STATE	STATE PROJECT REFERENCE NO.	SHEET NO.	TOTAL SHEETS
N.C.	17BP.9.P.1	1	132

STATE PROJ. NO.	F.A. PROJ. NO.	DESCRIPTION
17BP.9.P.1	NA	PE
17BP.9.P.1	NA	CONSTR.

STATE OF NORTH CAROLINA
DIVISION OF HIGHWAYS

FORSYTH COUNTY

LOCATION: *BRIDGES #51 AND #55 ON US 421 OVER YADKIN RIVER.*
BRIDGES #53 AND #54 OVER SOUTH FORK FIDDLER CREEK.
BRIDGE #78 ON US 52 OVER I-40.
BRIDGE #85 ON US 158 OVER NC 67.
BRIDGE #115 ON US 52 OVER SR 4315.
BRIDGE #185 ON 3RD STREET OVER US 52.
BRIDGE #265 ON SR 2264 OVER US 52.
BRIDGES #297 AND #302 ON US 52 OVER SOUTHERN RR

TYPE OF WORK: *BRIDGE PRESERVATION: HYDRODEMOLITION, EPOXY OVERLAY, LMC & LMC-VES OVERLAY, METHACRYLATE-CRACK SEAL, SUPERSTRUCTURE REPAIR AND SUBSTRUCTURE REPAIR.*

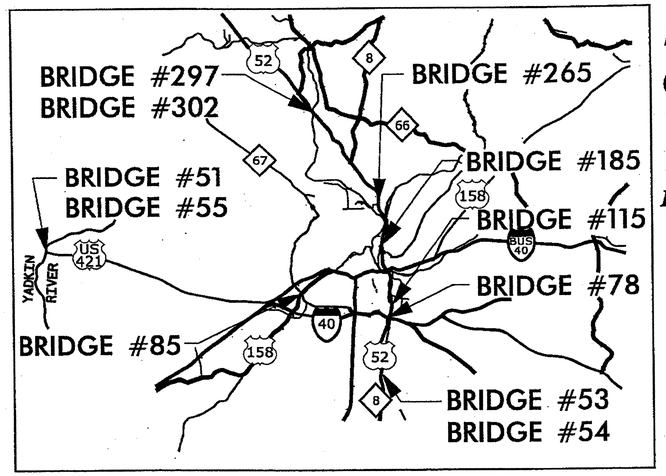

VICINITY MAP

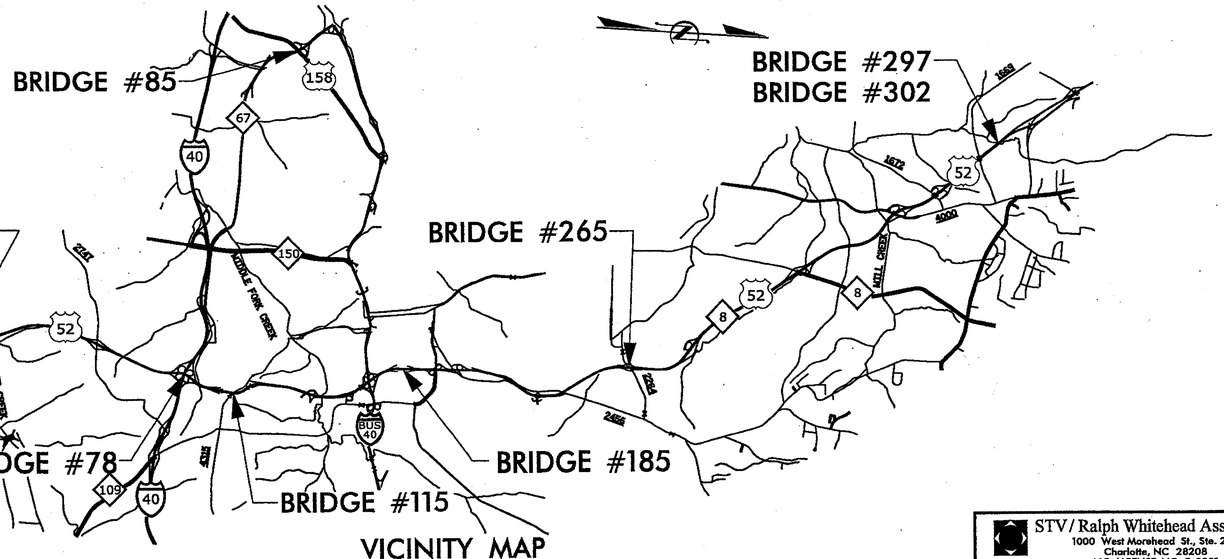

VICINITY MAP
BRIDGES #53, #54, #78, #85, #115, #185, #265, #297, & #302

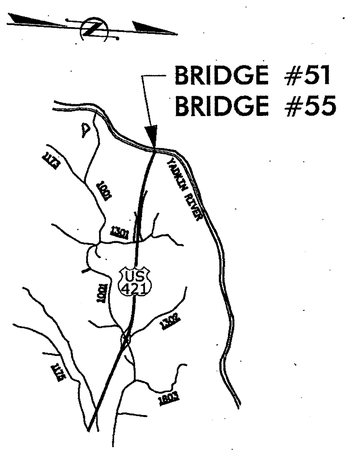

VICINITY MAP
BRIDGES #51 & #55

STV/ Ralph Whitehead Associates, Inc.
1000 West Morehead St., Ste. 200
Charlotte, NC 28208
NC LICENSE NO. F-0991

PROJECT LENGTH

BRIDGE	LENGTH STRUCTURE PROJECT
#51	.12 MILE
#53	.04 MILE
#54	.04 MILE
#55	.12 MILE
#78	.04 MILE
#85	.04 MILE
#115	.17 MILE
#185	.03 MILE
#265	.04 MILE
#297	.05 MILE
#302	.05 MILE

Prepared For:
STRUCTURES MANAGEMENT UNIT
NORTH CAROLINA DEPARTMENT OF TRANSPORTATION

2012 STANDARD SPECIFICATIONS

LETTING DATE:
APRIL 17, 2012

ENGINEER

NORTH CAROLINA PROFESSIONAL SEAL 19795 ENGINEER JOHN E. KELLY JR. 2/17/12

NORTH CAROLINA PROFESSIONAL SEAL 20208 ENGINEER ERIC B. NELSON, JR. 2/20/12

CONTRACT: C202993

PROJECT: 17BP.9.P.1

2/17/2012 9:15:37 AM i:\Projects\2515385\2515385_000i\50_Deliverables & Submittals\17BP.9.P.1\Structures\01Forsyth_TSH.dgn

STATE	STATE PROJECT REFERENCE NO.	SHEET NO.	TOTAL SHEETS
N.C.	17BP.9.P.1	1	132
STATE PROJ. NO.	F. A. PROJ. NO.	DESCRIPTION	
17BP.9.P.1	NA	PE	
17BP.9.P.1	NA	CONSTR.	

STATE OF NORTH CAROLINA
DIVISION OF HIGHWAYS

FORSYTH COUNTY

LOCATION: ***BRIDGES #51 AND #55 ON US 421 OVER YADKIN RIVER.***
BRIDGES #53 AND #54 OVER SOUTH FORK FIDDLER CREEK.
BRIDGE #78 ON US 52 OVER I-40.
BRIDGE #85 ON US 158 OVER NC 67.
BRIDGE #115 ON US 52 OVER SR 4315.
BRIDGE #185 ON 3RD STREET OVER US 52.
BRIDGE #265 ON SR 2264 OVER US 52.
BRIDGES #297 AND #302 ON US 52 OVER SOUTHERN RR

TYPE OF WORK: ***BRIDGE PRESERVATION: HYDRODEMOLITION, EPOXY OVERLAY, LMC & LMC-VES OVERLAY, METHACRYLATE-CRACK SEAL, SUPERSTRUCTURE REPAIR AND SUBSTRUCTURE REPAIR.***

INDEX OF SHEETS

1	TITLE SHEET
1A	INDEX OF SHEETS
2	SUMMARY OF QUANTITIES
S-1 – S-109	STRUCTURES
TMP-1 – TMP-4B	TRAFFIC MANAGEMENT PLANS
SD-1	SIGN DETAIL-1

PROJECT: 17BP.9.P.1

CONTRACT: C202993

STATE OF NORTH CAROLINA • DEPARTMENT OF TRANSPORTATION •

Prepared For:
STRUCTURES MANAGEMENT UNIT
NORTH CAROLINA DEPARTMENT OF TRANSPORTATION

LETTING DATE:
APRIL 17, 2012

ENGINEER

2/17/2012 9:16:19 AM I:\Projects\2515385\2515385_000\50_Deliverables & Submittals\17BP.9.P.1\Structures\01A Index_of_Shts.dgn

10/02/09

COMPUTED BY:_____ DATE:_____
CHECKED BY:_____ DATE:_____

PROJECT REFERENCE NO.	SHEET NO.
17BP.9.P.1	2

STATE OF NORTH CAROLINA
DIVISION OF HIGHWAYS

SUMMARY OF QUANTITIES

STATE OF NORTH CAROLINA
DIVISION OF HIGHWAYS
ROADWAY SUMMARY OF QUANTITIES FOR CONTRACT - C202993

ItemNumber	Sec #	Quantity	Unit	Description
0000100000-N	800	Lump Sum		MOBILIZATION
1330000000-E	607	2,327	SY	INCIDENTAL MILLING
1525000000-E	610	174	TON	ASPHALT CONC SURFACE COURSE, TYPE SF9.5A
1539000000-E	610	36	TON	ASPHALT CONC SURFACE COURSE, TYPE S12.5C
1575000000-E	620	14	TON	ASPHALT BINDER FOR PLANT MIX
4400000000-E	1110	350	SF	WORK ZONE SIGNS (STATIONARY)
4405000000-E	1110	275	SF	WORK ZONE SIGNS (PORTABLE)
4410000000-E	1110	90	SF	WORK ZONE SIGNS (BARRICADE MOUNTED)
4415000000-N	1115	4	EA	FLASHING ARROW BOARD
4422000000-N	1120	4	DAY	PORTABLE CHANGEABLE MESSAGE SIGN (SHORT TERM)
4430000000-N	1130	200	EA	DRUMS
4445000000-E	1145	40	LF	BARRICADES (TYPE III)
4480000000-N	1165	1	EA	TMA
4516000000-N	1180	21	EA	SKINNY DRUM
4725000000-E	1205	15	EA	THERMOPLASTIC PAVEMENT MARKING SYMBOL (90 MILS)
4847000000-E	1205	15,150	LF	POLYUREA PAVEMENT MARKING LINES (4", **********) (HIGHLY REFLECTIVE ELEMENTS)
4847140000-E	1205	25	LF	POLYUREA PAVEMENT MARKING LINES (24", **********) (HIGHLY REFLECTIVE ELEMENTS)
4900000000-N	1251	110	EA	PERMANENT RAISED PAVEMENT MARKERS
8161000000-E	420	148,699	SF	GROOVING BRIDGE FLOORS
8217000000-E	425	1,043	LB	REINFORCING STEEL (BRIDGE)
8573000000-E	SP	44	CY	LATEX MODIFIED CONC OVERLAY
8580000000-E	SP	909	SY	PLACING & FINISHING OF LATEX MODIFIED CONC OVERLAY
8657000000-N	430	Lump Sum		ELASTOMERIC BEARINGS
8660000000-E	SP	236	CF	CONCRETE REPAIRS
8664000000-E	SP	613	CF	SHOTCRETE REPAIRS
8678000000-E	SP	794	LF	EPOXY RESIN INJECTION
8692000000-N	SP	Lump Sum		FOAM JOINT SEALS
8699000000-N	SP	Lump Sum		STRIP SEALS
8860000000-N	SP	Lump Sum		GENERIC STRUCTURE ITEM BRIDGE JACKING
8860000000-N	SP	Lump Sum		GENERIC STRUCTURE ITEM CLEANING & PAINTING EXISTING BEARING PLATES
8860000000-N	SP	Lump Sum		GENERIC STRUCTURE ITEM DRAIN TROUGH SYSTEM
8860000000-N	SP	Lump Sum		GENERIC STRUCTURE ITEM RESET ROCKER BEARING
8860000000-N	SP	Lump Sum		GENERIC STRUCTURE ITEM SILICONE RUBBER EXPANSION JOINT SEALS
8860000000-N	SP	Lump Sum		GENERIC STRUCTURE ITEM UNDER STRUCTURE WORK PLATFORM
8881000000-E	SP	715	CY	GENERIC STRUCTURE ITEM LATEX MODIFIED CONCRETE OVER-LAY - VERY EARLY STRENGTH
8889000000-E	SP	16,095	LB	GENERIC STRUCTURE ITEM STRUCTURAL STEEL REPAIRS
8892000000-E	SP	9	SF	GENERIC STRUCTURE ITEM CLASS II CONC DECK REPAIRS FOR EPOXY / ASPHALT OVERLAY
8892000000-E	SP	17,760	SF	GENERIC STRUCTURE ITEM PLACEMENT OF CRACK/DECK SEALER
8892000000-E	SP	25,807	SF	GENERIC STRUCTURE ITEM PLACEMENT OF EPOXY OVERLAY
8893000000-E	SP	17,535	SY	GENERIC STRUCTURE ITEM HYDRO-DEMOLITION OF BRIDGE DE CK
8893000000-E	SP	16,626	SY	GENERIC STRUCTURE ITEM PLACING & FINISHING LATEX MOD CONC - VERY EARLY STRENGTH
8893000000-E	SP	17,535	SY	GENERIC STRUCTURE ITEM SCARIFYING BRIDGE DECK

GENERAL NOTES

EXISTING BRIDGE AND REPAIR DETAILS INDICATED ON THE PLANS ARE FROM THE BEST INFORMATION AVAILABLE. SINCE THIS INFORMATION IS SHOWN FOR THE CONVENIENCE OF THE CONTRACTOR, THE CONTRACTOR SHALL HAVE NO CLAIM WHATSOEVER AGAINST THE DEPARTMENT OF TRANSPORTATION FOR ANY DELAYS OR ADDITIONAL COST INCURRED BASED ON DIFFERENCES BETWEEN THE EXISTING BRIDGE AND REPAIR DETAILS SHOWN ON THE PLANS AND THE ACTUAL CONDITION AT THE PROJECT SITE.

THE CONTRACTOR SHALL TAKE NECESSARY STEPS TO PREVENT DEBRIS AND MATERIALS FROM FALLING, ROLLING, OR BLOWING INTO TRAFFIC OR ONTO BEAMS, GIRDERS, BEARINGS OR ANY OTHER UNINTENDED SURFACES. CONSIDERATION SHALL BE GIVEN TO THE USE OF SCREENS TO PROTECT TRAFFIC ADJACENT TO THE WORK AREA AND OTHER PORTIONS OF THE BRIDGE.

IT IS THE CONTRACTOR'S RESPONSIBILITY TO FOLLOW ALL OSHA AND STATE SAFETY REQUIREMENTS.

DIMENSIONS IN THESE PLANS ARE BASED ON ORIGINAL PLANS. THE CONTRACTOR SHALL FIELD VERIFY ALL DIMENSIONS PRIOR TO CONSTRUCTION.

ALL VISUAL AND NON-DESTRUCTIVE TESTING WILL BE PERFORMED BY NCDOT.

FOR UNDER-STRUCTURE WORK PLATFORM, SEE SPECIAL PROVISIONS.

CONTRACTOR SHALL COORDINATE WITH INSPECTION PERSONNEL TO CAREFULLY EXAMINE HEAVILY RUSTED AREAS, AFTER SURFACE PREPARATION, TO DETERMINE IF ANY SUBSTANTIAL SECTION LOSS HAS OCCURRED.

FOR MAINTENANCE OF TRAFFIC, SEE TRAFFIC CONTROL PLANS.

FOR SUBMITTAL OF WORKING DRAWINGS, SEE SPECIAL PROVISIONS.

FOR FALSEWORK AND FORMWORK, SEE SPECIAL PROVISIONS.

FOR GROUT FOR STRUCTURES, SEE SPECIAL PROVISIONS.

FOR STRUCTURAL STEEL REPAIRS, SEE SPECIAL PROVISIONS.

EXISTING JOINTS AND DECK DRAINS SHALL BE SEALED PRIOR TO BEGINNING SURFACE PREPARATION OF BRIDGE DECK. SEE SPECIAL PROVISIONS FOR HYDRO-DEMOLITOIN OF BRIDGE DECK FOR DETAILS

FOR EPOXY RESIN INJECTION, SEE SPECIAL PROVISIONS.

FOR CONCRETE REPAIRS, SEE SPECIAL PROVISIONS.

FOR SHOTCRETE REPAIRS, SEE SPECIAL PROVISIONS.

FOR CLEANING AND PAINTING EXISTING BEARING PLATES, SEE SPECIAL PROVISIONS.

FOR POLLUTION CONTROL, SEE STANDARD SPECIFICATIONS, SECTION 442, "PAINTING STEEL STRUCTURES".

FOR INCIDENTAL ASPHALT MILLING, SEE STANDARD SPECIFICATIONS, SECTION 607, "MILLING ASPHALT PAVEMENT".

FOR ASPHALT CONCRETE SURFACE COURSE TYPES SF 9.5A AND S 12.5C, SEE STANDARD SPECIFICATIONS, SECTION 610, "ASPHALT CONCRETE PLANT MIX PAVEMENTS".

REPLACEMENT OF DAMAGED REINFORCING STEEL AND DOWELS USED IN CONCRETE REPAIR SHALL BE CONSIDERED INCIDENTAL TO CONCRETE REPAIRS. NO ADDITIONAL PAYMENT OR MEASUREMENT WILL BE MADE.

THE COST OF LABOR, MATERIALS, TOOLS, EQUIPMENT AND INCIDENTALS NECESSARY FOR REMOVAL AND DISPOSAL OF EXISTING STRUCTURE COMPONENTS SHALL BE INCLUDED IN THE BID PRICE FOR THE VARIOUS CONTRACT PAY ITEMS.

DEBRIS SHALL BE REMOVED FROM EXISTING BENT CAPS. ALL COST ASSOCIATED WITH DEBRIS REMOVAL SHALL BE CONSIDERED INCIDENTAL TO CONCRETE REPAIR PAY ITEM.

FOR CONCRETE DECK REPAIR FOR EPOXY OR ASPHALT OVERLAYS, SEE SPECIAL PROVISIONS.

FOR UNDERSTRUCTURE WORK PLATFORM, SEE SPECIAL PROVISIONS.

MILLING ASPHALT PAVEMENT LENGTH AND QUANTITY IS APPROXIMATE, THE CONTRACTOR SHALL MILL AS REQUIRED TO PROVIDE A SMOOTH TRANSITION AT EACH END OF THE BRIDGE OR AS DIRECTED BY THE ENGINEER.

CONTRACTOR SHALL REVIEW DECK CONDITION WITH THE ENGINEER AFTER SCARIFICATION TO IDENTIFY ANY POTENTIAL CLASS III REPAIR AREAS.

IF ADDITIONAL CLASS III REPAIR AREAS ARE IDENTIFIED, THE CONTRACTOR SHALL INSTALL BLOW THROUGH CONTAINMENT.

IF DEMOLITION OPERATIONS IDENTIFY AREAS FOR POTENTIAL CLASS III REPAIRS, CONTRACTOR SHALL CEASE WORK AT THOSE LOCATIONS UNTIL SUCH TIME THAT BLOW THROUGH CONTAINMENT AND FORMWORK CAN BE INSTALLED.

UNPAINTED STRUCTURAL STEEL, EXCLUDING WEATHERING STEEL AND GALVANIZED STEEL, USED FOR REPAIRS SHALL BE PAINTED USING PAINT SYSTEM 1 AS SPECIFIED IN SECTION 442 OF THE STANDARD SPECIFICATIONS. THIS SYSTEM SHALL ALSO BE USED TO PAINT EXISTING STEEL ADJACENT TO THE REPAIRS THAT HAVE BEEN DISTURBED DUE TO REPAIR WORK.

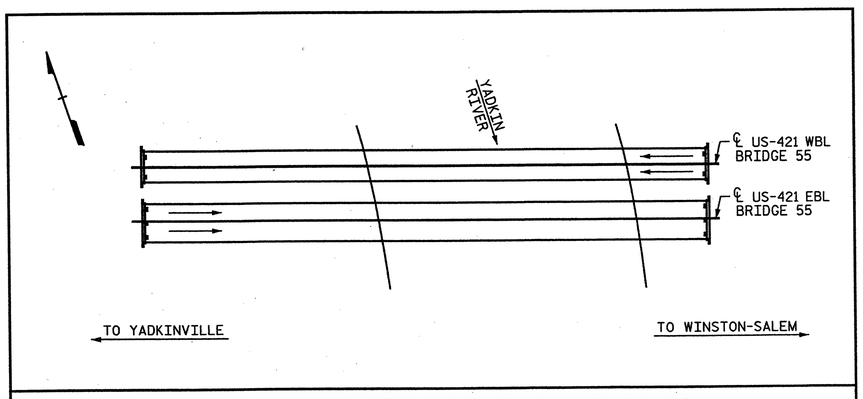

BRIDGES 51 & 55 LOCATION SKETCH

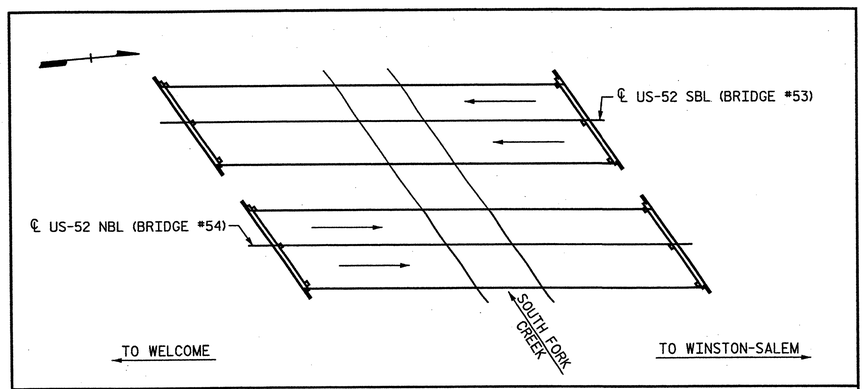

BRIDGES 53 & 54 LOCATION SKETCH

NORTH CAROLINA PROFESSIONAL SEAL 19765 ENGINEER PAUL E. KELLY
2/17/12

PROJECT NO. 17BP.9.P.1

FORSYTH COUNTY

BRIDGE NO.: 51, 53, 54 & 55

REHAB. OF FORSYTH CO. BRIDGES

STATE OF NORTH CAROLINA
DEPARTMENT OF TRANSPORTATION
RALEIGH

GENERAL NOTES AND LOCATION SKETCHES

REVISIONS						SHEET NO.
NO.	BY:	DATE:	NO.	BY:	DATE:	S-1
1			3			TOTAL SHEETS
2			4			S-109

STV / Ralph Whitehead Associates, Inc.
1000 West Morehead St., Ste. 200
Charlotte, NC 28206
NC License No. F-0991

DRAWN BY : RIB DATE : 1-12
CHECKED BY : AC DATE : 1-12-12

2/17/2012 11:04:45 AM
I:\Projects\2515385\2515385_0001\50_Deliverables & Submittals\17BP.9.P.1 Structures\17BP.9.P.1 Structures\17BP.9.P.1 FinalSet 01.24.12\Location Sketches\GeneralNotes and Loc Sketches.dgn

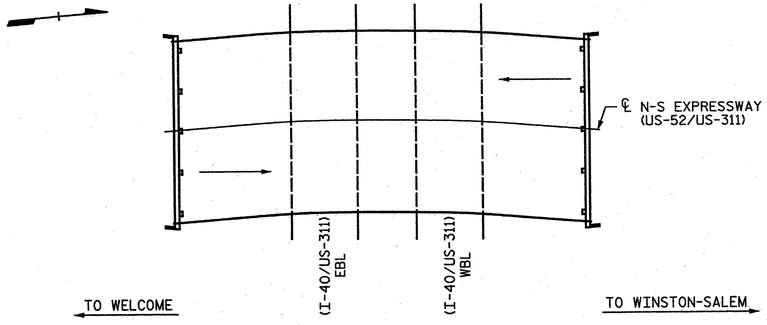

BRIDGE 78 LOCATION SKETCH

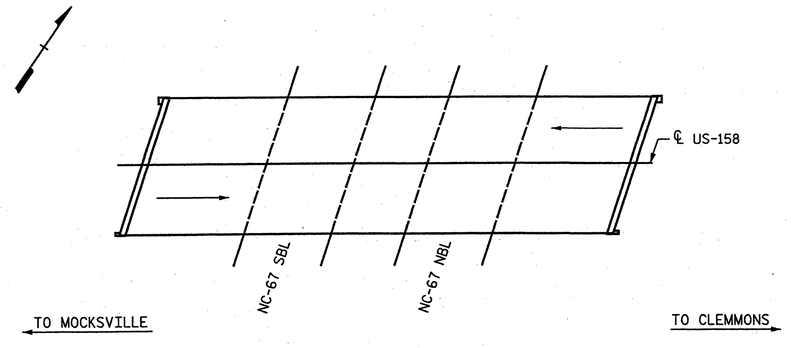

BRIDGE 85 LOCATION SKETCH

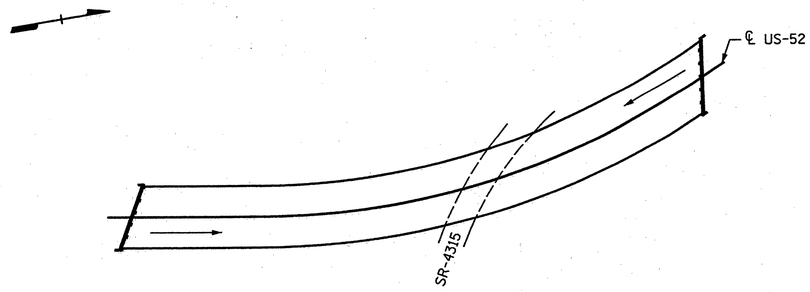

BRIDGE 115 LOCATION SKETCH

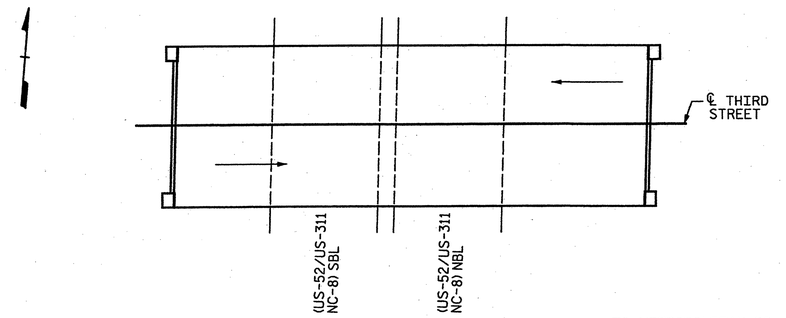

BRIDGE 185 LOCATION SKETCH

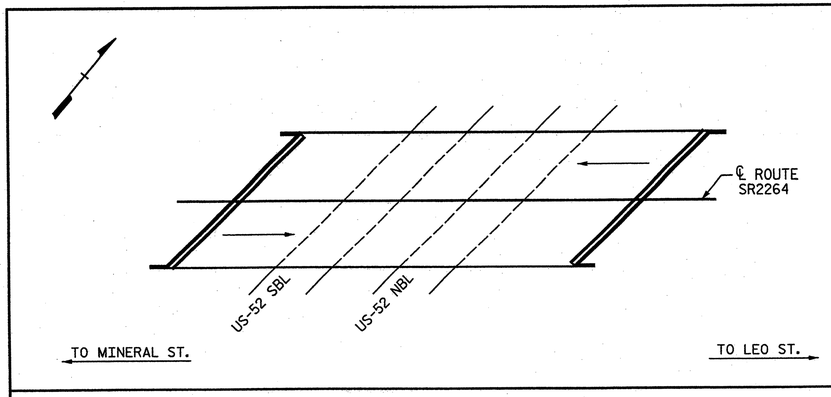

BRIDGE 265 LOCATION SKETCH

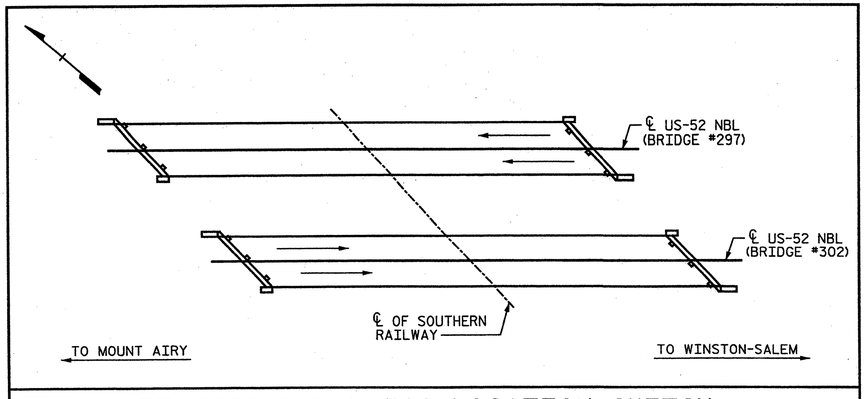

BRIDGES 297 & 302 LOCATION SKETCH

NORTH CAROLINA PROFESSIONAL SEAL 19765 ENGINEER ALAN E. KELLY, JR.
1/18/12

FOR GENERAL NOTES SEE SHEET S-1 OF S-109.

PROJECT NO. 17BP.9.P.1

FORSYTH COUNTY

BRIDGE NO.: 78, 85, 115, 185, 265, 297 & 302

REHAB. OF FORSYTH CO. BRIDGES

STATE OF NORTH CAROLINA
DEPARTMENT OF TRANSPORTATION
RALEIGH

GENERAL NOTES AND LOCATION SKETCHES

REVISIONS						SHEET NO.
NO.	BY:	DATE:	NO.	BY:	DATE:	S-2
1			3			TOTAL SHEETS
2			4			S-109

STV / Ralph Whitehead Associates, Inc.
1000 West Morehead St., Ste. 200
Charlotte, NC 28208
NC License No. F-0991

DRAWN BY : RIB DATE : 1-12
CHECKED BY : AC DATE : 1-12

I:\Projects\25153385\25153385.0001\50.Deliverables & Submittals\17BP.9.P.1\Structures\Final1-12-12\17BP.9.P.1 FinalSet 01.12.12\Location Sketches\General Notes and Loc Sketches.dgn
guldool
1/17/2012

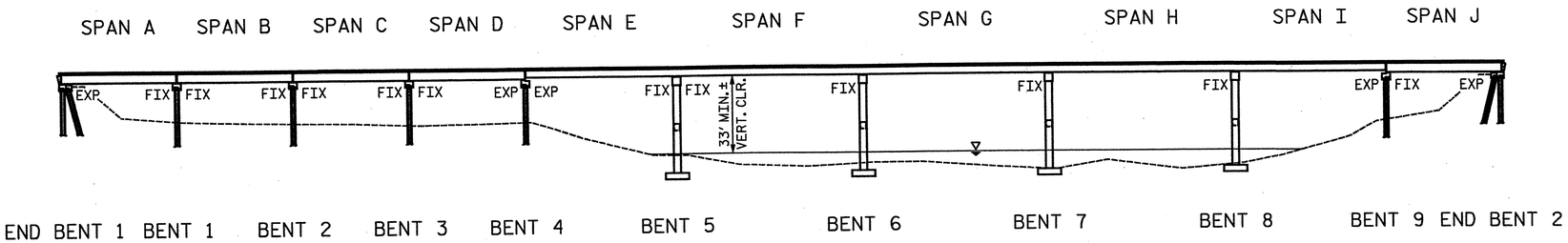

ELEVATION

(SECTIONS AT BENTS AND END BENTS ARE AT RIGHT ANGLES)

NOTES:

FOR GENERAL NOTES, SEE SHEET NO. S-1 OF S-109.

SEE BRIDGE NO. 51 SHEETS 3, 6, 7, 8 & 9 OF 10 FOR ADDITIONAL NOTES.

EXISTING BRIDGE INFORMATION BASED ON BEST AVAILABLE DATA.

AFTER ALL REPAIRS ON THE BRIDGE HAVE BEEN COMPLETED, AN EPOXY PROTECTIVE COATING SHALL BE APPLIED TO THE TOP SURFACE OF BENT CAPS, INCLUDING PEDESTALS, FOR EACH BENT BELOW A JOINT IN THE SUPERSTRUCTURE. CAP SURFACES SHALL BE GRIT BLASTED PRIOR TO EPOXY COATING. SEE STANDARD SPECIFICATIONS FOR EPOXY COATING. ALL COSTS ASSOCIATED WITH APPLYING EPOXY PROTECTIVE COATING SHALL BE INCLUDED IN THE SEVERAL PAY ITEMS FOR THE PROJECT. NO ADDITIONAL PAYMENT WILL BE MADE FOR THIS WORK.

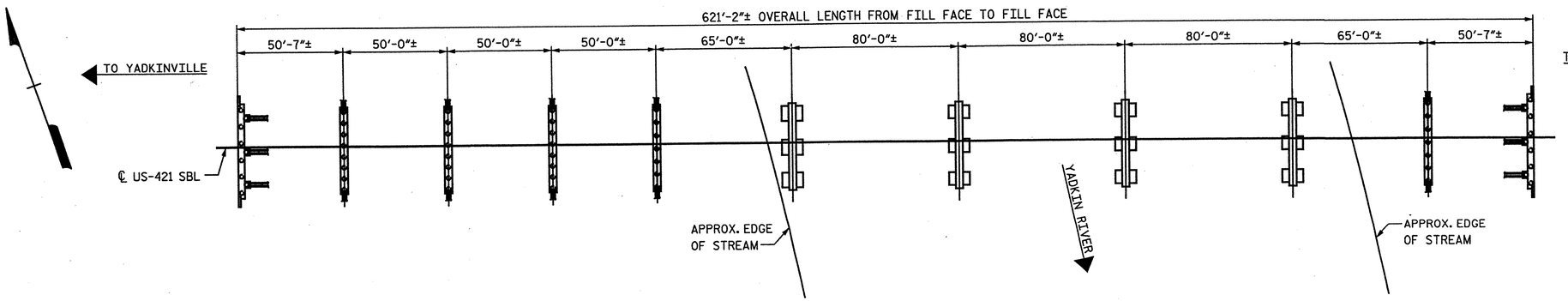

PLAN

PROJECT NO. 17BP.9.P.1

FORSYTH COUNTY

BRIDGE NO.: 51

REHAB. OF BRIDGE NO. 51 SHEET 1 OF 10

STATE OF NORTH CAROLINA
DEPARTMENT OF TRANSPORTATION
RALEIGH

GENERAL PLAN & ELEVATION

BRIDGE ON US 421 SBL OVER YADKIN RIVER

NORTH CAROLINA PROFESSIONAL SEAL 19765 ENGINEER PAUL E. KELLY, JR. 2/17/12

STV / Ralph Whitehead Associates, Inc.
1000 West Morehead St., Ste. 200
Charlotte, NC 28208
NC License No. F-0991

REVISIONS						SHEET NO.
NO.	BY:	DATE:	NO.	BY:	DATE:	S-3
1			3			TOTAL SHEETS
2			4			S-109

DRAWN BY : AFM DATE : 01-12
CHECKED BY : AC DATE : 01-12

I:\Projects\2515385\2515385_0001\50_Deliverables & Submittals\17BP.9.P.1\Structures\17BP.9.P.1 FinalSet 01_24_12\Bridge 051\Bridge 051 Rehab Plans.dgn

2/17/2012 tlaws

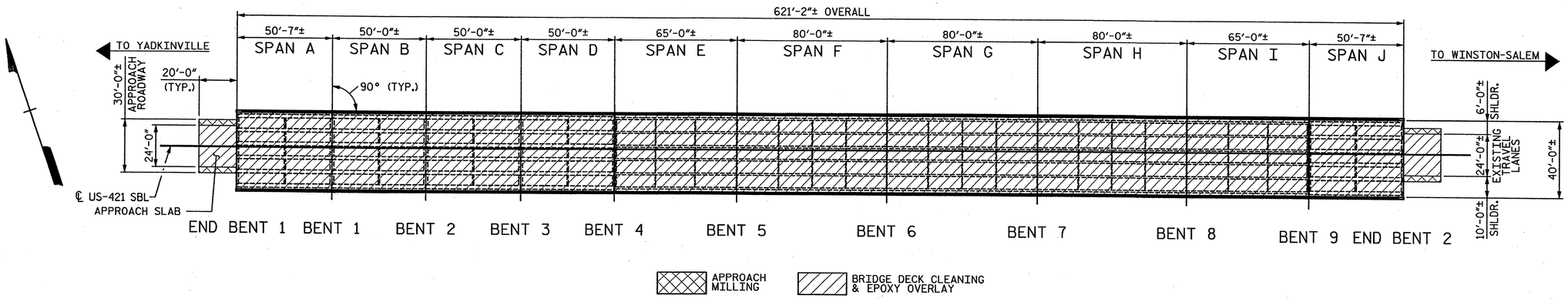

PLAN OF SPANS - PLACEMENT OF EPOXY OVERLAY

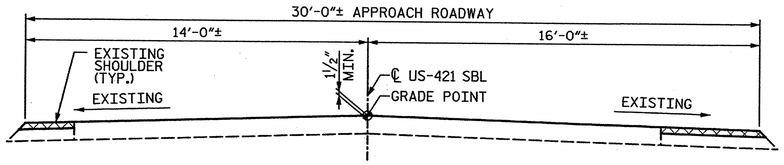

TYPICAL ROADWAY MILLING SECTION

(MILL TO 1½"DEPTH)

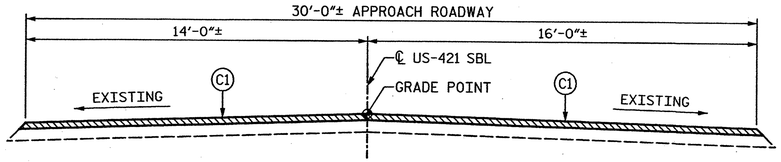

TYPICAL ROADWAY SECTION

C1	PROPOSED VARIABLE DEPTH ASPHALT CONCRETE SURFACE COURSE, TYPE SF9.5A AT AN AVERAGE RATE OF 110 LBS. PER SQ. YD. PER 1" DEPTH. TO BE PLACED IN LAYERS NOT LESS THAN 1" IN DEPTH OR GREATER THAN 1½" DEPTH

NOTES:

FOR ADDITIONAL MILLING DETAILS, SEE SHEET 3 OF 10.

PER EXISTING PLANS, THE EXISTING DECK HAS 2" CONCRETE COVER OVER EXISTING REINFORCING STEEL.

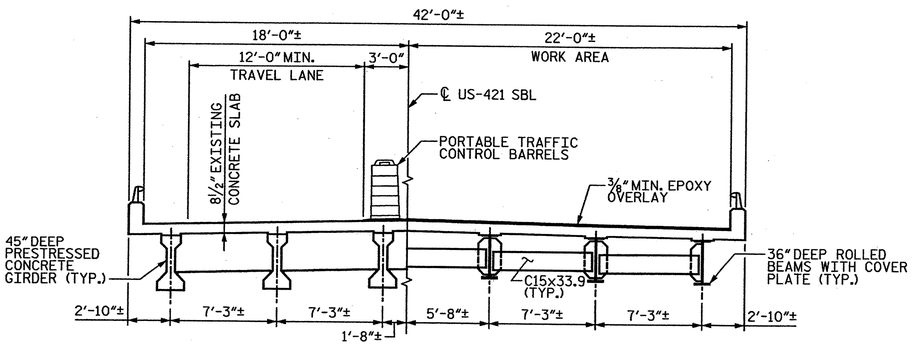

HALF SECTION SHOWING SPANS A, B, C, D & J

HALF SECTION SHOWING SPANS E, F, G, H & I

TYPICAL SECTION - STAGE I

(AT INTERMEDIATE DIAPHRAGMS)

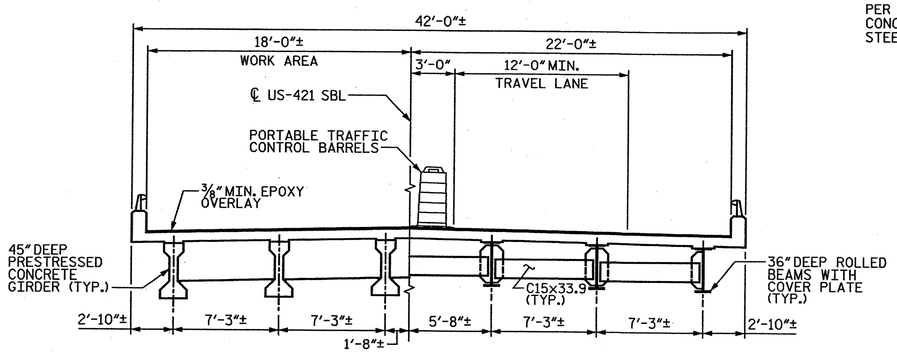

HALF SECTION SHOWING SPANS A, B, C, D & J

HALF SECTION SHOWING SPANS E, F, G, H & I

TYPICAL SECTION - STAGE II

(AT INTERMEDIATE DIAPHRAGMS)

TOTAL BILL OF MATERIAL

INCIDENTAL MILLING	PLACEMENT OF EPOXY OVERLAY	SILICONE RUBBER EXPANSION JOINT SEALS	ASPHALT CONCRETE SURFACE COURSE TYPE SF9.5A	EPOXY RESIN INJECTION	CONCRETE REPAIRS (CLASS A)	CLASS II CONCRETE DECK REPAIRS FOR EPOXY OVERLAY	BRIDGE JACKING	RESET ROCKER BEARING	STRUCTURAL STEEL REPAIRS	UNDER STRUCTURE WORK PLATFORM	■ REINFORCING STEEL
SQ. YD.	SQ. FT.	LUMP SUM	TONS	LIN. FT.	CU. FT.	SQ. FT.	LUMP SUM	LUMP SUM	LBS.	LUMP SUM	LBS.
27	25,807	LUMP SUM	2	248	13	9	LUMP SUM	LUMP SUM	573	LUMP SUM	100

* QUANTITIES FOR INFORMATION ONLY.

■ REINFORCING STEEL FOR REPLACEMENT OF REBAR DAMAGED PRIOR TO ONSET OF PROJECT.

PROJECT NO. 17BP.9.P.1

FORSYTH COUNTY

BRIDGE NO.: 51

REHAB. OF BRIDGE NO. 51 SHEET 2 OF 10

STATE OF NORTH CAROLINA
DEPARTMENT OF TRANSPORTATION
RALEIGH

PLAN OF SPANS & TYPICAL SECTION

BRIDGE ON US 421 SBL OVER YADKIN RIVER

REVISIONS						SHEET NO.
NO.	BY:	DATE:	NO.	BY:	DATE:	S-4
1			3			TOTAL SHEETS
2			4			S-109

DRAWN BY : AFM DATE : 01-12

CHECKED BY : AC DATE : 01-12

STV/ Ralph Whitehead Associates, Inc.
1000 West Morehead St. Ste. 200
Charlotte, NC 28208
NC License No. F-0991

NORTH CAROLINA PROFESSIONAL SEAL 19766 ENGINEER PAUL E. KELLY, JR. 3/15/12

3/15/2012 guldool I:\Projects\2515385\2515385.0001\50_Deliverables & Submittals\17BP.9.P.1\Structures\17BP.9.P.1 Final Set 01.24.12\Bridge 051\Bridge 051 Rehab Plans.dgn

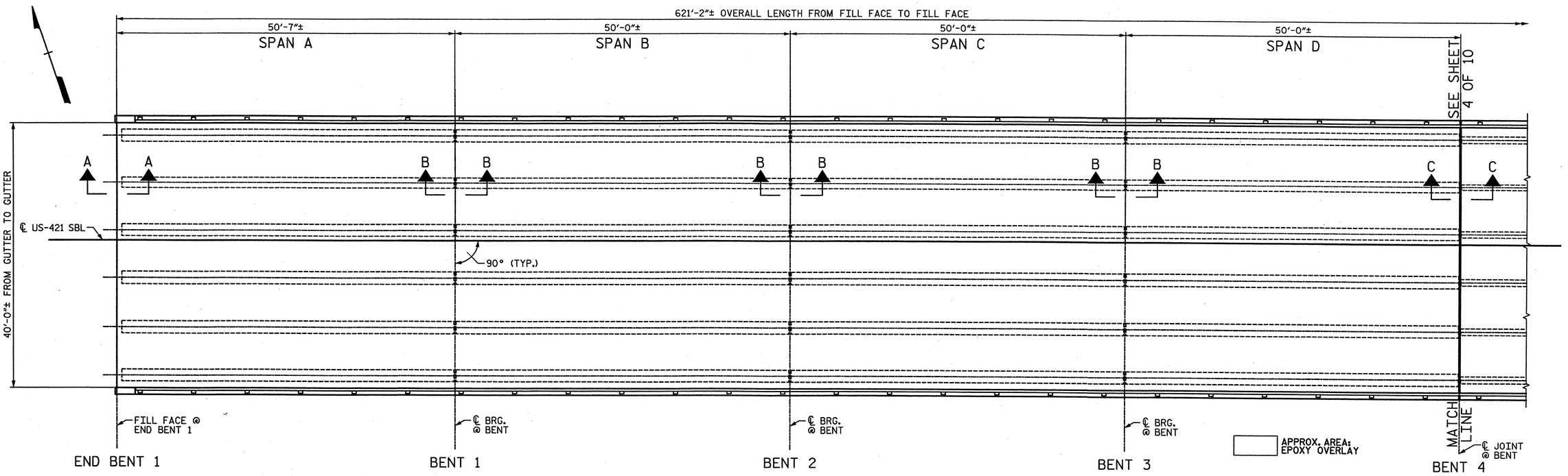

PARTIAL PLAN OF SPANS - DECK REPAIRS

(SEE SHEET 6 OF 10 FOR SECTION C-C)

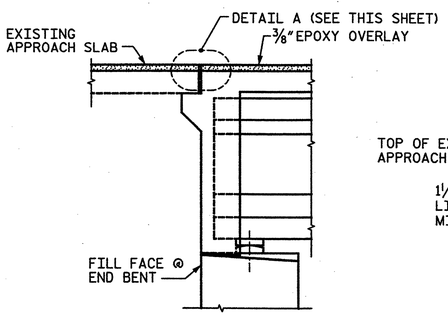

SECTION A-A

(PROPOSED JOINT @ END BENT 1 AND 2)

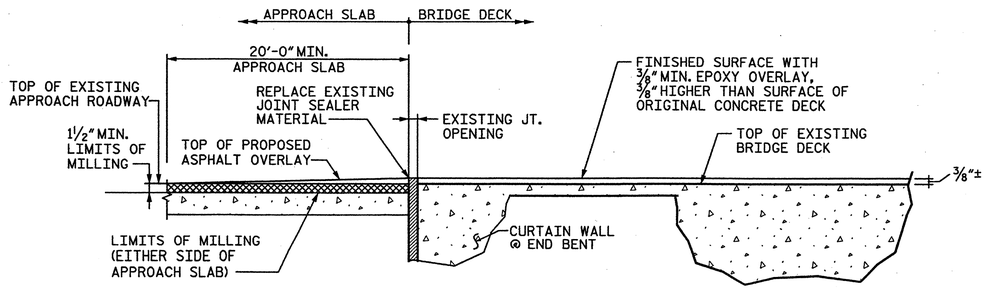

DETAIL A

(LOCATION OF JOINT TO MATCH EXISTING JOINT LOCATION)

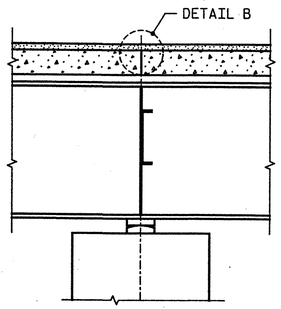

SECTION B-B

(PROPOSED JOINT @ BENTS 5, 6, 7 & 8)
(BENTS 1, 2 & 3 SIMILAR)

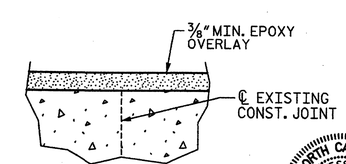

DETAIL B

NOTES:

FOR REPAIR OF BRIDGE DECK USING EPOXY OVERLAY, SEE SPECIAL PROVISIONS.

FOR CONCRETE DECK REPAIRS FOR EPOXY OVERLAYS, SEE SPECIAL PROVISIONS.

ALL COSTS ASSOCIATED WITH CONCRETE DECK REPAIRS FOR EPOXY OVERLAYS SHALL BE INCIDENTAL TO THE CONTRACT PAY ITEM PLACEMENT OF EPOXY OVERLAY.

IN THE EVENT THAT THE ENGINEER DEEMS IT NECESSARY TO PERFORM A CLASS III DECK REPAIR, THE CONTRACTOR SHALL CONSTRUCT BLOW THROUGH CONTAINMENT FORMWORK BENEATH THE SUBJECT AREA. SEE BRIDGE 55, SHEET 3 OF 17 FOR TYP. "BLOW THROUGH" CONTAINMENT AND FORMWORK DETAIL.

PROJECT NO. 17BP.9.P.1

FORSYTH COUNTY

BRIDGE NO.: 51

REHAB. OF BRIDGE NO. 51 SHEET 3 OF 10

STATE OF NORTH CAROLINA
DEPARTMENT OF TRANSPORTATION
RALEIGH

PLAN OF SPANS A,B,C&D DECK REPAIRS

BRIDGE ON US 421 SBL OVER YADKIN RIVER

NORTH CAROLINA PROFESSIONAL SEAL 19765 ENGINEER PAUL E. KELLY, JR. 2/17/12

STV / Ralph Whitehead Associates, Inc.
1000 West Morehead St., Ste. 200
Charlotte, NC 28208
NC License No. F-0991

REVISIONS						SHEET NO.
NO.	BY:	DATE:	NO.	BY:	DATE:	S-5
1			3			TOTAL SHEETS
2			4			S-109

DRAWN BY : AFM DATE : 01-12
CHECKED BY : AC DATE : 01-12

I:\Projects\2515385\2515385_0001\50_Deliverables & Submittals\17BP.9.P.1\Structures\17BP.9.P.1 FinalSet 01_24_12\Bridge 051\Bridge 051 Rehab Plans.dgn
tlaws
2/17/2012

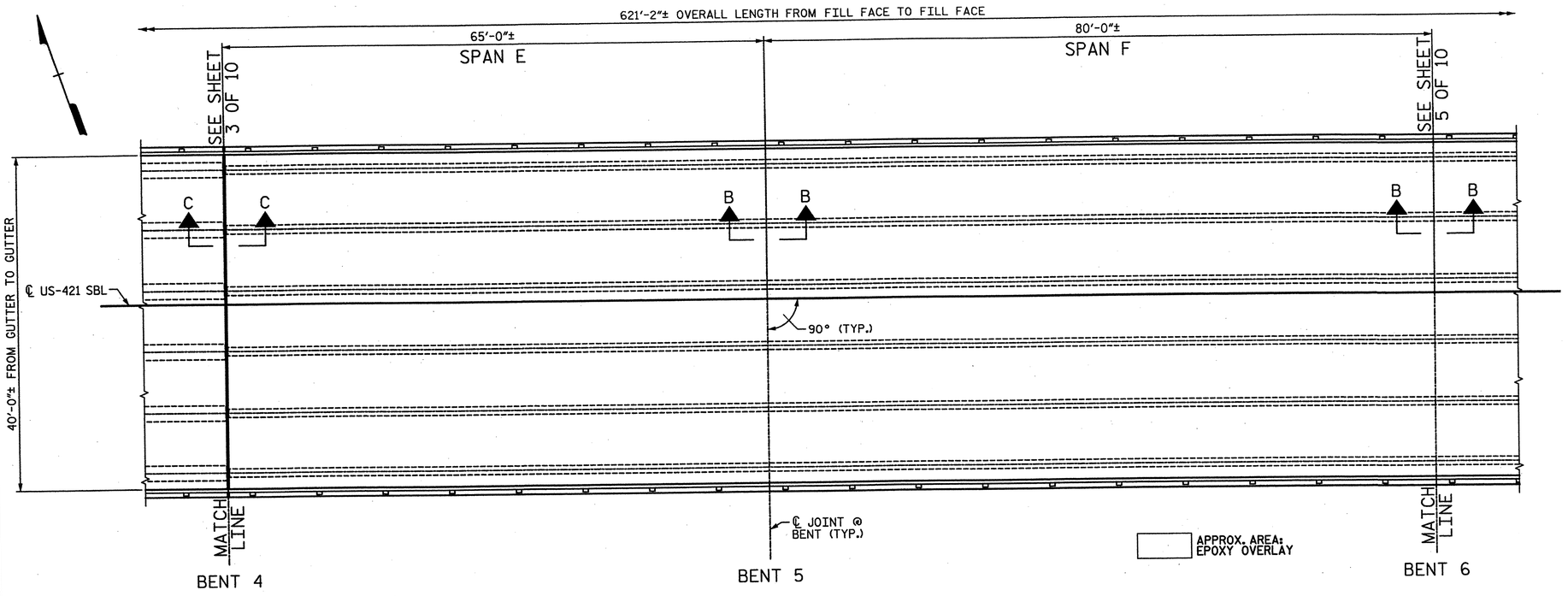

PARTIAL PLAN OF SPANS - DECK REPAIRS

(SEE SHEET 3 OF 10 FOR SECTION B-B)
(SEE SHEET 6 OF 10 FOR SECTION C-C)

NOTE:

SEE NOTES, SHEET 3 AND 6 OF 10.

PROJECT NO. 17BP.9.P.1

FORSYTH COUNTY

BRIDGE NO.: 51

REHAB. OF BRIDGE NO. 51 SHEET 4 OF 10

STATE OF NORTH CAROLINA
DEPARTMENT OF TRANSPORTATION
RALEIGH

PLAN OF SPANS E & F DECK REPAIRS

BRIDGE ON US 421 SBL
OVER YADKIN RIVER

NORTH CAROLINA PROFESSIONAL SEAL 18165 ENGINEER PAUL E. KELLY
2/17/12

STV / Ralph Whitehead Associates, Inc.
1000 West Morehead St. Ste. 200
Charlotte, NC 28208
NC License No. F-0991

REVISIONS						SHEET NO.
NO.	BY:	DATE:	NO.	BY:	DATE:	S-6
1			3			TOTAL SHEETS
2			4			S-109

DRAWN BY : AFM DATE : 01-12
CHECKED BY : AC DATE : 01-12

2/17/2012 tows I:\Projects\2515385\2515385_0001\50_Deliverables & Submittals\17BP.9.P.1\Structures\17BP.9.P.1 FinalSet 01.24.12\Bridge 051\Bridge 051 Rehab Plans.dgn

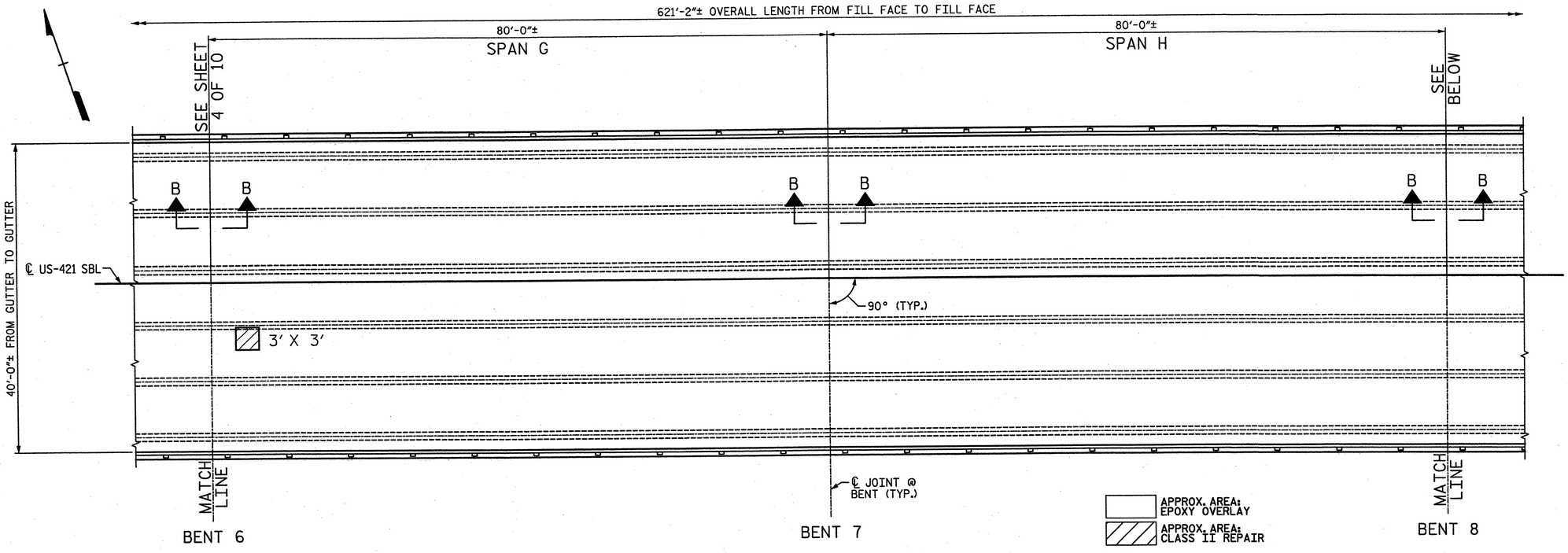

PARTIAL PLAN OF SPANS - DECK REPAIRS

(SEE SHEET 3 OF 10 FOR SECTION B-B)

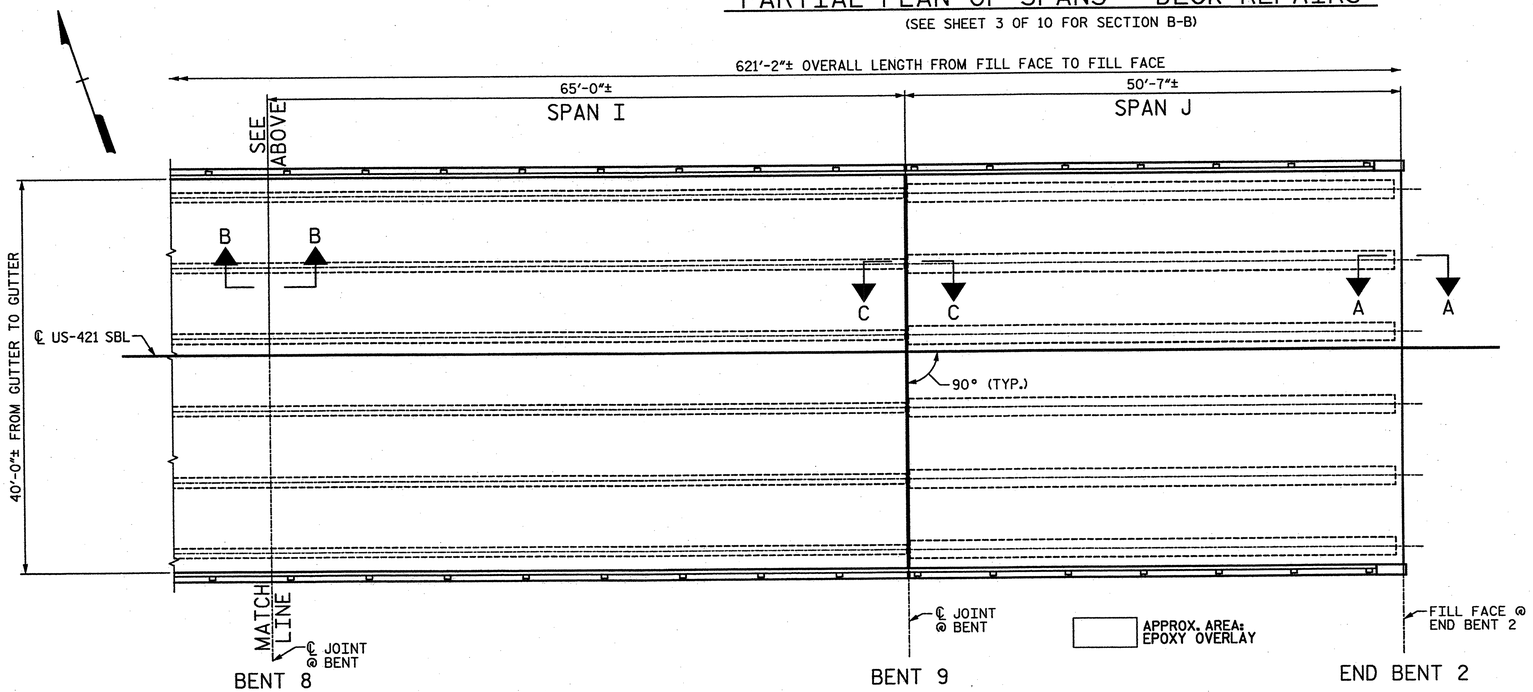

PARTIAL PLAN OF SPANS - DECK REPAIRS

(SEE SHEET 3 OF 10 FOR SECTIONS A-A AND B-B)
(SEE SHEET 4 OF 10 FOR SECTION C-C)

NOTE:

SEE NOTES, SHEET 3 OF 10.

PROJECT NO. 17BP.9.P.1

FORSYTH COUNTY

BRIDGE NO.: 51

REHAB. OF BRIDGE NO. 51 SHEET 5 OF 10

STATE OF NORTH CAROLINA
DEPARTMENT OF TRANSPORTATION
RALEIGH

PLAN OF SPANS G,H,I&J DECK REPAIRS

BRIDGE ON US 421 SBL
OVER YADKIN RIVER

NORTH CAROLINA PROFESSIONAL SEAL 19765 ENGINEER PAUL E. KELLY JR.

STV / Ralph Whitehead Associates, Inc.
1000 West Morehead St., Ste. 200
Charlotte, NC 28208
NC License No. F-0991

REVISIONS							SHEET NO.
NO.	BY:	DATE:	NO.	BY:	DATE:		S-7
1			3				TOTAL SHEETS
2			4				S-109

DRAWN BY : AFM DATE : 01-12
CHECKED BY : AC DATE : 01-12

I:\Projects\2515385\2515385.0001\50_Deliverables & Submittals\17BP.9.P.1\Structures\Final1-12-12\17BP.9.P.1 Final Set 01.12.12\Bridge 51\Bridge 051 Rehab Plans.dgn
ttownsend
1/17/2012

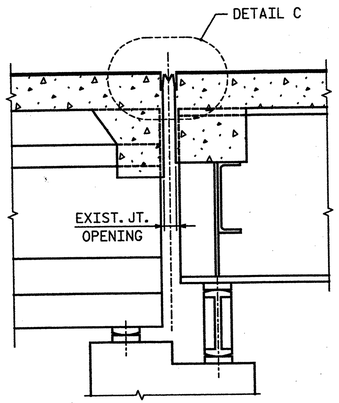

SECTION C-C

(PROPOSED JOINT)
(TYP. @ BENTS 4 & 9)

NOTES:

1. EXISTING JOINT ASSEMBLY SHOWN ON BEST AVAILABLE INFORMATION AND MAY VARY BASED ON FIELD CONDITIONS.
2. ALL JOINT DIMENSIONS SHOWN AT 60°F.
3. TOTAL THERMAL MOVEMENT MEASURED PARALLEL TO THE CENTER LINE OF THE ROADWAY IS 2¾" FOR BENT 4 AND 2⅛" FOR BENT 9.
4. SET TOP OF NEW JOINT SEAL A MINIMUM OF ¼" AND A MAXIMUM OF ½" BELOW TOP OF PROPOSED EPOXY OVERLAY.
5. CONTRACTOR CANNOT RE-OPEN TRAFFIC LANE UNTIL CONSTRUCTION IS COMPLETED.
6. CONTRACTOR SHALL COVER AND PROTECT THE JOINT CONSTRUCTION TO PREVENT DAMAGE DURING CONCRETE CURING AND AS NEEDED TO MAINTAIN TRAFFIC, AS DIRECTED BY THE ENGINEER.

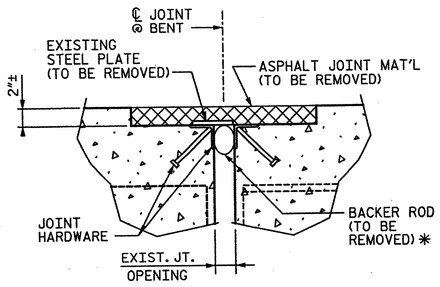

EXISTING JOINT DETAIL

* IN SOME PLACES MAY NOT BE IN PLACE

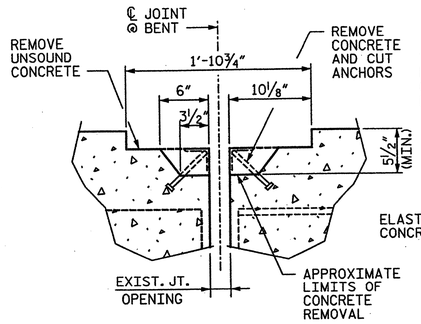

CONCRETE REMOVAL DETAIL @ EXISTING JOINT

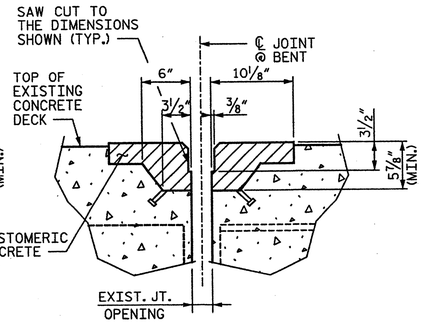

CONCRETE PLACEMENT DETAIL FOR EXPANSION JOINT SEAL

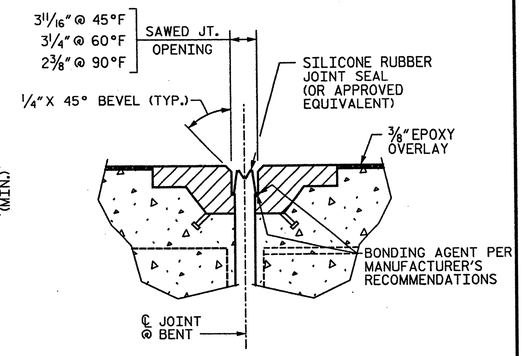

EXPANSION JOINT SEAL DETAIL

DETAIL C @ BENT 4

EXISTING JOINT DETAIL

* IN SOME PLACES MAY NOT BE IN PLACE

CONCRETE REMOVAL DETAIL @ EXISTING JOINT

CONCRETE PLACEMENT DETAIL FOR EXPANSION JOINT SEAL

EXPANSION JOINT SEAL DETAIL

DETAIL C @ BENT 9

* ELASTOMERIC CONCRETE
CU. FT.
39

* QUANTITIES FOR INFORMATION ONLY.

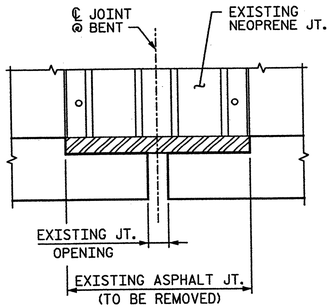

EXISTING JOINT ELEVATION

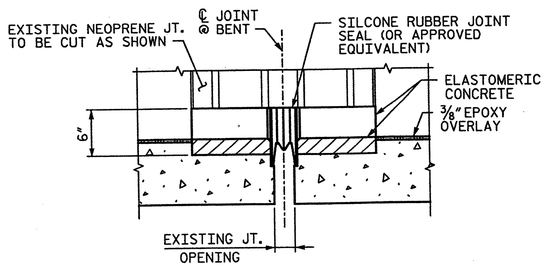

PROPOSED JOINT ELEVATION

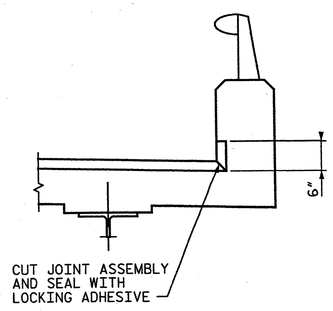

PROPOSED JOINT SECTION

DETAIL OF JOINT AT PARAPET

NORTH CAROLINA PROFESSIONAL SEAL 19468 ENGINEER CHARLES E. KELLER
2/17/12

STV/ Ralph Whitehead Associates, Inc.
1000 West Morehead St., Ste. 200
Charlotte, NC 28208
NC License No. F-0991

PROJECT NO. 17BP.9.P.1
FORSYTH COUNTY
BRIDGE NO.: 51
REHAB. OF BRIDGE NO. 51 SHEET 6 OF 10

STATE OF NORTH CAROLINA
DEPARTMENT OF TRANSPORTATION
RALEIGH

SILICONE RUBBER JOINT SEAL DETAILS

BRIDGE ON US 421 SBL OVER YADKIN RIVER

REVISIONS						SHEET NO.
NO.	BY:	DATE:	NO.	BY:	DATE:	S-8
1			3			TOTAL SHEETS
2			4			S-109

DRAWN BY : AFM DATE : 01-12
CHECKED BY : AC DATE : 01-12

I:\Projects\2515385\25153850.000\50.Deliverables & Submittals\17BP.9.P.1 Structures\17BP.9.P.1 Bridge 051 Rehab Plans.dgn
guldool
2/17/2012

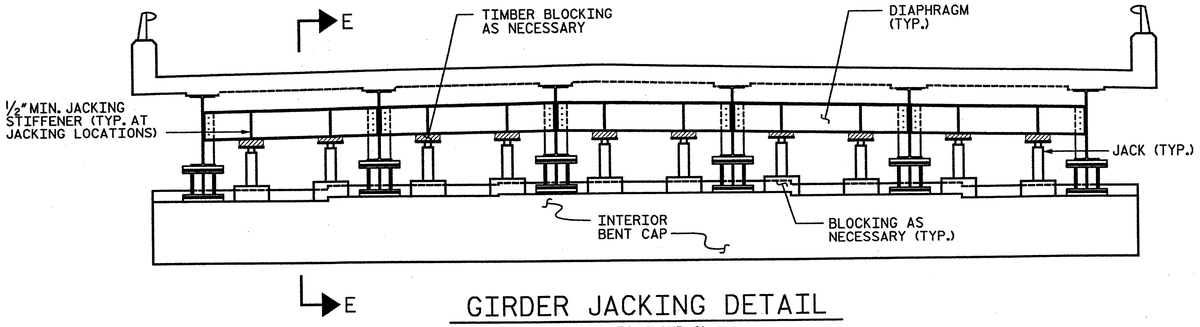

GIRDER JACKING DETAIL

(BENTS 4 AND 9)

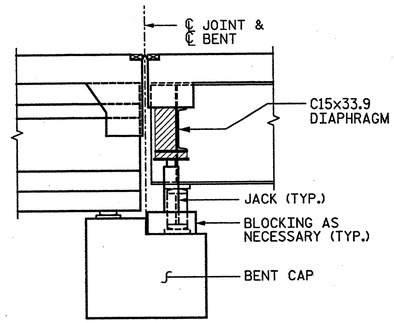

SECTION E-E JACKING LOCATION

CONSTRUCTION SEQUENCE:

1. INSTALL JACKS AND BLOCKING AT LOCATIONS SHOWN ON PLAN.
2. REMOVE NECESSARY NUTS ON ANCHOR BOLTS.
3. JACK GIRDERS A MAXIMUM OF 1/8" IN ORDER TO RELIEVE LOAD ON BENT CAP UNDER BEARING.
4. MECHANICALLY LOCK ALL JACKS AT BENT.
5. RESET ROCKER BEARINGS AT NECESSARY LOCATIONS AND PERFORM ANY CONCRETE REPAIRS.
6. ONCE ALL REPAIRS ARE COMPLETE, LOWER BRIDGE.

NOTE: THE CONTRACTOR HAS THE OPTION TO PROPOSE AN ALTERNATE CONSTRUCTION SEQUENCE PER THE APPROVAL OF THE ENGINEER.

NOTES:

FOR RESETTING ROCKER BEARINGS, SEE SPECIAL PROVISIONS.

JACKING DETAILS SHOWN ARE CONCEPTUAL AND CONSIDERED A MINIMUM. THE CONTRACTOR SHALL PROVIDE JACKING PLANS FOR ALL GIRDERS LIFTED FOR APPROVAL BY THE ENGINEER PRIOR TO ANY JACKING OPERATIONS. JACKING SHALL BE PERFORMED SUCH THAT BRIDGE CAN REMAIN OPEN TO TRAFFIC DURING JACKING OPERATIONS.

JACKING PLANS SHALL BE SIGNED AND SEALED BY LICENSED PROFESSIONAL ENGINEER REGISTERED IN NORTH CAROLINA.

THE CONTRACTOR SHALL PROVIDE BLOCKING FOR ALL JACKS AS NECESSARY. A BLOCKING PLAN SHALL BE INCLUDED AS PART OF THE JACKING PLAN.

THE CONTRACTOR SHALL JACK GIRDERS ON AN INDIVIDUAL BENT SIMULTANEOUSLY BY MEANS OF A DUAL-FLOW PRESSURIZED PUMP CONTROLLING THE JACKS.

THE CONTRACTOR SHALL MONITOR THE PLAN LOCATION OF THE GIRDERS FROM INITIAL JACKING UNTIL GIRDERS ARE SECURED ON THEIR PERMANENT BEARINGS. IF THE PLAN LOCATION OF THESE GIRDERS SHIFT FROM ITS ORIGINAL POSITION. THE CONTRACTOR SHALL SECURE FROM ADDITIONAL MOVEMENT IMMEDIATELY. NOTIFY ENGINEER PRIOR TO PROCEEDING WORK OPERATIONS.

EACH JACK SHALL HAVE A MINIMUM SAFE WORKING CAPACITY OF 55 TONS.

PRIOR TO JACKING THE CONTRACTOR SHALL ENSURE THERE ARE NO OBSTACLES PREVENTING THE SPAN FROM BEING LIFTED (E.G.: METAL RAILING, UTILITIES, ETC.).

ONCE SPAN HAS BEEN JACKED, CONTRACTOR SHALL INSTALL A MECHANICAL LOCKING DEVICE TO ENSURE THAT GIRDER WILL NOT BE LOWERED DURING THE REPAIR OF THE BEARINGS.

CONTRACTOR TO TAKE APPROPRIATE MEANS TO REMOVE NUT ON ANCHOR BOLT WITHOUT DAMAGING THE ANCHOR BOLT. CONTRACTOR SHALL SUBMIT NUT REMOVAL METHOD TO INCLUDE PROCEDURES THAT WILL LOOSEN BOND BETWEEN INTERLOCKING THREADS TO ENGINEER FOR APPROVAL PRIOR TO REMOVING ANCHOR BOLT NUTS.

IN NO CIRCUMSTANCES SHOULD THE JACKING BE SOLELY SUPPORTED BY THE DIAPHRAGM. JACKS SHOULD BE CENTERED UNDER DIAPHRAGM AND ADDITIONAL BLOCKING.

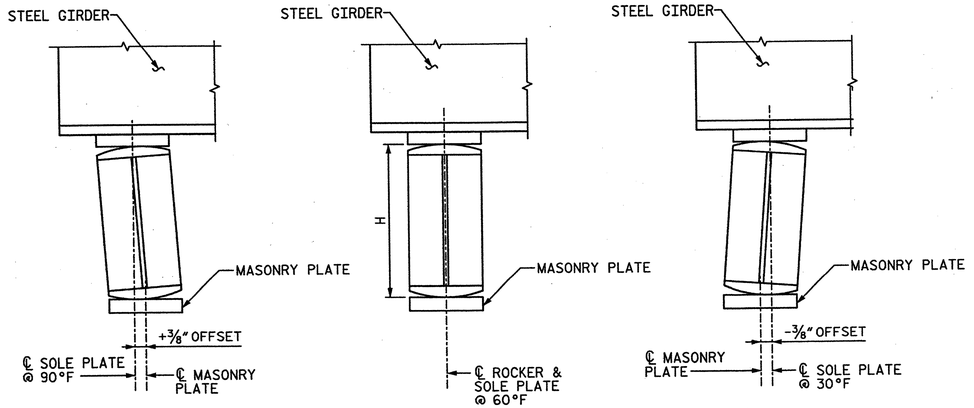

ROCKER BEARING TEMPERATURE GUIDE

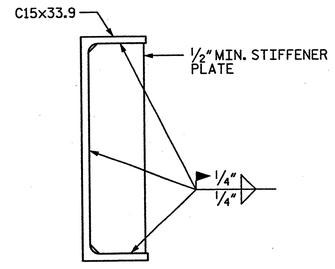

JACKING STIFFENER DETAIL

ROCKER BEARING RESET RECORD TABLE

LOCATION		DATE	TEMPERATURE	H	OFFSET (IN INCHES)	NOTES
SPAN	GIRDER					
E	1					
E	2					
E	3					
E	4					
E	5					
E	6					
I	1					
I	2					
I	3					
I	4					
I	5					
I	6					

PROJECT NO. 17BP.9.P.1

FORSYTH COUNTY

BRIDGE NO.: 51

REHAB. OF BRIDGE NO. 51 SHEET 7 OF 10

STATE OF NORTH CAROLINA
DEPARTMENT OF TRANSPORTATION
RALEIGH

ROCKER BEARING RESET & JACKING DETAIL

BRIDGE ON US 421 SBL OVER YADKIN RIVER

STV/ Ralph Whitehead Associates, Inc.
1000 West Morehead St., Ste. 200
Charlotte, NC 28208
NC License No. F-0991

REVISIONS						SHEET NO.
NO.	BY:	DATE:	NO.	BY:	DATE:	S-9
1			3			TOTAL SHEETS
2			4			S-109

DRAWN BY : AFM DATE : 01-12
CHECKED BY : AC DATE : 01-12

I:\Projects\2515385\2515385.0001\50_Deliverables & Submittals\17BP.9.P.1\Structures\17BP.9.P.1 Final Set 01_24_12\Bridge 051\Bridge 051 Rehab Plans.dgn
tlaws
2/17/2012

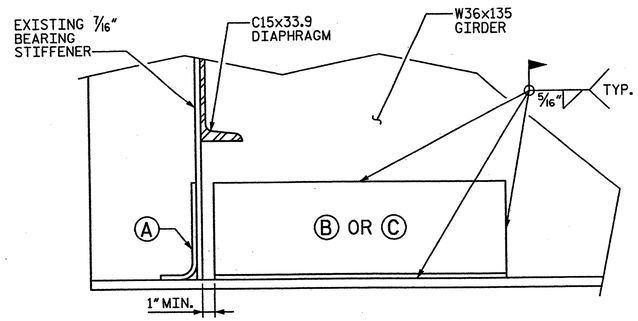

ELEVATION VIEW

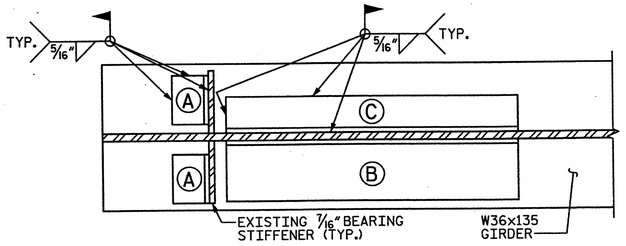

PLAN VIEW OF BOTTOM FLANGE
(DIAPHRAGMS NOT SHOWN FOR CLARITY)

REPAIR TYPE A, B & C DETAIL
TYPICAL AT INTERIOR GIRDER

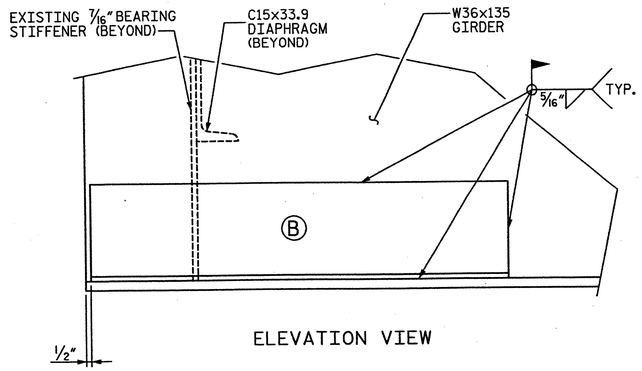

ELEVATION VIEW

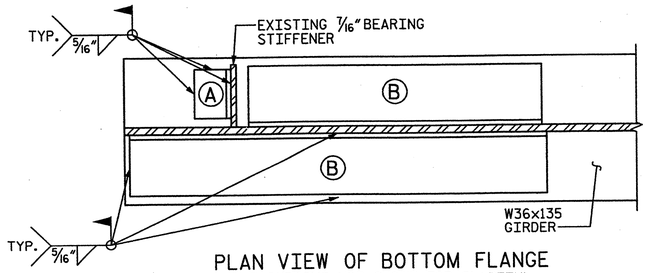

PLAN VIEW OF BOTTOM FLANGE
(DIAPHRAGMS NOT SHOWN FOR CLARITY)

REPAIR TYPE A & B DETAIL
TYPICAL AT EXTERIOR GIRDER

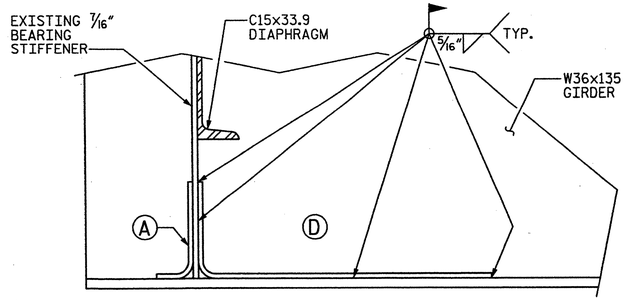

ELEVATION VIEW

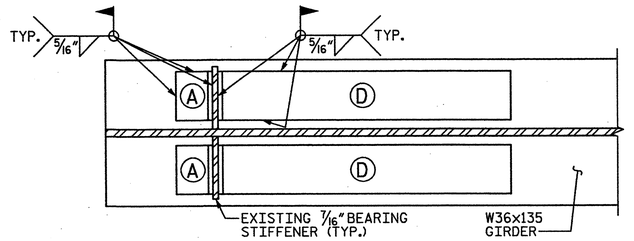

PLAN VIEW OF BOTTOM FLANGE
(DIAPHRAGMS NOT SHOWN FOR CLARITY)

REPAIR TYPE A & D DETAIL
TYPICAL AT INTERIOR GIRDER

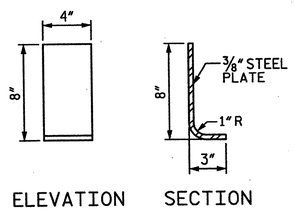

ELEVATION SECTION

PLATE 'A' DETAIL

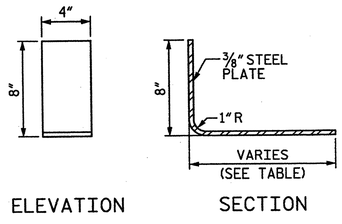

ELEVATION SECTION

PLATE 'D' DETAIL

TYPE 'B' REPAIR PLATE LENGTHS	
BENT 4	
BEAM 1 (EXT.):	3'-0"
BEAM 1 (INT.):	3'-10"
BENT 9	
BEAM 5:	2'-0"
BEAM 6 (EXT.):	3'-0"
BEAM 6 (INT.):	3'-10"

TYPE 'C' REPAIR PLATE LENGTHS	
BENT 4	
BEAM 2:	3'-0"
BEAM 4:	2'-0"

TYPE 'D' REPAIR PLATE LENGTHS	
BENT 4	
BEAM 5:	3'-0"

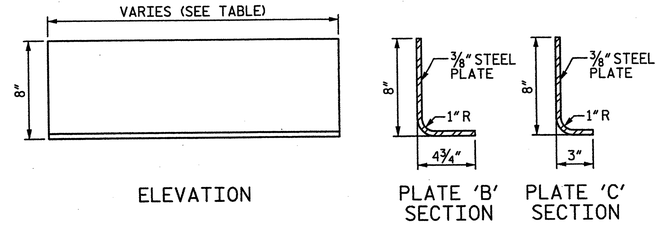

ELEVATION PLATE 'B' SECTION PLATE 'C' SECTION

PLATE 'B' & 'C' DETAIL

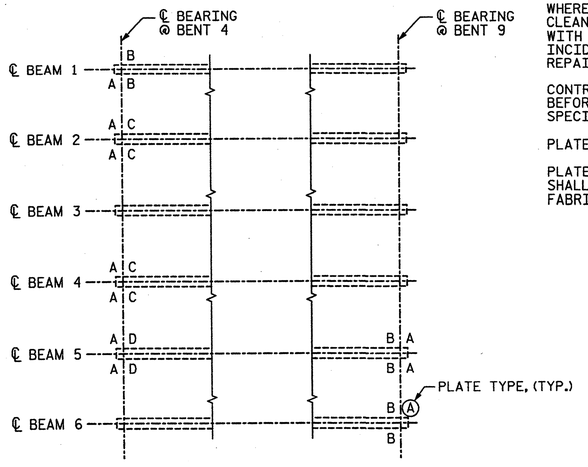

STRUCTURAL REPAIR LOCATIONS

NOTES:

ALL WELDING SHALL BE IN ACCORDANCE WITH CURRENT AWS SPECIFICATIONS. WELD MATERIAL SHALL BE E70XX.

WHERE STRUCTURAL REPAIRS ARE NOT SPECIFIED, CONTRACTOR SHALL CLEAN AND PAINT THE END 6'-0" OF THE BEAMS. ALL COSTS ASSOCIATED WITH CLEANING AND PAINTING OF STRUCTURAL STEEL SHALL BE INCIDENTAL TO THE CONTRACT PAY ITEM FOR STRUCTURAL STEEL REPAIRS.

CONTRACTOR SHALL CLEAN EXISTING STEEL SURFACES IN REPAIR AREA BEFORE PERFORMING REPAIRS. SEE STRUCTURAL STEEL REPAIRS IN SPECIAL PROVISIONS.

PLATE STEEL USED FOR REPAIR SHALL BE AASHTO M270 GRADE 36.

PLATE SIZES ARE BASED ON BEST INFORMATION AVAILABLE. ENGINEER SHALL VERIFY EXTENTS OF REPAIR AND PLATE SIZES PRIOR TO PLATE FABRICATION.

PROJECT NO. 17BP.9.P.1

FORSYTH COUNTY

BRIDGE NO.: 51

REHAB. OF BRIDGE NO. 51 SHEET 8 OF 10

STATE OF NORTH CAROLINA
DEPARTMENT OF TRANSPORTATION
RALEIGH

BENTS 4 & 9 BEAM END REPAIRS

BRIDGE ON US 421 SBL OVER YADKIN RIVER

NORTH CAROLINA PROFESSIONAL SEAL 19765 ENGINEER JOHN E. KELLER JR.
2/17/12

STV / Ralph Whitehead Associates, Inc.
1000 West Morehead St., Ste. 200
Charlotte, NC 28208
NC License No. F-0991

REVISIONS						SHEET NO.
NO.	BY:	DATE:	NO.	BY:	DATE:	S-10
1			3			TOTAL SHEETS
2			4			S-109

DRAWN BY : AFM DATE : 01-12
CHECKED BY : AC DATE : 01-12

I:\Projects\2515385\2515385.0001\50_Deliverables & Submittals\17BP.9.P.1\Structures\17BP.9.P.1 FinalSet 01.24.12\Bridge 051\Bridge 051 Rehab Plans.dgn
tlowe
2/17/2012

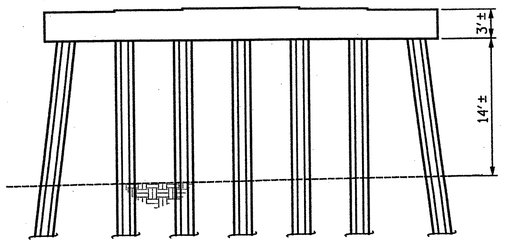

ELEVATION OF BENT 3
LOOKING SOUTH*

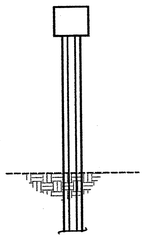

ELEVATION OF BENT 3
LOOKING EAST*

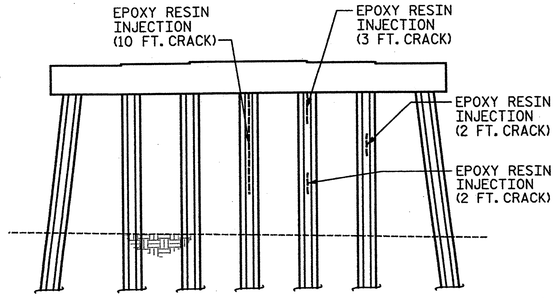

ELEVATION OF BENT 3
LOOKING NORTH*

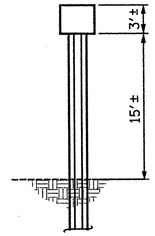

ELEVATION OF BENT 3
LOOKING WEST*

NOTES:

CONCRETE SHALL BE SOUNDED TO DETERMINE THE EXTENT OF ALL CONCRETE REPAIRS.

FOR CRACKS REQUIRING EPOXY RESIN INJECTION, SOUNDING MAY PROVE THAT A CONCRETE REPAIR IS NECESSARY.

SPALL, CRACK, AND DELAMINATION DIMENSIONS SHOWN ARE APPROXIMATE. CONTRACTOR SHALL DETERMINE ACTUAL SPALL, CRACK, AND DELAMINATION DIMENSIONS PRIOR TO MAKING REPAIRS.

THE ENGINEER SHALL BE NOTIFIED OF ANY BARS DAMAGED DURING THE CONCRETE REMOVAL PROCESS. REPAIRS TO DAMAGED BARS SHALL BE DIRECTED BY THE ENGINEER AND COMPLETED AT NO ADDITIONAL COST.

DOWEL LENGTH SHALL BE BASED ON A 9" EMBEDMENT INTO EXISTING CONCRETE AND MAY BE ADJUSTED BASED ON THE MINIMUM EMBEDMENT SPECIFIED BY THE MANUFACTURER OF THE EPOXY ADHESIVE BONDING SYSTEM.

REINFORCING STEEL SHALL BE GRADE 60.

BRIDGE JACKING IS REQUIRED FOR CONCRETE REPAIRS THAT EXTEND UNDER A BEARING PLATE. FOR JACKING DETAILS AND NOTES SEE SHEET 7 OF 10.

* LOOKING DIRECTION CORRESPONDS WITH DIRECTION OF TRAVEL ALONG HIGHWAY

(J) - JACKING REQUIRED

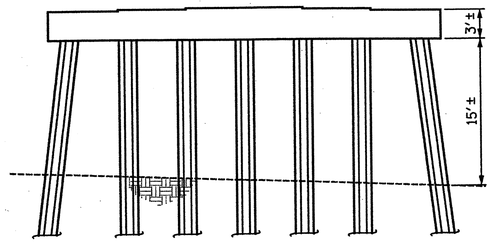

ELEVATION OF BENT 4
LOOKING SOUTH*

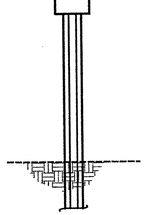

ELEVATION OF BENT 4
LOOKING EAST*

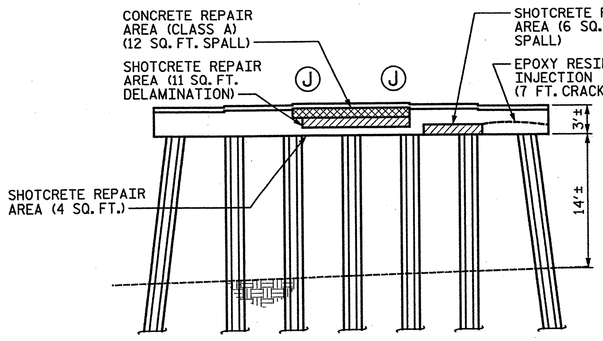

ELEVATION OF BENT 4
LOOKING NORTH*

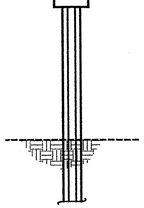

ELEVATION OF BENT 4
LOOKING WEST*

APPROX. LENGTH: EPOXY RESIN INJECTION

APPROX. AREA: SHOTCRETE REPAIRS

APPROX. AREA: CONCRETE REPAIRS (CLASS A)

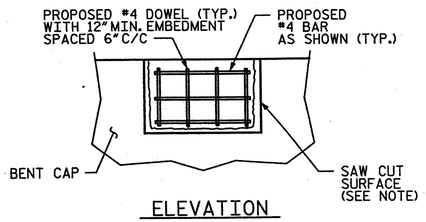

ELEVATION

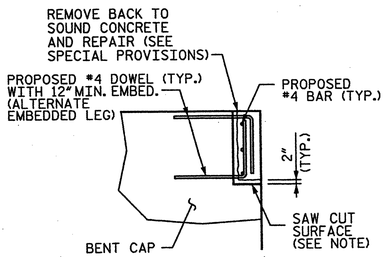

SECTION

BEARING SEAT REPAIR

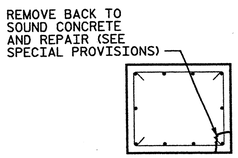

SECTION

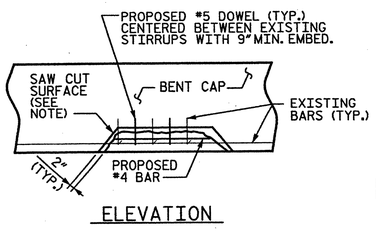

ELEVATION

CORNER REPAIR

NOTE: CONTRACTOR SHALL SAW CUT TO A MAXIMUM DEPTH OF 1". THIS DEPTH SHALL BE REDUCED TO PREVENT DAMAGE TO EXISTING REINFORCEMENT, BUT SHALL BE NO LESS THAN ½". CONTRACTOR SHALL REMOVE SURFACE CONCRETE TO VERIFY THAT SAW CUT DEPTH WILL NOT DAMAGE EXISTING REINFORCING STEEL.

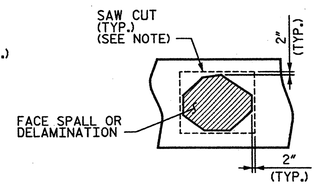

FACE REPAIR

TYPICAL SUBSTRUCTURE REPAIR DETAILS

NORTH CAROLINA PROFESSIONAL SEAL 19705 ENGINEER PAUL E. KELLY, JR.

2/17/12

PROJECT NO. 17BP.9.P.1

FORSYTH COUNTY

BRIDGE NO.: 51

REHAB. OF BRIDGE NO. 51 SHEET 9 OF 10

STATE OF NORTH CAROLINA
DEPARTMENT OF TRANSPORTATION
RALEIGH

BENTS 3 & 4 SUBSTRUCTURE REPAIRS

BRIDGE ON US 421 SBL
OVER YADKIN RIVER

STV/ Ralph Whitehead Associates, Inc.
1000 West Morehead St. Ste. 200
Charlotte, NC 28208
NC License No. F-0991

REVISIONS						SHEET NO.
NO.	BY:	DATE:	NO.	BY:	DATE:	S-11
1			3			TOTAL SHEETS
2			4			S-109

DRAWN BY : AFM DATE : 01-12
CHECKED BY : AC DATE : 01-12

I:\Projects\2515385\2515385.0001\50_Deliverables & Submittals\17BP.9.P.1\Structures\17BP.9.P.1 FinalSet 01_24_12\Bridge 051\Bridge 051 Rehab Plans.dgn
tlowe
2/17/2012

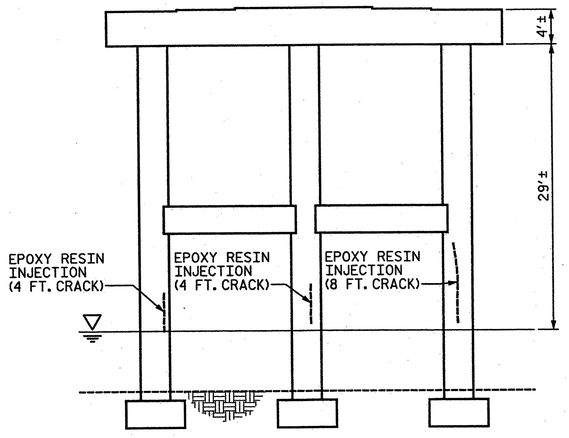

ELEVATION OF BENT 8
LOOKING SOUTH*

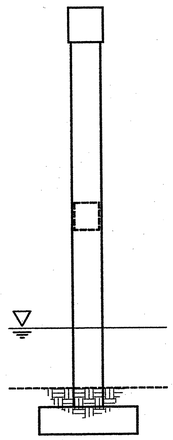

ELEVATION OF BENT 8
LOOKING EAST*

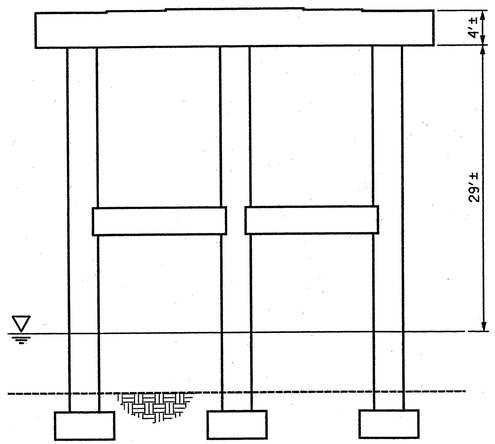

ELEVATION OF BENT 8
LOOKING NORTH*

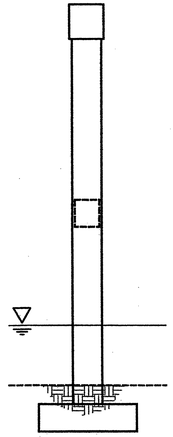

ELEVATION OF BENT 8
LOOKING WEST*

NOTE:

SEE NOTES AND TYPICAL REPAIR DETAILS, SHEET 9 OF 10.

WATER ELEVATION BASED ON 2009 BRIDGE INSPECTION SOUNDINGS.

* LOOKING DIRECTION CORRESPONDS WITH DIRECTION OF TRAVEL ALONG HIGHWAY

--------- APPROX. LENGTH: EPOXY RESIN INJECTION

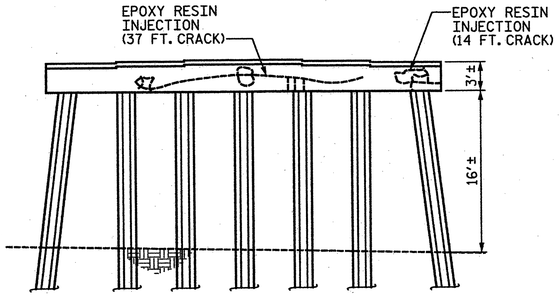

ELEVATION OF BENT 9
LOOKING SOUTH*

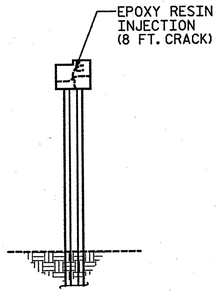

ELEVATION OF BENT 9
LOOKING EAST*

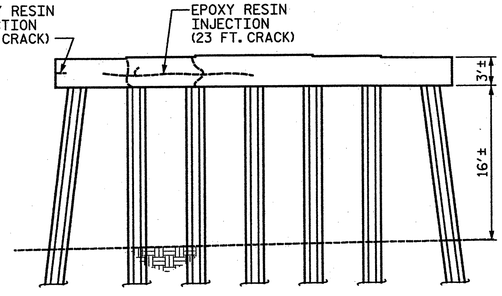

ELEVATION OF BENT 9
LOOKING NORTH*

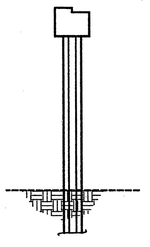

ELEVATION OF BENT 9
LOOKING WEST*

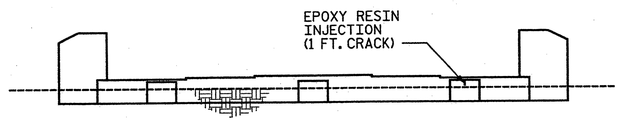

ELEVATION OF END BENT 2
LOOKING SOUTH*

PROJECT NO. 17BP.9.P.1

FORSYTH COUNTY

BRIDGE NO.: 51

REHAB. OF BRIDGE NO. 51 SHEET 10 OF 10

STATE OF NORTH CAROLINA
DEPARTMENT OF TRANSPORTATION
RALEIGH

BENTS 8&9, END BENT 2 SUBSTRUCTURE REPAIRS

BRIDGE ON US 421 SBL
OVER YADKIN RIVER

NORTH CAROLINA PROFESSIONAL SEAL 19765 ENGINEER PAUL E. KELLY, JR. 1/10/12

STV / Ralph Whitehead Associates, Inc.
1000 West Morehead St., Ste. 200
Charlotte, NC 28208
NC License No. F-0991

REVISIONS						SHEET NO.
NO.	BY:	DATE:	NO.	BY:	DATE:	S-12
1			3			TOTAL SHEETS
2			4			S-109

DRAWN BY : AEM DATE : 01-12
CHECKED BY : AC DATE : 01-12

I:\Projects\2515385\2515385.0001\SO_Deliverables & Submittals\17BP.9.P.1\Structures\Final-12-12\17BP.9.P.1 FinalSet 01.12.12\Bridge 51\Bridge 051 Rehab Plans.dgn
ttownsend
1/17/2012

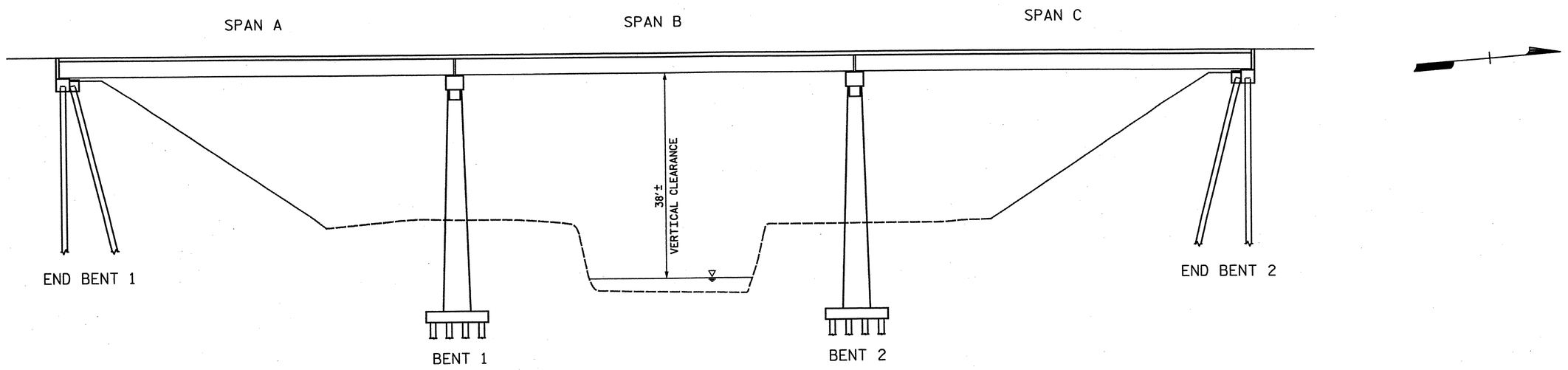

ELEVATION

(SECTIONS AT BENTS AND END BENTS ARE AT RIGHT ANGLES)

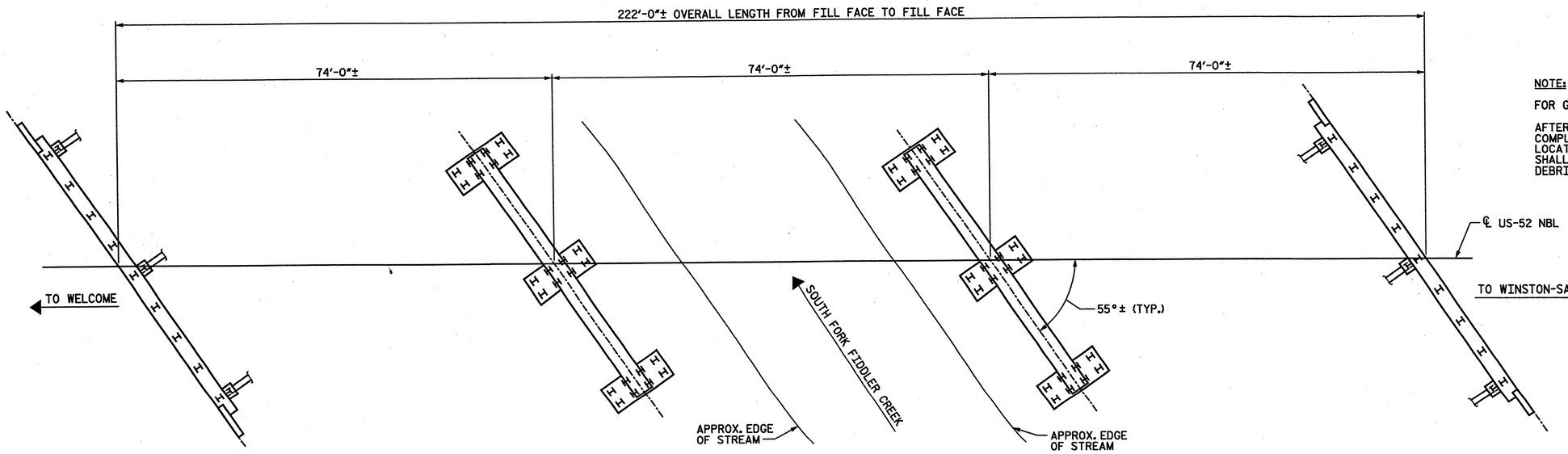

PLAN

NOTE:

FOR GENERAL NOTES, SEE SHEET S-1 OF S-109.

AFTER ALL REPAIRS ON THE BRIDGE HAVE BEEN COMPLETED THE TOP SURFACES OF ALL BENT CAPS LOCATED BELOW JOINTS IN THE SUPERSTRUCTURE SHALL BE THOROUGHLY CLEANED TO REMOVE ALL DEBRIS.

PROJECT NO. 17BP.9.P.1

FORSYTH COUNTY

BRIDGE NO.: 53

REHAB. OF BRIDGE NO. 53 SHEET 1 OF 3

STATE OF NORTH CAROLINA
DEPARTMENT OF TRANSPORTATION
RALEIGH

GENERAL PLAN & ELEVATION

BRIDGE ON US 52 NBL OVER SOUTH FORK FIDDLER CREEK

NORTH CAROLINA PROFESSIONAL SEAL 19755 ENGINEER T. E. KELLY, JR. 2/12/12

STV / Ralph Whitehead Associates, Inc.
1000 West Morehead St., Ste. 200
Charlotte, NC 28208
NC License No. F-0991

REVISIONS							SHEET NO.
NO.	BY:	DATE:	NO.	BY:	DATE:		S-13
1			3				TOTAL SHEETS
2			4				S-109

DRAWN BY : RIB DATE : 1-12
CHECKED BY : AC DATE : 1-12-12

I:\Projects\25153985.25153985.0001\50_Deliverables & Submittals\17BP.9.P.1\Structures\17BP.9.P.1 FinalSet 01.24.12\Bridge 053\Bridge 053 Rehab Plans.dgn
tlowe
2/17/2012

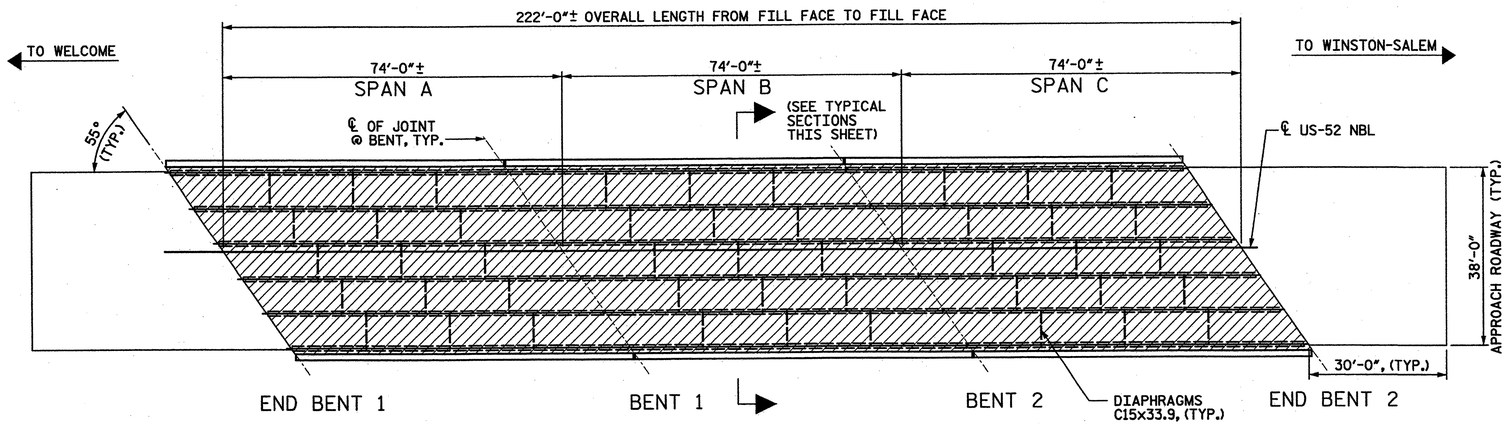

PLAN OF SPANS - PLACEMENT OF BRIDGE DECK CRACK SEAL

APPROX. AREA OF BRIDGE DECK CRACK SEAL

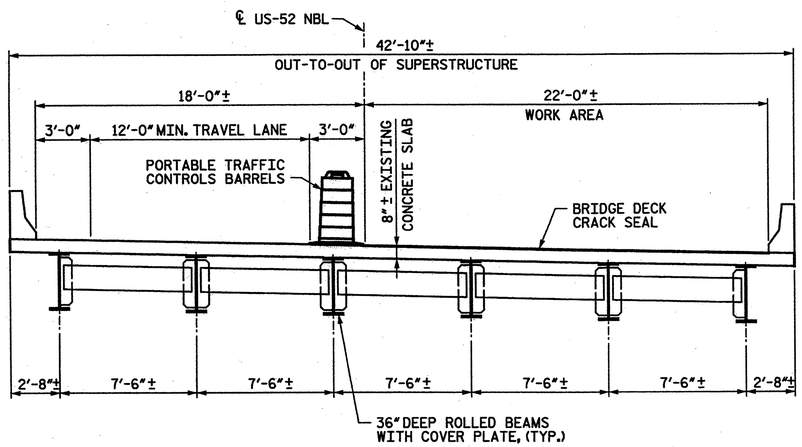

TYPICAL SECTION STAGE I
(AT INTERMEDIATE DIAPHRAGMS)

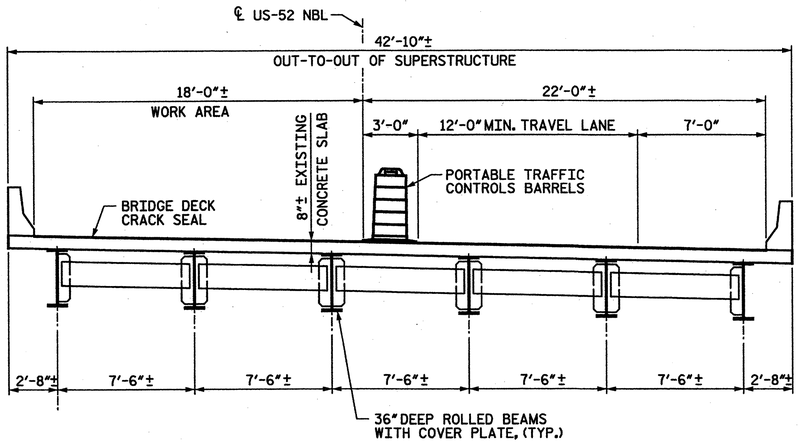

TYPICAL SECTION STAGE II
(AT INTERMEDIATE DIAPHRAGMS)

TOTAL BILL OF MATERIAL	
PLACEMENT OF CRACK/DECK SEALER	FOAM JOINT SEAL
SQ. FT.	LUMP SUM
8880	LUMP SUM

NOTES:

FOR BRIDGE DECK CRACK SEALER, SEE SPECIAL PROVISIONS.

EXISTING BRIDGE INFORMATION BASED ON BEST AVAILABLE DATA.

CONTRACTOR'S MEANS AND METHODS SHALL MINIMIZE DAMAGE TO EXISTING APPROACH PAVEMENT. AREAS OF APPROACH PAVEMENT DAMAGED BY CONTRACTOR'S OPERATIONS SHALL BE REPAIRED AS DIRECTED BY THE ENGINEER. ANY COST ASSOCIATED WITH REPAIR OF APPROACH PAVEMENT SHALL BE CONSIDERED INCIDENTAL AND NO SEPARATE MEASUREMENT AND PAYMENT WILL BE MADE.

FOR ADDITIONAL NOTES, SEE BRIDGE NO. 53 SHEET 3 OF 3.

FOR GENERAL NOTES, SEE SHEET S-1 OF S-109.

PROJECT NO. 17BP.9.P.1

FORSYTH COUNTY

BRIDGE NO.: 53

REHAB. OF BRIDGE NO. 53 SHEET 2 OF 3

STATE OF NORTH CAROLINA
DEPARTMENT OF TRANSPORTATION
RALEIGH

PLAN OF SPANS & TYPICAL SECTION

BRIDGE ON US 52 NBL OVER SOUTH FORK FIDDLER CREEK

NORTH CAROLINA PROFESSIONAL SEAL 19169 ENGINEER PAUL E. KELLY, JR.
2/20/12

STV / Ralph Whitehead Associates, Inc.
1000 West Morehead St. Ste. 200
Charlotte, NC 28208
NC License No. F-0991

REVISIONS						SHEET NO.
NO.	BY:	DATE:	NO.	BY:	DATE:	S-14
1			3			TOTAL SHEETS
2			4			S-109

DRAWN BY : RIB DATE : 1-12
CHECKED BY : AC DATE : 1-12-12

I:\Projects\2515385\2515385.0001\50_Deliverables & Submittals\17BP.9.P.1\Structures\17BP.9.P.1 FinalSet 01.24.12\Bridge 053\Bridge 053 Rehab Plan.dgn
guldool
2/20/2012

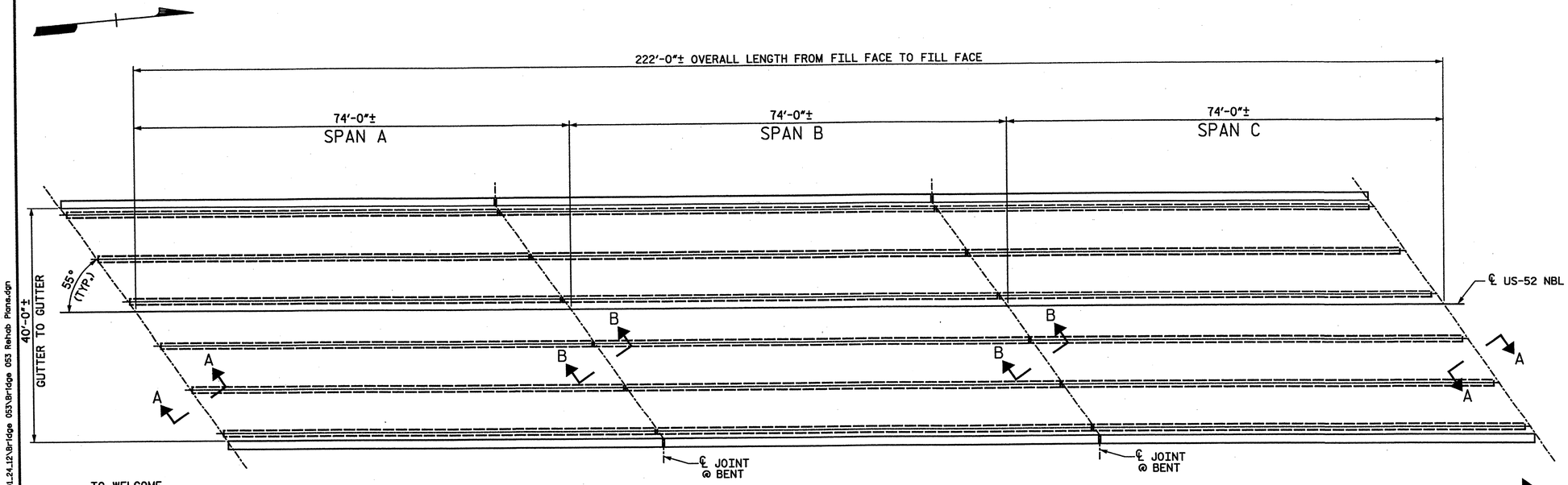

PLAN OF SPANS - DECK REPAIRS

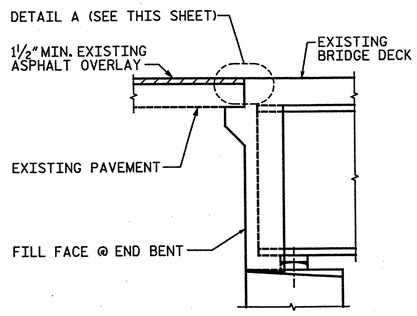

SECTION A-A

(TYP. @ END BENTS 1 AND 2)

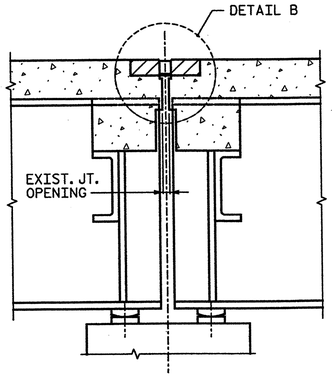

SECTION B-B

(PROPOSED JOINT)
(TYP. @ INTERIOR BENTS)

**ALL LOOSE AND UNSOUND CONCRETE SHALL BE REMOVED, IF THE EMBEDDED PORTION OF THE EXISTING WATERSTOP IS EXPOSED DURING REMOVAL. THE ENTIRE WATERSTOP SHALL BE REMOVED.

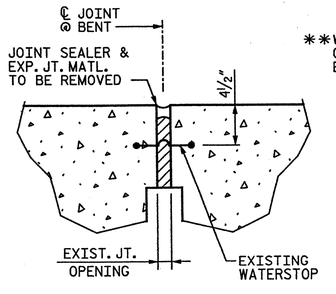

EXISTING JOINT DETAIL

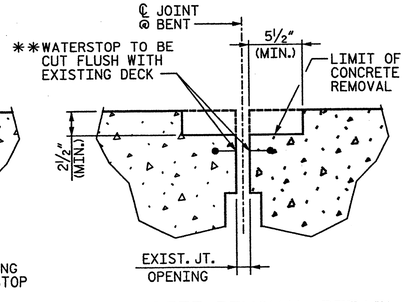

CONCRETE REMOVAL DETAIL @ EXISTING JOINT

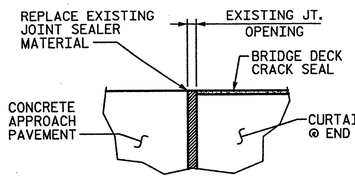

DETAIL A

(LOCATION OF JOINT TO MATCH EXISTING JOINT LOCATION)

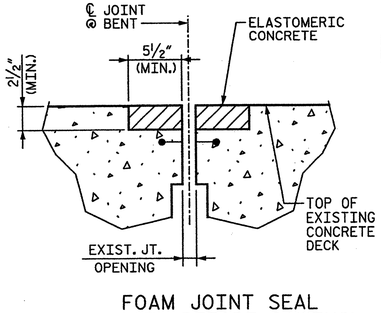

FOAM JOINT SEAL (DETAIL BEFORE SAWING)

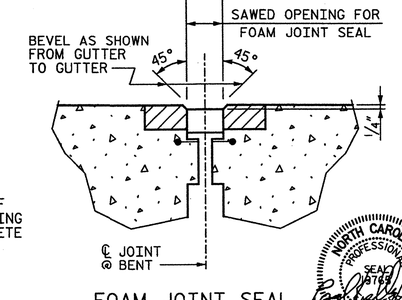

FOAM JOINT SEAL (DETAIL AFTER SAWING)

*ELASTOMERIC CONCRETE
CU. FT.
19

*QUANTITIES ARE FOR INFORMATION ONLY

DETAIL B

NOTES:

FOR FOAM JOINT SEALS, SEE SPECIAL PROVISIONS.

FOR ELASTOMERIC CONCRETE, SEE SPECIAL PROVISIONS.

THE CONTRACTOR SHALL COVER AND PROTECT THE JOINT CONSTRUCTION TO PREVENT DAMAGE DURING CONCRETE CURING AND AS NEEDED TO MAINTAIN TRAFFIC, AS DIRECTED BY THE ENGINEER.

THE INSTALLED FOAM JOINT SEALS SHALL BE WATERTIGHT.

THE NOMINAL UNCOMPRESSED SEAL WIDTH OF THE FOAM JOINT SEAL SHALL BE 2½".

THE CONTRACTOR WILL NOT BE PERMITTED TO FORM THE JOINT FOR THE FOAM JOINT SEAL IN LIEU OF SAWING THE JOINT.

FOAM JOINT OPENING WIDTHS SHALL BE CONFIRMED IN THE FIELD. CONTRACTOR SHALL MAKE ADJUSTMENTS TO FOAM JOINT SEALS, AS NECESSARY, TO MEET EXISTING CONDITIONS AND MANUFACTURER'S RECOMMENDATIONS. ANY CHANGES SHALL BE SUBMITTED TO THE ENGINEER FOR APPROVAL. ANY COST ASSOCIATED WITH THESE ADJUSTMENTS IS CONSIDERED INCIDENTAL AND NO SEPARATE MEASUREMENT OR PAYMENT WILL BE MADE.

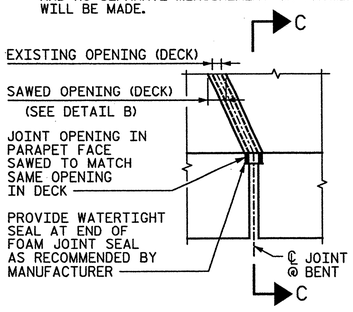

PLAN OF JOINT SEAL AT PARAPET

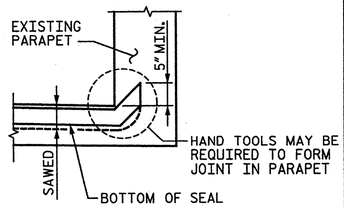

SECTION C-C

PROJECT NO. 17BP.9.P.1

FORSYTH COUNTY

BRIDGE NO.: 53

REHAB. OF BRIDGE NO. 53 SHEET 3 OF 3

STATE OF NORTH CAROLINA
DEPARTMENT OF TRANSPORTATION
RALEIGH

PLAN OF SPANS DECK REPAIRS

BRIDGE ON US 52 NBL OVER SOUTH FORK FIDDLER CREEK

REVISIONS						SHEET NO.
NO.	BY:	DATE:	NO.	BY:	DATE:	S-15
1			3			TOTAL SHEETS
2			4			S-109

STV / Ralph Whitehead Associates, Inc.
1000 West Morehead St., Ste. 200
Charlotte, NC 28208
NC License No. F-0991

NORTH CAROLINA PROFESSIONAL SEAL 18765 ENGINEER ROBERT E. KELLY, JR.
2/17/12

DRAWN BY : RIB DATE : 1-12
CHECKED BY : AC DATE : 1-12-12

I:\Projects\2515385\2515385.0001\50_Deliverables & Submittals\17BP.9.P.1\Structures\17BP.9.P.1 FinalSet 01.24.12\Bridge 053\Bridge 053 Rehab Plans.dgn
tlaws
2/17/2012

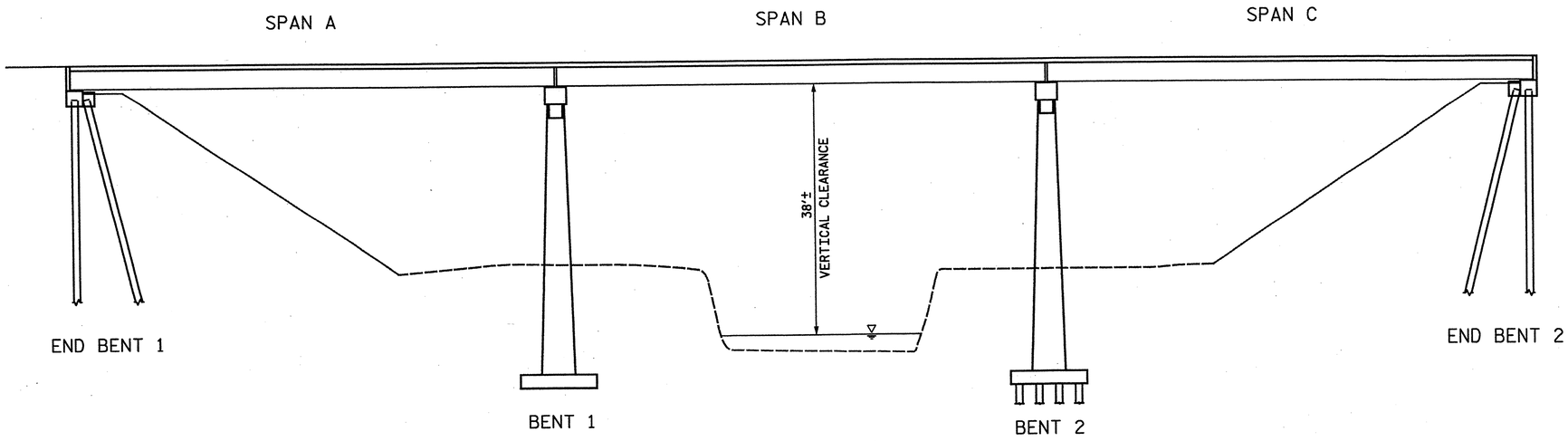

ELEVATION

(SECTIONS AT BENTS AND END BENTS ARE AT RIGHT ANGLES)

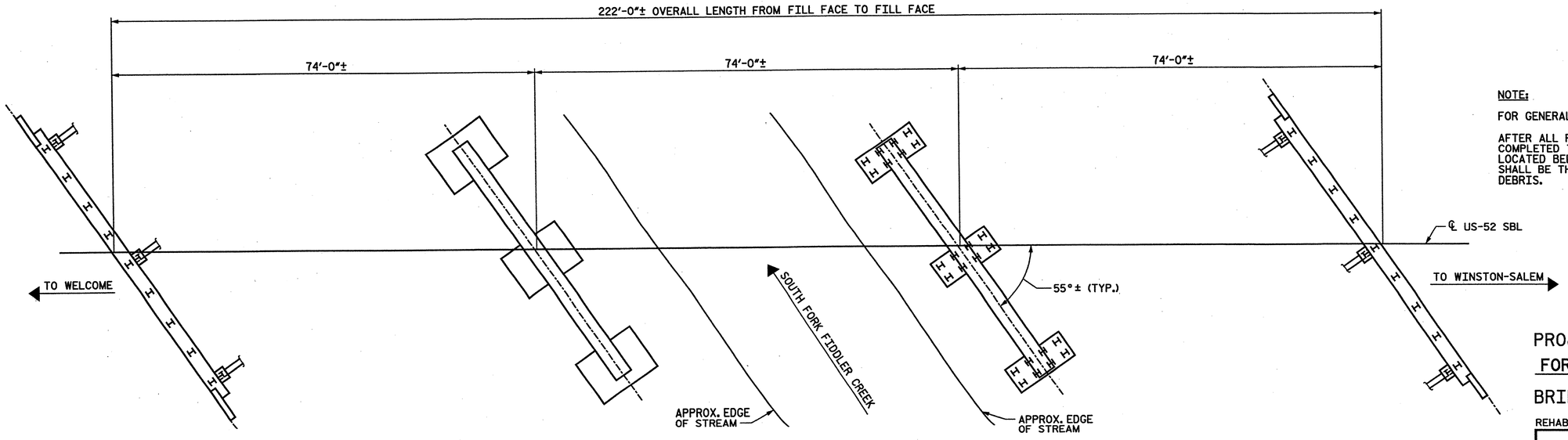

PLAN

NOTE:

FOR GENERAL NOTES, SEE SHEET S-1 OF S-109.

AFTER ALL REPAIRS ON THE BRIDGE HAVE BEEN COMPLETED THE TOP SURFACES OF ALL BENT CAPS LOCATED BELOW JOINTS IN THE SUPERSTRUCTURE SHALL BE THOROUGHLY CLEANED TO REMOVE ALL DEBRIS.

PROJECT NO. 17BP.9.P.1

FORSYTH COUNTY

BRIDGE NO.: 54

REHAB. OF BRIDGE NO. 54 SHEET 1 OF 3

STATE OF NORTH CAROLINA
DEPARTMENT OF TRANSPORTATION
RALEIGH

GENERAL PLAN & ELEVATION

BRIDGE ON US 52 NBL OVER SOUTH FORK FIDDLER CREEK

NORTH CAROLINA PROFESSIONAL SEAL 19765 ENGINEER JOHN E. KELLY, JR.
2/10/12

STV / Ralph Whitehead Associates, Inc.
1000 West Morehead St., Ste. 200
Charlotte, NC 28208
NC License No. F-0991

REVISIONS						SHEET NO.
NO.	BY:	DATE:	NO.	BY:	DATE:	S-16
1			3			TOTAL SHEETS
2			4			S-109

DRAWN BY : RIB DATE : 12/9/11
CHECKED BY : AC DATE : 12/13/11

I:\Projects\2515385\2515385.0001\50_Deliverables & Submittals\17BP.9.P.1\Structures\17BP.9.P.1 FinalSet 01_24_12\Bridge 054\Bridge 054 Rehab Plans.dgn
tHowe
2/17/2012

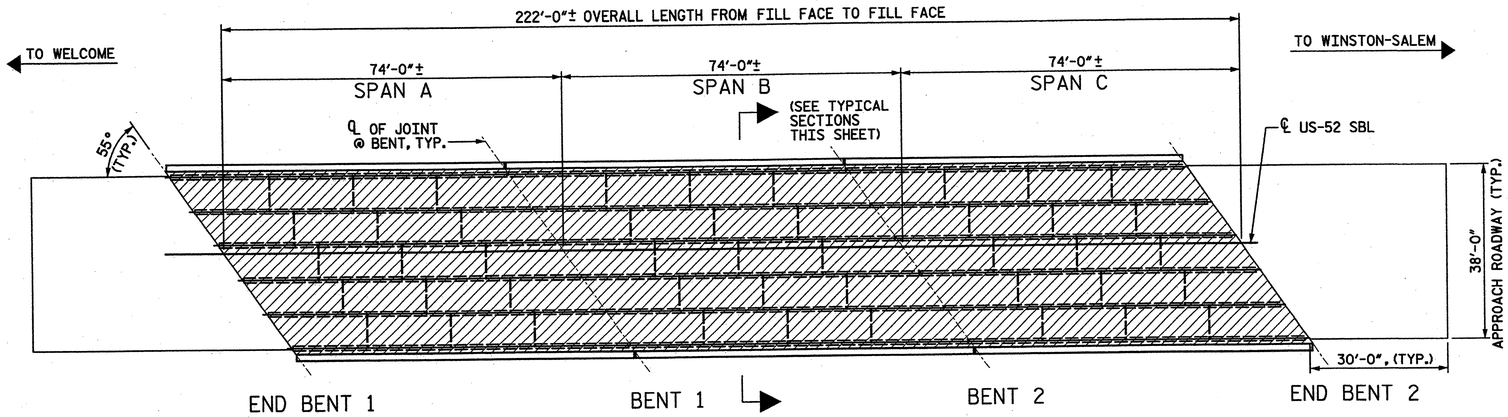

PLAN OF SPANS - PLACEMENT OF BRIDGE DECK CRACK SEAL

APPROX. AREA OF BRIDGE DECK CRACK SEAL

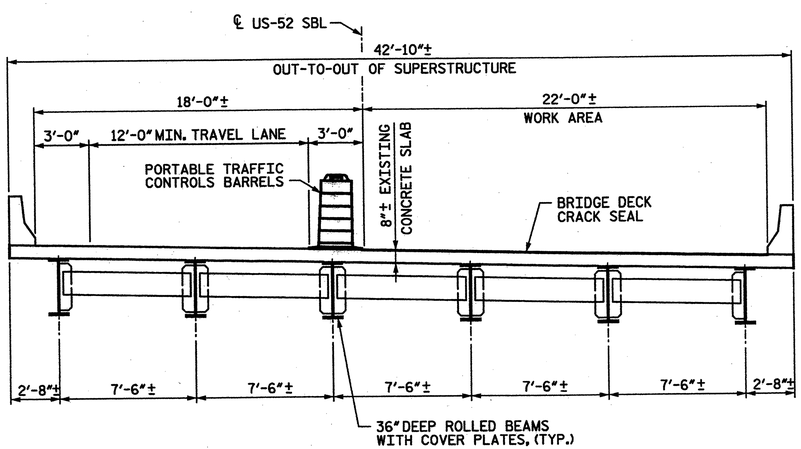

TYPICAL SECTION STAGE I
(AT INTERMEDIATE DIAPHRAGMS)

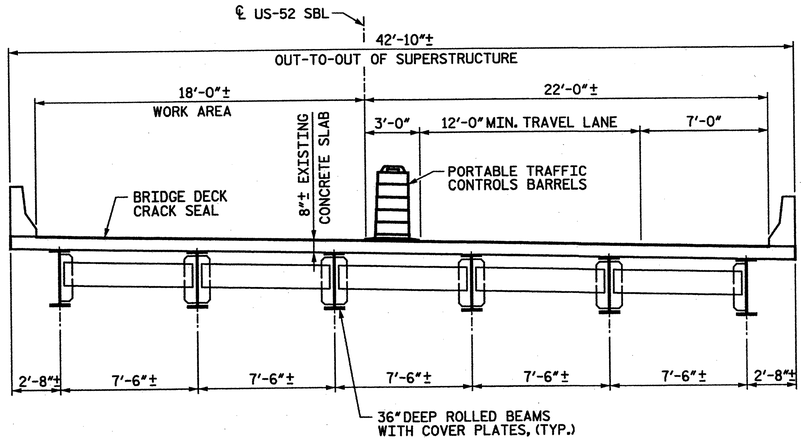

TYPICAL SECTION STAGE II
(AT INTERMEDIATE DIAPHRAGMS)

TOTAL BILL OF MATERIAL	
PLACEMENT OF CRACK/DECK SEALER	FOAM JOINT SEAL
SQ. FT.	LUMP SUM
8880	LUMP SUM

NOTES:

FOR BRIDGE DECK CRACK SEALER, SEE SPECIAL PROVISIONS.

EXISTING BRIDGE INFORMATION BASED ON BEST AVAILABLE DATA.

CONTRACTOR'S MEANS AND METHODS SHALL MINIMIZE DAMAGE TO EXISTING APPROACH PAVEMENT. AREAS OF APPROACH PAVEMENT DAMAGED BY CONTRACTOR'S OPERATIONS SHALL BE REPAIRED AS DIRECTED BY THE ENGINEER. ANY COST ASSOCIATED WITH REPAIR OF APPROACH PAVEMENT SHALL BE CONSIDERED INCIDENTAL AND NO SEPARATE MEASUREMENT AND PAYMENT WILL BE MADE.

FOR ADDITIONAL NOTES SEE BRIDGE NO. 54 SHEET 3 OF 3.

FOR GENERAL NOTES, SEE SHEET S-1 OF S-109.

PROJECT NO. 17BP.9.P.1

FORSYTH COUNTY

BRIDGE NO.: 54

REHAB. OF BRIDGE NO. 54 SHEET 2 OF 3

STATE OF NORTH CAROLINA
DEPARTMENT OF TRANSPORTATION
RALEIGH

PLAN OF SPANS & TYPICAL SECTION

BRIDGE ON US 52 NBL OVER SOUTH FORK FIDDLER CREEK

NORTH CAROLINA PROFESSIONAL SEAL 19765 ENGINEER PAUL C. KELLER
2/24/12

STV / Ralph Whitehead Associates, Inc.
1000 West Morehead St., Ste. 200
Charlotte, NC 28208
NC License No. F-0991

REVISIONS						SHEET NO.
NO.	BY:	DATE:	NO.	BY:	DATE:	S-17
1			3			TOTAL SHEETS
2			4			S-109

DRAWN BY : RIB DATE : 1-12
CHECKED BY : AC DATE : 1-12-12

2/20/2012 guldool I:\Projects\2515385\2515385.0001\50.Deliverables & Submittals\17BP.9.P.1 Structures\17BP.9.P.1 Structures\Bridge 054\Bridge 054 Rehab Plans.dgn

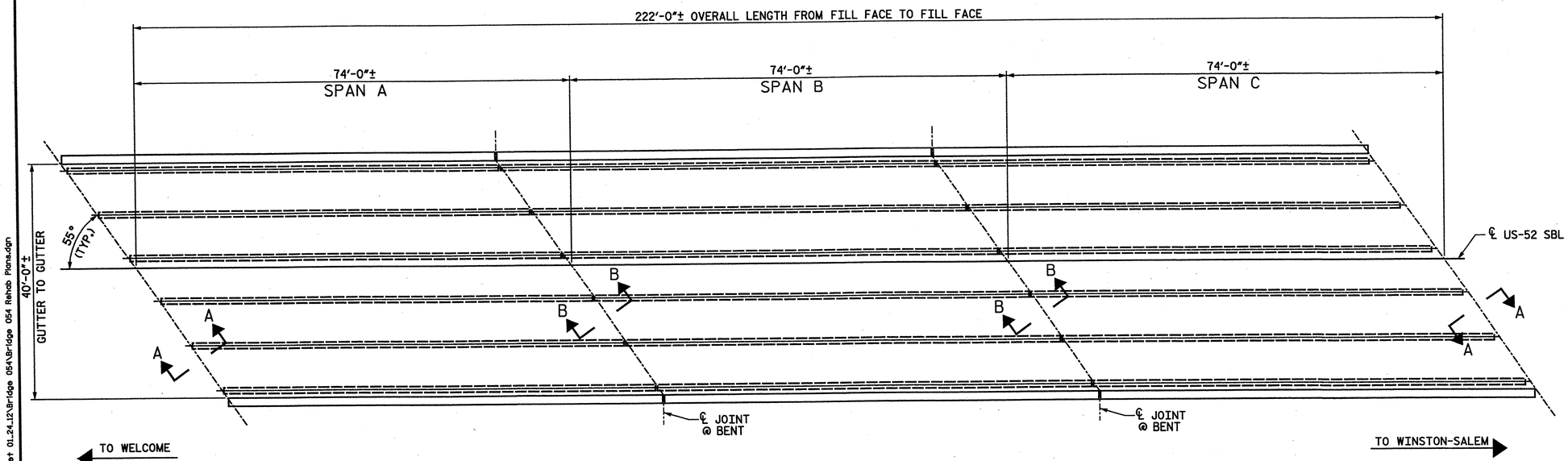

PLAN OF SPANS - DECK REPAIRS

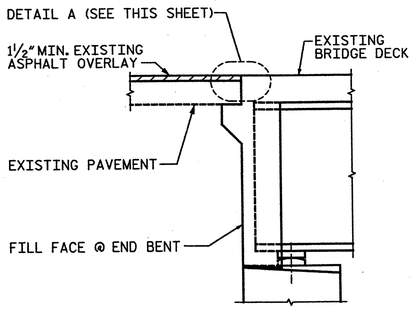

SECTION A-A

(TYP. @ END BENTS 1 AND 2)

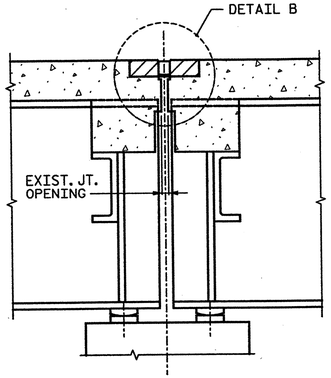

SECTION B-B

(PROPOSED JOINT)
(TYP. @ INTERIOR BENTS)

**ALL LOOSE AND UNSOUND CONCRETE SHALL BE REMOVED. IF THE EMBEDDED PORTION OF THE EXISTING WATERSTOP IS EXPOSED DURING REMOVAL. THE ENTIRE WATERSTOP SHALL BE REMOVED.

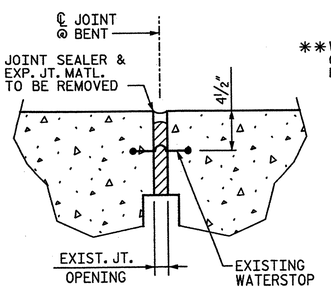

EXISTING JOINT DETAIL

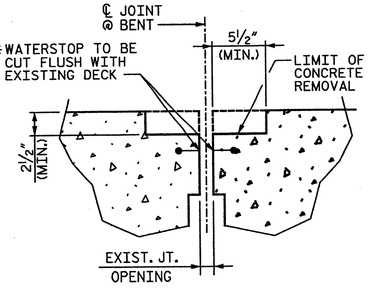

CONCRETE REMOVAL DETAIL
@ EXISTING JOINT

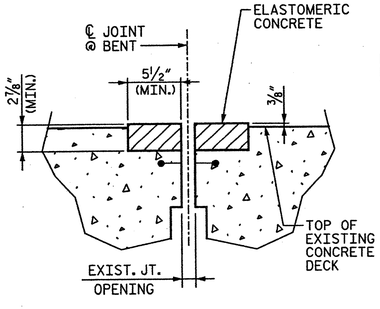

FOAM JOINT SEAL
(DETAIL BEFORE SAWING)

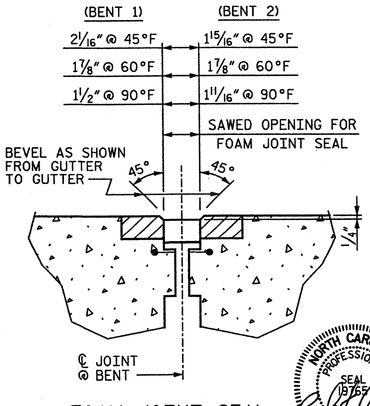

FOAM JOINT SEAL
(DETAIL AFTER SAWING)

DETAIL B

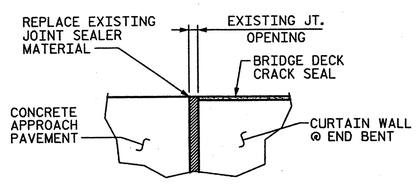

DETAIL A

(LOCATION OF JOINT TO MATCH EXISTING JOINT LOCATION)

✱ELASTOMERIC CONCRETE
CU. FT.
19

✱QUANTITIES ARE FOR INFORMATION ONLY

NOTES:

FOR FOAM JOINT SEALS, SEE SPECIAL PROVISIONS.

FOR ELASTOMERIC CONCRETE, SEE SPECIAL PROVISIONS.

THE CONTRACTOR SHALL COVER AND PROTECT THE JOINT CONSTRUCTION TO PREVENT DAMAGE DURING CONCRETE CURING AND AS NEEDED TO MAINTAIN TRAFFIC, AS DIRECTED BY THE ENGINEER.

THE INSTALLED FOAM JOINT SEALS SHALL BE WATERTIGHT.

THE NOMINAL UNCOMPRESSED SEAL WIDTH OF THE FOAM JOINT SEAL SHALL BE 2½".

THE CONTRACTOR WILL NOT BE PERMITTED TO FORM THE JOINT FOR THE FOAM JOINT SEAL IN LIEU OF SAWING THE JOINT.

FOAM JOINT OPENING WIDTHS SHALL BE CONFIRMED IN THE FIELD. CONTRACTOR SHALL MAKE ADJUSTMENTS TO FOAM JOINT SEALS, AS NECESSARY, TO MEET EXISTING CONDITIONS AND MANUFACTURER'S RECOMMENDATIONS. ANY CHANGES SHALL BE SUBMITTED TO THE ENGINEER FOR APPROVAL. ANY COST ASSOCIATED WITH THESE ADJUSTMENTS IS CONSIDERED INCIDENTAL AND NO SEPARATE MEASUREMENT OR PAYMENT WILL BE MADE.

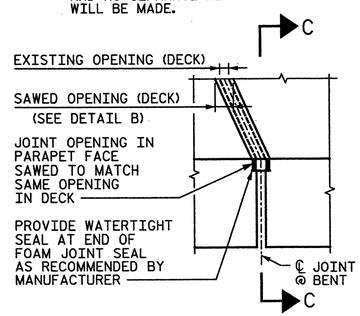

PLAN OF JOINT SEAL AT PARAPET

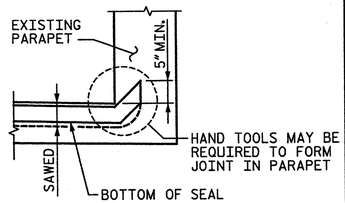

SECTION C-C

PROJECT NO. 17BP.9.P.1

FORSYTH COUNTY

BRIDGE NO.: 54

REHAB. OF BRIDGE NO. 54 SHEET 3 OF 3

STATE OF NORTH CAROLINA
DEPARTMENT OF TRANSPORTATION
RALEIGH

PLAN OF SPANS DECK REPAIRS

BRIDGE ON US 52 NBL OVER SOUTH FORK FIDDLER CREEK

NORTH CAROLINA PROFESSIONAL SEAL 18765 ENGINEER RALPH E. KEXLER, JR. 2/7/12

STV / Ralph Whitehead Associates, Inc.
1000 West Morehead St., Ste. 200
Charlotte, NC 28208
NC License No. F-0991

REVISIONS						SHEET NO.
NO.	BY:	DATE:	NO.	BY:	DATE:	S-18
1			3			TOTAL SHEETS
2			4			S-109

DRAWN BY : RIB DATE : 12/9/11
CHECKED BY : AC DATE : 12/13/11

I:\Projects\2515385\2515385_0001\SD_Deliverables & Submittals\17BP.9.P.1 Structures\17BP.9.P.1 FinalSet 01.24.12\Bridge 054\Bridge 054 Rehab Plans.dgn
2/17/2012 tlaws

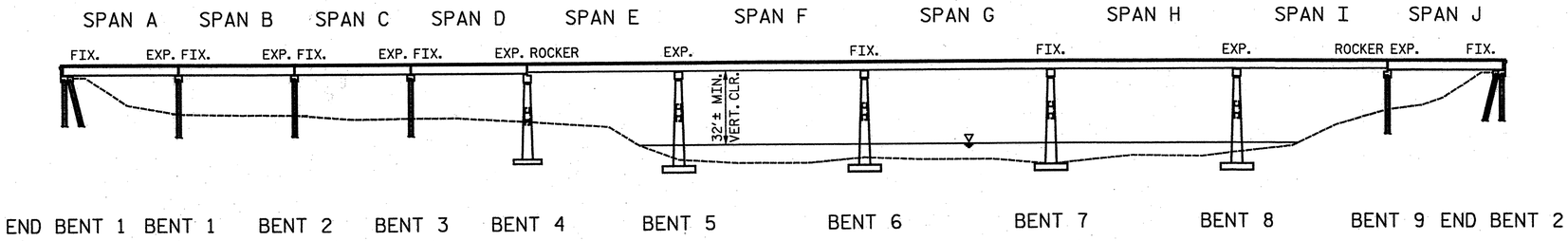

ELEVATION

(SECTIONS AT BENTS AND END BENTS ARE AT RIGHT ANGLES)

NOTES:

FOR GENERAL NOTES, SEE SHEET NO. S-1 OF S-109.

SEE BRIDGE NO. 55 SHEETS 4, 5, 6, 7, 9, 10, 16 & 17 OF 17 FOR ADDITIONAL NOTES.

EXISTING BRIDGE INFORMATION BASED ON BEST AVAILABLE DATA.

AFTER ALL REPAIRS ON THE BRIDGE HAVE BEEN COMPLETED, AN EPOXY PROTECTIVE COATING SHALL BE APPLIED TO THE TOP SURFACE OF BENT CAPS, INCLUDING PEDESTALS, FOR EACH BENT BELOW A JOINT IN THE SUPERSTRUCTURE. CAP SURFACES SHALL BE GRIT BLASTED PRIOR TO EPOXY COATING. SEE STANDARD SPECIFICATIONS FOR EPOXY COATING. ALL COSTS ASSOCIATED WITH APPLYING EPOXY PROTECTIVE COATING SHALL BE INCLUDED IN THE SEVERAL PAY ITEMS FOR THE PROJECT. NO ADDITIONAL PAYMENT WILL BE MADE FOR THIS WORK.

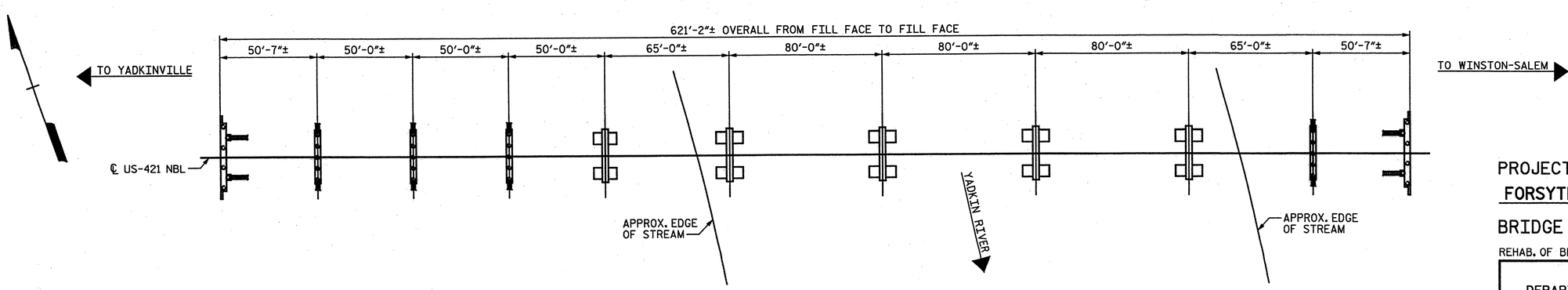

PLAN

PROJECT NO. 17BP.9.P.1

FORSYTH COUNTY

BRIDGE NO.: 55

REHAB. OF BRIDGE NO. 55 SHEET 1 OF 17

STATE OF NORTH CAROLINA
DEPARTMENT OF TRANSPORTATION
RALEIGH

GENERAL PLAN & ELEVATION

BRIDGE ON US 421 NBL OVER YADKIN RIVER

NORTH CAROLINA PROFESSIONAL SEAL 19765 ENGINEER PAUL E. KELLY, JR.
1/18/12

STV / Ralph Whitehead Associates, Inc.
1000 West Morehead St., Ste. 200
Charlotte, NC 28208
NC License No. F-0991

REVISIONS						SHEET NO.
NO.	BY:	DATE:	NO.	BY:	DATE:	S-19
1			3			TOTAL SHEETS
2			4			S-109

DRAWN BY : AFM DATE : 01-12
CHECKED BY : AC DATE : 01-12

I:\Projects\2515385\2515385_0001\50_Deliverables & Submittals\17BP.9.P.1\Structures\Final1-12-12\17BP.9.P.1 FinalSet 01.12.12\Bridge 55\Bridge 055 Rehab Plans.dgn

alveyao

1/17/2012

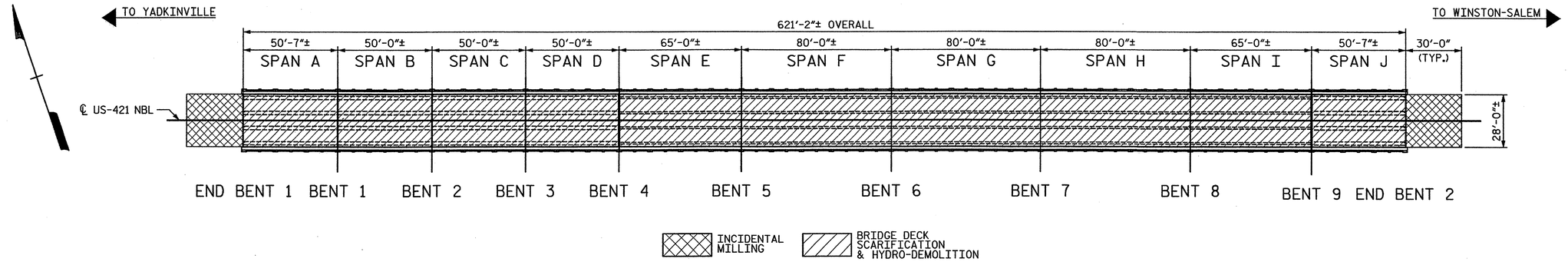

PLAN OF SPANS - DECK SCARIFICATION & HYDRO-DEMOLITION

(CONCRETE BRIDGE FLOOR SHALL BE GROOVED IN ACCORDANCE WITH SECTOIN 420-14 OF THE STANDARD SPECIFICATIONS.)

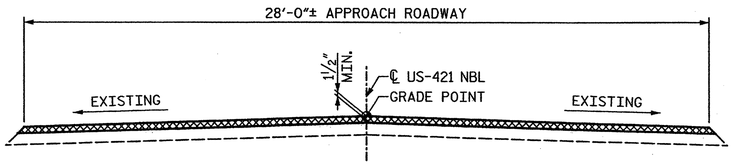

TYPICAL ROADWAY MILLING SECTION

(MILL TO 1½" DEPTH)

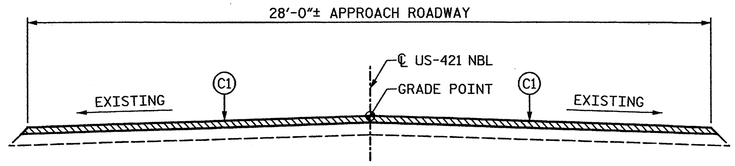

TYPICAL ROADWAY SECTION

(FINAL ROADWAY SURFACE TO MATCH EXISTING GRADE)

C1	PROPOSED VARIABLE DEPTH ASPHALT CONCRETE SURFACE COURSE, TYPE SF9.5A AT AN AVERAGE RATE OF 110 LBS. PER SQ. YD. PER 1" DEPTH. TO BE PLACED IN LAYERS NOT LESS THAN 1" IN DEPTH OR GREATER THAN 1½" DEPTH

NOTES:

FOR ADDITIONAL MILLING DETAILS, SEE SHEET 3 OF 17.

PER EXISTING PLANS, THE EXISTING DECK HAS 1⅛" CONCRETE COVER OVER EXISTING REINFORCING STEEL.

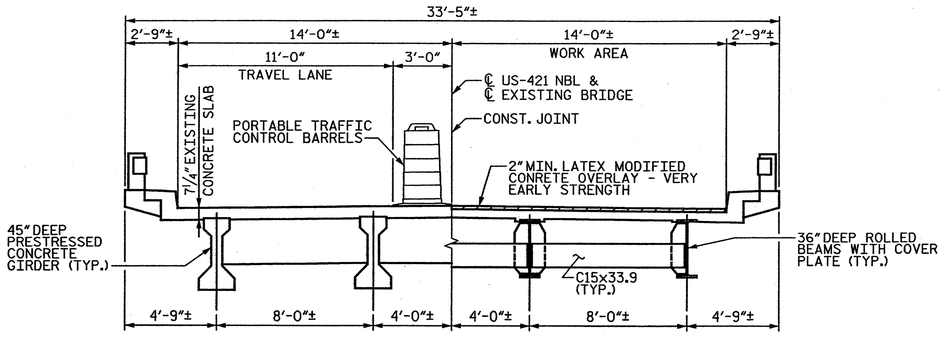

HALF SECTION SHOWING SPANS A, B, C, D & J

HALF SECTION SHOWING SPANS E, F, G, H & I

TYPICAL SECTION - STAGE I

(AT INTERMEDIATE DIAPHRAGMS)

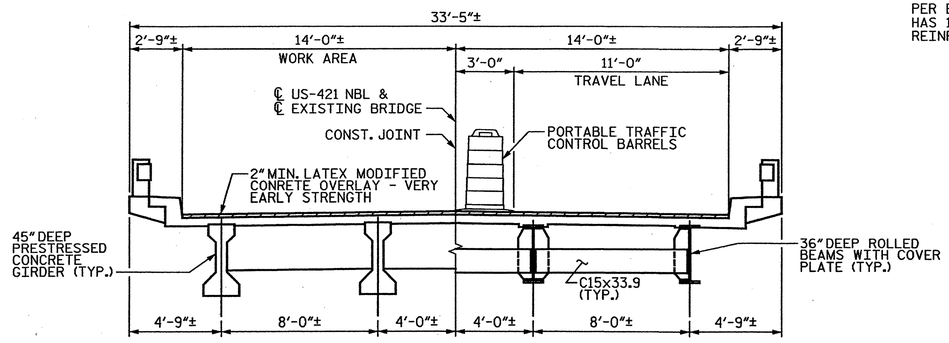

HALF SECTION SHOWING SPANS A, B, C, D & J

HALF SECTION SHOWING SPANS E, F, G, H & I

TYPICAL SECTION - STAGE II

(AT INTERMEDIATE DIAPHRAGMS)

TOTAL BILL OF MATERIAL

DECK SCARIFICATION	INCIDENTAL MILLING	✳CLASS I SURFACE PREPARATION	✳CLASS II SURFACE PREPARATION	✳CLASS III SURFACE PREPARATION	✳CLASS AA CONCRETE	HYDRO-DEMOLITION OF BRIDGE DECK	LATEX MODIFIED CONCRETE OVERLAY - VERY EARLY STRENGTH	PLACING & FINISHING LATEX MODIFIED CONCRETE OVERLAY - VERY EARLY STRENGTH	ASPHALT CONCRETE SURFACE COURSE TYPE SF9.5A	FOAM JOINT SEAL	GROOVING BRIDGE FLOORS	EPOXY RESIN INJECTION	CONCRETE REPAIRS	SHOTCRETE REPAIRS
SQ. YDS.	SQ. YDS.	SQ. YDS.	SQ. YDS.	SQ. YDS.	CU. YDS.	SQ. YDS.	CU. YDS.	SQ. YDS.	TONS	LUMP SUM	SQ. FT.	LIN. FT.	CU. FT.	CU. FT.
1933	187	1883	47	3	1	1933	120	1933	17	LUMP SUM	15371	122	3	63

DRAIN TROUGH SYSTEM	STRUCTURAL STEEL REPAIRS	ELASTOMERIC BEARINGS	UNDER STRUCTURE WORK PLATFORM	BRIDGE JACKING	■REINFORCING STEEL
LUMP SUM	LBS.	LUMP SUM	LUMP SUM	LUMP SUM	LBS.
LUMP SUM	282	LUMP SUM	LUMP SUM	LUMP SUM	100

✳ QUANTITIES FOR INFORMATION ONLY.

■ REINFORCING STEEL FOR REPLACEMENT OF REBAR DAMAGED PRIOR TO ONSET OF PROJECT.

DRAWN BY : AFM DATE : 01-12

CHECKED BY : AC DATE : 01-12

STV / Ralph Whitehead Associates, Inc.
1000 West Morehead St., Ste. 200
Charlotte, NC 28208
NC License No. F-0991

PROJECT NO. 17BP.9.P.1

FORSYTH COUNTY

BRIDGE NO.: 55

REHAB. OF BRIDGE NO. 55 SHEET 2 OF 17

STATE OF NORTH CAROLINA
DEPARTMENT OF TRANSPORTATION
RALEIGH

PLAN OF SPANS & TYPICAL SECTION

BRIDGE ON US 421 NBL OVER YADKIN RIVER

REVISIONS						SHEET NO.
NO.	BY:	DATE:	NO.	BY:	DATE:	S-20
1			3			TOTAL SHEETS
2			4			S-109

I:\Projects\36153851\2515385.0001\50_Deliverables & Submittals\17BP.9.P.1\Structures\17BP.9.P.1 FinalSet 01.24.12\Bridge 055 Rehab Plans.dgn
guldool
3/15/2012

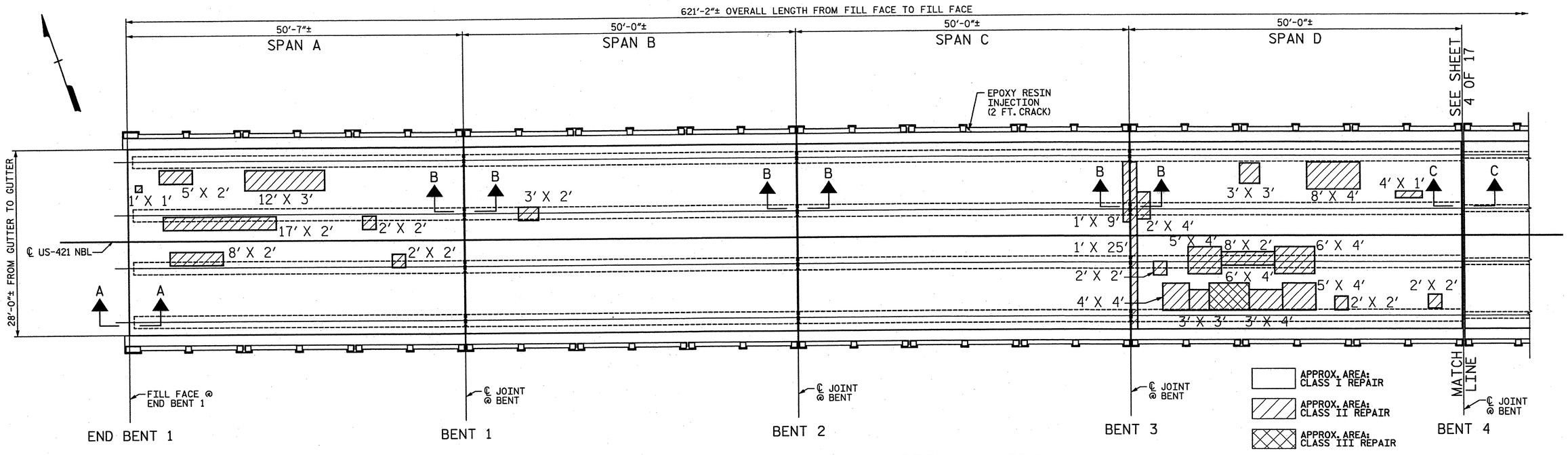

PARTIAL PLAN OF SPANS - DECK REPAIRS

(SEE SHEET 4 OF 17 FOR SECTION B-B)
(SEE SHEET 6 OF 17 FOR SECTION C-C)

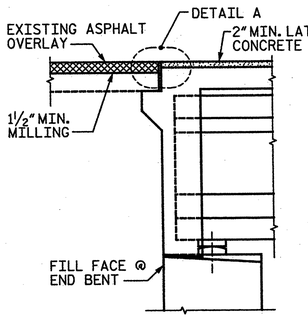

SECTION A-A

(TYP. @ END BENT 1 AND 2)

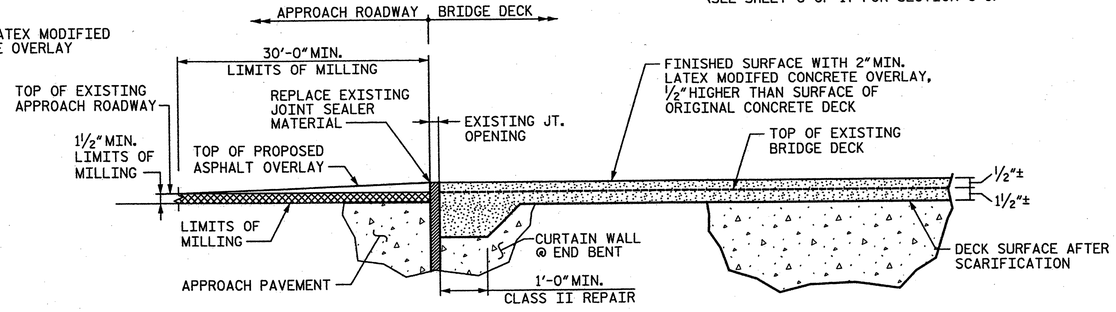

DETAIL A

(LOCATION OF JOINT TO MATCH EXISTING JOINT LOCATION)

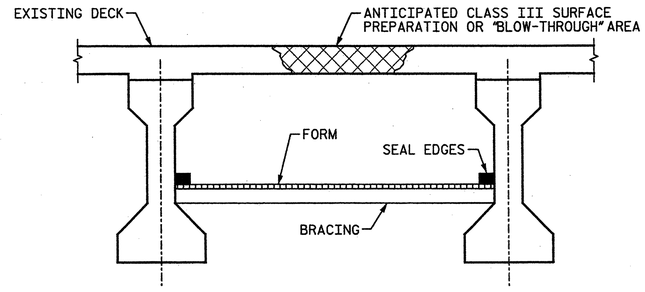

TYP. "BLOW-THROUGH" CONTAINMENT AND FORMWORK

A METHOD TO CAPTURE WATER AND DEBRIS FROM BLOW THRU DURING HYDRO-DEMOLITION SHALL BE INSTALLED IN AREAS INDICATED AS CLASS III SURFACE PREPARATION.

SUBMIT DETAILS OF PROPOSED FORMWORK FOR APPROVAL PRIOR TO BEGINNING WORK.

COSTS FOR INSTALLING AND REMOVING FORMWORK SHALL BE INCIDENTAL TO THE PRICE PER SQ. YARD OF HYDRO-DEMOLITION.

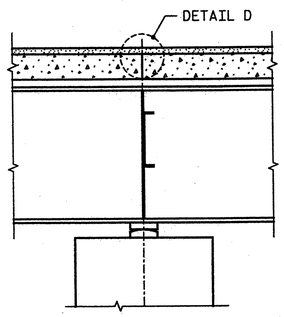

SECTION D-D

(PROPOSED JOINT @ BENTS 5, 6, 7 & 8)

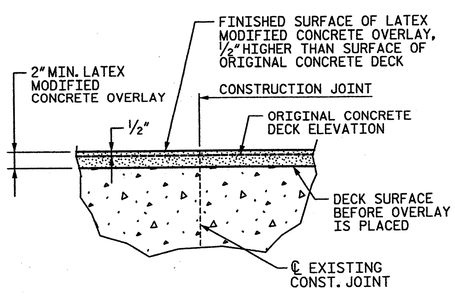

DETAIL D

(LOCATION OF JOINT TO MATCH EXISTING JOINT LOCATION)

NOTE:

SEE NOTES, SHEET 5 OF 17.

PROJECT NO. 17BP.9.P.1

FORSYTH COUNTY

BRIDGE NO.: 55

REHAB. OF BRIDGE NO. 55 SHEET 3 OF 17

STATE OF NORTH CAROLINA
DEPARTMENT OF TRANSPORTATION
RALEIGH

PLAN OF SPANS A,B,C&D DECK REPAIRS

BRIDGE ON US 421 NBL OVER YADKIN RIVER

NORTH CAROLINA PROFESSIONAL SEAL 19766 ENGINEER PAUL E. KELLY, JR. 1/18/12

STV / Ralph Whitehead Associates, Inc.
1000 West Morehead St., Ste. 200
Charlotte, NC 28208
NC License No. F-0991

REVISIONS						SHEET NO.
NO.	BY:	DATE:	NO.	BY:	DATE:	S-21
1			3			TOTAL SHEETS
2			4			S-109

DRAWN BY : AFM DATE : 01-12
CHECKED BY : AC DATE : 01-12

I:\Projects\2515385\2515385.0001\60_Deliverables & Submittals\17BP.9.P.1 FinalSet 01.12.12\Bridge 55\Bridge 055 Rehab Plans.dgn
ttownsend
1/17/2012

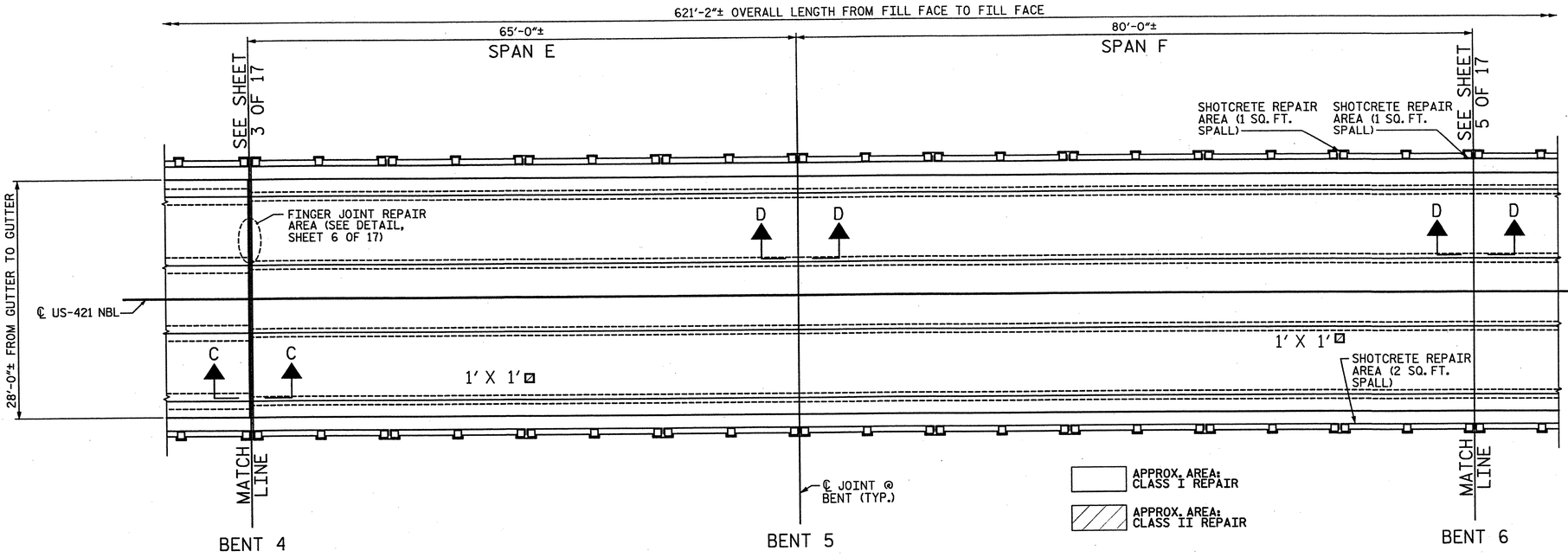

PARTIAL PLAN OF SPANS - DECK REPAIRS

(SEE SHEET 6 OF 17 FOR SECTION C-C)
(SEE SHEET 3 OF 17 FOR SECTION D-D)

NOTES:

FOR FOAM JOINT SEALS, SEE SPECIAL PROVISIONS.

FOR ELASTOMERIC CONCRETE, SEE SPECIAL PROVISIONS.

THE ELASTOMETRIC CONCRETE SHALL BE CONSIDERED INCIDENTAL TO THE FOAM JOINT SEAL PAY ITEM.

THE INSTALLED FOAM JOINT SEALS SHALL BE WATERTIGHT.

THE NOMINAL UNCOMPRESSED SEAL WIDTH OF THE FOAM JOINT SEAL SHALL BE 2½".

THE CONTRACTOR WILL NOT BE PERMITTED TO FORM THE JOINT FOR THE FOAM JOINT SEAL IN LIEU OF SAWING THE JOINT.

FOAM JOINT OPENING WIDTHS SHALL BE CONFIRMED IN THE FIELD. CONTRACTOR SHALL MAKE ADJUSTMENTS TO FOAM JOINT SEALS, AS NECESSARY, TO MEET EXISTING CONDITIONS AND MANUFACTURER'S RECOMMENDATIONS. ANY CHANGES SHALL BE SUBMITTED TO THE ENGINEER FOR APPROVAL. ANY COST ASSOCIATED WITH THESE ADJUSTMENTS IS CONSIDERED INCIDENTAL AND NO SEPERATE MEASUREMENT OR PAYMENT WILL BE MADE.

SEE ADDITIONAL NOTES, SHEET 5 OF 17.

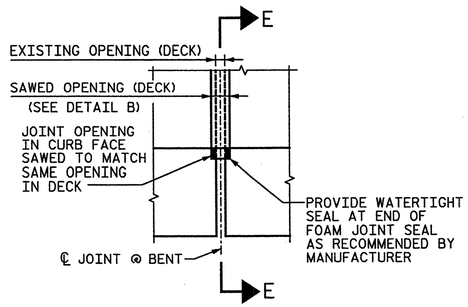

PLAN OF JOINT SEAL AT CURB

* ELASTOMERIC CONCRETE
CU. FT.
15

* QUANTITIES FOR INFORMATION ONLY.

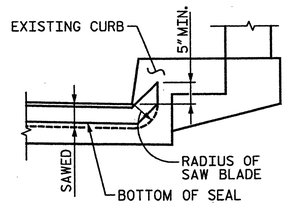

SECTION E-E

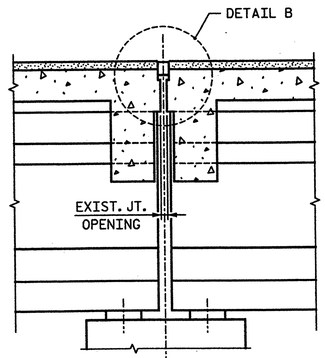

SECTION B-B

(PROPOSED JOINT)
(TYP. @ BENTS 1, 2 & 3)

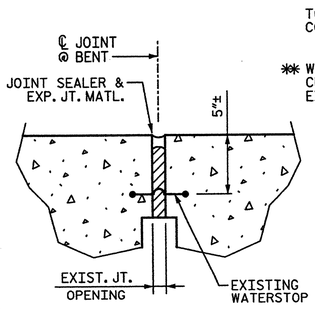

EXISTING JOINT DETAIL

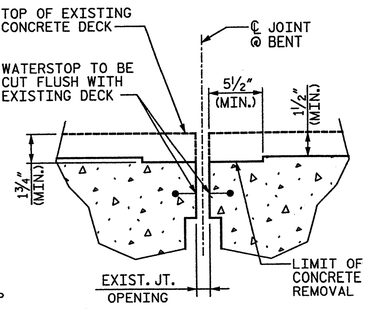

CONCRETE REMOVAL DETAIL @ EXISTING JOINT

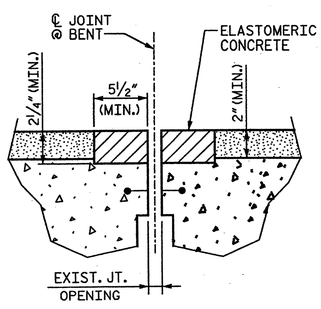

FOAM JOINT SEAL (DETAIL BEFORE SAWING)

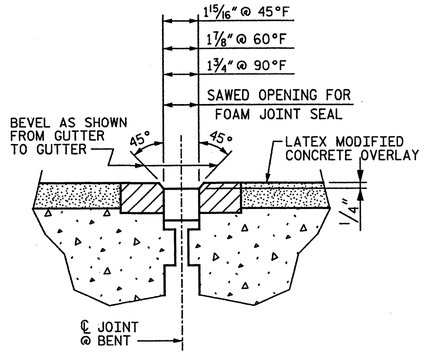

FOAM JOINT SEAL (DETAIL AFTER SAWING)

DETAIL B

** ALL LOOSE AND UNSOUND CONCRETE SHALL BE REMOVED. IF THE EMBEDDED PORTION OF THE EXISTING WATERSTOP IS EXPOSED DURING REMOVAL, THE ENTIRE WATER STOP SHALL BE REMOVED.

NORTH CAROLINA PROFESSIONAL SEAL 18768 ENGINEER PAUL E. KELLY, JR. 2/17/12

PROJECT NO. 17BP.9.P.1
FORSYTH COUNTY
BRIDGE NO.: 55
REHAB. OF BRIDGE NO. 55 SHEET 4 OF 17

STATE OF NORTH CAROLINA
DEPARTMENT OF TRANSPORTATION
RALEIGH

PLAN OF SPANS E & F DECK REPAIRS

BRIDGE ON US 421 NBL OVER YADKIN RIVER

REVISIONS						SHEET NO.
NO.	BY:	DATE:	NO.	BY:	DATE:	S-22
1			3			TOTAL SHEETS
2			4			S-109

STV/ Ralph Whitehead Associates, Inc.
1000 West Morehead St., Ste. 200
Charlotte, NC 28208
NC License No. F-0991

DRAWN BY : AFM DATE : 01-12
CHECKED BY : AC DATE : 01-12

I:\Projects\2515385\2515385_0001\50_Deliverables & Submittals\17BP.9.P.1 FinalSet 01.24.12\Bridge 055\Bridge 055 Rehab Plans.dgn
tlowe
2/17/2012

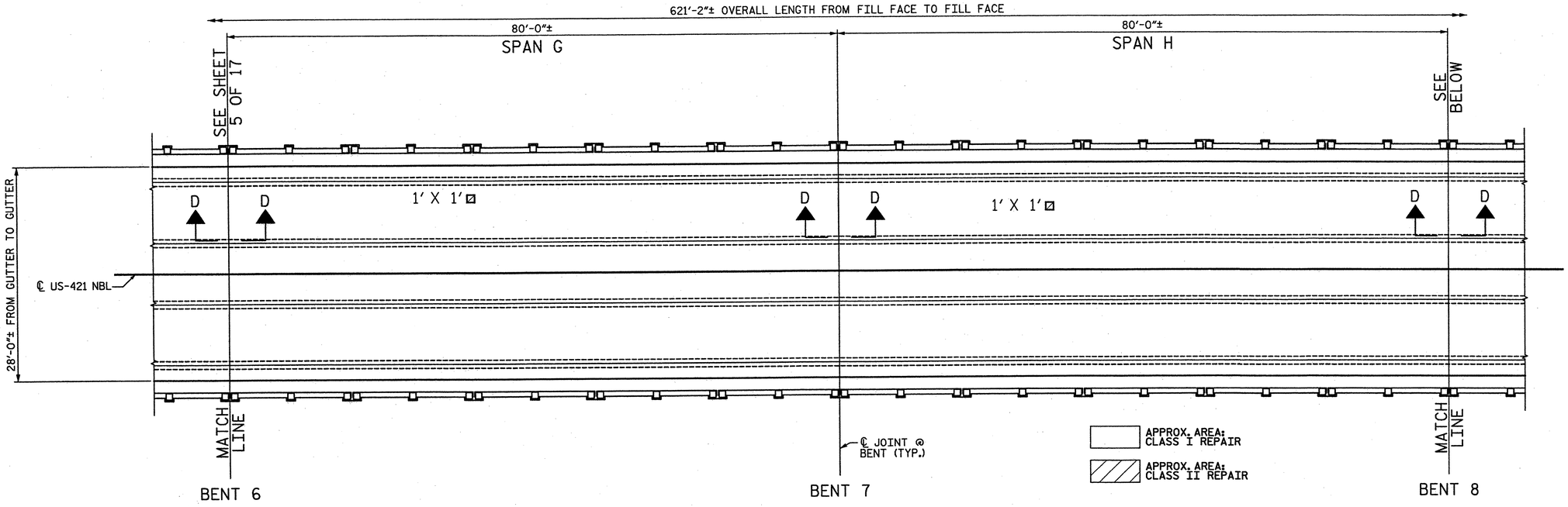

PARTIAL PLAN OF SPANS - DECK REPAIRS

(SEE SHEET 3 OF 17 FOR SECTION D-D)

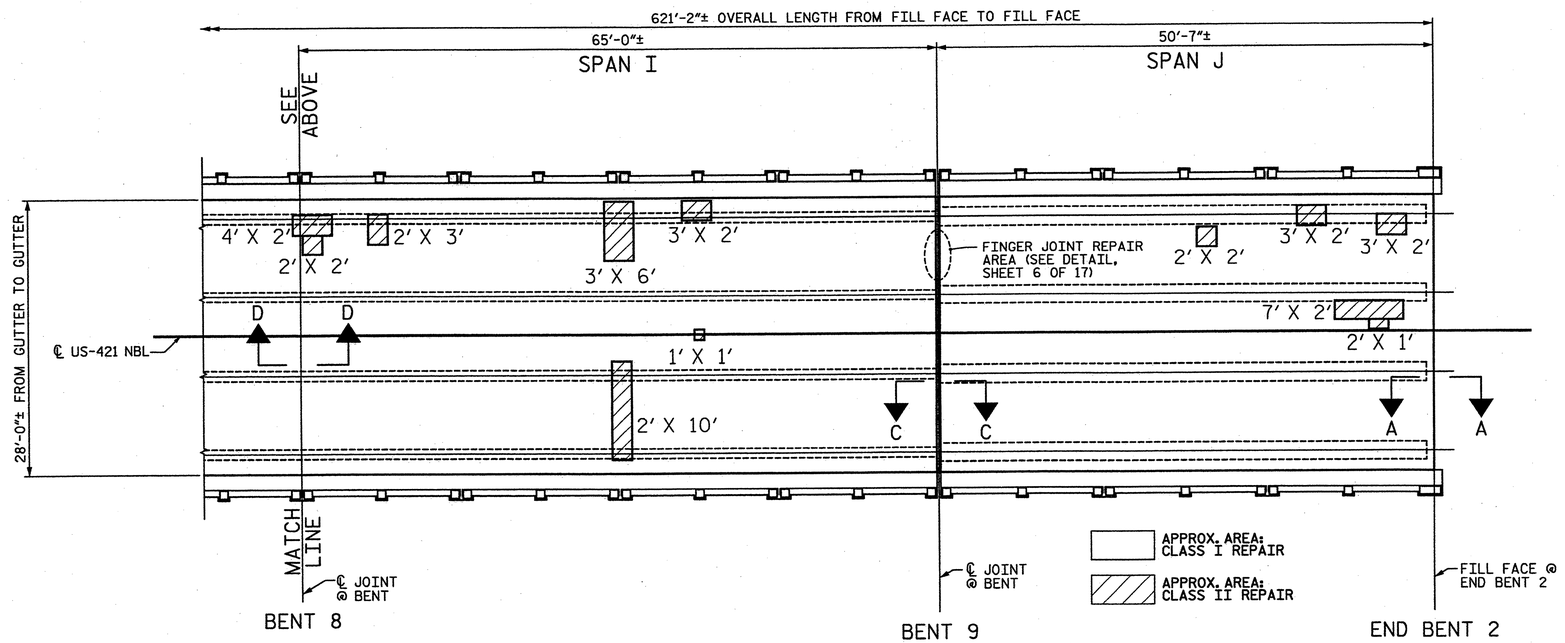

PARTIAL PLAN OF SPANS - DECK REPAIRS

(SEE SHEET 3 OF 17 FOR SECTIONS A-A & D-D)
(SEE SHEET 6 OF 17 FOR SECTION C-C)

NOTES:

LATEX MODIFIED CONCRETE SHALL BE LATEX MODIFIED CONCRETE - VERY EARLY STRENGTH. SEE SPECIAL PROVISIONS.

FOR HYDRO-DEMOLITION OF BRIDGE DECK, SEE SPECIAL PROVISIONS.

THE CONTRACTOR MUST COLLECT, TREAT AND DISPOSE OF RUN-OFF WATER FROM THE HYDRO-DEMOLITION PROCESS. SEE SPECIAL PROVISIONS.

THE BOUNDARY AREAS IDENTIFIED FOR CLASS III SURFACE PREPARATION ARE APPROXIMATE. THE CONTRACTOR SHALL PROVIDE CONTAINMENT FOR UNEXPECTED BLOW-THROUGH OF THE DECK. SEE DETAIL ON SHEET 3 OF 17 AND SPECIAL PROVISIONS.

PROJECT NO. 17BP.9.P.1
FORSYTH COUNTY
BRIDGE NO.: 55
REHAB. OF BRIDGE NO. 55 SHEET 5 OF 17

STATE OF NORTH CAROLINA
DEPARTMENT OF TRANSPORTATION
RALEIGH

PLAN OF SPANS G,H,I&J DECK REPAIRS

BRIDGE ON US 421 NBL OVER YADKIN RIVER

NORTH CAROLINA PROFESSIONAL SEAL 19765 ENGINEER PAUL E. KELLY, JR.
1/18/12

STV / Ralph Whitehead Associates, Inc.
1000 West Morehead St., Ste. 200
Charlotte, NC 28208
NC License No. F-0991

REVISIONS						SHEET NO.
NO.	BY:	DATE:	NO.	BY:	DATE:	S-23
1			3			TOTAL SHEETS
2			4			S-109

DRAWN BY : AFM DATE : 01-12
CHECKED BY : AC DATE : 01-12

I:\Projects\2515385\2515385.0001\50_Deliverables & Submittals\17BP.9.P.1\Structures\Final1-12-12\17BP.9.P.1 FinalSet 01.12.12\Bridge 55\Bridge 055 Rehab Plans.dgn
ttownsend
1/17/2012

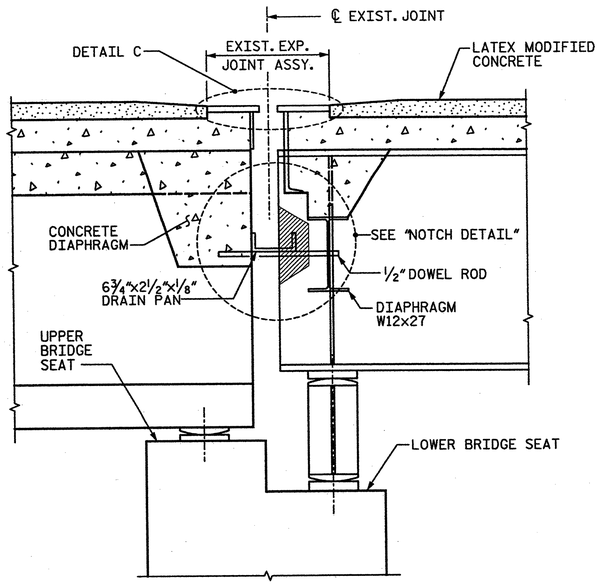

SECTION C-C
(PROPOSED JOINT @ BENTS 4 & 9)

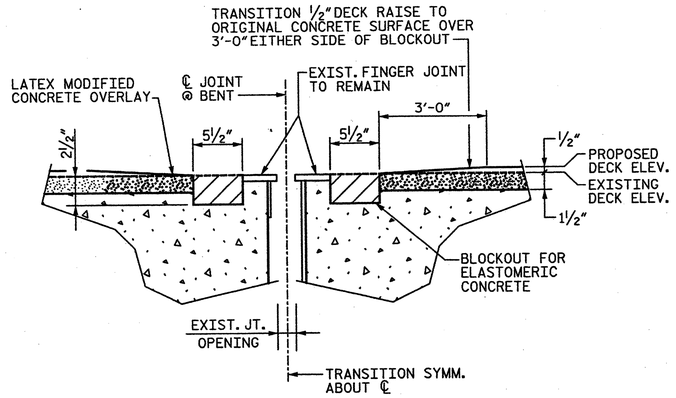

DETAIL C

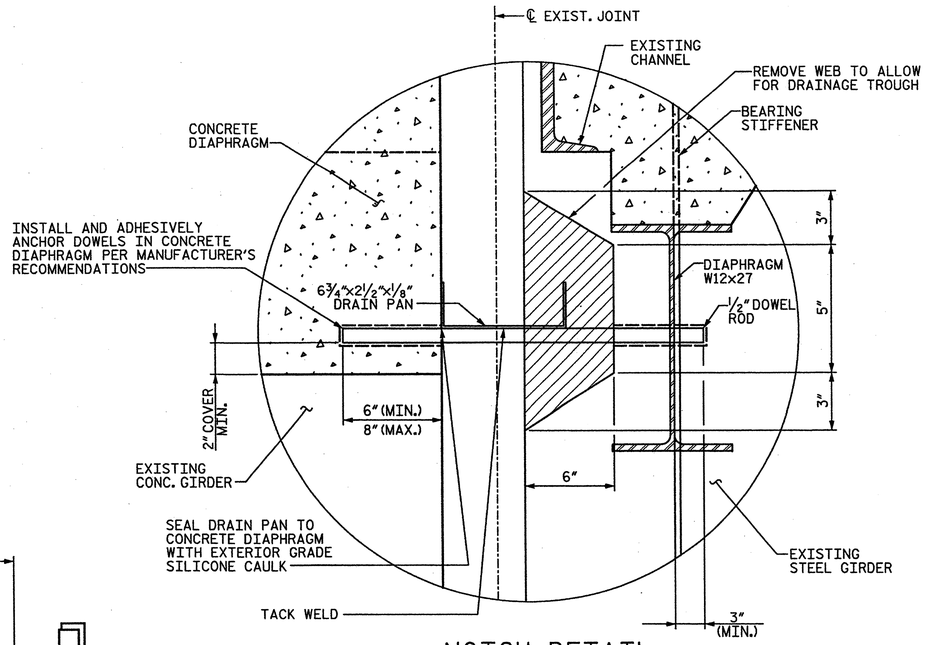

NOTCH DETAIL

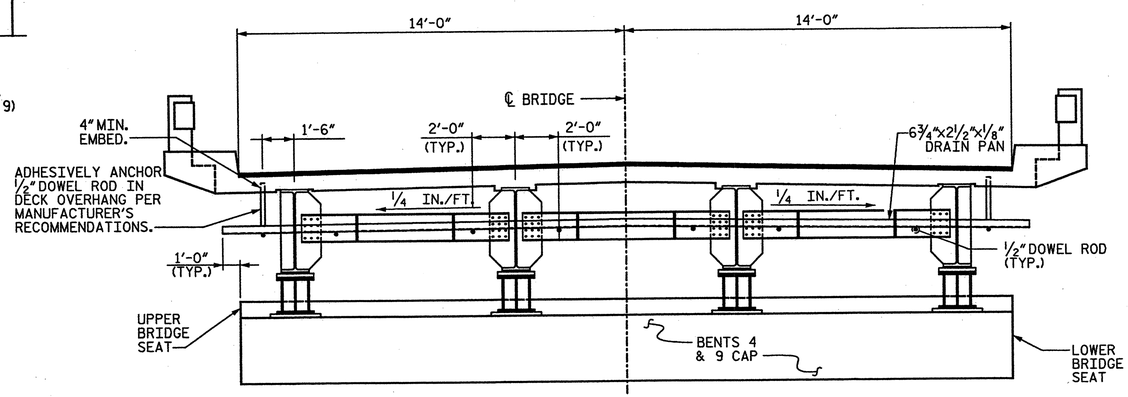

DRAIN TROUGH SYSTEM ELEVATION

NOTES:

ALL WELDING SHALL BE IN ACCORDANCE WITH CURRENT AWS SPECIFICATIONS. WELD MATERIAL SHALL BE E70XX.

BOLTS, NUTS, WASHERS, DOWEL ROD, STEEL BAR, AND DRAIN PAN SHALL BE HOT DIPPED GALVANIZED IN ACCORDANCE WITH THE STANDARD SPECIFICATIONS.

½" DOWEL ROD SHALL BE ASTM A307 STEEL OR APPROVED EQUAL. DRAIN PAN SHALL BE AASHTO M270 GRADE 36 OR APPROVED EQUAL.

FIELD TESTING OF THE ADHESIVE BONDING SYSTEM IS NOT REQUIRED.

APPLY AN EPOXY PROTECTIVE COATING TO THE TOP SURFACE AREA OF THE LOWER BENT CAP, EXCLUDING AREAS UNDER MASONRY PLATES. FOR EPOXY COATING SEE STANDARD SPECIFICATIONS.

DRAIN TROUGH SYSTEM TO BE INSTALLED AFTER ALL REPAIRS/MODIFICATIONS HAVE BEEN MADE TO BRIDGE.

TACK WELD DRAIN PAN TO ½" DOWELS ON BOTH SIDES AND REPAIR ANY DAMAGED GALVANIZING IN ACCORDANCE WITH THE STANDARD SPECIFICATIONS.

CONTRACTOR SHALL VERIFY ALL EXISTING DIMENSIONS PRIOR TO ORDERING MATERIAL AND COMMENCING ANY DRAIN TROUGH INSTALLATION OR JOINT REPAIR WORK.

ALL COSTS ASSOCIATED WITH FINGER JOINT REPAIR SHALL BE INCIDENTAL TO THE CONTRACT PAY ITEM FOR STRUCTURAL STEEL REPAIRS.

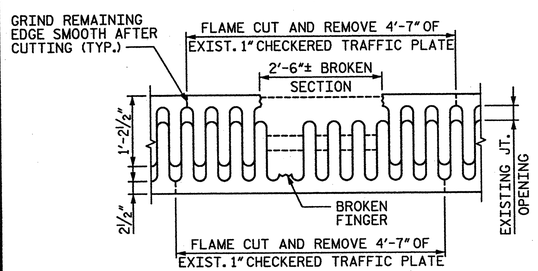

EXISTING JOINT

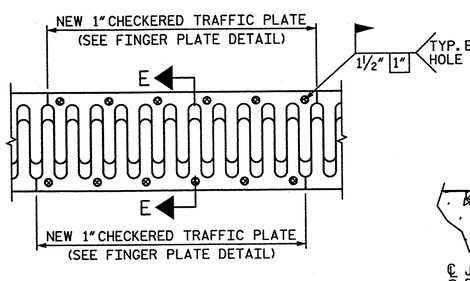

PROPOSED JOINT

PLAN OF FINGER JOINT REPAIR AT BENTS 4 & 9
(BENT 4 SHOWN; BENT 9 SIMILAR)

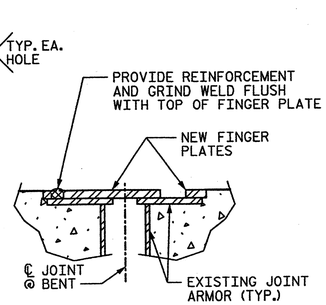

SECTION E-E

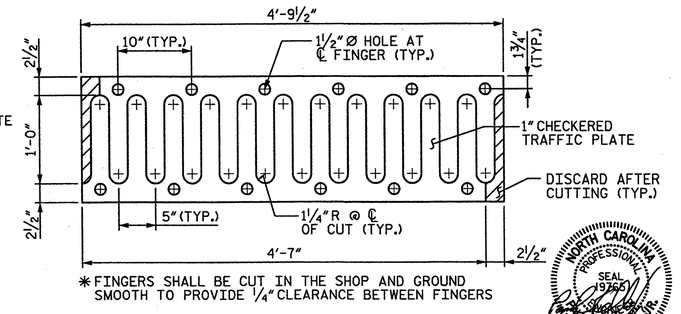

*FINGERS SHALL BE CUT IN THE SHOP AND GROUND SMOOTH TO PROVIDE ¼" CLEARANCE BETWEEN FINGERS

FINGER PLATE DETAIL

NORTH CAROLINA PROFESSIONAL SEAL 19565 ENGINEER PAUL E. KELLY, JR.
2/24/12

PROJECT NO. 17BP.9.P.1
FORSYTH COUNTY
BRIDGE NO.: 55
REHAB. OF BRIDGE NO. 55 SHEET 6 OF 17

STATE OF NORTH CAROLINA
DEPARTMENT OF TRANSPORTATION
RALEIGH

JOINT DETAILS BENTS 4 & 9

BRIDGE ON US 421 NBL OVER YADKIN RIVER

REVISIONS						SHEET NO.
NO.	BY:	DATE:	NO.	BY:	DATE:	S-24
1			3			TOTAL SHEETS
2			4			S-109

DRAWN BY : AFM DATE : 01-12
CHECKED BY : AC DATE : 01-12

STV/ Ralph Whitehead Associates, Inc.
1000 West Morehead St., Ste. 200
Charlotte, NC 28208
NC License No. F-0991

I:\Projects\2515385\2515385.0001\50_Deliverables & Submittals\17BP.9.P.1\Structures\17BP.9.P.1 FinalSet 01.24.12\Bridge 055\Bridge 055 Rehab Plans.dgn
quidool
2/23/2012

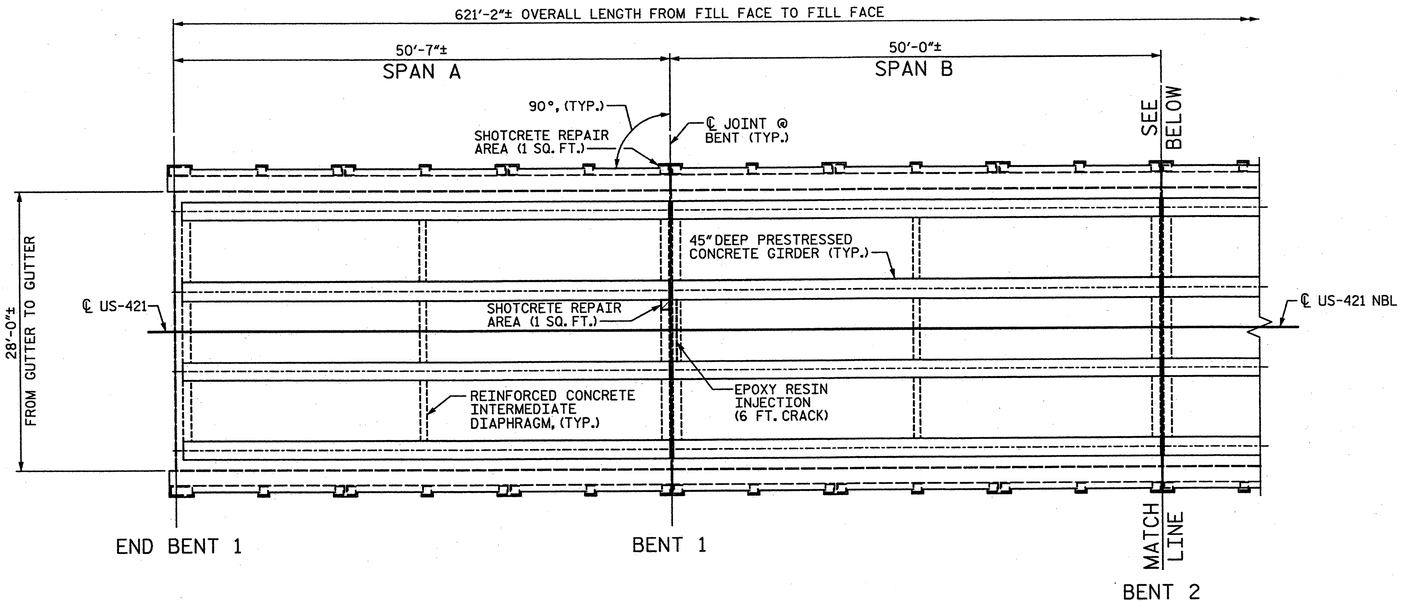

PARTIAL PLAN OF SPANS - UNDERSIDE OF DECK

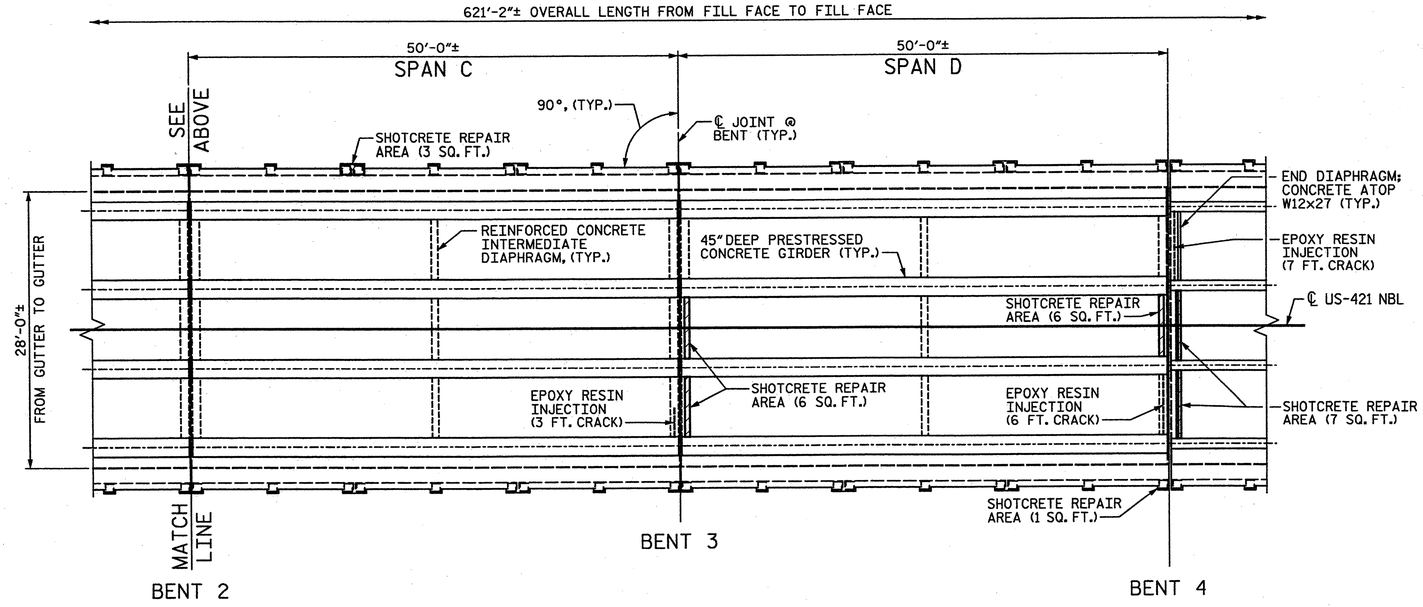

PARTIAL PLAN OF SPANS - UNDERSIDE OF DECK

-------- APPROX. LENGTH: EPOXY RESIN INJECTION

APPROX. AREA: SHOTCRETE REPAIRS

NOTES:

CONCRETE SHALL BE SOUNDED TO DETERMINE THE EXTENT OF ALL CONCRETE REPAIRS.

FOR CRACKS REQUIRING EPOXY RESIN INJECTION, SOUNDING MAY PROVE THAT A CONCRETE REPAIR IS NECESSARY.

SPALL, CRACK, AND DELAMINATION DIMENSIONS SHOWN ARE APPROXIMATE. CONTRACTOR SHALL DETERMINE ACTUAL SPALL, CRACK, AND DELAMINATION DIMENSIONS PRIOR TO MAKING REPAIRS.

THE ENGINEER SHALL BE NOTIFIED OF ANY BARS DAMAGED DURING THE CONCRETE REMOVAL PROCESS. REPAIRS TO DAMAGED BARS SHALL BE DIRECTED BY THE ENGINEER AND COMPLETED AT NO ADDITIONAL COST.

SEE ADDITIONAL NOTES AND TYPICAL REPAIR DETAILS ON SHEET 16 OF 17.

PROJECT NO. 17BP.9.P.1

FORSYTH COUNTY

BRIDGE NO.: 55

REHAB. OF BRIDGE NO. 55 SHEET 7 OF 17

STATE OF NORTH CAROLINA
DEPARTMENT OF TRANSPORTATION
RALEIGH

PLAN OF SPANS A,B,C&D DIAPHRAGM REPAIRS

BRIDGE ON US 421 NBL OVER YADKIN RIVER

NORTH CAROLINA PROFESSIONAL SEAL 19765 ENGINEER PAUL E. KELLER JR. 4/16/12

STV / Ralph Whitehead Associates, Inc.
1000 West Morehead St. Ste. 200
Charlotte, NC 28208
NC License No. F-0991

REVISIONS						SHEET NO.
NO.	BY:	DATE:	NO.	BY:	DATE:	S-25
1			3			TOTAL SHEETS
2			4			S-109

DRAWN BY : AFM DATE : 01-12
CHECKED BY : AC DATE : 01-12

I:\Projects\2515385\2515385.000\50_Deliverables & Submittals\17BP.9.P.1\Structures\Final1-12-12\17BP.9.P.1 Final Set 01.12.12\Bridge 55\Bridge 055 Rehab Plans.dgn
ttownsend
1/17/2012

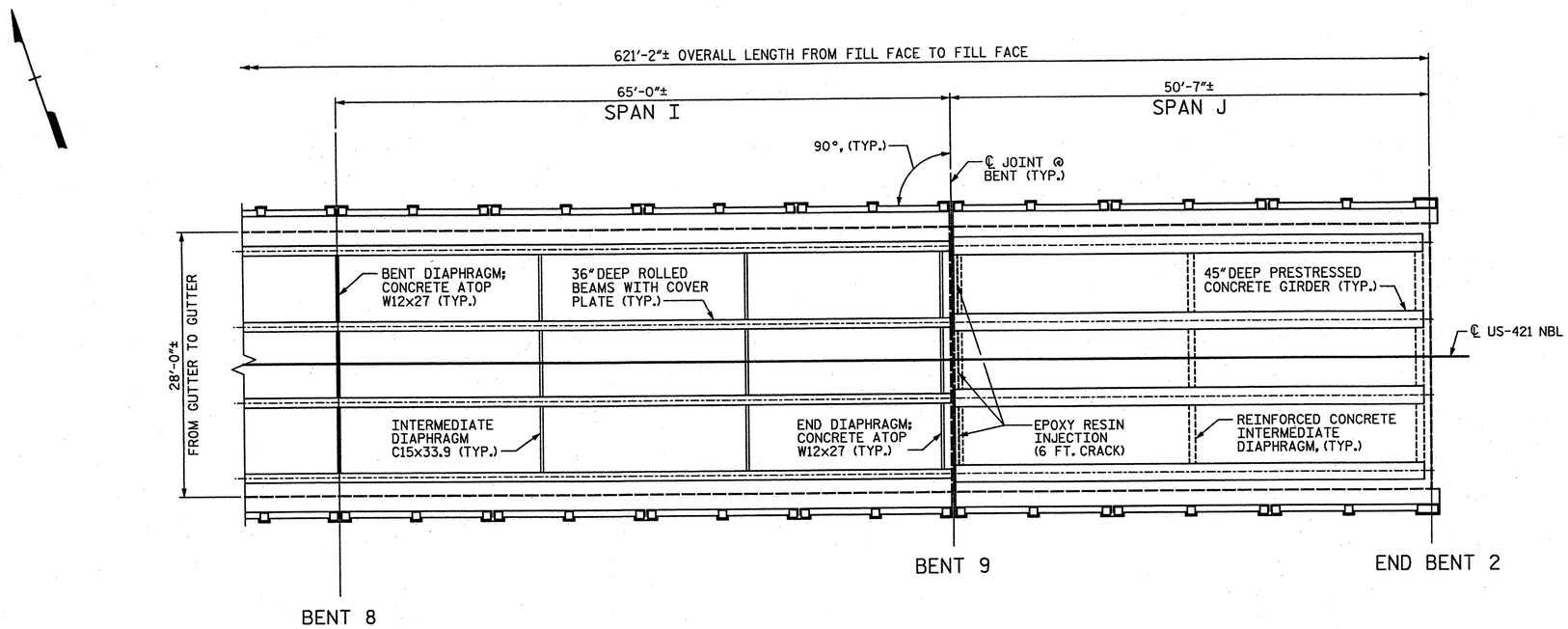

PARTIAL PLAN OF SPANS - UNDERSIDE OF DECK

-------- APPROX. LENGTH: EPOXY RESIN INJECTION

NOTE:

SEE NOTES, SHEET 7 OF 17.

PROJECT NO. 17BP.9.P.1

FORSYTH COUNTY

BRIDGE NO.: 55

REHAB. OF BRIDGE NO. 55 SHEET 8 OF 17

STATE OF NORTH CAROLINA
DEPARTMENT OF TRANSPORTATION
RALEIGH

PLAN OF SPANS I & J
DIAPHRAGM REPAIRS

BRIDGE ON US 421 NBL
OVER YADKIN RIVER

NORTH CAROLINA PROFESSIONAL SEAL 19765 ENGINEER PAUL E. KELLY, JR. 1/18/12

STV / Ralph Whitehead Associates, Inc.
1000 West Morehead St., Ste. 200
Charlotte, NC 28208
NC License No. F-0991

REVISIONS						SHEET NO.
NO.	BY:	DATE:	NO.	BY:	DATE:	S-26
1			3			TOTAL SHEETS
2			4			S-109

DRAWN BY : AFM DATE : 01-12
CHECKED BY : AC DATE : 01-12

I:\Projects\2515385\2515385_0001\50_Deliverables & Submittals\17BP.9.P.1\Structures\Final1-12-12\17BP.9.P.1 FinalSet 01_12_12\Bridge 55\Bridge 055 Rehab Plans.dgn

ttownsend

1/17/2012

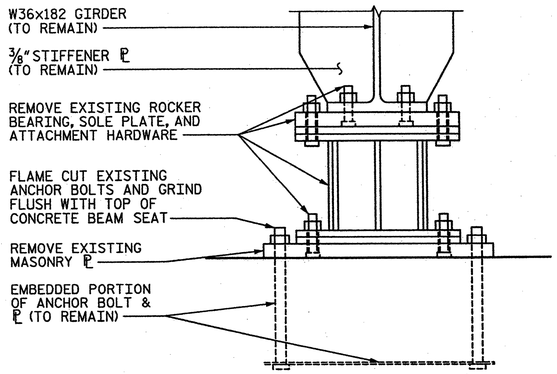

EXISTING BEARING - END VIEW

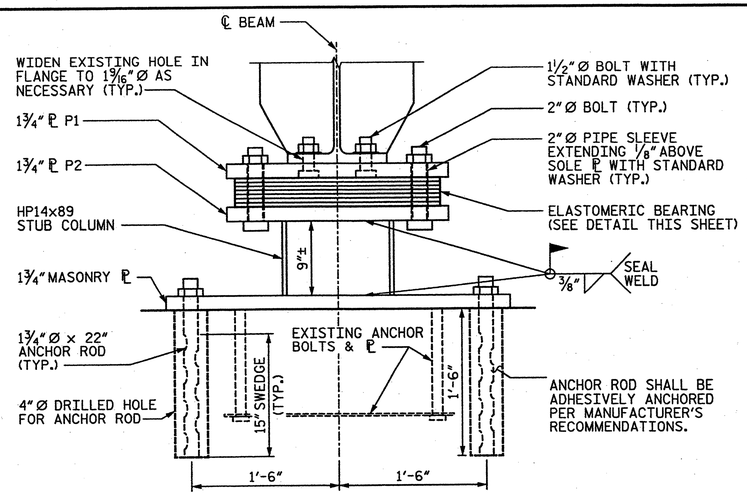

REPLACEMENT BEARING - END VIEW

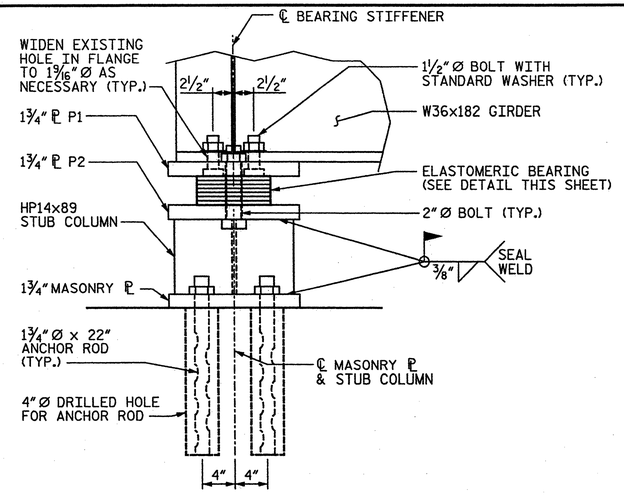

REPLACEMENT BEARING - SIDE VIEW

ROCKER BEARING REPLACEMENT DETAIL - BENTS 4 & 9

(DIAPHRAGMS NOT SHOWN FOR CLARITY)

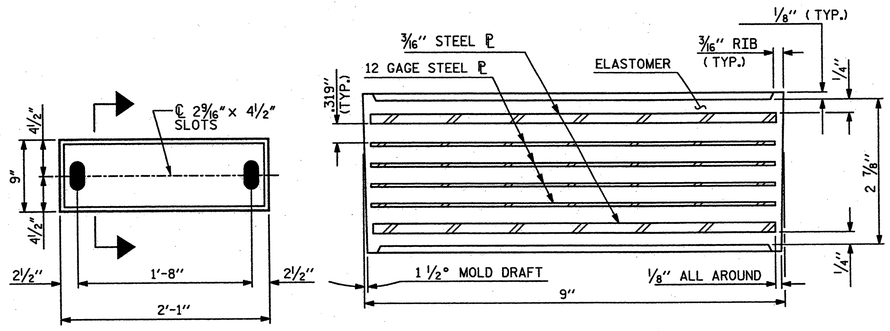

ELASTOMERIC BEARING DETAIL

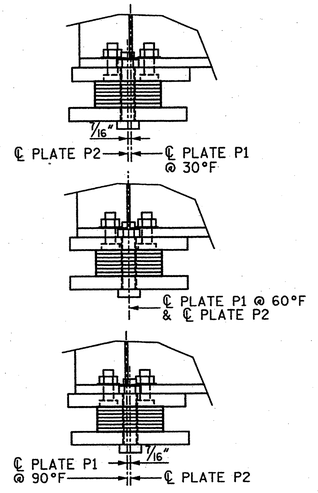

ELASTOMERIC BEARING TEMPERATURE GUIDE

NOTES:

FOR BOLT REMOVAL AND REPLACEMENT, SEE SPECIAL PROVISIONS.

STRUCTURAL STEEL FOR THE BEARING ASSEMBLY SHALL BE INCLUDED IN THE CONTRACT BID PRICE FOR STRUCTURAL STEEL. ALL COST ASSOCIATED WITH LABOR, MATERIALS, INSTALLATION, AND ALL INCIDENTALS SHALL BE INCLUDED IN THE PRICE.

ELASTOMER FOR ALL BEARINGS SHALL BE 60 DUROMETER HARDNESS.

ALL WELDING SHALL BE IN ACCORDANCE WITH CURRENT AWS SPECIFICATIONS. WELD MATERIAL SHALL BE E70XX.

STEEL FOR PLATES AND STUB COLUMNS SHALL BE AASHTO M270 GRADE 36.

PLATES P1 & P2, MASONRY PLATES, STUB COLUMNS, ANCHOR RODS, BOLTS, NUTS AND WASHERS SHALL BE GALVANIZED IN ACCORDANCE WITH THE STANDARD SPECIFICATIONS. REPAIR ANY DAMAGED GALVANIZING AFTER PLACEMENT.

ANCHOR RODS SHALL MEET THE REQUIREMENTS OF ASTM A449. BOLTS SHALL MEET THE REQUIREMENTS OF ASTM A325. NUTS SHALL MEET THE REQUIREMENTS OF AASHTO M291-DH. WASHERS SHALL MEET THE REQUIREMENTS OF AASHTO M293. SHOP DRAWINGS ARE NOT REQUIRED FOR ANCHOR RODS, BOLTS, NUTS AND WASHERS. SHOP INSPECTION IS REQUIRED.

FIELD TESTING OF THE ADHESIVE BONDING SYSTEM IS NOT REQUIRED.

ALL SURFACES OF BEARING PLATES SHALL BE SMOOTH AND STRAIGHT.

PLATE 1 SHALL BE CENTERED AS NEARLY AS PRACTICAL ABOUT THE BEARING STIFFENER. ANCHOR RODS, PLATE 2 AND MASONRY PLATE SHALL BE CENTERED AS NEARLY AS PRACTICAL ABOUT THE ELASTOMERIC BEARING SLOTS.

CONTRACTOR SHALL ENSURE THAT MASONRY PLATE AND PLATE P2 ARE LEVEL BEFORE FINAL PLACEMENT. CONTRACTOR SHALL SMOOTH THE SURFACE OF THE EXISTING BEAM SEAT AS NECESSARY AND AS DIRECTED BY THE ENGINEER.

CONTRACTOR SHALL DETERMINE THE LENGTH OF THE HP14x83 STUB COLUMN SUCH THAT THE GAP BETWEEN THE TOP OF THE STUB COLUMN AND THE PLATE P2 IS NO GREATER THAN 1/16" BEFORE THE BRIDGE IS LOWERED. CONTRACTOR SHALL GRIND THE ENDS OF THE HP14x83 STUB COLUMN TO PROVIDE A LEVEL SURFACE.

ALL STRUCTURAL STEEL BEARING COMPONENTS SHALL BE GALVANIZED.

CONSTRUCTION SEQUENCE:

1. INSTALL JACKS AND BLOCKING AT LOCATIONS SHOWN ON PLAN ON SHEET 17 OF 17.
2. REMOVE NUTS ON ANCHOR BOLTS, AS NEEDED.
3. JACK GIRDERS A MAXIMUM OF ⅛" IN ORDER TO RELIEVE LOAD ON BEARINGS.
4. MECHANICALLY LOCK ALL JACKS AT BENT.
5. REMOVE ALL EXISTING ROCKER BEARINGS AT PIERS 4 & 9, AS SHOWN IN REPLACEMENT DETAIL.
6. PLACE NEW MASONRY PLATES AND ANCHOR RODS.
7. PLACE NEW PLATES P1 & P2 AND ELASTOMERIC BEARINGS AS A SINGLE ASSEMBLY.
8. PLACE STUB COLUMN BETWEEN MASONRY PLATE AND BEARING ASSEMBLY AT ALL LOCATIONS AND LOWER BRIDGE.
9. WELD STUB COLUMNS TO MASONRY PLATE AND PLATE P2 IMMEDIATELY AFTER BRIDGE IS LOWERED.

NOTE: THE CONTRACTOR HAS THE OPTION TO PROPOSE AN ALTERNATE CONSTRUCTION SEQUENCE PER THE APPROVAL OF THE ENGINEER.

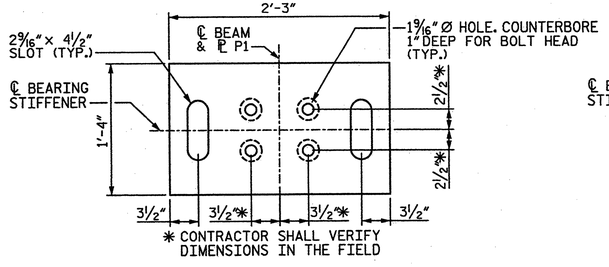

PLATE P1 DETAIL

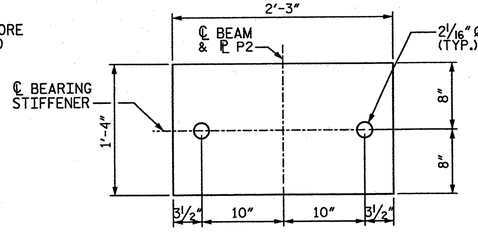

PLATE P2 DETAIL

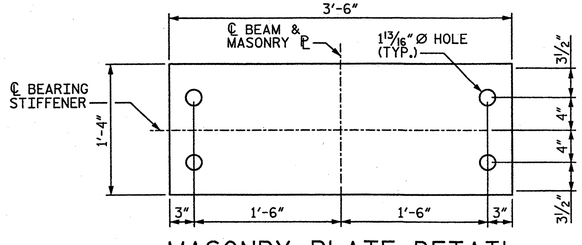

MASONRY PLATE DETAIL

NORTH CAROLINA PROFESSIONAL SEAL 19769 ENGINEER TIMOTHY E. KELLY, JR.
1/16/12

PROJECT NO. 17BP.9.P.1

FORSYTH COUNTY

BRIDGE NO.: 55

REHAB. OF BRIDGE NO. 55 SHEET 9 OF 17

STATE OF NORTH CAROLINA
DEPARTMENT OF TRANSPORTATION
RALEIGH

ROCKER BEARING REPLACEMENT DETAILS

BRIDGE ON US 421 NBL OVER YADKIN RIVER

REVISIONS						SHEET NO.
NO.	BY:	DATE:	NO.	BY:	DATE:	S-27
1			3			TOTAL SHEETS
2			4			S-109

STV / Ralph Whitehead Associates, Inc.
1000 West Morehead St., Ste. 200
Charlotte, NC 28208
NC License No. F-0991

DRAWN BY : AFM DATE : 01-12
CHECKED BY : AC DATE : 01-12

I:\Projects\2515385\2515385_0001\50_Deliverables & Submittals\17BP.9.P.1\S\Structures\Final1-12-12\17BP.9.P.1 Final Set 01_12_12\Bridge 55\Bridge 055 Rehab Plans.dgn
+townsend
1/17/2012

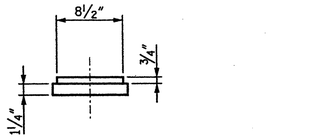

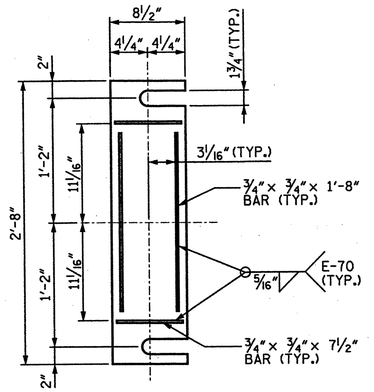

FIXED END ℄ P1

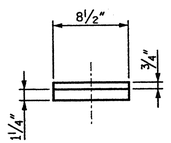

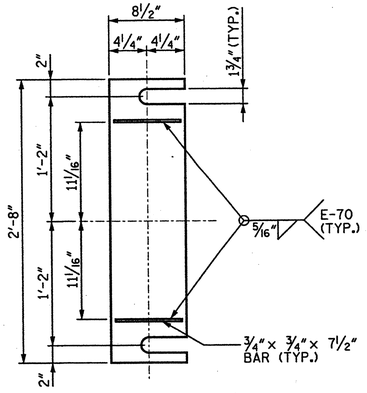

EXP. END ℄ P2

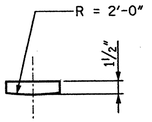

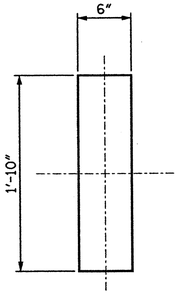

SOLE ℄ P3

BEARING PLATE DETAILS

EACH FIXED BEARING ASSEMBLY REQUIRES: 1 FIXED END PLATE P1
1 SOLE PLATE P3

EACH EXPANSION BEARING ASSEMBLY REQUIRES: 1 EXPANSION END PLATE P2
1 SOLE PLATE P3

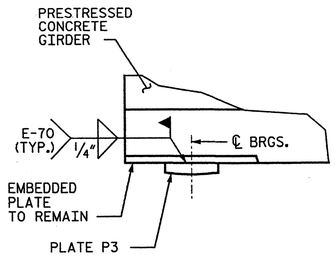

SOLE PLATE ATTACHMENT

NOTES:

AFTER ALL BEARINGS ARE CLEANED, BEARING REPLACEMENT SHALL BE PERFORMED UNDER ENGINEER'S DIRECTION. ALL BEARINGS THAT ARE NOT REPLACED SHALL BE PAINTED.

CONTRACTOR TO TAKE APPROPRIATE MEANS TO REMOVE EXISTING BEARING PLATE WITHOUT DAMAGING ANCHOR BOLTS.

STEEL FOR BEARINGS SHALL BE AASHTO M270 GRADE 50W AND GALVANIZED IN ACCORDANCE WITH THE STANDARD SPECIFICATIONS.

STRUCTURAL STEEL FOR BEARING ASSEMBLIES SHALL BE INCLUDED IN THE CONTRACT BID PRICE FOR STRUCTURAL STEEL REPAIRS. THE BID PRICE SHALL BE FULL PAYMENT FOR ALL LABOR, MATERIALS, INSTALLATION AND ALL INCIDENTALS REQUIRED TO COMPLETE THE WORK.

CONSTRUCTION SEQUENCE:

1. INSTALL JACKS AND BLOCKING AT LOCATIONS IDENTIFIED IN TABLE BELOW. SEE JACKING DETAIL, SHEET 17 OF 17.
2. REMOVE NUTS ON ANCHOR BOLTS, AS NEEDED.
3. JACK GIRDERS A MAXIMUM OF ⅛" IN ORDER TO RELIEVE LOAD ON BEARINGS.
4. MECHANICALLY LOCK ALL JACKS AT BENT.
5. PERFORM BEARING REPLACEMENTS
6. ONCE ALL REPAIRS ARE COMPLETE, LOWER BRIDGE.

THE CONTRACTOR HAS THE OPTION TO PROPOSE AN ALTERNATE CONSTRUCTION SEQUENCE FOR THE APPROVAL OF THE ENGINEER.

BEARING REPLACEMENT LOCATIONS (ESTIMATED)	
BENT 1:	6 BEARINGS
BENT 2:	2 BEARINGS
BENT 3:	2 BEARINGS
BENT 4:	1 BEARING
BENT 9:	1 BEARING

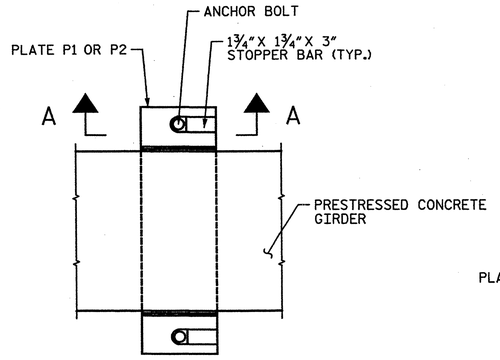

STOPPER BAR DETAIL FOR BEARING PLATES

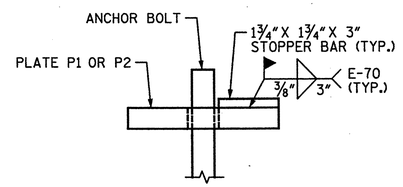

SECTION A-A

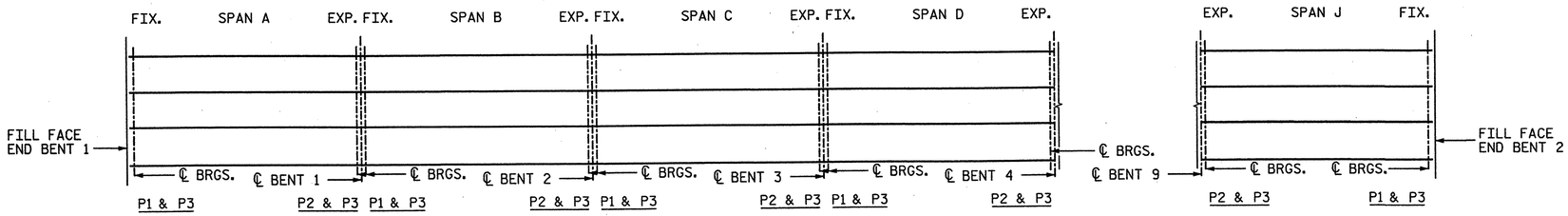

BEARING ASSEMBLY LOCATIONS

PROJECT NO. 17BP.9.P.1
FORSYTH COUNTY
BRIDGE NO.: 55
REHAB. OF BRIDGE NO. 55 SHEET 10 OF 17

STATE OF NORTH CAROLINA
DEPARTMENT OF TRANSPORTATION
RALEIGH

CONCRETE SPANS BEARING DETAILS

BRIDGE ON US 421 NBL OVER YADKIN RIVER

NORTH CAROLINA PROFESSIONAL SEAL 19768 ENGINEER DAVID E. KELLY, JR. 4/27/12

STV / Ralph Whitehead Associates, Inc.
1000 West Morehead St., Ste. 200
Charlotte, NC 28208
NC License No. F-0991

REVISIONS						SHEET NO.
NO.	BY:	DATE:	NO.	BY:	DATE:	S-28
1			3			TOTAL SHEETS
2			4			S-109

DRAWN BY : AFM DATE : 01-12
CHECKED BY : AC DATE : 01-12

I:\NP-projects\25\5385\25\5385_0001\50_Deliverables & Submittals\17BP.9.P.1 FinalSet 01.24.12\Bridge 055\Bridge 055 Rehab Plans.dgn
tlowe
2/17/2012

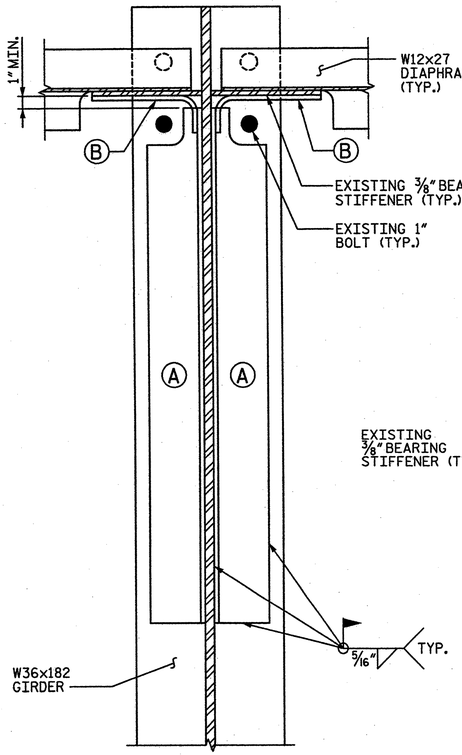

PLAN VIEW OF BOTTOM FLANGE

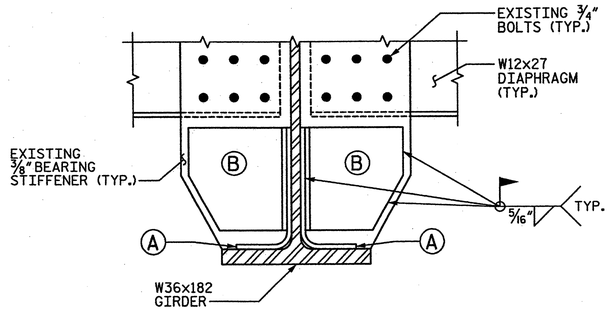

SECTION THROUGH BEAM

BENT 4, SPAN E BEAM END REPAIR DETAIL

(BEAM 2 SHOWN, BEAM 3 SIMILAR)

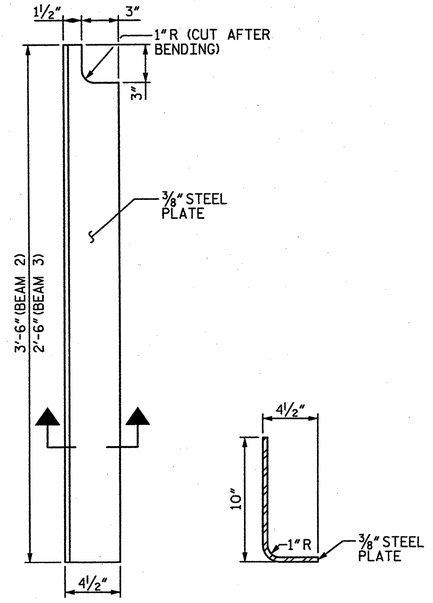

PLAN SECTION

PLATE 'A' DETAIL

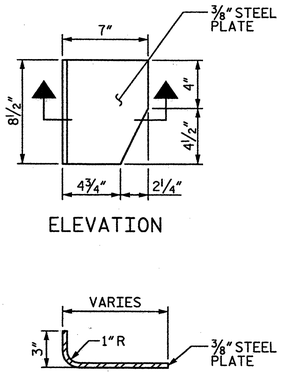

ELEVATION

SECTION

PLATE 'B' DETAIL

NOTES:

ALL WELDING SHALL BE IN ACCORDANCE WITH CURRENT AWS SPECIFICATIONS. WELD MATERIAL SHALL BE E70XX.

CONTRACTOR SHALL CLEAN EXISTING STEEL SURFACES IN REPAIR AREA BEFORE PERFORMING REPAIRS. SEE STRUCTURAL STEEL REPAIRS IN SPECIAL PROVISIONS.

PLATE STEEL USED FOR REPAIR SHALL BE AASHTO M270 GRADE 36.

PLATE SIZES ARE BASED ON BEST INFORMATION AVAILABLE. ENGINEER SHALL VERIFY EXTENTS OF REPAIR AND PLATE SIZES PRIOR TO PLATE FABRICATION.

PROJECT NO. 17BP.9.P.1

FORSYTH COUNTY

BRIDGE NO.: 55

REHAB. OF BRIDGE NO. 55 SHEET 11 OF 17

STATE OF NORTH CAROLINA
DEPARTMENT OF TRANSPORTATION
RALEIGH

BENTS 4 & 9 BEAM END REPAIRS

BRIDGE ON US 421 NBL
OVER YADKIN RIVER

NORTH CAROLINA PROFESSIONAL SEAL 19763 ENGINEER CHRISTOPHER E. KELLY

1/18/12

STV / Ralph Whitehead Associates, Inc.
1000 West Morehead St., Ste. 200
Charlotte, NC 28208
NC License No. F-0991

REVISIONS						SHEET NO.
NO.	BY:	DATE:	NO.	BY:	DATE:	S-29
1			3			TOTAL SHEETS
2			4			S-109

DRAWN BY : AFM DATE : 01-12
CHECKED BY : AC DATE : 01-12

1/17/2012 ttownsend I:\Projects\2515385\2515385.000\50.Deliverables & Submittals\17BP.9.P.1\Structures\Final\1-12-12\17BP.9.P.1 Final Set 01.12.12\Bridge 55\Bridge 055 Rehab Plans.dgn

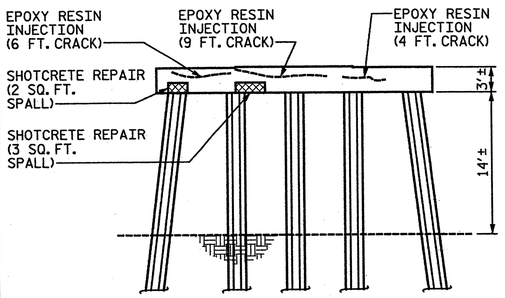

ELEVATION OF BENT 1
LOOKING SOUTH*

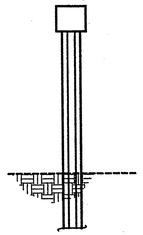

ELEVATION OF BENT 1
LOOKING EAST*

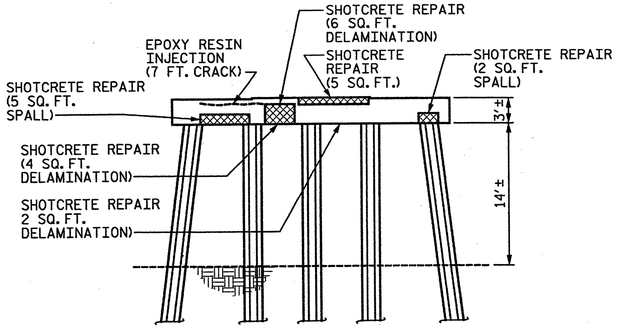

ELEVATION OF BENT 1
LOOKING NORTH*

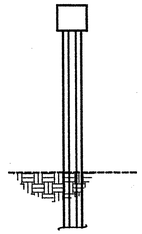

ELEVATION OF BENT 1
LOOKING WEST*

NOTE:

SEE NOTES AND TYPICAL REPAIR DETAILS, SHEET 16 OF 17.

* LOOKING DIRECTION CORRESPONDS WITH DIRECTION OF TRAVEL ALONG HIGHWAY

APPROX. LENGTH: EPOXY RESIN INJECTION

APPROX. AREA: CONCRETE REPAIR (CLASS A)

APPROX. AREA: SHOTCRETE REPAIR

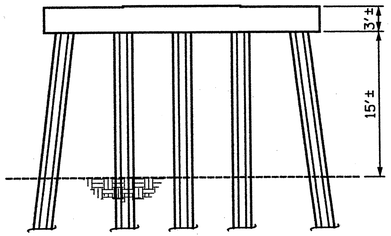

ELEVATION OF BENT 2
LOOKING SOUTH*

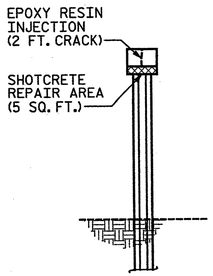

ELEVATION OF BENT 2
LOOKING EAST*

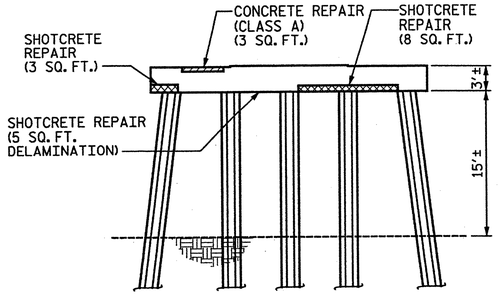

ELEVATION OF BENT 2
LOOKING NORTH*

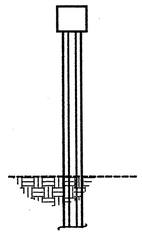

ELEVATION OF BENT 2
LOOKING WEST*

PROJECT NO. 17BP.9.P.1

FORSYTH COUNTY

BRIDGE NO.: 55

REHAB. OF BRIDGE NO. 55 SHEET 12 OF 17

STATE OF NORTH CAROLINA
DEPARTMENT OF TRANSPORTATION
RALEIGH

BENTS 1 & 2 SUBSTRUCTURE REPAIRS

BRIDGE ON US 421 NBL
OVER YADKIN RIVER

NORTH CAROLINA PROFESSIONAL SEAL 19769 ENGINEER PAUL E. KELLY, JR.
2/24/12

STV/ Ralph Whitehead Associates, Inc.
1000 West Morehead St., Ste. 200
Charlotte, NC 28208
NC License No. F-0991

REVISIONS						SHEET NO.
NO.	BY:	DATE:	NO.	BY:	DATE:	S-30
1			3			TOTAL SHEETS
2			4			S-109

DRAWN BY : AFM DATE : 01-12
CHECKED BY : AC DATE : 01-12

I:\Projects\2515385\2515385.0001\SD_Deliverables & Submittals\17BP.9.P.1\Structures\17BP.9.P.1 FinalSet 01.24.12\Bridge 055\Bridge 055 Rehab Plans.dgn
guidool
2/24/2012

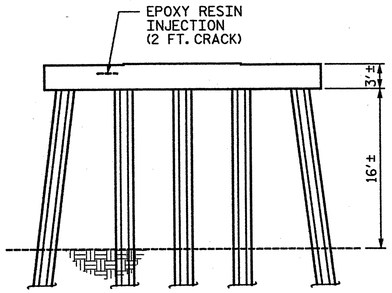

ELEVATION OF BENT 3
LOOKING SOUTH*

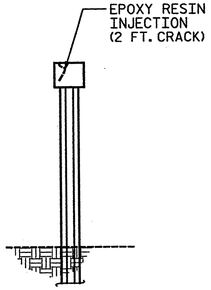

ELEVATION OF BENT 3
LOOKING EAST*

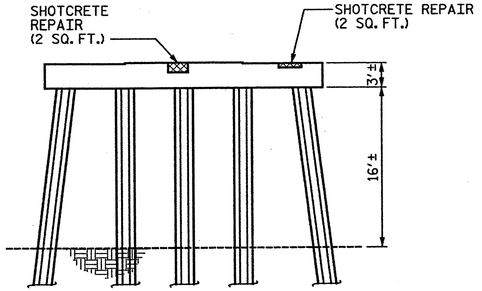

ELEVATION OF BENT 3
LOOKING NORTH*

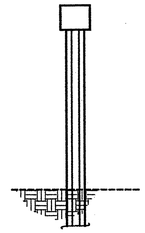

ELEVATION OF BENT 3
LOOKING WEST*

NOTES:

SEE NOTES AND TYPICAL REPAIR DETAILS, SHEET 16 OF 17.

WATER ELEVATION BASED ON 2009 INSPECTION SOUNDINGS.

* LOOKING DIRECTION CORRESPONDS WITH DIRECTION OF TRAVEL ALONG HIGHWAY

--------- APPROX. LENGTH: EPOXY RESIN INJECTION

APPROX. AREA: SHOTCRETE REPAIR

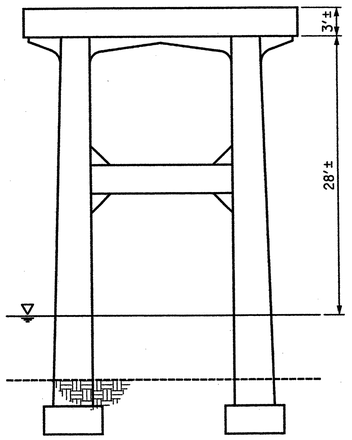

ELEVATION OF BENT 5
LOOKING SOUTH*

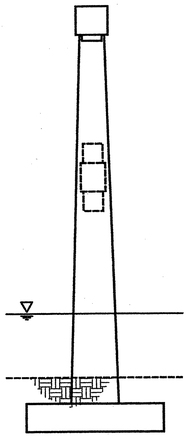

ELEVATION OF BENT 5
LOOKING EAST*

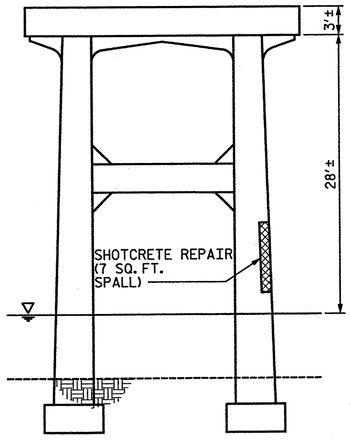

ELEVATION OF BENT 5
LOOKING NORTH*

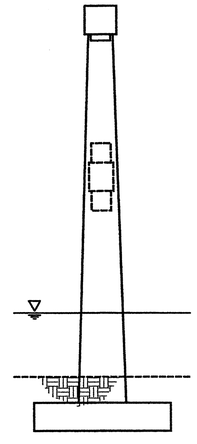

ELEVATION OF BENT 5
LOOKING WEST*

PROJECT NO. 17BP.9.P.1

FORSYTH COUNTY

BRIDGE NO.: 55

REHAB. OF BRIDGE NO. 55 SHEET 13 OF 17

STATE OF NORTH CAROLINA
DEPARTMENT OF TRANSPORTATION
RALEIGH

BENTS 3 & 5 SUBSTRUCTURE REPAIRS

BRIDGE ON US 421 NBL
OVER YADKIN RIVER

NORTH CAROLINA PROFESSIONAL SEAL 19764 ENGINEER JAMES E. KELLY, JR.
2/24/12

STV / Ralph Whitehead Associates, Inc.
1000 West Morehead St., Ste. 200
Charlotte, NC 28208
NC License No. F-0991

REVISIONS						SHEET NO.
NO.	BY:	DATE:	NO.	BY:	DATE:	S-31
1			3			TOTAL SHEETS
2			4			S-109

DRAWN BY : AFM DATE : 01-12
CHECKED BY : AC DATE : 01-12

I:\Projects\25153B5\25153B5_0001\SO_Deliverables & Submittals\17BP.9.P.1\Structures\17BP.9.P.1 FinalSet 01.24.12\Bridge 055\Bridge 055 Rehab Plans.dgn
guldool
2/24/2012

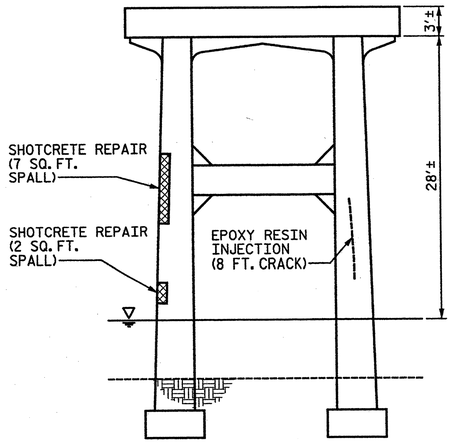

ELEVATION OF BENT 6
LOOKING SOUTH*

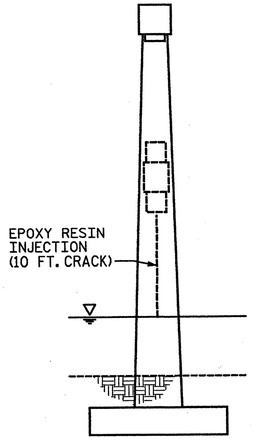

ELEVATION OF BENT 6
LOOKING EAST*

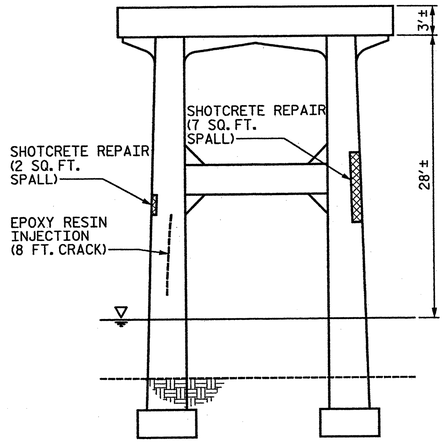

ELEVATION OF BENT 6
LOOKING NORTH*

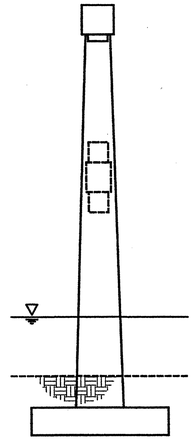

ELEVATION OF BENT 6
LOOKING WEST*

NOTES:

SEE NOTES AND TYPICAL REPAIR DETAILS. SHEET 16 OF 17.

WATER ELEVATION BASED ON 2009 INSPECTION SOUNDINGS.

* LOOKING DIRECTION CORRESPONDS WITH DIRECTION OF TRAVEL ALONG HIGHWAY

-------- APPROX. LENGTH: EPOXY RESIN INJECTION

APPROX. AREA: SHOTCRETE REPAIR

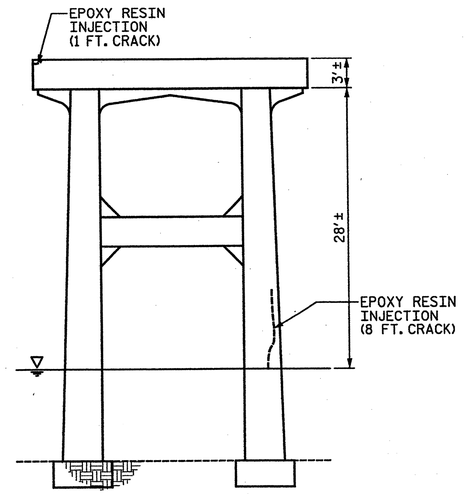

ELEVATION OF BENT 7
LOOKING SOUTH*

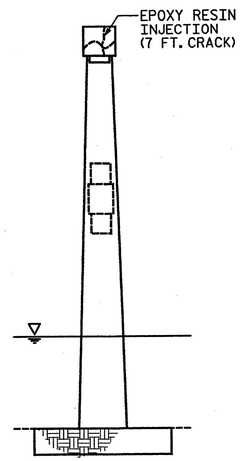

ELEVATION OF BENT 7
LOOKING EAST*

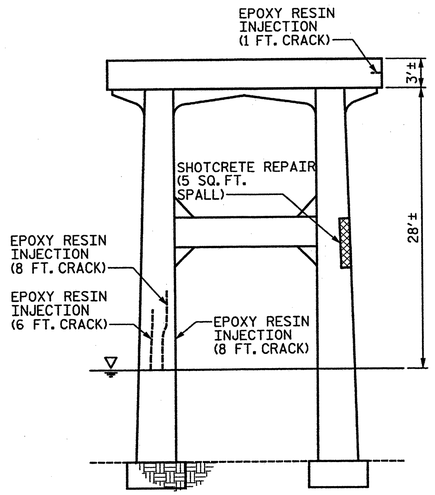

ELEVATION OF BENT 7
LOOKING NORTH*

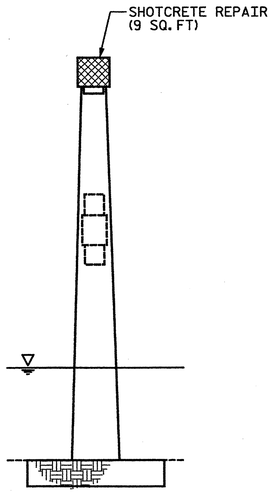

ELEVATION OF BENT 7
LOOKING WEST*

NORTH CAROLINA PROFESSIONAL SEAL 19750 ENGINEER PAUL E. KELLER

2/24/12

PROJECT NO. 17BP.9.P.1

FORSYTH COUNTY

BRIDGE NO.: 55

REHAB. OF BRIDGE NO. 55 SHEET 14 OF 17

STATE OF NORTH CAROLINA
DEPARTMENT OF TRANSPORTATION
RALEIGH

BENTS 6 & 7 SUBSTRUCTURE REPAIRS

BRIDGE ON US 421 NBL
OVER YADKIN RIVER

STV/ Ralph Whitehead Associates, Inc.
1000 West Morehead St. Ste. 200
Charlotte, NC 28208
NC License No. F-0991

REVISIONS						SHEET NO.
NO.	BY:	DATE:	NO.	BY:	DATE:	S-32
1			3			TOTAL SHEETS
2			4			S-109

DRAWN BY : AFM DATE : 01-12
CHECKED BY : AC DATE : 01-12

I:\Projects\2515385\2515385.0001\SD_Deliverables & Submittals\17BP.9.P.1\Structures\17BP.9.P.1 FinalSet 01.24.12\Bridge 055\Bridge 055 Rehab Plans.dgn
quidocl
2/24/2012

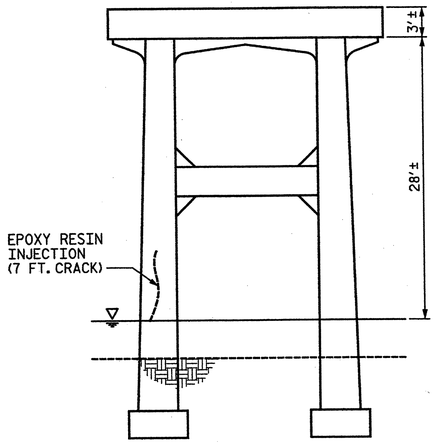

ELEVATION OF BENT 8
LOOKING SOUTH*

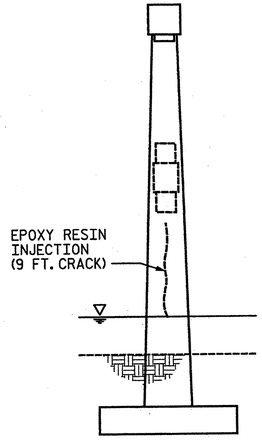

ELEVATION OF BENT 8
LOOKING EAST*

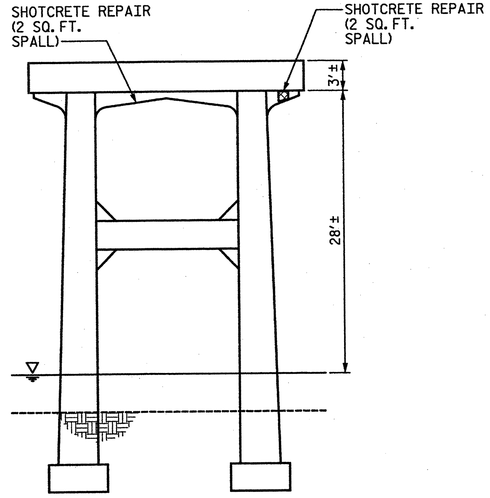

ELEVATION OF BENT 8
LOOKING NORTH*

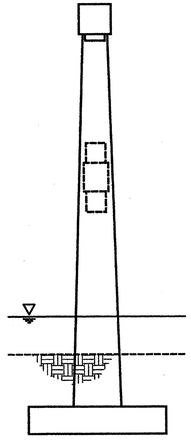

ELEVATION OF BENT 8
LOOKING WEST*

NOTES:

SEE NOTES AND TYPICAL REPAIR DETAILS, SHEET 16 OF 17.

WATER ELEVATION BASED ON 2009 INSPECTION SOUNDINGS.

* LOOKING DIRECTION CORRESPONDS WITH DIRECTION OF TRAVEL ALONG HIGHWAY

APPROX. LENGTH: EPOXY RESIN INJECTION

APPROX. AREA: SHOTCRETE REPAIR

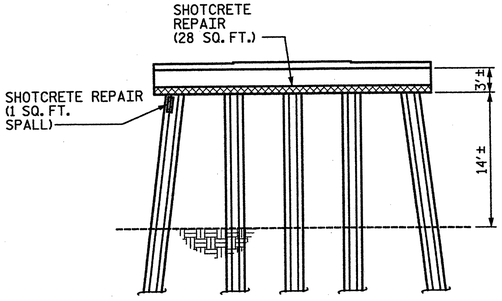

ELEVATION OF BENT 9
LOOKING SOUTH*

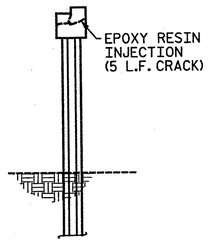

ELEVATION OF BENT 9
LOOKING EAST*

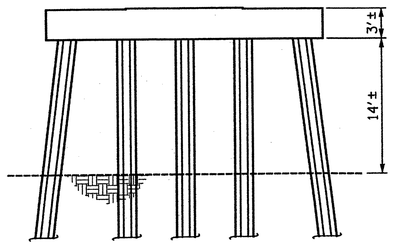

ELEVATION OF BENT 9
LOOKING NORTH*

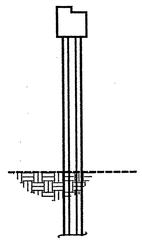

ELEVATION OF BENT 9
LOOKING WEST*

PROJECT NO. 17BP.9.P.1

FORSYTH COUNTY

BRIDGE NO.: 55

REHAB. OF BRIDGE NO. 55 SHEET 15 OF 17

STATE OF NORTH CAROLINA
DEPARTMENT OF TRANSPORTATION
RALEIGH

BENTS 8 & 9 SUBSTRUCTURE REPAIRS

BRIDGE ON US 421 NBL
OVER YADKIN RIVER

NORTH CAROLINA PROFESSIONAL SEAL 19160 ENGINEER RALPH E. KELLY, JR.

2/24/12

STV / Ralph Whitehead Associates, Inc.
1000 West Morehead St., Ste. 200
Charlotte, NC 28208
NC License No. F-0991

REVISIONS						SHEET NO.
NO.	BY:	DATE:	NO.	BY:	DATE:	S-33
1			3			TOTAL SHEETS
2			4			S-109

DRAWN BY : AFM DATE : 01-12
CHECKED BY : AC DATE : 01-12

I:\Projects\2515385\2515385.0001\50.Deliverables & Submittals\17BP.9.P.1\Structures\17BP.9.P.1 FinalSet 01.24.12\Bridge 055\Bridge 055 Rehab Plans.dgn guldool 2/23/2012

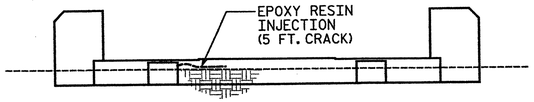

ELEVATION OF END BENT 1
LOOKING NORTH*

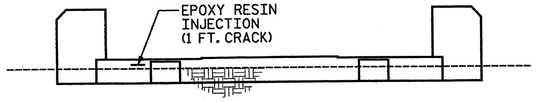

ELEVATION OF END BENT 2
LOOKING SOUTH*

* LOOKING DIRECTION CORRESPONDS WITH DIRECTION OF TRAVEL ALONG HIGHWAY

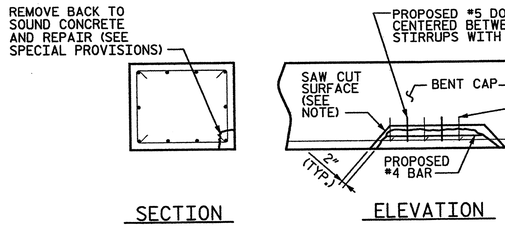

CORNER REPAIR

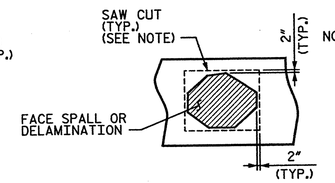

NOTE: CONTRACTOR SHALL SAW CUT TO A MAXIMUM DEPTH OF 1". THIS DEPTH SHALL BE REDUCED TO PREVENT DAMAGE TO EXISTING REINFORCEMENT, BUT SHALL BE NO LESS THAN ½". CONTRACTOR SHALL REMOVE SURFACE CONCRETE TO VERIFY THAT SAW CUT DEPTH WILL NOT DAMAGE EXISTING REINFORCING STEEL.

FACE REPAIR

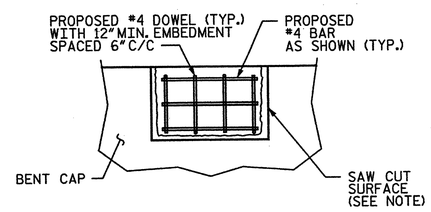

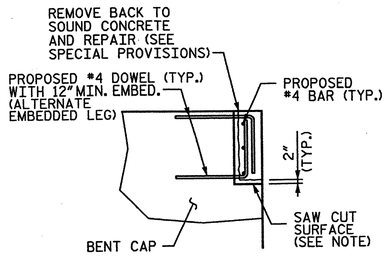

BEARING SEAT REPAIR

TYPICAL SUBSTRUCTURE REPAIR DETAILS

APPROX. LENGTH:
EPOXY RESIN INJECTION

NOTES:

CONCRETE SHALL BE SOUNDED TO DETERMINE THE EXTENT OF ALL CONCRETE REPAIRS.

FOR CRACKS REQUIRING EPOXY RESIN INJECTION, SOUNDING MAY PROVE THAT A CONCRETE REPAIR IS NECESSARY.

SPALL, CRACK, AND DELAMINATION DIMENSIONS SHOWN ARE APPROXIMATE. CONTRACTOR SHALL DETERMINE ACTUAL SPALL, CRACK, AND DELAMINATION DIMENSIONS PRIOR TO MAKING REPAIRS.

SHOTCRETE REPAIRS ON COLUMNS SHALL BE STAGED SO THAT ONLY ONE FACE IS REPAIRED AT A TIME. NOTIFY THE ENGINEER IF SHOTCRETE REPAIRS ON COLUMNS WILL EXCEED 6" IN DEPTH.

THE ENGINEER SHALL BE NOTIFIED OF ANY BARS DAMAGED DURING THE CONCRETE REMOVAL PROCESS. REPAIRS TO DAMAGED BARS SHALL BE DIRECTED BY THE ENGINEER AND COMPLETED AT NO ADDITIONAL COST.

DOWEL LENGTH SHALL BE BASED ON A 9" EMBEDMENT INTO EXISTING CONCRETE AND MAY BE ADJUSTED BASED ON THE MINIMUM EMBEDMENT SPECIFIED BY THE MANUFACTURER OF THE EPOXY ADHESIVE BONDING SYSTEM.

REINFORCING STEEL SHALL BE GRADE 60.

PROJECT NO. 17BP.9.P.1
FORSYTH COUNTY
BRIDGE NO.: 55
REHAB. OF BRIDGE NO. 55 SHEET 16 OF 17

STATE OF NORTH CAROLINA
DEPARTMENT OF TRANSPORTATION
RALEIGH

END BENTS & DETAILS
SUBSTRUCTURE REPAIRS

BRIDGE ON US 421 NBL
OVER YADKIN RIVER

NORTH CAROLINA PROFESSIONAL SEAL 19365 ENGINEER CHARLES E. KELLY, JR. 2/17/12

STV/ Ralph Whitehead Associates, Inc.
1000 West Morehead St., Ste. 200
Charlotte, NC 28208
NC License No. F-0991

REVISIONS						SHEET NO.
NO.	BY:	DATE:	NO.	BY:	DATE:	S-34
1			3			TOTAL SHEETS
2			4			S-109

DRAWN BY : AFM DATE : 01-12
CHECKED BY : AC DATE : 01-12

I:\Projects\25515385\25515385_0001\50.Deliverables & Submittals\17BP.9.P.1\Structures\17BP.9.P.1 FindSet 01.24.12\Bridge 055\Bridge 055 Rehab Plans.dgn
Hawa
2/17/2012

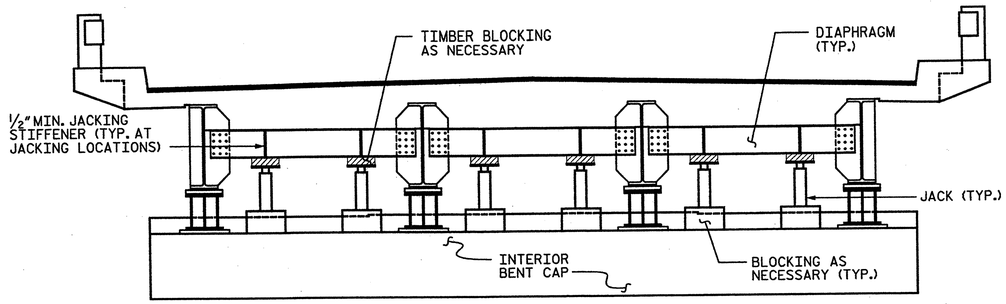

STEEL GIRDER JACKING DETAIL

(BENT 4/SPAN E AND BENT 9/SPAN I)

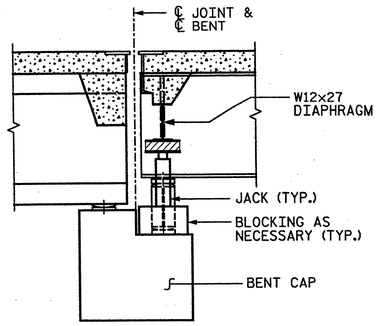

TYPICAL SECTION @ JACKING LOCATION

NOTES:

JACKING DETAILS SHOWN ARE CONCEPTUAL AND CONSIDERED A MINIMUM. THE CONTRACTOR SHALL PROVIDE JACKING PLANS FOR ALL GIRDERS LIFTED FOR APPROVAL BY THE ENGINEER PRIOR TO ANY JACKING OPERATIONS. JACKING SHALL BE PERFORMED SUCH THAT BRIDGE CAN REMAIN OPEN TO TRAFFIC DURING JACKING OPERATIONS.

JACKING PLANS SHALL BE SIGNED AND SEALED BY LICENSED PROFESSIONAL ENGINEER REGISTERED IN NORTH CAROLINA.

THE CONTRACTOR SHALL PROVIDE BLOCKING FOR ALL JACKS AS NECESSARY. A BLOCKING PLAN SHALL BE INCLUDED AS PART OF THE JACKING PLAN.

THE CONTRACTOR SHALL JACK GIRDERS ON AN INDIVIDUAL BENT SIMULTANEOUSLY BY MEANS OF A DUAL-FLOW PRESSURIZED PUMP CONTROLLING THE JACKS.

THE CONTRACTOR SHALL MONITOR THE PLAN LOCATION OF THE GIRDERS FROM INITIAL JACKING UNTIL GIRDERS ARE SECURED ON THEIR PERMANENT BEARINGS. IF THE PLAN LOCATION OF THESE GIRDERS SHIFT FROM ITS ORIGINAL POSITION, THE CONTRACTOR SHALL SECURE FROM ADDITIONAL MOVEMENT IMMEDIATELY. NOTIFY ENGINEER PRIOR TO PROCEEDING WORK OPERATIONS.

EACH JACK SHALL HAVE A MINIMUM SAFE WORKING CAPACITY OF 75 TONS.

PRIOR TO JACKING THE CONTRACTOR SHALL ENSURE THERE ARE NO OBSTACLES PREVENTING THE SPAN FROM BEING LIFTED.

ONCE SPAN HAS BEEN JACKED, CONTRACTOR SHALL INSTALL A MECHANICAL LOCKING DEVICE TO ENSURE THAT GIRDER WILL NOT BE LOWERED DURING THE REPAIR OF THE BEARINGS.

CONTRACTOR TO TAKE APPROPRIATE MEANS TO REMOVE NUT ON ANCHOR BOLT WITHOUT DAMAGING THE BEAM FLANGE. CONTRACTOR SHALL SUBMIT NUT REMOVAL METHOD TO INCLUDE PROCEDURES THAT WILL LOOSEN BOND BETWEEN INTERLOCKING THREADS TO ENGINEER FOR APPROVAL PRIOR TO REMOVING ANCHOR BOLT NUTS.

WHERE JACKING WILL BE SOLELY SUPPORTED BY THE DIAPHRAGM, THE CONTRACTOR SHALL VERIFY THAT THE EXISTING DIAPHRAGM HAS ADEQUATE CAPACITY TO SUPPORT JACKING LOADS.

REFER TO SHEETS 9 & 10 OF 17 FOR JACKING CONSTRUCTION SEQUENCES.

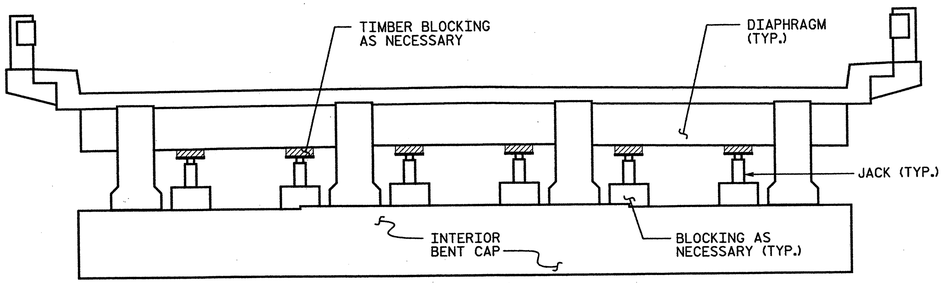

CONCRETE GIRDER JACKING DETAIL

(BENTS 1, 2 & 3; BENT 4/SPAN D AND BENT 9/SPAN J)

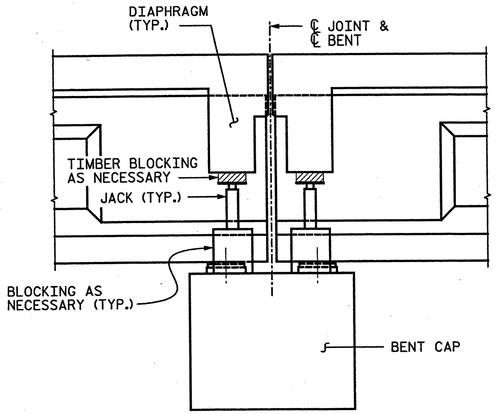

TYPICAL SECTION @ JACKING LOCATION

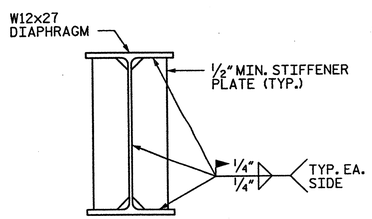

JACKING STIFFENER DETAIL

(FOR EXISTING DIAPHRAGM AND JACKING BEAM)

PROJECT NO. 17BP.9.P.1

FORSYTH COUNTY

BRIDGE NO.: 55

REHAB. OF BRIDGE NO. 55 SHEET 17 OF 17

STATE OF NORTH CAROLINA
DEPARTMENT OF TRANSPORTATION
RALEIGH

JACKING DETAILS

BRIDGE ON US 421 NBL
OVER YADKIN RIVER

NORTH CAROLINA PROFESSIONAL SEAL 19768 ENGINEER TODD E. KELLAM
2/17/12

STV / Ralph Whitehead Associates, Inc.
1000 West Morehead St., Ste. 200
Charlotte, NC 28208
NC License No. F-0991

REVISIONS						SHEET NO.
NO.	BY:	DATE:	NO.	BY:	DATE:	S-35
1			3			TOTAL SHEETS
2			4			S-109

DRAWN BY : AFM DATE : 01-12
CHECKED BY : AC DATE : 01-12

I:\Projects\2515385\2515385.000\50.Deliverables & Submittals\17BP.9.P.1\Structures\17BP.9.P.1 FinalSet 01.24.12\Bridge 055\Bridge 055 Rehab Plans.dgn
tlaws
2/17/2012

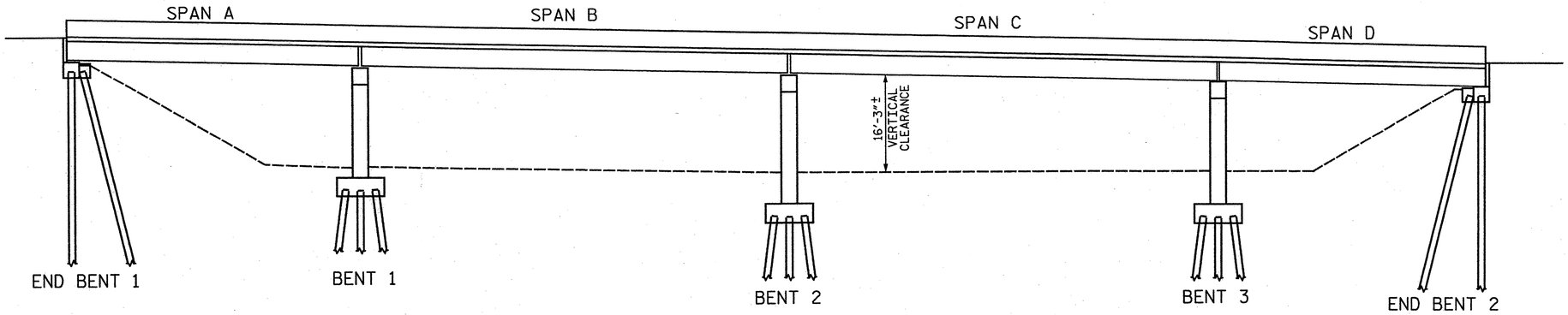

ELEVATION

(SECTIONS AT BENTS AND END BENTS ARE AT RIGHT ANGLES)

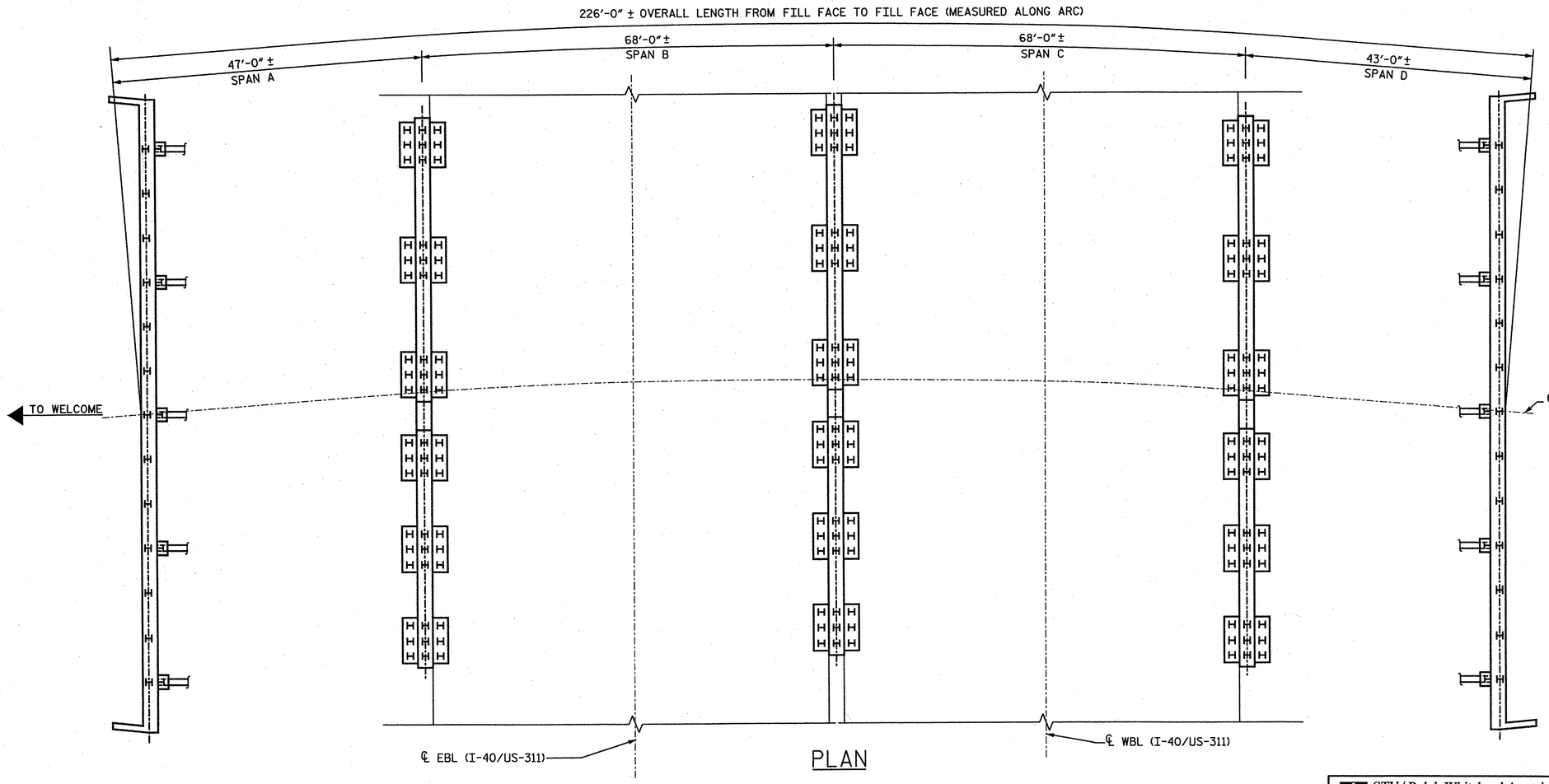

PLAN

NOTES:

SEE SHEET S-1 OF S-109 FOR GENERAL NOTES.

SEE BRIDGE NO. 78 SHEETS 4, 5, 8, AND 9 OF 9 FOR ADDITIONAL NOTES.

EXISTING BRIDGE INFORMATION BASED ON AVAILABLE DATA.

AFTER ALL REPAIRS ON THE BRIDGE HAVE BEEN COMPLETED, AN EPOXY PROTECTIVE COATING SHALL BE APPLIED TO THE TOP SURFACE OF BENT CAPS, INCLUDING PEDESTALS, FOR EACH BENT BELOW A JOINT IN THE SUPERSTRUCTURE. CAP SURFACES SHALL BE GRIT BLASTED PRIOR TO EPOXY COATING. SEE STANDARD SPECIFICATIONS FOR EPOXY COATING. ALL COSTS ASSOCIATED WITH APPLYING EPOXY PROTECTIVE COATING SHALL BE INCLUDED IN THE SEVERAL PAY ITEMS FOR THE PROJECT. NO ADDITIONAL PAYMENT WILL BE MADE FOR THIS WORK.

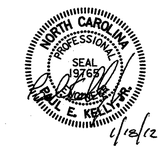

PROJECT NO. 17BP.9.P.1

FORSYTH COUNTY

BRIDGE NO.: 78

REHAB. OF BRIDGE NO. 78 SHEET 1 OF 9

STATE OF NORTH CAROLINA
DEPARTMENT OF TRANSPORTATION
RALEIGH

GENERAL PLAN & ELEVATION

BRIDGE ON US-52/US-311 OVER US-311/I-40

REVISIONS						SHEET NO.
NO.	BY:	DATE:	NO.	BY:	DATE:	S-36
1			3			TOTAL SHEETS
2			4			S-109

STV / Ralph Whitehead Associates, Inc.
1000 West Morehead St., Ste. 200
Charlotte, NC 28208
NC License No. F-0991

DRAWN BY : KMG DATE : 01-12
CHECKED BY : AC DATE : 01-12

1/17/2012 dveyoo I:\Projects\2515395\2515395_0001\50_Deliverables & Submittals\17BP.9.P.1\Structures\Final-12-12\17BP.9.P.1 FinalSet 01.12.12\Bridge 78\Bridge 078 Rehab Plans.dgn

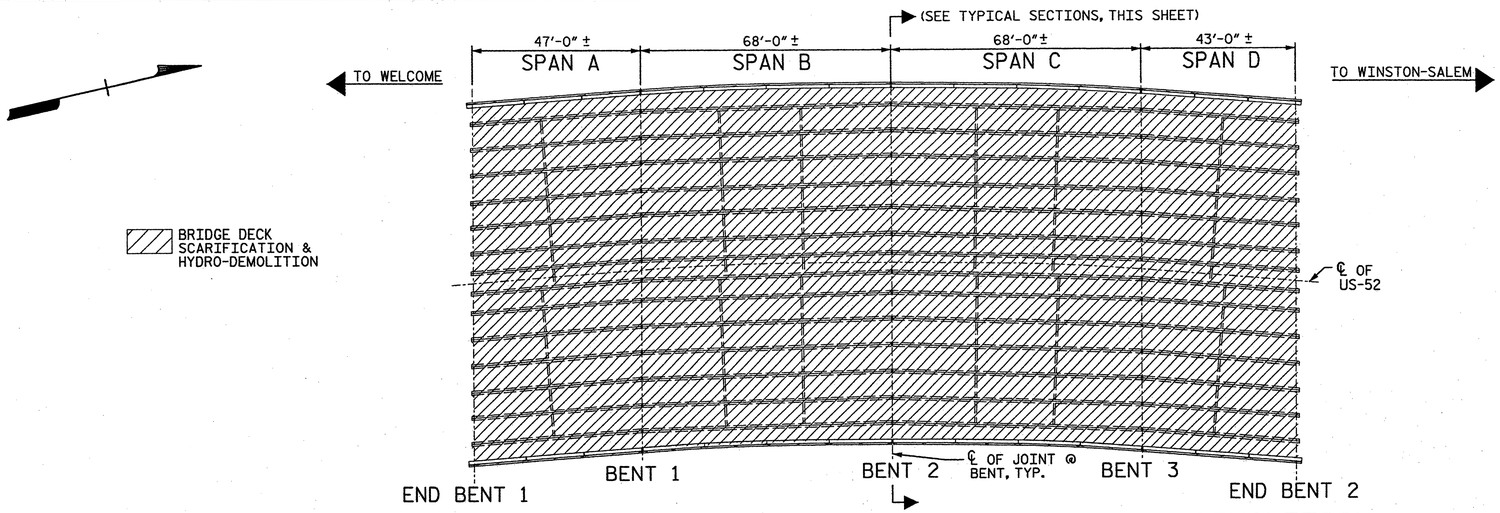

PLAN OF SPANS - DECK SCARIFICATION & HYDRO-DEMOLITION

(CONCRETE BRIDGE FLOORS SHALL BE GROOVED IN ACCORDANCE WITH SECTION 420-14 OF THE STANDARD SPECIFICATION)

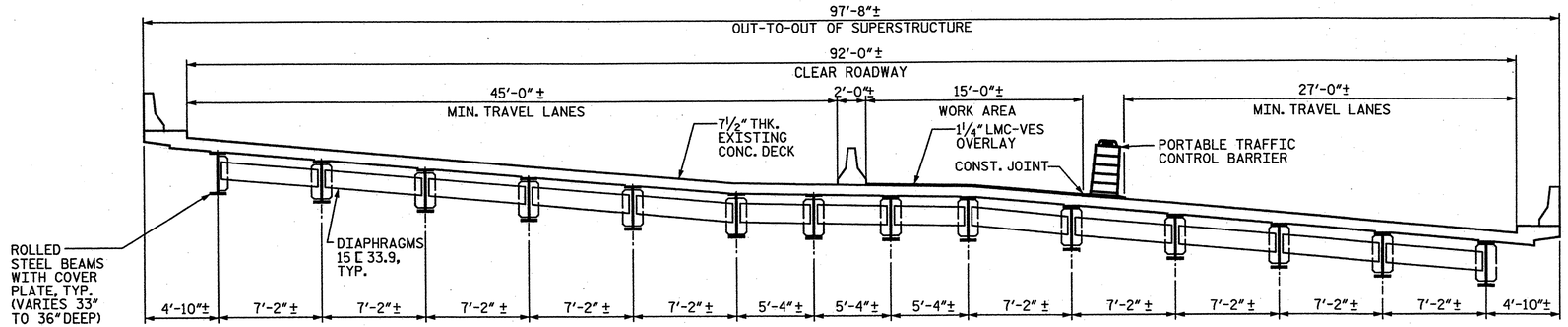

TYPICAL SECTION - STAGE 1

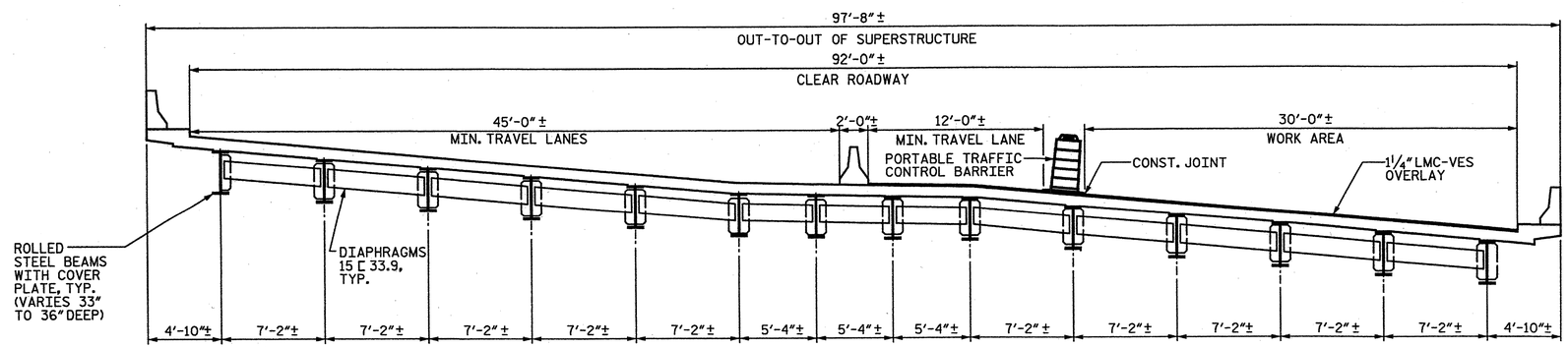

TYPICAL SECTION - STAGE 2

NOTE:

PER EXISTING PLANS THE EXISTING DECK HAS 1⅛" CONCRETE COVER OVER EXISTING REINFORCING STEEL.

PROJECT NO. 17BP.9.P.1

FORSYTH COUNTY

BRIDGE NO.: 78

REHAB. OF BRIDGE NO. 78 SHEET 2 OF 9

STATE OF NORTH CAROLINA
DEPARTMENT OF TRANSPORTATION
RALEIGH

FRAMING PLAN & TYPICAL SECTIONS

BRIDGE ON US-52/US-311 OVER US-311/I-40

NORTH CAROLINA PROFESSIONAL SEAL 19765 ENGINEER KYLE E. KEKLAK, JR. 1/16/12

STV / Ralph Whitehead Associates, Inc.
1000 West Morehead St., Ste. 200
Charlotte, NC 28208
NC License No. F-0991

REVISIONS						SHEET NO.
NO.	BY:	DATE:	NO.	BY:	DATE:	S-37
1			3			TOTAL SHEETS
2			4			S-109

DRAWN BY : KMG DATE : 01-12
CHECKED BY : AC DATE : 01-12

I:\Projects\2515385\2515385.0001\SD_Deliverables & Submittals\17BP.9.P.1\Structures\Final1-12-12\17BP.9.P.1 Final Set 01.12.12\Bridge 78\Bridge 078 Rehab Plans.dgn
1/17/2012
dveyoo

TOTAL BILL OF MATERIAL

DECK SCARIFICATION	✱CLASS II SURFACE PREPARATION	HYDRO-DEMOLITION OF BRIDGE DECK	LATEX MODIFIED CONCRETE VERY EARLY STRENGTH OVERLAY	PLACING & FINISHING LATEX MODIFIED CONCRETE OVERLAY - VERY EARLY STRENGTH	FOAM JOINT SEAL	GROOVING BRIDGE FLOORS	CONCRETE REPAIRS	SHOTCRETE REPAIRS	EPOXY RESIN INJECTION	BRIDGE JACKING	■REINFORCING STEEL
SQ. YDS.	SQ. YDS.	SQ. YDS.	CU. YDS.	SQ. YDS.	LUMP SUM	SQ. FT.	CU. FT.	CU. FT.	LIN. FT.	LUMP SUM	LBS
2461	9	2461	94	2461	LUMP SUM	22148	9	49	68	LUMP SUM	100

✱ QUANTITIES FOR INFORMATION ONLY.
■ REINFORCING STEEL FOR REPLACEMENT OF REBAR DAMAGED PRIOR TO ONSET OF PROJECT.

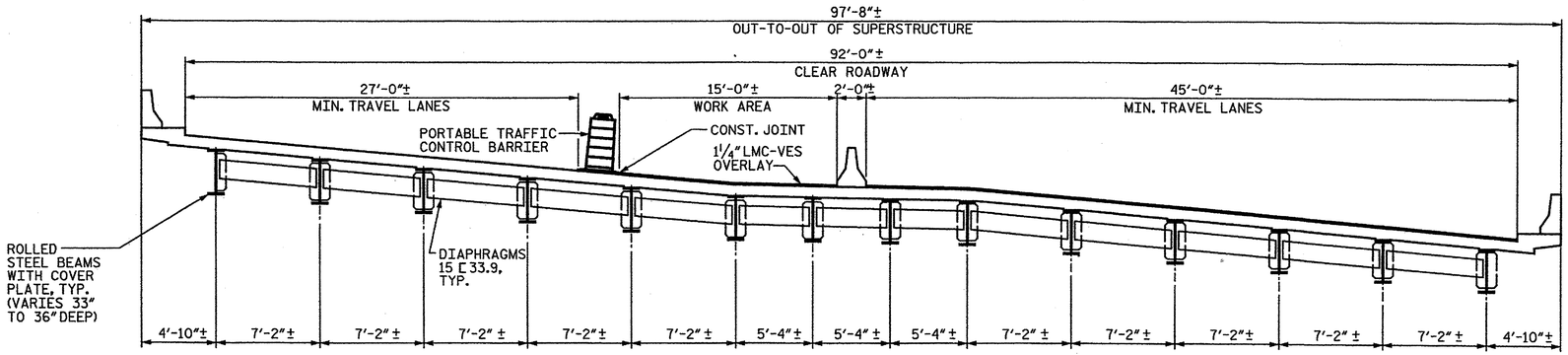

TYPICAL SECTION - STAGE 3

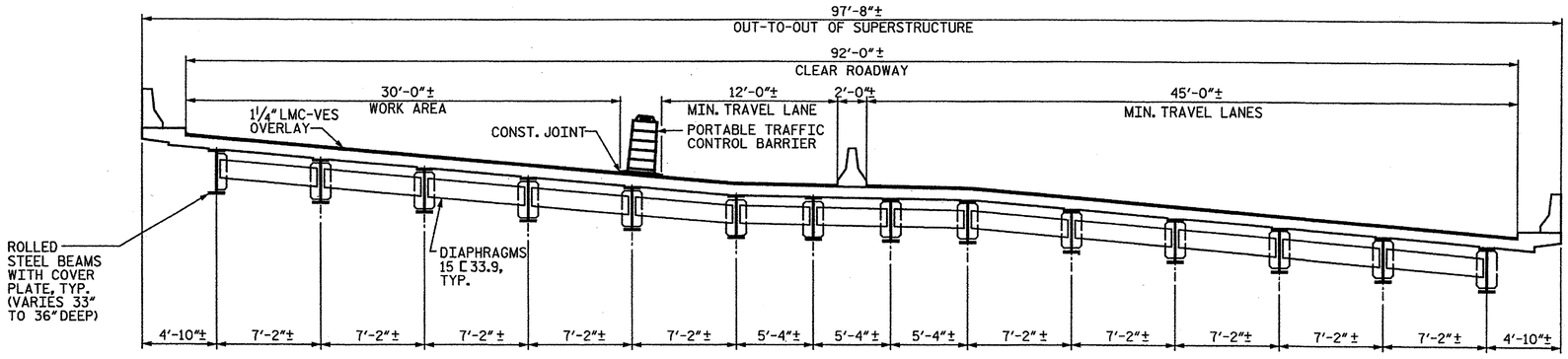

TYPICAL SECTION - STAGE 4

NOTE:

PER EXISTING PLANS THE EXISTING DECK HAS 1⅞" CONCRETE COVER OVER EXISTING REINFORCING STEEL.

PROJECT NO. 17BP.9.P.1
FORSYTH COUNTY
BRIDGE NO.: 78
REHAB. OF BRIDGE NO. 78 SHEET 3 OF 9

STATE OF NORTH CAROLINA
DEPARTMENT OF TRANSPORTATION
RALEIGH

TYPICAL SECTIONS

BRIDGE ON US-52/US-311
OVER US-311/I-40

NORTH CAROLINA PROFESSIONAL SEAL 19765 ENGINEER PAUL E. KELLY, JR.
2/24/12

STV/ Ralph Whitehead Associates, Inc.
1000 West Morehead St., Ste. 200
Charlotte, NC 28208
NC License No. F-0991

REVISIONS						
NO.	BY:	DATE:	NO.	BY:	DATE:	SHEET NO. S-38
1			3			TOTAL SHEETS S-109
2			4			

DRAWN BY : KMG DATE : 01-12
CHECKED BY : AC DATE : 01-12

I:\Projects\2515385\2515385.0001\50.Deliverables & Submittals\17BP.9.P.1\Structures\17BP.9.P.1 FinalSet 01.24.12\Bridge 078\Bridge 078 Rehab Plans.dgn
Jerilen
2/24/2012

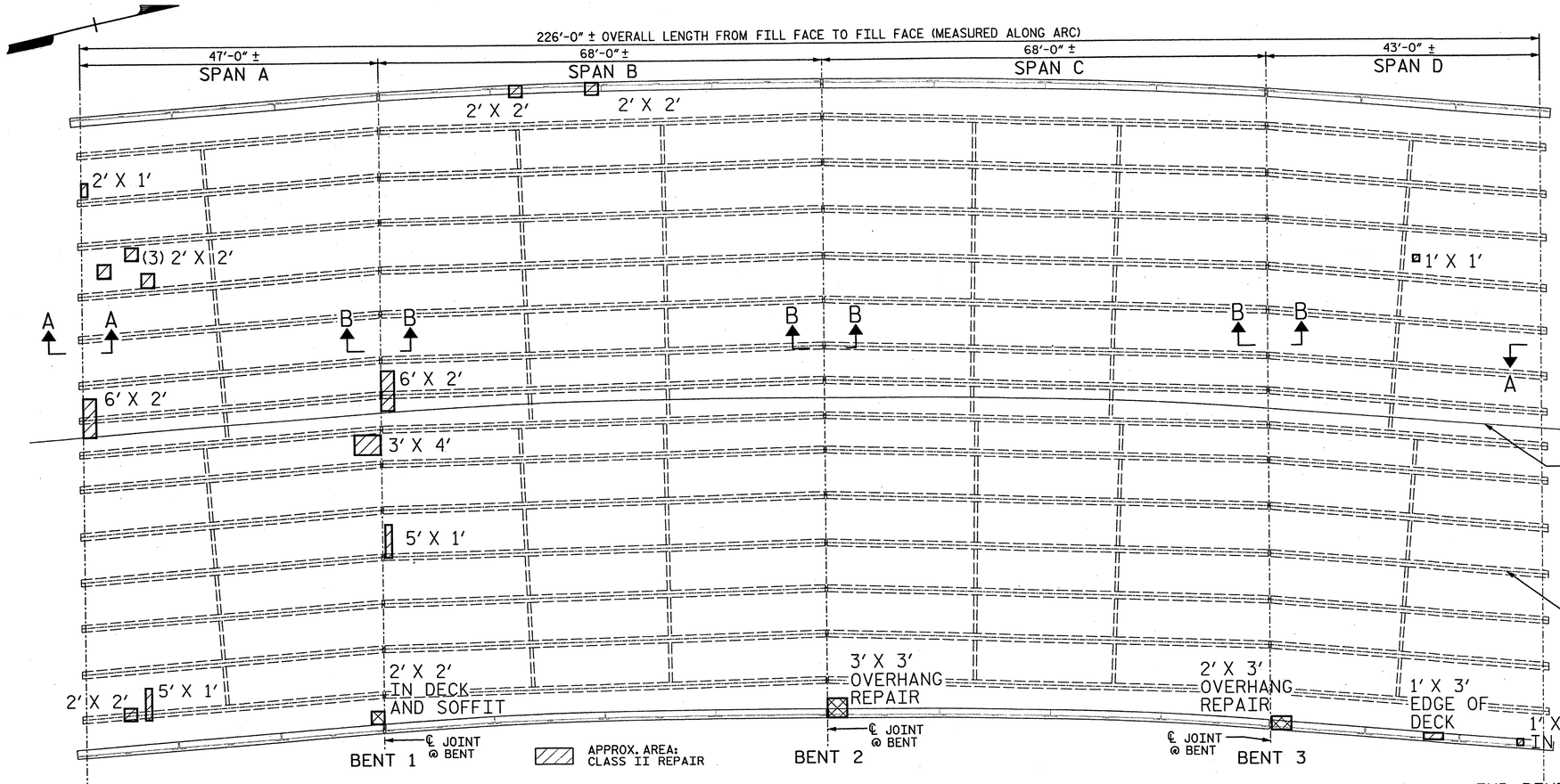

PLAN

✱ELASTOMERIC CONCRETE
CU. FT.
64

✱QUANTITIES FOR INFORMATION ONLY.

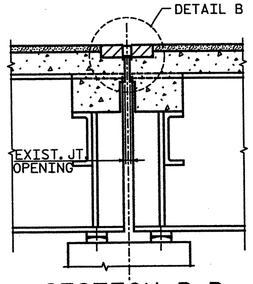

SECTION B-B
(PROPOSED JOINT)
(TYP. @ INTERIOR BENTS)

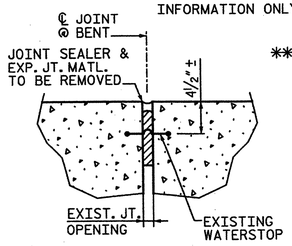

EXISTING JOINT DETAIL

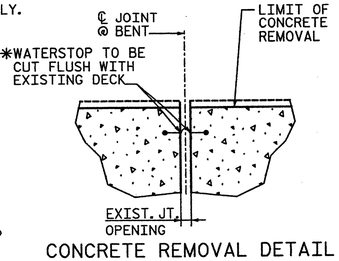

CONCRETE REMOVAL DETAIL @ EXISTING JOINT

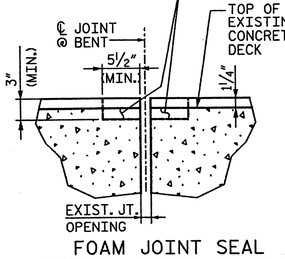

FOAM JOINT SEAL
(DETAIL BEFORE SAWING)

(BENT 1)	(BENT 2)	(BENT 3)
2" @ 45°F	2" @ 45°F	2" @ 45°F
1⅞" @ 60°F	1⅞" @ 60°F	1⅞" @ 60°F
1¾" @ 90°F	1⅝" @ 90°F	1½" @ 90°F

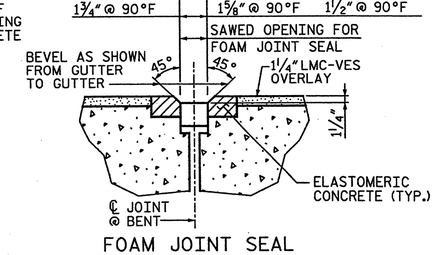

FOAM JOINT SEAL
(DETAIL AFTER SAWING)

DETAIL B

✱✱ ALL LOOSE AND UNSOUND CONCRETE SHALL BE REMOVED. IF THE EMBEDDED PORTION OF THE EXISTING WATERSTOP IS EXPOSED DURING REMOVAL, THE ENTIRE WATERSTOP SHALL BE REMOVED.

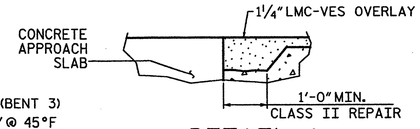

DETAIL A
(LOCATION OF JOINT TO MATCH EXISTING JOINT LOCATION)

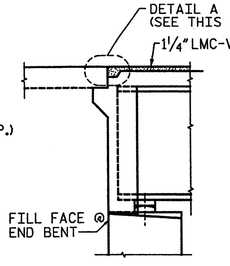

SECTION A-A
(TYP. @ END BENT 1 AND 2)

NOTES:

LATEX MODIFIED CONCRETE SHALL BE LATEX MODIFIED CONCRETE VERY EARLY STRENGTH - SEE SPECIAL PROVISIONS.

FOR FOAM JOINT SEALS, SEE SPECIAL PROVISIONS.

FOR ELASTOMERIC CONCRETE, SEE SPECIAL PROVISIONS.

FOR OVERHANG REPAIR DETAILS, SEE SHEET 9 OF 9.

FOR TYPICAL "BLOW-THROUGH" CONTAINMENT AND FORMWORK DETAILS, SEE SHEET 9 OF 9.

THE ELASTOMERIC CONCRETE SHALL BE CONSIDERED INCIDENTAL TO THE FOAM JOINT SEAL PAY ITEM.

CONTRACTOR SHALL COVER AND PROTECT THE JOINT CONSTRUCTION TO PREVENT DAMAGE DURING CONCRETE CURING AND AS NEEDED TO MAINTAIN TRAFFIC, AS DIRECTED BY THE ENGINEER.

THE INSTALLED FOAM JOINT SEALS SHALL BE WATERTIGHT.

THE NOMINAL UNCOMPRESSED SEAL WIDTH OF THE FOAM JOINT SEAL SHALL BE 2½".

THE CONTRACTOR WILL NOT BE PERMITTED TO FORM THE JOINT FOR THE FOAM JOINT SEAL IN LIEU OF SAWING THE JOINT.

FOAM JOINT OPENING WIDTHS SHALL BE CONFIRMED IN THE FIELD. CONTRACTOR SHALL MAKE ADJUSTMENTS TO FOAM JOINT SEALS, AS NECESSARY, TO MEET EXISTING CONDITIONS AND MANUFACTURER'S RECOMMENDATIONS. ANY CHANGES SHALL BE SUBMITTED TO THE ENGINEER FOR APPROVAL. ANY COST ASSOCIATED WITH THESE ADJUSTMENTS IS CONSIDERED INCIDENTAL AND NO SEPARATE MEASUREMENT OR PAYMENT WILL BE MADE.

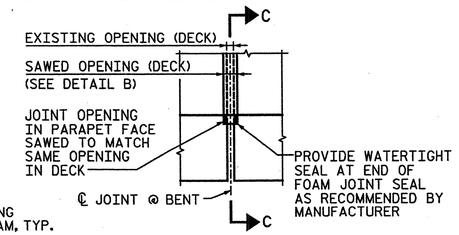

PLAN OF JOINT SEAL AT PARAPET

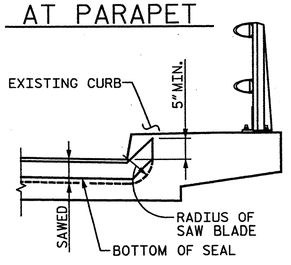

SECTION C-C

PROJECT NO. 17BP.9.P.1

FORSYTH COUNTY

BRIDGE NO.: 78

REHAB. OF BRIDGE NO. 78 SHEET 4 OF 9

STATE OF NORTH CAROLINA
DEPARTMENT OF TRANSPORTATION
RALEIGH

PLAN DECK REPAIRS

BRIDGE ON US-52/US-311 OVER US-311/I-40

NORTH CAROLINA PROFESSIONAL SEAL 19765 ENGINEER DAVID E. KELLY 2/17/12

STV/ Ralph Whitehead Associates, Inc.
1000 West Morehead St. Ste. 200
Charlotte, NC 28208
NC License No. F-0991

REVISIONS						SHEET NO.
NO.	BY:	DATE:	NO.	BY:	DATE:	S-39
1			3			TOTAL SHEETS
2			4			S-109

DRAWN BY : KMG DATE : 01-12
CHECKED BY : AC DATE : 01-12

I:\Projects\2515385\2515385_0001\50_Deliverables & Submittals\17BP.9.P.1\Structures\17BP.9.P.1 FinalSet 01_24_12\Bridge 078\Bridge 078 Rehab Plans.dgn
tlowe
2/17/2012

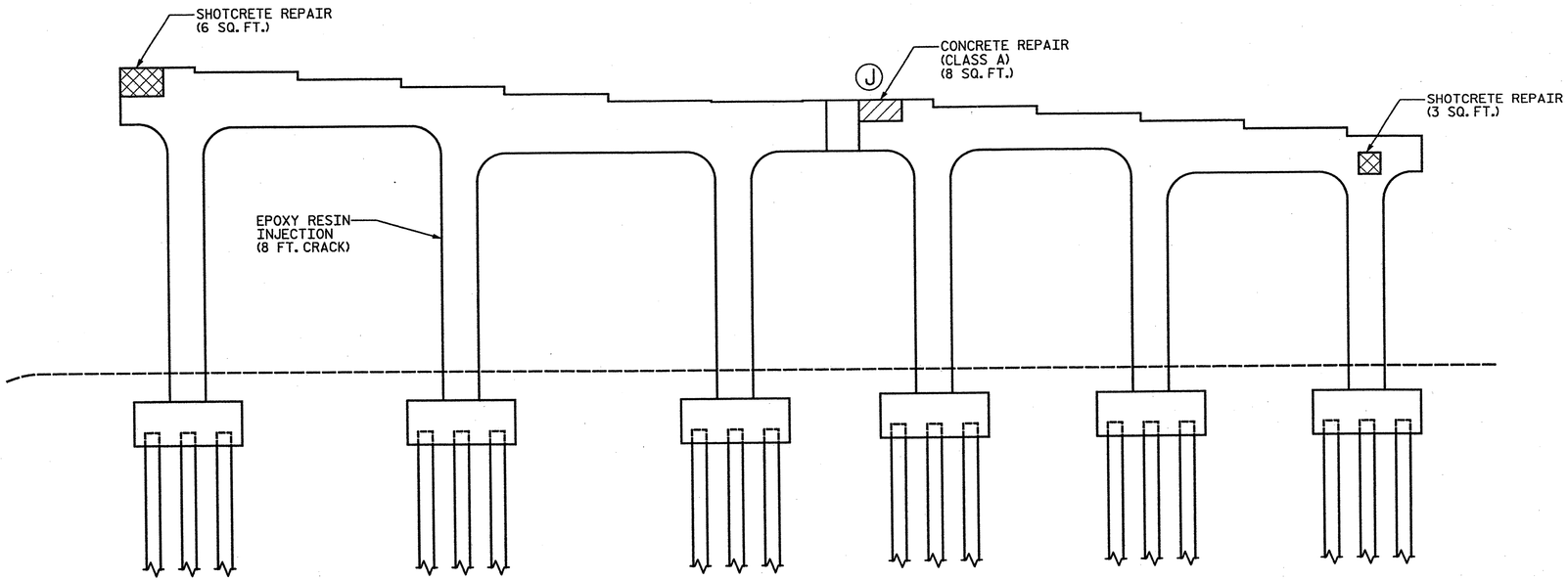

ELEVATION OF BENT 1 - LOOKING NORTH

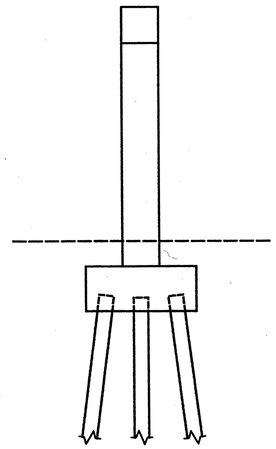

END VIEW
OF BENT 1
LOOKING WEST

NOTES:

FOR CONCRETE REPAIR DETAILS, SEE SHEET 9 OF 9.

CONCRETE SHALL BE SOUNDED TO DETERMINE THE EXTENT OF ALL CONCRETE REPAIRS.

FOR CRACKS REQUIRING EPOXY RESIN INJECTION, SOUNDING MAY PROVE THAT A CONCRETE REPAIR IS NECESSARY.

SPALL, CRACK, AND DELAMINATION DIMENSIONS SHOWN ARE APPROXIMATE. CONTRACTOR SHALL DETERMINE ACTUAL SPALL, CRACK, AND DELAMINATION DIMENSIONS PRIOR TO MAKING REPAIRS.

THE ENGINEER SHALL BE NOTIFIED OF ANY BARS DAMAGED DURING THE CONCRETE REMOVAL PROCESS. REPAIRS TO DAMAGED BARS SHALL BE DIRECTED BY THE ENGINEER AND COMPLETED AT NO ADDITIONAL COST.

DOWEL LENGTH SHALL BE BASED ON A 9"EMBEDMENT INTO EXISTING CONCRETE AND MAY BE ADJUSTED BASED ON THE MINIMUM EMBEDMENT SPECIFIED BY THE MANUFACTURER OF THE EPOXY ADHESIVE BONDING SYSTEM.

REINFORCING STEEL SHALL BE GRADE 60.

BENT CAP REPAIRS IN BEARING AREAS SHALL BE PERFORMED WITH CLASS A CONCRETE, SEE SHEET 9 OF 9.

BRIDGE JACKING IS REQUIRED FOR CONCRETE REPAIRS THAT EXTEND UNDER A BEARING PLATE. FOR JACKING DETAILS AND NOTES SEE SHEET 8 OF 9.

SUBSTRUCTURE REPAIRS SHALL PROVIDE A MINIMUM OF 2"CLEAR COVER TO REINFORCING STEEL. REPAIRED AREAS MAY BE BUILT OUT TO ACHIEVE CLEARANCE.

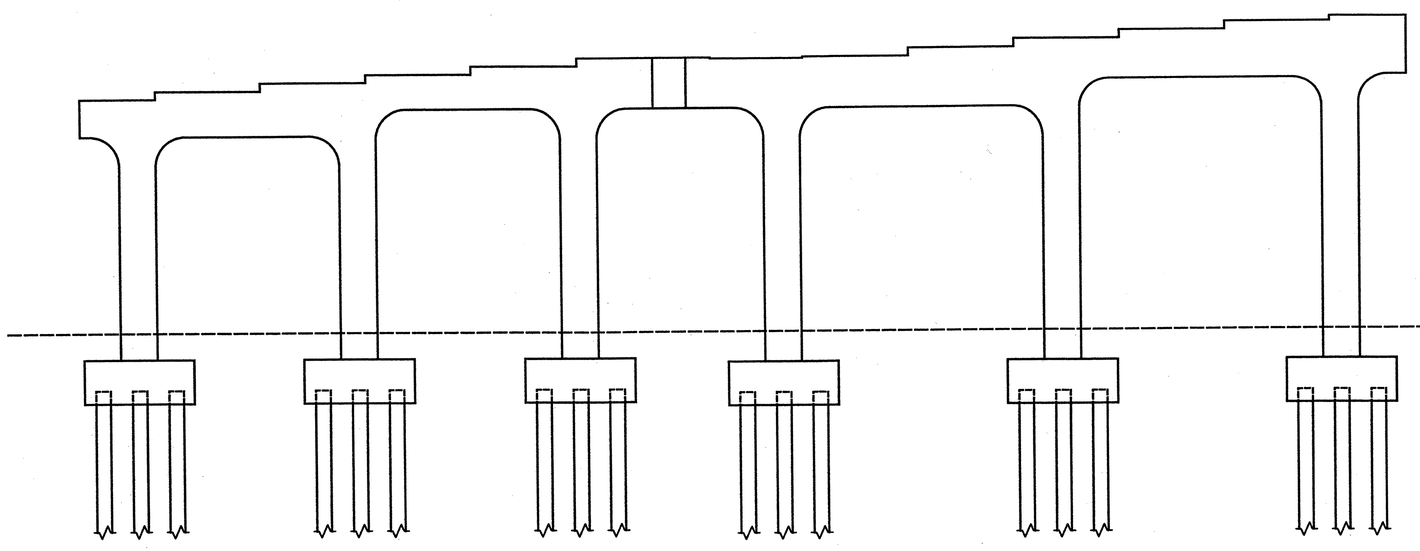

ELEVATION OF BENT 1 - LOOKING SOUTH

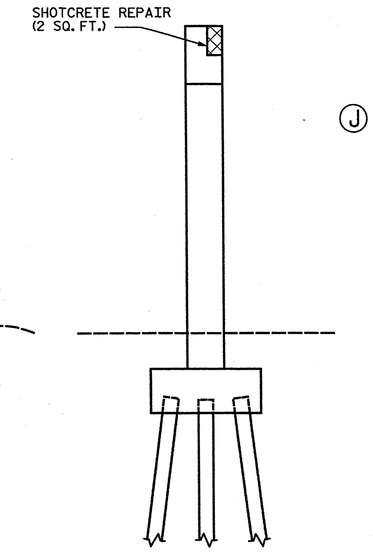

END VIEW
OF BENT 1
LOOKING EAST

J - JACKING REQUIRED

APPROX. LENGTH:
EPOXY RESIN INJECTION

APPROX. AREA:
SHOTCRETE REPAIRS

APPROX. AREA:
CONCRETE REPAIRS (CLASS A)

PROJECT NO. 17BP.9.P.1

FORSYTH COUNTY

BRIDGE NO.: 78

REHAB. OF BRIDGE NO. 78 SHEET 5 OF 9

STATE OF NORTH CAROLINA
DEPARTMENT OF TRANSPORTATION
RALEIGH

BENT 1
SUBSTRUCTURE REPAIRS

BRIDGE ON US-52/US-311
OVER US-311/I-40

NORTH CAROLINA PROFESSIONAL SEAL 19769 ENGINEER PAUL E. KELLY, JR.
2/24/12

STV/ Ralph Whitehead Associates, Inc.
1000 West Morehead St., Ste. 200
Charlotte, NC 28208
NC License No. F-0991

REVISIONS						SHEET NO.
NO.	BY:	DATE:	NO.	BY:	DATE:	S-40
1			3			TOTAL SHEETS
2			4			S-109

DRAWN BY : KMG DATE : 01-12
CHECKED BY : AC DATE : 01-12

I:\Projects\2515385\2515385.000\50.Deliverables & Submittals\17BP.9.P.1\Structures\17BP.9.P.1 FinalSet 01_24_12\Bridge 078\Bridge 078 Rehab Plans.dgn
guldool
2/23/2012

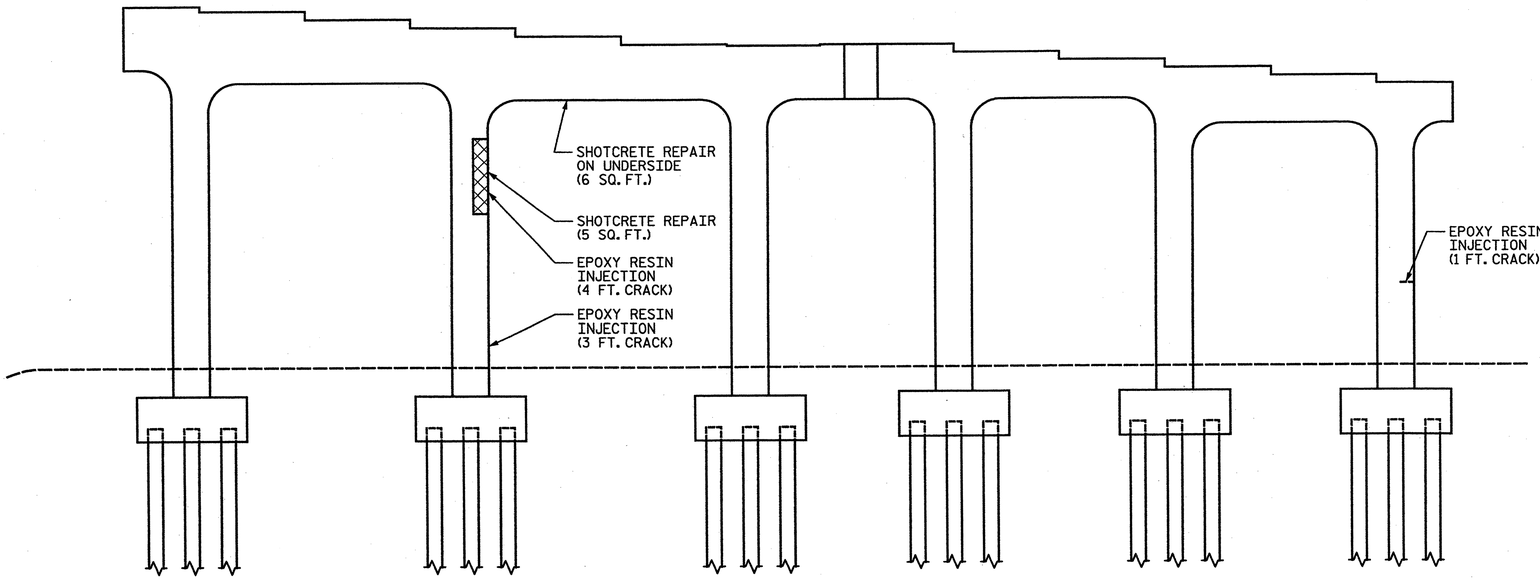

ELEVATION OF BENT 2 - LOOKING NORTH

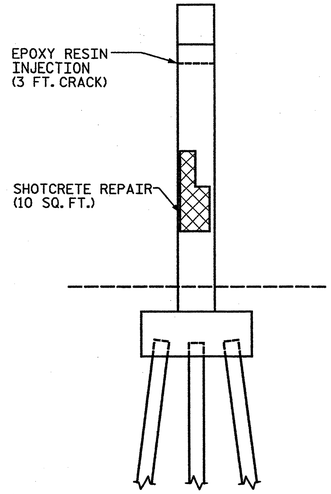

END VIEW
OF BENT 2
LOOKING WEST

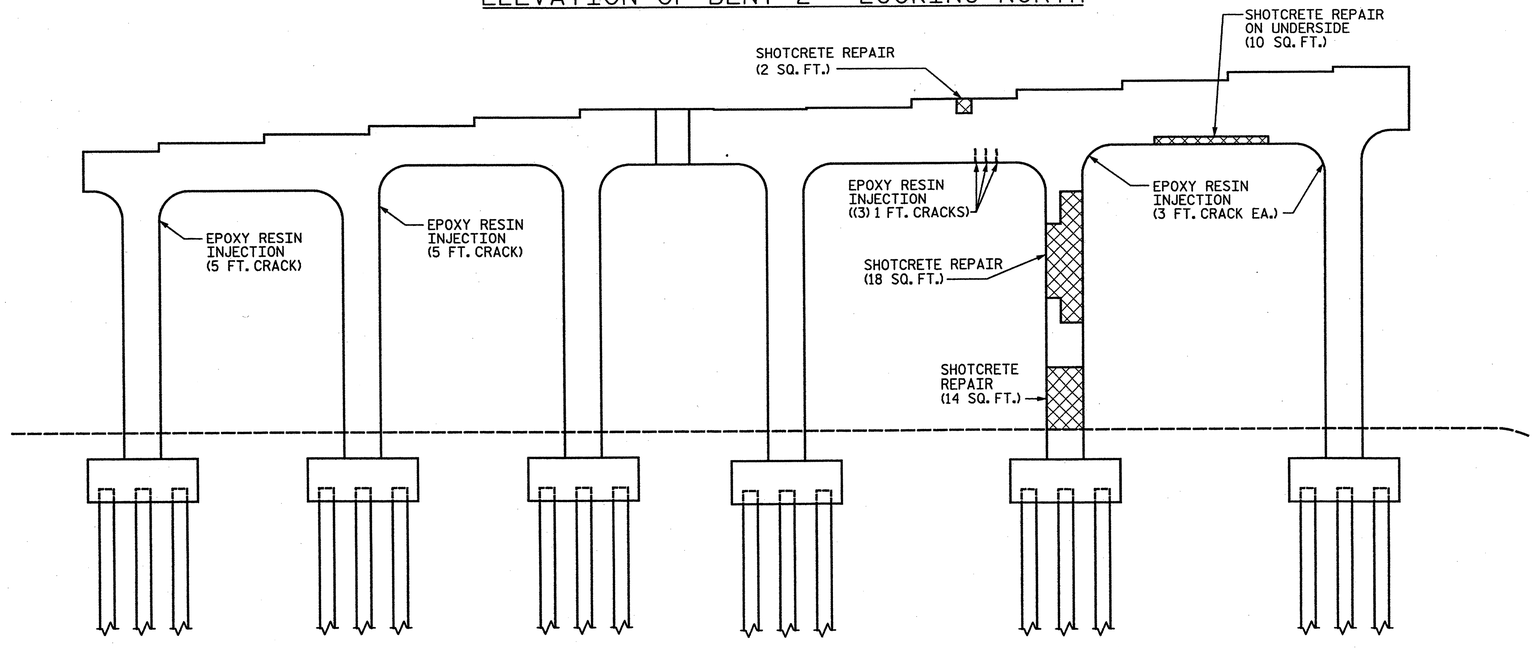

ELEVATION OF BENT 2 - LOOKING SOUTH

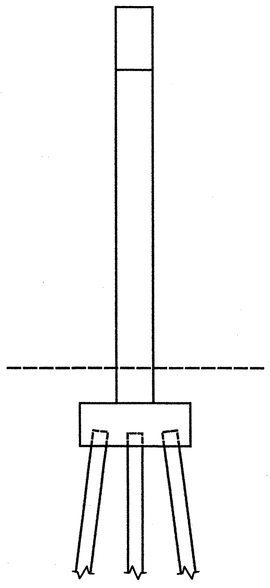

END VIEW
OF BENT 2
LOOKING EAST

REFERENCES:

FOR NOTES, SEE SHEET 5 OF 9.

(J) - JACKING REQUIRED

--------- APPROX. LENGTH: EPOXY RESIN INJECTION

APPROX. AREA: SHOTCRETE REPAIRS

NORTH CAROLINA PROFESSIONAL SEAL 18768 ENGINEER PAUL E. KELLY, JR. 2/24/12

STV/Ralph Whitehead Associates, Inc.
1000 West Morehead St., Ste. 200
Charlotte, NC 28208
NC License No. F-0991

PROJECT NO. 17BP.9.P.1

FORSYTH COUNTY

BRIDGE NO.: 78

REHAB. OF BRIDGE NO. 78 SHEET 6 OF 9

STATE OF NORTH CAROLINA
DEPARTMENT OF TRANSPORTATION
RALEIGH

BENT 2 SUBSTRUCTURE REPAIRS

BRIDGE ON US-52/US-311
OVER US-311/I-40

REVISIONS						SHEET NO.
NO.	BY:	DATE:	NO.	BY:	DATE:	S-41
1			3			TOTAL SHEETS
2			4			S-109

DRAWN BY : KMG DATE : 01-12
CHECKED BY : AC DATE : 01-12

I:\Projects\2515385\2515385.0001\50.Deliverables & Submittals\17BP.9.P.1 Structures\17BP.9.P.1 FinalSet 01.24.12\Bridge 078\Bridge 078 Rehab Plans.dgn
guldool
2/23/2012

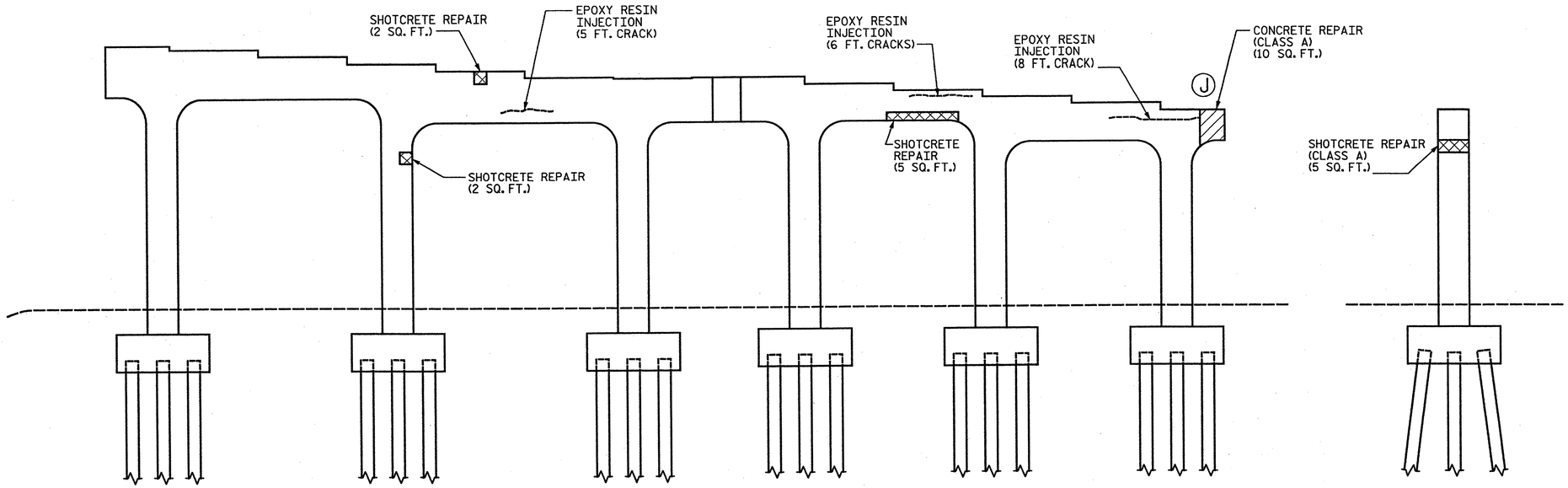

ELEVATION OF BENT 3 - LOOKING NORTH

END VIEW
OF BENT 3
LOOKING WEST

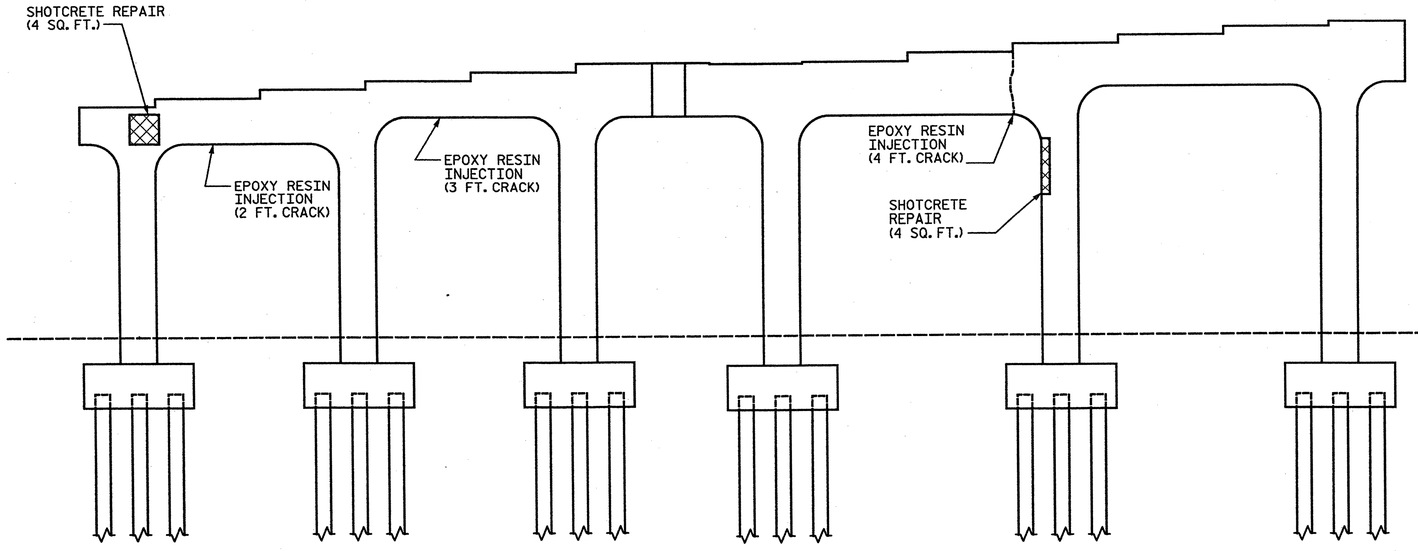

ELEVATION OF BENT 3 - LOOKING SOUTH

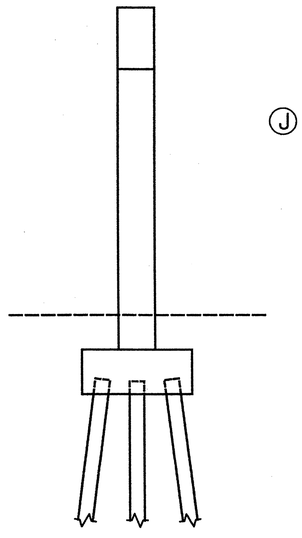

END VIEW
OF BENT 3
LOOKING EAST

REFERENCES:

FOR NOTES, SEE SHEET 5 OF 9.

(J) - JACKING REQUIRED

---------- APPROX. LENGTH: EPOXY RESIN INJECTION

APPROX. AREA: SHOTCRETE REPAIRS

APPROX. AREA: CONCRETE REPAIRS (CLASS A)

PROJECT NO. 17BP.9.P.1

FORSYTH COUNTY

BRIDGE NO.: 78

REHAB. OF BRIDGE NO. 78 SHEET 7 OF 9

STATE OF NORTH CAROLINA
DEPARTMENT OF TRANSPORTATION
RALEIGH

BENT 3 SUBSTRUCTURE REPAIRS

BRIDGE ON US-52/US-311
OVER US-311/I-40

NORTH CAROLINA PROFESSIONAL SEAL 19769 ENGINEER PAUL E. KELLY, JR.
2/24/12

STV/ Ralph Whitehead Associates, Inc.
1000 West Morehead St. Ste. 200
Charlotte, NC 28208
NC License No. F-0991

REVISIONS						SHEET NO.
NO.	BY:	DATE:	NO.	BY:	DATE:	S-42
1			3			TOTAL SHEETS
2			4			S-109

DRAWN BY : KMG DATE : 01-12
CHECKED BY : AC DATE : 01-12

I:\Projects\2515385\2515385.0001\50.Deliverables & Submittals\17BP.9.P.1\Structures\17BP.9.P.1 FinalSet 01.24.12\Bridge 078\Bridge 078 Rehab Plans.dgn
guldool
2/23/2012

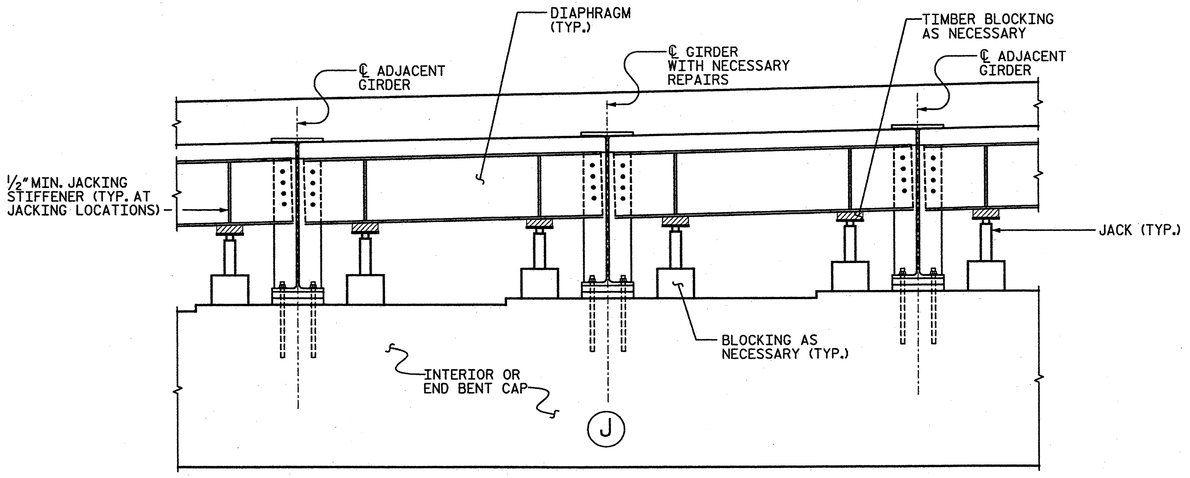

GIRDER JACKING DETAIL AT INTERIOR GIRDER

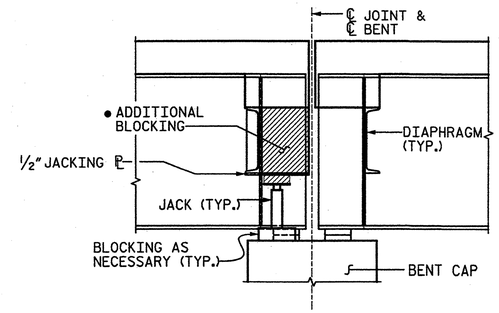

TYPICAL SECTION @ JACKING LOCATION

• BLOCKING SHALL BE FULL WIDTH FROM BACK OF DIAPHRAGM CHANNEL TO THE END OF THE DECK TURN DOWN. BLOCKING SHALL BE INSTALLED THE FULL DEPTH OF THE DIAPHRAGM SUCH THAT THE BLOCKING WILL BE LIFTED SIMULTANEOUSLY WITH THE EXISTING DIAPHRAGM.

CONSTRUCTION SEQUENCE:

1. INSTALL JACKS AND BLOCKING AT LOCATIONS SHOWN ON PLAN.
2. REMOVE NECESSARY NUTS ON ANCHOR BOLTS.
3. JACK GIRDERS A MAXIMUM OF ⅛" IN ORDER TO RELIEVE LOAD ON BENT CAP UNDER BEARING.
4. MECHANICALLY LOCK ALL JACKS AT BENT.
5. PERFORM CONCRETE REPAIRS AT SPECIFIED LOCATIONS.
6. ONCE ALL REPAIRS ARE COMPLETE, LOWER BRIDGE. CONTRACTOR SHALL NOT LOWER BRIDGE UNTIL CONCRETE REPAIR MATERIAL HAS REACHED A COMPRESSIVE STRENGTH OF 3,000 PSI.

NOTE: THE CONTRACTOR HAS THE OPTION TO PROPOSE AN ALTERNATE CONSTRUCTION SEQUENCE FOR THE APPROVAL OF THE ENGINEER.

NOTES:

JACKING DETAILS SHOWN ARE CONCEPTUAL AND CONSIDERED A MINIMUM. THE CONTRACTOR SHALL PROVIDE JACKING PLANS FOR ALL GIRDERS LIFTED FOR APPROVAL BY THE ENGINEER PRIOR TO ANY JACKING OPERATIONS. JACKING SHALL BE PERFORMED SUCH THAT BRIDGE CAN REMAIN OPEN TO TRAFFIC DURING JACKING OPERATIONS.

JACKING PLANS SHALL BE SIGNED AND SEALED BY LICENSED PROFESSIONAL ENGINEER REGISTERED IN NORTH CAROLINA.

THE CONTRACTOR SHALL PROVIDE BLOCKING FOR ALL JACKS AS NECESSARY. A BLOCKING PLAN SHALL BE INCLUDED AS PART OF THE JACKING PLAN.

THE CONTRACTOR SHALL JACK GIRDERS ON AN INDIVIDUAL BENT SIMULTANEOUSLY BY MEANS OF A DUAL-FLOW PRESSURIZED PUMP CONTROLLING THE JACKS.

THE CONTRACTOR SHALL MONITOR THE PLAN LOCATION OF THE GIRDERS FROM INITIAL JACKING UNTIL GIRDERS ARE SECURED ON THEIR PERMANENT BEARINGS. IF THE PLAN LOCATION OF THESE GIRDERS SHIFT FROM ITS ORIGINAL POSITION. THE CONTRACTOR SHALL SECURE FROM ADDITIONAL MOVEMENT IMMEDIATELY. NOTIFY ENGINEER PRIOR TO PROCEEDING WORK OPERATIONS.

EACH JACK SHALL HAVE A MINIMUM SAFE WORKING CAPACITY OF 75 TONS.

PRIOR TO JACKING THE CONTRACTOR SHALL ENSURE THERE ARE NO OBSTACLES PREVENTING THE SPAN FROM BEING LIFTED.

ONCE SPAN HAS BEEN JACKED, CONTRACTOR SHALL INSTALL A MECHANICAL LOCKING DEVICE TO ENSURE THAT GIRDER WILL NOT BE LOWERED DURING CURING OF CONCRETE.

CONTRACTOR TO TAKE APPROPRIATE MEANS TO REMOVE NUT ON ANCHOR BOLT WITHOUT DAMAGING THE ANCHOR BOLT. CONTRACTOR SHALL SUBMIT NUT REMOVAL METHOD TO INCLUDE PROCEDURES THAT WILL LOOSEN BOND BETWEEN INTERLOCKING THREADS TO ENGINEER FOR APPROVAL PRIOR TO REMOVING ANCHOR BOLT NUTS.

IN NO CIRCUMSTANCES SHOULD THE JACKING BY SOLELY SUPPORTED BY THE DIAPHRAGM. JACKS SHOULD BE CENTERED UNDER DIAPHRAGM AND ADDITIONAL BLOCKING.

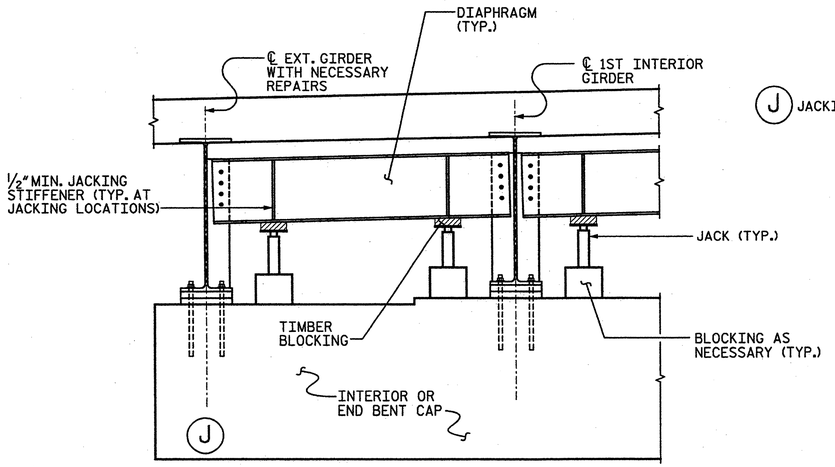

(J) JACKING FOR PROPOSED REPAIR LOCATION

GIRDER JACKING DETAIL AT EXTERIOR GIRDER

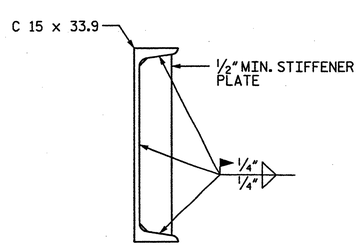

JACKING STIFFENER DETAIL

PROJECT NO. 17BP.9.P.1

FORSYTH COUNTY

BRIDGE NO.: 78

REHAB. OF BRIDGE NO. 78 SHEET 8 OF 9

STATE OF NORTH CAROLINA
DEPARTMENT OF TRANSPORTATION
RALEIGH

JACKING DETAILS

BRIDGE ON US-52/US-311 OVER US-311/I-40

NORTH CAROLINA PROFESSIONAL SEAL 18765 ENGINEER CHARLES E. KELLY, JR.

STV / Ralph Whitehead Associates, Inc.
1000 West Morehead St., Ste. 200
Charlotte, NC 28208
NC License No. F-0991

REVISIONS						SHEET NO.
NO.	BY:	DATE:	NO.	BY:	DATE:	S-43
1			3			TOTAL SHEETS
2			4			S-109

DRAWN BY : KMG DATE : 01-12
CHECKED BY : AC DATE : 01-12

I:\Projects\2515385\2515385.0001\50.Deliverables & Submittals\17BP.9.P.1 Structures\Final 1-12-12\17BP.9.P.1 FinalSet 01.12.12\Bridge 78\Bridge 078 Rehab Plans.dgn
1/17/2012 ttownsend

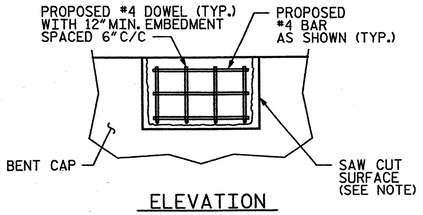

ELEVATION

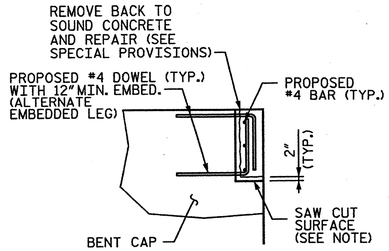

SECTION

CONCRETE REPAIRS AT BEARING LOCATIONS

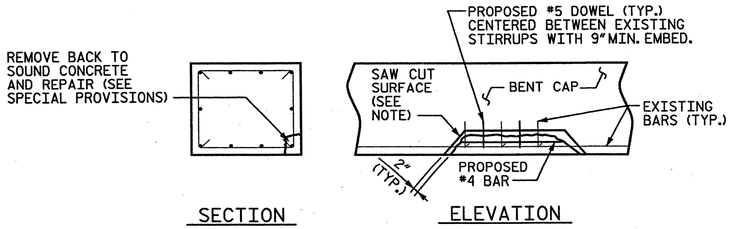

CORNER REPAIR

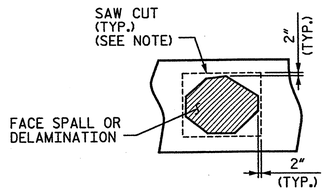

FACE REPAIR

TYPICAL SUBSTRUCTURE REPAIR DETAILS

(DOWEL LENGTH SHALL BE BASED ON A 9" EMBEDMENT INTO EXISTING CONCRETE AND MAY BE ADJUSTED BASED ON THE MINIMUM EMBEDMENT SPECIFIED BY THE MANUFACTURER OF THE EPOXY ADHESIVE BONDING SYSTEM)

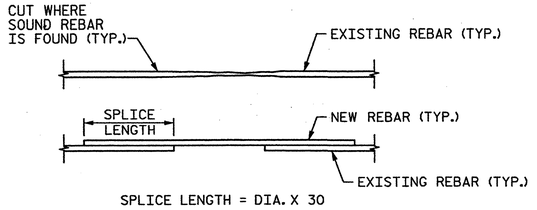

DAMAGED REBAR REPAIR DETAILS

(DAMAGED REBAR AFTER REMOVAL OF MATERIAL AND BLAST CLEANING SHALL BE REPLACED AS NEEDED, AS SHOWN)

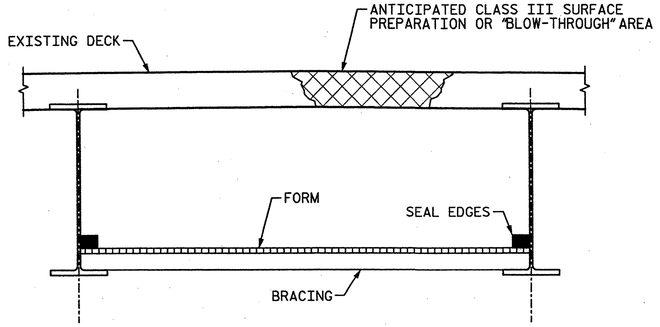

TYP. "BLOW-THROUGH" CONTAINMENT AND FORMWORK

A METHOD TO CAPTURE WATER AND DEBRIS FROM BLOW THRU DURING HYDRO-DEMOLITION SHALL BE INSTALLED IN AREAS INDICATED AS CLASS III SURFACE PREPARATION.

SUBMIT DETAILS OF PROPOSED FORMWORK FOR APPROVAL PRIOR TO BEGINNING WORK.

COSTS FOR INSTALLING AND REMOVING FORMWORK SHALL BE INCIDENTAL TO THE PRICE PER SQ. YARD OF HYDRO-DEMOLITION.

NOTES:

CONCRETE SHALL BE SOUNDED TO DETERMINE THE EXTENT OF ALL CONCRETE REPAIRS.

FOR CRACKS REQUIRING EPOXY RESIN INJECTION, SOUNDING MAY PROVE THAT A CONCRETE REPAIR IS NECESSARY.

SPALL, CRACK, AND DELAMINATION DIMENSIONS SHOWN ARE APPROXIMATE. CONTRACTOR SHALL DETERMINE ACTUAL SPALL, CRACK, AND DELAMINATION DIMENSIONS PRIOR TO MAKING REPAIRS.

THE ENGINEER SHALL BE NOTIFIED OF ANY BARS DAMAGED DURING THE CONCRETE REMOVAL PROCESS. REPAIRS TO DAMAGED BARS SHALL BE DIRECTED BY THE ENGINEER AND COMPLETED AT NO ADDITIONAL COST.

REINFORCING STEEL SHALL BE GRADE 60.

OVERHANG REPAIRS SHALL USE CLASS AA CONCRETE WITH FORMWORK USED DURING POURING AND THE COST SHALL BE INCLUDED IN THE CONCRETE REPAIRS PAY ITEM.

FOR DECK OVERHANG REPAIRS, CONTRACTOR SHALL INSTALL A METHOD OF CONTAINMENT TO CAPTURE DEBRIS & TO ENSURE CONTAINMENT OF REPAIR MATERIALS.

ANCHOR BOLTS AT METAL RAILING TO BE STAINLESS STEEL ASTM A449 WITH A MINIMUM 70,000 PSI ULTIMATE STRENGTH.

ANCHOR BOLTS AT METAL RAILING TO HAVE MINIMUM 7" EMBEDMENT INTO CONCRETE.

METAL RAILING POST IS TO BE REMOVED DURING OVERHANG REPAIRS. TEMPORARY CONCRETE BARRIERS SHALL BE INSTALLED AND SECURED AROUND THE AREA OF REPAIR TO PROTECT ON-COMING TRAFFIC.

CONTRACTOR SHALL SAW CUT TO A MAXIMUM DEPTH OF 1". THIS DEPTH SHALL BE REDUCED TO PREVENT DAMAGE TO EXISTING REINFORCEMENT, BUT SHALL BE NO LESS THAN ½". CONTRACTOR SHALL REMOVE SURFACE CONCRETE TO VERIFY THAT SAW CUT DEPTH WILL NOT DAMAGE EXISTING REINFORCING STEEL.

AS-BUILT PLANS INDICATE THE PRESENCE OF CONDUITS IN THE CURB OF THE SUPERSTRUCTURE. CONTRACTOR SHALL LOCATE AND ENSURE THAT CONDUITS ARE PROTECTED PRIOR TO REPAIR WORK.

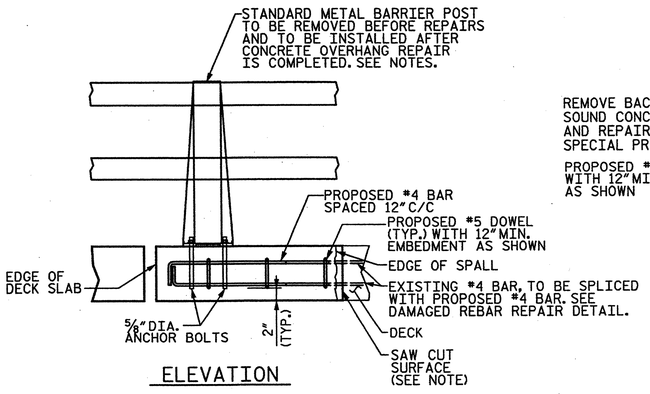

ELEVATION

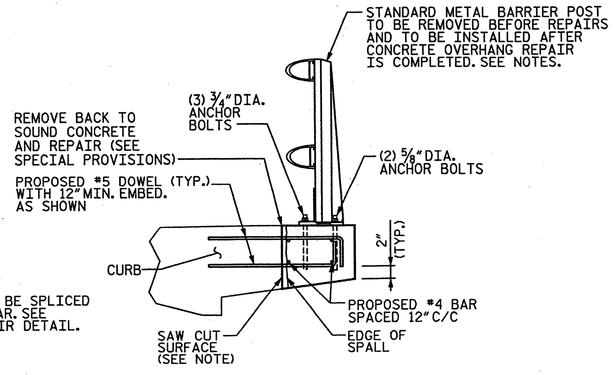

SECTION

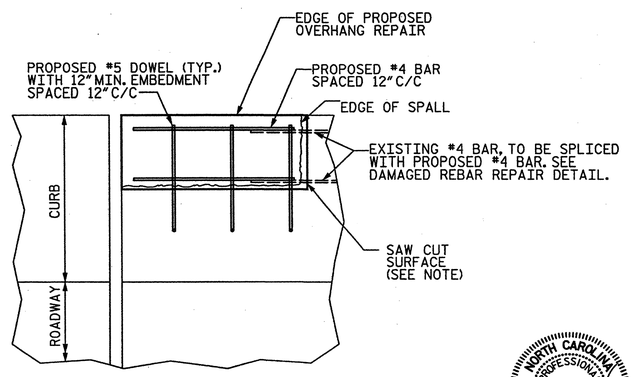

PLAN

TYPICAL OVERHANG REPAIR DETAILS

NORTH CAROLINA PROFESSIONAL SEAL 038785 ENGINEER ROBERT E. KELLY, JR. 2/17/12

PROJECT NO. 17BP.9.P.1

FORSYTH COUNTY

BRIDGE NO.: 78

REHAB. OF BRIDGE NO. 78 SHEET 9 OF 9

STATE OF NORTH CAROLINA
DEPARTMENT OF TRANSPORTATION
RALEIGH

TYPICAL DETAILS

BRIDGE ON US-52/US-311 OVER US-311/I-40

REVISIONS						SHEET NO.
NO.	BY:	DATE:	NO.	BY:	DATE:	S-44
1			3			TOTAL SHEETS
2			4			S-109

STV / Ralph Whitehead Associates, Inc.
1000 West Morehead St., Ste. 200
Charlotte, NC 28208
NC License No. F-0991

DRAWN BY : KMG DATE : 01-12
CHECKED BY : AC DATE : 01-12

I:\Projects\2515385\2515385.0001\50.Deliverables & Submittals\17BP.9.P.1\Structures\17BP.9.P.1 FinalSet 01.24.12\Bridge 078\Bridge 078 Rehab Plans.dgn
guldool
2/17/2012

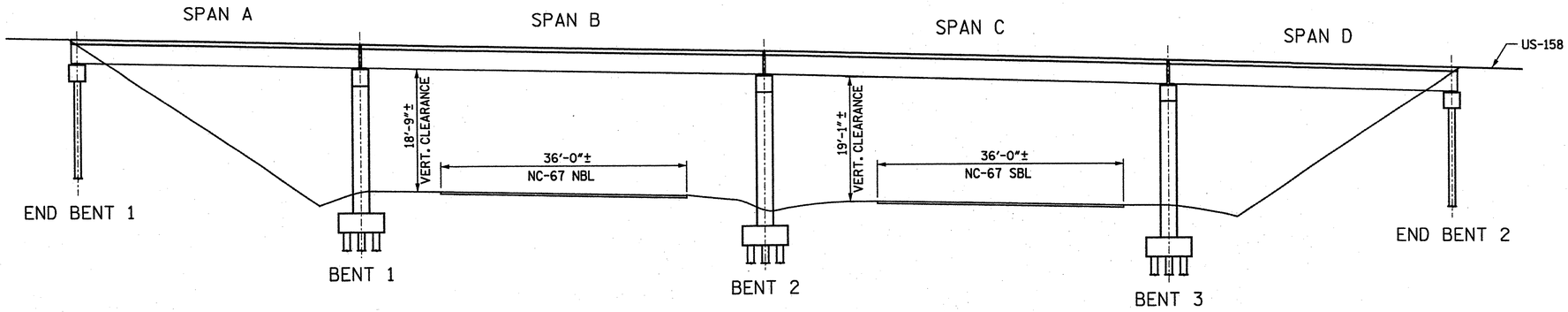

ELEVATION

(SECTIONS AT BENTS AND END BENTS ARE AT RIGHT ANGLES)

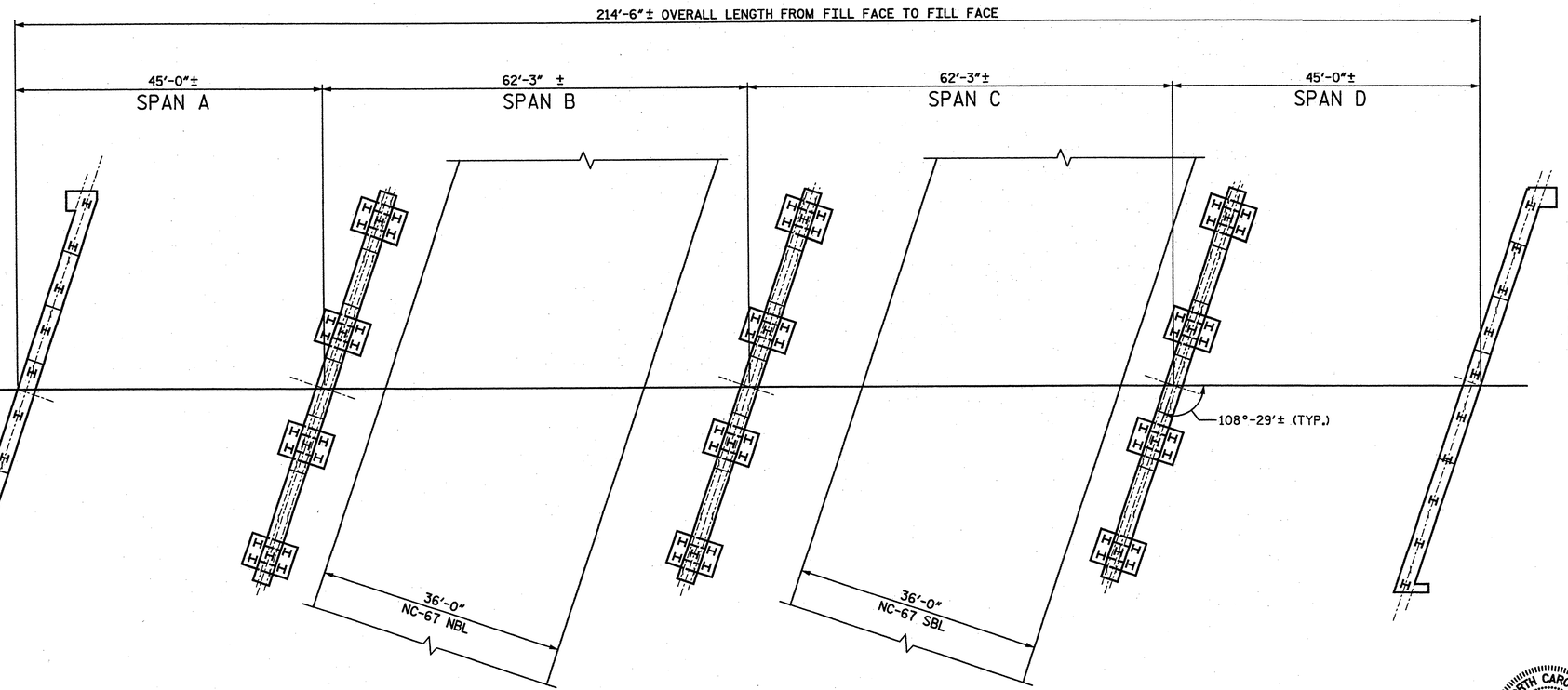

PLAN

NOTES:
FOR GENERAL NOTES, SEE SHEET S-1 OF S-109

AFTER ALL REPAIRS ON THE BRIDGE HAVE BEEN COMPLETED, AN EPOXY PROTECTIVE COATING SHALL BE APPLIED TO THE TOP SURFACE OF BENT CAPS, INCLUDING PEDESTALS, FOR EACH BENT BELOW A JOINT IN THE SUPERSTRUCTURE. CAP SURFACES SHALL BE GRIT BLASTED PRIOR TO POXY COATING. SEE STANDARD SPECIFICATIONS FOR EPOXY COATING. ALL COSTS ASSOCIATED WITH APPLYING EPOXY PROTECTIVE COATING SHALL BE INCLUDED IN THE SEVERAL PAY ITEMS FOR THE PROJECT. NO ADDITIONAL PAYMENT WILL BE MADE FOR THIS WORK.

PROJECT NO. 17BP.9.P.1

FORSYTH COUNTY

BRIDGE NO.: 85

REHAB. OF BRIDGE NO. 85 SHEET 1 OF 5

NORTH CAROLINA PROFESSIONAL SEAL 19765 ENGINEER PAUL E. KELLY, JR. 4/18/12

STATE OF NORTH CAROLINA
DEPARTMENT OF TRANSPORTATION
RALEIGH

GENERAL PLAN & ELEVATION

BRIDGE ON US 158
OVER NC 67

REVISIONS						SHEET NO.
NO.	BY:	DATE:	NO.	BY:	DATE:	S-45
1			3			TOTAL SHEETS
2			4			S-109

STV / Ralph Whitehead Associates, Inc.
1000 West Morehead St., Ste. 200
Charlotte, NC 28208
NC License No. F-0991

DRAWN BY : RIB DATE : 12/9/11
CHECKED BY : AC DATE : 1-12-12

I:\Projects\2515385\2515385.0001\50_Deliverables & Submittals\17BP.9.P.1\Structures\Final\1-12-12\17BP.9.P.1 Final Set 01.12.12\Bridge 85\Bridge 085 Rehab Plans.dgn
olveyoo
1/17/2012

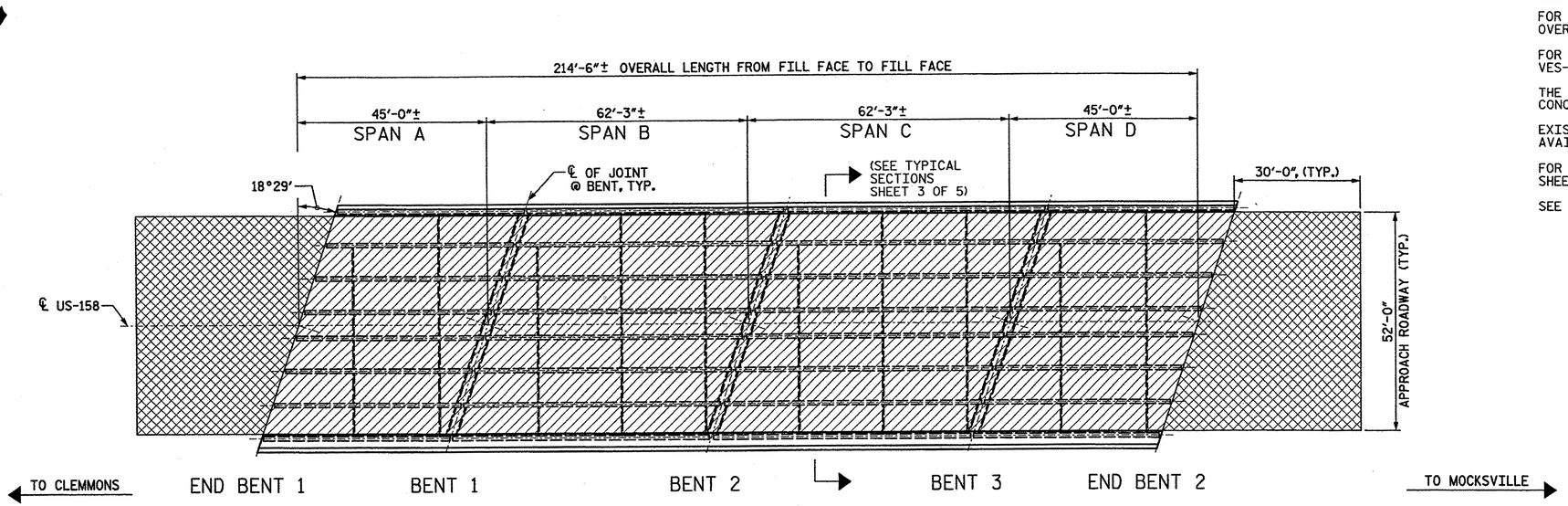

PLAN OF SPANS - DECK SCARIFICATION & HYDRO-DEMOLITION

(CONCRETE BRIDGE FLOORS SHALL BE GROOVED IN ACCORDANCE WITH SECTION 420-14 OF THE STANDARD SPECIFICATION)

NOTES:

FOR REPAIR OF BRIDGE DECK USING VES-LMC OVERLAY, SEE SPECIAL PROVISIONS.

FOR CONCRETE DECK REPAIRS FOR VES-LMC OVERLAY, SEE SPECIAL PROVISIONS.

THE BOUNDARY AREAS IDENTIFIED FOR CLASS II CONCRETE DECK REPAIRS ARE APPROXIMATE.

EXISTING BRIDGE INFORMATION BASED ON BEST AVAILABLE DATA.

FOR ADDITIONAL NOTES, SEE BRIDGE NO. 85 SHEET 4 OF 5.

SEE ADDITIONAL MILLING DETAIL ON SHEET 4 OF 5.

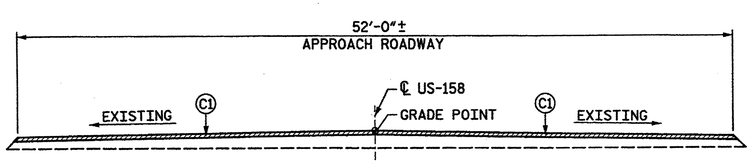

TYPICAL ROADWAY SECTION

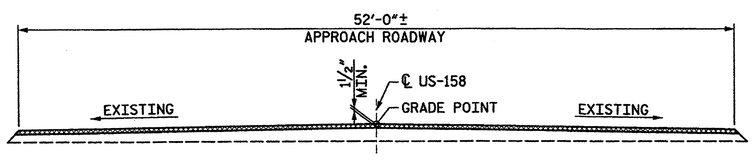

TYPICAL ROADWAY MILLING SECTION

(MILL TO 1½" MIN. DEPTH)

C1	PROPOSED VARIABLE DEPTH ASPHALT CONCRETE SURFACE COURSE, TYPE S12.5C AT AN AVERAGE RATE OF 110 LBS. PER SQ. YD. PER 1" DEPTH. TO BE PLACED IN LAYERS NOT LESS THAN 1" IN DEPTH OR GREATER THAN 1½" DEPTH

TOTAL BILL OF MATERIAL

INCIDENTAL MILLING	DECK SCARIFICATION	*CLASS I SURFACE PREPARATION	*CLASS II SURFACE PREPARATION	*CLASS III SURFACE PREPARATION	LATEX MODIFIED CONCRETE VERY EARLY STRENGTH OVERLAY	PLACING & FINISHING LATEX MODIFIED CONCRETE OVERLAY - VERY EARLY STRENGTH	ASPHALT CONCRETE SURFACE COURSE TYPE S12.5C	FOAM JOINT SEAL	GROOVING BRIDGE FLOORS	HYDRO-DEMOLITION OF BRIDGE DECK
SQ. YDS.	SQ. YDS.	SQ. YDS.	SQ. YDS.	SQ. YDS.	CU. YDS.	SQ. YDS.	TONS	LUMP SUM	SQ. FT.	SQ. YDS.
448	1240	1164	75	1	47	1240	36	LUMP SUM	11155	1,240

* QUANTITIES FOR INFORMATION ONLY.

NORTH CAROLINA PROFESSIONAL SEAL 19765 ENGINEER RALPH E. KELLY, JR. 2/24/12

STV/ Ralph Whitehead Associates, Inc.
1000 West Morehead St., Ste. 200
Charlotte, NC 28208
NC License No. F-0991

PROJECT NO. 17BP.9.P.1

FORSYTH COUNTY

BRIDGE NO.: 85

REHAB. OF BRIDGE NO. 85 SHEET 2 OF 5

STATE OF NORTH CAROLINA
DEPARTMENT OF TRANSPORTATION
RALEIGH

PLAN OF SPANS & TYPICAL SECTION

BRIDGE ON US 158 OVER NC 67

REVISIONS						SHEET NO.
NO.	BY:	DATE:	NO.	BY:	DATE:	S-46
1			3			TOTAL SHEETS
2			4			S-109

DRAWN BY : RIB DATE : 12-9-11
CHECKED BY : AC DATE : 1-12-12

I:\Projects\2515385\2515385.0001\50_Deliverables & Submittals\17BP.9.P.1\Structures\17BP.9.P.1 FinalSet 01.24.12\Bridge 085\Bridge 085 Rehab Plans.dgn
Jarlan
2/24/2012

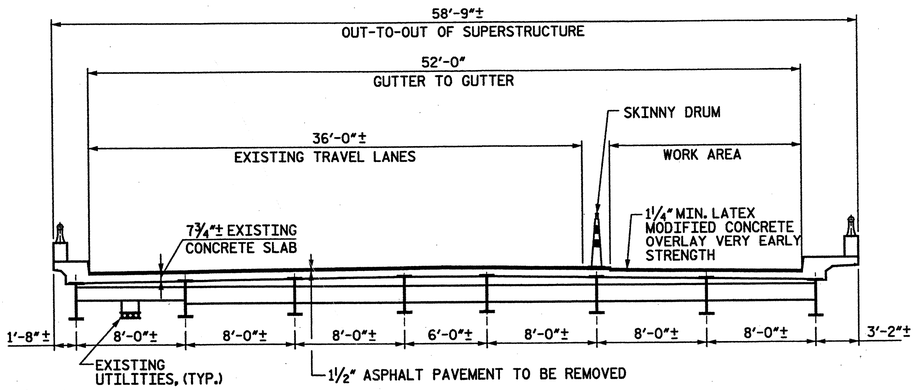

TYPICAL SECTION STAGE I
(AT INTERMEDIATE DIAPHRAGMS)

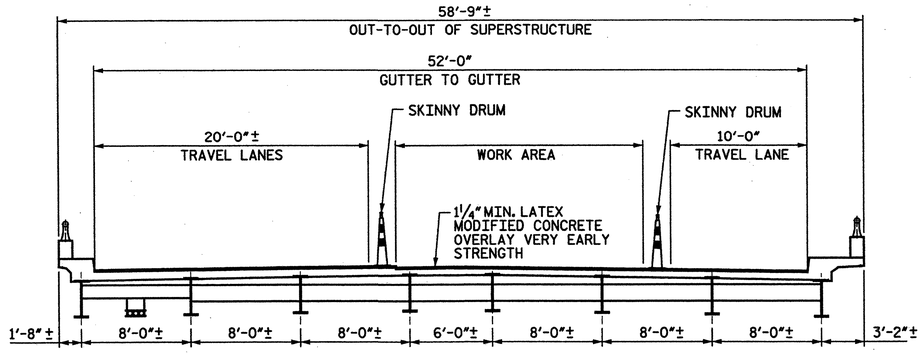

TYPICAL SECTION STAGE II
(AT INTERMEDIATE DIAPHRAGMS)

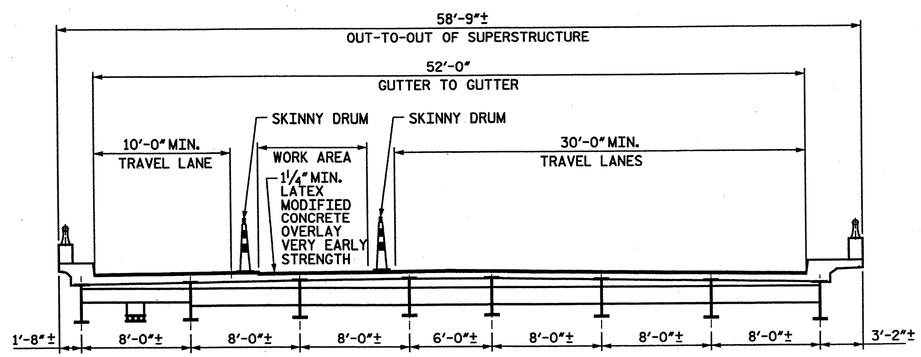

TYPICAL SECTION STAGE III
(AT INTERMEDIATE DIAPHRAGMS)

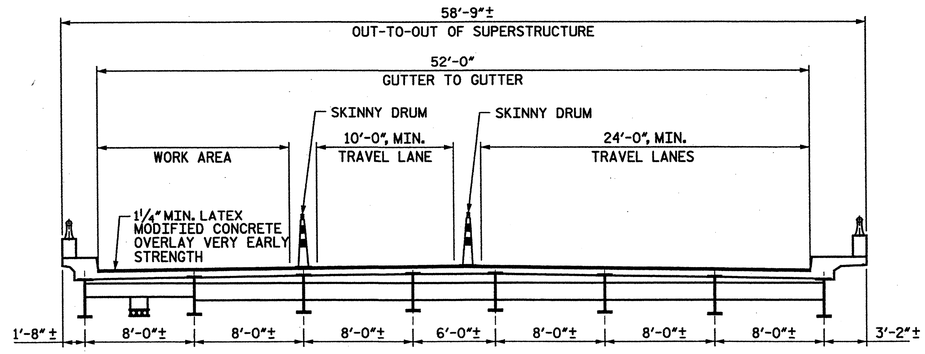

TYPICAL SECTION STAGE IV
(AT INTERMEDIATE DIAPHRAGMS)

NOTE: PER EXISTING PLANS THE EXISTING DECK HAS 1⅞" CLEAR COVER OVER EXISTING REINFORCING STEEL

PROJECT NO. 17BP.9.P.1
FORSYTH COUNTY
BRIDGE NO.: 85
REHAB. OF BRIDGE NO. 85 SHEET 3 OF 5

STATE OF NORTH CAROLINA
DEPARTMENT OF TRANSPORTATION
RALEIGH

MAINTENANCE OF TRAFFIC

BRIDGE ON US 158 OVER NC 67

NORTH CAROLINA PROFESSIONAL SEAL 19765 PAUL E. KELLY, JR. 2/17/12

STV / Ralph Whitehead Associates, Inc.
1000 West Morehead St., Ste. 200
Charlotte, NC 28208
NC License No. F-0991

REVISIONS						SHEET NO.
NO.	BY:	DATE:	NO.	BY:	DATE:	S-47
1			3			TOTAL SHEETS
2			4			S-109

DRAWN BY : RIB DATE : 1-10-12
CHECKED BY : AM DATE : 1-12-12

I:\Projects\2515385\2515385.0001\50_Deliverables & Submittals\17BP.9.P.1\Structures\17BP.9.P.1 FinalSet 01_24_12\Bridge 085\Bridge 085 Rehab Plans.dgn
guldool
2/17/2012

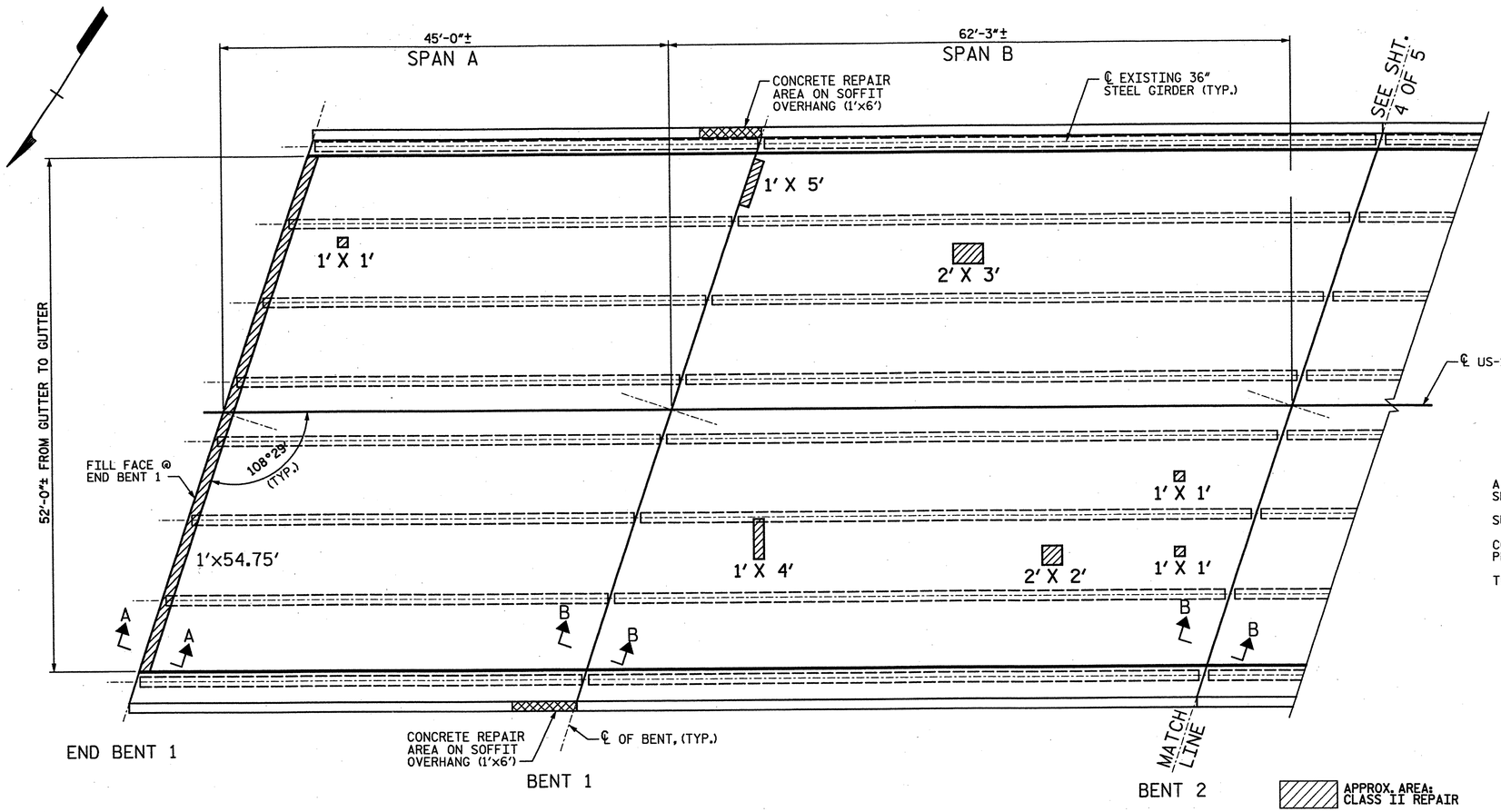

PARTIAL PLAN OF SPANS - DECK REPAIRS

(SEE SHEET 4 OF 5 FOR SECTION B-B)

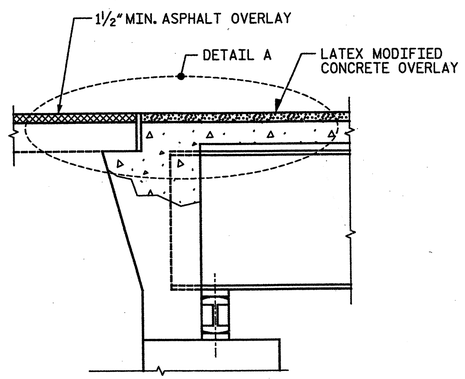

SECTION A-A

(PROPOSED JOINT @ END BENT 1 AND END BENT 2)

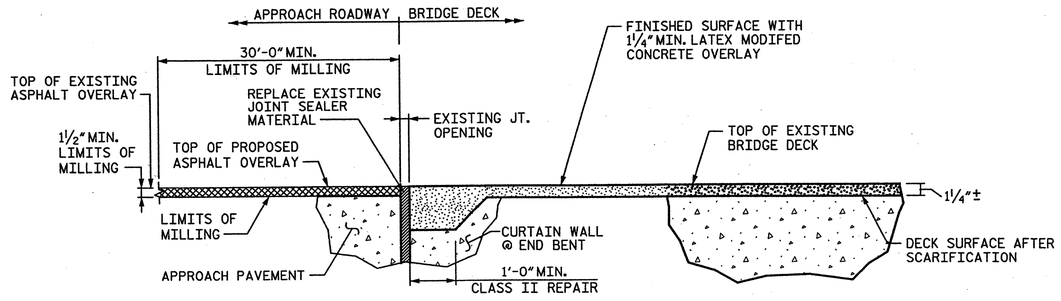

DETAIL A

(LOCATION OF JOINT TO MATCH EXISTING JOINT LOCATION)

NOTES:

LATEX MODIFIED CONCRETE OVERLAY SHALL BE EARLY STRENGTH, SEE SPECIAL PROVISIONS.

FOR HYDRO-DEMOLITION OF BRIDGE DECK, SEE SPECIAL PROVISIONS.

THE CONTRACTOR MUST COLLECT, TREAT AND DISPOSE OF RUN-OFF WATER FROM THE HYDRO-DEMOLITION PROCESS. SEE SPECIAL PROVISIONS.

THE BOUNDARY AREAS IDENTIFIED FOR CLASS III SURFACE PREPARATION ARE APPROXIMATE. THE CONTRACTOR SHALL PROVIDE CONTAINMENT FOR UNEXPECTED BLOW-THROUGH OF THE DECK. SEE DETAIL ON THIS SHEET AND SPECIAL PROVISIONS.

EXISTING BRIDGE INFORMATION BASED ON BEST AVAILABLE DATA.

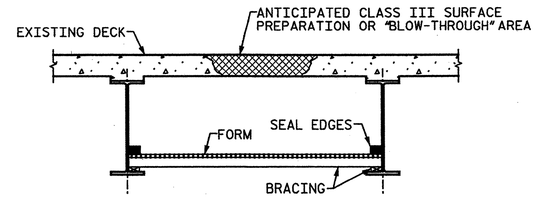

TYP. "BLOW-THROUGH" CONTAINMENT AND FORMWORK

A METHOD TO CAPTURE WATER AND DEBRIS FROM BLOW THRU DURING HYDRO-DEMOLITION SHALL BE INSTALLED IN AREAS INDICATED AS CLASS III SURFACE PREPARATION.

SUBMIT DETAILS OF PROPOSED FORMWORK FOR APPROVAL PRIOR TO BEGINNING WORK.

COSTS FOR INSTALLING AND REMOVING FORMWORK SHALL BE INCIDENTAL TO THE PRICE PER SQ. YARD OF HYDRO-DEMOLITION.

TO BE USED IN BAYS 2-9.

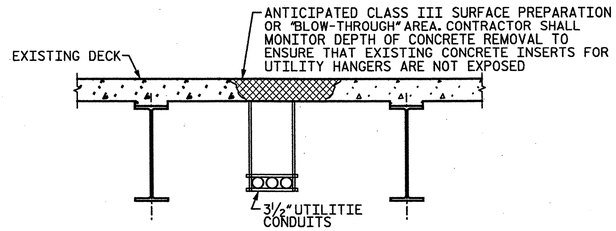

TYP. "BLOW-THROUGH" CONTAINMENT AND FORMWORK WITH HANGING UTILITY

THE CONTRACTOR SHALL DEVISE AND INSTALL A METHOD TO CAPTURE WATER AND DEBRIS FROM BLOW THRU DURING HYDRO-DEMOLITION IN AREAS INDICATED AS CLASS III SURFACE PREPARATION.

SUBMIT DETAILS OF PROPOSED FORMWORK FOR APPROVAL PRIOR TO BEGINNING WORK.

COSTS FOR INSTALLING AND REMOVING FORMWORK SHALL BE INCIDENTAL TO THE PRICE PER SQ. YARD OF HYDRO-DEMOLITION.

CONTRACTOR TO PROVIDE PLANS AND DETAILS FOR ACCOMMODATING EXISTING UTILITIES.

TO BE USED IN BAYS 1.

PROJECT NO. 17BP.9.P.1

FORSYTH COUNTY

BRIDGE NO.: 85

REHAB. OF BRIDGE NO. 85 SHEET 4 OF 5

STATE OF NORTH CAROLINA
DEPARTMENT OF TRANSPORTATION
RALEIGH

PLAN OF SPANS A & B DECK REPAIRS

BRIDGE ON US 158 OVER NC 67

NORTH CAROLINA PROFESSIONAL SEAL 018761 ENGINEER PAUL E. KELLY, JR.
2/17/12

STV / Ralph Whitehead Associates, Inc.
1000 West Morehead St. Ste. 200
Charlotte, NC 28208
NC License No. F-0991

REVISIONS						SHEET NO.
NO.	BY:	DATE:	NO.	BY:	DATE:	S-48
1			3			TOTAL SHEETS
2			4			S-109

DRAWN BY : RIB DATE : 12-9-11
CHECKED BY : AC DATE : 1-12-12

I:\Projects\2515385\2515385.0001\50.Deliverables & Submittals\17BP.9.P.1\Structures\17BP.9.P.1 FinalSet 01.24.12\Bridge 085\Bridge 085 Rehab Plans.dgn
guldool
2/17/2012

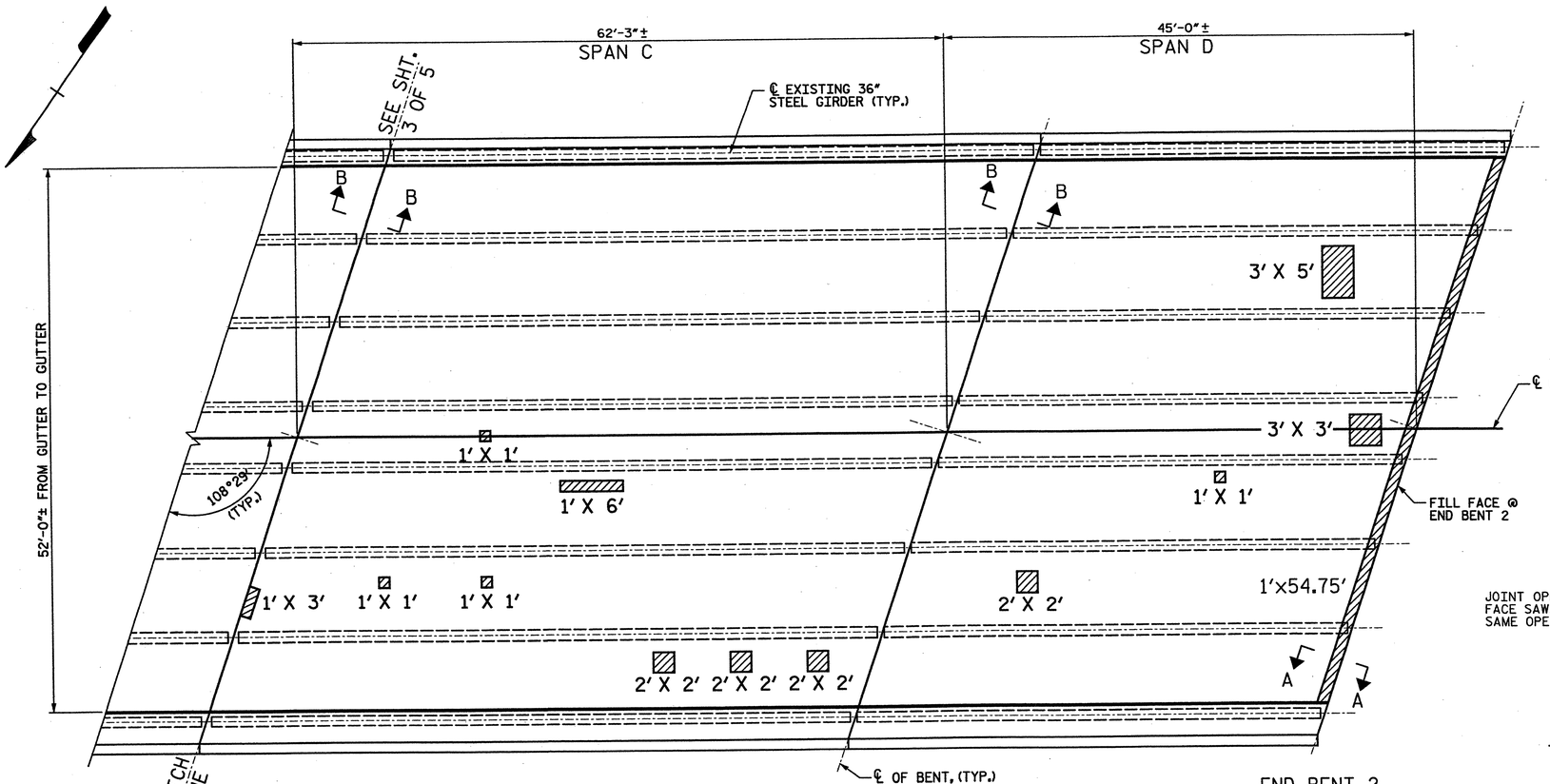

PARTIAL PLAN OF SPANS - DECK REPAIRS

(SEE SHEET 3 OF 5 FOR SECTION A-A)

NOTES:

FOR FOAM JOINT SEALS, SEE SPECIAL PROVISIONS.

FOR ELASTOMERIC CONCRETE, SEE SPECIAL PROVISIONS.

THE ELASTOMETRIC CONCRETE SHALL BE INCLUDED IN THE FOAM JOINT SEAL PAY ITEM.

THE INSTALLED FOAM JOINT SEALS SHALL BE WATERTIGHT.

THE NOMINAL UNCOMPRESSED SEAL WIDTH OF THE FOAM JOINT SEAL SHALL BE 2½".

THE CONTRACTOR WILL NOT BE PERMITTED TO FORM THE JOINT FOR THE FOAM JOINT SEAL IN LIEU OF SAWING THE JOINT.

FOAM JOINT OPENING WIDTHS SHALL BE CONFIRMED IN THE FIELD. THE CONTRACTOR SHALL MAKE ADJUSTMENTS TO FOAM JOINT SEALS, AS NECESSARY, TO MEET EXISTING CONDITIONS AND MANUFACTURER'S RECOMMENDATIONS. ANY CHANGES SHALL BE SUBMITTED TO THE ENGINEER FOR APPROVAL. ANY COST ASSOCIATED WITH THESE ADJUSTMENTS IS CONSIDERED INCIDENTAL AND NO SEPERATE MEASUREMENT OR PAYMENT WILL BE MADE.

FOR ADDITIONAL NOTES, SEE SHEET 3 OF 5.

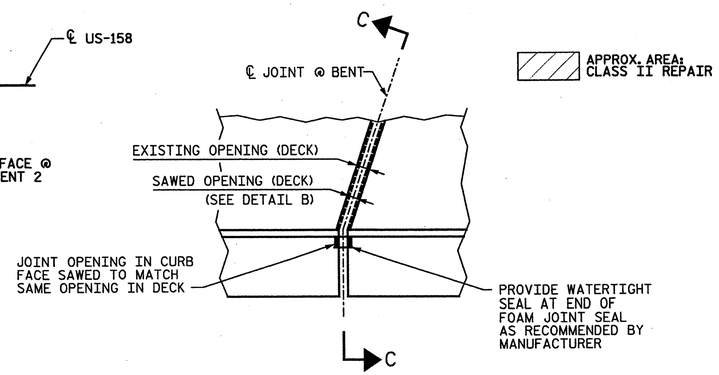

PLAN OF JOINT SEAL AT PARAPET

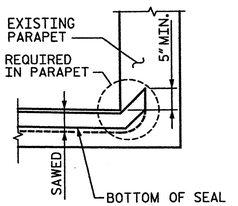

SECTION C-C

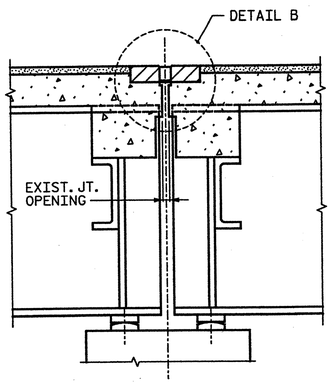

SECTION B-B

(PROPOSED JOINT)
(TYP. @ INTERIOR BENTS)

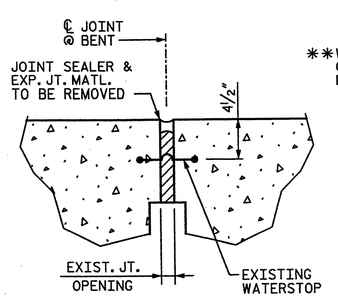

EXISTING JOINT DETAIL

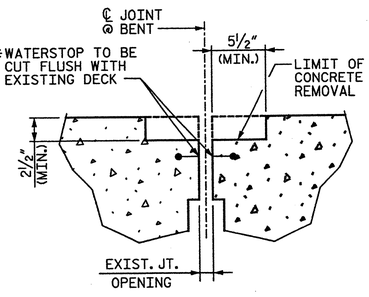

CONCRETE REMOVAL DETAIL @ EXISTING JOINT

*ELASTOMERIC CONCRETE
CU. FT.
32

* QUANTITIES FOR INFORMATION ONLY.

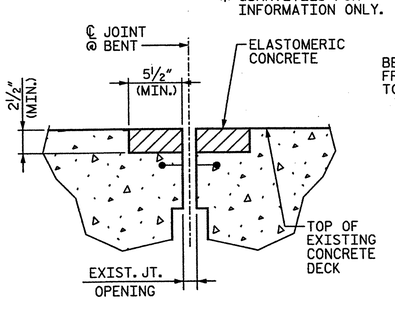

FOAM JOINT SEAL (DETAIL BEFORE SAWING)

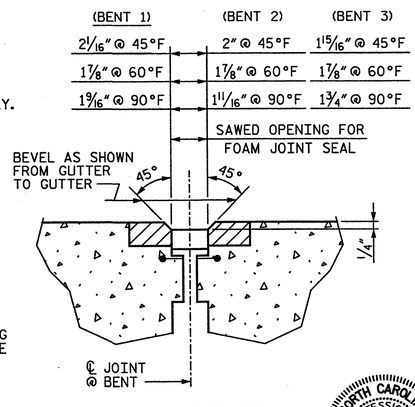

FOAM JOINT SEAL (DETAIL AFTER SAWING)

DETAIL B

**ALL LOOSE AND UNSOUND CONCRETE SHALL BE REMOVED, IF THE EMBEDDED PORTION OF THE EXISTING WATERSTOP IS EXPOSED DURING REMOVAL. THE ENTIRE WATERSTOP SHALL BE REMOVED.

PROJECT NO. 17BP.9.P.1

FORSYTH COUNTY

BRIDGE NO.: 85

REHAB. OF BRIDGE NO. 85 SHEET 5 OF 5

STATE OF NORTH CAROLINA
DEPARTMENT OF TRANSPORTATION
RALEIGH

PLAN OF SPANS C & D DECK REPAIRS

BRIDGE ON US 158
OVER NC 67

REVISIONS						SHEET NO.
NO.	BY:	DATE:	NO.	BY:	DATE:	S-49
1			3			TOTAL SHEETS
2			4			S-109

STV/ Ralph Whitehead Associates, Inc.
1000 West Morehead St., Ste. 200
Charlotte, NC 28208
NC License No. F-0991

NORTH CAROLINA PROFESSIONAL SEAL 19769 ENGINEER TODD E. KELLY JR.
2/17/12

DRAWN BY : RIB DATE : 12/9/11
CHECKED BY : AC DATE : 12/13/11

2/17/2012 11:11:11 tkaws I:\Projects\2515385\2515385.0001\50_Deliverables & Submittals\17BP.9.P.1\Structures\17BP.9.P.1 FinalSet 01.24.12\Bridge 085\Bridge 085 Rehab Plans.dgn

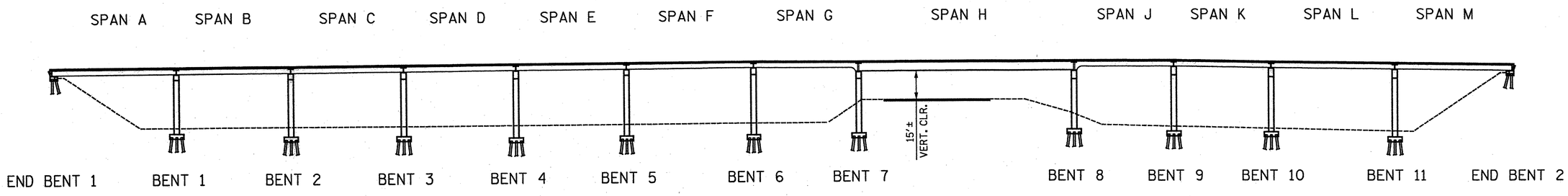

ELEVATION

(SECTIONS AT BENTS AND END BENTS ARE AT RIGHT ANGLES)

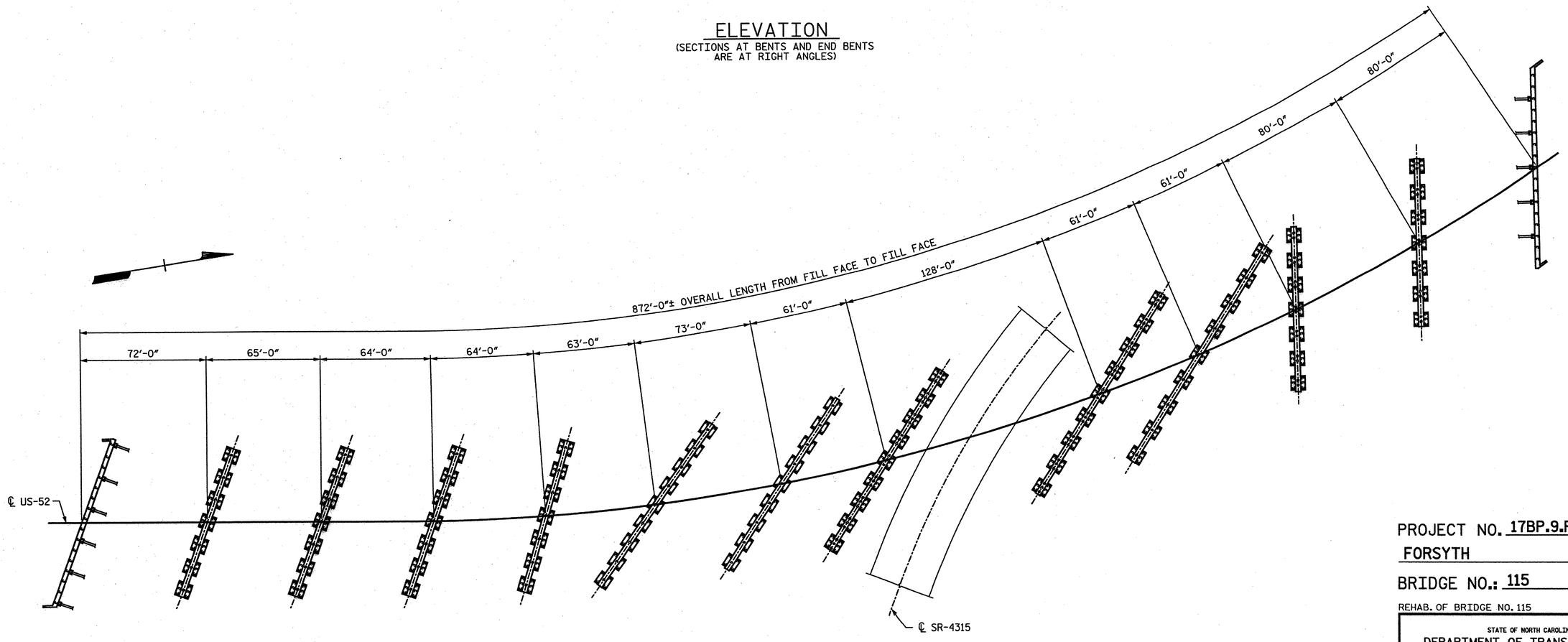

PLAN

NOTES:

SEE SHEET NO. S-01 OF S-109 FOR GENERAL NOTES.

SEE BRIDGE NO. 115 SHEETS 8, 9, 16 AND 17 OF 19 FOR ADDITIONAL NOTES.

AFTER ALL REPAIRS ON THE BRIDGE HAVE BEEN COMPLETED, AN EPOXY PROTECTIVE COATING SHALL BE APPLIED TO THE TOP SURFACE OF BENT CAPS, INCLUDING PEDESTALS, FOR EACH BENT BELOW A JOINT IN THE SUPERSTRUCTURE. CAP SURFACES SHALL BE GRIT BLASTED PRIOR TO EPOXY COATING. SEE STANDARD SPECIFICATIONS FOR EPOXY COATING. ALL COSTS ASSOCIATED WITH APPLYING EPOXY PROTECTIVE COATING SHALL BE INCLUDED IN THE SEVERAL PAY ITEMS FOR THE PROJECT. NO ADDITIONAL PAYMENT WILL BE MADE FOR THIS WORK.

PROJECT NO. 17BP.9.P.1

FORSYTH COUNTY

BRIDGE NO.: 115

REHAB. OF BRIDGE NO. 115 SHEET 1 OF 19

STATE OF NORTH CAROLINA
DEPARTMENT OF TRANSPORTATION
RALEIGH

GENERAL PLAN & ELEVATION

BRIDGE ON US 52
OVER SR 4315 & RAILROAD

NORTH CAROLINA PROFESSIONAL SEAL 19765 ENGINEER DANIEL E KELLY, JR. 1/18/12

STV / Ralph Whitehead Associates, Inc.
1000 West Morehead St., Ste. 200
Charlotte, NC 28208
NC License No. F-0991

REVISIONS						SHEET NO.
NO.	BY:	DATE:	NO.	BY:	DATE:	S-50
1			3			TOTAL SHEETS
2			4			S-109

DRAWN BY : AR DATE : 01-12
CHECKED BY : AC DATE : 01-12

I:\Projects\2515385\2515385_0001\50_Deliverables & Submittals\17BP.9.P.1\Structures\Final1-12-12\17BP.9.P.1 FinalSet 01_12_12\Bridge 115\Bridge 115 Rehab Plans.dgn
1/18/2012 diveyoo

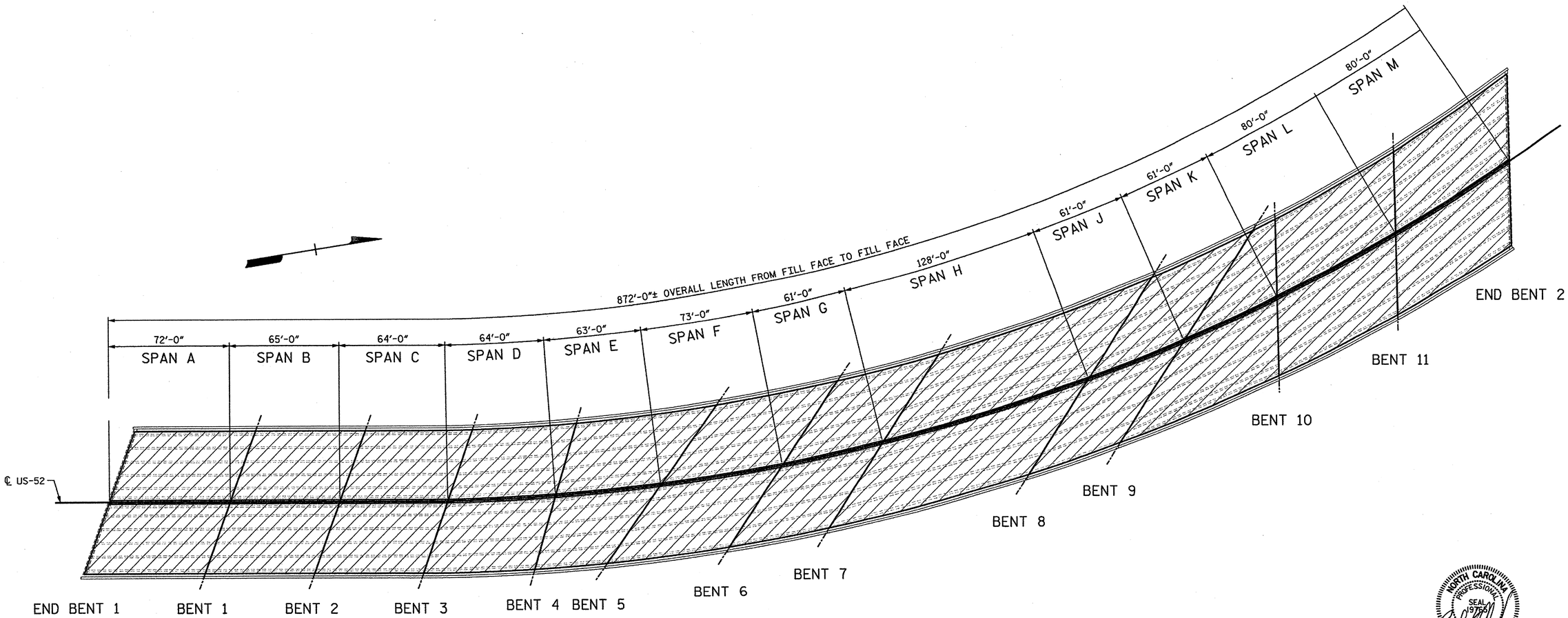

BRIDGE DECK SCARIFICATION & HYDRO-DEMOLITION

PLAN OF SPANS - DECK SCARIFICATION & HYDRO-DEMOLITION

(CONCRETE BRIDGE FLOORS SHALL BE GROOVED IN ACCORDANCE WITH SECTION 420-14 OF THE STANDARD SPECIFICATION)

TOTAL BILL OF MATERIAL

DECK SCARIFICATION	✳CLASS II SURFACE PREPARATION	HYDRO-DEMOLITION OF BRIDGE DECK	LATEX MODIFIED CONCRETE OVERLAY VERY EARLY STRENGTH	PLACING & FINISHING LATEX MODIFIED CONCRETE OVERLAY - VERY EARLY STRENGTH	FOAM JOINT SEAL	GROOVING BRIDGE FLOORS	EPOXY RESIN INJECTION	CONCRETE REPAIRS	SHOTCRETE REPAIRS	■REINFORCING STEEL	STRUCTURAL STEEL REPAIRS	BRIDGE JACKING	ELASTOMERIC BEARINGS	CLEANING AND PAINTING EXISTING STEEL BEARING PLATES
SQ. YDS.	SQ. YDS.	SQ. YDS.	CU. YDS.	SQ. YDS.	LUMP SUM	SQ. FT.	LIN. FT.	CU. FT.	CU. FT.	LBS	LBS	LUMP SUM	LUMP SUM	LUMP SUM
8052	68	8052	310	8052	LUMP SUM	67396	127	17	276	100	4120	LUMP SUM	LUMP SUM	LUMP SUM

✳ QUANTITIES FOR INFORMATION ONLY.

■ REINFORCING STEEL FOR REPLACEMENT OF REBAR DAMAGED PRIOR TO ONSET OF PROJECT.

DRAWN BY : AR DATE : 01-12

CHECKED BY : AC DATE : 01-12

STV/ Ralph Whitehead Associates, Inc.
1000 West Morehead St., Ste. 200
Charlotte, NC 28208
NC License No. F-0991

NORTH CAROLINA PROFESSIONAL SEAL 19766 ENGINEER PAUL E. KECKLER

2/24/12

PROJECT NO. 17BP.9.P.1

FORSYTH COUNTY

BRIDGE NO.: 115

REHAB. OF BRIDGE NO. 115 SHEET 2 OF 19

STATE OF NORTH CAROLINA
DEPARTMENT OF TRANSPORTATION
RALEIGH

PLAN OF SPANS

BRIDGE ON US 52
OVER SR 4315 & RAILROAD

REVISIONS						SHEET NO.
NO.	BY:	DATE:	NO.	BY:	DATE:	S-51
1			3			TOTAL SHEETS
2			4			S-109

In:\Projects\2515385\2515385.0001\50.Deliverables & Submittals\17BP.9.P.1\Structures\17BP.9.P.1 FinalSet 01.24.12\Bridge 115\Bridge 115 Rehab Plans.dgn
jerilen
2/24/2012

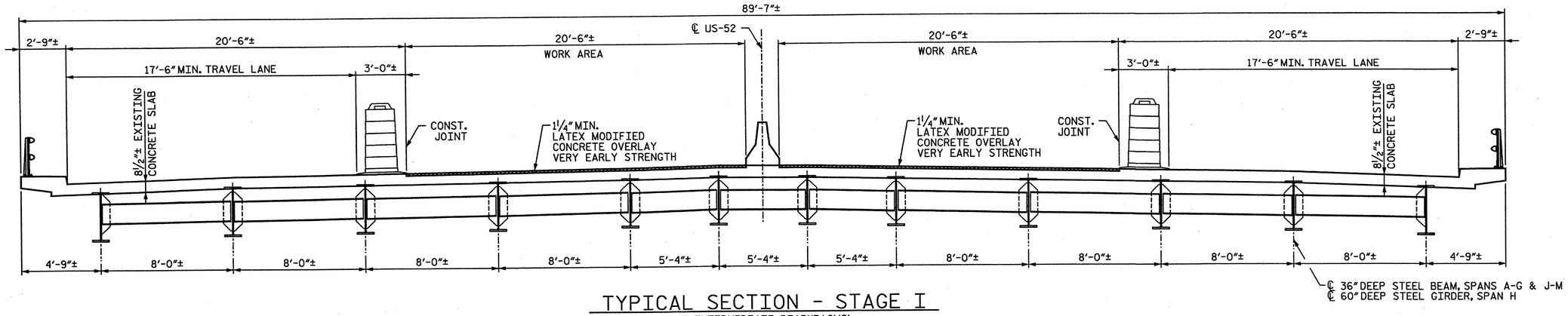

TYPICAL SECTION - STAGE I

(AT INTERMEDIATE DIAPHRAGMS)

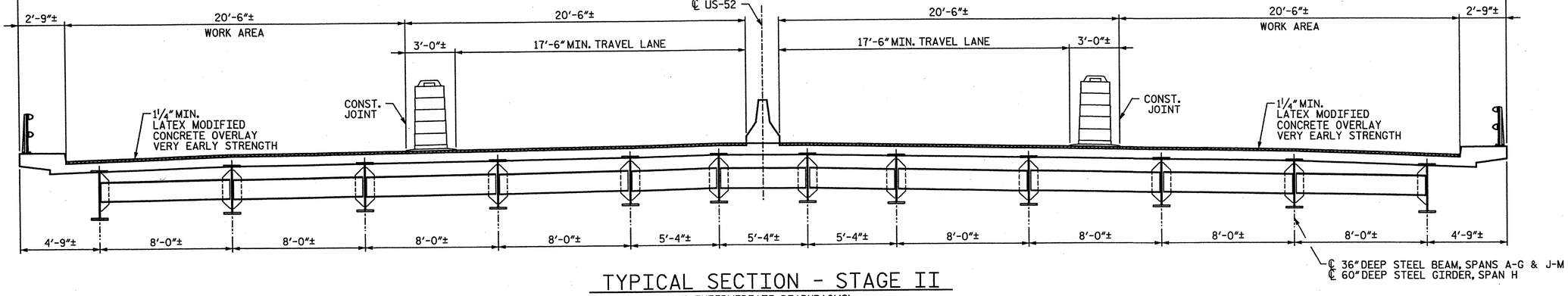

TYPICAL SECTION - STAGE II

(AT INTERMEDIATE DIAPHRAGMS)

NOTE:

PER EXISTING PLANS THE EXISTING DECK HAS 1¼" CONCRETE COVER OVER EXISTING REINFORCING STEEL.

NORTH CAROLINA PROFESSIONAL SEAL 19769 ENGINEER PAUL E. KELLY, JR. 2/17/12

PROJECT NO. 17BP.9.P.1

FORSYTH COUNTY

BRIDGE NO.: 115

REHAB. OF BRIDGE NO. 115 SHEET 3 OF 19

STATE OF NORTH CAROLINA
DEPARTMENT OF TRANSPORTATION
RALEIGH

TYPICAL SECTIONS

BRIDGE ON US 52
OVER SR 4315 & RAILROAD

REVISIONS						SHEET NO.
NO.	BY:	DATE:	NO.	BY:	DATE:	S-52
1			3			TOTAL SHEETS
2			4			S-109

STV/ Ralph Whitehead Associates, Inc.
1000 West Morehead St., Ste. 200
Charlotte, NC 28208
NC License No. F-0991

DRAWN BY : AR DATE : 01-12
CHECKED BY : AC DATE : 01-12

I:\Projects\2515385\2515385_0001\50_Deliverables & Submittals\17BP.9.P.1\Structures\17BP.9.P.1 FinalSet 01.24.12\Bridge 115\Bridge 115 Rehab Plans.dgn
guldool
2/17/2012

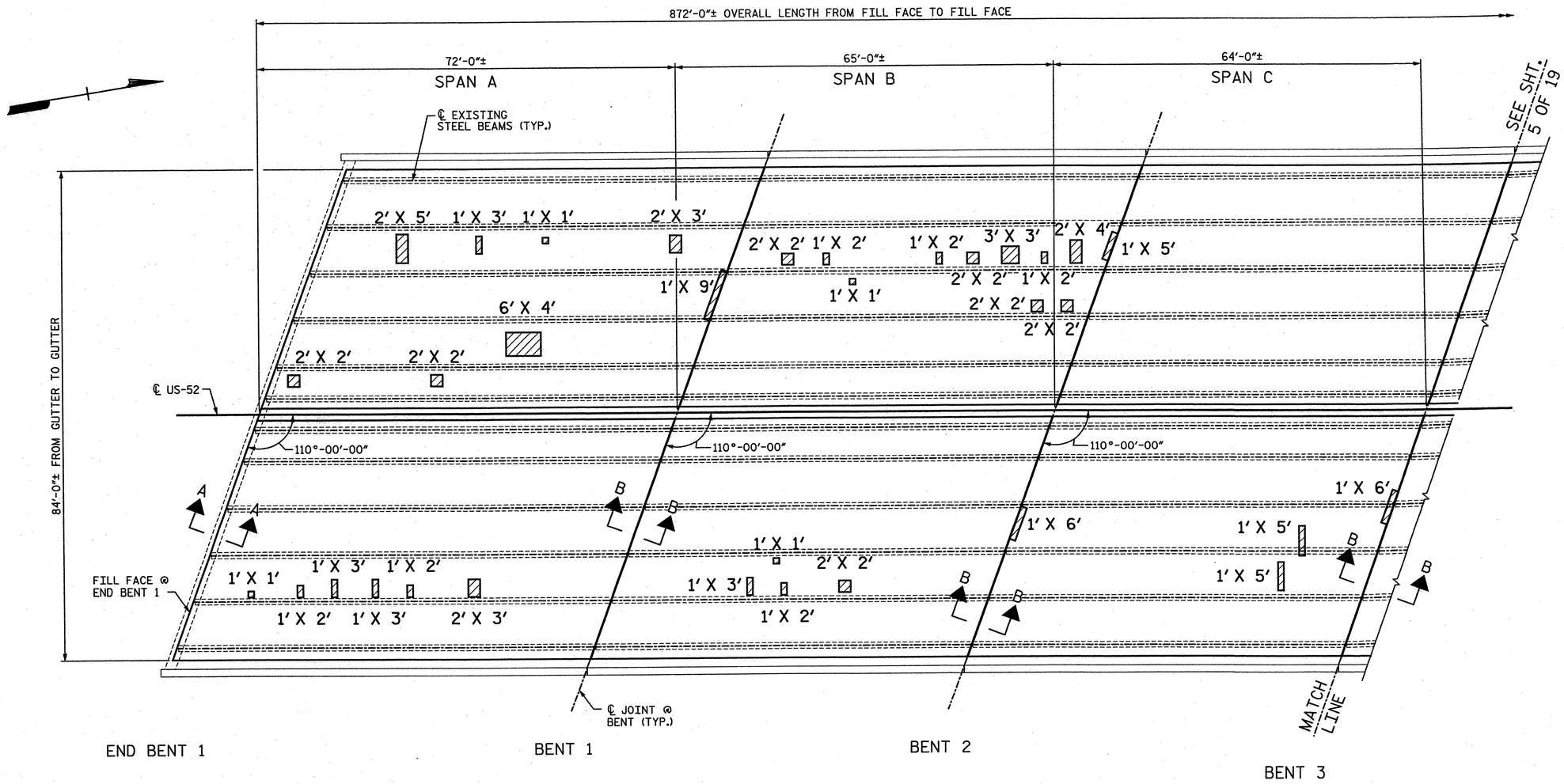

PLAN OF SPANS - DECK REPAIRS

(SEE SHEET 9 OF 19 FOR SECTIONS A-A, B-B & C-C)

APPROX. AREA: CLASS II REPAIR

PROJECT NO. 17BP.9.P.1

FORSYTH COUNTY

BRIDGE NO.: 115

REHAB. OF BRIDGE NO. 115 SHEET 4 OF 19

STATE OF NORTH CAROLINA
DEPARTMENT OF TRANSPORTATION
RALEIGH

PLAN OF SPANS A, B, C DECK REPAIRS

BRIDGE ON US 52
OVER SR 4315 & RAILROAD

NORTH CAROLINA PROFESSIONAL SEAL 19766 ENGINEER CHARLES E. KELLS, JR. 1/18/12

STV / Ralph Whitehead Associates, Inc.
1000 West Morehead St., Ste. 200
Charlotte, NC 28208
NC License No. F-0991

REVISIONS						SHEET NO.
NO.	BY:	DATE:	NO.	BY:	DATE:	S-53
1			3			TOTAL SHEETS
2			4			S-109

DRAWN BY : AR DATE : 01-12
CHECKED BY : AC DATE : 01-12

I:\Projects\2515385\2515385.0001\50.Deliverables & Submittals\17BP.9.P.1\Structures\Final\1-12-12\17BP-9-P-1 FinalSet 01.12.12\Bridge 115\Bridge 115 Rehab Plans.dgn
dlveyoo
1/18/2012

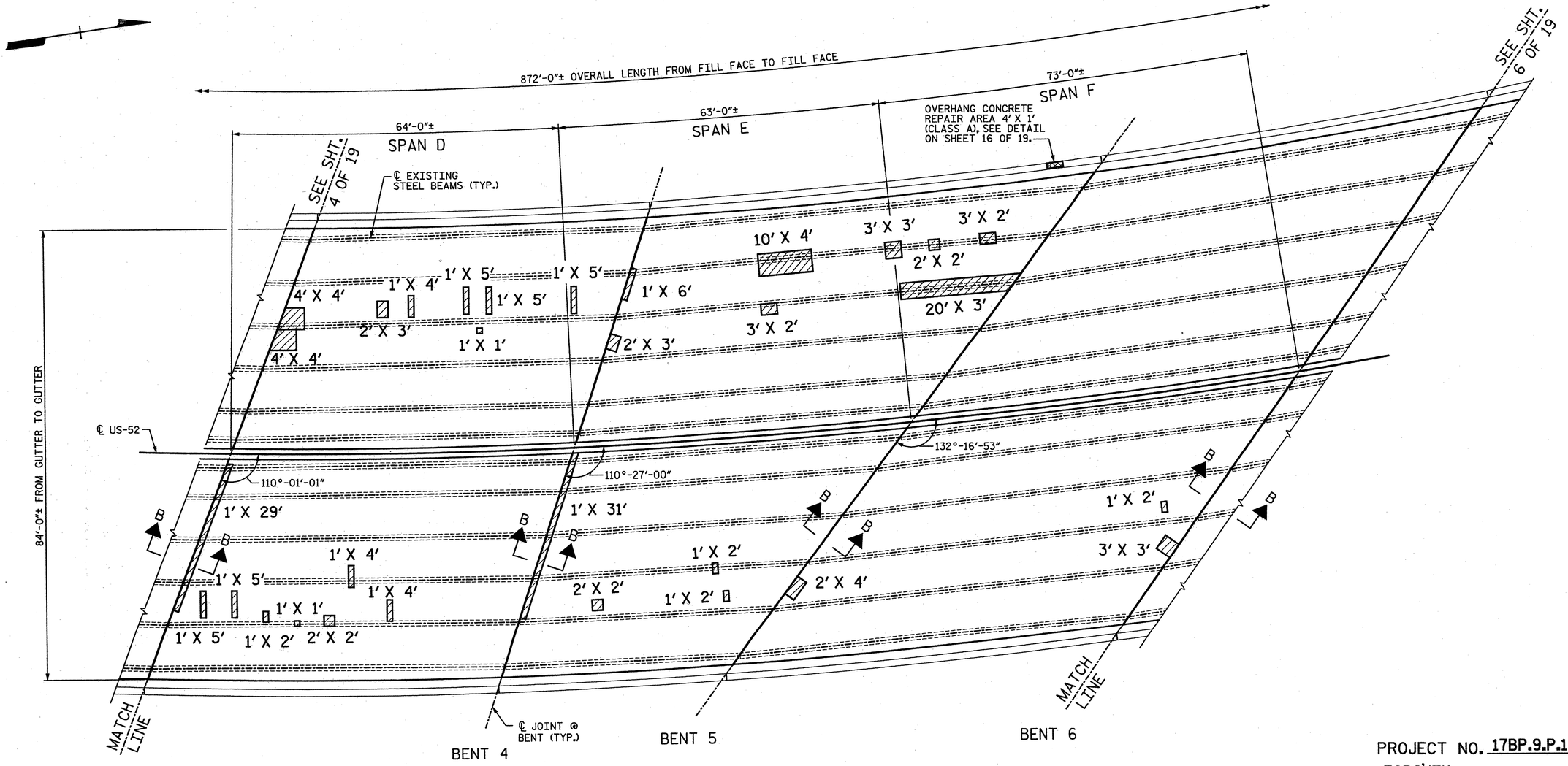

PLAN OF SPANS - DECK REPAIRS

(SEE SHEET 9 OF 19 FOR SECTIONS A-A, B-B & C-C)

APPROX. AREA: CLASS II REPAIR

PROJECT NO. 17BP.9.P.1

FORSYTH COUNTY

BRIDGE NO.: 115

REHAB. OF BRIDGE NO. 115 SHEET 5 OF 19

STATE OF NORTH CAROLINA
DEPARTMENT OF TRANSPORTATION
RALEIGH

PLAN OF SPANS D, E, F DECK REPAIRS

BRIDGE ON US 52
OVER SR 4315 & RAILROAD

NORTH CAROLINA PROFESSIONAL ENGINEER SEAL 19765 PAUL E. KELLY, JR. 1/18/12

STV / Ralph Whitehead Associates, Inc.
1000 West Morehead St., Ste. 200
Charlotte, NC 28208
NC License No. F-0991

REVISIONS						SHEET NO.
NO.	BY:	DATE:	NO.	BY:	DATE:	S-54
1			3			TOTAL SHEETS
2			4			S-109

DRAWN BY : AR DATE : 01-12
CHECKED BY : AC DATE : 01-12

I:\Projects\2515385\2515385_0001\50_Deliverables & Submittals\17BP.9.P.1\Structures\Final\1-12-12\17BP.9.P.1 Final Set 01_12_12\Bridge 115 Rehab Plans.dgn
1/18/2012
dlveyoo

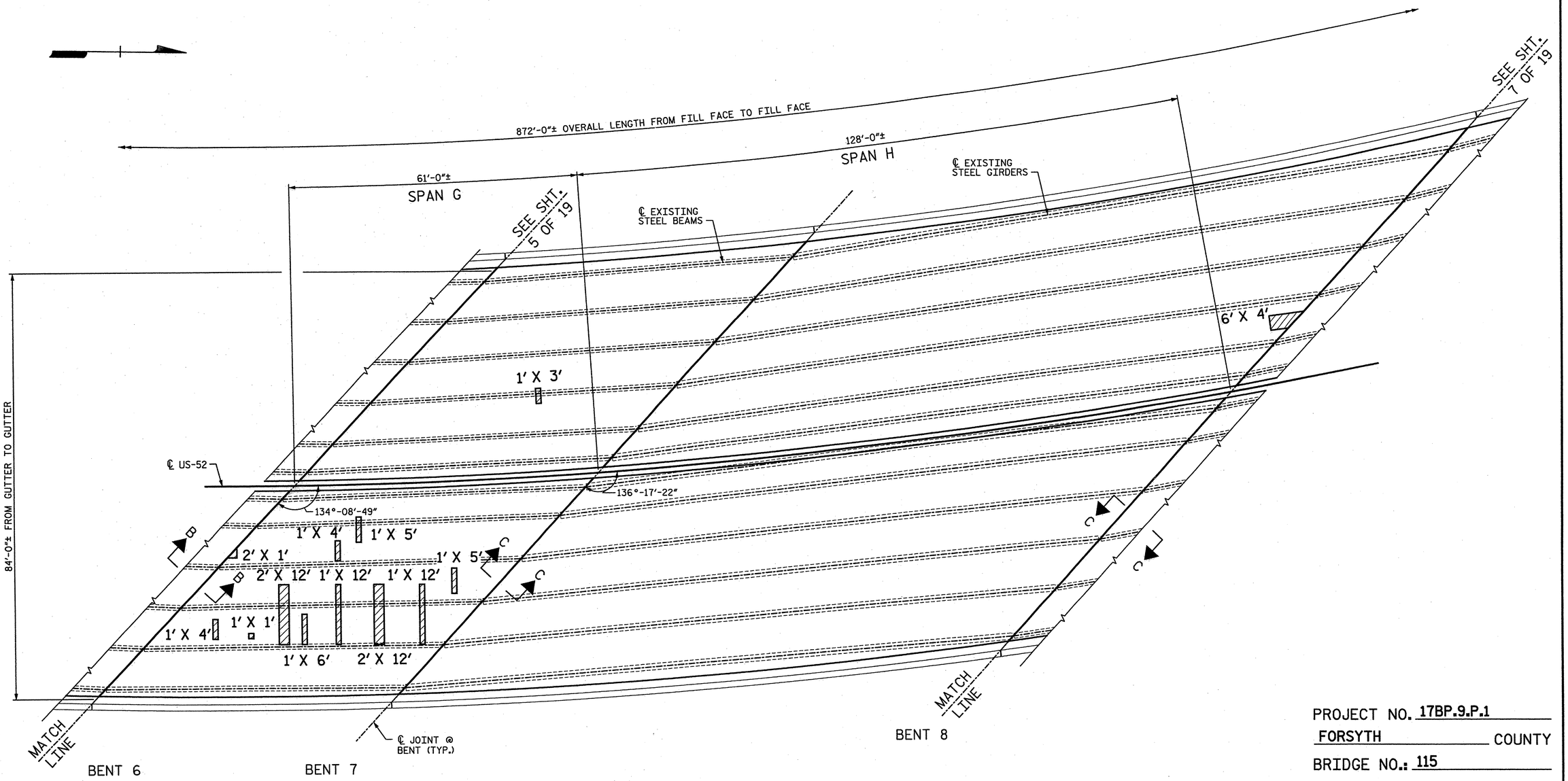

PLAN OF SPANS - DECK REPAIRS

(SEE SHEET 9 OF 19 FOR SECTIONS A-A, B-B & C-C)

APPROX. AREA: CLASS II REPAIR

PROJECT NO. 17BP.9.P.1

FORSYTH COUNTY

BRIDGE NO.: 115

REHAB. OF BRIDGE NO. 115 SHEET 6 OF 19

STATE OF NORTH CAROLINA
DEPARTMENT OF TRANSPORTATION
RALEIGH

PLAN OF SPANS G & H DECK REPAIRS

BRIDGE ON US 52
OVER SR 4315 & RAILROAD

NORTH CAROLINA PROFESSIONAL SEAL 19769 ENGINEER CHARLES E. KELLY, JR. 4/6/12

STV / Ralph Whitehead Associates, Inc.
1000 West Morehead St., Ste. 200
Charlotte, NC 28208
NC License No. F-0991

REVISIONS						SHEET NO.
NO.	BY:	DATE:	NO.	BY:	DATE:	S-55
1			3			TOTAL SHEETS
2			4			S-109

DRAWN BY : AR DATE : 01-12
CHECKED BY : AC DATE : 01-12

I:\Projects\2515385\2515385.0001\60_Deliverables & Submittals\17BP.9.P.1\Structures\Final-12-12\17BP.9.P.1 FinalSet 01.12.12\Bridge 115\Bridge 115 Rehab Plans.dgn
aveyoo
1/18/2012

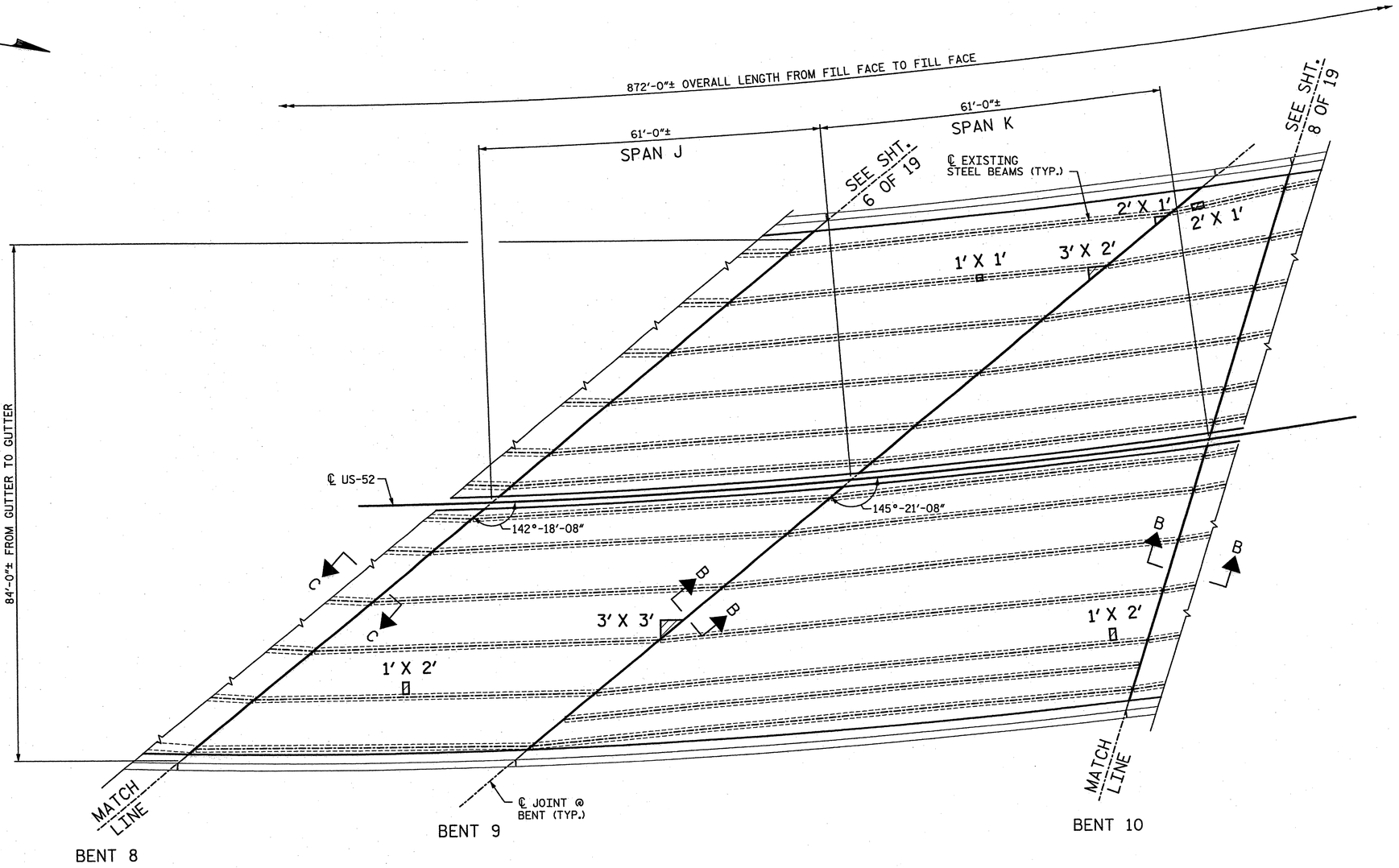

PLAN OF SPANS - DECK REPAIRS

(SEE SHEET 9 OF 19 FOR SECTIONS A-A, B-B & C-C)

APPROX. AREA: CLASS II REPAIR

PROJECT NO. 17BP.9.P.1

FORSYTH COUNTY

BRIDGE NO.: 115

REHAB. OF BRIDGE NO. 115 SHEET 7 OF 19

STATE OF NORTH CAROLINA
DEPARTMENT OF TRANSPORTATION
RALEIGH

PLAN OF SPANS J & K DECK REPAIRS

BRIDGE ON US 52
OVER SR 4315 & RAILROAD

NORTH CAROLINA PROFESSIONAL SEAL 18756 ENGINEER RALPH E. KELLY, JR.
1/18/12

STV / Ralph Whitehead Associates, Inc.
1000 West Morehead St., Ste. 200
Charlotte, NC 28208
NC License No. F-0991

REVISIONS						SHEET NO.
NO.	BY:	DATE:	NO.	BY:	DATE:	S-56
1			3			TOTAL SHEETS
2			4			S-109

DRAWN BY : AR DATE : 01-12
CHECKED BY : AC DATE : 01-12

I:\Projects\2515385\2515385.0001\50_Deliverables & Submittals\17BP.9.P.1\Structures\Final 1-12-12\17BP.9.P.1 Final Set 01.12.12\Bridge 115\Bridge 115 Rehab Plans.dgn
dveyoo
1/18/2012

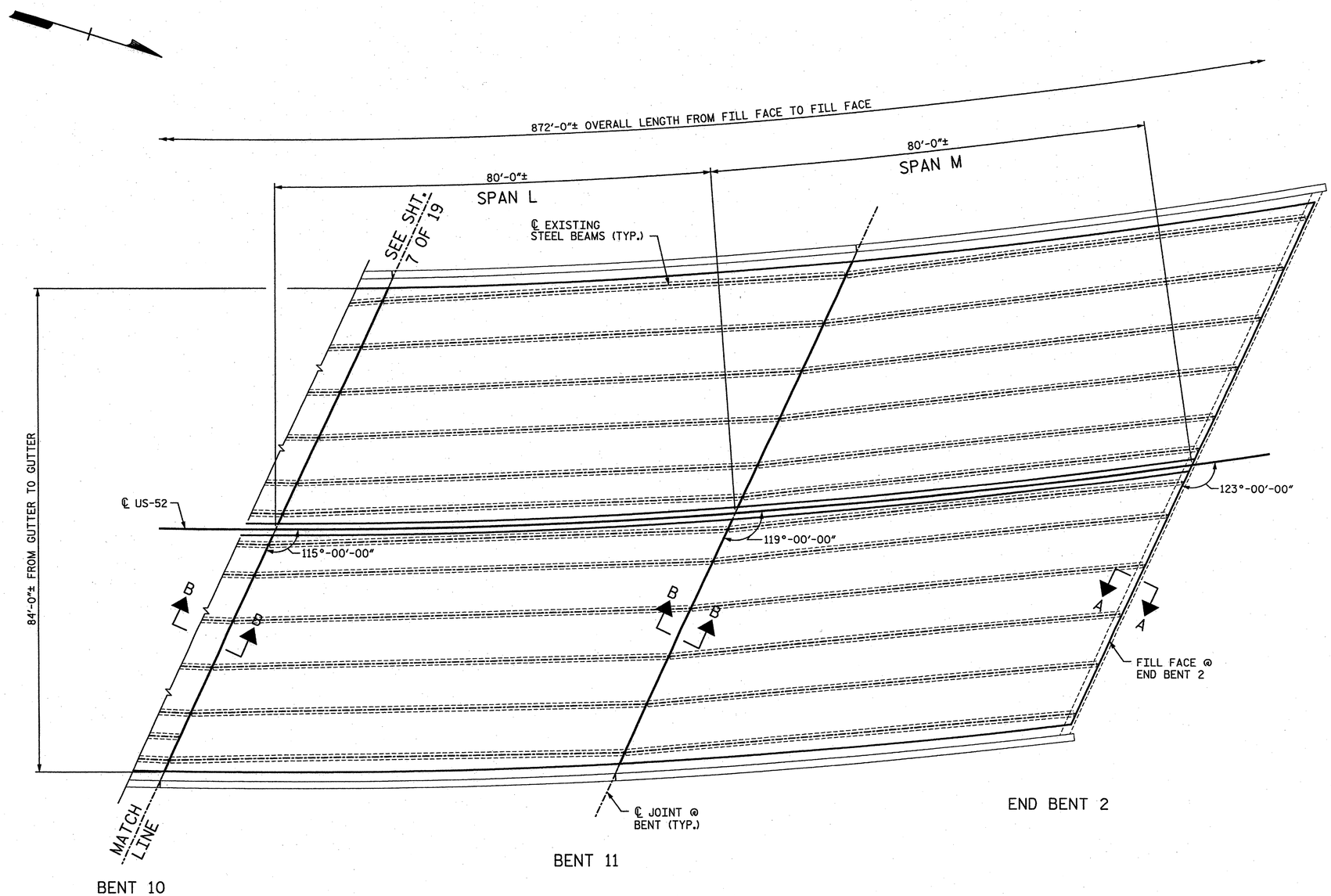

PLAN OF SPANS - DECK REPAIRS

(SEE SHEET 9 OF 19 FOR SECTIONS A-A, B-B & C-C)

APPROX. AREA: CLASS II REPAIR

NOTES:

LATEX MODIFIED CONCRETE OVERLAY SHALL BE LATEX MODIFIED CONCRETE - VERY EARLY STRENGTH, SEE SPECIAL PROVISIONS.

FOR HYDRO-DEMOLITION OF BRIDGE DECK, SEE SPECIAL PROVISIONS.

FOR OVERHANG REPAIR DETAILS, SEE SHEET 16 OF 19.

THE CONTRACTOR MUST COLLECT, TREAT AND DISPOSE OF RUN-OFF WATER FROM THE HYDRO-DEMOLITION PROCESS. SEE SPECIAL PROVISIONS.

THE CONTRACTOR SHALL PROVIDE CONTAINMENT FOR UNEXPECTED BLOW-THROUGH OF THE DECK. SEE DETAIL ON SHEET 9 OF 19 AND SPECIAL PROVISIONS.

EXISTING BRIDGE INFORMATION BASED ON BEST AVAILABLE DATA.

PROJECT NO. 17BP.9.P.1

FORSYTH COUNTY

BRIDGE NO.: 115

REHAB. OF BRIDGE NO. 115 SHEET 8 OF 19

STATE OF NORTH CAROLINA
DEPARTMENT OF TRANSPORTATION
RALEIGH

PLAN OF SPANS L & M
DECK REPAIRS

BRIDGE ON US 52
OVER SR 4315 & RAILROAD

NORTH CAROLINA PROFESSIONAL SEAL 19762 ENGINEER PAUL E. KELLY, JR. 1/18/12

STV/ Ralph Whitehead Associates, Inc.
1000 West Morehead St., Ste. 200
Charlotte, NC 28208
NC License No. F-0991

REVISIONS						SHEET NO.
NO.	BY:	DATE:	NO.	BY:	DATE:	S-57
1			3			TOTAL SHEETS
2			4			S-109

DRAWN BY : AR DATE : 01-12
CHECKED BY : AC DATE : 01-12

I:\Projects\2515385\2515385_0001\SD_Deliverables & Submittals\17BP.9.P.1\Structures\Final1-12-12\17BP.9.P.1 FinalSet 01_12_12\Bridge 115\Bridge 115 Rehab Plans.dgn
dveyoo
1/18/2012

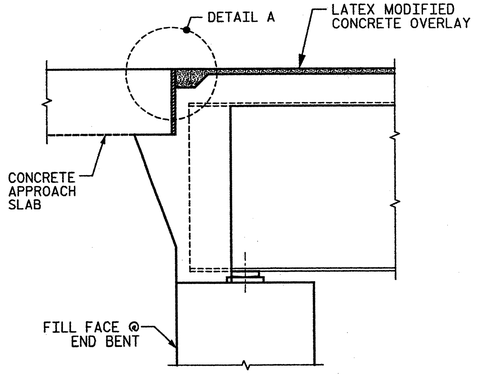

SECTION A-A
(TYP. @ END BENTS 1 AND 2)

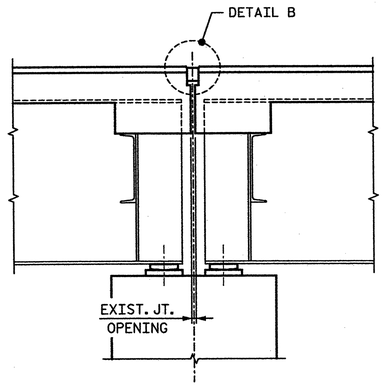

SECTION B-B
(PROPOSED JOINT)
(TYP. @ INTERIOR BENTS EXCEPT 7 & 8)

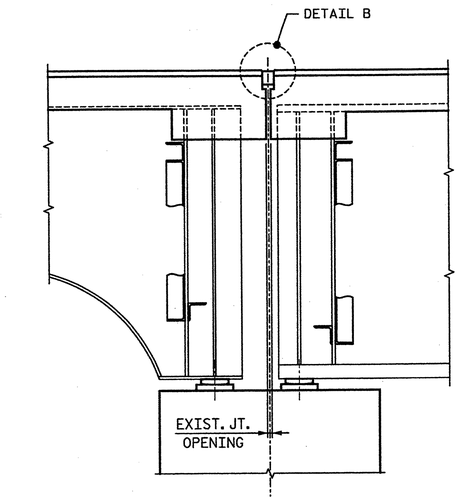

SECTION C-C
(PROPOSED JOINT)
(TYP. @ INTERIOR BENTS 7 & 8)

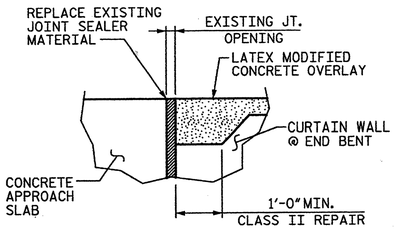

DETAIL A
(LOCATION OF JOINT TO MATCH EXISTING JOINT LOCATION)

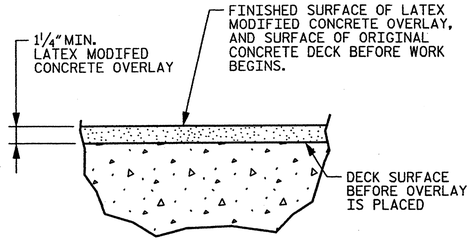

DETAIL FOR LATEX MODIFIED CONCRETE OVERLAY

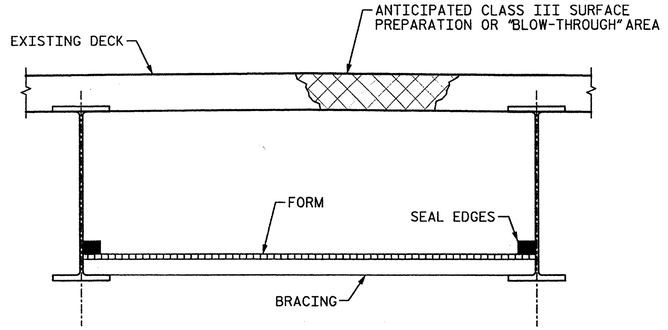

TYP. "BLOW-THROUGH" CONTAINMENT AND FORMWORK

A METHOD TO CAPTURE WATER AND DEBRIS FROM BLOW THRU DURING HYDRO-DEMOLITION SHALL BE INSTALLED IN AREAS INDICATED AS CLASS III SURFACE PREPARATION.

SUBMIT DETAILS OF PROPOSED FORMWORK FOR APPROVAL PRIOR TO BEGINNING WORK.

COSTS FOR INSTALLING AND REMOVING FORMWORK SHALL BE INCIDENTAL TO THE PRICE PER SQ. YARD OF HYDRO-DEMOLITION.

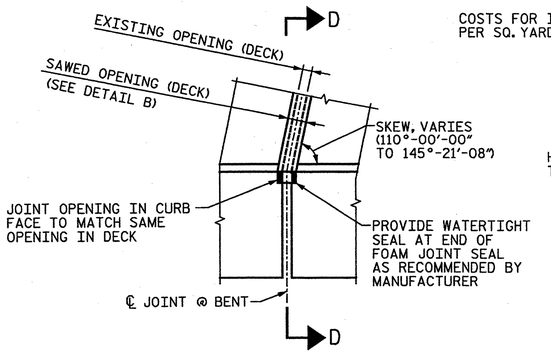

PLAN OF JOINT SEAL AT CURB

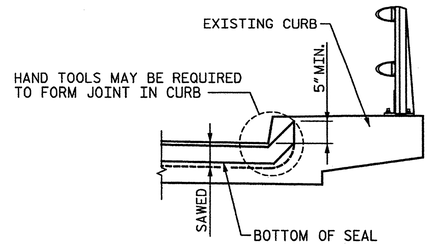

SECTION D-D

✱ ELASTOMERIC CONCRETE
CU. FT.
285

✱ QUANTITIES FOR INFORMATION ONLY.

(BENT 1)	(BENTS 2, 3, 4, 6 & 10)	(BENTS 5, 7 & 9)	(BENT 8)	(BENT 11)
2" @ 45°F	2 15/16" @ 45°F	1 15/16" @ 45°F	2" @ 45°F	2 5/16" @ 45°F
1 7/8" @ 60°F	1 7/8" @ 60°F	1 7/8" @ 60°F	1 7/8" @ 60°F	2 1/8" @ 60°F
1 11/16" @ 90°F	1 11/16" @ 90°F	1 3/4" @ 90°F	1 5/8" @ 90°F	1 11/16" @ 90°F

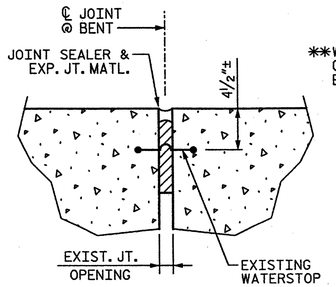

EXISTING JOINT DETAIL

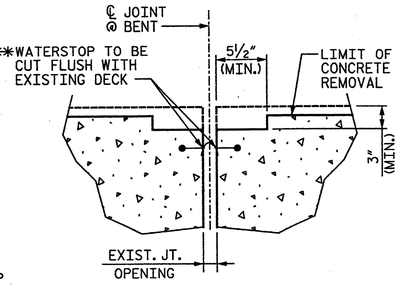

CONCRETE REMOVAL DETAIL @ EXISTING JOINT

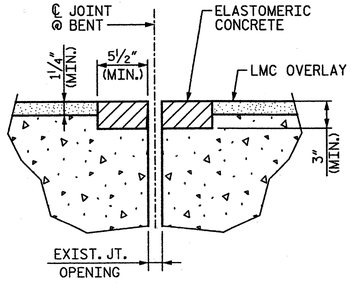

FOAM JOINT SEAL (DETAIL BEFORE SAWING)

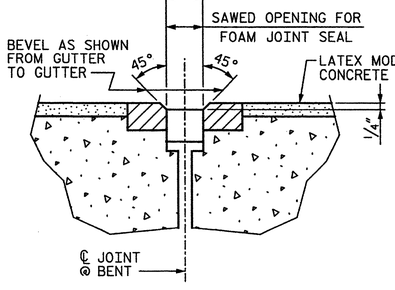

FOAM JOINT SEAL (DETAIL AFTER SAWING)

DETAIL B

✱✱ ALL LOOSE AND UNSOUND CONCRETE SHALL BE REMOVED. IF THE EMBEDDED PORTION OF THE EXISTING WATERSTOP IS EXPOSED DURING REMOVAL, THE ENTIRE WATERSTOP SHALL BE REMOVED.

NOTES:

FOR FOAM JOINT SEALS, SEE SPECIAL PROVISIONS.

FOR ELASTOMERIC CONCRETE, SEE SPECIAL PROVISIONS.

THE ELASTOMERIC CONCRETE SHALL BE INCLUDED IN THE FOAM JOINT SEAL PAY ITEM.

CONTRACTOR SHALL COVER AND PROTECT THE JOINT CONSTRUCTION TO PREVENT DAMAGE DURING CONCRETE CURING AND AS NEEDED TO MAINTAIN TRAFFIC, AS DIRECTED BY THE ENGINEER.

THE INSTALLED FOAM JOINT SEALS SHALL BE WATERTIGHT.

THE NOMINAL UNCOMPRESSED SEAL WIDTH OF THE FOAM JOINT SEAL SHALL BE 2½" AT BENTS 1 THROUGH 10 AND 2 13/16" AT BENT 11.

THE CONTRACTOR WILL NOT BE PERMITTED TO FORM THE JOINT FOR THE FOAM JOINT SEAL IN LIEU OF SAWING THE JOINT.

FOAM JOINT OPENING WIDTHS SHALL BE CONFIRMED IN THE FIELD. CONTRACTOR SHALL MAKE ADJUSTMENTS TO FOAM JOINT SEALS, AS NECESSARY, TO MEET EXISTING CONDITIONS AND MANUFACTURER'S RECOMMENDATIONS. ANY CHANGES SHALL BE SUBMITTED TO THE ENGINEER FOR APPROVAL. ANY COST ASSOCIATED WITH THESE ADJUSTMENTS IS CONSIDERED INCIDENTAL AND NO SEPARATE MEASUREMENT OR PAYMENT WILL BE MADE.

PROJECT NO. 17BP.9.P.1

FORSYTH COUNTY

BRIDGE NO.: 115

REHAB. OF BRIDGE NO. 115 SHEET 9 OF 19

STATE OF NORTH CAROLINA
DEPARTMENT OF TRANSPORTATION
RALEIGH

DECK REPAIR DETAILS

BRIDGE ON US 52
OVER SR 4315 & RAILROAD

NORTH CAROLINA PROFESSIONAL SEAL 19765 ENGINEER CHARLES KELLY JR. 2/17/12

STV / Ralph Whitehead Associates, Inc.
1000 West Morehead St., Ste. 200
Charlotte, NC 28208
NC License No. F-0991

REVISIONS						SHEET NO.
NO.	BY:	DATE:	NO.	BY:	DATE:	S-58
1			3			TOTAL SHEETS
2			4			S-109

DRAWN BY :	AR	DATE :	01-12
CHECKED BY :	AC	DATE :	01-12

I:\Projects\2515385\2515385_000\50.Deliverables & Submittals\17BP.9.P.1 FinalSet 01.24.12\Bridge 115\Bridge 115 Rehab Plans.dgn
tlaws
2/17/2012

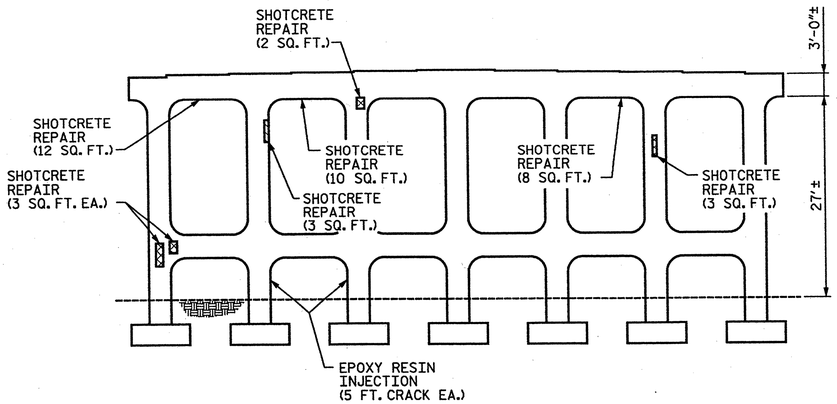

ELEVATION OF BENT 1 - LOOKING NORTH*

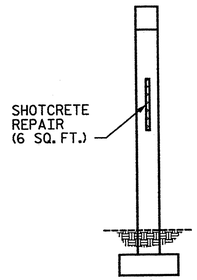

END VIEW OF BENT 1 LOOKING WEST*

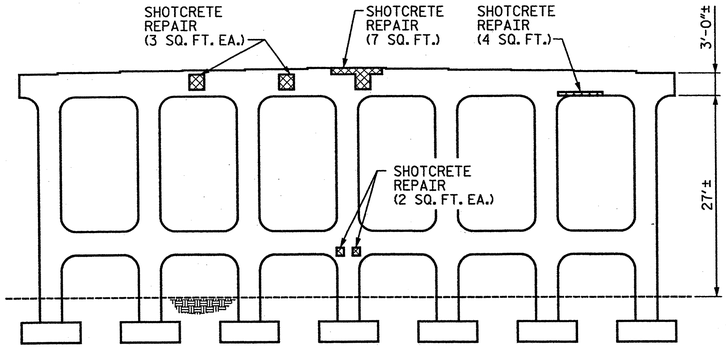

ELEVATION OF BENT 1 - LOOKING SOUTH*

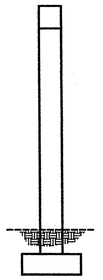

END VIEW OF BENT 1 LOOKING EAST*

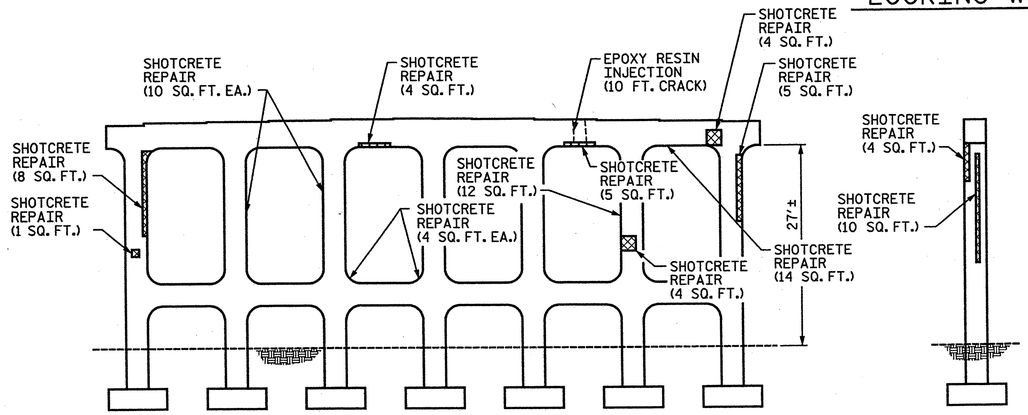

ELEVATION OF BENT 2 - LOOKING NORTH*

END VIEW OF BENT 2 LOOKING WEST*

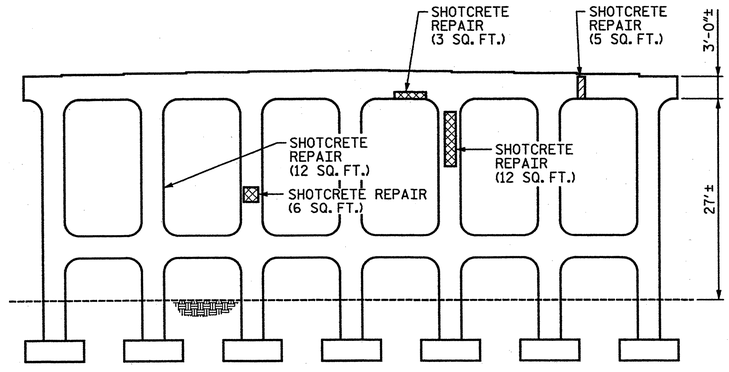

ELEVATION OF BENT 2 - LOOKING SOUTH*

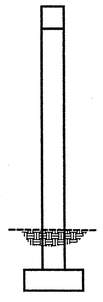

END VIEW OF BENT 2 LOOKING EAST*

------- EPOXY RESIN INJECTION

SHOTCRETE REPAIR

NOTE:

SEE NOTES AND TYPICAL REPAIR DETAILS ON SHEET 16 OF 19.

* LOOKING DIRECTION CORRESPONDS WITH DIRECTION OF TRAVEL ALONG HIGHWAY

NORTH CAROLINA PROFESSIONAL SEAL 18769 ENGINEER PAUL E. KELLY, JR.

2/24/12

STV/ Ralph Whitehead Associates, Inc.
1000 West Morehead St., Ste. 200
Charlotte, NC 28208
NC License No. F-0991

PROJECT NO. 17BP.9.P.1

FORSYTH COUNTY

BRIDGE NO.: 115

REHAB. OF BRIDGE NO. 115 SHEET 10 OF 19

STATE OF NORTH CAROLINA
DEPARTMENT OF TRANSPORTATION
RALEIGH

BENTS 1 & 2 SUBSTRUCTURE REPAIRS

BRIDGE ON US 52
OVER SR 4315 & RAILROAD

REVISIONS						SHEET NO.
NO.	BY:	DATE:	NO.	BY:	DATE:	S-59
1			3			TOTAL SHEETS
2			4			S-109

DRAWN BY : AR DATE : 01-12
CHECKED BY : AC DATE : 01-12

I:\Projects\2515385\2515385.0001\50.Deliverables & Submittals\17BP.9.P.1 Structures\17BP.9.P.1 FinalSet 01.24.12\Bridge 115\Bridge 115 Rehab Plans.dgn
quidool
2/23/2012

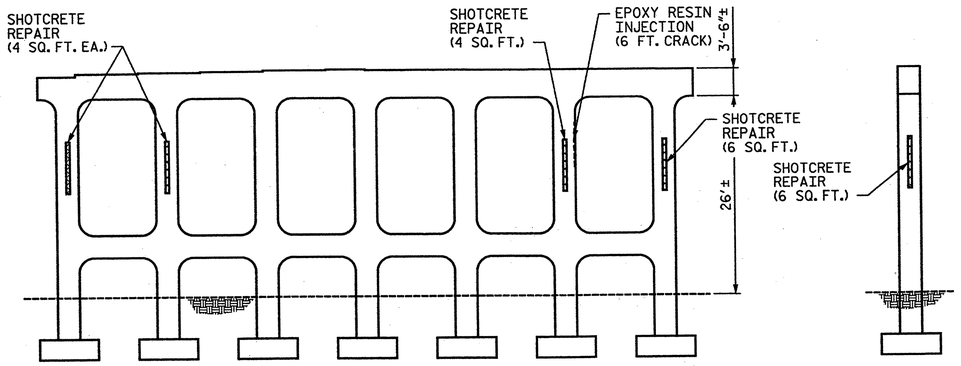

ELEVATION OF BENT 3 - LOOKING NORTH*

END VIEW OF BENT 3 LOOKING WEST*

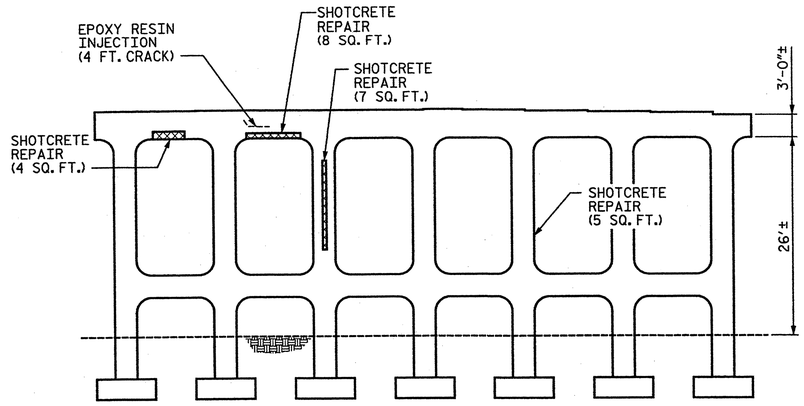

ELEVATION OF BENT 3 - LOOKING SOUTH*

END VIEW OF BENT 3 LOOKING EAST*

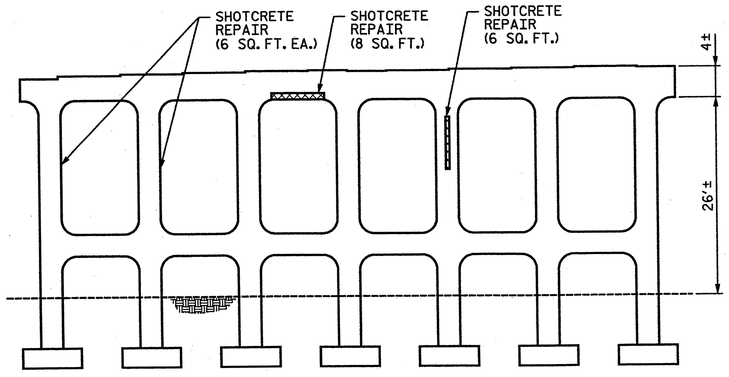

ELEVATION OF BENT 4 - LOOKING NORTH*

END VIEW OF BENT 4 LOOKING WEST*

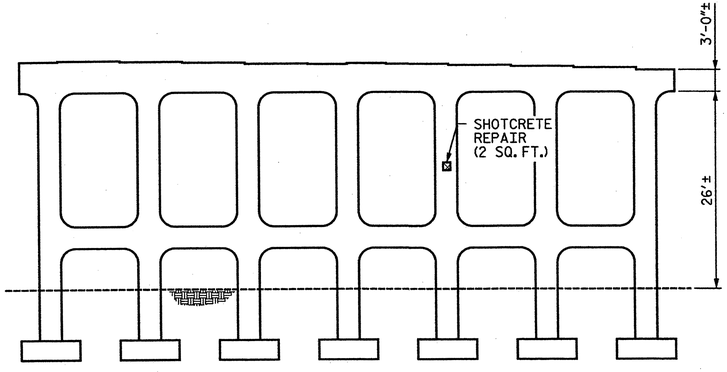

ELEVATION OF BENT 4 - LOOKING SOUTH*

END VIEW OF BENT 4 LOOKING EAST*

------- EPOXY RESIN INJECTION

SHOTCRETE REPAIR

NOTE:

SEE NOTES AND TYPICAL REPAIR DETAILS ON SHEET 16 OF 19.

* LOOKING DIRECTION CORRESPONDS WITH DIRECTION OF TRAVEL ALONG HIGHWAY

NORTH CAROLINA PROFESSIONAL SEAL 19764 ENGINEER PAUL E. KELLY, JR. 2/24/12

STV/ Ralph Whitehead Associates, Inc.
1000 West Morehead St., Ste. 200
Charlotte, NC 28208
NC License No. F-0991

PROJECT NO. 17BP.9.P.1

FORSYTH COUNTY

BRIDGE NO.: 115

REHAB. OF BRIDGE NO. 115 SHEET 11 OF 19

STATE OF NORTH CAROLINA
DEPARTMENT OF TRANSPORTATION
RALEIGH

BENTS 3 & 4 SUBSTRUCTURE REPAIRS

BRIDGE ON US 52
OVER SR 4315 & RAILROAD

REVISIONS						SHEET NO.
NO.	BY:	DATE:	NO.	BY:	DATE:	S-60
1			3			TOTAL SHEETS
2			4			S-109

DRAWN BY : AR DATE : 01-12
CHECKED BY : AC DATE : 01-12

I:\Projects\2515385\2515385.0001\50_Deliverables & Submittals\17BP.9.P.1\Structures\17BP.9.P.1 FinalSet 01_24_12\Bridge 115\Bridge 115 Rehab Plans.dgn guidool 2/23/2012

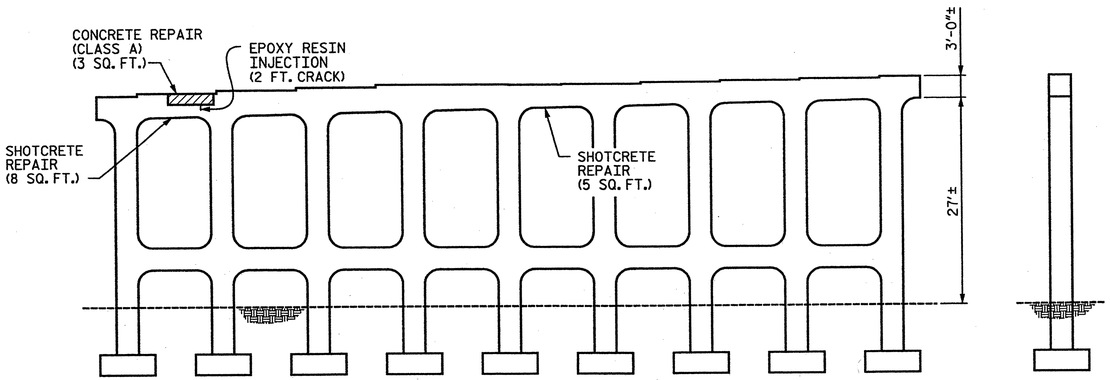

ELEVATION OF BENT 5 - LOOKING NORTH*

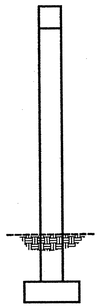

END VIEW OF BENT 5 LOOKING WEST*

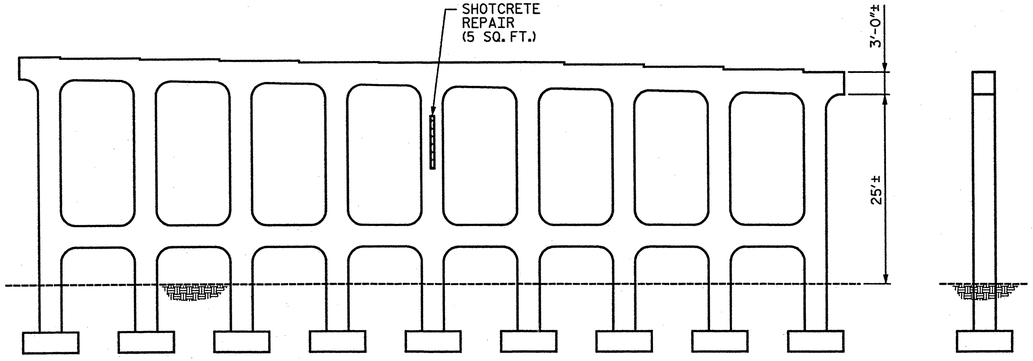

ELEVATION OF BENT 5 - LOOKING SOUTH*

END VIEW OF BENT 5 LOOKING EAST*

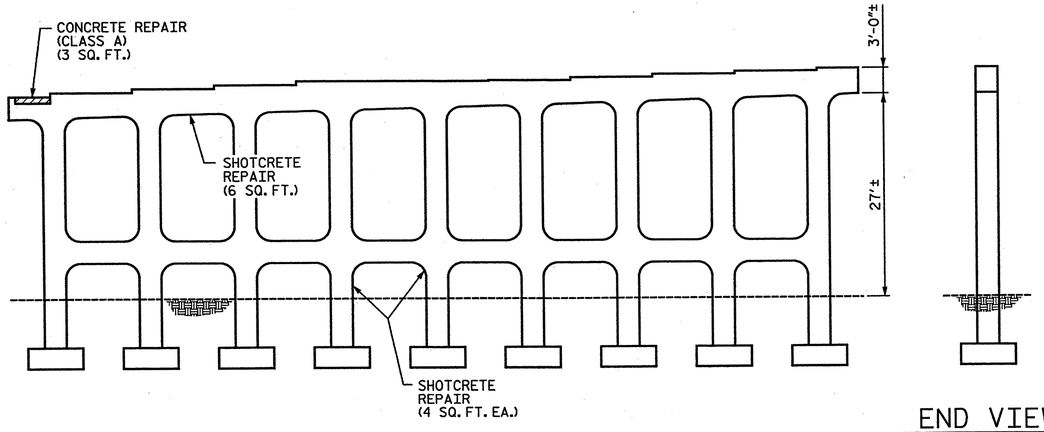

ELEVATION OF BENT 6 - LOOKING NORTH*

END VIEW OF BENT 6 LOOKING WEST*

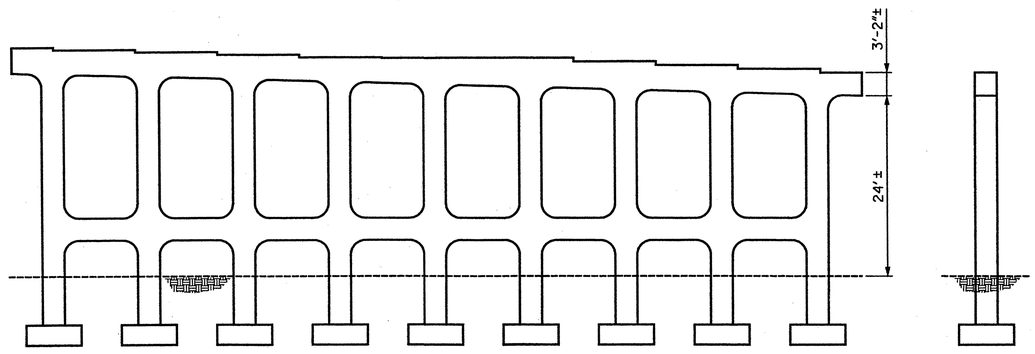

ELEVATION OF BENT 6 - LOOKING SOUTH*

END VIEW OF BENT 6 LOOKING EAST*

------- EPOXY RESIN INJECTION

CONCRETE REPAIR (CLASS A)

SHOTCRETE REPAIR

NOTE:

SEE NOTES AND TYPICAL REPAIR DETAILS ON SHEET 16 OF 19.

* LOOKING DIRECTION CORRESPONDS WITH DIRECTION OF TRAVEL ALONG HIGHWAY

NORTH CAROLINA PROFESSIONAL SEAL 19768 ENGINEER ROBERT E. KELLY, JR. 2/24/12

PROJECT NO. 17BP.9.P.1

FORSYTH COUNTY

BRIDGE NO.: 115

REHAB. OF BRIDGE NO. 115 SHEET 12 OF 19

STATE OF NORTH CAROLINA
DEPARTMENT OF TRANSPORTATION
RALEIGH

BENTS 5 & 6 SUBSTRUCTURE REPAIRS

BRIDGE ON US 52
OVER SR 4315 & RAILROAD

REVISIONS						SHEET NO.
NO.	BY:	DATE:	NO.	BY:	DATE:	S-61
1			3			TOTAL SHEETS
2			4			S-109

STV/ Ralph Whitehead Associates, Inc.
1000 West Morehead St., Ste. 200
Charlotte, NC 28208
NC License No. F-0991

DRAWN BY : AR DATE : 01-12
CHECKED BY : AC DATE : 01-12

I:\Projects\2515385\2515385.0001\50.Deliverables & Submittals\17BP.9.P.1 Structures\17BP.9.P.1 Final Set 01.24.12\Bridge 115\Bridge 115 Rehab Plans.dgn
quidool
2/23/2012

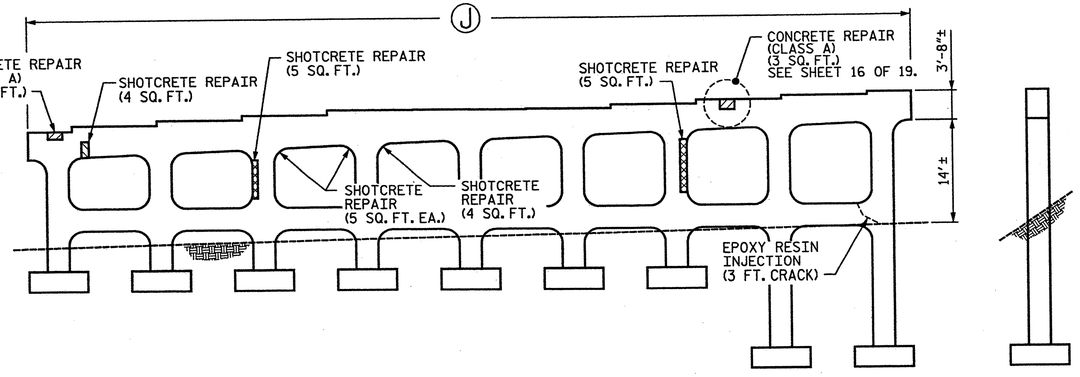

ELEVATION OF BENT 7 - LOOKING NORTH*

END VIEW OF BENT 7 LOOKING WEST*

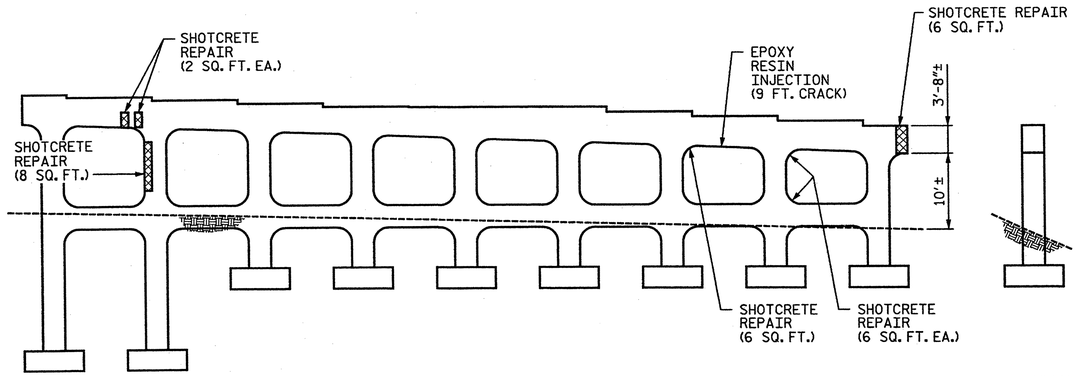

ELEVATION OF BENT 7 - LOOKING SOUTH*

END VIEW OF BENT 7 LOOKING EAST*

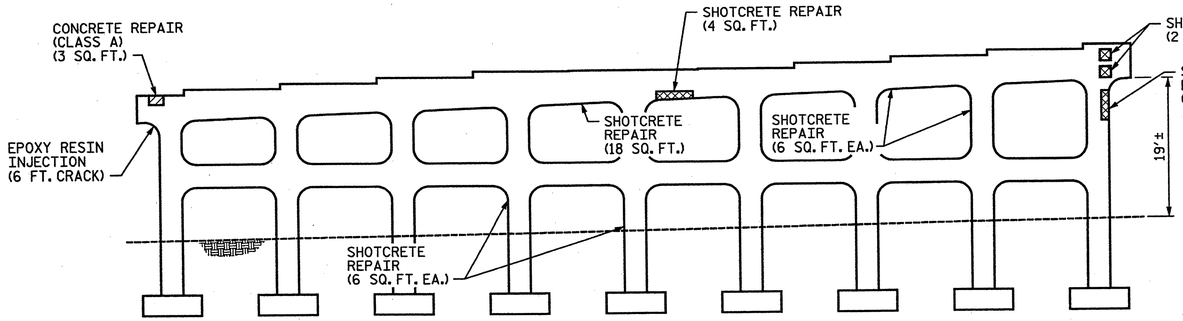

ELEVATION OF BENT 8 - LOOKING NORTH*

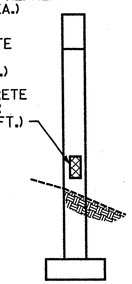

END VIEW OF BENT 8 LOOKING WEST*

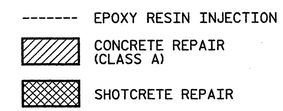

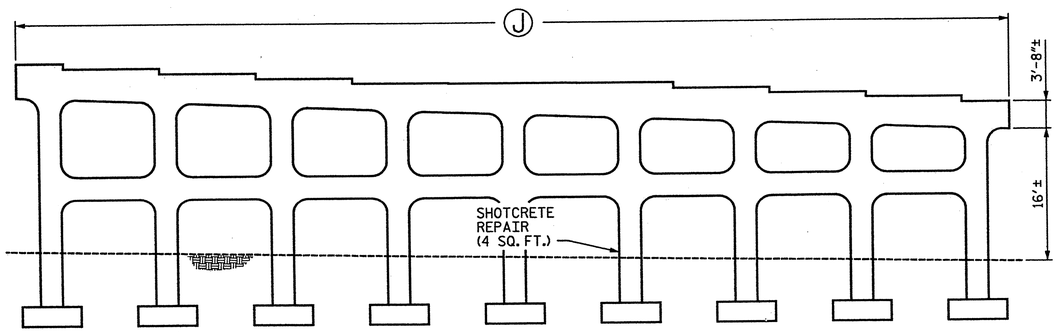

ELEVATION OF BENT 8 - LOOKING SOUTH*

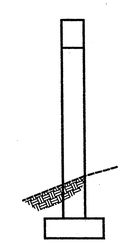

END VIEW OF BENT 8 LOOKING EAST*

NOTE:

SEE NOTES AND TYPICAL REPAIR DETAILS ON SHEET 16 OF 19.

* LOOKING DIRECTION CORRESPONDS WITH DIRECTION OF TRAVEL ALONG HIGHWAY

J - JACKING REQUIRED (SEE DETAIL ON SHEET 17 OF 19)

PROJECT NO. 17BP.9.P.1

FORSYTH COUNTY

BRIDGE NO.: 115

REHAB. OF BRIDGE NO. 115 SHEET 13 OF 19

STATE OF NORTH CAROLINA
DEPARTMENT OF TRANSPORTATION
RALEIGH

BENTS 7 & 8 SUBSTRUCTURE REPAIRS

BRIDGE ON US 52
OVER SR 4315 & RAILROAD

NORTH CAROLINA PROFESSIONAL SEAL 19765 ENGINEER PAUL E. KELLY, JR. 2/24/12

STV/ Ralph Whitehead Associates, Inc.
1000 West Morehead St., Ste. 200
Charlotte, NC 28208
NC License No. F-0991

REVISIONS						SHEET NO.
NO.	BY:	DATE:	NO.	BY:	DATE:	S-62
1			3			TOTAL SHEETS
2			4			S-109

DRAWN BY : AR DATE : 01-12
CHECKED BY : AC DATE : 01-12

I:\Projects\2515385\2515385.0001\50.Deliverables & Submittals\17BP.9.P.1\Structures\17BP.9.P.1 FinalSet 01.24.12\Bridge 115\Bridge 115 Rehab Plans.dgn

guldool

2/23/2012

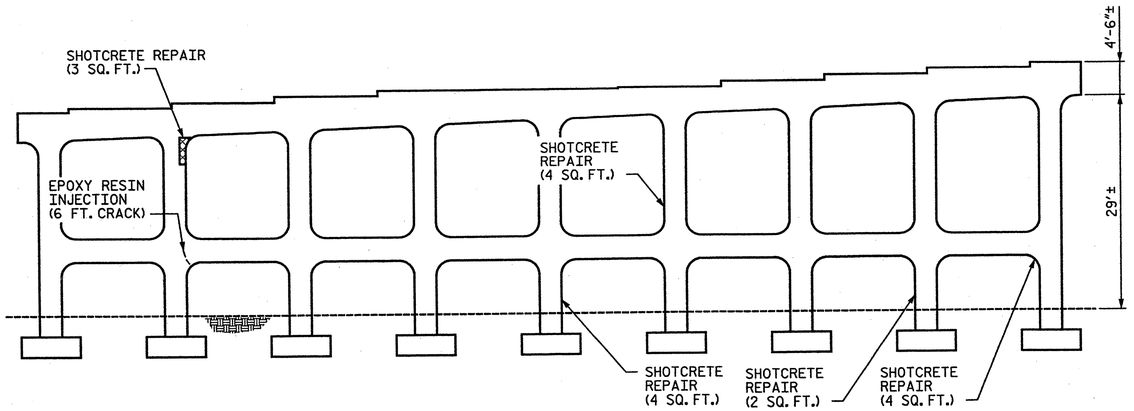

ELEVATION OF BENT 9 - LOOKING NORTH*

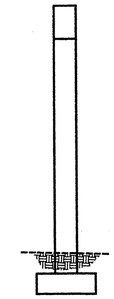

END VIEW
OF BENT 9
LOOKING WEST*

------- EPOXY RESIN INJECTION

SHOTCRETE REPAIR

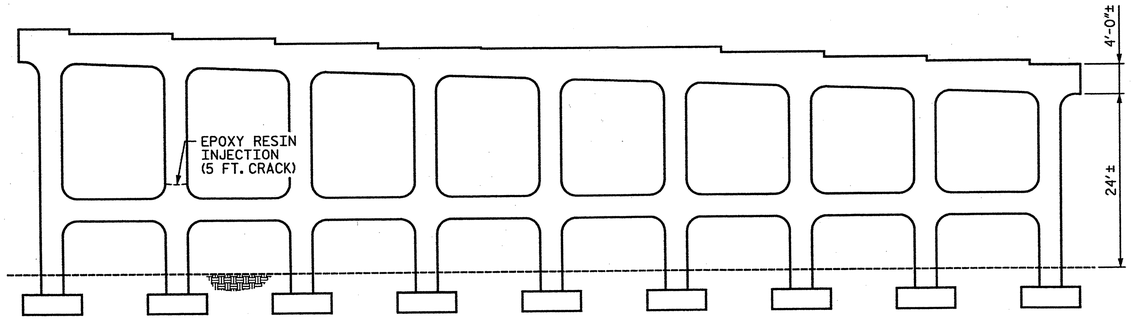

ELEVATION OF BENT 9 - LOOKING SOUTH*

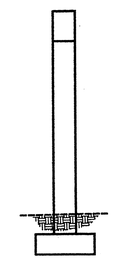

END VIEW
OF BENT 9
LOOKING EAST*

PROJECT NO. 17BP.9.P.1

FORSYTH COUNTY

BRIDGE NO.: 115

REHAB. OF BRIDGE NO. 115 SHEET 14 OF 19

NOTE:

SEE NOTES AND TYPICAL REPAIR DETAILS ON SHEET 16 OF 19.

* LOOKING DIRECTION CORRESPONDS WITH DIRECTION OF TRAVEL ALONG HIGHWAY

NORTH CAROLINA PROFESSIONAL SEAL 19765 ENGINEER PAUL E. KELLY, JR.

2/24/12

STATE OF NORTH CAROLINA
DEPARTMENT OF TRANSPORTATION
RALEIGH

BENT 9
SUBSTRUCTURE REPAIRS

BRIDGE ON US 52
OVER SR 4315 & RAILROAD

STV / Ralph Whitehead Associates, Inc.
1000 West Morehead St., Ste. 200
Charlotte, NC 28208
NC License No. F-0991

REVISIONS						SHEET NO.
NO.	BY:	DATE:	NO.	BY:	DATE:	S-63
1			3			TOTAL SHEETS
2			4			S-109

DRAWN BY : AR DATE : 01-12
CHECKED BY : AC DATE : 01-12

I:\Projects\2515385\2515385_0001\50_Deliverables & Submittals\17BP.9.P.1\Structures\17BP.9.P.1 FinalSet 01_24_12\Bridge 115\Bridge 115 Rehab Plans.dgn
guldool
2/23/2012

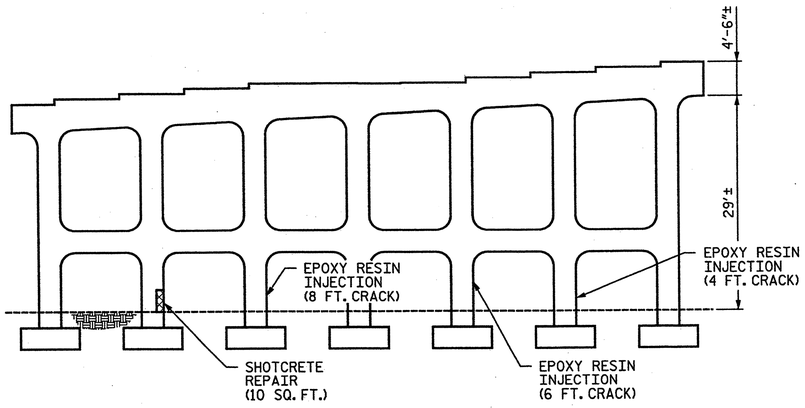

ELEVATION OF BENT 10 - LOOKING NORTH*

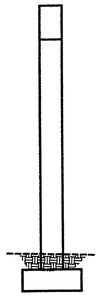

END VIEW OF BENT 10 LOOKING WEST*

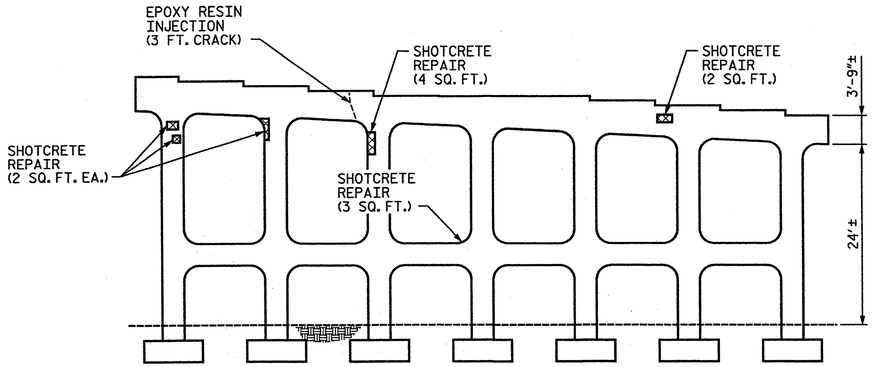

ELEVATION OF BENT 10 - LOOKING SOUTH*

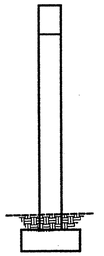

END VIEW OF BENT 10 LOOKING EAST*

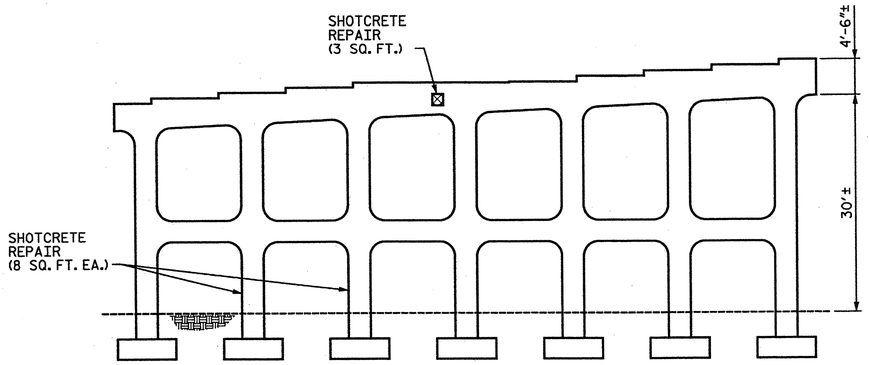

ELEVATION OF BENT 11 - LOOKING NORTH*

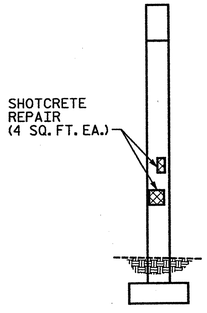

END VIEW OF BENT 11 LOOKING WEST*

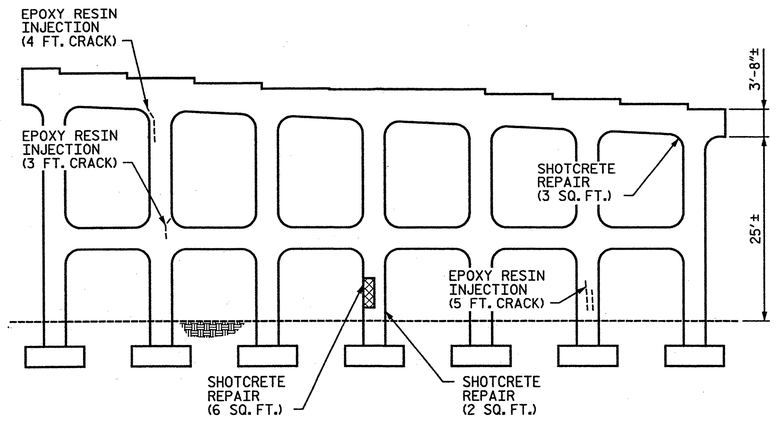

ELEVATION OF BENT 11 - LOOKING SOUTH*

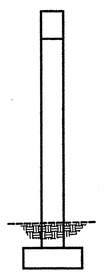

END VIEW OF BENT 11 LOOKING EAST*

------- EPOXY RESIN INJECTION

SHOTCRETE REPAIR

NOTE:

SEE NOTES AND TYPICAL REPAIR DETAILS ON SHEET 16 OF 19.

* LOOKING DIRECTION CORRESPONDS WITH DIRECTION OF TRAVEL ALONG HIGHWAY

NORTH CAROLINA PROFESSIONAL SEAL 19765 ENGINEER PAUL E. KELLY, JR. 2/24/12

STV/ Ralph Whitehead Associates, Inc.
1000 West Morehead St., Ste. 200
Charlotte, NC 28208
NC License No. F-0991

PROJECT NO. 17BP.9.P.1

FORSYTH COUNTY

BRIDGE NO.: 115

REHAB. OF BRIDGE NO. 115 SHEET 15 OF 19

STATE OF NORTH CAROLINA
DEPARTMENT OF TRANSPORTATION
RALEIGH

BENTS 10 & 11 SUBSTRUCTURE REPAIRS

BRIDGE ON US 52
OVER SR 4315 & RAILROAD

REVISIONS						SHEET NO.
NO.	BY:	DATE:	NO.	BY:	DATE:	S-64
1			3			TOTAL SHEETS
2			4			S-109

DRAWN BY : AR DATE : 01-12
CHECKED BY : AC DATE : 01-12

I:\Projects\2515395\2515385.0001\50_Deliverables & Submittals\17BP.9.P.1 Structures\17BP.9.P.1 Final Set 01_24_12\Bridge 115\Bridge 115 Rehab Plans.dgn guldool 2/23/2012

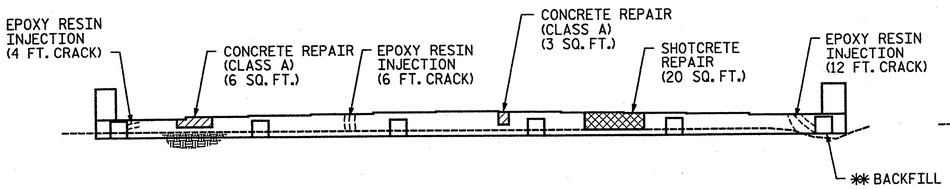

ELEVATION OF END BENT 1 - LOOKING SOUTH *

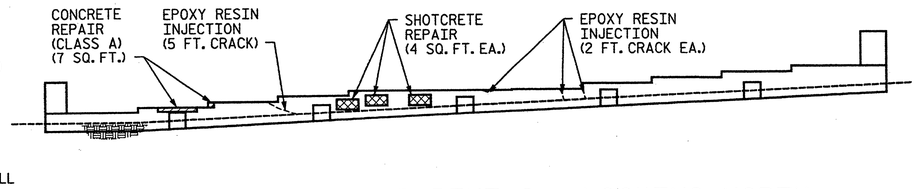

ELEVATION OF END BENT 2 - LOOKING NORTH*

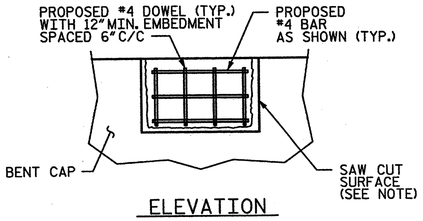

ELEVATION

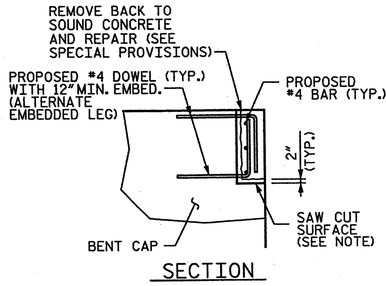

SECTION

CONCRETE REPAIRS AT BEARING LOCATIONS

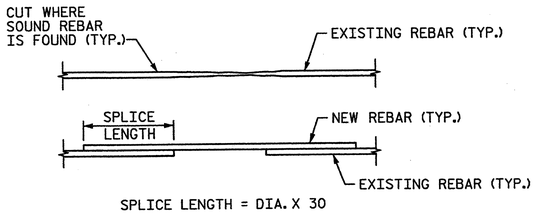

SPLICE LENGTH = DIA. X 30

DAMAGED REBAR REPAIR DETAILS

(DAMAGED REBAR AFTER REMOVAL OF MATERIAL AND BLAST CLEANING SHALL BE REPLACED AS NEEDED, AS SHOWN)

------- EPOXY RESIN INJECTION

CONCRETE REPAIR (CLASS A)

SHOTCRETE REPAIR

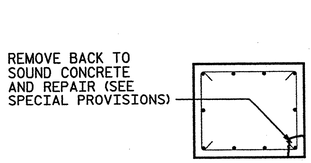

SECTION

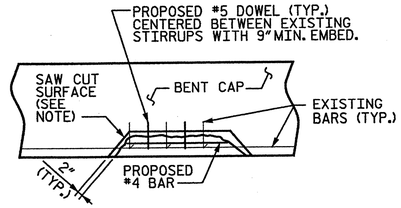

ELEVATION

CORNER REPAIR

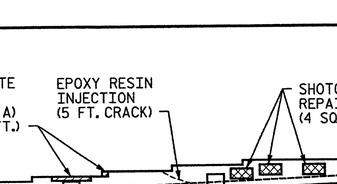

FACE REPAIR

TYPICAL SUBSTRUCTURE REPAIR DETAILS

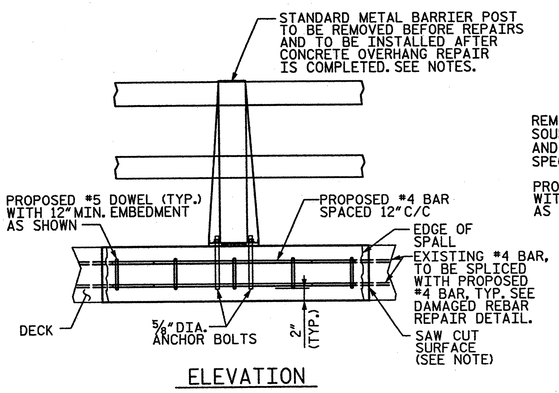

ELEVATION

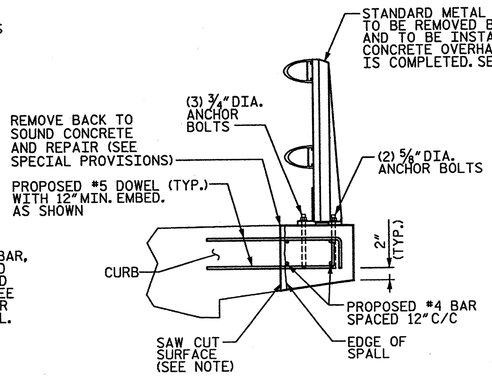

SECTION

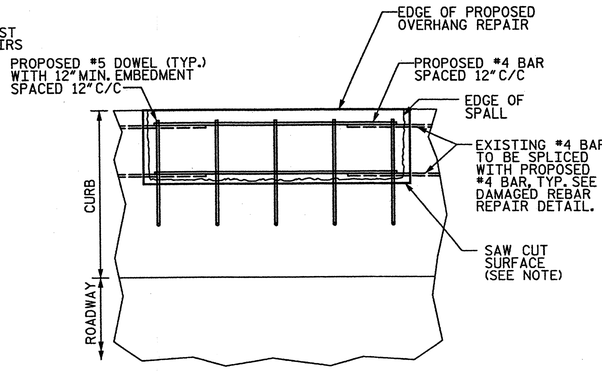

PLAN

TYPICAL OVERHANG REPAIR DETAILS

* LOOKING DIRECTION CORRESPONDS WITH DIRECTION OF TRAVEL ALONG HIGHWAY

** BACKFILL WITH CLASS II SELECT MATERIAL AS SPECIFIED IN THE STANDARD SPECIFICATIONS, SECTION 1016, "SELECT MATERIALS".

NOTES:

CONCRETE SHALL BE SOUNDED TO DETERMINE THE EXTENT OF ALL CONCRETE REPAIRS.

FOR CRACKS REQUIRING EPOXY RESIN INJECTION, SOUNDING MAY PROVE THAT A CONCRETE REPAIR IS NECESSARY.

SPALL, CRACK, AND DELAMINATION DIMENSIONS SHOWN ARE APPROXIMATE. CONTRACTOR SHALL DETERMINE ACTUAL SPALL, CRACK, AND DELAMINATION DIMENSIONS PRIOR TO MAKING REPAIRS.

THE ENGINEER SHALL BE NOTIFIED OF ANY BARS DAMAGED DURING THE CONCRETE REMOVAL PROCESS. REPAIRS TO DAMAGED BARS SHALL BE DIRECTED BY THE ENGINEER AND COMPLETED AT NO ADDITIONAL COST.

DOWEL LENGTH SHALL BE BASED ON A 9" EMBEDMENT INTO EXISTING CONCRETE AND MAY BE ADJUSTED BASED ON THE MINIMUM EMBEDMENT SPECIFIED BY THE MANUFACTURER OF THE EPOXY ADHESIVE BONDING SYSTEM.

REINFORCING STEEL SHALL BE GRADE 60.

OVERHANG REPAIRS SHALL USE CLASS AA CONCRETE WITH FORMWORK USED DURING POURING AND THE COST SHALL BE INCLUDED IN THE CONCRETE REPAIRS PAY ITEM.

FOR DECK OVERHANG REPAIRS, CONTRACTOR SHALL INSTALL A METHOD OF CONTAINMENT TO CAPTURE DEBRIS & TO ENSURE CONTAINMENT OF REPAIR MATERIALS.

ANCHOR BOLTS AT METAL RAILING TO BE STAINLESS STEEL ASTM A449 WITH A MINIMUM 70,000 PSI ULTIMATE STRENGTH.

ANCHOR BOLTS AT METAL RAILING TO HAVE MINIMUM 7" EMBEDMENT INTO CONCRETE.

METAL RAILING POST IS TO BE REMOVED DURING OVERHANG REPAIRS. TEMPORARY CONCRETE BARRIERS SHALL BE INSTALLED AND SECURED AROUND THE AREA OF REPAIR TO PROTECT ON-COMING TRAFFIC.

CONTRACTOR SHALL SAW CUT TO A MAXIMUM DEPTH OF 1". THIS DEPTH SHALL BE REDUCED TO PREVENT DAMAGE TO EXISTING REINFORCEMENT, BUT SHALL BE NO LESS THAN 1/2". CONTRACTOR SHALL REMOVE SURFACE CONCRETE TO VERIFY THAT SAW CUT DEPTH WILL NOT DAMAGE EXISTING REINFORCING STEEL.

EPOXY PROTECTIVE COATING SHALL BE APPLIED TO THE TOP OF ALL BENT CAPS AND THE COST SHALL BE INCLUDED IN THE VARIOUS PAY ITEMS. NO SEPERATE MEASUREMENT OR PAYMENT WILL BE MADE FOR THIS WORK.

AS-BUILT PLANS INDICATE THE PRESENCE OF CONDUITS IN THE CURB OF THE SUPERSTRUCTURE. CONTRACTOR SHALL LOCATE AND ENSURE THAT CONDUITS ARE PROTECTED PRIOR TO REPAIR WORK.

ALL COST ASSOCIATED WITH BACK FILLING SHALL BE INCIDENTAL TO SEVERAL PAY ITEMS.

PROJECT NO. 17BP.9.P.1

FORSYTH COUNTY

BRIDGE NO.: 115

REHAB. OF BRIDGE NO. 115 SHEET 16 OF 19

STATE OF NORTH CAROLINA
DEPARTMENT OF TRANSPORTATION
RALEIGH

END BENTS 1 & 2 SUBSTRUCTURE REPAIRS

BRIDGE ON US 52
OVER SR 4315 & RAILROAD

NORTH CAROLINA PROFESSIONAL SEAL 19765 ENGINEER ANDREW E. KELLY
2/21/12

STV/ Ralph Whitehead Associates, Inc.
1000 West Morehead St., Ste. 200
Charlotte, NC 28208
NC License No. F-0991

REVISIONS						SHEET NO.
NO.	BY:	DATE:	NO.	BY:	DATE:	S-65
1			3			TOTAL SHEETS
2			4			S-109

DRAWN BY : AR DATE : 01-12
CHECKED BY : AC DATE : 01-12

I:\Projects\2515385\2515385.0001\50_Deliverables & Submittals\17BP.9.P.1\Structures\17BP.9.P.1 Final Set 01.24.12\Bridge 115\Bridge 115 Rehab Plans.dgn
guldool
2/23/2012

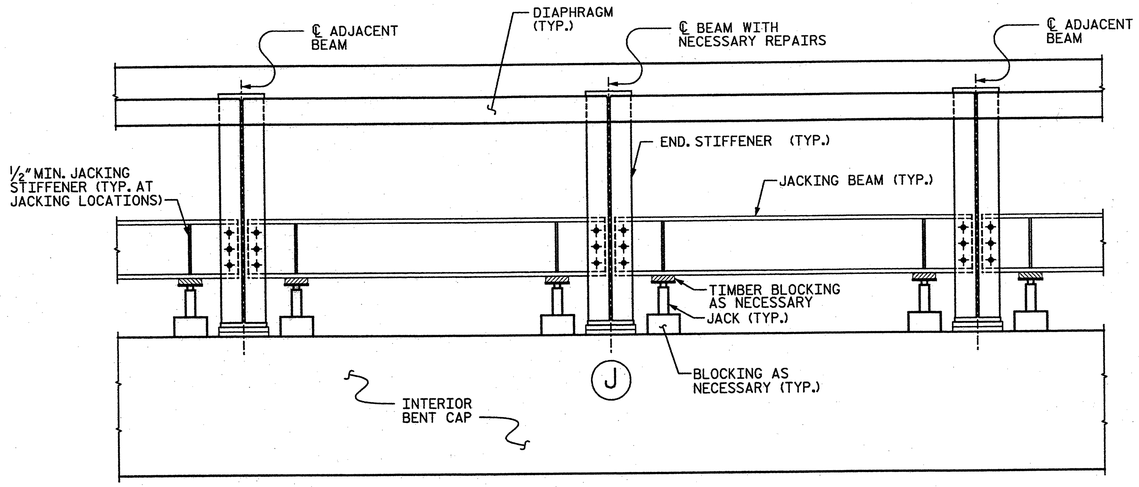

BEAM JACKING DETAIL

(J) JACKING FOR PROPOSED REPAIR LOCATION

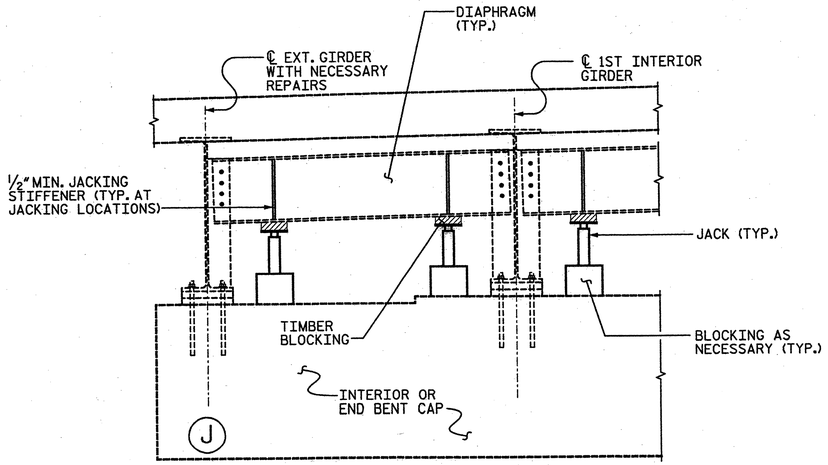

GIRDER JACKING DETAIL AT EXTERIOR GIRDER

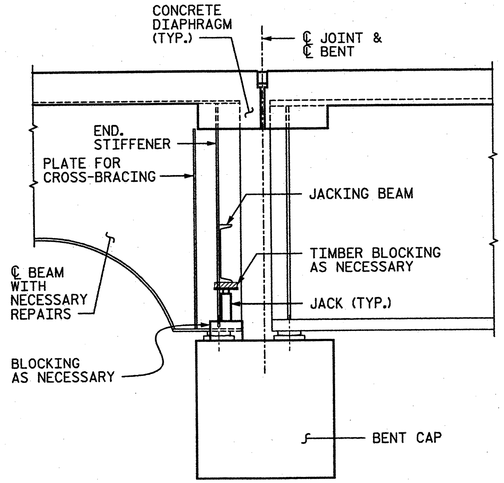

TYPICAL SECTION @ JACKING LOCATION

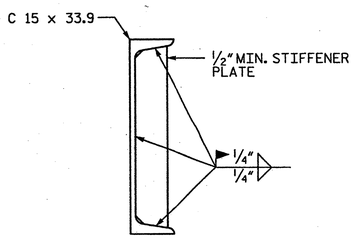

JACKING STIFFENER DETAIL

CONSTRUCTION SEQUENCE:

1. INSTALL JACKING BEAM AND BLOCKING AS SHOWN.
2. MODIFY EXISTING DIAPHRAGM AS SHOWN.
3. INSTALL JACKS AND BLOCKING AT LOCATIONS SHOWN ON PLANS.
4. REMOVE NECESSARY NUTS ON ANCHOR BOLTS.
5. JACK GIRDERS A MAXIMUM OF ⅛" IN ORDER TO RELIEVE LOAD ON BENT CAP UNDER BEARINGS.
6. MECHANICALLY LOCK ALL JACKS AT BENT.
7. PERFORM CONCRETE REPAIRS AT SPECIFIED LOCATIONS.
8. ONCE ALL REPAIRS ARE COMPLETE, LOWER BRIDGE. CONTRACTOR SHALL NOT LOWER BRIDGE UNTIL CONCRETE REPAIR MATERIAL HAS REACHED A COMPRESSIVE STRENGTH OF 3000 PSI.

NOTE: THE CONTRACTOR HAS THE OPTION TO PROPOSE AN ALTERNATE CONSTRUCTION SEQUENCE FOR THE APPROVAL OF THE ENGINEER.

NOTES:

JACKING DETAILS SHOWN ARE CONCEPTUAL AND CONSIDERED A MINIMUM. THE CONTRACTOR SHALL PROVIDE JACKING PLANS FOR ALL GIRDERS LIFTED FOR APPROVAL BY THE ENGINEER PRIOR TO ANY JACKING OPERATIONS. THE CAPACITY OF JACKING BEAMS MUST BE VERIFIED FOR JACKING OPERATION. JACKING SHALL BE PERFORMED SUCH THAT BRIDGE CAN REMAIN OPEN TO TRAFFIC DURING JACKING OPERATIONS.

JACKING PLANS SHALL BE SIGNED AND SEALED BY LICENSED PROFESSIONAL ENGINEER REGISTERED IN NORTH CAROLINA.

THE CONTRACTOR SHALL PROVIDE BLOCKING FOR ALL JACKS AS NECESSARY. A BLOCKING PLAN SHALL BE INCLUDED AS PART OF THE JACKING PLAN.

THE CONTRACTOR SHALL JACK GIRDERS ON AN INDIVIDUAL BENT SIMULTANEOUSLY BY MEANS OF A DUAL-FLOW PRESSURIZED PUMP CONTROLLING THE JACKS.

THE CONTRACTOR SHALL MONITOR THE PLAN LOCATION OF THE GIRDERS FROM INITIAL JACKING UNTIL GIRDERS ARE SECURED ON THEIR PERMANENT BEARINGS. IF THE PLAN LOCATION OF THESE GIRDERS SHIFT FROM ITS ORIGINAL POSITION, THE CONTRACTOR SHALL SECURE FROM ADDITIONAL MOVEMENT IMMEDIATELY. NOTIFY ENGINEER PRIOR TO PROCEEDING WORK OPERATIONS.

EACH JACK SHALL HAVE A MINIMUM SAFE WORKING CAPACITY OF 75 TONS.

PRIOR TO JACKING THE CONTRACTOR SHALL ENSURE THERE ARE NO OBSTACLES PREVENTING THE SPAN FROM BEING LIFTED.

ONCE SPAN HAS BEEN JACKED, CONTRACTOR SHALL INSTALL A MECHANICAL LOCKING DEVICE TO ENSURE THAT GIRDER WILL NOT BE LOWERED DURING CURING OF CONCRETE.

CONTRACTOR TO TAKE APPROPRIATE MEANS TO REMOVE NUT ON ANCHOR BOLT WITHOUT DAMAGING THE ANCHOR BOLT. CONTRACTOR SHALL SUBMIT NUT REMOVAL METHOD TO INCLUDE PROCEDURES THAT WILL LOOSEN BOND BETWEEN INTERLOCKING THREADS TO ENGINEER FOR APPROVAL PRIOR TO REMOVING ANCHOR BOLT NUTS.

IN NO CIRCUMSTANCES SHOULD THE JACKING BE SOLELY SUPPORTED BY THE DIAPHRAGM. JACKS SHOULD BE CENTERED UNDER JACKING BEAM/ DIAPHRAGM AND BLOCKING.

PROJECT NO. 17BP.9.P.1
FORSYTH COUNTY
BRIDGE NO.: 115
REHAB. OF BRIDGE NO. 115 SHEET 17 OF 19

STATE OF NORTH CAROLINA
DEPARTMENT OF TRANSPORTATION
RALEIGH

JACKING DETAILS

BRIDGE ON US 52
OVER SR 4315 & RAILROAD

NORTH CAROLINA PROFESSIONAL SEAL 19765 ENGINEER PAUL E. KELLY, JR. 1/18/12

STV/ Ralph Whitehead Associates, Inc.
1000 West Morehead St., Ste. 200
Charlotte, NC 28208
NC License No. F-0991

REVISIONS						SHEET NO.
NO.	BY:	DATE:	NO.	BY:	DATE:	S-66
1			3			TOTAL SHEETS
2			4			S-109

DRAWN BY : AR DATE : 01-12
CHECKED BY : AC DATE : 01-12

I:\Projects\2515385\2515385.0001\50_Deliverables & Submittals\17BP.9.P.1 Final Set 01.12.12\17BP.9.P.1 Final Set 01.12.12\Bridge 115\Bridge 115 Rehab Plans.dgn
dveyac
1/18/2012

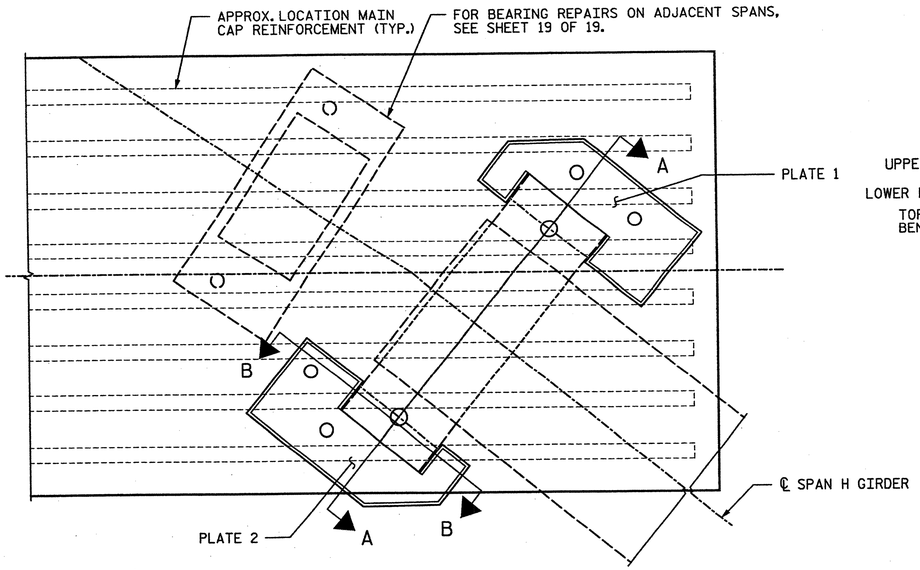

TYPICAL BEARING RESTRAINT SYSTEM

(FOR BEARING OF GIRDER H10 AND H12 AT BENT 8 ONLY)
(GIRDER H12 SHOWN AT BENT 8, GIRDER H10 AT BENT 8 SIMILAR)

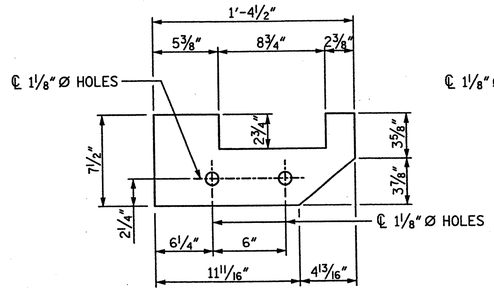

PLATE 1

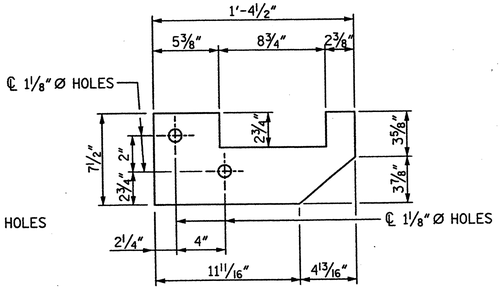

PLATE 2

UPPER PLATE

(ALL PLATES HAVE A THICKNESS OF 1″)

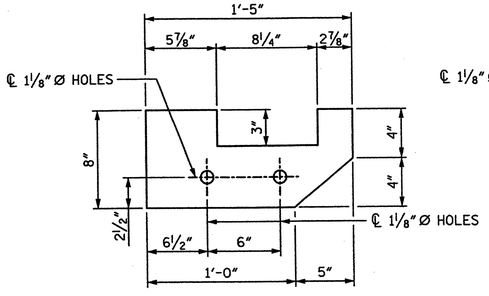

PLATE 1

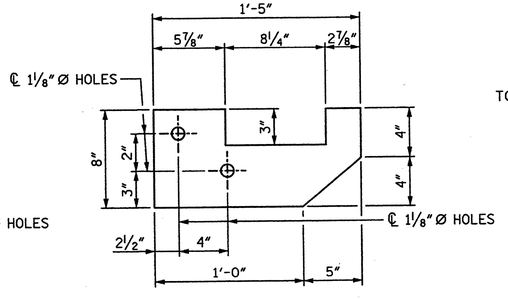

PLATE 2

LOWER PLATE

(ALL PLATES HAVE A THICKNESS OF 1″)

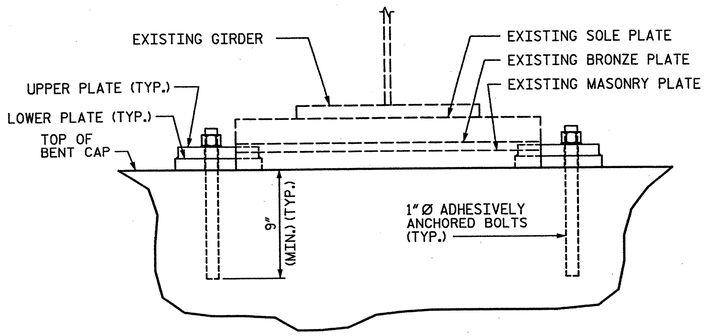

SECTION A-A

(EXISTING ANCHOR BOLTS NOT SHOWN FOR CLARITY)

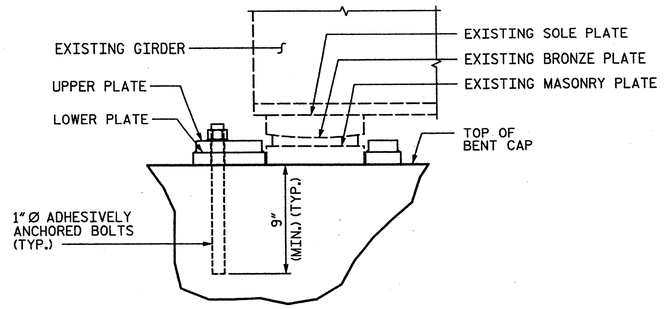

SECTION B-B

(EXISTING ANCHOR BOLTS NOT SHOWN FOR CLARITY)

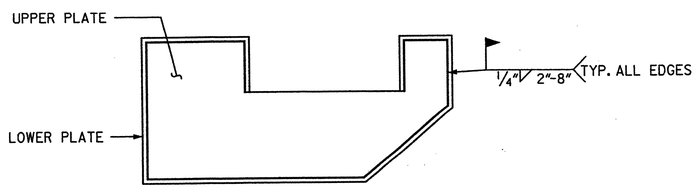

PLAN

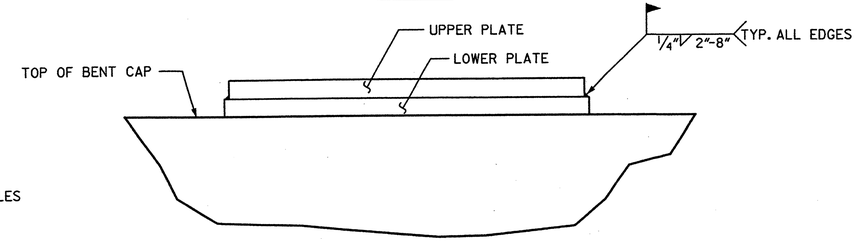

SECTION

PLATE WELD DETAIL

NOTES:

1. SEE SHEET 1 OF 19 FOR ADDITIONAL NOTES.
2. ALL STEEL SHALL BE AASHTO M270 GRADE 36 OR APPROVED EQUAL.
3. 1⅛″Ø HOLES ARE FOR 1″Ø ANCHOR BOLTS. CONTRACTOR SHALL USE LOWER PLATE AS A TEMPLATE FOR DRILLING AND ADHESIVELY ANCHORING THE ANCHOR BOLTS.
4. ANCHOR BOLTS SHALL BE 1″Ø A325 BOLTS WITH CORRESPONDING NUTS AND WASHERS.
5. FOR ADHESIVELY ANCHORED ANCHOR BOLTS, SEE THE STANDARD SPECIFICATIONS.
6. LOWER PLATES SHALL BE INSTALLED SUCH THAT EXISTING MASONRY PLATE HAS FULL CONTACT WITH PLATE NOTCH AS SHOWN. UPPER PLATE SHALL BE PLACED FLUSH AGAINST SHORT EDGE OF EXISTING MASONRY PLATE AND HAVE A ¼″ OFFSET ON ALL OTHER EDGES IN REGARD TO THE LOWER PLATE.
7. ALL WELDING SHALL BE DONE IN ACCORDANCE WITH CURRENT AWS SPECIFICATIONS.

PROJECT NO. 17BP.9.P.1
FORSYTH COUNTY
BRIDGE NO.: 115
REHAB. OF BRIDGE NO. 115 SHEET 18 OF 19

STATE OF NORTH CAROLINA
DEPARTMENT OF TRANSPORTATION
RALEIGH

SPAN H BEARING RESTRAINT SYSTEM

BRIDGE ON US 52
OVER SR 4315 & RAILROAD

NORTH CAROLINA PROFESSIONAL SEAL 19726 ENGINEER PAUL E. KELLY, JR.
2/17/12

STV/ Ralph Whitehead Associates, Inc.
1000 West Morehead St., Ste. 200
Charlotte, NC 28208
NC License No. F-0991

REVISIONS						SHEET NO.
NO.	BY:	DATE:	NO.	BY:	DATE:	S-66A
1			3			TOTAL SHEETS
2			4			S-109

DRAWN BY : TJT DATE : 01-12
CHECKED BY : AJP DATE : 01-12

I:\Projects\2515385\2515385.0001\50.Deliverables & Submittals\17BP.9.P.1 Structures\17BP.9.P.1 FinalSet 01.24.12\Bridge 115\SPAN H BEARING.dgn
guidool
2/17/2012

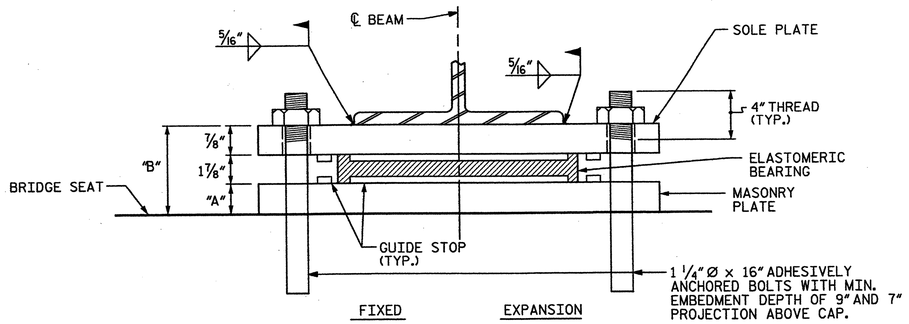

END VIEW

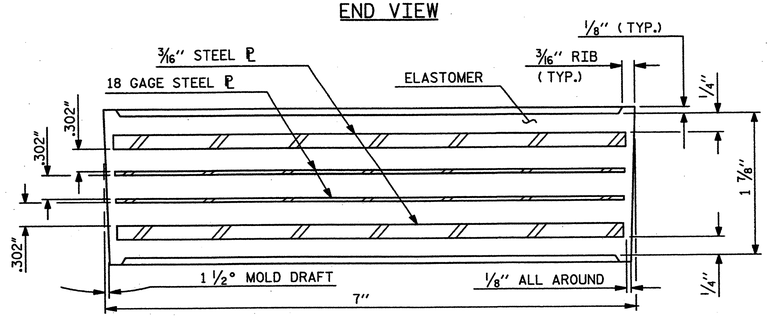

TYPICAL SECTION OF ELASTOMERIC BEARING

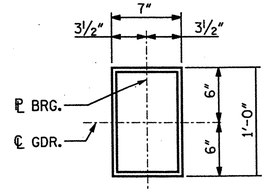

C1 (24 REQ'D)

PLAN VIEW OF ELASTOMERIC BEARING

TYPE CUSTOM

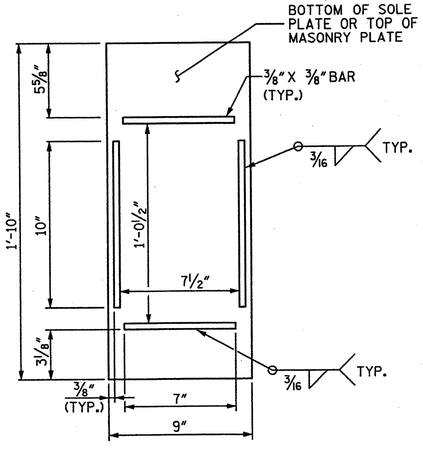

GUIDE STOP DETAILS

(HOLES NOT SHOWN FOR CLARITY)

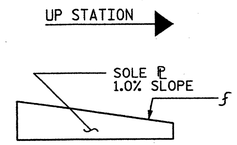

SOLE ℙ PLACEMENT DETAIL

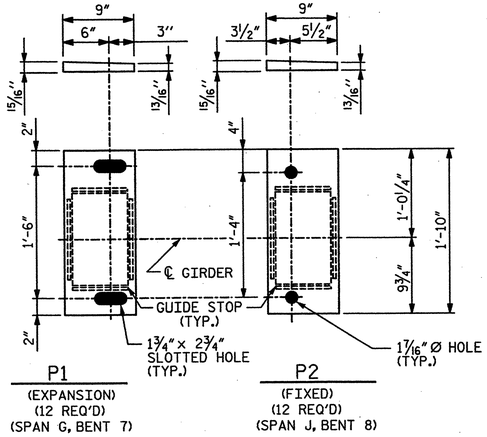

SOLE PLATE DETAILS

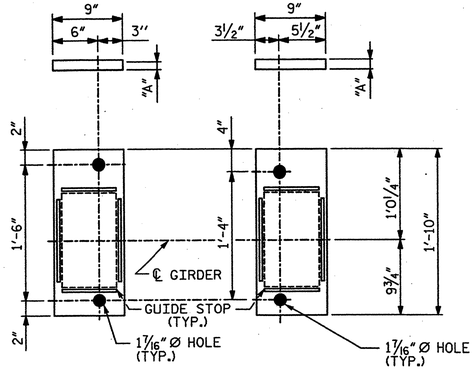

MASONRY PLATE DETAILS

NOTES

AT ALL FIXED POINTS OF SUPPORT, NUTS FOR ANCHOR BOLTS ARE TO BE TIGHTENED FINGER TIGHT AND THEN BACKED OFF 1/2 TURN. THE THREAD OF THE NUT AND BOLT SHALL THEN BE BURRED WITH A SHARP POINTED TOOL.

THE 1 1/2"Ø PIPE SLEEVE SHALL BE CUT FROM SCHEDULE 40 PVC PLASTIC PIPE. THE PVC PLASTIC PIPE SHALL MEET THE REQUIREMENTS OF ASTM D1785.

ALL NEW SOLE PLATES, ANCHOR BOLTS, NUTS AND WASHERS SHALL BE GALVANIZED IN ACCORDANCE WITH THE STANDARD SPECIFICATIONS.

REPAIR GALVANIZING DAMAGED DUE TO WELDING OR HANDLING IN ACCORDANCE WITH THE STANDARD SPECIFICATIONS.

STEEL FOR SOLE PLATES AND MASONRY PLATES SHALL BE AASHTO M270 GRADE 36.

ANCHOR BOLTS SHALL MEET THE REQUIREMENTS OF ASTM A449. NUTS SHALL MEET THE REQUIREMENTS OF AASHTO M291-DH. WASHERS SHALL MEET THE REQUIREMENTS OF AASHTO M293. SHOP DRAWINGS ARE NOT REQUIRED FOR ANCHOR BOLTS, NUTS AND WASHERS. SHOP INSPECTION IS REQUIRED.

FOR ADHESIVELY ANCHORED BOLTS, SEE SPECIAL PROVISIONS.

THE CONTRACTOR SHALL TAKE NECESSARY PRECAUTIONS TO NOT DAMAGE THE MAIN REINFORCING STEEL IN THE CAP.

WHEN FIELD WELDING THE SOLE PLATE TO THE GIRDER FLANGE, USE TEMPERATURE INDICATING WAX PENS, OR OTHER SUITABLEMEANS, TO ENSURE THAT THE TEMPERATURE OF THE SOLE PLATE DOES NOT EXCEED 300°F. TEMPERATURES ABOVE THIS MAY DAMAGE THE ELASTOMER.

ALL SURFACES OF BEARING PLATES SHALL BE SMOOTH AND STRAIGHT.

STRUCTURAL STEEL FOR BEARING ASSEMBLIES SHALL BE INCLUDED IN THE CONTRACT BID PRICE FOR STRUCTURAL STEEL REPAIRS. THE BID PRICE SHALL BE FULL PAYMENT FOR ALL LABOR, MATERIALS, INSTALLATION AND ALL INCIDENTALS REQUIRED TO COMPLETE THE WORK.

PRIOR TO PLATE FABRICATION, CONTRACTOR SHALL FIELD VERIFY EXISTING BEARING HEIGHTS AND DIMENSIONS TO ENSURE PROPER FIT OF PROPOSED PLATES.

MASONRY PLATE			
TYPE	"A"	"B"	* REQ'D
G1	1 3/4"	4 1/2"	1
G2	1 5/8"	4 3/8"	1
G3	2 1/16"	4 13/16"	1
G4	1 7/8"	4 5/8"	1
G5	1 3/8"	4 1/8"	1
G6	1 11/16"	4 7/16"	1
G7	1 3/4"	4 1/4"	1
G8	1 1/2"	4 1/4"	1
G9	1 5/16"	4 1/16"	1
G10	1 5/8"	4 3/8"	1
G11	1 1/4"	4"	1
G12	1 3/16"	3 15/16"	1

MASONRY PLATE			
TYPE	"A"	"B"	* REQ'D
J1	2 9/16"	5 5/16"	1
J2	1 15/16"	4 11/16"	1
J3	2 3/4"	5 1/2"	1
J4	2 3/8"	5 1/8"	1
J5	2 5/16"	5 1/16"	1
J6	2 7/16"	5 3/16"	1
J7	2 1/8"	4 7/8"	1
J8	2 3/16"	4 15/16"	1
J9	2 3/4"	5 1/2"	1
J10	2 7/16"	5 3/16"	1
J11	2 5/8"	5 3/8"	1
J12	2 3/8"	5 1/8"	1

-LOAD RATINGS-	
	MAX.D.L.+L.L.
TYPE C	84 K

PROJECT NO. 17BP.9.P.1

FORSYTH COUNTY

BRIDGE NO.: 115

REHAB. OF BRIDGE NO. 115 SHEET 19 OF 19

STATE OF NORTH CAROLINA
DEPARTMENT OF TRANSPORTATION
RALEIGH

SPAN G AND J BEARING DETAILS

BRIDGE ON US 52
OVER SR 4315 & RAILROAD

STV / Ralph Whitehead Associates, Inc.
1000 West Morehead St., Ste. 200
Charlotte, NC 28208
NC License No. F-0991

REVISIONS						SHEET NO.
NO.	BY:	DATE:	NO.	BY:	DATE:	S-66B
1			3			TOTAL SHEETS
2			4			S-109

DRAWN BY : AR DATE : 01-12
CHECKED BY : AC DATE : 01-12

I:\Projects\2515385\2515385_0001\50.Deliverables & Submittals\17BP.9.P.1\Structures\17BP.9.P.1 FinalSet 01.24.12\Bridge 115\Bridge 115 BEARING DETAILS.dgn
quidool
2/17/2012

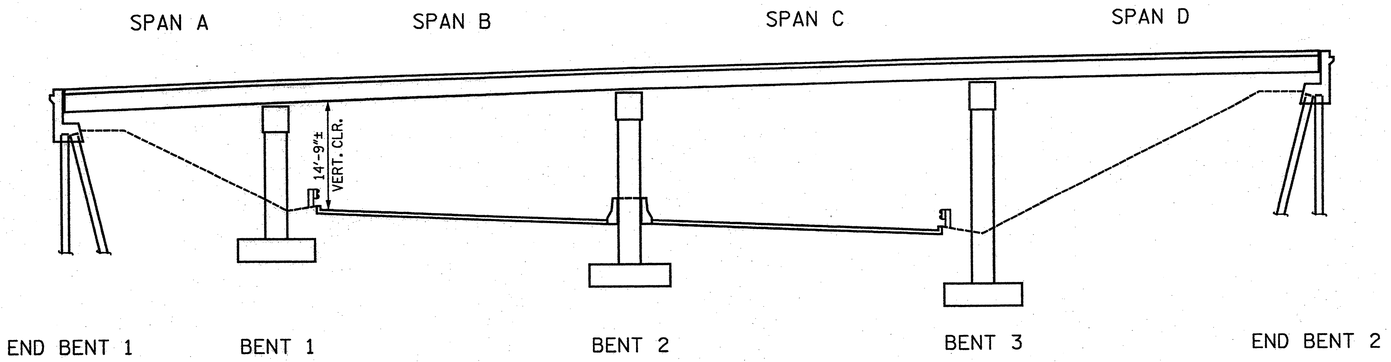

ELEVATION

(SECTIONS AT BENTS AND END BENTS ARE AT RIGHT ANGLES)

NOTES:

FOR GENERAL NOTES, SEE SHEET NO. S-1 OF S-109.

SEE BRIDGE NO. 185 SHEETS 3, 4, 5, 6, 7, 8, 10, 11 & 12 OF 12 FOR ADDITIONAL NOTES.

EXISTING BRIDGE INFORMATION BASED ON BEST AVAILABLE DATA.

AFTER ALL REPAIRS ON THE BRIDGE HAVE BEEN COMPLETED, AN EPOXY PROTECTIVE COATING SHALL BE APPLIED TO THE TOP SURFACE OF BENT CAPS, INCLUDING PEDESTALS, FOR EACH BENT BELOW A JOINT IN THE SUPERSTRUCTURE. CAP SURFACES SHALL BE GRIT BLASTED PRIOR TO EPOXY COATING. SEE STANDARD SPECIFICATIONS FOR EPOXY COATING. ALL COSTS ASSOCIATED WITH APPLYING EPOXY PROTECTIVE COATING SHALL BE INCLUDED IN THE SEVERAL PAY ITEMS FOR THE PROJECT. NO ADDITIONAL PAYMENT WILL BE MADE FOR THIS WORK.

THOROUGHLY CLEAN GIRDERS FOR 3' EITHER SIDE OF BEARINGS AT INTERIOR BENTS AND 3' FROM END OF GIRDERS AT END BENTS IN ACCORDANCE WITH ARTICLE 442-7(A) OF THE STANDARD SPECIFICATIONS.

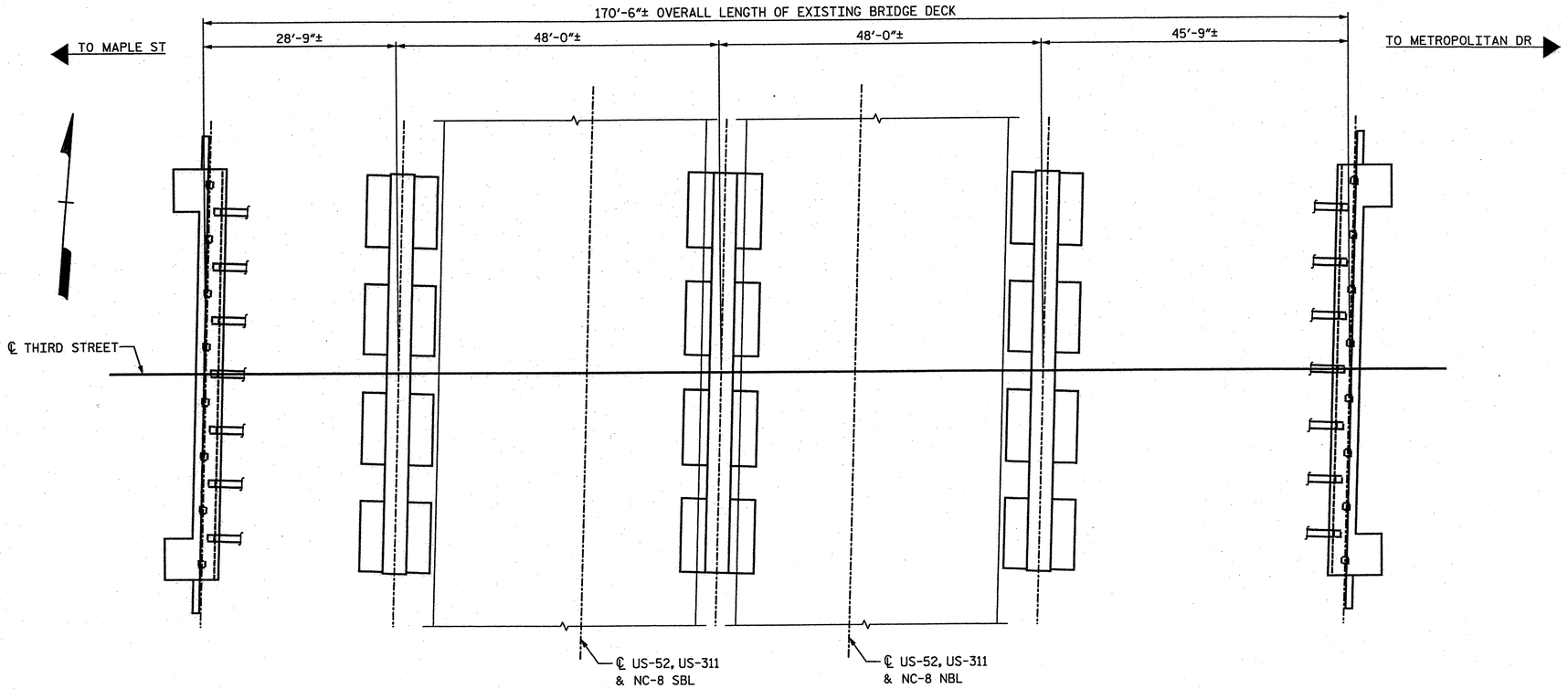

PLAN

PROJECT NO. 17BP.9.P.1

FORSYTH COUNTY

BRIDGE NO.: 185

REHAB. OF BRIDGE NO. 185 SHEET 1 OF 12

STATE OF NORTH CAROLINA
DEPARTMENT OF TRANSPORTATION
RALEIGH

GENERAL PLAN & ELEVATION

BRIDGE ON THIRD STREET OVER US-52, US-311 & NC-8

NORTH CAROLINA PROFESSIONAL SEAL 19765 ENGINEER JOHN E. KELLY, JR. 1/18/12

STV/ Ralph Whitehead Associates, Inc.
1000 West Morehead St., Ste. 200
Charlotte, NC 28208
NC License No. F-0991

REVISIONS						SHEET NO.
NO.	BY:	DATE:	NO.	BY:	DATE:	S-67
1			3			TOTAL SHEETS
2			4			S-109

DRAWN BY : AFM DATE : 01-12
CHECKED BY : AC DATE : 01-12

I:\Projects\2515385\2515385.000\SD_Deliverables & Submittals\17BP.9.P.1\Structures\Final-12-12\17BP.9.P.1 FinalSet 01.12.12\Bridge 185\Bridge 185 Rehab Plans.dgn
dveyao
1/18/2012

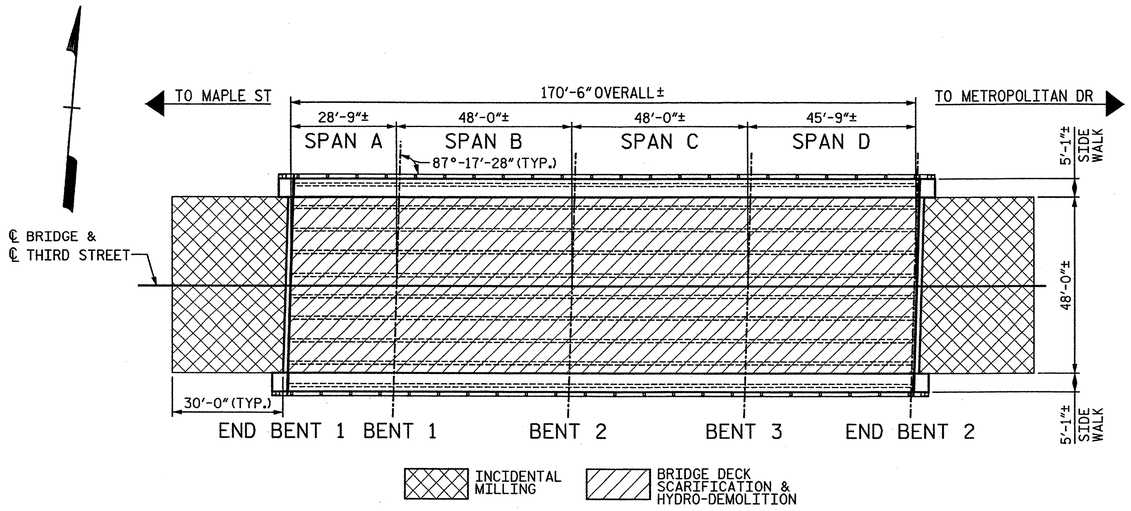

PLAN OF SPANS - DECK SCARIFICATION & HYDRO-DEMOLITION

(CONCRETE BRIDGE FLOORS SHALL BE GROOVED IN ACCORDANCE WITH SECTION 420-14 OF THE STANDARD SPECIFICATIONS.)

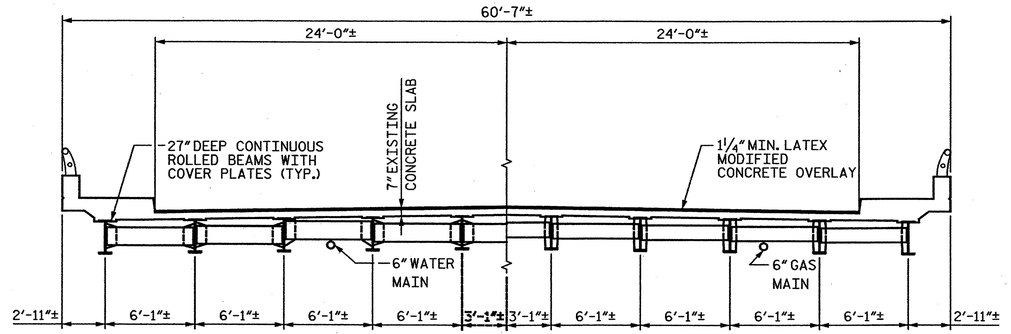

HALF SECTION SHOWING INTERMEDIATE DIAPHRAGMS

HALF SECTION SHOWING BENT DIAPHRAGMS

TYPICAL SECTION

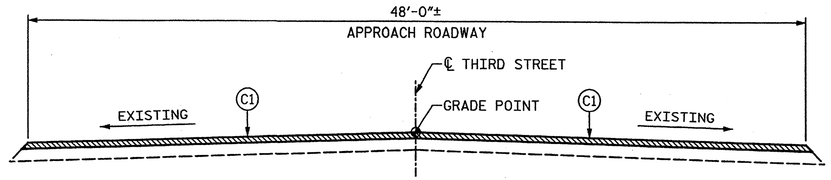

TYPICAL ROADWAY SECTION

(FINAL ROADWAY SURFACE TO MATCH EXISTING GRADE)

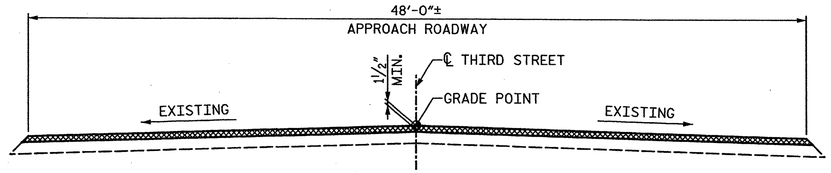

TYPICAL ROADWAY MILLING SECTION

(MILL TO 1½" DEPTH)

C1	PROPOSED VARIABLE DEPTH ASPHALT CONCRETE SURFACE COURSE, TYPE SF9.5A AT AN AVERAGE RATE OF 110 LBS. PER SQ. YD. PER 1" DEPTH. TO BE PLACED IN LAYERS NOT LESS THAN 1" IN DEPTH OR GREATER THAN 1½" DEPTH

NOTES:

FOR ADDITIONAL MILLING DETAILS, SEE SHEET 4 OF 12.

PER EXISTING PLANS, THE EXISTING DECK HAS 1½" CONCRETE COVER OVER EXISTING REINFORCING STEEL.

TOTAL BILL OF MATERIAL

DECK SCARIFICATION	✱CLASS II SURFACE PREPARATION	✱CLASS III SURFACE PREPARATION	✱CLASS AA CONCRETE	HYDRO-DEMOLITION OF BRIDGE DECK	LATEX MODIFIED CONCRETE OVERLAY	PLACING & FINISHING LATEX MODIFIED CONCRETE OVERLAY	ASPHALT CONCRETE SURFACE COURSE TYPE SF9.5A	STRIP SEAL EXPANSION JOINT	GROOVING BRIDGE FLOORS	EPOXY RESIN INJECTION	CONCRETE REPAIRS	SHOTCRETE REPAIRS	CLEANING & PAINTING EXISTING BEARING PLATES
SQ. YDS.	SQ. YDS.	SQ. YDS.	CU. YDS.	SQ. YDS.	CU. YDS.	SQ. YDS.	TONS	LUMP SUM	SQ. FT.	LIN. FT.	CU. FT.	CU. FT.	LUMP SUM
909	17	51	13	909	44	909	29	LUMP SUM	7673	46	21	27	LUMP SUM

INCIDENTAL MILLING	STRUCTURAL STEEL REPAIRS	BRIDGE JACKING	▪REINFORCING STEEL	ELASTOMERIC BEARINGS
SQ. YDS.	LBS.	LUMP SUM	LBS.	LUMP SUM
320	6,108	LUMP SUM	343	LUMP SUM

✱ QUANTITIES FOR INFORMATION ONLY.

▪ INCLUDES 100 LBS FOR REPAIRS OF EXISTING REINFORCING STEEL

NORTH CAROLINA PROFESSIONAL SEAL 19766 ENGINEER PATRICK C. KELLER
3/15/12

PROJECT NO. 17BP.9.P.1

FORSYTH COUNTY

BRIDGE NO.: 185

REHAB. OF BRIDGE NO. 185 SHEET 2 OF 12

STATE OF NORTH CAROLINA
DEPARTMENT OF TRANSPORTATION
RALEIGH

PLAN OF SPANS & TYPICAL SECTION

BRIDGE ON THIRD STREET OVER US-52, US-311 & NC-8

REVISIONS						SHEET NO.
NO.	BY:	DATE:	NO.	BY:	DATE:	S-68
1			3			TOTAL SHEETS
2			4			S-109

DRAWN BY : AFM DATE : 01-12
CHECKED BY : AC DATE : 01-12

STV / Ralph Whitehead Associates, Inc.
1000 West Morehead St., Ste. 200
Charlotte, NC 28208
NC License No. F-0991

I:\Projects\2515385\2515385.0001\50_Deliverables & Submittals\17BP.9.P.1\Structures\17BP.9.P.1 FinalSet 01.24.12\Bridge 185\DGN\A30.DGN
quidool
3/15/2012

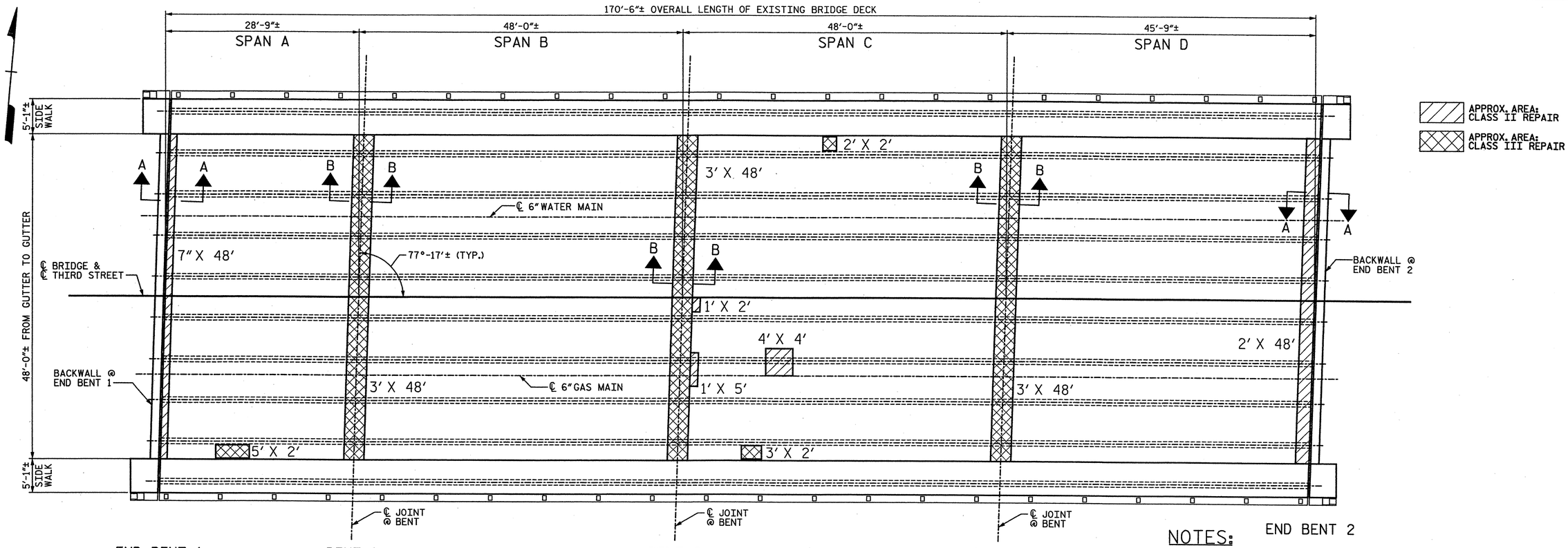

APPROX. AREA: CLASS II REPAIR

APPROX. AREA: CLASS III REPAIR

PLAN OF SPANS - DECK REPAIRS

(SEE SHEET 4 OF 12 FOR SECTION A-A)

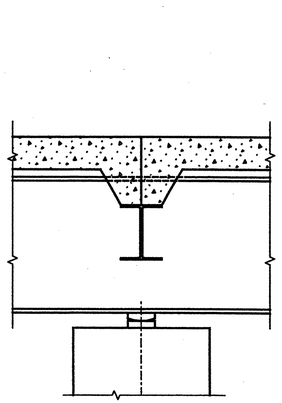

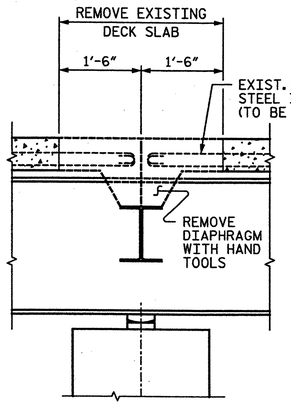

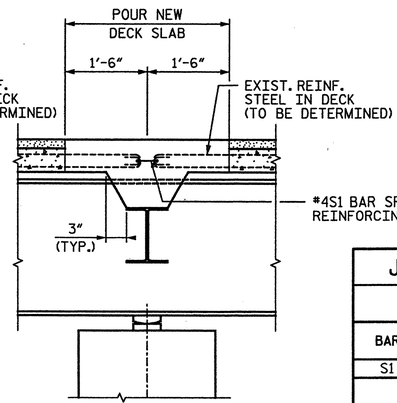

JOINT REPAIR DETAILS

(USE THIS REPAIR FROM GUTTERLINE TO GUTTERLINE)

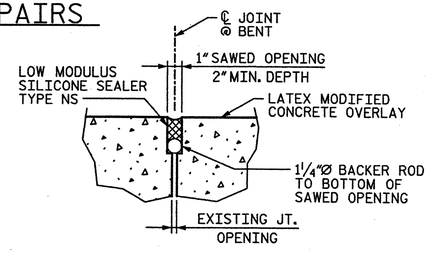

JOINT REPAIR DETAIL @ SIDEWALK

(USE THIS REPAIR FROM GUTTERLINE TO FACE OF PARAPET)

JOINT REPAIR BILL OF MATERIAL					
QUANTITIES FOR ONE JOINT					
BAR	NO.	SIZE	TYPE	LENGTH	WEIGHT
S1	91	#4	1	1'-4"	81
SUMMARY OF QUANTITIES					
REINFORCING STEEL				LBS.	81
CLASS AA CONCRETE				CU. YARDS	4.2

BAR TYPES

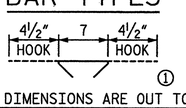

ALL BAR DIMENSIONS ARE OUT TO OUT.

NOTES:

FOR LATEX MODIFIED CONCRETE, SEE SPECIAL PROVISIONS.

FOR HYDRO-DEMOLITION, SEE SPECIAL PROVISIONS.

THE CONTRACTOR MUST COLLECT, TREAT AND DISPOSE OF RUN-OFF WATER FROM THE HYDRO-DEMOLITION PROCESS. SEE SPECIAL PROVISIONS.

THE BOUNDARY AREAS IDENTIFIED FOR CLASS III SURFACE PREPARATION ARE APPROXIMATE. THE CONTRACTOR SHALL PROVIDE A METHOD OF HANDLING UNEXPECTED BLOW-THROUGH OF THE DECK. SEE DETAIL ON SHEET 4 OF 12.

1¼"BACKER ROD SHALL BE CLOSED CELL EXPANDED POLYETHYLENE FOAM TYPE L. PLACE BACKER ROD IN SIDEWALK AT CURB TURNDOWN INTO SLAB FACE. NO SEPARATE PAYMENT FOR LABOR, MATERIALS, AND EQUIPMENT NEEDED TO CONSTRUCT CONCRETE JOINT SEAL SHALL BE MADE. COSTS FOR THIS WORK SHALL BE INCLUDED IN THE SEVERAL PAY ITEMS.

PAYMENT FOR JOINT REPAIR (EXCLUDING SIDEWALK) SHALL BE INCLUDED IN THE CONTRACT BID PRICE FOR HYDRODEMOLITION OF BRIDGE DECK.

PROJECT NO. 17BP.9.P.1

FORSYTH COUNTY

BRIDGE NO.: 185

REHAB. OF BRIDGE NO. 185 SHEET 3 OF 12

STATE OF NORTH CAROLINA
DEPARTMENT OF TRANSPORTATION
RALEIGH

PLAN OF SPANS DECK REPAIRS

BRIDGE ON THIRD STREET OVER US-52, US-311 & NC-8

NORTH CAROLINA PROFESSIONAL SEAL 19768 ENGINEER JOHN E. KELLY
2/17/12

STV / Ralph Whitehead Associates, Inc.
1000 West Morehead St. Ste. 200
Charlotte, NC 28208
NC License No. F-0991

DRAWN BY : AFM DATE : 1-12
CHECKED BY : AC DATE : 1-12

REVISIONS						SHEET NO.
NO.	BY:	DATE:	NO.	BY:	DATE:	S-69
1			3			TOTAL SHEETS
2			4			S-109

I:\Projects\2515385\2515385.0001\50_Deliverables & Submittals\17BP.9.P.1 \Structures\17BP.9.P.1 FinalSet 01.24.12\Bridge 185\DGN\A30.DGN
gudool
2/17/2012

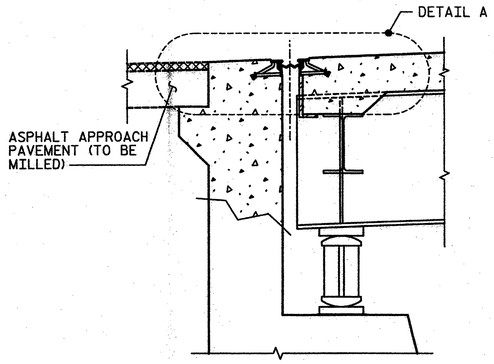

SECTION A-A

(PROPOSED JOINT @ END BENT 1 SHOWN, END BENT 2 SIMILAR)

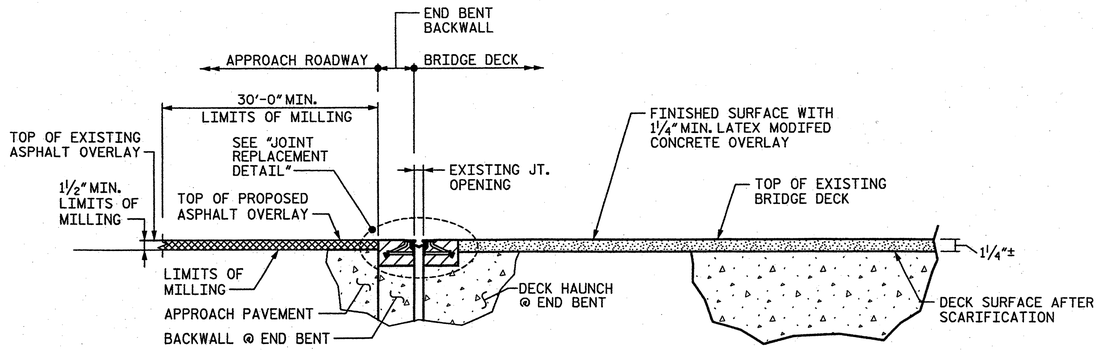

DETAIL A

(LOCATION OF JOINT TO MATCH EXISTING JOINT LOCATION)

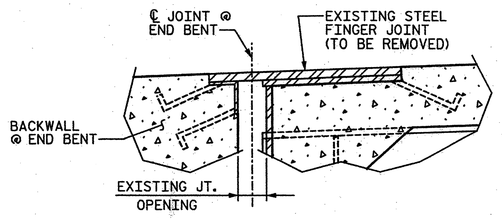

EXISTING JOINT DETAIL

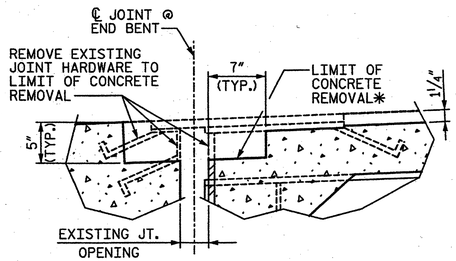

CONCRETE REMOVAL DETAIL @ EXISTING JOINT

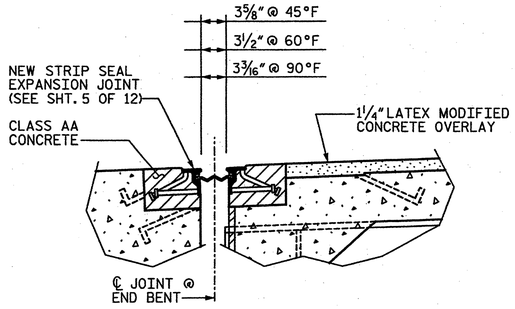

STRIP SEAL EXPANSION JOINT

JOINT REPLACEMENT DETAIL - ROADWAY

*CONTRACTOR SHALL SAW CUT TO A MAXIMUM DEPTH OF ½". REMAINING CONCRETE SHALL BE REMOVED IN SUCH A MANNER SO AS TO MINIMIZE DAMAGE TO REINFORCING STEEL IN DECK AND BACKWALL. ANY DAMAGED REINFORCING STEEL SHALL BE REPAIRED TO THE SATISFACTION OF THE ENGINEER.

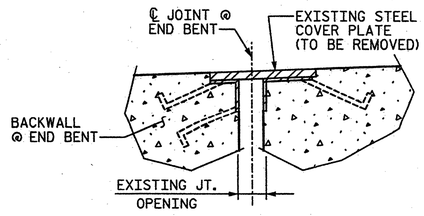

EXISTING JOINT DETAIL

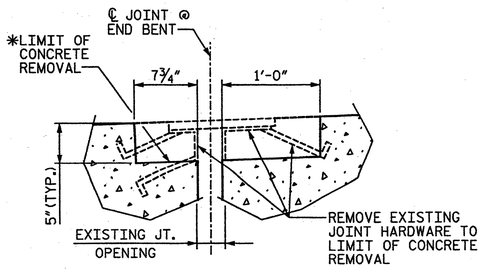

CONCRETE REMOVAL DETAIL @ EXISTING JOINT

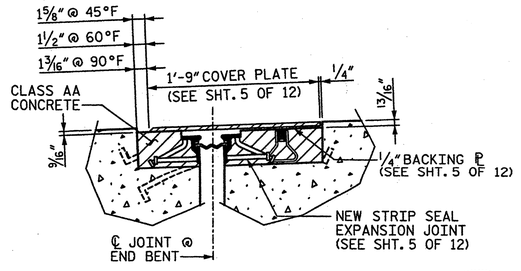

STRIP SEAL EXPANSION JOINT

JOINT REPLACEMENT DETAIL - SIDEWALK

*CONTRACTOR SHALL SAW CUT TO A MAXIMUM DEPTH OF ½". REMAINING CONCRETE SHALL BE REMOVED IN SUCH A MANNER SO AS TO MINIMIZE DAMAGE TO REINFORCING STEEL IN DECK AND BACKWALL. ANY DAMAGED REINFORCING STEEL SHALL BE REPAIRED TO THE SATISFACTION OF THE ENGINEER.

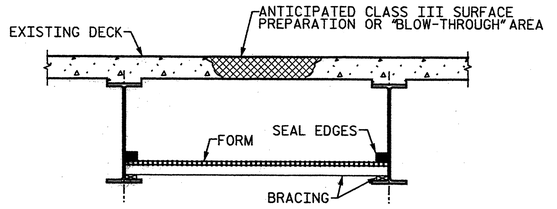

TYP. "BLOW-THROUGH" CONTAINMENT AND FORMWORK

A METHOD TO CAPTURE WATER AND DEBRIS FROM BLOW THRU DURING HYDRO-DEMOLITION SHALL BE INSTALLED IN AREAS INDICATED AS CLASS III SURFACE PREPARATION.

SUBMIT DETAILS OF PROPOSED FORMWORK FOR APPROVAL PRIOR TO BEGINNING WORK.

COSTS FOR INSTALLING AND REMOVING FORMWORK SHALL BE INCIDENTAL TO THE PRICE PER SQ. YARD OF HYDRO-DEMOLITION.

TO BE USED IN BAYS 1-2, 4-7, & 9.

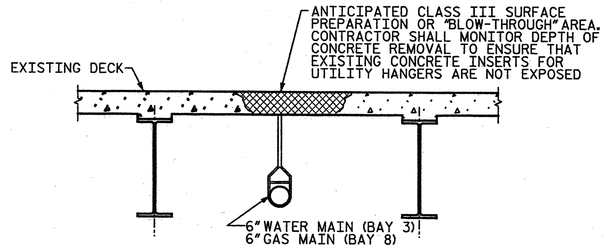

TYP. "BLOW-THROUGH" CONTAINMENT AND FORMWORK WITH HANGING UTILITY

THE CONTRACTOR SHALL DEVISE AND INSTALL A METHOD TO CAPTURE WATER AND DEBRIS FROM BLOW THRU DURING HYDRO-DEMOLITION IN AREAS INDICATED AS CLASS III SURFACE PREPARATION.

SUBMIT DETAILS OF PROPOSED FORMWORK FOR APPROVAL PRIOR TO BEGINNING WORK.

COSTS FOR INSTALLING AND REMOVING FORMWORK SHALL BE INCIDENTAL TO THE PRICE PER SQ. YARD OF HYDRO-DEMOLITION.

CONTRACTOR TO PROVIDE PLANS AND DETAILS FOR ACCOMMODATING EXISTING UTILITIES.

TO BE USED IN BAYS 3 & 8.

NOTES:

ALL COSTS ASSOCIATED WITH EXPANSION JOINT COVER PLATES SHALL BE CONSIDERED INCIDENTAL TO THE CONTRACT BID PRICE FOR STRIP SEAL EXPANSION JOINTS.

ALL DIMENSIONS SHALL BE FIELD VERIFIED BEFORE BEGINNING WORK.

EXISTING DECK REINFORCEMENT SHALL NOT BE DAMAGED WHILE INSTALLING STRIP SEAL JOINT. IF REINFORCING STEEL IS DAMAGED, IT SHALL BE REPAIRED AS DIRECTED BY THE ENGINEER AND AT NO ADDITIONAL COST.

FOR ADDITIONAL NOTES, SEE SHEETS 3 & 5 OF 12.

NORTH CAROLINA PROFESSIONAL SEAL 9766 ENGINEER PAUL E. KELLY, JR.

PROJECT NO. 17BP.9.P.1

FORSYTH COUNTY

BRIDGE NO.: 185

REHAB. OF BRIDGE NO. 185 SHEET 4 OF 12

STATE OF NORTH CAROLINA
DEPARTMENT OF TRANSPORTATION
RALEIGH

DECK REPAIR DETAILS

BRIDGE ON THIRD STREET OVER US-52, US-311 & NC-8

REVISIONS						SHEET NO.
NO.	BY:	DATE:	NO.	BY:	DATE:	S-70
1			3			TOTAL SHEETS
2			4			S-109

DRAWN BY : AFM DATE : 01-12
CHECKED BY : AC DATE : 01-12

STV/ Ralph Whitehead Associates, Inc.
1000 West Morehead St., Ste. 200
Charlotte, NC 28208
NC License No. F-0991

I:\Projects\2515385\2515385_0001\50_Deliverables & Submittals\17BP.9.P.1 FinalSet 01_12_12\17BP.9.P.1 Final 1-12-12\17BP.9.P.1 Structures\Final 1-12-12\17BP.9.P.1 Bridge 185 Rehab Plans.dgn
dvsyco
1/18/2012

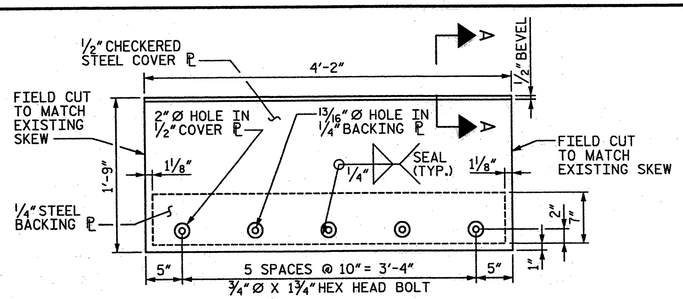

TYPE I COVER PLATE

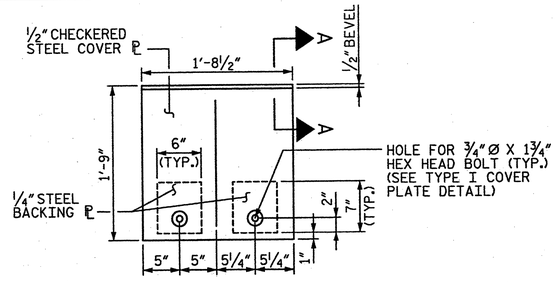

TYPE II COVER PLATE

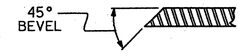

SECTION A-A

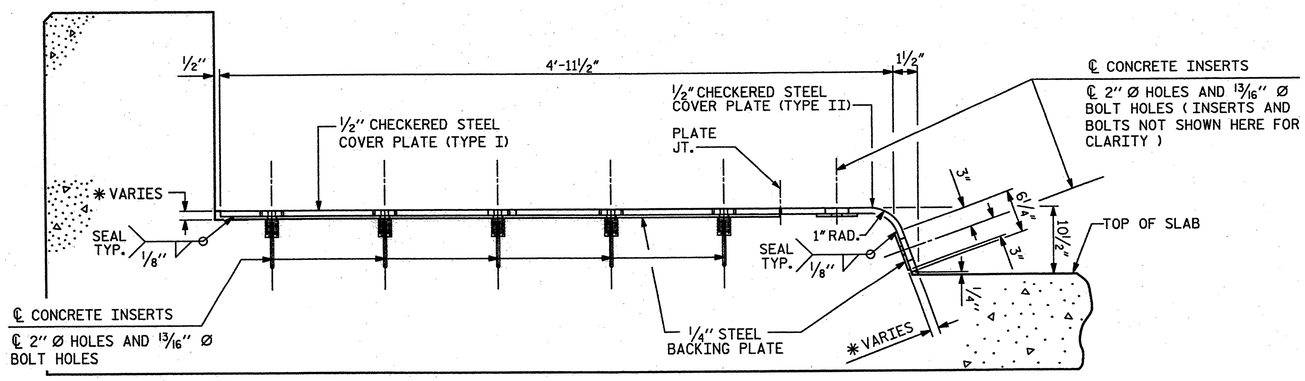

END VIEW OF COVER PLATE

(NORMAL TO SIDEWALK)

* CONCRETE RECESS DIMENSIONS:
  13/16" FOR THE SIDE OF THE JOINT HAVING THE ½" COVER PLATE WITH A ¼" BACKING PLATE.
  9/16" FOR THE SIDE OF THE JOINT HAVING ONLY THE ½" COVER PLATE.

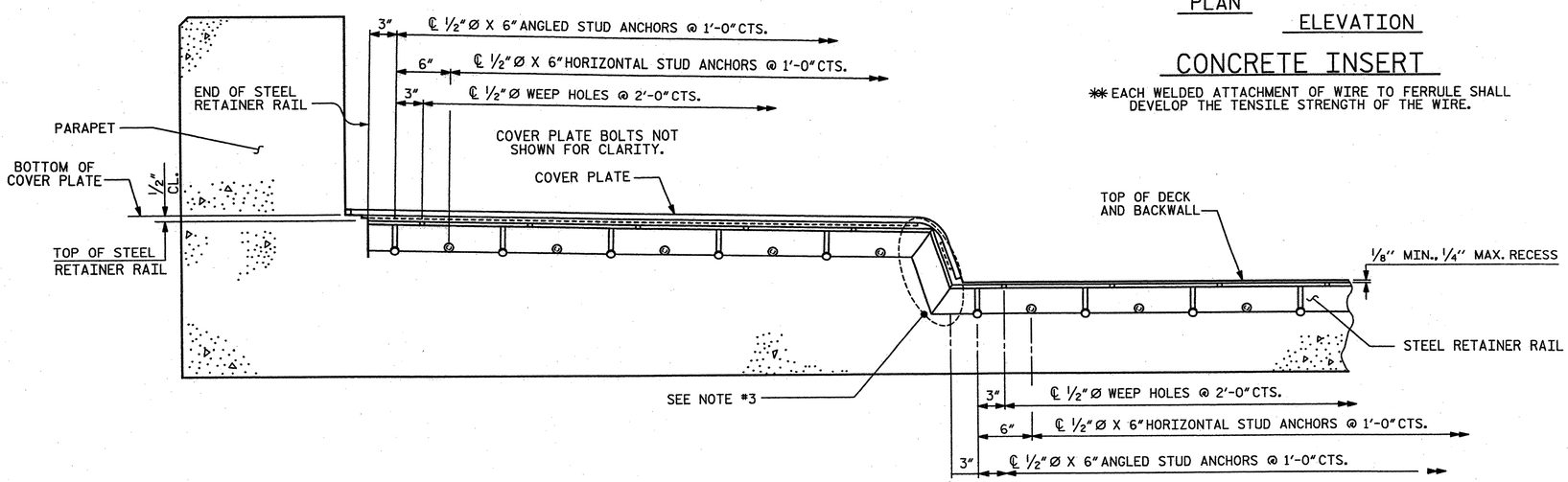

SECTION THRU SIDEWALK NORMAL TO JOINT

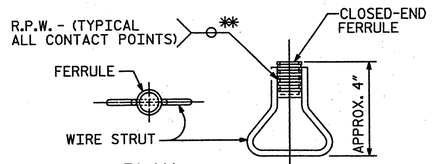

PLAN ELEVATION

CONCRETE INSERT

** EACH WELDED ATTACHMENT OF WIRE TO FERRULE SHALL DEVELOP THE TENSILE STRENGTH OF THE WIRE.

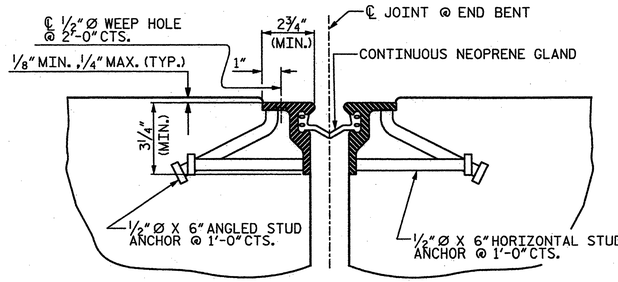

STRIP SEAL DETAILS

(SECTION NORMAL TO JOINT AT END BENT)

NOTES:

1. COVER PLATES AND STEEL RETAINER RAILS SHALL CONFORM TO AASHTO M270 GRADE 36 OR GRADE 50W STEEL. COVER PLATE BOLTS SHALL CONFORM TO ASTM F593 TYPE 304 STAINLESS STEEL. WASHERS SHALL CONFORM TO ASTM F844 EXCEPT THEY SHALL BE MADE FROM ALLOY 304 STAINLESS STEEL. ALL STUD ANCHORS SHALL CONFORM TO AASHTO M169, GRADES 1010 THRU 1020 OR APPROVED EQUAL. ALL CONCRETE INSERTS SHALL BE CLOSED-END AND SHALL CONFORM TO AASHTO M169, GRADE 12L14. TENSILE CAPACITY SHALL BE 3000 LBS. MIN.
2. GLAND SHALL BE CONTINUOUS THROUGHOUT THE JOINT.
3. SHOP DRAWINGS SHALL INCLUDE DETAILS OF THE SHOP WELDED SPLICE OF THE STEEL RETAINER RAIL AT THE UPTURN IN THE BARRIER RAIL.
4. CLOSED END FERRULES AND STUD ANCHORS SHALL BE SHOP WELDED AND ALL HOLES SHALL BE SHOP DRILLED AS SHOWN ON PLANS. STUD ANCHORS SHALL BE ELECTRIC ARC END WELDED WITH COMPLETE FUSION.
5. SURFACES COMING IN CONTACT WITH NEOPRENE SHALL BE GROUND SMOOTH PRIOR TO METALLIZING.
6. UPON COMPLETION OF SHOP FABRICATION, THE STEEL PARTS SHALL BE METALLIZED AS SHOWN IN "STRIP SEAL ASSEMBLY." SEE SPECIAL PROVISIONS FOR THERMAL SPRAYED COATINGS (METALLIZATION).
7. AT FIELD SPLICE LOCATIONS, THE ENDS OF THE STEEL RETAINER RAILS SHALL BE CUT PARALLEL TO THE BRIDGE CENTERLINE. FINISHED FIELD WELDS SHALL BE GROUND SMOOTH AND COATED WITH A MINIMUM THICKNESS OF 4 DRY MILS OF ZINC-RICH PAINT IN ACCORDANCE WITH THE STANDARD SPECIFICATIONS.
8. FIELD SPLICES OF STEEL RETAINER RAILS SHALL BE KEPT TO A MINIMUM. THE CONTRACTOR SHALL FURNISH DETAILED PLANS SHOWING PROPOSED SPLICE LOCATIONS FOR APPROVAL. STEEL RETAINER RAILS SHALL NOT BE SHIPPED IN LENGTHS EXCEEDING 20' UNLESS APPROVED BY THE ENGINEER.
9. INSTALLED STEEL RETAINER RAILS SHALL FOLLOW THE ROADWAY SLOPE.
10. AFTER THE CONCRETE HAS BEEN CAST ON BOTH SIDES OF THE JOINT, REMOVE ANY EXCESS CONCRETE THAT COMES OUT OF THE WEEP HOLES. ANY DAMAGED STEEL SHALL BE COATED WITH 4 DRY MILS OF ZINC-RICH PAINT IN ACCORDANCE WITH THE STANDARD SPECIFICATIONS.
11. FOR STRIP SEALS, SEE SPECIAL PROVISIONS.
12. THE CONTRACTOR MAY, AT HIS OPTION, USE ADHESIVELY ANCHORED ANCHOR BOLTS IN PLACE OF CONCRETE INSERTS FOR COVER PLATES. THE YIELD LOAD OF THE ¾" DIA. BOLT IS 10 KIPS. FIELD TESTING OF THE ADHESIVE BONDING SYSTEM IS NOT REQUIRED.
13. ALL DIMENSIONS SHALL BE FIELD VERIFIED BEFORE ORDERING MATERIALS.
14. EXISTING DECK REINFORCEMENT SHALL NOT BE DAMAGED WHILE INSTALLING STEEL RETAINERS. IF REINFORCING STEEL IS DAMAGED, IT SHALL BE REPAIRED AS DIRECTED BY THE ENGINEER AND AT NO ADDITIONAL COST.

PROJECT NO. 17BP.9.P.1

FORSYTH COUNTY

BRIDGE NO.: 185

REHAB. OF BRIDGE NO. 185 SHEET 5 OF 12

STATE OF NORTH CAROLINA
DEPARTMENT OF TRANSPORTATION
RALEIGH

STRIP SEAL EXPANSION JOINT DETAILS

BRIDGE ON THIRD STREET OVER US-52, US-311 & NC-8

NORTH CAROLINA PROFESSIONAL SEAL 19765 ENGINEER JAMES E. KELLY, JR.
1/18/12

STV/ Ralph Whitehead Associates, Inc.
1000 West Morehead St. Ste. 200
Charlotte, NC 28208
NC License No. F-0991

REVISIONS							SHEET NO.
NO.	BY:	DATE:	NO.	BY:	DATE:		S-71
1			3				TOTAL SHEETS
2			4				S-109

DRAWN BY : AEM DATE : 01-12
CHECKED BY : AC DATE : 01-12

I:\Projects\2515385\2515385.000\S0.Deliverables & Submittals\17BP.9.P.1\Structures\Final1-12-12\17BP.9.P.1 FinalSet 01.12.12\Bridge 185 Rehab Plans.dgn
dlveyoo
1/18/2012

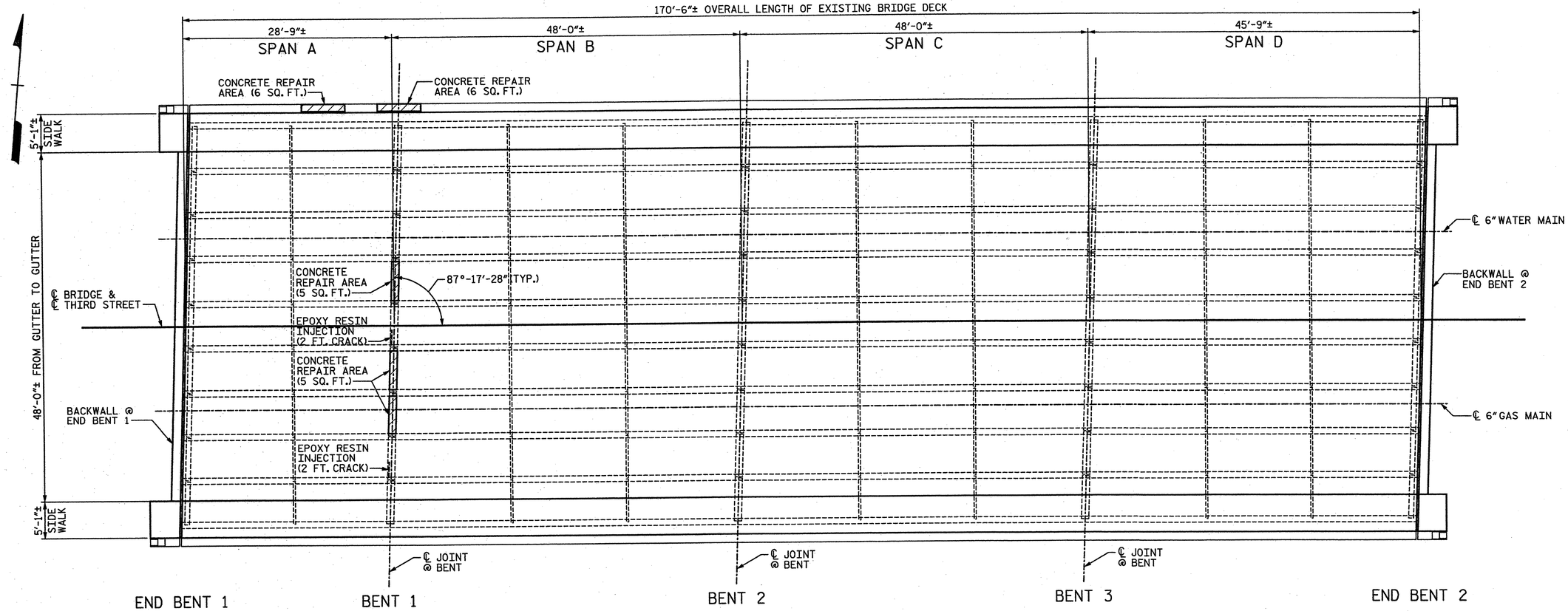

PLAN OF SPANS - UNDERSIDE OF DECK

APPROX. LENGTH: EPOXY RESIN INJECTION

APPROX. AREA: CONCRETE REPAIRS

NOTES:

CONCRETE SHALL BE SOUNDED TO DETERMINE THE EXTENT OF ALL CONCRETE REPAIRS.

FOR CRACKS REQUIRING EPOXY RESIN INJECTION, SOUNDING MAY PROVE THAT A CONCRETE REPAIR IS NECESSARY.

SPALL, CRACK, AND DELAMINATION DIMENSIONS SHOWN ARE APPROXIMATE. CONTRACTOR SHALL DETERMINE ACTUAL SPALL, CRACK, AND DELAMINATION DIMENSIONS PRIOR TO MAKING REPAIRS.

THE ENGINEER SHALL BE NOTIFIED OF ANY BARS DAMAGED DURING THE CONCRETE REMOVAL PROCESS. REPAIRS TO DAMAGED BARS SHALL BE DIRECTED BY THE ENGINEER AND COMPLETED AT NO ADDITIONAL COST.

SEE ADDITIONAL NOTES AND TYPICAL REPAIR DETAILS ON SHEET 10 OF 12.

PROJECT NO. 17BP.9.P.1

FORSYTH COUNTY

BRIDGE NO.: 185

REHAB. OF BRIDGE NO. 185 SHEET 6 OF 12

STATE OF NORTH CAROLINA
DEPARTMENT OF TRANSPORTATION
RALEIGH

PLAN OF SPANS DIAPHRAGM REPAIRS

BRIDGE ON THIRD STREET OVER US-52, US-311 & NC-8

NORTH CAROLINA PROFESSIONAL SEAL 19765 ENGINEER PAUL E. KELLY, JR.

1/18/12

STV / Ralph Whitehead Associates, Inc.
1000 West Morehead St., Ste. 200
Charlotte, NC 28208
NC License No. F-0991

REVISIONS						SHEET NO.
NO.	BY:	DATE:	NO.	BY:	DATE:	S-72
1			3			TOTAL SHEETS
2			4			S-109

DRAWN BY : AFM DATE : 01-12
CHECKED BY : AC DATE : 01-12

I:\Projects\2515385\2515385_0001\50_Deliverables & Submittals\17BP.9.P.1\Structures\Final 1-12-12\17BP.9.P.1 Final Set 01_12_12\Bridge 185\Bridge 185 Rehab Plans.dgn

alveyac

1/18/2012

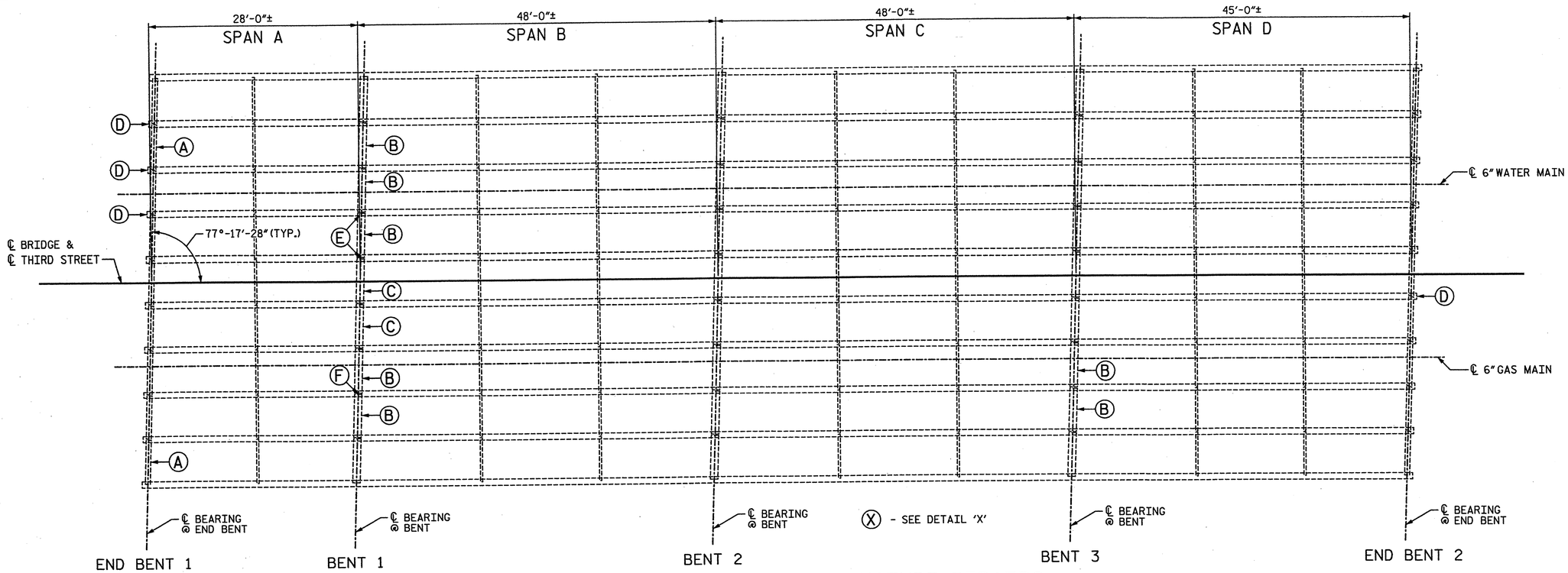

FRAMING PLAN - SUPERSTRUCTURE REPAIRS

(SEE SHEET 8 OF 12 FOR DETAILS 'C' THRU 'F')

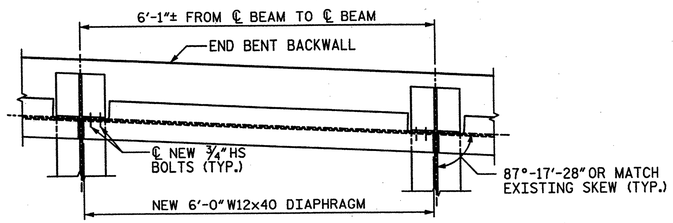

PLAN

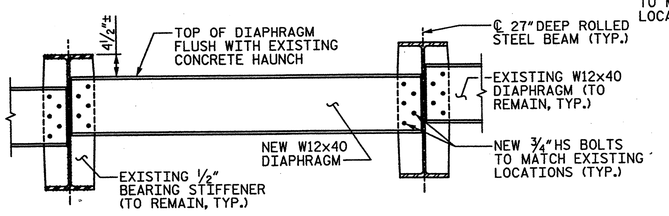

ELEVATION

REPAIR 'A' DETAIL

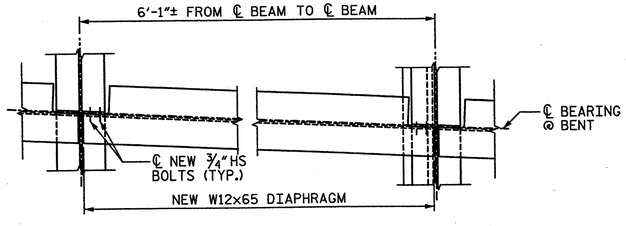

PLAN

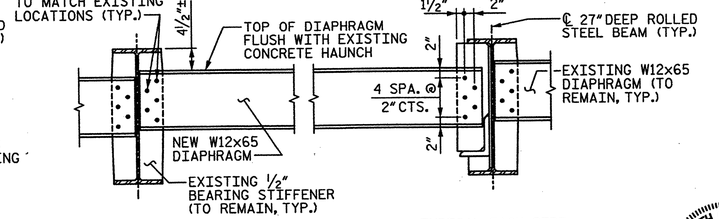

TYPICAL EACH SIDE
AT LOCATIONS SHOWN

TYPICAL EACH SIDE
AT REPAIR 'E'
LOCATIONS ONLY

ELEVATION

REPAIR 'B' DETAIL

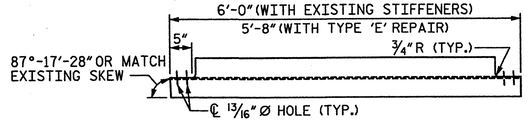

PLAN

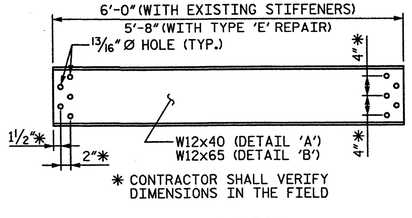

ELEVATION

DIAPHRAGM DETAIL

NOTES:

¾"BOLTS SHALL BE ASTM A325 BOLTS AND CORRESPONDING NUTS AND WASHERS. FOR BOLT REMOVAL AND REPLACEMENT, SEE SPECIAL PROVISIONS.

STEEL FOR ROLLED SECTIONS SHALL BE AASHTO M270 GRADE 36 OR HIGHER.

CONTRACTOR SHALL NOT REMOVE THE EXISTING DIAPHRAGM UNTIL THE REPLACEMENT DIAPHRAGM IS READY FOR PLACEMENT. CONTRACTOR SHALL TAKE STEPS TO MAINTAIN THE INTEGRITY OF THE EXISTING CONCRETE HAUNCHES.

BOLTS, NUTS, AND WASHERS SHALL BE GALVANIZED IN ACCORDANCE WITH THE STANDARD SPECIFICATIONS.

BOLTS, NUTS, WASHERS, AND MISCELLANEOUS COMPONENTS FOR STEEL REPAIRS SHALL BE CONSIDERED INCIDENTAL TO THE CONTRACT BID PRICE FOR STRUCTURAL STEEL REPAIRS.

FOR ADDITIONAL NOTES, SEE SHEET 8 OF 12.

PROJECT NO. 17BP.9.P.1

FORSYTH COUNTY

BRIDGE NO.: 185

REHAB. OF BRIDGE NO. 185 SHEET 7 OF 12

STATE OF NORTH CAROLINA
DEPARTMENT OF TRANSPORTATION
RALEIGH

SUPERSTRUCTURE REPAIRS (1 OF 2)

BRIDGE ON THIRD STREET
OVER US-52, US-311 & NC-8

NORTH CAROLINA PROFESSIONAL SEAL 19756 ENGINEER PAUL E. KELLY, JR.
2/17/12

STV / Ralph Whitehead Associates, Inc.
1000 West Morehead St., Ste. 200
Charlotte, NC 28208
NC License No. F-0991

REVISIONS						SHEET NO.
NO.	BY:	DATE:	NO.	BY:	DATE:	S-73
1			3			TOTAL SHEETS
2			4			S-109

DRAWN BY : AFM DATE : 01-12
CHECKED BY : AC DATE : 01-12

I:\Projects\2515385\2515385.0001\50_Deliverables & Submittals\17BP.9.P.1\Structures\17BP.9.P.1 FinalSet 01.24.12\Bridge 185\DGN\A30.DGN
guldool
2/17/2012

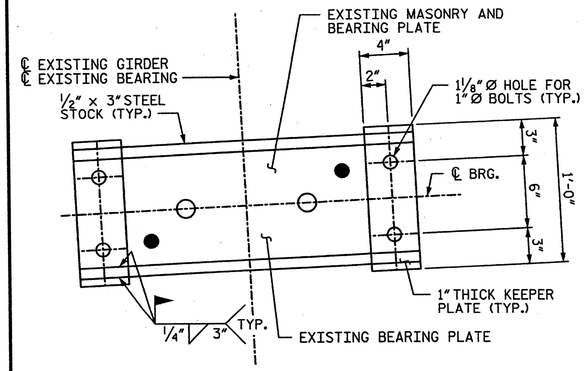

PLAN
(EXISTING GIRDER NOT SHOWN FOR CLARITY)

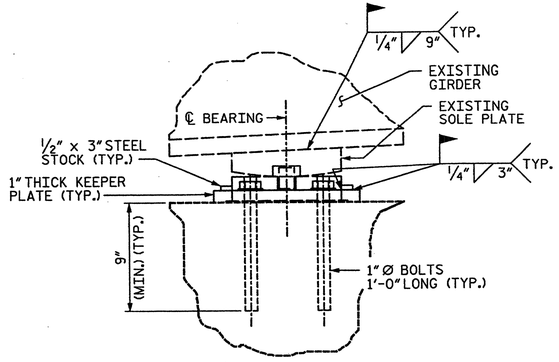

SECTION

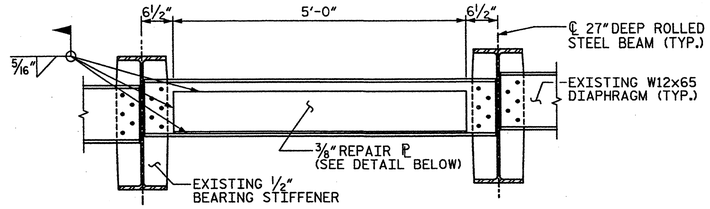

ELEVATION

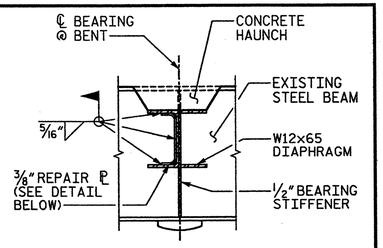

SECTION THRU DIAPHRAGM

REPAIR 'C' DETAIL

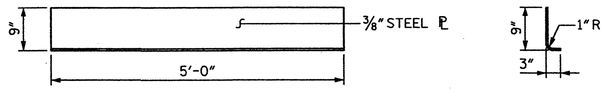

ELEVATION SECTION

BEARING RESTRAINT SYSTEM

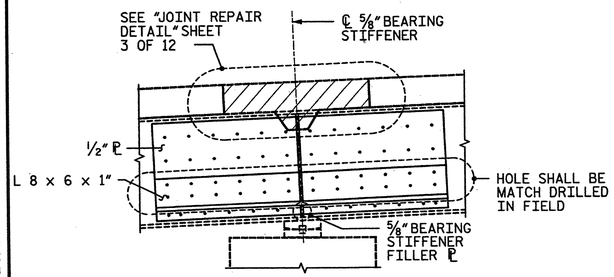

ELEVATION (LOOKING SOUTH)*
(DIAPHRAGM NOT SHOWN FOR CLARITY)

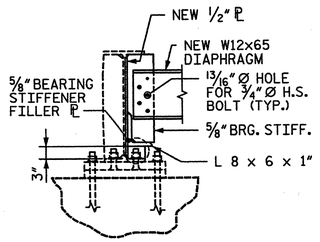

SECTION THRU GIRDER (LOOKING EAST)*

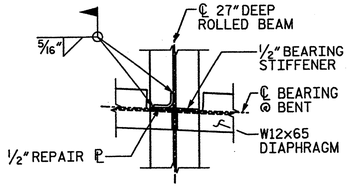

PLAN

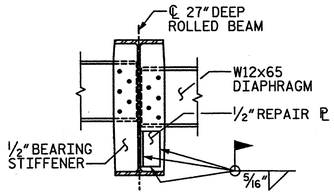

ELEVATION OF BACKSIDE

REPAIR 'C' PLATE DETAIL

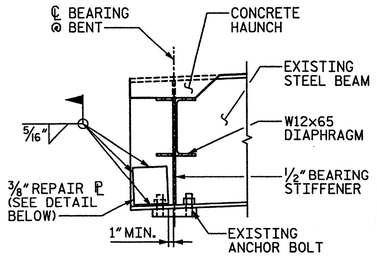

ELEVATION

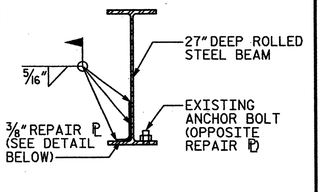

SECTION THRU GIRDER

REPAIR 'F' DETAIL

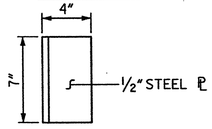

ELEVATION

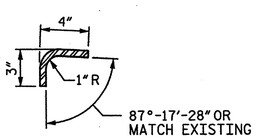

SECTION

REPAIR 'F' PLATE DETAIL

REPAIR 'D' DETAIL

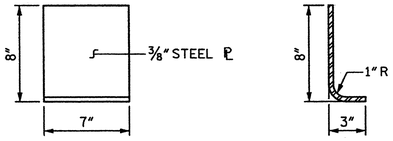

ELEVATION SECTION

REPAIR 'D' PLATE DETAIL

REPAIR 'E' DETAIL

* LOOKING DIRECTION CORRESPONDS WITH DIRECTION OF TRAVEL ALONG HIGHWAY

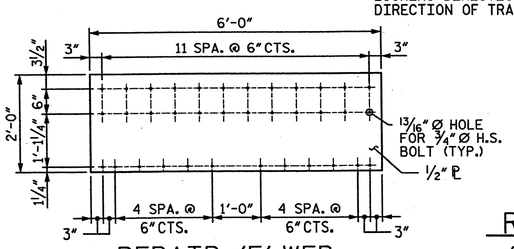

REPAIR 'E' WEB PLATE DETAIL

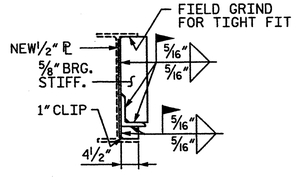

REPAIR 'E' BEARING STIFFENER DETAIL

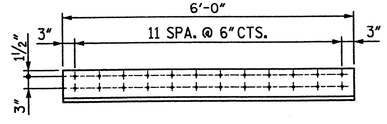

REPAIR 'E' ANGLE DETAIL
(L 8x6x1")

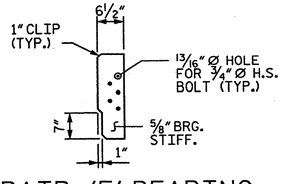

REPAIR 'E' BEARING STIFFENER PLATE DETAIL
(SEE "DIAPHRAGM DETAIL" SHEET 7 OF 12 FOR BOLT SPACING IN BEARING STIFFENER PLATE)

CONSTRUCTION SEQUENCE (REPAIR 'E'):

1. REMOVE EXISTING CONCRETE DIAPHRAGM.
2. REMOVE EXISTING STEEL DIAPHRAGM AND CONNECTOR PLATES.
3. BLAST CLEAN AND PAINT EXISTING BEAM AND BEARING AT LOCATION OF REPAIR FOR 3'-0" EACH SIDE OF REPAIR. PAINTING & BLAST CLEANING SHALL BE IN ACCORDANCE WITH SECTION 442 OF THE STANDARD SPECIFICATIONS.
4. INSTALL NEW REPAIR 'E' WEB PLATE, ANGLE, BEARING STIFFENER AND DIAPHRAGM.

NOTES:

ALL WELDING SHALL BE IN ACCORDANCE WITH CURRENT AWS SPECIFICATIONS. WELD MATERIAL SHALL BE E70XX.

ALL WELDS SHALL BE TERMINATED ¼" FROM CORNER OR END OF PLATE.

¾", ⅞" & 1" BOLTS SHALL BE ASTM A325 BOLTS AND CORRESPONDING NUTS AND WASHERS.

PLATE STEEL USED FOR REPAIR SHALL BE AASHTO M270 GRADE 36.

PLATE SIZES ARE BASED ON BEST INFORMATION AVAILABLE. ENGINEER SHALL VERIFY EXTENTS OF REPAIR AND PLATE SIZES PRIOR TO PLATE FABRICATION.

CONTRACTOR SHALL CLEAN EXISTING STEEL SURFACES IN REPAIR AREA BEFORE PERFORMING REPAIRS. SEE STRUCTURAL STEEL REPAIRS IN SPECIAL PROVISIONS.

CONTRACTOR SHALL CLEAN AND PAINT BEARINGS AT INTERIOR BENTS AS DIRECTED BY THE ENGINEER. SEE CLEANING AND PAINTING EXISTING BEARING PLATES IN THE SPECIAL PROVISIONS.

CONTRACTOR SHALL BLAST CLEAN AND PAINT ROCKER BEARING ASSEMBLIES AS DIRECTED BY THE ENGINEER. FOR BLAST CLEANING AND PAINTING BEARINGS SEE SPECIAL PROVISIONS FOR CLEANING AND PAINTING EXISTING BEARING PLATES.

CONTRACTOR SHALL ENSURE THAT EXISTING UTILITIES UNDER THE BRIDGE ARE NOT DAMAGED DURING REPAIR OPERATIONS.

BEARING RESTRAINT SYSTEM TO BE INSTALLED AT INTERIOR BENTS AT LOCATIONS DETERMINED BY THE ENGINEER. ESTIMATED 10 REQUIRED.

NORTH CAROLINA PROFESSIONAL SEAL 19765 ENGINEER PAUL E. KELLY
2/17/12

PROJECT NO. 17BP.9.P.1
FORSYTH COUNTY
BRIDGE NO.: 185
REHAB. OF BRIDGE NO. 185 SHEET 8 OF 12

STATE OF NORTH CAROLINA
DEPARTMENT OF TRANSPORTATION
RALEIGH

SUPERSTRUCTURE REPAIRS (2 OF 2)

BRIDGE ON THIRD STREET OVER US-52, US-311 & NC-8

STV / Ralph Whitehead Associates, Inc.
1000 West Morehead St., Ste. 200
Charlotte, NC 28208
NC License No. F-0991

REVISIONS						SHEET NO.
NO.	BY:	DATE:	NO.	BY:	DATE:	S-74
1			3			TOTAL SHEETS
2			4			S-109

DRAWN BY : AFM DATE : 01-12
CHECKED BY : AC DATE : 01-12

I:\Projects\2515385\2515385.0001\50_Deliverables & Submittals\17BP.9.P.1\Structures\17BP.9.P.1 FinalSet 01.24.12\Bridge 185\DGNA30.DGN
quidool
2/17/2012

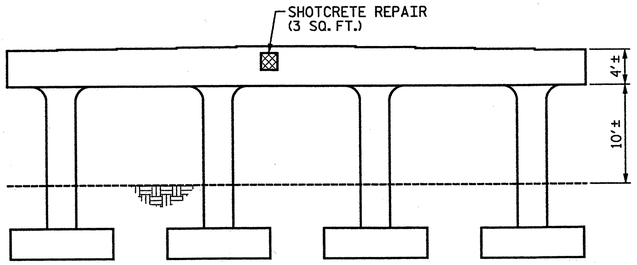

ELEVATION OF BENT 1 - LOOKING EAST*

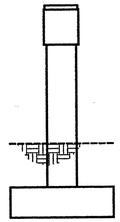

ELEVATION OF BENT 1
LOOKING NORTH*

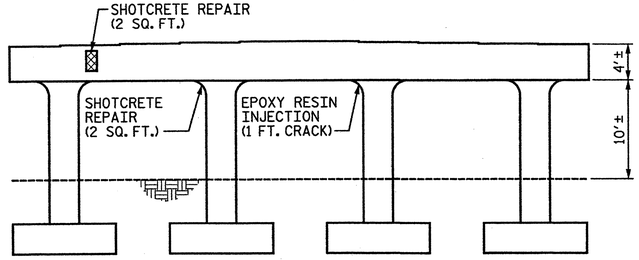

ELEVATION OF BENT 1 - LOOKING WEST*

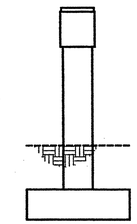

ELEVATION OF BENT 1
LOOKING SOUTH*

-------- EPOXY RESIN INJECTION
APPROX. AREA: CONCRETE REPAIRS (CLASS A)
APPROX. AREA: SHOTCRETE REPAIRS

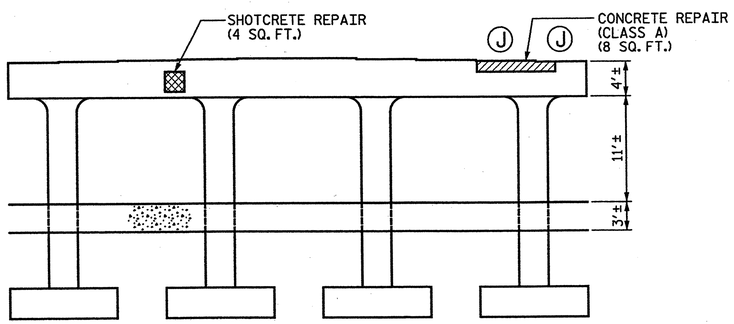

ELEVATION OF BENT 2 - LOOKING EAST*

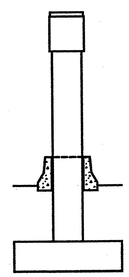

ELEVATION OF BENT 2
LOOKING NORTH*

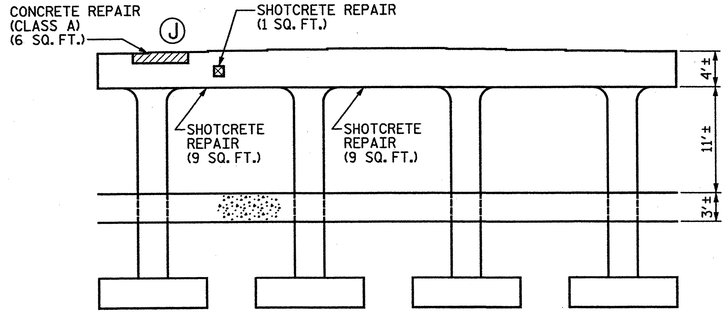

ELEVATION OF BENT 2 - LOOKING WEST*

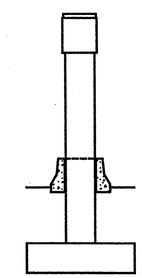

ELEVATION OF BENT 2
LOOKING SOUTH*

NOTE:

SEE NOTES AND TYPICAL REPAIR DETAILS, SHEET 10 OF 12.

* LOOKING DIRECTION CORRESPONDS WITH DIRECTION OF TRAVEL ALONG HIGHWAY

(J) - JACKING REQUIRED

PROJECT NO. 17BP.9.P.1
FORSYTH COUNTY
BRIDGE NO.: 185
REHAB. OF BRIDGE NO. 185 SHEET 9 OF 12

STATE OF NORTH CAROLINA
DEPARTMENT OF TRANSPORTATION
RALEIGH

BENTS 1 & 2 SUBSTRUCTURE REPAIRS

BRIDGE ON THIRD STREET
OVER US-52, US-311 & NC-8

NORTH CAROLINA PROFESSIONAL SEAL 19765 ENGINEER PAUL E. KELLY, JR.
2/24/12

STV / Ralph Whitehead Associates, Inc.
1000 West Morehead St., Ste. 200
Charlotte, NC 28208
NC License No. F-0991

REVISIONS						SHEET NO.
NO.	BY:	DATE:	NO.	BY:	DATE:	S-75
1			3			TOTAL SHEETS
2			4			S-109

DRAWN BY : AFM DATE : 01-12
CHECKED BY : AC DATE : 01-12

I:\Projects\2515385\2515385.0001\50.Deliverables & Submittals\17BP.9.P.1\Structures\17BP.9.P.1 FinalSet 01_24_12\Bridge 185\DGNA30.DGN
guldoal
2/24/2012

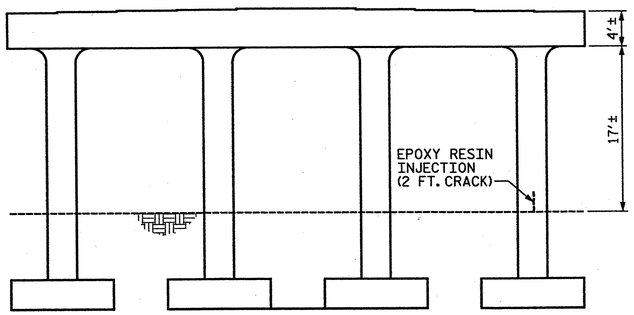

ELEVATION OF BENT 3 - LOOKING EAST*

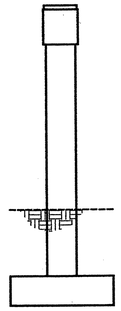

ELEVATION OF BENT 3
LOOKING NORTH*

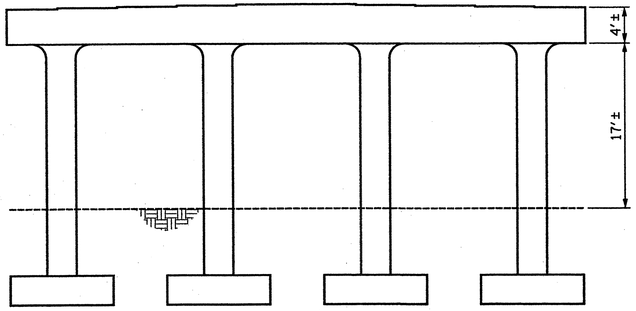

ELEVATION OF BENT 3 - LOOKING WEST*

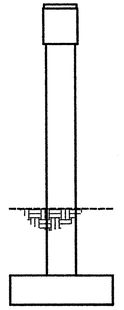

ELEVATION OF BENT 3
LOOKING SOUTH*

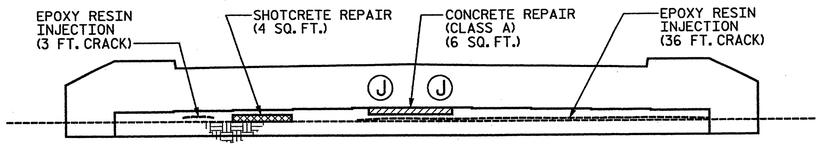

ELEVATION OF END BENT 1 - LOOKING WEST*
(FOR END BENT BEARING REPLACEMENT AND PEDESTAL DETAIL, SEE SHEET 11 OF 12.)

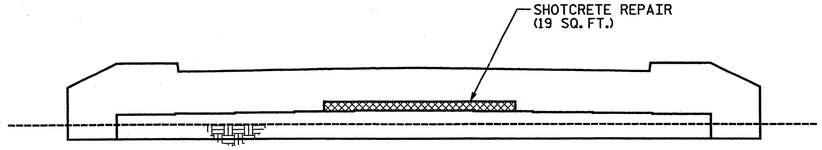

ELEVATION OF END BENT 2 - LOOKING EAST*
(FOR END BENT BEARING REPLACEMENT AND PEDESTAL DETAIL, SEE SHEET 11 OF 12.)

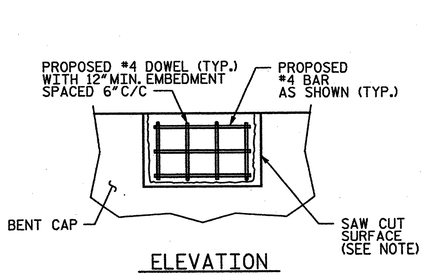

ELEVATION

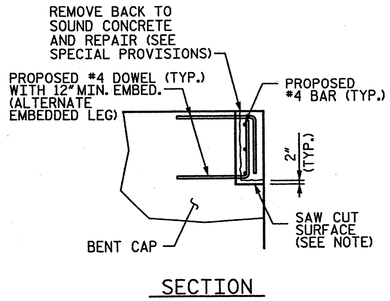

SECTION

BEARING SEAT REPAIR

NOTE: CONTRACTOR SHALL SAW CUT TO A MAXIMUM DEPTH OF 1". THIS DEPTH SHALL BE REDUCED TO PREVENT DAMAGE TO EXISTING REINFORCEMENT, BUT SHALL BE NO LESS THAN ½". CONTRACTOR SHALL REMOVE SURFACE CONCRETE TO VERIFY THAT SAW CUT DEPTH WILL NOT DAMAGE EXISTING REINFORCING STEEL.

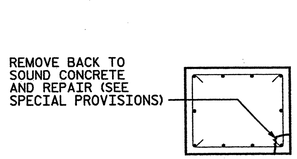

SECTION

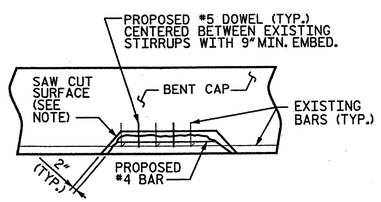

ELEVATION

CORNER REPAIR

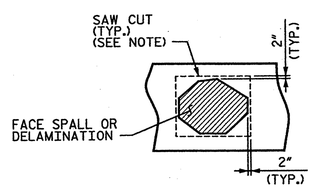

FACE REPAIR

TYPICAL SUBSTRUCTURE REPAIR DETAILS

NOTES:

CONCRETE SHALL BE SOUNDED TO DETERMINE THE EXTENT OF ALL CONCRETE REPAIRS.

FOR CRACKS REQUIRING EPOXY RESIN INJECTION, SOUNDING MAY PROVE THAT A CONCRETE REPAIR IS NECESSARY.

SPALL, CRACK, AND DELAMINATION DIMENSIONS SHOWN ARE APPROXIMATE. CONTRACTOR SHALL DETERMINE ACTUAL SPALL, CRACK, AND DELAMINATION DIMENSIONS PRIOR TO MAKING REPAIRS.

THE ENGINEER SHALL BE NOTIFIED OF ANY BARS DAMAGED DURING THE CONCRETE REMOVAL PROCESS. REPAIRS TO DAMAGED BARS SHALL BE DIRECTED BY THE ENGINEER AND COMPLETED AT NO ADDITIONAL COST.

DOWEL LENGTH SHALL BE BASED ON A 9"EMBEDMENT INTO EXISTING CONCRETE AND MAY BE ADJUSTED BASED ON THE MINIMUM EMBEDMENT SPECIFIED BY THE MANUFACTURER OF THE EPOXY ADHESIVE BONDING SYSTEM.

REINFORCING STEEL SHALL BE GRADE 60.

BRIDGE JACKING IS REQUIRED FOR CONCRETE REPAIRS THAT EXTEND UNDER A BEARING PLATE. FOR JACKING DETAILS AND NOTES SEE SHEET 12 OF 12.

EPOXY PROTECTIVE COATING SHALL BE APPLIED TO THE TOP OF ALL BENT CAPS AND THE COST SHALL BE INCLUDED IN THE VARIOUS PAY ITEMS. NO SEPARATE MEASUREMENT OR PAYMENT WILL BE MADE FOR THIS WORK.

* LOOKING DIRECTION CORRESPONDS WITH DIRECTION OF TRAVEL ALONG HIGHWAY

(J) - JACKING REQUIRED

-------- APPROX. LENGTH: EPOXY RESIN INJECTION

APPROX. AREA: CONCRETE REPAIRS

APPROX. AREA: CONCRETE REPAIRS (CLASS A)

NORTH CAROLINA PROFESSIONAL SEAL 19765 ENGINEER WILLIAM E. KELLETT

2/24/12

PROJECT NO. 17BP.9.P.1

FORSYTH COUNTY

BRIDGE NO.: 185

REHAB. OF BRIDGE NO. 185 SHEET 10 OF 12

STATE OF NORTH CAROLINA
DEPARTMENT OF TRANSPORTATION
RALEIGH

BENT 3 & END BENTS SUBSTRUCTURE REPAIRS

BRIDGE ON THIRD STREET
OVER US-52, US-311 & NC-8

STV/ Ralph Whitehead Associates, Inc.
1000 West Morehead St., Ste. 200
Charlotte, NC 28208
NC License No. F-0991

REVISIONS						SHEET NO.
NO.	BY:	DATE:	NO.	BY:	DATE:	S-76
1			3			TOTAL SHEETS
2			4			S-109

DRAWN BY : AFM DATE : 01-12
CHECKED BY : AC DATE : 01-12

I:\Projects\2515385\2515385.0001\50_Deliverables & Submittals\17BP.9.P.1\Structures\17BP.9.P.1 FinalSet 01_24_12\Bridge 185\DGN\A30.DGN
guldool
2/23/2012

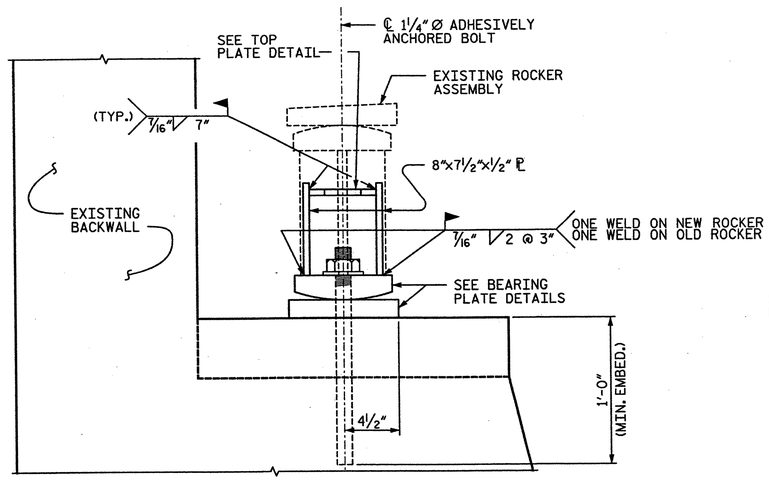

ROCKER BEARING REPAIR-SECTION VIEW

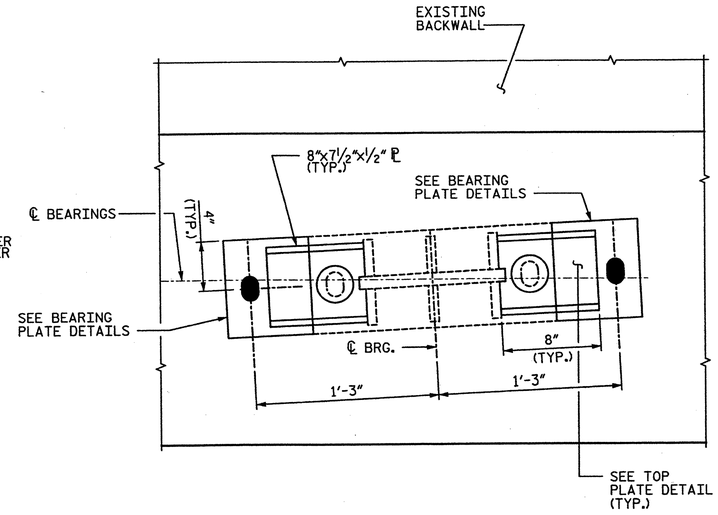

ROCKER BEARING REPAIR-PLAN VIEW

NOTES

AT ALL FIXED POINTS OF SUPPORT, NUTS FOR ANCHOR BOLTS ARE TO BE TIGHTENED FINGER TIGHT AND THEN BACKED OFF ½ TURN. THE THREAD OF THE NUT AND BOLT SHALL THEN BE BURRED WITH A SHARP POINTED TOOL.

ANCHOR BOLTS SHALL MEET THE REQUIREMENTS OF ASTM A449. NUTS SHALL MEET THE REQUIREMENTS OF AASHTO M291-DH OR AASHTO M292-2H. WASHERS SHALL MEET THE REQUIREMENTS OF AASHTO M293. SHOP DRAWINGS ARE NOT REQUIRED FOR ANCHOR BOLTS, NUTS AND WASHERS. SHOP INSPECTION IS REQUIRED.

ALL SURFACES OF BEARING PLATES SHALL BE SMOOTH AND STRAIGHT.

ANCHOR BOLTS SHALL BE ADHESIVELY ANCHORED USING AN APPROVED ADHESIVE CONSIDERING LOAD RESISTANCE, IN-SERVICE AND INSTALLATION TEMPERATURE, AVAILABILITY OF COMPREHENSIVE INSTALLATION INSTRUCTIONS, AND CREEP. ANCHORS SHALL BE INSTALLED TO THE MINIMUM EMBEDMENT DEPTHS AS SHOWN ON PLANS. SEE STANDARD SPECIFICATIONS.

ALL STRUCTURAL STEEL COMPONENTS SHOWN HEREIN FOR ROCKER BEARING REPAIR SHALL BE AASHTO M270 GRADE 36.

STRUCTURAL STEEL FOR BEARING ASSEMBLIES SHALL BE INCLUDED IN THE BID PRICES FOR STRUCTURAL STEEL REPAIRS. THE BID PRICE SHALL BE FULL PAYMENT FOR ALL LABOR, MATERIALS, INSTALLATION AND ALL INCIDENTALS REQUIRED TO COMPLETE THE WORK.

NOTE: ROCKER BEARING REPAIRS DETAILS ARE FOR BEARINGS AS FOLLOWS:

END BENT 1	BEAM 2
	BEAM 3
	BEAM 4
END BENT 2	BEAM 6

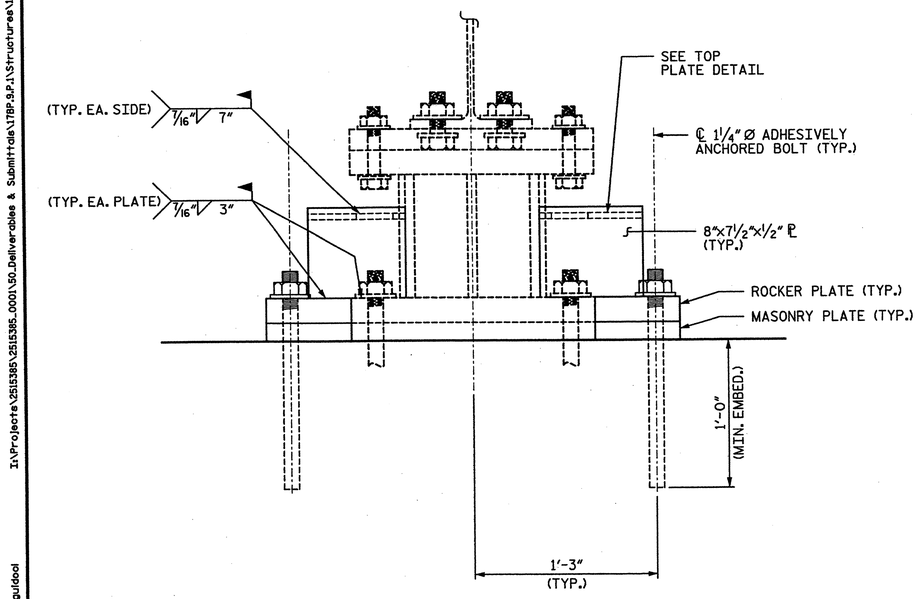

ROCKER BEARING REPAIR-ELEVATION VIEW

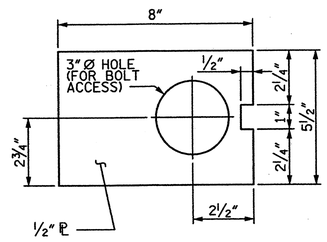

TOP PLATE DETAILS

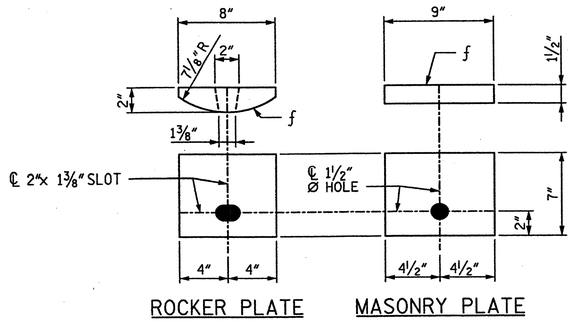

BEARING PLATE DETAILS

PROJECT NO. 17BP.9.P.1

FORSYTH COUNTY

BRIDGE NO.: 185

REHAB. OF BRIDGE NO. 185 SHEET 11 OF 12

STATE OF NORTH CAROLINA
DEPARTMENT OF TRANSPORTATION
RALEIGH

ROCKER BEARING REPAIR DETAILS

BRIDGE ON THIRD STREET OVER US-52, US-311 & NC-8

NORTH CAROLINA PROFESSIONAL SEAL 19769 ENGINEER KEVIN E. KELLY, JR.
2/17/12

STV/ Ralph Whitehead Associates, Inc.
1000 West Morehead St., Ste. 200
Charlotte, NC 28208
NC License No. F-0991

REVISIONS						SHEET NO.
NO.	BY:	DATE:	NO.	BY:	DATE:	S-76A
1			3			TOTAL SHEETS
2			4			S-109

DRAWN BY : TRL DATE : 01-12
CHECKED BY : KGB DATE : 01-12

I:\Projects\2515385\2515385.0001\SD_Deliverables & Submittals\17BP.9.P.1 Structures\17BP.9.P.1 FinalSet 01.24.12\Bridge 185\DGN\B30.DGN
guldool
2/17/2012

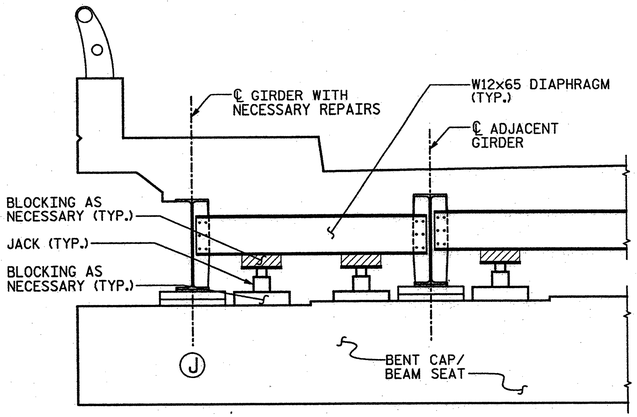

GIRDER JACKING DETAIL AT EXTERIOR GIRDER

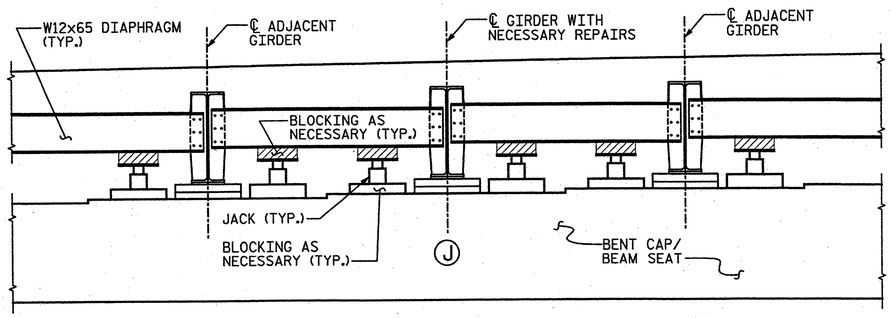

GIRDER JACKING DETAIL AT INTERIOR GIRDER

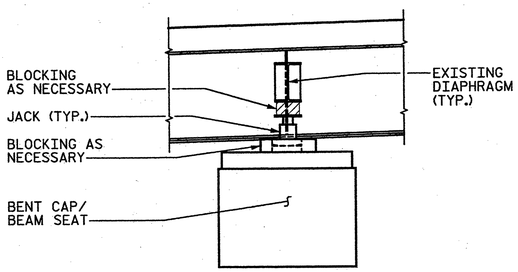

TYPICAL SECTION @ JACKING LOCATION

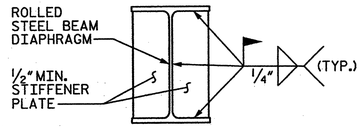

JACKING STIFFENER DETAIL

NOTES:

JACKING DETAILS SHOWN ARE CONCEPTUAL AND CONSIDERED A MINIMUM. THE CONTRACTOR SHALL PROVIDE JACKING PLANS FOR ALL GIRDERS LIFTED FOR APPROVAL BY THE ENGINEER PRIOR TO ANY JACKING OPERATIONS.

JACKING PLANS SHALL BE SIGNED AND SEALED BY LICENSED PROFESSIONAL ENGINEER REGISTERED IN NORTH CAROLINA.

THE CONTRACTOR SHALL PROVIDE BLOCKING FOR ALL JACKS AS NECESSARY. A BLOCKING PLAN SHALL BE INCLUDED AS PART OF THE JACKING PLAN.

THE CONTRACTOR SHALL JACK GIRDERS ON AN INDIVIDUAL BENT SIMULTANEOUSLY BY MEANS OF A DUAL-FLOW PRESSURIZED PUMP CONTROLLING THE JACKS.

THE CONTRACTOR SHALL MONITOR THE PLAN LOCATION OF THE GIRDERS FROM INITIAL JACKING UNTIL GIRDERS ARE SECURED ON THEIR PERMANENT BEARINGS. IF THE PLAN LOCATION OF THESE GIRDERS SHIFT FROM ITS ORIGINAL POSITION. THE CONTRACTOR SHALL SECURE FROM ADDITIONAL MOVEMENT IMMEDIATELY. NOTIFY ENGINEER PRIOR TO PROCEEDING WORK OPERATIONS.

EACH JACK SHALL HAVE A MINIMUM SAFE WORKING CAPACITY OF 75 TONS.

PRIOR TO JACKING THE CONTRACTOR SHALL ENSURE THERE ARE NO OBSTACLES PREVENTING THE SPAN FROM BEING LIFTED.

WHERE JACKING WILL BE SOLELY SUPPORTED BY THE DIAPHRAGM, THE CONTRACTOR SHALL VERIFY THAT THE EXISTING DIAPHRAGM HAS ADEQUATE CAPACITY TO SUPPORT JACKING LOADS.

THE CONTRACTOR SHALL ENSURE THAT EXISTING UTILITIES UNDER THE BRIDGE ARE NOT DAMAGED DURING JACKING OPERATIONS.

ONCE SPAN HAS BEEN JACKED, CONTRACTOR SHALL INSTALL A MECHANICAL LOCKING DEVICE TO ENSURE THAT GIRDER WILL NOT BE LOWERED DURING THE REPAIR OF BENT CAPS AND BEAMS.

CONTRACTOR TO TAKE APPROPRIATE MEANS TO REMOVE NUT ON ANCHOR BOLT WITHOUT DAMAGING THE BEAM FLANGE. CONTRACTOR SHALL SUBMIT NUT REMOVAL METHOD TO INCLUDE PROCEDURES THAT WILL LOOSEN BOND BETWEEN INTERLOCKING THREADS TO ENGINEER FOR APPROVAL PRIOR TO REMOVING ANCHOR BOLT NUTS.

JACKING SEQUENCE:

1. REMOVE NECESSARY NUTS ON ANCHOR BOLTS.
2. JACK GIRDERS A MAXIMUM OF ⅛" IN ORDER TO RELIEVE LOAD ON BENT CAP UNDER BEARING.
3. MECHANICALLY LOCK ALL JACKS AT BENT.
4. PERFORM CONCRETE REPAIRS AT SPECIFIED LOCATIONS.
5. ONCE ALL REPAIRS ARE COMPLETE, LOWER BRIDGE. CONTRACTOR SHALL NOT LOWER BRIDGE UNTIL CONCRETE REPAIR MATERIAL HAS REACHED A COMPRESSIVE STRENGTH OF 3,000 PSI.

NOTE: THE CONTRACTOR HAS THE OPTION TO PROPOSE AN ALTERNATE CONSTRUCTION SEQUENCE FOR THE APPROVAL OF THE ENGINEER.

PROJECT NO. 17BP.9.P.1

FORSYTH COUNTY

BRIDGE NO.: 185

REHAB. OF BRIDGE NO. 185 SHEET 12 OF 12

STATE OF NORTH CAROLINA
DEPARTMENT OF TRANSPORTATION
RALEIGH

JACKING DETAILS

BRIDGE ON THIRD STREET OVER US-52, US-311 & NC-8

NORTH CAROLINA PROFESSIONAL SEAL 19765 ENGINEER PAUL E. KELLY, JR. 1/18/12

STV/ Ralph Whitehead Associates, Inc.
1000 West Morehead St. Ste. 200
Charlotte, NC 28208
NC License No. F-0991

REVISIONS						SHEET NO.
NO.	BY:	DATE:	NO.	BY:	DATE:	S-77
1			3			TOTAL SHEETS
2			4			S-109

DRAWN BY : AFM DATE : 01-12
CHECKED BY : AC DATE : 01-12

I:\Projects\2515385\2515385.0001\50_Deliverables & Submittals\17BP.9.P.1\Structures\Final-12-12\17BP.9.P.1 Final Set 01.12.12\Bridge 185 Rehab Plans.dgn
dlveyco
1/18/2012

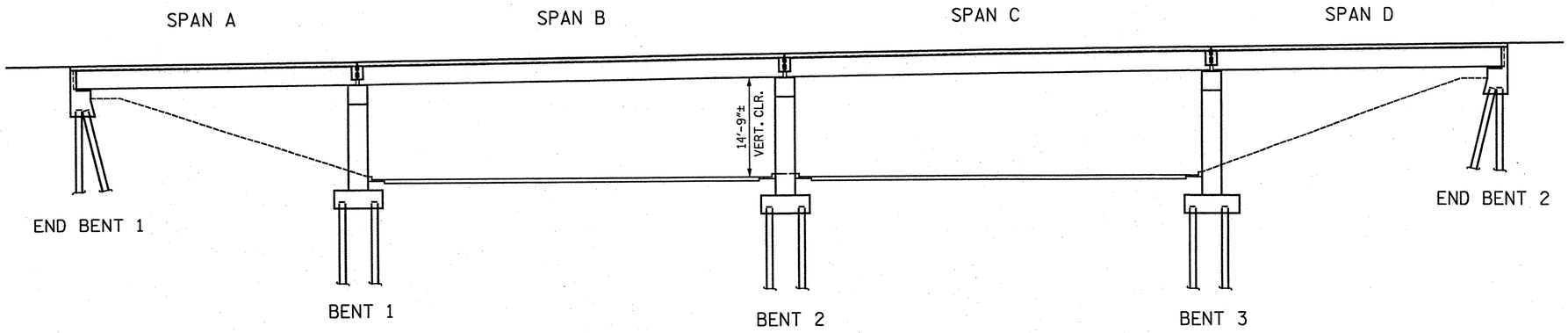

ELEVATION
(SECTIONS AT BENTS AND END BENTS ARE AT RIGHT ANGLES)

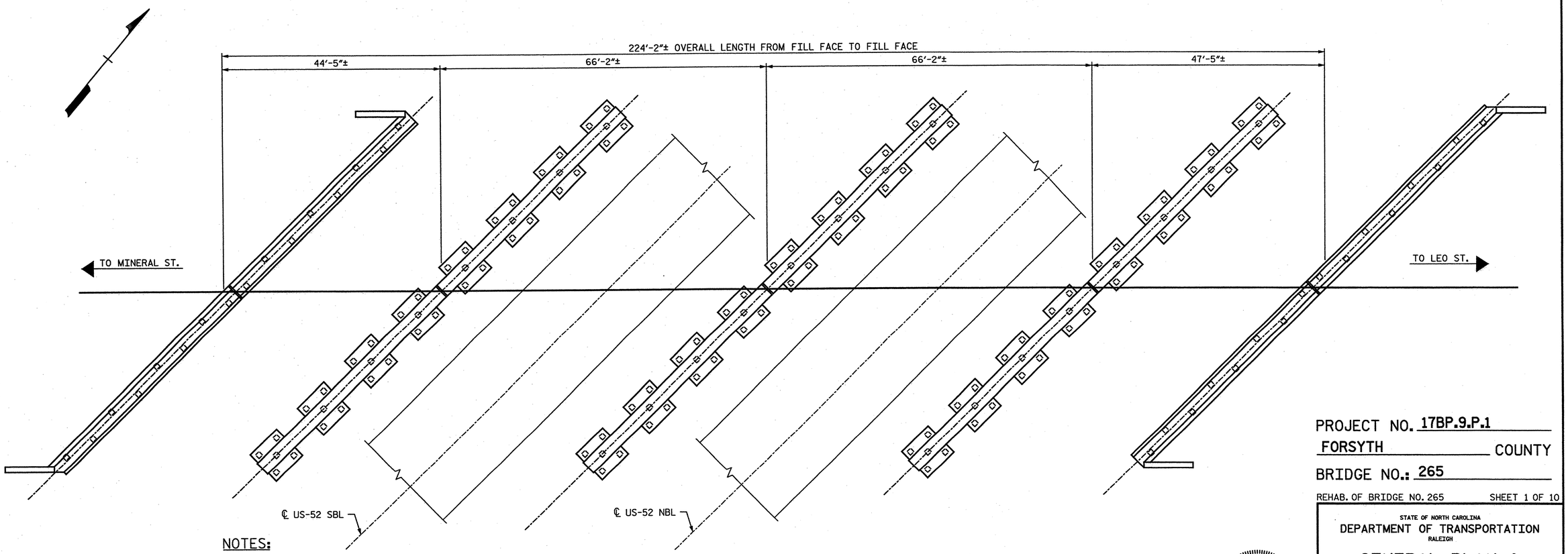

PLAN

NOTES:

SEE SHEET NO. S-1 OF S-109 FOR GENERAL NOTES.

SEE BRIDGE NO. 265 SHEETS 2, 5, 6, 9 & 10 OF 10 FOR ADDITIONAL NOTES.

EXISTING BRIDGE INFORMATION BASED ON BEST AVAILABLE DATA.

AFTER ALL REPAIRS ON THE BRIDGE HAVE BEEN COMPLETED, AN EPOXY PROTECTIVE COATING SHALL BE APPLIED TO THE TOP SURFACE OF BENT CAPS, INCLUDING PEDESTALS, FOR EACH BENT BELOW A JOINT IN THE SUPERSTRUCTURE. CAP SURFACES SHALL BE GRIT BLASTED PRIOR TO EPOXY COATING. SEE STANDARD SPECIFICATIONS FOR EPOXY COATING. ALL COSTS ASSOCIATED WITH APPLYING EPOXY PROTECTIVE COATING SHALL BE INCLUDED IN THE SEVERAL PAY ITEMS FOR THE PROJECT. NO ADDITIONAL PAYMENT WILL BE MADE FOR THIS WORK.

PROJECT NO. 17BP.9.P.1
FORSYTH COUNTY
BRIDGE NO.: 265
REHAB. OF BRIDGE NO. 265 SHEET 1 OF 10

STATE OF NORTH CAROLINA
DEPARTMENT OF TRANSPORTATION
RALEIGH

GENERAL PLAN & ELEVATION

BRIDGE ON AKRON DR. OVER US 52

NORTH CAROLINA PROFESSIONAL SEAL 19765 ENGINEER PAUL E. KELLY JR.
1/18/12

STV / Ralph Whitehead Associates, Inc.
1000 West Morehead St., Ste. 200
Charlotte, NC 28208
NC License No. F-0991

REVISIONS						SHEET NO.
NO.	BY:	DATE:	NO.	BY:	DATE:	S-78
1			3			TOTAL SHEETS
2			4			S-109

DRAWN BY : JWK DATE : 01-12
CHECKED BY : AC DATE : 01-12

I:\Projects\2515385\2515385.0001\50_Deliverables & Submittals\17BP.9.P.1\Structures\Final1-12-12\17BP.9.P.1 Final Set 01_12_12\Bridge 265\Bridge 265 Rehab Plans.dgn
alveyac
1/17/2012

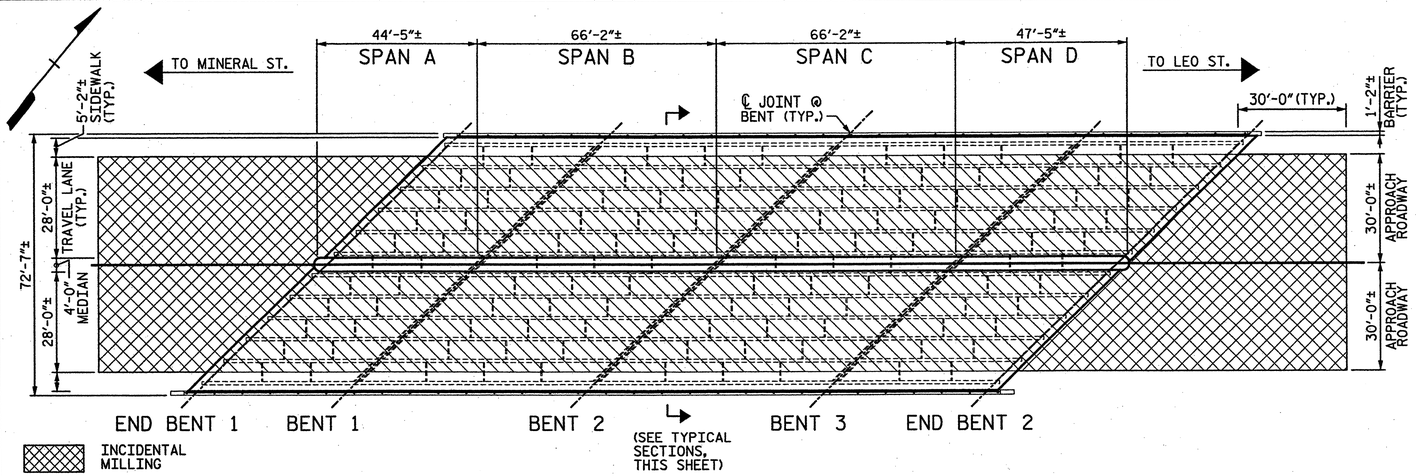

PLAN OF SPANS - DECK SCARIFICATION & HYDRO-DEMOLITION

(CONCRETE BRIDGE FLOORS SHALL BE GROOVED IN ACCORDANCE WITH SECTION 420-14 OF THE STANDARD SPECIFICATION)

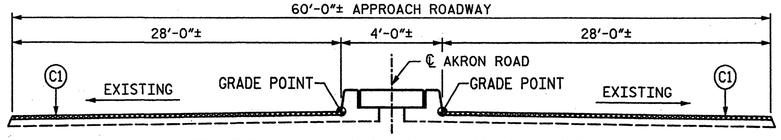

TYPICAL ROADWAY SECTION

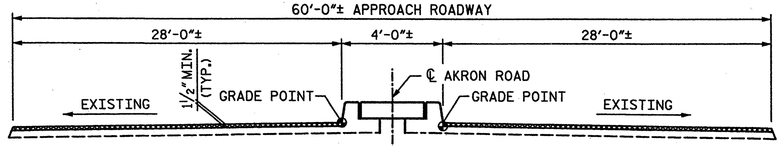

TYPICAL ROADWAY MILLING SECTION

(MILL TO 1½" DEPTH)

C1	PROPOSED VARIABLE DEPTH ASPHALT CONCRETE SURFACE COURSE, TYPE SF9.5A AT AN AVERAGE RATE OF 110 LBS. PER SQ. YD. PER 1" DEPTH. TO BE PLACED IN LAYERS NOT LESS THAN 1" IN DEPTH OR GREATER THAN 1½" DEPTH

NOTE: FOR ADDITIONAL MILLING DETAILS, SEE SHEET 5 OF 10.

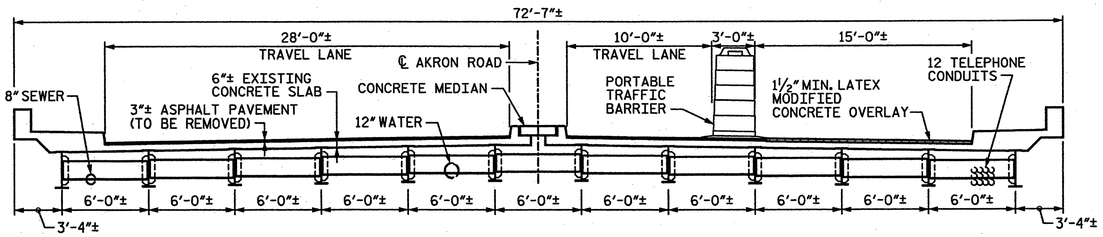

TYPICAL SECTION - STAGE I

(AT INTERMEDIATE DIAPHRAGMS)

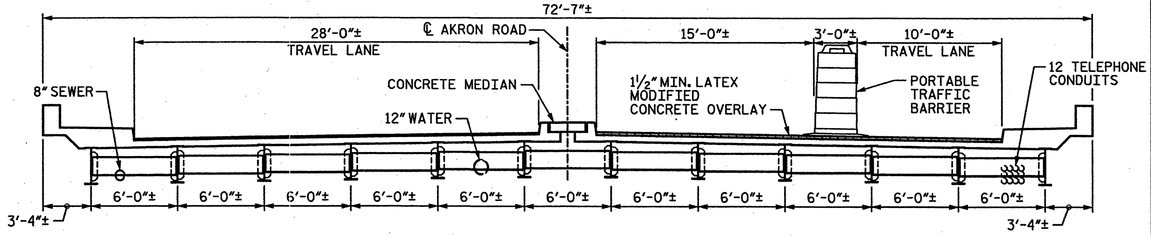

TYPICAL SECTION - STAGE II

(AT INTERMEDIATE DIAPHRAGMS)

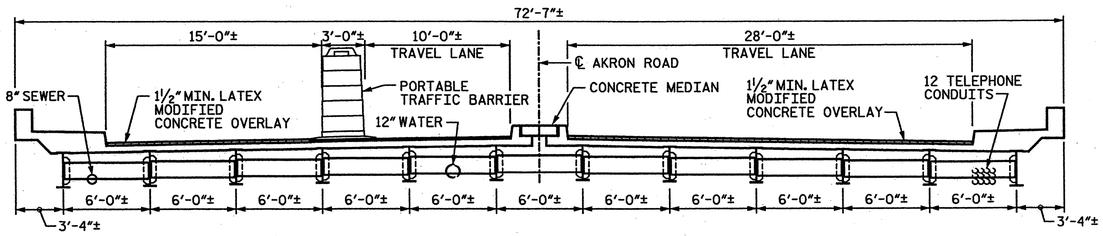

TYPICAL SECTION - STAGE III

(AT INTERMEDIATE DIAPHRAGMS)

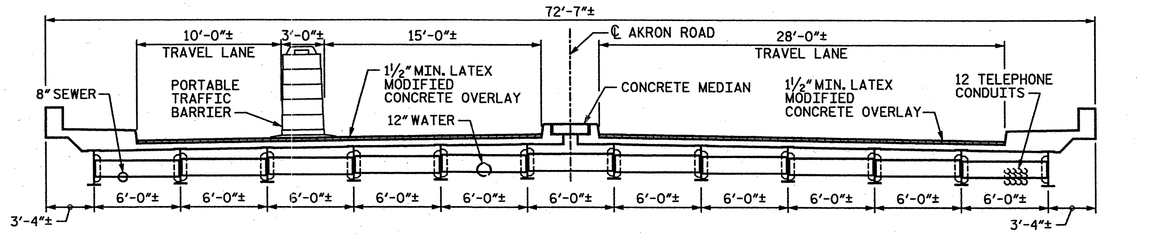

TYPICAL SECTION - STAGE IV

(AT INTERMEDIATE DIAPHRAGMS)

NOTES:

SEE NOTES ON SHEET 5 OF 10.

PER EXISTING PLANS, THE EXISTING DECK HAS 1¼" CONCRETE COVER OVER EXIST. REINFORCING STEEL.

LATEX MODIFIED CONCRETE OVERLAY SHALL BE LATEX MODIFIED CONCRETE - VERY EARLY STRENGTH, SEE SPECIAL PROVISIONS.

TOTAL BILL OF MATERIAL

INCIDENTAL MILLING	DECK SCARIFICATION	✱CLASS II SURFACE PREPARATION	✱CLASS III SURFACE PREPARATION	✱CLASS AA CONCRETE	HYDRO-DEMOLITION OF BRIDGE DECK	LATEX MODIFIED CONCRETE OVERLAY VERY EARLY STRENGTH	PLACING & FINISHING LATEX MODIFIED CONCRETE OVERLAY - VERY EARLY STRENGTH	ASPHALTCONCRETE SURFACE COURSE TYPE SF9.5A	FOAM JOINT SEAL	GROOVING BRIDGE FLOORS	EPOXY RESIN INJECTION	CONCRETE REPAIRS (CLASS A)	SHOTCRETE REPAIRS	BRIDGE JACKING	■REINFORCING STEEL
SQ. YDS.	SQ. YDS.	SQ. YDS.	SQ. YDS.	CU. YDS.	SQ. YDS.	CU. YDS.	SQ. YDS.	TON	LUMP SUM	SQ. FT.	LIN. FT.	CU. FT.	CU. FT.	LUMP SUM	LBS.
809	1396	44	15	3	1396	68	1396	74	LUMP SUM	12556	99	139	136	LUMP SUM	100

✱ QUANTITIES FOR INFORMATION ONLY.

■ REINFORCING STEEL FOR REPLACEMENT OF REBAR DAMAGED PRIOR TO ONSET OF PROJECT.

DRAWN BY : JWK DATE : 01-12

CHECKED BY : AC DATE : 01-12

STV/ Ralph Whitehead Associates, Inc.
1000 West Morehead St. Ste. 200
Charlotte, NC 28208
NC License No. F-0991

PROJECT NO. 17BP.9.P.1

FORSYTH COUNTY

BRIDGE NO.: 265

REHAB. OF BRIDGE NO. 265 SHEET 2 OF 10

STATE OF NORTH CAROLINA
DEPARTMENT OF TRANSPORTATION
RALEIGH

PLAN OF SPANS & TYPICAL SECTION

BRIDGE ON AKRON DR. OVER US 52

REVISIONS						SHEET NO.
NO.	BY:	DATE:	NO.	BY:	DATE:	S-79
1			3			TOTAL SHEETS
2			4			S-109

I:\Projects\2515385\2515385.0001\50.Deliverables & Submittals\17BP.9.P.1\Structures\17BP.9.P.1 FinalSet 01.24.12\Bridge 265\Bridge 265 Rehab Plans.dgn

guidool

3/6/2012

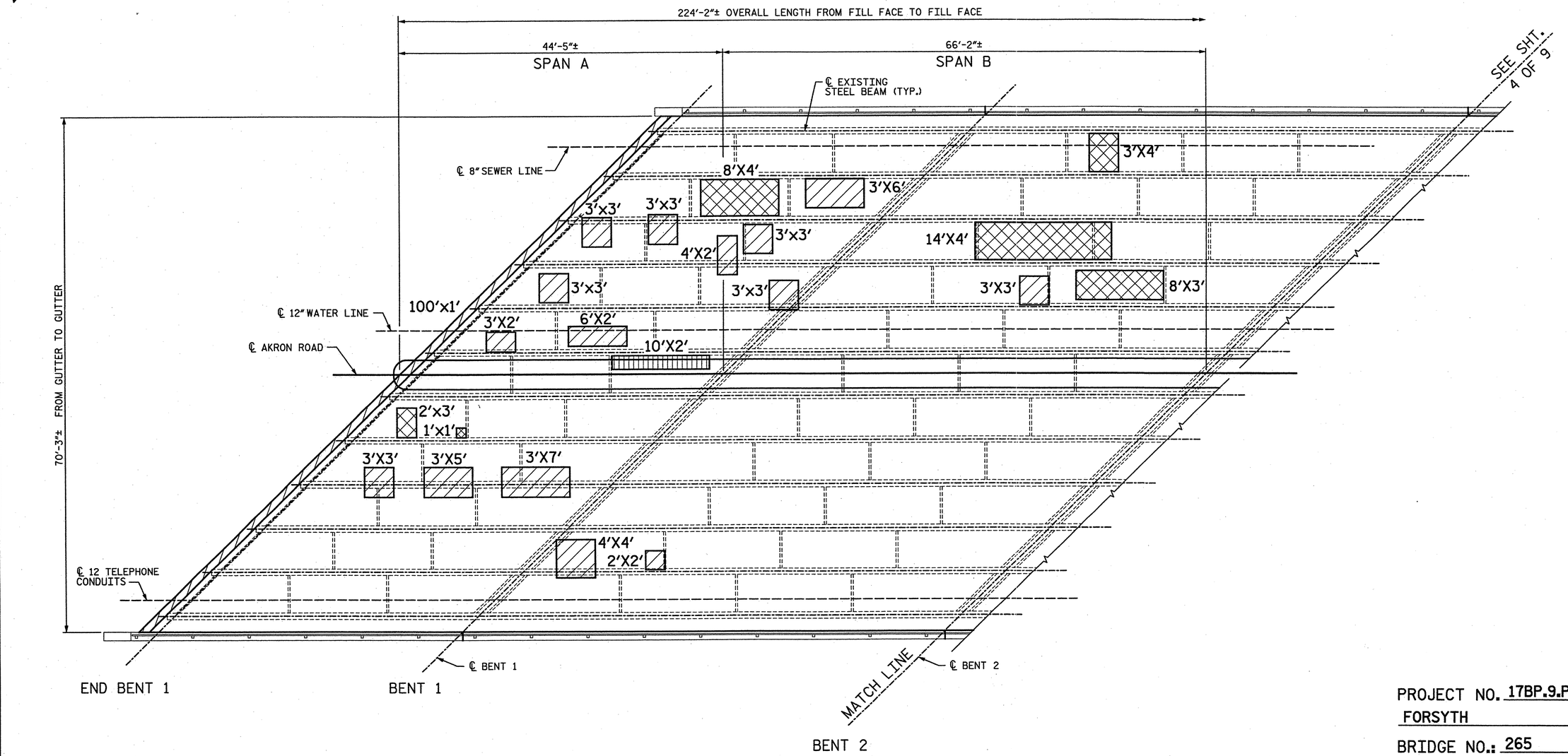

APPROX. AREA: CLASS II REPAIR

APPROX. AREA: CLASS III REPAIR

APPROX. AREA: SHOTCRETE SOFFIT REPAIR

PARTIAL PLAN OF SPANS - DECK REPAIRS

(SEE SHEET 5 OF 10 FOR SECTIONS)

NOTE:

SEE NOTES ON SHEET 5 OF 10.

DRAWN BY : JWK DATE : 01-12

CHECKED BY : AC DATE : 01-12

PROJECT NO. 17BP.9.P.1

FORSYTH COUNTY

BRIDGE NO.: 265

REHAB. OF BRIDGE NO. 265 SHEET 3 OF 10

STATE OF NORTH CAROLINA
DEPARTMENT OF TRANSPORTATION
RALEIGH

PLAN OF SPANS A & B DECK REPAIRS

BRIDGE ON AKRON DR. OVER US 52

NORTH CAROLINA PROFESSIONAL SEAL (19762) ENGINEER RALPH E. KELLY, JR. 1/18/12

STV/ Ralph Whitehead Associates, Inc.
1000 West Morehead St., Ste. 200
Charlotte, NC 28208
NC License No. F-0991

REVISIONS						SHEET NO.
NO.	BY:	DATE:	NO.	BY:	DATE:	S-80
1			3			TOTAL SHEETS
2			4			S-109

I:\Projects\25153985\25153985.0001\50_Deliverables & Submittals\17BP.9.P.1 Final Set 01.12.12\Bridge 265\Bridge 265 Rehab Plans.dgn
dlveysc
1/17/2012

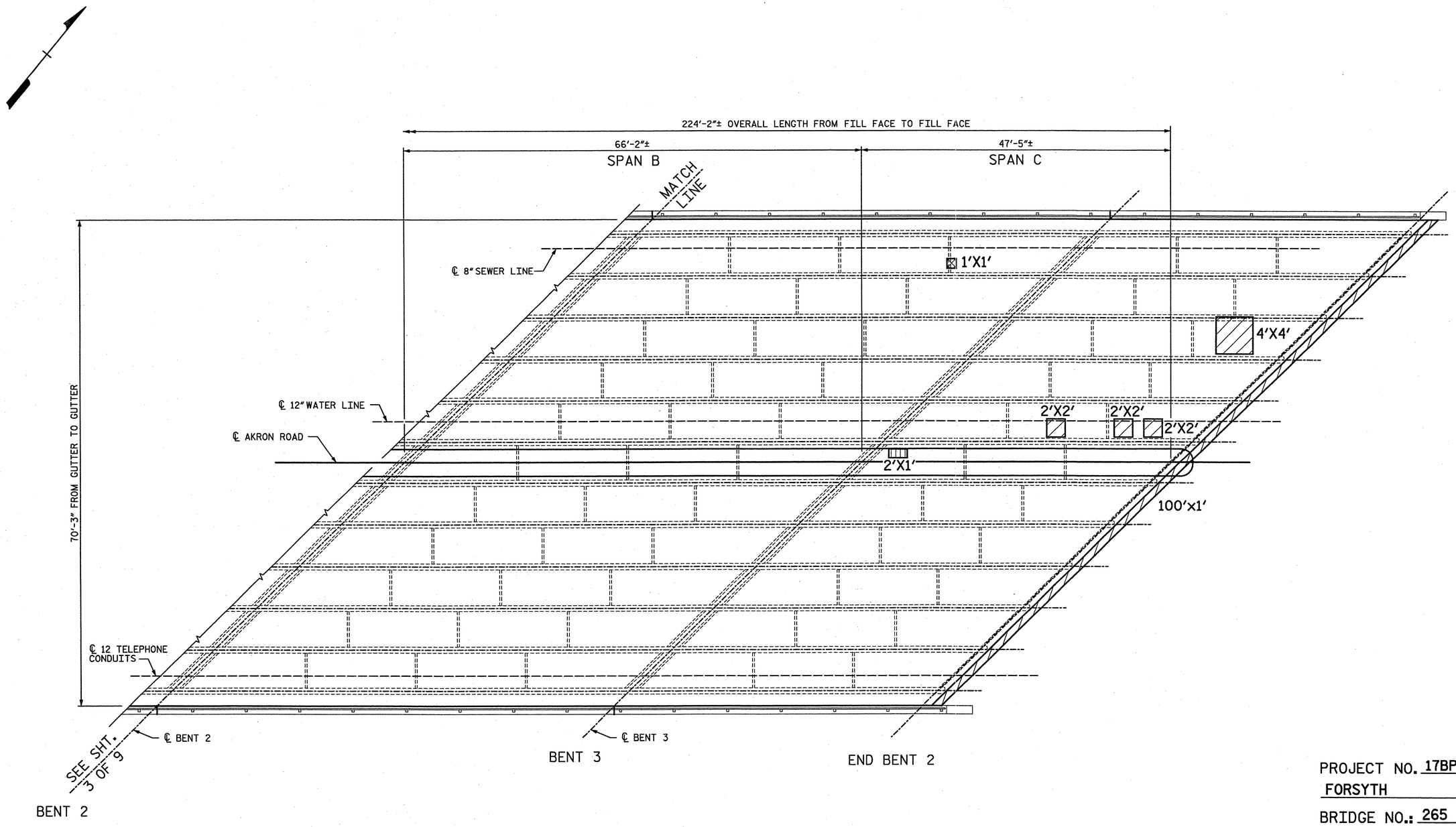

PROJECT NO. 17BP.9.P.1

FORSYTH COUNTY

BRIDGE NO.: 265

REHAB. OF BRIDGE NO. 265 SHEET 4 OF 10

PARTIAL PLAN OF SPANS - DECK REPAIRS

(SEE SHEET 5 OF 10 FOR SECTIONS)

APPROX. AREA: CLASS II REPAIR

APPROX. AREA: CLASS III REPAIR

APPROX. AREA: SHOTCRETE SOFFIT REPAIR

NOTE:

SEE NOTES ON SHEET 5 OF 10.

NORTH CAROLINA PROFESSIONAL SEAL 19765 ENGINEER PAUL E. KELLY, JR. 1/18/12

STATE OF NORTH CAROLINA
DEPARTMENT OF TRANSPORTATION
RALEIGH

PLAN OF SPANS C & D DECK REPAIRS

BRIDGE ON AKRON DR. OVER US 52

STV / Ralph Whitehead Associates, Inc.
1000 West Morehead St., Ste. 200
Charlotte, NC 28208
NC License No. F-0991

REVISIONS						SHEET NO.
NO.	BY:	DATE:	NO.	BY:	DATE:	S-81
1			3			TOTAL SHEETS
2			4			S-109

DRAWN BY : JWK DATE : 01-12
CHECKED BY : AC DATE : 01-12

I:\Projects\2515385\2515385_0001\50_Deliverables & Submittals\17BP.9.P.1\Structures\Final1-12-12\17BP.9.P.1 FinalSet 01.12.12\Bridge 265\Bridge 265 Rehab Plans.dgn

alveyac

1/17/2012

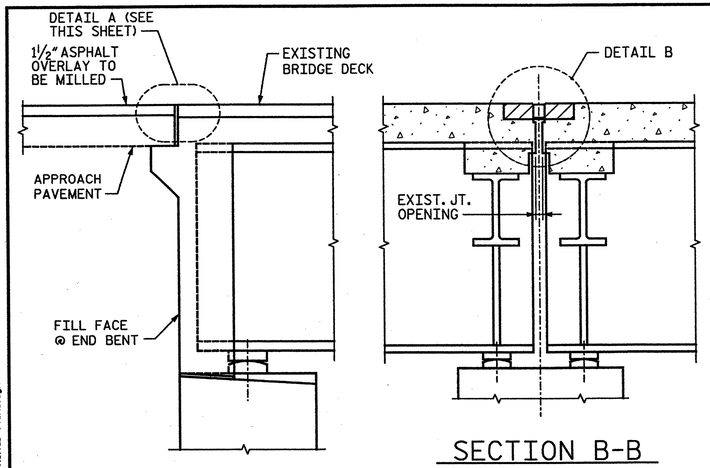

SECTION A-A

(TYP. @ END BENT 1 AND 2)

SECTION B-B

(PROPOSED JOINT)
(TYP. @ INTERIOR BENTS)

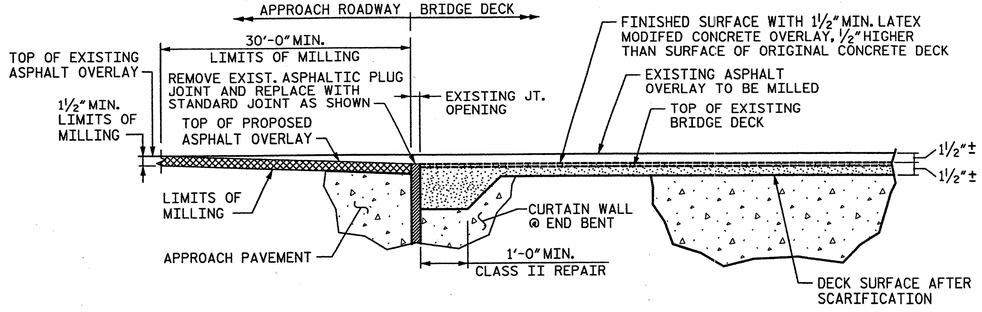

DETAIL A

(LOCATION OF JOINT TO MATCH EXISTING JOINT LOCATION)

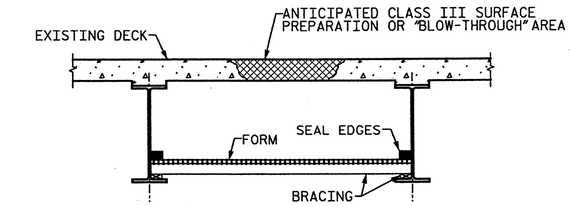

TYP. "BLOW-THROUGH" CONTAINMENT AND FORMWORK

A METHOD TO CAPTURE WATER AND DEBRIS FROM BLOW THRU DURING HYDRO-DEMOLITION SHALL BE INSTALLED IN AREAS INDICATED AS CLASS III SURFACE PREPARATION.

SUBMIT DETAILS OF PROPOSED FORMWORK FOR APPROVAL PRIOR TO BEGINNING WORK.

COSTS FOR INSTALLING AND REMOVING FORMWORK SHALL BE INCIDENTAL TO THE PRICE PER SQ. YARD OF HYDRO-DEMOLITION.

TO BE USED IN BAYS 2-4 & 7.

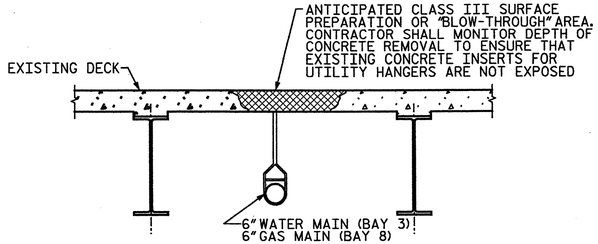

TYP. "BLOW-THROUGH" CONTAINMENT AND FORMWORK WITH HANGING UTILITY

THE CONTRACTOR SHALL DEVISE AND INSTALL A METHOD TO CAPTURE WATER AND DEBRIS FROM BLOW THRU DURING HYDRO-DEMOLITION IN AREAS INDICATED AS CLASS III SURFACE PREPARATION.

SUBMIT DETAILS OF PROPOSED FORMWORK FOR APPROVAL PRIOR TO BEGINNING WORK.

COSTS FOR INSTALLING AND REMOVING FORMWORK SHALL BE INCIDENTAL TO THE PRICE PER SQ. YARD OF HYDRO-DEMOLITION.

CONTRACTOR TO PROVIDE PLANS AND DETAILS FOR ACCOMMODATING EXISTING UTILITIES.

TO BE USED IN BAY 1.

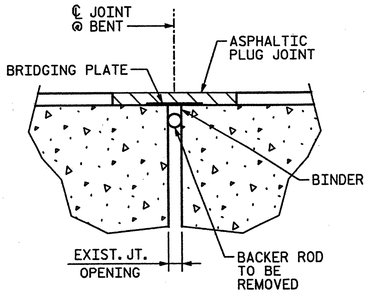

EXISTING JOINT DETAIL

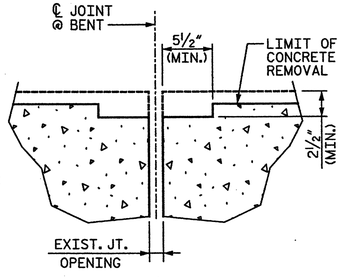

CONCRETE REMOVAL DETAIL @ EXISTING JOINT

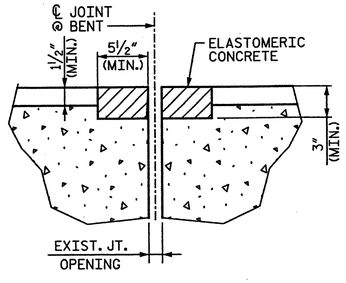

FOAM JOINT SEAL (DETAIL BEFORE SAWING)

(BENT 1)	(BENT 2)	(BENT 3)
1⅞" @ 45°F	2" @ 45°F	2" @ 45°F
1⅞" @ 60°F	1⅞" @ 60°F	1⅞" @ 60°F
1¾" @ 90°F	1¾" @ 90°F	1⅝" @ 90°F

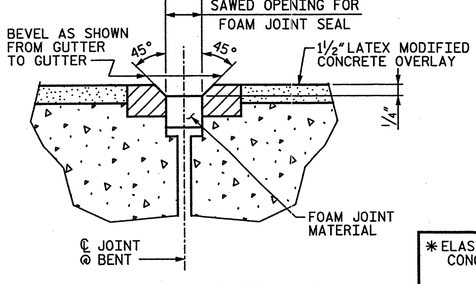

FOAM JOINT SEAL (DETAIL AFTER SAWING)

* ELASTOMERIC CONCRETE
CU. FT.
55

* QUANTITIES FOR INFORMATION ONLY.

DETAIL B

NOTES:

FOR FOAM JOINT SEALS, SEE SPECIAL PROVISIONS.

THE INSTALLED FOAM JOINT SEALS SHALL BE WATERTIGHT.

THE NOMINAL UNCOMPRESSED SEAL WIDTH OF THE FOAM JOINT SEAL SHALL BE 2½".

THE CONTRACTOR WILL NOT BE PERMITTED TO FORM THE JOINT FOR THE FOAM JOINT SEAL IN LIEU OF SAWING THE JOINT.

FOAM JOINT OPENING WIDTHS SHALL BE CONFIRMED IN THE FIELD. CONTRACTOR SHALL MAKE ADJUSTMENTS TO FOAM JOINT SEALS, AS NECESSARY, TO MEET EXISTING CONDITIONS AND MANUFACTURER'S RECOMMENDATIONS. ANY CHANGES SHALL BE SUBMITTED TO THE ENGINEER FOR APPROVAL. ANY COST ASSOCIATED WITH THESE ADJUSTMENTS IS CONSIDERED INCIDENTAL AND NO SEPARATE MEASUREMENT OR PAYMENT WILL BE MADE.

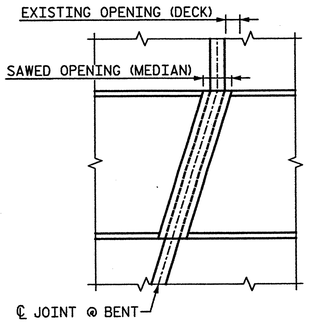

PLAN OF JOINT SEAL AT MEDIAN

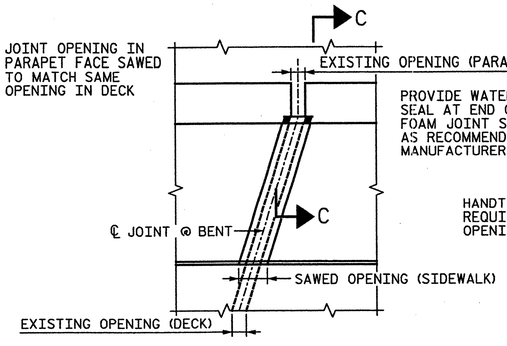

PLAN OF JOINT SEAL AT PARAPET

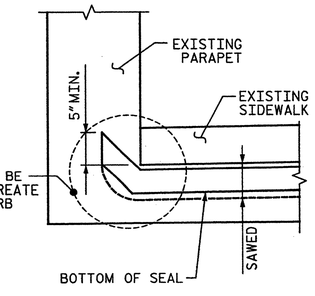

SECTION C-C

NORTH CAROLINA PROFESSIONAL SEAL 19768 ENGINEER CHARLES E. KELLY, JR. 2/17/12

PROJECT NO. 17BP.9.P.1

FORSYTH COUNTY

BRIDGE NO.: 265

REHAB. OF BRIDGE NO. 265 SHEET 5 OF 10

STATE OF NORTH CAROLINA
DEPARTMENT OF TRANSPORTATION
RALEIGH

DECK REPAIRS DETAILS

BRIDGE ON AKRON DR. OVER US 52

REVISIONS						SHEET NO.
NO.	BY:	DATE:	NO.	BY:	DATE:	S-82
1			3			TOTAL SHEETS
2			4			S-109

STV / Ralph Whitehead Associates, Inc.
1000 West Morehead St., Ste. 200
Charlotte, NC 28208
NC License No. F-0991

DRAWN BY : JWK DATE : 01-12
CHECKED BY : AC DATE : 01-12

I:\Projects\2515385\2515385.0001\50.Deliverables & Submittals\17BP.9.P.1 Structures\17BP.9.P.1 FinalSet 01_24_12\Bridge 265\Bridge 265 Rehab Plans.dgn
tlowe
2/17/2012

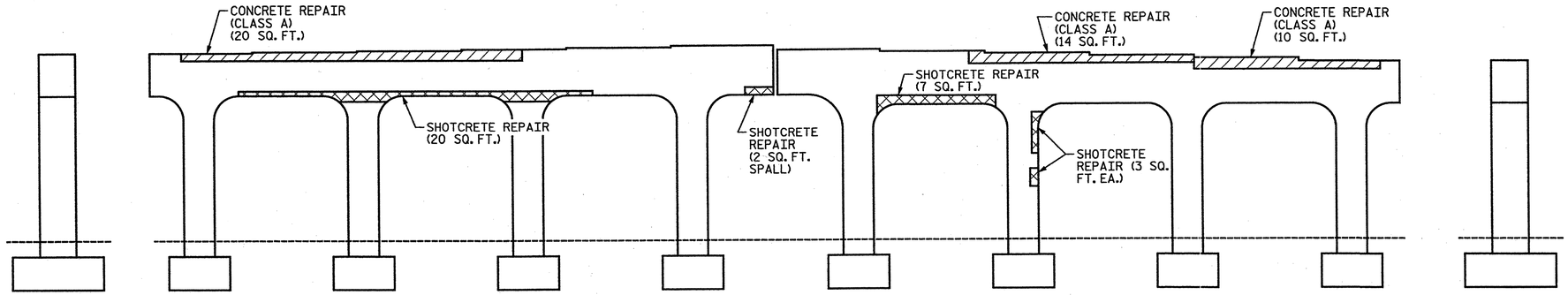

END VIEW OF BENT 1 LOOKING NORTH*

ELEVATION OF BENT 1 - LOOKING WEST*

END VIEW OF BENT 1 LOOKING SOUTH*

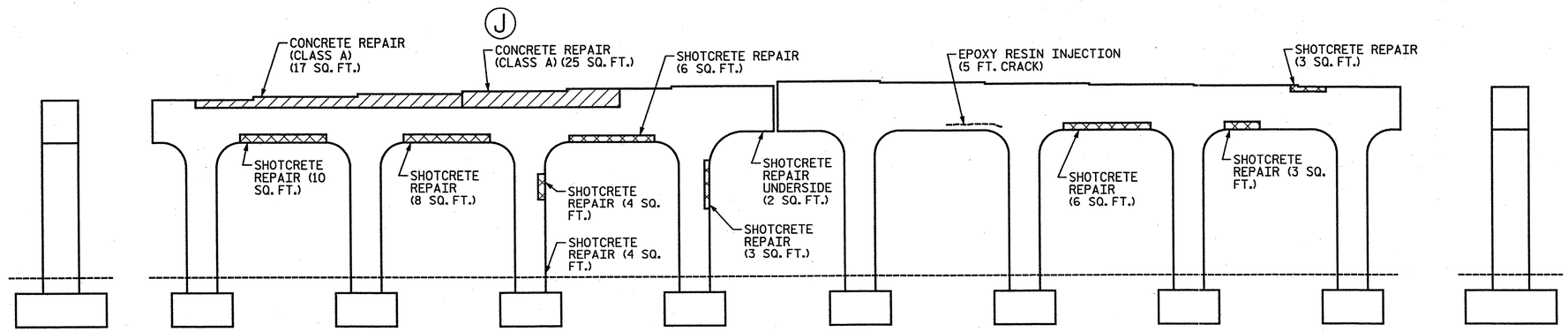

END VIEW OF BENT 1 LOOKING SOUTH*

ELEVATION OF BENT 1 - LOOKING EAST*

END VIEW OF BENT 1 LOOKING NORTH*

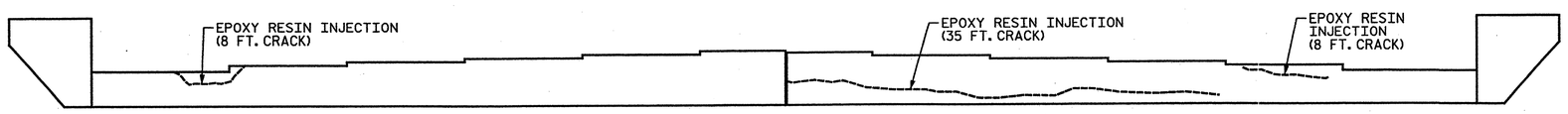

ELEVATION OF END BENT 1 - LOOKING WEST*

* LOOKING DIRECTION CORRESPONDS WITH DIRECTION OF TRAVEL ALONG HIGHWAY

APPROX. LENGTH: EPOXY RESIN INJECTION

APPROX. AREA: CONCRETE REPAIRS (CLASS A)

APPROX. AREA: SHOTCRETE REPAIRS

NOTES:

FOR CONCRETE REPAIR DETAILS, SEE SHEET 9 OF 10.

CONCRETE SHALL BE SOUNDED TO DETERMINE THE EXTENT OF ALL CONCRETE REPAIRS.

FOR CRACKS REQUIRING EPOXY RESIN INJECTION, SOUNDING MAY PROVE THAT A CONCRETE REPAIR IS NECESSARY.

SPALL, CRACK, AND DELAMINATION DIMENSIONS SHOWN ARE APPROXIMATE. CONTRACTOR SHALL DETERMINE ACTUAL SPALL, CRACK, AND DELAMINATION DIMENSIONS PRIOR TO MAKING REPAIRS.

THE ENGINEER SHALL BE NOTIFIED OF ANY BARS DAMAGED DURING THE CONCRETE REMOVAL PROCESS. REPAIRS TO DAMAGED BARS SHALL BE DIRECTED BY THE ENGINEER AND COMPLETED AT NO ADDITIONAL COST.

DOWEL LENGTH SHALL BE BASED ON A 9" EMBEDMENT INTO EXISTING CONCRETE AND MAY BE ADJUSTED BASED ON THE MINIMUM EMBEDMENT SPECIFIED BY THE MANUFACTURER OF THE EPOXY ADHESIVE BONDING SYSTEM.

REINFORCING STEEL SHALL BE GRADE 60.

BENT CAP REPAIRS IN BEARING AREAS SHALL BE PERFORMED WITH CLASS A CONCRETE.

BRIDGE JACKING IS REQUIRED FOR CONCRETE REPAIRS THAT EXTEND UNDER A BEARING PLATE. FOR JACKING REPAIR DETAILS, SEE SHEET 10 OF 10.

SUBSTRUCTURE REPAIRS SHALL PROVIDE A MINIMUM OF 2" CLEAR COVER TO REINFORCING STEEL. REPAIRED AREAS MAY BE BUILT OUT TO achieve CLEARANCE.

PROJECT NO. 17BP.9.P.1

FORSYTH COUNTY

BRIDGE NO.: 265

REHAB. OF BRIDGE NO. 265 SHEET 6 OF 10

STATE OF NORTH CAROLINA
DEPARTMENT OF TRANSPORTATION
RALEIGH

BENT 1 & END BENT 1 SUBSTRUCTURE REPAIRS

BRIDGE ON AKRON DR. OVER US 52

REVISIONS						SHEET NO.
NO.	BY:	DATE:	NO.	BY:	DATE:	S-83
1			3			TOTAL SHEETS
2			4			S-109

NORTH CAROLINA PROFESSIONAL SEAL 19769 ENGINEER RALPH E. KELLY, JR. 2/24/12

STV/ Ralph Whitehead Associates, Inc.
1000 West Morehead St., Ste. 200
Charlotte, NC 28208
NC License No. F-0991

DRAWN BY : JWK DATE : 01-12
CHECKED BY : AC DATE : 01-12

I:\Projects\2515385\2515385.0001\50.Deliverables & Submittals\17BP.9.P.1 FinalSet 01.24.12\Bridge 265\Bridge 265 Rehab Plans.dgn guldool 2/23/2012

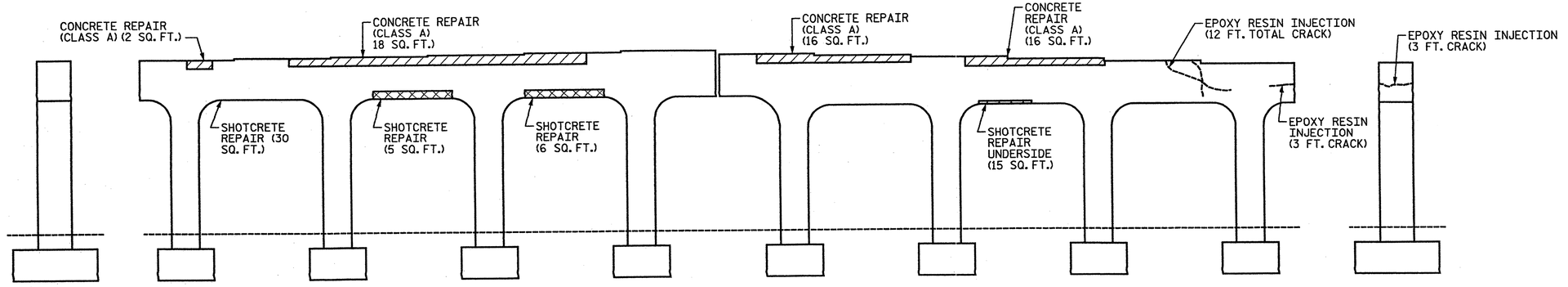

ELEVATION OF BENT 2 - LOOKING WEST*

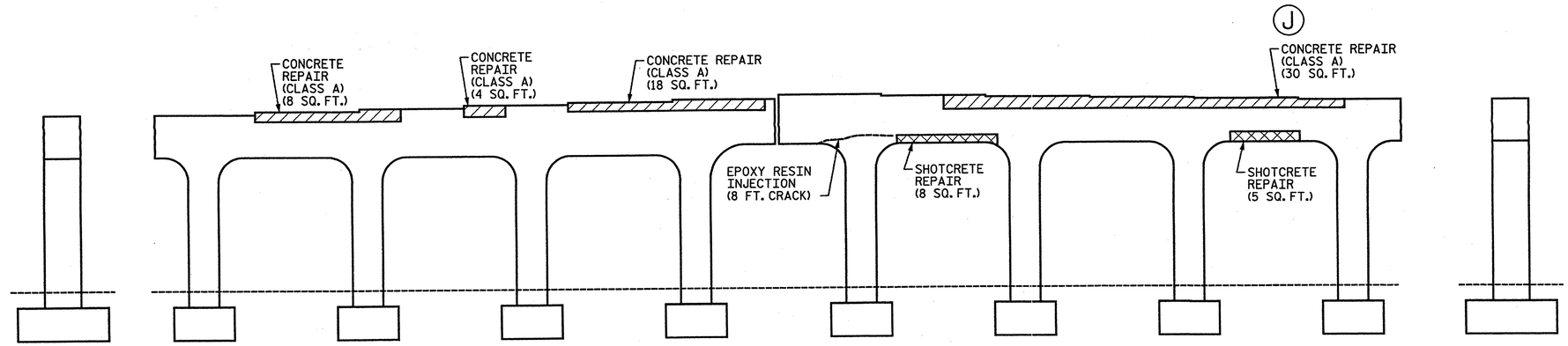

ELEVATION OF BENT 2 - LOOKING EAST*

LOOKING DIRECTION CORRESPONDS WITH DIRECTION OF TRAVEL ALONG HIGHWAY

PROJECT NO. 17BP.9.P.1

FORSYTH COUNTY

BRIDGE NO.: 265

REHAB. OF BRIDGE NO. 265 SHEET 7 OF 10

STATE OF NORTH CAROLINA
DEPARTMENT OF TRANSPORTATION
RALEIGH

BENT 2 SUBSTRUCTURE REPAIRS

BRIDGE ON AKRON DR. OVER US 52

NORTH CAROLINA PROFESSIONAL SEAL 19768 ENGINEER PAUL E. KELLYDR

2/24/12

APPROX. LENGTH: EPOXY RESIN INJECTION

APPROX. AREA: CONCRETE REPAIRS (CLASS A)

APPROX. AREA: SHOTCRETE REPAIRS

REVISIONS						SHEET NO.
NO.	BY:	DATE:	NO.	BY:	DATE:	S-84
1			3			TOTAL SHEETS
2			4			S-109

STV/Ralph Whitehead Associates, Inc.
1000 West Morehead St., Ste. 200
Charlotte, NC 28208
NC License No. F-0991

DRAWN BY : JWK DATE : 01-12
CHECKED BY : AC DATE : 01-12

I:\Projects\2515385\2515385_0001\50_Deliverables & Submittals\17BP.9.P.1\Structures\17BP.9.P.1 Final Set 01_24_12\Bridge 265\Bridge 265 Rehab Plans.dgn

guldool

2/23/2012

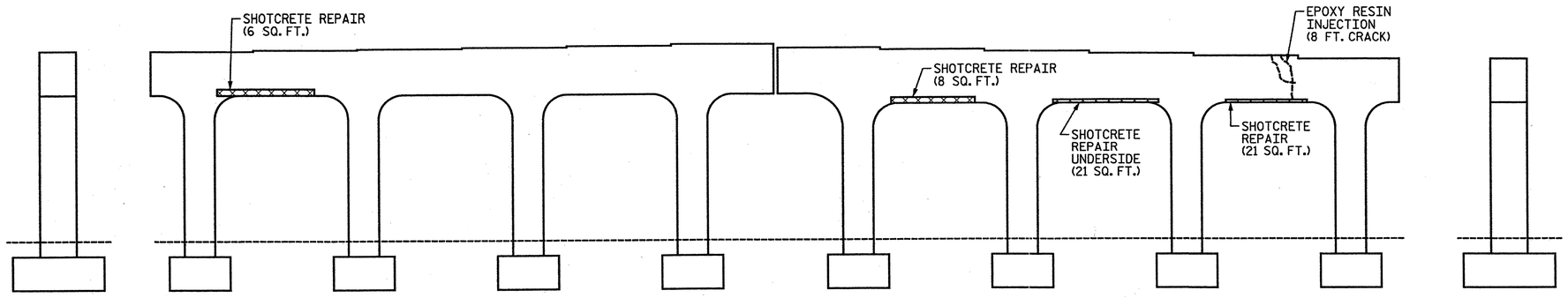

END VIEW
OF BENT 1
LOOKING NORTH*

ELEVATION OF BENT 3 - LOOKING WEST*

END VIEW
OF BENT 1
LOOKING SOUTH*

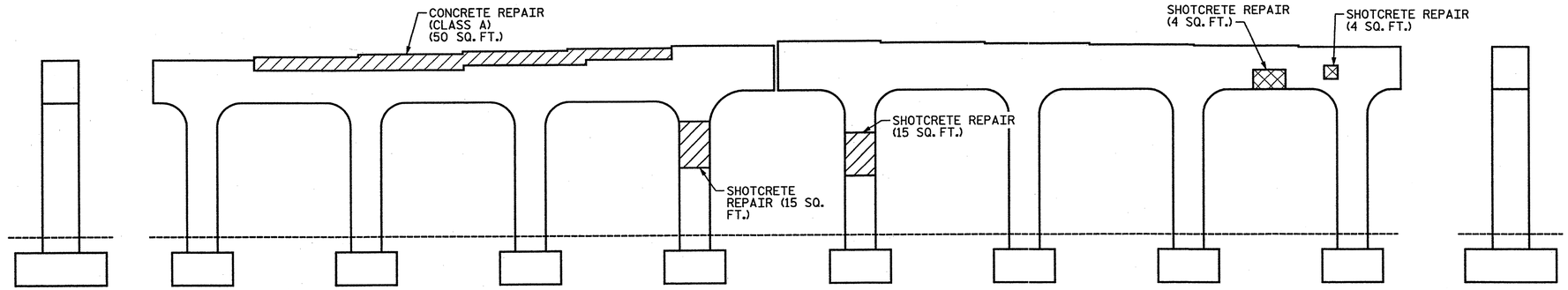

END VIEW
OF BENT 1
LOOKING SOUTH*

ELEVATION OF BENT 3 - LOOKING EAST*

END VIEW
OF BENT 1
LOOKING NORTH*

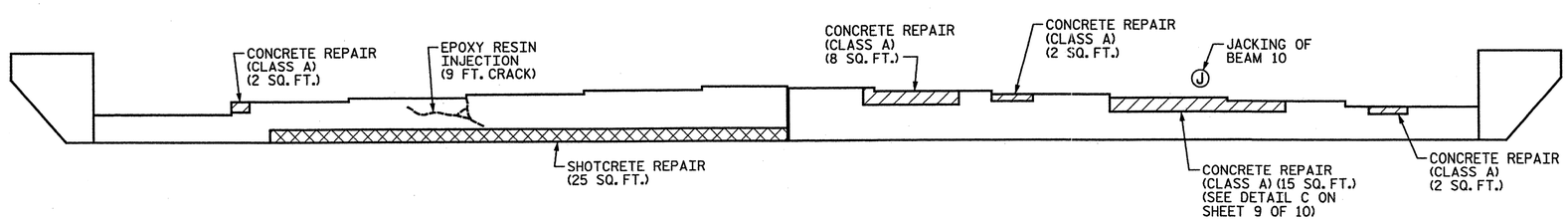

ELEVATION OF END BENT 2 - LOOKING EAST*

J JACKING REQUIRED

APPROX. LENGTH:
EPOXY RESIN INJECTION

APPROX. AREA:
CONCRETE REPAIRS (CLASS A)

APPROX. AREA:
SHOTCRETE REPAIRS

* LOOKING DIRECTION CORRESPONDS WITH
DIRECTION OF TRAVEL ALONG HIGHWAY

PROJECT NO. 17BP.9.P.1
FORSYTH COUNTY
BRIDGE NO.: 265

REHAB. OF BRIDGE NO. 265 SHEET 8 OF 10

STATE OF NORTH CAROLINA
DEPARTMENT OF TRANSPORTATION
RALEIGH

BENT 3 & END BENT 2 SUBSTRUCTURE REPAIRS

BRIDGE ON AKRON DR.
OVER US 52

NORTH CAROLINA PROFESSIONAL SEAL 19765 ENGINEER PAUL E. KELLY, JR.
2/24/12

STV/ Ralph Whitehead Associates, Inc.
1000 West Morehead St., Ste. 200
Charlotte, NC 28208
NC License No. F-0991

REVISIONS						SHEET NO.
NO.	BY:	DATE:	NO.	BY:	DATE:	S-85
1			3			TOTAL SHEETS
2			4			S-109

DRAWN BY : JWK DATE : 01-12
CHECKED BY : AC DATE : 01-12

I:\Projects\2515385\2515385_0001\50_Deliverables & Submittals\17BP.9.P.1\Structures\17BP.9.P.1 FinalSet 01_24_12\Bridge 265\Bridge 265 Rehab Plans.dgn
guldcol
2/23/2012

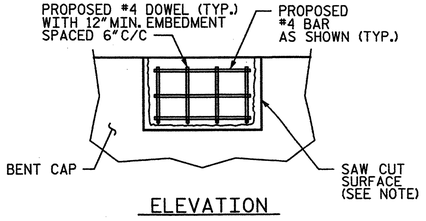

ELEVATION

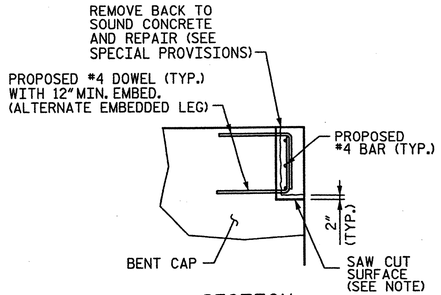

SECTION

REPAIR AT BEARING AREAS

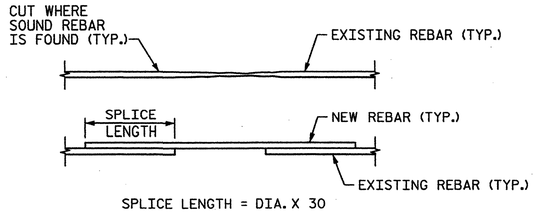

SPLICE LENGTH = DIA. X 30

DAMAGED REBAR REPAIR DETAILS

(DAMAGED REBAR AFTER REMOVAL OF MATERIAL AND BLAST CLEANING SHALL BE REPLACED AS NEEDED, AS SHOWN)

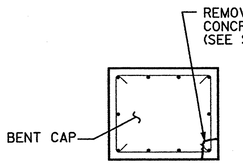

SECTION

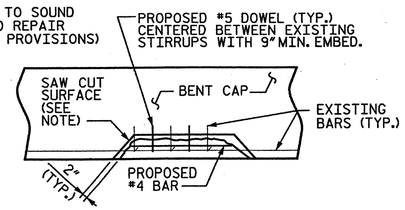

ELEVATION

CORNER REPAIR

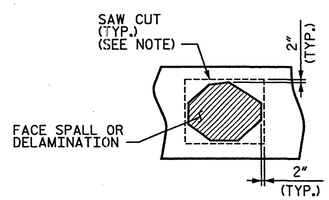

FACE REPAIR

TYPICAL SUBSTRUCTURE REPAIR DETAILS

NOTES:

CONTRACTOR SHALL SAW CUT TO A MAXIMUM DEPTH OF 1". THIS DEPTH SHALL BE REDUCED TO PREVENT DAMAGE TO EXISTING REINFORCEMENT, BUT SHALL BE NO LESS THAN 1/2". CONTRACTOR SHALL REMOVE SURFACE CONCRETE TO VERIFY THAT SAW CUT DEPTH WILL NOT DAMAGE EXISTING REINFORCING STEEL.

DRAWN BY : JWK DATE : 01-12
CHECKED BY : AC DATE : 01-12

PROJECT NO. 17BP.9.P.1
FORSYTH COUNTY
BRIDGE NO.: 265
REHAB. OF BRIDGE NO. 265 SHEET 9 OF 10

STATE OF NORTH CAROLINA
DEPARTMENT OF TRANSPORTATION
RALEIGH

SUBSTRUCTURE REPAIR DETAILS

BRIDGE ON AKRON DR.
OVER US 52

NORTH CAROLINA PROFESSIONAL SEAL 038766 ENGINEER PAUL E. KELLY, JR.
2/17/12

STV / Ralph Whitehead Associates, Inc.
1000 West Morehead St., Ste. 200
Charlotte, NC 28208
NC License No. F-0991

REVISIONS						SHEET NO.
NO.	BY:	DATE:	NO.	BY:	DATE:	S-86
1			3			TOTAL SHEETS
2			4			S-109

I:\Projects\2515385\2515385_0001\50_Deliverables & Submittals\17BP.9.P.1 FinalSet 01.24.12\Bridge 265\Bridge 265 Rehab Plans.dgn
guldool
2/17/2012

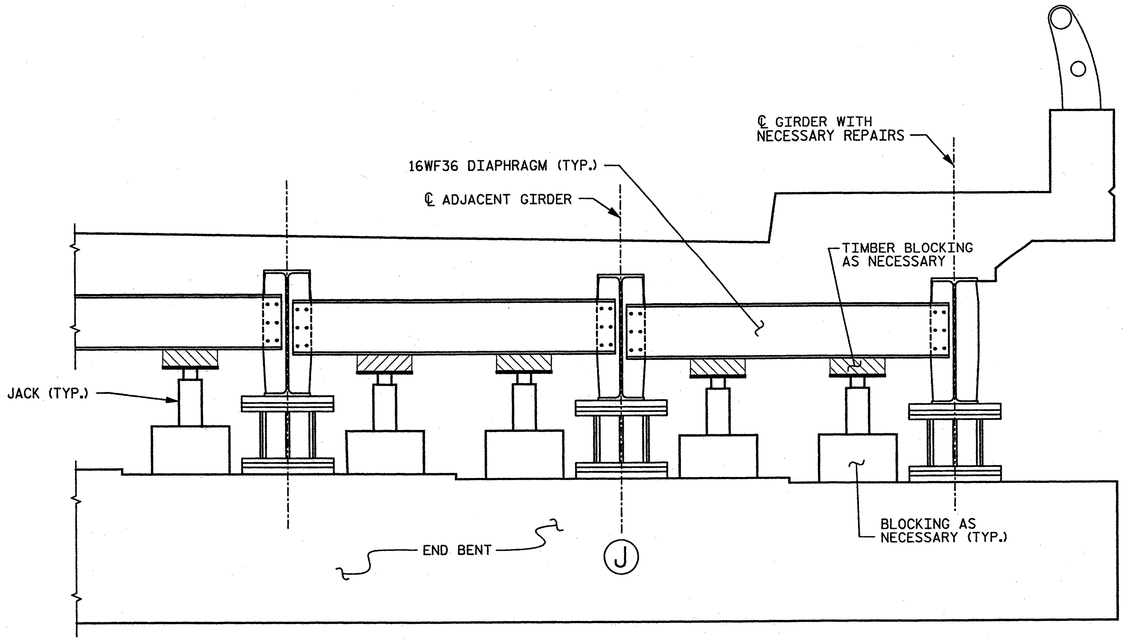

END BENT GIRDER JACKING DETAIL AT INTERIOR GIRDER

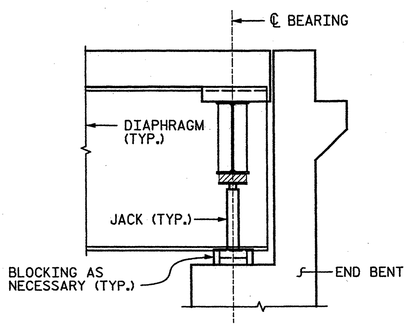

SECTION @ JACKING LOCATION

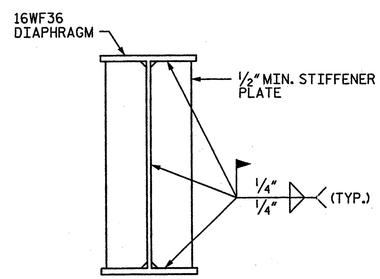

JACKING STIFFENER DETAIL

CONSTRUCTION SEQUENCE:

1. INSTALL JACKS AND BLOCKING AT LOCATIONS SHOWN ON PLAN.
2. REMOVE NECESSARY NUTS ON ANCHOR BOLTS.
3. JACK GIRDERS A MAXIMUM OF $\frac{1}{8}$" IN ORDER TO RELIEVE LOAD ON BENT CAP UNDER BEARING.
4. MECHANICALLY LOCK ALL JACKS AT BENT.
5. PERFORM CONCRETE REPAIRS AT SPECIFIED LOCATIONS.
6. ONCE ALL REPAIRS ARE COMPLETE, LOWER BRIDGE. CONTRACTOR SHALL NOT LOWER BRIDGE UNTIL CONCRETE REPAIR MATERIAL HAS REACHED A COMPRESSIVE STRENGTH OF 3,000 PSI.

NOTE: THE CONTRACTOR HAS THE OPTION TO PROPOSE AN ALTERNATE CONSTRUCTION SEQUENCE FOR THE APPROVAL OF THE ENGINEER.

NOTES:

JACKING DETAILS SHOWN ARE CONCEPTUAL AND CONSIDERED A MINIMUM. THE CONTRACTOR SHALL PROVIDE JACKING PLANS FOR ALL GIRDERS LIFTED FOR APPROVAL BY THE ENGINEER PRIOR TO ANY JACKING OPERATIONS. JACKING SHALL BE PERFORMED SUCH THAT BRIDGE CAN REMAIN OPEN TO TRAFFIC DURING JACKING OPERATIONS.

JACKING PLANS SHALL BE SIGNED AND SEALED BY LICENSED PROFESSIONAL ENGINEER REGISTERED IN NORTH CAROLINA.

THE CONTRACTOR SHALL PROVIDE BLOCKING FOR ALL JACKS AS NECESSARY. A BLOCKING PLAN SHALL BE INCLUDED AS PART OF THE JACKING PLAN.

THE CONTRACTOR SHALL JACK GIRDERS ON AN INDIVIDUAL BENT SIMULTANEOUSLY BY MEANS OF A DUAL-FLOW PRESSURIZED PUMP CONTROLLING THE JACKS.

THE CONTRACTOR SHALL MONITOR THE PLAN LOCATION OF THE GIRDERS FROM INITIAL JACKING UNTIL GIRDERS ARE SECURED ON THEIR PERMANENT BEARINGS. IF THE PLAN LOCATION OF THESE GIRDERS SHIFT FROM ITS ORIGINAL POSITION. THE CONTRACTOR SHALL SECURE FROM ADDITIONAL MOVEMENT IMMEDIATELY. NOTIFY ENGINEER PRIOR TO PROCEEDING WORK OPERATIONS.

EACH JACK, EXCEPT FOR EXTERIOR JACK, SHALL HAVE A MINIMUM SAFE WORKING CAPACITY OF 75 TONS.

PRIOR TO JACKING THE CONTRACTOR SHALL ENSURE THERE ARE NO OBSTACLES PREVENTING THE SPAN FROM BEING LIFTED.

ONCE SPAN HAS BEEN JACKED, CONTRACTOR SHALL INSTALL A MECHANICAL LOCKING DEVICE TO ENSURE THAT GIRDER WILL NOT BE LOWERED DURING CURING OF CONCRETE.

CONTRACTOR TO TAKE APPROPRIATE MEANS TO REMOVE NUT ON ANCHOR BOLT WITHOUT DAMAGING THE ANCHOR BOLT. CONTRACTOR SHALL SUBMIT NUT REMOVAL METHOD TO INCLUDE PROCEDURES THAT WILL LOOSEN BOND BETWEEN INTERLOCKING THREADS TO ENGINEER FOR APPROVAL PRIOR TO REMOVING ANCHOR BOLT NUTS.

WHERE JACKING WILL BE SOLELY SUPPORTED BY THE DIAPHRAGM, A PROFESSIONAL ENGINEER SHALL VERIFY THAT THE EXISTING DIAPHRAGM HAS ADEQUATE CAPACITY TO SUPPORT JACKING LOADS.

PROJECT NO. 17BP.9.P.1

FORSYTH COUNTY

BRIDGE NO.: 265

REHAB. OF BRIDGE NO. 265 SHEET 10 OF 10

STATE OF NORTH CAROLINA
DEPARTMENT OF TRANSPORTATION
RALEIGH

JACKING DETAILS

BRIDGE ON AKRON DR.
OVER US 52

NORTH CAROLINA PROFESSIONAL SEAL 19755 ENGINEER MICHAEL E. KELLER
1/18/12

REVISIONS						SHEET NO.
NO.	BY:	DATE:	NO.	BY:	DATE:	S-87
1			3			TOTAL SHEETS
2			4			S-109

STV / Ralph Whitehead Associates, Inc.
1000 West Morehead St., Ste. 200
Charlotte, NC 28208
NC License No. F-0991

DRAWN BY : JWK DATE : 01-12
CHECKED BY : AC DATE : 01-12

I:\Projects\2515385\2515385_0001\50_Deliverables & Submittals\17BP.9.P.1\Structures\Final1-12-12\17BP.9.P.1 Final Set 01.12.12\Bridge 265\Bridge 265 Rehab Plans.dgn
ttownsend
1/17/2012

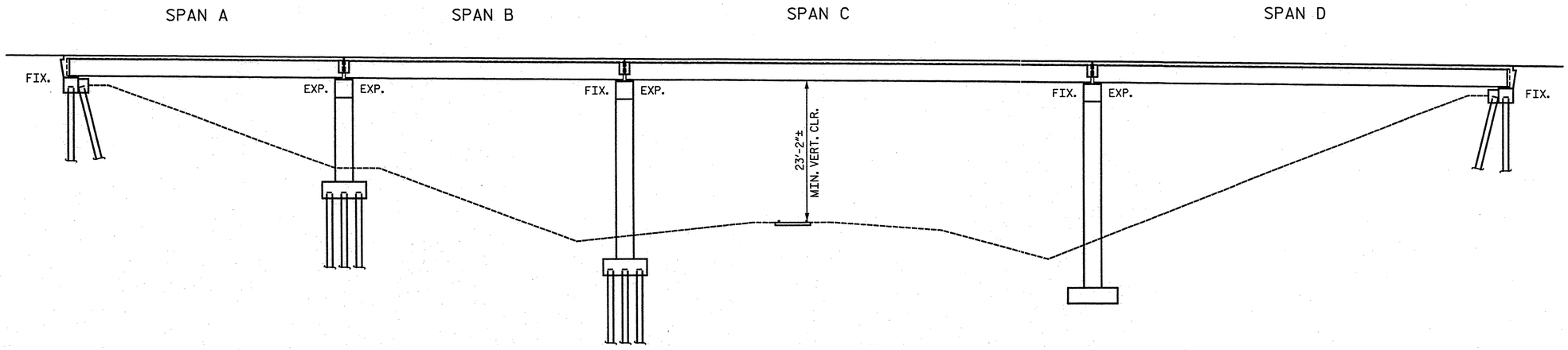

ELEVATION

(SECTIONS AT BENTS AND END BENTS ARE AT RIGHT ANGLES)

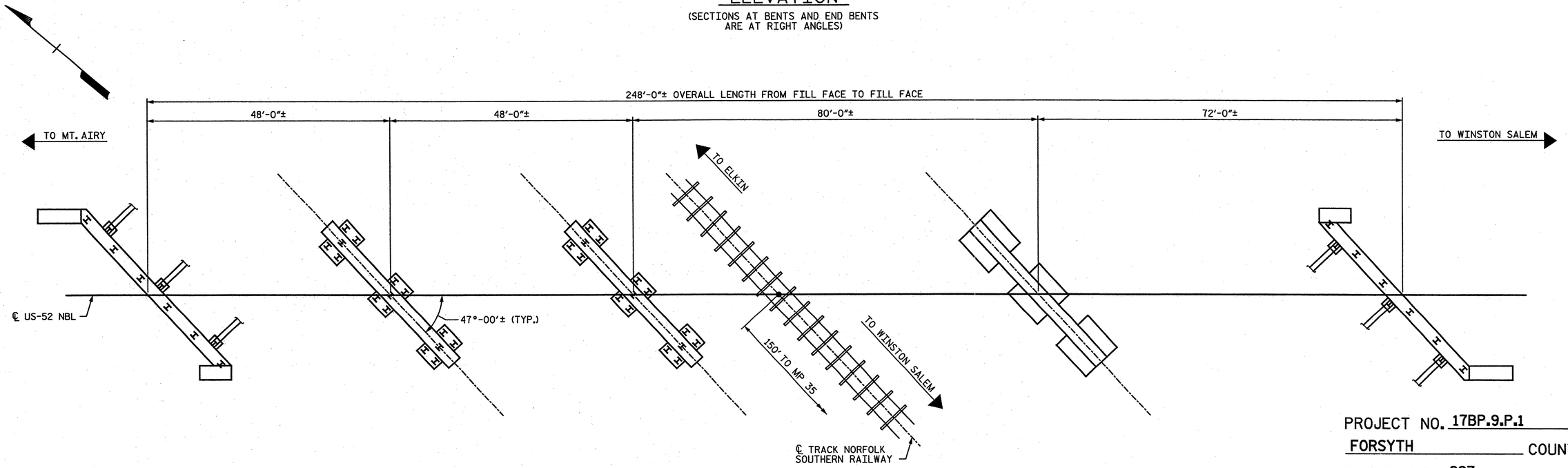

PLAN

NOTE:

FOR GENERAL NOTES SEE SHEET NO. S-1 OF S-109

SEE BRIDGE NO. 297 SHEETS 2, 4, 5, 7, 8, 9, 10 AND 11 OF 11 FOR ADDITIONAL NOTES.

AFTER ALL REPAIRS ON THE BRIDGE HAVE BEEN COMPLETED, AN EPOXY PROTECTIVE COATING SHALL BE APPLIED TO THE TOP SURFACE OF BENT CAPS, INCLUDING PEDESTALS, FOR EACH BENT BELOW A JOINT IN THE SUPERSTRUCTURE. CAP SURFACES SHALL BE GRIT BLASTED PRIOR TO EPOXY COATING. SEE STANDARD SPECIFICATIONS FOR EPOXY COATING. ALL COSTS ASSOCIATED WITH APPLYING EPOXY PROTECTIVE COATING SHALL BE INCLUDED IN THE SEVERAL PAY ITEMS FOR THE PROJECT. NO ADDITIONAL PAYMENT WILL BE MADE FOR THIS WORK.

PROJECT NO. 17BP.9.P.1

FORSYTH COUNTY

BRIDGE NO.: 297

REHAB. OF BRIDGE NO. 297 SHEET 1 OF 11

STATE OF NORTH CAROLINA
DEPARTMENT OF TRANSPORTATION
RALEIGH

GENERAL PLAN & ELEVATION

BRIDGE ON US 52 NBL OVER NS RAILWAY

NORTH CAROLINA PROFESSIONAL SEAL 19765 ENGINEER PAUL E. KELLER
1/10/12

STV / Ralph Whitehead Associates, Inc.
1000 West Morehead St., Ste. 200
Charlotte, NC 28208
NC License No. F-0991

REVISIONS						SHEET NO.
NO.	BY:	DATE:	NO.	BY:	DATE:	S-88
1			3			TOTAL SHEETS
2			4			S-109

DRAWN BY : AR DATE : 01-12
CHECKED BY : AC DATE : 01-12

I:\Projects\2515385\2515385_0001\50_Deliverables & Submittals\17BP.9.P.1\Structures\Final1-12-12\17BP.9.P.1 FinalSet 01.12.12\Bridge 297\Bridge 297 Rehab Plans.dgn
wuvm
1/17/2012

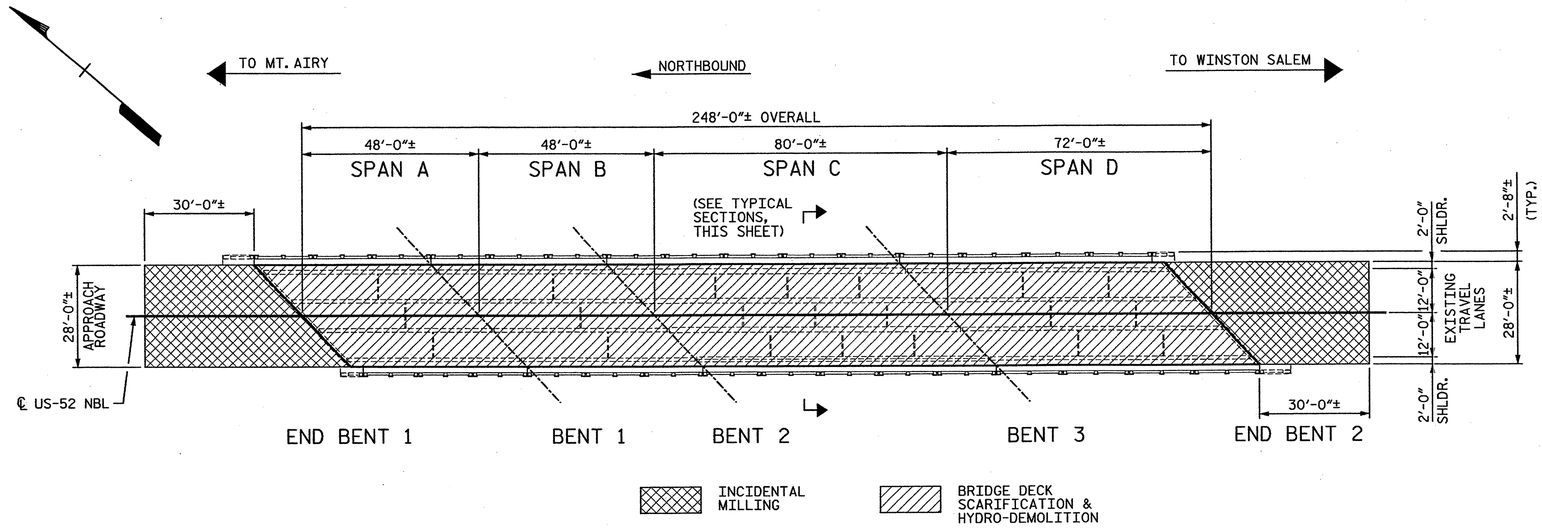

PLAN OF SPANS - DECK SCARIFICATION & HYDRO-DEMOLITION

(CONCRETE BRIDGE FLOORS SHALL BE GROOVED IN ACCORDANCE WITH SECTION 420-14 OF THE STANDARD SPECIFICATION)

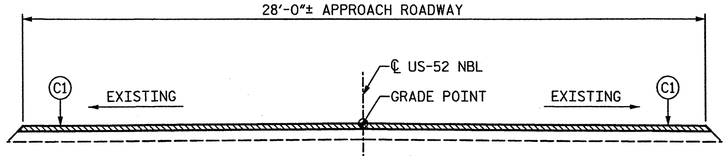

TYPICAL ROADWAY SECTION

(FINAL ROADWAY SURFACE TO MATCH EXISTING GRADE)

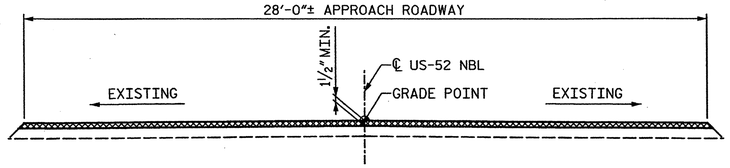

TYPICAL ROADWAY MILLING SECTION

(MILL TO 1½" MIN. DEPTH)

C1	PROPOSED VARIABLE DEPTH ASPHALT CONCRETE SURFACE COURSE, TYPE SF9.5A AT AN AVERAGE RATE OF 110 LBS. PER SQ. YD. PER 1" DEPTH. TO BE PLACED IN LAYERS NOT LESS THAN 1" IN DEPTH OR GREATER THAN 1½" DEPTH

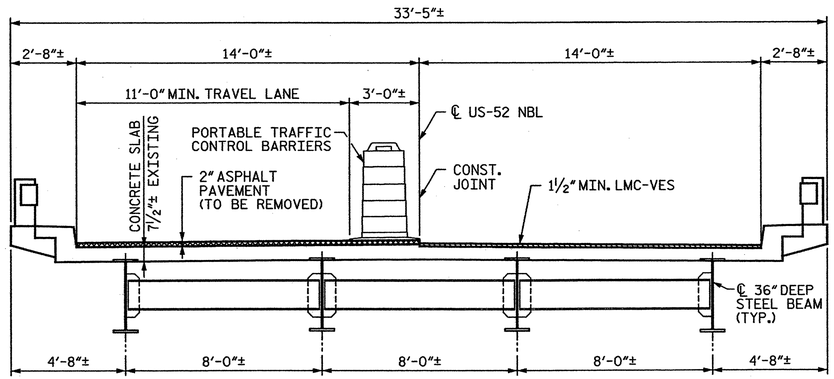

TYPICAL SECTION - STAGE I

(AT INTERMEDIATE DIAPHRAGMS)

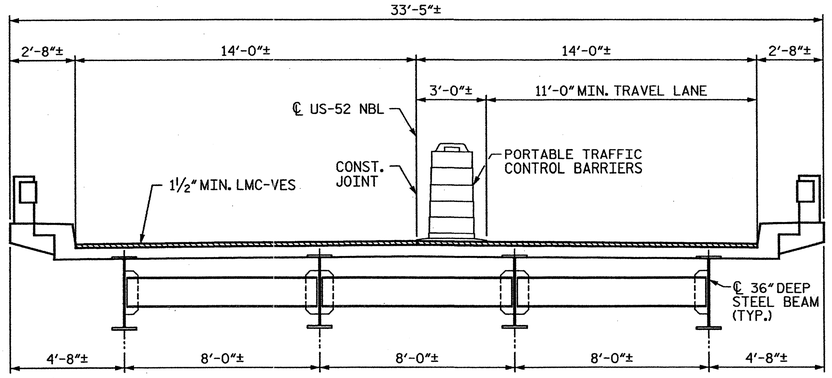

TYPICAL SECTION - STAGE II

(AT INTERMEDIATE DIAPHRAGMS)

NOTES:

FOR ADDITIONAL MILLING DETAILS SEE SHEET 4 OF 11.

PER EXISTING PLANS THE EXISTING DECK HAS 1⅛" CONCRETE COVER OVER EXISTING REINFORCING STEEL.

TOTAL BILL OF MATERIAL

INCIDENTAL MILLING	DECK SCARIFICATION	✻CLASS II SURFACE PREPARATION	HYDRO-DEMOLITION OF BRIDGE DECK	LATEX MODIFIED CONCRETE OVERLAY VERY EARLY STRENGTH	PLACING & FINISHING LATEX MODIFIED CONCRETE OVERLAY - VERY EARLY STRENGTH	ASPHALT CONCRETE SURFACE COURSE TYPE SF9.5A	FOAM JOINT SEAL	GROOVING BRIDGE FLOORS	STRUCTURAL STEEL REPAIR	EPOXY RESIN INJECTION	CONCRETE REPAIRS (CLASS A)	SHOTCRETE REPAIRS	■REINFORCING STEEL	ELASTOMERIC BEARINGS	BRIDGE JACKING	UNDER STRUCTURE WORK PLATFORM
SQ. YDS.	SQ. YDS.	SQ. YDS.	SQ. YDS.	CU. YDS.	SQ. YDS.	TON	LUMP SUM	SQ. FT.	LBS.	LIN. FT.	CU. FT.	CU. FT.	LBS.	LUMP SUM	LUMP SUM	LUMP SUM
268	772	10	772	38	772	26	LUMP SUM	6200	2532	42	23	42	100	LUMP SUM	LUMP SUM	LUMP SUM

✻ QUANTITIES FOR INFORMATION ONLY.
■ REINFORCING STEEL FOR REPLACEMENT OF REBAR DAMAGED PRIOR TO ONSET OF PROJECT.

DRAWN BY : AR DATE : 01-12
CHECKED BY : AC DATE : 01-12

STV / Ralph Whitehead Associates, Inc.
1000 West Morehead St., Ste. 200
Charlotte, NC 28208
NC License No. F-0991

NORTH CAROLINA PROFESSIONAL SEAL 19765 ENGINEER PAUL E. KELCHER
3/15/12

PROJECT NO. 17BP.9.P.1
FORSYTH COUNTY
BRIDGE NO.: 297

STATE OF NORTH CAROLINA
DEPARTMENT OF TRANSPORTATION
RALEIGH

PLAN OF SPANS & TYPICAL SECTION

BRIDGE ON US 52 NBL OVER NS RAILWAY

REVISIONS						SHEET NO.
NO.	BY:	DATE:	NO.	BY:	DATE:	S-89
1			3			TOTAL SHEETS
2			4			S-109

I:\Projects\2515385\2515385_000150_Deliverables & Submittals\17BP.9.P.1\Structures\17BP.9.P.1 FinalSet 01.24.12\Bridge 297\Bridge 297 Rehab Plans.dgn
guldool
3/15/2012

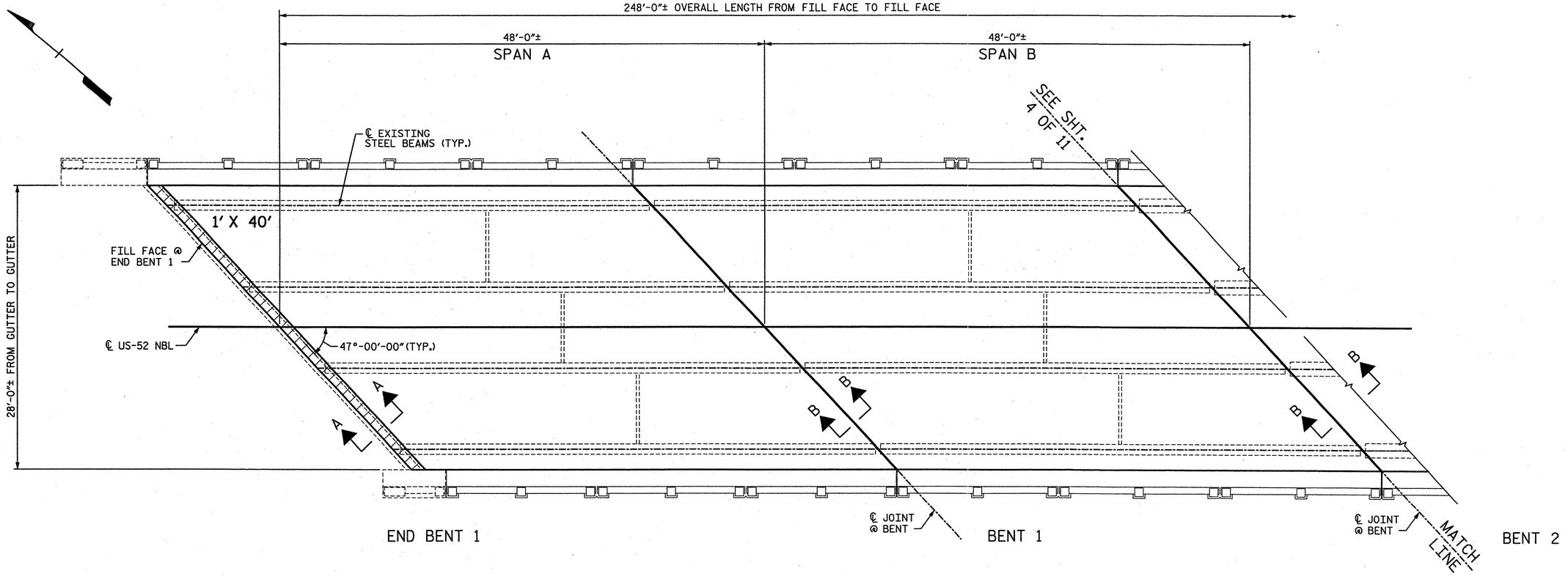

APPROX. AREA: CLASS II REPAIR

PLAN OF SPANS - DECK REPAIRS

(SEE SHEET 4 OF 11 FOR SECTION A-A)
(SEE SHEET 5 OF 11 FOR SECTION B-B)

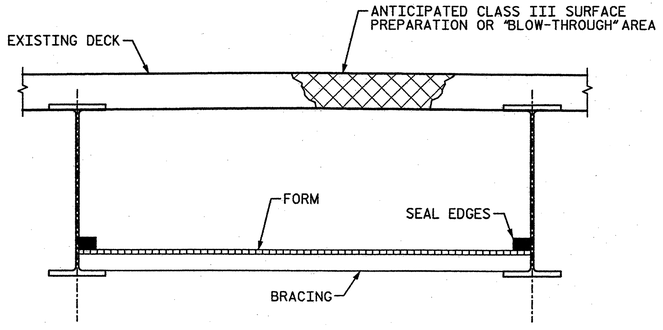

TYP. "BLOW-THROUGH" CONTAINMENT AND FORMWORK

A METHOD TO CAPTURE WATER AND DEBRIS FROM BLOW THRU DURING HYDRO-DEMOLITION SHALL BE INSTALLED IN AREAS INDICATED AS CLASS III SURFACE PREPARATION.

SUBMIT DETAILS OF PROPOSED FORMWORK FOR APPROVAL PRIOR TO BEGINNING WORK.

COSTS FOR INSTALLING AND REMOVING FORMWORK SHALL BE INCIDENTAL TO THE PRICE PER SQ. YARD OF HYDRO-DEMOLITION.

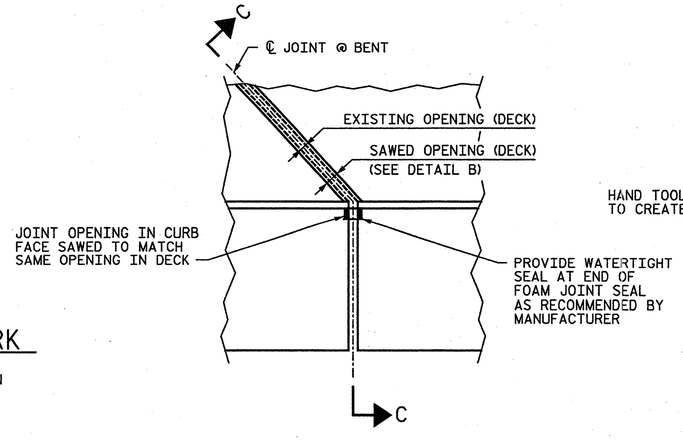

PLAN OF JOINT SEAL AT CURB

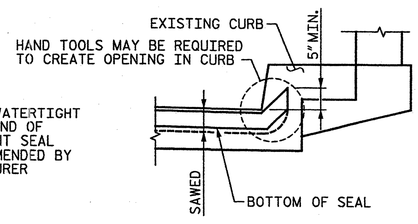

SECTION C-C

NORTH CAROLINA PROFESSIONAL SEAL 19765 ENGINEER DANIEL E. KEVLER
1/16/12

PROJECT NO. 17BP.9.P.1
FORSYTH COUNTY
BRIDGE NO.: 297
REHAB. OF BRIDGE NO. 297 SHEET 3 OF 11

STATE OF NORTH CAROLINA
DEPARTMENT OF TRANSPORTATION
RALEIGH

PLAN OF SPANS A & B DECK REPAIRS

BRIDGE ON US 52 NBL OVER NS RAILWAY

REVISIONS						SHEET NO.
NO.	BY:	DATE:	NO.	BY:	DATE:	S-90
1			3			TOTAL SHEETS
2			4			S-109

STV / Ralph Whitehead Associates, Inc.
1000 West Morehead St. Ste. 200
Charlotte, NC 28208
NC License No. F-0991

DRAWN BY : AR DATE : 01-12
CHECKED BY : AC DATE : 01-12

I:\Projects\2515385\2515385.0001\50.Deliverables & Submittals\17BP.9.P.1 FinalSet 01_12_12\Bridge 297\Bridge 297 Rehab Plans.dgn
wuvm
1/17/2012

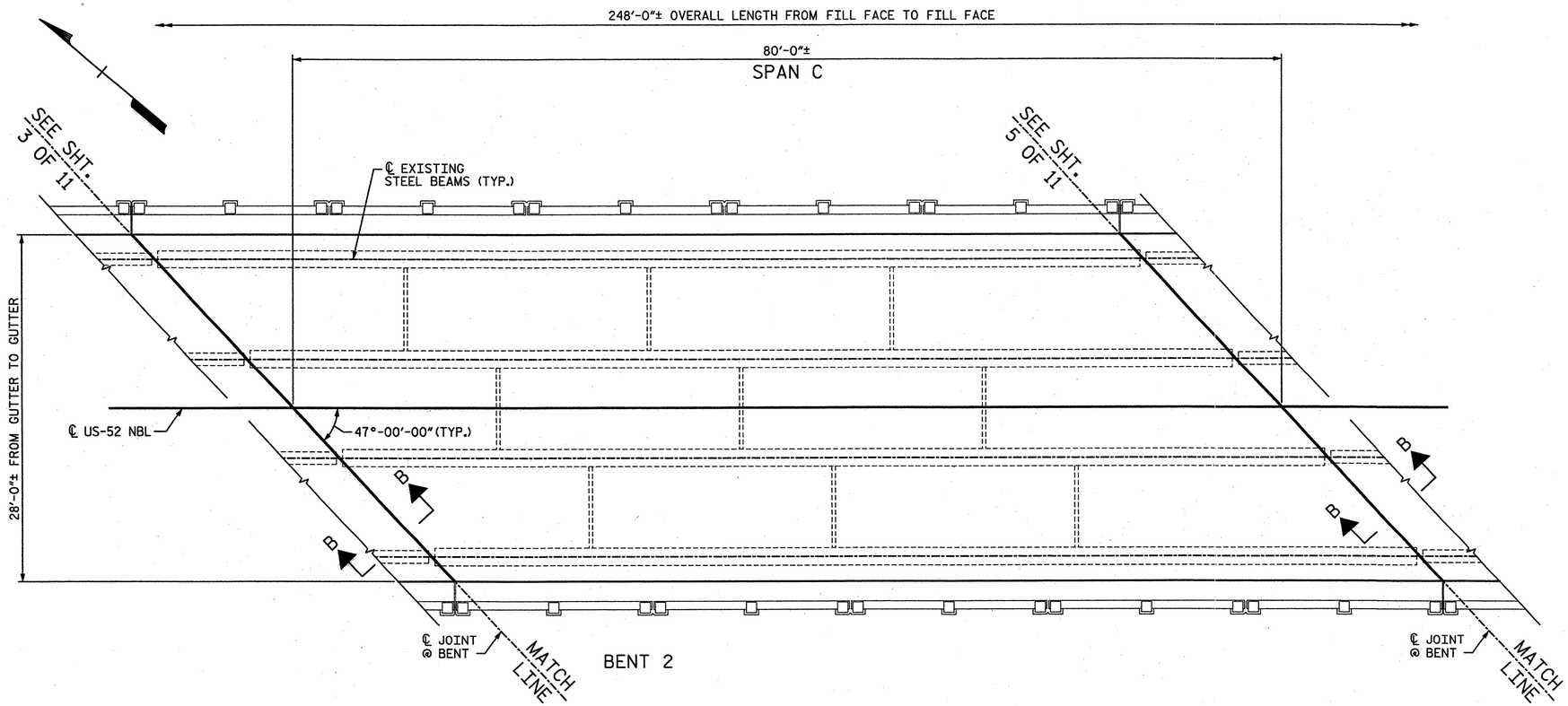

APPROX. AREA: CLASS II REPAIR

PLAN OF SPANS - DECK REPAIRS

(SEE SHEET 4 OF 11 FOR SECTION A-A)
(SEE SHEET 5 OF 11 FOR SECTION B-B)

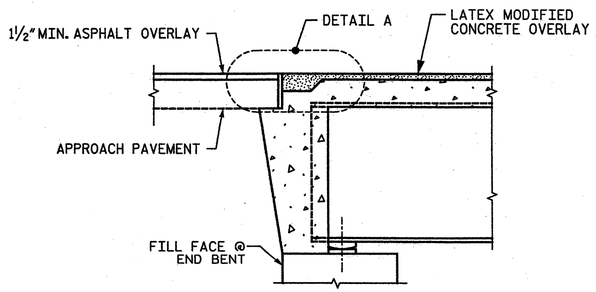

SECTION A-A

(TYP. @ END BENTS 1 AND 2)

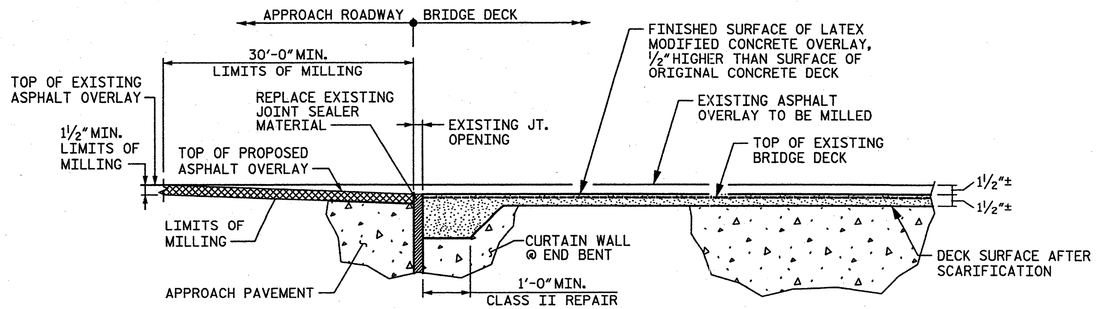

DETAIL A

(LOCATION OF JOINT TO MATCH EXISTING JOINT LOCATION)

NOTES:

LATEX MODIFIED CONCRETE OVERLAY SHALL BE LATEX MODIFIED CONCRETE - VERY EARLY STRENGTH, SEE SPECIAL PROVISIONS.

FOR HYDRO-DEMOLITION OF BRIDGE DECK, SEE SPECIAL PROVISIONS.

THE CONTRACTOR MUST COLLECT, TREAT AND DISPOSE OF RUN-OFF WATER FROM THE HYDRO-DEMOLITION PROCESS. SEE SPECIAL PROVISIONS.

THE BOUNDARY AREAS IDENTIFIED FOR CLASS III SURFACE PREPARATION ARE APPROXIMATE. THE CONTRACTOR SHALL PROVIDE CONTAINMENT FOR UNEXPECTED BLOW-THROUGH OF THE DECK. SEE DETAIL ON SHEET 3 OF 11 AND SPECIAL PROVISIONS.

EXISTING BRIDGE INFORMATION BASED ON BEST AVAILABLE DATA.

CONTRACTOR'S MEANS AND METHODS SHALL MINIMIZE DAMAGE TO EXISTING APPROACH PAVEMENT. AREAS OF APPROACH PAVEMENT DAMAGED BY CONTRACTOR'S OPERATIONS SHALL BE REPAIRED AS DIRECTED BY THE ENGINEER. ANY COST ASSOCIATED WITH REPAIR OF APPROACH PAVEMENT SHALL BE CONSIDERED INCIDENTAL AND NO SEPARATE MEASUREMENT AND PAYMENT WILL BE MADE.

PROJECT NO. 17BP.9.P.1
FORSYTH COUNTY
BRIDGE NO.: 297
REHAB. OF BRIDGE NO. 297 SHEET 4 OF 11

STATE OF NORTH CAROLINA
DEPARTMENT OF TRANSPORTATION
RALEIGH

PLAN OF SPAN C DECK REPAIRS

BRIDGE ON US 52 NBL OVER NS RAILWAY

NORTH CAROLINA PROFESSIONAL SEAL 9765 ENGINEER PAUL E. KELLY, JR.
4/16/12

STV / Ralph Whitehead Associates, Inc.
1000 West Morehead St., Ste. 200
Charlotte, NC 28208
NC License No. F-0991

REVISIONS						SHEET NO.
NO.	BY:	DATE:	NO.	BY:	DATE:	S-91
1			3			TOTAL SHEETS
2			4			S-109

DRAWN BY : AR DATE : 01-12
CHECKED BY : AC DATE : 01-12

I:\Projects\2515385\2515385.0001\50_Deliverables & Submittals\17BP.9.P.1 Structures\Final-12-12\17BP.9.P.1 FinalSet 01.12.12\Bridge 297\Bridge 297 Rehab Plans.dgn
wuvm
1/17/2012

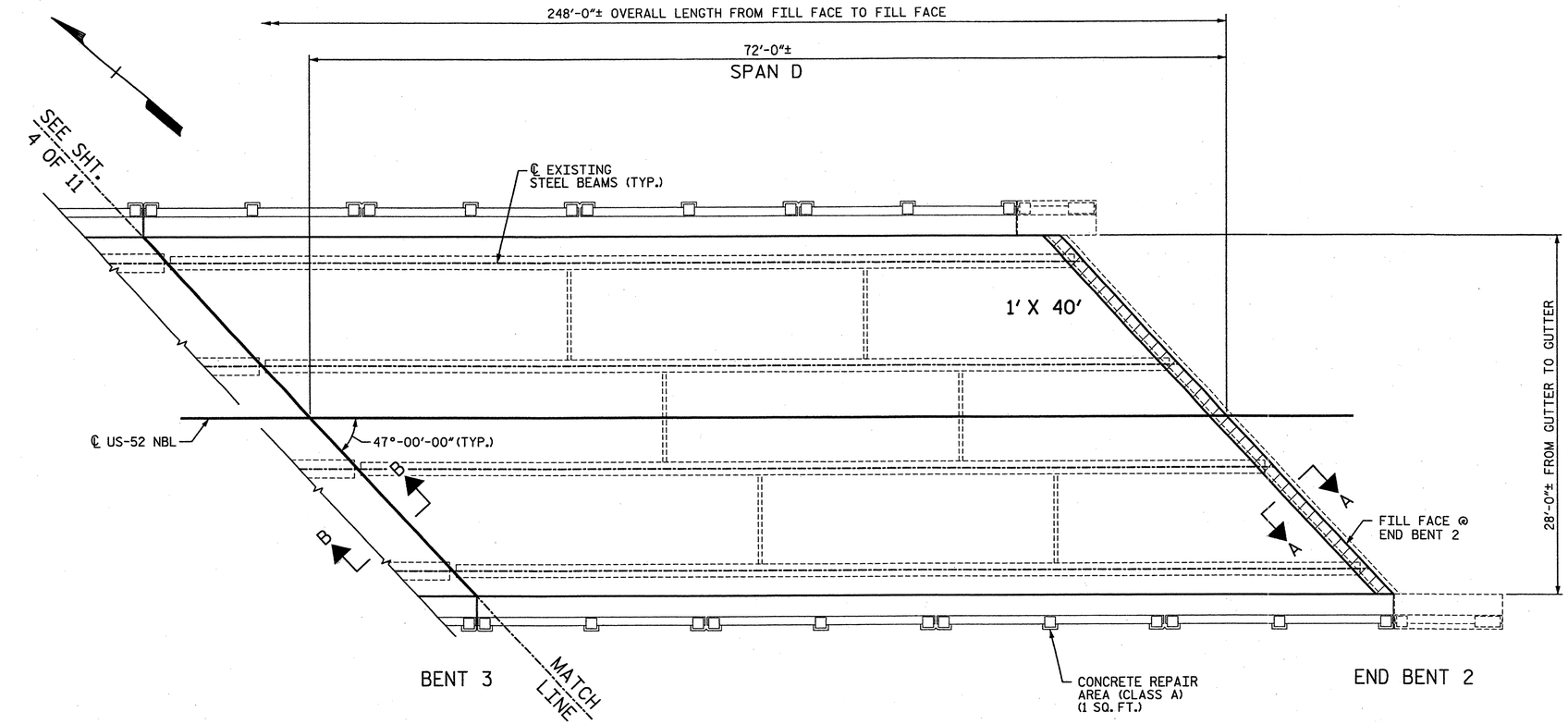

NOTES:

FOR FOAM JOINT SEALS, SEE SPECIAL PROVISIONS.

FOR ELASTOMERIC CONCRETE, SEE SPECIAL PROVISIONS.

THE ELASTOMERIC CONCRETE SHALL BE INCLUDED IN THE FOAM JOINT SEAL PAY ITEM.

CONTRACTOR SHALL COVER AND PROTECT THE JOINT CONSTRUCTION TO PREVENT DAMAGE DURING CONCRETE CURING AND AS NEEDED TO MAINTAIN TRAFFIC, AS DIRECTED BY THE ENGINEER.

THE INSTALLED FOAM JOINT SEALS SHALL BE WATERTIGHT.

THE NOMINAL UNCOMPRESSED SEAL WIDTH OF THE FOAM JOINT SEAL SHALL BE $2\frac{1}{2}$".

THE CONTRACTOR WILL NOT BE PERMITTED TO FORM THE JOINT FOR THE FOAM JOINT SEAL IN LIEU OF SAWING THE JOINT.

FOAM JOINT OPENING WIDTHS SHALL BE CONFIRMED IN THE FIELD. CONTRACTOR SHALL MAKE ADJUSTMENTS TO FOAM JOINT SEALS, AS NECESSARY, TO MEET EXISTING CONDITIONS AND MANUFACTURER'S RECOMMENDATIONS. ANY CHANGES SHALL BE SUBMITTED TO THE ENGINEER FOR APPROVAL. ANY COST ASSOCIATED WITH THESE ADJUSTMENTS IS CONSIDERED INCIDENTAL AND NO SEPARATE MEASUREMENT OR PAYMENT WILL BE MADE.

APPROX. AREA: CLASS II REPAIR

PLAN OF SPANS - DECK REPAIRS

(SEE SHEET 4 OF 11 FOR SECTION A-A)
(SEE SHEET 5 OF 11 FOR SECTION B-B)

* ELASTOMERIC CONCRETE
CU. FT.
28

* QUANTITIES FOR INFORMATION ONLY.

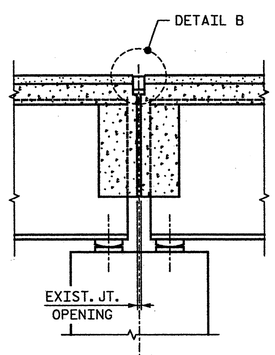

SECTION B-B

(PROPOSED JOINT)
(TYP. @ INTERIOR BENTS)

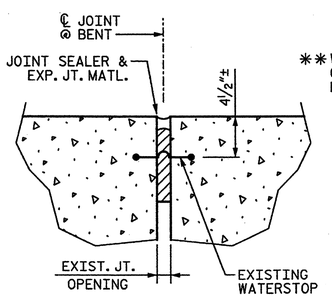

EXISTING JOINT DETAIL

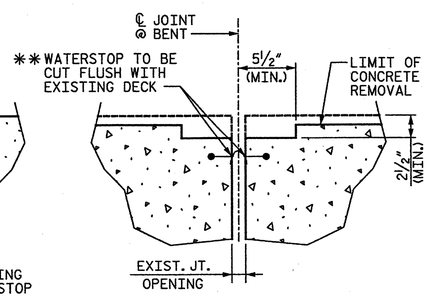

CONCRETE REMOVAL DETAIL @ EXISTING JOINT

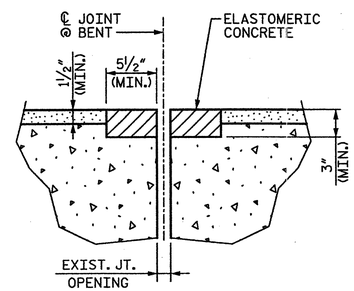

FOAM JOINT SEAL (DETAIL BEFORE SAWING)

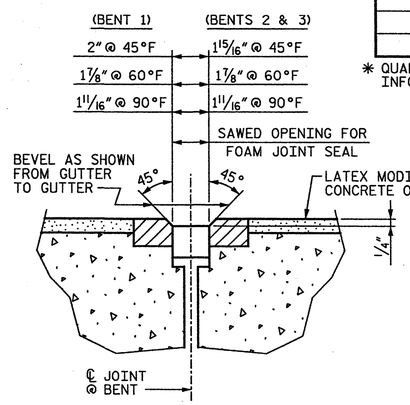

FOAM JOINT SEAL (DETAIL AFTER SAWING)

DETAIL B

** ALL LOOSE AND UNSOUND CONCRETE SHALL BE REMOVED. IF THE EMBEDDED PORTION OF THE EXISTING WATERSTOP IS EXPOSED DURING REMOVAL, THE ENTIRE WATERSTOP SHALL BE REMOVED.

NORTH CAROLINA PROFESSIONAL SEAL 19165 ENGINEER CHRIS E. KELLY
2/17/12

PROJECT NO. 17BP.9.P.1
FORSYTH COUNTY
BRIDGE NO.: 297
REHAB. OF BRIDGE NO. 297 SHEET 5 OF 11

STATE OF NORTH CAROLINA
DEPARTMENT OF TRANSPORTATION
RALEIGH

PLAN OF SPAN D DECK REPAIRS

BRIDGE ON US 52 NBL OVER NS RAILWAY

REVISIONS						SHEET NO.
NO.	BY:	DATE:	NO.	BY:	DATE:	S-92
1			3			TOTAL SHEETS
2			4			S-109

DRAWN BY : AR DATE : 01-12
CHECKED BY : AC DATE : 01-12

STV/ Ralph Whitehead Associates, Inc.
1000 West Morehead St., Ste. 200
Charlotte, NC 28208
NC License No. F-0991

I:\Projects\2515385\2515385.0001\50_Deliverables & Submittals\17BP.9.P.1 Final Set 01.24.12\Bridge 297\Bridge 297 Rehab Plans.dgn
guldool
2/17/2012

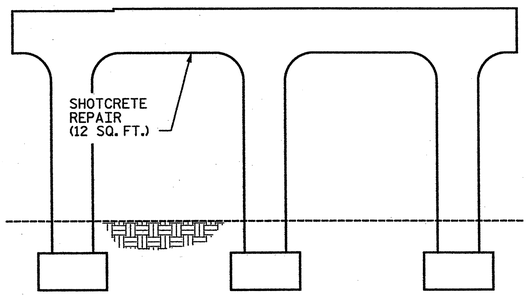

ELEVATION OF BENT 1 - LOOKING NORTH *

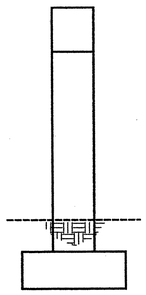

END VIEW OF BENT 1 LOOKING WEST *

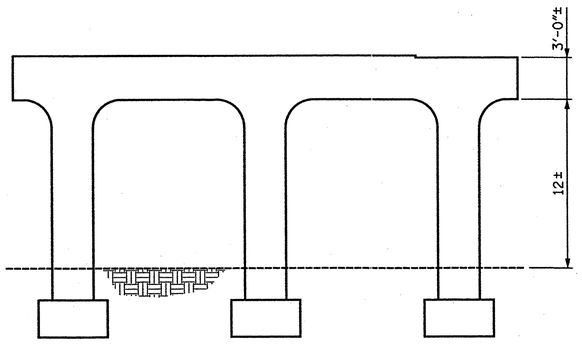

ELEVATION OF BENT 1 - LOOKING SOUTH *

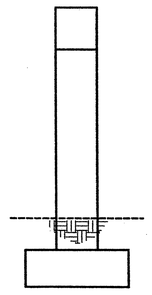

END VIEW OF BENT 1 LOOKING EAST *

NOTE:
SEE NOTES AND TYPICAL REPAIR DETAILS ON SHEET 8 OF 11.

* LOOKING DIRECTION CORRESPONDS WITH DIRECTION OF TRAVEL ALONG HIGHWAY

(J) - JACKING REQUIRED (SEE SHEET 8 OF 11)

- APPROXIMATE LENGTH: EPOXY RESIN INJECTION

- APPROXIMATE AREA: CONCRETE REPAIRS (CLASS A)

- APPROXIMATE AREA: SHOTCRETE REPAIRS

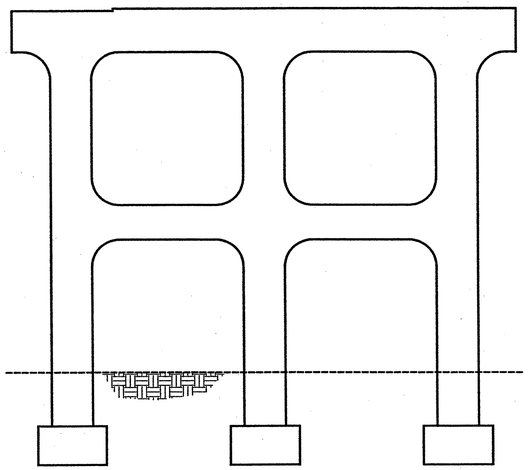

ELEVATION OF BENT 2 - LOOKING NORTH *

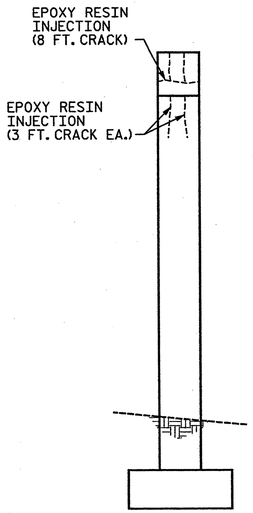

END VIEW OF BENT 2 LOOKING WEST *

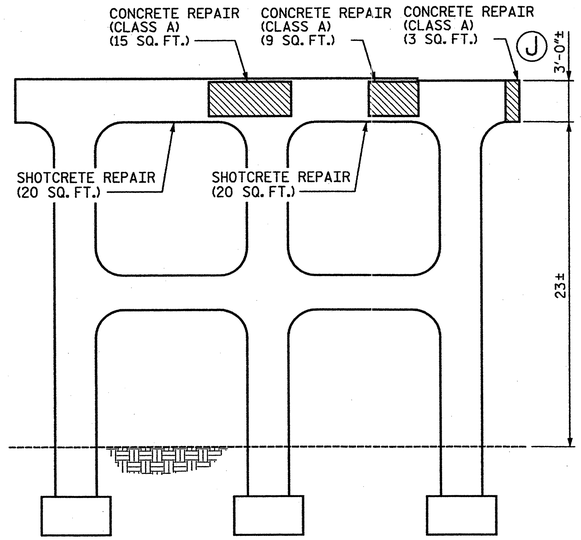

ELEVATION OF BENT 2 - LOOKING SOUTH *

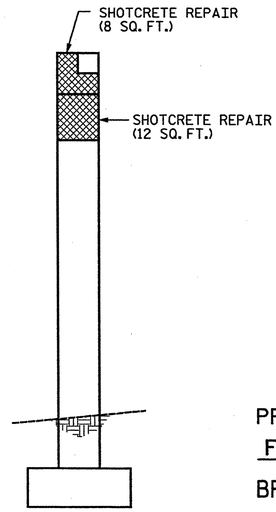

END VIEW OF BENT 2 LOOKING EAST *

NORTH CAROLINA PROFESSIONAL SEAL 19768 ENGINEER ROBERT E. KELLY, JR.
2/24/12

PROJECT NO. 17BP.9.P.1

FORSYTH COUNTY

BRIDGE NO.: 297

REHAB. OF BRIDGE NO. 297 SHEET 6 OF 11

STATE OF NORTH CAROLINA
DEPARTMENT OF TRANSPORTATION
RALEIGH

BENTS 1 & 2 SUBSTRUCTURE REPAIRS

BRIDGE ON US 52 NBL OVER NS RAILWAY

REVISIONS						SHEET NO.
NO.	BY:	DATE:	NO.	BY:	DATE:	S-93
1			3			TOTAL SHEETS
2			4			S-109

STV / Ralph Whitehead Associates, Inc.
1000 West Morehead St., Ste. 200
Charlotte, NC 28208
NC License No. F-0991

DRAWN BY : AR DATE : 01-12
CHECKED BY : AC DATE : 01-12

I:\Projects\2515385\2515385.0001\50.Deliverables & Submittals\17BP.9.P.1 Structures\17BP.9.P.1 FinalSet 01.24.12\Bridge 297\Bridge 297 Rehab Plans.dgn
guldool
2/24/2012

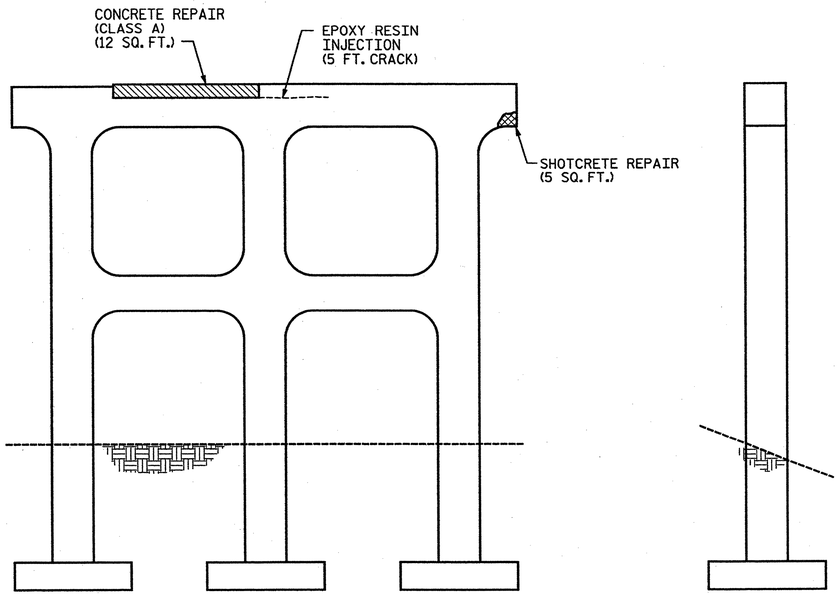

ELEVATION OF BENT 3 - LOOKING NORTH *

END VIEW OF BENT 3 LOOKING WEST *

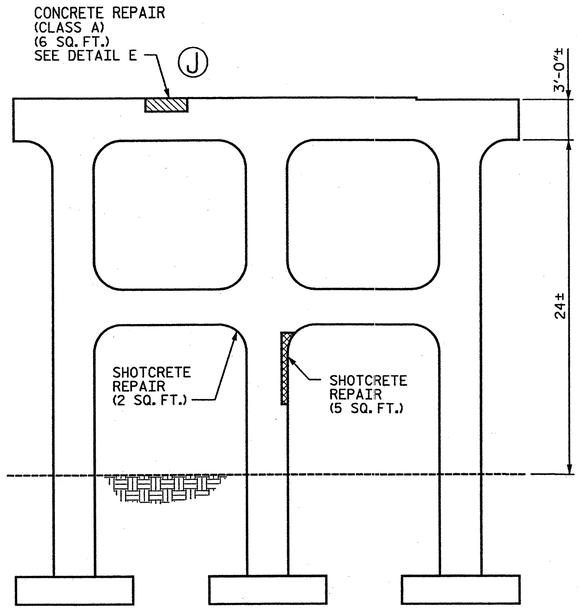

ELEVATION OF BENT 3 - LOOKING SOUTH *

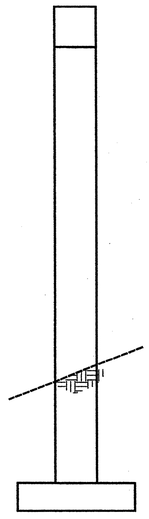

END VIEW OF BENT 3 LOOKING EAST *

NOTES:

CONCRETE SHALL BE SOUNDED TO DETERMINE THE EXTENT OF ALL CONCRETE REPAIRS.

FOR CRACKS REQUIRING EPOXY RESIN INJECTION, SOUNDING MAY PROVE THAT A CONCRETE REPAIR IS NECESSARY.

SPALL, CRACK, AND DELAMINATION DIMENSIONS SHOWN ARE APPROXIMATE. CONTRACTOR SHALL DETERMINE ACTUAL SPALL, CRACK, AND DELAMINATION DIMENSIONS PRIOR TO MAKING REPAIRS.

SHOTCRETE REPAIRS ON COLUMNS SHALL BE STAGED SO THAT ONLY ONE FACE IS REPAIRED AT A TIME. NOTIFY THE ENGINEER IF SHOTCRETE REPAIRS ON COLUMNS WILL EXCEED 6" IN DEPTH.

THE ENGINEER SHALL BE NOTIFIED OF ANY BARS DAMAGED DURING THE CONCRETE REMOVAL PROCESS. REPAIRS TO DAMAGED BARS SHALL BE DIRECTED BY THE ENGINEER AND COMPLETED AT NO ADDITIONAL COST.

DOWEL LENGTH SHALL BE BASED ON A 9" EMBEDMENT INTO EXISTING CONCRETE AND MAY BE ADJUSTED BASED ON THE MINIMUM EMBEDMENT SPECIFIED BY THE MANUFACTURER OF THE EPOXY ADHESIVE BONDING SYSTEM.

REINFORCING STEEL SHALL BE GRADE 60.

CONTRACTOR SHALL CLEAN AND REPAINT ALL STEEL BEARINGS AT END BENTS.

FOR CLEANING AND REPAINTING BEARINGS, SEE SPECIAL PROVISIONS.

BRIDGE JACKING IS REQUIRED FOR CONCRETE REPAIRS THAT EXTEND UNDER A BEARING PLATE. FOR JACKING DETAILS AND NOTES SEE SHEET 8 OF 11.

* LOOKING DIRECTION CORRESPONDS WITH DIRECTION OF TRAVEL ALONG HIGHWAY

Ⓙ - JACKING REQUIRED

- - - - - - - APPROXIMATE LENGTH: EPOXY RESIN INJECTION

▨ - APPROXIMATE AREA: CONCRETE REPAIRS (CLASS A)

▩ - APPROXIMATE AREA: SHOTCRETE REPAIRS

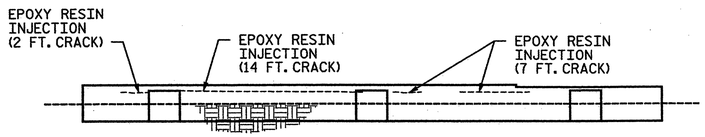

ELEVATION OF END BENT 2 - LOOKING SOUTH *

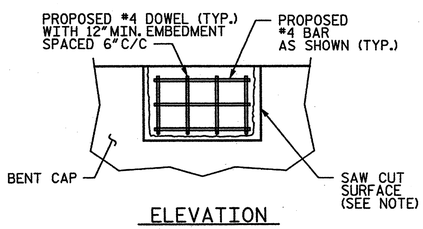

ELEVATION

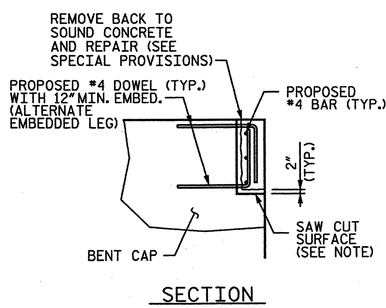

SECTION

DETAIL E

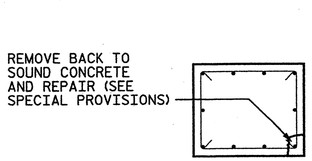

SECTION

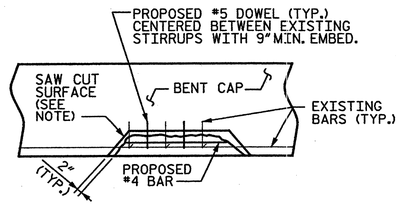

ELEVATION

CORNER REPAIR

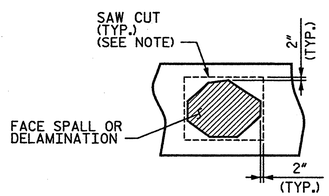

FACE REPAIR

TYPICAL SUBSTRUCTURE REPAIR DETAILS

NOTE: CONTRACTOR SHALL SAW CUT TO A MAXIMUM DEPTH OF 1". THIS DEPTH SHALL BE REDUCED TO PREVENT DAMAGE TO EXISTING REINFORCEMENT, BUT SHALL BE NO LESS THAN ½". CONTRACTOR SHALL REMOVE SURFACE CONCRETE TO VERIFY THAT SAW CUT DEPTH WILL NOT DAMAGE EXISTING REINFORCING STEEL.

NORTH CAROLINA PROFESSIONAL SEAL 19269 ENGINEER PAUL E. KELLER
2/24/12

PROJECT NO. 17BP.9.P.1

FORSYTH COUNTY

BRIDGE NO.: 297

REHAB. OF BRIDGE NO. 297 SHEET 7 OF 11

STATE OF NORTH CAROLINA
DEPARTMENT OF TRANSPORTATION
RALEIGH

BENT 3 & END BENT 2 SUBSTRUCTURE REPAIRS

BRIDGE ON US 52 NBL
OVER NS RAILWAY

REVISIONS						SHEET NO.
NO.	BY:	DATE:	NO.	BY:	DATE:	S-94
1			3			TOTAL SHEETS
2			4			S-109

STV / Ralph Whitehead Associates, Inc.
1000 West Morehead St., Ste. 200
Charlotte, NC 28208
NC License No. F-0991

DRAWN BY : AR DATE : 01-12
CHECKED BY : AC DATE : 01-12

I:\Projects\2515385\2515385.0001\50.Deliverables & Submittals\17BP.9.P.1\Structures\17BP.9.P.1 FinalSet 01_24_12\Bridge 297\Bridge 297 Rehab Plans.dgn
quidool
2/23/2012

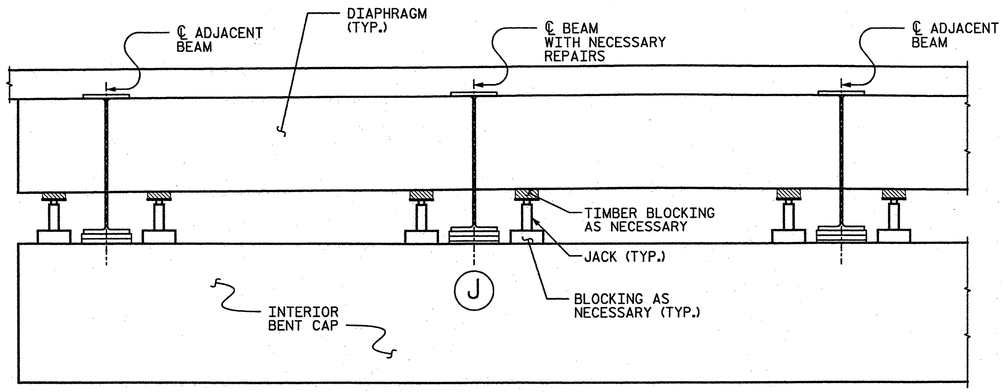

BEAM JACKING DETAIL AT INTERIOR BEAM

(J) JACKING FOR PROPOSED REPAIR LOCATION

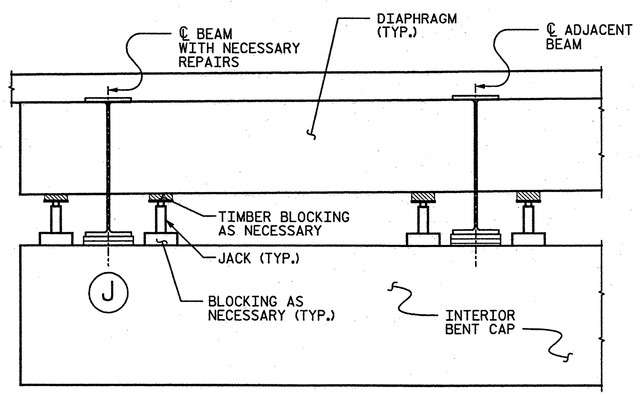

BEAM JACKING DETAIL AT EXTERIOR BEAM

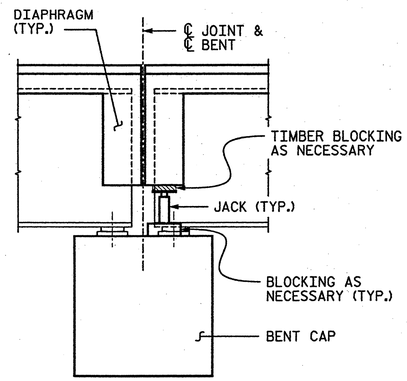

TYPICAL SECTION @ JACKING LOCATION

CONSTRUCTION SEQUENCE:

INSTALL JACKS AT LOCATIONS IDENTIFIED IN TABLE OR AT LOCATIONS REQUIRING CONCRETE REPAIRS UNDER BEARINGS.

REMOVE NECESSARY NUTS ON ANCHOR BOLTS.

JACK GIRDERS AT INTERIOR BENTS 1½" IN ORDER TO RELIEVE LOAD ON BENT CAP UNDER BEARINGS AND ACCOMMODATE BEARING REPLACEMENT. ALL GIRDERS AT EACH BENT SHALL JACKED SIMULTANEOUSLY.

MECHANICALLY LOCK ALL JACKS AT BENT.

PERFORM CONCRETE REPAIRS.

PERFORM BEARING REPLACEMENT.

ONCE ALL REPAIRS ARE COMPLETE, LOWER BRIDGE. CONTRACTOR SHALL NOT LOWER BRIDGE UNTIL CONCRETE REPAIR MATERIAL HAS REACHED A COMPRESSIVE STRENGTH OF 3000 PSI.

PERFORM ANY ADDITIONAL CONCRETE REPAIRS UNDER AREA(S) OF JACKS.

NOTE: THE CONTRACTOR HAS THE OPTION TO PROPOSE AN ALTERNATE CONSTRUCTION SEQUENCE PER THE APPROVAL OF THE ENGINEER.

NOTES:

JACKING DETAILS SHOWN ARE CONCEPTUAL AND CONSIDERED A MINIMUM. THE CONTRACTOR SHALL PROVIDE JACKING PLANS FOR ALL GIRDERS LIFTED FOR APPROVAL BY THE ENGINEER PRIOR TO ANY JACKING OPERATIONS. THE CAPACITY OF END DIAPHRAGMS MUST BE VERIFIED FOR JACKING OPERATION. JACKING SHALL BE PERFORMED SUCH THAT BRIDGE CAN REMAIN OPEN TO TRAFFIC DURING JACKING OPERATIONS.

JACKING PLANS SHALL BE SIGNED AND SEALED BY LICENSED PROFESSIONAL ENGINEER REGISTERED IN NORTH CAROLINA.

THE CONTRACTOR SHALL PROVIDE BLOCKING FOR ALL JACKS AS NECESSARY. A BLOCKING PLAN SHALL BE INCLUDED AS PART OF THE JACKING PLAN.

THE CONTRACTOR SHALL JACK GIRDERS ON AN INDIVIDUAL BENT SIMULTANEOUSLY BY MEANS OF A DUAL-FLOW PRESSURIZED PUMP CONTROLLING THE JACKS.

THE CONTRACTOR SHALL MONITOR THE PLAN LOCATION OF THE GIRDERS FROM INITIAL JACKING UNTIL GIRDERS ARE SECURED ON THEIR PERMANENT BEARINGS. IF THE PLAN LOCATION OF THESE GIRDERS SHIFT FROM ITS ORIGINAL POSITION. THE CONTRACTOR SHALL SECURE FROM ADDITIONAL MOVEMENT IMMEDIATELY. NOTIFY ENGINEER PRIOR TO PROCEEDING WORK OPERATIONS.

EACH JACK SHALL HAVE A MINIMUM SAFE WORKING CAPACITY OF 75 TONS.

PRIOR TO JACKING THE CONTRACTOR SHALL ENSURE THERE ARE NO OBSTACLES PREVENTING THE SPAN FROM BEING LIFTED.

ONCE SPAN HAS BEEN JACKED, CONTRACTOR SHALL INSTALL A MECHANICAL LOCKING DEVICE TO ENSURE THAT GIRDER WILL NOT BE LOWERED DURING CURING OF CONCRETE.

EXISTING ANCHOR BOLTS SHALL BE CUT FLUSH WITH TOP OF BENT CAP.

PROJECT NO. 17BP.9.P.1

FORSYTH COUNTY

BRIDGE NO.: 297

REHAB. OF BRIDGE NO. 297 SHEET 8 OF 11

NORTH CAROLINA PROFESSIONAL SEAL 19765 ENGINEER PAUL E. KELLY JR. 1/16/12

STATE OF NORTH CAROLINA
DEPARTMENT OF TRANSPORTATION
RALEIGH

JACKING DETAILS

BRIDGE ON US 52 NBL OVER NS RAILWAY

REVISIONS						SHEET NO.
NO.	BY:	DATE:	NO.	BY:	DATE:	S-95
1			3			TOTAL SHEETS
2			4			S-109

STV / Ralph Whitehead Associates, Inc.
1000 West Morehead St., Ste. 200
Charlotte, NC 28208
NC License No. F-0991

DRAWN BY : AR DATE : 01-12
CHECKED BY : AC DATE : 01-12

I:\Projects\25153851\25153851.0001\50_Deliverables & Submittals\17BP.9.P.1\Structures\Final1-12-12\17BP.9.P.1 FinalSet 01_12_12\Bridge 297\Bridge 297 Rehab Plans.dgn
wuvm
1/17/2012

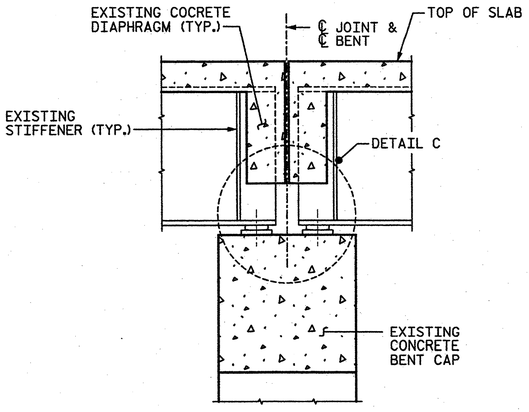

BEAM END REPAIR

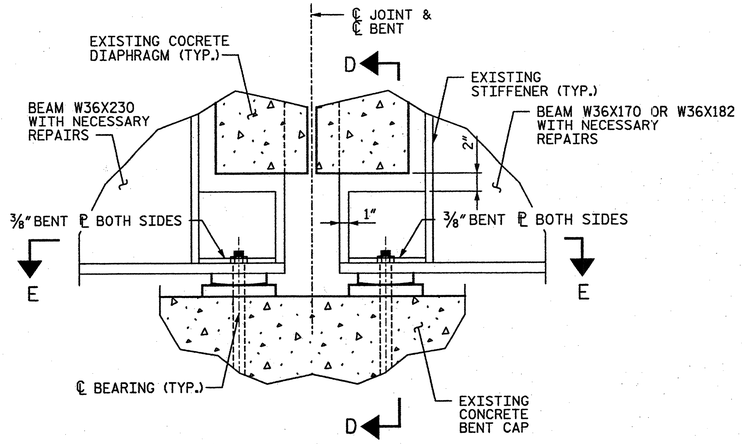

DETAIL C

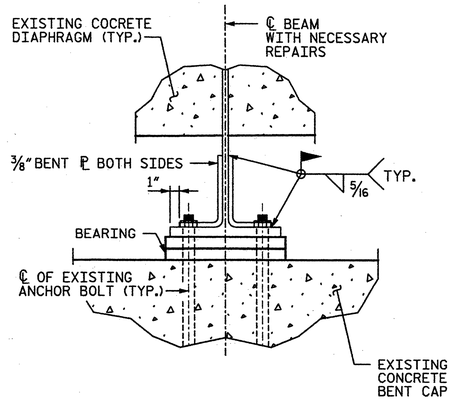

SECTION D-D

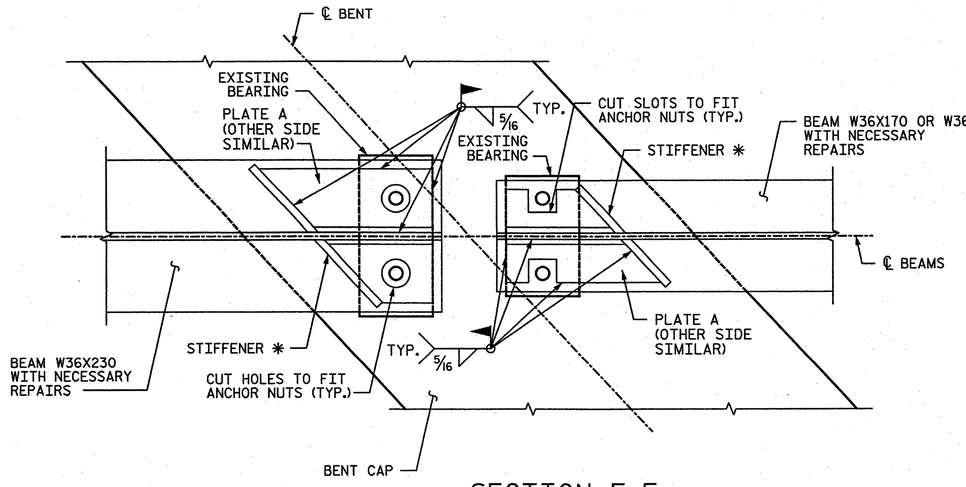

SECTION E-E

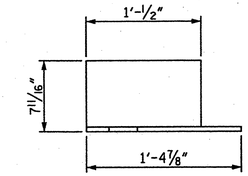

SIDE VIEW - PLATE "A"

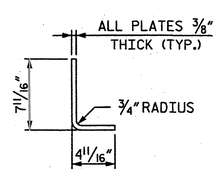

SECTION THROUGH PLATE "A"

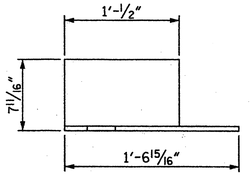

SIDE VIEW - PLATE "B"

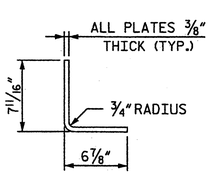

SECTION THROUGH PLATE "B"

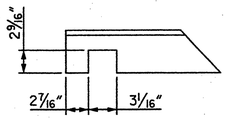

PLAN - PLATE "A" ■

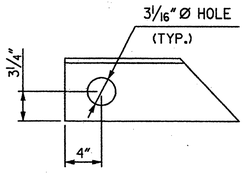

PLAN - PLATE "B" ■

BEAM REINFORCING PLATE DETAIL

■ CONTRACTOR MAY ELIMINATE SLOT AND HOLE DETAILS PROVIDED PLATES ARE INSTALLED AFTER BEARING REPLACEMENT IS COMPLETE.

✱ STIFFENERS ARE OMITTED ON OUTSIDE OF EXTERIOR BEAMS. REINFORCING PLATE LENGTH FOR OUTSIDE OF EXTERIOR BEAMS SHALL BE AT LEAST AS SHOWN FOR PLATES "A" AND "B".

BEAM END REPAIR LOCATIONS (ESTIMATED)
BENT 3, SPAN 3, BEAM 1
BENT 2, SPAN 2, BEAM 4
BENT 2, SPAN 3, BEAM 4
BENT 3, SPAN 4, BEAM 4
BENT 3, SPAN 2, BEAM 4

NOTES:

AFTER ALL BEAM ENDS ARE CLEANED, REPAIRS SHALL BE PERFORMED UNDER ENGINEER'S DIRECTION. ALL BEAM ENDS THAT ARE NOT REPAIRED SHALL BE PAINTED.

ALL WELDING SHALL BE IN ACCORDANCE WITH CURRENT AWS SPECIFICATIONS. WELD MATERIAL SHALL BE E70XX.

PLATE STEEL USED FOR REPAIR SHALL BE AASHTO M270 GRADE 36.

PLATE DIMENSIONS ARE BASED ON BEST INFORMATION AVAILABLE. PLATE DIMENSIONS SHOWN ARE APPROXIMATE. THE CONTRACTOR SHALL FIELD VERIFY PLATE DIMENSIONS PRIOR TO PLATE FABRICATION.

NORTH CAROLINA PROFESSIONAL SEAL 19265 ENGINEER DAVID E. KELLY, JR. 1/18/12

STV / Ralph Whitehead Associates, Inc.
1000 West Morehead St., Ste. 200
Charlotte, NC 28208
NC License No. F-0991

DRAWN BY : AR DATE : 01-12
CHECKED BY : AC DATE : 01-12

PROJECT NO. 17BP.9.P.1
FORSYTH COUNTY
BRIDGE NO.: 297
REHAB. OF BRIDGE NO. 297 SHEET 9 OF 11

STATE OF NORTH CAROLINA
DEPARTMENT OF TRANSPORTATION
RALEIGH

BEAM END REPAIR DETAILS

BRIDGE ON US 52 NBL OVER NS RAILWAY

REVISIONS						SHEET NO.
NO.	BY:	DATE:	NO.	BY:	DATE:	S-96
1			3			TOTAL SHEETS
2			4			S-109

I:\Projects\2515385\2515385.0001\50_Deliverables & Submittals\17BP.9.P.1\Structures\Final-12-12\178P.9.P.1 Final Set 01.12.12\Bridge 297\Bridge 297 Rehab Plans.dgn
wwm
1/17/2012

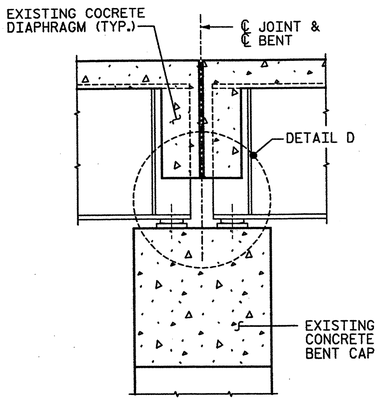

BEARING REPLACEMENT

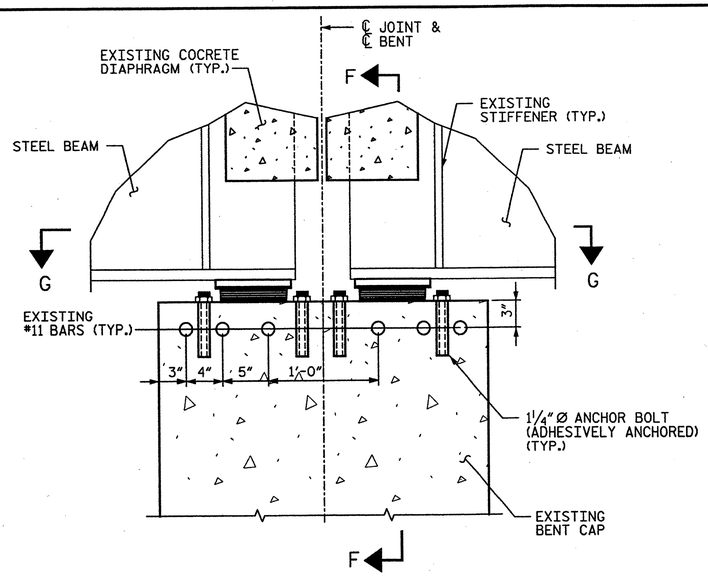

DETAIL D

FILL PLATE NOTES:

FINAL HEIGHT INCREASE FOR BOTTOM OF ALL EXISTING BEAMS TO BE JACKED IS TO EQUAL A RAISE OF 1⅜".

CONTRACTOR SHALL FIELD VERIFY MEASUREMENTS OF EXISTING BEARING HEIGHTS TO DETERMINE NEW FILL PLATE THICKNESS FOR PROPOSED BEARINGS.

PRIOR TO BEARING REPLACEMENT, CONTRACTOR SHALL SUBMIT FIELD DETERMINED FILL PLATE THICKNESSES FOR REVIEW AND APPROVAL.

BASED ON BEST AVAIABLE INFORMATION NEW FILL PLATES ARE DETERMINED TO BE A MAXIMUM THICKNESS OF 1⅜" (CONTRACTOR TO VERIFY AS NOTED PREVIOUSLY). CONTRACTOR SHALL USE A MINIMUM NEW FILL PLATE THICKNESS OF ¼". IF IT IS DETERMINED THAT A SMALLER NEW FILL PLATE IS REQUIRED, THE CONTRACTOR SHALL ADJUST THE SOLE PLATE THICKNESS TO ALLOW FOR A MINIMUN ¼" NEW FILL PLATE.

ALL NEW FILL PLATES SHALL BE OF EQUAL PLAN DIMENSIONS TO THEIR CORRESPONDING SOLE PLATES.

NOTES:

REPLACE EXISTING STEEL BEARING ON BENTS 1, 2, & 3 FOR ALL GIRDER LINES WITH THE BEARINGS DETAILED ON THIS SHEET.

STRUCTURAL STEEL SOLE PLATES, FILL PLATES, ANCHOR BOLTS, NUTS AND WASHERS SHALL BE PAID FOR AT THE PRICE BID PER POUND OF STRUCTURAL STEEL.

ALL NEW SOLE PLATES, FILL PLATES, ANCHOR BOLTS, NUTS AND WASHERS SHALL BE GALVANIZED IN ACCORDANCE WITH THE STANDARD SPECIFICATIONS.

STEEL FOR SOLE PLATES SHALL BE AASHTO M270 GRADE 36.

ANCHOR BOLTS SHALL MEET THE REQUIREMENTS OF ASTM A449. NUTS SHALL MEET THE REQUIREMENTS OF AASHTO M291-DH. WASHERS SHALL MEET THE REQUIREMENTS OF AASHTO M293. SHOP DRAWINGS ARE NOT REQUIRED FOR ANCHOR BOLTS, NUTS AND WASHERS. SHOP INSPECTION IS REQUIRED.

ALL SURFACES OF BEARING PLATES SHALL BE SMOOTH AND STRAIGHT.

NO LOAD TESTING IS REQUIRED FOR ADHESIVELY ANCHORED ANCHOR BOLTS.

FOR BEARING PLATE AND ELASTOMERIC BEARING DETAILS SEE SHEET 11 OF 11.

FOR CONSTRUCTION SEQUENCE, SEE SHEET 8 OF 11

ANCHOR BOLTS SHALL BE ADHESIVELY ANCHORED WITH AN EMBEDMENT DEPTH OF 6". FOR ADHESIVELY ANCHORED BOLTS, SEE STANDARD SPECIFICATIONS.

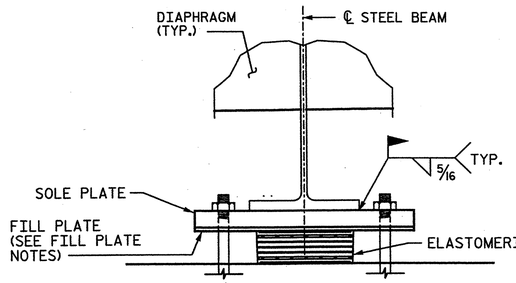

SECTION F-F

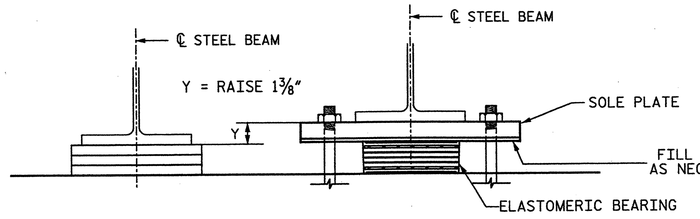

EXISTING BEARING ASSEMBLY PROPOSED BEARING ASSEMBLY

PROPOSED BEARING ASSEMBLY DETERMINATION

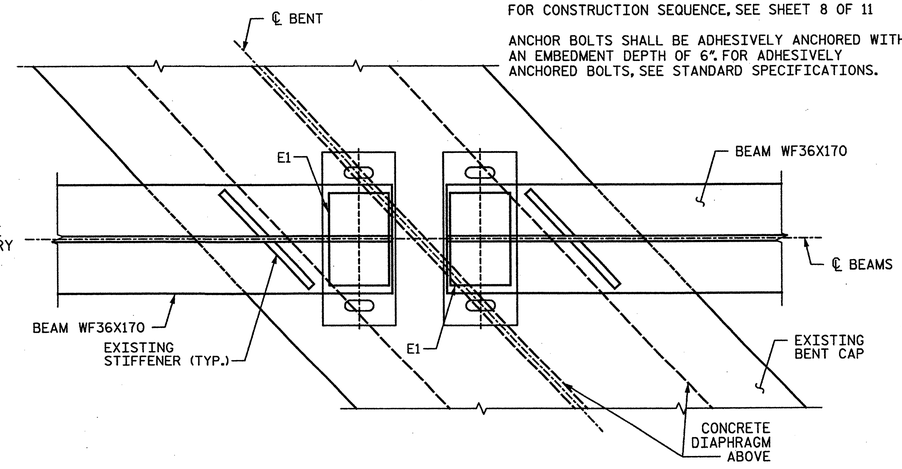

SECTION G-G
BENT 1 (TYP.)

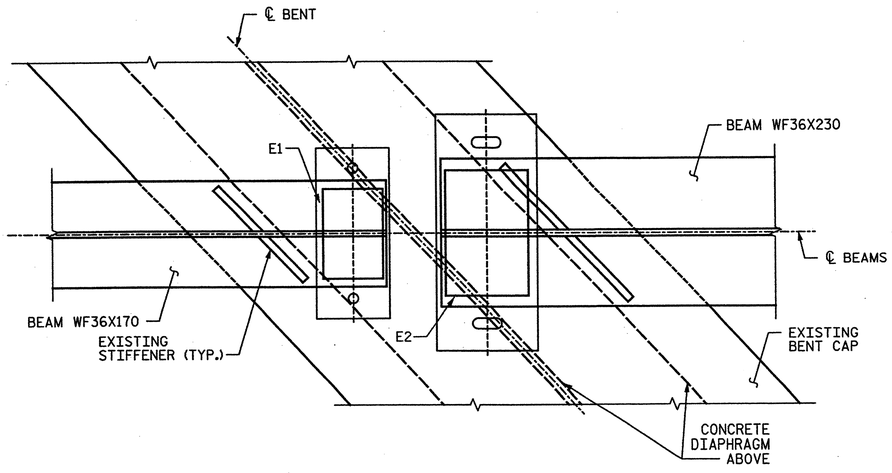

SECTION G-G
BENT 2 (TYP.)

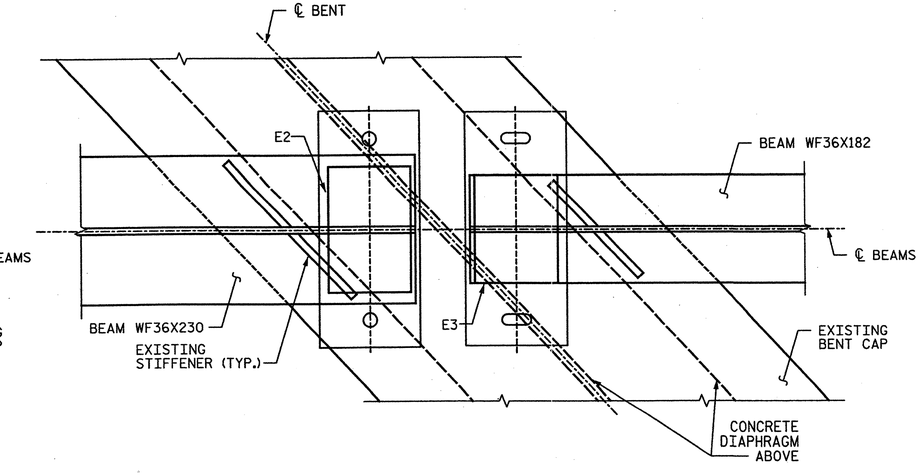

SECTION G-G
BENT 3 (TYP.)

PROJECT NO. 17BP.9.P.1

FORSYTH COUNTY

BRIDGE NO.: 297

REHAB. OF BRIDGE NO. 297 SHEET 10 OF 11

STATE OF NORTH CAROLINA
DEPARTMENT OF TRANSPORTATION
RALEIGH

BEARING REPLACEMENT DETAIL

BRIDGE ON US 52 NBL
OVER NS RAILWAY

NORTH CAROLINA PROFESSIONAL SEAL 19765 ENGINEER DANIEL E. KEKLAK
2/17/12

STV / Ralph Whitehead Associates, Inc.
1000 West Morehead St., Ste. 200
Charlotte, NC 28208
NC License No. F-0991

REVISIONS					
NO.	BY:	DATE:	NO.	BY:	DATE:
1			3		
2			4		

SHEET NO. S-97
TOTAL SHEETS S-109

DRAWN BY : AR DATE : 01-12
CHECKED BY : AC DATE : 01-12

I:\Projects\2515385\2515385.0001\SD_Deliverables & Submittals\17BP.9.P.1\Structures\17BP.9.P.1 FinalSet 01_24_12\Bridge 297\Bridge 297 Rehab Plansdgn
quidool
2/17/2012

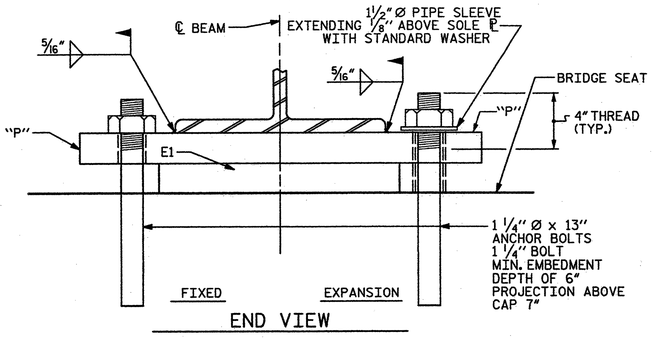

END VIEW

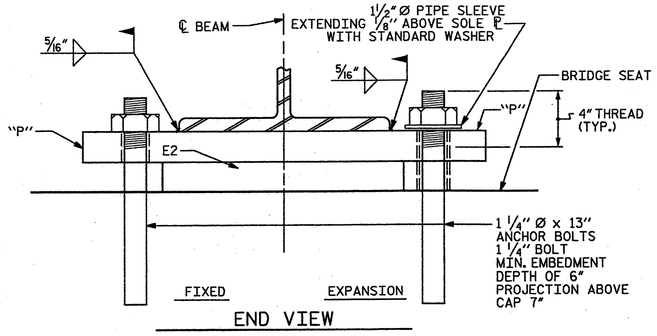

END VIEW

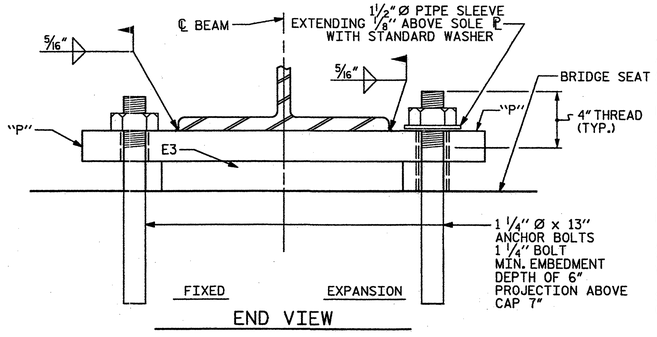

END VIEW

NOTES

AT ALL FIXED POINTS OF SUPPORT, NUTS FOR ANCHOR BOLTS ARE TO BE TIGHTENED FINGER TIGHT AND THEN BACKED OFF½ TURN. THE THREAD OF THE NUT AND BOLT SHALL THEN BE BURRED WITH A SHARP POINTED TOOL.

THE 1½Ø PIPE SLEEVE SHALL BE CUT FROM SCHEDULE 40 PVC PLASTIC PIPE. THE PVC PLASTIC PIPE SHALL MEET THE REQUIREMENTS OF ASTM D1785.

THE PAYMENT FOR THE PIPE SLEEVES SHALL BE INCLUDED IN THE SEVERAL PAY ITEMS.

ALL NEW SOLE PLATES, ANCHOR BOLTS, NUTS AND WASHERS SHALL BE GALVANIZED IN ACCORDANCE WITH THE STANDARD SPECIFICATIONS.

STEEL FOR SOLE PLATES SHALL BE AASHTO M270 GRADE 36.

ANCHOR BOLTS SHALL MEET THE REQUIREMENTS OF ASTM A449. NUTS SHALL MEET THE REQUIREMENTS OF AASHTO M291-DH. WASHERS SHALL MEET THE REQUIREMENTS OF AASHTO M293. SHOP DRAWINGS ARE NOT REQUIRED FOR ANCHOR BOLTS, NUTS AND WASHERS. SHOP INSPECTION IS REQUIRED.

WHEN FIELD WELDING THE SOLE PLATE TO THE GIRDER FLANGE, USE TEMPERATURE INDICATING WAX PENS, OR OTHER SUITABLEMEANS, TO ENSURE THAT THE TEMPERATURE OF THE SOLE PLATE DOES NOT EXCEED 300°F. TEMPERATURES ABOVE THIS MAY DAMAGE THE ELASTOMER.

ALL SURFACES OF BEARING PLATES SHALL BE SMOOTH AND STRAIGHT.

STRUCTURAL STEEL FOR BEARING ASSEMBLIES SHALL BE INCLUDED IN THE BID PRICES FOR STRUCTURAL STEEL REPAIRS. THE BID PRICE SHALL BE FULL PAYMENT FOR ALL LABOR, MATERIALS, INSTALLATION AND ALL INCIDENTALS REQUIRED TO COMPLETE THE WORK.

—LOAD RATINGS—	
	MAX.D.L.+L.L.
TYPE I	66 K
TYPE II	100 K
TYPE III	89 K

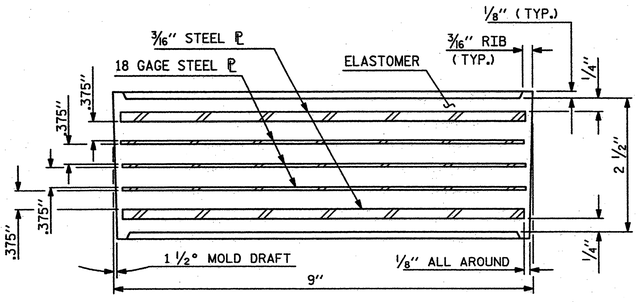

TYPICAL SECTION OF ELASTOMERIC BEARINGS

TYPE I

(FOR SPAN A AND B BEAMS)

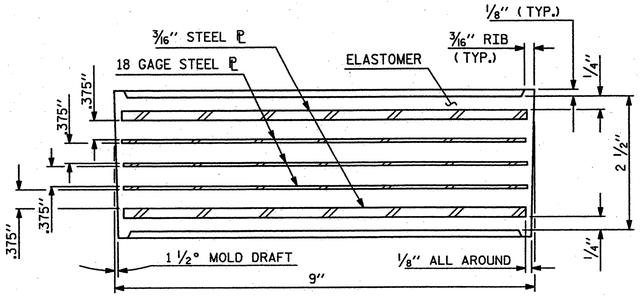

TYPICAL SECTION OF ELASTOMERIC BEARINGS

TYPE II

(FOR SPAN C BEAMS)

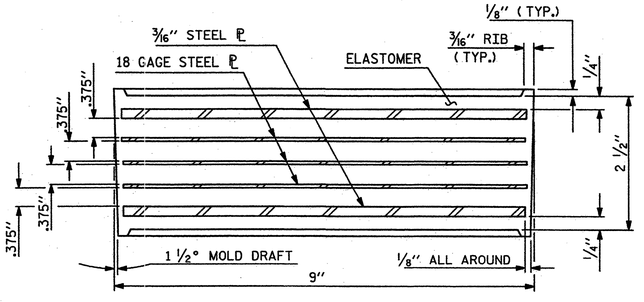

TYPICAL SECTION OF ELASTOMERIC BEARINGS

TYPE III

(FOR SPAN D BEAMS)

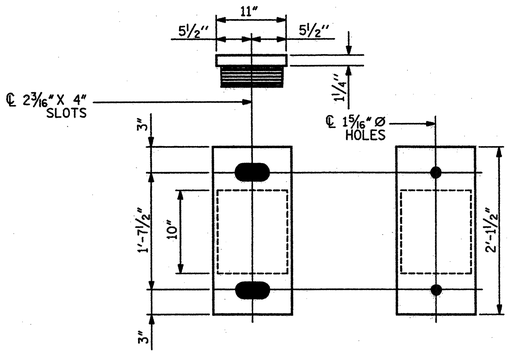

P1

(EXPANSION)
(8 REQ'D)
(SPAN A AND B, BENT 1)

P2

(FIXED)
(4 REQ'D)
(SPAN B, BENT 2)

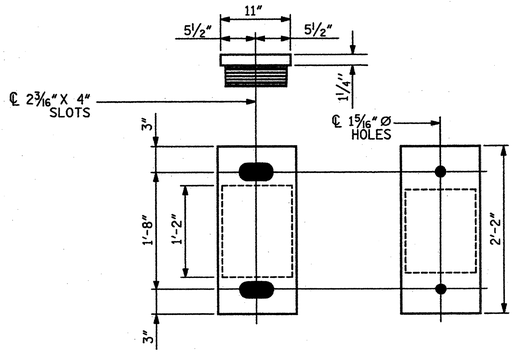

P3

(EXPANSION)
(4 REQ'D)
(SPAN C, BENT 2)

P4

(FIXED)
(4 REQ'D)
(SPAN C, BENT 3)

SOLE PLATE DETAILS ("P")

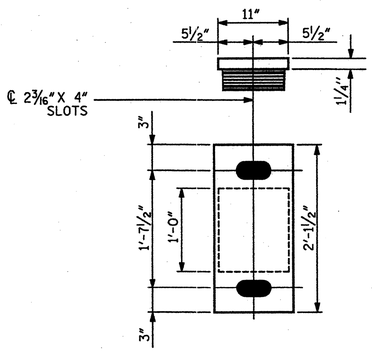

P5

(EXPANSION)
(4 REQ'D)
(SPAN D, BENT 3)

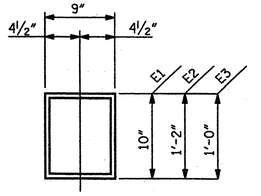

PLAN VIEW OF ELASTOMERIC BEARING

PROJECT NO. 17BP.9.P.1

FORSYTH COUNTY

BRIDGE NO.: 297

REHAB. OF BRIDGE NO. 297 SHEET 11 OF 11

STATE OF NORTH CAROLINA
DEPARTMENT OF TRANSPORTATION
RALEIGH

BEARING DETAIL

BRIDGE ON US 52 NBL
OVER NS RAILWAY

NORTH CAROLINA PROFESSIONAL SEAL 19765 ENGINEER ROBERT E. KELLER

4/6/12

STV/ Ralph Whitehead Associates, Inc.
1000 West Morehead St., Ste. 200
Charlotte, NC 28208
NC License No. F-0991

REVISIONS						SHEET NO.
NO.	BY:	DATE:	NO.	BY:	DATE:	S-98
1			3			TOTAL SHEETS
2			4			S-109

DRAWN BY : AR DATE : 01-12
CHECKED BY : AC DATE : 01-12

I:\Projects\25153851\25153851.0001\50_Deliverables & Submittals\17BP.9.P.1\Structures\Final\1-12\17BP.9.P.1 FinalSet 01.12.12\Bridge 297\Bridge 297 Rehab Plans.dgn
wuvm
1/17/2012

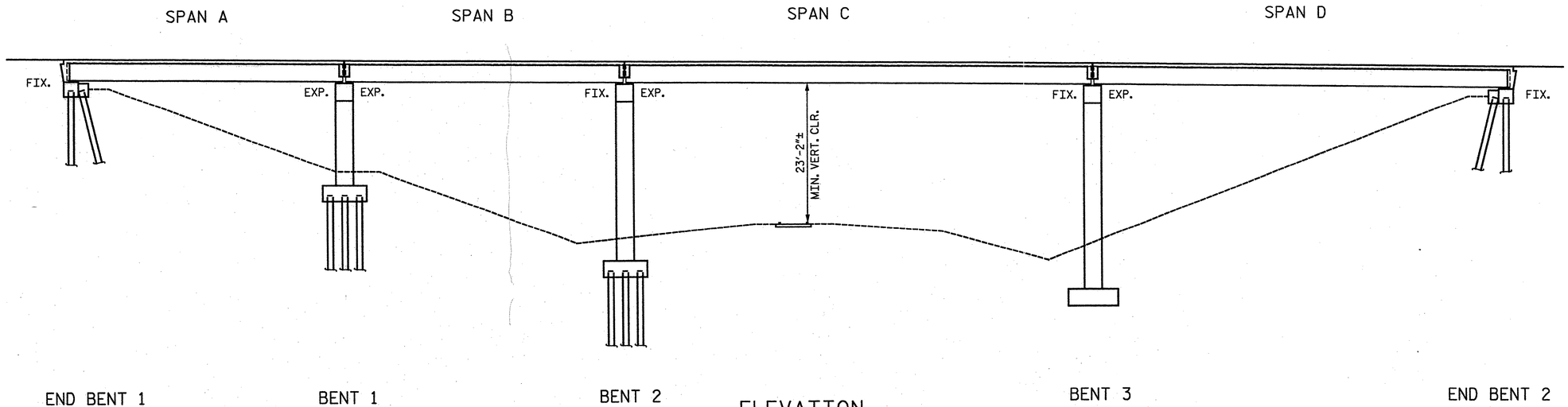

ELEVATION

(SECTIONS AT BENTS AND END BENTS ARE AT RIGHT ANGLES)

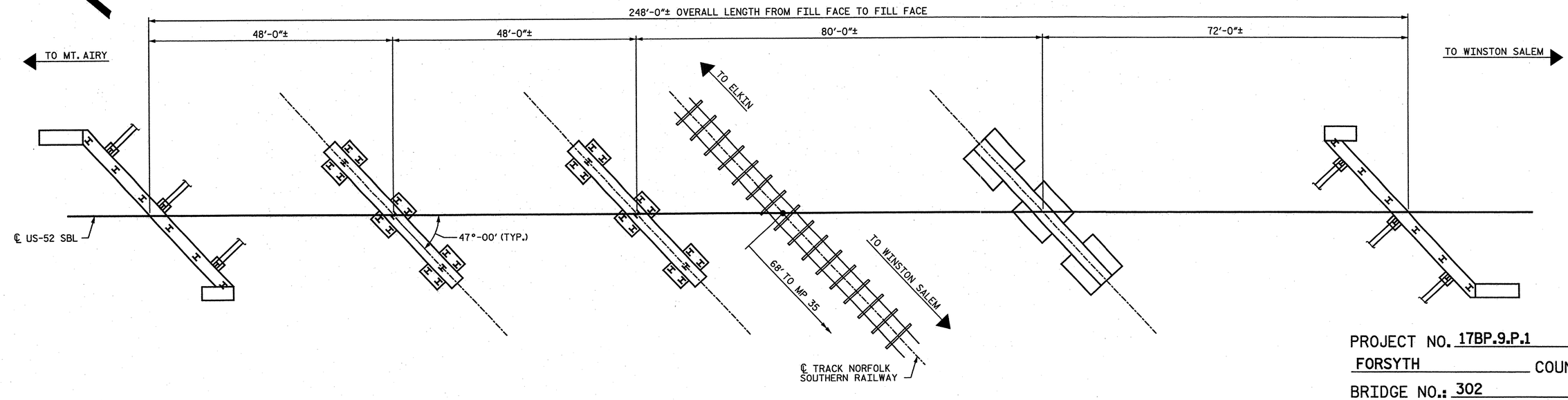

PLAN

NOTE:

FOR GENERAL NOTES SEE SHEET NO. S-1 OF S-109

SEE BRIDGE NO. 302 SHEETS 2, 4, 5, 7, 8, 9, 10 AND 11 OF 11 FOR ADDITIONAL NOTES.

AFTER ALL REPAIRS ON THE BRIDGE HAVE BEEN COMPLETED, AN EPOXY PROTECTIVE COATING SHALL BE APPLIED TO THE TOP SURFACE OF BENT CAPS, INCLUDING PEDESTALS, FOR EACH BENT BELOW A JOINT IN THE SUPERSTRUCTURE. CAP SURFACES SHALL BE GRIT BLASTED PRIOR TO EPOXY COATING. SEE STANDARD SPECIFICATIONS FOR EPOXY COATING. ALL COSTS ASSOCIATED WITH APPLYING EPOXY PROTECTIVE COATING SHALL BE INCLUDED IN THE SEVERAL PAY ITEMS FOR THE PROJECT. NO ADDITIONAL PAYMENT WILL BE MADE FOR THIS WORK.

PROJECT NO. 17BP.9.P.1

FORSYTH COUNTY

BRIDGE NO.: 302

REHAB. OF BRIDGE NO. 302 SHEET 1 OF 11

STATE OF NORTH CAROLINA
DEPARTMENT OF TRANSPORTATION
RALEIGH

GENERAL PLAN & ELEVATION

BRIDGE ON US 52 SBL OVER NS RAILWAY

NORTH CAROLINA PROFESSIONAL SEAL 19764 ENGINEER PAUL E. KELLY, JR.

1/16/12

STV / Ralph Whitehead Associates, Inc.
1000 West Morehead St., Ste. 200
Charlotte, NC 28208
NC License No. F-0991

REVISIONS						SHEET NO.
NO.	BY:	DATE:	NO.	BY:	DATE:	S-99
1			3			TOTAL SHEETS
2			4			S-109

DRAWN BY : AR DATE : 01-12
CHECKED BY : AC DATE : 01-12

I:\Projects\2515385\2515385_0001\50_Deliverables & Submittals\17BP.9.P.1\Structures\Final1-12-12\17BP.9.P.1 FindSet 01.12.12\Bridge 302\Bridge 302 Rehab Plans.dgn
dveyao
1/17/2012

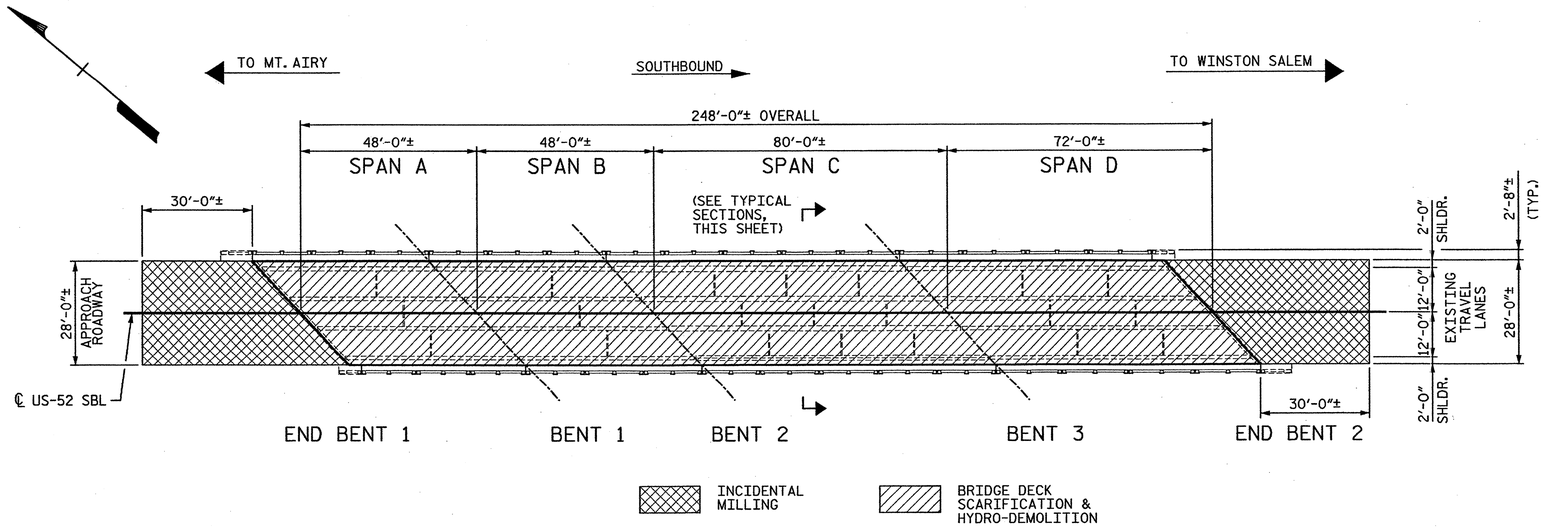

PLAN OF SPANS - DECK SCARIFICATION & HYDRO-DEMOLITION

(CONCRETE BRIDGE FLOORS SHALL BE GROOVED IN ACCORDANCE WITH SECTION 420-14 OF THE STANDARD SPECIFICATION)

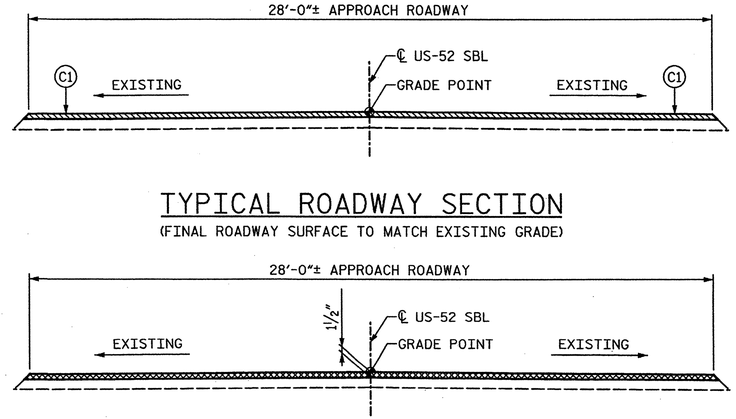

TYPICAL ROADWAY SECTION

(FINAL ROADWAY SURFACE TO MATCH EXISTING GRADE)

TYPICAL ROADWAY MILLING SECTION

(MILL TO 1½" DEPTH)

C1	PROPOSED VARIABLE DEPTH ASPHALT CONCRETE SURFACE COURSE, TYPE SF9.5A AT AN AVERAGE RATE OF 110 LBS. PER SQ. YD. PER 1" DEPTH. TO BE PLACED IN LAYERS NOT LESS THAN 1" IN DEPTH OR GREATER THAN 1½" DEPTH

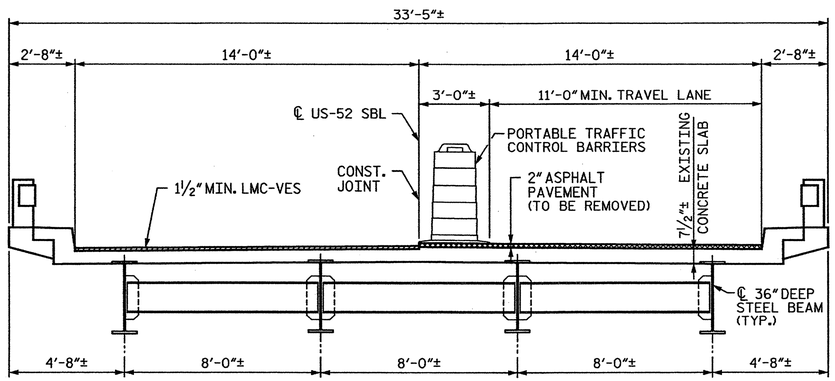

TYPICAL SECTION - STAGE I

(AT INTERMEDIATE DIAPHRAGMS)

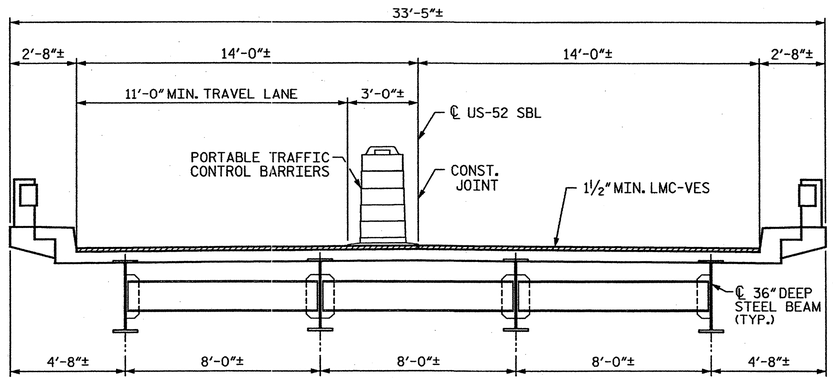

TYPICAL SECTION - STAGE II

(AT INTERMEDIATE DIAPHRAGMS)

NOTES:

FOR ADDITIONAL MILLING DETAILS SEE SHEET 4 OF 11.

PER EXISTING PLANS THE EXISTING DECK HAS 1⅛" CONCRETE COVER OVER EXISTING REINFORCING STEEL.

TOTAL BILL OF MATERIAL

INCIDENTAL MILLING	DECK SCARIFICATION	✳CLASS II SURFACE PREPARATION	HYDRO-DEMOLITION OF BRIDGE DECK	LATEX MODIFIED CONCRETE OVERLAY VERY EARLY STRENGTH	PLACING & FINISHING LATEX MODIFIED CONCRETE OVERLAY - VERY EARLY STRENGTH	ASPHALT CONCRETE SURFACE COURSE TYPE SF9.5A	FOAM JOINT SEAL	GROOVING BRIDGE FLOORS	STRUCTURAL STEEL REPAIR	EPOXY RESIN INJECTION	CONCRETE REPAIRS (CLASS A)	SHOTCRETE REPAIRS	■REINFORCING STEEL	ELASTOMERIC BEARINGS	BRIDGE JACKING	UNDER STRUCTURE WORK PLATFORM
SQ. YDS.	SQ. YDS.	SQ. YDS.	SQ. YDS.	CU. YDS.	SQ. YDS.	TON	LUMP SUM	SQ. FT.	LBS.	LIN. FT.	CU. FT.	CU. FT.	LBS.	LUMP SUM	LUMP SUM	LUMP SUM
268	772	10	772	38	772	26	LUMP SUM	6200	2480	42	11	20	100	LUMP SUM	LUMP SUM	LUMP SUM

✳ QUANTITIES FOR INFORMATION ONLY.
■ REINFORCING STEEL FOR REPLACEMENT OF REBAR DAMAGED PRIOR TO ONSET OF PROJECT.

DRAWN BY : AR DATE : 01-12
CHECKED BY : AC DATE : 01-12

STV/ Ralph Whitehead Associates, Inc.
1000 West Morehead St. Ste. 200
Charlotte, NC 28208
NC License No. F-0991

NORTH CAROLINA PROFESSIONAL SEAL 37654 ENGINEER PAUL E. KELLY, JR.
3/14/12

PROJECT NO. 17BP.9.P.1
FORSYTH COUNTY
BRIDGE NO.: 302
REHAB. OF BRIDGE NO. 302 SHEET 2 OF 11

STATE OF NORTH CAROLINA
DEPARTMENT OF TRANSPORTATION
RALEIGH

PLAN OF SPANS & TYPICAL SECTION

BRIDGE ON US 52 SBL OVER NS RAILWAY

REVISIONS						SHEET NO.
NO.	BY:	DATE:	NO.	BY:	DATE:	S-100
1			3			TOTAL SHEETS
2			4			S-109

I:\Projects\25153851\25153851.0001\50_Deliverables & Submittals\17BP.9.P.1\Structures\17BP.9.P.1 FinalSet 01.24.12\Bridge 302\Bridge 302 Rehab Plans.dgn
gufdool
3/15/2012

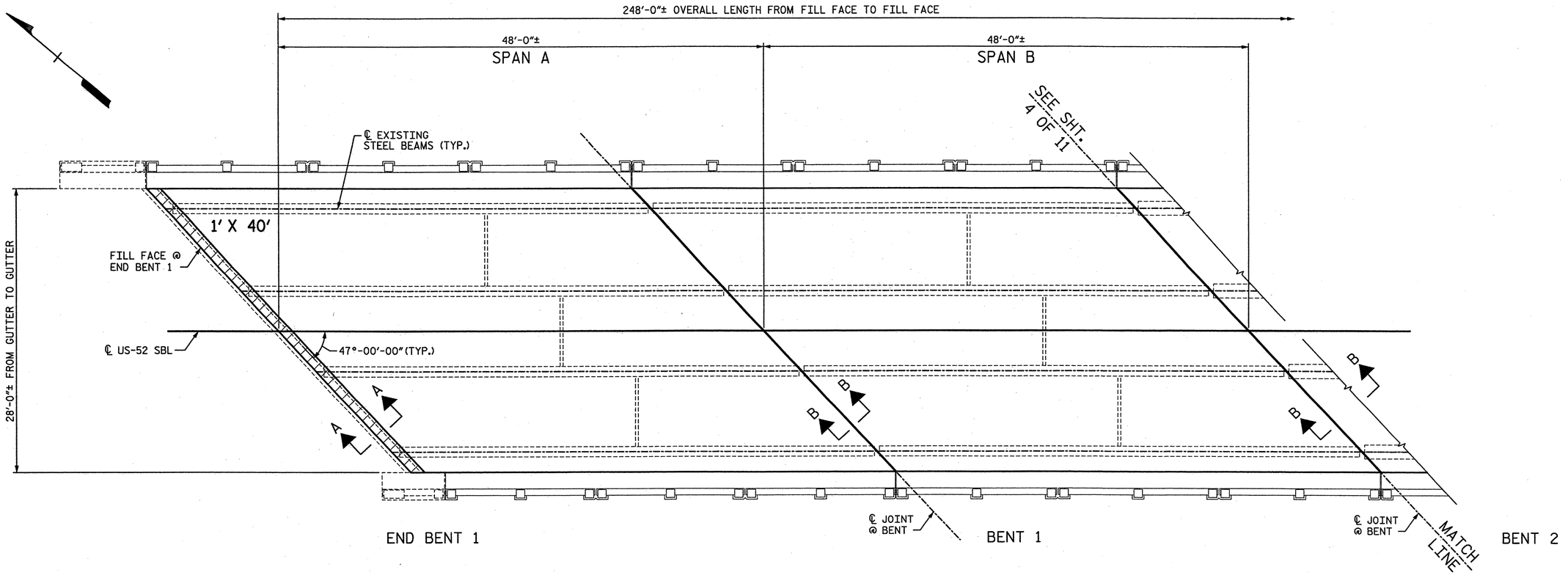

APPROX. AREA: CLASS II REPAIR

PLAN OF SPANS - DECK REPAIRS

(SEE SHEET 4 OF 11 FOR SECTION A-A)
(SEE SHEET 5 OF 11 FOR SECTION B-B)

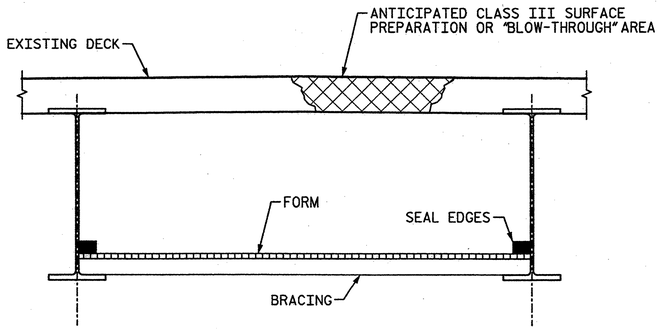

TYP. "BLOW-THROUGH" CONTAINMENT AND FORMWORK

A METHOD TO CAPTURE WATER AND DEBRIS FROM BLOW THRU DURING HYDRO-DEMOLITION SHALL BE INSTALLED IN AREAS INDICATED AS CLASS III SURFACE PREPARATION.

SUBMIT DETAILS OF PROPOSED FORMWORK FOR APPROVAL PRIOR TO BEGINNING WORK.

COSTS FOR INSTALLING AND REMOVING FORMWORK SHALL BE INCIDENTAL TO THE PRICE PER SQ. YARD OF HYDRO-DEMOLITION.

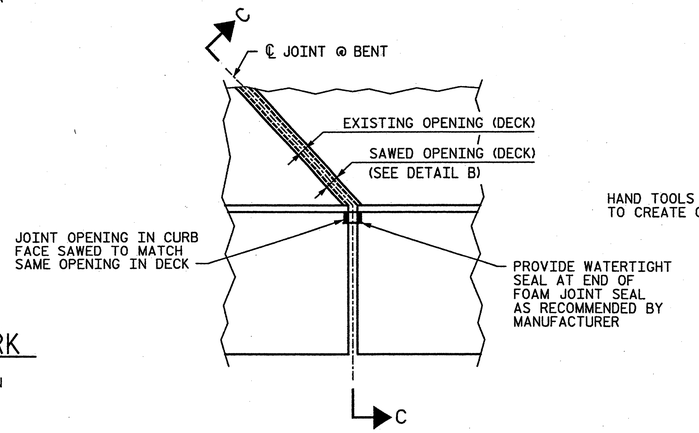

PLAN OF JOINT SEAL AT CURB

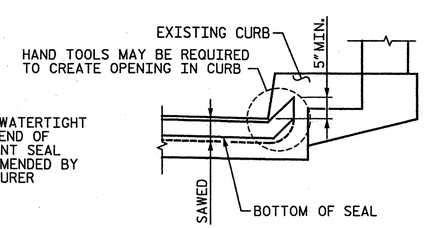

SECTION C-C

NORTH CAROLINA PROFESSIONAL SEAL 19765 ENGINEER PAUL E. KELLY, JR.
1/18/12

PROJECT NO. 17BP.9.P.1
FORSYTH COUNTY
BRIDGE NO.: 302
REHAB. OF BRIDGE NO. 302 SHEET 3 OF 11

STATE OF NORTH CAROLINA
DEPARTMENT OF TRANSPORTATION
RALEIGH

PLAN OF SPANS A & B DECK REPAIRS

BRIDGE ON US 52 SBL OVER NS RAILWAY

STV/Ralph Whitehead Associates, Inc.
1000 West Morehead St., Ste. 200
Charlotte, NC 28208
NC License No. F-0991

REVISIONS						SHEET NO.
NO.	BY:	DATE:	NO.	BY:	DATE:	S-101
1			3			TOTAL SHEETS
2			4			S-109

DRAWN BY : AR DATE : 01-12
CHECKED BY : AC DATE : 01-12

I:\Projects\2515385\2515385.0001\50_Deliverables & Submittals\17BP.9.P.1\Structures\Final 1-12-12\17BP.9.P.1 FinalSet 01.12.12\Bridge 302\Bridge 302 Rehab Plans.dgn
wuvm
1/17/2012

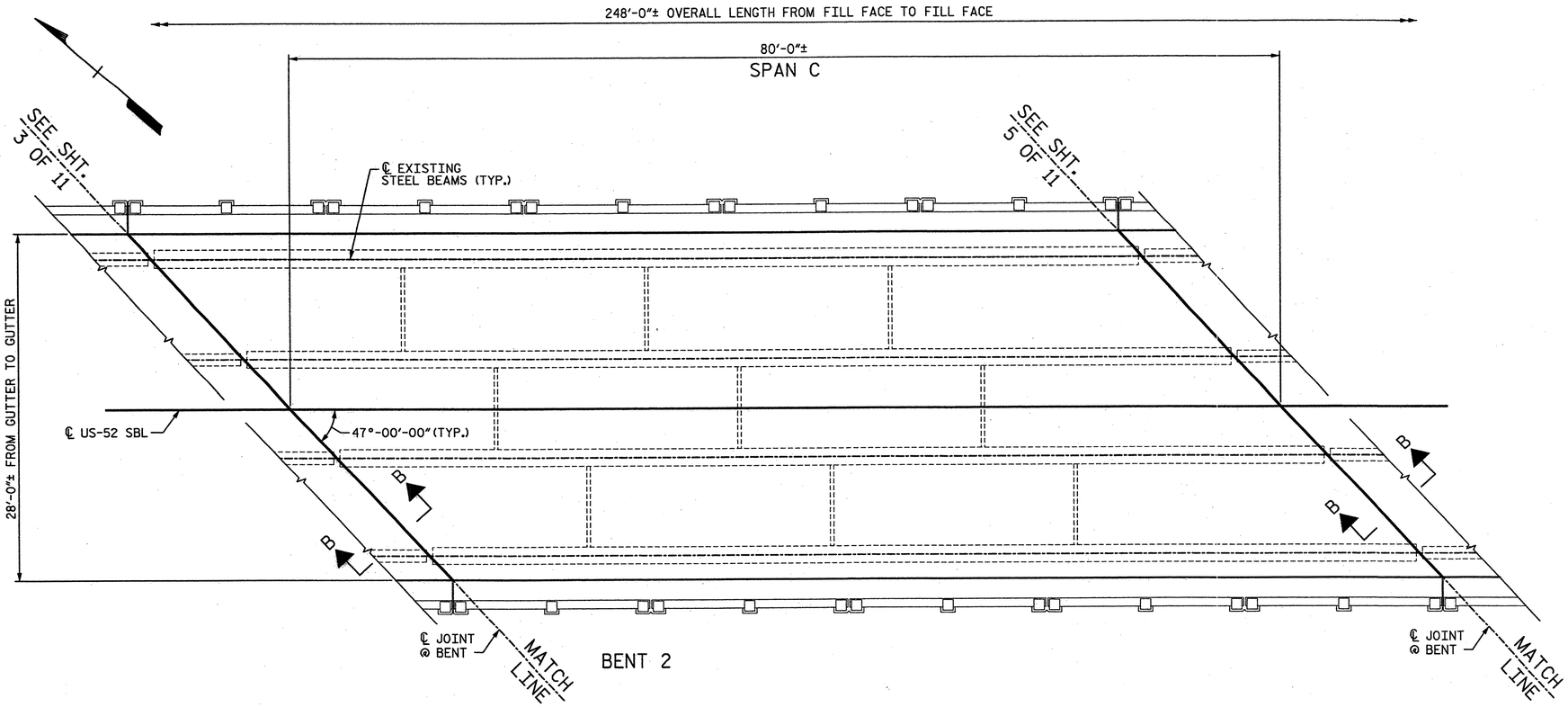

APPROX. AREA: CLASS II REPAIR

PLAN OF SPANS - DECK REPAIRS

(SEE SHEET 4 OF 11 FOR SECTION A-A)
(SEE SHEET 5 OF 11 FOR SECTION B-B)

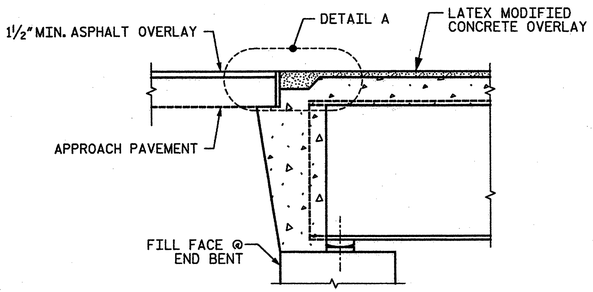

SECTION A-A

(TYP. @ END BENTS 1 AND 2)

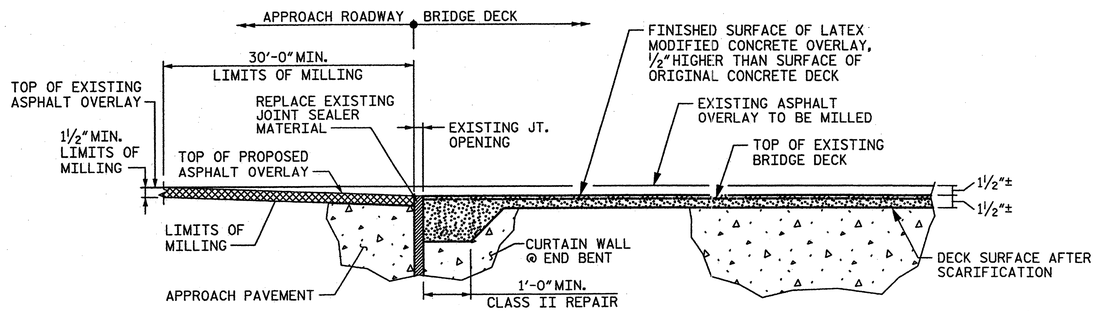

DETAIL A

(LOCATION OF JOINT TO MATCH EXISTING JOINT LOCATION)

NOTES:

LATEX MODIFIED CONCRETE OVERLAY SHALL BE LATEX MODIFIED CONCRETE - VERY EARLY STRENGTH, SEE SPECIAL PROVISIONS.

FOR HYDRO-DEMOLITION OF BRIDGE DECK, SEE SPECIAL PROVISIONS.

THE CONTRACTOR MUST COLLECT, TREAT AND DISPOSE OF RUN-OFF WATER FROM THE HYDRO-DEMOLITION PROCESS. SEE SPECIAL PROVISIONS.

THE BOUNDARY AREAS IDENTIFIED FOR CLASS III SURFACE PREPARATION ARE APPROXIMATE. THE CONTRACTOR SHALL PROVIDE CONTAINMENT FOR UNEXPECTED BLOW-THROUGH OF THE DECK. SEE DETAIL ON SHEET 3 OF 11 AND SPECIAL PROVISIONS.

EXISTING BRIDGE INFORMATION BASED ON BEST AVAILABLE DATA.

CONTRACTOR'S MEANS AND METHODS SHALL MINIMIZE DAMAGE TO EXISTING APPROACH PAVEMENT. AREAS OF APPROACH PAVEMENT DAMAGED BY CONTRACTOR'S OPERATIONS SHALL BE REPAIRED AS DIRECTED BY THE ENGINEER. ANY COST ASSOCIATED WITH REPAIR OF APPROACH PAVEMENT SHALL BE CONSIDERED INCIDENTAL AND NO SEPARATE MEASUREMENT AND PAYMENT WILL BE MADE.

NORTH CAROLINA PROFESSIONAL SEAL 19765 ENGINEER PAUL E. KELLY, JR. 1/6/12

PROJECT NO. 17BP.9.P.1
FORSYTH COUNTY
BRIDGE NO.: 302
REHAB. OF BRIDGE NO. 302 SHEET 4 OF 11

STATE OF NORTH CAROLINA
DEPARTMENT OF TRANSPORTATION
RALEIGH

PLAN OF SPAN C DECK REPAIRS

BRIDGE ON US 52 SBL OVER NS RAILWAY

STV/ Ralph Whitehead Associates, Inc.
1000 West Morehead St., Ste. 200
Charlotte, NC 28208
NC License No. F-0991

REVISIONS						SHEET NO.
NO.	BY:	DATE:	NO.	BY:	DATE:	S-102
1			3			TOTAL SHEETS
2			4			S-109

DRAWN BY : AR DATE : 01-12
CHECKED BY : AC DATE : 01-12

I:\Projects\2515385\2515385_000\50.Deliverables & Submittals\17BP.9.P.1\Structures\Final1-12-12\17BP.9.P.1 FinalSet 01.12.12\Bridge 302\Bridge 302 Rehab Plans.dgn
wuvm
1/17/2012

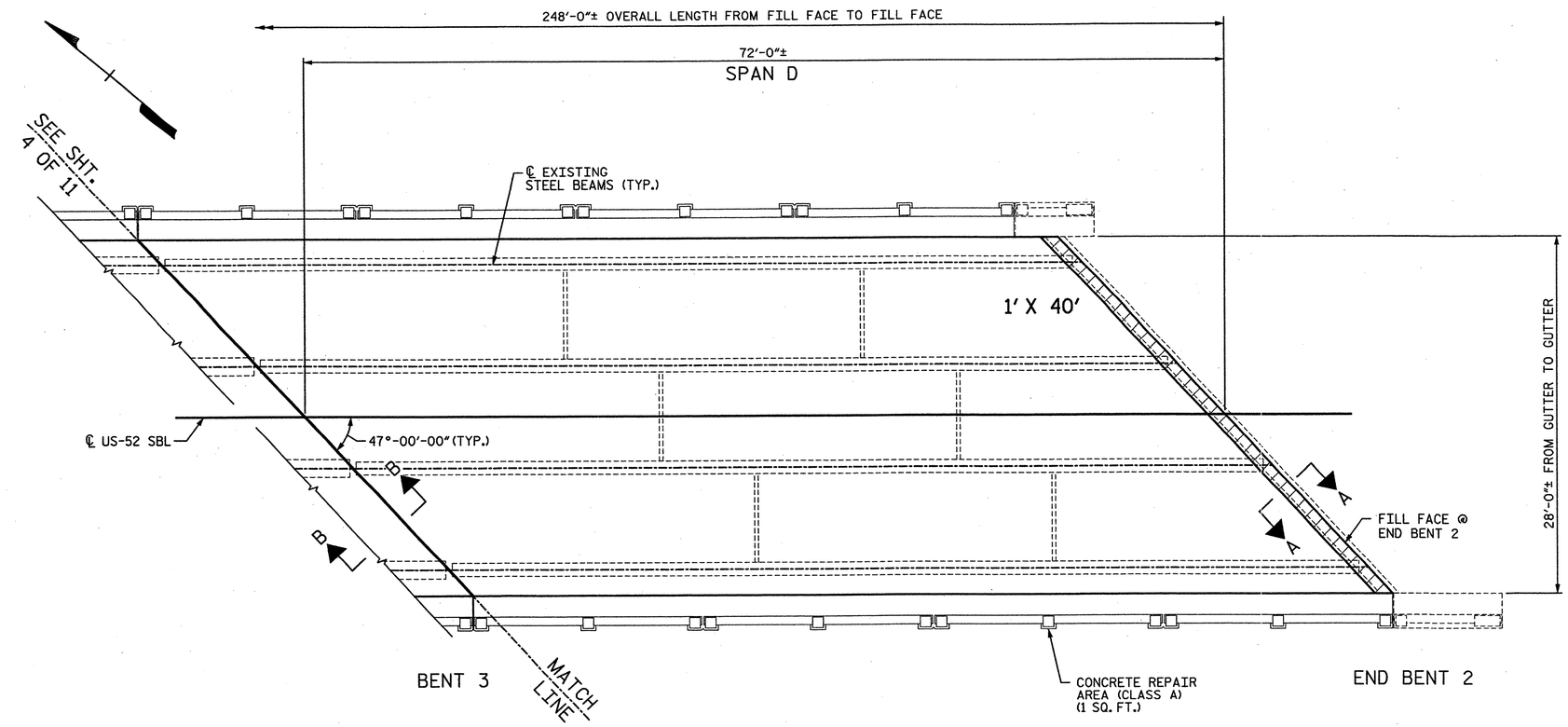

APPROX. AREA: CLASS II REPAIR

PLAN OF SPANS - DECK REPAIRS

(SEE SHEET 4 OF 11 FOR SECTION A-A)
(SEE SHEET 5 OF 11 FOR SECTION B-B)

NOTES:

FOR FOAM JOINT SEALS, SEE SPECIAL PROVISIONS.

FOR ELASTOMERIC CONCRETE, SEE SPECIAL PROVISIONS.

THE ELASTOMERIC CONCRETE SHALL BE INCLUDED IN THE FOAM JOINT SEAL PAY ITEM.

CONTRACTOR SHALL COVER AND PROTECT THE JOINT CONSTRUCTION TO PREVENT DAMAGE DURING CONCRETE CURING AND AS NEEDED TO MAINTAIN TRAFFIC, AS DIRECTED BY THE ENGINEER.

THE INSTALLED FOAM JOINT SEALS SHALL BE WATERTIGHT.

THE NOMINAL UNCOMPRESSED SEAL WIDTH OF THE FOAM JOINT SEAL SHALL BE 2½".

THE CONTRACTOR WILL NOT BE PERMITTED TO FORM THE JOINT FOR THE FOAM JOINT SEAL IN LIEU OF SAWING THE JOINT.

FOAM JOINT OPENING WIDTHS SHALL BE CONFIRMED IN THE FIELD. CONTRACTOR SHALL MAKE ADJUSTMENTS TO FOAM JOINT SEALS, AS NECESSARY, TO MEET EXISTING CONDITIONS AND MANUFACTURER'S RECOMMENDATIONS. ANY CHANGES SHALL BE SUBMITTED TO THE ENGINEER FOR APPROVAL. ANY COST ASSOCIATED WITH THESE ADJUSTMENTS IS CONSIDERED INCIDENTAL AND NO SEPARATE MEASUREMENT OR PAYMENT WILL BE MADE.

* ELASTOMERIC CONCRETE
CU. FT.
28

* QUANTITIES FOR INFORMATION ONLY.

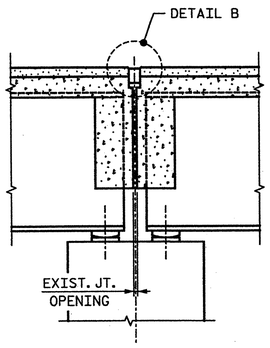

SECTION B-B
(PROPOSED JOINT)
(TYP. @ INTERIOR BENTS)

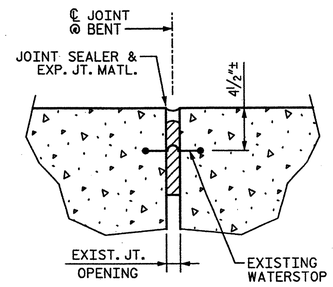

EXISTING JOINT DETAIL

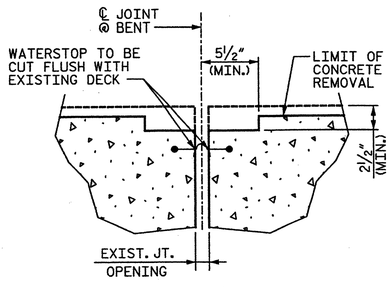

CONCRETE REMOVAL DETAIL @ EXISTING JOINT

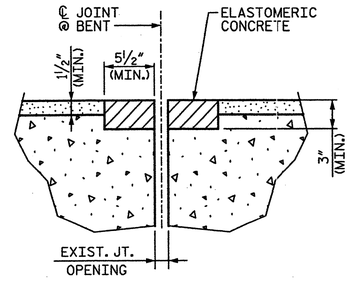

FOAM JOINT SEAL (DETAIL BEFORE SAWING)

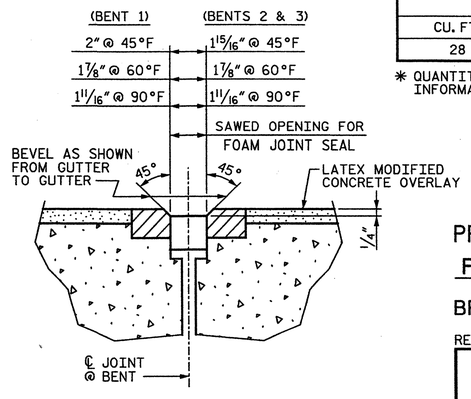

FOAM JOINT SEAL (DETAIL AFTER SAWING)

DETAIL B

NORTH CAROLINA PROFESSIONAL SEAL 13765 ENGINEER KEITH E. KERR
2/17/12

PROJECT NO. 17BP.9.P.1
FORSYTH COUNTY
BRIDGE NO.: 302
REHAB. OF BRIDGE NO. 302 SHEET 5 OF 11

STATE OF NORTH CAROLINA
DEPARTMENT OF TRANSPORTATION
RALEIGH

PLAN OF SPAN D DECK REPAIRS

BRIDGE ON US 52 SBL OVER NS RAILWAY

REVISIONS						SHEET NO.
NO.	BY:	DATE:	NO.	BY:	DATE:	S-103
1			3			TOTAL SHEETS
2			4			S-109

STV / Ralph Whitehead Associates, Inc.
1000 West Morehead St., Ste. 200
Charlotte, NC 28208
NC License No. F-0991

DRAWN BY : AR DATE : 01-12
CHECKED BY : AC DATE : 01-12

I:\Projects\25153B5\25153B5_000\50_Deliverables & Submittals\17BP.9.P.1\Structures\17BP.9.P.1 FinalSet 01.24.12\Bridge 302\Bridge 302 Rehab Plans.dgn
guldool
2/17/2012

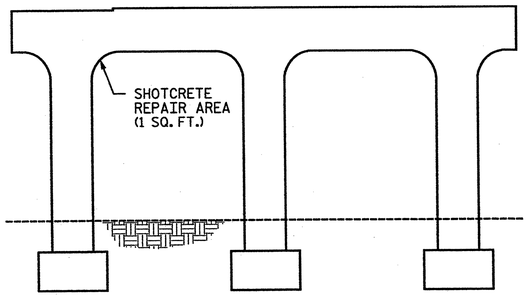

ELEVATION OF BENT 1 - LOOKING NORTH *

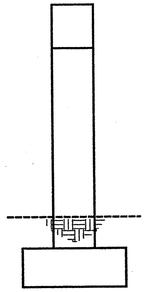

END VIEW OF BENT 1 LOOKING WEST *

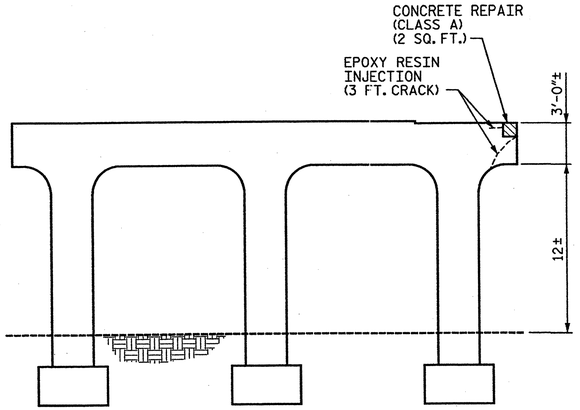

ELEVATION OF BENT 1 - LOOKING SOUTH *

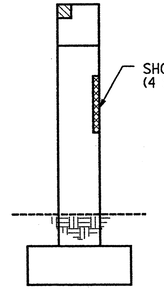

END VIEW OF BENT 1 LOOKING EAST *

NOTE:
SEE NOTES AND TYPICAL REPAIR DETAILS ON SHEET 8 OF 11.

* LOOKING DIRECTION CORRESPONDS WITH DIRECTION OF TRAVEL ALONG HIGHWAY

- - - - - - - APPROXIMATE LENGTH: EPOXY RESIN INJECTION

▨ - APPROXIMATE AREA: CONCRETE REPAIRS (CLASS A)

▩ - APPROXIMATE AREA: SHOTCRETE REPAIRS

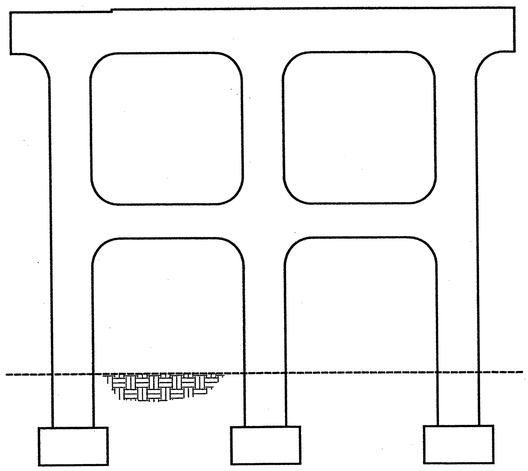

ELEVATION OF BENT 2 - LOOKING NORTH *

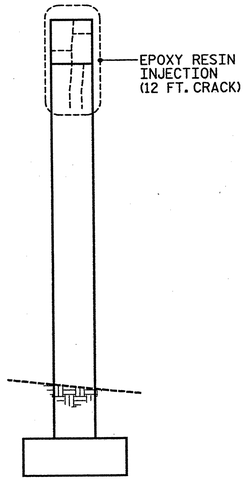

END VIEW OF BENT 2 LOOKING WEST *

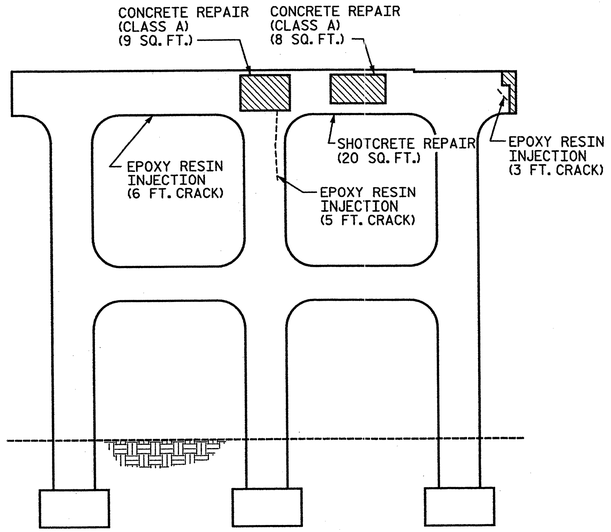

ELEVATION OF BENT 2 - LOOKING SOUTH *

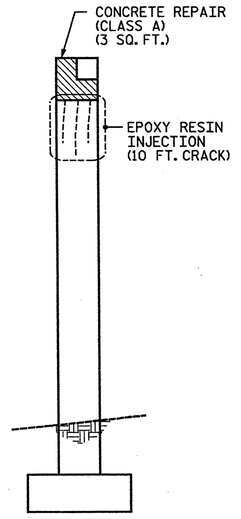

END VIEW OF BENT 2 LOOKING EAST *

NORTH CAROLINA PROFESSIONAL SEAL 19724 ENGINEER WILLIAM E. KELLY, JR. 2/24/12

PROJECT NO. 17BP.9.P.1

FORSYTH COUNTY

BRIDGE NO.: 302

REHAB. OF BRIDGE NO. 302 SHEET 6 OF 11

STATE OF NORTH CAROLINA
DEPARTMENT OF TRANSPORTATION
RALEIGH

BENTS 1 & 2 SUBSTRUCTURE REPAIRS

BRIDGE ON US 52 SBL OVER NS RAILWAY

REVISIONS						SHEET NO.
NO.	BY:	DATE:	NO.	BY:	DATE:	S-104
1			3			TOTAL SHEETS
2			4			S-109

STV / Ralph Whitehead Associates, Inc.
1000 West Morehead St., Ste. 200
Charlotte, NC 28208
NC License No. F-0991

DRAWN BY : AR DATE : 01-12
CHECKED BY : AC DATE : 01-12

I:\Projects\2515385\2515385.0001\50_Deliverables & Submittals\17BP.9.P.1\Structures\17BP.9.P.1 FinalSet 01.24.12\Bridge 302\Bridge 302 Rehab Plans.dgn
guldool
2/23/2012

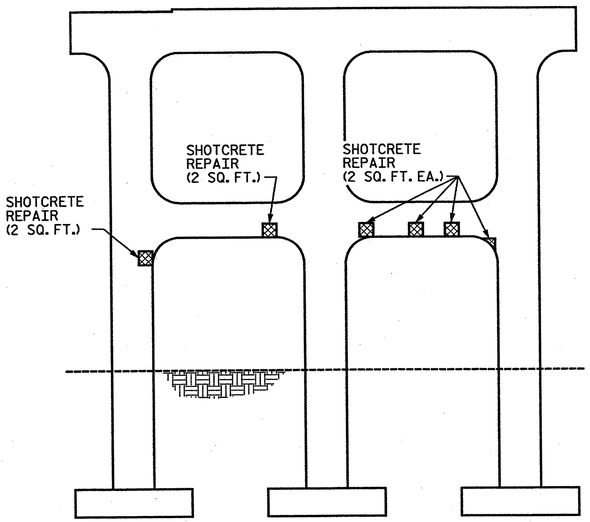

ELEVATION OF BENT 3 - LOOKING NORTH *

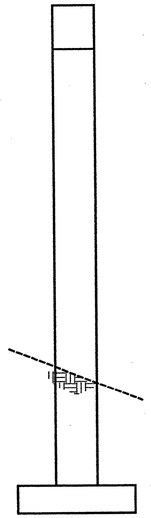

END VIEW OF BENT 3 LOOKING WEST *

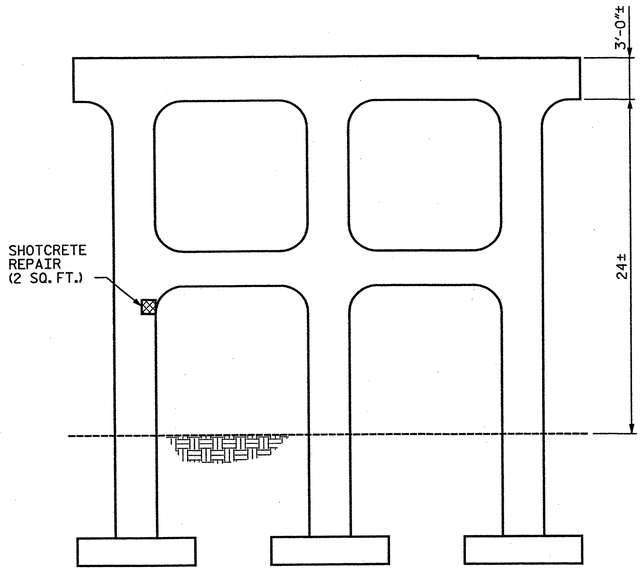

ELEVATION OF BENT 3 - LOOKING SOUTH *

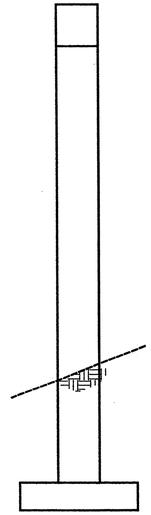

END VIEW OF BENT 3 LOOKING EAST *

NOTES:

CONCRETE SHALL BE SOUNDED TO DETERMINE THE EXTENT OF ALL CONCRETE REPAIRS.

FOR CRACKS REQUIRING EPOXY RESIN INJECTION, SOUNDING MAY PROVE THAT A CONCRETE REPAIR IS NECESSARY.

SPALL, CRACK, AND DELAMINATION DIMENSIONS SHOWN ARE APPROXIMATE. CONTRACTOR SHALL DETERMINE ACTUAL SPALL, CRACK, AND DELAMINATION DIMENSIONS PRIOR TO MAKING REPAIRS.

SHOTCRETE REPAIRS ON COLUMNS SHALL BE STAGED SO THAT ONLY ONE FACE IS REPAIRED AT A TIME. NOTIFY THE ENGINEER IF SHOTCRETE REPAIRS ON COLUMNS WILL EXCEED 6" IN DEPTH.

THE ENGINEER SHALL BE NOTIFIED OF ANY BARS DAMAGED DURING THE CONCRETE REMOVAL PROCESS. REPAIRS TO DAMAGED BARS SHALL BE DIRECTED BY THE ENGINEER AND COMPLETED AT NO ADDITIONAL COST.

DOWEL LENGTH SHALL BE BASED ON A 9" EMBEDMENT INTO EXISTING CONCRETE AND MAY BE ADJUSTED BASED ON THE MINIMUM EMBEDMENT SPECIFIED BY THE MANUFACTURER OF THE EPOXY ADHESIVE BONDING SYSTEM.

REINFORCING STEEL SHALL BE GRADE 60.

CONTRACTOR SHALL CLEAN AND REPAINT ALL STEEL BEARINGS AT END BENTS.

FOR CLEANING AND REPAINTING BEARINGS, SEE SPECIAL PROVISIONS.

* LOOKING DIRECTION CORRESPONDS WITH DIRECTION OF TRAVEL ALONG HIGHWAY

▨ - APPROXIMATE AREA: SHOTCRETE REPAIRS

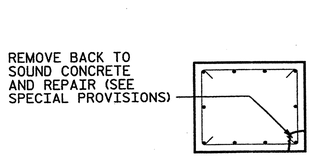

SECTION ELEVATION

CORNER REPAIR

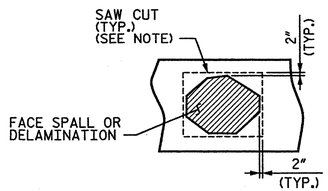

FACE REPAIR

TYPICAL SUBSTRUCTURE REPAIR DETAILS

NOTE: CONTRACTOR SHALL SAW CUT TO A MAXIMUM DEPTH OF 1". THIS DEPTH SHALL BE REDUCED TO PREVENT DAMAGE TO EXISTING REINFORCEMENT, BUT SHALL BE NO LESS THAN 1/2". CONTRACTOR SHALL REMOVE SURFACE CONCRETE TO VERIFY THAT SAW CUT DEPTH WILL NOT DAMAGE EXISTING REINFORCING STEEL.

NORTH CAROLINA PROFESSIONAL SEAL 19706 ENGINEER PAUL E. KELLY, JR.
2/24/12

PROJECT NO. 17BP.9.P.1
FORSYTH COUNTY
BRIDGE NO.: 302
REHAB. OF BRIDGE NO. 302 SHEET 7 OF 11

STATE OF NORTH CAROLINA
DEPARTMENT OF TRANSPORTATION
RALEIGH

BENT 3
SUBSTRUCTURE REPAIRS

BRIDGE ON US 52 SBL
OVER NS RAILWAY

STV/ Ralph Whitehead Associates, Inc.
1000 West Morehead St. Ste. 200
Charlotte, NC 28208
NC License No. F-0991

REVISIONS						SHEET NO.
NO.	BY:	DATE:	NO.	BY:	DATE:	S-105
1			3			TOTAL SHEETS
2			4			S-109

DRAWN BY : AR DATE : 01-12
CHECKED BY : AC DATE : 01-12

I:\Project\25153851\25153851.0001\50_Deliverables & Submittals\17BP.9.P.1\Structures\17BP.9.P.1 FindSet 01_24_12\Bridge 302\Bridge 302 Rehab Plans.dgn
guldool
2/23/2012

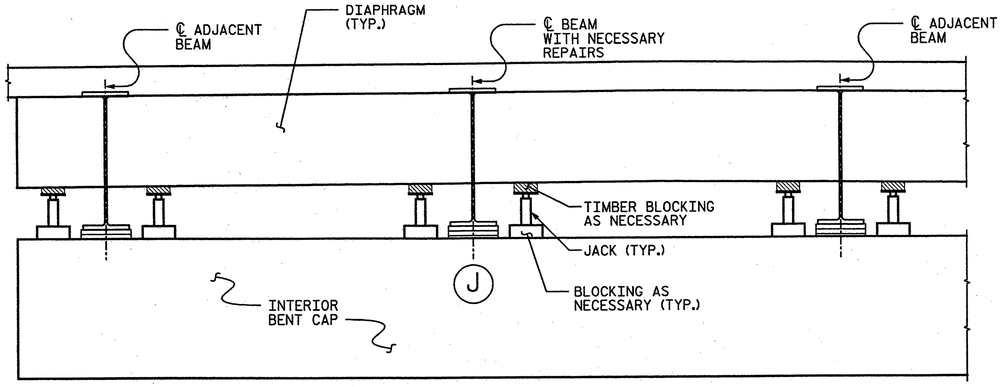

BEAM JACKING DETAIL AT INTERIOR BEAM

(J) JACKING FOR PROPOSED REPAIR LOCATION

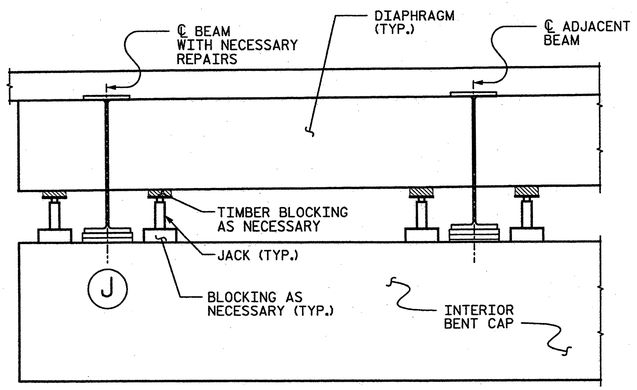

BEAM JACKING DETAIL AT EXTERIOR BEAM

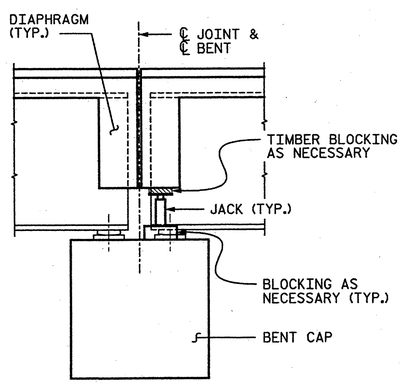

TYPICAL SECTION @ JACKING LOCATION

CONSTRUCTION SEQUENCE:

INSTALL JACKS AT LOCATIONS IDENTIFIED IN TABLE OR AT LOCATIONS REQUIRING CONCRETE REPAIRS UNDER BEARINGS.

REMOVE NECESSARY NUTS ON ANCHOR BOLTS.

JACK GIRDERS AT INTERIOR BENTS 1½" IN ORDER TO RELIEVE LOAD ON BENT CAP UNDER BEARINGS AND ACCOMMODATE BEARING REPLACEMENT. ALL GIRDERS AT EACH BENT SHALL JACKED SIMULTANEOUSLY.

MECHANICALLY LOCK ALL JACKS AT BENT.

PERFORM CONCRETE REPAIRS.

PERFORM BEARING REPLACEMENT.

ONCE ALL REPAIRS ARE COMPLETE, LOWER BRIDGE. CONTRACTOR SHALL NOT LOWER BRIDGE UNTIL CONCRETE REPAIR MATERIAL HAS REACHED A COMPRESSIVE STRENGTH OF 3000 PSI.

PERFORM ANY ADDITIONAL CONCRETE REPAIRS UNDER AREA(S) OF JACKS.

NOTE: THE CONTRACTOR HAS THE OPTION TO PROPOSE AN ALTERNATE CONSTRUCTION SEQUENCE PER THE APPROVAL OF THE ENGINEER.

NOTES:

JACKING DETAILS SHOWN ARE CONCEPTUAL AND CONSIDERED A MINIMUM. THE CONTRACTOR SHALL PROVIDE JACKING PLANS FOR ALL GIRDERS LIFTED FOR APPROVAL BY THE ENGINEER PRIOR TO ANY JACKING OPERATIONS. THE CAPACITY OF END DIAPHRAGMS MUST BE VERIFIED FOR JACKING OPERATION. JACKING SHALL BE PERFORMED SUCH THAT BRIDGE CAN REMAIN OPEN TO TRAFFIC DURING JACKING OPERATIONS.

JACKING PLANS SHALL BE SIGNED AND SEALED BY LICENSED PROFESSIONAL ENGINEER REGISTERED IN NORTH CAROLINA.

THE CONTRACTOR SHALL PROVIDE BLOCKING FOR ALL JACKS AS NECESSARY. A BLOCKING PLAN SHALL BE INCLUDED AS PART OF THE JACKING PLAN.

THE CONTRACTOR SHALL JACK GIRDERS ON AN INDIVIDUAL BENT SIMULTANEOUSLY BY MEANS OF A DUAL-FLOW PRESSURIZED PUMP CONTROLLING THE JACKS.

THE CONTRACTOR SHALL MONITOR THE PLAN LOCATION OF THE GIRDERS FROM INITIAL JACKING UNTIL GIRDERS ARE SECURED ON THEIR PERMANENT BEARINGS. IF THE PLAN LOCATION OF THESE GIRDERS SHIFT FROM ITS ORIGINAL POSITION. THE CONTRACTOR SHALL SECURE FROM ADDITIONAL MOVEMENT IMMEDIATELY. NOTIFY ENGINEER PRIOR TO PROCEEDING WORK OPERATIONS.

EACH JACK SHALL HAVE A MINIMUM SAFE WORKING CAPACITY OF 75 TONS.

PRIOR TO JACKING THE CONTRACTOR SHALL ENSURE THERE ARE NO OBSTACLES PREVENTING THE SPAN FROM BEING LIFTED.

ONCE SPAN HAS BEEN JACKED, CONTRACTOR SHALL INSTALL A MECHANICAL LOCKING DEVICE TO ENSURE THAT GIRDER WILL NOT BE LOWERED DURING CURING OF CONCRETE.

EXISTING ANCHOR BOLTS SHALL BE CUT FLUSH WITH TOP OF BENT CAP.

PROJECT NO. 17BP.9.P.1

FORSYTH COUNTY

BRIDGE NO.: 302

REHAB. OF BRIDGE NO. 302 SHEET 8 OF 11

STATE OF NORTH CAROLINA
DEPARTMENT OF TRANSPORTATION
RALEIGH

JACKING DETAILS

BRIDGE ON US 52 SBL
OVER NS RAILWAY

NORTH CAROLINA PROFESSIONAL SEAL 19765 ENGINEER PAUL E. KELLER
1/16/12

STV/ Ralph Whitehead Associates, Inc.
1000 West Morehead St., Ste. 200
Charlotte, NC 28208
NC License No. F-0991

REVISIONS						SHEET NO.
NO.	BY:	DATE:	NO.	BY:	DATE:	S-106
1			3			TOTAL SHEETS
2			4			S-109

DRAWN BY : AR DATE : 01-12
CHECKED BY : AC DATE : 01-12

I:\Projects\2515385\2515385.0001\50.Deliverables & Submittals\17BP.9.P.1\Structures\Final1-12-12\17BP.9.P.1 FinalSet 01.12.12\Bridge 302\Bridge 302 Rehab Plans.dgn
wuvm
1/17/2012

BEAM END REPAIR

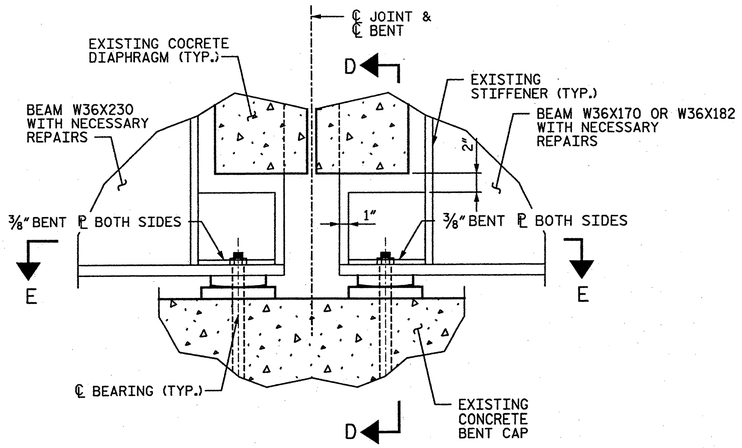

DETAIL C

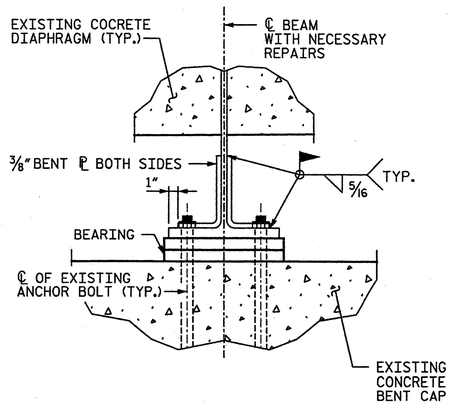

SECTION D-D

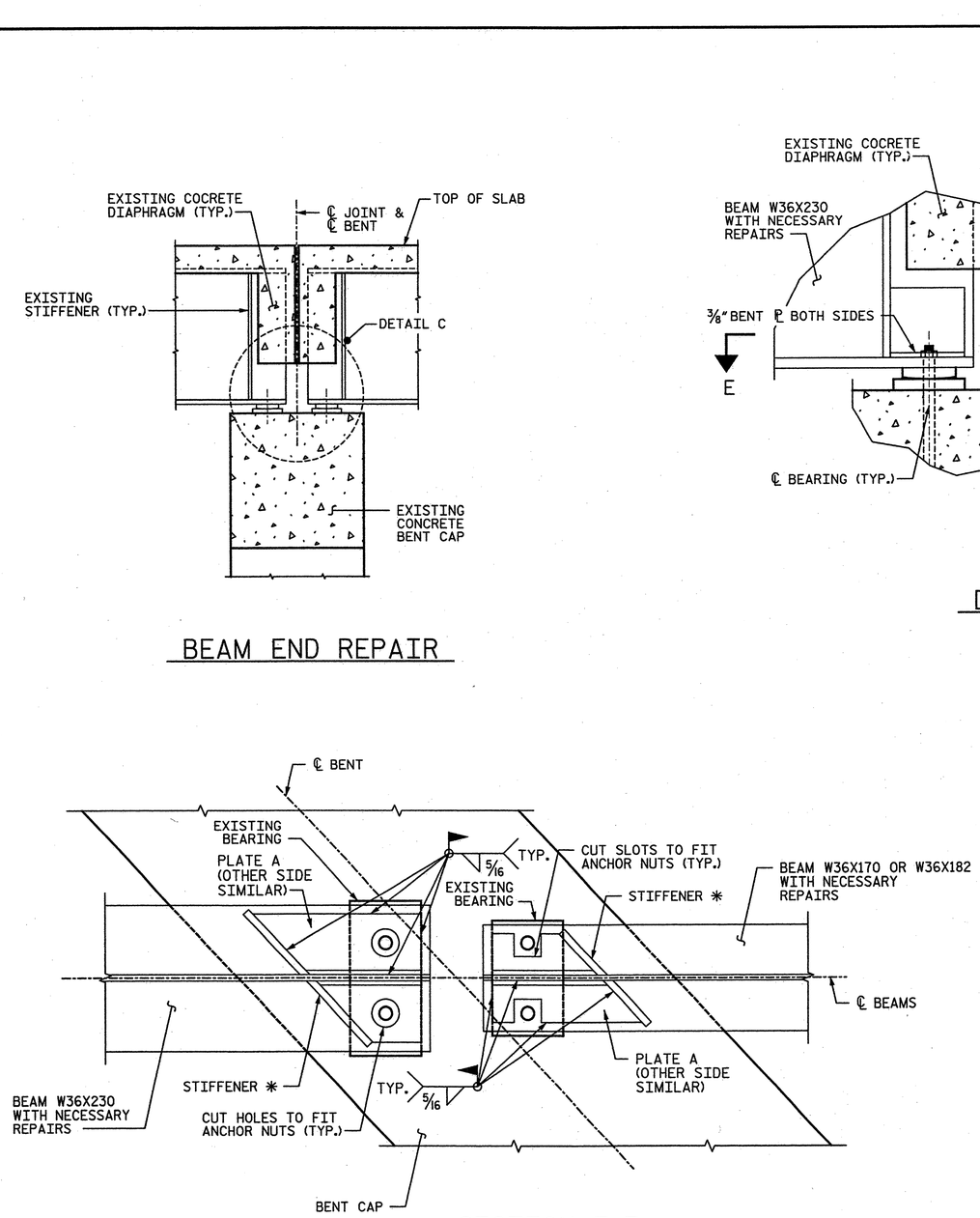

SECTION E-E

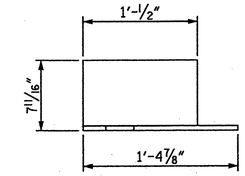

SIDE VIEW - PLATE "A"

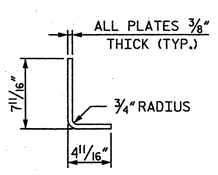

SECTION THROUGH PLATE "A"

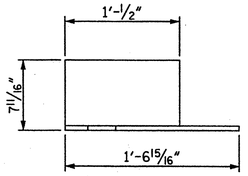

SIDE VIEW - PLATE "B"

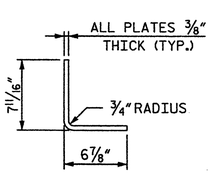

SECTION THROUGH PLATE "B"

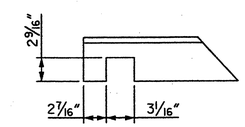

PLAN - PLATE "A" ■

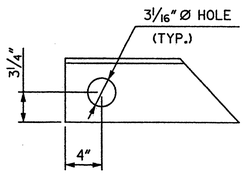

PLAN - PLATE "B" ■

BEAM REINFORCING PLATE DETAIL

■ CONTRACTOR MAY ELIMINATE SLOT AND HOLE DETAILS PROVIDED PLATES ARE INSTALLED AFTER BEARING REPLACEMENT IS COMPLETE.

*STIFFENERS ARE OMITTED ON OUTSIDE OF EXTERIOR BEAMS. REINFORCING PLATE LENGTH FOR OUTSIDE OF EXTERIOR BEAMS SHALL BE AT LEAST AS SHOWN FOR PLATES "A" AND "B".

BEAM END REPAIR LOCATIONS (ESTIMATED)
BENT 3, SPAN 3, BEAM 1 BENT 2, SPAN 2, BEAM 4 BENT 2, SPAN 3, BEAM 4

NOTES:

AFTER ALL BEAM ENDS ARE CLEANED, REPAIRS SHALL BE PERFORMED UNDER ENGINEER'S DIRECTION. ALL BEAM ENDS THAT ARE NOT REPAIRED SHALL BE PAINTED.

ALL WELDING SHALL BE IN ACCORDANCE WITH CURRENT AWS SPECIFICATIONS. WELD MATERIAL SHALL BE E70XX.

PLATE STEEL USED FOR REPAIR SHALL BE AASHTO M270 GRADE 36.

PLATE DIMENSIONS ARE BASED ON BEST INFORMATION AVAILABLE. PLATE DIMENSIONS SHOWN ARE APPROXIMATE. THE CONTRACTOR SHALL FIELD VERIFY PLATE DIMENSIONS PRIOR TO PLATE FABRICATION.

NORTH CAROLINA PROFESSIONAL SEAL 19769 ENGINEER ROBERT E. KELLY, JR. 1/16/12

STV/ Ralph Whitehead Associates, Inc.
1000 West Morehead St., Ste. 200
Charlotte, NC 28208
NC License No. F-0991

DRAWN BY : AR DATE : 01-12
CHECKED BY : AC DATE : 01-12

PROJECT NO. 17BP.9.P.1
FORSYTH COUNTY
BRIDGE NO.: 302
REHAB. OF BRIDGE NO. 302 SHEET 9 OF 11

STATE OF NORTH CAROLINA
DEPARTMENT OF TRANSPORTATION
RALEIGH

BEAM END REPAIR DETAILS

BRIDGE ON US 52 SBL OVER NS RAILWAY

REVISIONS						SHEET NO.
NO.	BY:	DATE:	NO.	BY:	DATE:	S-107
1			3			TOTAL SHEETS
2			4			S-109

I:\Projects\2515385\2515385.0001\50_Deliverables & Submittals\17BP.9.P.1\Structures\Final1-12-12\17BP.9.P.1 FinalSet 01_12_12\Bridge 302\Bridge 302 Rehab Plans.dgn
wvm
1/17/2012

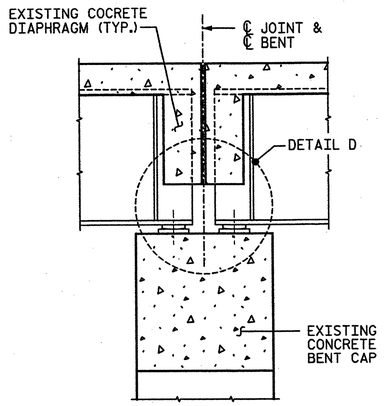

BEARING REPLACEMENT

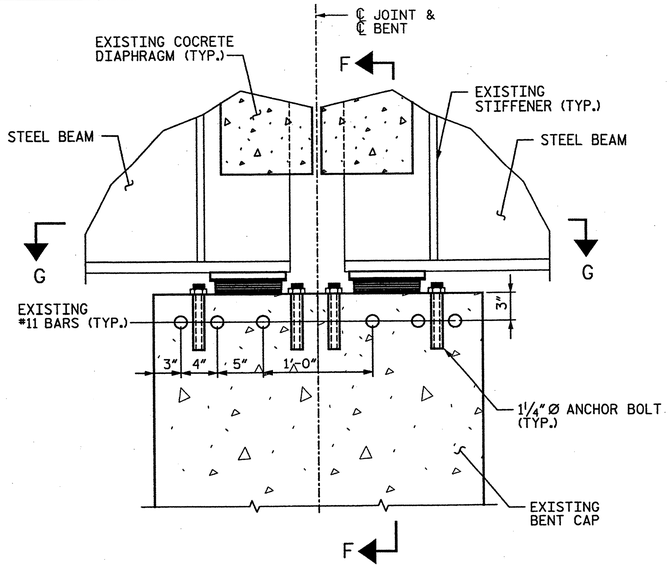

DETAIL D

FILL PLATE NOTES:

FINAL HEIGHT INCREASE FOR BOTTOM OF ALL EXISTING BEAMS TO BE JACKED IS TO EQUAL A RAISE OF 1⅜".

CONTRACTOR SHALL FIELD VERIFY MEASUREMENTS OF EXISTING BEARING HEIGHTS TO DETERMINE NEW FILL PLATE THICKNESS FOR PROPOSED BEARINGS.

PRIOR TO BEARING REPLACEMENT, CONTRACTOR SHALL SUBMIT FIELD DETERMINED FILL PLATE THICKNESSES FOR REVIEW AND APPROVAL.

BASED ON BEST AVAIABLE INFORMATION NEW FILL PLATES ARE DETERMINED TO BE A MAXIMUM THICKNESS OF 1⅜" (CONTRACTOR TO VERIFY AS NOTED PREVIOUSLY). CONTRACTOR SHALL USE A MINIMUM NEW FILL PLATE THICKNESS OF ¼". IF IT IS DETERMINED THAT A SMALLER NEW FILL PLATE IS REQUIRED, THE CONTRACTOR SHALL ADJUST THE SOLE PLATE THICKNESS TO ALLOW FOR A MINIMUN ¼" NEW FILL PLATE.

ALL NEW FILL PLATES SHALL BE OF EQUAL PLAN DIMENSIONS TO THEIR CORRESPONDING SOLE PLATES.

NOTES:

ALL NEW SOLE PLATES, FILL PLATES, ANCHOR BOLTS, NUTS AND WASHERS SHALL BE GALVANIZED IN ACCORDANCE WITH THE STANDARD SPECIFICATIONS.

STEEL FOR SOLE PLATES SHALL BE AASHTO M270 GRADE 36.

ANCHOR BOLTS SHALL MEET THE REQUIREMENTS OF ASTM A449. NUTS SHALL MEET THE REQUIREMENTS OF AASHTO M291-DH. WASHERS SHALL MEET THE REQUIREMENTS OF AASHTO M293. SHOP DRAWINGS ARE NOT REQUIRED FOR ANCHOR BOLTS, NUTS AND WASHERS. SHOP INSPECTION IS REQUIRED.

ALL SURFACES OF BEARING PLATES SHALL BE SMOOTH AND STRAIGHT.

NO LOAD TESTING IS REQUIRED FOR ADHESIVELY ANCHORED ANCHOR BOLTS.

FOR BEARING PLATE DETAILS SEE SHEET 11 OF 11.

FOR CONSTRUCTION SEQUENCE, SEE SHEET 8 OF 11

ANCHOR BOLTS SHALL BE ADHESIVELY ANCHORED WITH AN EMBEDMENT DEPTH OF 6". FOR ADHESIVELY ANCHORED BOLTS, SEE STANDARD SPECIFICATIONS.

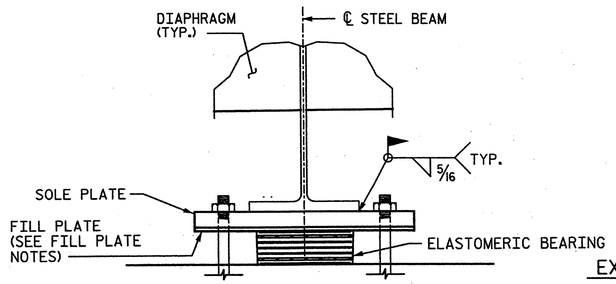

SECTION F-F

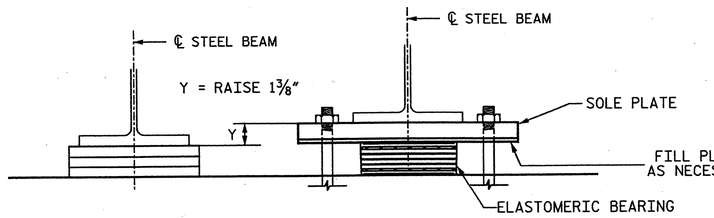

EXISTING BEARING ASSEMBLY PROPOSED BEARING ASSEMBLY

PROPOSED BEARING ASSEMBLY DETERMINATION

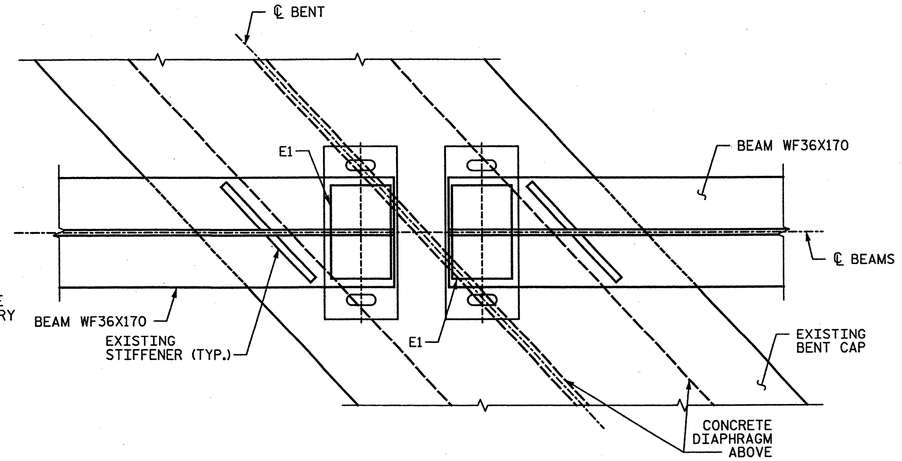

SECTION G-G
BENT 1 (TYP.)

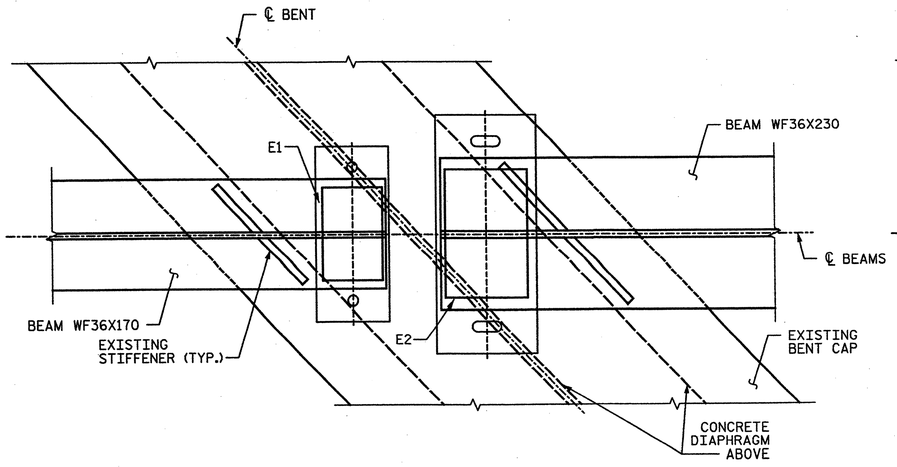

SECTION G-G
BENT 2 (TYP.)

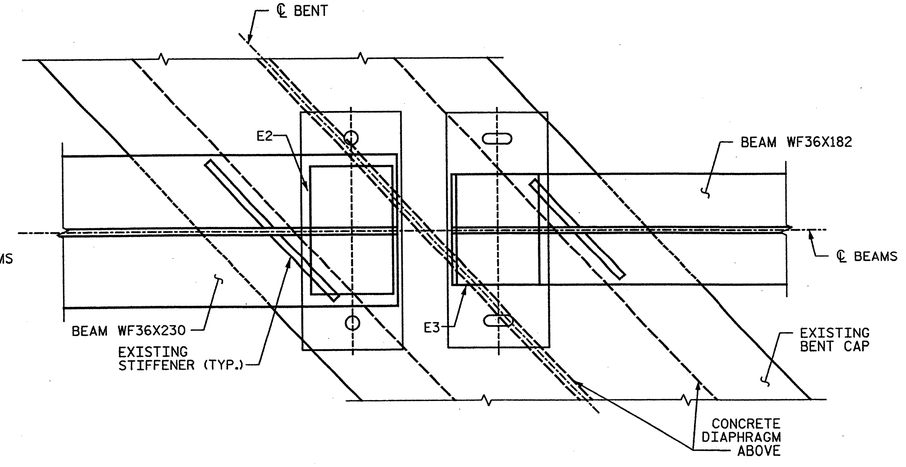

SECTION G-G
BENT 3 (TYP.)

PROJECT NO. 17BP.9.P.1
FORSYTH COUNTY
BRIDGE NO.: 302
REHAB. OF BRIDGE NO. 302 SHEET 10 OF 11

STATE OF NORTH CAROLINA
DEPARTMENT OF TRANSPORTATION
RALEIGH

BEARING REPLACEMENT DETAIL

BRIDGE ON US 52 SBL
OVER NS RAILWAY

NORTH CAROLINA PROFESSIONAL SEAL 19765 ENGINEER E. KELLOGG III
2/17/12

REVISIONS						SHEET NO.
NO.	BY:	DATE:	NO.	BY:	DATE:	S-108
1			3			TOTAL SHEETS
2			4			S-109

STV/ Ralph Whitehead Associates, Inc.
1000 West Morehead St., Ste. 200
Charlotte, NC 28208
NC License No. F-0991

DRAWN BY : AR DATE : 01-12
CHECKED BY : AC DATE : 01-12

I:\Projects\2515385\2515385.0001\50_Deliverables & Submittals\17BP.9.P.1 Structures\17BP.9.P.1 FinalSet 01.24.12\Bridge 302\Bridge 302 Rehab Plans.dgn
guldool
2/17/2012

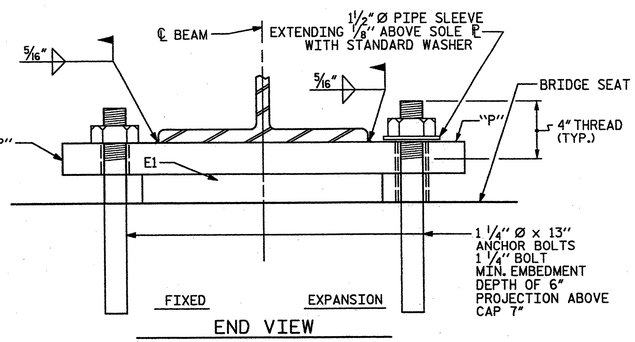

END VIEW

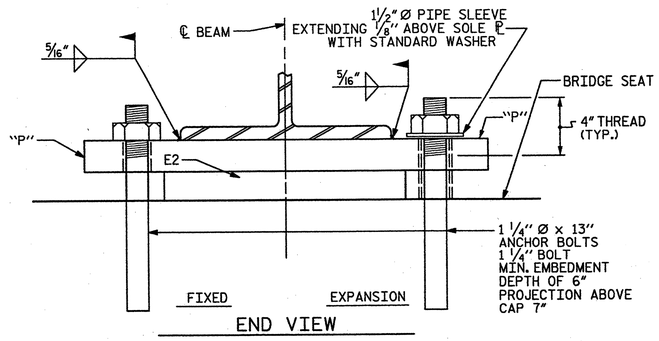

END VIEW

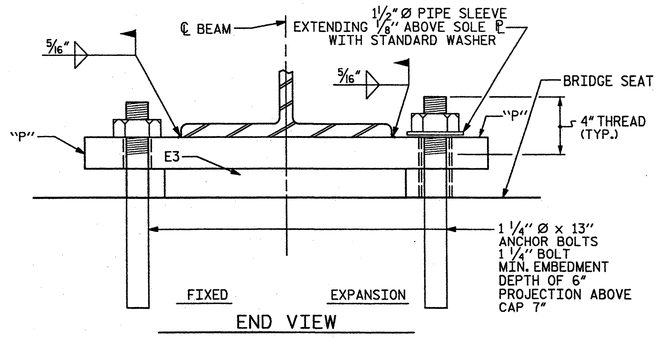

END VIEW

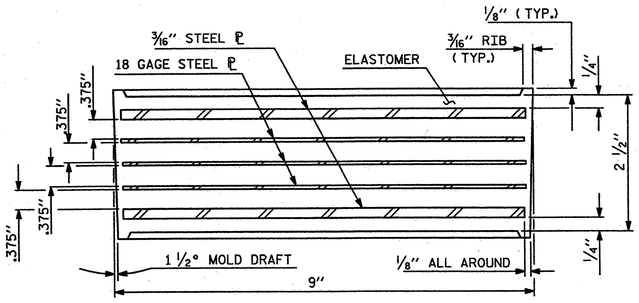

TYPICAL SECTION OF ELASTOMERIC BEARINGS

TYPE I

(FOR SPAN A AND B BEAMS)

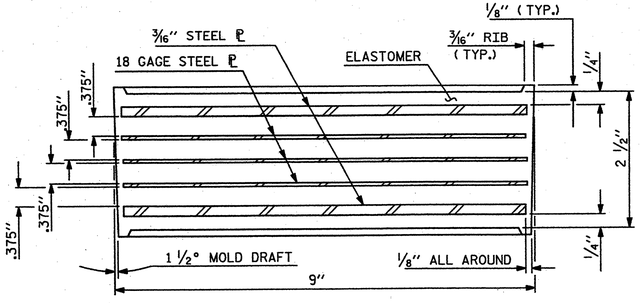

TYPICAL SECTION OF ELASTOMERIC BEARINGS

TYPE II

(FOR SPAN C BEAMS)

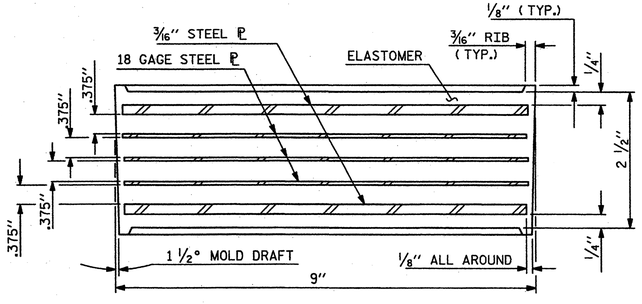

TYPICAL SECTION OF ELASTOMERIC BEARINGS

TYPE III

(FOR SPAN D BEAMS)

NOTES

AT ALL FIXED POINTS OF SUPPORT, NUTS FOR ANCHOR BOLTS ARE TO BE TIGHTENED FINGER TIGHT AND THEN BACKED OFF ½ TURN. THE THREAD OF THE NUT AND BOLT SHALL THEN BE BURRED WITH A SHARP POINTED TOOL.

THE 1½Ø PIPE SLEEVE SHALL BE CUT FROM SCHEDULE 40 PVC PLASTIC PIPE. THE PVC PLASTIC PIPE SHALL MEET THE REQUIREMENTS OF ASTM D1785.

THE PAYMENT FOR THE PIPE SLEEVES SHALL BE INCLUDED IN THE SEVERAL PAY ITEMS.

ALL NEW SOLE PLATES, ANCHOR BOLTS, NUTS AND WASHERS SHALL BE GALVANIZED IN ACCORDANCE WITH THE STANDARD SPECIFICATIONS.

STEEL FOR SOLE PLATES SHALL BE AASHTO M270 GRADE 36.

ANCHOR BOLTS SHALL MEET THE REQUIREMENTS OF ASTM A449. NUTS SHALL MEET THE REQUIREMENTS OF AASHTO M291-DH. WASHERS SHALL MEET THE REQUIREMENTS OF AASHTO M293. SHOP DRAWINGS ARE NOT REQUIRED FOR ANCHOR BOLTS, NUTS AND WASHERS. SHOP INSPECTION IS REQUIRED.

WHEN FIELD WELDING THE SOLE PLATE TO THE GIRDER FLANGE, USE TEMPERATURE INDICATING WAX PENS, OR OTHER SUITABLEMEANS, TO ENSURE THAT THE TEMPERATURE OF THE SOLE PLATE DOES NOT EXCEED 300°F. TEMPERATURES ABOVE THIS MAY DAMAGE THE ELASTOMER.

ALL SURFACES OF BEARING PLATES SHALL BE SMOOTH AND STRAIGHT.

STRUCTURAL STEEL FOR BEARING ASSEMBLIES SHALL BE INCLUDED IN THE BID PRICES FOR STRUCTURAL STEEL REPAIRS. THE BID PRICE SHALL BE FULL PAYMENT FOR ALL LABOR, MATERIALS, INSTALLATION AND ALL INCIDENTALS REQUIRED TO COMPLETE THE WORK.

—LOAD RATINGS—

	MAX.D.L.+L.L.
TYPE I	66 K
TYPE II	100 K
TYPE III	89 K

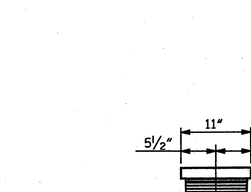

P1
(EXPANSION)
(8 REQ'D)
(SPAN A AND B, BENT 1)

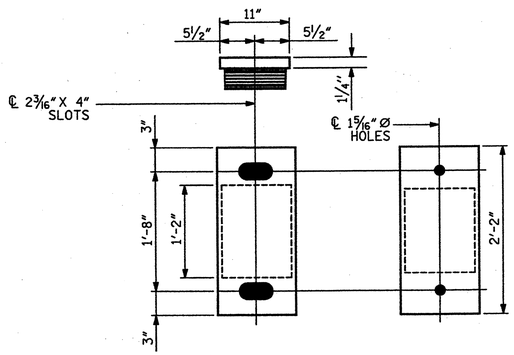

P3
(EXPANSION)
(4 REQ'D)
(SPAN C, BENT 2)

P4
(FIXED)
(4 REQ'D)
(SPAN C, BENT 3)

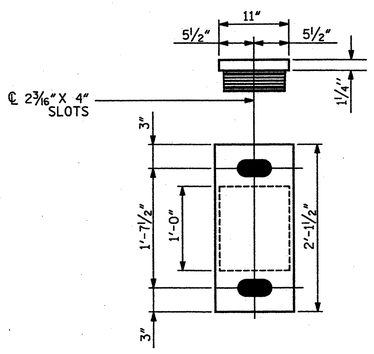

P5
(EXPANSION)
(4 REQ'D)
(SPAN D, BENT 3)

P2
(FIXED)
(4 REQ'D)
(SPAN B, BENT 2)

SOLE PLATE DETAILS ("P")

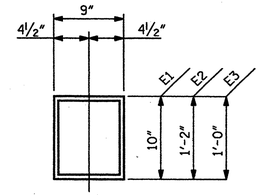

PLAN VIEW OF ELASTOMERIC BEARING

PROJECT NO. 17BP.9.P.1

FORSYTH COUNTY

BRIDGE NO.: 302

REHAB. OF BRIDGE NO. 302 SHEET 11 OF 11

STATE OF NORTH CAROLINA
DEPARTMENT OF TRANSPORTATION
RALEIGH

BEARING DETAIL

BRIDGE ON US 52 SBL
OVER NS RAILWAY

NORTH CAROLINA PROFESSIONAL SEAL 19167 ENGINEER PAUL E. KELLY, JR.
1/18/12

STV / Ralph Whitehead Associates, Inc.
1000 West Morehead St., Ste. 200
Charlotte, NC 28208
NC License No. F-0991

REVISIONS						SHEET NO.
NO.	BY:	DATE:	NO.	BY:	DATE:	S-109
1			3			TOTAL SHEETS
2			4			S-109

DRAWN BY : AR DATE : 01-12
CHECKED BY : AC DATE : 01-12

I:\Projects\2515385\2515385.0001\50.Deliverables & Submittals\17BP.9.P.1\Structures\Final-12-12\17BP.9.P.1 FinalSet 01.12.12\Bridge 302\Bridge 302 Rehab Plans.dgn
wwm
1/17/2012

STATE OF NORTH CAROLINA
DIVISION OF HIGHWAYS

TRANSPORTATION MANAGEMENT PLAN

FORSYTH COUNTY

DIVISION 9

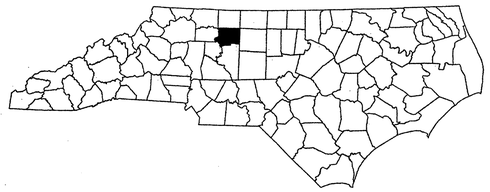

LOCATION 1: FORSYTH COUNTY BRIDGE #51 US 421 EB OVER YADKIN RIVER
TYPE OF WORK: OVERLAY, REPLACE JOINTS, STEEL REPAIRS

LOCATION 2: FORSYTH COUNTY BRIDGE #55 US 421 WB OVER YADKIN RIVER
TYPE OF WORK: OVERLAY, REPLACE FINGER JOINTS, CONSTRUCT SUBSTRUCTURE REPAIRS, STEEL REPAIRS, REPLACE ROCKERS

LOCATION 3: FORSYTH COUNTY BRIDGE #265 AKRON DRIVE (SR 2264) OVER US 52 /NC 8
TYPE OF WORK: OVERLAY, CONSTRUCT SUBSTRUCTURE REPAIRS

LOCATION 4: FORSYTH COUNTY BRIDGE #85 SOUTH STRATFORD ROAD (US 158) OVER SILAS CREEK PARKWAY (NC 67)
TYPE OF WORK: OVERLAY

LOCATION 5: FORSYTH COUNTY BRIDGE #115 US 52/NC8 OVER WAUGHTOWN STREET
TYPE OF WORK: OVERLAY, CONSTRUCT SUBSTRUCTURE REPAIRS

LOCATION 6: FORSYTH COUNTY BRIDGE #78 US 52 /NC 8 OVER I-40
TYPE OF WORK: OVERLAY, CONSTRUCT SUBSTRUCTURE REPAIRS

LOCATION 7: FORSYTH COUNTY BRIDGE #53 US 52 /NC 8 NB OVER SOUTH FORK MUDDY CREEK
TYPE OF WORK: CRACK SEALING

LOCATION 8: FORSYTH COUNTY BRIDGE #54 US 52 /NC 8 SB OVER SOUTH FORK MUDDY CREEK
TYPE OF WORK: CRACK SEALING

LOCATION 9: FORSYTH COUNTY BRIDGE #297 US 52 /NC 8 NB OVER NORFOLK-SOUTHERN RAILROAD
TYPE OF WORK: OVERLAY, STRUCTURAL STEEL REPAIR, CONSTRUCT SUBSTRUCTURE REPAIRS

LOCATION 10: FORSYTH COUNTY BRIDGE #302 US 52/NC 8 SB OVER NORFOLK-SOUTHERN RAILROAD
TYPE OF WORK: OVERLAY, STRUCTURAL STEEL REPAIR, CONSTRUCT SUBSTRUCTURE REPAIRS

LOCATION 11: FORSYTH COUNTY BRIDGE #185 3RD STREET OVER US 52 /NC 8 SB
TYPE OF WORK: OVERLAY, REPLACE FINGER JOINTS, STRUCTURAL STEEL REPAIR, CONSTRUCT SUBSTRUCTURE REPAIRS

SEE SHEET 1 FOR VICINITY MAPS

INDEX OF SHEETS

SHEET NO.	TITLE
TMP-1	TITLE SHEET AND INDEX OF SHEETS
TMP-1A	ROADWAY STANDARD DRAWINGS AND LEGEND
TMP-1B	GENERAL NOTES
TMP-1C-1G	PHASING NOTES
TMP-2A,2B	WORK ZONE DETAIL - BRIDGE 265
TMP-2C,2D	WORK ZONE DETAIL - BRIDGE 85
TMP-3A	OFFSITE DETOUR A
TMP-3B	OFFSITE DETOUR B
TMP-3C	OFFSITE DETOUR C
TMP-3D	OFFSITE DETOUR D
TMP-4A	LANE CLOSURE DETAIL A
TMP-4B	LANE CLOSURE DETAIL B
SD-1	SIGN DETAIL 1

SHEET NO.
TMP-1

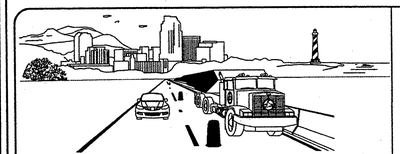

WORK ZONE SAFETY & MOBILITY
"from the MOUNTAINS to the COAST"

PLAN PREPARED FOR NCDOT BRIDGE MANAGEMENT UNIT

RALEIGH, NC

DIVISION OF HIGHWAYS · STATE OF NORTH CAROLINA · DEPARTMENT OF TRANSPORTATION · WORK ZONE TRAFFIC CONTROL

STV / Ralph Whitehead Associates, Inc.
1000 West Morehead St., Ste. 200
Charlotte, NC 28208
NC License Number F-0991

PROJECT ENGINEER JOHN JOHNSON, PE

DESIGN ENGINEER RICHARD ODYNSKI, PE

APPROVED:
DATE:

SEAL

NORTH CAROLINA PROFESSIONAL SEAL 047467 ENGINEER RICHARD A. ODYNSKI

2-14-12

PROJECT: 17BP.9.P.1

2/10/2012
r:\traffic\trafficcontrol\tcp\microstation files\9PL_TMP_TSH.dgn
odynskra

PROJ. REFERENCE NO.	SHEET NO.
17BP.9.P.1	TMP-1A

STV/Ralph Whitehead Associates, Inc.
1000 West Morehead St., Ste. 200
Charlotte, NC 28208
NC License Number F-0991

ROADWAY STANDARD DRAWINGS

REV. SEPTEMBER 2011

ROADWAY STANDARD DRAWINGS

THE FOLLOWING ROADWAY STANDARDS AS APPEAR IN "ROADWAY STANDARD DRAWINGS" - PROJECT SERVICES UNIT - N.C. DEPARTMENT OF TRANSPORTATION - RALEIGH, N.C., DATED JANUARY 2012 ARE APPLICABLE TO THIS PROJECT AND BY REFERENCE HEREBY ARE CONSIDERED A PART OF THESE PLANS:

STD.NO.	TITLE
1101.01	WORK ZONE ADVANCE WARNING SIGNS
1101.02	TEMPORARY LANE CLOSURES
1101.03	TEMPORARY ROAD CLOSURES
1101.04	TEMPORARY SHOULDER CLOSURES
1101.05	WORK ZONE VEHICLE ACCESS
1101.11	TRAFFIC CONTROL DESIGN TABLES
1110.01	STATIONARY WORK ZONE SIGNS
1110.02	PORTABLE WORK ZONE SIGNS
1115.01	FLASHING ARROW BOARDS
1130.01	DRUMS
1145.01	BARRICADES
1165.01	WORK VEHICLE LIGHTING SYSTEMS AND TMA DELINEATION
1170.01	PORTABLE CONCRETE BARRIER
1180.01	SKINNY DRUMS
1205.01	PAVEMENT MARKINGS - LINE TYPES AND OFFSETS
1205.02	PAVEMENT MARKINGS - TWO LANE AND MULTILANE ROADWAYS
1205.12	PAVEMENT MARKINGS - BRIDGES
1250.01	RAISED PAVEMENT MARKERS- INSTALLATION SPACING
1251.01	RAISED PAVEMENT MARKERS- (PERMANENT AND TEMPORARY)

LEGEND

GENERAL

- DIRECTION OF TRAFFIC FLOW
- DIRECTION OF PEDESTRIAN TRAFFIC FLOW
- EXIST. PVMT.
- NORTH ARROW
- PROPOSED PVMT.
- WORK AREA
- REMOVAL

TRAFFIC CONTROL DEVICES

- BARRICADE (TYPE III)
- CONE
- DRUM
- SKINNY DRUM
- TUBULAR MARKER
- TEMPORARY CRASH CUSHION
- FLASHING ARROW BOARD (TYPE C)
- FLAGGER
- LAW ENFORCEMENT
- TRUCK MOUNTED ATTENUATOR (TMA)
- CHANGEABLE MESSAGE SIGN

TEMPORARY SIGNING

- PORTABLE SIGN
- STATIONARY SIGN
- STATIONARY OR PORTABLE SIGN

SIGNALS

- EXISTING
- PROPOSED
- TEMPORARY

PAVEMENT MARKINGS

- EXISTING LINES
- TEMPORARY LINES

PAVEMENT MARKERS

- CRYSTAL/CRYSTAL
- CRYSTAL/RED
- YELLOW/YELLOW

PAVEMENT MARKING SYMBOLS

- PAVEMENT MARKING SYMBOLS

APPROVED:_____ DATE:_____

SEAL

NORTH CAROLINA PROFESSIONAL SEAL 037467 ENGINEER RICHARD A. ODYNSKI 2-14-12

DIVISION OF HIGHWAYS · STATE OF NORTH CAROLINA · DEPARTMENT OF TRANSPORTATION · WORK ZONE TRAFFIC CONTROL

ROADWAY STANDARD DRAWINGS & LEGEND

2/10/2012
r:\traffic\trafficcontrol\tcp\microstation files\9PL_TMP_1A.dgn
odynskra

STV/Ralph Whitehead Associates, Inc.
1000 West Morehead St., Ste. 200
Charlotte, NC 28208
NC License Number F-0991

PROJ. REFERENCE NO.	SHEET NO.
17BP.9.P.1	TMP-1B

GENERAL NOTES

CHANGES MAY BE REQUIRED WHEN PHYSICAL DIMENSIONS IN THE DETAIL DRAWINGS, STANDARD DETAILS, AND ROADWAY DETAILS ARE NOT ATTAINABLE TO MEET FIELD CONDITIONS OR RESULT IN DUPLICATE OR UNDESIRED OVERLAPPING OF DEVICES. MODIFICATION MAY INCLUDE: MOVING, SUPPLEMENTING, COVERING, OR REMOVAL OF DEVICES AS DIRECTED BY THE ENGINEER.

THE FOLLOWING GENERAL NOTES APPLY AT ALL TIMES FOR THE DURATION OF THE CONSTRUCTION PROJECT EXCEPT WHEN OTHERWISE NOTED IN THE PLAN OR DIRECTED BY THE ENGINEER.

TIME RESTRICTIONS

A) DO NOT CLOSE OR NARROW TRAVEL LANES AS FOLLOWS:

ROAD NAME	DAY AND TIME RESTRICTIONS
US 52,158,421, I-40 & AKRON,3RD,WAUGHTOWN ST	MONDAY TO SUNDAY 6:00 A.M. TO 8:00 P.M.

B) DO NOT CLOSE OR NARROW TRAVEL LANES DURING HOLIDAYS AND SPECIAL EVENTS AS FOLLOWS:

ROAD NAME

US 52, US 158, US 421, AKRON DR, 3RD ST, WAUGHTOWN ST, I-40

HOLIDAY

1. FOR ANY UNEXPECTED OCCURRENCE THAT CREATES UNUSUALLY HIGH TRAFFIC VOLUMES, AS DIRECTED BY THE ENGINEER.
2. FOR NEW YEAR'S, BETWEEN THE HOURS OF 6:00 A.M. DECEMBER 31st TO 8:00 P.M. JANUARY 2ND. IF NEW YEAR'S DAY IS ON A FRIDAY, SATURDAY, SUNDAY, OR MONDAY THEN UNTIL 8:00 P.M. THE FOLLOWING TUESDAY.
3. FOR EASTER, BETWEEN THE HOURS OF 6:00 A.M. THURSDAY AND 8:00 P.M. MONDAY.
4. FOR MEMORIAL DAY, BETWEEN THE HOURS OF 6:00 A.M. FRIDAY TO 8:00 P.M. TUESDAY.
5. FOR INDEPENDENCE DAY, BETWEEN THE HOURS OF 6:00 A.M. THE DAY BEFORE INDEPENDENCE DAY AND 8:00 P.M. THE DAY AFTER INDEPENDENCE DAY.

   IF INDEPENDENCE DAY IS ON A FRIDAY, SATURDAY, SUNDAY OR MONDAY THEN BETWEEN THE HOURS OF 6:00 A.M. THE THURSDAY BEFORE INDEPENDENCE DAY AND 8:00 P.M. THE TUESDAY AFTER INDEPENDENCE DAY.
6. FOR LABOR DAY, BETWEEN THE HOURS OF 6:00 A.M. FRIDAY AND 8:00 P.M. TUESDAY.
7. FOR THANKSGIVING DAY, BETWEEN THE HOURS OF 6:00 A.M. TUESDAY TO 8:00 P.M. MONDAY.
8. FOR CHRISTMAS, BETWEEN THE HOURS OF 6:00 A.M. THE FRIDAY BEFORE THE WEEK OF CHRISTMAS DAY AND 8:00 P.M. THE FOLLOWING TUESDAY AFTER THE WEEK OF CHRISTMAS.
9. FOR ANY SPECIAL EVENTS, AS LISTED ON THIS SHEET OR OTHERWISE NOTED BY THE ENGINEER, BETWEEN THE HOURS OF 6:00 A.M. THE DAY BEFORE THE EVENT TO 8:00 P.M. THE DAY AFTER THE EVENT.

LANE AND SHOULDER CLOSURE REQUIREMENTS

C) REMOVE LANE CLOSURE DEVICES FROM THE LANE WHEN WORK IS NOT BEING PERFORMED BEHIND THE LANE CLOSURE OR WHEN A LANE CLOSURE IS NO LONGER NEEDED OR AS DIRECTED BY THE ENGINEER.

D) WHEN PERSONNEL AND/OR EQUIPMENT ARE WORKING ON THE SHOULDER ADJACENT TO AN UNDIVIDED FACILITY AND WITHIN 5 FT OF AN OPEN TRAVEL LANE, CLOSE THE NEAREST OPEN TRAVEL LANE USING ROADWAY STANDARD DRAWING NO. 1101.02 UNLESS THE WORK AREA IS PROTECTED BY BARRIER OR GUARDRAIL.

WHEN PERSONNEL AND/OR EQUIPMENT ARE WORKING ON THE SHOULDER ADJACENT TO A DIVIDED FACILITY AND WITHIN 10 FT OF AN OPEN TRAVEL LANE, CLOSE THE NEAREST OPEN TRAVEL LANE USING ROADWAY STANDARD DRAWING NO. 1101.02 UNLESS THE WORK IS PROTECTED BY BARRIER OR GUARDRAIL.

E) WHEN PERSONNEL AND/OR EQUIPMENT ARE WORKING WITHIN A LANE OF TRAVEL OF AN UNDIVIDED OR DIVIDED FACILITY, CLOSE THE LANE ACCORDING TO THE TRAFFIC CONTROL PLANS, ROADWAY STANDARD DRAWINGS, OR AS DIRECTED BY THE ENGINEER. CONDUCT THE WORK SO THAT ALL PERSONNEL AND/OR EQUIPMENT REMAIN WITHIN THE CLOSED TRAVEL LANE.

F) DO NOT WORK SIMULTANEOUSLY WITHIN 15 FT ON BOTH SIDES OF AN OPEN TRAVELWAY, RAMP, OR LOOP WITHIN THE SAME LOCATION UNLESS PROTECTED WITH GUARDRAIL OR BARRIER.

TRAFFIC PATTERN ALTERATIONS

G) NOTIFY THE ENGINEER TWENTY ONE (21) CALENDAR DAYS PRIOR TO ANY TRAFFIC PATTERN ALTERATION.

SIGNING

H) INSTALL ADVANCE WORK ZONE WARNING SIGNS WHEN WORK IS WITHIN 40 FT FROM THE EDGE OF TRAVEL LANE AND NO MORE THAN THREE (3) DAYS PRIOR TO THE BEGINNING OF CONSTRUCTION.

I) PROVIDE SIGNING AND DEVICES REQUIRED TO CLOSE THE ROAD ACCORDING TO THE ROADWAY STANDARD DRAWINGS AND TRAFFIC CONTROL PLANS.

PROVIDE SIGNING REQUIRED FOR THE OFF-SITE DETOUR ROUTE AS SHOWN IN THE TRAFFIC CONTROL PLANS.

J) COVER OR REMOVE ALL SIGNS AND DEVICES REQUIRED TO CLOSE THE ROAD WHEN ROAD CLOSURE IS NOT IN OPERATION.

COVER OR REMOVE ALL SIGNS REQUIRED FOR THE OFF-SITE DETOUR WHEN THE DETOUR IS NOT IN OPERATION.

K) ENSURE ALL NECESSARY SIGNING IS IN PLACE PRIOR TO ALTERING ANY TRAFFIC PATTERN.

TRAFFIC BARRIER

L) INSTALL TEMPORARY BARRIER ACCRDING TO TRAFFIC CONTROL PLANS A MAXIMUM OF TWO (2) WEEKS PRIOR TO BEGINNING WORK IN ANY LOCATION. ONCE TEMPORARY BARRIER IS INSTALLED AT ANY LOCATION, PROCEED IN A CONTINUOUS MANNER TO COMPLETE THE PROPOSED WORK IN THAT LOCATION UNLESS OTHERWISE STATED IN THE TRAFFIC CONTROL PLANS OR AS DIRECTED BY THE ENGINEER.

DO NOT PLACE BARRIER DIRECTLY ON ANY SURFACE OTHER THAN ASPHALT OR CONCRETE.

ONCE TEMPORARY BARRIER IS INSTALLLED AT ANY LOCATION AND NO WORK IS PERFORMED BEHIND THE TEMPORARY BARRIER FOR A PERIOD LONGER THAN TWO (2) MONTHS, REMOVE/RESET TEMPORARY BARRIER AT NO COST TO THE DEPARTMENT UNLESS OTHERWISE STATED IN THE TRAFFIC CONTROL PLANS, TEMPORARY BARRIER IS PROTECTING A HAZARD, OR AS DIRECTED BY THE ENGINEER.

INSTALL TEMPORARY BARRIER WITH THE TRAFFIC FLOW BEGINNING WITH THE UPSTREAM SIDE OF TRAFFIC. REMOVE TEMPORARY BARRIER AGAINST THE TRAFFIC FLOW BEGINING WITH THE DOWNSTREAM SIDE OF TRAFFIC.

INSTALL AND SPACE DRUMS NO GREATER THAN TWICE THE POSTED SPEED LIMIT (MPH) TO CLOSE OR KEEP THE SECTION OF THE ROADWAY CLOSED UNTIL THE TEMPORARY BARRIER CAN PLACED OR AFTER THE TEMPORARY BARRIER IS REMOVED.

M) PROTECT THE APPROACH END OF MOVABLE/PORTABLE CONCRETE BARRIER AT ALL TIMES DURING THE INSTALLATION AND REMOVAL OF THE BARRIER BY EITHER A TRUCK MOUNTED ATTENUATOR (MAXIMUM 72 HOURS) OR A TEMPORARY CRASH CUSHION.

PROTECT THE APPROACH END OF MOVABLE/PORTABLE CONCRETE BARRIER FROM ONCOMING TRAFFIC AT ALL TIMES BY A TEMPORARY CRASH CUSHION UNLESS THE APPROACH END OF MOVABLE/PORTABLE CONCRETE BARRIER IS OFFSET FROM ONCOMING TRAFFIC AS FOLLOWS OR AS SHOWN IN THE PLANS:

POSTED SPEED LIMIT	MINIMUM OFFSET
40 OR LESS	15 FT
45-50	20 FT
55	25 FT
60 MPH OR HIGHER	30 FT

TRAFFIC CONTROL DEVICES

N) WHEN LANE CLOSURES ARE NOT IN EFFECT SPACE CHANNELIZING DEVICES IN WORK AREAS NO GREATER IN FEET THAN TWICE THE POSTED SPEED LIMIT (MPH) EXCEPT, 10 FT ON-CENTER IN RADII, AND 3 FT OFF THE EDGE OF AN OPEN TRAVELWAY. REFER TO STANDARD SPECIFICATIONS FOR ROADS AND STRUCTURES SECTIONS 1130 (DRUMS), 1135 (CONES) AND 1180 (SKINNY DRUMS) FOR ADDITIONAL REQUIREMENTS.

O) PLACE TYPE III BARRICADES, WITH "ROAD CLOSED" SIGN R11-2 ATTACHED, OF SUFFICIENT LENGTH TO CLOSE ENTIRE ROADWAY.

P) PLACE ADDITIONAL SETS OF THREE CHANNELIZING DEVICES PERPENDICULAR TO THE EDGE OF TRAVELWAY ON 500 FT CENTERS WHEN UNOPENED LANES ARE CLOSED TO TRAFFIC.

Q) TIE PROPOSED PAVEMENT MARKING LINES TO EXISTING PAVEMENT MARKING LINES.

R) REMOVE/REPLACE ANY CONFLICTING/DAMAGED PAVEMENT MARKINGS AND MARKERS BY THE END OF EACH DAY's OPERATION.

S) UPON COMPLETION OF ALL OTHER CONSTRUCTION OPERATIONS, INSTALL POLYUREA AND RAISED PAVEMENT MARKINGS ON THE FINAL SURFACE AS DIRECTED BY THE ENGINEER.

MISCELLANEOUS

T) LAW ENFORCEMENT MAY BE USED TO MAINTAIN TRAFFIC THROUGH THE WORK AREA AND/OR INTERSECTIONS AS DIRECTED BY THE ENGINEER.

SPECIAL EVENTS

U) WAKE FOREST UNIVERSITY EVENTS, LAWRENCE JOEL VETERANS MEMORIAL COLISEUM EVENTS, BB&T FIELD EVENTS, WINSTON SALEM STATE UNIVERSITY EVENTS, BOWMAN GREY STADIUM EVENTS, DIXIE CLASSIC FAIR, AND ANY OTHER EVENTS AS DETERMINED BY THE ENGINEER.

APPROVED:_____ DATE:_____

SEAL

NORTH CAROLINA PROFESSIONAL SEAL 28967 ENGINEER RICHARD A. ODYNSKI
2-14-12

DIVISION OF HIGHWAYS · STATE OF NORTH CAROLINA · DEPARTMENT OF TRANSPORTATION · WORK ZONE TRAFFIC CONTROL

GENERAL NOTES

2/10/2012
r:\traffic\trafficcontrol\tap\microstation files\9PI_TMP_1B.dgn
odynskra

PROJ. REFERENCE NO.	SHEET NO.
17BP.9.P.1	TMP-1C

STV/Ralph Whitehead Associates, Inc.
1000 West Morehead St., Ste. 200
Charlotte, NC 28208
NC License Number F-0991

PHASING

USE NCDOT STD. 1101.01 SHEET 1 AND 2 OF 3 TO INSTALL WORK ZONE ADVANCE WARNING SIGNS.

DO NOT PERFORM WORK ON MULTIPLE BRIDGE LOCATIONS SIMULTANEOUSLY. DO NOT WORK ON BOTH SIDES OF ROADWAY AT THE SAME LOCATION SIMULTANEOUSLY.

PHASE 1 (FORSYTH 51):

STEP 1: USING NCDOT STD. 1101.02 SHEET 4 OF 15, INSTALL LANE CLOSURE SIGNS AND DEVICES TO CLOSE THE EASTBOUND INSIDE LANE OF BRIDGE 51 DURING NIGHT OPERATIONS.

STEP 2: AWAY FROM TRAFFIC, PERFORM THE FOLLOWING:
REPLACE JOINTS, CONSTRUCT STRUCTURAL STEEL REPAIRS AND INSTALL OVERLAY ON THE EASTBOUND INSIDE LANE, SEE STRUCTURE PLANS.

STEP 3: COVER ALL LANE CLOSURE SIGNS AND DEVICES AND RETURN TRAFFIC TO ITS NORMAL TRAFFIC PATTERN AT THE END OF EACH NIGHT OPERATION.

STEP 4: WHEN WORK IS COMPLETE, REMOVE ALL LANE CLOSURE SIGNS AND DEVICES AND RETURN TRAFFIC TO ITS NORMAL TRAFFIC PATTERN.

STEP 5: USING NCDOT STD. 1101.02 SHEET 4 OF 15, INSTALL LANE CLOSURE SIGNS AND DEVICES TO CLOSE THE EASTBOUND OUTSIDE LANE OF BRIDGE 51 DURING NIGHT OPERATIONS.

STEP 6: AWAY FROM TRAFFIC, PERFORM THE FOLLOWING:
REPLACE JOINTS, CONSTRUCT STRUCTURAL STEEL REPAIRS AND INSTALL OVERLAY ON THE EASTBOUND OUTSIDE LANE, SEE STRUCTURE PLANS.

STEP 7: COVER ALL LANE CLOSURE SIGNS AND DEVICES AND RETURN TRAFFIC TO ITS NORMAL TRAFFIC PATTERN AT THE END OF EACH NIGHT OPERATION.

STEP 8: WHEN WORK IS COMPLETE, REMOVE ALL LANE CLOSURE SIGNS AND DEVICES AND RETURN TRAFFIC TO ITS NORMAL TRAFFIC PATTERN.

PHASE 2 (FORSYTH 55):

STEP 1: USING NCDOT STD. 1101.02 SHEET 4 OF 15, INSTALL LANE CLOSURE SIGNS AND DEVICES TO CLOSE THE WESTBOUND INSIDE LANE OF BRIDGE 55 DURING NIGHT OPERATIONS.

STEP 2: AWAY FROM TRAFFIC, PERFORM THE FOLLOWING:
REPLACE JOINTS, CONSTRUCT STRUCTURAL STEEL REPAIRS AND INSTALL OVERLAY ON THE WESTBOUND INSIDE LANE, SEE STRUCTURE PLANS.

STEP 3: COVER ALL LANE CLOSURE SIGNS AND DEVICES AND RETURN TRAFFIC TO ITS NORMAL TRAFFIC PATTERN AT THE END OF EACH NIGHT OPERATION.

STEP 4: WHEN WORK IS COMPLETE, REMOVE ALL LANE CLOSURE SIGNS AND DEVICES AND RETURN TRAFFIC TO ITS NORMAL TRAFFIC PATTERN.

STEP 5: USING NCDOT STD. 1101.02 SHEET 4 OF 15, INSTALL LANE CLOSURE SIGNS AND DEVICES TO CLOSE THE WESTBOUND OUTSIDE LANE OF BRIDGE 55 DURING NIGHT OPERATIONS.

STEP 6: AWAY FROM TRAFFIC, PERFORM THE FOLLOWING:
REPLACE JOINTS, CONSTRUCT STRUCTURAL STEEL REPAIRS AND INSTALL OVERLAY ON THE WESTBOUND OUTSIDE LANE, SEE STRUCTURE PLANS.

STEP 7: COVER ALL LANE CLOSURE SIGNS AND DEVICES AND RETURN TRAFFIC TO ITS NORMAL TRAFFIC PATTERN AT THE END OF EACH NIGHT OPERATION.

STEP 8: WHEN WORK IS COMPLETE, REMOVE ALL LANE CLOSURE SIGNS AND DEVICES AND RETURN TRAFFIC TO ITS NORMAL TRAFFIC PATTERN.

PHASE 3 (FORSYTH 265):

STEP 1: USING TMP-4A, INSTALL LANE CLOSURE SIGNS AND DEVICES TO CLOSE THE NORTHBOUND OUTSIDE LANE OF US 52 / NC 8 DURING NIGHT OPERATIONS.

STEP 2: AWAY FROM TRAFFIC, PERFORM THE FOLLOWING:
CONSTRUCT SUBSTRUCTURE REPAIRS ABOVE THE NORTHBOUND OUTSIDE LANE OF US 52 / NC 8, SEE STRUCTURE PLANS.

STEP 3: COVER ALL LANE CLOSURE SIGNS AND DEVICES AND RETURN TRAFFIC TO ITS NORMAL TRAFFIC PATTERN AT THE END OF EACH NIGHT OPERATION.

STEP 4: WHEN WORK IS COMPLETE, REMOVE ALL LANE CLOSURE SIGNS AND DEVICES AND RETURN TRAFFIC TO ITS NORMAL TRAFFIC PATTERN.

STEP 5: USING NCDOT STD. 1101.02 SHEET 4 OF 15, INSTALL LANE CLOSURE SIGNS AND DEVICES TO CLOSE THE NORTHBOUND INSIDE LANE OF US 52 / NC 8 DURING NIGHT OPERATIONS.

STEP 6: AWAY FROM TRAFFIC, PERFORM THE FOLLOWING:
CONSTRUCT SUBSTRUCTURE REPAIRS ABOVE THE NORTHBOUND INSIDE LANE OF US 52 / NC 8, SEE STRUCTURE PLANS.

STEP 7: COVER ALL LANE CLOSURE SIGNS AND DEVICES AND RETURN TRAFFIC TO ITS NORMAL TRAFFIC PATTERN AT THE END OF EACH NIGHT OPERATION.

STEP 8: WHEN WORK IS COMPLETE, REMOVE ALL LANE CLOSURE SIGNS AND DEVICES AND RETURN TRAFFIC TO ITS NORMAL TRAFFIC PATTERN.

STEP 9: USING NCDOT STD. 1101.02 SHEET 4 OF 15, INSTALL LANE CLOSURE SIGNS AND DEVICES TO CLOSE THE SOUTHBOUND INSIDE LANE OF US 52 / NC 8 DURING NIGHT OPERATIONS.

STEP 10: AWAY FROM TRAFFIC, PERFORM THE FOLLOWING:
CONSTRUCT SUBSTRUCTURE REPAIRS ABOVE THE SOUTHBOUND INSIDE LANE OF US 52 / NC 8, SEE STRUCTURE PLANS.

STEP 11: COVER ALL LANE CLOSURE SIGNS AND DEVICES AND RETURN TRAFFIC TO ITS NORMAL TRAFFIC PATTERN AT THE END OF EACH NIGHT OPERATION.

STEP 12: WHEN WORK IS COMPLETE, REMOVE ALL LANE CLOSURE SIGNS AND DEVICES AND RETURN TRAFFIC TO ITS NORMAL TRAFFIC PATTERN.

STEP 13: USING TMP-4B, INSTALL LANE CLOSURE SIGNS AND DEVICES TO CLOSE THE SOUTHBOUND OUTSIDE LANE OF US 52 / NC 8 DURING NIGHT OPERATIONS.

STEP 14: AWAY FROM TRAFFIC, PERFORM THE FOLLOWING:
CONSTRUCT SUBSTRUCTURE REPAIRS ABOVE THE SOUTHBOUND OUTSIDE LANE OF US 52 / NC 8, SEE STRUCTURE PLANS.

STEP 15: COVER ALL LANE CLOSURE SIGNS AND DEVICES AND RETURN TRAFFIC TO ITS NORMAL TRAFFIC PATTERN AT THE END OF EACH NIGHT OPERATION.

STEP 16: WHEN WORK IS COMPLETE, REMOVE ALL LANE CLOSURE SIGNS AND DEVICES AND RETURN TRAFFIC TO ITS NORMAL TRAFFIC PATTERN.

STEP 17: USING TMP-2A, INSTALL LANE CLOSURE SIGNS AND DEVICES TO CLOSE THE EASTBOUND OUTSIDE LANE OF BRIDGE 265 DURING NIGHT OPERATIONS.

STEP 18: AWAY FROM TRAFFIC, PERFORM THE FOLLOWING:
INSTALL OVERLAY ON THE EASTBOUND OUTSIDE LANE OF BRIDGE 265, SEE STRUCTURE PLANS.

STEP 19: COVER ALL LANE CLOSURE SIGNS AND DEVICES AND RETURN TRAFFIC TO ITS NORMAL TRAFFIC PATTERN AT THE END OF EACH NIGHT OPERATION.

STEP 20: WHEN WORK IS COMPLETE, REMOVE ALL LANE CLOSURE SIGNS AND DEVICES AND RETURN TRAFFIC TO ITS NORMAL TRAFFIC PATTERN.

STEP 21: USING TMP-2A, INSTALL LANE CLOSURE SIGNS AND DEVICES TO CLOSE THE EASTBOUND INSIDE LANE OF BRIDGE 265 DURING NIGHT OPERATIONS.

STEP 22: AWAY FROM TRAFFIC, PERFORM THE FOLLOWING:
INSTALL OVERLAY ON THE EASTBOUND INSIDE LANE OF BRIDGE 265, SEE STRUCTURE PLANS.

STEP 23: COVER ALL LANE CLOSURE SIGNS AND DEVICES AND RETURN TRAFFIC TO ITS NORMAL TRAFFIC PATTERN AT THE END OF EACH NIGHT OPERATION.

APPROVED:_____ DATE:_____

SEAL

NORTH CAROLINA PROFESSIONAL SEAL 030467 ENGINEER RICHARD A. ODYNSKI 2-14-12

DIVISION OF HIGHWAYS · STATE OF NORTH CAROLINA · DEPARTMENT OF TRANSPORTATION · WORK ZONE TRAFFIC CONTROL

PHASING NOTES

2/10/2012
r:\traffic\trafficcontrol\top\microstation files\9PL_TMP_IB.dgn
odynskra

PROJ. REFERENCE NO.	SHEET NO.
17BP.9.P.1	TMP-1D

STV/Ralph Whitehead Associates, Inc.
1000 West Morehead St., Ste. 200
Charlotte, NC 28208
NC License Number F-0991

PHASING (CONT.)

PHASE 3 CONTINUED (FORSYTH 265)

STEP 24: WHEN WORK IS COMPLETE, REMOVE ALL LANE CLOSURE SIGNS AND DEVICES AND RETURN TRAFFIC TO ITS NORMAL TRAFFIC PATTERN.

STEP 25: USING TMP-2B, INSTALL LANE CLOSURE SIGNS AND DEVICES TO CLOSE THE WESTBOUND INSIDE LANE OF BRIDGE 265 AND INSIDE LEFT TURN LANE OF US 52 / NC 8 EXIT RAMP DURING NIGHT OPERATIONS.

STEP 26: AWAY FROM TRAFFIC, PERFORM THE FOLLOWING:
INSTALL OVERLAY ON THE WESTBOUND INSIDE LANE OF BRIDGE 265, SEE STRUCTURE PLANS.

STEP 27: COVER ALL LANE CLOSURE SIGNS AND DEVICES AND RETURN TRAFFIC TO ITS NORMAL TRAFFIC PATTERN AT THE END OF EACH NIGHT OPERATION.

STEP 28: WHEN WORK IS COMPLETE, REMOVE ALL LANE CLOSURE SIGNS AND DEVICES AND RETURN TRAFFIC TO ITS NORMAL TRAFFIC PATTERN.

STEP 29: USING TMP-2B, INSTALL LANE CLOSURE SIGNS AND DEVICES TO CLOSE THE WESTBOUND OUTSIDE LANE OF BRIDGE 265 AND THE INSIDE LEFT TURN LANE OF US 52 / NC 8 EXIT RAMP DURING NIGHT OPERATIONS.

STEP 30: AWAY FROM TRAFFIC, PERFORM THE FOLLOWING:
INSTALL OVERLAY ON THE WESTBOUND OUTSIDE LANE OF BRIDGE 265, SEE STRUCTURE PLANS.

STEP 31: COVER ALL LANE CLOSURE SIGNS AND DEVICES AND RETURN TRAFFIC TO ITS NORMAL TRAFFIC PATTERN AT THE END OF EACH NIGHT OPERATION.

STEP 32: WHEN WORK IS COMPLETE, REMOVE ALL LANE CLOSURE SIGNS AND DEVICES AND RETURN TRAFFIC TO ITS NORMAL TRAFFIC PATTERN.

PHASE 4 (FORSYTH 85):

STEP 1: USING NCDOT RSD. 1101.02 SHEET 3 OF 15, INSTALL LANE CLOSURE SIGNS AND DEVICES TO CLOSE THE OUTSIDE LANE OF NORTHBOUND NC 67 DURING NIGHT OPERATIONS.

STEP 2: PEFORM SUBSTRUCTURE REPAIR AS NEEDED. REMOVE ALL LANE CLOSURE SIGNS AND DEVICES WHEN WORK IS COMPLETE AND RETURN TRAFFIC TO ITS NORMAL TRAFFIC PATTERN.

STEP 3: USING NCDOT RSD. 1101.02 SHEET 3 OF 15, INSTALL LANE CLOSURE SIGNS AND DEVICES TO CLOSE THE INSIDE LANES OF NC 67 DURING NIGHT OPERATIONS.

STEP 4: PEFORM SUBSTRUCTURE REPAIR AS NEEDED. REMOVE ALL LANE CLOSURE SIGNS AND DEVICES WHEN WORK IS COMPLETE AND RETURN TRAFFIC TO ITS NORMAL TRAFFIC PATTERN.

STEP 5: USING TMP-3D, INSTALL DETOUR SIGNS AND DEVICES TO CLOSE AND DETOUR THE SOUTHBOUND NC 67 RAMP FROM US 158 DURING NIGHT OPERATIONS.

STEP 6: USING NCDOT RSD. 1101.02 SHEET 3 OF 15, INSTALL LANE CLOSURE SIGNS AND DEVICES TO CLOSE THE OUTSIDE LANE OF SOUTHBOUND NC 67 DURING NIGHT OPERATIONS.

STEP 7: PEFORM SUBSTRUCTURE REPAIR AS NEEDED. REMOVE ALL LANE CLOSURE SIGNS AND DEVICES WHEN WORK IS COMPLETE AND RETURN TRAFFIC TO ITS NORMAL TRAFFIC PATTERN.

STEP 8: USING TMP-2C, INSTALL LANE CLOSURE SIGNS AND DEVICES TO CLOSE THE NORTHBOUND OUTSIDE LANE OF BRIDGE 85 DURING NIGHT OPERATIONS.

STEP 9: AWAY FROM TRAFFIC, PERFORM THE FOLLOWING:
INSTALL OVERLAY ON THE NORTHBOUND OUTSIDE LANE OF BRIDGE 85, SEE STRUCTURE PLANS.

STEP 10: COVER ALL LANE CLOSURE SIGNS AND DEVICES AND RETURN TRAFFIC TO ITS NORMAL TRAFFIC PATTERN AT THE END OF EACH NIGHT OPERATION.

STEP 11: WHEN WORK IS COMPLETE, REMOVE ALL LANE CLOSURE SIGNS AND DEVICES AND RETURN TRAFFIC TO ITS NORMAL TRAFFIC PATTERN.

STEP 12: USING TMP-2C, INSTALL LANE CLOSURE SIGNS AND DEVICES TO CLOSE THE NORTHBOUND INSIDE TWO LANES OF BRIDGE 85 DURING NIGHT OPERATIONS.

STEP 13: AWAY FROM TRAFFIC, PERFORM THE FOLLOWING:
INSTALL OVERLAY ON THE NORTHBOUND INSIDE TWO LANES OF BRIDGE 85, SEE STRUCTURE PLANS.

STEP 14: COVER ALL LANE CLOSURE SIGNS AND DEVICES AND RETURN TRAFFIC TO ITS NORMAL TRAFFIC PATTERN AT THE END OF EACH NIGHT OPERATION.

STEP 15: WHEN WORK IS COMPLETE, REMOVE ALL LANE CLOSURE SIGNS AND DEVICES AND RETURN TRAFFIC TO ITS NORMAL TRAFFIC PATTERN.

STEP 16: USING TMP-2D, INSTALL LANE CLOSURE SIGNS AND DEVICES TO CLOSE THE SOUTHBOUND INSIDE LANE OF BRIDGE 85 DURING NIGHT OPERATIONS.

STEP 17: AWAY FROM TRAFFIC, PERFORM THE FOLLOWING:
INSTALL OVERLAY ON THE SOUTHBOUND INSIDE LANE OF BRIDGE 85, SEE STRUCTURE PLANS.

STEP 18: COVER ALL LANE CLOSURE SIGNS AND DEVICES AND RETURN TRAFFIC TO ITS NORMAL TRAFFIC PATTERN AT THE END OF EACH NIGHT OPERATION.

STEP 19: WHEN WORK IS COMPLETE, REMOVE ALL LANE CLOSURE SIGNS AND DEVICES AND RETURN TRAFFIC TO ITS NORMAL TRAFFIC PATTERN.

STEP 20: USING TMP-2D, INSTALL LANE CLOSURE SIGNS AND DEVICES TO CLOSE THE SOUTHBOUND OUTSIDE LANE OF BRIDGE 85 DURING NIGHT OPERATIONS.

STEP 21: AWAY FROM TRAFFIC, PERFORM THE FOLLOWING:
INSTALL OVERLAY ON THE SOUTHBOUND OUTSIDE LANE OF BRIDGE 85, SEE STRUCTURE PLANS.

STEP 22: COVER ALL LANE CLOSURE SIGNS AND DEVICES AND RETURN TRAFFIC TO ITS NORMAL TRAFFIC PATTERN AT THE END OF EACH NIGHT OPERATION.

STEP 23: WHEN WORK IS COMPLETE, REMOVE ALL LANE CLOSURE SIGNS AND DEVICES AND RETURN TRAFFIC TO ITS NORMAL TRAFFIC PATTERN.

PHASE 5 (FORSYTH 115)

INTERMEDIATE CONTRACT TIME NUMBER 9: COMPLETE THE WORK REQUIRED OF PHASE 5, STEPS 1 TO 20, ON OR BEFORE DECEMBER 1, 2012. (SEE SPECIAL PROVISIONS, INTERMEDIATE CONTRACT TIME NUMBER 9, AND LIQUIDATED DAMAGES)

STEP 1: USING NCDOT STD. 1101.02 SHEET 3 OF 15, INSTALL LANE CLOSURE SIGNS AND DEVICES TO CLOSE THE OUTSIDE LANES OF WAUGHTOWN STREET DURING NIGHT OPERATIONS.

STEP 2: AWAY FROM TRAFFIC, PERFORM THE FOLLOWING:
CONSTRUCT SUBSTRUCTURE REPAIRS ABOVE THE OUTSIDE LANES OF WAUGHTOWN STREET, SEE STRUCTURE PLANS.

STEP 3: COVER ALL LANE CLOSURE SIGNS AND DEVICES AND RETURN TRAFFIC TO ITS NORMAL TRAFFIC PATTERN AT THE END OF EACH NIGHT OPERATION.

STEP 4: WHEN WORK IS COMPLETE, REMOVE ALL LANE CLOSURE SIGNS AND DEVICES AND RETURN TRAFFIC TO ITS NORMAL TRAFFIC PATTERN.

STEP 5: USING NCDOT STD. 1101.02 SHEET 3 OF 15, INSTALL LANE CLOSURE SIGNS AND DEVICES TO CLOSE THE NORTHBOUND INSIDE LANE OF BRIDGE 115 DURING NIGHT OPERATIONS.

STEP 6: AWAY FROM TRAFFIC, PERFORM THE FOLLOWING:
INSTALL OVERLAY ON THE NORTHBOUND INSIDE LANE OF BRIDGE 115, SEE STRUCTURE PLANS.

STEP 7: COVER ALL LANE CLOSURE SIGNS AND DEVICES AND RETURN TRAFFIC TO ITS NORMAL TRAFFIC PATTERN AT THE END OF EACH NIGHT OPERATION.

STEP 8: WHEN WORK IS COMPLETE, REMOVE ALL LANE CLOSURE SIGNS AND DEVICES AND RETURN TRAFFIC TO ITS NORMAL TRAFFIC PATTERN.

STEP 9: USING NCDOT STD. 1101.02 SHEET 3 OF 15, INSTALL LANE CLOSURE SIGNS AND DEVICES TO CLOSE THE NORTHBOUND OUTSIDE LANE OF BRIDGE 115 DURING NIGHT OPERATIONS. INSTALL PORTABLE CONCRETE BARRIER AS NEEDED TO PROTECT WORK AREA DURING BRIDGE OVERHANG REPAIR.

STEP 10: AWAY FROM TRAFFIC, PERFORM THE FOLLOWING:
PERFORM OVERLAY AND REPAIRS ON THE NORTHBOUND OUTSIDE LANE OF BRIDGE 115, SEE STRUCTURE PLANS.

APPROVED:_____ DATE:_____

SEAL

NORTH CAROLINA PROFESSIONAL SEAL 027462 ENGINEER DAVID A. GOTTLICH
2-14-12

DIVISION OF HIGHWAYS * STATE OF NORTH CAROLINA * DEPARTMENT OF TRANSPORTATION * WORK ZONE TRAFFIC CONTROL

PHASING NOTES

2/10/2012
F:\traffic\trafficcontrol\tcp\microstation files\9PI_TMP_1B.dgn
odynskra

PROJ. REFERENCE NO.	SHEET NO.
17BP.9.P.1	TMP-1E

STV / Ralph Whitehead Associates, Inc.
1000 West Morehead St., Ste. 200
Charlotte, NC 28208
NC License Number F-0991

PHASING (CONT.)

PHASE 5 CONTINUED (FORSYTH 115):

STEP 11: COVER ALL LANE CLOSURE SIGNS AND DEVICES AND RETURN TRAFFIC TO ITS NORMAL TRAFFIC PATTERN AT THE END OF EACH NIGHT OPERATION.

STEP 12: WHEN WORK IS COMPLETE, REMOVE ALL LANE CLOSURE SIGNS AND DEVICES AND RETURN TRAFFIC TO ITS NORMAL TRAFFIC PATTERN.

STEP 13: USING NCDOT STD. 1101.02 SHEET 3 OF 15, INSTALL LANE CLOSURE SIGNS AND DEVICES TO CLOSE THE SOUTHBOUND INSIDE LANE OF BRIDGE 115 DURING NIGHT OPERATIONS.

STEP 14: AWAY FROM TRAFFIC, PERFORM THE FOLLOWING:
INSTALL OVERLAY ON THE SOUTHBOUND INSIDE LANE OF BRIDGE 115, SEE STRUCTURE PLANS.

STEP 15: COVER ALL LANE CLOSURE SIGNS AND DEVICES AND RETURN TRAFFIC TO ITS NORMAL TRAFFIC PATTERN AT THE END OF EACH NIGHT OPERATION.

STEP 16: WHEN WORK IS COMPLETE, REMOVE ALL LANE CLOSURE SIGNS AND DEVICES AND RETURN TRAFFIC TO ITS NORMAL TRAFFIC PATTERN.

STEP 17: USING NCDOT STD. 1101.02 SHEET 3 OF 15, INSTALL LANE CLOSURE SIGNS AND DEVICES TO CLOSE THE SOUTHBOUND OUTSIDE LANE OF BRIDGE 115 DURING NIGHT OPERATIONS. INSTALL PORTABLE CONCRETE BARRIER AS NEEDED TO PROTECT WORK AREA DURING BRIDGE OVERHANG REPAIR.

STEP 18: AWAY FROM TRAFFIC, PERFORM THE FOLLOWING:
PERFORM OVERLAY AND REPAIRS ON THE SOUTHBOUND OUTSIDE LANE OF BRIDGE 115, SEE STRUCTURE PLANS.

STEP 19: COVER ALL LANE CLOSURE SIGNS AND DEVICES AND RETURN TRAFFIC TO ITS NORMAL TRAFFIC PATTERN AT THE END OF EACH NIGHT OPERATION.

STEP 20: WHEN WORK IS COMPLETE, REMOVE ALL LANE CLOSURE SIGNS AND DEVICES AND RETURN TRAFFIC TO ITS NORMAL TRAFFIC PATTERN.

PHASE 6 (FORSYTH 78):

STEP 1: USING NCDOT STD. 1101.02 SHEET 3 OF 15, INSTALL LANE CLOSURE SIGNS AND DEVICES TO CLOSE THE EASTBOUND INSIDE LANE OF I-40 DURING NIGHT OPERATIONS.

STEP 2: AWAY FROM TRAFFIC, PERFORM THE FOLLOWING:
CONSTRUCT SUBSTRUCTURE REPAIRS ABOVE THE EASTBOUND INSIDE LANE OF I-40, SEE STRUCTURE PLANS.

STEP 3: COVER ALL LANE CLOSURE SIGNS AND DEVICES AND RETURN TRAFFIC TO ITS NORMAL TRAFFIC PATTERN AT THE END OF EACH NIGHT OPERATION.

STEP 4: WHEN WORK IS COMPLETE, REMOVE ALL LANE CLOSURE SIGNS AND DEVICES AND RETURN TRAFFIC TO ITS NORMAL TRAFFIC PATTERN.

STEP 5: USING TMP-3C, INSTALL DETOUR SIGNS AND DEVICES TO CLOSE AND DETOUR THE EASTBOUND I-40 RAMPS TO AND FROM US 52 / NC 8 RAMPS DURING NIGHT OPERATIONS.

STEP 6: USE DRUMS TO CLOSE THE EASTBOUND AUXILLIARY LANE OF I-40 BETWEEN THE ENTRANCE RAMP FROM US 52 SB AND THE EXIT RAMP TO US 52 NB DURING NIGHT OPERATIONS.

STEP 7: AWAY FROM TRAFFIC, PERFORM THE FOLLOWING:
CONSTRUCT SUBTRUCTURE REPAIRS ABOVE THE EASTBOUND AUXILLIARY LANE OF I-40, SEE STRUCTURE PLANS.

STEP 8: COVER ALL LANE CLOSURE AND RAMP CLOSURE SIGNS AND DEVICES AND RETURN TRAFFIC TO ITS NORMAL TRAFFIC PATTERN AT THE END OF EACH NIGHT OPERATION.

STEP 9: WHEN WORK IS COMPLETE, REMOVE ALL LANE CLOSURE, RAMP CLOSURE AND DETOUR SIGNS AND DEVICES AND RETURN TRAFFIC TO ITS NORMAL TRAFFIC PATTERN.

STEP 10: USING NCDOT STD. 1101.02 SHEET 4 OF 15, INSTALL LANE CLOSURE SIGNS AND DEVICES TO CLOSE THE WESTBOUND INSIDE LANE OF I-40 DURING NIGHT OPERATIONS.

STEP 11: AWAY FROM TRAFFIC, PERFORM THE FOLLOWING:
CONSTRUCT SUBSTRUCTURE REPAIRS ABOVE THE WESTBOUND INSIDE LANE OF I-40, SEE STRUCTURE PLANS.

STEP 12: COVER ALL LANE CLOSURE SIGNS AND DEVICES AND RETURN TRAFFIC TO ITS NORMAL TRAFFIC PATTERN AT THE END OF EACH NIGHT OPERATION.

STEP 13: WHEN WORK IS COMPLETE, REMOVE ALL LANE CLOSURE SIGNS AND DEVICES AND RETURN TRAFFIC TO ITS NORMAL TRAFFIC PATTERN.

STEP 14: USING TMP-3C, INSTALL DETOUR SIGNS AND DEVICES TO CLOSE AND DETOUR THE EASTBOUND I-40 RAMPS TO AND FROM US 52 / NC 8 RAMPS DURING NIGHT OPERATIONS.

STEP 15: USE DRUMS TO CLOSE THE WESTBOUND AUXILLIARY LANE OF I-40 BETWEEN THE ENTRANCE RAMP FROM US 52 NB AND THE EXIT RAMP FROM US 52 SB DURING NIGHT OPERATIONS.

STEP 16: AWAY FROM TRAFFIC, PERFORM THE FOLLOWING:
CONSTRUCT SUBTRUCTURE REPAIRS ABOVE THE WESTBOUND AUXILLIARY LANE OF I-40, SEE STRUCTURE PLANS.

STEP 17: COVER ALL LANE CLOSURE AND RAMP CLOSURE SIGNS AND DEVICES AND RETURN TRAFFIC TO ITS NORMAL TRAFFIC PATTERN AT THE END OF EACH NIGHT OPERATION.

STEP 18: WHEN WORK IS COMPLETE, REMOVE ALL LANE CLOSURE, RAMP CLOSURE AND DETOUR SIGNS AND DEVICES AND RETURN TRAFFIC TO ITS NORMAL TRAFFIC PATTERN.

STEP 19: USING NCDOT STD. 1101.02 SHEET 3 OF 15, INSTALL LANE CLOSURE SIGNS AND DEVICES TO CLOSE THE NORTHBOUND INSIDE LANE OF BRIDGE 78 DURING NIGHT OPERATIONS.

STEP 20: AWAY FROM TRAFFIC, PERFORM THE FOLLOWING:
INSTALL OVERLAY ON THE NORTHBOUND INSIDE LANE OF BRIDGE 78, SEE STRUCTURE PLANS.

STEP 21: COVER ALL LANE CLOSURE SIGNS AND DEVICES AND RETURN TRAFFIC TO ITS NORMAL TRAFFIC PATTERN AT THE END OF EACH NIGHT OPERATION.

STEP 22: WHEN WORK IS COMPLETE, REMOVE ALL LANE CLOSURE SIGNS AND DEVICES AND RETURN TRAFFIC TO ITS NORMAL TRAFFIC PATTERN.

STEP 23: USING TMP-3B, INSTALL DETOUR SIGNS AND DEVICES TO CLOSE AND DETOUR THE NORTHBOUND US 52 / NC 8 RAMPS TO AND FROM I-40 DURING NIGHT OPERATIONS.

STEP 24: USING NCDOT STD. 1101.02 SHEET 3 OF 15, INSTALL LANE CLOSURE SIGNS AND DEVICES TO CLOSE THE NORTHBOUND OUTSIDE LANE OF BRIDGE 78 DURING NIGHT OPERATIONS. INSTALL PORTABLE CONCRETE BARRIER AS NEEDED TO PROTECT WORK AREA DURING BRIDGE OVERHANG REPAIR.

STEP 25: AWAY FROM TRAFFIC, PERFORM THE FOLLOWING:
PERFORM OVERLAY AND REPAIRS ON THE NORTHBOUND OUTSIDE LANE OF BRIDGE 78, SEE STRUCTURE PLANS.

STEP 26: COVER ALL LANE CLOSURE AND RAMP CLOSURE SIGNS AND DEVICES AND RETURN TRAFFIC TO ITS NORMAL TRAFFIC PATTERN AT THE END OF EACH NIGHT OPERATION.

STEP 27: WHEN WORK IS COMPLETE, REMOVE ALL LANE CLOSURE, RAMP CLOSURE AND DETOUR SIGNS AND DEVICES AND RETURN TRAFFIC TO ITS NORMAL TRAFFIC PATTERN.

STEP 28: USING NCDOT STD. 1101.02 SHEET 3 OF 15, INSTALL LANE CLOSURE SIGNS AND DEVICES TO CLOSE THE SOUTHBOUND INSIDE LANE OF BRIDGE 78 DURING NIGHT OPERATIONS.

STEP 29: AWAY FROM TRAFFIC, PERFORM THE FOLLOWING:
INSTALL OVERLAY ON THE SOUTHBOUND INSIDE LANE OF BRIDGE 78, SEE STRUCTURE PLANS.

STEP 30: COVER ALL LANE CLOSURE SIGNS AND DEVICES AND RETURN TRAFFIC TO ITS NORMAL TRAFFIC PATTERN AT THE END OF EACH NIGHT OPERATION.

STEP 31: WHEN WORK IS COMPLETE, REMOVE ALL LANE CLOSURE SIGNS AND DEVICES AND RETURN TRAFFIC TO ITS NORMAL TRAFFIC PATTERN.

STEP 32: USING TMP-3C, INSTALL DETOUR SIGNS AND DEVICES TO CLOSE AND DETOUR THE SOUTHBOUND US 52 / NC 8 RAMPS TO AND FROM I-40 DURING NIGHT OPERATIONS.

STEP 33: USING NCDOT STD. 1101.02 SHEETS 9 AND 10 OF 15, INSTALL LANE CLOSURE SIGNS AND DEVICES TO CLOSE THE SOUTHBOUND OUTSIDE LANE OF BRIDGE 78 DURING NIGHT OPERATIONS. INSTALL PORTABLE CONCRETE BARRIER AS NEEDED TO PROTECT WORK AREA DURING BRIDGE OVERHANG REPAIR.

APPROVED:_____ DATE:_____

SEAL

NORTH CAROLINA PROFESSIONAL SEAL 035167 ENGINEER RICHARD A. ODYNSKY
2-14-12

DIVISION OF HIGHWAYS · STATE OF NORTH CAROLINA · DEPARTMENT OF TRANSPORTATION · WORK ZONE TRAFFIC CONTROL

PHASING NOTES

2/10/2012
r:\traffic\trafficcontrol\tap\microstation files\9PI_TMP_IB.dgn
odynskra

PROJ. REFERENCE NO.	SHEET NO.
17BP.9.P.1	TMP-1F

STV/Ralph Whitehead Associates, Inc.
1000 West Morehead St., Ste. 200
Charlotte, NC 28208
NC License Number F-0991

PHASING (CONT.)

PHASE 6 CONTINUED (FORSYTH 78)

STEP 34: AWAY FROM TRAFFIC, PERFORM THE FOLLOWING:
PERFORM OVERLAY AND REPAIRS ON THE SOUTHBOUND OUTSIDE LANE OF BRIDGE 78, SEE STRUCTURE PLANS.

STEP 35: COVER ALL LANE CLOSURE AND RAMP CLOSURE SIGNS AND DEVICES AND RETURN TRAFFIC TO ITS NORMAL TRAFFIC PATTERN AT THE END OF EACH NIGHT OPERATION.

PHASE 7 (FORSYTH 53)

STEP 1: USING NCDOT STD. 1101.02 SHEET 4 OF 15, INSTALL LANE CLOSURE SIGNS AND DEVICES TO CLOSE THE NORTHBOUND INSIDE LANE OF BRIDGE 53 DURING NIGHT OPERATIONS.

STEP 2: AWAY FROM TRAFFIC, PERFORM THE FOLLOWING:
SEAL CRACKS ON THE NORTHBOUND INSIDE LANE OF BRIDGE 53, SEE STRUCTURE PLANS.

STEP 3: COVER ALL LANE CLOSURE SIGNS AND DEVICES AND RETURN TRAFFIC TO ITS NORMAL TRAFFIC PATTERN AT THE END OF EACH NIGHT OPERATION.

STEP 4: WHEN WORK IS COMPLETE, REMOVE ALL LANE CLOSURE SIGNS AND DEVICES AND RETURN TRAFFIC TO ITS NORMAL TRAFFIC PATTERN.

STEP 5: USING NCDOT STD. 1101.02 SHEET 4 OF 15, INSTALL LANE CLOSURE SIGNS AND DEVICES TO CLOSE THE NORTHBOUND OUTSIDE LANE OF BRIDGE 53 DURING NIGHT OPERATIONS.

STEP 6: AWAY FROM TRAFFIC, PERFORM THE FOLLOWING:
SEAL CRACKS ON THE NORTHBOUND OUTSIDE LANE OF BRIDGE 53, SEE STRUCTURE PLANS.

STEP 7: COVER ALL LANE CLOSURE SIGNS AND DEVICES AND RETURN TRAFFIC TO ITS NORMAL TRAFFIC PATTERN AT THE END OF EACH NIGHT OPERATION.

STEP 8: WHEN WORK IS COMPLETE, REMOVE ALL LANE CLOSURE SIGNS AND DEVICES AND RETURN TRAFFIC TO ITS NORMAL TRAFFIC PATTERN.

PHASE 8 (FORSYTH 54)

STEP 1: USING NCDOT STD. 1101.02 SHEET 4 OF 15, INSTALL LANE CLOSURE SIGNS AND DEVICES TO CLOSE THE SOUTHBOUND INSIDE LANE OF BRIDGE 54 DURING NIGHT OPERATIONS.

STEP 2: AWAY FROM TRAFFIC, PERFORM THE FOLLOWING:
SEAL CRACKS ON THE SOUTHBOUND INSIDE LANE OF BRIDGE 54, SEE STRUCTURE PLANS.

STEP 3: COVER ALL LANE CLOSURE SIGNS AND DEVICES AND RETURN TRAFFIC TO ITS NORMAL TRAFFIC PATTERN AT THE END OF EACH NIGHT OPERATION.

STEP 4: WHEN WORK IS COMPLETE, REMOVE ALL LANE CLOSURE SIGNS AND DEVICES AND RETURN TRAFFIC TO ITS NORMAL TRAFFIC PATTERN.

STEP 5: USING NCDOT STD. 1101.02 SHEET 4 OF 15, INSTALL LANE CLOSURE SIGNS AND DEVICES TO CLOSE THE SOUTHBOUND OUTSIDE LANE OF BRIDGE 54 DURING NIGHT OPERATIONS.

STEP 6: AWAY FROM TRAFFIC, PERFORM THE FOLLOWING:
SEAL CRACKS ON THE SOUTHBOUND OUTSIDE LANE OF BRIDGE 54, SEE STRUCTURE PLANS.

STEP 7: COVER ALL LANE CLOSURE SIGNS AND DEVICES AND RETURN TRAFFIC TO ITS NORMAL TRAFFIC PATTERN AT THE END OF EACH NIGHT OPERATION.

STEP 8: WHEN WORK IS COMPLETE, REMOVE ALL LANE CLOSURE SIGNS AND DEVICES AND RETURN TRAFFIC TO ITS NORMAL TRAFFIC PATTERN.

PHASE 9 (FORSYTH 297):

STEP 1: USING NCDOT STD. 1101.02 SHEET 4 OF 15, INSTALL LANE CLOSURE SIGNS AND DEVICES TO CLOSE THE NORTHBOUND INSIDE LANE OF BRIDGE 297 DURING NIGHT OPERATIONS.

STEP 2: AWAY FROM TRAFFIC, PERFORM THE FOLLOWING:
INSTALL OVERLAY ON THE NORTHBOUND INSIDE LANE OF BRIDGE 297, CONSTRUCT STRUCTURAL STEEL REPAIRS, CONSTRUCT SUBSTRUCTURE REPAIRS, SEE STRUCTURE PLANS.

STEP 3: COVER ALL LANE CLOSURE SIGNS AND DEVICES AND RETURN TRAFFIC TO ITS NORMAL TRAFFIC PATTERN AT THE END OF EACH NIGHT OPERATION.

STEP 4: WHEN WORK IS COMPLETE, REMOVE ALL LANE CLOSURE SIGNS AND DEVICES AND RETURN TRAFFIC TO ITS NORMAL TRAFFIC PATTERN.

STEP 5: USING NCDOT STD. 1101.02 SHEET 4 OF 15, INSTALL LANE CLOSURE SIGNS AND DEVICES TO CLOSE THE NORTHBOUND OUTSIDE LANE OF BRIDGE 297 DURING NIGHT OPERATIONS.

STEP 6: AWAY FROM TRAFFIC, PERFORM THE FOLLOWING:
INSTALL OVERLAY ON THE NORTHBOUND OUTSIDE LANE OF BRIDGE 297, CONSTRUCT STRUCTURAL STEEL REPAIRS, CONSTRUCT SUBSTRUCTURE REPAIRS, SEE STRUCTURE PLANS.

STEP 7: COVER ALL LANE CLOSURE SIGNS AND DEVICES AND RETURN TRAFFIC TO ITS NORMAL TRAFFIC PATTERN AT THE END OF EACH NIGHT OPERATION.

STEP 8: WHEN WORK IS COMPLETE, REMOVE ALL LANE CLOSURE SIGNS AND DEVICES AND RETURN TRAFFIC TO ITS NORMAL TRAFFIC PATTERN.

PHASE 10 (FORSYTH 302):

STEP 1: USING NCDOT STD. 1101.02 SHEET 4 OF 15, INSTALL LANE CLOSURE SIGNS AND DEVICES TO CLOSE THE SOUTHBOUND INSIDE LANE OF BRIDGE 302 DURING NIGHT OPERATIONS.

STEP 2: AWAY FROM TRAFFIC, PERFORM THE FOLLOWING:
INSTALL OVERLAY ON THE SOUTHBOUND INSIDE LANE OF BRIDGE 302, CONSTRUCT STRUCTURAL STEEL REPAIRS, CONSTRUCT SUBSTRUCTURE REPAIRS, SEE STRUCTURE PLANS.

STEP 3: COVER ALL LANE CLOSURE SIGNS AND DEVICES AND RETURN TRAFFIC TO ITS NORMAL TRAFFIC PATTERN AT THE END OF EACH NIGHT OPERATION.

STEP 4: WHEN WORK IS COMPLETE, REMOVE ALL LANE CLOSURE SIGNS AND DEVICES AND RETURN TRAFFIC TO ITS NORMAL TRAFFIC PATTERN.

STEP 5: USING NCDOT STD. 1101.02 SHEET 4 OF 15, INSTALL LANE CLOSURE SIGNS AND DEVICES TO CLOSE THE SOUTHBOUND OUTSIDE LANE OF BRIDGE 302 DURING NIGHT OPERATIONS.

STEP 6: AWAY FROM TRAFFIC, PERFORM THE FOLLOWING:
INSTALL OVERLAY ON THE SOUTHBOUND OUTSIDE LANE OF BRIDGE 302, CONSTRUCT STRUCTURAL STEEL REPAIRS, CONSTRUCT SUBSTRUCTURE REPAIRS, SEE STRUCTURE PLANS.

STEP 7: COVER ALL LANE CLOSURE SIGNS AND DEVICES AND RETURN TRAFFIC TO ITS NORMAL TRAFFIC PATTERN AT THE END OF EACH NIGHT OPERATION.

STEP 8: WHEN WORK IS COMPLETE, REMOVE ALL LANE CLOSURE SIGNS AND DEVICES AND RETURN TRAFFIC TO ITS NORMAL TRAFFIC PATTERN.

APPROVED:_____ DATE:_____

SEAL

NORTH CAROLINA PROFESSIONAL SEAL 037467 ENGINEER RICHARD A. ODYNIEC
2-14-12

DIVISION OF HIGHWAYS * STATE OF NORTH CAROLINA * DEPARTMENT OF TRANSPORTATION * WORK ZONE TRAFFIC CONTROL

PHASING NOTES

2/10/2012
F:\traffic\trafficcontrol\tcp\microstation files\9PL_TMP_IB.dgn
odyniecra

PROJ. REFERENCE NO.	SHEET NO.
17BP.9.P.1	TMP-1G

STV/Ralph Whitehead Associates, Inc.
1000 West Morehead St., Ste. 200
Charlotte, NC 28208
NC License Number F-0991

PHASING (CONT.)

PHASE 11 (FORSYTH 185)

STEP 1: USING NCDOT STD. 1101.02 SHEET 3 OF 15, INSTALL LANE CLOSURE SIGNS AND DEVICES TO CLOSE THE NORTHBOUND OUTSIDE LANE OF US 52 / NC 8 US 150 DURING NIGHT OPERATIONS.

STEP 2: AWAY FROM TRAFFIC, PERFORM THE FOLLOWING:
CONSTRUCT STRUCTURAL STEEL REPAIRS AND CONSTRUCT SUBSTRUCTURE REPAIRS ABOVE NORTHBOUND OUTSIDE LANE OF US 52 / NC 8, SEE STRUCTURE PLANS.

STEP 3: COVER ALL LANE CLOSURE SIGNS AND DEVICES AND RETURN TRAFFIC TO ITS NORMAL TRAFFIC PATTERN AT THE END OF EACH NIGHT OPERATION.

STEP 4: WHEN WORK IS COMPLETE, REMOVE ALL LANE CLOSURE SIGNS AND DEVICES AND RETURN TRAFFIC TO ITS NORMAL TRAFFIC PATTERN.

STEP 5: USING NCDOT STD. 1101.02 SHEET 3 OF 15, INSTALL LANE CLOSURE SIGNS AND DEVICES TO CLOSE THE NORTHBOUND INSIDE LANE OF US 52 / NC 8 DURING NIGHT OPERATIONS.

STEP 6: AWAY FROM TRAFFIC, PERFORM THE FOLLOWING:
CONSTRUCT STRUCTURAL STEEL REPAIRS AND CONSTRUCT SUBSTRUCTURE REPAIRS ABOVE NORTHBOUND INSIDE LANE OF US 52 / NC 8, SEE STRUCTURE PLANS.

STEP 7: COVER ALL LANE CLOSURE SIGNS AND DEVICES AND RETURN TRAFFIC TO ITS NORMAL TRAFFIC PATTERN AT THE END OF EACH NIGHT OPERATION.

STEP 8: WHEN WORK IS COMPLETE, REMOVE ALL LANE CLOSURE SIGNS AND DEVICES AND RETURN TRAFFIC TO ITS NORMAL TRAFFIC PATTERN.

STEP 9: USING NCDOT STD. 1101.02 SHEET 3 OF 15, INSTALL LANE CLOSURE SIGNS AND DEVICES TO CLOSE THE SOUTHBOUND INSIDE LANE OF US 52 / NC 8 DURING NIGHT OPERATIONS.

STEP 10: AWAY FROM TRAFFIC, PERFORM THE FOLLOWING:
CONSTRUCT STRUCTURAL STEEL REPAIRS AND CONSTRUCT SUBSTRUCTURE REPAIRS ABOVE SOUTHBOUND INSIDE LANE OF US 52 / NC 8, SEE STRUCTURE PLANS.

STEP 11: COVER ALL LANE CLOSURE SIGNS AND DEVICES AND RETURN TRAFFIC TO ITS NORMAL TRAFFIC PATTERN AT THE END OF EACH NIGHT OPERATION.

STEP 12: WHEN WORK IS COMPLETE, REMOVE ALL LANE CLOSURE SIGNS AND DEVICES AND RETURN TRAFFIC TO ITS NORMAL TRAFFIC PATTERN.

STEP 13: USING NCDOT STD. 1101.02 SHEET 3 OF 15, INSTALL LANE CLOSURE SIGNS AND DEVICES TO CLOSE THE SOUTHBOUND OUTSIDE LANE OF US 52 / NC 8 DURING NIGHT OPERATIONS.

STEP 14: AWAY FROM TRAFFIC, PERFORM THE FOLLOWING:
CONSTRUCT STRUCTURAL STEEL REPAIRS AND CONSTRUCT SUBSTRUCTURE REPAIRS ABOVE SOUTHBOUND OUTSIDE LANE OF US 52 / NC 8, SEE STRUCTURE PLANS.

STEP 15: COVER ALL LANE CLOSURE SIGNS AND DEVICES AND RETURN TRAFFIC TO ITS NORMAL TRAFFIC PATTERN AT THE END OF EACH NIGHT OPERATION.

STEP 16: WHEN WORK IS COMPLETE, REMOVE ALL LANE CLOSURE SIGNS AND DEVICES AND RETURN TRAFFIC TO ITS NORMAL TRAFFIC PATTERN.

STEP 17: USING NCDOT STD. 1101.03 SHEETS 1 AND 2 OF 9, AND TMP-3A, INSTALL ROAD CLOSURE SIGNS AND DEVICES TO CLOSE BRIDGE 185 AND DETOUR TRAFFIC.

STEP 18: AWAY FROM TRAFFIC, PERFORM THE FOLLOWING:
INSTALL OVERLAY AND REPLACE FINGER JOINTS OF BRIDGE 185, SEE STRUCTURE PLANS.

STEP 19: WHEN WORK IS COMPLETE, REMOVE ALL LANE CLOSURE SIGNS AND DEVICES AND RETURN TRAFFIC TO ITS NORMAL TRAFFIC PATTERN.

APPROVED:_____ DATE:_____

SEAL

NORTH CAROLINA PROFESSIONAL SEAL 037467 ENGINEER RICHARD A. ODYNSKI
2-14-12

DIVISION OF HIGHWAYS
STATE OF NORTH CAROLINA
DEPARTMENT OF TRANSPORTATION
WORK ZONE TRAFFIC CONTROL

PHASING NOTES

2/10/2012
r:\traffic\trafficcontrol\tcp\microstation files\9P1_TMP_1B.dgn
odynskra

PROJ. REFERENCE NO.	SHEET NO.
17BP.9.P.1	TMP-2A

STV/Ralph Whitehead Associates, Inc.
1000 West Morehead St., Ste. 200
Charlotte, NC 28208
NC License Number F-0991

SEE STD 1101.02 SHEET 3 OF 15
FOR LANE CLOSURE SIGNING

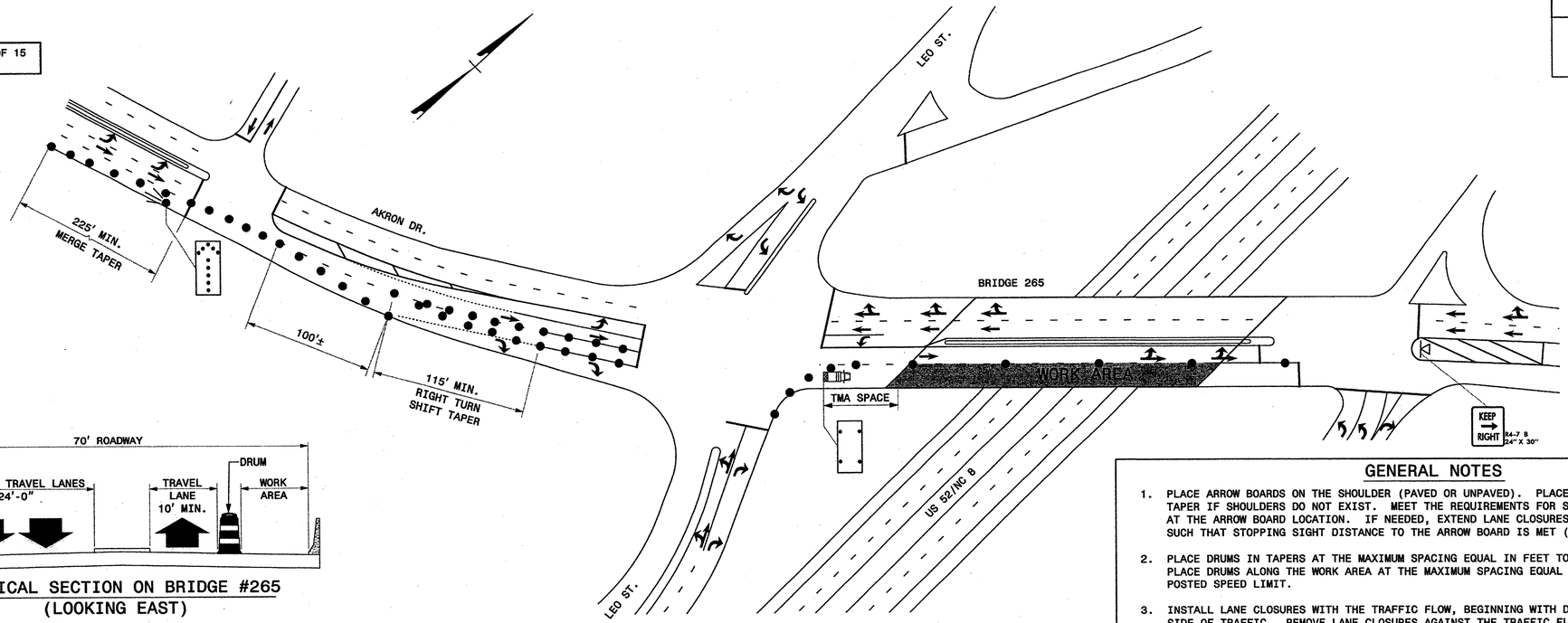

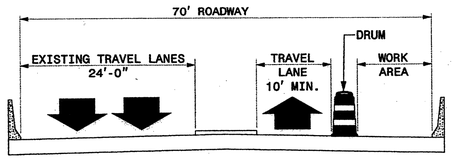

TYPICAL SECTION ON BRIDGE #265
(LOOKING EAST)

GENERAL NOTES

1. PLACE ARROW BOARDS ON THE SHOULDER (PAVED OR UNPAVED). PLACE ARROW BOARDS WITHIN THE TAPER IF SHOULDERS DO NOT EXIST. MEET THE REQUIREMENTS FOR STOPPING SIGHT DISTANCE AT THE ARROW BOARD LOCATION. IF NEEDED, EXTEND LANE CLOSURES AT THE BUFFER SPACE, SUCH THAT STOPPING SIGHT DISTANCE TO THE ARROW BOARD IS MET (SEE STD. 1101.11 SHEET 2).
2. PLACE DRUMS IN TAPERS AT THE MAXIMUM SPACING EQUAL IN FEET TO THE POSTED SPEED LIMIT. PLACE DRUMS ALONG THE WORK AREA AT THE MAXIMUM SPACING EQUAL IN FEET TO 2 TIMES THE POSTED SPEED LIMIT.
3. INSTALL LANE CLOSURES WITH THE TRAFFIC FLOW, BEGINNING WITH DEVICES ON THE UPSTREAM SIDE OF TRAFFIC. REMOVE LANE CLOSURES AGAINST THE TRAFFIC FLOW, BEGINNIG WITH DEVICES ON THE DOWNSTREAM SIDE OF TRAFFIC.
4. POSITION THE TMA TO MAINTAIN A ROLL-AHEAD DISTANCE AS RECOMMENDED BY THE MANUFACTURER AND CONTINUOUSLY ADVANCE TMA'S AS WORK PROGRESSES.
5. PLACE CHANGEABLE MESSAGE SIGN (CMS) ON THE OUTSIDE OF THE TRAVELWAY AS DIRECTED BY THE ENGINEER, PLACE CMS APPROXIMATELY 1 MILE IN ADVANCE OF THE W20-5 SIGNS. IF TRAFFIC BACKS UP TO WHERE THE CMS IS INITIALLY PLACED, RELOCATE CMS ½ MILE IN ADVANCE OF ANTICIPATED BACKUP. CONTINUE TO MONITOR TRAFFIC, MOVE CMS APPROXIMATELY ½ MILE IN ADVANCE OF ANTICIPATED BACKUP.
6. DO NOT EXCEED A 2 MILE LANE CLOSURE LENGTH UNLESS OTHERWISE SHOWN IN THE TMP OR AS DIRECTED BY THE ENGINEER.

SEE STD 1101.02 SHEET 3 OF 15
FOR LANE CLOSURE SIGNING

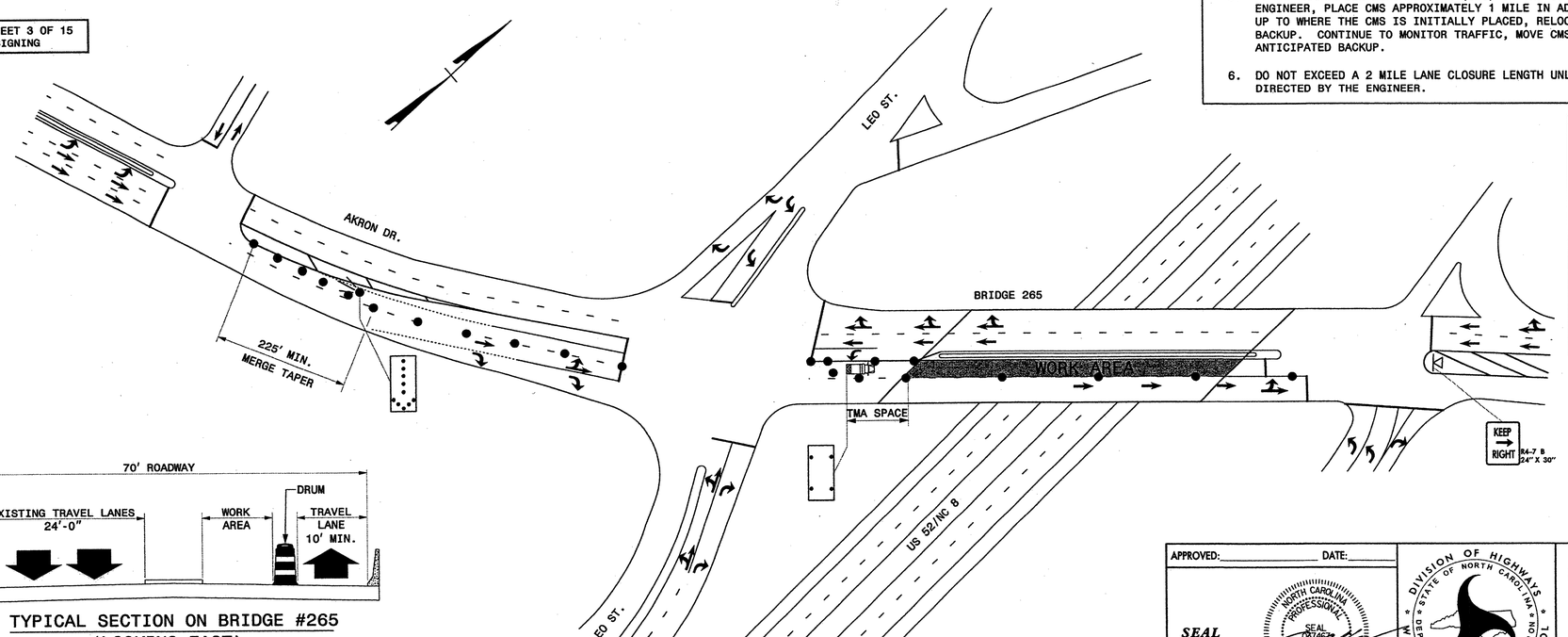

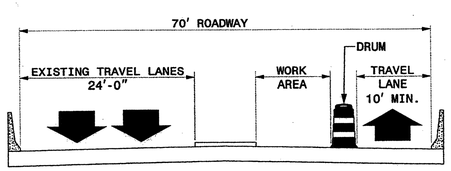

TYPICAL SECTION ON BRIDGE #265
(LOOKING EAST)

LEGEND

- FLASHING ARROW BOARD (TYPE C)
- FLASHING ARROW BOARD (TYPE C) (96"X48" MIN.), "CAUTION MODE"
- TRUCK MOUNTED ATTENUATOR (TMA)
- DRUM
- PORTABLE SIGN
- DIRECTION OF TRAFFIC FLOW
- CHANGEABLE MESSAGE SIGN (CMS)

APPROVED:_____ DATE:_____

SEAL

NORTH CAROLINA PROFESSIONAL SEAL 037467 ENGINEER RICHARD A. ODYNSKI
2-14-12

DIVISION OF HIGHWAYS
STATE OF NORTH CAROLINA
DEPARTMENT OF TRANSPORTATION
WORK ZONE TRAFFIC CONTROL

EB LANE CLOSURE DETAILS FOR AKRON DRIVE (SR 2264) OVER JOHN GOLD MEMORIAL EXPRESSWAY (US 52)
POSTED SPEED = 35 MPH

2/14/2012
R:\Traffic\TrafficControl\TCP\Microstation Files\9PL_TMP_2A.dgn
odynskra

PROJ. REFERENCE NO.	SHEET NO.
17BP.9.P.1	TMP-2B

STV/Ralph Whitehead Associates, Inc.
1000 West Morehead St., Ste. 200
Charlotte, NC 28208
NC License Number F-0991

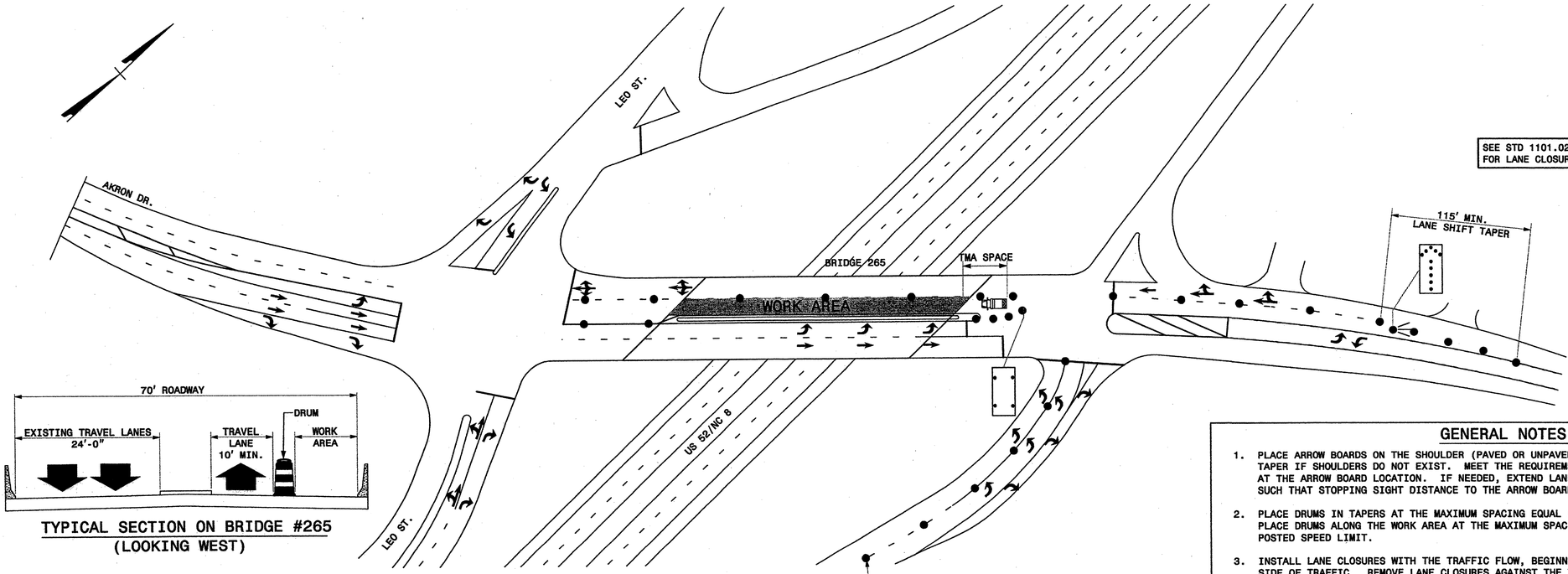

TYPICAL SECTION ON BRIDGE #265
(LOOKING WEST)

SEE STD 1101.02 SHEET 3 OF 15
FOR LANE CLOSURE SIGNING

GENERAL NOTES

1. PLACE ARROW BOARDS ON THE SHOULDER (PAVED OR UNPAVED). PLACE ARROW BOARDS WITHIN THE TAPER IF SHOULDERS DO NOT EXIST. MEET THE REQUIREMENTS FOR STOPPING SIGHT DISTANCE AT THE ARROW BOARD LOCATION. IF NEEDED, EXTEND LANE CLOSURES AT THE BUFFER SPACE, SUCH THAT STOPPING SIGHT DISTANCE TO THE ARROW BOARD IS MET (SEE STD. 1101.11 SHEET 2).
2. PLACE DRUMS IN TAPERS AT THE MAXIMUM SPACING EQUAL IN FEET TO THE POSTED SPEED LIMIT. PLACE DRUMS ALONG THE WORK AREA AT THE MAXIMUM SPACING EQUAL IN FEET TO 2 TIMES THE POSTED SPEED LIMIT.
3. INSTALL LANE CLOSURES WITH THE TRAFFIC FLOW, BEGINNING WITH DEVICES ON THE UPSTREAM SIDE OF TRAFFIC. REMOVE LANE CLOSURES AGAINST THE TRAFFIC FLOW, BEGINNIG WITH DEVICES ON THE DOWNSTREAM SIDE OF TRAFFIC.
4. POSITION THE TMA TO MAINTAIN A ROLL-AHEAD DISTANCE AS RECOMMENDED BY THE MANUFACTURER AND CONTINUOUSLY ADVANCE TMA'S AS WORK PROGRESSES.
5. PLACE CHANGEABLE MESSAGE SIGN (CMS) ON THE OUTSIDE OF THE TRAVELWAY AS DIRECTED BY THE ENGINEER, PLACE CMS APPROXIMATELY 1 MILE IN ADVANCE OF THE W20-5 SIGNS. IF TRAFFIC BACKS UP TO WHERE THE CMS IS INITIALLY PLACED, RELOCATE CMS ½ MILE IN ADVANCE OF ANTICIPATED BACKUP. CONTINUE TO MONITOR TRAFFIC, MOVE CMS APPROXIMATELY ½ MILE IN ADVANCE OF ANTICIPATED BACKUP.
6. DO NOT EXCEED A 2 MILE LANE CLOSURE LENGTH UNLESS OTHERWISE SHOWN IN THE TMP OR AS DIRECTED BY THE ENGINEER.

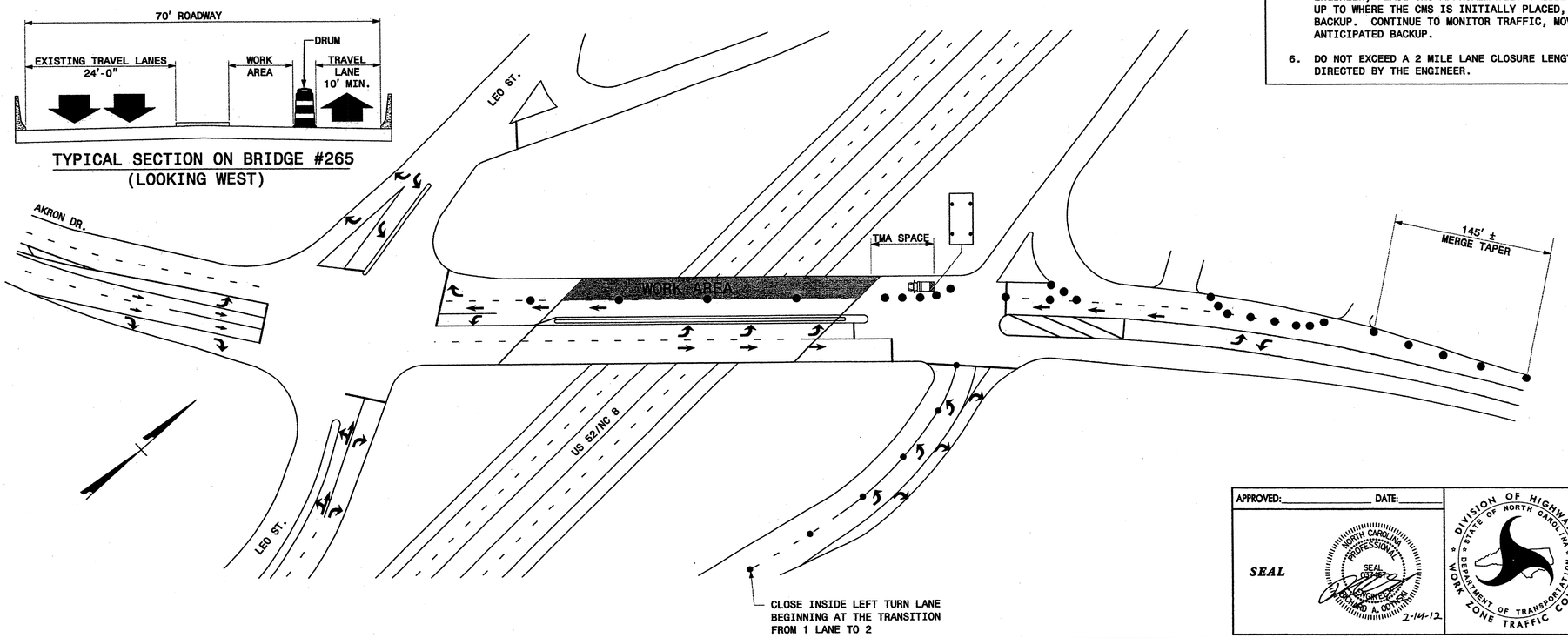

TYPICAL SECTION ON BRIDGE #265
(LOOKING WEST)

LEGEND

- FLASHING ARROW BOARD (TYPE C)
- FLASHING ARROW BOARD (TYPE C) (96"x48" MIN.), "CAUTION MODE"
- TRUCK MOUNTED ATTENUATOR (TMA)
- DRUM
- PORTABLE SIGN
- DIRECTION OF TRAFFIC FLOW
- CHANGEABLE MESSAGE SIGN (CMS)

SEE STD 1101.02 SHEET 3 OF 15
FOR LANE CLOSURE SIGNING

APPROVED:_____ DATE:_____

SEAL

NORTH CAROLINA PROFESSIONAL SEAL 027822 ENGINEER RICHARD A. OSTHAUS
2-14-12

DIVISION OF HIGHWAYS · STATE OF NORTH CAROLINA · DEPARTMENT OF TRANSPORTATION · WORK ZONE TRAFFIC CONTROL

WB LANE CLOSURE DETAILS FOR AKRON DRIVE (SR 2264) OVER JOHN GOLD MEMORIAL EXPRESSWAY (US 52) POSTED SPEED = 35 MPH

2/10/2012
r:\traffic\trafficcontrol\tap\microstation files\9Pl_TMP_2B.dgn
odynskrg

PROJ. REFERENCE NO.	SHEET NO.
17BP.9.P.1	TMP-2C

STV/Ralph Whitehead Associates, Inc.
1000 West Morehead St., Ste. 200
Charlotte, NC 28208
NC License Number F-0991

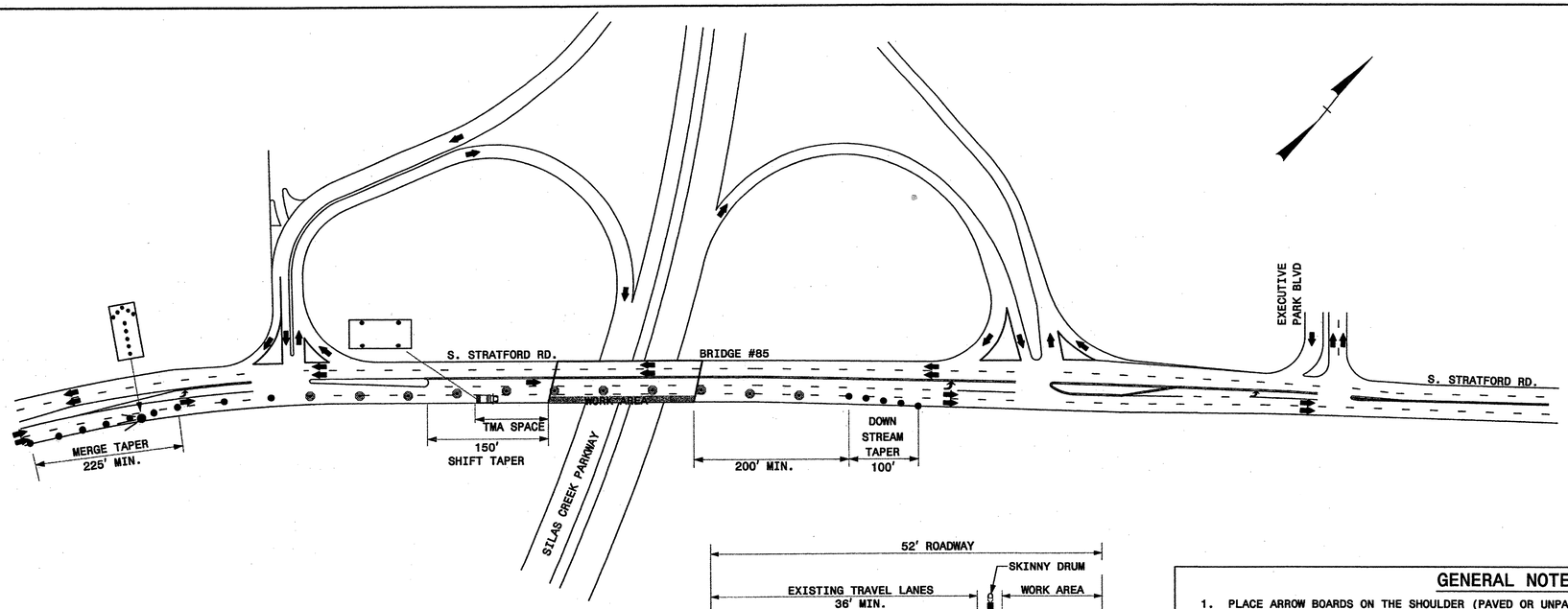

SEE STD. 1101.02 SHEETS 2 AND 3 OF 15
FOR LANE CLOSURE AND SHIFT SIGNING

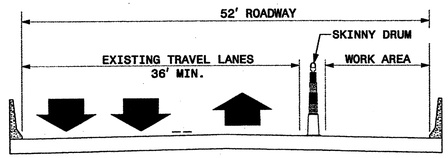

TYPICAL SECTION ON BRIDGE #85
(LOOKING EAST)

GENERAL NOTES

1. PLACE ARROW BOARDS ON THE SHOULDER (PAVED OR UNPAVED). PLACE ARROW BOARDS WITHIN THE TAPER IF SHOULDERS DO NOT EXIST. MEET THE REQUIREMENTS FOR STOPPING SIGHT DISTANCE AT THE ARROW BOARD LOCATION. IF NEEDED, EXTEND LANE CLOSURES AT THE BUFFER SPACE, SUCH THAT STOPPING SIGHT DISTANCE TO THE ARROW BOARD IS MET (SEE STD. 1101.11 SHEET 2).
2. PLACE DRUMS IN TAPERS AT THE MAXIMUM SPACING EQUAL IN FEET TO THE POSTED SPEED LIMIT. PLACE DRUMS ALONG THE WORK AREA AT THE MAXIMUM SPACING EQUAL IN FEET TO 2 TIMES THE POSTED SPEED LIMIT.
3. INSTALL LANE CLOSURES WITH THE TRAFFIC FLOW, BEGINNING WITH DEVICES ON THE UPSTREAM SIDE OF TRAFFIC. REMOVE LANE CLOSURES AGAINST THE TRAFFIC FLOW, BEGINNIG WITH DEVICES ON THE DOWNSTREAM SIDE OF TRAFFIC.
4. POSITION THE TMA TO MAINTAIN A ROLL-AHEAD DISTANCE AS RECOMMENDED BY THE MANUFACTURER AND CONTINUOUSLY ADVANCE TMA'S AS WORK PROGRESSES.
5. PLACE CHANGEABLE MESSAGE SIGN (CMS) ON THE OUTSIDE OF THE TRAVELWAY AS DIRECTED BY THE ENGINEER, PLACE CMS APPROXIMATELY 1 MILE IN ADVANCE OF THE W20-5 SIGNS. IF TRAFFIC BACKS UP TO WHERE THE CMS IS INITIALLY PLACED, RELOCATE CMS ½ MILE IN ADVANCE OF ANTICIPATED BACKUP. CONTINUE TO MONITOR TRAFFIC, MOVE CMS APPROXIMATELY ½ MILE IN ADVANCE OF ANTICIPATED BACKUP.
6. DO NOT EXCEED A 2 MILE LANE CLOSURE LENGTH UNLESS OTHERWISE SHOWN IN THE TMP OR AS DIRECTED BY THE ENGINEER.

LEGEND

- FLASHING ARROW BOARD (TYPE C)
- FLASHING ARROW BOARD (TYPE C) (96"X48" MIN.), "CAUTION MODE"
- TRUCK MOUNTED ATTENUATOR (TMA)
- DRUM
- SKINNY DRUM
- PORTABLE SIGN
- DIRECTION OF TRAFFIC FLOW
- CHANGEABLE MESSAGE SIGN (CMS)

SEE STD. 1101.02 SHEET 3 OF 15
FOR LANE CLOSURE SIGNING

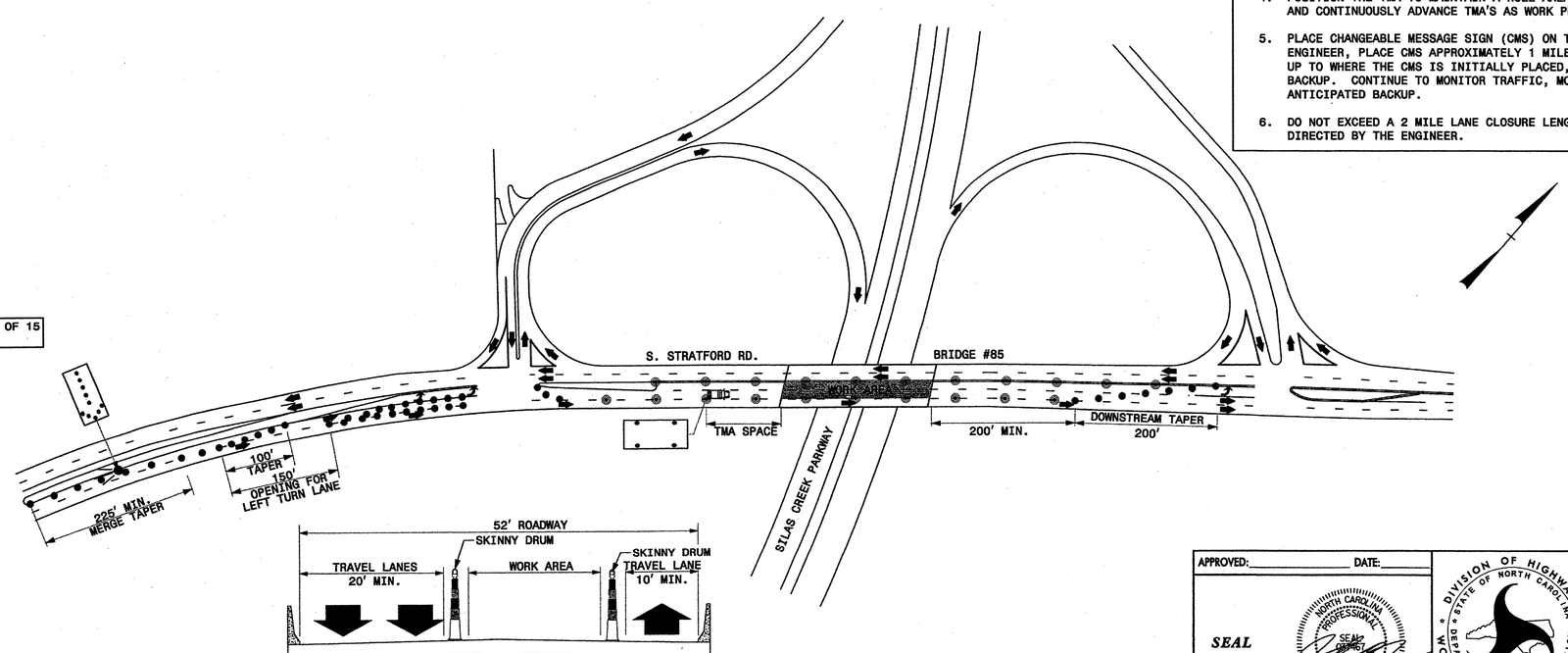

TYPICAL SECTION ON BRIDGE #85
(LOOKING EAST)

APPROVED:_____ DATE:_____

SEAL

NORTH CAROLINA PROFESSIONAL SEAL 037467 ENGINEER RICHARD A. ODYNSKI
2-14-12

DIVISION OF HIGHWAYS
STATE OF NORTH CAROLINA
DEPARTMENT OF TRANSPORTATION
WORK ZONE TRAFFIC CONTROL

NB LANE CLOSURE DETAILS FOR
S STRATFORD ROAD (US 158)
OVER SILAS CREEK PARKWAY
POSTED SPEED = 35 MPH

2/10/2012
r:\traffic\trafficcontrol\tcp\microstation files\9PL_TMP_2C.dgn
odynskra

PROJ. REFERENCE NO.	SHEET NO.
17BP.9.P.1	TMP-2D

STV/Ralph Whitehead Associates, Inc.
1000 West Morehead St. Ste. 200
Charlotte, NC 28208
NC License Number F-0991

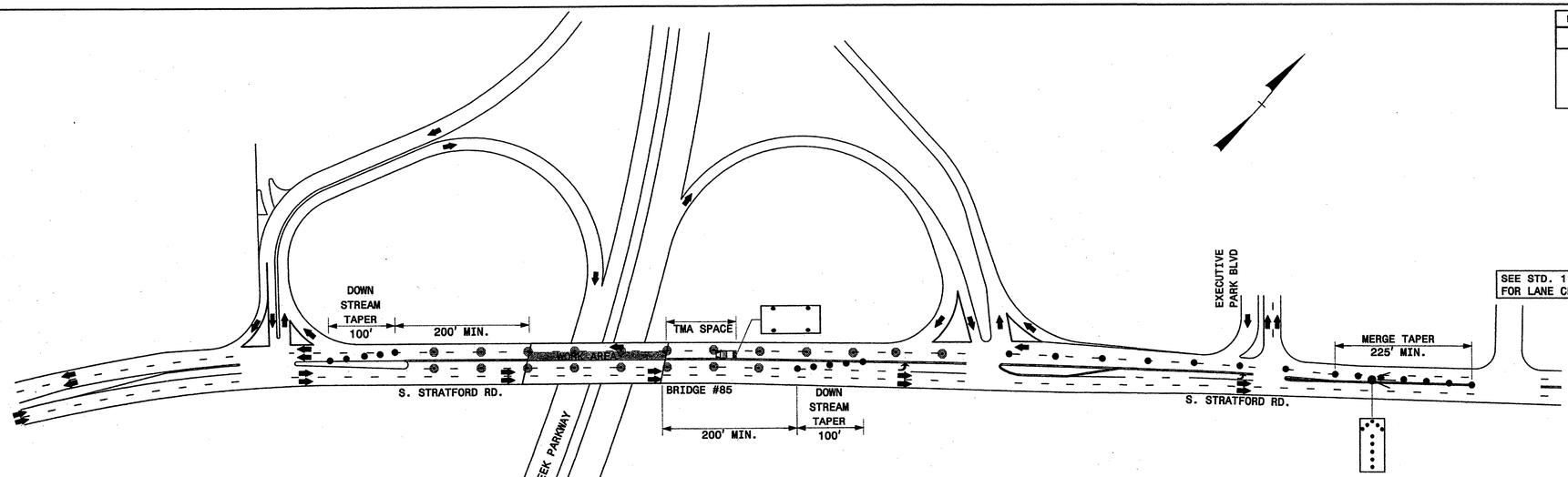

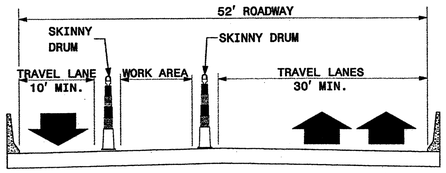

TYPICAL SECTION ON BRIDGE #85
(LOOKING EAST)

GENERAL NOTES

1. PLACE ARROW BOARDS ON THE SHOULDER (PAVED OR UNPAVED). PLACE ARROW BOARDS WITHIN THE TAPER IF SHOULDERS DO NOT EXIST. MEET THE REQUIREMENTS FOR STOPPING SIGHT DISTANCE AT THE ARROW BOARD LOCATION. IF NEEDED, EXTEND LANE CLOSURES AT THE BUFFER SPACE, SUCH THAT STOPPING SIGHT DISTANCE TO THE ARROW BOARD IS MET (SEE STD. 1101.11 SHEET 2).
2. PLACE DRUMS IN TAPERS AT THE MAXIMUM SPACING EQUAL IN FEET TO THE POSTED SPEED LIMIT. PLACE DRUMS ALONG THE WORK AREA AT THE MAXIMUM SPACING EQUAL IN FEET TO 2 TIMES THE POSTED SPEED LIMIT.
3. INSTALL LANE CLOSURES WITH THE TRAFFIC FLOW, BEGINNING WITH DEVICES ON THE UPSTREAM SIDE OF TRAFFIC. REMOVE LANE CLOSURES AGAINST THE TRAFFIC FLOW, BEGINNIG WITH DEVICES ON THE DOWNSTREAM SIDE OF TRAFFIC.
4. POSITION THE TMA TO MAINTAIN A ROLL-AHEAD DISTANCE AS RECOMMENDED BY THE MANUFACTURER AND CONTINUOUSLY ADVANCE TMA'S AS WORK PROGRESSES.
5. PLACE CHANGEABLE MESSAGE SIGN (CMS) ON THE OUTSIDE OF THE TRAVELWAY AS DIRECTED BY THE ENGINEER, PLACE CMS APPROXIMATELY 1 MILE IN ADVANCE OF THE W20-5 SIGNS. IF TRAFFIC BACKS UP TO WHERE THE CMS IS INITIALLY PLACED, RELOCATE CMS ½ MILE IN ADVANCE OF ANTICIPATED BACKUP. CONTINUE TO MONITOR TRAFFIC, MOVE CMS APPROXIMATELY ½ MILE IN ADVANCE OF ANTICIPATED BACKUP.
6. DO NOT EXCEED A 2 MILE LANE CLOSURE LENGTH UNLESS OTHERWISE SHOWN IN THE TMP OR AS DIRECTED BY THE ENGINEER.

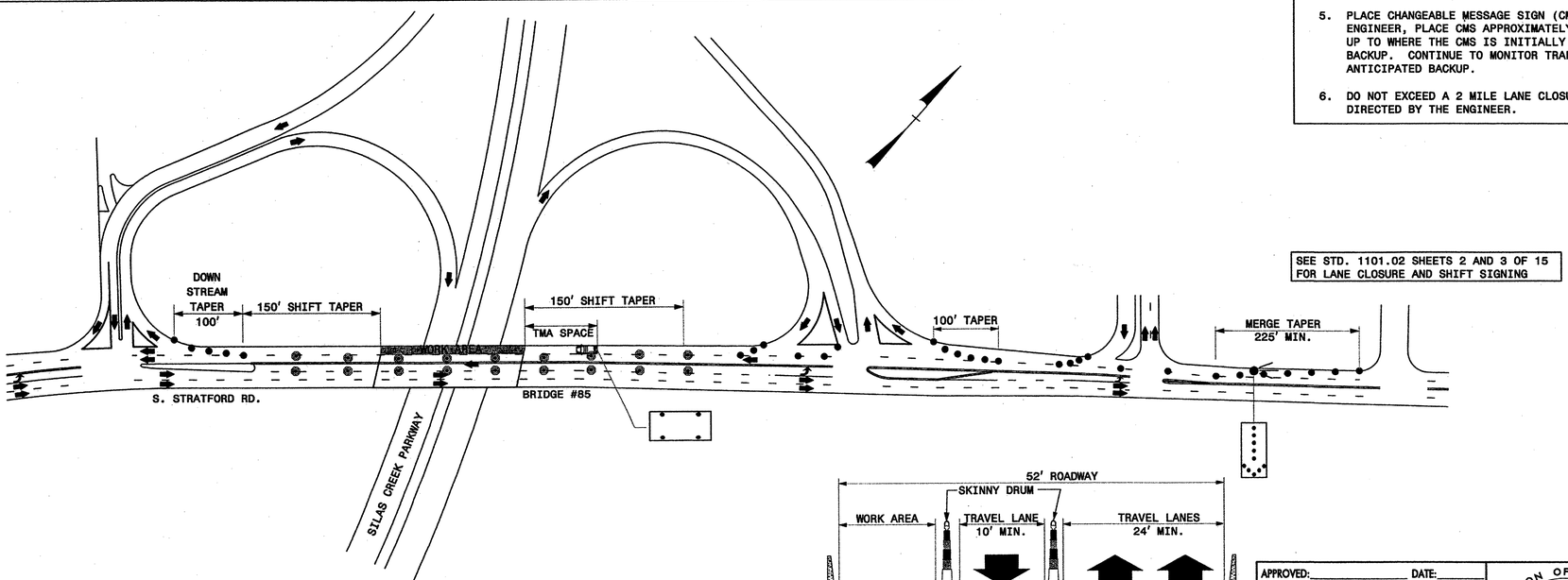

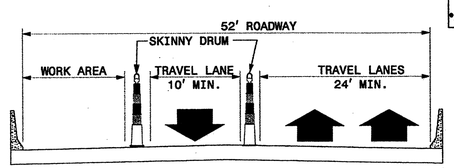

TYPICAL SECTION ON BRIDGE #85
(LOOKING EAST)

LEGEND

- FLASHING ARROW BOARD (TYPE C)
- FLASHING ARROW BOARD (TYPE C) (96"X48" MIN.), "CAUTION MODE"
- TRUCK MOUNTED ATTENUATOR (TMA)
- DRUM
- SKINNY DRUM
- PORTABLE SIGN
- DIRECTION OF TRAFFIC FLOW
- CHANGEABLE MESSAGE SIGN (CMS)

APPROVED:_____ DATE:_____

SEAL

NORTH CAROLINA PROFESSIONAL SEAL 030467 ENGINEER RICHARD A. ODYNSKI
2-14-12

DIVISION OF HIGHWAYS * STATE OF NORTH CAROLINA * DEPARTMENT OF TRANSPORTATION * WORK ZONE TRAFFIC CONTROL

SB LANE CLOSURE DETAILS FOR S STRATFORD ROAD (US 158) OVER SILAS CREEK PARKWAY POSTED SPEED = 35 MPH

2/10/2012
r:\traffic\trafficcontrol\tip\microstation files\9PL_TMP_2D.dgn
odynskra

PROJ. REFERENCE NO.	SHEET NO.
17BP.9.P.1	TMP-3A

STV/Ralph Whitehead Associates, Inc.
1000 West Morehead St., Ste. 200
Charlotte, NC 28208
NC License Number F-0991

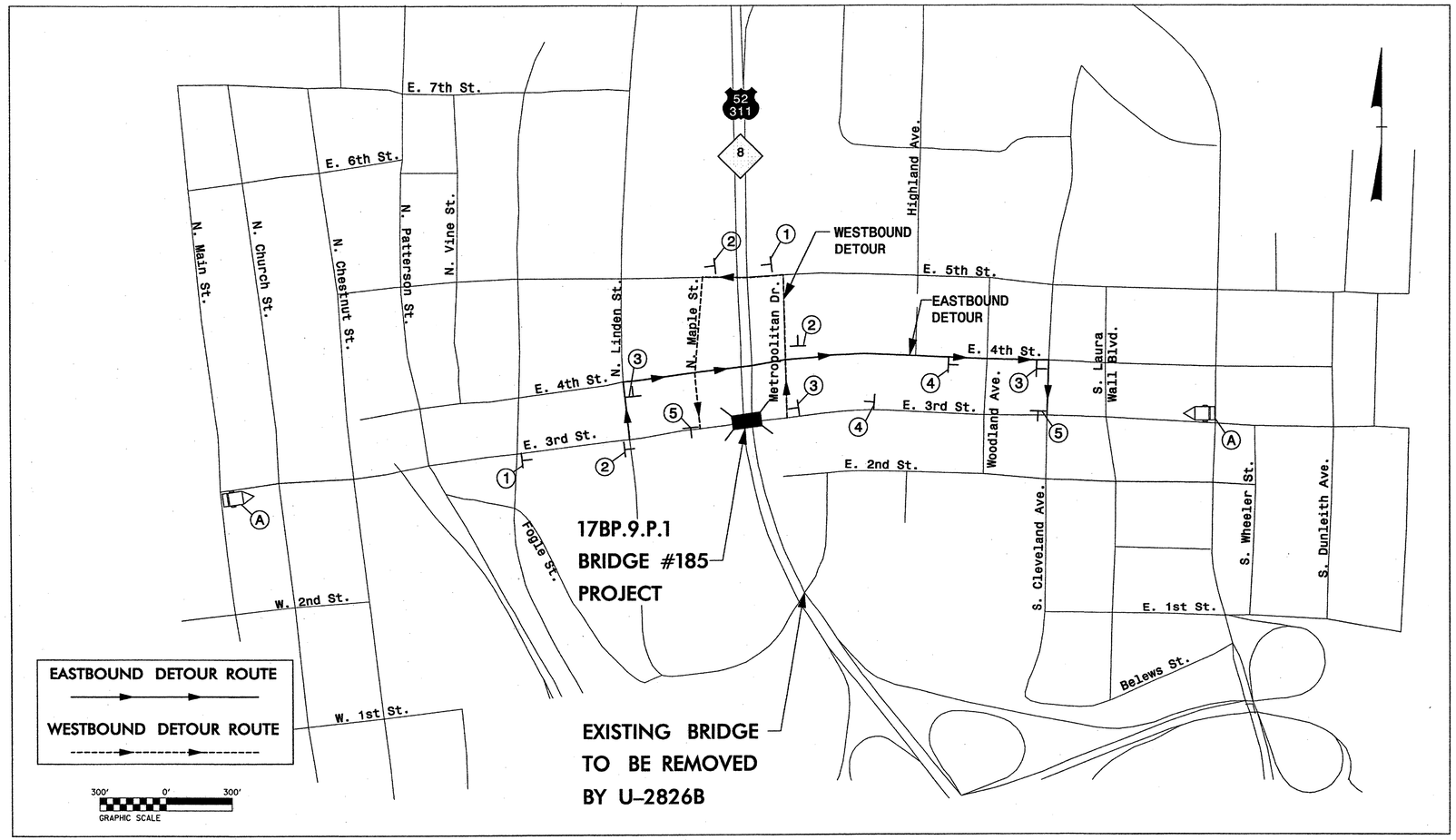

(SEE NOTE, TYP.)

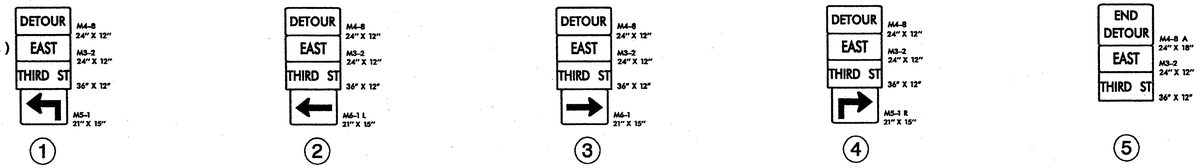

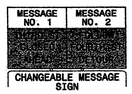

NOTES:

TRAFFIC CONTROL DEVICES ① THRU ⑤ AND Ⓐ SHALL BE INSTALLED AS PER ENGINEER'S INSTRUCTION.

USE "EAST" SIGN FOR EASTBOUND DETOUR AND "WEST" FOR WESTBOUND DETOUR.

SEE NCDOT STD 1101.03 SHEET 1 OF 9 FOR ADVANCE WARNING SIGNS AND DEVICES FOR EASTOUND DETOUR.

SEE NCDOT STD 1101.03 SHEET 2 OF 9 FOR ADVANCE WARNING SIGNS AND DEVICES FOR WESTBOUND DETOUR.

APPROVED:_____ DATE:_____

SEAL

NORTH CAROLINA PROFESSIONAL SEAL ENGINEER RICHARD A. ODYNSKI 2-14-12

DIVISION OF HIGHWAYS STATE OF NORTH CAROLINA DEPARTMENT OF TRANSPORTATION WORK ZONE TRAFFIC CONTROL

OFFSITE DETOUR A
SIGNING AND ROAD
CLOSURE SIGNING

2/13/2012
R:\Traffic\TrafficControl\TCP\Microstation Files\9PI_TMP_3A.dgn
odynskra

PROJ. REFERENCE NO.	SHEET NO.
17BP.9.P.1	TMP-3B

STV/Ralph Whitehead Associates, Inc.
1000 West Morehead St., Ste. 200
Charlotte, NC 28208
NC License Number F-0991

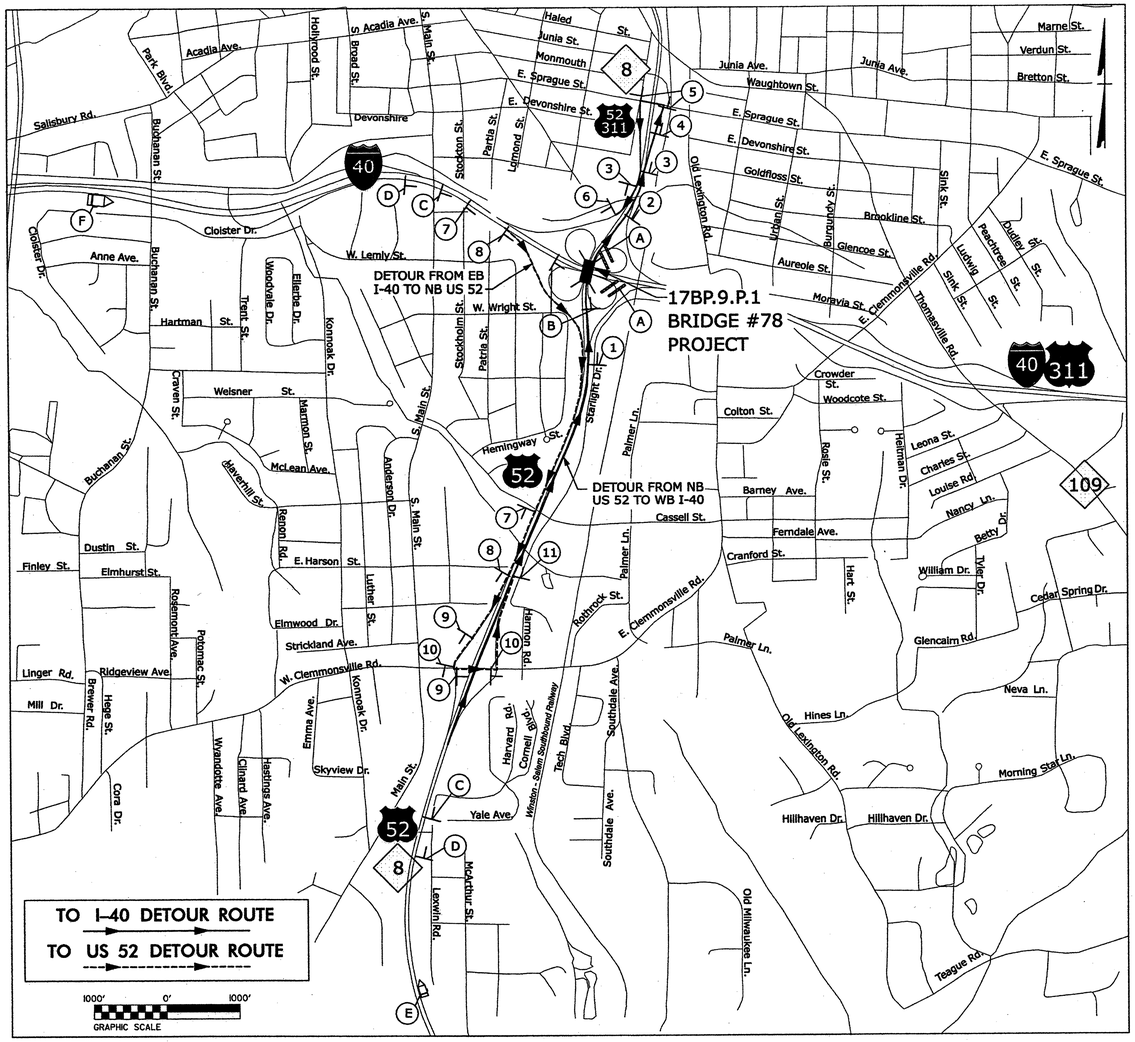

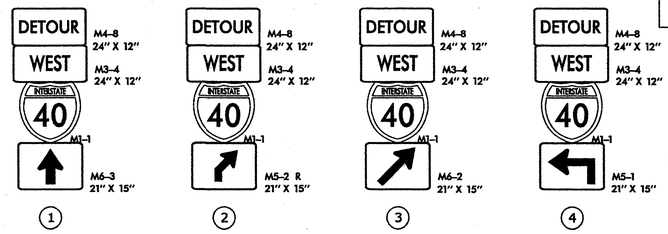

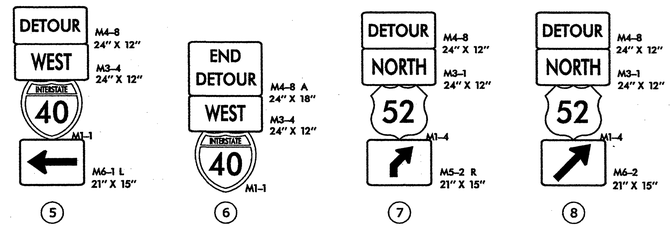

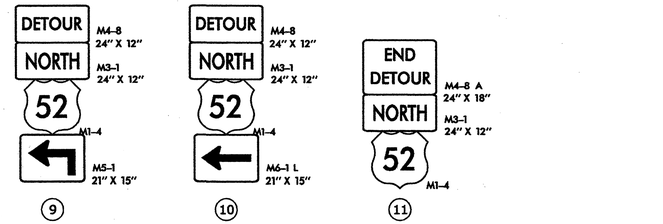

A

B

C

D

E

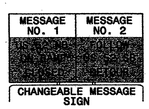

F

NOTES:

TRAFFIC CONTROL DEVICES (A) THRU (F) SHALL BE INSTALLED AS PER THE ENGINEER'S INSTRUCTION.

TRAFFIC CONTROL DEVICES (1) THRU (11) SHALL BE INSTALLED AS PER THE ENGINEER'S INSTRUCTION.

USE DRUMS TO CLOSE THE AUXILIARY LANE ON I-40 BETWEEN THE RAMPS AS PER THE ENGINEER'S INSTRUCTIONS.

APPROVED: _____ DATE: _____

SEAL

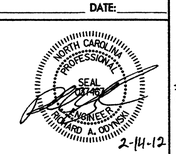

OFFSITE DETOUR B SIGNING AND ROAD CLOSURE SIGNING

PROJ. REFERENCE NO.	SHEET NO.
17BP.9.P.1	TMP-3C

STV / Ralph Whitehead Associates, Inc.
1000 West Morehead St., Ste. 200
Charlotte, NC 28208
NC License Number F-0991

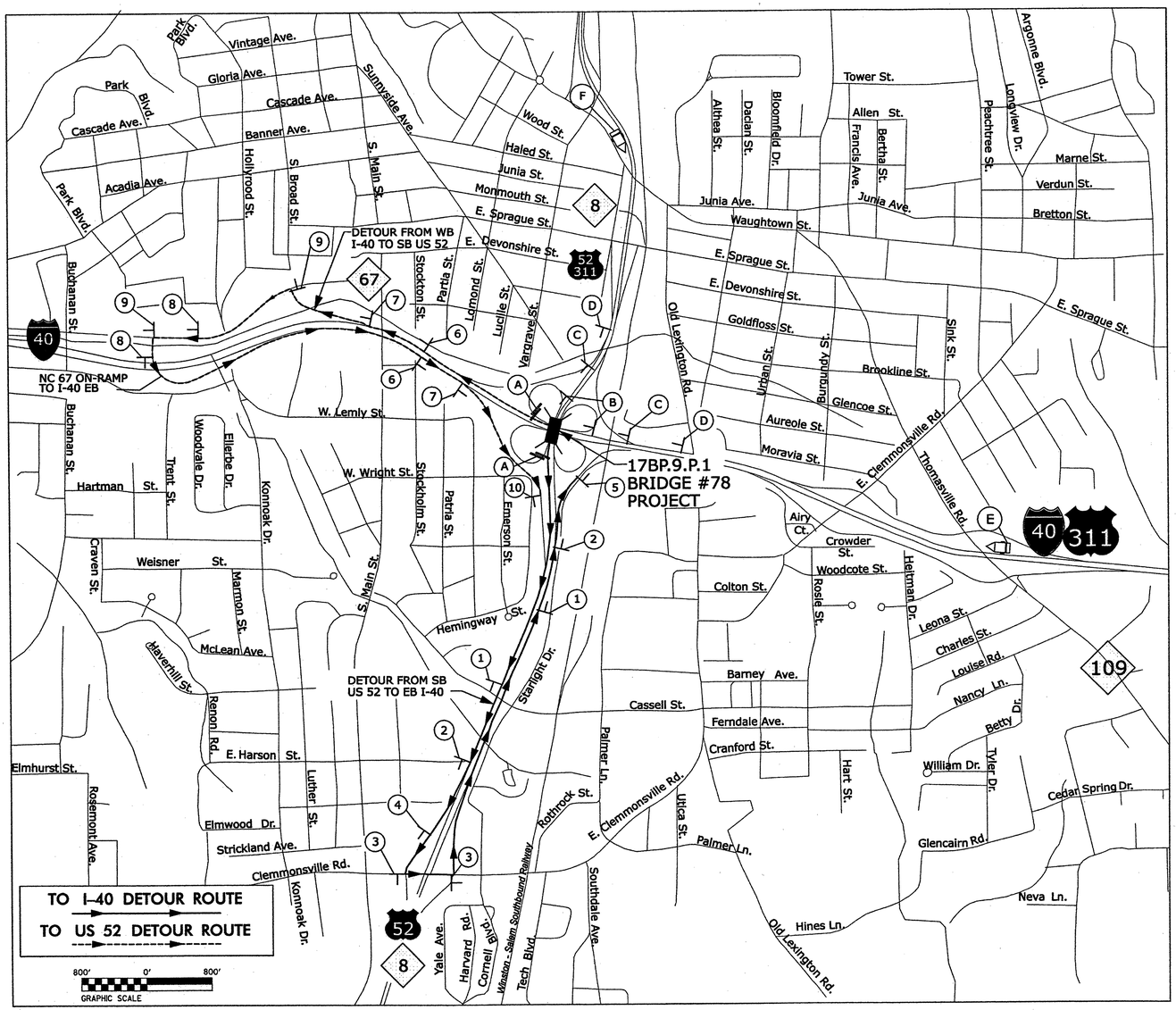

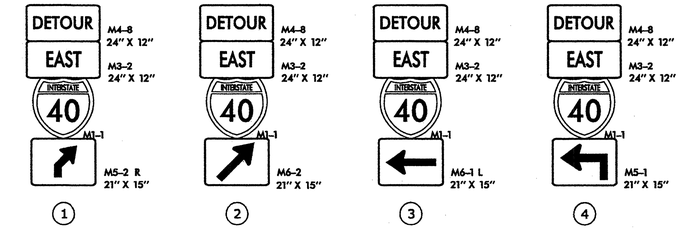

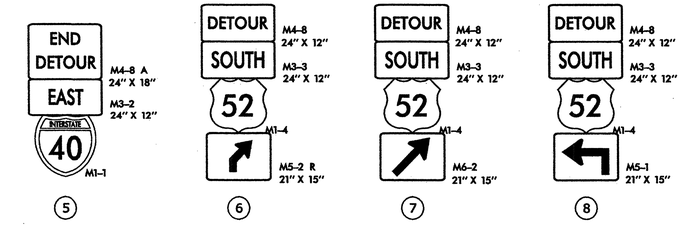

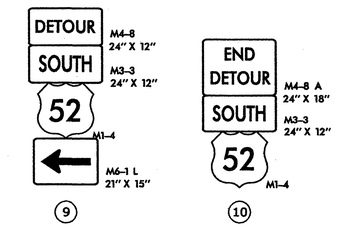

A

B

C

D

E

F

NOTES:

TRAFFIC CONTROL DEVICES (A) THRU (F) SHALL BE INSTALLED AS PER THE ENGINEER'S INSTRUCTION.

TRAFFIC CONTROL DEVICES (1) THRU (10) SHALL BE INSTALLED AS PER THE ENGINEER'S INSTRUCTIONS.

USE DRUMS TO CLOSE THE AUXILIARY LANE ON I-40 BETWEEN THE RAMPS AS PER THE ENGINEER'S INSTRUCTIONS.

APPROVED: _____ DATE: _____

SEAL

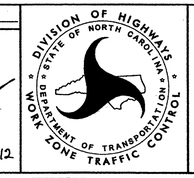

OFFSITE DETOUR C SIGNING AND ROAD CLOSURE SIGNING

PROJ. REFERENCE NO.	SHEET NO.
17BP.9.P.1	TMP-3D

STV / Ralph Whitehead Associates, Inc.
1000 West Morehead St., Ste. 200
Charlotte, NC 28208
NC License Number F-0991

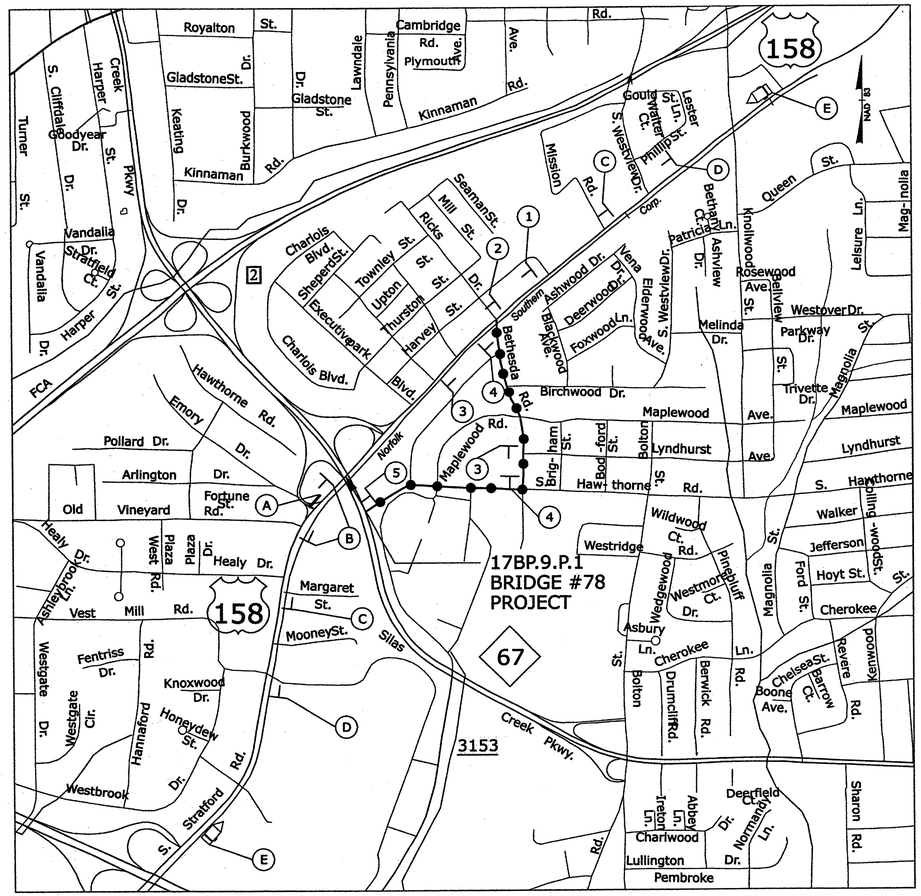

800′ 0′ 800′
GRAPHIC SCALE

DETOUR ROUTE

TYPE III BARRICADE

(A)

(B)

(C)

(D)

(E)

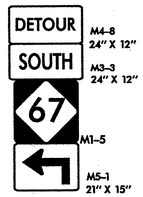

(1)

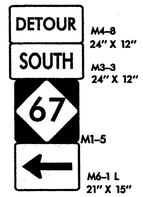

(2)

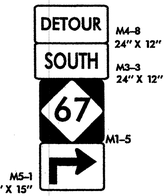

(3)

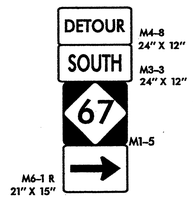

(4)

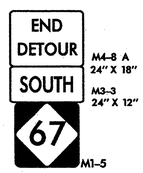

(5)

NOTES:

TRAFFIC CONTROL DEVICES (A) THRU (E) SHALL BE INSTALLED AS PER ENGINEER'S INSTRUCTION.

TRAFFIC CONTROL DEVICES (1) THRU (5) SHALL BE INSTALLED AS PER ENGINEER'S INSTRUCTION.

USE NCDOT RSD. 1101.02 SHEET 3 OF 15 TO CLOSE THE EASTBOUND LEFT TURN LANE ON US 158 TO THE NC 67 SOUTHBOUND RAMP.

APPROVED:_____ DATE:_____

SEAL

NORTH CAROLINA PROFESSIONAL SEAL 031467 ENGINEER RICHARD A. HOFFMAN
2-14-12

DIVISION OF HIGHWAYS
STATE OF NORTH CAROLINA
DEPARTMENT OF TRANSPORTATION
WORK ZONE TRAFFIC CONTROL

OFFSITE DETOUR D SIGNING AND ROAD CLOSURE SIGNING

PROJ. REFERENCE NO.	SHEET NO.
17BP.9.P.1	TMP-4A

STV/Ralph Whitehead Associates, Inc.
1000 West Morehead St., Ste. 200
Charlotte, NC 28208
NC License Number F-0991

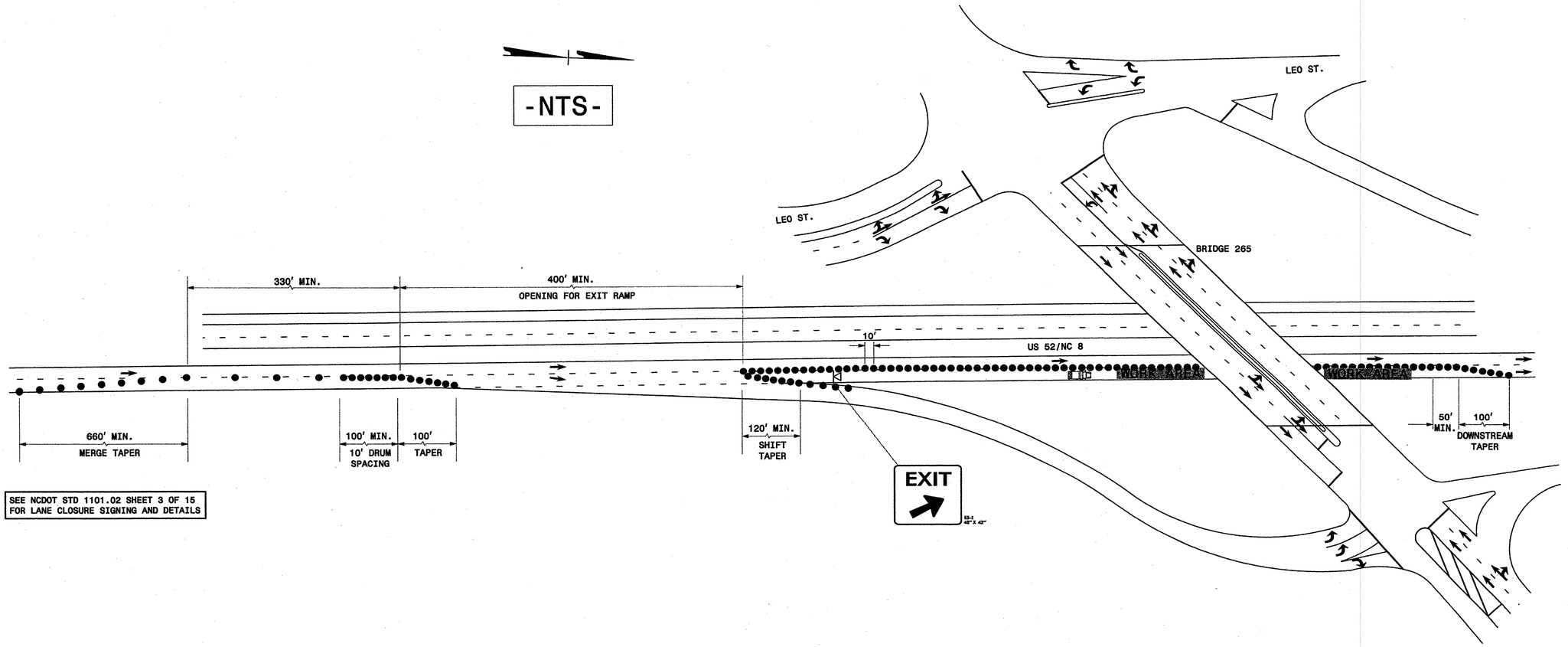

SEE NCDOT STD 1101.02 SHEET 3 OF 15
FOR LANE CLOSURE SIGNING AND DETAILS

GENERAL NOTES

1. PLACE ARROW BOARDS ON THE SHOULDER (PAVED OR UNPAVED). PLACE ARROW BOARDS WITHIN THE TAPER IF SHOULDERS DO NOT EXIST. MEET THE REQUIREMENTS FOR STOPPING SIGHT DISTANCE AT THE ARROW BOARD LOCATION. IF NEEDED, EXTEND LANE CLOSURES AT THE BUFFER SPACE, SUCH THAT STOPPING SIGHT DISTANCE TO THE ARROW BOARD IS MET (SEE STD. 1101.11 SHEET 2).
2. PLACE DRUMS IN TAPERS AT THE MAXIMUM SPACING EQUAL IN FEET TO THE POSTED SPEED LIMIT. PLACE DRUMS ALONG THE WORK AREA AT THE MAXIMUM SPACING EQUAL IN FEET TO 2 TIMES THE POSTED SPEED LIMIT.
3. INSTALL LANE CLOSURES WITH THE TRAFFIC FLOW, BEGINNING WITH DEVICES ON THE UPSTREAM SIDE OF TRAFFIC. REMOVE LANE CLOSURES AGAINST THE TRAFFIC FLOW, BEGINNIG WITH DEVICES ON THE DOWNSTREAM SIDE OF TRAFFIC.
4. POSITION THE TMA TO MAINTAIN A ROLL-AHEAD DISTANCE AS RECOMMENDED BY THE MANUFACTURER AND CONTINUOUSLY ADVANCE TMA'S AS WORK PROGRESSES.
5. PLACE CHANGEABLE MESSAGE SIGN (CMS) ON THE OUTSIDE OF THE TRAVELWAY AS DIRECTED BY THE ENGINEER, PLACE CMS APPROXIMATELY 1 MILE IN ADVANCE OF THE W20-5 SIGNS. IF TRAFFIC BACKS UP TO WHERE THE CMS IS INITIALLY PLACED, RELOCATE CMS ½ MILE IN ADVANCE OF ANTICIPATED BACKUP. CONTINUE TO MONITOR TRAFFIC, MOVE CMS APPROXIMATELY ½ MILE IN ADVANCE OF ANTICIPATED BACKUP.
6. DO NOT EXCEED A 2 MILE LANE CLOSURE LENGTH UNLESS OTHERWISE SHOWN IN THE TMP OR AS DIRECTED BY THE ENGINEER.
7. MOUNT EXIT SIGN A MINIMUM OF 5 FEET ABOVE THE PAVEMENT ELEVATION.
8. USE EXISTING RAMP OPENING LENGTH, BUT NO LESS THAN ½ ORIGINAL LENGTH. CONSIDER CLOSING RAMP IF ½ ORIGINAL LENGTH CANNOT BE OBTAINED, AS DIRECTED BY THE ENGINEER.

APPROVED:_____ DATE:_____

SEAL

NORTH CAROLINA PROFESSIONAL SEAL 031487 ENGINEER RICHARD A. ODYNSKI
2-14-12

DIVISION OF HIGHWAYS
STATE OF NORTH CAROLINA
DEPARTMENT OF TRANSPORTATION
WORK ZONE TRAFFIC CONTROL

US 52/NC 8 LANE
CLOSURE DETAIL A

2/10/2012
r:\traffic\trafficcontrol\tcp\microstation files\9PI_TMP_4.dgn
odynskra

PROJ. REFERENCE NO.	SHEET NO.
17BP.9.P.1	TMP-4B

STV/Ralph Whitehead Associates, Inc.
1000 West Morehead St., Ste. 200
Charlotte, NC 28208
NC License Number F-0991

-NTS-

SEE NCDOT STD 1101.02 SHEET 3 OF 15
FOR LANE CLOSURE SIGNING AND DETAILS

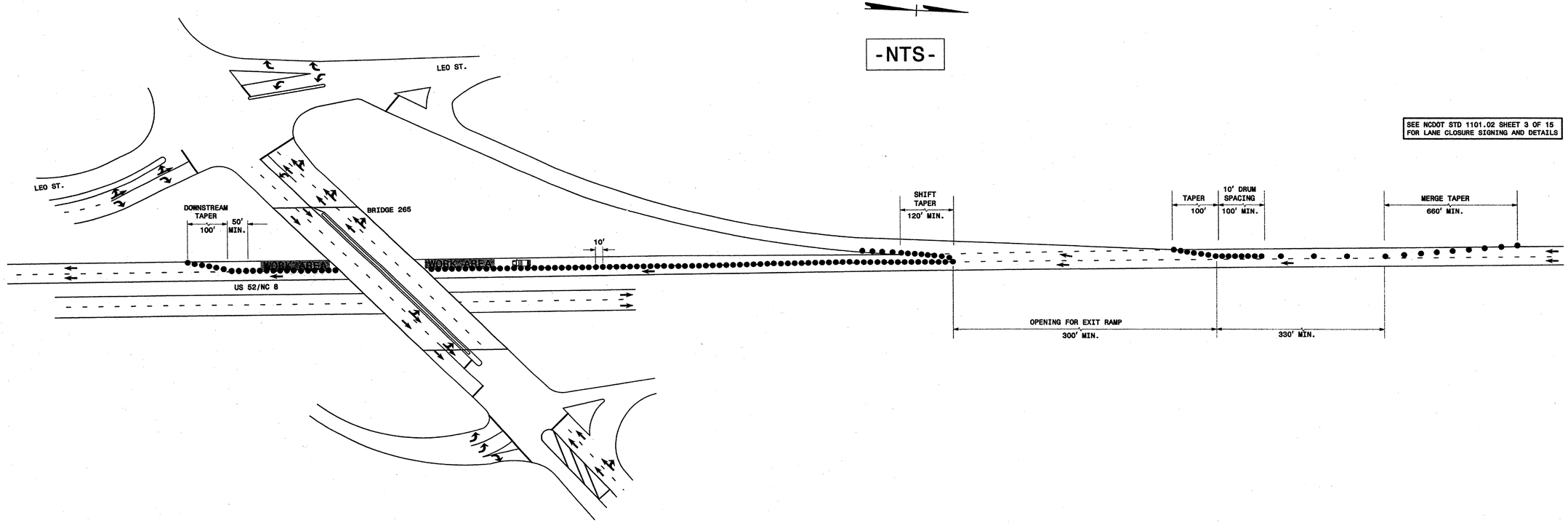

GENERAL NOTES

1. PLACE ARROW BOARDS ON THE SHOULDER (PAVED OR UNPAVED). PLACE ARROW BOARDS WITHIN THE TAPER IF SHOULDERS DO NOT EXIST. MEET THE REQUIREMENTS FOR STOPPING SIGHT DISTANCE AT THE ARROW BOARD LOCATION. IF NEEDED, EXTEND LANE CLOSURES AT THE BUFFER SPACE, SUCH THAT STOPPING SIGHT DISTANCE TO THE ARROW BOARD IS MET (SEE STD. 1101.11 SHEET 2).

2. PLACE DRUMS IN TAPERS AT THE MAXIMUM SPACING EQUAL IN FEET TO THE POSTED SPEED LIMIT. PLACE DRUMS ALONG THE WORK AREA AT THE MAXIMUM SPACING EQUAL IN FEET TO 2 TIMES THE POSTED SPEED LIMIT.

3. INSTALL LANE CLOSURES WITH THE TRAFFIC FLOW, BEGINNING WITH DEVICES ON THE UPSTREAM SIDE OF TRAFFIC. REMOVE LANE CLOSURES AGAINST THE TRAFFIC FLOW, BEGINNIG WITH DEVICES ON THE DOWNSTREAM SIDE OF TRAFFIC.

4. POSITION THE TMA TO MAINTAIN A ROLL-AHEAD DISTANCE AS RECOMMENDED BY THE MANUFACTURER AND CONTINUOUSLY ADVANCE TMA'S AS WORK PROGRESSES.

5. PLACE CHANGEABLE MESSAGE SIGN (CMS) ON THE OUTSIDE OF THE TRAVELWAY AS DIRECTED BY THE ENGINEER, PLACE CMS APPROXIMATELY 1 MILE IN ADVANCE OF THE W20-5 SIGNS. IF TRAFFIC BACKS UP TO WHERE THE CMS IS INITIALLY PLACED, RELOCATE CMS ½ MILE IN ADVANCE OF ANTICIPATED BACKUP. CONTINUE TO MONITOR TRAFFIC, MOVE CMS APPROXIMATELY ½ MILE IN ADVANCE OF ANTICIPATED BACKUP.

6. DO NOT EXCEED A 2 MILE LANE CLOSURE LENGTH UNLESS OTHERWISE SHOWN IN THE TMP OR AS DIRECTED BY THE ENGINEER.

7. MOUNT EXIT SIGNS A MINIMUM OF 5 FEET ABOVE THE PAVEMENT ELEVATION.

8. USE EXISTING RAMP OPENING LENGTH, BUT NO LESS THAN ½ ORIGINAL LENGTH. CONSIDER CLOSING RAMPIF ½ ORIGINAL LENGTH CANNOT BE OBTAINED, AS DIRECTED BY THE ENGINEER.

APPROVED:_____ DATE:_____

SEAL

NORTH CAROLINA PROFESSIONAL SEAL 031406 ENGINEER RICHARD A. ODYNSKI
2-14-12

DIVISION OF HIGHWAYS · STATE OF NORTH CAROLINA · DEPARTMENT OF TRANSPORTATION · WORK ZONE TRAFFIC CONTROL

US 52/NC 8 LANE CLOSURE DETAIL B

2/10/2012
r:\traffic\trafficcontrol\tcp\microstation files\9PL_TMP_4A.dgn
odynskra

PROJ. REFERENCE NO.	SHEET NO.
17BP.9.P.1	SD-1

STV/Ralph Whitehead Associates, Inc.
1000 West Morehead St., Ste. 200
Charlotte, NC 28208
NC License Number F-0991

DESIGN BY: JRG | CHECKED BY: RAO | STD #:

PROJECT ID: 17BP.9.P.1 | DIV: 9 | DATE: Dec 1, 2011

SIGN NUMBER:

TYPE: STATIONARY

QUANTITY: SEE PLANS

SIGN WIDTH: 3'-0"

HEIGHT: 1'-0"

TOTAL AREA: 3.0 Sq.Ft.

BORDER TYPE: INSET

RECESS: 0.5"

WIDTH:0.5"

RADII: 3"

NO. Z BARS:

LENGTH:

BACKG COLOR: Flourescent Orange

COPY COLOR: Black

MAJ. COPY SERIES:

ROUTE MARKERS:

ARROW TYPES:

MAT'L:
0.080" (2.0 mm) Aluminum
0.079" (2.0 mm) Composite

LETTER POSITIONS

	T	h	i	r	d		S	t		
6.7	3.2	3.4	1.6	2	2.6	5	3.2	1.8	6.7	22.7

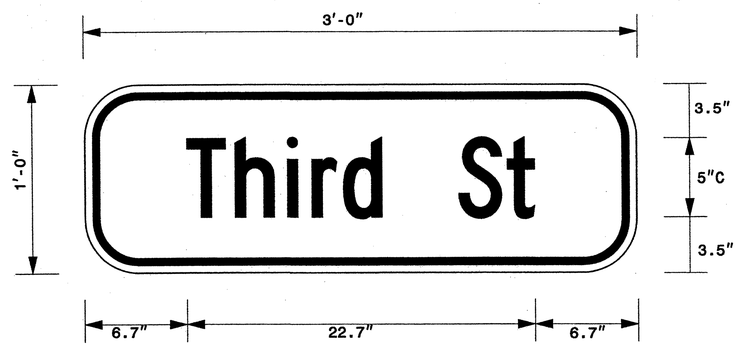

BORDER

R=3"

TH=0.5"

IN=0.5"

Panel Style: Street Name TC 12in.ssi
M.U.T.C.D.: 2003 Edition

USE NOTES: 1,2

1. Legend and border shall be direct applied black non-reflective sheeting.
2. Background shall be Type VII, VIII, or IX (prismatic) fluorescent orange retroreflective sheeting.

APPROVED:_____ DATE:_____

SEAL

NORTH CAROLINA PROFESSIONAL SEAL 030180 ENGINEER RICHARD OLIVER
2-14-12

DIVISION OF HIGHWAYS · STATE OF NORTH CAROLINA · DEPARTMENT OF TRANSPORTATION · WORK ZONE TRAFFIC CONTROL

SIGN DETAIL - 1

2/10/2012
F:\traffic\trafficcontrol\tcp\microstation files\9PLSD1.dgn
odynskra