CONTRACT: C202815

TIP PROJECT: U-2551

See Sheet 1-A For Index of Sheets
See Sheet 1-B For Conventional Symbols

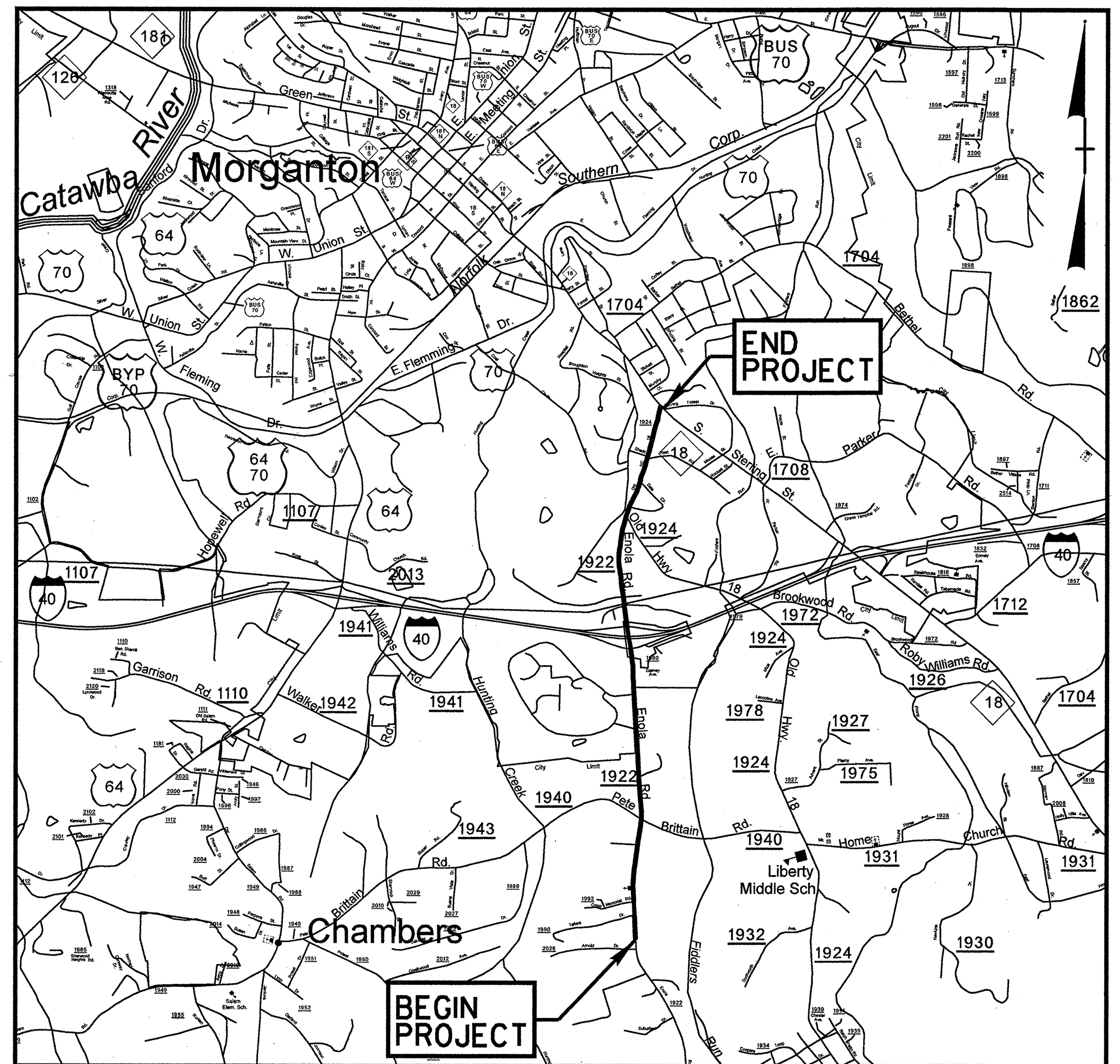

VICINITY MAP

STATE OF NORTH CAROLINA
DIVISION OF HIGHWAYS

BURKE COUNTY

STATE	STATE PROJECT REFERENCE NO.	SHEET NO.	TOTAL SHEETS
N.C.	U-2551	1	

STATE PROJ. NO.	F.A. PROJ. NO.	DESCRIPTION
34832.1.1	STP-1922 (1)	PE
34832.2.2	STP-1922 (1)	ROW, UTIL
34832.3.1	STP-1922 (1)	CONST.

LOCATION: *Morganton – SR 1922 (Enola Rd) / SR 1924 (Old NC 18) from SR 2026 (Arnold Drive) to NC 18 (South Sterling Street)*

TYPE OF WORK: *WIDENING, GRADING, PAVING, DRAINAGE STRUCTURE, RETAINING WALL AND SIGNALS*

NAD 83 /86

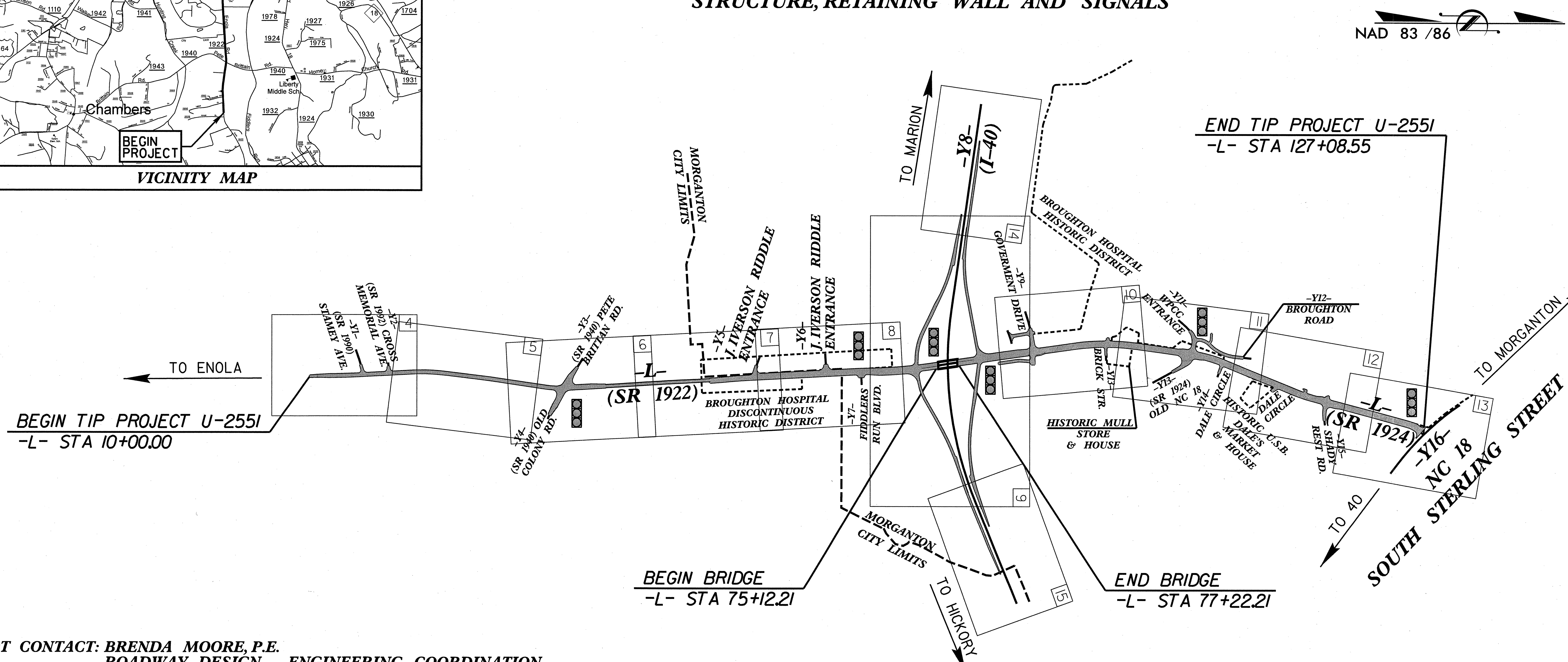

NCDOT CONTACT: ***BRENDA MOORE, P.E.***
ROADWAY DESIGN – ENGINEERING COORDINATION

GRAPHIC SCALES

50 25 0 50 100
PLANS

50 25 0 50 100
PROFILE (HORIZONTAL)

10 5 0 10 20
PROFILE (VERTICAL)

DESIGN DATA

ADT 2012 = 15364
ADT 2032 = 22504
DHV = 9 %
D = 60 %
T = 7 % *
V = 40 MPH
* (TTST 3 / DUAL 4)

REGIONAL TIER

PROJECT LENGTH

LENGTH OF ROADWAY TIP PROJECT U-2551 = 2.178 miles
LENGTH OF STRUCTURE TIP PROJECT U-2551 = 0.040 miles
TOTAL LENGTH TIP PROJECT U-2551 = 2.218 miles

PLANS PREPARED BY:

ARCADIS G & M of North Carolina, Inc.
WWW.ARCADIS-US.COM
801 Corporate Center Drive, Suite 300
Raleigh, NC 27607-5073
Tel: 919/854-1282 Fax: 919/854-5448 NC License No. C-1869

Florence & Hutcheson
CONSULTING ENGINEERS
5121 Kingdom Way, Suite 100 Raleigh, NC 27607
NC License No: F-0258

FOR THE DIVISION OF HIGHWAYS

2012 STANDARD SPECIFICATIONS

RIGHT OF WAY DATE:
SEPTEMBER 30, 2010

LETTING DATE:
APRIL 17, 2012

STEVE SMALLWOOD, P.E.
PROJECT ENGINEER

HYDRAULICS ENGINEER

NORTH CAROLINA PROFESSIONAL SEAL 024451 ENGINEER STACEY H. BAILEY

1/31/12 P.E.

SIGNATURE:

ROADWAY DESIGN ENGINEER

NORTH CAROLINA PROFESSIONAL SEAL 022037 ENGINEER STEPHEN T. SMALLWOOD

P.E.

SIGNATURE:

STATE OF NORTH CAROLINA DEPARTMENT OF TRANSPORTATION

09/08/99

$$$$$$$$SYSTIME$$$$$$$$$
$$$$$$$$$$$$$$DGN$$$$$$$$$$$$$$$$$$
$$$$$$$$USERNAME$$$$$$$

2551_rdy_tsh.dgn 1/31/2012 7:55:35 AM

TIP PROJECT: U-2551

CONTRACT: C202815

See Sheet 1-A For Index of Sheets
See Sheet 1-B For Conventional Symbols

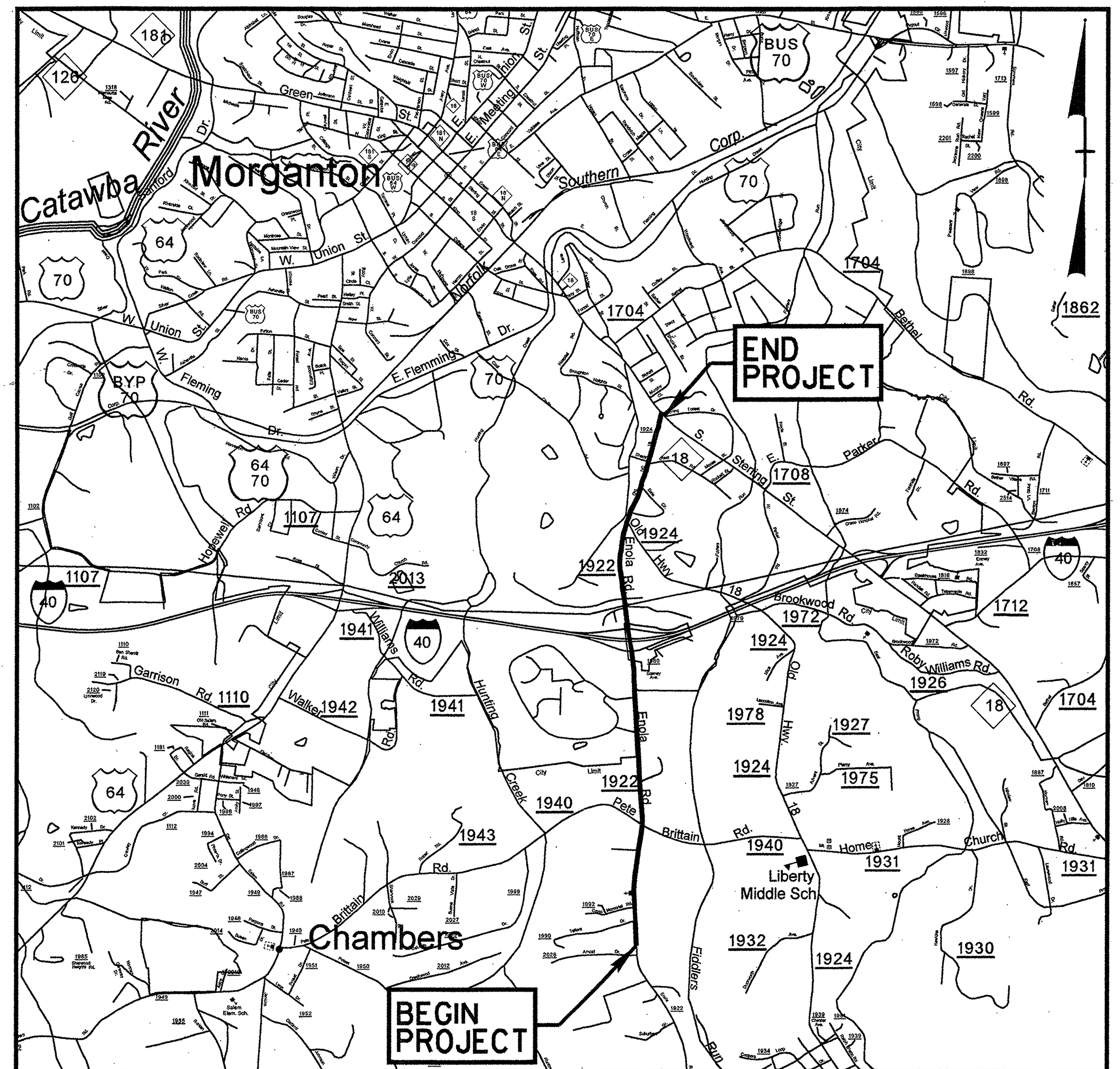

VICINITY MAP

STATE OF NORTH CAROLINA
DIVISION OF HIGHWAYS

BURKE COUNTY

LOCATION: *Morganton – SR 1922 (Enola Rd) /SR 1924 (Old NC 18) from SR 2026 (Arnold Drive) to NC 18 (South Sterling Street)*

TYPE OF WORK: *WIDENING, GRADING, PAVING, DRAINAGE STRUCTURE, RETAINING WALL AND SIGNALS*

STATE	STATE PROJECT REFERENCE NO.	SHEET NO.	TOTAL SHEETS
N.C.	U-2551	1	

STATE PROJ. NO.	F.A. PROJ. NO.	DESCRIPTION
34832.1.1	STP-1922 (1)	PE
34832.2.2	STP-1922 (1)	ROW, UTIL
34832.3.1	STP-1922 (1)	CONST.

Part 1of 2

NAD 83 /86

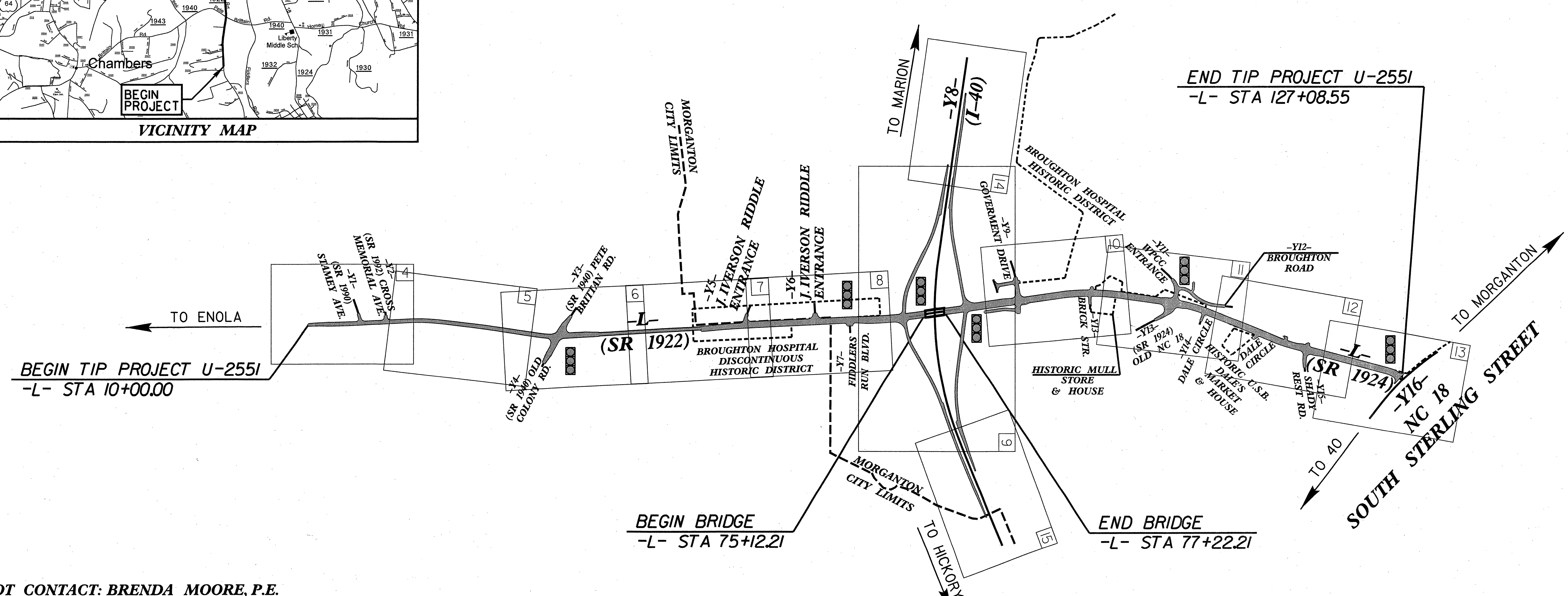

NCDOT CONTACT: BRENDA MOORE, P.E.
ROADWAY DESIGN – ENGINEERING COORDINATION

GRAPHIC SCALES

50 25 0 50 100 — PLANS

50 25 0 50 100 — PROFILE (HORIZONTAL)

10 5 0 10 20 — PROFILE (VERTICAL)

DESIGN DATA

ADT 2012 = 15364
ADT 2032 = 22504
DHV = 9 %
D = 60 %
T = 7 % *
V = 40 MPH
* (TTST 3 / DUAL 4)

REGIONAL TIER

PROJECT LENGTH

LENGTH OF ROADWAY TIP PROJECT U-2551 = 2.178 miles
LENGTH OF STRUCTURE TIP PROJECT U-2551 = 0.040 miles
TOTAL LENGTH TIP PROJECT U-2551 = 2.218 miles

PLANS PREPARED BY:

ARCADIS G & M of North Carolina, Inc.
WWW.ARCADIS-US.COM
801 Corporate Center Drive, Suite 300
Raleigh, NC 27607-5073
Tel: 919/854-1282 Fax: 919/854-5448 NC License No. C-1869

Florence & Hutcheson
CONSULTING ENGINEERS
5121 Kingdom Way, Suite 100 Raleigh, NC 27607
NC License No: F-0268

FOR THE DIVISION OF HIGHWAYS

2012 STANDARD SPECIFICATIONS

RIGHT OF WAY DATE:
SEPTEMBER 30, 2010

LETTING DATE:
APRIL 17, 2012

STEVE SMALLWOOD, P.E.
PROJECT ENGINEER

HYDRAULICS ENGINEER
NORTH CAROLINA PROFESSIONAL SEAL 24451 ENGINEER STACEY H. BAILEY
1/31/12 P.E.
SIGNATURE:

ROADWAY DESIGN ENGINEER
NORTH CAROLINA PROFESSIONAL SEAL 022037 ENGINEER STEPHEN T. SMALLWOOD
P.E.
SIGNATURE:

STATE OF NORTH CAROLINA DEPARTMENT OF TRANSPORTATION

09/08/99

$$$$$$SYSTIME$$$$$
$$$$$$$$$$$$$$$$DGN$$$$$$$$$$$$$$$$$$$$$$
$$$$USERNAME$$$$

551 rdy tsh dan 1/31/2012 7:55:35 AM

04/16/11

STATE OF NORTH CAROLINA
DIVISION OF HIGHWAYS

PROJECT REFERENCE NO.	SHEET NO.
U-2551	1A

ROADWAY DESIGN ENGINEER

NORTH CAROLINA PROFESSIONAL SEAL 022037 ENGINEER STEPHEN T. SMALLWOOD 2/13/12

SEAL NOT VALID UNLESS SIGNED AND DATED

INDEX OF SHEETS

SHEET NUMBER	SHEET
1	TITLE SHEET
1-A	INDEX OF SHEETS, GENERAL NOTES, & LIST OF STANDARD DRAWINGS
1-B	CONVENTIONAL SYMBOLS
1-C THRU 1-G	SURVEY CONTROL SHEETS
2 THRU 2-G	PAVEMENT SCHEDULE, WEDGING DETAIL & TYPICAL SECTIONS
2-H THRU 2-N	INTERSECTION DETAILS
2-O	SHEAR POINT DIAGRAM
2-P	DETAIL OF TRANSITION FROM WEAK TO STRONG POST GUARDRAIL
2-Q	CONCRETE STEPS AND HANDRAIL
2-R	ROCK PLATING DETAIL
2-S	STANDARD TEMPORARY SHORING
2-T THRU 2-V	STANDARD TEMPORARY WALL
3 (3 SHEETS)	SUMMARY OF QUANTITIES
3-A THRU 3-I	SUMMARY OF DRAINAGE QUANTITIES
3-J	SUMMARY OF GUARDRAIL
3-K	SUMMARY OF PAVEMENT REMOVAL, WOVEN WIRE AND CHAIN LINK FENCE
3-L	EARTHWORK SUMMARY
3-M	PARCEL INDEX SHEET
4 THRU 15	PLAN SHEETS
16 THRU 29	PROFILE SHEETS
TMP-1 THRU TMP-59	TRAFFIC CONTROL PLANS
PMP-1 THRU PMP-15	PAVEMENT MARKING PLANS
E-1 THRU E-3	ELECTRICAL PLANS
EC-1 THRU EC-27	EROSION CONTROL PLANS
SIGN-1 THRU SIGN-18	SIGNING PLANS
SD-1	SPECIAL SIGN DESIGN
SIG-1 THRU SIG-100	SIGNAL PLANS
UC-1 THRU UC-14	UTILITY CONSTRUCTION PLANS
UO-1 THRU UO-11	UTILITIES BY OTHERS PLANS
X-1A THRU X-1C	CROSS SECTION SUMMARY SHEETS
X-1 THRU X-127	CROSS SECTIONS
S-1 THRU S-47	STRUCTURE PLANS
W-1 THRU W-3	RETAINING WALL PLANS

GENERAL NOTES: 2012 SPECIFICATIONS

EFFECTIVE: 01-17-12
REVISED: 11-01-11

GRADING AND SURFACING OR RESURFACING AND WIDENING:

THE GRADE LINES SHOWN DENOTE THE FINISHED ELEVATION OF THE PROPOSED SURFACING AT GRADE POINTS SHOWN ON THE TYPICAL SECTIONS. WHERE NO GRADE LINES ARE SHOWN, THE PROFILES SHOWN DENOTE THE TOP ELEVATION OF THE EXISTING PAVEMENT ALONG THE CENTER LINE OF SURVEY ON WHICH THE PROPOSED RESURFACING WILL BE PLACED. GRADE LINES MAY BE ADJUSTED BY THE ENGINEER IN ORDER TO SECURE A PROPER TIE-IN.

CLEARING:

CLEARING ON THIS PROJECT SHALL BE PERFORMED TO THE LIMITS ESTABLISHED BY METHOD II.

SUPERELEVATION:

ALL CURVES ON THIS PROJECT SHALL BE SUPERELEVATED IN ACCORDANCE WITH STD. NO. 225.06. USING THE RATE OF SUPERELEVATION AND RUNOFF SHOWN ON THE PLANS. SUPERELEVATION IS TO BE REVOLVED ABOUT THE GRADE POINTS SHOWN ON THE TYPICAL SECTIONS.

SHOULDER CONSTRUCTION:

ASPHALT, EARTH, AND CONCRETE SHOULDER CONSTRUCTION ON THE HIGH SIDE OF SUPERELEVATED CURVES SHALL BE IN ACCORDANCE WITH STD. NO. 560.02.

SIDE ROADS:

THE CONTRACTOR WILL BE REQUIRED TO DO ALL NECESSARY WORK TO PROVIDE SUITABLE CONNECTIONS WITH ALL ROADS, STREETS, AND DRIVES ENTERING THIS PROJECT. THIS WORK WILL BE PAID FOR AT THE CONTRACT UNIT PRICE FOR THE PARTICULAR ITEMS INVOLVED.

UNDERDRAINS:

UNDERDRAINS SHALL BE CONSTRUCTED IN ACCORDANCE WITH STD. NO. 815.03 AT LOCATIONS DIRECTED BY THE ENGINEER.

DRIVEWAYS:

DRIVEWAYS SHALL BE CONSTRUCTED IN ACCORDANCE WITH STD. 848.02. USING 3' RADII OR RADII AS SHOWN ON THE PLANS. LOCATIONS OF DRIVES WILL BE SHOWN ON THE PLANS OR AS DIRECTED BY THE ENGINEER.

STREET TURNOUT:

STREET RETURNS SHALL BE CONSTRUCTED IN ACCORDANCE WITH STD. NO. 848.04 USING THE RADII NOTED ON PLANS.

GUARDRAIL:

THE GUARDRAIL LOCATIONS SHOWN ON THE PLANS MAY BE ADJUSTED DURING CONSTRUCTION AS DIRECTED BY THE ENGINEER. THE CONTRACTOR SHOULD CONSULT WITH THE ENGINEER PRIOR TO ORDERING GUARDRAIL MATERIAL.

TEMPORARY SHORING:

SHORING REQUIRED FOR THE MAINTENANCE OF TRAFFIC NOT SHOWN ON THE PLANS WILL BE PAID FOR AT THE CONTRACT PRICE FOR "TEMPORARY SHORING".

END BENTS:

THE ENGINEER SHALL CHECK THE STRUCTURE END BENT PLANS, DETAILS, AND CROSS-SECTION PRIOR TO SETTING OF THE SLOPE STAKES FOR THE EMBANKMENT OR EXCAVATION APPROACHING A BRIDGE.

UTILITIES:

UTILITY OWNERS ON THIS PROJECT ARE AT&T (TELEPHONE), PIEDMONT NATURAL GAS (GAS), COMPAS CABLE & INTERNET (CABLE TV), CITY OF MORGANTON, RUTHERFORD ELECTRIC MEMBERSHIP CORP. & DUKE ENERGY (POWER) & CITY OF MORGANTON (WATER & SEWER).

ANY RELOCATION OF EXISTING UTILITIES WILL BE ACCOMPLISHED BY OTHERS, EXCEPT AS SHOWN ON THE PLANS.

RIGHT-OF-WAY MARKERS:

ALL RIGHT-OF-WAY MARKERS ON THIS PROJECT SHALL BE PLACED BY CONTRACT.

CURB RAMPS:

CURB RAMPS ARE SHOWN ON THE PLANS AT APPROXIMATE LOCATIONS. CONSTRUCT ALL CURB RAMPS ACCORDANCE WITH STD. 848.05 AND 848.06.

2012 ROADWAY ENGLISH STANDARD DRAWINGS

EFF. 01-17-12

The following Roadway Standards as appear in "Roadway Standard Drawings" Highway Design Branch – N. C. Department of Transportation – Raleigh, N. C., Dated January, 2012 are applicable to this project and by reference hereby are considered a part of these plans:

STD.NO.	TITLE
DIVISION 2 – EARTHWORK	
200.02	Method of Clearing – Method II
225.01	Guide for Grading Subgrade – Interstate and Freeway
225.02	Guide for Grading Subgrade – Secondary and Local
225.03	Deceleration and Acceleration Lanes
225.04	Method of Obtaining Superelevation – Two Lane Pavement
225.06	Method of Grading Sight Distance at Intersections
225.09	Guide for Shoulder and Ditch Transition at Grade Separations
DIVISION 3 – PIPE CULVERTS	
300.01	Method of Pipe Installation
DIVISION 4 – MAJOR STRUCTURES	
422.10	Reinforced Bridge Approach Fills
DIVISION 5 – SUBGRADE, BASES AND SHOULDERS	
560.02	Method of Shoulder Construction – High Side of Superelevated Curve – Method II
DIVISION 6 – ASPHALT BASES AND PAVEMENTS	
610.03	Guide for Paving shoulders Under Bridges – Method III
654.01	Pavement Repairs
665.01	Asphalt Shoulders – Milled Rumble Strips
DIVISION 8 – INCIDENTALS	
806.01	Concrete Right-of-Way Marker
806.02	Granite Right-of-Way Marker
815.03	Pipe Underdrain and Blind Drain
840.00	Concrete Base Pad for Drainage Structures
840.01	Brick Catch Basin – 12" thru 54" Pipe
840.02	Concrete Catch Basin – 12" thru 54" Pipe
840.03	Frame, Grates and Hood – for Use on Standard Catch Basin
840.14	Concrete Drop Inlet – 12" thru 30" Pipe
840.15	Brick Drop Inlet – 12' thur 30" Pipe
840.16	Drop Inlet Frame and Grates – for use with Std. Dwg. 840.14 and 840.15
840.17	Concrete Grated Drop Inlet Type 'A' – 12" thru 72" Pipe
840.18	Concrete Grated Drop Inlet Type 'B' – 12' thru 36" Pipe
840.19	Concrete Grated Drop Inlet Type 'D' – 12' thru 36" Pipe
840.20	Frames and Wide Slot Flat Grates
840.22	Frames and Wide Slot Sag Grates
840.24	Frames and Narrow Slot Sag Grates
840.25	Anchorage for Frames – Brick or Concrete
840.26	Brick Grated Drop Inlet Type 'A' – 12" thru 72" Pipe
840.27	Brick Grated Drop Inlet Type 'B' – 12" thru 36" Pipe
840.28	Brick Grated Drop Inlet Type 'D' – 12" thru 36" Pipe
840.31	Concrete Junction Box – 12" thru 66" Pipe
840.32	Brick Junction Box – 12" thru 66" Pipe
840.34	Traffic Bearing Junction Box – for Use with Pipes 42" and Under
840.36	Traffic Bearing Grated Drop Inlet – for Steel (840.37) Double Frame and Grates
840.37	Steel Grate and Frame
840.45	Precast Drainage Structure
840.46	Traffic Bearing Precast Drainage Structure
840.54	Manhole Frame and Cover
840.66	Drainage Structure Steps
840.71	Concrete and Brick Pipe Plug
840.72	Pipe Collar
846.01	Concrete Curb, Gutter and Curb & Gutter
846.04	Drop Inlet Installation in Shoulder Berm Gutter
848.01	Concrete Sidewalk
848.02	Driveway Turnout – Radius Type
848.04	Street Turnout
848.05	Curb Ramp – Proposed Curb & Gutter
852.01	Concrete Islands
852.05	Median Curb for Catch Basin – for Use with 1'-6" Curb and Gutter
852.06	Method for Placement of Drop Inlets in Concrete Islands
857.01	Precast Reinforced Concrete Barrier – 41" Single Faced
862.01	Guardrail Placement
862.02	Guardrail Installation
862.03	Structure Anchor Units
866.01	Chain Link Fence – 4',5' and 6' High Fence
866.02	Woven Wire Fence – with Wood Post
876.01	Rip Rap in Channels
876.02	Guide for Rip Rap at Pipe Outlets
876.04	Drainage Ditches with Class 'B' Rip Rap

2551 rdy 1sh.dgn 2/3/2012 10:13:49 AM

04/16/11

PROJECT REFERENCE NO.	SHEET NO.
U-2551	1-B

Note: Not to Scale

S.U.E. = Subsurface Utility Engineering

STATE OF NORTH CAROLINA
DIVISION OF HIGHWAYS

CONVENTIONAL PLAN SHEET SYMBOLS

BOUNDARIES AND PROPERTY:

- State Line
- County Line
- Township Line
- City Line
- Reservation Line
- Property Line
- Existing Iron Pin — EIP
- Property Corner
- Property Monument — ECM
- Parcel/Sequence Number — 123
- Existing Fence Line
- Proposed Woven Wire Fence
- Proposed Chain Link Fence
- Proposed Barbed Wire Fence
- Existing Wetland Boundary — WLB
- Proposed Wetland Boundary — WLB
- Existing Endangered Animal Boundary — EAB
- Existing Endangered Plant Boundary — EPB
- Known Soil Contamination: Area or Site
- Potential Soil Contamination: Area or Site

BUILDINGS AND OTHER CULTURE:

- Gas Pump Vent or U/G Tank Cap
- Sign — S
- Well — W
- Small Mine
- Foundation
- Area Outline
- Cemetery
- Building
- School
- Church
- Dam

HYDROLOGY:

- Stream or Body of Water
- Hydro, Pool or Reservoir
- Jurisdictional Stream — JS
- Buffer Zone 1 — BZ 1
- Buffer Zone 2 — BZ 2
- Flow Arrow
- Disappearing Stream
- Spring
- Wetland
- Proposed Lateral, Tail, Head Ditch — FLOW
- False Sump

RAILROADS:

- Standard Gauge — CSX TRANSPORTATION
- RR Signal Milepost — MILEPOST 35
- Switch — SWITCH
- RR Abandoned
- RR Dismantled

RIGHT OF WAY:

- Baseline Control Point
- Existing Right of Way Marker
- Existing Right of Way Line
- Proposed Right of Way Line — RW
- Proposed Right of Way Line with Iron Pin and Cap Marker — RW
- Proposed Right of Way Line with Concrete or Granite Marker — RW
- Existing Control of Access — CA
- Proposed Control of Access — CA
- Existing Easement Line — E
- Proposed Temporary Construction Easement — E
- Proposed Temporary Drainage Easement — TDE
- Proposed Permanent Drainage Easement — PDE
- Proposed Permanent Drainage / Utility Easement — DUE
- Proposed Permanent Utility Easement — PUE
- Proposed Temporary Utility Easement — TUE
- Proposed Aerial Utility Easement — AUE
- Proposed Permanent Easement with Iron Pin and Cap Marker

ROADS AND RELATED FEATURES:

- Existing Edge of Pavement
- Existing Curb
- Proposed Slope Stakes Cut — C
- Proposed Slope Stakes Fill — F
- Proposed Curb Ramp — CR
- Existing Metal Guardrail
- Proposed Guardrail
- Existing Cable Guiderail
- Proposed Cable Guiderail
- Equality Symbol
- Pavement Removal

VEGETATION:

- Single Tree
- Single Shrub
- Hedge
- Woods Line
- Orchard
- Vineyard — Vineyard

EXISTING STRUCTURES:

MAJOR:

- Bridge, Tunnel or Box Culvert — CONC
- Bridge Wing Wall, Head Wall and End Wall — CONC WW

MINOR:

- Head and End Wall — CONC HW
- Pipe Culvert
- Footbridge
- Drainage Box: Catch Basin, DI or JB — CB
- Paved Ditch Gutter
- Storm Sewer Manhole — S
- Storm Sewer — S

UTILITIES:

POWER:

- Existing Power Pole
- Proposed Power Pole
- Existing Joint Use Pole
- Proposed Joint Use Pole
- Power Manhole — P
- Power Line Tower
- Power Transformer
- U/G Power Cable Hand Hole
- H-Frame Pole
- Recorded U/G Power Line — P
- Designated U/G Power Line (S.U.E.*) — P

TELEPHONE:

- Existing Telephone Pole
- Proposed Telephone Pole
- Telephone Manhole — T
- Telephone Booth
- Telephone Pedestal — T
- Telephone Cell Tower
- U/G Telephone Cable Hand Hole — HH
- Recorded U/G Telephone Cable — T
- Designated U/G Telephone Cable (S.U.E.*) — T
- Recorded U/G Telephone Conduit — TC
- Designated U/G Telephone Conduit (S.U.E.*) — TC
- Recorded U/G Fiber Optics Cable — T FO
- Designated U/G Fiber Optics Cable (S.U.E.*) — T FO

WATER:

- Water Manhole — W
- Water Meter
- Water Valve
- Water Hydrant
- Recorded U/G Water Line
- Designated U/G Water Line (S.U.E.*)
- Above Ground Water Line — A/G Water

TV:

- TV Satellite Dish
- TV Pedestal — C
- TV Tower
- U/G TV Cable Hand Hole — HH
- Recorded U/G TV Cable — TV
- Designated U/G TV Cable (S.U.E.*) — TV
- Recorded U/G Fiber Optic Cable — TV FO
- Designated U/G Fiber Optic Cable (S.U.E.*) — TV FO

GAS:

- Gas Valve
- Gas Meter
- Recorded U/G Gas Line — G
- Designated U/G Gas Line (S.U.E.*) — G
- Above Ground Gas Line — A/G Gas

SANITARY SEWER:

- Sanitary Sewer Manhole
- Sanitary Sewer Cleanout
- U/G Sanitary Sewer Line — SS
- Above Ground Sanitary Sewer — A/G Sanitary Sewer
- Recorded SS Forced Main Line — FSS
- Designated SS Forced Main Line (S.U.E.*) — FSS

MISCELLANEOUS:

- Utility Pole
- Utility Pole with Base
- Utility Located Object
- Utility Traffic Signal Box — S
- Utility Unknown U/G Line — ?UTL
- U/G Tank; Water, Gas, Oil
- Underground Storage Tank, Approx. Loc. — UST
- A/G Tank; Water, Gas, Oil
- Geoenvironmental Boring
- U/G Test Hole (S.U.E.*)
- Abandoned According to Utility Records — AATUR
- End of Information — E.O.I.

PROJECT REFERENCE NO.	SHEET NO.
U-2551	1C
Location and Surveys	

6/2/99

SURVEY CONTROL SHEET U-2551

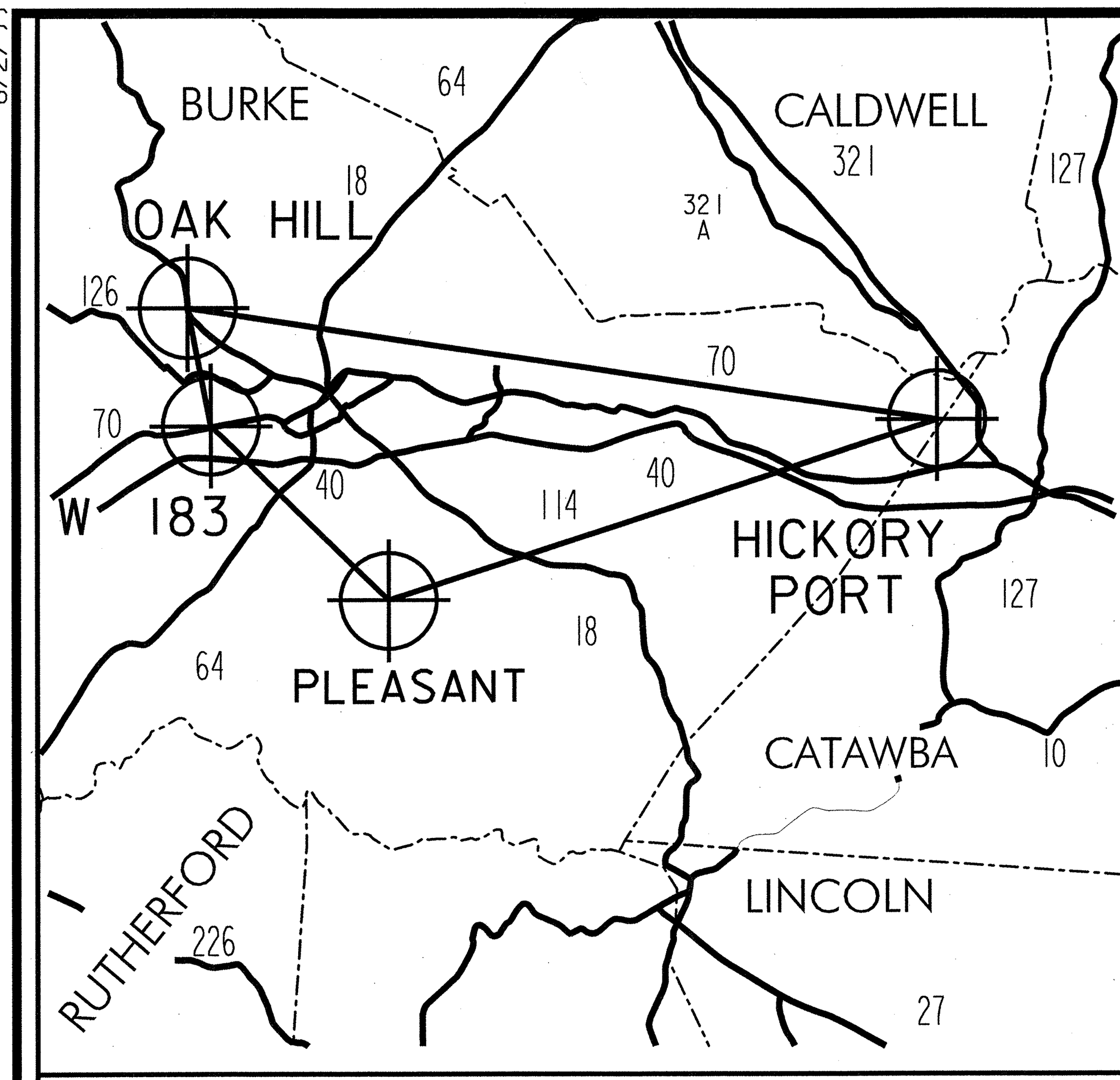

GPS NETWORK CONTROL

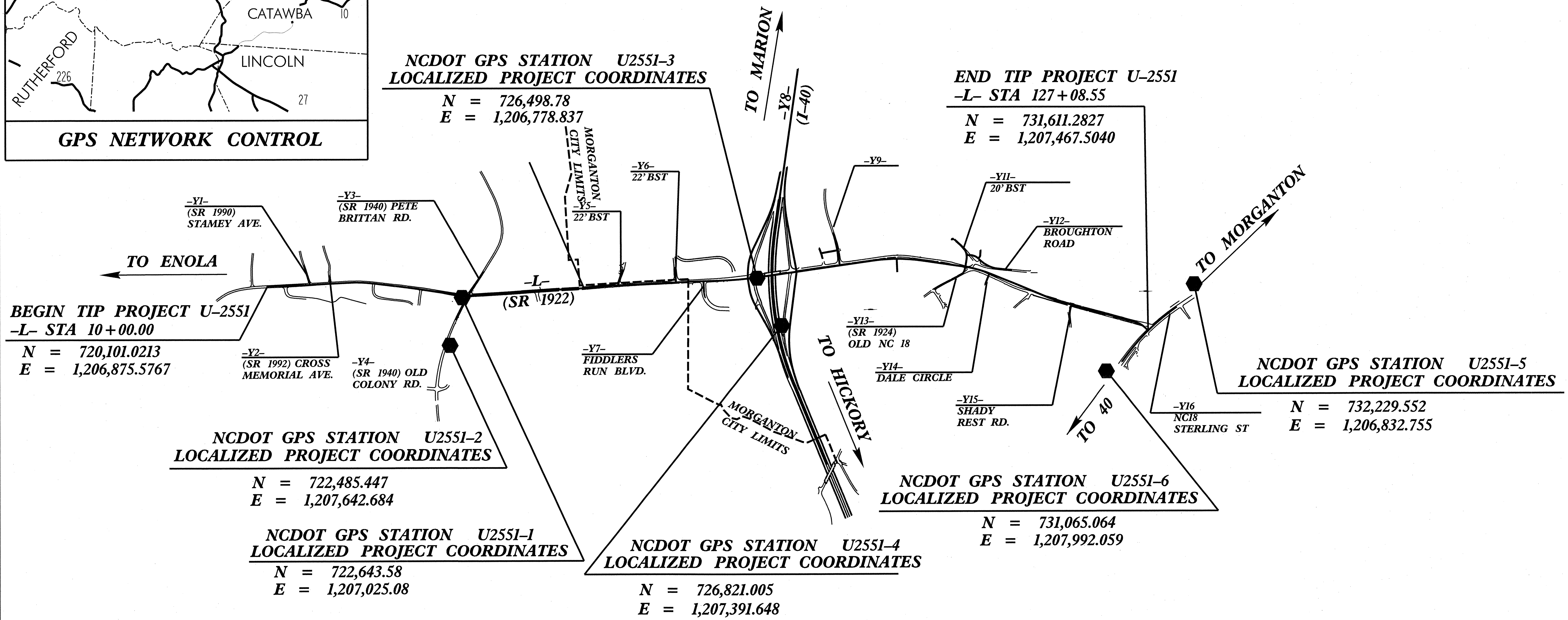

DATUM DESCRIPTION

THE LOCALIZED COORDINATE SYSTEM DEVELOPED FOR THIS PROJECT IS BASED ON THE STATE PLANE COORDINATES ESTABLISHED BY NCDOT FOR MONUMENT "U2551-3"
WITH NAD 83/86 STATE PLANE GRID COORDINATES OF
NORTHING: 726,498.78(ft) EASTING: 1,206,778.837(ft)
THE AVERAGE COMBINED GRID FACTOR USED ON THIS PROJECT (GROUND TO GRID) IS: 0.999854830
THE N.C. LAMBERT GRID BEARING AND LOCALIZED HORIZONTAL GROUND DISTANCE FROM "U2551-3" TO -L- STATION 10+00 IS
S 0°51'59" E 6,398.49
ALL LINEAR DIMENSIONS ARE LOCALIZED HORIZONTAL DISTANCES
VERTICAL DATUM USED IS NGVD 29

NOTE: DRAWING NOT TO SCALE

NOTES:

1. *NO CALIBRATION WAS DONE AT THIS TIME*
   IF A SYSTEM SUCH AS VRS (VIRTUAL REFERENCE STATION) IS USED, ADDITIONAL FIELD TIES MAY BE NEEDED TO REDUCE POSSIBLE ERRORS, OR BIASES.
2. *THE CONTROL DATA FOR THIS PROJECT CAN BE FOUND ELECTRONICALLY BY SELECTING PROJECT CONTROL DATA AT:*
   HTTP://WWW.NCDOT.ORG/DOH/PRECONSTRUCT/HIGHWAY/LOCATION/PROJECT/

   THE FILES TO BE FOUND ARE AS FOLLOWS:
   U2551_LS_CONTROL_0812XX.TXT

   IF FURTHER INFORMATION IS NEEDED, PLEASE CONTACT THE LOCATION AND SURVEYS UNIT.

⊚ *INDICATES GEODETIC CONTROL MONUMENTS USED OR SET FOR HORIZONTAL PROJECT CONTROL BY THE NCDOT LOCATION AND SURVEYS UNIT.*
PROJECT CONTROL ESTABLISHED USING GLOBAL POSITIONING SYSTEM.

$$$$$$$SYSTIME$$$$$ $$$$$$$$$$$$DGN$$$$$$$$$$$$$$ $$$$USERNAME$$$$

2551_ls_1c_081216.dgn 1/30/2012 3:44:30 PM

6/2/99

PROJECT REFERENCE NO.	SHEET NO.
U-2551	1D
Location and Surveys	

SURVEY CONTROL SHEET U-2551

BL

POINT	DESC.	NORTH	EAST	ELEVATION	L STATION	OFFSET
1	BL-1	723549.5157	1206967.1662	1164.63	44+60.83	18.08 RT
2	BL-2	723901.2817	1206946.7921	1170.67	48+13.42	20.42 RT
3	BL-3	724688.0717	1206893.7997	1154.28	56+02.17	19.61 RT
4	BL-4	725217.8544	1206872.3280	1159.99	61+32.35	25.09 RT
5	BL-5	725601.3492	1206848.4651	1170.61	65+16.57	20.75 RT
6	BL-6	726029.0490	1206830.2153	1171.19	69+44.85	18.45 RT
83	BL-83	726704.6180	1206732.8345	UNKNOWN	76+26.38	6.91 LT
7	BL-7	726866.8562	1206709.4484	1175.77	77+90.29	7.18 LT
8	BL-8	727563.2904	1206610.0817	1175.66	84+93.78	7.29 LT
9	BL-9	728312.1338	1206513.5630	1193.09	92+47.29	17.79 LT
10	BL-10	728462.6892	1206516.7888	1197.84	93+96.74	18.23 LT
11	BL-11	728921.6030	1206583.0057	1213.62	98+59.08	9.64 LT
12	BL-12	729243.3042	1206671.0206	1200.50	101+91.03	30.73 RT
13	BL-13	729509.5380	1206754.0981	1199.14	104+76.92	39.77 RT
14	BL-14	729900.1993	1206931.0465	1216.40	109+06.37	56.28 RT
15	BL-15	730090.6771	1206995.5750	1213.35	111+07.11	44.02 RT
16	BL-16	730550.2678	1207135.4755	1179.27	115+83.91	22.43 RT
17	BL-17	731210.6342	1207310.3222	1147.83	122+67.01	17.32 RT
18	BL-18	731481.3444	1207403.8929	1140.77	125+58.64	32.69 RT
84	BL-84	731522.0160	1207494.7924	UNKNOWN	126+65.55	82.85 RT
19	BL-19	731560.1565	1207580.0348	1143.11	OUTSIDE PROJECT LIMITS	

BL2

POINT	DESC.	NORTH	EAST	ELEVATION	L STATION	OFFSET
52	BL2-52	719306.6969	1207168.2733	1260.17	OUTSIDE PROJECT LIMITS	
53	BL2-53	719601.1786	1206973.3967	1248.24	OUTSIDE PROJECT LIMITS	
54	BL2-54	719887.5917	1206904.9296	1238.81	OUTSIDE PROJECT LIMITS	
55	BL2-55	720310.0116	1206878.3855	1242.70	12+08.95	10.13 RT
56	BL2-56	720644.2207	1206862.0818	1232.04	15+43.32	3.69 RT
57	BL2-57	721270.5463	1206837.3664	1212.69	21+70.70	9.41 RT
58	BL2-58	721742.9078	1206882.3423	1212.50	26+46.66	10.08 RT
59	BL2-59	722195.2799	1206937.4248	1198.91	31+02.52	3.10 RT
60	BL2-60	722728.0909	1207032.0601	1179.95	36+39.13	34.81 RT
1	BL2-1 LB PHASE 2	723549.5157	1206967.1662	1164.63	44+60.83	18.08 RT

BY11

POINT	DESC.	NORTH	EAST	ELEVATION	L STATION	OFFSET
61	BY11-61	719881.5732	1206680.7995	1222.20	OUTSIDE PROJECT LIMITS	
62	BL2-54	719887.5917	1206904.9296	1238.81	OUTSIDE PROJECT LIMITS	

BY12

POINT	DESC.	NORTH	EAST	ELEVATION	Y1 STATION	OFFSET
63	BY12-63	720581.1246	1206651.0163	1229.21	10+50.00	11.81 RT
64	BL2-56	720644.2207	1206862.0818	1232.04	OUTSIDE PROJECT LIMITS	

BY13

POINT	DESC.	NORTH	EAST	ELEVATION	Y3 STATION	OFFSET
65	BY13-65	723122.8174	1205810.6906	1135.43	OUTSIDE PROJECT LIMITS	
66	BY13-66	723194.3608	1206125.6134	1144.36	OUTSIDE PROJECT LIMITS	
67	BY13-67	723160.5155	1206327.4905	1152.09	OUTSIDE PROJECT LIMITS	
68	BY13-68	722916.8594	1206729.1412	1180.37	10+36.94	14.75 LT
69	BY13-68	722820.3109	1206872.5512	1181.90	12+09.44	11.59 LT

BY13

POINT	DESC.	NORTH	EAST	ELEVATION	Y4 STATION	OFFSET
70	BL2-60	722728.0909	1207032.0601	1179.95	10+29.08	19.38 LT
71	BY13-71	722529.4150	1207418.3185	1156.49	OUTSIDE PROJECT LIMITS	
72	BY13-72	722370.4073	1207897.7432	1139.26	OUTSIDE PROJECT LIMITS	
73	BY13-73	722328.3302	1208307.9975	1125.40	OUTSIDE PROJECT LIMITS	
74	BY13-74	722357.0088	1208709.4899	1160.60	OUTSIDE PROJECT LIMITS	

BY2

POINT	DESC.	NORTH	EAST	ELEVATION	Y5 STATION	OFFSET
27	BY2-27	724761.8718	1206682.3444	1156.33	10+08.91	15.36 LT
28	BY2-28	724688.0717	1206893.7997	1154.28	OUTSIDE PROJECT LIMITS	

BY1

POINT	DESC.	NORTH	EAST	ELEVATION	Y8 STATION	OFFSET
20	BY1-20	727030.3304	1204093.6202	1083.16	10+34.70	1.21 RT
21	BY1-21	726821.4493	1205546.0601	1120.96	25+02.09	1.13 RT
22	BY1-22	726699.5185	1206508.6506	1149.97	34+72.67	0.22 RT
85	BY1-85	726704.6180	1206732.8345	UNKNOWN	36+97.00	10.14 LT
23	BY1-23	726712.4398	1207076.6989	1155.71	40+41.41	0.42 LT
24	BY1-24	726809.6049	1207642.0157	1149.47	46+15.57	0.16 RT
25	BY1-25	726992.8865	1208192.3761	1133.07	51+96.15	0.57 RT
26	BY1-26	727379.2946	1209135.4478	1105.83	62+15.31	1.97 RT

BY3

POINT	DESC.	NORTH	EAST	ELEVATION	Y9 STATION	OFFSET
29	BY3-29	727483.3173	1206201.7211	1155.96	10+05.53	14.30 RT
30	BY3-30	727536.0687	1206396.5406	1168.98	12+09.07	15.52 RT
86	BY3-86	727563.2904	1206610.0817	1175.66	14+25.78	16.41 RT
32	BY3-32	727566.9611	1206766.3047	1178.95	OUTSIDE PROJECT LIMITS	
33	BY3-33	727583.1711	1207005.4171	1170.03	OUTSIDE PROJECT LIMITS	

BY4

POINT	DESC.	NORTH	EAST	ELEVATION	Y12 STATION	OFFSET
34	BY4-34	729857.6069	1206696.8081	1200.21	OUTSIDE PROJECT LIMITS	
35	BY4-35	729503.0324	1206660.1930	1191.40	13+25.00	40.55 RT
36	BY4-36	729326.6351	1206577.3228	1201.21	11+34.38	80.29 RT
87	BY4-87	729243.3042	1206671.0206	1200.50	OUTSIDE PROJECT LIMITS	

BY5

POINT	DESC.	NORTH	EAST	ELEVATION	Y11 STATION	OFFSET
38	BY5-38	729175.9597	1206390.5458	1222.20	12+72.30	15.23 LT
88	BY5-88	729326.6351	1206577.3228	1201.21	10+74.66	93.10 RT

BY6

POINT	DESC.	NORTH	EAST	ELEVATION	Y13 STATION	OFFSET
89	BY6-89	729243.3042	1206671.0206	1200.50	14+94.34	27.69 RT
41	BY6-41	729050.3943	1206786.2225	1190.78	12+77.75	12.24 LT
42	BY6-42	728816.5614	1206913.7716	1176.17	10+11.40	12.78 LT

BY7

POINT	DESC.	NORTH	EAST	ELEVATION	Y14 STATION	OFFSET
90	BY7-90	729509.5380	1206754.0981	1199.14	11+18.58	15.65 LT
44	BY7-44	729460.6344	1206900.6595	1199.33	OUTSIDE PROJECT LIMITS	

BY8

POINT	DESC.	NORTH	EAST	ELEVATION	Y15 STATION	OFFSET
91	BY8-91	730550.2678	1207135.4755	1179.27	12+20.95	56.09 LT
46	BY8-46	730599.1933	1207515.1299	1185.86	OUTSIDE PROJECT LIMITS	

BY9

POINT	DESC.	NORTH	EAST	ELEVATION	Y10 STATION	OFFSET
92	BY9-92	728312.1338	1206513.5630	1193.09	OUTSIDE PROJECT LIMITS	
48	BY9-48	728326.6158	1206785.9051	1173.80	OUTSIDE PROJECT LIMITS	

BY10

POINT	DESC.	NORTH	EAST	ELEVATION	Y16 STATION	OFFSET
49	BY10-49	732099.7534	1206989.9179	1149.17	OUTSIDE PROJECT LIMITS	
50	BY10-50	731609.8711	1207386.0721	1138.13	15+81.85	59.68 LT
93	BY10-93	731522.0160	1207494.7924	UNKNOWN	14+45.40	44.18 LT
51	BY1051	731209.0878	1207882.0397	1166.59	OUTSIDE PROJECT LIMITS	

****

BM * 1 ELEVATION = 1172.84
N 723816 E 1206989
L STATION 47+25 58 RIGHT
BENCH TIE MARKER SET IN 38" OAK

****

BM * 2 ELEVATION = 1166.31
N 725345 E 1206882
L STATION 62+59 41 RIGHT
BENCH TIE MARKER SET IN 16" MAPLE

****

BM * 3 ELEVATION = 1169.09
N 726845 E 1206820
L STATION 77+53 99 RIGHT
BENCH TIE MARKER SET IN 24" PINE

****

BM * 4 ELEVATION = 1194.26
N 728365 E 1206540
L STATION 93+00 8 RIGHT
BENCH TIE MARKER SET IN 18" PINE

****

BM * 5 ELEVATION = 1218.67
N 729824 E 1206844
L STATION 108+03 5 RIGHT
BENCH TIE MARKER SET IN 36" OAK

****

BM * 6 ELEVATION = 1141.54
N 731507 E 1207298
L STATION 125+42 75 LEFT
BENCH TIE MARKER SET IN 18" MAPLE

****

BM * 7 ELEVATION = 1095.74
N 727041 E 1204598
Y8 STATION 15+32 81 LEFT
BENCH TIE MARKER SET IN 30" POPLAR

****

BM * 8 ELEVATION = 1110.12
N 727447 E 1208959
Y8 STATION 60+78 128 LEFT
BENCH TIE MARKER SET IN 19" POPLAR

****

BM*9 ELEVATION = 1264.96
N 719338 E 1207090
L STATION 10+00
BENCH TIE IN 10" WHITE OAK

****

BM*10 ELEVATION = 1186.61
N 722591 E 1206956
L STATION 34+98 35 LEFT
BENCHTIE IN 32" TWIN WHITE OAK

****

BM*11 ELEVATION = 1145.31
N 723201 E 1206081
Y3 STATION 10+00
BENCHTIE IN 18" PINE

****

BM*12 ELEVATION = 1131.19
N 722428 E 1208420
Y4 STATION 13+61
BENCHTIE IN 42" OAK

****

DATUM DESCRIPTION

THE LOCALIZED COORDINATE SYSTEM DEVELOPED FOR THIS PROJECT IS BASED ON THE STATE PLANE COORDINATES ESTABLISHED BY NCDOT FOR MONUMENT "U2551-3"
WITH NAD 83/86 STATE PLANE GRID COORDINATES OF
NORTHING: 726,498.78 (ft) EASTING: 1,206,778.837 (ft)
THE AVERAGE COMBINED GRID FACTOR USED ON THIS PROJECT (GROUND TO GRID) IS: 0.999854830
THE N.C. LAMBERT GRID BEARING AND LOCALIZED HORIZONTAL GROUND DISTANCE FROM "U2551-3" TO -L- STATION 10+00 IS
S 0°51′59″ E 6,398.49
ALL LINEAR DIMENSIONS ARE LOCALIZED HORIZONTAL DISTANCES
VERTICAL DATUM USED IS NGVD 29

NOTE: DRAWING NOT TO SCALE

NOTES:

1. *NO CALIBRATION WAS DONE AT THIS TIME*
   IF A SYSTEM SUCH AS VRS (VIRTUAL REFERENCE STATION) IS USED, ADDITIONAL FIELD TIES MAY BE NEEDED TO REDUCE POSSIBLE ERRORS, OR BIASES.
2. *THE CONTROL DATA FOR THIS PROJECT CAN BE FOUND ELECTRONICALLY BY SELECTING PROJECT CONTROL DATA AT:*
   HTTP://WWW.NCDOT.ORG/DOH/PRECONSTRUCT/HIGHWAY/LOCATION/PROJECT/

   THE FILES TO BE FOUND ARE AS FOLLOWS:
   U2551_LS_CONTROL_0812XX.TXT

   IF FURTHER INFORMATION IS NEEDED, PLEASE CONTACT THE LOCATION AND SURVEYS UNIT.

⊚ *INDICATES GEODETIC CONTROL MONUMENTS USED OR SET FOR HORIZONTAL PROJECT CONTROL BY THE NCDOT LOCATION AND SURVEYS UNIT.*
PROJECT CONTROL ESTABLISHED USING GLOBAL POSITIONING SYSTEM.

$$$$SYSTIME$$$$ $$$$DGN$$$$$$$$$$$$$$$$ $$$$USERNAME$$$$
2551 ls 1D 081216.dgn 1/30/2012 3:45:26 PM

PROJECT REFERENCE NO.	SHEET NO.
U-2551	1 - E
Location and Surveys	

SURVEY CONTROL SHEET U-2551

(DESIGN ALIGNMENTS)

L

TYPE	STATION	NORTH	EAST
PC	10+00.00	720101.0213	1206875.5767
PRC	12+60.93	720361.8044	1206867.5635
PT	15+33.63	720634.3516	1206858.9210
PC	20+47.79	721147.7475	1206830.9517
PT	24+10.70	721509.9664	1206843.3827
PC	27+61.35	721857.9704	1206886.4171
PT	29+66.80	722061.5159	1206914.2455
PC	34+15.29	722505.0518	1206980.6973
PT	37+23.95	722812.8527	1206994.8128
PC	39+74.19	723062.6775	1206980.5416
PT	42+29.80	723317.8005	1206964.6589
PC	46+53.17	723740.2105	1206936.1931
PRC	49+64.52	724051.0742	1206918.9809
PRC	53+44.65	724430.2382	1206892.4617
PT	55+72.03	724656.9810	1206875.7477
PC	66+21.42	725705.0130	1206822.4173
PRC	68+18.79	725902.2550	1206815.6305
PT	74+36.88	726517.9869	1206766.4173
PC	89+40.36	728006.4346	1206554.2853
PT	95+96.09	728659.9446	1206554.9285
PC	101+44.00	729202.2119	1206633.3012
PT	105+10.15	729554.6531	1206729.1693
PC	113+07.56	730292.8975	1207030.5916
PT	114+89.55	730465.1437	1207089.0082
PC	125+10.41	731450.0119	1207357.6680
PT	126+58.55	731576.2851	1207431.7989
POT	127+08.55	731611.2827	1207467.5040

RPA

TYPE	STATION	NORTH	EAST
TS	10+00.00	726893.3267	1205328.2390
SC	12+50.00	726863.8066	1205576.4295
CS	15+57.58	726870.2878	1205883.5262
ST	18+07.58	726910.2529	1206130.2502
POT	23+82.59	727016.0773	1206695.4300

RPB

TYPE	STATION	NORTH	EAST
POT	10+00.00	726805.5199	1205390.1167
TS	11+61.98	726772.9362	1205548.7897
SC	14+11.98	726715.8835	1205792.1134
CS	15+26.74	726679.3442	1205900.8707
ST	17+76.74	726577.9076	1206129.2827
PC	20+77.86	726448.0949	1206400.9863
PT	23+71.08	726379.9606	1206683.9760
POT	24+71.58	726377.2646	1206784.4398

RPC

TYPE	STATION	NORTH	EAST
CS	10+00.00	726901.3549	1208069.4453
SRS	12+00.00	726834.1833	1207881.0691
SC	14+00.00	726766.1554	1207693.0089
CS	16+57.07	726660.3457	1207458.8434
ST	18+57.07	726564.1679	1207283.5030
PC	20+48.19	726470.0513	1207117.1663
PT	22+55.90	726400.7748	1206922.4517
POT	23+95.90	726377.2646	1206784.4398

RPD

TYPE	STATION	NORTH	EAST
POT	10+00.00	727049.4072	1208227.3544
TS	10+40.41	727036.3300	1208189.1159
SC	12+90.41	726962.0557	1207950.4848
CS	17+24.36	726918.2212	1207520.2803
ST	19+74.36	726942.8395	1207271.5729
POT	25+55.14	727016.0773	1206695.4300

SR1

TYPE	STATION	NORTH	EAST
POT	10+00.00	727335.9765	1206454.3232
POT	12+23.02	727555.8364	1206416.9127

SR2

TYPE	STATION	NORTH	EAST
POT	10+00.00	727311.9097	1206389.6583
PC	10+49.52	727329.3509	1206436.0003
PT	11+34.87	727354.8104	1206517.4205
POT	11+45.82	727357.4791	1206528.0422

SR3

TYPE	STATION	NORTH	EAST
POT	10+00.00	727216.3032	1206742.1468
PC	12+31.09	727445.0831	1206709.5414
PRC	13+16.85	727530.5488	1206709.6579
PT	13+86.18	727576.2939	1206669.3445
POT	14+39.81	727575.3165	1206615.7278

SR4

TYPE	STATION	NORTH	EAST
POT	10+00.00	727575.4252	1206615.7123
PC	11+15.54	727577.1724	1206731.2357
PT	11+71.71	727579.5984	1206787.3483

SR5

TYPE	STATION	NORTH	EAST
POT	10+00.00	727196.2032	1206737.4956
PC	12+18.93	727412.9470	1206706.6055
PT	12+64.67	727458.5661	1206705.3631
POT	13+83.49	727576.9374	1206715.7009

Y1

TYPE	STATION	NORTH	EAST
POT	10+00.00	720575.7850	1206599.9700
PC	10+34.57	720587.2201	1206632.5956
PT	12+45.56	720649.9518	1206833.9979
POT	12+70.15	720656.4345	1206857.7180

Y2

TYPE	STATION	NORTH	EAST
POT	10+00.00	720910.9367	1206733.8493
POT	11+09.94	720921.5413	1206843.2752

Y3

TYPE	STATION	NORTH	EAST
POT	10+00.00	722923.7280	1206689.9590
PC	10+37.90	722903.8046	1206722.2021
PT	11+00.13	722870.4235	1206774.7150
POT	13+66.00	722724.9450	1206997.2524

Y4

TYPE	STATION	NORTH	EAST
POT	10+00.00	722724.9450	1206997.2524
PC	11+42.31	722657.0176	1207122.3026
PT	13+10.46	722580.7491	1207272.1406
POT	13+60.52	722559.2417	1207317.3497

Y5

TYPE	STATION	NORTH	EAST
PC	10+00.00	724750.9143	1206668.3955
PT	12+17.81	724680.9181	1206874.5297

Y6

TYPE	STATION	NORTH	EAST
POT	10+00.00	725427.5326	1206635.7246
POT	12+00.57	725439.9361	1206835.9061

Y7

TYPE	STATION	NORTH	EAST
POT	10+00.00	725799.2350	1206818.3648
POT	11+38.40	725805.5470	1206956.6165

Y8

TYPE	STATION	NORTH	EAST
POT	10+00.00	727036.4722	1204059.4440
PC	31+28.61	726733.3413	1206166.3576
PT	51+65.10	726981.5979	1208163.4471
POT	62+92.06	727410.3077	1209205.6760

Y9

TYPE	STATION	NORTH	EAST
POT	10+00.00	727495.2743	1206192.1243
PC	10+65.50	727515.0892	1206254.5552
PCC	12+18.86	727553.2121	1206403.0190
PT	12+84.14	727563.3051	1206467.4912
POT	14+32.64	727580.3752	1206615.0069

Y10

TYPE	STATION	NORTH	EAST
POT	10+00.00	728326.4235	1206531.2813
POT	11+72.52	728333.1190	1206703.6742

Y11

TYPE	STATION	NORTH	EAST
POT	10+00.00	729222.9792	1206636.4513
PC	11+02.82	729239.1099	1206534.9068
PCC	12+57.71	729196.9685	1206391.0698
PT	14+22.22	729077.7401	1206278.0017

Y12

TYPE	STATION	NORTH	EAST
POT	10+00.00	729240.0009	1206486.3570
PC	10+37.29	729277.2574	1206484.7929
PRC	11+74.13	729400.2152	1206534.7125
PT	14+77.67	729666.9661	1206665.6020
POT	16+41.78	729830.2588	1206681.9385

Y13

TYPE	STATION	NORTH	EAST
POT	10+00.00	728812.7083	1206930.4518
PC	14+06.48	729169.1567	1206735.0848
PT	14+81.96	729213.5149	1206676.7424
POT	15+23.35	729222.9792	1206636.4513

Y14

TYPE	STATION	NORTH	EAST
POT	10+00.00	729482.1623	1206870.7537
PC	10+34.14	729493.7295	1206838.6285
PT	10+80.03	729509.9315	1206795.7025
POT	11+58.44	729538.7383	1206722.7773

Y15

TYPE	STATION	NORTH	EAST
POT	10+00.00	730593.0587	1207368.9608
PC	10+57.31	730587.4621	1207311.9240
PT	12+02.96	730599.6506	1207167.5936
POT	12+43.37	730610.2872	1207128.6015

Y16

TYPE	STATION	NORTH	EAST
POT	10+00.00	731270.7710	1207868.7655
PC	10+27.93	731287.0272	1207846.0523
PT	20+14.71	731986.8858	1207157.3321

WALL1

TYPE	STATION	NORTH	EAST
POT	10+00.00	726767.6164	1205435.1782
POT	11+00.17	726747.5575	1205533.3219

DWY1

TYPE	STATION	NORTH	EAST
POT	10+00.00	729421.5250	1206420.0517
PC	10+62.11	729418.5908	1206482.0911
PT	10+97.12	729405.3188	1206513.7165
POT	11+15.64	729392.7287	1206527.3011

DATUM DESCRIPTION

THE LOCALIZED COORDINATE SYSTEM DEVELOPED FOR THIS PROJECT
IS BASED ON THE STATE PLANE COORDINATES ESTABLISHED BY
NCDOT FOR MONUMENT "U2551-3"
WITH NAD 83/86 STATE PLANE GRID COORDINATES OF
NORTHING: 726,498.78(ft) EASTING: 1,206,778.837(ft)
THE AVERAGE COMBINED GRID FACTOR USED ON THIS PROJECT
(GROUND TO GRID) IS: 0.999854830
THE N.C. LAMBERT GRID BEARING AND
LOCALIZED HORIZONTAL GROUND DISTANCE FROM
"U2551-3" TO -L- STATION 10+00 IS
S 0°51'59" E 6,398.49
ALL LINEAR DIMENSIONS ARE LOCALIZED HORIZONTAL DISTANCES
VERTICAL DATUM USED IS NGVD 29

$$$$$$SYSTIME$$$$$$
$$$$$$DGN$$$$$$
$$$$$$DLSHEET$$$$$$
$$$$$$ZONE$$$$$$
$$$$$$SCALE$$$$$$
$$$$$$USER$$$$$$
$$$$$$FILE$$$$$$
$$$$$$DATE$$$$$$
$$$$$$TIME$$$$$$

U2551 1S 1e.dgn 1/30/2012 3:46:07 PM

6/2/99

SURVEY CONTROL SHEET U-2551

(ROW MARKERS)

ROW MARKER - CONCRETE OR GRANITE

ALIGN	STATION	OFFSET	NORTH	EAST
L	10+00.00	-30.02	720099.4472	1206845.6000
L	10+00.00	-40.00	720098.9238	1206835.6318
L	10+00.00	16.98	720101.9118	1206892.5353
L	10+00.00	85.00	720105.4785	1206960.4598
L	15+00.00	-40.00	720598.8101	1206820.7042
L	15+33.63	85.00	720638.9755	1206943.7951
L	16+35.00	-35.00	720733.6632	1206818.4566
L	17+60.00	-35.00	720858.4781	1206811.6589
L	18+65.00	-33.00	720963.4314	1206807.9420
L	20+00.00	-33.00	721098.2315	1206800.6004
L	20+00.00	-40.00	721097.8507	1206793.6107
L	20+47.79	-40.00	721145.5716	1206791.0109
L	20+47.79	85.00	721152.3714	1206915.8259
L	23+05.00	-40.00	721407.6287	1206793.2285
L	23+05.00	-45.00	721407.9854	1206788.2391
L	24+10.70	-45.00	721515.4891	1206798.7228
L	24+10.70	85.00	721499.5347	1206927.7401
L	27+61.35	-45.00	721863.4886	1206841.7567
L	27+61.35	85.00	721847.5387	1206970.7745
L	29+66.80	85.00	722048.9215	1206998.3073
L	29+66.80	-45.00	722068.1837	1206869.7401
L	32+10.00	-40.00	722307.9593	1206910.7198
L	32+10.00	-45.00	722308.7002	1206905.7750
L	34+15.29	-40.00	722510.9785	1206941.1388
L	34+15.29	85.00	722492.4574	1207064.7591
L	35+00.00	-40.00	722592.8255	1206951.0476
L	37+23.95	85.00	722817.7004	1207079.6744
L	38+00.00	-50.00	722885.9232	1206940.5571
L	40+72.54	-19.01	723159.7010	1206955.7634
L	40+72.54	-50.00	723157.8120	1206924.8322
L	40+72.54	85.00	723166.0414	1207059.5812
L	40+72.54	29.99	723162.6880	1207004.6723
L	51+20.00	30.15	724208.2818	1206940.6447
L	51+20.00	55.00	724209.8964	1206965.4463
L	51+25.00	-29.86	724209.3523	1206880.4399
L	51+25.00	-45.00	724208.3581	1206865.3309
L	53+44.65	55.00	724435.5275	1206947.2068
L	53+44.65	-45.00	724425.9104	1206847.6682
L	55+55.00	-45.00	724637.5325	1206831.7064
L	55+72.03	55.00	724659.7760	1206930.6746
L	56+75.00	-45.00	724757.5290	1206825.5709
L	56+78.00	40.00	724764.8450	1206910.3107
L	56+78.00	55.00	724765.6073	1206925.2913
L	57+79.00	40.00	724865.7145	1206905.1778
L	57+79.00	55.00	724866.4768	1206920.1584
L	62+75.00	-45.00	725356.7538	1206795.0807
L	64+50.00	-45.00	725531.5277	1206786.1871
L	66+21.42	-45.00	725702.7261	1206777.4754
L	66+21.42	55.00	725707.8081	1206877.3462
L	68+18.79	75.00	725903.6010	1206890.6184
L	68+18.79	-45.00	725901.4474	1206770.6377
L	70+45.00	-46.40	726125.3317	1206760.1444
L	71+75.00	-51.04	726253.3349	1206745.7233
L	71+80.00	75.00	726269.6163	1206870.8090
L	80+55.00	-60.00	727121.4613	1206619.8045
L	80+65.00	47.00	727146.4582	1206724.3232
L	82+73.39	-60.00	727337.6632	1206588.9916
L	83+33.37	-60.00	727397.0463	1206580.5284
L	84+40.00	-60.00	727502.6099	1206565.4836
L	85+50.00	65.00	727629.1461	1206673.7129
L	85+75.00	-52.38	727637.3339	1206553.9754
L	86+80.00	50.00	727755.7291	1206640.5187
L	86+80.00	65.00	727757.8456	1206655.3708
L	87+45.59	-51.58	727806.3271	1206530.7041
L	89+20.24	-51.34	727979.2623	1206506.2945
L	89+40.36	50.00	728013.4890	1206603.7831
L	91+22.25	-57.77	728183.7146	1206478.1086
L	92+20.00	50.00	728285.9858	1206581.7262
L	92+59.07	-63.77	728323.8639	1206467.5222
L	93+10.00	45.00	728374.1192	1206576.6880
L	93+26.29	-51.04	728392.6021	1206481.0473
L	93+26.29	-64.16	728392.9463	1206467.9298
L	94+60.58	-46.88	728529.2895	1206492.7887
L	98+31.28	-44.54	728899.0803	1206544.4860
L	99+00.00	-55.00	728968.5933	1206543.9654
L	99+00.00	-43.28	728966.9162	1206555.5692
L	100+00.00	-55.00	729067.5649	1206558.2695

ROW MARKER - CONCRETE OR GRANITE

ALIGN	STATION	OFFSET	NORTH	EAST
L	100+10.00	45.00	729063.1579	1206658.6716
L	102+57.58	-55.00	729325.8716	1206600.1046
L	102+71.57	-40.00	729336.6153	1206617.9353
L	103+00.00	55.00	729341.6991	1206716.9216
L	103+58.18	45.00	729398.5820	1206722.1114
L	104+50.00	45.00	729483.1983	1206749.8644
L	105+10.15	-40.00	729569.7732	1206692.1371
L	105+82.00	46.82	729603.4733	1206799.6754
L	108+46.79	59.23	729843.9269	1206911.2563
L	109+08.19	57.72	729901.3396	1206933.0688
L	110+75.00	106.98	730037.1536	1207041.7277
L	111+35.00	53.24	730113.0169	1207014.6522
L	112+17.65	46.08	730192.2414	1207039.2648
L	113+07.56	45.00	730275.8877	1207072.2507
L	113+07.56	-40.00	730308.0175	1206993.5594
L	114+89.55	-50.00	730478.3023	1207040.7708
L	114+89.55	45.00	730453.3010	1207132.4219
L	114+89.55	-40.00	730475.6706	1207050.4183
L	115+50.00	45.00	730511.6170	1207148.3298
L	117+00.00	-45.00	730680.0148	1207100.9781
L	117+00.00	-50.00	730681.3307	1207096.1544
L	117+25.00	60.00	730676.5005	1207208.8561
L	117+95.00	40.00	730749.2968	1207207.9810
L	119+75.00	45.00	730921.6354	1207260.1777
L	119+75.00	40.00	730922.9512	1207255.3540
L	122+50.00	-45.00	731210.6268	1207245.7225
L	122+50.00	-65.00	731215.8902	1207226.4275
L	125+03.43	45.00	731431.4423	1207399.2467
L	125+10.41	-65.00	731467.1181	1207294.9593
L	126+00.00	-65.00	731567.2012	1207340.4115

ROW MARKER - CONCRETE OR GRANITE

ALIGN	STATION	OFFSET	NORTH	EAST
RPA	18+07.58	-80.00	726988.8864	1206115.5269
RPA	18+07.58	-73.66	726982.6523	1206116.6941
RPA	22+65.00	-80.00	727073.0700	1206565.1290

ROW MARKER - CONCRETE OR GRANITE

ALIGN	STATION	OFFSET	NORTH	EAST
RPB	10+40.00	115.00	726684.8244	1205406.1664
RPB	10+40.00	91.48	726707.8611	1205410.8970
RPB	11+20.00	88.62	726694.5719	1205489.8374
RPB	11+20.00	115.00	726668.7320	1205484.5311
RPB	17+76.74	85.00	726501.2116	1206092.6394
RPB	17+76.74	67.35	726517.1382	1206100.2487
RPB	20+77.86	85.00	726371.3989	1206364.3430
RPB	23+71.08	85.00	726294.9912	1206681.6958

ROW MARKER - CONCRETE OR GRANITE

ALIGN	STATION	OFFSET	NORTH	EAST
RPC	18+57.07	-74.88	726499.0004	1207320.3760
RPC	18+57.07	-80.00	726494.5439	1207322.9005
RPC	20+48.19	-75.00	726404.7759	1207154.1004
RPC	22+55.90	-75.00	726326.8399	1206935.0464

ROW MARKER - CONCRETE OR GRANITE

ALIGN	STATION	OFFSET	NORTH	EAST
RPD	12+90.41	100.00	727059.0405	1207926.1138
RPD	12+90.41	70.38	727030.3089	1207933.3337
RPD	17+24.36	100.00	727018.1283	1207524.5895
RPD	19+74.36	100.00	727042.0412	1207284.1829
RPD	24+25.00	100.00	727098.8686	1206837.1371

ROW MARKER - CONCRETE OR GRANITE

ALIGN	STATION	OFFSET	NORTH	EAST
SR1	10+30.00	40.00	727358.8416	1206409.8576
SR1	11+85.00	40.00	727511.6454	1206383.8572

ROW MARKER - CONCRETE OR GRANITE

ALIGN	STATION	OFFSET	NORTH	EAST
SR2	10+30.00	29.00	727295.3355	1206427.9505
SR2	11+05.00	-32.00	727377.6573	1206479.5769
SR2	11+38.05	31.47	727325.0600	1206528.1765

ROW MARKER - CONCRETE OR GRANITE

ALIGN	STATION	OFFSET	NORTH	EAST
SR4	10+75.00	-40.00	727616.5548	1206690.0989
SR4	11+30.16	-40.00	727617.4827	1206744.6657
SR4	11+30.16	40.00	727532.5203	1206747.1937

ROW MARKER - CONCRETE OR GRANITE

ALIGN	STATION	OFFSET	NORTH	EAST
SR5	10+00.00	35.00	727201.1414	1206772.1455
SR5	12+18.93	35.00	727417.8853	1206741.2554
SR5	12+64.67	35.00	727455.5210	1206740.2304

ROW MARKER - CONCRETE OR GRANITE

ALIGN	STATION	OFFSET	NORTH	EAST
Y1	12+00.00	29.99	720608.8003	1206798.4868
Y1	12+22.34	-30.01	720672.6297	1206803.4876

ROW MARKER - CONCRETE OR GRANITE

ALIGN	STATION	OFFSET	NORTH	EAST
Y2	10+55.00	-30.25	720946.3476	1206785.6753
Y2	10+55.00	29.24	720887.1392	1206791.4112

ROW MARKER - CONCRETE OR GRANITE

ALIGN	STATION	OFFSET	NORTH	EAST
Y3	11+04.98	30.00	722842.6582	1206762.3606
Y3	11+04.98	14.00	722856.0511	1206771.1159
Y3	11+04.98	-14.00	722879.4876	1206786.4369
Y3	11+04.98	-30.00	722892.8792	1206795.1913
Y3	11+50.00	70.00	722784.5436	1206778.1559
Y3	11+50.00	-50.00	722884.9855	1206843.8174
Y3	12+00.00	-50.00	722857.6266	1206885.6681
Y3	13+00.00	70.00	722702.4668	1206903.7082

ROW MARKER - CONCRETE OR GRANITE

ALIGN	STATION	OFFSET	NORTH	EAST
Y4	11+42.31	-70.00	722718.5285	1207155.7154
Y4	12+00.00	70.00	722567.8329	1207140.9711
Y4	13+15.43	-19.00	722595.7718	1207284.7928
Y4	13+15.43	-50.00	722623.7652	1207298.1081
Y4	13+60.52	19.00	722542.0843	1207309.1873
Y4	13+60.52	70.00	722496.0322	1207287.2738

ROW MARKER - CONCRETE OR GRANITE

ALIGN	STATION	OFFSET	NORTH	EAST
Y5	10+94.00	35.00	724684.8104	1206744.8755
Y5	10+94.00	-30.00	724746.1961	1206766.2482
Y5	11+21.00	-35.00	724742.3754	1206792.9901
Y5	11+60.00	35.00	724663.8019	1206808.6940

DATUM DESCRIPTION

THE LOCALIZED COORDINATE SYSTEM DEVELOPED FOR THIS PROJECT IS BASED ON THE STATE PLANE COORDINATES ESTABLISHED BY NCDOT FOR MONUMENT "U2551-3"
WITH NAD 83/86 STATE PLANE GRID COORDINATES OF NORTHING: 726,498.78(ft) EASTING: 1,206,778.837(ft)
THE AVERAGE COMBINED GRID FACTOR USED ON THIS PROJECT (GROUND TO GRID) IS: 0.999854830
THE N.C. LAMBERT GRID BEARING AND LOCALIZED HORIZONTAL GROUND DISTANCE FROM "U2551-3" TO -L- STATION 10+00 IS
S 0°51'59" E 6,398.49
ALL LINEAR DIMENSIONS ARE LOCALIZED HORIZONTAL DISTANCES
VERTICAL DATUM USED IS NGVD 29

$$$$$SYSTIME$$$$$
$$$$$$$$$$$DGN$$$$$$$$$$$$$$$$$$$
$$$$USERNAME$$$$
2551_LS_1f.dgn 1/30/2012 3:46:45 PM

SURVEY CONTROL SHEET U-2551

PROJECT REFERENCE NO.	SHEET NO.
U-2551	1 - G
Location and Surveys	

(ROW MARKERS CONT.)

ROW MARKER - CONCRETE OR GRANITE

ALIGN	STATION	OFFSET	NORTH	EAST
Y6	11+00.00	40.00	725393.7934	1206738.0069
Y6	11+00.00	-40.00	725473.6403	1206733.0595

ROW MARKER - CONCRETE OR GRANITE

ALIGN	STATION	OFFSET	NORTH	EAST
Y7	11+00.00	30.00	725773.8261	1206919.6291
Y7	11+00.00	-30.00	725833.7637	1206916.8926

ROW MARKER - CONCRETE OR GRANITE

ALIGN	STATION	OFFSET	NORTH	EAST
Y9	11+84.77	15.68	727530.8743	1206373.0894
Y9	11+84.87	-15.66	727561.4859	1206366.3394
Y9	11+84.87	-56.19	727601.0366	1206357.4874
Y9	12+75.00	42.00	727520.5393	1206463.7182
Y9	13+40.00	40.00	727529.9919	1206527.5835
Y9	13+55.00	-52.36	727623.4621	1206531.8675

ROW MARKER - CONCRETE OR GRANITE

ALIGN	STATION	OFFSET	NORTH	EAST
Y10	10+65.00	30.00	728298.9687	1206597.3966
Y10	11+00.00	30.00	728300.3270	1206632.3703
Y10	11+20.00	-12.13	728343.2038	1206650.7201
Y10	11+20.00	-20.00	728351.0656	1206650.4147
Y10	11+40.00	8.36	728323.5037	1206671.5003
Y10	11+40.00	15.00	728316.8681	1206671.7580

ROW MARKER - CONCRETE OR GRANITE

ALIGN	STATION	OFFSET	NORTH	EAST
Y11	11+02.82	-90.00	729150.2247	1206520.7847
Y11	11+02.82	60.00	729298.3672	1206544.3177

ROW MARKER - CONCRETE OR GRANITE

ALIGN	STATION	OFFSET	NORTH	EAST
Y13	12+15.00	-25.00	728989.2304	1206805.1924
Y13	12+15.00	-13.88	728994.5748	1206814.9431
Y13	12+25.00	12.30	729015.9297	1206833.0994
Y13	12+60.00	-60.00	729011.8697	1206752.8716
Y13	12+85.00	60.00	729091.4689	1206846.0862
Y13	13+30.00	-65.00	729070.8510	1206714.8425
Y13	14+00.00	40.00	729182.7021	1206773.2748
Y13	14+50.00	40.00	729234.2224	1206728.0380

ROW MARKER - CONCRETE OR GRANITE

ALIGN	STATION	OFFSET	NORTH	EAST
Y14	10+40.00	-30.00	729467.5379	1206822.8496
Y14	10+40.00	-12.47	729484.0075	1206828.8525
Y14	10+40.00	11.53	729506.5567	1206837.0713
Y14	10+40.00	25.00	729519.2124	1206841.6841
Y14	10+80.03	-30.00	729482.0295	1206784.6808
Y14	10+80.03	40.00	729547.1342	1206810.3982

ROW MARKER - CONCRETE OR GRANITE

ALIGN	STATION	OFFSET	NORTH	EAST
Y15	10+00.00	13.42	730606.4188	1207367.6498
Y15	10+00.00	30.00	730622.9154	1207366.0311
Y15	10+25.00	-12.67	730578.0068	1207345.3176
Y15	10+25.00	-30.00	730560.7608	1207347.0099
Y15	10+57.31	40.00	730627.2710	1207308.0185
Y15	11+00.00	-55.00	730530.5683	1207268.8069
Y15	11+20.00	40.00	730626.1748	1207251.6658
Y15	11+50.00	-55.00	730534.6238	1207212.1138

(PERMANENT EASEMENTS)

PERMANENT EASEMENT-E- IRON PIN & CAP

ALIGN	STATION	OFFSET	NORTH	EAST
L	41+50.00	29.99	723240.0893	1206999.8254
L	41+50.00	85.00	723243.6128	1207054.7230
L	48+55.00	30.26	723943.2444	1206954.4072
L	48+55.00	65.00	723945.0419	1206989.1006
L	48+70.00	65.00	723959.9473	1206988.3370
L	48+70.00	30.27	723958.1906	1206953.6556
L	49+70.00	-29.67	724055.2414	1206889.1026
L	49+70.00	-55.00	724054.1247	1206863.7960
L	49+70.00	30.33	724057.8866	1206949.0443
L	49+85.00	-55.00	724068.9945	1206863.1242
L	49+85.00	-29.69	724070.1633	1206888.4098
L	50+25.00	157.00	724119.6099	1207072.8968
L	50+60.00	127.00	724153.6248	1207041.0071
L	50+61.00	30.22	724149.1482	1206944.3248
L	61+00.00	150.00	725191.8900	1206998.7233
L	61+00.00	55.00	725187.0621	1206903.8461
L	61+25.00	180.00	725218.3824	1207027.4141
L	61+25.00	72.00	725212.8937	1206919.5536
L	66+45.48	71.94	725732.4124	1206893.1056
L	67+76.46	89.69	725862.1796	1206906.2020
L	71+90.91	90.00	726282.0228	1206884.7371
L	83+85.00	-60.00	727448.1601	1206573.2432
L	86+35.00	-65.00	727694.9537	1206533.0205
L	86+35.00	-52.11	727696.7724	1206545.7818
L	86+60.00	-65.00	727719.7036	1206529.4931
L	86+60.00	-51.99	727721.5389	1206542.3705
L	86+60.00	-65.00	727719.7036	1206529.4931
L	86+95.00	65.00	727772.6956	1206653.2544
L	86+95.00	80.00	727774.8121	1206668.1054
L	89+30.00	65.00	728005.3448	1206620.0985
L	89+30.00	54.30	728003.8351	1206609.5056
L	90+25.00	65.00	728097.2216	1206608.5327
L	92+00.00	-65.00	728266.8566	1206597.1960
L	93+07.01	55.00	728371.0098	1206586.6343
L	95+96.09	65.00	728650.6468	1206619.2611
L	95+96.09	55.00	728652.0772	1206609.3640
L	97+90.00	50.00	728844.7049	1206632.1521
L	97+90.00	65.00	728842.5592	1206646.9978
L	100+11.44	50.00	729063.8636	1206663.8266
L	103+68.00	64.60	729402.0515	1206743.5986
L	103+68.00	45.00	729407.7106	1206724.8315
L	103+88.00	45.00	729426.2466	1206730.5560
L	103+88.00	65.00	729420.2178	1206749.6257
L	105+10.15	-55.00	729575.4432	1206678.2500
L	106+02.00	60.00	729617.0076	1206819.4369
L	106+02.00	47.76	729621.6335	1206808.1071
L	106+22.00	48.70	729639.7937	1206816.5387
L	106+22.00	60.00	729635.5237	1206826.9969
L	107+36.00	56.42	729742.4188	1206866.7744
L	107+36.00	66.00	729738.7974	1206875.6440
L	107+56.00	57.75	729760.4304	1206875.5700
L	107+56.00	67.00	729756.9355	1206884.1299
L	108+75.00	-55.00	729913.2223	1206816.1650
L	111+16.29	70.00	730089.3589	1207023.0986
L	111+70.00	50.21	730146.5648	1207025.0798
L	112+00.00	-40.00	730208.4390	1206952.9019
L	112+00.00	-60.00	730215.9990	1206934.3858
L	112+20.00	-60.00	730234.5151	1206941.9458
L	112+20.00	-40.00	730226.9551	1206960.4619
L	112+80.00	65.00	730242.8131	1207080.3515
L	112+80.00	45.33	730250.2482	1207062.1415
L	113+07.56	-65.00	730317.4686	1206970.4147
L	114+80.00	50.00	730442.4699	1207134.6174
L	115+53.49	49.97	730513.6774	1207154.0420
L	117+11.33	80.00	730658.0476	1207224.5531
L	117+95.00	80.00	730738.7694	1207246.5741
L	117+95.00	48.00	730747.1910	1207215.7011
L	118+07.00	40.00	730760.8734	1207211.1412
L	118+07.00	48.00	730758.7680	1207218.8591
L	118+75.00	-45.00	730848.8459	1207147.0332
L	118+75.00	-65.00	730854.1093	1207127.7382
L	118+85.00	40.00	730836.1238	1207231.6685
L	118+85.00	50.00	730833.4921	1207241.3160
L	119+00.00	40.00	730850.5951	1207235.6161
L	119+00.00	50.00	730847.9633	1207245.2636
L	122+30.00	-85.00	731201.8585	1207201.8701
L	122+30.00	-65.00	731196.5951	1207221.1651
L	125+10.41	-85.00	731472.3813	1207275.6654

(PERMANENT EASEMENTS)

PERMANENT EASEMENT-E- IRON PIN & CAP

ALIGN	STATION	OFFSET	NORTH	EAST
SR1	10+45.92	-60.22	727371.1472	1206387.2502
SR1	10+80.00	-40.00	727408.1333	1206401.4714
SR1	10+80.00	-60.00	727404.7783	1206381.7538
SR1	10+90.00	34.97	727430.5679	1206473.7043

DATUM DESCRIPTION

THE LOCALIZED COORDINATE SYSTEM DEVELOPED FOR THIS PROJECT IS BASED ON THE STATE PLANE COORDINATES ESTABLISHED BY NCDOT FOR MONUMENT "U2551-3"
WITH NAD 83/86 STATE PLANE GRID COORDINATES OF
NORTHING: 726,498.78(ft) EASTING: 1,206,778.837(ft)
THE AVERAGE COMBINED GRID FACTOR USED ON THIS PROJECT (GROUND TO GRID) IS: 0.999854830
THE N.C. LAMBERT GRID BEARING AND LOCALIZED HORIZONTAL GROUND DISTANCE FROM "U2551-3" TO -L- STATION 10+00 IS
S 0°51'59" E 6,398.49
ALL LINEAR DIMENSIONS ARE LOCALIZED HORIZONTAL DISTANCES
VERTICAL DATUM USED IS NGVD 29

6/2/99

PAGE 1 S 1a.dgn 1/30/2012 3:47:55 PM

PROJECT REFERENCE NO.	SHEET NO.
U-2551	2

ARCADIS G & M of North Carolina, Inc.
WWW.ARCADIS-US.COM
801 Corporate Center Drive, Suite 300
Raleigh, NC 27607-5073
Tel: 919/854-1282 Fax: 919/854-5448 NC License No. C-1869

ROADWAY DESIGN ENGINEER — NORTH CAROLINA PROFESSIONAL ENGINEER SEAL 022037 STEPHEN T. SMALLWOOD 2/27/12

PAVEMENT DESIGN ENGINEER — NORTH CAROLINA PROFESSIONAL ENGINEER SEAL 13368 DON-CHI CHEN 02/29/12

SEAL NOT VALID UNLESS SIGNED AND DATED

NOTE: SEE PLANS FOR LOCATION OF TURN LANES.

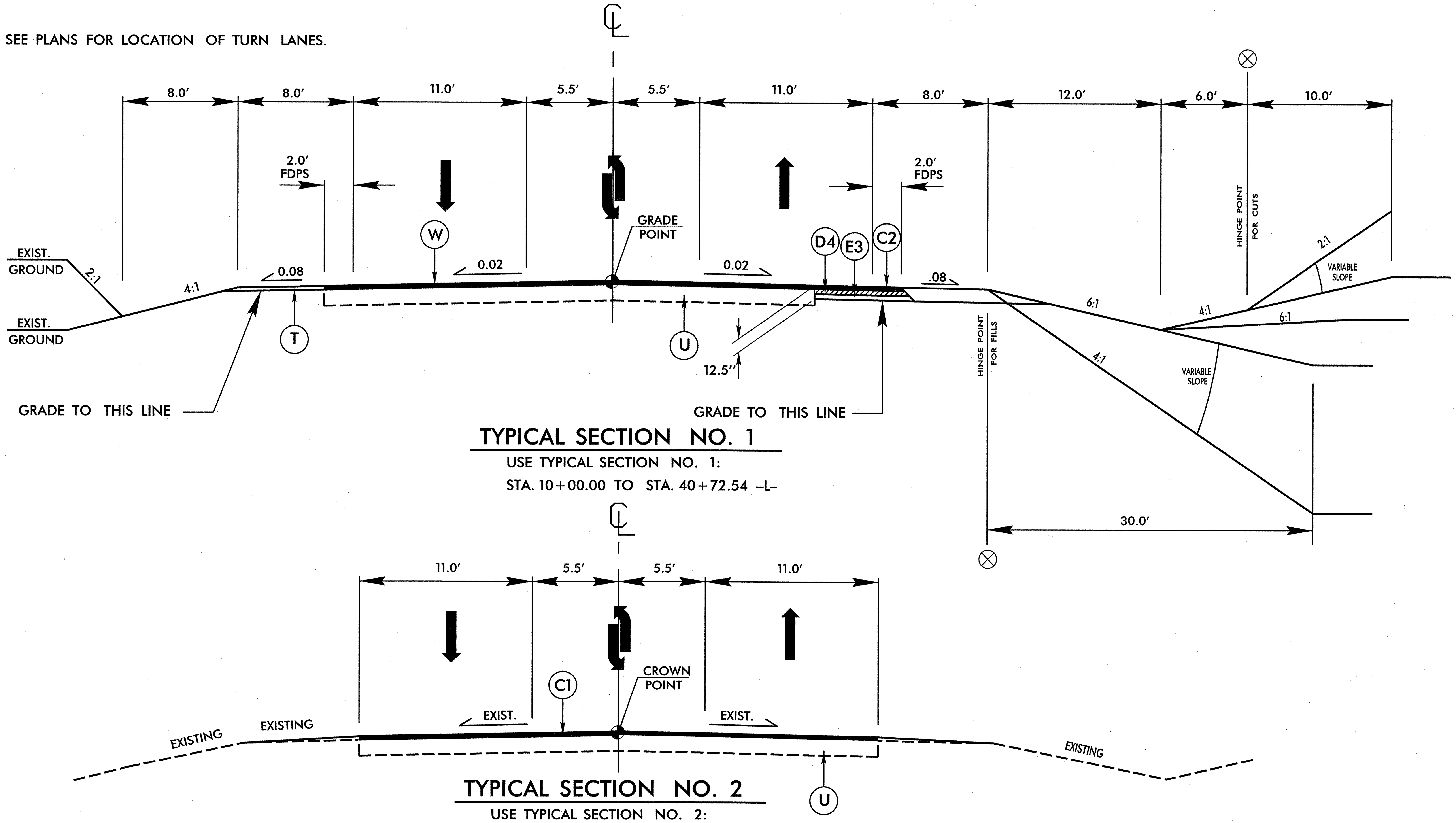

TYPICAL SECTION NO. 1

USE TYPICAL SECTION NO. 1:
STA. 10+00.00 TO STA. 40+72.54 -L-

TYPICAL SECTION NO. 2

USE TYPICAL SECTION NO. 2:
STA. 40+72.54 TO STA. 51+50 -L-

CODE	PAVEMENT SCHEDULE
C1	PROP. APPROX. 1.5" ASPHALT CONC. SURFACE COURSE, TYPE S9.5B, AT AN AVERAGE RATE OF 168 LBS. PER SQ. YD FOR A SINGLE LAYER.
C2	PROP. APPROX. 3.0" ASPHALT CONC. SURFACE COURSE, TYPE S9.5B, AT AN AVERAGE RATE OF 168 LBS. PER SQ. YD IN EACH OF TWO LAYERS.
C3	PROP. APPROX. 3.0" ASPHALT CONC. SURFACE COURSE, TYPE S9.5C, AT AN AVERAGE RATE OF 168 LBS. PER SQ. YD IN EACH OF TWO LAYERS.
C4	PROP. VAR. DEPTH ASPHALT CONCRETE SURFACE COURSE, TYPE S9.5B, AT AN AVERAGE RATE OF 112 LBS. PER SQ. YD. PER 1" DEPTH TO BE PLACED IN LAYERS NOT TO EXCEED 2" IN DEPTH.
D1	PROP. APPROX. 2.5" ASPHALT CONC. INTERMEDIATE COURSE, TYPE I19.0B, AT AN AVERAGE RATE OF 285 LBS. PER SQ. YD.
D2	PROP. APPROX. 3.0" ASPHALT CONC. INTERMEDIATE COURSE, TYPE I19.0B, AT AN AVERAGE RATE OF 342 LBS. PER SQ. YD.
D3	PROP. APPROX. 3.0" ASPHALT CONC. INTERMEDIATE COURSE, TYPE I19.0C, AT AN AVERAGE RATE OF 342 LBS. PER SQ. YD.
D4	PROP. APPROX. 4.0" ASPHALT CONC. INTERMEDIATE COURSE, TYPE I19.0B, AT AN AVERAGE RATE OF 456 LBS. PER SQ. YD.
D5	PROP. VAR. DEPTH ASPHALT CONCRETE INTERMEDIATE COURSE, TYPE I19.0B, AT AN AVERAGE RATE OF 114 LBS. PER SQ. YD. PER 1" DEPTH TO BE PLACED IN LAYERS NOT LESS THAN 2½" IN DEPTH OR GREATER THAN 4" IN DEPTH.
E1	PROP. APPROX. 4.0" ASPHALT CONC. BASE COURSE, TYPE B25.0B, AT AN AVERAGE RATE OF 456 LBS. PER SQ. YD.
E2	PROP. APPROX. 4.0" ASPHALT CONC. BASE COURSE, TYPE B25.0C, AT AN AVERAGE RATE OF 456 LBS. PER SQ. YD.
E3	PROP. APPROX. 5.5" ASPHALT CONC. BASE COURSE, TYPE B25.0B, AT AN AVERAGE RATE OF 627 LBS. PER SQ. YD.
E4	PROP. VAR. DEPTH ASPHALT CONCRETE BASE COURSE, TYPE B25.0B, AT AN AVERAGE RATE OF 114 LBS. PER SQ. YD. PER 1" DEPTH TO BE PLACED IN LAYERS NOT LESS THAN 3" IN DEPTH OR GREATER THAN 5½" IN DEPTH.
F	ULTRA-THIN BONDED WEARING COURSE
R1	2' - 6" CONCRETE CURB AND GUTTER
R2	1' - 6" CONCRETE CURB AND GUTTER
S	SIDEWALK
T	EARTH MATERIAL
U	EXISTING PAVEMENT
W	VARIABLE DEPTH ASPHALT PAVEMENT (SEE WEDGING DETAIL)
V	RUMBLE STRIP

Note: Pavement Edge Slopes are 1:1 Unless Shown Otherwise

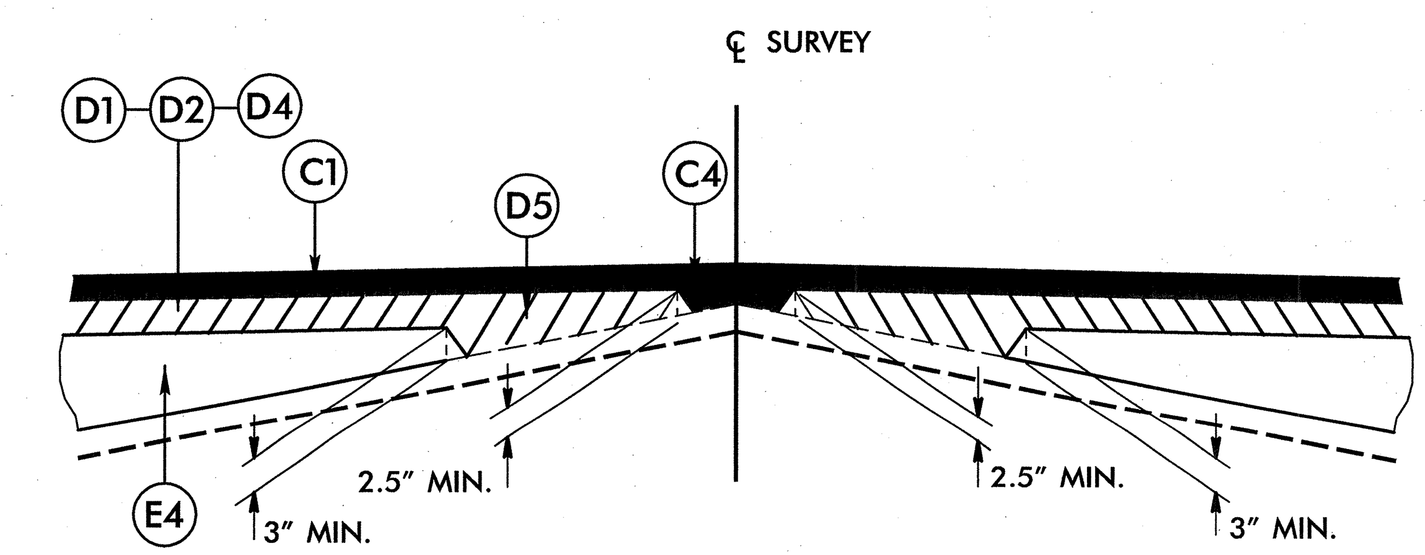

Detail Showing Method of Wedging

6/2/99

$$$$$$$$SYSTIME$$$$$
$$$$$$$$$$$$DGN$$$$$$$$$$$$$$$$$$$$$
$$$$$$$$USERNAME$$$$$

...551 rdy tyn.dgn 2/27/2012 2:27:34 PM

6/2/99

ARCADIS G & M of North Carolina, Inc. WWW.ARCADIS-US.COM 801 Corporate Center Drive, Suite 300 Raleigh, NC 27607-5073 Tel: 919/854-1282 Fax: 919/854-5448 NC License No. C-1869	PROJECT REFERENCE NO.	SHEET NO.
	U-2551	2A
	ROADWAY DESIGN ENGINEER	PAVEMENT DESIGN ENGINEER
	NORTH CAROLINA PROFESSIONAL SEAL 022037 ENGINEER STEPHEN T. SMALLWOOD 2/27/12	NORTH CAROLINA PROFESSIONAL SEAL 13368 ENGINEER DON CHI CHEN 02/29/12
	SEAL NOT VALID UNLESS SIGNED AND DATED	

NOTE: SEE PLANS FOR LOCATION OF TURN LANES.

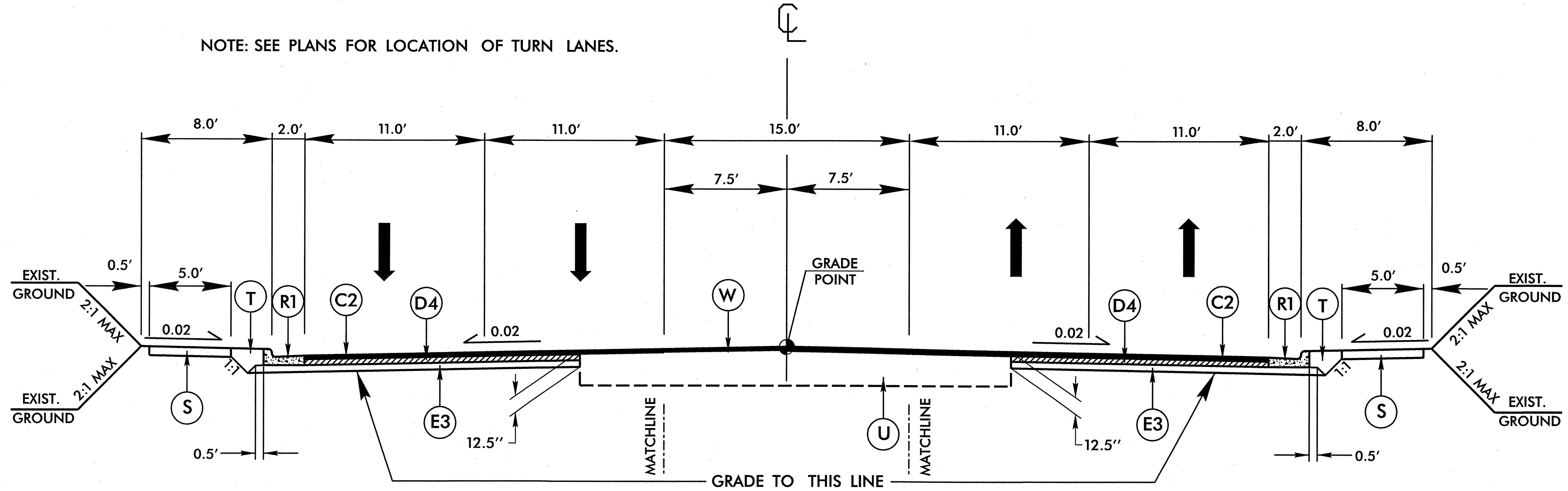

TYPICAL SECTION NO. 3

USE TYPICAL SECTION NO. 3:

STA. 51+50.00 TO STA. 75+12.21 -L- (BRIDGE)
STA. 77+22.21 (BRIDGE) TO STA. 127+08.55 -L-

CODE	PAVEMENT SCHEDULE
C2	3.0" ASPHALT, TYPE S9.5B
D4	4.0" ASPHALT, TYPE I19.0B
E3	5.5" ASPHALT, TYPE B25.0B
R1	2' – 6" CONCRETE CURB AND GUTTER
R2	1' – 6" CONCRETE CURB AND GUTTER
S	SIDEWALK
T	EARTH MATERIAL
U	EXISTING PAVEMENT
W	VARIABLE DEPTH ASPHALT PAVEMENT

Note: Pavement Edge Slopes are 1:1 Unless Shown Otherwise

PARTIAL SECTION #3B

USE IN CONJUNCTION WITH TYPICAL SECTION #3
STA. 73+50.00 TO STA. 79+00 -L- LT.

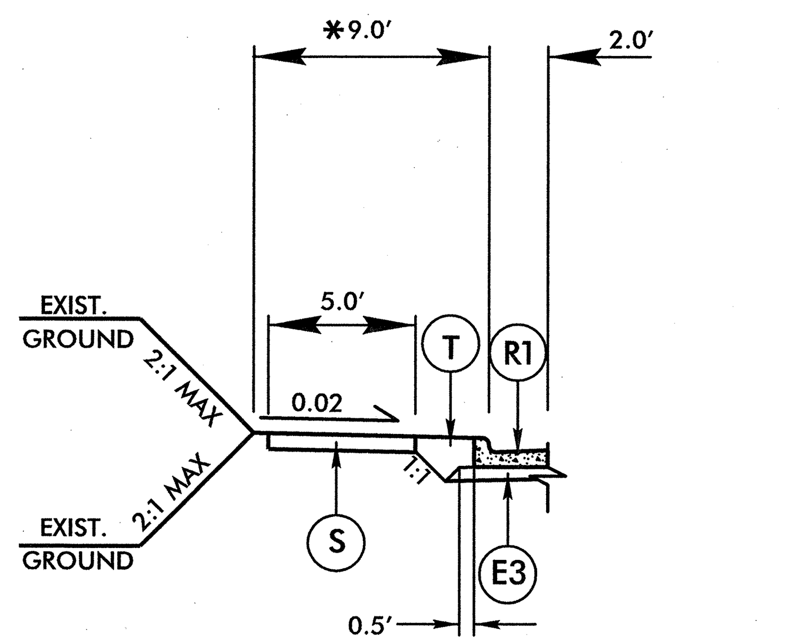

* 14' WHERE WIDENED FOR GUARDRAIL

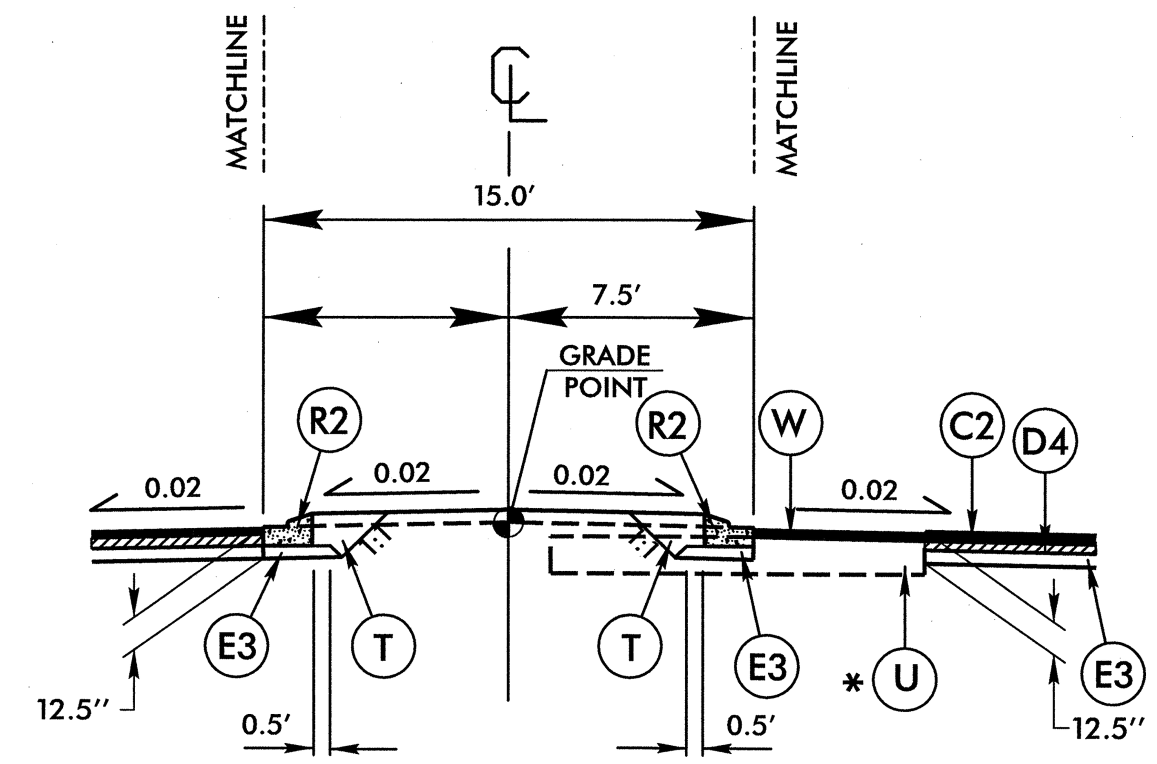

PARTIAL SECTION NO. 3A

* SEE PLANS AND PAVEMENT SUMMARY FOR LOCATIONS OF PAVMENT TO BE REMOVED UNDER PROPOSED GRASS ISLAND.

USE IN CONJUNCTION WITH TYPICAL SECTION NO. 3:

STA. 88+25.00 TO STA. 98+05.00 -L-
STA. 105+40.00 TO STA. 113+30.00 -L-
STA. 119+45.00 TO STA. 123+25.00 -L-

PARTIAL SECTION #3D

USE IN CONJUNCTION WITH TYPICAL SECTION #3
STA. 73+50.00 TO STA. 79+00 -L- RT.

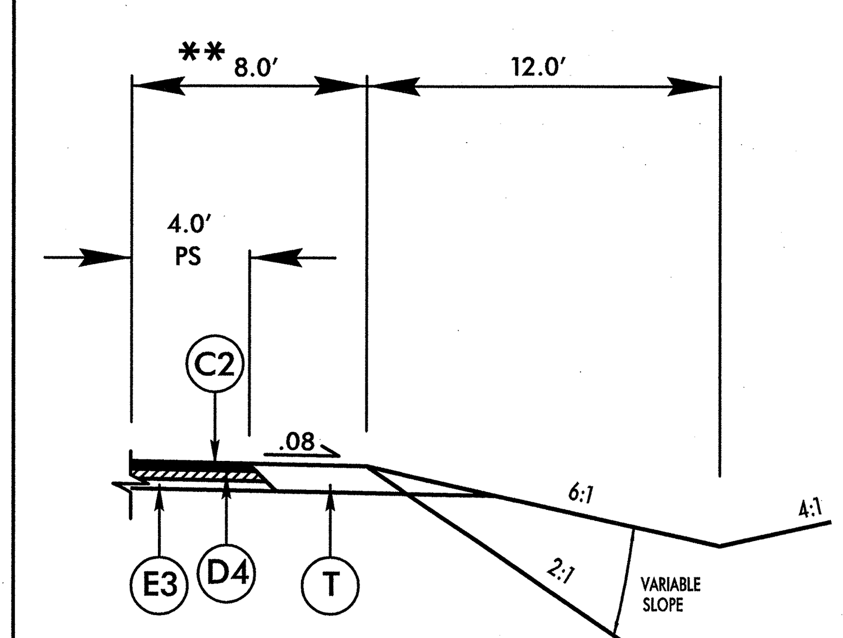

** 11' W/GUARDRAIL

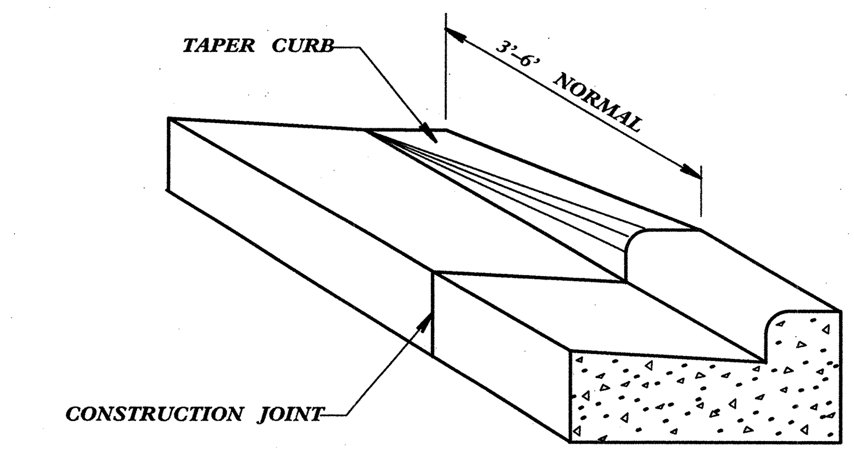

DETAIL OF CURB & GUTTER TERMINI

USE DETAIL AT RADIUS TERMINI POINTS AS DIRECTED BY THE ENGINEER

PARTIAL SECTION #3C

USE IN CONJUNCTION WITH TYPICAL SECTION #3
STA. 51+50.00 TO STA. 54+50 -L- LT.

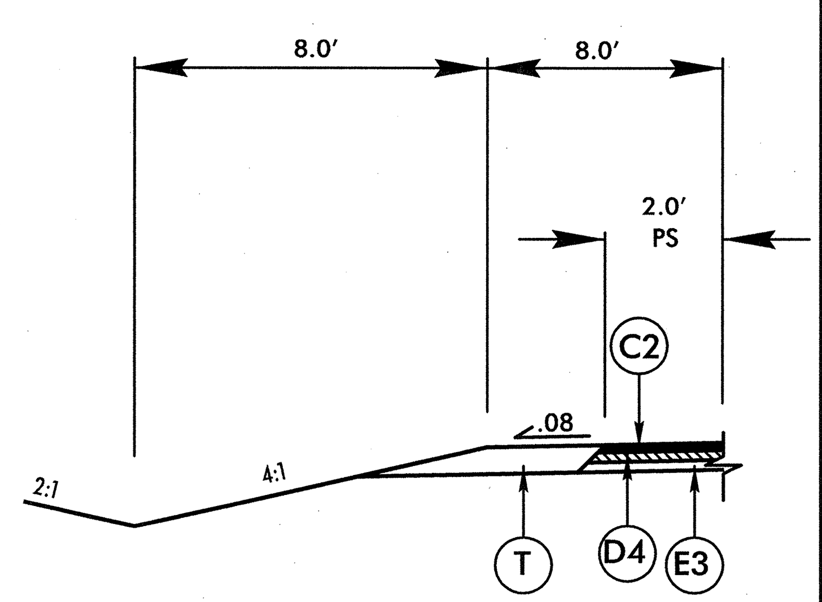

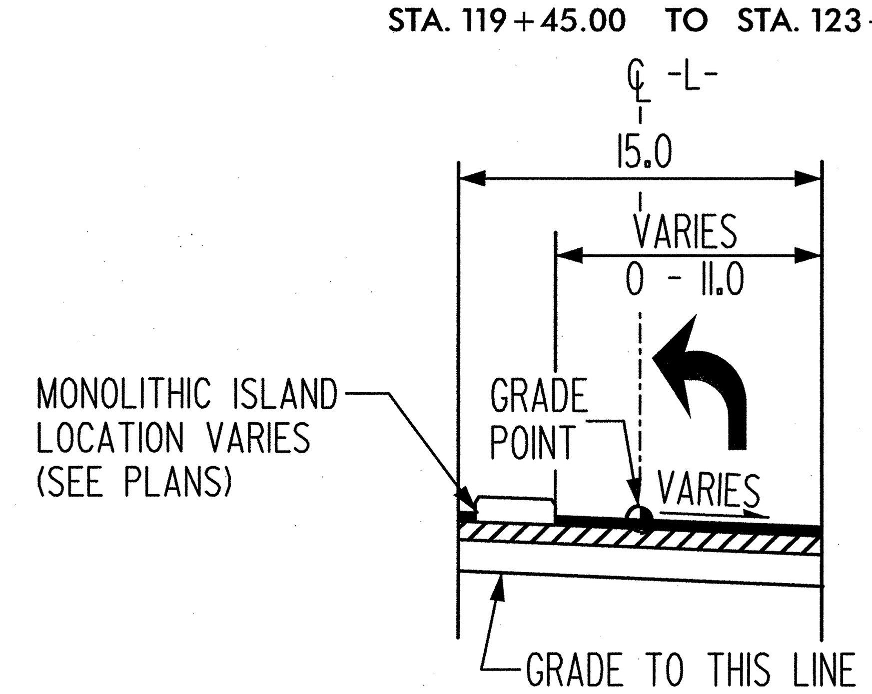

TYPICAL SECTION NO. 3E

USE IN CONJUNCTION WITH TYPICAL SECTION NO. 3 AS FOLLOWS:

-L- STA. 102+23 TO STA. 105+15
-L- STA. 113+55 TO STA. 115+92
-L- STA. 125+24.92 TO STA. 126+42

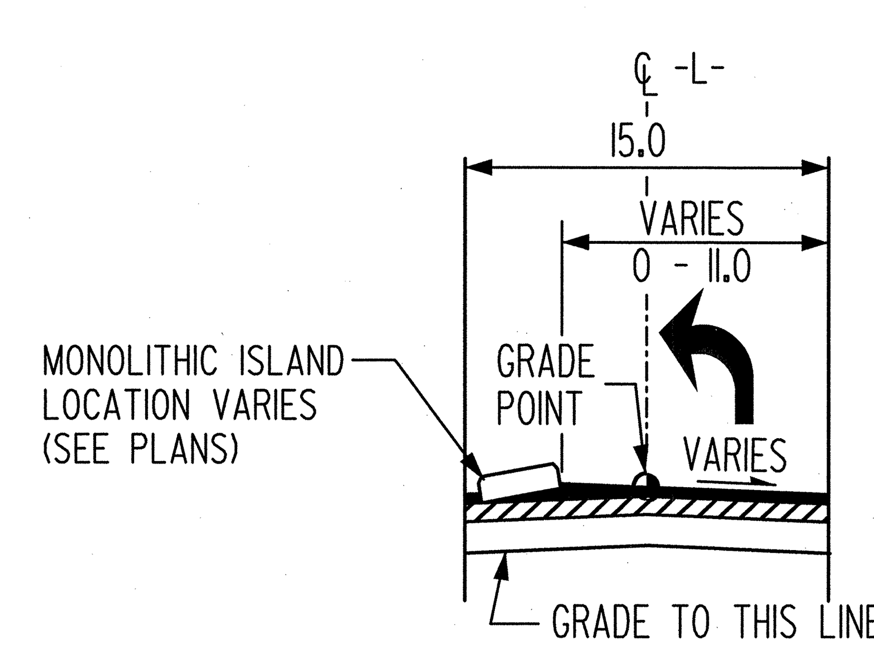

TYPICAL SECTION NO. 3F

USE IN CONJUNCTION WITH TYPICAL SECTION NO. 3 AS FOLLOWS:

-L- STA. 75+80 TO STA. 78+87
-L- STA. 82+28 TO STA. 84+67
-L- STA. 98+30 TO STA. 101+17
-L- STA. 123+55 TO STA. 125+24.92

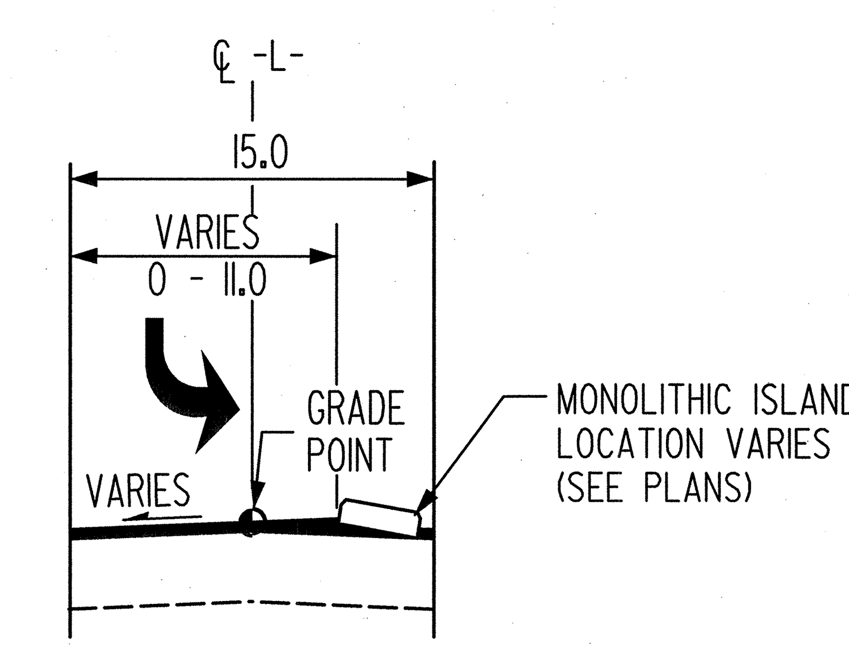

TYPICAL SECTION NO. 3G

USE IN CONJUNCTION WITH TYPICAL SECTION NO. 3 AS FOLLOWS:

-L- STA. 67+58 TO STA. 71+21
-L- STA. 73+40 TO STA. 75+48
-L- STA. 85+63 TO STA. 88+00
-L- STA. 116+83 TO STA. 119+20

$$$$SYSTIME$$$$
$$$$$$$$DGN$$$$$$$$$$$$$$$$
$$$$USERNAME$$$$

2551 rdy typ.dgn 2/23/2012 8:11:25 AM

ARCADIS
G.&.M. of North Carolina, Inc.
WWW.ARCADIS-US.COM
801 Corporate Center Drive, Suite 300
Raleigh, NC 27607-5073
Tel: 919/854-1282 Fax: 919/854-5448 NC License No. C-1869

PROJECT REFERENCE NO.	SHEET NO.
U-2551	2B

ROADWAY DESIGN ENGINEER
NORTH CAROLINA PROFESSIONAL SEAL 022027 ENGINEER STEPHEN T. SMALLWOOD
SEAL NOT VALID UNLESS SIGNED AND DATED

PAVEMENT DESIGN ENGINEER
NORTH CAROLINA PROFESSIONAL SEAL 13369 ENGINEER JIAN-CHI CHEN
02/29/12

CODE	PAVEMENT SCHEDULE
C2	3.0" ASPHALT, TYPE S9.5B
D2	3.0" ASPHALT , TYPE I19.0B
E3	5.5" ASPHALT, TYPE B25.0B
F	UBWC

Note: Pavement Edge Slopes are 1:1 Unless Shown Otherwise

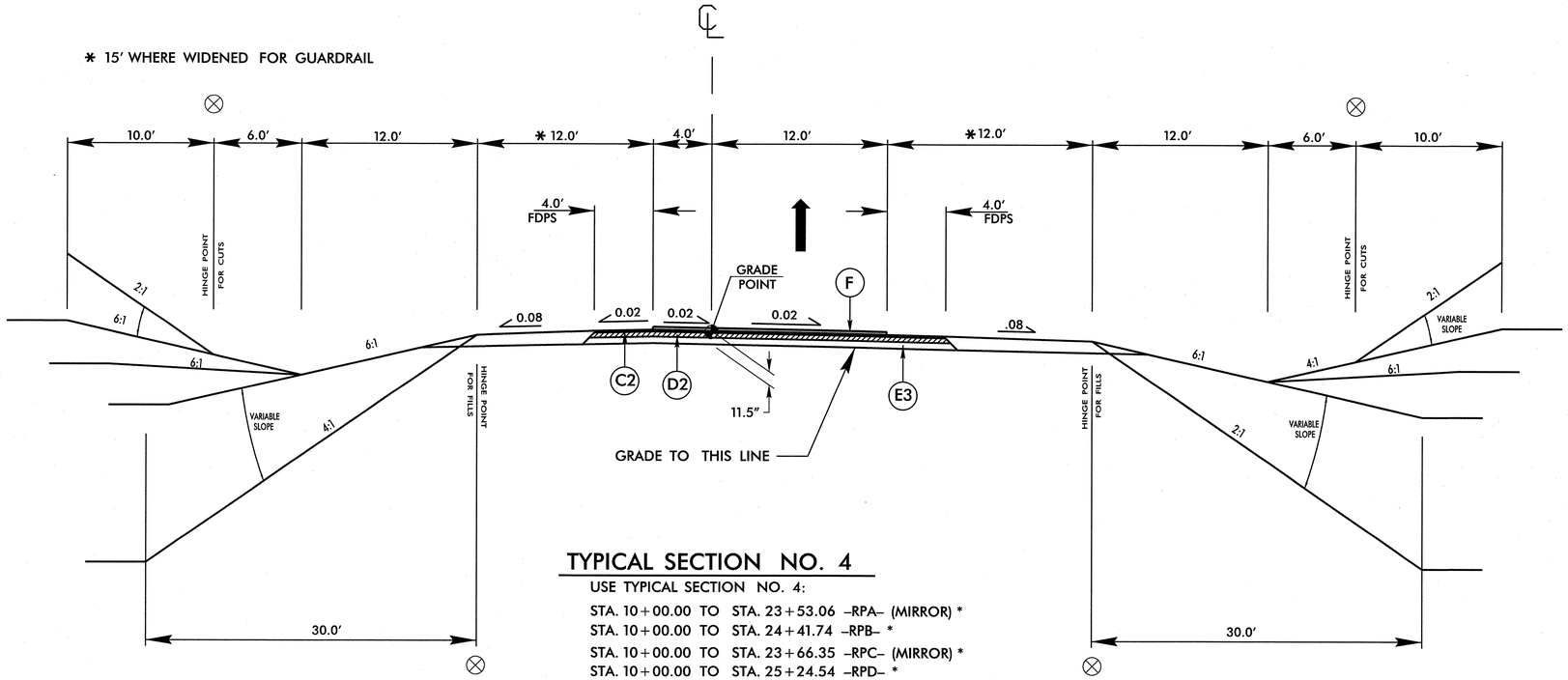

TYPICAL SECTION NO. 4

USE TYPICAL SECTION NO. 4:

STA. 10+00.00 TO STA. 23+53.06 –RPA– (MIRROR) *
STA. 10+00.00 TO STA. 24+41.74 –RPB– *
STA. 10+00.00 TO STA. 23+66.35 –RPC– (MIRROR) *
STA. 10+00.00 TO STA. 25+24.54 –RPD– *

* THESE STATIONS SHOULD BE 29.5' LT. OR RT. OF –L–.
ALSO THESE ARE WHERE GRADES FOR RAMPS SHOULD TIE TO.

PARTIAL SECTION #4A

USE IN CONJUNCTION WITH TYPICAL SECTION #4
STA. 10+95.00 TO STA. 17+20.00 –RPA–
STA. 21+50.00 –Y8– TO STA. 12+00.00 –RPB–
STA. 20+35.00 –RPC– TO STA. 59+50.00 –Y8–
STA. 20+35.00 –RPC– TO STA. 59+50.00 –Y8–

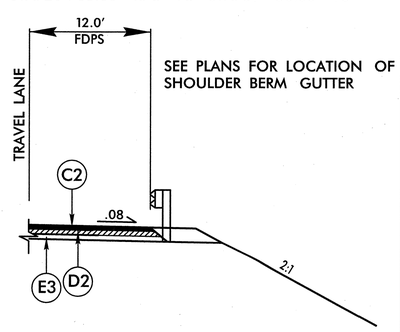

PARTIAL SECTION #4B

USE IN CONJUNCTION WITH TYPICAL SECTION #4
STA. 10+51.76 TO STA. 11+51.94 –RPB– RT.
SEE WALL PLANS

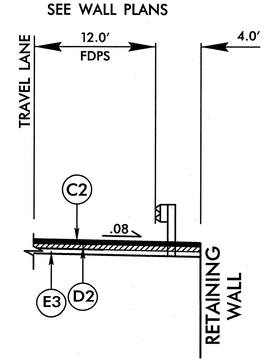

NOTE: USE 8' GUARDRAIL POSTS WHERE GUARDRAIL IS PLACED ADJACENT TO RETAINING WALL. 3'-1½" POST SPACING AT A POINT 25' BEFORE WALL AND CONTINUED THROUGHOUT THE LENGTH OF THE WALL IS REQUIRED.

6/2/99

SYSTIME$$$$ SYSDATE$$$$ FILENAME$$$$

u2551 rdy typ dgn 2/3/2012 11:17:17 AM

ARCADIS
G & M of North Carolina, Inc.
WWW.ARCADIS-US.COM
801 Corporate Center Drive, Suite 300
Raleigh, NC 27607-5073
Tel: 919/854-1282 Fax: 919/854-5448 NC License No. C-1869

PROJECT REFERENCE NO.	SHEET NO.
U-2551	2C

ROADWAY DESIGN ENGINEER: NORTH CAROLINA PROFESSIONAL SEAL 022037 ENGINEER STEPHEN T. SMALLWOOD 2/2/12

PAVEMENT DESIGN ENGINEER: NORTH CAROLINA PROFESSIONAL SEAL 13368 ENGINEER DON-CHI CHEN 02/29/12

SEAL NOT VALID UNLESS SIGNED AND DATED

NOTE: SEE PLANS FOR LOCATION OF TURN LANES.

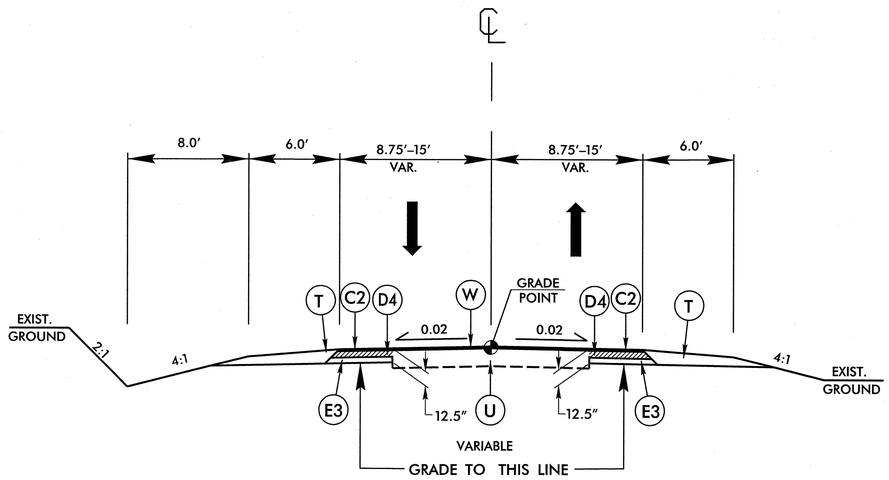

TYPICAL SECTION NO. 5

USE TYPICAL SECTION NO. 5:

STA. 11+63.00 TO STA. 12+53.27 -Y1-

STA. 10+38.00 TO STA. 10+93.42 -Y2-

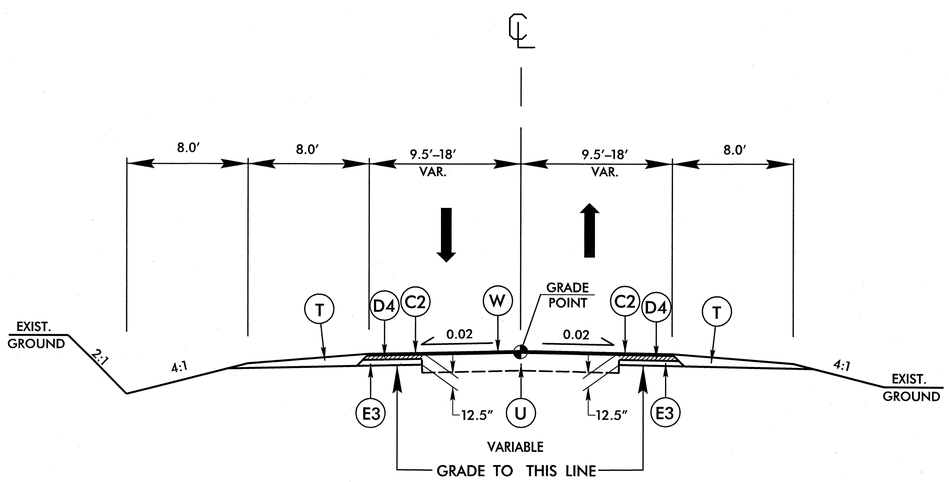

TYPICAL SECTION NO. 6

USE TYPICAL SECTION NO. 6:

STA. 10+29.52 TO STA. 11+20.00 -Y10-

STA. 10+40.00 TO STA. 11+28.94 -Y14-

CODE	PAVEMENT SCHEDULE
C2	3.0" ASPHALT, TYPE S9.5B
D4	4.0" ASPHALT, TYPE I19.0B
E3	5.5" ASPHALT, TYPE B25.0B
T	EARTH MATERIAL
U	EXISTING PAVEMENT
W	VARIABLE DEPTH ASPHALT PAVEMENT

Note: Pavement Edge Slopes are 1:1 Unless Shown Otherwise

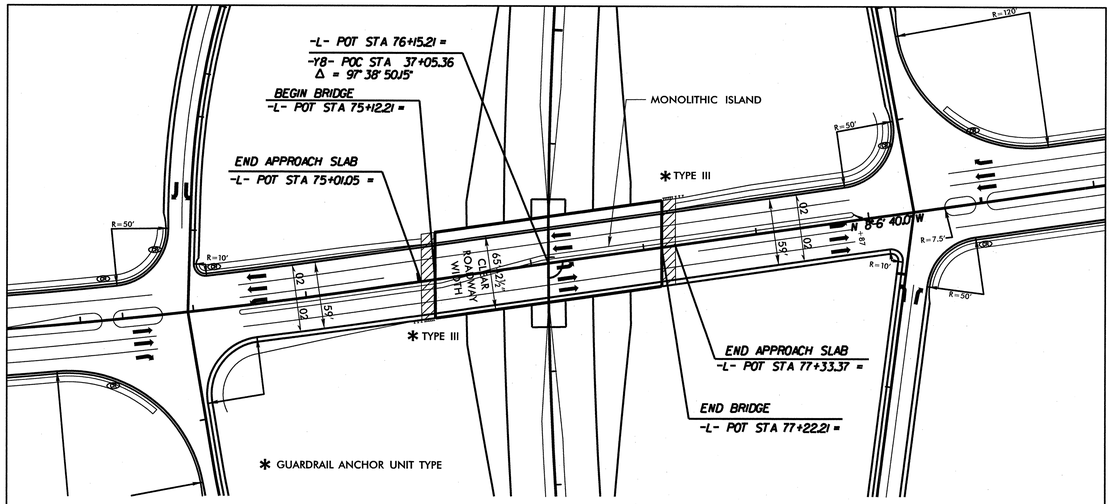

SKETCH SHOWING PAVEMENT-BRIDGE RELATIONSHIP
(-L- OVER -Y8-)

6/2/99
$$$$$SYSTIME$$$$$
$$$$$USERNAME$$$$$
551 rdy typ.dgn 1/30/2012 12:43:23 PM

ARCADIS
G & M of North Carolina, Inc.
WWW.ARCADIS-US.COM
801 Corporate Center Drive, Suite 300
Raleigh, NC 27607-5073
Tel: 919/854-1282 Fax: 919/854-5448 NC License No. C-1869

PROJECT REFERENCE NO.	SHEET NO.
U-2551	2D

ROADWAY DESIGN ENGINEER — NORTH CAROLINA PROFESSIONAL ENGINEER SEAL 022037 STEPHEN T. SMALLWOOD — SEAL NOT VALID UNLESS SIGNED AND DATED

PAVEMENT DESIGN ENGINEER — NORTH CAROLINA PROFESSIONAL ENGINEER SEAL 13368 DON-CHI CHEN 02/29/12

NOTE: SEE PLANS FOR LOCATION OF TURN LANES.

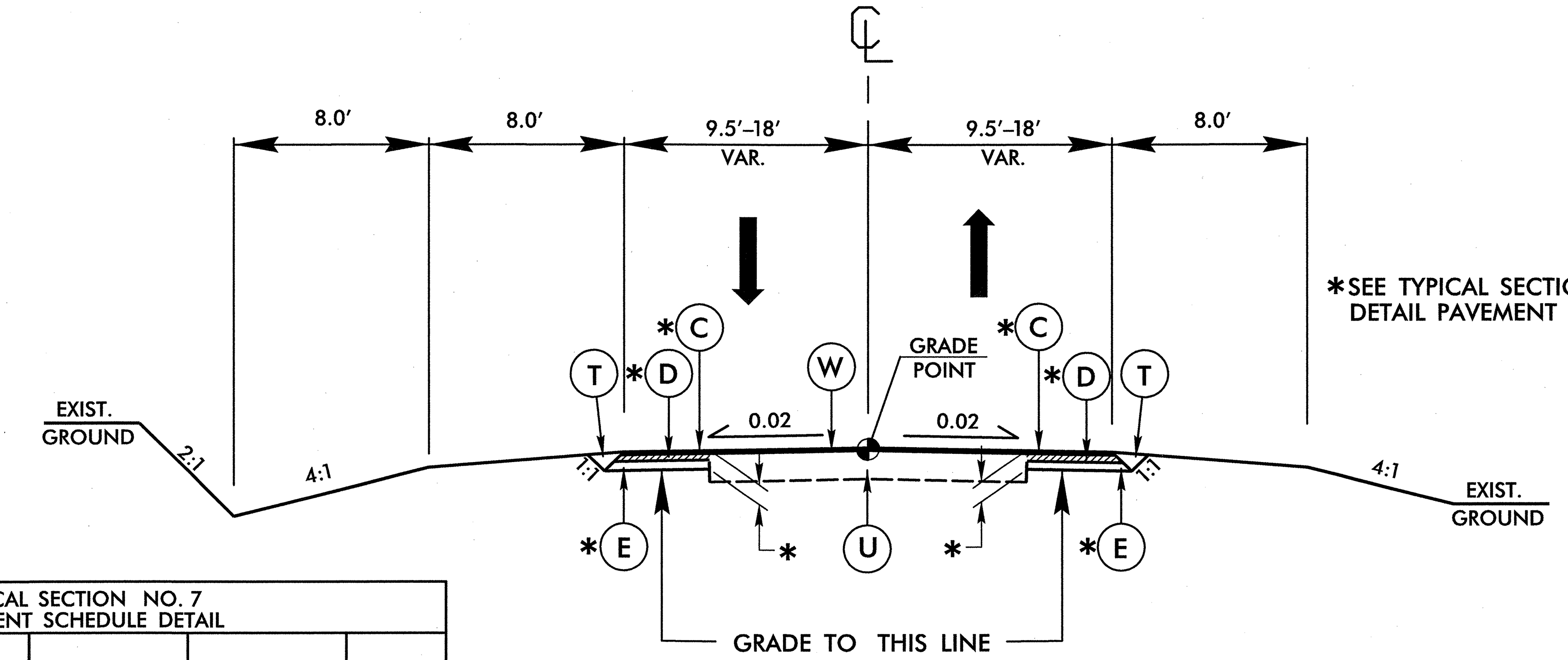

*SEE TYPICAL SECTION NO. 7 DETAIL PAVEMENT SCHEDULE

TYPICAL SECTION NO. 7 PAVEMENT SCHEDULE DETAIL				
ROADWAY	* C	* D	* E	* DEPTH
Y3	3.0" S9.5B	2.5" I19.0B	4.0" B25.0B	9.5"
Y4	3.0" S9.5B	2.5" I19.0B	4.0" B25.0B	9.5"
Y9	3.0" S9.5B	–	4.0" B25.0B	7.0"
Y11	3.0" S9.5B	–	5.5" B25.0B	8.5"
Y13	3.0" S9.5B		5.5" B25.0B	8.5"
Y15	3.0" S9.5B	–	4.0" B25.0B	7.0"

TYPICAL SECTION NO. 7

USE TYPICAL SECTION NO. 7:

STA. 11+04.98 TO STA. 13+46.26 –Y3–
STA. 10+16.50 TO STA. 13+15.43 –Y4–
STA. 11+84.82 TO STA. 14+32.64 –Y9–
STA. 12+00.00 TO STA. 12+60.00 –Y11–
STA. 12+30.73 TO STA. 15+23.35 –Y13–
STA. 10+45.00 TO STA. 12+13.88 –Y15–

CODE	PAVEMENT SCHEDULE
C2	3.0" ASPHALT, TYPE S9.5B
D1	2.5" ASPHALT, TYPE I19.0B
D4	4.0" ASPHALT, TYPE I19.0B
E1	4.0" ASPHALT, TYPE B25.0B
E3	5.5" ASPHALT, TYPE B25.0B
T	EARTH MATERIAL
U	EXISTING PAVEMENT
W	VARIABLE DEPTH ASPHALT PAVEMENT

Note: Pavement Edge Slopes are 1:1 Unless Shown Otherwise

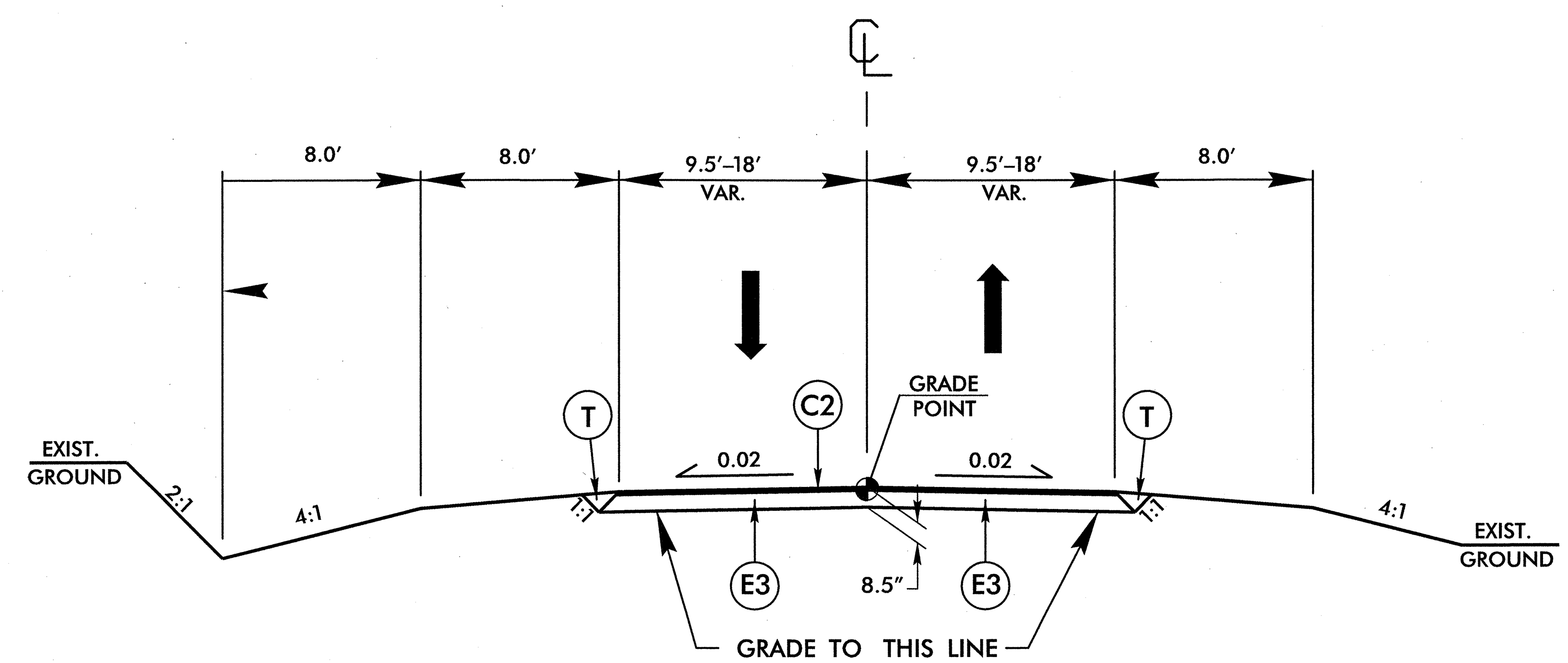

TYPICAL SECTION NO. 8

USE TYPICAL SECTION NO. 8:

STA. 10+29.50 TO STA. 12+00.00 –Y11–

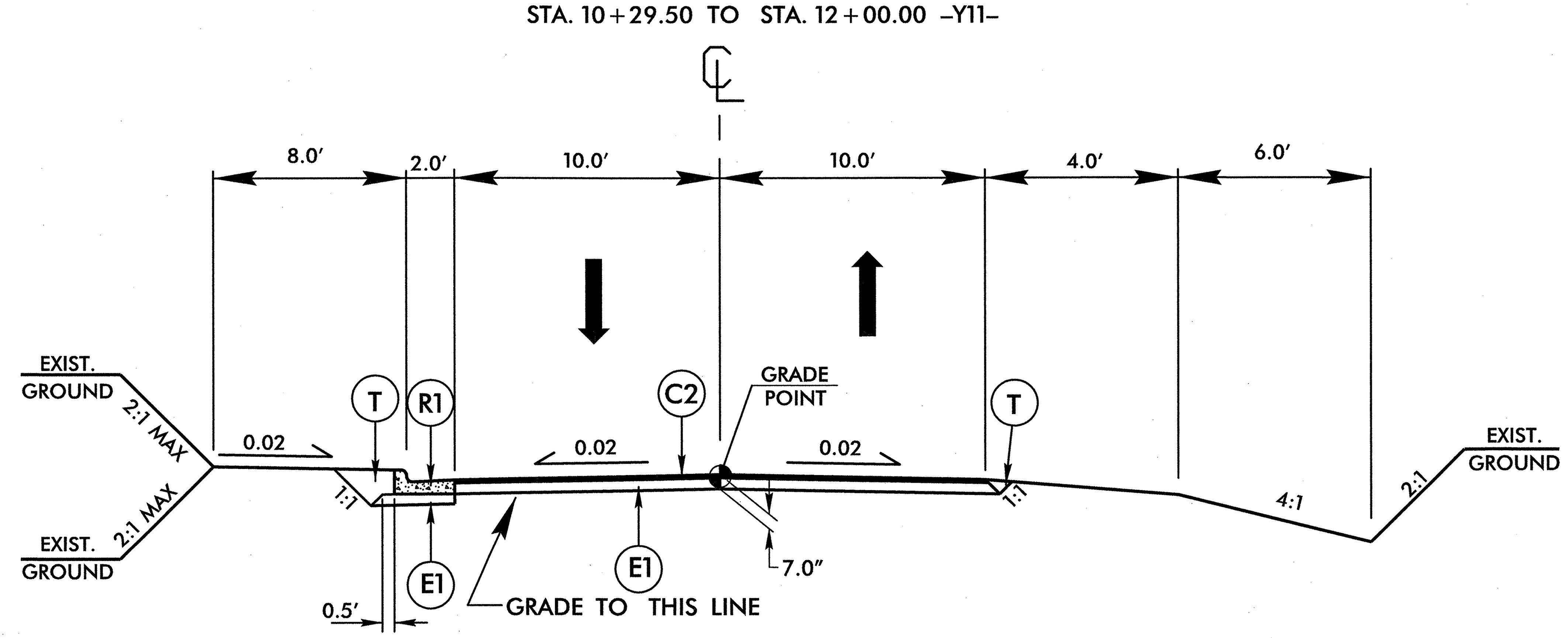

TYPICAL SECTION NO. 9

USE TYPICAL SECTION NO. 9

STA. 10+36.75 TO STA. 11+30.16 –SR5–

6/2/99

$$$$SYSTIME$$$$ $$$$$DGN$$$$$$$$$$$$$$$$ $$$$USERNAME$$$$

2551 rdy tyn.dgn 1/30/2012 11:43:07 AM

ARCADIS
G & M of North Carolina, Inc.
WWW.ARCADIS-US.COM
801 Corporate Center Drive, Suite 300
Raleigh, NC 27607-5073
Tel: 919/854-6282 Fax: 919/854-5448 NC License No. C-1869

PROJECT REFERENCE NO.	SHEET NO.
U-2551	2E

ROADWAY DESIGN ENGINEER

NORTH CAROLINA PROFESSIONAL SEAL 022037 ENGINEER STEPHEN T. SMALLWOOD

SEAL NOT VALID UNLESS SIGNED AND DATED

PAVEMENT DESIGN ENGINEER

NORTH CAROLINA PROFESSIONAL SEAL 13368 ENGINEER CHI CHEN

02/29/12

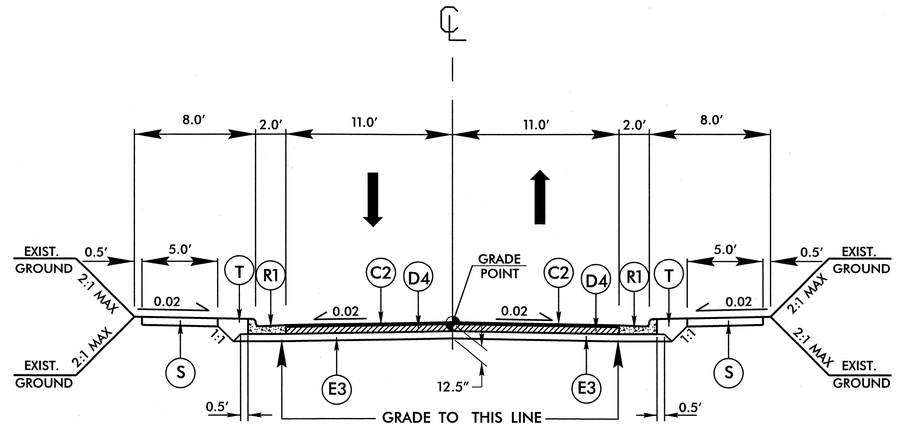

TYPICAL SECTION NO. 10

USE TYPICAL SECTION NO. 10:

STA. 10+94.00 TO STA. 11+86.63 –Y5–

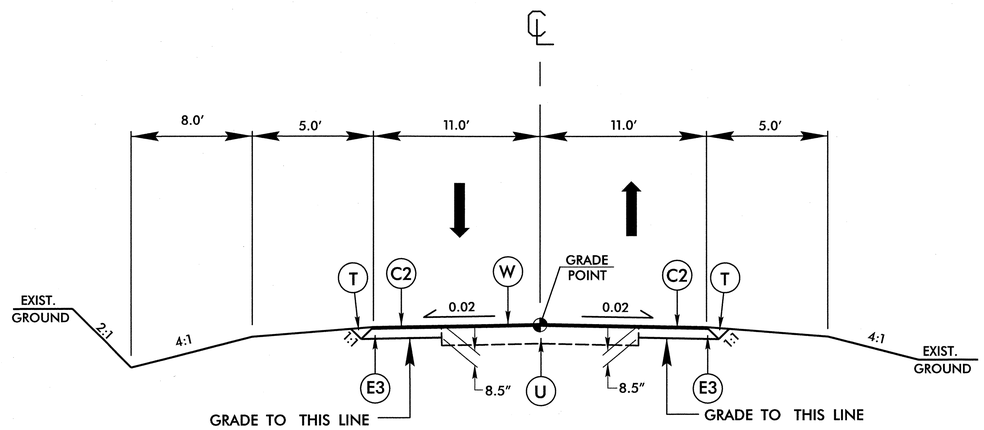

TYPICAL SECTION NO. 11

USE TYPICAL SECTION NO. 11:

STA. 13+73.42 TO STA. 15+60.00 –Y12–

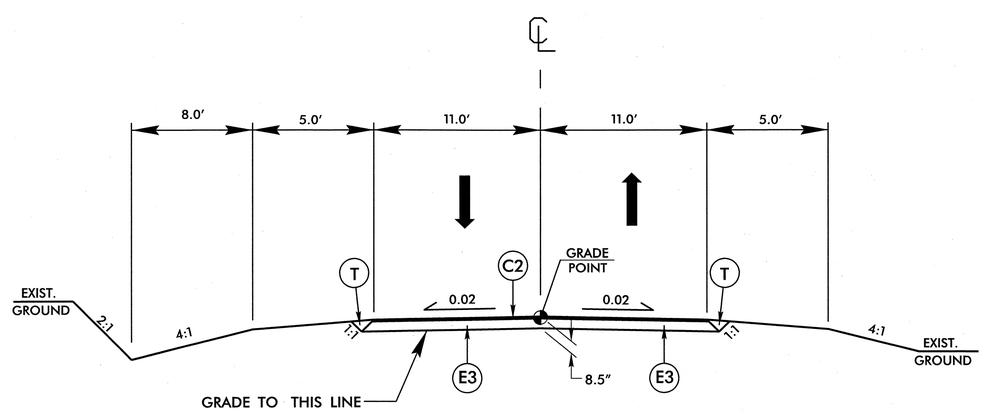

TYPICAL SECTION NO. 12

USE TYPICAL SECTION NO. 12:

STA. 10+19.59 TO STA. 13+73.42 –Y12–

CODE	PAVEMENT SCHEDULE
C2	3.0″ ASPHALT, TYPE S9.5B
D4	4.0″ ASPHALT, TYPE I19.0B
E3	5.5″ ASPHALT, TYPE B25.0B
R1	2′ – 6″ CONCRETE CURB AND GUTTER
S	SIDEWALK
T	EARTH MATERIAL
U	EXISTING PAVEMENT
W	VARIABLE DEPTH ASPHALT PAVEMENT

Note: Pavement Edge Slopes are 1:1 Unless Shown Otherwise

6/2/99

$$$$SYSTIME$$$$
$$$$DGN$$$$
$$$$USERNAME$$$$

2551 rdy typ.dgn 1/30/2012 11:43:28 AM

6/2/99

ARCADIS
G & M of North Carolina, Inc.
WWW.ARCADIS-US.COM
801 Corporate Center Drive, Suite 300
Raleigh, NC 27607-5073
Tel: 919/854-1282 Fax: 919/854-5448 NC License No. C-1869

PROJECT REFERENCE NO.	SHEET NO.
U-2551	2F
ROADWAY DESIGN ENGINEER	PAVEMENT DESIGN ENGINEER

NORTH CAROLINA PROFESSIONAL SEAL 022037 ENGINEER STEPHEN T. SMALLWOOD

SEAL NOT VALID UNLESS SIGNED AND DATED

NORTH CAROLINA PROFESSIONAL SEAL 13368 ENGINEER DON CHI CHEN 02/29/12

CODE	PAVEMENT SCHEDULE
C2	3.0" ASPHALT, TYPE S9.5B
E1	4.0" ASPHALT, TYPE B25.0B
T	EARTH MATERIAL

Note: Pavement Edge Slopes are 1:1 Unless Shown Otherwise

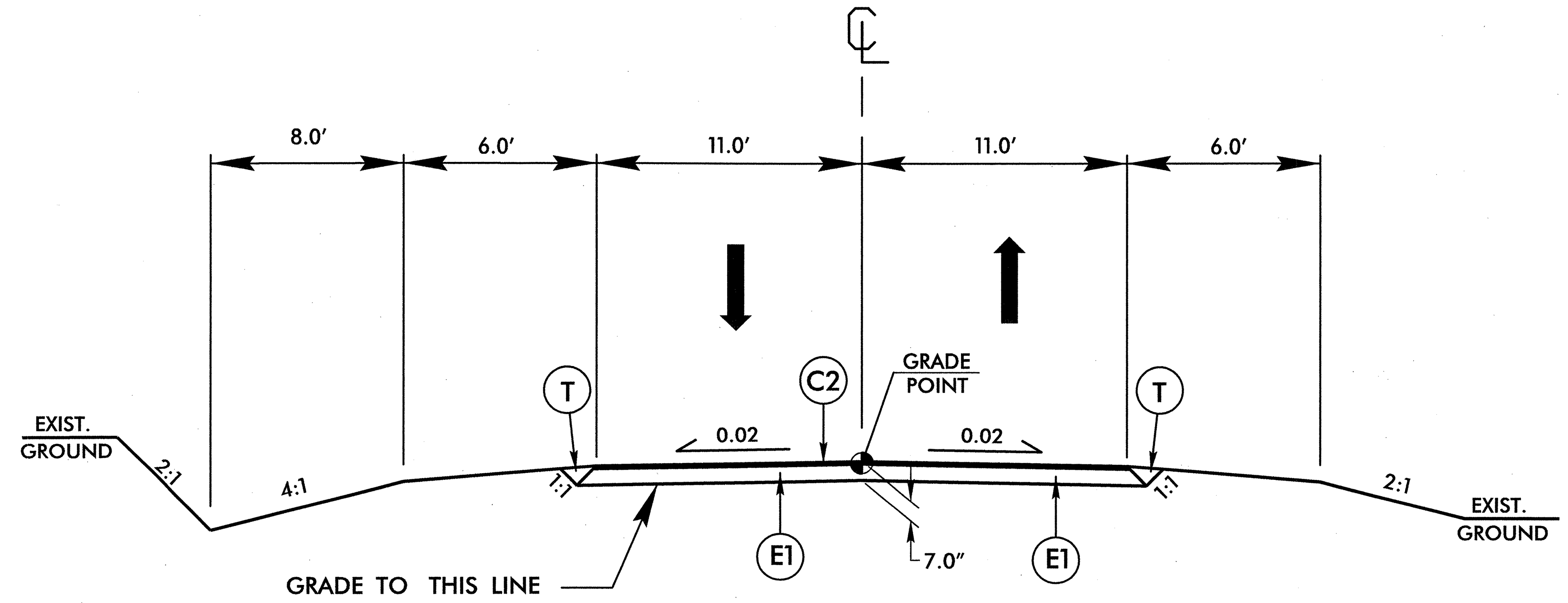

TYPICAL SECTION NO. 13

USE TYPICAL SECTION NO. 13:

STA. 10+10.00 TO STA. 12+08.48 -SR1-

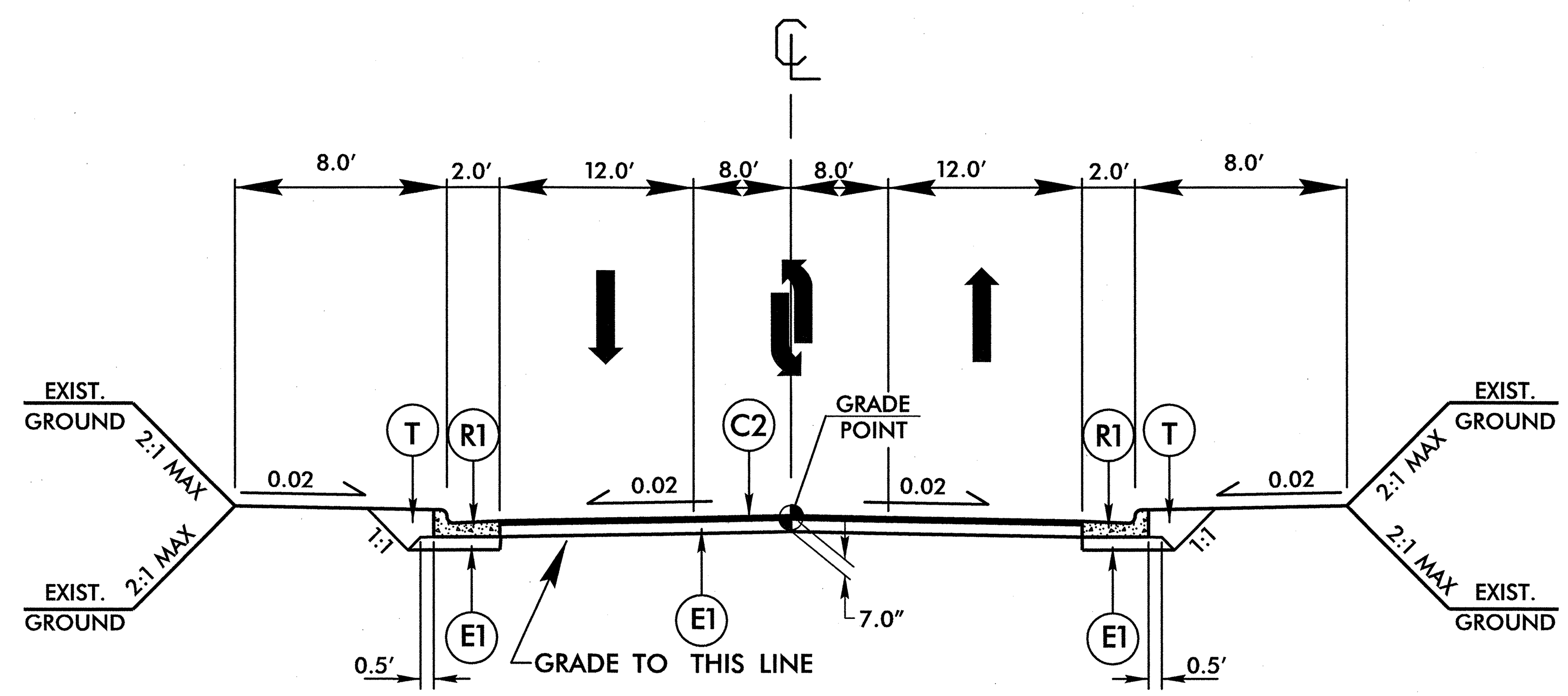

TYPICAL SECTION NO. 14

USE TYPICAL SECTION NO. 14:

STA. 11+25.00 TO STA. 13+68.80 -SR4-

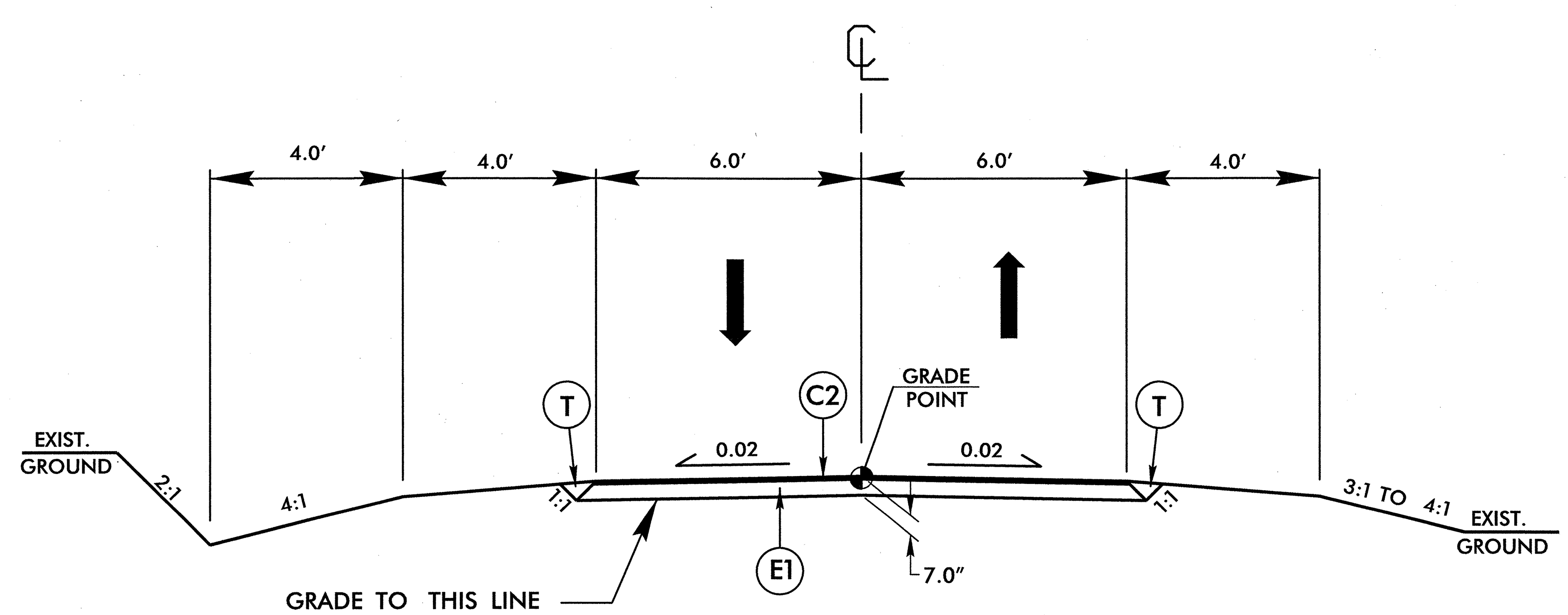

TYPICAL SECTION NO. 15

USE TYPICAL SECTION NO. 15

STA. 10+00.00 TO STA. 11+05.31 -DWY1-

$$$$$$SYSTIME$$$$$
$$$$$$$$$$$$DGN$$$$$$$$$$$$$$$$$$$$$$$$$$
$$$$USERNAME$$$$

2551 rdy typ.dgn 1/30/2012 11:43:46 AM

ARCADIS
G & M of North Carolina, Inc.
WWW.ARCADIS-US.COM
801 Corporate Center Drive, Suite 300
Raleigh, NC 27607-5073
Tel: 919/854-1282 Fax: 919/854-5448 NC License No. C-1869

PROJECT REFERENCE NO.	SHEET NO.
U-2551	2G

ROADWAY DESIGN ENGINEER — SEAL: NORTH CAROLINA PROFESSIONAL SEAL 022037 ENGINEER STEPHEN T. SMALLWOOD 2/22/12

PAVEMENT DESIGN ENGINEER — SEAL: NORTH CAROLINA PROFESSIONAL SEAL 13368 ENGINEER DON-CHI CHEN 02/29/12

SEAL NOT VALID UNLESS SIGNED AND DATED

CODE	PAVEMENT SCHEDULE
C2	3.0" ASPHALT, TYPE S9.5B
C3	3.0" ASPHALT, TYPE S9.5C
D2	3.0" ASPHALT , TYPE I19.0B
D3	3.0" ASPHALT , TYPE I19.0C
E1	4.0" ASPHALT, TYPE B25.0B
E2	4.0" ASPHALT, TYPE B25.0C
E3	5.5" ASPHALT, TYPE B25.0B
F	UBWC
T	EARTH MATERIAL
U	EXISTING PAVEMENT
V	RUMBLE STRIP

Note: Pavement Edge Slopes are 1:1 Unless Shown Otherwise

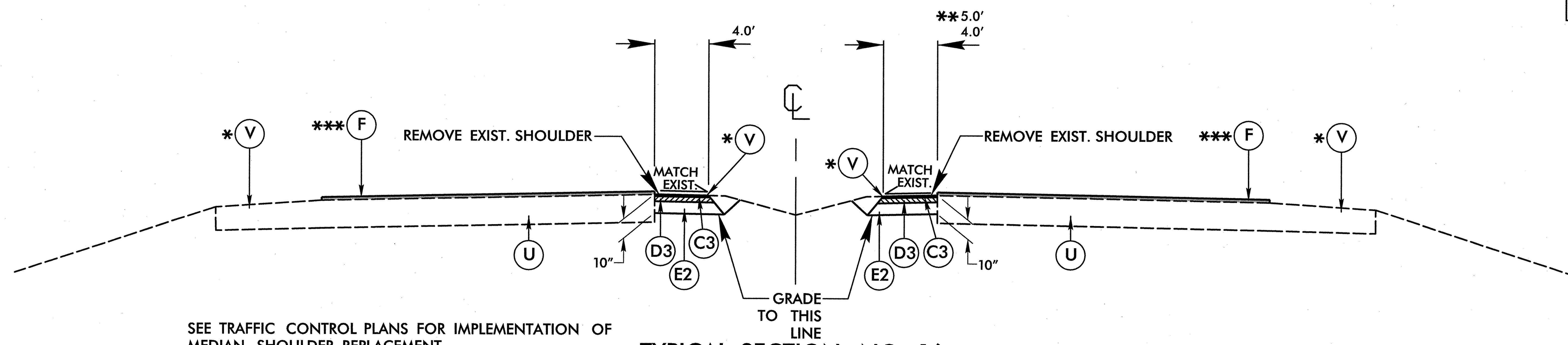

SEE TRAFFIC CONTROL PLANS FOR IMPLEMENTATION OF MEDIAN SHOULDER REPLACEMENT

TYPICAL SECTION NO. 16

USE TYPICAL SECTION NO. 16:

STA. 11+96 TO STA. 36+50 -Y8- MED. LT.
STA. 37+60 TO STA. 60+51 -Y8- MED. LT.
STA. 15+20 TO STA. 36+50 -Y8- MED. RT.
STA. 37+60 TO STA. 48+00 -Y8- MED. RT.
STA. 51+00 TO STA. 61+00 -Y8- MED. RT.
** STA. 48+00 TO STA. 51+00 -Y8- MED. RT.
* STA. 11+96 TO STA. 64+95 -Y8-(TIE TO U-2550B) OUTSIDE & MEDIAN SHOULDER LT.
* STA. 11+96 TO STA. 73+95 -Y8-(TIE TO U-2550B) OUTSIDE & MEDIAN SHOULDER RT.
*** STA. 11+96 TO STA. 61+00 -Y8-

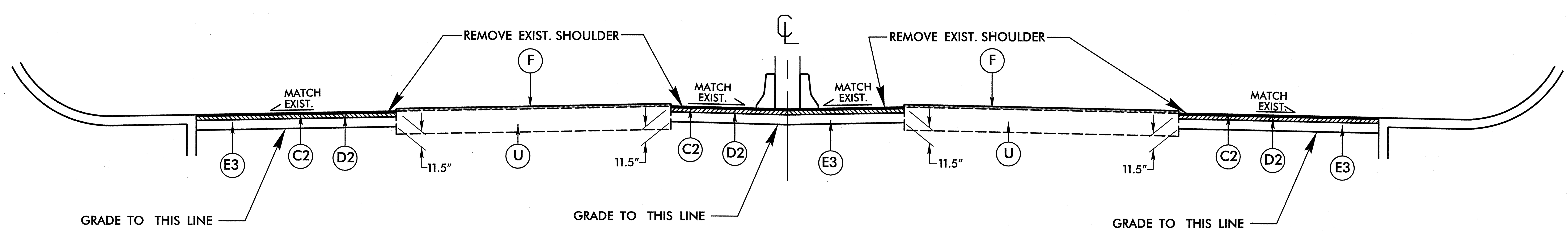

TYPICAL SECTION NO. 17

USE TYPICAL SECTION NO. 17 UNDER BRIDGE:

STA. 35+50 TO STA. 38+75 -Y8- RT
STA. 35+30 TO STA. 38+65 -Y8- LT
STA. 36+50 TO STA. 37+60 -Y8- MED

DETAIL FOR LIMITS OF MILLING EXISTING I-40 ULTRATHIN SURFACE COURSES

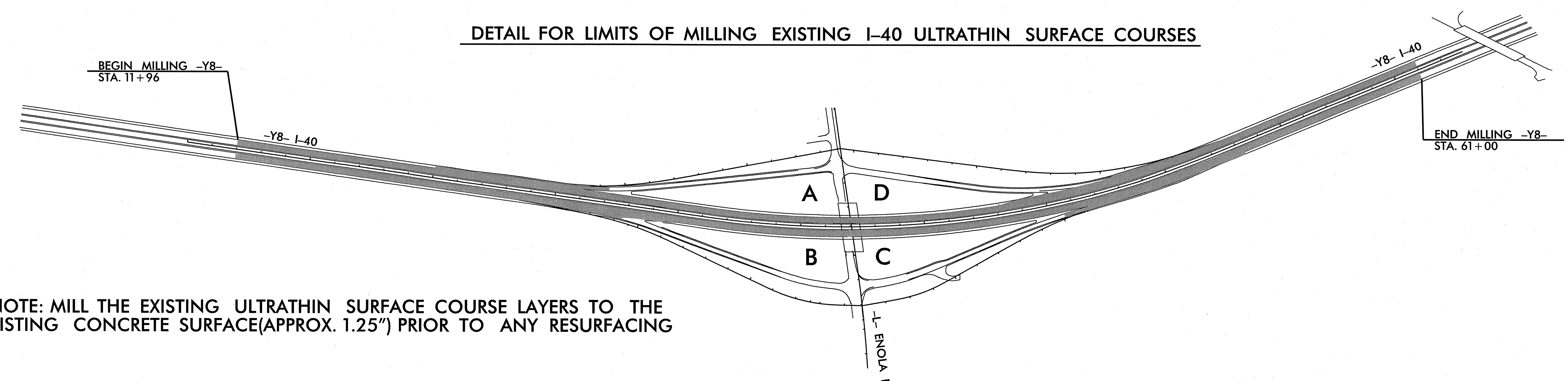

NOTE: MILL THE EXISTING ULTRATHIN SURFACE COURSE LAYERS TO THE EXISTING CONCRETE SURFACE(APPROX. 1.25") PRIOR TO ANY RESURFACING

$$$$$$SYSTIME$$$$$
$$$$$$$$$$$$DGN$$$$$$$$$$$$$$$$$$
$$$$$USERNAME$$$$$

5/14/99

INTERSECTION DETAIL
ENOLA ROAD(SR 1922) @ STAMEY AVENUE(SR 1990) & CROSS MEMORIAL AVENUE(SR 1992)

ARCADIS
G & M of North Carolina, Inc.
WWW.ARCADIS-US.COM
801 Corporate Center Drive, Suite 300
Raleigh, NC 27607-5073
Tel: 919/854-1282 Fax: 919/854-5448 NC License No. C-1869

PROJECT REFERENCE NO.	SHEET NO.
U-2551	2H

ROADWAY DESIGN ENGINEER
NORTH CAROLINA PROFESSIONAL SEAL 022037 ENGINEER STEPHEN T. SMALLWOOD
SEAL NOT VALID UNLESS SIGNED AND DATED

40′ 0′ 40′ 80′
20′

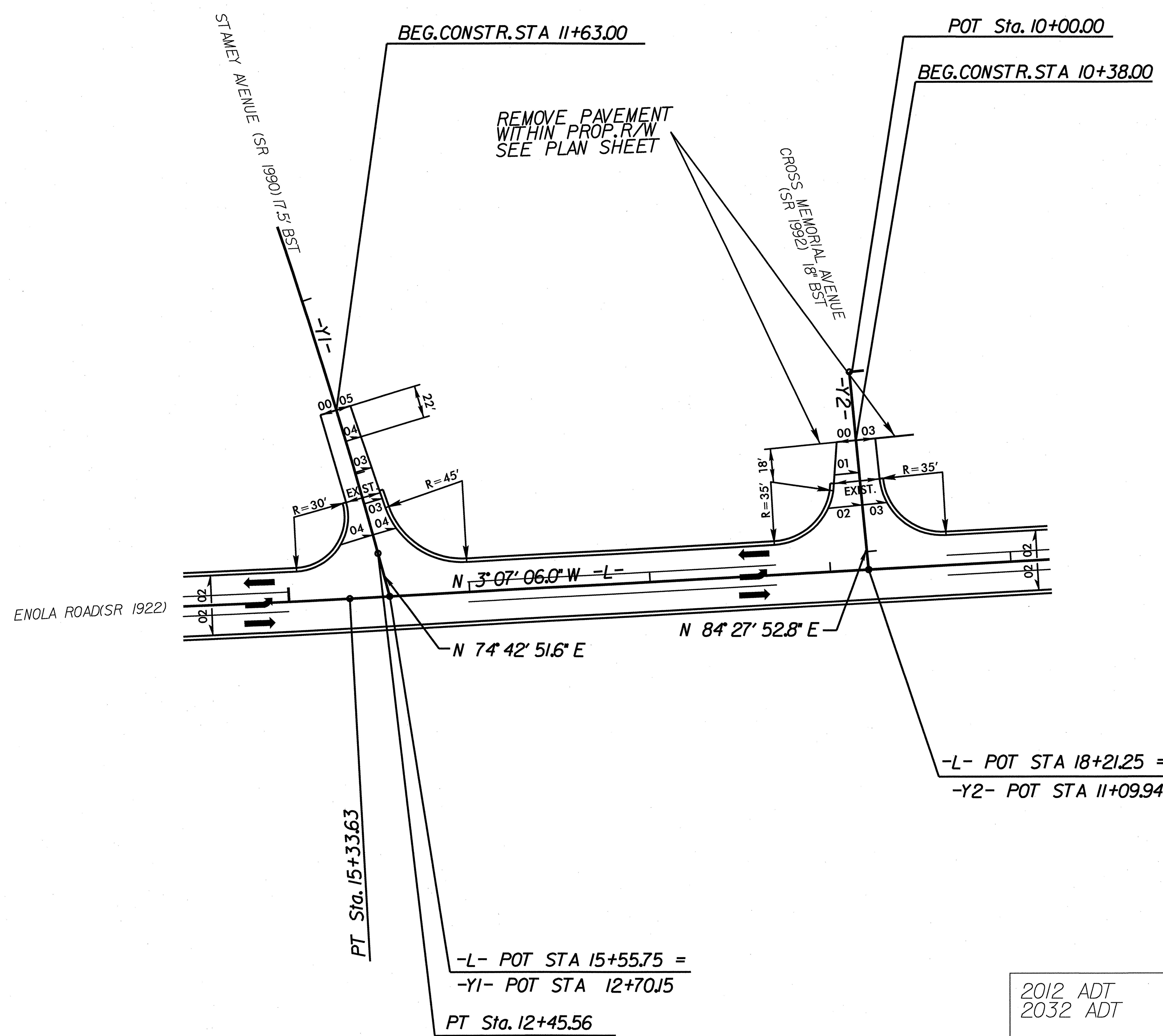

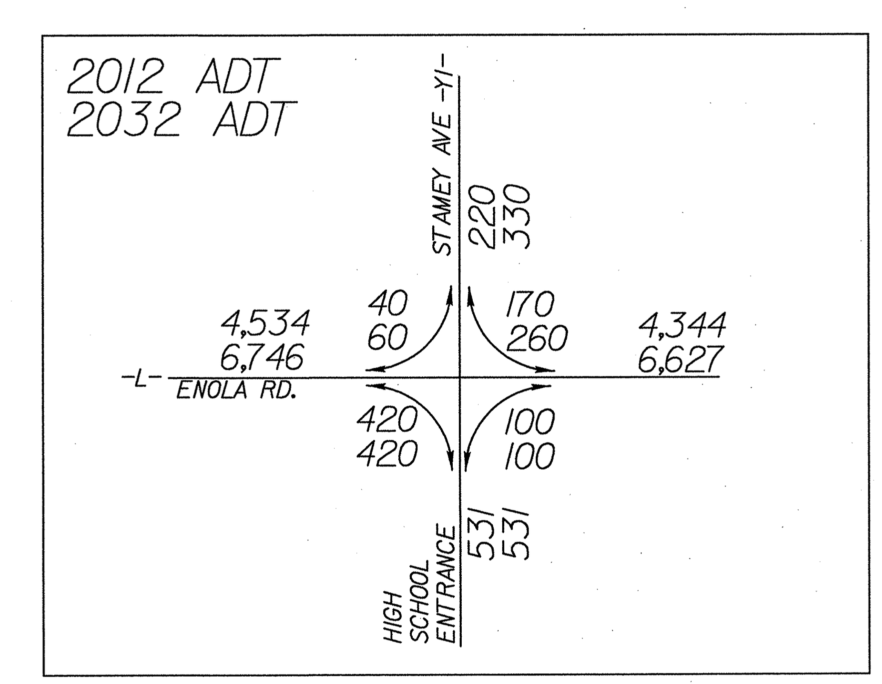

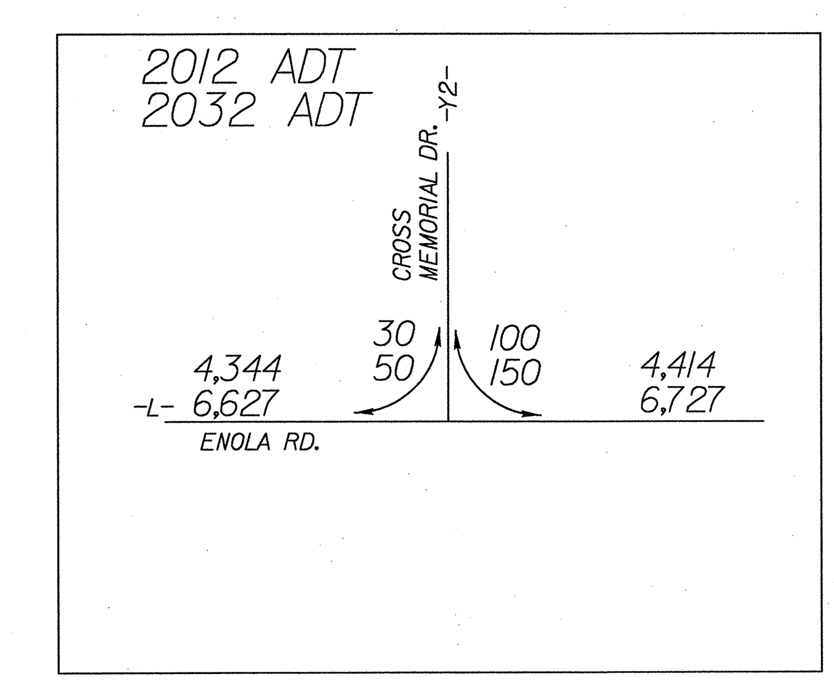

SEE SHEET 4 FOR -L-, -Y1- & -Y2- PLAN

$$$$SYSTIME$$$$
$$$$$$$$DGN$$$$$$$$$$$$$$$$$$$
$$$$USERNAME$$$$

[illegible]551 rdy Intersection Detail1.dgn 1/30/2012 2:31:01 PM

INTERSECTION DETAIL
ENOLA ROAD(SR 1922) @ PETE BRITTAIN(SR 1940) & OLD COLONY ROAD(SR 1940)

ARCADIS
G & M of North Carolina, Inc.
WWW.ARCADIS-US.COM
801 Corporate Center Drive, Suite 300
Raleigh, NC 27607-5073
Tel: 919/854-1282 Fax: 919/854-5448 NC License No. C-1869

PROJECT REFERENCE NO.	SHEET NO.
U-2551	21

ROADWAY DESIGN ENGINEER
NORTH CAROLINA PROFESSIONAL SEAL 022037 ENGINEER STEPHEN T. SMALLWOOD
SEAL NOT VALID UNLESS SIGNED AND DATED

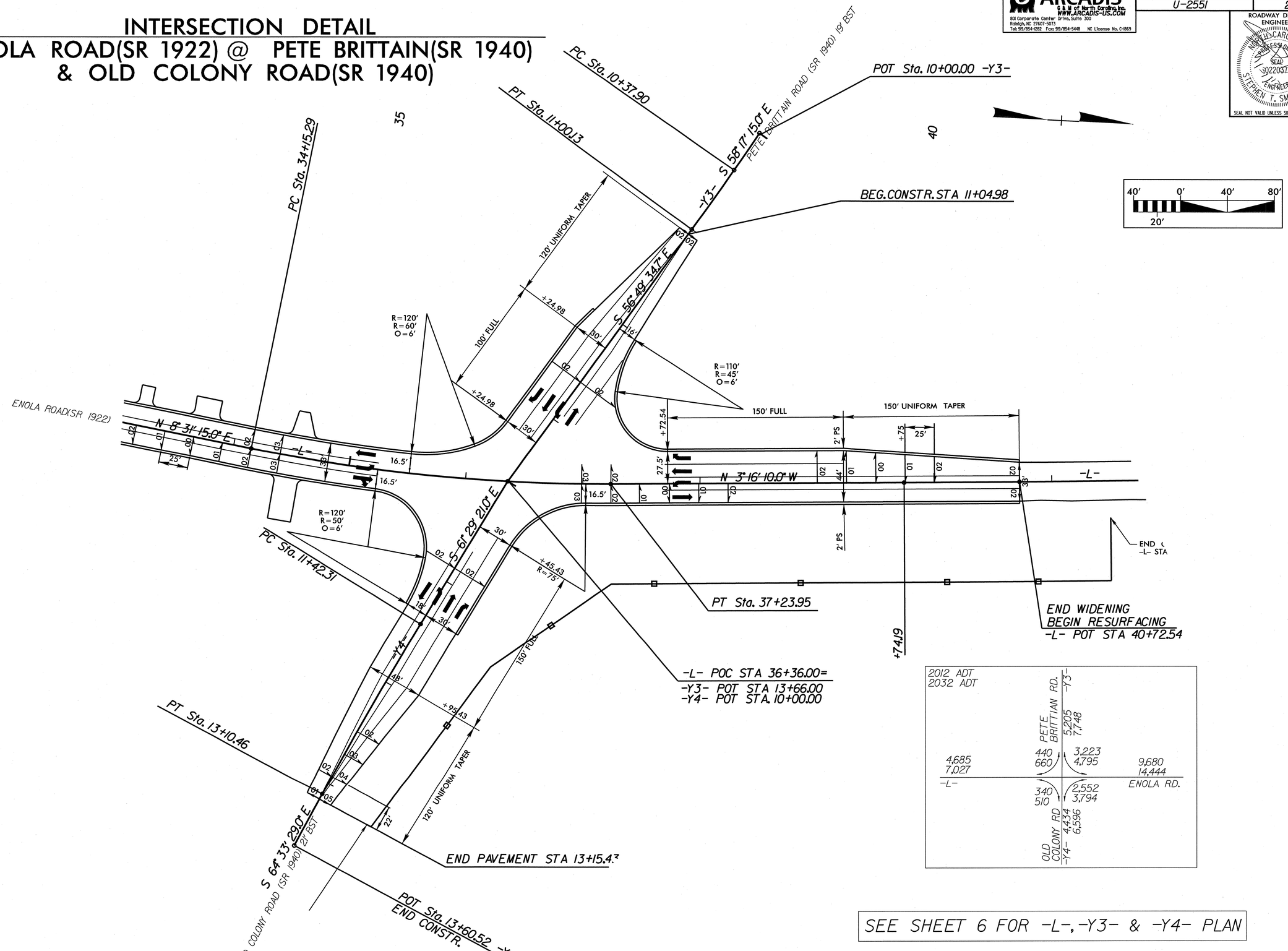

SEE SHEET 6 FOR -L-, -Y3- & -Y4- PLAN

5/14/99

$$$$$SYSTIME$$$$$
$$$$$DGN$$$$$
$$$$$USERNAME$$$$$

551 rdy Intersection Detail2.dgn 1/30/2012 2:32:24 PM

5/14/99

ARCADIS
G & M of North Carolina, Inc.
WWW.ARCADIS-US.COM
801 Corporate Center Drive, Suite 300
Raleigh, NC 27607-5073
Tel: 919/854-1282 Fax: 919/854-5448 NC License No. C-1869

PROJECT REFERENCE NO.	SHEET NO.
U-2551	2J

ROADWAY DESIGN ENGINEER

NORTH CAROLINA PROFESSIONAL SEAL 022037 ENGINEER STEPHEN T. SMALLWOOD

SEAL NOT VALID UNLESS SIGNED AND DATED

INTERSECTION DETAIL

ENOLA ROAD(SR 1922) @ J. IVERSON RIDDLE(SOUTH ENTRANCE) & J. IVERSON RIDDLE(NORTH ENTRANCE)

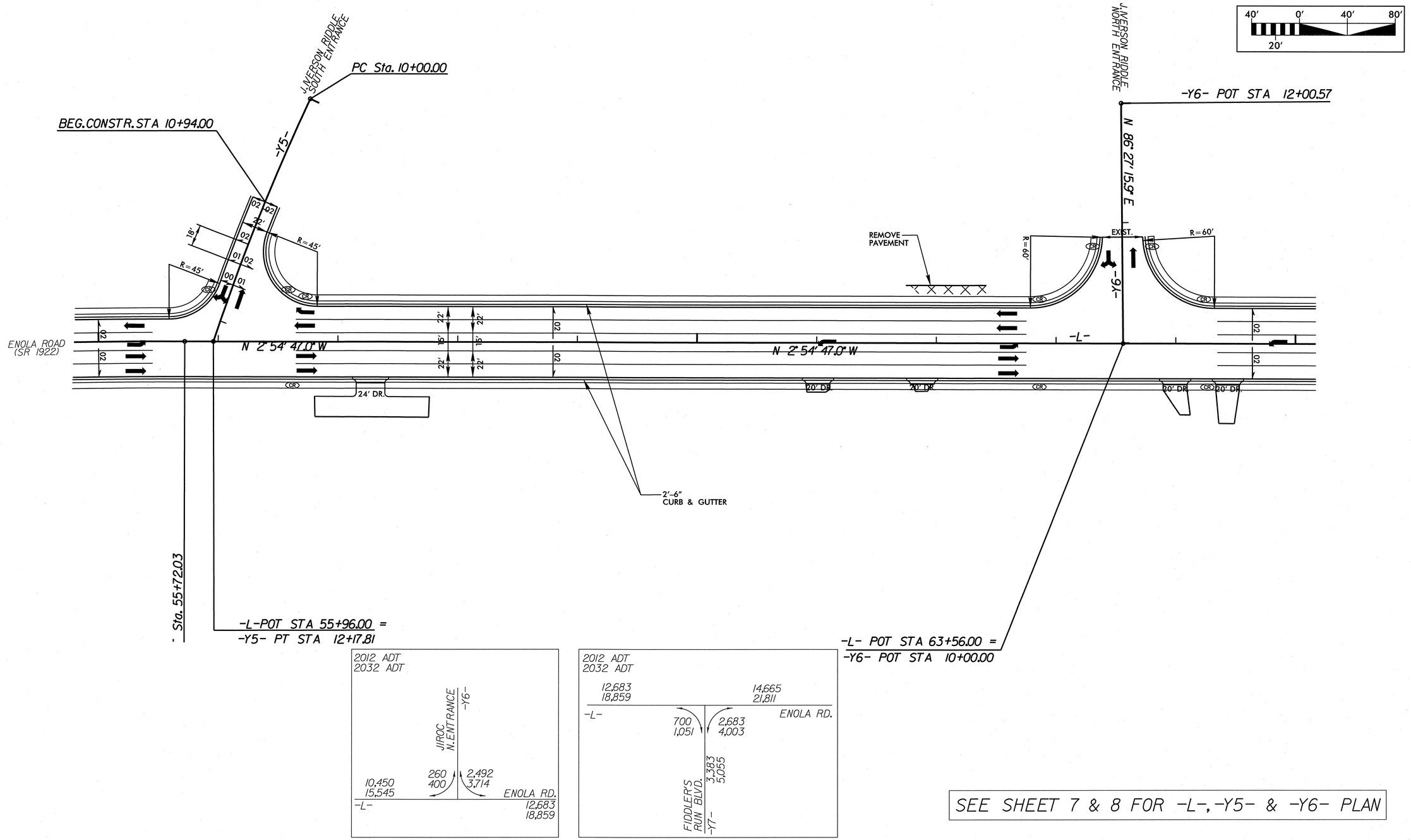

SEE SHEET 7 & 8 FOR -L-, -Y5- & -Y6- PLAN

$$$$$SYSTIME$$$$$
$$$$$USERNAME$$$$$
$$$$$DGN$$$$$

551 rdy Intersection Detail3.dgn 1/30/2012 2:33:38 PM

5/14/99

ARCADIS
G & M of North Carolina, Inc.
WWW.ARCADIS-US.COM
801 Corporate Center Drive, Suite 300
Raleigh, NC 27607-5073
Tel: 919/854-1282 Fax: 919/854-5448 NC License No. C-1869

PROJECT REFERENCE NO.	SHEET NO.
U-2551	2K

ROADWAY DESIGN ENGINEER

NORTH CAROLINA PROFESSIONAL SEAL 022037 ENGINEER STEPHEN T. SMALLWOOD
SEAL NOT VALID UNLESS SIGNED AND DATED

INTERSECTION DETAIL
ENOLA ROAD(SR 1922) @ FIDDLER'S RUN & I-40 SOUTH RAMP

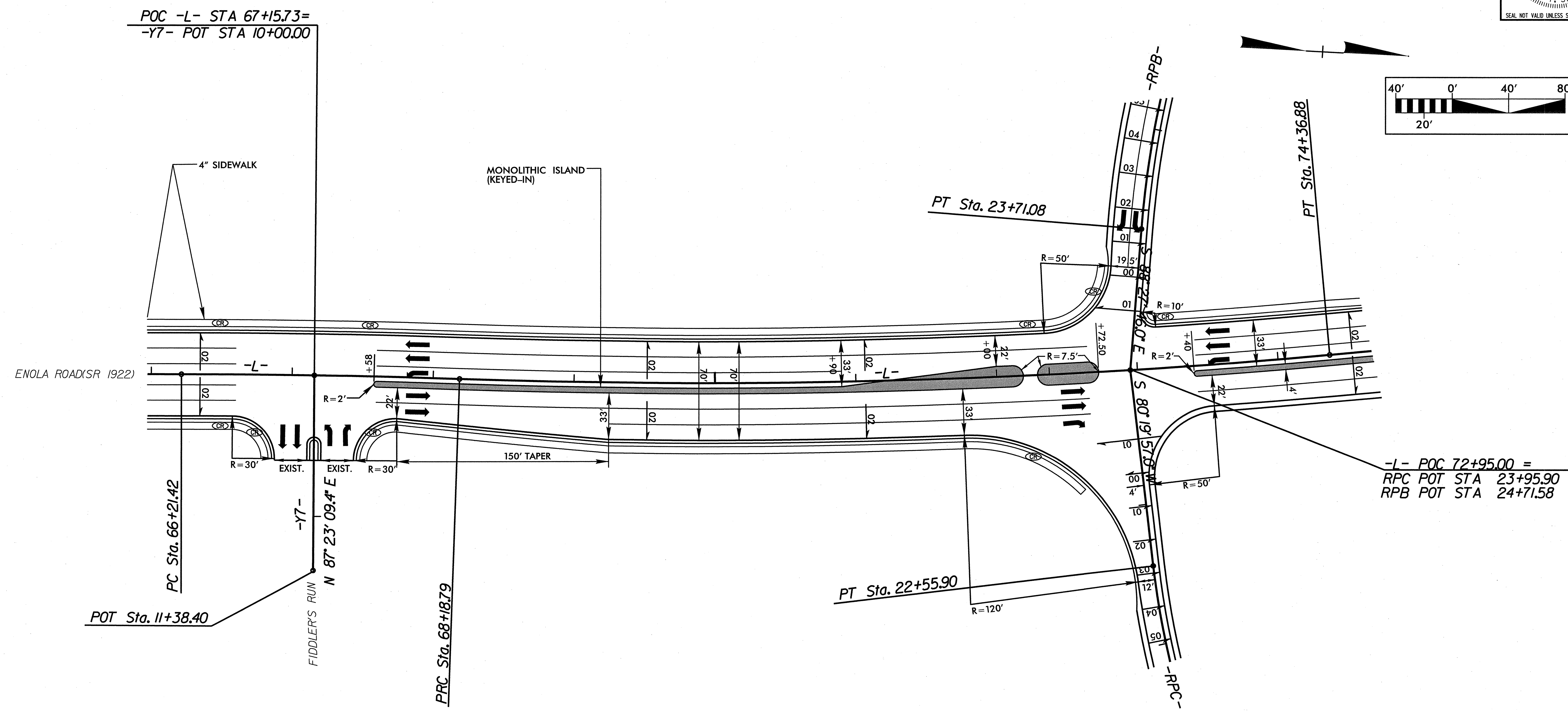

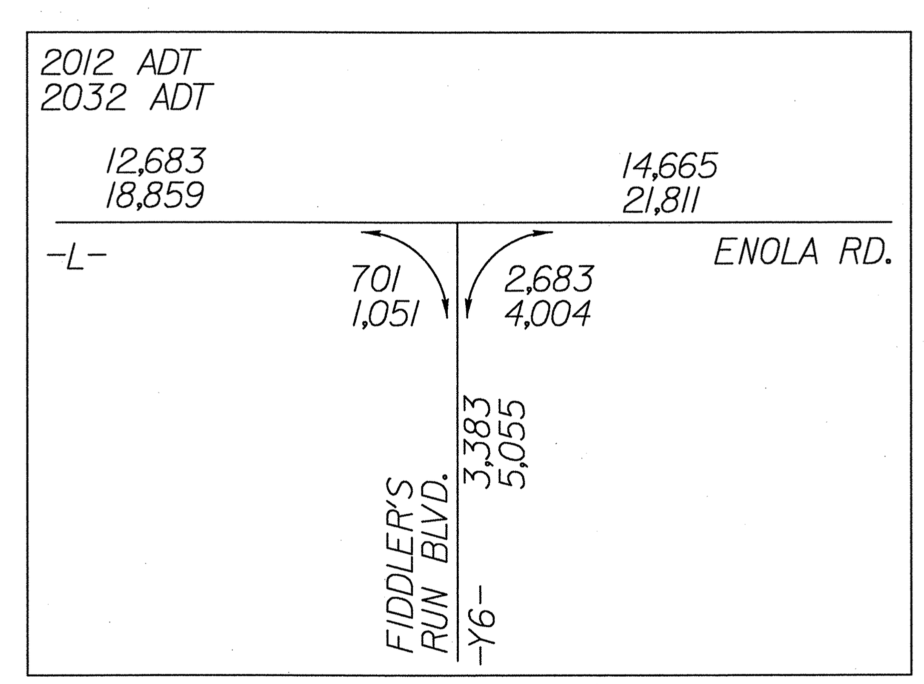

SEE SHEET 8 & 9 FOR -L-,-Y7-,-RPB- & RPC PLAN

$$$$$SYSTIME$$$$
$$$$$$$$$$$$DGN$$$$$$$$$$$$$$$
$$$$USERNAME$$$$

2551 rdv Intersection Detail4.dgn 1/30/2012 2:34:34 PM

5/14/99

ARCADIS
G.A.I. of North Carolina, Inc.
WWW.ARCADIS-US.COM
801 Corporate Center Drive, Suite 300
Raleigh, NC 27607-5073
Tel: 919/854-1282 Fax: 919/854-5448 NC License No. C-1869

PROJECT REFERENCE NO.	SHEET NO.
U-2551	2L

ROADWAY DESIGN ENGINEER

NORTH CAROLINA PROFESSIONAL SEAL 022037 ENGINEER STEPHEN T. SMALLWOOD

SEAL NOT VALID UNLESS SIGNED AND DATED

INTERSECTION DETAIL
ENOLA ROAD(SR 1922) @ GOVERNMENT DRIVE & I-40 NORTH RAMP

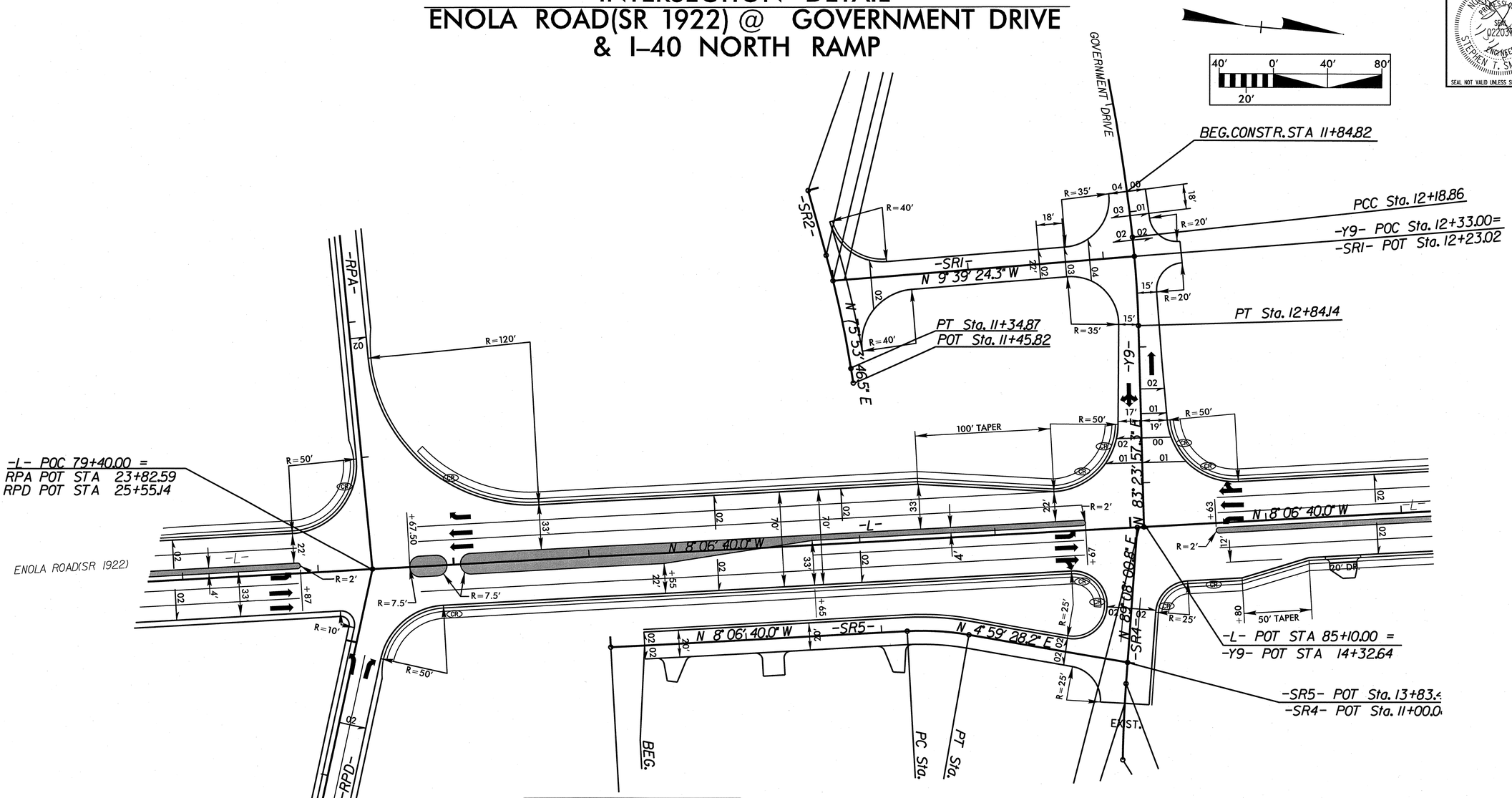

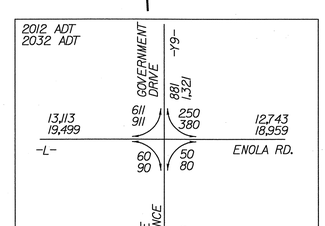

SEE SHEET 9 & 10 FOR -L-, -RPA-, -RPB-, & -Y9- PLAN

$$$$$$SYSTIME$$$$$$
$$$$$$LIGHTDATE$$$$$$

2551 rdy Intersection Details.dgn 1/30/2012 2:36:23 PM

ARCADIS
G & M of North Carolina, Inc.
WWW.ARCADIS-US.COM
801 Corporate Center Drive, Suite 300
Raleigh, NC 27607-5073
Tel: 919/854-1282 Fax: 919/854-5448 NC License No. C-1869

PROJECT REFERENCE NO.	SHEET NO.
U-2551	2M

ROADWAY DESIGN ENGINEER
NORTH CAROLINA PROFESSIONAL SEAL 022037 ENGINEER STEPHEN T. SMALLWOOD
SEAL NOT VALID UNLESS SIGNED AND DATED

INTERSECTION DETAIL
ENOLA ROAD(SR 1922/SR 1924) @ OLD NC 18(SR 1924) AND BROUGHTON ROAD

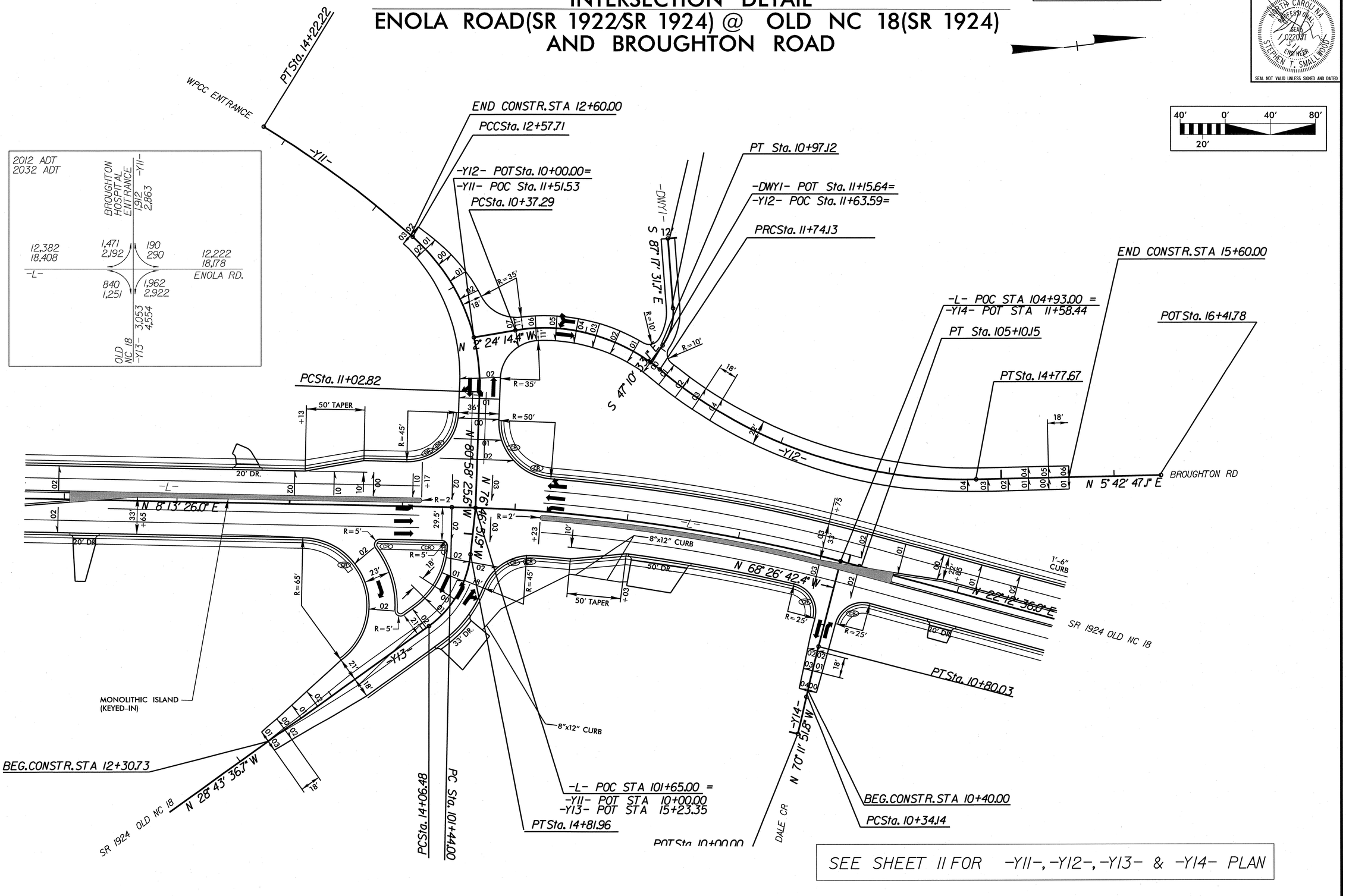

SEE SHEET 11 FOR -Y11-, -Y12-, -Y13- & -Y14- PLAN

5/14/99

$$$$$SYSTIME$$$$$
$$$$$DGN$$$$$
$$$$$USERNAME$$$$$

551 rdy Intersection Detail6.dgn 1/30/2012 2:36:18 PM

5/14/99

INTERSECTION DETAIL
ENOLA ROAD(SR 1922/1924) @ SHADY REST RD

ARCADIS
G & M of North Carolina, Inc.
WWW.ARCADIS-US.COM
801 Corporate Center Drive, Suite 300
Raleigh, NC 27607-5073
Tel: 919/854-1282 Fax: 919/854-5448 NC License No. C-1869

PROJECT REFERENCE NO.	SHEET NO.
U-2551	2N

ROADWAY DESIGN ENGINEER

NORTH CAROLINA PROFESSIONAL SEAL 022037 ENGINEER STEPHEN T. SMALLWOOD

SEAL NOT VALID UNLESS SIGNED AND DATED

40' 0' 40' 80'
20'

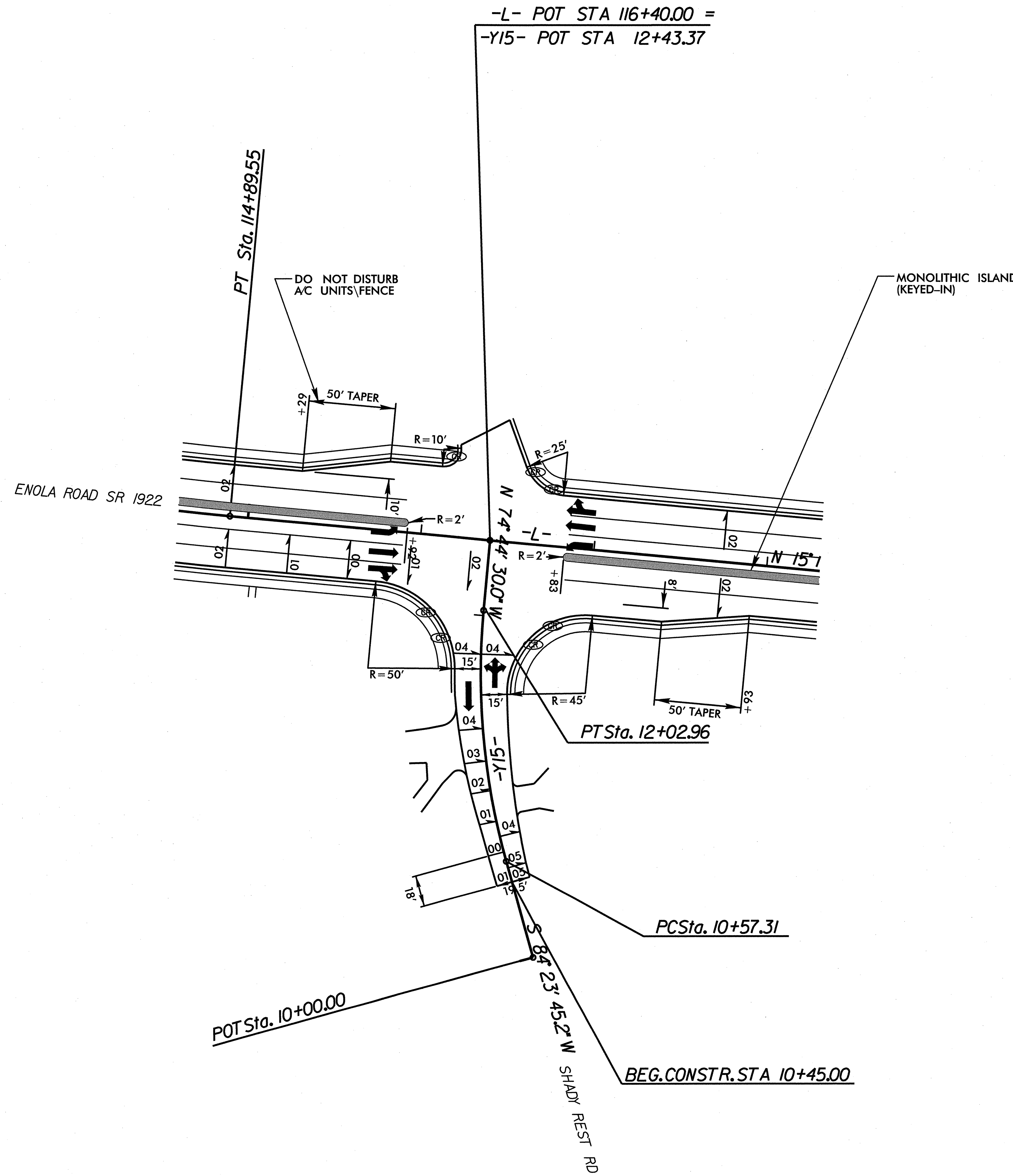

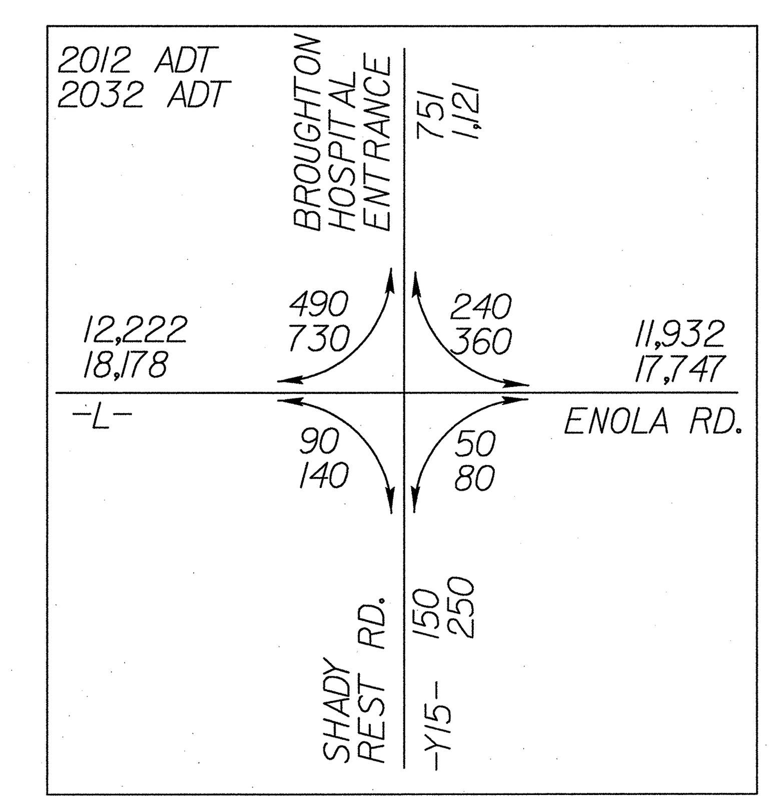

SEE SHEET 12 FOR -L- & -Y15- PLAN

$$$$SYSTIME$$$$
$$$$$$$$DGN$$$$$$$$$$$$$$$$
$$$$USERNAME$$$$

551_rdy_Intersection Detail7.dgn 1/30/2012 2:38:16 PM

ARCADIS
G & M of North Carolina, Inc.
WWW.ARCADIS-US.COM
801 Corporate Center Drive, Suite 300
Raleigh, NC 27607-5073
Tel: 919/854-2282 Fax: 919/854-5448 NC License No. C-1869

GRAPHIC SCALE
50 25 0 50 100
PLANS

PROJECT REFERENCE NO.	SHEET NO.
U-2551	2-0

ROADWAY DESIGN ENGINEER

NORTH CAROLINA PROFESSIONAL SEAL 022031 ENGINEER STEPHEN T. SMALLWOOD

SEAL NOT VALID UNLESS SIGNED AND DATED

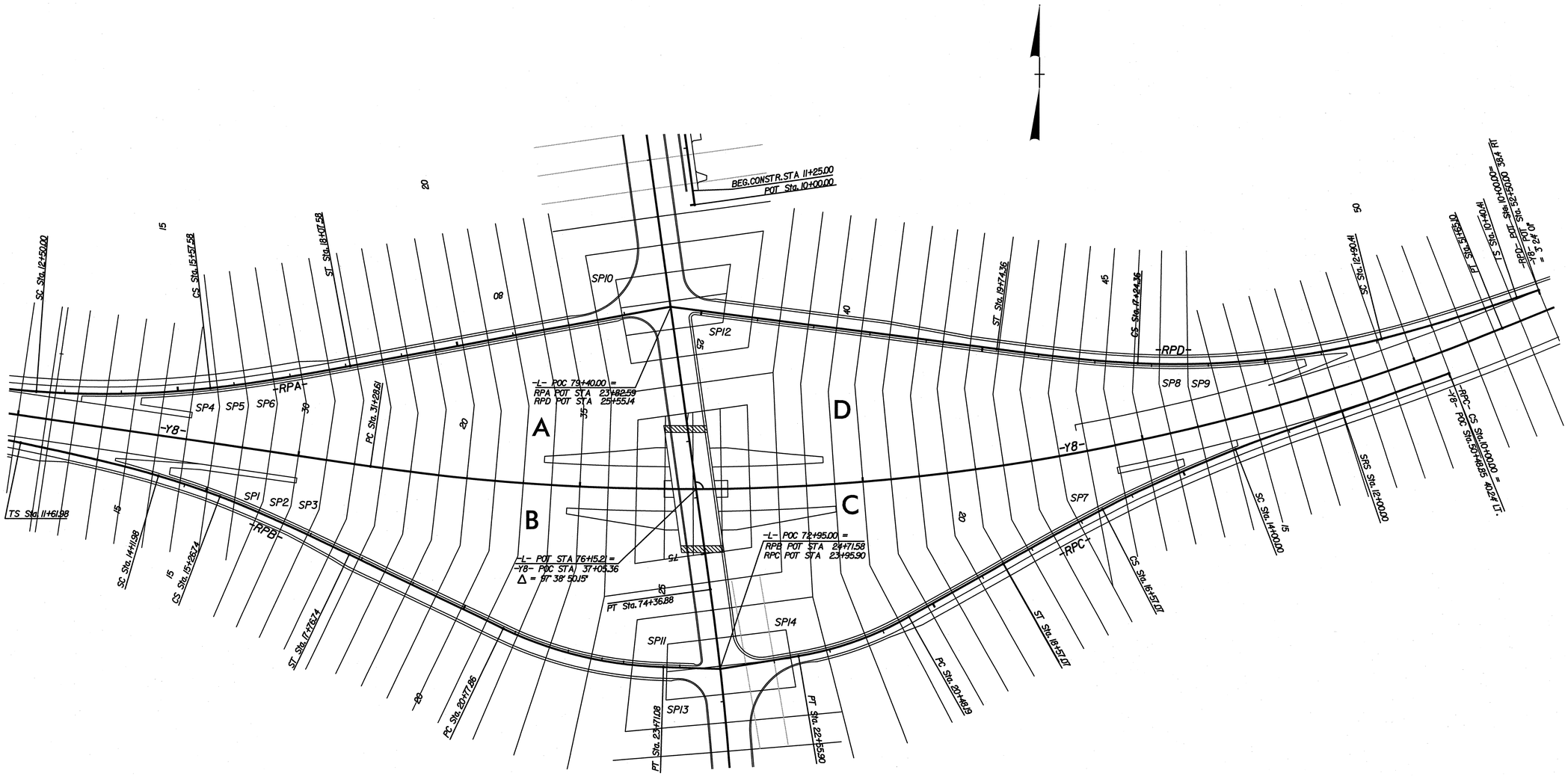

SHEARPOINT DIAGRAM

SEE SHEET 9 FOR PLAN VIEW

SYSTIME$$DATE$$DGN$$
U2551 rdy nsh shearpt.dgn 1/31/2012 8:07:56 AM

PROJECT REFERENCE NO.	SHEET NO.
U-2551	2-P

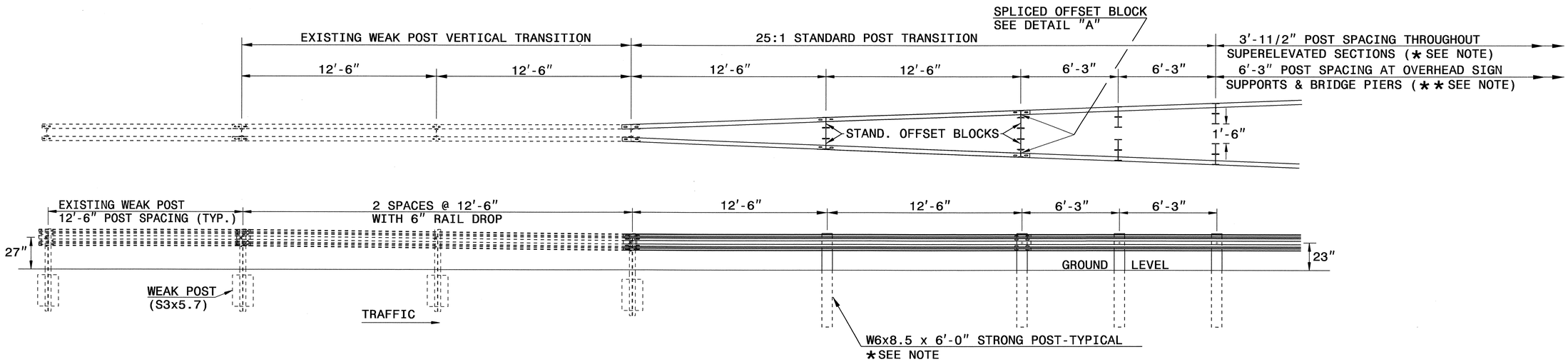

WEAK POST TO STRONG POST TRANSITION

NOTES:

EXISTING WEAK POST GUARDRAIL POST HEIGHT WILL BE ADJUSTED IN THE FIELD AS SHOWN ABOVE.

EXISTING WEAK POST GUARDRAIL W BEAM MAY NEED TO BE REMOVED TO ACHEIVE THE APPROPRIATE MOUNTING HEIGHT AND LAP PATTERNS.

SEE STANDARD DRAWING 862.02 FOR STANDARD W6x8.5 x 6'-0" STRONG POST AND OFFSET BLOCK DIMENSIONS.

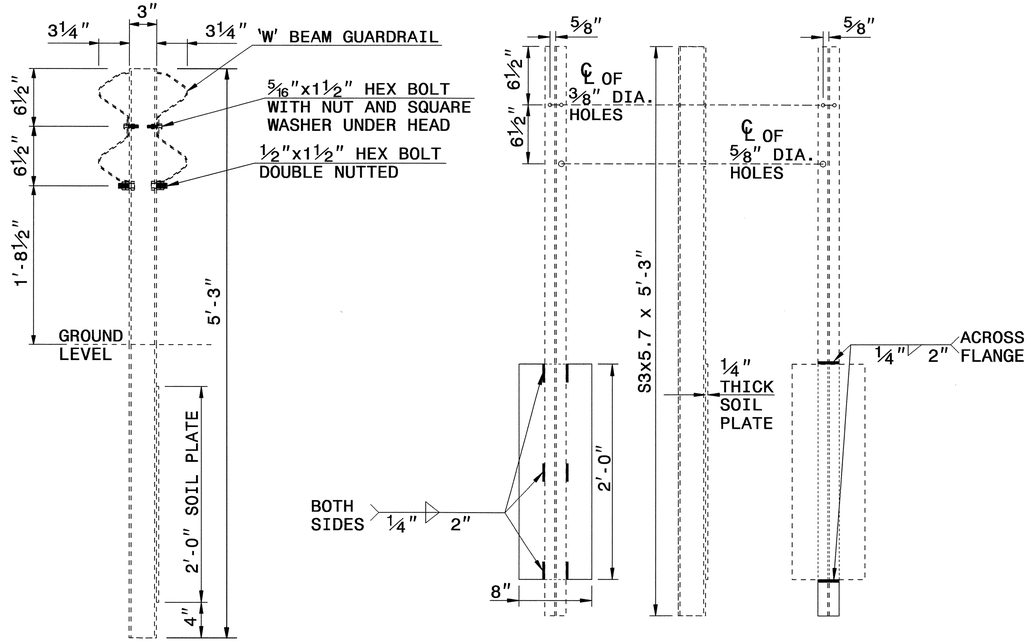

TYPICAL SECTION

FRONT - SIDE - BACK

WEAK POST (S3x5.7)

CONTRACT STANDARDS AND DEVELOPMENT UNIT
Office 919-707-6950 FAX 919-250-4119

DETAIL OF TRANSTION FROM DOUBLE FACED WEAK POST TO SINGLE FACED STRONG POST

ORIGINAL BY: L. Robinson DATE: March 1996
MODIFIED BY: T. Spell/E. Ward DATE: May 1997
CHECKED BY: [signature] DATE: 3/13/12
FILE SPEC.: 862:/usr/details/stand/wpgr.dgn

13-MAR-2012 10:15
S:\Contracts\Contracts\Special Details\ericward\usr\details\stand\wpgr.dgn
$$$$USERNAME$$$$

PROJECT REFERENCE NO.	SHEET NO.
U-2551	2-Q

STATE OF
NORTH CAROLINA
DEPT. OF TRANSPORTATION
DIVISION OF HIGHWAYS
RALEIGH, N.C.

ENGLISH DETAIL DRAWING FOR

CONCRETE STEPS WITH HANDRAIL

SHEET 1 OF 1

844D01

GENERAL NOTES :

1- CONSTRUCT PROPOSED STEEL PIPE RAIL OF 1½" DIAMETER SCHEDULE 40 PLAIN END GALVANIZED STEEL PIPE MEETING THE REQUIREMENTS OF ASTM A53. EMBED PIPE RAIL 8" INTO PROPOSED STEPS WITH CHEMICAL OR CONCRETE GROUT ANCHORING SYSTEM AS DIRECTED BY THE ENGINEER.
2- USE A ROTARY DRILL FOR DRILLING THE HOLES FOR THE PIPE RAIL. NO IMPACT DRILLS ALLOWED.
3- USE CLASS "B" CONCRETE THROUGHOUT FOR CONCRETE STEPS.
4- LOCATION AND QUANTIES SHOWN ARE APPROXIMATE ONLY. EXACT LOCATION AND QUANTIES WILL BE DETERMINED BY THE ENGINEER.
5- ALL WORK AS DIRECTED BY THE ENGINEER.
6- REPAIR OF GALVANIZING IN ACCORDANCE WITH SCT.1076 OF THE STANDARD SPECIFICATIONS.
7- WELD IN ACCORDANCE WITH ARTICLE 1072-20 OF THE STANDARD SPECIFICATIONS.
8- 2" CLEAR SPACING ON ALL REINFORCING BARS.
9- EXTEND HORIZONTAL REINFORCING BARS UPWARD INTO SIDE WALLS.
10- ALL HANDRAILS AND STEPS MUST COMPLY WITH ADA STANDARDS FOR ACCESSIBLE DESIGN.

CUBIC YARDS IN STANDARD CONCRETE STEPS

NO. OF STEPS	4' WIDE	5' WIDE	6' WIDE	7' WIDE	ADDITIONAL CU. YDS. PER 1' WIDTH
2	0.4	0.5	0.5	0.6	0.1
3	0.6	0.7	0.8	0.9	0.1
4	0.8	0.9	1.0	1.2	0.1
5	1.0	1.2	1.3	1.4	0.1
6	1.2	1.4	1.5	1.7	0.2
7	1.4	1.6	1.8	2.0	0.2
8	1.6	1.8	2.0	2.3	0.2
9	1.8	2.0	2.3	2.6	0.3
10	2.0	2.3	2.5	2.8	0.3
ADDITIONAL STEP INCREMENT	0.2	0.2	0.2	0.3	0.1

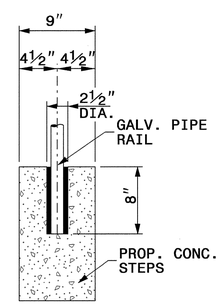

DETAIL "A"

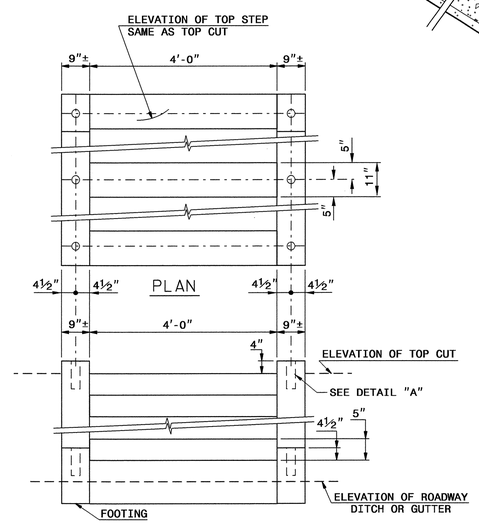

FRONT ELEVATION

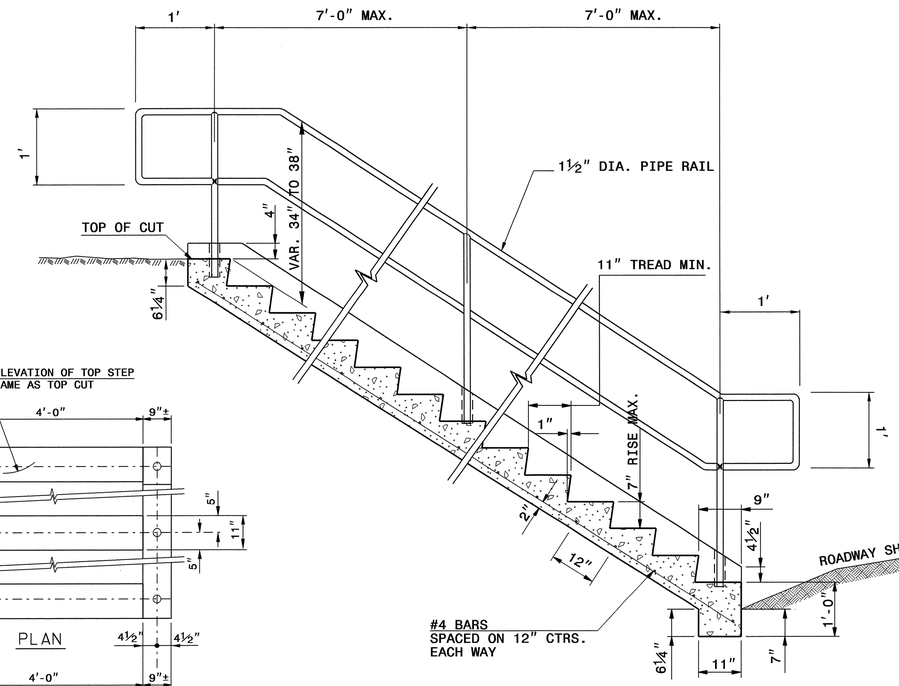

SECTION
CONCRETE STEPS

STATE OF
NORTH CAROLINA
DEPT. OF TRANSPORTATION
DIVISION OF HIGHWAYS
RALEIGH, N.C.

ENGLISH DETAIL DRAWING FOR

CONCRETE STEPS WITH HANDRAIL

SHEET 1 OF 1

844D01

NORTH CAROLINA PROFESSIONAL SEAL 022966 ENGINEER
PUBLIC HIGHWAYS
2/6/12

CONTRACT STANDARDS AND DEVELOPMENT UNIT
Office 919-707-6950 FAX 919-250-4119

SEE PLATE FOR TITLE

ORIGINAL BY: T.Spell DATE: Oct.7,1998
MODIFIED BY: DATE:
CHECKED BY: DATE: 1/11/12
FILE SPEC.: $|usr/details/stand/844d01e.dgn

06-JAN-2012 09:24
S:\Contracts\Contracts\Special Details\tspell\tspell\details\stand\844d01e.dgn
$$$$USERNAME$$$$

PROJECT REFERENCE NO.	SHEET NO.
U-2551	2-R

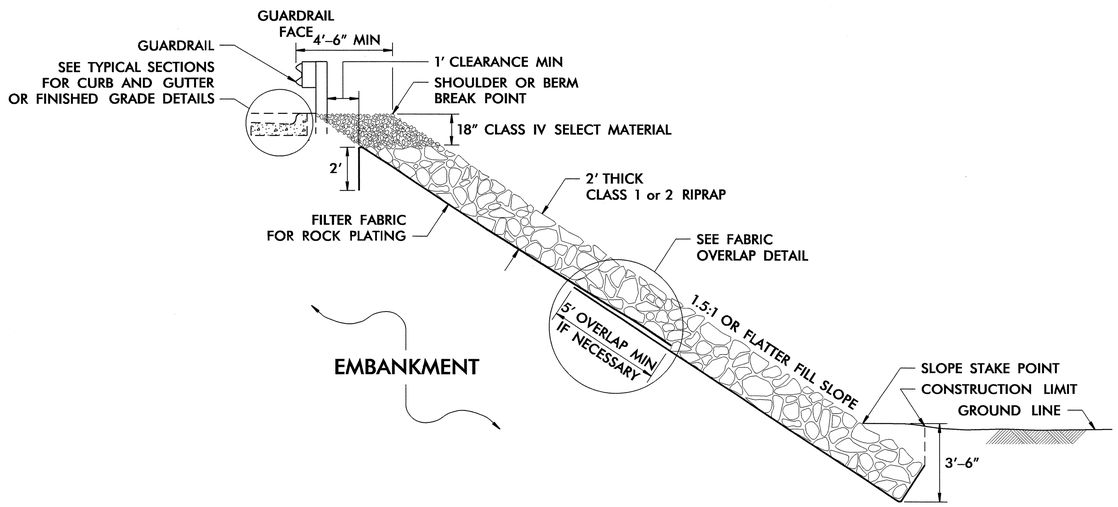

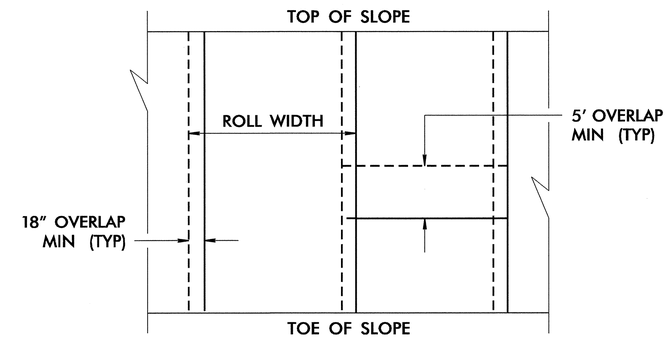

FABRIC OVERLAP DETAIL
(PLAN VIEW)

ROCK PLATING DETAIL

USE ROCK PLATING DETAIL
AT THE FOLLOWING LOCATIONS:

-Y8- STA 54+50 TO STA 57+50 RT
EXTEND ROCK PLATING LIMITS TO 2:1 SLOPES.

NOTE: ROCK PLATING DETAIL AND LOCATION WERE PROVIDED THROUGH A SEALED DOCUMENT FROM THE GEOTECHNICAL ENGINEERING UNIT. THE DOCUMENT WAS SUBMITTED TO THE ROADWAY DESIGN UNIT ON JANUARY 12, 2012 AND SEALED BY A PROFESSIONAL ENGINEER, THEIN SHANE CLARK, PE, LICENSE #029869

PROJECT REFERENCE NO.	SHEET
U-2551	2-S

GEOTECHNICAL ENGINEER

NORTH CAROLINA PROFESSIONAL SEAL 022246 ENGINEER SCOTT A. HIDDEN

Scott A. Hidden 11/18/11
SIGNATURE DATE

ENGINEER

SIGNATURE DATE

GROUNDWATER CONDITION (SEE NOTE 6)	H SHORING HEIGHT (FT)	SLOPE OR SURCHARGE CASE WITH NO TRAFFIC IMPACT					SURCHARGE CASE WITH TRAFFIC IMPACT				
		SHEET PILES		H-PILES WITH TIMBER LAGGING			SHEET PILES		H-PILES WITH TIMBER LAGGING		
		MINIMUM REQUIRED EMBEDMENT (FT)	MINIMUM REQUIRED SECTION MODULUS (IN^3/FT)	MINIMUM REQUIRED EMBEDMENT* (FT) (SEE NOTE 10)			MINIMUM REQUIRED EMBEDMENT (FT)	MINIMUM REQUIRED SECTION MODULUS (IN^3/FT)	MINIMUM REQUIRED EMBEDMENT* (FT) (SEE NOTE 10)		
				HP 10x42	HP 12x53	HP 14x73			HP 10x42	HP 12x53	HP 14x73
GROUNDWATER ELEVATION BEWTEEN BOTTOM OF SHORING AND PILE TIP	< 6	11.5	4.5	11.5	11.5	11.5	16.0	12.0	13.0	13.0	13.0
	7	13.0	7.0	13.0	13.0	13.0	17.0	14.5	14.5	14.5	14.5
	8	15.0	10.0	--	15.0	15.0	18.0	17.0	--	15.5	15.5
	9	17.0	14.0	--	17.0	17.0	19.0	20.0	--	17.0	17.0
	10	18.5	19.5	--	--	18.5	20.0	23.5	--	--	18.5
	11	20.5	26.0	--	--	--	21.0	28.0	--	--	20.0
	12	22.5	33.0	--	--	--	22.0	33.0	--	--	21.5
GROUNDWATER ELEVATION BELOW PILE TIP	< 6	7.5	3.0	8.0	8.0	8.0	11.0	10.0	9.5	9.5	9.5
	7	8.5	4.5	9.5	9.5	9.5	12.0	12.0	10.5	10.5	10.5
	8	10.0	6.5	10.5	10.5	10.5	12.5	14.0	11.5	11.5	11.5
	9	11.0	9.5	--	12.0	12.0	13.5	16.5	--	12.5	12.5
	10	12.5	13.0	--	--	13.5	14.0	19.5	--	13.5	13.5
	11	13.5	17.0	--	--	14.5	15.0	22.5	--	--	14.5
	12	15.0	21.5	--	--	16.0	16.0	25.5	--	--	15.5

MINIMUM REQUIRED EMBEDMENT AND SECTION MODULUS

***DO NOT USE H-PILES WITH TIMBER LAGGING FOR GROUNDWATER CONDITION, SHORING HEIGHT AND H-PILE SIZE SHOWN IF MINIMUM REQUIRED EMBEDMENT IS "--".**

NOTES:

1. AT THE CONTRACTOR'S OPTION, USE STANDARD TEMPORARY SHORING AS NOTED IN THE PLANS.
2. FOR STANDARD TEMPORARY SHORING, SEE STANDARD SHORING PROVISION.
3. STANDARD TEMPORARY SHORING IS BASED ON THE FOLLOWING IN-SITU ASSUMED SOIL PARAMETERS:
   UNIT WEIGHT, γ = 120 LB/CF
   FRICTION ANGLE, ϕ = 30 DEGREES
   COHESION, c = 0 LB/SF
4. DO NOT USE STANDARD TEMPORARY SHORING IF ASSUMED SOIL PARAMETERS ARE NOT APPLICABLE.
5. DO NOT USE STANDARD TEMPORARY SHORING WHEN VERY LOOSE OR SOFT SOIL OR MUCK IS WITHIN THE EMBEDMENT DEPTH.
6. USE GROUNDWATER ELEVATION NOTED IN THE PLANS. IF NO GROUNDWATER ELEVATION IS SHOWN IN THE PLANS, USE "GROUNDWATER ELEVATION BETWEEN BOTTOM OF SHORING AND PILE TIP" FOR GROUNDWATER CONDITION. DO NOT USE STANDARD TEMPORARY SHORING IF GROUNDWATER IS ABOVE BOTTOM OF SHORING.
7. AT THE CONTRACTOR'S OPTION OR IF AVAILABLE CLEAR DISTANCE IS LESS THAN THE MINIMUM REQUIRED FOR CONCRETE BARRIER, SET BARRIER NEXT TO AND UP AGAINST TRAFFIC SIDE OF PILES AND USE "SURCHARGE CASE WITH TRAFFIC IMPACT".
8. AT THE CONTRACTOR'S OPTION OR IF AVAILABLE CLEAR DISTANCE IS LESS THAN 4' FOR TEMPORARY GUARDRAIL, ATTACH GUARDRAIL TO TRAFFIC SIDE OF PILES AS SHOWN IN THE PLANS AND USE "SURCHARGE CASE WITH TRAFFIC IMPACT".
9. MINIMUM REQUIRED EXTENSION IS 6" FOR "SLOPE OR SURCHARGE CASE WITH NO TRAFFIC IMPACT" AND 32" FOR "SURCHARGE CASE WITH TRAFFIC IMPACT".
10. MINIMUM REQUIRED EMBEDMENT FOR H-PILES WITH TIMBER LAGGING IS BASED ON DRIVEN H-PILES AT MAXIMUM 6' SPACING. AT THE CONTRACTOR'S OPTION, EMBEDMENT DEPTHS MAY BE REDUCED BY 25% FOR DRILLED-IN H-PILES.
11. SUBMIT A "STANDARD TEMPORARY SHORING SELECTION FORM" AT LEAST 7 DAYS BEFORE STARTING TEMPORARY SHORING CONSTRUCTION. UP TO 3 SHORING LOCATIONS MAY BE INCLUDED ON EACH FORM.
12. CONTACT THE ENGINEER IF PILES DO NOT ATTAIN THE MINIMUM REQUIRED EMBEDMENT.

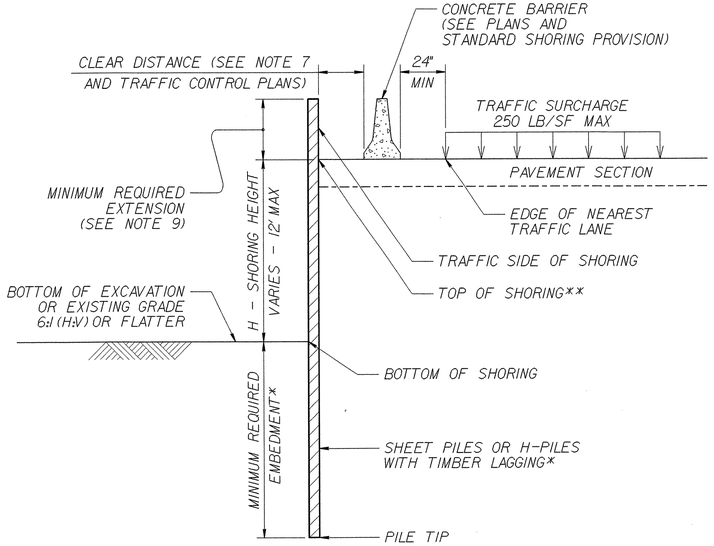

CONCRETE BARRIER

****TOP OF SHORING = EDGE OF PAVEMENT**

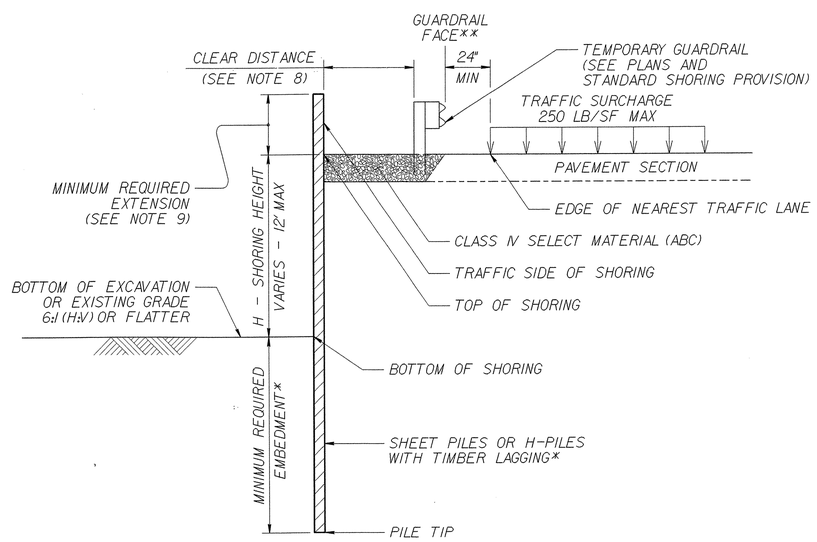

TEMPORARY GUARDRAIL

****GUARDRAIL FACE = EDGE OF PAVEMENT**

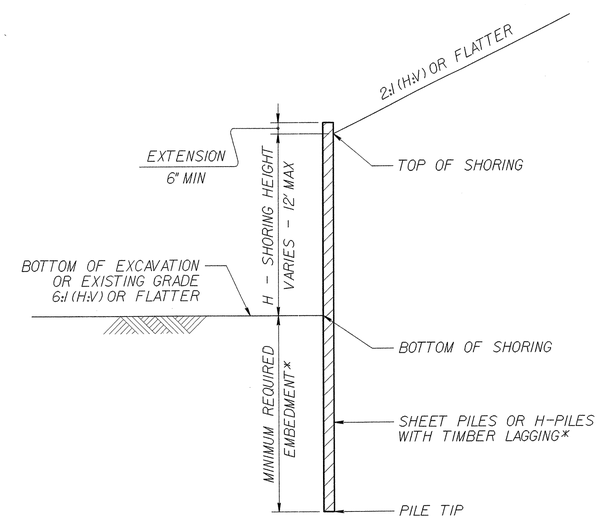

STANDARD TEMPORARY SHORING

(SLOPE CASE)

***SEE TABLE ABOVE.**

STANDARD TEMPORARY SHORING

(SURCHARGE CASE)

***SEE TABLE ABOVE.**

STATE OF NORTH CAROLINA DEPARTMENT OF TRANSPORTATION

GEOTECHNICAL ENGINEERING UNIT

STATE OF NORTH CAROLINA DEPARTMENT OF TRANSPORTATION RALEIGH

STANDARD DRAWING NO. 1801.01

STANDARD TEMPORARY SHORING

DATE: 1-17-12

PROJECT REFERENCE NO.	SHEET
U-2551	2-T

GEOTECHNICAL ENGINEER

NORTH CAROLINA PROFESSIONAL SEAL 022246 ENGINEER SCOTT A. HIDDEN

Scott A. Hidden 11/18/11
SIGNATURE DATE

ENGINEER

SIGNATURE DATE

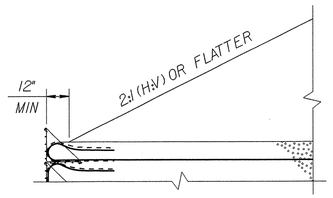

SLOPE CASE

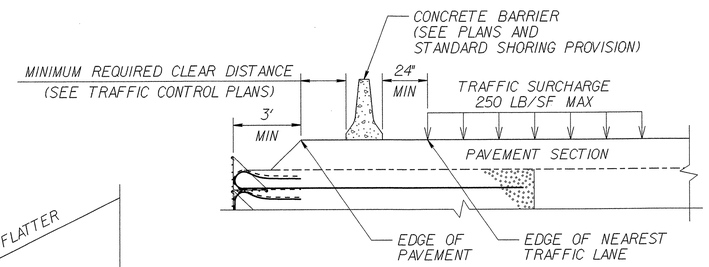

SURCHARGE CASE

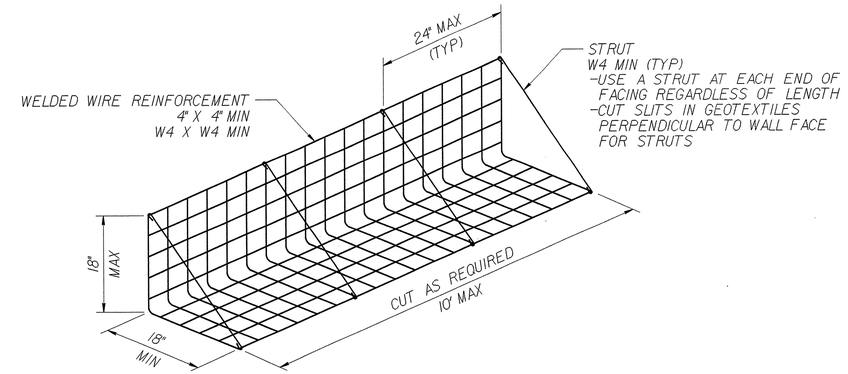

FACING DETAIL

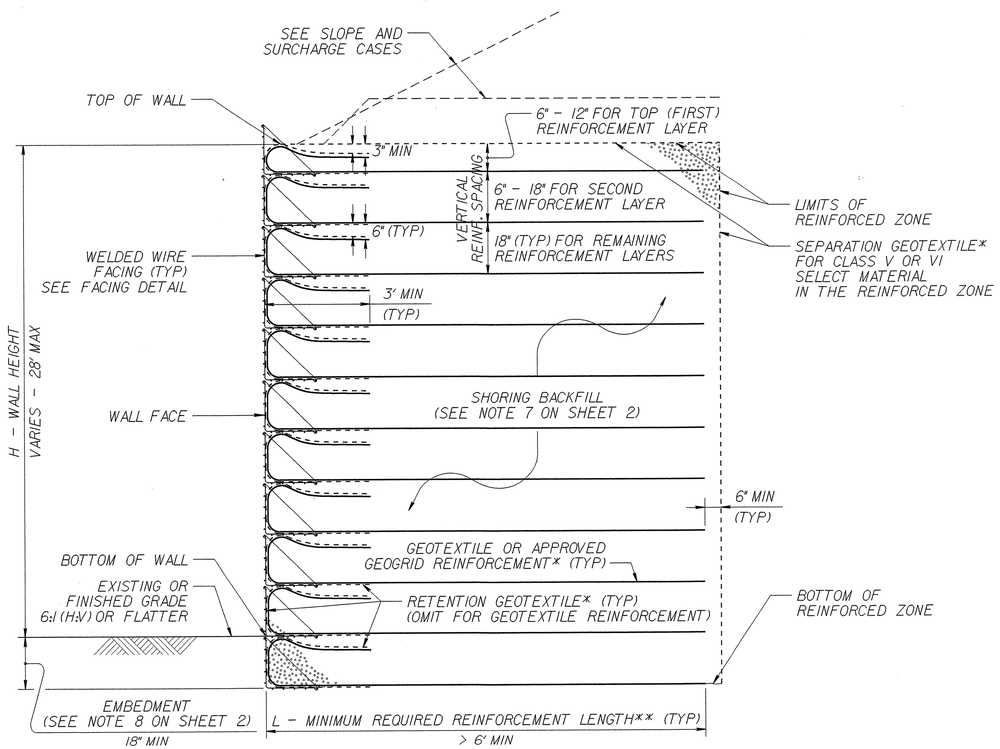

STANDARD TEMPORARY WALL

(FOR STANDARD TEMPORARY WALLS ON STRUCTURES, SEE TEMPORARY WALL ON STRUCTURE DETAIL ON SHEET 2.)
*SEE GEOSYNTHETIC PLACEMENT DETAILS ON SHEET 2.
**SEE REINFORCEMENT TABLES ON SHEET 3.

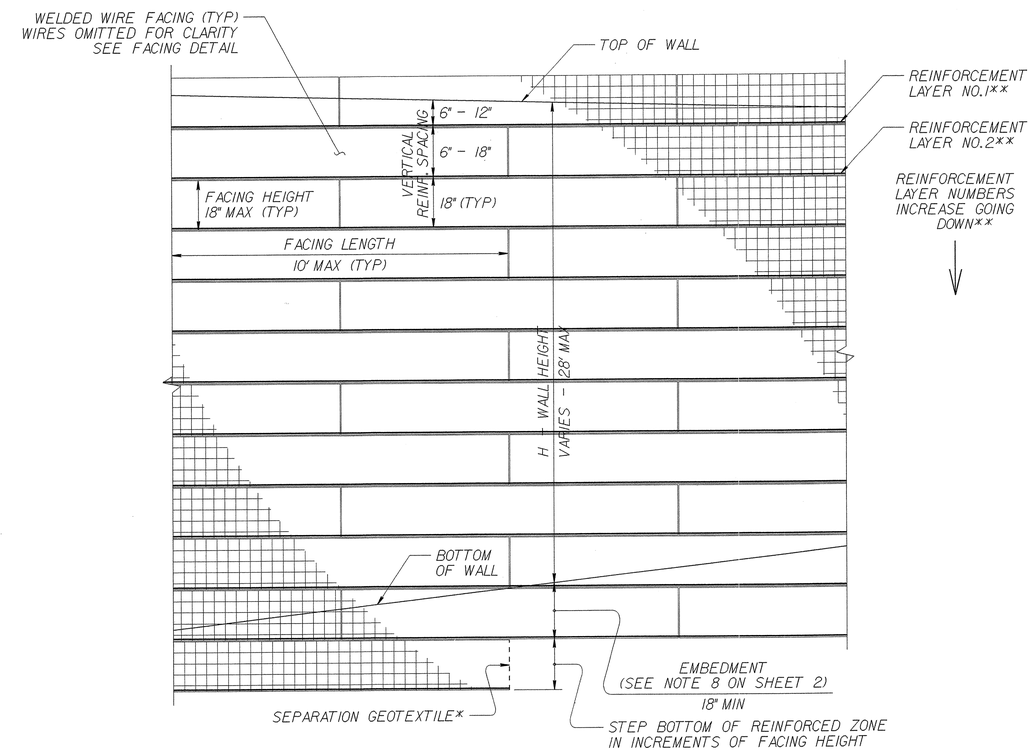

STANDARD TEMPORARY WALL – PARTIAL ELEVATION

*SEE GEOSYNTHETIC PLACEMENT DETAILS ON SHEET 2.
**SEE REINFORCEMENT TABLES ON SHEET 3.

STATE OF NORTH CAROLINA DEPARTMENT OF TRANSPORTATION

GEOTECHNICAL ENGINEERING UNIT

STATE OF NORTH CAROLINA DEPARTMENT OF TRANSPORTATION RALEIGH

STANDARD DRAWING NO. 1801.02

STANDARD TEMPORARY WALL
Sheet 1 of 3

DATE: 1-17-12

PROJECT REFERENCE NO.	SHEET
U-2551	2-U

GEOTECHNICAL ENGINEER

NORTH CAROLINA PROFESSIONAL SEAL 022246 ENGINEER SCOTT A. HIDDEN

Scott A. Hidden 11/18/11

SIGNATURE DATE

ENGINEER

SIGNATURE DATE

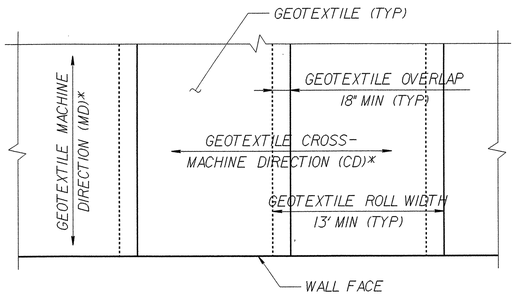

GEOTEXTILE PLACEMENT

(100% COVERAGE MIN FOR GEOTEXTILE REINFORCEMENT)

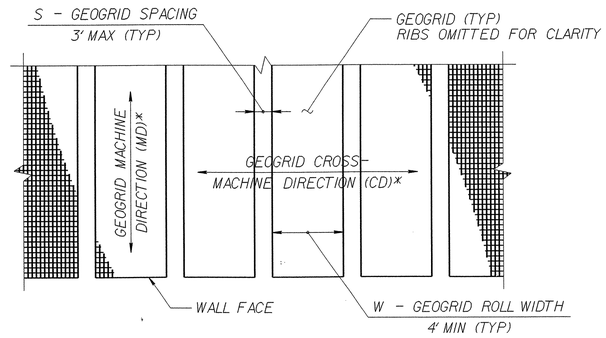

GEOGRID PLACEMENT

(80% COVERAGE MIN FOR GEOGRID REINFORCEMENT – $\frac{W}{W+S} \times 100 \geq 80\%$, SEE NOTE 11)

GEOSYNTHETIC PLACEMENT DETAILS

(PLAN VIEW)
***SEE NOTE 12.**

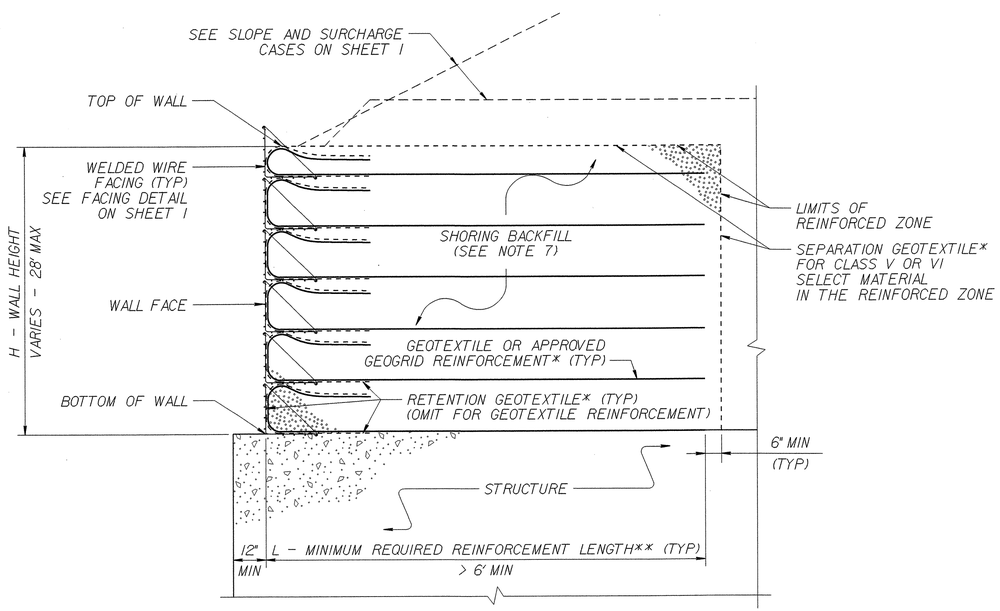

TEMPORARY WALL ON STRUCTURE DETAIL

***SEE GEOSYNTHETIC PLACEMENT DETAILS.**
****SEE REINFORCEMENT TABLES ON SHEET 3.**

NOTES:

1. AT THE CONTRACTOR'S OPTION, USE STANDARD TEMPORARY WALLS AS NOTED IN THE PLANS.
2. FOR STANDARD TEMPORARY WALLS, SEE STANDARD SHORING PROVISION.
3. STANDARD TEMPORARY WALLS ARE BASED ON THE FOLLOWING IN-SITU ASSUMED SOIL PARAMETERS:
   UNIT WEIGHT, γ = 120 LB/CF
   FRICTION ANGLE, ϕ = 30 DEGREES
   COHESION, c = 0 LB/SF
4. DO NOT USE STANDARD TEMPORARY WALLS IF ASSUMED SOIL PARAMETERS ARE NOT APPLICABLE.
5. DO NOT USE STANDARD TEMPORARY WALLS WHEN VERY LOOSE OR SOFT SOIL OR MUCK IS BELOW TEMPORARY WALLS.
6. USE GROUNDWATER ELEVATION NOTED IN THE PLANS. IF NO GROUNDWATER ELEVATION IS SHOWN IN THE PLANS, ASSUME GROUNDWATER DEPTH IS LESS THAN 7' BELOW BOTTOM OF REINFORCED ZONE. DO NOT USE STANDARD TEMPORARY WALLS IF GROUNDWATER IS ABOVE BOTTOM OF REINFORCED ZONE.
7. DO NOT USE A-2-4 SOIL FOR STANDARD TEMPORARY WALLS AROUND CULVERTS OR IN THE REINFORCED ZONE OF STANDARD TEMPORARY WALLS FOR SLOPE CASES. DO NOT USE CLASS VI SELECT MATERIAL IN THE REINFORCED ZONE OF STANDARD TEMPORARY WALLS WITH GEOTEXTILE REINFORCEMENT.
8. EMBEDMENT IS NOT REQUIRED FOR STANDARD TEMPORARY WALLS ON STRUCTURES OR ROCK AS DETERMINED BY THE ENGINEER.
9. DO NOT USE MORE THAN 4 DIFFERENT REINFORCEMENT STRENGTHS FOR EACH STANDARD TEMPORARY WALL.
10. GEOGRIDS ARE APPROVED FOR SHORT-TERM DESIGN STRENGTHS FOR A 3-YEAR DESIGN LIFE IN THE MACHINE DIRECTION (MD) AND CROSS-MACHINE DIRECTION (CD) BASED ON MATERIAL TYPE. FOR DETAILS OF APPROVED GEOGRIDS AND SHORT-TERM DESIGN STRENGTHS, SEE www.ncdot.org/doh/operations/materials/soils/gep.html
    DEFINE MATERIAL TYPE FROM THE WEBSITE ABOVE FOR SHORING BACKFILL AS FOLLOWS:

MATERIAL TYPE	SHORING BACKFILL
BORROW	A-2-4 SOIL
FINE AGGREGATE	CLASS II, TYPE 1 OR CLASS III SELECT MATERIAL
COARSE AGGREGATE	CLASS V OR VI SELECT MATERIAL

11. FOR GEOGRID REINFORCEMENT WITH LESS THAN 100% COVERAGE, STAGGER REINFORCEMENT SO GEOGRIDS ARE CENTERED OVER GAPS IN THE REINFORCEMENT LAYER BELOW.
12. AT THE CONTRACTOR'S OPTION, REINFORCEMENT MAY BE INSTALLED WITH THE MD PARALLEL TO THE WALL FACE IF BOTH THE FOLLOWING CONDITIONS OCCUR:
    - W (REINFORCEMENT ROLL WIDTH) $\geq$ L (MINIMUM REQUIRED REINFORCEMENT LENGTH) + 4.5' AND
    - REINFORCEMENT STRENGTH IN CD $\geq$ MINIMUM REQUIRED REINFORCEMENT STRENGTH IN MD.
13. SUBMIT A "STANDARD TEMPORARY WALL SELECTION FORM" AT LEAST 7 DAYS BEFORE STARTING TEMPORARY WALL CONSTRUCTION.
14. DO NOT PLACE SHORING BACKFILL OR REINFORCEMENT UNTIL EXCAVATION DIMENSIONS AND FOUNDATION MATERIAL ARE APPROVED.
15. FOR STANDARD TEMPORARY WALLS WITH PILE FOUNDATIONS IN THE REINFORCED ZONE, DRIVE PILES THROUGH REINFORCEMENT AFTER CONSTRUCTING TEMPORARY WALLS.
16. DO NOT SPLICE OR OVERLAP REINFORCEMENT SO SEAMS ARE PARALLEL TO THE WALL FACE.
17. CONTACT THE ENGINEER WHEN EXISTING OR FUTURE OBSTRUCTIONS SUCH AS FOUNDATIONS, PAVEMENTS, PIPES, INLETS OR UTILITIES WILL INTERFERE WITH REINFORCEMENT.
18. FOR STANDARD TEMPORARY WALLS WITH INTERIOR ANGLES LESS THAN 90 DEGREES, WRAP GEOSYNTHETICS AT ACUTE CORNERS AS DIRECTED BY THE ENGINEER.
19. FOR STANDARD TEMPORARY WALLS WITH TOP OF WALL WITHIN 5' OF FINISHED GRADE, REMOVE TOP FACING AND INCORPORATE TOP REINFORCEMENT LAYER INTO FILL WHEN PLACING FILL IN FRONT OF WALL.

STATE OF NORTH CAROLINA DEPARTMENT OF TRANSPORTATION

GEOTECHNICAL ENGINEERING UNIT

STATE OF NORTH CAROLINA DEPARTMENT OF TRANSPORTATION RALEIGH

STANDARD DRAWING NO. 1801.02

STANDARD TEMPORARY WALL
Sheet 2 of 3

DATE: 1-17-12

PROJECT REFERENCE NO.	SHEET
U-2551	2-V

GEOTECHNICAL ENGINEER

NORTH CAROLINA PROFESSIONAL SEAL 022246 ENGINEER SCOTT A. HIDDEN

Scott A. Hidden 11/8/11
SIGNATURE DATE

ENGINEER

SIGNATURE DATE

SLOPE OR SURCHARGE CASE	GROUNDWATER DEPTH BELOW BOTTOM OF REINFORCED ZONE (SEE NOTE 6 ON SHEET 2) (FT)	SHORING BACKFILL TYPE IN THE REINFORCED ZONE (SEE NOTE 7 ON SHEET 2)	H - WALL HEIGHT (FT)																								
			< 4	5	6	7	8	9	10	11	12	13	14	15	16	17	18	19	20	21	22	23	24	25	26	27	28
SLOPE CASE	> 0	CLASS II, TYPE I, CLASS III, CLASS V OR CLASS VI SELECT MATERIAL	6	6	7	8	9	11	12	13	13	14	15	16	17	18	19	20	21	22	23	24	24	25	26	27	27
SURCHARGE CASE	> 0 TO 7 FOR H < 20′ > 0 TO 10 FOR H ≥ 20′	ALL SHORING BACKFILL TYPES	6	7	7	8	8	9	9	10	11	11	12	12	13	14	14	15	16	16	17	18	18	19	20	20	21
	> 7 FOR H < 20′ > 10 FOR H ≥ 20′	A-2-4 SOIL	6	6	7	8	8	9	9	10	11	11	12	12	13	14	14	15	15	16	16	17	17	18	19	19	20
		CLASS II, TYPE I OR CLASS III SELECT MATERIAL	6	6	7	7	8	8	9	10	10	11	11	12	12	13	13	14	14	15	15	16	16	17	17	18	19
		CLASS V OR CLASS VI SELECT MATERIAL	6	6	7	7	7	8	8	9	9	10	10	11	11	12	12	13	13	14	14	15	16	16	17	18	18

L – MINIMUM REQUIRED REINFORCEMENT LENGTH (FT)

(FOR ALL REINFORCEMENT TYPES)

WALL HEIGHT (H) + EMBEDMENT (FT)	NUMBER OF REINFORCEMENT LAYERS*
2.5 - 4	3
4 - 5.5	4
5.5 - 7	5
7 - 8.5	6
8.5 - 10	7
10 - 11.5	8
11.5 - 13	9
13 - 14.5	10
14.5 - 16	11
16 - 17.5	12
17.5 - 19	13
19 - 20.5	14
20.5 - 22	15
22 - 23.5	16
23.5 - 25	17
25 - 26.5	18
26.5 - 28	19
28 - 29.5	20

*BASED ON VERTICAL REINFORCEMENT SPACING SHOWN ON SHEET 1.

REINFORCEMENT LAYER NUMBER*	SHORING BACKFILL TYPE IN THE REINFORCED ZONE (SEE NOTE 7 ON SHEET 2)				
	SLOPE CASE		SURCHARGE CASE		
	CLASS II, TYPE I OR CLASS III SELECT MATERIAL	CLASS V SELECT MATERIAL	A-2-4 SOIL	CLASS II, TYPE I OR CLASS III SELECT MATERIAL	CLASS V SELECT MATERIAL
1	2400	2400	2400	2400	2400
2	2400	2400	2400	2400	2400
3	2400	2400	2400	2400	2400
4	2400	2400	2500	2400	2400
5	2500	2400	3000	2400	2400
6	3000	2400	3500	2800	2400
7	3500	2700	4000	3200	2600
8	4000	3100	4500	3600	2900
9	4500	3500	5000	4000	3200
10	5000	3900	5500	4400	3500
11	5500	4300	6000	4800	3800
12	6000	4700	6500	5200	4100
13	6500	5100	7000	5600	4400
14	7000	5400	7500	6000	4700
15	7500	5800	8000	6400	5000
16	8000	6200	8500	6800	5300
17	8500	6600	9000	7200	5600
18	9000	7000	9500	7600	5900
19	9500	7400	10000	8000	6200
20	10000	7800	10500	8400	6500

GEOTEXTILE REINFORCEMENT
ULTIMATE TENSILE STRENGTH (LB/FT)

REINFORCEMENT LAYER NUMBER*	SHORING BACKFILL TYPE IN THE REINFORCED ZONE (SEE NOTE 7 ON SHEET 2)				
	SLOPE CASE		SURCHARGE CASE		
	CLASS II, TYPE I OR CLASS III SELECT MATERIAL	CLASS V OR CLASS VI SELECT MATERIAL	A-2-4 SOIL	CLASS II, TYPE I OR CLASS III SELECT MATERIAL	CLASS V OR CLASS VI SELECT MATERIAL
1	240	200	340	290	240
2	380	310	520	430	350
3	530	420	700	570	460
4	690	550	870	720	570
5	860	690	1050	860	680
6	1030	830	1220	1000	790
7	1200	970	1400	1150	900
8	1370	1110	1580	1290	1010
9	1550	1240	1750	1430	1120
10	1720	1380	1930	1580	1230
11	1890	1520	2100	1720	1340
12	2060	1660	2280	1860	1450
13	2240	1800	2450	2010	1560
14	2410	1940	2630	2150	1670
15	2580	2080	2800	2290	1780
16	2750	2220	2980	2440	1890
17	2930	2360	3160	2580	2000
18	3100	2500	3330	2720	2110
19	3270	2640	3510	2860	2220
20	3440	2780	3690	3000	2330

GEOGRID REINFORCEMENT
SHORT-TERM DESIGN STRENGTH (LB/FT)
(SEE NOTE 10 ON SHEET 2.)

MINIMUM REQUIRED REINFORCEMENT STRENGTH IN MD
(SEE NOTE 9 ON SHEET 2.)
*SEE PARTIAL ELEVATION ON SHEET 1
FOR REINFORCEMENT LAYER NUMBERING.

STATE OF NORTH CAROLINA DEPARTMENT OF TRANSPORTATION

GEOTECHNICAL ENGINEERING UNIT

STATE OF NORTH CAROLINA
DEPARTMENT OF TRANSPORTATION
RALEIGH

STANDARD DRAWING NO. 1801.02

STANDARD
TEMPORARY WALL
Sheet 3 of 3

DATE: 1-17-12

STATE OF NORTH CAROLINA
DIVISION OF HIGHWAYS
ROADWAY SUMMARY OF QUANTITIES FOR CONTRACT - C202815

SUMMARY OF QUANTITIES - U-2551

ItemNumber	Sec #	Quantity	Unit	Description
0000100000-N	800	Lump Sum		MOBILIZATION
0000400000-N	801	Lump Sum		CONSTRUCTION SURVEYING
0001000000-E	200	Lump Sum		CLEARING & GRUBBING .. ACRE(S)
0008000000-E	200	1	ACR	SUPPLEMENTARY CLEARING & GRUB-BING
0015000000-N	205	1	EA	SEALING ABANDONED WELLS
0022000000-E	225	87,000	CY	UNCLASSIFIED EXCAVATION
0029000000-N	SP	Lump Sum		REINFORCED BRIDGE APPROACH FILL, STATION ********** (76+15.21)
0036000000-E	225	1,400	CY	UNDERCUT EXCAVATION
0134000000-E	240	1,537	CY	DRAINAGE DITCH EXCAVATION
0156000000-E	250	17,250	SY	REMOVAL OF EXISTING ASPHALT PAVEMENT
0163000000-E	250	7,600	SY	REMOVAL OF EXISTING CONCRETE PAVEMENT
0195000000-E	265	2,000	CY	SELECT GRANULAR MATERIAL
0196000000-E	270	14,600	SY	GEOTEXTILE FOR SOIL STABILIZA-TION
0199000000-E	SP	2,500	SF	TEMPORARY SHORING
0223000000-E	275	2,000	SY	ROCK PLATING
0255000000-E	SP	100	TON	GENERIC GRADING ITEM EXCAVATION, HAULING, AND DISPOSAL OF CONTAMINATED SOIL
0318000000-E	300	1,620	TON	FOUNDATION CONDITIONING MATE-RIAL, MINOR STRUCTURES
0320000000-E	300	6,170	SY	FOUNDATION CONDITIONING GEO-TEXTILE
0335000000-E	305	24	LF	** DRAINAGE PIPE (8")
0335200000-E	305	1,396	LF	15" DRAINAGE PIPE
0335300000-E	305	1,416	LF	18" DRAINAGE PIPE
0335400000-E	305	328	LF	24" DRAINAGE PIPE
0335500000-E	305	12	LF	30" DRAINAGE PIPE
0335600000-E	305	100	LF	36" DRAINAGE PIPE
0343000000-E	310	336	LF	15" SIDE DRAIN PIPE
0344000000-E	310	32	LF	18" SIDE DRAIN PIPE
0366000000-E	310	752	LF	15" RC PIPE CULVERTS, CLASS III
0372000000-E	310	1,396	LF	18" RC PIPE CULVERTS, CLASS III
0378000000-E	310	216	LF	24" RC PIPE CULVERTS, CLASS III
0384000000-E	310	632	LF	30" RC PIPE CULVERTS, CLASS III
0390000000-E	310	196	LF	36" RC PIPE CULVERTS, CLASS III
0448200000-E	310	4,688	LF	15" RC PIPE CULVERTS, CLASS IV
0448300000-E	310	848	LF	18" RC PIPE CULVERTS, CLASS IV
0448400000-E	310	376	LF	24" RC PIPE CULVERTS, CLASS IV
0582000000-E	310	420	LF	15" CS PIPE CULVERTS, 0.064" THICK
0588000000-E	310	152	LF	18" CS PIPE CULVERTS, 0.064" THICK
0594000000-E	310	20	LF	24" CS PIPE CULVERTS, 0.064" THICK
0636000000-E	310	8	EA	** CS PIPE ELBOWS, ***** THICK (15")
0636000000-E	310	2	EA	** CS PIPE ELBOWS, ***** THICK (18")
0636000000-E	310	1	EA	** CS PIPE ELBOWS, ***** THICK (24")
0973100000-E	330	72	LF	** WELDED STEEL PIPE, **** THICK, GRADE B IN SOIL (15", 0.5")
0995000000-E	340	4,450	LF	PIPE REMOVAL
1000000000-E	462	150	SY	6" SLOPE PROTECTION
1011000000-N	500	Lump Sum		FINE GRADING
1099500000-E	505	4,000	CY	SHALLOW UNDERCUT
1099700000-E	505	7,600	TON	CLASS IV SUBGRADE STABILIZA-TION
1220000000-E	545	300	TON	INCIDENTAL STONE BASE
1231000000-E	560	4,200	CY	SHOULDER BORROW
1297000000-E	607	340	SY	MILLING ASPHALT PAVEMENT, *** DEPTH (1-1/2")
1297000000-E	607	29,600	SY	MILLING ASPHALT PAVEMENT, *** DEPTH (1-1/4")
1489000000-E	610	22,250	TON	ASPHALT CONC BASE COURSE, TYPE B25.0B
1491000000-E	610	1,200	TON	ASPHALT CONC BASE COURSE, TYPE B25.0C
1498000000-E	610	12,400	TON	ASPHALT CONC INTERMEDIATE COURSE, TYPE I19.0B
1503000000-E	610	950	TON	ASPHALT CONC INTERMEDIATE COURSE, TYPE I19.0C
1519000000-E	610	15,800	TON	ASPHALT CONC SURFACE COURSE, TYPE S9.5B
1523000000-E	610	900	TON	ASPHALT CONC SURFACE COURSE, TYPE S9.5C
1575000000-E	620	2,675	TON	ASPHALT BINDER FOR PLANT MIX
1577000000-E	620	80	TON	POLYMER MODIFIED ASPHALT BIN-DER FOR PLANT MIX
1693000000-E	654	100	TON	ASPHALT PLANT MIX, PAVEMENT REPAIR
1839140000-E	661	1,500	TON	ULTRA-THIN BONDED WEARING COURSE
1839200000-E	661	42,300	SY	APPLICATION OF ULTRATHIN HOT MIX ASPHALT
1840000000-E	665	20,000	LF	MILLED RUMBLE STRIPS (ASPHALT CONCRETE)
2000000000-N	806	197	EA	RIGHT OF WAY MARKERS
2022000000-E	815	112	CY	SUBDRAIN EXCAVATION
2033000000-E	815	84	CY	SUBDRAIN FINE AGGREGATE
2044000000-E	815	500	LF	6" PERFORATED SUBDRAIN PIPE
2070000000-N	815	1	EA	SUBDRAIN PIPE OUTLET
2077000000-E	815	6	LF	6" OUTLET PIPE
2253000000-E	840	2.5	CY	PIPE COLLARS
2264000000-E	840	1	CY	PIPE PLUGS
2275000000-E	SP	12	CY	FLOWABLE FILL
2286000000-N	840	150	EA	MASONRY DRAINAGE STRUCTURES
2308000000-E	840	47.57	LF	MASONRY DRAINAGE STRUCTURES
2354000000-N	840	2	EA	FRAME WITH GRATE, STD 840.22
2364000000-N	840	32	EA	FRAME WITH TWO GRATES, STD 840.16
2364200000-N	840	9	EA	FRAME WITH TWO GRATES, STD 840.20
2365000000-N	840	10	EA	FRAME WITH TWO GRATES, STD 840.22
2366000000-N	840	19	EA	FRAME WITH TWO GRATES, STD 840.24
2374000000-N	840	11	EA	FRAME WITH GRATE & HOOD, STD 840.03, TYPE ** (E)
2374000000-N	840	26	EA	FRAME WITH GRATE & HOOD, STD 840.03, TYPE ** (F)
2374000000-N	840	35	EA	FRAME WITH GRATE & HOOD, STD 840.03, TYPE ** (G)
2396000000-N	840	7	EA	FRAME WITH COVER, STD 840.54
2407000000-N	840	1	EA	STEEL FRAME WITH TWO GRATES, STD 840.37
2440000000-N	852	3	EA	CONCRETE TRANSITIONAL SECTION FOR CATCH BASIN
2451000000-N	852	7	EA	CONCRETE TRANSITIONAL SECTION FOR DROP INLET
2542000000-E	846	4,300	LF	1'-6" CONCRETE CURB & GUTTER
2549000000-E	846	13,450	LF	2'-6" CONCRETE CURB & GUTTER
2556000000-E	846	2,470	LF	SHOULDER BERM GUTTER
2591000000-E	848	7,700	SY	4" CONCRETE SIDEWALK
2605000000-N	848	59	EA	CONCRETE CURB RAMP
2612000000-E	848	825	SY	6" CONCRETE DRIVEWAY
2655000000-E	852	1,925	SY	5" MONOLITHIC CONCRETE ISLANDS (KEYED IN)
2724000000-E	857	150	LF	PRECAST REINFORCED CONCRETE BARRIER, SINGLE FACED
2830000000-N	858	15	EA	ADJUSTMENT OF MANHOLES
2845000000-N	858	15	EA	ADJUSTMENT OF METER BOXES OR VALVE BOXES
3030000000-E	862	12,637.5	LF	STEEL BM GUARDRAIL
3045000000-E	862	162.5	LF	STEEL BM GUARDRAIL, SHOP CURVED
3150000000-N	862	10	EA	ADDITIONAL GUARDRAIL POSTS
3195000000-N	862	2	EA	GUARDRAIL ANCHOR UNITS, TYPE AT-1
3210000000-N	862	2	EA	GUARDRAIL ANCHOR UNITS, TYPE CAT-1
3215000000-N	862	2	EA	GUARDRAIL ANCHOR UNITS, TYPE III
3270000000-N	SP	2	EA	GUARDRAIL ANCHOR UNITS, TYPE 350
3317000000-N	862	4	EA	GUARDRAIL ANCHOR UNITS, TYPE B-77
3360000000-E	863	8,136	LF	REMOVE EXISTING GUARDRAIL
3435000000-N	SP	16	EA	GENERIC GUARDRAIL ITEM EXTRA LENGTH GUARDRAIL POSTS (8' STEEL)
3500000000-E	866	7,420	LF	WOVEN WIRE FENCE, ** FABRIC (48")
3509000000-E	866	490	EA	4" TIMBER FENCE POSTS, 7'-6" LONG
3515000000-E	866	90	EA	5" TIMBER FENCE POSTS, 8'-0" LONG
3533000000-E	866	780	LF	CHAIN LINK FENCE, ** FABRIC (60")
3539000000-E	866	70	EA	METAL LINE POSTS FOR ** CHAIN LINK FENCE (60")
3545000000-E	866	10	EA	METAL TERMINAL POSTS FOR ** CHAIN LINK FENCE (60")
3557000000-E	866	1,000	LF	ADDITIONAL BARBED WIRE
3563000000-E	SP	2,400	LF	TEMP ** WOVEN WIRE FENCE, COMPLETE W/POSTS (48")
3579000000-N	866	1	EA	GENERIC FENCING ITEM DOUBLE GATES, 48" HIGH, 6" WIDE, 12' OPENING (TEMPORARY)
3628000000-E	876	23	TON	RIP RAP, CLASS I
3649000000-E	876	1,010	TON	RIP RAP, CLASS B
3656000000-E	876	6,525	SY	GEOTEXTILE FOR DRAINAGE
4048000000-E	902	15	CY	REINFORCED CONCRETE SIGN FOUN-DATIONS
4054000000-E	902	2	CY	PLAIN CONCRETE SIGN FOUNDA-TIONS
4060000000-E	903	9,774	LB	SUPPORTS, BREAKAWAY STEEL BEAM
4066000000-E	903	3,723	LB	SUPPORTS, SIMPLE STEEL BEAM
4072000000-E	903	1,222	LF	SUPPORTS, 3-LB STEEL U-CHANNEL
4078000000-E	903	2	EA	SUPPORTS, 2-LB STEEL U-CHANNEL
4102000000-N	904	68	EA	SIGN ERECTION, TYPE E
4108000000-N	904	11	EA	SIGN ERECTION, TYPE F
4110000000-N	904	12	EA	SIGN ERECTION, TYPE *** (GROUND MOUNTED) (A)
4110000000-N	904	4	EA	SIGN ERECTION, TYPE *** (GROUND MOUNTED) (B)
4114000000-N	904	2	EA	SIGN ERECTION, MILEMARKERS
4116100000-N	904	4	EA	SIGN ERECTION, RELOCATE, TYPE **** (GROUND MOUNTED) (A)
4116100000-N	904	1	EA	SIGN ERECTION, RELOCATE, TYPE **** (GROUND MOUNTED) (B)
4116100000-N	904	9	EA	SIGN ERECTION, RELOCATE, TYPE **** (GROUND MOUNTED) (D)
4138000000-N	907	8	EA	DISPOSAL OF SUPPORT, STEEL BEAM
4152000000-N	907	6	EA	DISPOSAL OF SIGN SYSTEM, STEEL BEAM
4155000000-N	907	82	EA	DISPOSAL OF SIGN SYSTEM, U-CHANNEL
4400000000-E	1110	1,246	SF	WORK ZONE SIGNS (STATIONARY)

SUMMARY OF QUANTITIES - U-2551

ItemNumber	Sec #	Quantity	Unit	Description
4405000000-E	1110	1,228	SF	WORK ZONE SIGNS (PORTABLE)
4410000000-E	1110	695	SF	WORK ZONE SIGNS (BARRICADE MOUNTED)
4415000000-N	1115	4	EA	FLASHING ARROW BOARD
4420000000-N	1120	4	EA	PORTABLE CHANGEABLE MESSAGE SIGN
4430000000-N	1130	600	EA	DRUMS
4445000000-E	1145	560	LF	BARRICADES (TYPE III)
4455000000-N	1150	1,050	DAY	FLAGGER
4465000000-N	1160	8	EA	TEMPORARY CRASH CUSHIONS
4470000000-N	1160	6	EA	RESET TEMPORARY CRASH CUSHION
4480000000-N	1165	2	EA	TMA
4485000000-E	1170	7,380	LF	PORTABLE CONCRETE BARRIER
4500000000-E	1170	9,110	LF	RESET PORTABLE CONCRETE BARRIER
4510000000-N	SP	48	HR	LAW ENFORCEMENT
4516000000-N	1180	200	EA	SKINNY DRUM
4650000000-N	1251	3,660	EA	TEMPORARY RAISED PAVEMENT MARKERS
4695000000-E	1205	140	LF	THERMOPLASTIC PAVEMENT MARKING LINES (8", 90 MILS)
4697000000-E	1205	2,279	LF	THERMOPLASTIC PAVEMENT MARKING LINES (8", 120 MILS)
4710000000-E	1205	1,073	LF	THERMOPLASTIC PAVEMENT MARKING LINES (24", 120 MILS)
4721000000-E	1205	7	EA	THERMOPLASTIC PAVEMENT MARKING CHARACTER (120 MILS)
4725000000-E	1205	165	EA	THERMOPLASTIC PAVEMENT MARKING SYMBOL (90 MILS)
4770000000-E	1205	2,115	LF	COLD APPLIED PLASTIC PAVEMENT MARKING LINES, TYPE ** (4") (IV)
4800000000-N	1205	6	EA	COLD APPLIED PLASTIC PAVEMENT MARKING CHARACTER, TYPE ** (IV)
4810000000-E	1205	250,345	LF	PAINT PAVEMENT MARKING LINES (4")
4820000000-E	1205	571	LF	PAINT PAVEMENT MARKING LINES (8")
4825000000-E	1205	6,186	LF	PAINT PAVEMENT MARKING LINES (12")
4835000000-E	1205	5,807	LF	PAINT PAVEMENT MARKING LINES (24")
4840000000-N	1205	60	EA	PAINT PAVEMENT MARKING CHARACTER
4845000000-N	1205	345	EA	PAINT PAVEMENT MARKING SYMBOL
4847000000-E	1205	64,643	LF	POLYUREA PAVEMENT MARKING LINES (4", **********) (HIGHLY REFLECTIVE ELEMENTS)
4847100000-E	1205	21,785	LF	POLYUREA PAVEMENT MARKING LINES (6", **********) (HIGHLY REFLECTIVE ELEMENTS)
4847120000-E	1205	3,153	LF	POLYUREA PAVEMENT MARKING LINES (12", **********) (HIGHLY REFLECTIVE ELEMENTS)
4850000000-E	1205	119,373	LF	REMOVAL OF PAVEMENT MARKING LINES (4")
4860000000-E	1205	760	LF	REMOVAL OF PAVEMENT MARKING LINES (8")
4870000000-E	1205	22	LF	REMOVAL OF PAVEMENT MARKING LINES (24")
4875000000-N	1205	88	EA	REMOVAL OF PAVEMENT MARKING SYMBOLS & CHARACTERS
4905000000-N	1253	619	EA	SNOWPLOWABLE PAVEMENT MARKERS
5015000000-E	1401	3	EA	120' HIGH MOUNT STANDARD
5020000000-N	1401	1	EA	PORTABLE DRIVE UNIT
5025000000-E	SP	24.6	CY	HIGH MOUNT FOUNDATIONS
5030000000-N	1403	24	EA	HIGH MOUNT LUMINAIRES ******** (750W HPS)
5050000000-N	1404	14	EA	LIGHT STANDARD, TYPE MTLT ********** (45' SA, 15' ARM)
5070000000-N	1405	10	EA	STANDARD FOUNDATION ********* (R1)
5070000000-N	1405	4	EA	STANDARD FOUNDATION ********* (R2)
5080000000-N	1406	14	EA	LIGHT STANDARD LUMINAIRES, TYPE ********** (RDW 250W HPS, FLAT GLASS, MC3)
5120000000-N	1407	1	EA	ELECTRIC SERVICE POLE **** ********* (30' CLASS 4)
5125000000-E	1407	100	LF	ELECTRIC SERVICE LATERAL ********** (3 #1/0 USE)
5145000000-N	1408	1	EA	LIGHT CONTROL EQUIPMENT, TYPE RW ********** (240/480 VOLT)
5155000000-E	1409	200	LF	ELECTRICAL DUCT, TYPE BD, SIZE ***** (2")
5155000000-E	1409	115	LF	ELECTRICAL DUCT, TYPE BD, SIZE ***** (3")
5155000000-E	1409	155	LF	ELECTRICAL DUCT, TYPE BD, SIZE ***** (4")
5160000000-E	1409	460	LF	ELECTRICAL DUCT, TYPE JA, SIZE ***** (2")
5160000000-E	1409	55	LF	ELECTRICAL DUCT, TYPE JA, SIZE ***** (3")
5160000000-E	1409	120	LF	ELECTRICAL DUCT, TYPE JA, SIZE ***** (4")
5170000000-E	1410	380	LF	** #8 W/G FEEDER CIRCUIT (2)
5180000000-E	1410	1,235	LF	** #4 W/G FEEDER CIRCUIT (2)
5205000000-E	1410	3,830	LF	** #8 W/G FEEDER CIRCUIT IN ***** CONDUIT (2, 1.5")
5215000000-E	1410	3,165	LF	** #4 W/G FEEDER CIRCUIT IN ***** CONDUIT (2, 1.5")
5240000000-N	1411	16	EA	ELECTRICAL JUNCTION BOXES ********** (PC18)
5255000000-N	1413	Lump Sum		PORTABLE LIGHTING
5325200000-E	1510	1,395	LF	2" WATER LINE
5325600000-E	1510	1,009	LF	6" WATER LINE
5325800000-E	1510	495	LF	8" WATER LINE
5326200000-E	1510	982	LF	12" WATER LINE
5536000000-E	1515	4	EA	2" VALVE
5540000000-E	1515	8	EA	6" VALVE
5546000000-E	1515	5	EA	8" VALVE
5558000000-E	1515	3	EA	12" VALVE
5571600000-E	1515	1	EA	6" TAPPING VALVE
5571800000-E	1515	1	EA	8" TAPPING VALVE
5606000000-E	1515	2	EA	2" BLOW OFF
5648000000-N	1515	60	EA	RELOCATE WATER METER
5649000000-N	1515	3	EA	RECONNECT WATER METER
5672000000-N	1515	11	EA	RELOCATE FIRE HYDRANT
5691300000-E	1520	1,979	LF	8" SANITARY GRAVITY SEWER
5768000000-N	1520	60	EA	SANITARY SEWER CLEAN-OUT
5775000000-E	1525	9	EA	4' DIA UTILITY MANHOLE
5781000000-E	1525	29	LF	UTILITY MANHOLE WALL, 4' DIA
5815000000-N	1530	1	EA	REMOVE WATER METER
5816000000-N	1530	3	EA	ABANDON UTILITY MANHOLE
5828000000-N	1530	1	EA	REMOVE UTILITY MANHOLE
6000000000-E	1605	25,000	LF	TEMPORARY SILT FENCE
6006000000-E	1610	1,850	TON	STONE FOR EROSION CONTROL, CLASS A
6009000000-E	1610	7,210	TON	STONE FOR EROSION CONTROL, CLASS B
6012000000-E	1610	4,200	TON	SEDIMENT CONTROL STONE
6015000000-E	1615	25	ACR	TEMPORARY MULCHING
6018000000-E	1620	900	LB	SEED FOR TEMPORARY SEEDING
6021000000-E	1620	5.5	TON	FERTILIZER FOR TEMPORARY SEEDING
6024000000-E	1622	2,000	LF	TEMPORARY SLOPE DRAINS
6029000000-E	SP	500	LF	SAFETY FENCE
6030000000-E	1630	9,600	CY	SILT EXCAVATION
6036000000-E	1631	50,000	SY	MATTING FOR EROSION CONTROL
6037000000-E	SP	300	SY	COIR FIBER MAT
6038000000-E	SP	5,625	SY	PERMANENT SOIL REINFORCEMENT MAT
6042000000-E	1632	10,000	LF	1/4" HARDWARE CLOTH
6071020000-E	SP	1,350	LB	POLYACRYLAMIDE (PAM)
6071030000-E	1640	2,020	LF	COIR FIBER BAFFLE
6071050000-E	SP	23	EA	"*" SKIMMER (1-1/2")
6084000000-E	1660	25	ACR	SEEDING & MULCHING
6087000000-E	1660	15	ACR	MOWING
6090000000-E	1661	250	LB	SEED FOR REPAIR SEEDING
6093000000-E	1661	0.75	TON	FERTILIZER FOR REPAIR SEEDING
6096000000-E	1662	425	LB	SEED FOR SUPPLEMENTAL SEEDING
6108000000-E	1665	12.75	TON	FERTILIZER TOPDRESSING
6114500000-N	1667	40	MHR	SPECIALIZED HAND MOWING
6117000000-N	SP	100	EA	RESPONSE FOR EROSION CONTROL
6890000000-E	SP	10	CY	CONCRETE STEPS
6895000000-E	SP	30	LF	HANDRAIL ON STEPS
7048500000-E	1705	34	EA	PEDESTRIAN SIGNAL HEAD (16", 1 SECTION W/COUNTDOWN)
7060000000-E	1705	17,130	LF	SIGNAL CABLE
7120000000-E	1705	84	EA	VEHICLE SIGNAL HEAD (12", 3 SECTION)
7132000000-E	1705	10	EA	VEHICLE SIGNAL HEAD (12", 4 SECTION)
7144000000-E	1705	7	EA	VEHICLE SIGNAL HEAD (12", 5 SECTION)
7252000000-E	1710	5,510	LF	MESSENGER CABLE (1/4")
7264000000-E	1710	2,520	LF	MESSENGER CABLE (3/8")
7279000000-E	1715	4,810	LF	TRACER WIRE
7288000000-E	1715	150	LF	PAVED TRENCHING (**********) (1, 2")
7288000000-E	1715	10	LF	PAVED TRENCHING (**********) (2, 2")
7300000000-E	1715	6,220	LF	UNPAVED TRENCHING (**********) (1, 2")
7300000000-E	1715	460	LF	UNPAVED TRENCHING (**********) (2, 2")
7300000000-E	1715	70	LF	UNPAVED TRENCHING (**********) (4, 2")
7300100000-E	1715	2,440	LF	UNPAVED TRENCHING FOR TEMPORARY LEAD-IN
7301000000-E	1715	2,120	LF	DIRECTIONAL DRILL (**********) (1, 2")
7301000000-E	1715	1,880	LF	DIRECTIONAL DRILL (**********) (2, 2")
7324000000-N	1716	49	EA	JUNCTION BOX (STANDARD SIZE)
7348000000-N	1716	43	EA	JUNCTION BOX (OVER-SIZED, HEAVY DUTY)
7360000000-N	1720	17	EA	WOOD POLE
7372000000-N	1721	50	EA	GUY ASSEMBLY
7396000000-E	1722	2	EA	1/2" RISER WITH WEATHERHEAD
7408000000-E	1722	4	EA	1" RISER WITH WEATHERHEAD
7420000000-E	1722	23	EA	2" RISER WITH WEATHERHEAD
7432000000-E	1722	6	EA	2" RISER WITH HEAT SHRINK TUBING
7444000000-E	1725	10,030	LF	INDUCTIVE LOOP SAWCUT
7456000000-E	1726	29,180	LF	LEAD-IN CABLE (**********) (14-2)
7516000000-E	1730	13,400	LF	COMMUNICATIONS CABLE (**FIBER) (12)
7552000000-N	1731	7	EA	INTERCONNECT CENTER
7564000000-N	1732	7	EA	FIBER-OPTIC TRANSCEIVER, DROP & REPEAT
7566000000-N	1733	15	EA	DELINEATOR MARKER

SUMMARY OF QUANTITIES - U-2551

ItemNumber	Sec #	Quantity	Unit	Description
7568000000-N	SP	1	EA	FURNISH FIBER-OPTIC RESTORATION KIT
7570000000-N	SP	1	EA	FURNISH FIBER-OPTIC POWER METER
7572000000-N	SP	1	EA	FURNISH OPTICAL LIGHT GENERATOR
7574000000-N	SP	1	EA	FURNISH FIBER-OPTIC TRANSCEIVER
7575142060-N	SP	1	EA	MODIFY RADIO INSTALLATION
7588000000-N	SP	16	EA	METAL POLE WITH SINGLE MAST ARM
7590000000-N	SP	4	EA	METAL POLE WITH DUAL MAST ARM
7613000000-N	SP	20	EA	SOIL TEST
7614100000-E	SP	160	CY	DRILLED PIER FOUNDATION
7631000000-N	SP	20	EA	MAST ARM WITH METAL POLE DESIGN
7636000000-N	1745	18	EA	SIGN FOR SIGNALS
7642200000-N	1743	16	EA	TYPE II PEDESTAL WITH FOUNDATION
7684000000-N	1750	6	EA	SIGNAL CABINET FOUNDATION
7756000000-N	1751	6	EA	CONTROLLER WITH CABINET (TYPE 2070L, BASE MOUNTED)
7780000000-N	1751	45	EA	DETECTOR CARD (TYPE 2070L)
7901000000-N	1753	6	EA	CABINET BASE EXTENDER
7980000000-N	SP	4	EA	GENERIC SIGNAL ITEM PROTECTIVE GREEN COATING FOR DOUBLE MAST ARM WITH METAL POLE
7980000000-N	SP	16	EA	GENERIC SIGNAL ITEM PROTECTIVE GREEN COATING FOR SINGLE MAST ARM WITH METAL POLE
7980000000-N	SP	16	EA	GENERIC SIGNAL ITEM PROTECTIVE GREEN COATING FOR TYPE II PEDESTAL WITH FOUNDATION

COMPUTED BY: JTP	DATE: 10/6/2011
CHECKED BY: JRB	DATE: 1/10/2012

PROJECT NO.	SHEET NO.
U2551	3-A

NORTH CAROLINA DEPARTMENT OF TRANSPORTATION
DIVISION OF HIGHWAYS

Note: Invert Elevations indicated are for Bid Purposes only and shall not be used for project construction stakeout. See "Standard Specifications For Roads and Structures, Section 300-5".

LIST OF PIPES, ENDWALLS, ETC. (FOR PIPES 48 INCHES & UNDER)

STATION / SIZE / THICKNESS OR GAUGE	LOCATION (LT, RT, OR CL)'	STRUCTURE NO. FROM	STRUCTURE NO. TO	TOP ELEVATION	INVERT ELEVATION	INVERT ELEVATION	SLOPE CRITICAL	DRAINAGE PIPE (RCP, CSP, CAAP, HDPE, or PVC) 8"	12"	15"	18"	24"	30"	36"	42"	48"	DO NOT USE RCP	DO NOT USE CSP	DO NOT USE CAAP	DO NOT USE HDPE	C.S. PIPE 12" .064	15" .064	18" .064	24" .064	30" .079	36" .079	42" .109	48" .109	R.C. PIPE CLASS III 12"	15"	18"	24"	30"	36"	42"	48"	R.C. PIPE CLASS IV 12"	15"	18"	24"	30"	36"	42"	48"	** " R.C. PIPE (CLASS V)	***" RC PIPE CULVERTS, CONTRACTOR DESIGN	15" WELDED STEEL PIPE, 0.500" THK. (TRENCHLESS INSTALLATION) IN SOIL	15" SIDE DRAIN PIPE	18" SIDE DRAIN PIPE	ENDWALLS STD. 838.01 838.11 OR STD. 838.80 (UNLESS NOTED OTHERWISE) CU. YARDS R.C.P.	C.S.P.	QUANTITIES FOR DRAINAGE STRUCTURES PER EACH (0' THRU 5.0')	*TOTAL L.F. FOR PAY QUANTITY SHALL BE COL. 'A' + (1.3 X COL.'B') LIN. FT. A 5.0' THRU 10.0'	B 10.0' AND ABOVE	C.B. STD. 840.01 OR STD. 840.02	FRAME, GRATES, AND HOOD STANDARD 840.03 TYPE OF GRATE E	F	G	CONCRETE TRANSITIONAL SECTION DROP INLET	CATCH BASIN	D.I. STD. 840.14 OR STD. 840.15	D.I. FRAME AND TWO GRATES STD. 840.16	G.D.I. TYPE "A" STD. 840.17 OR 840.26	G.D.I. TYPE "B" STD. 840.18 OR 840.27	G.D.I. TYPE "D" STD. 840.19 OR 840.28	G.D.I. FRAME WITH GRATE STD. 840.22	G.D.I. FRAME WITH TWO GRATES STD. 840.20	G.D.I. FRAME WITH TWO GRATES STD. 840.22	G.D.I. (N.S.) FRAME WITH GRATE STD. 840.24	G.D.I. (N.S.) FRAME WITH TWO GRATES STD. 840.24	J.B. STD. 840.31 OR 840.32	TBJB STD. 840.34	MANHOLE FRAME & COVER STD. 840.54	T.B.D.I. STD. 840.36	STEEL GRATE AND FRAME SRD. 840.37	FLOWABLE FILL, CY	C.S. PIPE ELBOWS NO. & SIZE	CONC. & BRICK PIPE PLUG, C.Y. STD. 840.71	CONC. COLLARS CL. "B" C.Y. STD. 840.72	PIPE REMOVAL LIN. FT.	REMARKS
-L- 10+25	LT	0401	OUT		---	---																																										32																																18	REMOVE 12" RCP
-L- 11+35	LT	0410			---	---																																																																											98	REMOVE 30' 4" PVC &
																																																																																		REMOVE 68' 12" CMP
-L- 13+15	LT	0402	OUT		---	---																																										32																																	
-L- 15+10	LT	0403	0405		1230.6	1221.7																																208																																											185	REMOVE EX. DI & 15" CMP
-L- 17+25	LT	0405		1224.0	1221.7																																															1									1	1																				REMOVE EX. DI
-L- 17+25	LT	0405	0407		1221.7	1218.4																									84																																																				80	REMOVE 15" CMP
-L- 18+00	LT	0407		1222.8	1218.4																																															1																				1	1									REMOVE EX. DI
-L- 18+00	LT	0407	0409		1218.4	1216.5																									120																																																				120	REMOVE 15" RCP
-L- 19+20	LT	0409		1219.0	1216.5																																															1									1	1																				REMOVE EX. DI
-L- 19+20	LT	0409	0501		1216.5	1215.7																																		92																																												86	REMOVE 18" RCP
-L- 17+90	LT	0406		1221.7	1218.5																																															1																						1	1							
-L- 17+90	LT	0406	0407		1218.5	1218.4				24								X	X																																																																
-L- 20+95	LT	0502	OUT		---	---																																											32																															75	REMOVE EX. DI & 12" RCP
-L- 21+90	LT	0508			---	---																																																																													32	REMOVE 15" RCP
-L- 21+90	LT	0503	OUT		---	---																																										32																																	
-L- 24+85	LT	0509			---	---																																																																													18	REMOVE 12" CLAY
-L- 27+55	LT	0504	OUT		---	---																																										32																																26	REMOVE 12" CLAY
-L- 30+00	LT	0505	OUT		---	---																																										32																																23	REMOVE 15" CLAY
-L- 31+05	LT	0506	OUT		---	---																																										32																																21	REMOVE 15" RCP
-L- 31+90	LT	0507	0601		1192.9	1186.7					112							X	X																																																															19	REMOVE 15" CLAY
-L- 33+00	LT	0601		1189.7	1186.7																																															1												1						1											
-L- 33+00	LT	0601	0602		1186.7	1184.8					52							X	X																																																														33	REMOVE EX. DI & 18" RCP
-L- 33+50	LT	0602		1187.8	1184.8																																															1												1						1											
-L- 33+50	LT	0602	0603		1184.8	1181.7					92							X	X																																																														131	REMOVE 18" RCP
-L- 33+40	LT	0603		1184.7	1181.7																																															1												1						1											
-L- 34+40	LT	0603	0604		1181.7	1179.8					60							X	X																																																															63	REMOVE EX. JB & 18" RCP
-L- 35+00	LT	0604		1182.8	1179.8																																															1												1						1											
-L- 35+00	LT	0604	0605		1179.8	1176.8					60							X	X																																																															
-L- 35+60	LT	0605		1180.3	1176.8																																															1												1						1											
-L- 35+60	LT	0605	0606		1176.8	1176.4																												88																																																					
-L- 34+60	RT	0607	OUT		---	---																																										68																																31	REMOVE 18" CMP
-Y3- 11+60	RT	0608	OUT		---	---																																										16																																	
-L- 38+65	LT	0609			---	---																																																																														22	REMOVE 18" CONC
SHEET TOTALS										24	376																			204		88						208	92									276	32			9									2	2		5						5		1	1	1	1					1081	

ABBREVIATIONS

C.B.	CATCH BASIN
N.D.I.	NARROW DROP INLET
D.I.	DROP INLET
G.D.I.	GRATED DROP INLET
G.D.I.(N.S.)	(NARROW SLOT)
J.B.	JUNCTION BOX
M.H.	MANHOLE
T.B.D.I.	TRAFFIC BEARING DROP INLET
T.B.J.B.	TRAFFIC BEARING JUNCTION BOX

NC1D-JBEARD2

COMPUTED BY: JTP DATE: 10/6/2011

CHECKED BY: JRB DATE: 1/10/2012

NC1D-JBEARD2

PROJECT NO.	SHEET NO.
U2551	3-B

NORTH CAROLINA DEPARTMENT OF TRANSPORTATION
DIVISION OF HIGHWAYS

Note: Invert Elevations indicated are for Bid Purposes only and shall not be used for project construction stakeout. See "Standard Specifications For Roads and Structures, Section 300-5".

LIST OF PIPES, ENDWALLS, ETC. (FOR PIPES 48 INCHES & UNDER)

ABBREVIATIONS

C.B.	CATCH BASIN
N.D.I.	NARROW DROP INLET
D.I.	DROP INLET
G.D.I.	GRATED DROP INLET
G.D.I.(N.S.)	(NARROW SLOT)
J.B.	JUNCTION BOX
M.H.	MANHOLE
T.B.D.I.	TRAFFIC BEARING DROP INLET
T.B.J.B.	TRAFFIC BEARING JUNCTION BOX

STATION (SIZE / THICKNESS OR GAUGE)	LOCATION (LT, RT, OR CL)	STRUCTURE NO. FROM	STRUCTURE NO. TO	TOP ELEVATION	INVERT ELEVATION	INVERT ELEVATION	SLOPE CRITICAL	DRAINAGE PIPE (RCP, CSP, CAAP, HDPE, or PVC) 8"	12"	15"	18"	24"	30"	36"	42"	48"	DO NOT USE RCP	DO NOT USE CSP	DO NOT USE CAAP	DO NOT USE HDPE
-L- 50+85	RT	0708	0709		1164.9	1161.1				104								X	X	
-L- 51+30	RT	0709		1164.0	1161.1															
-L- 51+30	RT	0709	0710		1161.9	1152.7														
-L- 55+00	RT	0710		1155.7	1152.7															
-L- 55+00	RT	0710	0711		1152.7	1151.1														
-L- 56+70	RT	0711		1154.3	1151.1															
-L- 56+70	RT	0711	0712		1151.1	1149.2														
-L- 56+95	RT	0712		1154.3	1146.6															
-L- 56+95	RT	0712	0715		1146.8	1151.6														
-L- 57+85	RT	0715		1154.6	1151.6															
-L- 57+85	RT	0715	0803		1151.6	1153.5														
-L- 58+50	RT	0803		1156.5	1153.5															
-L- 58+50	RT	0803	0802		1153.5	1156.5														
-L- 61+20	RT	0802		1159.5	1156.5															
-L- 57+85	RT	0716		1154.0	1151.8															
-L- 57+85	RT	0716	0715		1151.8	1151.6				20								X	X	
-L- 56+70	RT	0713		1153.5	1151.2															
-L- 56+70	RT	0713	0711		1151.2	1151.1				20								X	X	
-L- 56+95	RT	0707		---	1147.4															
-L- 56+95	RT	0707	0712		1147.4	1147.2	X													
-L- 55+60	LT	0701		1154.0	1151.0															
-L- 55+60	LT	0701	0702		1151.0	1150.9					20							X	X	
-L- 55+60	LT	0702		1155.2	1150.9															
-L- 55+60	LT	0702	0703		1150.9	1150.3														
-L- 56+70	LT	0703		1154.2	1150.3															
-L- 56+70	LT	0703	0705		1150.3	1150.1														
-L- 57+05	LT	0705		1154.3	1150.1															
-L- 57+05	LT	0705	0801		1150.9	1152.1														
-L- 58+50	LT	0801		1155.1	1152.1															
-L- 57+05	LT	0704		1154.8	1151.6															
-L- 57+05	LT	0704	0705		1151.6	1150.4				16								X	X	
-L- 57+05	LT	0706		---	1149.9															
-L- 57+05	LT	0706	0705		1149.9	1150.1														
-L- 67+90	LT	0808		1168.0	1163.0															
-L- 67+90	LT	0808	0807		1164.5	1166.1														
-L- 67+90	LT	0807		1169.6	1166.1															
-L- 67+90	LT	0807	0806		1166.1	1166.7														
-L- 68+30	LT	0806		1169.7	1166.7															
-L- 68+30	LT	0806	0908		1166.7	1168.0														
-L- 70+30	LT	0908		1171.6	1168.0															
-L- 70+30	LT	0908	0907		1168.0	1168.4														
-L- 70+30	RT	0907		1171.4	1168.4															
-L- 67+90	LT	0807	0805		1166.1	1166.4														
-L- 67+90	RT	0805		1169.5	1166.4															
-L- 67+90	RT	0805	0804		1166.4	1166.6														
-L- 68+30	RT	0804		1169.6	1166.6															
SHEET TOTALS										160	20									

STATION	FROM	TO	C.S. PIPE 12" .064	15" .064	18" .064	24" .064	30" .079	36" .079	42" .109	48" .109	R.C. PIPE CLASS III 12"	15"	18"	24"	30"	36"	42"	48"	R.C. PIPE CLASS IV 12"	15"	18"	24"	30"	36"	42"	48"	** " R.C. PIPE (CLASS V)	***" RC PIPE CULVERTS, CONTRACTOR DESIGN	15" WELDED STEEL PIPE, 0.500" THK. (TRENCHLESS INSTALLATION) IN SOIL	15" SIDE DRAIN PIPE	18" SIDE DRAIN PIPE	ENDWALLS STD. 838.01 838.11 OR STD. 838.80 (UNLESS NOTED OTHERWISE) CU. YARDS R.C.P.	C.S.P.
-L- 50+85	0708	0709																															
-L- 51+30	0709																																
-L- 51+30	0709	0710																		348													
-L- 55+00	0710																																
-L- 55+00	0710	0711																		172													
-L- 56+70	0711																																
-L- 56+70	0711	0712																		20													
-L- 56+95	0712																																
-L- 56+95	0712	0715																		92													
-L- 57+85	0715																																
-L- 57+85	0715	0803																		164													
-L- 58+50	0803																																
-L- 58+50	0803	0802																		172													
-L- 61+20	0802																																
-L- 57+85	0716																																
-L- 57+85	0716	0715																															
-L- 56+70	0713																																
-L- 56+70	0713	0711																															
-L- 56+95	0707																																
-L- 56+95	0707	0712											8																				
-L- 55+60	0701																																
-L- 55+60	0701	0702																															
-L- 55+60	0702																																
-L- 55+60	0702	0703											116																				
-L- 56+70	0703																																
-L- 56+70	0703	0705											32																				
-L- 57+05	0705																																
-L- 57+05	0705	0801																		148													
-L- 58+50	0801																																
-L- 57+05	0704																																
-L- 57+05	0704	0705																															
-L- 57+05	0706																																
-L- 57+05	0706	0705											12																				
-L- 67+90	0808																																
-L- 67+90	0808	0807										20																					
-L- 67+90	0807																																
-L- 67+90	0807	0806																		48													
-L- 68+30	0806																																
-L- 68+30	0806	0908																		196													
-L- 70+30	0908																																
-L- 70+30	0908	0907																		76													
-L- 70+30	0907																																
-L- 67+90	0807	0805																		64													
-L- 67+90	0805																																
-L- 67+90	0805	0804																		48													
-L- 68+30	0804																																
SHEET TOTALS												20	168							1548													

STATION	FROM	TO	QUANTITIES FOR DRAINAGE STRUCTURES PER EACH (0' THRU 5.0')	*TOTAL L.F. FOR PAY QUANTITY SHALL BE COL. 'A' + (1.3 X COL.'B') LIN. FT. A 5.0' THRU 10.0'	B 10.0' AND ABOVE	C.B. STD. 840.01 OR STD. 840.02	FRAME, GRATES, AND HOOD STANDARD 840.03 TYPE OF GRATE E	F	G	CONCRETE TRANSITIONAL SECTION DROP INLET	CATCH BASIN	D.I. STD. 840.14 OR STD. 840.15	D.I. FRAME AND TWO GRATES STD. 840.16	G.D.I. TYPE "A" STD. 840.17 OR 840.26	G.D.I. TYPE "B" STD. 840.18 OR 840.27	G.D.I. TYPE "D" STD. 840.19 OR 840.28	G.D.I. FRAME WITH GRATE STD. 840.22	G.D.I. FRAME WITH TWO GRATES STD. 840.20	G.D.I. FRAME WITH TWO GRATES STD. 840.22	G.D.I. (N.S.) FRAME WITH GRATE STD. 840.24	G.D.I. (N.S.) FRAME WITH TWO GRATES STD. 840.24	J.B. STD. 840.31 OR 840.32	TBJB STD. 840.34	MANHOLE FRAME & COVER STD. 840.54	T.B.D.I. STD. 840.36	STEEL GRATE AND FRAME SRD. 840.37	FLOWABLE FILL, CY	C.S. PIPE ELBOWS NO. & SIZE	CONC. & BRICK PIPE PLUG, C.Y. STD. 840.71	CONC. COLLARS CL. "B" C.Y. STD. 840.72	PIPE REMOVAL LIN. FT.	REMARKS
-L- 50+85	0708	0709																													40	REMOVE 15" CMP
-L- 51+30	0709		1			1		1																								
-L- 51+30	0709	0710																														
-L- 55+00	0710		1			1		1																								
-L- 55+00	0710	0711																														
-L- 56+70	0711		1			1	1																									
-L- 56+70	0711	0712																														
-L- 56+95	0712		1	2.7		1	1																									
-L- 56+95	0712	0715																													29	REMOVE 12" RCP
-L- 57+85	0715		1			1			1																							
-L- 57+85	0715	0803																														
-L- 58+50	0803		1			1			1																							
-L- 58+50	0803	0802																														
-L- 61+20	0802		1			1			1																							
-L- 57+85	0716		1									1	1																			
-L- 57+85	0716	0715																														
-L- 56+70	0713		1									1	1																			
-L- 56+70	0713	0711																														
-L- 56+95	0707																													0.4465		REMOVE EX. DI
-L- 56+95	0707	0712																													8	CUT & REMOVE 18" RCP
-L- 55+60	0701		1												1						1											
-L- 55+60	0701	0702																														
-L- 55+60	0702		1			1			1																							
-L- 55+60	0702	0703																													150	REMOVE 15" CMP
-L- 56+70	0703		1			1	1																									
-L- 56+70	0703	0705																														
-L- 57+05	0705		1			1		1																								
-L- 57+05	0705	0801																														
-L- 58+50	0801		1			1		1																								
-L- 57+05	0704		1									1	1																			
-L- 57+05	0704	0705																														
-L- 57+05	0706																													0.4465		REMOVE EX. DI
-L- 57+05	0706	0705																														
-L- 67+90	0808		1									1	1																			
-L- 67+90	0808	0807																													18	CUT & REMOVE 12" CONC
-L- 67+90	0807		1			1	1																									REMOVE EX. CB
-L- 67+90	0807	0806																														
-L- 68+30	0806		1			1		1																								
-L- 68+30	0806	0908																														
-L- 70+30	0908		1			1		1																								
-L- 70+30	0908	0907																														
-L- 70+30	0907		1			1			1																							
-L- 67+90	0807	0805																													43	REMOVE 18" CMP
-L- 67+90	0805		1			1	1																									REMOVE EX. CB
-L- 67+90	0805	0804																														
-L- 68+30	0804		1			1			1																							
SHEET TOTALS			22	2.7		17	5	6	6			4	4		1						1									0.893	288	

COMPUTED BY: JTP DATE: 10/6/2011

CHECKED BY: JRB DATE: 1/10/2012

NC1D-JBEARD2

NORTH CAROLINA DEPARTMENT OF TRANSPORTATION
DIVISION OF HIGHWAYS

PROJECT NO.	SHEET NO.
U2551	3-C

Note: Invert Elevations indicated are for Bid Purposes only and shall not be used for project construction stakeout. See "Standard Specifications For Roads and Structures, Section 300-5".

LIST OF PIPES, ENDWALLS, ETC. (FOR PIPES 48 INCHES & UNDER)

STATION	LOCATION (LT, RT, OR CL)	STRUCTURE NO. FROM	STRUCTURE NO. TO	TOP ELEVATION	INVERT ELEVATION	INVERT ELEVATION	SLOPE CRITICAL	DRAINAGE PIPE (RCP, CSP, CAAP, HDPE, or PVC) 8"	12"	15"	18"	24"	30"	36"	42"	48"	DO NOT USE RCP	DO NOT USE CSP	DO NOT USE CAAP	DO NOT USE HDPE	C.S. PIPE 12" (.064)	15" (.064)	18" (.064)	24" (.064)	30" (.079)	36" (.079)	42" (.109)	48" (.109)
-RPB- 10+20	RT	0936		1097.8	1096.3																							
-RPB- 10+20	RT	0936	0937		1096.3	1095.5																						
-RPA- 11+00	LT	0951		1117.3	1114.6																							
-RPA- 11+00	LT	0951	0952		1114.6	1114.3												X	X									
-RPA- 11+50	LT	0952		1118.5	1114.3																							
-RPA- 11+50	LT	0952	0953		1114.3	1099.2																32						
-RPA- 11+60	LT	0953			1099.2																							
-RPB- 10+90	RT	0934	0933		1096.0	1103.2																	72					
-RPB- 11+50	RT	0933		1106.2	1103.2																							
-RPB- 11+50	RT	0933	0932		1103.4	1122.6				340								X	X									
-RPB- 15+00	RT	0932		1125.3	1122.6																							
-RPB- 15+00	RT	0932	0931		1122.6	1124.2																						
-RPB- 15+00	LT	0931		1128.2	1124.2																							
-RPA- 15+20	RT	0949		1126.9	1122.9																							
-RPA- 15+20	RT	0949	0950		1122.9	1116.0																						
-RPA- 16+00	LT	0948	0947		1118.9	1123.4																		20				
-RPA- 16+08	LT	0947		1130.0	1123.4																							
-RPA- 16+08	LT	0947	0946		1124.1	1128.6				64								X	X									
-RPA- 16+70	LT	0946		1131.4	1128.6																							
-RPA- 16+50	RT	0945			---	---																						
-Y8- 30+00	RT	0944			---	---																						
-Y8- 43+70	RT	0927			---	---																						
-RPC- 16+60	RT	0920		1150.5	1147.5																							
-RPC- 16+60	RT	0920	0921		1147.5	1147.2																						
-RPC- 16+60	LT	0921		1152.7	1147.2																							
-RPC- 16+60	LT	0921	0922		1147.2	1144.2																						
-RPC- 13+00	LT	0922		1147.2	1144.2																							
-RPC- 13+00	LT	0922	0923		1144.2	1143.0																						
-RPC- 12+50	LT	0923		1146.0	1143.0																							
-RPC- 12+50	LT	0923	0924		1143.0	1131.4																	44					
-RPC- 12+90	LT	0929		1143.0	1137.2																							
-RPC- 12+90	LT	0929	0930		1137.2	1132.9																						
-RPD- 15+00	LT	0913		1143.1	1139.4																							
-RPD- 15+00	LT	0913	0914		1139.4	1137.7																						
-L-73+40	LT	0903	0902		1168.6	1173.2				60								X	X									
-L-73+40	LT	0902		1176.2	1173.2																							
-L-73+40	LT	0902	0901		1173.2	1174.2																						
-L-74+00	LT	0901		1177.2	1174.2																							
SHEET TOTALS										464												32	116	20				

STATION	R.C. PIPE CLASS III 12"	15"	18"	24"	30"	36"	42"	48"	R.C. PIPE CLASS IV 12"	15"	18"	24"	30"	36"	42"	48"	** " R.C. PIPE (CLASS V)	***" RC PIPE CULVERTS, CONTRACTOR DESIGN	15" WELDED STEEL PIPE, 0.500" THK. (TRENCHLESS INSTALLATION) IN SOIL	15" SIDE DRAIN PIPE	18" SIDE DRAIN PIPE	ENDWALLS STD. 838.01 838.11 OR STD. 838.80 (UNLESS NOTED OTHERWISE) CU. YARDS R.C.P.	C.S.P.	QUANTITIES FOR DRAINAGE STRUCTURES PER EACH (0' THRU 5.0')	*TOTAL L.F. FOR PAY QUANTITY SHALL BE COL. 'A' + (1.3 X COL.'B') LIN. FT. A 5.0' THRU 10.0'	B 10.0' AND ABOVE	C.B. STD. 840.01 OR STD. 840.02	FRAME, GRATES, AND HOOD STANDARD 840.03 TYPE OF GRATE E	F	G	CONCRETE TRANSITIONAL SECTION DROP INLET	CATCH BASIN
-RPB- 10+20																																
-RPB- 10+20			20																													
-RPA- 11+00																								1								
-RPA- 11+00										52																						
-RPA- 11+50																								1								
-RPA- 11+50																																
-RPA- 11+60																																
-RPB- 10+90																																
-RPB- 11+50																								1								
-RPB- 11+50																																
-RPB- 15+00																								1								
-RPB- 15+00		60																														
-RPB- 15+00																								1								
-RPA- 15+20																								1								
-RPA- 15+20		72																														
-RPA- 16+00																																
-RPA- 16+08																								1	1.7							
-RPA- 16+08																																
-RPA- 16+70																								1								
-RPA- 16+50																																
-Y8- 30+00																																
-Y8- 43+70																																
-RPC- 16+60																								1								
-RPC- 16+60			56																													
-RPC- 16+60																								1	0.5							
-RPC- 16+60			364																													
-RPC- 13+00																								1								
-RPC- 13+00											60																					
-RPC- 12+50																								1								
-RPC- 12+50																																
-RPC- 12+90																								1	0.8							
-RPC- 12+90			44																													
-RPD- 15+00																								1								
-RPD- 15+00		72																														
-L-73+40																																
-L-73+40																								1			1		1			
-L-73+40										64																						
-L-74+00																								1			1		1			
SHEET TOTALS		204	484							116	60													16	3		2		2			

STATION	D.I. STD. 840.14 OR STD. 840.15	D.I. FRAME AND TWO GRATES STD. 840.16	G.D.I. TYPE "A" STD. 840.17 OR 840.26	G.D.I. TYPE "B" STD. 840.18 OR 840.27	G.D.I. TYPE "D" STD. 840.19 OR 840.28	G.D.I. FRAME WITH GRATE STD. 840.22	G.D.I. FRAME WITH TWO GRATES STD. 840.20	G.D.I. FRAME WITH TWO GRATES STD. 840.22	G.D.I. (N.S.) FRAME WITH GRATE STD. 840.24	G.D.I. (N.S.) FRAME WITH TWO GRATES STD. 840.24	J.B. STD. 840.31 OR 840.32	TBJB STD. 840.34	MANHOLE FRAME & COVER STD. 840.54	T.B.D.I. STD. 840.36	STEEL GRATE AND FRAME SRD. 840.37	FLOWABLE FILL, CY	C.S. PIPE ELBOWS NO. & SIZE	CONC. & BRICK PIPE PLUG, C.Y. STD. 840.71	CONC. COLLARS CL. "B" C.Y. STD. 840.72	PIPE REMOVAL LIN. FT.	REMARKS
-RPB- 10+20																			0.4465		
-RPB- 10+20																					
-RPA- 11+00				1			1														
-RPA- 11+00																					
-RPA- 11+50				1			1														
-RPA- 11+50																					15" CSP W/ ELBOW ROD & LUG
-RPA- 11+60																	1@15"				CONNECTORS W/ SLEEVES
-RPB- 10+90																	1@18"				18" CSP W/ ELBOW ROD & LUG
																					CONNECTORS W/ SLEEVES
-RPB- 11+50				1				1													
-RPB- 11+50																					
-RPB- 15+00				1				1													
-RPB- 15+00																					
-RPB- 15+00			1			1		1													
-RPA- 15+20				1				1													
-RPA- 15+20																					
-RPA- 16+00																	1@24"				24" CSP W/ ELBOW
-RPA- 16+08											1		1								
-RPA- 16+08																					
-RPA- 16+70				1				1													
-RPA- 16+50																					REMOVE EX. CONC. APRON AT
																					EX. 2 GI
-Y8- 30+00																3		0.09			REM. EX. DI ,FILL 15" W/ FLOW. FILL &
																					PLUG EACH END
-Y8- 43+70																3		0.09			REM. EX. DI ,FILL 15" W/ FLOW. FILL &
																					PLUG EACH END
-RPC- 16+60			1			1		1													
-RPC- 16+60																					
-RPC- 16+60				1			1														
-RPC- 16+60																					
-RPC- 13+00				1			1														
-RPC- 13+00																					
-RPC- 12+50				1			1														
-RPC- 12+50																	1@18"				18" CSP W/ ELBOWS ROD & LUG
																					CONNECTORS W/ SLEEVES
-RPC- 12+90											1		1								
-RPC- 12+90																					
-RPD- 15+00				1				1													
-RPD- 15+00																					
-L-73+40																					
-L-73+40																					
-L-73+40																	1@15"				
-L-74+00																	2@18"				
SHEET TOTALS			2	10		2	5	7			2		2			6	1@24"	0.18	0.4465		

ABBREVIATIONS

C.B.	CATCH BASIN
N.D.I.	NARROW DROP INLET
D.I.	DROP INLET
G.D.I.	GRATED DROP INLET
G.D.I.(N.S.)	(NARROW SLOT)
J.B.	JUNCTION BOX
M.H.	MANHOLE
T.B.D.I.	TRAFFIC BEARING DROP INLET
T.B.J.B.	TRAFFIC BEARING JUNCTION BOX

NC1D-JBEARD2

COMPUTED BY: JTP DATE: 10/6/2011

CHECKED BY: JRB DATE: 1/10/2012

PROJECT NO.	SHEET NO.
U2551	3-D

NORTH CAROLINA DEPARTMENT OF TRANSPORTATION
DIVISION OF HIGHWAYS

Note: Invert Elevations indicated are for Bid Purposes only and shall not be used for project construction stakeout. See "Standard Specifications For Roads and Structures, Section 300-5".

LIST OF PIPES, ENDWALLS, ETC. (FOR PIPES 48 INCHES & UNDER)

STATION / SIZE / THICKNESS OR GAUGE	LOCATION (LT, RT, OR CL)'	STRUCTURE NO. FROM	STRUCTURE NO. TO	TOP ELEVATION	INVERT ELEVATION	INVERT ELEVATION	SLOPE CRITICAL	DRAINAGE PIPE (RCP, CSP, CAAP, HDPE, or PVC) 8"	12"	15"	18"	24"	30"	36"	42"	48"	DO NOT USE RCP	DO NOT USE CSP	DO NOT USE CAAP	DO NOT USE HDPE	C.S. PIPE 12" .064	15" .064	18" .064	24" .064	30" .079	36" .079	42" .109	48" .109
-L-73+50	RT	0906	0905		1172.8	1173.8				24																		
-L-73+55	RT	0905		1176.6	1173.8																							
-L-73+55	RT	0905	0904		1173.8	1174.5																						
-L-74+00	RT	0904		1177.2	1174.5																							
-Y-37+05	RT	0954			---	---																						
-Y-37+05	CL	0955			---	---																						
-Y8-38+15	CL	0938		1154.3	1149.3																							
-Y8-38+15	CL	0938	0939		1149.3	1148.0																						
-Y8-38+15	LT	0939		1153.0	1148.0																							
-Y8-38+15	LT	0939	0943		1148.0	1142.3					440																	
-Y8-33+66	LT	0943		1145.7	1142.2																							
-L-77+35	RT	0909		1180.0	1177.3																							
-L-77+35	RT	0909	0910		1177.3	1162.0																	56						
-L-78+80	LT	0911		1178.7	1175.7																							
-L-78+80	LT	0911	0912		1175.7	1169.3																	60						
-SR5-10+40	RT	0956	OUT		---	---																						
-SR5-11+20	RT	0957	OUT		---	---																						
-L-82+25	LT	1006		1175.3	1172.3																							
-L-82+25	LT	1006	1005		1172.3	1171.0																						
-L-83+62	LT	1005		1174.2	1170.2																							
-L-83+62	LT	1005	1007		1170.2	1169.5	X																					
-L-83+74	LT	1007		1174.3	1168.3																							
-L-83+74	LT	1007	1008		1168.3	1155.8	X					132																
-SR1-10+75	RT	1008		1158.8	1155.3																							
-SR1-10+75	RT	1008	1010		1155.3	1155.2	X						12															
-SR1-10+75	RT	1010		1162.5	1154.8																							
-SR1-10+75	RT	1010	1011		1154.8	1149.5																						
-L-83+00	RT	0998		1174.7	1171.7																							
-L-83+00	RT	0998	1004		1171.7	1171.4	X																					
-L-83+62	RT	1004		1174.4	1170.6																							
-L-83+62	RT	1004	1005		1170.6	1170.2																						
-SR5-12+00	RT	0996	0997		1174.7	1173.2				28																		
-SR5-12+25	RT	0997		1175.1	1173.2																							
-SR5-12+25	RT	0997	0999		1173.2	1173.1	X																					
-SR5-12+25	LT	0999		1176.7	1173.1																							
-SR5-12+25	LT	0999	1004		1173.1	1171.4				40																		
-SR1-10+50	RT	1035		---	1155.4																							
-SR1-10+50	RT	1035	1010		1155.4	1155.3	X																					
SHEET TOTALS										92	440	132	12										116						

STATION	LOCATION	FROM	TO	R.C. PIPE CLASS III 12"	15"	18"	24"	30"	36"	42"	48"	R.C. PIPE CLASS IV 12"	15"	18"	24"	30"	36"	42"	48"	** " R.C. PIPE (CLASS V)	***" RC PIPE CULVERTS, CONTRACTOR DESIGN	15" WELDED STEEL PIPE, 0.500" THK. (TRENCHLESS INSTALLATION) IN SOIL	15" SIDE DRAIN PIPE	18" SIDE DRAIN PIPE	ENDWALLS STD. 838.01 838.11 OR STD. 838.80 (UNLESS NOTED OTHERWISE) CU. YARDS R.C.P.	C.S.P.
-L-73+50	RT	0906	0905																							
-L-73+55	RT	0905																								
-L-73+55	RT	0905	0904										48													
-L-74+00	RT	0904																								
-Y-37+05	RT	0954																								
-Y-37+05	CL	0955																								
-Y8-38+15	CL	0938																								
-Y8-38+15	CL	0938	0939																			72				
-Y8-38+15	LT	0939																								
-Y8-38+15	LT	0939	0943																							
-Y8-33+66	LT	0943																								
-L-77+35	RT	0909																								
-L-77+35	RT	0909	0910																							
-L-78+80	LT	0911																								
-L-78+80	LT	0911	0912																							
-SR5-10+40	RT	0956	OUT																				28			
-SR5-11+20	RT	0957	OUT																				32			
-L-82+25	LT	1006																								
-L-82+25	LT	1006	1005										140													
-L-83+62	LT	1005																								
-L-83+62	LT	1005	1007												12											
-L-83+74	LT	1007																								
-L-83+74	LT	1007	1008																							
-SR1-10+75	RT	1008																								
-SR1-10+75	RT	1008	1010																							
-SR1-10+75	RT	1010																								
-SR1-10+75	RT	1010	1011					64																		
-L-83+00	RT	0998																								
-L-83+00	RT	0998	1004										64													
-L-83+62	RT	1004																								
-L-83+62	RT	1004	1005												72											
-SR5-12+00	RT	0996	0997																							
-SR5-12+25	RT	0997																								
-SR5-12+25	RT	0997	0999		32																					
-SR5-12+25	LT	0999																								
-SR5-12+25	LT	0999	1004																							
-SR1-10+50	RT	1035																								
-SR1-10+50	RT	1035	1010		28																					
SHEET TOTALS					60			64					252		84							72	60			

STATION	LOCATION	FROM	TO	QUANTITIES FOR DRAINAGE STRUCTURES PER EACH (0' THRU 5.0')	*TOTAL L.F. FOR PAY QUANTITY SHALL BE COL. 'A' + (1.3 X COL.'B') LIN. FT. A 5.0' THRU 10.0'	B 10.0' AND ABOVE	C.B. STD. 840.01 OR STD. 840.02	FRAME, GRATES, AND HOOD STANDARD 840.03 TYPE OF GRATE E	F	G	CONCRETE TRANSITIONAL SECTION DROP INLET	CATCH BASIN	D.I. STD. 840.14 OR STD. 840.15	D.I. FRAME AND TWO GRATES STD. 840.16	G.D.I. TYPE "A" STD. 840.17 OR 840.26	G.D.I. TYPE "B" STD. 840.18 OR 840.27	G.D.I. TYPE "D" STD. 840.19 OR 840.28	G.D.I. FRAME WITH GRATE STD. 840.22	G.D.I. FRAME WITH TWO GRATES STD. 840.20	G.D.I. FRAME WITH TWO GRATES STD. 840.22	G.D.I. (N.S.) FRAME WITH GRATE STD. 840.24	G.D.I. (N.S.) FRAME WITH TWO GRATES STD. 840.24	J.B. STD. 840.31 OR 840.32	TBJB STD. 840.34	MANHOLE FRAME & COVER STD. 840.54	T.B.D.I. STD. 840.36	STEEL GRATE AND FRAME SRD. 840.37	FLOWABLE FILL, CY	C.S. PIPE ELBOWS NO. & SIZE	CONC. & BRICK PIPE PLUG, C.Y. STD. 840.71	CONC. COLLARS CL. "B" C.Y. STD. 840.72	PIPE REMOVAL LIN. FT.	REMARKS
-L-73+50	RT	0906	0905																														
-L-73+55	RT	0905		1												1						1											
-L-73+55	RT	0905	0904																														
-L-74+00	RT	0904		1												1						1											
-Y-37+05	RT	0954																										3		0.13			REM. EX. DI, FILL 18" RCP W/ FLOW. FILL &
																																	PLUG EACH END
-Y-37+05	CL	0955																										3		0.13			REM. EX. DI, FILL 18" RCP W/ FLOW. FILL &
																																	PLUG EACH END
-Y8-38+15	CL	0938		1												1				1													
-Y8-38+15	CL	0938	0939																														
-Y8-38+15	LT	0939		1												1				1													
-Y8-38+15	LT	0939	0943																													328	REMOVE 18" RCP
-Y8-33+66	LT	0943		1												1				1													REMOVE EX. DI
-L-77+35	RT	0909		1												1						1											
-L-77+35	RT	0909	0910																										1@15'				15" CSP W/ ELBOWS W/ ROD &
																																	LUG CONNECTORS
-L-78+80	LT	0911		1			1			1																							
-L-78+80	LT	0911	0912																										1@15"				15" CSP W/ ELBOW
-SR5-10+40	RT	0956	OUT																														
-SR5-11+20	RT	0957	OUT																														
-L-82+25	LT	1006		1			1			1																							
-L-82+25	LT	1006	1005																														
-L-83+62	LT	1005		1			1	1																								38	REMOVE EX. DI & 18" MTL
-L-83+62	LT	1005	1007																														
-L-83+74	LT	1007		1	0.92		1	1																									
-L-83+74	LT	1007	1008																												0.399	136	REMOVE EX. DI & 18" RCP, COLLAR 15" RCP
-SR1-10+75	RT	1008		1									1	1																			
-SR1-10+75	RT	1008	1010																														
-SR1-10+75	RT	1010		1	2.75																		1		1								
-SR1-10+75	RT	1010	1011																													59	REMOVE 18" RCP
-L-83+00	RT	0998		1			1		1																								
-L-83+00	RT	0998	1004																														
-L-83+62	RT	1004		1			1	1																									
-L-83+62	RT	1004	1005																													37	REMOVE 2 SEP. SEGMENTS OF 18"
																																	RCP, REMOVE EX. JB W/ MH
-SR5-12+00	RT	0996	0997																														
-SR5-12+25	RT	0997		1													1					1											
-SR5-12+25	RT	0997	0999																														
-SR5-12+25	LT	0999		1			1	1																									
-SR5-12+25	LT	0999	1004																														
-SR1-10+50	RT	1035																													0.399		REMOVE EX. DI
-SR1-10+50	RT	1035	1010																														
SHEET TOTALS				16	3.67		7	4	1	2			1	1		6	1			3		4	1		1			6	2@15"	0.26	0.798	598	

ABBREVIATIONS

C.B.	CATCH BASIN
N.D.I.	NARROW DROP INLET
D.I.	DROP INLET
G.D.I.	GRATED DROP INLET
G.D.I.(N.S.)	(NARROW SLOT)
J.B.	JUNCTION BOX
M.H.	MANHOLE
T.B.D.I.	TRAFFIC BEARING DROP INLET
T.B.J.B.	TRAFFIC BEARING JUNCTION BOX

COMPUTED BY: JTP DATE: 10/6/2011

CHECKED BY: JRB DATE: 1/10/2012

NC1D-JBEARD2

PROJECT NO.	SHEET NO.
U2551	3-E

NORTH CAROLINA DEPARTMENT OF TRANSPORTATION
DIVISION OF HIGHWAYS

Note: Invert Elevations indicated are for Bid Purposes only and shall not be used for project construction stakeout. See "Standard Specifications For Roads and Structures, Section 300-5".

LIST OF PIPES, ENDWALLS, ETC. (FOR PIPES 48 INCHES & UNDER)

ABBREVIATIONS

C.B. CATCH BASIN
N.D.I. NARROW DROP INLET
D.I. DROP INLET
G.D.I. GRATED DROP INLET
G.D.I.(N.S.) (NARROW SLOT)
J.B. JUNCTION BOX
M.H. MANHOLE
T.B.D.I. TRAFFIC BEARING DROP INLET
T.B.J.B. TRAFFIC BEARING JUNCTION BOX

STATION	LOCATION (LT, RT, OR CL)	STRUCTURE NO. FROM	STRUCTURE NO. TO	TOP ELEVATION	INVERT ELEVATION	INVERT ELEVATION	SLOPE CRITICAL	DRAINAGE PIPE (RCP, CSP, CAAP, HDPE, or PVC) 8"	12"	15"	18"	24"	30"	36"	42"	48"	DO NOT USE RCP	DO NOT USE CSP	DO NOT USE CAAP	DO NOT USE HDPE
-L-84+25	RT	1003	1004		1171.4	1171.1														
-L-84+25	RT	1003		1174.7	1171.4															
-L-85+40	RT	1002	1003		1172.6	1171.4														
-L-85+40	RT	1002		1175.8	1172.6															
-L-86+30	RT	1001	1002		1174.5	1172.8														
-L-86+30	RT	1001		1177.5	1174.5															
-L-87+80	RT	1000	1001		1177.6	1174.5														
-L-87+80	RT	1000		1180.6	1177.6															
-L-85+83	LT	1017		1176.6	1173.6															
-L-85+83	LT	1017	1018		1173.6	1173.3														
-L-86+50	LT	1018		1177.9	1173.3															
-L-86+50	LT	1018	1016		1173.3	1181.2														
-L-89+05	LT	1016		1184.2	1181.2															
-L-89+05	LT	1016	1015		1181.2	1182.8				40										
-L-89+40	LT	1015		1185.0	1182.8															
-L-89+40	LT	1015	1014		1182.8	1183.8				68										
-L-90+06	LT	1014		1186.0	1183.8															
-L-86+47	LT	1019		1177.0	1172.7															
-L-86+47	LT	1019	1018		1172.7	1173.1														
-L-89+05	LT	1016	1013		1181.2	1181.3														
-L-89+25	CL	1013		1184.3	1181.3															
-L-89+25	CL	1013	1012		1181.3	1182.5														
-L-89+75	CL	1012		1185.5	1182.5															
-L-90+05	CL	1035			---	---														
-L-90+40	CL	1036			---	---														
-L-91+00	CL	1037			---	---														
-L-89+05	LT	1034	1033		1170.7	1175.9						84								
-L-89+97	LT	1033		1180.6	1175.9															
-L-89+97	LT	1033	1030		1175.9	1184.7						112								
-L-90+98	LT	1030		1189.1	1184.7															
-L-90+98	LT	1030	1029		1185.2	1190.1					236									
-L-92+70	LT	1029		1194.1	1190.1															
-L-92+70	LT	1029	1027		1190.1	1190.2	X													
-L-92+99	LT	1027		1194.9	1190.2															
-L-92+99	LT	1027	1024		1190.2	1190.4	X				44									
-L-93+25	LT	1024		1195.6	1190.4															
-L-93+25	LT	1024	1103		1190.7	1207.7														
-L-97+17	LT	1103		1210.7	1207.7															
-L-90+00	LT	1032	1033		1179.0	1178.1					8									
-L-92+48	LT	1028		1194.9	1192.7															
-L-92+48	LT	1028	1029		1192.7	1190.3				28										
SHEET TOTALS										136	288	196								

STATION	FROM	TO	C.S. PIPE 12" (.064)	15" (.064)	18" (.064)	24" (.064)	30" (.079)	36" (.079)	42" (.109)	48" (.109)	R.C. PIPE CLASS III 12"	15"	18"	24"	30"	36"	42"	48"	R.C. PIPE CLASS IV 12"	15"	18"	24"	30"	36"	42"	48"
-L-84+25	1003	1004																			64					
-L-84+25	1003																									
-L-85+40	1002	1003																		116						
-L-85+40	1002																									
-L-86+30	1001	1002																		92						
-L-86+30	1001																									
-L-87+80	1000	1001																		152						
-L-87+80	1000																									
-L-85+83	1017																									
-L-85+83	1017	1018																		68						
-L-86+50	1018																									
-L-86+50	1018	1016																		256						
-L-89+05	1016																									
-L-89+05	1016	1015																								
-L-89+40	1015																									
-L-89+40	1015	1014																								
-L-90+06	1014																									
-L-86+47	1019																									
-L-86+47	1019	1018											28													
-L-89+05	1016	1013																		32						
-L-89+25	1013																									
-L-89+25	1013	1012																		52						
-L-89+75	1012																									
-L-90+05	1035																									
-L-90+40	1036																									
-L-91+00	1037																									
-L-89+05	1034	1033																								
-L-89+97	1033																									
-L-89+97	1033	1030																								
-L-90+98	1030																									
-L-90+98	1030	1029																								
-L-92+70	1029																									
-L-92+70	1029	1027											32													
-L-92+99	1027																									
-L-92+99	1027	1024																								
-L-93+25	1024																									
-L-93+25	1024	1103																		396						
-L-97+17	1103																									
-L-90+00	1032	1033																								
-L-92+48	1028																									
-L-92+48	1028	1029																								
SHEET TOTALS													60							1164	64					

STATION	FROM	TO	** " R.C. PIPE (CLASS V)	***" RC PIPE CULVERTS, CONTRACTOR DESIGN	15" WELDED STEEL PIPE, 0.500" THK. (TRENCHLESS INSTALLATION) IN SOIL	15" SIDE DRAIN PIPE	18" SIDE DRAIN PIPE	ENDWALLS STD. 838.01 838.11 OR STD. 838.80 (UNLESS NOTED OTHERWISE) CU. YARDS R.C.P.	C.S.P.	QUANTITIES FOR DRAINAGE STRUCTURES PER EACH (0' THRU 5.0')	*TOTAL L.F. FOR PAY QUANTITY SHALL BE COL. 'A' + (1.3 X COL.'B') LIN. FT. A 5.0' THRU 10.0'	B 10.0' AND ABOVE	C.B. STD. 840.01 OR STD. 840.02	FRAME, GRATES, AND HOOD STANDARD 840.03 TYPE OF GRATE E	F	G	CONCRETE TRANSITIONAL SECTION DROP INLET	CATCH BASIN
-L-84+25	1003	1004																
-L-84+25	1003									1			1			1		
-L-85+40	1002	1003																
-L-85+40	1002									1			1			1		
-L-86+30	1001	1002																
-L-86+30	1001									1			1			1		
-L-87+80	1000	1001																
-L-87+80	1000									1			1			1		
-L-85+83	1017									1			1		1			
-L-85+83	1017	1018																
-L-86+50	1018									1			1		1			
-L-86+50	1018	1016																
-L-89+05	1016									1			1		1			
-L-89+05	1016	1015																
-L-89+40	1015									1								
-L-89+40	1015	1014																
-L-90+06	1014									1								
-L-86+47	1019									1								
-L-86+47	1019	1018																
-L-89+05	1016	1013																
-L-89+25	1013									1			1			1		1
-L-89+25	1013	1012																
-L-89+75	1012									1			1			1		1
-L-90+05	1035																	
-L-90+40	1036																	
-L-91+00	1037																	
-L-89+05	1034	1033																
-L-89+97	1033									1								
-L-89+97	1033	1030																
-L-90+98	1030									1								
-L-90+98	1030	1029																
-L-92+70	1029									1								
-L-92+70	1029	1027																
-L-92+99	1027									1								
-L-92+99	1027	1024																
-L-93+25	1024									1	0.23		1		1			
-L-93+25	1024	1103																
-L-97+17	1103									1			1		1			
-L-90+00	1032	1033																
-L-92+48	1028									1								
-L-92+48	1028	1029																
SHEET TOTALS										19	0.23		11		5	6		2

STATION	FROM	TO	D.I. STD. 840.14 OR STD. 840.15	D.I. FRAME AND TWO GRATES STD. 840.16	G.D.I. TYPE "A" STD. 840.17 OR 840.26	G.D.I. TYPE "B" STD. 840.18 OR 840.27	G.D.I. TYPE "D" STD. 840.19 OR 840.28	G.D.I. FRAME WITH GRATE STD. 840.22	G.D.I. FRAME WITH TWO GRATES STD. 840.20	G.D.I. FRAME WITH TWO GRATES STD. 840.22	G.D.I. (N.S.) FRAME WITH GRATE STD. 840.24	G.D.I. (N.S.) FRAME WITH TWO GRATES STD. 840.24	J.B. STD. 840.31 OR 840.32	TBJB STD. 840.34	MANHOLE FRAME & COVER STD. 840.54	T.B.D.I. STD. 840.36	STEEL GRATE AND FRAME SRD. 840.37	FLOWABLE FILL, CY	C.S. PIPE ELBOWS NO. & SIZE	CONC. & BRICK PIPE PLUG, C.Y. STD. 840.71	CONC. COLLARS CL. "B" C.Y. STD. 840.72	PIPE REMOVAL LIN. FT.	REMARKS
-L-84+25	1003	1004																					
-L-84+25	1003																						
-L-85+40	1002	1003																				38	REMOVE 15" RCP
-L-85+40	1002																						
-L-86+30	1001	1002																					
-L-86+30	1001																						
-L-87+80	1000	1001																					
-L-87+80	1000																						
-L-85+83	1017																						
-L-85+83	1017	1018																					
-L-86+50	1018																						REMOVE EX. DI
-L-86+50	1018	1016																				48	REMOVE 2 EX. 15" RCP
-L-89+05	1016																						
-L-89+05	1016	1015																					
-L-89+40	1015		1	1																			
-L-89+40	1015	1014																					
-L-90+06	1014		1	1																			
-L-86+47	1019		1	1																			
-L-86+47	1019	1018																				15	CUT & REMOVE 18" RCP
-L-89+05	1016	1013																				23	REMOVE 15" RCP
-L-89+25	1013																						
-L-89+25	1013	1012																				66	REMOVE 15" RCP
-L-89+75	1012																						
-L-90+05	1035																					35	REMOVE EX. DI & 35' OF 15" RCP
-L-90+40	1036																					60	REMOVE EX. DI & 60' OF 15" RCP
-L-91+00	1037																						REMOVE EX. DI
-L-89+05	1034	1033																				83	REMOVE 18" RCP
-L-89+97	1033				1							1											
-L-89+97	1033	1030																				110	REMOVE 12" RCP
-L-90+98	1030												1		1								REMOVE EX. JB
-L-90+98	1030	1029																				234	REMOVE 15" RCP
-L-92+70	1029		1	1																			REMOVE EX. DI
-L-92+70	1029	1027																				28	REMOVE 18" RCP
-L-92+99	1027		1	1																			REMOVE EX. DI
-L-92+99	1027	1024																					
-L-93+25	1024																						
-L-93+25	1024	1103																					
-L-97+17	1103																						
-L-90+00	1032	1033																				8	REMOVE 15" CLAY
-L-92+48	1028		1	1																			
-L-92+48	1028	1029																					
SHEET TOTALS			6	6	1							1	1		1							748	

COMPUTED BY: JTP DATE: 10/6/2011

CHECKED BY: JRB DATE: 1/10/2012

NC1D-JBEARD2

NORTH CAROLINA DEPARTMENT OF TRANSPORTATION
DIVISION OF HIGHWAYS

PROJECT NO.	SHEET NO.
U2551	3-F

Note: Invert Elevations indicated are for Bid Purposes only and shall not be used for project construction stakeout. See "Standard Specifications For Roads and Structures, Section 300-5".

LIST OF PIPES, ENDWALLS, ETC. (FOR PIPES 48 INCHES & UNDER)

STATION	LOCATION (LT, RT, OR CL)	STRUCTURE NO. FROM	STRUCTURE NO. TO	TOP ELEVATION	INVERT ELEVATION	INVERT ELEVATION	SLOPE CRITICAL	DRAINAGE PIPE (RCP, CSP, CAAP, HDPE, or PVC) 8"	12"	15"	18"	24"	30"	36"	42"	48"	DO NOT USE RCP	DO NOT USE CSP	DO NOT USE CAAP	DO NOT USE HDPE
-L-93+25	LT	1024	1023		1190.4	1190.5	X													
-L-93+25	CL	1023		1195.1	1190.5															
-L-93+25	CL	1023	1022		1190.5	1190.7	X													
-L-93+25	RT	1022		1194.0	1190.7															
-L-93+25	RT	1022	1021		1191.0	1193.7														
-L-94+00	RT	1021		1196.7	1193.7															
-L-99+30	LT	1120		1214.0	1210.8															
-L-99+30	LT	1120	1121		1210.8	1206.5				92										
-L-100+20	LT	1121		1209.5	1206.5															
-L-100+20	LT	1121	1127		1206.5	1202.6														
-L-101+10	LT	1127		1206.3	1202.4															
-L-101+10	LT	1127	1131		1202.4	1196.1														
-L-103+45	LT	1131		1200.7	1196.1															
-L-103+45	LT	1131	1132		1196.1	1191.0														
-L-103+45	LT	1132		1194.0	1191.0															
-L-103+45	LT	1132	1133		1191.0	1181.3														
-L-100+05	RT	1104		1210.1	1207.1															
-L-100+05	RT	1104	1105		1207.1	1199.2														
-L-101+30	RT	1105		1204.4	1199.2															
-L-101+30	RT	1105	1106		1199.2	1193.3														
-Y13-14+00	LT	1106		1196.3	1193.3															
-Y13-14+00	LT	1106	1107		1193.3	1189.2														
-Y13-13+30	LT	1107		1192.2	1189.2															
-Y13-13+30	LT	1107	1108		1189.2	1188.3				40										
-Y13-13+28	RT	1109		1192.1	1189.1															
-Y13-13+28	RT	1109	1110		1189.1	1187.4				20										
-Y11-12+50	LT	1137	OUT		---	---				56										
-Y11-11+80	LT	1124		1220.5	1214.2															
-Y11-11+80	LT	1124	1125		1214.2	1211.0														
-Y11-11+80	LT	1125		1213.8	1211.0															
-Y11-11+80	LT	1125	1126		1211.0	1202.9														
-Y11-10+90	LT	1126		1205.6	1202.6															
-Y11-10+90	LT	1126	1127		1202.6	1202.4	X				56									
-L-101+10	CL	1122		1206.2	1203.0															
-L-101+10	CL	1122	1127		1203.0	1202.6														
-Y12-11+75	LT	1138	OUT		---	---					52									
-Y12-11+80	RT	1139			---	---														
SHEET TOTALS										208	108									

SIZE / THICKNESS OR GAUGE columns continued:

STATION	C.S. PIPE 12" (.064)	15" (.064)	18" (.064)	24" (.064)	30" (.079)	36" (.079)	42" (.109)	48" (.109)	R.C. PIPE CLASS III 12"	15"	18"	24"	30"	36"	42"	48"	R.C. PIPE CLASS IV 12"	15"	18"	24"	30"	36"	42"	48"
-L-93+25											28													
-L-93+25																								
-L-93+25																			40					
-L-93+25																								
-L-93+25																		76						
-L-94+00																								
-L-99+30																								
-L-99+30																								
-L-100+20																								
-L-100+20																		88						
-L-101+10																								
-L-101+10																			240					
-L-103+45																								
-L-103+45			36																					
-L-103+45																								
-L-103+45											140													
-L-100+05																								
-L-100+05																		124						
-L-101+30																								
-L-101+30																		64						
-Y13-14+00																								
-Y13-14+00																		76						
-Y13-13+30																								
-Y13-13+30																								
-Y13-13+28																								
-Y13-13+28																								
-Y11-12+50																								
-Y11-11+80																								
-Y11-11+80		24																						
-Y11-11+80																								
-Y11-11+80		76																						
-Y11-10+90																								
-Y11-10+90																								
-L-101+10																								
-L-101+10																		36						
-Y12-11+75																								
-Y12-11+80																								
SHEET TOTALS		100	36								168							464	280					

STATION	** " R.C. PIPE (CLASS V)	***" RC PIPE CULVERTS, CONTRACTOR DESIGN	15" WELDED STEEL PIPE, 0.500" THK. (TRENCHLESS INSTALLATION) IN SOIL	15" SIDE DRAIN PIPE	18" SIDE DRAIN PIPE	ENDWALLS STD. 838.01, 838.11 OR STD. 838.80 (UNLESS NOTED OTHERWISE) CU. YARDS R.C.P.	C.S.P.	QUANTITIES FOR DRAINAGE STRUCTURES PER EACH (0' THRU 5.0')	*TOTAL L.F. FOR PAY QUANTITY SHALL BE COL. 'A' + (1.3 X COL.'B') LIN. FT. A 5.0' THRU 10.0'	B 10.0' AND ABOVE	C.B. STD. 840.01 OR STD. 840.02	FRAME, GRATES, AND HOOD STANDARD 840.03 TYPE OF GRATE E	F	G	CONCRETE TRANSITIONAL SECTION DROP INLET	CATCH BASIN	D.I. STD. 840.14 OR STD. 840.15	D.I. FRAME AND TWO GRATES STD. 840.16	G.D.I. TYPE "A" STD. 840.17 OR 840.26	G.D.I. TYPE "B" STD. 840.18 OR 840.27	G.D.I. TYPE "D" STD. 840.19 OR 840.28	G.D.I. FRAME WITH GRATE STD. 840.22	G.D.I. FRAME WITH TWO GRATES STD. 840.20	G.D.I. FRAME WITH TWO GRATES STD. 840.22	G.D.I. (N.S.) FRAME WITH GRATE STD. 840.24	G.D.I. (N.S.) FRAME WITH TWO GRATES STD. 840.24	J.B. STD. 840.31 OR 840.32	TBJB STD. 840.34	MANHOLE FRAME & COVER STD. 840.54	T.B.D.I. STD. 840.36	STEEL GRATE AND FRAME SRD. 840.37	FLOWABLE FILL, CY	C.S. PIPE ELBOWS NO. & SIZE	CONC. & BRICK PIPE PLUG, C.Y. STD. 840.71	CONC. COLLARS CL. "B" C.Y. STD. 840.72	PIPE REMOVAL LIN. FT.	REMARKS
-L-93+25																																					
-L-93+25								1			1			1		1																					
-L-93+25																																					
-L-93+25								1			1			1																							
-L-93+25																																					
-L-94+00								1			1			1																							
-L-99+30								1									1	1																			
-L-99+30																																					
-L-100+20								1			1			1																							
-L-100+20																																					
-L-101+10								1			1			1																							
-L-101+10																																					
-L-103+45								1			1	1																								244	REMOVE 2 EX. CB, REMOVE 2 RCP &
-L-103+45																																					
-L-103+45								1												1						1											
-L-103+45																																					
-L-100+05								1			1		1																								
-L-100+05																																					
-L-101+30								1	0.24		1		1																								
-L-101+30																																					
-Y13-14+00								1			1		1																								
-Y13-14+00																																				44	REMOVE 2 8" ROOF DRAINS
-Y13-13+30								1			1		1																								
-Y13-13+30																																				121	REMOVE 15" CMP
-Y13-13+28								1			1			1																							
-Y13-13+28																																					
-Y11-12+50																																				91	REMOVE 91' OF 12" RCP
-Y11-11+80								1									1	1																		174	REMOVE 174' OF 12" RCP
-Y11-11+80																																					
-Y11-11+80								1												1						1											
-Y11-11+80																																					
-Y11-10+90								1												1						1											
-Y11-10+90																																					
-L-101+10								1							1		1	1																			
-L-101+10																																					
-Y12-11+75																																					
-Y12-11+80																																				40	REMOVE EX. DI & 12" RCP
SHEET TOTALS								17	0.24		11	1	4	6	1	1	3	3		3						3										714	

ABBREVIATIONS

C.B.	CATCH BASIN
N.D.I.	NARROW DROP INLET
D.I.	DROP INLET
G.D.I.	GRATED DROP INLET
G.D.I.(N.S.)	(NARROW SLOT)
J.B.	JUNCTION BOX
M.H.	MANHOLE
T.B.D.I.	TRAFFIC BEARING DROP INLET
T.B.J.B.	TRAFFIC BEARING JUNCTION BOX

COMPUTED BY: JTP DATE: 10/6/2011

CHECKED BY: JRB DATE: 1/10/2012

NORTH CAROLINA DEPARTMENT OF TRANSPORTATION
DIVISION OF HIGHWAYS

PROJECT NO.	SHEET NO.
U2551	3-G

NC1D-JBEARD2

Note: Invert Elevations indicated are for Bid Purposes only and shall not be used for project construction stakeout. See "Standard Specifications For Roads and Structures, Section 300-5".

LIST OF PIPES, ENDWALLS, ETC. (FOR PIPES 48 INCHES & UNDER)

STATION	LOCATION (LT, RT, OR CL)'	STRUCTURE NO. FROM	STRUCTURE NO. TO	TOP ELEVATION	INVERT ELEVATION	INVERT ELEVATION	SLOPE CRITICAL
-L-103+45	LT	1131	1130		1196.3	1196.5	
-L-103+45	CL	1130		1200.0	1196.5		
-L-103+45	CL	1130	1129		1196.5	1196.7	
-L-103+80	CL	1129		1199.9	1196.7		
-L-103+80	CL	1129	1128		1196.7	1196.9	
-L-104+25	CL	1128		1200.1	1196.9		
-L-104+65	LT	1140			---	---	
-L-103+75	RT	1119	1118		1193.7	1194.0	
-L-103+75	RT	1118		1198.8	1194.0		
-L-103+75	RT	1118	1117		1194.0	1194.8	X
-L-105+40	RT	1117		1201.8	1194.8		
-L-105+40	RT	1117	1114		1195.1	1201.4	
-L-106+15	RT	1114		1204.6	1201.4		
-L-106+15	RT	1114	1112		1201.4	1207.8	
-L-107+45	RT	1112		1210.8	1207.8		
-L-107+45	RT	1112	1111		1207.8	1209.2	
-L-107+45	RT	1111		1211.4	1209.2		
-Y14-10+90	RT	1115		1198.1	1195.4		
-Y14-10+90	RT	1115	1116		1195.4	1195.2	X
-Y14-11+05	RT	1116		1200.5	1195.2		
-Y14-11+05	RT	1116	1117		1195.2	1195.1	X
-Y12-15+10	RT	1136	1135		1188.0	1189.0	
-Y12-15+10	RT	1135		1191.7	1189.0		
-Y12-15+10	RT	1135	1134		1189.0	1202.8	
-L-106+33	LT	1134		1205.8	1202.8		
-L-106+15	RT	1113		1203.7	1201.5		
-L-106+15	RT	1113	1114		1201.5	1201.4	X
-L-110+50	RT	1201		1214.2	1211.2		
-L-110+50	RT	1201	1230		1211.2	1210.9	X
-L-110+50	LT	1230		1214.4	1210.9		
-L-110+50	LT	1230	1209		1210.9	1200.4	
-L-110+95	RT	1203		1214.2	1210.0		
-L-110+95	RT	1203	1206		1210.0	1203.6	
-L-112+02	RT	1206		1207.3	1203.4		
-L-112+02	RT	1206	1207		1203.4	1203.2	
-L-112+02	RT	1207		1206.5	1201.5		
-L-112+02	RT	1207	1209		1201.5	1196.1	X
-L-112+12	LT	1209		1205.4	1196.1		
-L-112+12	LT	1209	1211		1196.1	1188.6	
-L-113+65	LT	1211		1194.8	1188.6		
-L-113+65	LT	1211	1213		1188.6	1178.0	
-L-115+07	LT	1213		1184.5	1178.0		
-L-115+07	LT	1213	1216		1178.0	174.3	
SHEET TOTALS							

STATION (SIZE)	FROM	TO	DRAINAGE PIPE (RCP, CSP, CAAP, HDPE, or PVC) 8"	12"	15"	18"	24"	30"	36"	42"	48"	DO NOT USE RCP	DO NOT USE CSP	DO NOT USE CAAP	DO NOT USE HDPE	C.S. PIPE 12"	15"	18"	24"	30"	36"	42"	48"	R.C. PIPE CLASS III 12"	15"	18"	24"	30"	36"	42"	48"	R.C. PIPE CLASS IV 12"	15"	18"	24"	30"	36"	42"	48"
THICKNESS OR GAUGE																.064	.064	.064	.064	.079	.079	.109	.109																
-L-103+45	1131	1130																															36						
-L-103+45	1130																																						
-L-103+45	1130	1129																															36						
-L-103+80	1129																																						
-L-103+80	1129	1128																															48						
-L-104+25	1128																																						
-L-104+65	1140																																						
-L-103+75	1119	1118				24																																	
-L-103+75	1118																																						
-L-103+75	1118	1117																								160													
-L-105+40	1117																																						
-L-105+40	1117	1114																															72						
-L-106+15	1114																																						
-L-106+15	1114	1112																															136						
-L-107+45	1112																																						
-L-107+45	1112	1111			24																																		
-L-107+45	1111																																						
-Y14-10+90	1115																																						
-Y14-10+90	1115	1116			32																																		
-Y14-11+05	1116																																						
-Y14-11+05	1116	1117			24																																		
-Y12-15+10	1136	1135																							76														
-Y12-15+10	1135																																						
-Y12-15+10	1135	1134															52																						
-L-106+33	1134																																						
-L-106+15	1113																																						
-L-106+15	1113	1114			16																																		
-L-110+50	1201																																						
-L-110+50	1201	1230																															64						
-L-110+50	1230																																						
-L-110+50	1230	1209																															164						
-L-110+95	1203																																						
-L-110+95	1203	1206																															108						
-L-112+02	1206																																						
-L-112+02	1206	1207				16																																	
-L-112+02	1207																																						
-L-112+02	1207	1209																								64													
-L-112+12	1209																																						
-L-112+12	1209	1211																								152													
-L-113+65	1211																																						
-L-113+65	1211	1213																								140													
-L-115+07	1213																																						
-L-115+07	1213	1216																																96					
SHEET TOTALS					96	40											52								76	516								664	96					

STATION	FROM	TO	** " R.C. PIPE (CLASS V)	***" RC PIPE CULVERTS, CONTRACTOR DESIGN	15" WELDED STEEL PIPE, 0.500" THK. (TRENCHLESS INSTALLATION) IN SOIL	15" SIDE DRAIN PIPE	18" SIDE DRAIN PIPE	ENDWALLS STD. 838.01 838.11 OR STD. 838.80 (UNLESS NOTED OTHERWISE) CU. YARDS R.C.P.	C.S.P.	QUANTITIES FOR DRAINAGE STRUCTURES PER EACH (0' THRU 5.0')	*TOTAL L.F. FOR PAY QUANTITY SHALL BE COL. 'A' + (1.3 X COL.'B') LIN. FT. A 5.0' THRU 10.0'	B 10.0' AND ABOVE	C.B. STD. 840.01 OR STD. 840.02	FRAME, GRATES, AND HOOD STANDARD 840.03 TYPE OF GRATE E	F	G	CONCRETE TRANSITIONAL SECTION DROP INLET	CATCH BASIN	D.I. STD. 840.14 OR STD. 840.15	D.I. FRAME AND TWO GRATES STD. 840.16	G.D.I. TYPE "A" STD. 840.17 OR 840.26	G.D.I. TYPE "B" STD. 840.18 OR 840.27	G.D.I. TYPE "D" STD. 840.19 OR 840.28	G.D.I. FRAME WITH GRATE STD. 840.22	G.D.I. FRAME WITH TWO GRATES STD. 840.20	G.D.I. FRAME WITH TWO GRATES STD. 840.22	G.D.I. (N.S.) FRAME WITH GRATE STD. 840.24	G.D.I. (N.S.) FRAME WITH TWO GRATES STD. 840.24	J.B. STD. 840.31 OR 840.32	TBJB STD. 840.34	MANHOLE FRAME & COVER STD. 840.54	T.B.D.I. STD. 840.36	STEEL GRATE AND FRAME SRD. 840.37	FLOWABLE FILL, CY
-L-103+45	1131	1130																																
-L-103+45	1130									1							1		1	1														
-L-103+45	1130	1129																																
-L-103+80	1129									1							1		1	1														
-L-103+80	1129	1128																																
-L-104+25	1128									1							1		1	1														
-L-104+65	1140																																	
-L-103+75	1119	1118																																
-L-103+75	1118									1			1			1																		
-L-103+75	1118	1117																																
-L-105+40	1117									1	1.9		1			1																		
-L-105+40	1117	1114																																
-L-106+15	1114									1			1			1																		
-L-106+15	1114	1112																																
-L-107+45	1112									1			1			1																		
-L-107+45	1112	1111																																
-L-107+45	1111									1									1	1														
-Y14-10+90	1115									1												1							1							
-Y14-10+90	1115	1116																																
-Y14-11+05	1116									1	0.3								1	1														
-Y14-11+05	1116	1117																																
-Y12-15+10	1136	1135																																
-Y12-15+10	1135									1												1							1							
-Y12-15+10	1135	1134																																
-L-106+33	1134									1			1		1																			
-L-106+15	1113									1									1	1														
-L-106+15	1113	1114																																
-L-110+50	1201									1			1		1																			
-L-110+50	1201	1230																																
-L-110+50	1230									1			1			1																		
-L-110+50	1230	1209																																
-L-110+95	1203									1																					1	1			
-L-110+95	1203	1206																																
-L-112+02	1206									1									1	1														
-L-112+02	1206	1207																																
-L-112+02	1207									1			1		1																			
-L-112+02	1207	1209																																
-L-112+12	1209									1	4.3		1			1																		
-L-112+12	1209	1211																																
-L-113+65	1211									1	1.3		1			1																		
-L-113+65	1211	1213																																
-L-115+07	1213									1	1.6		1			1																		
-L-115+07	1213	1216																																
SHEET TOTALS										21	9.3		11		3	8	3		7	7		2							2		1	1			

STATION	FROM	TO	C.S. PIPE ELBOWS NO. & SIZE	CONC. & BRICK PIPE PLUG, C.Y. STD. 840.71	CONC. COLLARS CL. "B" C.Y. STD. 840.72	PIPE REMOVAL LIN. FT.	REMARKS
-L-103+45	1131	1130					
-L-103+45	1130						
-L-103+45	1130	1129					
-L-103+80	1129						
-L-103+80	1129	1128					
-L-104+25	1128						
-L-104+65	1140					89	REMOVE EX. DI & 18" CMP
-L-103+75	1119	1118					
-L-103+75	1118						
-L-103+75	1118	1117					
-L-105+40	1117						
-L-105+40	1117	1114					
-L-106+15	1114						
-L-106+15	1114	1112					
-L-107+45	1112					60	REMOVE 8" ROOF DRAIN
-L-107+45	1112	1111					
-L-107+45	1111						
-Y14-10+90	1115						
-Y14-10+90	1115	1116					
-Y14-11+05	1116						
-Y14-11+05	1116	1117					
-Y12-15+10	1136	1135					
-Y12-15+10	1135						
-Y12-15+10	1135	1134					
-L-106+33	1134						
-L-106+15	1113						
-L-106+15	1113	1114					
-L-110+50	1201						
-L-110+50	1201	1230					
-L-110+50	1230						
-L-110+50	1230	1209					
-L-110+95	1203						
-L-110+95	1203	1206				35	REMOVE 12" CMP
-L-112+02	1206						
-L-112+02	1206	1207					
-L-112+02	1207						
-L-112+02	1207	1209					
-L-112+12	1209						
-L-112+12	1209	1211					
-L-113+65	1211						
-L-113+65	1211	1213				51	REMOVE EX. CB & 12" RCP
-L-115+07	1213						
-L-115+07	1213	1216				32	REM. 2 EX. CB, JB & 12" RCP
SHEET TOTALS						267	

ABBREVIATIONS

C.B.	CATCH BASIN
N.D.I.	NARROW DROP INLET
D.I.	DROP INLET
G.D.I.	GRATED DROP INLET
G.D.I.(N.S.)	(NARROW SLOT)
J.B.	JUNCTION BOX
M.H.	MANHOLE
T.B.D.I.	TRAFFIC BEARING DROP INLET
T.B.J.B.	TRAFFIC BEARING JUNCTION BOX

COMPUTED BY: JTP DATE: 10/6/2011

CHECKED BY: JRB DATE: 1/10/2012

NORTH CAROLINA DEPARTMENT OF TRANSPORTATION
DIVISION OF HIGHWAYS

PROJECT NO.	SHEET NO.
U2551	3-H

NC1D-JBEARD2

Note: Invert Elevations indicated are for Bid Purposes only and shall not be used for project construction stakeout. See "Standard Specifications For Roads and Structures, Section 300-5".

LIST OF PIPES, ENDWALLS, ETC. (FOR PIPES 48 INCHES & UNDER)

STATION / SIZE / THICKNESS OR GAUGE	LOCATION (LT, RT, OR CL)	STRUCTURE NO. FROM	STRUCTURE NO. TO	TOP ELEVATION	INVERT ELEVATION	INVERT ELEVATION	SLOPE CRITICAL	DRAINAGE PIPE (RCP, CSP, CAAP, HDPE, or PVC) 8"	12"	15"	18"	24"	30"	36"	42"	48"	DO NOT USE RCP	DO NOT USE CSP	DO NOT USE CAAP	DO NOT USE HDPE
-L-116+00	LT	1216		1177.6	1173.8															
-L-116+00	LT	1216	1218		1173.8	1166.6														
-L-117+12	LT	1218		1170.3	1166.6															
-L-117+12	LT	1218	1227		1166.6	1154.5														
-L-118+92	LT	1227		1158.8	1151.1															
-L-118+92	LT	1227	1302		1151.1	1140.3														
-L-122+70	LT	1302		1147.3	1140.3															
-L-122+70	LT	1302	1306		1140.3	1133.7														
-L-124+55	LT	1306		1141.5	1133.7															
-L-124+55	LT	1306	1307		1133.7	1130.4														
-L-125+65	LT	1307		1140.0	1130.4															
-L-125+65	LT	1307	1310		1130.4	1130.0	X													
-L-126+36	LT	1310		1138.6	1130.0															
-L-126+36	LT	1310	1311		1130.0	1128.2	X							28						
-L-126+36	LT	1311		1135.2	1128.2															
-L-126+36	LT	1311	1312		1128.2	1126.5								72						
-L-112+02	RT	1206	1205		1203.6	1203.9	X													
-L-112+65	RT	1205		1207.1	1203.9															
-L-112+12	LT	1208		1202.8	1200.5															
-L-112+12	LT	1208	1209		1200.5	1200.4				20										
-L-113+65	CL	1210		1196.0	1188.7															
-L-113+65	CL	1210	1211		1188.7	1188.6	X													
-L-113+65	LT	1211	EX.		1191.0	UNK		24									X	X	X	X
-L-115+07	CL	1212		1185.3	1178.1															
-L-115+07	CL	1212	1213		1178.1	1178.0	X													
-L-115+78	LT	1215		1181.8	1177.5															
-L-115+78	LT	1215	1216		1177.5	1174.6				32										
-Y15-11+25	LT	1228	OUT							48										
-Y15-11+50	RT	1219	1220		1176.8	1173.9														
-Y15-11+43	RT	1220		1177.7	1173.9															
-Y15-11+43	RT	1220	1221		1173.9	1167.4					68									
-L-117+05	RT	1221		1170.7	1167.4															
-L-117+05	RT	1221	1223		1167.4	1161.1														
-L-118+02	RT	1223		1164.4	1161.1															
-L-118+02	RT	1223	1226		1161.1	1155.0														
-L-118+92	RT	1226		1158.8	1153.3															
-L-118+92	RT	1226	1227		1153.3	1151.1	X													
-Y15-10+95	RT	1229	OUT							24										
-L-117+13	LT	1217		1175.3	1172.3															
-L-117+13	LT	1217	1218		1172.3	1167.3														
SHEET TOTALS								24		124	68			100						

STATION	C.S. PIPE 12" .064	15" .064	18" .064	24" .064	30" .079	36" .079	42" .109	48" .109	R.C. PIPE CLASS III 12"	15"	18"	24"	30"	36"	42"	48"	R.C. PIPE CLASS IV 12"	15"	18"	24"	30"	36"	42"	48"
-L-116+00																								
-L-116+00																				112				
-L-117+12																								
-L-117+12																				180				
-L-118+92																								
-L-118+92													380											
-L-122+70																								
-L-122+70													188											
-L-124+55																								
-L-124+55														116										
-L-125+65																								
-L-125+65														80										
-L-126+36																								
-L-126+36																								
-L-126+36																								
-L-126+36																								
-L-112+02										64														
-L-112+65																								
-L-112+12																								
-L-112+12																								
-L-113+65																								
-L-113+65										32														
-L-113+65																								
-L-115+07																								
-L-115+07										28														
-L-115+78																								
-L-115+78																								
-Y15-11+25																								
-Y15-11+50																			64					
-Y15-11+43																								
-Y15-11+43																								
-L-117+05																								
-L-117+05																			100					
-L-118+02																								
-L-118+02																			92					
-L-118+92																								
-L-118+92												64												
-Y15-10+95																								
-L-117+13																								
-L-117+13		32																						
SHEET TOTALS		32								124		64	568	196					256	292				

STATION	** " R.C. PIPE (CLASS V)	***" RC PIPE CULVERTS, CONTRACTOR DESIGN	15" WELDED STEEL PIPE, 0.500" THK. (TRENCHLESS INSTALLATION) IN SOIL	15" SIDE DRAIN PIPE	18" SIDE DRAIN PIPE	ENDWALLS STD. 838.01, 838.11 OR STD. 838.80 (UNLESS NOTED OTHERWISE) CU. YARDS R.C.P.	C.S.P.	QUANTITIES FOR DRAINAGE STRUCTURES PER EACH (0' THRU 5.0')	*TOTAL L.F. FOR PAY QUANTITY SHALL BE COL. 'A' + (1.3 X COL.'B') LIN. FT. A 5.0' THRU 10.0'	B 10.0' AND ABOVE	C.B. STD. 840.01 OR STD. 840.02	FRAME, GRATES, AND HOOD STANDARD 840.03 TYPE OF GRATE E	F	G	CONCRETE TRANSITIONAL SECTION DROP INLET	CATCH BASIN
-L-116+00								1			1			1		
-L-116+00																
-L-117+12								1			1			1		
-L-117+12																
-L-118+92								1	2.7		1			1		
-L-118+92																
-L-122+70								1	2.0		1			1		
-L-122+70																
-L-124+55								1	2.8		1			1		
-L-124+55																
-L-125+65								1	4.6		1			1		
-L-125+65																
-L-126+36								1	3.5		1			1		
-L-126+36																
-L-126+36								1	2.0							
-L-126+36																
-L-112+02																
-L-112+65								1								
-L-112+12								1								
-L-112+12																
-L-113+65								1	2.3						1	
-L-113+65																
-L-113+65																
-L-115+07								1	2.2						1	
-L-115+07																
-L-115+78								1								
-L-115+78																
-Y15-11+25																
-Y15-11+50																
-Y15-11+43								1								
-Y15-11+43																
-L-117+05								1			1		1			
-L-117+05																
-L-118+02								1			1		1			
-L-118+02																
-L-118+92								1			1		1			
-L-118+92																
-Y15-10+95																
-L-117+13								1			1	1				
-L-117+13																
SHEET TOTALS								18	22.2		11	1	3	7	2	

STATION	D.I. STD. 840.14 OR STD. 840.15	D.I. FRAME AND TWO GRATES STD. 840.16	G.D.I. TYPE "A" STD. 840.17 OR 840.26	G.D.I. TYPE "B" STD. 840.18 OR 840.27	G.D.I. TYPE "D" STD. 840.19 OR 840.28	G.D.I. FRAME WITH GRATE STD. 840.22	G.D.I. FRAME WITH TWO GRATES STD. 840.20	G.D.I. FRAME WITH TWO GRATES STD. 840.22	G.D.I. (N.S.) FRAME WITH GRATE STD. 840.24	G.D.I. (N.S.) FRAME WITH TWO GRATES STD. 840.24	J.B. STD. 840.31 OR 840.32	TBJB STD. 840.34	MANHOLE FRAME & COVER STD. 840.54	T.B.D.I. STD. 840.36	STEEL GRATE AND FRAME SRD. 840.37	FLOWABLE FILL, CY	C.S. PIPE ELBOWS NO. & SIZE	CONC. & BRICK PIPE PLUG, C.Y. STD. 840.71	CONC. COLLARS CL. "B" C.Y. STD. 840.72	PIPE REMOVAL LIN. FT.	REMARKS
-L-116+00																					
-L-116+00																				180	REM. 2 JB, DI, MULT. 15" RCP
-L-117+12																					
-L-117+12																				35	REMOVE EX. 12" RCP
-L-118+92																		0.065		20	REM. JB & 18" RCP, PLUG 18" CMP
-L-118+92																				70	REMOVE EX. CB, JB, & 12" CMP
-L-122+70																					
-L-122+70																					
-L-124+55																					
-L-124+55																					
-L-125+65																					
-L-125+65																					
-L-126+36																					
-L-126+36																					
-L-126+36				1						1											
-L-126+36																				139	REMOVE EX. DI & 2 15" RCP
-L-112+02																					
-L-112+65	1	1																			
-L-112+12	1	1																			
-L-112+12																					
-L-113+65	1	1																			
-L-113+65																					
-L-113+65																				31	REMOVE EX. 8" PVC
																					TIE EXISTING PIPE TO NEW CB
-L-115+07	1	1																			
-L-115+07																					
-L-115+78	1	1																			
-L-115+78																				60	REMOVE 12" CMP
-Y15-11+25																					
-Y15-11+50																					
-Y15-11+43				1						1											
-Y15-11+43																					
-L-117+05																					
-L-117+05																					
-L-118+02																					
-L-118+02																					
-L-118+92																					
-L-118+92																					
-Y15-10+95																					
-L-117+13																					
-L-117+13																	1@15"				15" CSP W/ ELBOWS
SHEET TOTALS	5	5		2						2							1@15"	0.065		535	

ABBREVIATIONS

C.B.	CATCH BASIN
N.D.I.	NARROW DROP INLET
D.I.	DROP INLET
G.D.I.	GRATED DROP INLET
G.D.I.(N.S.)	(NARROW SLOT)
J.B.	JUNCTION BOX
M.H.	MANHOLE
T.B.D.I.	TRAFFIC BEARING DROP INLET
T.B.J.B.	TRAFFIC BEARING JUNCTION BOX

NC1D-IBEARD2

COMPUTED BY: JTP	DATE: 10/6/2011
CHECKED BY: JRB	DATE: 1/10/2012

NORTH CAROLINA DEPARTMENT OF TRANSPORTATION
DIVISION OF HIGHWAYS

PROJECT NO.	SHEET NO.
U2551	3-I

Note: Invert Elevations indicated are for Bid Purposes only and shall not be used for project construction stakeout. See "Standard Specifications For Roads and Structures, Section 300-5".

LIST OF PIPES, ENDWALLS, ETC. (FOR PIPES 48 INCHES & UNDER)

STATION	LOCATION (LT, RT, OR CL)	STRUCTURE NO. FROM	STRUCTURE NO. TO	TOP ELEVATION	INVERT ELEVATION	INVERT ELEVATION	SLOPE CRITICAL	DRAINAGE PIPE (RCP, CSP, CAAP, HDPE, or PVC) SIZE												C.S. PIPE SIZE								R.C. PIPE CLASS III SIZE								R.C. PIPE CLASS IV SIZE							
SIZE								8"	12"	15"	18"	24"	30"	36"	42"	48"	DO NOT USE RCP	DO NOT USE CSP	DO NOT USE CAAP	DO NOT USE HDPE	12"	15"	18"	24"	30"	36"	42"	48"	12"	15"	18"	24"	30"	36"	42"	48"	12"	15"	18"	24"	30"	36"	42"	48"
THICKNESS OR GAUGE																					.064	.064	.064	.064	.079	.079	.109	.109														
-L-118+02	RT	1222		1164.5	1162.3																																				
-L-118+02	RT	1222	1223		1162.3	1161.4				12																															
-L-118+92	RT	1225		1158.6	1156.4																																				
-L-118+92	RT	1225	1226		1156.4	1155.3				12																															
-L-120+10	RT	1313	OUT							32																															
-L-122+70	RT	1301		1147.3	1142.3																																				
-L-122+70	RT	1301	1302		1142.3	1140.3	X																							64											
-L-124+56	LT	1305	1306		1136.5	1133.7	X																									64									
-L-124+56	RT	1305		1141.5	1136.5																																				
-L-124+56	RT	1304	1305		1138.0	1137.5					12																														
-L-124+56	RT	1304		1141.0	1138.0																																				
-L-124+56	RT	1303	1304		1141.1	1138.2				36																															
-L-126+26	RT	1308		1140.1	1137.9																																				
-L-126+26	RT	1308	1309		1137.9	1136.8																																			
-L-126+35	CL	1309		1139.9	1136.8																																				
-L-126+35	CL	1309	1310		1136.8	1135.6																																			
-Y8-21+50	RT	1401		1111.2	1108.4																																				
-Y8-21+50	RT	1401	1402		1108.4	1108.0	X																																		
-Y8-22+25	RT	1402		1113.3	1108.0																																				
-Y8-22+25	RT	1402	1403		1108.0	1197.8															32																				
-Y8-58+45	RT	1503	1502		1108.7	1091.5															56																				
-Y8-58+50	RT	1502		1114.7	1108.7																																				
-Y8-59+45	RT	1501	1502		1109.2	1108.7	X																																		
-Y8-59+45	RT	1501		1112.0	1109.2																																				
-Y8-51+06	LT	1504	1505		1128.9	1126.6					64																														
-Y8-51+56	LT	1505		1133.8	1126.6																																				
SHEET TOTALS										92	76										88									64		64										
GRAND TOTALS								24		1396	1416	328	12	100							420	152	20						752	1396	216	632	196								

STATION	** * R.C. PIPE (CLASS V)	**** RC PIPE CULVERTS, CONTRACTOR DESIGN	15" WELDED STEEL PIPE, 0.500" THK. (TRENCHLESS INSTALLATION) IN SOIL	15" SIDE DRAIN PIPE	18" SIDE DRAIN PIPE	ENDWALLS STD. 838.01 838.11 OR STD. 838.80 (UNLESS NOTED OTHERWISE) CU. YARDS R.C.P.	ENDWALLS CU. YARDS C.S.P.	QUANTITIES FOR DRAINAGE STRUCTURES PER EACH (0' THRU 5.0')	LIN. FT. A 5.0' THRU 10.0'	LIN. FT. B 10.0' AND ABOVE	*TOTAL L.F. FOR PAY QUANTITY SHALL BE COL. "A" + (1.3 X COL. "B")	C.B. STD. 840.01 OR STD. 840.02	FRAME, GRATES, AND HOOD STANDARD 840.03 TYPE OF GRATE E	F	G	CONCRETE TRANSITIONAL SECTION DROP INLET	CATCH BASIN	D.I. STD. 840.14 OR STD. 840.15	D.I. FRAME AND TWO GRATES STD. 840.16	G.D.I. TYPE "A" STD. 840.17 OR 840.26	G.D.I. TYPE "B" STD. 840.18 OR 840.27	G.D.I. TYPE "D" STD. 840.19 OR 840.28	G.D.I. FRAME WITH GRATE STD. 840.22	G.D.I. FRAME WITH TWO GRATES STD. 840.20	G.D.I. FRAME WITH TWO GRATES STD. 840.22	G.D.I. (N.S.) FRAME WITH GRATE STD. 840.24	G.D.I. (N.S.) FRAME WITH TWO GRATES STD. 840.24	J.B. STD. 840.31 OR 840.32	TB.JB STD. 840.34	MANHOLE FRAME & COVER STD. 840.54	T.B.D.I. STD. 840.36	STEEL GRATE AND FRAME SRD. 840.37	FLOWABLE FILL, CY	C.S. PIPE ELBOWS NO. & SIZE	CONC. & BRICK PIPE PLUG, C.Y. STD. 840.71	CONC. COLLARS CL. "B" C.Y. STD. 840.72	PIPE REMOVAL LIN. FT.	REMARKS
-L-118+02								1											1	1																					
-L-118+02																																									
-L-118+92																																									
-L-118+92								1											1	1																				9	REMOVE 8" PVC
-L-120+10																																									
-L-122+70								1				1		1																											
-L-122+70																																									
-L-124+56																																									
-L-124+56								1				1		1																											
-L-124+56																																									
-L-124+56								1														1					1													
-L-124+56																																								149	REMOVE 2 EX. CB & 2 EX. 15" RCP
-L-126+26								1												1	1																				REMOVE EX. DI
-L-126+26						64																																		57	REMOVE 15" RCP
-L-126+35								1										1		1	1																				REMOVE EX. JB
-L-126+35						36																																			
-Y8-21+50								1														1		1																	
-Y8-21+50						76																																			
-Y8-22+25								1	0.29													1		1																	
-Y8-22+25																																						2@15"				15" CSP W/ ELBOWS ROD & LUG
																																									CONNECTORS W/ SLEEVES
-Y8-58+45																																						2@15"				15" CSP W/ ELBOWS ROD & LUG
																																									CONNECTORS W/ SLEEVES
-Y8-58+50								1	0.94													1		1																	
-Y8-59+45						96																																			
-Y8-59+45								1														1		1																	
-Y8-51+06																																									
-Y8-51+56								1																						1		1									
SHEET TOTALS						272		12	1.23			2		2		1			4	4		5		4			1	1		1					4@15"			215	
GRAND TOTALS						4688	848	376				72	336	32		150	42.57		72	11	26	35	7	3	32	32	3	34	1	2	9	10		19	5	2	7	1	1	12	8@15" 2@18" 1@24"	0.505	2.1375	4446	
																Say	43																								Say	1	2.5	4450	

ABBREVIATIONS

C.B.	CATCH BASIN
N.D.I.	NARROW DROP INLET
D.I.	DROP INLET
G.D.I.	GRATED DROP INLET
G.D.I.(N.S.)	(NARROW SLOT)
J.B.	JUNCTION BOX
M.H.	MANHOLE
T.B.D.I.	TRAFFIC BEARING DROP INLET
T.B.J.B.	TRAFFIC BEARING JUNCTION BOX

COMPUTED BY: DL DATE: 8/12/2011
CHECKED BY: DAP DATE: 1/10/2012

DIVISION OF HIGHWAYS
STATE OF NORTH CAROLINA

PROJECT REFERENCE NO.	SHEET NO.
U-2551	3-J

"N" = DISTANCE FROM EDGE OF LANE TO FACE OF GUARDRAIL
TOTAL SHOULDER WIDTH = DISTANCE FROM EDGE OF TRAVEL LANE TO SHOULDER BREAK POINT.
FLARE LENGTH = DISTANCE FROM LAST SECTION OF PARALLEL GUARDRAIL TO END OF GUARDRAIL
W = TOTAL WIDTH OF FLARE FROM BEGINNING OF TAPER TO END OF GUARDRAIL

GUARDRAIL SUMMARY

G = GATING IMPACT ATTENUATOR TYPE 350
NG = NON-GATING IMPACT ATTENUATOR TYPE 350

SURVEY LINE	BEG. STA.	END STA.	LOCATION	LENGTH			WARRANT POINT		"N" DIST. FROM E.O.L.	TOTAL SHOUL WIDTH	FLARE LENGTH		W		ANCHORS									IMPACT ATTENUATOR		EXTRA LENGTH	SINGLE FACED CONCRETE BARRIER	REMOVE EXISTING GUARDRAIL	REMOVE & STOCKPILE EXISTING GUARDRAIL	REMARKS
				STRAIGHT	SHOP CURVED	DOUBLE FACED	APPROACH END	TRAILING END			APPROACH END	TRAILING END	APPROACH END	TRAILING END	B-77	XI	GRAU 350	M-350	III	CAT-1	VI MOD	BIC	AT-1	G	NG	GUARDRAIL POSTS				
-L-	73+20	75+12.21	RT	162.5	75		75+12.21		4	11	143.75		2.875						1				1							
-L-	77+22.21	79+20	LT	162.5	75		77+22.21		11	14	143.75		2.875						1				1							
-RPA-	10+95	17+20	LT	625			15+95	10+95	12	15	50		1				1			1								665		
-Y8-/-RPB-	21+50	12+00	RT	400				12+00	12	15										1						16		478		TIE TO EXIST. GUARDRAIL; 3'-1 1/2" POST SPACING AT WALL
-Y8-/-RPC-	59+50	20+35	LT	1,887.50			19+50		12	15	50		1				1											1,445		TIE TO EXISTING GUARDRAIL
-Y8-	14+77.50	36+65	MED LT	2,187.50					6	6					2												75			TIE TO EXISTING GUARDRAIL
-Y8-	37+46.25	63+71.25	MED LT.	2,625					6	6																				TIE TO EXISTING STRONG POST GUARDRAIL
-Y8-	14+77.50	36+65	MED RT	2,187.50					6	6					2												75			TIE TO EXISTING GUARDRAIL
-Y8-	37+46.25	63+71.25	MED RT.	2,625					6	6																				TIE TO EXISTING STRONG POST GUARDRAIL
-L-	74+20	75+25	LT																									105		
-L-	74+28	7520	RT																									91		
-L-	77+27	78+32	LT																									105		
-L-	77+24	78+15	RT																									92		
-Y8-	35+05	36+75	RT																									170		
-Y8-	36+92	38+65	LT																									170		
-Y8-	14+75	36+65	MED																									2,190		
-Y8-	37+46	63+70	MED																									2,625		
	SUBTOTAL			12,862.50	150										4		2		2	2			2			16	150	8,136		
	ANCHOR DEDUCTIONS																													
	GRAU-350	2 @50'	=	100'																										
	TYPE III	2 @ 18.75'	=	37.5'																										
	CAT-1	2 @ 6.25'	=	12.5'																										
	AT-1	2 @ 6.25'	=	12.5'																										
	B-77	4 @ 18.75'	=	75'																										
	TOTAL ANCHOR DEDUCTIONS			237.5'																										
	TOTAL			12,625	150										4		2		2	2			2			16	150	8,136		
	SAY			**12,637.50**	**162.5**											**ADDITIONAL GUARDRAIL POSTS 10 EACH**											**150**	**8,136**		

COMPUTED BY: JB	DATE: 9/30/2011
CHECKED BY: DAP	DATE: 1/10/2012

PROJECT NO.	SHEET NO.
U-2551	3-K

RD244542

STATE OF NORTH CAROLINA
DIVISION OF HIGHWAYS

SUMMARY OF EXISTING ASPHALT PAVEMENT REMOVAL

LINE	Station	Station	LOC LT/RT/CL	YD^2	Note
-L-	65+00		CL	70	Fatigue Cracking
-L-	68+75	72+70	LT	335	
-L-	73+05	75+20	CL	1,090	
-L-	77+25	79+25	LT.	985	
-L-	85+45	92+75	LT.	545	
-L-	93+00	100+10	CL	895	
-L-	101+90	102+55	RT	200	
-L-	101+95	105+60	LT	1,080	
-L-	103+65	104+75	RT	50	
-L-	105+20	110+75	RT	1,220	
-L-	111+20	112+55	RT	110	
-L-	111+30	113+35	CL	230	Under Proposed Island
-L-	115+90	116+25	RT	85	
-L-	119+45	123+40	CL	710	Under Proposed Island
-L-	125+65	126+75	RT	55	
-Y12-	11+55	12+15	RT	55	
-Y8-/-RPA-	13+75	23+30	LT	1,550	
-RPA-	13+30	23+30	RT	570	
-Y8-/-RPB-	21+50	23+95	RT	1,750	
-RPB-	15+45	16+40	LT	10	
-Y8-/-RPC-	59+45	23+30	LT	1,625	
-RPC-	13+85	23+30	RT	545	
-Y8-/-RPD-	54+50	23+00	RT/LT	2,065	
-Y8-	34+35	39+35	LT	555	
-Y8-	34+80	39+50	RT	525	
-Y8-	36+50	37+60	CL	95	
			TOTAL:	17,005	
			SAY:	17,250	

SUMMARY OF EXISTING CONCRETE PAVEMENT REMOVAL

LINE	Station	Station	LOC LT/RT/CL	YD^2
-RPA-	13+30	23+30	RT	1,845
-RPB-	14+25	19+25	LT	1497
-RPC-	13+85	23+90	RT	2,135
-RPD-	10+90	21+50	LT	2,060
			TOTAL:	7,537
			SAY:	7,600

SUMMARY OF WOVEN WIRE FENCE

Station to Station	LOC LT OR RT	A FABRIC L.F.	B END BRACE	C CORNER BRACE	D LINE BRACE	E 4" POSTS	F 5" POSTS
Y8 21+45 (INCLUDE RP A) TO -L- 84+75	LT.	1,890	2	7		121	25
RP B 10+40 TO 11+20	RT.	130	2	2		4	10
RP B 17+75 TO L 68+18	RT.	1,080	2	2		72	10
L 67+70 (INCLUDE RP C) TO Y8 59+50	RT.	2,695	2	5	2	179	25
RP D 12+90 TO L 84+35	LT.	1,620	2	2	1	109	13
	TOTAL:	7,415	10	18	3	485	83
	SAY:	**7,420**				**490**	**90**

SUMMARY OF TEMPORARY WOVEN WIRE FENCE

Station to Station	LOC LT OR RT	A FABRIC L.F.	B END BRACE	C CORNER BRACE	D LINE BRACE	E 4" POSTS	F 5" POSTS
L 51+50 TO Y5 10+94	LT.	505	2	2		31	10
RP B 10+40 TO 11+20	RT.	1135	2	2		76	10
RP B 17+75 TO L 68+18	LT.	725	2	3		45	13
	TOTAL:	2,365	6	7	0	152	33
	SAY:	**2,400**					

SUMMARY OF CHAIN LINK FENCE

Station to Station	LOC LT OR RT	A FABRIC L.F.	B END BRACE	C CORNER BRACE	D LINE BRACE	E LINE POSTS	F TERMINAL POSTS
-Y4- 13+15 TO -L- 41+50	LT.	780	2	6	1	66	9
	TOTAL:	780	2	6	1	66	9
	SAY:	**780**				**70**	**10**

5/28/99

ARCADIS
G & M of North Carolina, Inc.
WWW.ARCADIS-US.COM
801 Corporate Center Drive, Suite 300
Raleigh, NC 27607-5073
Tel: 919/854-1282 Fax: 919/854-5448

PROJECT REFERENCE NO.	SHEET NO.
U-2551	3L

STATE OF NORTH CAROLINA
DIVISION OF HIGHWAYS

SUMMARY OF EARTHWORK

IN CUBIC YARDS

STATION	STATION	TOTAL EXCAV. (UNCL.)	UNDERCUT EXCAV.	EMB. +	BORROW	TOTAL WASTE
SUMMARY #1 –L– Left 10+50.00	40+72.54	2,587		196	0	2,391
–Y1– 11+63.00	12+43.24	13		2	0	11
–Y2– 10+38.00	10+93.42	13		0	0	13
–Y3– 11+04.98	13+46.26	603		63	0	540
TOTAL SUMMARY #1		3,216		261	0	2,955
SUMMARY #2 –L– Right 10+50.00	40+72.54	2,055		3,557	1,502	0
–Y4– 10+25.75	13+15.43	2,101		204	0	1,897
TOTAL SUMMARY #2		4,156		3,761	1,502	1,897
SUMMARY #3 –L– Left 51+50.00	75+12.21	1,472		1,304	0	168
–Y5– 10+94.00	11+86.63	271		29	0	241
–RPB– 16+00.00	23+77.27	9,217		833	0	8,384
–Y8RT–(RAMPB) 21+50.00	30+50.00	2,086		2,437	351	0
TOTAL SUMMARY #3		13,046		4,604	351	8,793
SUMMARY #4 –L– Right 51+50.00	75+12.21	1,842		2,866	1,024	0
–RPC– 17+04.78	22+70.00	1,978		4,819	2,841	0
–Y8RT–(RAMPC) 43+50.00	59+48.00	3,345		8,619	5,274	0
TOTAL SUMMARY #4		7,165		16,304	9,139	0
SUMMARY #5 –L– Left 77+22.21	101+65.00	880		2,098	1,218	0
–RPA– 15+70.00	22+95.75	12,400		254	0	12,146
–Y9– 11+84.82	13+00.00	86		53	0	33
–SR1– 10+10.00	12+08.53	0		1,917	1,917	0
–Y8LT–(RAMPA) 14+00.00	29+00.00	2,895		2,525	0	370
TOTAL SUMMARY #5		16,261		6,847	3,135	12,549

Estimated Undercut (Shallow) = 4,000 CY
Estimated Shoulder Borrow = 4,200 CY
Estimated DDE = 1,537 CY

STATION	STATION	TOTAL EXCAV. (UNCL.)	UNDERCUT EXCAV.	EMB. +	BORROW	TOTAL WASTE
SUMMARY #6 –L– Right 77+22.21	101+65.00	3,834		4,750	916	0
–RPD– 16+36.00	24+60.00	20,766		0	0	20,766
–Y8LT–(RAMPA) 44+50.00	54+50.00	7,876		513	0	7,363
–SR4– 10+29.73	11+15.54	182		16	0	166
–SR5– (–L– Station) 81+37.39	84+71.05	173		244	71	0
–Y10– 10+29.52	11+20.00	18		30	12	0
TOTAL SUMMARY #6		32,849		5,553	999	28,295
SUMMARY #7 –L– Left 101+65.00	126+74.09	3,533	480	6,640	3,107	480
–Y11– 10+33.51	12+60.00	1,865		75	0	1,790
–Y12– 10+25.24	15+60.00	182		7,013	6,831	0
–DWY1– 10+00.00	11+06.23	3		489	486	0
TOTAL SUMMARY #7		5,583	480	14,217	10,424	2,270
SUMMARY #8 –L– Right 101+65.00	126+74.09	3,262		2,954	0	308
–Y13– 12+30.73	14+93.88	710		331	0	379
–Y14– 10+40.00	11+29.03	62		25	0	37
–Y15– 10+45.00	12+13.87	1,129		1	0	1,128
TOTAL SUMMARY #8		5,163		3,311	0	1,852
SUBTOTAL SUMMARIES 1,2,3,4,5,6,7 & 8		87,439	480	54,858	25,550	58,611
TOTALS		87,439	480	54,858	25,550	58,611
LOSS DUE TO CLEARING & GRUBBING		–1,250				–1,250
ADDITIONAL UNDERCUT			920	1,058	1,058	920
WASTE TO REPLACE BORROW					–26,608	–26,608
GRAND TOTALS		86,189	1,400	55,916	0	31,673
SAY		87,000				

Earthwork quantities are calculated by the Roadway Design Unit. These earthwork quantities are based in part on subsurface data provided by the Geotechnical Engineering Unit.

$$$$$$SYSTIME$$$$$
$$$$$$$$$$$DGN$$$$$$$$$$$$$$$$$
$$$$USERNAME$$$$

551 rdy Earthwork summary.dgn 2/23/2012 9:07:19 AM

PROJ. REFERENCE NO.	SHEET NO.
U-2551	3-M

STATE OF NORTH CAROLINA
DIVISION OF HIGHWAYS

PARCEL INDEX SHEET

PARCEL No.	SHEET No.	PROPERTY OWNER NAME
1	4	WYKE, JONATHAN D.
2	4	CHAPMAN, WAYNE A.
3	4	DAVIS, ROY C.
4	4	ST JOHN, ANDY S.
5	4	CROSS MEMORIAL BAPTIST CHURCH
6	4	BURKE COUNTY
6A	5	STATE OF NC BURKE COUNTY BOARD OF EDUCATION
7	5	STAMEY, CAROL Y.
8	5	PATTERSON, WILLIAM E.
9	5	COLE, ET AL, SHERRILL
10	5	HARBISON, BETTI JOE
11	5	HARBISON, BETTI JOE
12	5	NOGGLE, S. L.
13	5	NOGGLE, SUSAN H.
14	5	DIXON, BRANDON C, & AMY H.
15	5	BRISTOL, HEIDI AND BRISTOL, IAN
16	5	TALLENT, LARRY G. ET AL.
17	6	MORGAN, CHRISTOPHER S.
18	6	MILLNER, JOSEPH H.
19	6	DALE, JASON P.
20	6	BRITTAIN, MARY D.
20A	6	BRITTAIN, MARY D.
21	6	DUCKWORTH, LINDA A.
22	6	WILLIAMS, JONNIE F.
23	6	BURKE PROPERTIES, INC.
23A	6	BURKE PROPERTIES, INC.
24	7	J. IVERSON RIDDLE DEVELOPMENTAL CENTER
24	8	J. IVERSON RIDDLE DEVELOPMENTAL CENTER
25	7	KATHRYN B. DUCKWORTH & FREDIE RAY DUCKWORTH
26	7	VERNON LESLIE WELLMAN
27	7	FOOTHILLS REGIONALAIRPORT AUTHORITY
28	7	J. IVERSON RIDDLE DEVELOPMENTAL CENTER
28	8	J. IVERSON RIDDLE DEVELOPMENTAL CENTER
28	9	J. IVERSON RIDDLE DEVELOPMENTAL CENTER
29	8	WAYNE & CORINNE ABELE
30	8	WAYNE & CORINNE ABELE
31	8	JAMES R KIRKPATRICK TRUSTEE
32	8	CHICK- FIL-A, INC.
33	8	DRURY LANE OWNERSHIP UNKNOWN
34	9	KRT & H LLC
35	9	CHARLIE & NANCY HARMON
36	9	WILLIAM T. & ANNIE T. WILLIAMS
37	9	FLOYD E. & CATHER WILLIAMS
38	9	JAMES R KIRKPATRICK TRUSTEE
39	9	SECU
39	10	SECU
40	9	F. STEVE WHITE, SR., ET AL
41	9	NORTH CAROLINA STATE BROUGHTON HOSPITAL
41	10	NORTH CAROLINA STATE BROUGHTON HOSPITAL
41	11	NORTH CAROLINA STATE BROUGHTON HOSPITAL
41	12	NORTH CAROLINA STATE BROUGHTON HOSPITAL
41	13	NORTH CAROLINA STATE BROUGHTON HOSPITAL
42	10	SECU
42	9	STATE EMPLOYEES CREDIT UNION
43	9	JASON PEYTON DALE
44	10	PRIVATE DRIVE OWNERSHIP UNKNOWN
45	10	STATE EMPLOYEES CREDIT UNION
47	10	HOMER HINES COFFEY
49	10	COUNTY OF BURKE

PARCEL No.	SHEET No.	PROPERTY OWNER NAME
50	10	RALPH L. DALE
50A	10	JACK LEE EDGE, SR. & JO BUCHANON EDGE
51	10	ROGER D. HASTINGS & MILLIE C. HASTINGS
52	10	ANTON, ALAN B. & TERESA S
53	10	HOWARD J. & REBECCA MULL
54	11	RANDY W. SMALL
56	11	JIMMY DANIEL REECE
57	11	ANTON, ALAN B.
58	11	COOK, JONATHAN & COOK, KIMBERLY
61	11	EARP, CHAD EDWARD
62	11	DONNA ELAINE ROSS
63	11	WESTERN PIEDMONT COMMUNITY COLLEGE
64	11	RICHARD J. DALE
65	11	SANDRA D. ROPER
66	12	TIM W. BUFF & CHARLOTTE S. BUFF
67	12	TIM W. BUFF & CHARLOTTE S. BUFF
68	12	TIM W. BUFF & CHARLOTTE S. BUFF
69	12	TIM W. BUFF & CHARLOTTE S. BUFF
70	12	NANCY M. DELOACH ET AL
71	12	MANLEY R. BARRIER & BEULAH B. BARRIER
72	12	WALTER E. DeHETRE GRACE E. DeHETRE
73	12	DIMITRIOS VARELAS & ELENI Z. VARELAS
74	12	REAL ESTATE RENTALS
75	12	MARTHA WILKINS JUNE
76	13	LENOX SQUARE LLC
77	13	PATRICK C. BARTHOLOMEW & LISA F. BARTHOLOMEW
78	13	SHARON L. ROBINSON
79	13	CHARLES A. BENNETT & MARY A. BENNETT
80	13	JACK L. HUFFMAN & AUDRY S. HUFFMAN

5/14/99

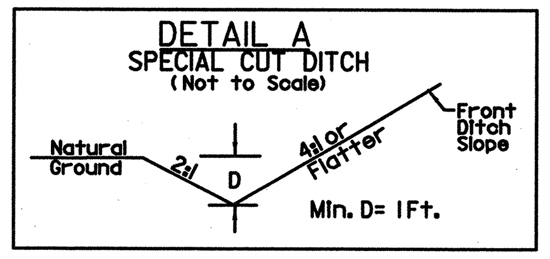

FROM STA. 10+00 TO STA. 11+00 -L- LT
FROM STA. 12+31 TO STA. 12+50 -L- LT

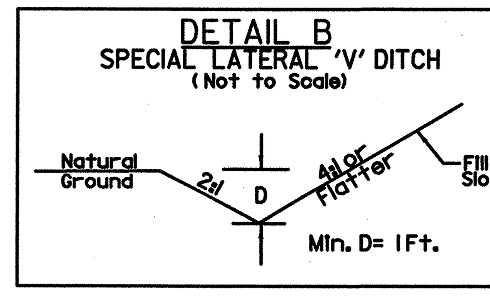

FROM STA. 16+00 TO STA. 17+65 -L- RT

-L-	-L-	-Y1-
PI Sta 11+30.48	PI Sta 13+97.30	PI Sta 11+40.11
Δ = 2° 29' 30.0" (RT)	Δ = 2° 36' 15.0" (LT)	Δ = 4° 01' 46.6" (RT)
D = 0° 57' 17.7"	D = 0° 57' 17.7"	D = 1° 54' 35.5"
L = 260.93'	L = 272.71'	L = 210.99'
T = 130.48'	T = 136.38'	T = 105.54'
R = 6,000.00'	R = 6,000.00'	R = 3,000.00'
SE = NC	SE = NC	SE = SEE PLANS
DS = 40 MPH	DS = 40 MPH	DS = 40 MPH

ARCADIS
G & M of North Carolina, Inc.
WWW.ARCADIS-US.COM
801 Corporate Center Drive, Suite 300
Raleigh, NC 27607-5073
Tel: 919/854-1282 Fax: 919/854-5448 NC License No. C-1869

Florence & Hutcheson
CONSULTING ENGINEERS
5121 Kingdom Way, Suite 100 Raleigh, NC 27607
NC License No: F-0258

PROJECT REFERENCE NO.	SHEET NO.
U-2551	4
R/W SHEET NO.	

ROADWAY DESIGN ENGINEER — NORTH CAROLINA PROFESSIONAL SEAL 022037 ENGINEER STEPHEN T. SMALLWOOD — 2/3/12

HYDRAULICS ENGINEER — NORTH CAROLINA PROFESSIONAL SEAL 24451 ENGINEER STACEY H. BAILEY — 2/3/12

SEAL NOT VALID UNLESS SIGNED AND DATED

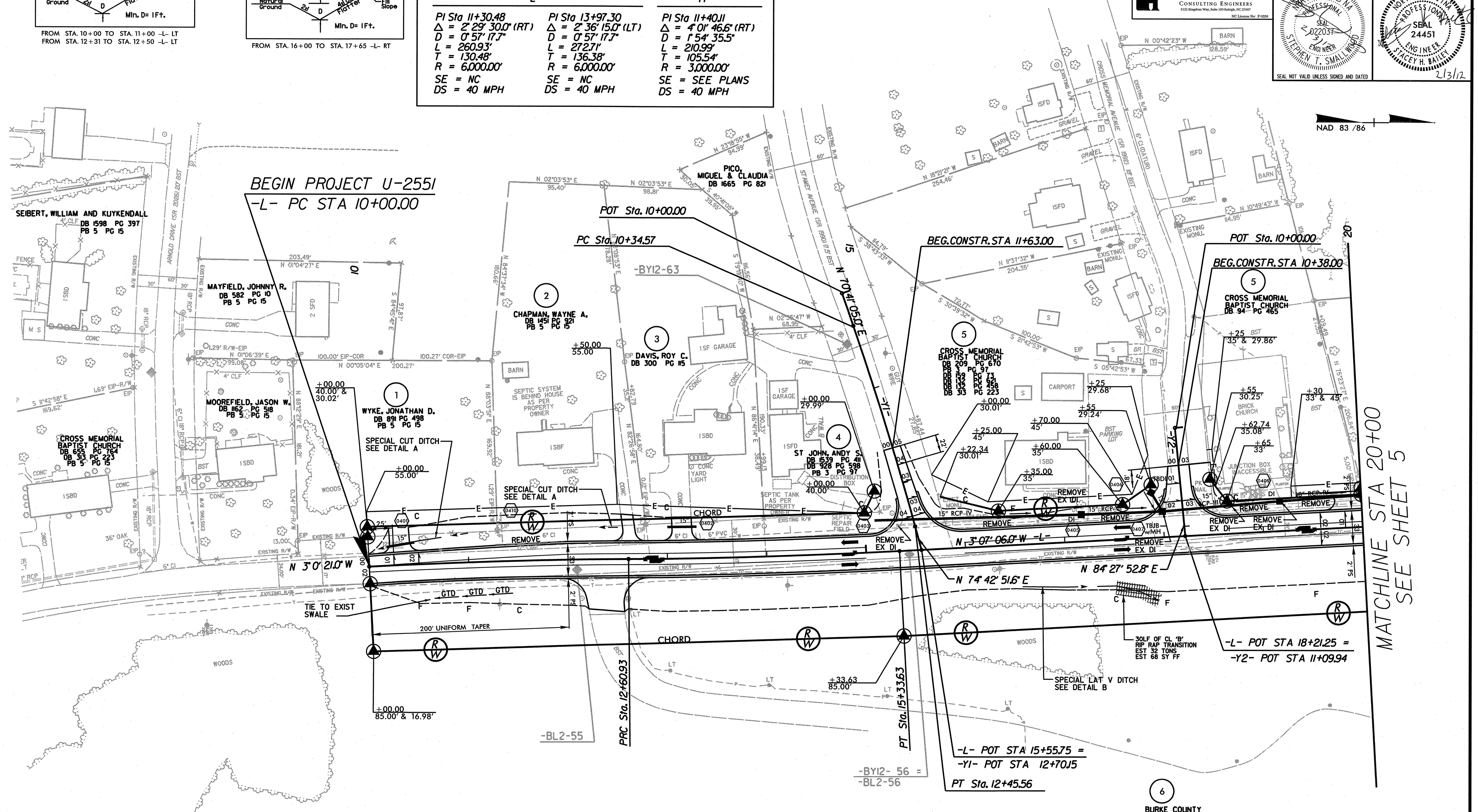

SEE SHEET 2-G FOR INTERSECTION DETAIL
SEE SHEET 16 FOR -L- PROFILE
SEE SHEET 25 FOR -Y1- & -Y2- PROFILES

$$$$$$SYSTIME$$$$$$
$$$$$$DGN$$$$$$$$$$$$$$$$$$
$$$$$$USERNAME$$$$$$

551 rdy psh 04.dgn 2/3/2012 8:17:44 AM

5/14/99

ARCADIS
a d a m of North Carolina, Inc.
WWW.ARCADIS-US.COM
801 Corporate Center Drive, Suite 300
Raleigh, NC 27601-5073
Tel: 919/854-1282 Fax: 919/854-5448 NC License No. C-1869

Florence & Hutcheson
CONSULTING ENGINEERS
3121 Kingdom Way, Suite 100 Raleigh, NC 27607
NC License No: F-0258

PROJECT REFERENCE NO.	SHEET NO.
U-2551	5
R/W SHEET NO.	

ROADWAY DESIGN ENGINEER
NORTH CAROLINA PROFESSIONAL SEAL 022037 ENGINEER STEPHEN T. SMALLWOOD
SEAL NOT VALID UNLESS SIGNED AND DATED

HYDRAULICS ENGINEER
NORTH CAROLINA PROFESSIONAL SEAL 24451 ENGINEER STACEY H. BALLEW
2/2/12

-L-

PI Sta 22+29.72	PI Sta 28+64.08
Δ = 10° 10' 04.0" (RT)	Δ = 1° 28' 17.0" (RT)
D = 2° 48' 06.3"	D = 0° 42' 58.3"
L = 362.91'	L = 205.44'
T = 181.93'	T = 102.73'
R = 2,045.00'	R = 8,000.00'
SE = .03	SE = NC
DS = 40 MPH	DS = 40 MPH

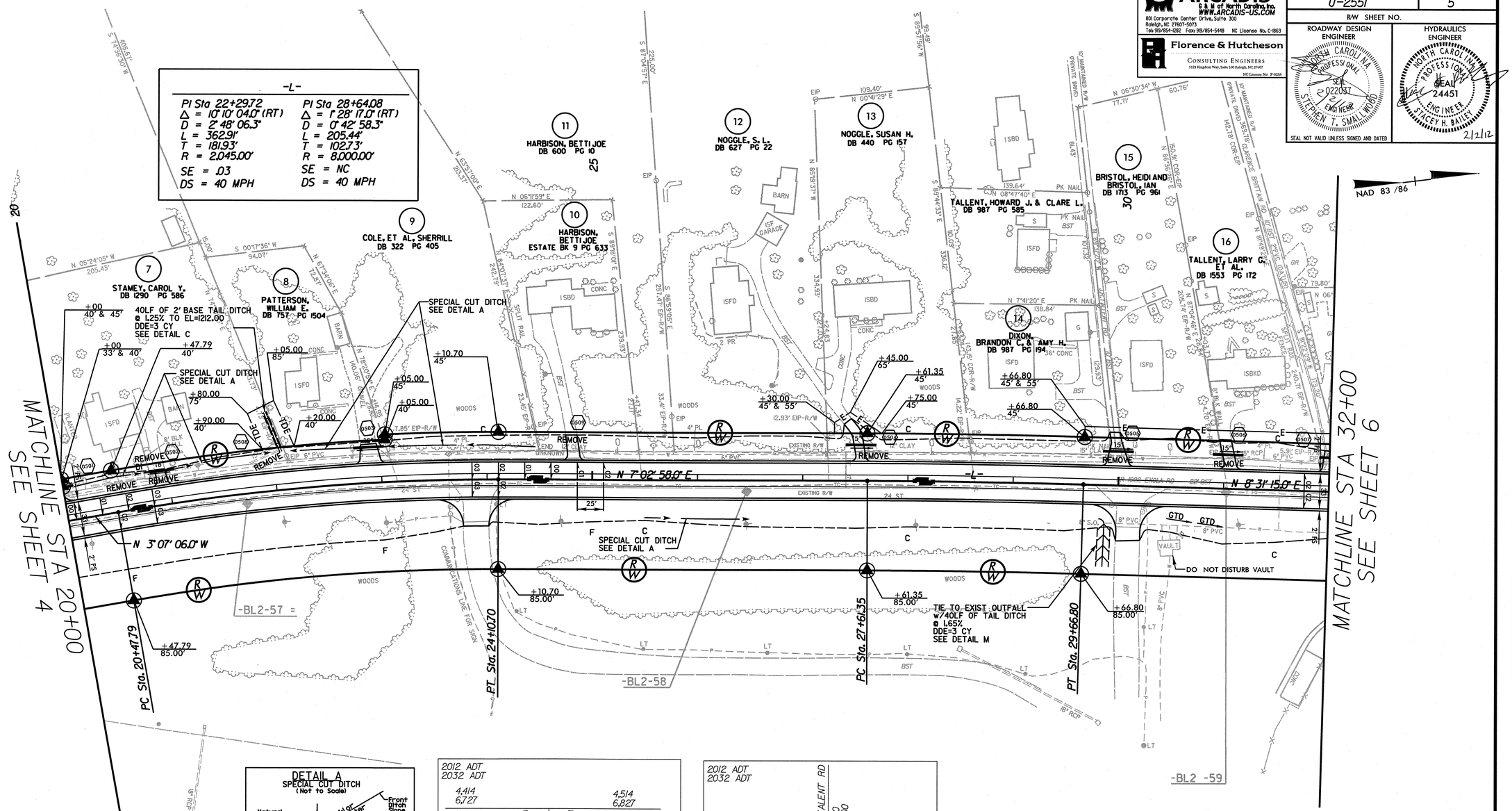

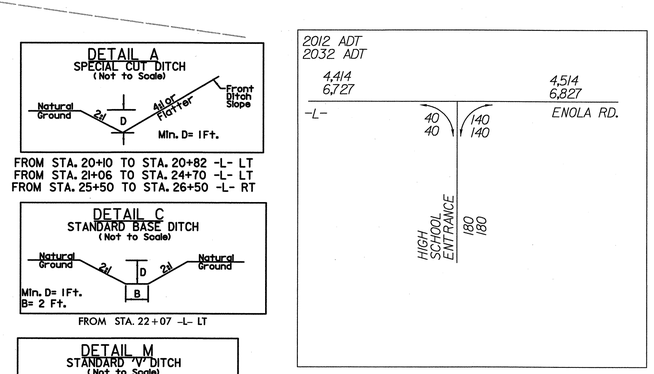

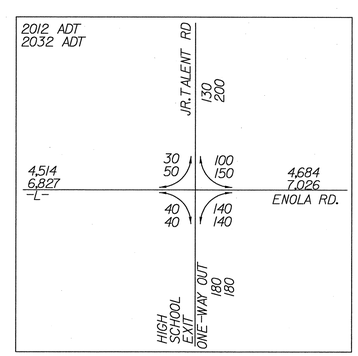

6
BURKE COUNTY
DB 1530 PG 247

DETAIL A
SPECIAL CUT DITCH
(Not to Scale)

FROM STA. 20+10 TO STA. 20+82 -L- LT
FROM STA. 21+06 TO STA. 24+70 -L- LT
FROM STA. 25+50 TO STA. 26+50 -L- RT

DETAIL C
STANDARD BASE DITCH
(Not to Scale)

FROM STA. 22+07 -L- LT

DETAIL M
STANDARD "V" DITCH
(Not to Scale)

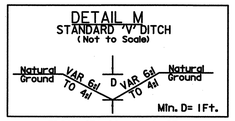

FROM STA. 29+75 -L- RT

SEE SHEET 16 (-L-) FOR PROFILES

MICROSTATION FILENAME: u2551 rdy nsh 05.dgn 2/2/2012 9:48:57 AM

5/14/99

ARCADIS
G & W of North Carolina, Inc.
WWW.ARCADIS-US.COM
801 Corporate Center Drive, Suite 300
Raleigh, NC 27607-5073
Tel: 919/854-0282 Fax: 919/854-5448 NC License No. C-1869

Florence & Hutcheson
CONSULTING ENGINEERS
5121 Kingdom Way, Suite 100 Raleigh, NC 27607
NC License No. F-0205

PROJECT REFERENCE NO.	SHEET NO.
U-2551	6
R/W SHEET NO.	

ROADWAY DESIGN ENGINEER
NORTH CAROLINA PROFESSIONAL SEAL 022037 ENGINEER STEPHEN T. SMALLWOOD
SEAL NOT VALID UNLESS SIGNED AND DATED
2/2/12

HYDRAULICS ENGINEER
NORTH CAROLINA PROFESSIONAL SEAL 24451 ENGINEER STACEY H. BAILEY
2/2/12

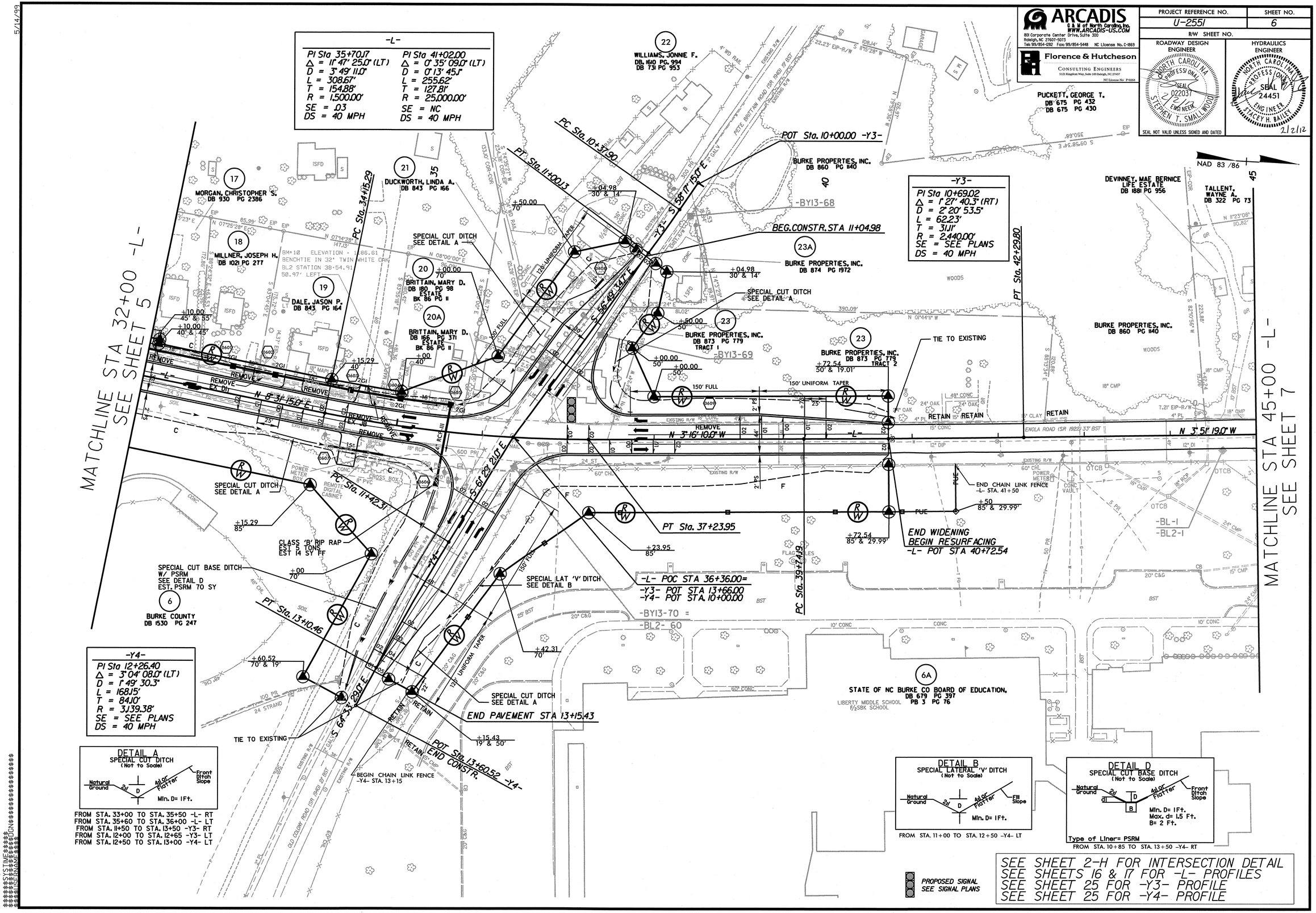

u2551 rdy psh 06.dgn 2/2/2012 11:13:05 AM

5/14/99

ARCADIS
G & M of North Carolina, Inc.
WWW.ARCADIS-US.COM
801 Corporate Center Drive, Suite 300
Raleigh, NC 27607-5073
Tel: 919/854-1282 Fax: 919/854-5448 NC License No. C-1869

Florence & Hutcheson
CONSULTING ENGINEERS
5121 Kingdom Way, Suite 100 Raleigh, NC 27607
NC License No: F-0258

PROJECT REFERENCE NO.	SHEET NO.
U-2551	7
R/W SHEET NO.	

ROADWAY DESIGN ENGINEER	HYDRAULICS ENGINEER
NORTH CAROLINA PROFESSIONAL ENGINEER SEAL 022037 STEPHEN T. SMALLWOOD 2/20/12	NORTH CAROLINA PROFESSIONAL ENGINEER SEAL 24451 STACEY H. BAILEY 2/20/12
SEAL NOT VALID UNLESS SIGNED AND DATED	

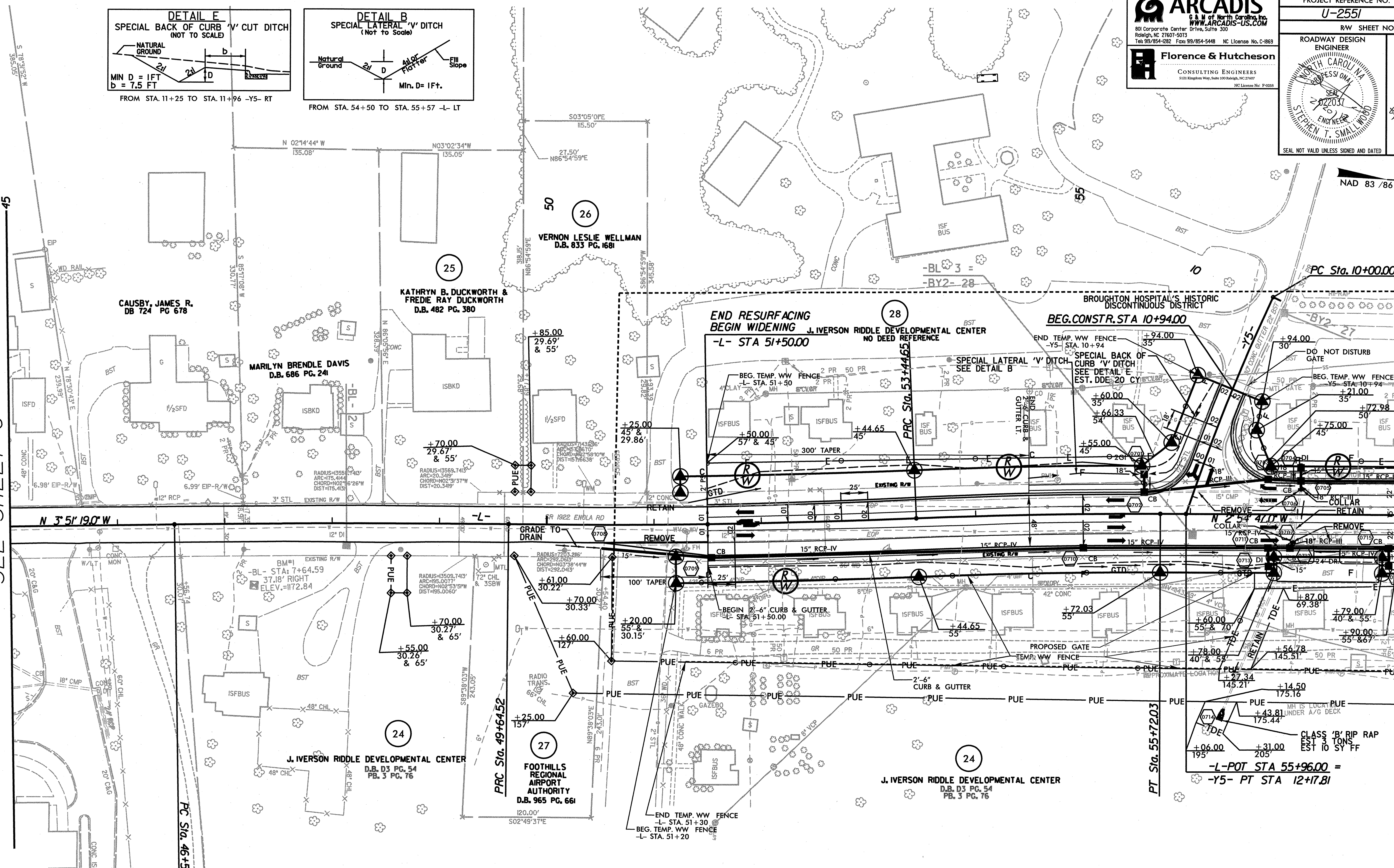

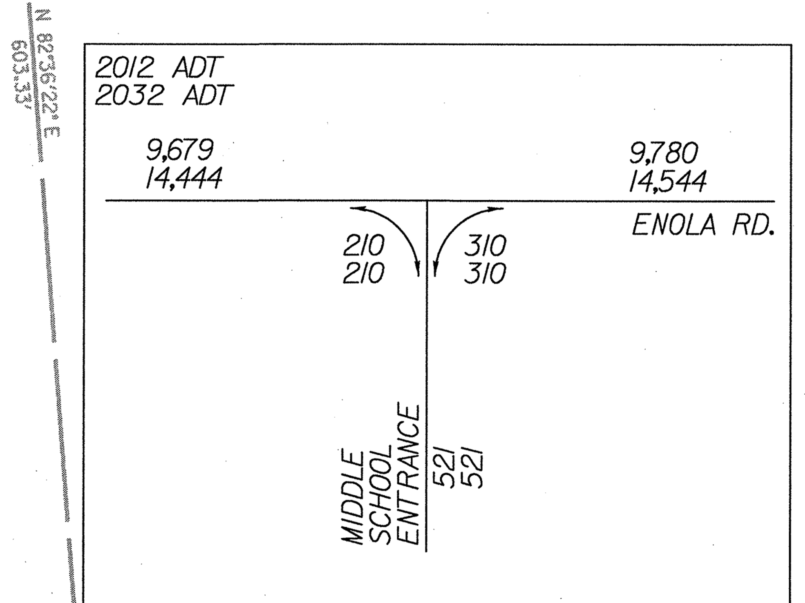

-L-

PI Sta 48+08.85	PI Sta 51+54.63	PI Sta 54+58.36
Δ = 1° 22' 20.0" (RT)	Δ = 3° 02' 08.0" (LT)	Δ = 2° 36' 20.0" (RT)
D = 0° 26' 26.7"	D = 0° 47' 54.8"	D = 1° 08' 45.3"
L = 311.35'	L = 380.13'	L = 227.38'
T = 155.68'	T = 190.11'	T = 113.71'
R = 13,000.00'	R = 7,175.00'	R = 5,000.00'
SE = EXIST.	SE = NC	SE = NC
	DS = 40 MPH	DS = 40 MPH

-Y5-

PI Sta 11+09.02
Δ = 6° 26' 36.8" (LT)
D = 2° 57' 30.0"
L = 217.81'
T = 109.02'
R = 1,936.75'
SE = SEE PLANS
DS = 40 MPH

SEE SHEET 2-I FOR INTERSECTION DETAIL
SEE SHEET 17 FOR -L- PROFILE
SEE SHEET 25 -Y5- FOR PROFILE

$$$$SYSTIME$$$$
$$$$$$$DGN$$$$$$$$$$$$$$$$$
$$$$USERNAME$$$$

551 rdy psh 07.dgn 2/20/2012 9:41:39 AM

5/14/99

PROJECT REFERENCE NO.	SHEET NO.
U-2551	8
R/W SHEET NO.	

ARCADIS
G & M of North Carolina, Inc.
WWW.ARCADIS-US.COM
801 Corporate Center Drive, Suite 300
Raleigh, NC 27607-5073
Tel: 919/854-1282 Fax: 919/854-5448 NC License No. C-1869

Florence & Hutcheson
CONSULTING ENGINEERS
5121 Kingdom Way, Suite 100 Raleigh, NC 27607
NC License No: F-0258

ROADWAY DESIGN ENGINEER
NORTH CAROLINA PROFESSIONAL SEAL 022037 ENGINEER STEPHEN T. SMALLWOOD
SEAL NOT VALID UNLESS SIGNED AND DATED

HYDRAULICS ENGINEER
NORTH CAROLINA PROFESSIONAL SEAL 24451 ENGINEER STACEY H. BAILEY
2/20/12

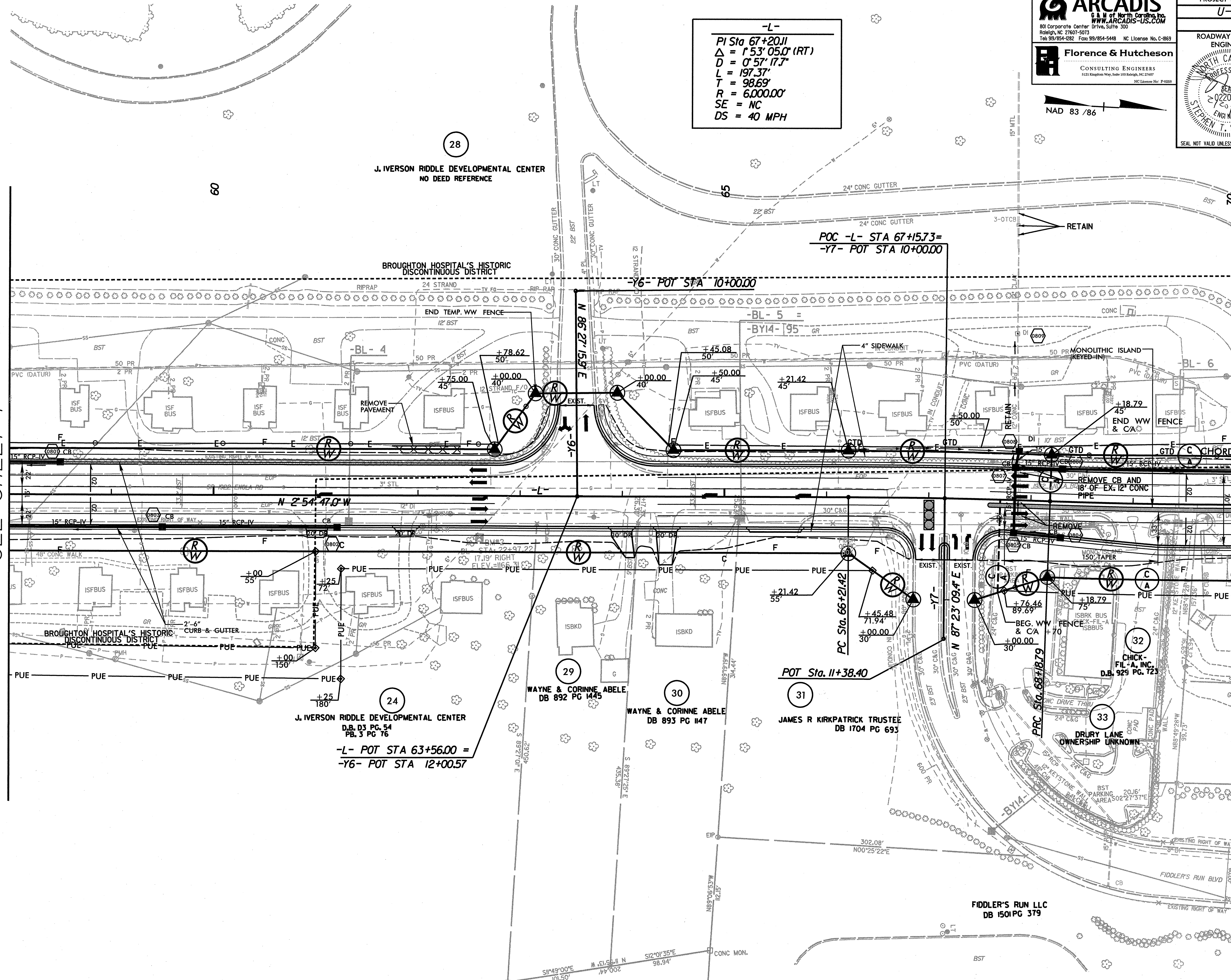

PROPOSED SIGNAL
SEE SIGNAL PLANS

SEE SHEET 2-I & 2-J FOR INTERSECTION DETAIL
SEE SHEETS 17 & 18 FOR -L- PROFILE
SEE SHEET 25 FOR -Y6- & -Y7- PROFILES

$$$$$$SYSTIME$$$$$
$$$$$$$$$$$DGN$$$$$$$$$$$$$
$$$$USERNAME$$$$

2551 rdy psh 08.dgn 2/20/2012 9:42:37 AM

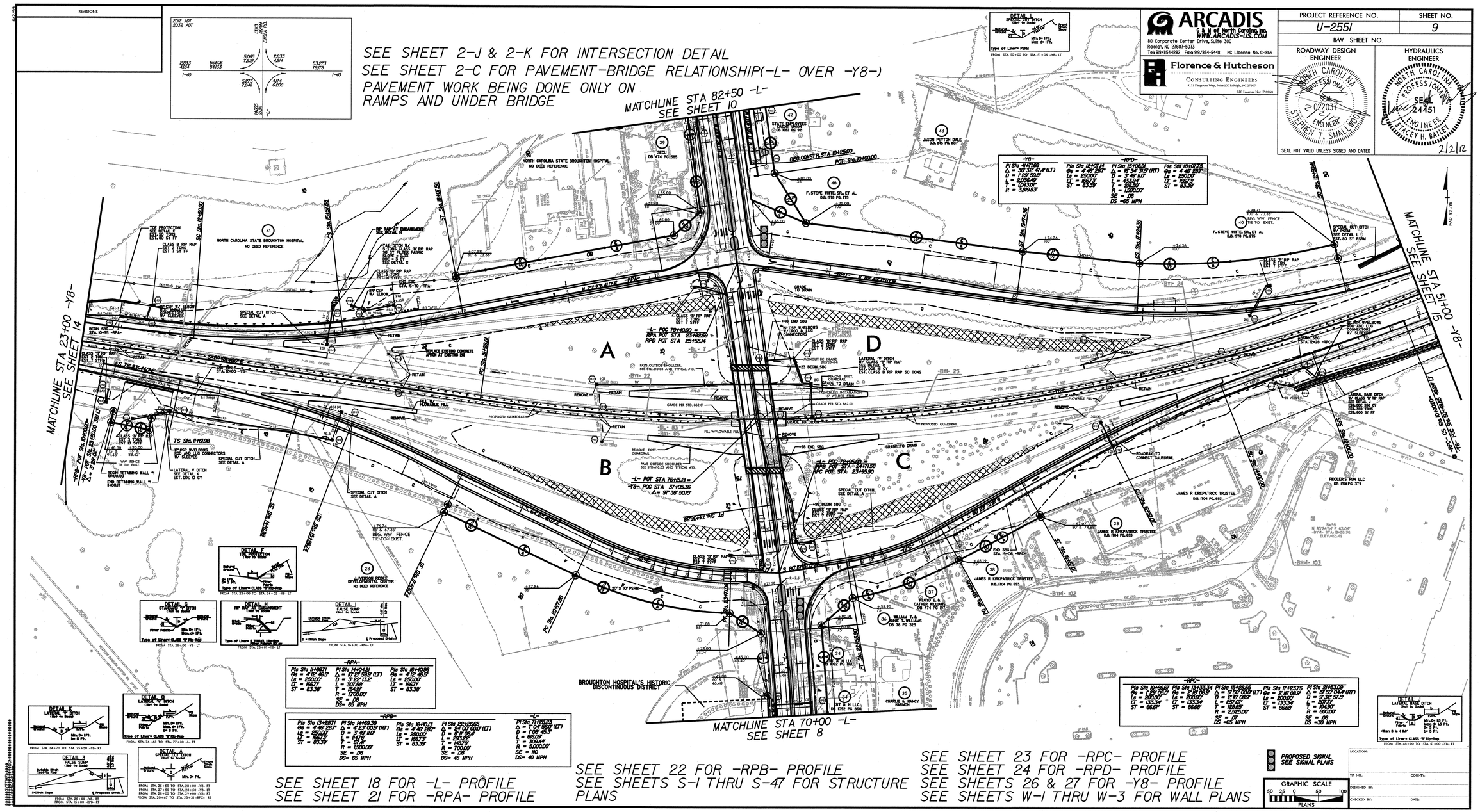

SEE SHEET 18 FOR -L- PROFILE
SEE SHEET 21 FOR -RPA- PROFILE

SEE SHEET 22 FOR -RPB- PROFILE
SEE SHEETS S-1 THRU S-47 FOR STRUCTURE PLANS

SEE SHEET 23 FOR -RPC- PROFILE
SEE SHEET 24 FOR -RPD- PROFILE
SEE SHEETS 26 & 27 FOR -Y8- PROFILE
SEE SHEETS W-1 THRU W-3 FOR WALL PLANS

ARCADIS
G & M of North Carolina, Inc.
WWW.ARCADIS-US.COM
801 Corporate Center Drive, Suite 300
Raleigh, NC 27607-5073
Tel: 919/854-1282 Fax: 919/854-5448 NC License No. C-1869

Florence & Hutcheson
CONSULTING ENGINEERS
5121 Kingdom Way, Suite 300 Raleigh, NC 27607
NC License No: F-0258

PROJECT REFERENCE NO.	SHEET NO.
U-2551	9
R/W SHEET NO.	
ROADWAY DESIGN ENGINEER	HYDRAULICS ENGINEER

NORTH CAROLINA PROFESSIONAL SEAL 022037 ENGINEER STEPHEN T. SMALLWOOD
NORTH CAROLINA PROFESSIONAL SEAL 24451 ENGINEER STACEY H. BAILEY
2/2/12

SEAL NOT VALID UNLESS SIGNED AND DATED

LOCATION:
TIP NO.: COUNTY:
DESIGNED BY:
CHECKED BY: DATE:

551 rdy dsh 09.dgn 2/2/2012 10:51:24 AM

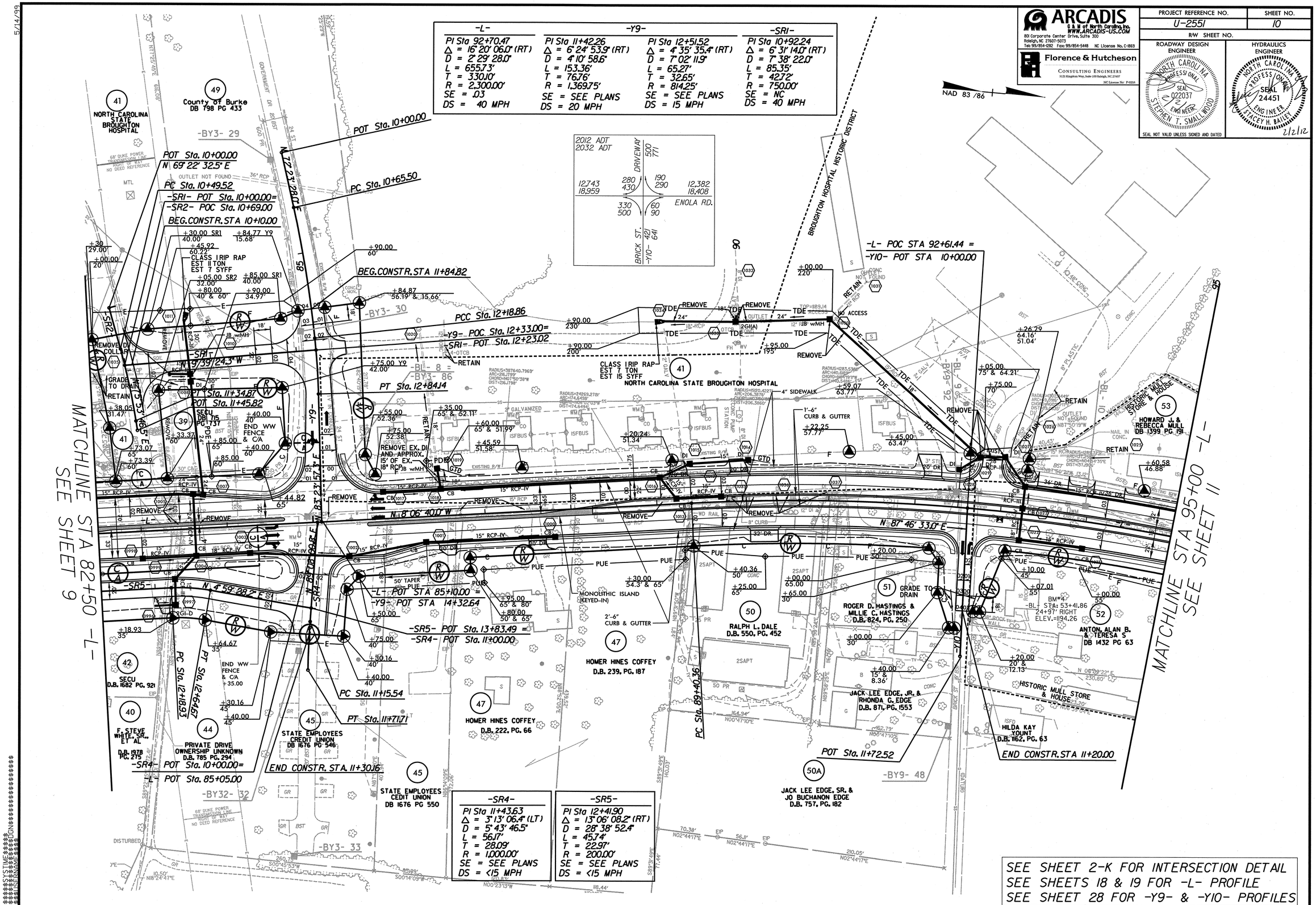

ARCADIS
G & M of North Carolina, Inc.
WWW.ARCADIS-US.COM
801 Corporate Center Drive, Suite 300
Raleigh, NC 27607-5073
Tel: 919/854-1282 Fax: 919/854-5448 NC License No. C-1869
Florence & Hutcheson
CONSULTING ENGINEERS
5121 Kingdom Way, Suite 100 Raleigh, NC 27607
NC License No: P-0258
PROJECT REFERENCE NO.
U-2551
SHEET NO.
10
R/W SHEET NO.
ROADWAY DESIGN ENGINEER
NORTH CAROLINA PROFESSIONAL SEAL 022037 ENGINEER STEPHEN T. SMALLWOOD
HYDRAULICS ENGINEER
NORTH CAROLINA PROFESSIONAL SEAL 24451 ENGINEER STACEY H. BAILEY
2/2/12
SEAL NOT VALID UNLESS SIGNED AND DATED
NAD 83 /86
-L-
PI Sta 92+70.47
Δ = 16° 20' 06.0" (RT)
D = 2° 29' 28.0"
L = 655.73'
T = 330.10'
R = 2,300.00'
SE = .03
DS = 40 MPH
-Y9-
PI Sta 11+42.26
Δ = 6° 24' 53.9" (RT)
D = 4° 10' 58.6"
L = 153.36'
T = 76.76'
R = 1,369.75'
SE = SEE PLANS
DS = 20 MPH
PI Sta 12+51.52
Δ = 4° 35' 35.4" (RT)
D = 7° 02' 11.9"
L = 65.27'
T = 32.65'
R = 814.25'
SE = SEE PLANS
DS = 15 MPH
-SR1-
PI Sta 10+92.24
Δ = 6° 31' 14.0" (RT)
D = 7° 38' 22.0"
L = 85.35'
T = 42.72'
R = 750.00'
SE = NC
DS = 40 MPH
2012 ADT
2032 ADT
DRIVEWAY
500
771
12,743
18,959
280
430
190
290
12,382
18,408
330
500
60
90
ENOLA RD.
BRICK ST.
-Y10- 421
641
NORTH CAROLINA STATE BROUGHTON HOSPITAL
County of Burke DB 798 PG 433
POT Sta. 10+00.00
N 69° 22' 32.5" E
PC Sta. 10+49.52
-SR1- POT Sta. 10+00.00=
-SR2- POC Sta. 10+69.00
BEG.CONSTR.STA 10+10.00
PC Sta. 10+65.50
BEG.CONSTR.STA 11+84.82
PCC Sta. 12+18.86
-Y9- POC Sta. 12+33.00=
-SR1- POT Sta. 12+23.02
PT Sta. 12+84.14
-L- POC STA 92+61.44 =
-Y10- POT STA 10+00.00
CLASS I RIP RAP
EST 7 TON
EST 15 SYFF
NORTH CAROLINA STATE BROUGHTON HOSPITAL
BROUGHTON HOSPITAL HISTORIC DISTRICT
HISTORIC MULL STORE & HOUSE
HOWARD J. & REBECCA MULL DB 1399 PG 191
MATCHLINE STA 82+50 -L- SEE SHEET 9
MATCHLINE STA 95+00 -L- SEE SHEET 11
-L- POT STA 85+10.00 =
-Y9- POT STA 14+32.64
-SR5- POT Sta. 13+83.49 =
-SR4- POT Sta. 11+00.00
PC Sta. 11+15.54
PT Sta. 11+71.71
PC Sta. 12+18.93
PT Sta. 12+64.67
PC Sta. 89+40.36
PT Sta. 11+72.52
END CONSTR. STA. 11+30.16
END CONSTR. STA 11+20.00
-SR4- POT Sta. 10+00.00=
-L- POT Sta. 85+05.00
-SR4-
PI Sta 11+43.63
Δ = 3° 13' 06.4" (LT)
D = 5° 43' 46.5"
L = 56.17'
T = 28.09'
R = 1,000.00'
SE = SEE PLANS
DS = <15 MPH
-SR5-
PI Sta 12+41.90
Δ = 13° 06' 08.2" (RT)
D = 28° 38' 52.4"
L = 45.74'
T = 22.97'
R = 200.00'
SE = SEE PLANS
DS = <15 MPH
SECU DB 1682 PG. 921
F. STEVE WHITE, SR., ET AL D.B. 1978 PG. 275
PRIVATE DRIVE OWNERSHIP UNKNOWN D.B. 785 PG. 294
STATE EMPLOYEES CREDIT UNION DB 1676 PG 546
STATE EMPLOYEES CEDIT UNION DB 1676 PG 550
HOMER HINES COFFEY D.B. 239, PG. 187
HOMER HINES COFFEY D.B. 222, PG. 66
RALPH L. DALE D.B. 550, PG. 452
ROGER D. HASTINGS & MILLIE C. HASTINGS D.B. 824, PG. 250
JACK LEE EDGE, JR. & RHONDA G. EDGE D.B. 871, PG. 1553
JACK LEE EDGE, SR. & JO BUCHANON EDGE D.B. 757, PG. 182
ANTON, ALAN B. & TERESA S DB 1432 PG 63
HILDA KAY YOUNT D.B. 1162, PG. 63
SEE SHEET 2-K FOR INTERSECTION DETAIL
SEE SHEETS 18 & 19 FOR -L- PROFILE
SEE SHEET 28 FOR -Y9- & -Y10- PROFILES

5/14/99

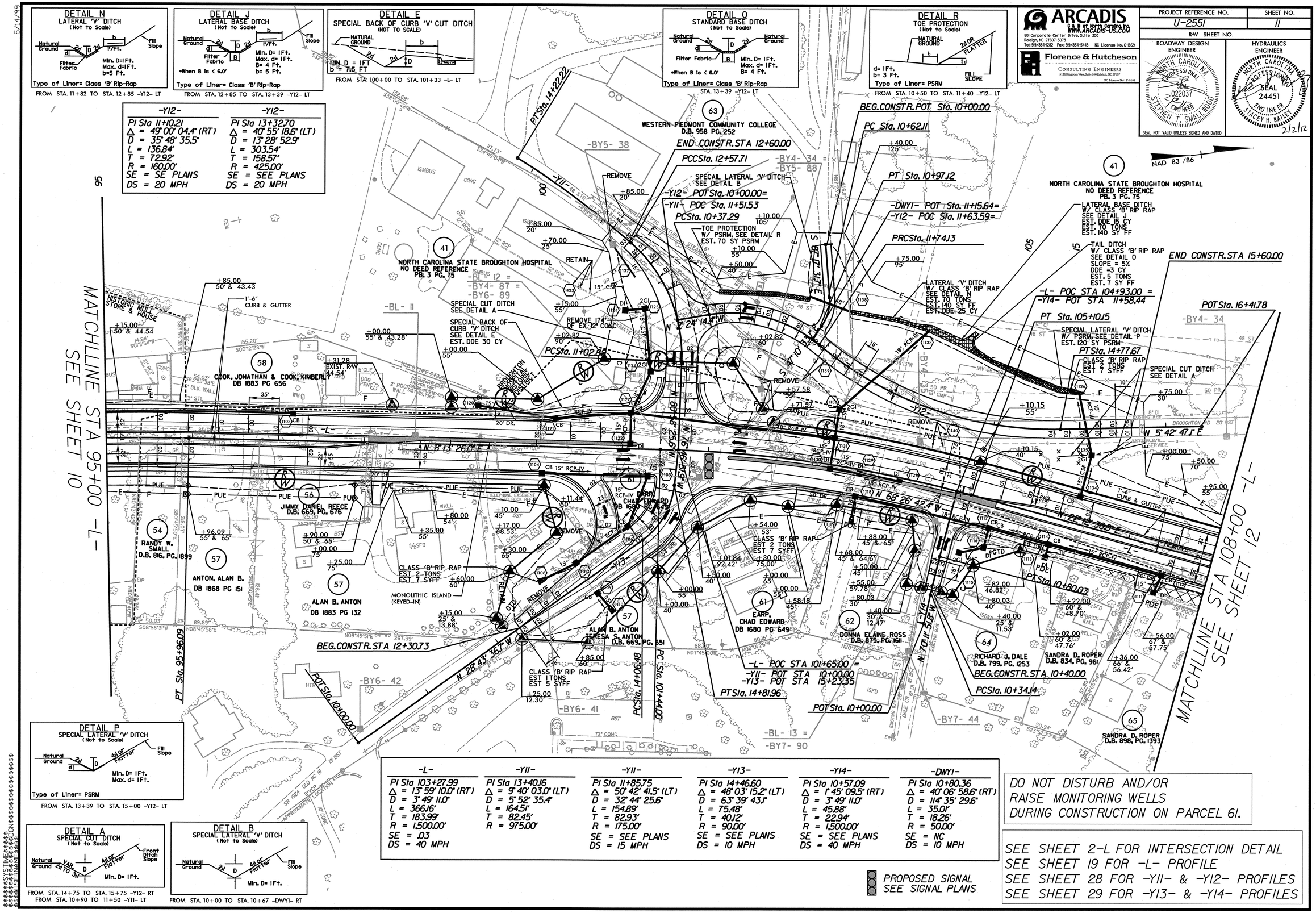

DO NOT DISTURB AND/OR RAISE MONITORING WELLS DURING CONSTRUCTION ON PARCEL 61.

SEE SHEET 2-L FOR INTERSECTION DETAIL
SEE SHEET 19 FOR -L- PROFILE
SEE SHEET 28 FOR -Y11- & -Y12- PROFILES
SEE SHEET 29 FOR -Y13- & -Y14- PROFILES

U2551 rdy nsh 11.dgn 2/2/2012 11:36:24 AM

5/14/99

ARCADIS
A.D.A. of North Carolina, Inc.
WWW.ARCADIS-US.COM
801 Corporate Center Drive, Suite 300
Raleigh, NC 27607-5073
Tel: 919/854-1282 Fax: 919/854-5448 NC License No. C-1869

Florence & Hutcheson
CONSULTING ENGINEERS
5121 Kingdom Way, Suite 100 Raleigh, NC 27607
NC License No: F-0258

PROJECT REFERENCE NO.	SHEET NO.
U-2551	12
R/W SHEET NO.	

ROADWAY DESIGN ENGINEER
NORTH CAROLINA PROFESSIONAL SEAL 022037 ENGINEER STEPHEN T. SMALLWOOD
SEAL NOT VALID UNLESS SIGNED AND DATED

HYDRAULICS ENGINEER
NORTH CAROLINA PROFESSIONAL SEAL 24451 ENGINEER STACEY H. BAILEY
2/2/12

NAD 83 /86

-L-	-Y15-
PI Sta 113+98.67	PI Sta 11+30.95
Δ = 6° 57' 06.0" (LT)	Δ = 20° 51' 44.8" (RT)
D = 3° 49' 11.0"	D = 14° 19' 26.2"
L = 181.99'	L = 145.65'
T = 91.11'	T = 73.64'
R = 1,500.00'	R = 400.00'
SE = .03	SE = SEE PLANS
DS = 40 MPH	DS = 35 MPH

DETAIL E
SPECIAL BACK OF CURB 'V' CUT DITCH
(NOT TO SCALE)
NATURAL GROUND; 2d; 2d; b; D; 2'-6" CURB
MIN D = 1FT
b = 7.5 FT
FROM STA. 119+50 TO STA. 125+15 -L- RT

DETAIL A
SPECIAL CUT DITCH
(Not to Scale)
Natural Ground; 2d; D; 4d or Flatter; Front Ditch Slope
Min. D= 1Ft.
FROM STA. 10+63 TO STA. 11+96 -Y15- LT
FROM STA. 10+47 TO STA. 11+43 -Y15- RT

DETAIL B
SPECIAL LATERAL 'V' DITCH
(Not to Scale)
Natural Ground; 2d; D; 4d or Flatter; Fill Slope
Min. D= 1Ft.
FROM STA. 111+78 TO STA. 112+50 -L- LT

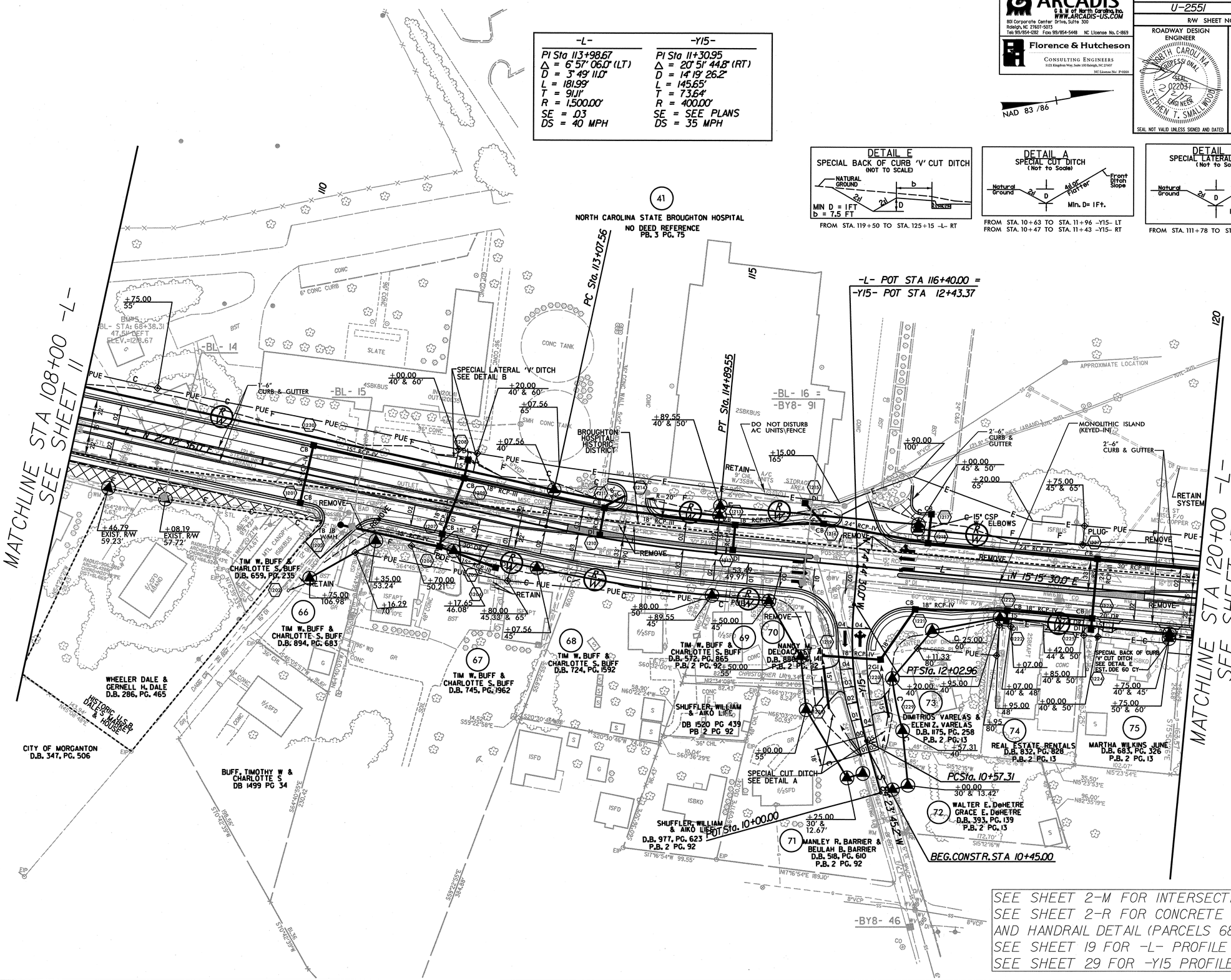

SEE SHEET 2-M FOR INTERSECTION DETAIL
SEE SHEET 2-R FOR CONCRETE STEPS AND HANDRAIL DETAIL (PARCELS 68 & 69)
SEE SHEET 19 FOR -L- PROFILE
SEE SHEET 29 FOR -Y15 PROFILE

$$$$$SYSTIME$$$$$ $$$$$DGN$$$$$

u2551 rdy nsh 12 dgn 2/2/2012 11:44:34 AM

5/14/99

-L-	-Y16-
PI Sta 125+86.26	PI Sta 15+26.26
Δ = 30° 18' 54.0" (RT)	Δ = 19° 44' 07.0" (RT)
D = 20° 27' 46.0"	D = 1° 59' 59.9"
L = 148.15'	L = 986.78'
T = 75.85'	T = 498.32'
R = 280.00'	R = 2,864.82'
SE = SEE PLANS	
DS = 30 MPH	

ARCADIS
G & W of North Carolina, Inc.
WWW.ARCADIS-US.COM
801 Corporate Center Drive, Suite 300
Raleigh, NC 27607-5073
Tel: 919/854-6282 Fax: 919/854-5448 NC License No. C-1869

Florence & Hutcheson
CONSULTING ENGINEERS
3121 Kingdom Way, Suite 100 Raleigh, NC 27607
NC License No: F-0258

PROJECT REFERENCE NO.	SHEET NO.
U-2551	13
R/W SHEET NO.	
ROADWAY DESIGN ENGINEER	HYDRAULICS ENGINEER

NORTH CAROLINA PROFESSIONAL SEAL 022037 ENGINEER STEPHEN T. SMALLWOOD
2/2/12
SEAL NOT VALID UNLESS SIGNED AND DATED

NORTH CAROLINA PROFESSIONAL SEAL 24451 ENGINEER STACEY H. BAILEY
2/2/12

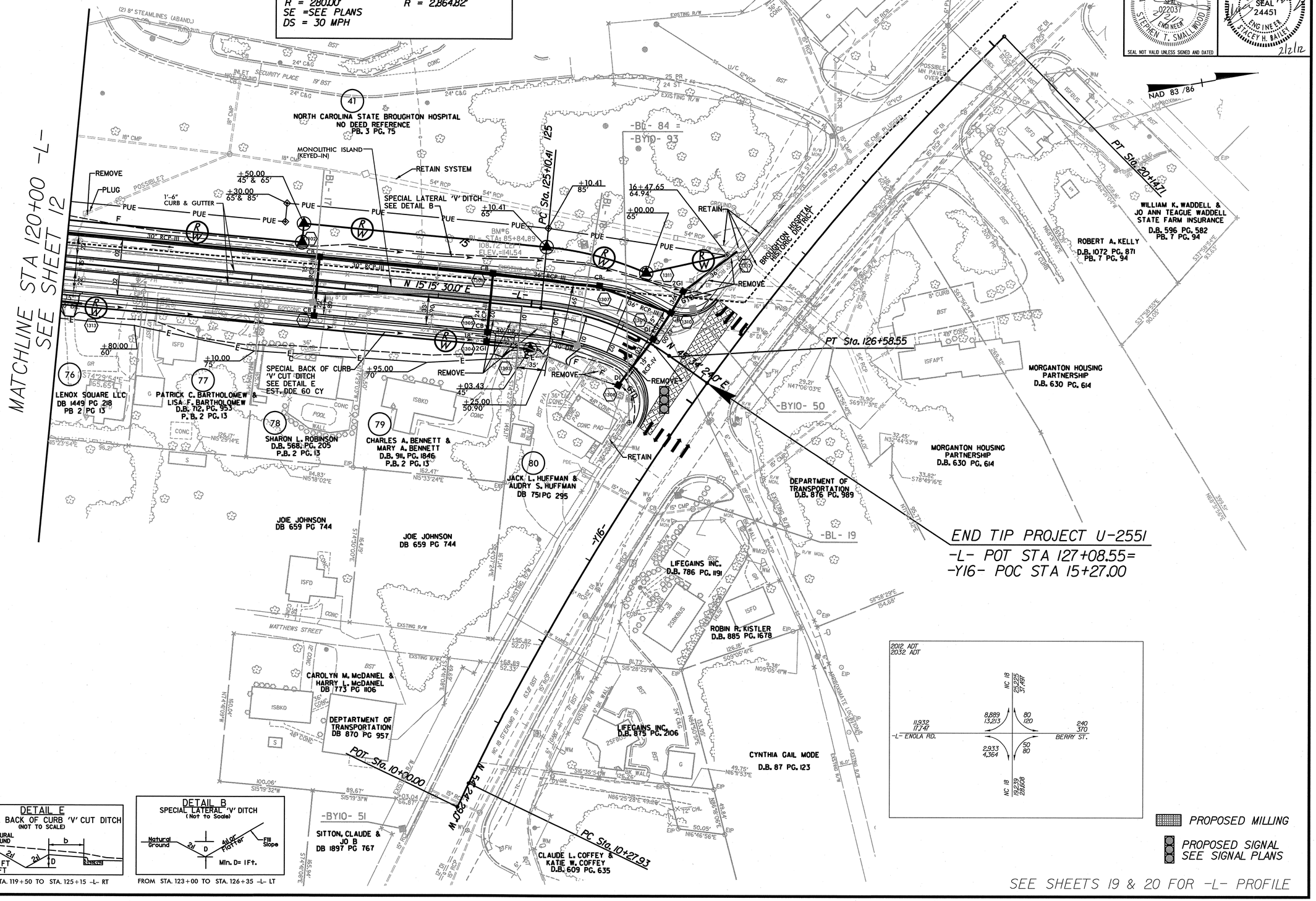

DETAIL E
SPECIAL BACK OF CURB 'V' CUT DITCH
(NOT TO SCALE)
NATURAL GROUND
b
2:1
D
MIN D = 1FT
b = 7.5 FT
FROM STA. 119+50 TO STA. 125+15 -L- RT

DETAIL B
SPECIAL LATERAL 'V' DITCH
(Not to Scale)
Natural Ground
2:1
D
ALOF FLOWLINE
Fill Slope
Min. D= 1Ft.
FROM STA. 123+00 TO STA. 126+35 -L- LT

SYSTIME= 09:00 DGN= 1551 rdy dsh 13.dgn 2/7/2012 12:22:28 PM

ARCADIS
G & M of North Carolina, Inc.
WWW.ARCADIS-US.COM
801 Corporate Center Drive, Suite 300
Raleigh, NC 27607-5073
Tel: 919/854-1282 Fax: 919/854-5448 NC License No. C-1869

Florence & Hutcheson
CONSULTING ENGINEERS
5121 Kingdom Way, Suite 100 Raleigh, NC 27607
NC License No: F-0258

PROJECT REFERENCE NO.	SHEET NO.
U-2551	14
R/W SHEET NO.	

ROADWAY DESIGN ENGINEER — NORTH CAROLINA PROFESSIONAL SEAL 022037 ENGINEER STEPHEN T. SMALLWOOD 2/2/12

HYDRAULICS ENGINEER — NORTH CAROLINA PROFESSIONAL SEAL 24451 ENGINEER STACEY H. BAILEY 2/2/12

SEAL NOT VALID UNLESS SIGNED AND DATED

DETAIL F
TOE PROTECTION
(Not to Scale)
Natural Ground
b
2:1 OR FLATTER
Fill Slope
d
d= 1 Ft.
b= 3 Ft.
Filter Fabric
Type of Liner= CLASS 'B' Rip-Rap
FROM STA. 22+50 TO STA. 23+00 -Y8- LT

-RPA-
PIs Sta 11+66.71
Θs = 4°12' 46.5"
Ls = 250.00'
LT = 166.71'
ST = 83.38'

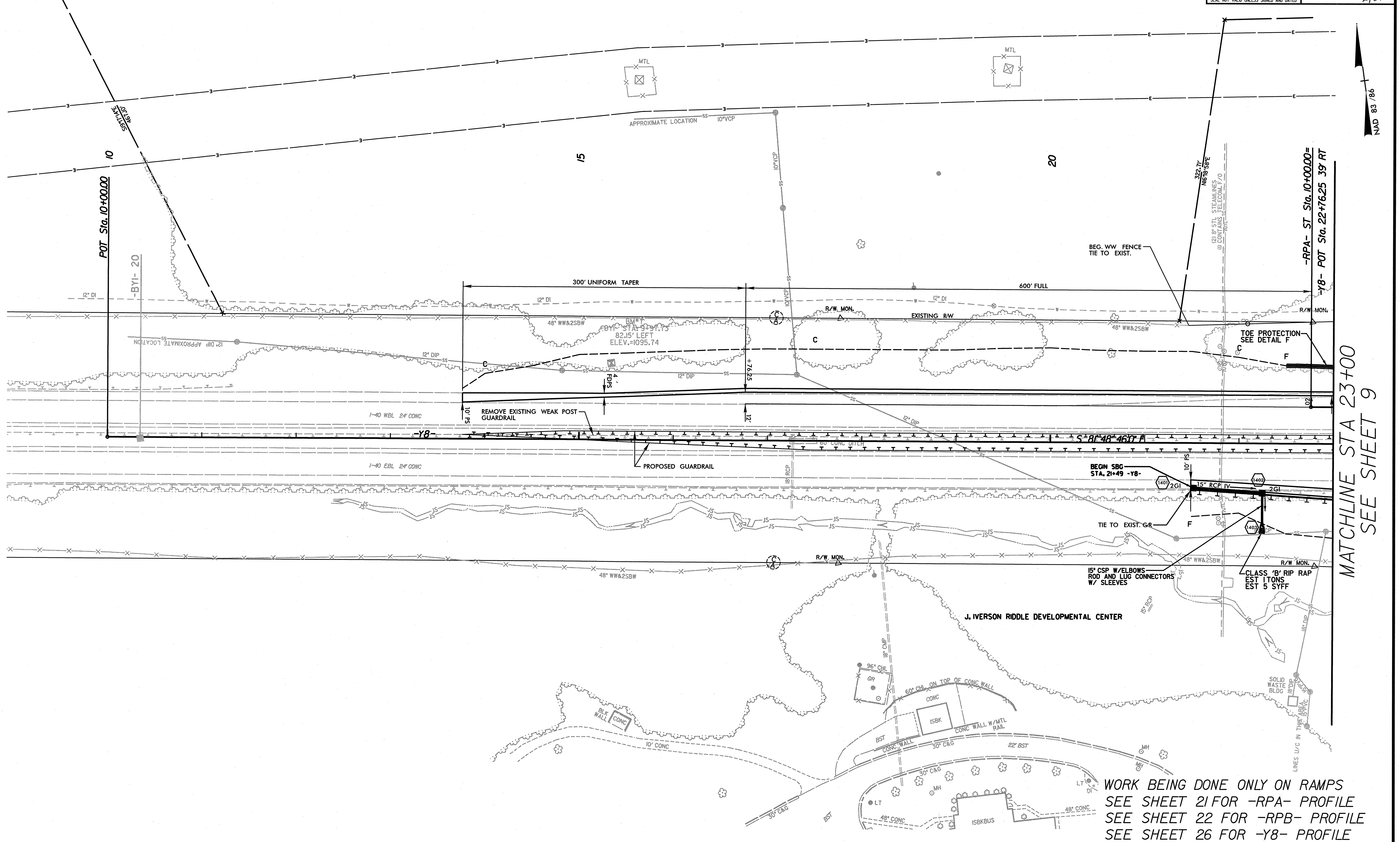

WORK BEING DONE ONLY ON RAMPS
SEE SHEET 21 FOR -RPA- PROFILE
SEE SHEET 22 FOR -RPB- PROFILE
SEE SHEET 26 FOR -Y8- PROFILE

5/14/99
$$$$$$SYSTIME$$$$$
$$$$$$DGN$$$$$$$$$$$$$$$$$
$$$$USERNAME$$$$
551 rdy psh 14.dgn 2/2/2012 1:09:06 PM

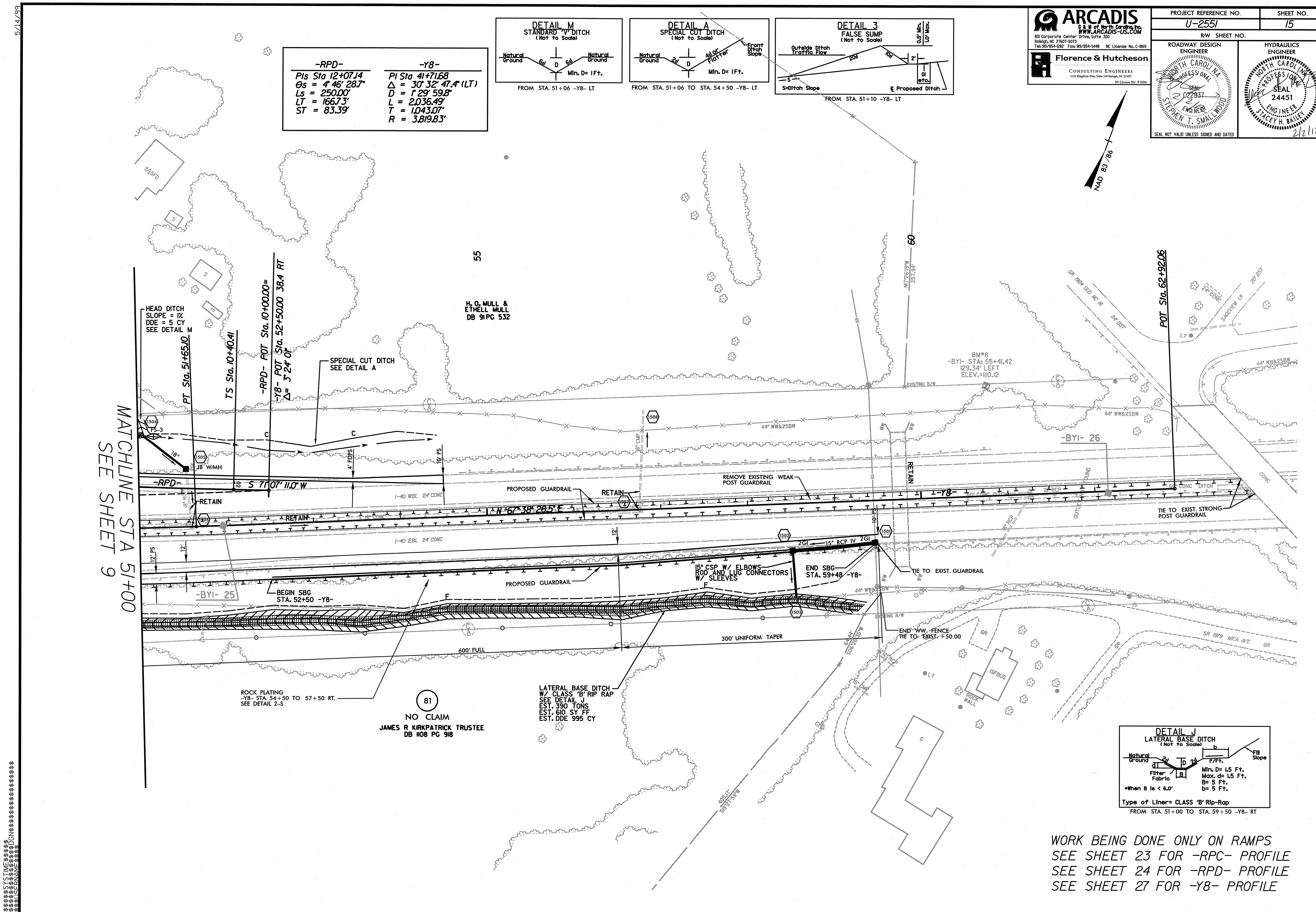

PROJECT REFERENCE NO.
U-2551
SHEET NO.
15
R/W SHEET NO.
ARCADIS
G & M of North Carolina, Inc.
WWW.ARCADIS-US.COM
801 Corporate Center Drive, Suite 300
Raleigh, NC 27607-5073
Tel: 919/854-1282 Fax: 919/854-5448 NC License No. C-1869
Florence & Hutcheson
CONSULTING ENGINEERS
5121 Kingdom Way, Suite 100 Raleigh, NC 27607
NC License No: F-0258
ROADWAY DESIGN ENGINEER
NORTH CAROLINA PROFESSIONAL SEAL 022037 ENGINEER STEPHEN T. SMALLWOOD
SEAL NOT VALID UNLESS SIGNED AND DATED
HYDRAULICS ENGINEER
NORTH CAROLINA PROFESSIONAL SEAL 24451 ENGINEER STACEY H. BAILEY
2/2/12
NAD 83/86
5/14/99
-RPD-
PIs Sta 12+07.14
Θs = 4° 46' 28.7"
Ls = 250.00'
LT = 166.73'
ST = 83.39'
-Y8-
PI Sta 41+71.68
Δ = 30° 32' 47.4" (LT)
D = 1° 29' 59.8"
L = 2,036.49'
T = 1,043.07'
R = 3,819.83'
DETAIL M
STANDARD 'V' DITCH
(Not to Scale)
Natural Ground
6:1
D
Min. D= 1Ft.
FROM STA. 51+06 -Y8- LT
DETAIL A
SPECIAL CUT DITCH
(Not to Scale)
2:1
4:1 or Flatter
Front Ditch Slope
Min. D= 1Ft.
FROM STA. 51+06 TO STA. 54+50 -Y8- LT
DETAIL 3
FALSE SUMP
(Not to Scale)
Outside Ditch Traffic Flow
20:1
10:1
2'
0.5' Min.
1.0' Max.
GI etc.
S=Ditch Slope
℄ Proposed Ditch
FROM STA. 51+10 -Y8- LT
55
60
H. O. MULL & ETHELL MULL
DB 91 PG 532
1½ SFD
HEAD DITCH
SLOPE = 1%
DDE = 5 CY
SEE DETAIL M
PT Sta. 51+65.10
TS Sta. 10+40.41
-RPD- POT Sta. 10+00.00=
-Y8- POT Sta. 52+50.00 38.4 RT
Δ= 3° 24' 01"
SPECIAL CUT DITCH
SEE DETAIL A
MATCHLINE STA 51+00
SEE SHEET 9
FS-3
JB W/MH
18"
-RPD-
S 71° 07' 11.0" W
4' FDPS
10' PS
12' PS
12'
RETAIN
PROPOSED GUARDRAIL
I-40 WBL 24' CONC
I-40 EBL 24' CONC
N 67° 38' 26.5" E
18" CMP
44" WW&2SBW
EXISTING R/W
REMOVE EXISTING WEAK POST GUARDRAIL
BM#8
-BYI- STA: 55+41.42
129.34' LEFT
ELEV.=1110.12
N17°26'19"W
257.94'
-BYI- 26
-BYI- 25
-Y8-
60" CONC DITCH
18" RCP
POT Sta. 62+92.06
SR 1924 OLD NC 18
24' BST
SAGEVIEW LN
20' BST
24" CONC
CONC
TIE TO EXIST. STRONG POST GUARDRAIL
15" RCP IV
2GI
15" CSP W/ ELBOWS
ROD AND LUG CONNECTORS
W/ SLEEVES
END SBG
STA. 59+48 -Y8-
TIE TO EXIST. GUARDRAIL
BEGIN SBG
STA. 52+50 -Y8-
END WW FENCE
TIE TO EXIST. +50.00
300' UNIFORM TAPER
600' FULL
64.44'
S06°26'35"W
405.17'
S19°27'58"W
SR 1979 MICA AVE
1SFBUS
ROCK WALL
ROCK PLATING
-Y8- STA. 54+50 TO 57+50 RT.
SEE DETAIL 2-S
81
NO CLAIM
JAMES R KIRKPATRICK TRUSTEE
DB 1108 PG 918
LATERAL BASE DITCH
W/ CLASS 'B' RIP RAP
SEE DETAIL J
EST. 390 TONS
EST. 610 SY FF
EST. DDE 995 CY
DETAIL J
LATERAL BASE DITCH
(Not to Scale)
Natural Ground
Filter Fabric
1"/Ft.
Fill Slope
Min. D= 1.5 Ft.
Max. d= 1.5 Ft.
B= 5 Ft.
b= 5 Ft.
*When B is < 6.0'
Type of Liner= CLASS 'B' Rip-Rap
FROM STA. 51+00 TO STA. 59+50 -Y8- RT
WORK BEING DONE ONLY ON RAMPS
SEE SHEET 23 FOR -RPC- PROFILE
SEE SHEET 24 FOR -RPD- PROFILE
SEE SHEET 27 FOR -Y8- PROFILE

PROJECT REFERENCE NO.	SHEET NO.
U-2551	16

ROADWAY DESIGN ENGINEER — SEAL 022037, NORTH CAROLINA PROFESSIONAL ENGINEER, STEPHEN T. SMALLWOOD

HYDRAULICS ENGINEER — SEAL 24451, NORTH CAROLINA PROFESSIONAL ENGINEER, STACEY H. BAILEY — 1/31/12

SEAL NOT VALID UNLESS SIGNED AND DATED

5/28/99

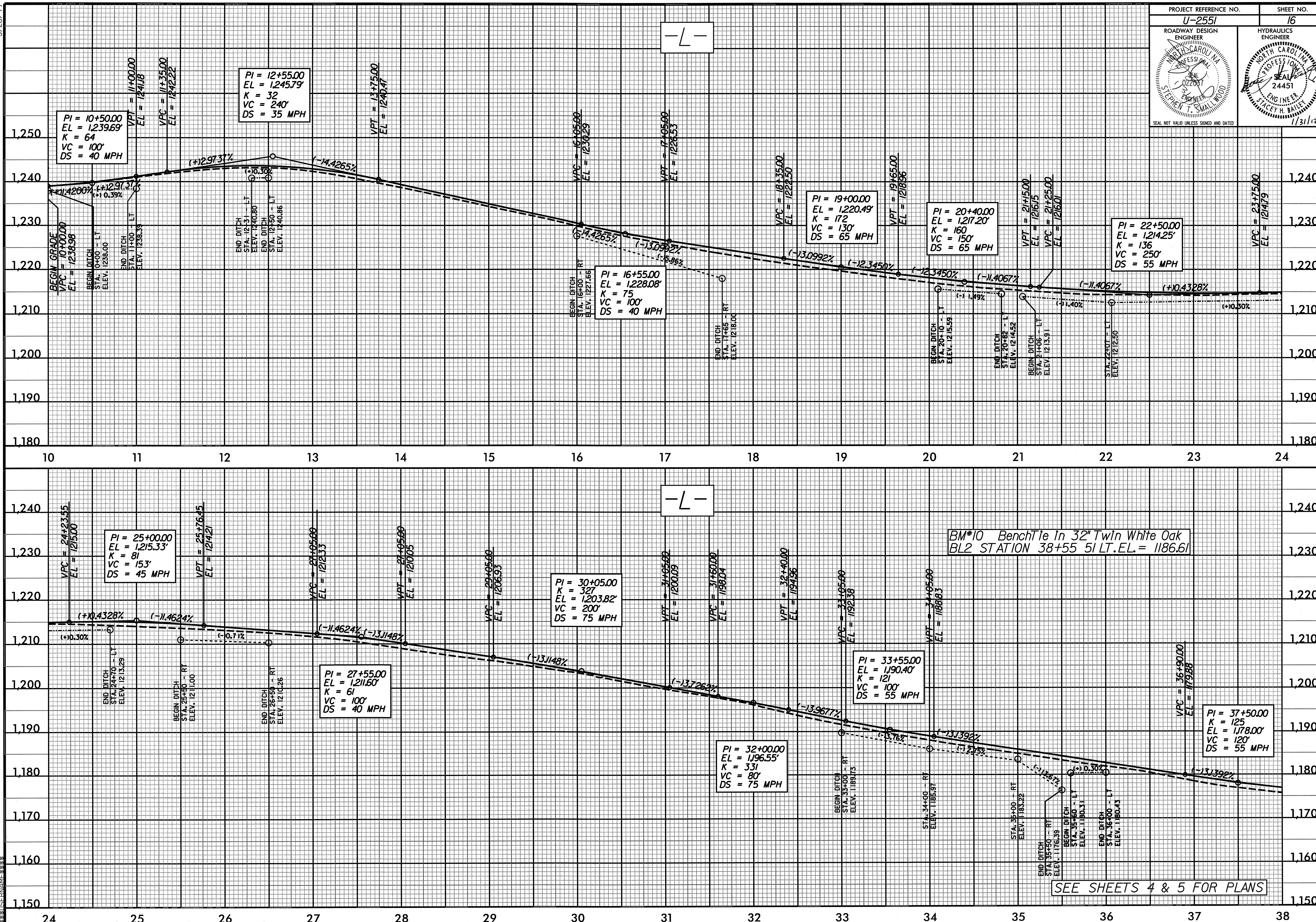

$$$$$$SYSTIME$$$$$ $$$$$$DGN$$$$$$$$$$$$$$$$$ $$$$$USERNAME$$$$$

U2551_rdy_pf1_psh16.dgn 1/10/2012 9:07:12 AM

5/28/99

PROJECT REFERENCE NO.	SHEET NO.
U-2551	17

ROADWAY DESIGN ENGINEER
NORTH CAROLINA PROFESSIONAL SEAL 022031 ENGINEER STEPHEN T. SMALLWOOD
SEAL NOT VALID UNLESS SIGNED AND DATED

HYDRAULICS ENGINEER
NORTH CAROLINA PROFESSIONAL SEAL 24451 ENGINEER STACEY H. BAILEY
1/31/12

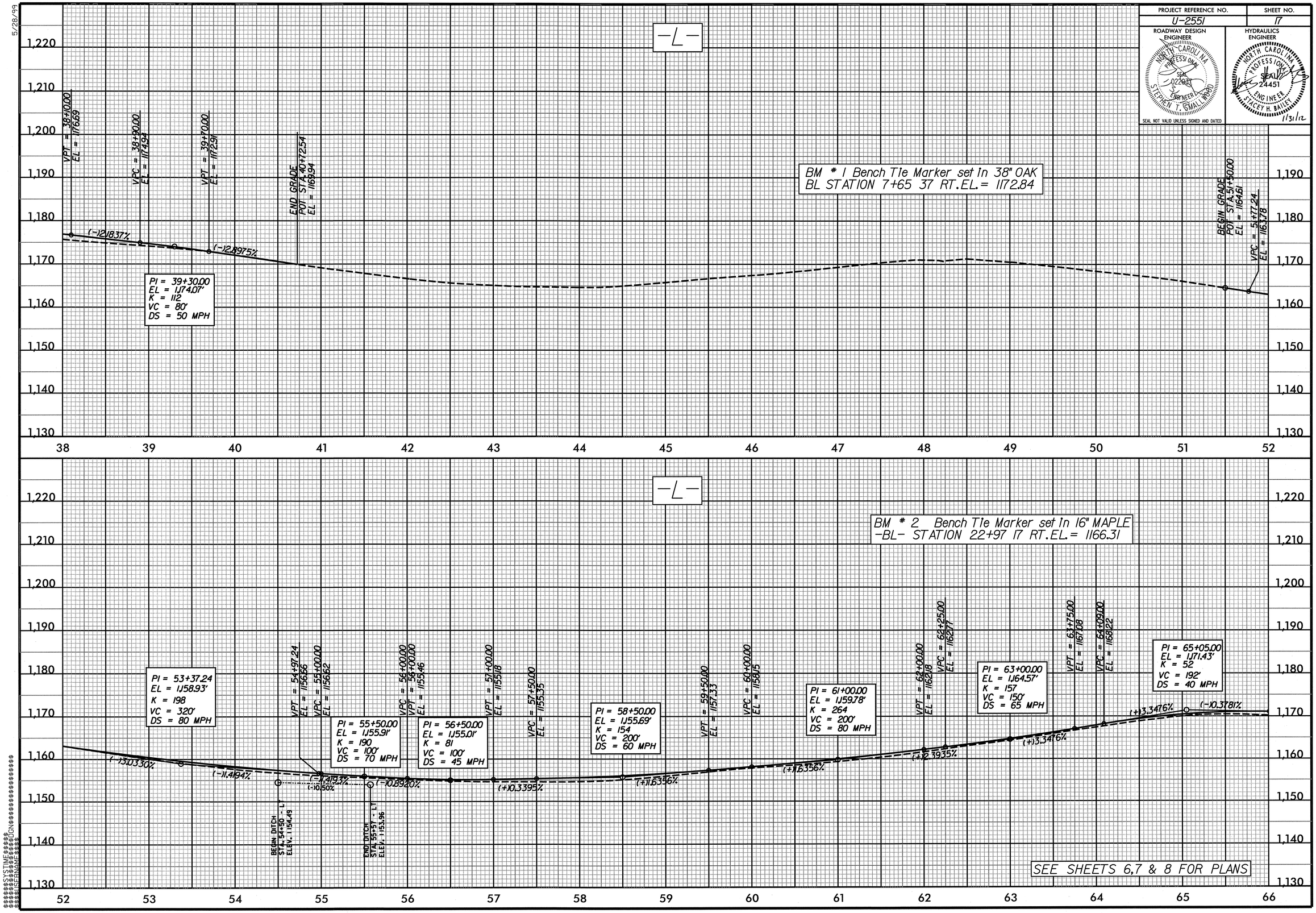

5/28/99

PROJECT REFERENCE NO.	SHEET NO.
U-2551	18

ROADWAY DESIGN ENGINEER
NORTH CAROLINA PROFESSIONAL SEAL 022034 ENGINEER STEPHEN T. SMALLWOOD
SEAL NOT VALID UNLESS SIGNED AND DATED

HYDRAULICS ENGINEER
NORTH CAROLINA PROFESSIONAL SEAL 24451 ENGINEER STACEY H. BAILEY
11/31/12

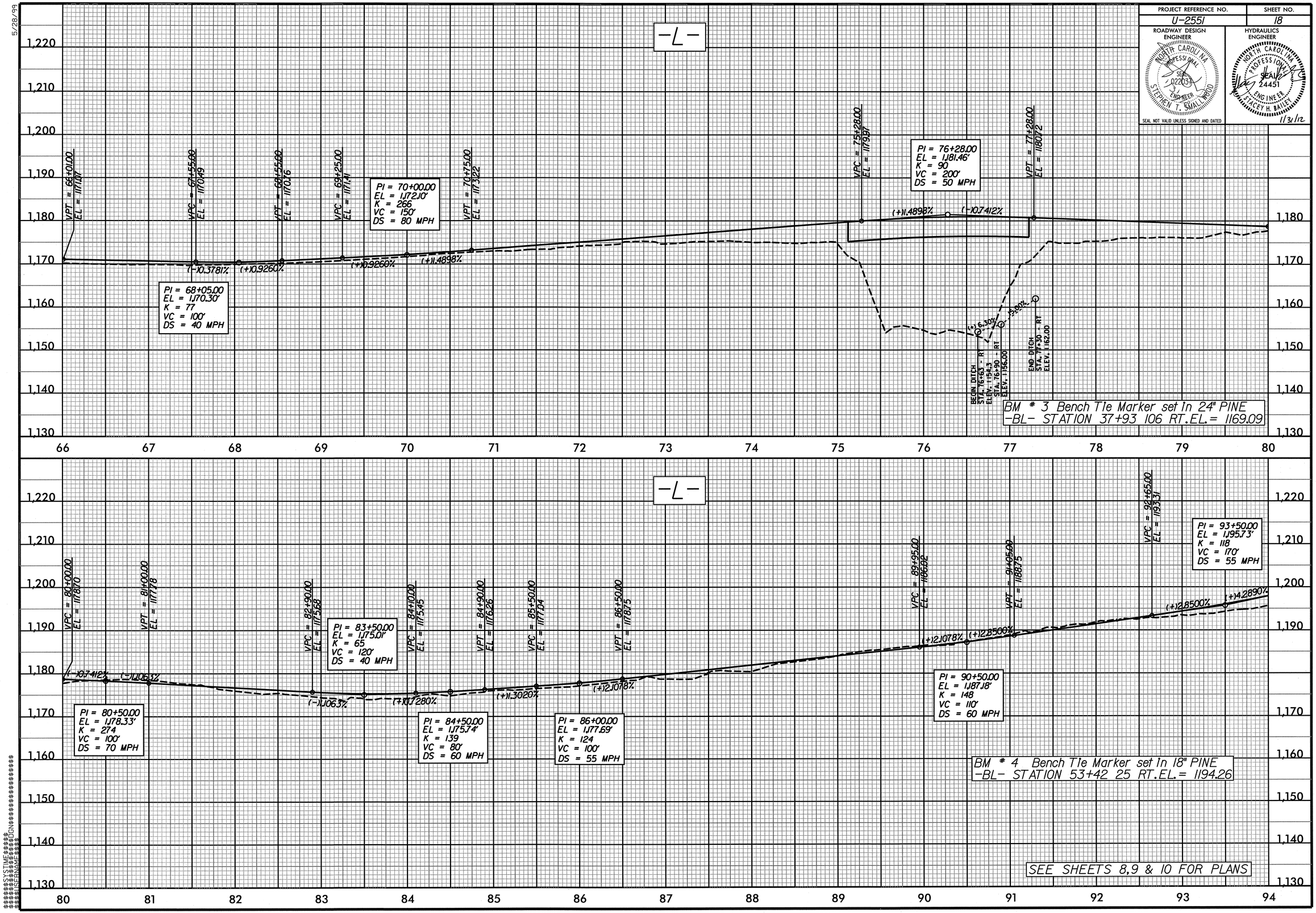

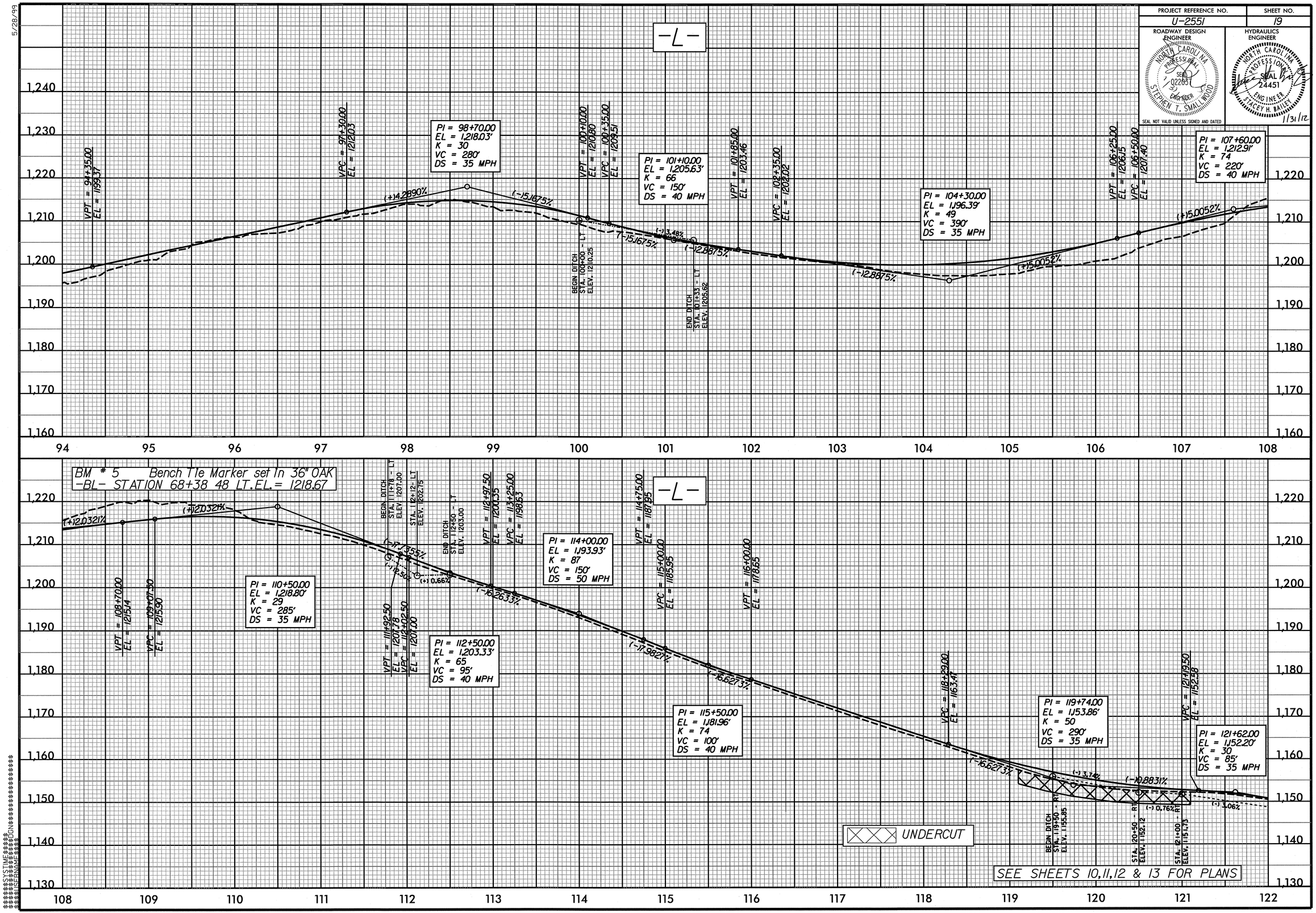

PROJECT REFERENCE NO.
U-2551
SHEET NO.
19
ROADWAY DESIGN ENGINEER
HYDRAULICS ENGINEER
SEAL NOT VALID UNLESS SIGNED AND DATED
1/31/12
-L-
VPT = 94+35.00
EL = 1199.37
VPC = 97+30.00
EL = 1212.03
PI = 98+70.00
EL = 1,218.03'
K = 30
VC = 280'
DS = 35 MPH
VPT = 100+10.00
EL = 1210.80
VPC = 100+35.00
EL = 1209.51
PI = 101+10.00
EL = 1,205.63'
K = 66
VC = 150'
DS = 40 MPH
VPT = 101+85.00
EL = 1203.46
VPC = 102+35.00
EL = 1202.02
PI = 104+30.00
EL = 1,196.39'
K = 49
VC = 390'
DS = 35 MPH
VPT = 106+25.00
EL = 1206.15
VPC = 106+50.00
EL = 1207.40
PI = 107+60.00
EL = 1,212.91'
K = 74
VC = 220'
DS = 40 MPH
(+)4.2890%
(-)5.1675%
(-)5.1675%
(-)3.48%
(-)2.8875%
(-)2.8875%
(+)5.0052%
(+)5.0052%
BEGIN DITCH
STA. 100+00 - LT
ELEV. 1210.25
END DITCH
STA. 101+33 - LT
ELEV. 1205.62
BM # 5 Bench Tie Marker set in 36" OAK
-BL- STATION 68+38 48 LT. EL. = 1218.67
(+)2.0321%
(+)2.0321%
VPT = 108+70.00
EL = 1215.14
VPC = 109+07.50
EL = 1215.90
PI = 110+50.00
EL = 1,218.80'
K = 29
VC = 285'
DS = 35 MPH
BEGIN DITCH
STA. 111+78 - LT
ELEV. 1207.00
STA. 112+12 - LT
ELEV. 1202.75
VPT = 111+92.50
EL = 1207.78
VPC = 112+02.50
EL = 1207.00
(-)7.7355%
(-)12.50%
(+) 0.66%
END DITCH
STA. 112+50 - LT
ELEV. 1203.00
PI = 112+50.00
EL = 1,203.33'
K = 65
VC = 95'
DS = 40 MPH
VPT = 112+97.50
EL = 1200.35
VPC = 113+25.00
EL = 1198.63
PI = 114+00.00
EL = 1,193.93'
K = 87
VC = 150'
DS = 50 MPH
VPT = 114+75.00
EL = 1187.95
VPC = 115+00.00
EL = 1185.95
VPT = 116+00.00
EL = 1178.65
(-)16.2633%
(-)17.9827%
(-)16.6273%
PI = 115+50.00
EL = 1,181.96'
K = 74
VC = 100'
DS = 40 MPH
VPC = 118+29.00
EL = 1163.47
PI = 119+74.00
EL = 1,153.86'
K = 50
VC = 290'
DS = 35 MPH
VPC = 121+19.50
EL = 1152.58
PI = 121+62.00
EL = 1,152.20'
K = 30
VC = 85'
DS = 35 MPH
(-)16.6273%
(-)3.74%
(-)0.8831%
(-)0.76%
(-)3.06%
BEGIN DITCH
STA. 119+50 - RT
ELEV. 1155.85
STA. 120+50 - RT
ELEV. 1152.12
STA. 121+00 - RT
ELEV. 1151.73
UNDERCUT
SEE SHEETS 10,11,12 & 13 FOR PLANS

5/28/99

PROJECT REFERENCE NO.	SHEET NO.
U-2551	20

ROADWAY DESIGN ENGINEER
NORTH CAROLINA PROFESSIONAL SEAL 022031 ENGINEER STEPHEN T. SMALLWOOD
SEAL NOT VALID UNLESS SIGNED AND DATED

HYDRAULICS ENGINEER
NORTH CAROLINA PROFESSIONAL SEAL 24451 ENGINEER STACEY H. BAILEY
1/31/12

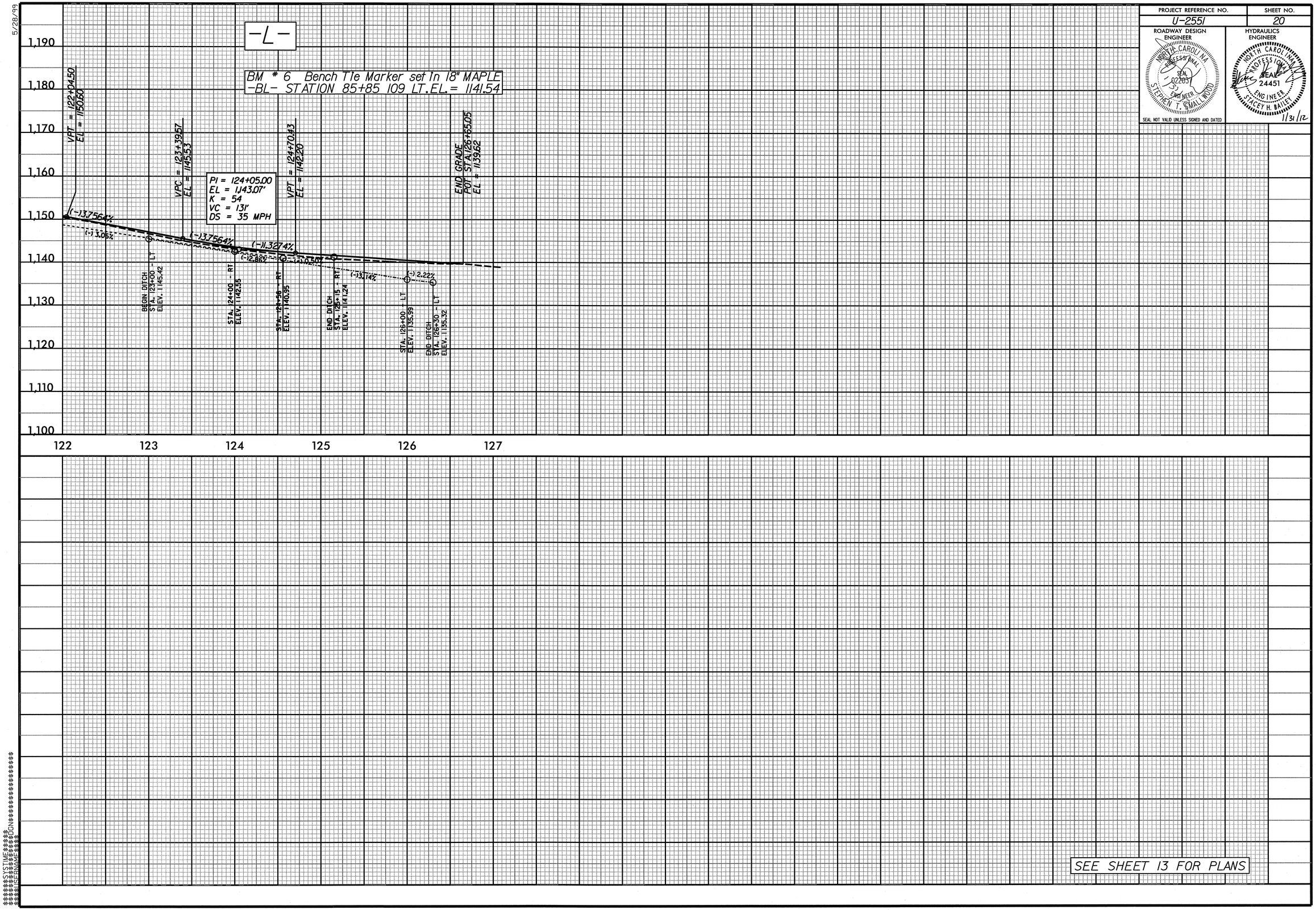

SEE SHEET 13 FOR PLANS

SYSTEM ENGINEER

5/28/99

PROJECT REFERENCE NO.	SHEET NO.
U-2551	21

ROADWAY DESIGN ENGINEER

NORTH CAROLINA PROFESSIONAL SEAL 022027 ENGINEER STEPHEN T. SMALLWOOD

SEAL NOT VALID UNLESS SIGNED AND DATED

HYDRAULICS ENGINEER

NORTH CAROLINA PROFESSIONAL SEAL 24451 ENGINEER STACEY H. BAILEY

1/31/12

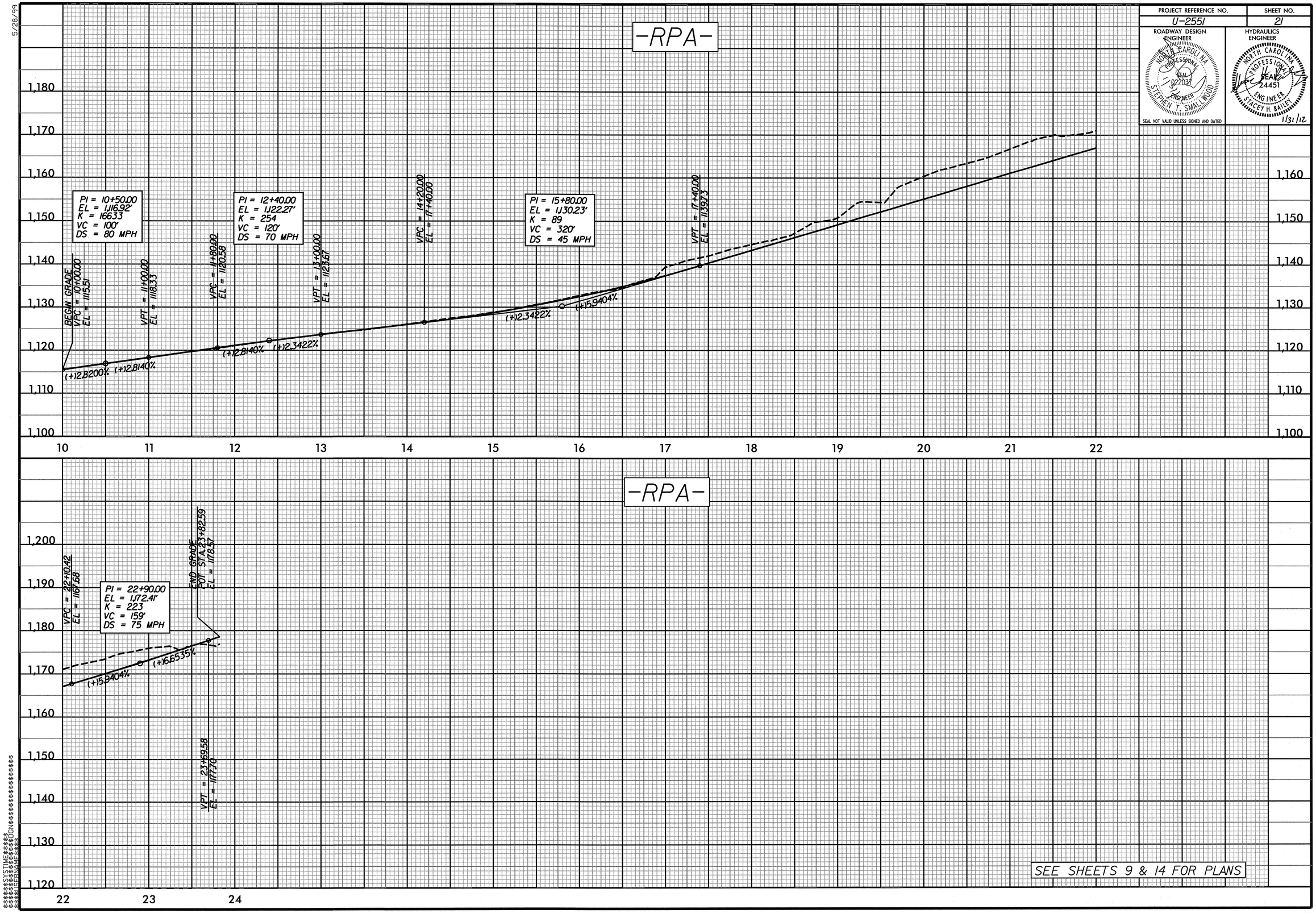

5/28/99

PROJECT REFERENCE NO.	SHEET NO.
U-2551	22

ROADWAY DESIGN ENGINEER
NORTH CAROLINA PROFESSIONAL SEAL 022039 ENGINEER STEPHEN T. SMALLWOOD
SEAL NOT VALID UNLESS SIGNED AND DATED

HYDRAULICS ENGINEER
NORTH CAROLINA PROFESSIONAL SEAL 24451 ENGINEER STACEY H. BAILEY
1/31/12

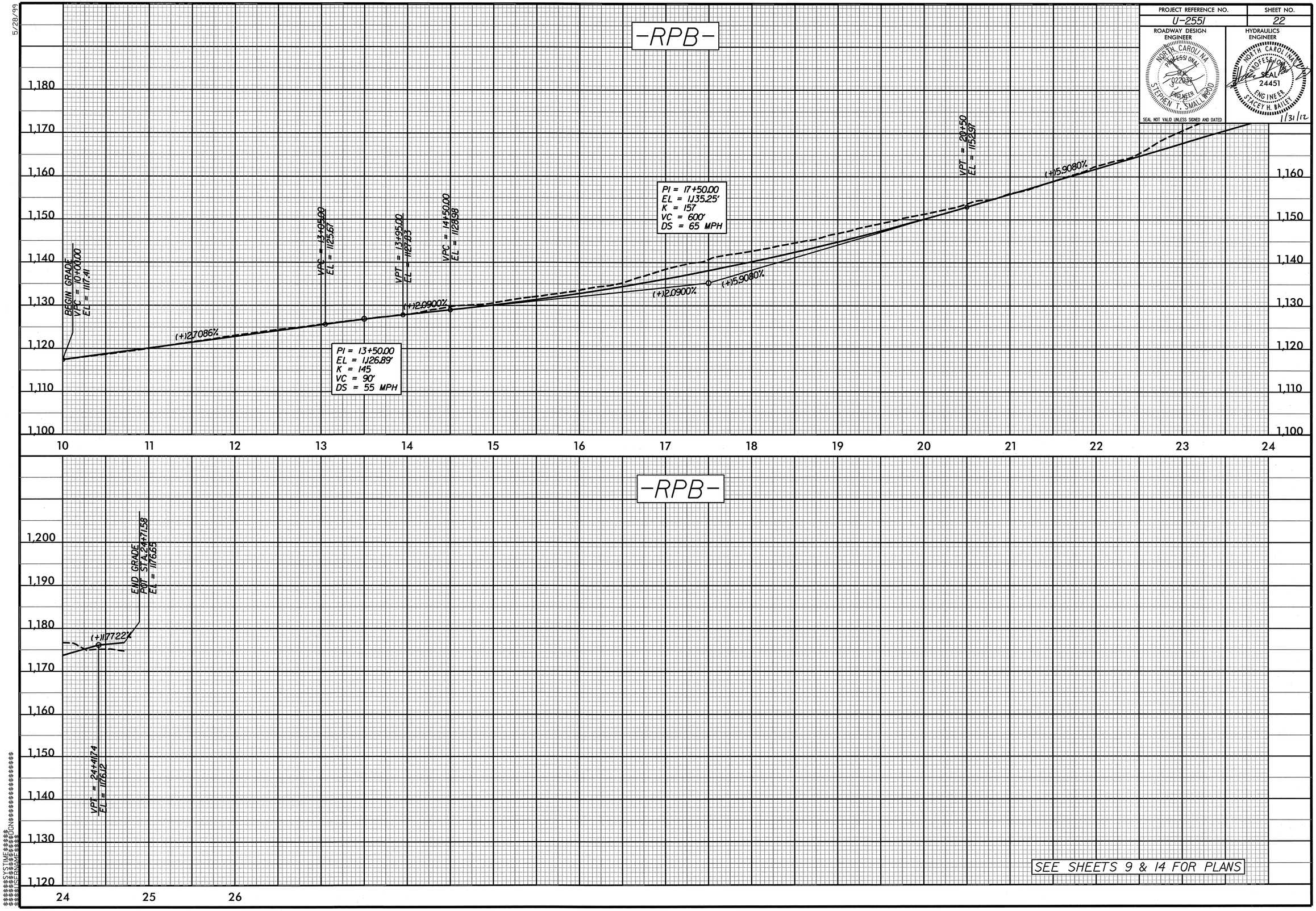

PROJECT REFERENCE NO.	SHEET NO.
U-2551	23

ROADWAY DESIGN ENGINEER

NORTH CAROLINA PROFESSIONAL SEAL 022037 ENGINEER STEPHEN T. SMALLWOOD

SEAL NOT VALID UNLESS SIGNED AND DATED

HYDRAULICS ENGINEER

NORTH CAROLINA PROFESSIONAL SEAL 24451 ENGINEER STACEY H. BAILEY

1/31/12

5/28/99

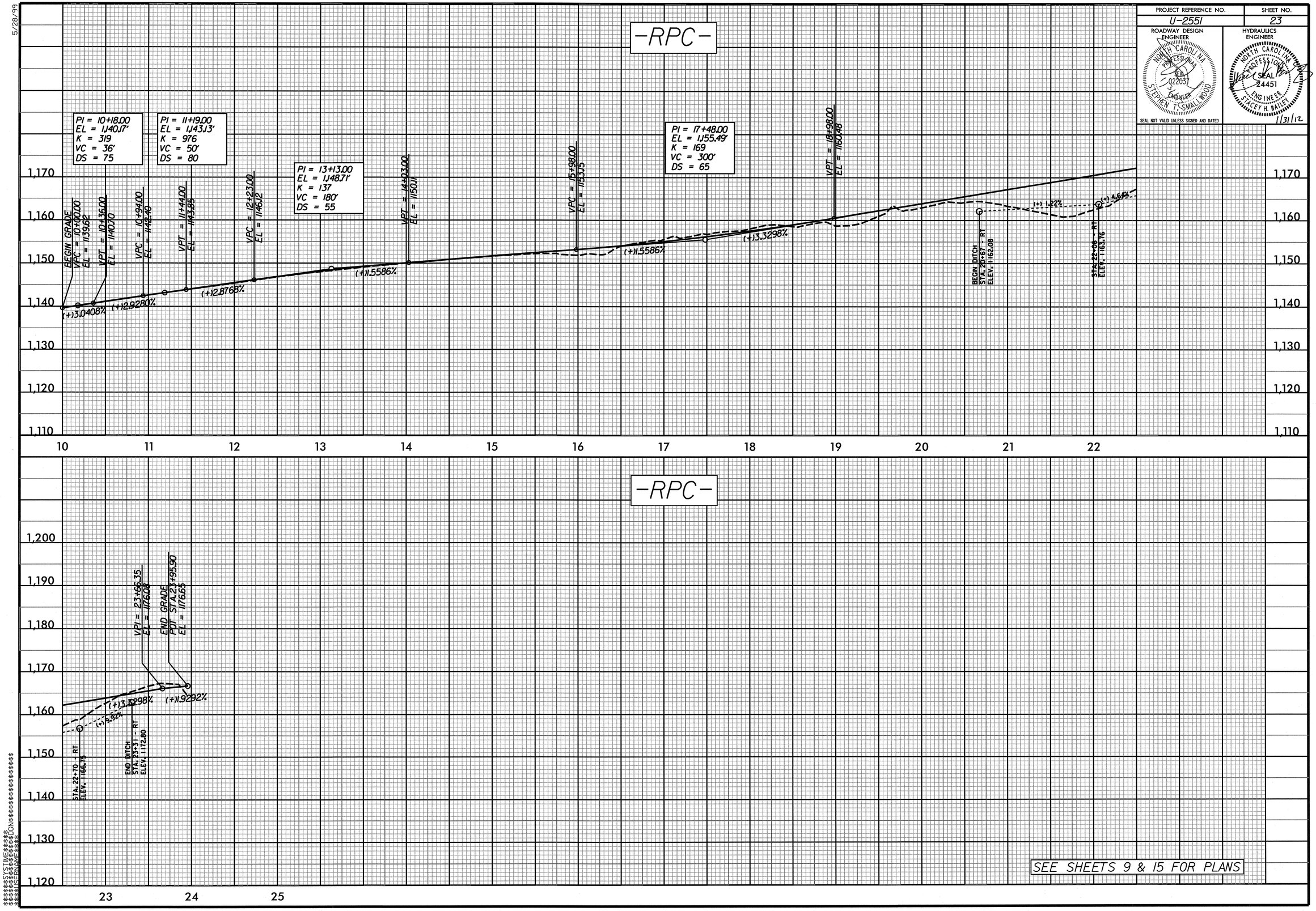

SEE SHEETS 9 & 15 FOR PLANS

5/28/99

PROJECT REFERENCE NO.	SHEET NO.
U-2551	24

ROADWAY DESIGN ENGINEER
NORTH CAROLINA PROFESSIONAL SEAL 022030 ENGINEER STEPHEN T. SMALLWOOD
SEAL NOT VALID UNLESS SIGNED AND DATED

HYDRAULICS ENGINEER
NORTH CAROLINA PROFESSIONAL SEAL 24451 ENGINEER STACEY H. BAILEY
1/31/12

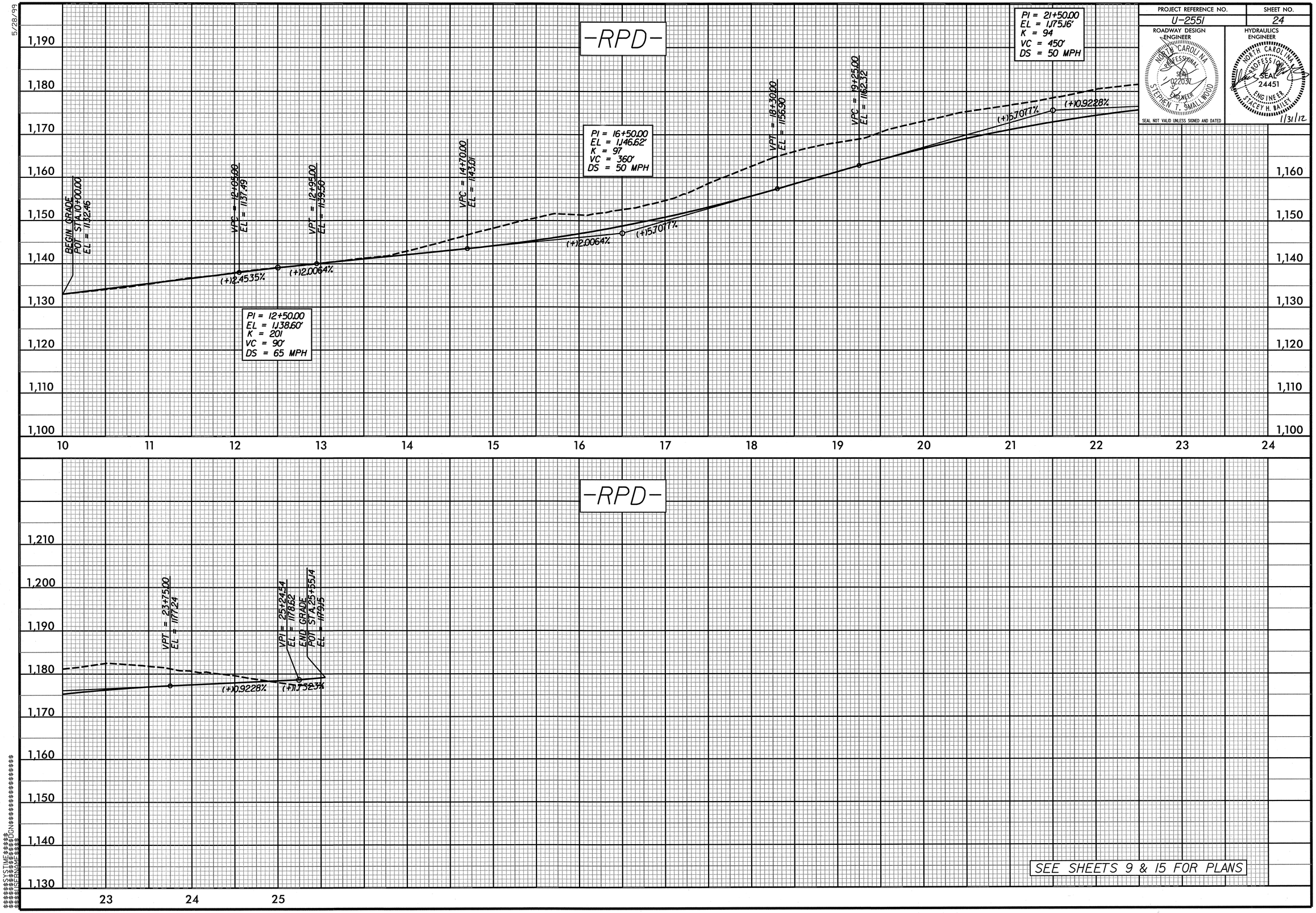

PROJECT REFERENCE NO.	SHEET NO.
U-2551	25

ROADWAY DESIGN ENGINEER — NORTH CAROLINA PROFESSIONAL SEAL 022037 ENGINEER STEPHEN T. SMALLWOOD

HYDRAULICS ENGINEER — NORTH CAROLINA PROFESSIONAL SEAL 24451 ENGINEER STACEY H. BAILEY 1/31/12

SEAL NOT VALID UNLESS SIGNED AND DATED

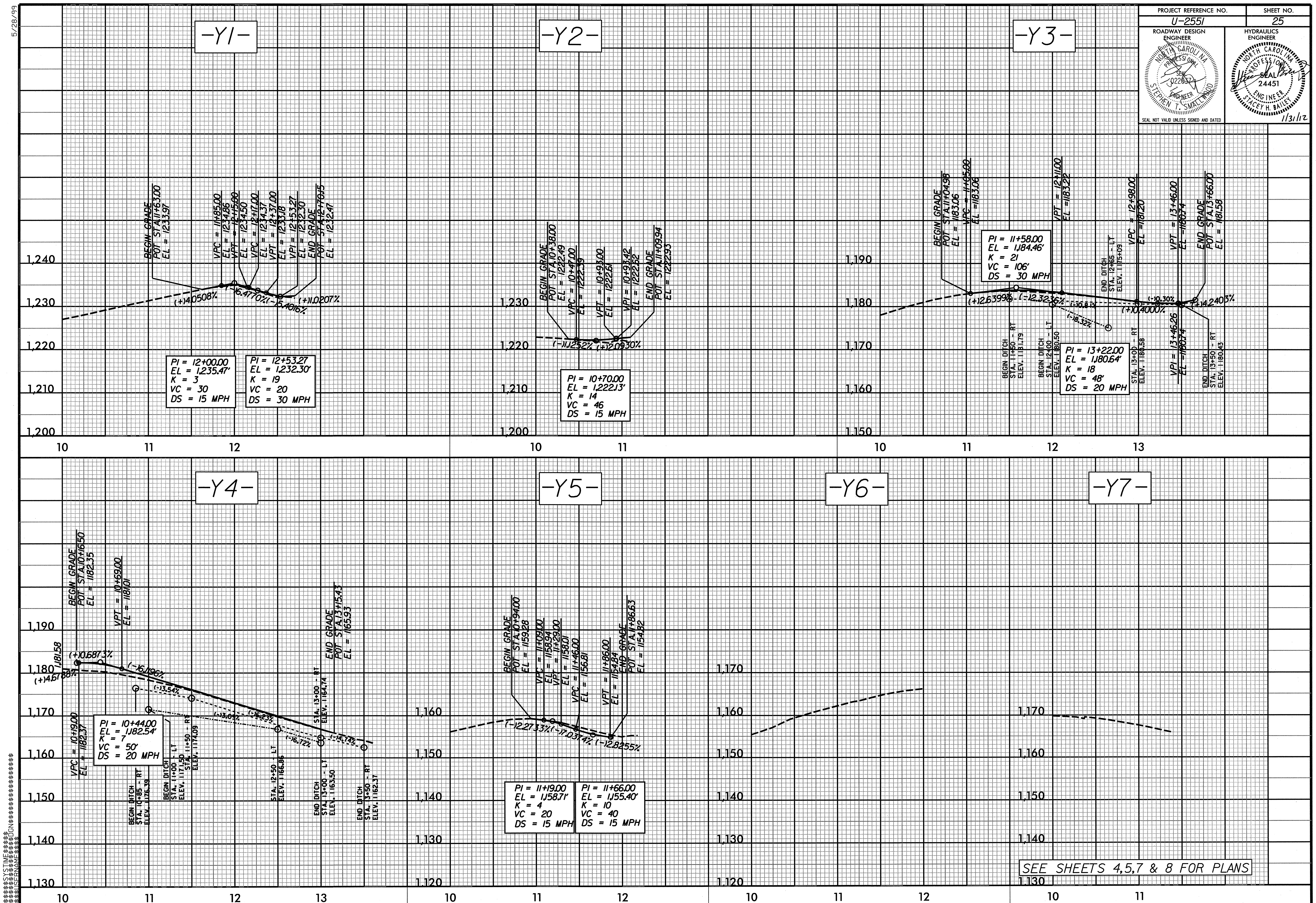

PROJECT REFERENCE NO.	SHEET NO.
U-2551	26

ROADWAY DESIGN ENGINEER

NORTH CAROLINA PROFESSIONAL SEAL 022037 ENGINEER STEPHEN T. SMALLWOOD

HYDRAULICS ENGINEER

NORTH CAROLINA PROFESSIONAL SEAL 24451 ENGINEER STACEY H. BAILEY

1/31/12

SEAL NOT VALID UNLESS SIGNED AND DATED

5/28/99

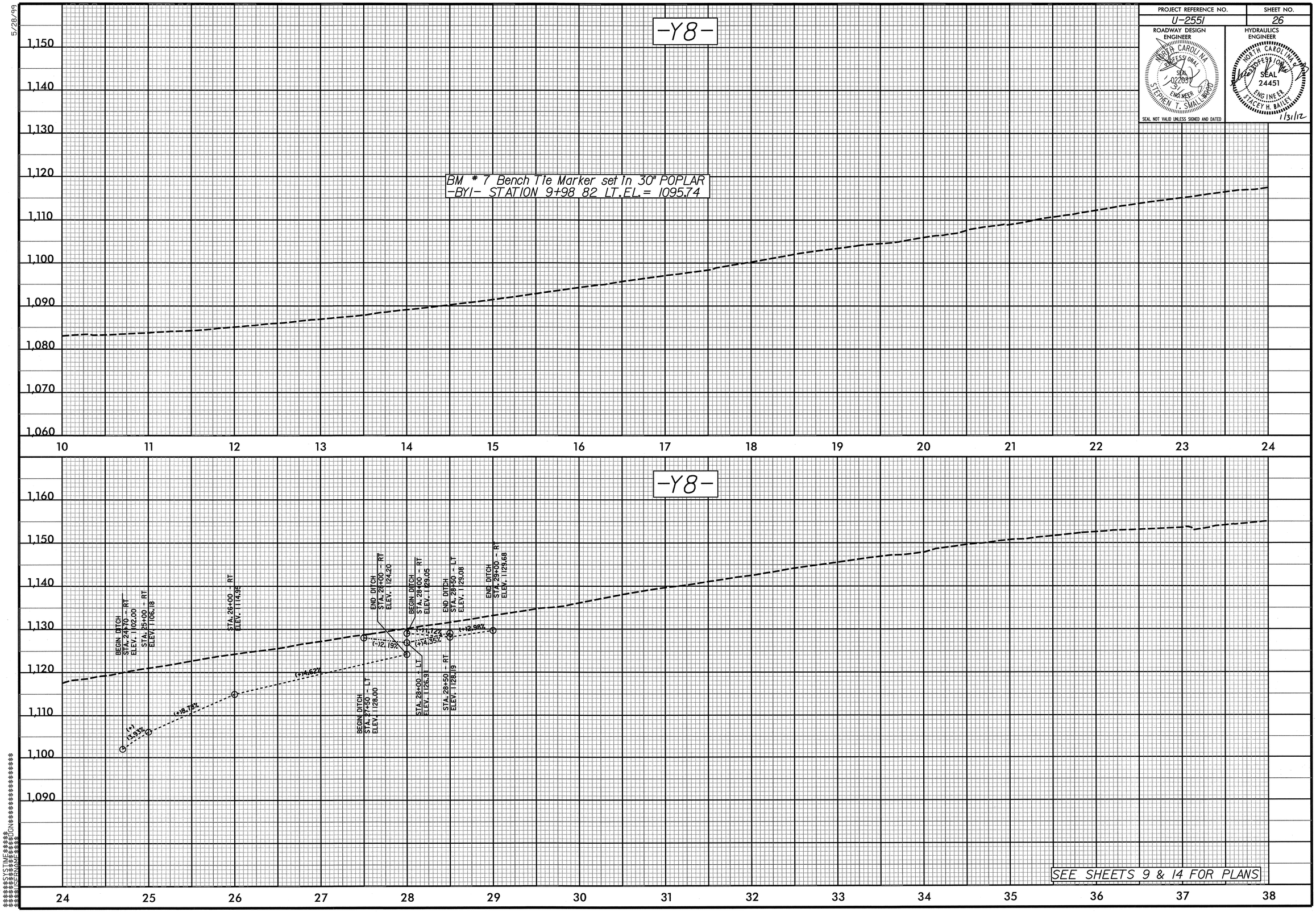

PROJECT REFERENCE NO.	SHEET NO.
U-2551	27

ROADWAY DESIGN ENGINEER — NORTH CAROLINA PROFESSIONAL SEAL 022031 ENGINEER STEPHEN T. SMALLWOOD

SEAL NOT VALID UNLESS SIGNED AND DATED

HYDRAULICS ENGINEER — NORTH CAROLINA PROFESSIONAL SEAL 24451 ENGINEER STACEY H. BAILEY 1/31/12

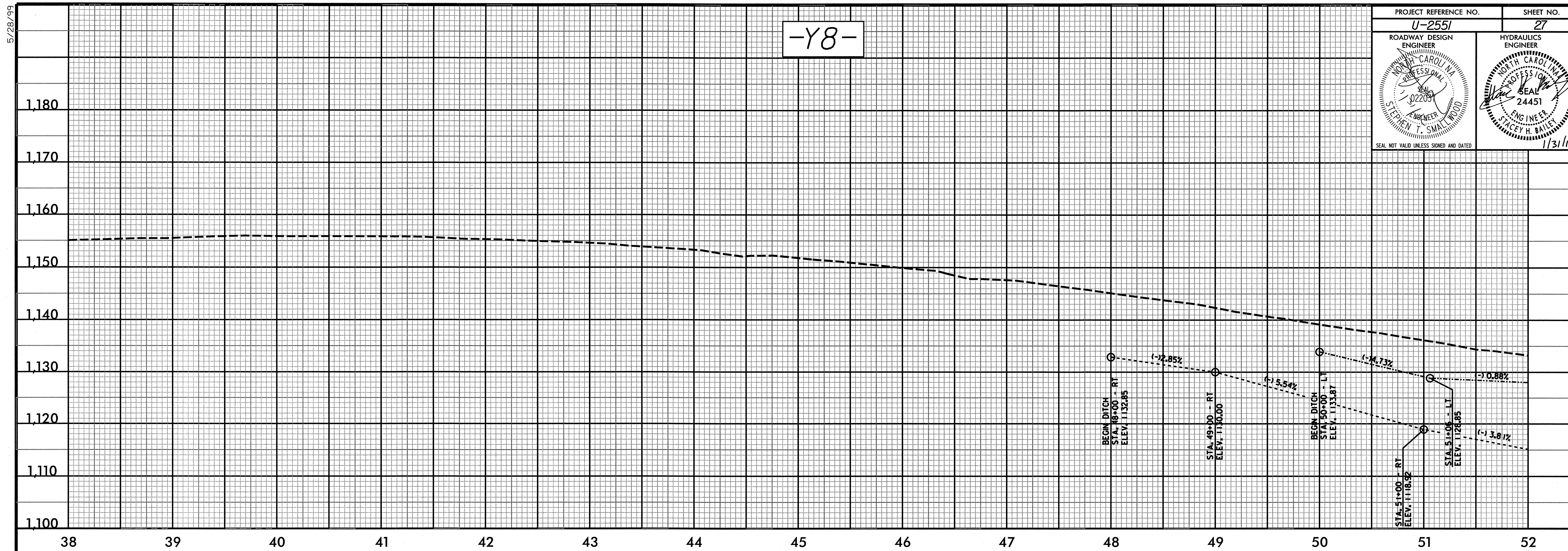

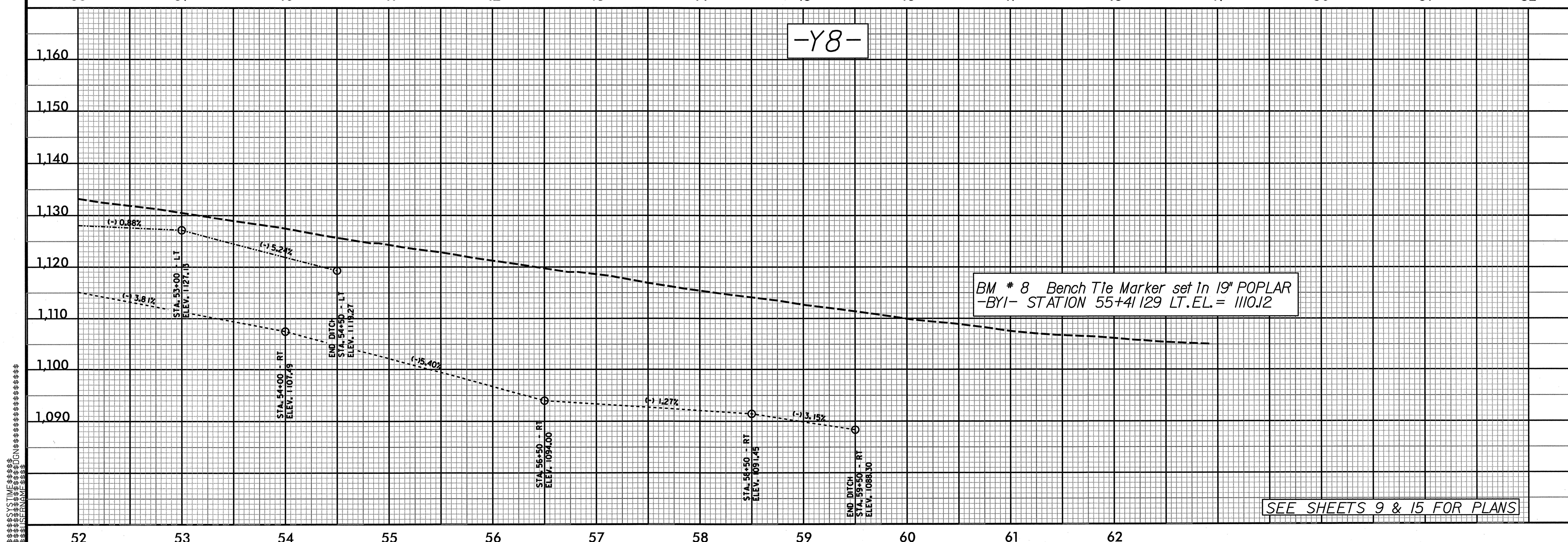

5/28/99

PROJECT REFERENCE NO.	SHEET NO.
U-2551	28

ROADWAY DESIGN ENGINEER
NORTH CAROLINA PROFESSIONAL SEAL 022037 ENGINEER STEPHEN T. SMALLWOOD
SEAL NOT VALID UNLESS SIGNED AND DATED

HYDRAULICS ENGINEER
NORTH CAROLINA PROFESSIONAL SEAL 24451 ENGINEER STACEY H. BAILEY
1/31/12

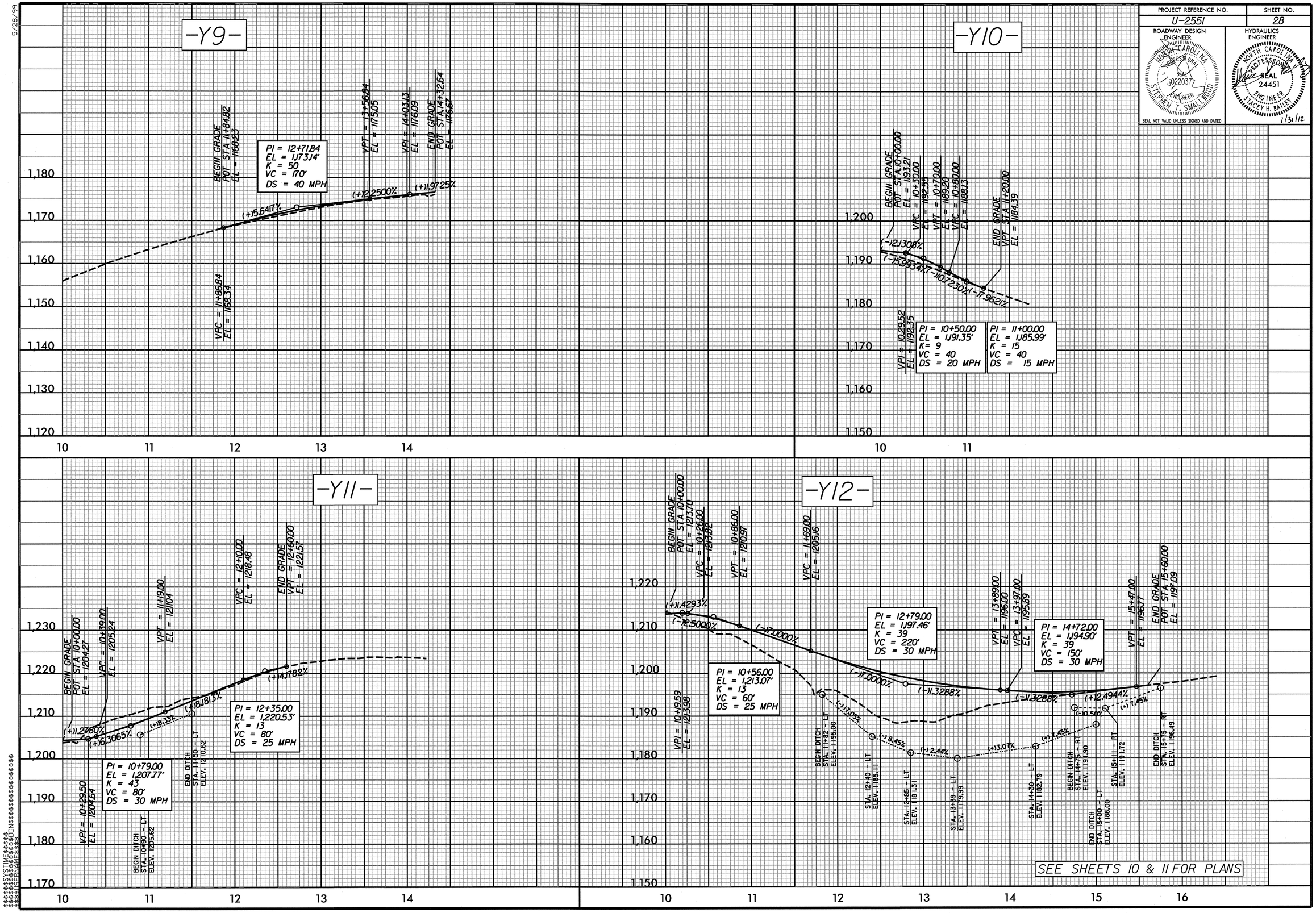

SYSTIME$$$$$$$$$$
DGN$$$$$$$$$$

5/28/99

PROJECT REFERENCE NO.	SHEET NO.
U-2551	29

ROADWAY DESIGN ENGINEER
NORTH CAROLINA PROFESSIONAL SEAL 022037 ENGINEER STEPHEN T. SMALLWOOD
SEAL NOT VALID UNLESS SIGNED AND DATED

HYDRAULICS ENGINEER
NORTH CAROLINA PROFESSIONAL SEAL 24451 ENGINEER STACEY H. BAILEY
11/31/12

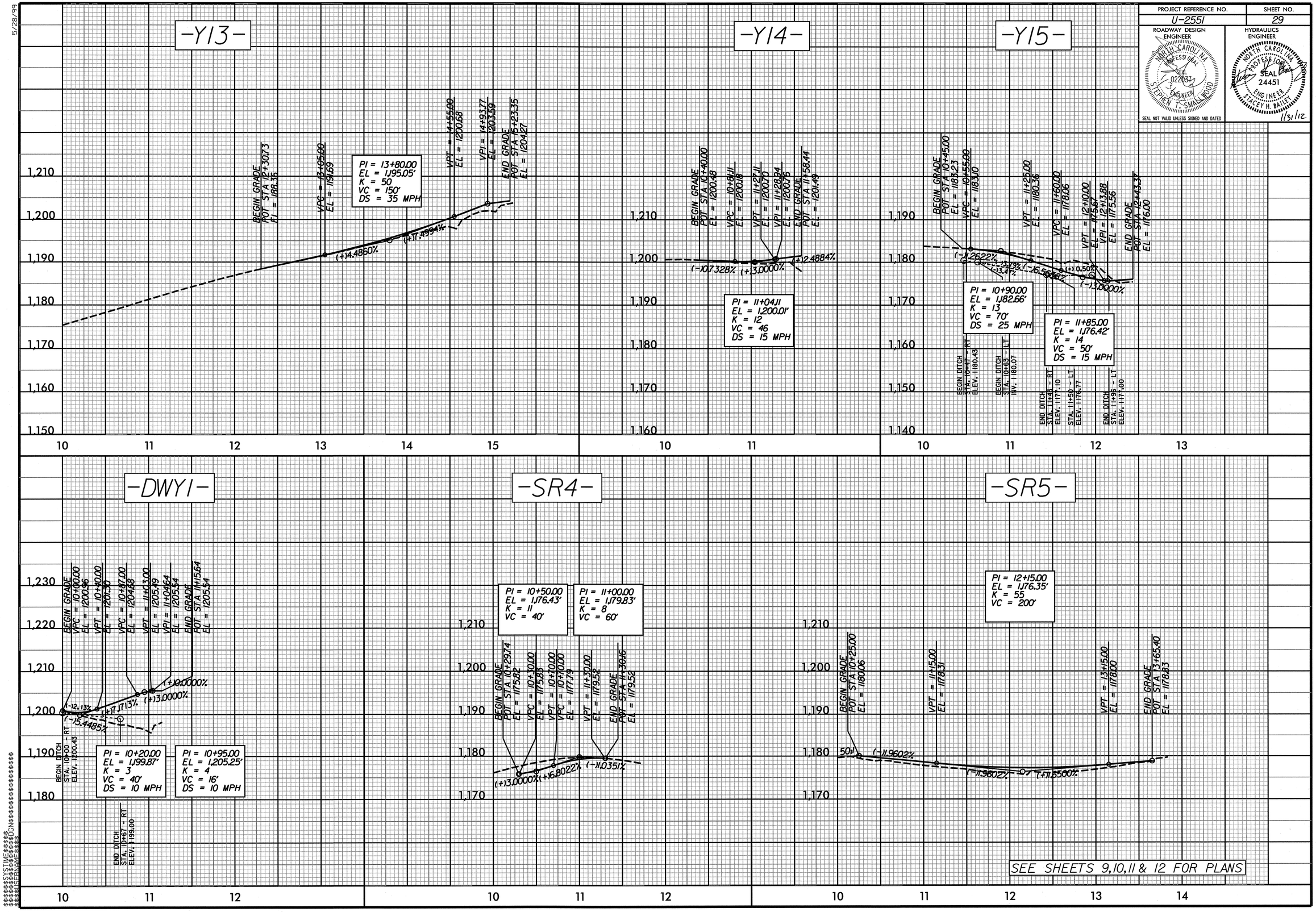

Y-TIME SHEET DGN