TIP Project: U-2551

Project No.	Sheet No.
U-2551	Sig. 1

STATE OF NORTH CAROLINA
DIVISION OF HIGHWAYS

BURKE COUNTY

LOCATION: SR 1922 (ENOLA RD) /SR 1924 (OLD NC 18) FROM SOUTH OF SR 1940 (OLD COLONY RD /PETE BRITTAIN RD) TO NC 18 (S STERLING ST)

TYPE OF WORK: TRAFFIC SIGNALS AND FIBER OPTIC COMMUNICATION CABLE ROUTING

Vicinity

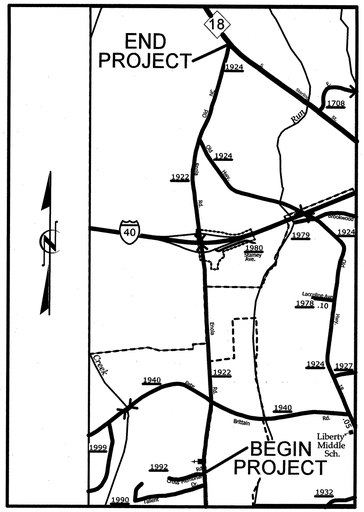

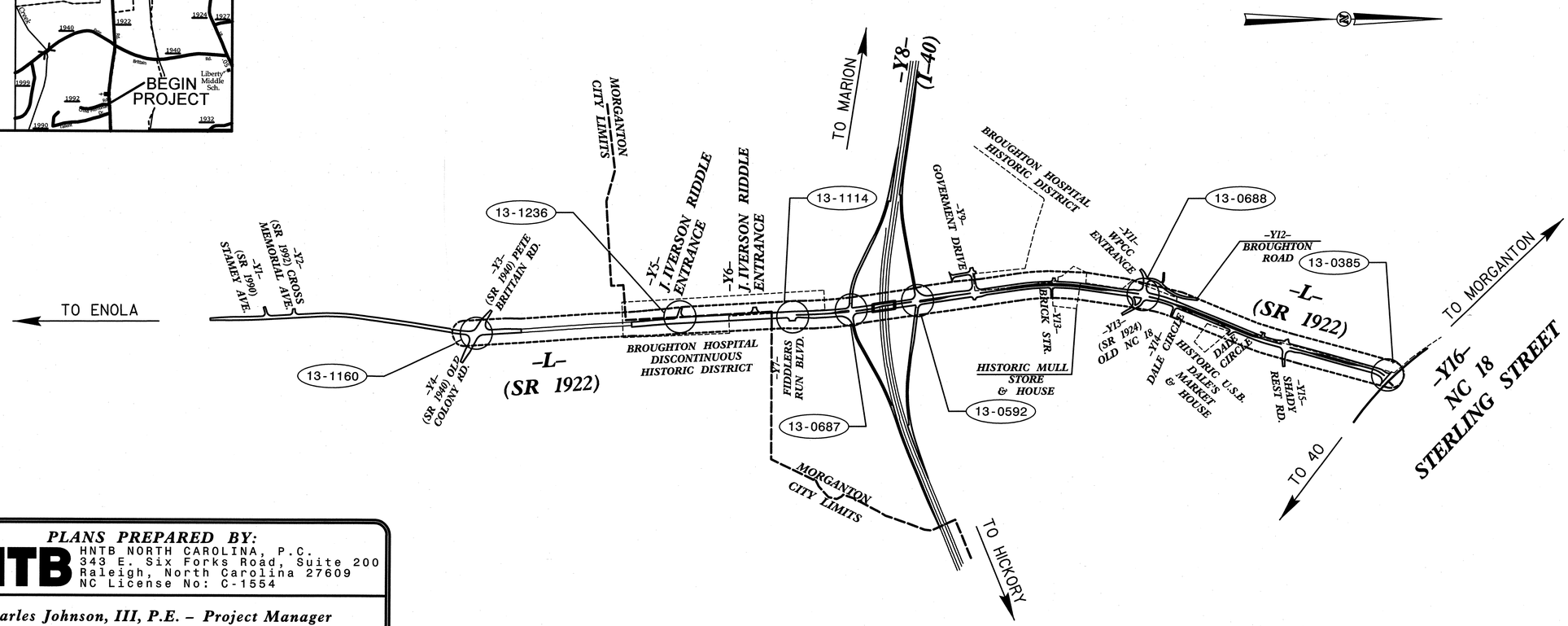

PLANS PREPARED BY:

HNTB NORTH CAROLINA, P.C.
343 E. Six Forks Road, Suite 200
Raleigh, North Carolina 27609
NC License No: C-1554

Charles Johnson, III, P.E. – Project Manager
Natasha M. Rodevick, P.E., PTOE – Project Engineer
Harvey L. Winstead, P.E. – Project Engineer
Andrew D. Klinksiek, E.I. – Design Engineer
Tracey R. Terrell – Design Technician

Refer to "Roadway Standard Drawings NCDOT" dated January 2012 and "Standard Specifications for Roads and Structures" dated January 2012.

Index of Plans

Sheet #	Reference #	Location/Description
Sig. 1	--------	Title Sheet
Sig. 2-10	13-1160	SR 1922 (Enola Rd) at SR 1940 (Pete Brittain Rd / Old Colony Rd)
Sig. 11-12	13-1236	SR 1922 (Enola Rd) at J.I.R.D.C. Southern Entrance
Sig. 13-23	13-1114	SR 1922 (Enola Rd) at Fiddlers Run Blvd
Sig. 24-42	13-0687	SR 1922 (Enola Rd) at I-40 Eastbound Ramp
Sig. 43-60	13-0592	SR 1922 (Enola Rd) at I-40 Westbound Ramp
Sig. 61-63	13-0688	SR 1922 (Enola Rd) at SR 1924 (Old NC 18) / Broughton Hospital Entrance
Sig. 64-70	13-0385	NC 18 (S Sterling St) at SR 1924 (Old NC 18) / Berry St
Sig. 71-75	--------	Metal Pole Standard Details
Sig. 76-89	--------	Metal Pole Designs
Sig. 90-98	--------	Communications Cable Routing
Sig. 99-100	--------	Fiber Optic Splice Details

LEGEND

(##-####) SIGNAL INVENTORY NUMBER
(-------) CLOSED LOOP SYSTEM

INTELLIGENT TRANSPORTATION AND SIGNALS UNIT

Contacts:

Greg Fuller, P.E. – State ITS & Signals Engineer
Zachary M. Little, P.E. – Western Regional Signals Project Engineer
George C. Brown, P.E. – Signal Equipment Design Engineer
I. Neil Avery – Signal Communications Project Engineer

SEAL

NORTH CAROLINA PROFESSIONAL SEAL 031464 ENGINEER NATASHA M. RODEVICK

Natasha M. Rodevick 12-12-11
SIGNATURE DATE

Prepared for:
DIVISION OF HIGHWAYS
TRANSPORTATION MOBILITY AND SAFETY DIVISION

Intelligent Transportation Systems & Signals Unit
STATE OF NORTH CAROLINA DEPARTMENT OF TRANSPORTATION

750 N. Greenfield Parkway, Garner, NC 27529

PROJECT REFERENCE NO.	SHEET NO.
U-2551	Sig. 2

PHASING DIAGRAM

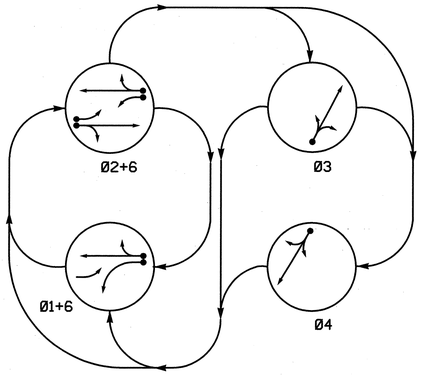

PHASING DIAGRAM DETECTION LEGEND

- DETECTED MOVEMENT
- UNDETECTED MOVEMENT (OVERLAP)
- UNSIGNALIZED MOVEMENT
- PEDESTRIAN MOVEMENT

TABLE OF OPERATION

SIGNAL FACE	PHASE 01+6	PHASE 02+6	PHASE 03	PHASE 04	FLASH
11	←	F Y	R	R	Y
21	F Y	F Y	R	R	Y
22,23	R	G	R	R	Y
31	R	R	G	R	R
32	R	R	G	R	R
41	R	R	R	G	R
42	R	R	R	G	R
61,62	G	G	R	R	Y

F Y = Flashing Yellow Arrow

STANDARD SIGNAL FACE CLEARANCES FOR FLASHING LEFT TURN SIGNAL

FROM	TO ←	TO F Y	TO R		
	1	2	1	2	1	2
←	←	←	Y	R	Y	R
F Y	F Y	F Y	F Y	F Y	Y	R
R	R	R	R	R	R	R

F Y = Flashing Yellow Arrow

SIGNAL FACE I.D.

All Heads L.E.D.

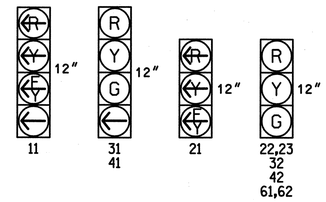

OASIS 2070L LOOP & DETECTOR INSTALLATION CHART

INDUCTIVE LOOPS					DETECTOR PROGRAMMING							
LOOP	SIZE (FT)	DISTANCE FROM STOPBAR (FT)	TURNS	NEW LOOP	PHASE	CALLING	EXTENSION	FULL TIME DELAY	STRETCH TIME	DELAY TIME	SYSTEM LOOP	NEW CARD
1A	6X60	EXIST	EXIST	-	1	Y	Y	-	-	15	-	Y
					6	Y	Y	-	-	-	-	Y
2A	6X6	70	6	Y	2	Y	Y	-	-	-	-	Y
2B	6X40	0	2-4-2	Y	2	Y	Y	-	-	-	-	Y
3A	6X40	0	2-4-2	Y	3	Y	Y	-	-	10	-	Y
4A	6X60	EXIST	EXIST	-	4	Y	Y	-	-	10	-	Y
6A	6X6	70	4	Y	6	Y	Y	-	-	-	-	Y

4 Phase
Fully Actuated
NC 18 (Sterling St)/SR 1922 (Enola Rd)
Closed Loop System

NOTES

1. Refer to "Roadway Standard Drawings NCDOT" dated January 2012 and "Standard Specifications for Roads and Structures" dated January 2012.
2. Do not program signal for late night flashing operation unless otherwise directed by the Engineer.
3. Phase 1 may be lagged.
4. The order of phase 3 and phase 4 may be reversed.
5. Locate new cabinet so as not to obstruct sight distance of vehicles turning right on red.
6. Set all detector units to presence mode.
7. Pavement markings are existing.
8. Maximum times shown in timing chart are for free-run operation only. Coordinated signal system timing values supersede these values.
9. Closed loop system data: Controller Asset #1160.

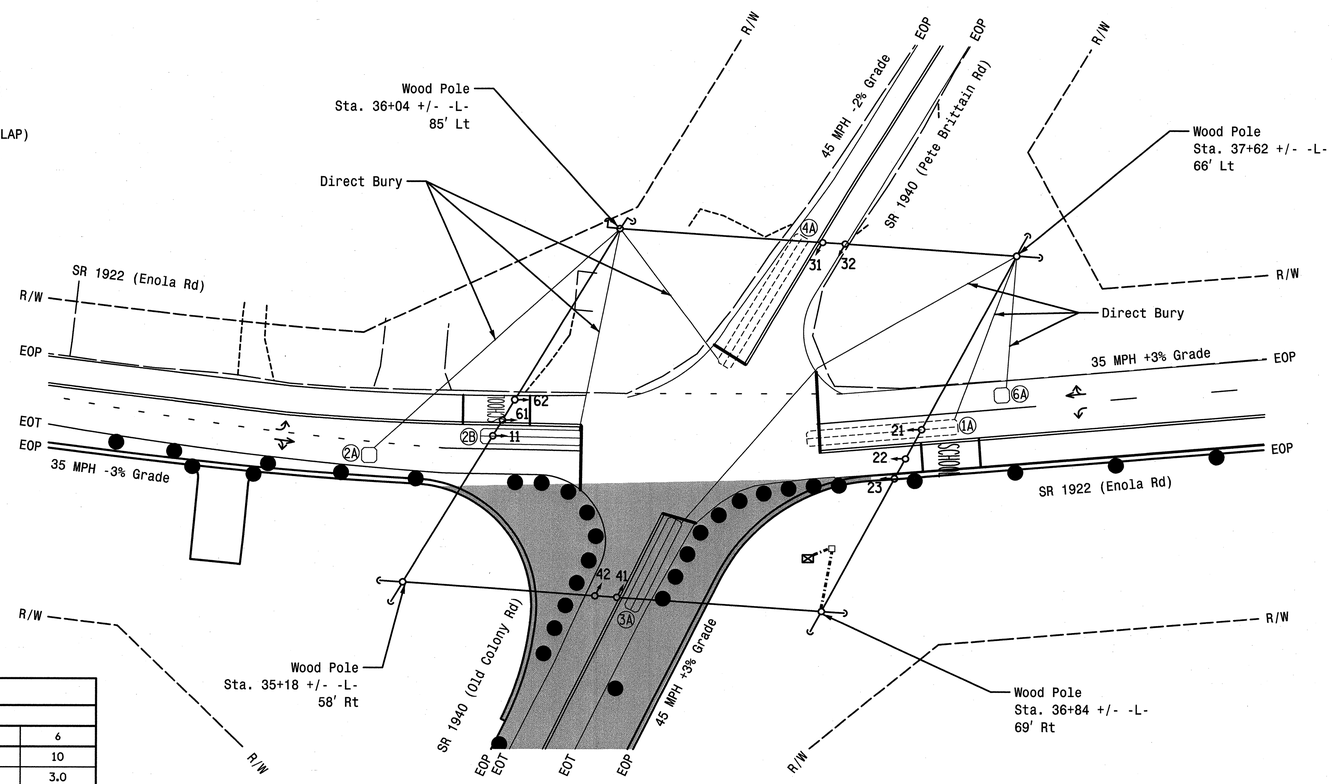

LEGEND

PROPOSED		EXISTING
	Traffic Signal Head	
	Modified Signal Head	N/A
	Sign	
	Pedestrian Signal Head With Push Button & Sign	
	Signal Pole with Guy	
	Signal Pole with Sidewalk Guy	
	Inductive Loop Detector	
	Controller & Cabinet	
	Junction Box	
	2-in Underground Conduit	
N/A	Right of Way	
	Directional Arrow	
	Construction Zone Drums	N/A
	Construction Zone	N/A

OASIS 2070L TIMING CHART

FEATURE	PHASE 1	PHASE 2	PHASE 3	PHASE 4	PHASE 6
Min Green 1 *	7	10	7	7	10
Extension 1 *	1.0	3.0	2.0	1.0	3.0
Max Green 1 *	30	45	30	30	45
Yellow Clearance	3.0	4.1	4.3	4.7	4.1
Red Clearance	2.1	1.4	1.0	1.0	1.4
Red Revert	2.0	2.0	2.0	2.0	2.0
Walk 1 *	-	-	-	-	-
Don't Walk 1	-	-	-	-	-
Seconds Per Actuation *	-	-	-	-	-
Max Variable Initial *	-	-	-	-	-
Time Before Reduction *	-	-	-	-	-
Time To Reduce *	-	-	-	-	-
Minimum Gap	-	-	-	-	-
Recall Mode	-	MIN RECALL	-	-	MIN RECALL
Vehicle Call Memory	-	YELLOW	-	-	YELLOW
Dual Entry	-	-	-	-	-
Simultaneous Gap	ON	ON	ON	ON	ON

* These values may be field adjusted. Do not adjust Min Green and Extension times for phases 2 and 6 lower than what is shown. Min Green for all other phases should not be lower than 4 seconds.

Signal Upgrade - Temporary Design 1
(Construction Phase I, Step 2)

HNTB NORTH CAROLINA, P.C.
343 E. Six Forks Road, Suite 200
Raleigh, North Carolina 27609
NC License No: C-1554

Prepared for: Transportation Mobility and Safety Division, Traffic Engineering Branch, Signal Design Section, 750 N.Greenfield Pkwy, Garner, NC 27529

SR 1922 (Enola Rd)
at
SR 1940 (Pete Brittain Rd/
Old Colony Rd)

Division 13 Burke County Morganton

PLAN DATE: July 2011	REVIEWED BY: A.D. Klinksiek
PREPARED BY: T.R. Terrell	REVIEWED BY: N.M. Rodevick

SCALE 0 30 1"=30'

REVISIONS	INIT.	DATE

SEAL: NORTH CAROLINA PROFESSIONAL SEAL 031464 ENGINEER NATASHA M. RODEVICK

SIGNATURE Natasha M. Rodevick DATE 12-12-11

SIG. INVENTORY NO. 13-1160T1

PROJECT REFERENCE NO.	SHEET NO.
U-2551	Sig. 3

EDI MODEL 2018ECL-NC CONFLICT MONITOR PROGRAMMING DETAIL

(remove jumpers and set switches as shown)

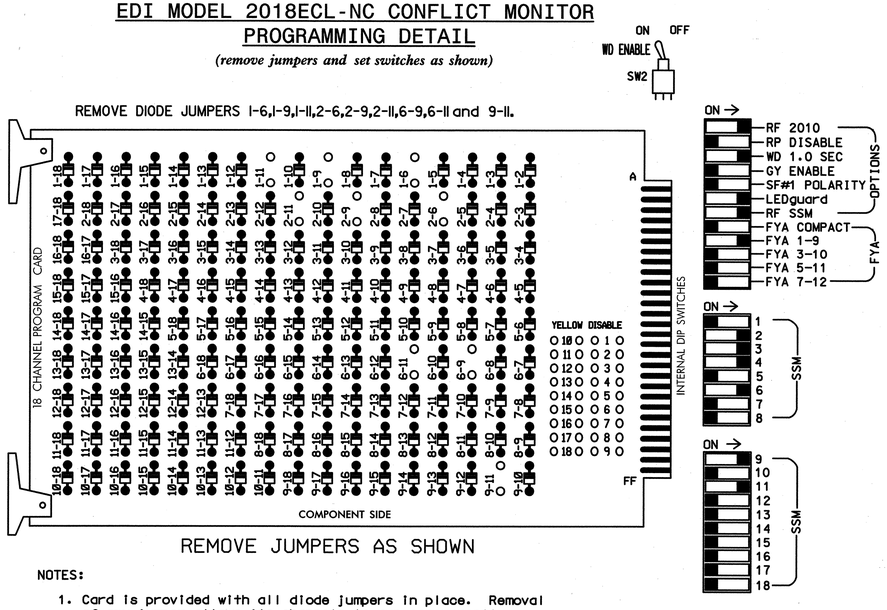

■ = DENOTES POSITION OF SWITCH

NOTES:

1. Card is provided with all diode jumpers in place. Removal of any jumper allows its channels to run concurrently.
2. Ensure jumpers SEL2-SEL5 and SEL9 are present on the monitor board.
3. Ensure that Red Enable is active at all times during normal operation.
4. Connect serial cable from conflict monitor to comm. port 1 of 2070 controller. Ensure conflict monitor communicates with 2070.

NOTES

1. To prevent "flash-conflict" problems, insert red flash program blocks for all unused vehicle load switches in the output file. The installer shall verify that signal heads flash in accordance with the Signal Plans.
2. Enable Simultaneous Gap-Out for all phases.
3. Program phases 2 and 6 for Start Up In Green.
4. Program phases 2 and 6 for Yellow Flash and overlap 1 as Wag Overlap.
5. The cabinet and controller are part of the NC 18 (Sterling St)/SR 1922 (Enola Rd) Closed Loop System.

SIGNAL HEAD HOOK-UP CHART

LOAD SWITCH NO.	S1	S2	S3	S4		S5		S6	S7	S8	S9	S10	S11	S12	AUX S1	AUX S2	AUX S3	AUX S4	AUX S5	AUX S6
CMU CHANNEL NO.	1	2	13	3		4		14	5	6	15	7	8	16	9	10	17	11	12	18
PHASE	1	2	2 PED	3		4		4 PED	5	6	6 PED	7	8	8 PED	OLA	OLB	SPARE	OLC	OLD	SPARE
SIGNAL HEAD NO.	11★	22,23	NU	31	32	41	42	NU	NU	61,62	NU	NU	NU	NU	11★	NU	NU	21★	NU	NU
RED		128		116	116	101	101			134										
YELLOW	✳	129		117	117	102	102			135										
GREEN		130		118	118	103	103			136										
RED ARROW															A121			A114		
YELLOW ARROW															A122			A115		
FLASHING YELLOW ARROW															A123			A116		
GREEN ARROW	127			118		103														

NU = Not Used

✳ Denotes install load resistor. See load resistor installation detail this sheet.

★ See pictorial of head wiring in detail below.

EQUIPMENT INFORMATION

CONTROLLER.....2070L
CABINET.....332 /W/ AUX
SOFTWARE.....ECONOLITE OASIS
CABINET MOUNT.....BASE
OUTPUT FILE POSITIONS...18 WITH AUX. OUTPUT FILE
LOAD SWITCHES USED.....S1,S2,S4,S5,S8,AUX S1,AUX S4
PHASES USED.....1,2,3,4,6
OVERLAP "A".....1+2
OVERLAP "B".....NOT USED
OVERLAP "C".....6
OVERLAP "D".....NOT USED

FYA SIGNAL WIRING DETAIL

(wire signal heads as shown)

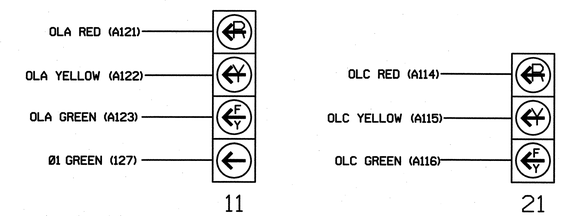

NOTE

1. The sequence display for signal head 11 requires special logic programming. See sheet 2 of 2 for programming instructions.

INPUT FILE POSITION LAYOUT

(front view)

		1	2	3	4	5	6	7	8	9	10	11	12	13	14
FILE "I"	U	Ø1 1A	SLOT EMPTY	Ø2 2A	SLOT EMPTY	Ø3 3A	Ø4 4A	SLOT EMPTY	SLOT EMPTY	SLOT EMPTY	SLOT EMPTY	SLOT EMPTY	SLOT EMPTY	SLOT EMPTY	FS DC ISOLATOR
	L	NOT USED		Ø2 2B		NOT USED	NOT USED								ST DC ISOLATOR
FILE "J"	U	SLOT EMPTY	Ø6 6A	SLOT EMPTY	WIRED INPUT ⊗	SLOT EMPTY	SLOT EMPTY	SLOT EMPTY	SLOT EMPTY	SLOT EMPTY	SLOT EMPTY	SLOT EMPTY	SLOT EMPTY	SLOT EMPTY	SLOT EMPTY
	L		NOT USED												

EX.: 1A, 2A, ETC. = LOOP NO.'S

FS = FLASH SENSE
ST = STOP TIME

⊗Wired Input - Do not populate slot with detector card

INPUT FILE CONNECTION & PROGRAMMING CHART

LOOP NO.	LOOP TERMINAL	INPUT FILE POS.	PIN NO.	INPUT ASSIGNMENT NO.	DETECTOR NO.	NEMA PHASE	CALL	EXTEND	FULL TIME DELAY	STRETCH TIME	DELAY TIME
1A[1]	TB2-1,2	I1U	56	18	1	1	Y	Y			15
	-	J4U	48	10	26	6	Y	Y			
2A	TB2-9,10	I3U	63	25	32	2	Y	Y			
2B	TB2-11,12	I3L	76	38	42	2	Y	Y			
3A	TB4-5,6	I5U	58	20	3	3	Y	Y			10
4A	TB4-9,10	I6U	41	3	4	4	Y	Y			10
6A	TB3-5,6	J2U	40	2	6	6	Y	Y			

[1] Add jumper from I1-W to J4-W, on rear of input file.

INPUT FILE POSITION LEGEND: J2L
FILE J
SLOT 2
LOWER

THIS ELECTRICAL DETAIL IS FOR
THE SIGNAL DESIGN: 13-1160T1
DESIGNED: July 2011
SEALED: 12-12-2011
REVISED:

LOAD RESISTOR INSTALLATION DETAIL

(install resistors as shown below)

ACCEPTABLE VALUES

VALUE (ohms)	WATTAGE
1.5K - 1.9K	25W (min)
2.0K - 3.0K	10W (min)

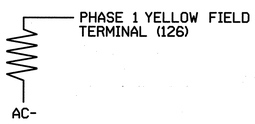

HNTB NORTH CAROLINA, P.C.
343 E. Six Forks Road, Suite 200
Raleigh, North Carolina 27609
NC License No: C-1554

Signal Upgrade - Temporary Design 1 (Construction Phase I, Step 2) (Sheet 1 of 2)

ELECTRICAL AND PROGRAMMING DETAILS FOR:

Prepared for: Transportation Mobility and Safety Division, Department of Transportation, State of North Carolina, Signal Management Section
750 N.Greenfield Pkwy,Garner,NC 27529

SR 1922 (Enola Rd)
at
SR 1940 (Pete Brittain Rd/
Old Colony Rd)

Division 13 Burke County Morganton

PLAN DATE:	July 2011	REVIEWED BY:	N.M. Rodevick
PREPARED BY:	A.D. Klinksiek	REVIEWED BY:	H.L. Winstead

REVISIONS	INIT.	DATE

SEAL
NORTH CAROLINA PROFESSIONAL SEAL 07983 ENGINEER HARVEY L. WINSTEAD, JR.

SIGNATURE H.L. Winstead DATE 12/12/11

SIG. INVENTORY NO. 13-1160T1

PROJECT REFERENCE NO.	SHEET NO.
U-2551	Sig. 4

LOGICAL I/O PROCESSOR PROGRAMMING DETAIL TO PRODUCE SPECIAL FYA-PPLT SIGNAL SEQUENCE

(program controller as shown below)

1. FROM MAIN MENU PRESS '2' (PHASE CONTROL), THEN '1' (PHASE CONTROL FUNCTIONS). SCROLL TO THE BOTTOM OF THE MENU AND ENABLE ACT LOGIC COMMANDS 1, 2, AND 3.

2. FROM MAIN MENU PRESS '6' (OUTPUTS), THEN '3' (LOGICAL I/O PROCESSOR).

```
LOGICAL I/O COMMAND #1  (+/-COMMAND#)
IF  ACTIVE PHASE       #1  IS ON
AND RED CLEAR ON PHASE #1  IS ON

                 SCROLL DOWN

THEN:
SET OUTPUT  ASSIGNMENT #50 ON
SET OUTPUT  ASSIGNMENT #51 OFF
```

NOTE: LOGIC FOR PHASE 1 RED CLEAR WHEN TRANSITIONING FROM PHASE 1 TO PHASE 2 (HEAD 11).

PRESS '+'

```
LOGICAL I/O COMMAND #2  (+/-COMMAND#)
IF  ACTIVE PHASE       #1  IS ON

                 SCROLL DOWN

THEN:
SET OUTPUT  ASSIGNMENT #52 OFF
```

NOTE: LOGIC FOR SWITCHING FLASHING YELLOW ARROW "OFF" DURING PHASE 1 (HEAD 11).

PRESS '+'

```
LOGICAL I/O COMMAND #3  (+/-COMMAND#)
IF  YELLOW ON PHASE    #1  IS ON

                 SCROLL DOWN

THEN:
SET OUTPUT  ASSIGNMENT #51 ON
```

NOTE: LOGIC FOR YELLOW ARROW CLEARANCE FROM PHASE 1 (HEAD 11).

LOGIC I/O PROCESSOR PROGRAMMING COMPLETE

OUTPUT REFERENCE SCHEDULE

OUTPUT 50 = Overlap A Red
OUTPUT 51 = Overlap A Yellow
OUTPUT 52 = Overlap A Green

OVERLAP PROGRAMMING DETAIL

(program controller as shown below)

FROM MAIN MENU PRESS '8' (OVERLAPS), THEN '1' (VEHICLE OVERLAP SETTINGS).

```
PAGE 1: VEHICLE OVERLAP 'A' SETTINGS
PHASE:          |123456789101112131415 16
VEH OVL PARENTS:|XX
VEH OVL NOT VEH:|
VEH OVL NOT PED:|
VEH OVL GRN EXT:|
STARTUP COLOR: _ RED  _ YELLOW  _ GREEN
FLASH COLORS:  _ RED  _ YELLOW  X GREEN
SELECT VEHICLE OVERLAP OPTIONS:   (Y/N)
FLASH YELLOW IN CONTROLLER FLASH?...Y
GREEN EXTENSION (0-255 SEC).........0
YELLOW CLEAR (0=PARENT,3-25.5 SEC)..0.0
RED CLEAR (0=PARENT,0.1-25.5 SEC)...0.0
OUTPUT AS PHASE # (0=NONE, 1-16)....0
```

← NOTICE GREEN FLASH

PRESS '+' TWICE

```
PAGE 1: VEHICLE OVERLAP 'C' SETTINGS
PHASE:          |123456789101112131415 16
VEH OVL PARENTS:|     X
VEH OVL NOT VEH:|
VEH OVL NOT PED:|
VEH OVL GRN EXT:|
STARTUP COLOR: _ RED  _ YELLOW  _ GREEN
FLASH COLORS:  _ RED  _ YELLOW  X GREEN
SELECT VEHICLE OVERLAP OPTIONS:   (Y/N)
FLASH YELLOW IN CONTROLLER FLASH?...Y
GREEN EXTENSION (0-255 SEC).........0
YELLOW CLEAR (0=PARENT,3-25.5 SEC)..0.0
RED CLEAR (0=PARENT,0.1-25.5 SEC)...0.0
OUTPUT AS PHASE # (0=NONE, 1-16)....0
```

← NOTICE GREEN FLASH

OVERLAP PROGRAMMING COMPLETE

THIS ELECTRICAL DETAIL IS FOR
THE SIGNAL DESIGN: 13-1160T1
DESIGNED: July 2011
SEALED: 12-12-2011
REVISED:

Signal Upgrade - Temporary Design 1 (Construction Phase I, Step 2)(Sheet 2 of 2)

HNTB NORTH CAROLINA, P.C.
343 E. Six Forks Road, Suite 200
Raleigh, North Carolina 27609
NC License No: C-1554

ELECTRICAL AND PROGRAMMING DETAILS FOR:

Prepared for: Transportation Mobility and Safety Division, Signal Management Section, 750 N.Greenfield Pkwy, Garner, NC 27529

SR 1922 (Enola Rd)
at
SR 1940 (Pete Brittain Rd/
Old Colony Rd)

Division 13 Burke County Morganton

PLAN DATE:	July 2011	REVIEWED BY:	N.M. Rodevick
PREPARED BY:	A.D. Klinksiek	REVIEWED BY:	H.L. Winstead

REVISIONS	INIT.	DATE

SEAL

NORTH CAROLINA PROFESSIONAL SEAL 07983 ENGINEER HARVEY L. WINSTEAD, JR.

SIGNATURE H.L. Winstead DATE 12/12/11

SIG. INVENTORY NO. 13-1160T1

PROJECT REFERENCE NO.	SHEET NO.
U-2551	Sig. 5

PHASING DIAGRAM

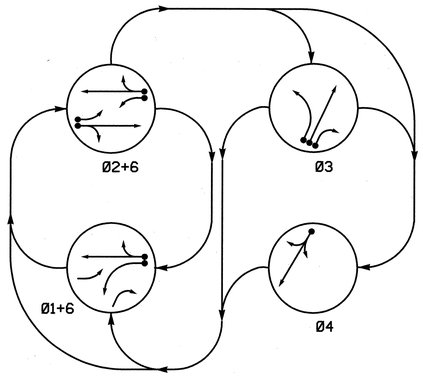

PHASING DIAGRAM DETECTION LEGEND

- DETECTED MOVEMENT
- UNDETECTED MOVEMENT (OVERLAP)
- UNSIGNALIZED MOVEMENT
- PEDESTRIAN MOVEMENT

TABLE OF OPERATION

SIGNAL FACE	PHASE 01+6	PHASE 02+6	PHASE 03	PHASE 04	FLASH
11	←	F Y	R	R	Y
21	F Y	F Y	R	R	Y
22,23	R	G	R	R	Y
31	R	R	G	R	R
32	R	R	G	R	R
33	R	R	G	R	R
41	R	R	R	G	R
42	R	R	R	G	R
61,62	G	G	R	R	Y

F Y = Flashing Yellow Arrow

STANDARD SIGNAL FACE CLEARANCES FOR FLASHING LEFT TURN SIGNAL

FROM	TO ← 1	TO ← 2	TO F Y 1	TO F Y 2	TO R 1	TO R 2
←	←	←	Y	R	Y	R
F Y	F Y	F Y	F Y	F Y	Y	R
R	R	R	R	R	R	R

F Y = Flashing Yellow Arrow

SIGNAL FACE I.D.

All Heads L.E.D.

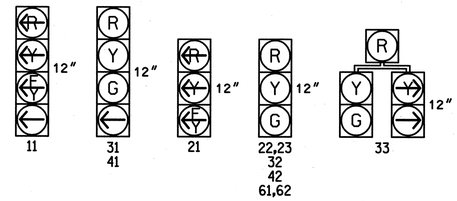

OASIS 2070L LOOP & DETECTOR INSTALLATION CHART

INDUCTIVE LOOPS					DETECTOR PROGRAMMING							
LOOP	SIZE (FT)	DISTANCE FROM STOPBAR (FT)	TURNS	NEW LOOP	PHASE	CALLING	EXTENSION	FULL TIME DELAY	STRETCH TIME	DELAY TIME	SYSTEM LOOP	NEW CARD
1A	6X40	0	2-4-2	Y	1	Y	Y	-	-	15	-	-
					6	Y	Y	-	-	-	-	-
1B	6X40	0	2-4-2	Y	1	Y	Y	-	-	15	-	Y
2A	6X6	70	4	Y	2	Y	Y	-	-	-	-	-
2B	6X40	0	2-4-2	Y	2	Y	Y	-	-	-	-	-
3A	6X40	0	2-4-2	Y	3	Y	Y	-	-	3	-	-
3B	6X40	0	2-4-2	Y	3	Y	Y	-	-	-	-	Y
4A	6X40	0	2-4-2	Y	4	Y	Y	-	-	10	-	-
6A	6X6	70	3	Y	6	Y	Y	-	-	-	-	-

4 Phase
Fully Actuated
NC 18 (Sterling St)/SR 1922 (Enola Rd)
Closed Loop System

NOTES

1. Refer to "Roadway Standard Drawings NCDOT" dated January 2012 and "Standard Specifications for Roads and Structures" dated January 2012.
2. Do not program signal for late night flashing operation unless otherwise directed by the Engineer.
3. Phase 1 may be lagged.
4. The order of phase 3 and phase 4 may be reversed.
5. Reposition existing signal heads numbered 11,21,31,32, 61 and 62.
6. Set all detector units to presence mode.
7. Maximum times shown in timing chart are for free-run operation only. Coordinated signal system timing values supersede these values.
8. Closed loop system data: Controller Asset #:1160.

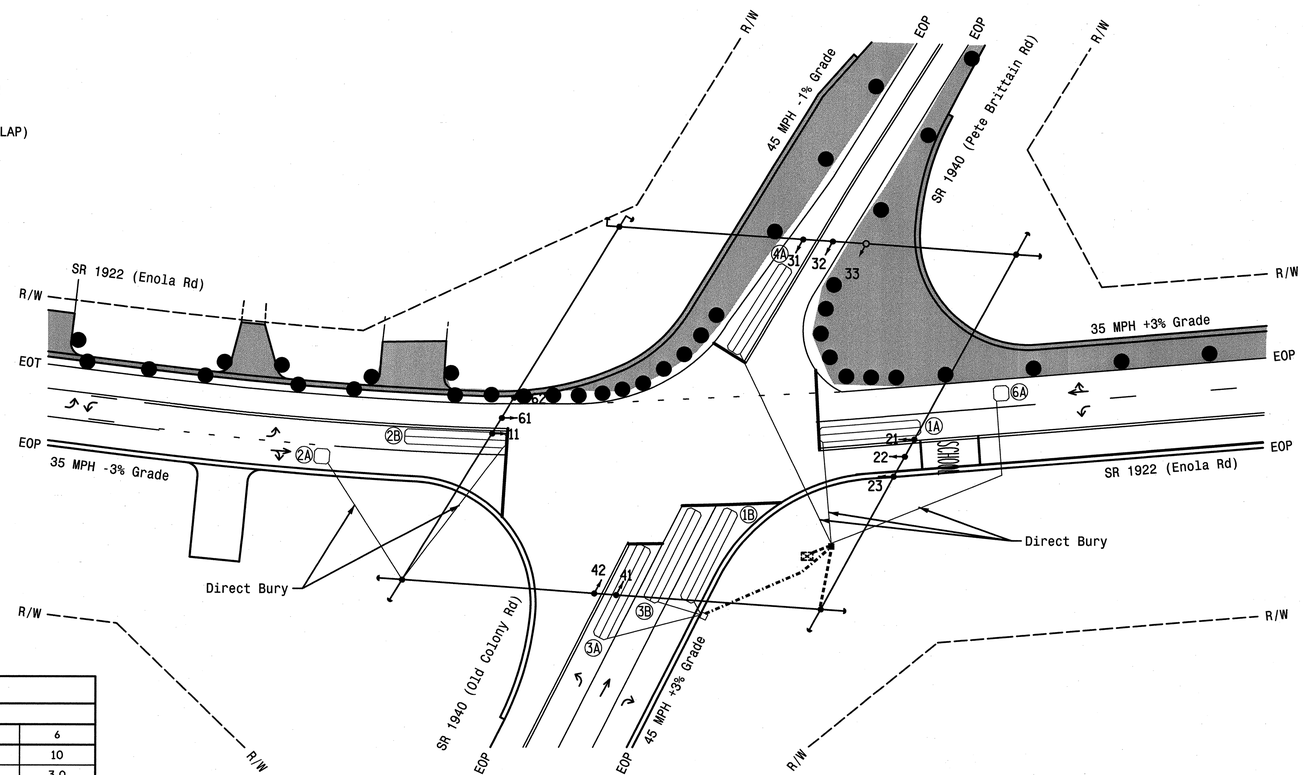

LEGEND

PROPOSED		EXISTING
	Traffic Signal Head	
	Modified Signal Head	N/A
	Sign	
	Pedestrian Signal Head With Push Button & Sign	
	Signal Pole with Guy	
	Signal Pole with Sidewalk Guy	
	Inductive Loop Detector	
	Controller & Cabinet	
	Junction Box	
	2-in Underground Conduit	
N/A	Right of Way	
	Directional Arrow	
	Construction Zone Drums	N/A
	Construction Zone	N/A

OASIS 2070L TIMING CHART

FEATURE	PHASE 1	PHASE 2	PHASE 3	PHASE 4	PHASE 6
Min Green 1 *	7	10	7	7	10
Extension 1 *	2.0	3.0	2.0	2.0	3.0
Max Green 1 *	30	45	30	30	45
Yellow Clearance	3.0	4.1	4.1	4.7	4.1
Red Clearance	2.4	2.1	1.0	1.0	2.1
Red Revert	2.0	2.0	2.0	2.0	2.0
Walk 1 *	-	-	-	-	-
Don't Walk 1	-	-	-	-	-
Seconds Per Actuation *	-	-	-	-	-
Max Variable Initial *	-	-	-	-	-
Time Before Reduction *	-	-	-	-	-
Time To Reduce *	-	-	-	-	-
Minimum Gap	-	-	-	-	-
Recall Mode	-	MIN RECALL	-	-	MIN RECALL
Vehicle Call Memory	-	YELLOW	-	-	YELLOW
Dual Entry	-	-	-	-	-
Simultaneous Gap	ON	ON	ON	ON	ON

* These values may be field adjusted. Do not adjust Min Green and Extension times for phases 2 and 6 lower than what is shown. Min Green for all other phases should not be lower than 4 seconds.

Signal Upgrade - Temporary Design 2 (Construction Phase II)

HNTB NORTH CAROLINA, P.C.
343 E. Six Forks Road, Suite 200
Raleigh, North Carolina 27609
NC License No: C-1554

Prepared for: Transportation Mobility and Safety Division, Intermodal Transportation Management Unit, Signal Design Section
750 N.Greenfield Pkwy,Garner,NC 27529

SCALE 0 50 1"=50'

SR 1922 (Enola Rd)
at
SR 1940 (Pete Brittain Rd/
Old Colony Rd)

Division 13 Burke County Morganton

PLAN DATE:	July 2011	REVIEWED BY:	A.D. Klinksiek
PREPARED BY:	T.R. Terrell	REVIEWED BY:	N.W. Rodevick

REVISIONS	INIT.	DATE

SEAL
NORTH CAROLINA PROFESSIONAL SEAL 031464 ENGINEER NATASHA M. RODEVICK
SIGNATURE Natasha M. Rodevick DATE 12-12-11
SIG. INVENTORY NO. 13-1160T2

PROJECT REFERENCE NO.	SHEET NO.
U-2551	Sig. 6

EDI MODEL 2018ECL-NC CONFLICT MONITOR PROGRAMMING DETAIL

(remove jumpers and set switches as shown)

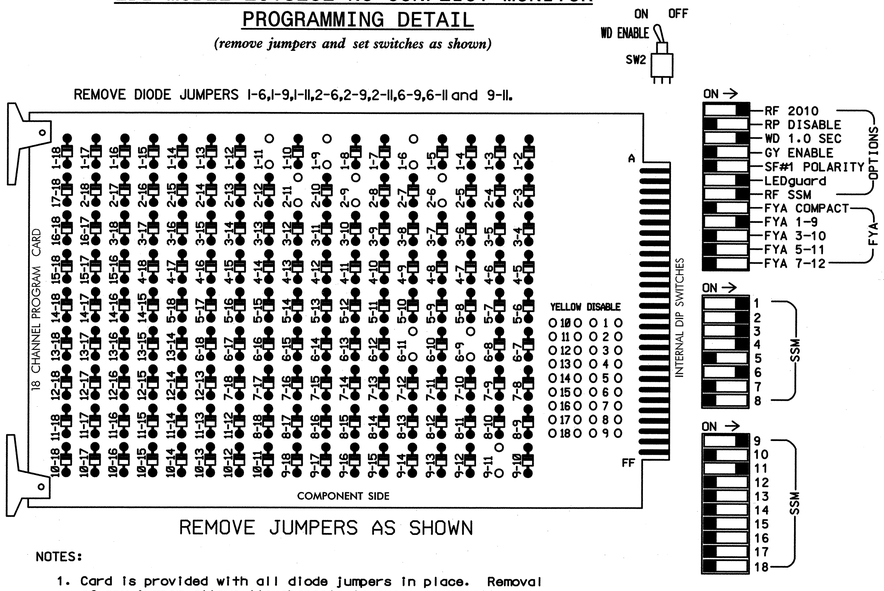

■ = DENOTES POSITION OF SWITCH

NOTES:

1. Card is provided with all diode jumpers in place. Removal of any jumper allows its channels to run concurrently.
2. Ensure jumpers SEL2-SEL5 and SEL9 are present on the monitor board.
3. Ensure that Red Enable is active at all times during normal operation.
4. Connect serial cable from conflict monitor to comm. port 1 of 2070 controller. Ensure conflict monitor communicates with 2070.

NOTES

1. To prevent "flash-conflict" problems, insert red flash program blocks for all unused vehicle load switches in the output file. The installer shall verify that signal heads flash in accordance with the Signal Plans.
2. Enable Simultaneous Gap-Out for all phases.
3. Program phases 2 and 6 for Start Up In Green.
4. Program phases 2 and 6 for Yellow Flash and overlap 1 as Wag Overlap.
5. The cabinet and controller are part of the NC 18 (Sterling St)/SR 1922 (Enola Rd) Closed Loop System.

SIGNAL HEAD HOOK-UP CHART

LOAD SWITCH NO.	S1		S2	S3	S4		S5		S6	S7	S8	S9	S10	S11	S12	AUX S1	AUX S2	AUX S3	AUX S4	AUX S5	AUX S6
CMU CHANNEL NO.	1		2	13	3		4		14	5	6	15	7	8	16	9	10	17	11	12	18
PHASE	1		2	2 PED	3		4		4 PED	5	6	6 PED	7	8	8 PED	OLA	OLB	SPARE	OLC	OLD	SPARE
SIGNAL HEAD NO.	11★	33	22,23	NU	31	32,33	41	42	NU	NU	61,62	NU	NU	NU	NU	11★	NU	NU	21★	NU	NU
RED		✳	128		116	116	101	101			134										
YELLOW			129		117	117	102	102			135										
GREEN			130		118	118	103	103			136										
RED ARROW																A121			A114		
YELLOW ARROW		126														A122			A115		
FLASHING YELLOW ARROW																A123			A116		
GREEN ARROW	127	127			118		103														

NU = Not Used

✳ Denotes install load resistor. See load resistor installation detail this sheet.

★ See pictorial of head wiring in detail below.

EQUIPMENT INFORMATION

CONTROLLER.....2070L
CABINET.....332 /W/ AUX
SOFTWARE.....ECONOLITE OASIS
CABINET MOUNT.....BASE
OUTPUT FILE POSITIONS...18 WITH AUX. OUTPUT FILE
LOAD SWITCHES USED.....S1,S2,S4,S5,S8,AUX S1,AUX S4
PHASES USED.....1,2,3,4,6
OVERLAP "A".....1+2
OVERLAP "B".....NOT USED
OVERLAP "C".....6
OVERLAP "D".....NOT USED

FYA SIGNAL WIRING DETAIL

(wire signal heads as shown)

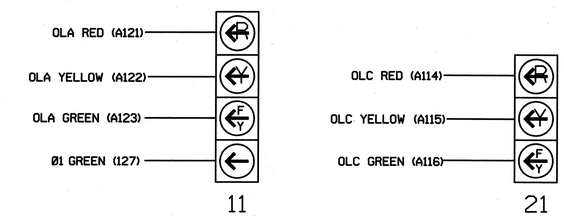

NOTE

1. The sequence display for signal head 11 requires special logic programming. See sheet 2 of 2 for programming instructions.

INPUT FILE POSITION LAYOUT

(front view)

		1	2	3	4	5	6	7	8	9	10	11	12	13	14
FILE "I"	U	Ø1 1A	Ø1 1B	Ø2 2A	SLOT EMPTY	SLOT EMPTY	Ø4 4A	SLOT EMPTY	SLOT EMPTY	SLOT EMPTY	SLOT EMPTY	SLOT EMPTY	SLOT EMPTY	SLOT EMPTY	FS DC ISOLATOR
	L	NOT USED	NOT USED	Ø2 2B			NOT USED								ST DC ISOLATOR
FILE "J"	U	SLOT EMPTY	Ø6 6A	SLOT EMPTY	WIRED INPUT ⊗	SLOT EMPTY	Ø3 3A	SLOT EMPTY	SLOT EMPTY	SLOT EMPTY	SLOT EMPTY	SLOT EMPTY	SLOT EMPTY	SLOT EMPTY	SLOT EMPTY
	L		NOT USED				Ø3 3B								

EX.: 1A, 2A, ETC. = LOOP NO.'S

⊗ Wired Input - Do not populate slot with detector card

FS = FLASH SENSE
ST = STOP TIME

INPUT FILE CONNECTION & PROGRAMMING CHART

LOOP NO.	LOOP TERMINAL	INPUT FILE POS.	PIN NO.	INPUT ASSIGNMENT NO.	DETECTOR NO.	NEMA PHASE	CALL	EXTEND	FULL TIME DELAY	STRETCH TIME	DELAY TIME
1A[1]	TB2-1,2	I1U	56	18	1	1	Y	Y			15
	-	J4U	48	10	26	6	Y	Y			
1B	TB2-5,6	I2U	39	1	2	1	Y	Y			15
2A	TB2-9,10	I3U	63	25	32	2	Y	Y			
2B	TB2-11,12	I3L	76	38	42	2	Y	Y			
4A	TB4-9,10	I6U	41	3	4	4	Y	Y			10
6A	TB3-5,6	J2U	40	2	6	6	Y	Y			
3A	TB5-9,10	J6U	42	4	8	3	Y	Y			3
3B	TB5-11,12	J6L	46	8	18	3	Y	Y			

[1] Add jumper from I1-W to J4-W, on rear of input file.

INPUT FILE POSITION LEGEND: J2L
FILE J
SLOT 2
LOWER

THIS ELECTRICAL DETAIL IS FOR
THE SIGNAL DESIGN: 13-1160T2
DESIGNED: July 2011
SEALED: 12-12-2011
REVISED:

LOAD RESISTOR INSTALLATION DETAIL

(install resistors as shown below)

ACCEPTABLE VALUES

VALUE (ohms)	WATTAGE
1.5K - 1.9K	25W (min)
2.0K - 3.0K	10W (min)

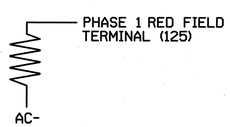

HNTB NORTH CAROLINA, P.C.
343 E. Six Forks Road, Suite 200
Raleigh, North Carolina 27609
NC License No: C-1554

Signal Upgrade - Temporary Design 2 (Construction Phase II) (Sheet 1 of 2)

ELECTRICAL AND PROGRAMMING DETAILS FOR:

Prepared for: Transportation Mobility and Safety Division, Signals Management Section, Department of Transportation, State of North Carolina

750 N.Greenfield Pkwy,Garner,NC 27529

SR 1922 (Enola Rd)
at
SR 1940 (Pete Brittain Rd/
Old Colony Rd)

Division 13 Burke County Morganton

PLAN DATE:	July 2011	REVIEWED BY:	N.M. Rodevick
PREPARED BY:	A.D. Klinksiek	REVIEWED BY:	H.L. Winstead

REVISIONS	INIT.	DATE

SEAL

NORTH CAROLINA PROFESSIONAL SEAL 07983 ENGINEER HARVEY L. WINSTEAD, JR.

SIGNATURE H.L. Winstead DATE 12/12/11

SIG. INVENTORY NO. 13-1160T2

PROJECT REFERENCE NO.	SHEET NO.
U-2551	Sig. 7

LOGICAL I/O PROCESSOR PROGRAMMING DETAIL TO PRODUCE SPECIAL FYA-PPLT SIGNAL SEQUENCE

(program controller as shown below)

1. FROM MAIN MENU PRESS '2' (PHASE CONTROL), THEN '1' (PHASE CONTROL FUNCTIONS). SCROLL TO THE BOTTOM OF THE MENU AND ENABLE ACT LOGIC COMMANDS 1, 2, AND 3.

2. FROM MAIN MENU PRESS '6' (OUTPUTS), THEN '3' (LOGICAL I/O PROCESSOR).

```
LOGICAL I/O COMMAND #1  (+/-COMMAND#)
IF  ACTIVE PHASE       #1  IS ON
AND RED CLEAR ON PHASE #1  IS ON

SCROLL DOWN

THEN:
SET OUTPUT  ASSIGNMENT #50 ON
SET OUTPUT  ASSIGNMENT #51 OFF
```

NOTE: LOGIC FOR PHASE 1 RED CLEAR WHEN TRANSITIONING FROM PHASE 1 TO PHASE 2 (HEAD 11).

PRESS '+'

```
LOGICAL I/O COMMAND #2  (+/-COMMAND#)
IF  ACTIVE PHASE       #1  IS ON

SCROLL DOWN

THEN:
SET OUTPUT  ASSIGNMENT #52 OFF
```

NOTE: LOGIC FOR SWITCHING FLASHING YELLOW ARROW "OFF" DURING PHASE 1 (HEAD 11).

PRESS '+'

```
LOGICAL I/O COMMAND #3  (+/-COMMAND#)
IF  YELLOW ON PHASE    #1  IS ON

SCROLL DOWN

THEN:
SET OUTPUT  ASSIGNMENT #51 ON
```

NOTE: LOGIC FOR YELLOW ARROW CLEARANCE FROM PHASE 1 (HEAD 11).

LOGIC I/O PROCESSOR PROGRAMMING COMPLETE

OUTPUT REFERENCE SCHEDULE

OUTPUT 50 = Overlap A Red
OUTPUT 51 = Overlap A Yellow
OUTPUT 52 = Overlap A Green

OVERLAP PROGRAMMING DETAIL

(program controller as shown below)

FROM MAIN MENU PRESS '8' (OVERLAPS), THEN '1' (VEHICLE OVERLAP SETTINGS).

```
PAGE 1: VEHICLE OVERLAP 'A' SETTINGS
PHASE:          |123456789101112131415 16
VEH OVL PARENTS:|XX
VEH OVL NOT VEH:|
VEH OVL NOT PED:|
VEH OVL GRN EXT:|
STARTUP COLOR: _ RED  _ YELLOW  _ GREEN
FLASH COLORS:  _ RED  _ YELLOW  X GREEN
SELECT VEHICLE OVERLAP OPTIONS:   (Y/N)
FLASH YELLOW IN CONTROLLER FLASH?...Y
GREEN EXTENSION (0-255 SEC).........0
YELLOW CLEAR (0=PARENT,3-25.5 SEC)..0.0
RED CLEAR (0=PARENT,0.1-25.5 SEC)...0.0
OUTPUT AS PHASE # (0=NONE, 1-16)....0
```

← NOTICE GREEN FLASH

PRESS '+' TWICE

```
PAGE 1: VEHICLE OVERLAP 'C' SETTINGS
PHASE:          |123456789101112131415 16
VEH OVL PARENTS:|     X
VEH OVL NOT VEH:|
VEH OVL NOT PED:|
VEH OVL GRN EXT:|
STARTUP COLOR: _ RED  _ YELLOW  _ GREEN
FLASH COLORS:  _ RED  _ YELLOW  X GREEN
SELECT VEHICLE OVERLAP OPTIONS:   (Y/N)
FLASH YELLOW IN CONTROLLER FLASH?...Y
GREEN EXTENSION (0-255 SEC).........0
YELLOW CLEAR (0=PARENT,3-25.5 SEC)..0.0
RED CLEAR (0=PARENT,0.1-25.5 SEC)...0.0
OUTPUT AS PHASE # (0=NONE, 1-16)....0
```

← NOTICE GREEN FLASH

OVERLAP PROGRAMMING COMPLETE

THIS ELECTRICAL DETAIL IS FOR
THE SIGNAL DESIGN: 13-1160T2
DESIGNED: July 2011
SEALED: 12-12-2011
REVISED:

Signal Upgrade - Temporary Design 2 (Construction Phase II)(Sheet 2 of 2)

HNTB NORTH CAROLINA, P.C.
343 E. Six Forks Road, Suite 200
Raleigh, North Carolina 27609
NC License No: C-1554

ELECTRICAL AND PROGRAMMING DETAILS FOR:

Prepared for:
Transportation Mobility and Safety Division
STATE OF NORTH CAROLINA DEPARTMENT OF TRANSPORTATION
Signal Management Section
750 N.Greenfield Pkwy,Garner,NC 27529

SR 1922 (Enola Rd)
at
SR 1940 (Pete Brittain Rd/
Old Colony Rd)

Division 13 Burke County Morganton

PLAN DATE:	July 2011	REVIEWED BY:	N.M. Rodevick
PREPARED BY:	A.D. Klinksiek	REVIEWED BY:	H.L. Winstead

REVISIONS	INIT.	DATE

SEAL

NORTH CAROLINA PROFESSIONAL SEAL 07983 ENGINEER HARVEY L. WINSTEAD, JR.

SIGNATURE H.L. Winstead DATE 12/12/11

SIG. INVENTORY NO. 13-1160T2

PROJECT REFERENCE NO.	SHEET NO.
U-2551	Sig. 8

3 Phase
Fully Actuated
NC 18 (Sterling St)/SR 1922 (Enola Rd)
Closed Loop System

PHASING DIAGRAM

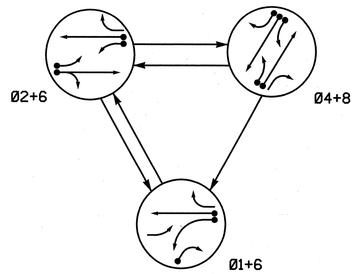

PHASING DIAGRAM DETECTION LEGEND

- DETECTED MOVEMENT
- UNDETECTED MOVEMENT (OVERLAP)
- UNSIGNALIZED MOVEMENT
- PEDESTRIAN MOVEMENT

TABLE OF OPERATION

SIGNAL FACE	PHASE 01+6	PHASE 02+6	PHASE 04+8	FLASH
11	←	F Y	~~R~~	~~Y~~
21	~~F Y~~	F Y	~~R~~	~~Y~~
22,23	R	G	R	Y
41	~~R~~	~~R~~	F Y	~~R~~
42,43	R	R	G	R
61,62	G	G	R	R
81	~~R~~	~~R~~	F Y	~~R~~
82	R	R	G	R
83	R	R	G	R

F Y = Flashing Yellow Arrow

STANDARD SIGNAL FACE CLEARANCES FOR FLASHING LEFT TURN SIGNAL

FROM	TO ← 1	TO ← 2	TO F Y 1	TO F Y 2	TO ~~R~~ 1	TO ~~R~~ 2
←	←	←	~~Y~~	~~R~~	~~Y~~	~~R~~
F Y	F Y	F Y	F Y	F Y	~~Y~~	~~R~~
~~R~~	~~R~~	~~R~~	~~R~~	~~R~~	~~R~~	~~R~~

F Y = Flashing Yellow Arrow

SIGNAL FACE I.D.

All Heads L.E.D.

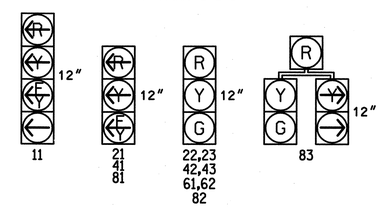

OASIS 2070L LOOP & DETECTOR INSTALLATION CHART

INDUCTIVE LOOPS: LOOP	SIZE (FT)	DISTANCE FROM STOPBAR (FT)	TURNS	NEW LOOP	DETECTOR PROGRAMMING: PHASE	CALLING	EXTENSION	FULL TIME DELAY	STRETCH TIME	DELAY TIME	SYSTEM LOOP	NEW CARD
1A	6x40	0	2-4-2	Y	1	Y	Y	-	-	15	-	-
					6	Y	Y	-	-	-	-	-
1B	6x40	0	2-4-2	-	1	Y	Y	-	-	15	-	-
2A	6x6	70	4	Y	2	Y	Y	-	-	-	-	-
2B	6x40	0	2-4-2	Y	2	Y	Y	-	-	-	-	-
4A	6x40	0	2-4-2	Y	4	Y	Y	-	-	-	-	-
4B	6x40	0	2-4-2	Y	4	Y	Y	-	-	-	-	Y
4C	6x40	0	2-4-2	Y	4	Y	Y	-	-	15	-	Y
6A	6x6	70	3	Y	6	Y	Y	-	-	-	-	-
8A	6x40	0	2-4-2	-	8	Y	Y	-	-	3	-	Y
8B	6x40	0	2-4-2	-	8	Y	Y	-	-	-	-	Y
S56	6x6	+170	3	Y	-	-	-	-	-	-	Y	Y

NOTES

1. Refer to "Roadway Standard Drawings NCDOT" dated January 2012 and "Standard Specifications for Roads and Structures" dated January 2012.
2. Do not program signal for late night flashing operation unless otherwise directed by the Engineer.
3. Phase 1 may be lagged.
4. Set all detector units to presence mode.
5. Maximum times shown in timing chart are for free-run operation only. Coordinated signal system timing values supersede these values.
6. Closed loop system data: Controller Asset #:1160.

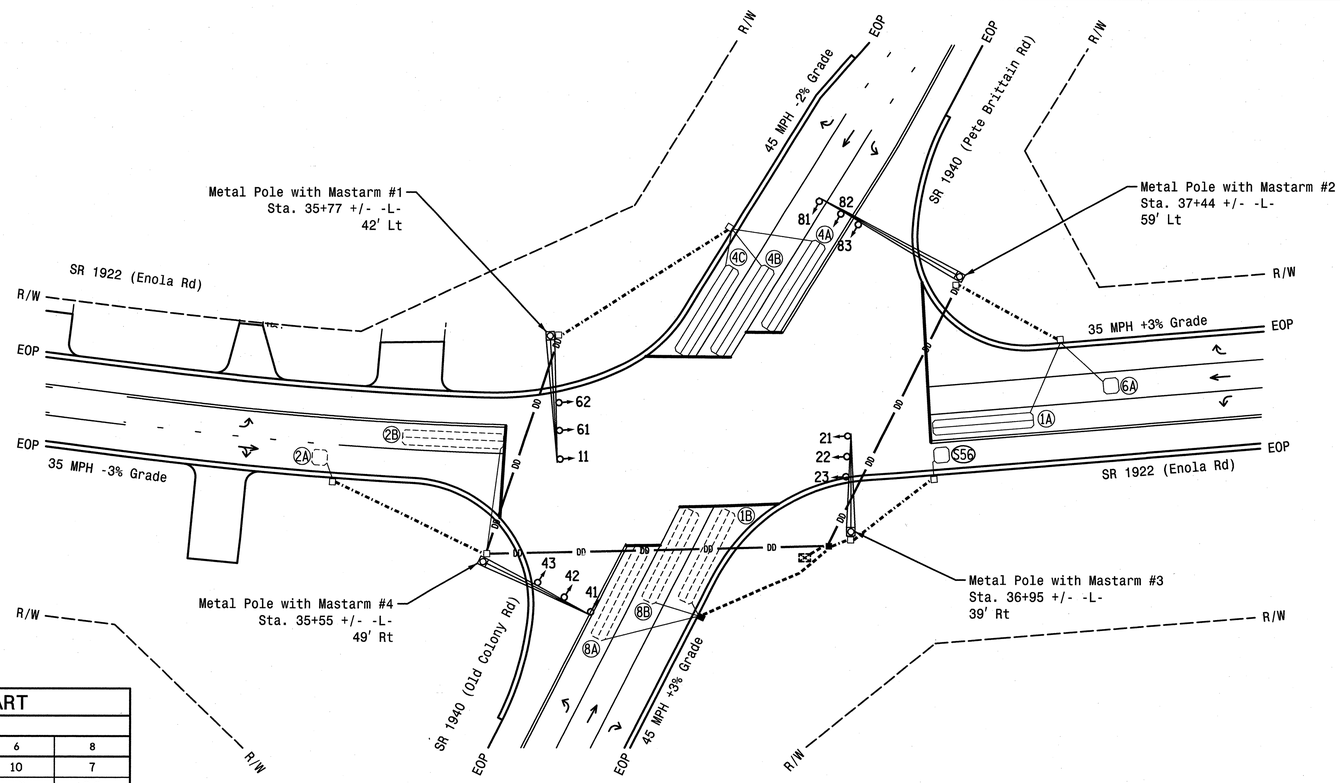

LEGEND

PROPOSED		EXISTING
	Traffic Signal Head	
	Modified Signal Head	N/A
	Sign	
	Pedestrian Signal Head With Push Button & Sign	
	Signal Pole with Guy	
	Signal Pole with Sidewalk Guy	
	Inductive Loop Detector	
	Controller & Cabinet	
	Junction Box	
	2-in Underground Conduit	
DD	Directional Drill	DD
N/A	Right of Way	
	Directional Arrow	
	Metal Pole with Mastarm	

OASIS 2070L TIMING CHART

FEATURE	PHASE 1	PHASE 2	PHASE 4	PHASE 6	PHASE 8
Min Green 1 *	7	10	7	10	7
Extension 1 *	2.0	3.0	2.0	3.0	2.0
Max Green 1 *	20	45	30	45	30
Yellow Clearance	3.0	4.1	4.7	4.1	4.7
Red Clearance	3.5	2.8	1.1	2.8	1.1
Red Revert	2.0	2.0	2.0	2.0	2.0
Walk 1 *	-	-	-	-	-
Don't Walk 1	-	-	-	-	-
Seconds Per Actuation *	-	-	-	-	-
Max Variable Initial *	-	-	-	-	-
Time Before Reduction *	-	-	-	-	-
Time To Reduce *	-	-	-	-	-
Minimum Gap	-	-	-	-	-
Recall Mode	-	MIN RECALL	-	MIN RECALL	-
Vehicle Call Memory	-	YELLOW	-	YELLOW	-
Dual Entry	-	-	ON	-	ON
Simultaneous Gap	ON	ON	ON	ON	ON

* These values may be field adjusted. Do not adjust Min Green and Extension times for phases 2 and 6 lower than what is shown. Min Green for all other phases should not be lower than 4 seconds.

Signal Upgrade - Final Design

HNTB NORTH CAROLINA, P.C.
343 E. Six Forks Road, Suite 200
Raleigh, North Carolina 27609
NC License No: C-1554

Prepared For: Transportation Mobility and Safety Division, Signal Design Section, 750 N.Greenfield Pkwy,Garner,NC 27529

SCALE 0 30 1"=30'

SR 1922 (Enola Rd) at SR 1940 (Pete Brittain Rd/ Old Colony Rd)

Division 13 Burke County Morganton

PLAN DATE:	July 2011	REVIEWED BY:	A.D. Klinksiek
PREPARED BY:	T.R. Terrell	REVIEWED BY:	N.W. Rodevick

REVISIONS	INIT.	DATE

SEAL: NORTH CAROLINA PROFESSIONAL SEAL 031464 ENGINEER NATASHA M. RODEVICK

SIGNATURE DATE 12-12-11

SIG. INVENTORY NO. 13-1160

PROJECT REFERENCE NO.	SHEET NO.
U-2551	Sig. 9

EDI MODEL 2018ECL-NC CONFLICT MONITOR PROGRAMMING DETAIL

(remove jumpers and set switches as shown)

REMOVE DIODE JUMPERS 1-6,1-9,1-11,2-6,2-9,2-11,4-8,4-10,4-12,6-9,6-11,8-10, 8-12,9-11 and 10-12.

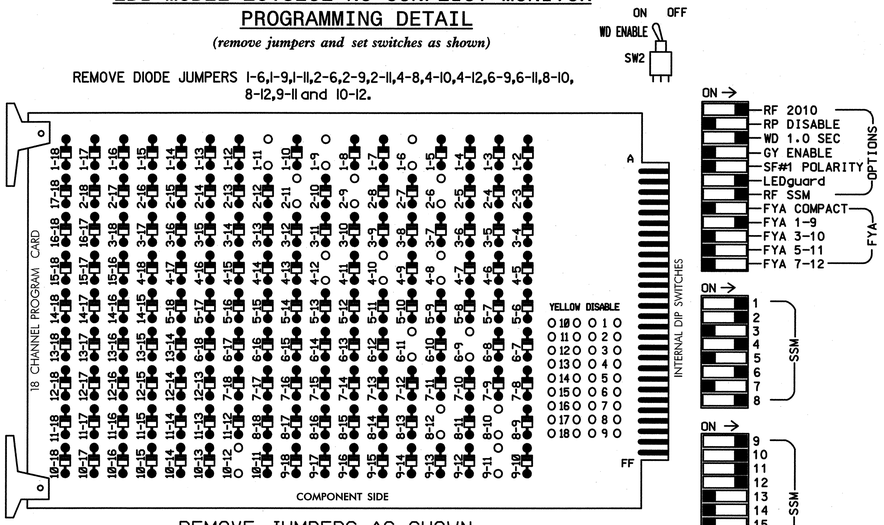

REMOVE JUMPERS AS SHOWN

NOTES:

1. Card is provided with all diode jumpers in place. Removal of any jumper allows its channels to run concurrently.
2. Ensure jumpers SEL2-SEL5 and SEL9 are present on the monitor board.
3. Ensure that Red Enable is active at all times during normal operation.
4. Connect serial cable from conflict monitor to comm. port 1 of 2070 controller. Ensure conflict monitor communicates with 2070.

NOTES

1. To prevent "flash-conflict" problems, insert red flash program blocks for all unused vehicle load switches in the output file. The installer shall verify that signal heads flash in accordance with the Signal Plans.
2. Program phases 4 and 8 for Dual Entry.
3. Enable Simultaneous Gap-Out for all phases.
4. Program phases 2 and 6 for Start Up In Green.
5. Program phases 2 and 6 for Yellow Flash and overlaps 1 and 2 as Wag Overlaps.
6. The cabinet and controller are part of the NC 18 (Sterling St)/SR 1922 (Enola Rd) Closed Loop System.

SIGNAL HEAD HOOK-UP CHART

LOAD SWITCH NO.	S1		S2	S3	S4	S5	S6	S7	S8	S9	S10	S11	S12	AUX S1	AUX S2	AUX S3	AUX S4	AUX S5	AUX S6
CMU CHANNEL NO.	1		2	13	3	4	14	5	6	15	7	8	16	9	10	17	11	12	18
PHASE	1		2	2 PED	3	4	4 PED	5	6	6 PED	7	8	8 PED	OLA	OLB	SPARE	OLC	OLD	SPARE
SIGNAL HEAD NO.	11★	83	22,23	NU	NU	42,43	NU	NU	61,62	NU	NU	82,83	NU	11★	81★	NU	21★	41★	NU
RED		✱	128			101			134			107							
YELLOW			129			102			135			108							
GREEN			130			103			136			109							
RED ARROW														A121	A124		A114	A101	
YELLOW ARROW		126												A122	A125		A115	A102	
FLASHING YELLOW ARROW														A123	A126		A116	A103	
GREEN ARROW	127	127																	

NU = Not Used

✱ Denotes install load resistor. See load resistor installation detail this sheet.

★ See pictorial of head wiring in detail below.

EQUIPMENT INFORMATION

CONTROLLER.....2070L
CABINET.....332 /W/ AUX
SOFTWARE.....ECONOLITE OASIS
CABINET MOUNT.....BASE
OUTPUT FILE POSITIONS...18 WITH AUX. OUTPUT FILE
LOAD SWITCHES USED.....S1,S2,S5,S8,S11,AUX S1,AUX S2, AUX S4, AUX S5
PHASES USED.....1,2,4,6,8
OVERLAP "A".....1+2
OVERLAP "B".....4
OVERLAP "C".....6
OVERLAP "D".....8

FYA SIGNAL WIRING DETAIL

(wire signal heads as shown)

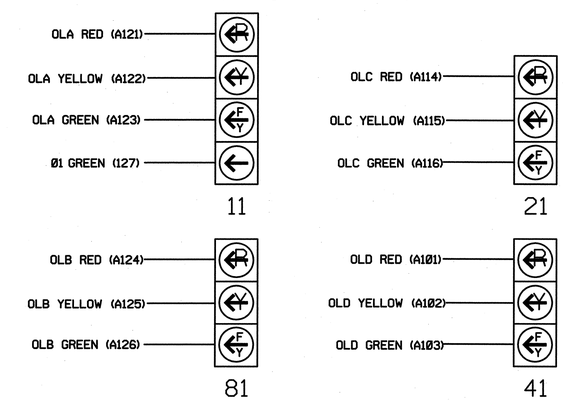

NOTE

1. The sequence display for signal head 11 requires special logic programming. See sheet 2 of 2 for programming instructions.

INPUT FILE POSITION LAYOUT

(front view)

		1	2	3	4	5	6	7	8	9	10	11	12	13	14
FILE "I"	U	Ø1 1A	Ø1 1B	Ø2 2A	SLOT EMPTY	SLOT EMPTY	Ø4 4A	Ø4 4C	SLOT EMPTY	SYS. DET. S56	SLOT EMPTY	SLOT EMPTY	SLOT EMPTY	SLOT EMPTY	FS DC ISOLATOR
	L	NOT USED	NOT USED	Ø2 2B			Ø4 4B	NOT USED		NOT USED					ST DC ISOLATOR
FILE "J"	U	SLOT EMPTY	Ø6 6A	SLOT EMPTY	WIRED INPUT ⊗	SLOT EMPTY	Ø8 8A	SLOT EMPTY	SLOT EMPTY	SLOT EMPTY	SLOT EMPTY	SLOT EMPTY	SLOT EMPTY	SLOT EMPTY	SLOT EMPTY
	L		NOT USED				Ø8 8B								

EX.: 1A, 2A, ETC. = LOOP NO.'S

⊗Wired Input - Do not populate slot with detector card

FS = FLASH SENSE
ST = STOP TIME

INPUT FILE CONNECTION & PROGRAMMING CHART

LOOP NO.	LOOP TERMINAL	INPUT FILE POS.	PIN NO.	INPUT ASSIGNMENT NO.	DETECTOR NO.	NEMA PHASE	CALL	EXTEND	FULL TIME DELAY	STRETCH TIME	DELAY TIME
1A[1]	TB2-1,2	I1U	56	18	1	1	Y	Y			15
	-	J4U	48	10	26	6	Y	Y			
1B	TB2-5,6	I2U	39	1	2	1	Y	Y			15
2A	TB2-9,10	I3U	63	25	32	2	Y	Y			
2B	TB2-11,12	I3L	76	38	42	2	Y	Y			
4A	TB4-9,10	I6U	41	3	4	4	Y	Y			
4B	TB4-11,12	I6L	45	7	14	4	Y	Y			
4C	TB6-1,2	I7U	65	27	34	4	Y	Y			15
✱S56	TB6-9,10	I9U	60	22	11	SYS					
6A	TB3-5,6	J2U	40	2	6	6	Y	Y			
8A	TB5-9,10	J6U	42	4	8	8	Y	Y			3
8B	TB5-11,12	J6L	46	8	18	8	Y	Y			

✱ SYSTEM DETECTOR ONLY. REMOVE THE VEHICLE PHASE ASSIGNED TO THIS DETECTOR IN THE DEFAULT PROGRAMMING.

[1]Add jumper from I1-W to J4-W, on rear of input file.

INPUT FILE POSITION LEGEND: J2L
FILE J
SLOT 2
LOWER

LOAD RESISTOR INSTALLATION DETAIL

(install resistors as shown below)

ACCEPTABLE VALUES

VALUE (ohms)	WATTAGE
1.5K - 1.9K	25W (min)
2.0K - 3.0K	10W (min)

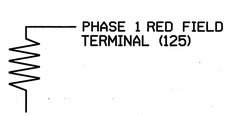

THIS ELECTRICAL DETAIL IS FOR
THE SIGNAL DESIGN: 13-1160
DESIGNED: July 2011
SEALED: 12-12-2011
REVISED:

Signal Upgrade - Final Design (Sheet 1 of 2)

HNTB NORTH CAROLINA, P.C.
343 E. Six Forks Road, Suite 200
Raleigh, North Carolina 27609
NC License No: C-1554

ELECTRICAL AND PROGRAMMING DETAILS FOR:

Prepared for: Transportation Mobility and Safety Division, Traffic Engineering Branch, Signal Management Section, Department of Transportation, State of North Carolina

750 N.Greenfield Pkwy,Garner,NC 27529

SR 1922 (Enola Rd)
at
SR 1940 (Pete Brittain Rd/ Old Colony Rd))

Division 13 Burke County Morganton

PLAN DATE:	July 2011	REVIEWED BY:	N.M. Rodevick
PREPARED BY:	A.D. Klinksiek	REVIEWED BY:	H.L. Winstead

REVISIONS	INIT.	DATE

SEAL
NORTH CAROLINA PROFESSIONAL SEAL 07983 ENGINEER HARVEY L. WINSTEAD, JR.

SIGNATURE H.L. Winstead DATE 12/12/11

SIG. INVENTORY NO. 13-1160

PROJECT REFERENCE NO.	SHEET NO.
U-2551	Sig. 10

LOGICAL I/O PROCESSOR PROGRAMMING DETAIL TO PRODUCE SPECIAL FYA-PPLT SIGNAL SEQUENCE

(program controller as shown below)

1. FROM MAIN MENU PRESS '2' (PHASE CONTROL), THEN '1' (PHASE CONTROL FUNCTIONS). SCROLL TO THE BOTTOM OF THE MENU AND ENABLE ACT LOGIC COMMANDS 1, 2, AND 3.

2. FROM MAIN MENU PRESS '6' (OUTPUTS), THEN '3' (LOGICAL I/O PROCESSOR).

```
LOGICAL I/O COMMAND #1   (+/-COMMAND#)
IF  ACTIVE PHASE        #1  IS ON
AND RED CLEAR ON PHASE #1  IS ON

                 SCROLL DOWN

THEN:
SET OUTPUT  ASSIGNMENT #50 ON
SET OUTPUT  ASSIGNMENT #51 OFF
```

NOTE: LOGIC FOR PHASE 1 RED CLEAR WHEN TRANSITIONING FROM PHASE 1 TO PHASE 2 (HEAD 11).

PRESS '+'

```
LOGICAL I/O COMMAND #2   (+/-COMMAND#)
IF  ACTIVE PHASE        #1  IS ON

                 SCROLL DOWN

THEN:
SET OUTPUT  ASSIGNMENT #52 OFF
```

NOTE: LOGIC FOR SWITCHING FLASHING YELLOW ARROW "OFF" DURING PHASE 1 (HEAD 11).

PRESS '+'

```
LOGICAL I/O COMMAND #3   (+/-COMMAND#)
IF  YELLOW ON PHASE     #1  IS ON

                 SCROLL DOWN

THEN:
SET OUTPUT  ASSIGNMENT #51 ON
```

NOTE: LOGIC FOR YELLOW ARROW CLEARANCE FROM PHASE 1 (HEAD 11).

LOGIC I/O PROCESSOR PROGRAMMING COMPLETE

OUTPUT REFERENCE SCHEDULE

OUTPUT 50 = Overlap A Red
OUTPUT 51 = Overlap A Yellow
OUTPUT 52 = Overlap A Green

OVERLAP PROGRAMMING DETAIL

(program controller as shown below)

FROM MAIN MENU PRESS '8' (OVERLAPS), THEN '1' (VEHICLE OVERLAP SETTINGS).

```
PAGE 1: VEHICLE OVERLAP 'A' SETTINGS
PHASE:          |123456789101112131415 16
VEH OVL PARENTS:|XX
VEH OVL NOT VEH:|
VEH OVL NOT PED:|
VEH OVL GRN EXT:|
STARTUP COLOR: _ RED  _ YELLOW  _ GREEN
FLASH COLORS:  _ RED  _ YELLOW  X GREEN
SELECT VEHICLE OVERLAP OPTIONS:   (Y/N)
FLASH YELLOW IN CONTROLLER FLASH?...Y
GREEN EXTENSION (0-255 SEC).........0
YELLOW CLEAR (0=PARENT,3-25.5 SEC)..0.0
RED CLEAR (0=PARENT,0.1-25.5 SEC)...0.0
OUTPUT AS PHASE # (0=NONE, 1-16)....0
```

NOTICE GREEN FLASH

PRESS '+' ONCE

```
PAGE 1: VEHICLE OVERLAP 'B' SETTINGS
PHASE:          |123456789101112131415 16
VEH OVL PARENTS:|   X
VEH OVL NOT VEH:|
VEH OVL NOT PED:|
VEH OVL GRN EXT:|
STARTUP COLOR: _ RED  _ YELLOW  _ GREEN
FLASH COLORS:  _ RED  _ YELLOW  X GREEN
SELECT VEHICLE OVERLAP OPTIONS:   (Y/N)
FLASH YELLOW IN CONTROLLER FLASH?...N
GREEN EXTENSION (0-255 SEC).........0
YELLOW CLEAR (0=PARENT,3-25.5 SEC)..0.0
RED CLEAR (0=PARENT,0.1-25.5 SEC)...0.0
OUTPUT AS PHASE # (0=NONE, 1-16)....0
```

NOTICE GREEN FLASH

PRESS '+' ONCE

```
PAGE 1: VEHICLE OVERLAP 'C' SETTINGS
PHASE:          |123456789101112131415 16
VEH OVL PARENTS:|     X
VEH OVL NOT VEH:|
VEH OVL NOT PED:|
VEH OVL GRN EXT:|
STARTUP COLOR: _ RED  _ YELLOW  _ GREEN
FLASH COLORS:  _ RED  _ YELLOW  X GREEN
SELECT VEHICLE OVERLAP OPTIONS:   (Y/N)
FLASH YELLOW IN CONTROLLER FLASH?...Y
GREEN EXTENSION (0-255 SEC).........0
YELLOW CLEAR (0=PARENT,3-25.5 SEC)..0.0
RED CLEAR (0=PARENT,0.1-25.5 SEC)...0.0
OUTPUT AS PHASE # (0=NONE, 1-16)....0
```

NOTICE GREEN FLASH

PRESS '+' ONCE

```
PAGE 1: VEHICLE OVERLAP 'D' SETTINGS
PHASE:          |123456789101112131415 16
VEH OVL PARENTS:|       X
VEH OVL NOT VEH:|
VEH OVL NOT PED:|
VEH OVL GRN EXT:|
STARTUP COLOR: _ RED  _ YELLOW  _ GREEN
FLASH COLORS:  _ RED  _ YELLOW  X GREEN
SELECT VEHICLE OVERLAP OPTIONS:   (Y/N)
FLASH YELLOW IN CONTROLLER FLASH?...N
GREEN EXTENSION (0-255 SEC).........0
YELLOW CLEAR (0=PARENT,3-25.5 SEC)..0.0
RED CLEAR (0=PARENT,0.1-25.5 SEC)...0.0
OUTPUT AS PHASE # (0=NONE, 1-16)....0
```

NOTICE GREEN FLASH

OVERLAP PROGRAMMING COMPLETE

THIS ELECTRICAL DETAIL IS FOR
THE SIGNAL DESIGN: 13-1160
DESIGNED: July 2011
SEALED: 12-12-2011
REVISED:

HNTB
HNTB NORTH CAROLINA, P.C.
343 E. Six Forks Road, Suite 200
Raleigh, North Carolina 27609
NC License No: C-1554

Signal Upgrade - Final Design (Sheet 2 of 2)

ELECTRICAL AND PROGRAMMING DETAILS FOR:

Prepared for: Transportation Mobility and Safety Division, Department of Transportation, State of North Carolina, Signals Management Section
750 N.Greenfield Pkwy,Garner,NC 27529

SR 1922 (Enola Rd)
at
SR 1940 (Pete Brittain Rd/
Old Colony Rd))

Division 13 Burke County Morganton

PLAN DATE:	July 2011	REVIEWED BY:	N.M. Rodevick
PREPARED BY:	A.D. Klinksiek	REVIEWED BY:	H.L. Winstead

REVISIONS	INIT.	DATE

SEAL

NORTH CAROLINA PROFESSIONAL SEAL 07983 ENGINEER HARVEY L. WINSTEAD, JR.

H.L. Winstead 12/12/11
SIGNATURE DATE

SIG. INVENTORY NO. 13-1160

PROJECT REFERENCE NO.	SHEET NO.
U-2551	Sig. 11

PHASING DIAGRAM

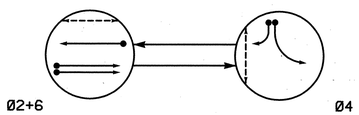

PHASING DIAGRAM DETECTION LEGEND

- DETECTED MOVEMENT
- UNDETECTED MOVEMENT (OVERLAP)
- UNSIGNALIZED MOVEMENT
- PEDESTRIAN MOVEMENT

TABLE OF OPERATION

SIGNAL FACE	PHASE Ø2+6	PHASE Ø4	FLASH
21,22	G	R	Y
41,42	R	G	R
61,62	G	R	Y
P41,P42	DW	W	DRK
P61,P62	W	DW	DRK

W - Walk
DW - Don't Walk
DRK - Dark

SIGNAL FACE I.D.

All Heads L.E.D.

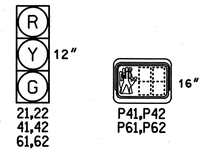

OASIS 2070L LOOP & DETECTOR INSTALLATION CHART

INDUCTIVE LOOPS					DETECTOR PROGRAMMING						
LOOP	SIZE (FT)	DISTANCE FROM STOPBAR (FT)	TURNS	NEW LOOP	PHASE	CALLING	EXTENSION	FULL TIME DELAY	STRETCH TIME	DELAY TIME	SYSTEM LOOP	NEW CARD
2A	6X6	70	3	Y	2	Y	Y	-	-	-	-	Y
2B	6X6	70	3	Y	2	Y	Y	-	-	-	-	Y
4A	6X40	0	2-4-2	Y	4	Y	Y	-	-	-	-	Y
4B	6X40	0	2-4-2	Y	4	Y	Y	-	-	15	-	Y
6A	6X6	70	3	Y	6	Y	Y	-	-	-	-	Y
S53	6X6	+100	3	Y	-	-	-	-	-	-	Y	Y
S54	6X6	+100	3	Y	-	-	-	-	-	-	Y	Y
S55	6X6	+120	3	Y	-	-	-	-	-	-	Y	Y

2 Phase
Fully Actuated
NC 18 (Sterling St)/SR 1922 (Enola Rd)
Closed Loop System

NOTES

1. Refer to "Roadway Standard Drawings NCDOT" dated January 2012 and "Standard Specifications for Roads and Structures" dated January 2012.
2. Do not program signal for late night flashing operation unless otherwise directed by the Engineer.
3. Set all detector units to presence mode.
4. Locate new cabinet so as not to obstruct sight distance of vehicles turning right on red.
5. The cabinet should be designed to include an Auxiliary Output file for future use.
6. Omit "WALK" and flashing "DON'T WALK" with no pedestrian calls.
7. Program pedestrian heads to countdown the flashing "Don't Walk" time only.
8. Maximum times shown in timing chart are for free-run operation only. Coordinated signal system timing values supersede these values.
9. Closed loop system data: Controller Asset #:1236.

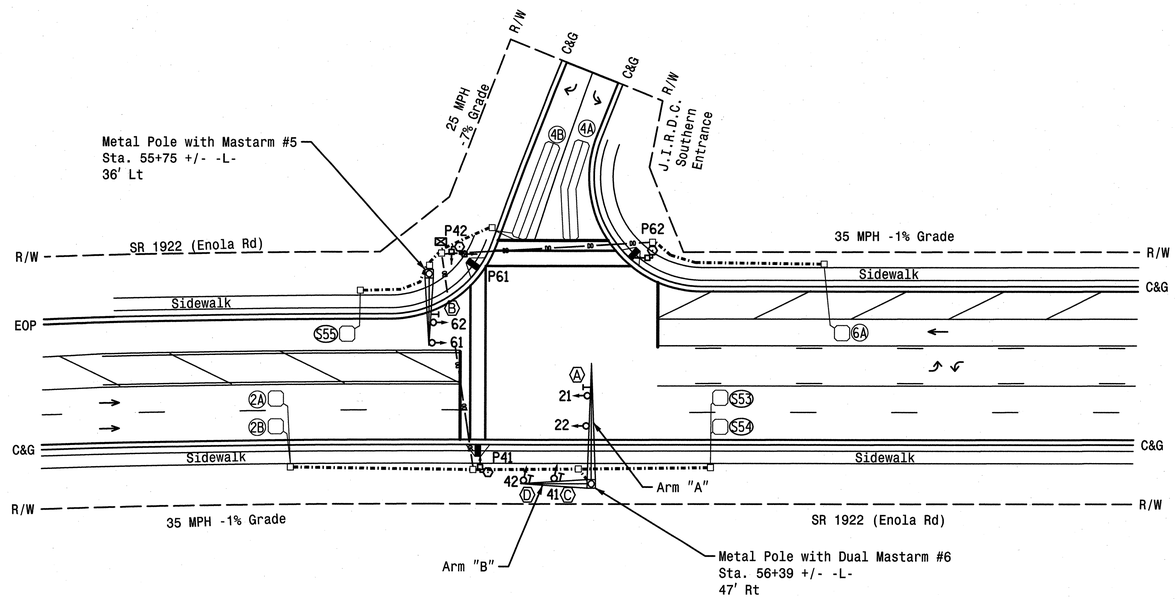

LEGEND

PROPOSED		EXISTING
	Traffic Signal Head	
	Modified Signal Head	N/A
	Sign	
	Pedestrian Signal Head With Push Button & Sign	
	Signal Pole with Guy	
	Signal Pole with Sidewalk Guy	
	Inductive Loop Detector	
	Controller & Cabinet	
	Junction Box	
	2-in Underground Conduit	
— DD —	Directional Drill	— DD —
N/A	Right of Way	
	Directional Arrow	
	Metal Pole with Mastarm	
	Signal Pedestal	
N/A	Wheelchair Ramp	
A	No Left Turn Sign (R3-2)	N/A
B	No Right Turn Sign (R3-1)	N/A
C	Left Arrow "ONLY" Sign (R3-5L)	N/A
D	Right Arrow "ONLY" Sign (R3-5R)	N/A

OASIS 2070L TIMING CHART

FEATURE	PHASE 2	PHASE 4	PHASE 6
Min Green 1 *	10	7	10
Extension 1 *	3.0	2.0	3.0
Max Green 1 *	45	25	45
Yellow Clearance	3.9	3.2	3.9
Red Clearance	1.1	2.3	1.4
Red Revert	2.0	2.0	2.0
Walk 1 *	-	7	7
Don't Walk 1	-	17	13
Seconds Per Actuation *	-	-	-
Max Variable Initial *	-	-	-
Time Before Reduction *	-	-	-
Time To Reduce *	-	-	-
Minimum Gap	-	-	-
Recall Mode	MIN RECALL	-	MIN RECALL
Vehicle Call Memory	YELLOW	-	YELLOW
Dual Entry	-	-	-
Simultaneous Gap	ON	ON	ON

* These values may be field adjusted. Do not adjust Min Green and Extension times for phases 2 and 6 lower than what is shown. Min Green for all other phases should not be lower than 4 seconds.

New Installation

HNTB
HNTB NORTH CAROLINA, P.C.
343 E. Six Forks Road, Suite 200
Raleigh, North Carolina 27609
NC License No: C-1554

Prepared for:
Transportation Mobility and Safety Division
Signal Design Section
750 N.Greenfield Pkwy,Garner,NC 27529

SR 1922 (Enola Rd)
at
J.I.R.D.C. Southern
Entrance

Division 13 Burke County Morganton

PLAN DATE:	July 2011	REVIEWED BY:	A.D. Klinksiek
PREPARED BY:	T.R. Terrell	REVIEWED BY:	N.W. Rodevick

SCALE 0 30 1"=30'

REVISIONS	INIT.	DATE

SEAL
NORTH CAROLINA PROFESSIONAL SEAL 031464 ENGINEER NATASHA M. RODEVICK

SIGNATURE
12-12-11
DATE

SIG. INVENTORY NO. 13-1236

PROJECT REFERENCE NO.	SHEET NO.
U-2551	Sig. 12

EDI MODEL 2018ECL-NC CONFLICT MONITOR PROGRAMMING DETAIL

(remove jumpers and set switches as shown)

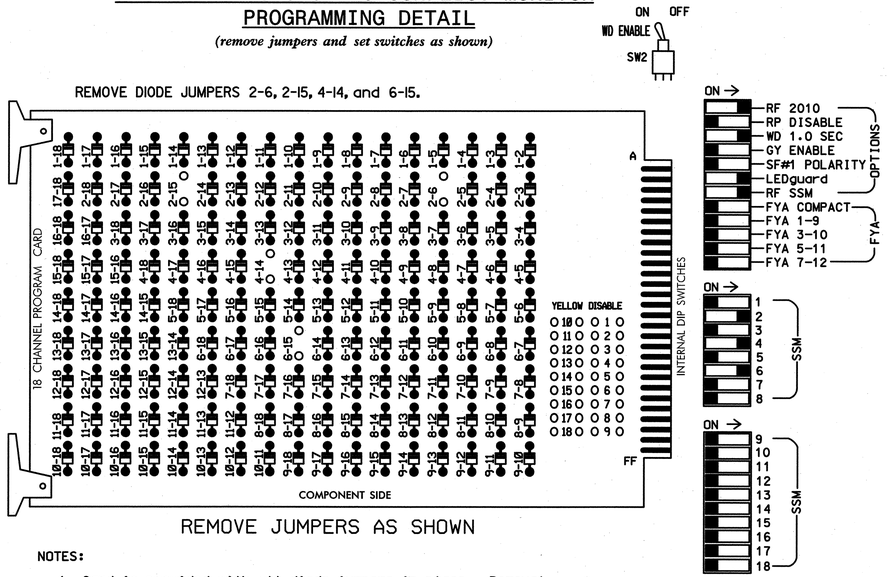

REMOVE JUMPERS AS SHOWN

■ = DENOTES POSITION OF SWITCH

NOTES:

1. Card is provided with all diode jumpers in place. Removal of any jumper allows its channels to run concurrently.
2. Ensure jumpers SEL2-SEL5 and SEL9 are present on the monitor board.
3. Ensure that Red Enable is active at all times during normal operation.
4. Connect serial cable from conflict monitor to comm. port 1 of 2070 controller. Ensure conflict monitor communicates with 2070.

NOTES

1. To prevent "flash-conflict" problems, insert red flash program blocks for all unused vehicle load switches in the output file. The installer shall verify that signal heads flash in accordance with the Signal Plans.
2. Enable Simultaneous Gap-Out for all phases.
3. Program phases 2 and 6 for Start Up In Green.
4. Program phases 4 and 6 for 'STARTUP PED CALL'.
5. Program phases 2 and 6 for Yellow Flash.
6. The cabinet and controller are part of the NC 18 (Sterling St)/SR 1922 (Enola Rd) Closed Loop System.

SIGNAL HEAD HOOK-UP CHART

LOAD SWITCH NO.	S1	S2	S3	S4	S5	S6	S7	S8	S9	S10	S11	S12	AUX S1	AUX S2	AUX S3	AUX S4	AUX S5	AUX S6
CMU CHANNEL NO.	1	2	13	3	4	14	5	6	15	7	8	16	9	10	17	11	12	18
PHASE	1	2	2 PED	3	4	4 PED	5	6	6 PED	7	8	8 PED	OLA	OLB	SPARE	OLC	OLD	SPARE
SIGNAL HEAD NO.	NU	21,22	NU	NU	41,42	P41, P42	NU	61,62	P61, P62	NU	NU	NU	NU	NU	NU	NU	NU	NU
RED		128			101			134										
YELLOW		129			102			135										
GREEN		130			103			136										
RED ARROW																		
YELLOW ARROW																		
GREEN ARROW																		
✋						104			119									
🚶						106			121									

NU = Not Used

EQUIPMENT INFORMATION

CONTROLLER.....2070L
CABINET.....332 /W/ AUX
SOFTWARE.....ECONOLITE OASIS
CABINET MOUNT.....BASE
OUTPUT FILE POSITIONS...18 WITH AUX. OUTPUT FILE
LOAD SWITCHES USED.....S2,S5,S6,S8,S9
PHASES USED.....2,4,4PED,6,6PED
OVERLAP "A".....NOT USED
OVERLAP "B".....NOT USED
OVERLAP "C".....NOT USED
OVERLAP "D".....NOT USED

COUNTDOWN PEDESTRIAN SIGNAL OPERATION

Countdown Ped Signals are required to display timing only during Ped Clearance Interval. Consult Ped Signal Module user's manual for instructions on selecting this feature.

INPUT FILE POSITION LAYOUT

(front view)

	1	2	3	4	5	6	7	8	9	10	11	12	13	14
FILE "I" U	SLOT	Ø2	SLOT	SLOT	SLOT	Ø4	SLOT	SLOT	SYS. DET.	SLOT	SLOT	NOT USED	Ø6 PED DC ISOLATOR	FS DC ISOLATOR
FILE "I" L	EMPTY	2A	EMPTY	EMPTY	EMPTY	4A	EMPTY	EMPTY	S53	EMPTY	EMPTY	Ø4 PED DC ISOLATOR	NOT USED	ST DC ISOLATOR
		Ø2				Ø4			SYS. DET.					
		2B				4B			S54					
FILE "J" U	SLOT	Ø6	SLOT	SLOT	SLOT	SLOT	SLOT	SLOT	SYS. DET.	SLOT	SLOT	SLOT	SLOT	SLOT
FILE "J" L	EMPTY	6A	EMPTY	EMPTY	EMPTY	EMPTY	EMPTY	EMPTY	S55	EMPTY	EMPTY	EMPTY	EMPTY	EMPTY
		NOT USED							NOT USED					

EX.: 1A, 2A, ETC. = LOOP NO.'S

FS = FLASH SENSE
ST = STOP TIME

INPUT FILE CONNECTION & PROGRAMMING CHART

LOOP NO.	LOOP TERMINAL	INPUT FILE POS.	PIN NO.	INPUT ASSIGNMENT NO.	DETECTOR NO.	NEMA PHASE	CALL	EXTEND	FULL TIME DELAY	STRETCH TIME	DELAY TIME
2A	TB2-5,6	I2U	39	1	2	2	Y	Y			
2B	TB2-7,8	I2L	43	5	12	2	Y	Y			
4A	TB4-9,10	I6U	41	3	4	4	Y	Y			
4B	TB4-11,12	I6L	45	7	14	4	Y	Y			15
✱S53	TB6-9,10	I9U	60	22	11	SYS					
✱S54	TB6-11,12	I9L	62	24	13	SYS					
6A	TB3-5,6	J2U	40	2	6	6	Y	Y			
✱S55	TB7-9,10	J9U	59	21	15	SYS					
PED PUSH BUTTONS											
P41,P42	TB8-5,6	I12L	69	31	PED 4	4 PED					
P61,P62	TB8-7,9	I13U	68	30	PED 6	6 PED					

NOTE:
INSTALL DC ISOLATORS IN INPUT FILE SLOTS I12 AND I13.

✱ SYSTEM DETECTOR ONLY. REMOVE THE VEHICLE PHASE ASSIGNED TO THIS DETECTOR IN THE DEFAULT PROGRAMMING.

INPUT FILE POSITION LEGEND: J2L
FILE J
SLOT 2
LOWER

THIS ELECTRICAL DETAIL IS FOR
THE SIGNAL DESIGN: 13-1236
DESIGNED: July 2011
SEALED: 12-12-2011
REVISED:

New Installation

ELECTRICAL AND PROGRAMMING DETAILS FOR:

SR 1922 (Enola Rd)
at
J.I.R.D.C. Southern
Entrance

Division 13 Burke County Morganton

PLAN DATE:	July 2011	REVIEWED BY:	N.W. Rodevick
PREPARED BY:	A.D. Klinksiek	REVIEWED BY:	H.L. Winstead

REVISIONS	INIT.	DATE

SEAL
NORTH CAROLINA PROFESSIONAL SEAL 07983 ENGINEER HARVEY L. WINSTEAD, JR.

SIGNATURE H.L. Winstead DATE 12/12/11

SIG. INVENTORY NO. 13-1236

Prepared for: Transportation Mobility and Safety Division, Department of Transportation, Signals Management Section
750 N.Greenfield Pkwy,Garner,NC 27529

HNTB
HNTB NORTH CAROLINA, P.C.
343 E. Six Forks Road, Suite 200
Raleigh, North Carolina 27609
NC License No: C-1554

PROJECT REFERENCE NO.	SHEET NO.
U-2551	Sig. 13

PHASING DIAGRAM

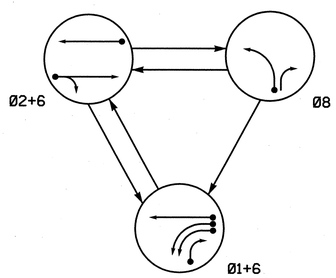

PHASING DIAGRAM DETECTION LEGEND

- DETECTED MOVEMENT
- UNDETECTED MOVEMENT (OVERLAP)
- UNSIGNALIZED MOVEMENT
- PEDESTRIAN MOVEMENT

TABLE OF OPERATION

SIGNAL FACE	PHASE Ø1+6	PHASE Ø2+6	PHASE Ø8	FLASH
11,12	—	~~R~~	~~R~~	~~R~~
21,22	R	G	R	Y
61,62	G	G	R	Y
81	R	R	G	R
82	R/—	R	G	R

SIGNAL FACE I.D.

All Heads L.E.D.

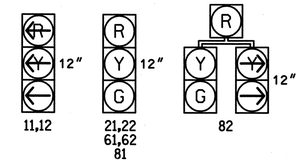

OASIS 2070L LOOP & DETECTOR INSTALLATION CHART

INDUCTIVE LOOPS					DETECTOR PROGRAMMING							
LOOP	SIZE (FT)	DISTANCE FROM STOPBAR (FT)	TURNS	NEW LOOP	PHASE	CALLING	EXTENSION	FULL TIME DELAY	STRETCH TIME	DELAY TIME	SYSTEM LOOP	NEW CARD
1A	6x60	+2	EXIST	-	1	Y	Y	-	-	3	-	Y
1B	6x60	+2	EXIST	-	1	Y	Y	-	-	-	-	Y
1C	6x60	0	EXIST	-	1	Y	Y	-	-	15	-	Y
2A	6x6	70	4	Y	2	Y	Y	-	-	-	-	Y
6A	6x6	70	4	Y	6	Y	Y	-	-	-	-	Y
8A	6x60	0	EXIST	-	8	Y	Y	-	-	-	-	Y

3 Phase
Fully Actuated
NC 18 (Sterling St)/SR 1922 (Enola Rd)
Closed Loop System

NOTES

1. Refer to "Roadway Standard Drawings NCDOT" dated January 2012 and "Standard Specifications for Roads and Structures" dated January 2012.
2. Do not program signal for late night flashing operation unless otherwise directed by the Engineer.
3. Set all detector units to presence mode.
4. The cabinet should be designed to include an Auxiliary Output file for future use.
5. Locate new cabinet so as not to obstruct sight distance of vehicles turning right on red.
6. Maximum times shown in timing chart are for free-run operation only. Coordinated signal system timing values supersede these values.
7. Closed loop system data: Controller Asset #:1114.

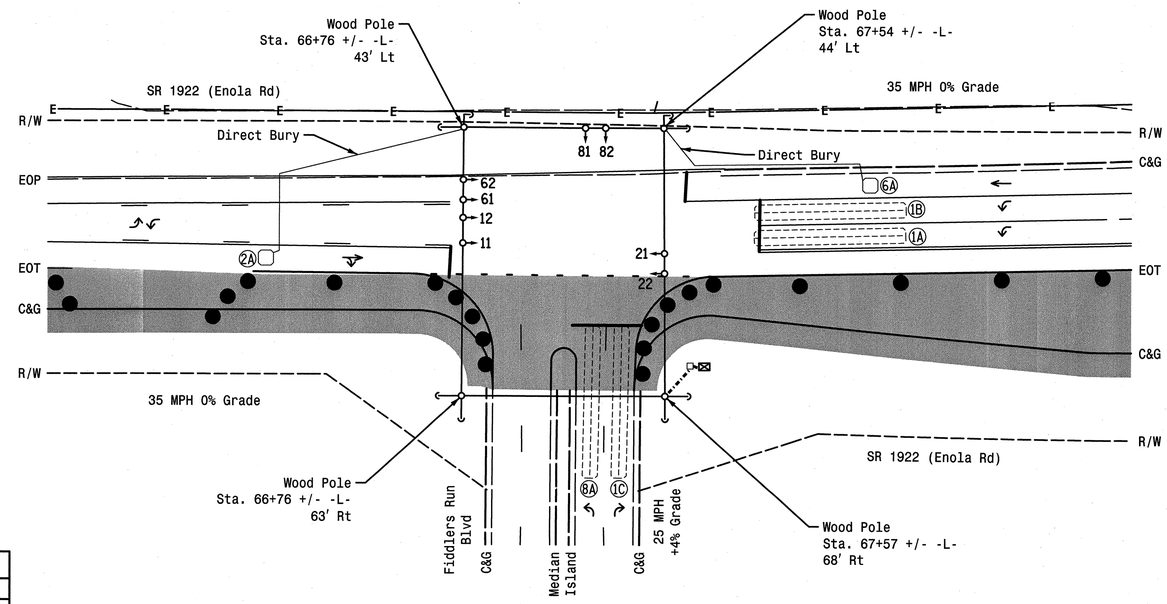

LEGEND

PROPOSED		EXISTING
	Traffic Signal Head	
	Modified Signal Head	N/A
	Sign	
	Pedestrian Signal Head With Push Button & Sign	
	Signal Pole with Guy	
	Signal Pole with Sidewalk Guy	
	Inductive Loop Detector	
	Controller & Cabinet	
	Junction Box	
	2-in Underground Conduit	
N/A	Right of Way	
	Easement Construction	N/A
	Directional Arrow	
	Construction Zone Drums	N/A
	Construction Zone	N/A

OASIS 2070L TIMING CHART

FEATURE	PHASE 1	PHASE 2	PHASE 6	PHASE 8
Min Green 1 *	7	10	10	7
Extension 1 *	1.0	3.0	3.0	1.0
Max Green 1 *	25	45	45	25
Yellow Clearance	3.0	3.8	3.8	3.0
Red Clearance	3.3	1.5	1.6	2.4
Red Revert	2.0	2.0	2.0	2.0
Walk 1 *	-	-	-	-
Don't Walk 1	-	-	-	-
Seconds Per Actuation *	-	-	-	-
Max Variable Initial *	-	-	-	-
Time Before Reduction *	-	-	-	-
Time To Reduce *	-	-	-	-
Minimum Gap	-	-	-	-
Recall Mode	-	MIN RECALL	MIN RECALL	-
Vehicle Call Memory	-	YELLOW	YELLOW	-
Dual Entry	-	-	-	-
Simultaneous Gap	ON	ON	ON	ON

* These values may be field adjusted. Do not adjust Min Green and Extension times for phases 2 and 6 lower than what is shown. Min Green for all other phases should not be lower than 4 seconds.

Signal Upgrade - Temporary Design 1 (Construction Phase I)

HNTB NORTH CAROLINA, P.C.
343 E. Six Forks Road, Suite 200
Raleigh, North Carolina 27609
NC License No: C-1554

Prepared for: Transportation Mobility and Safety Division, Traffic Engineering Branch, Signal Design Section, 750 N.Greenfield Pkwy, Garner, NC 27529

SR 1922 (Enola Rd)
at
Fiddlers Run Blvd

Division 13 Burke County Morganton

PLAN DATE:	July 2011	REVIEWED BY:	A.D. Klinksiek
PREPARED BY:	T.R. Terrell	REVIEWED BY:	N.M. Rodevick

SCALE 0 30 1"=30'

REVISIONS	INIT.	DATE

SEAL
NORTH CAROLINA PROFESSIONAL SEAL 031464 ENGINEER NATASHA M. RODEVICK

Natasha M. Rodevick 12-12-11
SIGNATURE DATE

SIG. INVENTORY NO. 13-1114T1

PROJECT REFERENCE NO.	SHEET NO.
U-2551	Sig. 14

EDI MODEL 2018ECL-NC CONFLICT MONITOR PROGRAMMING DETAIL

(remove jumpers and set switches as shown)

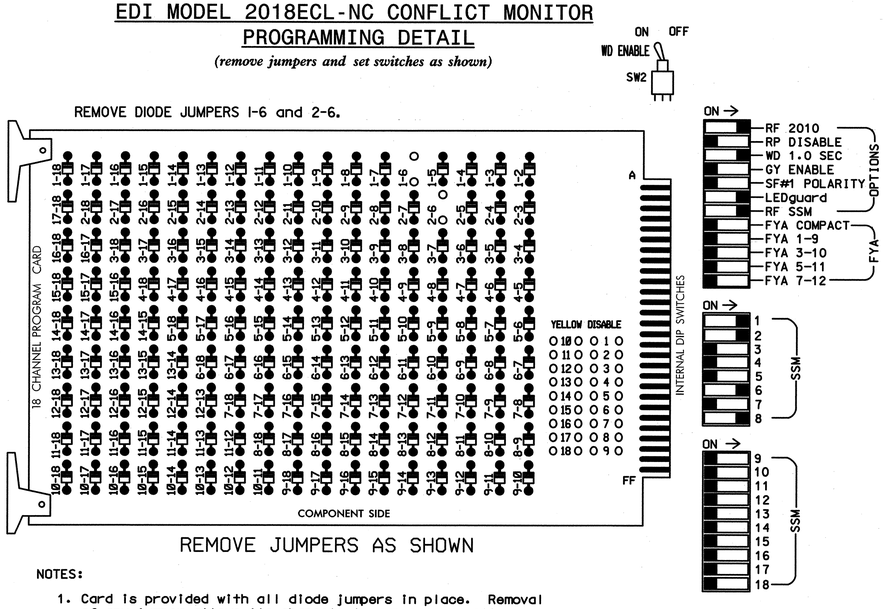

REMOVE JUMPERS AS SHOWN

■ = DENOTES POSITION OF SWITCH

NOTES:

1. Card is provided with all diode jumpers in place. Removal of any jumper allows its channels to run concurrently.
2. Ensure jumpers SEL2-SEL5 and SEL9 are present on the monitor board.
3. Ensure that Red Enable is active at all times during normal operation.
4. Connect serial cable from conflict monitor to comm. port 1 of 2070 controller. Ensure conflict monitor communicates with 2070.

NOTES

1. To prevent "flash-conflict" problems, insert red flash program blocks for all unused vehicle load switches in the output file. The installer shall verify that signal heads flash in accordance with the Signal Plans.
2. Enable Simultaneous Gap-Out for all phases.
3. Program phases 2 and 6 for Start Up In Green.
4. Program phases 2 and 6 for Yellow Flash.
5. The cabinet and controller are part of the NC 18 (Sterling St)/SR 1922 (Enola Rd) Closed Loop System.

SIGNAL HEAD HOOK-UP CHART

LOAD SWITCH NO.	S1	S2	S3	S4	S5	S6	S7	S8	S9	S10	S11	S12	AUX S1	AUX S2	AUX S3	AUX S4	AUX S5	AUX S6
CMU CHANNEL NO.	1	2	13	3	4	14	5	6	15	7	8	16	9	10	17	11	12	18
PHASE	1	2	2 PED	3	4	4 PED	5	6	6 PED	7	8	8 PED	OLA	OLB	SPARE	OLC	OLD	SPARE
SIGNAL HEAD NO.	11,12	82	21,22	NU	NU	NU	NU	NU	61,62	NU	NU	81,82	NU	NU	NU	NU	NU	NU	NU
RED			128						134			107							
YELLOW			129						135			108							
GREEN			130						136			109							
RED ARROW	125																		
YELLOW ARROW	126	126																	
FLASHING YELLOW ARROW																			
GREEN ARROW	127	127																	

NU = Not Used

EQUIPMENT INFORMATION

CONTROLLER.....2070L
CABINET.....332 /W/ AUX
SOFTWARE.....ECONOLITE OASIS
CABINET MOUNT.....BASE
OUTPUT FILE POSITIONS...18 WITH AUX. OUTPUT FILE
LOAD SWITCHES USED.....S1,S2,S8,S11
PHASES USED.....1,2,6,8
OVERLAP "A".....NOT USED
OVERLAP "B".....NOT USED
OVERLAP "C".....NOT USED
OVERLAP "D".....NOT USED

INPUT FILE POSITION LAYOUT

(front view)

		1	2	3	4	5	6	7	8	9	10	11	12	13	14
FILE "I"	U	Ø1 1A	Ø1 1B	Ø2 2A	SLOT EMPTY	SLOT EMPTY	SLOT EMPTY	SLOT EMPTY	SLOT EMPTY	SLOT EMPTY	SLOT EMPTY	SLOT EMPTY	SLOT EMPTY	SLOT EMPTY	FS DC ISOLATOR
	L	NOT USED	Ø1 1C	NOT USED											ST DC ISOLATOR
FILE "J"	U	SLOT EMPTY	Ø6 6A	SLOT EMPTY	SLOT EMPTY	SLOT EMPTY	Ø8 8A	SLOT EMPTY	SLOT EMPTY	SLOT EMPTY	SLOT EMPTY	SLOT EMPTY	SLOT EMPTY	SLOT EMPTY	SLOT EMPTY
	L		NOT USED				NOT USED								

EX.: 1A, 2A, ETC. = LOOP NO.'S

FS = FLASH SENSE
ST = STOP TIME

INPUT FILE CONNECTION & PROGRAMMING CHART

LOOP NO.	LOOP TERMINAL	INPUT FILE POS.	PIN NO.	INPUT ASSIGNMENT NO.	DETECTOR NO.	NEMA PHASE	CALL	EXTEND	FULL TIME DELAY	STRETCH TIME	DELAY TIME
1A	TB2-1,2	I1U	56	18	1	1	Y	Y			3
1B	TB2-5,6	I2U	39	1	2	1	Y	Y			
1C	TB2-7,8	I2L	43	5	12	1	Y	Y			15
2A	TB2-9,10	I3U	63	25	32	2	Y	Y			
6A	TB3-5,6	J2U	40	2	6	6	Y	Y			
8A	TB5-9,10	J6U	42	4	8	8	Y	Y			

INPUT FILE POSITION LEGEND: J2L
FILE J
SLOT 2
LOWER

THIS ELECTRICAL DETAIL IS FOR
THE SIGNAL DESIGN: 13-1114T1
DESIGNED: July 2011
SEALED: 12-12-2011
REVISED:

Signal Upgrade - Temporary Design 1 (Construction Phase I)

ELECTRICAL AND PROGRAMMING DETAILS FOR:

Prepared for: Transportation Mobility and Safety Division, Signal Management Section, Department of Transportation
750 N.Greenfield Pkwy,Garner,NC 27529

SR 1922 (Enola Rd)
at
Fiddlers Run Blvd

Division 13 Burke County Morganton

PLAN DATE:	July 2011	REVIEWED BY:	N.M. Rodevick
PREPARED BY:	A.D. Klinksiek	REVIEWED BY:	H.L. Winstead

REVISIONS	INIT.	DATE

SEAL
NORTH CAROLINA PROFESSIONAL SEAL 07983 ENGINEER HARVEY L. WINSTEAD, JR.
SIGNATURE H.L. Winstead DATE 12/12/11
SIG. INVENTORY NO. 13-1114T1

HNTB
HNTB NORTH CAROLINA, P.C.
343 E. Six Forks Road, Suite 200
Raleigh, North Carolina 27609
NC License No: C-1554

PROJECT REFERENCE NO.	SHEET NO.
U-2551	Sig. 15

3 Phase
Fully Actuated
NC 18 (Sterling St)/SR 1922 (Enola Rd)
Closed Loop System

PHASING DIAGRAM

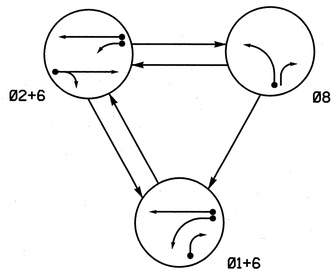

PHASING DIAGRAM DETECTION LEGEND

- DETECTED MOVEMENT
- UNDETECTED MOVEMENT (OVERLAP)
- UNSIGNALIZED MOVEMENT
- PEDESTRIAN MOVEMENT

TABLE OF OPERATION

SIGNAL FACE	PHASE 01+6	PHASE 02+6	PHASE 08	FLASH
11	←	FY	~~R~~	~~Y~~
21,22	R	G	R	Y
61,62	G	G	R	Y
81	R	R	G	R
82	R	R	G	R

FY = Flashing Yellow Arrow

STANDARD SIGNAL FACE CLEARANCES FOR FLASHING LEFT TURN SIGNAL

FROM	TO ← 1	TO ← 2	TO FY 1	TO FY 2	TO ~~R~~ 1	TO ~~R~~ 2
←	←	←	~~Y~~	~~R~~	~~Y~~	~~R~~
FY	FY	FY	FY	FY	~~Y~~	~~R~~
~~R~~	~~R~~	~~R~~	~~R~~	~~R~~	~~R~~	~~R~~

FY = Flashing Yellow Arrow

SIGNAL FACE I.D.

All Heads L.E.D.

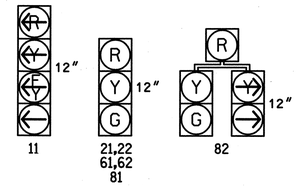

OASIS 2070L LOOP & DETECTOR INSTALLATION CHART

INDUCTIVE LOOPS					DETECTOR PROGRAMMING							
LOOP	SIZE (FT)	DISTANCE FROM STOPBAR (FT)	TURNS	NEW LOOP	PHASE	CALLING	EXTENSION	FULL TIME DELAY	STRETCH TIME	DELAY TIME	SYSTEM LOOP	NEW CARD
1A	6x40	0	2-4-2	Y	1	Y	Y	-	-	15	-	-
					6	Y	Y	-	-	-	-	-
1B	6x40	0	2-4-2	Y	1	Y	Y	-	-	15	-	-
2A	6x6	70	3	Y	2	Y	Y	-	-	-	-	-
6A	6x6	70	3	Y	6	Y	Y	-	-	-	-	-
8A	6x40	0	2-4-2	Y	8	Y	Y	-	-	-	-	-

NOTES

1. Refer to "Roadway Standard Drawings NCDOT" dated January 2012 and "Standard Specifications for Roads and Structures" dated January 2012.
2. Do not program signal for late night flashing operation unless otherwise directed by the Engineer.
3. Reposition existing signal heads numbered 21,22,61 and 62.
4. Set all detector units to presence mode.
5. Maximum times shown in timing chart are for free-run operation only. Coordinated signal system timing values supersede these values.
6. Closed loop system data: Controller Asset #:1114.

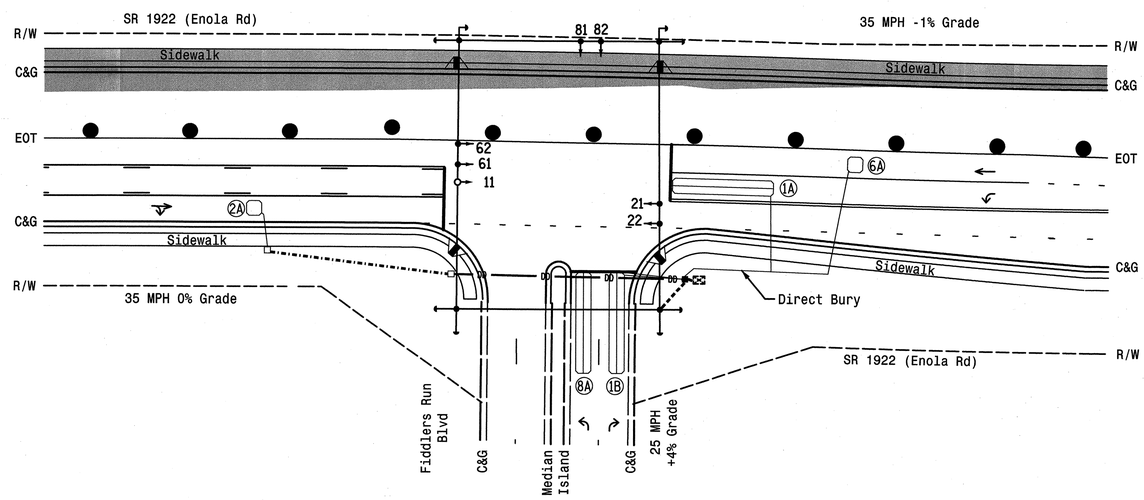

LEGEND

PROPOSED		EXISTING
	Traffic Signal Head	
	Modified Signal Head	N/A
	Sign	
	Pedestrian Signal Head With Push Button & Sign	
	Signal Pole with Guy	
	Signal Pole with Sidewalk Guy	
	Inductive Loop Detector	
	Controller & Cabinet	
	Junction Box	
	2-in Underground Conduit	
DD	Directional Drill	DD
N/A	Right of Way	
	Directional Arrow	
N/A	Wheelchair Ramp	
	Construction Zone Drums	N/A
	Construction Zone	N/A

OASIS 2070L TIMING CHART

FEATURE	PHASE 1	PHASE 2	PHASE 6	PHASE 8
Min Green 1 *	7	10	10	7
Extension 1 *	2.0	3.0	3.0	2.0
Max Green 1 *	25	45	45	25
Yellow Clearance	3.0	3.9	3.9	3.0
Red Clearance	1.9	1.6	1.6	2.1
Red Revert	2.0	2.0	2.0	2.0
Walk 1 *	-	-	-	-
Don't Walk 1	-	-	-	-
Seconds Per Actuation *	-	-	-	-
Max Variable Initial *	-	-	-	-
Time Before Reduction *	-	-	-	-
Time To Reduce *	-	-	-	-
Minimum Gap	-	-	-	-
Recall Mode	-	MIN RECALL	MIN RECALL	-
Vehicle Call Memory	-	YELLOW	YELLOW	-
Dual Entry	-	-	-	-
Simultaneous Gap	ON	ON	ON	ON

* These values may be field adjusted. Do not adjust Min Green and Extension times for phases 2 and 6 lower than what is shown. Min Green for all other phases should not be lower than 4 seconds.

Signal Upgrade - Temporary Design 2 (Construction Phase II)

HNTB NORTH CAROLINA, P.C.
343 E. Six Forks Road, Suite 200
Raleigh, North Carolina 27609
NC License No: C-1554

Prepared for: Transportation Mobility and Safety Division, Signal Design Section, 750 N.Greenfield Pkwy, Garner, NC 27529

SR 1922 (Enola Rd)
at
Fiddlers Run Blvd

Division 13 Burke County Morganton

PLAN DATE:	July 2011	REVIEWED BY:	A.D. Klinksiek
PREPARED BY:	T.R. Terrell	REVIEWED BY:	N.M. Rodevick

SCALE 0 30 1"=30'

REVISIONS	INIT.	DATE

SEAL
NORTH CAROLINA PROFESSIONAL SEAL 031464 ENGINEER NATASHA M. RODEVICK

Natasha M. Rodevick 12-12-11
SIGNATURE DATE

SIG. INVENTORY NO. 13-1114T2

PROJECT REFERENCE NO.	SHEET NO.
U-2551	Sig. 16

EDI MODEL 2018ECL-NC CONFLICT MONITOR PROGRAMMING DETAIL

(remove jumpers and set switches as shown)

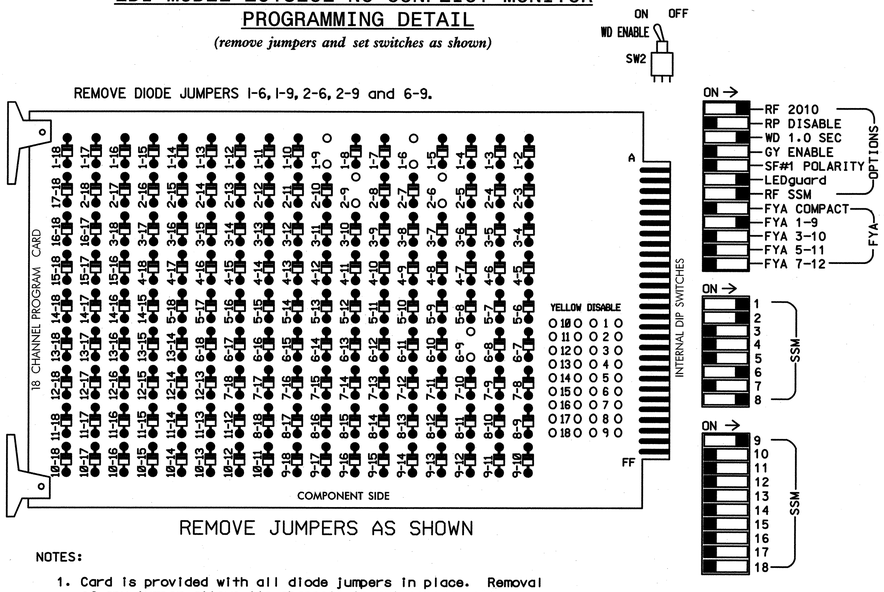

■ = DENOTES POSITION OF SWITCH

NOTES:

1. Card is provided with all diode jumpers in place. Removal of any jumper allows its channels to run concurrently.
2. Ensure jumpers SEL2-SEL5 and SEL9 are present on the monitor board.
3. Ensure that Red Enable is active at all times during normal operation.
4. Connect serial cable from conflict monitor to comm. port 1 of 2070 controller. Ensure conflict monitor communicates with 2070.

NOTES

1. To prevent "flash-conflict" problems, insert red flash program blocks for all unused vehicle load switches in the output file. The installer shall verify that signal heads flash in accordance with the Signal Plans.
2. Enable Simultaneous Gap-Out for all phases.
3. Program phases 2 and 6 for Start Up In Green.
4. Program phases 2 and 6 for Yellow Flash and overlap 1 as Wag Overlaps.
5. The cabinet and controller are part of the NC 18 (Sterling St)/SR 1922 (Enola Rd) Closed Loop System.

SIGNAL HEAD HOOK-UP CHART

LOAD SWITCH NO.	S1		S2	S3	S4	S5	S6	S7	S8	S9	S10	S11	S12	AUX S1	AUX S2	AUX S3	AUX S4	AUX S5	AUX S6
CMU CHANNEL NO.	1		2	13	3	4	14	5	6	15	7	8	16	9	10	17	11	12	18
PHASE	1		2	2 PED	3	4	4 PED	5	6	6 PED	7	8	8 PED	OLA	OLB	SPARE	OLC	OLD	SPARE
SIGNAL HEAD NO.	11★	82	21,22	NU	NU	NU	NU	NU	61,62	NU	NU	81,82	NU	11★	NU	NU	NU	NU	NU
RED		✳	128						134			107							
YELLOW			129						135			108							
GREEN			130						136			109							
RED ARROW														A121					
YELLOW ARROW		126												A122					
FLASHING YELLOW ARROW														A123					
GREEN ARROW	127	127																	

NU = Not Used

✳ Denotes install load resistor. See load resistor installation detail this sheet.

★ See pictorial of head wiring in detail below.

EQUIPMENT INFORMATION

CONTROLLER.....2070L
CABINET.....332 /W/ AUX
SOFTWARE.....ECONOLITE OASIS
CABINET MOUNT.....BASE
OUTPUT FILE POSITIONS...18 WITH AUX. OUTPUT FILE
LOAD SWITCHES USED.....S1,S2,S8,S11,AUX S1
PHASES USED.....1,2,6,8
OVERLAP "A".....1+2
OVERLAP "B".....NOT USED
OVERLAP "C".....NOT USED
OVERLAP "D".....NOT USED

4 SECTION FYA PPLT SIGNAL WIRING DETAIL

(wire signal heads as shown)

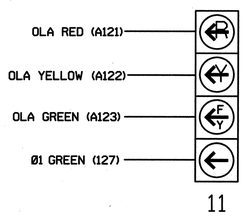

NOTE

1. The sequence display for this signal requires special logic programming. See sheet 2 of 2 for programming instructions.

INPUT FILE POSITION LAYOUT

(front view)

		1	2	3	4	5	6	7	8	9	10	11	12	13	14
FILE "I"	U	Ø1 1A	Ø1 1B	Ø2 2A	SLOT EMPTY	SLOT EMPTY	SLOT EMPTY	SLOT EMPTY	SLOT EMPTY	SLOT EMPTY	SLOT EMPTY	SLOT EMPTY	SLOT EMPTY	SLOT EMPTY	FS DC ISOLATOR
	L	NOT USED	NOT USED	NOT USED											ST DC ISOLATOR
FILE "J"	U	SLOT EMPTY	Ø6 6A	SLOT EMPTY	WIRED INPUT ⊗	SLOT EMPTY	Ø8 8A	SLOT EMPTY	SLOT EMPTY	SLOT EMPTY	SLOT EMPTY	SLOT EMPTY	SLOT EMPTY	SLOT EMPTY	SLOT EMPTY
	L		NOT USED				NOT USED								

EX.: 1A, 2A, ETC. = LOOP NO.'S

FS = FLASH SENSE
ST = STOP TIME

⊗ Wired Input - Do not populate slot with detector card

INPUT FILE CONNECTION & PROGRAMMING CHART

LOOP NO.	LOOP TERMINAL	INPUT FILE POS.	PIN NO.	INPUT ASSIGNMENT NO.	DETECTOR NO.	NEMA PHASE	CALL	EXTEND	FULL TIME DELAY	STRETCH TIME	DELAY TIME
1A[1]	TB2-1,2	I1U	56	18	1	1	Y	Y			15
	-	J4U	48	10	26	6	Y	Y			
1B	TB2-5,6	I2U	39	1	2	1	Y	Y			15
2A	TB2-9,10	I3U	63	25	32	2	Y	Y			
6A	TB3-5,6	J2U	40	2	6	6	Y	Y			
8A	TB5-9,10	J6U	42	4	8	8	Y	Y			

[1] Add jumper from I1-W to J4-W, on rear of input file.

INPUT FILE POSITION LEGEND: J2L
FILE J
SLOT 2
LOWER

LOAD RESISTOR INSTALLATION DETAIL

(install resistors as shown below)

ACCEPTABLE VALUES

VALUE (ohms)	WATTAGE
1.5K - 1.9K	25W (min)
2.0K - 3.0K	10W (min)

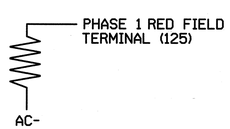

THIS ELECTRICAL DETAIL IS FOR
THE SIGNAL DESIGN: 13-1114T2
DESIGNED: July 2011
SEALED: 12-12-2011
REVISED:

Signal Upgrade - Temporary Design 2 (Construction Phase II) (Sheet 1 of 2)

HNTB NORTH CAROLINA, P.C.
343 E. Six Forks Road, Suite 200
Raleigh, North Carolina 27609
NC License No: C-1554

ELECTRICAL AND PROGRAMMING DETAILS FOR:

Prepared for: Transportation Mobility and Safety Division, Traffic Management Section, Department of Transportation, State of North Carolina

750 N.Greenfield Pkwy,Garner,NC 27529

SR 1922 (Enola Rd)
at
Fiddlers Run Blvd

Division 13 Burke County Morganton

PLAN DATE:	July 2011	REVIEWED BY:	N.M. Rodevick
PREPARED BY:	A.D. Klinksiek	REVIEWED BY:	H.L. Winstead

REVISIONS	INIT.	DATE

SEAL
NORTH CAROLINA PROFESSIONAL SEAL 07983 ENGINEER HARVEY L. WINSTEAD, JR.

SIGNATURE / DATE 12/12/11

SIG. INVENTORY NO. 13-1114T2

PROJECT REFERENCE NO.	SHEET NO.
U-2551	Sig. 17

LOGICAL I/O PROCESSOR PROGRAMMING DETAIL
TO PRODUCE SPECIAL FYA-PPLT SIGNAL SEQUENCE

(program controller as shown below)

1. FROM MAIN MENU PRESS '2' (PHASE CONTROL), THEN '1' (PHASE CONTROL FUNCTIONS). SCROLL TO THE BOTTOM OF THE MENU AND ENABLE ACT LOGIC COMMANDS 1, 2, AND 3.

2. FROM MAIN MENU PRESS '6' (OUTPUTS), THEN '3' (LOGICAL I/O PROCESSOR).

```
LOGICAL I/O COMMAND #1  (+/-COMMAND#)
IF  ACTIVE PHASE        #1  IS ON
AND RED CLEAR ON PHASE #1  IS ON

                SCROLL DOWN
THEN:
SET OUTPUT  ASSIGNMENT #50 ON
SET OUTPUT  ASSIGNMENT #51 OFF
```

NOTE: LOGIC FOR PHASE 1 RED CLEAR WHEN TRANSITIONING FROM PHASE 1 TO PHASE 2 (HEAD 11).

PRESS '+'

```
LOGICAL I/O COMMAND #2  (+/-COMMAND#)
IF  ACTIVE PHASE        #1  IS ON

                SCROLL DOWN
THEN:
SET OUTPUT  ASSIGNMENT #52 OFF
```

NOTE: LOGIC FOR SWITCHING FLASHING YELLOW ARROW "OFF" DURING PHASE 1 (HEAD 11).

PRESS '+'

```
LOGICAL I/O COMMAND #3  (+/-COMMAND#)
IF  YELLOW ON PHASE     #1  IS ON

                SCROLL DOWN
THEN:
SET OUTPUT  ASSIGNMENT #51 ON
```

NOTE: LOGIC FOR YELLOW ARROW CLEARANCE FROM PHASE 1 (HEAD 11).

PRESS '+'

LOGIC I/O PROCESSOR PROGRAMMING COMPLETE

OUTPUT REFERENCE SCHEDULE

OUTPUT 50 = Overlap A Red
OUTPUT 51 = Overlap A Yellow
OUTPUT 52 = Overlap A Green

OVERLAP PROGRAMMING DETAIL

(program controller as shown below)

FROM MAIN MENU PRESS '8' (OVERLAPS), THEN '1' (VEHICLE OVERLAP SETTINGS).

```
PAGE 1: VEHICLE OVERLAP 'A' SETTINGS
 PHASE:          |123456789101112131415 16
VEH OVL PARENTS: |XX
VEH OVL NOT VEH: |
VEH OVL NOT PED: |
VEH OVL GRN EXT: |
STARTUP COLOR: _ RED  _ YELLOW  _ GREEN
FLASH COLORS:  _ RED  _ YELLOW  X GREEN
SELECT VEHICLE OVERLAP OPTIONS:   (Y/N)
FLASH YELLOW IN CONTROLLER FLASH?...Y
GREEN EXTENSION (0-255 SEC).........0
YELLOW CLEAR (0=PARENT,3-25.5 SEC)..0.0
RED CLEAR (0=PARENT,0.1-25.5 SEC)...0.0
OUTPUT AS PHASE # (0=NONE, 1-16)....0
```

NOTICE GREEN FLASH

OVERLAP PROGRAMMING COMPLETE

THIS ELECTRICAL DETAIL IS FOR
THE SIGNAL DESIGN: 13-1114T2
DESIGNED: July 2011
SEALED: 12-12-2011
REVISED:

Signal Upgrade - Temporary Design 2 (Construction Phase II) (Sheet 2 of 2)

HNTB NORTH CAROLINA, P.C.
343 E. Six Forks Road, Suite 200
Raleigh, North Carolina 27609
NC License No: C-1554

ELECTRICAL AND PROGRAMMING DETAILS FOR:

Prepared for: Transportation Mobility and Safety Division, Department of Transportation, State of North Carolina, Signal Management Section
750 N.Greenfield Pkwy,Garner,NC 27529

SR 1922 (Enola Rd)
at
Fiddlers Run Blvd

Division 13 Burke County Morganton

PLAN DATE:	July 2011	REVIEWED BY:	N.W. Rodevick
PREPARED BY:	A.D. Klinksiek	REVIEWED BY:	H.L. Winstead

REVISIONS	INIT.	DATE

SEAL

NORTH CAROLINA PROFESSIONAL SEAL 07983 ENGINEER HARVEY L. WINSTEAD, JR.

H.L. Winstead Jr. 12/12/11
SIGNATURE DATE

SIG. INVENTORY NO. 13-1114T2

PROJECT REFERENCE NO.	SHEET NO.
U-2551	Sig. 18

3 Phase
Fully Actuated
NC 18 (Sterling St)/SR 1922 (Enola Rd)
Closed Loop System

PHASING DIAGRAM

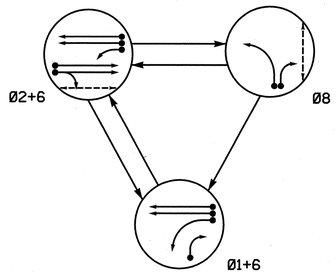

PHASING DIAGRAM DETECTION LEGEND

- DETECTED MOVEMENT
- UNDETECTED MOVEMENT (OVERLAP)
- UNSIGNALIZED MOVEMENT
- PEDESTRIAN MOVEMENT

TABLE OF OPERATION

SIGNAL FACE	PHASE 0 1 + 6	PHASE 0 2 + 6	PHASE 0 8	FLASH
11	←	F Y	R	Y
21,22	R	G	R	Y
61,62	G	G	R	Y
81	R	R	G	R
82	R	R	G	R
P21,P22	DW	W	DW	DRK
P81,P82	DW	DW	W	DRK

F Y = Flashing Yellow Arrow
W - Walk
DW - Don't Walk
DRK - Dark

STANDARD SIGNAL FACE CLEARANCES FOR FLASHING LEFT TURN SIGNAL

FROM \ TO	← 1	← 2	F Y 1	F Y 2	R 1	R 2
←	←	←	Y	R	Y	R
F Y	F Y	F Y	F Y	F Y	Y	R
R	R	R	R	R	R	R

F Y = Flashing Yellow Arrow

SIGNAL FACE I.D.

All Heads L.E.D.

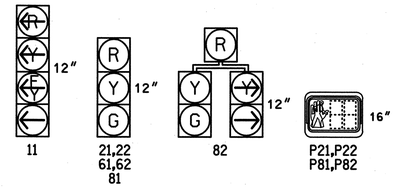

OASIS 2070L LOOP & DETECTOR INSTALLATION CHART

INDUCTIVE LOOPS					DETECTOR PROGRAMMING							
LOOP	SIZE (FT)	DISTANCE FROM STOPBAR (FT)	TURNS	NEW LOOP	PHASE	CALLING	EXTENSION	FULL TIME DELAY	STRETCH TIME	DELAY TIME	SYSTEM LOOP	NEW CARD
1A	6X40	0	2-4-2	Y	1	Y	Y	-	-	15	-	-
					6	Y	Y	-	-	-	-	-
1B	6X40	0	2-4-2	-	1	Y	Y	-	-	15	-	-
2A	6X6	70	3	Y	2	Y	Y	-	-	-	-	-
2B	6X6	70	3	-	2	Y	Y	-	-	-	-	Y
6A	6X6	70	3	Y	6	Y	Y	-	-	-	-	-
6B	6X6	70	3	Y	6	Y	Y	-	-	-	-	Y
8A	6X40	0	2-4-2	-	8	Y	Y	-	-	-	-	-

NOTES

1. Refer to "Roadway Standard Drawings NCDOT" dated January 2012 and "Standard Specifications for Roads and Structures" dated January 2012.
2. Do not program signal for late night flashing operation unless otherwise directed by the Engineer.
3. Set all detector units to presence mode.
4. Omit "WALK" and flashing "DON'T WALK" with no pedestrian calls.
5. Program pedestrian heads to countdown the flashing "Don't Walk" time only.
6. Maximum times shown in timing chart are for free-run operation only. Coordinated signal system timing values supersede these values.
7. Closed loop system data: Controller Asset #:1114.

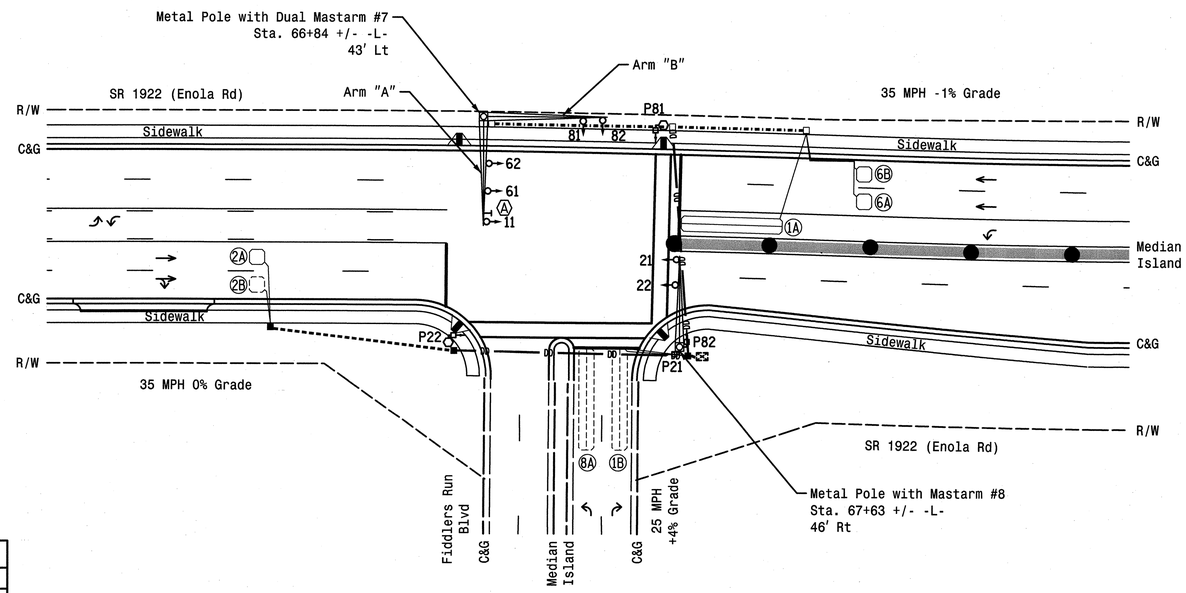

LEGEND

PROPOSED		EXISTING
	Traffic Signal Head	
	Modified Signal Head	N/A
	Sign	
	Pedestrian Signal Head With Push Button & Sign	
	Signal Pole with Guy	
	Signal Pole with Sidewalk Guy	
	Inductive Loop Detector	
	Controller & Cabinet	
	Junction Box	
	2-in Underground Conduit	
	Directional Drill	
N/A	Right of Way	
	Directional Arrow	
	Metal Pole with Mastarm	
	Signal Pedestal	
N/A	Wheelchair Ramp	
	"U-TURN YIELD TO RIGHT TURN" Sign (R10-16)	N/A
	Construction Zone Drums	N/A
	Construction Zone	N/A

OASIS 2070L TIMING CHART

FEATURE	PHASE 1	PHASE 2	PHASE 6	PHASE 8
Min Green 1 *	7	10	10	7
Extension 1 *	2.0	3.0	3.0	2.0
Max Green 1 *	25	45	45	30
Yellow Clearance	3.0	3.9	3.9	3.0
Red Clearance	2.4	1.7	1.7	2.6
Red Revert	2.0	2.0	2.0	2.0
Walk 1 *	-	7	-	7
Don't Walk 1	-	18	-	18
Seconds Per Actuation *	-	-	-	-
Max Variable Initial *	-	-	-	-
Time Before Reduction *	-	-	-	-
Time To Reduce *	-	-	-	-
Minimum Gap	-	-	-	-
Recall Mode	-	MIN RECALL	MIN RECALL	-
Vehicle Call Memory	-	YELLOW	YELLOW	-
Dual Entry	-	-	-	-
Simultaneous Gap	ON	ON	ON	ON

* These values may be field adjusted. Do not adjust Min Green and Extension times for phases 2 and 6 lower than what is shown. Min Green for all other phases should not be lower than 4 seconds.

Signal Upgrade - Temporary Design 3 (Construction Phase III)

HNTB
HNTB NORTH CAROLINA, P.C.
343 E. Six Forks Road, Suite 200
Raleigh, North Carolina 27609
NC License No: C-1554

Prepared for: Transportation Mobility and Safety Division, Signal Design Section, 750 N.Greenfield Pkwy,Garner,NC 27529

SR 1922 (Enola Rd)
at
Fiddlers Run Blvd

Division 13 Burke County Morganton

PLAN DATE: July 2011	REVIEWED BY: A.D. Klinksiek
PREPARED BY: T.R. Terrell	REVIEWED BY: N.M. Rodevick

REVISIONS	INIT.	DATE

SCALE 0 30 1"=30'

SEAL
NORTH CAROLINA PROFESSIONAL SEAL 031464 ENGINEER NATASHA M. RODEVICK
SIGNATURE 12-13-11 DATE
SIG. INVENTORY NO. 13-1114T3

PROJECT REFERENCE NO.	SHEET NO.
U-2551	Sig. 19

EDI MODEL 2018ECL-NC CONFLICT MONITOR PROGRAMMING DETAIL

(remove jumpers and set switches as shown)

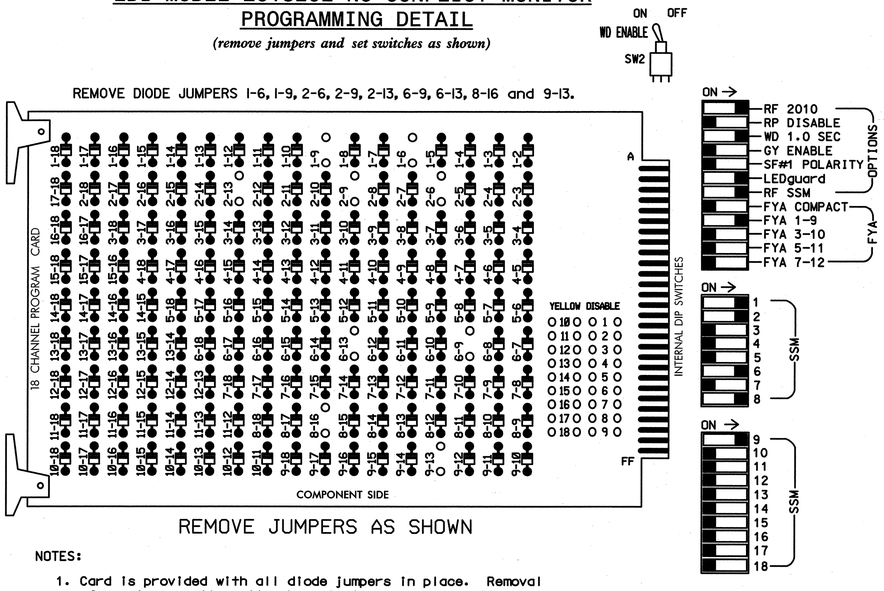

■ = DENOTES POSITION OF SWITCH

NOTES:

1. Card is provided with all diode jumpers in place. Removal of any jumper allows its channels to run concurrently.
2. Ensure jumpers SEL2-SEL5 and SEL9 are present on the monitor board.
3. Ensure that Red Enable is active at all times during normal operation.
4. Connect serial cable from conflict monitor to comm. port 1 of 2070 controller. Ensure conflict monitor communicates with 2070.

INPUT FILE POSITION LAYOUT

(front view)

		1	2	3	4	5	6	7	8	9	10	11	12	13	14
FILE "I"	U	Ø1 1A	Ø1 1B	Ø2 2A	SLOT EMPTY	SLOT EMPTY	SLOT EMPTY	SLOT EMPTY	SLOT EMPTY	SLOT EMPTY	SLOT EMPTY	SLOT EMPTY	Ø2 PED DC ISOLATOR	NOT USED	FS DC ISOLATOR
	L	NOT USED	NOT USED	Ø2 2B									NOT USED	Ø8 PED DC ISOLATOR	ST DC ISOLATOR
FILE "J"	U	SLOT EMPTY	Ø6 6A	SLOT EMPTY	WIRED INPUT ⊗	SLOT EMPTY	Ø8 8A	SLOT EMPTY	SLOT EMPTY	SLOT EMPTY	SLOT EMPTY	SLOT EMPTY	SLOT EMPTY	SLOT EMPTY	SLOT EMPTY
	L		Ø6 6B				NOT USED								

EX.: 1A, 2A, ETC. = LOOP NO.'S

FS = FLASH SENSE
ST = STOP TIME

⊗ Wired Input - Do not populate slot with detector card

LOAD RESISTOR INSTALLATION DETAIL

(install resistors as shown below)

ACCEPTABLE VALUES

VALUE (ohms)	WATTAGE
1.5K - 1.9K	25W (min)
2.0K - 3.0K	10W (min)

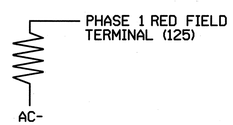

NOTES

1. To prevent "flash-conflict" problems, insert red flash program blocks for all unused vehicle load switches in the output file. The installer shall verify that signal heads flash in accordance with the Signal Plans.
2. Enable Simultaneous Gap-Out for all phases.
3. Program phases 2 and 6 for Start Up In Green.
4. Program phases 2 and 8 for 'STARTUP PED CALL'.
5. Program phases 2 and 6 for Yellow Flash and overlap 1 as Wag Overlaps.
6. The cabinet and controller are part of the NC 18 (Sterling St)/SR 1922 (Enola Rd) Closed Loop System.

EQUIPMENT INFORMATION

CONTROLLER.....2070L
CABINET.....332 /W/ AUX
SOFTWARE.....ECONOLITE OASIS
CABINET MOUNT.....BASE
OUTPUT FILE POSITIONS...18 WITH AUX. OUTPUT FILE
LOAD SWITCHES USED.....S1,S2,S3,S8,S11,S12,AUX S1
PHASES USED.....1,2,2PED,6,8,8PED
OVERLAP "A".....1+2
OVERLAP "B".....NOT USED
OVERLAP "C".....NOT USED
OVERLAP "D".....NOT USED

INPUT FILE CONNECTION & PROGRAMMING CHART

LOOP NO.	LOOP TERMINAL	INPUT FILE POS.	PIN NO.	INPUT ASSIGNMENT NO.	DETECTOR NO.	NEMA PHASE	CALL	EXTEND	FULL TIME DELAY	STRETCH TIME	DELAY TIME
1A[1]	TB2-1,2	I1U	56	18	1	1	Y	Y			15
	-	J4U	48	10	26	6	Y	Y			
1B	TB2-5,6	I2U	39	1	2	1	Y	Y			15
2A	TB2-9,10	I3U	63	25	32	2	Y	Y			
2B	TB2-11,12	I3L	76	38	42	2	Y	Y			
6A	TB3-5,6	J2U	40	2	6	6	Y	Y			
6B	TB3-7,8	J2L	44	6	16	6	Y	Y			
8A	TB5-9,10	J6U	42	4	8	8	Y	Y			
PED PUSH BUTTONS											
P21,P22	TB8-4,6	I12U	67	29	PED 2	2 PED					
P81,P82 P83,P84	TB8-8,9	I13L	70	32	PED 8	8 PED					

NOTE:
INSTALL DC ISOLATORS IN INPUT FILE SLOTS I12 AND I13.

[1] Add jumper from I1-W to J4-W, on rear of input file.

INPUT FILE POSITION LEGEND: J2L
FILE J
SLOT 2
LOWER

SIGNAL HEAD HOOK-UP CHART

LOAD SWITCH NO.	S1		S2	S3	S4	S5	S6	S7	S8	S9	S10	S11	S12	AUX S1	AUX S2	AUX S3	AUX S4	AUX S5	AUX S6
CMU CHANNEL NO.	1		2	13	3	4	14	5	6	15	7	8	16	9	10	17	11	12	18
PHASE	1		2	2 PED	3	4	4 PED	5	6	6 PED	7	8	8 PED	OLA	OLB	SPARE	OLC	OLD	SPARE
SIGNAL HEAD NO.	11★	82	21,22	P21, P22	NU	NU	NU	NU	61,62	NU	NU	81,82	P81, P82	11★	NU	NU	NU	NU	NU
RED		✳	128						134			107							
YELLOW			129						135			108							
GREEN			130						136			109							
RED ARROW														A121					
YELLOW ARROW		126												A122					
FLASHING YELLOW ARROW														A123					
GREEN ARROW	127	127																	
✋				113									110						
🚶				115									112						

NU = Not Used
✳ Denotes install load resistor. See load resistor installation detail this sheet.
★ See pictorial of head wiring in detail below.

4 SECTION FYA PPLT SIGNAL WIRING DETAIL

(wire signal heads as shown)

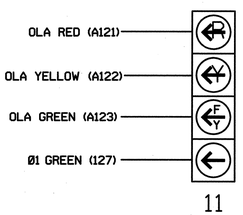

NOTE

1. The sequence display for this signal requires special logic programming. See sheet 2 of 2 for programming instructions.

COUNTDOWN PEDESTRIAN SIGNAL OPERATION

Countdown Ped Signals are required to display timing only during Ped Clearance Interval. Consult Ped Signal Module user's manual for instructions on selecting this feature.

THIS ELECTRICAL DETAIL IS FOR
THE SIGNAL DESIGN: 13-1114T3
DESIGNED: July 2011
SEALED: 12-12-2011
REVISED:

Signal Upgrade - Temporary Design 3 (Construction Phase III) (Sheet 1 of 2)

ELECTRICAL AND PROGRAMMING DETAILS FOR:

Prepared for: Transportation Mobility and Safety Division, Traffic Engineering, Signals Management Section, State of North Carolina Department of Transportation
750 N.Greenfield Pkwy,Garner,NC 27529

SR 1922 (Enola Rd)
at
Fiddlers Run Blvd

Division 13 Burke County Morganton

PLAN DATE:	July 2011	REVIEWED BY:	N.M. Rodevick
PREPARED BY:	A.D. Klinksiek	REVIEWED BY:	H.L. Winstead

REVISIONS	INIT.	DATE

SEAL
NORTH CAROLINA PROFESSIONAL SEAL 07983 ENGINEER HARVEY L. WINSTEAD, JR.
SIGNATURE H.L. Winstead DATE 12/12/11
SIG. INVENTORY NO. 13-1114T3

HNTB
HNTB NORTH CAROLINA, P.C.
343 E. Six Forks Road, Suite 200
Raleigh, North Carolina 27609
NC License No: C-1554

PROJECT REFERENCE NO.	SHEET NO.
U-2551	Sig. 20

LOGICAL I/O PROCESSOR PROGRAMMING DETAIL
TO PRODUCE SPECIAL FYA-PPLT SIGNAL SEQUENCE

(program controller as shown below)

1. FROM MAIN MENU PRESS '2' (PHASE CONTROL), THEN '1' (PHASE CONTROL FUNCTIONS). SCROLL TO THE BOTTOM OF THE MENU AND ENABLE ACT LOGIC COMMANDS 1, 2, AND 3.

2. FROM MAIN MENU PRESS '6' (OUTPUTS), THEN '3' (LOGICAL I/O PROCESSOR).

```
LOGICAL I/O COMMAND #1  (+/-COMMAND#)
IF  ACTIVE PHASE       #1  IS ON
AND RED CLEAR ON PHASE #1  IS ON

              SCROLL DOWN

THEN:
SET OUTPUT  ASSIGNMENT #50 ON
SET OUTPUT  ASSIGNMENT #51 OFF
```

NOTE: LOGIC FOR PHASE 1 RED CLEAR WHEN TRANSITIONING FROM PHASE 1 TO PHASE 2 (HEAD 11).

PRESS '+'

```
LOGICAL I/O COMMAND #2  (+/-COMMAND#)
IF  ACTIVE PHASE       #1  IS ON

              SCROLL DOWN

THEN:
SET OUTPUT  ASSIGNMENT #52 OFF
```

NOTE: LOGIC FOR SWITCHING FLASHING YELLOW ARROW "OFF" DURING PHASE 1 (HEAD 11).

PRESS '+'

```
LOGICAL I/O COMMAND #3  (+/-COMMAND#)
IF  YELLOW ON PHASE    #1  IS ON

              SCROLL DOWN

THEN:
SET OUTPUT  ASSIGNMENT #51 ON
```

NOTE: LOGIC FOR YELLOW ARROW CLEARANCE FROM PHASE 1 (HEAD 11).

PRESS '+'

LOGIC I/O PROCESSOR PROGRAMMING COMPLETE

OUTPUT REFERENCE SCHEDULE

OUTPUT 50 = Overlap A Red
OUTPUT 51 = Overlap A Yellow
OUTPUT 52 = Overlap A Green

OVERLAP PROGRAMMING DETAIL

(program controller as shown below)

FROM MAIN MENU PRESS '8' (OVERLAPS), THEN '1' (VEHICLE OVERLAP SETTINGS).

```
PAGE 1: VEHICLE OVERLAP 'A' SETTINGS
PHASE:          |123456789101112131415 16
VEH OVL PARENTS:|XX
VEH OVL NOT VEH:|
VEH OVL NOT PED:|
VEH OVL GRN EXT:|
STARTUP COLOR: _ RED  _ YELLOW  _ GREEN
FLASH COLORS:  _ RED  _ YELLOW  X GREEN
SELECT VEHICLE OVERLAP OPTIONS:   (Y/N)
FLASH YELLOW IN CONTROLLER FLASH?...Y
GREEN EXTENSION (0-255 SEC).........0
YELLOW CLEAR (0=PARENT,3-25.5 SEC)..0.0
RED CLEAR (0=PARENT,0.1-25.5 SEC)...0.0
OUTPUT AS PHASE # (0=NONE, 1-16)....0
```

NOTICE GREEN FLASH

OVERLAP PROGRAMMING COMPLETE

THIS ELECTRICAL DETAIL IS FOR
THE SIGNAL DESIGN: 13-1114T3
DESIGNED: July 2011
SEALED: 12-12-2011
REVISED:

Signal Upgrade - Temporary Design 3 (Construction Phase III) (Sheet 2 of 2)

HNTB NORTH CAROLINA, P.C.
343 E. Six Forks Road, Suite 200
Raleigh, North Carolina 27609
NC License No: C-1554

ELECTRICAL AND PROGRAMMING DETAILS FOR:

Prepared for: Transportation Mobility and Safety Division, Department of Transportation, State of North Carolina, Signal Management Section
750 N.Greenfield Pkwy,Garner,NC 27529

SR 1922 (Enola Rd)
at
Fiddlers Run Blvd

Division 13 Burke County Morganton

PLAN DATE:	July 2011	REVIEWED BY:	N.M. Rodevick
PREPARED BY:	A.D. Klinksiek	REVIEWED BY:	H.L. Winstead

REVISIONS	INIT.	DATE

SEAL

NORTH CAROLINA PROFESSIONAL SEAL 07983 ENGINEER HARVEY L. WINSTEAD, JR.

SIGNATURE / DATE: 12/12/11

SIG. INVENTORY NO. 13-1114T3

PROJECT REFERENCE NO.	SHEET NO.
U-2551	Sig. 21

3 Phase
Fully Actuated
NC 18 (Sterling St)/SR 1922 (Enola Rd)
Closed Loop System

PHASING DIAGRAM

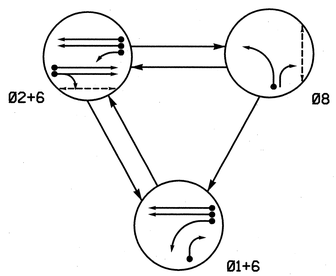

PHASING DIAGRAM DETECTION LEGEND

- DETECTED MOVEMENT
- UNDETECTED MOVEMENT (OVERLAP)
- UNSIGNALIZED MOVEMENT
- PEDESTRIAN MOVEMENT

TABLE OF OPERATION

SIGNAL FACE	PHASE 0 1 + 6	PHASE 0 2 + 6	PHASE 0 8	FLASH
11	←	F Y	~~R~~	~~Y~~
21,22	R	G	R	Y
61,62	G	G	R	Y
81	R	R	G	R
82	R	R	G	R
P21,P22	DW	W	DW	DRK
P81,P82	DW	DW	W	DRK

F Y = Flashing Yellow Arrow
W - Walk
DW - Don't Walk
DRK - Dark

STANDARD SIGNAL FACE CLEARANCES FOR FLASHING LEFT TURN SIGNAL

FROM	TO ← 1	TO ← 2	TO F Y 1	TO F Y 2	TO ~~R~~ 1	TO ~~R~~ 2
←	←	←	~~Y~~	~~R~~	~~Y~~	~~R~~
F Y	F Y	F Y	F Y	F Y	~~Y~~	~~R~~
~~R~~	~~R~~	~~R~~	~~R~~	~~R~~	~~R~~	~~R~~

F Y = Flashing Yellow Arrow

SIGNAL FACE I.D.

All Heads L.E.D.

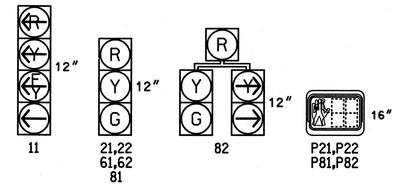

OASIS 2070L LOOP & DETECTOR INSTALLATION CHART

INDUCTIVE LOOPS: LOOP	SIZE (FT)	DISTANCE FROM STOPBAR (FT)	TURNS	NEW LOOP	DETECTOR PROGRAMMING: PHASE	CALLING	EXTENSION	FULL TIME DELAY	STRETCH TIME	DELAY TIME	SYSTEM LOOP	NEW CARD
1A	6x40	0	2-4-2	-	1	Y	Y	-	-	15	-	-
					6	Y	Y	-	-	-	-	-
1B	6x40	0	2-4-2	-	1	Y	Y	-	-	15	-	-
2A	6x6	70	3	-	2	Y	Y	-	-	-	-	-
2B	6x6	70	3	-	2	Y	Y	-	-	-	-	-
6A	6x6	70	3	-	6	Y	Y	-	-	-	-	-
6B	6x6	70	3	-	6	Y	Y	-	-	-	-	-
8A	6x40	0	2-4-2	-	8	Y	Y	-	-	-	-	-
S49	6x6	+100	3	Y	-	-	-	-	-	-	Y	Y
S50	6x6	+100	3	Y	-	-	-	-	-	-	Y	Y
S51	6x6	+100	3	Y	-	-	-	-	-	-	Y	Y
S52	6x6	+100	3	Y	-	-	-	-	-	-	Y	Y

NOTES

1. Refer to "Roadway Standard Drawings NCDOT" dated January 2012 and "Standard Specifications for Roads and Structures" dated January 2012.
2. Do not program signal for late night flashing operation unless otherwise directed by the Engineer.
3. Set all detector units to presence mode.
4. Omit "WALK" and flashing "DON'T WALK" with no pedestrian calls.
5. Program pedestrian heads to countdown the flashing "Don't Walk" time only.
6. Maximum times shown in timing chart are for free-run operation only. Coordinated signal system timing values supersede these values.
7. Closed loop system data: Controller Asset #:1114.

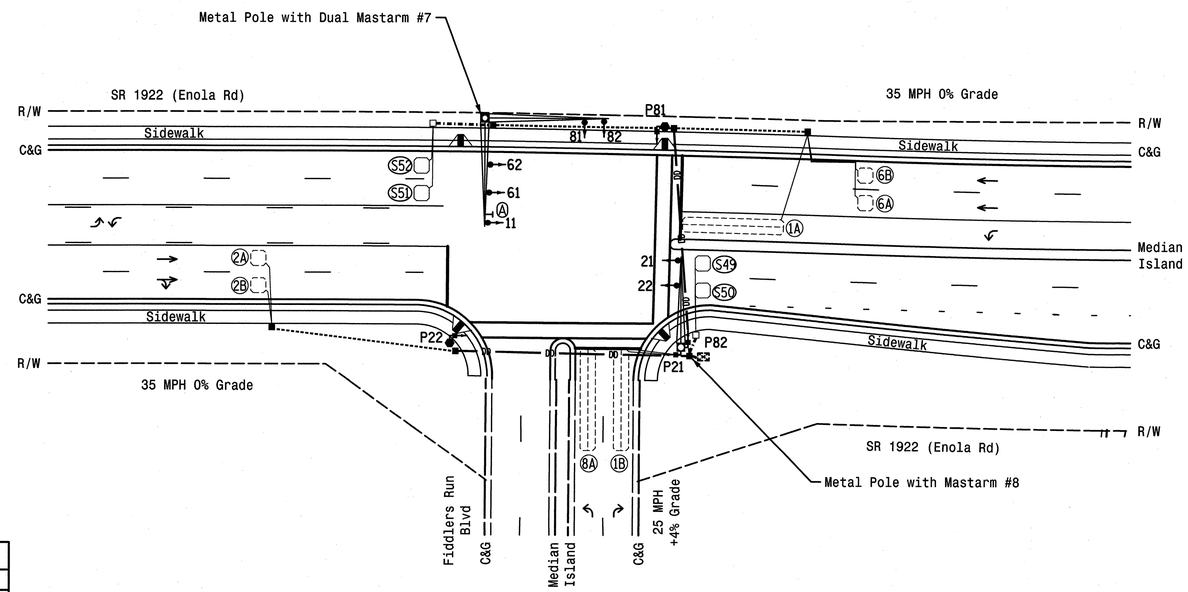

LEGEND

PROPOSED		EXISTING
	Traffic Signal Head	
	Modified Signal Head	N/A
	Sign	
	Pedestrian Signal Head With Push Button & Sign	
	Signal Pole with Guy	
	Signal Pole with Sidewalk Guy	
	Inductive Loop Detector	
	Controller & Cabinet	
	Junction Box	
	2-in Underground Conduit	
DD	Directional Drill	DD
N/A	Right of Way	
	Directional Arrow	
	Metal Pole with Mastarm	
	Signal Pedestal	
N/A	Wheelchair Ramp	
N/A	"U-TURN YIELD TO RIGHT TURN" Sign (R10-16)	A

OASIS 2070L TIMING CHART

FEATURE	PHASE 1	PHASE 2	PHASE 6	PHASE 8
Min Green 1 *	7	10	10	7
Extension 1 *	2.0	3.0	3.0	2.0
Max Green 1 *	25	45	45	30
Yellow Clearance	3.0	3.9	3.9	3.0
Red Clearance	2.4	1.7	1.7	2.8
Red Revert	2.0	2.0	2.0	2.0
Walk 1 *	-	7	-	7
Don't Walk 1	-	18	-	18
Seconds Per Actuation *	-	-	-	-
Max Variable Initial *	-	-	-	-
Time Before Reduction *	-	-	-	-
Time To Reduce *	-	-	-	-
Minimum Gap	-	-	-	-
Recall Mode	-	MIN RECALL	MIN RECALL	-
Vehicle Call Memory	-	YELLOW	YELLOW	-
Dual Entry	-	-	-	-
Simultaneous Gap	ON	ON	ON	ON

* These values may be field adjusted. Do not adjust Min Green and Extension times for phases 2 and 6 lower than what is shown. Min Green for all other phases should not be lower than 4 seconds.

HNTB
HNTB NORTH CAROLINA, P.C.
343 E. Six Forks Road, Suite 200
Raleigh, North Carolina 27609
NC License No: C-1554

Signal Upgrade - Final Design

Prepared for: Transportation Mobility and Safety Division, Signal Design Section, 750 N.Greenfield Pkwy, Garner, NC 27529

SR 1922 (Enola Rd)
at
Fiddlers Run Blvd

Division 13 Burke County Morganton

PLAN DATE:	July 2011	REVIEWED BY:	A.D. Klinksiek
PREPARED BY:	T.R. Terrell	REVIEWED BY:	N.M. Rodevick

SCALE 0 30 1"=30'

REVISIONS	INIT.	DATE

SEAL
NORTH CAROLINA PROFESSIONAL SEAL 031464 ENGINEER NATASHA M. RODEVICK
SIGNATURE Natasha M. Rodevick DATE 12-12-11
SIG. INVENTORY NO. 13-1114

PROJECT REFERENCE NO.	SHEET NO.
U-2551	Sig. 22

EDI MODEL 2018ECL-NC CONFLICT MONITOR PROGRAMMING DETAIL

(remove jumpers and set switches as shown)

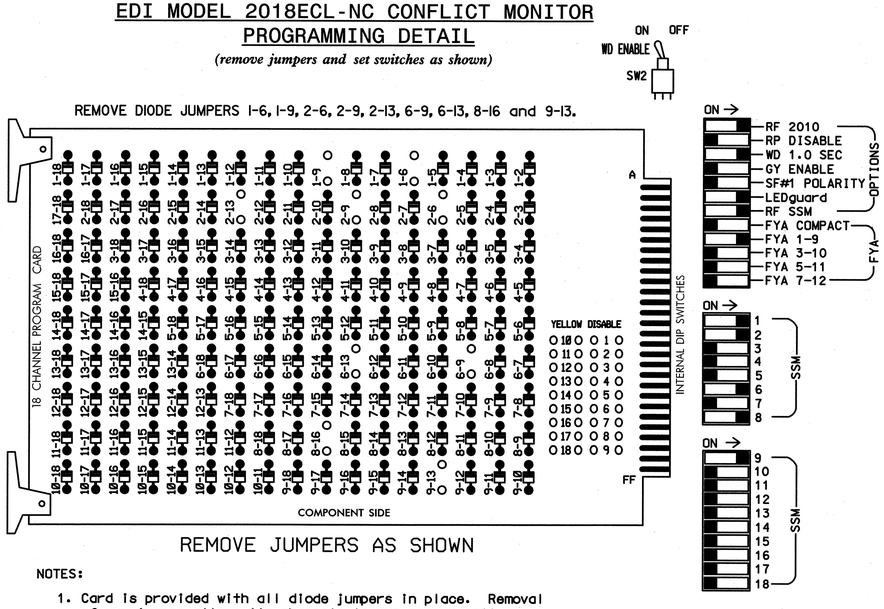

NOTES:

1. Card is provided with all diode jumpers in place. Removal of any jumper allows its channels to run concurrently.
2. Ensure jumpers SEL2-SEL5 and SEL9 are present on the monitor board.
3. Ensure that Red Enable is active at all times during normal operation.
4. Connect serial cable from conflict monitor to comm. port 1 of 2070 controller. Ensure conflict monitor communicates with 2070.

INPUT FILE POSITION LAYOUT

(front view)

		1	2	3	4	5	6	7	8	9	10	11	12	13	14
FILE "I"	U	ø1 1A	ø1 1B	ø2 2A	SLOT EMPTY	SLOT EMPTY	SLOT EMPTY	SLOT EMPTY	SLOT EMPTY	SYS. DET. S49	SLOT EMPTY	SLOT EMPTY	ø2 PED DC ISOLATOR	NOT USED	FS DC ISOLATOR
	L	NOT USED	NOT USED	ø2 2B						SYS. DET. S50			NOT USED	ø8 PED DC ISOLATOR	ST DC ISOLATOR
FILE "J"	U	SLOT EMPTY	ø6 6A	SLOT EMPTY	WAB⊗ INPUT	SLOT EMPTY	ø8 8A	SLOT EMPTY	SLOT EMPTY	SYS. DET. S51	SLOT EMPTY	SLOT EMPTY	SLOT EMPTY	SLOT EMPTY	SLOT EMPTY
	L		ø6 6B				NOT USED			SYS. DET. S52					

EX.: 1A, 2A, ETC. = LOOP NO.'S

FS = FLASH SENSE
ST = STOP TIME

⊗ Wired Input - Do not populate slot with detector card

LOAD RESISTOR INSTALLATION DETAIL

(install resistors as shown below)

ACCEPTABLE VALUES

VALUE (ohms)	WATTAGE
1.5K - 1.9K	25W (min)
2.0K - 3.0K	10W (min)

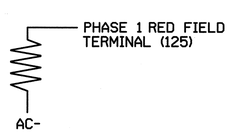

NOTES

1. To prevent "flash-conflict" problems, insert red flash program blocks for all unused vehicle load switches in the output file. The installer shall verify that signal heads flash in accordance with the Signal Plans.
2. Enable Simultaneous Gap-Out for all phases.
3. Program phases 2 and 6 for Start Up In Green.
4. Program phases 2 and 8 for 'STARTUP PED CALL'.
5. Program phases 2 and 6 for Yellow Flash and overlap 1 as Wag Overlaps.
6. The cabinet and controller are part of the NC 18 (Sterling St)/SR 1922 (Enola Rd) Closed Loop System.

EQUIPMENT INFORMATION

CONTROLLER.....2070L
CABINET.....332 /W/ AUX
SOFTWARE.....ECONOLITE OASIS
CABINET MOUNT.....BASE
OUTPUT FILE POSITIONS...18 WITH AUX. OUTPUT FILE
LOAD SWITCHES USED.....S1,S2,S3,S8,S11,S12,AUX S1
PHASES USED.....1,2,2PED,6,8,8PED
OVERLAP "A".....1+2
OVERLAP "B".....NOT USED
OVERLAP "C".....NOT USED
OVERLAP "D".....NOT USED

INPUT FILE CONNECTION & PROGRAMMING CHART

LOOP NO.	LOOP TERMINAL	INPUT FILE POS.	PIN NO.	INPUT ASSIGNMENT NO.	DETECTOR NO.	NEMA PHASE	CALL	EXTEND	FULL TIME DELAY	STRETCH TIME	DELAY TIME
1A[1]	TB2-1,2	I1U	56	18	1	1	Y	Y			15
	-	J4U	48	10	26	6	Y	Y			
1B	TB2-5,6	I2U	39	1	2	1	Y	Y			15
2A	TB2-9,10	I3U	63	25	32	2	Y	Y			
2B	TB2-11,12	I3L	76	38	42	2	Y	Y			
*S49	TB6-9,10	I9U	60	22	11	SYS					
*S50	TB6-11,12	I9L	62	24	13	SYS					
6A	TB3-5,6	J2U	40	2	6	6	Y	Y			
6B	TB3-7,8	J2L	44	6	16	6	Y	Y			
8A	TB5-9,10	J6U	42	4	8	8	Y	Y			
*S51	TB7-9,10	J9U	59	21	15	SYS					
*S52	TB7-11,12	J9L	61	23	17	SYS					
PED PUSH BUTTONS											
P21,P22	TB8-4,6	I12U	67	29	PED 2	2 PED					
P81,P82 P83,P84	TB8-8,9	I13L	70	32	PED 8	8 PED					

[1] Add jumper from I1-W to J4-W, on rear of input file.

NOTE:
INSTALL DC ISOLATORS IN INPUT FILE SLOTS I12 AND I13.

* SYSTEM DETECTOR ONLY. REMOVE THE VEHICLE PHASE ASSIGNED TO THIS DETECTOR IN THE DEFAULT PROGRAMMING.

INPUT FILE POSITION LEGEND: J2L
FILE J
SLOT 2
LOWER

HNTB
HNTB NORTH CAROLINA, P.C.
343 E. Six Forks Road, Suite 200
Raleigh, North Carolina 27609
NC License No: C-1554

SIGNAL HEAD HOOK-UP CHART

LOAD SWITCH NO.	S1	S2	S3	S4	S5	S6	S7	S8	S9	S10	S11	S12	AUX S1	AUX S2	AUX S3	AUX S4	AUX S5	AUX S6
CMU CHANNEL NO.	1	2	13	3	4	14	5	6	15	7	8	16	9	10	17	11	12	18
PHASE	1	2	2 PED	3	4	4 PED	5	6	6 PED	7	8	8 PED	OLA	OLB	SPARE	OLC	OLD	SPARE
SIGNAL HEAD NO.	11★	82	21,22	P21, P22	NU	NU	NU	61,62	NU	NU	81,82	P81 P82	11★	NU	NU	NU	NU	NU
RED		*	128					134			107							
YELLOW			129					135			108							
GREEN			130					136			109							
RED ARROW													A121					
YELLOW ARROW		126											A122					
FLASHING YELLOW ARROW													A123					
GREEN ARROW	127	127																
✋			113									110						
🚶			115									112						

NU = Not Used
* Denotes install load resistor. See load resistor installation detail this sheet.
★ See pictorial of head wiring in detail below.

4 SECTION FYA PPLT SIGNAL WIRING DETAIL

(wire signal heads as shown)

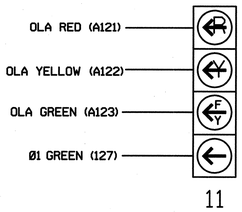

NOTE

1. The sequence display for this signal requires special logic programming. See sheet 2 of 2 for programming instructions.

COUNTDOWN PEDESTRIAN SIGNAL OPERATION

Countdown Ped Signals are required to display timing only during Ped Clearance Interval. Consult Ped Signal Module user's manual for instructions on selecting this feature.

THIS ELECTRICAL DETAIL IS FOR
THE SIGNAL DESIGN: 13-1114
DESIGNED: July 2011
SEALED: 12-12-2011
REVISED:

Signal Upgrade - Final Design (Sheet 1 of 2)

ELECTRICAL AND PROGRAMMING DETAILS FOR:

Prepared for: Transportation Mobility and Safety Division, Intelligent Transportation Systems, Signal Management Section
750 N.Greenfield Pkwy,Garner,NC 27529

SR 1922 (Enola Rd)
at
Fiddlers Run Blvd

Division 13 Burke County Morganton

PLAN DATE:	July 2011	REVIEWED BY:	N.M. Rodevick
PREPARED BY:	A.D. Klinksiek	REVIEWED BY:	H.L. Winstead

REVISIONS	INIT.	DATE

SEAL
NORTH CAROLINA PROFESSIONAL SEAL 07983 ENGINEER HARVEY L. WINSTEAD, JR.
SIGNATURE H.L. Winstead DATE 12/12/11
SIG. INVENTORY NO. 13-1114

PROJECT REFERENCE NO.	SHEET NO.
U-2551	Sig. 23

LOGICAL I/O PROCESSOR PROGRAMMING DETAIL
TO PRODUCE SPECIAL FYA-PPLT SIGNAL SEQUENCE

(program controller as shown below)

1. FROM MAIN MENU PRESS '2' (PHASE CONTROL), THEN '1' (PHASE CONTROL FUNCTIONS). SCROLL TO THE BOTTOM OF THE MENU AND ENABLE ACT LOGIC COMMANDS 1, 2, AND 3.

2. FROM MAIN MENU PRESS '6' (OUTPUTS), THEN '3' (LOGICAL I/O PROCESSOR).

```
LOGICAL I/O COMMAND #1  (+/-COMMAND#)
IF  ACTIVE PHASE        #1  IS ON
AND RED CLEAR ON PHASE #1  IS ON

                 ↓
            SCROLL DOWN

THEN:
SET OUTPUT  ASSIGNMENT #50 ON
SET OUTPUT  ASSIGNMENT #51 OFF
```

NOTE: LOGIC FOR PHASE 1 RED CLEAR WHEN TRANSITIONING FROM PHASE 1 TO PHASE 2 (HEAD 11).

PRESS '+'

```
LOGICAL I/O COMMAND #2  (+/-COMMAND#)
IF  ACTIVE PHASE        #1  IS ON

                 ↓
            SCROLL DOWN

THEN:
SET OUTPUT  ASSIGNMENT #52 OFF
```

NOTE: LOGIC FOR SWITCHING FLASHING YELLOW ARROW "OFF" DURING PHASE 1 (HEAD 11).

PRESS '+'

```
LOGICAL I/O COMMAND #3  (+/-COMMAND#)
IF  YELLOW ON PHASE     #1  IS ON

                 ↓
            SCROLL DOWN

THEN:
SET OUTPUT  ASSIGNMENT #51 ON
```

NOTE: LOGIC FOR YELLOW ARROW CLEARANCE FROM PHASE 1 (HEAD 11).

PRESS '+'
LOGIC I/O PROCESSOR PROGRAMMING COMPLETE

OUTPUT REFERENCE SCHEDULE

OUTPUT 50 = Overlap A Red
OUTPUT 51 = Overlap A Yellow
OUTPUT 52 = Overlap A Green

OVERLAP PROGRAMMING DETAIL

(program controller as shown below)

FROM MAIN MENU PRESS '8' (OVERLAPS), THEN '1' (VEHICLE OVERLAP SETTINGS).

```
PAGE 1: VEHICLE OVERLAP 'A' SETTINGS
PHASE:          |123456789101112131415 16
VEH OVL PARENTS:|XX
VEH OVL NOT VEH:|
VEH OVL NOT PED:|
VEH OVL GRN EXT:|
STARTUP COLOR: _ RED   _ YELLOW  _ GREEN
FLASH COLORS:  _ RED   _ YELLOW  X GREEN
SELECT VEHICLE OVERLAP OPTIONS:   (Y/N)
FLASH YELLOW IN CONTROLLER FLASH?...Y
GREEN EXTENSION (0-255 SEC).........0
YELLOW CLEAR (0=PARENT,3-25.5 SEC)..0.0
RED CLEAR (0=PARENT,0.1-25.5 SEC)...0.0
OUTPUT AS PHASE # (0=NONE, 1-16)....0
```

← NOTICE GREEN FLASH

OVERLAP PROGRAMMING COMPLETE

THIS ELECTRICAL DETAIL IS FOR
THE SIGNAL DESIGN: 13-1114
DESIGNED: July 2011
SEALED: 12-12-2011
REVISED:

Signal Upgrade - Final Design (Sheet 2 of 2)

HNTB
HNTB NORTH CAROLINA, P.C.
343 E. Six Forks Road, Suite 200
Raleigh, North Carolina 27609
NC License No: C-1554

ELECTRICAL AND PROGRAMMING DETAILS FOR:

Prepared for: Transportation Mobility and Safety Division, Department of Transportation, State of North Carolina, Signal Management Section
750 N.Greenfield Pkwy,Garner,NC 27529

SR 1922 (Enola Rd)
at
Fiddlers Run Blvd

Division 13 Burke County Morganton

PLAN DATE:	July 2011	REVIEWED BY:	N.M. Rodevick
PREPARED BY:	A.D. Klinksiek	REVIEWED BY:	H.L. Winstead

REVISIONS	INIT.	DATE

SEAL
NORTH CAROLINA PROFESSIONAL SEAL 07983 ENGINEER HARVEY L. WINSTEAD, JR.
SIGNATURE H.L. Winstead Jr. DATE 12/12/11
SIG. INVENTORY NO. 13-1114

PROJECT REFERENCE NO.	SHEET NO.
U-2551	Sig. 24

PHASING DIAGRAM

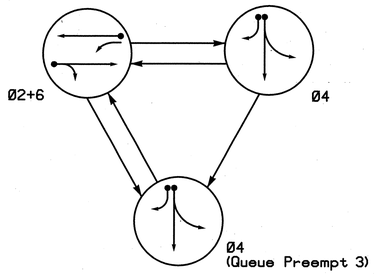

PHASING DIAGRAM DETECTION LEGEND

- DETECTED MOVEMENT
- UNDETECTED MOVEMENT (OVERLAP)
- UNSIGNALIZED MOVEMENT
- PEDESTRIAN MOVEMENT

TABLE OF OPERATION

SIGNAL FACE	PHASE Ø2+6	PHASE Ø4	PHASE PREEMPT 3	FLASH
21,22	G	R	R	Y
41,42	R	G	G	R
61,62,63	G	R	R	Y

SIGNAL FACE I.D.

All Heads L.E.D.

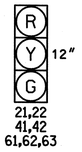

OASIS 2070L LOOP & DETECTOR INSTALLATION CHART

INDUCTIVE LOOPS: LOOP	SIZE (FT)	DISTANCE FROM STOPBAR (FT)	TURNS	NEW LOOP	DETECTOR PROGRAMMING: PHASE	CALLING	EXTENSION	FULL TIME DELAY	STRETCH TIME	DELAY TIME	QUEUE MAX OCCUPANCY TIME	QUEUE GAP RESET TIME	PREEMPT INDEX FOR QUEUE	SYSTEM LOOP	NEW CARD
2A	6X6	70	3	Y	2	Y	Y	-	-	-	-	-	-	-	Y
4A	6x40	0	2-4-2	Y	4	Y	Y	-	-	-	-	-	-	-	Y
4B	6x40	0	2-4-2	Y	4	Y	Y	-	-	15	-	-	-	-	Y
*** Q1	6X6	650	6	Y	PRE3	-	-	-	-	-	5	0.1	3	-	Y
6A	6X6	70	EXIST	-	6	Y	Y	-	-	-	-	-	-	-	Y

*** See Note 6.

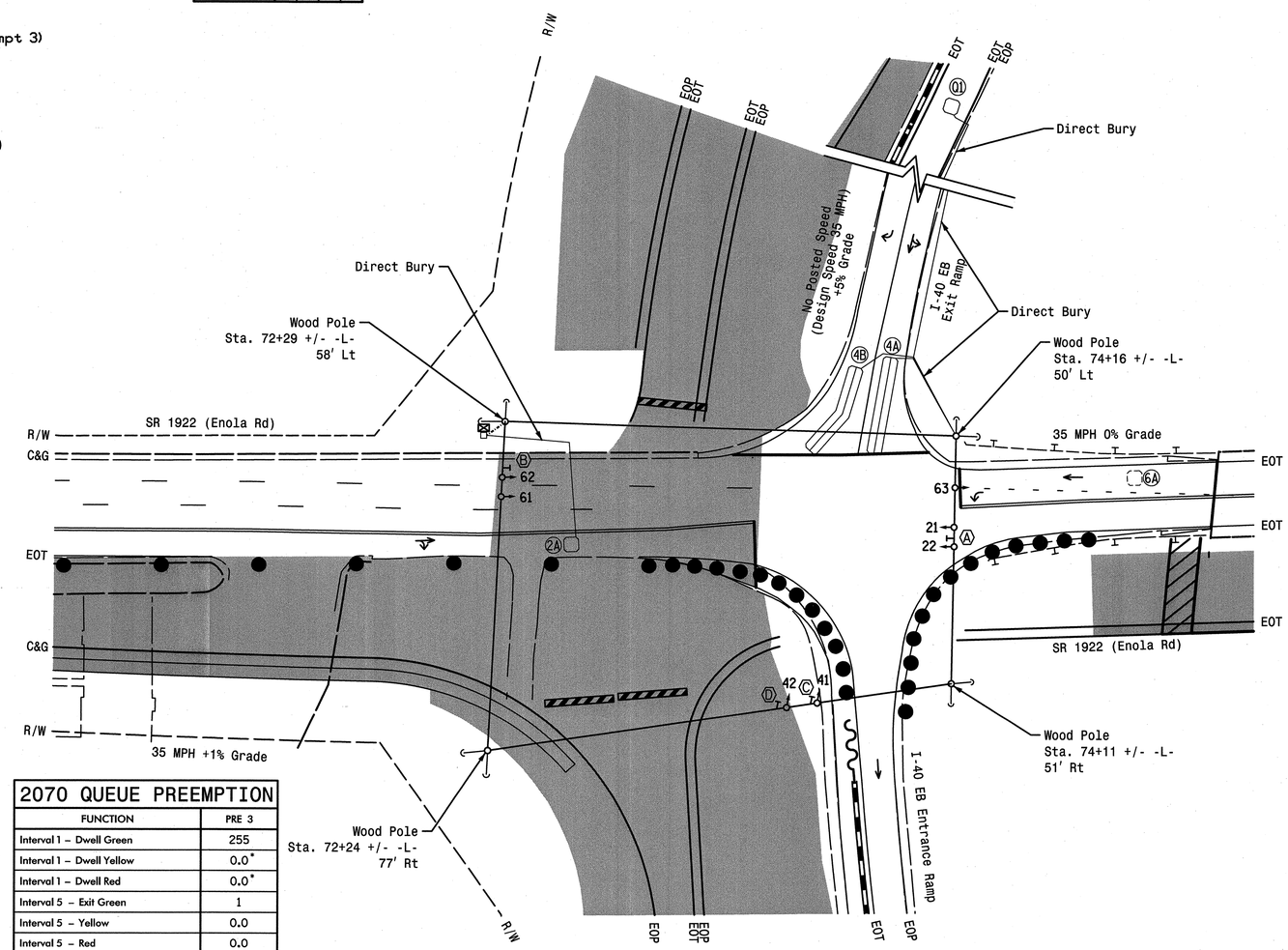

OASIS 2070L TIMING CHART

FEATURE	PHASE 2	PHASE 4	PHASE 6
Min Green 1 *	10	7	10
Extension 1 *	3.0	2.0	3.0
Max Green 1 *	45	25	45
Yellow Clearance	3.8	3.6	3.8
Red Clearance	1.4	1.0	1.5
Red Revert	2.0	2.0	2.0
Walk 1 *	-	-	-
Don't Walk 1	-	-	-
Seconds Per Actuation *	-	-	-
Max Variable Initial *	-	-	-
Time Before Reduction *	-	-	-
Time To Reduce *	-	-	-
Minimum Gap	-	-	-
Recall Mode	MIN RECALL	-	MIN RECALL
Vehicle Call Memory	YELLOW	-	YELLOW
Dual Entry	-	-	-
Simultaneous Gap	ON	ON	ON

* These values may be field adjusted. Do not adjust Min Green and Extension times for phases 2 and 6 lower than what is shown. Min Green for all other phases should not be lower than 4 seconds.

2070 QUEUE PREEMPTION

FUNCTION	PRE 3
Interval 1 – Dwell Green	255
Interval 1 – Dwell Yellow	0.0*
Interval 1 – Dwell Red	0.0*
Interval 5 – Exit Green	1
Interval 5 – Yellow	0.0
Interval 5 – Red	0.0
Delay Time	0
Min Green Before Pre	10
Ped Clear Before Pre	0
Yellow Clear Before Pre	3.8
Red Clear Before Pre	1.5
Dwell Min Time	30
Enable Backup Protection	N
Ped Clear Through Yellow	N

* Time defaults to time used for phase during normal operation.

2 Phase
Fully Actuated w/
Queue Preemption
NC 18 (Sterling St)/SR 1922 (Enola Rd)
Closed Loop System

NOTES

1. Refer to "Roadway Standard Drawings NCDOT" dated January 2012 and "Standard Specifications for Roads and Structures" dated January 2012.
2. Do not program signal for late night flashing operation unless otherwise directed by the Engineer.
3. Set all detector units to presence mode.
4. Locate new cabinet so as not to obstruct sight distance of vehicles turning right on red.
5. The cabinet should be designed to include an Auxiliary Output File for future use.
6. This loop serves as a queue backup detector. After 5 seconds of constant actuation, the detector unit places a call to the controller to preempt normal operation to clear out the storage lanes.
7. Maximum times shown in timing chart are for free-run operation only. Coordinated signal system timing values supersede these values.
8. Closed loop system data: Controller number #:0687.

LEGEND

PROPOSED		EXISTING
	Traffic Signal Head	
	Modified Signal Head	N/A
	Sign	
	Pedestrian Signal Head With Push Button & Sign	
	Signal Pole with Guy	
	Signal Pole with Sidewalk Guy	
	Inductive Loop Detector	
	Controller & Cabinet	
	Junction Box	
	2-in Underground Conduit	
N/A	Right of Way	
	Directional Arrow	
N/A	Guardrail	
A	No Left Turn Sign (R3-2)	N/A
B	No Right Turn Sign (R3-1)	N/A
C	Combined Through and Left Arrow Sign (R3-6L)	N/A
D	Right Arrow "ONLY" Sign (R3-5R)	N/A
	Construction Zone Drums	N/A
	Construction Barricade	N/A
	Construction Zone	N/A
	Portable Concrete Barrier	N/A
	Crash Cushion	N/A

Signal Upgrade - Temporary Design 1
(Construction Phase I Step 2)

HNTB NORTH CAROLINA, P.C.
343 E. Six Forks Road, Suite 200
Raleigh, North Carolina 27609
NC License No: C-1554

Prepared for:
Transportation Mobility and Safety Division
Traffic Engineering
Signal Design Section
750 N.Greenfield Pkwy,Garner,NC 27529

SCALE 0 30 1"=30'

SR 1922 (Enola Rd)
at
I-40 Eastbound Ramp

Division 13 Burke County Morganton

PLAN DATE: July 2011 REVIEWED BY: T.R. Terrell
PREPARED BY: A.D. Klinksiek REVIEWED BY: N.W. Rodevick

REVISIONS	INIT.	DATE

SEAL
NORTH CAROLINA PROFESSIONAL SEAL 031464 ENGINEER NATASHA M. RODEVICK
SIGNATURE DATE
SIG. INVENTORY NO. 13-0687T1

PROJECT REFERENCE NO.	SHEET NO.
U-2551	Sig. 25

EDI MODEL 2018ECL-NC CONFLICT MONITOR PROGRAMMING DETAIL

(remove jumpers and set switches as shown)

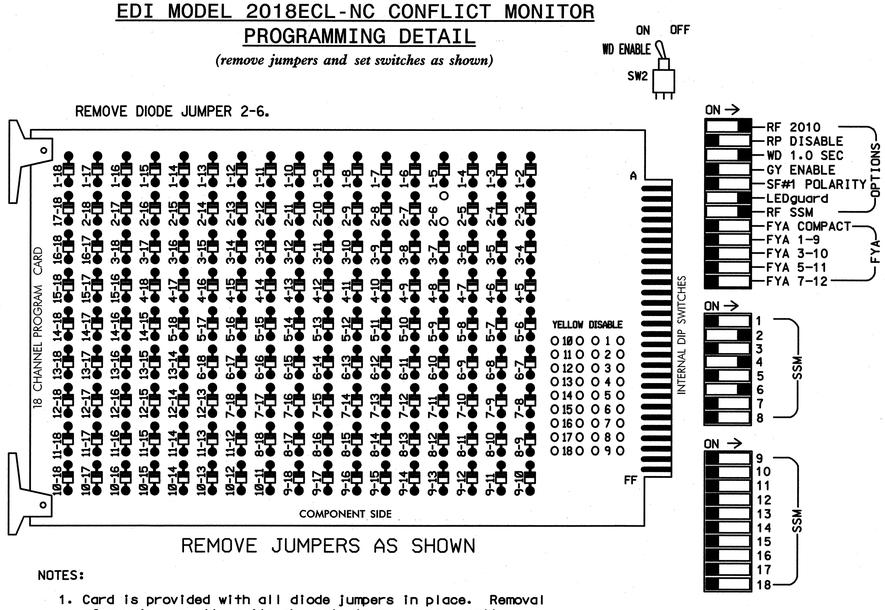

REMOVE JUMPERS AS SHOWN

NOTES:

1. Card is provided with all diode jumpers in place. Removal of any jumper allows its channels to run concurrently.
2. Ensure jumpers SEL2-SEL5 and SEL9 are present on the monitor board.
3. Ensure that Red Enable is active at all times during normal operation.
4. Connect serial cable from conflict monitor to comm. port 1 of 2070 controller. Ensure conflict monitor communicates with 2070.

INPUT FILE POSITION LAYOUT

(front view)

		1	2	3	4	5	6	7	8	9	10	11	12	13	14
FILE "I"	U	SLOT	Ø2	SLOT	SLOT	SLOT	Ø4	PRE3	SLOT	SLOT	SLOT	SLOT	SLOT	SLOT	FS
		EMPTY	2A	EMPTY	EMPTY	EMPTY	4A	Q1	EMPTY	EMPTY	EMPTY	EMPTY	EMPTY	EMPTY	DC ISOLATOR
	L		NOT USED				Ø4	NOT USED							ST
							4B								DC ISOLATOR
FILE "J"	U	SLOT	Ø6	SLOT	SLOT	SLOT	SLOT	SLOT	SLOT	SLOT	SLOT	SLOT	SLOT	SLOT	SLOT
		EMPTY	6A	EMPTY	EMPTY	EMPTY	EMPTY	EMPTY	EMPTY	EMPTY	EMPTY	EMPTY	EMPTY	EMPTY	EMPTY
	L		NOT USED												

EX.: 1A, 2A, ETC. = LOOP NO.'S

FS = FLASH SENSE
ST = STOP TIME

NOTES

1. To prevent "flash-conflict" problems, insert red flash program blocks for all unused vehicle load switches in the output file. The installer shall verify that signal heads flash in accordance with the Signal Plans.
2. Enable Simultaneous Gap-Out for all phases.
3. Program phases 2 and 6 for Start Up In Green.
4. Program phases 2 and 6 for Yellow Flash.
5. The cabinet and controller are part of the NC 18 (Sterling St)/SR 1922 (Enola Rd) Closed Loop System.

EQUIPMENT INFORMATION

CONTROLLER.....2070L
CABINET.....332 /W/ AUX
SOFTWARE.....ECONOLITE OASIS
CABINET MOUNT.....BASE
OUTPUT FILE POSITIONS...18 WITH AUX. OUTPUT FILE
LOAD SWITCHES USED.....S2,S5,S8
PHASES USED.....2,4,6
OVERLAP "A".....NOT USED
OVERLAP "B".....NOT USED
OVERLAP "C".....NOT USED
OVERLAP "D".....NOT USED

INPUT FILE CONNECTION & PROGRAMMING CHART

LOOP NO.	LOOP TERMINAL	INPUT FILE POS.	PIN NO.	INPUT ASSIGNMENT NO.	DETECTOR NO.	NEMA PHASE	CALL	EXTEND	FULL TIME DELAY	STRETCH TIME	DELAY TIME
2A	TB2-5,6	I2U	39	1	2	2	Y	Y			
4A	TB4-9,10	I6U	41	3	4	4	Y	Y			
4B	TB4-11,12	I6L	45	7	14	4	Y	Y			15
Q1	TB6-1,2	I7U	65	27	*34	PRE3					
6A	TB3-5,6	J2U	40	2	6	6	Y	Y			

*See vehicle detector programming detail on Sheet 2.

INPUT FILE POSITION LEGEND: J2L
FILE J
SLOT 2
LOWER

SIGNAL HEAD HOOK-UP CHART

LOAD SWITCH NO.	S1	S2	S3	S4	S5	S6	S7	S8	S9	S10	S11	S12	AUX S1	AUX S2	AUX S3	AUX S4	AUX S5	AUX S6
CMU CHANNEL NO.	1	2	13	3	4	14	5	6	15	7	8	16	9	10	17	11	12	18
PHASE	1	2	2 PED	3	4	4 PED	5	6	6 PED	7	8	8 PED	OLA	OLB	SPARE	OLC	OLD	SPARE
SIGNAL HEAD NO.	NU	21,22	NU	NU	41,42	NU	NU	61,62 63	NU	NU	NU	NU	NU	NU	NU	NU	NU	NU
RED		128			101			134										
YELLOW		129			102			135										
GREEN		130			103			136										
RED ARROW																		
YELLOW ARROW																		
GREEN ARROW																		
✋																		
🚶																		

NU = Not Used

THIS ELECTRICAL DETAIL IS FOR
THE SIGNAL DESIGN: 13-0687T1
DESIGNED: July 2011
SEALED: 12-12-2011
REVISED:

Signal Upgrade - Temporary Design 1 (Construction Phase I Step 2) (Sheet 1 of 2)

ELECTRICAL AND PROGRAMMING DETAILS FOR:

Prepared for: Transportation Mobility and Safety Division, Signals Management Section, Department of Transportation, State of North Carolina
750 N.Greenfield Pkwy, Garner, NC 27529

SR 1922 (Enola Rd)
at
I-40 Eastbound Ramp

Division 13 Burke County Morganton

PLAN DATE:	July 2011	REVIEWED BY:	N.M. Rodevick
PREPARED BY:	A.D. Klinksiek	REVIEWED BY:	H.L. Winstead

REVISIONS	INIT.	DATE

SEAL
NORTH CAROLINA PROFESSIONAL SEAL 07983 ENGINEER HARVEY L. WINSTEAD, JR.

SIGNATURE H.L. Winstead DATE 12/12/11

SIG. INVENTORY NO. 13-0687T1

HNTB
HNTB NORTH CAROLINA, P.C.
343 E. Six Forks Road, Suite 200
Raleigh, North Carolina 27609
NC License No: C-1554

PROJECT REFERENCE NO.	SHEET NO.
U-2551	Sig. 26

QUEUE PREEMPTION PROGRAMMING DETAIL

(program controller as shown below)

From Main Menu press 'A' (Preemption), then '1' (Standard Preemptions). Press 'NEXT' until Preemption #3 is reached.

```
   PREEMPTION  #3  SETTINGS (NEXT:1-10)
INTERVAL/TIMING |  CLEAR/DWELL PHASES
  GRN YEL  RED  |123456789101112131415 16
1 255  0.0  0.0 |   X
2   0  0.0  0.0 |
3   0  0.0  0.0 |
4   0  0.0  0.0 |
5   1  0.0  0.0 | X   X
EXIT CALLS      |
              OPTIONS
PRIORITY (Y/N TO SELECT) ............MED
DELAY TIMER (0-255 SEC) .............0.0
MIN GREEN BEFORE PRE (0= DEFAULT)....10
PED CLEAR BEFORE PRE (0= DEFAULT)....0
YELLOW CLEAR BEFORE PRE (0= DEFAULT).3.8
RED CLEAR BEFORE PRE (0= DEFAULT)....1.5
DWELL MIN TIMER (0-255 SEC) .........30
DWELL MAX TIMER (0=OFF,1-255MIN) ....0
DWELL HOLD-OVER TIMER (0-255) .......0
LATCH CALL? .........................N
LINK TO NEXT PREEMPT? ...............N
ENABLE BACKUP PROTECTION? ...........N
HOLD CLEAR 1 PHASES DURING DELAY? ...N
FAST GREEN FLASH DWELL PHASES? ......N
PED CLEARANCE THROUGH YELLOW? .......N
INHIBIT OVERLAP GREEN EXTENSION? ....N
SERVICE DURING SOFTWARE FLASH? ......N
REST IN RED DURING DWELL INTERVAL? ..N
FLASH DWELL INTERVAL? ...............N
ALLOW PEDS IN DWELL INTERVAL? .......N
RE-TIME DWELL INTERVAL? .............N
OVERLAPS:                | ABCDEFGHIJKLMNOP
DWELL INT FLASH YELLOW   |
OMIT OVERLAPS:           |
```

VEHICLE DETECTOR #34 SETTINGS FOR QUEUE PREEMPT

(program controller as shown below)

FROM MAIN MENU PRESS '7' (DETECTORS), THEN '1' (VEHICLE DETECTOR ASSIGNMENTS). PRESS '+' UNTIL DETECTOR #34 IS REACHED.

```
VEHICLE DETECTOR #34  SETTINGS (+-,1-64)
SETTING:                          (Y/N)
ENABLE DETECTOR......................Y
ENABLE LOGGING.......................N
ENABLE DIAGNOSTICS...................N
SPEED TRAP...........................N
CALL DETECTOR........................N
EXTENSION DETECTOR...................N
MODE 2 STOP BAR......................N
SWITCHING DETECTOR...................N
DUPLICATING DETECTOR.................N
ENABLE FULL TIME DELAY...............N
IF FAILED, SET MIN RECALL?...........N
IF FAILED, SET MAX1 RECALL?..........N
IF FAILED, SET MAX2 RECALL?..........N
PHASE#          |123456789101112131415 16
PHASES ASSIGNED |
SWITCH/DUPLICATE|
LOOP SIZE (0-255 FT)................6
SPEED TRAP DISTANCE (0-255 FT)......0
STOP BAR TIME (0-255 SEC)...........0
STRETCH (0-25.5 SEC)................0.0
DELAY (0-255 SEC)...................0
MAX CALLS/MIN (0-255)...............255
MIN CALLS/DIAGNOSTIC PERIOD (0-255).0
MAX OCCUPANCY (0-100%)..............100
EXTENSION DISABLE TIME (0-255 SEC)..0
QUEUE MAX OCCUPANCY TIME (0-255)....5
QUEUE GAP RESET TIME (0-25.5).......0.1
PREEMPTION INDEX FOR QUEUE (0-10)...3
```

THIS ELECTRICAL DETAIL IS FOR
THE SIGNAL DESIGN: 13-0687T1
DESIGNED: July 2011
SEALED: 12-12-2011
REVISED:

Signal Upgrade - Temporary Design 1 (Construction Phase I Step 2) (Sheet 2 of 2)

ELECTRICAL AND PROGRAMMING DETAILS FOR:

Prepared for: Transportation Mobility and Safety Division, Department of Transportation, Signals Management Section

750 N.Greenfield Pkwy,Garner,NC 27529

SR 1922 (Enola Rd)
at
I-40 Eastbound Ramp

Division 13 Burke County Morganton

PLAN DATE:	July 2011	REVIEWED BY:	N.W. Rodevick
PREPARED BY:	A.D. Klinksiek	REVIEWED BY:	H.L. Winstead

REVISIONS	INIT.	DATE

SEAL

NORTH CAROLINA PROFESSIONAL SEAL 07983 ENGINEER HARVEY L. WINSTEAD, JR.

SIGNATURE H.L. Winstead DATE 12/12/11

SIG. INVENTORY NO. 13-0687T1

HNTB

HNTB NORTH CAROLINA, P.C.
343 E. Six Forks Road, Suite 200
Raleigh, North Carolina 27609
NC License No: C-1554

PROJECT REFERENCE NO.	SHEET NO.
U-2551	Sig. 27

PHASING DIAGRAM

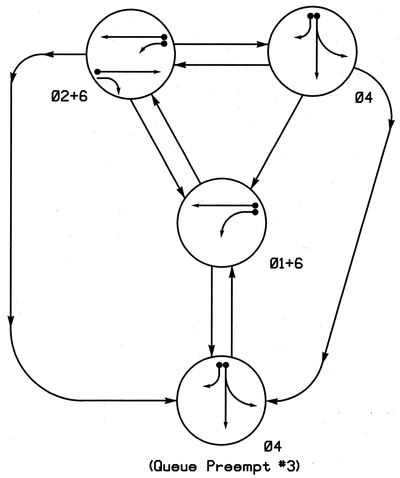

PHASING DIAGRAM DETECTION LEGEND

- DETECTED MOVEMENT
- UNDETECTED MOVEMENT (OVERLAP)
- UNSIGNALIZED MOVEMENT
- PEDESTRIAN MOVEMENT

TABLE OF OPERATION

SIGNAL FACE	PHASE Ø1+6	Ø2+6	Ø4	PREEMPT 3	FLASH
21,22	R	G	R	R	Y
41,42	R	R	G	G	R
61	G	G	R	R	Y
62	G	G	R	R	Y

SIGNAL FACE I.D.

All Heads L.E.D.

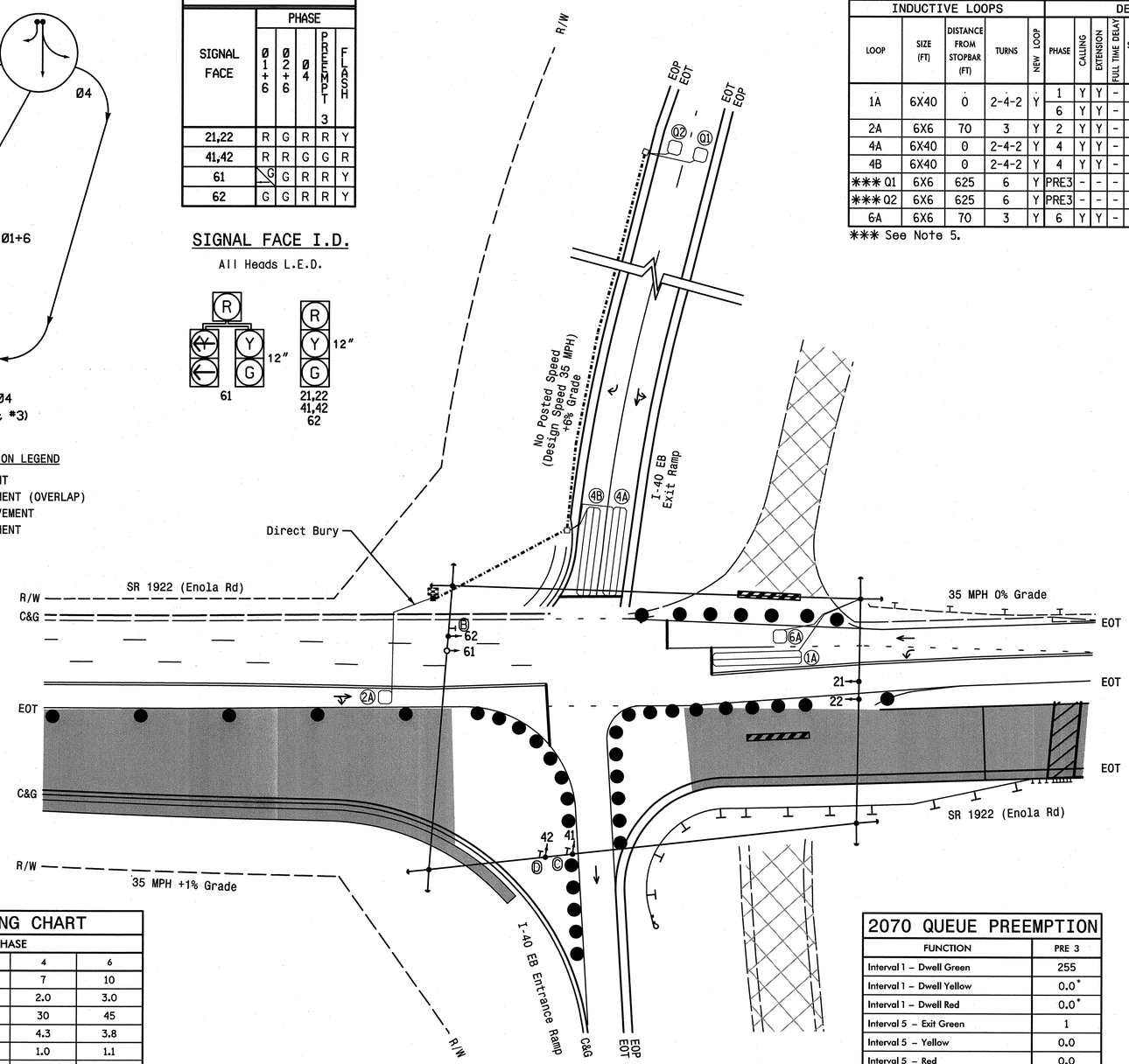

OASIS 2070L LOOP & DETECTOR INSTALLATION CHART

INDUCTIVE LOOPS					DETECTOR PROGRAMMING										
LOOP	SIZE (FT)	DISTANCE FROM STOPBAR (FT)	TURNS	NEW LOOP	PHASE	CALLING	EXTENSION	FULL TIME DELAY	STRETCH TIME	DELAY TIME	QUEUE MAX OCCUPANCY TIME	QUEUE GAP RESET TIME	PREEMPT INDEX FOR QUEUE	SYSTEM LOOP	NEW CARD
1A	6X40	0	2-4-2	Y	1	Y	Y	-	-	20	-	-	-	-	Y
					6	Y	Y	-	-	-	-	-	-	-	Y
2A	6X6	70	3	Y	2	Y	Y	-	-	-	-	-	-	-	-
4A	6X40	0	2-4-2	Y	4	Y	Y	-	-	-	-	-	-	-	-
4B	6X40	0	2-4-2	Y	4	Y	Y	-	-	15	-	-	-	-	-
*** Q1	6X6	625	6	Y	PRE3	-	-	-	-	-	5	0.1	3	-	-
*** Q2	6X6	625	6	Y	PRE3	-	-	-	-	-	5	0.1	3	-	-
6A	6X6	70	3	Y	6	Y	Y	-	-	-	-	-	-	-	-

*** See Note 5.

3 Phase
Fully Actuated w/
Queue Preemption
NC 18 (Sterling St)/SR 1922 (Enola Rd)
Closed Loop System

NOTES

1. Refer to "Roadway Standard Drawings NCDOT" dated January 2012 and "Standard Specifications for Roads and Structures" dated January 2012.
2. Do not program signal for late night flashing operation unless otherwise directed by the Engineer.
3. Reposition existing signal heads numbered 41,42, Sign Ⓒ, and Sign Ⓓ.
4. Set all detector units to presence mode.
5. These loops serve as queue backup detectors. After 5 seconds of constant actuation, the detector unit places a call to the controller to preempt normal operation to clear out the storage lanes.
6. When leaving preemption, ensure all non-preempt phases are served before serving the preempt phase again.
7. Maximum times shown in timing chart are for free-run operation only. Coordinated signal system timing values supersede these values.
8. Closed loop system data: Controller number #:0687.

LEGEND

PROPOSED		EXISTING
	Traffic Signal Head	
	Modified Signal Head	N/A
	Sign	
	Pedestrian Signal Head With Push Button & Sign	
	Signal Pole with Guy	
	Signal Pole with Sidewalk Guy	
	Inductive Loop Detector	
	Controller & Cabinet	
	Junction Box	
	2-in Underground Conduit	
N/A	Right of Way	
	Directional Arrow	
N/A	Guardrail	
N/A	No Right Turn Sign (R3-1)	Ⓑ
	Construction Zone Drums	N/A
	Construction Barricade	N/A
	Construction Zone	N/A

OASIS 2070L TIMING CHART

FEATURE	PHASE 1	2	4	6
Min Green 1 *	7	10	7	10
Extension 1 *	2.0	3.0	2.0	3.0
Max Green 1 *	20	45	30	45
Yellow Clearance	3.0	3.8	4.3	3.8
Red Clearance	1.9	1.0	1.0	1.1
Red Revert	2.0	2.0	2.0	2.0
Walk 1 *	-	-	-	-
Don't Walk 1	-	-	-	-
Seconds Per Actuation *	-	-	-	-
Max Variable Initial *	-	-	-	-
Time Before Reduction *	-	-	-	-
Time To Reduce *	-	-	-	-
Minimum Gap	-	-	-	-
Recall Mode	-	MIN RECALL	-	MIN RECALL
Vehicle Call Memory	-	YELLOW	-	YELLOW
Dual Entry	-	-	-	-
Simultaneous Gap	ON	ON	ON	ON

* These values may be field adjusted. Do not adjust Min Green and Extension times for phases 2 and 6 lower than what is shown. Min Green for all other phases should not be lower than 4 seconds.

2070 QUEUE PREEMPTION

FUNCTION	PRE 3
Interval 1 – Dwell Green	255
Interval 1 – Dwell Yellow	0.0*
Interval 1 – Dwell Red	0.0*
Interval 5 – Exit Green	1
Interval 5 – Yellow	0.0
Interval 5 – Red	0.0
Delay Time	0
Min Green Before Pre	10
Ped Clear Before Pre	0
Yellow Clear Before Pre	3.8
Red Clear Before Pre	1.1
Dwell Min Time	30
Enable Backup Protection	N
Ped Clear Through Yellow	N

* Time defaults to time used for phase during normal operation.

HNTB NORTH CAROLINA, P.C.
343 E. Six Forks Road, Suite 200
Raleigh, North Carolina 27609
NC License No: C-1554

Signal Upgrade - Temporary Design 2
(Construction Phase I Step IV)

Prepared for: Transportation Mobility and Safety Division, Signal Design Section, Department of Transportation, State of North Carolina
750 N.Greenfield Pkwy,Garner,NC 27529

SCALE 0 30 1"=30'

SR 1922 (Enola Rd)
at
I-40 Eastbound Ramp

Division 13 Burke County Morganton

PLAN DATE:	July 2011	REVIEWED BY:	T.R. Terrell
PREPARED BY:	A.D. Klinksiek	REVIEWED BY:	N.M. Rodevick

REVISIONS	INIT.	DATE

SEAL
NORTH CAROLINA PROFESSIONAL SEAL 031464 ENGINEER NATASHA M. RODEVICK

Natasha M. Rodevick 12-12-11
SIGNATURE DATE

SIG. INVENTORY NO. 13-0687T2

PROJECT REFERENCE NO.	SHEET NO.
U-2551	Sig. 28

EDI MODEL 2018ECL-NC CONFLICT MONITOR PROGRAMMING DETAIL

(remove jumpers and set switches as shown)

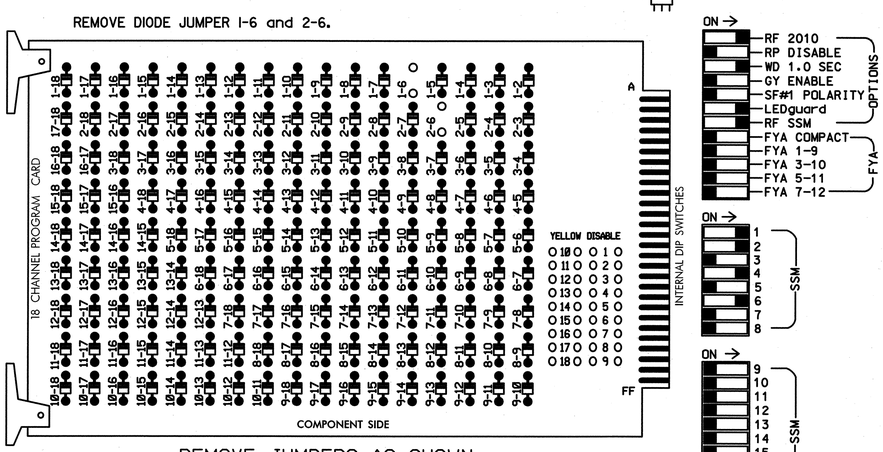

REMOVE JUMPERS AS SHOWN

■ = DENOTES POSITION OF SWITCH

NOTES:

1. Card is provided with all diode jumpers in place. Removal of any jumper allows its channels to run concurrently.
2. Ensure jumpers SEL2-SEL5 and SEL9 are present on the monitor board.
3. Ensure that Red Enable is active at all times during normal operation.
4. Connect serial cable from conflict monitor to comm. port 1 of 2070 controller. Ensure conflict monitor communicates with 2070.

NOTES

1. To prevent "flash-conflict" problems, insert red flash program blocks for all unused vehicle load switches in the output file. The installer shall verify that signal heads flash in accordance with the Signal Plans.
2. Enable Simultaneous Gap-Out for all phases.
3. Program phases 2 and 6 for Start Up In Green.
4. Program phases 2 and 6 for Yellow Flash.
5. The cabinet and controller are part of the NC 18 (Sterling St)/SR 1922 (Enola Rd) Closed Loop System.

SIGNAL HEAD HOOK-UP CHART

LOAD SWITCH NO.	S1	S2	S3	S4	S5	S6	S7	S8	S9	S10	S11	S12	AUX S1	AUX S2	AUX S3	AUX S4	AUX S5	AUX S6
CMU CHANNEL NO.	1	2	13	3	4	14	5	6	15	7	8	16	9	10	17	11	12	18
PHASE	1	2	2 PED	3	4	4 PED	5	6	6 PED	7	8	8 PED	OLA	OLB	SPARE	OLC	OLD	SPARE
SIGNAL HEAD NO.	61	21,22	NU	NU	41,42	NU	NU	61,62	NU	NU	NU	NU	NU	NU	NU	NU	NU	NU
RED	*	128			101			134										
YELLOW		129			102			135										
GREEN		130			103			136										
RED ARROW																		
YELLOW ARROW	126																	
GREEN ARROW	127																	
✋																		
🚶																		

NU = Not Used
* Denotes Install load resistor. See load resistor installation detail this sheet.

EQUIPMENT INFORMATION

CONTROLLER.....2070L
CABINET.....332 /W/ AUX
SOFTWARE.....ECONOLITE OASIS
CABINET MOUNT.....BASE
OUTPUT FILE POSITIONS...18 WITH AUX. OUTPUT FILE
LOAD SWITCHES USED.....S1,S2,S5,S8
PHASES USED.....1,2,4,6
OVERLAP "A".....NOT USED
OVERLAP "B".....NOT USED
OVERLAP "C".....NOT USED
OVERLAP "D".....NOT USED

INPUT FILE POSITION LAYOUT

(front view)

		1	2	3	4	5	6	7	8	9	10	11	12	13	14
FILE "I"	U	ø1 1A	ø2 2A	SLOT EMPTY	SLOT EMPTY	SLOT EMPTY	ø4 4A	PRE3 Q1	SLOT EMPTY	SLOT EMPTY	SLOT EMPTY	SLOT EMPTY	SLOT EMPTY	SLOT EMPTY	FS DC ISOLATOR
	L	NOT USED	NOT USED				ø4 4B	PRE3 Q2							ST DC ISOLATOR
FILE "J"	U	SLOT EMPTY	ø6 6A	SLOT EMPTY	WIRED INPUT ⊗	SLOT EMPTY	SLOT EMPTY	SLOT EMPTY	SLOT EMPTY	SLOT EMPTY	SLOT EMPTY	SLOT EMPTY	SLOT EMPTY	SLOT EMPTY	SLOT EMPTY
	L		NOT USED												

EX.: 1A, 2A, ETC. = LOOP NO.'S

FS = FLASH SENSE
ST = STOP TIME

⊗ Wired Input - Do not populate slot with detector card

INPUT FILE CONNECTION & PROGRAMMING CHART

LOOP NO.	LOOP TERMINAL	INPUT FILE POS.	PIN NO.	INPUT ASSIGNMENT NO.	DETECTOR NO.	NEMA PHASE	CALL	EXTEND	FULL TIME DELAY	STRETCH TIME	DELAY TIME
1A[1]	TB2-1,2	I1U	56	18	1	1	Y	Y			20
	-	J4U	48	10	26	6	Y	Y			
2A	TB2-5,6	I2U	39	1	2	2	Y	Y			
4A	TB4-9,10	I6U	41	3	4	4	Y	Y			
4B	TB4-11,12	I6L	45	7	14	4	Y	Y			15
Q1	TB6-1,2	I7U	65	27	*34	PRE3					
Q2	TB6-3,4	I7L	78	40	*44	PRE3					
6A	TB3-5,6	J2U	40	2	6	6	Y	Y			

[1] Add jumper FROM I1-W to J4-W, on rear of input file.
*See vehicle detector programming detail on Sheet 2.

INPUT FILE POSITION LEGEND: J2L
FILE J
SLOT 2
LOWER

LOAD RESISTOR INSTALLATION DETAIL

(install resistor as shown below)

ACCEPTABLE VALUES

VALUE (ohms)	WATTAGE
1.5K - 1.9K	25W (min)
2.0K - 3.0K	10W (min)

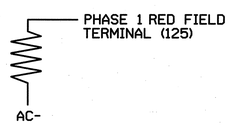

THIS ELECTRICAL DETAIL IS FOR
THE SIGNAL DESIGN: 13-0687T2
DESIGNED: July 2011
SEALED: 12-12-2011
REVISED:

Signal Upgrade -
Temporary Design 2 (Construction Phase I Step IV) (Sheet 1 of 2)

ELECTRICAL AND PROGRAMMING DETAILS FOR:

Prepared for: Transportation Mobility and Safety Division, Intelligent Transportation Systems, Signals Management Section, Department of Transportation, State of North Carolina

750 N.Greenfield Pkwy, Garner, NC 27529

SR 1922 (Enola Rd)
at
I-40 Eastbound Ramp

Division 13 Burke County Morganton

PLAN DATE:	July 2011	REVIEWED BY:	N.M. Rodevick
PREPARED BY:	A.D. Klinksiek	REVIEWED BY:	H.L. Winstead

REVISIONS	INIT.	DATE

SEAL
NORTH CAROLINA PROFESSIONAL SEAL 07983 ENGINEER HARVEY L. WINSTEAD, JR.

SIGNATURE H.L. Winstead DATE 12/12/11

SIG. INVENTORY NO. 13-0687T2

HNTB NORTH CAROLINA, P.C.
343 E. Six Forks Road, Suite 200
Raleigh, North Carolina 27609
NC License No: C-1554

PROJECT REFERENCE NO.	SHEET NO.
U-2551	Sig. 29

LOGICAL I/O PROCESSOR PROGRAMMING DETAIL WHEN LEAVING PREEMPTOR SEQUENCE

(program controller as shown below)

1. FROM MAIN MENU PRESS '2' (PHASE CONTROL), THEN '1' (PHASE CONTROL FUNCTIONS). SCROLL TO THE BOTTOM OF THE MENU AND ENABLE ACT LOGIC COMMANDS 1,2, AND 3.
2. FROM MAIN MENU PRESS '6' (OUTPUTS), THEN '3' (LOGICAL I/O PROCESSOR).

NOTE: WHEN LEAVING PREEMPTOR SEQUENCE, THE FOLLOWING LOGIC STATEMENTS ENSURE ALL PHASES WITH A CALL WILL BE SERVED BEFORE PREEMPTOR CAN BE SERVICED AGAIN.

```
LOGICAL I/O COMMAND #1  (+/-COMMAND#)
IF  ACTIVE PREEMPTION  #3  IS ON

                SCROLL DOWN

THEN:
SET LOGIC FLAG          #1 ON
```

NOTE: SETS LOGIC FLAG

PRESS '+'

```
LOGICAL I/O COMMAND #2  (+/-COMMAND#)
IF  LOGIC FLAG          #1 IS ON

                SCROLL DOWN

THEN:
SET INPUT   ASSIGNMENT #40 OFF
SET INPUT   ASSIGNMENT #27 OFF
```

NOTE: INHIBITS PREEMPT BY DISCONNECTING QUEUE LOOPS

PRESS '+'

```
LOGICAL I/O COMMAND #3  (+/-COMMAND#)
IF  LOGIC FLAG          #1 IS ON

                SCROLL DOWN

THEN:
    DELAY FOR 75.0 SECONDS
SET LOGIC FLAG          #1 OFF
```

NOTE: TIMEOUT FOR RECONNECTING QUEUE LOOPS

LOGIC I/O PROCESSOR PROGRAMMING COMPLETE

VEHICLE DETECTOR #34 SETTINGS FOR QUEUE PREEMPT

(program controller as shown below)

FROM MAIN MENU PRESS '7' (DETECTORS), THEN '1' (VEHICLE DETECTOR ASSIGNMENTS). PRESS '+' UNTIL DETECTOR #34 IS REACHED.

```
VEHICLE DETECTOR #34  SETTINGS (+-,1-64)
SETTING:                            (Y/N)
ENABLE DETECTOR....................Y
ENABLE LOGGING.....................N
ENABLE DIAGNOSTICS.................N
SPEED TRAP.........................N
CALL DETECTOR......................N
EXTENSION DETECTOR.................N
MODE 2 STOP BAR....................N
SWITCHING DETECTOR.................N
DUPLICATING DETECTOR...............N
ENABLE FULL TIME DELAY.............N
IF FAILED, SET MIN RECALL?.........N
IF FAILED, SET MAX1 RECALL?........N
IF FAILED, SET MAX2 RECALL?........N
PHASE#          |123456789101112131415 16
PHASES ASSIGNED |
SWITCH/DUPLICATE|
LOOP SIZE (0-255 FT)...............6
SPEED TRAP DISTANCE (0-255 FT).....0
STOP BAR TIME (0-255 SEC)..........0
STRETCH (0-25.5 SEC)...............0.0
DELAY (0-255 SEC)..................0
MAX CALLS/MIN (0-255)..............255
MIN CALLS/DIAGNOSTIC PERIOD (0-255).0
MAX OCCUPANCY (0-100%).............100
EXTENSION DISABLE TIME (0-255 SEC)..0
QUEUE MAX OCCUPANCY TIME (0-255)....5
QUEUE GAP RESET TIME (0-25.5).......0.1
PREEMPTION INDEX FOR QUEUE (0-10)...3
```

VEHICLE DETECTOR #44 SETTINGS FOR QUEUE PREEMPT

(program controller as shown below)

FROM MAIN MENU PRESS '7' (DETECTORS), THEN '1' (VEHICLE DETECTOR ASSIGNMENTS). PRESS '+' UNTIL DETECTOR #44 IS REACHED.

```
VEHICLE DETECTOR #44  SETTINGS (+-,1-64)
SETTING:                            (Y/N)
ENABLE DETECTOR....................Y
ENABLE LOGGING.....................N
ENABLE DIAGNOSTICS.................N
SPEED TRAP.........................N
CALL DETECTOR......................N
EXTENSION DETECTOR.................N
MODE 2 STOP BAR....................N
SWITCHING DETECTOR.................N
DUPLICATING DETECTOR...............N
ENABLE FULL TIME DELAY.............N
IF FAILED, SET MIN RECALL?.........N
IF FAILED, SET MAX1 RECALL?........N
IF FAILED, SET MAX2 RECALL?........N
PHASE#          |123456789101112131415 16
PHASES ASSIGNED |
SWITCH/DUPLICATE|
LOOP SIZE (0-255 FT)...............6
SPEED TRAP DISTANCE (0-255 FT).....0
STOP BAR TIME (0-255 SEC)..........0
STRETCH (0-25.5 SEC)...............0.0
DELAY (0-255 SEC)..................0
MAX CALLS/MIN (0-255)..............255
MIN CALLS/DIAGNOSTIC PERIOD (0-255).0
MAX OCCUPANCY (0-100%).............100
EXTENSION DISABLE TIME (0-255 SEC)..0
QUEUE MAX OCCUPANCY TIME (0-255)....5
QUEUE GAP RESET TIME (0-25.5).......0.1
PREEMPTION INDEX FOR QUEUE (0-10)...3
```

QUEUE PREEMPTION PROGRAMMING DETAIL

(program controller as shown below)

From Main Menu press 'A' (Preemption), then '1' (Standard Preemptions). Press 'Next' until Preemption #3 is reached.

```
   PREEMPTION  #3  SETTINGS (NEXT:1-10)
INTERVAL/TIMING |  CLEAR/DWELL PHASES
  GRN YEL  RED  |123456789101112131415 16
1 255  0.0  0.0 |   X
2   0  0.0  0.0 |
3   0  0.0  0.0 |
4   0  0.0  0.0 |
5   1  0.0  0.0 |X    X
EXIT CALLS      |
            OPTIONS
PRIORITY (Y/N TO SELECT) ............MED
DELAY TIMER (0-255 SEC) .............0.0
MIN GREEN BEFORE PRE (0= DEFAULT)....10
PED CLEAR BEFORE PRE (0= DEFAULT)....0
YELLOW CLEAR BEFORE PRE (0= DEFAULT).3.8
RED CLEAR BEFORE PRE (0= DEFAULT)....1.1
DWELL MIN TIMER (0-255 SEC) .........30
DWELL MAX TIMER (0=OFF,1-255MIN) ....0
DWELL HOLD-OVER TIMER (0-255) .......0
LATCH CALL? .........................N
LINK TO NEXT PREEMPT? ...............N
ENABLE BACKUP PROTECTION? ...........N
HOLD CLEAR 1 PHASES DURING DELAY? ...N
FAST GREEN FLASH DWELL PHASES? ......N
PED CLEARANCE THROUGH YELLOW? .......N
INHIBIT OVERLAP GREEN EXTENSION? ....N
SERVICE DURING SOFTWARE FLASH? ......N
REST IN RED DURING DWELL INTERVAL? ..N
FLASH DWELL INTERVAL? ...............N
ALLOW PEDS IN DWELL INTERVAL? .......N
RE-TIME DWELL INTERVAL? .............N
OVERLAPS:                | ABCDEFGHIJKLMNOP
DWELL INT FLASH YELLOW   |
OMIT OVERLAPS:           |
```

THIS ELECTRICAL DETAIL IS FOR
THE SIGNAL DESIGN: 13-0687T2
DESIGNED: July 2011
SEALED: 12-12-2011
REVISED:

HNTB
HNTB NORTH CAROLINA, P.C.
343 E. Six Forks Road, Suite 200
Raleigh, North Carolina 27609
NC License No: C-1554

Signal Upgrade -
Temporary Design 2 (Construction Phase I Step IV) (Sheet 2 of 2)

ELECTRICAL AND PROGRAMMING DETAILS FOR:

Prepared for: Transportation Mobility and Safety Division, Department of Transportation, State of North Carolina, Signals Management Section
750 N.Greenfield Pkwy, Garner, NC 27529

SR 1922 (Enola Rd)
at
I-40 Eastbound Ramp

Division 13 Burke County Morganton

PLAN DATE:	July 2011	REVIEWED BY:	N.W. Rodevick
PREPARED BY:	A.D. Klinksiek	REVIEWED BY:	H.L. Winstead

REVISIONS	INIT.	DATE

SEAL
NORTH CAROLINA PROFESSIONAL SEAL 07983 ENGINEER HARVEY L. WINSTEAD, JR.

SIGNATURE H.L. Winstead DATE 12/12/11
SIG. INVENTORY NO. 13-0687T2

THIS PAGE INTENTIONALLY LEFT BLANK

THIS PAGE INTENTIONALLY LEFT BLANK

THIS PAGE INTENTIONALLY LEFT BLANK

PROJECT REFERENCE NO.	SHEET NO.
U-2551	Sig. 33

PHASING DIAGRAM

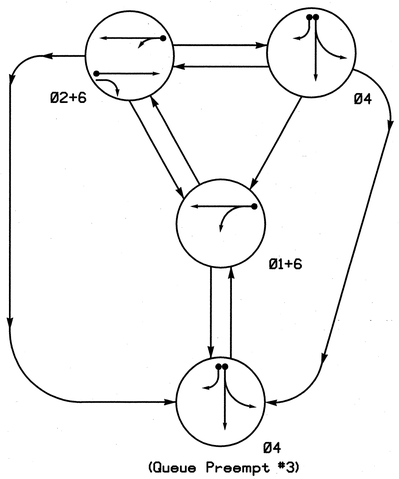

PHASING DIAGRAM DETECTION LEGEND

- DETECTED MOVEMENT
- UNDETECTED MOVEMENT (OVERLAP)
- UNSIGNALIZED MOVEMENT
- PEDESTRIAN MOVEMENT

TABLE OF OPERATION

SIGNAL FACE	PHASE Ø1+6	Ø2+6	Ø4	PREEMPT 3	FLASH
21,22,23	R	G	R	R	Y
41,42	R	R	G	G	R
61	G	G	R	R	Y
62	G	G	R	R	Y

SIGNAL FACE I.D.

All Heads L.E.D.

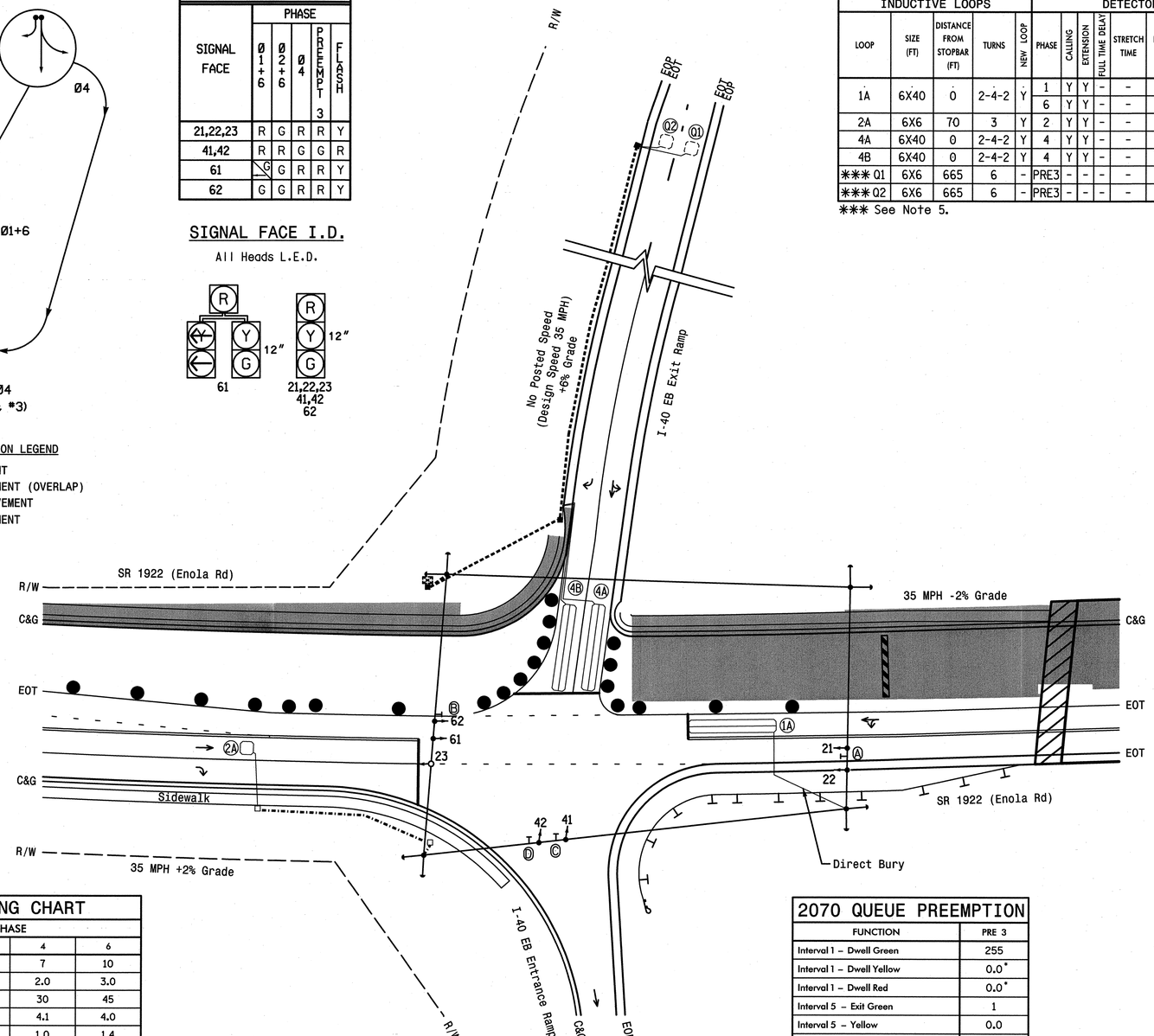

OASIS 2070L LOOP & DETECTOR INSTALLATION CHART

INDUCTIVE LOOPS					DETECTOR PROGRAMMING										
LOOP	SIZE (FT)	DISTANCE FROM STOPBAR (FT)	TURNS	NEW LOOP	PHASE	CALLING	EXTENSION	FULL TIME DELAY	STRETCH TIME	DELAY TIME	QUEUE MAX OCCUPANCY TIME	QUEUE GAP RESET TIME	PREEMPT INDEX FOR QUEUE	SYSTEM LOOP	NEW CARD
1A	6X40	0	2-4-2	Y	1	Y	Y	-	-	20	-	-	-	-	-
					6	Y	Y	-	-	-	-	-	-	-	-
2A	6X6	70	3	Y	2	Y	Y	-	-	-	-	-	-	-	-
4A	6X40	0	2-4-2	Y	4	Y	Y	-	-	-	-	-	-	-	-
4B	6X40	0	2-4-2	Y	4	Y	Y	-	-	15	-	-	-	-	-
*** Q1	6X6	665	6	-	PRE3	-	-	-	-	-	5	0.1	3	-	-
*** Q2	6X6	665	6	-	PRE3	-	-	-	-	-	5	0.1	3	-	-

*** See Note 5.

3 Phase
Fully Actuated w/
Queue Preemption
NC 18 (Sterling St)/SR 1922 (Enola Rd)
Closed Loop System

NOTES

1. Refer to "Roadway Standard Drawings NCDOT" dated January 2012 and "Standard Specifications for Roads and Structures" dated January 2012.
2. Do not program signal for late night flashing operation unless otherwise directed by the Engineer.
3. Reposition existing signal heads numbered 21,22,61,62 and Sign Ⓐ, and Sign Ⓑ.
4. Set all detector units to presence mode.
5. These loops serve as queue backup detectors. After 5 seconds of constant actuation, the detector unit places a call to the controller to preempt normal operation to clear out the storage lanes.
6. When leaving preemption, ensure all non-preempt phases are served before serving the preempt phase again.
7. Maximum times shown in timing chart are for free-run operation only. Coordinated signal system timing values supersede these values.
8. Closed loop system data: Controller number #:0687.

LEGEND

PROPOSED		EXISTING
	Traffic Signal Head	
	Modified Signal Head	N/A
	Sign	
	Pedestrian Signal Head With Push Button & Sign	
	Signal Pole with Guy	
	Signal Pole with Sidewalk Guy	
	Inductive Loop Detector	
	Controller & Cabinet	
	Junction Box	
	2-in Underground Conduit	
N/A	Right of Way	
	Directional Arrow	
N/A	Guardrail	
N/A	No Left Turn Sign (R3-2)	Ⓐ
N/A	No Right Turn Sign (R3-1)	Ⓑ
N/A	Combined Through and Left Arrow Sign (R3-6L)	Ⓒ
N/A	Right Arrow "ONLY" Sign (R3-5R)	Ⓓ
	Construction Zone Drums	N/A
	Construction Barricade	N/A
	Construction Zone	N/A

OASIS 2070L TIMING CHART

FEATURE	PHASE 1	2	4	6
Min Green 1 *	7	10	7	10
Extension 1 *	2.0	3.0	2.0	3.0
Max Green 1 *	20	45	30	45
Yellow Clearance	3.0	3.7	4.1	4.0
Red Clearance	1.9	1.8	1.0	1.4
Red Revert	2.0	2.0	2.0	2.0
Walk 1 *	-	-	-	-
Don't Walk 1	-	-	-	-
Seconds Per Actuation *	-	-	-	-
Max Variable Initial *	-	-	-	-
Time Before Reduction *	-	-	-	-
Time To Reduce *	-	-	-	-
Minimum Gap	-	-	-	-
Recall Mode	-	MIN RECALL	-	MIN RECALL
Vehicle Call Memory	-	YELLOW	-	YELLOW
Dual Entry	-	-	-	-
Simultaneous Gap	ON	ON	ON	ON

* These values may be field adjusted. Do not adjust Min Green and Extension times for phases 2 and 6 lower than what is shown. Min Green for all other phases should not be lower than 4 seconds.

2070 QUEUE PREEMPTION

FUNCTION	PRE 3
Interval 1 – Dwell Green	255
Interval 1 – Dwell Yellow	0.0*
Interval 1 – Dwell Red	0.0*
Interval 5 – Exit Green	1
Interval 5 – Yellow	0.0
Interval 5 – Red	0.0
Delay Time	0
Min Green Before Pre	10
Ped Clear Before Pre	0
Yellow Clear Before Pre	4.0
Red Clear Before Pre	1.5
Dwell Min Time	30
Enable Backup Protection	N
Ped Clear Through Yellow	N

* Time defaults to time used for phase during normal operation.

HNTB
HNTB NORTH CAROLINA, P.C.
343 E. Six Forks Road, Suite 200
Raleigh, North Carolina 27609
NC License No: C-1554

Signal Upgrade - Temporary Design 3 (Construction Phase II)

Prepared For: Transportation Mobility and Safety Division, Traffic Engineering Branch, Signal Design Section, Department of Transportation, State of North Carolina
750 N.Greenfield Pkwy,Garner,NC 27529

SCALE 0 30 1"=30'

SR 1922 (Enola Rd)
at
I-40 Eastbound Ramp

Division 13 Burke County Morganton

PLAN DATE:	July 2011	REVIEWED BY:	T.R. Terrell
PREPARED BY:	A.D. Klinksiek	REVIEWED BY:	N.W. Rodevick

REVISIONS	INIT.	DATE

SEAL
NORTH CAROLINA PROFESSIONAL SEAL 031464 ENGINEER NATASHA M. RODEVICK

Natasha M. Rodevick 12-12-11
SIGNATURE DATE

SIG. INVENTORY NO. 13-0687T3

PROJECT REFERENCE NO.	SHEET NO.
U-2551	Sig. 34

EDI MODEL 2018ECL-NC CONFLICT MONITOR PROGRAMMING DETAIL

(remove jumpers and set switches as shown)

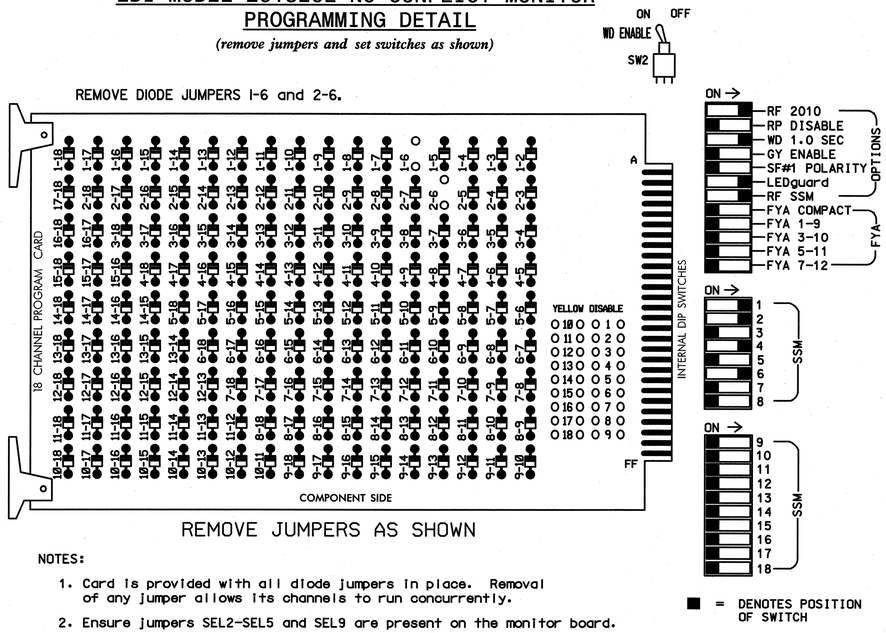

■ = DENOTES POSITION OF SWITCH

NOTES:

1. Card is provided with all diode jumpers in place. Removal of any jumper allows its channels to run concurrently.
2. Ensure jumpers SEL2-SEL5 and SEL9 are present on the monitor board.
3. Ensure that Red Enable is active at all times during normal operation.
4. Connect serial cable from conflict monitor to comm. port 1 of 2070 controller. Ensure conflict monitor communicates with 2070.

INPUT FILE POSITION LAYOUT

(front view)

		1	2	3	4	5	6	7	8	9	10	11	12	13	14
FILE "I"	U	Ø1 1A	Ø2 2A	SLOT EMPTY	SLOT EMPTY	SLOT EMPTY	Ø4 4A	PRE3 Q1	SLOT EMPTY	SLOT EMPTY	SLOT EMPTY	SLOT EMPTY	SLOT EMPTY	SLOT EMPTY	FS DC ISOLATOR
	L	NOT USED	NOT USED				Ø4 4B	PRE3 Q2							ST DC ISOLATOR
FILE "J"	U	SLOT EMPTY	SLOT EMPTY	SLOT EMPTY	WIRED INPUT ⊗	SLOT EMPTY	SLOT EMPTY	SLOT EMPTY	SLOT EMPTY	SLOT EMPTY	SLOT EMPTY	SLOT EMPTY	SLOT EMPTY	SLOT EMPTY	SLOT EMPTY
	L														

EX.: 1A, 2A, ETC. = LOOP NO.'S

FS = FLASH SENSE
ST = STOP TIME

⊗ Wired Input - Do not populate slot with detector card

LOAD RESISTOR INSTALLATION DETAIL

(install resistor as shown below)

ACCEPTABLE VALUES

VALUE (ohms)	WATTAGE
1.5K - 1.9K	25W (min)
2.0K - 3.0K	10W (min)

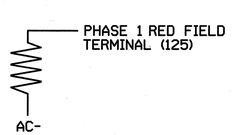

NOTES

1. To prevent "flash-conflict" problems, insert red flash program blocks for all unused vehicle load switches in the output file. The installer shall verify that signal heads flash in accordance with the Signal Plans.
2. Enable Simultaneous Gap-Out for all phases.
3. Program phases 2 and 6 for Start Up In Green.
4. Program phases 2 and 6 for Yellow Flash.
5. The cabinet and controller are part of the NC 18 (Sterling St)/SR 1922 (Enola Rd) Closed Loop System.

SIGNAL HEAD HOOK-UP CHART

LOAD SWITCH NO.	S1	S2	S3	S4	S5	S6	S7	S8	S9	S10	S11	S12	AUX S1	AUX S2	AUX S3	AUX S4	AUX S5	AUX S6
CMU CHANNEL NO.	1	2	13	3	4	14	5	6	15	7	8	16	9	10	17	11	12	18
PHASE	1	2	2 PED	3	4	4 PED	5	6	6 PED	7	8	8 PED	OLA	OLB	SPARE	OLC	OLD	SPARE
SIGNAL HEAD NO.	61	21,22 23	NU	NU	41,42	NU	NU	61,62	NU	NU	NU	NU	NU	NU	NU	NU	NU	NU
RED	*	128			101			134										
YELLOW		129			102			135										
GREEN		130			103			136										
RED ARROW																		
YELLOW ARROW	126																	
GREEN ARROW	127																	
✋																		
🚶																		

NU = Not Used
* Denotes install load resistor. See load resistor installation detail this sheet.

EQUIPMENT INFORMATION

CONTROLLER.....2070L
CABINET.....332 /W/ AUX
SOFTWARE.....ECONOLITE OASIS
CABINET MOUNT.....BASE
OUTPUT FILE POSITIONS...18 WITH AUX. OUTPUT FILE
LOAD SWITCHES USED.....S1,S2,S5,S8
PHASES USED.....1,2,4,6
OVERLAP "A".....NOT USED
OVERLAP "B".....NOT USED
OVERLAP "C".....NOT USED
OVERLAP "D".....NOT USED

INPUT FILE CONNECTION & PROGRAMMING CHART

LOOP NO.	LOOP TERMINAL	INPUT FILE POS.	PIN NO.	INPUT ASSIGNMENT NO.	DETECTOR NO.	NEMA PHASE	CALL	EXTEND	FULL TIME DELAY	STRETCH TIME	DELAY TIME
1A[1]	TB2-1,2	I1U	56	18	1	1	Y	Y			20
	-	J4U	48	10	26	6	Y	Y			
2A	TB2-5,6	I2U	39	1	2	2	Y	Y			
4A	TB4-9,10	I6U	41	3	4	4	Y	Y			
4B	TB4-11,12	I6L	45	7	14	4	Y	Y			15
Q1	TB6-1,2	I7U	65	27	*34	PRE3					
Q2	TB6-3,4	I7L	78	40	*44	PRE3					

[1] Add jumper FROM I1-W to J4-W, on rear of input file.
*See vehicle detector programming detail on Sheet 2.

INPUT FILE POSITION LEGEND: J2L
FILE J
SLOT 2
LOWER

THIS ELECTRICAL DETAIL IS FOR
THE SIGNAL DESIGN: 13-0687T3
DESIGNED: July 2011
SEALED: 12-12-2011
REVISED:

Signal Upgrade - Temporary Design 3 (Construction Phase II) (Sheet 1 of 2)

HNTB NORTH CAROLINA, P.C.
343 E. Six Forks Road, Suite 200
Raleigh, North Carolina 27609
NC License No: C-1554

ELECTRICAL AND PROGRAMMING DETAILS FOR:

Prepared for: Transportation Mobility and Safety Division, Traffic Engineering Branch, Signals Management Section, Department of Transportation, State of North Carolina

750 N.Greenfield Pkwy,Garner,NC 27529

SR 1922 (Enola Rd)
at
I-40 Eastbound Ramp

Division 13 Burke County Morganton

PLAN DATE:	July 2011	REVIEWED BY:	N.W. Rodevick
PREPARED BY:	A.D. Klinksiek	REVIEWED BY:	H.L. Winstead

REVISIONS	INIT.	DATE

SEAL

NORTH CAROLINA PROFESSIONAL SEAL 07983 ENGINEER HARVEY L. WINSTEAD, JR.

SIGNATURE DATE 12/12/11

SIG. INVENTORY NO. 13-0687T3

PROJECT REFERENCE NO.	SHEET NO.
U-2551	Sig. 35

LOGICAL I/O PROCESSOR PROGRAMMING DETAIL WHEN LEAVING PREEMPTOR SEQUENCE

(program controller as shown below)

1. FROM MAIN MENU PRESS '2' (PHASE CONTROL), THEN '1' (PHASE CONTROL FUNCTIONS). SCROLL TO THE BOTTOM OF THE MENU AND ENABLE ACT LOGIC COMMANDS 1,2, AND 3.
2. FROM MAIN MENU PRESS '6' (OUTPUTS), THEN '3' (LOGICAL I/O PROCESSOR).

NOTE: WHEN LEAVING PREEMPTOR SEQUENCE, THE FOLLOWING LOGIC STATEMENTS ENSURE ALL PHASES WITH A CALL WILL BE SERVED BEFORE PREEMPTOR CAN BE SERVICED AGAIN.

```
LOGICAL I/O COMMAND #1  (+/-COMMAND#)
IF  ACTIVE PREEMPTION  #3  IS ON

                 ↓
            SCROLL DOWN
THEN:
SET LOGIC FLAG          #1 ON
```

NOTE: SETS LOGIC FLAG

PRESS '+'

```
LOGICAL I/O COMMAND #2  (+/-COMMAND#)
IF  LOGIC FLAG          #1 IS ON

                 ↓
            SCROLL DOWN
THEN:
SET INPUT   ASSIGNMENT #40 OFF
SET INPUT   ASSIGNMENT #27 OFF
```

NOTE: INHIBITS PREEMPT BY DISCONNECTING QUEUE LOOPS

PRESS '+'

```
LOGICAL I/O COMMAND #3  (+/-COMMAND#)
IF  LOGIC FLAG          #1 IS ON

                 ↓
            SCROLL DOWN
THEN:
    DELAY FOR 75.0 SECONDS
SET LOGIC FLAG          #1 OFF
```

NOTE: TIMEOUT FOR RECONNECTING QUEUE LOOPS

LOGIC I/O PROCESSOR PROGRAMMING COMPLETE

VEHICLE DETECTOR #34 SETTINGS FOR QUEUE PREEMPT

(program controller as shown below)

FROM MAIN MENU PRESS '7' (DETECTORS), THEN '1' (VEHICLE DETECTOR ASSIGNMENTS). PRESS '+' UNTIL DETECTOR #34 IS REACHED.

```
VEHICLE DETECTOR #34  SETTINGS (+-,1-64)
SETTING:                              (Y/N)
ENABLE DETECTOR....................Y
ENABLE LOGGING.....................N
ENABLE DIAGNOSTICS.................N
SPEED TRAP.........................N
CALL DETECTOR......................N
EXTENSION DETECTOR.................N
MODE 2 STOP BAR....................N
SWITCHING DETECTOR.................N
DUPLICATING DETECTOR...............N
ENABLE FULL TIME DELAY.............N
IF FAILED, SET MIN RECALL?.........N
IF FAILED, SET MAX1 RECALL?........N
IF FAILED, SET MAX2 RECALL?........N
PHASE#          |123456789101112131415 16
PHASES ASSIGNED |
SWITCH/DUPLICATE|
LOOP SIZE (0-255 FT)...............6
SPEED TRAP DISTANCE (0-255 FT).....0
STOP BAR TIME (0-255 SEC)..........0
STRETCH (0-25.5 SEC)...............0.0
DELAY (0-255 SEC)..................0
MAX CALLS/MIN (0-255)..............255
MIN CALLS/DIAGNOSTIC PERIOD (0-255).0
MAX OCCUPANCY (0-100%).............100
EXTENSION DISABLE TIME (0-255 SEC)..0
QUEUE MAX OCCUPANCY TIME (0-255)....5
QUEUE GAP RESET TIME (0-25.5).......0.1
PREEMPTION INDEX FOR QUEUE (0-10)...3
```

VEHICLE DETECTOR #44 SETTINGS FOR QUEUE PREEMPT

(program controller as shown below)

FROM MAIN MENU PRESS '7' (DETECTORS), THEN '1' (VEHICLE DETECTOR ASSIGNMENTS). PRESS '+' UNTIL DETECTOR #44 IS REACHED.

```
VEHICLE DETECTOR #44  SETTINGS (+-,1-64)
SETTING:                              (Y/N)
ENABLE DETECTOR....................Y
ENABLE LOGGING.....................N
ENABLE DIAGNOSTICS.................N
SPEED TRAP.........................N
CALL DETECTOR......................N
EXTENSION DETECTOR.................N
MODE 2 STOP BAR....................N
SWITCHING DETECTOR.................N
DUPLICATING DETECTOR...............N
ENABLE FULL TIME DELAY.............N
IF FAILED, SET MIN RECALL?.........N
IF FAILED, SET MAX1 RECALL?........N
IF FAILED, SET MAX2 RECALL?........N
PHASE#          |123456789101112131415 16
PHASES ASSIGNED |
SWITCH/DUPLICATE|
LOOP SIZE (0-255 FT)...............6
SPEED TRAP DISTANCE (0-255 FT).....0
STOP BAR TIME (0-255 SEC)..........0
STRETCH (0-25.5 SEC)...............0.0
DELAY (0-255 SEC)..................0
MAX CALLS/MIN (0-255)..............255
MIN CALLS/DIAGNOSTIC PERIOD (0-255).0
MAX OCCUPANCY (0-100%).............100
EXTENSION DISABLE TIME (0-255 SEC)..0
QUEUE MAX OCCUPANCY TIME (0-255)....5
QUEUE GAP RESET TIME (0-25.5).......0.1
PREEMPTION INDEX FOR QUEUE (0-10)...3
```

QUEUE PREEMPTION PROGRAMMING DETAIL

(program controller as shown below)

From Main Menu press 'A' (Preemption), then '1' (Standard Preemptions). Press 'Next' until Preemption #3 is reached.

```
   PREEMPTION  #3  SETTINGS (NEXT:1-10)
INTERVAL/TIMING |  CLEAR/DWELL PHASES
  GRN YEL  RED  |123456789101112131415 16
1 255  0.0  0.0 |   X
2   0  0.0  0.0 |
3   0  0.0  0.0 |
4   0  0.0  0.0 |
5   1  0.0  0.0 |X    X
EXIT CALLS      |
          OPTIONS
PRIORITY (Y/N TO SELECT) ............MED
DELAY TIMER (0-255 SEC) .............0.0
MIN GREEN BEFORE PRE (0= DEFAULT)....10
PED CLEAR BEFORE PRE (0= DEFAULT)....0
YELLOW CLEAR BEFORE PRE (0= DEFAULT).4.0
RED CLEAR BEFORE PRE (0= DEFAULT)....1.5
DWELL MIN TIMER (0-255 SEC) .........30
DWELL MAX TIMER (0=OFF,1-255MIN) ....0
DWELL HOLD-OVER TIMER (0-255) .......0
LATCH CALL? .........................N
LINK TO NEXT PREEMPT? ...............N
ENABLE BACKUP PROTECTION? ...........N
HOLD CLEAR 1 PHASES DURING DELAY? ...N
FAST GREEN FLASH DWELL PHASES? ......N
PED CLEARANCE THROUGH YELLOW? .......N
INHIBIT OVERLAP GREEN EXTENSION? ....N
SERVICE DURING SOFTWARE FLASH? ......N
REST IN RED DURING DWELL INTERVAL? ..N
FLASH DWELL INTERVAL? ...............N
ALLOW PEDS IN DWELL INTERVAL? .......N
RE-TIME DWELL INTERVAL? .............N
OVERLAPS:                | ABCDEFGHIJKLMNOP
DWELL INT FLASH YELLOW   |
OMIT OVERLAPS:           |
```

THIS ELECTRICAL DETAIL IS FOR
THE SIGNAL DESIGN: 13-0687T3
DESIGNED: July 2011
SEALED: 12-12-2011
REVISED:

Signal Upgrade - Temporary Design 3 (Construction Phase II) (Sheet 2 of 2)

HNTB
HNTB NORTH CAROLINA, P.C.
343 E. Six Forks Road, Suite 200
Raleigh, North Carolina 27609
NC License No: C-1554

ELECTRICAL AND PROGRAMMING DETAILS FOR:

Prepared for: Transportation Mobility and Safety Division, Signal Management Section, STATE OF NORTH CAROLINA DEPARTMENT OF TRANSPORTATION

750 N.Greenfield Pkwy,Garner,NC 27529

SR 1922 (Enola Rd)
at
I-40 Eastbound Ramp

Division 13 Burke County Morganton

PLAN DATE:	July 2011	REVIEWED BY:	N.M. Rodevick
PREPARED BY:	A.D. Klinksiek	REVIEWED BY:	H.L. Winstead

REVISIONS	INIT.	DATE

SEAL

NORTH CAROLINA PROFESSIONAL SEAL 07983 ENGINEER HARVEY L. WINSTEAD, JR.

SIGNATURE: H.L. Winstead DATE: 12/12/11

SIG. INVENTORY NO. 13-0687T3

THIS PAGE INTENTIONALLY LEFT BLANK

PROJECT REFERENCE NO.	SHEET NO.
U-2551	Sig. 37

PHASING DIAGRAM

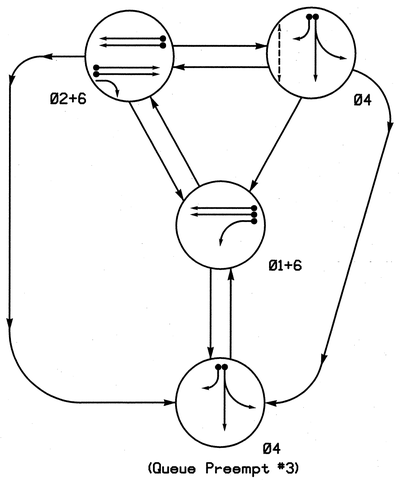

PHASING DIAGRAM DETECTION LEGEND

- DETECTED MOVEMENT
- UNDETECTED MOVEMENT (OVERLAP)
- UNSIGNALIZED MOVEMENT
- PEDESTRIAN MOVEMENT

TABLE OF OPERATION					
SIGNAL FACE	PHASE				
	Ø1+6	Ø2+6	Ø4	PREEMPT 3	FLASH
11	~~R~~	~~R~~	~~R~~	~~R~~	~~R~~
21,22	R	G	R	R	Y
41,42	R	R	G	G	R
61,62	G	G	R	R	Y
P41,P42	DW	DW	W	DW	DRK

W - Walk
DW - Don't Walk
DRK - Dark

SIGNAL FACE I.D.

All Heads L.E.D.

OASIS 2070L LOOP & DETECTOR INSTALLATION CHART															
INDUCTIVE LOOPS					DETECTOR PROGRAMMING										
LOOP	SIZE (FT)	DISTANCE FROM STOPBAR (FT)	TURNS	NEW LOOP	PHASE	CALLING	EXTENSION	FULL TIME DELAY	STRETCH TIME	DELAY TIME	QUEUE MAX OCCUPANCY TIME	QUEUE GAP RESET TIME	PREEMPT INDEX FOR QUEUE	SYSTEM LOOP	NEW CARD
1A	6X40	0	2-4-2	Y	1	Y	Y	-	-	-	-	-	-	-	-
2A	6X6	70	5	Y	2	Y	Y	-	-	-	-	-	-	-	-
2B	6X6	70	5	-	2	Y	Y	-	-	-	-	-	-	-	Y
4A	6X40	0	2-4-2	Y	4	Y	Y	-	-	-	-	-	-	-	-
4B	6X40	0	2-4-2	Y	4	Y	Y	-	-	15	-	-	-	-	-
*** Q1	6X6	625	6	-	PRE3	-	-	-	-	-	5	0.1	3	-	-
*** Q2	6X6	625	6	-	PRE3	-	-	-	-	-	5	0.1	3	-	-
6A	6X6	70	3	Y	6	Y	Y	-	-	-	-	-	-	-	-
6B	6X6	70	3	Y	6	Y	Y	-	-	-	-	-	-	-	Y

*** See Note 7.

3 Phase
Fully Actuated w/
Queue Preemption
NC 18 (Sterling St)/SR 1922 (Enola Rd)
Closed Loop System

NOTES

1. Refer to "Roadway Standard Drawings NCDOT" dated January 2012 and "Standard Specifications for Roads and Structures" dated January 2012.
2. Do not program signal for late night flashing operation unless otherwise directed by the Engineer.
3. Phase 1 may be lagged.
4. Set all detector units to presence mode.
5. Omit "WALK" and flashing "DON'T WALK" with no pedestrian calls.
6. Program pedestrian heads to countdown the flashing "Don't Walk" time only.
7. These loops serve as queue backup detectors. After 5 seconds of constant actuation, the detector unit places a call to the controller to preempt normal operation to clear out the storage lanes.
8. When leaving preemption, ensure all non-preempt phases are served before serving the preempt phase again.
9. Maximum times shown in timing chart are for free-run operation only. Coordinated signal system timing values supersede these values.
10. Closed loop system data: Controller number #:0687.

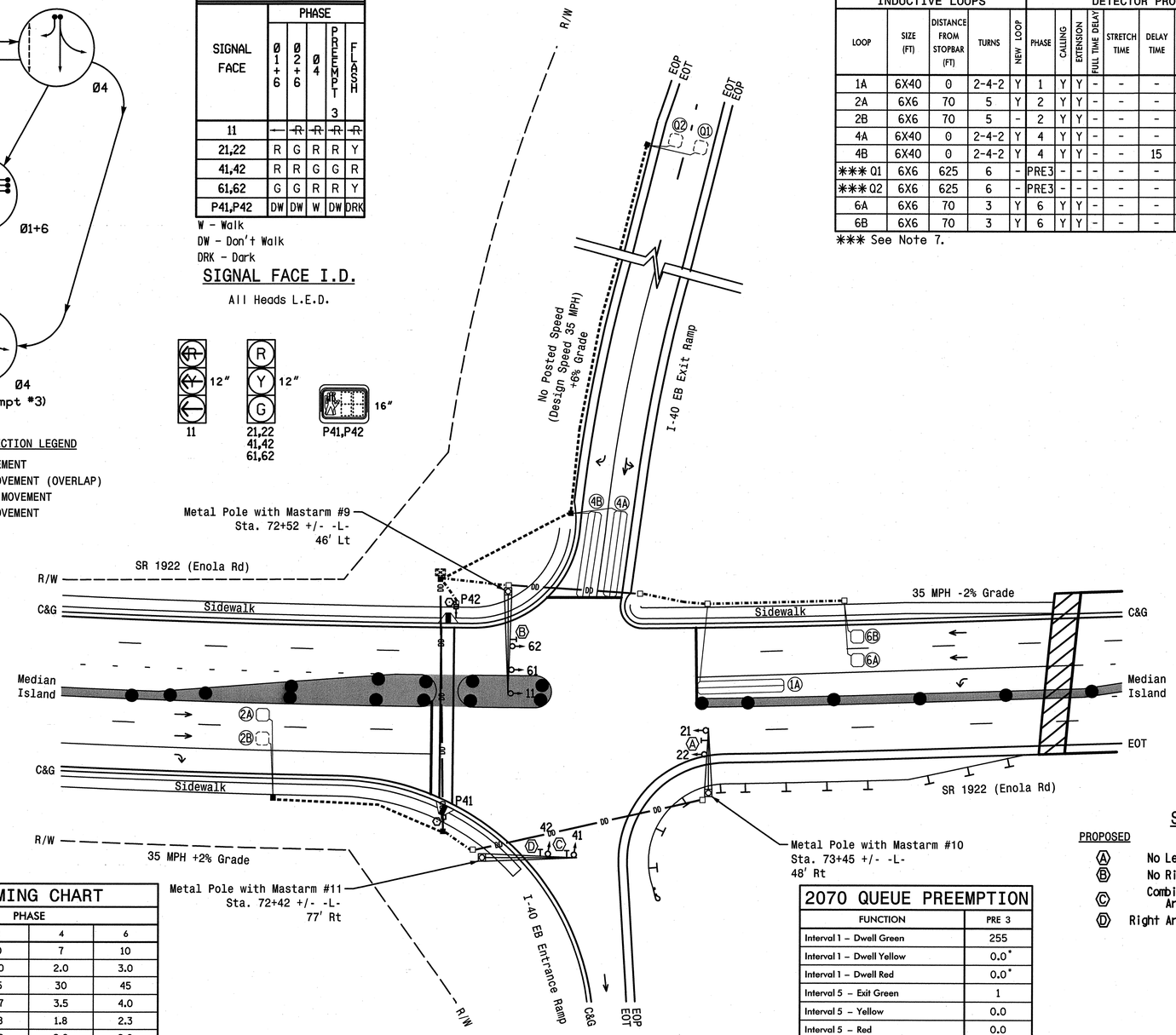

LEGEND

PROPOSED		EXISTING
	Traffic Signal Head	
	Modified Signal Head	N/A
	Sign	
	Pedestrian Signal Head With Push Button & Sign	
	Signal Pole with Guy	
	Signal Pole with Sidewalk Guy	
	Inductive Loop Detector	
	Controller & Cabinet	
	Junction Box	
	2-in Underground Conduit	
DD	Directional Drill	DD
N/A	Right of Way	
	Directional Arrow	
N/A	Guardrail	
	Metal Pole with Mastarm	
	Signal Pedestal	
N/A	Wheelchair Ramp	
	Construction Zone Drums	N/A
	Construction Zone	N/A

SIGN LEGEND

PROPOSED		EXISTING
A	No Left Turn Sign (R3-2)	N/A
B	No Right Turn Sign (R3-1)	N/A
C	Combined Through and Left Arrow Sign (R3-6L)	N/A
D	Right Arrow "ONLY" Sign (R3-5R)	N/A

OASIS 2070L TIMING CHART

FEATURE	PHASE 1	PHASE 2	PHASE 4	PHASE 6
Min Green 1 *	7	10	7	10
Extension 1 *	2.0	3.0	2.0	3.0
Max Green 1 *	25	45	30	45
Yellow Clearance	3.0	3.7	3.5	4.0
Red Clearance	2.3	1.8	1.8	2.3
Red Revert	2.0	2.0	2.0	2.0
Walk 1 *	-	-	7	-
Don't Walk 1	-	-	21	-
Seconds Per Actuation *	-	-	-	-
Max Variable Initial *	-	-	-	-
Time Before Reduction *	-	-	-	-
Time To Reduce *	-	-	-	-
Minimum Gap	-	-	-	-
Recall Mode	-	MIN RECALL	-	MIN RECALL
Vehicle Call Memory	-	YELLOW	-	YELLOW
Dual Entry	-	-	-	-
Simultaneous Gap	ON	ON	ON	ON

* These values may be field adjusted. Do not adjust Min Green and Extension times for phases 2 and 6 lower than what is shown. Min Green for all other phases should not be lower than 4 seconds.

2070 QUEUE PREEMPTION

FUNCTION	PRE 3
Interval 1 – Dwell Green	255
Interval 1 – Dwell Yellow	0.0*
Interval 1 – Dwell Red	0.0*
Interval 5 – Exit Green	1
Interval 5 – Yellow	0.0
Interval 5 – Red	0.0
Delay Time	0
Min Green Before Pre	10
Ped Clear Before Pre	0.0*
Yellow Clear Before Pre	4.0
Red Clear Before Pre	2.3
Dwell Min Time	30
Enable Backup Protection	N
Ped Clear Through Yellow	Y

* Time defaults to time used for phase during normal operation.

HNTB
HNTB NORTH CAROLINA, P.C.
343 E. Six Forks Road, Suite 200
Raleigh, North Carolina 27609
NC License No: C-1554

Signal Upgrade - Temporary Design 4 (Construction Phase III)

Prepared for: Transportation Mobility and Safety Division, Signal Design Section, NORTH CAROLINA DEPARTMENT OF TRANSPORTATION
750 N.Greenfield Pkwy,Garner,NC 27529

SR 1922 (Enola Rd)
at
I-40 Eastbound Ramp

Division 13 | Burke County | Morganton

PLAN DATE:	July 2011	REVIEWED BY:	T.R. Terrell
PREPARED BY:	A.D. Klinksiek	REVIEWED BY:	N.M. Rodevick

SCALE 0 30 1"=30'

REVISIONS	INIT.	DATE

SEAL
NORTH CAROLINA PROFESSIONAL SEAL 031464 ENGINEER NATASHA M. RODEVICK
SIGNATURE
12-12-11
DATE
SIG. INVENTORY NO. 13-0687T4

PROJECT REFERENCE NO.	SHEET NO.
U-2551	Sig. 38

EDI MODEL 2018ECL-NC CONFLICT MONITOR PROGRAMMING DETAIL

(remove jumpers and set switches as shown)

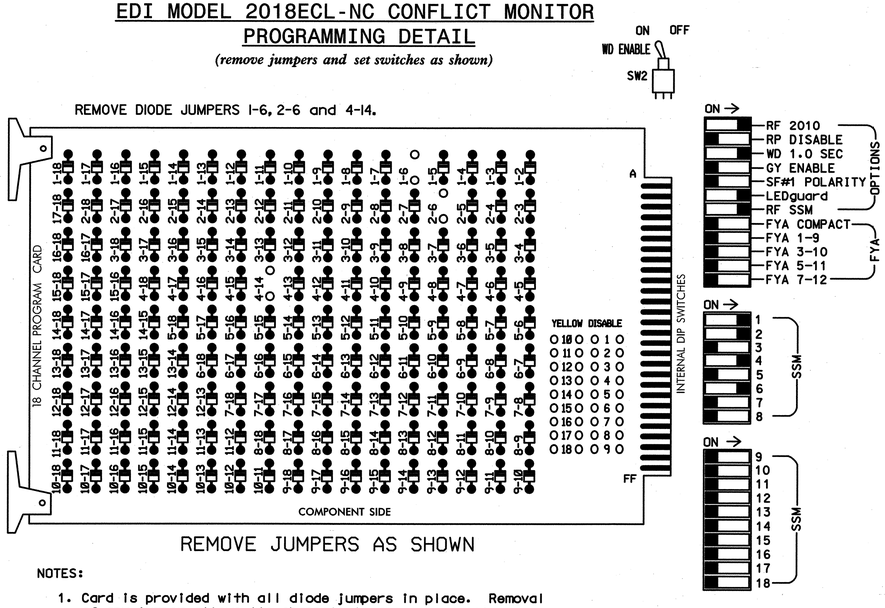

REMOVE JUMPERS AS SHOWN

■ = DENOTES POSITION OF SWITCH

NOTES:

1. Card is provided with all diode jumpers in place. Removal of any jumper allows its channels to run concurrently.
2. Ensure jumpers SEL2-SEL5 and SEL9 are present on the monitor board.
3. Ensure that Red Enable is active at all times during normal operation.
4. Connect serial cable from conflict monitor to comm. port 1 of 2070 controller. Ensure conflict monitor communicates with 2070.

NOTES

1. To prevent "flash-conflict" problems, insert red flash program blocks for all unused vehicle load switches in the output file. The installer shall verify that signal heads flash in accordance with the Signal Plans.
2. Enable Simultaneous Gap-Out for all phases.
3. Program phases 2 and 6 for Start Up In Green.
4. Program phase 4 for 'STARTUP PED CALL'.
5. Program phases 2 and 6 for Yellow Flash.
6. The cabinet and controller are part of the NC 18 (Sterling St)/SR 1922 (Enola Rd) Closed Loop System.

SIGNAL HEAD HOOK-UP CHART

LOAD SWITCH NO.	S1	S2	S3	S4	S5	S6	S7	S8	S9	S10	S11	S12	AUX S1	AUX S2	AUX S3	AUX S4	AUX S5	AUX S6
CMU CHANNEL NO.	1	2	13	3	4	14	5	6	15	7	8	16	9	10	17	11	12	18
PHASE	1	2	2 PED	3	4	4 PED	5	6	6 PED	7	8	8 PED	OLA	OLB	SPARE	OLC	OLD	SPARE
SIGNAL HEAD NO.	11	21,22	NU	NU	41,42	P41, P42	NU	61,62	NU	NU	NU	NU	NU	NU	NU	NU	NU	NU
RED		128			101			134										
YELLOW		129			102			135										
GREEN		130			103			136										
RED ARROW	125																	
YELLOW ARROW	126																	
GREEN ARROW	127																	
✋						104												
🚶						106												

NU = Not Used

EQUIPMENT INFORMATION

CONTROLLER.....2070L
CABINET.....332 /W/ AUX
SOFTWARE.....ECONOLITE OASIS
CABINET MOUNT.....BASE
OUTPUT FILE POSITIONS...18 WITH AUX. OUTPUT FILE
LOAD SWITCHES USED.....S1,S2,S5,S6,S8
PHASES USED.....1,2,4,4PED,6
OVERLAP "A".....NOT USED
OVERLAP "B".....NOT USED
OVERLAP "C".....NOT USED
OVERLAP "D".....NOT USED

COUNTDOWN PEDESTRIAN SIGNAL OPERATION

Countdown Ped Signals are required to display timing only during Ped Clearance Interval. Consult Ped Signal Module user's manual for instructions on selecting this feature.

INPUT FILE POSITION LAYOUT

(front view)

		1	2	3	4	5	6	7	8	9	10	11	12	13	14
FILE "I"	U	Ø1 1A	Ø2 2A	SLOT EMPTY	SLOT EMPTY	SLOT EMPTY	Ø4 4A	PRE3 Q1	SLOT EMPTY	SLOT EMPTY	SLOT EMPTY	SLOT EMPTY	NOT USED	SLOT EMPTY	FS DC ISOLATOR
	L	NOT USED	Ø2 2B				Ø4 4B	PRE3 Q2					Ø4 PED DC ISOLATOR		ST DC ISOLATOR
FILE "J"	U	SLOT EMPTY	Ø6 6A	SLOT EMPTY	SLOT EMPTY	SLOT EMPTY	SLOT EMPTY	SLOT EMPTY	SLOT EMPTY	SLOT EMPTY	SLOT EMPTY	SLOT EMPTY	SLOT EMPTY	SLOT EMPTY	SLOT EMPTY
	L		Ø6 6B												

EX.: 1A, 2A, ETC. = LOOP NO.'S

FS = FLASH SENSE
ST = STOP TIME

INPUT FILE CONNECTION & PROGRAMMING CHART

LOOP NO.	LOOP TERMINAL	INPUT FILE POS.	PIN NO.	INPUT ASSIGNMENT NO.	DETECTOR NO.	NEMA PHASE	CALL	EXTEND	FULL TIME DELAY	STRETCH TIME	DELAY TIME
1A[1]	TB2-1,2	I1U	56	18	1	1	Y	Y			
2A	TB2-5,6	I2U	39	1	2	2	Y	Y			
2B	TB2-7,8	I2L	43	5	12	2	Y	Y			
4A	TB4-9,10	I6U	41	3	4	4	Y	Y			
4B	TB4-11,12	I6L	45	7	14	4	Y	Y			15
Q1	TB6-1,2	I7U	65	27	*34	PRE3					
Q2	TB6-3,4	I7L	78	40	*44	PRE3					
6A	TB3-5,6	J2U	40	2	6	6	Y	Y			
6B	TB3-7,8	J2L	44	6	16	6	Y	Y			
PED PUSH BUTTONS											
P41,P42	TB8-5,6	I12L	69	31	PED 4	4 PED					

*See vehicle detector programming detail on Sheet 2.

[1]Remove jumper from I1-W to J4-W, on rear of input file.

NOTE:
INSTALL DC ISOLATORS IN INPUT FILE SLOT I12.

INPUT FILE POSITION LEGEND: J2L
FILE J
SLOT 2
LOWER

THIS ELECTRICAL DETAIL IS FOR
THE SIGNAL DESIGN: 13-0687T4
DESIGNED: July 2011
SEALED: 12-12-2011
REVISED:

LOAD RESISTOR INSTALLATION DETAIL

(remove resistor as shown below)

ACCEPTABLE VALUES

VALUE (ohms)	WATTAGE
1.5K - 1.9K	25W (min)
2.0K - 3.0K	10W (min)

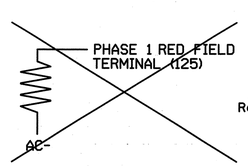

Remove load resistor.

HNTB NORTH CAROLINA, P.C.
343 E. Six Forks Road, Suite 200
Raleigh, North Carolina 27609
NC License No: C-1554

Signal Upgrade - Temporary Design 4 (Construction Phase III) (Sheet 1 of 2)

ELECTRICAL AND PROGRAMMING DETAILS FOR:

Prepared for: Transportation Mobility and Safety Division, Traffic Engineering Branch, Signal Management Section, Department of Transportation, State of North Carolina
750 N.Greenfield Pkwy, Garner, NC 27529

SR 1922 (Enola Rd)
at
I-40 Eastbound Ramp

Division 13 Burke County Morganton

PLAN DATE:	July 2011	REVIEWED BY:	N.M. Rodevick
PREPARED BY:	A.D. Klinksiek	REVIEWED BY:	H.L. Winstead

REVISIONS	INIT.	DATE

SEAL
NORTH CAROLINA PROFESSIONAL SEAL 07983 ENGINEER HARVEY L. WINSTEAD, JR.

SIGNATURE H.L. Winstead DATE 12/12/11

SIG. INVENTORY NO. 13-0687T4

LOGICAL I/O PROCESSOR PROGRAMMING DETAIL WHEN LEAVING PREEMPTOR SEQUENCE

(program controller as shown below)

1. FROM MAIN MENU PRESS '2' (PHASE CONTROL), THEN '1' (PHASE CONTROL FUNCTIONS). SCROLL TO THE BOTTOM OF THE MENU AND ENABLE ACT LOGIC COMMANDS 1,2, AND 3.
2. FROM MAIN MENU PRESS '6' (OUTPUTS), THEN '3' (LOGICAL I/O PROCESSOR).

NOTE: WHEN LEAVING PREEMPTOR SEQUENCE, THE FOLLOWING LOGIC STATEMENTS ENSURE ALL PHASES WITH A CALL WILL BE SERVED BEFORE PREEMPTOR CAN BE SERVICED AGAIN.

```
LOGICAL I/O COMMAND #1  (+/-COMMAND#)
IF  ACTIVE PREEMPTION  #3  IS ON

                 ↓
            SCROLL DOWN
THEN:
SET LOGIC FLAG          #1 ON
```

NOTE: SETS LOGIC FLAG

PRESS '+'

```
LOGICAL I/O COMMAND #2  (+/-COMMAND#)
IF  LOGIC FLAG          #1 IS ON

                 ↓
            SCROLL DOWN
THEN:
SET INPUT   ASSIGNMENT #40 OFF
SET INPUT   ASSIGNMENT #27 OFF
```

NOTE: INHIBITS PREEMPT BY DISCONNECTING QUEUE LOOPS

PRESS '+'

```
LOGICAL I/O COMMAND #3  (+/-COMMAND#)
IF  LOGIC FLAG          #1 IS ON

                 ↓
            SCROLL DOWN
THEN:
    DELAY FOR 75.0 SECONDS
SET LOGIC FLAG          #1 OFF
```

NOTE: TIMEOUT FOR RECONNECTING QUEUE LOOPS

LOGIC I/O PROCESSOR PROGRAMMING COMPLETE

VEHICLE DETECTOR #34 SETTINGS FOR QUEUE PREEMPT

(program controller as shown below)

FROM MAIN MENU PRESS '7' (DETECTORS), THEN '1' (VEHICLE DETECTOR ASSIGNMENTS). PRESS '+' UNTIL DETECTOR #34 IS REACHED.

```
VEHICLE DETECTOR #34  SETTINGS (+-,1-64)
SETTING:                              (Y/N)
ENABLE DETECTOR....................Y
ENABLE LOGGING.....................N
ENABLE DIAGNOSTICS.................N
SPEED TRAP.........................N
CALL DETECTOR......................N
EXTENSION DETECTOR.................N
MODE 2 STOP BAR....................N
SWITCHING DETECTOR.................N
DUPLICATING DETECTOR...............N
ENABLE FULL TIME DELAY.............N
IF FAILED, SET MIN RECALL?.........N
IF FAILED, SET MAX1 RECALL?........N
IF FAILED, SET MAX2 RECALL?........N
PHASE#            |123456789101112131415 16
PHASES ASSIGNED   |
SWITCH/DUPLICATE  |
LOOP SIZE (0-255 FT)...............6
SPEED TRAP DISTANCE (0-255 FT)......0
STOP BAR TIME (0-255 SEC)...........0
STRETCH (0-25.5 SEC)................0.0
DELAY (0-255 SEC)...................0
MAX CALLS/MIN (0-255)..............255
MIN CALLS/DIAGNOSTIC PERIOD (0-255).0
MAX OCCUPANCY (0-100%)............100
EXTENSION DISABLE TIME (0-255 SEC)..0
QUEUE MAX OCCUPANCY TIME (0-255)....5
QUEUE GAP RESET TIME (0-25.5).......0.1
PREEMPTION INDEX FOR QUEUE (0-10)...3
```

VEHICLE DETECTOR #44 SETTINGS FOR QUEUE PREEMPT

(program controller as shown below)

FROM MAIN MENU PRESS '7' (DETECTORS), THEN '1' (VEHICLE DETECTOR ASSIGNMENTS). PRESS '+' UNTIL DETECTOR #44 IS REACHED.

```
VEHICLE DETECTOR #44  SETTINGS (+-,1-64)
SETTING:                              (Y/N)
ENABLE DETECTOR....................Y
ENABLE LOGGING.....................N
ENABLE DIAGNOSTICS.................N
SPEED TRAP.........................N
CALL DETECTOR......................N
EXTENSION DETECTOR.................N
MODE 2 STOP BAR....................N
SWITCHING DETECTOR.................N
DUPLICATING DETECTOR...............N
ENABLE FULL TIME DELAY.............N
IF FAILED, SET MIN RECALL?.........N
IF FAILED, SET MAX1 RECALL?........N
IF FAILED, SET MAX2 RECALL?........N
PHASE#            |123456789101112131415 16
PHASES ASSIGNED   |
SWITCH/DUPLICATE  |
LOOP SIZE (0-255 FT)...............6
SPEED TRAP DISTANCE (0-255 FT)......0
STOP BAR TIME (0-255 SEC)...........0
STRETCH (0-25.5 SEC)................0.0
DELAY (0-255 SEC)...................0
MAX CALLS/MIN (0-255)..............255
MIN CALLS/DIAGNOSTIC PERIOD (0-255).0
MAX OCCUPANCY (0-100%)............100
EXTENSION DISABLE TIME (0-255 SEC)..0
QUEUE MAX OCCUPANCY TIME (0-255)....5
QUEUE GAP RESET TIME (0-25.5).......0.1
PREEMPTION INDEX FOR QUEUE (0-10)...3
```

QUEUE PREEMPTION PROGRAMMING DETAIL

(program controller as shown below)

From Main Menu press 'A' (Preemption), then '1' (Standard Preemptions). Press 'NEXT' until Preemption #3 is reached.

```
   PREEMPTION  #3  SETTINGS (NEXT:1-10)
INTERVAL/TIMING  |  CLEAR/DWELL PHASES
  GRN YEL  RED   |123456789101112131415 16
1 255  0.0  0.0  |   X
2   0  0.0  0.0  |
3   0  0.0  0.0  |
4   0  0.0  0.0  |
5   1  0.0  0.0  |X    X
EXIT CALLS       |
            OPTIONS
PRIORITY (Y/N TO SELECT) ............MED
DELAY TIMER (0-255 SEC) .............0.0
MIN GREEN BEFORE PRE (0= DEFAULT)....10
PED CLEAR BEFORE PRE (0= DEFAULT)....0
YELLOW CLEAR BEFORE PRE (0= DEFAULT).4.0
RED CLEAR BEFORE PRE (0= DEFAULT)....2.3
DWELL MIN TIMER (0-255 SEC) .........30
DWELL MAX TIMER (0=OFF,1-255MIN) ....0
DWELL HOLD-OVER TIMER (0-255) .......0
LATCH CALL? .........................N
LINK TO NEXT PREEMPT? ...............N
ENABLE BACKUP PROTECTION? ...........N
HOLD CLEAR 1 PHASES DURING DELAY? ...N
FAST GREEN FLASH DWELL PHASES? ......N
PED CLEARANCE THROUGH YELLOW? .......Y
INHIBIT OVERLAP GREEN EXTENSION? ....N
SERVICE DURING SOFTWARE FLASH? ......N
REST IN RED DURING DWELL INTERVAL? ..N
FLASH DWELL INTERVAL? ...............N
ALLOW PEDS IN DWELL INTERVAL? .......N
RE-TIME DWELL INTERVAL? .............N
OVERLAPS:                | ABCDEFGHIJKLMNOP
DWELL INT FLASH YELLOW   |
OMIT OVERLAPS:           |
```

THIS ELECTRICAL DETAIL IS FOR
THE SIGNAL DESIGN: 13-0687T4
DESIGNED: July 2011
SEALED: 12-12-2011
REVISED:

Signal Upgrade - Temporary Design 4 (Construction Phase III) (Sheet 2 of 2)

HNTB NORTH CAROLINA, P.C.
343 E. Six Forks Road, Suite 200
Raleigh, North Carolina 27609
NC License No: C-1554

ELECTRICAL AND PROGRAMMING DETAILS FOR:

Prepared for: Transportation Mobility and Safety Division, Signal Management Section

750 N.Greenfield Pkwy,Garner,NC 27529

SR 1922 (Enola Rd)
at
I-40 Eastbound Ramp

Division 13 Burke County Morganton

PLAN DATE:	July 2011	REVIEWED BY:	N.M. Rodevick
PREPARED BY:	A.D. Klinksiek	REVIEWED BY:	H.L. Winstead

REVISIONS	INIT.	DATE

SEAL

NORTH CAROLINA PROFESSIONAL SEAL 07983 ENGINEER HARVEY L. WINSTEAD, JR.

SIGNATURE H.L. Winstead DATE 12/12/11

SIG. INVENTORY NO: 13-0687T4

PROJECT REFERENCE NO.	SHEET NO.
U-2551	Sig. 40

PHASING DIAGRAM

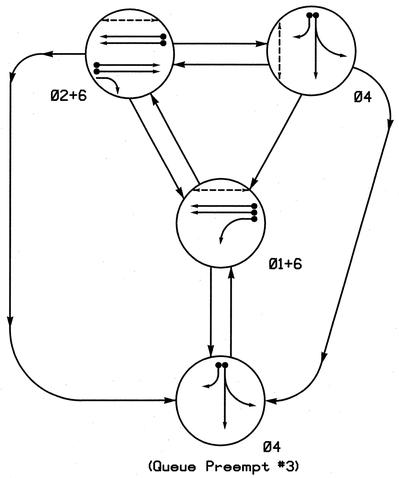

PHASING DIAGRAM DETECTION LEGEND

- DETECTED MOVEMENT
- UNDETECTED MOVEMENT (OVERLAP)
- UNSIGNALIZED MOVEMENT
- PEDESTRIAN MOVEMENT

TABLE OF OPERATION

SIGNAL FACE	PHASE 01+6	PHASE 02+6	PHASE 04	PREEMPT 3	FLASH
11	~~R~~	~~R~~	~~R~~	~~R~~	~~R~~
21,22	R	G	R	R	Y
41,42	R	R	G	G	R
61,62	G	G	R	R	Y
P41,P42	DW	DW	W	DW	DRK
P61,P62	W	W	DW	DW	DRK

W - Walk
DW - Don't Walk
DRK - Dark

SIGNAL FACE I.D.

All Heads L.E.D.

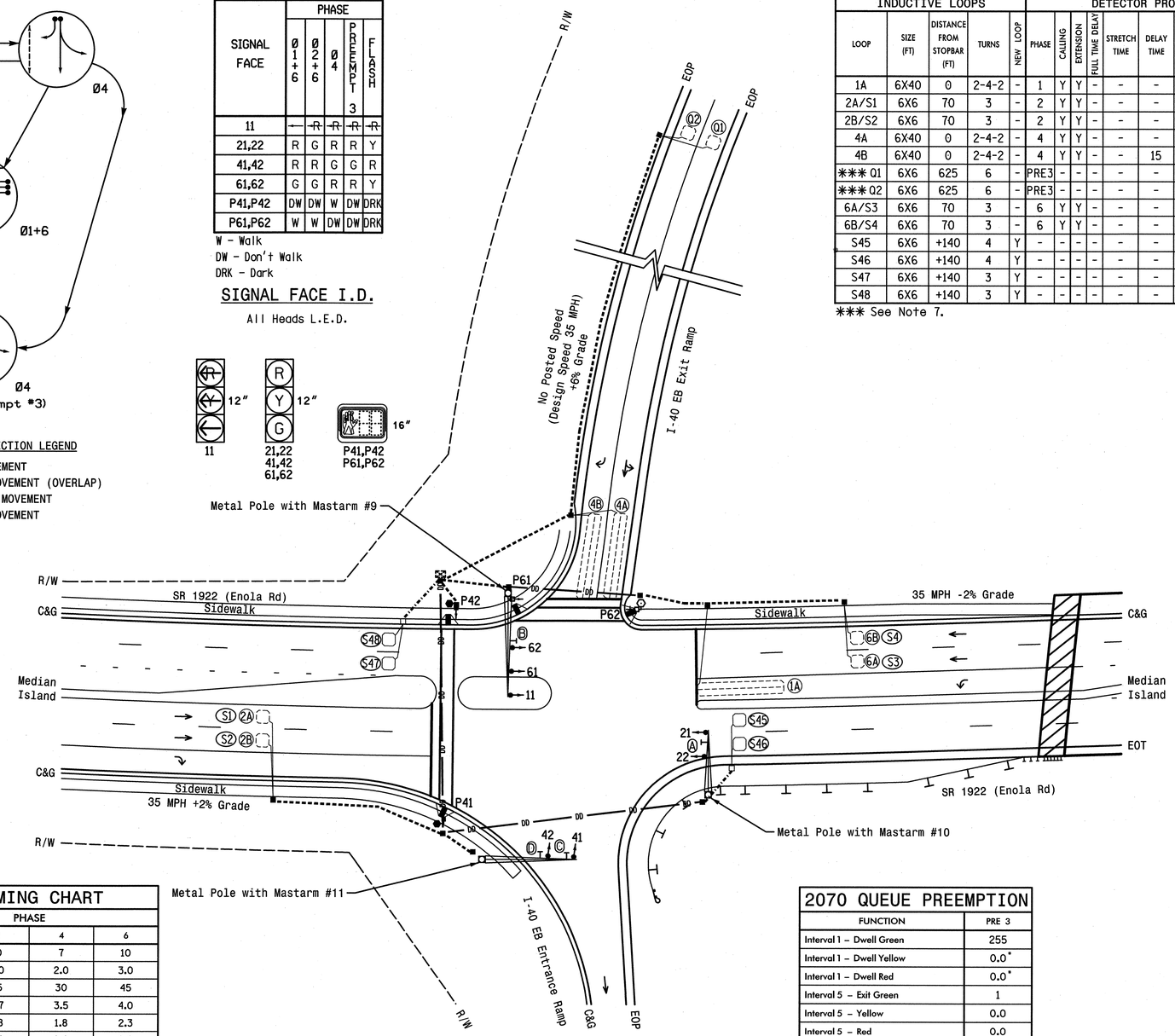

OASIS 2070L LOOP & DETECTOR INSTALLATION CHART

INDUCTIVE LOOPS					DETECTOR PROGRAMMING									
LOOP	SIZE (FT)	DISTANCE FROM STOPBAR (FT)	TURNS	NEW LOOP	PHASE	CALLING	EXTENSION	FULL TIME DELAY	STRETCH TIME	DELAY TIME	QUEUE MAX OCCUPANCY TIME	QUEUE GAP RESET TIME	PREEMPT INDEX FOR QUEUE	SYSTEM LOOP	NEW CARD
1A	6X40	0	2-4-2	-	1	Y	Y	-	-	-	-	-	-	-	-
2A/S1	6X6	70	3	-	2	Y	Y	-	-	-	-	-	-	Y	-
2B/S2	6X6	70	3	-	2	Y	Y	-	-	-	-	-	-	Y	-
4A	6X40	0	2-4-2	-	4	Y	Y	-	-	-	-	-	-	-	-
4B	6X40	0	2-4-2	-	4	Y	Y	-	-	15	-	-	-	-	-
*** Q1	6X6	625	6	-	PRE3	-	-	-	-	-	5	0.1	3	-	-
*** Q2	6X6	625	6	-	PRE3	-	-	-	-	-	5	0.1	3	-	-
6A/S3	6X6	70	3	-	6	Y	Y	-	-	-	-	-	-	Y	-
6B/S4	6X6	70	3	-	6	Y	Y	-	-	-	-	-	-	Y	-
S45	6X6	+140	4	Y	-	-	-	-	-	-	-	-	-	Y	Y
S46	6X6	+140	4	Y	-	-	-	-	-	-	-	-	-	Y	Y
S47	6X6	+140	3	Y	-	-	-	-	-	-	-	-	-	Y	Y
S48	6X6	+140	3	Y	-	-	-	-	-	-	-	-	-	Y	Y

*** See Note 7.

3 Phase
Fully Actuated w/
Queue Preemption
NC 18 (Sterling St)/SR 1922 (Enola Rd)
Closed Loop System

1. Refer to "Roadway Standard Drawings NCDOT" dated January 2012 and "Standard Specifications for Roads and Structures" dated January 2012.
2. Do not program signal for late night flashing operation unless otherwise directed by the Engineer.
3. Phase 1 may be lagged.
4. Set all detector units to presence mode.
5. Omit "WALK" and flashing "DON'T WALK" with no pedestrian calls.
6. Program pedestrian heads to countdown the flashing "Don't Walk" time only.
7. These loops serve as queue backup detectors. After 5 seconds of constant actuation, the detector unit places a call to the controller to preempt normal operation to clear out the storage lanes.
8. When leaving preemption, ensure all non-preempt phases are served before serving the preempt phase again.
9. Maximum times shown in timing chart are for free-run operation only. Coordinated signal system timing values supersede these values.
10. Closed loop system data: Controller number #:0687.

LEGEND

PROPOSED		EXISTING
	Traffic Signal Head	
	Modified Signal Head	N/A
	Sign	
	Pedestrian Signal Head With Push Button & Sign	
	Signal Pole with Guy	
	Signal Pole with Sidewalk Guy	
	Inductive Loop Detector	
	Controller & Cabinet	
	Junction Box	
	2-in Underground Conduit	
— DD —	Directional Drill	— DD —
N/A	Right of Way	
	Directional Arrow	
N/A	Guardrail	
	Metal Pole with Mastarm	
	Signal Pedestal	
N/A	Wheelchair Ramp	
N/A	No Left Turn Sign (R3-2)	A
N/A	No Right Turn Sign (R3-1)	B
N/A	Combined Through and Left Arrow Sign (R3-6L)	C
N/A	Right Arrow "ONLY" Sign (R3-5R)	D

OASIS 2070L TIMING CHART

FEATURE	PHASE 1	PHASE 2	PHASE 4	PHASE 6
Min Green 1 *	7	10	7	10
Extension 1 *	2.0	3.0	2.0	3.0
Max Green 1 *	25	45	30	45
Yellow Clearance	3.0	3.7	3.5	4.0
Red Clearance	2.3	1.8	1.8	2.3
Red Revert	2.0	2.0	2.0	2.0
Walk 1 *	-	-	7	7
Don't Walk 1	-	-	21	11
Seconds Per Actuation *	-	-	-	-
Max Variable Initial *	-	-	-	-
Time Before Reduction *	-	-	-	-
Time To Reduce *	-	-	-	-
Minimum Gap	-	-	-	-
Recall Mode	-	MIN RECALL	-	MIN RECALL
Vehicle Call Memory	-	YELLOW	-	YELLOW
Dual Entry	-	-	-	-
Simultaneous Gap	ON	ON	ON	ON

* These values may be field adjusted. Do not adjust Min Green and Extension times for phases 2 and 6 lower than what is shown. Min Green for all other phases should not be lower than 4 seconds.

2070 QUEUE PREEMPTION

FUNCTION	PRE 3
Interval 1 – Dwell Green	255
Interval 1 – Dwell Yellow	0.0*
Interval 1 – Dwell Red	0.0*
Interval 5 – Exit Green	1
Interval 5 – Yellow	0.0
Interval 5 – Red	0.0
Delay Time	0
Min Green Before Pre	10
Ped Clear Before Pre	0.0*
Yellow Clear Before Pre	4.0
Red Clear Before Pre	2.3
Dwell Min Time	30
Enable Backup Protection	N
Ped Clear Through Yellow	Y

* Time defaults to time used for phase during normal operation.

HNTB
HNTB NORTH CAROLINA, P.C.
343 E. Six Forks Road, Suite 200
Raleigh, North Carolina 27609
NC License No: C-1554

Signal Upgrade - Final Design

Prepared for: Transportation Mobility and Safety Division, Traffic Engineering Branch, Signal Design Section, NORTH CAROLINA DEPARTMENT OF TRANSPORTATION
750 N.Greenfield Pkwy,Garner,NC 27529

SR 1922 (Enola Rd)
at
I-40 Eastbound Ramp

Division 13 Burke County Morganton

PLAN DATE:	July 2011	REVIEWED BY:	T.R. Terrell
PREPARED BY:	A.D. Klinksiek	REVIEWED BY:	N.W. Rodevick

SCALE 0 50 1"=50'

REVISIONS	INIT.	DATE

SEAL
NORTH CAROLINA PROFESSIONAL SEAL 031464 ENGINEER NATASHA M. RODEVICK

Natasha M. Rodevick 12-12-11
SIGNATURE DATE

SIG. INVENTORY NO. 13-0687

PROJECT REFERENCE NO.	SHEET NO.
U-2551	Sig. 41

EDI MODEL 2018ECL-NC CONFLICT MONITOR PROGRAMMING DETAIL

(remove jumpers and set switches as shown)

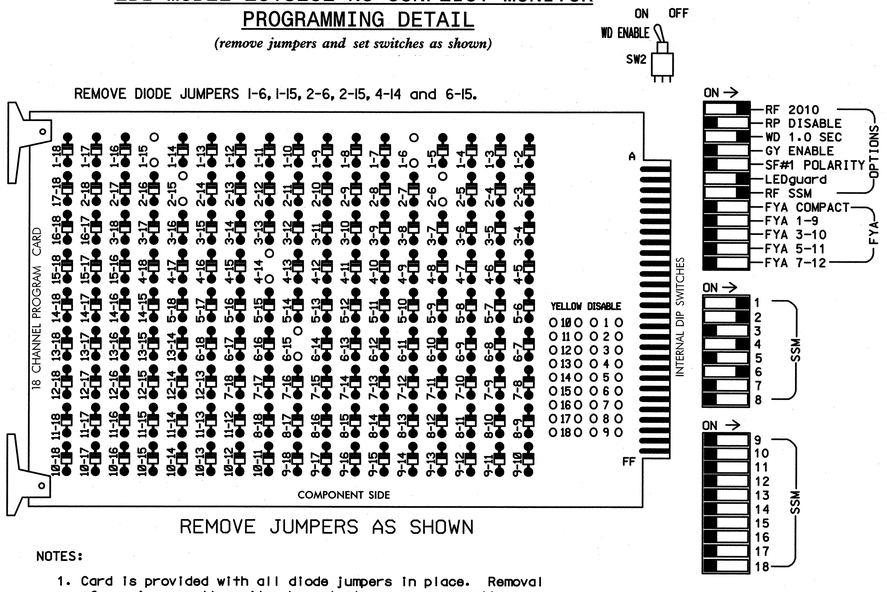

■ = DENOTES POSITION OF SWITCH

NOTES:

1. Card is provided with all diode jumpers in place. Removal of any jumper allows its channels to run concurrently.
2. Ensure jumpers SEL2-SEL5 and SEL9 are present on the monitor board.
3. Ensure that Red Enable is active at all times during normal operation.
4. Connect serial cable from conflict monitor to comm. port 1 of 2070 controller. Ensure conflict monitor communicates with 2070.

INPUT FILE POSITION LAYOUT

(front view)

		1	2	3	4	5	6	7	8	9	10	11	12	13	14
FILE "I"	U	Ø 1 1A	Ø2/SYS 2A/S1	SLOT EMPTY	SLOT EMPTY	SLOT EMPTY	Ø 4 4A	PRE3 Q1	SLOT EMPTY	SYS. DET. S45	SLOT EMPTY	SLOT EMPTY	NOT USED	Ø6 PED DC ISOLATOR	FS DC ISOLATOR
	L	NOT USED	Ø2/SYS 2B/S2				Ø 4 4B	PRE3 Q2		SYS. DET. S46			Ø4 PED DC ISOLATOR	NOT USED	ST DC ISOLATOR
FILE "J"	U	SLOT EMPTY	Ø6/SYS 6A/S3	SLOT EMPTY	SLOT EMPTY	SLOT EMPTY	SLOT EMPTY	SLOT EMPTY	SLOT EMPTY	SYS. DET. S47	SLOT EMPTY	SLOT EMPTY	SLOT EMPTY	SLOT EMPTY	SLOT EMPTY
	L		Ø6/SYS 6B/S4							SYS. DET. S48					

EX.: 1A, 2A, ETC. = LOOP NO.'S

FS = FLASH SENSE
ST = STOP TIME

NOTES

1. To prevent "flash-conflict" problems, insert red flash program blocks for all unused vehicle load switches in the output file. The installer shall verify that signal heads flash in accordance with the Signal Plans.
2. Enable Simultaneous Gap-Out for all phases.
3. Program phases 2 and 6 for Start Up In Green.
4. Program phases 4 and 6 for 'STARTUP PED CALL'.
5. Program phases 2 and 6 for Yellow Flash.
6. The cabinet and controller are part of the NC 18 (Sterling St)/SR 1922 (Enola Rd) Closed Loop System.

EQUIPMENT INFORMATION

CONTROLLER.....2070L
CABINET.....332 /W/ AUX
SOFTWARE.....ECONOLITE OASIS
CABINET MOUNT.....BASE
OUTPUT FILE POSITIONS...18 WITH AUX. OUTPUT FILE
LOAD SWITCHES USED.....S1,S2,S5,S6,S8,S9
PHASES USED.....1,2,4,4PED,6,6PED
OVERLAP "A".....NOT USED
OVERLAP "B".....NOT USED
OVERLAP "C".....NOT USED
OVERLAP "D".....NOT USED

INPUT FILE CONNECTION & PROGRAMMING CHART

LOOP NO.	LOOP TERMINAL	INPUT FILE POS.	PIN NO.	INPUT ASSIGNMENT NO.	DETECTOR NO.	NEMA PHASE	CALL	EXTEND	FULL TIME DELAY	STRETCH TIME	DELAY TIME
1A	TB2-1,2	I1U	56	18	1	1	Y	Y			
2A/S1	TB2-5,6	I2U	39	1	2	2/SYS	Y	Y			
2B/S2	TB2-7,8	I2L	43	5	12	2/SYS	Y	Y			
4A	TB4-9,10	I6U	41	3	4	4	Y	Y			
4B	TB4-11,12	I6L	45	7	14	4	Y	Y			15
Q1	TB6-1,2	I7U	65	27	*34	PRE3					
Q2	TB6-3,4	I7L	78	40	*44	PRE3					
**S45	TB6-9,10	I9U	60	22	11	SYS					
**S46	TB6-11,12	I9L	62	24	13	SYS					
6A/S3	TB3-5,6	J2U	40	2	6	6/SYS	Y	Y			
6B/S4	TB3-7,8	J2L	44	6	16	6/SYS	Y	Y			
**S47	TB7-9,10	J9U	59	21	15	SYS					
**S48	TB7-11,12	J9L	61	23	17	SYS					
PED PUSH BUTTONS											
P41,P42	TB8-5,6	I12L	69	31	PED 4	4 PED					
P61,P62	TB8-7,9	I13U	68	30	PED 6	6 PED					

NOTE:
INSTALL DC ISOLATORS IN INPUT FILE SLOTS I12 AND I13.

* See vehicle detector programming detail on Sheet 2.

** System detector only. Remove the vehicle phase assigned to this detector in the default programming.

INPUT FILE POSITION LEGEND: J2L
FILE J
SLOT 2
LOWER

SIGNAL HEAD HOOK-UP CHART

LOAD SWITCH NO.	S1	S2	S3	S4	S5	S6	S7	S8	S9	S10	S11	S12	AUX S1	AUX S2	AUX S3	AUX S4	AUX S5	AUX S6
CMU CHANNEL NO.	1	2	13	3	4	14	5	6	15	7	8	16	9	10	17	11	12	18
PHASE	1	2	2 PED	3	4	4 PED	5	6	6 PED	7	8	8 PED	OLA	OLB	SPARE	OLC	OLD	SPARE
SIGNAL HEAD NO.	11	21,22	NU	NU	41,42	P41, P42	NU	61,62	P61, P62	NU	NU	NU	NU	NU	NU	NU	NU	NU
RED		128			101			134										
YELLOW		129			102			135										
GREEN		130			103			136										
RED ARROW	125																	
YELLOW ARROW	126																	
GREEN ARROW	127																	
✋						104			119									
🚶						106			121									

NU = Not Used

COUNTDOWN PEDESTRIAN SIGNAL OPERATION

Countdown Ped Signals are required to display timing only during Ped Clearance Interval. Consult Ped Signal Module user's manual for instructions on selecting this feature.

THIS ELECTRICAL DETAIL IS FOR
THE SIGNAL DESIGN: 13-0687
DESIGNED: July 2011
SEALED: 12-12-2011
REVISED:

Signal Upgrade - Final Design (Sheet 1 of 2)

ELECTRICAL AND PROGRAMMING DETAILS FOR:

SR 1922 (Enola Rd)
at
I-40 Eastbound Ramp

Division 13 Burke County Morganton

PLAN DATE:	July 2011	REVIEWED BY:	N.M. Rodevick
PREPARED BY:	A.D. Klinksiek	REVIEWED BY:	H.L. Winstead

REVISIONS	INIT.	DATE

SEAL
NORTH CAROLINA PROFESSIONAL SEAL 07983 ENGINEER HARVEY L. WINSTEAD, JR.
SIGNATURE H.L. Winstead DATE 12/12/11
SIG. INVENTORY NO. 13-0687

Transportation Mobility and Safety Division
STATE OF NORTH CAROLINA DEPARTMENT OF TRANSPORTATION
Signal Management Section
750 N.Greenfield Pkwy,Garner,NC 27529

HNTB
HNTB NORTH CAROLINA, P.C.
343 E. Six Forks Road, Suite 200
Raleigh, North Carolina 27609
NC License No: C-1554

PROJECT REFERENCE NO.	SHEET NO.
U-2551	Sig. 42

LOGICAL I/O PROCESSOR PROGRAMMING DETAIL WHEN LEAVING PREEMPTOR SEQUENCE

(program controller as shown below)

1. FROM MAIN MENU PRESS '2' (PHASE CONTROL), THEN '1' (PHASE CONTROL FUNCTIONS). SCROLL TO THE BOTTOM OF THE MENU AND ENABLE ACT LOGIC COMMANDS 1,2, AND 3.
2. FROM MAIN MENU PRESS '6' (OUTPUTS), THEN '3' (LOGICAL I/O PROCESSOR).

NOTE: WHEN LEAVING PREEMPTOR SEQUENCE, THE FOLLOWING LOGIC STATEMENTS ENSURE ALL PHASES WITH A CALL WILL BE SERVED BEFORE PREEMPTOR CAN BE SERVICED AGAIN.

```
  LOGICAL I/O COMMAND #1  (+/-COMMAND#)
IF  ACTIVE PREEMPTION  #3  IS ON

                  ↓
            SCROLL DOWN
THEN:
SET LOGIC FLAG          #1 ON
```

NOTE: SETS LOGIC FLAG

PRESS '+'

```
  LOGICAL I/O COMMAND #2  (+/-COMMAND#)
IF  LOGIC FLAG          #1 IS ON

                  ↓
            SCROLL DOWN
THEN:
SET INPUT   ASSIGNMENT #40 OFF
SET INPUT   ASSIGNMENT #27 OFF
```

NOTE: INHIBITS PREEMPT BY DISCONNECTING QUEUE LOOPS

PRESS '+'

```
  LOGICAL I/O COMMAND #3  (+/-COMMAND#)
IF  LOGIC FLAG          #1 IS ON

                  ↓
            SCROLL DOWN
THEN:
     DELAY FOR 75.0 SECONDS
SET LOGIC FLAG          #1 OFF
```

NOTE: TIMEOUT FOR RECONNECTING QUEUE LOOPS

LOGIC I/O PROCESSOR PROGRAMMING COMPLETE

VEHICLE DETECTOR #34 SETTINGS FOR QUEUE PREEMPT

(program controller as shown below)

FROM MAIN MENU PRESS '7' (DETECTORS), THEN '1' (VEHICLE DETECTOR ASSIGNMENTS). PRESS '+' UNTIL DETECTOR #34 IS REACHED.

```
VEHICLE DETECTOR #34  SETTINGS (+-,1-64)
SETTING:                            (Y/N)
ENABLE DETECTOR....................Y
ENABLE LOGGING.....................N
ENABLE DIAGNOSTICS.................N
SPEED TRAP.........................N
CALL DETECTOR......................N
EXTENSION DETECTOR.................N
MODE 2 STOP BAR....................N
SWITCHING DETECTOR.................N
DUPLICATING DETECTOR...............N
ENABLE FULL TIME DELAY.............N
IF FAILED, SET MIN RECALL?.........N
IF FAILED, SET MAX1 RECALL?........N
IF FAILED, SET MAX2 RECALL?........N
PHASE#          |123456789101112131415 16
PHASES ASSIGNED |
SWITCH/DUPLICATE|
LOOP SIZE (0-255 FT)...............6
SPEED TRAP DISTANCE (0-255 FT)......0
STOP BAR TIME (0-255 SEC)...........0
STRETCH (0-25.5 SEC)................0.0
DELAY (0-255 SEC)...................0
MAX CALLS/MIN (0-255)..............255
MIN CALLS/DIAGNOSTIC PERIOD (0-255).0
MAX OCCUPANCY (0-100%).............100
EXTENSION DISABLE TIME (0-255 SEC)..0
QUEUE MAX OCCUPANCY TIME (0-255)....5
QUEUE GAP RESET TIME (0-25.5).......0.1
PREEMPTION INDEX FOR QUEUE (0-10)...3
```

VEHICLE DETECTOR #44 SETTINGS FOR QUEUE PREEMPT

(program controller as shown below)

FROM MAIN MENU PRESS '7' (DETECTORS), THEN '1' (VEHICLE DETECTOR ASSIGNMENTS). PRESS '+' UNTIL DETECTOR #44 IS REACHED.

```
VEHICLE DETECTOR #44  SETTINGS (+-,1-64)
SETTING:                            (Y/N)
ENABLE DETECTOR....................Y
ENABLE LOGGING.....................N
ENABLE DIAGNOSTICS.................N
SPEED TRAP.........................N
CALL DETECTOR......................N
EXTENSION DETECTOR.................N
MODE 2 STOP BAR....................N
SWITCHING DETECTOR.................N
DUPLICATING DETECTOR...............N
ENABLE FULL TIME DELAY.............N
IF FAILED, SET MIN RECALL?.........N
IF FAILED, SET MAX1 RECALL?........N
IF FAILED, SET MAX2 RECALL?........N
PHASE#          |123456789101112131415 16
PHASES ASSIGNED |
SWITCH/DUPLICATE|
LOOP SIZE (0-255 FT)...............6
SPEED TRAP DISTANCE (0-255 FT)......0
STOP BAR TIME (0-255 SEC)...........0
STRETCH (0-25.5 SEC)................0.0
DELAY (0-255 SEC)...................0
MAX CALLS/MIN (0-255)..............255
MIN CALLS/DIAGNOSTIC PERIOD (0-255).0
MAX OCCUPANCY (0-100%).............100
EXTENSION DISABLE TIME (0-255 SEC)..0
QUEUE MAX OCCUPANCY TIME (0-255)....5
QUEUE GAP RESET TIME (0-25.5).......0.1
PREEMPTION INDEX FOR QUEUE (0-10)...3
```

QUEUE PREEMPTION PROGRAMMING DETAIL

(program controller as shown below)

From Main Menu press 'A' (Preemption), then '1' (Standard Preemptions). Press 'NEXT' until Preemption #3 is reached.

```
   PREEMPTION  #3  SETTINGS (NEXT:1-10)
INTERVAL/TIMING |  CLEAR/DWELL PHASES
  GRN YEL  RED  |123456789101112131415 16
1 255  0.0  0.0 |   X
2   0  0.0  0.0 |
3   0  0.0  0.0 |
4   0  0.0  0.0 |
5   1  0.0  0.0 |X    X
EXIT CALLS      |
          OPTIONS
PRIORITY (Y/N TO SELECT) ............MED
DELAY TIMER (0-255 SEC) .............0.0
MIN GREEN BEFORE PRE (0= DEFAULT)....10
PED CLEAR BEFORE PRE (0= DEFAULT)....0
YELLOW CLEAR BEFORE PRE (0= DEFAULT).4.0
RED CLEAR BEFORE PRE (0= DEFAULT)....2.3
DWELL MIN TIMER (0-255 SEC) .........30
DWELL MAX TIMER (0=OFF,1-255MIN) ....0
DWELL HOLD-OVER TIMER (0-255) .......0
LATCH CALL? .........................N
LINK TO NEXT PREEMPT? ...............N
ENABLE BACKUP PROTECTION? ...........N
HOLD CLEAR 1 PHASES DURING DELAY? ...N
FAST GREEN FLASH DWELL PHASES? ......N
PED CLEARANCE THROUGH YELLOW? .......Y
INHIBIT OVERLAP GREEN EXTENSION? ....N
SERVICE DURING SOFTWARE FLASH? ......N
REST IN RED DURING DWELL INTERVAL? ..N
FLASH DWELL INTERVAL? ...............N
ALLOW PEDS IN DWELL INTERVAL? .......N
RE-TIME DWELL INTERVAL? .............N
OVERLAPS:                 | ABCDEFGHIJKLMNOP
DWELL INT FLASH YELLOW    |
OMIT OVERLAPS:            |
```

THIS ELECTRICAL DETAIL IS FOR
THE SIGNAL DESIGN: 13-0687
DESIGNED: July 2011
SEALED: 12-12-2011
REVISED:

HNTB NORTH CAROLINA, P.C.
343 E. Six Forks Road, Suite 200
Raleigh, North Carolina 27609
NC License No: C-1554

Signal Upgrade - Final Design (Sheet 2 of 2)

ELECTRICAL AND PROGRAMMING DETAILS FOR:

Prepared for: Transportation Mobility and Safety Division, Traffic Engineering Branch, Signal Management Section, Department of Transportation, State of North Carolina
750 N.Greenfield Pkwy,Garner,NC 27529

SR 1922 (Enola Rd)
at
I-40 Eastbound Ramp

Division 13 | Burke County | Morganton

PLAN DATE:	July 2011	REVIEWED BY:	N.M. Rodevick
PREPARED BY:	A.D. Klinksiek	REVIEWED BY:	H.L. Winstead

REVISIONS	INIT.	DATE

SEAL

NORTH CAROLINA PROFESSIONAL SEAL 07983 ENGINEER HARVEY L. WINSTEAD, JR.

SIGNATURE: HLWinstead | DATE: 12/12/11

SIG. INVENTORY NO. 13-0687

PROJECT REFERENCE NO.	SHEET NO.
U-2551	Sig. 43

PHASING DIAGRAM

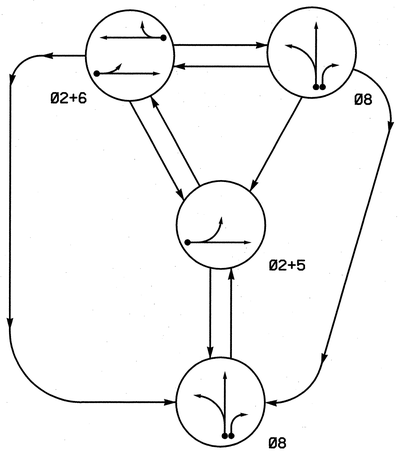

(Queue Preempt #3)

PHASING DIAGRAM DETECTION LEGEND

- DETECTED MOVEMENT
- UNDETECTED MOVEMENT (OVERLAP)
- UNSIGNALIZED MOVEMENT
- PEDESTRIAN MOVEMENT

TABLE OF OPERATION

SIGNAL FACE	PHASE Ø2+5	PHASE Ø2+6	PHASE Ø8	PHASE PREEMPT 3	FLASH
21	G	G	R	R	Y
22,23	G	G	R	R	Y
61,62	R	G	R	R	Y
81,82	R	R	G	G	R

SIGNAL FACE I.D.

All Heads L.E.D.

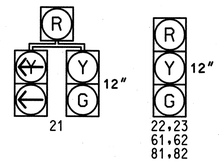

OASIS 2070L LOOP & DETECTOR INSTALLATION CHART

INDUCTIVE LOOPS					DETECTOR PROGRAMMING									
LOOP	SIZE (FT)	DISTANCE FROM STOPBAR (FT)	TURNS	NEW LOOP	PHASE	CALLING	EXTENSION	FULL TIME DELAY	STRETCH TIME	DELAY TIME	QUEUE MAX OCCUPANCY TIME	QUEUE GAP RESET TIME	PREEMPT INDEX FOR QUEUE	SYSTEM LOOP	NEW CARD
2A	6X6	70	EXIST	-	2	Y	Y	-	-	-	-	-	-	-	Y
5A	6X40	0	EXIST	-	5	Y	Y	-	-	20	-	-	-	-	Y
				-	2	Y	Y	-	-	-	-	-	-	-	Y
6A	6X6	70	3	Y	6	Y	Y	-	-	-	-	-	-	-	Y
8A	6X40	0	2-4-2	Y	8	Y	Y	-	-	-	-	-	-	-	Y
8B	6X40	0	2-4-2	Y	8	Y	Y	-	-	15	-	-	-	-	Y
*** Q1	6X6	625	6	Y	PRE3	-	-	-	-	-	5	0.1	3	-	Y

*** See Note 7.

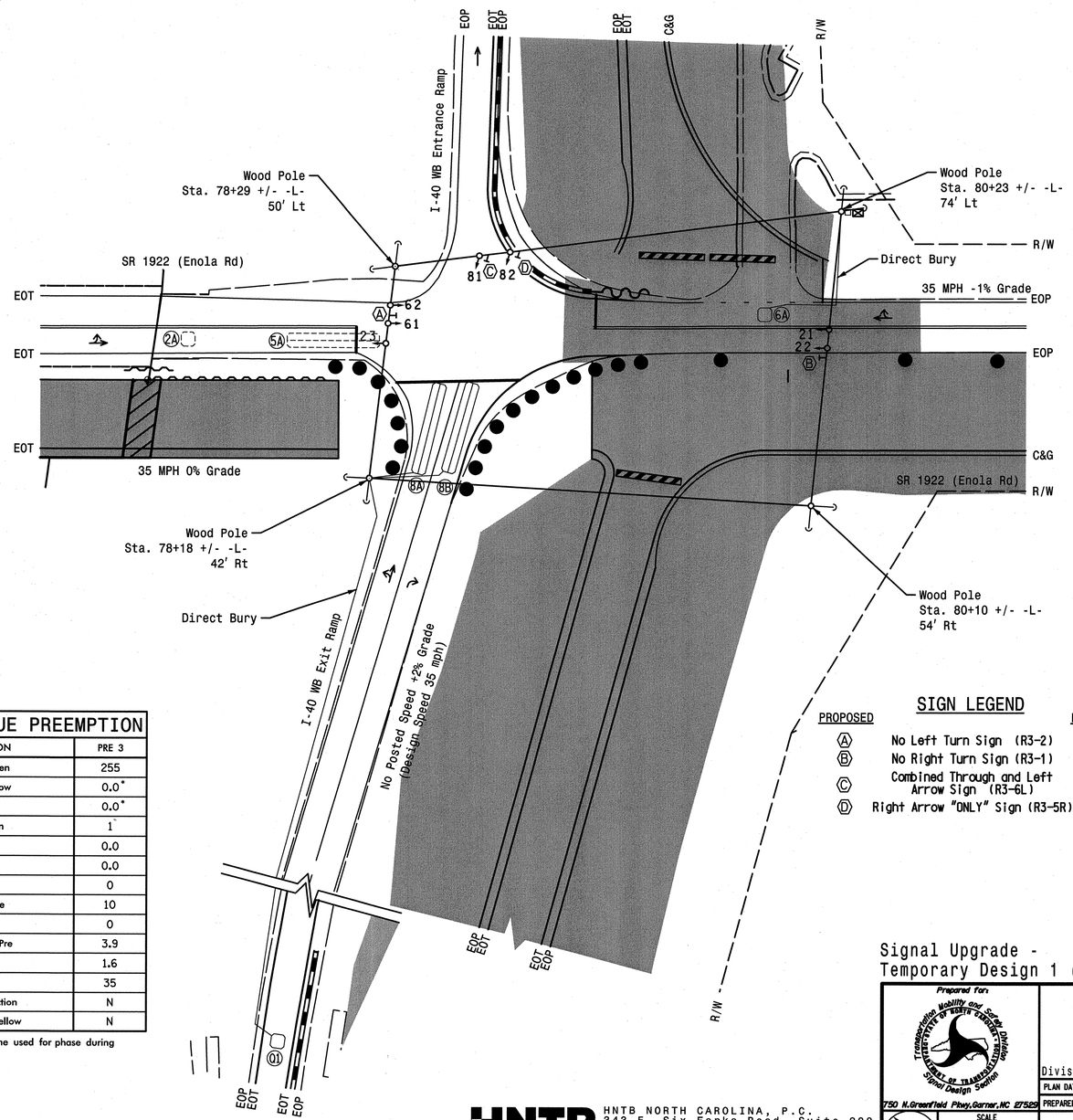

OASIS 2070L TIMING CHART

FEATURE	PHASE 2	PHASE 5	PHASE 6	PHASE 8
Min Green 1 *	10	7	10	7
Extension 1 *	3.0	2.0	3.0	2.0
Max Green 1 *	45	15	45	25
Yellow Clearance	3.8	3.0	3.9	3.7
Red Clearance	1.3	1.8	1.6	1.0
Red Revert	2.0	2.0	2.0	2.0
Walk 1 *	-	-	-	-
Don't Walk 1	-	-	-	-
Seconds Per Actuation *	-	-	-	-
Max Variable Initial *	-	-	-	-
Time Before Reduction *	-	-	-	-
Time To Reduce *	-	-	-	-
Minimum Gap	-	-	-	-
Recall Mode	MIN RECALL	-	MIN RECALL	-
Vehicle Call Memory	YELLOW	-	YELLOW	-
Dual Entry	-	-	-	-
Simultaneous Gap	ON	ON	ON	ON

* These values may be field adjusted. Do not adjust Min Green and Extension times for phases 2 and 6 lower than what is shown. Min Green for all other phases should not be lower than 4 seconds.

2070 QUEUE PREEMPTION

FUNCTION	PRE 3
Interval 1 – Dwell Green	255
Interval 1 – Dwell Yellow	0.0*
Interval 1 – Dwell Red	0.0*
Interval 5 – Exit Green	1
Interval 5 – Yellow	0.0
Interval 5 – Red	0.0
Delay Time	0
Min Green Before Pre	10
Ped Clear Before Pre	0
Yellow Clear Before Pre	3.9
Red Clear Before Pre	1.6
Dwell Min Time	35
Enable Backup Protection	N
Ped Clear Through Yellow	N

* Time defaults to time used for phase during normal operation.

3 Phase
Fully Actuated w/Queue Preemption
NC 18 (Sterling St)/SR 1922 (Enola Rd)
Closed Loop System

NOTES

1. Refer to "Roadway Standard Drawings NCDOT" dated January 2012 and "Standard Specifications for Roads and Structures" dated January 2012.
2. Do not program signal for late night flashing operation unless otherwise directed by the Engineer.
3. Phase 5 may be lagged.
4. Set all detector units to presence mode.
5. Locate new cabinet so as not to obstruct sight distance of vehicles turning right on red.
6. The cabinet should be designed to include an Auxiliary Output file for future use.
7. This loop serves as a queue backup detector. After 5 seconds of constant actuation, the detector unit places a call to the controller to preempt normal operation to clear out the storage lanes.
8. When leaving preemption, ensure all non-preempt phases are served before serving the preempt phase again.
9. Maximum times shown in timing chart are for free-run operation only. Coordinated signal system timing values supersede these values.
10. Closed loop system data: Controller Asset #:0592.

SIGN LEGEND

PROPOSED		EXISTING
A	No Left Turn Sign (R3-2)	N/A
B	No Right Turn Sign (R3-1)	N/A
C	Combined Through and Left Arrow Sign (R3-6L)	N/A
D	Right Arrow "ONLY" Sign (R3-5R)	N/A

LEGEND

PROPOSED		EXISTING
	Traffic Signal Head	
	Modified Signal Head	N/A
	Sign	
	Pedestrian Signal Head With Push Button & Sign	
	Signal Pole with Guy	
	Signal Pole with Sidewalk Guy	
	Inductive Loop Detector	
	Controller & Cabinet	
	Junction Box	
	2-in Underground Conduit	
N/A	Right of Way	
	Directional Arrow	
N/A	Guardrail	
	Construction Zone Drums	N/A
	Construction Barricade	N/A
	Construction Zone	N/A
	Portable Concrete Barrier	N/A
	Crash Cushion	N/A

Signal Upgrade -
Temporary Design 1 (Construction Phase I Step II)

Prepared for: Transportation Mobility and Safety Division, Signal Design Section, 750 N.Greenfield Pkwy, Garner, NC 27529

SR 1922 (Enola Rd)
at
I-40 Westbound Ramp

Division 13 Burke County Morganton

PLAN DATE:	July 2011	REVIEWED BY:	T.R. Terrell
PREPARED BY:	A.D. Klinksiek	REVIEWED BY:	N.M. Rodevick

SCALE 0 30 1"=30'

REVISIONS	INIT.	DATE

SEAL: NORTH CAROLINA PROFESSIONAL ENGINEER SEAL 031464 NATASHA M. RODEVICK

SIGNATURE Natasha M. Rodevick DATE 12-13-11

SIG. INVENTORY NO. 13-0592T1

HNTB NORTH CAROLINA, P.C.
343 E. Six Forks Road, Suite 200
Raleigh, North Carolina 27609
NC License No: C-1554

PROJECT REFERENCE NO.	SHEET NO.
U-2551	Sig. 44

EDI MODEL 2018ECL-NC CONFLICT MONITOR PROGRAMMING DETAIL

(remove jumpers and set switches as shown)

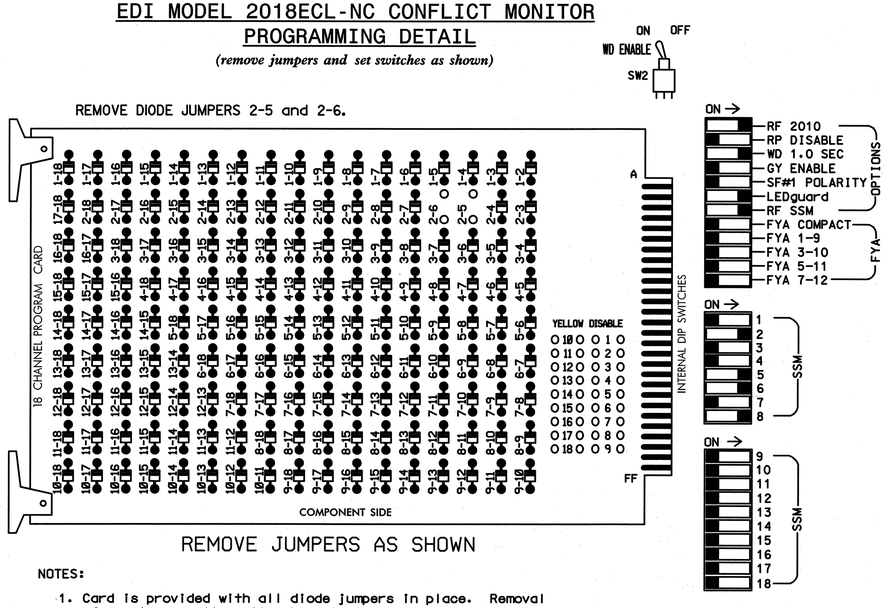

■ = DENOTES POSITION OF SWITCH

NOTES:

1. Card is provided with all diode jumpers in place. Removal of any jumper allows its channels to run concurrently.
2. Ensure jumpers SEL2-SEL5 and SEL9 are present on the monitor board.
3. Ensure that Red Enable is active at all times during normal operation.
4. Connect serial cable from conflict monitor to comm. port 1 of 2070 controller. Ensure conflict monitor communicates with 2070.

INPUT FILE POSITION LAYOUT

(front view)

		1	2	3	4	5	6	7	8	9	10	11	12	13	14
FILE "I"	U	SLOT EMPTY	Ø2 2A	SLOT EMPTY	WIRED INPUT ⊗	SLOT EMPTY	SLOT EMPTY	SLOT EMPTY	SLOT EMPTY	SLOT EMPTY	SLOT EMPTY	SLOT EMPTY	SLOT EMPTY	SLOT EMPTY	FS DC ISOLATOR
	L		NOT USED												ST DC ISOLATOR
FILE "J"	U	Ø5 5A	Ø6 6A	SLOT EMPTY	SLOT EMPTY	SLOT EMPTY	Ø8 8A	PRE3 Q1	SLOT EMPTY	SLOT EMPTY	SLOT EMPTY	SLOT EMPTY	SLOT EMPTY	SLOT EMPTY	SLOT EMPTY
	L	NOT USED	NOT USED				Ø8 8B	NOT USED							

EX.: 1A, 2A, ETC. = LOOP NO.'S

FS = FLASH SENSE
ST = STOP TIME

⊗ Wired Input - Do not populate slot with detector card

LOAD RESISTOR INSTALLATION DETAIL

(install resistor as shown below)

ACCEPTABLE VALUES

VALUE (ohms)	WATTAGE
1.5K - 1.9K	25W (min)
2.0K - 3.0K	10W (min)

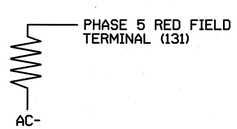

NOTES

1. To prevent "flash-conflict" problems, insert red flash program blocks for all unused vehicle load switches in the output file. The installer shall verify that signal heads flash in accordance with the Signal Plans.
2. Enable Simultaneous Gap-Out for all phases.
3. Program phases 2 and 6 for Start Up In Green.
4. Program phases 2 and 6 for Yellow Flash.
5. The cabinet and controller are part of the NC 18 (Sterling St)/SR 1922 (Enola Rd) Closed Loop System.

EQUIPMENT INFORMATION

CONTROLLER.....2070L
CABINET.....332 /W/ AUX
SOFTWARE.....ECONOLITE OASIS
CABINET MOUNT.....BASE
OUTPUT FILE POSITIONS...18 WITH AUX. OUTPUT FILE
LOAD SWITCHES USED.....S2,S7,S8,S11
PHASES USED.....2,5,6,8
OVERLAP "A".....NOT USED
OVERLAP "B".....NOT USED
OVERLAP "C".....NOT USED
OVERLAP "D".....NOT USED

INPUT FILE CONNECTION & PROGRAMMING CHART

LOOP NO.	LOOP TERMINAL	INPUT FILE POS.	PIN NO.	INPUT ASSIGNMENT NO.	DETECTOR NO.	NEMA PHASE	CALL	EXTEND	FULL TIME DELAY	STRETCH TIME	DELAY TIME
2A	TB2-5,6	I2U	39	1	2	2	Y	Y			
5A[1]	TB3-1,2	J1U	55	17	5	5	Y	Y			20
	-	I4U	47	9	22	2	Y	Y			
6A	TB3-5,6	J2U	40	2	6	6	Y	Y			
8A	TB5-9,10	J6U	42	4	8	8	Y	Y			
8B	TB5-11,12	J6L	46	8	18	8	Y	Y			15
Q1	TB7-1,2	J7U	66	28	*38	PRE3					

[1] Add jumper from J1-W to I4-W, on rear of input file.
*See vehicle detector programming detail on Sheet 2.

INPUT FILE POSITION LEGEND: J2L
FILE J
SLOT 2
LOWER

SIGNAL HEAD HOOK-UP CHART

LOAD SWITCH NO.	S1	S2	S3	S4	S5	S6	S7	S8	S9	S10	S11	S12	AUX S1	AUX S2	AUX S3	AUX S4	AUX S5	AUX S6
CMU CHANNEL NO.	1	2	13	3	4	14	5	6	15	7	8	16	9	10	17	11	12	18
PHASE	1	2	2 PED	3	4	4 PED	5	6	6 PED	7	8	8 PED	OLA	OLB	SPARE	OLC	OLD	SPARE
SIGNAL HEAD NO.	NU	21,22, 23	NU	NU	NU	NU	21	61,62	NU	NU	81,82	NU	NU	NU	NU	NU	NU	NU
RED		128					*	134			107							
YELLOW		129						135			108							
GREEN		130						136			109							
RED ARROW																		
YELLOW ARROW							132											
GREEN ARROW							133											

NU = Not Used
* Denotes install load resistor. See load resistor installation detail this sheet.

THIS ELECTRICAL DETAIL IS FOR
THE SIGNAL DESIGN: 13-0592T1
DESIGNED: July 2011
SEALED: 12-12-2011
REVISED:

Signal Upgrade - Temporary Design 1
(Construction Phase I Step II) (Sheet 1 of 2)

HNTB NORTH CAROLINA, P.C.
343 E. Six Forks Road, Suite 200
Raleigh, North Carolina 27609
NC License No: C-1554

ELECTRICAL AND PROGRAMMING DETAILS FOR:

Prepared for: Transportation Mobility and Safety Division, Signals Management Section, Department of Transportation, State of North Carolina
750 N.Greenfield Pkwy, Garner, NC 27529

SR 1922 (Enola Rd)
at
I-40 Westbound Ramp

Division 13 Burke County Morganton

PLAN DATE:	July 2011	REVIEWED BY:	N.M. Rodevick
PREPARED BY:	A.D. Klinksiek	REVIEWED BY:	H.L. Winstead

REVISIONS	INIT.	DATE

SEAL
NORTH CAROLINA PROFESSIONAL SEAL 07983 ENGINEER HARVEY L. WINSTEAD, JR.
SIGNATURE DATE 12/12/11
SIG. INVENTORY NO. 13-0592T1

PROJECT REFERENCE NO.	SHEET NO.
U-2551	Sig. 45

LOGICAL I/O PROCESSOR PROGRAMMING DETAIL WHEN LEAVING PREEMPTOR SEQUENCE

(program controller as shown below)

1. FROM MAIN MENU PRESS '2' (PHASE CONTROL), THEN '1' (PHASE CONTROL FUNCTIONS). SCROLL TO THE BOTTOM OF THE MENU AND ENABLE ACT LOGIC COMMANDS 1,2, AND 3.
2. FROM MAIN MENU PRESS '6' (OUTPUTS), THEN '3' (LOGICAL I/O PROCESSOR).

NOTE: WHEN LEAVING PREEMPTOR SEQUENCE, THE FOLLOWING LOGIC STATEMENTS ENSURE ALL PHASES WITH A CALL WILL BE SERVED BEFORE PREEMPTOR CAN BE SERVICED AGAIN.

```
LOGICAL I/O COMMAND #1  (+/-COMMAND#)
IF  ACTIVE PREEMPTION  #3  IS ON

                 SCROLL DOWN
THEN:
SET LOGIC FLAG          #1 ON
```

NOTE: SETS LOGIC FLAG

PRESS '+'

```
LOGICAL I/O COMMAND #2  (+/-COMMAND#)
IF  LOGIC FLAG          #1 IS ON

                 SCROLL DOWN
THEN:
SET INPUT   ASSIGNMENT #28 OFF
```

NOTE: INHIBITS PREEMPT BY DISCONNECTING QUEUE LOOPS

PRESS '+'

```
LOGICAL I/O COMMAND #3  (+/-COMMAND#)
IF  LOGIC FLAG          #1 IS ON

                 SCROLL DOWN
THEN:
    DELAY FOR 75.0 SECONDS
SET LOGIC FLAG          #1 OFF
```

NOTE: TIMEOUT FOR RECONNECTING QUEUE LOOPS

LOGIC I/O PROCESSOR PROGRAMMING COMPLETE

VEHICLE DETECTOR #38 SETTINGS FOR QUEUE PREEMPT

(program controller as shown below)

FROM MAIN MENU PRESS '7' (DETECTORS), THEN '1' (VEHICLE DETECTOR ASSIGNMENTS). PRESS '+' UNTIL DETECTOR #38 IS REACHED.

```
VEHICLE DETECTOR #38  SETTINGS (+-,1-64)
SETTING:                              (Y/N)
ENABLE DETECTOR....................Y
ENABLE LOGGING.....................N
ENABLE DIAGNOSTICS.................N
SPEED TRAP.........................N
CALL DETECTOR......................N
EXTENSION DETECTOR.................N
MODE 2 STOP BAR....................N
SWITCHING DETECTOR.................N
DUPLICATING DETECTOR...............N
ENABLE FULL TIME DELAY.............N
IF FAILED, SET MIN RECALL?.........N
IF FAILED, SET MAX1 RECALL?........N
IF FAILED, SET MAX2 RECALL?........N
PHASE#          |123456789101112131415 16
PHASES ASSIGNED |
SWITCH/DUPLICATE|
LOOP SIZE (0-255 FT)...............6
SPEED TRAP DISTANCE (0-255 FT)......0
STOP BAR TIME (0-255 SEC)...........0
STRETCH (0-25.5 SEC)................0.0
DELAY (0-255 SEC)...................0
MAX CALLS/MIN (0-255)..............255
MIN CALLS/DIAGNOSTIC PERIOD (0-255).0
MAX OCCUPANCY (0-100%).............100
EXTENSION DISABLE TIME (0-255 SEC)..0
QUEUE MAX OCCUPANCY TIME (0-255)....5
QUEUE GAP RESET TIME (0-25.5).......0.1
PREEMPTION INDEX FOR QUEUE (0-10)...3
```

QUEUE PREEMPTION PROGRAMMING DETAIL

(program controller as shown below)

From Main Menu press 'A' (Preemption), then '1' (Standard Preemptions). Press 'NEXT' until Preemption #3 is reached.

```
   PREEMPTION  #3  SETTINGS (NEXT:1-10)
INTERVAL/TIMING |  CLEAR/DWELL PHASES
  GRN YEL  RED  |123456789101112131415 16
1 255  0.0  0.0 |       X
2   0  0.0  0.0 |
3   0  0.0  0.0 |
4   0  0.0  0.0 |
5   1  0.0  0.0 | X  X
EXIT CALLS      |
          OPTIONS
PRIORITY (Y/N TO SELECT) ............MED
DELAY TIMER (0-255 SEC) .............0.0
MIN GREEN BEFORE PRE (0= DEFAULT)....10
PED CLEAR BEFORE PRE (0= DEFAULT)....0
YELLOW CLEAR BEFORE PRE (0= DEFAULT).3.9
RED CLEAR BEFORE PRE (0= DEFAULT)....1.6
DWELL MIN TIMER (0-255 SEC) .........35
DWELL MAX TIMER (0=OFF,1-255MIN) ....0
DWELL HOLD-OVER TIMER (0-255) .......0
LATCH CALL? .........................N
LINK TO NEXT PREEMPT? ...............N
ENABLE BACKUP PROTECTION? ...........N
HOLD CLEAR 1 PHASES DURING DELAY? ...N
FAST GREEN FLASH DWELL PHASES? ......N
PED CLEARANCE THROUGH YELLOW? .......N
INHIBIT OVERLAP GREEN EXTENSION? ....N
SERVICE DURING SOFTWARE FLASH? ......N
REST IN RED DURING DWELL INTERVAL? ..N
FLASH DWELL INTERVAL? ...............N
ALLOW PEDS IN DWELL INTERVAL? .......N
RE-TIME DWELL INTERVAL? .............N
OVERLAPS:                | ABCDEFGHIJKLMNOP
DWELL INT FLASH YELLOW   |
OMIT OVERLAPS:           |
```

THIS ELECTRICAL DETAIL IS FOR
THE SIGNAL DESIGN: 13-0592T1
DESIGNED: July 2011
SEALED: 12-12-2011
REVISED:

Signal Upgrade - Temporary Design 1
(Construction Phase I Step II) (Sheet 2 of 2)

HNTB NORTH CAROLINA, P.C.
343 E. Six Forks Road, Suite 200
Raleigh, North Carolina 27609
NC License No: C-1554

ELECTRICAL AND PROGRAMMING DETAILS FOR:

Prepared for: Transportation Mobility and Safety Division, State of North Carolina, Dept. of Transportation, Signal Management Section
750 N.Greenfield Pkwy,Garner,NC 27529

SR 1922 (Enola Rd)
at
I-40 Westbound Ramp

Division 13 Burke County Morganton

PLAN DATE:	July 2011	REVIEWED BY:	N.M. Rodevick
PREPARED BY:	A.D. Klinksiek	REVIEWED BY:	H.L. Winstead

REVISIONS	INIT.	DATE

SEAL
NORTH CAROLINA PROFESSIONAL SEAL 07983 ENGINEER HARVEY L. WINSTEAD, JR.

SIGNATURE H.L. Winstead DATE 12/12/11

SIG. INVENTORY NO. 13-0592T1

PROJECT REFERENCE NO.	SHEET NO.
U-2551	Sig. 46

PHASING DIAGRAM

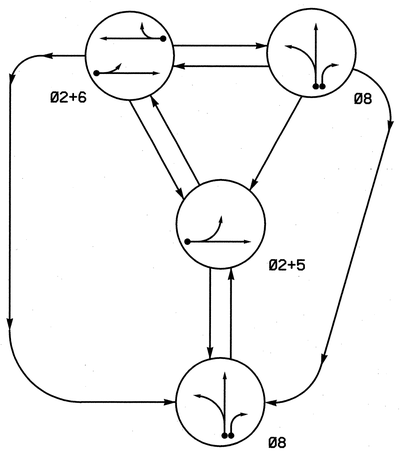

(Queue Preempt #3)

PHASING DIAGRAM DETECTION LEGEND

- DETECTED MOVEMENT
- UNDETECTED MOVEMENT (OVERLAP)
- UNSIGNALIZED MOVEMENT
- PEDESTRIAN MOVEMENT

TABLE OF OPERATION

SIGNAL FACE	PHASE Ø2+5	Ø2+6	Ø8	PREEMPT 3	FLASH
21	G	G	R	R	Y
22	G	G	R	R	Y
61,62	R	G	R	R	Y
81,82	R	R	G	G	R

SIGNAL FACE I.D.

All Heads L.E.D.

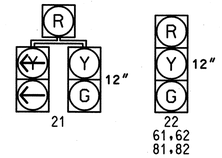

OASIS 2070L LOOP & DETECTOR INSTALLATION CHART

INDUCTIVE LOOPS					DETECTOR PROGRAMMING									
LOOP	SIZE (FT)	DISTANCE FROM STOPBAR (FT)	TURNS	NEW LOOP	PHASE	CALLING	EXTENSION	FULL TIME DELAY	STRETCH TIME	DELAY TIME	QUEUE MAX OCCUPANCY TIME	QUEUE GAP RESET TIME	PREEMPT INDEX FOR QUEUE	SYSTEM LOOP	NEW CARD
5A	6X40	0	2-4-2	Y	5	Y	Y	-	-	20	-	-	-	-	-
					2	Y	Y	-	-	-	-	-	-	-	-
6A	6X6	70	4	Y	6	Y	Y	-	-	-	-	-	-	-	-
8A	6X40	0	2-4-2	Y	8	Y	Y	-	-	-	-	-	-	-	-
8B	6X40	0	2-4-2	Y	8	Y	Y	-	-	15	-	-	-	-	-
*** Q1	6X6	667	6	Y	PRE3	-	-	-	-	-	5	0.1	3	-	-

*** See Note 6.

3 Phase
Fully Actuated w/Queue Preemption
NC 18 (Sterling St)/SR 1922 (Enola Rd)
Closed Loop System

NOTES

1. Refer to "Roadway Standard Drawings NCDOT" dated January 2012 and "Standard Specifications for Roads and Structures" dated January 2012.
2. Do not program signal for late night flashing operation unless otherwise directed by the Engineer.
3. Reposition existing signal heads numbered 81, 82, Sign Ⓒ, and Sign Ⓓ.
4. Phase 5 may be lagged.
5. Set all detector units to presence mode.
6. These loops serve as queue backup detectors. After 5 seconds of constant actuation, the detector unit places a call to the controller to preempt normal operation to clear out the storage lanes.
7. When leaving preemption, ensure all non-preempt phases are served before serving the preempt phase again.
8. Maximum times shown in timing chart are for free-run operation only. Coordinated signal system timing values supersede these values.
9. Closed loop system data: Controller Asset #:0592.

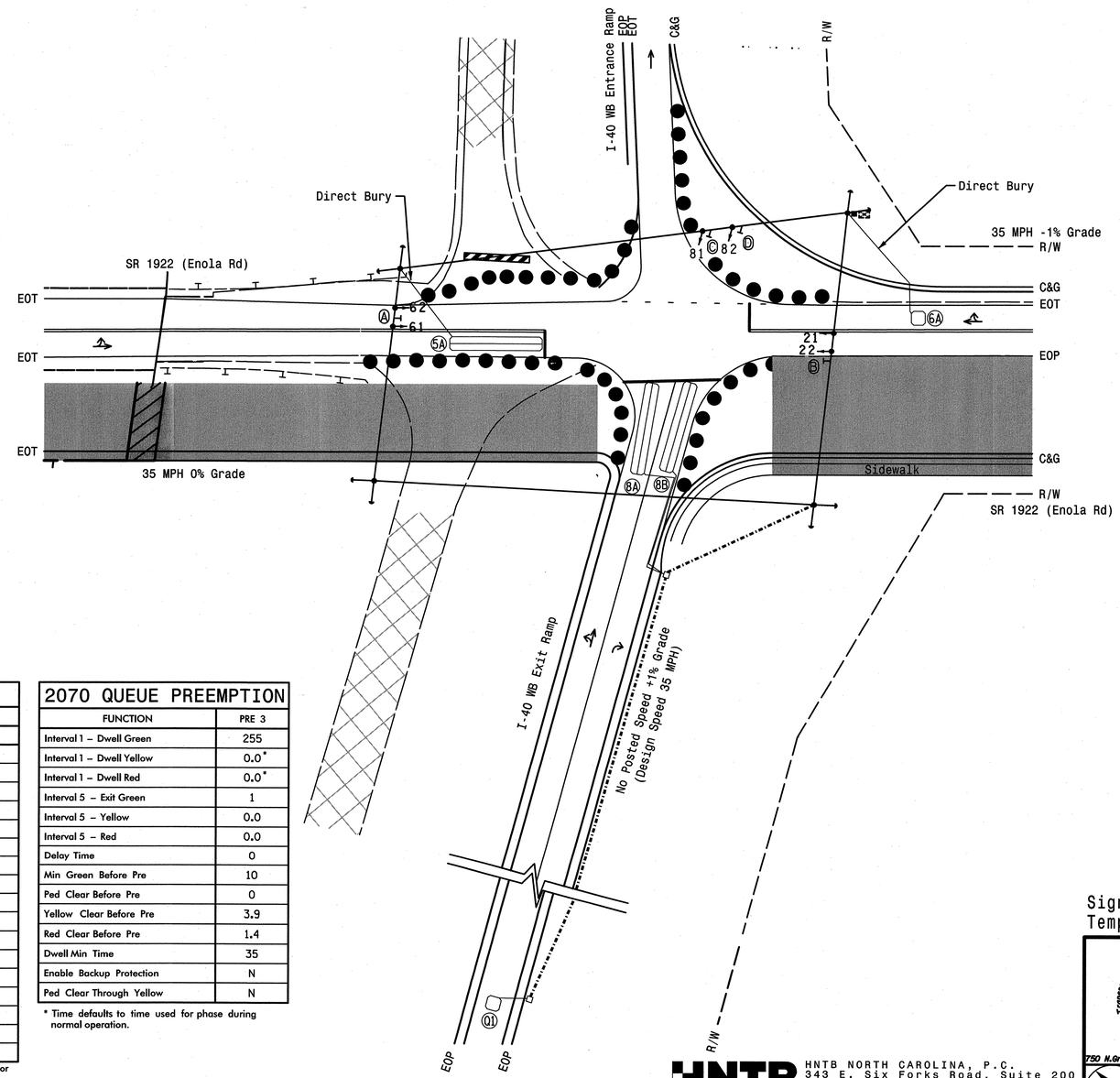

LEGEND

PROPOSED		EXISTING
	Traffic Signal Head	
	Modified Signal Head	N/A
	Sign	
	Pedestrian Signal Head With Push Button & Sign	
	Signal Pole with Guy	
	Signal Pole with Sidewalk Guy	
	Inductive Loop Detector	
	Controller & Cabinet	
	Junction Box	
	2-in Underground Conduit	
N/A	Right of Way	
	Directional Arrow	
N/A	Guardrail	
N/A	No Left Turn Sign (R3-2)	Ⓐ
N/A	No Right Turn Sign (R3-1)	Ⓑ
N/A	Combined Through and Left Arrow Sign (R3-6L)	Ⓒ
Ⓓ	Right Arrow "ONLY" Sign (R3-5R)	Ⓓ
	Construction Zone Drums	N/A
	Construction Barricade	N/A
	Construction Zone	N/A
	Portable Concrete Barrier	N/A
	Crash Cushion	N/A

OASIS 2070L TIMING CHART

FEATURE	PHASE 2	5	6	8
Min Green 1 *	10	7	10	7
Extension 1 *	3.0	2.0	3.0	2.0
Max Green 1 *	45	15	45	25
Yellow Clearance	3.9	3.0	3.8	3.8
Red Clearance	1.4	1.8	1.0	1.0
Red Revert	2.0	2.0	2.0	2.0
Walk 1 *	-	-	-	-
Don't Walk 1	-	-	-	-
Seconds Per Actuation *	-	-	-	-
Max Variable Initial *	-	-	-	-
Time Before Reduction *	-	-	-	-
Time To Reduce *	-	-	-	-
Minimum Gap	-	-	-	-
Recall Mode	MIN RECALL	-	MIN RECALL	-
Vehicle Call Memory	YELLOW	-	YELLOW	-
Dual Entry	-	-	-	-
Simultaneous Gap	ON	ON	ON	ON

* These values may be field adjusted. Do not adjust Min Green and Extension times for phases 2 and 6 lower than what is shown. Min Green for all other phases should not be lower than 4 seconds.

2070 QUEUE PREEMPTION

FUNCTION	PRE 3
Interval 1 – Dwell Green	255
Interval 1 – Dwell Yellow	0.0*
Interval 1 – Dwell Red	0.0*
Interval 5 – Exit Green	1
Interval 5 – Yellow	0.0
Interval 5 – Red	0.0
Delay Time	0
Min Green Before Pre	10
Ped Clear Before Pre	0
Yellow Clear Before Pre	3.9
Red Clear Before Pre	1.4
Dwell Min Time	35
Enable Backup Protection	N
Ped Clear Through Yellow	N

* Time defaults to time used for phase during normal operation.

Signal Upgrade -
Temporary Design 2 (Construction Phase I Step VI)

HNTB NORTH CAROLINA, P.C.
343 E. Six Forks Road, Suite 200
Raleigh, North Carolina 27609
NC License No: C-1554

Prepared For: Transportation Mobility and Safety Division, Signal Design Section, 750 N.Greenfield Pkwy, Garner, NC 27529

SR 1922 (Enola Rd)
at
I-40 Westbound Ramp

Division 13 Burke County Morganton

PLAN DATE:	July 2011	REVIEWED BY:	T.R. Terrell
PREPARED BY:	A.D. Klinksiek	REVIEWED BY:	N.M. Rodevick

SCALE 0 30 1"=30'

REVISIONS	INIT.	DATE

SEAL: NORTH CAROLINA PROFESSIONAL SEAL 031464 ENGINEER NATASHA M. RODEVICK

SIGNATURE: Natasha M. Rodevick DATE: 12-12-11

SIG. INVENTORY NO. 13-0592T2

PROJECT REFERENCE NO.	SHEET NO.
U-2551	Sig. 47

EDI MODEL 2018ECL-NC CONFLICT MONITOR PROGRAMMING DETAIL

(remove jumpers and set switches as shown)

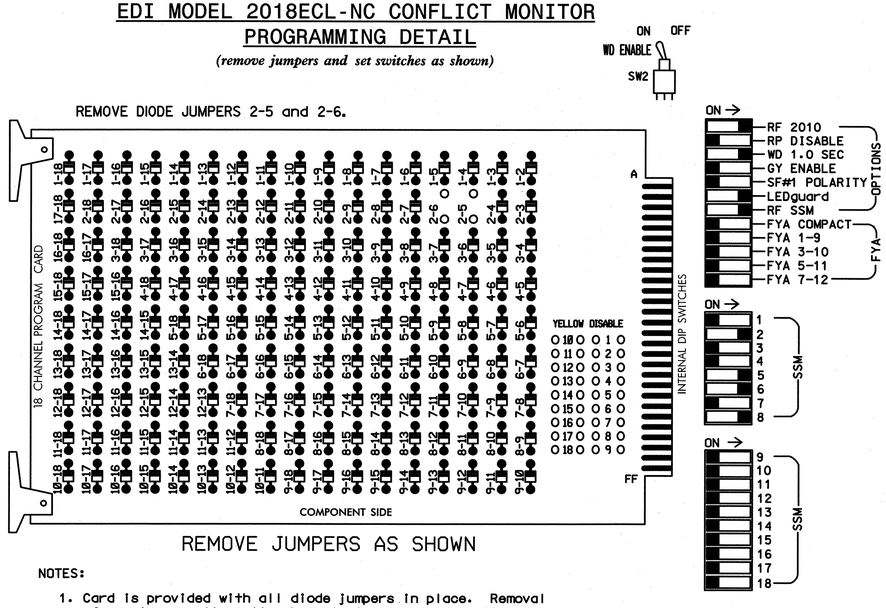

NOTES:

1. Card is provided with all diode jumpers in place. Removal of any jumper allows its channels to run concurrently.
2. Ensure jumpers SEL2-SEL5 and SEL9 are present on the monitor board.
3. Ensure that Red Enable is active at all times during normal operation.
4. Connect serial cable from conflict monitor to comm. port 1 of 2070 controller. Ensure conflict monitor communicates with 2070.

INPUT FILE POSITION LAYOUT

(front view)

		1	2	3	4	5	6	7	8	9	10	11	12	13	14
FILE "I"	U	SLOT EMPTY	SLOT EMPTY	SLOT EMPTY	WIRED INPUT ⊗	SLOT EMPTY	SLOT EMPTY	SLOT EMPTY	SLOT EMPTY	SLOT EMPTY	SLOT EMPTY	SLOT EMPTY	SLOT EMPTY	SLOT EMPTY	FS DC ISOLATOR
	L														ST DC ISOLATOR
FILE "J"	U	Ø5 5A	Ø6 6A	SLOT EMPTY	SLOT EMPTY	SLOT EMPTY	Ø8 8A	PRE3 Q1	SLOT EMPTY	SLOT EMPTY	SLOT EMPTY	SLOT EMPTY	SLOT EMPTY	SLOT EMPTY	SLOT EMPTY
	L	NOT USED	NOT USED				Ø8 8B	NOT USED							

EX.: 1A, 2A, ETC. = LOOP NO.'S

FS = FLASH SENSE
ST = STOP TIME

⊗ Wired Input - Do not populate slot with detector card

LOAD RESISTOR INSTALLATION DETAIL

(install resistor as shown below)

ACCEPTABLE VALUES

VALUE (ohms)	WATTAGE
1.5K - 1.9K	25W (min)
2.0K - 3.0K	10W (min)

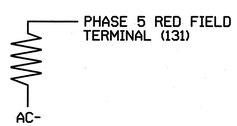

NOTES

1. To prevent "flash-conflict" problems, insert red flash program blocks for all unused vehicle load switches in the output file. The installer shall verify that signal heads flash in accordance with the Signal Plans.
2. Enable Simultaneous Gap-Out for all phases.
3. Program phases 2 and 6 for Start Up In Green.
4. Program phases 2 and 6 for Yellow Flash.
5. The cabinet and controller are part of the NC 18 (Sterling St)/SR 1922 (Enola Rd) Closed Loop System.

SIGNAL HEAD HOOK-UP CHART

LOAD SWITCH NO.	S1	S2	S3	S4	S5	S6	S7	S8	S9	S10	S11	S12	AUX S1	AUX S2	AUX S3	AUX S4	AUX S5	AUX S6
CMU CHANNEL NO.	1	2	13	3	4	14	5	6	15	7	8	16	9	10	17	11	12	18
PHASE	1	2	2 PED	3	4	4 PED	5	6	6 PED	7	8	8 PED	OLA	OLB	SPARE	OLC	OLD	SPARE
SIGNAL HEAD NO.	NU	21,22	NU	NU	NU	NU	21	61,62	NU	NU	81,82	NU	NU	NU	NU	NU	NU	NU
RED		128					*	134			107							
YELLOW		129						135			108							
GREEN		130						136			109							
RED ARROW																		
YELLOW ARROW							132											
GREEN ARROW							133											

NU = Not Used

* Denotes install load resistor. See load resistor installation detail this sheet.

EQUIPMENT INFORMATION

CONTROLLER.....2070L
CABINET.....332 /W/ AUX
SOFTWARE.....ECONOLITE OASIS
CABINET MOUNT.....BASE
OUTPUT FILE POSITIONS...18 WITH AUX. OUTPUT FILE
LOAD SWITCHES USED.....S2,S7,S8,S11
PHASES USED.....2,5,6,8
OVERLAP "A".....NOT USED
OVERLAP "B".....NOT USED
OVERLAP "C".....NOT USED
OVERLAP "D".....NOT USED

INPUT FILE CONNECTION & PROGRAMMING CHART

LOOP NO.	LOOP TERMINAL	INPUT FILE POS.	PIN NO.	INPUT ASSIGNMENT NO.	DETECTOR NO.	NEMA PHASE	CALL	EXTEND	FULL TIME DELAY	STRETCH TIME	DELAY TIME
5A[1]	TB3-1,2	J1U	55	17	5	5	Y	Y			20
	-	I4U	47	9	22	2	Y	Y			
6A	TB3-5,6	J2U	40	2	6	6	Y	Y			
8A	TB5-9,10	J6U	42	4	8	8	Y	Y			
8B	TB5-11,12	J6L	46	8	18	8	Y	Y			15
Q1	TB7-1,2	J7U	66	28	*38	PRE3					

[1]Add jumper from J1-W to I4-W. on rear of input file.
*See vehicle detector programming detail on Sheet 2.

INPUT FILE POSITION LEGEND: J2L
FILE J
SLOT 2
LOWER

THIS ELECTRICAL DETAIL IS FOR
THE SIGNAL DESIGN: 13-0592T2
DESIGNED: July 2011
SEALED: 12-12-2011
REVISED:

Signal Upgrade - Temporary Design 2
(Construction Phase I Step VI) (Sheet 1 of 2)

ELECTRICAL AND PROGRAMMING DETAILS FOR:

Prepared for: Transportation Mobility and Safety Division, Traffic Engineering Branch, Signal Management Section, Department of Transportation, State of North Carolina
750 N.Greenfield Pkwy,Garner,NC 27529

SR 1922 (Enola Rd)
at
I-40 Westbound Ramp

Division 13 Burke County Morganton

PLAN DATE:	July 2011	REVIEWED BY:	N.W. Rodevick
PREPARED BY:	A.D. Klinksiek	REVIEWED BY:	H.L. Winstead

REVISIONS	INIT.	DATE

SEAL
NORTH CAROLINA PROFESSIONAL SEAL 07983 ENGINEER HARVEY L. WINSTEAD, JR.
SIGNATURE DATE 12/12/11
SIG. INVENTORY NO. 13-0592T2

HNTB
HNTB NORTH CAROLINA, P.C.
343 E. Six Forks Road, Suite 200
Raleigh, North Carolina 27609
NC License No: C-1554

PROJECT REFERENCE NO.	SHEET NO.
U-2551	Sig. 48

LOGICAL I/O PROCESSOR PROGRAMMING DETAIL WHEN LEAVING PREEMPTOR SEQUENCE

(program controller as shown below)

1. FROM MAIN MENU PRESS '2' (PHASE CONTROL), THEN '1' (PHASE CONTROL FUNCTIONS). SCROLL TO THE BOTTOM OF THE MENU AND ENABLE ACT LOGIC COMMANDS 1,2, AND 3.
2. FROM MAIN MENU PRESS '6' (OUTPUTS), THEN '3' (LOGICAL I/O PROCESSOR).

NOTE: WHEN LEAVING PREEMPTOR SEQUENCE, THE FOLLOWING LOGIC STATEMENTS ENSURE ALL PHASES WITH A CALL WILL BE SERVED BEFORE PREEMPTOR CAN BE SERVICED AGAIN.

```
LOGICAL I/O COMMAND #1  (+/-COMMAND#)
IF  ACTIVE PREEMPTION  #3  IS ON

                 ↓
            SCROLL DOWN
THEN:
SET LOGIC FLAG          #1 ON
```

NOTE: SETS LOGIC FLAG

PRESS '+'

```
LOGICAL I/O COMMAND #2  (+/-COMMAND#)
IF  LOGIC FLAG          #1 IS ON

                 ↓
            SCROLL DOWN
THEN:
SET INPUT   ASSIGNMENT #28 OFF
```

NOTE: INHIBITS PREEMPT BY DISCONNECTING QUEUE LOOPS

PRESS '+'

```
LOGICAL I/O COMMAND #3  (+/-COMMAND#)
IF  LOGIC FLAG          #1 IS ON

                 ↓
            SCROLL DOWN
THEN:
    DELAY FOR 75.0 SECONDS
SET LOGIC FLAG          #1 OFF
```

NOTE: TIMEOUT FOR RECONNECTING QUEUE LOOPS

LOGIC I/O PROCESSOR PROGRAMMING COMPLETE

VEHICLE DETECTOR #38 SETTINGS FOR QUEUE PREEMPT

(program controller as shown below)

FROM MAIN MENU PRESS '7' (DETECTORS), THEN '1' (VEHICLE DETECTOR ASSIGNMENTS). PRESS '+' UNTIL DETECTOR #38 IS REACHED.

```
VEHICLE DETECTOR #38  SETTINGS (+-,1-64)
SETTING:                              (Y/N)
ENABLE DETECTOR....................Y
ENABLE LOGGING.....................N
ENABLE DIAGNOSTICS.................N
SPEED TRAP.........................N
CALL DETECTOR......................N
EXTENSION DETECTOR.................N
MODE 2 STOP BAR....................N
SWITCHING DETECTOR.................N
DUPLICATING DETECTOR...............N
ENABLE FULL TIME DELAY.............N
IF FAILED, SET MIN RECALL?.........N
IF FAILED, SET MAX1 RECALL?........N
IF FAILED, SET MAX2 RECALL?........N
PHASE#          |123456789101112131415 16
PHASES ASSIGNED |
SWITCH/DUPLICATE|
LOOP SIZE (0-255 FT)...............6
SPEED TRAP DISTANCE (0-255 FT).....0
STOP BAR TIME (0-255 SEC)..........0
STRETCH (0-25.5 SEC)...............0.0
DELAY (0-255 SEC)..................0
MAX CALLS/MIN (0-255)..............255
MIN CALLS/DIAGNOSTIC PERIOD (0-255).0
MAX OCCUPANCY (0-100%).............100
EXTENSION DISABLE TIME (0-255 SEC)..0
QUEUE MAX OCCUPANCY TIME (0-255)....5
QUEUE GAP RESET TIME (0-25.5).......0.1
PREEMPTION INDEX FOR QUEUE (0-10)...3
```

QUEUE PREEMPTION PROGRAMMING DETAIL

(program controller as shown below)

From Main Menu press 'A' (Preemption), then '1' (Standard Preemptions). Press 'NEXT' until Preemption #3 is reached.

```
   PREEMPTION  #3  SETTINGS (NEXT:1-10)
INTERVAL/TIMING |  CLEAR/DWELL PHASES
 GRN YEL  RED   |123456789101112131415 16
1 255  0.0  0.0 |       X
2   0  0.0  0.0 |
3   0  0.0  0.0 |
4   0  0.0  0.0 |
5   1  0.0  0.0 | X  X
EXIT CALLS      |
            OPTIONS
PRIORITY (Y/N TO SELECT) ............MED
DELAY TIMER (0-255 SEC) .............0.0
MIN GREEN BEFORE PRE (0= DEFAULT)....10
PED CLEAR BEFORE PRE (0= DEFAULT)....0
YELLOW CLEAR BEFORE PRE (0= DEFAULT).3.9
RED CLEAR BEFORE PRE (0= DEFAULT)....1.4
DWELL MIN TIMER (0-255 SEC) .........35
DWELL MAX TIMER (0=OFF,1-255MIN) ....0
DWELL HOLD-OVER TIMER (0-255) .......0
LATCH CALL? .........................N
LINK TO NEXT PREEMPT? ...............N
ENABLE BACKUP PROTECTION? ...........N
HOLD CLEAR 1 PHASES DURING DELAY? ...N
FAST GREEN FLASH DWELL PHASES? ......N
PED CLEARANCE THROUGH YELLOW? .......N
INHIBIT OVERLAP GREEN EXTENSION? ....N
SERVICE DURING SOFTWARE FLASH? ......N
REST IN RED DURING DWELL INTERVAL? ..N
FLASH DWELL INTERVAL? ...............N
ALLOW PEDS IN DWELL INTERVAL? .......N
RE-TIME DWELL INTERVAL? .............N
OVERLAPS:                | ABCDEFGHIJKLMNOP
DWELL INT FLASH YELLOW   |
OMIT OVERLAPS:           |
```

THIS ELECTRICAL DETAIL IS FOR
THE SIGNAL DESIGN: 13-0592T2
DESIGNED: July 2011
SEALED: 12-12-2011
REVISED:

Signal Upgrade - Temporary Design 2
(Construction Phase I Step VI) (Sheet 2 of 2)

HNTB NORTH CAROLINA, P.C.
343 E. Six Forks Road, Suite 200
Raleigh, North Carolina 27609
NC License No: C-1554

ELECTRICAL AND PROGRAMMING DETAILS FOR:

Prepared for: Transportation Mobility and Safety Division, Department of Transportation, State of North Carolina, Signals Management Section
750 N.Greenfield Pkwy,Garner,NC 27529

SR 1922 (Enola Rd)
at
I-40 Westbound Ramp

Division 13 Burke County Morganton

PLAN DATE:	July 2011	REVIEWED BY:	N.W. Rodevick
PREPARED BY:	A.D. Klinksiek	REVIEWED BY:	H.L. Winstead

REVISIONS	INIT.	DATE

SEAL
NORTH CAROLINA PROFESSIONAL SEAL 07983 ENGINEER HARVEY L. WINSTEAD, JR.

SIGNATURE H.L. Winstead DATE 12/12/11

SIG. INVENTORY NO. 13-0592T2

THIS PAGE INTENTIONALLY LEFT BLANK

THIS PAGE INTENTIONALLY LEFT BLANK

THIS PAGE INTENTIONALLY LEFT BLANK

PROJECT REFERENCE NO.	SHEET NO.
U-2551	Sig. 52

PHASING DIAGRAM

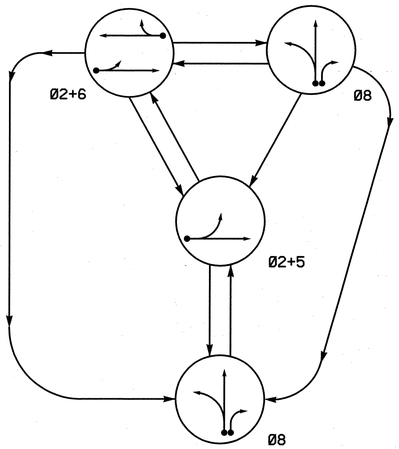

(Queue Preempt #3)

PHASING DIAGRAM DETECTION LEGEND

- DETECTED MOVEMENT
- UNDETECTED MOVEMENT (OVERLAP)
- UNSIGNALIZED MOVEMENT
- PEDESTRIAN MOVEMENT

TABLE OF OPERATION

SIGNAL FACE	PHASE 02+5	PHASE 02+6	PHASE 08	PREEMPT 3	FLASH
21	G	G	R	R	Y
22	G	G	R	R	Y
61,62	R	G	R	R	Y
81,82	R	R	G	G	R

SIGNAL FACE I.D.

All Heads L.E.D.

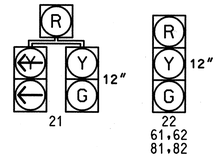

OASIS 2070L LOOP & DETECTOR INSTALLATION CHART

INDUCTIVE LOOPS					DETECTOR PROGRAMMING									
LOOP	SIZE (FT)	DISTANCE FROM STOPBAR (FT)	TURNS	NEW LOOP	PHASE	CALLING	EXTENSION	FULL TIME DELAY	STRETCH TIME	DELAY TIME	QUEUE MAX OCCUPANCY TIME	QUEUE GAP RESET TIME	PREEMPT INDEX FOR QUEUE	SYSTEM LOOP	NEW CARD
5A	6X40	0	2-4-2	Y	5	Y	Y	-	-	20	-	-	-	-	-
					2	Y	Y	-	-	-	-	-	-	-	-
6A	6X6	70	4	Y	6	Y	Y	-	-	-	-	-	-	-	-
8A	6X40	0	2-4-2	Y	8	Y	Y	-	-	-	-	-	-	-	-
8B	6X40	0	2-4-2	Y	8	Y	Y	-	-	15	-	-	-	-	-
*** Q1	6X6	625	6	-	PRE3	-	-	-	-	-	5	0.1	3	-	-

*** See Note 6.

3 Phase
Fully Actuated w/Queue Preemption
NC 18 (Sterling St)/SR 1922 (Enola Rd)
Closed Loop System

NOTES

1. Refer to "Roadway Standard Drawings NCDOT" dated January 2012 and "Standard Specifications for Roads and Structures" dated January 2012.
2. Do not program signal for late night flashing operation unless otherwise directed by the Engineer.
3. Reposition existing signal heads numbered 21,22,61,62, and Sign Ⓐ, and Sign Ⓑ.
4. Phase 5 may be lagged.
5. Set all detector units to presence mode.
6. These loops serve as queue backup detectors. After 5 seconds of constant actuation, the detector unit places a call to the controller to preempt normal operation to clear out the storage lanes.
7. When leaving preemption, ensure all non-preempt phases are served before serving the preempt phase again.
8. Maximum times shown in timing chart are for free-run operation only. Coordinated signal system timing values supersede these values.
9. Closed loop system data: Controller Asset #:0592.

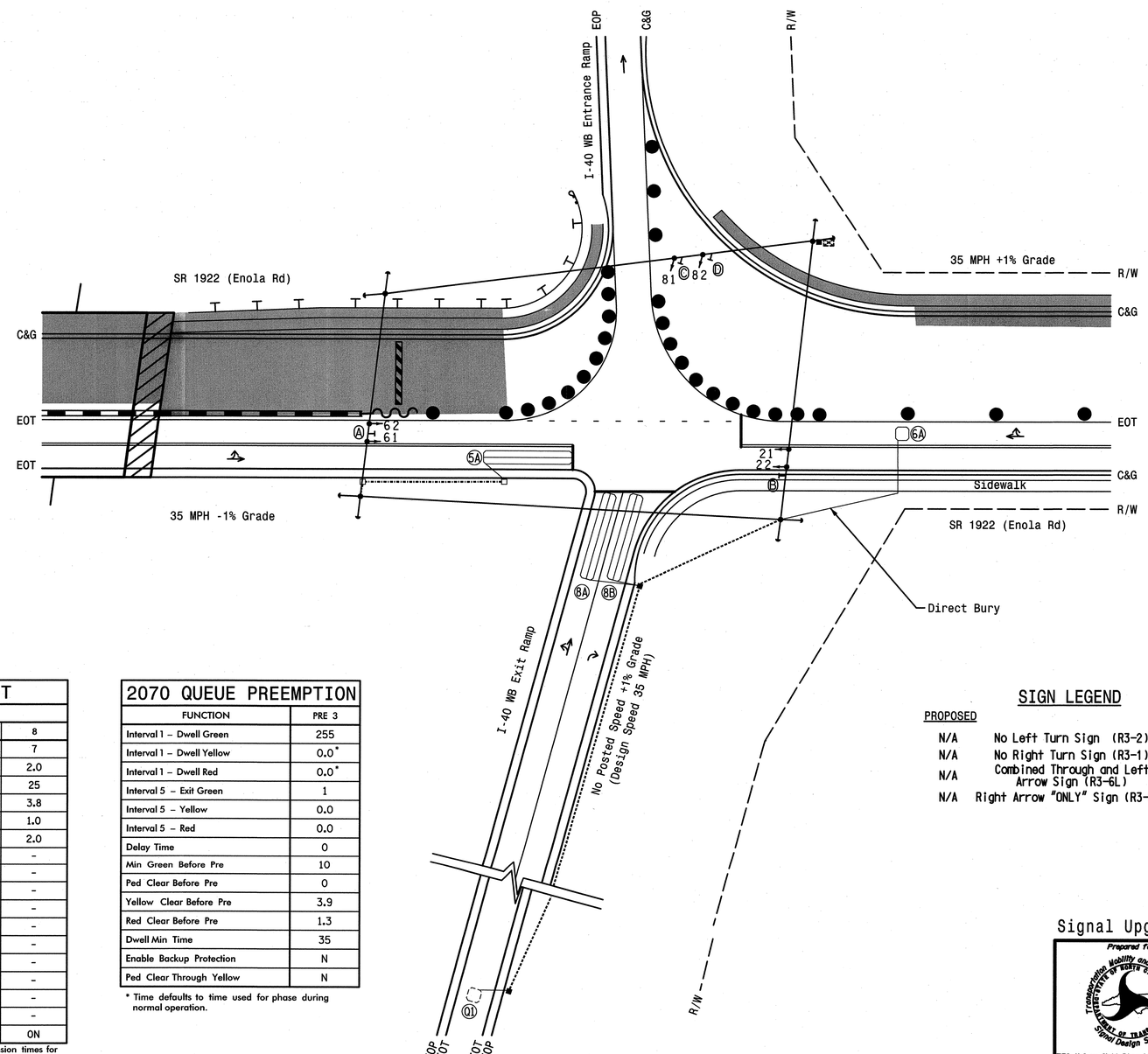

OASIS 2070L TIMING CHART

FEATURE	PHASE 2	PHASE 5	PHASE 6	PHASE 8
Min Green 1 *	10	7	10	7
Extension 1 *	3.0	2.0	3.0	2.0
Max Green 1 *	45	15	45	25
Yellow Clearance	3.9	3.0	3.8	3.8
Red Clearance	1.0	1.1	1.4	1.0
Red Revert	2.0	2.0	2.0	2.0
Walk 1 *	-	-	-	-
Don't Walk 1	-	-	-	-
Seconds Per Actuation *	-	-	-	-
Max Variable Initial *	-	-	-	-
Time Before Reduction *	-	-	-	-
Time To Reduce *	-	-	-	-
Minimum Gap	-	-	-	-
Recall Mode	MIN RECALL	-	MIN RECALL	-
Vehicle Call Memory	YELLOW	-	YELLOW	-
Dual Entry	-	-	-	-
Simultaneous Gap	ON	ON	ON	ON

* These values may be field adjusted. Do not adjust Min Green and Extension times for phases 2 and 6 lower than what is shown. Min Green for all other phases should not be lower than 4 seconds.

2070 QUEUE PREEMPTION

FUNCTION	PRE 3
Interval 1 – Dwell Green	255
Interval 1 – Dwell Yellow	0.0*
Interval 1 – Dwell Red	0.0*
Interval 5 – Exit Green	1
Interval 5 – Yellow	0.0
Interval 5 – Red	0.0
Delay Time	0
Min Green Before Pre	10
Ped Clear Before Pre	0
Yellow Clear Before Pre	3.9
Red Clear Before Pre	1.3
Dwell Min Time	35
Enable Backup Protection	N
Ped Clear Through Yellow	N

* Time defaults to time used for phase during normal operation.

SIGN LEGEND

PROPOSED		EXISTING
N/A	No Left Turn Sign (R3-2)	Ⓐ
N/A	No Right Turn Sign (R3-1)	Ⓑ
N/A	Combined Through and Left Arrow Sign (R3-6L)	Ⓒ
N/A	Right Arrow "ONLY" Sign (R3-5R)	Ⓓ

LEGEND

PROPOSED		EXISTING
	Traffic Signal Head	
	Modified Signal Head	N/A
	Sign	
	Pedestrian Signal Head With Push Button & Sign	
	Signal Pole with Guy	
	Signal Pole with Sidewalk Guy	
	Inductive Loop Detector	
	Controller & Cabinet	
	Junction Box	
	2-in Underground Conduit	
N/A	Right of Way	
	Directional Arrow	
N/A	Guardrail	
	Construction Zone Drums	N/A
	Construction Barricade	N/A
	Construction Zone	N/A
	Portable Concrete Barrier	N/A
	Crash Cushion	N/A

Signal Upgrade - Temporary Design 3 (Construction Phase II)

HNTB
HNTB NORTH CAROLINA, P.C.
343 E. Six Forks Road, Suite 200
Raleigh, North Carolina 27609
NC License No: C-1554

Prepared for: Transportation Mobility and Safety Division, STATE OF NORTH CAROLINA DEPARTMENT OF TRANSPORTATION, Signal Design Section
750 N.Greenfield Pkwy,Garner,NC 27529

SCALE 0 30 1"=30'

SR 1922 (Enola Rd)
at
I-40 Westbound Ramp

Division 13 Burke County Morganton

PLAN DATE:	July 2011	REVIEWED BY:	T.R. Terrell
PREPARED BY:	A.D. Klinksiek	REVIEWED BY:	N.M. Rodevick

REVISIONS	INIT.	DATE

SEAL
NORTH CAROLINA PROFESSIONAL SEAL 031464 ENGINEER NATASHA M. RODEVICK

Natasha M. Rodevick 12-12-11
SIGNATURE DATE

SIG. INVENTORY NO. 13-0592T3

PROJECT REFERENCE NO.	SHEET NO.
U-2551	Sig. 53

EDI MODEL 2018ECL-NC CONFLICT MONITOR PROGRAMMING DETAIL

(remove jumpers and set switches as shown)

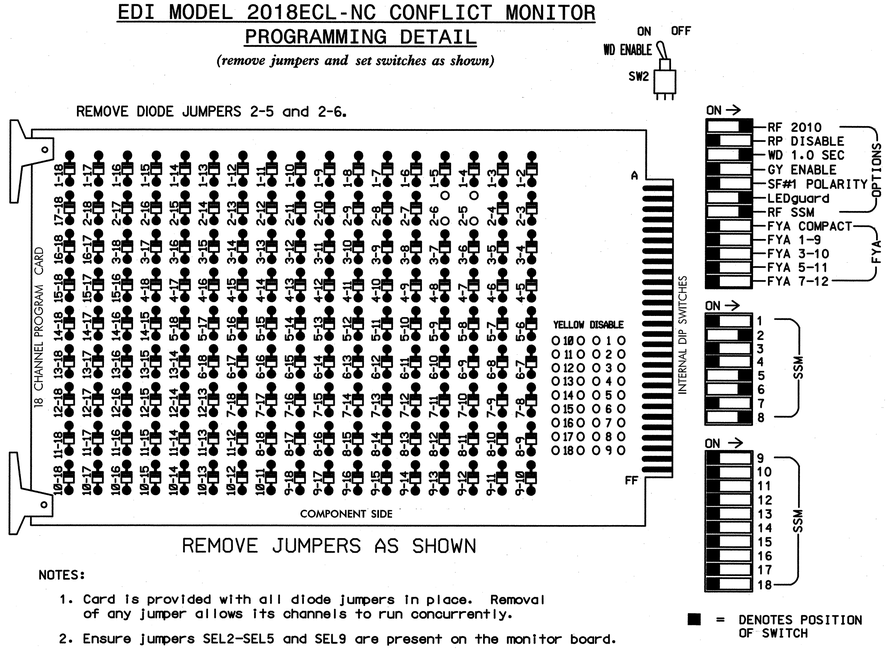

■ = DENOTES POSITION OF SWITCH

NOTES:

1. Card is provided with all diode jumpers in place. Removal of any jumper allows its channels to run concurrently.
2. Ensure jumpers SEL2-SEL5 and SEL9 are present on the monitor board.
3. Ensure that Red Enable is active at all times during normal operation.
4. Connect serial cable from conflict monitor to comm. port 1 of 2070 controller. Ensure conflict monitor communicates with 2070.

INPUT FILE POSITION LAYOUT

(front view)

		1	2	3	4	5	6	7	8	9	10	11	12	13	14
FILE "I"	U	SLOT EMPTY	SLOT EMPTY	SLOT EMPTY	WIRED INPUT ⊗	SLOT EMPTY	SLOT EMPTY	SLOT EMPTY	SLOT EMPTY	SLOT EMPTY	SLOT EMPTY	SLOT EMPTY	SLOT EMPTY	SLOT EMPTY	FS DC ISOLATOR
	L														ST DC ISOLATOR
FILE "J"	U	Ø5 5A	Ø6 6A	SLOT EMPTY	SLOT EMPTY	SLOT EMPTY	Ø8 8A	PRE3 Q1	SLOT EMPTY	SLOT EMPTY	SLOT EMPTY	SLOT EMPTY	SLOT EMPTY	SLOT EMPTY	SLOT EMPTY
	L	NOT USED	NOT USED				Ø8 8B	NOT USED							

EX.: 1A, 2A, ETC. = LOOP NO.'S

FS = FLASH SENSE
ST = STOP TIME

⊗ Wired Input - Do not populate slot with detector card

LOAD RESISTOR INSTALLATION DETAIL

(install resistor as shown below)

ACCEPTABLE VALUES

VALUE (ohms)	WATTAGE
1.5K - 1.9K	25W (min)
2.0K - 3.0K	10W (min)

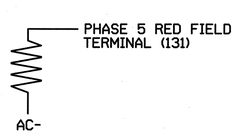

NOTES

1. To prevent "flash-conflict" problems, insert red flash program blocks for all unused vehicle load switches in the output file. The installer shall verify that signal heads flash in accordance with the Signal Plans.
2. Enable Simultaneous Gap-Out for all phases.
3. Program phases 2 and 6 for Start Up In Green.
4. Program phases 2 and 6 for Yellow Flash.
5. The cabinet and controller are part of the NC 18 (Sterling St)/SR 1922 (Enola Rd) Closed Loop System.

SIGNAL HEAD HOOK-UP CHART

LOAD SWITCH NO.	S1	S2	S3	S4	S5	S6	S7	S8	S9	S10	S11	S12	AUX S1	AUX S2	AUX S3	AUX S4	AUX S5	AUX S6
CMU CHANNEL NO.	1	2	13	3	4	14	5	6	15	7	8	16	9	10	17	11	12	18
PHASE	1	2	2 PED	3	4	4 PED	5	6	6 PED	7	8	8 PED	OLA	OLB	SPARE	OLC	OLD	SPARE
SIGNAL HEAD NO.	NU	21,22	NU	NU	NU	NU	21	61,62	NU	NU	81,82	NU	NU	NU	NU	NU	NU	NU
RED		128					*	134			107							
YELLOW		129						135			108							
GREEN		130						136			109							
RED ARROW																		
YELLOW ARROW							132											
GREEN ARROW							133											

NU = Not Used

* Denotes install load resistor. See load resistor installation detail this sheet.

EQUIPMENT INFORMATION

CONTROLLER.....2070L
CABINET.....332 /W/ AUX
SOFTWARE.....ECONOLITE OASIS
CABINET MOUNT.....BASE
OUTPUT FILE POSITIONS...18 WITH AUX. OUTPUT FILE
LOAD SWITCHES USED.....S2,S7,S8,S11
PHASES USED.....2,5,6,8
OVERLAP "A".....NOT USED
OVERLAP "B".....NOT USED
OVERLAP "C".....NOT USED
OVERLAP "D".....NOT USED

INPUT FILE CONNECTION & PROGRAMMING CHART

LOOP NO.	LOOP TERMINAL	INPUT FILE POS.	PIN NO.	INPUT ASSIGNMENT NO.	DETECTOR NO.	NEMA PHASE	CALL	EXTEND	FULL TIME DELAY	STRETCH TIME	DELAY TIME
5A[1]	TB3-1,2	J1U	55	17	5	5	Y	Y			20
	-	I4U	47	9	22	2	Y	Y			
6A	TB3-5,6	J2U	40	2	6	6	Y	Y			
8A	TB5-9,10	J6U	42	4	8	8	Y	Y			
8B	TB5-11,12	J6L	46	8	18	8	Y	Y			15
Q1	TB7-1,2	J7U	66	28	*38	PRE3					

[1] Add jumper from J1-W to I4-W, on rear of input file.
*See vehicle detector programming detail on Sheet 2.

INPUT FILE POSITION LEGEND: J2L
FILE J
SLOT 2
LOWER

THIS ELECTRICAL DETAIL IS FOR
THE SIGNAL DESIGN: 13-0592T3
DESIGNED: July 2011
SEALED: 12-12-2011
REVISED:

Signal Upgrade - Temporary Design 3 (Construction Phase II) (Sheet 1 of 2)

HNTB NORTH CAROLINA, P.C.
343 E. Six Forks Road, Suite 200
Raleigh, North Carolina 27609
NC License No: C-1554

ELECTRICAL AND PROGRAMMING DETAILS FOR:

Prepared for: Transportation Mobility and Safety Division, Traffic Engineering Branch, Signal Management Section, Department of Transportation, State of North Carolina

750 N.Greenfield Pkwy, Garner, NC 27529

SR 1922 (Enola Rd)
at
I-40 Westbound Ramp

Division 13 Burke County Morganton

PLAN DATE:	July 2011	REVIEWED BY:	N.W. Rodevick
PREPARED BY:	A.D. Klinksiek	REVIEWED BY:	H.L. Winstead

REVISIONS	INIT.	DATE

SEAL
NORTH CAROLINA PROFESSIONAL SEAL 07983 ENGINEER HARVEY L. WINSTEAD, JR.

SIGNATURE H.L. Winstead DATE 12/12/11

SIG. INVENTORY NO. 13-0592T3

PROJECT REFERENCE NO.	SHEET NO.
U-2551	Sig. 54

LOGICAL I/O PROCESSOR PROGRAMMING DETAIL WHEN LEAVING PREEMPTOR SEQUENCE

(program controller as shown below)

1. FROM MAIN MENU PRESS '2' (PHASE CONTROL), THEN '1' (PHASE CONTROL FUNCTIONS). SCROLL TO THE BOTTOM OF THE MENU AND ENABLE ACT LOGIC COMMANDS 1,2, AND 3.
2. FROM MAIN MENU PRESS '6' (OUTPUTS), THEN '3' (LOGICAL I/O PROCESSOR).

NOTE: WHEN LEAVING PREEMPTOR SEQUENCE, THE FOLLOWING LOGIC STATEMENTS ENSURE ALL PHASES WITH A CALL WILL BE SERVED BEFORE PREEMPTOR CAN BE SERVICED AGAIN.

```
LOGICAL I/O COMMAND #1  (+/-COMMAND#)
IF  ACTIVE PREEMPTION  #3  IS ON

                 ↓
            SCROLL DOWN
THEN:
SET LOGIC FLAG          #1 ON
```

NOTE: SETS LOGIC FLAG

PRESS '+'

```
LOGICAL I/O COMMAND #2  (+/-COMMAND#)
IF  LOGIC FLAG          #1 IS ON

                 ↓
            SCROLL DOWN
THEN:
SET INPUT   ASSIGNMENT #28 OFF
```

NOTE: INHIBITS PREEMPT BY DISCONNECTING QUEUE LOOPS

PRESS '+'

```
LOGICAL I/O COMMAND #3  (+/-COMMAND#)
IF  LOGIC FLAG          #1 IS ON

                 ↓
            SCROLL DOWN
THEN:
    DELAY FOR 75.0 SECONDS
SET LOGIC FLAG          #1 OFF
```

NOTE: TIMEOUT FOR RECONNECTING QUEUE LOOPS

LOGIC I/O PROCESSOR PROGRAMMING COMPLETE

VEHICLE DETECTOR #38 SETTINGS FOR QUEUE PREEMPT

(program controller as shown below)

FROM MAIN MENU PRESS '7' (DETECTORS), THEN '1' (VEHICLE DETECTOR ASSIGNMENTS). PRESS '+' UNTIL DETECTOR #38 IS REACHED.

```
VEHICLE DETECTOR #38  SETTINGS (+-,1-64)
SETTING:                              (Y/N)
ENABLE DETECTOR....................Y
ENABLE LOGGING.....................N
ENABLE DIAGNOSTICS.................N
SPEED TRAP.........................N
CALL DETECTOR......................N
EXTENSION DETECTOR.................N
MODE 2 STOP BAR....................N
SWITCHING DETECTOR.................N
DUPLICATING DETECTOR...............N
ENABLE FULL TIME DELAY.............N
IF FAILED, SET MIN RECALL?.........N
IF FAILED, SET MAX1 RECALL?........N
IF FAILED, SET MAX2 RECALL?........N
PHASE#          |123456789101112131415 16
PHASES ASSIGNED |
SWITCH/DUPLICATE|
LOOP SIZE (0-255 FT)...............6
SPEED TRAP DISTANCE (0-255 FT)......0
STOP BAR TIME (0-255 SEC)...........0
STRETCH (0-25.5 SEC)................0.0
DELAY (0-255 SEC)...................0
MAX CALLS/MIN (0-255)..............255
MIN CALLS/DIAGNOSTIC PERIOD (0-255).0
MAX OCCUPANCY (0-100%).............100
EXTENSION DISABLE TIME (0-255 SEC)..0
QUEUE MAX OCCUPANCY TIME (0-255)....5
QUEUE GAP RESET TIME (0-25.5).......0.1
PREEMPTION INDEX FOR QUEUE (0-10)...3
```

QUEUE PREEMPTION PROGRAMMING DETAIL

(program controller as shown below)

From Main Menu press 'A' (Preemption), then '1' (Standard Preemptions). Press 'NEXT' until Preemption #3 is reached.

```
   PREEMPTION  #3  SETTINGS (NEXT:1-10)
INTERVAL/TIMING |  CLEAR/DWELL PHASES
  GRN YEL  RED  |123456789101112131415 16
1 255  0.0  0.0 |        X
2   0  0.0  0.0 |
3   0  0.0  0.0 |
4   0  0.0  0.0 |
5   1  0.0  0.0 | X  X
EXIT CALLS      |
          OPTIONS
PRIORITY (Y/N TO SELECT) ............MED
DELAY TIMER (0-255 SEC) .............0.0
MIN GREEN BEFORE PRE (0= DEFAULT)....10
PED CLEAR BEFORE PRE (0= DEFAULT)....0
YELLOW CLEAR BEFORE PRE (0= DEFAULT).3.9
RED CLEAR BEFORE PRE (0= DEFAULT)....1.3
DWELL MIN TIMER (0-255 SEC) .........35
DWELL MAX TIMER (0=OFF,1-255MIN) ....0
DWELL HOLD-OVER TIMER (0-255) .......0
LATCH CALL? .........................N
LINK TO NEXT PREEMPT? ...............N
ENABLE BACKUP PROTECTION? ...........N
HOLD CLEAR 1 PHASES DURING DELAY? ...N
FAST GREEN FLASH DWELL PHASES? ......N
PED CLEARANCE THROUGH YELLOW? .......N
INHIBIT OVERLAP GREEN EXTENSION? ....N
SERVICE DURING SOFTWARE FLASH? ......N
REST IN RED DURING DWELL INTERVAL? ..N
FLASH DWELL INTERVAL? ...............N
ALLOW PEDS IN DWELL INTERVAL? .......N
RE-TIME DWELL INTERVAL? .............N
OVERLAPS:                | ABCDEFGHIJKLMNOP
DWELL INT FLASH YELLOW   |
OMIT OVERLAPS:           |
```

THIS ELECTRICAL DETAIL IS FOR
THE SIGNAL DESIGN: 13-0592T3
DESIGNED: July 2011
SEALED: 12-12-2011
REVISED:

Signal Upgrade - Temporary Design 3 (Construction Phase II) (Sheet 2 of 2)

HNTB NORTH CAROLINA, P.C.
343 E. Six Forks Road, Suite 200
Raleigh, North Carolina 27609
NC License No: C-1554

ELECTRICAL AND PROGRAMMING DETAILS FOR:

Prepared for: Transportation Mobility and Safety Division, Traffic Engineering Branch, Signals Management Section, Department of Transportation, State of North Carolina

750 N.Greenfield Pkwy,Garner,NC 27529

SR 1922 (Enola Rd)
at
I-40 Westbound Ramp

Division 13 Burke County Morganton

PLAN DATE:	July 2011	REVIEWED BY:	N.M. Rodevick
PREPARED BY:	A.D. Klinksiek	REVIEWED BY:	H.L. Winstead

REVISIONS	INIT.	DATE

SEAL: NORTH CAROLINA PROFESSIONAL SEAL 07983 ENGINEER HARVEY L. WINSTEAD, JR.

SIGNATURE: H.L. Winstead DATE: 12/12/11

SIG. INVENTORY NO. 13-0592T3

PROJECT REFERENCE NO.	SHEET NO.
U-2551	Sig. 55

PHASING DIAGRAM

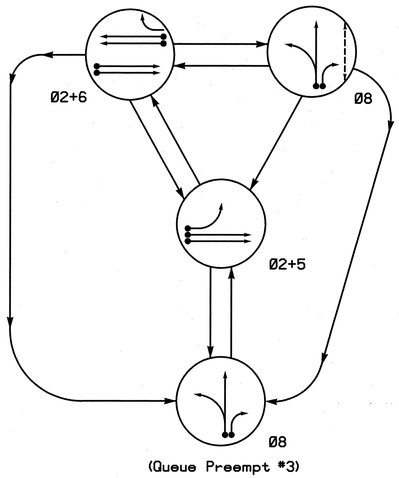

PHASING DIAGRAM DETECTION LEGEND

- DETECTED MOVEMENT
- UNDETECTED MOVEMENT (OVERLAP)
- UNSIGNALIZED MOVEMENT
- PEDESTRIAN MOVEMENT

TABLE OF OPERATION

SIGNAL FACE	PHASE Ø2+5	Ø2+6	Ø8	PREEMPT 3	FLASH
21,22	G	G	R	R	Y
51	~~-~~	~~R~~	~~R~~	~~R~~	~~R~~
61,62	R	G	R	R	Y
81,82	R	R	G	G	R
P81,P82	DW	DW	W	DW	DRK

W - Walk
DW - Don't Walk
DRK - Dark

SIGNAL FACE I.D.

All Heads L.E.D.

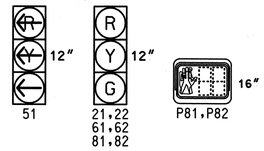

OASIS 2070L LOOP & DETECTOR INSTALLATION CHART

INDUCTIVE LOOPS					DETECTOR PROGRAMMING										
LOOP	SIZE (FT)	DISTANCE FROM STOPBAR (FT)	TURNS	NEW LOOP	PHASE	CALLING	EXTENSION	FULL TIME DELAY	STRETCH TIME	DELAY TIME	QUEUE MAX OCCUPANCY TIME	QUEUE GAP RESET TIME	PREEMPT INDEX FOR QUEUE	SYSTEM LOOP	NEW CARD
2A	6X6	70	5	Y	2	Y	Y	-	-	-	-	-	-	-	-
2B	6X6	70	5	Y	2	Y	Y	-	-	-	-	-	-	-	Y
5A	6X40	0	2-4-2	Y	5	Y	Y	-	-	-	-	-	-	-	-
6A	6X6	70	3	Y	6	Y	Y	-	-	-	-	-	-	-	-
6B	6X6	70	3	Y	6	Y	Y	-	-	-	-	-	-	-	Y
8A	6X40	0	2-4-2	-	8	Y	Y	-	-	-	-	-	-	-	-
8B	6X40	0	2-4-2	-	8	Y	Y	-	-	15	-	-	-	-	-
*** Q1	6X6	625	6	-	PRE3	-	-	-	-	-	5	0.1	3	-	-

*** See Note 7.

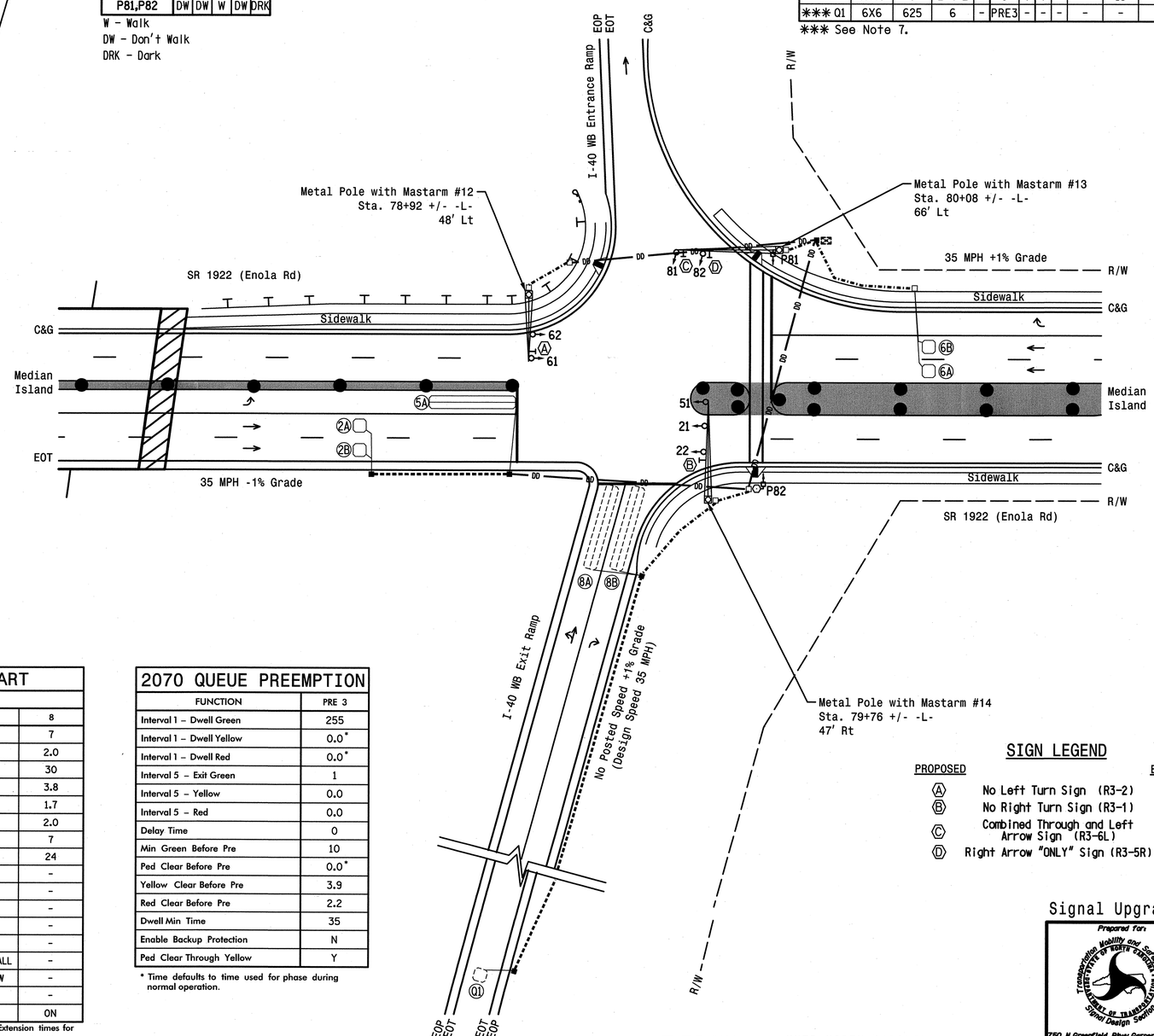

3 Phase
Fully Actuated w/Queue Preemption
NC 18 (Sterling St)/SR 1922 (Enola Rd)
Closed Loop System

NOTES

1. Refer to "Roadway Standard Drawings NCDOT" dated July 2012 and "Standard Specifications for Roads and Structures" dated July 2012.
2. Do not program signal for late night flashing operation unless otherwise directed by the Engineer.
3. Phase 5 may be lagged.
4. Set all detector units to presence mode.
5. Omit "WALK" and flashing "DON'T WALK" with no pedestrian calls.
6. Program pedestrian heads to countdown the flashing "Don't Walk" time only.
7. These loops serve as queue backup detectors. After 5 seconds of constant actuation, the detector unit places a call to the controller to preempt normal operation to clear out the storage lanes.
8. When leaving preemption, ensure all non-preempt phases are served before serving the preempt phase again.
9. Maximum times shown in timing chart are for free-run operation only. Coordinated signal system timing values supersede these values.
10. Closed loop system data: Controller Asset #:0592.

LEGEND

PROPOSED		EXISTING
	Traffic Signal Head	
	Modified Signal Head	N/A
	Sign	
	Pedestrian Signal Head With Push Button & Sign	
	Signal Pole with Guy	
	Signal Pole with Sidewalk Guy	
	Inductive Loop Detector	
	Controller & Cabinet	
	Junction Box	
	2-in Underground Conduit	
DD	Directional Drill	DD
N/A	Right of Way	
	Directional Arrow	
N/A	Guardrail	
	Metal Pole with Mastarm	
	Signal Pedestal	
	Wheelchair Ramp	
	Construction Zone Drums	N/A
	Construction Zone	N/A

SIGN LEGEND

PROPOSED		EXISTING
A	No Left Turn Sign (R3-2)	N/A
B	No Right Turn Sign (R3-1)	N/A
C	Combined Through and Left Arrow Sign (R3-6L)	N/A
D	Right Arrow "ONLY" Sign (R3-5R)	N/A

OASIS 2070L TIMING CHART

FEATURE	PHASE 2	5	6	8
Min Green 1 *	10	7	10	7
Extension 1 *	3.0	2.0	3.0	2.0
Max Green 1 *	45	20	45	30
Yellow Clearance	3.9	3.0	3.8	3.8
Red Clearance	2.2	2.4	1.7	1.7
Red Revert	2.0	2.0	2.0	2.0
Walk 1 *	-	-	-	7
Don't Walk 1	-	-	-	24
Seconds Per Actuation *	-	-	-	-
Max Variable Initial *	-	-	-	-
Time Before Reduction *	-	-	-	-
Time To Reduce *	-	-	-	-
Minimum Gap	-	-	-	-
Recall Mode	MIN RECALL	-	MIN RECALL	-
Vehicle Call Memory	YELLOW	-	YELLOW	-
Dual Entry	-	-	-	-
Simultaneous Gap	ON	ON	ON	ON

* These values may be field adjusted. Do not adjust Min Green and Extension times for phases 2 and 6 lower than what is shown. Min Green for all other phases should not be lower than 4 seconds.

2070 QUEUE PREEMPTION

FUNCTION	PRE 3
Interval 1 – Dwell Green	255
Interval 1 – Dwell Yellow	0.0*
Interval 1 – Dwell Red	0.0*
Interval 5 – Exit Green	1
Interval 5 – Yellow	0.0
Interval 5 – Red	0.0
Delay Time	0
Min Green Before Pre	10
Ped Clear Before Pre	0.0*
Yellow Clear Before Pre	3.9
Red Clear Before Pre	2.2
Dwell Min Time	35
Enable Backup Protection	N
Ped Clear Through Yellow	Y

* Time defaults to time used for phase during normal operation.

Signal Upgrade - Temporary Design 4 (Construction Phase III)

HNTB
HNTB NORTH CAROLINA, P.C.
343 E. Six Forks Road, Suite 200
Raleigh, North Carolina 27609
NC License No: C-1554

Prepared for: Transportation Mobility and Safety Division, Traffic Engineering Branch, Signal Design Section, Department of Transportation, State of North Carolina
750 N.Greenfield Pkwy,Garner,NC 27529

SCALE 0 30 1"=30'

SR 1922 (Enola Rd)
at
I-40 Westbound Ramp

Division 13 Burke County Morganton

PLAN DATE:	July 2011	REVIEWED BY:	T.R. Terrell
PREPARED BY:	A.D. Klinksiek	REVIEWED BY:	N.W. Rodevick

REVISIONS	INIT.	DATE

SEAL
NORTH CAROLINA PROFESSIONAL SEAL 031464 ENGINEER NATASHA M. RODEVICK
SIGNATURE
12-12-11
DATE
SIG. INVENTORY NO. 13-0592T4

PROJECT REFERENCE NO.	SHEET NO.
U-2551	Sig. 56

EDI MODEL 2018ECL-NC CONFLICT MONITOR PROGRAMMING DETAIL

(remove jumpers and set switches as shown)

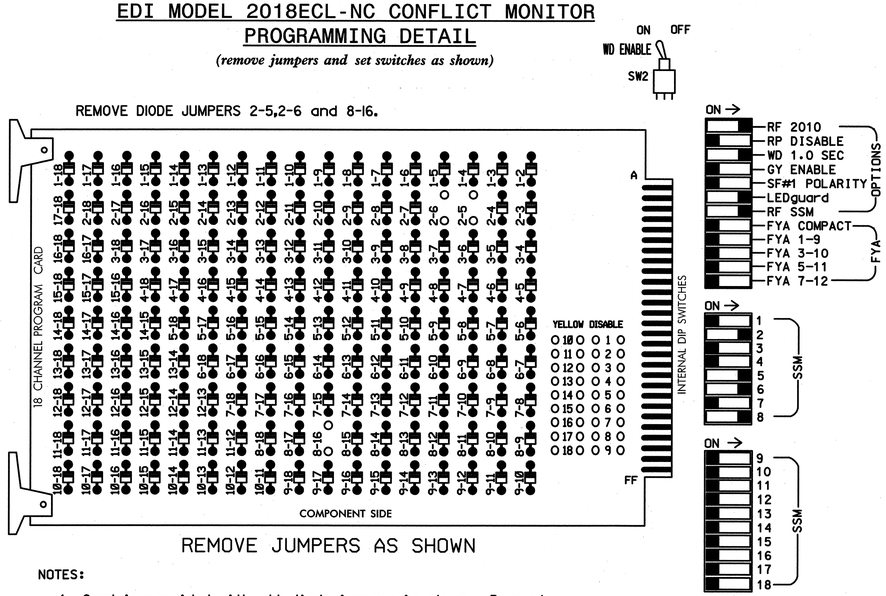

■ = DENOTES POSITION OF SWITCH

NOTES:

1. Card is provided with all diode jumpers in place. Removal of any jumper allows its channels to run concurrently.
2. Ensure jumpers SEL2-SEL5 and SEL9 are present on the monitor board.
3. Ensure that Red Enable is active at all times during normal operation.
4. Connect serial cable from conflict monitor to comm. port 1 of 2070 controller. Ensure conflict monitor communicates with 2070.

NOTES

1. To prevent "flash-conflict" problems, insert red flash program blocks for all unused vehicle load switches in the output file. The installer shall verify that signal heads flash in accordance with the Signal Plans.
2. Enable Simultaneous Gap-Out for all phases.
3. Program phases 2 and 6 for Start Up In Green.
4. Program phase 8 for 'STARTUP PED CALL'.
5. Program phases 2 and 6 for Yellow Flash.
6. The cabinet and controller are part of the NC 18 (Sterling St)/SR 1922 (Enola Rd) Closed Loop System.

SIGNAL HEAD HOOK-UP CHART

LOAD SWITCH NO.	S1	S2	S3	S4	S5	S6	S7	S8	S9	S10	S11	S12	AUX S1	AUX S2	AUX S3	AUX S4	AUX S5	AUX S6
CMU CHANNEL NO.	1	2	13	3	4	14	5	6	15	7	8	16	9	10	17	11	12	18
PHASE	1	2	2 PED	3	4	4 PED	5	6	6 PED	7	8	8 PED	OLA	OLB	SPARE	OLC	OLD	SPARE
SIGNAL HEAD NO.	NU	21,22	NU	NU	NU	NU	51	61,62	NU	NU	81,82	P81, P82	NU	NU	NU	NU	NU	NU
RED		128						134			107							
YELLOW		129						135			108							
GREEN		130						136			109							
RED ARROW							131											
YELLOW ARROW							132											
GREEN ARROW							133											
✋												110						
🚶												112						

NU = Not Used

EQUIPMENT INFORMATION

CONTROLLER.....2070L
CABINET.....332 /W/ AUX
SOFTWARE.....ECONOLITE OASIS
CABINET MOUNT.....BASE
OUTPUT FILE POSITIONS...18 WITH AUX. OUTPUT FILE
LOAD SWITCHES USED.....S2,S7,S8,S11,S12
PHASES USED.....2,5,6,8,8PED
OVERLAP "A".....NOT USED
OVERLAP "B".....NOT USED
OVERLAP "C".....NOT USED
OVERLAP "D".....NOT USED

COUNTDOWN PEDESTRIAN SIGNAL OPERATION

Countdown Ped Signals are required to display timing only during Ped Clearance Interval. Consult Ped Signal Module user's manual for instructions on selecting this feature.

INPUT FILE POSITION LAYOUT

(front view)

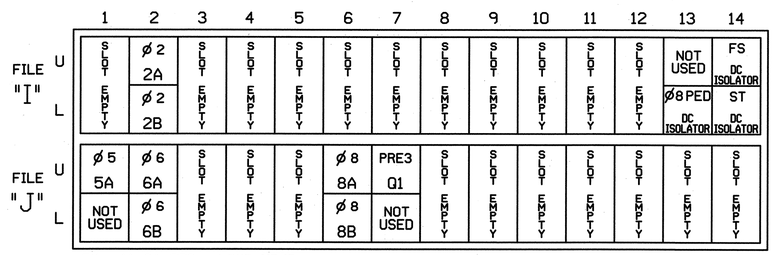

EX.: 1A, 2A, ETC. = LOOP NO.'S

FS = FLASH SENSE
ST = STOP TIME

INPUT FILE CONNECTION & PROGRAMMING CHART

LOOP NO.	LOOP TERMINAL	INPUT FILE POS.	PIN NO.	INPUT ASSIGNMENT NO.	DETECTOR NO.	NEMA PHASE	CALL	EXTEND	FULL TIME DELAY	STRETCH TIME	DELAY TIME
2A	TB2-5,6	I2U	39	1	2	2	Y	Y			
2B	TB2-7,8	I2L	43	5	12	2	Y	Y			
5A[1]	TB3-1,2	J1U	55	17	5	5	Y	Y			
6A	TB3-5,6	J2U	40	2	6	6	Y	Y			
6B	TB3-7,8	J2L	44	6	16	6	Y	Y			
8A	TB5-9,10	J6U	42	4	8	8	Y	Y			
8B	TB5-11,12	J6L	46	8	18	8	Y	Y			15
Q1	TB7-1,2	J7U	66	28	*38	PRE3					
PED PUSH BUTTONS											
P81,P82	TB8-8,9	I13L	70	32	PED 8	8 PED					

NOTE:
INSTALL DC ISOLATORS IN INPUT FILE SLOT I13.

*See vehicle detector programming detail on Sheet 2.

[1]Remove jumper from J1-W to I4-W, on rear of input file.

INPUT FILE POSITION LEGEND: J2L
FILE J
SLOT 2
LOWER

THIS ELECTRICAL DETAIL IS FOR
THE SIGNAL DESIGN: 13-0592T4
DESIGNED: July 2011
SEALED: 12-12-2011
REVISED:

LOAD RESISTOR INSTALLATION DETAIL

(remove resistor as shown below)

ACCEPTABLE VALUES	
VALUE (ohms)	WATTAGE
1.5K - 1.9K	25W (min)
2.0K - 3.0K	10W (min)

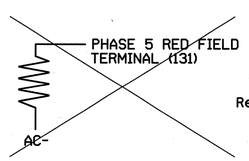

Remove load resistor.

HNTB NORTH CAROLINA, P.C.
343 E. Six Forks Road, Suite 200
Raleigh, North Carolina 27609
NC License No: C-1554

Signal Upgrade - Temporary Design 4 (Construction Phase III) (Sheet 1 of 2)

ELECTRICAL AND PROGRAMMING DETAILS FOR:

Prepared for: Transportation Mobility and Safety Division, Traffic Engineering Branch, Signal Management Section, Department of Transportation
750 N.Greenfield Pkwy,Garner,NC 27529

SR 1922 (Enola Rd)
at
I-40 Westbound Ramp

Division 13 Burke County Morganton

PLAN DATE: July 2011	REVIEWED BY: N.M. Rodevick
PREPARED BY: A.D. Klinksiek	REVIEWED BY: H.L. Winstead

REVISIONS	INIT.	DATE

SEAL
NORTH CAROLINA PROFESSIONAL SEAL 07983 ENGINEER HARVEY L. WINSTEAD, JR.
SIGNATURE H.L. Winstead DATE 12/12/11
SIG. INVENTORY NO. 13-0592T4

PROJECT REFERENCE NO.	SHEET NO.
U-2551	Sig. 57

LOGICAL I/O PROCESSOR PROGRAMMING DETAIL WHEN LEAVING PREEMPTOR SEQUENCE

(program controller as shown below)

1. FROM MAIN MENU PRESS '2' (PHASE CONTROL), THEN '1' (PHASE CONTROL FUNCTIONS). SCROLL TO THE BOTTOM OF THE MENU AND ENABLE ACT LOGIC COMMANDS 1,2,AND 3.
2. FROM MAIN MENU PRESS '6' (OUTPUTS), THEN '3' (LOGICAL I/O PROCESSOR).

NOTE: WHEN LEAVING PREEMPTOR SEQUENCE, THE FOLLOWING LOGIC STATEMENTS ENSURE ALL PHASES WITH A CALL WILL BE SERVED BEFORE PREEMPTOR CAN BE SERVICED AGAIN.

```
LOGICAL I/O COMMAND #1   (+/-COMMAND#)
IF  ACTIVE PREEMPTION  #3  IS ON

                 SCROLL DOWN
THEN:
SET LOGIC FLAG          #1 ON
```

NOTE: SETS LOGIC FLAG

PRESS '+'

```
LOGICAL I/O COMMAND #2   (+/-COMMAND#)
IF  LOGIC FLAG          #1 IS ON

                 SCROLL DOWN
THEN:
SET INPUT   ASSIGNMENT #28 OFF
```

NOTE: INHIBITS PREEMPT BY DISCONNECTING QUEUE LOOPS

PRESS '+'

```
LOGICAL I/O COMMAND #3   (+/-COMMAND#)
IF  LOGIC FLAG          #1 IS ON

                 SCROLL DOWN
THEN:
    DELAY FOR 75.0 SECONDS
SET LOGIC FLAG          #1 OFF
```

NOTE: TIMEOUT FOR RECONNECTING QUEUE LOOPS

LOGIC I/O PROCESSOR PROGRAMMING COMPLETE

VEHICLE DETECTOR #38 SETTINGS FOR QUEUE PREEMPT

(program controller as shown below)

FROM MAIN MENU PRESS '7' (DETECTORS), THEN '1' (VEHICLE DETECTOR ASSIGNMENTS). PRESS '+' UNTIL DETECTOR #38 IS REACHED.

```
VEHICLE DETECTOR #38  SETTINGS (+-,1-64)
SETTING:                            (Y/N)
ENABLE DETECTOR....................Y
ENABLE LOGGING.....................N
ENABLE DIAGNOSTICS.................N
SPEED TRAP.........................N
CALL DETECTOR......................N
EXTENSION DETECTOR.................N
MODE 2 STOP BAR....................N
SWITCHING DETECTOR.................N
DUPLICATING DETECTOR...............N
ENABLE FULL TIME DELAY.............N
IF FAILED, SET MIN RECALL?.........N
IF FAILED, SET MAX1 RECALL?........N
IF FAILED, SET MAX2 RECALL?........N
PHASE#          |123456789101112131415 16
PHASES ASSIGNED |
SWITCH/DUPLICATE|
LOOP SIZE (0-255 FT)...............6
SPEED TRAP DISTANCE (0-255 FT)......0
STOP BAR TIME (0-255 SEC)...........0
STRETCH (0-25.5 SEC)................0.0
DELAY (0-255 SEC)...................0
MAX CALLS/MIN (0-255)..............255
MIN CALLS/DIAGNOSTIC PERIOD (0-255).0
MAX OCCUPANCY (0-100%)............100
EXTENSION DISABLE TIME (0-255 SEC)..0
QUEUE MAX OCCUPANCY TIME (0-255)....5
QUEUE GAP RESET TIME (0-25.5).......0.1
PREEMPTION INDEX FOR QUEUE (0-10)...3
```

QUEUE PREEMPTION PROGRAMMING DETAIL

(program controller as shown below)

From Main Menu press 'A' (Preemption), then '1' (Standard Preemptions). Press 'NEXT' until Preemption #3 is reached.

```
   PREEMPTION  #3  SETTINGS (NEXT:1-10)
INTERVAL/TIMING |  CLEAR/DWELL PHASES
  GRN YEL  RED  |123456789101112131415 16
1 255  0.0  0.0 |       X
2   0  0.0  0.0 |
3   0  0.0  0.0 |
4   0  0.0  0.0 |
5   1  0.0  0.0 | X  X
EXIT CALLS      |
          OPTIONS
PRIORITY (Y/N TO SELECT) ............MED
DELAY TIMER (0-255 SEC) .............0.0
MIN GREEN BEFORE PRE (0= DEFAULT)....10
PED CLEAR BEFORE PRE (0= DEFAULT)....0
YELLOW CLEAR BEFORE PRE (0= DEFAULT).3.9
RED CLEAR BEFORE PRE (0= DEFAULT)....2.2
DWELL MIN TIMER (0-255 SEC) .........35
DWELL MAX TIMER (0=OFF,1-255MIN) ....0
DWELL HOLD-OVER TIMER (0-255) .......0
LATCH CALL? .........................N
LINK TO NEXT PREEMPT? ...............N
ENABLE BACKUP PROTECTION? ...........N
HOLD CLEAR 1 PHASES DURING DELAY? ...N
FAST GREEN FLASH DWELL PHASES? ......N
PED CLEARANCE THROUGH YELLOW? .......Y
INHIBIT OVERLAP GREEN EXTENSION? ....N
SERVICE DURING SOFTWARE FLASH? ......N
REST IN RED DURING DWELL INTERVAL? ..N
FLASH DWELL INTERVAL? ...............N
ALLOW PEDS IN DWELL INTERVAL? .......N
RE-TIME DWELL INTERVAL? .............N
OVERLAPS:                | ABCDEFGHIJKLMNOP
DWELL INT FLASH YELLOW   |
OMIT OVERLAPS:           |
```

THIS ELECTRICAL DETAIL IS FOR
THE SIGNAL DESIGN: 13-0592T4
DESIGNED: July 2011
SEALED: 12-12-2011
REVISED:

HNTB NORTH CAROLINA, P.C.
343 E. Six Forks Road, Suite 200
Raleigh, North Carolina 27609
NC License No: C-1554

Signal Upgrade - Temporary Design 4 (Construction Phase III) (Sheet 2 of 2)

ELECTRICAL AND PROGRAMMING DETAILS FOR:

Prepared for: Transportation Mobility and Safety Division, Traffic Engineering Branch, Signal Management Section, DEPARTMENT OF TRANSPORTATION, STATE OF NORTH CAROLINA

750 N.Greenfield Pkwy,Garner,NC 27529

SR 1922 (Enola Rd)
at
I-40 Westbound Ramp

Division 13 Burke County Morganton

PLAN DATE:	July 2011	REVIEWED BY:	N.W. Rodevick
PREPARED BY:	A.D. Klinksiek	REVIEWED BY:	H.L. Winstead

REVISIONS	INIT.	DATE

SEAL

NORTH CAROLINA PROFESSIONAL SEAL 07983 ENGINEER HARVEY L. WINSTEAD, JR.

H.L. Winstead 12/12/11
SIGNATURE DATE

SIG. INVENTORY NO. 13-0592T4

PROJECT REFERENCE NO.	SHEET NO.
U-2551	Sig. 58

PHASING DIAGRAM

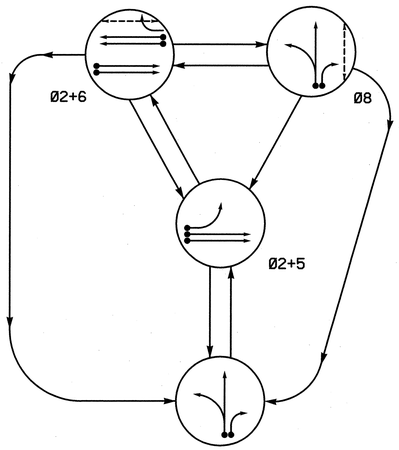

(Queue Preempt #3)

PHASING DIAGRAM DETECTION LEGEND

- DETECTED MOVEMENT
- UNDETECTED MOVEMENT (OVERLAP)
- UNSIGNALIZED MOVEMENT
- PEDESTRIAN MOVEMENT

TABLE OF OPERATION

SIGNAL FACE	PHASE 02+5	02+6	08	PREEMPT 3	FLASH
21,22	G	G	R	R	Y
51	~~R~~	~~R~~	~~R~~	~~R~~	~~R~~
61,62	R	G	R	R	Y
81,82	R	R	G	G	R
P61,P62	DW	W	DW	DW	DRK
P81,P82	DW	DW	W	DW	DRK

W - Walk
DW - Don't Walk
DRK - Dark

SIGNAL FACE I.D.

All Heads L.E.D.

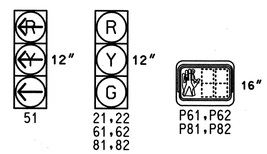

OASIS 2070L LOOP & DETECTOR INSTALLATION CHART

INDUCTIVE LOOPS					DETECTOR PROGRAMMING										
LOOP	SIZE (FT)	DISTANCE FROM STOPBAR (FT)	TURNS	NEW LOOP	PHASE	CALLING	EXTENSION	FULL TIME DELAY	STRETCH TIME	DELAY TIME	QUEUE MAX OCCUPANCY TIME	QUEUE GAP RESET TIME	PREEMPT INDEX FOR QUEUE	SYSTEM LOOP	NEW CARD
2A/S5	6X6	70	5	-	2	Y	Y	-	-	-	-	-	-	Y	-
2B/S6	6X6	70	5	-	2	Y	Y	-	-	-	-	-	-	Y	-
5A	6X40	0	2-4-2	-	5	Y	Y	-	-	-	-	-	-	-	-
6A/S7	6X6	70	3	-	6	Y	Y	-	-	-	-	-	-	Y	-
6B/S8	6X6	70	3	-	6	Y	Y	-	-	-	-	-	-	Y	-
8A	6X40	0	2-4-2	-	8	Y	Y	-	-	-	-	-	-	-	-
8B	6X40	0	2-4-2	-	8	Y	Y	-	-	15	-	-	-	-	-
*** Q1	6X6	625	6	-	PRE3	-	-	-	-	-	5	0.1	3	-	-
S41	6X6	+135	3	Y	-	-	-	-	-	-	-	-	-	Y	Y
S42	6X6	+135	3	Y	-	-	-	-	-	-	-	-	-	Y	Y
S43	6X6	+135	3	Y	-	-	-	-	-	-	-	-	-	Y	Y
S44	6X6	+135	3	Y	-	-	-	-	-	-	-	-	-	Y	Y

*** See Note 7.

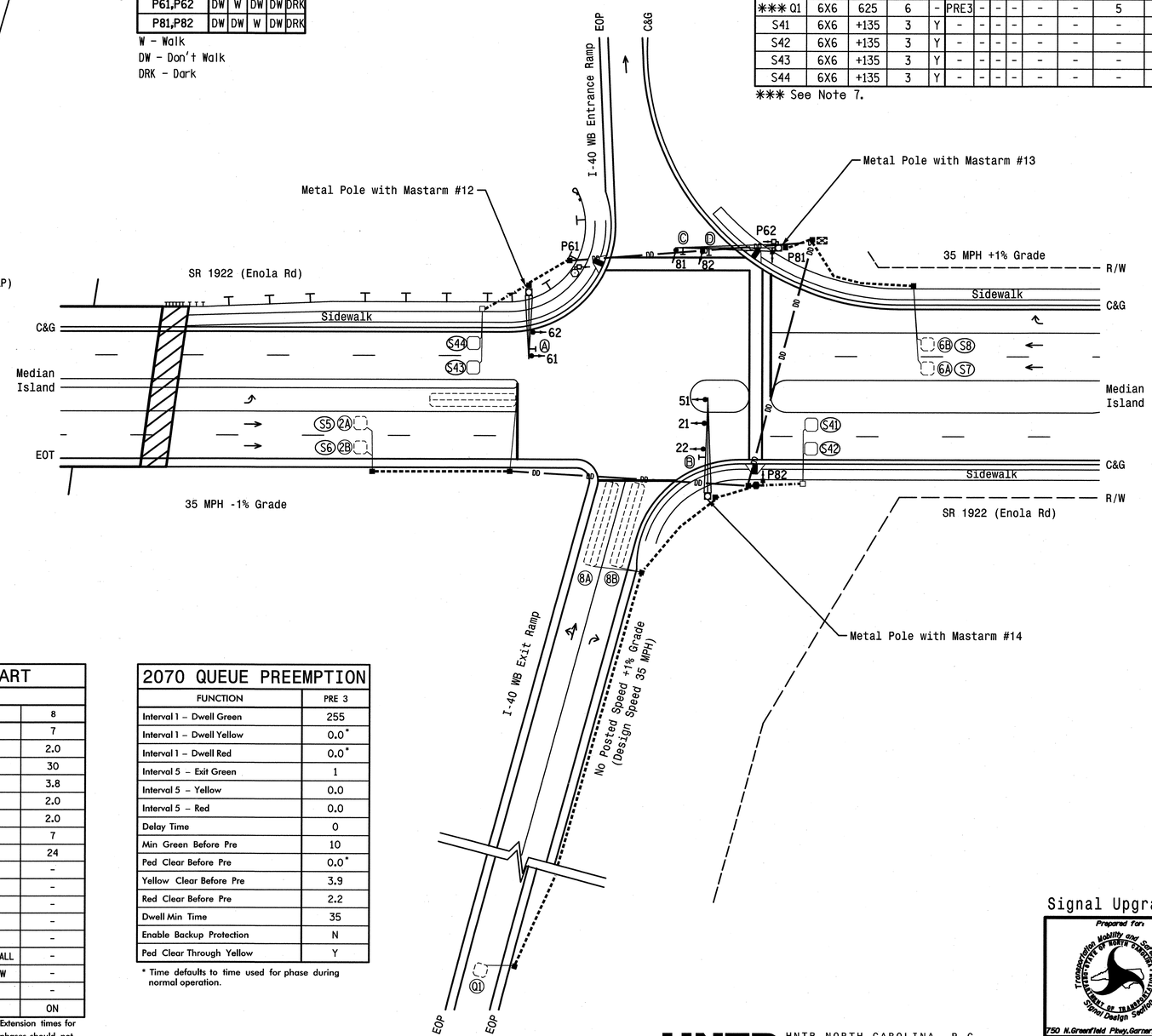

OASIS 2070L TIMING CHART

FEATURE	PHASE 2	5	6	8
Min Green 1 *	10	7	10	7
Extension 1 *	3.0	2.0	3.0	2.0
Max Green 1 *	45	20	45	30
Yellow Clearance	3.9	3.0	3.8	3.8
Red Clearance	2.2	2.9	1.7	2.0
Red Revert	2.0	2.0	2.0	2.0
Walk 1 *	-	-	7	7
Don't Walk 1	-	-	18	24
Seconds Per Actuation *	-	-	-	-
Max Variable Initial *	-	-	-	-
Time Before Reduction *	-	-	-	-
Time To Reduce *	-	-	-	-
Minimum Gap	-	-	-	-
Recall Mode	MIN RECALL	-	MIN RECALL	-
Vehicle Call Memory	YELLOW	-	YELLOW	-
Dual Entry	-	-	-	-
Simultaneous Gap	ON	ON	ON	ON

* These values may be field adjusted. Do not adjust Min Green and Extension times for phases 2 and 6 lower than what is shown. Min Green for all other phases should not be lower than 4 seconds.

2070 QUEUE PREEMPTION

FUNCTION	PRE 3
Interval 1 – Dwell Green	255
Interval 1 – Dwell Yellow	0.0*
Interval 1 – Dwell Red	0.0*
Interval 5 – Exit Green	1
Interval 5 – Yellow	0.0
Interval 5 – Red	0.0
Delay Time	0
Min Green Before Pre	10
Ped Clear Before Pre	0.0*
Yellow Clear Before Pre	3.9
Red Clear Before Pre	2.2
Dwell Min Time	35
Enable Backup Protection	N
Ped Clear Through Yellow	Y

* Time defaults to time used for phase during normal operation.

HNTB NORTH CAROLINA, P.C.
343 E. Six Forks Road, Suite 200
Raleigh, North Carolina 27609
NC License No: C-1554

3 Phase
Fully Actuated w/Queue Preemption
NC 18 (Sterling St)/SR 1922 (Enola Rd)
Closed Loop System

NOTES

1. Refer to "Roadway Standard Drawings NCDOT" dated January 2012 and "Standard Specifications for Roads and Structures" dated January 2012.
2. Do not program signal for late night flashing operation unless otherwise directed by the Engineer.
3. Phase 5 may be lagged.
4. Set all detector units to presence mode.
5. Omit "WALK" and flashing "DON'T WALK" with no pedestrian calls.
6. Program pedestrian heads to countdown the flashing "Don't Walk" time only.
7. These loops serve as queue backup detectors. After 5 seconds of constant actuation, the detector unit places a call to the controller to preempt normal operation to clear out the storage lanes.
8. When leaving preemption, ensure all non-preempt phases are served before serving the preempt phase again.
9. Maximum times shown in timing chart are for free-run operation only. Coordinated signal system timing values supersede these values.
10. Closed loop system data: Controller Asset #: 0592.

LEGEND

PROPOSED		EXISTING
	Traffic Signal Head	
	Modified Signal Head	N/A
	Sign	
	Pedestrian Signal Head With Push Button & Sign	
	Signal Pole with Guy	
	Signal Pole with Sidewalk Guy	
	Inductive Loop Detector	
	Controller & Cabinet	
	Junction Box	
	2-in Underground Conduit	
DD	Directional Drill	DD
N/A	Right of Way	
	Directional Arrow	
N/A	Guardrail	
	Metal Pole with Mastarm	
	Signal Pedestal	
N/A	Wheelchair Ramp	
N/A	No Left Turn Sign (R3-2)	A
N/A	No Right Turn Sign (R3-1)	B
N/A	Combined Through and Left Arrow Sign (R3-6L)	C
N/A	Right Arrow "ONLY" Sign (R3-5R)	D

Signal Upgrade - Final Design

Prepared for: Transportation Mobility and Safety Division, Traffic Engineering Branch, Signal Design Section
750 N.Greenfield Pkwy,Garner,NC 27529

SR 1922 (Enola Rd)
at
I-40 Westbound Ramp

Division 13 Burke County Morganton

PLAN DATE: July 2011	REVIEWED BY: T.R. Terrell
PREPARED BY: A.D. Klinksiek	REVIEWED BY: N.W. Rodevick

SCALE 0 30 1"=30'

REVISIONS	INIT.	DATE

SEAL
NORTH CAROLINA PROFESSIONAL SEAL 031464 ENGINEER NATASHA M. RODEVICK

Natasha M. Rodevick 12-12-11
SIGNATURE DATE

SIG. INVENTORY NO. 13-0592

PROJECT REFERENCE NO.	SHEET NO.
U-2551	Sig. 59

EDI MODEL 2018ECL-NC CONFLICT MONITOR PROGRAMMING DETAIL

(remove jumpers and set switches as shown)

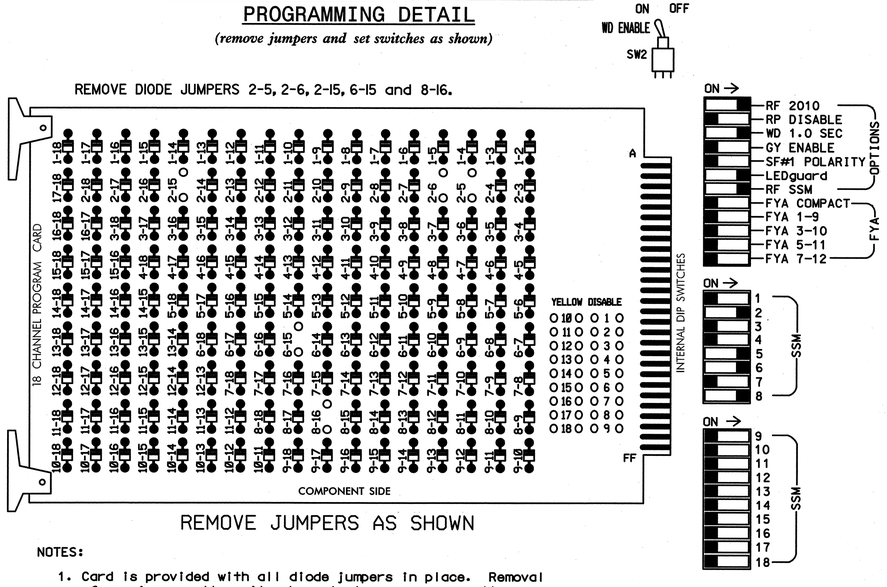

NOTES:

1. Card is provided with all diode jumpers in place. Removal of any jumper allows its channels to run concurrently.
2. Ensure jumpers SEL2-SEL5 and SEL9 are present on the monitor board.
3. Ensure that Red Enable is active at all times during normal operation.
4. Connect serial cable from conflict monitor to comm. port 1 of 2070 controller. Ensure conflict monitor communicates with 2070.

INPUT FILE POSITION LAYOUT

(front view)

		1	2	3	4	5	6	7	8	9	10	11	12	13	14
FILE "I"	U	SLOT	Ø2/SYS 2A/S5	SLOT	SLOT	SLOT	SLOT	SLOT	SLOT	SYS. DET. S41	SLOT	SLOT	SLOT	Ø6 PED DC ISOLATOR	FS DC ISOLATOR
	L	EMPTY	Ø2/SYS 2B/S6	EMPTY	EMPTY	EMPTY	EMPTY	EMPTY	EMPTY	SYS. DET. S42	EMPTY	EMPTY	EMPTY	Ø8 PED DC ISOLATOR	ST DC ISOLATOR
FILE "J"	U	Ø5 5A	Ø6/SYS 6A/S7	SLOT	SLOT	SLOT	Ø8 8A	PRE3 Q1	SLOT	SYS. DET. S43	SLOT	SLOT	SLOT	SLOT	SLOT
	L	NOT USED	Ø6/SYS 6B/S8	EMPTY	EMPTY	EMPTY	Ø8 8B	NOT USED	EMPTY	SYS. DET. S44	EMPTY	EMPTY	EMPTY	EMPTY	EMPTY

EX.: 1A, 2A, ETC. = LOOP NO.'S

FS = FLASH SENSE
ST = STOP TIME

NOTES

1. To prevent "flash-conflict" problems, insert red flash program blocks for all unused vehicle load switches in the output file. The installer shall verify that signal heads flash in accordance with the Signal Plans.
2. Enable Simultaneous Gap-Out for all phases.
3. Program phases 2 and 6 for Start Up In Green.
4. Program phases 6 and 8 for 'STARTUP PED CALL'.
5. Program phases 2 and 6 for Yellow Flash.
6. The cabinet and controller are part of the NC 18 (Sterling St)/SR 1922 (Enola Rd) Closed Loop System.

SIGNAL HEAD HOOK-UP CHART

LOAD SWITCH NO.	S1	S2	S3	S4	S5	S6	S7	S8	S9	S10	S11	S12	AUX S1	AUX S2	AUX S3	AUX S4	AUX S5	AUX S6
CMU CHANNEL NO.	1	2	13	3	4	14	5	6	15	7	8	16	9	10	17	11	12	18
PHASE	1	2	2 PED	3	4	4 PED	5	6	6 PED	7	8	8 PED	OLA	OLB	SPARE	OLC	OLD	SPARE
SIGNAL HEAD NO.	NU	21,22	NU	NU	NU	NU	51	61,62	P61, P62	NU	81,82	P81, P82	NU	NU	NU	NU	NU	NU
RED		128						134			107							
YELLOW		129						135			108							
GREEN		130						136			109							
RED ARROW							131											
YELLOW ARROW							132											
GREEN ARROW							133											
✋									119			110						
🚶									121			112						

NU = Not Used

EQUIPMENT INFORMATION

CONTROLLER.....2070L
CABINET.....332 /W/ AUX
SOFTWARE.....ECONOLITE OASIS
CABINET MOUNT.....BASE
OUTPUT FILE POSITIONS...18 WITH AUX. OUTPUT FILE
LOAD SWITCHES USED.....S2,S7,S8,S9,S11,S12
PHASES USED.....2,5,6,6PED,8,8PED
OVERLAP "A".....NOT USED
OVERLAP "B".....NOT USED
OVERLAP "C".....NOT USED
OVERLAP "D".....NOT USED

COUNTDOWN PEDESTRIAN SIGNAL OPERATION

Countdown Ped Signals are required to display timing only during Ped Clearance Interval. Consult Ped Signal Module user's manual for instructions on selecting this feature.

INPUT FILE CONNECTION & PROGRAMMING CHART

LOOP NO.	LOOP TERMINAL	INPUT FILE POS.	PIN NO.	INPUT ASSIGNMENT NO.	DETECTOR NO.	NEMA PHASE	CALL	EXTEND	FULL TIME DELAY	STRETCH TIME	DELAY TIME
2A/S5	TB2-5,6	I2U	39	1	2	2/SYS	Y	Y			
2B/S6	TB2-7,8	I2L	43	5	12	2/SYS	Y	Y			
** S41	TB6-9,10	I9U	60	22	11	SYS					
** S42	TB6-11,12	I9L	62	24	13	SYS					
5A	TB3-1,2	J1U	55	17	5	5	Y	Y			
6A/S7	TB3-5,6	J2U	40	2	6	6/SYS	Y	Y			
6B/S8	TB3-7,8	J2L	44	6	16	6/SYS	Y	Y			
8A	TB5-9,10	J6U	42	4	8	8	Y	Y			
8B	TB5-11,12	J6L	46	8	18	8	Y	Y			15
Q1	TB7-1,2	J7U	66	28	* 38	PRE3					
** S43	TB7-9,10	J9U	59	21	15	SYS					
** S44	TB7-11,12	J9L	61	23	17	SYS					
PED PUSH BUTTONS											
P61,P62	TB8-7,9	I13U	68	30	PED 6	6 PED					
P81,P82	TB8-8,9	I13L	70	32	PED 8	8 PED					

NOTE:
INSTALL DC ISOLATORS IN INPUT FILE SLOT I13.

* See vehicle detector programming detail on Sheet 2.

** System detector only. Remove the vehicle phase assigned to this detector in the default programming.

INPUT FILE POSITION LEGEND: J2L
FILE J
SLOT 2
LOWER

THIS ELECTRICAL DETAIL IS FOR
THE SIGNAL DESIGN: 13-0592
DESIGNED: July 2011
SEALED: 12-12-2011
REVISED:

Signal Upgrade - Final Design (Sheet 1 of 2)

HNTB NORTH CAROLINA, P.C.
343 E. Six Forks Road, Suite 200
Raleigh, North Carolina 27609
NC License No: C-1554

ELECTRICAL AND PROGRAMMING DETAILS FOR:

Prepared for: Transportation Mobility and Safety Division, Department of Transportation, Signal Management Section
750 N.Greenfield Pkwy,Garner,NC 27529

SR 1922 (Enola Rd)
at
I-40 Westbound Ramp

Division 13 Burke County Morganton

PLAN DATE:	July 2011	REVIEWED BY:	N.W. Rodevick
PREPARED BY:	A.D. Klinksiek	REVIEWED BY:	H.L. Winstead

REVISIONS	INIT.	DATE

SEAL
NORTH CAROLINA PROFESSIONAL SEAL 07983 ENGINEER HARVEY L. WINSTEAD, JR.
SIGNATURE DATE 12/12/11
SIG. INVENTORY NO. 13-0592

PROJECT REFERENCE NO.	SHEET NO.
U-2551	Sig. 60

LOGICAL I/O PROCESSOR PROGRAMMING DETAIL WHEN LEAVING PREEMPTOR SEQUENCE

(program controller as shown below)

1. FROM MAIN MENU PRESS '2' (PHASE CONTROL), THEN '1' (PHASE CONTROL FUNCTIONS). SCROLL TO THE BOTTOM OF THE MENU AND ENABLE ACT LOGIC COMMANDS 1,2, AND 3.
2. FROM MAIN MENU PRESS '6' (OUTPUTS), THEN '3' (LOGICAL I/O PROCESSOR).

NOTE: WHEN LEAVING PREEMPTOR SEQUENCE, THE FOLLOWING LOGIC STATEMENTS ENSURE ALL PHASES WITH A CALL WILL BE SERVED BEFORE PREEMPTOR CAN BE SERVICED AGAIN.

```
LOGICAL I/O COMMAND #1  (+/-COMMAND#)
IF  ACTIVE PREEMPTION  #3  IS ON

                 SCROLL DOWN

THEN:
SET LOGIC FLAG          #1 ON
```

NOTE: SETS LOGIC FLAG

PRESS '+'

```
LOGICAL I/O COMMAND #2  (+/-COMMAND#)
IF  LOGIC FLAG          #1 IS ON

                 SCROLL DOWN

THEN:
SET INPUT   ASSIGNMENT #28 OFF
```

NOTE: INHIBITS PREEMPT BY DISCONNECTING QUEUE LOOPS

PRESS '+'

```
LOGICAL I/O COMMAND #3  (+/-COMMAND#)
IF  LOGIC FLAG          #1 IS ON

                 SCROLL DOWN

THEN:
     DELAY FOR 75.0 SECONDS
SET LOGIC FLAG          #1 OFF
```

NOTE: TIMEOUT FOR RECONNECTING QUEUE LOOPS

LOGIC I/O PROCESSOR PROGRAMMING COMPLETE

VEHICLE DETECTOR #38 SETTINGS FOR QUEUE PREEMPT

(program controller as shown below)

FROM MAIN MENU PRESS '7' (DETECTORS), THEN '1' (VEHICLE DETECTOR ASSIGNMENTS). PRESS '+' UNTIL DETECTOR #38 IS REACHED.

```
VEHICLE DETECTOR #38  SETTINGS (+-,1-64)
SETTING:                          (Y/N)
ENABLE DETECTOR....................Y
ENABLE LOGGING.....................N
ENABLE DIAGNOSTICS.................N
SPEED TRAP.........................N
CALL DETECTOR......................N
EXTENSION DETECTOR.................N
MODE 2 STOP BAR....................N
SWITCHING DETECTOR.................N
DUPLICATING DETECTOR...............N
ENABLE FULL TIME DELAY.............N
IF FAILED, SET MIN RECALL?.........N
IF FAILED, SET MAX1 RECALL?........N
IF FAILED, SET MAX2 RECALL?........N
PHASE#            |123456789101112131415 16
PHASES ASSIGNED   |
SWITCH/DUPLICATE  |
LOOP SIZE (0-255 FT)...............6
SPEED TRAP DISTANCE (0-255 FT).....0
STOP BAR TIME (0-255 SEC)..........0
STRETCH (0-25.5 SEC)...............0.0
DELAY (0-255 SEC)..................0
MAX CALLS/MIN (0-255)..............255
MIN CALLS/DIAGNOSTIC PERIOD (0-255).0
MAX OCCUPANCY (0-100%).............100
EXTENSION DISABLE TIME (0-255 SEC)..0
QUEUE MAX OCCUPANCY TIME (0-255)....5
QUEUE GAP RESET TIME (0-25.5).......0.1
PREEMPTION INDEX FOR QUEUE (0-10)...3
```

QUEUE PREEMPTION PROGRAMMING DETAIL

(program controller as shown below)

From Main Menu press 'A' (Preemption), then '1' (Standard Preemptions). Press 'NEXT' until Preemption #3 is reached.

```
   PREEMPTION  #3  SETTINGS (NEXT:1-10)
INTERVAL/TIMING  |  CLEAR/DWELL PHASES
  GRN YEL  RED   |123456789101112131415 16
1 255  0.0  0.0  |        X
2   0  0.0  0.0  |
3   0  0.0  0.0  |
4   0  0.0  0.0  |
5   1  0.0  0.0  | X  X
EXIT CALLS       |
                 |
          OPTIONS
PRIORITY (Y/N TO SELECT) ............MED
DELAY TIMER (0-255 SEC) .............0.0
MIN GREEN BEFORE PRE (0= DEFAULT)....10
PED CLEAR BEFORE PRE (0= DEFAULT)....0
YELLOW CLEAR BEFORE PRE (0= DEFAULT).3.9
RED CLEAR BEFORE PRE (0= DEFAULT)....2.2
DWELL MIN TIMER (0-255 SEC) .........35
DWELL MAX TIMER (0=OFF,1-255MIN) ....0
DWELL HOLD-OVER TIMER (0-255) .......0
LATCH CALL? .........................N
LINK TO NEXT PREEMPT? ...............N
ENABLE BACKUP PROTECTION? ...........N
HOLD CLEAR 1 PHASES DURING DELAY? ...N
FAST GREEN FLASH DWELL PHASES? ......N
PED CLEARANCE THROUGH YELLOW? .......Y
INHIBIT OVERLAP GREEN EXTENSION? ....N
SERVICE DURING SOFTWARE FLASH? ......N
REST IN RED DURING DWELL INTERVAL? ..N
FLASH DWELL INTERVAL? ...............N
ALLOW PEDS IN DWELL INTERVAL? .......N
RE-TIME DWELL INTERVAL? .............N
OVERLAPS:                | ABCDEFGHIJKLMNOP
DWELL INT FLASH YELLOW   |
OMIT OVERLAPS:           |
```

THIS ELECTRICAL DETAIL IS FOR
THE SIGNAL DESIGN: 13-0592
DESIGNED: July 2011
SEALED: 12-12-2011
REVISED:

HNTB NORTH CAROLINA, P.C.
343 E. Six Forks Road, Suite 200
Raleigh, North Carolina 27609
NC License No: C-1554

Signal Upgrade - Final Design (Sheet 2 of 2)

ELECTRICAL AND PROGRAMMING DETAILS FOR:

Prepared for: Transportation Mobility and Safety Division, Traffic Engineering Branch, Signal Management Section, NORTH CAROLINA DEPARTMENT OF TRANSPORTATION

750 N.Greenfield Pkwy,Garner,NC 27529

SR 1922 (Enola Rd)
at
I-40 Westbound Ramp

Division 13 Burke County Morganton

PLAN DATE:	July 2011	REVIEWED BY:	N.W. Rodevick
PREPARED BY:	A.D. Klinksiek	REVIEWED BY:	H.L. Winstead

REVISIONS	INIT.	DATE

SEAL

NORTH CAROLINA PROFESSIONAL SEAL 07983 ENGINEER HARVEY L. WINSTEAD, JR.

SIGNATURE H.L. Winstead DATE 12/12/11

SIG. INVENTORY NO. 13-0592

PROJECT REFERENCE NO.	SHEET NO.
U-2551	Sig. 61

5 Phase
Fully Actuated
NC 18 (Sterling St)/SR 1922 (Enola Rd)
Closed Loop System

PHASING DIAGRAM

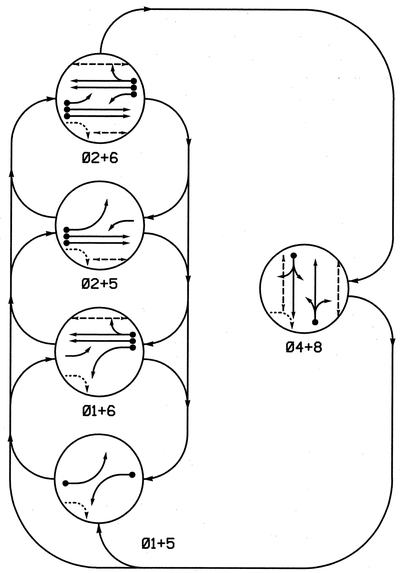

PHASING DIAGRAM DETECTION LEGEND

- DETECTED MOVEMENT
- UNDETECTED MOVEMENT (OVERLAP)
- UNSIGNALIZED MOVEMENT
- PEDESTRIAN MOVEMENT

TABLE OF OPERATION

SIGNAL FACE	PHASE 01+5	01+6	02+5	02+6	04+8	FLASH
11	—	—	F Y	F Y	R	Y
21,22	R	R	G	G	R	Y
41,42	R	R	R	R	G	R
51	—	F Y	—	F Y	R	Y
61,62	R	G	R	G	R	Y
81,82	R	R	R	R	G	R
P21,P22	DW	DW	W	W	DW	DRK
P41,P42	DW	DW	DW	DW	W	DRK
P61,P62	DW	W	DW	W	DW	DRK
P81,P82	DW	DW	DW	DW	W	DRK

F Y = Flashing Yellow Arrow
W - Walk
DW - Don't Walk
DRK - Dark

STANDARD SIGNAL FACE CLEARANCES FOR FLASHING LEFT TURN SIGNAL

FROM	TO ←	F Y 1	F Y 2	R 1	R 2
←	←	Y	Y	R	Y
F Y	F Y	F Y	F Y	F Y	R
R	R	R	R	R	R

F Y = Flashing Yellow Arrow

SIGNAL FACE I.D.

All Heads L.E.D.

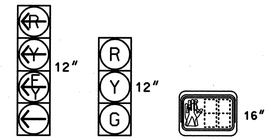

OASIS 2070L LOOP & DETECTOR INSTALLATION CHART

INDUCTIVE LOOPS					DETECTOR PROGRAMMING							
LOOP	SIZE (FT)	DISTANCE FROM STOPBAR (FT)	TURNS	NEW LOOP	PHASE	CALLING	EXTENSION	FULL TIME DELAY	STRETCH TIME	DELAY TIME	SYSTEM LOOP	NEW CARD
1A	6X40	0	2-4-2	Y	1	Y	Y	-	-	15	-	Y
					6	Y	Y	-	-	-	-	Y
2A	6X6	70	3	Y	2	Y	Y	-	-	-	-	Y
2B	6X6	70	3	Y	2	Y	Y	-	-	-	-	Y
4A	6X40	0	2-4-2	Y	4	Y	Y	-	-	10	-	Y
5A	6X40	0	2-4-2	Y	5	Y	Y	-	-	15	-	Y
					2	Y	Y	-	-	-	-	Y
6A	6X6	70	3	Y	6	Y	Y	-	-	-	-	Y
6B	6X6	70	3	Y	6	Y	Y	-	-	-	-	Y
8A	6X40	0	2-4-2	Y	8	Y	Y	-	-	10	-	Y
8B	6X6	0	3	Y	8	Y	Y	-	-	15	-	Y
S37	6X6	+200	4	Y	-	-	-	-	-	-	Y	Y
S38	6X6	+200	4	Y	-	-	-	-	-	-	Y	Y
S39	6X6	+225	3	Y	-	-	-	-	-	-	Y	Y
S40	6X6	+225	3	Y	-	-	-	-	-	-	Y	Y

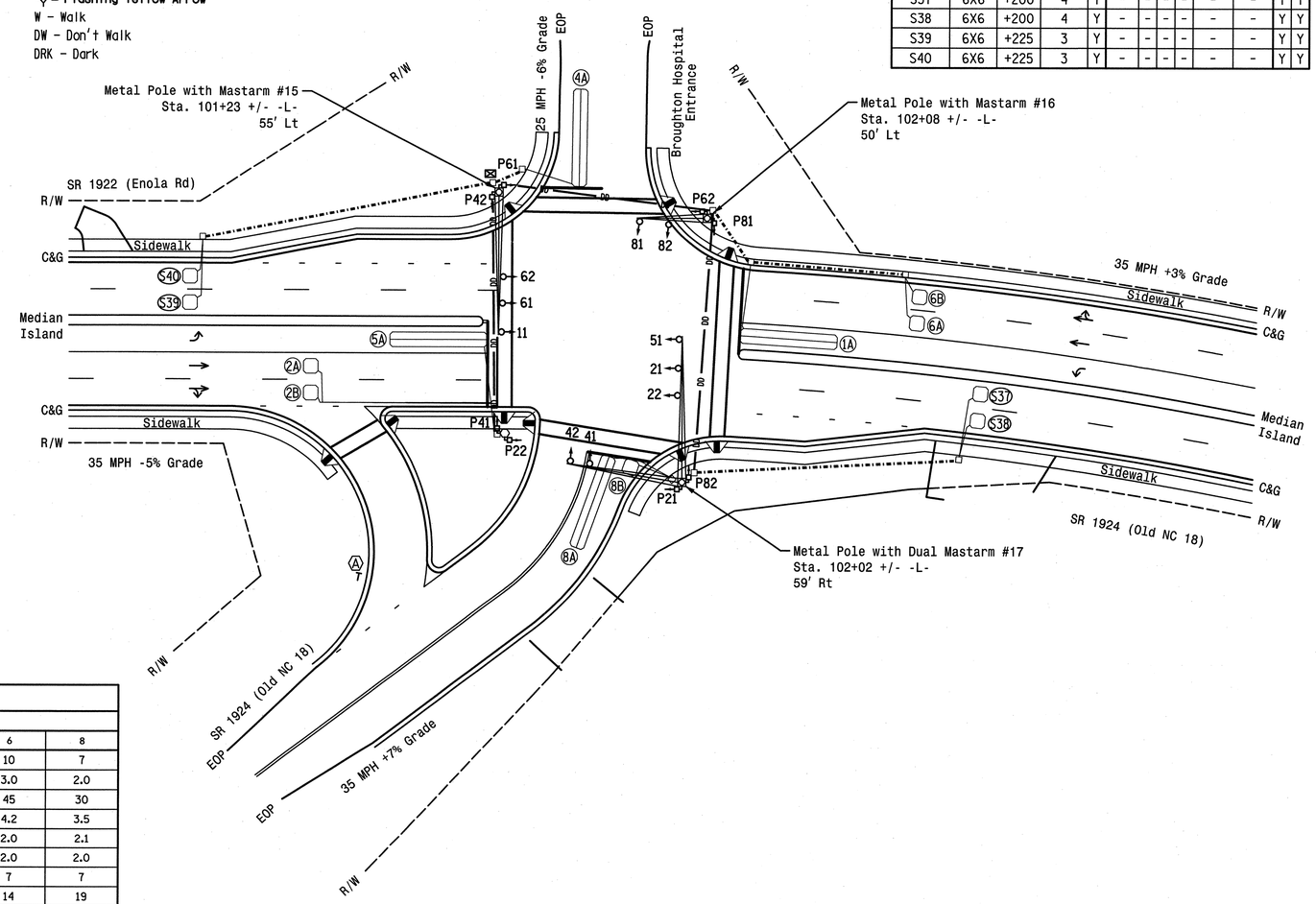

NOTES

1. Refer to "Roadway Standard Drawings NCDOT" dated January 2012 and "Standard Specifications for Roads and Structures" dated January 2012.
2. Do not program signal for late night flashing operation unless otherwise directed by the Engineer.
3. Phase 1 and/or phase 5 may be lagged.
4. Set all detector units to presence mode.
5. Locate new cabinet so as not to obstruct sight distance of vehicles turning right on red.
6. Omit "WALK" and flashing "DON'T WALK" with no pedestrian calls.
7. Program pedestrian heads to countdown the flashing "Don't Walk" time only.
8. Maximum times shown in timing chart are for free-run operation only. Coordinated signal system timing values supersede these values.
9. Closed loop system data: Controller Asset #:0688.

LEGEND

PROPOSED		EXISTING
	Traffic Signal Head	
	Modified Signal Head	N/A
	Sign	
	Pedestrian Signal Head With Push Button & Sign	
	Signal Pole with Guy	
	Signal Pole with Sidewalk Guy	
	Inductive Loop Detector	
	Controller & Cabinet	
	Junction Box	
	2-in Underground Conduit	
— DD —	Directional Drill	— DD —
N/A	Right of Way	
	Directional Arrow	
	Metal Pole with Mastarm	
	Signal Pedestal	
N/A	Wheelchair Ramp	
	"YIELD" Sign (R1-2)	N/A

OASIS 2070L TIMING CHART

FEATURE	PHASE 1	2	4	5	6	8
Min Green 1 *	7	10	7	7	10	7
Extension 1 *	2.0	3.0	2.0	2.0	3.0	2.0
Max Green 1 *	20	45	30	20	45	30
Yellow Clearance	3.0	4.2	3.5	3.1	4.2	3.5
Red Clearance	2.6	2.0	2.8	2.6	2.0	2.1
Red Revert	2.0	2.0	2.0	2.0	2.0	2.0
Walk 1 *	-	7	7	-	7	7
Don't Walk 1	-	13	20	-	14	19
Seconds Per Actuation *	-	-	-	-	-	-
Max Variable Initial *	-	-	-	-	-	-
Time Before Reduction *	-	-	-	-	-	-
Time To Reduce *	-	-	-	-	-	-
Minimum Gap	-	-	-	-	-	-
Recall Mode	-	MIN RECALL	-	-	MIN RECALL	-
Vehicle Call Memory	-	YELLOW	-	-	YELLOW	-
Dual Entry	-	-	ON	-	-	ON
Simultaneous Gap	ON	ON	ON	ON	ON	ON

* These values may be field adjusted. Do not adjust Min Green and Extension times for phases 2 and 6 lower than what is shown. Min Green for all other phases should not be lower than 4 seconds.

New Installation

HNTB
HNTB NORTH CAROLINA, P.C.
343 E. Six Forks Road, Suite 200
Raleigh, North Carolina 27609
NC License No: C-1554

Prepared for: Transportation Mobility and Safety Division, Signal Design Section, Department of Transportation, State of North Carolina
750 N.Greenfield Pkwy,Garner,NC 27529

SR 1922 (Enola Rd)
at
SR 1924 (Old NC 18)/
Broughton Hospital Entrance

Division 13 Burke County Morganton

PLAN DATE:	July 2011	REVIEWED BY:	A.D. Klinksiek
PREPARED BY:	T.R. Terrell	REVIEWED BY:	N.M. Rodevick

SCALE 0 30 1"=30'

REVISIONS	INIT.	DATE

SEAL
NORTH CAROLINA PROFESSIONAL SEAL 031464 ENGINEER NATASHA M. RODEVICK

Natasha M. Rodevick 12-12-11
SIGNATURE DATE

SIG. INVENTORY NO. 13-0688

PROJECT REFERENCE NO.	SHEET NO.
U-2551	Sig. 62

EDI MODEL 2018ECL-NC CONFLICT MONITOR PROGRAMMING DETAIL

(remove jumpers and set switches as shown)

REMOVE DIODE JUMPERS 1-5, 1-6, 1-9, 1-11, 1-15, 2-5, 2-6, 2-9, 2-11, 2-13, 2-15, 4-8, 4-14, 4-16, 5-9, 5-11, 5-13, 6-9, 6-11, 6-13, 6-15, 8-14, 8-16, 9-11, 9-13, 9-15, 11-13, 11-15, 13-15 and 14-16.

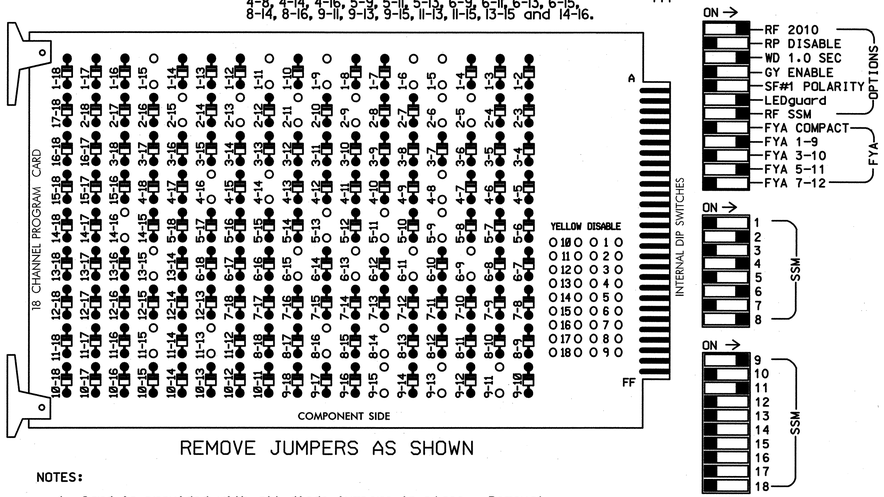

REMOVE JUMPERS AS SHOWN

NOTES:

1. Card is provided with all diode jumpers in place. Removal of any jumper allows its channels to run concurrently.
2. Ensure jumpers SEL2-SEL5 and SEL9 are present on the monitor board.
3. Ensure that Red Enable is active at all times during normal operation.
4. Connect serial cable from conflict monitor to comm. port 1 of 2070 controller. Ensure conflict monitor communicates with 2070.

NOTES

1. To prevent "flash-conflict" problems, insert red flash program blocks for all unused vehicle load switches in the output file. The installer shall verify that signal heads flash in accordance with the Signal Plans.
2. Program phases 4 and 8 for Dual Entry.
3. Enable Simultaneous Gap-Out for all phases.
4. Program phases 2 and 6 for Start Up In Green.
5. Program phases 2, 4, 6 and 8 for 'STARTUP PED CALL'.
6. Program phases 2 and 6 for Yellow Flash and overlap 1 as Wag Overlap.
7. The cabinet and controller are part of the NC 18 (Sterling St)/SR 1922 (Enola Rd) Closed Loop System.

SIGNAL HEAD HOOK-UP CHART

LOAD SWITCH NO.	S1	S2	S3	S4	S5	S6	S7	S8	S9	S10	S11	S12	AUX S1	AUX S2	AUX S3	AUX S4	AUX S5	AUX S6
CMU CHANNEL NO.	1	2	13	3	4	14	5	6	15	7	8	16	9	10	17	11	12	18
PHASE	1★	2	2 PED	3	4	4 PED	5★	6	6 PED	7	8	8 PED	OLA★	OLB	SPARE	OLC★	OLD	SPARE
SIGNAL HEAD NO.	11	21,22	P21 P22	NU	41,42	P41 P42	51	61,62	P61 P62	NU	81,82	P81 P82	11	NU	NU	51	NU	NU
RED		128			101			134			107							
YELLOW	✳	129			102		✳	135			108							
GREEN		130			103			136			109							
RED ARROW													A121			A114		
YELLOW ARROW													A122			A115		
FLASHING YELLOW ARROW													A123			A116		
GREEN ARROW	127						133											
✋			113			104			119			110						
🚶			115			106			121			112						

NU = Not Used

✳ Denotes install load resistor. See load resistor installation detail this sheet.

★ See pictorial of head wiring in detail below.

INPUT FILE POSITION LAYOUT

(front view)

		1	2	3	4	5	6	7	8	9	10	11	12	13	14
FILE "I"	U	Ø1 1A	Ø2 2A	SLOT EMPTY	WAS INPUT ⊗	SLOT EMPTY	Ø4 4A	SLOT EMPTY	SLOT EMPTY	SYS. DET. S37	SLOT EMPTY	SLOT EMPTY	Ø2 PED DC ISOLATOR	Ø6 PED DC ISOLATOR	FS DC ISOLATOR
	L	NOT USED	Ø2 2B				NOT USED			SYS. DET. S38			Ø4 PED DC ISOLATOR	Ø8 PED DC ISOLATOR	ST DC ISOLATOR
FILE "J"	U	Ø5 5A	Ø6 6A	SLOT EMPTY	WAS INPUT ⊗	SLOT EMPTY	Ø8 8A	SLOT EMPTY	SLOT EMPTY	SYS. DET. S39	SLOT EMPTY	SLOT EMPTY	SLOT EMPTY	SLOT EMPTY	SLOT EMPTY
	L	NOT USED	Ø6 6B				Ø8 8B			SYS. DET. S40					

EX.: 1A, 2A, ETC. = LOOP NO.'S

FS = FLASH SENSE
ST = STOP TIME

⊗ Wired Input - Do not populate slot with detector card

EQUIPMENT INFORMATION

CONTROLLER.....2070L
CABINET.....332 /W/ AUX
SOFTWARE.....ECONOLITE OASIS
CABINET MOUNT.....BASE
OUTPUT FILE POSITIONS...18 WITH AUX. OUTPUT FILE
LOAD SWITCHES USED.....S1,S2,S3,S5,S6,S7,S8,S9,S11,S12
AUX S1,AUX S4
PHASES USED.....1,2,2PED,4,4PED,5,6,6PED,8,8PED
OVERLAP "A".....1+2
OVERLAP "B".....NOT USED
OVERLAP "C".....5+6
OVERLAP "D".....NOT USED

4 SECTION FYA PPLT SIGNAL WIRING DETAIL

(wire signal heads as shown)

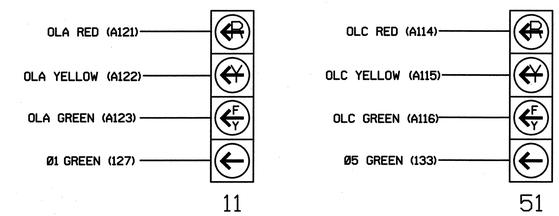

NOTE

1. The sequence display for signal heads 11 and 51 require special logic programming. See sheet 2 of 2 for programming instructions.

INPUT FILE CONNECTION & PROGRAMMING CHART

LOOP NO.	LOOP TERMINAL	INPUT FILE POS.	PIN NO.	INPUT ASSIGNMENT NO.	DETECTOR NO.	NEMA PHASE	CALL	EXTEND	FULL TIME DELAY	STRETCH TIME	DELAY TIME
1A [1]	TB2-1,2	I1U	56	18	1	1	Y	Y			15
	-	J4U	48	10	26	6	Y	Y			
2A	TB2-5,6	I2U	39	1	2	2	Y	Y			
2B	TB2-7,8	I2L	43	5	12	2	Y	Y			
✱✱ S37	TB6-9,10	I9U	60	22	11	SYS					
✱✱ S38	TB6-11,12	I9L	62	24	13	SYS					
4A	TB4-9,10	I6U	41	3	4	4	Y	Y			10
5A [2]	TB3-1,2	J1U	55	17	5	5	Y	Y			15
	-	I4U	47	9	22	2	Y	Y			
6A	TB3-5,6	J2U	40	2	6	6	Y	Y			
6B	TB3-7,8	J2L	44	6	16	6	Y	Y			
8A	TB5-9,10	J6U	42	4	8	8	Y	Y			10
8B	TB5-11,12	J6L	46	8	18	8	Y	Y			15
✱✱ S39	TB7-9,10	J9U	59	21	15	SYS					
✱✱ S40	TB7-11,12	J9L	61	23	17	SYS					
PED PUSH BUTTONS											
P21,P22	TB8-4,6	I12U	67	29	PED 2	2 PED					
P41,P42	TB8-5,6	I12L	69	31	PED 4	4 PED					
P61,P62	TB8-7,9	I13U	68	30	PED 6	6 PED					
P81,P82	TB8-8,9	I13L	70	32	PED 8	8 PED					

NOTE:
INSTALL DC ISOLATORS IN INPUT FILE SLOTS I12 AND I13.

[1] Add jumper from I1-W to J4-W, on rear of input file.
[2] Add jumper from J1-W to I4-W, on rear of input file.
✱✱ System detector only. Remove the vehicle phase assigned to this detector in the default programming.

INPUT FILE POSITION LEGEND: J2L
FILE J
SLOT 2
LOWER

COUNTDOWN PEDESTRIAN SIGNAL OPERATION

Countdown Ped Signals are required to display timing only during Ped Clearance Interval. Consult Ped Signal Module user's manual for instructions on selecting this feature.

LOAD RESISTOR INSTALLATION DETAIL

(install resistors as shown below)

ACCEPTABLE VALUES	
VALUE (ohms)	WATTAGE
1.5K - 1.9K	25W (min)
2.0K - 3.0K	10W (min)

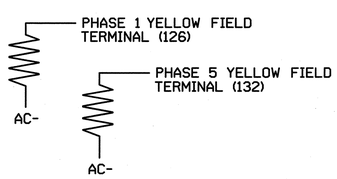

THIS ELECTRICAL DETAIL IS FOR
THE SIGNAL DESIGN: 13-0688
DESIGNED: July 2011
SEALED: 12-12-2011
REVISED:

New Installation (Sheet 1 of 2)

HNTB NORTH CAROLINA, P.C.
343 E. Six Forks Road, Suite 200
Raleigh, North Carolina 27609
NC License No: C-1554

ELECTRICAL AND PROGRAMMING DETAILS FOR:

Prepared for: Transportation Mobility and Safety Division, Signals Management Section, Department of Transportation, State of North Carolina
750 N.Greenfield Pkwy, Garner, NC 27529

SR 1922 (Enola Rd)
at
SR 1924 (Old NC 18)/
Broughton Hospital Entrance

Division 13 Burke County Morganton

PLAN DATE:	July 2011	REVIEWED BY:	N.W. Rodevick
PREPARED BY:	A.D. Klinksiek	REVIEWED BY:	H.L. Winstead

REVISIONS	INIT.	DATE

SEAL
NORTH CAROLINA PROFESSIONAL SEAL 07983 ENGINEER HARVEY L. WINSTEAD, JR.

SIGNATURE H.L. Winstead DATE 12/12/11

SIG. INVENTORY NO. 13-0688

PROJECT REFERENCE NO.	SHEET NO.
U-2551	Sig. 63

LOGICAL I/O PROCESSOR PROGRAMMING DETAIL
TO PRODUCE SPECIAL FYA-PPLT SIGNAL SEQUENCE

(program controller as shown below)

1. FROM MAIN MENU PRESS '2' (PHASE CONTROL), THEN '1' (PHASE CONTROL FUNCTIONS). SCROLL TO THE BOTTOM OF THE MENU AND ENABLE ACT LOGIC COMMANDS 1, 2, 3, 4, 5 AND 6.

2. FROM MAIN MENU PRESS '6' (OUTPUTS), THEN '3' (LOGICAL I/O PROCESSOR).

```
LOGICAL I/O COMMAND #1  (+/-COMMAND#)
IF  ACTIVE PHASE        #1  IS ON
AND RED CLEAR ON PHASE #1  IS ON

SCROLL DOWN

THEN:
SET OUTPUT  ASSIGNMENT #50 ON
SET OUTPUT  ASSIGNMENT #51 OFF
```

NOTE: LOGIC FOR PHASE 1 RED CLEAR WHEN TRANSITIONING FROM PHASE 1 TO PHASE 2 (HEAD 11).

PRESS '+'

```
LOGICAL I/O COMMAND #2  (+/-COMMAND#)
IF  ACTIVE PHASE        #1  IS ON

SCROLL DOWN

THEN:
SET OUTPUT  ASSIGNMENT #52 OFF
```

NOTE: LOGIC FOR SWITCHING FLASHING YELLOW ARROW "OFF" DURING PHASE 1 (HEAD 11).

PRESS '+'

```
LOGICAL I/O COMMAND #3  (+/-COMMAND#)
IF  YELLOW ON PHASE     #1  IS ON

SCROLL DOWN

THEN:
SET OUTPUT  ASSIGNMENT #51 ON
```

NOTE: LOGIC FOR YELLOW ARROW CLEARANCE FROM PHASE 1 (HEAD 11).

PRESS '+'

```
LOGICAL I/O COMMAND #4  (+/-COMMAND#)
IF  ACTIVE PHASE        #5  IS ON
AND RED CLEAR ON PHASE #5  IS ON

SCROLL DOWN

THEN:
SET OUTPUT  ASSIGNMENT #42 ON
SET OUTPUT  ASSIGNMENT #43 OFF
```

NOTE: LOGIC FOR PHASE 5 RED CLEAR WHEN TRANSITIONING FROM PHASE 5 TO PHASE 6 (HEAD 51).

PRESS '+'

```
LOGICAL I/O COMMAND #5  (+/-COMMAND#)
IF  ACTIVE PHASE        #5  IS ON

SCROLL DOWN

THEN:
SET OUTPUT  ASSIGNMENT #44 OFF
```

NOTE: LOGIC FOR SWITCHING FLASHING YELLOW ARROW "OFF" DURING PHASE 5 (HEAD 51).

PRESS '+'

```
LOGICAL I/O COMMAND #6  (+/-COMMAND#)
IF  YELLOW ON PHASE     #5  IS ON

SCROLL DOWN

THEN:
SET OUTPUT  ASSIGNMENT #43 ON
```

NOTE: LOGIC FOR YELLOW ARROW CLEARANCE FROM PHASE 5 (HEAD 51).

LOGIC I/O PROCESSOR PROGRAMMING COMPLETE

OUTPUT REFERENCE SCHEDULE

OUTPUT 42 = Overlap C Red
OUTPUT 43 = Overlap C Yellow
OUTPUT 44 = Overlap C Green
OUTPUT 50 = Overlap A Red
OUTPUT 51 = Overlap A Yellow
OUTPUT 52 = Overlap A Green

OVERLAP PROGRAMMING DETAIL

(program controller as shown below)

FROM MAIN MENU PRESS '8' (OVERLAPS), THEN '1' (VEHICLE OVERLAP SETTINGS).

```
PAGE 1: VEHICLE OVERLAP 'A' SETTINGS
PHASE:            |12345678910111213141516
VEH OVL PARENTS:  |XX
VEH OVL NOT VEH:  |
VEH OVL NOT PED:  |
VEH OVL GRN EXT:  |
STARTUP COLOR: _ RED  _ YELLOW  _ GREEN
FLASH COLORS:  _ RED  _ YELLOW  X GREEN
SELECT VEHICLE OVERLAP OPTIONS:   (Y/N)
FLASH YELLOW IN CONTROLLER FLASH?...Y
GREEN EXTENSION (0-255 SEC).........0
YELLOW CLEAR (0=PARENT,3-25.5 SEC)..0.0
RED CLEAR (0=PARENT,0.1-25.5 SEC)...0.0
OUTPUT AS PHASE # (0=NONE, 1-16)....0
```

← NOTICE GREEN FLASH

PRESS '+' TWICE

```
PAGE 1: VEHICLE OVERLAP 'C' SETTINGS
PHASE:            |12345678910111213141516
VEH OVL PARENTS:  |   XX
VEH OVL NOT VEH:  |
VEH OVL NOT PED:  |
VEH OVL GRN EXT:  |
STARTUP COLOR: _ RED  _ YELLOW  _ GREEN
FLASH COLORS:  _ RED  _ YELLOW  X GREEN
SELECT VEHICLE OVERLAP OPTIONS:   (Y/N)
FLASH YELLOW IN CONTROLLER FLASH?...Y
GREEN EXTENSION (0-255 SEC).........0
YELLOW CLEAR (0=PARENT,3-25.5 SEC)..0.0
RED CLEAR (0=PARENT,0.1-25.5 SEC)...0.0
OUTPUT AS PHASE # (0=NONE, 1-16)....0
```

← NOTICE GREEN FLASH

OVERLAP PROGRAMMING COMPLETE

THIS ELECTRICAL DETAIL IS FOR
THE SIGNAL DESIGN: 13-0688
DESIGNED: July 2011
SEALED: 12-12-2011
REVISED:

New Installation (Sheet 2 of 2)

HNTB NORTH CAROLINA, P.C.
343 E. Six Forks Road, Suite 200
Raleigh, North Carolina 27609
NC License No: C-1554

ELECTRICAL AND PROGRAMMING DETAILS FOR:

Prepared for: Transportation Mobility and Safety Division, Signals Management Section, STATE OF NORTH CAROLINA DEPARTMENT OF TRANSPORTATION
750 N.Greenfield Pkwy,Garner,NC 27529

SR 1922 (Enola Rd)
at
SR 1924 (Old NC 18)/
Broughton Hospital Entrance

Division 13 Burke County Morganton

PLAN DATE:	July 2011	REVIEWED BY:	N.M. Rodevick
PREPARED BY:	A.D. Klinksiek	REVIEWED BY:	H.L. Winstead

REVISIONS	INIT.	DATE

SEAL

NORTH CAROLINA PROFESSIONAL SEAL 07983 ENGINEER HARVEY L. WINSTEAD, JR.

SIGNATURE H.L. Winstead DATE 12/12/11

SIG. INVENTORY NO. 13-0688

PROJECT REFERENCE NO.	SHEET NO.
U-2551	Sig. 64

PHASING DIAGRAM

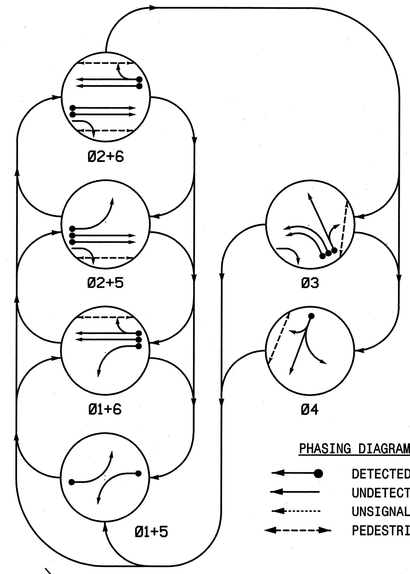

PHASING DIAGRAM DETECTION LEGEND

- DETECTED MOVEMENT
- UNDETECTED MOVEMENT (OVERLAP)
- UNSIGNALIZED MOVEMENT
- PEDESTRIAN MOVEMENT

TABLE OF OPERATION

SIGNAL FACE	PHASE 01+5	01+6	02+5	02+6	03	04	FLASH
11	-	-	R	R	R	R	R
21	R	R	G	G	R	R	Y
22	R	R	G	G	R/G	R	Y
31,32	R	R	R	R	-	R	R
33,34	R	R	R	R	G	R	R
41	R	R	R	R	R	G	R
42	R	R	R	R	R	G	R
51	-	R	-	R	R	R	R
61,62	R	G	R	G	R	R	Y
P21,P22	DW	DW	W	W	DW	DW	DRK
P31,P32	DW	DW	DW	DW	W	DW	DRK
P41,P42	DW	DW	DW	DW	DW	W	DRK
P61,P62	DW	W	DW	W	DW	DW	DRK

W - Walk
DW - Don't Walk
DRK - Dark

SIGNAL FACE I.D.

All Heads L.E.D.

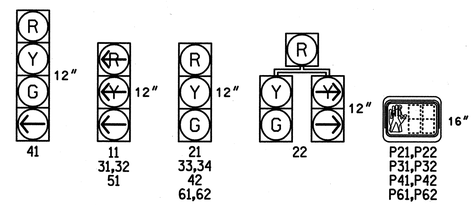

OASIS 2070L LOOP & DETECTOR INSTALLATION CHART

INDUCTIVE LOOPS					DETECTOR PROGRAMMING							
LOOP	SIZE (FT)	DISTANCE FROM STOPBAR (FT)	TURNS	NEW LOOP	PHASE	CALLING	EXTENSION	FULL TIME DELAY	STRETCH TIME	DELAY TIME	SYSTEM LOOP	NEW CARD
1A	6X60	0	EXIST	-	1	Y	Y	-	-	3	-	-
2A/S15	6X6	250	EXIST	-	2	Y	Y	-	-	-	Y	-
2B/S16	6X6	250	EXIST	-	2	Y	Y	-	-	-	Y	-
3A	6X60	+5	EXIST	-	3	Y	Y	-	-	3	-	-
3B	6X60	+5	EXIST	-	3	Y	Y	-	-	-	-	-
3C	6X60	+5	EXIST	-	3	Y	Y	-	-	10	-	-
4A	6X60	0	EXIST	-	4	Y	Y	-	-	10	-	-
5A	6X60	0	EXIST	-	5	Y	Y	-	-	3	-	-
6A/S17	6X6	300	EXIST	-	6	Y	Y	-	-	-	Y	-
6B/S18	6X6	300	EXIST	-	6	Y	Y	-	-	-	Y	-

6 Phase
Fully Actuated
NC 18 (Sterling St)/SR 1922 (Enola Rd)
Closed Loop System

NOTES

1. Refer to "Roadway Standard Drawings NCDOT" dated January 2012 and "Standard Specifications for Roads and Structures" dated January 2012.
2. Do not program signal for late night flashing operation unless otherwise directed by the Engineer.
3. Phase 1 and/or phase 5 may be lagged.
4. The order of phase 3 and phase 4 may be reversed.
5. Set all detector units to presence mode.
6. Omit "WALK" and flashing "DON'T WALK" with no pedestrian calls.
7. Program pedestrian heads to countdown the flashing "Don't Walk" time only.
8. Pavement markings are existing.
9. Maximum times shown in timing chart are for free-run operation only. Coordinated signal system timing values supersede these values.
10. Closed loop system data: Controller Asset#:0385.
11. Coordinate signal upgrades with NCDOT TIP Project U-2550B.

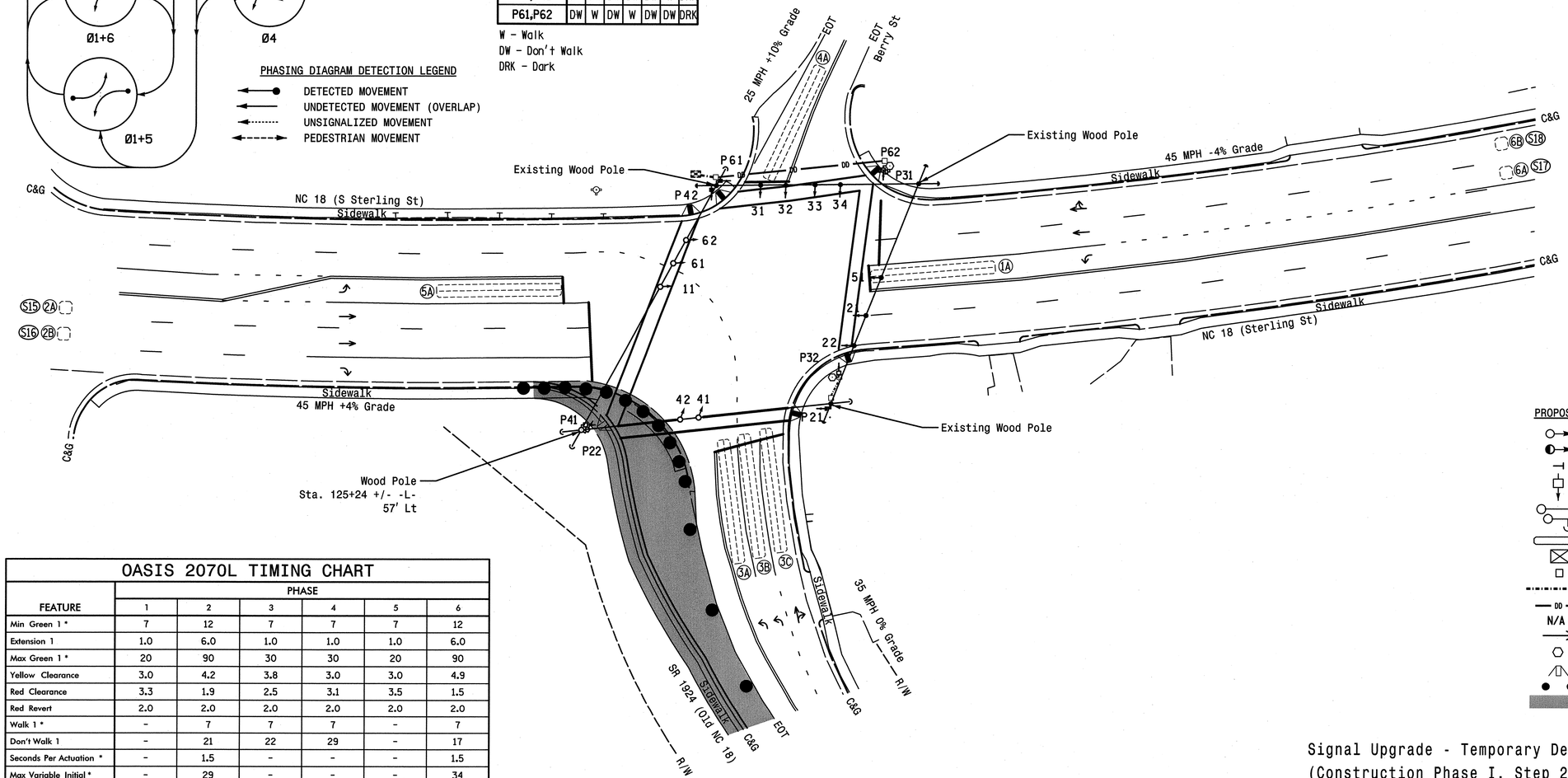

LEGEND

PROPOSED		EXISTING
	Traffic Signal Head	
	Modified Signal Head	N/A
	Sign	
	Pedestrian Signal Head With Push Button & Sign	
	Signal Pole with Guy	
	Signal Pole with Sidewalk Guy	
	Inductive Loop Detector	
	Controller & Cabinet	
	Junction Box	
	2-in Underground Conduit	
— DD —	Directional Drill	— DD —
N/A	Right of Way	
	Directional Arrow	
	Signal Pedestal	
	Wheelchair Ramp	
	Construction Zone Drums	N/A
	Construction Zone	N/A

OASIS 2070L TIMING CHART

FEATURE	PHASE 1	2	3	4	5	6
Min Green 1 *	7	12	7	7	7	12
Extension 1	1.0	6.0	1.0	1.0	1.0	6.0
Max Green 1 *	20	90	30	30	20	90
Yellow Clearance	3.0	4.2	3.8	3.0	3.0	4.9
Red Clearance	3.3	1.9	2.5	3.1	3.5	1.5
Red Revert	2.0	2.0	2.0	2.0	2.0	2.0
Walk 1 *	-	7	7	7	-	7
Don't Walk 1	-	21	22	29	-	17
Seconds Per Actuation *	-	1.5	-	-	-	1.5
Max Variable Initial *	-	29	-	-	-	34
Time Before Reduction *	-	15	-	-	-	15
Time To Reduce *	-	30	-	-	-	30
Minimum Gap	-	3.0	-	-	-	3.0
Recall Mode	-	MIN RECALL	-	-	-	MIN RECALL
Vehicle Call Memory	-	YELLOW	-	-	-	YELLOW
Dual Entry	-	-	-	-	-	-
Simultaneous Gap	ON	ON	ON	ON	ON	ON

* These values may be field adjusted. Do not adjust Min Green and Extension times for phases 2 and 6 lower than what is shown. Min Green for all other phases should not be lower than 4 seconds.

Signal Upgrade - Temporary Design 1
(Construction Phase I, Step 2)

HNTB
HNTB NORTH CAROLINA, P.C.
343 E. Six Forks Road, Suite 200
Raleigh, North Carolina 27609
NC License No: C-1554

Prepared for: Transportation Mobility and Safety Division, Signal Design Section, 750 N.Greenfield Pkwy, Garner, NC 27529

SCALE 0 30 1"=30'

NC 18 (S Sterling St)
at
SR 1924 (Old NC 18)/Berry St

Division 13 Burke County Morganton

PLAN DATE: July 2011	REVIEWED BY: A.D. Klinksiek
PREPARED BY: T.R. Terrell	REVIEWED BY: N.M. Rodevick

REVISIONS	INIT.	DATE

SEAL
NORTH CAROLINA PROFESSIONAL SEAL 031464 ENGINEER NATASHA M. RODEVICK
SIGNATURE Natasha M. Rodevick DATE 12-12-11
SIG. INVENTORY NO. 13-0385T1

PROJECT REFERENCE NO.	SHEET NO.
U-2551	Sig. 65

PHASING DIAGRAM

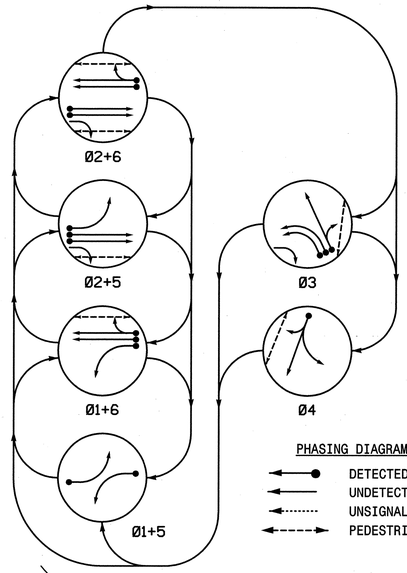

PHASING DIAGRAM DETECTION LEGEND

- DETECTED MOVEMENT
- UNDETECTED MOVEMENT (OVERLAP)
- UNSIGNALIZED MOVEMENT
- PEDESTRIAN MOVEMENT

TABLE OF OPERATION

SIGNAL FACE	PHASE 01+5	01+6	02+5	02+6	03	04	FLASH
11	-	-	R	R	R	R	R
21	R	R	G	G	R	R	Y
22	R	R	G	G	R	R	Y
31,32	R	R	R	R	-	R	R
33,34	R	R	R	R	G	R	R
41	R	R	R	R	R	G	R
42	R	R	R	R	R	G	R
51	-	R	-	R	R	R	R
61,62	R	G	R	G	R	R	Y
P21,P22	DW	DW	W	W	DW	DW	DRK
P31,P32	DW	DW	DW	DW	W	DW	DRK
P41,P42	DW	DW	DW	DW	DW	W	DRK
P61,P62	DW	W	DW	W	DW	DW	DRK

W - Walk
DW - Don't Walk
DRK - Dark

SIGNAL FACE I.D.

All Heads L.E.D.

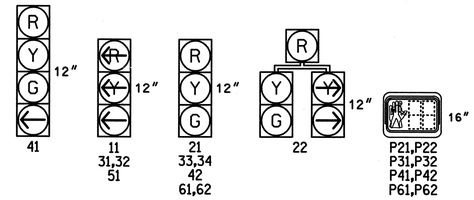

OASIS 2070L LOOP & DETECTOR INSTALLATION CHART

INDUCTIVE LOOPS					DETECTOR PROGRAMMING							
LOOP	SIZE (FT)	DISTANCE FROM STOPBAR (FT)	TURNS	NEW LOOP	PHASE	CALLING	EXTENSION	FULL TIME DELAY	STRETCH TIME	DELAY TIME	SYSTEM LOOP	NEW CARD
1A	6X60	0	EXIST	-	1	Y	Y	-	-	3	-	-
2A/S15	6X6	250	EXIST	-	2	Y	Y	-	-	-	Y	-
2B/S16	6X6	250	EXIST	-	2	Y	Y	-	-	-	Y	-
3A	6X40	0	2-4-2	Y	3	Y	Y	-	-	3	-	-
3B	6X40	0	2-4-2	Y	3	Y	Y	-	-	-	-	-
3C	6X40	0	2-4-2	Y	3	Y	Y	-	-	10	-	-
4A	6X40	0	EXIST	-	4	Y	Y	-	-	10	-	-
5A	6X40	0	EXIST	-	5	Y	Y	-	-	3	-	-
6A/S17	6X6	300	EXIST	-	6	Y	Y	-	-	-	Y	-
6B/S18	6X6	300	EXIST	-	6	Y	Y	-	-	-	Y	-

6 Phase
Fully Actuated
NC 18 (Sterling St)/SR 1922 (Enola Rd)
Closed Loop System

NOTES

1. Refer to "Roadway Standard Drawings NCDOT" dated January 2012 and "Standard Specifications for Roads and Structures" dated January 2012.
2. Do not program signal for late night flashing operation unless otherwise directed by the Engineer.
3. Phase 1 and/or phase 5 may be lagged.
4. The order of phase 3 and phase 4 may be reversed.
5. Reposition existing signal heads numbered 31,32,33 and 34.
6. Set all detector units to presence mode.
7. Omit "WALK" and flashing "DON'T WALK" with no pedestrian calls.
8. Program pedestrian heads to countdown the flashing "Don't Walk" time only.
9. Maximum times shown in timing chart are for free-run operation only. Coordinated signal system timing values supersede these values.
10. Closed loop system data: Controller Asset #:0385.
11. Coordinate signal upgrades with NCDOT TIP Project U-2550B.

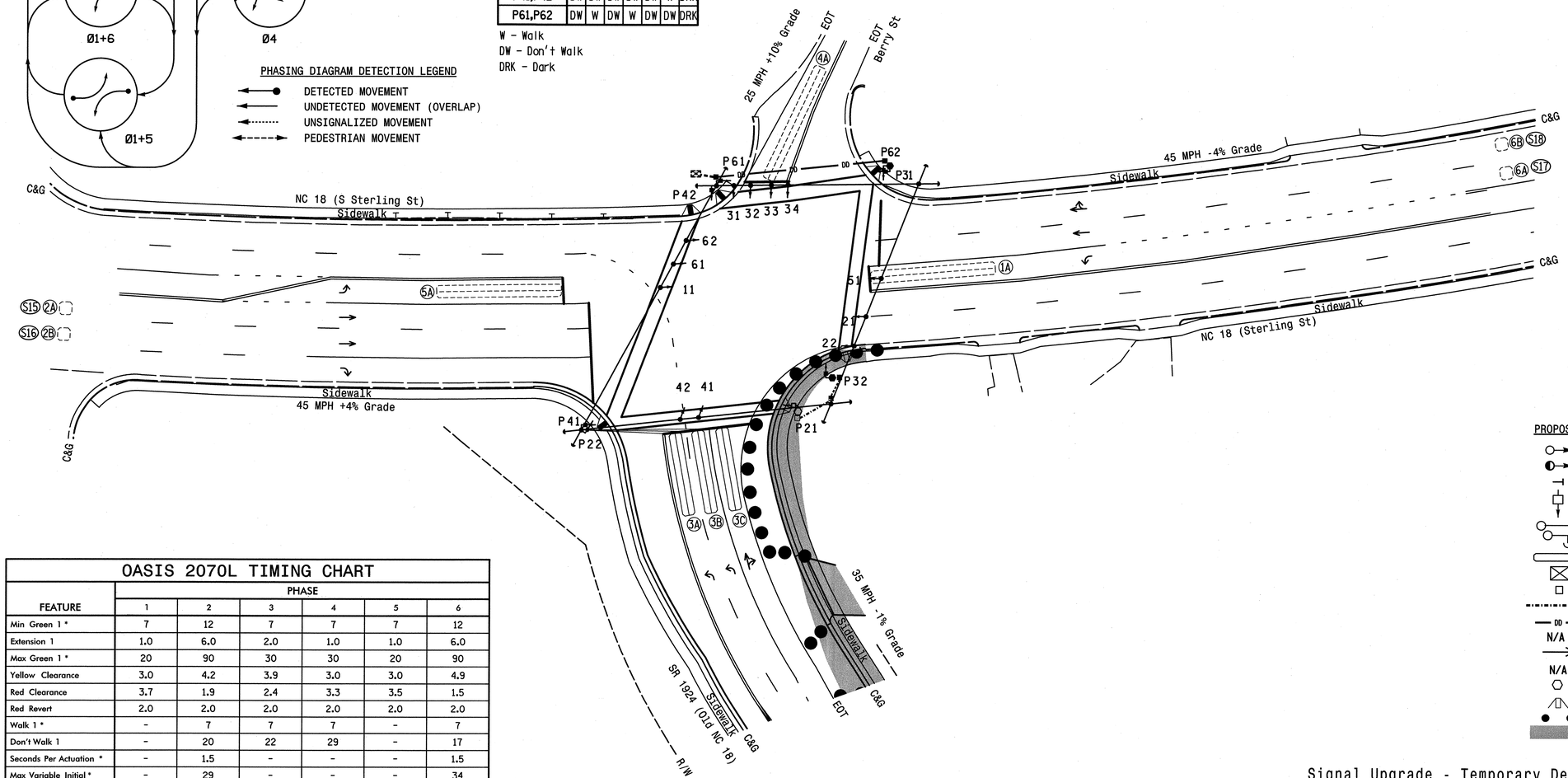

LEGEND

PROPOSED		EXISTING
	Traffic Signal Head	
	Modified Signal Head	N/A
	Sign	
	Pedestrian Signal Head With Push Button & Sign	
	Signal Pole with Guy	
	Signal Pole with Sidewalk Guy	
	Inductive Loop Detector	
	Controller & Cabinet	
	Junction Box	
	2-in Underground Conduit	
DD	Directional Drill	DD
N/A	Right of Way	
	Directional Arrow	
N/A	Guardrail	
	Signal Pedestal	
	Wheelchair Ramp	
	Construction Zone Drums	N/A
	Construction Zone	N/A

OASIS 2070L TIMING CHART

FEATURE	PHASE 1	2	3	4	5	6
Min Green 1 *	7	12	7	7	7	12
Extension 1	1.0	6.0	2.0	1.0	1.0	6.0
Max Green 1 *	20	90	30	30	20	90
Yellow Clearance	3.0	4.2	3.9	3.0	3.0	4.9
Red Clearance	3.7	1.9	2.4	3.3	3.5	1.5
Red Revert	2.0	2.0	2.0	2.0	2.0	2.0
Walk 1 *	-	7	7	7	-	7
Don't Walk 1	-	20	22	29	-	17
Seconds Per Actuation *	-	1.5	-	-	-	1.5
Max Variable Initial *	-	29	-	-	-	34
Time Before Reduction *	-	15	-	-	-	15
Time To Reduce *	-	30	-	-	-	30
Minimum Gap	-	3.0	-	-	-	3.0
Recall Mode	-	MIN RECALL	-	-	-	MIN RECALL
Vehicle Call Memory	-	YELLOW	-	-	-	YELLOW
Dual Entry	-	-	-	-	-	-
Simultaneous Gap	ON	ON	ON	ON	ON	ON

* These values may be field adjusted. Do not adjust Min Green and Extension times for phases 2 and 6 lower than what is shown. Min Green for all other phases should not be lower than 4 seconds.

Signal Upgrade - Temporary Design 2 (Construction Phase II)

HNTB NORTH CAROLINA, P.C.
343 E. Six Forks Road, Suite 200
Raleigh, North Carolina 27609
NC License No: C-1554

Prepared for: Transportation Mobility and Safety Division, Traffic Engineering Branch, Signal Design Section, 750 N.Greenfield Pkwy, Garner, NC 27529

NC 18 (S Sterling St)
at
SR 1924 (Old NC 18)/Berry St

Division 13 | Burke County | Morganton

PLAN DATE:	July 2011	REVIEWED BY:	A.D. Klinksiek
PREPARED BY:	T.R. Terrell	REVIEWED BY:	N.M. Rodevick

SCALE 0 30 1"=30'

REVISIONS	INIT.	DATE

SEAL: NORTH CAROLINA PROFESSIONAL SEAL 031464 ENGINEER NATASHA M. RODEVICK

SIGNATURE | DATE 12-12-11

SIG. INVENTORY NO. 13-0385T2

PROJECT REFERENCE NO.	SHEET NO.
U-2551	Sig. 66

EDI MODEL 2010ECL-NC CONFLICT MONITOR PROGRAMMING DETAIL

(remove jumpers and set switches as shown)

REMOVE DIODE JUMPERS 1-5, 1-6, 1-15, 2-5, 2-6, 2-13, 2-15, 3-16, 4-14, 5-13, 6-13, 6-15, and 13-15.

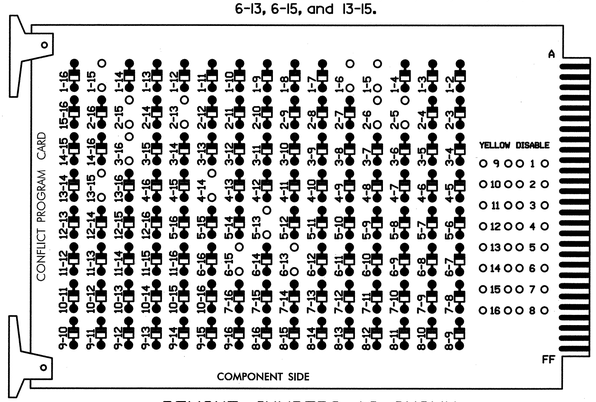

REMOVE JUMPERS AS SHOWN

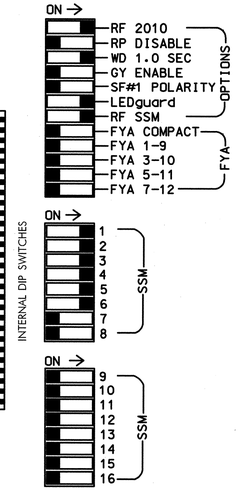

NOTES:

1. Card is provided with all diode jumpers in place. Removal of any jumper allows its channels to run concurrently.
2. Make sure jumpers SEL2-SEL5 are present on the monitor board.

■ = DENOTES POSITION OF SWITCH

INPUT FILE POSITION LAYOUT

(front view)

		1	2	3	4	5	6	7	8	9	10	11	12	13	14
FILE "I"	U	Ø1	Ø2/SYS	SLOT	SLOT	Ø3	Ø3	Ø4	SLOT	SLOT	SLOT	SLOT	Ø2 PED	Ø6 PED	FS
		1A	2A/S15	EMPTY	EMPTY	3A	3B	4A	EMPTY	EMPTY	EMPTY	EMPTY	DC ISOLATOR	DC ISOLATOR	DC ISOLATOR
	L	NOT USED	Ø2/SYS			NOT USED	Ø3	NOT USED					Ø4 PED	Ø3 PED	ST
			2B/S16				3C						DC ISOLATOR	DC ISOLATOR	DC ISOLATOR
FILE "J"	U	Ø5	Ø6/SYS	SLOT	SLOT	SLOT	SLOT	SLOT	SLOT	SLOT	SLOT	SLOT	SLOT	SLOT	SLOT
		5A	6A/S17	EMPTY	EMPTY	EMPTY	EMPTY	EMPTY	EMPTY	EMPTY	EMPTY	EMPTY	EMPTY	EMPTY	EMPTY
	L	NOT USED	Ø6/SYS												
			6B/S18												

EX.: 1A, 2A, ETC. = LOOP NO.'S

FS = FLASH SENSE
ST = STOP TIME

NOTES

1. To prevent "flash-conflict" problems, insert red flash program blocks for all unused vehicle load switches in the output file. The installer shall verify that signal heads flash in accordance with the Signal Plans.
2. Ensure that Red Enable is active at all times during normal operation. To prevent Red Failures on unused monitor channels, tie unused red monitor inputs 7,8,9, 10,11,12,13,14,15 & 16 to load switch AC+ per the cabinet manufacturer's instructions.
3. Enable Simultaneous Gap-Out for all phases.
4. Program phases 2 and 6 for Variable Initial and Gap Reduction.
5. Program phases 2 and 6 for Start Up In Green.
6. Program phases 2, 3, 4 and 6 for 'STARTUP PED CALL'.
7. Program phases 2 and 6 for Yellow Flash.
8. The cabinet and controller are part of the NC 18 (Sterling St)/SR 1922 (Enola Rd) Closed Loop System.

SIGNAL HEAD HOOK-UP CHART

LOAD SWITCH NO.	S1	S2	S2P	S3			S4		S4P	S5	S6	S6P	S7	S8	S8P	S9	S10	S11	S12	S13	S14
PHASE	1	2	2 PED	3			4		4 PED	5	6	6 PED	7	8	3 PED	OLA	OLB	SPARE	OLC	OLD	SPARE
SIGNAL HEAD NO.	11	21,22	P21, P22	22	31,32	33,34	41	42	P41, P42	51	61,62	P61, P62	NU	NU	P31, P32	NU	NU	NU	NU	NU	NU
RED		128				116	101	101			134										
YELLOW		129				117	102	102			135										
GREEN		130				118	103	103			136										
RED ARROW	125				116					131											
YELLOW ARROW	126			117	117					132											
GREEN ARROW	127			118	118		103			133											
✋			113						104			119			110						
🚶			115						106			121			112						

NU = Not Used

EQUIPMENT INFORMATION

CONTROLLER.....2070L
CABINET.....332 /W/ AUX
SOFTWARE.....ECONOLITE OASIS
CABINET MOUNT.....BASE
OUTPUT FILE POSITIONS...18 WITH AUX. OUTPUT FILE
LOAD SWITCHES USED.....S1,S2,S2P,S3,S4,S4P,S5,S6,S6P,S8P
PHASES USED.....1,2,2PED,3,3PED,4,4PED,5,6,6PED
OVERLAP "A".....NOT USED
OVERLAP "B".....NOT USED
OVERLAP "C".....NOT USED
OVERLAP "D".....NOT USED

INPUT FILE CONNECTION & PROGRAMMING CHART

LOOP NO.	LOOP TERMINAL	INPUT FILE POS.	PIN NO.	INPUT ASSIGNMENT NO.	DETECTOR NO.	NEMA PHASE	CALL	EXTEND	FULL TIME DELAY	STRETCH TIME	DELAY TIME
1A	TB2-1,2	I1U	56	18	1	1	Y	Y			3
2A/S15	TB2-5,6	I2U	39	1	2	2/SYS	Y	Y			
2B/S16	TB2-7,8	I2L	43	5	12	2/SYS	Y	Y			
3A	TB4-5,6	I5U	58	20	3	3	Y	Y			3
3B	TB4-9,10	I6U	41	3	4	3	Y	Y			
3C	TB4-11,12	I6L	45	7	14	3	Y	Y			10
4A	TB6-1,2	I7U	65	27	34	4	Y	Y			10
5A	TB3-1,2	J1U	55	17	5	5	Y	Y			3
6A/S17	TB3-5,6	J2U	40	2	6	6/SYS	Y	Y			
6B/S18	TB3-7,8	J2L	44	6	16	6/SYS	Y	Y			
PED PUSH BUTTONS											
P21,P22	TB8-4,6	I12U	67	29	PED 2	2 PED					
P41,P42	TB8-5,6	I12L	69	31	PED 4	4 PED					
P61,P62	TB8-7,9	I13U	68	30	PED 6	6 PED					
P31,P32	TB8-8,9	I13L	70	32	PED 8	3 PED					

NOTE:
INSTALL DC ISOLATORS IN INPUT FILE SLOTS I12 AND I13.

INPUT FILE POSITION LEGEND: J2L
FILE J
SLOT 2
LOWER

THIS ELECTRICAL DETAIL IS FOR
THE SIGNAL DESIGN: 13-0385T2
DESIGNED: July 2011
SEALED: 12-12-2011
REVISED:

COUNTDOWN PEDESTRIAN SIGNAL OPERATION

Countdown Ped Signals are required to display timing only during Ped Clearance Interval. Consult Ped Signal Module user's manual for instructions on selecting this feature.

PED 3 PROGRAMMING DETAIL

(program controller as shown below)

CHANGING OUTPUT ASSIGNMENTS

1. FROM MAIN MENU SELECT '6' (OUTPUTS), THEN '1' (OUTPUT ASSIGNMENTS)
2. ENTER 17 (PHASE 8 DW) FOR OUTPUT ASSIGNMENT #.
3. SCROLL DOWN TO 'PEDESTRIAN PHASE' AND ENTER 'Y' REGARDLESS OF DEFAULT PROGRAMMING!
4. ENTER '3' FOR 'SELECT PEDESTRIAN PHASE'. NO CHANGE NEEDED FOR 'SELECT COLOR'
5. BACKUP TO 'OUTPUT ASSIGNMENTS AND SETTINGS MENU:' BY PRESSING THE 'ESC' BUTTON ON KEYBOARD.
6. SELECT '1' (OUTPUT ASSIGNMENTS)
7. ENTER 18 (PHASE 8 W) FOR OUTPUT ASSIGNMENT #.
8. REPEAT STEPS # 3 AND # 4.

CHANGING INPUT ASSIGNMENTS

1. FROM MAIN MENU SELECT '7' (DETECTORS), THEN '2' (PEDESTRIAN DETECTOR ASSIGNMENTS)
2. CYCLE TO PED DETECTOR #8 BY REPEATEDLY DEPRESSING '+' KEY
3. MODIFY PHASE ASSIGNED TO PED DETECTOR # 8 FROM PHASE 8 TO PHASE 3

PROGRAMMING COMPLETE

Signal Upgrade - Temporary Designs 1 & 2
(Construction Phase I, Step 2 & Construction Phase II)

HNTB
HNTB NORTH CAROLINA, P.C.
343 E. Six Forks Road, Suite 200
Raleigh, North Carolina 27609
NC License No: C-1554

ELECTRICAL AND PROGRAMMING DETAILS FOR:

Prepared for: Transportation Mobility and Safety Division, Signals Management Section, Traffic Engineering Branch, Division of Highways, Department of Transportation, State of North Carolina
750 N.Greenfield Pkwy,Garner,NC 27529

NC 18 (S Sterling St)
at
SR 1924 (Old NC 18)/Berry St

Division 13 Burke County Morganton

PLAN DATE:	July 2011	REVIEWED BY:	N.M. Rodevick
PREPARED BY:	A.D. Klinksiek	REVIEWED BY:	H.L. Winstead

REVISIONS	INIT.	DATE

SEAL
NORTH CAROLINA PROFESSIONAL SEAL 07983 ENGINEER HARVEY L. WINSTEAD, JR.
SIGNATURE DATE 12/12/11
SIG. INVENTORY NO. 13-0385T2

PROJECT REFERENCE NO.	SHEET NO.
U-2551	Sig. 67

PHASING DIAGRAM

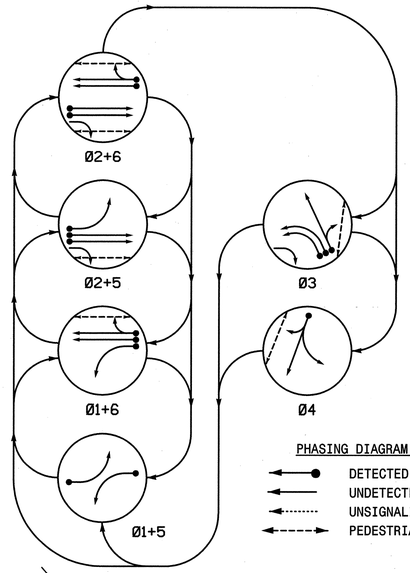

PHASING DIAGRAM DETECTION LEGEND

- DETECTED MOVEMENT
- UNDETECTED MOVEMENT (OVERLAP)
- UNSIGNALIZED MOVEMENT
- PEDESTRIAN MOVEMENT

TABLE OF OPERATION

SIGNAL FACE	PHASE 01+5	01+6	02+5	02+6	03	04	FLASH
11	-	-	R	R	R	R	R
21	R	R	G	G	R	R	Y
22	R	R	G	G	R/	R	Y
31,32	R	R	R	R	-	R	R
33,34	R	R	R	R	G	R	R
41	R	R	R	R	R	G	R
42	R	R	R	R	R	G	R
51	-	R	-	R	R	R	R
61,62	R	G	R	G	R	R	Y
P21,P22	DW	DW	W	W	DW	DW	DRK
P31,P32	DW	DW	DW	DW	W	DW	DRK
P41,P42	DW	DW	DW	DW	DW	W	DRK
P61,P62	DW	W	DW	W	DW	DW	DRK

W - Walk
DW - Don't Walk
DRK - Dark

SIGNAL FACE I.D.

All Heads L.E.D.

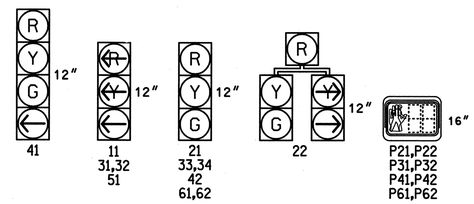

OASIS 2070L LOOP & DETECTOR INSTALLATION CHART

INDUCTIVE LOOPS					DETECTOR PROGRAMMING							
LOOP	SIZE (FT)	DISTANCE FROM STOPBAR (FT)	TURNS	NEW LOOP	PHASE	CALLING	EXTENSION	FULL TIME DELAY	STRETCH TIME	DELAY TIME	SYSTEM LOOP	NEW CARD
1A	6X60	0	EXIST	-	1	Y	Y	-	-	3	-	-
2A/S15	6X6	250	EXIST	-	2	Y	Y	-	-	-	Y	-
2B/S16	6X6	250	EXIST	-	2	Y	Y	-	-	-	Y	-
3A	6X40	0	2-4-2	Y	3	Y	Y	-	-	-	-	-
3B	6X40	0	2-4-2	Y	3	Y	Y	-	-	-	-	-
3C	6X40	0	2-4-2	Y	3	Y	Y	-	-	10	-	-
4A	6X40	0	EXIST	-	4	Y	Y	-	-	10	-	-
5A	6X40	0	EXIST	-	5	Y	Y	-	-	3	-	-
6A/S17	6X6	300	EXIST	-	6	Y	Y	-	-	-	Y	-
6B/S18	6X6	300	EXIST	-	6	Y	Y	-	-	-	Y	-

6 Phase
Fully Actuated
NC 18 (Sterling St)/SR 1922 (Enola Rd)
Closed Loop System

NOTES

1. Refer to "Roadway Standard Drawings NCDOT" dated January 2012 and "Standard Specifications for Roads and Structures" dated January 2012.
2. Do not program signal for late night flashing operation unless otherwise directed by the Engineer.
3. Phase 1 and/or phase 5 may be lagged.
4. The order of phase 3 and phase 4 may be reversed.
5. Set all detector units to presence mode.
6. Omit "WALK" and flashing "DON'T WALK" with no pedestrian calls.
7. Program pedestrian heads to countdown the flashing "Don't Walk" time only.
8. Maximum times shown in timing chart are for free-run operation only. Coordinated signal system timing values supersede these values.
9. Closed loop system data: Controller Asset#:0385.
10. Coordinate signal upgrades with NCDOT TIP Project U-2550B.

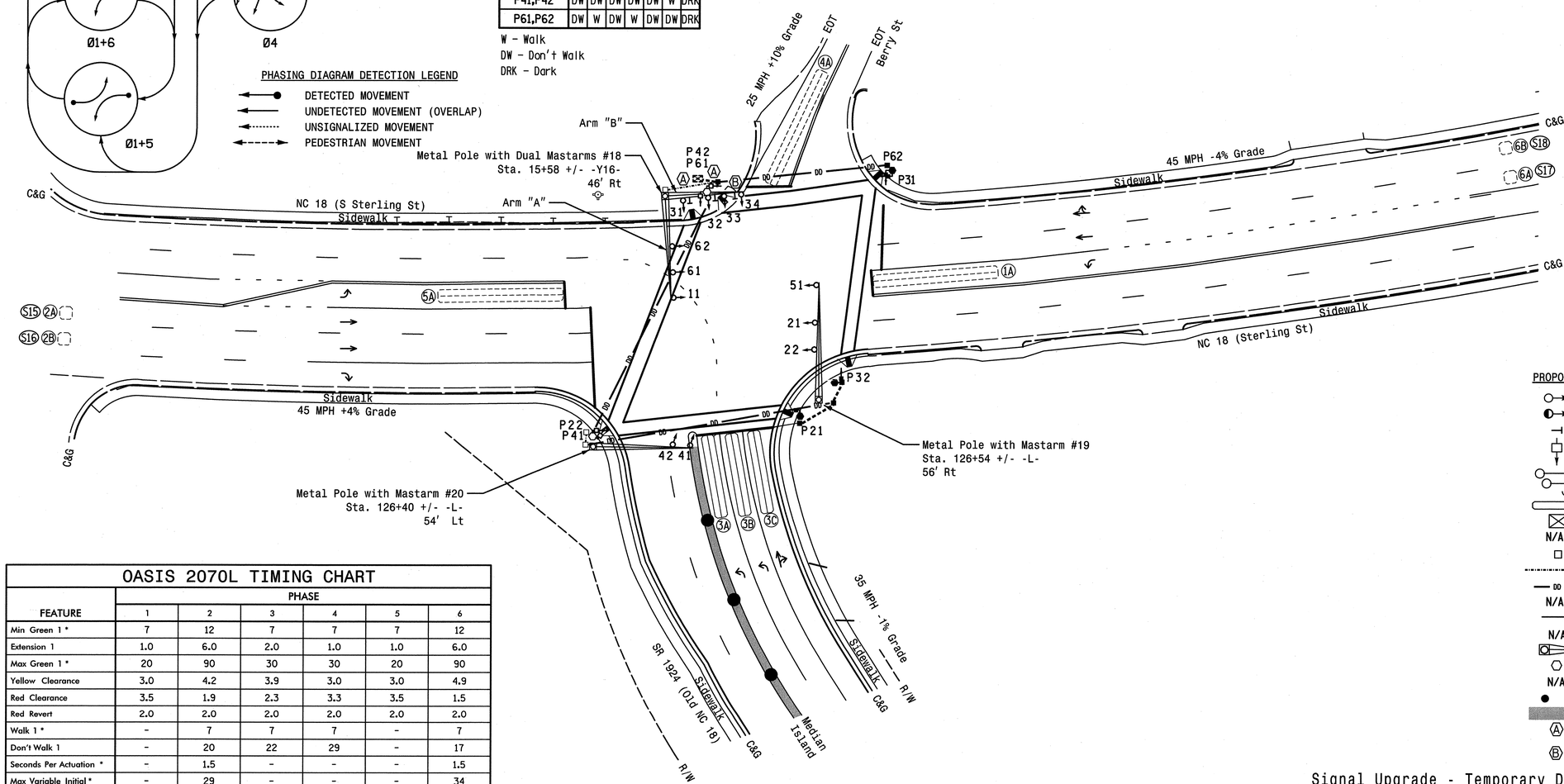

LEGEND

PROPOSED		EXISTING
	Traffic Signal Head	
	Modified Signal Head	N/A
	Sign	
	Pedestrian Signal Head With Push Button & Sign	
	Signal Pole with Guy	
	Signal Pole with Sidewalk Guy	
	Inductive Loop Detector	
	Controller & Cabinet	
N/A	Master Controller & Cabinet	
	Junction Box	
	2-in Underground Conduit	
	Directional Drill	
N/A	Right of Way	
	Directional Arrow	
N/A	Guardrail	
	Metal Pole with Mastarm	
	Signal Pedestal	
N/A	Wheelchair Ramp	
	Construction Zone Drums	N/A
	Construction Zone	N/A
	Left Arrow "ONLY" Sign (R3-5L)	N/A
	Combined Through and Right Arrow Sign (R3-6R)	N/A

OASIS 2070L TIMING CHART

FEATURE	PHASE 1	2	3	4	5	6
Min Green 1 *	7	12	7	7	7	12
Extension 1	1.0	6.0	2.0	1.0	1.0	6.0
Max Green 1 *	20	90	30	30	20	90
Yellow Clearance	3.0	4.2	3.9	3.0	3.0	4.9
Red Clearance	3.5	1.9	2.3	3.3	3.5	1.5
Red Revert	2.0	2.0	2.0	2.0	2.0	2.0
Walk 1 *	-	7	7	7	-	7
Don't Walk 1	-	20	22	29	-	17
Seconds Per Actuation *	-	1.5	-	-	-	1.5
Max Variable Initial *	-	29	-	-	-	34
Time Before Reduction *	-	15	-	-	-	15
Time To Reduce *	-	30	-	-	-	30
Minimum Gap	-	3.0	-	-	-	3.0
Recall Mode	-	MIN RECALL	-	-	-	MIN RECALL
Vehicle Call Memory	-	YELLOW	-	-	-	YELLOW
Dual Entry	-	-	-	-	-	-
Simultaneous Gap	ON	ON	ON	ON	ON	ON

* These values may be field adjusted. Do not adjust Min Green and Extension times for phases 2 and 6 lower than what is shown. Min Green for all other phases should not be lower than 4 seconds.

Signal Upgrade - Temporary Design 3 (Construction Phase III)

HNTB NORTH CAROLINA, P.C.
343 E. Six Forks Road, Suite 200
Raleigh, North Carolina 27609
NC License No: C-1554

Prepared for: Transportation Mobility and Safety Division, Signal Design Section
750 N.Greenfield Pkwy,Garner,NC 27529

SCALE 0 30 1"=30'

NC 18 (S Sterling St)
at
SR 1924 (Old NC 18)/Berry St

Division 13 Burke County Morganton

PLAN DATE:	July 2011	REVIEWED BY:	A.D. Klinksiek
PREPARED BY:	T.R. Terrell	REVIEWED BY:	N.W. Rodevick

REVISIONS	INIT.	DATE

SEAL
NORTH CAROLINA PROFESSIONAL SEAL 031464 ENGINEER NATASHA M. RODEVICK
SIGNATURE 12-12-11 DATE
SIG. INVENTORY NO. 13-0385T3

PROJECT REFERENCE NO.	SHEET NO.
U-2551	Sig. 68

EDI MODEL 2010ECL-NC CONFLICT MONITOR PROGRAMMING DETAIL

(remove jumpers and set switches as shown)

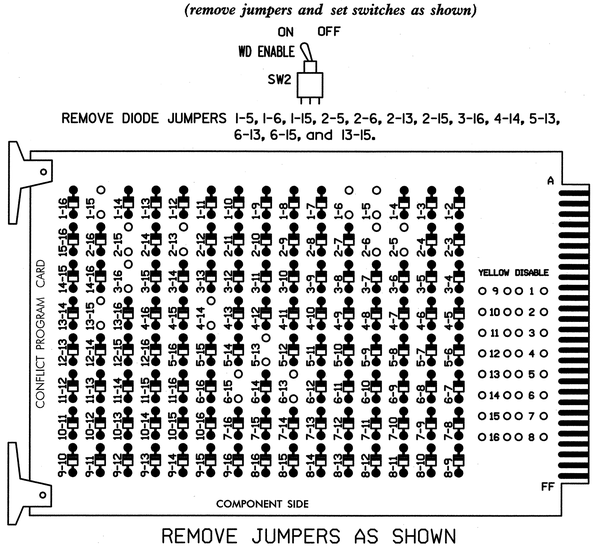

REMOVE DIODE JUMPERS I-5, I-6, I-15, 2-5, 2-6, 2-13, 2-15, 3-16, 4-14, 5-13, 6-13, 6-15, and 13-15.

REMOVE JUMPERS AS SHOWN

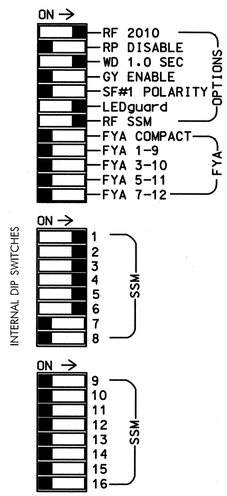

■ = DENOTES POSITION OF SWITCH

NOTES:

1. Card is provided with all diode jumpers in place. Removal of any jumper allows its channels to run concurrently.
2. Make sure jumpers SEL2-SEL5 are present on the monitor board.

NOTES

1. To prevent "flash-conflict" problems, insert red flash program blocks for all unused vehicle load switches in the output file. The installer shall verify that signal heads flash in accordance with the Signal Plans.
2. Ensure that Red Enable is active at all times during normal operation. To prevent Red Failures on unused monitor channels, tie unused red monitor inputs 7,8,9, 10,11,12,13,14,15 & 16 to load switch AC+ per the cabinet manufacturer's instructions.
3. Enable Simultaneous Gap-Out for all phases.
4. Program phases 2 and 6 for Variable Initial and Gap Reduction.
5. Program phases 2 and 6 for Start Up In Green.
6. Program phases 2, 3, 4 and 6 for 'STARTUP PED CALL'.
7. Program phases 2 and 6 for Yellow Flash.
8. The cabinet and controller are part of the NC 18 (Sterling St)/SR 1922 (Enola Rd) Closed Loop System.

SIGNAL HEAD HOOK-UP CHART

LOAD SWITCH NO.	S1	S2	S2P	S3			S4		S4P	S5	S6	S6P	S7	S8	S8P	S9	S10	S11	S12	S13	S14
PHASE	1	2	2 PED	3			4		4 PED	5	6	6 PED	7	8	3 PED	OLA	OLB	SPARE	OLC	OLD	SPARE
SIGNAL HEAD NO.	11	21,22	P21, P22	22	31,32	33,34	41	42	P41, P42	51	61,62	P61, P62	NU	NU	P31, P32	NU	NU	NU	NU	NU	NU
RED		128				116	101	101			134										
YELLOW		129				117	102	102			135										
GREEN		130				118	103	103			136										
RED ARROW	125				116					131											
YELLOW ARROW	126			117	117					132											
GREEN ARROW	127			118	118		103			133											
✋			113						104			119			110						
🚶			115						106			121			112						

NU = Not Used

EQUIPMENT INFORMATION

CONTROLLER.....2070L
CABINET.....332 /W/ AUX
SOFTWARE.....ECONOLITE OASIS
CABINET MOUNT.....BASE
OUTPUT FILE POSITIONS...18 WITH AUX. OUTPUT FILE
LOAD SWITCHES USED.....S1,S2,S2P,S3,S4,S4P,S5,S6,S6P,S8P
PHASES USED.....1,2,2PED,3,3PED,4,4PED,5,6,6PED
OVERLAP "A".....NOT USED
OVERLAP "B".....NOT USED
OVERLAP "C".....NOT USED
OVERLAP "D".....NOT USED

COUNTDOWN PEDESTRIAN SIGNAL OPERATION

Countdown Ped Signals are required to display timing only during Ped Clearance Interval. Consult Ped Signal Module user's manual for instructions on selecting this feature.

INPUT FILE POSITION LAYOUT

(front view)

		1	2	3	4	5	6	7	8	9	10	11	12	13	14
FILE "I"	U	Ø1	Ø2/SYS	SLOT	SLOT	Ø3	Ø3	Ø4	SLOT	SLOT	SLOT	SLOT	Ø2 PED DC ISOLATOR	Ø6 PED DC ISOLATOR	FS DC ISOLATOR
		1A	2A/S15	EMPTY	EMPTY	3A	3B	4A	EMPTY	EMPTY	EMPTY	EMPTY			
	L	NOT USED	Ø2/SYS			NOT USED	Ø3	NOT USED					Ø4 PED DC ISOLATOR	Ø3 PED DC ISOLATOR	ST DC ISOLATOR
			2B/S16				3C								
FILE "J"	U	Ø5	Ø6/SYS	SLOT	SLOT	SLOT	SLOT	SLOT	SLOT	SLOT	SLOT	SLOT	SLOT	SLOT	SLOT
		5A	6A/S17	EMPTY	EMPTY	EMPTY	EMPTY	EMPTY	EMPTY	EMPTY	EMPTY	EMPTY	EMPTY	EMPTY	EMPTY
	L	NOT USED	Ø6/SYS												
			6B/S18												

EX.: 1A, 2A, ETC. = LOOP NO.'S

FS = FLASH SENSE
ST = STOP TIME

INPUT FILE CONNECTION & PROGRAMMING CHART

LOOP NO.	LOOP TERMINAL	INPUT FILE POS.	PIN NO.	INPUT ASSIGNMENT NO.	DETECTOR NO.	NEMA PHASE	CALL	EXTEND	FULL TIME DELAY	STRETCH TIME	DELAY TIME
1A	TB2-1,2	I1U	56	18	1	1	Y	Y			3
2A/S15	TB2-5,6	I2U	39	1	2	2/SYS	Y	Y			
2B/S16	TB2-7,8	I2L	43	5	12	2/SYS	Y	Y			
3A	TB4-5,6	I5U	58	20	3	3	Y	Y			
3B	TB4-9,10	I6U	41	3	4	3	Y	Y			
3C	TB4-11,12	I6L	45	7	14	3	Y	Y			10
4A	TB6-1,2	I7U	65	27	34	4	Y	Y			10
5A	TB3-1,2	J1U	55	17	5	5	Y	Y			3
6A/S17	TB3-5,6	J2U	40	2	6	6/SYS	Y	Y			
6B/S18	TB3-7,8	J2L	44	6	16	6/SYS	Y	Y			
PED PUSH BUTTONS											
P21,P22	TB8-4,6	I12U	67	29	PED 2	2 PED					
P41,P42	TB8-5,6	I12L	69	31	PED 4	4 PED					
P61,P62	TB8-7,9	I13U	68	30	PED 6	6 PED					
P31,P32	TB8-8,9	I13L	70	32	PED 8	3 PED					

NOTE:
INSTALL DC ISOLATORS IN INPUT FILE SLOTS I12 AND I13.

INPUT FILE POSITION LEGEND: J2L
FILE J
SLOT 2
LOWER

PED 3 PROGRAMMING DETAIL

(program controller as shown below)

CHANGING OUTPUT ASSIGNMENTS

1. FROM MAIN MENU SELECT '6' (OUTPUTS), THEN '1' (OUTPUT ASSIGNMENTS)
2. ENTER 17 (PHASE 8 DW) FOR OUTPUT ASSIGNMENT #.
3. SCROLL DOWN TO 'PEDESTRIAN PHASE' AND ENTER 'Y' REGARDLESS OF DEFAULT PROGRAMMING!
4. ENTER '3' FOR 'SELECT PEDESTRIAN PHASE'. NO CHANGE NEEDED FOR 'SELECT COLOR'
5. BACKUP TO 'OUTPUT ASSIGNMENTS AND SETTINGS MENU:' BY PRESSING THE 'ESC' BUTTON ON KEYBOARD.
6. SELECT '1' (OUTPUT ASSIGNMENTS)
7. ENTER 18 (PHASE 8 W) FOR OUTPUT ASSIGNMENT #.
8. REPEAT STEPS # 3 AND # 4.

CHANGING INPUT ASSIGNMENTS

1. FROM MAIN MENU SELECT '7' (DETECTORS), THEN '2' (PEDESTRIAN DETECTOR ASSIGNMENTS)
2. CYCLE TO PED DETECTOR #8 BY REPEATEDLY DEPRESSING '+' KEY
3. MODIFY PHASE ASSIGNED TO PED DETECTOR # 8 FROM PHASE 8 TO PHASE 3

PROGRAMMING COMPLETE

THIS ELECTRICAL DETAIL IS FOR
THE SIGNAL DESIGN: 13-0385T3
DESIGNED: July 2011
SEALED: 12-12-2011
REVISED:

HNTB
HNTB NORTH CAROLINA, P.C.
343 E. Six Forks Road, Suite 200
Raleigh, North Carolina 27609
NC License No: C-1554

Signal Upgrade - Temporary Design 3 (Construction Phase III)

ELECTRICAL AND PROGRAMMING DETAILS FOR:

Prepared for: Transportation Mobility and Safety Division, Traffic Engineering Branch, Signals Management Section, Department of Transportation, State of North Carolina
750 N.Greenfield Pkwy, Garner, NC 27529

NC 18 (S Sterling St)
at
SR 1924 (Old NC 18)/Berry St

Division 13 Burke County Morganton

PLAN DATE:	July 2011	REVIEWED BY:	N.M. Rodevick
PREPARED BY:	A.D. Klinksiek	REVIEWED BY:	H.L. Winstead

REVISIONS	INIT.	DATE

SEAL
NORTH CAROLINA PROFESSIONAL SEAL 07983 ENGINEER HARVEY L. WINSTEAD, JR.

H.L. Winstead 12/12/11
SIGNATURE DATE
SIG. INVENTORY NO. 13-0385T3

PROJECT REFERENCE NO.	SHEET NO.
U-2551	Sig. 69

PHASING DIAGRAM

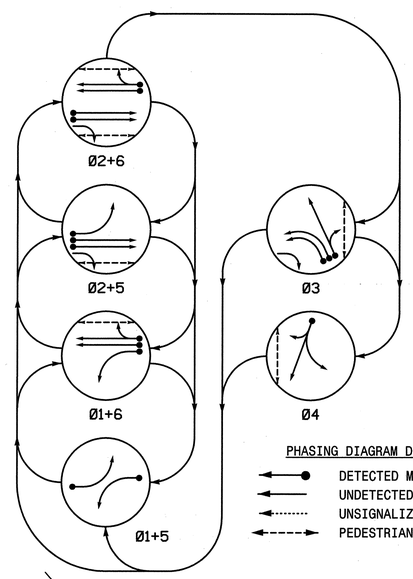

PHASING DIAGRAM DETECTION LEGEND

- DETECTED MOVEMENT
- UNDETECTED MOVEMENT (OVERLAP)
- UNSIGNALIZED MOVEMENT
- PEDESTRIAN MOVEMENT

TABLE OF OPERATION

SIGNAL FACE	PHASE 01+5	01+6	02+5	02+6	03	04	FLASH
11	—	—	R	R	R	R	R
21	R	R	G	G	R	R	Y
22	R	R	G	G	R	R	Y
31,32	R	R	R	R	—	R	R
33,34	R	R	R	R	G	R	R
41	R	R	R	R	R	G	R
42	R	R	R	R	R	G	R
51	—	R	—	R	R	R	R
61,62	R	G	R	G	R	R	Y
P21,P22	DW	DW	W	W	DW	DW	DRK
P31,P32	DW	DW	DW	DW	W	DW	DRK
P41,P42	DW	DW	DW	DW	DW	W	DRK
P61,P62	DW	W	DW	W	DW	DW	DRK

W - Walk
DW - Don't Walk
DRK - Dark

SIGNAL FACE I.D.

All Heads L.E.D.

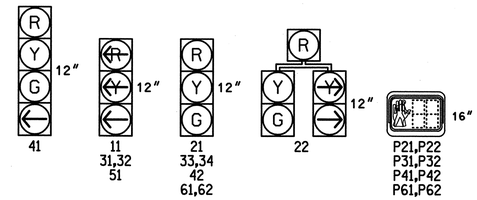

OASIS 2070L LOOP & DETECTOR INSTALLATION CHART

INDUCTIVE LOOPS					DETECTOR PROGRAMMING							
LOOP	SIZE (FT)	DISTANCE FROM STOPBAR (FT)	TURNS	NEW LOOP	PHASE	CALLING	EXTENSION	FULL TIME DELAY	STRETCH TIME	DELAY TIME	SYSTEM LOOP	NEW CARD
1A	6X60	0	EXIST	-	1	Y	Y	-	-	3	-	-
2A/S15	6X6	250	EXIST	-	2	Y	Y	-	-	-	Y	-
2B/S16	6X6	250	EXIST	-	2	Y	Y	-	-	-	Y	-
3A	6X40	0	2-4-2	-	3	Y	Y	-	-	-	-	-
3B	6X40	0	2-4-2	-	3	Y	Y	-	-	-	-	-
3C	6X40	0	2-4-2	-	3	Y	Y	-	-	10	-	-
4A	6X60	0	EXIST	-	4	Y	Y	-	-	10	-	-
5A	6X60	0	EXIST	-	5	Y	Y	-	-	3	-	-
6A/S17	6X6	300	EXIST	-	6	Y	Y	-	-	-	Y	-
6B/S18	6X6	300	EXIST	-	6	Y	Y	-	-	-	Y	-
S35	6X6	+230	4	Y	-	-	-	-	-	-	Y	Y
S36	6X6	+230	4	Y	-	-	-	-	-	-	Y	Y

6 Phase
Fully Actuated
NC 18 (Sterling St)/SR 1922 (Enola Rd)
Closed Loop System

NOTES

1. Refer to "Roadway Standard Drawings NCDOT" dated January 2012 and "Standard Specifications for Roads and Structures" dated January 2012.
2. Do not program signal for late night flashing operation unless otherwise directed by the Engineer.
3. Phase 1 and/or phase 5 may be lagged.
4. The order of phase 3 and phase 4 may be reversed.
5. Set all detector units to presence mode.
6. Omit "WALK" and flashing "DON'T WALK" with no pedestrian calls.
7. Program pedestrian heads to countdown the flashing "Don't Walk" time only.
8. Maximum times shown in timing chart are for free-run operation only. Coordinated signal system timing values supersede these values.
9. Closed loop system data: Controller Asset #:0385.
10. Coordinate signal upgrades with NCDOT TIP Project U-2550B.

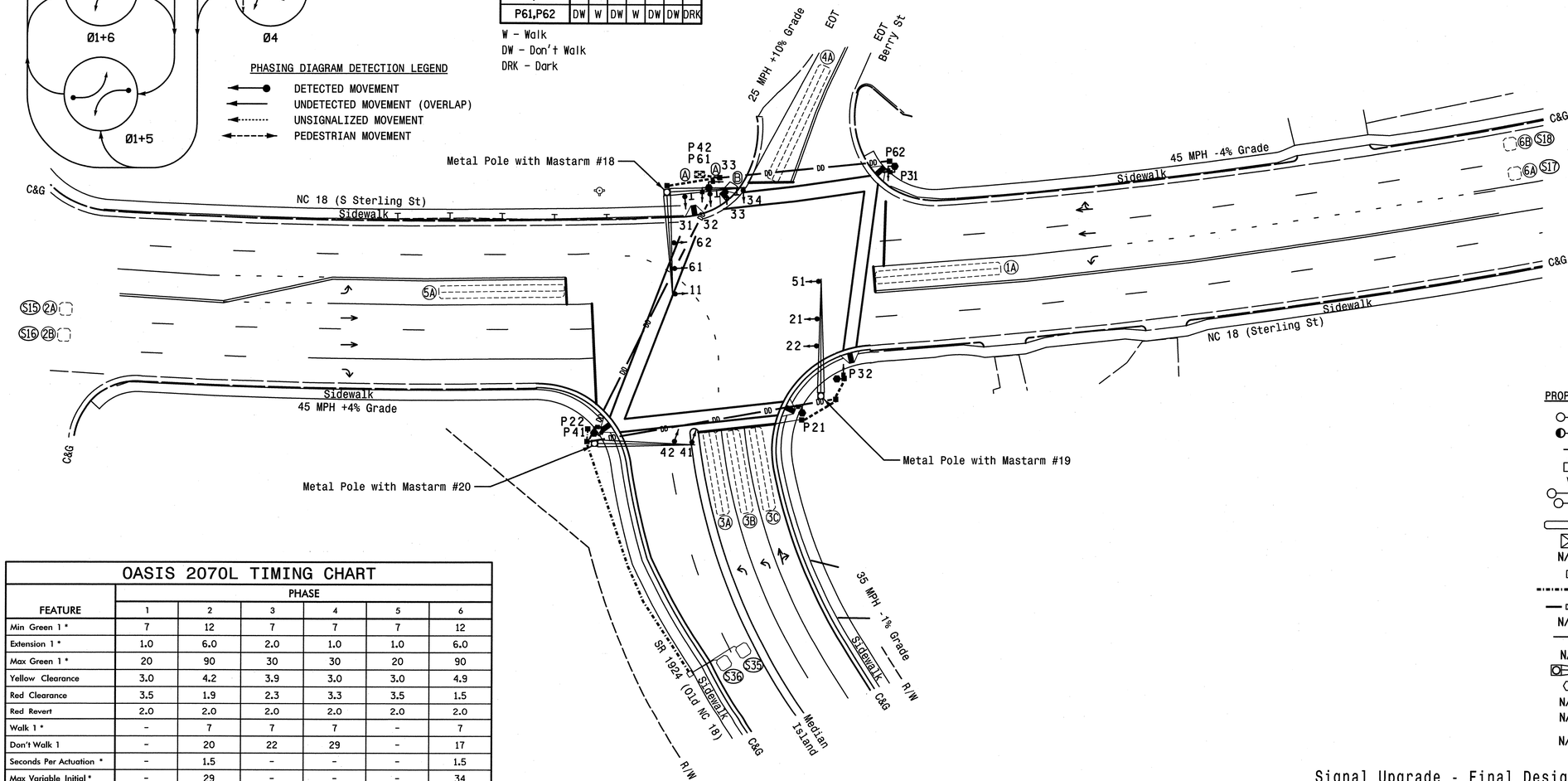

OASIS 2070L TIMING CHART

FEATURE	PHASE 1	2	3	4	5	6
Min Green 1 *	7	12	7	7	7	12
Extension 1 *	1.0	6.0	2.0	1.0	1.0	6.0
Max Green 1 *	20	90	30	30	20	90
Yellow Clearance	3.0	4.2	3.9	3.0	3.0	4.9
Red Clearance	3.5	1.9	2.3	3.3	3.5	1.5
Red Revert	2.0	2.0	2.0	2.0	2.0	2.0
Walk 1 *	-	7	7	7	-	7
Don't Walk 1	-	20	22	29	-	17
Seconds Per Actuation *	-	1.5	-	-	-	1.5
Max Variable Initial *	-	29	-	-	-	34
Time Before Reduction *	-	15	-	-	-	15
Time To Reduce *	-	30	-	-	-	30
Minimum Gap	-	3.0	-	-	-	3.0
Recall Mode	-	MIN RECALL	-	-	-	MIN RECALL
Vehicle Call Memory	-	YELLOW	-	-	-	YELLOW
Dual Entry	-	-	-	-	-	-
Simultaneous Gap	ON	ON	ON	ON	ON	ON

* These values may be field adjusted. Do not adjust Min Green and Extension times for phases 2 and 6 lower than what is shown. Min Green for all other phases should not be lower than 4 seconds.

LEGEND

PROPOSED		EXISTING
	Traffic Signal Head	
	Modified Signal Head	N/A
	Sign	
	Pedestrian Signal Head With Push Button & Sign	
	Signal Pole with Guy	
	Signal Pole with Sidewalk Guy	
	Inductive Loop Detector	
	Controller & Cabinet	
N/A	Master Controller & Cabinet	
	Junction Box	
	2-in Underground Conduit	
	Directional Drill	
N/A	Right of Way	
	Directional Arrow	
N/A	Guardrail	
	Metal Pole with Mastarm	
	Signal Pedestal	
N/A	Wheelchair Ramp	
N/A	Left Arrow "ONLY" Sign (R3-5L)	Ⓐ
N/A	Combined Through and Right Arrow Sign (R3-6R)	Ⓑ

Signal Upgrade - Final Design

HNTB NORTH CAROLINA, P.C.
343 E. Six Forks Road, Suite 200
Raleigh, North Carolina 27609
NC License No: C-1554

Prepared for: Transportation Mobility and Safety Division, Signal Design Section, 750 N.Greenfield Pkwy, Garner, NC 27529

SCALE 0 30 1"=30'

NC 18 (S Sterling St)
at
SR 1924 (Old NC 18)/Berry St

Division 13 Burke County Morganton

PLAN DATE:	July 2011	REVIEWED BY:	A.D. Klinksiek
PREPARED BY:	T.R. Terrell	REVIEWED BY:	N.M. Rodevick

REVISIONS	INIT.	DATE

SEAL
NORTH CAROLINA PROFESSIONAL SEAL 031464 ENGINEER NATASHA M. RODEVICK

SIGNATURE DATE 12-12-11

SIG. INVENTORY NO. 13-0385

PROJECT REFERENCE NO.	SHEET NO.
U-2551	Sig. 70

EDI MODEL 2010ECL-NC CONFLICT MONITOR PROGRAMMING DETAIL

(remove jumpers and set switches as shown)

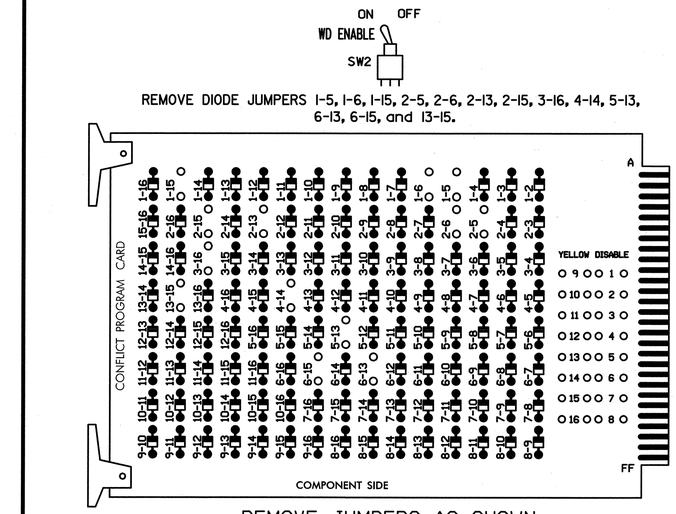

REMOVE DIODE JUMPERS 1-5, 1-6, 1-15, 2-5, 2-6, 2-13, 2-15, 3-16, 4-14, 5-13, 6-13, 6-15, and 13-15.

REMOVE JUMPERS AS SHOWN

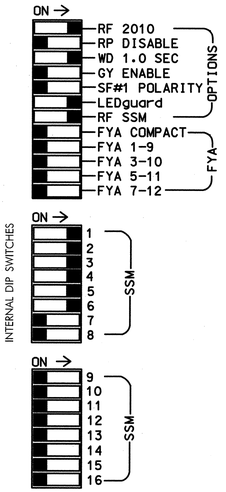

NOTES:

1. Card is provided with all diode jumpers in place. Removal of any jumper allows its channels to run concurrently.
2. Make sure jumpers SEL2-SEL5 are present on the monitor board.

■ = DENOTES POSITION OF SWITCH

NOTES

1. To prevent "flash-conflict" problems, insert red flash program blocks for all unused vehicle load switches in the output file. The installer shall verify that signal heads flash in accordance with the Signal Plans.
2. Ensure that Red Enable is active at all times during normal operation. To prevent Red Failures on unused monitor channels, tie unused red monitor inputs 7,8,9, 10,11,12,13,14,15 & 16 to load switch AC+ per the cabinet manufacturer's instructions.
3. Enable Simultaneous Gap-Out for all phases.
4. Program phases 2 and 6 for Variable Initial and Gap Reduction.
5. Program phases 2 and 6 for Start Up In Green.
6. Program phases 2, 3, 4 and 6 for 'STARTUP PED CALL'.
7. Program phases 2 and 6 for Yellow Flash.
8. The cabinet and controller are part of the NC 18 (Sterling St)/SR 1922 (Enola Rd) Closed Loop System.

SIGNAL HEAD HOOK-UP CHART

LOAD SWITCH NO.	S1	S2	S2P	S3			S4		S4P	S5	S6	S6P	S7	S8	S8P	S9	S10	S11	S12	S13	S14
PHASE	1	2	2 PED	3			4		4 PED	5	6	6 PED	7	8	3 PED	OLA	OLB	SPARE	OLC	OLD	SPARE
SIGNAL HEAD NO.	11	21,22	P21, P22	22	31,32	33,34	41	42	P41, P42	51	61,62	P61, P62	NU	NU	P31, P32	NU	NU	NU	NU	NU	NU
RED		128				116	101	101			134										
YELLOW		129				117	102	102			135										
GREEN		130				118	103	103			136										
RED ARROW	125				116					131											
YELLOW ARROW	126			117	117					132											
GREEN ARROW	127			118	118		103			133											
✋			113						104			119			110						
🚶			115						106			121			112						

NU = Not Used

EQUIPMENT INFORMATION

CONTROLLER.....2070L
CABINET.....332 /W/ AUX
SOFTWARE.....ECONOLITE OASIS
CABINET MOUNT.....BASE
OUTPUT FILE POSITIONS...18 WITH AUX. OUTPUT FILE
LOAD SWITCHES USED.....S1,S2,S2P,S3,S4,S4P,S5,S6,S6P,S8P
PHASES USED.....1,2,2PED,3,3PED,4,4PED,5,6,6PED
OVERLAP "A".....NOT USED
OVERLAP "B".....NOT USED
OVERLAP "C".....NOT USED
OVERLAP "D".....NOT USED

COUNTDOWN PEDESTRIAN SIGNAL OPERATION

Countdown Ped Signals are required to display timing only during Ped Clearance Interval. Consult Ped Signal Module user's manual for instructions on selecting this feature.

INPUT FILE POSITION LAYOUT

(front view)

		1	2	3	4	5	6	7	8	9	10	11	12	13	14
FILE "I"	U	Ø1	Ø2/SYS	SLOT	SLOT	Ø3	Ø3	Ø4	SLOT	SYS. DET.	SLOT	SLOT	Ø2 PED	Ø6 PED	FS
		1A	2A/S15	EMPTY	EMPTY	3A	3B	4A	EMPTY	S35	EMPTY	EMPTY	DC ISOLATOR	DC ISOLATOR	DC ISOLATOR
	L	NOT USED	Ø2/SYS			NOT USED	Ø3	NOT USED		SYS. DET.			Ø4 PED	Ø3 PED	ST
			2B/S16				3C			S36			DC ISOLATOR	DC ISOLATOR	DC ISOLATOR
FILE "J"	U	Ø5	Ø6/SYS	SLOT	SLOT	SLOT	SLOT	SLOT	SLOT	SLOT	SLOT	SLOT	SLOT	SLOT	SLOT
		5A	6A/S17	EMPTY	EMPTY	EMPTY	EMPTY	EMPTY	EMPTY	EMPTY	EMPTY	EMPTY	EMPTY	EMPTY	EMPTY
	L	NOT USED	Ø6/SYS												
			6B/S18												

EX.: 1A, 2A, ETC. = LOOP NO.'S

FS = FLASH SENSE
ST = STOP TIME

INPUT FILE CONNECTION & PROGRAMMING CHART

LOOP NO.	LOOP TERMINAL	INPUT FILE POS.	PIN NO.	INPUT ASSIGNMENT NO.	DETECTOR NO.	NEMA PHASE	CALL	EXTEND	FULL TIME DELAY	STRETCH TIME	DELAY TIME
1A	TB2-1,2	I1U	56	18	1	1	Y	Y			3
2A/S15	TB2-5,6	I2U	39	1	2	2/SYS	Y	Y			
2B/S16	TB2-7,8	I2L	43	5	12	2/SYS	Y	Y			
** S35	TB6-9,10	I9U	60	22	11	SYS					
** S36	TB6-11,12	I9L	62	24	13	SYS					
3A	TB4-5,6	I5U	58	20	3	3	Y	Y			
3B	TB4-9,10	I6U	41	3	4	3	Y	Y			
3C	TB4-11,12	I6L	45	7	14	3	Y	Y			10
4A	TB6-1,2	I7U	65	27	34	4	Y	Y			10
5A	TB3-1,2	J1U	55	17	5	5	Y	Y			3
6A/S17	TB3-5,6	J2U	40	2	6	6/SYS	Y	Y			
6B/S18	TB3-7,8	J2L	44	6	16	6/SYS	Y	Y			
PED PUSH BUTTONS											
P21,P22	TB8-4,6	I12U	67	29	PED 2	2 PED					
P41,P42	TB8-5,6	I12L	69	31	PED 4	4 PED					
P61,P62	TB8-7,9	I13U	68	30	PED 6	6 PED					
P31,P32	TB8-8,9	I13L	70	32	PED 8	3 PED					

NOTE:
INSTALL DC ISOLATORS IN INPUT FILE SLOTS I12 AND I13.

** System detector only. Remove the vehicle phase assigned to this detector in the default programming.

INPUT FILE POSITION LEGEND: J2L
FILE J
SLOT 2
LOWER

THIS ELECTRICAL DETAIL IS FOR
THE SIGNAL DESIGN: 13-0385
DESIGNED: July 2011
SEALED: 12-12-2011
REVISED:

PED 3 PROGRAMMING DETAIL

(program controller as shown below)

CHANGING OUTPUT ASSIGNMENTS

1. FROM MAIN MENU SELECT '6' (OUTPUTS), THEN '1' (OUTPUT ASSIGNMENTS)
2. ENTER 17 (PHASE 8 DW) FOR OUTPUT ASSIGNMENT #.
3. SCROLL DOWN TO 'PEDESTRIAN PHASE' AND ENTER 'Y' REGARDLESS OF DEFAULT PROGRAMMING!
4. ENTER '3' FOR 'SELECT PEDESTRIAN PHASE'. NO CHANGE NEEDED FOR 'SELECT COLOR'
5. BACKUP TO 'OUTPUT ASSIGNMENTS AND SETTINGS MENU:' BY PRESSING THE 'ESC' BUTTON ON KEYBOARD.
6. SELECT '1' (OUTPUT ASSIGNMENTS)
7. ENTER 18 (PHASE 8 W) FOR OUTPUT ASSIGNMENT #.
8. REPEAT STEPS # 3 AND # 4.

CHANGING INPUT ASSIGNMENTS

1. FROM MAIN MENU SELECT '7' (DETECTORS), THEN '2' (PEDESTRIAN DETECTOR ASSIGNMENTS)
2. CYCLE TO PED DETECTOR #8 BY REPEATEDLY DEPRESSING '+' KEY
3. MODIFY PHASE ASSIGNED TO PED DETECTOR # 8 FROM PHASE 8 TO PHASE 3

PROGRAMMING COMPLETE

Signal Upgrade - Final Design

HNTB
HNTB NORTH CAROLINA, P.C.
343 E. Six Forks Road, Suite 200
Raleigh, North Carolina 27609
NC License No: C-1554

ELECTRICAL AND PROGRAMMING DETAILS FOR:

Prepared for: Transportation Mobility and Safety Division, Signals Management Section, Department of Transportation, State of North Carolina
750 N.Greenfield Pkwy,Garner,NC 27529

NC 18 (S Sterling St)
at
SR 1924 (Old NC 18)/Berry St

Division 13 Burke County Morganton

PLAN DATE:	July 2011	REVIEWED BY:	N.W. Rodevick
PREPARED BY:	A.D. Klinksiek	REVIEWED BY:	H.L. Winstead

REVISIONS	INIT.	DATE

SEAL
NORTH CAROLINA PROFESSIONAL SEAL 07983 ENGINEER HARVEY L. WINSTEAD, JR.
SIGNATURE 12/12/11 DATE
SIG. INVENTORY NO. 13-0385

STATE	PROJECT NO.	SHEET NO.
N.C.	U-2551	Sig. 71
F. A. PROJ. NO.		M 1
PROJECT ID. NO.		

STATE OF NORTH CAROLINA
DIVISION OF HIGHWAYS

STANDARD DRAWINGS FOR METAL POLES

NCDOT METAL POLE STANDARDS

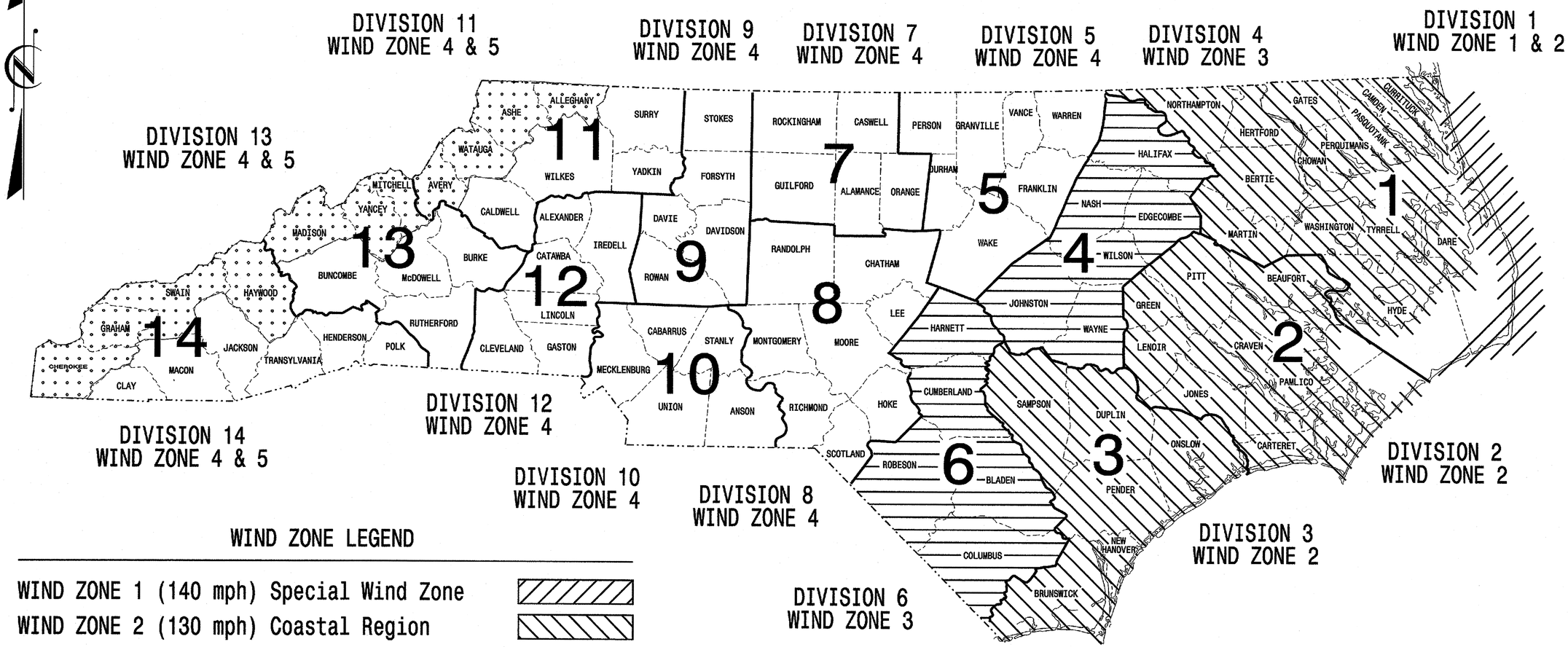

WIND ZONE LEGEND

- WIND ZONE 1 (140 mph) Special Wind Zone
- WIND ZONE 2 (130 mph) Coastal Region
- WIND ZONE 3 (110 mph) Eastern Region
- WIND ZONE 4 (90 mph) Central & Mtn. Region
- WIND ZONE 5 (120 mph) Special Wind Zone

http://www.ncdot.org/doh/preconstruct/traffic/ITSS/ws/mpoles/poles.html

Prepared In the Offices of:

Transportation Mobility and Safety Division
STATE OF NORTH CAROLINA
DEPARTMENT OF TRANSPORTATION
Signal Design Section

750 N.Greenfield Pkwy, Garner, NC 27529

Designed in conformance with the 2002 Interim to the 4th Edition 2001

AASHTO

Standard Specifications for Structural Supports for Highway Signs, Luminares, and Traffic Signals

INDEX OF PLANS

DRAWING NUMBER	DESCRIPTION
M 1	Title Sheet
M 2	Fabrication Details – All Poles
M 3	Fabrication Details – Strain Poles
M 4,5	Fabrication Details – Mast Arm Poles
M 6	Construction Details – Strain Poles
M 7	Construction Details – Foundations
M 8	Standard Strain Poles

NCDOT CONTACTS:

MOBILITY AND SAFETY DIVISION – ITS and SIGNALS UNIT

G. A. Fuller, P.E. – State ITS and Signals Engineer
G. G. Murr, Jr., P.E. – State Signals Engineer
D. C. Sarkar, P.E. – ITS and Signals Senior Structural Engineer
C. F. Andrews, Jr. – ITS and Signals Structural Project Engineer
M. Aslam – ITS and Signals Structural Project Engineer
N. Bitting, P.E. – ITS and Signals Structural Project Engineer

SEAL

NORTH CAROLINA PROFESSIONAL SEAL 028094 ENGINEER DEBESH C. SARKAR

D. Sarkar 7.21.2009
SIGNATURE DATE

PROJECT REFERENCE NO.	SHEET NO.
U-2551	Sig. 72 M 2

Fabrication Details – All Poles

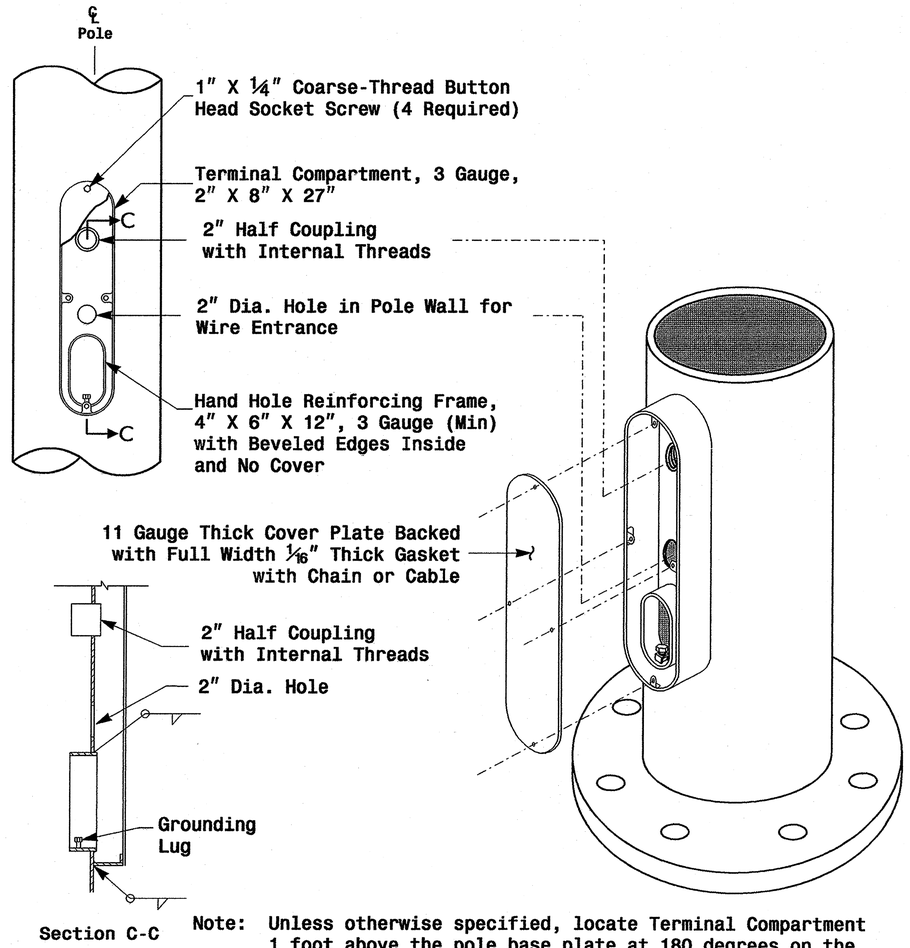

Note: Unless otherwise specified, locate Terminal Compartment 1 foot above the pole base plate at 180 degrees on the pole's radial index.

Terminal Compartment Detail

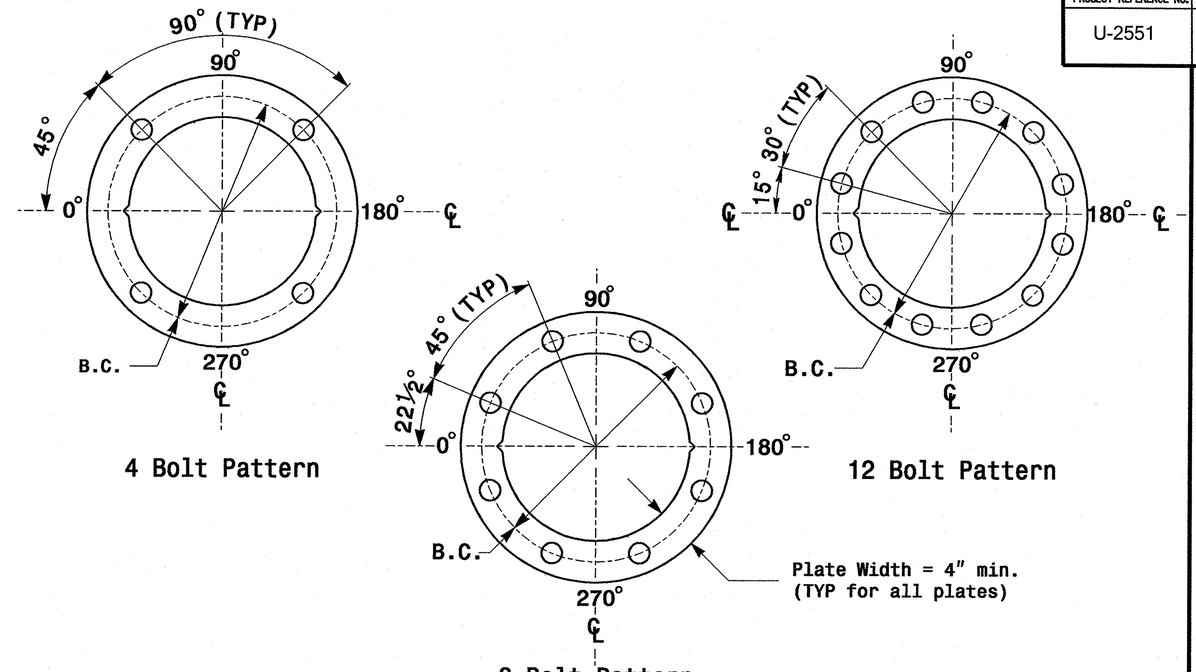

Construct Templates and Plates from ¼" min. thick Steel. Galvanizing is not required.

Base Plate Template and Anchor Bolt Lock Plate Details

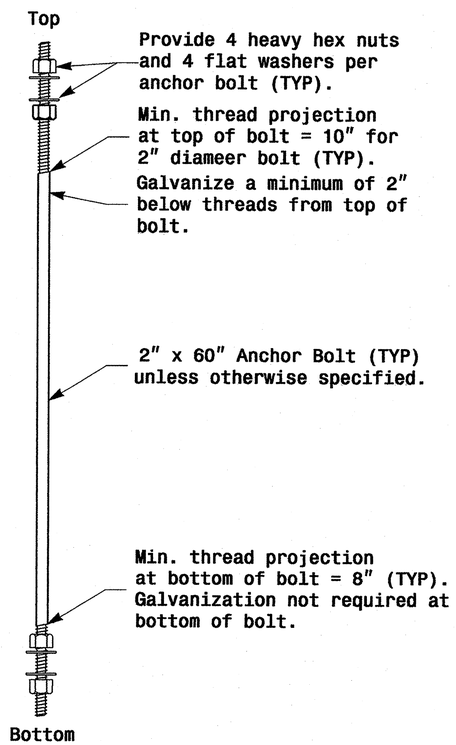

Anchor Bolt Detail

Note: See Strain Pole drawing M3 and Mast arm drawing M4 for base plate weld details.

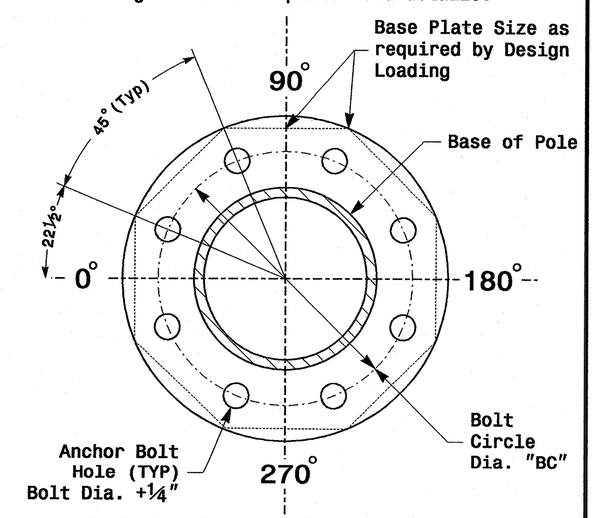

8 Bolt Base Plate Detail

MFG _____ MFG. DATE: MM/YY
SHAFT D/T/L/Y ----/----/----/----
ARM-A D/T/L/Y ----/----/----/----
----/----/----/----
ARM-B D/T/L/Y ----/----/----/----
----/----/----/----
A.B. DIA./B.C./L/Y ----/----/----/----
NCDOT STANDARD ----------

Shaft I.D. Tag
(Provide on Strain Poles and Mast Arm Poles)

MFG _____ MFG. DATE: MM/YY
SECTION D/T/L/Y ----/----/----/----
NCDOT STANDARD ----------

Arm I.D. Tag
(Provide on each section of a multi-section mast arm)

Notes:
1) D= Diameter, T= Thickness, L= Length, Y= Yield Strength
2) A.B. = Anchor Bolt
3) B.C. = Bolt Circle of Anchor Bolts
4) If Custom Design, use "NCDOT STANDARD" line for plan pole I.D.
5) See drawing M4 for mounting positions of I.D. tags.

Identification Tag Details

Prepared in the Offices of: Traffic Engineering and Traffic Control Branch, Division of Highways, Department of Transportation, State of North Carolina
122 N. McDowell St., Raleigh, NC 27603

SCALE 0 NA NONE

Typical Fabrication Details Common To All Metal Poles

PLAN DATE: May 2005	REVIEWED BY: C.F. Andrews
PREPARED BY: P.L. Alexander	REVIEWED BY: A.W. Esposito

REVISIONS	INIT.	DATE

SEAL: NORTH CAROLINA PROFESSIONAL SEAL 028094 ENGINEER DEBESH C. SARKAR

D. Sarkar 9.22.2005
SIGNATURE DATE

SIG. INVENTORY NO.

01-SEP-2005 18:22
D:\projects\Metrol Pole Standards\2004 m2 thru m5.dgn
candrews

PROJECT REFERENCE NO.	SHEET NO.
U-2551	Sig. 73 M 4

Fabrication Details – Mast Arm Poles

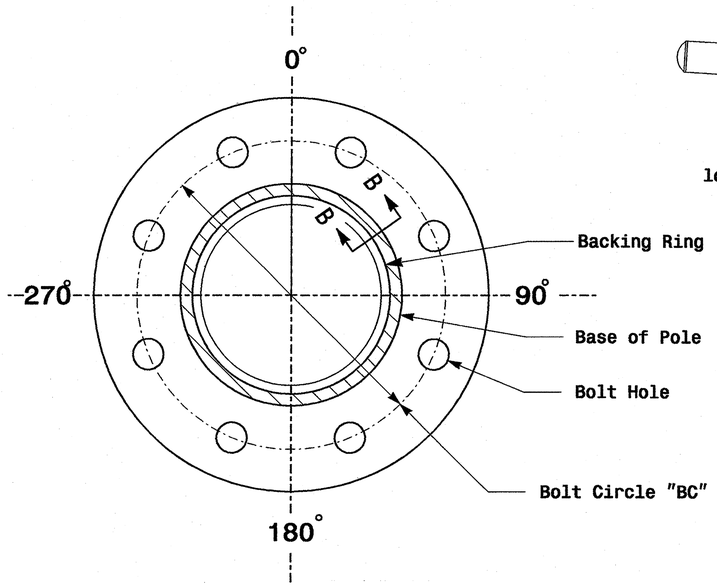

Section A-A

(See drawing M 2)

Pole Base Plate

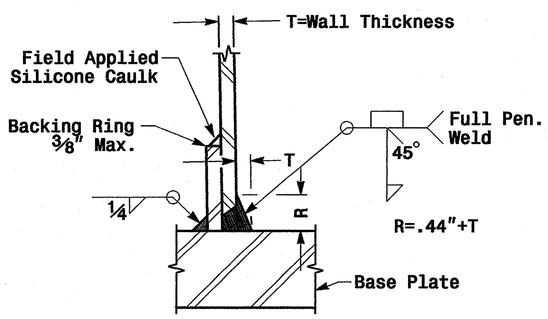

Section B-B

(Pole Attachment to Base Plate)

Full-Penetration Groove Weld Detail

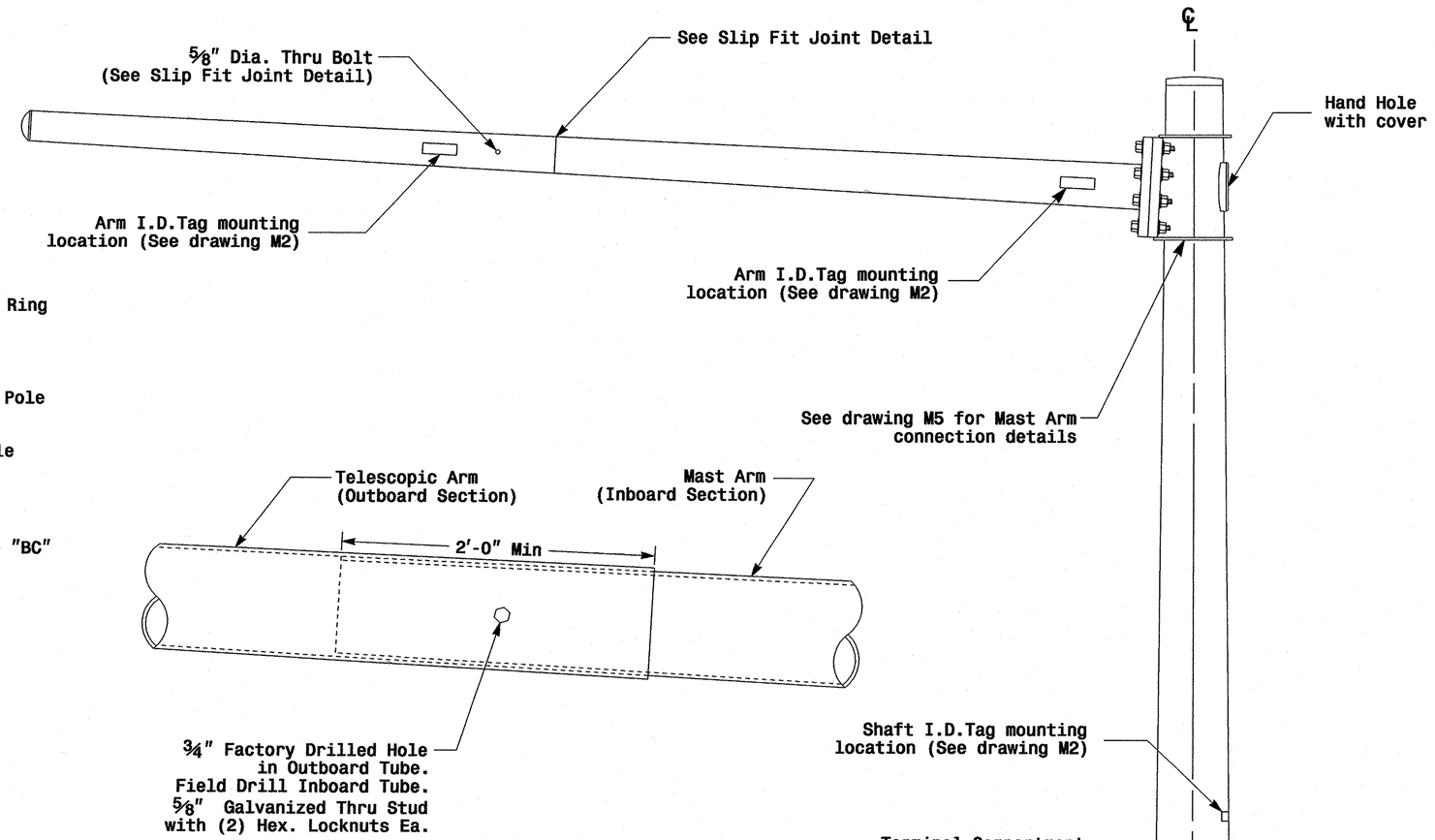

Slip Fit Joint Detail for Mast Arm

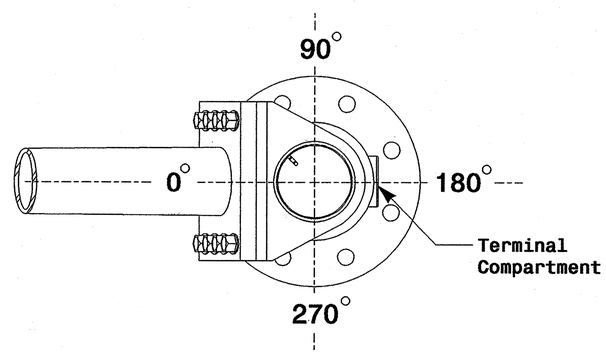

Mast Arm Radial Orientation

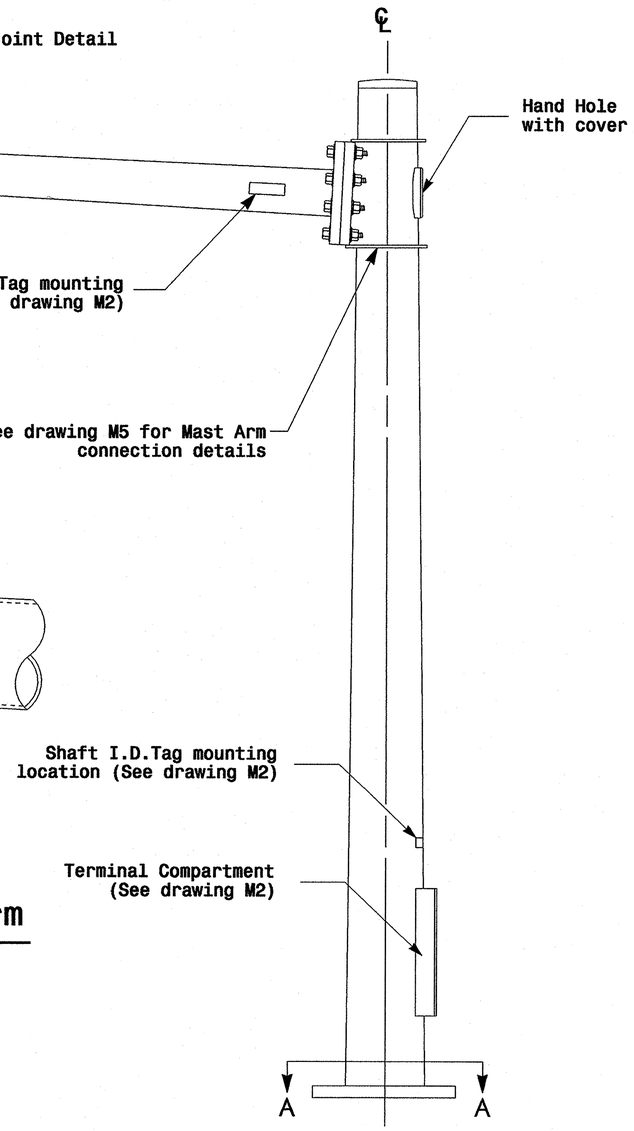

Monotube Mast Arm Pole
(.14in./ft. taper)

Prepared in the Offices of:
Traffic Engineering and Safety Systems Branch
Signals and Geometrics Section
122 N. McDowell St., Raleigh, NC 27603

SCALE: 0 NA — NONE

Typical Fabrication Details for Mast Arm Poles

PLAN DATE:	May 2005	REVIEWED BY:	C.F. Andrews
PREPARED BY:	P.L. Alexander	REVIEWED BY:	A.W. Esposito

REVISIONS	INIT.	DATE

SEAL: NORTH CAROLINA PROFESSIONAL SEAL 028094 ENGINEER DEBESH C. SARKAR

SIGNATURE: D. Sarkar DATE: 9.2.2005

STG. INVENTORY NO.

01-SEP-2005 14:08
w:\design-build\workgroups\2004 metal pole standards\2004 m4.dgn
palexander

PROJECT REFERENCE NO.	SHEET NO.
U-2551	Sig. 74 M 5

Fabrication Details – Mast Arm Poles

Adjustable Clamp Type Bolted Mast Arm Connection

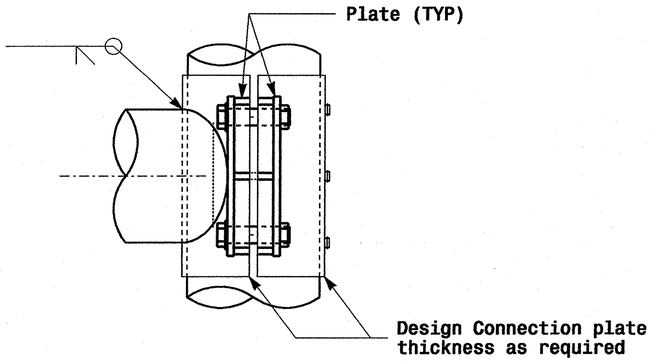

Side Elevation View

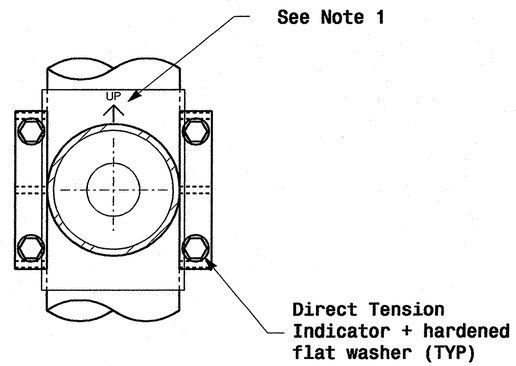

Front Elevation View

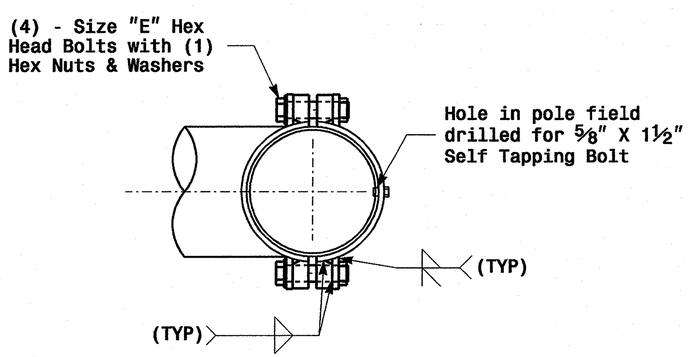

Plan View

Welded Ring Stiffened Mast Arm Connection

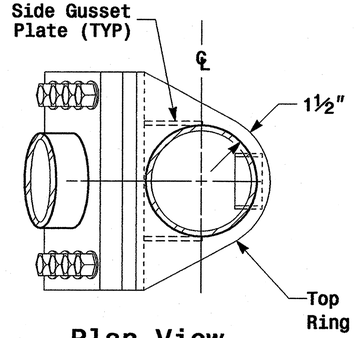

Plan View

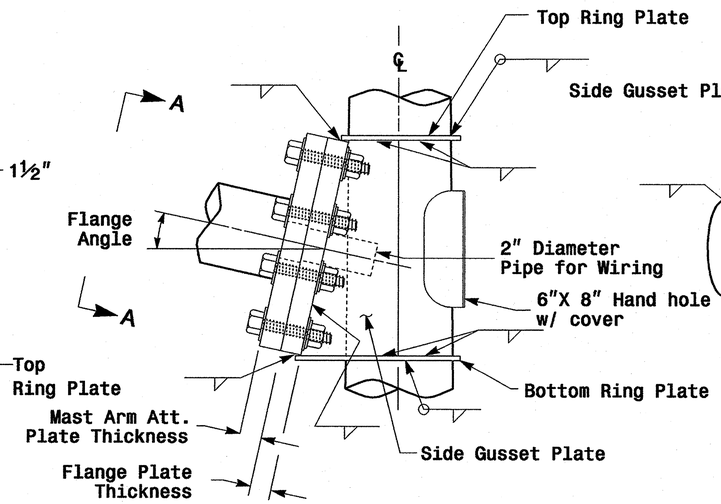

Side Elevation View

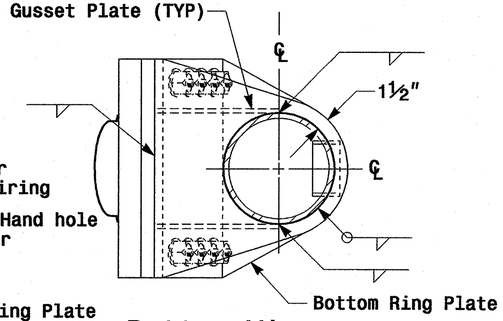

Bottom View

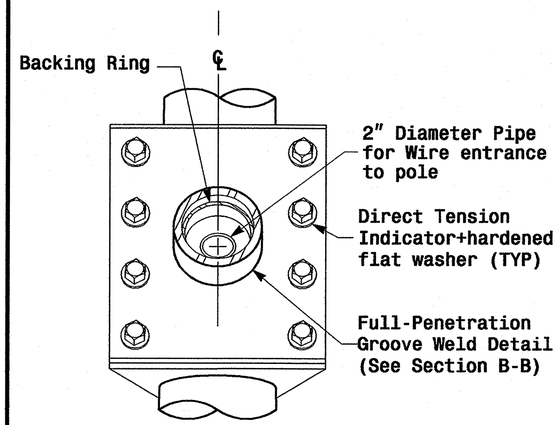

Front Elevation View

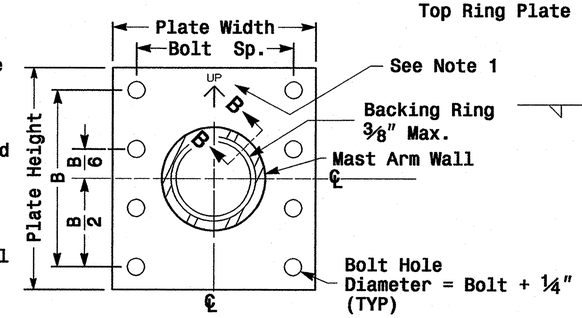

Section View A-A

Mast Arm Attachment Plate

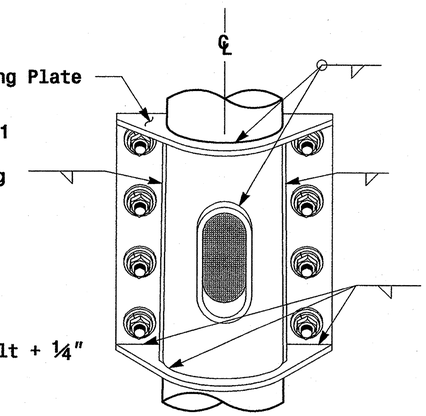

Back Elevation View

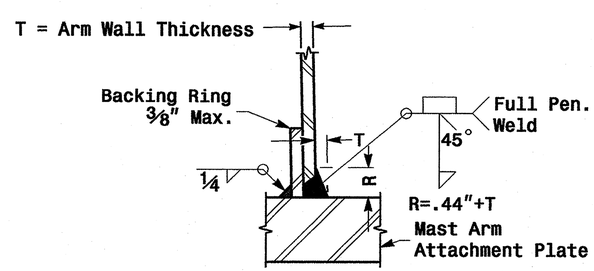

Section B-B

Full-Penetration Groove Weld Detail

Notes:

1. Provide a permanent means of identification above the mast arm to indicate proper attachment orientation of the mast arm.
2. Designer will determine the size of all structural components, plates, fasteners, and welds shown unless they are already specified.
3. Designer is responsible for providing appropriate drainage points.

Prepared in the Offices of: Traffic Engineering and Safety Systems Branch, Signals and Geometrics Section, Department of Transportation, State of North Carolina
122 N. McDowell St., Raleigh, NC 27603

Fabrication Details For Mast Arm Connection To Pole

PLAN DATE: May 2005	REVIEWED BY: C.F. Andrews
PREPARED BY: P.L. Alexander	REVIEWED BY: A.M. Esposito

REVISIONS	INIT.	DATE

SCALE: 0 NA — NONE

SEAL: NORTH CAROLINA PROFESSIONAL SEAL 028094 ENGINEER DEBESH C. SARKAR

D. Sarkar 9.2.2005
SIGNATURE DATE

SIG. INVENTORY NO.

01-SEP-2005 14:11
v:\design-unit\workgroups\2004 metal pole standards\2004 m5.dgn
polexander

PROJECT REFERENCE NO.	SHEET NO.
U-2551	Sig. 75 M 7

Construction Details – Foundations

Reinforcing Steel Bars

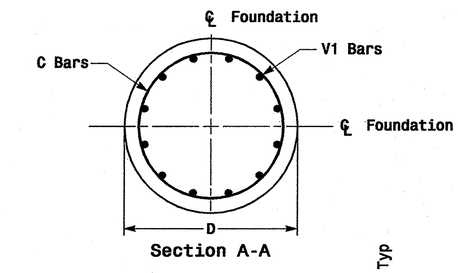

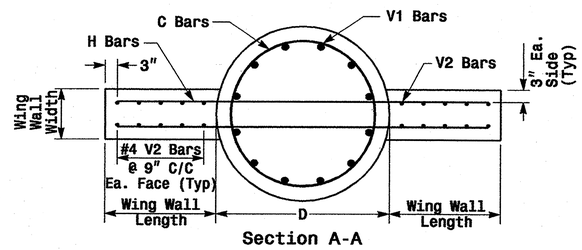

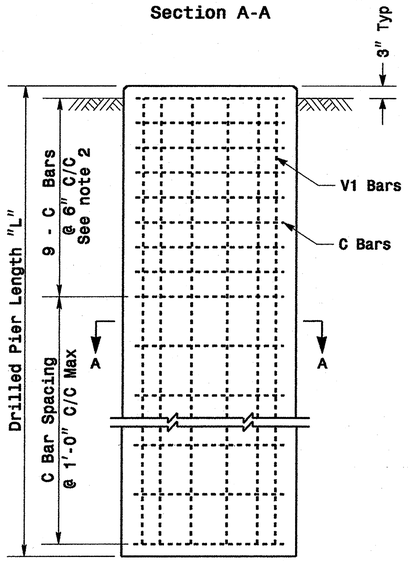

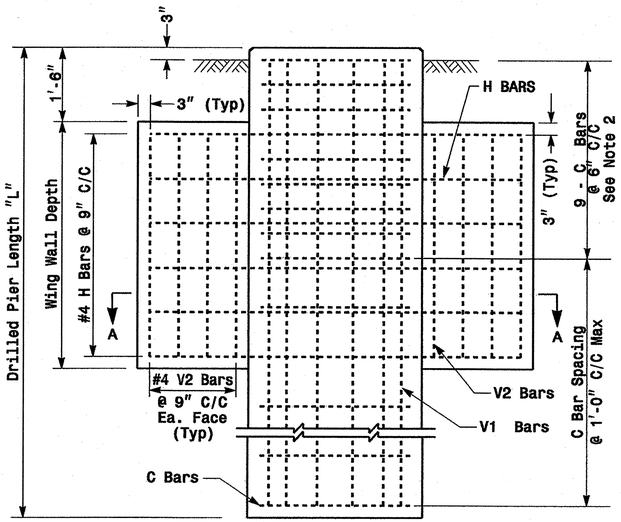

REINFORCING STEEL TABLE FOR STANDARD DRILL PIER SHAFT (42" & 48" DIAMETER)						
Shaft Dia (in.)	Conc. Volume (cu. yds.)	Bar Name	No.	Size	Type	Length
42"	.356 x L	V1	9	#8	STR.	**
		C	*	#4	CIR.	10'-9"
48"	.465 x L	V1	12	#8	STR.	**
		C	*	#4	CIR.	12'-6"

* See Note No. 1
** See Note No. 3

REINFORCING STEEL TABLE FOR STANDARD 42" and 48" DRILL PIER SHAFT WITH TYPE 1 AND TYPE 2 WING WALLS						
Wing Wall Type	Drill Pier Shaft Dia. (in.)	Reinforcing Steel				
		Bar Name	No.	Size	Type	Length
TYPE 1	42"	V1	9	#8	STR.	**
		V2	12	#4	STR.	2'-6"
		H	8	#4	STR.	6'-0"
		C	*	#4	CIR.	10'-9"
TYPE 2	42"	V1	9	#8	STR.	**
		V2	16	#4	STR.	4'-6"
		H	12	#4	STR.	9'-0"
		C	*	#4	CIR.	10'-9"
TYPE 2	48"	V1	12	#8	STR.	**
		V2	16	#4	STR.	4'-6"
		H	12	#4	STR.	9'-6"
		C	*	#4	CIR.	12'-6"

* See Note No. 1
** See Note No. 3

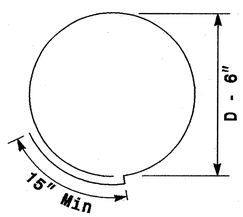

Typical "C" Bars

WING WALL DETAILS				
Wing Wall Type	Wing Wall Length (Ft.)	Wing Wall Width (Ft.)	Wing Wall Depth (Ft.)	Concrete Volume (Cu. Yds.)
TYPE 1	1'-6"	1'-0"	3'-0"	.4
TYPE 2	3'-0"	1'-0"	5'-0"	1.2

See Note No. 4

Typical Foundation Anchor Bolt Details

(Reinforcing Cage Not Shown for Clarity)

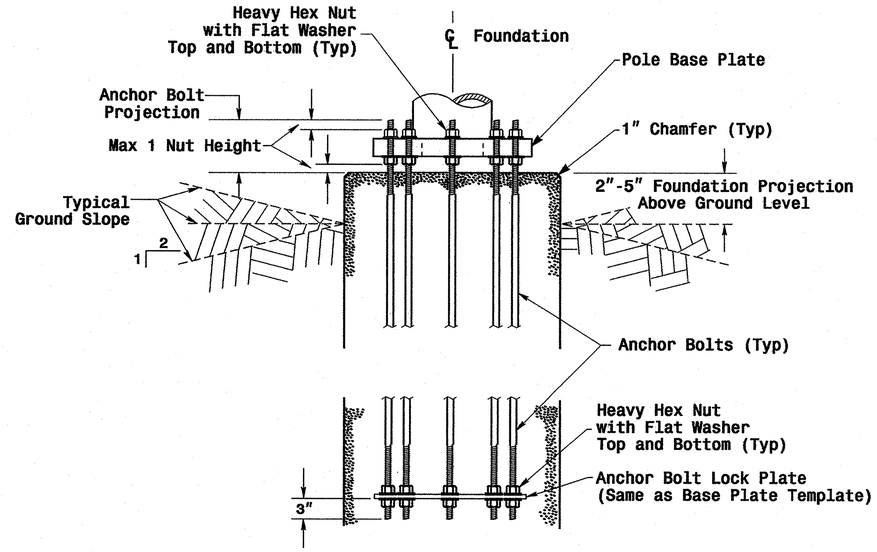

Typical Foundation Conduit Details

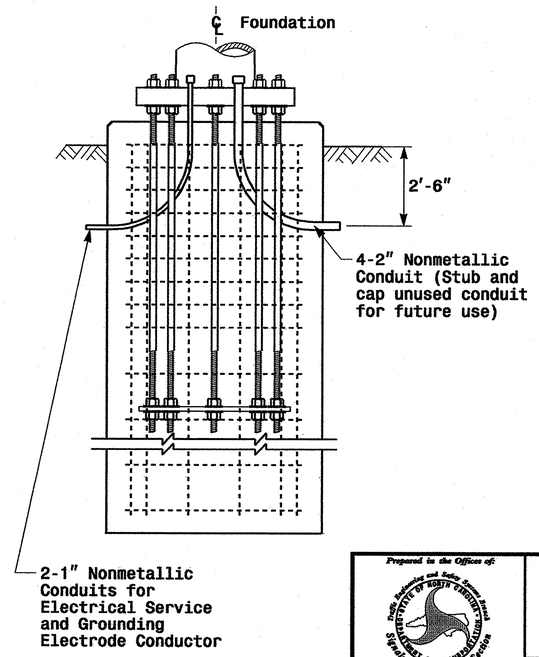

Notes

1. The number of C-bars is based on foundation depth. For standard foundations, see sheet M 8.
2. Circular tie reinforcing rings may be vertically adjusted by +/- 3" at a depth between 2'-0" and 3'-0" to facilitate the installation of electrical conduit entering in the cage.
3. The length of V1-bars is based on foundation depth. For standard foundations, see sheet M 8.
4. The quantities for steel and concrete shown in the Wing Wall Details Chart reflect the amount of material for 1 pair of wing walls (2 wing walls per drilled pier shaft.)

Prepared in the Offices of:
State Traffic Engineering and Safety Systems Branch
Signals and Geometrics Section
122 N. McDowell St., Raleigh, NC 27603

Construction Details
Foundations

PLAN DATE: May 2005	REVIEWED BY: P.L. ALEXANDER
PREPARED BY: C.F. ANDREWS	REVIEWED BY: A.M. ESPOSITO

REVISIONS	INIT.	DATE

SCALE: 0 NA — NONE

SEAL: NORTH CAROLINA PROFESSIONAL SEAL 028094 ENGINEER DEBESH C. SARKAR

D. Sarkar 9.2.2005
SIGNATURE DATE

SIG. INVENTORY NO.

01-SEP-2005 17:48
w:\roadway\traffic\workgroups\2004 metrol pole standards\2004 m7.dgn
pole\andrcf

METAL POLE No. 1 and 2

PROJECT REFERENCE NO.	SHEET NO.
U-2551	Sig. 76

Design Loading for METAL POLE NO. 1

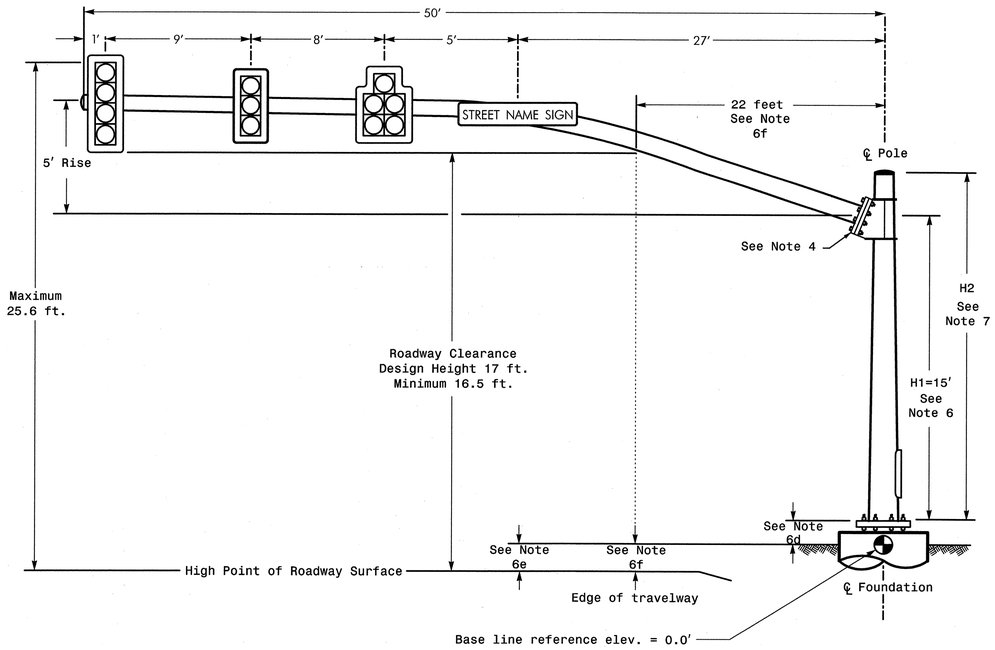

ELEVATION VIEW

Design Loading for METAL POLE NO. 2

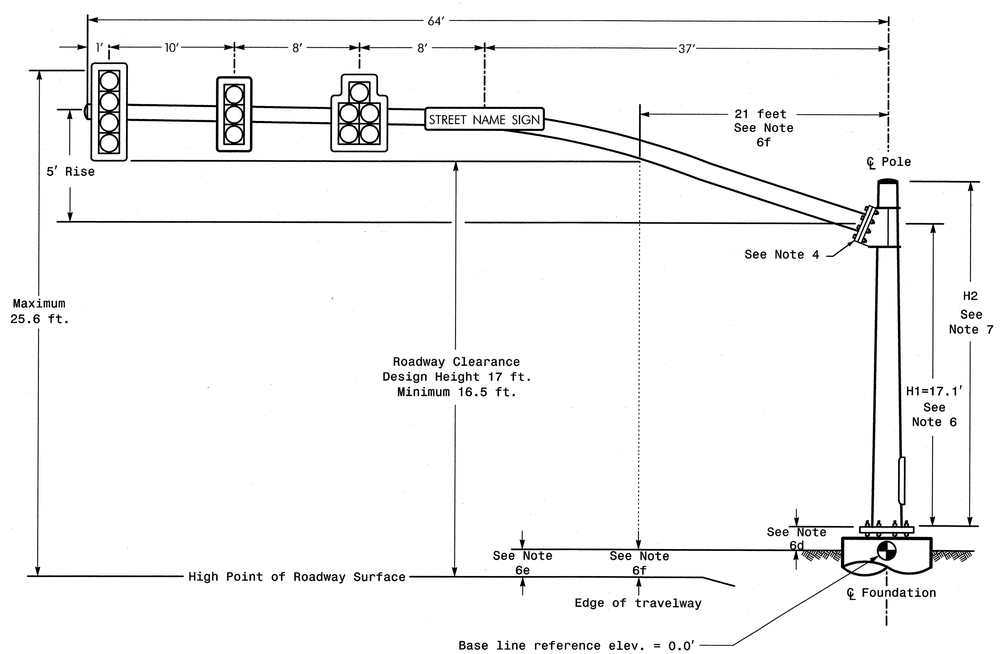

ELEVATION VIEW

SPECIAL NOTE

The contractor is responsible for verifying that the mast arm attachment height (H1) will provide the "Design Height" clearance from the roadway before submitting final shop drawings for approval. Verify elevation data below which was obtained by field measurement or from available project survey data.

Elevation Data for Mast Arm Attachment (H1)

Elevation Differences for:	Pole 1	Pole 2
Baseline reference point at ⊕ Foundation @ ground level	0.0 ft.	0.0 ft.
Elevation difference at High point of roadway surface	+0.99 ft.	+3.11 ft.
Elevation difference at Edge of travelway or face of curb	0.0 ft.	+1.94 ft.

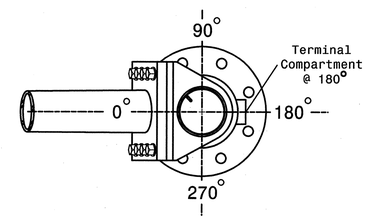

POLE RADIAL ORIENTATION

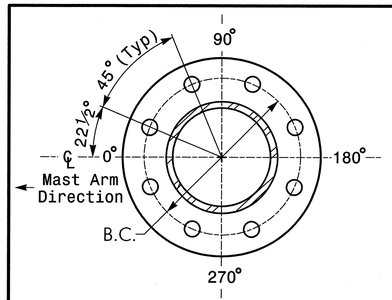

8 BOLT BASE PLATE DETAIL

See Note 5

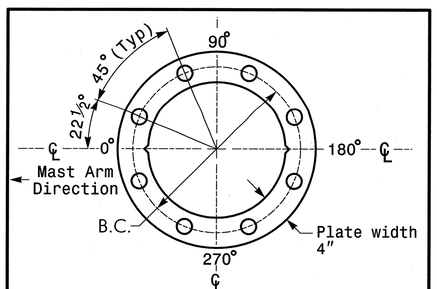

BASE PLATE TEMPLATE & ANCHOR BOLT LOCK PLATE DETAIL

For 8 Bolt Base Plate

MAST ARM LOADING SCHEDULE

LOADING SYMBOL	DESCRIPTION	AREA	SIZE	WEIGHT
	SIGNAL HEAD 12"–5 SECTION–WITH BACKPLATE RIGID MOUNTED	16.3 S.F.	42.0" W X 56.0" L	103 LBS
	SIGNAL HEAD 12"–4 SECTION–WITH BACKPLATE RIGID MOUNTED	11.5 S.F.	25.5" W X 66.0" L	74 LBS
	SIGNAL HEAD 12"–3 SECTION–WITH BACKPLATE RIGID MOUNTED	9.3 S.F.	25.5" W X 52.5" L	60 LBS
STREET NAME SIGN	STREET NAME SIGN RIGID MOUNTED	12.0 S.F.	18.0" W X 96.0" L	27 LBS

NOTES

Design Reference Material

1. Design the traffic signal structure and foundation in accordance with:
   - The 4th Edition 2001 AASHTO "Standard Specifications for Structural Supports for Highway Signs, Luminaires, and Traffic Signals, including all of the latest interim revisions.
   - The 2012 NCDOT "Standard Specifications for Roads and Structures". The latest addenda to these specifications can be found in the traffic signal project special provisions.
   - The 2012 NCDOT Roadway Standard Drawings.
   - The traffic signal project plans and special provisions.

Design Requirements

2. Design the traffic signal structure using the loading conditions shown in the elevation views. These are anticipated worst case "Design loads" and may not represent the actual loads that will be applied at the time of the installation. The contractor should refer to the traffic signal plans for the actual loads that will be applied at the time of the installation.
3. Design all signal supports using stress ratios that do not exceed 0.9.
4. A clamp-type bolted mast arm-to-pole connection may be used instead of the welded ring stiffened box connection shown as long as the connection meets all of the design requirements.
5. Design base plate with 8 anchor bolt holes. Provide 2 inch x 60 inch anchor bolts.
6. The mast arm attachment height (H1) shown is based on the following design assumptions:
   a. Nominal vertical rise in mast arm is 5 feet as measured from the centerline of the arm base to the centerline of the free end of the arm.
   b. Signal heads attached to the mast arm are rigid mounted and vertically centered on the arm.
   c. The roadway clearance height for design is as shown in the elevation views.
   d. The top of the pole base plate is .75 feet above the ground elevation.
   e. Refer to the Elevation Data chart for elevation differences between the proposed foundation ground level and the high point on the roadway.
   f. Provide horizontal distance from proposed centerline of foundation to edge of travelway. Refer to the Elevation Data chart above for elevation difference between the proposed foundation ground level and the edge of travelway. This information is necessary when arched arms are specified to ensure that the roadway clearance is maintained at the edge of the travelway and to assist in the camber design of the mast arm.
7. The pole manufacturer will determine the total height (H2) of each pole using the greater of the following:
   - Mast arm attachment height (H1) plus 2 feet, or
   - H1 plus ½ of the total height of the mast arm attachment assembly plus 1 foot.
8. If pole location adjustments are required, the contractor must gain approval from the engineer as this may affect the mast arm lengths and arm attachment heights. The contractor may contact the Signal Design Section Structural Engineer for assistance at (919) 773-2800.
9. The contractor is responsible for verifying that the mast arm length shown will allow proper positioning of the signal heads over the roadway.
10. The contractor is responsible for providing soil penetration testing data (SPT) to the pole manufacturer so site specific foundations can be designed.

HNTB
HNTB NORTH CAROLINA, P.C.
343 E. Six Forks Road, Suite 200
Raleigh, North Carolina 27609
NC License No: C-1554

NCDOT Wind Zone 4 (90 mph)

Prepared for: Transportation Mobility and Safety Division — State of North Carolina Department of Transportation — Signal Design Section
750 N. Greenfield Pkwy, Garner, NC 27529

SR 1922 (Enola Rd)
at
SR 1940 (Pete Brittain Rd/
Old Colony Rd)

Division 13 Burke County Morganton

PLAN DATE:	October 2011	REVIEWED BY:	A.D. Klinksiek
PREPARED BY:	T.R. Terrell	REVIEWED BY:	N.M. Rodevick

SCALE: 0 N/A — N/A

REVISIONS	INIT.	DATE

SEAL: NORTH CAROLINA PROFESSIONAL SEAL 031464 ENGINEER NATASHA M. RODEVICK

Natasha M. Rodevick 12-12-11
SIGNATURE DATE

SIG. INVENTORY NO. 13-1160

Design Loading for METAL POLE NO. 3

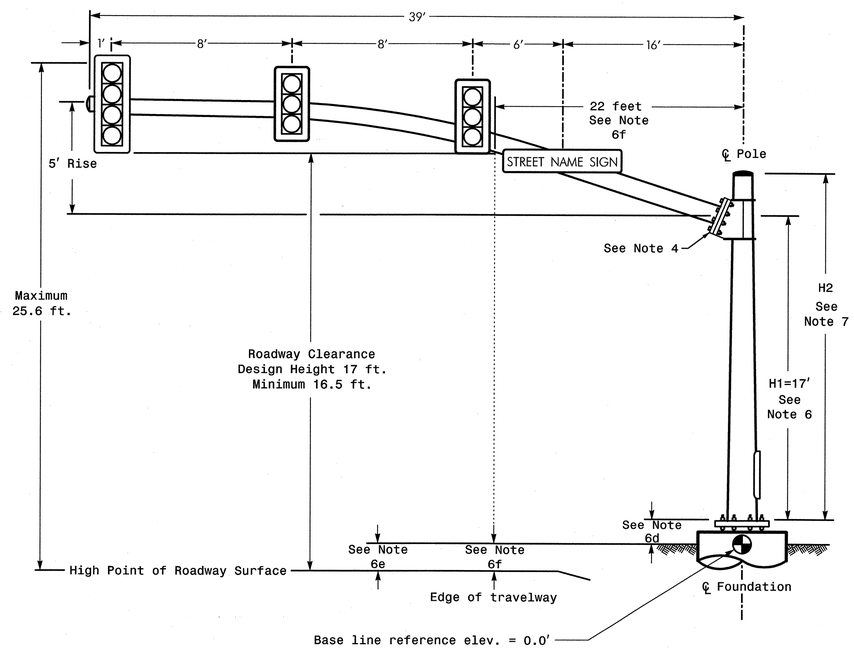

ELEVATION VIEW

Design Loading for METAL POLE NO. 4

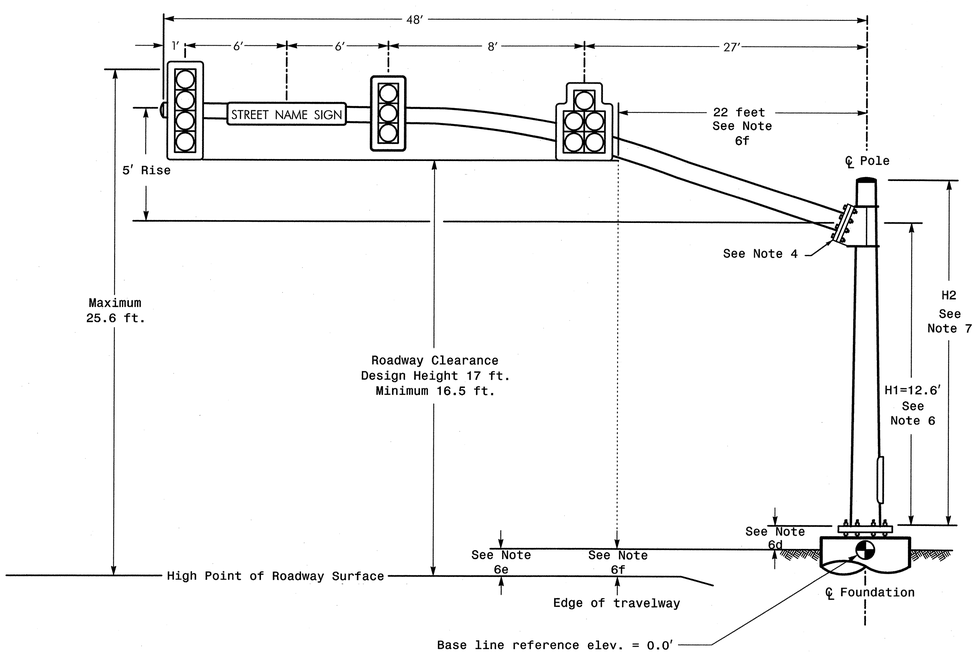

ELEVATION VIEW

SPECIAL NOTE

The contractor is responsible for verifying that the mast arm attachment height (H1) will provide the "Design Height" clearance from the roadway before submitting final shop drawings for approval. Verify elevation data below which was obtained by field measurement or from available project survey data.

Elevation Data for Mast Arm Attachment (H1)

Elevation Differences for:	Pole 3	Pole 4
Baseline reference point at ℄ Foundation @ ground level	0.0 ft.	0.0 ft.
Elevation difference at High point of roadway surface	+3.00 ft.	-1.40 ft.
Elevation difference at Edge of travelway or face of curb	+3.00 ft.	-1.40 ft.

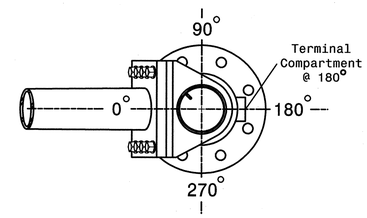

POLE RADIAL ORIENTATION

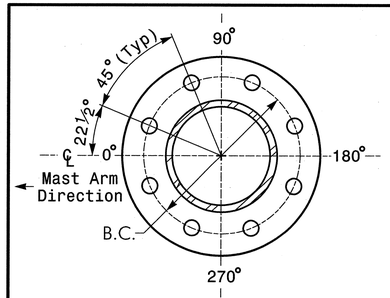

8 BOLT BASE PLATE DETAIL

See Note 5

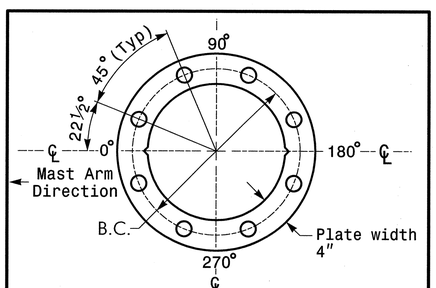

BASE PLATE TEMPLATE & ANCHOR BOLT LOCK PLATE DETAIL

For 8 Bolt Base Plate

METAL POLE No. 3 and 4

PROJECT REFERENCE NO.	SHEET NO.
U-2551	Sig. 77

MAST ARM LOADING SCHEDULE

LOADING SYMBOL	DESCRIPTION	AREA	SIZE	WEIGHT
	SIGNAL HEAD 12″–5 SECTION–WITH BACKPLATE RIGID MOUNTED	16.3 S.F.	42.0″ W X 56.0″ L	103 LBS
	SIGNAL HEAD 12″–4 SECTION–WITH BACKPLATE RIGID MOUNTED	11.5 S.F.	25.5″ W X 66.0″ L	74 LBS
	SIGNAL HEAD 12″–3 SECTION–WITH BACKPLATE RIGID MOUNTED	9.3 S.F.	25.5″ W X 52.5″ L	60 LBS
STREET NAME SIGN	STREET NAME SIGN RIGID MOUNTED	12.0 S.F.	18.0″ W X 96.0″ L	27 LBS

NOTES

Design Reference Material

1. Design the traffic signal structure and foundation in accordance with:
   - The 4th Edition 2001 AASHTO "Standard Specifications for Structural Supports for Highway Signs, Luminaires, and Traffic Signals, including all of the latest interim revisions.
   - The 2012 NCDOT "Standard Specifications for Roads and Structures". The latest addenda to these specifications can be found in the traffic signal project special provisions.
   - The 2012 NCDOT Roadway Standard Drawings.
   - The traffic signal project plans and special provisions.

Design Requirements

2. Design the traffic signal structure using the loading conditions shown in the elevation views. These are anticipated worst case "Design loads" and may not represent the actual loads that will be applied at the time of the installation. The contractor should refer to the traffic signal plans for the actual loads that will be applied at the time of the installation.
3. Design all signal supports using stress ratios that do not exceed 0.9.
4. A clamp-type bolted mast arm-to-pole connection may be used instead of the welded ring stiffened box connection shown as long as the connection meets all of the design requirements.
5. Design base plate with 8 anchor bolt holes. Provide 2 inch x 60 inch anchor bolts.
6. The mast arm attachment height (H1) shown is based on the following design assumptions:
   a. Nominal vertical rise in mast arm is 5 feet as measured from the centerline of the arm base to the centerline of the free end of the arm.
   b. Signal heads attached to the mast arm are rigid mounted and vertically centered on the arm.
   c. The roadway clearance height for design is as shown in the elevation views.
   d. The top of the pole base plate is .75 feet above the ground elevation.
   e. Refer to the Elevation Data chart for elevation differences between the proposed foundation ground level and the high point on the roadway.
   f. Provide horizontal distance from proposed centerline of foundation to edge of travelway. Refer to the Elevation Data chart above for elevation difference between the proposed foundation ground level and the edge of travelway. This information is necessary when arched arms are specified to ensure that the roadway clearance is maintained at the edge of the travelway and to assist in the camber design of the mast arm.
7. The pole manufacturer will determine the total height (H2) of each pole using the greater of the following:
   - Mast arm attachment height (H1) plus 2 feet, or
   - H1 plus ½ of the total height of the mast arm attachment assembly plus 1 foot.
8. If pole location adjustments are required, the contractor must gain approval from the engineer as this may affect the mast arm lengths and arm attachment heights. The contractor may contact the Signal Design Section Structural Engineer for assistance at (919) 773-2800.
9. The contractor is responsible for verifying that the mast arm length shown will allow proper positioning of the signal heads over the roadway.
10. The contractor is responsible for providing soil penetration testing data (SPT) to the pole manufacturer so site specific foundations can be designed.

HNTB
HNTB NORTH CAROLINA, P.C.
343 E. Six Forks Road, Suite 200
Raleigh, North Carolina 27609
NC License No: C-1554

NCDOT Wind Zone 4 (90 mph)

Prepared for: Transportation Mobility and Safety Division — Department of Transportation — State of North Carolina — Signal Design Section
750 N. Greenfield Pkwy, Garner, NC 27529

SR 1922 (Enola Rd)
at
SR 1940 (Pete Brittain Rd/
Old Colony Rd)

Division 13 Burke County Morganton

PLAN DATE:	October 2011	REVIEWED BY:	A.D. Klinksiek
PREPARED BY:	T.R. Terrell	REVIEWED BY:	N.M. Rodevick

REVISIONS	INIT.	DATE

SCALE 0 N/A N/A

SEAL
NORTH CAROLINA PROFESSIONAL SEAL 031464 ENGINEER NATASHA M. RODEVICK

Natasha M. Rodevick 12-12-11
SIGNATURE DATE

SIG. INVENTORY NO. 13-1160

METAL POLE No. 5

PROJECT REFERENCE NO.	SHEET NO.
U-2551	Sig. 78

SPECIAL NOTE

The contractor is responsible for verifying that the mast arm attachment height (H1) will provide the "Design Height" clearance from the roadway before submitting final shop drawings for approval. Verify elevation data below which was obtained by field measurement or from available project survey data.

Elevation Data for Mast Arm Attachment (H1)

Elevation Differences for:	Pole 5	
Baseline reference point at ℄ Foundation @ ground level	0.0 ft.	
Elevation difference at High point of roadway surface	+1.71 ft.	
Elevation difference at Edge of travelway or face of curb	+1.34 ft.	

MAST ARM LOADING SCHEDULE

LOADING SYMBOL	DESCRIPTION	AREA	SIZE	WEIGHT
	SIGNAL HEAD 12"–5 SECTION–WITH BACKPLATE RIGID MOUNTED	16.3 S.F.	42.0" W X 56.0" L	103 LBS
	SIGNAL HEAD 12"–3 SECTION–WITH BACKPLATE RIGID MOUNTED	9.3 S.F.	25.5" W X 52.5" L	60 LBS
STREET NAME SIGN	STREET NAME SIGN RIGID MOUNTED	12.0 S.F.	18.0" W X 96.0" L	27 LBS
	SIGN RIGID MOUNTED	7.5 S.F.	30.0" W X 36.0" L	14 LBS

Design Loading for METAL POLE NO. 5

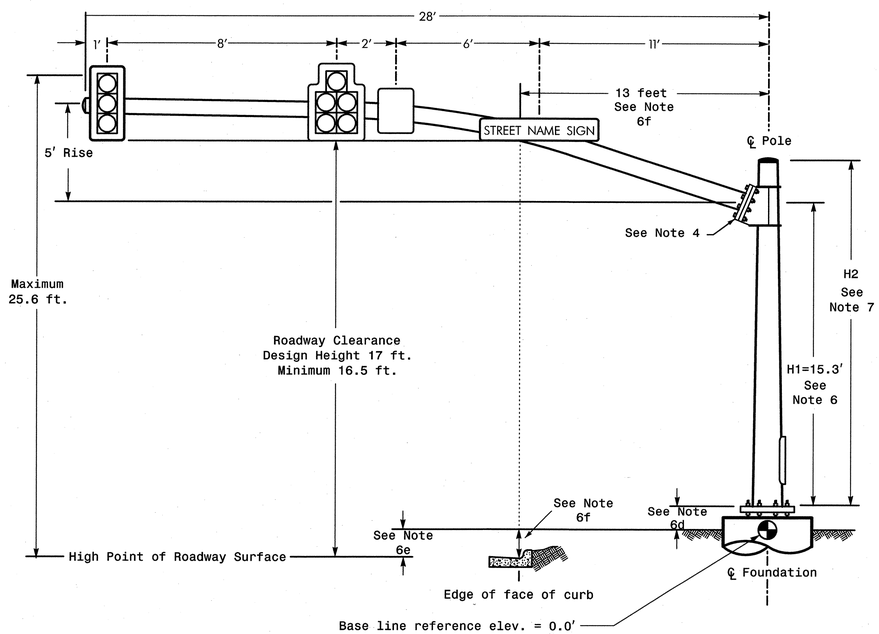

ELEVATION VIEW

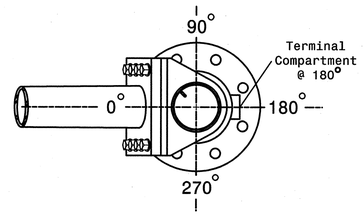

POLE RADIAL ORIENTATION

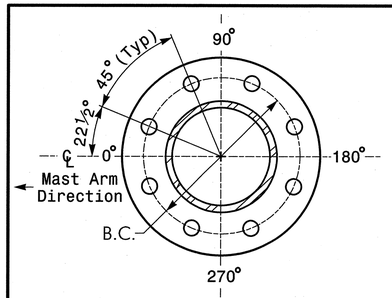

8 BOLT BASE PLATE DETAIL

See Note 5

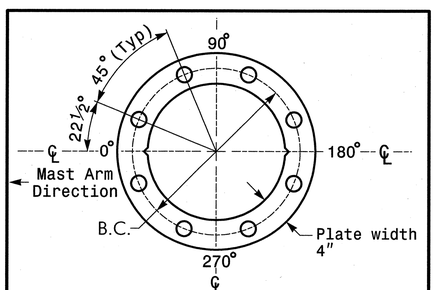

BASE PLATE TEMPLATE & ANCHOR BOLT LOCK PLATE DETAIL

For 8 Bolt Base Plate

NOTES

Design Reference Material

1. Design the traffic signal structure and foundation in accordance with:
   - The 4th Edition 2001 AASHTO "Standard Specifications for Structural Supports for Highway Signs, Luminaires, and Traffic Signals, including all of the latest interim revisions.
   - The 2012 NCDOT "Standard Specifications for Roads and Structures". The latest addenda to these specifications can be found in the traffic signal project special provisions.
   - The 2012 NCDOT Roadway Standard Drawings.
   - The traffic signal project plans and special provisions.

Design Requirements

2. Design the traffic signal structure using the loading conditions shown in the elevation views. These are anticipated worst case "Design loads" and may not represent the actual loads that will be applied at the time of the installation. The contractor should refer to the traffic signal plans for the actual loads that will be applied at the time of the installation.
3. Design all signal supports using stress ratios that do not exceed 0.9.
4. A clamp-type bolted mast arm-to-pole connection may be used instead of the welded ring stiffened box connection shown as long as the connection meets all of the design requirements.
5. Design base plate with 8 anchor bolt holes. Provide 2 inch x 60 inch anchor bolts.
6. The mast arm attachment height (H1) shown is based on the following design assumptions:
   a. Nominal vertical rise in mast arm is 5 feet as measured from the centerline of the arm base to the centerline of the free end of the arm.
   b. Signal heads attached to the mast arm are rigid mounted and vertically centered on the arm.
   c. The roadway clearance height for design is as shown in the elevation views.
   d. The top of the pole base plate is .75 feet above the ground elevation.
   e. Refer to the Elevation Data chart for elevation differences between the proposed foundation ground level and the high point on the roadway.
   f. Provide horizontal distance from proposed centerline of foundation to edge of travelway. Refer to the Elevation Data chart above for elevation difference between the proposed foundation ground level and the edge of travelway. This information is necessary when arched arms are specified to ensure that the roadway clearance is maintained at the edge of the travelway and to assist in the camber design of the mast arm.
7. The pole manufacturer will determine the total height (H2) of each pole using the greater of the following:
   - Mast arm attachment height (H1) plus 2 feet, or
   - H1 plus ½ of the total height of the mast arm attachment assembly plus 1 foot.
8. If pole location adjustments are required, the contractor must gain approval from the engineer as this may affect the mast arm lengths and arm attachment heights. The contractor may contact the Signal Design Section Structural Engineer for assistance at (919) 773-2800.
9. The contractor is responsible for verifying that the mast arm length shown will allow proper positioning of the signal heads over the roadway.
10. The contractor is responsible for providing soil penetration testing data (SPT) to the pole manufacturer so site specific foundations can be designed.

HNTB
HNTB NORTH CAROLINA, P.C.
343 E. Six Forks Road, Suite 200
Raleigh, North Carolina 27609
NC License No: C-1554

NCDOT Wind Zone 4 (90 mph)

Prepared for: Transportation Mobility and Safety Division, State of North Carolina, Department of Transportation, Signal Design Section
750 N. Greenfield Pkwy, Garner, NC 27529

SR 1922 (Enola Rd)
at
J.I.R.D.C. Southern
Entrance

Division 13 | Burke County | Morganton

PLAN DATE:	October 2011	REVIEWED BY:	A.D. Klinksiek
PREPARED BY:	T.R. Terrell	REVIEWED BY:	N.M. Rodevick

SCALE: 0 N/A N/A

REVISIONS	INIT.	DATE

SEAL: NORTH CAROLINA PROFESSIONAL SEAL 031464 ENGINEER NATASHA M. RODEVICK

SIGNATURE: Natasha M. Rodevick DATE: 12-12-11

SIG. INVENTORY NO. 13-1236

METAL POLE No. 6

PROJECT REFERENCE NO.	SHEET NO.
U-2551	Sig. 79

Design Loading for METAL POLE NO. 6, MAST ARM A

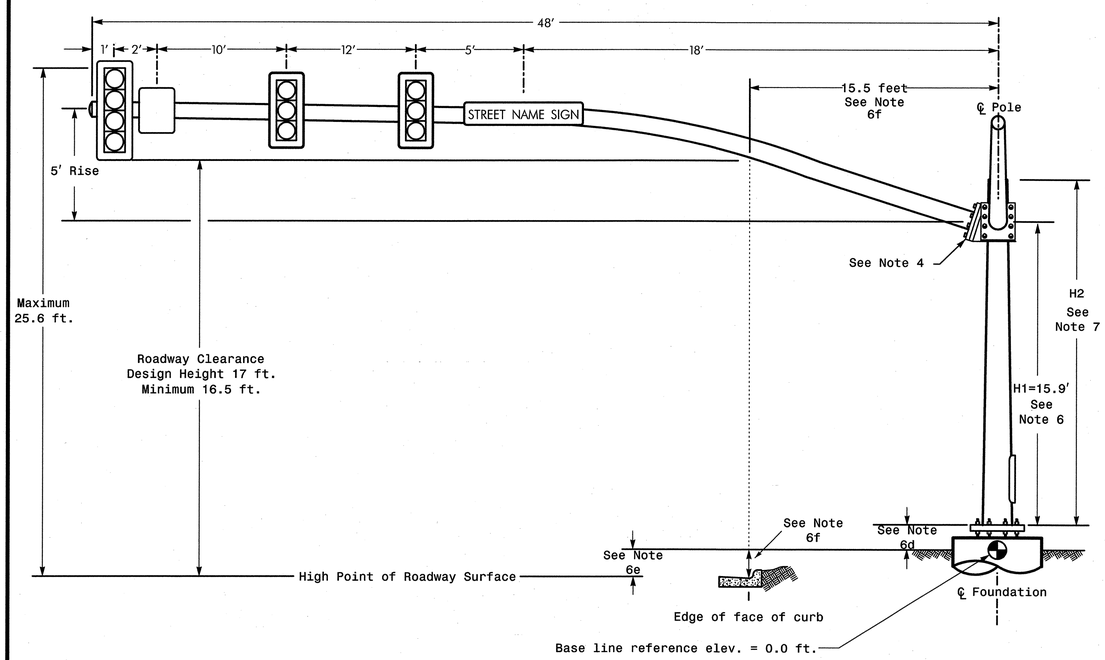

Elevation View @ 0

Design Loading for METAL POLE NO. 6, MAST ARM B

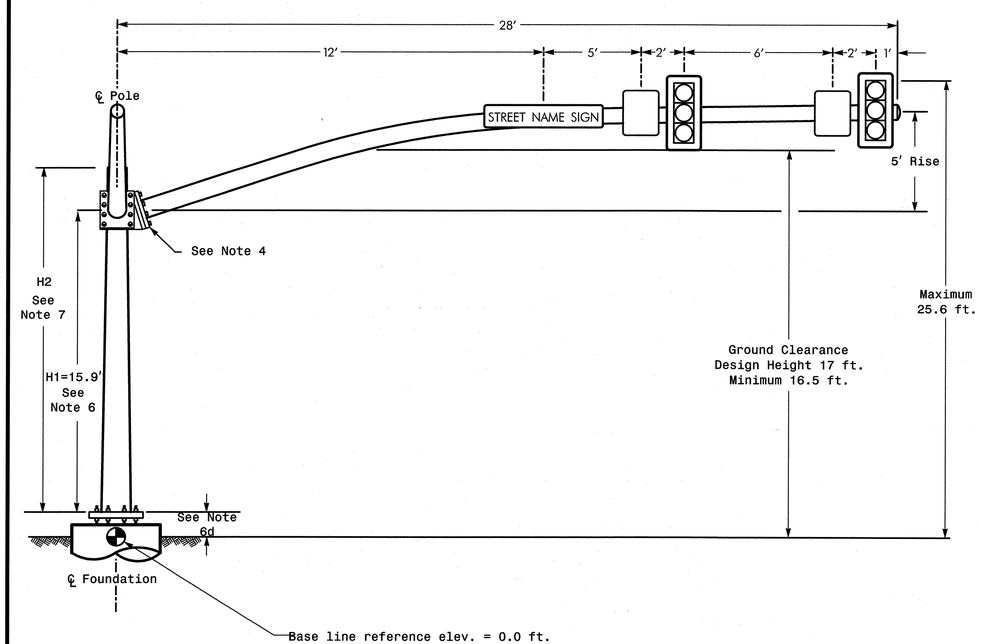

Elevation View @ 270°

SPECIAL NOTE

The contractor is responsible for verifying that the mast arm attachment height (H1) will provide the "Design Height" clearance from the roadway before submitting final shop drawings for approval. Verify elevation data below which was obtained by field measurement or from available project survey data.

Elevation Data for Mast Arm Attachment (H1)

Elevation Differences for:	Arm "A"	Arm "B"
Baseline reference point at ℄ Foundation @ ground level	0.0 ft.	0.0 ft.
Elevation difference at High point of roadway surface	+1.25 ft.	0.0 ft.
Elevation difference at Edge of travelway or face of curb	+0.58 ft.	0.0 ft.

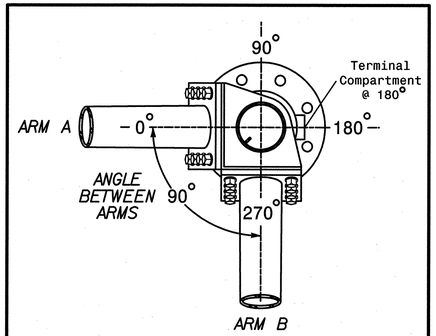

POLE RADIAL ORIENTATION

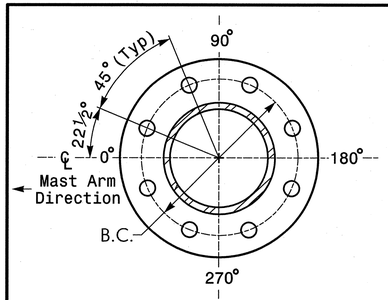

8 BOLT BASE PLATE DETAIL

See Note 5

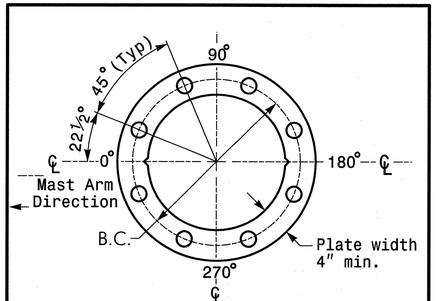

BASE PLATE TEMPLATE & ANCHOR BOLT LOCK PLATE DETAIL

For 8 Bolt Base Plate

MAST ARM LOADING SCHEDULE

LOADING SYMBOL	DESCRIPTION	AREA	SIZE	WEIGHT
	SIGNAL HEAD 12"–4 SECTION–WITH BACKPLATE RIGID MOUNTED	11.5 S.F.	25.5" W X 66.0" L	74 LBS
	SIGNAL HEAD 12"–3 SECTION–WITH BACKPLATE RIGID MOUNTED	9.3 S.F.	25.5" W X 52.5" L	60 LBS
STREET NAME SIGN	STREET NAME SIGN RIGID MOUNTED	12.0 S.F.	18.0" W X 96.0" L	27 LBS
	SIGN RIGID MOUNTED	7.5 S.F.	30.0" W X 36.0" L	14 LBS

NOTES

Design Reference Material

1. Design the traffic signal structure and foundation in accordance with:
   - The 4th Edition 2001 AASHTO "Standard Specifications for Structural Supports for Highway Signs, Luminaires, and Traffic Signals, including all of the latest interim revisions.
   - The 2012 NCDOT "Standard Specifications for Roads and Structures". The latest addenda to these specifications can be found in the traffic signal project special provisions.
   - The 2012 NCDOT Roadway Standard Drawings.
   - The traffic signal project plans and special provisions.

Design Requirements

2. Design the traffic signal structure using the loading conditions shown in the elevation views. These are anticipated worst case "Design loads" and may not represent the actual loads that will be applied at the time of the installation. The contractor should refer to the traffic signal plans for the actual loads that will be applied at the time of the installation.
3. Design all signal supports using stress ratios that do not exceed 0.9.
4. A clamp-type bolted mast arm-to-pole connection may be used instead of the welded ring stiffened box connection shown as long as the connection meets all of the design requirements. This requires staggering the connections. Use elevation data for each arm to determine appropriate connection points.
5. Design base plate with 8 anchor bolt holes. Provide 2 inch x 60 inch anchor bolts.
6. The mast arm attachment height (H1) shown is based on the following design assumptions:
   a. Nominal vertical rise in mast arm is 5 feet as measured from the centerline of the arm base to the centerline of the free end of the arm.
   b. Signal heads attached to the mast arm are rigid mounted and vertically centered on the arm.
   c. The roadway clearance height for design is as shown in the elevation views.
   d. The top of the pole base plate is .75 feet above the ground elevation.
   e. Refer to the Elevation Data chart for elevation differences between the proposed foundation ground level and the high point on the roadway.
   f. Provide horizontal distance from proposed centerline of foundation to edge of travelway. Refer to the Elevation Data chart above for elevation difference between the proposed foundation ground level and the edge of travelway. This information is necessary when arched arms are specified to ensure that the roadway clearance is maintained at the edge of the travelway and to assist in the camber design of the mast arm.
7. The pole manufacturer will determine the total height (H2) of the pole using the greater of the following:
   - Mast arm attachment height (H1) plus 2 feet, or
   - H1 plus ½ of the total height of the mast arm attachment assembly plus 1 foot.
8. If pole location adjustments are required, the contractor must gain approval from the engineer as this may affect the mast arm lengths and arm attachment heights. The contractor may contact the Signal Design Section Structural Engineer for assistance at (919) 773-2800.
9. The contractor is responsible for verifying that the mast arm length shown will allow proper positioning of the signal heads over the roadway.
10. The contractor is responsible for providing soil penetration testing data (SPT) to the pole manufacturer so site specific foundations can be designed.

HNTB
HNTB NORTH CAROLINA, P.C.
343 E. Six Forks Road, Suite 200
Raleigh, North Carolina 27609
NC License No: C-1554

NCDOT Wind Zone 4 (90 mph)

Prepared for: Transportation Mobility and Safety Division, Signal Design Section, 750 N. Greenfield Pkwy, Garner, NC 27529

SR 1922 (Enola Rd)
at
J.I.R.D.C. Southern
Entrance

Division 13 Burke County Morganton

PLAN DATE:	October 2011	REVIEWED BY:	A.D. Klinksiek
PREPARED BY:	T.R. Terrell	REVIEWED BY:	N.W. Rodevick

SCALE 0 N/A N/A

REVISIONS	INIT.	DATE

SEAL: NORTH CAROLINA PROFESSIONAL SEAL 031464 ENGINEER NATASHA M. RODEVICK

SIGNATURE Natasha M. Rodevick DATE 12-12-11

SIG. INVENTORY NO. 13-1236

METAL POLE No. 7

PROJECT REFERENCE NO.	SHEET NO.
U-2551	Sig. 80

Design Loading for METAL POLE NO. 7, MAST ARM A

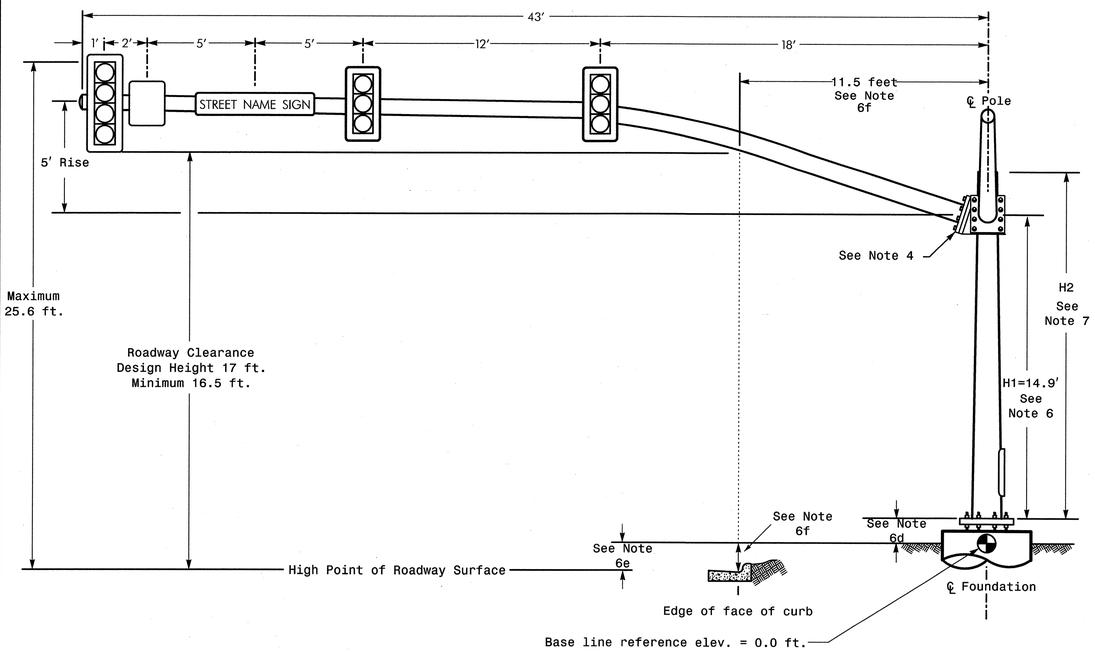

Elevation View @ 0°

Design Loading for METAL POLE NO. 7, MAST ARM B

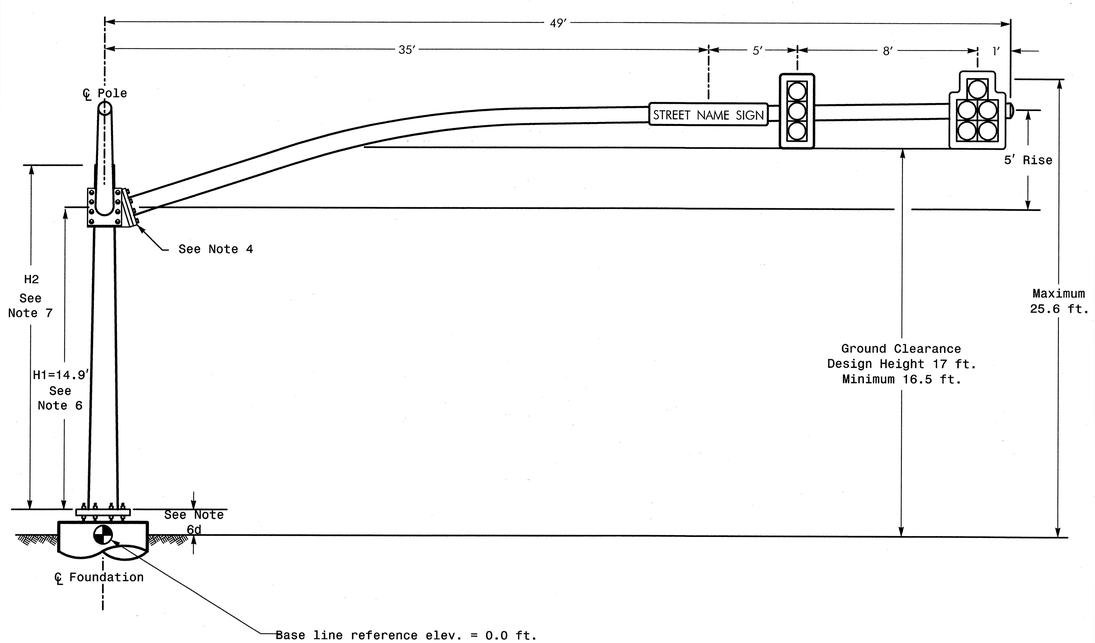

Elevation View @ 270°

SPECIAL NOTE

The contractor is responsible for verifying that the mast arm attachment height (H1) will provide the "Design Height" clearance from the roadway before submitting final shop drawings for approval. Verify elevation data below which was obtained by field measurement or from available project survey data.

Elevation Data for Mast Arm Attachment (H1)

Elevation Differences for:	Arm "A"	Arm "B"
Baseline reference point at ℄ Foundation @ ground level	0.0 ft.	0.0 ft.
Elevation difference at High point of roadway surface	+0.93 ft.	0.0 ft.
Elevation difference at Edge of travelway or face of curb	+0.23 ft.	0.0 ft.

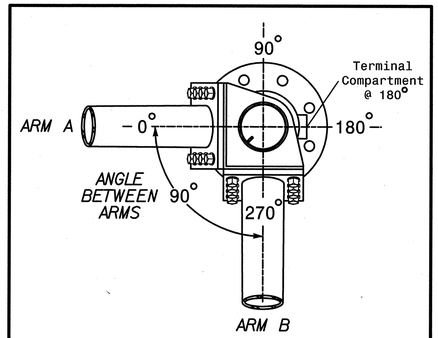

POLE RADIAL ORIENTATION

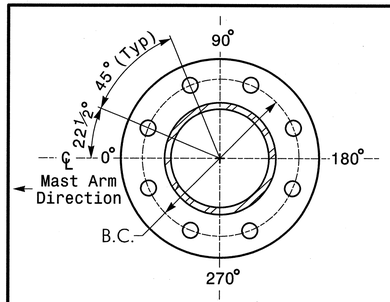

8 BOLT BASE PLATE DETAIL

See Note 5

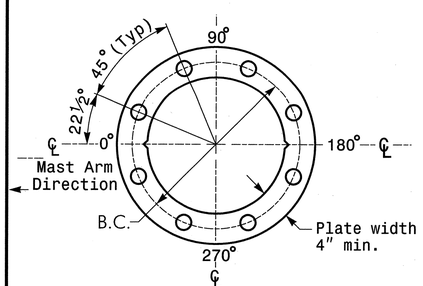

BASE PLATE TEMPLATE & ANCHOR BOLT LOCK PLATE DETAIL

For 8 Bolt Base Plate

MAST ARM LOADING SCHEDULE

LOADING SYMBOL	DESCRIPTION	AREA	SIZE	WEIGHT
	SIGNAL HEAD 12"–5 SECTION–WITH BACKPLATE RIGID MOUNTED	16.3 S.F.	42.0" W X 56.0" L	103 LBS
	SIGNAL HEAD 12"–4 SECTION–WITH BACKPLATE RIGID MOUNTED	11.5 S.F.	25.5" W X 66.0" L	74 LBS
	SIGNAL HEAD 12"–3 SECTION–WITH BACKPLATE RIGID MOUNTED	9.3 S.F.	25.5" W X 52.5" L	60 LBS
STREET NAME SIGN	STREET NAME SIGN RIGID MOUNTED	12.0 S.F.	18.0" W X 96.0" L	27 LBS
	SIGN RIGID MOUNTED	7.5 S.F.	30.0" W X 36.0" L	14 LBS

NOTES

Design Reference Material

1. Design the traffic signal structure and foundation in accordance with:
   - The 4th Edition 2001 AASHTO "Standard Specifications for Structural Supports for Highway Signs, Luminaires, and Traffic Signals, including all of the latest interim revisions.
   - The 2012 NCDOT "Standard Specifications for Roads and Structures". The latest addenda to these specifications can be found in the traffic signal project special provisions.
   - The 2012 NCDOT Roadway Standard Drawings.
   - The traffic signal project plans and special provisions.

Design Requirements

2. Design the traffic signal structure using the loading conditions shown in the elevation views. These are anticipated worst case "Design loads" and may not represent the actual loads that will be applied at the time of the installation. The contractor should refer to the traffic signal plans for the actual loads that will be applied at the time of the installation.
3. Design all signal supports using stress ratios that do not exceed 0.9.
4. A clamp-type bolted mast arm-to-pole connection may be used instead of the welded ring stiffened box connection shown as long as the connection meets all of the design requirements. This requires staggering the connections. Use elevation data for each arm to determine appropriate connection points.
5. Design base plate with 8 anchor bolt holes. Provide 2 inch x 60 inch anchor bolts.
6. The mast arm attachment height (H1) shown is based on the following design assumptions:
   a. Nominal vertical rise in mast arm is 5 feet as measured from the centerline of the arm base to the centerline of the free end of the arm.
   b. Signal heads attached to the mast arm are rigid mounted and vertically centered on the arm.
   c. The roadway clearance height for design is as shown in the elevation views.
   d. The top of the pole base plate is .75 feet above the ground elevation.
   e. Refer to the Elevation Data chart for elevation differences between the proposed foundation ground level and the high point on the roadway.
   f. Provide horizontal distance from proposed centerline of foundation to edge of travelway. Refer to the Elevation Data chart above for elevation difference between the proposed foundation ground level and the edge of travelway. This information is necessary when arched arms are specified to ensure that the roadway clearance is maintained at the edge of the travelway and to assist in the camber design of the mast arm.
7. The pole manufacturer will determine the total height (H2) of the pole using the greater of the following:
   - Mast arm attachment height (H1) plus 2 feet, or
   - H1 plus ½ of the total height of the mast arm attachment assembly plus 1 foot.
8. If pole location adjustments are required, the contractor must gain approval from the engineer as this may affect the mast arm lengths and arm attachment heights. The contractor may contact the Signal Design Section Structural Engineer for assistance at (919) 773-2800.
9. The contractor is responsible for verifying that the mast arm length shown will allow proper positioning of the signal heads over the roadway.
10. The contractor is responsible for providing soil penetration testing data (SPT) to the pole manufacturer so site specific foundations can be designed.

HNTB
HNTB NORTH CAROLINA, P.C.
343 E. Six Forks Road, Suite 200
Raleigh, North Carolina 27609
NC License No: C-1554

NCDOT Wind Zone 4 (90 mph)

Prepared for: Transportation Mobility and Safety Division — Department of Transportation — Signal Design Section
750 N. Greenfield Pkwy, Garner, NC 27529

SR 1922 (Enola Rd)
at
Fiddlers Run Blvd

Division 13 Burke County Morganton

PLAN DATE:	October 2011	REVIEWED BY:	A.D. Klinksiek
PREPARED BY:	T.R. Terrell	REVIEWED BY:	N.M. Rodevick

REVISIONS	INIT.	DATE

SCALE 0 N/A N/A

SEAL
NORTH CAROLINA PROFESSIONAL SEAL 031464 ENGINEER NATASHA M. RODEVICK

Natasha M. Rodevick 12-12-11
SIGNATURE DATE

SIG. INVENTORY NO. 13-1114

PROJECT REFERENCE NO.	SHEET NO.
U-2551	Sig. 81

METAL POLE No. 8

SPECIAL NOTE

The contractor is responsible for verifying that the mast arm attachment height (H1) will provide the "Design Height" clearance from the roadway before submitting final shop drawings for approval. Verify elevation data below which was obtained by field measurement or from available project survey data.

Elevation Data for Mast Arm Attachment (H1)

Elevation Differences for:	Pole 8	
Baseline reference point at ℄ Foundation @ ground level	0.0 ft.	
Elevation difference at High point of roadway surface	+1.11 ft.	
Elevation difference at Edge of travelway or face of curb	+0.44 ft.	

MAST ARM LOADING SCHEDULE

LOADING SYMBOL	DESCRIPTION	AREA	SIZE	WEIGHT
	SIGNAL HEAD 12"–3 SECTION–WITH BACKPLATE RIGID MOUNTED	9.3 S.F.	25.5" W X 52.5" L	60 LBS
STREET NAME SIGN	STREET NAME SIGN RIGID MOUNTED	12.0 S.F.	18.0" W X 96.0" L	27 LBS

Design Loading for METAL POLE NO. 8

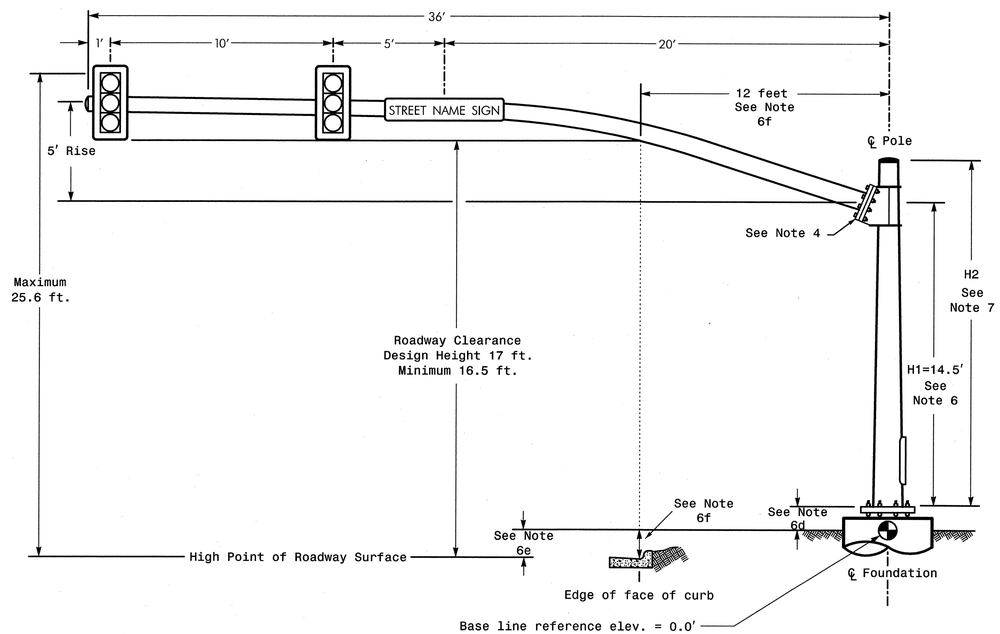

ELEVATION VIEW

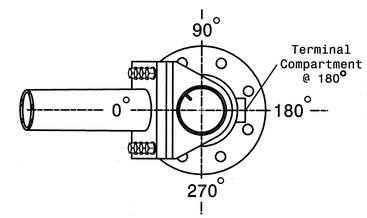

POLE RADIAL ORIENTATION

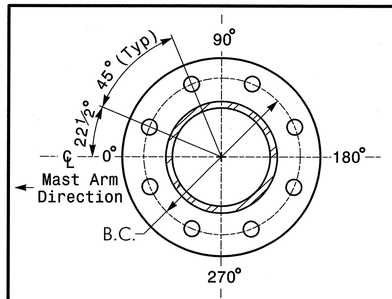

8 BOLT BASE PLATE DETAIL

See Note 5

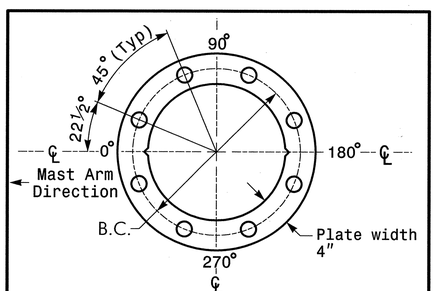

BASE PLATE TEMPLATE & ANCHOR BOLT LOCK PLATE DETAIL

For 8 Bolt Base Plate

NOTES

Design Reference Material

1. Design the traffic signal structure and foundation in accordance with:
   - The 4th Edition 2001 AASHTO "Standard Specifications for Structural Supports for Highway Signs, Luminaires, and Traffic Signals, including all of the latest interim revisions.
   - The 2012 NCDOT "Standard Specifications for Roads and Structures". The latest addenda to these specifications can be found in the traffic signal project special provisions.
   - The 2012 NCDOT Roadway Standard Drawings.
   - The traffic signal project plans and special provisions.

Design Requirements

2. Design the traffic signal structure using the loading conditions shown in the elevation views. These are anticipated worst case "Design loads" and may not represent the actual loads that will be applied at the time of the installation. The contractor should refer to the traffic signal plans for the actual loads that will be applied at the time of the installation.
3. Design all signal supports using stress ratios that do not exceed 0.9.
4. A clamp-type bolted mast arm-to-pole connection may be used instead of the welded ring stiffened box connection shown as long as the connection meets all of the design requirements.
5. Design base plate with 8 anchor bolt holes. Provide 2 inch x 60 inch anchor bolts.
6. The mast arm attachment height (H1) shown is based on the following design assumptions:
   a. Nominal vertical rise in mast arm is 5 feet as measured from the centerline of the arm base to the centerline of the free end of the arm.
   b. Signal heads attached to the mast arm are rigid mounted and vertically centered on the arm.
   c. The roadway clearance height for design is as shown in the elevation views.
   d. The top of the pole base plate is .75 feet above the ground elevation.
   e. Refer to the Elevation Data chart for elevation differences between the proposed foundation ground level and the high point on the roadway.
   f. Provide horizontal distance from proposed centerline of foundation to edge of travelway. Refer to the Elevation Data chart above for elevation difference between the proposed foundation ground level and the edge of travelway. This information is necessary when arched arms are specified to ensure that the roadway clearance is maintained at the edge of the travelway and to assist in the camber design of the mast arm.
7. The pole manufacturer will determine the total height (H2) of each pole using the greater of the following:
   - Mast arm attachment height (H1) plus 2 feet, or
   - H1 plus ½ of the total height of the mast arm attachment assembly plus 1 foot.
8. If pole location adjustments are required, the contractor must gain approval from the engineer as this may affect the mast arm lengths and arm attachment heights. The contractor may contact the Signal Design Section Structural Engineer for assistance at (919) 773-2800.
9. The contractor is responsible for verifying that the mast arm length shown will allow proper positioning of the signal heads over the roadway.
10. The contractor is responsible for providing soil penetration testing data (SPT) to the pole manufacturer so site specific foundations can be designed.

HNTB
HNTB NORTH CAROLINA, P.C.
343 E. Six Forks Road, Suite 200
Raleigh, North Carolina 27609
NC License No: C-1554

NCDOT Wind Zone 4 (90 mph)

Prepared for: State of North Carolina Department of Transportation — Transportation Mobility and Safety Division, Signal Design Section
750 N. Greenfield Pkwy, Garner, NC 27529

SR 1922 (Enola Rd)
at
Fiddlers Run Blvd

Division 13 Burke County Morganton

PLAN DATE:	October 2011	REVIEWED BY:	A.D. Klinksiek
PREPARED BY:	T.R. Terrell	REVIEWED BY:	N.M. Rodevick

REVISIONS	INIT.	DATE

SCALE: 0 N/A — N/A

SEAL: NORTH CAROLINA PROFESSIONAL ENGINEER SEAL 031464 NATASHA M. RODEVICK

SIGNATURE: Natasha M. Rodevick DATE: 12-13-11

SIG. INVENTORY NO. 13-1114

PROJECT REFERENCE NO.	SHEET NO.
U-2551	Sig. 82

METAL POLE No. 9 and 10

Design Loading for METAL POLE NO. 9

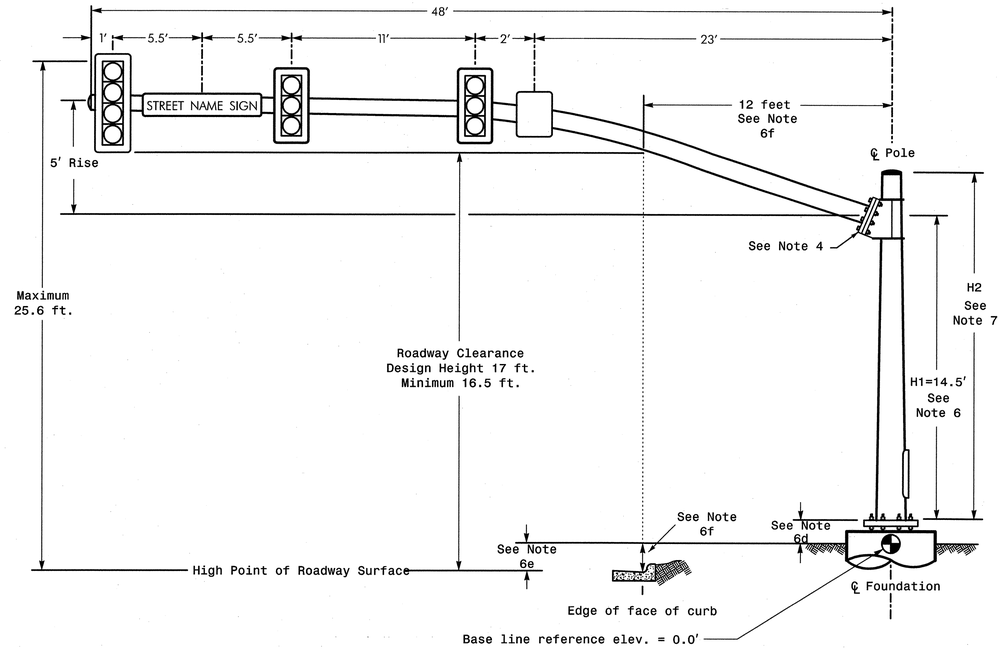

ELEVATION VIEW

Design Loading for METAL POLE NO. 10

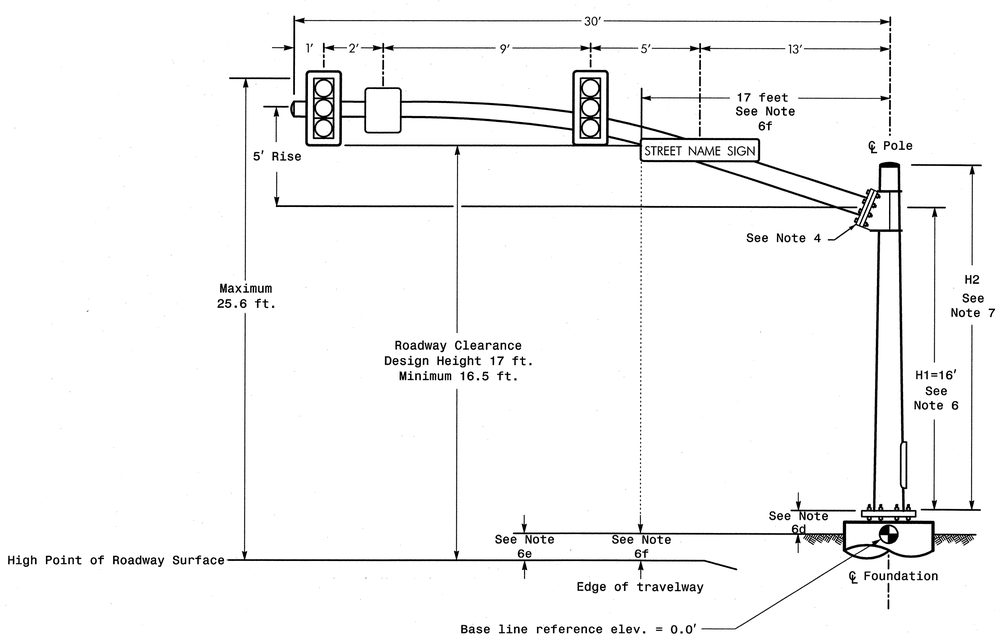

ELEVATION VIEW

SPECIAL NOTE

The contractor is responsible for verifying that the mast arm attachment height (H1) will provide the "Design Height" clearance from the roadway before submitting final shop drawings for approval. Verify elevation data below which was obtained by field measurement or from available project survey data.

Elevation Data for Mast Arm Attachment (H1)

Elevation Differences for:	Pole 9	Pole 10
Baseline reference point at ℄ Foundation @ ground level	0.0 ft.	0.0 ft.
Elevation difference at High point of roadway surface	+0.48 ft.	+2.59 ft.
Elevation difference at Edge of travelway or face of curb	-0.07 ft.	+2.15 ft.

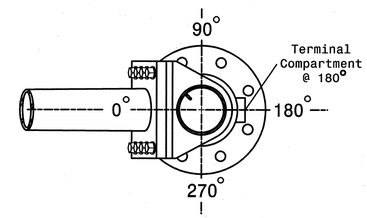

POLE RADIAL ORIENTATION

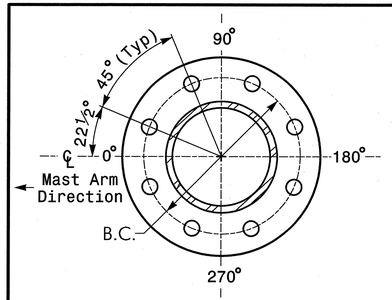

8 BOLT BASE PLATE DETAIL

See Note 5

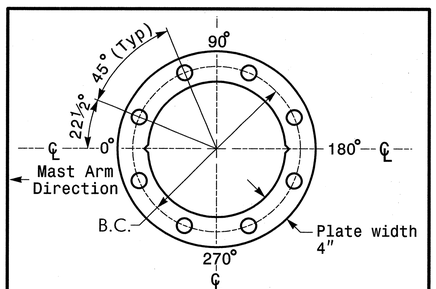

BASE PLATE TEMPLATE & ANCHOR BOLT LOCK PLATE DETAIL

For 8 Bolt Base Plate

MAST ARM LOADING SCHEDULE

LOADING SYMBOL	DESCRIPTION	AREA	SIZE	WEIGHT
	SIGNAL HEAD 12"–4 SECTION–WITH BACKPLATE RIGID MOUNTED	11.5 S.F.	25.5" W X 66.0" L	74 LBS
	SIGNAL HEAD 12"–3 SECTION–WITH BACKPLATE RIGID MOUNTED	9.3 S.F.	25.5" W X 52.5" L	60 LBS
STREET NAME SIGN	STREET NAME SIGN RIGID MOUNTED	12.0 S.F.	18.0" W X 96.0" L	27 LBS
	SIGN RIGID MOUNTED	7.5 S.F.	30.0" W X 36.0" L	14 LBS

NOTES

Design Reference Material

1. Design the traffic signal structure and foundation in accordance with:
   - The 4th Edition 2001 AASHTO "Standard Specifications for Structural Supports for Highway Signs, Luminaires, and Traffic Signals, including all of the latest interim revisions.
   - The 2012 NCDOT "Standard Specifications for Roads and Structures". The latest addenda to these specifications can be found in the traffic signal project special provisions.
   - The 2012 NCDOT Roadway Standard Drawings.
   - The traffic signal project plans and special provisions.

Design Requirements

2. Design the traffic signal structure using the loading conditions shown in the elevation views. These are anticipated worst case "Design loads" and may not represent the actual loads that will be applied at the time of the installation. The contractor should refer to the traffic signal plans for the actual loads that will be applied at the time of the installation.
3. Design all signal supports using stress ratios that do not exceed 0.9.
4. A clamp-type bolted mast arm-to-pole connection may be used instead of the welded ring stiffened box connection shown as long as the connection meets all of the design requirements.
5. Design base plate with 8 anchor bolt holes. Provide 2 inch x 60 inch anchor bolts.
6. The mast arm attachment height (H1) shown is based on the following design assumptions:
   a. Nominal vertical rise in mast arm is 5 feet as measured from the centerline of the arm base to the centerline of the free end of the arm.
   b. Signal heads attached to the mast arm are rigid mounted and vertically centered on the arm.
   c. The roadway clearance height for design is as shown in the elevation views.
   d. The top of the pole base plate is .75 feet above the ground elevation.
   e. Refer to the Elevation Data chart for elevation differences between the proposed foundation ground level and the high point on the roadway.
   f. Provide horizontal distance from proposed centerline of foundation to edge of travelway. Refer to the Elevation Data chart above for elevation difference between the proposed foundation ground level and the edge of travelway. This information is necessary when arched arms are specified to ensure that the roadway clearance is maintained at the edge of the travelway and to assist in the camber design of the mast arm.
7. The pole manufacturer will determine the total height (H2) of each pole using the greater of the following:
   - Mast arm attachment height (H1) plus 2 feet, or
   - H1 plus ½ of the total height of the mast arm attachment assembly plus 1 foot.
8. If pole location adjustments are required, the contractor must gain approval from the engineer as this may affect the mast arm lengths and arm attachment heights. The contractor may contact the Signal Design Section Structural Engineer for assistance at (919) 773-2800.
9. The contractor is responsible for verifying that the mast arm length shown will allow proper positioning of the signal heads over the roadway.
10. The contractor is responsible for providing soil penetration testing data (SPT) to the pole manufacturer so site specific foundations can be designed.

HNTB
HNTB NORTH CAROLINA, P.C.
343 E. Six Forks Road, Suite 200
Raleigh, North Carolina 27609
NC License No: C-1554

NCDOT Wind Zone 4 (90 mph)

Prepared for: Transportation Mobility and Safety Division — Traffic Engineering Branch — Signal Design Section — 750 N. Greenfield Pkwy, Garner, NC 27529

SR 1922 (Enola Rd)
at
I-40 Eastbound Ramp

Division 13 Burke County Morganton

PLAN DATE:	October 2011	REVIEWED BY:	A.D. Klinksiek
PREPARED BY:	T.R. Terrell	REVIEWED BY:	N.M. Rodevick

REVISIONS	INIT.	DATE

SCALE 0 N/A N/A

SEAL: NORTH CAROLINA PROFESSIONAL SEAL 031464 ENGINEER NATASHA M. RODEVICK

SIGNATURE DATE 12-12-11

SIG. INVENTORY NO. 13-0687

METAL POLE No. 11

PROJECT REFERENCE NO.	SHEET NO.
U-2551	Sig. 83

SPECIAL NOTE

The contractor is responsible for verifying that the mast arm attachment height (H1) will provide the "Design Height" clearance from the roadway before submitting final shop drawings for approval. Verify elevation data below which was obtained by field measurement or from available project survey data.

Elevation Data for Mast Arm Attachment (H1)

Elevation Differences for:	Pole 11	
Baseline reference point at ℄ Foundation @ ground level	0.0 ft.	
Elevation difference at High point of roadway surface	+0.68 ft.	
Elevation difference at Edge of travelway or face of curb	+0.68 ft.	

MAST ARM LOADING SCHEDULE

LOADING SYMBOL	DESCRIPTION	AREA	SIZE	WEIGHT
	SIGNAL HEAD 12"–3 SECTION–WITH BACKPLATE RIGID MOUNTED	9.3 S.F.	25.5" W X 52.5" L	60 LBS
STREET NAME SIGN	STREET NAME SIGN RIGID MOUNTED	12.0 S.F.	18.0" W X 96.0" L	27 LBS
	SIGN RIGID MOUNTED	7.5 S.F.	30.0" W X 36.0" L	14 LBS

Design Loading for METAL POLE NO. 11

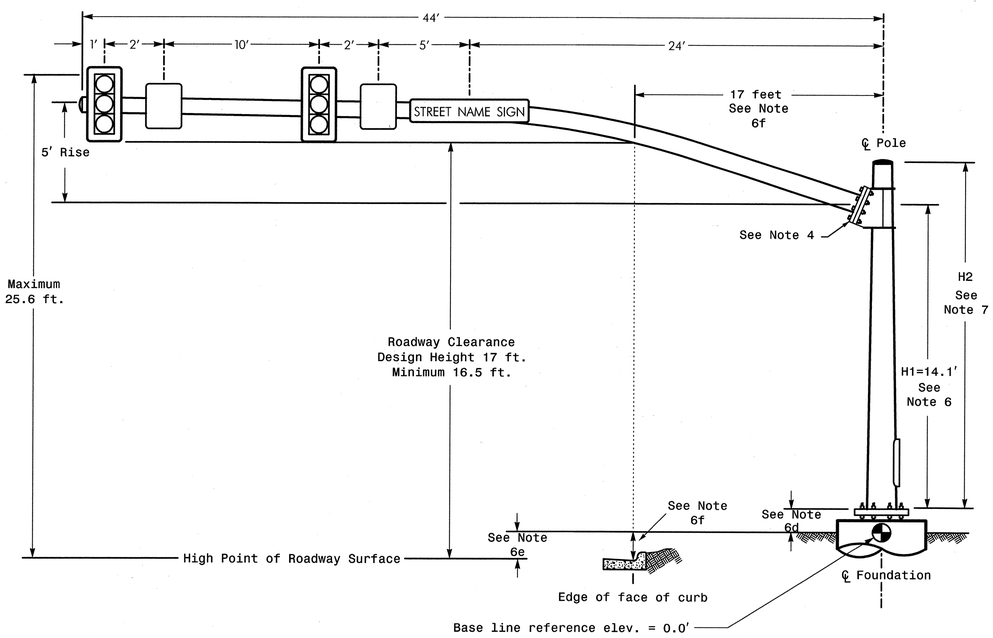

ELEVATION VIEW

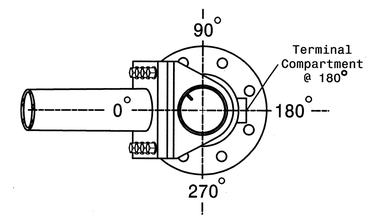

POLE RADIAL ORIENTATION

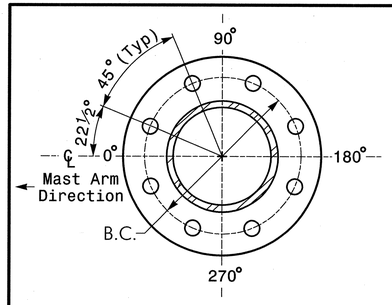

8 BOLT BASE PLATE DETAIL

See Note 5

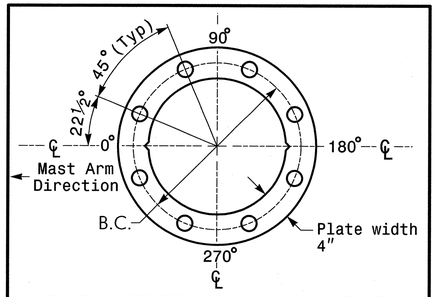

BASE PLATE TEMPLATE & ANCHOR BOLT LOCK PLATE DETAIL

For 8 Bolt Base Plate

NOTES

Design Reference Material

1. Design the traffic signal structure and foundation in accordance with:
   - The 4th Edition 2001 AASHTO "Standard Specifications for Structural Supports for Highway Signs, Luminaires, and Traffic Signals, including all of the latest interim revisions.
   - The 2012 NCDOT "Standard Specifications for Roads and Structures". The latest addenda to these specifications can be found in the traffic signal project special provisions.
   - The 2012 NCDOT Roadway Standard Drawings.
   - The traffic signal project plans and special provisions.

Design Requirements

2. Design the traffic signal structure using the loading conditions shown in the elevation views. These are anticipated worst case "Design loads" and may not represent the actual loads that will be applied at the time of the installation. The contractor should refer to the traffic signal plans for the actual loads that will be applied at the time of the installation.
3. Design all signal supports using stress ratios that do not exceed 0.9.
4. A clamp-type bolted mast arm-to-pole connection may be used instead of the welded ring stiffened box connection shown as long as the connection meets all of the design requirements.
5. Design base plate with 8 anchor bolt holes. Provide 2 inch x 60 inch anchor bolts.
6. The mast arm attachment height (H1) shown is based on the following design assumptions:
   a. Nominal vertical rise in mast arm is 5 feet as measured from the centerline of the arm base to the centerline of the free end of the arm.
   b. Signal heads attached to the mast arm are rigid mounted and vertically centered on the arm.
   c. The roadway clearance height for design is as shown in the elevation views.
   d. The top of the pole base plate is .75 feet above the ground elevation.
   e. Refer to the Elevation Data chart for elevation differences between the proposed foundation ground level and the high point on the roadway.
   f. Provide horizontal distance from proposed centerline of foundation to edge of travelway. Refer to the Elevation Data chart above for elevation difference between the proposed foundation ground level and the edge of travelway. This information is necessary when arched arms are specified to ensure that the roadway clearance is maintained at the edge of the travelway and to assist in the camber design of the mast arm.
7. The pole manufacturer will determine the total height (H2) of each pole using the greater of the following:
   - Mast arm attachment height (H1) plus 2 feet, or
   - H1 plus ½ of the total height of the mast arm attachment assembly plus 1 foot.
8. If pole location adjustments are required, the contractor must gain approval from the engineer as this may affect the mast arm lengths and arm attachment heights. The contractor may contact the Signal Design Section Structural Engineer for assistance at (919) 773-2800.
9. The contractor is responsible for verifying that the mast arm length shown will allow proper positioning of the signal heads over the roadway.
10. The contractor is responsible for providing soil penetration testing data (SPT) to the pole manufacturer so site specific foundations can be designed.

HNTB
HNTB NORTH CAROLINA, P.C.
343 E. Six Forks Road, Suite 200
Raleigh, North Carolina 27609
NC License No: C-1554

NCDOT Wind Zone 4 (90 mph)

Prepared for: Transportation Mobility and Safety Division, Signal Design Section, NORTH CAROLINA DEPARTMENT OF TRANSPORTATION
750 N. Greenfield Pkwy, Garner, NC 27529

SCALE: 0 N/A — N/A

SR 1922 (Enola Rd)
at
I-40 Eastbound Ramp

Division 13 Burke County Morganton

PLAN DATE:	October 2011	REVIEWED BY:	A.D. Klinksiek
PREPARED BY:	T.R. Terrell	REVIEWED BY:	N.M. Rodevick

REVISIONS	INIT.	DATE

SEAL
NORTH CAROLINA PROFESSIONAL SEAL 031464 ENGINEER NATASHA M. RODEVICK

Natasha M. Rodevick 12-12-11
SIGNATURE DATE

SIG. INVENTORY NO. 13-0687

METAL POLE No. 12 and 13

PROJECT REFERENCE NO.	SHEET NO.
U-2551	Sig. 84

Design Loading for METAL POLE NO. 12

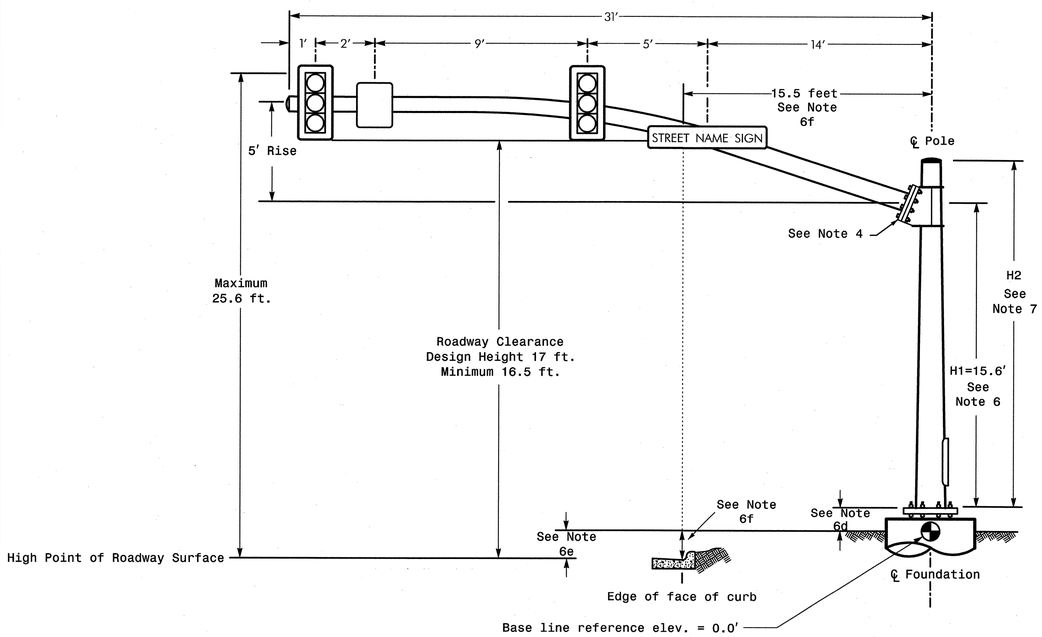

ELEVATION VIEW

Design Loading for METAL POLE NO. 13

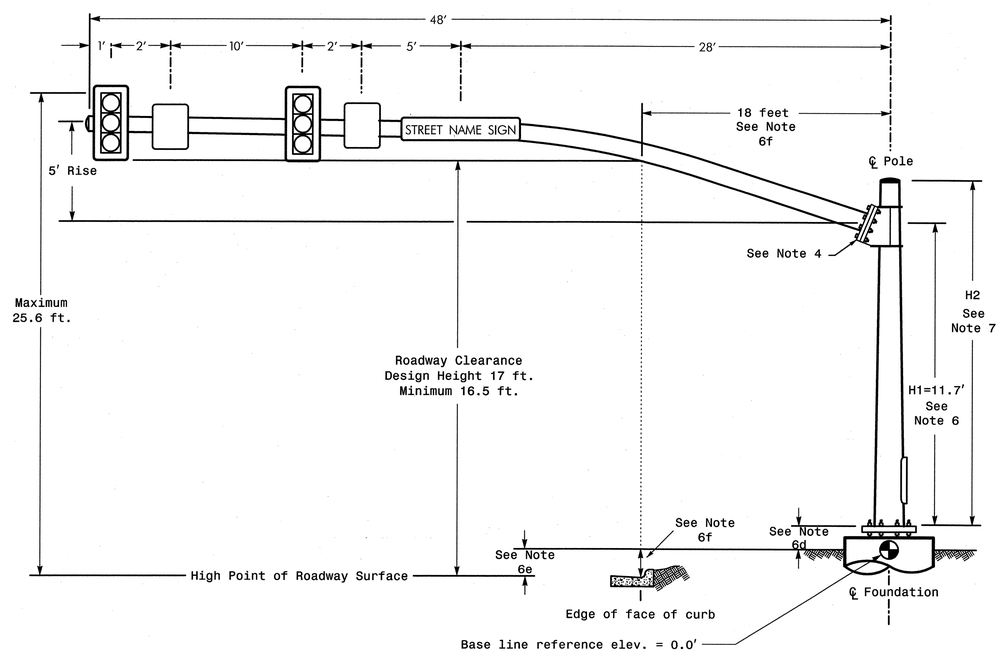

ELEVATION VIEW

SPECIAL NOTE

The contractor is responsible for verifying that the mast arm attachment height (H1) will provide the "Design Height" clearance from the roadway before submitting final shop drawings for approval. Verify elevation data below which was obtained by field measurement or from available project survey data.

Elevation Data for Mast Arm Attachment (H1)

Elevation Differences for:	Pole 12	Pole 13
Baseline reference point at ℄ Foundation @ ground level	0.0 ft.	0.0 ft.
Elevation difference at High point of roadway surface	+2.18 ft.	-1.78 ft.
Elevation difference at Edge of travelway or face of curb	+1.48 ft.	-2.52 ft.

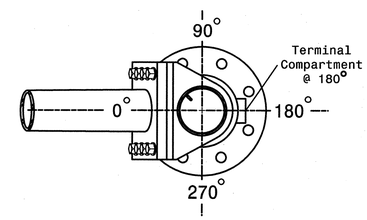

POLE RADIAL ORIENTATION

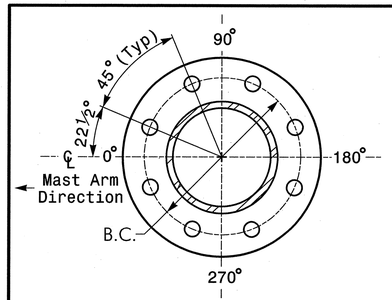

8 BOLT BASE PLATE DETAIL

See Note 5

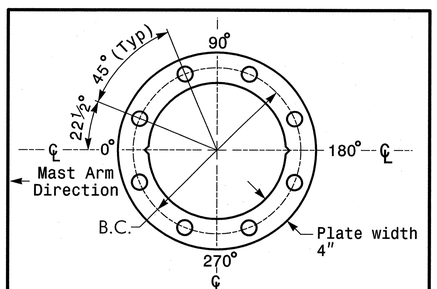

BASE PLATE TEMPLATE & ANCHOR BOLT LOCK PLATE DETAIL

For 8 Bolt Base Plate

MAST ARM LOADING SCHEDULE

LOADING SYMBOL	DESCRIPTION	AREA	SIZE	WEIGHT
	SIGNAL HEAD 12"-3 SECTION-WITH BACKPLATE RIGID MOUNTED	9.3 S.F.	25.5" W X 52.5" L	60 LBS
	SIGN RIGID MOUNTED	5.0 S.F.	24.0" W X 30.0" L	11 LBS
STREET NAME SIGN	STREET NAME SIGN RIGID MOUNTED	12.0 S.F.	18.0" W X 96.0" L	27 LBS

NOTES

Design Reference Material

1. Design the traffic signal structure and foundation in accordance with:
   - The 4th Edition 2001 AASHTO "Standard Specifications for Structural Supports for Highway Signs, Luminaires, and Traffic Signals, including all of the latest interim revisions.
   - The 2012 NCDOT "Standard Specifications for Roads and Structures". The latest addenda to these specifications can be found in the traffic signal project special provisions.
   - The 2012 NCDOT Roadway Standard Drawings.
   - The traffic signal project plans and special provisions.

Design Requirements

2. Design the traffic signal structure using the loading conditions shown in the elevation views. These are anticipated worst case "Design loads" and may not represent the actual loads that will be applied at the time of the installation. The contractor should refer to the traffic signal plans for the actual loads that will be applied at the time of the installation.
3. Design all signal supports using stress ratios that do not exceed 0.9.
4. A clamp-type bolted mast arm-to-pole connection may be used instead of the welded ring stiffened box connection shown as long as the connection meets all of the design requirements.
5. Design base plate with 8 anchor bolt holes. Provide 2 inch x 60 inch anchor bolts.
6. The mast arm attachment height (H1) shown is based on the following design assumptions:
   a. Nominal vertical rise in mast arm is 5 feet as measured from the centerline of the arm base to the centerline of the free end of the arm.
   b. Signal heads attached to the mast arm are rigid mounted and vertically centered on the arm.
   c. The roadway clearance height for design is as shown in the elevation views.
   d. The top of the pole base plate is .75 feet above the ground elevation.
   e. Refer to the Elevation Data chart for elevation differences between the proposed foundation ground level and the high point on the roadway.
   f. Provide horizontal distance from proposed centerline of foundation to edge of travelway. Refer to the Elevation Data chart above for elevation difference between the proposed foundation ground level and the edge of travelway. This information is necessary when arched arms are specified to ensure that the roadway clearance is maintained at the edge of the travelway and to assist in the camber design of the mast arm.
7. The pole manufacturer will determine the total height (H2) of each pole using the greater of the following:
   - Mast arm attachment height (H1) plus 2 feet, or
   - H1 plus ½ of the total height of the mast arm attachment assembly plus 1 foot.
8. If pole location adjustments are required, the contractor must gain approval from the engineer as this may affect the mast arm lengths and arm attachment heights. The contractor may contact the Signal Design Section Structural Engineer for assistance at (919) 773-2800.
9. The contractor is responsible for verifying that the mast arm length shown will allow proper positioning of the signal heads over the roadway.
10. The contractor is responsible for providing soil penetration testing data (SPT) to the pole manufacturer so site specific foundations can be designed.

HNTB
HNTB NORTH CAROLINA, P.C.
343 E. Six Forks Road, Suite 200
Raleigh, North Carolina 27609
NC License No: C-1554

NCDOT Wind Zone 4 (90 mph)

Prepared for:
Transportation Mobility and Safety Division
Signal Design Section
750 N. Greenfield Pkwy, Garner, NC 27529

SR 1922 (Enola Rd)
at
I-40 Westbound Ramp

Division 13 Burke County Morganton

PLAN DATE:	October 2011	REVIEWED BY:	A.D. Klinksiek
PREPARED BY:	T.R. Terrell	REVIEWED BY:	N.M. Rodevick

SCALE 0 N/A N/A

REVISIONS	INIT.	DATE

SEAL
NORTH CAROLINA PROFESSIONAL SEAL 031464 ENGINEER NATASHA M. RODEVICK

Natasha M. Rodevick 12-12-11
SIGNATURE DATE

SIG. INVENTORY NO. 13-0592

METAL POLE No. 14

PROJECT REFERENCE NO.	SHEET NO.
U-2551	Sig. 85

SPECIAL NOTE

The contractor is responsible for verifying that the mast arm attachment height (H1) will provide the "Design Height" clearance from the roadway before submitting final shop drawings for approval. Verify elevation data below which was obtained by field measurement or from available project survey data.

Elevation Data for Mast Arm Attachment (H1)

Elevation Differences for:	Pole 14	
Baseline reference point at ℄ Foundation @ ground level	0.0 ft.	
Elevation difference at High point of roadway surface	-1.33 ft.	
Elevation difference at Edge of travelway or face of curb	-1.87 ft.	

MAST ARM LOADING SCHEDULE

LOADING SYMBOL	DESCRIPTION	AREA	SIZE	WEIGHT
	SIGNAL HEAD 12"–4 SECTION (VERTICAL)–WITH BACKPLATE RIGID MOUNTED	11.5 S.F.	25.5" W X 66.0" L	74 LBS
	SIGNAL HEAD 12"–3 SECTION–WITH BACKPLATE RIGID MOUNTED	9.3 S.F.	25.5" W X 52.5" L	60 LBS
STREET NAME SIGN	STREET NAME SIGN RIGID MOUNTED	12.0 S.F.	18.0" W X 96.0" L	27 LBS
	SIGN RIGID MOUNTED	7.5 S.F.	30.0" W X 36.0" L	14 LBS

Design Loading for METAL POLE NO. 14

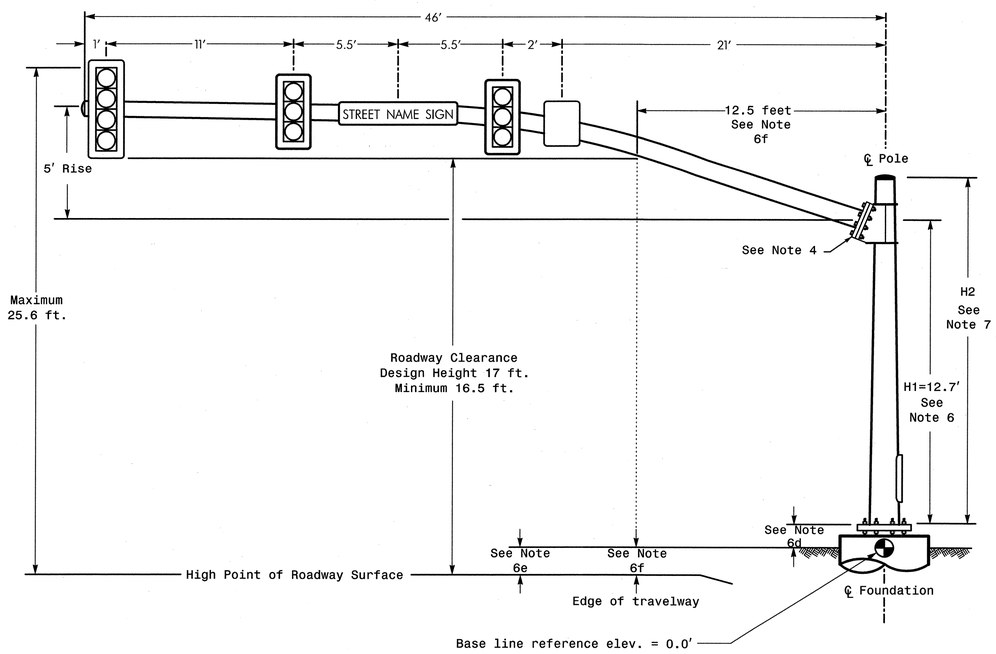

ELEVATION VIEW

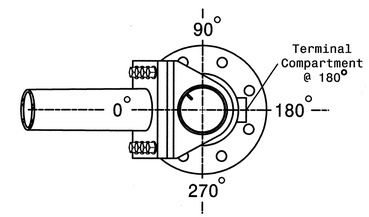

POLE RADIAL ORIENTATION

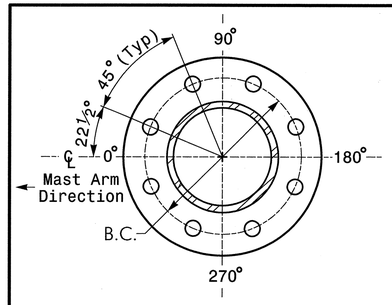

8 BOLT BASE PLATE DETAIL

See Note 5

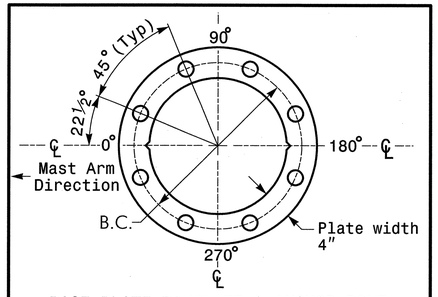

BASE PLATE TEMPLATE & ANCHOR BOLT LOCK PLATE DETAIL

For 8 Bolt Base Plate

NOTES

Design Reference Material

1. Design the traffic signal structure and foundation in accordance with:
   - The 4th Edition 2001 AASHTO "Standard Specifications for Structural Supports for Highway Signs, Luminaires, and Traffic Signals, including all of the latest interim revisions.
   - The 2012 NCDOT "Standard Specifications for Roads and Structures". The latest addenda to these specifications can be found in the traffic signal project special provisions.
   - The 2012 NCDOT Roadway Standard Drawings.
   - The traffic signal project plans and special provisions.

Design Requirements

2. Design the traffic signal structure using the loading conditions shown in the elevation views. These are anticipated worst case "Design loads" and may not represent the actual loads that will be applied at the time of the installation. The contractor should refer to the traffic signal plans for the actual loads that will be applied at the time of the installation.
3. Design all signal supports using stress ratios that do not exceed 0.9.
4. A clamp-type bolted mast arm-to-pole connection may be used instead of the welded ring stiffened box connection shown as long as the connection meets all of the design requirements.
5. Design base plate with 8 anchor bolt holes. Provide 2 inch x 60 inch anchor bolts.
6. The mast arm attachment height (H1) shown is based on the following design assumptions:
   a. Nominal vertical rise in mast arm is 5 feet as measured from the centerline of the arm base to the centerline of the free end of the arm.
   b. Signal heads attached to the mast arm are rigid mounted and vertically centered on the arm.
   c. The roadway clearance height for design is as shown in the elevation views.
   d. The top of the pole base plate is .75 feet above the ground elevation.
   e. Refer to the Elevation Data chart for elevation differences between the proposed foundation ground level and the high point on the roadway.
   f. Provide horizontal distance from proposed centerline of foundation to edge of travelway. Refer to the Elevation Data chart above for elevation difference between the proposed foundation ground level and the edge of travelway. This information is necessary when arched arms are specified to ensure that the roadway clearance is maintained at the edge of the travelway and to assist in the camber design of the mast arm.
7. The pole manufacturer will determine the total height (H2) of each pole using the greater of the following:
   - Mast arm attachment height (H1) plus 2 feet, or
   - H1 plus ½ of the total height of the mast arm attachment assembly plus 1 foot.
8. If pole location adjustments are required, the contractor must gain approval from the engineer as this may affect the mast arm lengths and arm attachment heights. The contractor may contact the Signal Design Section Structural Engineer for assistance at (919) 773-2800.
9. The contractor is responsible for verifying that the mast arm length shown will allow proper positioning of the signal heads over the roadway.
10. The contractor is responsible for providing soil penetration testing data (SPT) to the pole manufacturer so site specific foundations can be designed.

HNTB
HNTB NORTH CAROLINA, P.C.
343 E. Six Forks Road, Suite 200
Raleigh, North Carolina 27609
NC License No: C-1554

NCDOT Wind Zone 4 (90 mph)

Prepared for:
Transportation Mobility and Safety Division
STATE OF NORTH CAROLINA
DEPARTMENT OF TRANSPORTATION
Signal Design Section
750 N. Greenfield Pkwy, Garner, NC 27529

SCALE
0 N/A
N/A

SR 1922 (Enola Rd)
at
I-40 Westbound Ramp

Division 13 Burke County Morganton

PLAN DATE:	October 2011	REVIEWED BY:	A.D. Klinksiek
PREPARED BY:	T.R. Terrell	REVIEWED BY:	N.M. Rodevick

REVISIONS	INIT.	DATE

SEAL
NORTH CAROLINA PROFESSIONAL SEAL 031464 ENGINEER NATASHA M. RODEVICK

Natasha M. Rodevick 12-12-11
SIGNATURE DATE

SIG. INVENTORY NO. 13-0592

METAL POLE No. 15 and 16

PROJECT REFERENCE NO.	SHEET NO.
U-2551	Sig. 86

Design Loading for METAL POLE NO. 15

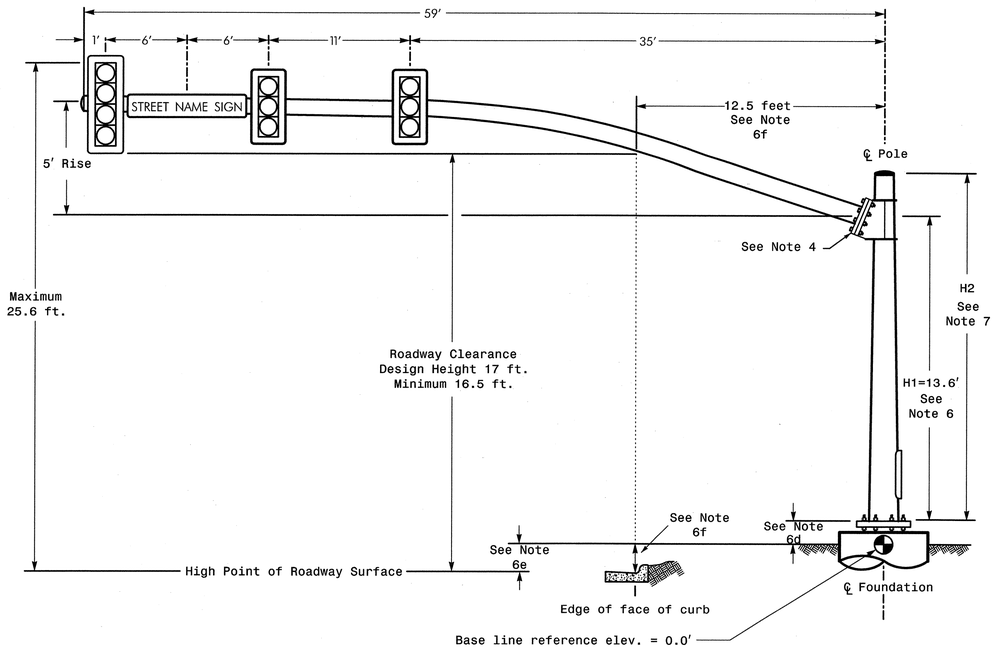

ELEVATION VIEW

Design Loading for METAL POLE NO. 16

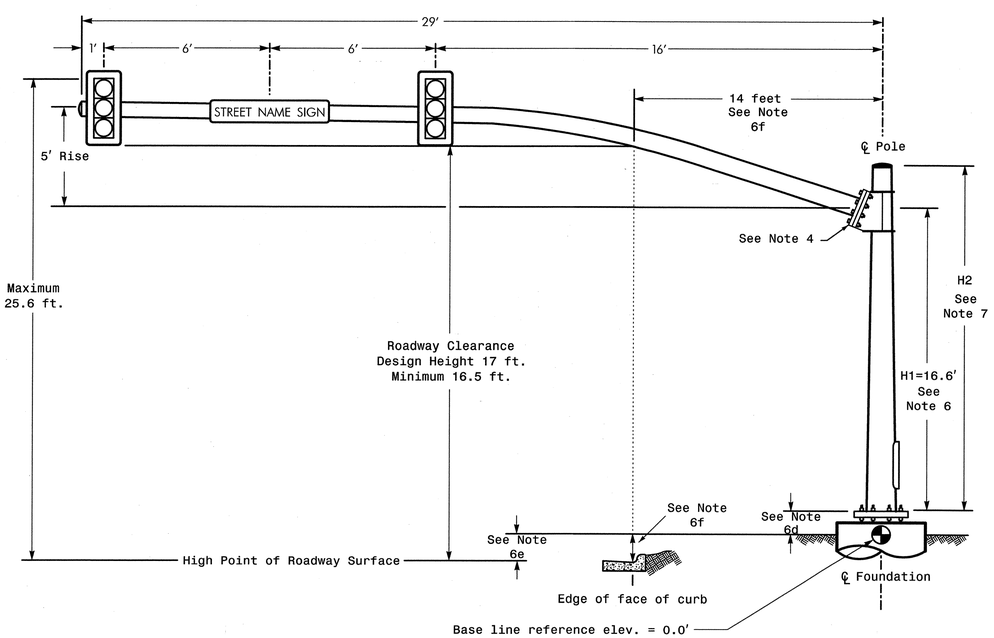

ELEVATION VIEW

SPECIAL NOTE

The contractor is responsible for verifying that the mast arm attachment height (H1) will provide the "Design Height" clearance from the roadway before submitting final shop drawings for approval. Verify elevation data below which was obtained by field measurement or from available project survey data.

Elevation Data for Mast Arm Attachment (H1)

Elevation Differences for:	Pole 15	Pole 16
Baseline reference point at ℄ Foundation @ ground level	0.0 ft.	0.0 ft.
Elevation difference at High point of roadway surface	-0.39 ft.	+3.21 ft.
Elevation difference at Edge of travelway or face of curb	-0.45 ft.	+2.23 ft.

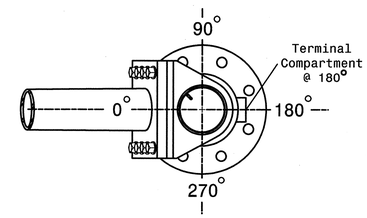

POLE RADIAL ORIENTATION

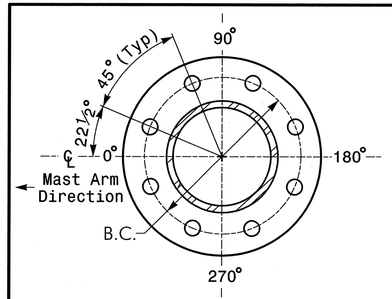

8 BOLT BASE PLATE DETAIL

See Note 5

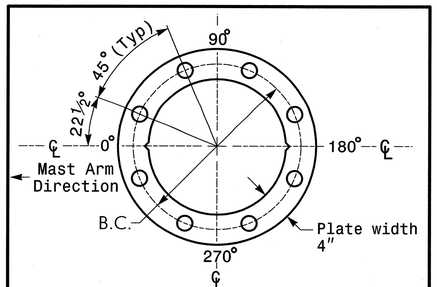

BASE PLATE TEMPLATE & ANCHOR BOLT LOCK PLATE DETAIL

For 8 Bolt Base Plate

MAST ARM LOADING SCHEDULE

LOADING SYMBOL	DESCRIPTION	AREA	SIZE	WEIGHT
	SIGNAL HEAD 12"–4 SECTION–WITH BACKPLATE RIGID MOUNTED	11.5 S.F.	25.5" W X 66.0" L	74 LBS
	SIGNAL HEAD 12"–3 SECTION–WITH BACKPLATE RIGID MOUNTED	9.3 S.F.	25.5" W X 52.5" L	60 LBS
STREET NAME SIGN	STREET NAME SIGN RIGID MOUNTED	12.0 S.F.	18.0" W X 96.0" L	27 LBS

NOTES

Design Reference Material

1. Design the traffic signal structure and foundation in accordance with:
   - The 4th Edition 2001 AASHTO "Standard Specifications for Structural Supports for Highway Signs, Luminaires, and Traffic Signals, including all of the latest interim revisions.
   - The 2012 NCDOT "Standard Specifications for Roads and Structures". The latest addenda to these specifications can be found in the traffic signal project special provisions.
   - The 2012 NCDOT Roadway Standard Drawings.
   - The traffic signal project plans and special provisions.

Design Requirements

2. Design the traffic signal structure using the loading conditions shown in the elevation views. These are anticipated worst case "Design loads" and may not represent the actual loads that will be applied at the time of the installation. The contractor should refer to the traffic signal plans for the actual loads that will be applied at the time of the installation.
3. Design all signal supports using stress ratios that do not exceed 0.9.
4. A clamp-type bolted mast arm-to-pole connection may be used instead of the welded ring stiffened box connection shown as long as the connection meets all of the design requirements.
5. Design base plate with 8 anchor bolt holes. Provide 2 inch x 60 inch anchor bolts.
6. The mast arm attachment height (H1) shown is based on the following design assumptions:
   a. Nominal vertical rise in mast arm is 5 feet as measured from the centerline of the arm base to the centerline of the free end of the arm.
   b. Signal heads attached to the mast arm are rigid mounted and vertically centered on the arm.
   c. The roadway clearance height for design is as shown in the elevation views.
   d. The top of the pole base plate is .75 feet above the ground elevation.
   e. Refer to the Elevation Data chart for elevation differences between the proposed foundation ground level and the high point on the roadway.
   f. Provide horizontal distance from proposed centerline of foundation to edge of travelway. Refer to the Elevation Data chart above for elevation difference between the proposed foundation ground level and the edge of travelway. This information is necessary when arched arms are specified to ensure that the roadway clearance is maintained at the edge of the travelway and to assist in the camber design of the mast arm.
7. The pole manufacturer will determine the total height (H2) of each pole using the greater of the following:
   - Mast arm attachment height (H1) plus 2 feet, or
   - H1 plus ½ of the total height of the mast arm attachment assembly plus 1 foot.
8. If pole location adjustments are required, the contractor must gain approval from the engineer as this may affect the mast arm lengths and arm attachment heights. The contractor may contact the Signal Design Section Structural Engineer for assistance at (919) 773-2800.
9. The contractor is responsible for verifying that the mast arm length shown will allow proper positioning of the signal heads over the roadway.
10. The contractor is responsible for providing soil penetration testing data (SPT) to the pole manufacturer so site specific foundations can be designed.

HNTB
HNTB NORTH CAROLINA, P.C.
343 E. Six Forks Road, Suite 200
Raleigh, North Carolina 27609
NC License No: C-1554

NCDOT Wind Zone 4 (90 mph)

Prepared for: Transportation Mobility and Safety Division — Traffic Engineering Branch — Signal Design Section — Department of Transportation — State of North Carolina
750 N. Greenfield Pkwy, Garner, NC 27529

SR 1922 (Enola Rd)
at
SR 1924 (Old NC 18)/
Broughton Hospital Entrance

Division 13 Burke County Morganton

PLAN DATE:	October 2011	REVIEWED BY:	A.D. Klinksiek
PREPARED BY:	T.R. Terrell	REVIEWED BY:	N.M. Rodevick

SCALE: 0 N/A — N/A

REVISIONS	INIT.	DATE

SEAL: NORTH CAROLINA PROFESSIONAL SEAL 031464 ENGINEER NATASHA M. RODEVICK

Natasha M. Rodevick 12-12-11
SIGNATURE DATE

SIG. INVENTORY NO. 13-0688

METAL POLE No. 17

PROJECT REFERENCE NO.	SHEET NO.
U-2551	Sig. 87

Design Loading for METAL POLE NO. 17, MAST ARM A

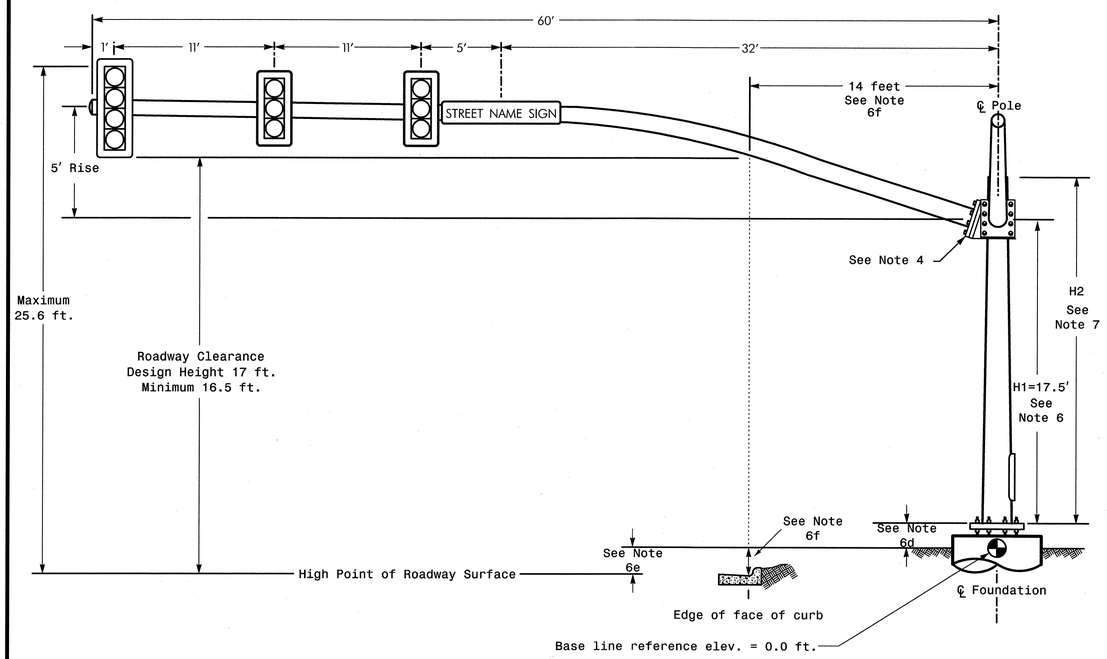

Elevation View @ 0°

Design Loading for METAL POLE NO. 17, MAST ARM B

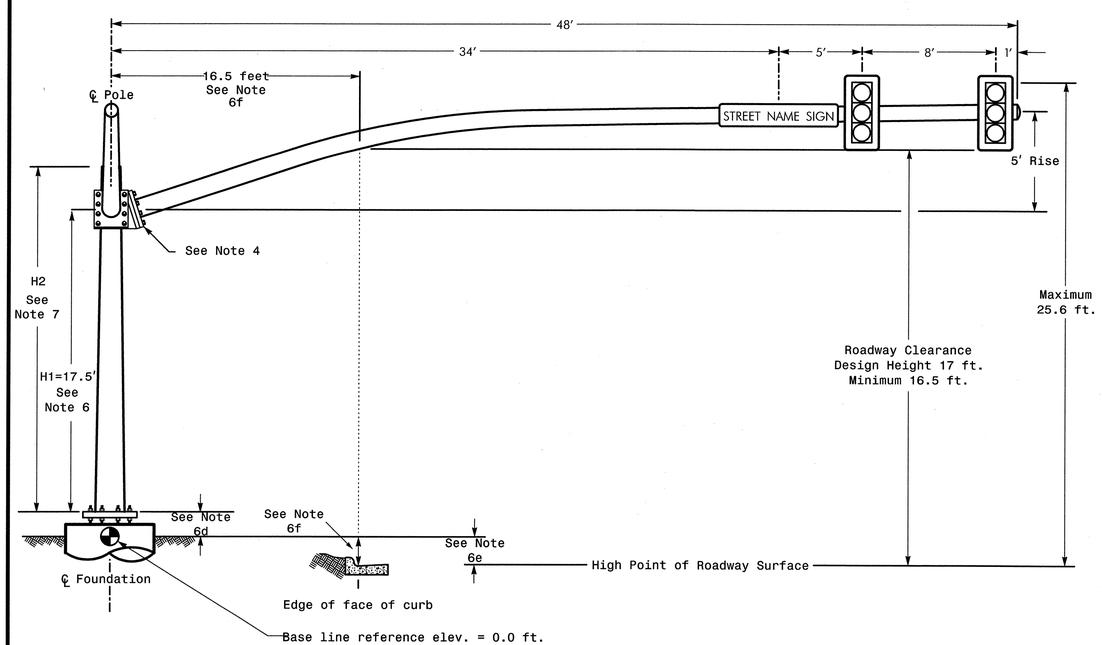

Elevation View @ 279° 30′31″

SPECIAL NOTE

The contractor is responsible for verifying that the mast arm attachment height (H1) will provide the "Design Height" clearance from the roadway before submitting final shop drawings for approval. Verify elevation data below which was obtained by field measurement or from available project survey data.

Elevation Data for Mast Arm Attachment (H1)

Elevation Differences for:	Arm "A"	Arm "B"
Baseline reference point at ℄ Foundation @ ground level	0.0 ft.	0.0 ft.
Elevation difference at High point of roadway surface	+3.54 ft.	+4.06 ft.
Elevation difference at Edge of travelway or face of curb	+1.32 ft.	+3.48 ft.

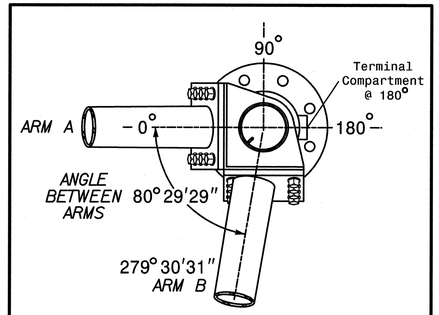

POLE RADIAL ORIENTATION

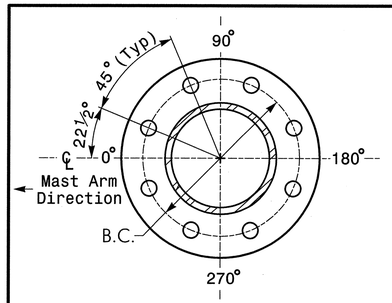

8 BOLT BASE PLATE DETAIL

See Note 5

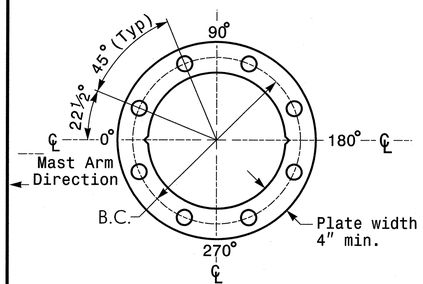

BASE PLATE TEMPLATE & ANCHOR BOLT LOCK PLATE DETAIL

For 8 Bolt Base Plate

MAST ARM LOADING SCHEDULE

LOADING SYMBOL	DESCRIPTION	AREA	SIZE	WEIGHT
	SIGNAL HEAD 12"–4 SECTION–WITH BACKPLATE RIGID MOUNTED	11.5 S.F.	25.5" W X 66.0" L	74 LBS
	SIGNAL HEAD 12"–3 SECTION–WITH BACKPLATE RIGID MOUNTED	9.3 S.F.	25.5" W X 52.5" L	60 LBS
STREET NAME SIGN	STREET NAME SIGN RIGID MOUNTED	12.0 S.F.	18.0" W X 96.0" L	27 LBS

NOTES

Design Reference Material

1. Design the traffic signal structure and foundation in accordance with:
   - The 4th Edition 2001 AASHTO "Standard Specifications for Structural Supports for Highway Signs, Luminaires, and Traffic Signals, including all of the latest interim revisions.
   - The 2012 NCDOT "Standard Specifications for Roads and Structures". The latest addenda to these specifications can be found in the traffic signal project special provisions.
   - The 2012 NCDOT Roadway Standard Drawings.
   - The traffic signal project plans and special provisions.

Design Requirements

2. Design the traffic signal structure using the loading conditions shown in the elevation views. These are anticipated worst case "Design loads" and may not represent the actual loads that will be applied at the time of the installation. The contractor should refer to the traffic signal plans for the actual loads that will be applied at the time of the installation.
3. Design all signal supports using stress ratios that do not exceed 0.9.
4. A clamp-type bolted mast arm-to-pole connection may be used instead of the welded ring stiffened box connection shown as long as the connection meets all of the design requirements. This requires staggering the connections. Use elevation data for each arm to determine appropriate connection points.
5. Design base plate with 8 anchor bolt holes. Provide 2 inch x 60 inch anchor bolts.
6. The mast arm attachment height (H1) shown is based on the following design assumptions:
   a. Nominal vertical rise in mast arm is 5 feet as measured from the centerline of the arm base to the centerline of the free end of the arm.
   b. Signal heads attached to the mast arm are rigid mounted and vertically centered on the arm.
   c. The roadway clearance height for design is as shown in the elevation views.
   d. The top of the pole base plate is .75 feet above the ground elevation.
   e. Refer to the Elevation Data chart for elevation differences between the proposed foundation ground level and the high point on the roadway.
   f. Provide horizontal distance from proposed centerline of foundation to edge of travelway. Refer to the Elevation Data chart above for elevation difference between the proposed foundation ground level and the edge of travelway. This information is necessary when arched arms are specified to ensure that the roadway clearance is maintained at the edge of the travelway and to assist in the camber design of the mast arm.
7. The pole manufacturer will determine the total height (H2) of the pole using the greater of the following:
   - Mast arm attachment height (H1) plus 2 feet, or
   - H1 plus ½ of the total height of the mast arm attachment assembly plus 1 foot.
8. If pole location adjustments are required, the contractor must gain approval from the engineer as this may affect the mast arm lengths and arm attachment heights. The contractor may contact the Signal Design Section Structural Engineer for assistance at (919) 773-2800.
9. The contractor is responsible for verifying that the mast arm length shown will allow proper positioning of the signal heads over the roadway.
10. The contractor is responsible for providing soil penetration testing data (SPT) to the pole manufacturer so site specific foundations can be designed.

HNTB

HNTB NORTH CAROLINA, P.C.
343 E. Six Forks Road, Suite 200
Raleigh, North Carolina 27609
NC License No: C-1554

NCDOT Wind Zone 4 (90 mph)

Prepared for: Transportation Mobility and Safety Division — State of North Carolina Department of Transportation — Signal Design Section
750 N. Greenfield Pkwy, Garner, NC 27529

SR 1922 (Enola Rd)
at
SR 1924 (Old NC 18)/
Broughton Hospital Entrance

Division 13 Burke County Morganton

PLAN DATE:	October 2011	REVIEWED BY:	A.D. Klinksiek
PREPARED BY:	T.R. Terrell	REVIEWED BY:	N.M. Rodevick

SCALE: 0 N/A — N/A

REVISIONS	INIT.	DATE

SEAL

NORTH CAROLINA PROFESSIONAL SEAL 031464 ENGINEER NATASHA M. RODEVICK

Natasha M. Rodevick 12-12-11
SIGNATURE DATE

SIG. INVENTORY NO. 13-0688

METAL POLE No. 18

PROJECT REFERENCE NO.	SHEET NO.
U-2551	Sig. 88

Design Loading for METAL POLE NO. 18, MAST ARM A

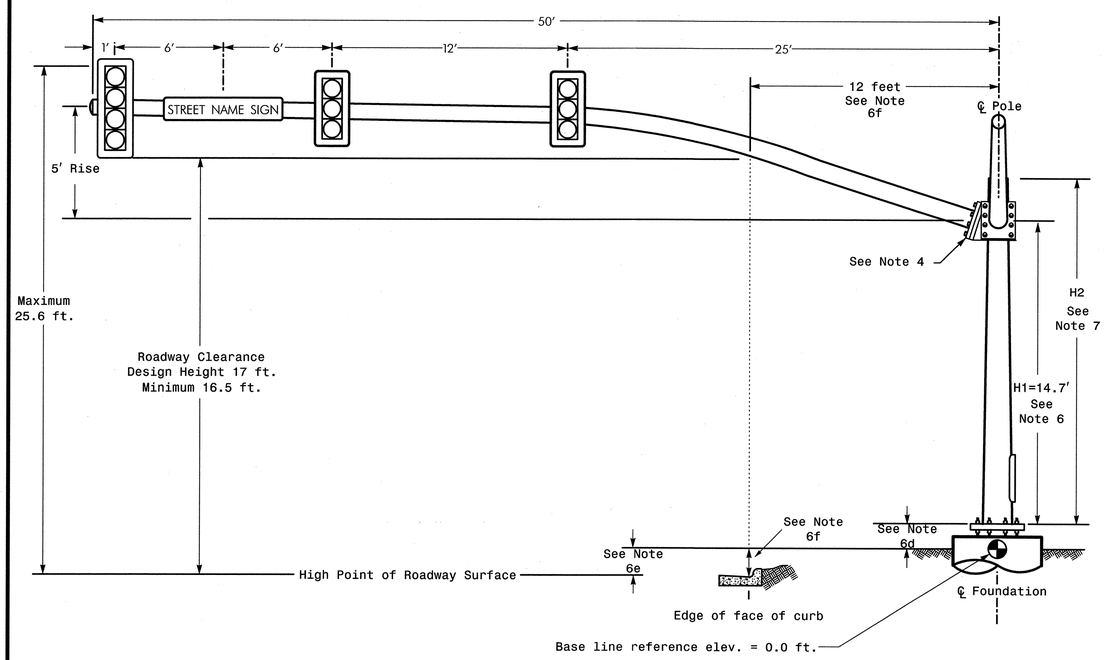

Elevation View @ 0°

Design Loading for METAL POLE NO. 18, MAST ARM B

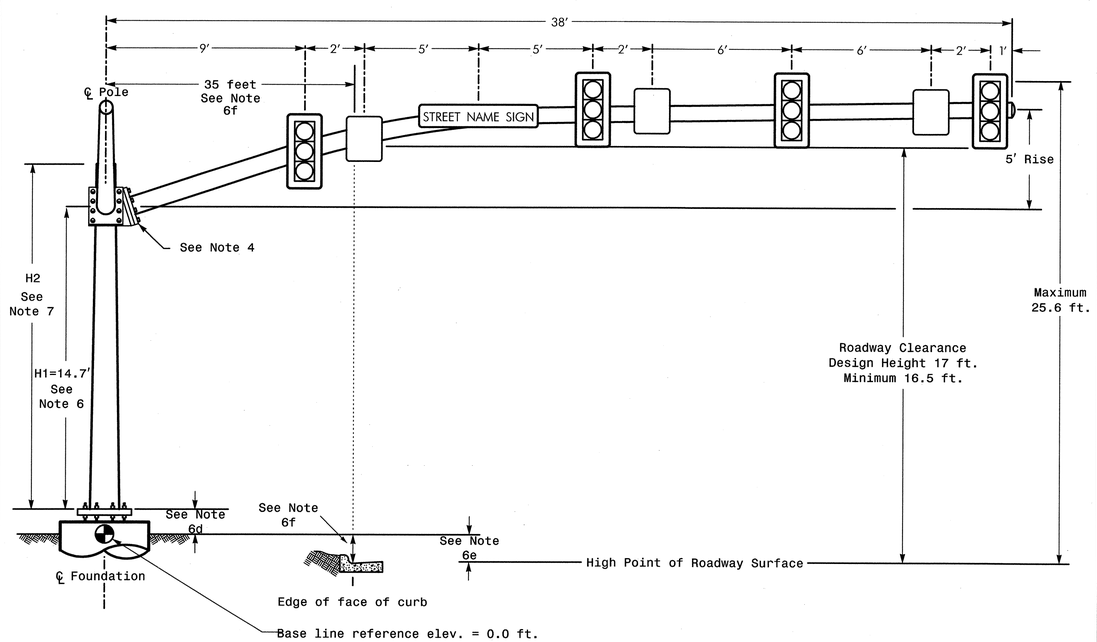

Elevation View @ 270°

SPECIAL NOTE

The contractor is responsible for verifying that the mast arm attachment height (H1) will provide the "Design Height" clearance from the roadway before submitting final shop drawings for approval. Verify elevation data below which was obtained by field measurement or from available project survey data.

Elevation Data for Mast Arm Attachment (H1)

Elevation Differences for:	Arm "A"	Arm "B"
Baseline reference point at ℄ Foundation @ ground level	0.0 ft.	0.0 ft.
Elevation difference at High point of roadway surface	+0.74 ft.	+0.50 ft.
Elevation difference at Edge of travelway or face of curb	-0.63 ft.	+0.03 ft

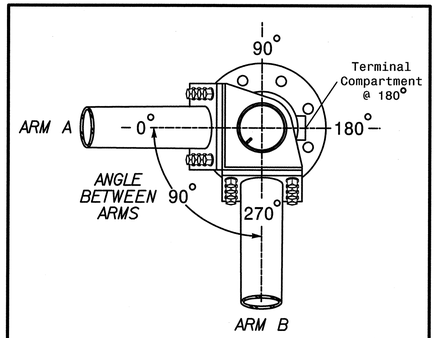

POLE RADIAL ORIENTATION

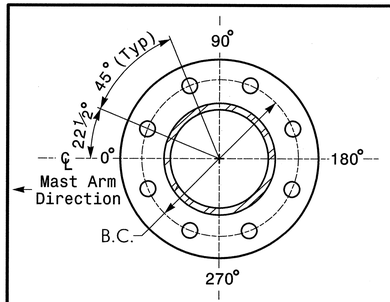

8 BOLT BASE PLATE DETAIL

See Note 5

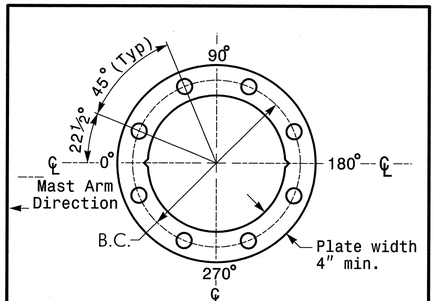

BASE PLATE TEMPLATE & ANCHOR BOLT LOCK PLATE DETAIL

For 8 Bolt Base Plate

MAST ARM LOADING SCHEDULE

LOADING SYMBOL	DESCRIPTION	AREA	SIZE	WEIGHT
	SIGNAL HEAD 12"–4 SECTION–WITH BACKPLATE RIGID MOUNTED	11.5 S.F.	25.5" W X 66.0" L	74 LBS
	SIGNAL HEAD 12"–3 SECTION–WITH BACKPLATE RIGID MOUNTED	9.3 S.F.	25.5" W X 52.5" L	60 LBS
	SIGN RIGID MOUNTED	5.0 S.F.	24.0" W X 30.0" L	11 LBS
STREET NAME SIGN	STREET NAME SIGN RIGID MOUNTED	12.0 S.F.	18.0" W X 96.0" L	27 LBS

NOTES

Design Reference Material

1. Design the traffic signal structure and foundation in accordance with:
   - The 4th Edition 2001 AASHTO "Standard Specifications for Structural Supports for Highway Signs, Luminaires, and Traffic Signals, including all of the latest interim revisions.
   - The 2012 NCDOT "Standard Specifications for Roads and Structures". The latest addenda to these specifications can be found in the traffic signal project special provisions.
   - The 2012 NCDOT Roadway Standard Drawings.
   - The traffic signal project plans and special provisions.

Design Requirements

2. Design the traffic signal structure using the loading conditions shown in the elevation views. These are anticipated worst case "Design loads" and may not represent the actual loads that will be applied at the time of the installation. The contractor should refer to the traffic signal plans for the actual loads that will be applied at the time of the installation.
3. Design all signal supports using stress ratios that do not exceed 0.9.
4. A clamp-type bolted mast arm-to-pole connection may be used instead of the welded ring stiffened box connection shown as long as the connection meets all of the design requirements. This requires staggering the connections. Use elevation data for each arm to determine appropriate connection points.
5. Design base plate with 8 anchor bolt holes. Provide 2 inch x 60 inch anchor bolts.
6. The mast arm attachment height (H1) shown is based on the following design assumptions:
   a. Nominal vertical rise in mast arm is 5 feet as measured from the centerline of the arm base to the centerline of the free end of the arm.
   b. Signal heads attached to the mast arm are rigid mounted and vertically centered on the arm.
   c. The roadway clearance height for design is as shown in the elevation views.
   d. The top of the pole base plate is .75 feet above the ground elevation.
   e. Refer to the Elevation Data chart for elevation differences between the proposed foundation ground level and the high point on the roadway.
   f. Provide horizontal distance from proposed centerline of foundation to edge of travelway. Refer to the Elevation Data chart above for elevation difference between the proposed foundation ground level and the edge of travelway. This information is necessary when arched arms are specified to ensure that the roadway clearance is maintained at the edge of the travelway and to assist in the camber design of the mast arm.
7. The pole manufacturer will determine the total height (H2) of the pole using the greater of the following:
   - Mast arm attachment height (H1) plus 2 feet, or
   - H1 plus ½ of the total height of the mast arm attachment assembly plus 1 foot.
8. If pole location adjustments are required, the contractor must gain approval from the engineer as this may affect the mast arm lengths and arm attachment heights. The contractor may contact the Signal Design Section Structural Engineer for assistance at (919) 773-2800.
9. The contractor is responsible for verifying that the mast arm length shown will allow proper positioning of the signal heads over the roadway.
10. The contractor is responsible for providing soil penetration testing data (SPT) to the pole manufacturer so site specific foundations can be designed.

HNTB
HNTB NORTH CAROLINA, P.C.
343 E. Six Forks Road, Suite 200
Raleigh, North Carolina 27609
NC License No: C-1554

NCDOT Wind Zone 4 (90 mph)

Prepared for: Transportation Mobility and Safety Division — Department of Transportation — Signal Design Section — 750 N. Greenfield Pkwy, Garner, NC 27529

SCALE: 0 N/A — N/A

NC 18 (S Sterling St)
at
SR 1924 (Old NC 18)/Berry St

Division 13 | Burke County | Morganton

PLAN DATE:	October 2011	REVIEWED BY:	A.D. Klinksiek
PREPARED BY:	T.R. Terrell	REVIEWED BY:	N.M. Rodevick

REVISIONS	INIT.	DATE

SEAL: NORTH CAROLINA PROFESSIONAL SEAL 031464 ENGINEER NATASHA M. RODEVICK

Natasha M. Rodevick 12-12-11
SIGNATURE DATE

SIG. INVENTORY NO. 13-0385

PROJECT REFERENCE NO.	SHEET NO.
U-2551	Sig. 89

METAL POLE No. 19 and 20

Design Loading for METAL POLE NO. 19

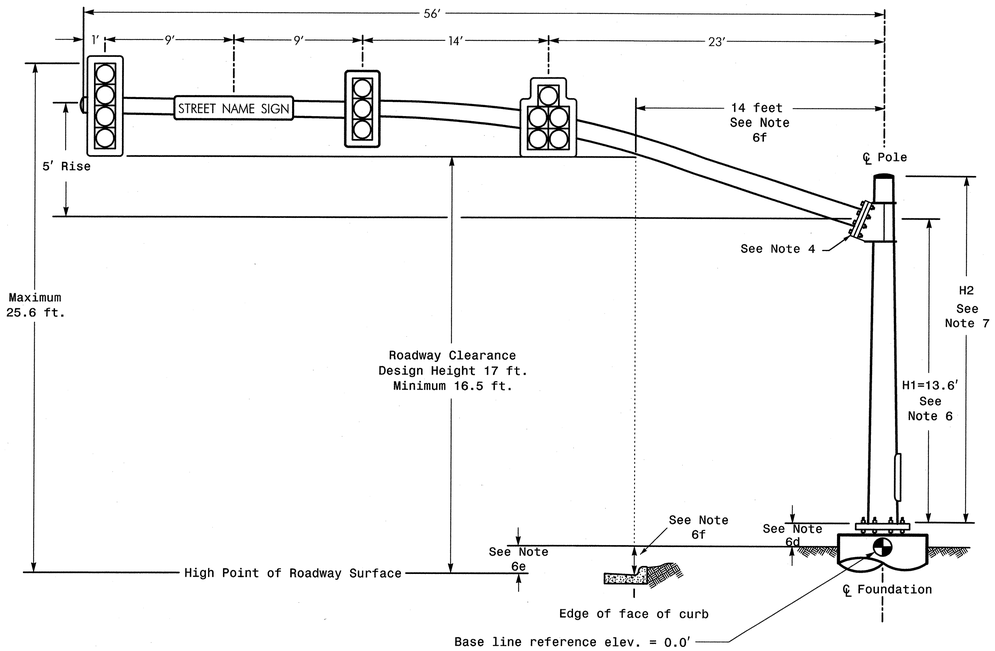

ELEVATION VIEW

Design Loading for METAL POLE NO. 20

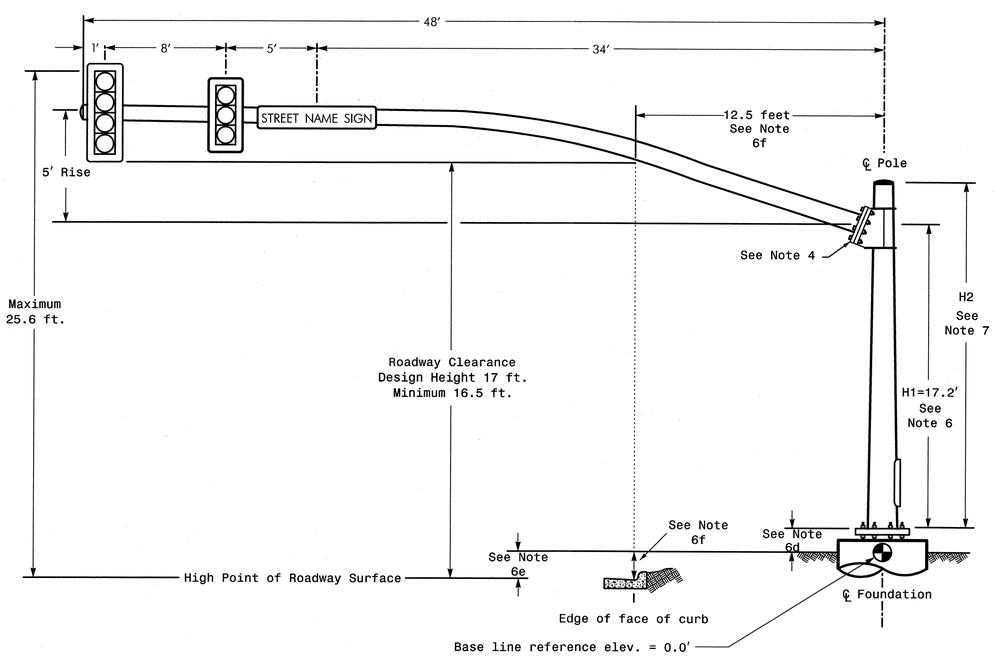

ELEVATION VIEW

SPECIAL NOTE

The contractor is responsible for verifying that the mast arm attachment height (H1) will provide the "Design Height" clearance from the roadway before submitting final shop drawings for approval. Verify elevation data below which was obtained by field measurement or from available project survey data.

Elevation Data for Mast Arm Attachment (H1)

Elevation Differences for:	Pole 19	Pole 20
Baseline reference point at ℄ Foundation @ ground level	0.0 ft.	0.0 ft.
Elevation difference at High point of roadway surface	-0.38 ft.	+3.18 ft.
Elevation difference at Edge of travelway or face of curb	-0.40 ft.	+0.92 ft.

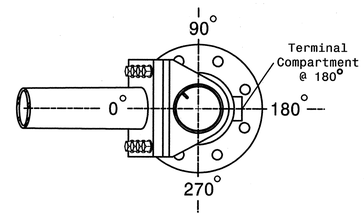

POLE RADIAL ORIENTATION

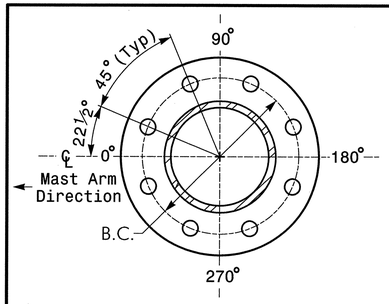

8 BOLT BASE PLATE DETAIL

See Note 5

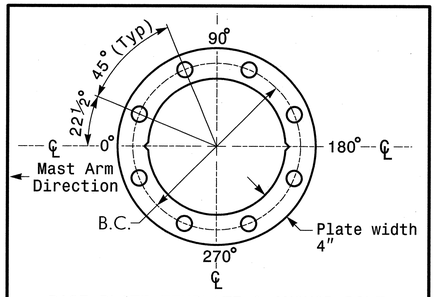

BASE PLATE TEMPLATE & ANCHOR BOLT LOCK PLATE DETAIL

For 8 Bolt Base Plate

MAST ARM LOADING SCHEDULE

LOADING SYMBOL	DESCRIPTION	AREA	SIZE	WEIGHT
	SIGNAL HEAD 12"–5 SECTION–WITH BACKPLATE RIGID MOUNTED	16.3 S.F.	42.0" W X 56.0" L	103 LBS
	SIGNAL HEAD 12"–4 SECTION–WITH BACKPLATE RIGID MOUNTED	11.5 S.F.	25.5" W X 66.0" L	74 LBS
	SIGNAL HEAD 12"–3 SECTION–WITH BACKPLATE RIGID MOUNTED	9.3 S.F.	25.5" W X 52.5" L	60 LBS
STREET NAME SIGN	STREET NAME SIGN RIGID MOUNTED	12.0 S.F.	18.0" W X 96.0" L	27 LBS

NOTES

Design Reference Material

1. Design the traffic signal structure and foundation in accordance with:
   - The 4th Edition 2001 AASHTO "Standard Specifications for Structural Supports for Highway Signs, Luminaires, and Traffic Signals, including all of the latest interim revisions.
   - The 2012 NCDOT "Standard Specifications for Roads and Structures". The latest addenda to these specifications can be found in the traffic signal project special provisions.
   - The 2012 NCDOT Roadway Standard Drawings.
   - The traffic signal project plans and special provisions.

Design Requirements

2. Design the traffic signal structure using the loading conditions shown in the elevation views. These are anticipated worst case "Design loads" and may not represent the actual loads that will be applied at the time of the installation. The contractor should refer to the traffic signal plans for the actual loads that will be applied at the time of the installation.
3. Design all signal supports using stress ratios that do not exceed 0.9.
4. A clamp-type bolted mast arm-to-pole connection may be used instead of the welded ring stiffened box connection shown as long as the connection meets all of the design requirements.
5. Design base plate with 8 anchor bolt holes. Provide 2 inch x 60 inch anchor bolts.
6. The mast arm attachment height (H1) shown is based on the following design assumptions:
   a. Nominal vertical rise in mast arm is 5 feet as measured from the centerline of the arm base to the centerline of the free end of the arm.
   b. Signal heads attached to the mast arm are rigid mounted and vertically centered on the arm.
   c. The roadway clearance height for design is as shown in the elevation views.
   d. The top of the pole base plate is .75 feet above the ground elevation.
   e. Refer to the Elevation Data chart for elevation differences between the proposed foundation ground level and the high point on the roadway.
   f. Provide horizontal distance from proposed centerline of foundation to edge of travelway. Refer to the Elevation Data chart above for elevation difference between the proposed foundation ground level and the edge of travelway. This information is necessary when arched arms are specified to ensure that the roadway clearance is maintained at the edge of the travelway and to assist in the camber design of the mast arm.
7. The pole manufacturer will determine the total height (H2) of each pole using the greater of the following:
   - Mast arm attachment height (H1) plus 2 feet, or
   - H1 plus ½ of the total height of the mast arm attachment assembly plus 1 foot.
8. If pole location adjustments are required, the contractor must gain approval from the engineer as this may affect the mast arm lengths and arm attachment heights. The contractor may contact the Signal Design Section Structural Engineer for assistance at (919) 773-2800.
9. The contractor is responsible for verifying that the mast arm length shown will allow proper positioning of the signal heads over the roadway.
10. The contractor is responsible for providing soil penetration testing data (SPT) to the pole manufacturer so site specific foundations can be designed.

HNTB
HNTB NORTH CAROLINA, P.C.
343 E. Six Forks Road, Suite 200
Raleigh, North Carolina 27609
NC License No: C-1554

NCDOT Wind Zone 4 (90 mph)

Prepared for: Transportation Mobility and Safety Division — Traffic Engineering Branch — Signal Design Section
750 N. Greenfield Pkwy, Garner, NC 27529

NC 18 (S Sterling St)
at
SR 1924 (Old NC 18)/Berry St

Division 13 Burke County Morganton

PLAN DATE:	October 2011	REVIEWED BY:	A.D. Klinksiek
PREPARED BY:	T.R. Terrell	REVIEWED BY:	N.M. Rodevick

SCALE 0 N/A N/A

REVISIONS	INIT.	DATE

SEAL: NORTH CAROLINA PROFESSIONAL SEAL 031464 ENGINEER NATASHA M. RODEVICK

SIGNATURE — DATE 12-12-11

SIG. INVENTORY NO. 13-0385

PROJECT REFERENCE NO.	SHEET NO.
U-2551	Sig. 90

1. INSTALL REA, PE – 22, SHIELDED, TWISTED PAIR COMMUNICATIONS CABLE
2. INSTALL REA, PE – 38, (FIGURE 8) SHIELDED, TWISTED PAIR COMMUNICATIONS CABLE
3. INSTALL REA, PE – 39, (UNDERGROUND) SHIELDED, TWISTED PAIR COMMUNICATIONS CABLE
4. INSTALL SMFO CABLE
5. INSTALL MMFO CABLE
6. INSTALL FIBER OPTIC DROP CABLE
7. INSTALL TRACER WIRE
8. TRENCH
9. INSTALL PVC CONDUIT
10. INSTALL RIGID, GALVANIZED STEEL CONDUIT
11. INSTALL RIGID, GALVANIZED STEEL RISER WITH WEATHERHEAD
12. INSTALL RIGID, GALVANIZED STEEL RISER WITH FIBER OPTIC CABLE SEAL
13. INSTALL OUTER–DUCT POLYETHYLENE CONDUIT
14. INSTALL POLYETHYLENE CONDUIT
15. DIRECTIONAL DRILL CONDUIT
16. BORE AND JACK CONDUIT
17. INSTALL CABLE(S) IN EXISTING CONDUIT
18. INSTALL CABLE(S) IN NEW CONDUIT
19. INSTALL CABLE(S) IN EXISTING RISER
20. INSTALL CABLE(S) IN NEW RISER
21. INSTALL CABLE(S) IN EXISTING CONDUIT STUB–OUTS
22. INSTALL NEW CONDUIT INTO EXISTING CABINET BASE (USE EXISTING CONDUIT STUB–OUTS WHEN AVAILABLE)
23. INSTALL NEW RISER INTO EXISTING CABINET BASE (USE EXISTING CONDUIT STUB–OUTS WHEN AVAILABLE)
24. INSTALL NEW CONDUIT INTO EXISTING POLE MOUNTED CABINET
25. INSTALL NEW RISER INTO EXISTING POLE MOUNTED CABINET
26. TERMINATE COMMUNICATIONS CABLE ON EXISTING TELEMETRY INTERFACE PANEL IN TRAFFIC SIGNAL CONTROLLER CABINET
27. INSTALL NEW TELEMETRY INTERFACE PANEL IN TRAFFIC SIGNAL CONTROLLER CABINET
28. INSTALL INTERCONNECT CENTER, PATCH PANEL, JUMPERS AND FUSION SPLICE CABLE IN CABINET
29. INSTALL UNDERGROUND SPLICE ENCLOSURE
30. INSTALL AERIAL SPLICE ENCLOSURE
31. INSTALL POLE MOUNTED SPLICE CABINET
32. INSTALL BASE MOUNTED SPLICE CABINET
33. REMOVE EXISTING SPLICE CABINET
34. INSTALL CABINET FOUNDATION
35. REMOVE EXISTING CABINET FOUNDATION
36. INSTALL CCTV CAMERA ASSEMBLY
37. INSTALL CCTV CAMERA WOOD POLE
38. INSTALL CCTV CAMERA METAL POLE AND FOUNDATION
39. INSTALL JUNCTION BOX
40. INSTALL OVERSIZED JUNCTION BOX
41. REMOVE EXISTING JUNCTION BOX
42. INSTALL WOOD POLE
43. REMOVE EXISTING WOOD POLE
44. INSTALL AERIAL GUY ASSEMBLY
45. INSTALL STANDARD GUY ASSEMBLY
46. INSTALL SIDEWALK GUY ASSEMBLY
47. INSTALL MESSENGER CABLE
48. REMOVE EXISTING COMMUNICATIONS AND MESSENGER CABLE
49. REMOVE EXISTING MESSENGER CABLE
50. INSTALL TELEPHONE SERVICE
51. INSTALL CABLE STORAGE RACKS (SNOW SHOES) AND STORE 100 FEET OF CABLE
52. INSTALL DELINEATOR MARKER
53. STORE 20 FEET OF COMMUNICATIONS CABLE
54. LASH CABLE(S) TO EXISTING SIGNAL/COMMUNICATIONS CABLE
55. LASH CABLE(S) TO EXISTING MESSENGER CABLE
56. LASH CABLE(S) TO NEW MESSENGER CABLE
57. MODIFY EXISTING ELECTRICAL SERVICE
58. INSTALL NEW ELECTRICAL SERVICE

LEGEND

- FO — NEW FIBER OPTIC COMMUNICATIONS CABLE
- EXI — EXISTING COMMUNICATIONS CABLE
- REM — EXISTING COMMUNICATIONS CABLE TO BE REMOVED
- NEW AERIAL GUY ASSEMBLY
- NEW CONDUIT
- EXISTING CONDUIT
- DD — NEW DIRECTIONAL DRILLED CONDUIT
- B&J — NEW BORED AND JACKED CONDUIT
- NEW JUNCTION BOX
- EXISTING JUNCTION BOX
- NEW WOOD POLE
- EXISTING WOOD POLE
- S — AERIAL SPLICE ENCLOSURE
- NEW METAL POLE
- EXISTING METAL POLE
- NEW MAST ARM
- NEW STANDARD GUY ASSEMBLY
- NEW SIDEWALK GUY ASSEMBLY
- NEW CABLE STORAGE RACKS (SNOW SHOES)
- X — EXISTING CONTROLLER AND CABINET
- M — EXISTING MASTER CONTROLLER AND CABINET
- S — EXISTING SPLICE CABINET
- S — NEW SPLICE CABINET
- SP — SIGNAL POLE
- XX–XXXX — SIGNAL INVENTORY NUMBER
- CLOSED LOOP SYSTEM
- NEW YAGI ANTENNA (SINGLE)

CONSTRUCTION NOTE SYMBOLOGY KEY

- XX — INDICATES NUMBER OF CABLES, LOOPS, ETC.
- XX — INDICATES NUMBER OF FIBERS PER CABLE, TWISTED PAIRS PER CABLE, ETC.
- XX — INDICATES NUMBER OF RISER(S)/CONDUIT(S)
- XX — INDICATES DIAMETER OF RISER(S)/CONDUIT(S) (INCH)

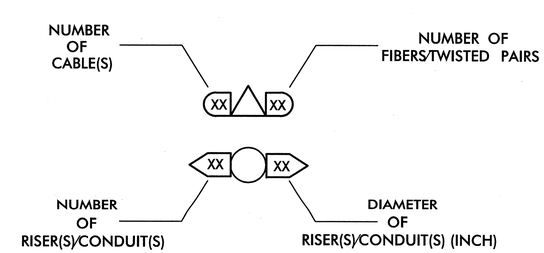

HNTB
HNTB NORTH CAROLINA, P.C.
343 E. Six Forks Road, Suite 200
Raleigh, North Carolina 27609
NC License No: C-1554

Prepared for: Transportation Mobility and Safety Division, Intelligent Transportation Systems Section, STATE OF NORTH CAROLINA DEPARTMENT OF TRANSPORTATION
750 N. Greenfield Pkwy., Garner, NC 27529

SCALE: 0 N/A — NONE

SR 1922 (Enola Rd)
Construction Notes

Division 13 | Burke County | Morganton

PLAN DATE:	August 2011	REVIEWED BY:	N.M. Rodevick
PREPARED BY:	A.D. Klinksiek	REVIEWED BY:	H.L. Winstead

REVISIONS	INIT.	DATE

SEAL: NORTH CAROLINA PROFESSIONAL SEAL 07983 ENGINEER HARVEY L. WINSTEAD, JR.

SIGNATURE: H.L. Winstead — DATE: 12/12/11

CADD FILE NAME: CL-02.dgn

PROJECT REFERENCE NO.	SHEET NO.
U-2551	Sig. 91

TMP-1
AT THE DIRECTION OF THE ENGINEER, INSTALL COMMUNICATIONS CABLE AND TERMINATE IN SIGNAL CABINET. MAKE SYSTEM OPERATIONAL.

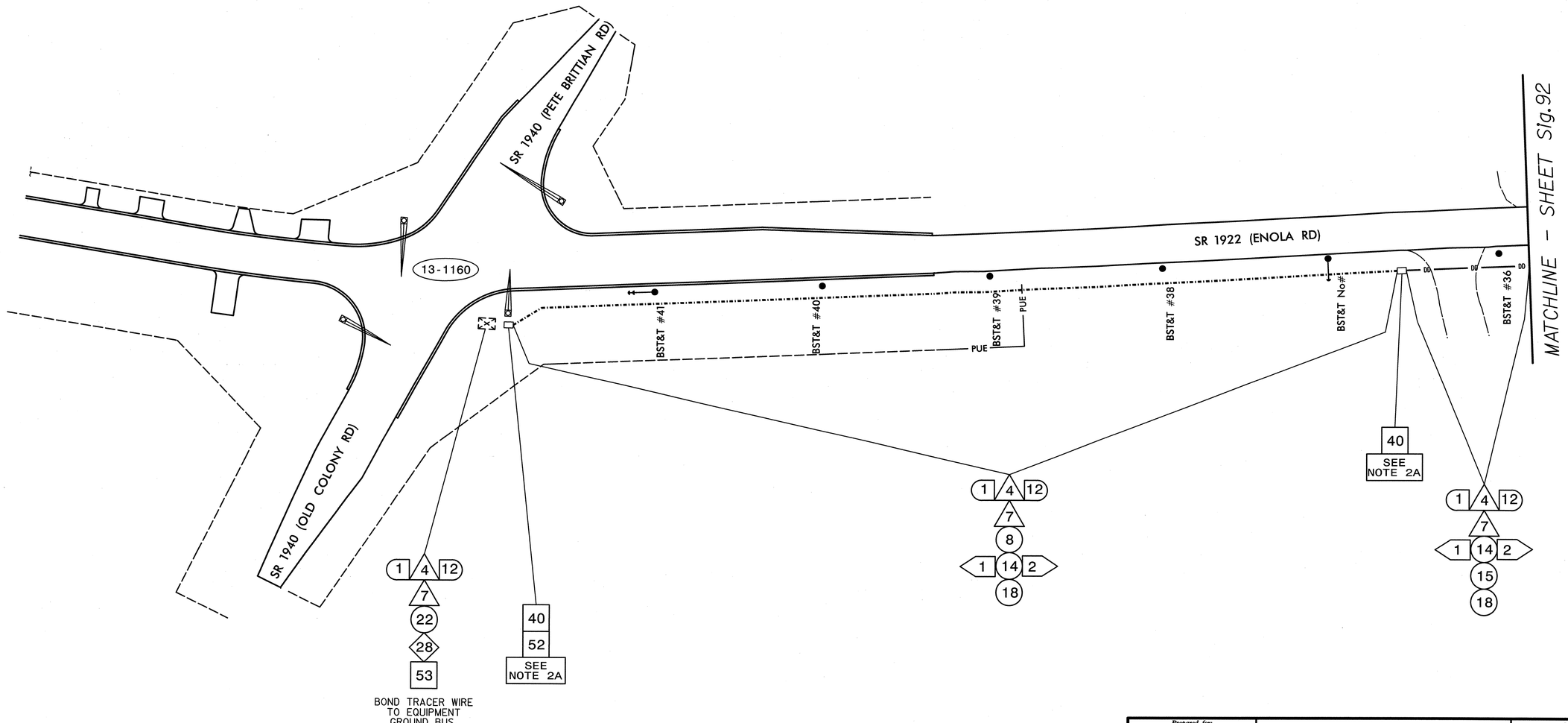

NOTES:

1. ATTACH FIBER OPTIC CABLE 40" BELOW POWER AND ON THE FRONT SIDE (FS) OF POLE, UNLESS OTHERWISE NOTED.

2A. STORE 60 FEET OF COMMUNICATIONS CABLE IN JUNCTION BOX.

2B. STORE 60 FEET OF EACH COMMUNICATION CABLE SEGMENT IN JUNCTION BOX.

3. DISTANCES SHOWN BETWEEN JUNCTION BOXES ARE APPROXIMATE.

HNTB

HNTB NORTH CAROLINA, P.C.
343 E. Six Forks Road, Suite 200
Raleigh, North Carolina 27609
NC License No: C-1554

Prepared for:
Mobility and Safety Division
Transportation Planning Division
Transportation Systems Solutions
NORTH CAROLINA DEPARTMENT OF TRANSPORTATION
750 N. Greenfield Pkwy., Garner, NC 27529

SCALE
10 0 50
1"=50'

SR 1922 (Enola Rd)
Communications Cable and Conduit Routing Plans

Division 13 Burke County Morganton

PLAN DATE:	August 2011	REVIEWED BY:	N.M. Rodevick
PREPARED BY:	A.D. Klinksiek	REVIEWED BY:	H.L. Winstead

REVISIONS	INIT.	DATE

SEAL
NORTH CAROLINA PROFESSIONAL SEAL 07983 ENGINEER HARVEY L. WINSTEAD, JR.

HLWinstead 12/12/11
SIGNATURE DATE

CADD FILE NAME CL-03.dgn

PROJECT REFERENCE NO.	SHEET NO.
U-2551	Sig. 92

TMP-1
AT THE DIRECTION OF THE ENGINEER, INSTALL COMMUNICATIONS CABLE AND TERMINATE IN SIGNAL CABINET. MAKE SYSTEM OPERATIONAL.

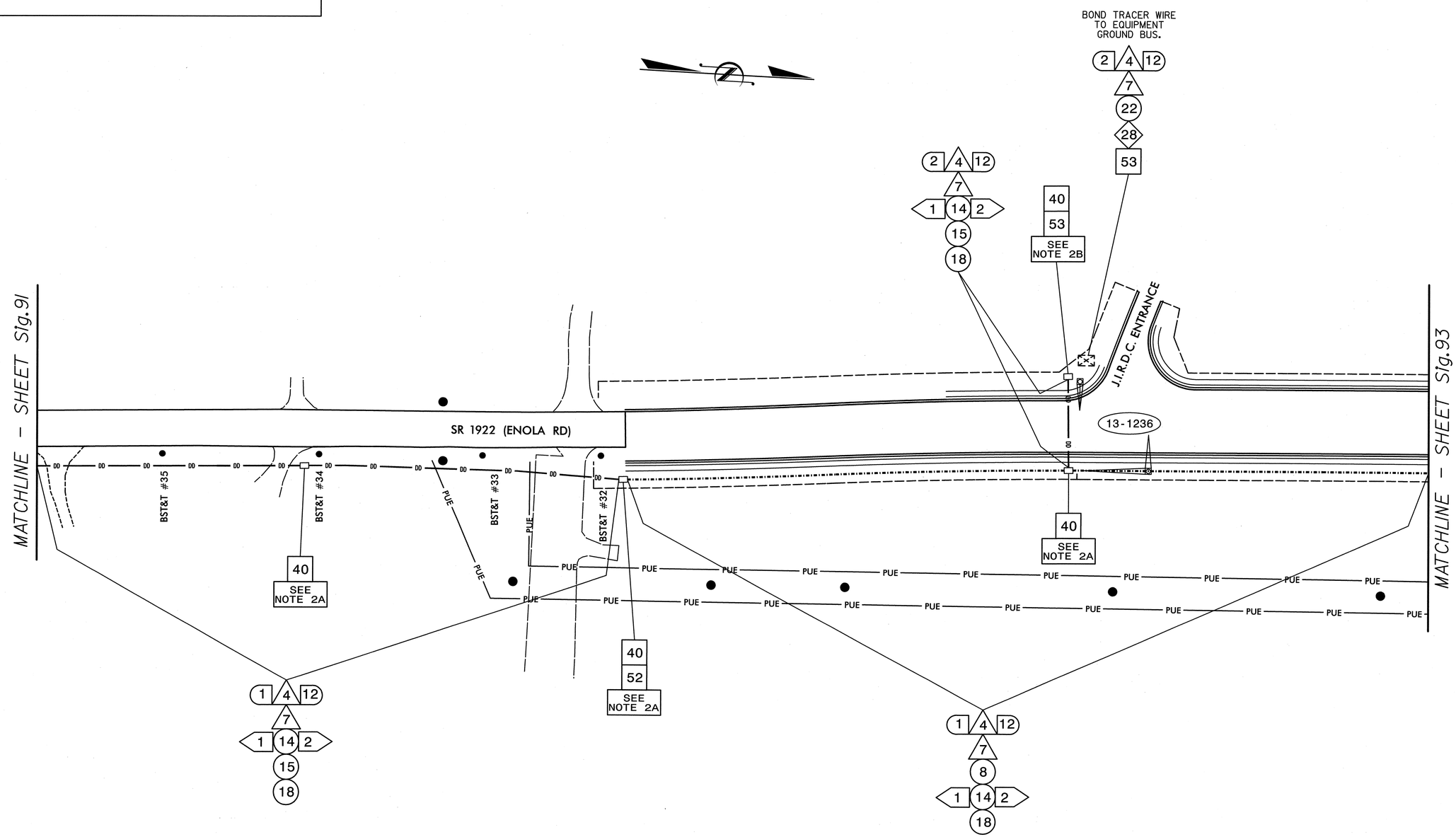

NOTES:
1. ATTACH FIBER OPTIC CABLE 40" BELOW POWER AND ON THE FRONT SIDE (FS) OF POLE, UNLESS OTHERWISE NOTED.
2A. STORE 60 FEET OF COMMUNICATIONS CABLE IN JUNCTION BOX.
2B. STORE 60 FEET OF EACH COMMUNICATION CABLE SEGMENT IN JUNCTION BOX.
3. DISTANCES SHOWN BETWEEN JUNCTION BOXES ARE APPROXIMATE.

HNTB
HNTB NORTH CAROLINA, P.C.
343 E. Six Forks Road, Suite 200
Raleigh, North Carolina 27609
NC License No: C-1554

Prepared for:
Transportation Mobility and Safety Division
STATE OF NORTH CAROLINA DEPARTMENT OF TRANSPORTATION
Integrated Transportation Systems Section
750 N. Greenfield Pkwy., Garner, NC 27529

SCALE
10 0 50
1"=50'

SR 1922 (Enola Rd)
Communications Cable and Conduit Routing Plans

Division 13 Burke County Morganton

PLAN DATE:	August 2011	REVIEWED BY:	N.M. Rodevick
PREPARED BY:	A.D. Klinksiek	REVIEWED BY:	H.L. Winstead

REVISIONS	INIT.	DATE

SEAL
NORTH CAROLINA PROFESSIONAL ENGINEER SEAL 07983 HARVEY L. WINSTEAD, JR.

H.L. Winstead 12/12/11
SIGNATURE DATE

CADD FILE NAME CL-04.dgn

PROJECT REFERENCE NO.	SHEET NO.
U-2551	Sig. 93

TMP-1
AT THE DIRECTION OF THE ENGINEER, INSTALL COMMUNICATIONS CABLE AND TERMINATE IN SIGNAL CABINET. MAKE SYSTEM OPERATIONAL.

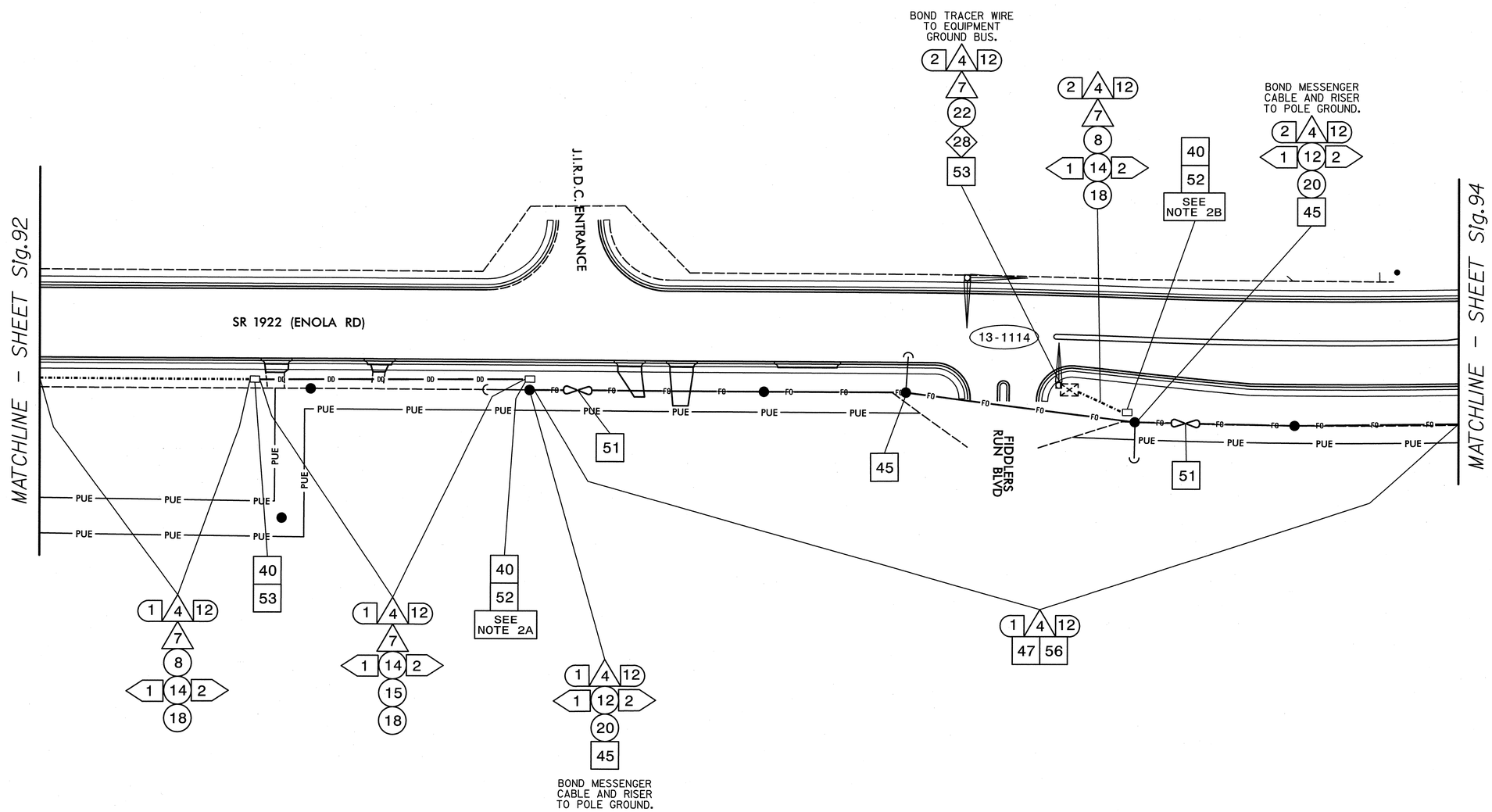

NOTES:
1. ATTACH FIBER OPTIC CABLE 40" BELOW POWER AND ON THE FRONT SIDE (FS) OF POLE, UNLESS OTHERWISE NOTED.
2A. STORE 60 FEET OF COMMUNICATIONS CABLE IN JUNCTION BOX.
2B. STORE 60 FEET OF EACH COMMUNICATION CABLE SEGMENT IN JUNCTION BOX.
3. DISTANCES SHOWN BETWEEN JUNCTION BOXES ARE APPROXIMATE.

HNTB
HNTB NORTH CAROLINA, P.C.
343 E. Six Forks Road, Suite 200
Raleigh, North Carolina 27609
NC License No: C-1554

Prepared for: Transportation Mobility and Safety Division, Intermodal Transportation Systems Section, Department of Transportation, State of North Carolina
750 N. Greenfield Pkwy., Garner, NC 27529

SCALE 10 0 50 1"=50'

SR 1922 (Enola Rd)
Communications Cable and Conduit Routing Plans

Division 13 Burke County Morganton

PLAN DATE:	August 2011	REVIEWED BY:	N.M. Rodevick
PREPARED BY:	A.D. Klinksiek	REVIEWED BY:	H.L. Winstead

REVISIONS	INIT.	DATE

SEAL
NORTH CAROLINA PROFESSIONAL SEAL 07983 ENGINEER HARVEY L. WINSTEAD, JR.

SIGNATURE H.L. Winstead DATE 12/12/11

CADD FILE NAME CL-05.dgn

PROJECT REFERENCE NO.	SHEET NO.
U-2551	Sig. 94

TMP-1
AT THE DIRECTION OF THE ENGINEER, INSTALL COMMUNICATIONS CABLE AND TERMINATE IN SIGNAL CABINET. MAKE SYSTEM OPERATIONAL.

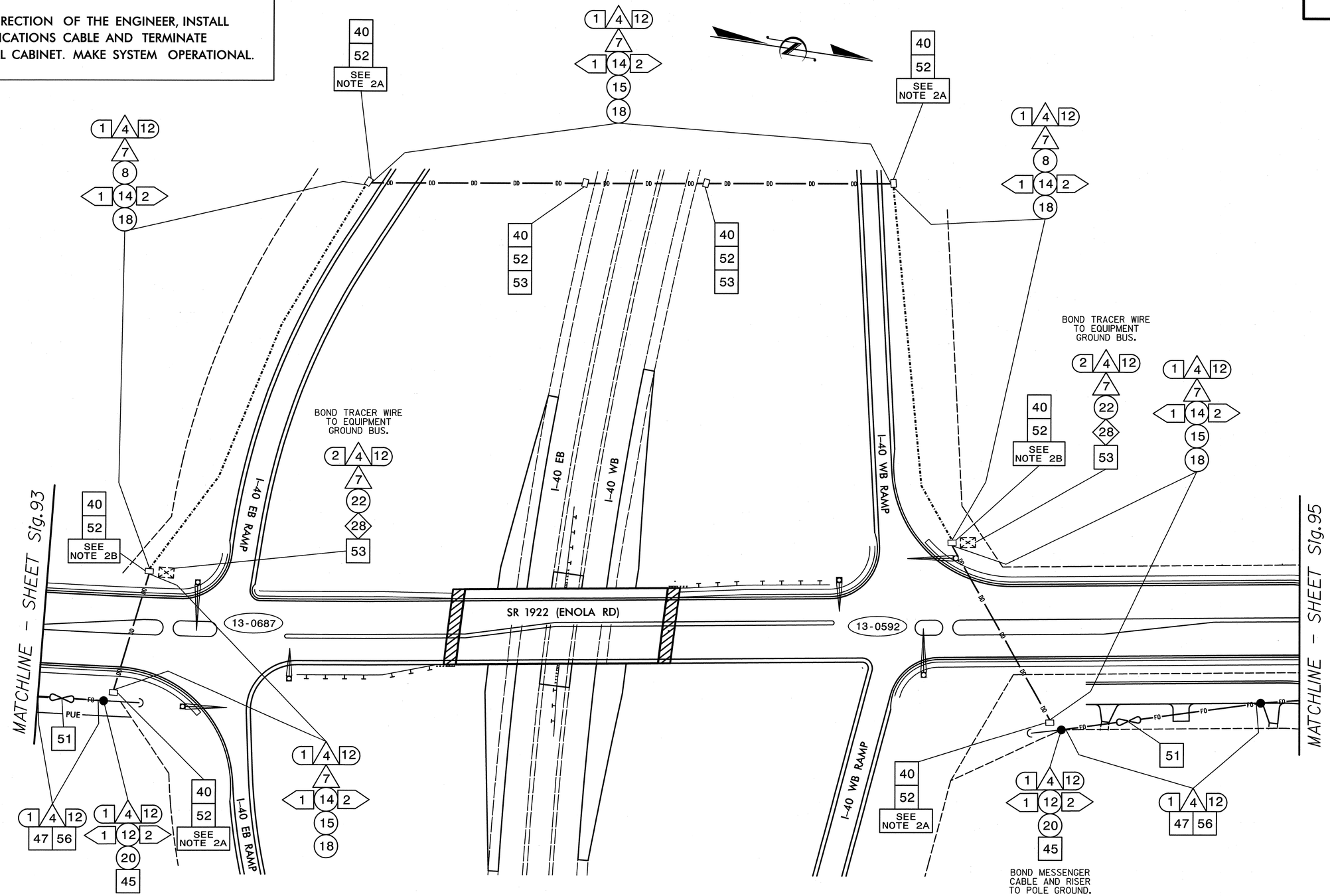

NOTES:

1. ATTACH FIBER OPTIC CABLE 40" BELOW POWER AND ON THE FRONT SIDE (FS) OF POLE, UNLESS OTHERWISE NOTED.

2A. STORE 60 FEET OF COMMUNICATIONS CABLE IN JUNCTION BOX.

2B. STORE 60 FEET OF EACH COMMUNICATION CABLE SEGMENT IN JUNCTION BOX.

3. DISTANCES SHOWN BETWEEN JUNCTION BOXES ARE APPROXIMATE.

HNTB

HNTB NORTH CAROLINA, P.C.
343 E. Six Forks Road, Suite 200
Raleigh, North Carolina 27609
NC License No: C-1554

Prepared for: Transportation Mobility and Safety Division, Intermodal Transportation Systems Section, STATE OF NORTH CAROLINA DEPARTMENT OF TRANSPORTATION
750 N. Greenfield Pkwy., Garner, NC 27529

SCALE 10 0 50
1"=50'

SR 1922 (Enola Rd)
Communications Cable and Conduit Routing Plans

Division 13 Burke County Morganton

PLAN DATE:	August 2011	REVIEWED BY:	N.W. Rodevick
PREPARED BY:	A.D. Klinksiek	REVIEWED BY:	H.L. Winstead

REVISIONS	INIT.	DATE

SEAL
NORTH CAROLINA PROFESSIONAL SEAL 07983 ENGINEER HARVEY L. WINSTEAD, JR.

SIGNATURE H.L. Winstead DATE 12/12/11

CADD FILE NAME CL-06.dgn

PROJECT REFERENCE NO.	SHEET NO.
U-2551	Sig. 95

TMP-1
AT THE DIRECTION OF THE ENGINEER, INSTALL COMMUNICATIONS CABLE AND TERMINATE IN SIGNAL CABINET. MAKE SYSTEM OPERATIONAL.

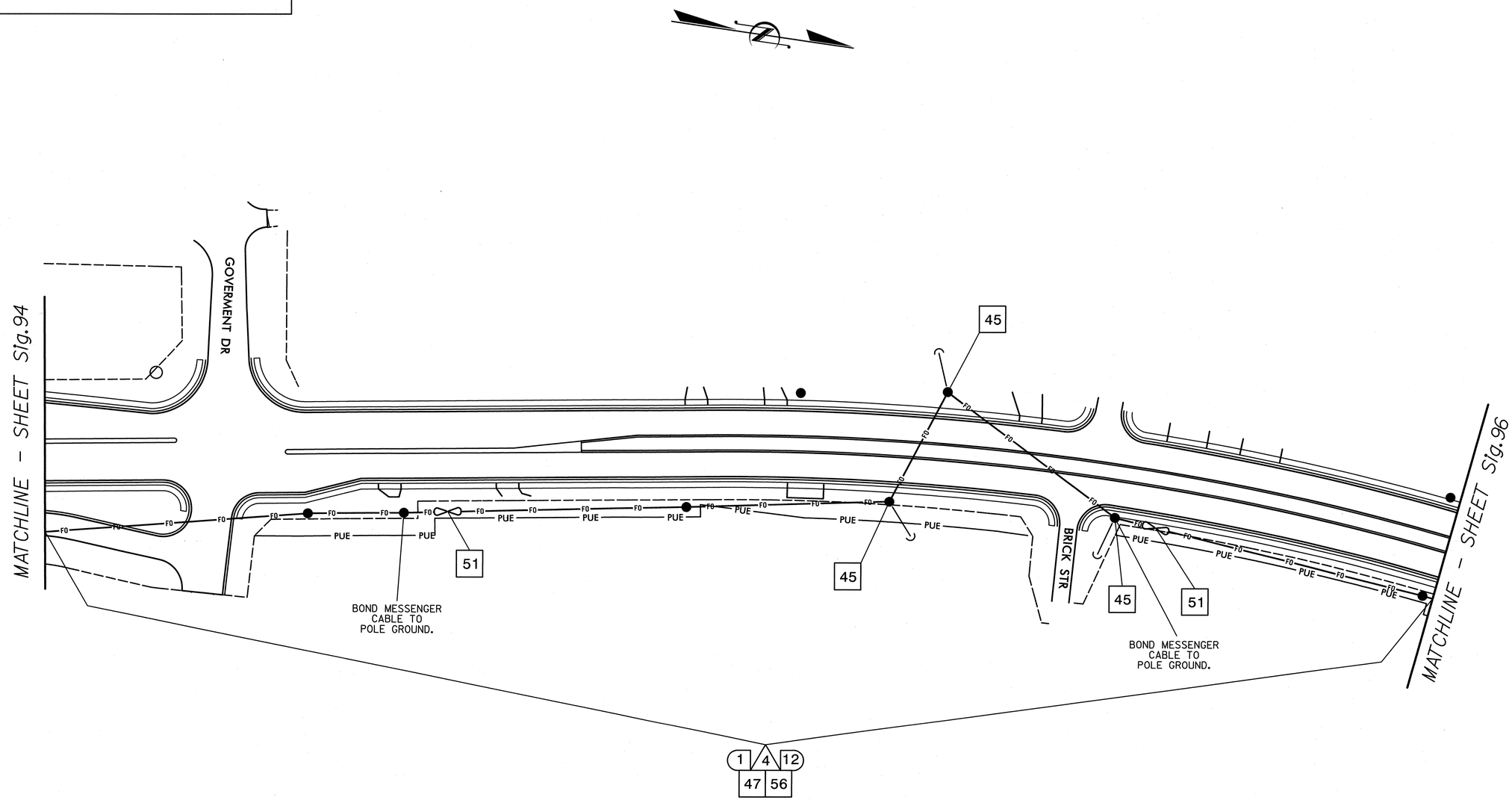

NOTES:
1. ATTACH FIBER OPTIC CABLE 40" BELOW POWER AND ON THE FRONT SIDE (FS) OF POLE, UNLESS OTHERWISE NOTED.
2A. STORE 60 FEET OF COMMUNICATIONS CABLE IN JUNCTION BOX.
2B. STORE 60 FEET OF EACH COMMUNICATION CABLE SEGMENT IN JUNCTION BOX.
3. DISTANCES SHOWN BETWEEN JUNCTION BOXES ARE APPROXIMATE.

HNTB
HNTB NORTH CAROLINA, P.C.
343 E. Six Forks Road, Suite 200
Raleigh, North Carolina 27609
NC License No: C-1554

Prepared for:
Transportation Mobility and Safety Division
STATE OF NORTH CAROLINA DEPARTMENT OF TRANSPORTATION
Intelligent Transportation Systems Section
750 N. Greenfield Pkwy., Garner, NC 27529

SCALE
10 0 50
1"=50'

SR 1922 (Enola Rd)
Communications Cable and Conduit Routing Plans

Division 13 Burke County Morganton

PLAN DATE:	August 2011	REVIEWED BY:	N.M. Rodevick
PREPARED BY:	A.D. Klinksiek	REVIEWED BY:	H.L. Winstead

REVISIONS	INIT.	DATE

SEAL
NORTH CAROLINA PROFESSIONAL SEAL 07983 ENGINEER HARVEY L. WINSTEAD, JR.
H.L. Winstead 12/12/11
SIGNATURE DATE
CADD FILE NAME CL-07.dgn

PROJECT REFERENCE NO.	SHEET NO.
U-2551	Sig. 96

TMP-1
AT THE DIRECTION OF THE ENGINEER, INSTALL COMMUNICATIONS CABLE AND TERMINATE IN SIGNAL CABINET. MAKE SYSTEM OPERATIONAL.

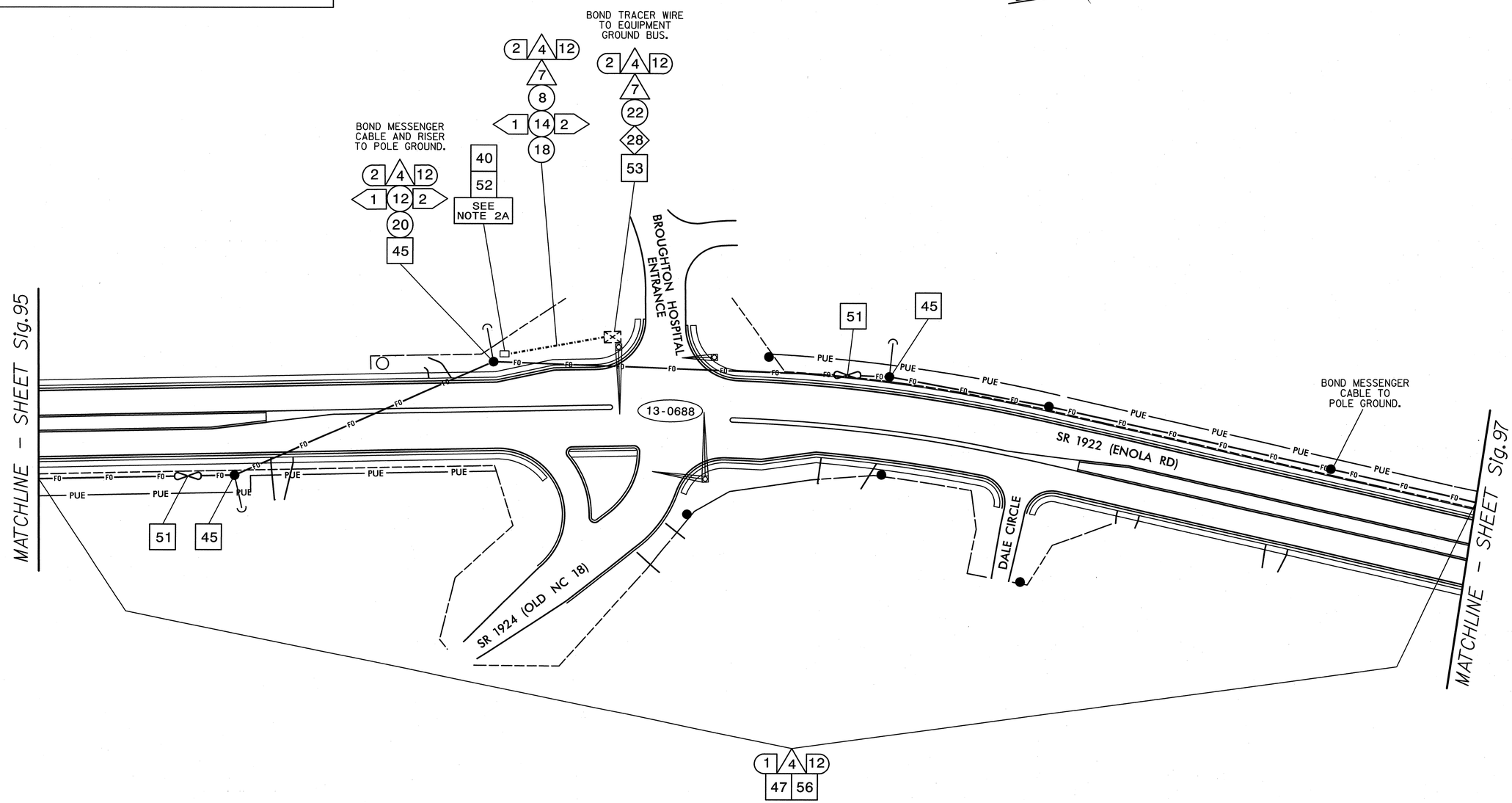

NOTES:
1. ATTACH FIBER OPTIC CABLE 40" BELOW POWER AND ON THE FRONT SIDE (FS) OF POLE, UNLESS OTHERWISE NOTED.
2A. STORE 60 FEET OF COMMUNICATIONS CABLE IN JUNCTION BOX.
2B. STORE 60 FEET OF EACH COMMUNICATION CABLE SEGMENT IN JUNCTION BOX.
3. DISTANCES SHOWN BETWEEN JUNCTION BOXES ARE APPROXIMATE.

HNTB
HNTB NORTH CAROLINA, P.C.
343 E. Six Forks Road, Suite 200
Raleigh, North Carolina 27609
NC License No: C-1554

Prepared for:
750 N. Greenfield Pkwy., Garner, NC 27529

SCALE
10 0 50
1"=50'

SR 1922 (Enola Rd)
Communications Cable and Conduit Routing Plans

Division 13 Burke County Morganton

PLAN DATE:	August 2011	REVIEWED BY:	N.W. Rodevick
PREPARED BY:	A.D. Klinksiek	REVIEWED BY:	H.L. Winstead

REVISIONS	INIT.	DATE

SEAL
NORTH CAROLINA PROFESSIONAL SEAL 07983 ENGINEER HARVEY L. WINSTEAD, JR.
SIGNATURE H.L. Winstead Jr. DATE 12/12/11
CADD FILE NAME CL-08.dgn

PROJECT REFERENCE NO.	SHEET NO.
U-2551	Sig. 97

TMP-1
AT THE DIRECTION OF THE ENGINEER, INSTALL COMMUNICATIONS CABLE AND TERMINATE IN SIGNAL CABINET. MAKE SYSTEM OPERATIONAL.

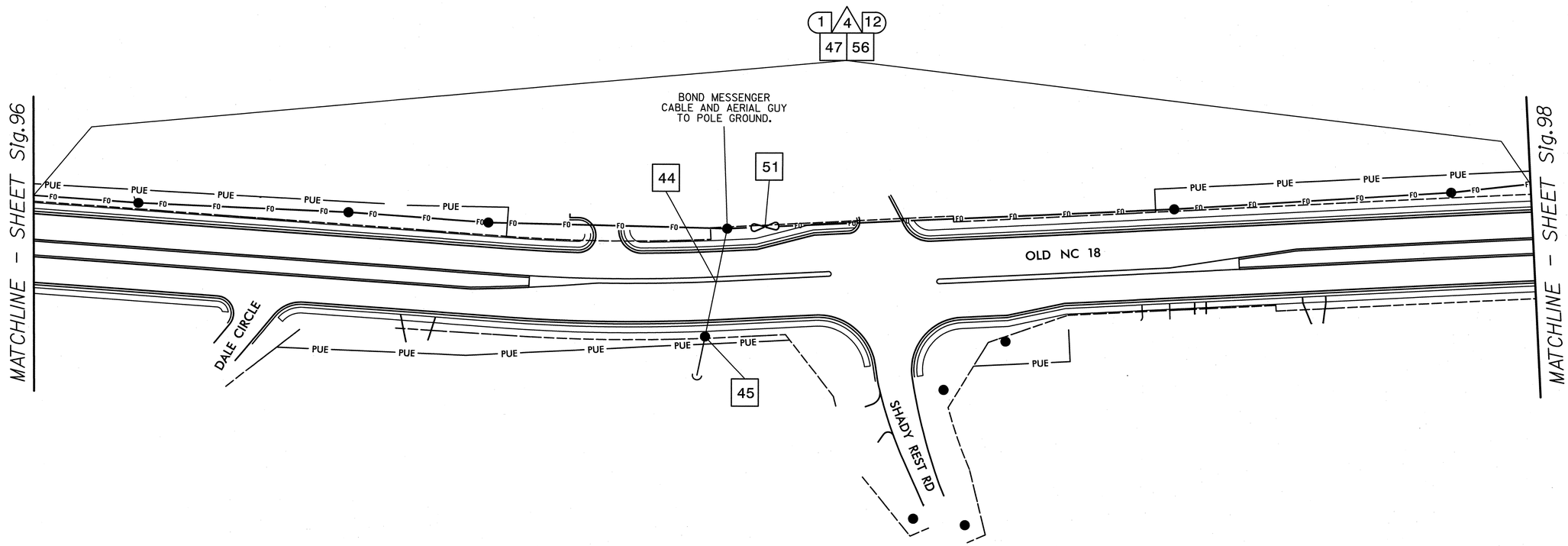

NOTES:
1. ATTACH FIBER OPTIC CABLE 40" BELOW POWER AND ON THE FRONT SIDE (FS) OF POLE, UNLESS OTHERWISE NOTED.
2A. STORE 60 FEET OF COMMUNICATIONS CABLE IN JUNCTION BOX.
2B. STORE 60 FEET OF EACH COMMUNICATION CABLE SEGMENT IN JUNCTION BOX.
3. DISTANCES SHOWN BETWEEN JUNCTION BOXES ARE APPROXIMATE.

HNTB
HNTB NORTH CAROLINA, P.C.
343 E. Six Forks Road, Suite 200
Raleigh, North Carolina 27609
NC License No: C-1554

Prepared for:
Transportation Mobility and Safety Division
Intelligent Transportation Systems Section
STATE OF NORTH CAROLINA DEPARTMENT OF TRANSPORTATION
750 N. Greenfield Pkwy., Garner, NC 27529

SCALE
10 0 50
1"=50'

SR 1922 (Enola Rd)
Communications Cable and Conduit Routing Plans

Division 13 Burke County Morganton

PLAN DATE:	August 2011	REVIEWED BY:	N.M. Rodevick
PREPARED BY:	A.D. Klinksiek	REVIEWED BY:	H.L. Winstead

REVISIONS	INIT.	DATE

SEAL
NORTH CAROLINA PROFESSIONAL SEAL 07983 ENGINEER HARVEY L. WINSTEAD, JR.
HLWinstead 12/12/11
SIGNATURE DATE
CADD FILE NAME CL-09.dgn

PROJECT REFERENCE NO.	SHEET NO.
U-2551	Sig. 98

TMP-1
AT THE DIRECTION OF THE ENGINEER, INSTALL COMMUNICATIONS CABLE AND TERMINATE IN SIGNAL CABINET. MAKE SYSTEM OPERATIONAL.

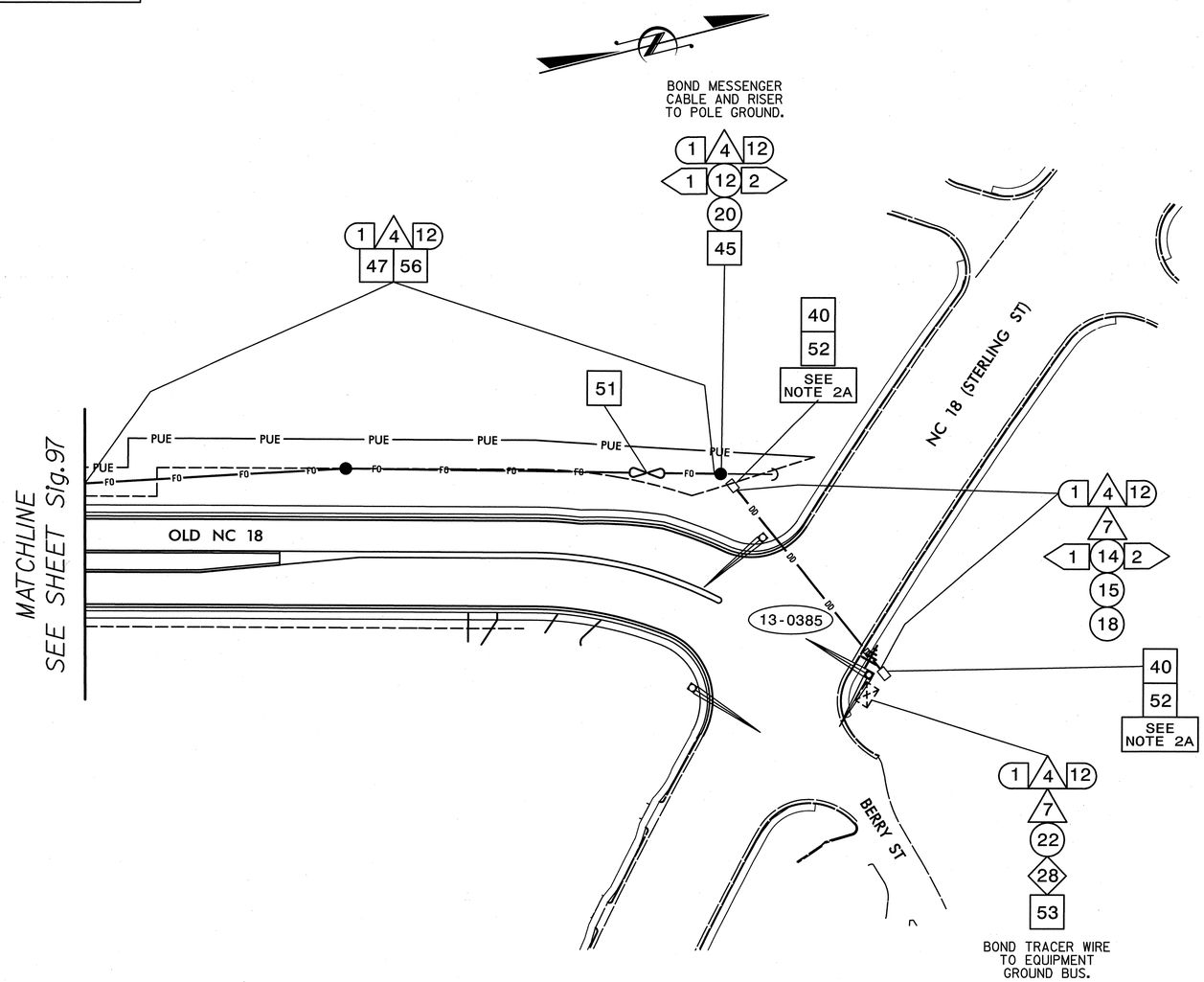

900 MHZ RADIO NOTES

1. MAINTAIN EXISTING 900 MHZ WIRELESS RADIO.
2. RELOCATE ANTENNA (8.5 dB) AND MOUNTING HARDWARE FROM WOOD POLE TO NEW METAL POLE WITH MAST ARM.
3. MOUNT ANTENNA A MINIMUM OF 6 FEET AWAY FROM THE VERTICAL SHAFT MEMBER.
4. AIM ANTENNA TOWARD EXISTING ANTENNA AT 13-0454.
5. MAINTAIN PROPER CLEARANCE FROM ALL UTILITIES PER THE NATIONAL ELECTRICAL SAFETY CODE.
6. INSTALL COAXIAL CABLE:
   A. ON METAL POLES, RUN THE COAXIAL CABLE UP THROUGH THE POLE AND OUT THE MAST ARM. FIELD DRILL 1/2" HOLE WITH GROMMET THROUGH BOTTOM OF MAST ARM FOR INSTALLATION OF THE COAXIAL CABLE.
   B. BETWEEN THE POINT OF EXISTING THE METAL POLE OR MAST ARM AND THE ANTENNA, SECURE THE COAXIAL CABLE TO THE STRUCTURE USING 3/4" STAINLESS STEEL STRAPS EVERY 12".
7. INSTALL NEW COAXIAL CABLE WITH N-TYPE CONNECTORS AND NEW COAXIAL CABLE SHIELD GROUNDING AND WEATHERPROOFING KIT.
8. INSTALL DATA SPLITTER CABLE BETWEEN 900 MHZ RADIO, FIBER OPTIC MODEM AND CONTROLLER.
9. REFERENCE RSD 1756.01 (SHEETS 1 AND 2 OF 5).

NOTES:
1. ATTACH FIBER OPTIC CABLE 40" BELOW POWER AND ON THE FRONT SIDE (FS) OF POLE, UNLESS OTHERWISE NOTED.
2A. STORE 60 FEET OF COMMUNICATIONS CABLE IN JUNCTION BOX.
2B. STORE 60 FEET OF EACH COMMUNICATION CABLE SEGMENT IN JUNCTION BOX.
3. DISTANCES SHOWN BETWEEN JUNCTION BOXES ARE APPROXIMATE.

HNTB
HNTB NORTH CAROLINA, P.C.
343 E. Six Forks Road, Suite 200
Raleigh, North Carolina 27609
NC License No: C-1554

Prepared for: Transportation Mobility and Safety Division — Intermodal Transportation Systems Section — STATE OF NORTH CAROLINA DEPARTMENT OF TRANSPORTATION
750 N. Greenfield Pkwy., Garner, NC 27529

SCALE 10 0 50 — 1"=50'

SR 1922 (Enola Rd)
Communications Cable and Conduit Routing Plans

Division 13 Burke County Morganton

PLAN DATE:	August 2011	REVIEWED BY:	N.W. Rodevick
PREPARED BY:	A.D. Klinksiek	REVIEWED BY:	H.L. Winstead

REVISIONS	INIT.	DATE

SEAL
NORTH CAROLINA PROFESSIONAL ENGINEER SEAL 07983 HARVEY L. WINSTEAD, JR.
SIGNATURE H.L. Winstead DATE 12/2/11
CADD FILE NAME CL-10.dgn

PROJECT REFERENCE NO.	SHEET NO.
U-2551	Sig. 99

SR 1922 (ENOLA RD) AT SR 1940 (PETE BRITTAIN RD/ OLD COLONY RD

SIG. INV. # 13–1160

Notes:
Unused fibers left coiled and stored in splice tray.
Unused Buffer Tubes left coiled and stored in splice tray.

LEGEND
X = FUSION SPLICE
C = CAP AND SEAL

COLOR CODE TIA/EIA 598–A
(1) BLUE
(2) ORANGE
(3) GREEN
(4) BROWN
(5) SLATE
(6) WHITE

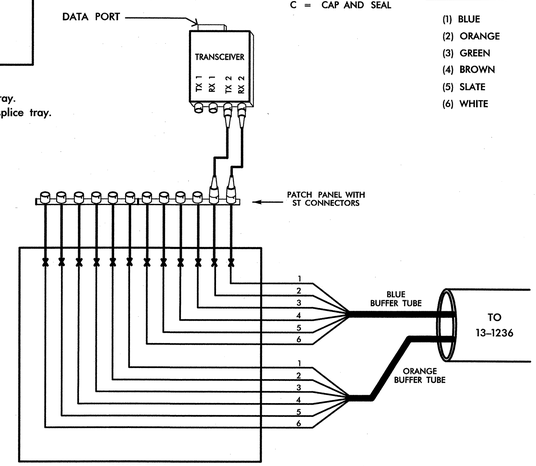

SR 1922 (ENOLA RD) AT J.I.R.D.C. SOUTHERN ENTRANCE

SIG. INV. # 13–1236

Notes:
Unused fibers left coiled and stored in splice tray.
Unused Buffer Tubes left coiled and stored in splice tray.

LEGEND
X = FUSION SPLICE
C = CAP AND SEAL

COLOR CODE TIA/EIA 598–A
(1) BLUE
(2) ORANGE
(3) GREEN
(4) BROWN
(5) SLATE
(6) WHITE

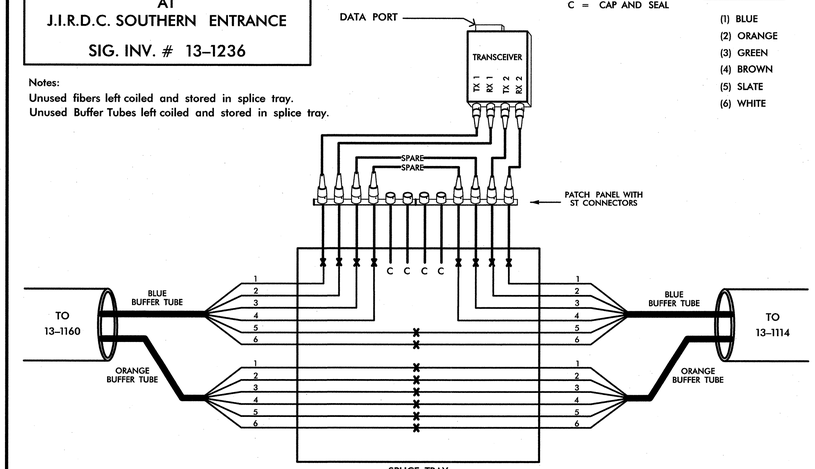

SR 1922 (ENOLA RD) AT FIDDLERS RUN BLVD

SIG. INV. # 13–1114

Notes:
Unused fibers left coiled and stored in splice tray.
Unused Buffer Tubes left coiled and stored in splice tray.

LEGEND
X = FUSION SPLICE
C = CAP AND SEAL

COLOR CODE TIA/EIA 598–A
(1) BLUE
(2) ORANGE
(3) GREEN
(4) BROWN
(5) SLATE
(6) WHITE

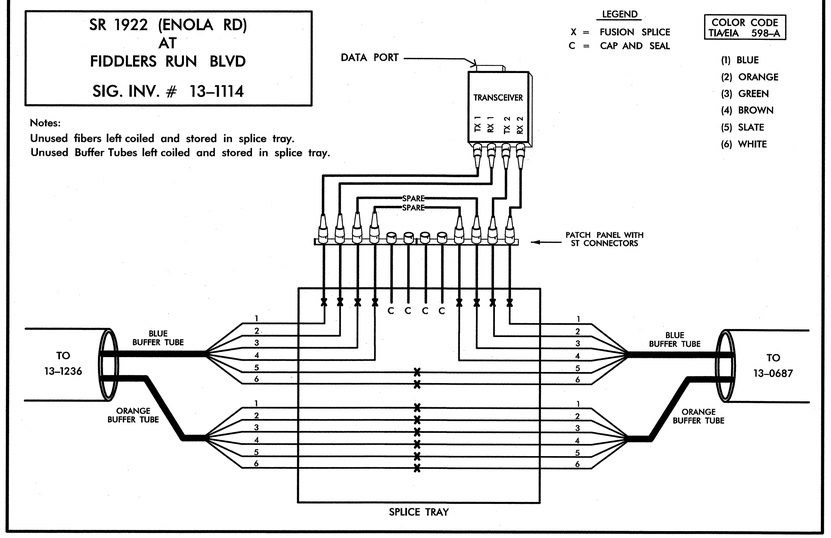

SR 1922 (ENOLA RD) AT I–40 EASTBOUND RAMP

SIG. INV. # 13–0687

Notes:
Unused fibers left coiled and stored in splice tray.
Unused Buffer Tubes left coiled and stored in splice tray.

LEGEND
X = FUSION SPLICE
C = CAP AND SEAL

COLOR CODE TIA/EIA 598–A
(1) BLUE
(2) ORANGE
(3) GREEN
(4) BROWN
(5) SLATE
(6) WHITE

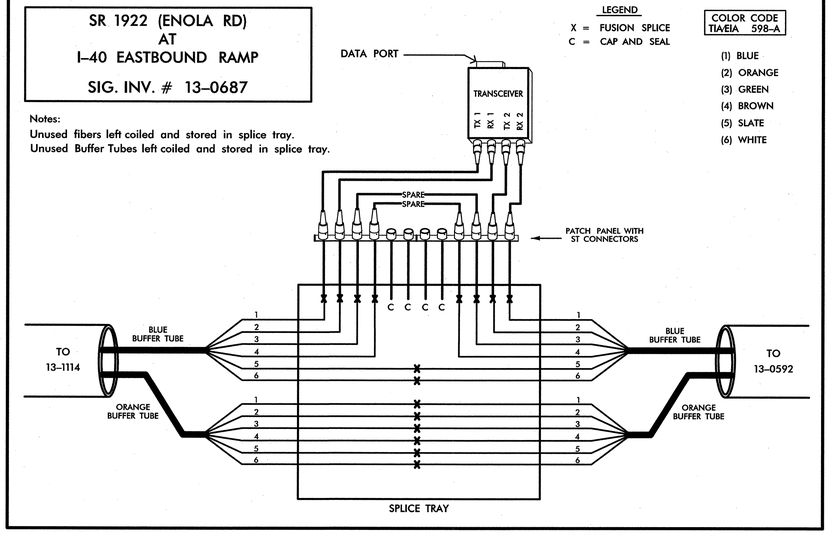

Transceiver termination configurations are generic. Contractor is responsible for determining /ensuring the proper terminations.

HNTB NORTH CAROLINA, P.C.
343 E. Six Forks Road, Suite 200
Raleigh, North Carolina 27609
NC License No: C-1554

Prepared for: Transportation Mobility and Safety Division — Intermodal Transportation Systems Section — STATE OF NORTH CAROLINA DEPARTMENT OF TRANSPORTATION
750 N. Greenfield Pkwy., Garner, NC 27529

SCALE: NONE

FIBER OPTIC SPLICE DETAILS

Division 13 | Burke County | Morganton

PLAN DATE:	Aug 2011	REVIEWED BY:	N.M. Rodevick
PREPARED BY:	A.D. Klinksiek	REVIEWED BY:	H.L. Winstead

REVISIONS	INIT.	DATE

SEAL
NORTH CAROLINA PROFESSIONAL SEAL 07983 ENGINEER HARVEY L. WINSTEAD, JR.

SIGNATURE: H.L. Winstead | DATE: 12/12/11

CADD FILE NAME: Sig-99.dgn

PROJECT REFERENCE NO.	SHEET NO.
U-2551	Sig. 100

SR 1922 (ENOLA RD) AT I-40 WESTBOUND RAMP

SIG. INV. # 13-0592

Notes:
Unused fibers left coiled and stored in splice tray.
Unused Buffer Tubes left coiled and stored in splice tray.

LEGEND
X = FUSION SPLICE
C = CAP AND SEAL

COLOR CODE TIA/EIA 598-A
(1) BLUE
(2) ORANGE
(3) GREEN
(4) BROWN
(5) SLATE
(6) WHITE

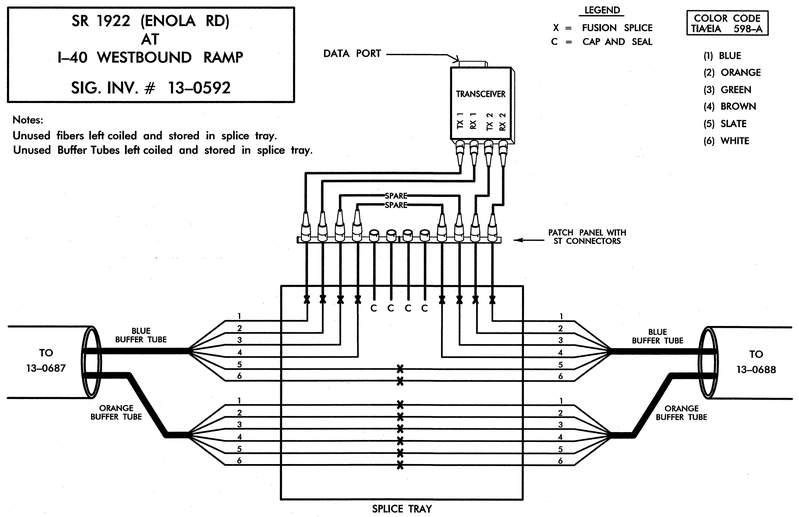

SR 1922 (ENOLA RD) AT SR 1924 (OLD NC 18)/ BROUGHTON HOSPITAL ENTRANCE

SIG. INV. # 13-0688

Notes:
Unused fibers left coiled and stored in splice tray.
Unused Buffer Tubes left coiled and stored in splice tray.

LEGEND
X = FUSION SPLICE
C = CAP AND SEAL

COLOR CODE TIA/EIA 598-A
(1) BLUE
(2) ORANGE
(3) GREEN
(4) BROWN
(5) SLATE
(6) WHITE

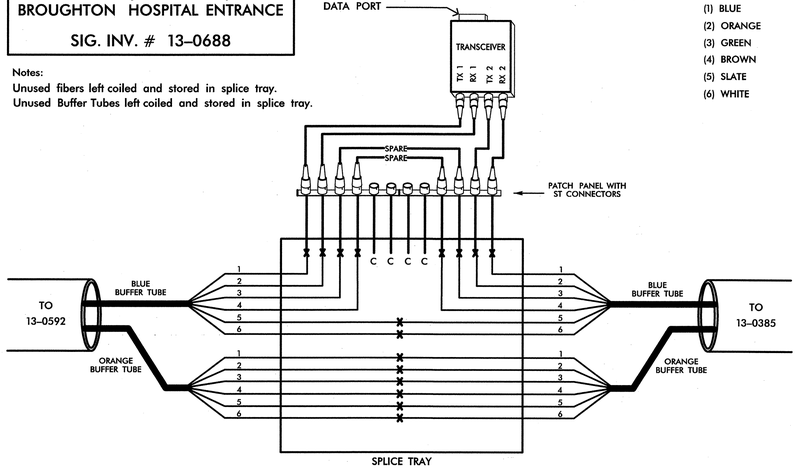

NC 18 (SOUTH STERLING STREET) AT BERRY STREET /OLD NC 18

SIG. INV. # 13-0385

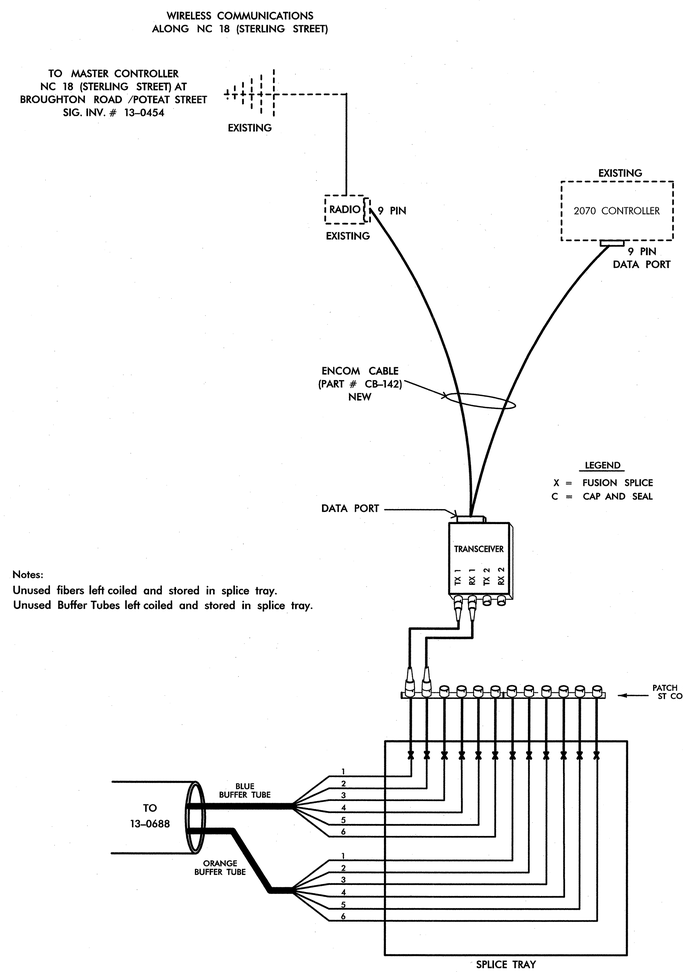

Notes:
Unused fibers left coiled and stored in splice tray.
Unused Buffer Tubes left coiled and stored in splice tray.

Transceiver termination configurations are generic. Contractor is responsible for determining /ensuring the proper terminations.

HNTB
HNTB NORTH CAROLINA, P.C.
343 E. Six Forks Road, Suite 200
Raleigh, North Carolina 27609
NC License No: C-1554

Prepared for: Transportation Mobility and Safety Division — Intermodal Transportation Systems Section — STATE OF NORTH CAROLINA DEPARTMENT OF TRANSPORTATION
750 N. Greenfield Pkwy., Garner, NC 27529

SCALE: NONE

FIBER OPTIC SPLICE DETAILS

Division 13 Burke County Morganton

PLAN DATE:	Aug 2011	REVIEWED BY:	N.M. Rodevick
PREPARED BY:	A.D. Klinksiek	REVIEWED BY:	H.L. Winstead

REVISIONS	INIT.	DATE

SEAL: NORTH CAROLINA PROFESSIONAL SEAL 07983 ENGINEER HARVEY L. WINSTEAD, JR.

SIGNATURE H.L. Winstead DATE 12/12/11

CADD FILE NAME Sig-100.dgn