TIP PROJECT: R-2414B

Project No.	Sheet No.
	Sig. 1

STATE OF NORTH CAROLINA
DIVISION OF HIGHWAYS

METRIC

CAMDEN COUNTY

LOCATION: US 158 – FROM NORTH OF SR 1257 (HAVENWOOD DRIVE) TO EAST OF NC 34 IN BELCROSS

TYPE OF WORK: SIGNALS

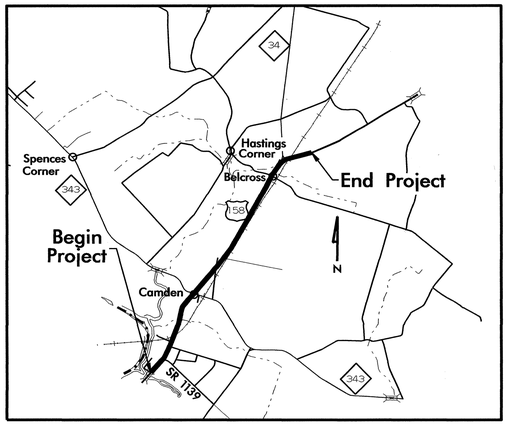

VICINITY MAP

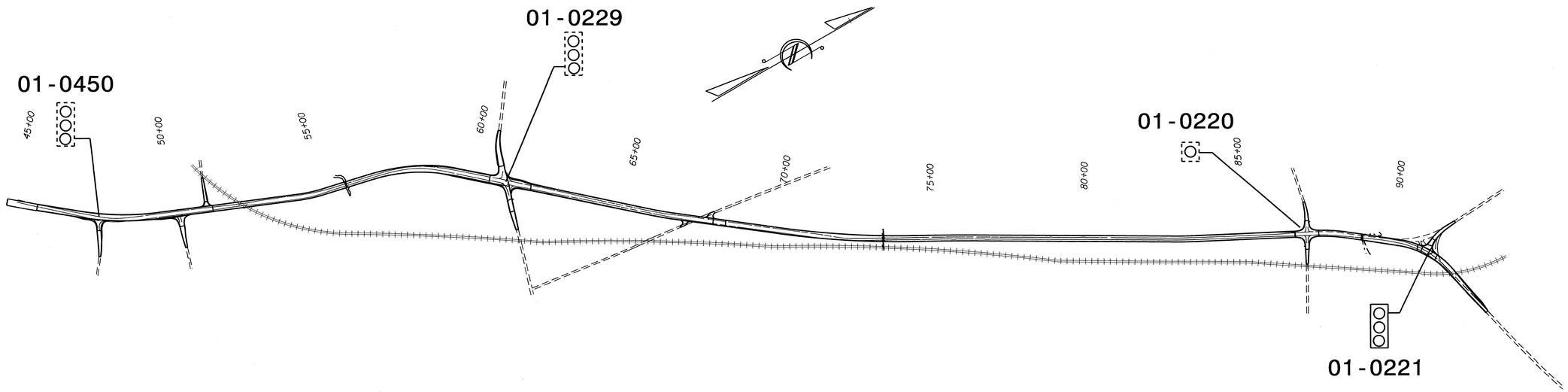

Index of Plans

Sheet #	Reference #	Location/Description
Sig. 1	--------	Title Sheet
Sig. 2–12	01–0450	US 158 at SR 1139 (Country Club Road)
Sig. 13–32	01–0229	US 158 at NC 343
Sig. 33–35	01–0220	US 158 at SR SR 1145 (Belcross Road/Lambs Road)
Sig. 36–43	01–0221	US 158 at NC 34
Sig. 44–48	NA	Standard Drawings for Metal Poles
Sig. 49–51	NA	Inductive Detection Loop Plate Drawings

INTELLIGENT TRANSPORTATION AND SIGNALS UNIT

Contacts:

Jason Galloway, PE – East Region Signal Project Engineer
George Brown, PE – Signal Equipment Design Engineer

Prepared in the Offices of:
TRANSPORTATION MOBILITY AND SAFETY DIVISION

Intelligent Transportation Systems & Signals Unit

750 N. Greefield Parkway, Garner, NC 27529

03-SEP-2010 15:37
S:\TPB&SOUTTS\Signals\Workgroups\TIP Projects\R-2414B\Signals\Design\Titlesheet\R2414B_sig_tsh_20100907.dgn
jgallaway

METRIC	PROJECT REFERENCE NO.	SHEET NO.
	R-2414B	Sig.2

PHASING DIAGRAM

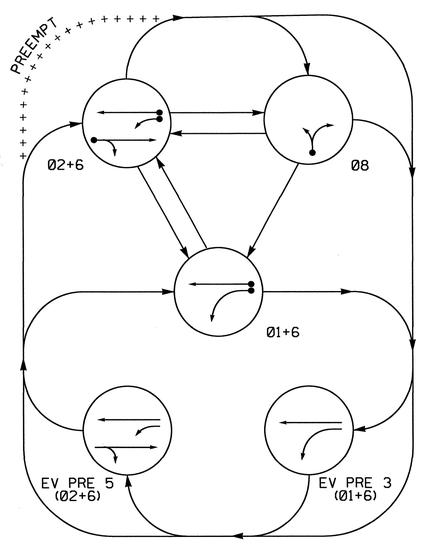

PHASING DIAGRAM DETECTION LEGEND

- DETECTED MOVEMENT
- UNDETECTED MOVEMENT (OVERLAP)
- UNSIGNALIZED MOVEMENT
- PEDESTRIAN MOVEMENT

TABLE OF OPERATION

SIGNAL FACE	PHASE 01+6	PHASE 02+6	PHASE 08	PREVE 3	PREVE 5	FLASH
11	←	F	R	←	F	Y
21,22	R	G	R	R	G	Y
61,62	G	G	R	G	G	Y
81,82	R	R	G	R	R	R

SIGNAL FACE I.D.

All Heads L.E.D.

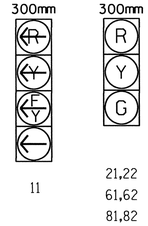

STANDARD SIGNAL FACE CLEARANCES FOR FLASHING LEFT TURN SIGNAL

FROM	TO ← 1	TO ← 2	TO F 1	TO F 2	TO R 1	TO R 2
←	←	←	✗	R	✗	R
F	F Y	F Y	F Y	F Y	✗	R
R	R	R	R	R	R	R

F = Flashing Yellow Arrow

OASIS 2070L LOOP & DETECTOR INSTALLATION CHART

INDUCTIVE LOOPS					DETECTOR PROGRAMMING						
LOOP	SIZE (M)	DISTANCE FROM STOPBAR (M)	TURNS	NEW LOOP	PHASE	CALLING	EXTENSION	FULL TIME DELAY	STRETCH TIME	DELAY TIME	SYSTEM LOOP	NEW CARD
1A	1.8X12	+1.5	2-4-2	Y	1	Y	Y	-	-	15	-	Y
					6	Y	Y	-	-	-	-	Y
2A	1.8X1.8	20	4	Y	2	Y	Y	-	-	-	-	Y
6A	1.8X1.8	20	4	Y	6	Y	Y	-	-	-	-	Y
8A	1.8X12	0	2-4-2	Y	8	Y	Y	-	-	5	-	Y
8B	1.8X1.8	+1.5	4	Y	8	Y	Y	-	-	15	-	Y

3 Phase W/EV Preempt
Fully Actuated
Isolated

NOTES

1. Refer to "Roadway Standard Drawings NCDOT" dated July 2006 and "Standard Specifications for Roads and Structures" dated July 2006.
2. Do not program signal for late night flashing operation unless otherwise directed by the Engineer.
3. Phase 1 may be lagged.
4. Set all detector units to presence mode.
5. Locate new cabinet so as not to obstruct sight distance of vehicles turning right on red.
6. This intersection features an optical preemption system. Shown locations of optical detectors are conceptual only.

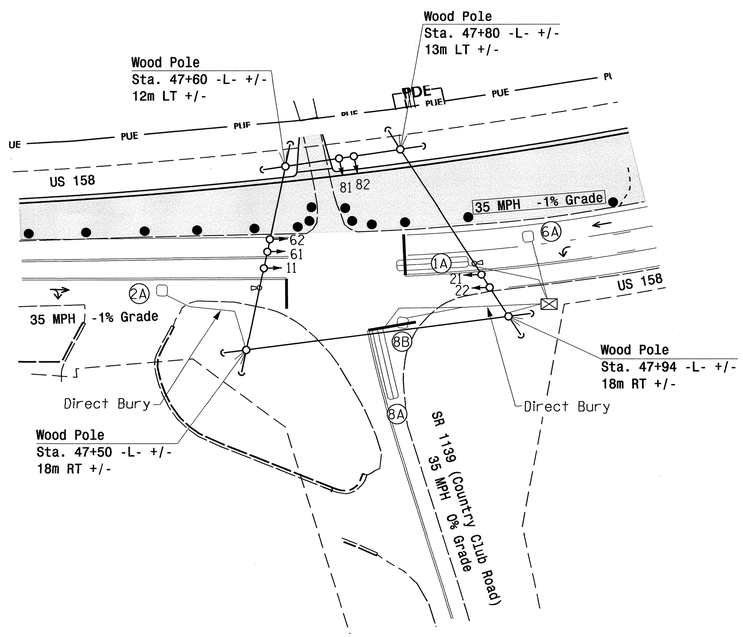

LEGEND

PROPOSED		EXISTING
	Traffic Signal Head	
	Modified Signal Head	N/A
	Sign	
	Pedestrian Signal Head With Push Button & Sign	
	Signal Pole with Guy	
	Signal Pole with Sidewalk Guy	
	Inductive Loop Detector	
	Controller & Cabinet	
	Junction Box	
	50mm Underground Conduit	
N/A	Right of Way with Marker	
	Directional Arrow	
	Opticom Detector	
	Construction Zone Drums	

OASIS 2070L TIMING CHART

FEATURE	PHASE 1	PHASE 2	PHASE 6	PHASE 8
Min Green 1 *	7	10	10	7
Extension 1 *	2.0	3.0	3.0	2.0
Max Green 1 *	15	60	60	25
Yellow Clearance	3.0	3.9	3.9	3.0
Red Clearance	1.2	1.3	1.3	2.0
Walk 1 *	-	-	-	-
Don't Walk 1	-	-	-	-
Seconds Per Actuation *	-	-	-	-
Max Variable Initial *	-	-	-	-
Time Before Reduction *	-	-	-	-
Time To Reduce *	-	-	-	-
Minimum Gap	-	-	-	-
Recall Mode	-	MIN RECALL	MIN RECALL	-
Vehicle Call Memory	-	YELLOW	YELLOW	-
Dual Entry	-	-	-	-
Simultaneous Gap	ON	ON	ON	ON

* These values may be field adjusted. Do not adjust Min Green and Extension times for phases 2 and 6 lower than what is shown. Min Green for all other phases should not be lower than 4 seconds.

OASIS 2070 EV PREEMPTION

FUNCTION	PRE 3	PRE 5
Interval 1 – Dwell Green	255	255
Interval 1 – Dwell Yellow	0.0*	0.0*
Interval 1 – Dwell Red	0.0*	0.0*
Interval 5 – Exit Green	0	0
Interval 5 – Yellow	0.0	0.0
Interval 5 – Red	0.0	0.0
Priority	MEDIUM	MEDIUM
Delay Time	0.0	0.0
Min Green Before Pre	1	1
Ped Clear Before Pre	0	0
Yellow Clear Before Pre	0.0*	0.0*
Red Clear Before Pre	0.0*	0.0*
Dwell Min Time	7	10
Enable Backup Protection	N	N
Ped Clear Through Yellow	N	N
Preempt Extend**	2	2

* Time defaults to time used for phase during normal operation
** Program Timing on Optical Detection Unit

Signal Upgrade/Temp 1 Phase I

Prepared in the Offices of:
Traffic Engineering and Safety Systems Branch
STATE OF NORTH CAROLINA DEPARTMENT OF TRANSPORTATION
Signals and Geometrics Section
750 N. Greenfield Pkwy, Garner, NC 27529

SCALE 5 0 10 500:1

US 158
At
SR 1139 (Country Club Road)

Division 1 Camden County Camden

PLAN DATE: April 2010	REVIEWED BY:
PREPARED BY: JPG	REVIEWED BY:

REVISIONS	INIT.	DATE

SEAL
STATE OF NORTH CAROLINA PROFESSIONAL SEAL 29904 ENGINEER JASON P. GALLOWAY
SIGNATURE 8/9/10 DATE
STD. INVENTORY NO. 01/0450T1

19-AUG-2010 10:24
S:*ITSAS*ITS Signals*Workgroups*TIP Projects*R-2414B*Signals*Designs*Signals*01-0450*01045OT1_sig_dsn_2010mmdd.dgn
jgalloway

PROJECT REFERENCE NO.	SHEET NO.
R-2414B	Sig. 3

EDI MODEL 2010ECL-NC CONFLICT MONITOR PROGRAMMING DETAIL

(remove jumpers and set switches as shown)

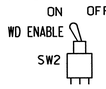

REMOVE DIODE JUMPERS 1-6, 1-9, 2-6, 2-9 and 6-9.

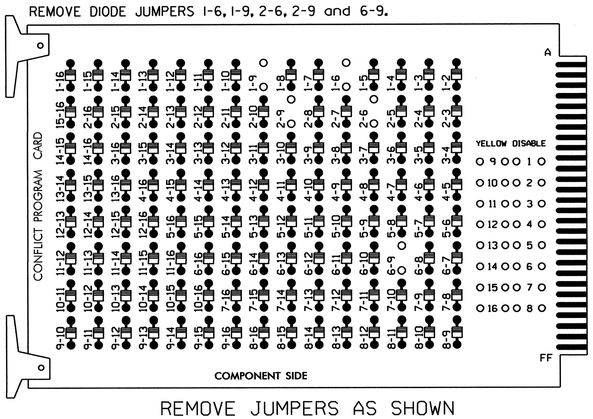

REMOVE JUMPERS AS SHOWN

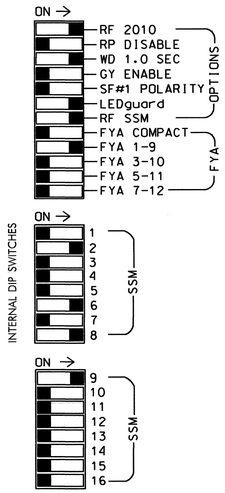

■ = DENOTES POSITION OF SWITCH

NOTES:

1. Card is provided with all diode jumpers in place. Removal of any jumper allows its channels to run concurrently.
2. Make sure jumpers SEL2-SEL5 are present on the monitor board.

NOTES

1. To prevent "flash-conflict" problems, insert red flash program blocks for all unused vehicle load switches in the output file. The installer shall verify that signal heads flash in accordance with the Signal Plans.
2. Ensure that Red Enable is active at all times during normal operation. To prevent Red Failures on unused monitor channels, tie unused red monitor inputs 1,3,4, 5,7,10,11,12,13,14,15 & 16 to load switch AC+ per the cabinet manufacturer's instructions.
3. Enable Simultaneous Gap-Out for all phases.
4. Program phases 2 and 6 for Start Up In Green.
5. Program phases 2 and 6 for Yellow Flash, and overlap 1 as Wag Overlaps.

EQUIPMENT INFORMATION

CONTROLLER.....2070L
CABINET.....332 /W/ AUX
SOFTWARE.....ECONOLITE OASIS
CABINET MOUNT.....BASE
OUTPUT FILE POSITIONS...18 WITH AUX. OUTPUT FILE
LOAD SWITCHES USED.....S1,S2,S6,S8,S9
PHASES USED.....1,2,6,8
OVERLAP "A".....1+2
OVERLAP "B".....NOT USED
OVERLAP "C".....NOT USED
OVERLAP "D".....NOT USED

SIGNAL HEAD HOOK-UP CHART

LOAD SWITCH NO.	S1	S2	S2P	S3	S4	S4P	S5	S6	S6P	S7	S8	S8P	S9	S10	S11	S12	S13	S14
PHASE	1	2	2 PED	3	4	4 PED	5	6	6 PED	7	8	8 PED	OLA	OLB	SPARE	OLC	OLD	SPARE
SIGNAL HEAD NO.	11★	21,22	NU	NU	NU	NU	NU	61,62	NU	NU	81,82	NU	11★	NU	NU	NU	NU	NU
RED		128						134			107							
YELLOW	✳	129						135			108							
GREEN		130						136			109							
RED ARROW													A121					
YELLOW ARROW													A122					
FLASHING YELLOW ARROW													A123					
GREEN ARROW	127																	

NU = Not Used
✳ Denotes install load resistor. See load resistor installation detail this sheet.
★ See pictorial of head wiring in detail below.

4 SECTION FYA PPLT SIGNAL WIRING DETAIL

(wire signal heads as shown)

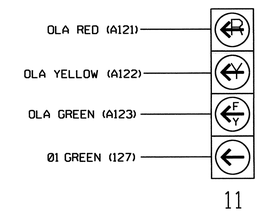

NOTE

1. The sequence display for this signal requires special logic programming. See sheet 2 of 2 for programming instructions.

INPUT FILE POSITION LAYOUT

(front view)

		1	2	3	4	5	6	7	8	9	10	11	12	13	14
FILE "I"	U	Ø1	SLOT	Ø2	SLOT	SLOT	SLOT	SLOT	SLOT	SLOT	SLOT	SLOT	SLOT	SLOT	FS
		1A	EMPTY	2A	EMPTY	EMPTY	EMPTY	EMPTY	EMPTY	EMPTY	EMPTY	EMPTY	EMPTY	EMPTY	DC ISOLATOR
	L	NOT USED		NOT USED											ST
															DC ISOLATOR
FILE "J"	U	SLOT	Ø6	SLOT	WIRED INPUT ⊗	SLOT	Ø8	SLOT	SLOT	SLOT	SLOT	SLOT	PRE3	SLOT	SLOT
		EMPTY	6A	EMPTY		EMPTY	8A	EMPTY	EMPTY	EMPTY	EMPTY	EMPTY	OPTICAL DETECTOR (2-CHAN.)	EMPTY	EMPTY
	L		NOT USED				Ø8						PRE5		
							8B								

EX.: 1A, 2A, ETC. = LOOP NO.'S

FS = FLASH SENSE
ST = STOP TIME

⊗ Wired Input - Do not populate slot with detector card

INPUT FILE CONNECTION & PROGRAMMING CHART

LOOP NO.	LOOP TERMINAL	INPUT FILE POS.	PIN NO.	INPUT ASSIGNMENT NO.	DETECTOR NO.	NEMA PHASE	CALL	EXTEND	FULL TIME DELAY	STRETCH TIME	DELAY TIME
1A[1]	TB2-1,2	I1U	56	18	1	1	Y	Y			15
	-	J4U	48	10	26	6	Y	Y			
2A	TB2-9,10	I3U	63	25	32	2	Y	Y			
6A	TB3-5,6	J2U	40	2	6	6	Y	Y			
8A	TB5-9,10	J6U	42	4	8	8	Y	Y			5
8B	TB5-11,12	J6L	46	8	18	8	Y	Y			15

[1] Add jumper from I1-W to J4-W. on rear of input file.

INPUT FILE POSITION LEGEND: J2L
FILE J
SLOT 2
LOWER

LOAD RESISTOR INSTALLATION DETAIL

(install resistors as shown below)

ACCEPTABLE VALUES	
VALUE (ohms)	WATTAGE
1.5K - 1.9K	25W (min)
2.0K - 3.0K	10W (min)

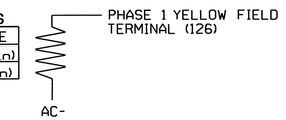

OPTICOM FIELD WIRE DETAIL

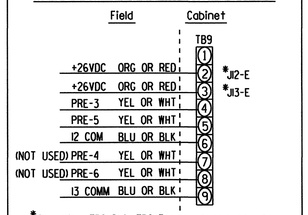

*Assuming TB9-2 & TB9-3 are unused on the J File, move wires on J11-J & J-11-K (Twisted Pair) to J12-E & J13-E Respectively.

THIS ELECTRICAL DETAIL IS FOR
THE SIGNAL DESIGN: 01-0450T1
DESIGNED: April 2010
SEALED: 08/19/10
REVISED:

ELECTRICAL DETAIL - TEMP 1 - SHEET 1 OF 2

ELECTRICAL AND PROGRAMMING DETAILS FOR:

Prepared in the Offices of:
Transportation Mobility and Safety Division
Signals Management Section
750 N.Greenfield Pkwy,Garner,NC 27529

US 158
at
SR 1139 (Country Club Road)

Division 1 Camden County Camden

PLAN DATE: July 2010	REVIEWED BY: T. Jyk
PREPARED BY: C. Strickland	REVIEWED BY:

REVISIONS	INIT.	DATE

SEAL
NORTH CAROLINA PROFESSIONAL SEAL 022013 ENGINEER GEORGE C. BROWN
SIGNATURE 8/25/10 DATE
SIG. INVENTORY NO. 01-0450T1

23-AUG-2010 13:35
S:\ITS\SG\WITS Signals\Workgroups\Sig Man\Strickland\01045O_smele.xxx.dgn
ces\strickland

PROJECT REFERENCE NO.	SHEET NO.
R-2414B	Sig. 4

EMERGENCY VEHICLE PREEMPTION PROGRAMMING DETAIL

(program controller as shown below)

From Main Menu press 'A' (Preemption), then '1' (Standard Preemptions). Press 'NEXT' as needed to advance to Preempts 3 and 5.

```
   PREEMPTION  #3  SETTINGS (NEXT:1-10)
INTERVAL/TIMING |  CLEAR/DWELL PHASES
 GRN YEL  RED   |123456789101112131415 16
1 255  0.0* 0.0*|X    X
2   0  0.0  0.0 |
3   0  0.0  0.0 |
4   0  0.0  0.0 |
5   0  0.0  0.0 |
EXIT CALLS      |
          OPTIONS
PRIORITY (Y/N TO SELECT) ............MED
DELAY TIMER (0-255 SEC) .............0
MIN GREEN BEFORE PRE (0= DEFAULT)....1
PED CLEAR BEFORE PRE (0= DEFAULT)....0
YELLOW CLEAR BEFORE PRE (0= DEFAULT).0.0*
RED CLEAR BEFORE PRE (0= DEFAULT)....0.0*
DWELL MIN TIMER (0-255 SEC) .........7
DWELL MAX TIMER (0=OFF,1-255MIN) ....0
DWELL HOLD-OVER TIMER (0-255) .......0
LATCH CALL? .........................N
LINK TO NEXT PREEMPT? ...............N
ENABLE BACKUP PROTECTION? ...........N
HOLD CLEAR 1 PHASES DURING DELAY? ...N
FAST GREEN FLASH DWELL PHASES? ......N
PED CLEARANCE THROUGH YELLOW? .......N
INHIBIT OVERLAP GREEN EXTENSION? ....N
SERVICE DURING SOFTWARE FLASH? ......N
REST IN RED DURING DWELL INTERVAL? ..N
FLASH DWELL INTERVAL? ...............N
ALLOW PEDS IN DWELL INTERVAL? .......N
RE-TIME DWELL INTERVAL? .............N
OVERLAPS:                | ABCDEFGHIJKLMNOP
DWELL INT FLASH YELLOW   |
OMIT OVERLAPS:           |
```

PRESS 'NEXT' TWICE

```
   PREEMPTION  #5  SETTINGS (NEXT:1-10)
INTERVAL/TIMING |  CLEAR/DWELL PHASES
 GRN YEL  RED   |123456789101112131415 16
1 255  0.0* 0.0*| X   X
2   0  0.0  0.0 |
3   0  0.0  0.0 |
4   0  0.0  0.0 |
5   0  0.0  0.0 |
EXIT CALLS      |
          OPTIONS
PRIORITY (Y/N TO SELECT) ............MED
DELAY TIMER (0-255 SEC) .............0
MIN GREEN BEFORE PRE (0= DEFAULT)....1
PED CLEAR BEFORE PRE (0= DEFAULT)....0
YELLOW CLEAR BEFORE PRE (0= DEFAULT).0.0*
RED CLEAR BEFORE PRE (0= DEFAULT)....0.0*
DWELL MIN TIMER (0-255 SEC) .........10
DWELL MAX TIMER (0=OFF,1-255MIN) ....0
DWELL HOLD-OVER TIMER (0-255) .......0
LATCH CALL? .........................N
LINK TO NEXT PREEMPT? ...............N
ENABLE BACKUP PROTECTION? ...........N
HOLD CLEAR 1 PHASES DURING DELAY? ...N
FAST GREEN FLASH DWELL PHASES? ......N
PED CLEARANCE THROUGH YELLOW? .......N
INHIBIT OVERLAP GREEN EXTENSION? ....N
SERVICE DURING SOFTWARE FLASH? ......N
REST IN RED DURING DWELL INTERVAL? ..N
FLASH DWELL INTERVAL? ...............N
ALLOW PEDS IN DWELL INTERVAL? .......N
RE-TIME DWELL INTERVAL? .............N
OVERLAPS:                | ABCDEFGHIJKLMNOP
DWELL INT FLASH YELLOW   |
OMIT OVERLAPS:           |
```

PROGRAMMING COMPLETE

*TIME DEFAULTS TO TIME USED BY PHASE DURING NORMAL OPERATION

NOTE!

PROGRAM EXTEND TIME ON ALL 'OPTICOM' DETECTOR UNITS FOR 2 SEC.

LOGICAL I/O PROCESSOR PROGRAMMING DETAIL TO PRODUCE SPECIAL FYA-PPLT SIGNAL SEQUENCE

(program controller as shown below)

1. FROM MAIN MENU PRESS '2' (PHASE CONTROL), THEN '1' (PHASE CONTROL FUNCTIONS). SCROLL TO THE BOTTOM OF THE MENU AND ENABLE ACT LOGIC COMMANDS 1, 2 AND 3.
2. FROM MAIN MENU PRESS '6' (OUTPUTS), THEN '3' (LOGICAL I/O PROCESSOR).

```
LOGICAL I/O COMMAND #1  (+/-COMMAND#)
IF  ACTIVE PHASE        #1  IS ON
AND RED CLEAR ON PHASE  #1  IS ON

            SCROLL DOWN
THEN:
SET OUTPUT  ASSIGNMENT #50 ON
SET OUTPUT  ASSIGNMENT #51 OFF
```

NOTE: LOGIC FOR PHASE 1 RED CLEAR WHEN TRANSITIONING FROM PHASE 1 TO PHASE 2 (HEAD 11).

PRESS '+'

```
LOGICAL I/O COMMAND #2  (+/-COMMAND#)
IF  ACTIVE PHASE        #1  IS ON

            SCROLL DOWN
THEN:
SET OUTPUT  ASSIGNMENT #52 OFF
```

NOTE: LOGIC FOR SWITCHING FLASHING YELLOW ARROW "OFF" DURING PHASE 1 (HEAD 11).

PRESS '+'

```
LOGICAL I/O COMMAND #3  (+/-COMMAND#)
IF  YELLOW ON PHASE     #1  IS ON

            SCROLL DOWN
THEN:
SET OUTPUT  ASSIGNMENT #51 ON
```

NOTE: LOGIC FOR YELLOW ARROW CLEARANCE FROM PHASE 1 (HEAD 11).

LOGIC I/O PROCESSOR PROGRAMMING COMPLETE

OUTPUT REFERENCE SCHEDULE

OUTPUT 50 = Overlap A Red
OUTPUT 51 = Overlap A Yellow
OUTPUT 52 = Overlap A Green

OVERLAP PROGRAMMING DETAIL

(program controller as shown below)

FROM MAIN MENU PRESS '8' (OVERLAPS), THEN '1' (VEHICLE OVERLAP SETTINGS).

```
PAGE 1: VEHICLE OVERLAP 'A' SETTINGS
PHASE:                 |123456789101112131415 16
VEH OVL PARENTS:       |XX
VEH OVL NOT VEH:       |
VEH OVL NOT PED:       |
VEH OVL GRN EXT:       |
STARTUP COLOR:  _ RED  _ YELLOW  _ GREEN
FLASH COLORS:   _ RED  _ YELLOW  X GREEN
SELECT VEHICLE OVERLAP OPTIONS:   (Y/N)
FLASH YELLOW IN CONTROLLER FLASH?...Y
GREEN EXTENSION (0-255 SEC).........0
YELLOW CLEAR (0=PARENT,3-25.5 SEC)..0.0
RED CLEAR (0=PARENT,0.1-25.5 SEC)...0.0
OUTPUT AS PHASE # (0=NONE, 1-16)....0
```

NOTICE GREEN FLASH

OVERLAP PROGRAMMING COMPLETE

THIS ELECTRICAL DETAIL IS FOR
THE SIGNAL DESIGN: 01-0450T1
DESIGNED: April 2010
SEALED: 08/19/10
REVISED:

ELECTRICAL DETAIL - TEMP 1 - SHEET 2 OF 2

ELECTRICAL AND PROGRAMMING DETAILS FOR:

Prepared in the Offices of:
Transportation Mobility and Safety Division
STATE OF NORTH CAROLINA DEPARTMENT OF TRANSPORTATION
Signals Management Section
750 N.Greenfield Pkwy,Garner,NC 27529

US 158
at
SR 1139 (Country Club Road)

Division 1 | Camden County | Camden

PLAN DATE: July 2010	REVIEWED BY: T. Lyle		
PREPARED BY: C. Strickland	REVIEWED BY:		
REVISIONS		INIT.	DATE

SEAL
NORTH CAROLINA PROFESSIONAL SEAL 022013 ENGINEER GEORGE C. BROWN
SIGNATURE DATE 8/25/10
SIG. INVENTORY NO. 01-0450T1

23-AUG-2010 13:36
S:#TTSASU#TS Signals#workgroups#Sig Mom#Strickland#01450_sm_ele_xxx.dgn
cestrickland

PROJECT REFERENCE NO.	SHEET NO.
R-2414B	Sig.5

PHASING DIAGRAM

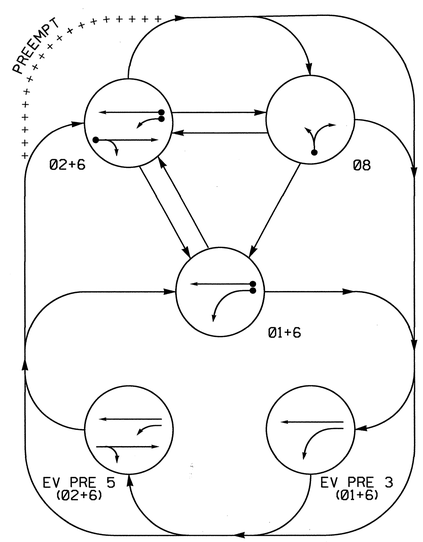

PHASING DIAGRAM DETECTION LEGEND

- DETECTED MOVEMENT
- UNDETECTED MOVEMENT (OVERLAP)
- UNSIGNALIZED MOVEMENT
- PEDESTRIAN MOVEMENT

TABLE OF OPERATION

SIGNAL FACE	PHASE 01+6	PHASE 02+6	PHASE 08	PHASE PREVE 3	PHASE PREVE 5	FLASH
11	←	F Y	R	←	F Y	Y
21,22	R	G	R	R	G	Y
61,62	G	G	R	G	G	Y
81,82	R	R	G	R	R	R

SIGNAL FACE I.D.

All Heads L.E.D.

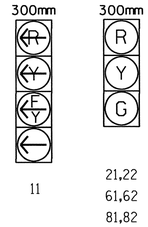

STANDARD SIGNAL FACE CLEARANCES FOR FLASHING LEFT TURN SIGNAL

FROM	TO ←	TO F Y	TO R 1	TO R 2	TO R 1	TO R 2
←	←	←	Y	R	Y	R
F Y	F Y	F Y	F Y	F Y	Y	R
R	R	R	R	R	R	R

F Y = Flashing Yellow Arrow

OASIS 2070L LOOP & DETECTOR INSTALLATION CHART

INDUCTIVE LOOPS					DETECTOR PROGRAMMING						
LOOP	SIZE (M)	DISTANCE FROM STOPBAR (M)	TURNS	NEW LOOP	PHASE	CALLING	EXTENSION	FULL TIME DELAY	STRETCH TIME	DELAY TIME	SYSTEM LOOP	NEW CARD
1A	1.8X12	+1.5	2-4-2	Y	1	Y	Y	-	-	15	-	-
					6	Y	Y	-	-	-	-	-
2A	1.8X1.8	20	4	Y	2	Y	Y	-	-	-	-	-
6A	1.8X1.8	20	4	Y	6	Y	Y	-	-	-	-	-
8A	1.8X12	0	2-4-2	Y	8	Y	Y	-	-	5	-	-
8B	1.8X1.8	+1.5	4	Y	8	Y	Y	-	-	15	-	-

3 Phase W/EV Preempt
Fully Actuated
Isolated

NOTES

1. Refer to "Roadway Standard Drawings NCDOT" dated July 2006 and "Standard Specifications for Roads and Structures" dated July 2006.
2. Do not program signal for late night flashing operation unless otherwise directed by the Engineer.
3. Phase 1 may be lagged.
4. Set all detector units to presence mode.
5. Locate new cabinet so as not to obstruct sight distance of vehicles turning right on red.
6. This intersection features an optical preemption system. Shown locations of optical detectors are conceptual only.

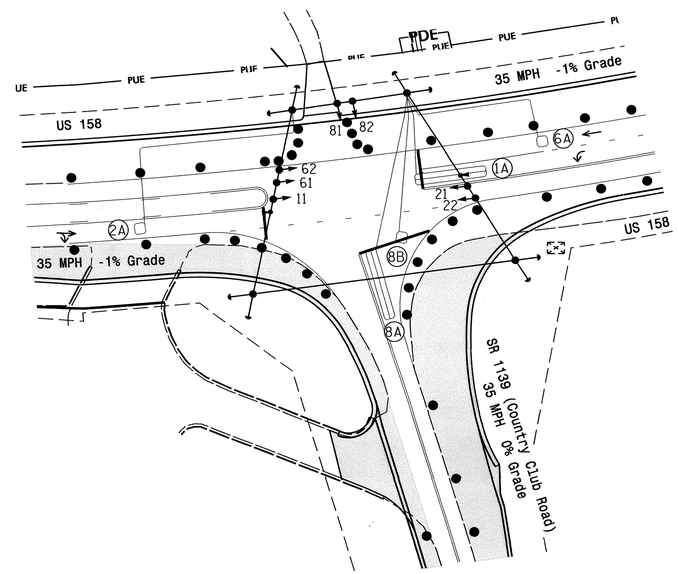

OASIS 2070L TIMING CHART

FEATURE	PHASE 1	PHASE 2	PHASE 6	PHASE 8
Min Green 1 *	7	10	10	7
Extension 1 *	2.0	3.0	3.0	2.0
Max Green 1 *	15	60	60	25
Yellow Clearance	3.0	3.9	3.9	3.0
Red Clearance	1.7	1.8	1.8	2.0
Walk 1 *	-	-	-	-
Don't Walk 1	-	-	-	-
Seconds Per Actuation *	-	-	-	-
Max Variable Initial *	-	-	-	-
Time Before Reduction *	-	-	-	-
Time To Reduce *	-	-	-	-
Minimum Gap	-	-	-	-
Recall Mode	-	MIN RECALL	MIN RECALL	-
Vehicle Call Memory	-	YELLOW	YELLOW	-
Dual Entry	-	-	-	-
Simultaneous Gap	ON	ON	ON	ON

* These values may be field adjusted. Do not adjust Min Green and Extension times for phases 2 and 6 lower than what is shown. Min Green for all other phases should not be lower than 4 seconds.

OASIS 2070 EV PREEMPTION

FUNCTION	PRE 3	PRE 5
Interval 1 – Dwell Green	255	255
Interval 1 – Dwell Yellow	0.0*	0.0*
Interval 1 – Dwell Red	0.0*	0.0*
Interval 5 – Exit Green	0	0
Interval 5 – Yellow	0.0	0.0
Interval 5 – Red	0.0	0.0
Priority	MEDIUM	MEDIUM
Delay Time	0.0	0.0
Min Green Before Pre	1	1
Ped Clear Before Pre	0	0
Yellow Clear Before Pre	0.0*	0.0*
Red Clear Before Pre	0.0*	0.0*
Dwell Min Time	7	10
Enable Backup Protection	N	N
Ped Clear Through Yellow	N	N
Preempt Extend**	2	2

* Time defaults to time used for phase during normal operation
** Program Timing on Optical Detection Unit

LEGEND

PROPOSED		EXISTING
	Traffic Signal Head	
	Modified Signal Head	N/A
	Sign	
	Pedestrian Signal Head With Push Button & Sign	
	Signal Pole with Guy	
	Signal Pole with Sidewalk Guy	
	Inductive Loop Detector	
	Controller & Cabinet	
	Junction Box	
	50mm Underground Conduit	
N/A	Right of Way with Marker	
	Directional Arrow	
	Opticom Detector	
	Construction Zone Drums	

Signal Upgrade/Temp 2 Phases II and III

Prepared in the Offices of:
Traffic Engineering and Safety Systems Branch
Signals and Geometrics Section
STATE OF NORTH CAROLINA DEPARTMENT OF TRANSPORTATION
750 N. Greenfield Pkwy, Garner, NC 27529

SCALE 5 0 10 500:1

US 158
At
SR 1139 (Country Club Road)

Division 1 Camden County Camden

PLAN DATE: April 2010 REVIEWED BY:
PREPARED BY: JPG REVIEWED BY:

REVISIONS	INIT.	DATE

SEAL
NORTH CAROLINA PROFESSIONAL SEAL 29904 ENGINEER JASON P. GALLOWAY
SIGNATURE 8/19/10 DATE
STG. INVENTORY NO. 01-0450T2

19-AUG-2010 10:31
S:*TIS&S*ITS Signals*Workgroups*TIP Projects*R-2414B*Signals*Designs*Signals*01-0450*01045OT2_sig_dsn_2010mmda.dgn
jgalloway

PROJECT REFERENCE NO.	SHEET NO.
R-2414B	Sig. 6

EDI MODEL 2010ECL-NC CONFLICT MONITOR PROGRAMMING DETAIL

(remove jumpers and set switches as shown)

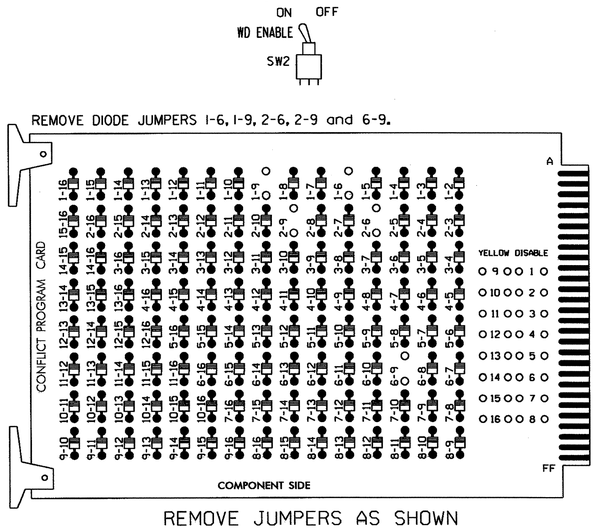

REMOVE JUMPERS AS SHOWN

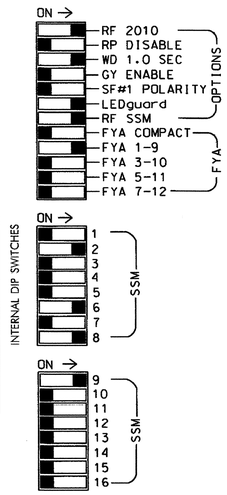

NOTES:

1. Card is provided with all diode jumpers in place. Removal of any jumper allows its channels to run concurrently.
2. Make sure jumpers SEL2-SEL5 are present on the monitor board.

■ = DENOTES POSITION OF SWITCH

NOTES

1. To prevent "flash-conflict" problems, insert red flash program blocks for all unused vehicle load switches in the output file. The installer shall verify that signal heads flash in accordance with the Signal Plans.
2. Ensure that Red Enable is active at all times during normal operation. To prevent Red Failures on unused monitor channels, tie unused red monitor inputs 1,3,4, 5,7,10,11,12,13,14,15 & 16 to load switch AC+ per the cabinet manufacturer's instructions.
3. Enable Simultaneous Gap-Out for all phases.
4. Program phases 2 and 6 for Start Up In Green.
5. Program phases 2 and 6 for Yellow Flash, and overlap 1 as Wag Overlaps.

SIGNAL HEAD HOOK-UP CHART

LOAD SWITCH NO.	S1	S2	S2P	S3	S4	S4P	S5	S6	S6P	S7	S8	S8P	S9	S10	S11	S12	S13	S14
PHASE	1	2	2 PED	3	4	4 PED	5	6	6 PED	7	8	8 PED	OLA	OLB	SPARE	OLC	OLD	SPARE
SIGNAL HEAD NO.	11★	21,22	NU	NU	NU	NU	NU	61,62	NU	NU	81,82	NU	11★	NU	NU	NU	NU	NU
RED		128						134			107							
YELLOW	✱	129						135			108							
GREEN		130						136			109							
RED ARROW													A121					
YELLOW ARROW													A122					
FLASHING YELLOW ARROW													A123					
GREEN ARROW	127																	

NU = Not Used

✱ Denotes install load resistor. See load resistor installation detail this sheet.

★ See pictorial of head wiring in detail below.

EQUIPMENT INFORMATION

CONTROLLER.....2070L
CABINET.....332 /W/ AUX
SOFTWARE.....ECONOLITE OASIS
CABINET MOUNT.....BASE
OUTPUT FILE POSITIONS...18 WITH AUX. OUTPUT FILE
LOAD SWITCHES USED.....S1,S2,S6,S8,S9
PHASES USED.....1,2,6,8
OVERLAP "A".....1+2
OVERLAP "B".....NOT USED
OVERLAP "C".....NOT USED
OVERLAP "D".....NOT USED

4 SECTION FYA PPLT SIGNAL WIRING DETAIL

(wire signal heads as shown)

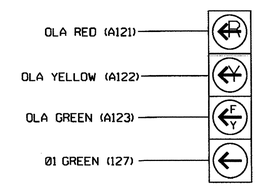

NOTE

1. The sequence display for this signal requires special logic programming. See sheet 2 of 2 for programming instructions.

INPUT FILE POSITION LAYOUT

(front view)

		1	2	3	4	5	6	7	8	9	10	11	12	13	14
FILE "I"	U	Ø1 1A	SLOT EMPTY	Ø2 2A	SLOT EMPTY	SLOT EMPTY	SLOT EMPTY	SLOT EMPTY	SLOT EMPTY	SLOT EMPTY	SLOT EMPTY	SLOT EMPTY	SLOT EMPTY	SLOT EMPTY	FS DC ISOLATOR
	L	NOT USED		NOT USED											ST DC ISOLATOR
FILE "J"	U	SLOT EMPTY	Ø6 6A	SLOT EMPTY	WIRED INPUT ⊗	SLOT EMPTY	Ø8 8A	SLOT EMPTY	SLOT EMPTY	SLOT EMPTY	SLOT EMPTY	SLOT EMPTY	PRE3 OPTICAL DETECTOR (2-CHANL)	SLOT EMPTY	SLOT EMPTY
	L		NOT USED				Ø8 8B						PRE5		

EX.: 1A, 2A, ETC. = LOOP NO.'S

FS = FLASH SENSE
ST = STOP TIME

⊗ Wired Input - Do not populate slot with detector card

INPUT FILE CONNECTION & PROGRAMMING CHART

LOOP NO.	LOOP TERMINAL	INPUT FILE POS.	PIN NO.	INPUT ASSIGNMENT NO.	DETECTOR NO.	NEMA PHASE	CALL	EXTEND	FULL TIME DELAY	STRETCH TIME	DELAY TIME
1A[1]	TB2-1,2	I1U	56	18	1	1	Y	Y			15
	-	J4U	48	10	26	6	Y	Y			
2A	TB2-9,10	I3U	63	25	32	2	Y	Y			
6A	TB3-5,6	J2U	40	2	6	6	Y	Y			
8A	TB5-9,10	J6U	42	4	8	8	Y	Y			5
8B	TB5-11,12	J6L	46	8	18	8	Y	Y			15

[1] Add jumper from I1-W to J4-W, on rear of input file.

INPUT FILE POSITION LEGEND: J2L
FILE J
SLOT 2
LOWER

OPTICOM FIELD WIRE DETAIL

Field		Cabinet TB9	
+26VDC	ORG OR RED	1	
+26VDC	ORG OR RED	2	*J2-E
PRE-3	YEL OR WHT	3	*J13-E
PRE-5	YEL OR WHT	4	
I2 COM	BLU OR BLK	5	
(NOT USED) PRE-4	YEL OR WHT	6	
(NOT USED) PRE-6	YEL OR WHT	7	
I3 COMM	BLU OR BLK	8	
		9	

*Assuming TB9-2 & TB9-3 are unused on the J File, move wires on J11-J & J-11-K (Twisted Pair) to J12-E & J13-E Respectively.

LOAD RESISTOR INSTALLATION DETAIL

(install resistors as shown below)

ACCEPTABLE VALUES

VALUE (ohms)	WATTAGE
1.5K - 1.9K	25W (min)
2.0K - 3.0K	10W (min)

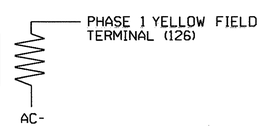

THIS ELECTRICAL DETAIL IS FOR
THE SIGNAL DESIGN: 01-0450T2
DESIGNED: April 2010
SEALED: 08/19/10
REVISED:

ELECTRICAL DETAIL - TEMP 2 - SHEET 1 OF 2

ELECTRICAL AND PROGRAMMING DETAILS FOR:

Prepared in the Offices of:
Transportation Mobility and Safety Division
STATE OF NORTH CAROLINA DEPARTMENT OF TRANSPORTATION
Signal Management Section
750 N.Greenfield Pkwy,Garner,NC 27529

US 158
at
SR 1139 (Country Club Road)

Division 1 Camden County Camden

PLAN DATE: July 2010 REVIEWED BY: T. Jym
PREPARED BY: C. Strickland REVIEWED BY:

REVISIONS	INIT.	DATE

SEAL
NORTH CAROLINA PROFESSIONAL SEAL 022013 ENGINEER GEORGE C. BROWN
SIGNATURE DATE 8/25/10
SIG. INVENTORY NO. 01-0450T2

23-AUG-2010 13:47
S:\#ITS&SU\ITS Signals\workgroups\Sig Mgmt\Strickland\ad010450_sm.ele.xxx.dgn
castrickland

EMERGENCY VEHICLE PREEMPTION PROGRAMMING DETAIL

(program controller as shown below)

From Main Menu press 'A' (Preemption), then '1' (Standard Preemptions). Press 'NEXT' as needed to advance to Preempts 3 and 5.

```
   PREEMPTION  #3  SETTINGS (NEXT:1-10)
INTERVAL/TIMING ¦  CLEAR/DWELL PHASES
  GRN YEL  RED  ¦123456789101112131415 16
1 255  0.0* 0.0*¦X    X
2   0  0.0  0.0 ¦
3   0  0.0  0.0 ¦
4   0  0.0  0.0 ¦
5   0  0.0  0.0 ¦
EXIT CALLS      ¦
          OPTIONS
PRIORITY (Y/N TO SELECT) ............MED
DELAY TIMER (0-255 SEC) .............0
MIN GREEN BEFORE PRE (0= DEFAULT)....1
PED CLEAR BEFORE PRE (0= DEFAULT)....0
YELLOW CLEAR BEFORE PRE (0= DEFAULT).0.0*
RED CLEAR BEFORE PRE (0= DEFAULT)....0.0*
DWELL MIN TIMER (0-255 SEC) .........7
DWELL MAX TIMER (0=OFF,1-255MIN) ....0
DWELL HOLD-OVER TIMER (0-255) .......0
LATCH CALL? .........................N
LINK TO NEXT PREEMPT? ...............N
ENABLE BACKUP PROTECTION? ...........N
HOLD CLEAR 1 PHASES DURING DELAY? ...N
FAST GREEN FLASH DWELL PHASES? ......N
PED CLEARANCE THROUGH YELLOW? .......N
INHIBIT OVERLAP GREEN EXTENSION? ....N
SERVICE DURING SOFTWARE FLASH? ......N
REST IN RED DURING DWELL INTERVAL? ..N
FLASH DWELL INTERVAL? ...............N
ALLOW PEDS IN DWELL INTERVAL? .......N
RE-TIME DWELL INTERVAL? .............N
OVERLAPS:                ¦ABCDEFGHIJKLMNOP
DWELL INT FLASH YELLOW   ¦
OMIT OVERLAPS:           ¦
```

PRESS 'NEXT' TWICE

```
   PREEMPTION  #5  SETTINGS (NEXT:1-10)
INTERVAL/TIMING ¦  CLEAR/DWELL PHASES
  GRN YEL  RED  ¦123456789101112131415 16
1 255  0.0* 0.0*¦X    X
2   0  0.0  0.0 ¦
3   0  0.0  0.0 ¦
4   0  0.0  0.0 ¦
5   0  0.0  0.0 ¦
EXIT CALLS      ¦
          OPTIONS
PRIORITY (Y/N TO SELECT) ............MED
DELAY TIMER (0-255 SEC) .............0
MIN GREEN BEFORE PRE (0= DEFAULT)....1
PED CLEAR BEFORE PRE (0= DEFAULT)....0
YELLOW CLEAR BEFORE PRE (0= DEFAULT).0.0*
RED CLEAR BEFORE PRE (0= DEFAULT)....0.0*
DWELL MIN TIMER (0-255 SEC) .........10
DWELL MAX TIMER (0=OFF,1-255MIN) ....0
DWELL HOLD-OVER TIMER (0-255) .......0
LATCH CALL? .........................N
LINK TO NEXT PREEMPT? ...............N
ENABLE BACKUP PROTECTION? ...........N
HOLD CLEAR 1 PHASES DURING DELAY? ...N
FAST GREEN FLASH DWELL PHASES? ......N
PED CLEARANCE THROUGH YELLOW? .......N
INHIBIT OVERLAP GREEN EXTENSION? ....N
SERVICE DURING SOFTWARE FLASH? ......N
REST IN RED DURING DWELL INTERVAL? ..N
FLASH DWELL INTERVAL? ...............N
ALLOW PEDS IN DWELL INTERVAL? .......N
RE-TIME DWELL INTERVAL? .............N
OVERLAPS:                ¦ABCDEFGHIJKLMNOP
DWELL INT FLASH YELLOW   ¦
OMIT OVERLAPS:           ¦
```

PROGRAMMING COMPLETE

*TIME DEFAULTS TO TIME USED BY PHASE DURING NORMAL OPERATION

NOTE!

PROGRAM EXTEND TIME ON ALL 'OPTICOM' DETECTOR UNITS FOR 2 SEC.

LOGICAL I/O PROCESSOR PROGRAMMING DETAIL TO PRODUCE SPECIAL FYA-PPLT SIGNAL SEQUENCE

(program controller as shown below)

1. FROM MAIN MENU PRESS '2' (PHASE CONTROL), THEN '1' (PHASE CONTROL FUNCTIONS). SCROLL TO THE BOTTOM OF THE MENU AND ENABLE ACT LOGIC COMMANDS 1, 2 AND 3.

2. FROM MAIN MENU PRESS '6' (OUTPUTS), THEN '3' (LOGICAL I/O PROCESSOR).

```
 LOGICAL I/O COMMAND #1  (+/-COMMAND#)
IF  ACTIVE PHASE        #1  IS ON
AND RED CLEAR ON PHASE #1  IS ON

            SCROLL DOWN

THEN:
SET OUTPUT  ASSIGNMENT #50 ON
SET OUTPUT  ASSIGNMENT #51 OFF
```

NOTE: LOGIC FOR PHASE 1 RED CLEAR WHEN TRANSITIONING FROM PHASE 1 TO PHASE 2 (HEAD 11).

PRESS '+'

```
 LOGICAL I/O COMMAND #2  (+/-COMMAND#)
IF  ACTIVE PHASE        #1  IS ON

            SCROLL DOWN

THEN:
SET OUTPUT  ASSIGNMENT #52 OFF
```

NOTE: LOGIC FOR SWITCHING FLASHING YELLOW ARROW "OFF" DURING PHASE 1 (HEAD 11).

PRESS '+'

```
 LOGICAL I/O COMMAND #3  (+/-COMMAND#)
IF  YELLOW ON PHASE     #1  IS ON

            SCROLL DOWN

THEN:
SET OUTPUT  ASSIGNMENT #51 ON
```

NOTE: LOGIC FOR YELLOW ARROW CLEARANCE FROM PHASE 1 (HEAD 11).

LOGIC I/O PROCESSOR PROGRAMMING COMPLETE

OUTPUT REFERENCE SCHEDULE

OUTPUT 50 = Overlap A Red
OUTPUT 51 = Overlap A Yellow
OUTPUT 52 = Overlap A Green

OVERLAP PROGRAMMING DETAIL

(program controller as shown below)

FROM MAIN MENU PRESS '8' (OVERLAPS), THEN '1' (VEHICLE OVERLAP SETTINGS).

```
 PAGE 1: VEHICLE OVERLAP 'A' SETTINGS
 PHASE:            ¦123456789101112131415 16
VEH OVL PARENTS:   ¦XX
VEH OVL NOT VEH:   ¦
VEH OVL NOT PED:   ¦
VEH OVL GRN EXT:   ¦
STARTUP COLOR: _ RED  _ YELLOW  _ GREEN
FLASH COLORS:  _ RED  _ YELLOW  X GREEN
SELECT VEHICLE OVERLAP OPTIONS:   (Y/N)
FLASH YELLOW IN CONTROLLER FLASH?...Y
GREEN EXTENSION (0-255 SEC).........0
YELLOW CLEAR (0=PARENT,3-25.5 SEC)..0.0
RED CLEAR (0=PARENT,0.1-25.5 SEC)...0.0
OUTPUT AS PHASE # (0=NONE, 1-16)....0
```

NOTICE GREEN FLASH

OVERLAP PROGRAMMING COMPLETE

THIS ELECTRICAL DETAIL IS FOR
THE SIGNAL DESIGN: 01-0450T2
DESIGNED: April 2010
SEALED: 08/19/10
REVISED:

ELECTRICAL DETAIL - TEMP 2 - SHEET 2 OF 2

ELECTRICAL AND PROGRAMMING DETAILS FOR:

Prepared in the Offices of:
Transportation Mobility and Safety Division
NORTH CAROLINA DEPARTMENT OF TRANSPORTATION
Signals Management Section
750 N.Greenfield Pkwy,Garner,NC 27529

US 158
at
SR 1139 (Country Club Road)

Division 1 | Camden County | Camden

PLAN DATE: July 2010	REVIEWED BY: T. Jones		
PREPARED BY: C. Strickland	REVIEWED BY:		
REVISIONS		INIT.	DATE

SEAL
NORTH CAROLINA PROFESSIONAL SEAL 022013 ENGINEER GEORGE C. BROWN
SIGNATURE | DATE
SIG. INVENTORY NO. 01-0450T2

23-AUG-2010 13:48
S:*ITSS&SU*ITS Signals*Workgroups*Sig Man*Strickland*01-0450_smele.xxx.dgn
cestrickland

PROJECT REFERENCE NO.	SHEET NO.
R-2414B	Sig. 8

PHASING DIAGRAM

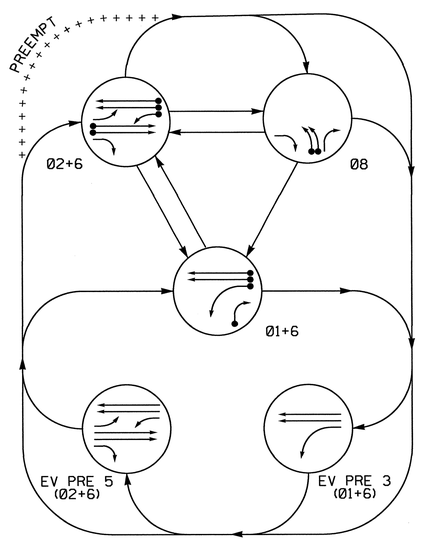

TABLE OF OPERATION

SIGNAL FACE	PHASE 01+6	02+6	08	PEREVE 3	PEREVE 5	FLASH
11	←	F Y	R	←	F Y	Y
21	R	G	R	R	G	Y
22	R	G	R/→	R	G	Y
61,62	G	G	R	G	G	Y
81	R	R	G	R	R	R
82	R/→	R	G	R	R	R

SIGNAL FACE I.D.

All Heads L.E.D.

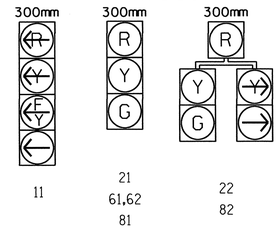

STANDARD SIGNAL FACE CLEARANCES FOR FLASHING LEFT TURN SIGNAL

FROM	TO ←	TO F Y 1	TO F Y 2	TO R 1	TO R 2
←	←	←	←	R	R
F Y	F Y	F Y	F Y	R	R
R	R	R	R	R	R

F Y = Flashing Yellow Arrow

OASIS 2070L LOOP & DETECTOR INSTALLATION CHART

INDUCTIVE LOOPS					DETECTOR PROGRAMMING						
LOOP	SIZE (M)	DISTANCE FROM STOPBAR (M)	TURNS	NEW LOOP	PHASE	CALLING	EXTENSION	FULL TIME DELAY	STRETCH TIME	DELAY TIME	SYSTEM LOOP	NEW CARD
1A	1.8X12	+1.5	2-4-2	Y	1	Y	Y	-	-	15	-	-
					6	Y	Y	Y	-	3	-	-
1B	1.8X12	+3	2-4-2	Y	1	Y	Y	-	-	15	-	Y
2A	1.8X1.8	110	5	Y	2	Y	Y	-	-	-	-	-
2B	1.8X1.8	110	5	Y	2	Y	Y	-	-	-	-	-
6A	1.8X1.8	110	5	Y	6	Y	Y	-	-	-	-	-
6B	1.8X1.8	110	5	Y	6	Y	Y	-	-	-	-	-
8A	1.8X12	0	2-4-2	Y	8	Y	Y	-	-	3	-	-
8B	1.8X12	0	2-4-2	Y	8	Y	Y	-	-	-	-	-

3 Phase W/EV Preempt
Fully Actuated
Isolated

NOTES

1. Refer to "Roadway Standard Drawings NCDOT" dated July 2006 and "Standard Specifications for Roads and Structures" dated July 2006.
2. Do not program signal for late night flashing operation unless otherwise directed by the Engineer.
3. Phase 1 may be lagged.
4. Set all detector units to presence mode.
5. This intersection features an optical preemption system. Shown locations of optical detectors are conceptual only.
6. Relocate existing optical detectors to mastarms.

PHASING DIAGRAM DETECTION LEGEND

- DETECTED MOVEMENT
- UNDETECTED MOVEMENT (OVERLAP)
- UNSIGNALIZED MOVEMENT
- PEDESTRIAN MOVEMENT

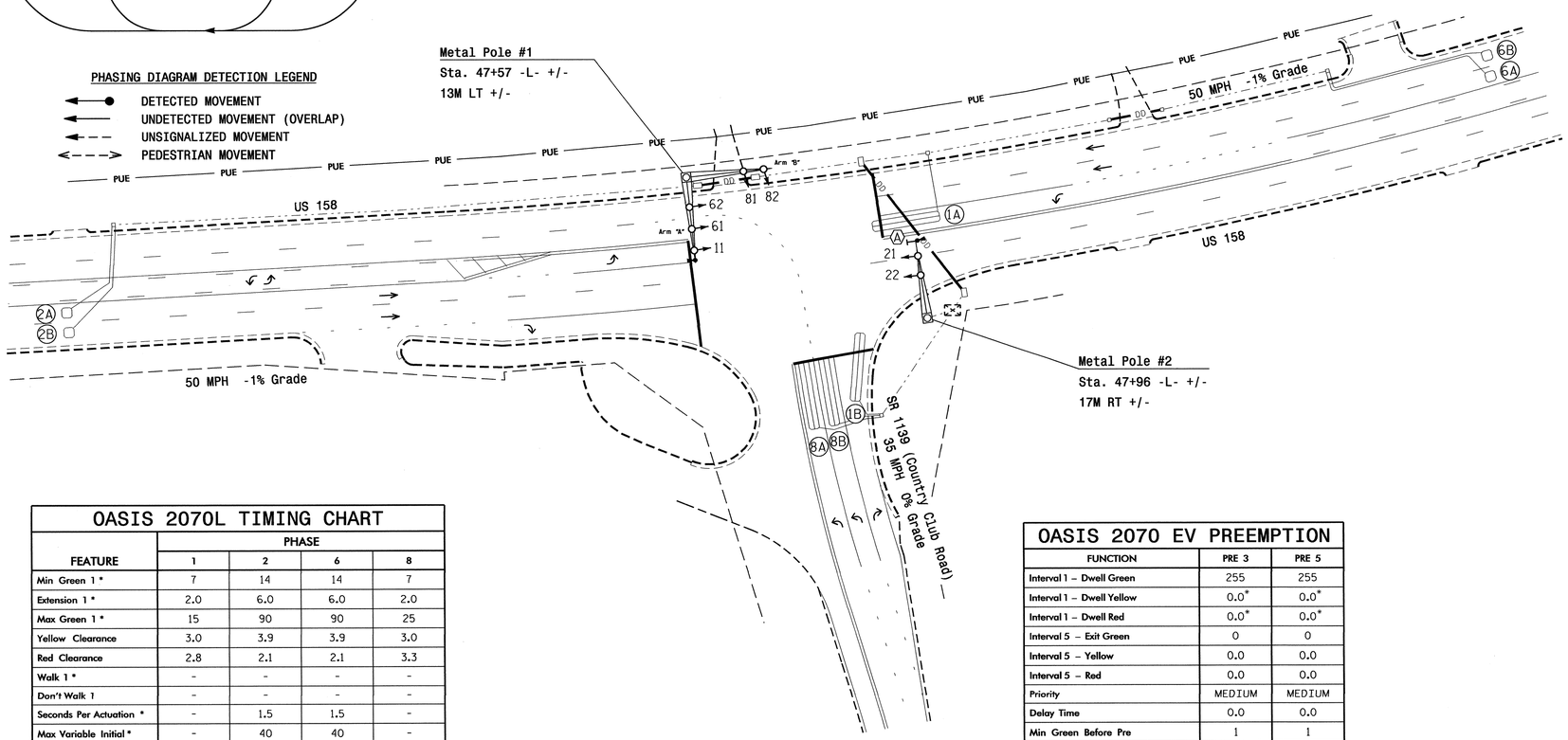

OASIS 2070L TIMING CHART

FEATURE	PHASE 1	2	6	8
Min Green 1 *	7	14	14	7
Extension 1 *	2.0	6.0	6.0	2.0
Max Green 1 *	15	90	90	25
Yellow Clearance	3.0	3.9	3.9	3.0
Red Clearance	2.8	2.1	2.1	3.3
Walk 1 *	-	-	-	-
Don't Walk 1	-	-	-	-
Seconds Per Actuation *	-	1.5	1.5	-
Max Variable Initial *	-	40	40	-
Time Before Reduction *	-	15	15	-
Time To Reduce *	-	45	45	-
Minimum Gap	-	3.0	3.0	-
Recall Mode	-	MIN RECALL	MIN RECALL	-
Vehicle Call Memory	-	YELLOW	YELLOW	-
Dual Entry	-	-	-	-
Simultaneous Gap	ON	ON	ON	ON

* These values may be field adjusted. Do not adjust Min Green and Extension times for phases 2 and 6 lower than what is shown. Min Green for all other phases should not be lower than 4 seconds.

OASIS 2070 EV PREEMPTION

FUNCTION	PRE 3	PRE 5
Interval 1 – Dwell Green	255	255
Interval 1 – Dwell Yellow	0.0*	0.0*
Interval 1 – Dwell Red	0.0*	0.0*
Interval 5 – Exit Green	0	0
Interval 5 – Yellow	0.0	0.0
Interval 5 – Red	0.0	0.0
Priority	MEDIUM	MEDIUM
Delay Time	0.0	0.0
Min Green Before Pre	1	1
Ped Clear Before Pre	0	0
Yellow Clear Before Pre	0.0*	0.0*
Red Clear Before Pre	0.0*	0.0*
Dwell Min Time	7	10
Enable Backup Protection	N	N
Ped Clear Through Yellow	N	N
Preempt Extend**	2	2
Omit Overlaps	D	-

* Time defaults to time used for phase during normal operation
** Program Timing on Optical Detection Unit

LEGEND

PROPOSED		EXISTING
	Traffic Signal Head	
	Modified Signal Head	N/A
	Sign	
	Pedestrian Signal Head With Push Button & Sign	
	Signal Pole with Guy	
	Signal Pole with Sidewalk Guy	
	Inductive Loop Detector	
	Controller & Cabinet	
	Junction Box	
	Over-Sized Junction Box	
	50mm Underground Conduit	
N/A	Right of Way with Marker	
	Directional Arrow	
	Opticom Detector	
DD	Directional Drill	N/A
A	"ONCOMING TRAFFIC MAY HAVE EXTEND GREEN" Sign (W25-2)	A

Signal Upgrade/Final

Prepared in the Offices of:
Traffic Engineering and Safety Systems Branch
STATE OF NORTH CAROLINA DEPARTMENT OF TRANSPORTATION
Signals and Geometrics Section
750 N. Greenfield Pkwy, Garner, NC 27529

SCALE 5 0 10 500:1

US 158
At
SR 1139 (Country Club Road)

Division 1 Camden County Camden

PLAN DATE: April 2010	REVIEWED BY:
PREPARED BY: JPG	REVIEWED BY:

REVISIONS	INIT.	DATE

SEAL
NORTH CAROLINA PROFESSIONAL SEAL 29904 ENGINEER JAMES P. GALLOWAY
SIGNATURE 8/19/10 DATE
SIG. INVENTORY NO. 01-0450

30-AUG-2010 14:23
S:*15SSUM1TS Signals*Workgroups*TIP Projects*R-2414B*Signals*Design*Signals*01-0450*01450F_sig_dsn_2010mmdd.dgn
jpgallaway

PROJECT REFERENCE NO.	SHEET NO.
R-2414B	Sig. 9

EDI MODEL 2010ECL-NC CONFLICT MONITOR PROGRAMMING DETAIL

(remove jumpers and set switches as shown)

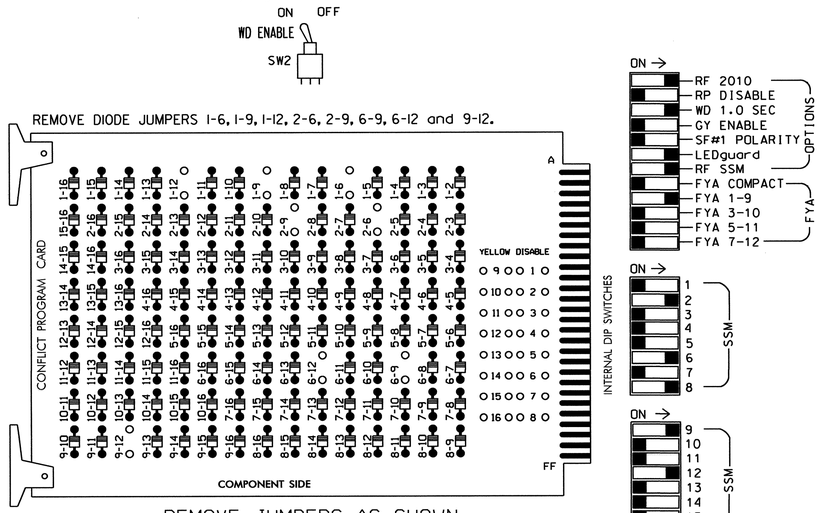

NOTES:

1. Card is provided with all diode jumpers in place. Removal of any jumper allows its channels to run concurrently.
2. Make sure jumpers SEL2-SEL5 are present on the monitor board.

■ = DENOTES POSITION OF SWITCH

NOTES

1. To prevent "flash-conflict" problems, insert red flash program blocks for all unused vehicle load switches in the output file. The installer shall verify that signal heads flash in accordance with the Signal Plans.
2. Ensure that Red Enable is active at all times during normal operation. To prevent Red Failures on unused monitor channels, tie unused red monitor inputs 1,3,4, 5,7,10,11,13,14,15 & 16 to load switch AC+ per the cabinet manufacturer's instructions.
3. Enable Simultaneous Gap-Out for all phases.
4. Program phases 2 and 6 for Variable Initial and Gap Reduction.
5. Program phases 2 and 6 for Start Up In Green.
6. Program phases 2 and 6 for Yellow Flash, and overlap 1 as Wag Overlaps.

EQUIPMENT INFORMATION

CONTROLLER.....2070L
CABINET.....332 /W/ AUX
SOFTWARE.....ECONOLITE OASIS
CABINET MOUNT.....BASE
OUTPUT FILE POSITIONS...18 WITH AUX. OUTPUT FILE
LOAD SWITCHES USED.....S1,S2,S6,S8,S9,S13
PHASES USED.....1,2,6,8
OVERLAP "A".....1+2
OVERLAP "B".....NOT USED
OVERLAP "C".....NOT USED
OVERLAP "D".....1

SIGNAL HEAD HOOK-UP CHART

LOAD SWITCH NO.	S1	S2	S2P	S3	S4	S4P	S5	S6	S6P	S7	S8		S8P	S9	S10	S11	S12	S13	S14
PHASE	1	2	2 PED	3	4	4 PED	5	6	6 PED	7	8		8 PED	OLA	OLB	SPARE	OLC	OLD	SPARE
SIGNAL HEAD NO.	11★	21,22	NU	NU	NU	NU	NU	61,62	NU	NU	22	81,82	NU	11★	NU	NU	NU	82	NU
RED		128						134				107						✳	
YELLOW	✳	129						135				108							
GREEN		130						136				109							
RED ARROW														A121					
YELLOW ARROW											108			A122				A102	
FLASHING YELLOW ARROW														A123					
GREEN ARROW	127										109							A103	

NU = Not Used

✳ Denotes install load resistor. See load resistor installation detail this sheet.

★ See pictorial of head wiring in detail below.

4 SECTION FYA PPLT SIGNAL WIRING DETAIL

(wire signal heads as shown)

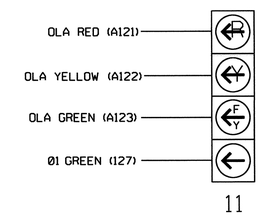

NOTE

1. The sequence display for this signal requires special logic programming. See sheet 2 of 2 for programming instructions.

INPUT FILE POSITION LAYOUT

(front view)

		1	2	3	4	5	6	7	8	9	10	11	12	13	14
FILE "I"	U	Ø 1 1A	Ø 1 1B	Ø 2 2A	SLOT EMPTY	SLOT EMPTY	SLOT EMPTY	SLOT EMPTY	SLOT EMPTY	SLOT EMPTY	SLOT EMPTY	SLOT EMPTY	SLOT EMPTY	SLOT EMPTY	FS DC ISOLATOR
	L	NOT USED	NOT USED	Ø 2 2B											ST DC ISOLATOR
FILE "J"	U	SLOT EMPTY	Ø 6 6A	SLOT EMPTY	WIRED INPUT ⊗	SLOT EMPTY	Ø 8 8A	SLOT EMPTY	SLOT EMPTY	SLOT EMPTY	SLOT EMPTY	SLOT EMPTY	PRE3 OPTICAL DETECTOR (2-CHAN.)	SLOT EMPTY	SLOT EMPTY
	L		Ø 6 6B				Ø 8 8B						PRE5		

EX.: 1A, 2A, ETC. = LOOP NO.'S

FS = FLASH SENSE
ST = STOP TIME

⊗ Wired Input - Do not populate slot with detector card

INPUT FILE CONNECTION & PROGRAMMING CHART

LOOP NO.	LOOP TERMINAL	INPUT FILE POS.	PIN NO.	INPUT ASSIGNMENT NO.	DETECTOR NO.	NEMA PHASE	CALL	EXTEND	FULL TIME DELAY	STRETCH TIME	DELAY TIME
1A[1]	TB2-1,2	I1U	56	18	1	1	Y	Y			15
	-	J4U	48	10	26	6	Y	Y	Y		3
1B	TB2-5,6	I2U	39	1	2	1	Y	Y			15
2A	TB2-9,10	I3U	63	25	32	2	Y	Y			
2B	TB2-11,12	I3L	76	38	42	2	Y	Y			
6A	TB3-5,6	J2U	40	2	6	6	Y	Y			
6B	TB3-7,8	J2L	44	6	16	6	Y	Y			
8A	TB5-9,10	J6U	42	4	8	8	Y	Y			3
8B	TB5-11,12	J6L	46	8	18	8	Y	Y			

[1] Add jumper from I1-W to J4-W, on rear of input file.

INPUT FILE POSITION LEGEND: J2L
FILE J
SLOT 2
LOWER

LOAD RESISTOR INSTALLATION DETAIL

(install resistors as shown below)

ACCEPTABLE VALUES

VALUE (ohms)	WATTAGE
1.5K - 1.9K	25W (min)
2.0K - 3.0K	10W (min)

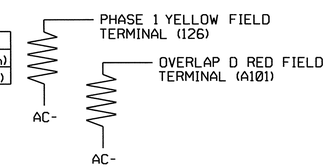

OPTICOM FIELD WIRE DETAIL

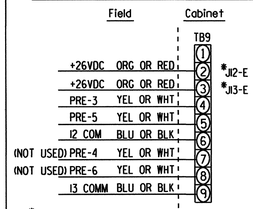

*Assuming TB9-2 & TB9-3 are unused on the J File, move wires on J11-J & J-11-K (Twisted Pair) to J12-E & J13-E Respectively.

THIS ELECTRICAL DETAIL IS FOR
THE SIGNAL DESIGN: 01-0450
DESIGNED: April 2010
SEALED: 08/19/10
REVISED:

ELECTRICAL DETAIL - FINAL - SHEET 1 OF 2

ELECTRICAL AND PROGRAMMING DETAILS FOR:

Prepared in the Offices of:
Transportation Mobility and Safety Division
STATE OF NORTH CAROLINA DEPARTMENT OF TRANSPORTATION
Signal Management Section
750 N.Greenfield Pkwy.Garner,NC 27529

US 158
at
SR 1139 (Country Club Road)

Division 1 Camden County Camden

PLAN DATE: July 2010	REVIEWED BY: T.V.P.
PREPARED BY: C. Strickland	REVIEWED BY:

REVISIONS	INIT.	DATE

SEAL
NORTH CAROLINA PROFESSIONAL SEAL 022013 ENGINEER GEORGE C. BROWN
SIGNATURE DATE 8/25/10
SIG. INVENTORY NO. 01-0450

23-AUG-2010 14:21
S:*TISSUMITS\Signals\workgroups\Sig Mark\Strickland\01450_sm_ele_xxx.dgn
cestrickland

PROJECT REFERENCE NO.	SHEET NO.
R-2414B	Sig.10

EMERGENCY VEHICLE PREEMPTION PROGRAMMING DETAIL

(program controller as shown below)

From Main Menu press 'A' (Preemption), then '1' (Standard Preemptions). Press 'NEXT' as needed to advance to Preempts 3 and 5.

```
   PREEMPTION  #3  SETTINGS (NEXT:1-10)
INTERVAL/TIMING ¦  CLEAR/DWELL PHASES
  GRN YEL  RED  ¦123456789101112131415 16
1 255  0.0* 0.0*¦X    X
2   0  0.0  0.0 ¦
3   0  0.0  0.0 ¦
4   0  0.0  0.0 ¦
5   0  0.0  0.0 ¦
EXIT CALLS      ¦
          OPTIONS
PRIORITY (Y/N TO SELECT) ............MED
DELAY TIMER (0-255 SEC) .............0
MIN GREEN BEFORE PRE (0= DEFAULT)....1
PED CLEAR BEFORE PRE (0= DEFAULT)....0
YELLOW CLEAR BEFORE PRE (0= DEFAULT).0.0*
RED CLEAR BEFORE PRE (0= DEFAULT)....0.0*
DWELL MIN TIMER (0-255 SEC) .........7
DWELL MAX TIMER (0=OFF,1-255MIN) ....0
DWELL HOLD-OVER TIMER (0-255) .......0
LATCH CALL? .........................N
LINK TO NEXT PREEMPT? ...............N
ENABLE BACKUP PROTECTION? ...........N
HOLD CLEAR 1 PHASES DURING DELAY? ...N
FAST GREEN FLASH DWELL PHASES? ......N
PED CLEARANCE THROUGH YELLOW? .......N
INHIBIT OVERLAP GREEN EXTENSION? ....N
SERVICE DURING SOFTWARE FLASH? ......N
REST IN RED DURING DWELL INTERVAL? ..N
FLASH DWELL INTERVAL? ...............N
ALLOW PEDS IN DWELL INTERVAL? .......N
RE-TIME DWELL INTERVAL? .............N
OVERLAPS:                ¦ABCDEFGHIJKLMNOP
DWELL INT FLASH YELLOW   ¦
OMIT OVERLAPS:           ¦   X
```

PRESS 'NEXT' TWICE

```
   PREEMPTION  #5  SETTINGS (NEXT:1-10)
INTERVAL/TIMING ¦  CLEAR/DWELL PHASES
  GRN YEL  RED  ¦123456789101112131415 16
1 255  0.0* 0.0*¦X    X
2   0  0.0  0.0 ¦
3   0  0.0  0.0 ¦
4   0  0.0  0.0 ¦
5   0  0.0  0.0 ¦
EXIT CALLS      ¦
          OPTIONS
PRIORITY (Y/N TO SELECT) ............MED
DELAY TIMER (0-255 SEC) .............0
MIN GREEN BEFORE PRE (0= DEFAULT)....1
PED CLEAR BEFORE PRE (0= DEFAULT)....0
YELLOW CLEAR BEFORE PRE (0= DEFAULT).0.0*
RED CLEAR BEFORE PRE (0= DEFAULT)....0.0*
DWELL MIN TIMER (0-255 SEC) .........10
DWELL MAX TIMER (0=OFF,1-255MIN) ....0
DWELL HOLD-OVER TIMER (0-255) .......0
LATCH CALL? .........................N
LINK TO NEXT PREEMPT? ...............N
ENABLE BACKUP PROTECTION? ...........N
HOLD CLEAR 1 PHASES DURING DELAY? ...N
FAST GREEN FLASH DWELL PHASES? ......N
PED CLEARANCE THROUGH YELLOW? .......N
INHIBIT OVERLAP GREEN EXTENSION? ....N
SERVICE DURING SOFTWARE FLASH? ......N
REST IN RED DURING DWELL INTERVAL? ..N
FLASH DWELL INTERVAL? ...............N
ALLOW PEDS IN DWELL INTERVAL? .......N
RE-TIME DWELL INTERVAL? .............N
OVERLAPS:                ¦ABCDEFGHIJKLMNOP
DWELL INT FLASH YELLOW   ¦
OMIT OVERLAPS:           ¦
```

PROGRAMMING COMPLETE

*TIME DEFAULTS TO TIME USED BY PHASE DURING NORMAL OPERATION

NOTE!

PROGRAM EXTEND TIME ON ALL 'OPTICOM' DETECTOR UNITS FOR 2 SEC.

LOGICAL I/O PROCESSOR PROGRAMMING DETAIL TO PRODUCE SPECIAL FYA-PPLT SIGNAL SEQUENCE

(program controller as shown below)

1. FROM MAIN MENU PRESS '2' (PHASE CONTROL), THEN '1' (PHASE CONTROL FUNCTIONS). SCROLL TO THE BOTTOM OF THE MENU AND ENABLE ACT LOGIC COMMANDS 1, 2 AND 3.
2. FROM MAIN MENU PRESS '6' (OUTPUTS), THEN '3' (LOGICAL I/O PROCESSOR).

```
 LOGICAL I/O COMMAND #1  (+/-COMMAND#)
IF  ACTIVE PHASE        #1  IS ON
AND RED CLEAR ON PHASE #1  IS ON

                SCROLL DOWN

THEN:
SET OUTPUT  ASSIGNMENT #50 ON
SET OUTPUT  ASSIGNMENT #51 OFF
```

NOTE: LOGIC FOR PHASE 1 RED CLEAR WHEN TRANSITIONING FROM PHASE 1 TO PHASE 2 (HEAD 11).

PRESS '+'

```
 LOGICAL I/O COMMAND #2  (+/-COMMAND#)
IF  ACTIVE PHASE        #1  IS ON

                SCROLL DOWN

THEN:
SET OUTPUT  ASSIGNMENT #52 OFF
```

NOTE: LOGIC FOR SWITCHING FLASHING YELLOW ARROW "OFF" DURING PHASE 1 (HEAD 11).

PRESS '+'

```
 LOGICAL I/O COMMAND #3  (+/-COMMAND#)
IF  YELLOW ON PHASE     #1  IS ON

                SCROLL DOWN

THEN:
SET OUTPUT  ASSIGNMENT #51 ON
```

NOTE: LOGIC FOR YELLOW ARROW CLEARANCE FROM PHASE 1 (HEAD 11).

LOGIC I/O PROCESSOR PROGRAMMING COMPLETE

OUTPUT REFERENCE SCHEDULE

OUTPUT 50 = Overlap A Red
OUTPUT 51 = Overlap A Yellow
OUTPUT 52 = Overlap A Green

OVERLAP PROGRAMMING DETAIL

(program controller as shown below)

FROM MAIN MENU PRESS '8' (OVERLAPS), THEN '1' (VEHICLE OVERLAP SETTINGS).

```
 PAGE 1: VEHICLE OVERLAP 'A' SETTINGS
 PHASE:          ¦123456789101112131415 16
VEH OVL PARENTS: ¦XX
VEH OVL NOT VEH: ¦
VEH OVL NOT PED: ¦
VEH OVL GRN EXT: ¦
STARTUP COLOR: _ RED  _ YELLOW  _ GREEN
FLASH COLORS:  _ RED  _ YELLOW  X GREEN
SELECT VEHICLE OVERLAP OPTIONS:   (Y/N)
FLASH YELLOW IN CONTROLLER FLASH?...Y
GREEN EXTENSION (0-255 SEC).........0
YELLOW CLEAR (0=PARENT,3-25.5 SEC)..0.0
RED CLEAR (0=PARENT,0.1-25.5 SEC)...0.0
OUTPUT AS PHASE # (0=NONE, 1-16)....0
```

NOTICE GREEN FLASH

PRESS '+' THREE TIMES

```
 PAGE 1: VEHICLE OVERLAP 'D' SETTINGS
 PHASE:          ¦123456789101112131415 16
VEH OVL PARENTS: ¦X
VEH OVL NOT VEH: ¦
VEH OVL NOT PED: ¦
VEH OVL GRN EXT: ¦
STARTUP COLOR: _ RED  _ YELLOW  _ GREEN
FLASH COLORS:  _ RED  _ YELLOW  _ GREEN
SELECT VEHICLE OVERLAP OPTIONS:   (Y/N)
FLASH YELLOW IN CONTROLLER FLASH?...N
GREEN EXTENSION (0-255 SEC).........0
YELLOW CLEAR (0=PARENT,3-25.5 SEC)..0.0
RED CLEAR (0=PARENT,0.1-25.5 SEC)...0.0
OUTPUT AS PHASE # (0=NONE, 1-16)....0
```

OVERLAP PROGRAMMING COMPLETE

THIS ELECTRICAL DETAIL IS FOR
THE SIGNAL DESIGN: 01-0450
DESIGNED: April 2010
SEALED: 08/19/10
REVISED:

ELECTRICAL DETAIL - FINAL - SHEET 2 OF 2

ELECTRICAL AND PROGRAMMING DETAILS FOR:

Prepared in the Offices of:

Transportation Mobility and Safety Division
STATE OF NORTH CAROLINA DEPARTMENT OF TRANSPORTATION
Signal Management Section

750 N.Greenfield Pkwy,Garner,NC 27529

US 158
at
SR 1139 (Country Club Road)

Division 1 Camden County Camden

PLAN DATE: July 2010 REVIEWED BY: T. Igel
PREPARED BY: C. Strickland REVIEWED BY:

REVISIONS	INIT.	DATE

SEAL

NORTH CAROLINA PROFESSIONAL SEAL 022013 ENGINEER GEORGE C. BROWN

George C. Brown 8/25/10
SIGNATURE DATE

SIG. INVENTORY NO. 01-0450

23-AUG-2010 14:22
S:##ITS&SU#ITS Signals#workgroups#Sig Mgmt#strickland#0101450_smlele.xxx.dgn
cestrickland

Design Loading for METAL POLE NO. 1, MAST ARM A

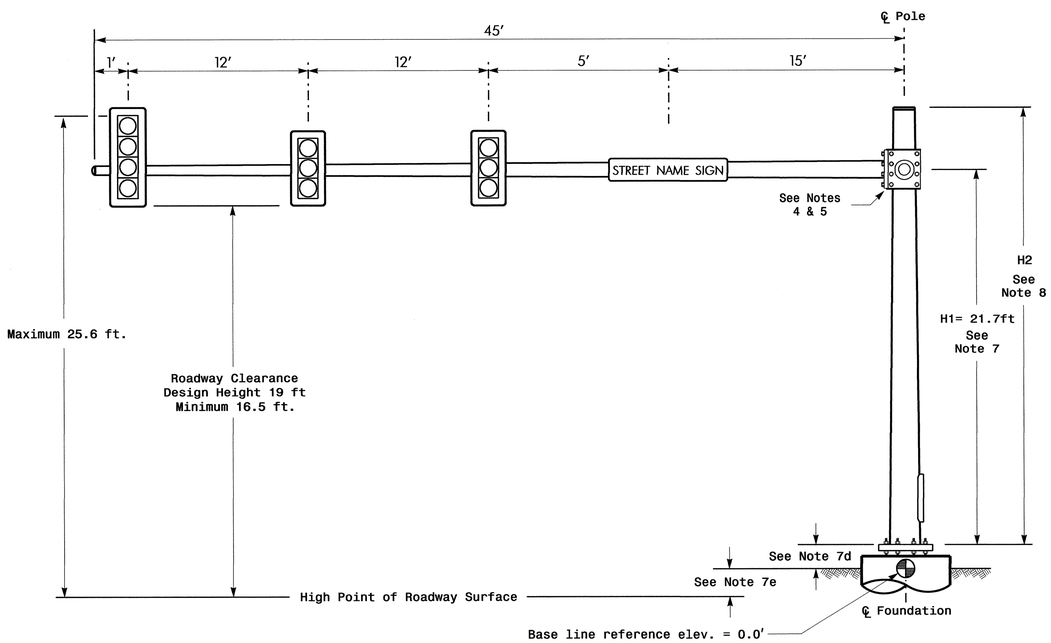

Elevation View @ 270°

Design Loading for METAL POLE NO. 1, MAST ARM B

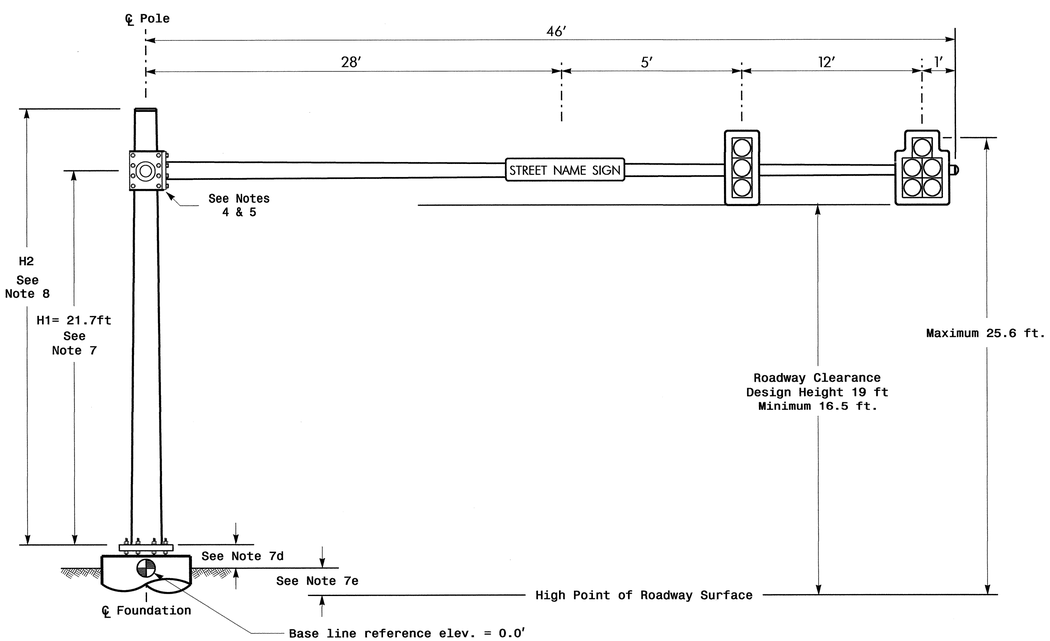

Elevation View @ 0°

SPECIAL NOTE

The contractor is responsible for verifying that the mast arm attachment height (H1) will provide the "Design Height" clearance from the roadway before submitting final shop drawings for approval. Verify elevation data below which was obtained by field measurement or from available project survey data.

Elevation Data for Mast Arm Attachment (H1)

Elevation Differences for:	Arm "A"	Arm "B"
Baseline reference point at ℄ Foundation @ ground level	0.0 ft.	0.0 ft.
Elevation difference at High point of roadway surface	+0.7 ft.	+0.7 ft.
Elevation difference at Edge of travelway or face of curb	NA	NA

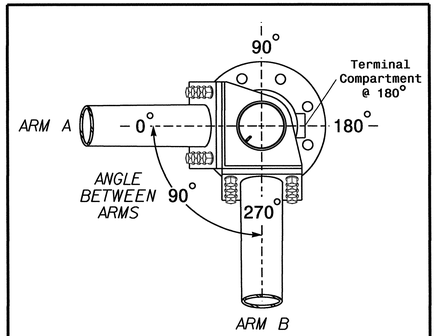

POLE RADIAL ORIENTATION

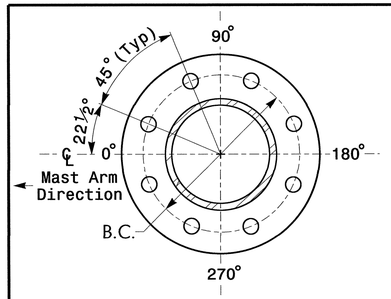

8 BOLT BASE PLATE DETAIL

See Note 6

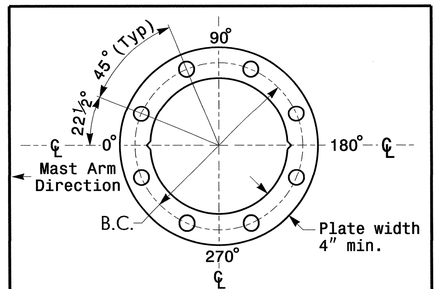

BASE PLATE TEMPLATE & ANCHOR BOLT LOCK PLATE DETAIL

For 8 Bolt Base Plate

MAST ARM LOADING SCHEDULE

LOADING SYMBOL	DESCRIPTION	AREA	SIZE	WEIGHT
	SIGNAL HEAD 12″–5 SECTION–WITH BACKPLATE AND ASTRO–BRAC	16.3 S.F.	42.0″ W X 56.0″ L	103 LBS
	SIGNAL HEAD 12″–4 SECTION–WITH BACKPLATE AND ASTRO–BRAC	11.5 S.F.	25.5″ W X 66.0″ L	74 LBS
	SIGNAL HEAD 12″–3 SECTION–WITH BACKPLATE AND ASTRO–BRAC	9.3 S.F.	25.5″ W X 52.5″ L	60 LBS
	SIGN RIGID MOUNTED WITH ASTRO–SIGN–BRAC	5.0 S.F.	24.0″ W X 30.0″ L	11 LBS
STREET NAME SIGN	STREET NAME SIGN RIGID MOUNTED WITH ASTRO–SIGN–BRAC	12.0 S.F.	18.0″ W X 96.0″ L	27 LBS

NOTES

Design Reference Material

1. Design the traffic signal structure and foundation in accordance with:
   - The 4th Edition 2001 AASHTO "Standard Specifications for Structural Supports for Highway Signs, Luminaires, and Traffic Signals, including all of the latest interim revisions.
   - The 2006 NCDOT "Standard Specifications for Roads and Structures". The latest addenda to these specifications can be found in the traffic signal project special provisions.
   - The 2006 NCDOT Roadway Standard Drawings.
   - The traffic signal project plans and special provisions.
   - The NCDOT "Metal Pole Standards" located at the following NCDOT website: http://www.ncdot.org/doh/preconstruct/traffic/ITSS/ws/mpoles/poles.html

Design Requirements

2. Design the traffic signal structure using the loading conditions shown in the elevation views. These are anticipated worst case "Design loads" and may not represent the actual loads that will be applied at the time of the installation. The contractor should refer to the traffic signal plans for the actual loads that will be applied at the time of the installation.
3. Design all signal supports using stress ratios that do not exceed 0.9.
4. The camber design for mast arm deflection should provide an appearance of a low pitched arch where the tip or the free end of the mast arm does not deflect below horizontal when fully loaded.
5. A clamp-type bolted mast arm-to-pole connection may be used instead of the welded ring stiffened box connection shown as long as the connection meets all of the design requirements. This requires staggering the connections. Use elevation data for each arm to determine appropriate arm connection points.
6. Design base plate with 8 anchor bolt holes. Provide 2 inch x 60 inch anchor bolts.
7. The mast arm attachment height (H1) shown is based on the following design assumptions:
   a. Mast arm slope and deflection are not considered in determining the arm attachment height as they are assumed to offset each other.
   b. Signal heads attached to the mast arm are rigid mounted and vertically centered on the arm.
   c. The roadway clearance height for design is as shown in the elevation views.
   d. The top of the pole base plate is .75 feet above the ground elevation.
   e. Refer to the Elevation Data chart for elevation differences between the proposed foundation ground level and the high point on the roadway.
8. The pole manufacturer will determine the total height (H2) of the pole using the greater of the following:
   - Mast arm attachment height (H1) plus 2 feet, or
   - H1 plus ½ of the total height of the mast arm attachment assembly plus 1 foot.
9. If pole location adjustments are required, the contractor must gain approval from the engineer as this may affect the mast arm lengths and arm attachment heights. The contractor may contact the Signals & Geometrics Structural Engineer for assistance at (919) 773-2800.
10. The contractor is responsible for verifying that the mast arm lengths shown will allow proper positioning of the signal heads over the roadway.
11. The contractor is responsible for providing soil penetration testing data (SPT) to the pole manufacturer so site specific foundations can be designed.

NCDOT Wind Zone 2 (130 mph)

Prepared in the Offices of: Transportation Mobility and Safety Division, Traffic Engineering Branch, Signal Design Section, 750 N.Greenfield Pkwy, Garner, NC 27529

US 158
At
SR 1139 (Country Club Road)

Division 1 Camden County Camden

PLAN DATE:	May 2010	REVIEWED BY:	PLA
PREPARED BY:	JPG	REVIEWED BY:	

SCALE 0 N/A N/A

REVISIONS	INIT.	DATE

SEAL: NORTH CAROLINA PROFESSIONAL SEAL 29904 ENGINEER JASON E. GALLOWAY

SIGNATURE DATE 9/3/10

SIG. INVENTORY NO. 01-0450

03-SEP-2010 14:29
S:\ITS\SS\ITS Signals\Workgroups\TIP Projects\R-2414B\Signals\Designs\Signals\01-0450mp.dgn
jgalloway

METAL POLE No. 2

PROJECT REFERENCE NO.	SHEET NO.
R-2414B	Sig. 12

Design Loading for METAL POLE NO. 2

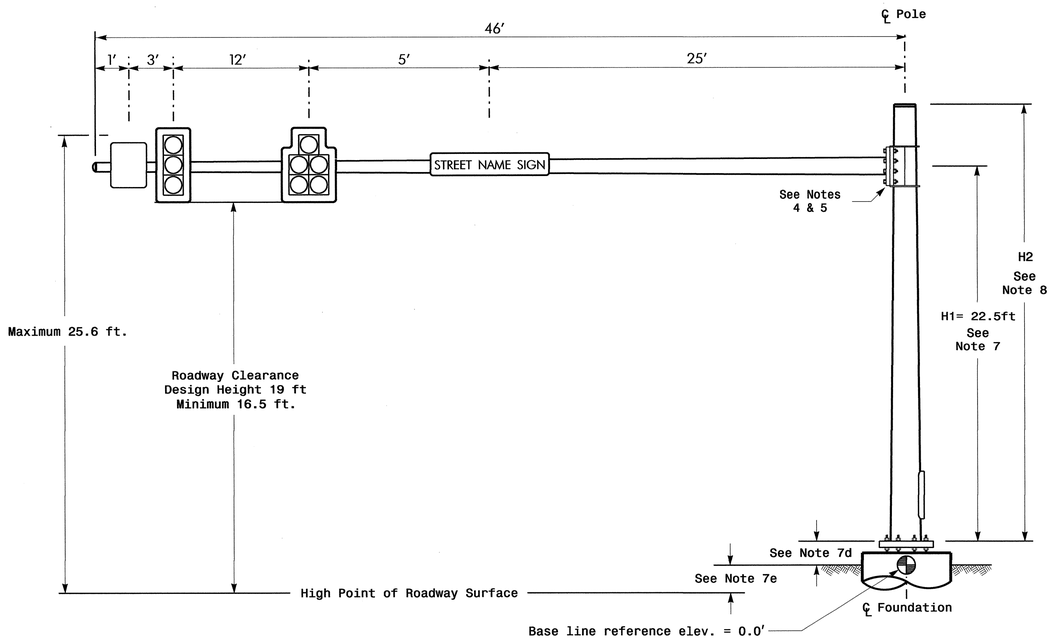

Elevation View

SPECIAL NOTE

The contractor is responsible for verifying that the mast arm attachment height (H1) will provide the "Design Height" clearance from the roadway before submitting final shop drawings for approval. Verify elevation data below which was obtained by field measurement or from available project survey data.

Elevation Data for Mast Arm Attachment (H1)

Elevation Differences for:	Pole 2	
Baseline reference point at ℄ Foundation @ ground level	0.0 ft.	
Elevation difference at High point of roadway surface	+1.9 ft.	
Elevation difference at Edge of travelway or face of curb	NA	

MAST ARM LOADING SCHEDULE

LOADING SYMBOL	DESCRIPTION	AREA	SIZE	WEIGHT
	SIGNAL HEAD 12"–5 SECTION–WITH BACKPLATE AND ASTRO–BRAC	16.3 S.F.	42.0" W X 56.0" L	103 LBS
	SIGNAL HEAD 12"–4 SECTION–WITH BACKPLATE AND ASTRO–BRAC	11.5 S.F.	25.5" W X 66.0" L	74 LBS
	SIGNAL HEAD 12"–3 SECTION–WITH BACKPLATE AND ASTRO–BRAC	9.3 S.F.	25.5" W X 52.5" L	60 LBS
	SIGN RIGID MOUNTED WITH ASTRO–SIGN–BRAC	5.0 S.F.	24.0" W X 30.0" L	11 LBS
STREET NAME SIGN	STREET NAME SIGN RIGID MOUNTED WITH ASTRO–SIGN–BRAC	12.0 S.F.	18.0" W X 96.0" L	27 LBS

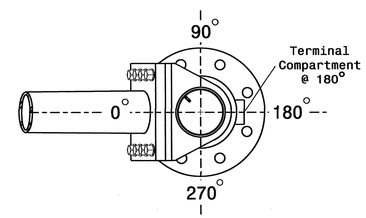

POLE RADIAL ORIENTATION

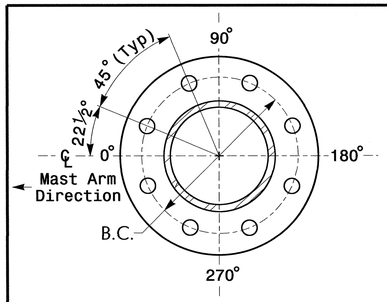

8 BOLT BASE PLATE DETAIL

See Note 6

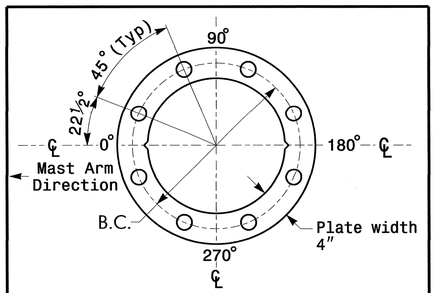

BASE PLATE TEMPLATE & ANCHOR BOLT LOCK PLATE DETAIL

For 8 Bolt Base Plate

NOTES

Design Reference Material

1. Design the traffic signal structure and foundation in accordance with:
   - The 4th Edition 2001 AASHTO "Standard Specifications for Structural Supports for Highway Signs, Luminaires, and Traffic Signals, including all of the latest interim revisions.
   - The 2006 NCDOT "Standard Specifications for Roads and Structures". The latest addenda to these specifications can be found in the traffic signal project special provisions.
   - The 2006 NCDOT Roadway Standard Drawings.
   - The traffic signal project plans and special provisions.
   - The NCDOT "Metal Pole Standards" located at the following NCDOT website: http://www.ncdot.org/doh/preconstruct/traffic/ITSS/ws/mpoles/poles.html

Design Requirements

2. Design the traffic signal structure using the loading conditions shown in the elevation views. These are anticipated worst case "Design loads" and may not represent the actual loads that will be applied at the time of the installation. The contractor should refer to the traffic signal plans for the actual loads that will be applied at the time of the installation.
3. Design all signal supports using stress ratios that do not exceed 0.9.
4. The camber design for mast arm deflection should provide an appearance of a low pitched arch where the tip or the free end of the mast arm does not deflect below horizontal when fully loaded.
5. A clamp-type bolted mast arm-to-pole connection may be used instead of the welded ring stiffened box connection shown as long as the connection meets all of the design requirements.
6. Design base plate with 8 anchor bolt holes. Provide 2 inch x 60 inch anchor bolts.
7. The mast arm attachment height (H1) shown is based on the following design assumptions:
   a. Mast arm slope and deflection are not considered in determining the arm attachment height as they are assumed to offset each other.
   b. Signal heads attached to the mast arm are rigid mounted and vertically centered on the arm.
   c. The roadway clearance height for design is as shown in the elevation views.
   d. The top of the pole base plate is .75 feet above the ground elevation.
   e. Refer to the Elevation Data chart for elevation differences between the proposed foundation ground level and the high point on the roadway.
8. The pole manufacturer will determine the total height (H2) of each pole using the greater of the following:
   - Mast arm attachment height (H1) plus 2 feet, or
   - H1 plus ½ of the total height of the mast arm attachment assembly plus 1 foot.
9. If pole location adjustments are required, the contractor must gain approval from the engineer as this may affect the mast arm lengths and arm attachment heights. The contractor may contact the Signals & Geometrics Structural Engineer for assistance at (919) 773-2800.
10. The contractor is responsible for verifying that the mast arm length shown will allow proper positioning of the signal heads over the roadway.
11. The contractor is responsible for providing soil penetration testing data (SPT) to the pole manufacturer so site specific foundations can be designed.

NCDOT Wind Zone 2 (130 mph)

Prepared In the Offices of:
Transportation Mobility and Safety Division
Signal Design Section
750 N.Greenfield Pkwy.Garner,NC 27529

US 158
At
SR 1139 (Country Club Road)

Division 1 Camden County Camden

PLAN DATE: May 2010	REVIEWED BY: PLA		
PREPARED BY: JPG	REVIEWED BY:		
REVISIONS		INIT.	DATE

SCALE 0 N/A

SEAL
NORTH CAROLINA PROFESSIONAL SEAL 29904 ENGINEER JASON R. GALLOWAY

SIGNATURE DATE 9/3/10

SIG. INVENTORY NO. 01-0450

03-SEP-2010 14:30
S:\ITS&SU\ITS Signals\Workgroups\TIP Projects\R-2414B\Signals\Design\Signals\01-0450mmp.dgn
jgalloway

METRIC	PROJECT REFERENCE NO.	SHEET NO.
	R-2414B	Sig.13

PHASING DIAGRAM

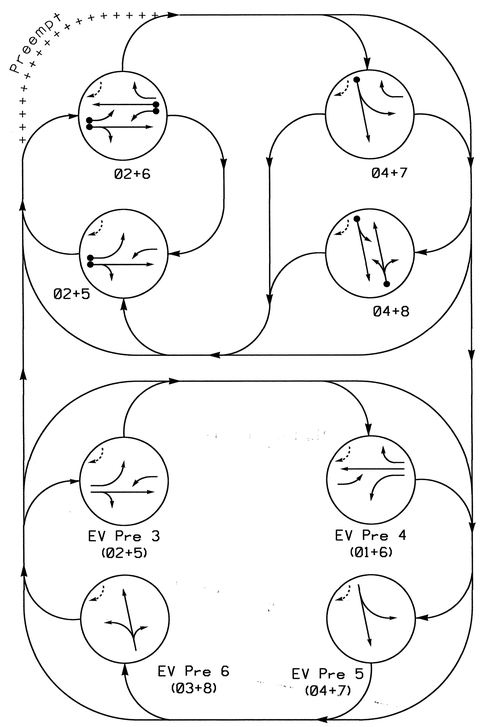

PHASING DIAGRAM DETECTION LEGEND

- DETECTED MOVEMENT
- UNDETECTED MOVEMENT (OVERLAP)
- UNSIGNALIZED MOVEMENT
- PEDESTRIAN MOVEMENT

TABLE OF OPERATION

SIGNAL FACE	PHASE 02+5	02+6	04+7	04+8	PErVe3	PErVe4	PErVe5	PErVe6	FLASH
21,22	G	G	R	R	G	R	R	R	Y
41	R	R	G	G	R	R	G	R	R
42	R	R	G	G	R	R	G	R	R
51	←	F Y	R	R	←	F Y	R	R	Y
61	F Y	F Y	R	R	F Y	←	R	R	Y
62	R	G	R	R	R	G	R	R	Y
63	R	G	R	R	R	G	R	R	Y
81	R	R	R	G	R	R	R	G	R
82	R	R	R	G	R	R	R	G	R

SIGNAL FACE I.D.

All Heads L.E.D.

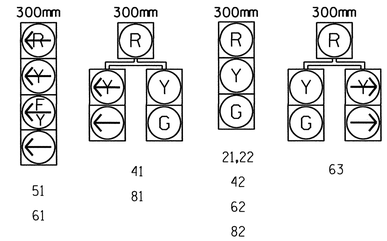

OASIS 2070L LOOP & DETECTOR INSTALLATION

INDUCTIVE LOOPS					DETECTOR PROGRAMMING							
LOOP	SIZE (M)	TURNS	DISTANCE FROM STOPBAR (M)	NEW LOOP	PHASE	CALLING	EXTENSION	FULL TIME DELAY	STRETCH TIME	DELAY TIME	SYSTEM LOOP	NEW CARD
2A	1.8X1.8	4	20	Y	2	Y	Y	-	-	-	-	Y
4A	1.8X12	2-4-2	0	Y	7	Y	Y	-	-	15	-	Y
					4	Y	Y	-	-	3	-	Y
5A	1.8X12	2-4-2	0	Y	5	Y	Y	-	-	15	-	Y
					2	Y	Y	-	-	-	-	Y
6A	1.8X1.8	4	20	Y	6	Y	Y	-	-	-	-	Y
8A	1.8X12	2-4-2	0	Y	8	Y	Y	-	-	3	-	Y
8B	1.8X1.8	4	0	Y	8	Y	Y	-	-	15	-	Y

4 Phase W/EV Preemption
Fully Actuated
Isolated

NOTES

1. Refer to "Roadway Standard Drawings NCDOT" dated July 2006 and "Standard Specifications for Roads and Structures" dated July 2006.
2. Do not program signal for late night flashing operation unless otherwise directed by the Engineer.
3. Omit phase 7 during phase 8 on.
4. Phase 5 may be lagged.
5. Set all detector units to presence mode.
6. Locate new cabinet so as not to obstruct sight distance of vehicles turning right on red.
7. This intersection features an optical preemption system. Shown locations of optical detectors are conceptual only.

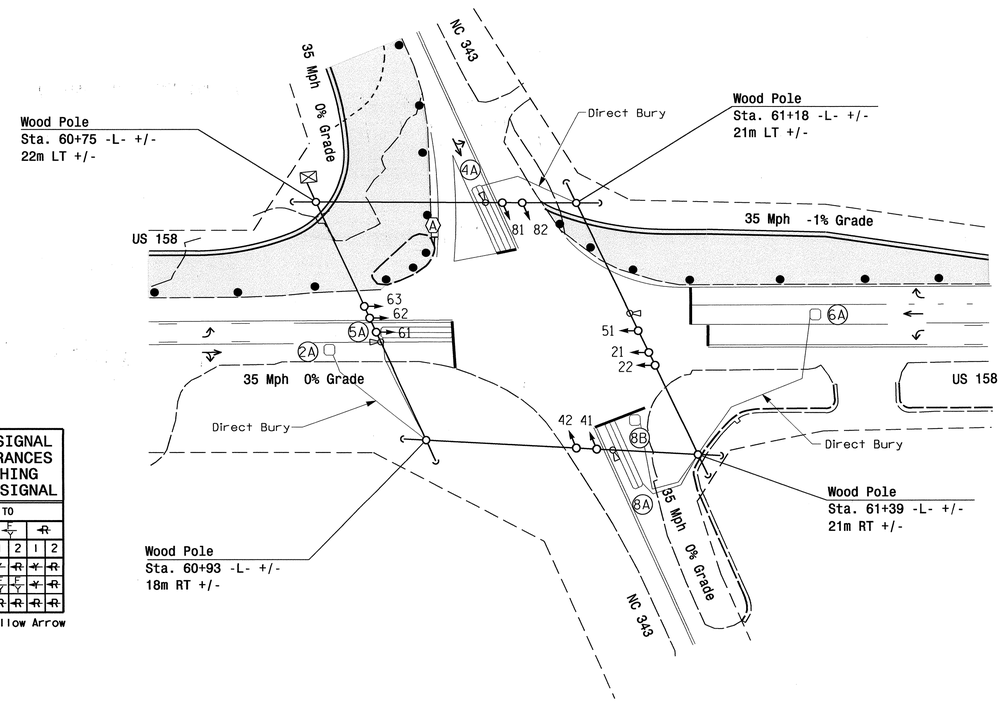

STANDARD SIGNAL FACE CLEARANCES FOR FLASHING LEFT TURN SIGNAL

FROM	TO ←	F Y	R 1	R 2	F Y 1	F Y 2	R 1	R 2
←	←	←	←	←	R	R	R	R
F Y	F Y	F Y	F Y	F Y	F Y	F Y	R	R
R	R	R	R	R	R	R	R	R

F Y = Flashing Yellow Arrow

LEGEND

PROPOSED		EXISTING
	Traffic Signal Head	
	Modified Signal Head	N/A
	Sign	
	Pedestrian Signal Head With Push Button & Sign	
	Signal Pole with Guy	
	Signal Pole with Sidewalk Guy	
	Inductive Loop Detector	
	Controller & Cabinet	
	Junction Box	
	50mm Underground Conduit	
N/A	Right of Way with Marker	
	Directional Arrow	
	Out of Pavement Detector	
	"YIELD" Sign (R1-2)	
	Construction Zone Drums	

OASIS 2070L TIMING CHART

FEATURE	PHASE 2	4	5	6	7	8
Min Green 1 *	10	7	7	10	7	7
Extension 1 *	3.0	2.0	2.0	3.0	2.0	2.0
Max Green 1 *	45	35	20	45	35	35
Yellow Clearance	3.9	3.8	3.0	3.9	3.0	3.8
Red Clearance	1.9	2.0	1.9	1.9	2.8	1.8
Walk 1 *	-	-	-	-	-	-
Don't Walk 1	-	-	-	-	-	-
Seconds Per Actuation *	-	-	-	-	-	-
Max Variable Initial *	-	-	-	-	-	-
Time Before Reduction *	-	-	-	-	-	-
Time To Reduce *	-	-	-	-	-	-
Minimum Gap	-	-	-	-	-	-
Recall Mode	MIN RECALL	-	-	MIN RECALL	-	-
Vehicle Call Memory	YELLOW	-	-	YELLOW	-	-
Dual Entry	-	ON	-	-	-	ON
Simultaneous Gap	ON	ON	ON	ON	ON	ON

* These values may be field adjusted. Do not adjust Min Green and Extension times for phases 2 and 6 lower than what is shown. Min Green for all other phases should not be lower than 4 seconds.

2070 EV PREEMPTION

FUNCTION	PRE 3	PRE 4	PRE 5	PRE 6
Interval 1 – Dwell Green	255	255	255	255
Interval 1 – Dwell Yellow	0.0*	3.9	0.0*	3.8
Interval 1 – Dwell Red	0.0*	1.9	0.0*	1.8
Interval 5 – Exit Green	0	0	0	0
Interval 5 – Yellow	0.0	0.0	0.0	0.0
Interval 5 – Red	0.0	0.0	0.0	0.0
Priority	Medium	Medium	Medium	Medium
Delay Time	0.0	0.0	0.0	0.0
Min Green Before Pre	1	1	1	1
Ped Clear Before Pre	0	0	0	0
Yellow Clear Before Pre	0.0*	0.0*	0.0*	0.0*
Red Clear Before Pre	0.0*	0.0*	0.0*	0.0*
Dwell Min Time	7	7	7	7
Enable Backup Protection	N	N	Y	Y
Ped Clear Through Yellow	N	N	N	N
Preempt Extend**	2	2	2	2
Omit Overlaps	-	-	B	-

* Time defaults to time used for phase during normal operation
** Program Timing on Optical Detection Unit

Signal Upgrade/Temp 1 Phase I

Prepared in the Offices of:
Traffic Engineering Branch
Traffic Safety Unit
Signals and Geometrics Section
750 N. Greenfield Pkwy, Garner, NC 27529

US 158
At
NC 343

Division 1 Camden County Camden

PLAN DATE: March 2010 REVIEWED BY:
PREPARED BY: JPG REVIEWED BY:

SCALE 5 0 10
500:1

REVISIONS | INIT. | DATE

SEAL
NORTH CAROLINA PROFESSIONAL SEAL 29904 ENGINEER JASON P. GALLOWAY
SIGNATURE 8/9/10 DATE
STD. INVENTORY NO. 01-0229T1

19-AUG-2010 14:29
S:\TSS\SUM\ITS Signals\Workgroups\TIP Projects\R-2414B\Signals\Design\Signals\01-0229\01022 9T1_sig.dgn,2010nmad.dgn
jgallaway

PROJECT REFERENCE NO.	SHEET NO.
R-2414B	Sig.14

EDI MODEL 2010ECL-NC CONFLICT MONITOR PROGRAMMING DETAIL

(remove jumpers and set switches as shown)

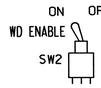

REMOVE DIODE JUMPERS 1-6, 1-9, 1-11, 2-5, 2-6, 2-9, 2-11, 3-8, 4-7, 4-8, 4-10, 5-9, 5-11, 6-9, 6-11, 7-10 and 9-11.

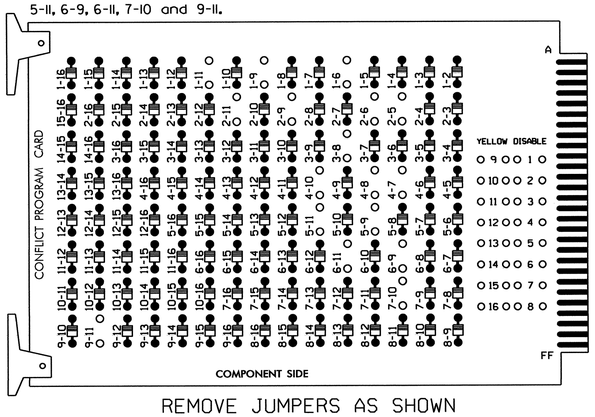

REMOVE JUMPERS AS SHOWN

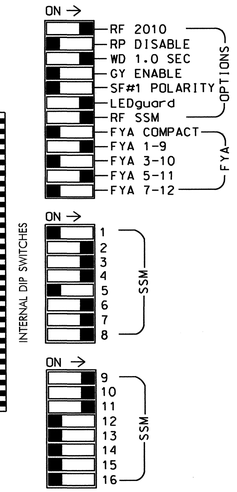

■ = DENOTES POSITION OF SWITCH

NOTES:

1. Card is provided with all diode jumpers in place. Removal of any jumper allows its channels to run concurrently.
2. Make sure jumpers SEL2-SEL5 are present on the monitor board.

NOTES

1. To prevent "flash-conflict" problems, insert red flash program blocks for all unused vehicle load switches in the output file. The installer shall verify that signal heads flash in accordance with the Signal Plans.
2. Ensure that Red Enable is active at all times during normal operation. To prevent Red Failures on unused monitor channels, tie unused red monitor inputs 1,5, 12,13,14,15 & 16 to load switch AC+ per the cabinet manufacturer's instructions.
3. Program phases 4 and 8 for Dual Entry.
4. Enable Simultaneous Gap-Out for all phases.
5. Program phases 2 and 6 for Start Up In Green.
6. Program phases 2 and 6 for Yellow Flash, and overlap 1 as Wag Overlaps.

SIGNAL HEAD HOOK-UP CHART

LOAD SWITCH NO.	S1	S2	S2P	S3	S4	S4P	S5	S6	S6P	S7	S8	S8P	S9	S10	S11	S12	S13	S14
PHASE	1	2	2 PED	3	4	4 PED	5	6	6 PED	7	8	8 PED	OLA	OLB	SPARE	OLC	OLD	SPARE
SIGNAL HEAD NO.	61★	21,22	NU	81	41,42	NU	51★	62,63	NU	41	81,82	NU	61★	63	NU	51★	NU	NU
RED		128		✱	101			134		✱	107			✱				
YELLOW	✱	129			102		✱	135			108							
GREEN		130			103			136			109							
RED ARROW													A121			A114		
YELLOW ARROW				117						123			A122	A125		A115		
FLASHING YELLOW ARROW													A123			A116		
GREEN ARROW	127			118			133			124				A126				

NU = Not Used

✱ Denotes install load resistor. See load resistor installation detail this sheet.

★ See pictorial of head wiring in detail below.

PREEMPT ONLY PHASE OMIT NOTE

(program controller as shown below)

From Main Menu press '2' (Phase Control). Then '1' (Phase Control Functions). Program Phases 1 and 3 for 'Omit Phase' and Phases 2, 4, 5, 6, 7 and 8 for 'Startup Calls'. This is to prevent Phases 1 and 3 from being served when not in Preempt.

EQUIPMENT INFORMATION

CONTROLLER.....2070L
CABINET.....332 /W/ AUX
SOFTWARE.....ECONOLITE OASIS
CABINET MOUNT.....BASE
OUTPUT FILE POSITIONS...18 WITH AUX. OUTPUT FILE
LOAD SWITCHES USED.....S1,S2,S3,S4,S5,S6,S7,S8,S9,S10,S12
PHASES USED.....*1,2,*3,4,5,6,7,8
OVERLAP "A".....1+2
OVERLAP "B".....7
OVERLAP "C".....5+6
OVERLAP "D".....NOT USED

*PHASES 1 AND 3 USED IN PREEMPT SEQUENCE ONLY

4 SECTION FYA PPLT SIGNAL WIRING DETAIL

(wire signal heads as shown)

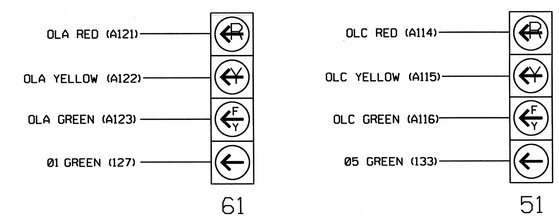

NOTE

1. The sequence display for this signal requires special logic programming. See sheet 2 of 3 for programming instructions.

INPUT FILE POSITION LAYOUT

(front view)

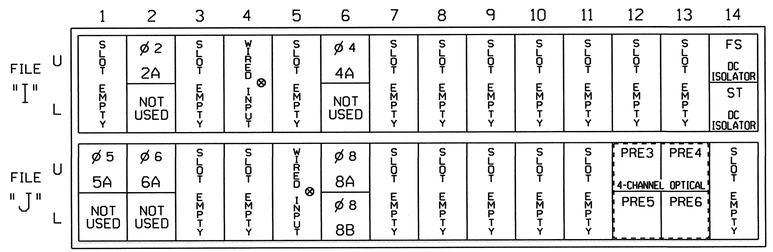

EX.: 1A, 2A, ETC. = LOOP NO.'S

FS = FLASH SENSE
ST = STOP TIME

⊗ Wired Input - Do not populate slot with detector card

INPUT FILE CONNECTION & PROGRAMMING CHART

LOOP NO.	LOOP TERMINAL	INPUT FILE POS.	PIN NO.	INPUT ASSIGNMENT NO.	DETECTOR NO.	NEMA PHASE	CALL	EXTEND	FULL TIME DELAY	STRETCH TIME	DELAY TIME
2A	TB2-5,6	I2U	39	1	2	2	Y	Y			
4A[1]	-	J5U	57	19	7	7	Y	Y			15
	TB4-9,10	I6U	41	3	4	4	Y	Y			3
5A[2]	TB3-1,2	J1U	55	17	5	5	Y	Y			15
	-	I4U	47	9	22	2	Y	Y			
6A	TB3-5,6	J2U	40	2	6	6	Y	Y			
8A	TB5-9,10	J6U	42	4	8	8	Y	Y			3
8B	TB5-11,12	J6L	46	8	18	8	Y	Y			15

[1] Add jumper from I6-F to J5-F, on rear of input file.

[2] Add jumper from J1-W to I4-W, on rear of input file.

INPUT FILE POSITION LEGEND: J2L
FILE J
SLOT 2
LOWER

DYNAMIC BACK-UP CONTROL PROGRAMMING

(program controller as shown below)

1. From Main Menu press '2' (Phase Control), then '1' (Phase Control Functions). Scroll to the bottom of the menu and enable Dynamic/Backup Control Function 1.
2. From Phase Control Functions Menu press '2' (Dynamic/Backup Control Functions).

```
DYNAMIC/BACKUP CONTROL FUNCTION #01
              OVERLAPS:¦ABCDEFGHIJKLMNOP
IF OVERLAPS ARE ACTIVE ¦
OR          PHASES:¦123456789101112131415 16
IF PHASES ARE ON¦        X
OMIT PHASES     ¦        X
CALL PHASES     ¦
```

BACKUP PROTECTION PROGRAMMING COMPLETE

LOAD RESISTOR INSTALLATION DETAIL

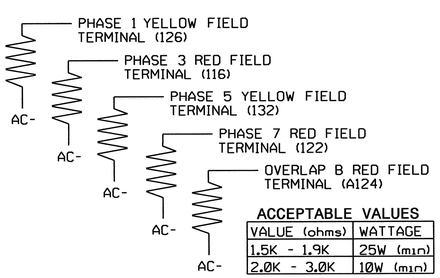

ACCEPTABLE VALUES

VALUE (ohms)	WATTAGE
1.5K - 1.9K	25W (min)
2.0K - 3.0K	10W (min)

OPTICOM FIELD WIRE DETAIL

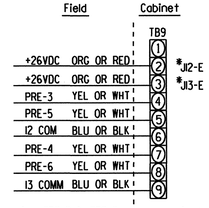

*Assuming TB9-2 & TB9-3 are unused on the J File, move wires on J11-J & J-11-K (Twisted Pair) to J12-E & J13-E Respectively.

THIS ELECTRICAL DETAIL IS FOR
THE SIGNAL DESIGN: 01-0229T1
DESIGNED: March 2010
SEALED: 08/19/10
REVISED:

ELECTRICAL DETAIL - TEMP 1 - SHEET 1 OF 3

ELECTRICAL AND PROGRAMMING DETAILS FOR:

Prepared in the Offices of:
Transportation Mobility and Safety Division
STATE OF NORTH CAROLINA DEPARTMENT OF TRANSPORTATION
Signals Management Section
750 N.Greenfield Pkwy,Garner,NC 27529

US 158
at
NC 343

Division 1 Camden County Camden

PLAN DATE: July 2010 REVIEWED BY: T. Vaz
PREPARED BY: C. Strickland REVIEWED BY:

REVISIONS	INIT.	DATE

SEAL
NORTH CAROLINA PROFESSIONAL SEAL 022013 ENGINEER GEORGE C. BROWN

George C. Brown 8/26/10
SIGNATURE DATE

SIG. INVENTORY NO. 01-0229T1

25-AUG-2010 07:06
S:\ITS&SU\ITS Signals\Workgroups\Sig Mgmt\Strickland\m010229_sm1ele.xxx.dgn
castrickland

PROJECT REFERENCE NO.	SHEET NO.
R-2414B	Sig. 15

LOGICAL I/O PROCESSOR PROGRAMMING DETAIL
TO PRODUCE SPECIAL FYA-PPLT SIGNAL SEQUENCE

(program controller as shown below)

1. FROM MAIN MENU PRESS '2' (PHASE CONTROL). THEN '1' (PHASE CONTROL FUNCTIONS). SCROLL TO THE BOTTOM OF THE MENU AND ENABLE ACT LOGIC COMMANDS 1, 2, 3, 4, 5 AND 6.

2. FROM MAIN MENU PRESS '6' (OUTPUTS). THEN '3' (LOGICAL I/O PROCESSOR).

```
LOGICAL I/O COMMAND #1  (+/-COMMAND#)
IF  ACTIVE PHASE        #1  IS ON
AND RED CLEAR ON PHASE  #1  IS ON

SCROLL DOWN

THEN:
SET OUTPUT  ASSIGNMENT #50 ON
SET OUTPUT  ASSIGNMENT #51 OFF
```

NOTE: LOGIC FOR PHASE 1 RED CLEAR WHEN TRANSITIONING FROM PHASE 1 (EV PRE 4) TO PHASE 2 (HEAD 61).

PRESS '+'

```
LOGICAL I/O COMMAND #2  (+/-COMMAND#)
IF  ACTIVE PHASE        #1  IS ON

SCROLL DOWN

THEN:
SET OUTPUT  ASSIGNMENT #52 OFF
```

NOTE: LOGIC FOR SWITCHING FLASHING YELLOW ARROW "OFF" DURING PHASE 1 (HEAD 61).

PRESS '+'

```
LOGICAL I/O COMMAND #3  (+/-COMMAND#)
IF  YELLOW ON PHASE     #1  IS ON

SCROLL DOWN

THEN:
SET OUTPUT  ASSIGNMENT #51 ON
```

NOTE: LOGIC FOR YELLOW ARROW CLEARANCE FROM PHASE 1 (HEAD 61).

PRESS '+'

```
LOGICAL I/O COMMAND #4  (+/-COMMAND#)
IF  ACTIVE PHASE        #5  IS ON
AND RED CLEAR ON PHASE  #5  IS ON

SCROLL DOWN

THEN:
SET OUTPUT  ASSIGNMENT #42 ON
SET OUTPUT  ASSIGNMENT #43 OFF
```

NOTE: LOGIC FOR PHASE 5 RED CLEAR WHEN TRANSITIONING FROM PHASE 5 TO PHASE 6 (HEAD 51).

PRESS '+'

```
LOGICAL I/O COMMAND #5  (+/-COMMAND#)
IF  ACTIVE PHASE        #5  IS ON

SCROLL DOWN

THEN:
SET OUTPUT  ASSIGNMENT #44 OFF
```

NOTE: LOGIC FOR SWITCHING FLASHING YELLOW ARROW "OFF" DURING PHASE 5 (HEAD 51).

PRESS '+'

```
LOGICAL I/O COMMAND #6  (+/-COMMAND#)
IF  YELLOW ON PHASE     #5  IS ON

SCROLL DOWN

THEN:
SET OUTPUT  ASSIGNMENT #43 ON
```

NOTE: LOGIC FOR YELLOW ARROW CLEARANCE FROM PHASE 5 (HEAD 51).

LOGIC I/O PROCESSOR PROGRAMMING COMPLETE

OUTPUT REFERENCE SCHEDULE

OUTPUT 42 = Overlap C Red
OUTPUT 43 = Overlap C Yellow
OUTPUT 44 = Overlap C Green
OUTPUT 50 = Overlap A Red
OUTPUT 51 = Overlap A Yellow
OUTPUT 52 = Overlap A Green

OVERLAP PROGRAMMING DETAIL

(program controller as shown below)

FROM MAIN MENU PRESS '8' (OVERLAPS). THEN '1' (VEHICLE OVERLAP SETTINGS).

```
PAGE 1: VEHICLE OVERLAP 'A' SETTINGS
PHASE:          |123456789101112131415 16
VEH OVL PARENTS:|XX
VEH OVL NOT VEH:|
VEH OVL NOT PED:|
VEH OVL GRN EXT:|
STARTUP COLOR: _ RED  _ YELLOW  _ GREEN
FLASH COLORS:  _ RED  _ YELLOW  X GREEN
SELECT VEHICLE OVERLAP OPTIONS:   (Y/N)
FLASH YELLOW IN CONTROLLER FLASH?...Y
GREEN EXTENSION (0-255 SEC).........0
YELLOW CLEAR (0=PARENT,3-25.5 SEC)..0.0
RED CLEAR (0=PARENT,0.1-25.5 SEC)...0.0
OUTPUT AS PHASE # (0=NONE, 1-16)....0
```

NOTICE GREEN FLASH

PRESS '+'

```
PAGE 1: VEHICLE OVERLAP 'B' SETTINGS
PHASE:          |123456789101112131415 16
VEH OVL PARENTS:|      X
VEH OVL NOT VEH:|
VEH OVL NOT PED:|
VEH OVL GRN EXT:|
STARTUP COLOR: _ RED  _ YELLOW  _ GREEN
FLASH COLORS:  _ RED  _ YELLOW  _ GREEN
SELECT VEHICLE OVERLAP OPTIONS:   (Y/N)
FLASH YELLOW IN CONTROLLER FLASH?...N
GREEN EXTENSION (0-255 SEC).........0
YELLOW CLEAR (0=PARENT,3-25.5 SEC)..0.0
RED CLEAR (0=PARENT,0.1-25.5 SEC)...0.0
OUTPUT AS PHASE # (0=NONE, 1-16)....0
```

PRESS '+'

```
PAGE 1: VEHICLE OVERLAP 'C' SETTINGS
PHASE:          |123456789101112131415 16
VEH OVL PARENTS:|    XX
VEH OVL NOT VEH:|
VEH OVL NOT PED:|
VEH OVL GRN EXT:|
STARTUP COLOR: _ RED  _ YELLOW  _ GREEN
FLASH COLORS:  _ RED  _ YELLOW  X GREEN
SELECT VEHICLE OVERLAP OPTIONS:   (Y/N)
FLASH YELLOW IN CONTROLLER FLASH?...Y
GREEN EXTENSION (0-255 SEC).........0
YELLOW CLEAR (0=PARENT,3-25.5 SEC)..0.0
RED CLEAR (0=PARENT,0.1-25.5 SEC)...0.0
OUTPUT AS PHASE # (0=NONE, 1-16)....0
```

NOTICE GREEN FLASH

OVERLAP PROGRAMMING COMPLETE

THIS ELECTRICAL DETAIL IS FOR
THE SIGNAL DESIGN: 01-0229T1
DESIGNED: March 2010
SEALED: 08/19/10
REVISED:

ELECTRICAL DETAIL - TEMP 1 - SHEET 2 OF 3

ELECTRICAL AND PROGRAMMING DETAILS FOR:

Prepared in the Offices of:
Transportation Mobility and Safety Division
STATE OF NORTH CAROLINA DEPARTMENT OF TRANSPORTATION
Signals Management Section
750 N.Greenfield Pkwy,Garner,NC 27529

US 158
at
NC 343

Division 1 Camden County Camden

PLAN DATE: July 2010 REVIEWED BY: T. Jope
PREPARED BY: C. Strickland REVIEWED BY:

REVISIONS	INIT.	DATE

SEAL
NORTH CAROLINA PROFESSIONAL SEAL 022013 ENGINEER GEORGE C. BROWN

George C. Brown 8/26/10
SIGNATURE DATE

SIG. INVENTORY NO. 01-0229T1

24-AUG-2010 09:05
S:\#ITSA&SM\TS Signals\workgroups\Sig Mgmt\Strickland\n0229_sm_ele_xxx.dgn
cestrickland

PROJECT REFERENCE NO.	SHEET NO.
R-2414B	Sig.16

EMERGENCY VEHICLE PREEMPTION PROGRAMMING DETAIL

(program controller as shown below)

From Main Menu press 'A' (Preemption), then '1' (Standard Preemptions). Press 'NEXT' as needed to advance to Preempts 3, 4, 5 and 6.

```
   PREEMPTION  #3  SETTINGS (NEXT:1-10)
INTERVAL/TIMING |  CLEAR/DWELL PHASES
  GRN YEL  RED  |123456789101112131415 16
1 255  0.0* 0.0* | X  X
2   0  0.0  0.0  |
3   0  0.0  0.0  |
4   0  0.0  0.0  |
5   0  0.0  0.0  |
EXIT CALLS       |
          OPTIONS
PRIORITY (Y/N TO SELECT) ............MED
DELAY TIMER (0-255 SEC) .............0
MIN GREEN BEFORE PRE (0= DEFAULT)....1
PED CLEAR BEFORE PRE (0= DEFAULT)....0
YELLOW CLEAR BEFORE PRE (0= DEFAULT).0.0*
RED CLEAR BEFORE PRE (0= DEFAULT)....0.0*
DWELL MIN TIMER (0-255 SEC) .........7
DWELL MAX TIMER (0=OFF,1-255MIN) ....0
DWELL HOLD-OVER TIMER (0-255) .......0
LATCH CALL? .........................N
LINK TO NEXT PREEMPT? ...............N
ENABLE BACKUP PROTECTION? ...........N
HOLD CLEAR 1 PHASES DURING DELAY? ...N
FAST GREEN FLASH DWELL PHASES? ......N
PED CLEARANCE THROUGH YELLOW? .......N
INHIBIT OVERLAP GREEN EXTENSION? ....N
SERVICE DURING SOFTWARE FLASH? ......N
REST IN RED DURING DWELL INTERVAL? ..N
FLASH DWELL INTERVAL? ...............N
ALLOW PEDS IN DWELL INTERVAL? .......N
RE-TIME DWELL INTERVAL? .............N
OVERLAPS:                | ABCDEFGHIJKLMNOP
DWELL INT FLASH YELLOW   |
OMIT OVERLAPS:           |
```

PRESS 'NEXT'

```
   PREEMPTION  #4  SETTINGS (NEXT:1-10)
INTERVAL/TIMING |  CLEAR/DWELL PHASES
  GRN YEL  RED  |123456789101112131415 16
1 255  3.9  1.9 | X    X
2   0  0.0  0.0 |
3   0  0.0  0.0 |
4   0  0.0  0.0 |
5   0  0.0  0.0 |
EXIT CALLS      |
          OPTIONS
PRIORITY (Y/N TO SELECT) ............MED
DELAY TIMER (0-255 SEC) .............0
MIN GREEN BEFORE PRE (0= DEFAULT)....1
PED CLEAR BEFORE PRE (0= DEFAULT)....0
YELLOW CLEAR BEFORE PRE (0= DEFAULT).0.0*
RED CLEAR BEFORE PRE (0= DEFAULT)....0.0*
DWELL MIN TIMER (0-255 SEC) .........7
DWELL MAX TIMER (0=OFF,1-255MIN) ....0
DWELL HOLD-OVER TIMER (0-255) .......0
LATCH CALL? .........................N
LINK TO NEXT PREEMPT? ...............N
ENABLE BACKUP PROTECTION? ...........N
HOLD CLEAR 1 PHASES DURING DELAY? ...N
FAST GREEN FLASH DWELL PHASES? ......N
PED CLEARANCE THROUGH YELLOW? .......N
INHIBIT OVERLAP GREEN EXTENSION? ....N
SERVICE DURING SOFTWARE FLASH? ......N
REST IN RED DURING DWELL INTERVAL? ..N
FLASH DWELL INTERVAL? ...............N
ALLOW PEDS IN DWELL INTERVAL? .......N
RE-TIME DWELL INTERVAL? .............N
OVERLAPS:                | ABCDEFGHIJKLMNOP
DWELL INT FLASH YELLOW   |
OMIT OVERLAPS:           |
```

PRESS 'NEXT'

```
   PREEMPTION  #5  SETTINGS (NEXT:1-10)
INTERVAL/TIMING |  CLEAR/DWELL PHASES
  GRN YEL  RED  |123456789101112131415 16
1 255  0.0* 0.0* |   X  X
2   0  0.0  0.0  |
3   0  0.0  0.0  |
4   0  0.0  0.0  |
5   0  0.0  0.0  |
EXIT CALLS       |
          OPTIONS
PRIORITY (Y/N TO SELECT) ............MED
DELAY TIMER (0-255 SEC) .............0
MIN GREEN BEFORE PRE (0= DEFAULT)....1
PED CLEAR BEFORE PRE (0= DEFAULT)....0
YELLOW CLEAR BEFORE PRE (0= DEFAULT).0.0*
RED CLEAR BEFORE PRE (0= DEFAULT)....0.0*
DWELL MIN TIMER (0-255 SEC) .........7
DWELL MAX TIMER (0=OFF,1-255MIN) ....0
DWELL HOLD-OVER TIMER (0-255) .......0
LATCH CALL? .........................N
LINK TO NEXT PREEMPT? ...............N
ENABLE BACKUP PROTECTION? ...........Y
HOLD CLEAR 1 PHASES DURING DELAY? ...N
FAST GREEN FLASH DWELL PHASES? ......N
PED CLEARANCE THROUGH YELLOW? .......N
INHIBIT OVERLAP GREEN EXTENSION? ....N
SERVICE DURING SOFTWARE FLASH? ......N
REST IN RED DURING DWELL INTERVAL? ..N
FLASH DWELL INTERVAL? ...............N
ALLOW PEDS IN DWELL INTERVAL? .......N
RE-TIME DWELL INTERVAL? .............N
OVERLAPS:                | ABCDEFGHIJKLMNOP
DWELL INT FLASH YELLOW   |
OMIT OVERLAPS:           |  X
```

PRESS 'NEXT'

```
   PREEMPTION  #6  SETTINGS (NEXT:1-10)
INTERVAL/TIMING |  CLEAR/DWELL PHASES
  GRN YEL  RED  |123456789101112131415 16
1 255  3.8  1.8 |   X    X
2   0  0.0  0.0  |
3   0  0.0  0.0  |
4   0  0.0  0.0  |
5   0  0.0  0.0  |
EXIT CALLS       |
          OPTIONS
PRIORITY (Y/N TO SELECT) ............MED
DELAY TIMER (0-255 SEC) .............0
MIN GREEN BEFORE PRE (0= DEFAULT)....1
PED CLEAR BEFORE PRE (0= DEFAULT)....0
YELLOW CLEAR BEFORE PRE (0= DEFAULT).0.0*
RED CLEAR BEFORE PRE (0= DEFAULT)....0.0*
DWELL MIN TIMER (0-255 SEC) .........7
DWELL MAX TIMER (0=OFF,1-255MIN) ....0
DWELL HOLD-OVER TIMER (0-255) .......0
LATCH CALL? .........................N
LINK TO NEXT PREEMPT? ...............N
ENABLE BACKUP PROTECTION? ...........Y
HOLD CLEAR 1 PHASES DURING DELAY? ...N
FAST GREEN FLASH DWELL PHASES? ......N
PED CLEARANCE THROUGH YELLOW? .......N
INHIBIT OVERLAP GREEN EXTENSION? ....N
SERVICE DURING SOFTWARE FLASH? ......N
REST IN RED DURING DWELL INTERVAL? ..N
FLASH DWELL INTERVAL? ...............N
ALLOW PEDS IN DWELL INTERVAL? .......N
RE-TIME DWELL INTERVAL? .............N
OVERLAPS:                | ABCDEFGHIJKLMNOP
DWELL INT FLASH YELLOW   |
OMIT OVERLAPS:           |
```

PROGRAMMING COMPLETE

*TIME DEFAULTS TO TIME USED BY PHASE DURING NORMAL OPERATION

NOTE!

PROGRAM EXTEND TIME ON ALL 'OPTICOM' DETECTOR UNITS FOR 2 SEC.

THIS ELECTRICAL DETAIL IS FOR
THE SIGNAL DESIGN: 01-0229T1
DESIGNED: March 2010
SEALED: 08/19/10
REVISED:

ELECTRICAL DETAIL - TEMP 1 - SHEET 3 OF 3

ELECTRICAL AND PROGRAMMING DETAILS FOR:

Prepared in the Offices of:
Transportation Mobility and Safety Division
STATE OF NORTH CAROLINA DEPARTMENT OF TRANSPORTATION
Signals Management Section
750 N.Greenfield Pkwy,Garner,NC 27529

US 158
at
NC 343

Division 1 | Camden County | Camden

PLAN DATE: July 2010	REVIEWED BY: T. Jye		
PREPARED BY: C. Strickland	REVIEWED BY:		
REVISIONS		INIT.	DATE

SEAL

NORTH CAROLINA PROFESSIONAL SEAL 022013 ENGINEER GEORGE C. BROWN

George C. Brown 8/26/10
SIGNATURE DATE

SIG. INVENTORY NO. 01-0229T1

24-AUG-2010 09:45
S:#ITS&SU#ITS Signals#WorkGroups#Sig Man#Strickland#010229_smu#le_xxx.dgn
cas:Strickland

METRIC	PROJECT REFERENCE NO.	SHEET NO.
	R-2414B	Sig.17

PHASING DIAGRAM

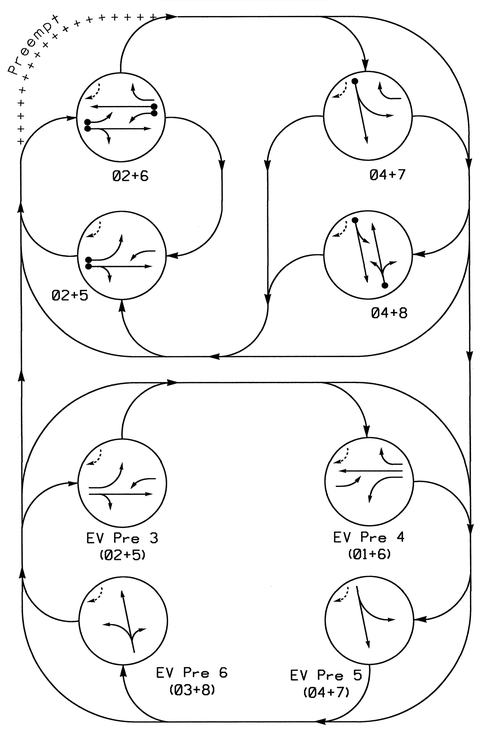

PHASING DIAGRAM DETECTION LEGEND

- DETECTED MOVEMENT
- UNDETECTED MOVEMENT (OVERLAP)
- UNSIGNALIZED MOVEMENT
- PEDESTRIAN MOVEMENT

TABLE OF OPERATION

SIGNAL FACE	PHASE								
	02+5	02+6	04+7	04+8	PrEv3	PrEv4	PrEv5	PrEv6	FLASH
21,22	G	G	R	R	G	R	R	R	Y
41	R	R	G	G	R	R	G	R	R
42	R	R	G	G	R	R	G	R	R
51	←	FY	R	R	←	FY	R	R	Y
61	FY	FY	R	R	FY	←	R	R	Y
62	R	G	R	R	R	G	R	R	Y
63	R	G	R	R	R	G	R	R	Y
81	R	R	R	G	R	R	R	G	R
82	R	R	R	G	R	R	R	G	R

SIGNAL FACE I.D.

All Heads L.E.D.

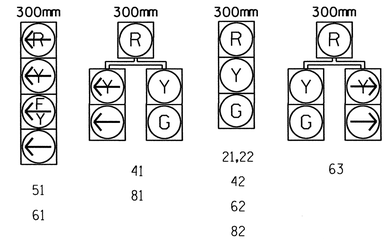

OASIS 2070L LOOP & DETECTOR INSTALLATION

INDUCTIVE LOOPS					DETECTOR PROGRAMMING						
LOOP	SIZE (M)	TURNS	DISTANCE FROM STOPBAR (M)	NEW LOOP	PHASE	CALLING	EXTENSION	FULL TIME DELAY	STRETCH TIME	DELAY TIME	SYSTEM LOOP	NEW CARD
2A	1.8X1.8	4	20	Y	2	Y	Y	-	-	-	-	-
4A	1.8X12	2-4-2	0	-	7	Y	Y	-	-	15	-	-
					4	Y	Y	-	-	3	-	-
5A	1.8X12	2-4-2	0	Y	5	Y	Y	-	-	15	-	-
					2	Y	Y	-	-	-	-	-
6A	1.8X1.8	4	20	Y	6	Y	Y	-	-	-	-	-
8A	1.8X12	2-4-2	0	-	8	Y	Y	-	-	3	-	-
8B	1.8X1.8	4	0	-	8	Y	Y	-	-	15	-	-

STANDARD SIGNAL FACE CLEARANCES FOR FLASHING LEFT TURN SIGNAL

FROM	TO ←		TO FY		TO R	
	1	2	1	2	1	2
←	←	←	~~←~~	~~R~~	~~←~~	~~R~~
FY	FY	FY	FY	FY	~~←~~	~~R~~
R	~~R~~	~~R~~	~~R~~	~~R~~	~~R~~	~~R~~

FY = Flashing Yellow Arrow

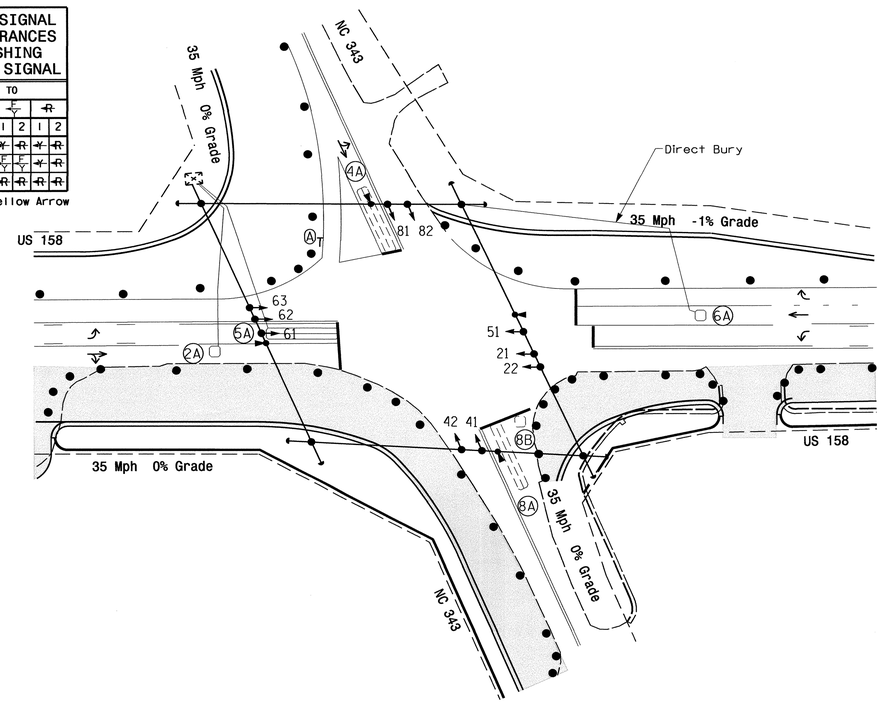

4 Phase W/EV Preemption Fully Actuated Isolated

NOTES

1. Refer to "Roadway Standard Drawings NCDOT" dated July 2006 and "Standard Specifications for Roads and Structures" dated July 2006.
2. Do not program signal for late night flashing operation unless otherwise directed by the Engineer.
3. Omit phase 7 during phase 8 on.
4. Phase 5 may be lagged.
5. Set all detector units to presence mode.
6. Locate new cabinet so as not to obstruct sight distance of vehicles turning right on red.
7. This intersection features an optical preemption system. Shown locations of optical detectors are conceptual only.

OASIS 2070L TIMING CHART

FEATURE	PHASE 2	4	5	6	7	8
Min Green 1 *	10	7	7	10	7	7
Extension 1 *	3.0	2.0	2.0	3.0	2.0	2.0
Max Green 1 *	45	35	20	45	35	35
Yellow Clearance	3.9	3.8	3.0	3.9	3.0	3.8
Red Clearance	1.9	2.0	1.9	1.9	2.8	1.8
Walk 1 *	-	-	-	-	-	-
Don't Walk 1	-	-	-	-	-	-
Seconds Per Actuation *	-	-	-	-	-	-
Max Variable Initial *	-	-	-	-	-	-
Time Before Reduction *	-	-	-	-	-	-
Time To Reduce *	-	-	-	-	-	-
Minimum Gap	-	-	-	-	-	-
Recall Mode	MIN RECALL	-	-	MIN RECALL	-	-
Vehicle Call Memory	YELLOW	-	-	YELLOW	-	-
Dual Entry	-	ON	-	-	-	ON
Simultaneous Gap	ON	ON	ON	ON	ON	ON

* These values may be field adjusted. Do not adjust Min Green and Extension times for phases 2 and 6 lower than what is shown. Min Green for all other phases should not be lower than 4 seconds.

OASIS 2070 EV PREEMPTION

FUNCTION	PRE 3	PRE 4	PRE 5	PRE 6
Interval 1 – Dwell Green	255	255	255	255
Interval 1 – Dwell Yellow	0.0*	3.9	0.0*	3.8
Interval 1 – Dwell Red	0.0*	1.9	0.0*	1.8
Interval 5 – Exit Green	0	0	0	0
Interval 5 – Yellow	0.0	0.0	0.0	0.0
Interval 5 – Red	0.0	0.0	0.0	0.0
Priority	Medium	Medium	Medium	Medium
Delay Time	0.0	0.0	0.0	0.0
Min Green Before Pre	1	1	1	1
Ped Clear Before Pre	0	0	0	0
Yellow Clear Before Pre	0.0*	0.0*	0.0*	0.0*
Red Clear Before Pre	0.0*	0.0*	0.0*	0.0*
Dwell Min Time	7	7	7	7
Enable Backup Protection	N	N	Y	Y
Ped Clear Through Yellow	N	N	N	N
Preempt Extend**	2	2	2	2
Omit Overlaps	-	-	B	-

* Time defaults to time used for phase during normal operation
** Program Timing on Optical Detection Unit

LEGEND

PROPOSED		EXISTING
	Traffic Signal Head	
	Modified Signal Head	N/A
	Sign	
	Pedestrian Signal Head With Push Button & Sign	
	Signal Pole with Guy	
	Signal Pole with Sidewalk Guy	
	Inductive Loop Detector	
	Controller & Cabinet	
	Junction Box	
	50mm Underground Conduit	
N/A	Right of Way with Marker	
	Directional Arrow	
	Out of Pavement Detector	
	"YIELD" Sign (R1-2)	
	Construction Zone Drums	

Signal Upgrade/Temp 2 Phase II

Prepared in the Offices of:
Traffic Engineering and Safety Systems Branch
Signals and Geometrics Section
750 N. Greenfield Pkwy, Garner, NC 27529

SCALE 5 0 10
500:1

US 158
At
NC 343

Division 1 Camden County Camden

PLAN DATE: March 2010	REVIEWED BY:
PREPARED BY: JPG	REVIEWED BY:

REVISIONS	INIT.	DATE

SEAL
NORTH CAROLINA PROFESSIONAL SEAL 29904 ENGINEER JACKIE L. GALLOWAY

SIGNATURE DATE 8/9/10

STD. INVENTORY NO. 91-0229T2

19-AUG-2010 14:38
S:*ITSASU*ITS Signals*Workgroups*TIP Projects*R-2414B*Signals*Designs*Signals*01-0229*01022912_sig_dsn_2010mmdd.dgn
jgalloway

PROJECT REFERENCE NO.	SHEET NO.
R-2414B	Sig. 18

EDI MODEL 2010ECL-NC CONFLICT MONITOR PROGRAMMING DETAIL

(remove jumpers and set switches as shown)

REMOVE DIODE JUMPERS 1-6, 1-9, 1-11, 2-5, 2-6, 2-9, 2-11, 3-8, 4-7, 4-8, 4-10, 5-9, 5-11, 6-9, 6-11, 7-10 and 9-11.

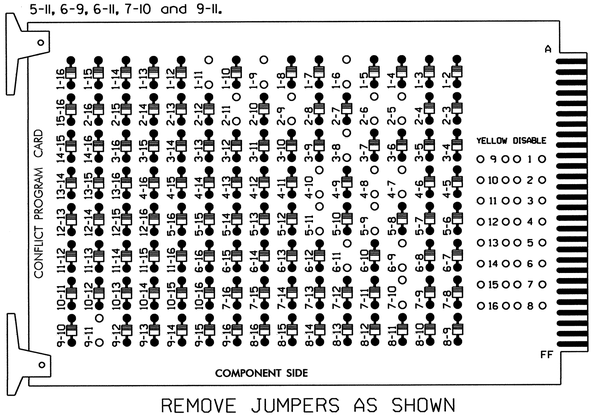

REMOVE JUMPERS AS SHOWN

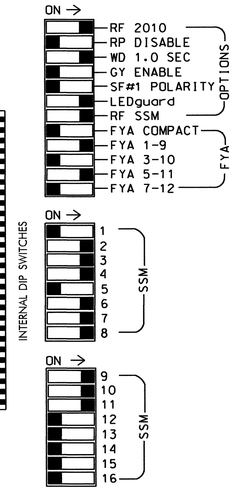

■ = DENOTES POSITION OF SWITCH

NOTES:

1. Card is provided with all diode jumpers in place. Removal of any jumper allows its channels to run concurrently.
2. Make sure jumpers SEL2-SEL5 are present on the monitor board.

NOTES

1. To prevent "flash-conflict" problems, insert red flash program blocks for all unused vehicle load switches in the output file. The installer shall verify that signal heads flash in accordance with the Signal Plans.
2. Ensure that Red Enable is active at all times during normal operation. To prevent Red Failures on unused monitor channels, tie unused red monitor inputs 1,5, 12,13,14,15 & 16 to load switch AC+ per the cabinet manufacturer's instructions.
3. Program phases 4 and 8 for Dual Entry.
4. Enable Simultaneous Gap-Out for all phases.
5. Program phases 2 and 6 for Start Up In Green.
6. Program phases 2 and 6 for Yellow Flash, and overlap 1 as Wag Overlaps.

PREEMPT ONLY PHASE OMIT NOTE

(program controller as shown below)

From Main Menu press '2' (Phase Control). Then '1' (Phase Control Functions). Program Phases 1 and 3 for 'Omit Phase' and Phases 2, 4, 5, 6, 7 and 8 for 'Startup Calls'. This is to prevent Phases 1 and 3 from being served when not in Preempt.

SIGNAL HEAD HOOK-UP CHART

LOAD SWITCH NO.	S1	S2	S2P	S3	S4	S4P	S5	S6	S6P	S7	S8	S8P	S9	S10	S11	S12	S13	S14
PHASE	1	2	2 PED	3	4	4 PED	5	6	6 PED	7	8	8 PED	OLA	OLB	SPARE	OLC	OLD	SPARE
SIGNAL HEAD NO.	61★	21,22	NU	81	41,42	NU	51★	62,63	NU	41	81,82	NU	61★	63	NU	51★	NU	NU
RED		128		✳	101			134		✳	107			✳				
YELLOW	✳	129			102		✳	135			108							
GREEN		130			103			136			109							
RED ARROW													A121			A114		
YELLOW ARROW				117						123			A122	A125		A115		
FLASHING YELLOW ARROW													A123			A116		
GREEN ARROW	127			118			133			124				A126				

NU = Not Used

✳ Denotes install load resistor. See load resistor installation detail this sheet.

★ See pictorial of head wiring in detail below.

EQUIPMENT INFORMATION

CONTROLLER.....2070L
CABINET.....332 /W/ AUX
SOFTWARE.....ECONOLITE OASIS
CABINET MOUNT.....BASE
OUTPUT FILE POSITIONS...18 WITH AUX. OUTPUT FILE
LOAD SWITCHES USED.....S1,S2,S3,S4,S5,S6,S7,S8,S9,S10,S12
PHASES USED.....*1,2,*3,4,5,6,7,8
OVERLAP "A".....1+2
OVERLAP "B".....7
OVERLAP "C".....5+6
OVERLAP "D".....NOT USED

*PHASES 1 AND 3 USED IN PREEMPT SEQUENCE ONLY

4 SECTION FYA PPLT SIGNAL WIRING DETAIL

(wire signal heads as shown)

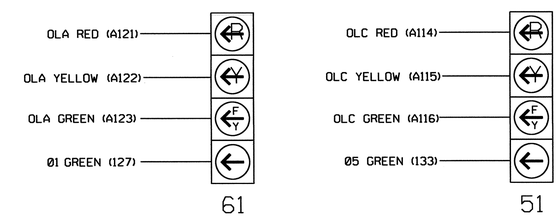

NOTE

1. The sequence display for this signal requires special logic programming. See sheet 2 of 3 for programming instructions.

INPUT FILE POSITION LAYOUT

(front view)

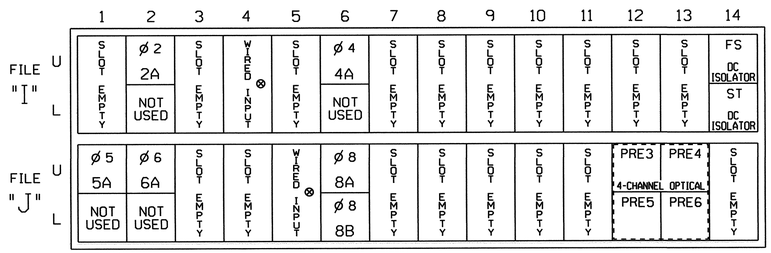

EX.: 1A, 2A, ETC. = LOOP NO.'S

FS = FLASH SENSE
ST = STOP TIME

⊗ Wired Input - Do not populate slot with detector card

INPUT FILE CONNECTION & PROGRAMMING CHART

LOOP NO.	LOOP TERMINAL	INPUT FILE POS.	PIN NO.	INPUT ASSIGNMENT NO.	DETECTOR NO.	NEMA PHASE	CALL	EXTEND	FULL TIME DELAY	STRETCH TIME	DELAY TIME
2A	TB2-5,6	I2U	39	1	2	2	Y	Y			
4A[1]	-	J5U	57	19	7	7	Y	Y			15
	TB4-9,10	I6U	41	3	4	4	Y	Y			3
5A[2]	TB3-1,2	J1U	55	17	5	5	Y	Y			15
	-	I4U	47	9	22	2	Y	Y			
6A	TB3-5,6	J2U	40	2	6	6	Y	Y			
8A	TB5-9,10	J6U	42	4	8	8	Y	Y			3
8B	TB5-11,12	J6L	46	8	18	8	Y	Y			15

[1] Add jumper from I6-F to J5-F, on rear of input file.

[2] Add jumper from J1-W to I4-W, on rear of input file.

INPUT FILE POSITION LEGEND: J2L

FILE J
SLOT 2
LOWER

DYNAMIC BACK-UP CONTROL PROGRAMMING

(program controller as shown below)

1. From Main Menu press '2' (Phase Control), then '1' (Phase Control Functions). Scroll to the bottom of the menu and enable Dynamic/Backup Control Function 1.
2. From Phase Control Functions Menu press '2' (Dynamic/Backup Control Functions).

```
DYNAMIC/BACKUP CONTROL FUNCTION #01
                 OVERLAPS:¦ABCDEFGHIJKLMNOP
IF OVERLAPS ARE ACTIVE   ¦
OR        PHASES:¦123456789101112131415 16
IF PHASES ARE ON ¦        X
OMIT PHASES      ¦        X
CALL PHASES      ¦
```

BACKUP PROTECTION PROGRAMMING COMPLETE

LOAD RESISTOR INSTALLATION DETAIL

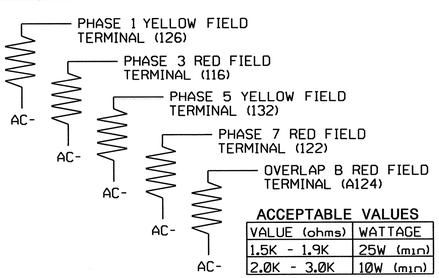

ACCEPTABLE VALUES

VALUE (ohms)	WATTAGE
1.5K - 1.9K	25W (min)
2.0K - 3.0K	10W (min)

OPTICOM FIELD WIRE DETAIL

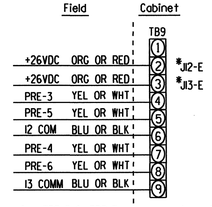

*Assuming TB9-2 & TB9-3 are unused on the J File, move wires on J11-J & J-11-K (Twisted Pair) to J12-E & J13-E Respectively.

THIS ELECTRICAL DETAIL IS FOR
THE SIGNAL DESIGN: 01-0229T2
DESIGNED: March 2010
SEALED: 08/19/10
REVISED:

ELECTRICAL DETAIL - TEMP 2 - SHEET 1 OF 3

ELECTRICAL AND PROGRAMMING DETAILS FOR:

Prepared in the Offices of: Transportation Mobility and Safety Division, Signals Management Section
750 N.Greenfield Pkwy, Garner, NC 27529

US 158
at
NC 343

Division 1 | Camden County | Camden

PLAN DATE: July 2010 | REVIEWED BY: T. Jyle
PREPARED BY: C. Strickland | REVIEWED BY:

REVISIONS	INIT.	DATE

SEAL
NORTH CAROLINA PROFESSIONAL SEAL 022013 ENGINEER GEORGE C. BROWN
SIGNATURE | DATE 8/26/10
SIG. INVENTORY NO. 01-0229T2

24-AUG-2010 09:22
S:\ITS&SU\ITS Signals\Workgroups\Sig Man\Strickland\m010229_sm_ele_xxx.dgn
castrickland

PROJECT REFERENCE NO.	SHEET NO.
R-2414B	Sig.19

LOGICAL I/O PROCESSOR PROGRAMMING DETAIL
TO PRODUCE SPECIAL FYA-PPLT SIGNAL SEQUENCE

(program controller as shown below)

1. FROM MAIN MENU PRESS '2' (PHASE CONTROL), THEN '1' (PHASE CONTROL FUNCTIONS). SCROLL TO THE BOTTOM OF THE MENU AND ENABLE ACT LOGIC COMMANDS 1, 2, 3, 4, 5 AND 6.

2. FROM MAIN MENU PRESS '6' (OUTPUTS), THEN '3' (LOGICAL I/O PROCESSOR).

```
LOGICAL I/O COMMAND #1  (+/-COMMAND#)
IF  ACTIVE PHASE        #1  IS ON
AND RED CLEAR ON PHASE  #1  IS ON

SCROLL DOWN

THEN:
SET OUTPUT  ASSIGNMENT #50 ON
SET OUTPUT  ASSIGNMENT #51 OFF
```

NOTE: LOGIC FOR PHASE 1 RED CLEAR WHEN TRANSITIONING FROM PHASE 1 (EV PRE 4) TO PHASE 2 (HEAD 61).

PRESS '+'

```
LOGICAL I/O COMMAND #2  (+/-COMMAND#)
IF  ACTIVE PHASE        #1  IS ON

SCROLL DOWN

THEN:
SET OUTPUT  ASSIGNMENT #52 OFF
```

NOTE: LOGIC FOR SWITCHING FLASHING YELLOW ARROW "OFF" DURING PHASE 1 (HEAD 61).

PRESS '+'

```
LOGICAL I/O COMMAND #3  (+/-COMMAND#)
IF  YELLOW ON PHASE     #1  IS ON

SCROLL DOWN

THEN:
SET OUTPUT  ASSIGNMENT #51 ON
```

NOTE: LOGIC FOR YELLOW ARROW CLEARANCE FROM PHASE 1 (HEAD 61).

PRESS '+'

```
LOGICAL I/O COMMAND #4  (+/-COMMAND#)
IF  ACTIVE PHASE        #5  IS ON
AND RED CLEAR ON PHASE  #5  IS ON

SCROLL DOWN

THEN:
SET OUTPUT  ASSIGNMENT #42 ON
SET OUTPUT  ASSIGNMENT #43 OFF
```

NOTE: LOGIC FOR PHASE 5 RED CLEAR WHEN TRANSITIONING FROM PHASE 5 TO PHASE 6 (HEAD 51).

PRESS '+'

```
LOGICAL I/O COMMAND #5  (+/-COMMAND#)
IF  ACTIVE PHASE        #5  IS ON

SCROLL DOWN

THEN:
SET OUTPUT  ASSIGNMENT #44 OFF
```

NOTE: LOGIC FOR SWITCHING FLASHING YELLOW ARROW "OFF" DURING PHASE 5 (HEAD 51).

PRESS '+'

```
LOGICAL I/O COMMAND #6  (+/-COMMAND#)
IF  YELLOW ON PHASE     #5  IS ON

SCROLL DOWN

THEN:
SET OUTPUT  ASSIGNMENT #43 ON
```

NOTE: LOGIC FOR YELLOW ARROW CLEARANCE FROM PHASE 5 (HEAD 51).

LOGIC I/O PROCESSOR PROGRAMMING COMPLETE

OUTPUT REFERENCE SCHEDULE

OUTPUT 42 = Overlap C Red
OUTPUT 43 = Overlap C Yellow
OUTPUT 44 = Overlap C Green
OUTPUT 50 = Overlap A Red
OUTPUT 51 = Overlap A Yellow
OUTPUT 52 = Overlap A Green

OVERLAP PROGRAMMING DETAIL

(program controller as shown below)

FROM MAIN MENU PRESS '8' (OVERLAPS), THEN '1' (VEHICLE OVERLAP SETTINGS).

```
PAGE 1: VEHICLE OVERLAP 'A' SETTINGS
 PHASE:            |123456789101121314151 6
VEH OVL PARENTS:   |XX
VEH OVL NOT VEH:   |
VEH OVL NOT PED:   |
VEH OVL GRN EXT:   |
STARTUP COLOR: _ RED  _ YELLOW  _ GREEN
FLASH COLORS:  _ RED  _ YELLOW  X GREEN
SELECT VEHICLE OVERLAP OPTIONS:   (Y/N)
FLASH YELLOW IN CONTROLLER FLASH?...Y
GREEN EXTENSION (0-255 SEC).........0
YELLOW CLEAR (0=PARENT,3-25.5 SEC)..0.0
RED CLEAR (0=PARENT,0.1-25.5 SEC)...0.0
OUTPUT AS PHASE # (0=NONE, 1-16)....0
```

NOTICE GREEN FLASH

PRESS '+'

```
PAGE 1: VEHICLE OVERLAP 'B' SETTINGS
 PHASE:            |123456789101121314151 6
VEH OVL PARENTS:   |      X
VEH OVL NOT VEH:   |
VEH OVL NOT PED:   |
VEH OVL GRN EXT:   |
STARTUP COLOR: _ RED  _ YELLOW  _ GREEN
FLASH COLORS:  _ RED  _ YELLOW  _ GREEN
SELECT VEHICLE OVERLAP OPTIONS:   (Y/N)
FLASH YELLOW IN CONTROLLER FLASH?...N
GREEN EXTENSION (0-255 SEC).........0
YELLOW CLEAR (0=PARENT,3-25.5 SEC)..0.0
RED CLEAR (0=PARENT,0.1-25.5 SEC)...0.0
OUTPUT AS PHASE # (0=NONE, 1-16)....0
```

PRESS '+'

```
PAGE 1: VEHICLE OVERLAP 'C' SETTINGS
 PHASE:            |123456789101121314151 6
VEH OVL PARENTS:   |    XX
VEH OVL NOT VEH:   |
VEH OVL NOT PED:   |
VEH OVL GRN EXT:   |
STARTUP COLOR: _ RED  _ YELLOW  _ GREEN
FLASH COLORS:  _ RED  _ YELLOW  X GREEN
SELECT VEHICLE OVERLAP OPTIONS:   (Y/N)
FLASH YELLOW IN CONTROLLER FLASH?...Y
GREEN EXTENSION (0-255 SEC).........0
YELLOW CLEAR (0=PARENT,3-25.5 SEC)..0.0
RED CLEAR (0=PARENT,0.1-25.5 SEC)...0.0
OUTPUT AS PHASE # (0=NONE, 1-16)....0
```

NOTICE GREEN FLASH

OVERLAP PROGRAMMING COMPLETE

THIS ELECTRICAL DETAIL IS FOR
THE SIGNAL DESIGN: 01-0229T2
DESIGNED: March 2010
SEALED: 08/19/10
REVISED:

ELECTRICAL DETAIL - TEMP 2 - SHEET 2 OF 3

ELECTRICAL AND PROGRAMMING DETAILS FOR:

Prepared in the Offices of:
Transportation Mobility and Safety Division
STATE OF NORTH CAROLINA DEPARTMENT OF TRANSPORTATION
Signals Management Section
750 N.Greenfield Pkwy,Garner,NC 27529

US 158
at
NC 343

Division 1 | Camden County | Camden

PLAN DATE: July 2010 | REVIEWED BY: T. Vigil
PREPARED BY: C. Strickland | REVIEWED BY:

REVISIONS	INIT.	DATE

SEAL
NORTH CAROLINA PROFESSIONAL SEAL 022013 ENGINEER GEORGE C. BROWN

George C. Brown 8/26/10
SIGNATURE DATE
SIG. INVENTORY NO. 01-0229T2

24-AUG-2010 09:22
S:#ITSA$#ITS Signals##workgroups#Sig Mark#Strickland#01029_sm_ele_xxx.dgn
cestrickland

PROJECT REFERENCE NO.	SHEET NO.
R-2414B	Sig.20

EMERGENCY VEHICLE PREEMPTION PROGRAMMING DETAIL

(program controller as shown below)

From Main Menu press 'A' (Preemption), then '1' (Standard Preemptions). Press 'NEXT' as needed to advance to Preempts 3, 4, 5 and 6.

```
   PREEMPTION  #3  SETTINGS (NEXT:1-10)
INTERVAL/TIMING ¦  CLEAR/DWELL PHASES
  GRN YEL  RED  ¦1234567891011121314151 6
1 255  0.0* 0.0*¦ X  X
2   0  0.0  0.0 ¦
3   0  0.0  0.0 ¦
4   0  0.0  0.0 ¦
5   0  0.0  0.0 ¦
EXIT CALLS      ¦
          OPTIONS
PRIORITY (Y/N TO SELECT) ............MED
DELAY TIMER (0-255 SEC) .............0
MIN GREEN BEFORE PRE (0= DEFAULT)....1
PED CLEAR BEFORE PRE (0= DEFAULT)....0
YELLOW CLEAR BEFORE PRE (0= DEFAULT).0.0*
RED CLEAR BEFORE PRE (0= DEFAULT)....0.0*
DWELL MIN TIMER (0-255 SEC) .........7
DWELL MAX TIMER (0=OFF,1-255MIN) ....0
DWELL HOLD-OVER TIMER (0-255) .......0
LATCH CALL? .........................N
LINK TO NEXT PREEMPT? ...............N
ENABLE BACKUP PROTECTION? ...........N
HOLD CLEAR 1 PHASES DURING DELAY? ...N
FAST GREEN FLASH DWELL PHASES? ......N
PED CLEARANCE THROUGH YELLOW? .......N
INHIBIT OVERLAP GREEN EXTENSION? ....N
SERVICE DURING SOFTWARE FLASH? ......N
REST IN RED DURING DWELL INTERVAL? ..N
FLASH DWELL INTERVAL? ...............N
ALLOW PEDS IN DWELL INTERVAL? .......N
RE-TIME DWELL INTERVAL? .............N
OVERLAPS:                ¦ ABCDEFGHIJKLMNOP
DWELL INT FLASH YELLOW   ¦
OMIT OVERLAPS:           ¦
```

PRESS 'NEXT'

```
   PREEMPTION  #4  SETTINGS (NEXT:1-10)
INTERVAL/TIMING ¦  CLEAR/DWELL PHASES
  GRN YEL  RED  ¦1234567891011121314151 6
1 255  3.9* 1.9*¦ X     X
2   0  0.0  0.0 ¦
3   0  0.0  0.0 ¦
4   0  0.0  0.0 ¦
5   0  0.0  0.0 ¦
EXIT CALLS      ¦
          OPTIONS
PRIORITY (Y/N TO SELECT) ............MED
DELAY TIMER (0-255 SEC) .............0
MIN GREEN BEFORE PRE (0= DEFAULT)....1
PED CLEAR BEFORE PRE (0= DEFAULT)....0
YELLOW CLEAR BEFORE PRE (0= DEFAULT).0.0*
RED CLEAR BEFORE PRE (0= DEFAULT)....0.0*
DWELL MIN TIMER (0-255 SEC) .........7
DWELL MAX TIMER (0=OFF,1-255MIN) ....0
DWELL HOLD-OVER TIMER (0-255) .......0
LATCH CALL? .........................N
LINK TO NEXT PREEMPT? ...............N
ENABLE BACKUP PROTECTION? ...........N
HOLD CLEAR 1 PHASES DURING DELAY? ...N
FAST GREEN FLASH DWELL PHASES? ......N
PED CLEARANCE THROUGH YELLOW? .......N
INHIBIT OVERLAP GREEN EXTENSION? ....N
SERVICE DURING SOFTWARE FLASH? ......N
REST IN RED DURING DWELL INTERVAL? ..N
FLASH DWELL INTERVAL? ...............N
ALLOW PEDS IN DWELL INTERVAL? .......N
RE-TIME DWELL INTERVAL? .............N
OVERLAPS:                ¦ ABCDEFGHIJKLMNOP
DWELL INT FLASH YELLOW   ¦
OMIT OVERLAPS:           ¦
```

PRESS 'NEXT'

```
   PREEMPTION  #5  SETTINGS (NEXT:1-10)
INTERVAL/TIMING ¦  CLEAR/DWELL PHASES
  GRN YEL  RED  ¦1234567891011121314151 6
1 255  0.0* 0.0*¦   X  X
2   0  0.0  0.0 ¦
3   0  0.0  0.0 ¦
4   0  0.0  0.0 ¦
5   0  0.0  0.0 ¦
EXIT CALLS      ¦
          OPTIONS
PRIORITY (Y/N TO SELECT) ............MED
DELAY TIMER (0-255 SEC) .............0
MIN GREEN BEFORE PRE (0= DEFAULT)....1
PED CLEAR BEFORE PRE (0= DEFAULT)....0
YELLOW CLEAR BEFORE PRE (0= DEFAULT).0.0*
RED CLEAR BEFORE PRE (0= DEFAULT)....0.0*
DWELL MIN TIMER (0-255 SEC) .........7
DWELL MAX TIMER (0=OFF,1-255MIN) ....0
DWELL HOLD-OVER TIMER (0-255) .......0
LATCH CALL? .........................N
LINK TO NEXT PREEMPT? ...............N
ENABLE BACKUP PROTECTION? ...........Y
HOLD CLEAR 1 PHASES DURING DELAY? ...N
FAST GREEN FLASH DWELL PHASES? ......N
PED CLEARANCE THROUGH YELLOW? .......N
INHIBIT OVERLAP GREEN EXTENSION? ....N
SERVICE DURING SOFTWARE FLASH? ......N
REST IN RED DURING DWELL INTERVAL? ..N
FLASH DWELL INTERVAL? ...............N
ALLOW PEDS IN DWELL INTERVAL? .......N
RE-TIME DWELL INTERVAL? .............N
OVERLAPS:                ¦ ABCDEFGHIJKLMNOP
DWELL INT FLASH YELLOW   ¦
OMIT OVERLAPS:           ¦  X
```

PRESS 'NEXT'

```
   PREEMPTION  #6  SETTINGS (NEXT:1-10)
INTERVAL/TIMING ¦  CLEAR/DWELL PHASES
  GRN YEL  RED  ¦1234567891011121314151 6
1 255  3.8  1.8 ¦ X     X
2   0  0.0  0.0 ¦
3   0  0.0  0.0 ¦
4   0  0.0  0.0 ¦
5   0  0.0  0.0 ¦
EXIT CALLS      ¦
          OPTIONS
PRIORITY (Y/N TO SELECT) ............MED
DELAY TIMER (0-255 SEC) .............0
MIN GREEN BEFORE PRE (0= DEFAULT)....1
PED CLEAR BEFORE PRE (0= DEFAULT)....0
YELLOW CLEAR BEFORE PRE (0= DEFAULT).0.0*
RED CLEAR BEFORE PRE (0= DEFAULT)....0.0*
DWELL MIN TIMER (0-255 SEC) .........7
DWELL MAX TIMER (0=OFF,1-255MIN) ....0
DWELL HOLD-OVER TIMER (0-255) .......0
LATCH CALL? .........................N
LINK TO NEXT PREEMPT? ...............N
ENABLE BACKUP PROTECTION? ...........Y
HOLD CLEAR 1 PHASES DURING DELAY? ...N
FAST GREEN FLASH DWELL PHASES? ......N
PED CLEARANCE THROUGH YELLOW? .......N
INHIBIT OVERLAP GREEN EXTENSION? ....N
SERVICE DURING SOFTWARE FLASH? ......N
REST IN RED DURING DWELL INTERVAL? ..N
FLASH DWELL INTERVAL? ...............N
ALLOW PEDS IN DWELL INTERVAL? .......N
RE-TIME DWELL INTERVAL? .............N
OVERLAPS:                ¦ ABCDEFGHIJKLMNOP
DWELL INT FLASH YELLOW   ¦
OMIT OVERLAPS:           ¦
```

PROGRAMMING COMPLETE

* TIME DEFAULTS TO TIME USED BY PHASE DURING NORMAL OPERATION

NOTE!

PROGRAM EXTEND TIME ON ALL 'OPTICOM' DETECTOR UNITS FOR 2 SEC.

THIS ELECTRICAL DETAIL IS FOR
THE SIGNAL DESIGN: 01-0229T2
DESIGNED: March 2010
SEALED: 08/19/10
REVISED:

ELECTRICAL DETAIL - TEMP 2 - SHEET 3 OF 3

ELECTRICAL AND PROGRAMMING DETAILS FOR:

Prepared in the Offices of:
Transportation Mobility and Safety Division
STATE OF NORTH CAROLINA DEPARTMENT OF TRANSPORTATION
Signals Management Section
750 N.Greenfield Pkwy,Garner,NC 27529

US 158
at
NC 343

Division 1 Camden County Camden

PLAN DATE: July 2010	REVIEWED BY: T. Lyle		
PREPARED BY: C. Strickland	REVIEWED BY:		
REVISIONS		INIT.	DATE

SEAL
STATE OF NORTH CAROLINA PROFESSIONAL SEAL 022013 ENGINEER GEORGE C. BROWN

George C. Brown 8/26/10
SIGNATURE DATE
SIG. INVENTORY NO. 01-0229T2

24-AUG-2010 09:57
S:#TSASU#ITS Signals#Workgroups#Sig Man#Strickland#010229_sample_xxx.dgn
cestrickland

PHASING DIAGRAM

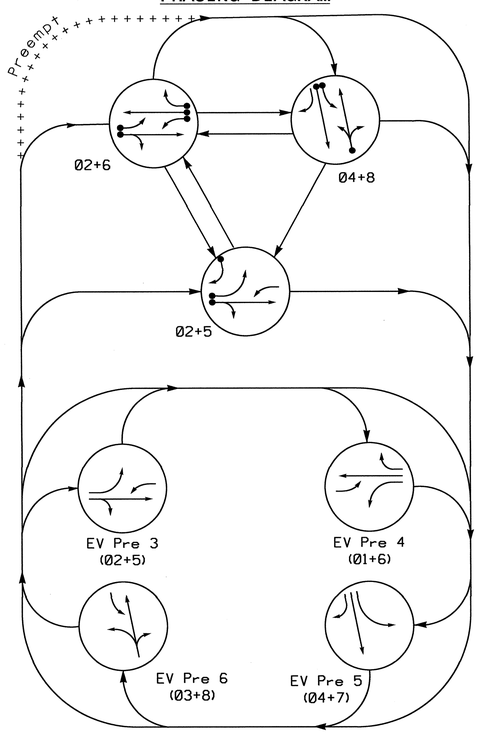

PHASING DIAGRAM DETECTION LEGEND

- DETECTED MOVEMENT
- UNDETECTED MOVEMENT (OVERLAP)
- UNSIGNALIZED MOVEMENT
- PEDESTRIAN MOVEMENT

TABLE OF OPERATION

SIGNAL FACE	PHASE 02+5	02+6	04+8	PEr Ve 3	PEr Ve 4	PEr Ve 5	PEr Ve 6	FLASH
21,22	G	G	R	G	R	R	R	Y
41	~~R~~	~~R~~	FY	~~R~~	~~R~~	←	FY	~~R~~
42	R	R	G	R	R	G	R	R
43	R	R	G	R	R	G	R	R
51	←	FY	~~R~~	←	FY	~~R~~	~~R~~	~~Y~~
61	FY	FY	~~R~~	FY	←	~~R~~	~~R~~	~~Y~~
62,63	R	G	R	R	G	R	R	Y
81	R	R	G	R	R	R	G	R
82	R	R	G	R	R	R	G	R

SIGNAL FACE I.D.

All Heads L.E.D.

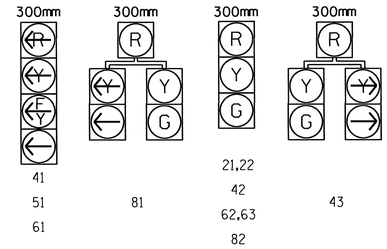

OASIS 2070L LOOP & DETECTOR INSTALLATION

INDUCTIVE LOOPS					DETECTOR PROGRAMMING						
LOOP	SIZE (M)	TURNS	DISTANCE FROM STOPBAR (M)	NEW LOOP	PHASE	CALLING	EXTENSION	FULL TIME DELAY	STRETCH TIME	DELAY TIME	SYSTEM LOOP	NEW CARD
2A	1.8X1.8	4	20	-	2	Y	Y	-	-	-	-	-
4A	1.8X12	2-4-2	0	Y	4	Y	Y	-	-	3	-	-
4B	1.8X12	2-4-2	0	Y	4	Y	Y	-	-	-	-	-
5A	1.8X12	2-4-2	0	-	5	Y	Y	-	-	15	-	-
					2	Y	Y	-	-	-	-	-
5B	1.8X12	2-4-2	0	Y	5	Y	Y	-	-	15	-	-
6A	1.8X1.8	4	20	-	6	Y	Y	-	-	-	-	-
8A	1.8X12	2-4-2	0	Y	8	Y	Y	-	-	3	-	-
8B	1.8X1.8	4	0	Y	8	Y	Y	-	-	15	-	-

STANDARD SIGNAL FACE CLEARANCES FOR FLASHING LEFT TURN SIGNAL

FROM \ TO	←	FY 1	FY 2	R 1	R 2
←	←	←	←	R	R
FY	FY	FY	FY	R	R
R	R	R	R	R	R

FY = Flashing Yellow Arrow

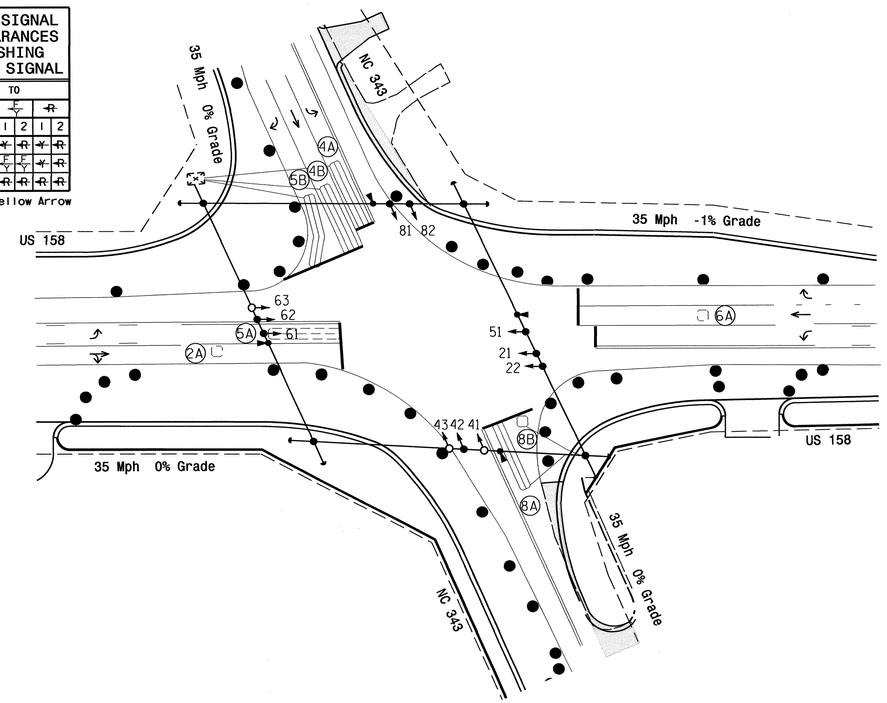

4 Phase W/EV Preemption
Fully Actuated
Isolated

NOTES

1. Refer to "Roadway Standard Drawings NCDOT" dated July 2006 and "Standard Specifications for Roads and Structures" dated July 2006.
2. Do not program signal for late night flashing operation unless otherwise directed by the Engineer.
3. Phase 5 may be lagged.
4. Set all detector units to presence mode.
5. Reposition signal head number 41.
6. This intersection features an optical preemption system. Shown locations of optical detectors are conceptual only.

OASIS 2070L TIMING CHART

FEATURE	PHASE 2	4	5	6	8
Min Green 1 *	10	7	7	10	7
Extension 1 *	3.0	2.0	2.0	3.0	2.0
Max Green 1 *	45	35	20	45	35
Yellow Clearance	3.9	3.8	3.0	3.9	3.8
Red Clearance	2.5	2.4	1.6	2.5	2.4
Walk 1 *	-	-	-	-	-
Don't Walk 1	-	-	-	-	-
Seconds Per Actuation *	-	-	-	-	-
Max Variable Initial *	-	-	-	-	-
Time Before Reduction *	-	-	-	-	-
Time To Reduce *	-	-	-	-	-
Minimum Gap	-	-	-	-	-
Recall Mode	MIN RECALL	-	-	MIN RECALL	-
Vehicle Call Memory	YELLOW	-	-	YELLOW	-
Dual Entry	-	ON	-	-	ON
Simultaneous Gap	ON	ON	ON	ON	ON

* These values may be field adjusted. Do not adjust Min Green and Extension times for phases 2 and 6 lower than what is shown. Min Green for all other phases should not be lower than 4 seconds.

OASIS 2070 EV PREEMPTION

FUNCTION	PRE 3	PRE 4	PRE 5	PRE 6
Interval 1 – Dwell Green	255	255	255	255
Interval 1 – Dwell Yellow	0.0*	3.9	3.8	3.8
Interval 1 – Dwell Red	0.0*	2.5	2.4	2.4
Interval 5 – Exit Green	0	0	0	0
Interval 5 – Yellow	0.0	0.0	0.0	0.0
Interval 5 – Red	0.0	0.0	0.0	0.0
Priority	Medium	Medium	Medium	Medium
Delay Time	0.0	0.0	0.0	0.0
Min Green Before Pre	1	1	1	1
Ped Clear Before Pre	0	0	0	0
Yellow Clear Before Pre	0.0*	0.0*	0.0*	0.0*
Red Clear Before Pre	0.0*	0.0*	0.0*	0.0*
Dwell Min Time	7	7	7	7
Enable Backup Protection	N	N	Y	N
Ped Clear Through Yellow	N	N	N	N
Preempt Extend**	2	2	2	2
Omit Overlaps	B	-	-	-

* Time defaults to time used for phase during normal operation
** Program Timing on Optical Detection Unit

LEGEND

PROPOSED		EXISTING
	Traffic Signal Head	
	Modified Signal Head	N/A
	Sign	
	Pedestrian Signal Head With Push Button & Sign	
	Signal Pole with Guy	
	Signal Pole with Sidewalk Guy	
	Inductive Loop Detector	
	Controller & Cabinet	
	Junction Box	
	50mm Underground Conduit	
N/A	Right of Way with Marker	
	Directional Arrow	
	Pavement Marking Arrow	
	Out of Pavement Detector	
	Construction Zone Drums	

Signal Upgrade/Temp 3 Phase III

Prepared in the Offices of:
Traffic Engineering and Safety Systems Branch
Signals and Geometrics Section
750 N. Greenfield Pkwy, Garner, NC 27529

US 158
At
NC 343

Division 1 Camden County Camden

PLAN DATE: March 2010 | REVIEWED BY:
PREPARED BY: JPG | REVIEWED BY:

SCALE 5 0 10 500:1

REVISIONS | INIT. | DATE

SEAL: NORTH CAROLINA PROFESSIONAL SEAL 29904 ENGINEER JASON P. GALLOWAY
SIGNATURE 8/9/10 DATE
SIG. INVENTORY NO. 01-D229T3

01-SEP-2010 12:04
S:\TS&S\ITS Signals\Workgroups\TIP Projects\R-2414B\Signals\Design\Signals\01-D229\D102913_sig_dsn_2010mmdd.dgn
jgallowy

PROJECT REFERENCE NO.	SHEET NO.
R-2414B	Sig.22

EDI MODEL 2010ECL-NC CONFLICT MONITOR PROGRAMMING DETAIL

(remove jumpers and set switches as shown)

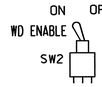

REMOVE DIODE JUMPERS 1-6, 1-9, 1-11, 2-5, 2-6, 2-9, 2-10, 2-11, 3-8, 3-12, 4-7, 4-8, 4-12, 5-9, 5-10, 5-11, 6-9, 6-11, 7-12, 8-12, 9-10, 9-11 and 10-11.

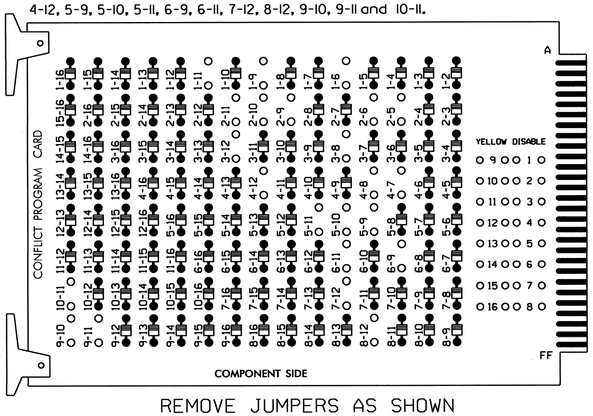

REMOVE JUMPERS AS SHOWN

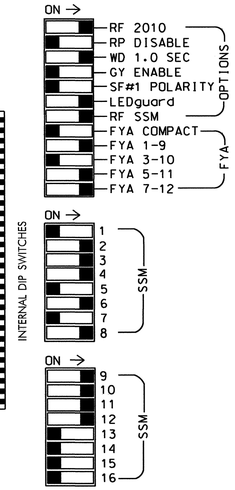

■ = DENOTES POSITION OF SWITCH

NOTES:

1. Card is provided with all diode jumpers in place. Removal of any jumper allows its channels to run concurrently.
2. Make sure jumpers SEL2-SEL5 are present on the monitor board.

INPUT FILE POSITION LAYOUT

(front view)

		1	2	3	4	5	6	7	8	9	10	11	12	13	14
FILE "I"	U	SLOT EMPTY	Ø2 2A	SLOT EMPTY	WAGO INPUT ⊗	SLOT EMPTY	Ø4 4A	SLOT EMPTY	SLOT EMPTY	SLOT EMPTY	SLOT EMPTY	SLOT EMPTY	SLOT EMPTY	SLOT EMPTY	FS DC ISOLATOR
	L		NOT USED				Ø4 4B								ST DC ISOLATOR
FILE "J"	U	Ø5 5A	Ø5 5B	SLOT EMPTY	SLOT EMPTY	SLOT EMPTY	Ø8 8A	SLOT EMPTY	SLOT EMPTY	SLOT EMPTY	SLOT EMPTY	SLOT EMPTY	PRE3	PRE4	SLOT EMPTY
	L	NOT USED	Ø6 6A				Ø8 8B						PRE5	PRE6	

4-CHANNEL OPTICAL

EX.: 1A, 2A, ETC. = LOOP NO.'S

FS = FLASH SENSE
ST = STOP TIME

⊗ Wired Input - Do not populate slot with detector card

LOAD RESISTOR INSTALLATION DETAIL

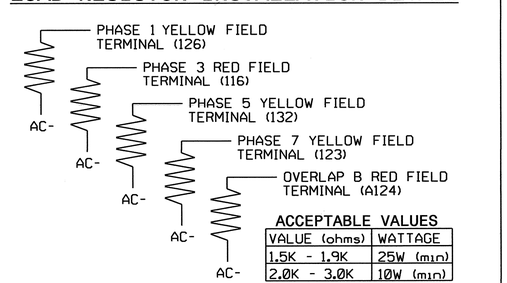

ACCEPTABLE VALUES

VALUE (ohms)	WATTAGE
1.5K - 1.9K	25W (min)
2.0K - 3.0K	10W (min)

OPTICOM FIELD WIRE DETAIL

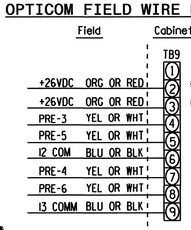

*Assuming TB9-2 & TB9-3 are unused on the J File, move wires on J11-J & J-11-K (Twisted Pair) to J12-E & J13-E Respectively.

NOTES

1. To prevent "flash-conflict" problems, insert red flash program blocks for all unused vehicle load switches in the output file. The installer shall verify that signal heads flash in accordance with the Signal Plans.
2. Ensure that Red Enable is active at all times during normal operation. To prevent Red Failures on unused monitor channels, tie unused red monitor inputs 1,5, 7,13,14,15 & 16 to load switch AC+ per the cabinet manufacturer's instructions.
3. Program phases 4 and 8 for Dual Entry.
4. Enable Simultaneous Gap-Out for all phases.
5. Program phases 2 and 6 for Start Up In Green.
6. Program phases 2 and 6 for Yellow Flash, and overlap 1 as Wag Overlaps.

PREEMPT ONLY PHASE OMIT NOTE

(program controller as shown below)

From Main Menu press '2' (Phase Control). Then '1' (Phase Control Functions). Program Phases 1, 3 and 7 for 'Omit Phase' and Phases 2, 4, 5, 6, and 8 for 'Startup Calls'. This is to prevent Phases 1, 3 and 7 from being served when not in Preempt.

EQUIPMENT INFORMATION

CONTROLLER.....2070L
CABINET.....332 /W/ AUX
SOFTWARE.....ECONOLITE OASIS
CABINET MOUNT.....BASE
OUTPUT FILE POSITIONS...18 WITH AUX. OUTPUT FILE
LOAD SWITCHES USED.....S1,S2,S3,S4,S5,S6,S7,S8,S9,S10,S12,S13
PHASES USED.....*1,2,*3,4,5,6,*7,8
OVERLAP "A".....1+2+5
OVERLAP "B".....5
OVERLAP "C".....5+6
OVERLAP "D".....7+8

*PHASES 1, 3 AND 7 USED IN PREEMPT SEQUENCE ONLY

INPUT FILE CONNECTION & PROGRAMMING CHART

LOOP NO.	LOOP TERMINAL	INPUT FILE POS.	PIN NO.	INPUT ASSIGNMENT NO.	DETECTOR NO.	NEMA PHASE	CALL	EXTEND	FULL TIME DELAY	STRETCH TIME	DELAY TIME
2A	TB2-5,6	I2U	39	1	2	2	Y	Y			
4A	TB4-9,10	I6U	41	3	4	4	Y	Y			3
4B	TB4-11,12	I6L	45	7	14	4	Y	Y			
5A[1]	TB3-1,2	J1U	55	17	5	5	Y	Y			15
	-	I4U	47	9	22	2	Y	Y			
5B	TB3-5,6	J2U	40	2	6	5	Y	Y			15
6A	TB3-7,8	J2L	44	6	16	6	Y	Y			
8A	TB5-9,10	J6U	42	4	8	8	Y	Y			3
8B	TB5-11,12	J6L	46	8	18	8	Y	Y			15

[1]Add jumper from J1-W to I4-W, on rear of input file.

! IMPORTANT: Remove jumper from I6-F to J5-F, on rear of input file.

INPUT FILE POSITION LEGEND: J2L
FILE J
SLOT 2
LOWER

SIGNAL HEAD HOOK-UP CHART

LOAD SWITCH NO.	S1	S2	S2P	S3	S4	S4P	S5	S6	S6P	S7	S8	S8P	S9	S10	S11	S12	S13	S14
PHASE	1	2	2 PED	3	4	4 PED	5	6	6 PED	7	8	8 PED	OLA	OLB	SPARE	OLC	OLD	SPARE
SIGNAL HEAD NO.	61★	21,22	NU	81	42,43	NU	51★	62,63	NU	41★	81,82	NU	61★	43	NU	51★	41★	NU
RED		128		*	101			134			107			*				
YELLOW	*	129			102		*	135		*	108							
GREEN		130			103			136			109							
RED ARROW													A121			A114	A101	
YELLOW ARROW				117									A122	A125		A115	A102	
FLASHING YELLOW ARROW													A123			A116	A103	
GREEN ARROW	127			118			133			124				A126				

NU = Not Used

* Denotes install load resistor. See load resistor installation detail this sheet.

★ See pictorial of head wiring in detail below.

4 SECTION FYA PPLT SIGNAL WIRING DETAIL

(wire signal heads as shown)

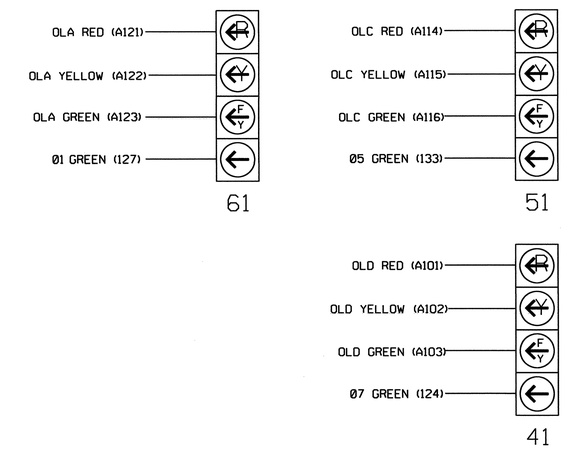

NOTE

1. The sequence display for these signals require special logic programming. See sheet 2 of 3 for programming instructions.

THIS ELECTRICAL DETAIL IS FOR
THE SIGNAL DESIGN: 01-0229T3
DESIGNED: March 2010
SEALED: 08/19/10
REVISED:

ELECTRICAL DETAIL - TEMP 3 - SHEET 1 OF 3

ELECTRICAL AND PROGRAMMING DETAILS FOR:

Prepared in the Offices of:
Transportation Mobility and Safety Division
STATE OF NORTH CAROLINA DEPARTMENT OF TRANSPORTATION
Signals Management Section
750 N.Greenfield Pkwy,Garner,NC 27529

US 158
at
NC 343

Division 1 Camden County Camden

PLAN DATE: July 2010	REVIEWED BY: T. Joyce		
PREPARED BY: C. Strickland	REVIEWED BY:		
REVISIONS		INIT.	DATE

SEAL
NORTH CAROLINA PROFESSIONAL SEAL 022013 ENGINEER GEORGE C. BROWN

George C. Brown 8/27/10
SIGNATURE DATE

SIG. INVENTORY NO. 01-0229T3

24-AUG-2010 11:18
S:*ITSASU*ITS Signals*Workgroups*Sig Man*Strickland*01229_sm_ele.xxx.dgn
castrickland

PROJECT REFERENCE NO.	SHEET NO.
R-2414B	Sig.23

LOGICAL I/O PROCESSOR PROGRAMMING DETAIL
TO PRODUCE SPECIAL FYA-PPLT SIGNAL SEQUENCE

(program controller as shown below)

1. FROM MAIN MENU PRESS '2' (PHASE CONTROL), THEN '1' (PHASE CONTROL FUNCTIONS). SCROLL TO THE BOTTOM OF THE MENU AND ENABLE ACT LOGIC COMMANDS 1, 2, 3, 4, 5, 6, 7, 8 AND 9.

2. FROM MAIN MENU PRESS '6' (OUTPUTS), THEN '3' (LOGICAL I/O PROCESSOR).

```
LOGICAL I/O COMMAND #1  (+/-COMMAND#)
IF  ACTIVE PHASE        #1  IS ON
AND RED CLEAR ON PHASE  #1  IS ON

SCROLL DOWN

THEN:
SET OUTPUT  ASSIGNMENT #50 ON
SET OUTPUT  ASSIGNMENT #51 OFF
```

NOTE: LOGIC FOR PHASE 1 RED CLEAR WHEN TRANSITIONING FROM PHASE 1 (EV PRE 4) TO PHASE 2 (HEAD 61).

PRESS '+'

```
LOGICAL I/O COMMAND #2  (+/-COMMAND#)
IF  ACTIVE PHASE        #1  IS ON

SCROLL DOWN

THEN:
SET OUTPUT  ASSIGNMENT #52 OFF
```

NOTE: LOGIC FOR SWITCHING FLASHING YELLOW ARROW "OFF" DURING PHASE 1 (HEAD 61).

PRESS '+'

```
LOGICAL I/O COMMAND #3  (+/-COMMAND#)
IF  YELLOW ON PHASE     #1  IS ON

SCROLL DOWN

THEN:
SET OUTPUT  ASSIGNMENT #51 ON
```

NOTE: LOGIC FOR YELLOW ARROW CLEARANCE FROM PHASE 1 (HEAD 61).

PRESS '+'

```
LOGICAL I/O COMMAND #4  (+/-COMMAND#)
IF  ACTIVE PHASE        #5  IS ON
AND RED CLEAR ON PHASE  #5  IS ON

SCROLL DOWN

THEN:
SET OUTPUT  ASSIGNMENT #42 ON
SET OUTPUT  ASSIGNMENT #43 OFF
```

NOTE: LOGIC FOR PHASE 5 RED CLEAR WHEN TRANSITIONING FROM PHASE 5 TO PHASE 6 (HEAD 51).

PRESS '+'

```
LOGICAL I/O COMMAND #5  (+/-COMMAND#)
IF  ACTIVE PHASE        #5  IS ON

SCROLL DOWN

THEN:
SET OUTPUT  ASSIGNMENT #44 OFF
```

NOTE: LOGIC FOR SWITCHING FLASHING YELLOW ARROW "OFF" DURING PHASE 5 (HEAD 51).

PRESS '+'

```
LOGICAL I/O COMMAND #6  (+/-COMMAND#)
IF  YELLOW ON PHASE     #5  IS ON

SCROLL DOWN

THEN:
SET OUTPUT  ASSIGNMENT #43 ON
```

NOTE: LOGIC FOR YELLOW ARROW CLEARANCE FROM PHASE 5 (HEAD 51).

PRESS '+'

```
LOGICAL I/O COMMAND #7  (+/-COMMAND#)
IF  ACTIVE PHASE        #7  IS ON
AND RED CLEAR ON PHASE  #7  IS ON

SCROLL DOWN

THEN:
SET OUTPUT  ASSIGNMENT #39 ON
SET OUTPUT  ASSIGNMENT #40 OFF
```

NOTE: LOGIC FOR PHASE 7 RED CLEAR WHEN TRANSITIONING FROM PHASE 7 (EV PRE 5) TO PHASE 8 (HEAD 41).

PRESS '+'

```
LOGICAL I/O COMMAND #8  (+/-COMMAND#)
IF  ACTIVE PHASE        #7  IS ON

SCROLL DOWN

THEN:
SET OUTPUT  ASSIGNMENT #41 OFF
```

NOTE: LOGIC FOR SWITCHING FLASHING YELLOW ARROW "OFF" DURING PHASE 7 (HEAD 41).

PRESS '+'

```
LOGICAL I/O COMMAND #9  (+/-COMMAND#)
IF  YELLOW ON PHASE     #7  IS ON

SCROLL DOWN

THEN:
SET OUTPUT  ASSIGNMENT #40 ON
```

NOTE: LOGIC FOR YELLOW ARROW CLEARANCE FROM PHASE 7 (HEAD 41).

LOGIC I/O PROCESSOR PROGRAMMING COMPLETE

OUTPUT REFERENCE SCHEDULE

USE TO INTERPRET LOGIC PROCESSOR

OUTPUT 39 = Overlap D Red
OUTPUT 40 = Overlap D Yellow
OUTPUT 41 = Overlap D Green
OUTPUT 42 = Overlap C Red
OUTPUT 43 = Overlap C Yellow
OUTPUT 44 = Overlap C Green
OUTPUT 50 = Overlap A Red
OUTPUT 51 = Overlap A Yellow
OUTPUT 52 = Overlap A Green

OVERLAP PROGRAMMING DETAIL

(program controller as shown below)

FROM MAIN MENU PRESS '8' (OVERLAPS), THEN '1' (VEHICLE OVERLAP SETTINGS).

```
PAGE 1: VEHICLE OVERLAP 'A' SETTINGS
PHASE:                 |123456789101112131415 16
VEH OVL PARENTS:       |XX  X
VEH OVL NOT VEH:       |
VEH OVL NOT PED:       |
VEH OVL GRN EXT:       |
STARTUP COLOR: _ RED  _ YELLOW  _ GREEN
FLASH COLORS:  _ RED  _ YELLOW  X GREEN
SELECT VEHICLE OVERLAP OPTIONS:   (Y/N)
FLASH YELLOW IN CONTROLLER FLASH?...Y
GREEN EXTENSION (0-255 SEC).........0
YELLOW CLEAR (0=PARENT,3-25.5 SEC)..0.0
RED CLEAR (0=PARENT,0.1-25.5 SEC)...0.0
OUTPUT AS PHASE # (0=NONE, 1-16)....0
```

NOTICE GREEN FLASH

PRESS '+'

```
PAGE 1: VEHICLE OVERLAP 'B' SETTINGS
PHASE:                 |123456789101112131415 16
VEH OVL PARENTS:       |    X
VEH OVL NOT VEH:       |
VEH OVL NOT PED:       |
VEH OVL GRN EXT:       |
STARTUP COLOR: _ RED  _ YELLOW  _ GREEN
FLASH COLORS:  _ RED  _ YELLOW  _ GREEN
SELECT VEHICLE OVERLAP OPTIONS:   (Y/N)
FLASH YELLOW IN CONTROLLER FLASH?...N
GREEN EXTENSION (0-255 SEC).........0
YELLOW CLEAR (0=PARENT,3-25.5 SEC)..0.0
RED CLEAR (0=PARENT,0.1-25.5 SEC)...0.0
OUTPUT AS PHASE # (0=NONE, 1-16)....0
```

PRESS '+'

```
PAGE 1: VEHICLE OVERLAP 'C' SETTINGS
PHASE:                 |123456789101112131415 16
VEH OVL PARENTS:       |    XX
VEH OVL NOT VEH:       |
VEH OVL NOT PED:       |
VEH OVL GRN EXT:       |
STARTUP COLOR: _ RED  _ YELLOW  _ GREEN
FLASH COLORS:  _ RED  _ YELLOW  X GREEN
SELECT VEHICLE OVERLAP OPTIONS:   (Y/N)
FLASH YELLOW IN CONTROLLER FLASH?...Y
GREEN EXTENSION (0-255 SEC).........0
YELLOW CLEAR (0=PARENT,3-25.5 SEC)..0.0
RED CLEAR (0=PARENT,0.1-25.5 SEC)...0.0
OUTPUT AS PHASE # (0=NONE, 1-16)....0
```

NOTICE GREEN FLASH

PRESS '+'

```
PAGE 1: VEHICLE OVERLAP 'D' SETTINGS
PHASE:                 |123456789101112131415 16
VEH OVL PARENTS:       |      XX
VEH OVL NOT VEH:       |
VEH OVL NOT PED:       |
VEH OVL GRN EXT:       |
STARTUP COLOR: _ RED  _ YELLOW  _ GREEN
FLASH COLORS:  _ RED  _ YELLOW  X GREEN
SELECT VEHICLE OVERLAP OPTIONS:   (Y/N)
FLASH YELLOW IN CONTROLLER FLASH?...N
GREEN EXTENSION (0-255 SEC).........0
YELLOW CLEAR (0=PARENT,3-25.5 SEC)..0.0
RED CLEAR (0=PARENT,0.1-25.5 SEC)...0.0
OUTPUT AS PHASE # (0=NONE, 1-16)....0
```

NOTICE GREEN FLASH

OVERLAP PROGRAMMING COMPLETE

DYNAMIC BACK-UP CONTROL PROGRAMMING

(program controller as shown below)

1. From Main Menu press '2' (Phase Control), then '1' (Phase Control Functions). Scroll to the bottom of the menu and enable Dynamic/Backup Control Function 1.

2. From Phase Control Functions Menu press '2' (Dynamic/Backup Control Functions).

```
DYNAMIC/BACKUP CONTROL FUNCTION #01
                 OVERLAPS:|ABCDEFGHIJKLMNOP
IF OVERLAPS ARE ACTIVE |
OR        PHASES:|123456789101112131415 16
IF PHASES ARE ON|        X
OMIT PHASES     |       X
CALL PHASES     |
```

BACKUP PROTECTION PROGRAMMING COMPLETE

! IMPORTANT: Disable Dynamic/Backup Control Function 1.

FLASHER CIRCUIT MODIFICATION DETAIL

IN ORDER TO INSURE THAT SIGNALS FLASH CONCURRENTLY ON THE SAME APPROACH, MAKE THE FOLLOWING FLASHER CIRCUIT CHANGES:

1. ON REAR OF PDA - REMOVE WIRE FROM TERM. T2-4 AND TERMINATE ON T2-2.
2. ON REAR OF PDA - REMOVE WIRE FROM TERM. T2-5 AND TERMINATE ON T2-3.
3. REMOVE FLASHER UNIT 2.

THE CHANGES LISTED ABOVE TIES ALL PHASES AND OVERLAPS TO FLASHER UNIT 1.

THIS ELECTRICAL DETAIL IS FOR
THE SIGNAL DESIGN: 01-0229T3
DESIGNED: March 2010
SEALED: 08/19/10
REVISED:

ELECTRICAL DETAIL - TEMP 3 - SHEET 2 OF 3

ELECTRICAL AND PROGRAMMING DETAILS FOR:

Prepared in the Offices of:
Transportation Mobility and Safety Division
STATE OF NORTH CAROLINA DEPARTMENT OF TRANSPORTATION
Signals Management Section
750 N.Greenfield Pkwy,Garner,NC 27529

US 158
at
NC 343

Division 1 | Camden County | Camden

PLAN DATE: July 2010 | REVIEWED BY: T. Jugl
PREPARED BY: C. Strickland | REVIEWED BY:

REVISIONS	INIT.	DATE

SEAL
NORTH CAROLINA PROFESSIONAL SEAL 022013 ENGINEER GEORGE C. BROWN

George C. Brown 8/27/10
SIGNATURE DATE

SIG. INVENTORY NO. 01-0229T3

24-AUG-2010 11:20
S:#ITSESU#ITS Signals#Workgroups#Sig Man#Strickland#010229_smlele_xxx.dgn
cestrickland

PROJECT REFERENCE NO.	SHEET NO.
R-2414B	Sig.24

EMERGENCY VEHICLE PREEMPTION PROGRAMMING DETAIL

(program controller as shown below)

From Main Menu press 'A' (Preemption), then '1' (Standard Preemptions). Press 'NEXT' as needed to advance to Preempts 3, 4, 5 and 6.

```
   PREEMPTION  #3  SETTINGS (NEXT:1-10)
INTERVAL/TIMING ¦  CLEAR/DWELL PHASES
  GRN YEL  RED  ¦123456789101112131415 16
1 255  0.0* 0.0*¦ X  X
2   0  0.0  0.0¦
3   0  0.0  0.0¦
4   0  0.0  0.0¦
5   0  0.0  0.0¦
EXIT CALLS      ¦
          OPTIONS
PRIORITY (Y/N TO SELECT) ............MED
DELAY TIMER (0-255 SEC) .............0
MIN GREEN BEFORE PRE (0= DEFAULT)....1
PED CLEAR BEFORE PRE (0= DEFAULT)....0
YELLOW CLEAR BEFORE PRE (0= DEFAULT).0.0*
RED CLEAR BEFORE PRE (0= DEFAULT)....0.0*
DWELL MIN TIMER (0-255 SEC) .........7
DWELL MAX TIMER (0=OFF,1-255MIN) ....0
DWELL HOLD-OVER TIMER (0-255) .......0
LATCH CALL? .........................N
LINK TO NEXT PREEMPT? ...............N
ENABLE BACKUP PROTECTION? ...........N
HOLD CLEAR 1 PHASES DURING DELAY? ...N
FAST GREEN FLASH DWELL PHASES? ......N
PED CLEARANCE THROUGH YELLOW? .......N
INHIBIT OVERLAP GREEN EXTENSION? ....N
SERVICE DURING SOFTWARE FLASH? ......N
REST IN RED DURING DWELL INTERVAL? ..N
FLASH DWELL INTERVAL? ...............N
ALLOW PEDS IN DWELL INTERVAL? .......N
RE-TIME DWELL INTERVAL? .............N
OVERLAPS:                ¦ ABCDEFGHIJKLMNOP
DWELL INT FLASH YELLOW   ¦
OMIT OVERLAPS:           ¦  X
```

PRESS 'NEXT'

```
   PREEMPTION  #4  SETTINGS (NEXT:1-10)
INTERVAL/TIMING ¦  CLEAR/DWELL PHASES
  GRN YEL  RED  ¦123456789101112131415 16
1 255  3.9  2.5 ¦X    X
2   0  0.0  0.0¦
3   0  0.0  0.0¦
4   0  0.0  0.0¦
5   0  0.0  0.0¦
EXIT CALLS      ¦
          OPTIONS
PRIORITY (Y/N TO SELECT) ............MED
DELAY TIMER (0-255 SEC) .............0
MIN GREEN BEFORE PRE (0= DEFAULT)....1
PED CLEAR BEFORE PRE (0= DEFAULT)....0
YELLOW CLEAR BEFORE PRE (0= DEFAULT).0.0*
RED CLEAR BEFORE PRE (0= DEFAULT)....0.0*
DWELL MIN TIMER (0-255 SEC) .........7
DWELL MAX TIMER (0=OFF,1-255MIN) ....0
DWELL HOLD-OVER TIMER (0-255) .......0
LATCH CALL? .........................N
LINK TO NEXT PREEMPT? ...............N
ENABLE BACKUP PROTECTION? ...........N
HOLD CLEAR 1 PHASES DURING DELAY? ...N
FAST GREEN FLASH DWELL PHASES? ......N
PED CLEARANCE THROUGH YELLOW? .......N
INHIBIT OVERLAP GREEN EXTENSION? ....N
SERVICE DURING SOFTWARE FLASH? ......N
REST IN RED DURING DWELL INTERVAL? ..N
FLASH DWELL INTERVAL? ...............N
ALLOW PEDS IN DWELL INTERVAL? .......N
RE-TIME DWELL INTERVAL? .............N
OVERLAPS:                ¦ ABCDEFGHIJKLMNOP
DWELL INT FLASH YELLOW   ¦
OMIT OVERLAPS:           ¦
```

PRESS 'NEXT'

```
   PREEMPTION  #5  SETTINGS (NEXT:1-10)
INTERVAL/TIMING ¦  CLEAR/DWELL PHASES
  GRN YEL  RED  ¦123456789101112131415 16
1 255  3.8  2.4 ¦   X  X
2   0  0.0  0.0¦
3   0  0.0  0.0¦
4   0  0.0  0.0¦
5   0  0.0  0.0¦
EXIT CALLS      ¦
          OPTIONS
PRIORITY (Y/N TO SELECT) ............MED
DELAY TIMER (0-255 SEC) .............0
MIN GREEN BEFORE PRE (0= DEFAULT)....1
PED CLEAR BEFORE PRE (0= DEFAULT)....0
YELLOW CLEAR BEFORE PRE (0= DEFAULT).0.0*
RED CLEAR BEFORE PRE (0= DEFAULT)....0.0*
DWELL MIN TIMER (0-255 SEC) .........7
DWELL MAX TIMER (0=OFF,1-255MIN) ....0
DWELL HOLD-OVER TIMER (0-255) .......0
LATCH CALL? .........................N
LINK TO NEXT PREEMPT? ...............N
ENABLE BACKUP PROTECTION? ...........Y
HOLD CLEAR 1 PHASES DURING DELAY? ...N
FAST GREEN FLASH DWELL PHASES? ......N
PED CLEARANCE THROUGH YELLOW? .......N
INHIBIT OVERLAP GREEN EXTENSION? ....N
SERVICE DURING SOFTWARE FLASH? ......N
REST IN RED DURING DWELL INTERVAL? ..N
FLASH DWELL INTERVAL? ...............N
ALLOW PEDS IN DWELL INTERVAL? .......N
RE-TIME DWELL INTERVAL? .............N
OVERLAPS:                ¦ ABCDEFGHIJKLMNOP
DWELL INT FLASH YELLOW   ¦
OMIT OVERLAPS:           ¦
```

PRESS 'NEXT'

```
   PREEMPTION  #6  SETTINGS (NEXT:1-10)
INTERVAL/TIMING ¦  CLEAR/DWELL PHASES
  GRN YEL  RED  ¦123456789101112131415 16
1 255  3.8  2.4 ¦   X     X
2   0  0.0  0.0¦
3   0  0.0  0.0¦
4   0  0.0  0.0¦
5   0  0.0  0.0¦
EXIT CALLS      ¦
          OPTIONS
PRIORITY (Y/N TO SELECT) ............MED
DELAY TIMER (0-255 SEC) .............0
MIN GREEN BEFORE PRE (0= DEFAULT)....1
PED CLEAR BEFORE PRE (0= DEFAULT)....0
YELLOW CLEAR BEFORE PRE (0= DEFAULT).0.0*
RED CLEAR BEFORE PRE (0= DEFAULT)....0.0*
DWELL MIN TIMER (0-255 SEC) .........7
DWELL MAX TIMER (0=OFF,1-255MIN) ....0
DWELL HOLD-OVER TIMER (0-255) .......0
LATCH CALL? .........................N
LINK TO NEXT PREEMPT? ...............N
ENABLE BACKUP PROTECTION? ...........N
HOLD CLEAR 1 PHASES DURING DELAY? ...N
FAST GREEN FLASH DWELL PHASES? ......N
PED CLEARANCE THROUGH YELLOW? .......N
INHIBIT OVERLAP GREEN EXTENSION? ....N
SERVICE DURING SOFTWARE FLASH? ......N
REST IN RED DURING DWELL INTERVAL? ..N
FLASH DWELL INTERVAL? ...............N
ALLOW PEDS IN DWELL INTERVAL? .......N
RE-TIME DWELL INTERVAL? .............N
OVERLAPS:                ¦ ABCDEFGHIJKLMNOP
DWELL INT FLASH YELLOW   ¦
OMIT OVERLAPS:           ¦
```

PROGRAMMING COMPLETE

*TIME DEFAULTS TO TIME USED BY PHASE DURING NORMAL OPERATION

NOTE!

PROGRAM EXTEND TIME ON ALL 'OPTICOM' DETECTOR UNITS FOR 2 SEC.

THIS ELECTRICAL DETAIL IS FOR
THE SIGNAL DESIGN: 01-0229T3
DESIGNED: March 2010
SEALED: 08/19/10
REVISED:

ELECTRICAL DETAIL - TEMP 3 - SHEET 3 OF 3

ELECTRICAL AND PROGRAMMING DETAILS FOR:

Prepared in the Offices of:

Transportation Mobility and Safety Division
STATE OF NORTH CAROLINA DEPARTMENT OF TRANSPORTATION
Signals Management Section

750 N.Greenfield Pkwy,Garner,NC 27529

US 158
at
NC 343

Division 1 | Camden County | Camden

PLAN DATE: July 2010	REVIEWED BY: T. Joyce		
PREPARED BY: C. Strickland	REVIEWED BY:		
REVISIONS		INIT.	DATE

SEAL

NORTH CAROLINA PROFESSIONAL SEAL 022013 ENGINEER GEORGE C. BROWN

George C. Brown 8/27/10
SIGNATURE DATE

SIG. INVENTORY NO. 01-0229T3

24-AUG-2010 11:21
S:\TISS\SM\TS Signals\Workgroups\Sig Man\Strickland\01229_sm_ele_xxx.dgn
cestrickland

METRIC	PROJECT REFERENCE NO.	SHEET NO.
	R-2414B	Sig.25

PHASING DIAGRAM

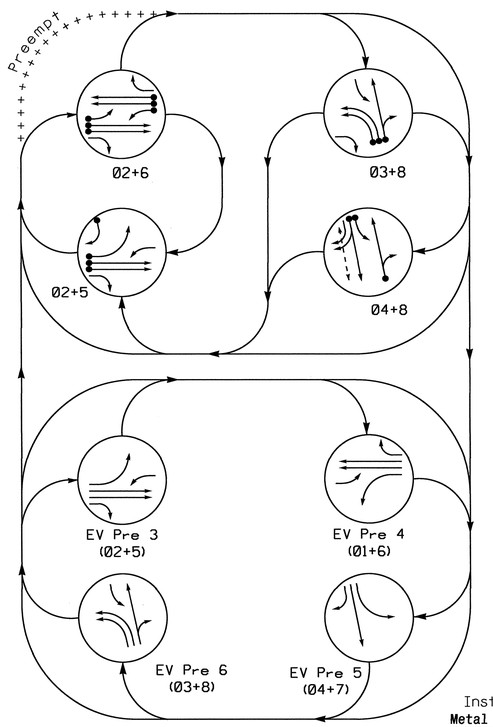

TABLE OF OPERATION

SIGNAL FACE	PHASE 02+5	02+6	03+8	04+8	PEr Ve3	PEr Ve4	PEr Ve5	PEr Ve6	FLASH
21	G	G	R	R	G	R	R	R	Y
22	G	G	R/→	R	G	R	R	R	Y
31,32	~~R~~	~~R~~	~~←~~	~~R~~	~~R~~	~~R~~	~~R~~	~~←~~	~~R~~
41	~~R~~	~~R~~	~~F Y~~	~~F Y~~	~~R~~	~~R~~	~~←~~	~~F Y~~	~~R~~
42	R	R	R	G	R	R	G	R	R
43	R/→	R	R	G	R	R	G	R	R
51	~~←~~	~~F Y~~	~~R~~	~~R~~	~~←~~	~~F Y~~	~~R~~	~~R~~	~~Y~~
61	~~F Y~~	~~F Y~~	~~R~~	~~R~~	~~F Y~~	~~←~~	~~R~~	~~R~~	~~Y~~
62,63	R	G	R	R	R	G	R	R	Y
81,82	R	R	G	G	R	R	R	G	R
P41,P42	DW	DW	DW	W	DW	DW	DW	DW	DRK

PHASING DIAGRAM DETECTION LEGEND

- DETECTED MOVEMENT
- UNDETECTED MOVEMENT (OVERLAP)
- UNSIGNALIZED MOVEMENT
- PEDESTRIAN MOVEMENT

SIGNAL FACE I.D.

All Heads L.E.D.

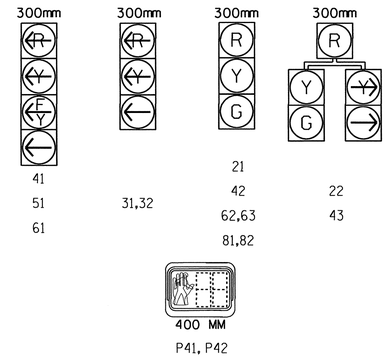

STANDARD SIGNAL FACE CLEARANCES FOR FLASHING LEFT TURN SIGNAL

FROM	TO ←	TO F Y 1	TO F Y 2	TO R 1	TO R 2
←	~~←~~	~~←~~	~~Y~~	~~R~~	~~Y~~	~~R~~
F Y	~~F Y~~	~~F Y~~	~~F Y~~	~~F Y~~	~~Y~~	~~R~~
R	~~R~~	~~R~~	~~R~~	~~R~~	~~R~~	~~R~~

F Y = Flashing Yellow Arrow

OASIS 2070L LOOP & DETECTOR INSTALLATION

INDUCTIVE LOOPS					DETECTOR PROGRAMMING						
LOOP	SIZE (M)	TURNS	DISTANCE FROM STOPBAR (M)	NEW LOOP	PHASE	CALLING	EXTENSION	FULL TIME DELAY	STRETCH TIME	DELAY TIME	SYSTEM LOOP	NEW CARD
2A	1.8X1.8	4	110	Y	2	Y	Y	-	-	-	-	-
2B	1.8X1.8	4	110	Y	2	Y	Y	-	-	-	-	-
3A	1.8X12	2-4-2	0	Y	3	Y	Y	-	-	-	-	Y
3B	1.8X12	2-4-2	0	Y	3	Y	Y	-	-	-	-	Y
4A	1.8X12	2-4-2	0	Y	4	Y	Y	-	-	-	-	-
4B	1.8X12	2-4-2	0	Y	4	Y	Y	-	-	-	-	-
5A	1.8X12	2-4-2	0	Y	5	Y	Y	-	-	15	-	-
					2	Y	Y	Y	-	3	-	-
5B	1.8X12	2-4-2	0	Y	5	Y	Y	-	-	15	-	-
6A	1.8X1.8	5	110	Y	6	Y	Y	-	-		-	-
6B	1.8X1.8	5	110	Y	6	Y	Y	-	-	-	-	-
6C	1.8X12	2-4-2	0	Y	6	Y	Y	Y	-	3	-	Y
8A	1.8X12	2-4-2	0	Y	8	Y	Y	-	-	3	-	-
8B	1.8X6	2-4-2	+3	Y	8	Y	Y	-	-	15	-	-

OASIS 2070 EV PREEMPTION

FUNCTION	PRE 3	PRE 4	PRE 5	PRE 6
Interval 1 – Dwell Green	255	255	255	255
Interval 1 – Dwell Yellow	0.0*	4.9	3.8	0.0*
Interval 1 – Dwell Red	0.0*	1.8	3.1	0.0*
Interval 5 – Exit Green	0	0	0	0
Interval 5 – Yellow	0.0	0.0	0.0	0.0
Interval 5 – Red	0.0	0.0	0.0	0.0
Priority	Medium	Medium	Medium	Medium
Delay Time	0.0	0.0	0.0	0.0
Min Green Before Pre	1	1	1	1
Ped Clear Before Pre	0 *	0 *	0 *	0 *
Yellow Clear Before Pre	0.0*	0.0*	0.0*	0.0*
Red Clear Before Pre	0.0*	0.0*	0.0*	0.0*
Dwell Min Time	7	7	7	7
Enable Backup Protection	N	N	N	N
Ped Clear Through Yellow	Y	Y	Y	Y
Preempt Extend**	2	2	2	2
Omit Overlaps	B	-	-	E

* Time defaults to time used for phase during normal operation
** Program Timing on Optical Detection Unit

4 Phase W/EV Preemption
Fully Actuated
Isolated

NOTES

1. Refer to "Roadway Standard Drawings NCDOT" dated July 2006 and "Standard Specifications for Roads and Structures" dated July 2006.
2. Do not program signal for late night flashing operation unless otherwise directed by the Engineer.
3. Phase 5 may be lagged.
4. Phase 3 may be lagged.
5. Set all detector units to presence mode.
6. Omit "WALK" and flashing "DON'T WALK" with no pedestrian calls.
7. Program pedestrian heads to countdown the flashing "Don't Walk" time only.
6. This intersection features an optical preemption system. Shown locations of optical detectors are conceptual only.
7. Relocate existing optical detectors to mastarms.

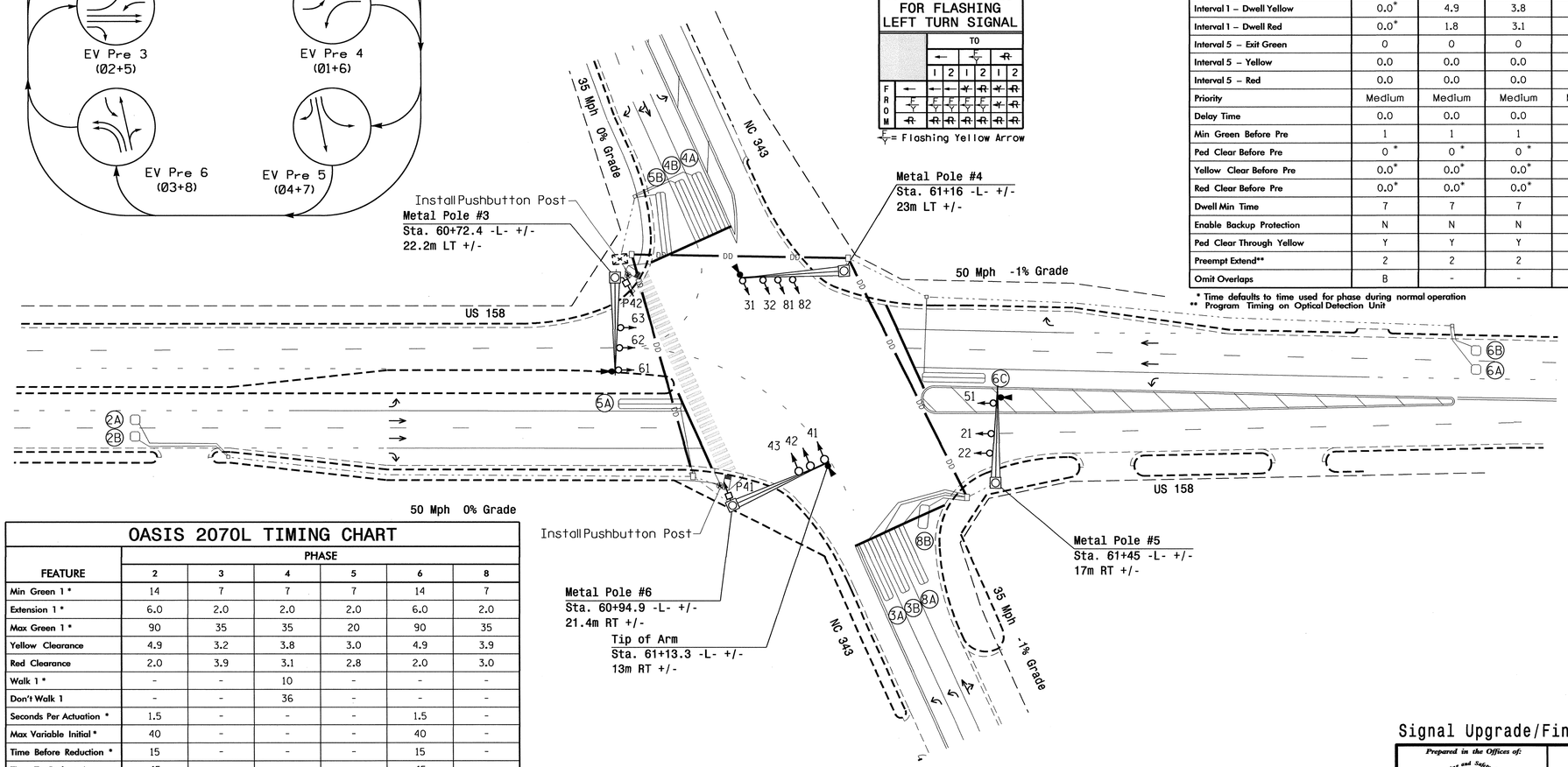

OASIS 2070L TIMING CHART

FEATURE	PHASE 2	3	4	5	6	8
Min Green 1 *	14	7	7	7	14	7
Extension 1 *	6.0	2.0	2.0	2.0	6.0	2.0
Max Green 1 *	90	35	35	20	90	35
Yellow Clearance	4.9	3.2	3.8	3.0	4.9	3.9
Red Clearance	2.0	3.9	3.1	2.8	2.0	3.0
Walk 1 *	-	-	10	-	-	-
Don't Walk 1	-	-	36	-	-	-
Seconds Per Actuation *	1.5	-	-	-	1.5	-
Max Variable Initial *	40	-	-	-	40	-
Time Before Reduction *	15	-	-	-	15	-
Time To Reduce *	45	-	-	-	45	-
Minimum Gap	3.0	-	-	-	3.0	-
Recall Mode	MIN RECALL	-	-	-	MIN RECALL	-
Vehicle Call Memory	YELLOW	-	-	-	YELLOW	-
Dual Entry	-	-	-	-	-	ON
Simultaneous Gap	ON	ON	ON	ON	ON	ON

* These values may be field adjusted. Do not adjust Min Green and Extension times for phases 2 and 6 lower than what is shown. Min Green for all other phases should not be lower than 4 seconds.

LEGEND

PROPOSED		EXISTING
	Traffic Signal Head	
	Modified Signal Head	N/A
	Sign	
	Pedestrian Signal Head With Push Button & Sign	
	Signal Pole with Guy	
	Signal Pole with Sidewalk Guy	
	Inductive Loop Detector	
	Controller & Cabinet	
	Junction Box	
	50mm Underground Conduit	
N/A	Right of Way with Marker	
	Directional Arrow	
	Pavement Marking Arrow	
	Out of Pavement Detector	

Signal Upgrade/Final

Prepared in the Offices of:
Traffic Engineering and Safety Systems Branch
Signals and Geometrics Section
750 N. Greenfield Pkwy, Garner, NC 27529

SCALE 5 0 10
500:1

US 158
At
NC 343

Division 1 Camden County Camden

PLAN DATE: March 2010	REVIEWED BY:
PREPARED BY: JPG	REVIEWED BY:

REVISIONS	INIT.	DATE

SEAL
NORTH CAROLINA PROFESSIONAL SEAL 29904 ENGINEER
STEVEN A. GALLOWAY

SIGNATURE DATE 8/26/10
SIG. INVENTORY NO. 01-0229

01-SEP-2010 14:47
S:\TTSAGU\TTS Signals\Workgroups\TIP Projects\R-2414B\Signals\Design\Signals\01-0229\010229_sig_dsn_2010nmdd.dgn
jgallaway

PROJECT REFERENCE NO.	SHEET NO.
R-2414B	Sig. 26

EDI MODEL 2010ECL-NC CONFLICT MONITOR PROGRAMMING DETAIL

(remove jumpers and set switches as shown)

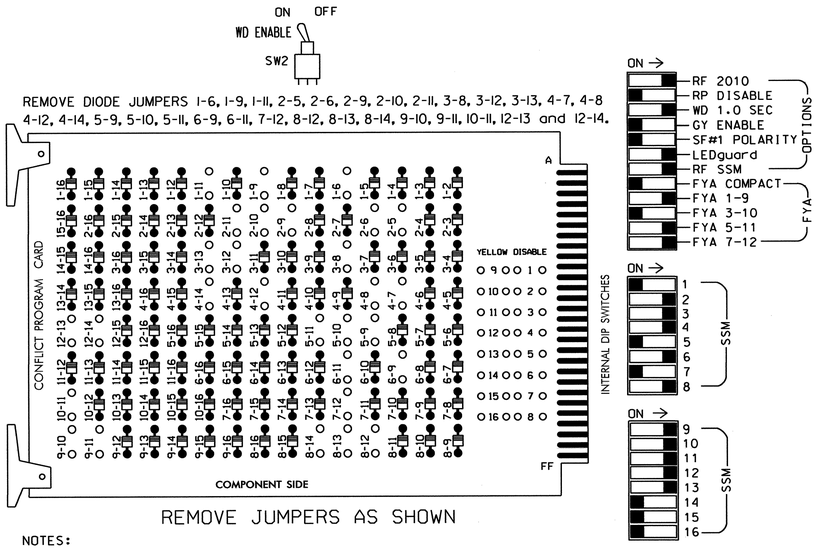

■ = DENOTES POSITION OF SWITCH

NOTES:

1. Card is provided with all diode jumpers in place. Removal of any jumper allows its channels to run concurrently.
2. Make sure jumpers SEL2-SEL5 are present on the monitor board.

INPUT FILE POSITION LAYOUT

(front view)

		1	2	3	4	5	6	7	8	9	10	11	12	13	14
FILE "I"	U	SLOT EMPTY	Ø2 2A	SLOT EMPTY	WIRED INPUT ⊗	Ø3 3A	Ø4 4A	SLOT EMPTY	SLOT EMPTY	SLOT EMPTY	SLOT EMPTY	SLOT EMPTY	NOT USED	SLOT EMPTY	FS DC ISOLATOR
	L		Ø2 2B			Ø3 3B	Ø4 4B						Ø4 PED DC ISOLATOR		ST DC ISOLATOR
FILE "J"	U	Ø5 5A	Ø5 5B	Ø6 6B	SLOT EMPTY	SLOT EMPTY	Ø8 8A	SLOT EMPTY	SLOT EMPTY	SLOT EMPTY	SLOT EMPTY	SLOT EMPTY	PRE3	PRE4	SLOT EMPTY
	L	NOT USED		Ø6 6A	Ø6 6C		Ø8 8B						4-CHANNEL OPTICAL PRE5	PRE6	

EX.: 1A, 2A, ETC. = LOOP NO.'S

FS = FLASH SENSE
ST = STOP TIME

⊗ Wired Input - Do not populate slot with detector card

OPTICOM FIELD WIRE DETAIL

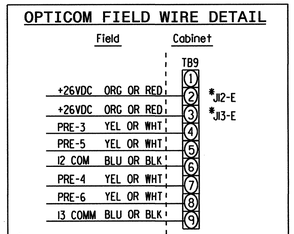

*Assuming TB9-2 & TB9-3 are unused on the J File, move wires on JII-J & J-II-K (Twisted Pair) to JI2-E & JI3-E Respectively.

NOTES

1. To prevent "flash-conflict" problems, insert red flash program blocks for all unused vehicle load switches in the output file. The installer shall verify that signal heads flash in accordance with the Signal Plans.
2. Ensure that Red Enable is active at all times during normal operation. To prevent Red Failures on unused monitor channels, tie unused red monitor inputs 1,5, 7,14,15 & 16 to load switch AC+ per the cabinet manufacturer's instructions.
3. Program phase 8 for Dual Entry.
4. Enable Simultaneous Gap-Out for all phases.
5. Program phases 2 and 6 for Variable Initial and Gap Reduction.
6. Program phases 2 and 6 for Start Up In Green.
7. Program phase 4 for 'STARTUP PED CALL'.
8. Program phases 2 and 6 for Yellow Flash, and overlap 1 as Wag Overlaps.

PREEMPT ONLY PHASE OMIT NOTE

(program controller as shown below)

From Main Menu press '2' (Phase Control). Then '1' (Phase Control Functions). Program Phases 1 and 7 for 'Omit Phase' and Phases 2, 3, 4, 5, 6, and 8 for 'Startup Calls'. This is to prevent Phases 1 and 7 from being served when not in Preempt.

EQUIPMENT INFORMATION

CONTROLLER.....2070L
CABINET.....332 /W/ AUX
SOFTWARE.....ECONOLITE OASIS
CABINET MOUNT.....BASE
OUTPUT FILE POSITIONS...18 WITH AUX. OUTPUT FILE
LOAD SWITCHES USED.....S1,S2,S2P,S3,S4,S4P,S5,S6,S7,S8,S9, S10,S12,S13
PHASES USED.....*1,2,3,4,4 PED,5,6,*7,8
OVERLAP "A".....1+2+5
OVERLAP "B".....5
OVERLAP "C".....5+6
OVERLAP "D".....3+7+8
OVERLAP "E".....3

*PHASES 1 AND 7 USED IN PREEMPT SEQUENCE ONLY

INPUT FILE CONNECTION & PROGRAMMING CHART

LOOP NO.	LOOP TERMINAL	INPUT FILE POS.	PIN NO.	INPUT ASSIGNMENT NO.	DETECTOR NO.	NEMA PHASE	CALL	EXTEND	FULL TIME DELAY	STRETCH TIME	DELAY TIME
2A	TB2-5,6	I2U	39	1	2	2	Y	Y			
2B	TB2-7,8	I2L	43	5	12	2	Y	Y			
3A	TB4-5,6	I5U	58	20	3	3	Y	Y			
3B	TB4-7,8	I5L	58	20	3	3	Y	Y			
4A	TB4-9,10	I6U	41	3	4	4	Y	Y			
4B	TB4-11,12	I6L	45	7	14	4	Y	Y			
5A[1]	TB3-1,2	J1U	55	17	5	5	Y	Y			15
	-	I4U	47	9	22	2	Y	Y	Y		3
5B	TB3-5,6	J2U	40	2	6	5	Y	Y			15
6A	TB3-7,8	J2L	44	6	16	6	Y	Y			
6B	TB3-9,10	J3U	64	26	36	6	Y	Y			
6C	TB3-11,12	J3L	77	39	46	6	Y	Y	Y		3
8A	TB5-9,10	J6U	42	4	8	8	Y	Y			3
8B	TB5-11,12	J6L	46	8	18	8	Y	Y			15
PED PUSH BUTTONS											
P41,P42	TB8-5,6	I12L	69	31	PED 4	4 PED					

NOTE:
INSTALL DC ISOLATORS IN INPUT FILE SLOT I12.

[1] Add jumper from J1-W to I4-W, on rear of input file.

INPUT FILE POSITION LEGEND: J2L
FILE J
SLOT 2
LOWER

COUNTDOWN PEDESTRIAN SIGNAL OPERATION

Countdown Ped Signals are required to display timing only during Ped Clearance Interval. Consult Ped Signal Module user's manual for instructions on selecting this feature.

SIGNAL HEAD HOOK-UP CHART

LOAD SWITCH NO.	S1	S2	S2P	S3	S4	S4P	S5	S6	S6P	S7	S8	S8P	S9	S10	S11	S12	S13	S14
PHASE	1	2	OLE	3	4	4 PED	5	6	6 PED	7	8	8 PED	OLA	OLB	SPARE	OLC	OLD	SPARE
SIGNAL HEAD NO.	61★	21,22	22★	31,32	42,43	P41, P42	51★	62,63	NU	41★	81,82	NU	61★	43	NU	51★	41★	NU
RED		128	*		101			134			107			*				
YELLOW	*	129	**		102		*	135		*	108							
GREEN		130			103			136			109							
RED ARROW				116									A121			A114	A101	
YELLOW ARROW			114	117									A122	A125		A115	A102	
FLASHING YELLOW ARROW													A123			A116	A103	
GREEN ARROW	127		115	118			133			124				A126				
✋						104												
🚶						106												

NU = Not Used

* Denotes install load resistor. See Load Resistor Installation Detail this sheet.

** If present, remove existing load resistor. See Load Resistor Removal Detail this sheet.

★ See pictorial of head wiring on detail sheet 2 of 5.

LOAD RESISTOR INSTALLATION DETAIL

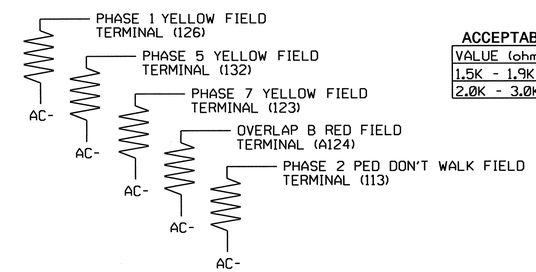

ACCEPTABLE VALUES

VALUE (ohms)	WATTAGE
1.5K - 1.9K	25W (min)
2.0K - 3.0K	10W (min)

LOAD RESISTOR REMOVAL DETAIL

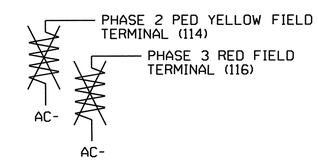

NOTE: If present, remove existing load resistor.

THIS ELECTRICAL DETAIL IS FOR
THE SIGNAL DESIGN: 01-0229
DESIGNED: March 2010
SEALED: 08/26/10
REVISED:

ELECTRICAL DETAIL - FINAL - SHEET 1 OF 5

ELECTRICAL AND PROGRAMMING DETAILS FOR:

Prepared in the Offices of:
Transportation Mobility and Safety Division
Signals Management Section
750 N.Greenfield Pkwy, Garner, NC 27529

US 158
at
NC 343

Division 1 | Camden County | Camden

PLAN DATE: July 2010 | REVIEWED BY: T. Joyce
PREPARED BY: C. Strickland | REVIEWED BY:

REVISIONS	INIT.	DATE

SEAL
NORTH CAROLINA PROFESSIONAL SEAL 022013 ENGINEER GEORGE C. BROWN

George C. Brown 8/30/10
SIGNATURE DATE

SIG. INVENTORY NO. 01-0229

27-AUG-2010 10:26
S:*TSSASUM*ITS Signals*Workgroups*Sig Mgmt*Strickland*010229_smlele_xxx.dgn
cestrickland

PROJECT REFERENCE NO.	SHEET NO.
R-2414B	Sig.27

4 SECTION FYA PPLT SIGNAL WIRING DETAIL

(wire signal heads as shown)

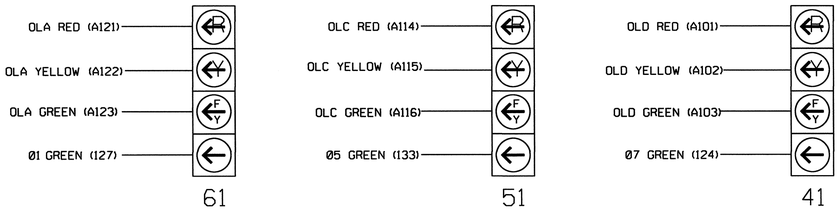

NOTE

1. The sequence display for these signals require special logic programming. See sheet 4 of 5 for programming instructions.

OVERLAP 'E' (SIGNAL HEAD 22) WIRING DETAIL

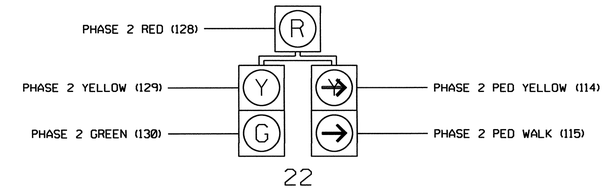

NOTE:

1. See 'Overlap E (Signal Head 22) Wiring & Programming Instructions' notes on this sheet.

FLASHER CIRCUIT MODIFICATION DETAIL

IN ORDER TO INSURE THAT SIGNALS FLASH CONCURRENTLY ON THE SAME APPROACH, MAKE THE FOLLOWING FLASHER CIRCUIT CHANGES:

1. ON REAR OF PDA - REMOVE WIRE FROM TERM. T2-4 AND TERMINATE ON T2-2.
2. ON REAR OF PDA - REMOVE WIRE FROM TERM. T2-5 AND TERMINATE ON T2-3.
3. REMOVE FLASHER UNIT 2.

THE CHANGES LISTED ABOVE TIES ALL PHASES AND OVERLAPS TO FLASHER UNIT 1.

OVERLAP 'E' (SIGNAL HEAD 22) WIRING & PROGRAMMING INSTRUCTIONS

1. Install load switch in slot 'S2P'. (See 'Signal Head Hook-up Chart' on sheet 1).
2. If present, remove existing factory-installed load resistor from Ped Yellow field terminal 114.
3. Ensure installation of load resistor on 2 Ped Don't Walk field terminal 113. (See 'Load Resistor Installation Detail' sheet 1 of 5).
4. Add a jumper wire from rear of the card edge connector of the conflict monitor from pin 8 (channel 13 yellow) to signal head field terminal 114 (S2P yellow).

   (channel 13 yellow) pin 8 ---------- field terminal 114 (S2P yellow)

5. Ensure Output Assignments for Overlap 'E' are programmed as shown in details sheet 3 of 5.
6. Ensure Overlap 'E' is programmed as shown on Overlap programming Detail sheet 4 of 5.
7. Ensure PRE6 (EVP 6) is programmed to omit Overlap 'E'. (See 'Emergency Vehicle Preemption Programming Detail' sheet 5 of 5).

ELECTRICAL DETAIL - FINAL - SHEET 2 OF 5

THIS ELECTRICAL DETAIL IS FOR
THE SIGNAL DESIGN: 01-0229
DESIGNED: March 2010
SEALED: 08/26/10
REVISED:

ELECTRICAL AND PROGRAMMING DETAILS FOR:

Prepared in the Offices of:

Transportation Mobility and Safety Division
STATE OF NORTH CAROLINA
DEPARTMENT OF TRANSPORTATION
Signal Management Section

750 N.Greenfield Pkwy,Garner,NC 27529

US 158
at
NC 343

Division 1 | Camden County | Camden

PLAN DATE: July 2010 | REVIEWED BY: T. Jap
PREPARED BY: C. Strickland | REVIEWED BY:

REVISIONS	INIT.	DATE

SEAL

NORTH CAROLINA PROFESSIONAL SEAL 022013 ENGINEER GEORGE C. BROWN

SIGNATURE | DATE 8/30/10

SIG. INVENTORY NO. 01-0229

27-AUG-2010 03:17
S:\TSCS\ITS Signals\WorkGroups\Sig Mgmt\Strickland\ND10229_sm.ele.xxx.dgn
castrickland

PROJECT REFERENCE NO.	SHEET NO.
R-2414B	Sig.28

"2 PED" to OVERLAP "E"
OUTPUT ASSIGNMENT PROGRAMMING DETAIL

(program controller as shown below)

1. FROM MAIN MENU PRESS '6' (OUTPUTS), THEN '1' (OUTPUT (ASSIGNMENTS).
2. WITH CURSOR IN "OUTPUT ASSIGNMENT #" FIELD, USE + KEY TO FIND THE OUTPUT ASSIGNMENT NUMBER 9 , AS SHOWN BELOW.
3. PROGRAM CONTROLLER AS SHOWN:

SCROLL DOWN TO VIEW ALL DATA

```
PAGE:1  C1 PIN:10  PEDESTRIAN PHASE
OUTPUT ASSIGNMENT #................9
FREQUENCY (0=DEFAULT) (0-25.5 HZ)...0.0
DUTY CYCLE (0=DEFAULT) (0 - 100%)...0
MODE (0=SOLID, 1=FLASH.............0
SELECT ASSIGNMENT:
NOT ENABLED........................
VEHICLE PHASE......................
PEDESTRIAN PHASE...................Y
VEHICLE OVERLAP....................Y
PEDESTRIAN OVERLAP.................
WATCHDOG...........................
DETECTOR RESET.....................
ADVANCE BEACON.....................
OUT OF PHASE FLASHER...............
CONTROLLER FLASH...................
RUN FREE...........................
RESERVED...........................
PREEMPT............................
SOFT PREEMPT.......................
ANY PREEMPT........................
COORDINATION PLAN..................
OFFSET.............................
PHASE CHECK........................
PHASE ON...........................
PHASE NEXT.........................
```

EXISTING DEFAULT ENTRY

```
PAGE:1  C1 PIN:10  PEDESTRIAN PHASE
SELECT VEHICLE OVERLAP (A=1, P=16)...5
SELECT COLOR (0=RED,1=YEL,2=GRN).....0
```

WHEN A "Y" IS ENTERED FOR "VEHICLE OVERLAP" THE SCREEN SHOWN ABOVE WILL APPEAR. ENTER DATA AS SHOWN.

PRESS ENTER AFTER ENTERING DATA, THEN ESC.

DISPLAY WILL NOW SHOW THE SPECIFIED OUTPUT ASSIGNED AS "VEHICLE OVERLAP" AS SHOWN BELOW:

```
PAGE:1  C1 PIN:10   VEHICLE OVERLAP
OUTPUT ASSIGNMENT #................9
FREQUENCY (0=DEFAULT) (0-25.5 HZ)...0.0
DUTY CYCLE (0=DEFAULT) (0 - 100%)...0
MODE (0=SOLID, 1=FLASH.............0
SELECT ASSIGNMENT:
NOT ENABLED........................
VEHICLE PHASE......................
PEDESTRIAN PHASE...................
VEHICLE OVERLAP....................Y
PEDESTRIAN OVERLAP.................
WATCHDOG...........................
DETECTOR RESET.....................
ADVANCE BEACON.....................
OUT OF PHASE FLASHER...............
CONTROLLER FLASH...................
RUN FREE...........................
RESERVED...........................
PREEMPT............................
SOFT PREEMPT.......................
ANY PREEMPT........................
COORDINATION PLAN..................
OFFSET.............................
PHASE CHECK........................
PHASE ON...........................
PHASE NEXT.........................
```

VEHICLE OVERLAP E (RED) LOAD SWITCH S2P

1. FROM MAIN MENU PRESS '6' (OUTPUTS), THEN '1' (OUTPUT (ASSIGNMENTS).
2. WITH CURSOR IN "OUTPUT ASSIGNMENT #" FIELD, USE + KEY TO FIND THE OUTPUT ASSIGNMENT NUMBER 10, AS SHOWN BELOW.
3. PROGRAM CONTROLLER AS SHOWN:

SCROLL DOWN TO VIEW ALL DATA

```
PAGE:1  C1 PIN:11  PEDESTRIAN PHASE
OUTPUT ASSIGNMENT #................10
FREQUENCY (0=DEFAULT) (0-25.5 HZ)...0.0
DUTY CYCLE (0=DEFAULT) (0 - 100%)...0
MODE (0=SOLID, 1=FLASH.............0
SELECT ASSIGNMENT:
NOT ENABLED........................
VEHICLE PHASE......................
PEDESTRIAN PHASE...................Y
VEHICLE OVERLAP....................Y
PEDESTRIAN OVERLAP.................
WATCHDOG...........................
DETECTOR RESET.....................
ADVANCE BEACON.....................
OUT OF PHASE FLASHER...............
CONTROLLER FLASH...................
RUN FREE...........................
RESERVED...........................
PREEMPT............................
SOFT PREEMPT.......................
ANY PREEMPT........................
COORDINATION PLAN..................
OFFSET.............................
PHASE CHECK........................
PHASE ON...........................
PHASE NEXT.........................
```

EXISTING DEFAULT ENTRY

```
PAGE:1  C1 PIN:11  PEDESTRIAN PHASE
SELECT VEHICLE OVERLAP (A=1, P=16)...5
SELECT COLOR (0=RED,1=YEL,2=GRN).....2
```

WHEN A "Y" IS ENTERED FOR "VEHICLE OVERLAP" THE SCREEN SHOWN ABOVE WILL APPEAR. ENTER DATA AS SHOWN.

PRESS ENTER AFTER ENTERING DATA, THEN ESC.

DISPLAY WILL NOW SHOW THE SPECIFIED OUTPUT ASSIGNED AS "VEHICLE OVERLAP" AS SHOWN BELOW:

```
PAGE:1  C1 PIN:11  VEHICLE OVERLAP
OUTPUT ASSIGNMENT #................10
FREQUENCY (0=DEFAULT) (0-25.5 HZ)...0.0
DUTY CYCLE (0=DEFAULT) (0 - 100%)...0
MODE (0=SOLID, 1=FLASH.............0
SELECT ASSIGNMENT:
NOT ENABLED........................
VEHICLE PHASE......................
PEDESTRIAN PHASE...................
VEHICLE OVERLAP....................Y
PEDESTRIAN OVERLAP.................
WATCHDOG...........................
DETECTOR RESET.....................
ADVANCE BEACON.....................
OUT OF PHASE FLASHER...............
CONTROLLER FLASH...................
RUN FREE...........................
RESERVED...........................
PREEMPT............................
SOFT PREEMPT.......................
ANY PREEMPT........................
COORDINATION PLAN..................
OFFSET.............................
PHASE CHECK........................
PHASE ON...........................
PHASE NEXT.........................
```

VEHICLE OVERLAP E (GREEN) LOAD SWITCH S2P

1. FROM MAIN MENU PRESS '6' (OUTPUTS), THEN '1' (OUTPUT (ASSIGNMENTS).
2. WITH CURSOR IN "OUTPUT ASSIGNMENT #" FIELD, USE + KEY TO FIND THE OUTPUT ASSIGNMENT NUMBER 33, AS SHOWN BELOW.
3. PROGRAM CONTROLLER AS SHOWN:

SCROLL DOWN TO VIEW ALL DATA

```
PAGE:1  C1 PIN:35  NOT ENABLED
OUTPUT ASSIGNMENT #................33
FREQUENCY (0=DEFAULT) (0-25.5 HZ)...0.0
DUTY CYCLE (0=DEFAULT) (0 - 100%)...0
MODE (0=SOLID, 1=FLASH.............0
SELECT ASSIGNMENT:
NOT ENABLED........................Y
VEHICLE PHASE......................
PEDESTRIAN PHASE...................
VEHICLE OVERLAP....................Y
PEDESTRIAN OVERLAP.................
WATCHDOG...........................
DETECTOR RESET.....................
ADVANCE BEACON.....................
OUT OF PHASE FLASHER...............
CONTROLLER FLASH...................
RUN FREE...........................
RESERVED...........................
PREEMPT............................
SOFT PREEMPT.......................
ANY PREEMPT........................
COORDINATION PLAN..................
OFFSET.............................
PHASE CHECK........................
PHASE ON...........................
PHASE NEXT.........................
```

EXISTING DEFAULT ENTRY

```
PAGE:1  C1 PIN:35  NOT ENABLED
SELECT VEHICLE OVERLAP (A=1, P=16)...5
SELECT COLOR (0=RED,1=YEL,2=GRN).....1
```

WHEN A "Y" IS ENTERED FOR "VEHICLE OVERLAP" THE SCREEN SHOWN ABOVE WILL APPEAR. ENTER DATA AS SHOWN.

PRESS ENTER AFTER ENTERING DATA, THEN ESC.

DISPLAY WILL NOW SHOW THE SPECIFIED OUTPUT ASSIGNED AS "VEHICLE OVERLAP" AS SHOWN BELOW:

```
PAGE:1  C1 PIN:35  VEHICLE OVERLAP
OUTPUT ASSIGNMENT #................33
FREQUENCY (0=DEFAULT) (0-25.5 HZ)...0.0
DUTY CYCLE (0=DEFAULT) (0 - 100%)...0
MODE (0=SOLID, 1=FLASH.............0
SELECT ASSIGNMENT:
NOT ENABLED........................
VEHICLE PHASE......................
PEDESTRIAN PHASE...................
VEHICLE OVERLAP....................Y
PEDESTRIAN OVERLAP.................
WATCHDOG...........................
DETECTOR RESET.....................
ADVANCE BEACON.....................
OUT OF PHASE FLASHER...............
CONTROLLER FLASH...................
RUN FREE...........................
RESERVED...........................
PREEMPT............................
SOFT PREEMPT.......................
ANY PREEMPT........................
COORDINATION PLAN..................
OFFSET.............................
PHASE CHECK........................
PHASE ON...........................
PHASE NEXT.........................
```

VEHICLE OVERLAP E (YELLOW) LOAD SWITCH S2P

THIS ELECTRICAL DETAIL IS FOR
THE SIGNAL DESIGN: 01-0229
DESIGNED: March 2010
SEALED: 08/26/10
REVISED:

ELECTRICAL DETAIL - FINAL - SHEET 3 OF 5

ELECTRICAL AND PROGRAMMING DETAILS FOR:

Prepared In the Offices of:
Transportation Mobility and Safety Division
STATE OF NORTH CAROLINA DEPARTMENT OF TRANSPORTATION
Signals Management Section
750 N.Greenfield Pkwy,Garner,NC 27529

US 158
at
NC 343

Division 1 Camden County Camden

PLAN DATE: March 2010 REVIEWED BY: T. Igan
PREPARED BY: C. Strickland REVIEWED BY:

REVISIONS	INIT.	DATE

SEAL
NORTH CAROLINA PROFESSIONAL SEAL 022013 ENGINEER GEORGE C. BROWN
George C. Brown 8/30/10
SIGNATURE DATE
SIG. INVENTORY NO. 01-0229

27-AUG-2010 09:18
S:*ITS&S*ITS Signals\Workgroups\Sig Man\Strickland\R010229_smlele_xxx.dgn
cbstrickland

LOGICAL I/O PROCESSOR PROGRAMMING DETAIL

TO PRODUCE SPECIAL FYA-PPLT SIGNAL SEQUENCE

(program controller as shown below)

1. FROM MAIN MENU PRESS '2' (PHASE CONTROL). THEN '1' (PHASE CONTROL FUNCTIONS). SCROLL TO THE BOTTOM OF THE MENU AND ENABLE ACT LOGIC COMMANDS 1, 2, 3, 4, 5, 6, 7, 8 AND 9.

2. FROM MAIN MENU PRESS '6' (OUTPUTS). THEN '3' (LOGICAL I/O PROCESSOR).

```
LOGICAL I/O COMMAND #1  (+/-COMMAND#)
IF  ACTIVE PHASE        #1  IS ON
AND RED CLEAR ON PHASE  #1  IS ON

SCROLL DOWN

THEN:
SET OUTPUT  ASSIGNMENT #50 ON
SET OUTPUT  ASSIGNMENT #51 OFF
```

NOTE: LOGIC FOR PHASE 1 RED CLEAR WHEN TRANSITIONING FROM PHASE 1 (EV PRE 4) TO PHASE 2 (HEAD 61).

PRESS '+'

```
LOGICAL I/O COMMAND #2  (+/-COMMAND#)
IF  ACTIVE PHASE        #1  IS ON

SCROLL DOWN

THEN:
SET OUTPUT  ASSIGNMENT #52 OFF
```

NOTE: LOGIC FOR SWITCHING FLASHING YELLOW ARROW "OFF" DURING PHASE 1 (HEAD 61).

PRESS '+'

```
LOGICAL I/O COMMAND #3  (+/-COMMAND#)
IF  YELLOW ON PHASE     #1  IS ON

SCROLL DOWN

THEN:
SET OUTPUT  ASSIGNMENT #51 ON
```

NOTE: LOGIC FOR YELLOW ARROW CLEARANCE FROM PHASE 1 (HEAD 61).

PRESS '+'

```
LOGICAL I/O COMMAND #4  (+/-COMMAND#)
IF  ACTIVE PHASE        #5  IS ON
AND RED CLEAR ON PHASE  #5  IS ON

SCROLL DOWN

THEN:
SET OUTPUT  ASSIGNMENT #42 ON
SET OUTPUT  ASSIGNMENT #43 OFF
```

NOTE: LOGIC FOR PHASE 5 RED CLEAR WHEN TRANSITIONING FROM PHASE 5 TO PHASE 6 (HEAD 51).

PRESS '+'

```
LOGICAL I/O COMMAND #5  (+/-COMMAND#)
IF  ACTIVE PHASE        #5  IS ON

SCROLL DOWN

THEN:
SET OUTPUT  ASSIGNMENT #44 OFF
```

NOTE: LOGIC FOR SWITCHING FLASHING YELLOW ARROW "OFF" DURING PHASE 5 (HEAD 51).

PRESS '+'

```
LOGICAL I/O COMMAND #6  (+/-COMMAND#)
IF  YELLOW ON PHASE     #5  IS ON

SCROLL DOWN

THEN:
SET OUTPUT  ASSIGNMENT #43 ON
```

NOTE: LOGIC FOR YELLOW ARROW CLEARANCE FROM PHASE 5 (HEAD 51).

PRESS '+'

```
LOGICAL I/O COMMAND #7  (+/-COMMAND#)
IF  ACTIVE PHASE        #7  IS ON
AND RED CLEAR ON PHASE  #7  IS ON

SCROLL DOWN

THEN:
SET OUTPUT  ASSIGNMENT #39 ON
SET OUTPUT  ASSIGNMENT #40 OFF
```

NOTE: LOGIC FOR PHASE 7 RED CLEAR WHEN TRANSITIONING FROM PHASE 7 (EV PRE 5) TO PHASE 8 (HEAD 41).

PRESS '+'

```
LOGICAL I/O COMMAND #8  (+/-COMMAND#)
IF  ACTIVE PHASE        #7  IS ON

SCROLL DOWN

THEN:
SET OUTPUT  ASSIGNMENT #41 OFF
```

NOTE: LOGIC FOR SWITCHING FLASHING YELLOW ARROW "OFF" DURING PHASE 7 (HEAD 41).

PRESS '+'

```
LOGICAL I/O COMMAND #9  (+/-COMMAND#)
IF  YELLOW ON PHASE     #7  IS ON

SCROLL DOWN

THEN:
SET OUTPUT  ASSIGNMENT #40 ON
```

NOTE: LOGIC FOR YELLOW ARROW CLEARANCE FROM PHASE 7 (HEAD 41).

LOGIC I/O PROCESSOR PROGRAMMING COMPLETE

OUTPUT REFERENCE SCHEDULE

USE TO INTERPRET LOGIC PROCESSOR

OUTPUT 39 = Overlap D Red
OUTPUT 40 = Overlap D Yellow
OUTPUT 41 = Overlap D Green
OUTPUT 42 = Overlap C Red
OUTPUT 43 = Overlap C Yellow
OUTPUT 44 = Overlap C Green
OUTPUT 50 = Overlap A Red
OUTPUT 51 = Overlap A Yellow
OUTPUT 52 = Overlap A Green

OVERLAP PROGRAMMING DETAIL

(program controller as shown below)

FROM MAIN MENU PRESS '8' (OVERLAPS). THEN '1' (VEHICLE OVERLAP SETTINGS).

```
PAGE 1: VEHICLE OVERLAP 'A' SETTINGS
PHASE:            ;123456789101112131415 16
VEH OVL PARENTS:;XX  X
VEH OVL NOT VEH:;
VEH OVL NOT PED:;
VEH OVL GRN EXT:;
STARTUP COLOR: _ RED  _ YELLOW  _ GREEN
FLASH COLORS:  _ RED  _ YELLOW  X GREEN
SELECT VEHICLE OVERLAP OPTIONS:   (Y/N)
FLASH YELLOW IN CONTROLLER FLASH?...Y
GREEN EXTENSION (0-255 SEC).........0
YELLOW CLEAR (0=PARENT,3-25.5 SEC)..0.0
RED CLEAR (0=PARENT,0.1-25.5 SEC)...0.0
OUTPUT AS PHASE # (0=NONE, 1-16)....0
```

NOTICE GREEN FLASH

PRESS '+'

```
PAGE 1: VEHICLE OVERLAP 'B' SETTINGS
PHASE:            ;123456789101112131415 16
VEH OVL PARENTS:;    X
VEH OVL NOT VEH:;
VEH OVL NOT PED:;
VEH OVL GRN EXT:;
STARTUP COLOR: _ RED  _ YELLOW  _ GREEN
FLASH COLORS:  _ RED  _ YELLOW  _ GREEN
SELECT VEHICLE OVERLAP OPTIONS:   (Y/N)
FLASH YELLOW IN CONTROLLER FLASH?...N
GREEN EXTENSION (0-255 SEC).........0
YELLOW CLEAR (0=PARENT,3-25.5 SEC)..0.0
RED CLEAR (0=PARENT,0.1-25.5 SEC)...0.0
OUTPUT AS PHASE # (0=NONE, 1-16)....0
```

PRESS '+'

```
PAGE 1: VEHICLE OVERLAP 'C' SETTINGS
PHASE:            ;123456789101112131415 16
VEH OVL PARENTS:;    XX
VEH OVL NOT VEH:;
VEH OVL NOT PED:;
VEH OVL GRN EXT:;
STARTUP COLOR: _ RED  _ YELLOW  _ GREEN
FLASH COLORS:  _ RED  _ YELLOW  X GREEN
SELECT VEHICLE OVERLAP OPTIONS:   (Y/N)
FLASH YELLOW IN CONTROLLER FLASH?...Y
GREEN EXTENSION (0-255 SEC).........0
YELLOW CLEAR (0=PARENT,3-25.5 SEC)..0.0
RED CLEAR (0=PARENT,0.1-25.5 SEC)...0.0
OUTPUT AS PHASE # (0=NONE, 1-16)....0
```

NOTICE GREEN FLASH

PRESS '+'

```
PAGE 1: VEHICLE OVERLAP 'D' SETTINGS
PHASE:            ;123456789101112131415 16
VEH OVL PARENTS:;  X   XX
VEH OVL NOT VEH:;
VEH OVL NOT PED:;
VEH OVL GRN EXT:;
STARTUP COLOR: _ RED  _ YELLOW  _ GREEN
FLASH COLORS:  _ RED  _ YELLOW  X GREEN
SELECT VEHICLE OVERLAP OPTIONS:   (Y/N)
FLASH YELLOW IN CONTROLLER FLASH?...N
GREEN EXTENSION (0-255 SEC).........0
YELLOW CLEAR (0=PARENT,3-25.5 SEC)..0.0
RED CLEAR (0=PARENT,0.1-25.5 SEC)...0.0
OUTPUT AS PHASE # (0=NONE, 1-16)....0
```

NOTICE GREEN FLASH

PRESS '+'

```
PAGE 1: VEHICLE OVERLAP 'E' SETTINGS
PHASE:            ;123456789101112131415 16
VEH OVL PARENTS:;  X
VEH OVL NOT VEH:;
VEH OVL NOT PED:;
VEH OVL GRN EXT:;
STARTUP COLOR: _ RED  _ YELLOW  _ GREEN
FLASH COLORS:  _ RED  _ YELLOW  _ GREEN
SELECT VEHICLE OVERLAP OPTIONS:   (Y/N)
FLASH YELLOW IN CONTROLLER FLASH?...N
GREEN EXTENSION (0-255 SEC).........0
YELLOW CLEAR (0=PARENT,3-25.5 SEC)..0.0
RED CLEAR (0=PARENT,0.1-25.5 SEC)...0.0
OUTPUT AS PHASE # (0=NONE, 1-16)....0
```

OVERLAP PROGRAMMING COMPLETE

ELECTRICAL DETAIL - FINAL - SHEET 4 OF 5

THIS ELECTRICAL DETAIL IS FOR
THE SIGNAL DESIGN: 01-0229
DESIGNED: March 2010
SEALED: 08/26/10
REVISED:

ELECTRICAL AND PROGRAMMING DETAILS FOR:

Prepared in the Offices of:
Transportation Mobility and Safety Division
STATE OF NORTH CAROLINA DEPARTMENT OF TRANSPORTATION
Signals Management Section
750 N.Greenfield Pkwy,Garner,NC 27529

US 158
at
NC 343

Division 1 | Camden County | Camden

PLAN DATE: July 2010 | REVIEWED BY: T. Vga
PREPARED BY: C. Strickland | REVIEWED BY:

REVISIONS	INIT.	DATE

SEAL
NORTH CAROLINA PROFESSIONAL SEAL 022013 ENGINEER GEORGE C. BROWN

SIGNATURE DATE

SIG. INVENTORY NO. 01-0229

27-AUG-2010 09:19
S:#TIS&SU#TS Signals#Workgroups#Sig Man#Strickland#010229_smlele_xxx.dgn
cestrickland

EMERGENCY VEHICLE PREEMPTION PROGRAMMING DETAIL

(program controller as shown below)

From Main Menu press 'A' (Preemption), then '1' (Standard Preemptions). Press 'NEXT' as needed to advance to Preempts 3, 4, 5 and 6.

```
   PREEMPTION  #3  SETTINGS (NEXT:1-10)
INTERVAL/TIMING  |  CLEAR/DWELL PHASES
  GRN YEL  RED   |1234567891011121314 1516
1 255  0.0* 0.0* |  X  X
2   0  0.0  0.0  |
3   0  0.0  0.0  |
4   0  0.0  0.0  |
5   0  0.0  0.0  |
EXIT CALLS       |
          OPTIONS
PRIORITY (Y/N TO SELECT) ............MED
DELAY TIMER (0-255 SEC) .............0
MIN GREEN BEFORE PRE (0= DEFAULT)....1
PED CLEAR BEFORE PRE (0= DEFAULT)....0
YELLOW CLEAR BEFORE PRE (0= DEFAULT).0.0*
RED CLEAR BEFORE PRE (0= DEFAULT)....0.0*
DWELL MIN TIMER (0-255 SEC) .........7
DWELL MAX TIMER (0=OFF,1-255MIN) ....0
DWELL HOLD-OVER TIMER (0-255) .......0
LATCH CALL? .........................N
LINK TO NEXT PREEMPT? ...............N
ENABLE BACKUP PROTECTION? ...........N
HOLD CLEAR 1 PHASES DURING DELAY? ...N
FAST GREEN FLASH DWELL PHASES? ......N
PED CLEARANCE THROUGH YELLOW? .......Y
INHIBIT OVERLAP GREEN EXTENSION? ....N
SERVICE DURING SOFTWARE FLASH? ......N
REST IN RED DURING DWELL INTERVAL? ..N
FLASH DWELL INTERVAL? ...............N
ALLOW PEDS IN DWELL INTERVAL? .......N
RE-TIME DWELL INTERVAL? .............N
OVERLAPS:                | ABCDEFGHIJKLMNOP
DWELL INT FLASH YELLOW   |
OMIT OVERLAPS:           |  X
```

PRESS 'NEXT'

```
   PREEMPTION  #4  SETTINGS (NEXT:1-10)
INTERVAL/TIMING  |  CLEAR/DWELL PHASES
  GRN YEL  RED   |1234567891011121314 1516
1 255  4.9  1.8  |X    X
2   0  0.0  0.0  |
3   0  0.0  0.0  |
4   0  0.0  0.0  |
5   0  0.0  0.0  |
EXIT CALLS       |
          OPTIONS
PRIORITY (Y/N TO SELECT) ............MED
DELAY TIMER (0-255 SEC) .............0
MIN GREEN BEFORE PRE (0= DEFAULT)....1
PED CLEAR BEFORE PRE (0= DEFAULT)....0
YELLOW CLEAR BEFORE PRE (0= DEFAULT).0.0*
RED CLEAR BEFORE PRE (0= DEFAULT)....0.0*
DWELL MIN TIMER (0-255 SEC) .........7
DWELL MAX TIMER (0=OFF,1-255MIN) ....0
DWELL HOLD-OVER TIMER (0-255) .......0
LATCH CALL? .........................N
LINK TO NEXT PREEMPT? ...............N
ENABLE BACKUP PROTECTION? ...........N
HOLD CLEAR 1 PHASES DURING DELAY? ...N
FAST GREEN FLASH DWELL PHASES? ......N
PED CLEARANCE THROUGH YELLOW? .......Y
INHIBIT OVERLAP GREEN EXTENSION? ....N
SERVICE DURING SOFTWARE FLASH? ......N
REST IN RED DURING DWELL INTERVAL? ..N
FLASH DWELL INTERVAL? ...............N
ALLOW PEDS IN DWELL INTERVAL? .......N
RE-TIME DWELL INTERVAL? .............N
OVERLAPS:                | ABCDEFGHIJKLMNOP
DWELL INT FLASH YELLOW   |
OMIT OVERLAPS:           |
```

PRESS 'NEXT'

```
   PREEMPTION  #5  SETTINGS (NEXT:1-10)
INTERVAL/TIMING  |  CLEAR/DWELL PHASES
  GRN YEL  RED   |1234567891011121314 1516
1 255  3.8  3.1  |   X  X
2   0  0.0  0.0  |
3   0  0.0  0.0  |
4   0  0.0  0.0  |
5   0  0.0  0.0  |
EXIT CALLS       |
          OPTIONS
PRIORITY (Y/N TO SELECT) ............MED
DELAY TIMER (0-255 SEC) .............0
MIN GREEN BEFORE PRE (0= DEFAULT)....1
PED CLEAR BEFORE PRE (0= DEFAULT)....0
YELLOW CLEAR BEFORE PRE (0= DEFAULT).0.0*
RED CLEAR BEFORE PRE (0= DEFAULT)....0.0*
DWELL MIN TIMER (0-255 SEC) .........7
DWELL MAX TIMER (0=OFF,1-255MIN) ....0
DWELL HOLD-OVER TIMER (0-255) .......0
LATCH CALL? .........................N
LINK TO NEXT PREEMPT? ...............N
ENABLE BACKUP PROTECTION? ...........N
HOLD CLEAR 1 PHASES DURING DELAY? ...N
FAST GREEN FLASH DWELL PHASES? ......N
PED CLEARANCE THROUGH YELLOW? .......Y
INHIBIT OVERLAP GREEN EXTENSION? ....N
SERVICE DURING SOFTWARE FLASH? ......N
REST IN RED DURING DWELL INTERVAL? ..N
FLASH DWELL INTERVAL? ...............N
ALLOW PEDS IN DWELL INTERVAL? .......N
RE-TIME DWELL INTERVAL? .............N
OVERLAPS:                | ABCDEFGHIJKLMNOP
DWELL INT FLASH YELLOW   |
OMIT OVERLAPS:           |
```

PRESS 'NEXT'

```
   PREEMPTION  #6  SETTINGS (NEXT:1-10)
INTERVAL/TIMING  |  CLEAR/DWELL PHASES
  GRN YEL  RED   |1234567891011121314 1516
1 255  0.0* 0.0* |  X    X
2   0  0.0  0.0  |
3   0  0.0  0.0  |
4   0  0.0  0.0  |
5   0  0.0  0.0  |
EXIT CALLS       |
          OPTIONS
PRIORITY (Y/N TO SELECT) ............MED
DELAY TIMER (0-255 SEC) .............0
MIN GREEN BEFORE PRE (0= DEFAULT)....1
PED CLEAR BEFORE PRE (0= DEFAULT)....0
YELLOW CLEAR BEFORE PRE (0= DEFAULT).0.0*
RED CLEAR BEFORE PRE (0= DEFAULT)....0.0*
DWELL MIN TIMER (0-255 SEC) .........7
DWELL MAX TIMER (0=OFF,1-255MIN) ....0
DWELL HOLD-OVER TIMER (0-255) .......0
LATCH CALL? .........................N
LINK TO NEXT PREEMPT? ...............N
ENABLE BACKUP PROTECTION? ...........N
HOLD CLEAR 1 PHASES DURING DELAY? ...N
FAST GREEN FLASH DWELL PHASES? ......N
PED CLEARANCE THROUGH YELLOW? .......Y
INHIBIT OVERLAP GREEN EXTENSION? ....N
SERVICE DURING SOFTWARE FLASH? ......N
REST IN RED DURING DWELL INTERVAL? ..N
FLASH DWELL INTERVAL? ...............N
ALLOW PEDS IN DWELL INTERVAL? .......N
RE-TIME DWELL INTERVAL? .............N
OVERLAPS:                | ABCDEFGHIJKLMNOP
DWELL INT FLASH YELLOW   |
OMIT OVERLAPS:           |  X
```

PROGRAMMING COMPLETE

* TIME DEFAULTS TO TIME USED BY PHASE DURING NORMAL OPERATION

NOTE!

PROGRAM EXTEND TIME ON ALL 'OPTICOM' DETECTOR UNITS FOR 2 SEC.

THIS ELECTRICAL DETAIL IS FOR
THE SIGNAL DESIGN: 01-0229
DESIGNED: March 2010
SEALED: 08/26/10
REVISED:

ELECTRICAL DETAIL - FINAL - SHEET 5 OF 5

ELECTRICAL AND PROGRAMMING DETAILS FOR:

Prepared in the Offices of:

Transportation Mobility and Safety Division
Signals Management Section

750 N.Greenfield Pkwy,Garner,NC 27529

US 158
at
NC 343

Division 1 | Camden County | Camden

PLAN DATE: July 2010	REVIEWED BY: T. Upton		
PREPARED BY: C. Strickland	REVIEWED BY:		
REVISIONS		INIT.	DATE

SEAL

NORTH CAROLINA PROFESSIONAL SEAL 022013 ENGINEER GEORGE C. BROWN

George C. Brown 8/30/10
SIGNATURE DATE

SIG. INVENTORY NO. 01-0229

27-AUG-2010 09:20
S:#ITS&SU#ITS Signals#Workgroups#Sig Man#Strickland#010229_sm_01b_xxx.dgn
cbstrickland

METAL POLE No. 3 & 4

PROJECT REFERENCE NO.	SHEET NO.
R-2414B	Sig. 31

Design Loading for METAL POLE NO. 3

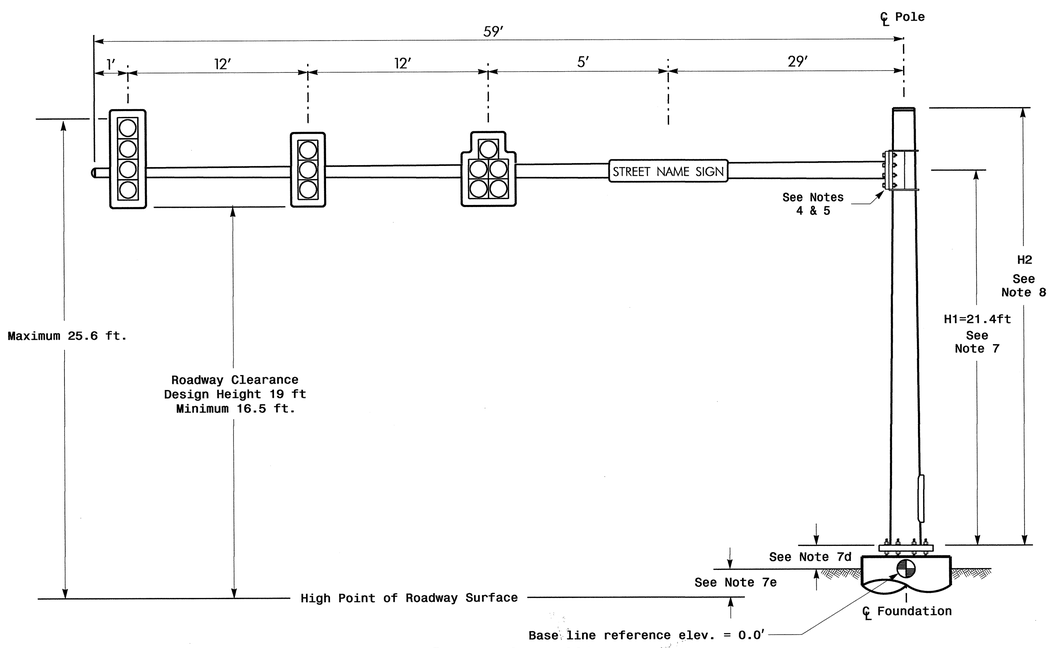

Elevation View

Design Loading for METAL POLE NO. 4

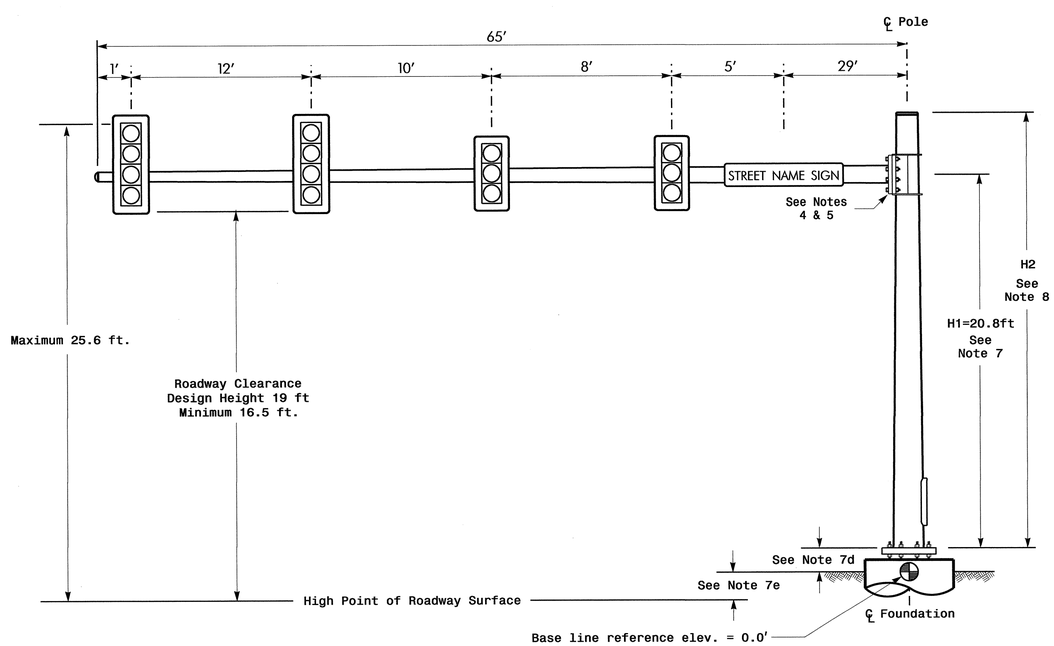

Elevation View

SPECIAL NOTE

The contractor is responsible for verifying that the mast arm attachment height (H1) will provide the "Design Height" clearance from the roadway before submitting final shop drawings for approval. Verify elevation data below which was obtained by field measurement or from available project survey data.

Elevation Data for Mast Arm Attachment (H1)

Elevation Differences for:	Pole 3	Pole 4
Baseline reference point at ⊕ ℄ Foundation @ ground level	0.0 ft.	0.0 ft.
Elevation difference at High point of roadway surface	+0.4 ft.	+0.4 ft.
Elevation difference at Edge of travelway or face of curb	NA	NA

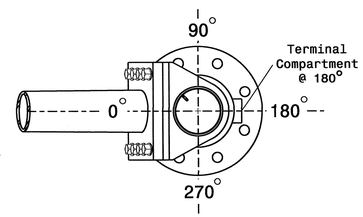

POLE RADIAL ORIENTATION

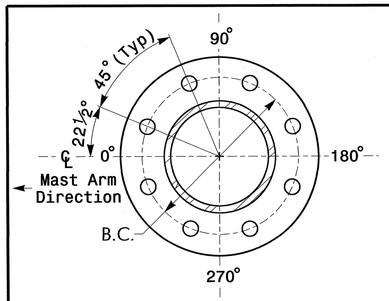

8 BOLT BASE PLATE DETAIL

See Note 6

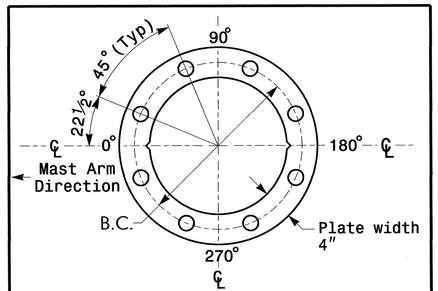

BASE PLATE TEMPLATE & ANCHOR BOLT LOCK PLATE DETAIL

For 8 Bolt Base Plate

MAST ARM LOADING SCHEDULE

LOADING SYMBOL	DESCRIPTION	AREA	SIZE	WEIGHT
	SIGNAL HEAD 12″–5 SECTION–WITH BACKPLATE AND ASTRO–BRAC	16.3 S.F.	42.0″ W X 56.0″ L	103 LBS
	SIGNAL HEAD 12″–4 SECTION–WITH BACKPLATE AND ASTRO–BRAC	11.5 S.F.	25.5″ W X 66.0″ L	74 LBS
	SIGNAL HEAD 12″–3 SECTION–WITH BACKPLATE AND ASTRO–BRAC	9.3 S.F.	25.5″ W X 52.5″ L	60 LBS
	SIGN RIGID MOUNTED WITH ASTRO–SIGN–BRAC	5.0 S.F.	24.0″ W X 30.0″ L	11 LBS
STREET NAME SIGN	STREET NAME SIGN RIGID MOUNTED WITH ASTRO–SIGN–BRAC	12.0 S.F.	18.0″ W X 96.0″ L	27 LBS

NOTES

Design Reference Material

1. Design the traffic signal structure and foundation in accordance with:
   - The 4th Edition 2001 AASHTO "Standard Specifications for Structural Supports for Highway Signs, Luminaires, and Traffic Signals, including all of the latest interim revisions.
   - The 2006 NCDOT "Standard Specifications for Roads and Structures". The latest addenda to these specifications can be found in the traffic signal project special provisions.
   - The 2006 NCDOT Roadway Standard Drawings.
   - The traffic signal project plans and special provisions.
   - The NCDOT "Metal Pole Standards" located at the following NCDOT website: http://www.ncdot.org/doh/preconstruct/traffic/ITSS/ws/mpoles/poles.html

Design Requirements

2. Design the traffic signal structure using the loading conditions shown in the elevation views. These are anticipated worst case "Design loads" and may not represent the actual loads that will be applied at the time of the installation. The contractor should refer to the traffic signal plans for the actual loads that will be applied at the time of the installation.
3. Design all signal supports using stress ratios that do not exceed 0.9.
4. The camber design for mast arm deflection should provide an appearance of a low pitched arch where the tip or the free end of the mast arm does not deflect below horizontal when fully loaded.
5. A clamp-type bolted mast arm-to-pole connection may be used instead of the welded ring stiffened box connection shown as long as the connection meets all of the design requirements.
6. Design base plate with 8 anchor bolt holes. Provide 2 inch x 60 inch anchor bolts.
7. The mast arm attachment height (H1) shown is based on the following design assumptions:
   a. Mast arm slope and deflection are not considered in determining the arm attachment height as they are assumed to offset each other.
   b. Signal heads attached to the mast arm are rigid mounted and vertically centered on the arm.
   c. The roadway clearance height for design is as shown in the elevation views.
   d. The top of the pole base plate is .75 feet above the ground elevation.
   e. Refer to the Elevation Data chart for elevation differences between the proposed foundation ground level and the high point on the roadway.
8. The pole manufacturer will determine the total height (H2) of each pole using the greater of the following:
   - Mast arm attachment height (H1) plus 2 feet, or
   - H1 plus ½ of the total height of the mast arm attachment assembly plus 1 foot.
9. If pole location adjustments are required, the contractor must gain approval from the engineer as this may affect the mast arm lengths and arm attachment heights. The contractor may contact the Signals & Geometrics Structural Engineer for assistance at (919) 773-2800.
10. The contractor is responsible for verifying that the mast arm length shown will allow proper positioning of the signal heads over the roadway.
11. The contractor is responsible for providing soil penetration testing data (SPT) to the pole manufacturer so site specific foundations can be designed.

NCDOT Wind Zone 2 (130 mph)

Prepared In the Offices of: Transportation Mobility and Safety Division, Traffic Engineering Branch, Signal Design Section, 750 N.Greenfield Pkwy,Garner,NC 27529

US 158 At NC 343

Division 1 Camden County Camden

PLAN DATE:	May 2010	REVIEWED BY:	PLA
PREPARED BY:	JPG	REVIEWED BY:	

SCALE 0 N/A N/A

REVISIONS | INIT. | DATE

SEAL NORTH CAROLINA PROFESSIONAL SEAL 29904 ENGINEER JASON P. GALLIMAY

SIGNATURE 9/3/10 DATE

STC. INVENTORY NO. 01-0229

03-SEP-2010 14:23
S:\ITS&SU\ITS Signals\Workgroups\TIP Projects\R-2414B\Signals\Designs\Signals\01-0229\01229_sig_mp3456_2010nmdd.dgn
jgallimay

METAL POLE No. 5 & 6

PROJECT REFERENCE NO.	SHEET NO.
R-2414B	Sig. 32

Design Loading for METAL POLE NO. 5

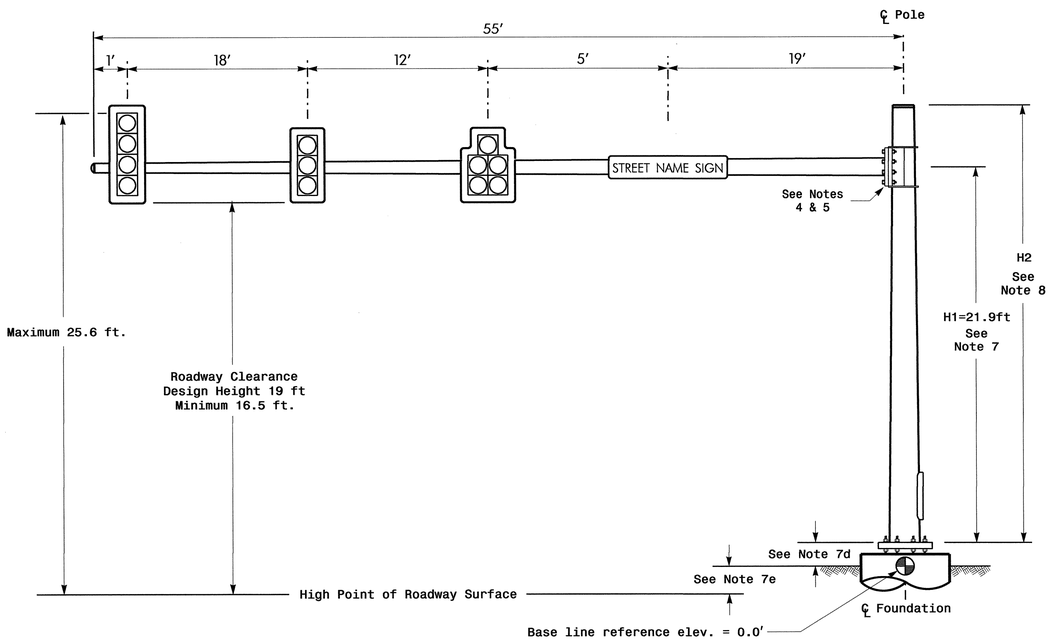

Elevation View

Design Loading for METAL POLE NO. 6

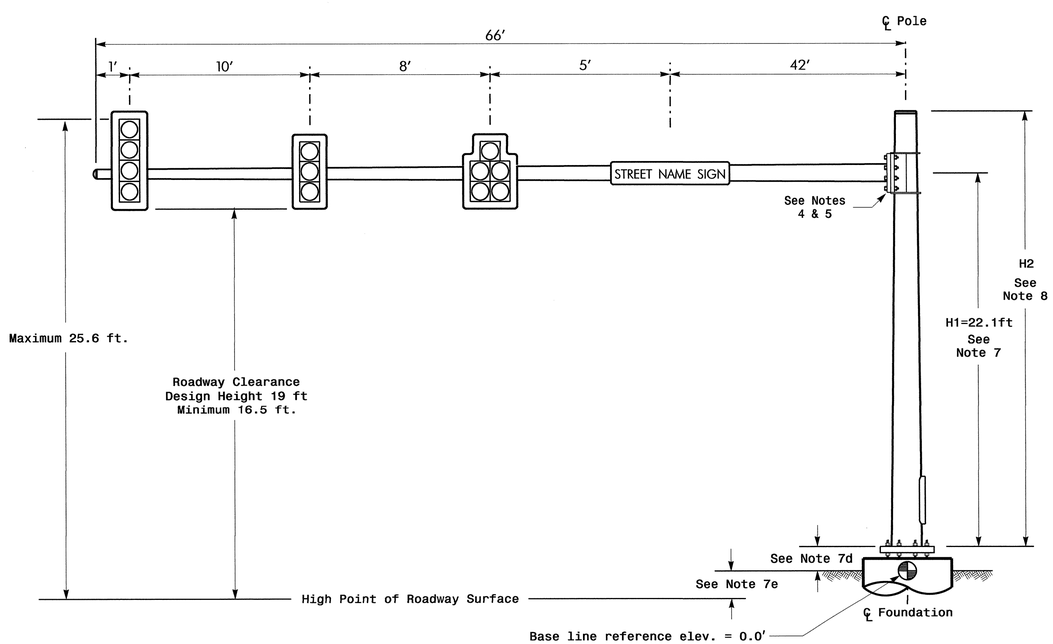

Elevation View

SPECIAL NOTE

The contractor is responsible for verifying that the mast arm attachment height (H1) will provide the "Design Height" clearance from the roadway before submitting final shop drawings for approval. Verify elevation data below which was obtained by field measurement or from available project survey data.

Elevation Data for Mast Arm Attachment (H1)

Elevation Differences for:	Pole 5	Pole 6
Baseline reference point at ⊕ ℄ Foundation @ ground level	0.0 ft.	0.0 ft.
Elevation difference at High point of roadway surface	+0.9 ft.	+1.1 ft.
Elevation difference at Edge of travelway or face of curb	NA	NA

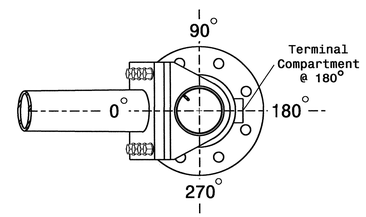

POLE RADIAL ORIENTATION

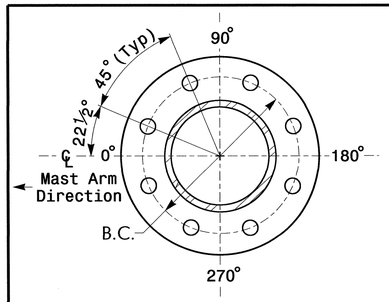

8 BOLT BASE PLATE DETAIL

See Note 6

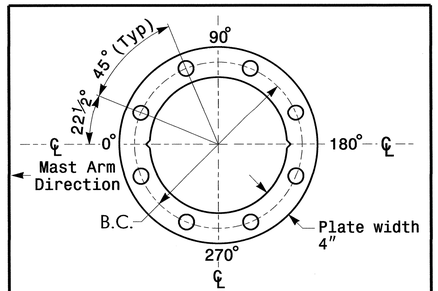

BASE PLATE TEMPLATE & ANCHOR BOLT LOCK PLATE DETAIL

For 8 Bolt Base Plate

MAST ARM LOADING SCHEDULE

LOADING SYMBOL	DESCRIPTION	AREA	SIZE	WEIGHT
	SIGNAL HEAD 12″-5 SECTION-WITH BACKPLATE AND ASTRO-BRAC	16.3 S.F.	42.0″ W X 56.0″ L	103 LBS
	SIGNAL HEAD 12″-4 SECTION-WITH BACKPLATE AND ASTRO-BRAC	11.5 S.F.	25.5″ W X 66.0″ L	74 LBS
	SIGNAL HEAD 12″-3 SECTION-WITH BACKPLATE AND ASTRO-BRAC	9.3 S.F.	25.5″ W X 52.5″ L	60 LBS
	SIGN RIGID MOUNTED WITH ASTRO-SIGN-BRAC	5.0 S.F.	24.0″ W X 30.0″ L	11 LBS
STREET NAME SIGN	STREET NAME SIGN RIGID MOUNTED WITH ASTRO-SIGN-BRAC	12.0 S.F.	18.0″ W X 96.0″ L	27 LBS

NOTES

Design Reference Material

1. Design the traffic signal structure and foundation in accordance with:
   - The 4th Edition 2001 AASHTO "Standard Specifications for Structural Supports for Highway Signs, Luminaires, and Traffic Signals, including all of the latest interim revisions.
   - The 2006 NCDOT "Standard Specifications for Roads and Structures". The latest addenda to these specifications can be found in the traffic signal project special provisions.
   - The 2006 NCDOT Roadway Standard Drawings.
   - The traffic signal project plans and special provisions.
   - The NCDOT "Metal Pole Standards" located at the following NCDOT website: http://www.ncdot.org/doh/preconstruct/traffic/ITSS/ws/mpoles/poles.html

Design Requirements

2. Design the traffic signal structure using the loading conditions shown in the elevation views. These are anticipated worst case "Design loads" and may not represent the actual loads that will be applied at the time of the installation. The contractor should refer to the traffic signal plans for the actual loads that will be applied at the time of the installation.
3. Design all signal supports using stress ratios that do not exceed 0.9.
4. The camber design for mast arm deflection should provide an appearance of a low pitched arch where the tip or the free end of the mast arm does not deflect below horizontal when fully loaded.
5. A clamp-type bolted mast arm-to-pole connection may be used instead of the welded ring stiffened box connection shown as long as the connection meets all of the design requirements.
6. Design base plate with 8 anchor bolt holes. Provide 2 inch x 60 inch anchor bolts.
7. The mast arm attachment height (H1) shown is based on the following design assumptions:
   a. Mast arm slope and deflection are not considered in determining the arm attachment height as they are assumed to offset each other.
   b. Signal heads attached to the mast arm are rigid mounted and vertically centered on the arm.
   c. The roadway clearance height for design is as shown in the elevation views.
   d. The top of the pole base plate is .75 feet above the ground elevation.
   e. Refer to the Elevation Data chart for elevation differences between the proposed foundation ground level and the high point on the roadway.
8. The pole manufacturer will determine the total height (H2) of each pole using the greater of the following:
   - Mast arm attachment height (H1) plus 2 feet, or
   - H1 plus ½ of the total height of the mast arm attachment assembly plus 1 foot.
9. If pole location adjustments are required, the contractor must gain approval from the engineer as this may affect the mast arm lengths and arm attachment heights. The contractor may contact the Signals & Geometrics Structural Engineer for assistance at (919) 773-2800.
10. The contractor is responsible for verifying that the mast arm length shown will allow proper positioning of the signal heads over the roadway.
11. The contractor is responsible for providing soil penetration testing data (SPT) to the pole manufacturer so site specific foundations can be designed.

NCDOT Wind Zone 2 (130 mph)

Prepared in the Offices of: Transportation Mobility and Safety Division, Traffic Engineering Branch, Signal Design Section, 750 N.Greenfield Pkwy, Garner, NC 27529

US 158 At NC 343

Division 1 Camden County Camden

PLAN DATE: May 2010	REVIEWED BY: PLA		
PREPARED BY: JPG	REVIEWED BY:		
REVISIONS		INIT.	DATE

SCALE 0 N/A

SEAL: NORTH CAROLINA PROFESSIONAL SEAL 29904 ENGINEER JOSEPH P. GALLOWAY

SIGNATURE DATE 9/3/10

SIG. INVENTORY NO. 01-0229

03-SEP-2010 14:24
S:\ITS&SU\ITS Signals\WorkGroups\TIP Projects\R-2414B\Signals\Design\Signals\01-0229\01-0229_sig_mp3456_2010nmdd.dgn
jgalloway

METRIC	PROJECT REFERENCE NO.	SHEET NO.
	R-2414B	Sig.33

TABLE OF OPERATION		
SIGNAL FACE	INTERVAL 1	INTERVAL 2
11,13	ON	OFF
12,14	OFF	ON
21,22	ON	OFF
23,24	OFF	ON

Flasher

NOTES

1. Refer to "Roadway Standard Drawings NCDOT" dated July 2006 and "Standard Specifications for Roads and Structures" dated July 2006.
2. Flash vertically mounted heads alternately.
3. Flash horizontally mounted heads concurrently.

SIGNAL FACE I.D.

All Heads L.E.D.

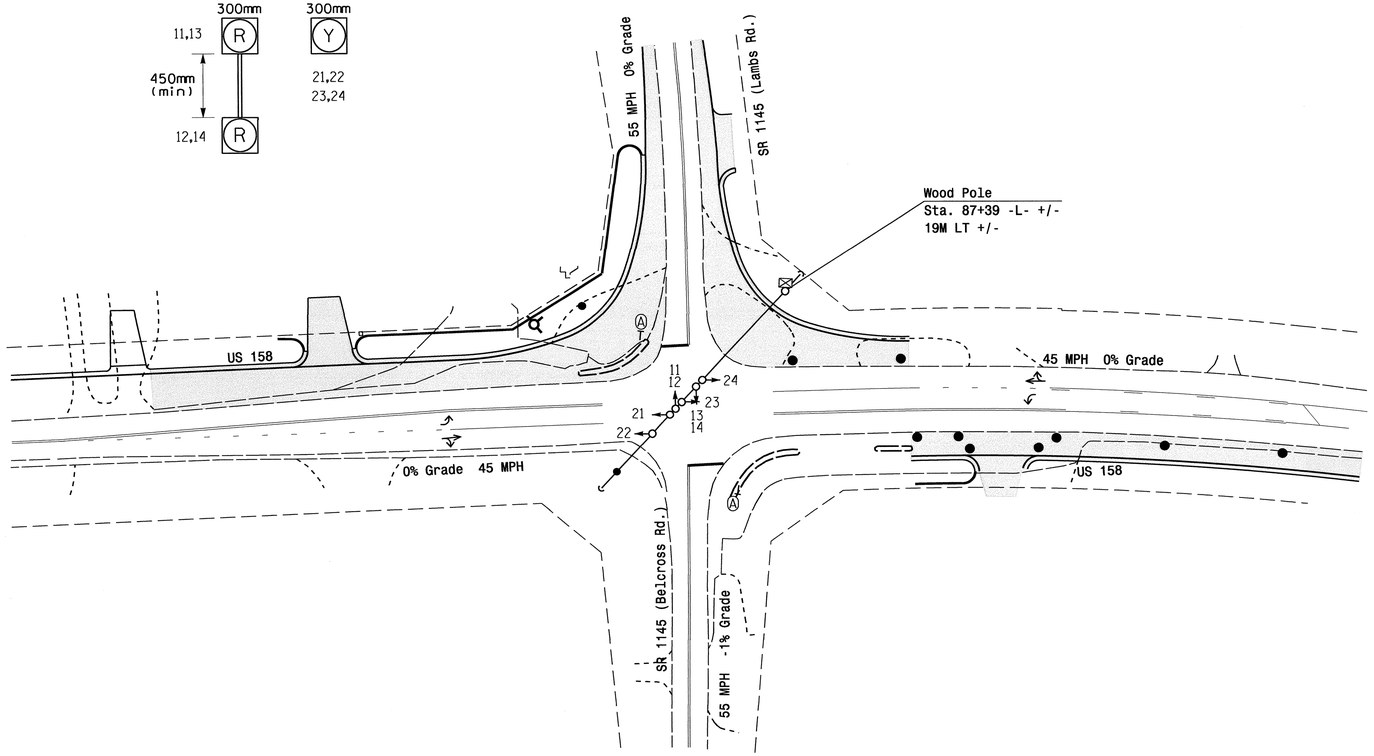

LEGEND

PROPOSED		EXISTING
	Traffic Signal Head	
	Modified Signal Head	N/A
	Sign	
	Pedestrian Signal Head With Push Button & Sign	
	Signal Pole with Guy	
	Signal Pole with Sidewalk Guy	
	Inductive Loop Detector	
	Controller & Cabinet	
	Junction Box	
	50mm Underground Conduit	
N/A	Right of Way with Marker	
	Directional Arrow	
	Pavement Marking Arrow	
	"STOP" Sign (R1-1)	

Signal Upgrade/Temp 1 Phase I

Prepared in the Offices of:
Transportation Mobility and Safety Division
Signal Design Section
750 N.Greenfield Pkwy,Garner,NC 27529

US 158
At
SR 1145
(Belcross Road)/(Lambs Road)

Division 1 Camden County Belcross

PLAN DATE: April 2010	REVIEWED BY: PLA
PREPARED BY: JPG	REVIEWED BY:

SCALE 5 0 10 500:1

REVISIONS	INIT.	DATE

SEAL
NORTH CAROLINA PROFESSIONAL SEAL 29904 ENGINEER JASON P. GALLOWAY

SIGNATURE DATE 9/2/10

SIG. INVENTORY NO. 01-0220T1

01-SEP-2010 15:42
S:\TSA&S\TS Signals\Workgroups\TIP Projects\R-2414B\Signals\Designs\01-0220\01-0220T1_sig_dsn_2010mdd.dgn
jpolloway

METRIC	PROJECT REFERENCE NO.	SHEET NO.
	R-2414B	Sig.34

TABLE OF OPERATION		
SIGNAL FACE	INTERVAL 1	INTERVAL 2
11,13	ON	OFF
12,14	OFF	ON
21,22	ON	OFF
23,24	OFF	ON

Flasher

NOTES

1. Refer to "Roadway Standard Drawings NCDOT" dated July 2006 and "Standard Specifications for Roads and Structures" dated July 2006.
2. Flash vertically mounted heads alternately.
3. Flash horizontally mounted heads concurrently.

SIGNAL FACE I.D.

All Heads L.E.D.

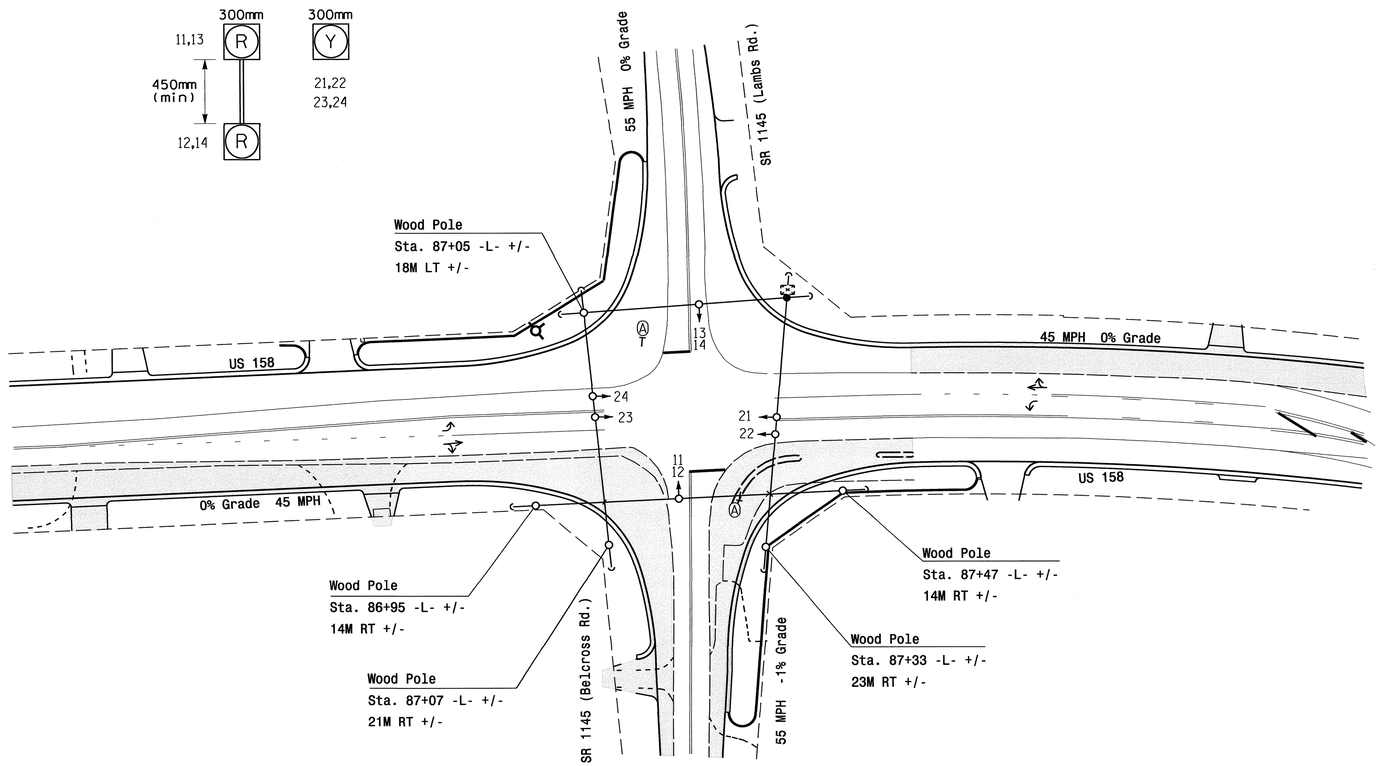

LEGEND

PROPOSED		EXISTING
	Traffic Signal Head	
	Modified Signal Head	N/A
	Sign	
	Pedestrian Signal Head With Push Button & Sign	
	Signal Pole with Guy	
	Signal Pole with Sidewalk Guy	
	Inductive Loop Detector	
	Controller & Cabinet	
	Junction Box	
	50mm Underground Conduit	
N/A	Right of Way with Marker	
	Directional Arrow	
	Pavement Marking Arrow	
	"STOP" Sign (R1-1)	

Signal Upgrade/Temp 2 Phase II & III

Prepared in the Offices of:
Transportation Mobility and Safety Division
Signal Design Section
750 N.Greenfield Pkwy,Garner,NC 27529

US 158
At
SR 1145
(Belcross Road)/(Lambs Road)

Division 1 Camden County Belcross

PLAN DATE: April 2010	REVIEWED BY: PLA		
PREPARED BY: JPG	REVIEWED BY:		
REVISIONS		INIT.	DATE

SCALE 5 0 10 500:1

SEAL
NORTH CAROLINA PROFESSIONAL SEAL 29904 ENGINEER JASON P. GALLOWAY

SIGNATURE 9/2/10 DATE

SIG. INVENTORY NO. 01-0220T2

01-SEP-2010 15:40
S:*ITS&SU*ITS Signals*Workgroups*TIP Projects*R-2414B*Signals*Designs*Signals*01-0220*01022OT2_sig_dsn_2010mod.dgn
jgalloway

METRIC	PROJECT REFERENCE NO.	SHEET NO.
	R-2414B	Sig.35

Flasher

TABLE OF OPERATION		
SIGNAL FACE	INTERVAL 1	INTERVAL 2
11,13	ON	OFF
12,14	OFF	ON
21,22	ON	OFF
23,24	OFF	ON

SIGNAL FACE I.D.

All Heads L.E.D.

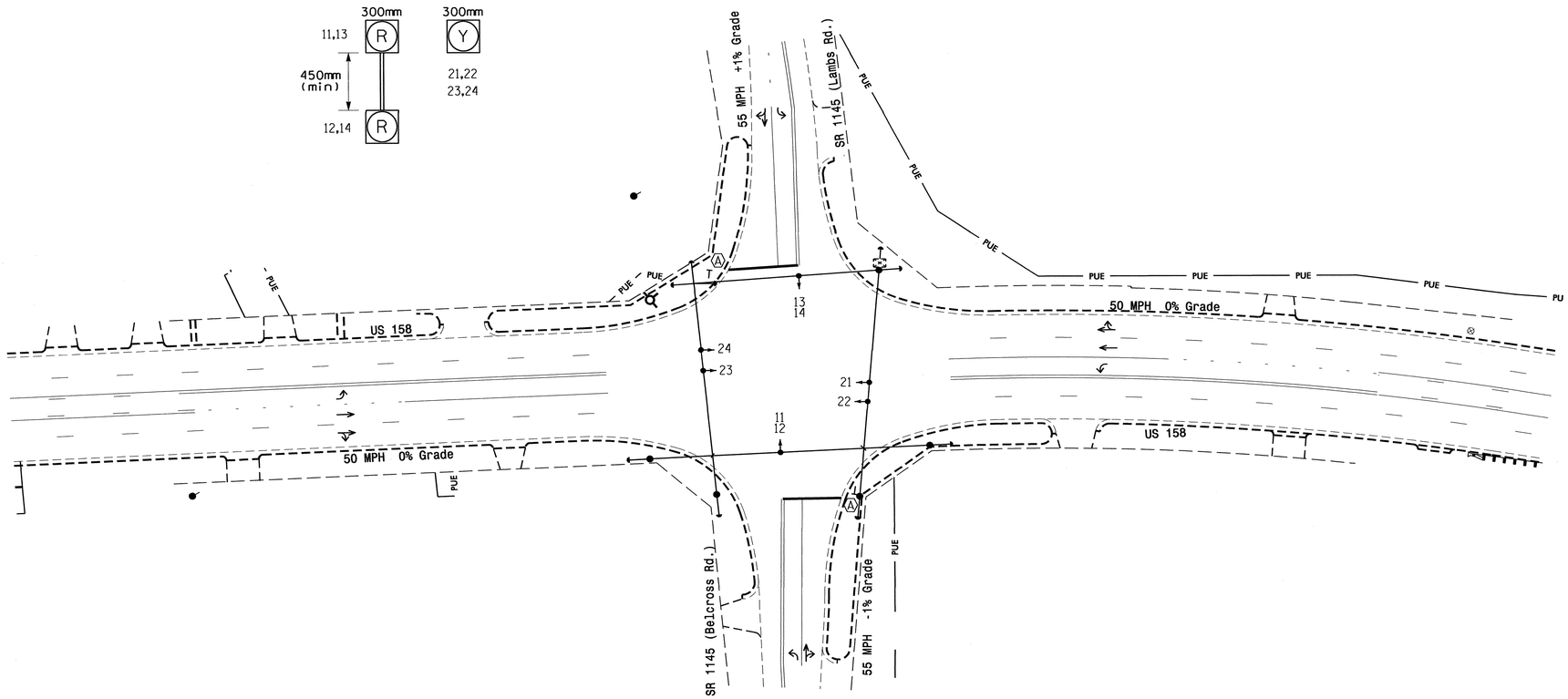

NOTES

1. Refer to "Roadway Standard Drawings NCDOT" dated July 2006 and "Standard Specifications for Roads and Structures" dated July 2006.
2. Flash vertically mounted heads alternately.
3. Flash horizontally mounted heads concurrently.

LEGEND

PROPOSED		EXISTING
	Traffic Signal Head	
	Modified Signal Head	N/A
	Sign	
	Pedestrian Signal Head With Push Button & Sign	
	Signal Pole with Guy	
	Signal Pole with Sidewalk Guy	
	Inductive Loop Detector	
	Controller & Cabinet	
	Junction Box	
	50mm Underground Conduit	
N/A	Right of Way with Marker	
	Directional Arrow	
	Pavement Marking Arrow	
	"STOP" Sign (R1-1)	

Signal Upgrade/Final

Prepared in the Offices of:
Transportation Mobility and Safety Division
Signal Design Section
750 N.Greenfield Pkwy,Garner,NC 27529

SCALE 5 0 10
500:1

US 158
At
SR 1145
(Belcross Road)/(Lambs Road)

Division 1 Camden County Belcross

PLAN DATE:	April 2010	REVIEWED BY:	PLA
PREPARED BY:	JPG	REVIEWED BY:	

REVISIONS	INIT.	DATE

SEAL
NORTH CAROLINA PROFESSIONAL SEAL 29904 ENGINEER JASON P. GALLOWAY

SIGNATURE 9/2/10 DATE

SIG. INVENTORY NO. 01-0220

01-SEP-2010 15:43
S:\TSGS\TS Signals\Workgroups\TIP Projects\R-2414B\Signals\Designs\Signals\01-0220\01-0220F_sig_dsn_2010mod.dgn
jgallaway

METRIC	PROJECT REFERENCE NO.	SHEET NO.
	R-2414B	Sig.36

PHASING DIAGRAM

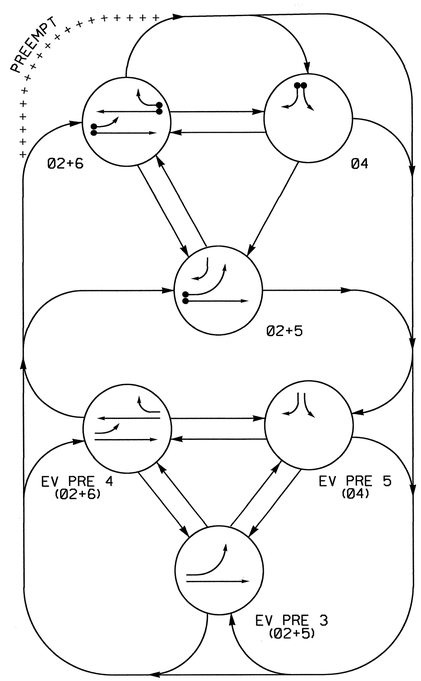

TABLE OF OPERATION

SIGNAL FACE	PHASE 02+5	02+6	04	PEREVE 3	PEREVE 4	PEREVE 5	FLASH
21,22	G	G	R	G	G	R	Y
41	R	R	G	R	R	G	R
42	R/G	R	G	R	R	G	R
51	←Y	←Y	←R	←Y	←Y	←R	←Y
61,62	R	G	R	R	G	R	Y

SIGNAL FACE I.D.

All Heads L.E.D.

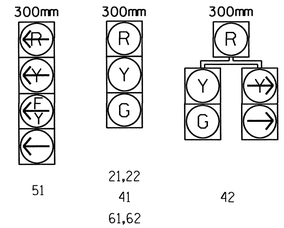

STANDARD SIGNAL FACE CLEARANCES FOR FLASHING LEFT TURN SIGNAL

FROM	TO ←	TO Y← 1	TO Y← 2	TO → 1	TO → 2	TO R
←	←	←	←	R	←	R
Y← 1	Y←	Y←	Y←	Y←	←	R
Y← 2	Y←	Y←	Y←	Y←	←	R
R	R	R	R	R	R	R

Y← = Flashing Yellow Arrow

2070L LOOP & DETECTOR INSTALLATION

INDUCTIVE LOOPS					DETECTOR PROGRAMMING							
LOOP	SIZE (M)	TURNS	DISTANCE FROM STOPBAR (M)	NEW LOOP	PHASE	CALLING	EXTENSION	FULL TIME DELAY	SYSTEM LOOP	STRETCH TIME	DELAY TIME	NEW CARD
2A	1.8X1.8	5	90	Y	2	Y	Y	-	-	-	-	Y
4A	1.8X12	2-4-2	0	Y	4	Y	Y	-	-	-	3	Y
4B	1.8X12	2-4-2	0	Y	4	Y	Y	-	-	-	15	Y
5A	1.8X12	2-4-2	0	Y	5	Y	Y	-	-	-	15	Y
					2	Y	Y	Y	-	-	3	Y
6A	1.8X1.8	5	90	Y	6	Y	Y	-	-	-	-	Y

3 Phase
Fully Actuated
Isolated

NOTES

1. Refer to "Roadway Standard Drawings NCDOT" dated July 2006 and "Standard Specifications for Roads and Structures" dated July 2006.
2. Do not program signal for late night flashing operation unless otherwise directed by the Engineer.
3. Phase 5 may be lagged.
4. Set all detector units to presence mode.
5. Locate new cabinet so as not to obstruct sight distance of vehicles turning right on red.
6. This intersection features an optical preemption system. Shown locations of optical detectors are conceptual only.

PHASING DIAGRAM DETECTION LEGEND

- DETECTED MOVEMENT
- UNDETECTED MOVEMENT (OVERLAP)
- UNSIGNALIZED MOVEMENT
- PEDESTRIAN MOVEMENT

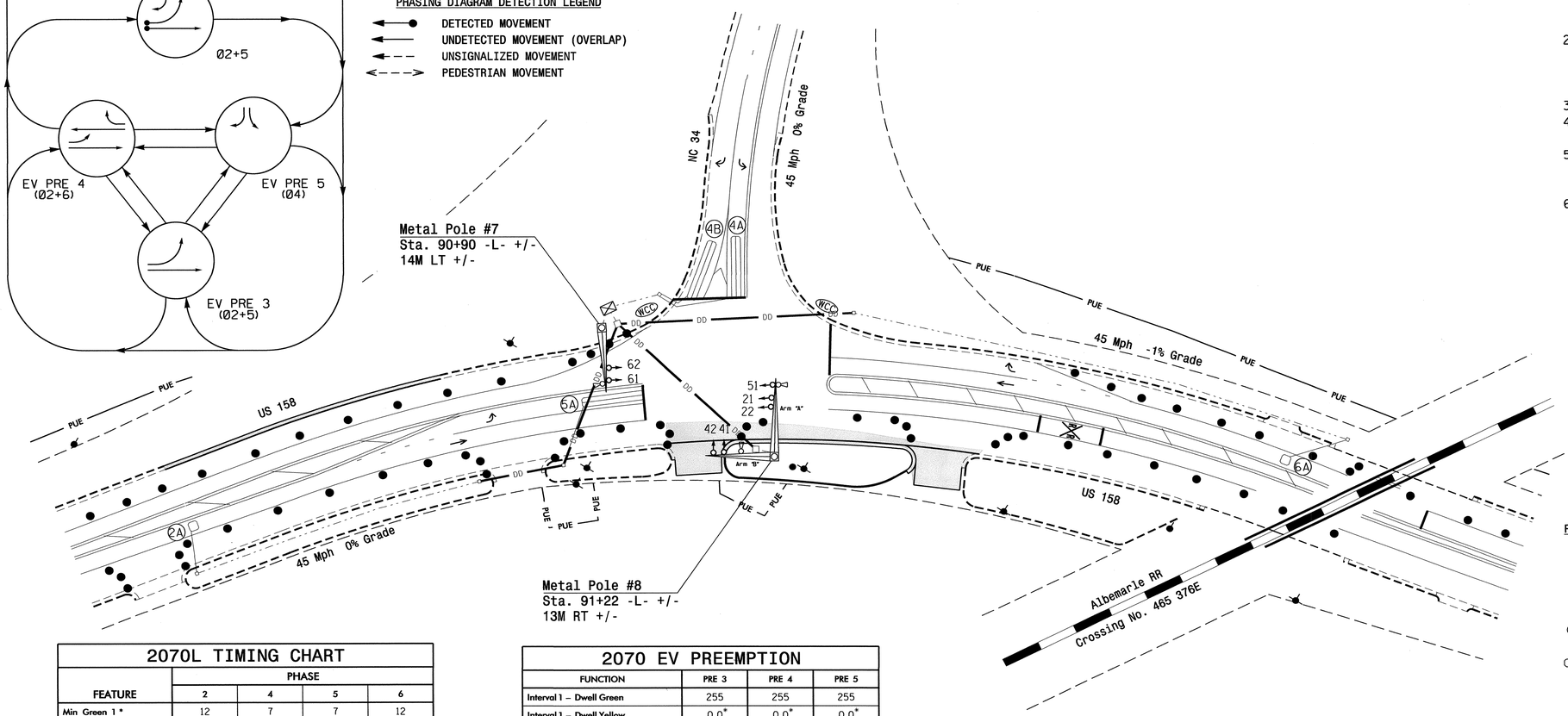

LEGEND

PROPOSED		EXISTING
	Traffic Signal Head	
	Modified Signal Head	N/A
	Sign	
	Pedestrian Signal Head With Push Button & Sign	
	Signal Pole with Guy	
	Signal Pole with Sidewalk Guy	
	Inductive Loop Detector	
	Controller & Cabinet	
	Junction Box	
	Over-sized Junction Box	
	50mm Underground Conduit	
N/A	Right of Way with Marker	
	Directional Arrow	
N/A	Railroad Tracks	
DD	Directional Drill	N/A
	Metal Pole with Mastarm	
	Out of Pavement Detector	
	Construction Zone Drums	

2070L TIMING CHART

FEATURE	PHASE 2	4	5	6
Min Green 1 *	12	7	7	12
Extension 1 *	6.0	2.0	2.0	6.0
Max Green 1 *	90	15	25	90
Yellow Clearance	4.6	3.0	3.0	4.6
Red Clearance	1.5	2.3	2.8	1.5
Walk 1 *	-	-	-	-
Don't Walk 1	-	-	-	-
Seconds Per Actuation *	2.5	-	-	2.5
Max Variable Initial *	34	-	-	34
Time Before Reduction *	15	-	-	15
Time To Reduce *	45	-	-	45
Minimum Gap	3.0	-	-	3.0
Recall Mode	MIN RECALL	-	-	MIN RECALL
Vehicle Call Memory	YELLOW	-	-	YELLOW
Dual Entry	-	-	-	-
Simultaneous Gap	ON	ON	ON	ON

* These values may be field adjusted. Do not adjust Min Green and Extension times for phases 2 and 6 lower than what is shown. Min Green for all other phases should not be lower than 4 seconds.

2070 EV PREEMPTION

FUNCTION	PRE 3	PRE 4	PRE 5
Interval 1 – Dwell Green	255	255	255
Interval 1 – Dwell Yellow	0.0*	0.0*	0.0*
Interval 1 – Dwell Red	0.0*	0.0*	0.0*
Interval 5 – Exit Green	0	0	0
Interval 5 – Yellow	0.0	0.0	0.0
Interval 5 – Red	0.0	0.0	0.0
Priority	MEDIUM	MEDIUM	MEDIUM
Delay Time	0.0	0.0	0.0
Min Green Before Pre	1	1	1
Ped Clear Before Pre	0	0	0
Yellow Clear Before Pre	0.0*	0.0*	0.0*
Red Clear Before Pre	0.0*	0.0*	0.0*
Dwell Min Time	7	12	7
Enable Backup Protection	N	N	N
Ped Clear Through Yellow	N	N	N
Preempt Extend**	2	2	2
Omit Overlaps	B	-	-

* Time defaults to time used for phase during normal operation
** Program Timing on Optical Detection Unit

New Installation/Temp 1

Prepared in the Offices of:
Traffic Engineering and Safety Systems Branch
Signals and Geometrics Section
750 N. Greenfield Pkwy, Garner, NC 27529

SCALE 5 0 10
500:1

US 158
At
NC 34

Division 1 Camden County Belcross

PLAN DATE: March 2010	REVIEWED BY: JPG
PREPARED BY: JPG	REVIEWED BY:

REVISIONS	INIT.	DATE

SEAL
NORTH CAROLINA PROFESSIONAL SEAL 29904 ENGINEER JASON P. CALLOWAY

SIGNATURE 8/24/10 DATE

SIG. INVENTORY NO. 01-0221T1

02-SEP-2010 11:38
S:\TS&SU\TS Signals\Workgroups\TIP Projects\R-2414B\Signals\Design\Signals\01-0221\01022TT1_sig_dsn_2010mdd.dgn
jpolloway

PROJECT REFERENCE NO.	SHEET NO.
R-2414B	Sig.57

EDI MODEL 2010ECL-NC CONFLICT MONITOR PROGRAMMING DETAIL

(remove jumpers and set switches as shown)

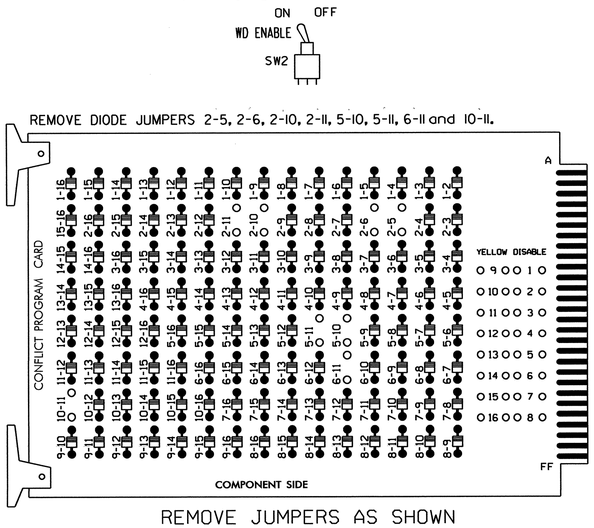

REMOVE JUMPERS AS SHOWN

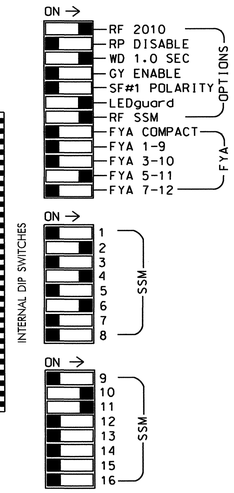

■ = DENOTES POSITION OF SWITCH

NOTES:

1. Card is provided with all diode jumpers in place. Removal of any jumper allows its channels to run concurrently.
2. Make sure jumpers SEL2-SEL5 are present on the monitor board.

NOTES

1. To prevent "flash-conflict" problems, insert red flash program blocks for all unused vehicle load switches in the output file. The installer shall verify that signal heads flash in accordance with the Signal Plans.
2. Ensure that Red Enable is active at all times during normal operation. To prevent Red Failures on unused monitor channels, tie unused red monitor inputs 1,3,5, 7,8,9,12,13,14,15 & 16 to load switch AC+ per the cabinet manufacturer's instructions.
3. Enable Simultaneous Gap-Out for all phases.
4. Program phases 2 and 6 for Variable Initial and Gap Reduction.
5. Program phases 2 and 6 for Start Up In Green.
6. Program phases 2 and 6 for Yellow Flash.

EQUIPMENT INFORMATION

CONTROLLER.....2070L
CABINET.....332 /W/ AUX
SOFTWARE.....ECONOLITE OASIS
CABINET MOUNT.....BASE
OUTPUT FILE POSITIONS...18 WITH AUX. OUTPUT FILE
LOAD SWITCHES USED.....S2,S4,S5,S6,S10,S12
PHASES USED.....2,4,5,6
OVERLAP "A".....NOT USED
OVERLAP "B".....5
OVERLAP "C".....5+6
OVERLAP "D".....NOT USED

SIGNAL HEAD HOOK-UP CHART

LOAD SWITCH NO.	S1	S2	S2P	S3	S4	S4P	S5	S6	S6P	S7	S8	S8P	S9	S10	S11	S12	S13	S14
PHASE	1	2	2 PED	3	4	4 PED	5	6	6 PED	7	8	8 PED	OLA	OLB	SPARE	OLC	OLD	SPARE
SIGNAL HEAD NO.	NU	21,22	NU	NU	41,42	NU	51★	61,62	NU	NU	NU	NU	NU	42	NU	51★	NU	NU
RED		128			101			134						✳				
YELLOW		129			102		✳	135										
GREEN		130			103			136										
RED ARROW																A114		
YELLOW ARROW														A125		A115		
FLASHING YELLOW ARROW																A116		
GREEN ARROW							133							A126				

NU = Not Used

✳ Denotes install load resistor. See load resistor installation detail this sheet.

★ See pictorial of head wiring in detail below.

4 SECTION FYA PPLT SIGNAL WIRING DETAIL

(wire signal heads as shown)

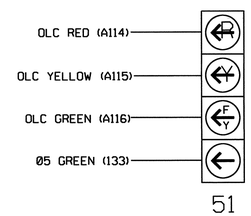

NOTE

1. The sequence display for signal head 51 requires special logic programming. See sheet 2 of 2 for programming instructions.

INPUT FILE POSITION LAYOUT

(front view)

		1	2	3	4	5	6	7	8	9	10	11	12	13	14
FILE "I"	U	SLOT EMPTY	Ø2 2A	SLOT EMPTY	WIRED INPUT ⊗	SLOT EMPTY	Ø4 4A	SLOT EMPTY	SLOT EMPTY	SLOT EMPTY	SLOT EMPTY	SLOT EMPTY	SLOT EMPTY	SLOT EMPTY	FS DC ISOLATOR
	L		NOT USED				Ø4 4B								ST DC ISOLATOR
FILE "J"	U	Ø5 5A	Ø6 6A	SLOT EMPTY	SLOT EMPTY	SLOT EMPTY	SLOT EMPTY	SLOT EMPTY	SLOT EMPTY	SLOT EMPTY	SLOT EMPTY	SLOT EMPTY	PRE3	PRE4	SLOT EMPTY
	L	NOT USED	NOT USED										4-CHANNEL OPTICAL PRE5	NOT USED	

EX.: 1A, 2A, ETC. = LOOP NO.'S

FS = FLASH SENSE
ST = STOP TIME

⊗ Wired Input - Do not populate slot with detector card

INPUT FILE CONNECTION & PROGRAMMING CHART

LOOP NO.	LOOP TERMINAL	INPUT FILE POS.	PIN NO.	INPUT ASSIGNMENT NO.	DETECTOR NO.	NEMA PHASE	CALL	EXTEND	FULL TIME DELAY	STRETCH TIME	DELAY TIME
2A	TB2-5,6	I2U	39	1	2	2	Y	Y			
4A	TB4-9,10	I6U	41	3	4	4	Y	Y			3
4B	TB4-11,12	I6L	45	7	14	4	Y	Y			15
5A[1]	TB3-1,2	J1U	55	17	5	5	Y	Y			15
	-	I4U	47	9	22	2	Y	Y	Y		3
6A	TB3-5,6	J2U	40	2	6	6	Y	Y			

[1] Add jumper from J1-W to I4-W, on rear of input file.

INPUT FILE POSITION LEGEND: J2L
FILE J
SLOT 2
LOWER

OPTICOM FIELD WIRE DETAIL

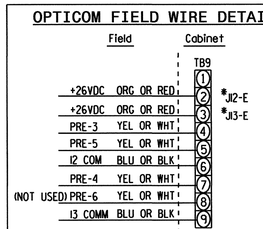

*Assuming TB9-2 & TB9-3 are unused on the J File, move wires on JII-J & J-II-K (Twisted Pair) to JI2-E & JI3-E Respectively.

LOAD RESISTOR INSTALLATION DETAIL

(install resistors as shown below)

ACCEPTABLE VALUES

VALUE (ohms)	WATTAGE
1.5K - 1.9K	25W (min)
2.0K - 3.0K	10W (min)

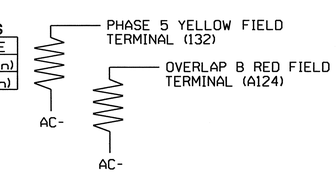

THIS ELECTRICAL DETAIL IS FOR
THE SIGNAL DESIGN: 01-0221T1
DESIGNED: March 2010
SEALED: 08/24/10
REVISED:

ELECTRICAL DETAIL - TEMP 1 - SHEET 1 OF 2

ELECTRICAL AND PROGRAMMING DETAILS FOR:

Prepared in the Offices of:
Transportation Mobility and Safety Division
Signals Management Section
750 N.Greenfield Pkwy,Garner,NC 27529

US 158
at
NC 34

Division 1 Camden County Belcross

PLAN DATE: August 2010 REVIEWED BY: T. Vogel
PREPARED BY: C. Strickland REVIEWED BY:

REVISIONS	INIT.	DATE

SEAL
NORTH CAROLINA PROFESSIONAL SEAL 022013 ENGINEER GEORGE C. BROWN

George C. Brown 8/26/10
SIGNATURE DATE

SIG. INVENTORY NO. 01-0221T1

25-AUG-2010 11:31
S:\TISAS\WITS Signals\Workgroups\Sig Mgmt\Strickland\01221_sm_ele_xxx.dgn
cestrickland

LOGICAL I/O PROCESSOR PROGRAMMING DETAIL TO PRODUCE SPECIAL FYA-PPLT SIGNAL SEQUENCE

(program controller as shown below)

1. FROM MAIN MENU PRESS '2' (PHASE CONTROL), THEN '1' (PHASE CONTROL FUNCTIONS). SCROLL TO THE BOTTOM OF THE MENU AND ENABLE ACT LOGIC COMMANDS 1, 2 AND 3.

2. FROM MAIN MENU PRESS '6' (OUTPUTS), THEN '3' (LOGICAL I/O PROCESSOR).

```
LOGICAL I/O COMMAND #1  (+/-COMMAND#)
IF  ACTIVE PHASE        #5  IS ON
AND RED CLEAR ON PHASE  #5  IS ON

SCROLL DOWN

THEN:
SET OUTPUT  ASSIGNMENT #42 ON
SET OUTPUT  ASSIGNMENT #43 OFF
```

NOTE: LOGIC FOR PHASE 5 RED CLEAR WHEN TRANSITIONING FROM PHASE 5 TO PHASE 6 (HEAD 51).

PRESS '+'

```
LOGICAL I/O COMMAND #2  (+/-COMMAND#)
IF  ACTIVE PHASE        #5  IS ON

SCROLL DOWN

THEN:
SET OUTPUT  ASSIGNMENT #44 OFF
```

NOTE: LOGIC FOR SWITCHING FLASHING YELLOW ARROW "OFF" DURING PHASE 5 (HEAD 51).

PRESS '+'

```
LOGICAL I/O COMMAND #3  (+/-COMMAND#)
IF  YELLOW ON PHASE     #5  IS ON

SCROLL DOWN

THEN:
SET OUTPUT  ASSIGNMENT #43 ON
```

NOTE: LOGIC FOR YELLOW ARROW CLEARANCE FROM PHASE 5 (HEAD 51).

LOGIC I/O PROCESSOR PROGRAMMING COMPLETE

OUTPUT REFERENCE SCHEDULE

OUTPUT 42 = Overlap C Red
OUTPUT 43 = Overlap C Yellow
OUTPUT 44 = Overlap C Green

EMERGENCY VEHICLE PREEMPTION PROGRAMMING DETAIL

(program controller as shown below)

From Main Menu press 'A' (Preemption), then '1' (Standard Preemptions). Press 'NEXT' as needed to advance to Preempts 3, 4 and 5.

```
   PREEMPTION  #3  SETTINGS (NEXT:1-10)
INTERVAL/TIMING ¦  CLEAR/DWELL PHASES
 GRN YEL  RED   ¦123456789101112131415 16
1 255  0.0* 0.0*¦ X  X
2   0  0.0  0.0 ¦
3   0  0.0  0.0 ¦
4   0  0.0  0.0 ¦
5   0  0.0  0.0 ¦
EXIT CALLS      ¦
          OPTIONS
PRIORITY (Y/N TO SELECT) ............MED
DELAY TIMER (0-255 SEC) .............0
MIN GREEN BEFORE PRE (0= DEFAULT)....1
PED CLEAR BEFORE PRE (0= DEFAULT)....0
YELLOW CLEAR BEFORE PRE (0= DEFAULT).0.0*
RED CLEAR BEFORE PRE (0= DEFAULT)....0.0*
DWELL MIN TIMER (0-255 SEC) .........7
DWELL MAX TIMER (0=OFF,1-255MIN) ....0
DWELL HOLD-OVER TIMER (0-255) .......0
LATCH CALL? .........................N
LINK TO NEXT PREEMPT? ...............N
ENABLE BACKUP PROTECTION? ...........N
HOLD CLEAR 1 PHASES DURING DELAY? ...N
FAST GREEN FLASH DWELL PHASES? ......N
PED CLEARANCE THROUGH YELLOW? .......N
INHIBIT OVERLAP GREEN EXTENSION? ....N
SERVICE DURING SOFTWARE FLASH? ......N
REST IN RED DURING DWELL INTERVAL? ..N
FLASH DWELL INTERVAL? ...............N
ALLOW PEDS IN DWELL INTERVAL? .......N
RE-TIME DWELL INTERVAL? .............N
OVERLAPS:                ¦ ABCDEFGHIJKLMNOP
DWELL INT FLASH YELLOW   ¦
OMIT OVERLAPS:           ¦  X
```

PRESS 'NEXT'

```
   PREEMPTION  #4  SETTINGS (NEXT:1-10)
INTERVAL/TIMING ¦  CLEAR/DWELL PHASES
 GRN YEL  RED   ¦123456789101112131415 16
1 255  0.0* 0.0*¦ X    X
2   0  0.0  0.0 ¦
3   0  0.0  0.0 ¦
4   0  0.0  0.0 ¦
5   0  0.0  0.0 ¦
EXIT CALLS      ¦
          OPTIONS
PRIORITY (Y/N TO SELECT) ............MED
DELAY TIMER (0-255 SEC) .............0
MIN GREEN BEFORE PRE (0= DEFAULT)....1
PED CLEAR BEFORE PRE (0= DEFAULT)....0
YELLOW CLEAR BEFORE PRE (0= DEFAULT).0.0*
RED CLEAR BEFORE PRE (0= DEFAULT)....0.0*
DWELL MIN TIMER (0-255 SEC) .........12
DWELL MAX TIMER (0=OFF,1-255MIN) ....0
DWELL HOLD-OVER TIMER (0-255) .......0
LATCH CALL? .........................N
LINK TO NEXT PREEMPT? ...............N
ENABLE BACKUP PROTECTION? ...........N
HOLD CLEAR 1 PHASES DURING DELAY? ...N
FAST GREEN FLASH DWELL PHASES? ......N
PED CLEARANCE THROUGH YELLOW? .......N
INHIBIT OVERLAP GREEN EXTENSION? ....N
SERVICE DURING SOFTWARE FLASH? ......N
REST IN RED DURING DWELL INTERVAL? ..N
FLASH DWELL INTERVAL? ...............N
ALLOW PEDS IN DWELL INTERVAL? .......N
RE-TIME DWELL INTERVAL? .............N
OVERLAPS:                ¦ ABCDEFGHIJKLMNOP
DWELL INT FLASH YELLOW   ¦
OMIT OVERLAPS:           ¦
```

PRESS 'NEXT'

```
   PREEMPTION  #5  SETTINGS (NEXT:1-10)
INTERVAL/TIMING ¦  CLEAR/DWELL PHASES
 GRN YEL  RED   ¦123456789101112131415 16
1 255  0.0* 0.0*¦   X
2   0  0.0  0.0 ¦
3   0  0.0  0.0 ¦
4   0  0.0  0.0 ¦
5   0  0.0  0.0 ¦
EXIT CALLS      ¦
          OPTIONS
PRIORITY (Y/N TO SELECT) ............MED
DELAY TIMER (0-255 SEC) .............0
MIN GREEN BEFORE PRE (0= DEFAULT)....1
PED CLEAR BEFORE PRE (0= DEFAULT)....0
YELLOW CLEAR BEFORE PRE (0= DEFAULT).0.0*
RED CLEAR BEFORE PRE (0= DEFAULT)....0.0*
DWELL MIN TIMER (0-255 SEC) .........7
DWELL MAX TIMER (0=OFF,1-255MIN) ....0
DWELL HOLD-OVER TIMER (0-255) .......0
LATCH CALL? .........................N
LINK TO NEXT PREEMPT? ...............N
ENABLE BACKUP PROTECTION? ...........N
HOLD CLEAR 1 PHASES DURING DELAY? ...N
FAST GREEN FLASH DWELL PHASES? ......N
PED CLEARANCE THROUGH YELLOW? .......N
INHIBIT OVERLAP GREEN EXTENSION? ....N
SERVICE DURING SOFTWARE FLASH? ......N
REST IN RED DURING DWELL INTERVAL? ..N
FLASH DWELL INTERVAL? ...............N
ALLOW PEDS IN DWELL INTERVAL? .......N
RE-TIME DWELL INTERVAL? .............N
OVERLAPS:                ¦ ABCDEFGHIJKLMNOP
DWELL INT FLASH YELLOW   ¦
OMIT OVERLAPS:           ¦
```

PROGRAMMING COMPLETE

* TIME DEFAULTS TO TIME USED BY PHASE DURING NORMAL OPERATION

NOTE!

PROGRAM EXTEND TIME ON ALL 'OPTICOM' DETECTOR UNITS FOR 2 SEC.

OVERLAP PROGRAMMING DETAIL

(program controller as shown below)

FROM MAIN MENU PRESS '8' (OVERLAPS), THEN '1' (VEHICLE OVERLAP SETTINGS).

PRESS '+' OR '-' TO POSITION ON OVERLAP B

```
PAGE 1: VEHICLE OVERLAP 'B' SETTINGS
PHASE:          ¦123456789101112131415 16
VEH OVL PARENTS:¦    X
VEH OVL NOT VEH:¦
VEH OVL NOT PED:¦
VEH OVL GRN EXT:¦
STARTUP COLOR: _ RED   _ YELLOW   _ GREEN
FLASH COLORS:  _ RED   _ YELLOW   _ GREEN
SELECT VEHICLE OVERLAP OPTIONS:   (Y/N)
FLASH YELLOW IN CONTROLLER FLASH?...N
GREEN EXTENSION (0-255 SEC).........0
YELLOW CLEAR (0=PARENT,3-25.5 SEC)..0.0
RED CLEAR (0=PARENT,0.1-25.5 SEC)...0.0
OUTPUT AS PHASE # (0=NONE, 1-16)....0
```

PRESS '+'

```
PAGE 1: VEHICLE OVERLAP 'C' SETTINGS
PHASE:          ¦123456789101112131415 16
VEH OVL PARENTS:¦    XX
VEH OVL NOT VEH:¦
VEH OVL NOT PED:¦
VEH OVL GRN EXT:¦
STARTUP COLOR: _ RED   _ YELLOW   _ GREEN
FLASH COLORS:  _ RED   _ YELLOW   X GREEN
SELECT VEHICLE OVERLAP OPTIONS:   (Y/N)
FLASH YELLOW IN CONTROLLER FLASH?...Y
GREEN EXTENSION (0-255 SEC).........0
YELLOW CLEAR (0=PARENT,3-25.5 SEC)..0.0
RED CLEAR (0=PARENT,0.1-25.5 SEC)...0.0
OUTPUT AS PHASE # (0=NONE, 1-16)....0
```

NOTICE GREEN FLASH

OVERLAP PROGRAMMING COMPLETE

THIS ELECTRICAL DETAIL IS FOR
THE SIGNAL DESIGN: 01-0221T1
DESIGNED: March 2010
SEALED: 08/24/10
REVISED:

ELECTRICAL DETAIL - TEMP 1 - SHEET 2 OF 2

ELECTRICAL AND PROGRAMMING DETAILS FOR:

Prepared in the Offices of:
Transportation Mobility and Safety Division
STATE OF NORTH CAROLINA DEPARTMENT OF TRANSPORTATION
Signal Management Section
750 N.Greenfield Pkwy,Garner,NC 27529

US 158
at
NC 34

Division 1 | Camden County | Belcross

PLAN DATE: August 2010 | REVIEWED BY: T. Jagh
PREPARED BY: C. Strickland | REVIEWED BY:

REVISIONS	INIT.	DATE

SEAL
NORTH CAROLINA PROFESSIONAL SEAL 022013 ENGINEER GEORGE C. BROWN

SIGNATURE | DATE 8/26/10

SIG. INVENTORY NO. 01-0221T1

25-AUG-2010 11:32
S:\TSA&IM\TS Signals\Workgroups\Sig Man\Strickland\01221_sm_ele_xxx.dgn
cestrickland

PHASING DIAGRAM

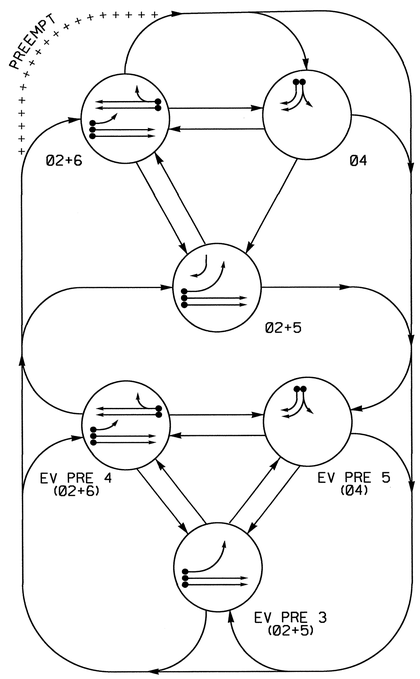

TABLE OF OPERATION

SIGNAL FACE	PHASE 02+5	02+6	04	PEREVE 3	PEREVE 4	PEREVE 5	FLASH
21,22	G	G	R	G	G	R	Y
41	R	R	G	R	R	G	R
42	R	R	G	R	R	G	R
51	←	F Y	R	←	F Y	R	Y
61,62	R	G	R	R	G	R	Y

SIGNAL FACE I.D.

All Heads L.E.D.

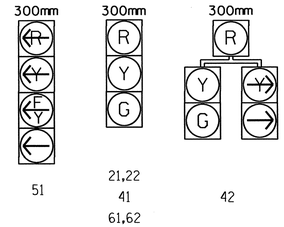

STANDARD SIGNAL FACE CLEARANCES FOR FLASHING LEFT TURN SIGNAL

FROM	TO ←	F Y	R	1	2	1	2
←		←	Y	R	Y	R
F Y	F Y	F Y	F Y	F Y	Y	R
R	R	R	R	R	R	R

F Y = Flashing Yellow Arrow

OASIS 2070L LOOP & DETECTOR INSTALLATION

INDUCTIVE LOOPS					DETECTOR PROGRAMMING						
LOOP	SIZE (M)	TURNS	DISTANCE FROM STOPBAR (M)	NEW LOOP	PHASE	CALLING	EXTENSION	FULL TIME DELAY	SYSTEM LOOP	STRETCH TIME	DELAY TIME	NEW CARD
2A	1.8X1.8	5	110	Y	2	Y	Y	-	-	-	-	-
2B	1.8X1.8	5	110	Y	2	Y	Y	-	-	-	-	-
4A	1.8X12	2-4-2	0	-	4	Y	Y	-	-	-	3	-
4B	1.8X12	2-4-2	0	-	4	Y	Y	-	-	-	15	-
5A	1.8X12	2-4-2	0	-	5	Y	Y	-	-	-	15	-
					2	Y	Y	Y	-	-	3	-
6A	1.8X1.8	5	99	Y	6	Y	Y	-	-	-	-	-
6B	1.8X1.8	5	99	Y	6	Y	Y	-	-	-	-	-

3 Phase
Fully Actuated
Isolated

NOTES

1. Refer to "Roadway Standard Drawings NCDOT" dated July 2006 and "Standard Specifications for Roads and Structures" dated July 2006.
2. Do not program signal for late night flashing operation unless otherwise directed by the Engineer.
3. Phase 5 may be lagged.
4. Set all detector units to presence mode.
5. Reposition existing signal heads numbered 21,22,61, and 62.
6. This intersection features an optical preemption system. Shown locations of optical detectors are conceptual only.

PHASING DIAGRAM DETECTION LEGEND

- DETECTED MOVEMENT
- UNDETECTED MOVEMENT (OVERLAP)
- UNSIGNALIZED MOVEMENT
- PEDESTRIAN MOVEMENT

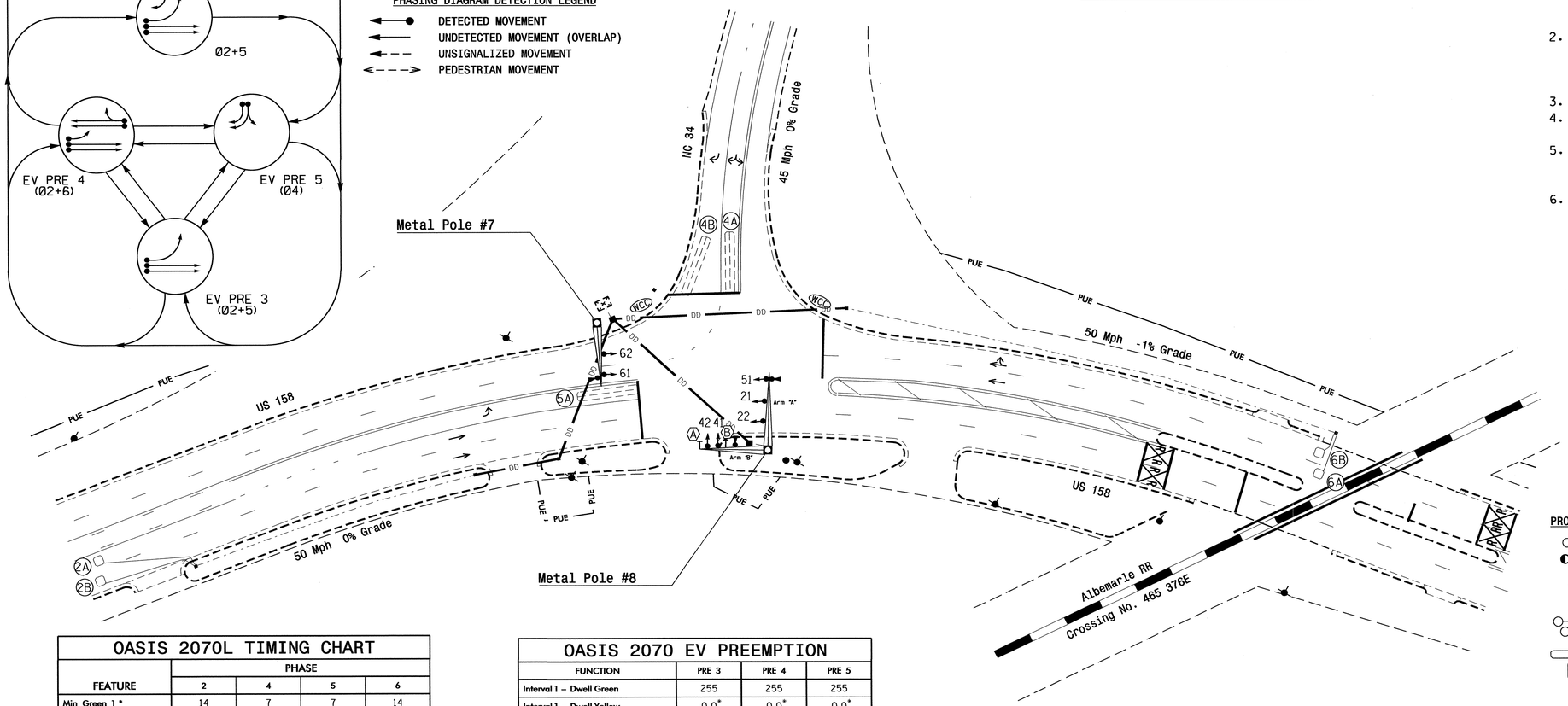

OASIS 2070L TIMING CHART

FEATURE	PHASE 2	4	5	6
Min Green 1 *	14	7	7	14
Extension 1 *	6.0	2.0	2.0	6.0
Max Green 1 *	90	15	25	90
Yellow Clearance	4.6	3.0	3.0	4.6
Red Clearance	1.5	2.3	2.8	1.5
Walk 1 *	-	-	-	-
Don't Walk 1	-	-	-	-
Seconds Per Actuation *	1.5	-	-	1.5
Max Variable Initial *	40	-	-	37
Time Before Reduction *	15	-	-	15
Time To Reduce *	45	-	-	45
Minimum Gap	3.0	-	-	3.0
Recall Mode	MIN RECALL	-	-	MIN RECALL
Vehicle Call Memory	YELLOW	-	-	YELLOW
Dual Entry	-	-	-	-
Simultaneous Gap	ON	ON	ON	ON

* These values may be field adjusted. Do not adjust Min Green and Extension times for phases 2 and 6 lower than what is shown. Min Green for all other phases should not be lower than 4 seconds.

OASIS 2070 EV PREEMPTION

FUNCTION	PRE 3	PRE 4	PRE 5
Interval 1 – Dwell Green	255	255	255
Interval 1 – Dwell Yellow	0.0*	0.0*	0.0*
Interval 1 – Dwell Red	0.0*	0.0*	0.0*
Interval 5 – Exit Green	0	0	0
Interval 5 – Yellow	0.0	0.0	0.0
Interval 5 – Red	0.0	0.0	0.0
Priority	MEDIUM	MEDIUM	MEDIUM
Delay Time	0.0	0.0	0.0
Min Green Before Pre	1	1	1
Ped Clear Before Pre	0	0	0
Yellow Clear Before Pre	0.0*	0.0*	0.0*
Red Clear Before Pre	0.0*	0.0*	0.0*
Dwell Min Time	7	14	7
Enable Backup Protection	N	N	N
Ped Clear Through Yellow	N	N	N
Preempt Extend**	2	2	2
Omit Overlaps	B	-	-

* Time defaults to time used for phase during normal operation
** Program Timing on Optical Detection Unit

LEGEND

PROPOSED		EXISTING
	Traffic Signal Head	
	Modified Signal Head	N/A
	Sign	
	Pedestrian Signal Head With Push Button & Sign	
	Signal Pole with Guy	
	Signal Pole with Sidewalk Guy	
	Inductive Loop Detector	
	Controller & Cabinet	
	Junction Box	
	Over-sized Junction Box	
	50mm Underground Conduit	
N/A	Right of Way with Marker	
	Directional Arrow	
N/A	Railroad Tracks	
DD	Directional Drill	DD
	Metal Pole with Mastarm	
	Out of Pavement Detector	
A	Right Arrow "ONLY" Sign (R3-5R)	A
B	Dual Turn Arrows Sign	B

Signal Upgrade/Final

Prepared in the Offices of: Traffic Engineering and Safety Systems Branch, Signals and Geometrics Section, Division of Highways, State of North Carolina, Department of Transportation
750 N. Greenfield Pkwy, Garner, NC 27529

US 158
At
NC 34

Division 1 Camden County Belcross

PLAN DATE: March 2010	REVIEWED BY: PLA
PREPARED BY: JPG	REVIEWED BY:

SCALE 5 0 10 500:1

REVISIONS	INIT.	DATE

SEAL: NORTH CAROLINA PROFESSIONAL SEAL 29904 ENGINEER JASON P. GALLOWAY

SIGNATURE DATE 8/24/10

SIG. INVENTORY NO. 09-0221

02-SEP-2010 10:53
S:\TS&SU\TS Signals\Workgroups\TIP Projects\R-2414B\Signals\Design\Signals\01-0221\010221_sig_dsn_2010mmdd.dgn
jgallowy

PROJECT REFERENCE NO.	SHEET NO.
R-2414B	Sig.40

EDI MODEL 2010ECL-NC CONFLICT MONITOR PROGRAMMING DETAIL

(remove jumpers and set switches as shown)

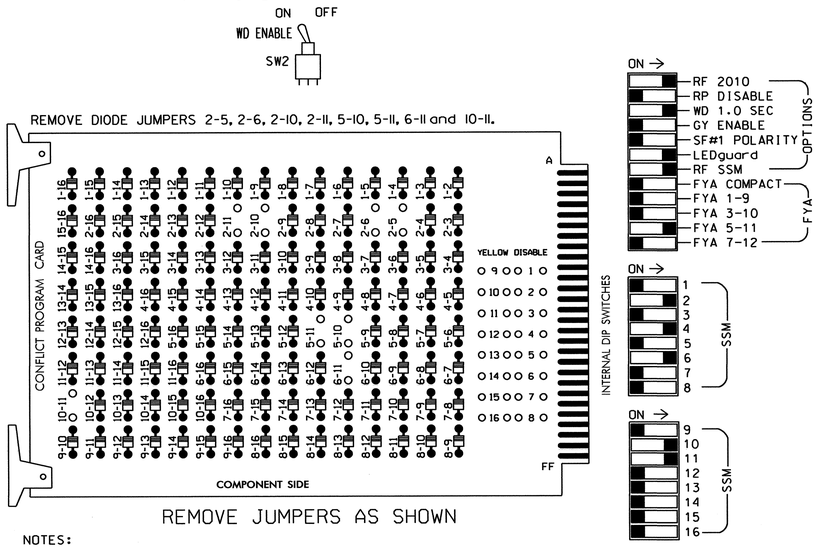

REMOVE JUMPERS AS SHOWN

NOTES:

1. Card is provided with all diode jumpers in place. Removal of any jumper allows its channels to run concurrently.
2. Make sure jumpers SEL2-SEL5 are present on the monitor board.

■ = DENOTES POSITION OF SWITCH

NOTES

1. To prevent "flash-conflict" problems, insert red flash program blocks for all unused vehicle load switches in the output file. The installer shall verify that signal heads flash in accordance with the Signal Plans.
2. Ensure that Red Enable is active at all times during normal operation. To prevent Red Failures on unused monitor channels, tie unused red monitor inputs 1,3,5, 7,8,9,12,13,14,15 & 16 to load switch AC+ per the cabinet manufacturer's instructions.
3. Enable Simultaneous Gap-Out for all phases.
4. Program phases 2 and 6 for Variable Initial and Gap Reduction.
5. Program phases 2 and 6 for Start Up In Green.
6. Program phases 2 and 6 for Yellow Flash.

SIGNAL HEAD HOOK-UP CHART

LOAD SWITCH NO.	S1	S2	S2P	S3	S4	S4P	S5	S6	S6P	S7	S8	S8P	S9	S10	S11	S12	S13	S14
PHASE	1	2	2 PED	3	4	4 PED	5	6	6 PED	7	8	8 PED	OLA	OLB	SPARE	OLC	OLD	SPARE
SIGNAL HEAD NO.	NU	21,22	NU	NU	41,42	NU	51★	61,62	NU	NU	NU	NU	NU	42	NU	51★	NU	NU
RED		128			101			134						✱				
YELLOW		129			102		✱	135										
GREEN		130			103			136										
RED ARROW																A114		
YELLOW ARROW														A125		A115		
FLASHING YELLOW ARROW																A116		
GREEN ARROW							133							A126				

NU = Not Used

✱ Denotes install load resistor. See load resistor installation detail this sheet.

★ See pictorial of head wiring in detail below.

EQUIPMENT INFORMATION

CONTROLLER.....2070L
CABINET.....332 /W/ AUX
SOFTWARE.....ECONOLITE OASIS
CABINET MOUNT.....BASE
OUTPUT FILE POSITIONS...18 WITH AUX. OUTPUT FILE
LOAD SWITCHES USED.....S2,S4,S5,S6,S10,S12
PHASES USED.....2,4,5,6
OVERLAP "A".....NOT USED
OVERLAP "B".....5
OVERLAP "C".....5+6
OVERLAP "D".....NOT USED

4 SECTION FYA PPLT SIGNAL WIRING DETAIL

(wire signal heads as shown)

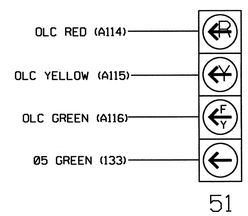

NOTE

1. The sequence display for signal head 51 requires special logic programming. See sheet 2 of 2 for programming instructions.

INPUT FILE POSITION LAYOUT

(front view)

		1	2	3	4	5	6	7	8	9	10	11	12	13	14
FILE "I"	U	SLOT	Ø2 2A	SLOT	WIRED INPUT ⊗	SLOT	Ø4 4A	SLOT	SLOT	SLOT	SLOT	SLOT	SLOT	SLOT	FS DC ISOLATOR
	L	EMPTY	Ø2 2B	EMPTY		EMPTY	Ø4 4B	EMPTY	EMPTY	EMPTY	EMPTY	EMPTY	EMPTY	EMPTY	ST DC ISOLATOR
FILE "J"	U	Ø5 5A	Ø6 6A	SLOT	SLOT	SLOT	SLOT	SLOT	SLOT	SLOT	SLOT	SLOT	PRE3	PRE4	SLOT
	L	NOT USED	Ø6 6B	EMPTY	EMPTY	EMPTY	EMPTY	EMPTY	EMPTY	EMPTY	EMPTY	EMPTY	4-CHANNEL OPTICAL PRE5	NOT USED	EMPTY

EX.: 1A, 2A, ETC. = LOOP NO.'S

FS = FLASH SENSE
ST = STOP TIME

⊗ Wired Input - Do not populate slot with detector card

INPUT FILE CONNECTION & PROGRAMMING CHART

LOOP NO.	LOOP TERMINAL	INPUT FILE POS.	PIN NO.	INPUT ASSIGNMENT NO.	DETECTOR NO.	NEMA PHASE	CALL	EXTEND	FULL TIME DELAY	STRETCH TIME	DELAY TIME
2A	TB2-5,6	I2U	39	1	2	2	Y	Y			
2B	TB2-7,8	I2L	43	5	12	2	Y	Y			
4A	TB4-9,10	I6U	41	3	4	4	Y	Y			3
4B	TB4-11,12	I6L	45	7	14	4	Y	Y			15
5A[1]	TB3-1,2	J1U	55	17	5	5	Y	Y			15
	-	I4U	47	9	22	2	Y	Y	Y		3
6A	TB3-5,6	J2U	40	2	6	6	Y	Y			
6B	TB3-7,8	J2L	44	6	16	6	Y	Y			

[1] Add jumper from J1-W to I4-W, on rear of input file.

INPUT FILE POSITION LEGEND: J2L
FILE J
SLOT 2
LOWER

OPTICOM FIELD WIRE DETAIL

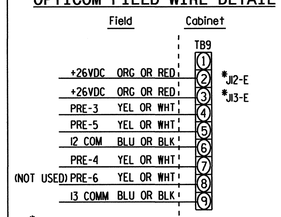

*Assuming TB9-2 & TB9-3 are unused on the J File, move wires on J11-J & J-11-K (Twisted Pair) to J12-E & J13-E Respectively.

LOAD RESISTOR INSTALLATION DETAIL

(install resistors as shown below)

ACCEPTABLE VALUES

VALUE (ohms)	WATTAGE
1.5K - 1.9K	25W (min)
2.0K - 3.0K	10W (min)

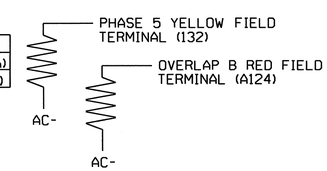

THIS ELECTRICAL DETAIL IS FOR THE SIGNAL DESIGN: 01-0221
DESIGNED: March 2010
SEALED: 08/24/10
REVISED:

ELECTRICAL DETAIL - FINAL - SHEET 1 OF 2

ELECTRICAL AND PROGRAMMING DETAILS FOR:

US 158 at NC 34

Division 1 Camden County Belcross

PLAN DATE: August 2010 REVIEWED BY: T. Vogel
PREPARED BY: C. Strickland REVIEWED BY:

REVISIONS | INIT. | DATE

Prepared in the Offices of:
Transportation Mobility and Safety Division
STATE OF NORTH CAROLINA DEPARTMENT OF TRANSPORTATION
Signals Management Section
750 N.Greenfield Pkwy.Garner.NC 27529

SEAL
NORTH CAROLINA PROFESSIONAL SEAL 022013 ENGINEER GEORGE C. BROWN

SIGNATURE DATE 8/26/10
SIG. INVENTORY NO. 01-0221

25-AUG-2010 11:33
S:*TSASU*TS Signals*Workgroups*Sig Man*Strickland*010221_sm_ele_xxx.dgn
cestrickland

LOGICAL I/O PROCESSOR PROGRAMMING DETAIL TO PRODUCE SPECIAL FYA-PPLT SIGNAL SEQUENCE

(program controller as shown below)

1. FROM MAIN MENU PRESS '2' (PHASE CONTROL), THEN '1' (PHASE CONTROL FUNCTIONS). SCROLL TO THE BOTTOM OF THE MENU AND ENABLE ACT LOGIC COMMANDS 1, 2 AND 3.

2. FROM MAIN MENU PRESS '6' (OUTPUTS), THEN '3' (LOGICAL I/O PROCESSOR).

```
LOGICAL I/O COMMAND #1  (+/-COMMAND#)
IF  ACTIVE PHASE        #5  IS ON
AND RED CLEAR ON PHASE  #5  IS ON

SCROLL DOWN

THEN:
SET OUTPUT  ASSIGNMENT #42 ON
SET OUTPUT  ASSIGNMENT #43 OFF
```

NOTE: LOGIC FOR PHASE 5 RED CLEAR WHEN TRANSITIONING FROM PHASE 5 TO PHASE 6 (HEAD 51).

PRESS '+'

```
LOGICAL I/O COMMAND #2  (+/-COMMAND#)
IF  ACTIVE PHASE        #5  IS ON

SCROLL DOWN

THEN:
SET OUTPUT  ASSIGNMENT #44 OFF
```

NOTE: LOGIC FOR SWITCHING FLASHING YELLOW ARROW "OFF" DURING PHASE 5 (HEAD 51).

PRESS '+'

```
LOGICAL I/O COMMAND #3  (+/-COMMAND#)
IF  YELLOW ON PHASE     #5  IS ON

SCROLL DOWN

THEN:
SET OUTPUT  ASSIGNMENT #43 ON
```

NOTE: LOGIC FOR YELLOW ARROW CLEARANCE FROM PHASE 5 (HEAD 51).

LOGIC I/O PROCESSOR PROGRAMMING COMPLETE

OUTPUT REFERENCE SCHEDULE

OUTPUT 42 = Overlap C Red
OUTPUT 43 = Overlap C Yellow
OUTPUT 44 = Overlap C Green

EMERGENCY VEHICLE PREEMPTION PROGRAMMING DETAIL

(program controller as shown below)

From Main Menu press 'A' (Preemption), then '1' (Standard Preemptions). Press 'NEXT' as needed to advance to Preempts 3, 4 and 5.

```
   PREEMPTION  #3  SETTINGS (NEXT:1-10)
INTERVAL/TIMING ¦  CLEAR/DWELL PHASES
  GRN YEL  RED  ¦123456789101112131415 16
1 255  0.0* 0.0*¦ X  X
2   0  0.0  0.0 ¦
3   0  0.0  0.0 ¦
4   0  0.0  0.0 ¦
5   0  0.0  0.0 ¦
EXIT CALLS      ¦
          OPTIONS
PRIORITY (Y/N TO SELECT) ............MED
DELAY TIMER (0-255 SEC) .............0
MIN GREEN BEFORE PRE (0= DEFAULT)....1
PED CLEAR BEFORE PRE (0= DEFAULT)....0
YELLOW CLEAR BEFORE PRE (0= DEFAULT).0.0*
RED CLEAR BEFORE PRE (0= DEFAULT)....0.0*
DWELL MIN TIMER (0-255 SEC) .........7
DWELL MAX TIMER (0=OFF,1-255MIN) ....0
DWELL HOLD-OVER TIMER (0-255) .......0
LATCH CALL? .........................N
LINK TO NEXT PREEMPT? ...............N
ENABLE BACKUP PROTECTION? ...........N
HOLD CLEAR 1 PHASES DURING DELAY? ...N
FAST GREEN FLASH DWELL PHASES? ......N
PED CLEARANCE THROUGH YELLOW? .......N
INHIBIT OVERLAP GREEN EXTENSION? ....N
SERVICE DURING SOFTWARE FLASH? ......N
REST IN RED DURING DWELL INTERVAL? ..N
FLASH DWELL INTERVAL? ...............N
ALLOW PEDS IN DWELL INTERVAL? .......N
RE-TIME DWELL INTERVAL? .............N
OVERLAPS:                ¦ ABCDEFGHIJKLMNOP
DWELL INT FLASH YELLOW   ¦
OMIT OVERLAPS:           ¦  X
```

PRESS 'NEXT'

```
   PREEMPTION  #4  SETTINGS (NEXT:1-10)
INTERVAL/TIMING ¦  CLEAR/DWELL PHASES
  GRN YEL  RED  ¦123456789101112131415 16
1 255  0.0* 0.0*¦ X    X
2   0  0.0  0.0 ¦
3   0  0.0  0.0 ¦
4   0  0.0  0.0 ¦
5   0  0.0  0.0 ¦
EXIT CALLS      ¦
          OPTIONS
PRIORITY (Y/N TO SELECT) ............MED
DELAY TIMER (0-255 SEC) .............0
MIN GREEN BEFORE PRE (0= DEFAULT)....1
PED CLEAR BEFORE PRE (0= DEFAULT)....0
YELLOW CLEAR BEFORE PRE (0= DEFAULT).0.0*
RED CLEAR BEFORE PRE (0= DEFAULT)....0.0*
DWELL MIN TIMER (0-255 SEC) .........14
DWELL MAX TIMER (0=OFF,1-255MIN) ....0
DWELL HOLD-OVER TIMER (0-255) .......0
LATCH CALL? .........................N
LINK TO NEXT PREEMPT? ...............N
ENABLE BACKUP PROTECTION? ...........N
HOLD CLEAR 1 PHASES DURING DELAY? ...N
FAST GREEN FLASH DWELL PHASES? ......N
PED CLEARANCE THROUGH YELLOW? .......N
INHIBIT OVERLAP GREEN EXTENSION? ....N
SERVICE DURING SOFTWARE FLASH? ......N
REST IN RED DURING DWELL INTERVAL? ..N
FLASH DWELL INTERVAL? ...............N
ALLOW PEDS IN DWELL INTERVAL? .......N
RE-TIME DWELL INTERVAL? .............N
OVERLAPS:                ¦ ABCDEFGHIJKLMNOP
DWELL INT FLASH YELLOW   ¦
OMIT OVERLAPS:           ¦
```

PRESS 'NEXT'

```
   PREEMPTION  #5  SETTINGS (NEXT:1-10)
INTERVAL/TIMING ¦  CLEAR/DWELL PHASES
  GRN YEL  RED  ¦123456789101112131415 16
1 255  0.0* 0.0*¦   X
2   0  0.0  0.0 ¦
3   0  0.0  0.0 ¦
4   0  0.0  0.0 ¦
5   0  0.0  0.0 ¦
EXIT CALLS      ¦
          OPTIONS
PRIORITY (Y/N TO SELECT) ............MED
DELAY TIMER (0-255 SEC) .............0
MIN GREEN BEFORE PRE (0= DEFAULT)....1
PED CLEAR BEFORE PRE (0= DEFAULT)....0
YELLOW CLEAR BEFORE PRE (0= DEFAULT).0.0*
RED CLEAR BEFORE PRE (0= DEFAULT)....0.0*
DWELL MIN TIMER (0-255 SEC) .........7
DWELL MAX TIMER (0=OFF,1-255MIN) ....0
DWELL HOLD-OVER TIMER (0-255) .......0
LATCH CALL? .........................N
LINK TO NEXT PREEMPT? ...............N
ENABLE BACKUP PROTECTION? ...........N
HOLD CLEAR 1 PHASES DURING DELAY? ...N
FAST GREEN FLASH DWELL PHASES? ......N
PED CLEARANCE THROUGH YELLOW? .......N
INHIBIT OVERLAP GREEN EXTENSION? ....N
SERVICE DURING SOFTWARE FLASH? ......N
REST IN RED DURING DWELL INTERVAL? ..N
FLASH DWELL INTERVAL? ...............N
ALLOW PEDS IN DWELL INTERVAL? .......N
RE-TIME DWELL INTERVAL? .............N
OVERLAPS:                ¦ ABCDEFGHIJKLMNOP
DWELL INT FLASH YELLOW   ¦
OMIT OVERLAPS:           ¦
```

PROGRAMMING COMPLETE

* TIME DEFAULTS TO TIME USED BY PHASE DURING NORMAL OPERATION

NOTE!

PROGRAM EXTEND TIME ON ALL 'OPTICOM' DETECTOR UNITS FOR 2 SEC.

OVERLAP PROGRAMMING DETAIL

(program controller as shown below)

FROM MAIN MENU PRESS '8' (OVERLAPS), THEN '1' (VEHICLE OVERLAP SETTINGS).

PRESS '+' OR '-' TO POSITION ON OVERLAP B

```
PAGE 1: VEHICLE OVERLAP 'B' SETTINGS
PHASE:            ¦123456789101112131415 16
VEH OVL PARENTS:  ¦    X
VEH OVL NOT VEH:  ¦
VEH OVL NOT PED:  ¦
VEH OVL GRN EXT:  ¦
STARTUP COLOR: _ RED   _ YELLOW   _ GREEN
FLASH COLORS:  _ RED   _ YELLOW   _ GREEN
SELECT VEHICLE OVERLAP OPTIONS:    (Y/N)
FLASH YELLOW IN CONTROLLER FLASH?...N
GREEN EXTENSION (0-255 SEC).........0
YELLOW CLEAR (0=PARENT,3-25.5 SEC)..0.0
RED CLEAR (0=PARENT,0.1-25.5 SEC)...0.0
OUTPUT AS PHASE # (0=NONE, 1-16)....0
```

PRESS '+'

```
PAGE 1: VEHICLE OVERLAP 'C' SETTINGS
PHASE:            ¦123456789101112131415 16
VEH OVL PARENTS:  ¦    XX
VEH OVL NOT VEH:  ¦
VEH OVL NOT PED:  ¦
VEH OVL GRN EXT:  ¦
STARTUP COLOR: _ RED   _ YELLOW   _ GREEN
FLASH COLORS:  _ RED   _ YELLOW   X GREEN
SELECT VEHICLE OVERLAP OPTIONS:    (Y/N)
FLASH YELLOW IN CONTROLLER FLASH?...Y
GREEN EXTENSION (0-255 SEC).........0
YELLOW CLEAR (0=PARENT,3-25.5 SEC)..0.0
RED CLEAR (0=PARENT,0.1-25.5 SEC)...0.0
OUTPUT AS PHASE # (0=NONE, 1-16)....0
```

NOTICE GREEN FLASH

OVERLAP PROGRAMMING COMPLETE

THIS ELECTRICAL DETAIL IS FOR
THE SIGNAL DESIGN: 01-0221
DESIGNED: March 2010
SEALED: 08/24/10
REVISED:

ELECTRICAL DETAIL - FINAL - SHEET 2 OF 2

ELECTRICAL AND PROGRAMMING DETAILS FOR:

Prepared in the Offices of:
Transportation Mobility and Safety Division
STATE OF NORTH CAROLINA DEPARTMENT OF TRANSPORTATION
Signals Management Section
750 N.Greenfield Pkwy,Garner,NC 27529

US 158
at
NC 34

Division 1 | Camden County | Belcross

PLAN DATE: August 2010	REVIEWED BY: T. Vaughn		
PREPARED BY: C. Strickland	REVIEWED BY:		
REVISIONS		INIT.	DATE

SEAL
NORTH CAROLINA PROFESSIONAL SEAL 022013 ENGINEER GEORGE C. BROWN

George C. Brown 8/26/10
SIGNATURE DATE

SIG. INVENTORY NO. 01-0221

25-AUG-2010 13:51
S:\TISAS\MTS Signals\Workgroups\Sig Man\Strickland\01021_sm_ele_xxx.dgn
cestrickland

METAL POLE No. 7

Design Loading for METAL POLE NO. 7

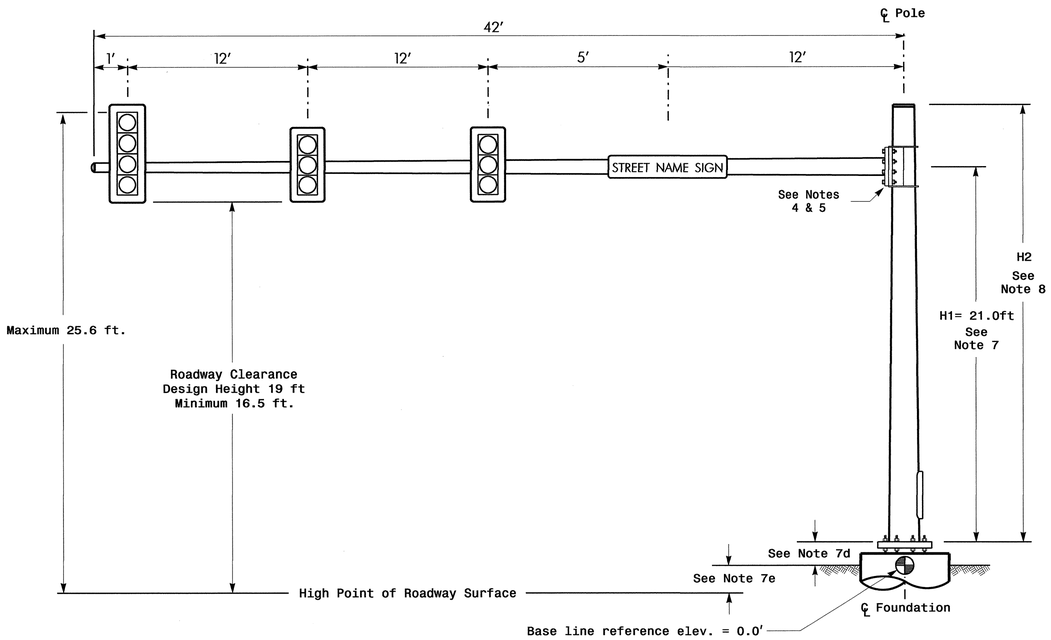

Elevation View

SPECIAL NOTE

The contractor is responsible for verifying that the mast arm attachment height (H1) will provide the "Design Height" clearance from the roadway before submitting final shop drawings for approval. Verify elevation data below which was obtained by field measurement or from available project survey data.

Elevation Data for Mast Arm Attachment (H1)

Elevation Differences for:	Pole 7	
Baseline reference point at ℄ Foundation @ ground level	0.0 ft.	
Elevation difference at High point of roadway surface	+/-0.0ft.	
Elevation difference at Edge of travelway or face of curb	NA	

MAST ARM LOADING SCHEDULE

LOADING SYMBOL	DESCRIPTION	AREA	SIZE	WEIGHT
	SIGNAL HEAD 12"–5 SECTION–WITH BACKPLATE AND ASTRO–BRAC	16.3 S.F.	42.0" W X 56.0" L	103 LBS
	SIGNAL HEAD 12"–4 SECTION–WITH BACKPLATE AND ASTRO–BRAC	11.5 S.F.	25.5" W X 66.0" L	74 LBS
	SIGNAL HEAD 12"–3 SECTION–WITH BACKPLATE AND ASTRO–BRAC	9.3 S.F.	25.5" W X 52.5" L	60 LBS
	SIGN RIGID MOUNTED WITH ASTRO–SIGN–BRAC	5.0 S.F.	24.0" W X 30.0" L	11 LBS
STREET NAME SIGN	STREET NAME SIGN RIGID MOUNTED WITH ASTRO–SIGN–BRAC	12.0 S.F.	18.0" W X 96.0" L	27 LBS

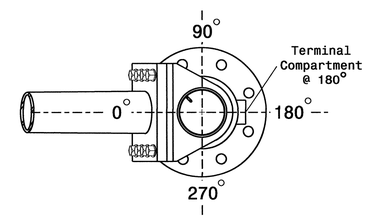

POLE RADIAL ORIENTATION

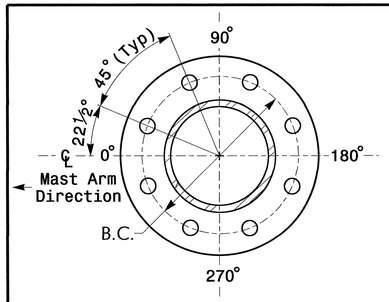

8 BOLT BASE PLATE DETAIL

See Note 6

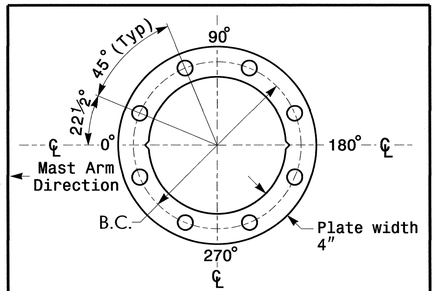

BASE PLATE TEMPLATE & ANCHOR BOLT LOCK PLATE DETAIL

For 8 Bolt Base Plate

NOTES

Design Reference Material

1. Design the traffic signal structure and foundation in accordance with:
   - The 4th Edition 2001 AASHTO "Standard Specifications for Structural Supports for Highway Signs, Luminaires, and Traffic Signals, including all of the latest interim revisions.
   - The 2006 NCDOT "Standard Specifications for Roads and Structures". The latest addenda to these specifications can be found in the traffic signal project special provisions.
   - The 2006 NCDOT Roadway Standard Drawings.
   - The traffic signal project plans and special provisions.
   - The NCDOT "Metal Pole Standards" located at the following NCDOT website: http://www.ncdot.org/doh/preconstruct/traffic/ITSS/ws/mpoles/poles.html

Design Requirements

2. Design the traffic signal structure using the loading conditions shown in the elevation views. These are anticipated worst case "Design loads" and may not represent the actual loads that will be applied at the time of the installation. The contractor should refer to the traffic signal plans for the actual loads that will be applied at the time of the installation.
3. Design all signal supports using stress ratios that do not exceed 0.9.
4. The camber design for mast arm deflection should provide an appearance of a low pitched arch where the tip or the free end of the mast arm does not deflect below horizontal when fully loaded.
5. A clamp-type bolted mast arm-to-pole connection may be used instead of the welded ring stiffened box connection shown as long as the connection meets all of the design requirements.
6. Design base plate with 8 anchor bolt holes. Provide 2 inch x 60 inch anchor bolts.
7. The mast arm attachment height (H1) shown is based on the following design assumptions:
   a. Mast arm slope and deflection are not considered in determining the arm attachment height as they are assumed to offset each other.
   b. Signal heads attached to the mast arm are rigid mounted and vertically centered on the arm.
   c. The roadway clearance height for design is as shown in the elevation views.
   d. The top of the pole base plate is .75 feet above the ground elevation.
   e. Refer to the Elevation Data chart for elevation differences between the proposed foundation ground level and the high point on the roadway.
8. The pole manufacturer will determine the total height (H2) of each pole using the greater of the following:
   - Mast arm attachment height (H1) plus 2 feet, or
   - H1 plus ½ of the total height of the mast arm attachment assembly plus 1 foot.
9. If pole location adjustments are required, the contractor must gain approval from the engineer as this may affect the mast arm lengths and arm attachment heights. The contractor may contact the Signals & Geometrics Structural Engineer for assistance at (919) 773-2800.
10. The contractor is responsible for verifying that the mast arm length shown will allow proper positioning of the signal heads over the roadway.
11. The contractor is responsible for providing soil penetration testing data (SPT) to the pole manufacturer so site specific foundations can be designed.

NCDOT Wind Zone 2 (130 mph)

Prepared in the Offices of:
Transportation Mobility and Safety Division
STATE OF NORTH CAROLINA DEPARTMENT OF TRANSPORTATION
Signal Design Section
750 N.Greenfield Pkwy,Garner,NC 27529

SCALE 0 N/A N/A

US 158
At
NC 34

Division 1 Camden County Belcross

PLAN DATE: May 2010		REVIEWED BY:	PLA
PREPARED BY: JPG		REVIEWED BY:	

REVISIONS	INIT.	DATE

SEAL
NORTH CAROLINA PROFESSIONAL SEAL 29904 ENGINEER JASON L. GALLOWAY
SIGNATURE 9/3/10 DATE
SIG. INVENTORY NO: 01-0221

02-SEP-2010 11:26
S:\TTSASU\TS Signals\Workgroups\TIP Projects\R-2414B\Signals\Design\Signals\01-0450\mp.dgn
jgallaway

Design Loading for METAL POLE NO. 8, MAST ARM A

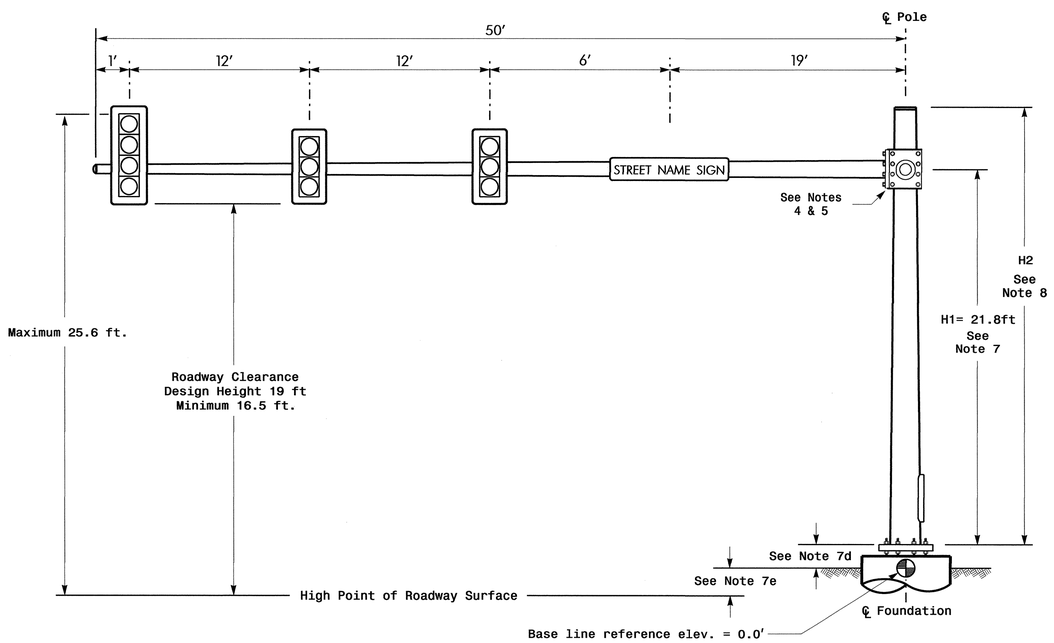

Elevation View @ 270°

Design Loading for METAL POLE NO. 8, MAST ARM B

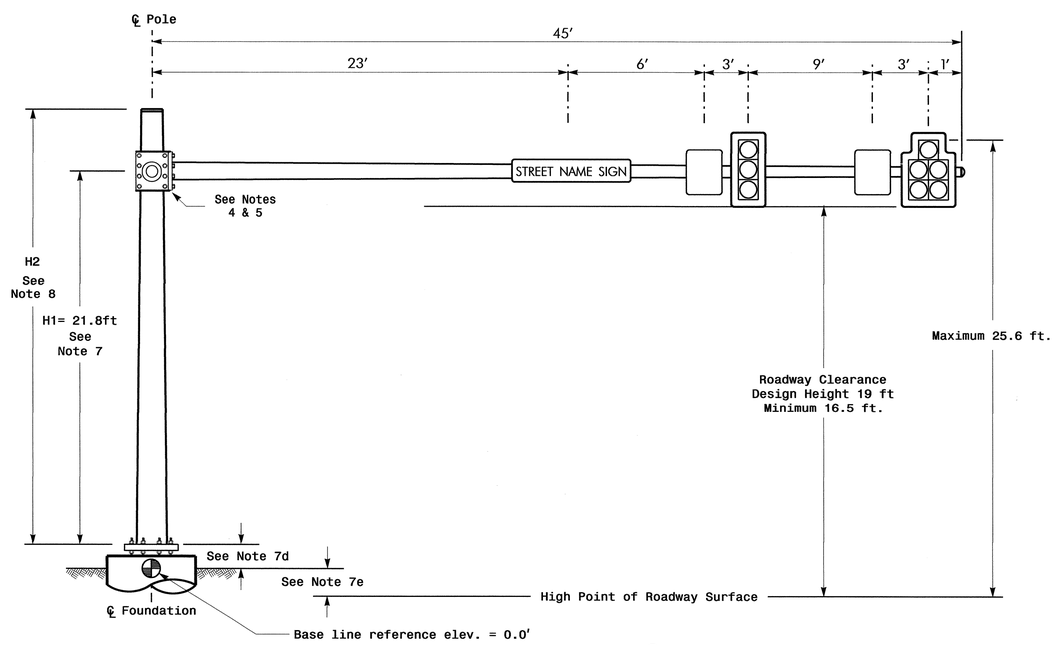

Elevation View @ 0°

SPECIAL NOTE

The contractor is responsible for verifying that the mast arm attachment height (H1) will provide the "Design Height" clearance from the roadway before submitting final shop drawings for approval. Verify elevation data below which was obtained by field measurement or from available project survey data.

Elevation Data for Mast Arm Attachment (H1)

Elevation Differences for:	Arm "A"	Arm "B"
Baseline reference point at ℄ Foundation @ ground level	0.0 ft.	0.0 ft.
Elevation difference at High point of roadway surface	+0.8 ft.	+0.8 ft.
Elevation difference at Edge of travelway or face of curb	NA	NA

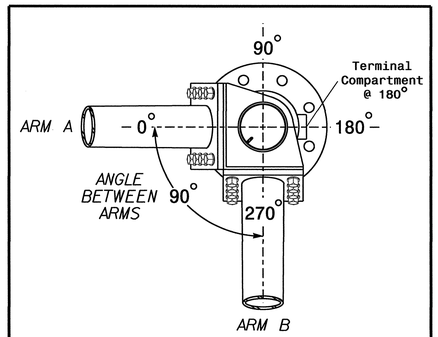

POLE RADIAL ORIENTATION

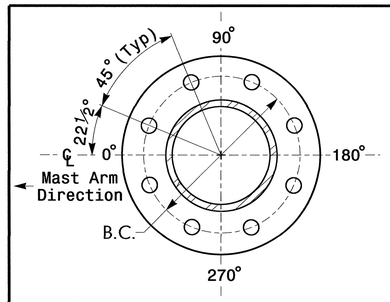

8 BOLT BASE PLATE DETAIL

See Note 6

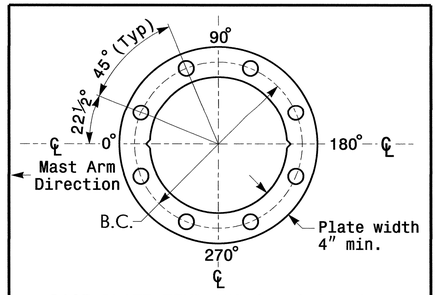

BASE PLATE TEMPLATE & ANCHOR BOLT LOCK PLATE DETAIL

For 8 Bolt Base Plate

MAST ARM LOADING SCHEDULE

LOADING SYMBOL	DESCRIPTION	AREA	SIZE	WEIGHT
	SIGNAL HEAD 12″–5 SECTION–WITH BACKPLATE AND ASTRO–BRAC	16.3 S.F.	42.0″ W X 56.0″ L	103 LBS
	SIGNAL HEAD 12″–4 SECTION–WITH BACKPLATE AND ASTRO–BRAC	11.5 S.F.	25.5″ W X 66.0″ L	74 LBS
	SIGNAL HEAD 12″–3 SECTION–WITH BACKPLATE AND ASTRO–BRAC	9.3 S.F.	25.5″ W X 52.5″ L	60 LBS
	SIGN RIGID MOUNTED WITH ASTRO–SIGN–BRAC	5.0 S.F.	24.0″ W X 30.0″ L	11 LBS
STREET NAME SIGN	STREET NAME SIGN RIGID MOUNTED WITH ASTRO–SIGN–BRAC	12.0 S.F.	18.0″ W X 96.0″ L	27 LBS

NOTES

Design Reference Material

1. Design the traffic signal structure and foundation in accordance with:
   - The 4th Edition 2001 AASHTO "Standard Specifications for Structural Supports for Highway Signs, Luminaires, and Traffic Signals, including all of the latest interim revisions.
   - The 2006 NCDOT "Standard Specifications for Roads and Structures". The latest addenda to these specifications can be found in the traffic signal project special provisions.
   - The 2006 NCDOT Roadway Standard Drawings.
   - The traffic signal project plans and special provisions.
   - The NCDOT "Metal Pole Standards" located at the following NCDOT website: http://www.ncdot.org/doh/preconstruct/traffic/ITSS/ws/mpoles/poles.html

Design Requirements

2. Design the traffic signal structure using the loading conditions shown in the elevation views. These are anticipated worst case "Design loads" and may not represent the actual loads that will be applied at the time of the installation. The contractor should refer to the traffic signal plans for the actual loads that will be applied at the time of the installation.
3. Design all signal supports using stress ratios that do not exceed 0.9.
4. The camber design for mast arm deflection should provide an appearance of a low pitched arch where the tip or the free end of the mast arm does not deflect below horizontal when fully loaded.
5. A clamp-type bolted mast arm-to-pole connection may be used instead of the welded ring stiffened box connection shown as long as the connection meets all of the design requirements. This requires staggering the connections. Use elevation data for each arm to determine appropriate arm connection points.
6. Design base plate with 8 anchor bolt holes. Provide 2 inch x 60 inch anchor bolts.
7. The mast arm attachment height (H1) shown is based on the following design assumptions:
   a. Mast arm slope and deflection are not considered in determining the arm attachment height as they are assumed to offset each other.
   b. Signal heads attached to the mast arm are rigid mounted and vertically centered on the arm.
   c. The roadway clearance height for design is as shown in the elevation views.
   d. The top of the pole base plate is .75 feet above the ground elevation.
   e. Refer to the Elevation Data chart for elevation differences between the proposed foundation ground level and the high point on the roadway.
8. The pole manufacturer will determine the total height (H2) of the pole using the greater of the following:
   - Mast arm attachment height (H1) plus 2 feet, or
   - H1 plus ½ of the total height of the mast arm attachment assembly plus 1 foot.
9. If pole location adjustments are required, the contractor must gain approval from the engineer as this may affect the mast arm lengths and arm attachment heights. The contractor may contact the Signals & Geometrics Structural Engineer for assistance at (919) 773-2800.
10. The contractor is responsible for verifying that the mast arm lengths shown will allow proper positioning of the signal heads over the roadway.
11. The contractor is responsible for providing soil penetration testing data (SPT) to the pole manufacturer so site specific foundations can be designed.

NCDOT Wind Zone 2 (130 mph)

STATE	PROJECT NO.	SHEET NO.
N.C.	R-2414B	Sig. 44
F. A. PROJ. NO.		M 1
PROJECT ID. NO.		

STATE OF NORTH CAROLINA
DIVISION OF HIGHWAYS

STANDARD DRAWINGS FOR METAL POLES

POLE STANDARDS

NCDOT METAL

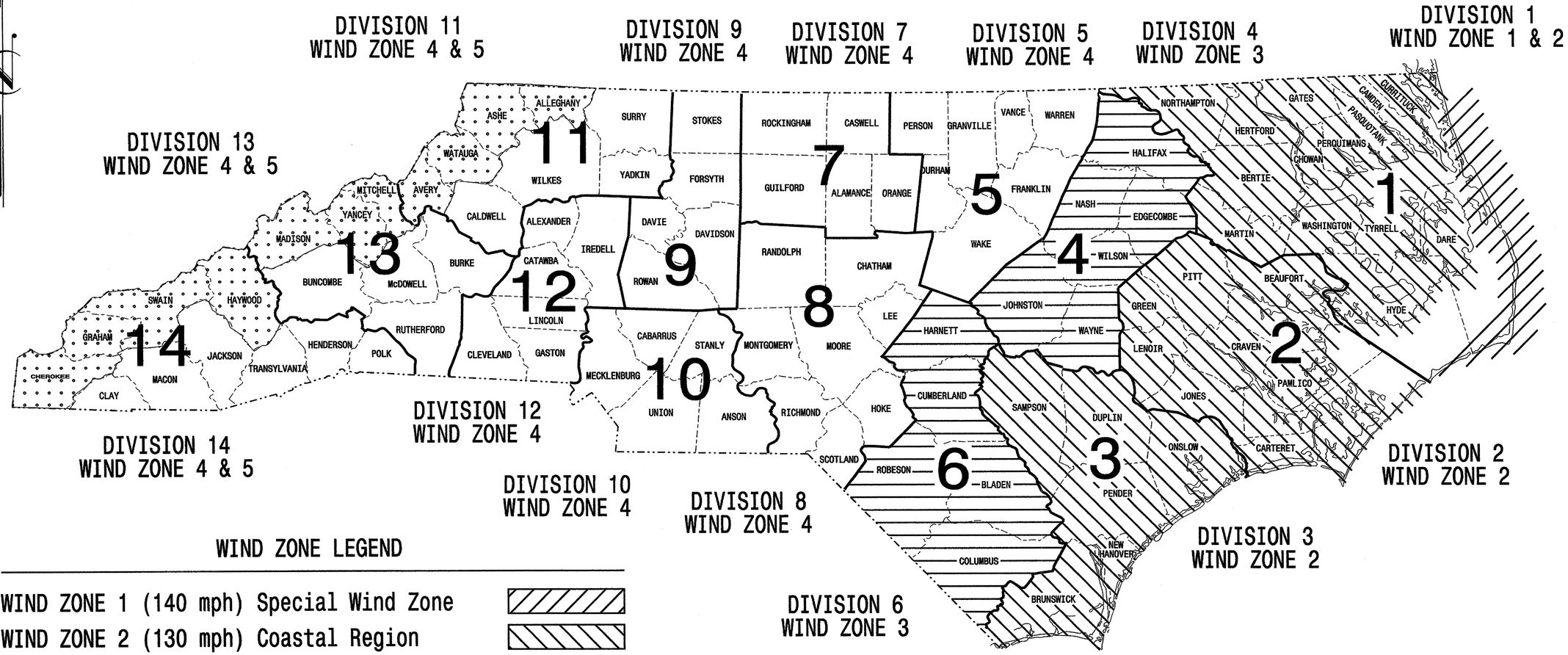

WIND ZONE LEGEND

WIND ZONE 1 (140 mph) Special Wind Zone	
WIND ZONE 2 (130 mph) Coastal Region	
WIND ZONE 3 (110 mph) Eastern Region	
WIND ZONE 4 (90 mph) Central & Mtn. Region	
WIND ZONE 5 (120 mph) Special Wind Zone	

http://www.ncdot.org/doh/preconstruct/traffic/ITSS/ws/mpoles/poles.html

Prepared In the Offices of:

Transportation Mobility and Safety Division
STATE OF NORTH CAROLINA DEPARTMENT OF TRANSPORTATION
Signal Design Section

750 N.Greenfield Pkwy,Garner,NC 27529

Designed in conformance with the 2002 Interim to the 4th Edition 2001

AASHTO

Standard Specifications for Structural Supports for Highway Signs, Luminares, and Traffic Signals

INDEX OF PLANS

DRAWING NUMBER	DESCRIPTION
M 1	Title Sheet
M 2	Fabrication Details – All Poles
M 3	Fabrication Details – Strain Poles
M 4,5	Fabrication Details – Mast Arm Poles
M 6	Construction Details – Strain Poles
M 7	Construction Details – Foundations
M 8	Standard Strain Poles

NCDOT CONTACTS:

MOBILITY AND SAFETY DIVISION – ITS and SIGNALS UNIT

G. A. Fuller, P.E. – State ITS and Signals Engineer
G. G. Murr, Jr., P.E. – State Signals Engineer
D. C. Sarkar, P.E. – ITS and Signals Senior Structural Engineer
C. F. Andrews, Jr. – ITS and Signals Structural Project Engineer
M. Aslam – ITS and Signals Structural Project Engineer
N. Bitting, P.E. – ITS and Signals Structural Project Engineer

SEAL

NORTH CAROLINA PROFESSIONAL SEAL 028094 ENGINEER DEBESH C. SARKAR

D. Sarkar — SIGNATURE
7.21.2009 — DATE

PROJECT REFERENCE NO.	SHEET NO.
R-2414B	Sig. 45 M 2

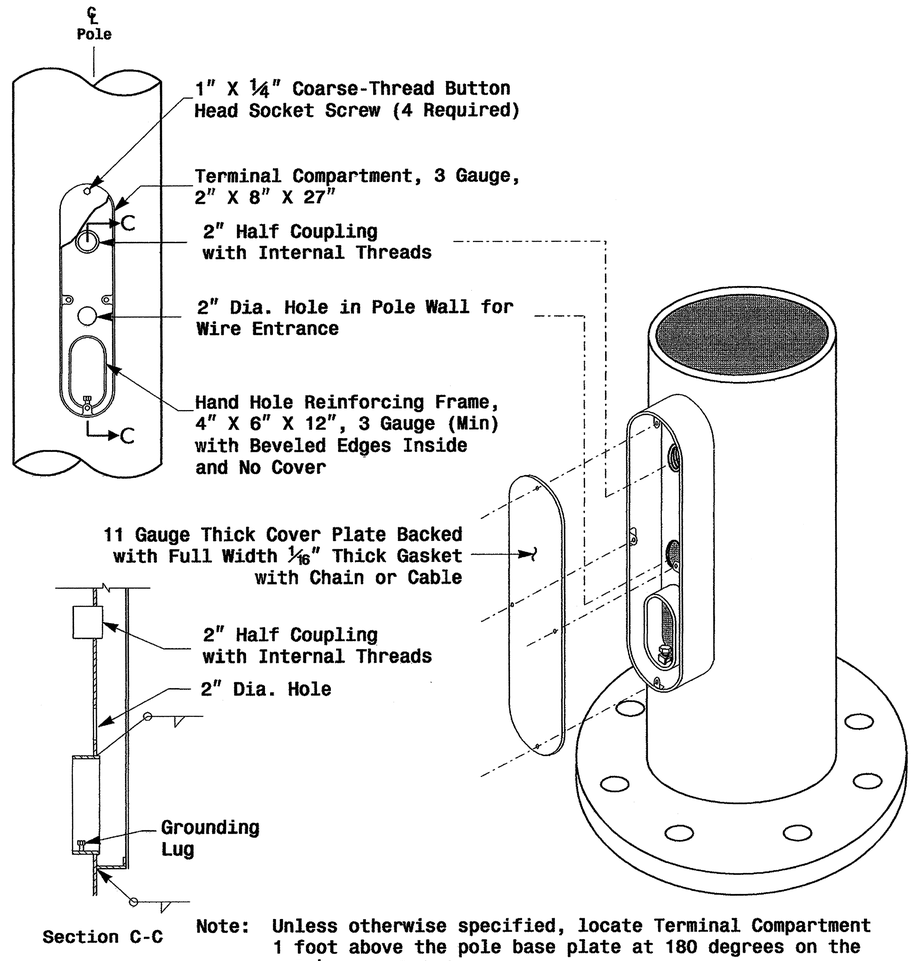

Note: Unless otherwise specified, locate Terminal Compartment 1 foot above the pole base plate at 180 degrees on the pole's radial index.

Terminal Compartment Detail

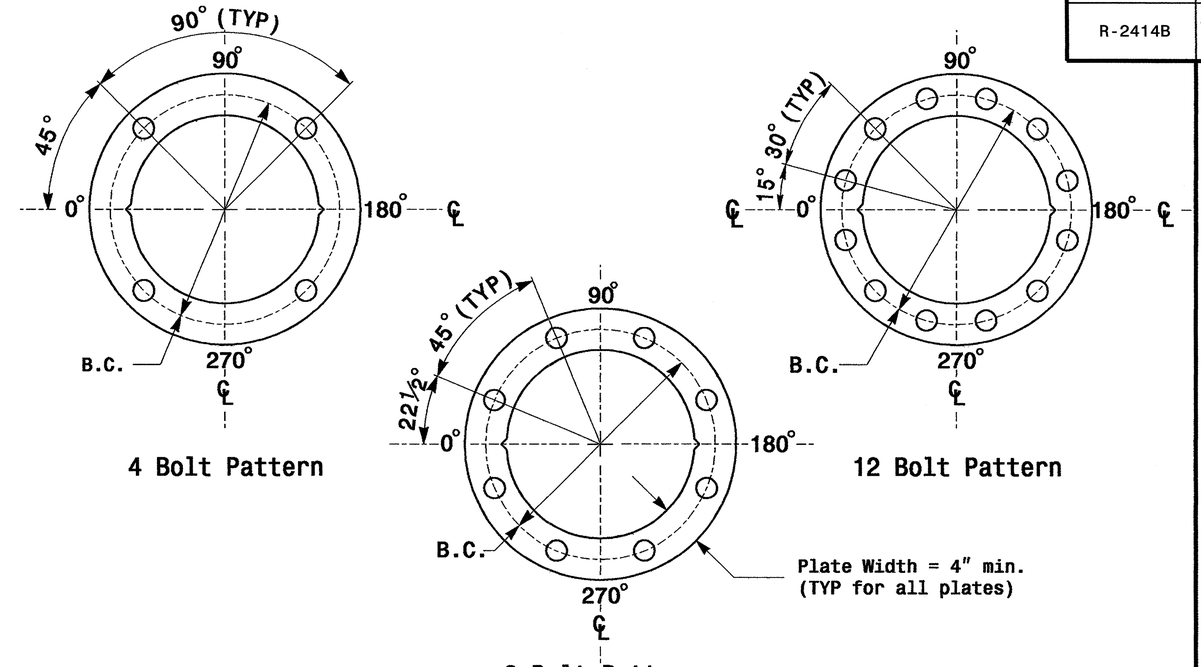

Construct Templates and Plates from ¼" min. thick Steel. Galvanizing is not required.

Base Plate Template and Anchor Bolt Lock Plate Details

Note: See Strain Pole drawing M3 and Mast arm drawing M4 for base plate weld details.

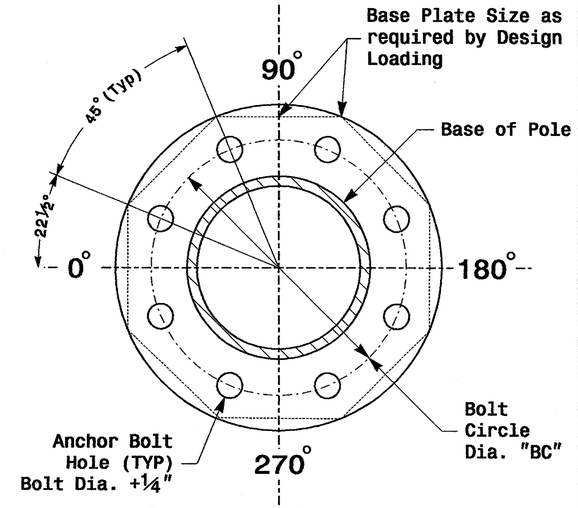

8 Bolt Base Plate Detail

MFG _____ MFG. DATE: MM/YY
SHAFT D/T/L/Y ----/----/----/----
ARM-A D/T/L/Y ----/----/----/----
----/----/----/----
ARM-B D/T/L/Y ----/----/----/----
----/----/----/----
A.B. DIA./B.C./L/Y ----/----/----/----
NCDOT STANDARD ----------

Shaft I.D. Tag
(Provide on Strain Poles and Mast Arm Poles)

MFG _____ MFG. DATE: MM/YY
SECTION D/T/L/Y ----/----/----/----
NCDOT STANDARD ----------

Arm I.D. Tag
(Provide on each section of a multi-section mast arm)

Notes:
1) D= Diameter, T= Thickness, L= Length, Y= Yield Strength
2) A.B. = Anchor Bolt
3) B.C. = Bolt Circle of Anchor Bolts
4) If Custom Design, use "NCDOT STANDARD" line for plan pole I.D.
5) See drawing M4 for mounting positions of I.D. tags.

Identification Tag Details

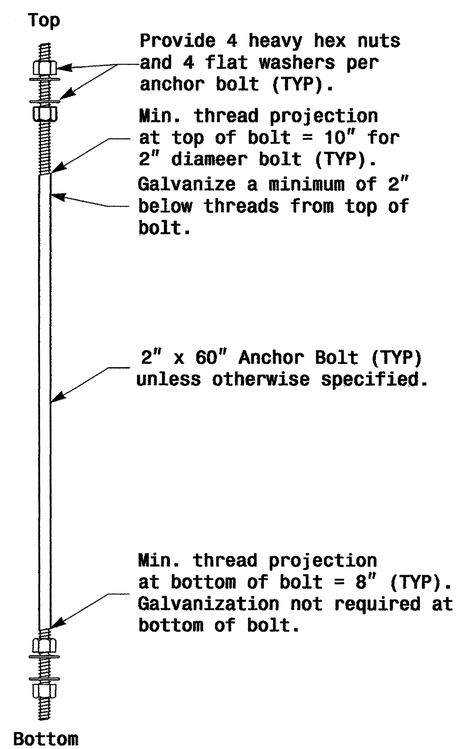

Anchor Bolt Detail

Fabrication Details – All Poles

Prepared in the Offices of: Traffic Engineering and Safety Systems Branch, Signals and Geometric Section, Division of Highways, Department of Transportation, 122 N. McDowell St., Raleigh, NC 27603

Typical Fabrication Details Common To All Metal Poles

PLAN DATE: May 2005	REVIEWED BY: C.F. Andrews
PREPARED BY: P.L. Alexander	REVIEWED BY: A.M. Esposito

REVISIONS | INIT. | DATE

SCALE 0 NA NONE

SEAL: NORTH CAROLINA PROFESSIONAL SEAL 028094 ENGINEER DEBESH C. SARKAR

D. Sarkar 9.2.2005
SIGNATURE DATE

SIG. INVENTORY NO.

01-SEP-2005 18:22
D:\R2014_Metal Pole Standards\2004 m2 thru m5.dgn
DGN:M2

PROJECT REFERENCE NO.	SHEET NO.
R-2414B	Sig. 46 M 4

Fabrication Details – Mast Arm Poles

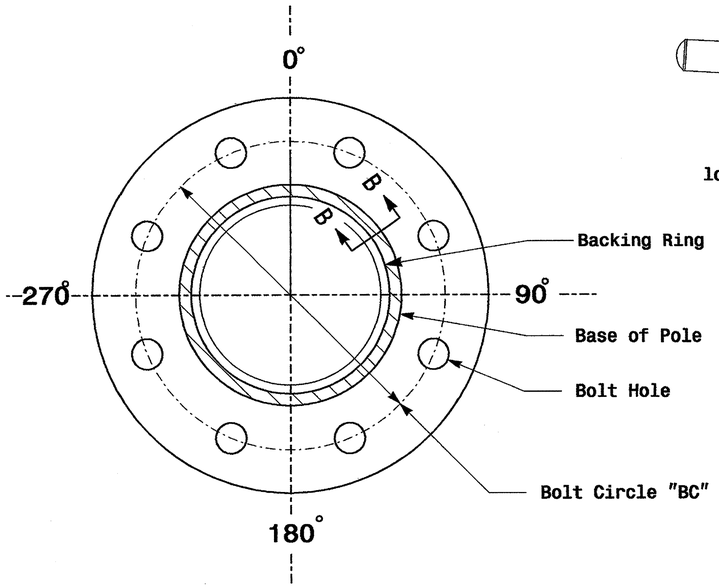

Section A-A
(See drawing M 2)

Pole Base Plate

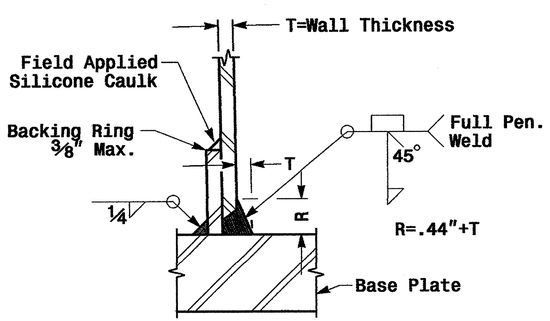

Section B-B
(Pole Attachment to Base Plate)

Full-Penetration Groove Weld Detail

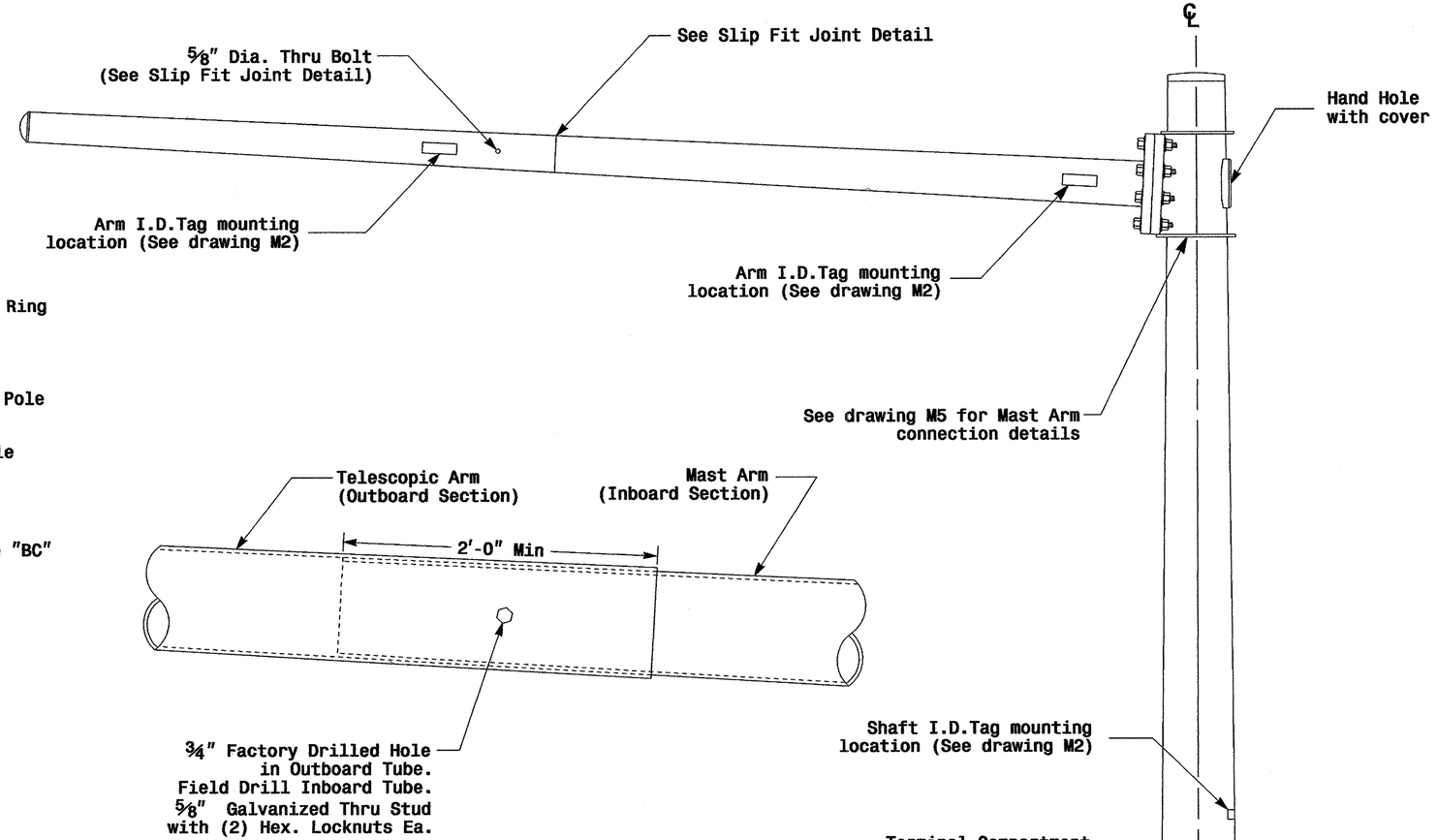

Slip Fit Joint Detail for Mast Arm

Monotube Mast Arm Pole
(.14in./ft. taper)

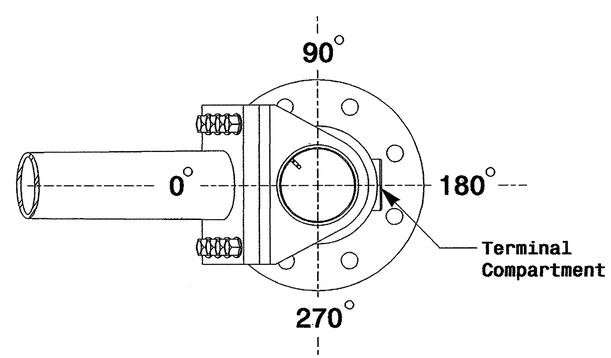

Mast Arm Radial Orientation

Prepared in the Offices of:
Traffic Engineering and Safety Systems Branch
Signals and Geometrics Section
STATE OF NORTH CAROLINA DEPARTMENT OF TRANSPORTATION
122 N. McDowell St., Raleigh, NC 27603

Typical Fabrication Details for Mast Arm Poles

PLAN DATE:	May 2005	REVIEWED BY:	C.F. Andrews
PREPARED BY:	P.L. Alexander	REVIEWED BY:	A.W. Esposito

REVISIONS	INIT.	DATE

SCALE: 0 NA — NONE

SEAL: NORTH CAROLINA PROFESSIONAL SEAL 028094 ENGINEER DEBESH C. SARKAR

SIGNATURE: D. Sarkar DATE: 9.2.2005

SIG. INVENTORY NO.

01-SEP-2005 14:08
w:\bicycle-unit\workgroups\2004 metal pole standards\2004 m4.dgn
pallexander

PROJECT REFERENCE NO.	SHEET NO.
R-2414B	Sig.47 M 5

Fabrication Details – Mast Arm Poles

Adjustable Clamp Type Bolted Mast Arm Connection

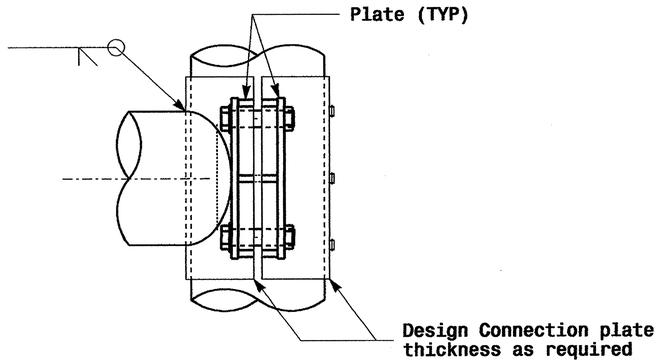

Side Elevation View

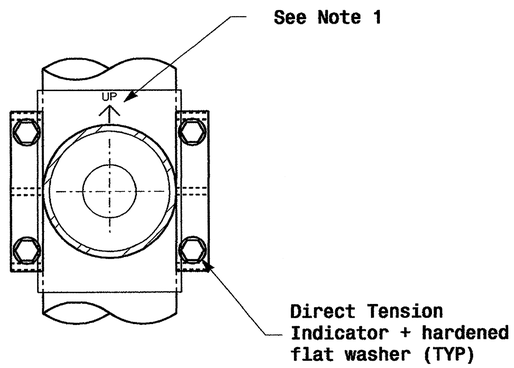

Front Elevation View

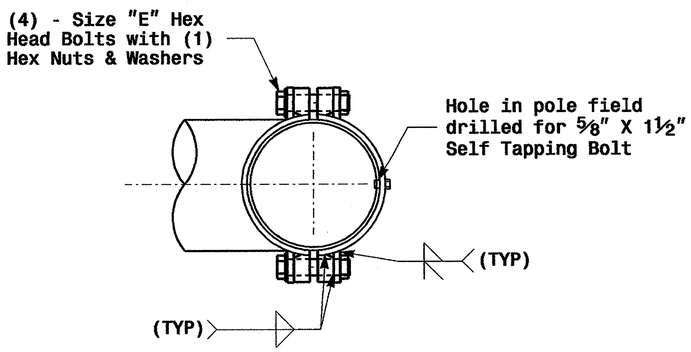

Plan View

Welded Ring Stiffened Mast Arm Connection

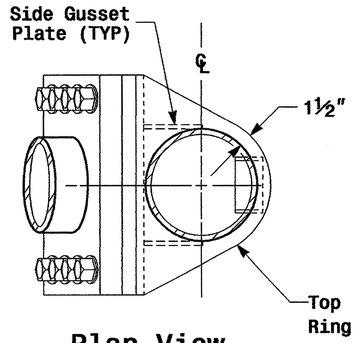

Plan View

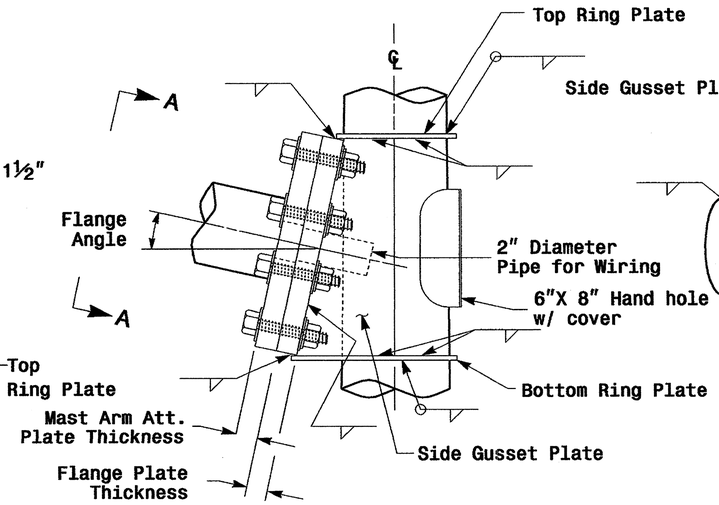

Side Elevation View

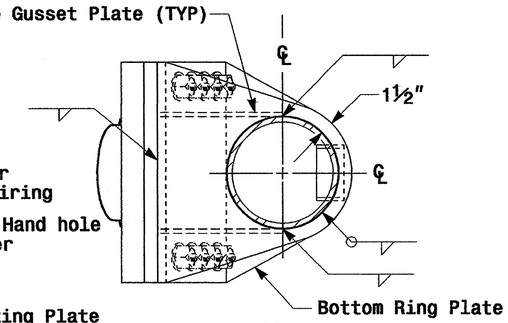

Bottom View

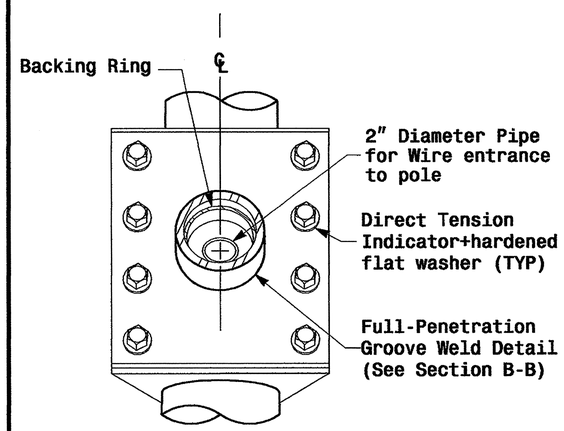

Front Elevation View

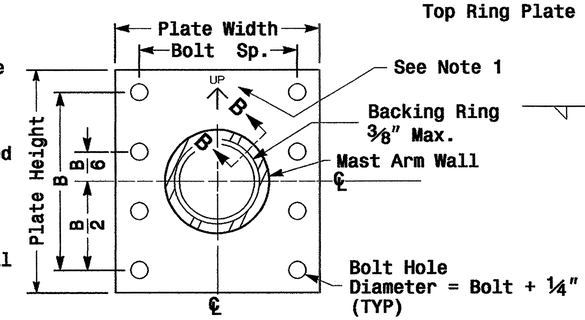

Section View A-A

Mast Arm Attachment Plate

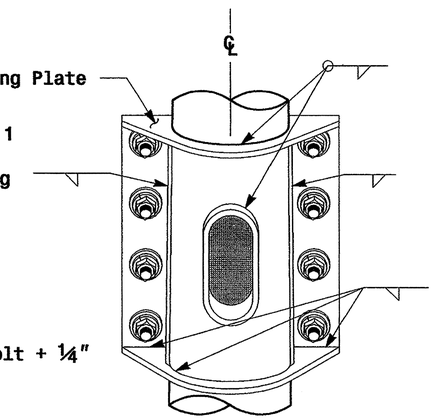

Back Elevation View

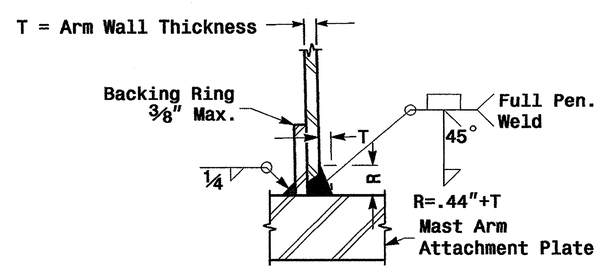

Section B-B

Full-Penetration Groove Weld Detail

Notes:

1. Provide a permanent means of identification above the mast arm to indicate proper attachment orientation of the mast arm.
2. Designer will determine the size of all structural components, plates, fasteners, and welds shown unless they are already specified.
3. Designer is responsible for providing appropriate drainage points.

Prepared in the Office of: Traffic Engineering and Safety Systems Branch, Signals and Geometrics Section, Department of Transportation, State of North Carolina, 122 N. McDonald St., Raleigh, NC 27603

Fabrication Details For Mast Arm Connection To Pole

PLAN DATE:	May 2005	REVIEWED BY:	C.F. Andrews
PREPARED BY:	P.L. Alexander	REVIEWED BY:	A.W. Esposito

SCALE: 0 NA — NONE

REVISIONS	INIT.	DATE

SEAL: NORTH CAROLINA PROFESSIONAL SEAL 028094 ENGINEER DEBESH C. SARKAR

D. Sarkar 9.2.2005
SIGNATURE DATE

SIG. INVENTORY NO.

01-SEP-2005 14:11
w:\roadway\sig_unit\workgroups\2004 metal pole standards\2004 m5.dgn
palexander

PROJECT REFERENCE NO.	SHEET NO.
R-2414B	Sig. 48 M 7

Construction Details – Foundations

Reinforcing Steel Bars

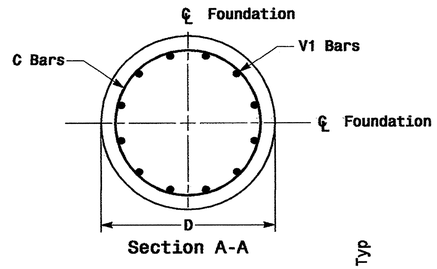

Section A-A

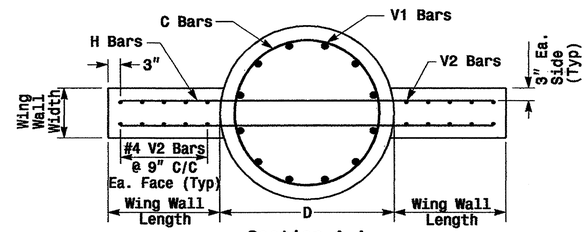

Section A-A

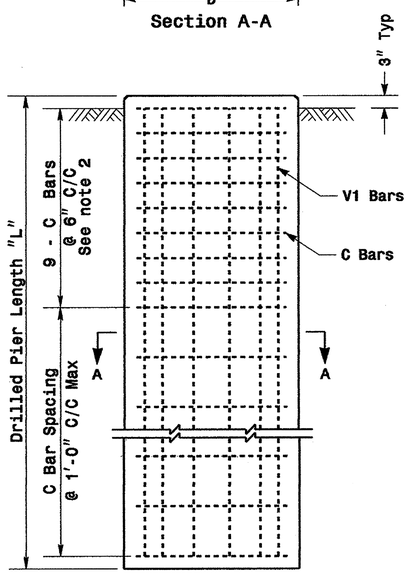

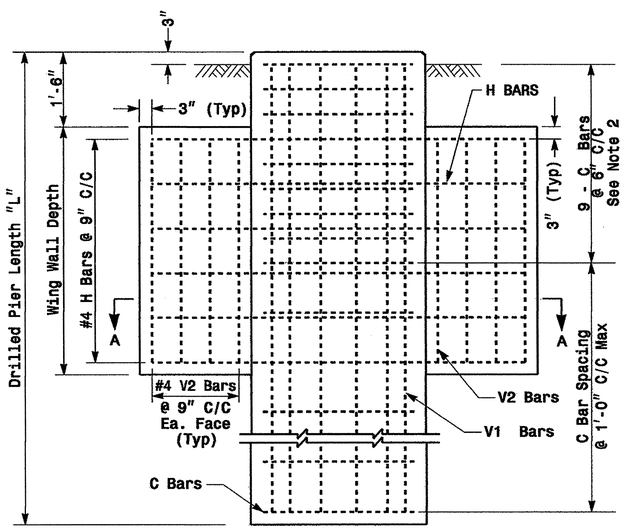

REINFORCING STEEL TABLE FOR STANDARD DRILL PIER SHAFT (42" & 48" DIAMETER)

Shaft Dia (in.)	Conc. Volume (cu. yds.)	Bar Name	No.	Size	Type	Length
42"	.356 x L	V1	9	#8	STR.	**
		C	*	#4	CIR.	10'-9"
48"	.465 x L	V1	12	#8	STR.	**
		C	*	#4	CIR.	12'-6"

* See Note No. 1
** See Note No. 3

REINFORCING STEEL TABLE FOR STANDARD 42" and 48" DRILL PIER SHAFT WITH TYPE 1 AND TYPE 2 WING WALLS

Wing Wall Type	Drill Pier Shaft Dia. (in.)	Reinforcing Steel				
		Bar Name	No.	Size	Type	Length
TYPE 1	42"	V1	9	#8	STR.	**
		V2	12	#4	STR.	2'-6"
		H	8	#4	STR.	6'-0"
		C	*	#4	CIR.	10'-9"
TYPE 2	42"	V1	9	#8	STR.	**
		V2	16	#4	STR.	4'-6"
		H	12	#4	STR.	9'-0"
		C	*	#4	CIR.	10'-9"
TYPE 2	48"	V1	12	#8	STR.	**
		V2	16	#4	STR.	4'-6"
		H	12	#4	STR.	9'-6"
		C	*	#4	CIR.	12'-6"

* See Note No. 1
** See Note No. 3

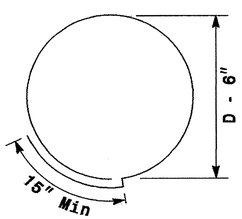

Typical "C" Bars

WING WALL DETAILS

Wing Wall Type	Wing Wall Length (Ft.)	Wing Wall Width (Ft.)	Wing Wall Depth (Ft.)	Concrete Volume (Cu. Yds.)
TYPE 1	1'-6"	1'-0"	3'-0"	.4
TYPE 2	3'-0"	1'-0"	5'-0"	1.2

See Note No. 4

Typical Foundation Anchor Bolt Details

(Reinforcing Cage Not Shown for Clarity)

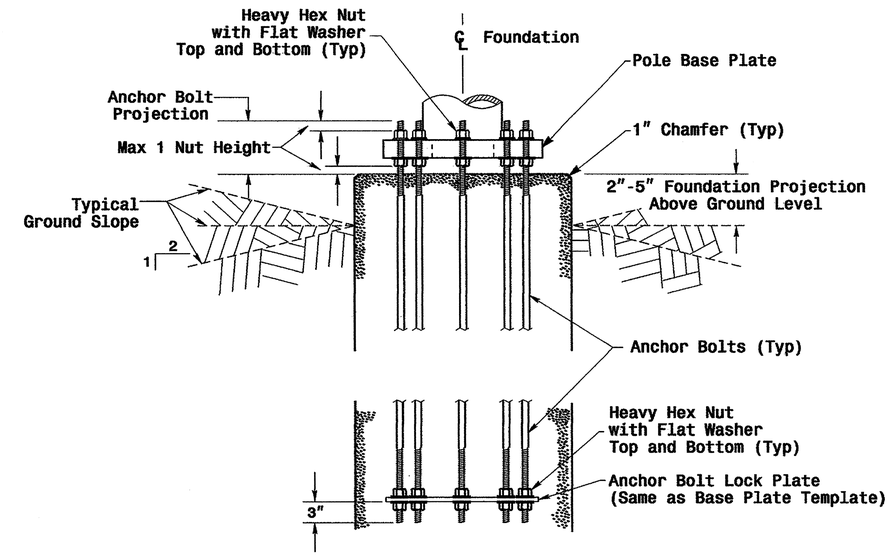

Typical Foundation Conduit Details

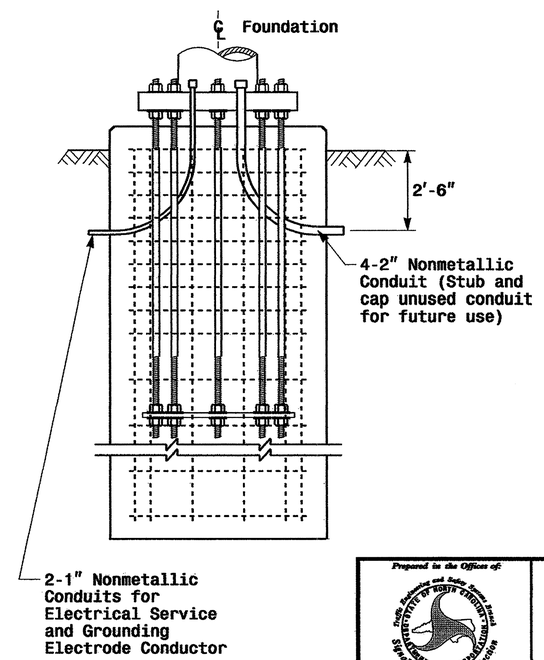

Notes

1. The number of C-bars is based on foundation depth. For standard foundations, see sheet M 8.
2. Circular tie reinforcing rings may be vertically adjusted by +/- 3" at a depth between 2'-0" and 3'-0" to facilitate the installation of electrical conduit entering in the cage.
3. The length of V1-bars is based on foundation depth. For standard foundations, see sheet M 8.
4. The quantities for steel and concrete shown in the Wing Wall Details Chart reflect the amount of material for 1 pair of wing walls (2 wing walls per drilled pier shaft.)

Prepared in the Offices of: Structure and Subsurface Design, Department of Transportation, Structure and Geotechnics Section, 122 M. McDowell St., Raleigh, NC 27603

Construction Details Foundations

PLAN DATE:	May 2005	REVIEWED BY:	P.L. ALEXANDER
PREPARED BY:	C.F. ANDREWS	REVIEWED BY:	A.M. ESPOSITO

REVISIONS	INIT.	DATE

SCALE: 0 NA — NONE

SEAL: NORTH CAROLINA PROFESSIONAL SEAL 028094 ENGINEER DEBESH C. SARKAR

SIGNATURE: D. Sarkar DATE: 9.2.2005

SIG. INVENTORY NO.

01-SEP-2005 11:48
w:\$scripts_un1\workgroups\#2004 metal pole standards\#2004 m7.dgn
pollexander

STATE OF NORTH CAROLINA
DEPT. OF TRANSPORTATION
DIVISION OF HIGHWAYS
RALEIGH, N.C.

11-08

ENGLISH DETAIL DRAWING FOR
INDUCTIVE DETECTION LOOPS

CONVENTIONAL 4-SIDED LOOP

SAW SLOT DEPTH CHART

DEPTH (IN)	NO. OF WIRE TURNS				
	2	3	4	5	6
CONCRETE	2.0	2.0	2.5	2.5	3.0
ASPHALT	2.0	2.5	3.0	3.0	3.0

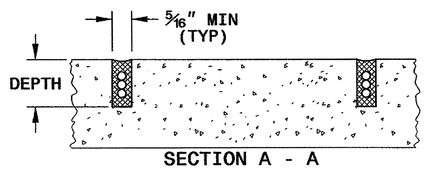

SAW CUT OPTIONS

OPTION 1

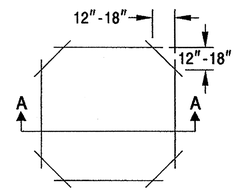

OPTION 2
(POOR PAVEMENT)

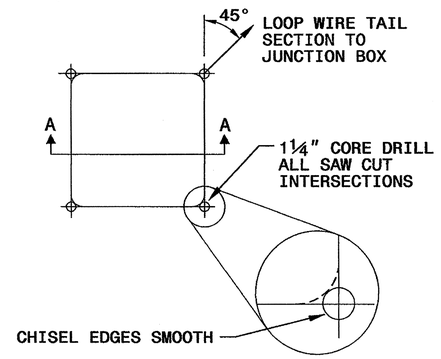

LOOP WINDING METHOD

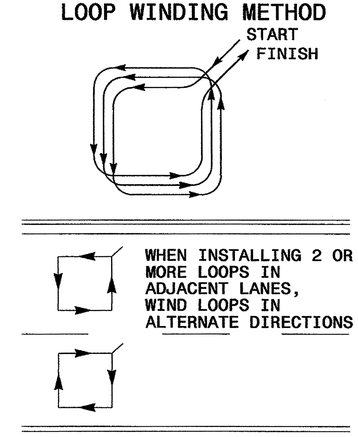

LOOP WIRE TWISTING METHOD

INCORRECT WAY TO TWIST WIRE

CORRECT WAY TO TWIST WIRE

NOTES

1. OVERLAP SAW CUTS AT CORNERS AND INTERSECTION POINTS TO ENSURE UNIFORM SAW SLOT DEPTH.
2. MAINTAIN 12" SPACING BETWEEN LOOP WIRE TAIL SECTIONS.
3. WIRE LOOPS CONNECTED TO THE SAME DETECTOR CHANNEL IN SERIES.
4. LOCATE LOOPS IN CENTER OF LANES UNLESS OTHERWISE SHOWN ON PLANS OR APPROVED BY ENGINEER.

QUADRUPOLE LOOP

SAW CUT OPTIONS

OPTION 1

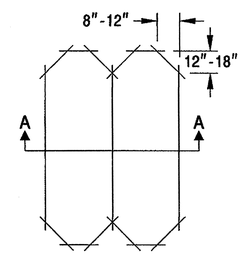

OPTION 2
(POOR PAVEMENT)

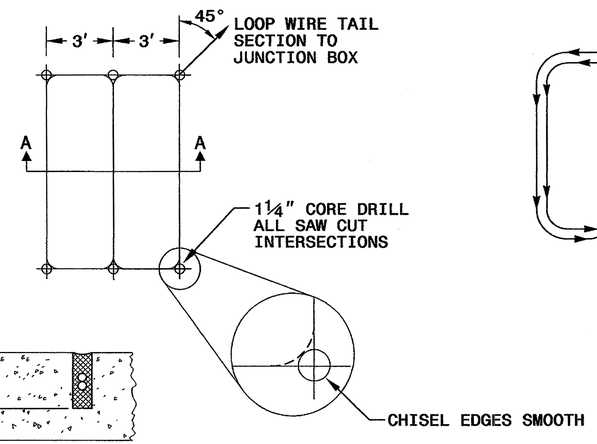

LOOP WINDING METHOD

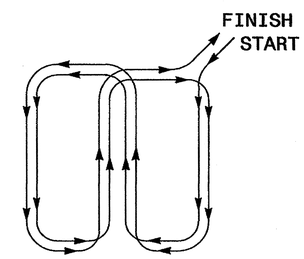

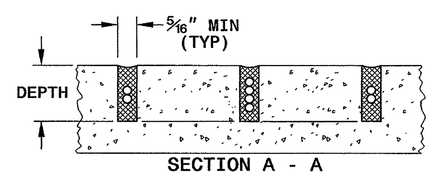

DEPTH IS 2.5" FOR CONCRETE AND 3.0" FOR ASPHALT

SHEET 1 OF 3
1725D01

STATE OF NORTH CAROLINA
DEPT. OF TRANSPORTATION
DIVISION OF HIGHWAYS
RALEIGH, N.C.

11-08

ENGLISH DETAIL DRAWING FOR
INDUCTIVE DETECTION LOOPS

SHEET 1 OF 3
1725D01

See Plate for Title

Prepared in the Offices of:

Intelligent Transportation Systems & Signals Unit
STATE OF NORTH CAROLINA · DEPARTMENT OF TRANSPORTATION

750 N. Greenfield Parkway
Garner, NC 27529

SEAL

NORTH CAROLINA PROFESSIONAL SEAL 16286 ENGINEER MILTON L. DEAN

SIGNATURE — DATE 11/24/08

24-NOV-2008 09:28
d:\work\files\0-standard plate sheets\1725010i_mcy2307.dgn
mmitte

PROJECT REFERENCE NO.	SHEET NO.
R-2414B	Sig.50

STATE OF NORTH CAROLINA
DEPT. OF TRANSPORTATION
DIVISION OF HIGHWAYS
RALEIGH, N.C.

11-08

ENGLISH DETAIL DRAWING FOR
INDUCTIVE DETECTION LOOPS
LOOP WIRE DETAILS

SHEET 2 OF 3
1725D01

LOOP WIRE SPLICE POINT DETAILS

LOOP WIRE AT JUNCTION BOX

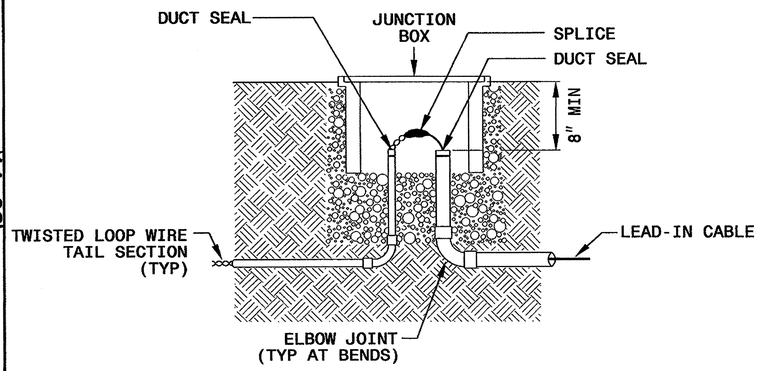

LOOP WIRE AT POLE

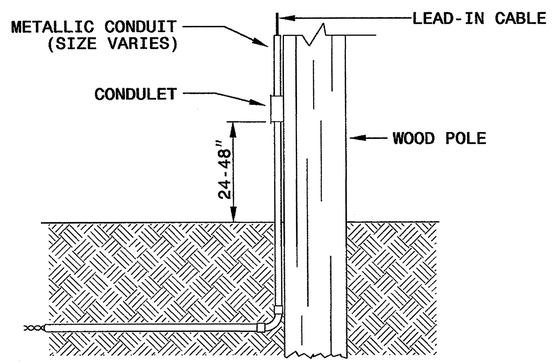

NOTE

SPLICE ALL LOOP WIRE TAIL SECTIONS/LEAD-IN CABLE IN JUNCTION BOXES OR APPROVED CONDULETS.

LOOP WIRE PAVEMENT EDGE DETAILS

LOOP WIRE AT CURB & GUTTER SECTION

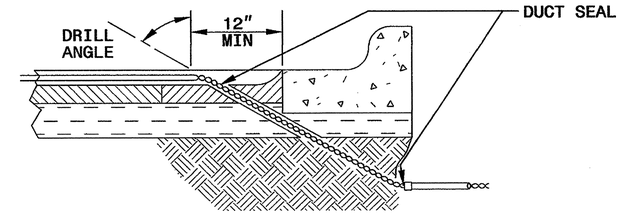

LOOP WIRE AT PAVEMENT SECTION

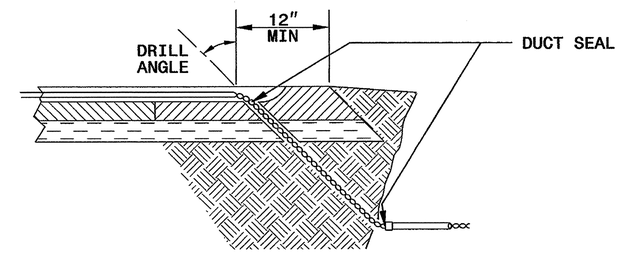

NOTES

1. DO NOT EXCAVATE UNDER CURB AND GUTTER SECTIONS FOR CONDUIT INSTALLATION.
2. TWIST LOOP WIRE TAIL SECTIONS FROM WHERE LOOP WIRE TAIL LEAVES SAW CUT TO JUNCTION BOX, INCLUDING THROUGH CONDUIT.
3. BEFORE SEALING LOOPS, INSTALL DUCT SEAL WHERE LOOP WIRE TAIL SECTION LEAVES SAW CUT IN PAVEMENT AND AT ENTRANCE OF CONDUIT TO JUNCTION BOX.

STATE OF NORTH CAROLINA
DEPT. OF TRANSPORTATION
DIVISION OF HIGHWAYS
RALEIGH, N.C.

11-08

ENGLISH DETAIL DRAWING FOR
INDUCTIVE DETECTION LOOPS
LOOP WIRE DETAILS

SHEET 2 OF 3
1725D01

See Plate for Title

Prepared in the Offices of:

Intelligent Transportation Systems & Signals Unit
STATE OF NORTH CAROLINA DEPARTMENT OF TRANSPORTATION

750 N. Greenfield Parkway
Garner, NC 27529

SEAL

NORTH CAROLINA PROFESSIONAL SEAL 16286 ENGINEER MILTON I. DEAN

Milton I. Dean 11/24/08
SIGNATURE DATE

24-NOV-2008 09:29
d:\work\filesmrs\standard plate sheets\1725D02_nov2307.dgn
zmittle

PROJECT REFERENCE NO.	SHEET NO.
R-2414B	Sig.51

STATE OF NORTH CAROLINA
DEPT. OF TRANSPORTATION
DIVISION OF HIGHWAYS
RALEIGH, N.C.

11-08

ENGLISH DETAIL DRAWING FOR
INDUCTIVE DETECTION LOOPS
SPLICING FOR LEAD-IN CABLE AND LOOP WIRE

SHEET 3 OF 3
1725D01

STEP 1. STRIP LOOP WIRE AND LEAD-IN CABLE

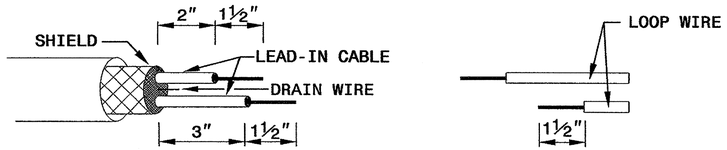

STEP 2. CONNECT AND SOLDER

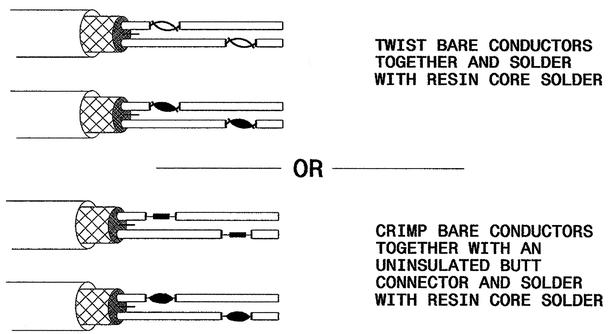

BOND SHIELD DRAIN WIRE AT SPLICE SECTIONS (DO NOT GROUND)

LOOP WIRE AND LEAD-IN CABLE CONNECTION DETAILS

SINGLE CONNECTION SERIES CONNECTION

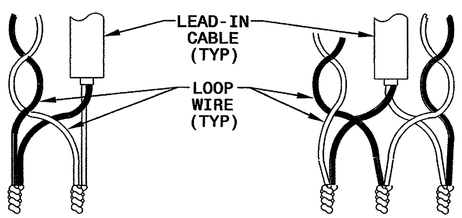

STEP 3. INSULATE EACH SOLDER JOINT SEPARATELY

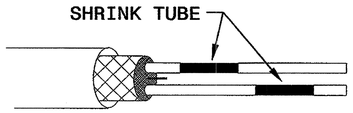

STEP 4. ENVIRONMENTALLY PROTECT SPLICE

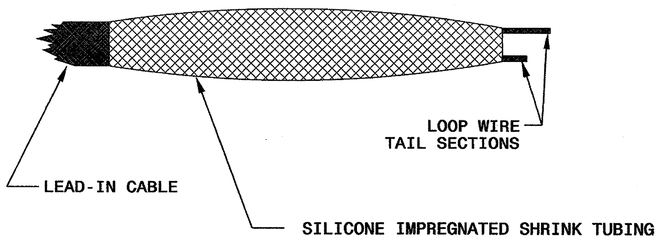

STATE OF NORTH CAROLINA
DEPT. OF TRANSPORTATION
DIVISION OF HIGHWAYS
RALEIGH, N.C.

11-08

ENGLISH DETAIL DRAWING FOR
INDUCTIVE DETECTION LOOPS
SPLICING FOR LEAD-IN CABLE AND LOOP WIRE

SHEET 3 OF 3
1725D01

See Plate for Title

Prepared in the Offices of:
Intelligent Transportation Systems & Signals Unit
STATE OF NORTH CAROLINA DEPARTMENT OF TRANSPORTATION
750 N. Greenfield Parkway
Garner, NC 27529

SEAL
NORTH CAROLINA PROFESSIONAL SEAL 16286 ENGINEER WILTON I. DEAN

SIGNATURE Wilton I. Dean DATE 11/24/08

24-NOV-2009 09:36
d:\work files\ms-standard plate sheets\1725D103_mod2307.dgn
zmittle