TIP PROJECT: R-2413C

CONTRACT: C200800B

STATE OF NORTH CAROLINA
DIVISION OF HIGHWAYS

GUILFORD–ROCKINGHAM COUNTIES

LOCATION: US 220 FROM SOUTH OF HAW RIVER TO THE INTERSECTION OF US 220 AND EXISTING NC 68

TYPE OF WORK: GRADING, DRAINAGE, STRUCTURES, CULVERTS, PAVING, SIGNING, ITS & SIGNALS

METRIC

ALL DIMENSIONS IN THESE PLANS ARE IN METERS AND /OR MILLIMETERS UNLESS OTHERWISE NOTED

STATE	STATE PROJECT REFERENCE NO.	SHEET NO.	TOTAL SHEETS
N.C.	R-2413C		

STATE PROJ. NO.	F. A. PROJ. NO.	DESCRIPTION
34429.1.3 (6.499008T)		P.E.
34429.2.4 (6.499008T)		R/W
34429.3.7 (6.499008T)		CONST.

PART 2 0F 2

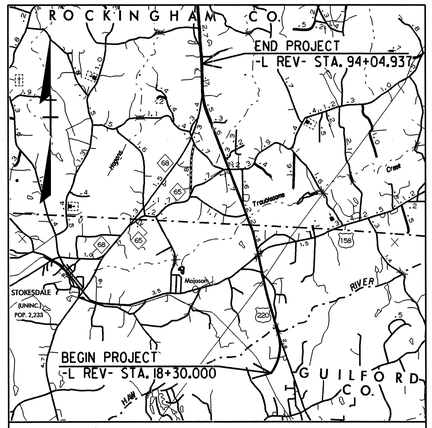

VICINITY MAP

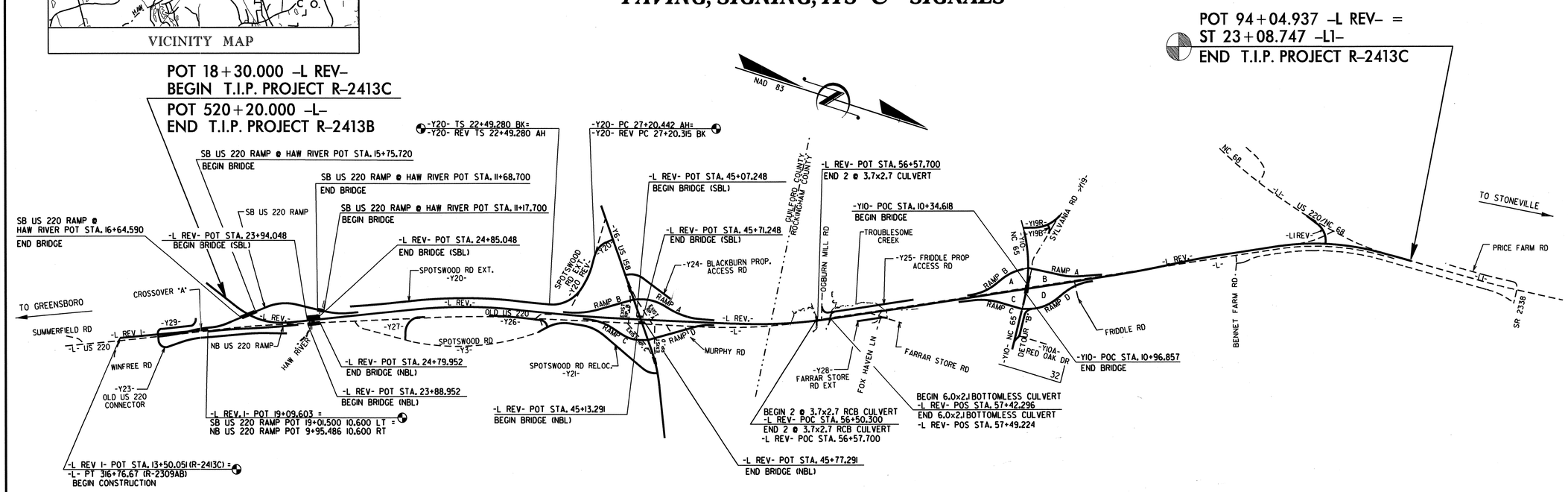

STRUCTURES

STATE OF NORTH CAROLINA DEPARTMENT OF TRANSPORTATION

DESIGN DATA

ADT 2012 = 37400
ADT 2032 = 64000
DHV = 11 %
D = 65 %
T = 15 %*
*(10% TTST + 5% DUALS)
V = 110 km/h
FUNC. CLASS.: INTERSTATE

PROJECT LENGTH

LENGTH ROADWAY T.I.P PROJECT R-2413C	7.406	KM.
LENGTH STRUCTURES T.I.P. PROJECT R-2413C	0.169	KM.
TOTAL LENGTH T.I.P. PROJECT R-2413C	7.575	KM.

NOTE: SB LANE BRIDGE STATIONING USED TO DETERMINE LENGTH OF ROADWAY & STRUCTURES

Prepared In the Office of:

DIVISION OF HIGHWAYS

2006 STANDARD SPECIFICATIONS

LETTING DATE:
FEBRUARY 21, 2012

OMAR R. AZIZI, P.E.
PROJECT ENGINEER

EMILY MURRAY, P.E.
PROJECT DESIGN ENGINEER

STRUCTURE DESIGN UNIT
1000 Birch Ridge Dr.
Raleigh, N.C. 27610

DIVISION OF HIGHWAYS
STATE OF NORTH CAROLINA

STATE OF NORTH CAROLINA
DIVISION OF HIGHWAYS

PART 2 0F 2

GUILFORD–ROCKINGHAM COUNTIES

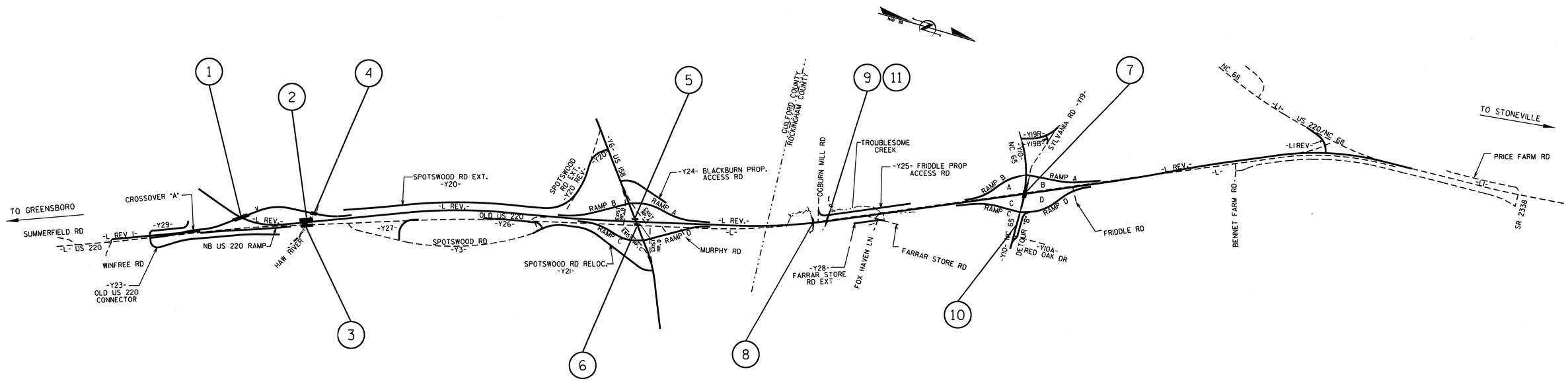

INDEX

STR. #	STATION	DESCRIPTION	SHEET #
1	20+06.118 -LREV-	BRIDGE ON US 220 RAMP OVER NC68 CONNECTOR BETWEEN NC 150 AND US 158	S-1 THRU S-33
2	24+37.000 -LREV-	LEFT LANE BRIDGE OVER HAW RIVER ON US 220 BETWEEN SR 2313 AND SR 2104	S-34 THRU S-70
3	24+37.000 -LREV-	RIGHT LANE BRIDGE OVER HAW RIVER ON US 220 BETWEEN SR 2313 AND SR 2104	S-71 THRU S-111
4	11+43.200 -SB US 220 RAMP-	BRIDGE ON SOUTHBOUND US 220 RAMP OVER HAW RIVER BETWEEN US 158 AND NC 150	S-112 THRU S-146
5	45+30.610 -LREV-	LEFT LANE BRIDGE ON US 220 OVER US 158 BETWEEN SR 2104 AND SR 2300	S-147 THRU S-176
6	45+30.610 -LREV-	RIGHT LANE BRIDGE ON US 220 OVER US 158 BETWEEN SR 2104 AND SR 2300	S-177 THRU S-206
7	70+09.407 -LREV-	BRIDGE ON NC 65 OVER US 220 BETWEEN SR 1100 AND SR 2340	S-207 THRU S-238
8	56+54.000 -LREV-	DOUBLE 3.7 × 3.0 RCBC	C-1 THRU C-5
9	57+45.800 -LREV-	7.3 X 2.1 PRECAST REINF.CONC.THREE SIDED CULVERT	C-6 THRU C-8
10	12+08.000 -Y10-	MSE RETAINING WALL	W-1 THRU W-2
11	56+58.570 -LREV-	SOUND BARRIER WALL	SW-1 THRU SW-6

PROJECT NO. R-2413C
GUILFORD-ROCKINGHAM COUNTY

STATE OF NORTH CAROLINA
DEPARTMENT OF TRANSPORTATION
RALEIGH

INDEX

REVISIONS						
NO.	BY:	DATE:	NO.	BY:	DATE:	
1			3			
2			4			

DRAWN BY : PEGGY PARISI DATE : 9-2-11
CHECKED BY : E. MURRAY DATE : 9-13-11

22-NOV-2011 09:38
Z:\TIPProjects-R\R2413c\Structures\Final Plans\R2413C_sd_TSH_01.dgn
emurray

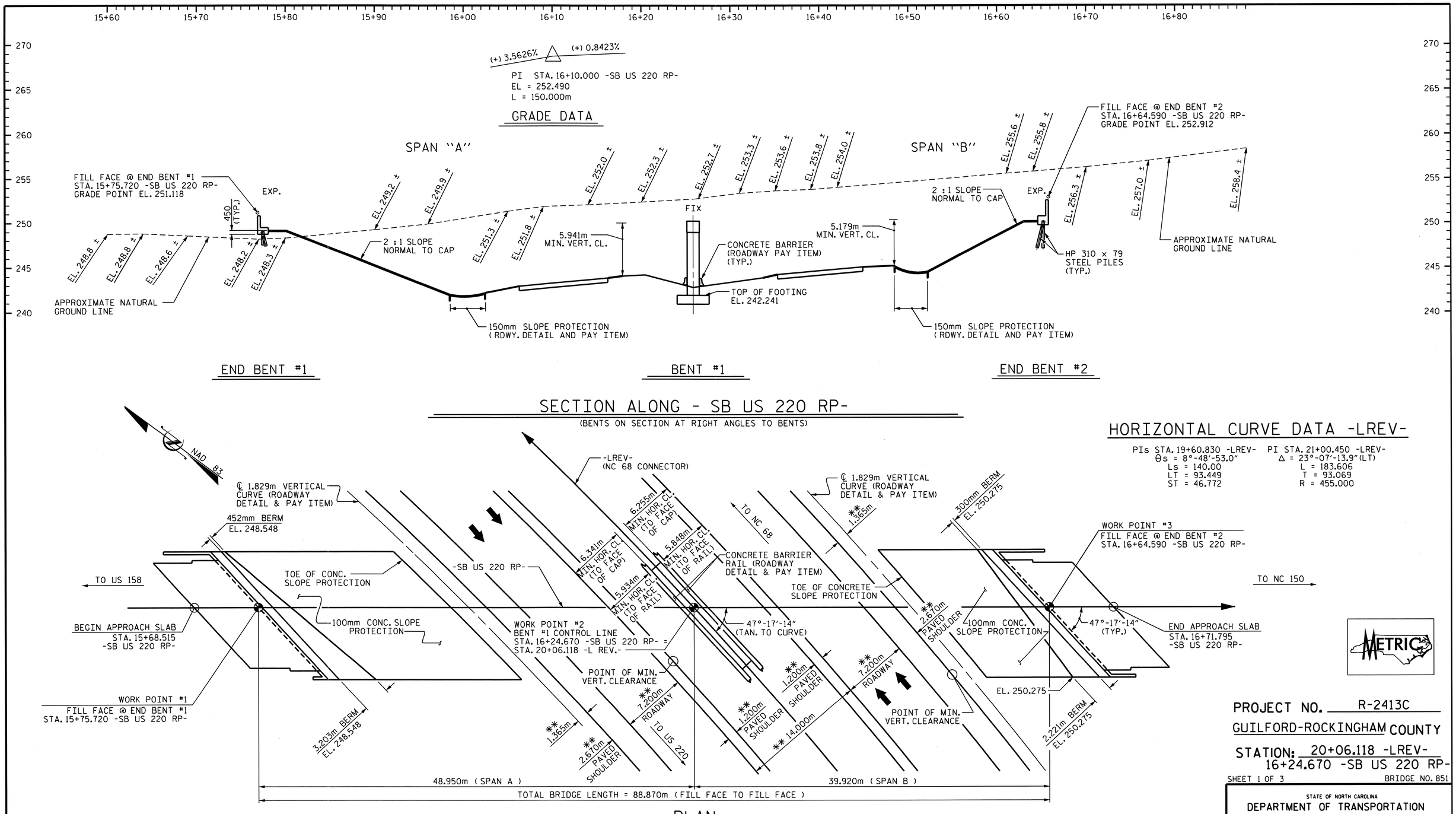

HORIZONTAL CURVE DATA -LREV-

PIs STA. 19+60.830 -LREV-	PI STA. 21+00.450 -LREV-
θs = 8°-48'-53.0"	Δ = 23°-07'-13.9"(LT)
Ls = 140.00	L = 183.606
LT = 93.449	T = 93.069
ST = 46.772	R = 455.000

METRIC

PROJECT NO. R-2413C

GUILFORD-ROCKINGHAM COUNTY

STATION: 20+06.118 -LREV-
16+24.670 -SB US 220 RP-

SHEET 1 OF 3 BRIDGE NO. 851

STATE OF NORTH CAROLINA
DEPARTMENT OF TRANSPORTATION
RALEIGH

GENERAL DRAWING
FOR BRIDGE ON US 220
RAMP OVER NC 68
CONNECTOR BETWEEN
NC 150 AND US 158

NORTH CAROLINA PROFESSIONAL SEAL 022516 ENGINEER EMILY E. MURRAY
10/28/11

NORTH CAROLINA PROFESSIONAL SEAL 12274 ENGINEER OMAR R. AZIZ
10/28/11

REVISIONS							SHEET NO.
NO.	BY:	DATE:	NO.	BY:	DATE:		S-1
1			3				TOTAL SHEETS
2			4				237

DRAWN BY : NMR/T.L. AVERETTE DATE : 06-06-11
CHECKED BY : PEGGY PARISI DATE : 07-26-11

19-OCT-2011 13:50
R:\TIPProjects-R\R2413c\Structures\FinalPlans\Str.#1\R2413C_sd_GD_01.dgn
toveratte

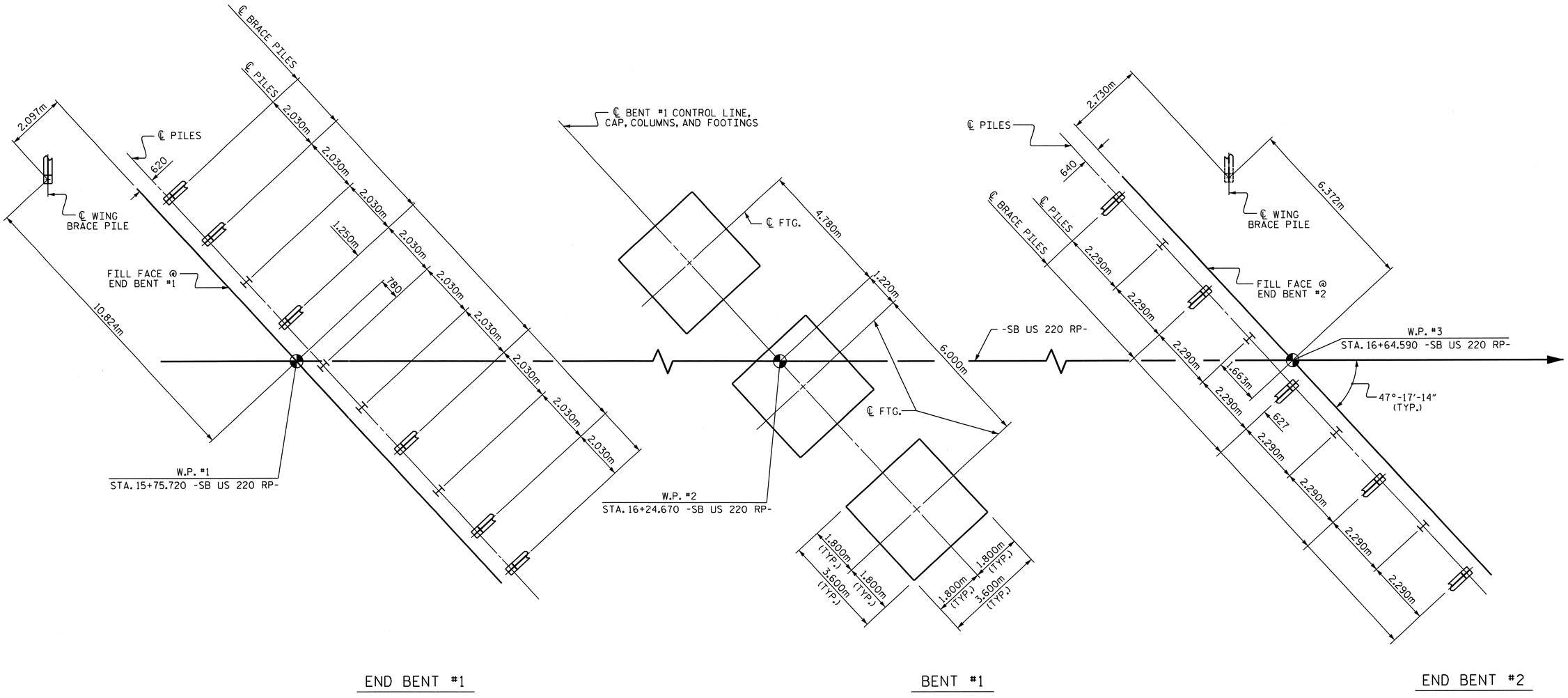

FOUNDATION LAYOUT

ALL PILES ARE HP 310 x 79 STEEL PILES.
DIMENSIONS LOCATING PILES ARE TO THE PILE CENTERLINE.
BRACE PILES AT END BENTS ARE TO BE BATTERED @ 250 : 1000

FOUNDATION NOTES

THE ALLOWABLE BEARING CAPACITY FOR PILES AT END BENT NO. 1 AND END BENT NO. 2 IS 530 KN PER PILE.

DRIVE PILES AT END BENT NO. 1 AND END BENT NO. 2 TO A REQUIRED BEARING CAPACITY OF 1060 KN PER PILE. THE REQUIRED BEARING CAPACITY IS EQUAL TO THE ALLOWABLE BEARING CAPACITY WITH A MINIMUM FACTOR OF SAFETY OF TWO.

THE ALLOWABLE BEARING CAPACITY FOR SPREAD FOOTINGS AT BENT NO. 1 IS 380 KPA.

THE REQUIRED BEARING CAPACITY FOR SPREAD FOOTINGS AT BENT NO. 1 IS 1140 KPA. CHECK FIELD CONDITIONS FOR THE REQUIRED BEARING CAPACITY JUST BEFORE PLACING CONCRETE.

FOR BLASTING ADJACENT TO HIGHWAY STRUCTURES, SEE ARTICLE 410-11 OF THE STANDARD SPECIFICATIONS.

FOR PILES, SEE SPECIAL PROVISIONS.

PROJECT NO. R-2413C
GUILFORD-ROCKINGHAM COUNTY
STATION: 20+06.118 -LREV-
16+24.670 -SB US 220 RP-
SHEET 2 OF 3

NORTH CAROLINA PROFESSIONAL SEAL 022516 ENGINEER EMILY E. MURRAY
10/28/11

STATE OF NORTH CAROLINA
DEPARTMENT OF TRANSPORTATION
RALEIGH

GENERAL DRAWING
FOR BRIDGE ON US 220
RAMP OVER NC 68
CONNECTOR BETWEEN
NC 150 AND US 158

REVISIONS						SHEET NO.
NO.	BY:	DATE:	NO.	BY:	DATE:	S-2
1			3			TOTAL SHEETS
2			4			237

DRAWN BY : T.L. AVERETTE DATE : 06-06-11
CHECKED BY : PEGGY PARISI DATE : 07-26-11

13-SEP-2011 09:51
W:\Structures\FinalPlans\Str.#1\R2413C_sd_GD_01.dgn
bbaroddawala

BM #5 R.R. SPIKE IN BASE OF POWER POLE 21.7m RT. OF -L- STA. 22+36.500 EL. 244.580

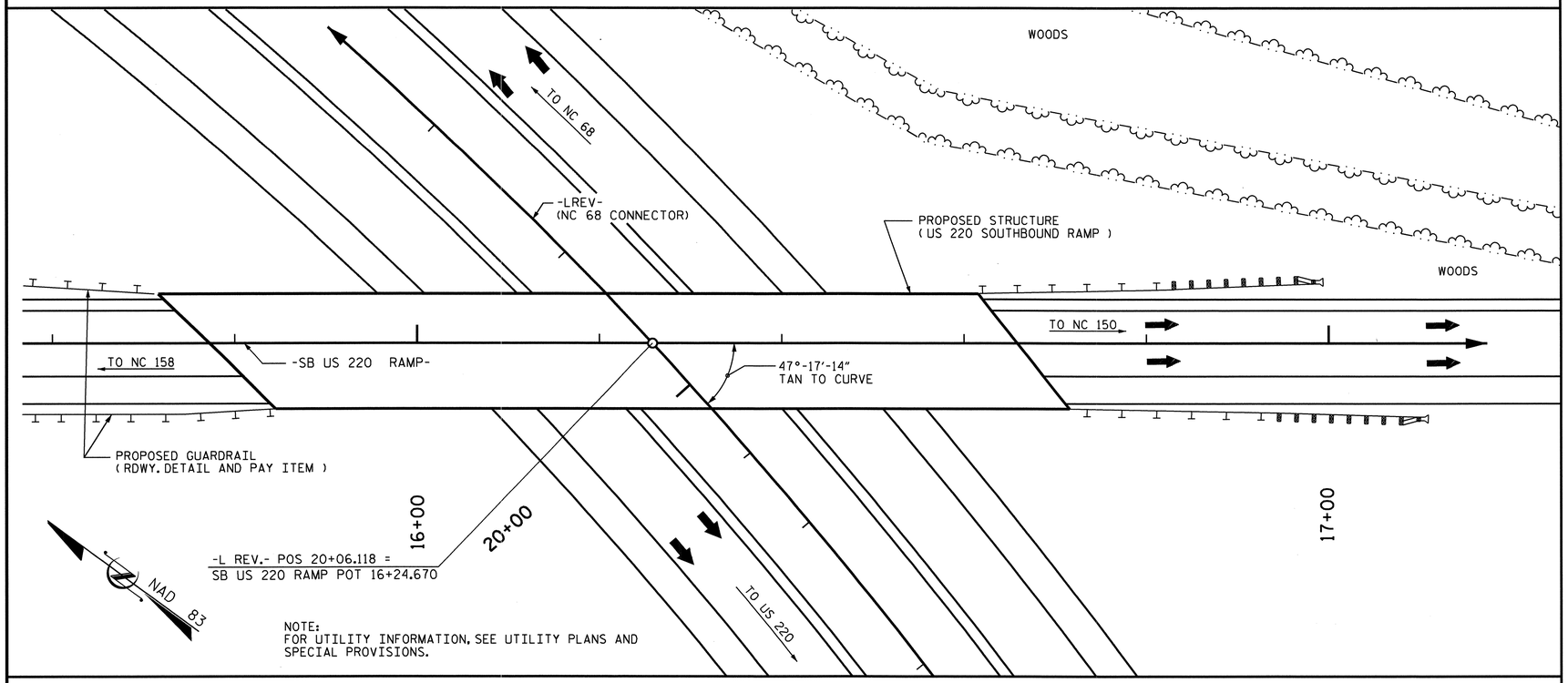

LOCATION SKETCH

NOTES

ALL DIMENSIONS ARE IN MILLIMETERS UNLESS OTHERWISE NOTED.

ALL ELEVATIONS ARE IN METERS.

ASSUMED LIVE LOAD = MS 18 OR ALTERNATE LOADING, EXCEPT THAT THE GIRDERS HAVE BEEN DESIGNED FOR MS 22.5.

FOR OTHER DESIGN DATA AND GENERAL NOTES, SEE SHEET SNSM.

FOR EROSION CONTROL MEASURES SEE EROSION CONTROL PLANS.

THIS BRIDGE HAS BEEN DESIGNED BY THE STRENGTH DESIGN METHOD AS SPECIFIED IN AASHTO STANDARD SPECIFICATIONS.

ALL STRUCTURAL STEEL SHALL BE AASHTO M270 GRADE 345W AND PAINTED IN ACCORDANCE WITH SYSTEM 4 OF ARTICLE 442-7 OF THE STANDARD SPECIFICATIONS UNLESS OTHERWISE NOTED ON THE PLANS.

REMOVABLE FORMS MAY BE USED IN LIEU OF METAL STAY-IN-PLACE FORMS IN ACCORDANCE WITH ARTICLE 420-3 OF THE STANDARD SPECIFICATIONS.

WORK SHALL NOT BE STARTED ON THIS BRIDGE UNTIL ROADWAY SECTION HAS BEEN EXCAVATED.

THE CLASS AA CONCRETE IN THE BRIDGE DECK SHALL CONTAIN FLY ASH OR GROUND GRANULATED BLAST FURNACE SLAG AT THE SUBSTITUTION RATE SPECIFIED IN ARTICLE 1024-1 AND IN ACCORDANCE WITH ARTICLES 1024-5 AND 1024-6 OF THE STANDARD SPECIFICATIONS. NO PAYMENT WILL BE MADE FOR THIS SUBSTITUTION AS IT IS CONSIDERED INCIDENTAL TO THE COST OF THE REINFORCED CONCRETE DECK SLAB.

FOR SUBMITTAL OF WORKING DRAWINGS, SEE SPECIAL PROVISIONS.

FOR FALSEWORK AND FORMWORK, SEE SPECIAL PROVISIONS.

FOR CRANE SAFETY, SEE SPECIAL PROVISIONS.

FOR GROUT FOR STRUCTURES, SEE SPECIAL PROVISIONS.

FOR CURING CONCRETE, SEE SPECIAL PROVISIONS.

FOR PLACING LOAD ON STRUCTURE MEMBERS, SEE SPECIAL PROVISIONS.

THE USE OF NEEDLE BEAMS TO SUPPORT THE DECK SLAB WILL ONLY BE ALLOWED IN THE ACUTE CORNER OF THE SLAB.

THIS BRIDGE HAS BEEN DESIGNED IN ACCORDANCE WITH THE REQUIREMENTS OF THE STANDARD SPECIFICATIONS FOR SEISMIC DESIGN OF HIGHWAY BRIDGES FOR SEISMIC PERFORMANCE CATEGORY A.

FOR SHIPPING STEEL STRUCTURAL MEMBERS, SEE SPECIAL PROVISIONS.

FOR METRIC STRUCTURAL STEEL, SEE SPECIAL PROVISIONS.

TOTAL BILL OF MATERIAL

	FOUNDATION EXCAVATION FOR BENT	REINFORCED CONCRETE DECK SLAB	GROOVING BRIDGE FLOORS	CLASS A CONCRETE	BRIDGE APPROACH SLABS	REINFORCING STEEL	SPIRAL COLUMN REINFORCING STEEL	STRUCTURAL STEEL	HP 310 X 79 STEEL PILES		CONCRETE BARRIER RAIL	100mm SLOPE PROTECTION	POT BEARINGS	ELASTOMERIC BEARINGS	EXPANSION JOINT SEALS
		SQ. METERS	SQ. METERS	CU. METERS	LUMP SUM	kg	kg	APPROX. kg	NO.	METERS	METERS	SQ. METERS	LUMP SUM	LUMP SUM	LUMP SUM
SUPERSTRUCTURE		1090.2	1071.3		LUMP SUM			246,000			188.820		LUMP SUM	LUMP SUM	LUMP SUM
END BENT #1				39.3		2,905			11	92.3		319			
BENT #1	LUMP SUM			90.5		7,308	927								
END BENT #2				41.5		3,108			10	115.7		218			
TOTAL	LUMP SUM	1090.2	1071.3	171.3	LUMP SUM	13,321	927	246,000	21	208.0	188.820	537	LUMP SUM	LUMP SUM	LUMP SUM

TOTAL BILL OF MATERIAL - ENGLISH

	LUMP SUM	SQ. FT.	SQ. FT.	CU. YDS.	LUMP SUM	LBS.	LBS.	APPROX. LBS.	NO.	LIN. FT.	LIN. FT.	SQ. YD.	LUMP SUM	LUMP SUM	LUMP SUM
TOTAL	LUMP SUM	11,735	11,531	224.1	LUMP SUM	29,368	2,044	542,337	21	682	619.49	642	LUMP SUM	LUMP SUM	LUMP SUM

PROJECT NO. R-2413C

GUILFORD-ROCKINGHAM COUNTY

STATION: 20+06.118 -LREV-
16+24.670 -SB US 220 RP-

SHEET 3 OF 3

NORTH CAROLINA PROFESSIONAL SEAL 022516 ENGINEER EMILY E. MURPHY

10/28/11

STATE OF NORTH CAROLINA
DEPARTMENT OF TRANSPORTATION
RALEIGH

GENERAL DRAWING
FOR BRIDGE ON US 220
RAMP OVER NC 68
CONNECTOR BETWEEN
NC 150 AND US 158

REVISIONS						SHEET NO.
NO.	BY:	DATE:	NO.	BY:	DATE:	S-3
1			3			TOTAL SHEETS
2			4			237

DRAWN BY : NMR/T.L. AVERETTE DATE : 06-06-11
CHECKED BY : PEGGY PARISI DATE : 07-26-11

19-OCT-2011 13:51
R:\TIPProjects-R\R2413c\Structures\Final Plans\Str.#1\R2413C_sd_GD_01.dgn
taverette

STR #1

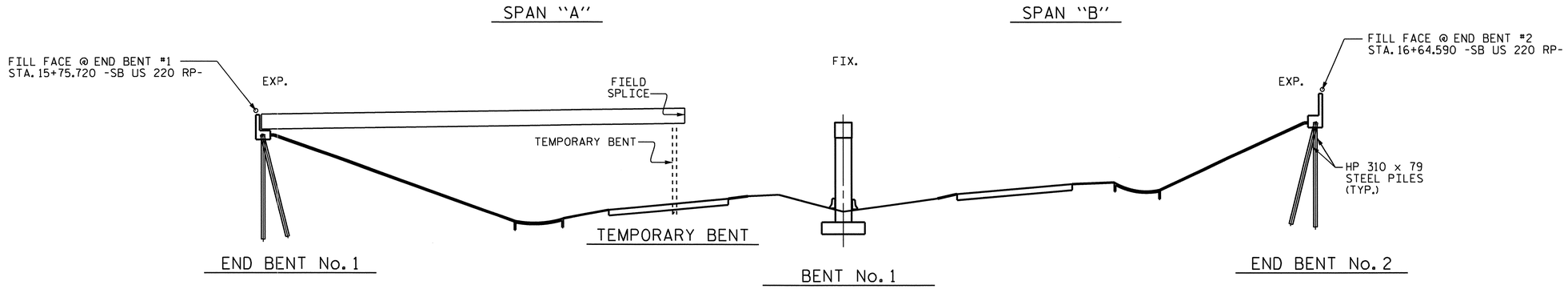

STAGE I GIRDER ERECTION

(SECTIONS AT BENT & END BENTS ARE AT RIGHT ANGLES)

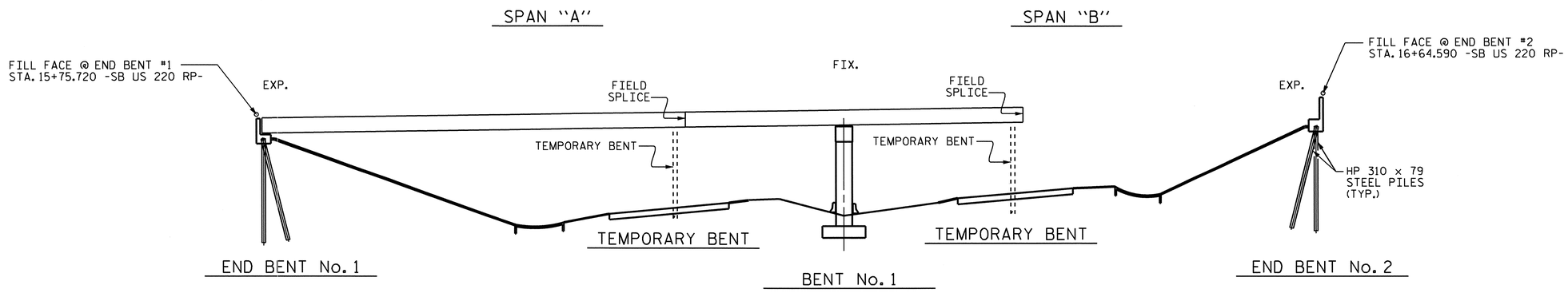

STAGE II GIRDER ERECTION

(SECTIONS AT BENT & END BENTS ARE AT RIGHT ANGLES)

ERECTION NOTES

ERECT A MINIMUM OF TWO GIRDERS WITH ALL DIAPHRAGMS/CROSSFRAMES BETWEEN THE GIRDERS IN PLACE AND THE BOLTS TIGHTENED PRIOR TO RELEASING THE GIRDERS.

ERECT EACH SUBSEQUENT GIRDER WITH DIAPHRAGMS/CROSSFRAMES CONNECTING TO THE ADJACENT PREVIOUSLY ERECTED GIRDER AND TIGHTEN ALL BOLTS BEFORE RELEASING THE GIRDER.

THE STRUCTURAL STEEL SHALL BE SUPPORTED DURING ERECTION IN ITS CAMBERED POSITION. A MINIMUM OF ONE TEMPORARY BENT SHALL BE USED IN BOTH SPANS "A" & "B".

TEMPORARY BENTS SHALL SUPPORT ALL GIRDERS IN THE TYPICAL SECTION.

TEMPORARY BENTS SHALL REMAIN IN PLACE UNTIL ALL DIAPHRAGMS/CROSSFRAMES ARE IN PLACE AND ALL HIGH STRENGTH BOLTS ARE TIGHTENED.

TEMPORARY BENTS SHALL PROVIDE BEARING AT CONNECTOR PLATE LOCATIONS. WHEN CONNECTOR PLATES ARE USED AS TEMPORARY BEARING STIFFENERS, DIAPHRAGMS MUST BE ATTACHED.

THE CONTRACTOR'S ERECTION PLANS SHALL INCLUDE A METHOD OF TEMPORARY BENT REMOVAL THAT WILL UNIFORMLY TRANSFER THE STRUCTURAL WEIGHT TO THE DIAPHRAGMS/CROSSFRAMES AND THE GIRDERS WILL REMAIN IN THE CAMBERED POSITIONS.

PLANS FOR TEMPORARY BENT ERECTION AND REMOVAL SHALL BE SUBMITTED TO THE ENGINEER FOR REVIEW.

THE CONTRACTOR IS RESPONSIBLE FOR DESIGNING THE TEMPORARY BENTS. THE DESIGNS SHALL BE COMPLETED BY A PROFESSIONAL ENGINEER REGISTERED IN THE STATE OF NORTH CAROLINA. THE CONTRACTOR SHALL SUBMIT SIGNED AND SEALED WORKING DRAWINGS AND CALCULATIONS FOR APPROVAL BY THE ENGINEER.

DURING THE GIRDER ERECTION PROCEDURE, THE CONTRACTOR IS RESPONSIBLE FOR PROVIDING TEMPORARY LATERAL BRACING AND OTHER MEANS OF SUPPORT, AS REQUIRED, TO ENSURE STABILITY OF THE GIRDERS, AVOID UPLIFT OF THE GIRDERS AT THE TEMPORARY BENTS AND TO ENSURE PLUMBNESS OF THE GIRDERS IN THE FINAL CONDITION.

NO SEPARATE MEASUREMENT OR PAYMENT WILL BE MADE FOR PROVIDING THE TEMPORARY BENTS. THE COST FOR ALL MATERIALS, EQUIPMENT, TOOLS, LABOR AND ANY INCIDENTALS NECESSARY TO PROVIDE THE TEMPORARY BENTS SHALL BE CONSIDERED INCIDENTAL TO THE LUMP SUM BID PRICE FOR STRUCTURAL STEEL.

THE CONTRACTOR MAY SUBMIT AN ALTERNATE ERECTION METHOD TO THE ENGINEER FOR REVIEW AND APPROVAL.

PROJECT NO. R-2413C
GUILFORD-ROCKINGHAM COUNTY
STATION: 20+06.118 -LREV-

NORTH CAROLINA PROFESSIONAL SEAL 022516 ENGINEER EMILY E. MURRAY
10/28/11

STATE OF NORTH CAROLINA
DEPARTMENT OF TRANSPORTATION
RALEIGH

GIRDER ERECTION DETAILS

REVISIONS						SHEET NO.
NO.	BY:	DATE:	NO.	BY:	DATE:	S-4
1			3			TOTAL SHEETS
2			4			237

DRAWN BY : PEGGY PARISI DATE : 6-1-11
CHECKED BY : T.L. AVERETTE DATE : 7-28-11

13-SEP-2011 10:33
W:\Structures\Final Plans\Str.#1\R2413C_sd_GD_01.dgn
bbarodawala

STR. #1

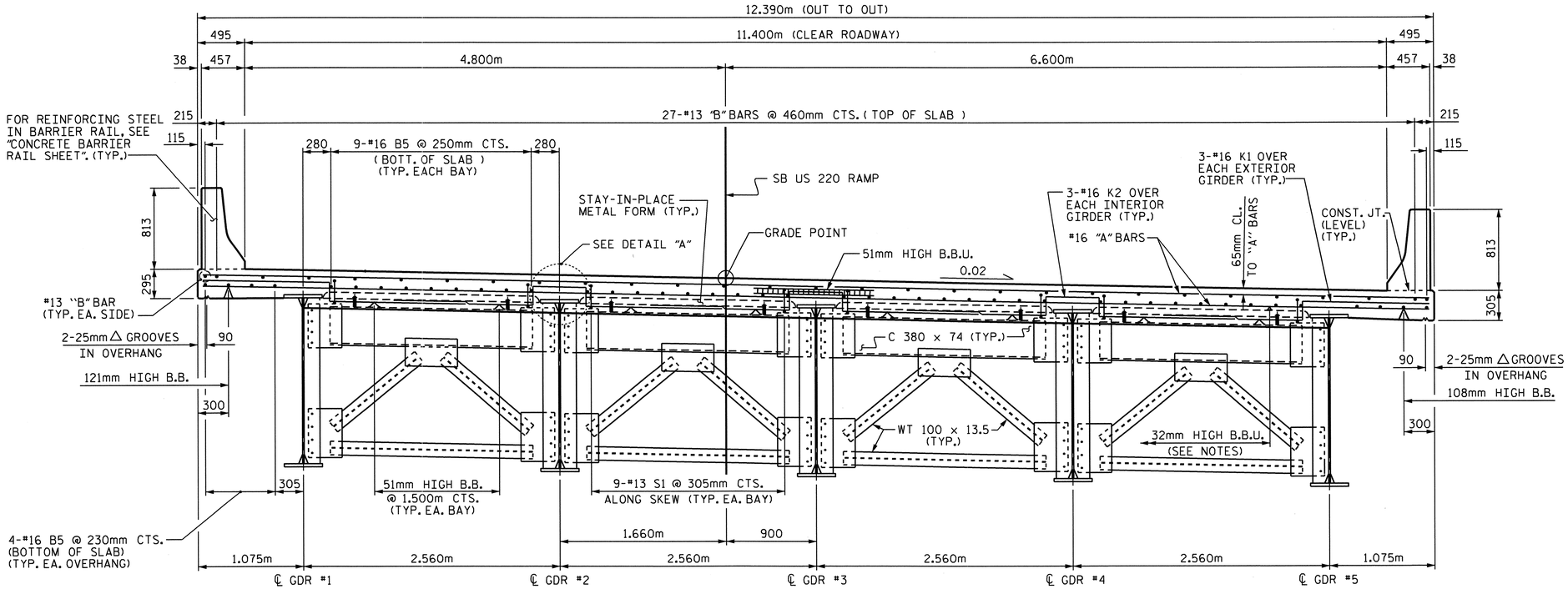

TYPICAL SECTION @ END BENT DIAPHRAGM

SHOWING TYPE D1, SEE "FRAMING PLAN"

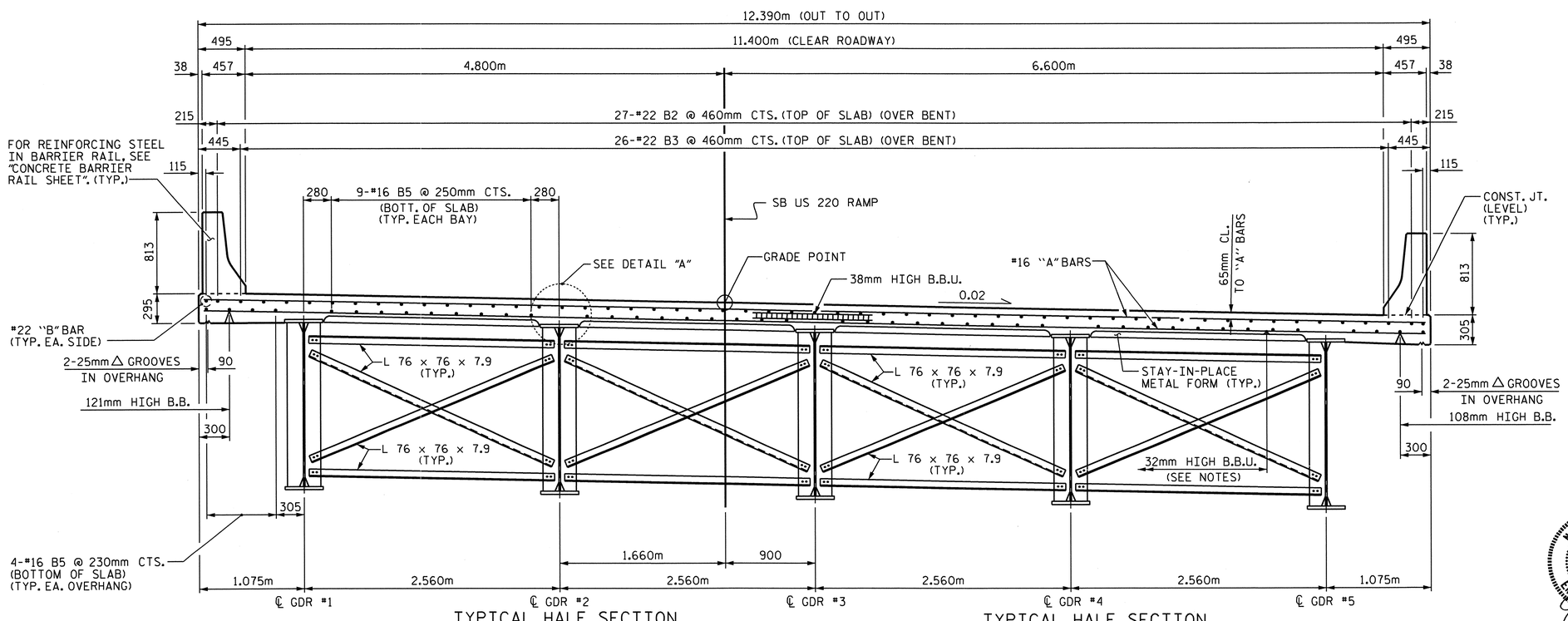

TYPICAL HALF SECTION @ BENT DIAPHRAGM

SHOWING TYPE D2, SEE "FRAMING PLAN"

TYPICAL HALF SECTION @ INTERMEDIATE DIAPHRAGM

SHOWING TYPE D3, SEE "FRAMING PLAN"

---- NOTES ----

PROVIDE 32mm HIGH BEAM BOLSTERS UPPER AT 1.2m CTS. ATOP THE METAL STAY-IN-PLACE FORMS TO SUPPORT THE BOTTOM MAT OF 'A' BARS. WHEN USING REMOVABLE FORMS, PROVIDE CONTINUOUS HIGH CHAIRS FOR METAL DECK (C.H.C.M.) @ 1.2m CTS. WITH A HEIGHT TO SUPPORT THE BOTTOM MAT OF 'A' BARS A CLEAR DISTANCE OF 65mm ABOVE THE TOP OF THE REMOVABLE FORM.

METAL STAY-IN-PLACE FORMS SHALL NOT BE WELDED TO GIRDER FLANGES IN THE ZONES REQUIRING CHARPY V-NOTCH TEST. SEE STRUCTURAL STEEL DETAIL SHEETS.

PREVIOUSLY CAST CONCRETE IN A CONTINUOUS UNIT SHALL HAVE ATTAINED A MINIMUM COMPRESSIVE STRENGTH OF 20.7 MPa BEFORE ADDITIONAL CONCRETE IS CAST IN THE UNIT.

BARRIER RAIL IN A CONTINUOUS UNIT SHALL NOT BE CAST UNTIL ALL SLAB CONCRETE IN THE UNIT HAS BEEN CAST AND HAS REACHED A MINIMUM COMPRESSIVE STRENGTH OF 20.7 MPa.

STRUCTURAL STEEL ERECTION IN A CONTINUOUS UNIT SHALL BE COMPLETE BEFORE FALSEWORK OR FORMS ARE PLACED ON THE UNIT.

THE CONTRACTOR MAY, WHEN NECESSARY, PROPOSE A SCHEME FOR AVOIDING INTERFERENCE BETWEEN METAL STAY-IN-PLACE FORM SUPPORTS OR FORMS AND GIRDER STIFFENERS OR CONNECTOR PLATES. THE PROPOSAL SHALL BE INDICATED, AS APPROPRIATE, ON EITHER THE STEEL WORKING DRAWINGS OR THE METAL STAY-IN- PLACE FORM WORKING DRAWINGS.

THE CONTRACTOR SHALL ADJUST THE GIRDER BUILDUPS AS NECESSARY TO INCORPORATE A MAXIMUM PERMISSIBLE VARIATION IN POT BEARING DEPTH OF 13mm, SEE SPECIAL PROVISION FOR POT BEARINGS.

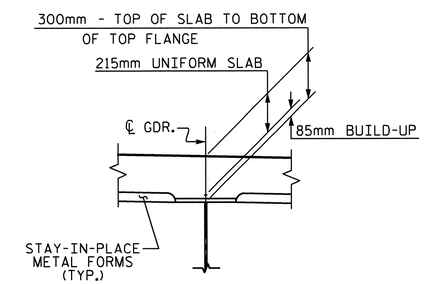

DETAIL "A"

PROJECT NO. R-2413C

GUILFORD-ROCKINGHAM COUNTY

STATION: 20+06.118 -LREV-

SHEET 1 OF 2

STATE OF NORTH CAROLINA
DEPARTMENT OF TRANSPORTATION
RALEIGH

SUPERSTRUCTURE

TYPICAL SECTIONS

NORTH CAROLINA PROFESSIONAL SEAL 022516 ENGINEER EMILY E. MURRAY

10/28/11

REVISIONS						SHEET NO.
NO.	BY:	DATE:	NO.	BY:	DATE:	S-5
1			3			TOTAL SHEETS
2			4			237

DRAWN BY : NMR/T.L. AVERETTE DATE : 6-29-11
CHECKED BY : PEGGY PARISI DATE : 7-26-11

19-OCT-2011 13:51
R:\TIPProjects-R\R2413c\Structures\Final Plans\Str_#1\R2413C_sd_TS_01.dgn
taverette

STR. #1

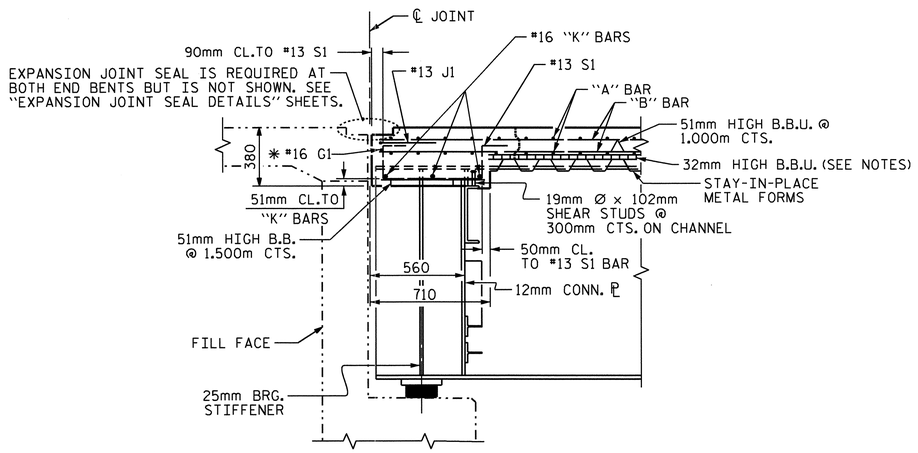

SECTION THRU END BENT DIAPHRAGM

* #16 G1 BAR MAY BE SHIFTED SLIGHTLY, AS NECESSARY, TO CLEAR DIAPHRAGM AND REINFORCING STEEL.

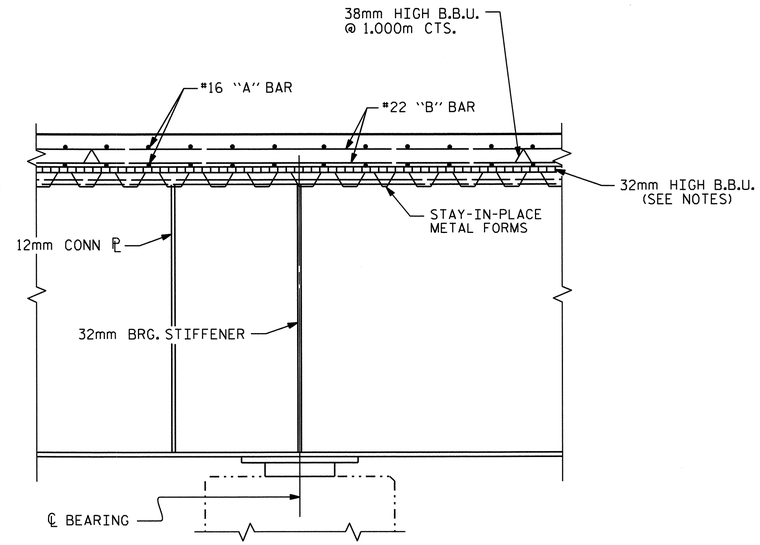

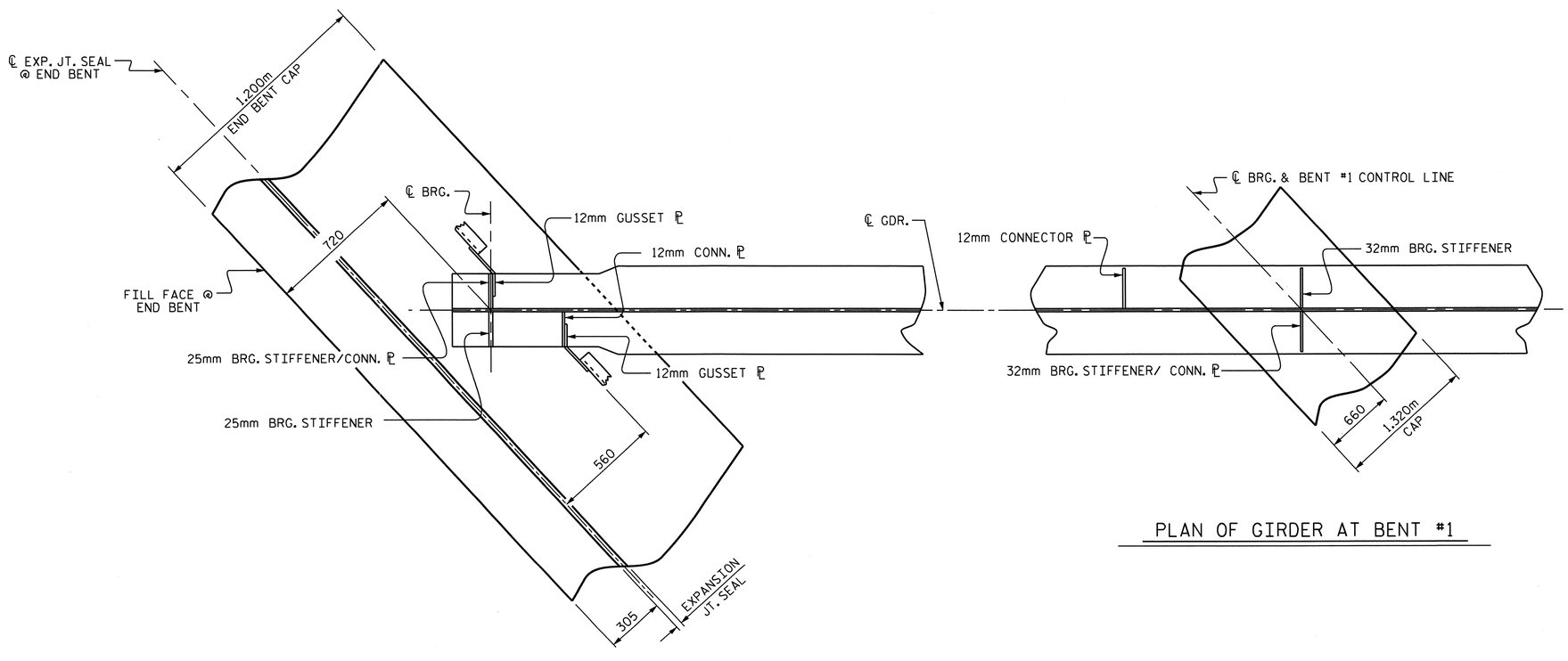

PLAN OF GIRDER AT END BENT JOINT

(END BENT #1 SHOWN, END BENT #2 SIMILAR)

PLAN OF GIRDER AT BENT #1

PROJECT NO. R-2413C

GUILFORD-ROCKINGHAM COUNTY

STATION: 20+06.118 -LREV-

SHEET 2 OF 2

STATE OF NORTH CAROLINA
DEPARTMENT OF TRANSPORTATION
RALEIGH

SUPERSTRUCTURE

TYPICAL SECTION DETAILS

NORTH CAROLINA PROFESSIONAL SEAL 022516 ENGINEER EMILY E. McGRAY

Emily E. McGray 10/28/11

REVISIONS						SHEET NO.
NO.	BY:	DATE:	NO.	BY:	DATE:	S-6
1			3			TOTAL SHEETS
2			4			237

DRAWN BY : NMR/T.L. AVERETTE DATE : 6-29-11
CHECKED BY : PEGGY PARISI DATE : 7-26-11

19-OCT-2011 13:52
R:\TIPProjects-R\R2413c\Structures\Final Plans\Str.#1\R2413C_sd_TS_01.dgn
taverette

STR. #1

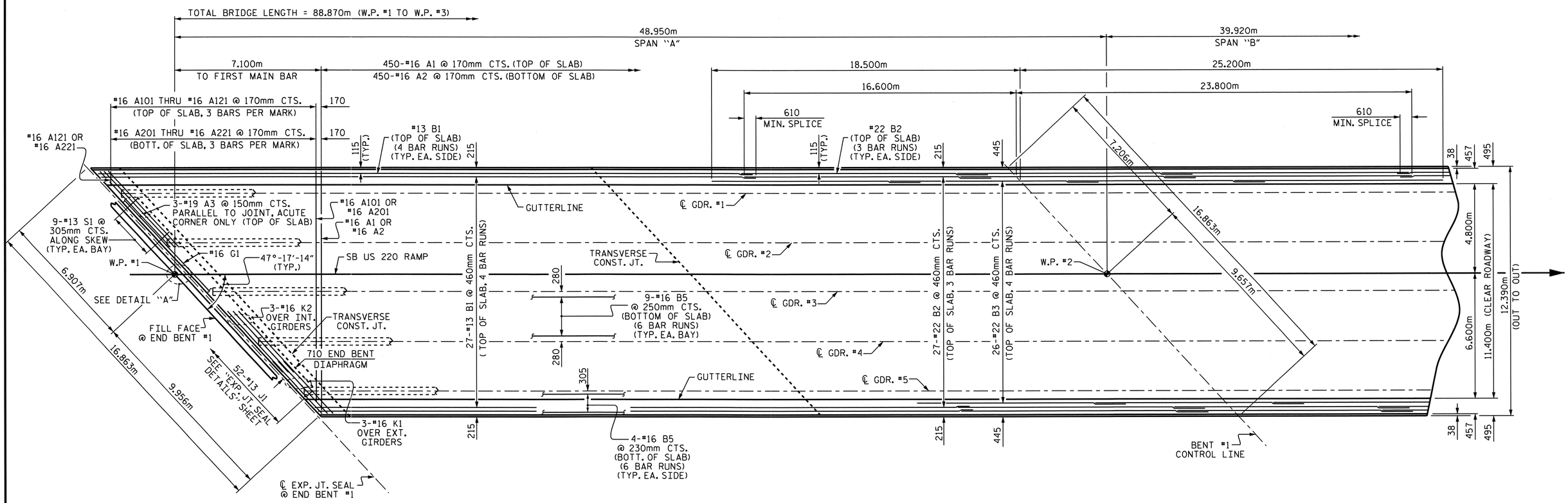

PLAN OF SPAN "A"

FOR LOCATION OF TRANSVERSE CONSTRUCTION JOINTS, SEE POURING SEQUENCE ON SUPERSTRUCTURE BILL OF MATERIAL SHEET.

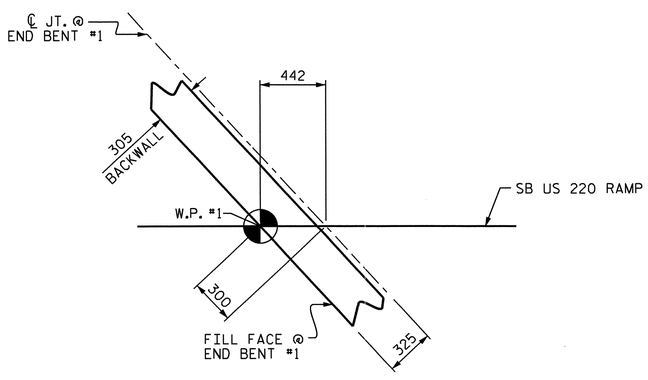

DETAIL "A"

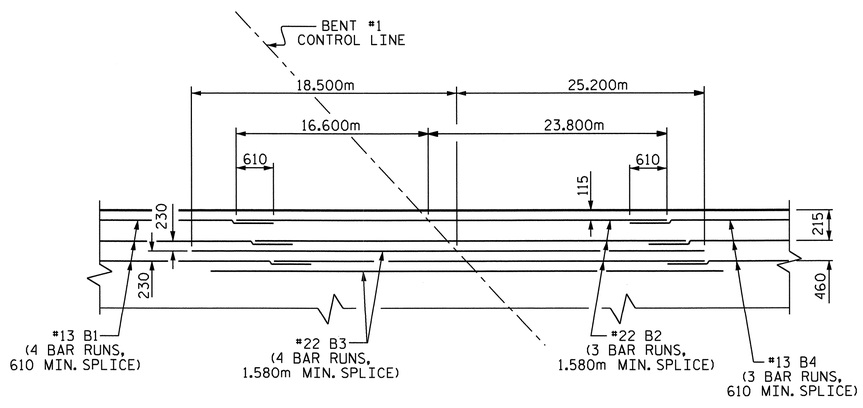

TOP OF SLAB REINFORCING LAYOUT

@ BENT #1

PROJECT NO. R-2413C

GUILFORD-ROCKINGHAM COUNTY

STATION: 20+06.118 -LREV-

SHEET 1 OF 2

STATE OF NORTH CAROLINA
DEPARTMENT OF TRANSPORTATION
RALEIGH

SUPERSTRUCTURE

PLAN OF SPAN "A"

NORTH CAROLINA PROFESSIONAL SEAL 022516 ENGINEER CLAY E. MURRAY
10/28/11

REVISIONS							SHEET NO.
NO.	BY:	DATE:	NO.	BY:	DATE:		S-7
1			3				TOTAL SHEETS
2			4				237

DRAWN BY : T.L. AVERETTE DATE : 6-29-11
CHECKED BY : PEGGY PARISI DATE : 7-26-11

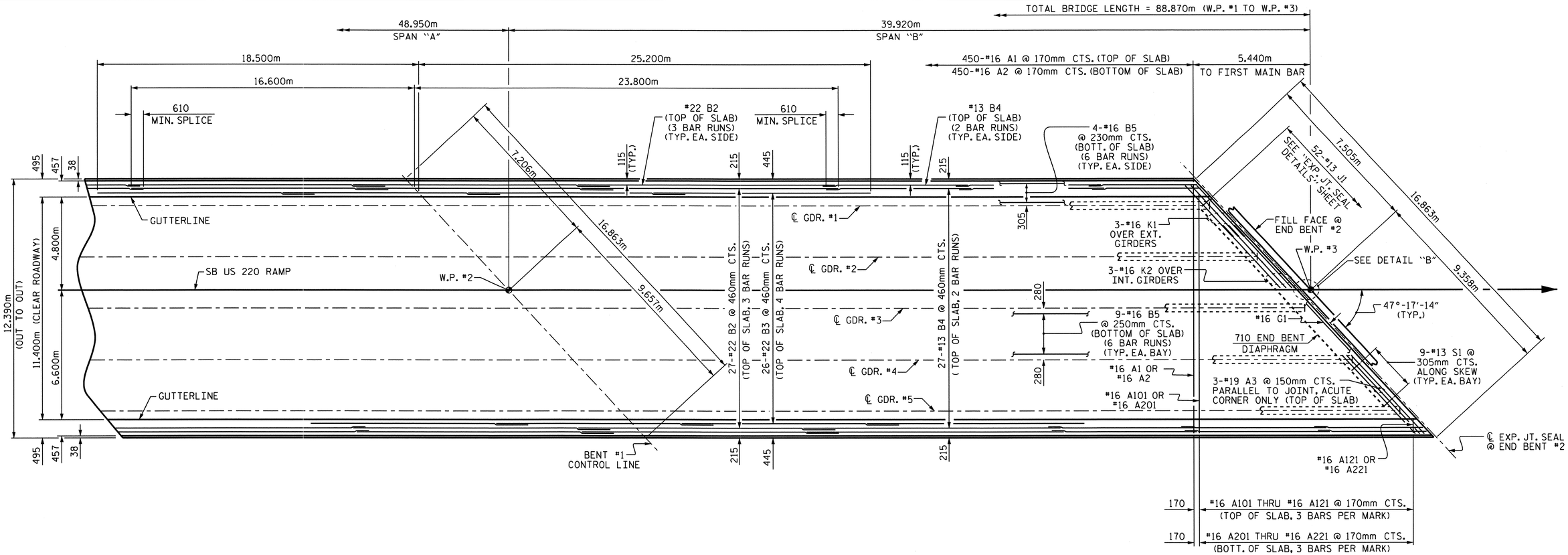

PLAN OF SPAN "B"

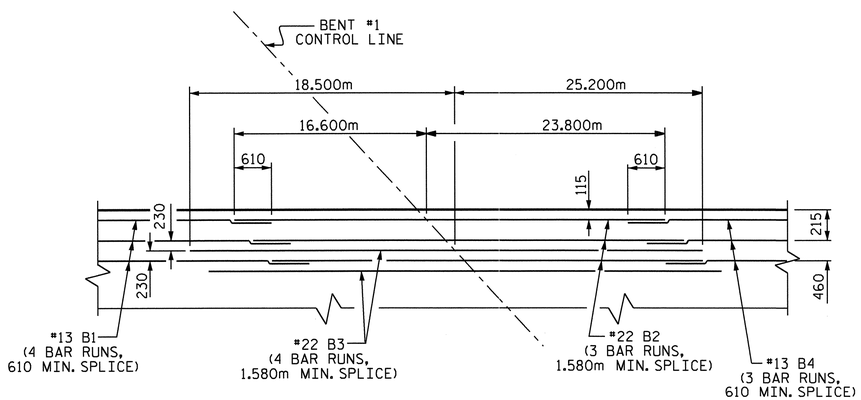

TOP OF SLAB REINFORCING LAYOUT

@ BENT #1

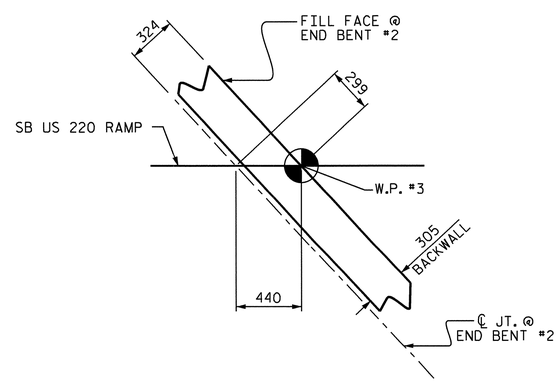

DETAIL "B"

PROJECT NO. R-2413C

GUILFORD-ROCKINGHAM COUNTY

STATION: 20+06.118 -LREV-

SHEET 2 OF 2

STATE OF NORTH CAROLINA
DEPARTMENT OF TRANSPORTATION
RALEIGH

SUPERSTRUCTURE

PLAN OF SPAN "B"

NORTH CAROLINA PROFESSIONAL SEAL 022516 ENGINEER L. Y. E. MURRAY

10/28/11

REVISIONS						SHEET NO.
NO.	BY:	DATE:	NO.	BY:	DATE:	S-8
1			3			TOTAL SHEETS
2			4			237

DRAWN BY : T.L. AVERETTE DATE : 6-29-11
CHECKED BY : PEGGY PARISI DATE : 7-26-11

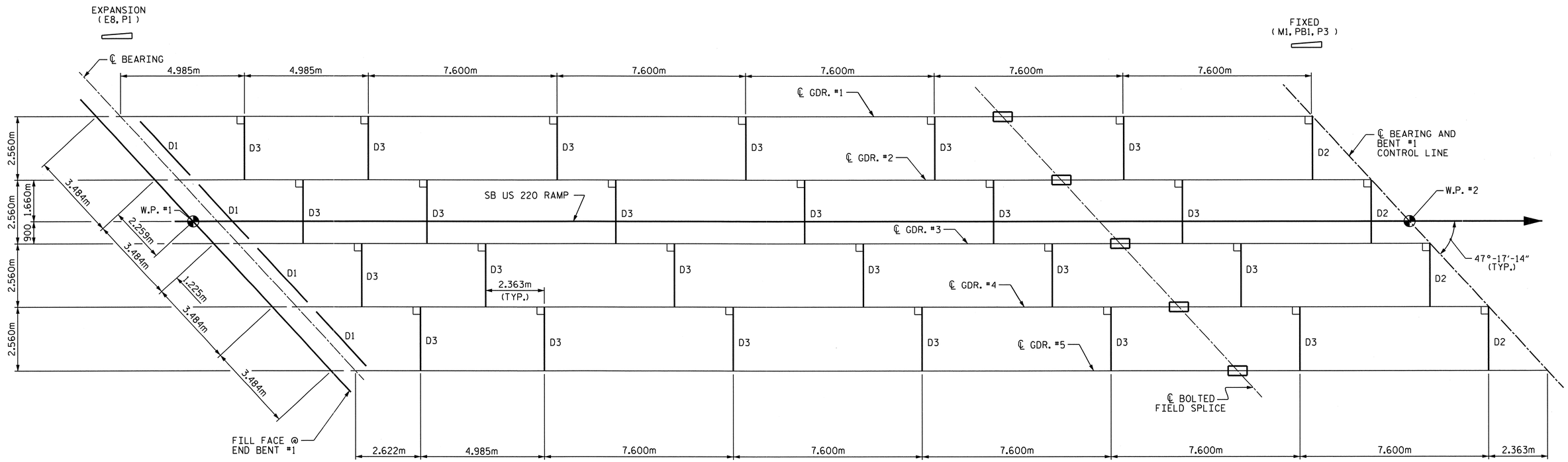

SPAN "A"

PROJECT NO. R-2413C

GUILFORD-ROCKINGHAM COUNTY

STATION: 20+06.118 -LREV-

SHEET 1 OF 2

STATE OF NORTH CAROLINA
DEPARTMENT OF TRANSPORTATION
RALEIGH

FRAMING PLAN OF CONTINUOUS SPAN "A"

NORTH CAROLINA PROFESSIONAL SEAL 022516 ENGINEER ELMER E. MURRAY

10/28/11

REVISIONS						SHEET NO.
NO.	BY:	DATE:	NO.	BY:	DATE:	S-9
1			3			TOTAL SHEETS
2			4			237

DRAWN BY : NMR/T.L. AVERETTE DATE : 6-29-11
CHECKED BY : PEGGY PARISI DATE : 7-26-11

19-OCT-2011 13:53
R:\TIPProjects-R\R2413c\Structures\FinalPlans\Str.#1\R2413C_sd_FP_01.dgn
taverette

STR. #1

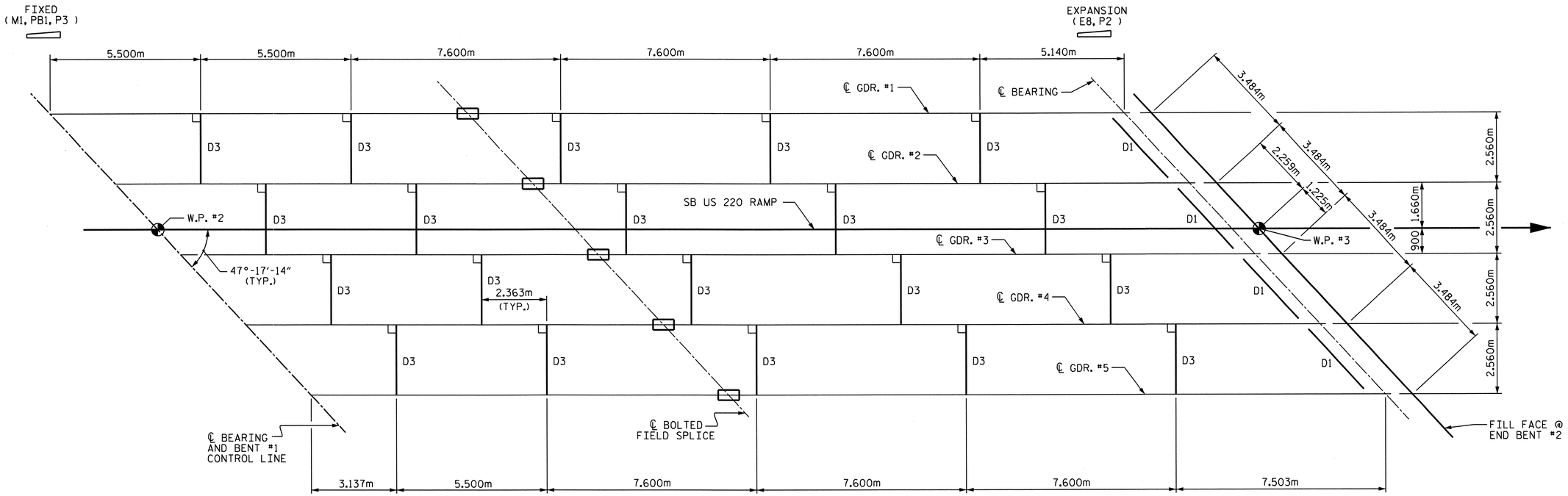

SPAN "B"

FOR BENT DIAPHRAGM D2, SEE SHEET 1 OF 2

PROJECT NO. R-2413C

GUILFORD-ROCKINGHAM COUNTY

STATION: 20+06.118 -LREV-

SHEET 2 OF 2

STATE OF NORTH CAROLINA
DEPARTMENT OF TRANSPORTATION
RALEIGH

FRAMING PLAN OF CONTINUOUS SPAN "B"

NORTH CAROLINA PROFESSIONAL SEAL 022516 ENGINEER EMILY E. McGRAW

10/28/11

REVISIONS						SHEET NO.
NO.	BY:	DATE:	NO.	BY:	DATE:	S-10
1			3			TOTAL SHEETS
2			4			237

DRAWN BY : NMR/T.L. AVERETTE DATE : 6-29-11
CHECKED BY : PEGGY PARISI DATE : 7-26-11

19-OCT-2011 13:53
R:\TIPProjects-R\R2413c\Structures\FinalPlans\Str.#1\R2413C_sd_FP_01.dgn
taverette

STR. #1

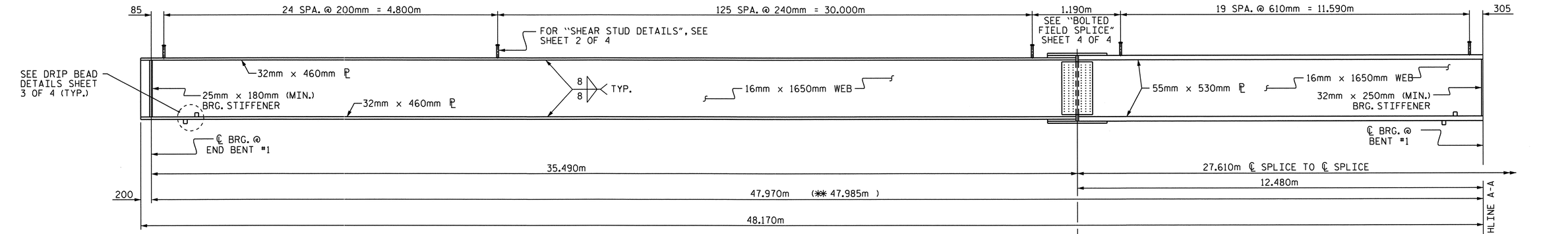

GIRDER ELEVATION

(TYPICAL ALL GIRDERS)

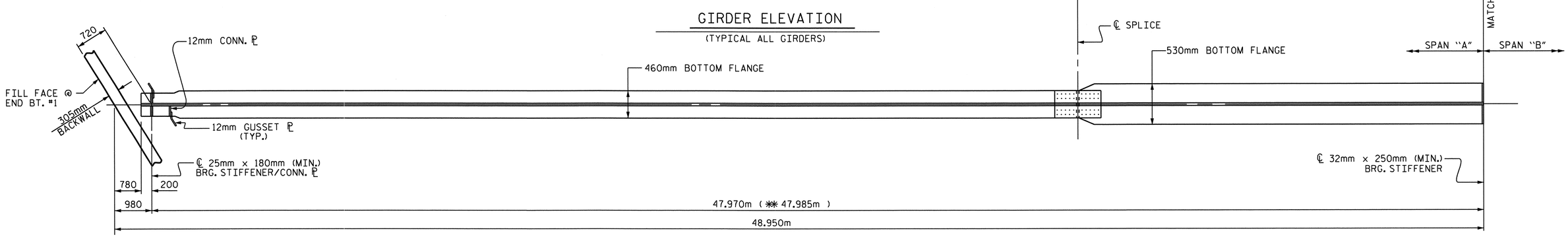

BOTTOM FLANGE DETAIL

** SLOPE DISTANCE

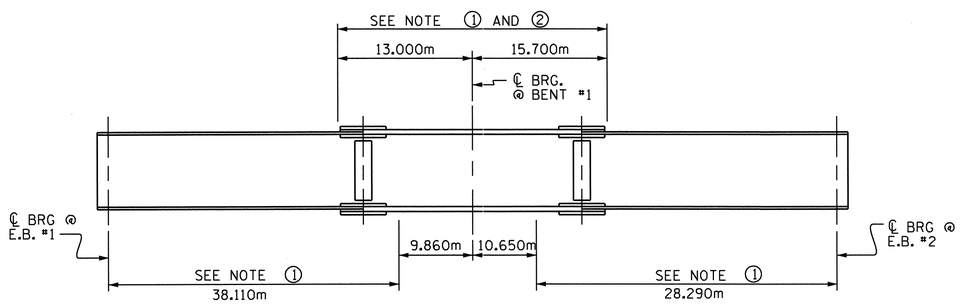

GIRDER MAKE UP

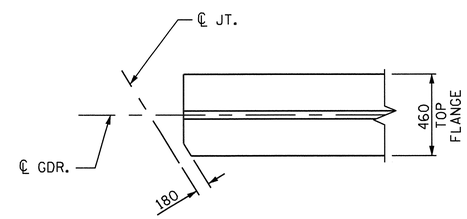

TOP FLANGE CLIP DETAIL

(TYP. EA. END)

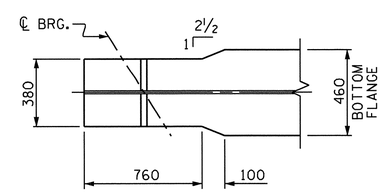

BOTTOM FLANGE TAPER DETAIL

(TYP. EA. END)

NOTE ①: CHARPY V-NOTCH TESTS ARE REQUIRED FOR ALL TOP OR BOTTOM FLANGE PLATES WHICH FALL WITHIN THESE LIMITS, ALL WEB PLATES, AND ALL SPLICE PLATES. IF A PERMITTED SHOP FLANGE SPLICE IS NOT USED, CHARPY V-NOTCH TESTS WILL BE REQUIRED FOR THE ENTIRE FLANGE PLATE. FOR CHARPY V-NOTCH TESTS, SEE ARTICLE 1072-9 OF THE STANDARD SPECIFICATIONS.

NOTE ②: NO WELDING OF FORMS OR FALSEWORK TO THE TOP FLANGE WILL BE PERMITTED IN THIS REGION.

CHARPY V-NOTCH TESTS FOR CONTINUOUS PLATE GIRDERS

PROJECT NO. R-2413C
GUILFORD-ROCKINGHAM COUNTY
STATION: 20+06.118 -LREV-

SHEET 1 OF 4

STATE OF NORTH CAROLINA
DEPARTMENT OF TRANSPORTATION
RALEIGH

SUPERSTRUCTURE STRUCTURAL STEEL DETAILS SPAN "A"

NORTH CAROLINA PROFESSIONAL SEAL 022516 ENGINEER EMILY E. MURRAY
10/28/11

REVISIONS						SHEET NO.
NO.	BY:	DATE:	NO.	BY:	DATE:	S-11
1			3			TOTAL SHEETS
2			4			237

STR #1

DRAWN BY : NMR/T.L. AVERETTE DATE : 6-28-11
CHECKED BY : PEGGY PARISI DATE : 7-26-11

13-SEP-2011 10:29
W:\Structures\Final Plans\Str.#1\R2413C_sd_SS_01.dgn
bbarodawala

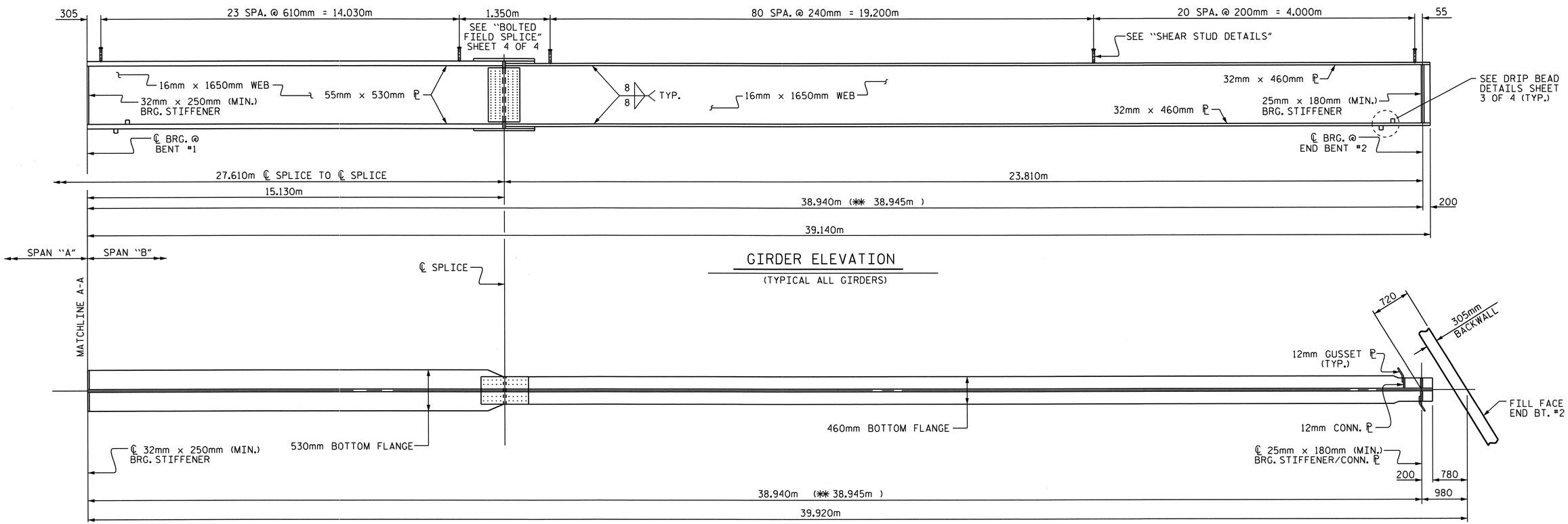

GIRDER ELEVATION

(TYPICAL ALL GIRDERS)

BOTTOM FLANGE DETAIL

✱✱ SLOPE DISTANCE

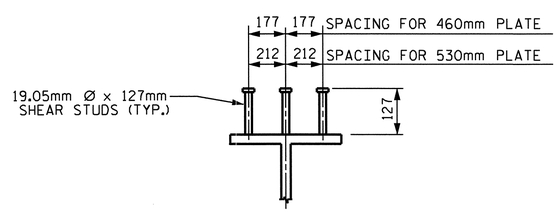

SHEAR STUD DETAILS

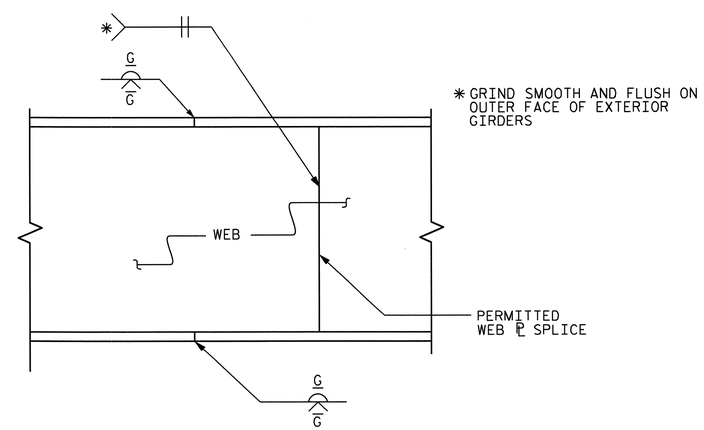

ELEVATION

TYPICAL FLANGE AND WEB BUTT JOINT

PROJECT NO. R-2413C

GUILFORD-ROCKINGHAM COUNTY

STATION: 20+06.118 -LREV-

SHEET 2 OF 4

STATE OF NORTH CAROLINA
DEPARTMENT OF TRANSPORTATION
RALEIGH

SUPERSTRUCTURE STRUCTURAL STEEL DETAILS SPAN "B"

NORTH CAROLINA PROFESSIONAL SEAL 022516 ENGINEER TIMOTHY E. MURRAY 10/28/11

REVISIONS						SHEET NO.
NO.	BY:	DATE:	NO.	BY:	DATE:	S-12
1			3			TOTAL SHEETS
2			4			237

DRAWN BY : NMR/T.L. AVERETTE DATE : 6-28-11
CHECKED BY : PEGGY PARISI DATE : 7-26-11

13-SEP-2011 10:29
W:\Structures\Final Plans\Str.#1\R2413C_sd_SS_01.dgn
bbarodawala

STR #1

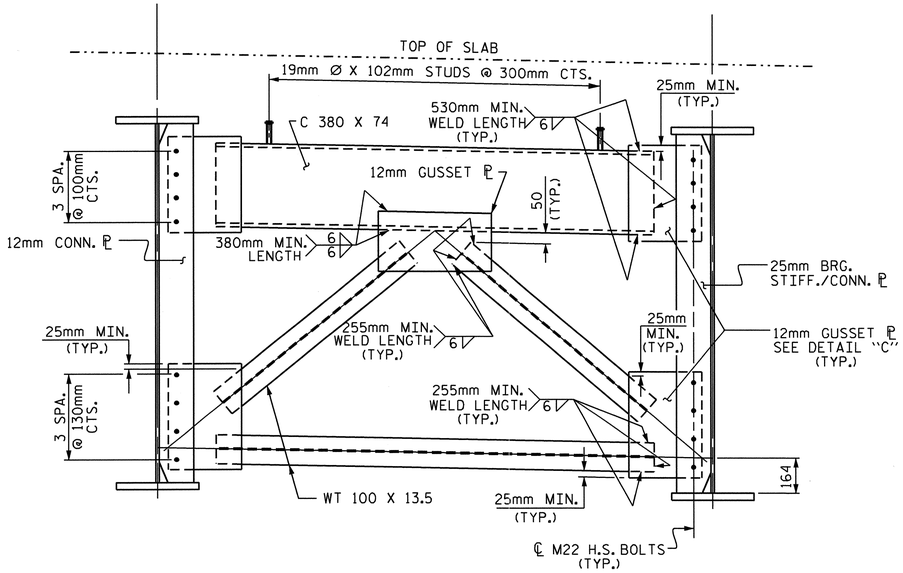

TYPICAL END BENT CROSSFRAME (D1)

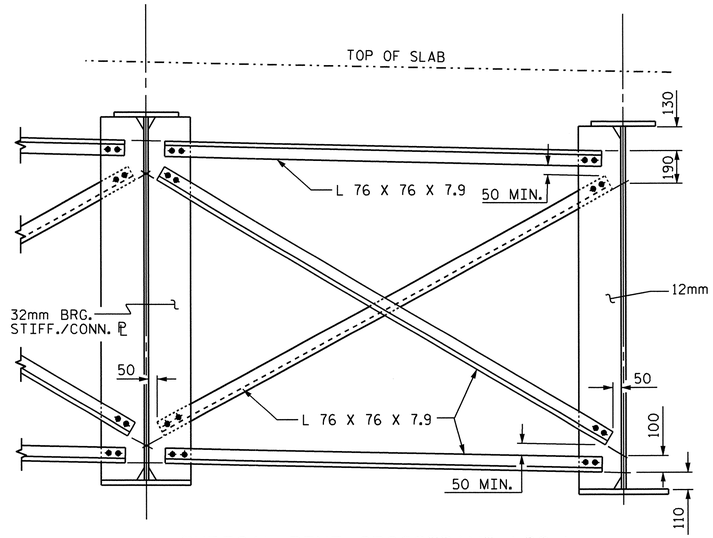

TYPICAL BENT CROSSFRAME (D2)

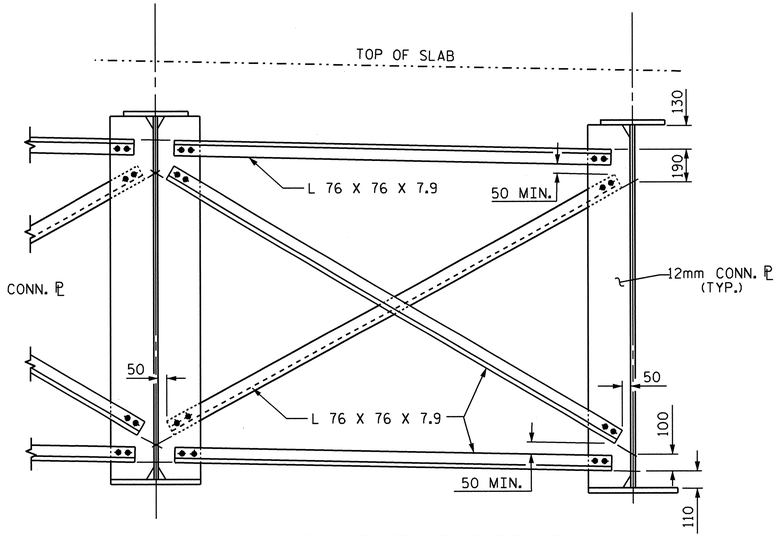

TYPICAL INTERMEDIATE CROSSFRAME (D3)

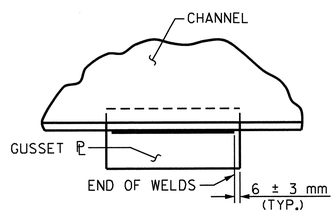

TYPICAL GUSSET PLATE CONNECTION

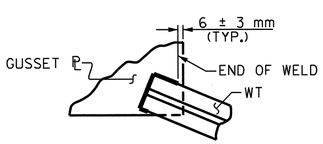

TYPICAL "TEE" TO GUSSET PLATE CONNECTION

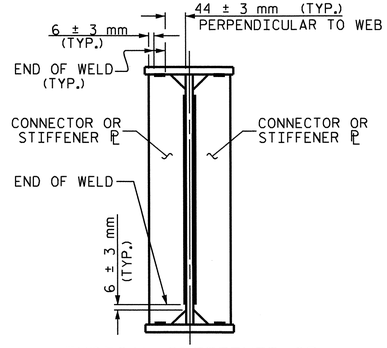

TYPICAL STIFFENER OR CONNECTOR PLATE CONNECTIONS

WELD TERMINATION DETAILS

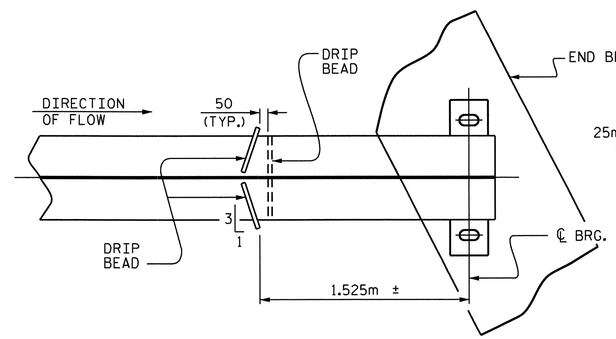

PART PLAN - BOTTOM FLANGE

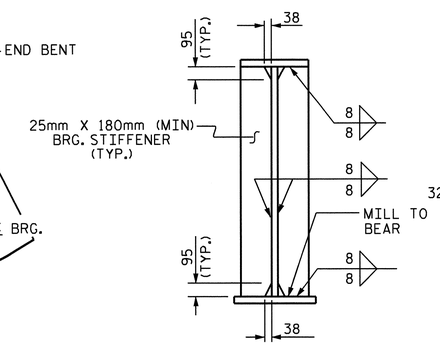

@ END BENTS

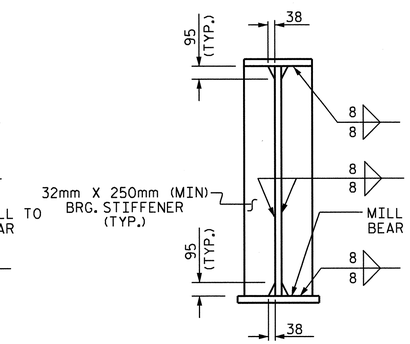

@ BENTS

NOTE:
THE BEARING STIFFENER SHALL BE WELDED TO THE BOTTOM FLANGE ONLY WHEN USED AS A CONNECTOR ℙ.

BEARING STIFFENER

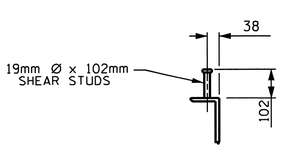

SHEAR STUD DETAILS

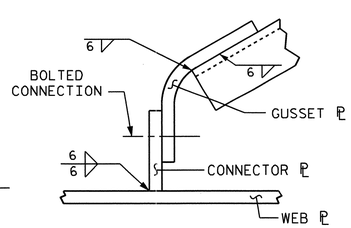

DETAIL "C"

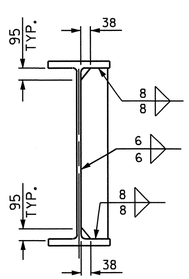

CONNECTOR PLATE DETAIL

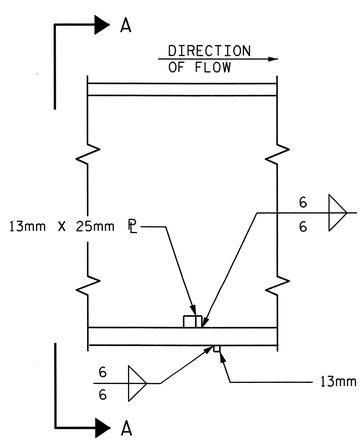

SECTION

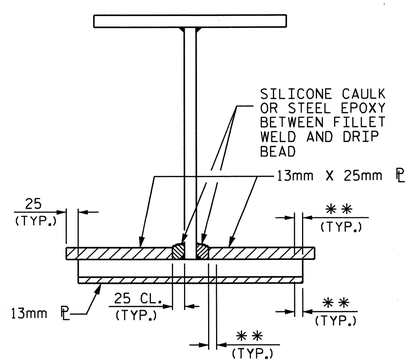

VIEW A-A

**SEE "WELD TERMINATION DETAILS"

DRIP BEAD DETAILS

PROJECT NO. R-2413C

GUILFORD-ROCKINGHAM COUNTY

STATION: 20+06.118 -LREV-

SHEET 3 OF 4

STATE OF NORTH CAROLINA
DEPARTMENT OF TRANSPORTATION
RALEIGH

SUPERSTRUCTURE STRUCTURAL STEEL DETAILS

NORTH CAROLINA PROFESSIONAL SEAL 022516 ENGINEER TIMOTHY E. MURRAY
10/28/11

REVISIONS						SHEET NO.
NO.	BY:	DATE:	NO.	BY:	DATE:	S-13
1			3			TOTAL SHEETS
2			4			237

DRAWN BY : NMR/T.L. AVERETTE DATE : 6-28-11
CHECKED BY : PEGGY PARISI DATE : 7-26-11

19-OCT-2011 13:54
R:\TIPProjects-R\R2413c\Structures\FinalPlans\Str.#1\R2413C_sd_SS_01.dgn
taverette

STR. #1

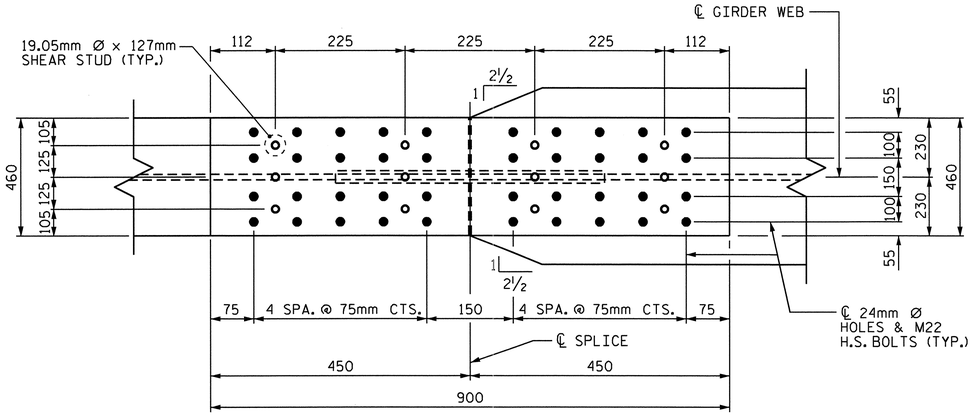

PLAN (TOP OF TOP FLANGE)

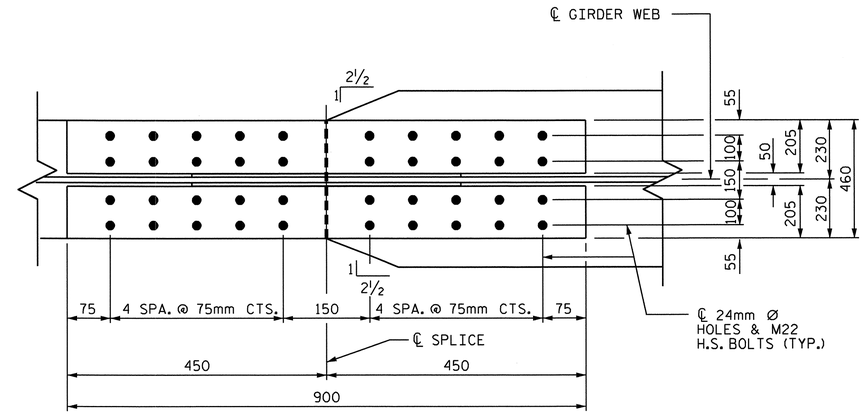

PLAN (TOP OF BOTTOM FLANGE)

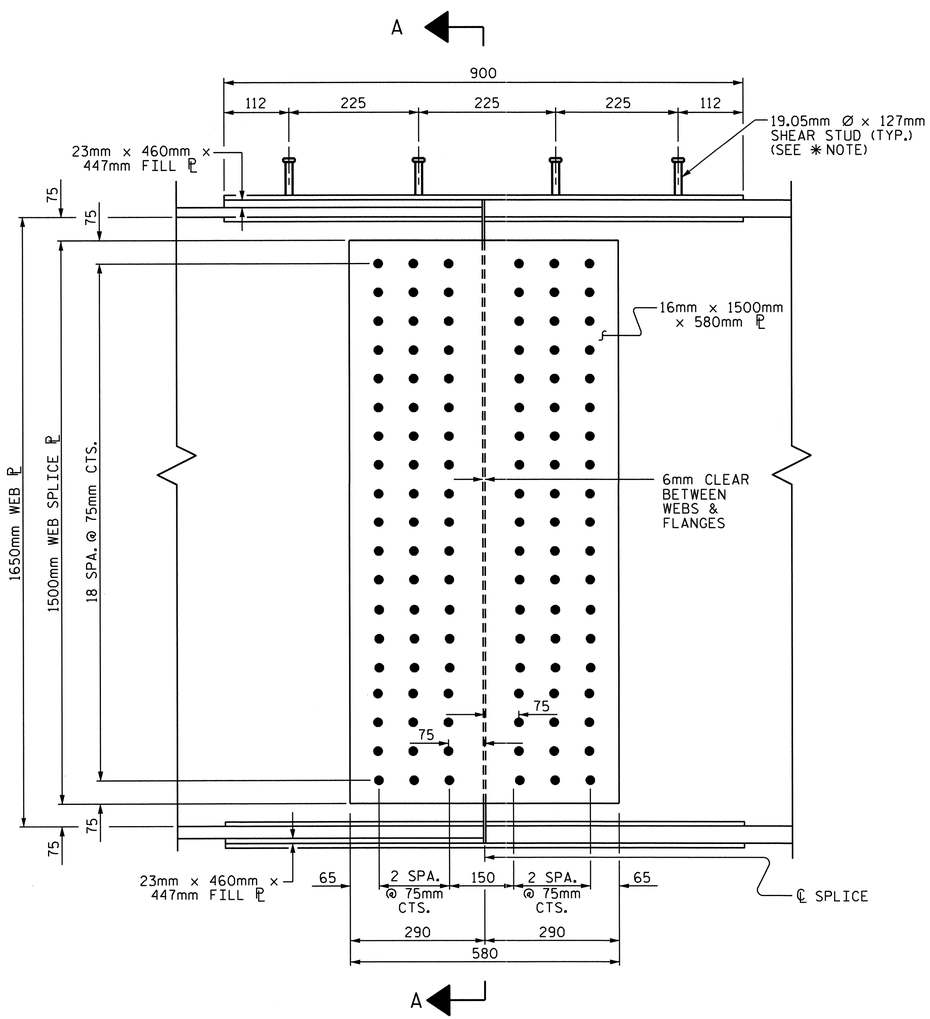

ELEVATION

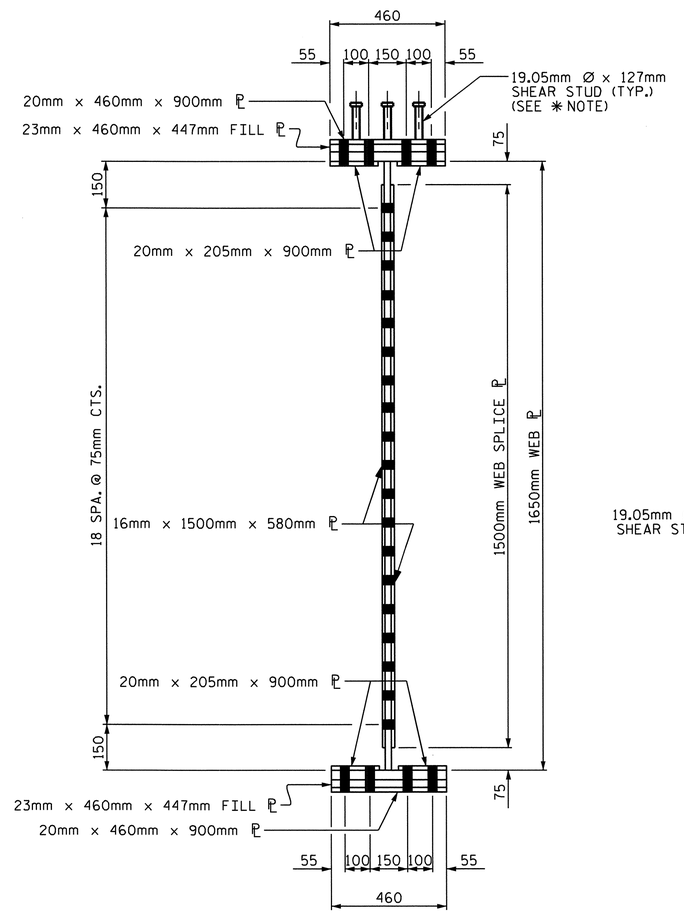

SECTION A-A

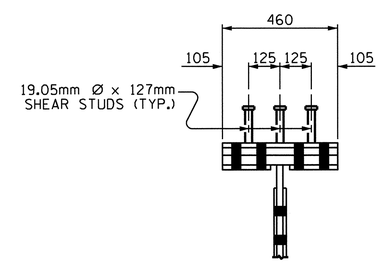

SHEAR STUD DETAIL FOR TOP FLANGE SPLICE PLATE

✱ NOTE: SHEAR STUDS ARE TO BE SHOP WELDED ON TOP OF PLATE BEFORE FIELD ASSEMBLY.

NOTES

ALL STRUCTURAL STEEL SHALL BE AASHTO M270 GRADE 345W AND PAINTED IN ACCORDANCE WITH SYSTEM 4 OF ARTICLE 442-7 OF THE STANDARD SPECIFICATIONS UNLESS OTHERWISE NOTED ON THE PLANS.

ALL DIMENSIONS SHOWN ARE HORIZONTAL OR VERTICAL, UNLESS OTHERWISE NOTED.

ALL FIELD CONNECTIONS TO BE 22.23mm DIA. HIGH STRENGTH BOLTS UNLESS OTHERWISE NOTED. FOR HIGH STRENGTH BOLTS, SEE SPECIAL PROVISIONS.

BEARING STIFFENERS ARE TO BE PLACED NORMAL TO THE WEB OF THE GIRDER AND SHALL BE PLUMB.

PERMITTED FLANGE AND WEB SHOP SPLICES SHALL NOT BE LOCATED WITHIN 4.5 METERS OF MAXIMUM DEAD LOAD DEFLECTION (NOR WITHIN 4.5 METERS OF INTERMEDIATE BEARINGS OF CONTINUOUS UNITS). KEEP 600mm MINIMUM BETWEEN WEB AND FLANGE SHOP SPLICES. KEEP 150mm MINIMUM BETWEEN CONNECTOR PLATE OR TRANSVERSE STIFFENER WELDS AND WEB OR FLANGE SHOP SPLICES.

STUDS ON GIRDERS MAY BE SHIFTED UP TO 25mm IF NECESSARY TO CLEAR FLANGE SPLICE WELD.

TENSION ON THE AASHTO M164 BOLTS SHALL BE CALIBRATED USING DIRECT TENSION INDICATOR WASHERS. FOR DIRECT TENSION INDICATORS, SEE SPECIAL PROVISIONS.

END OF GIRDERS SHALL BE PLUMB.

BEARING STIFFENER MAY REQUIRE COPING IF WIDER THAN BOTTOM FLANGE TO AVOID INTERFERENCE WITH THE ANCHOR BOLT.

FOR SHIPPING STEEL STRUCTURAL MEMBERS, SEE SPECIAL PROVISIONS.

FABRICATORS SHALL DETAIL DIAPHRAGM MEMBERS AND CONNECTIONS FOR FULL DEAD LOAD FIT UP. GIRDERS SHALL BE PLUMB AFTER THE FULL AMOUNT OF DEAD LOAD IS APPLIED.

BOLTED FIELD SPLICE DETAILS

(TYPICAL EACH FIELD SPLICE)

PROJECT NO. R-2413C
GUILFORD-ROCKINGHAM COUNTY
STATION: 20+06.118 -LREV-

SHEET 4 OF 4

STATE OF NORTH CAROLINA
DEPARTMENT OF TRANSPORTATION
RALEIGH

SUPERSTRUCTURE
STRUCTURAL STEEL
DETAILS
BOLTED FIELD SPLICE

NORTH CAROLINA PROFESSIONAL SEAL 022516 ENGINEER EMILY E. MURRAY
10/28/11

REVISIONS						SHEET NO.
NO.	BY:	DATE:	NO.	BY:	DATE:	S-14
1			3			TOTAL SHEETS
2			4			237

DRAWN BY : NMR/T.L. AVERETTE DATE : 6-28-11
CHECKED BY : PEGGY PARISI DATE : 7-26-11

13-SEP-2011 10:29
W:\Structures\Final Plans\Str.#1\R2413C_sd_SS_01.dgn
bbarodawala

STR. #1

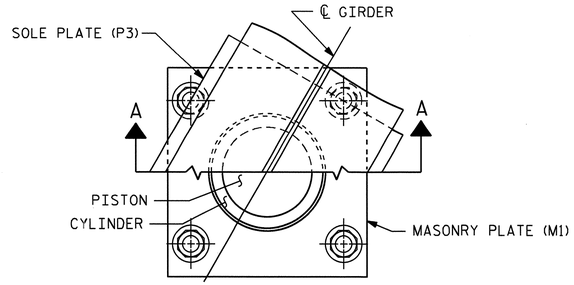

CUT-AWAY PLAN

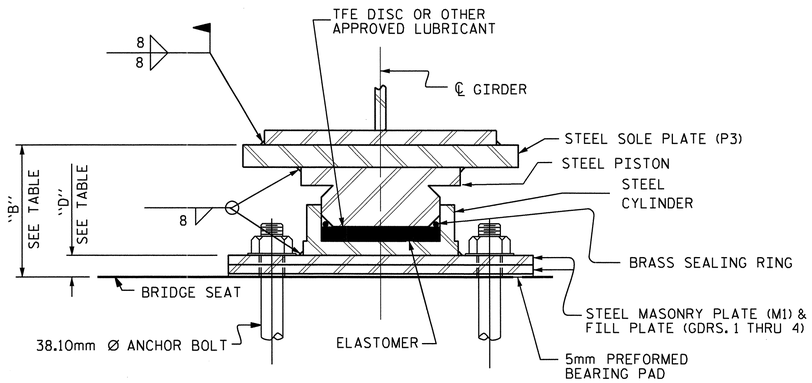

SECTION A-A

PB1, FIXED

(5 REQUIRED)

POT BEARING DETAILS

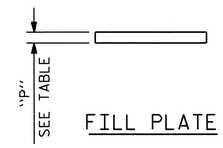

FILL PLATE

GIRDER	DIMENSION "B"	DIMENSION "D"	DIMENSION "P"
1	197	62	25
2	192	57	20
3	188	53	16
4	181	46	9
5	172	37	-

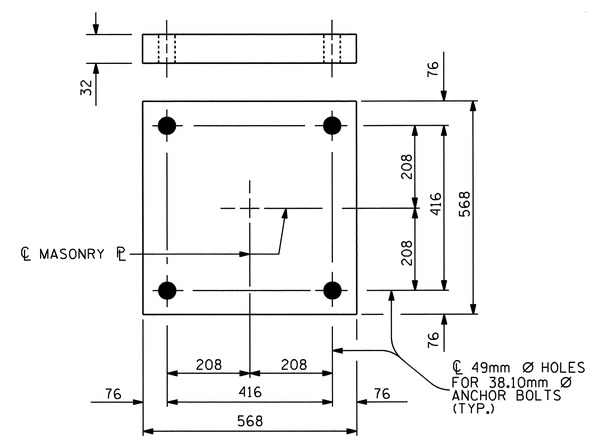

M1

(5 REQUIRED)

MASONRY PLATE DETAILS (M1)

NOTES

FOR POT BEARINGS, SEE SPECIAL PROVISIONS.

AT ALL POINTS OF SUPPORT, NUTS FOR ANCHOR BOLTS SHALL BE TIGHTENED FINGER TIGHT AND GIVEN AN ADDITIONAL 1/4 TURN. THE THREAD OF THE NUT AND BOLT SHALL THEN BE BURRED WITH A SHARP POINTED TOOL.

WHEN WELDING THE SOLE PLATE TO THE GIRDER, USE TEMPERATURE INDICATING WAX PENS, OR OTHER SUITABLE MEANS, TO ENSURE THAT THE TEMPERATURE OF THE BEARING DOES NOT EXCEED 121°C TEMPERATURES ABOVE THIS MAY DAMAGE THE TFE OR ELASTOMER.

SOLE PLATES SHOULD BE WELDED TO BEAM FLANGES BEFORE FALSEWORK IS PLACED.

ALL SURFACES OF BEARING PLATES SHALL BE SMOOTH AND STRAIGHT.

FOR THERMAL SPRAYED COATINGS (METALLIZATION), SEE SPECIAL PROVISIONS.

THE CONTRACTOR MAY SUBSTITUTE DISC BEARINGS FOR THE POT BEARINGS SHOWN. FOR OPTIONAL DISC BEARINGS, SEE SPECIAL PROVISIONS.

AT THE CONTRACTOR'S OPTION, FILL PLATES (WHERE USED) MAY BE COMBINED WITH MASONRY PLATES.

THE CONTRACTOR SHALL ADJUST THE GIRDER BUILDUPS AS NECESSARY TO INCORPORATE A MAXIMUM PERMISSIBLE VARIATION IN POT BEARING DEPTH OF 13mm, SEE SPECIAL PROVISION FOR POT BEARINGS.

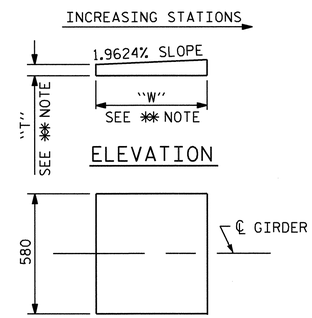

✱✱ NOTE:
DIMENSIONS "W" AND "T" ARE TO BE DETERMINED BY THE MANUFACTURER.

SOLE PLATE DETAILS (P3)

PROJECT NO. R-2413C

GUILFORD-ROCKINGHAM COUNTY

STATION: 20+06.118 -LREV-

TABLE FOR LOADS AND MOVEMENTS

BEARING	LOCATION	VERTICAL LOAD (kN)			LATERAL LOAD (kN)	TOTAL MOVEMENT (mm)
		DEAD	LIVE	TOTAL		
PB1 (FIXED)	BENT #1	1520	491	2011	304	0

STATE OF NORTH CAROLINA
DEPARTMENT OF TRANSPORTATION
RALEIGH

STANDARD

POT BEARING DETAILS

REVISIONS						SHEET NO.
NO.	BY:	DATE:	NO.	BY:	DATE:	S-15
1			3			TOTAL SHEETS
2			4			237

STR. #1 PB1SM.STD

ASSEMBLED BY : T.L. AVERETTE DATE : 06-23-11
CHECKED BY : PEGGY PARISI DATE : 07-26-11

DRAWN BY : RWW 8/99
CHECKED BY : LES 8/99

REV. 7/10/01 LES/RWW
REV. 5/7/03 RWW/JTE
REV. 5/1/06R TLA/GM

19-OCT-2011 13:56
R:\TIPProjects-R\R2413c\Structures\Final Plans\Str.#1\R2413C_sd_BG_01.dgn
taverette

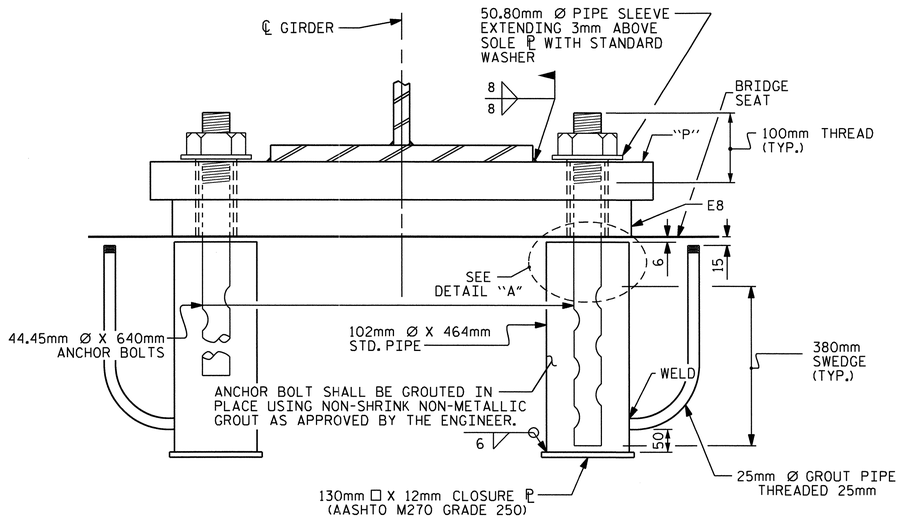

EXPANSION

END VIEW

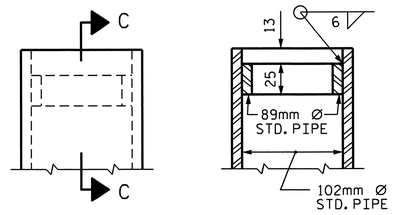

SECTION C-C

DETAIL "A"

LOAD RATINGS	
	MAX.D.L.+ L.L.
TYPE IV	809 kN

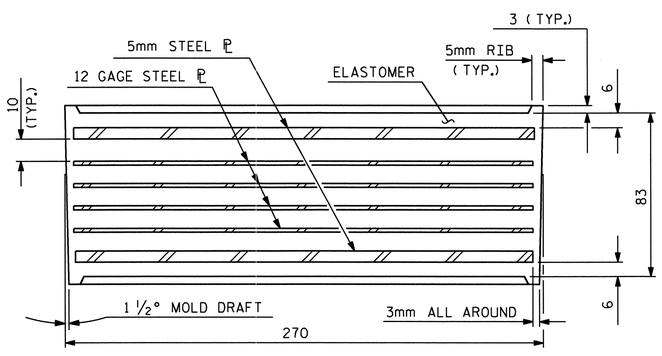

TYPICAL SECTION OF ELASTOMERIC BEARING

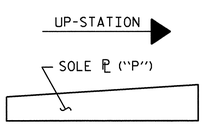

SOLE ℙ PLACEMENT DETAIL

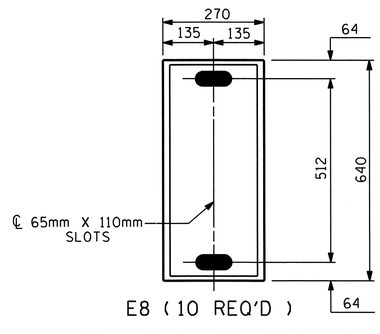

E8 (10 REQ'D)

PLAN VIEW OF ELASTOMERIC BEARING

TYPE IV

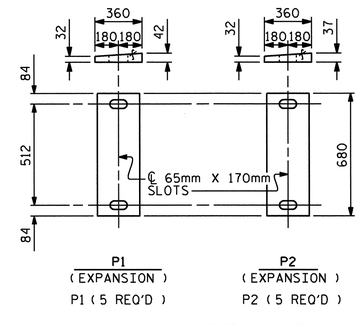

SOLE PLATE DETAILS ("P")

NOTES

THE 51mm Ø PIPE SLEEVE SHALL BE CUT FROM SCHEDULE 40 PVC PLASTIC PIPE. THE PVC PLASTIC PIPE SHALL MEET THE REQUIREMENTS OF ASTM D1785.

THE PAYMENT FOR THE PIPE SLEEVES SHALL BE INCLUDED IN THE SEVERAL PAY ITEMS.

FOR AASHTO M270 GRADE 345W STRUCTURAL STEEL, SOLE PLATE SHALL BE AASHTO M270 GRADE 345W AND SHALL NOT BE GALVANIZED, ANCHOR BOLTS AND NUTS SHALL BE GALVANIZED IN ACCORDANCE WITH THE STANDARD SPECIFICATIONS.

ANCHOR BOLTS SHALL MEET THE REQUIREMENTS OF ASTM A449. NUTS SHALL MEET THE REQUIREMENTS OF AASHTO M291M-12 OR AASHTO M292M-2H. WASHERS SHALL MEET THE REQUIREMENTS OF AASHTO M293M. SHOP DRAWINGS ARE NOT REQUIRED FOR ANCHOR BOLTS, NUTS AND WASHERS. SHOP INSPECTION IS REQUIRED.

WHEN FIELD WELDING THE SOLE PLATE TO THE GIRDER FLANGE, USE TEMPERATURE INDICATING WAX PENS, OR OTHER SUITABLE MEANS, TO ENSURE THAT THE TEMPERATURE OF THE SOLE PLATE DOES NOT EXCEED 149°C. TEMPERATURES ABOVE THIS MAY DAMAGE THE ELASTOMER.

ALL SURFACES OF BEARING PLATES SHALL BE SMOOTH AND STRAIGHT.

THE CLOSURE PLATE, GROUT PIPE AND STANDARD PIPE FOR THE EXPANSION ASSEMBLY NEED NOT BE GALVANIZED.

THE CONTRACTOR'S ATTENTION IS CALLED TO THE FOLLOWING PROCEDURES TO ACCOMODATE GIRDER TRANSLATION AND END ROTATION:

1. ONCE THE DECK HAS CURED, THE GIRDERS SHALL BE JACKED AND THE ANCHOR BOLTS, SOLE PLATE, AND ELASTOMERIC BEARING SLOTS SHALL BE CENTERED AS NEARLY AS PRACTICAL ABOUT THE BEARING STIFFENER. THIS OPERATION SHALL BE PERFORMED AT APPROXIMATELY 16° C.
2. AFTER CENTERING THE SLOTS AND ANCHOR BOLTS, THE SOLE PLATES SHALL BE FIELD WELDED TO THE GIRDER FLANGES AND ANCHOR BOLTS GROUTED.

THE CONTRACTOR MAY PROPOSE ALTERNATE METHODS, PROVIDED DETAILS ARE SUBMITTED TO THE ENGINEER FOR REVIEW AND APPROVAL.

PROJECT NO. R-2413C
GUILFORD-ROCKINGHAM COUNTY
STATION: 20+06.118 -LREV-

NORTH CAROLINA PROFESSIONAL SEAL 022516 ENGINEER EMILY E. MURRAY
10/28/11

STATE OF NORTH CAROLINA
DEPARTMENT OF TRANSPORTATION
RALEIGH

STANDARD
ELASTOMERIC BEARING DETAILS
(STEEL SUPERSTRUCTURE)

REVISIONS							SHEET NO.
NO.	BY:	DATE:	NO.	BY:	DATE:		S-16
1			3				TOTAL SHEETS
2			4				237

ASSEMBLED BY : T.L. AVERETTE		DATE :	6-23-11
CHECKED BY : PEGGY PARISI		DATE :	7-26-11
DRAWN BY : EEM 10/95	REV. 8/16/99		MAB/LES
CHECKED BY : PEK 10/95	REV. 10/17/00		RWW/LES
	REV. 5/1/06		TLA/GM

STR. #1

STD. NO. EB2SM

13-SEP-2011 09:54
W:\Structures\Final Plans\Str.#1\R2413C_sd_BG_01.dgn
bbarodawala

DEAD LOAD DEFLECTION TABLE FOR EXTERIOR GIRDERS - SPAN A

	GIRDERS #1 & #5																				
@ TWENTIETH POINTS BETWEEN ℄ BEARINGS	0	.05	.10	.15	.20	.25	.30	.35	.40	.45	.50	.55	.60	.65	.70	.75	.80	.85	.90	.95	0
DEFLECTION DUE TO WEIGHT OF GIRDER	0.000	0.006	0.011	0.016	0.020	0.024	0.027	0.029	0.030	0.030	0.029	0.027	0.025	0.022	0.018	0.014	0.011	0.007	0.004	0.002	0.000
DEFLECTION DUE TO WEIGHT OF SLAB ✱	0.000	0.016	0.032	0.046	0.059	0.070	0.078	0.083	0.086	0.086	0.084	0.079	0.072	0.063	0.053	0.043	0.032	0.022	0.013	0.005	0.000
DEFLECTION DUE TO WEIGHT OF BARRIER RAIL	0.000	0.002	0.003	0.005	0.006	0.007	0.008	0.008	0.008	0.009	0.008	0.008	0.007	0.006	0.005	0.004	0.003	0.002	0.001	0.001	0.000
TOTAL DEAD LOAD DEFLECTION	0.000	0.024	0.046	0.067	0.085	0.101	0.113	0.120	0.124	0.125	0.121	0.114	0.104	0.091	0.076	0.061	0.046	0.031	0.018	0.008	0.000
VERTICAL CURVE ORDINATE	0.000	0.010	0.019	0.027	0.033	0.039	0.044	0.048	0.050	0.052	0.052	0.052	0.050	0.048	0.044	0.039	0.033	0.027	0.019	0.010	0.000
REQUIRED CAMBER	0	34	65	94	118	140	157	168	174	177	173	166	154	139	120	100	79	58	37	18	0

✱ INCLUDES SLAB, BUILDUPS & STAY-IN-PLACE FORMS.
ALL VALUES ARE SHOWN IN METERS EXCEPT "REQUIRED CAMBER", WHICH IS GIVEN IN MILLIMETERS.

DEAD LOAD DEFLECTION TABLE FOR INTERIOR GIRDERS - SPAN A

	GIRDERS #2, #3, & #4																				
@ TWENTIETH POINTS BETWEEN ℄ BEARINGS	0	.05	.10	.15	.20	.25	.30	.35	.40	.45	.50	.55	.60	.65	.70	.75	.80	.85	.90	.95	0
DEFLECTION DUE TO WEIGHT OF GIRDER	0.000	0.006	0.011	0.016	0.020	0.024	0.027	0.029	0.030	0.030	0.029	0.027	0.025	0.022	0.018	0.014	0.011	0.007	0.004	0.002	0.000
DEFLECTION DUE TO WEIGHT OF SLAB ✱	0.000	0.016	0.032	0.046	0.059	0.069	0.078	0.083	0.086	0.086	0.083	0.079	0.072	0.063	0.053	0.042	0.032	0.022	0.013	0.005	0.000
DEFLECTION DUE TO WEIGHT OF BARRIER RAIL	0.000	0.002	0.003	0.004	0.006	0.007	0.007	0.008	0.008	0.008	0.008	0.008	0.007	0.006	0.005	0.004	0.003	0.002	0.001	0.001	0.000
TOTAL DEAD LOAD DEFLECTION	0.000	0.024	0.046	0.066	0.085	0.100	0.112	0.120	0.124	0.124	0.120	0.114	0.104	0.091	0.076	0.060	0.046	0.031	0.018	0.008	0.000
VERTICAL CURVE ORDINATE	0.000	0.010	0.019	0.027	0.033	0.039	0.044	0.048	0.050	0.052	0.052	0.052	0.050	0.048	0.044	0.039	0.033	0.027	0.019	0.010	0.000
REQUIRED CAMBER	0	34	65	93	118	139	156	168	174	176	172	166	154	139	120	99	79	58	37	18	0

✱ INCLUDES SLAB, BUILDUPS & STAY-IN-PLACE FORMS.
ALL VALUES ARE SHOWN IN METERS EXCEPT "REQUIRED CAMBER", WHICH IS GIVEN IN MILLIMETERS.

DEAD LOAD DEFLECTION TABLE FOR EXTERIOR GIRDERS - SPAN B

	GIRDERS #1 & #5																				
@ TWENTIETH POINTS BETWEEN ℄ BEARINGS	0	.05	.10	.15	.20	.25	.30	.35	.40	.45	.50	.55	.60	.65	.70	.75	.80	.85	.90	.95	0
DEFLECTION DUE TO WEIGHT OF GIRDER	0.000	-0.001	-0.001	-0.001	0.000	0.001	0.002	0.003	0.004	0.005	0.006	0.006	0.007	0.007	0.007	0.006	0.005	0.004	0.003	0.002	0.000
DEFLECTION DUE TO WEIGHT OF SLAB ✱	0.000	-0.003	-0.004	-0.003	-0.002	0.000	0.002	0.005	0.007	0.010	0.012	0.014	0.015	0.016	0.016	0.015	0.013	0.010	0.007	0.004	0.000
DEFLECTION DUE TO WEIGHT OF BARRIER RAIL	0.000	0.000	0.000	0.000	0.000	0.000	0.000	0.001	0.001	0.001	0.001	0.002	0.002	0.002	0.002	0.002	0.001	0.001	0.001	0.000	0.000
TOTAL DEAD LOAD DEFLECTION	0.000	-0.004	-0.005	-0.004	-0.002	0.001	0.004	0.009	0.012	0.016	0.019	0.022	0.024	0.025	0.025	0.023	0.019	0.015	0.011	0.006	0.000
VERTICAL CURVE ORDINATE	0.000	0.007	0.012	0.018	0.022	0.026	0.029	0.031	0.033	0.034	0.034	0.034	0.033	0.031	0.029	0.026	0.022	0.018	0.012	0.007	0.000
REQUIRED CAMBER	0	3	7	14	20	27	33	40	45	50	53	56	57	56	54	49	41	33	23	13	0

✱ INCLUDES SLAB, BUILDUPS & STAY-IN-PLACE FORMS.
ALL VALUES ARE SHOWN IN METERS EXCEPT "REQUIRED CAMBER", WHICH IS GIVEN IN MILLIMETERS.

DEAD LOAD DEFLECTION TABLE FOR INTERIOR GIRDERS - SPAN B

	GIRDERS #2, #3, & #4																				
@ TWENTIETH POINTS BETWEEN ℄ BEARINGS	0	.05	.10	.15	.20	.25	.30	.35	.40	.45	.50	.55	.60	.65	.70	.75	.80	.85	.90	.95	0
DEFLECTION DUE TO WEIGHT OF GIRDER	0.000	-0.001	-0.001	-0.001	0.000	0.001	0.002	0.003	0.004	0.005	0.006	0.006	0.007	0.007	0.007	0.006	0.005	0.004	0.003	0.002	0.000
DEFLECTION DUE TO WEIGHT OF SLAB ✱	0.000	-0.003	-0.004	-0.003	-0.002	0.000	0.002	0.005	0.007	0.010	0.012	0.014	0.015	0.016	0.016	0.015	0.013	0.010	0.007	0.004	0.000
DEFLECTION DUE TO WEIGHT OF BARRIER RAIL	0.000	0.000	0.000	0.000	0.000	0.000	0.000	0.001	0.001	0.001	0.001	0.002	0.002	0.002	0.002	0.002	0.001	0.001	0.001	0.000	0.000
TOTAL DEAD LOAD DEFLECTION	0.000	-0.004	-0.005	-0.004	-0.002	0.001	0.004	0.009	0.012	0.016	0.019	0.022	0.024	0.025	0.025	0.023	0.019	0.015	0.011	0.006	0.000
VERTICAL CURVE ORDINATE	0.000	0.007	0.012	0.018	0.022	0.026	0.029	0.031	0.033	0.034	0.034	0.034	0.033	0.031	0.029	0.026	0.022	0.018	0.012	0.007	0.000
REQUIRED CAMBER	0	3	7	14	20	27	33	40	45	50	53	56	57	56	54	49	41	33	23	13	0

✱ INCLUDES SLAB, BUILDUPS & STAY-IN-PLACE FORMS.
ALL VALUES ARE SHOWN IN METERS EXCEPT "REQUIRED CAMBER", WHICH IS GIVEN IN MILLIMETERS.

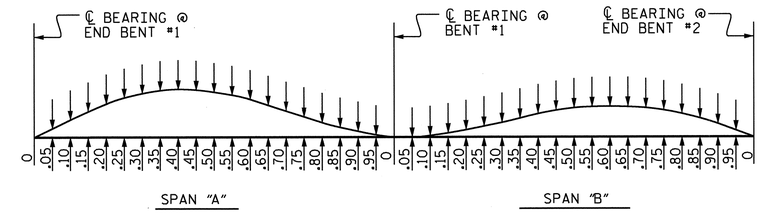

SCHEMATIC CAMBER ORDINATES

NOTE : FOR CAMBER @ 20TH POINTS SEE TABLES.
SLOPE FOR THE ZERO CAMBER BASE LINE VARIES.

PROJECT NO. R-2413C
GUILFORD-ROCKINGHAM COUNTY
STATION: 20+06.118 -LREV-

NORTH CAROLINA PROFESSIONAL SEAL 022516 ENGINEER EMILY E. MURRAY
10/28/11

STATE OF NORTH CAROLINA
DEPARTMENT OF TRANSPORTATION
RALEIGH

SUPERSTRUCTURE
DEAD LOAD DEFLECTIONS

REVISIONS						SHEET NO.
NO.	BY:	DATE:	NO.	BY:	DATE:	S-17
1			3			TOTAL SHEETS
2			4			237

DRAWN BY : T.L. AVERETTE DATE : 6-30-11
CHECKED BY : PEGGY PARISI DATE : 7-26-11

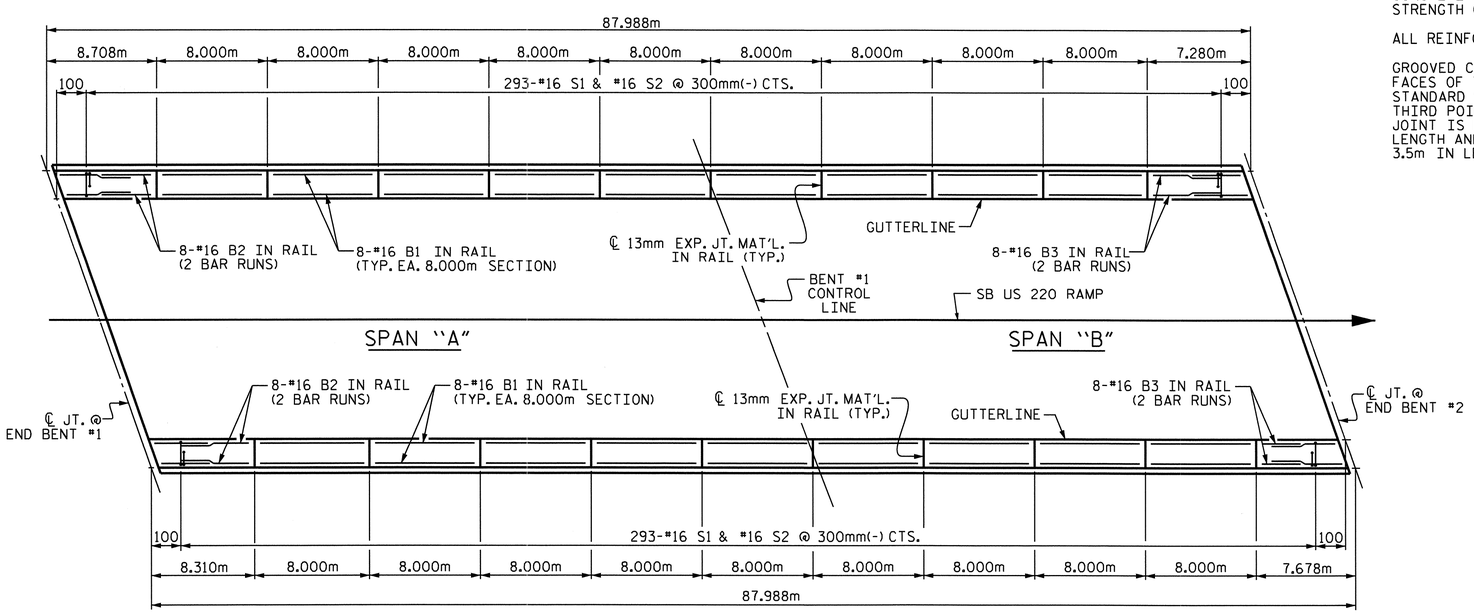

PLAN

NOTES

THE BARRIER RAIL IN A CONTINUOUS UNIT SHALL NOT BE CAST UNTIL ALL SLAB CONCRETE IN THE UNIT HAS BEEN CAST AND HAS REACHED A MINIMUM COMPRESSIVE STRENGTH OF 20.7 MPa.

ALL REINFORCING STEEL IN BARRIER RAILS SHALL BE EPOXY COATED.

GROOVED CONTRACTION JOINTS, 12mm IN DEPTH, SHALL BE TOOLED IN ALL EXPOSED FACES OF THE BARRIER RAIL AND IN ACCORDANCE WITH ARTICLE 825-10(B) OF THE STANDARD SPECIFICATIONS. THE CONTRACTION JOINT SHALL BE LOCATED AT EACH THIRD POINT BETWEEN BARRIER RAIL EXPANSION JOINTS. ONLY ONE CONTRACTION JOINT IS REQUIRED AT MIDPOINT OF BARRIER RAIL SEGMENTS LESS THAN 6.1m IN LENGTH AND NO CONTRACTION JOINTS ARE REQUIRED FOR THOSE SEGMENTS LESS THAN 3.5m IN LENGTH.

BAR TYPES

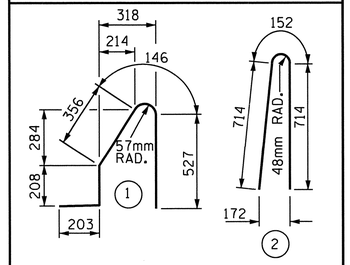

ALL BAR DIMENSIONS ARE OUT TO OUT

BILL OF MATERIAL

FOR CONCRETE BARRIER RAIL ONLY

BAR	NO.	SIZE	TYPE	LENGTH	WEIGHT
* S1	586	#16	1	1440	1310
* S2	586	#16	2	1580	1437
* B1	144	#16	STR	7880	1761
* B2	32	#16	STR	4780	237
* B3	32	#16	STR	4260	212

* EPOXY COATED REINFORCING STEEL	4957 kg
CLASS AA CONCRETE	44.2 CU. METER
CONCRETE BARRIER RAIL	
SUPERSTRUCTURE	175.976 METERS
● APPROACH SLABS	12.844 METERS
TOTAL	188.820 METERS

● FOR EPOXY COATED REINFORCING STEEL AND CLASS AA CONCRETE IN THE BARRIER RAIL ON THE APPROACH SLABS, SEE "BRIDGE APPROACH SLAB DETAILS" SHEET.

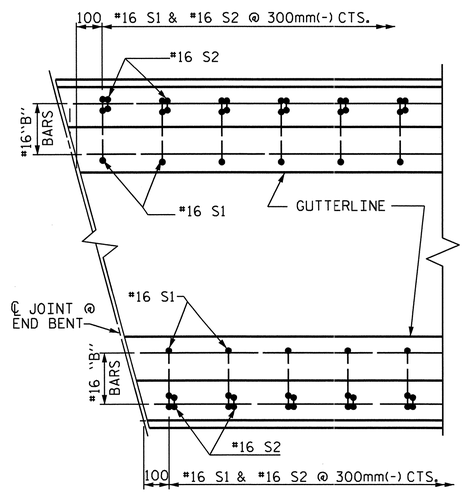

PLAN

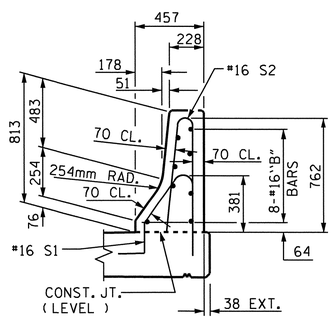

END VIEW

END OF RAIL DETAILS

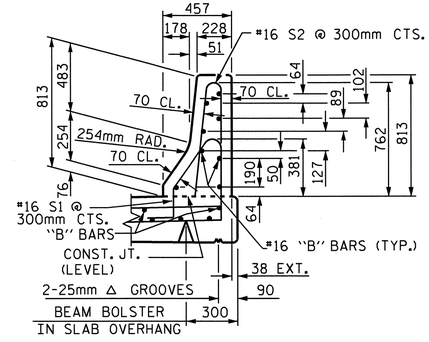

SECTION THRU RAIL

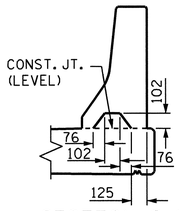

SECTION S-S

AT DAM IN OPEN JOINT
(THIS IS TO BE USED ONLY WHEN SLIP FORM IS USED)

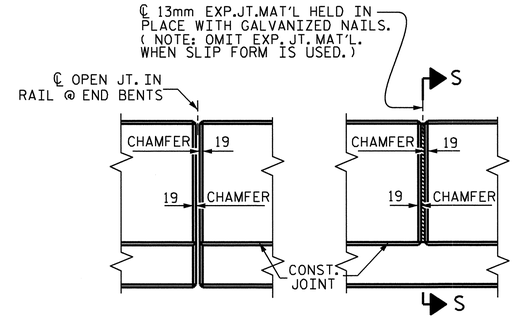

ELEVATION AT EXPANSION JOINTS

BARRIER RAIL DETAILS

NORTH CAROLINA PROFESSIONAL SEAL 022516 ENGINEER EARLY E. MURRAY
10/28/11

PROJECT NO. R-2413C

GUILFORD-ROCKINGHAM COUNTY

STATION: 20+06.118 -LREV-

STATE OF NORTH CAROLINA
DEPARTMENT OF TRANSPORTATION
RALEIGH

STANDARD

CONCRETE BARRIER RAIL

REVISIONS						SHEET NO.
NO.	BY:	DATE:	NO.	BY:	DATE:	S-18
1			3			TOTAL SHEETS
2			4			237

STR. #1

STD. No. CBR1SM

ASSEMBLED BY : T.L. AVERETTE	DATE : 10-10		
CHECKED BY : PEGGY PARISI	DATE : 10-10		
DRAWN BY : ARB 5/87	REV. 10/17/00	RWW/LES	
CHECKED BY : SJD 9/87	REV. 5/7/03R	RWW/JTE	
	REV. 5/1/06	TLA/GM	

13-SEP-2011 09:53
W:\Structures\Final Plans\Str.#1\R2413C_sd_BR_01.dgn
bbarodawala

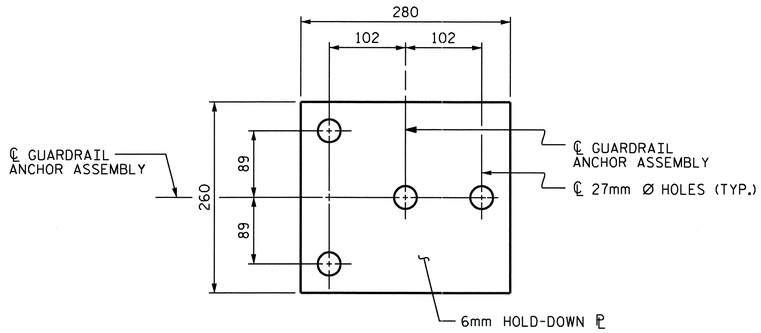

PLAN

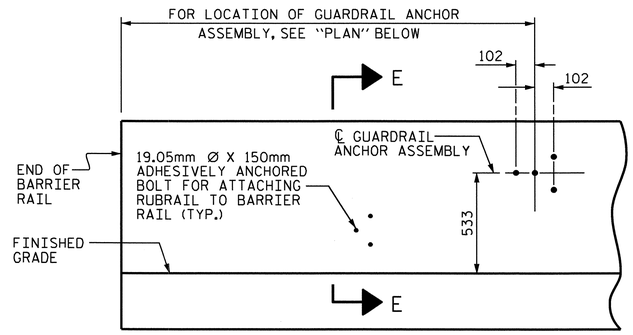

ELEVATION

FOR LOCATION OF RUBRAIL, SEE ROADWAY STD. 862.03

NOTES

THE GUARDRAIL ANCHOR ASSEMBLY SHALL CONSIST OF A 6mm HOLD DOWN PLATE AND 4 - 22.23mm Ø BOLTS WITH NUTS AND WASHERS, RUBRAIL, AND ADHESIVELY ANCHORED BOLTS.

THE HOLD-DOWN PLATE SHALL CONFORM TO AASHTO M270 GRADE 36. AFTER FABRICATION, THE HOLD-DOWN PLATE SHALL BE HOT-DIP GALVANIZED IN ACCORDANCE WITH AASHTO M111.

BOLTS SHALL CONFORM TO THE REQUIREMENTS OF ASTM A307 AND NUTS SHALL CONFORM TO THE REQUIREMENTS OF AASHTO M291. BOLTS, NUTS AND WASHERS SHALL BE GALVANIZED. (AT THE CONTRACTOR'S OPTION, STAINLESS STEEL BOLTS, NUTS AND WASHERS MAY BE USED AS AN ALTERNATE FOR THE 22.23mm Ø GALVANIZED BOLTS, NUTS AND WASHERS. THEY SHALL CONFORM TO OR EXCEED THE MECHANICAL REQUIREMENTS OF ASTM A307. THE USE OF THIS ALTERNATE SHALL BE APPROVED BY THE ENGINEER.)

THE GUARDRAIL ANCHOR ASSEMBLY IS REQUIRED AT ALL POINTS WHERE APPROACH GUARDRAIL IS TO BE ATTACHED TO THE END OF BARRIER RAIL. FOR POINTS OF ATTACHMENT, SEE SKETCH.

AFTER INSTALLATION, THE EXPOSED THREAD OF THE BOLT SHALL BE BURRED WITH A SHARP POINTED TOOL.

THE COST OF THE GUARDRAIL ANCHOR ASSEMBLY SHALL BE INCLUDED IN THE UNIT CONTRACT PRICE BID FOR CONCRETE BARRIER RAIL.

THE 32mm Ø HOLES SHALL BE FORMED OR DRILLED WITH A CORE BIT. IMPACT TOOLS WILL NOT BE PERMITTED. ANY CONCRETE DAMAGED BY THIS WORK SHALL BE REPAIRED TO THE SATISFACTION OF THE ENGINEER.

THE C150 X 12 RUBRAIL IS TO BE ADHESIVELY ANCHORED TO THE RAIL USING THREE 19.05mm Ø X 150mm BOLTS WITH WASHERS. LEVEL ONE FIELD TESTING IS REQUIRED, AND THE YIELD LOAD OF THE 19.05mm Ø BOLTS IS 53.4kN. FOR ADHESIVELY ANCHORED ANCHOR BOLTS OR DOWELS, SEE SPECIAL PROVISIONS. SEE ROADWAY STANDARD 862.03 FOR DETAILS AND LOCATION OF THE RUBRAIL.

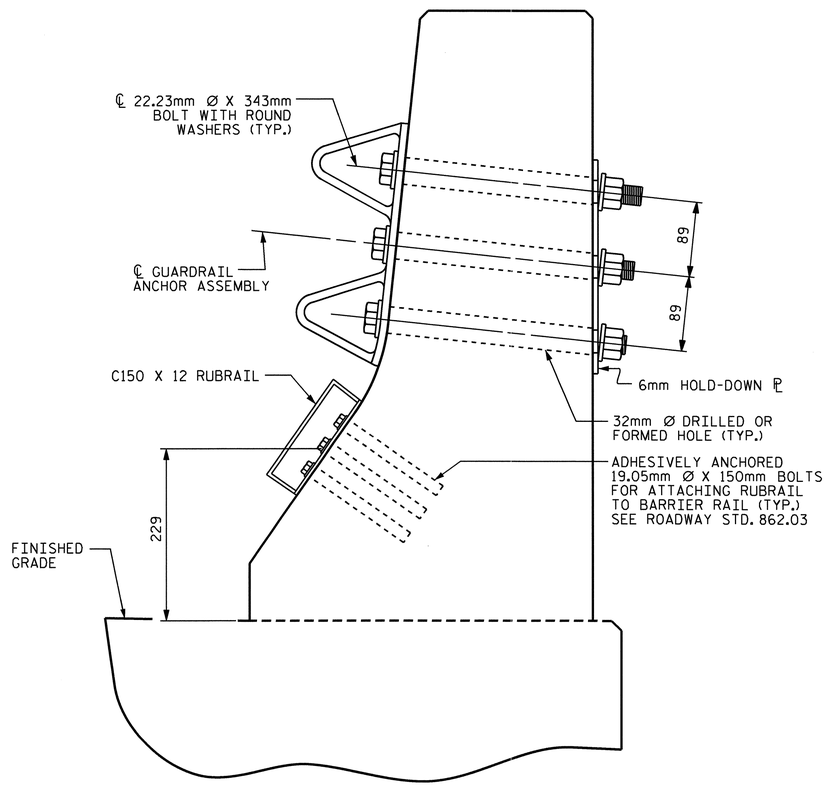

SECTION E-E

GUARDRAIL ANCHOR ASSEMBLY DETAILS

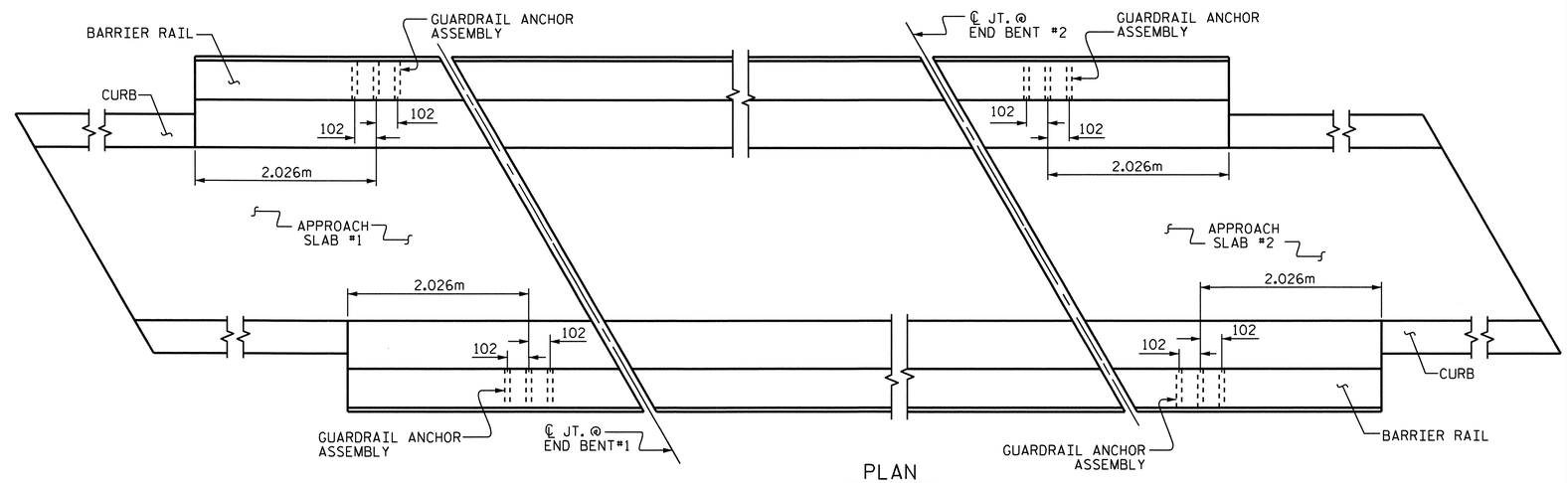

PLAN

LOCATION OF ANCHORS FOR GUARDRAIL

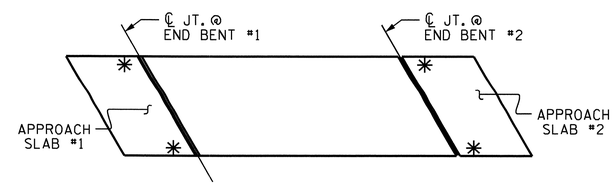

SKETCH SHOWING POINTS OF ATTACHMENTS

✳ DENOTES B-77 GUARDRAIL ANCHOR ASSEMBLY

PROJECT NO. R-2413C

GUILFORD-ROCKINGHAM COUNTY

STATION: 20+06.118 -LREV-

STATE OF NORTH CAROLINA
DEPARTMENT OF TRANSPORTATION
RALEIGH

STANDARD

GUARDRAIL ANCHORAGE FOR BARRIER RAIL

NORTH CAROLINA PROFESSIONAL SEAL 022516 ENGINEER EMILY E. MURRAY
10/28/11

REVISIONS						SHEET NO.
NO.	BY:	DATE:	NO.	BY:	DATE:	S-19
1			3			TOTAL SHEETS
2			4			237

STR. #1 STD. NO. GRA2

ASSEMBLED BY : T.L. AVERETTE DATE : 10-10
CHECKED BY : PEGGY PARISI DATE : 10-10
DRAWN BY : TLA 5/06
CHECKED BY : GM 5/06
ADDED 5/1/06R KMM/GM

13-SEP-2011 09:53
W:\Structures\Final Plans\Str.#1\R2413C_sd_BR_01.dgn
bbarodawala

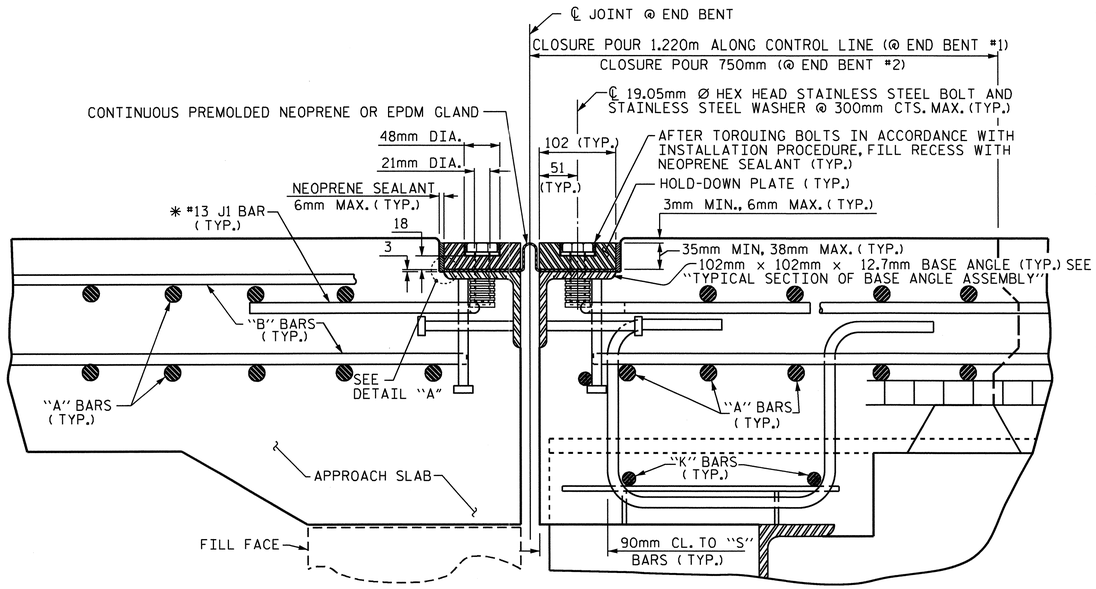

EXPANSION JOINT DETAILS

SECTION NORMAL TO JOINT -- STEEL SUPERSTRUCTURE

* THE QUANTITY OF #13 J1 BARS ON THE BILL OF MATERIAL IS BASED ON 300mm CENTERS. J1 BARS SHALL BE PLACED AT EACH VERTICAL STUD ANCHOR BOLT. IN THE EVENT THAT THE NUMBER OF VERTICAL STUD ANCHOR BOLTS EXCEEDS THE NUMBER OF J1 BARS SPECIFIED, ADDITIONAL J1 BARS WILL NOT BE REQUIRED.

INSTALLATION PROCEDURE

1. A TEMPLATE OR OTHER SUITABLE DEVICE SHALL BE USED TO FORM THE TOP OF THE EXPANSION JOINT SEAL BLOCKOUT TO THE PROPER DEPTH AND WIDTH. THE TEMPLATE SHALL BE 105mm TO 108mm WIDE AND OF SUCH THICKNESS AS TO PROVIDE FOR CORRECT FINAL ELEVATION OF TOP OF HOLD-DOWN PLATES. THE TEMPLATE SHALL BE ATTACHED TO THE BASE ANGLE ASSEMBLY WITH THE 19.05mm Ø HEX HEAD BOLTS PROVIDED FOR THE HOLD-DOWN PLATES. A 25mm Ø HOLE SHALL BE PROVIDED IN THE TEMPLATE CENTERED OVER EACH WEEP HOLE IN THE 102mm X 102mm X 12.7mm BASE ANGLE. OTHER METHODS OF INSURING DRAINAGE THROUGH WEEP HOLES MAY BE EMPLOYED SUBJECT TO ENGINEER'S APPROVAL.
2. AFTER THE CONCRETE HAS BEEN CAST ON BOTH SIDES OF THE JOINT, REMOVE THE TEMPLATE. THOROUGHLY CLEAN THE BOLT HOLES AND THE ANGLE PLATE. REMOVE ANY EXCESS CONCRETE THAT COMES OUT OF THE WEEP HOLES. ANY DAMAGED STEEL SHALL BE COATED WITH A MINIMUM THICKNESS OF 0.100mm (DRY) OF ZINC-RICH PAINT IN ACCORDANCE WITH THE STANDARD SPECIFICATIONS.
3. LAY THE GLAND ON THE BASE ANGLE AND FIELD MARK THE GLAND FOR THE BOLT HOLES. HOLES IN THE GLAND SHALL BE PUNCHED 22mm IN DIAMETER WITH A HAND PUNCH.
4. IN ORDER TO CHECK FOR PROPER ALIGNMENT, PLACE THE GLAND AND HOLD-DOWN PLATES ON THE BASE ANGLE. DO NOT APPLY NEOPRENE SEALANT. BOLT THE HOLD-DOWN PLATES TO THE BASE ANGLE BUT DO NOT TIGHTEN. THE ENGINEER SHALL INSPECT THE JOINT SEAL DEVICE FOR PROPER ALIGNMENT.
5. AFTER INSPECTION, REMOVE THE HOLD-DOWN PLATES AND GLAND. APPLY NEOPRENE SEALANT TO THE BASE ANGLE IN ACCORDANCE WITH THE "INSTALLATION SKETCH". PLACE GLAND AND HOLD-DOWN PLATES ON THE BASE ANGLE. BOLT THE HOLD-DOWN PLATES TO THE BASE ANGLE ASSEMBLY AND TORQUE THE BOLTS TO 119.3 N-m WITH A TORQUE WRENCH. THE TORQUE WRENCH SHALL BE CALIBRATED IN ACCORDANCE WITH SECTION 440-10 (D) OF THE STANDARD SPECIFICATIONS. CHECK THE TORQUE AFTER THREE (3) HOURS AND, IF NECESSARY, RETIGHTEN TO 119.3 N-m. A FINAL CHECK SHALL BE MADE AT SEVEN (7) DAYS. TORQUE SHALL NOT BE LESS THAN 108.5 N-m AFTER SEVEN (7) DAYS.
6. AFTER PROPER TORQUING, CLEAN THE BOLT HOLE RECESSES AND THE RECESS BETWEEN THE JOINT SEAL DEVICE AND CONCRETE, COMPLETELY FILL THESE RECESSES WITH NEOPRENE SEALANT.

GENERAL NOTES

1. FOR EXPANSION JOINT SEALS, SEE SPECIAL PROVISIONS.
2. ALL PLATES AND ANGLES SHALL CONFORM TO AASHTO M270 GRADE 250 STEEL OR APPROVED EQUAL. ALL HOLD-DOWN BOLTS SHALL CONFORM TO ASTM F593 ALLOY 304 STAINLESS STEEL. WASHERS SHALL CONFORM TO ASTM F844 EXCEPT THEY SHALL BE MADE FROM ALLOY 304 STAINLESS STEEL. ALL STUD ANCHORS SHALL CONFORM TO AASHTO M169, GRADES 1010 THRU 1020 OR APPROVED EQUAL. ALL CONCRETE INSERTS SHALL BE CLOSED END AND SHALL CONFORM TO AASHTO M169, GRADE 12L14. TENSILE CAPACITY SHALL BE 13.3 kN MIN.
3. A PREMOLDED CORRUGATED OR NON-CORRUGATED GLAND SHALL BE USED FOR JOINTS SKEWED BETWEEN 50° THRU 130° . FOR JOINTS SKEWED LESS THAN 50° OR MORE THAN 130° , ONLY A CORRUGATED GLAND SHALL BE USED.
4. CLOSED END FERRULES AND STUD ANCHORS SHALL BE SHOP WELDED AND ALL HOLES SHALL BE SHOP DRILLED AS SHOWN ON PLANS. STUD ANCHORS SHALL BE ELECTRIC ARC END WELDED WITH COMPLETE FUSION.
5. SURFACES COMING IN CONTACT WITH NEOPRENE SHALL BE GROUND SMOOTH PRIOR TO METALLIZING.
6. UPON COMPLETION OF SHOP FABRICATION, THE HOLD DOWN PLATE AND BASE ANGLE ASSEMBLY AS SHOWN IN THE "TYPICAL SECTION OF BASE ANGLE ASSEMBLY", SHALL BE METALLIZED. SEE SPECIAL PROVISION FOR THERMAL SPRAYED COATINGS (METALLIZATION).
7. BASE ANGLE ASSEMBLY SHALL BE CONTINUOUS FOR THE LENGTH OF THE JOINT. AT CROWN BREAKS, THE ENDS OF THE BASE ANGLE ASSEMBLY SHALL BE CUT PARALLEL TO THE BRIDGE CENTERLINE FOR SKEWS LESS THAN 80° AND GREATER THAN 100°. FINISHED WELD SHALL BE GROUND SMOOTH AND COATED WITH A MINIMUM THICKNESS OF 0.100mm (DRY) OF ZINC-RICH PAINT IN ACCORDANCE WITH THE STANDARD SPECIFICATIONS.
8. FIELD SPLICES OF HOLD-DOWN PLATES SHALL BE KEPT TO A MINIMUM. CONTRACTOR SHALL FURNISH DETAILED PLANS SHOWING PROPOSED SPLICE LOCATIONS FOR APPROVAL. HOLD-DOWN PLATES SHALL NOT EXCEED 6.1m LENGTHS UNLESS APPROVED BY THE ENGINEER.
9. NO ALTERNATE JOINT DETAILS SHALL BE PERMITTED IN LIEU OF THOSE SHOWN ON THESE PLANS.
10. THE CONTRACTOR MAY, AT HIS OPTION, USE ADHESIVELY ANCHORED ANCHOR BOLTS IN PLACE OF CONCRETE INSERTS FOR COVER PLATES. THE YIELD LOAD OF THE 19.05mm DIA. BOLT IS 44.5 kN. FIELD TESTING OF THE ADHESIVE BONDING SYSTEM IS NOT REQUIRED.

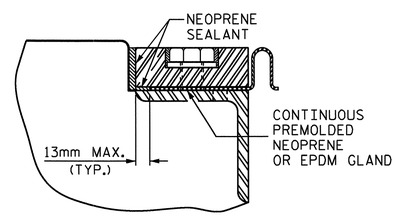

DETAIL "A"

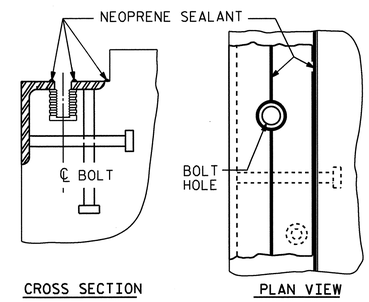

INSTALLATION SKETCH

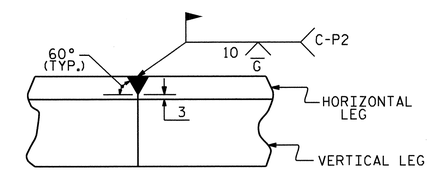

DETAIL- FIELD WELD SPLICE OF BASE ANGLE

MOVEMENT AND SETTING AT JOINT					
END BENT NO.	SKEW ANGLE	TOTAL MOVEMENT (ALONG ℄ RDWY)	PERPENDICULAR JOINT OPENING AT 7° C	PERPENDICULAR JOINT OPENING AT 16° C	PERPENDICULAR JOINT OPENING AT 32° C
1	47°-17'-14"	40mm	44mm	39mm	31mm
2	47°-17'-14"	33mm	41mm	37mm	30mm

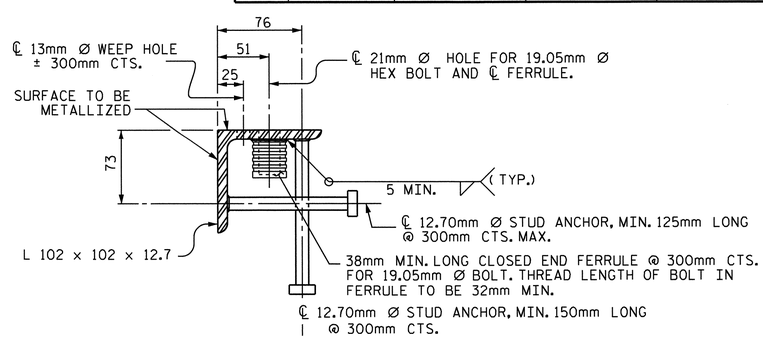

TYPICAL SECTION OF BASE ANGLE ASSEMBLY

PROJECT NO. R-2413C

GUILFORD-ROCKINGHAM COUNTY

STATION: 20+06.118 -LREV-

SHEET 1 OF 2

STATE OF NORTH CAROLINA
DEPARTMENT OF TRANSPORTATION
RALEIGH

STANDARD

EXPANSION JOINT SEAL DETAILS

NORTH CAROLINA PROFESSIONAL SEAL 022516 ENGINEER EMILY E. McMURRAY
10/28/11

REVISIONS							SHEET NO.
NO.	BY:	DATE:	NO.	BY:	DATE:		S-20
1			3				TOTAL SHEETS
2			4				237

ASSEMBLED BY : T.L. AVERETTE		DATE : 6-29-11	
CHECKED BY : PEGGY PARISI		DATE : 7-28-11	
DRAWN BY : REK 9/87	REV. 10/17/00	RWW/LES	
CHECKED BY : CRK 10/87	REV. 5/7/03R	RWW/JTE	
	REV. 5/1/06	TLA/GM	

13-SEP-2011 09:51
W:\Structures\Final Plans\Str.#1\R2413C_sd_JS_01.dgn
bbarodawala

STR. #1

STD. NO. EJS1SM

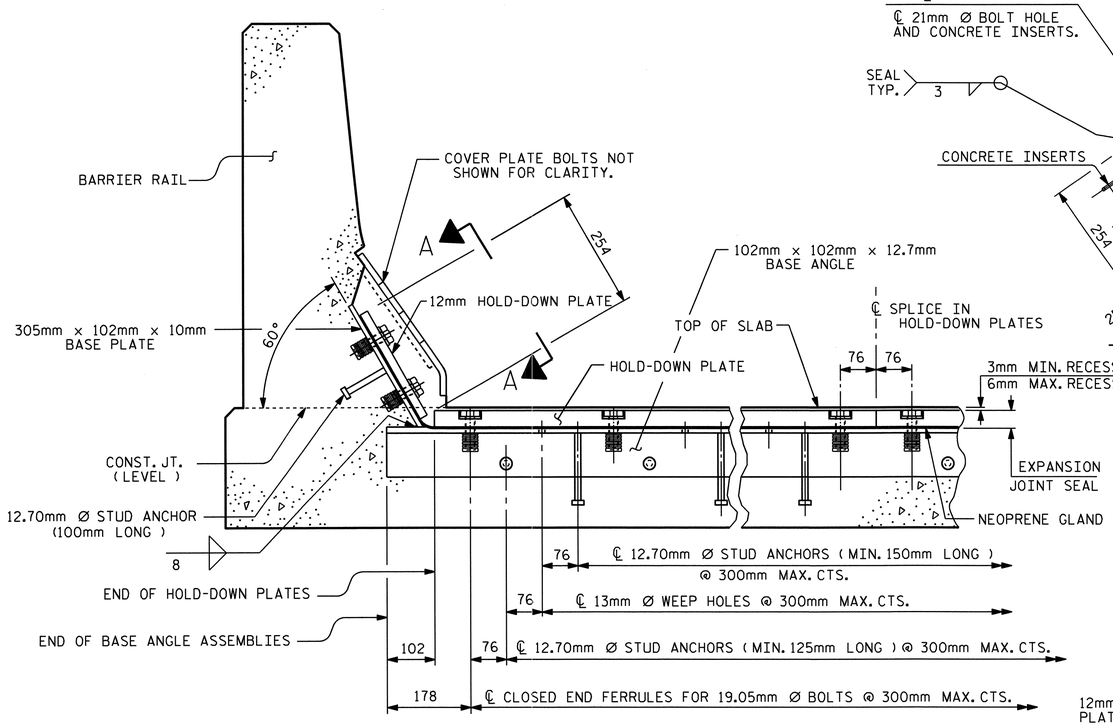

SECTION THRU RAIL NORMAL TO JOINT

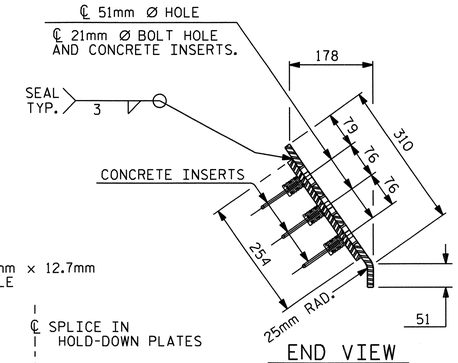

END VIEW

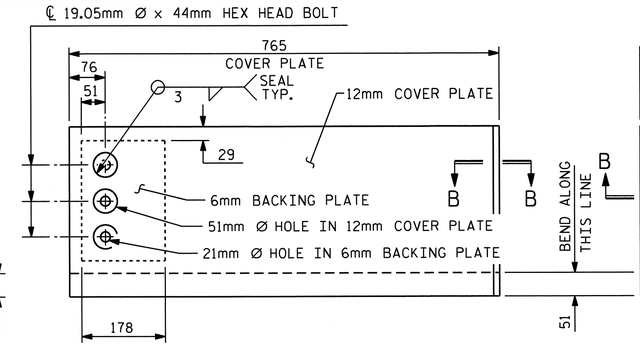

TYPE I - ELEVATION VIEW

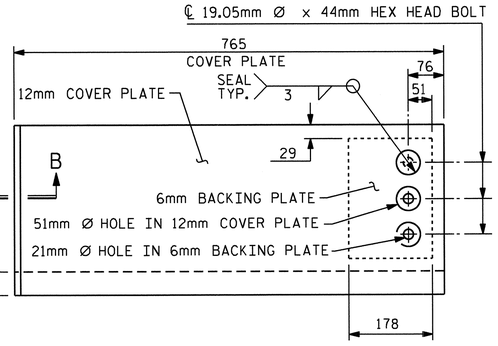

TYPE II - ELEVATION VIEW

COVER PLATE DETAILS

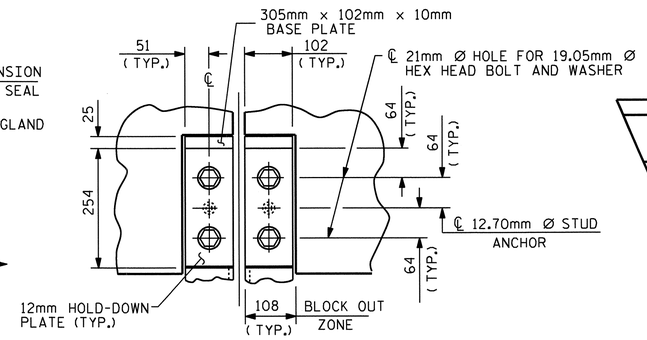

SECTION A - A

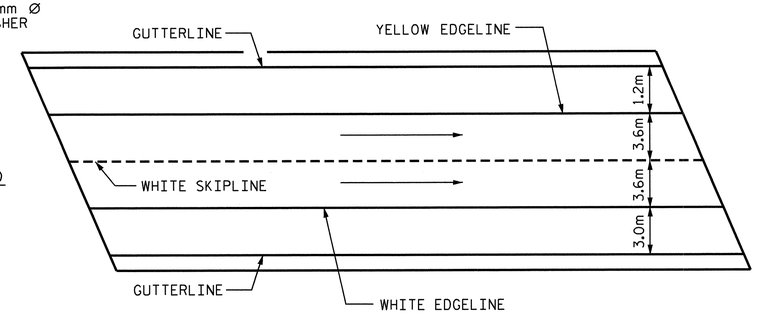

PAVEMENT MARKING ALIGNMENT

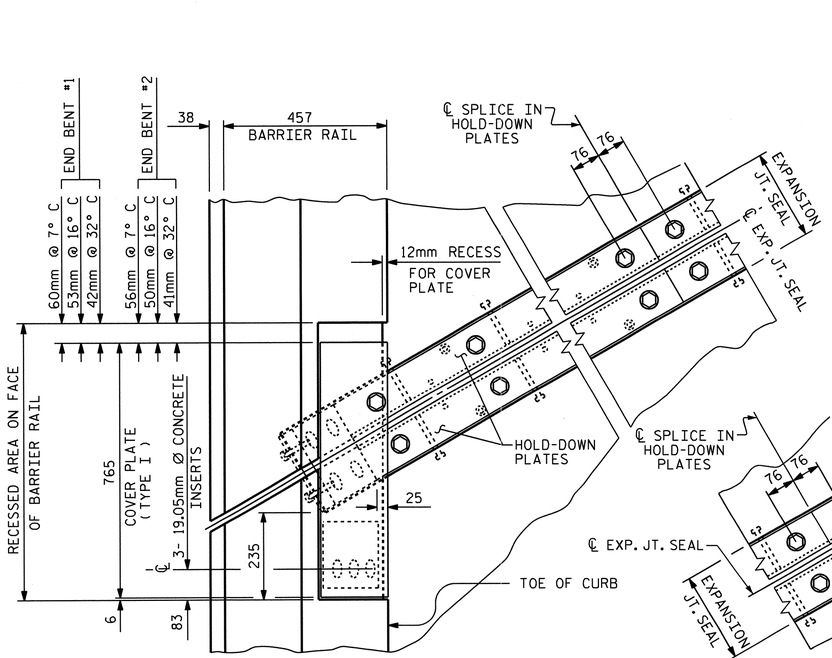

PLAN OF EXPANSION JOINT SEAL - LEFT SIDE

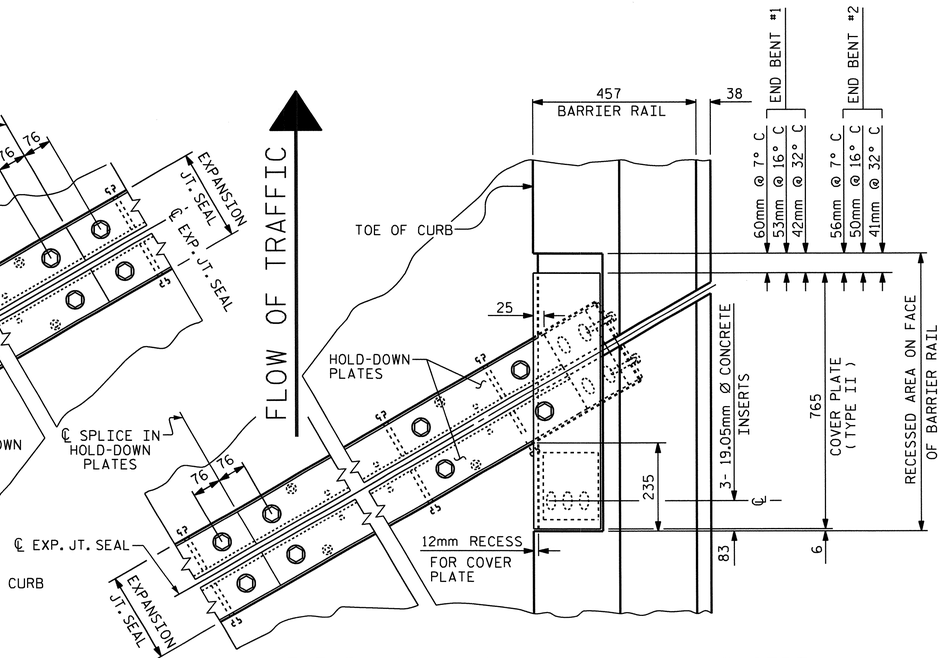

PLAN OF EXPANSION JOINT SEAL - RIGHT SIDE

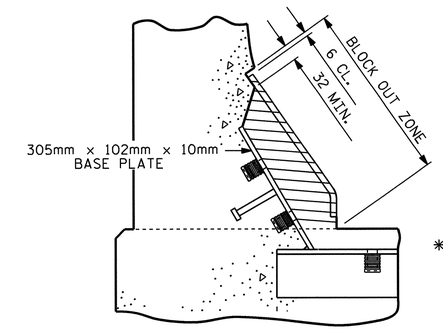

BLOCK OUT DETAIL

SEE "SECTION A - A" FOR OTHER DETAILS.

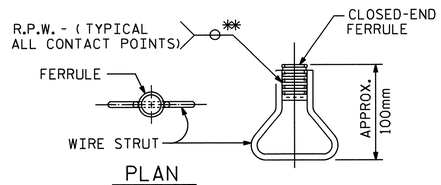

PLAN

ELEVATION

CONCRETE INSERT

** EACH WELDED ATTACHMENT OF WIRE TO FERRULE SHALL DEVELOP THE TENSILE STRENGTH OF THE WIRE.

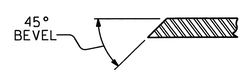

SECTION B - B

PROJECT NO. R-2413C

GUILFORD-ROCKINGHAM COUNTY

STATION: 20+06.118 -LREV-

SHEET 2 OF 2

STATE OF NORTH CAROLINA
DEPARTMENT OF TRANSPORTATION
RALEIGH

STANDARD EXPANSION JOINT SEAL DETAILS FOR BARRIER RAIL

NORTH CAROLINA PROFESSIONAL SEAL 022516 ENGINEER EMILY E. MURRAY
10/28/11

REVISIONS								SHEET NO.
NO.	BY:	DATE:	NO.	BY:	DATE:			S-21
1			3					TOTAL SHEETS
2			4					237

ASSEMBLED BY : T.L. AVERETTE		DATE : 6-29-11	
CHECKED BY : PEGGY PARISI		DATE : 7-28-11	
DRAWN BY : REK 9/87	REV. 7/17/98	RWW/LES	
CHECKED BY : CRK 10/87	REV. 10/17/00	RWW/LES	
	REV. 5/1/06	TLA/GM	

13-SEP-2011 09:51
W:\Structures\Final Plans\Str.#1\R2413C_sd_JS_01.dgn
bbarodawala

STR. #1

STD. NO. EJS2SM

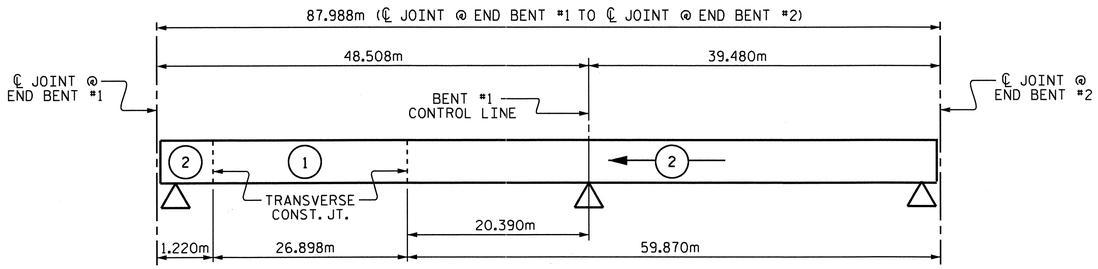

POURING SEQUENCE

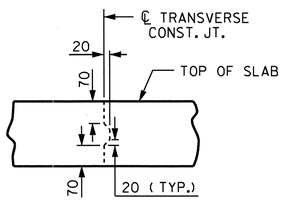

TRANSVERSE CONSTRUCTION JOINT DETAIL

NOTE: REINFORCING STEEL IN SLAB NOT SHOWN.
LONGITUDINAL REINFORCING STEEL SHALL
BE CONTINUOUS THROUGH JOINT.

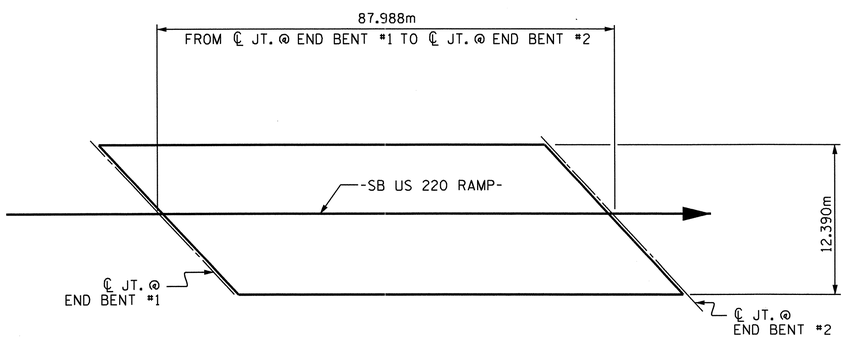

LAYOUT FOR COMPUTING AREA OF REINFORCED CONCRETE DECK SLAB

(SQ. METER = 1090.2)

SUPERSTRUCTURE REINFORCING STEEL LENGTHS ARE BASED ON THE FOLLOWING MINIMUM SPLICE LENGTHS					
BAR SIZE	SUPERSTRUCTURE EXCEPT APPROACH SLABS, PARAPET, AND BARRIER RAIL		APPROACH SLABS		PARAPET AND BARRIER RAIL
	EPOXY COATED	UNCOATED	EPOXY COATED	UNCOATED	
#13	610	540	610	540	840
#16	770	660	770	660	1050
#19	920	790	1190	790	1330
#22	1580	1060			
#25	2080	1390			

GROOVING BRIDGE FLOORS		
APPROACH SLABS	152.6	SQ.METER
BRIDGE DECK	918.7	SQ.METER
TOTAL	1071.3	SQ.METER

REINFORCING BAR SCHEDULE

SPANS A & B

BAR	NO	SIZE	TYPE	LENGTH	WEIGHT
*A1	450	16	STR	12280	8576
A2	450	16	STR	12280	8576
*A3	6	19	STR	5000	67
*A101	6	16	STR	11800	110
*A102	6	16	STR	11240	105
*A103	6	16	STR	10680	99
*A104	6	16	STR	10140	94
*A105	6	16	STR	9580	89
*A106	6	16	STR	9020	84
*A107	6	16	STR	8480	79
*A108	6	16	STR	7920	74
*A109	6	16	STR	7380	69
*A110	6	16	STR	6820	64
*A111	6	16	STR	6260	58
*A112	6	16	STR	5720	53
*A113	6	16	STR	5160	48
*A114	6	16	STR	4600	43
*A115	6	16	STR	4060	38
*A116	6	16	STR	3500	33
*A117	6	16	STR	2960	28
*A118	6	16	STR	2400	22
*A119	6	16	STR	1840	17
*A120	6	16	STR	1300	12
*A121	6	16	STR	740	7
A201	6	16	STR	11800	110
A202	6	16	STR	11240	105
A203	6	16	STR	10680	99
A204	6	16	STR	10140	94
A205	6	16	STR	9580	89
A206	6	16	STR	9020	84
A207	6	16	STR	8480	79
A208	6	16	STR	7920	74
A209	6	16	STR	7380	69
A210	6	16	STR	6820	64
A211	6	16	STR	6260	58
A212	6	16	STR	5720	53
A213	6	16	STR	5160	48
A214	6	16	STR	4600	43
A215	6	16	STR	4060	38
A216	6	16	STR	3500	33
A217	6	16	STR	2960	28
A218	6	16	STR	2400	22
A219	6	16	STR	1840	17
A220	6	16	STR	1300	12
A221	6	16	STR	740	7
*B1	116	13	STR	8580	989
*B2	87	22	STR	14520	3843
*B3	104	22	STR	12120	3834
*B4	58	13	STR	8420	485
B5	264	16	STR	15200	6228
*G1	2	16	STR	16720	52
*J1	104	13	4	440	45
*K1	12	16	1	3720	69
*K2	18	16	2	4660	130
*S1	72	13	3	1260	90

REINFORCING STEEL	kg	16,030
*EPOXY COATED REINFORCING STEEL	kg	19,406

BAR TYPES

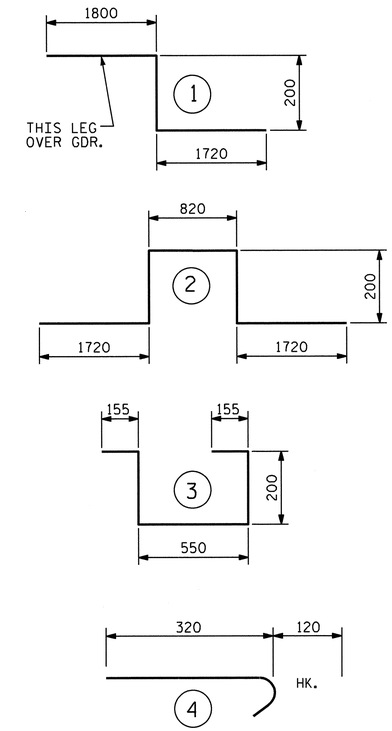

ALL BAR DIMENSIONS ARE OUT TO OUT

SUPERSTRUCTURE BILL OF MATERIAL

	CLASS AA CONCRETE	REINFORCING STEEL	EPOXY COATED REINFORCING STEEL
	(CU.METER)	(kg)	(kg)
POUR #1	84.5		
POUR #2	194.2		
TOTALS**	278.7	16,030	19,406

** QUANTITIES FOR BARRIER RAIL ARE NOT INCLUDED

PROJECT NO. R-2413C
GUILFORD-ROCKINGHAM COUNTY
STATION: 20+06.118 -LREV-

STATE OF NORTH CAROLINA
DEPARTMENT OF TRANSPORTATION
RALEIGH

STANDARD
SUPERSTRUCTURE BILL OF MATERIAL

NORTH CAROLINA PROFESSIONAL SEAL 022516 ENGINEER EMILY E. MURRAY
10/28/11

REVISIONS						SHEET NO.
NO.	BY:	DATE:	NO.	BY:	DATE:	S-22
1			3			TOTAL SHEETS
2			4			237

DRAWN BY : NMR/T.L. AVERETTE DATE : 6-30-11
CHECKED BY : PEGGY PARISI DATE : 7-26-11

19-OCT-2011 13:57
R:\TIPProjects-R\R2413c\Structures\Final Plans\Str.#1\R2413C_sd_BM_01.dgn
taverette

STR. #1

STD. NO. BOM1SM

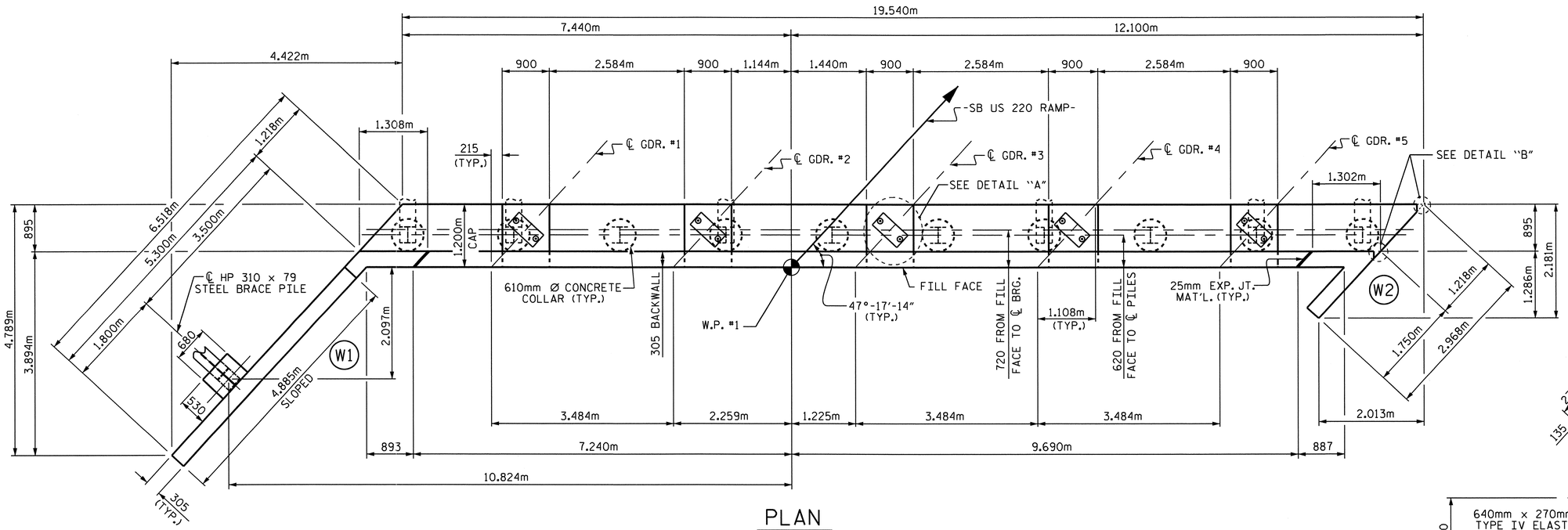

PLAN

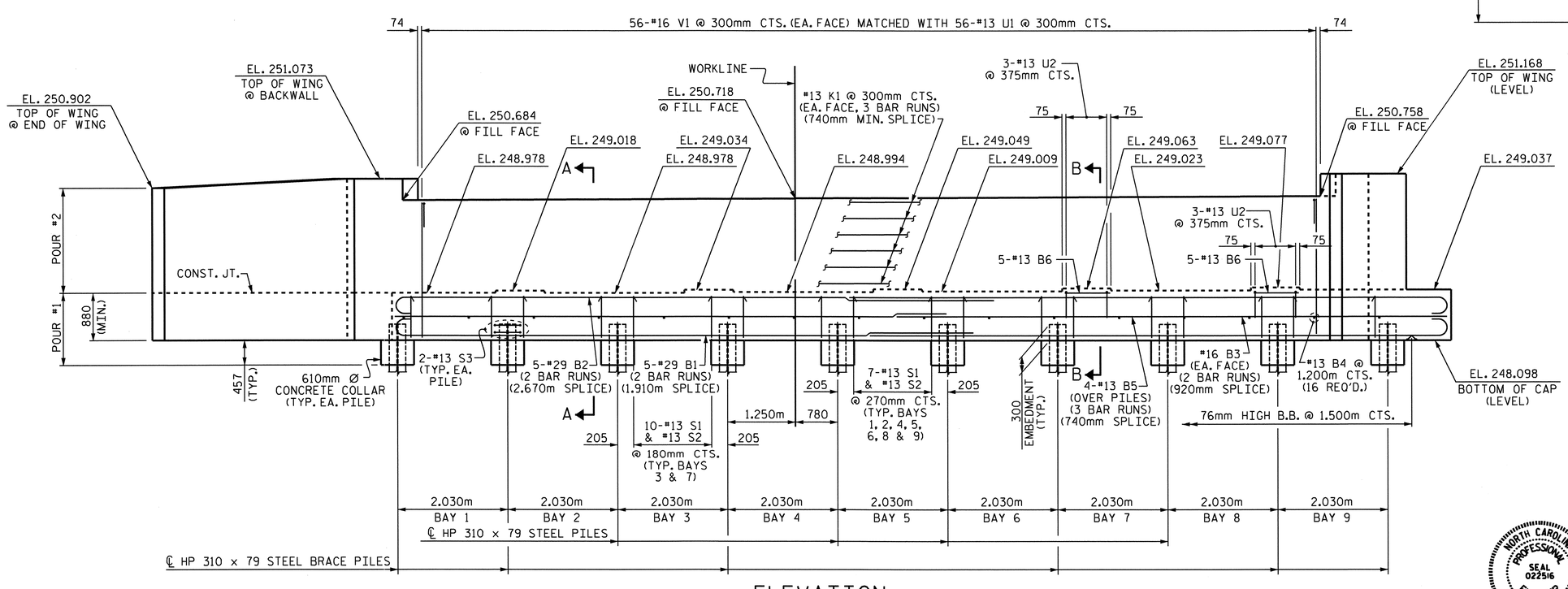

NOTE: FOR CLARITY, WING BRACE PILE IS NOT SHOWN IN ELEVATION VIEW.

ELEVATION

NOTES

STIRRUPS AND U1 BARS IN CAP MAY BE SHIFTED AS NECESSARY TO CLEAR ANCHOR BOLTS.

BACKWALL SHALL BE PLACED BEFORE APPLYING THE EPOXY PROTECTIVE COATING.

THE TOP SURFACE AREAS OF THE END BENT CAPS SHALL BE CURED IN ACCORDANCE WITH THE STANDARD SPECIFICATIONS EXCEPT THE MEMBRANE CURING COMPOUND METHOD SHALL NOT BE USED.

THE TOP SURFACE OF THE END BENT CAP EXCEPT THE BRIDGE SEAT BUILDUPS SHALL BE SLOPED TRANSVERSELY FROM THE FILL FACE TO THE BACK FACE AT A RATE OF 2%.

THE CONTRACTOR SHALL PROVIDE FOR THE INSTALLATION OF THE 102mm Ø DRAIN PIPE THROUGH THE WING WALL AS REQUIRED FOR REINFORCED BRIDGE APPROACH FILL. SEE THE ROADWAY PLANS. REINFORCING STEEL IN THE WING WALL MAY BE SHIFTED AS NECESSARY TO CLEAR THE DRAIN PIPE.

EPOXY COAT THE END BENT CAP AFTER ADJUSTMENTS ARE MADE TO BEARINGS AND ANCHOR BOLTS ARE GROUTED.

FOR PIPE INSERT DETAILS, SEE BEARINGS SHEET.

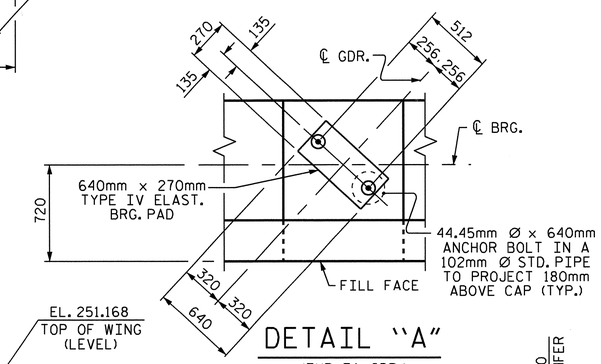

DETAIL "A"

(TYP. EA. GDR.)

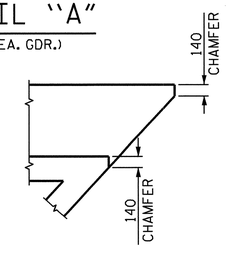

DETAIL "B"

PROJECT NO. R-2413C

GUILFORD-ROCKINGHAM COUNTY

STATION: 20+06.118 -LREV-

SHEET 1 OF 3

STATE OF NORTH CAROLINA
DEPARTMENT OF TRANSPORTATION
RALEIGH

SUBSTRUCTURE

END BENT #1

NORTH CAROLINA PROFESSIONAL SEAL 022516 ENGINEER EMILY E. MURRAY
10/28/11

REVISIONS							SHEET NO.
NO.	BY:	DATE:	NO.	BY:	DATE:		S-23
1			3				TOTAL SHEETS
2			4				237

DRAWN BY : T.L. AVERETTE DATE : 6-23-11
CHECKED BY : PEGGY PARISI DATE : 7-28-11

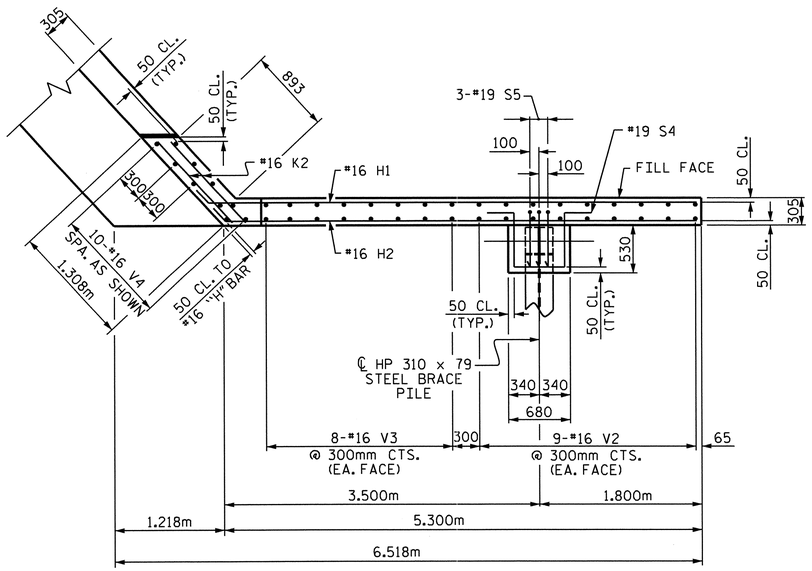

PLAN OF LEFT WING (W1)

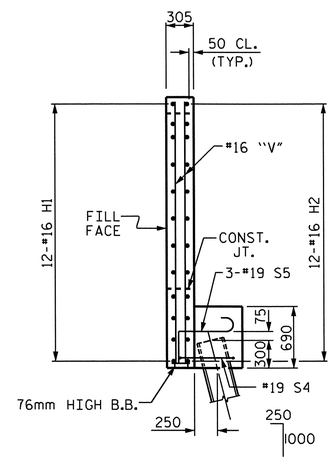

SECTION X-X

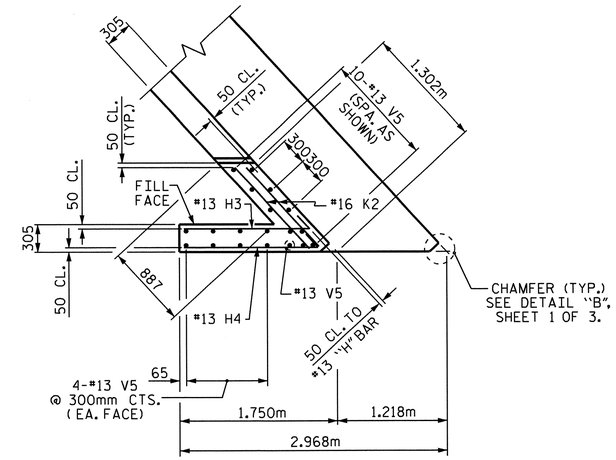

PLAN OF RIGHT WING (W2)

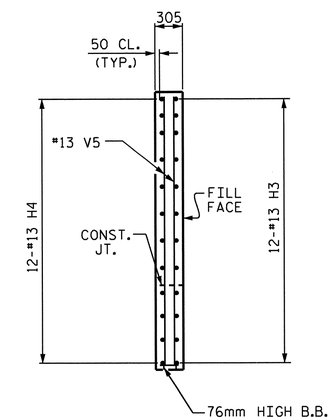

SECTION Y-Y

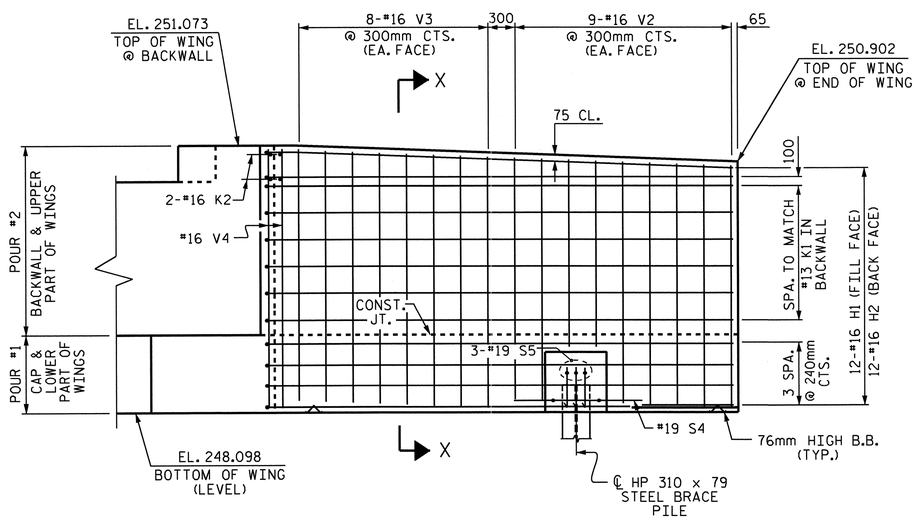

ELEVATION OF LEFT WING (W1)

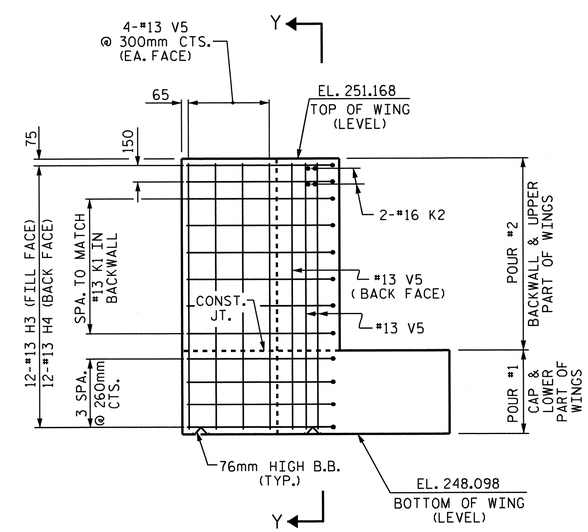

ELEVATION OF RIGHT WING (W2)

NORTH CAROLINA PROFESSIONAL SEAL 022516 ENGINEER ELMER E. MURRAY
10/28/11

PROJECT NO. R-2413C
GUILFORD-ROCKINGHAM COUNTY
STATION: 20+06.118 -LREV-

SHEET 2 OF 3

STATE OF NORTH CAROLINA
DEPARTMENT OF TRANSPORTATION
RALEIGH

SUBSTRUCTURE
END BENT #1

REVISIONS								SHEET NO.
NO.	BY:	DATE:	NO.	BY:	DATE:			S-24
1			3					TOTAL SHEETS
2			4					237

DRAWN BY : T.L. AVERETTE DATE : 6-23-11
CHECKED BY : PEGGY PARISI DATE : 7-28-11

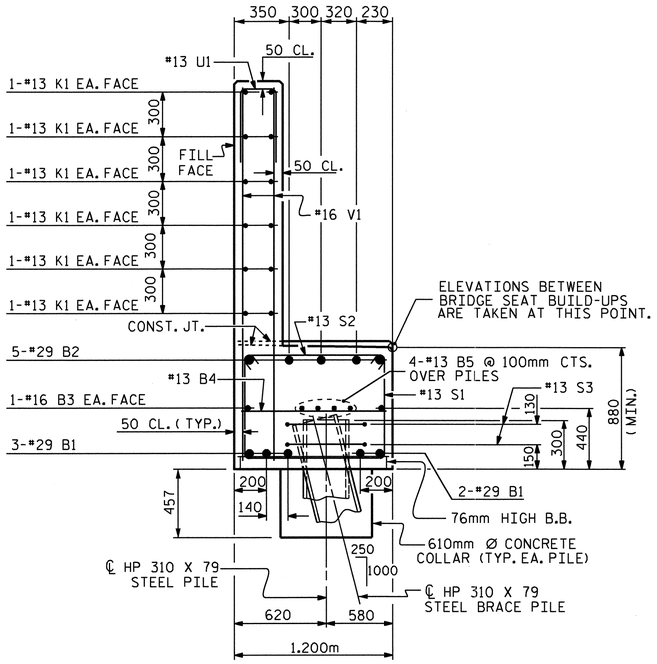

SECTION A-A

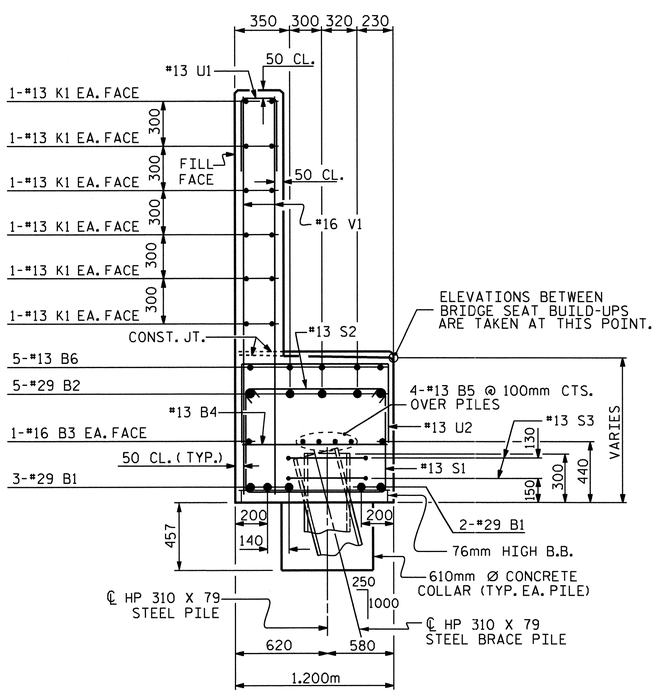

SECTION B-B

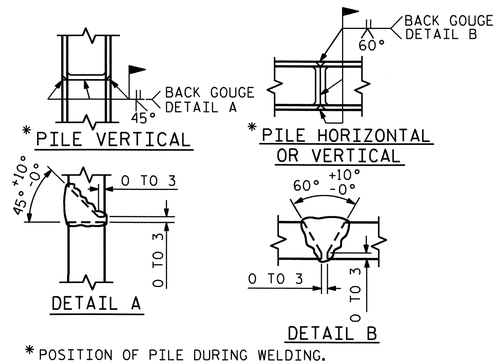

* POSITION OF PILE DURING WELDING.

PILE SPLICE DETAILS

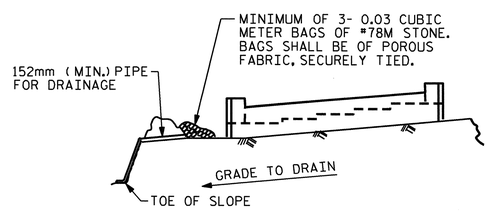

BAGGED STONE AND PIPE SHALL BE PLACED IMMEDIATELY AFTER COMPLETION OF END BENT EXCAVATION. PIPE MAY BE EITHER CONCRETE, CORRUGATED STEEL, CORRUGATED ALUMINUM ALLOY, OR CORRUGATED PLASTIC. PERFORATED PIPE WILL NOT BE ALLOWED.

BAGGED STONE SHALL REMAIN IN PLACE UNTIL THE ENGINEER DIRECTS THAT IT BE REMOVED. THE CONTRACTOR SHALL REMOVE AND DISPOSE OF SILT ACCUMULATIONS AT BAGGED STONE WHEN SO DIRECTED BY THE ENGINEER. BAGS SHALL BE REMOVED AND REPLACED WHENEVER THE ENGINEER DETERMINES THAT THEY HAVE DETERIORATED AND LOST THEIR EFFECTIVENESS.

NO SEPARATE PAYMENT WILL BE MADE FOR THIS WORK AND THE ENTIRE COST OF THIS WORK SHALL BE INCLUDED IN THE UNIT CONTRACT PRICE BID FOR THE SEVERAL PAY ITEMS.

TEMPORARY DRAINAGE AT END BENT

BAR TYPES

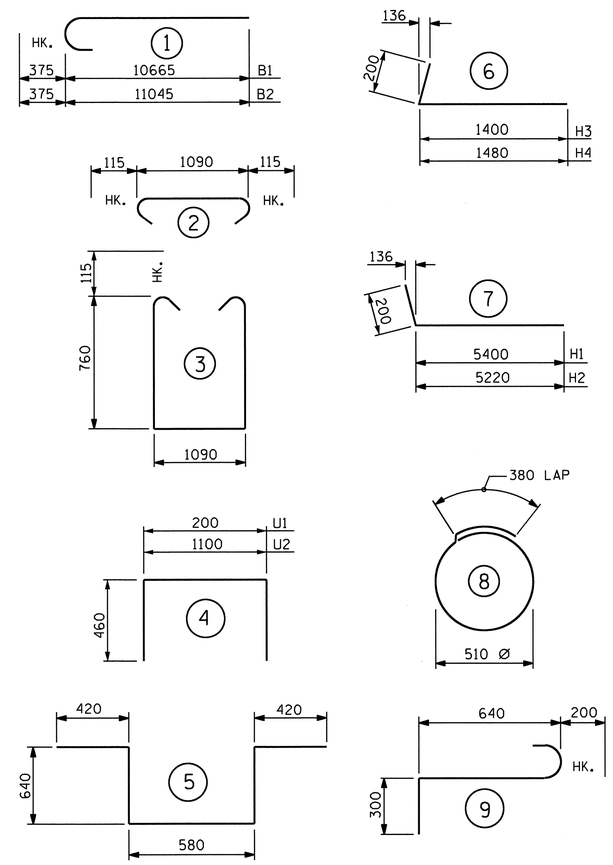

ALL BAR DIMENSIONS ARE OUT TO OUT.

BILL OF MATERIAL

END BENT #1

BAR	NUM	SZ	TYP	LENGTH	WEIGHT
B1	10	29	1	11040	559
B2	10	29	1	11420	578
B3	4	16	STR	10180	63
B4	16	13	STR	1100	17
B5	12	13	STR	6980	83
B6	10	13	STR	800	8
H1	12	16	7	5600	104
H2	12	16	7	5420	101
H3	12	13	6	1600	19
H4	12	13	6	1680	20
K1	36	13	STR	6980	250
K2	8	16	STR	1120	14
S1	69	13	3	2840	195
S2	69	13	2	1320	91
S3	20	13	8	1980	39
S4	1	19	5	2700	6
S5	3	19	9	1140	8
U1	56	13	4	1120	62
U2	6	13	4	2020	12
V1	112	16	STR	2480	431
V2	18	16	STR	2700	75
V3	16	16	STR	2800	70
V4	10	16	STR	2860	44
V5	19	13	STR	2960	56
REINFORCING STEEL				KG.	2,905

CLASS A CONCRETE BREAKDOWN

POUR #1 (CAP, LOWER WINGS, WING BRACE PILE FTG. & CONCRETE COLLARS)	C.M.	24.9
POUR #2 (BACKWALL & UPPER WINGS)	C.M.	14.4
TOTAL CLASS A CONCRETE	C.M.	39.3

HP 310 X 79 STEEL PILES

NO. 11	METERS	92.3

PROJECT NO. R-2413C

GUILFORD-ROCKINGHAM COUNTY

STATION: 20+06.118 -LREV-

SHEET 3 OF 3

STATE OF NORTH CAROLINA
DEPARTMENT OF TRANSPORTATION
RALEIGH

SUBSTRUCTURE

END BENT #1

NORTH CAROLINA PROFESSIONAL SEAL 022516 ENGINEER EMILY E. MURRAY
10/28/11

REVISIONS						SHEET NO.
NO.	BY:	DATE:	NO.	BY:	DATE:	S-25
1			3			TOTAL SHEETS
2			4			237

DRAWN BY : T.L. AVERETTE DATE : 6-23-11
CHECKED BY : PEGGY PARISI DATE : 7-28-11

NOTES

STIRRUPS AND U1 BARS IN CAP MAY BE SHIFTED AS NECESSARY TO CLEAR ANCHOR BOLTS.

HOOKS ON "V" BARS MAY BE TURNED AS NECESSARY FOR PLACING REINFORCING STEEL.

INVERT ALTERNATE STIRRUPS.

THE CONTRACTOR'S ATTENTION IS CALLED TO THE FACT THAT THE M1 BARS IN THE SPREAD FOOTINGS ARE DETAILED WITH ONE METER OF EXTRA LENGTH.

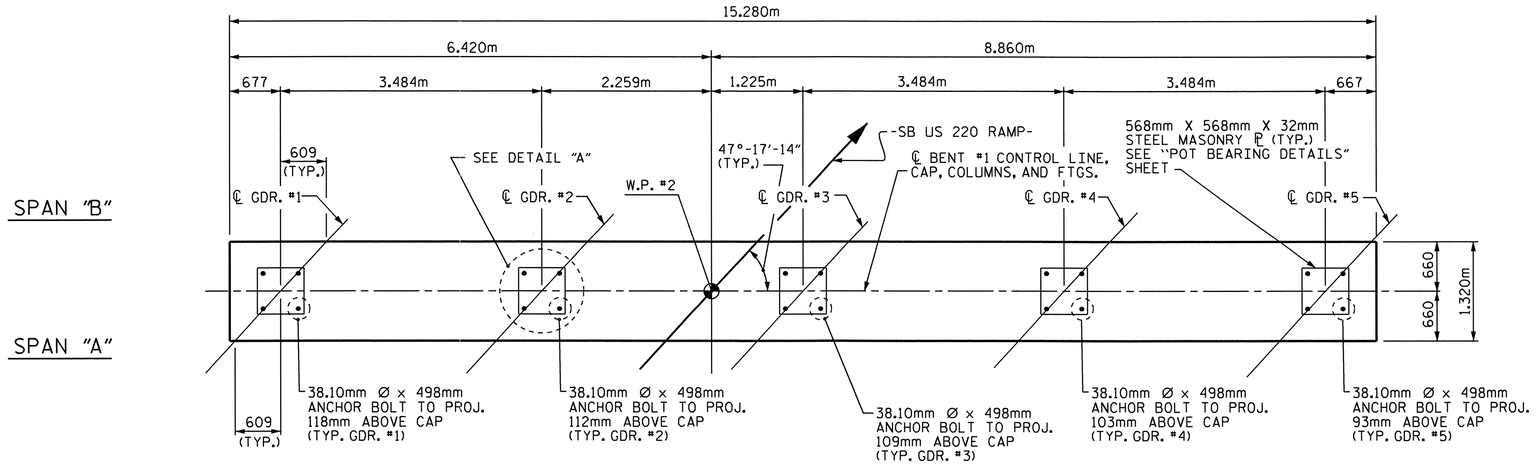

PLAN

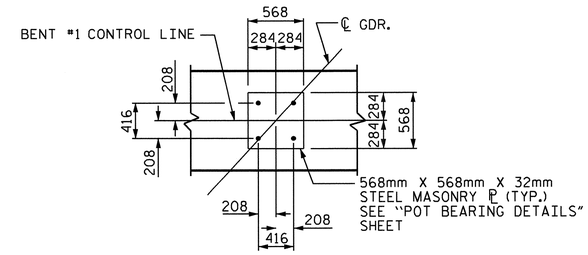

DETAIL "A"

(TYP. EA. GDR.)

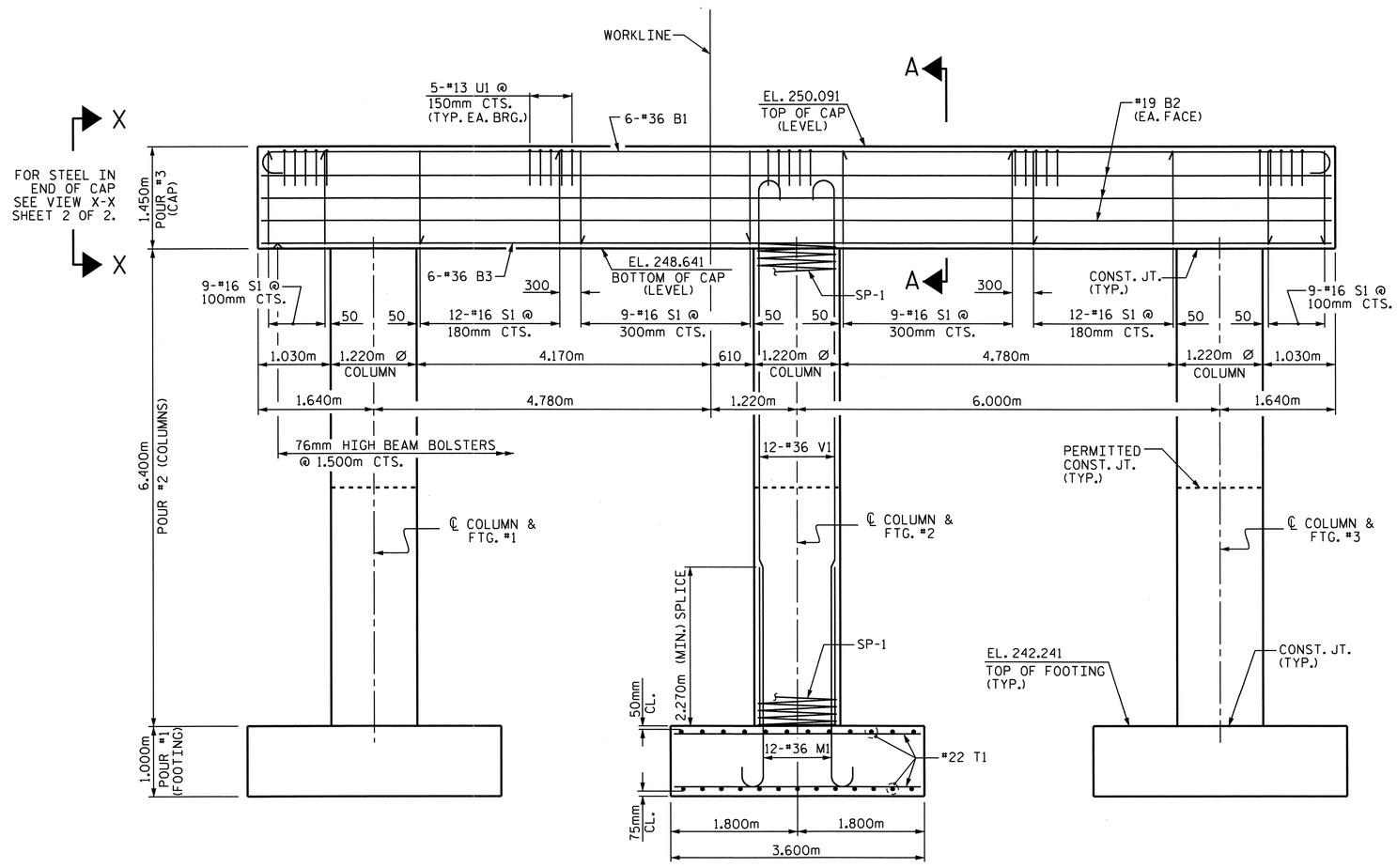

ELEVATION

(DIMENSIONS AND REINFORCING STEEL FOR EACH COLUMN & FOOTING ARE TYPICAL)

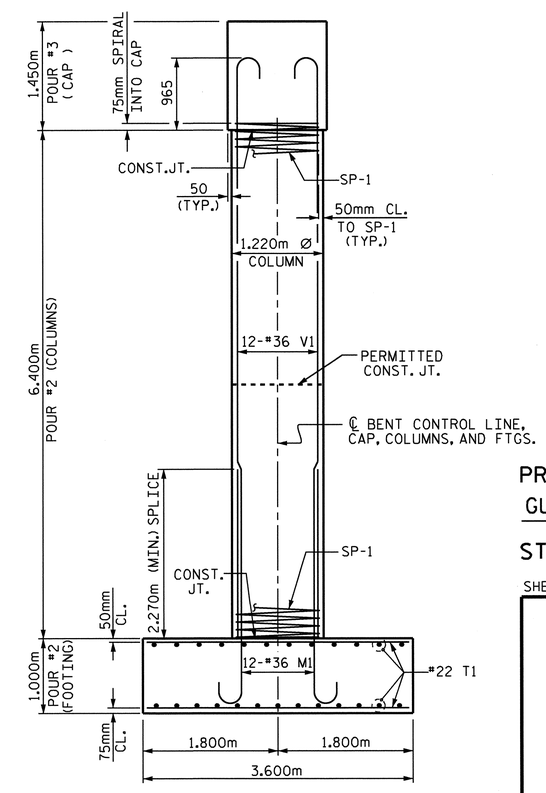

END ELEVATION

NORTH CAROLINA PROFESSIONAL SEAL 022516 ENGINEER EMILY E. MURRAY
10/28/11

PROJECT NO. R-2413C

GUILFORD-ROCKINGHAM COUNTY

STATION: 20+06.118 -LREV-

SHEET 1 OF 2

STATE OF NORTH CAROLINA
DEPARTMENT OF TRANSPORTATION
RALEIGH

SUBSTRUCTURE

BENT #1

REVISIONS						SHEET NO.
NO.	BY:	DATE:	NO.	BY:	DATE:	S-26
1			3			TOTAL SHEETS
2			4			237

DRAWN BY : MJH/T.L. AVERETTE DATE : 6-22-11
CHECKED BY : PEGGY PARISI DATE : 7-28-11

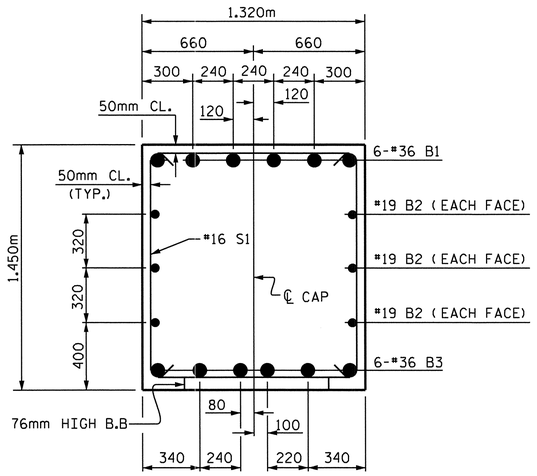

SECTION A-A

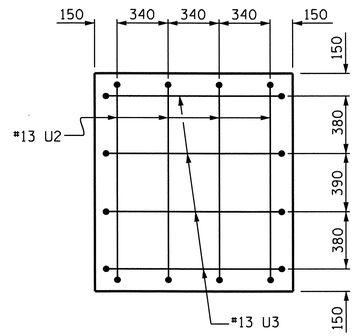

VIEW X-X

(TYP. EA. END)

BAR TYPES

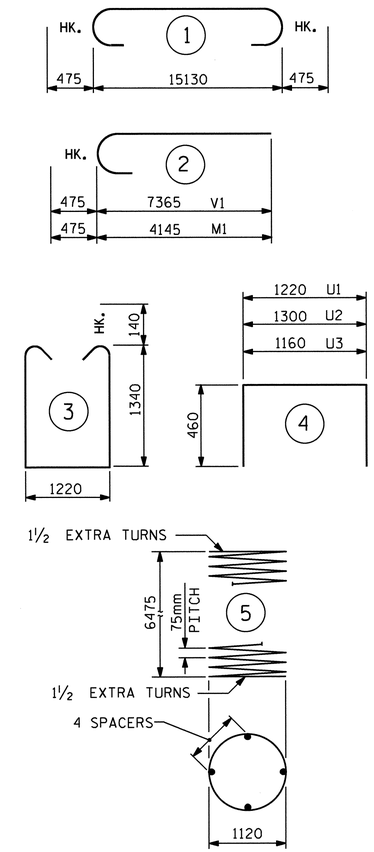

ALL BAR DIMENSIONS ARE OUT TO OUT.

BILL OF MATERIAL

BENT NO. 1

BAR	NO.	SIZE	TYPE	LENGTH	WEIGHT
B1	6	#36	1	16080	763
B2	6	#19	STR.	15180	204
B3	6	#36	STR.	15180	720
M1	36	#36	2	4620	1315
S1	60	#16	3	4180	389
T1	150	#22	STR.	3500	1597
U1	25	#13	4	2140	53
U2	8	#13	4	2220	18
U3	8	#13	4	2080	17
V1	36	#36	2	7840	2232
TOTAL REINFORCING STEEL				kg	7308

SPIRAL COLUMN REINFORCING STEEL					
SP-1	3	**	5	310840	927
TOTAL SPIRAL STEEL				kg	927

CLASS A CONCRETE BREAKDOWN		
POUR #1 (FOOTINGS)	m^3	38.9
POUR #2 (COLUMNS)	m^3	22.4
POUR #3 (CAP)	m^3	29.2
TOTAL CLASS A CONCRETE	m^3	90.5

FOUNDATION EXCAVATION LUMP SUM

**THE SP-1 SPIRAL REINFORCING STEEL SHALL BE W20 OR D-20 COLD DRAWN WIRE OR #13 PLAIN OR DEFORMED BAR.

THE CONTRACTOR'S ATTENTION IS CALLED TO THE FACT THAT THE LONGITUDINAL REINFORCEMENT FOR THE COLUMNS IS DETAILED WITH ONE METER OF EXTRA LENGTH.

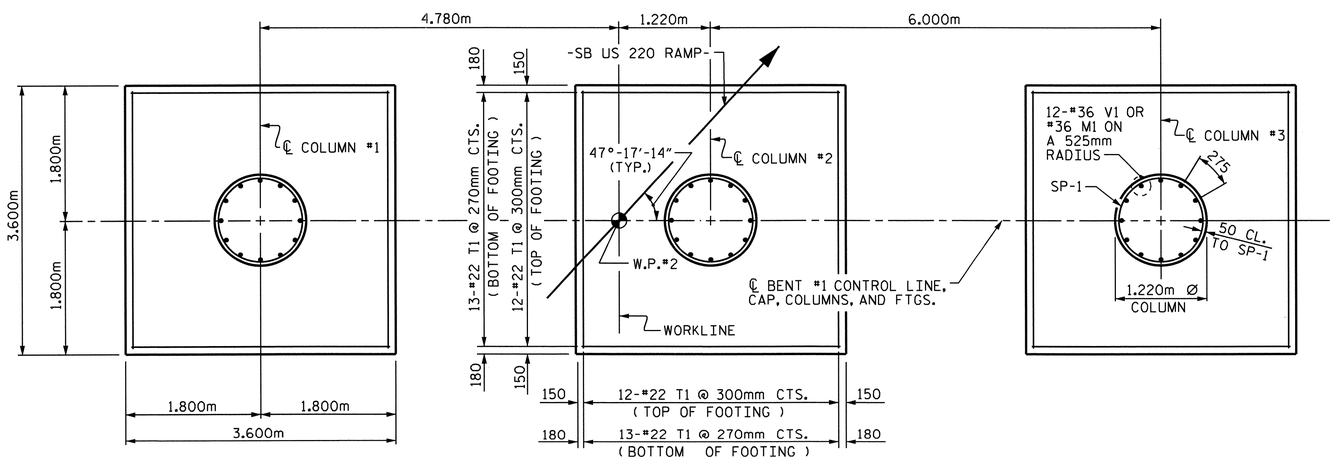

PLAN OF FOOTINGS

(DIMENSIONS AND REINFORCING STEEL FOR EACH COLUMN & FOOTING ARE TYPICAL)

PROJECT NO. R-2413C
GUILFORD-ROCKINGHAM COUNTY
STATION: 20+06.118 -LREV-

SHEET 2 OF 2

STATE OF NORTH CAROLINA
DEPARTMENT OF TRANSPORTATION
RALEIGH

SUBSTRUCTURE

BENT #1

NORTH CAROLINA PROFESSIONAL SEAL 022516 ENGINEER EMILY E. McARRAY
10/26/11

REVISIONS						SHEET NO.
NO.	BY:	DATE:	NO.	BY:	DATE:	S-27
1			3			TOTAL SHEETS
2			4			237

DRAWN BY : MJH/T.L. AVERETTE DATE : 6-22-11
CHECKED BY : PEGGY PARISI DATE : 7-28-11

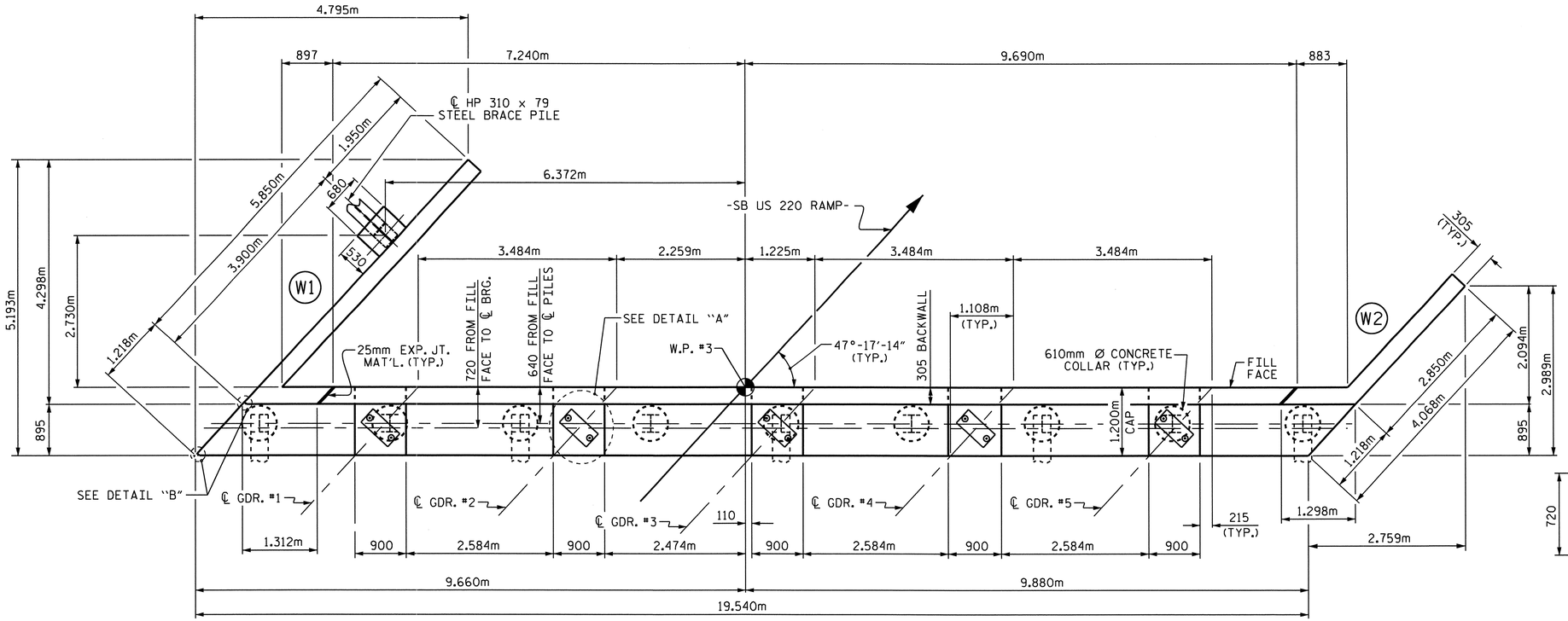

PLAN

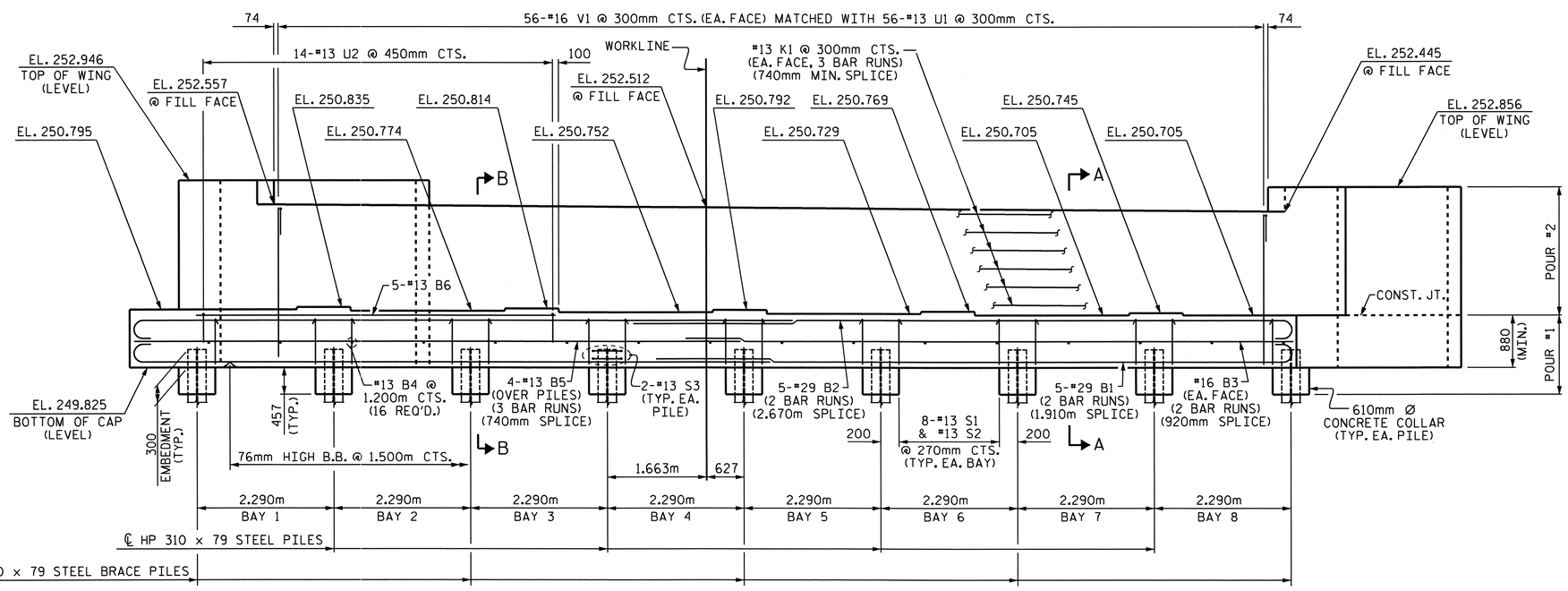

ELEVATION

NOTE: FOR CLARITY, WING BRACE PILE IS NOT SHOWN IN ELEVATION VIEW.

NOTES

STIRRUPS AND U1 BARS IN CAP MAY BE SHIFTED AS NECESSARY TO CLEAR ANCHOR BOLTS.

BACKWALL SHALL BE PLACED BEFORE APPLYING THE EPOXY PROTECTIVE COATING.

THE TOP SURFACE AREAS OF THE END BENT CAPS SHALL BE CURED IN ACCORDANCE WITH THE STANDARD SPECIFICATIONS EXCEPT THE MEMBRANE CURING COMPOUND METHOD SHALL NOT BE USED.

THE TOP SURFACE OF THE END BENT CAP EXCEPT THE BRIDGE SEAT BUILDUPS SHALL BE SLOPED TRANSVERSELY FROM THE FILL FACE TO THE BACK FACE AT A RATE OF 2%.

THE CONTRACTOR SHALL PROVIDE FOR THE INSTALLATION OF THE 102mm Ø DRAIN PIPE THROUGH THE WING WALL AS REQUIRED FOR REINFORCED BRIDGE APPROACH FILL, SEE THE ROADWAY PLANS. REINFORCING STEEL IN THE WING WALL MAY BE SHIFTED AS NECESSARY TO CLEAR THE DRAIN PIPE.

EPOXY COAT THE END BENT CAP AFTER ADJUSTMENTS ARE MADE TO BEARINGS AND ANCHOR BOLTS ARE GROUTED.

FOR PIPE INSERT DETAILS, SEE BEARINGS SHEET.

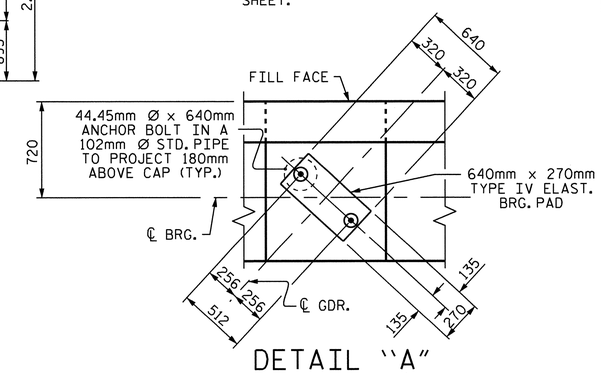

DETAIL "A"

(TYP. EA. GDR.)

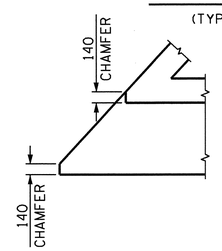

DETAIL "B"

PROJECT NO. R-2413C

GUILFORD-ROCKINGHAM COUNTY

STATION: 20+06.118 -LREV-

SHEET 1 OF 3

STATE OF NORTH CAROLINA
DEPARTMENT OF TRANSPORTATION
RALEIGH

SUBSTRUCTURE

END BENT #2

NORTH CAROLINA PROFESSIONAL SEAL 022516 ENGINEER EMILY E. MURRAY
10/28/14

REVISIONS							SHEET NO.
NO.	BY:	DATE:	NO.	BY:	DATE:		S-28
1			3				TOTAL SHEETS
2			4				237

DRAWN BY : T.L AVERETTE DATE : 6-23-11
CHECKED BY : PEGGY PARISI DATE : 7-28-11

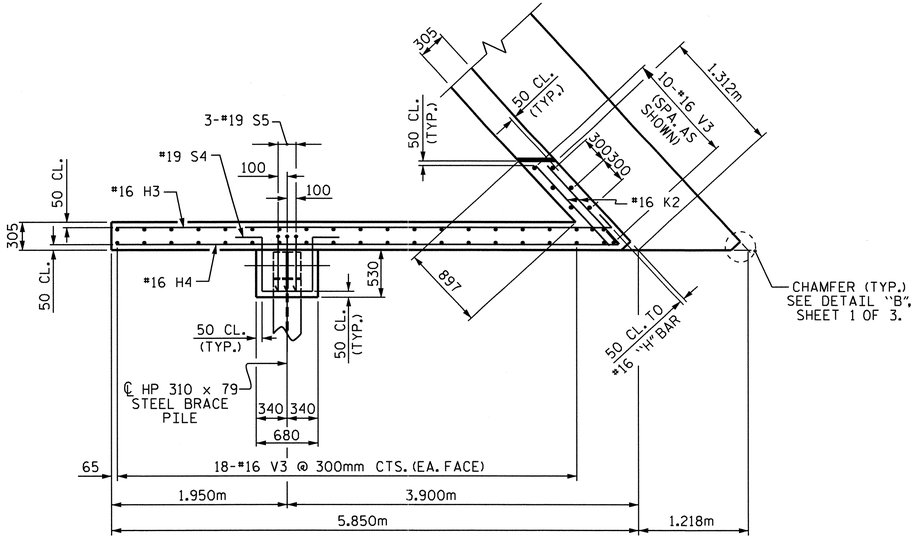

PLAN OF LEFT WING (W1)

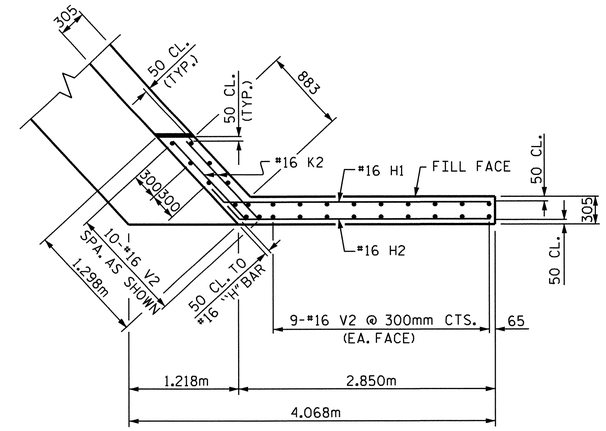

PLAN OF RIGHT WING (W2)

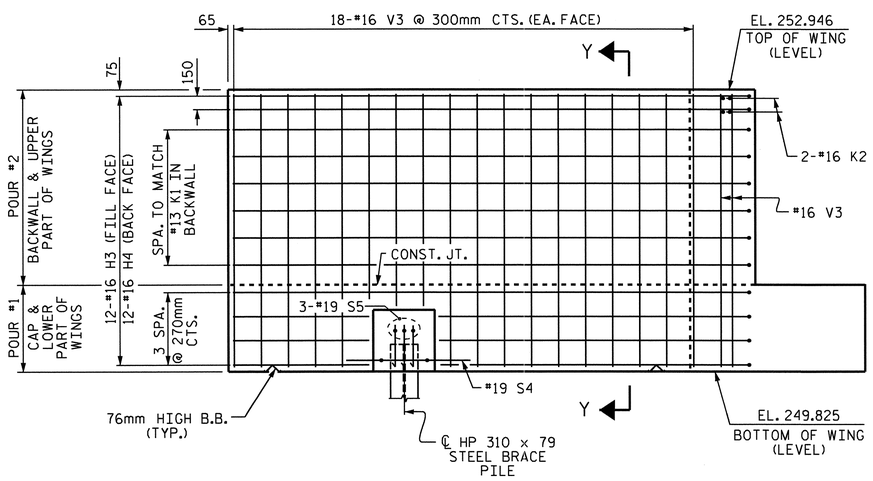

ELEVATION OF LEFT WING (W1)

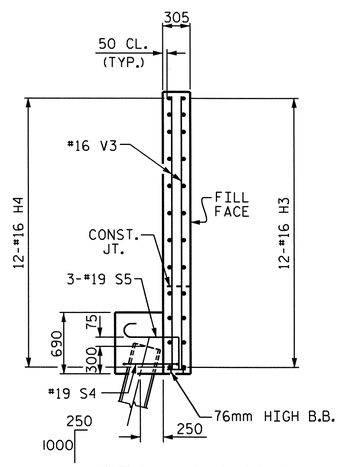

SECTION Y-Y

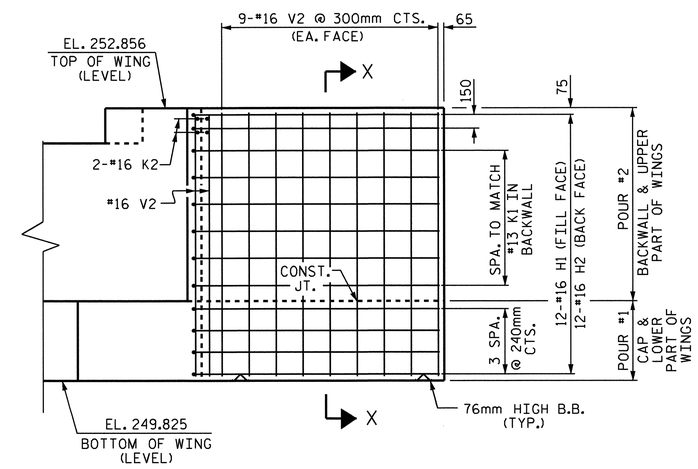

ELEVATION OF RIGHT WING (W2)

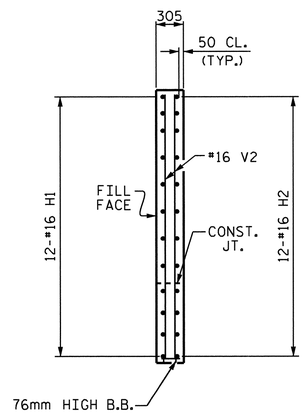

SECTION X-X

PROJECT NO. R-2413C

GUILFORD-ROCKINGHAM COUNTY

STATION: 20+06.118 -LREV-

SHEET 2 OF 3

STATE OF NORTH CAROLINA
DEPARTMENT OF TRANSPORTATION
RALEIGH

SUBSTRUCTURE

END BENT #2

NORTH CAROLINA PROFESSIONAL SEAL 022516 ENGINEER EMILY E. MURRAY
10/28/11

REVISIONS						SHEET NO.
NO.	BY:	DATE:	NO.	BY:	DATE:	S-29
1			3			TOTAL SHEETS
2			4			237

DRAWN BY : T.L. AVERETTE DATE : 6-23-11
CHECKED BY : PEGGY PARISI DATE : 7-28-11

STR. #1

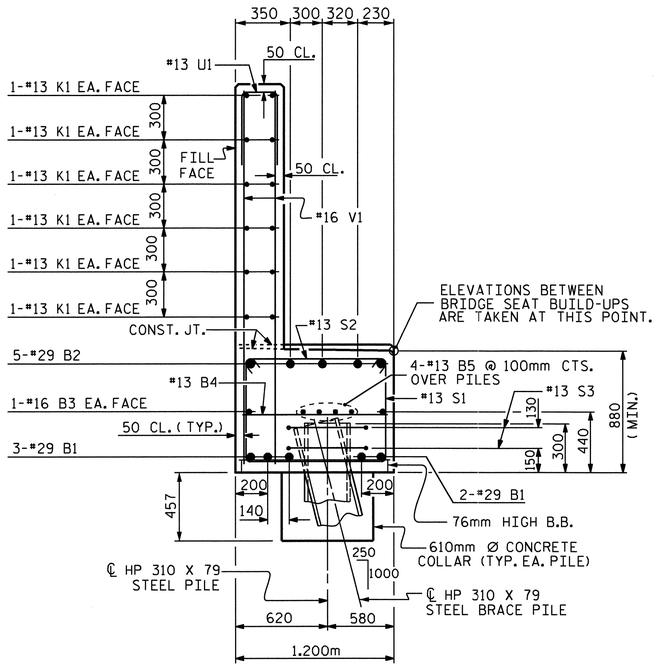

SECTION A-A

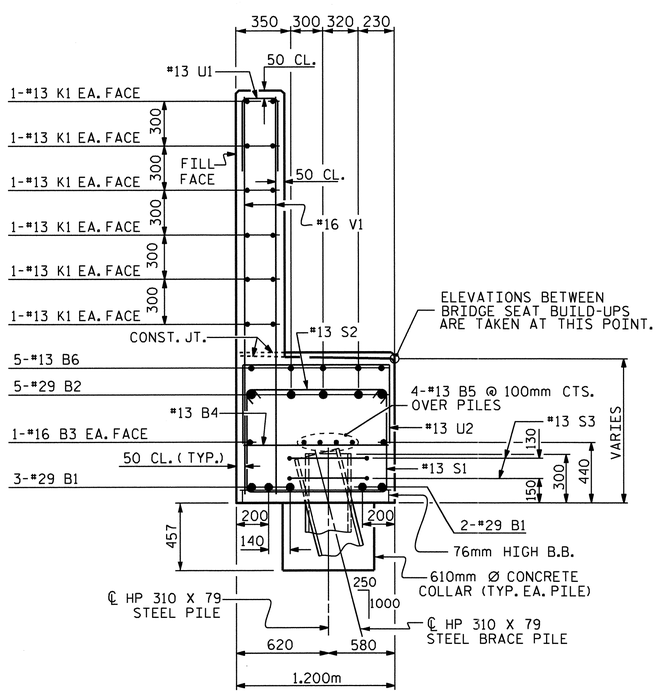

SECTION B-B

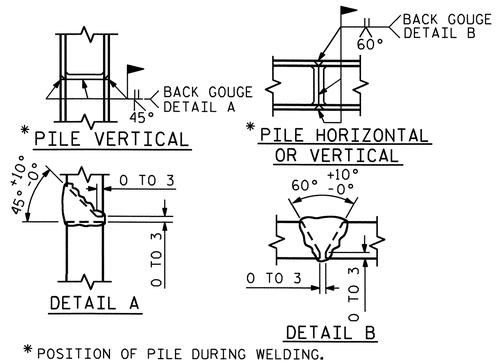

* POSITION OF PILE DURING WELDING.

PILE SPLICE DETAILS

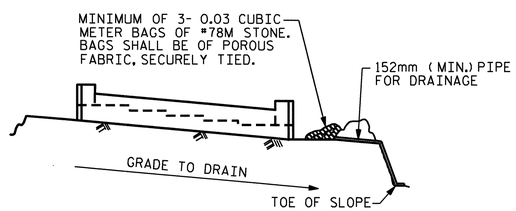

BAGGED STONE AND PIPE SHALL BE PLACED IMMEDIATELY AFTER COMPLETION OF END BENT EXCAVATION. PIPE MAY BE EITHER CONCRETE, CORRUGATED STEEL, CORRUGATED ALUMINUM ALLOY, OR CORRUGATED PLASTIC. PERFORATED PIPE WILL NOT BE ALLOWED.

BAGGED STONE SHALL REMAIN IN PLACE UNTIL THE ENGINEER DIRECTS THAT IT BE REMOVED. THE CONTRACTOR SHALL REMOVE AND DISPOSE OF SILT ACCUMULATIONS AT BAGGED STONE WHEN SO DIRECTED BY THE ENGINEER. BAGS SHALL BE REMOVED AND REPLACED WHENEVER THE ENGINEER DETERMINES THAT THEY HAVE DETERIORATED AND LOST THEIR EFFECTIVENESS.

NO SEPARATE PAYMENT WILL BE MADE FOR THIS WORK AND THE ENTIRE COST OF THIS WORK SHALL BE INCLUDED IN THE UNIT CONTRACT PRICE BID FOR THE SEVERAL PAY ITEMS.

TEMPORARY DRAINAGE AT END BENT

BAR TYPES

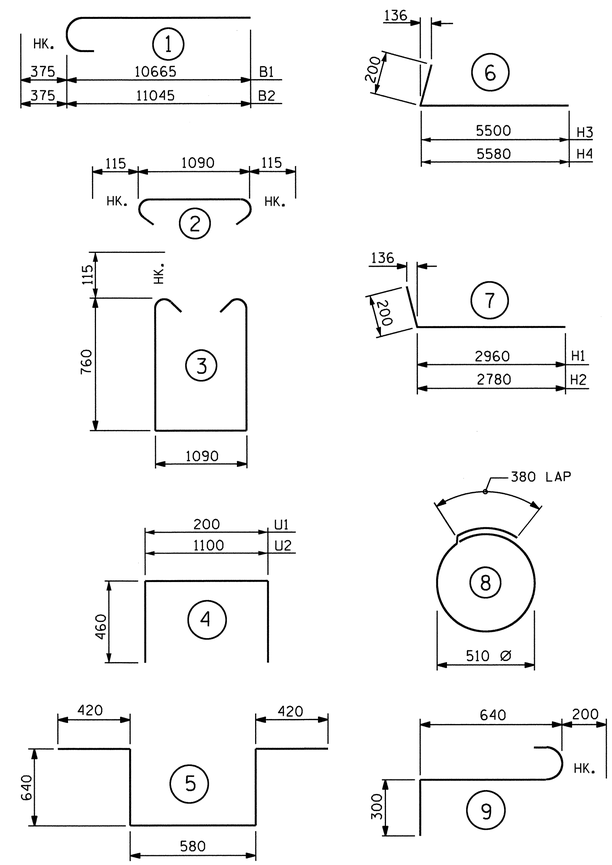

ALL BAR DIMENSIONS ARE OUT TO OUT.

BILL OF MATERIAL

END BENT #2

BAR	NUM	SZ	TYP	LENGTH	WEIGHT
B1	10	29	1	11040	559
B2	10	29	1	11420	578
B3	4	16	STR	10180	63
B4	16	13	STR	1100	17
B5	12	13	STR	6980	83
B6	5	13	STR	6020	30
H1	12	16	7	3160	59
H2	12	16	7	2980	56
H3	12	16	6	5700	106
H4	12	16	6	5780	108
K1	36	13	STR	6980	250
K2	8	16	STR	1120	14
S1	64	13	3	2840	181
S2	64	13	2	1320	84
S3	18	13	8	1980	35
S4	1	19	5	2700	6
S5	3	19	9	1140	8
U1	56	13	4	1120	62
U2	14	13	4	2020	28
V1	112	16	STR	2520	438
V2	28	16	STR	2920	127
V3	46	16	STR	3020	216
REINFORCING STEEL				KG.	3,108

CLASS A CONCRETE BREAKDOWN

POUR #1 (CAP, LOWER WINGS, WING BRACE PILE FTG. & CONCRETE COLLARS)	C.M.	25.5
POUR #2 (BACKWALL & UPPER WINGS)	C.M.	16.0
TOTAL CLASS A CONCRETE	C.M.	41.5

HP 310 X 79 STEEL PILES

NO. 10	METERS	115.7

PROJECT NO. R-2413C
GUILFORD-ROCKINGHAM COUNTY
STATION: 20+06.118 -LREV-

SHEET 3 OF 3

STATE OF NORTH CAROLINA
DEPARTMENT OF TRANSPORTATION
RALEIGH

SUBSTRUCTURE
END BENT #2

NORTH CAROLINA PROFESSIONAL SEAL 022516 ENGINEER EMILY E. McGRADY 10/28/11

REVISIONS						SHEET NO.
NO.	BY:	DATE:	NO.	BY:	DATE:	S-30
1			3			TOTAL SHEETS
2			4			237

DRAWN BY : T.L. AVERETTE DATE : 6-23-11
CHECKED BY : PEGGY PARISI DATE : 7-28-11

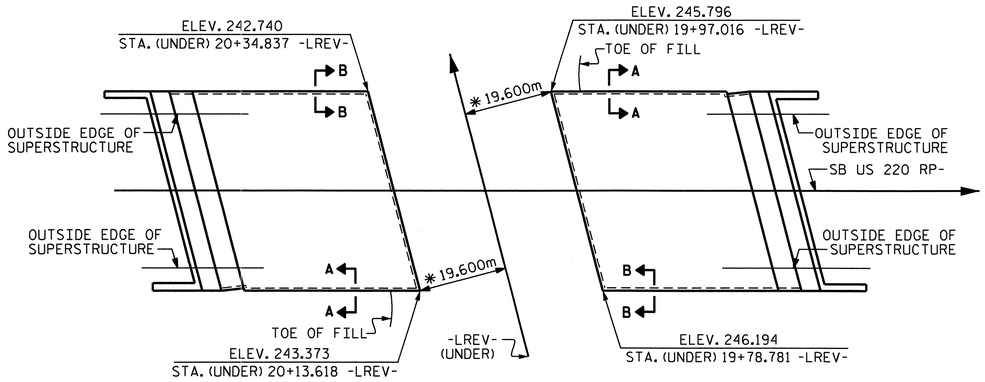

PLAN OF SLOPE PROTECTION

* RADIAL DIMENSION

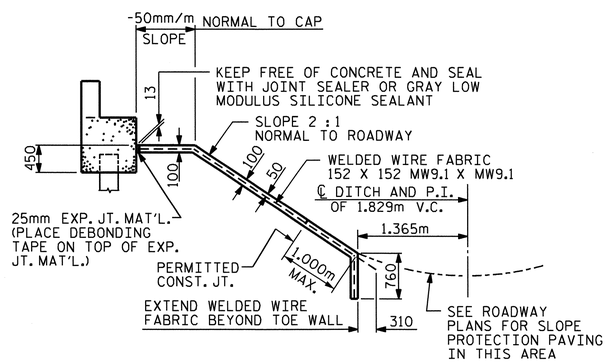

SECTION ALONG ℄ ROADWAY WHEN FILL CATCHES IN DITCH

GENERAL NOTES

SLOPE PROTECTION SHALL BE PLACED UNDER THE ENDS OF THE BRIDGE AS SHOWN IN THE DETAILS. STRAIGHT EDGING WILL NOT BE REQUIRED UNLESS, IN THE OPINION OF THE ENGINEER, VISUAL INSPECTION INDICATES A NEED FOR IT. MEASUREMENT AND PAYMENT SHALL BE AS PRESCRIBED IN SECTION 462 OF THE STANDARD SPECIFICATIONS. FOR BERM WIDTH, SEE GENERAL DRAWING.

SLOPE PROTECTION SHALL CONSIST OF 100mm POURED-IN-PLACE CONCRETE PAVING AS SHOWN IN THE DETAILS ON THIS SHEET. CONCRETE SHALL BE CLASS "B". THE CONCRETE SURFACE SHALL BE FLOATED WITH A WOODEN FLOAT AND FINISHED. WELDED WIRE FABRIC REINFORCING SHALL BE 152 X 152 - W9.1 X W9.1, 1520mm WIDE. SLOPE PROTECTION SHALL BE POURED IN 1520mm STRIPS AS SHOWN IN THE "POURING DETAIL" WITH 600mm LONG #13 BARS PLACED ALONG THE SLOPE BETWEEN STRIPS AT 450mm MAXIMUM SPACING. SLOPE PROTECTION MAY BE POURED IN ALTERNATE 1220mm AND 1520mm STRIPS AS SHOWN IN THE "OPTIONAL POURING DETAIL" WITH ADJACENT RUNS OF WELDED WIRE FABRIC LAPPING AT LEAST 152mm. THE COST OF THE WELDED WIRE FABRIC AND #13 BARS, IF USED, SHALL BE INCLUDED IN THE CONTRACT UNIT PRICE BID PER SQUARE METER FOR SLOPE PROTECTION.

BRIDGE @ STA. 20+06.118 -LREV-	100 mm SLOPE PROTECTION	* WELDED WIRE FABRIC 1520mm WIDE
	SQUARE METERS	APPROX. METERS
END BENT 1	319	233
END BENT 2	218	159

* QUANTITY SHOWN IS BASED ON 1520mm POURS.

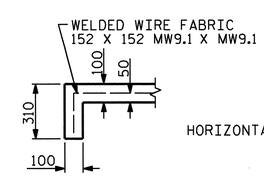

SECTION A-A

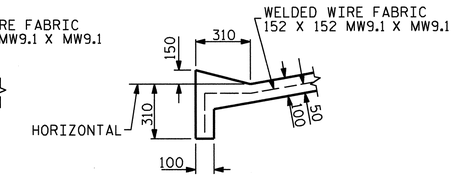

SECTION B-B

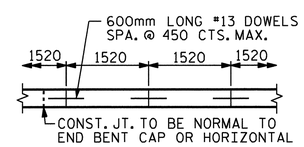

STRIP WIDTHS MAY VARY IN CURVED PORTION.

POURING DETAIL

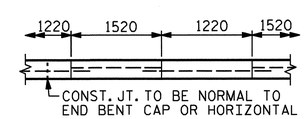

POUR A 1220mm STRIP FIRST. STRIP WIDTHS MAY VARY IN CURVED PORTION.

OPTIONAL POURING DETAIL

NORTH CAROLINA PROFESSIONAL SEAL 025516 ENGINEER GARY S. MURPHY

10/28/11

PROJECT NO. R-2413C

GUILFORD-ROCKINGHAM COUNTY

STATION: 20+06.118 -LREV-

STATE OF NORTH CAROLINA
DEPARTMENT OF TRANSPORTATION
RALEIGH

STANDARD SLOPE PROTECTION DETAILS

REVISIONS						SHEET NO.
NO.	BY:	DATE:	NO.	BY:	DATE:	S-31
1			3			TOTAL SHEETS
2			4			237

STR. #1

STD. NO. SP1SM

ASSEMBLED BY : M.GUDLAUGSSON	DATE : 7-6-11		
CHECKED BY : T.L. AVERETTE	DATE : 8-2-11		
DRAWN BY : ELR 5/92	REV. 7/10/01	LES/RDR	
CHECKED BY : GRP 6/92	REV. 5/7/03	RWW/JTE	
	REV. 5/1/06	TLA/GM	

19-OCT-2011 14:00
R:\TIPProjects-R\R2413c\Structures\Final Plans\Str.#1\R2413C_sd_SP_01.dgn
taverette

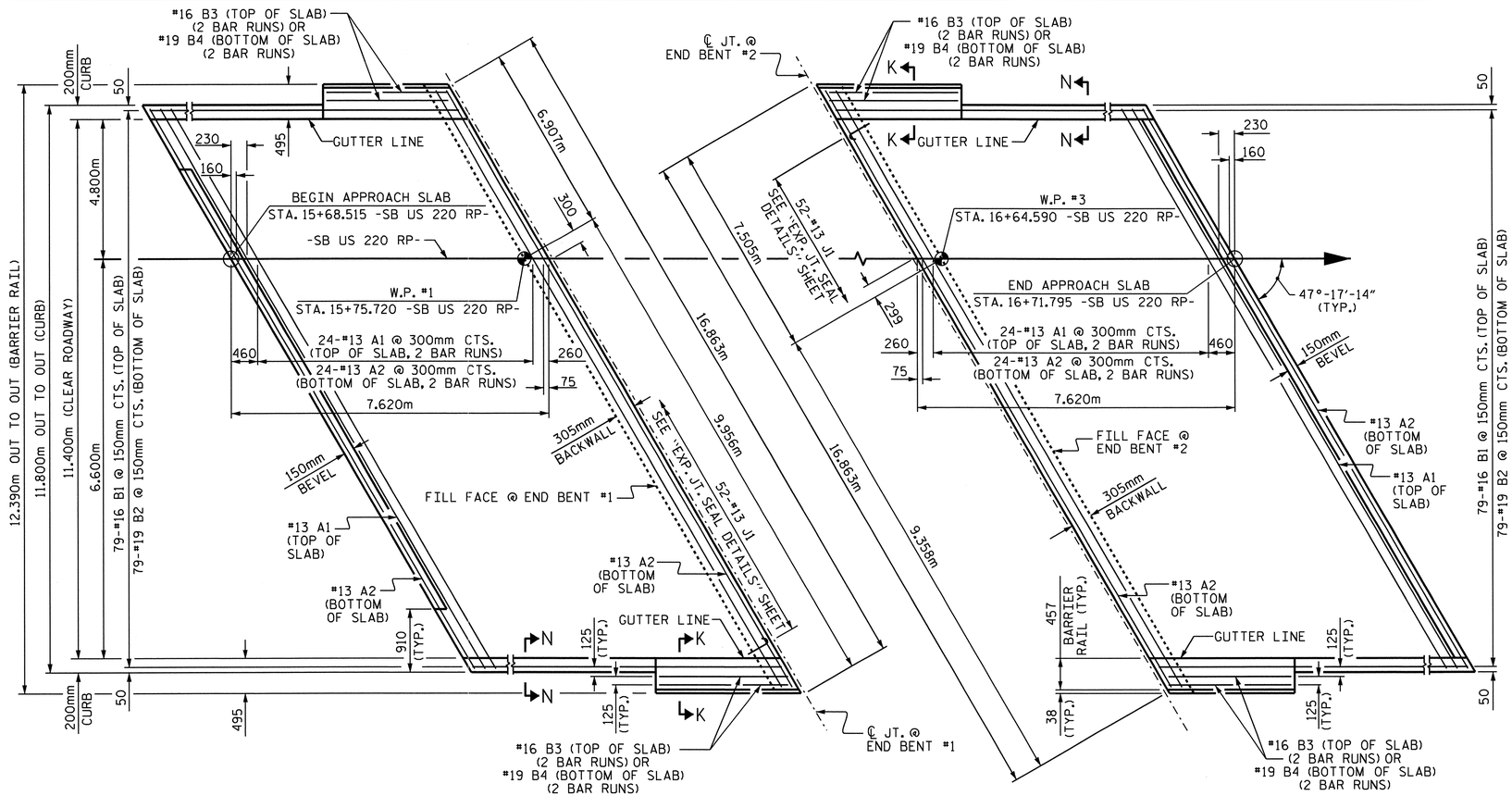

PLAN @ END BENT #1

PLAN @ END BENT #2

DIMENSIONS SHOWN ARE TYPICAL FOR BOTH APPROACH SLABS.
FOR BARRIER RAIL ON THE APPROACH SLAB DETAILS, REINFORCING STEEL AND BILL OF MATERIAL, SEE SHEET 2 OF 2.

NOTES

THE CONCRETE BARRIER RAIL ON THE APPROACH SLAB IS INCLUDED IN THE CONCRETE BARRIER RAIL QUANTITY FOR THE SUPERSTRUCTURE.

APPROACH SLAB SHALL NOT BE CONSTRUCTED PRIOR TO COMPLETION OF THE BRIDGE DECK.

FOR REINFORCED BRIDGE APPROACH FILL INCLUDING FABRIC, IMPERMEABLE GEOMEMBRANE, 102mm Ø DRAINAGE PIPE, #78M STONE, AND SELECT MATERIAL, SEE ROADWAY PLANS.

AREA BETWEEN THE WINGWALL AND APPROACH SLAB SHALL BE GRADED TO DRAIN THE WATER AWAY FROM THE FILL FACE OF THE BRIDGE AND SHALL BE PAVED. SEE ROADWAY PLANS.

THE 150mm COMP. A.B.C. SHALL BE FLUSH WITH THE ROADWAY END OF THE APPROACH SLAB AND SHALL EXTEND 300mm OUTSIDE OF EACH EDGE OF THE APPROACH SLAB.

THE CONTRACTOR MAY USE 100mm TYPE B-25.0B ASPHALT CONCRETE BASE COURSE IN LIEU OF 150mm COMP. A.B.C. IF THIS OPTION IS USED, THE BASE COURSE SHALL BE FLUSH WITH THE ROADWAY END OF THE APPROACH SLAB, AND THE WIDTH SHALL BE THE SAME AS THAT OF THE APPROACH SLAB.

THE CONTRACTOR MAY USE 125mm CLASS "A" CONCRETE BASE IN LIEU OF 150mm COMP. A.B.C. IF THIS OPTION IS USED, THE CONCRETE BASE SHALL BE FLUSH WITH THE ROADWAY END OF THE APPROACH SLAB, AND THE WIDTH SHALL BE THE SAME AS THAT OF THE APPROACH SLAB. THE CONCRETE SHALL BE FINISHED TO A SMOOTH SURFACE AND A LAYER OF 13.6 kg ROOFING FELT SHALL BE PLACED BETWEEN THE CONCRETE BASE AND THE APPROACH SLAB TO PREVENT BOND. THE APPROACH SLAB SHALL NOT BE CAST UNTIL THE CONCRETE BASE HAS REACHED AN AGE OF THREE CURING DAYS.

FOR EXPANSION JOINT SEALS, SEE SPECIAL PROVISIONS.

THE BARRIER RAIL ON EACH APPROACH SLAB SHALL NOT BE CAST UNTIL ALL APPROACH SLAB CONCRETE HAS BEEN CAST AND HAS REACHED A MINIMUM COMPRESSIVE STRENGTH OF 20.7 MPa.

ALL REINFORCING STEEL IN BARRIER RAILS SHALL BE EPOXY COATED.

BILL OF MATERIAL
FOR ONE APPROACH SLAB (2 REQ'D)

BAR	NO.	SIZE	TYPE	LENGTH	WEIGHT
* A1	50	#13	STR	8680	431
A2	52	#13	STR	8640	447
* B1	79	#16	STR	7140	875
B2	79	#19	STR	7480	1321
* B3	8	#16	STR	2140	27
B4	8	#19	STR	2000	36
* J1	52	#13	3	440	23
REINFORCING STEEL				kg.	1804
● * EPOXY COATED REINFORCING STEEL				kg.	1356
● CLASS AA CONCRETE				C.M.	28.6

BAR TYPE

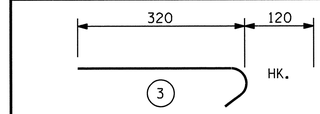

ALL BAR DIMENSIONS ARE OUT TO OUT

● QUANTITIES FOR BARRIER RAIL ON APPROACH SLAB ARE NOT INCLUDED. SEE SHEET 2 OF 2.

SPLICE CHART

BAR	SPLICE
#13 A1	610
#13 A2	540
#16 B3	1050
#19 B4	790

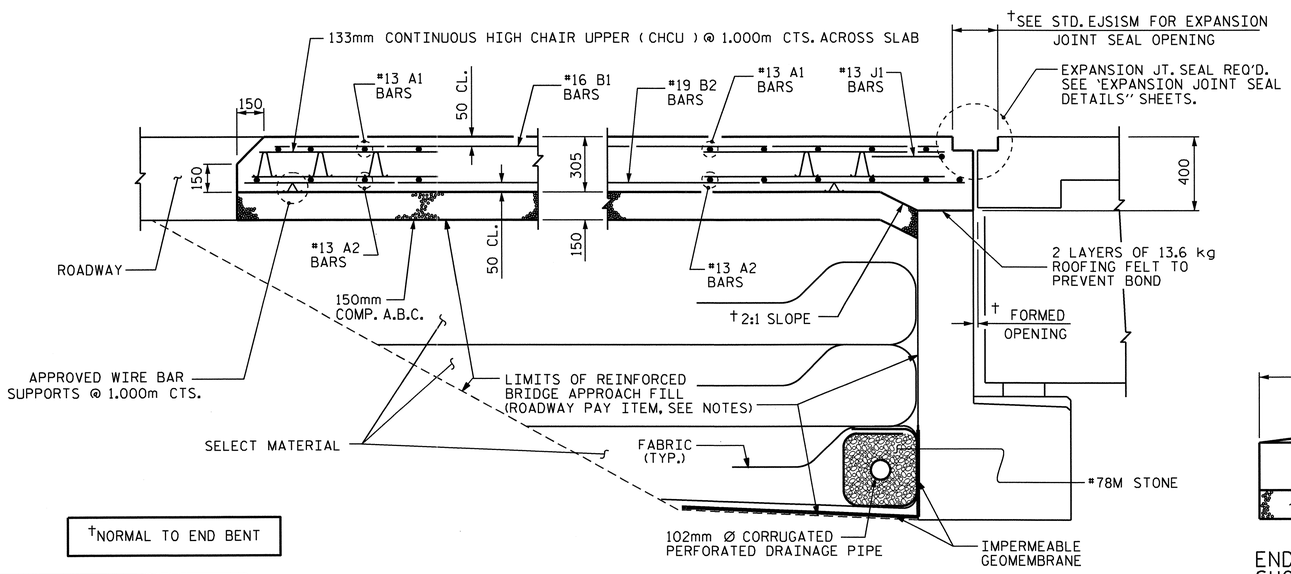

†NORMAL TO END BENT

SECTION THRU SLAB

BARRIER RAIL AND CURB NOT SHOWN

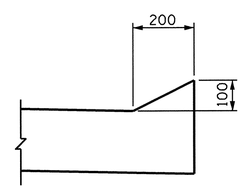

SECTION N-N

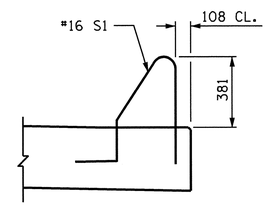

SECTION K-K

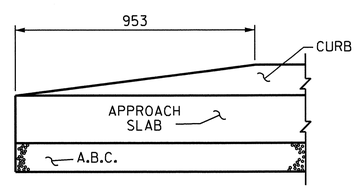

END OF CURB WITHOUT SHOULDER BERM GUTTER

CURB DETAILS

PROJECT NO. R-2413C
GUILFORD-ROCKINGHAM COUNTY
STATION: 20+06.118 -LREV-

SHEET 1 OF 2

STATE OF NORTH CAROLINA
DEPARTMENT OF TRANSPORTATION
RALEIGH

STANDARD

BRIDGE APPROACH SLAB FOR FLEXIBLE PAVEMENT

NORTH CAROLINA PROFESSIONAL SEAL 022516 ENGINEER EMILY E. MURRAY
10/28/11

REVISIONS							SHEET NO.
NO.	BY:	DATE:	NO.	BY:	DATE:		S-32
1			3				TOTAL SHEETS
2			4				237

STR #1 STD. NO. BAS4SM

ASSEMBLED BY : T.L. AVERETTE	DATE : 11-29-10
CHECKED BY : PEGGY PARISI	DATE : 05-05-11
DRAWN BY : FCJ 6/87	REV. 7/10/01 RWW/LES
CHECKED BY : EGA 6/87	REV. 5/7/03R RWW/JTE
	REV. 5/1/06R KMM/GM

13-SEP-2011 10:23
W:\Structures\Final Plans\Str.#1\R2413C_sd_AS_01.dgn
bbarodawala

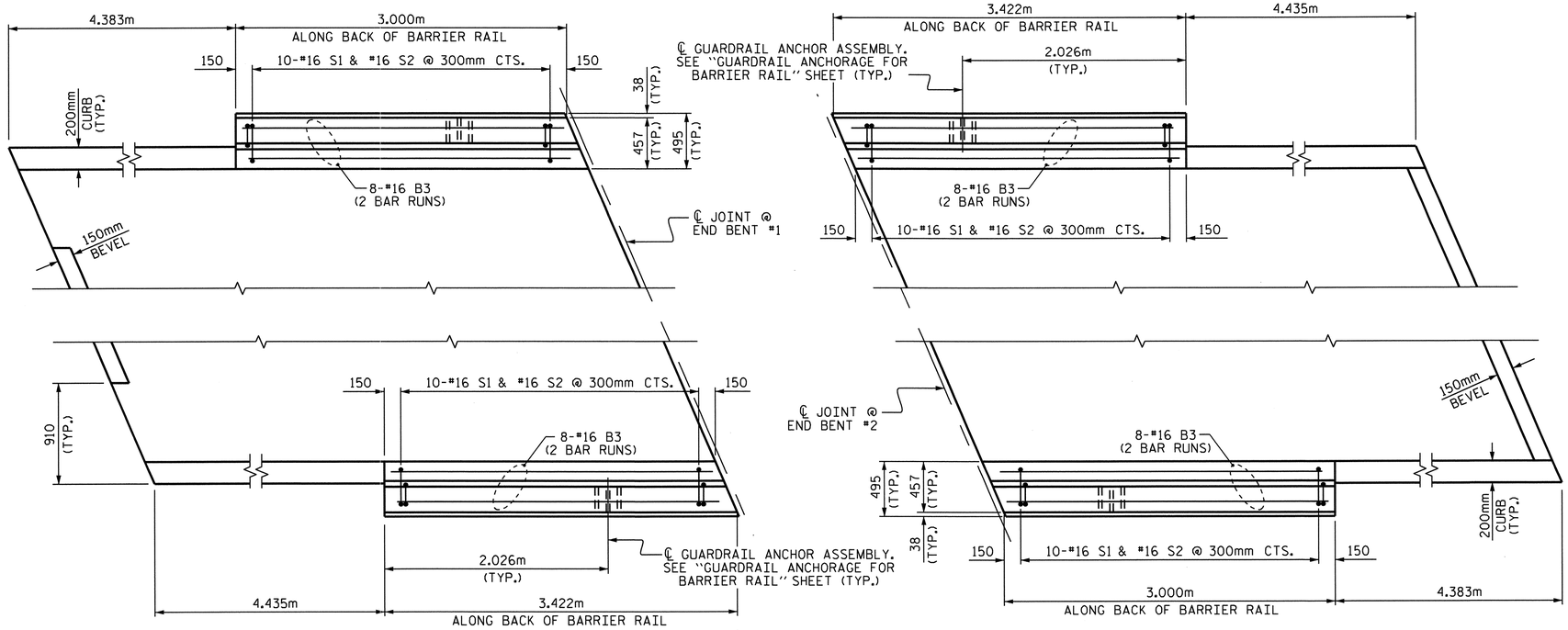

PLAN OF BARRIER RAIL ON APPROACH SLABS

BAR TYPES

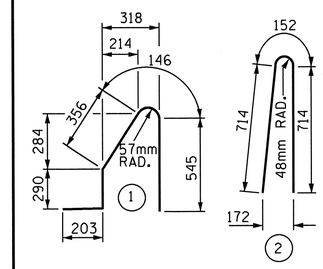

ALL BAR DIMENSIONS ARE OUT TO OUT

BILL OF MATERIAL

FOR CONCRETE BARRIER RAIL ON BOTH APPROACH SLABS ONLY

BAR	NO.	SIZE	TYPE	LENGTH	WEIGHT
* B3	64	#16	STR	2140	213
* S1	40	#16	1	1540	96
* S2	40	#16	2	1580	98
* EPOXY COATED REINFORCING STEEL				kg.	407
CLASS AA CONCRETE				C. M.	3.2
CONCRETE BARRIER RAIL				METERS	12.844

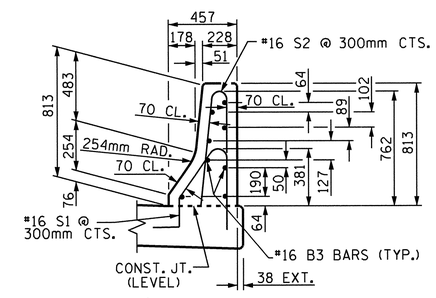

SECTION THRU RAIL

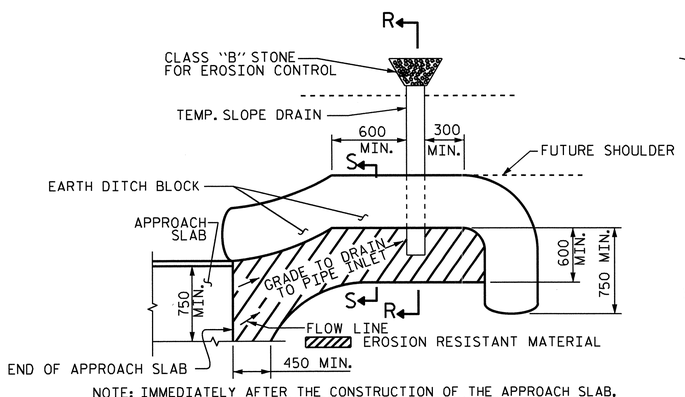

NOTE: IMMEDIATELY AFTER THE CONSTRUCTION OF THE APPROACH SLAB, THE CONTRACTOR SHALL PROVIDE TEMPORARY BERM AND SLOPE DRAIN. CONTRACTOR SHALL GRADE TO PIPE INLET AND PROVIDE EROSION RESISTANT MATERIAL AS SHOWN. THE EROSION RESISTANT MATERIAL SHALL BE EITHER 1) ASPHALT PLANT MIX, TYPE 1 OR TYPE 2, MIN. 50mm DEPTH, 2) EROSION CONTROL MAT, OR 3) CONCRETE, AS DIRECTED BY THE ENGINEER. THE SLOPE DRAIN SHALL CONSIST OF A NON-PERFORATED TEMPORARY DRAINAGE PIPE, 305mm IN DIAMETER.

PLAN VIEW

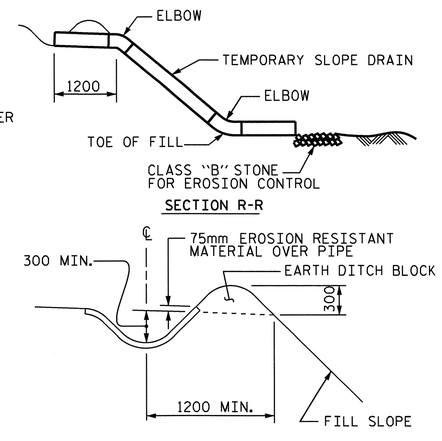

SECTION S-S

TEMPORARY BERM AND SLOPE DRAIN DETAILS

(TO BE USED WHEN SHOULDER BERM GUTTER IS REQUIRED)

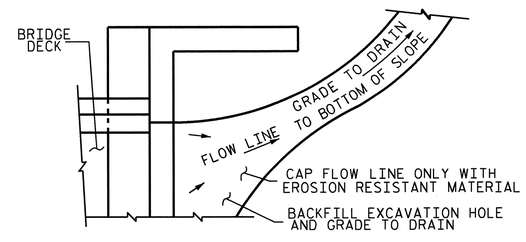

NOTE: IF THE APPROACH SLAB IS NOT CONSTRUCTED IMMEDIATELY AFTER THE BACKFILLING OF THE END BENT EXCAVATION, GRADE TO DRAIN TO THE BOTTOM OF THE SLOPE AND PROVIDE EROSION RESISTANT MATERIAL, SUCH AS FIBERGLASS ROVING OR AS DIRECTED BY THE ENGINEER TO PREVENT SOIL EROSION AND TO PROTECT THE AREA ADJACENT TO THE STRUCTURE. THE CONTRACTOR WILL BE REQUIRED TO REMOVE THESE MATERIALS PRIOR TO CONSTRUCTION OF THE APPROACH SLAB.

TEMPORARY DRAINAGE DETAIL

PROJECT NO. R-2413C

GUILFORD-ROCKINGHAM COUNTY

STATION: 20+06.118 -LREV-

SHEET 2 OF 2

STATE OF NORTH CAROLINA
DEPARTMENT OF TRANSPORTATION
RALEIGH

STANDARD
BRIDGE APPROACH
SLAB DETAILS

NORTH CAROLINA PROFESSIONAL SEAL 022516 ENGINEER EMILY E. McFRAY

REVISIONS								SHEET NO.
NO.	BY:	DATE:	NO.	BY:	DATE:			S-33
1			3					TOTAL SHEETS
2			4					237

STR #1

STD. NO. BAS10SM

ASSEMBLED BY : T.L. AVERETTE	DATE : 11-29-10		
CHECKED BY : PEGGY PARISI	DATE : 05-05-11		
DRAWN BY : FCJ 11/88	REV. 10/17/00	RWW/LES	
CHECKED BY : ARB 11/88	REV. 5/7/03	RWW/JTE	
	REV. 5/1/06RR	MAA/KMM	

13-SEP-2011 10:23
W:\Structures\Final Plans\Str.#1\R2413C_sd_AS_01.dgn
bbarodawala

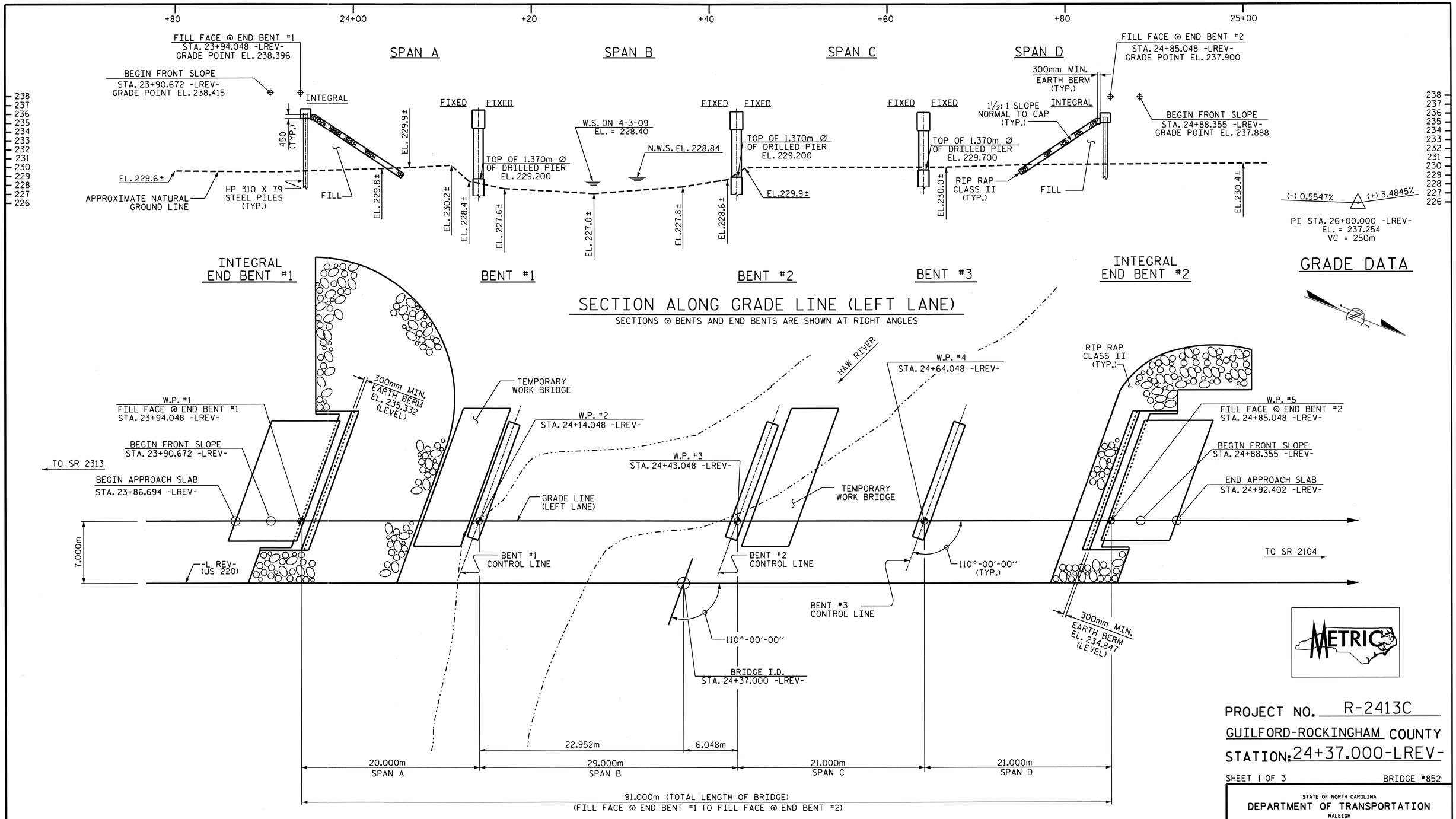

PLAN

PILES NOT SHOWN FOR CLARITY

I HEREBY CERTIFY THESE PLANS ARE THE AS-BUILT PLANS

NORTH CAROLINA PROFESSIONAL SEAL 12274 ENGINEER OMAR R. AZIZI
10/28/11

NORTH CAROLINA PROFESSIONAL SEAL 022516 ENGINEER EMILY E. MURPHY
10/28/11

PROJECT NO. R-2413C

GUILFORD-ROCKINGHAM COUNTY

STATION: 24+37.000-LREV-

SHEET 1 OF 3 BRIDGE #852

STATE OF NORTH CAROLINA
DEPARTMENT OF TRANSPORTATION
RALEIGH

GENERAL DRAWING
BRIDGE OVER HAW RIVER
ON US 220 BETWEEN
SR 2313 AND SR 2104
(LEFT LANE)

REVISIONS						SHEET NO.
NO.	BY:	DATE:	NO.	BY:	DATE:	S-34
1			3			TOTAL SHEETS
2			4			238

STR. #2

DRAWN BY : M.GUDLAUGSSON DATE : 5-23-11
CHECKED BY : PEGGY PARISI DATE : 7-30-11

19-OCT-2011 14:01
R:\TIPProjects-R\R2413c\Structures\Final Plans\Str.#2\R-2413C_SD_GD_02.dgn
taverette

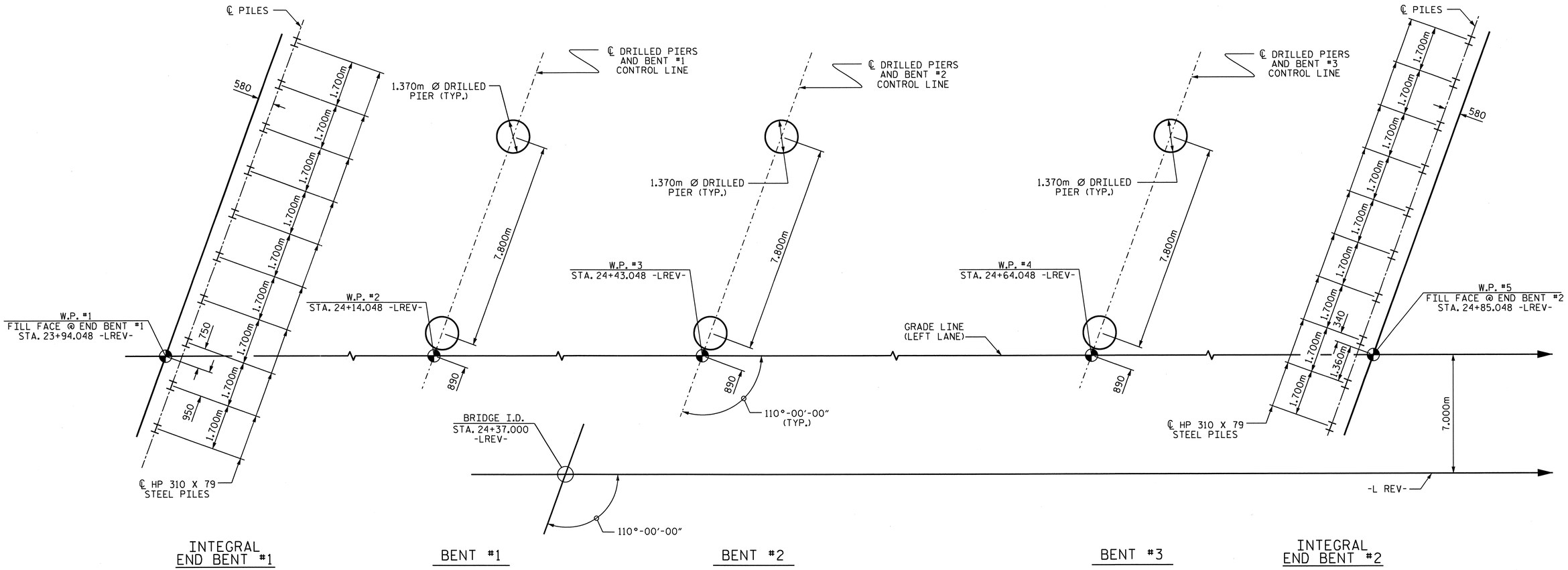

FOUNDATION LAYOUT

DIMENSIONS LOCATING PILES ARE SHOWN TO THE PILE CENTERLINE.

FOUNDATION NOTES

FOR PILES, SEE SPECIAL PROVISIONS.

THE ALLOWABLE BEARING CAPACITY FOR PILES AT END BENT NO.1 AND END BENT NO. 2 IS 670 kN PER PILE.

DRIVE PILES AT END BENT NO. 1 AND END BENT NO. 2 TO A REQUIRED BEARING CAPACITY OF 1340 kN PER PILE. THE REQUIRED BEARING CAPACITY IS EQUAL TO THE ALLOWABLE BEARING CAPACITY WITH A MINIMUM FACTOR OF SAFETY OF TWO.

THE DRILLED PIERS AT BENT NO. 1, BENT NO. 2, AND BENT NO. 3 ARE DESIGNED FOR BOTH SKIN FRICTION AND END BEARING. CHECK FIELD CONDITIONS FOR THE REQUIRED END BEARING CAPACITY OF 4300 kPa, 5000 kPa AND 4300 kPa, RESPECTIVELY.

DRILLED PIERS AT BENT NO. 1, BENT NO. 2, AND BENT NO. 3 ARE DESIGNED FOR AN APPLIED LOAD OF 4565 kN, 4618 kN, AND 4132 kN EACH AT THE TOP OF THE COLUMN, RESPECTIVELY.

PERMANENT STEEL CASINGS MAY BE REQUIRED FOR DRILLED PIERS AT BENT NO. 1 AND BENT NO. 2 (RIGHT SIDE). IF REQUIRED, DO NOT EXTEND PERMANENT CASINGS BELOW ELEVATIONS 224.0m WITHOUT PRIOR APPROVAL FROM THE ENGINEER. THE ENGINEER WILL DETERMINE THE NEED FOR PERMANENT CASINGS.

PERMANENT STEEL CASINGS ARE REQUIRED FOR DRILLED PIER AT BENT NO.2 (LEFT SIDE). DO NOT EXTEND PERMANENT CASINGS BELOW ELEVATION 224.0m WITHOUT PRIOR APPROVAL FROM THE ENGINEER.

OBSERVE A TWO MONTH WAITING PERIOD AFTER CONSTRUCTING THE EMBANKMENT TO WITHIN 0.6m OF FINISHED GRADE BEFORE BEGINNING END BENT CONSTRUCTION AT END BENT NO. 1 AND END BENT NO. 2.

INSTALL DRILLED PIERS AT BENT NO. 1 AND BENT NO.2 THAT EXTEND TO ELEVATIONS NO HIGHER THAN 212.6m (LT), AND 211.0m (RT.), AND SATISFY THE REQUIRED END BEARING CAPACITY.

INSTALL DRILLED PIERS AT BENT NO.3 THAT EXTEND TO ELEVATIONS NO HIGHER THAN 213.9 (LT) AND 213.0m (RT), AND SATISFY THE REQUIRED END BEARING CAPACITY.

SLURRY CONSTRUCTION IS REQUIRED FOR DRILLED PIERS AT BENT NO. 1, BENT NO. 2, AND BENT NO. 3.

THE SCOUR CRITICAL ELEVATION FOR BENT NO. 1, BENT NO. 2, AND BENT NO. 3 IS ELEVATION 224.0m. SCOUR CRITICAL ELEVATIONS ARE USED TO MONITOR POSSIBLE SCOUR PROBLEMS DURING THE LIFE OF THE STRUCTURE.

FOR DRILLED PIERS, SEE DRILLED PIERS SPECIAL PROVISION.

IF REQUIRED, INSTALL PERMANENT STEEL CASINGS AT BENT NO. 1 AND BENT NO. 2 BY VIBRATING, SCREWING OR DRIVING PERMANENT CASINGS BEFORE EXCAVATING OR DISTURBING ANY MATERIAL BELOW ELEVATION 225.2m AND 226.4m, RESPECTIVELY.

SPT TESTING MAY BE REQUIRED FOR DRILLED PIERS. THE ENGINEER WILL DETERMINE THE NEED FOR SPT TESTING. FOR SPT, SEE DRILLED PIERS SPECIAL PROVISION.

SID INSPECTIONS ARE REQUIRED FOR A MINIMUM OF ONE DRILLED PIER AT EACH INTERIOR BENT. THE ENGINEER WILL DETERMINE WHICH DRILLED PIERS WILL BE TESTED. FOR SID, SEE DRILLED PIERS SPECIAL PROVISION.

CSL TUBES ARE REQUIRED AND CSL TESTING MAY BE REQUIRED FOR DRILLED PIERS. THE ENGINEER WILL DETERMINE THE NEED FOR CSL TESTING. FOR CROSSHOLE SONIC LOGGING, SEE DRILLED PIERS SPECIAL PROVISION.

NORTH CAROLINA PROFESSIONAL SEAL 022516 ENGINEER EMILY E. MURRAY
10/25/11

PROJECT NO. R-2413C
GUILFORD-ROCKINGHAM COUNTY
STATION: 24+37.000 -LREV-

SHEET 2 OF 3

STATE OF NORTH CAROLINA
DEPARTMENT OF TRANSPORTATION
RALEIGH

GENERAL DRAWING
BRIDGE OVER HAW RIVER
ON US 220 BETWEEN
SR 2313 AND SR 2104
(LEFT LANE)

REVISIONS						SHEET NO.
NO.	BY:	DATE:	NO.	BY:	DATE:	S-35
1			3			TOTAL SHEETS
2			4			238

STR. #2

DRAWN BY : M.GUDLAUGSSON DATE : 5-23-11
CHECKED BY : PEGGY PARISI DATE : 7-30-11

28-OCT-2011 16:03
Z:\TIPProjects-R\R2413c\Structures\Final Plans\Str.#2\R-2413C_SD_GD_02.dgn
emurray

TOTAL BILL OF MATERIAL

	CONSTRUCTION, MAINTENANCE, & REMOVAL OF TEMPORARY ACCESS	1370mm Ø DRILLED PIERS	PERMANENT STEEL CASING FOR 1370mm Ø DRILLED PIER	SID INSPECTION	SPT TESTING	CSL TESTING	REINFORCED CONCRETE DECK SLAB	GROOVING BRIDGE FLOORS	CLASS A CONCRETE	BRIDGE APPROACH SLABS	REINFORCING STEEL	SPIRAL COLUMN REINFORCING STEEL	1372mm PRESTRESSED CONCRETE GIRDERS		HP 310 X 79 STEEL PILES		CONCRETE BARRIER RAIL	RIP RAP CLASS II (600mm THICK)	FILTER FABRIC FOR DRAINAGE	ELASTOMERIC BEARINGS	EVAZOTE JOINT SEALS
	LUMP SUM	METERS	METERS	EACH	EACH	EACH	SQ. METERS	SQ. METERS	CU. METERS	LUMP SUM	Kg	Kg	No.	METERS	No.	METERS	METERS	METRIC TONS	SQ. METERS	LUMP SUM	LUMP SUM
SUPERSTRUCTURE							1236.7	1234.7		LUMP SUM			20	447.140			180.936			LUMP SUM	LUMP SUM
END BENT #1									23.0		2264				10	144.5		641	654		
BENT #1		34.8	10.4	1					51.8		10343	2003									
BENT #2		34.8	10.4	1					51.4		10303	1988									
BENT #3		32.5		1					50.0		9857	1834									
END BENT #2									22.9		2066				10	183.0		408	416		
TOTAL	LUMP SUM	102.1	20.8	3	3	2	1236.7	1234.7	199.1	LUMP SUM	34,833	5825	20	447.140	20	327.5	180.936	1049	1070	LUMP SUM	LUMP SUM

TOTAL BILL OF MATERIAL - ENGLISH

	LUMP SUM	LIN. FT.	LIN. FT.	EACH	EACH	EACH	SQ. FT.	SQ. FT.	CU. YDS.	LUMP SUM	LBS.	LBS.	No.	LIN. FT.	No.	LIN. FT.	LIN. FT.	TONS	SQ. YD.	LUMP SUM	LUMP SUM
TOTAL	LUMP SUM	335.0	68.2	3	3	2	13,312	13,290	260.4	LUMP SUM	76,794	12,842	20	1466.98	20	1074	593.62	1156	1280	LUMP SUM	LUMP SUM

HYDRAULIC DATA

DESIGN DISCHARGE	=	107.6 m^3/s
FREQUENCY OF DESIGN FLOOD	=	50 YEARS
DESIGN HIGH WATER ELEVATION	=	231.54m
DRAINAGE AREA	=	53.4 Sq.Km
BASE DISCHARGE (Q100)	=	141.6m^3/s
BASE HIGH WATER ELEVATION	=	231.93m

OVERTOPPING FLOOD DATA

OVERTOPPING DISCHARGE	=	> 172.7 m^3/s
FREQUENCY OF OVERTOPPING FLOOD	=	> 500 YEARS
OVERTOPPING FLOOD ELEVATION	=	237.85m

BM #6 DISC STAMPED E-170 1965, IN NE WINGWALL OF BRIDGE, 5.4m RT OF STA. 25+94.140 -L- ELEV. 233.273.

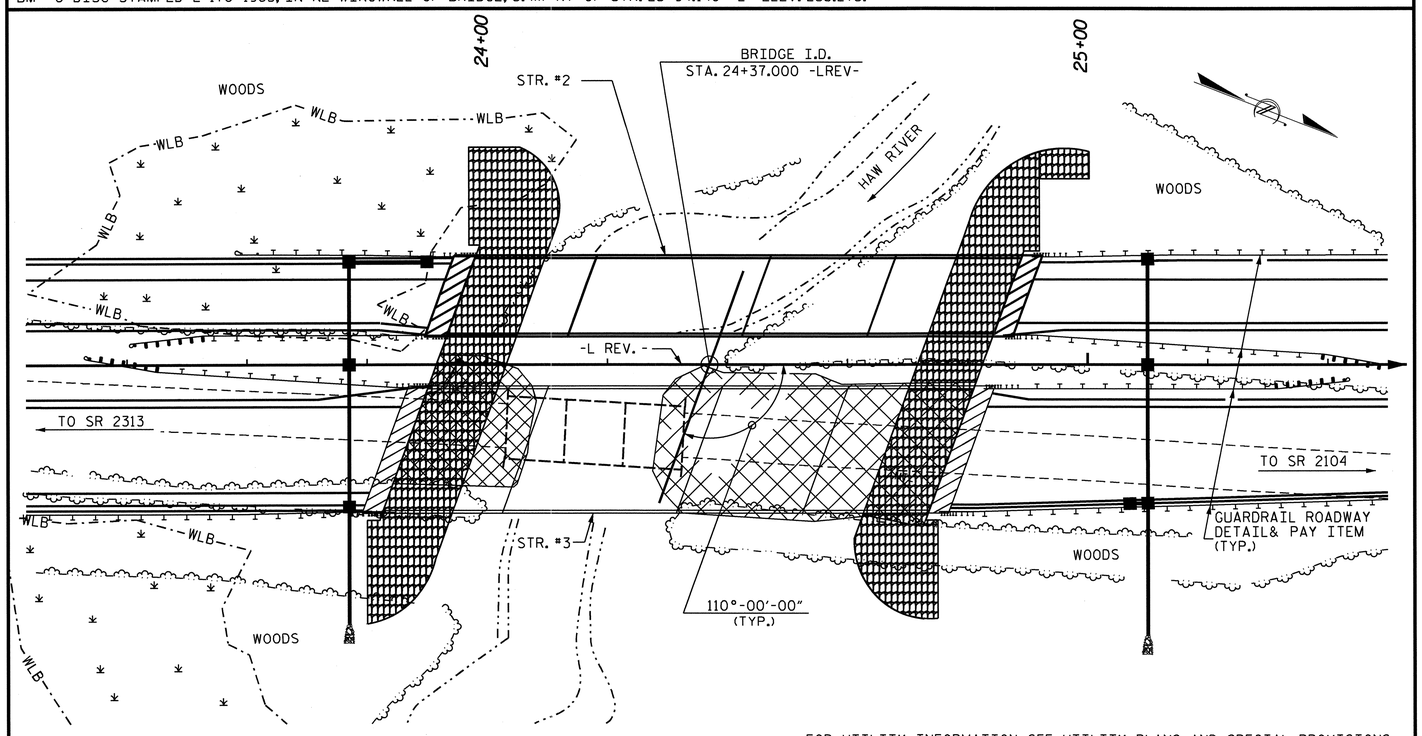

FOR UTILITY INFORMATION, SEE UTILITY PLANS AND SPECIAL PROVISIONS.

LOCATION SKETCH

NOTES

ALL DIMENSIONS ARE IN MILLIMETERS UNLESS OTHERWISE NOTED.

ALL ELEVATIONS ARE IN METERS.

ASSUMED LIVE LOAD = MS 18 OR ALTERNATE LOADING, EXCEPT THAT THE GIRDERS HAVE BEEN DESIGNED FOR MS 22.5.

FOR OTHER DESIGN DATA AND GENERAL NOTES, SEE SHEET SNSM.

THIS BRIDGE HAS BEEN DESIGNED BY THE STRENGTH DESIGN METHOD AS SPECIFIED IN AASHTO STANDARD SPECIFICATIONS.

THE LOCATION OF THE CONSTRUCTION JOINT IN THE DRILLED PIERS FOR BENT #3 IS BASED ON AN APPROXIMATE GROUND LINE ELEVATION. IF THE CONSTRUCTION JOINT IS ABOVE THE ACTUAL GROUND ELEVATION, THE CONTRACTOR SHALL PLACE THE CONSTRUCTION JOINT 300mm BELOW THE GROUND LINE.

NEEDLE BEAMS WILL NOT BE ALLOWED UNLESS OTHERWISE CALLED FOR ON THE PLANS OR APPROVED BY THE ENGINEER.

FOR SUBMITTAL OF WORKING DRAWINGS, SEE SPECIAL PROVISIONS.

FOR FALSEWORK AND FORMWORK, SEE SPECIAL PROVISIONS.

PRESTRESSED CONCRETE DECK PANELS MAY BE USED IN LIEU OF METAL STAY-IN-PLACE FORMS IN ACCORDANCE WITH ARTICLE 420-3 OF THE STANDARD SPECIFICATIONS.

THIS STRUCTURE HAS BEEN DESIGNED IN ACCORDANCE WITH HEC 18, "EVALUATING SCOUR AT BRIDGES", MAY, 2001.

FOR CONSTRUCTION, MAINTENANCE, AND REMOVAL OF TEMPORARY ACCESS, SEE SPECIAL PROVISIONS.

REMOVABLE FORMS MAY BE USED IN LIEU OF METAL STAY-IN-PLACE FORMS IN ACCORDANCE WITH ARTICLE 420-3 OF THE STANDARD SPECIFICATIONS.

THIS BRIDGE HAS BEEN DESIGNED IN ACCORDANCE WITH THE REQUIREMENTS OF THE STANDARD SPECIFICATIONS FOR SEISMIC DESIGN OF HIGHWAY BRIDGES FOR SEISMIC PERFORMANCE CATEGORY A.

THE CLASS AA CONCRETE IN THE BRIDGE DECK SHALL CONTAIN FLY ASH OR GROUND GRANULATED BLAST FURNACE SLAG AT THE SUBSTITUTION RATE SPECIFIED IN ARTICLE 1024-1 AND IN ACCORDANCE WITH ARTICLES 1024-5 AND 1024-6 OF THE STANDARD SPECIFICATIONS. NO PAYMENT WILL BE MADE FOR THIS SUBSTITUTION AS IT IS CONSIDERED INCIDENTAL TO THE COST OF THE REINFORCED CONCRETE DECK SLAB.

FOR PRESTRESSED CONCRETE MEMBERS, SEE SPECIAL PROVISIONS.

FOR CRANE SAFETY, SEE SPECIAL PROVISIONS.

FOR GROUT FOR STRUCTURES, SEE SPECIAL PROVISIONS.

FOR CURING CONCRETE, SEE SPECIAL PROVISIONS.

FOR PLACING LOAD ON STRUCTURE MEMBERS, SEE SPECIAL PROVISIONS.

FOR EROSION CONTROL MEASURES SEE EROSION CONTROL PLANS.

FOR METRIC STRUCTURAL STEEL, SEE SPECIAL PROVISIONS.

FOR MASS CONCRETE, SEE SPECIAL PROVISIONS.

PROJECT NO. R-2413C
GUILFORD-ROCKINGHAM COUNTY
STATION: 24+37.000-LREV-

SHEET 3 OF 3

STATE OF NORTH CAROLINA
DEPARTMENT OF TRANSPORTATION
RALEIGH

GENERAL DRAWING
BRIDGE OVER HAW RIVER ON US 220 BETWEEN SR 2313 AND SR 2104 (LEFT LANE)

NORTH CAROLINA PROFESSIONAL SEAL 022516 ENGINEER EMILY E. MURRAY
10/28/11

REVISIONS						SHEET NO.
NO.	BY:	DATE:	NO.	BY:	DATE:	S-36
1			3			TOTAL SHEETS
2			4			238

DRAWN BY : M.GUDLAUGSSON DATE : 5-23-11
CHECKED BY : PEGGY PARISI DATE : 7-30-11

19-OCT-2011 14:02
R:\TIPProjects-R\R2413c\Structures\Final Plans\Str.#2\R-2413C_SD_GD_02.dgn
taverette

STR. #2

NOTES

PROVIDE 32mm HIGH BEAM BOLSTERS UPPER AT 1.200m CTS. ATOP THE METAL STAY-IN-PLACE FORMS TO SUPPORT THE BOTTOM MAT OF 'A' BARS. WHEN USING REMOVABLE FORMS, PROVIDE CONTINUOUS HIGH CHAIRS FOR METAL DECK (C.H.C.M.) @ 1.2m CTS. WITH A HEIGHT TO SUPPORT THE BOTTOM MAT OF 'A' BARS A CLEAR DISTANCE OF 65mm ABOVE THE TOP OF THE REMOVABLE FORM.

LONGITUDINAL STEEL MAY BE SHIFTED SLIGHTLY, AS NECESSARY, TO AVOID INTERFERENCE WITH STIRRUPS IN PRESTRESSED CONCRETE GIRDERS.

PREVIOUSLY CAST CONCRETE IN A CONTINUOUS UNIT SHALL HAVE ATTAINED A MINIMUM COMPRESSESIVE STRENGTH OF 20.7 MPa BEFORE ADDITIONAL CONCRETE IS CAST IN THE UNIT.

BARRIER RAIL IN A CONTINUOUS UNIT SHALL NOT BE CAST UNTIL ALL SLAB CONCRETE IN THE UNIT HAS BEEN CAST AND HAS REACHED A MINIMUM COMPRESSIVE STRENGTH OF 20.7 MPa.

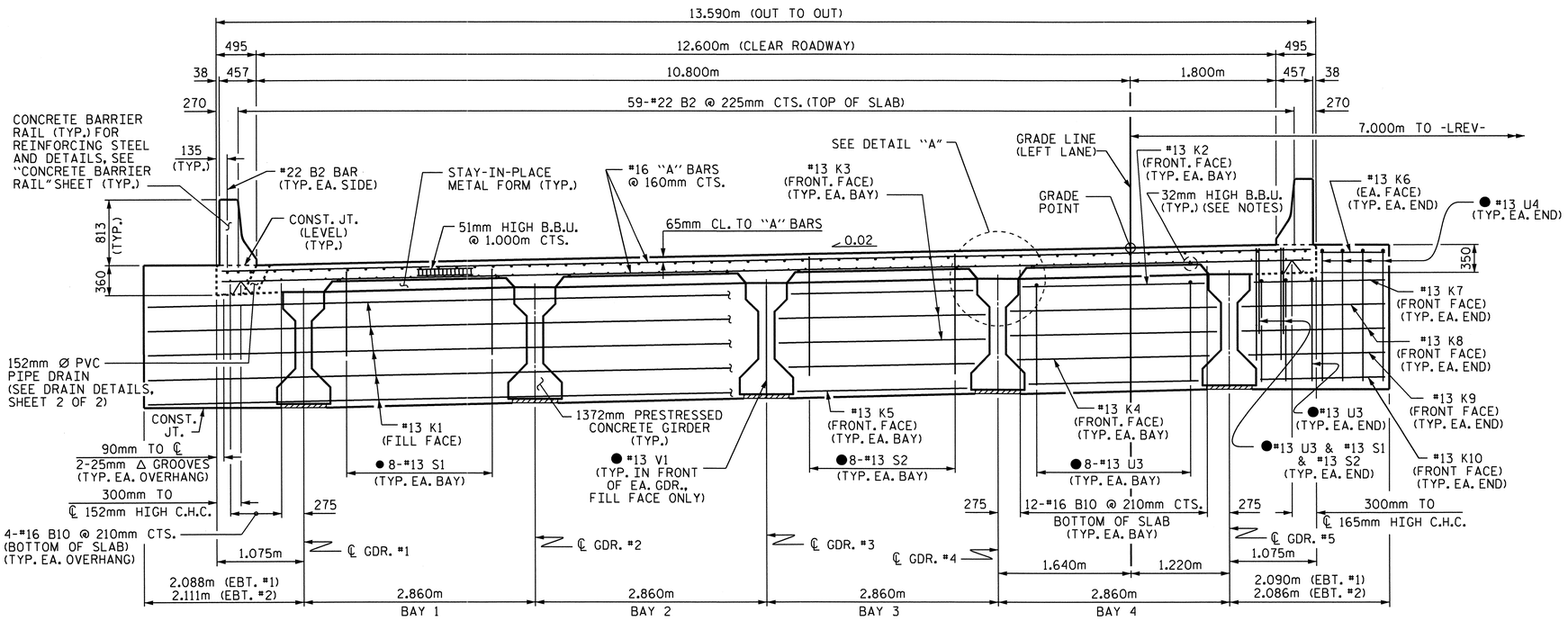

TYPICAL SECTION @ INTEGRAL END BENT

● #13 U3, #13 U4, #13 S1, #13 S2, & #13 V1 BARS SPACED TO MATCH WITH #13 "V" BARS IN INTEGRAL END BENT CAP

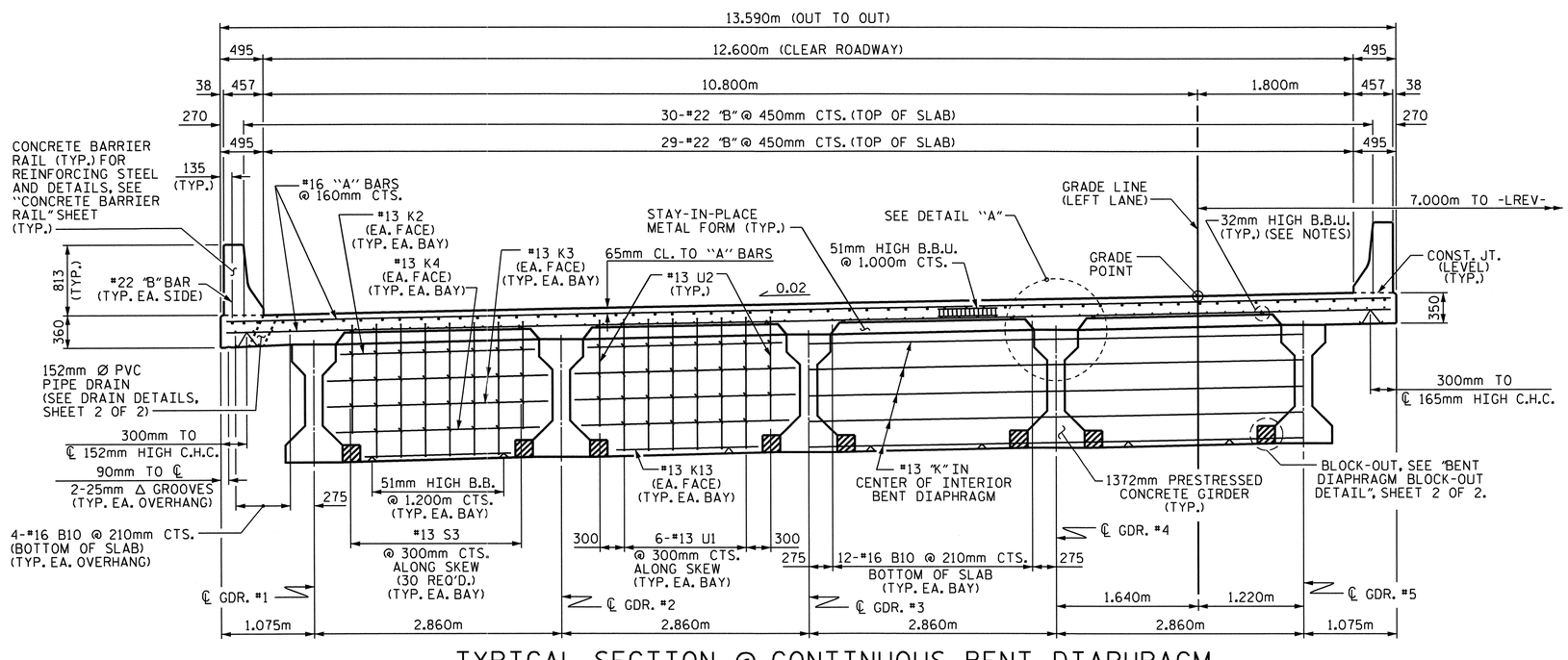

TYPICAL SECTION @ CONTINUOUS BENT DIAPHRAGM

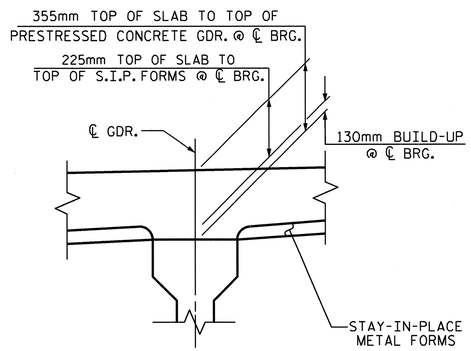

DETAIL "A"

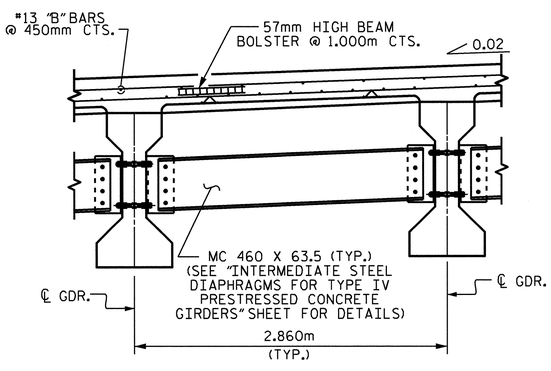

PARTIAL TYPICAL SECTION

AT INTERMEDIATE DIAPHRAGM

PROJECT NO. R-2413C

GUILFORD-ROCKINGHAM COUNTY

STATION: 24+37.000 -LREV-

SHEET 1 OF 2

STATE OF NORTH CAROLINA
DEPARTMENT OF TRANSPORTATION
RALEIGH

SUPERSTRUCTURE

TYPICAL SECTION (LEFT LANE)

NORTH CAROLINA PROFESSIONAL SEAL 022516 ENGINEER EMILY E. MURRAY 10/28/11

REVISIONS						SHEET NO.
NO.	BY:	DATE:	NO.	BY:	DATE:	S-37
1			3			TOTAL SHEETS
2			4			238

DRAWN BY : M.GUDLAUGSSON DATE : 10-8-10
CHECKED BY : T.L. AVERETTE DATE : 1-19-11

05-SEP-2011 10:59
Y:\Structures\Final Plans\Str.#2\R-2413C_SD_TS_02.dgn
mgudlaugsson

STR.#2

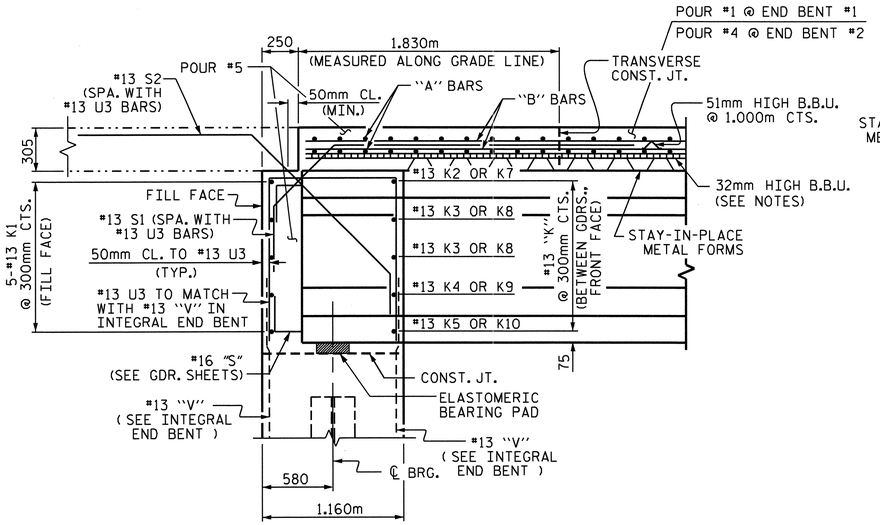

END OF GIRDER DETAIL AT INTEGRAL END BENT

#13 V1 BAR IN FRONT OF GIRDER NOT SHOWN

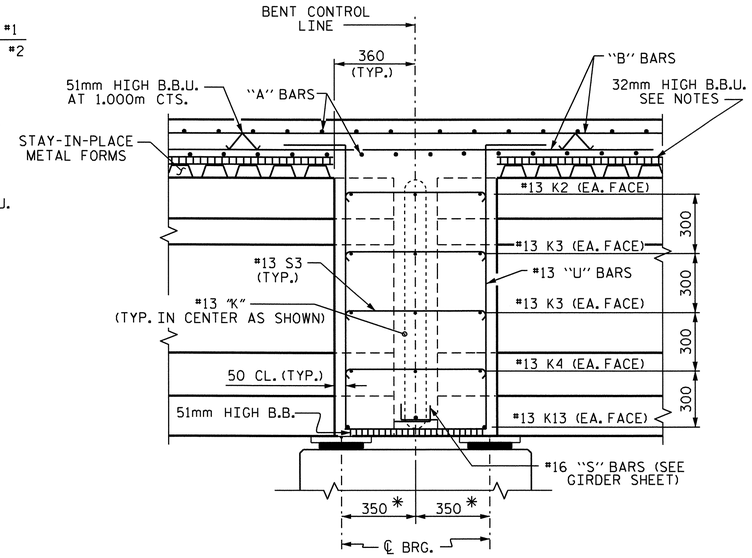

SECTION THRU BENT DIAPHRAGM

* MEASURED ALONG ℄ GDR.

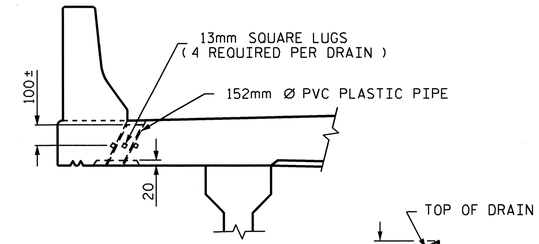

ELEVATION

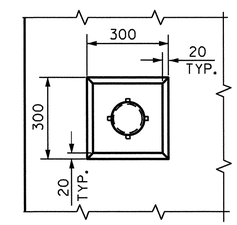

PLAN OF RECESS

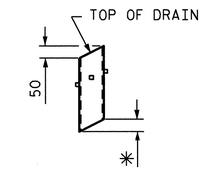

* TO BE SET TO MATCH SLOPE OF BOTTOM OF OVERHANG

PIPE DETAIL

TOP OF FLOOR DRAINS TO BE SET 10mm BELOW SURFACE OF SLAB.

4 - 13mm SQUARE LUGS TO BE GLUED TO THE PVC PLASTIC PIPE AT EQUAL SPACES AROUND THE PIPE DRAIN APPROXIMATELY 100mm FROM THE TOP OF THE PIPE.

THE 152mm Ø PVC PIPE AND FITTINGS SHALL BE SCHEDULE 40 AND CONFORM TO ASTM D1785.

DRAIN DETAILS

(21 DRAINS REQUIRED)

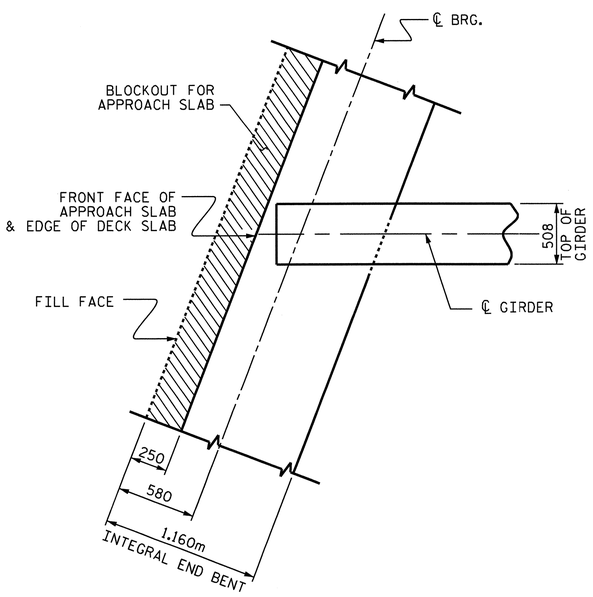

AT INTEGRAL END BENT

(END BENT #1 SHOWN, END BENT #2 SIMILAR)

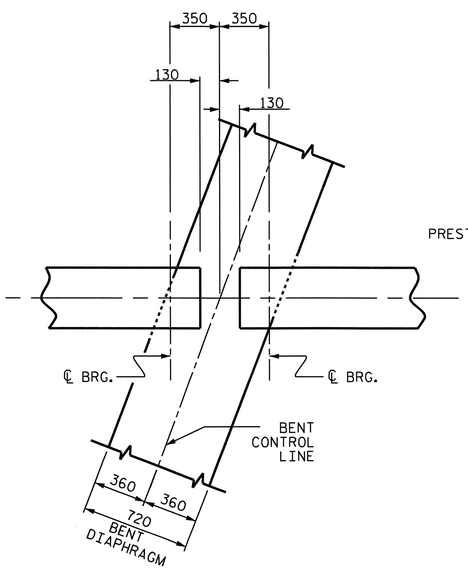

AT BENT DIAPHRAGM

PLAN OF GIRDER

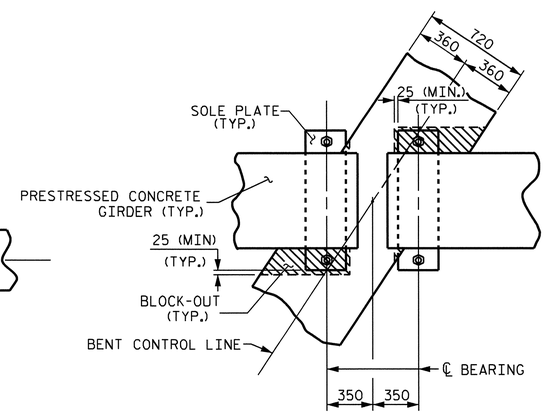

PLAN

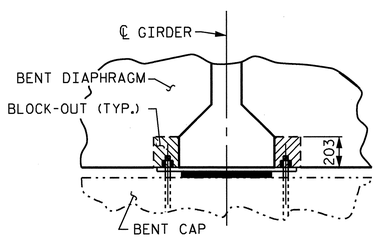

SECTION

BENT DIAPHRAGM BLOCK-OUT DETAIL

PROJECT NO. R-2413C

GUILFORD-ROCKINGHAM COUNTY

STATION: 24+37.000 -LREV-

SHEET 2 OF 2

STATE OF NORTH CAROLINA
DEPARTMENT OF TRANSPORTATION
RALEIGH

SUPERSTRUCTURE
TYPICAL SECTION
(LEFT LANE)

NORTH CAROLINA PROFESSIONAL SEAL 022516 ENGINEER EMILY E. MURRAY
10/28/11

REVISIONS						SHEET NO.
NO.	BY:	DATE:	NO.	BY:	DATE:	S-38
1			3			TOTAL SHEETS
2			4			238

STR. #2

DRAWN BY : M.GUDLAUGSSON DATE : 10-12-10
CHECKED BY : T.L. AVERETTE DATE : 12-9-10

05-SEP-2011 10:59
Y:\Structures\Final Plans\Str.#2\R-2413C_SD_TS_02.dgn
mgudlaugsson

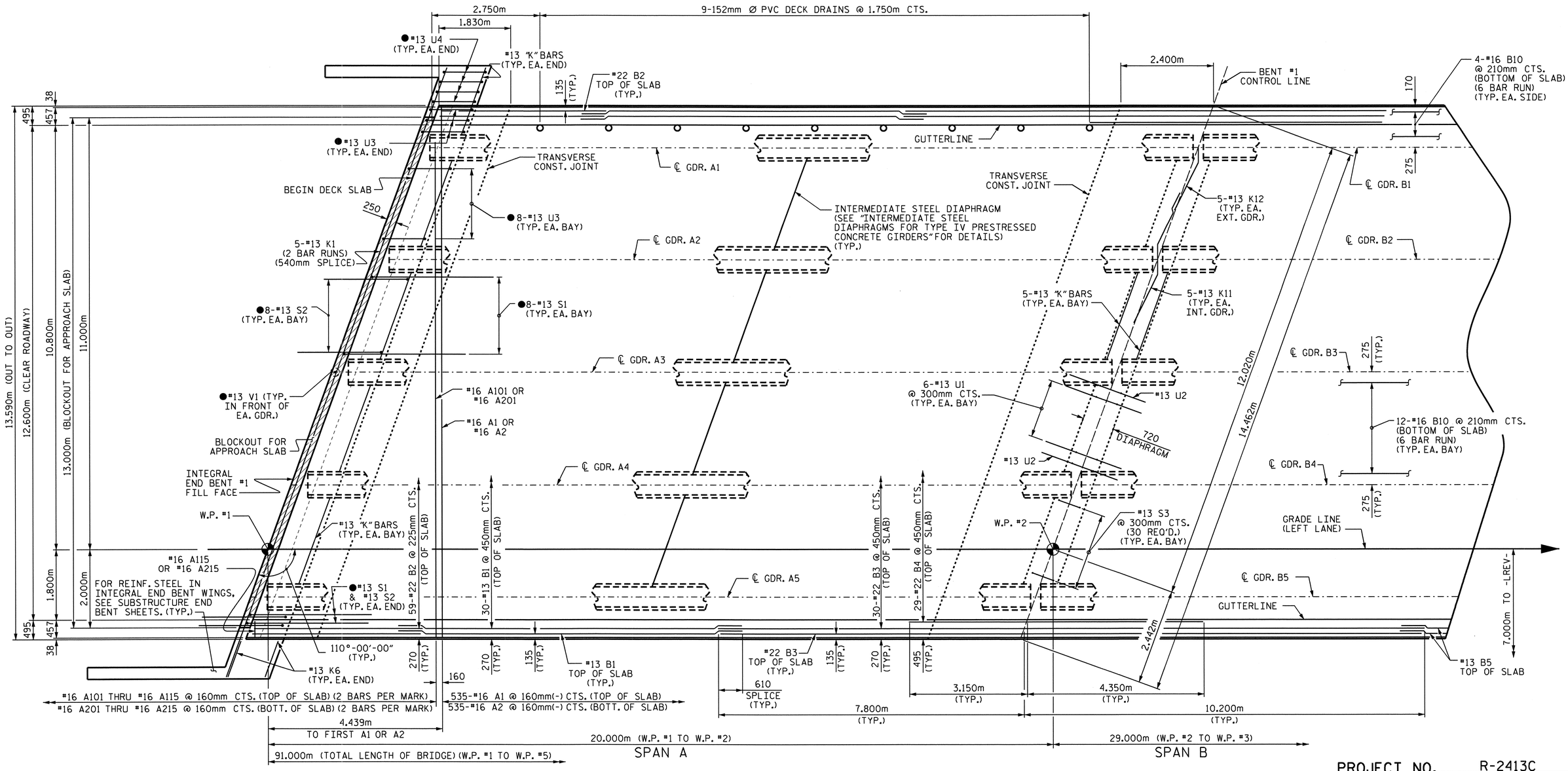

PLAN OF SPANS

●#13 U3, #13 U4, #13 S1, #13 S2 & #13 V1 BARS SPACED TO MATCH WITH #13 "V" BARS IN INTEGRAL END BENT CAP

PROJECT NO. R-2413C

GUILFORD-ROCKINGHAM COUNTY

STATION: 24+37.000 -LREV-

SHEET 1 OF 3

STATE OF NORTH CAROLINA
DEPARTMENT OF TRANSPORTATION
RALEIGH

SUPERSTRUCTURE
PLAN OF SPANS
(LEFT LANE)

NORTH CAROLINA PROFESSIONAL SEAL 022516 ENGINEER EMILY E. MURRAY
1/28/11

REVISIONS						SHEET NO.
NO.	BY:	DATE:	NO.	BY:	DATE:	S-39
1			3			TOTAL SHEETS
2			4			238

STR. #2

DRAWN BY : M.GUDLAUGSSON DATE : 11-2-10
CHECKED BY : T.L. AVERETTE DATE : 1-19-11

05-SEP-2011 11:01
Y:\Structures\Final Plans\Str.#2\R-2413C_SD_S*_02.dgn
mgudlaugsson

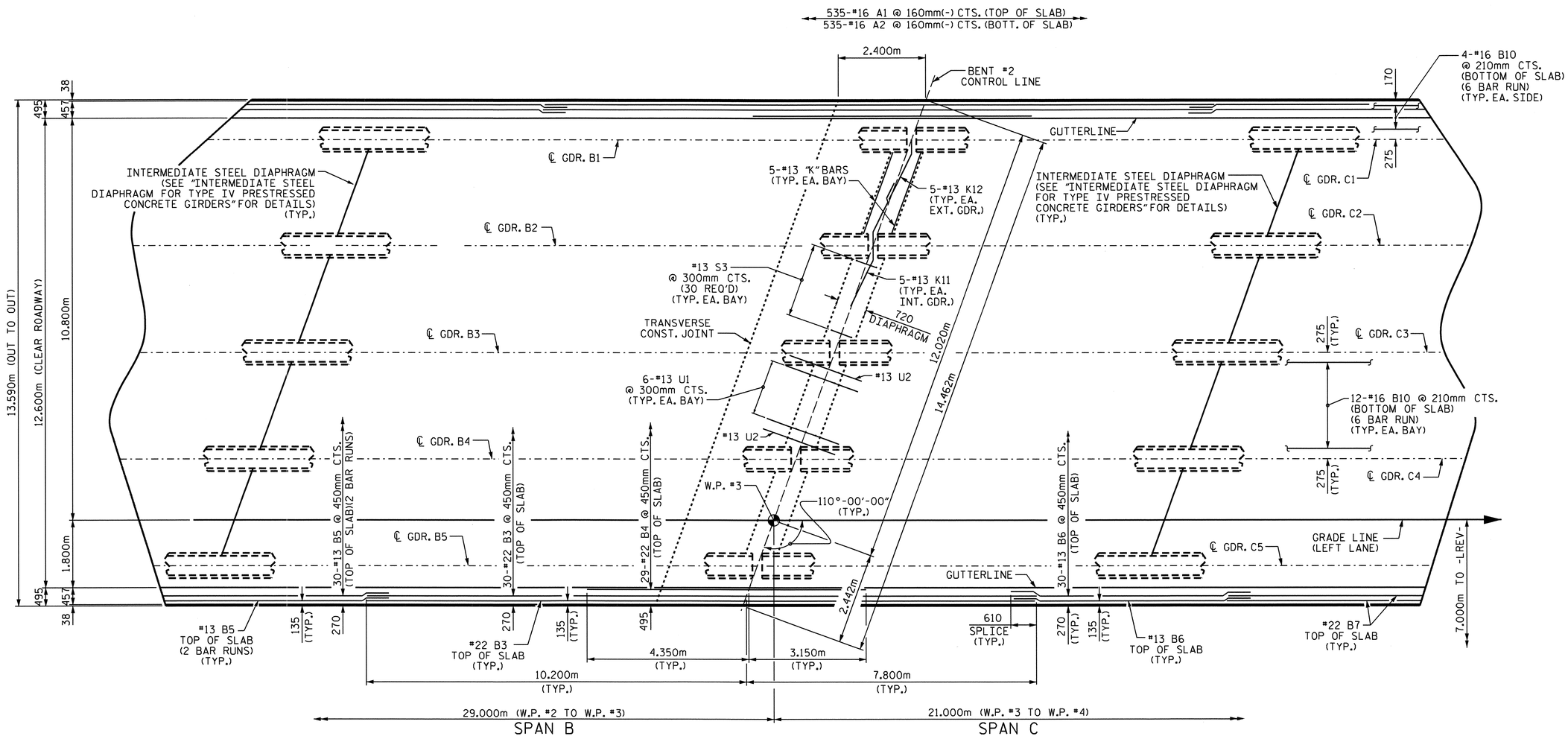

PLAN OF SPANS

PROJECT NO. R-2413C

GUILFORD-ROCKINGHAM COUNTY

STATION: 24+37.000 -LREV-

SHEET 2 OF 3

STATE OF NORTH CAROLINA
DEPARTMENT OF TRANSPORTATION
RALEIGH

SUPERSTRUCTURE
PLAN OF SPANS
(LEFT LANE)

NORTH CAROLINA PROFESSIONAL SEAL 022516 ENGINEER EMILY E. McMURRAY
10/28/11

REVISIONS						SHEET NO.
NO.	BY:	DATE:	NO.	BY:	DATE:	S-40
1			3			TOTAL SHEETS
2			4			238

STR. #2

DRAWN BY : M.GUDLAUGSSON DATE : 11-2-10
CHECKED BY : T.L. AVERETTE DATE : 1-19-11

05-SEP-2011 11:01
Y:\Structures\Final Plans\Str.#2\R-2413C_SD_S#_02.dgn
mgudlaugsson

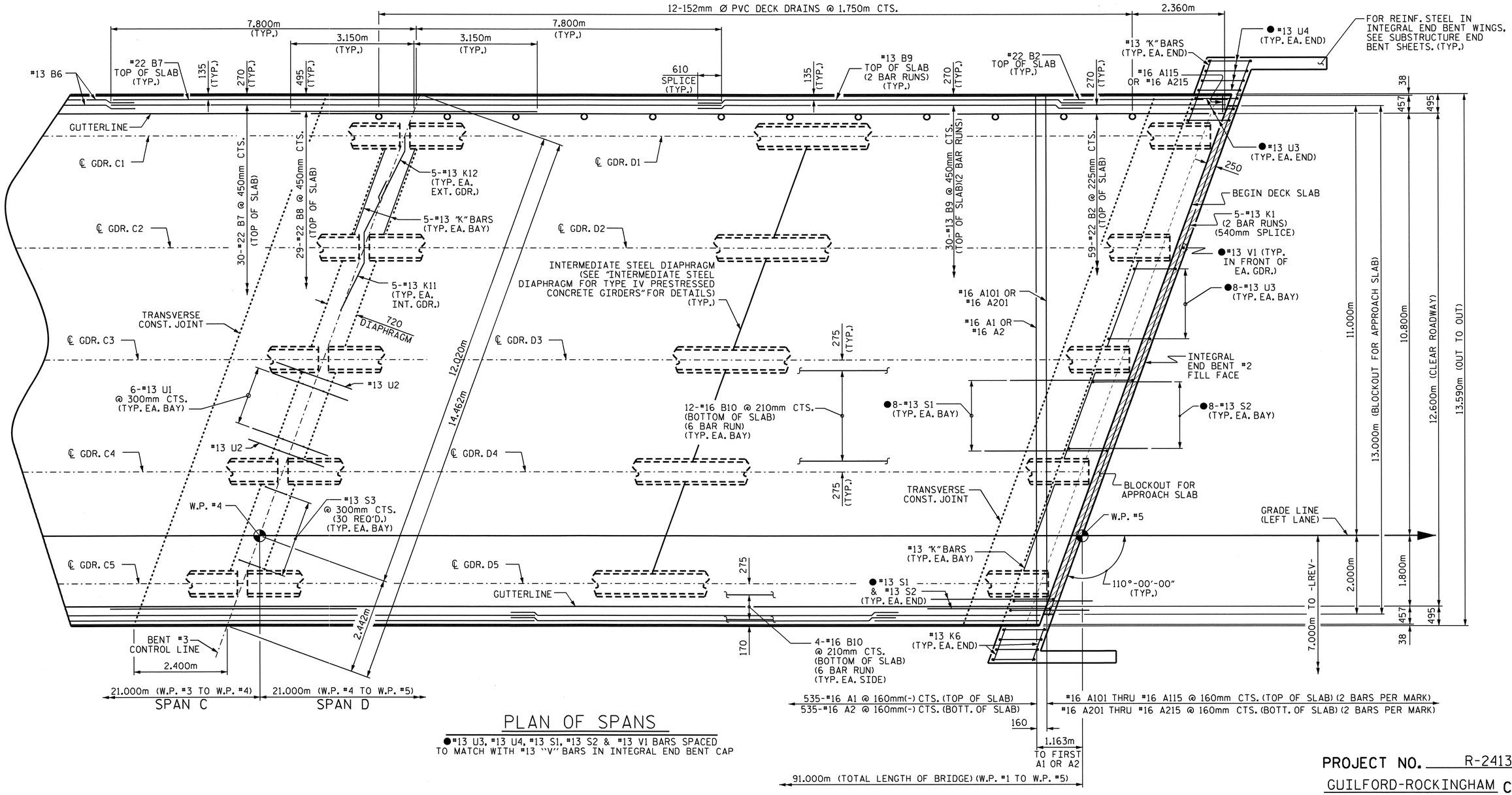

PLAN OF SPANS

●#13 U3, #13 U4, #13 S1, #13 S2 & #13 V1 BARS SPACED TO MATCH WITH #13 "V" BARS IN INTEGRAL END BENT CAP

PROJECT NO. R-2413C

GUILFORD-ROCKINGHAM **COUNTY**

STATION: 24+37.000 -LREV-

SHEET 3 OF 3

STATE OF NORTH CAROLINA
DEPARTMENT OF TRANSPORTATION
RALEIGH

SUPERSTRUCTURE

PLAN OF SPANS (LEFT LANE)

NORTH CAROLINA PROFESSIONAL SEAL 022516 ENGINEER EMILY E. MARRAY
10/28/11

REVISIONS						SHEET NO.
NO.	BY:	DATE:	NO.	BY:	DATE:	S-41
1			3			TOTAL SHEETS
2			4			238

DRAWN BY : M.GUDLAUGSSON DATE : 11-2-10
CHECKED BY : T.L. AVERETTE DATE : 1-19-11

05-SEP-2011 11:02
Y:\Structures\Final Plans\Str.#2\R-2413C_SD_S#_02.dgn
mgudlaugsson

STR. #2

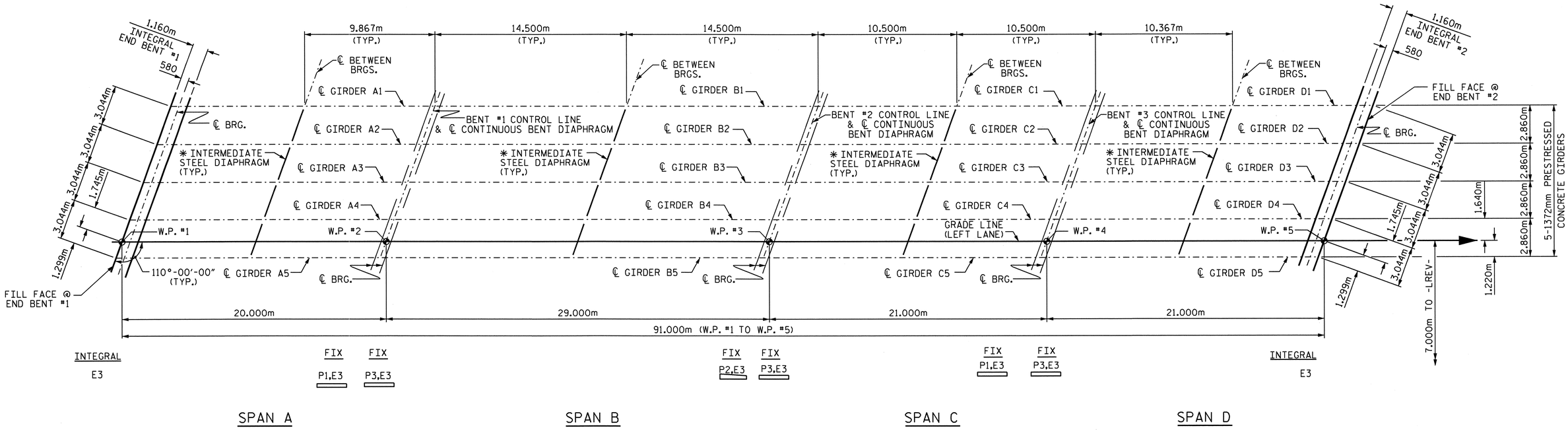

FRAMING PLAN

* NOTE: SEE "INTERMEDIATE STEEL DIAPHRAGMS FOR TYPE IV PRESTRESSED CONCRETE GIRDERS" SHEET FOR DETAILS.

PROJECT NO. R-2413C
GUILFORD-ROCKINGHAM COUNTY
STATION: 24+37.000 -LREV-

STATE OF NORTH CAROLINA
DEPARTMENT OF TRANSPORTATION
RALEIGH

SUPERSTRUCTURE
FRAMING PLAN
(LEFT LANE)

NORTH CAROLINA PROFESSIONAL SEAL 022516 ENGINEER EMILY E. MURRAY
12/28/11

REVISIONS						SHEET NO.
NO.	BY:	DATE:	NO.	BY:	DATE:	S-42
1			3			TOTAL SHEETS
2			4			238

DRAWN BY : M.GUDLAUGSSON DATE : 10-1-10
CHECKED BY : T.L. AVERETTE DATE : 12-9-10

19-OCT-2011 14:03
R:\TIPProjects-R\R2413c\Structures\FinalPlans\Str.#2\R-2413C_SD_FP_02.dgn
taverette

STR. #2

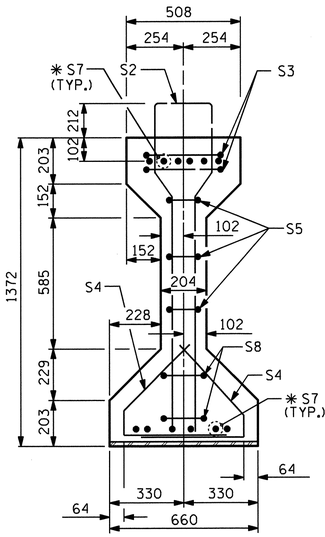

SECTION A-A

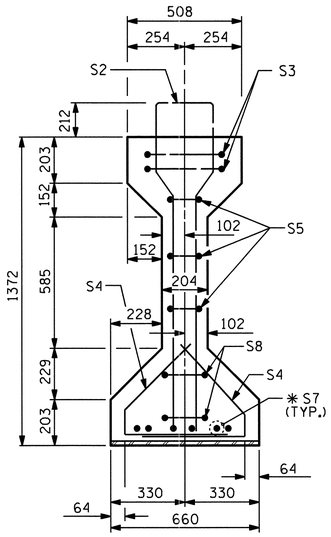

SECTION B-B

✱ FOR S7 BARS, SEE DETAIL "A" OF PRESTRESSED CONCRETE GIRDER CONTINUOUS FOR LIVE LOAD DETAILS SHEET

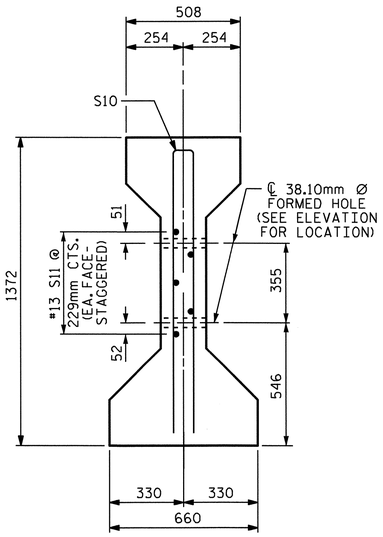

SECTION C-C

(S1 BARS NOT SHOWN)

NOTE: S11 BARS MAY BE SHIFTED SLIGHTLY VERTICALLY TO AVOID STRANDS.

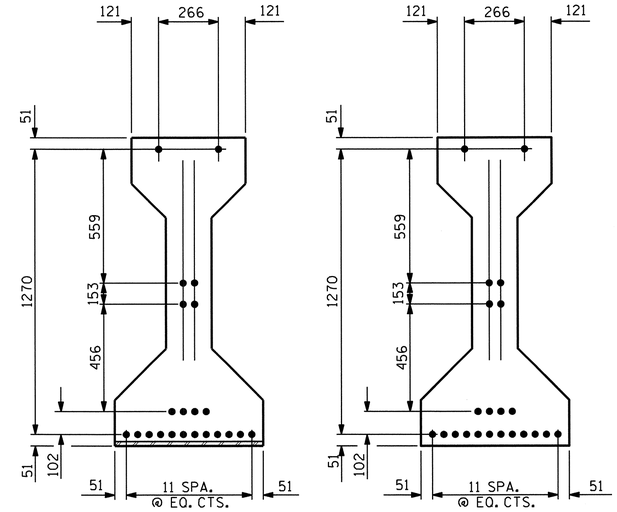

15.24mm Ø LOW RELAXATION STRAND LAYOUT

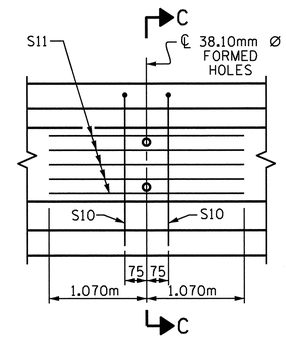

PARTIAL ELEVATION

SHOWING INTERMEDIATE DIAPHRAGM REINFORCING STEEL FOR ALL GIRDERS

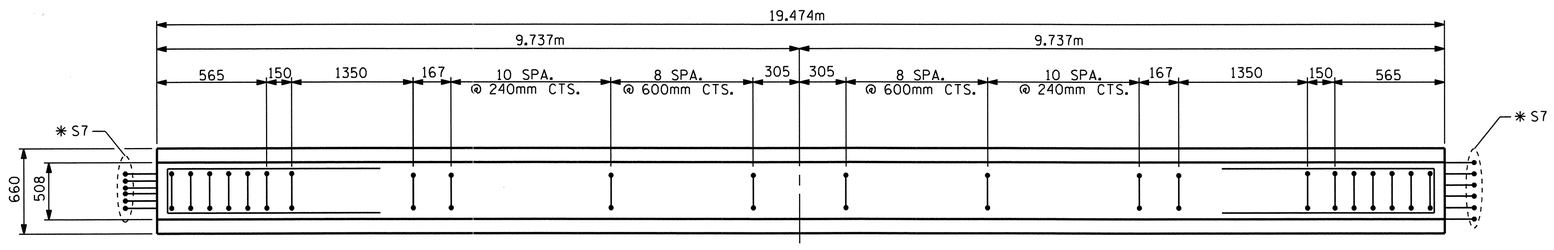

PLAN OF GIRDER

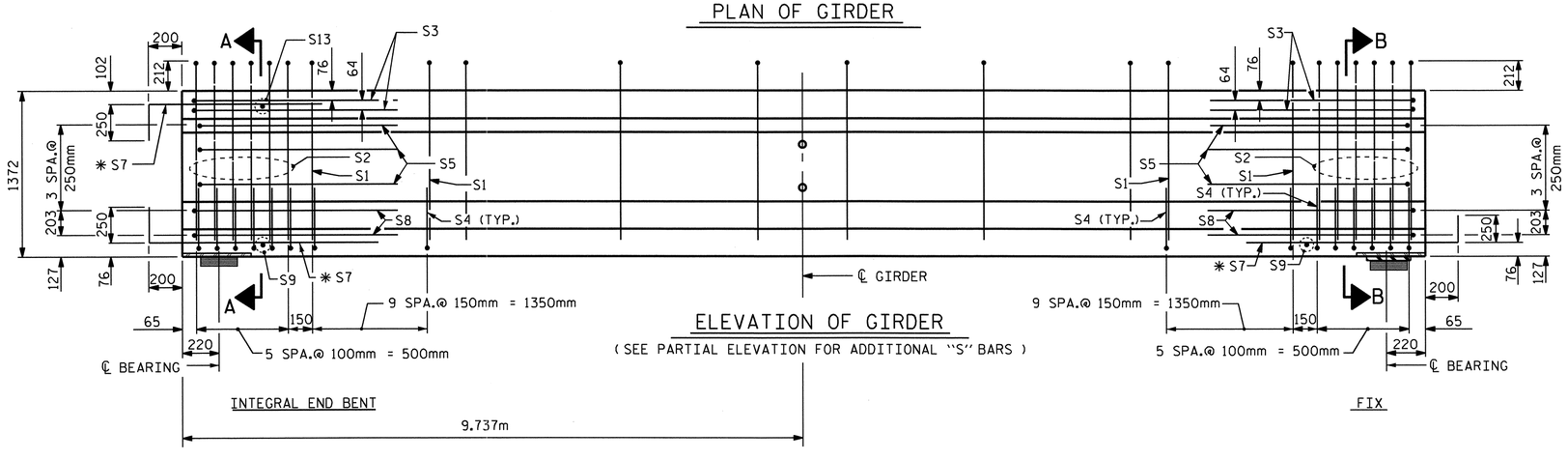

ELEVATION OF GIRDER

(SEE PARTIAL ELEVATION FOR ADDITIONAL "S" BARS)

15.24mm Ø L. R. GRADE 270 STRANDS

AREA (mm²)	ULTIMATE STRENGTH (kN PER STRAND)	APPLIED PRESTRESS (kN PER STRAND)
140.00	260.7	195.5

REINFORCING STEEL FOR ONE GIRDER

BAR	NUMBER	SIZE	TYPE	LENGTH	WEIGHT
S1	58	#13	1	3380	195
S2	12	#19	1	3380	91
S3	4	#13	2	2760	11
S4	64	#13	3	1040	66
S5	6	#13	2	2560	15
✱S7	18	#16	STR	1120	31
S8	4	#13	2	2620	10
S9	2	#10	STR	560	1
S10	2	#16	2	2640	8
S11	5	#13	STR	2140	11
S13	1	#10	STR	400	1

✱NOTE: S7 BARS SHALL BE BENT BEFORE SHIPMENT. HEAT BENDING SHALL NOT BE ALLOWED.

BAR TYPES

ALL BAR DIMENSIONS ARE OUT-TO-OUT

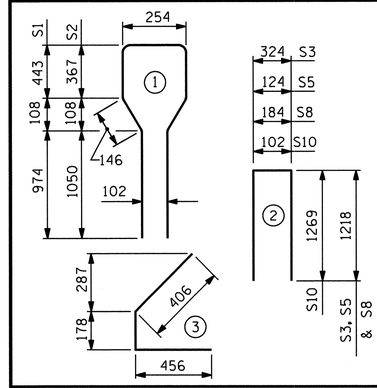

QUANTITIES FOR ONE GIRDER

	REINFORCING STEEL	37.92MPa CONCRETE	15.24mm Ø L.R. STRANDS
	kg	m³	No.
	440	9.9	22

GIRDERS REQUIRED

NUMBER	LENGTH	TOTAL LENGTH
5	19.474m	97.370m

PROJECT NO. R-2413C

GUILFORD-ROCKINGHAM COUNTY

STATION: 24+37.000 -LREV-

SHEET 1 OF 6

STATE OF NORTH CAROLINA
DEPARTMENT OF TRANSPORTATION
RALEIGH

AASHTO TYPE IV
PRESTRESSED CONCRETE GIRDER
CONTINUOUS FOR LIVE LOAD
SPAN 'A'
(LEFT LANE)

NORTH CAROLINA PROFESSIONAL SEAL 022516 ENGINEER EMILY E. MURRAY
10/28/11

REVISIONS								SHEET NO.
NO.	BY:	DATE:	NO.	BY:	DATE:			S-43
1			3					TOTAL SHEETS
2			4					238

STR.#2

STD. NO. PCG6SM

ASSEMBLED BY: M.GUDLAUGSSON	DATE: 10-28-10	
CHECKED BY : T.L. AVERETTE	DATE: 12-9-10	
DRAWN BY : ELR 8/91	REV. 7/17/98	RWW/LES
CHECKED BY : GRP 8/91	REV. 10/17/00R	RWW/LES
	REV. 5/1/06R	TLA/GM

05-SEP-2011 11:03
Y:\Structures\Final Plans\Str.#2\R-2413C_SD_G#_02.dgn
mgudlaugsson

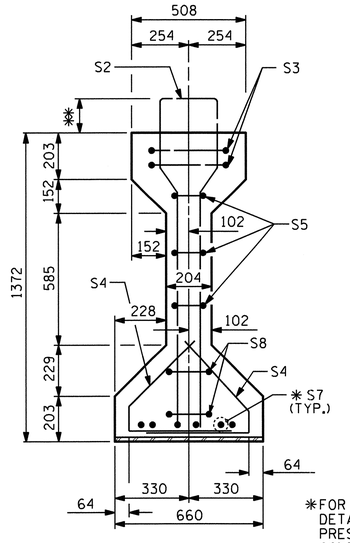

SECTION B-B

*FOR S7 BARS, SEE DETAIL "A" OF PRESTRESSED CONCRETE GIRDER CONTINUOUS FOR LIVE LOAD DETAILS SHEET

** NOTE:
THE PROJECTION OF THE S2 & S12 BARS IS 212mm.
THE PROJECTION OF THE S13 BARS IS 172mm.
THE PROJECTION OF THE S1 BARS IS 152mm.

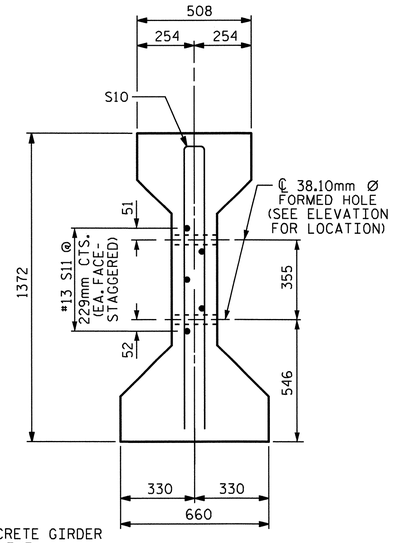

SECTION C-C

(S1 BARS NOT SHOWN)
NOTE: S11 BARS MAY BE SHIFTED SLIGHTLY VERTICALLY TO AVOID STRANDS.

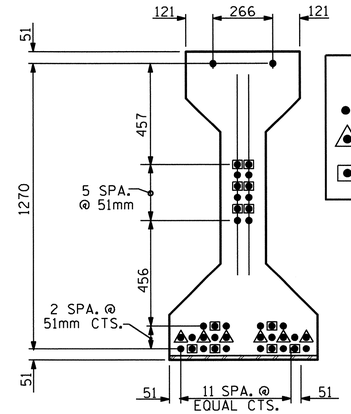

AT END OF GIRDER

DEBONDING LEGEND

- ● FULLY BONDED STRANDS
- △ STRANDS DEBONDED FOR 1.220m FROM END OF GIRDER
- ▣ STRANDS DEBONDED FOR 610mm FROM END OF GIRDER

BOND SHALL BE BROKEN ON STRANDS AS SHOWN FOR THE SPECIFIED LENGTH FROM EACH END OF THE GIRDER. SEE STANDARD SPECIFICATIONS ARTICLE 1078-13.

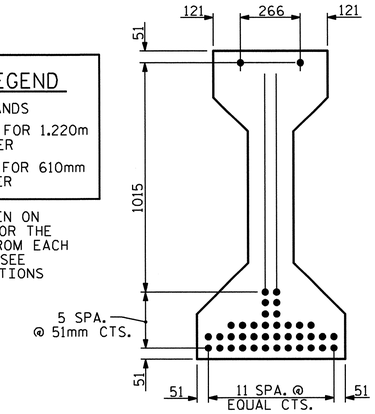

AT ℄ OF GIRDER

15.24mm Ø LOW RELAXATION STRAND LAYOUT

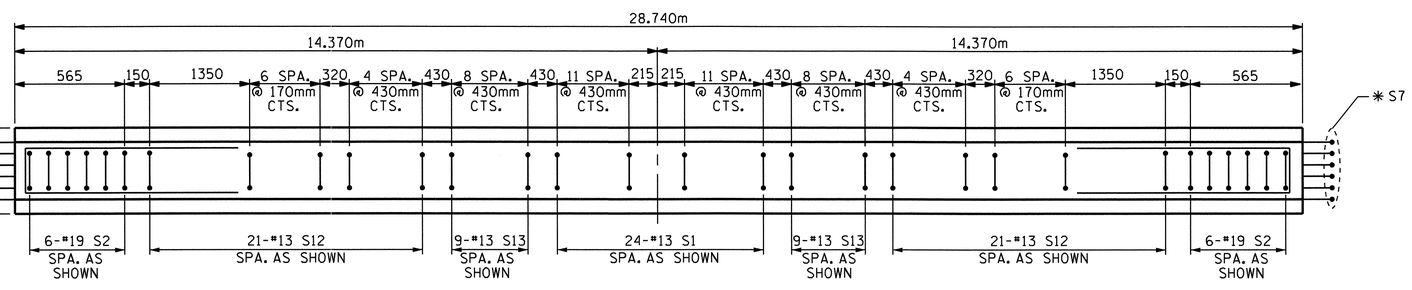

PLAN OF GIRDER

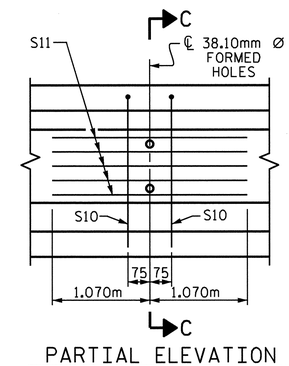

PARTIAL ELEVATION

SHOWING INTERMEDIATE DIAPHRAGM REINFORCING STEEL FOR ALL GIRDERS.

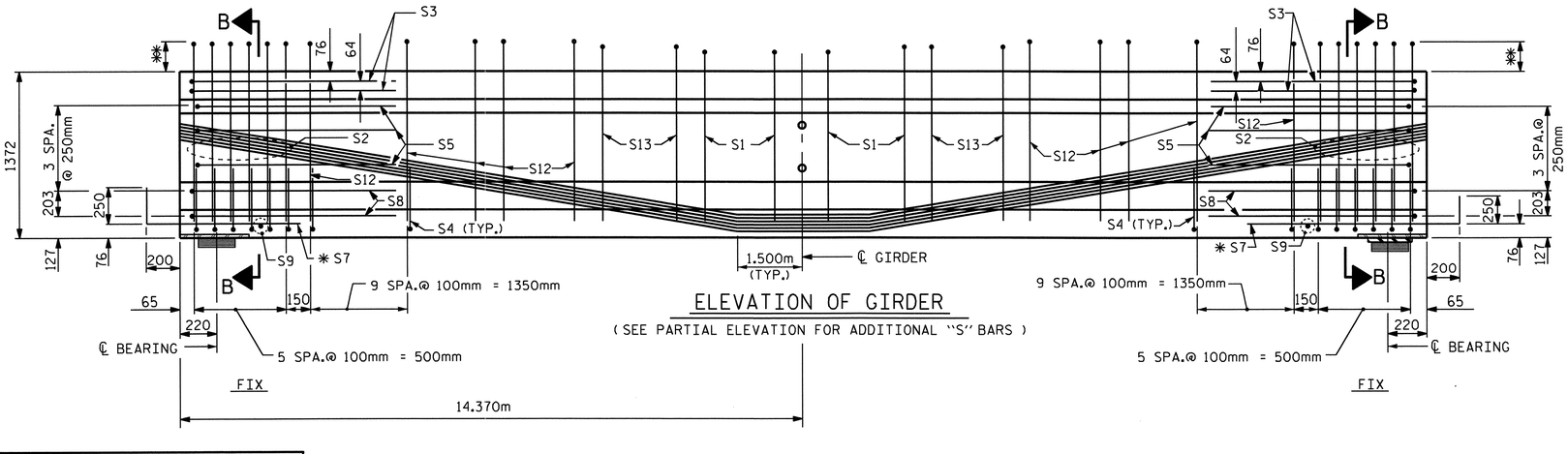

ELEVATION OF GIRDER

(SEE PARTIAL ELEVATION FOR ADDITIONAL "S" BARS)

15.24mm Ø L. R. GRADE 270 STRANDS

AREA (mm²)	ULTIMATE STRENGTH (kN PER STRAND)	APPLIED PRESTRESS (kN PER STRAND)
140.00	260.7	195.5

REINFORCING STEEL FOR ONE GIRDER

BAR	NUMBER	SIZE	TYPE	LENGTH	WEIGHT
S1	24	#13	1	3260	78
S2	12	#19	1	3380	91
S3	4	#13	2	2760	11
S4	64	#13	3	1040	66
S5	6	#13	2	2560	15
* S7	12	#16	STR	1120	21
S8	4	#13	2	2620	10
S9	2	#10	STR	560	1
S10	2	#16	2	2640	8
S11	5	#13	STR	2140	11
S12	42	#13	1	3380	141
S13	18	#13	1	3300	59

* NOTE: S7 BARS SHALL BE BENT BEFORE SHIPMENT. HEAT BENDING SHALL NOT BE ALLOWED.

BAR TYPES

ALL BAR DIMENSIONS ARE OUT-TO-OUT

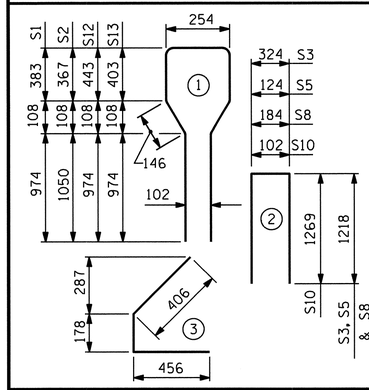

QUANTITIES FOR ONE GIRDER

	REINFORCING STEEL	55.15 MPa CONCRETE	15.24mm Ø L.R. STRANDS
	kg	m³	No.
	512	14.6	40

GIRDERS REQUIRED

NUMBER	LENGTH	TOTAL LENGTH
5	28.740m	143.700m

PROJECT NO. R-2413C

GUILFORD-ROCKINGHAM COUNTY

STATION: 24+37.000 -LREV-

SHEET 2 OF 6

STATE OF NORTH CAROLINA
DEPARTMENT OF TRANSPORTATION
RALEIGH

AASHTO TYPE IV
PRESTRESSED CONCRETE GIRDER
CONTINUOUS FOR LIVE LOAD
SPAN 'B'
(LEFT LANE)

NORTH CAROLINA PROFESSIONAL SEAL 022516 ENGINEER EMILY E. MURRAY
10/28/11

REVISIONS						SHEET NO.
NO.	BY:	DATE:	NO.	BY:	DATE:	S-44
1			3			TOTAL SHEETS
2			4			238

ASSEMBLED BY: M.GUDLAUGSSON	DATE: 10-28-10	
CHECKED BY : T.L. AVERETTE	DATE: 12-9-10	
DRAWN BY : ELR 8/91	REV. 7/17/98	RWW/LES
CHECKED BY : GRP 8/91	REV. 10/17/00R	RWW/LES
	REV. 5/1/06R	TLA/GM

05-SEP-2011 11:04
Y:\Structures\Final Plans\Str.#2\R-2413C_SD_G#_02.dgn
mgudlaugsson

STR.#2

STD. NO. PCG6SM

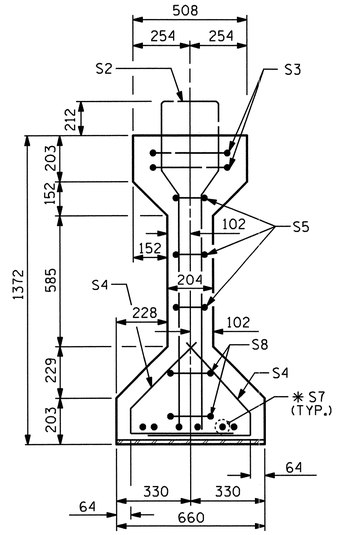

SECTION B-B

*FOR S7 BARS, SEE DETAIL "A" OF PRESTRESSED CONCRETE GIRDER CONTINUOUS FOR LIVE LOAD DETAILS SHEET

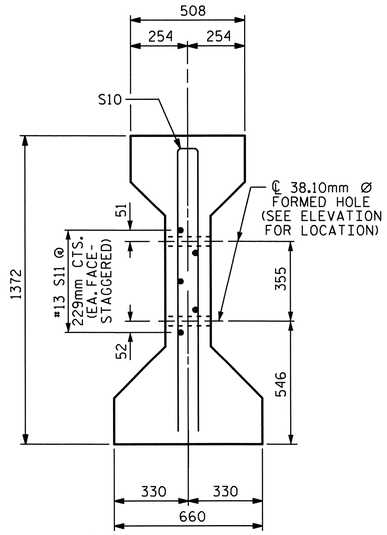

SECTION C-C

(S1 BARS NOT SHOWN)

NOTE: S11 BARS MAY BE SHIFTED SLIGHTLY VERTICALLY TO AVOID STRANDS.

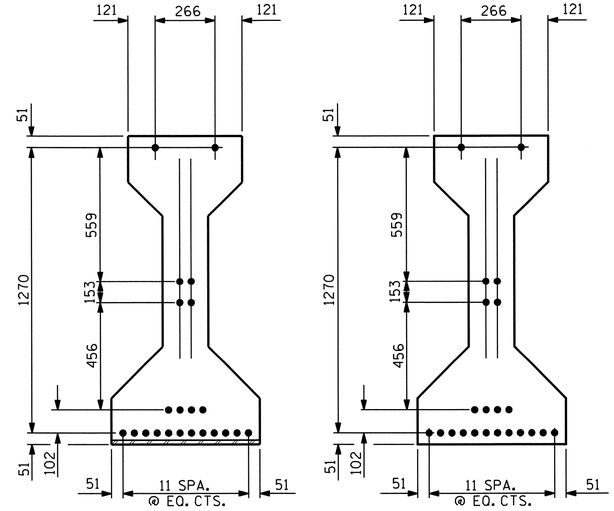

15.24mm Ø LOW RELAXATION STRAND LAYOUT

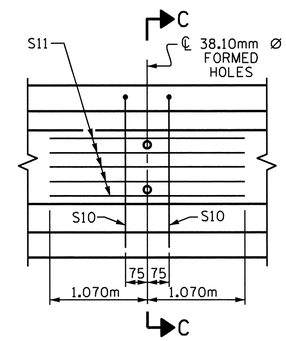

PARTIAL ELEVATION

SHOWING INTERMEDIATE DIAPHRAGM REINFORCING STEEL FOR ALL GIRDERS

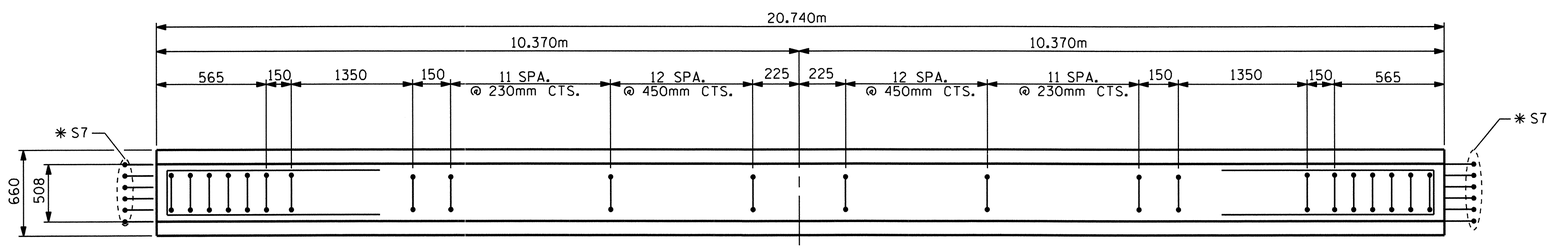

PLAN OF GIRDER

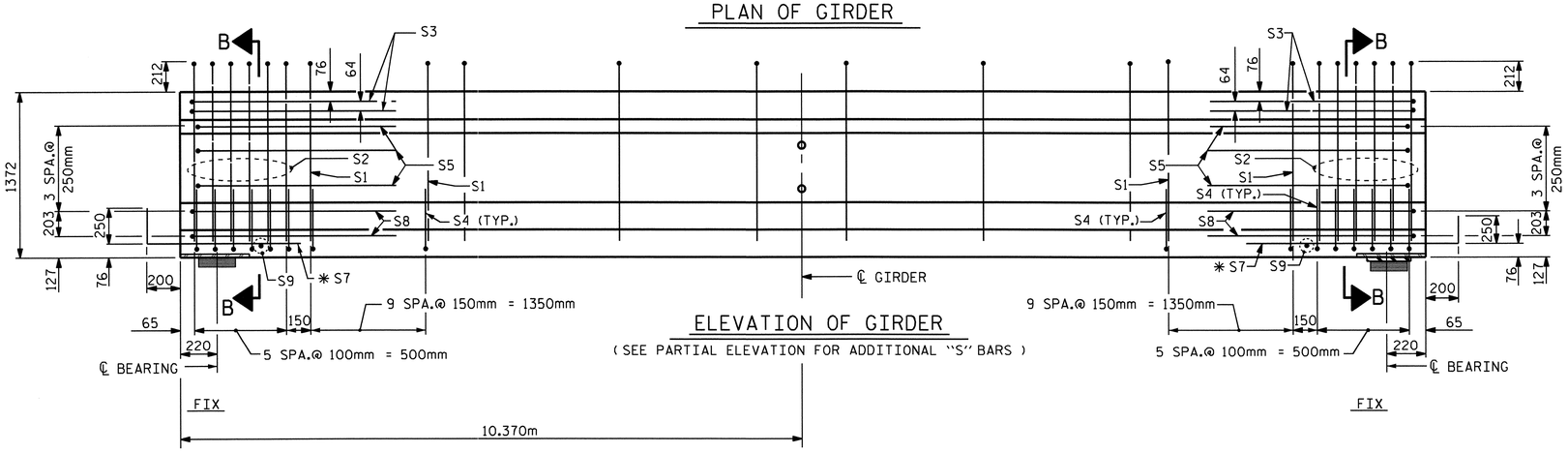

ELEVATION OF GIRDER

(SEE PARTIAL ELEVATION FOR ADDITIONAL "S" BARS)

15.24mm Ø L. R. GRADE 270 STRANDS

AREA (mm²)	ULTIMATE STRENGTH (kN PER STRAND)	APPLIED PRESTRESS (kN PER STRAND)
140.00	260.7	195.5

REINFORCING STEEL FOR ONE GIRDER

BAR	NUMBER	SIZE	TYPE	LENGTH	WEIGHT
S1	68	#13	1	3380	228
S2	12	#19	1	3380	91
S3	4	#13	2	2760	11
S4	64	#13	3	1040	66
S5	6	#13	2	2560	15
* S7	12	#16	STR	1120	21
S8	4	#13	2	2620	10
S9	2	#10	STR	560	1
S10	2	#16	2	2640	8
S11	5	#13	STR	2140	11

* NOTE: S7 BARS SHALL BE BENT BEFORE SHIPMENT. HEAT BENDING SHALL NOT BE ALLOWED.

BAR TYPES

ALL BAR DIMENSIONS ARE OUT-TO-OUT

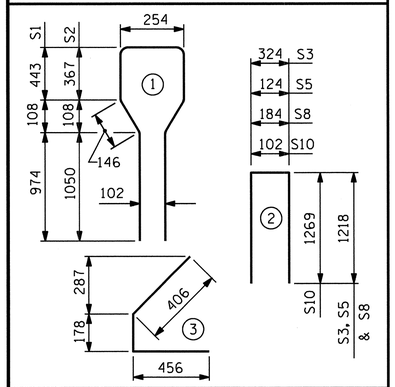

QUANTITIES FOR ONE GIRDER

	REINFORCING STEEL	37.92 MPa CONCRETE	15.24mm Ø L.R. STRANDS
	kg	m³	No.
	462	10.6	22

GIRDERS REQUIRED

NUMBER	LENGTH	TOTAL LENGTH
5	20.740m	103.700m

PROJECT NO. R-2413C

GUILFORD-ROCKINGHAM COUNTY

STATION: 24+37.000 -LREV-

SHEET 3 OF 6

STATE OF NORTH CAROLINA
DEPARTMENT OF TRANSPORTATION
RALEIGH

AASHTO TYPE IV
PRESTRESSED CONCRETE GIRDER
CONTINUOUS FOR LIVE LOAD
SPAN 'C'
(LEFT LANE)

NORTH CAROLINA PROFESSIONAL SEAL 022516 ENGINEER EMILY F. GUMPHREY
10/28/11

REVISIONS								SHEET NO.
NO.	BY:	DATE:	NO.	BY:	DATE:			S-45
1			3					TOTAL SHEETS
2			4					238

ASSEMBLED BY: M.GUDLAUGSSON	DATE: 10-28-10		
CHECKED BY : T.L. AVERETTE	DATE: 12-9-10		
DRAWN BY : ELR 8/91	REV. 7/17/98	RWW/LES	
CHECKED BY : GRP 8/91	REV. 10/17/00R	RWW/LES	
	REV. 5/1/06R	TLA/GM	

05-SEP-2011 11:04
Y:\Structures\Final Plans\Str.#2\R-2413C_SD_G*_02.dgn
mgudlaugsson

STR.#2

STD. NO. PCG6SM

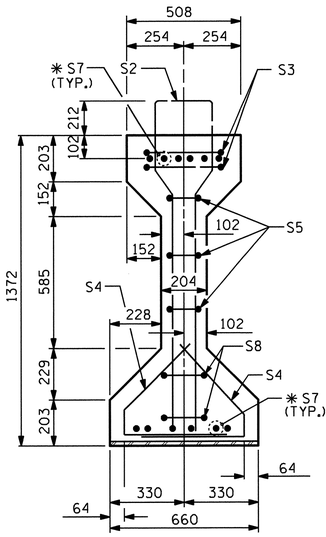

SECTION A-A

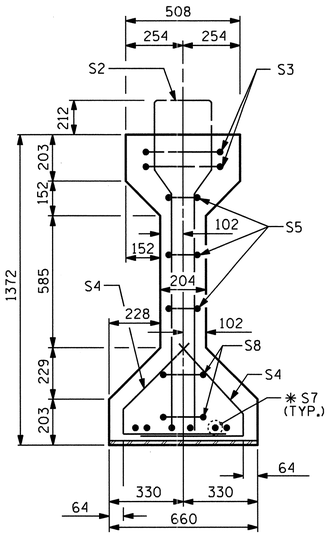

SECTION B-B

✱ FOR S7 BARS, SEE DETAIL "A" OF PRESTRESSED CONCRETE GIRDER CONTINUOUS FOR LIVE LOAD DETAILS SHEET

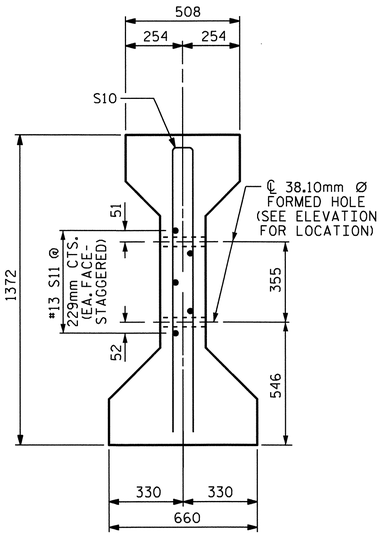

SECTION C-C

(S1 BARS NOT SHOWN)

NOTE: S11 BARS MAY BE SHIFTED SLIGHTLY VERTICALLY TO AVOID STRANDS.

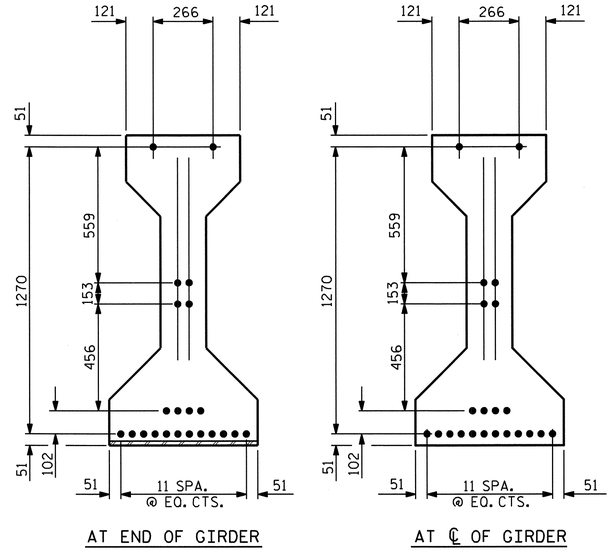

15.24mm Ø LOW RELAXATION STRAND LAYOUT

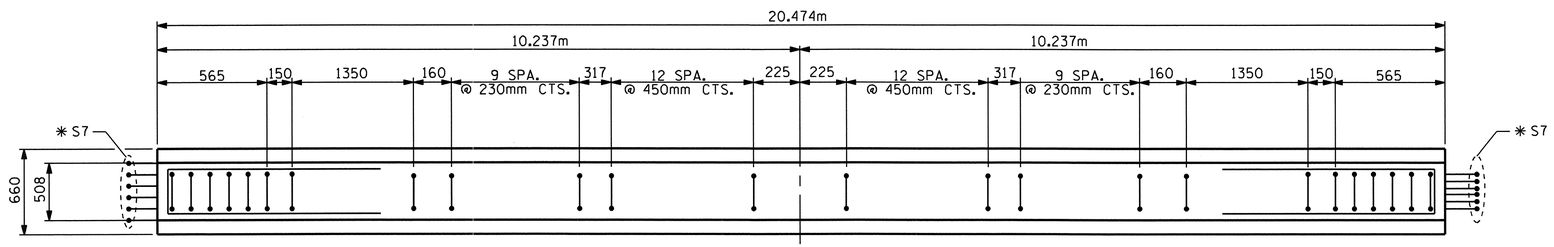

PLAN OF GIRDER

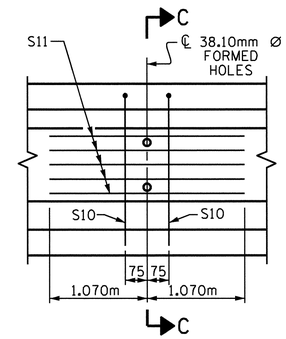

PARTIAL ELEVATION

SHOWING INTERMEDIATE DIAPHRAGM REINFORCING STEEL FOR ALL GIRDERS

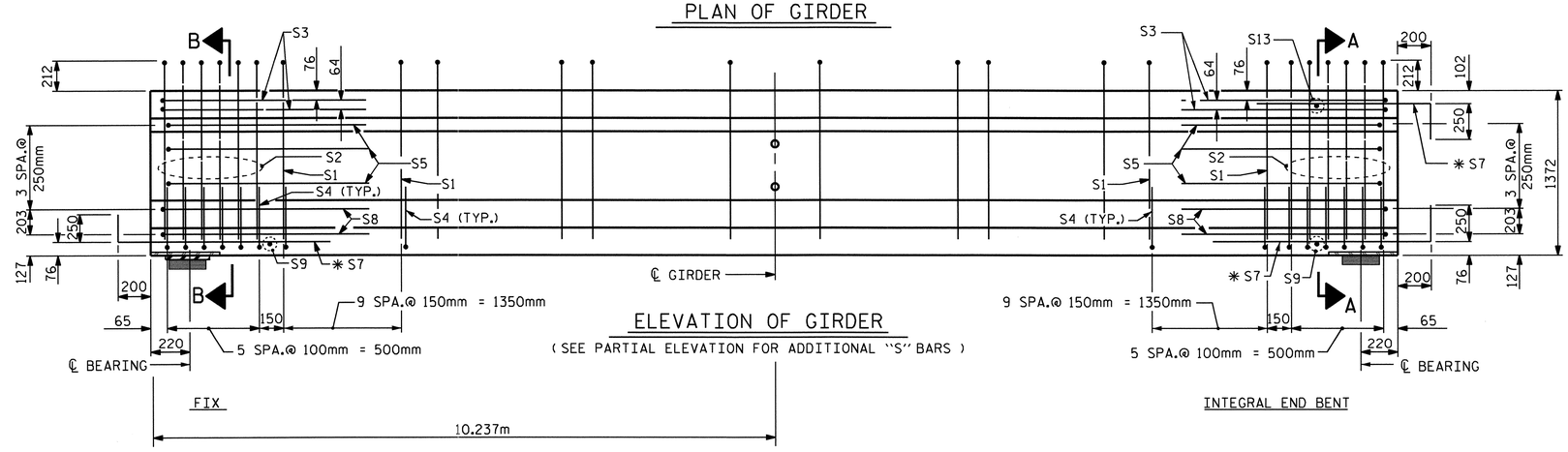

ELEVATION OF GIRDER

(SEE PARTIAL ELEVATION FOR ADDITIONAL "S" BARS)

15.24mm Ø L. R. GRADE 270 STRANDS

AREA (mm²)	ULTIMATE STRENGTH (kN PER STRAND)	APPLIED PRESTRESS (kN PER STRAND)
140.00	260.7	195.5

REINFORCING STEEL FOR ONE GIRDER

BAR	NUMBER	SIZE	TYPE	LENGTH	WEIGHT
S1	66	#13	1	3380	222
S2	12	#19	1	3380	91
S3	4	#13	2	2760	11
S4	64	#13	3	1040	66
S5	6	#13	2	2560	15
✱ S7	18	#16	STR	1120	31
S8	4	#13	2	2620	10
S9	2	#10	STR	560	1
S10	2	#16	2	2640	8
S11	5	#13	STR	2140	11
S13	1	#10	STR	400	1

✱ NOTE: S7 BARS SHALL BE BENT BEFORE SHIPMENT. HEAT BENDING SHALL NOT BE ALLOWED.

BAR TYPES

ALL BAR DIMENSIONS ARE OUT-TO-OUT

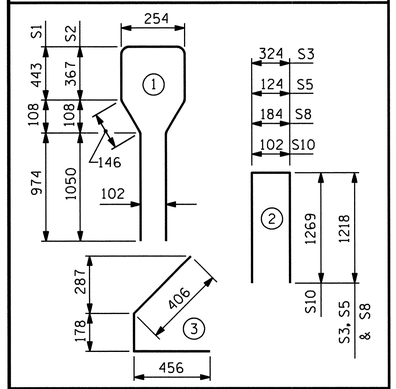

QUANTITIES FOR ONE GIRDER

	REINFORCING STEEL	37.92 MPa CONCRETE	15.24mm Ø L.R. STRANDS
	kg	m³	No.
	467	10.4	22

GIRDERS REQUIRED

NUMBER	LENGTH	TOTAL LENGTH
5	20.474m	102.370m

PROJECT NO. R-2413C

GUILFORD-ROCKINGHAM COUNTY

STATION: 24+37.000 -LREV-

SHEET 4 OF 6

STATE OF NORTH CAROLINA
DEPARTMENT OF TRANSPORTATION
RALEIGH

AASHTO TYPE IV
PRESTRESSED CONCRETE GIRDER
CONTINUOUS FOR LIVE LOAD
SPAN 'D'
(LEFT LANE)

NORTH CAROLINA PROFESSIONAL SEAL 022516 ENGINEER EMILY F. SARRAY 10/28/11

ASSEMBLED BY: M.GUDLAUGSSON	DATE: 10-28-10
CHECKED BY : T.L. AVERETTE	DATE: 12-9-10
DRAWN BY : ELR 8/91	REV. 7/17/98 RWW/LES
CHECKED BY : GRP 8/91	REV. 10/17/00R RWW/LES
	REV. 5/1/06R TLA/GM

REVISIONS

NO.	BY:	DATE:	NO.	BY:	DATE:
1			3		
2			4		

SHEET NO. S-46

TOTAL SHEETS 238

STR.#2

STD. NO. PCG6SM

05-SEP-2011 11:04
Y:\Structures\Final Plans\Str.#2\R-2413C_SD_G#_02.dgn
mgudlaugsson

DEAD LOAD DEFLECTION TABLE

15.24mm Ø LOW RELAXATION	SPANS A,C & D GIRDERS 1 THRU 5										
TENTH POINTS	0	.1	.2	.3	.4	.5	.6	.7	.8	.9	0
CAMBER (GIRDER ALONE IN PLACE) ↑	0.0	0.011	0.021	0.029	0.033	0.035	0.033	0.029	0.021	0.011	0.0
* DEFLECTION DUE TO SUPERIMPOSED D.L. ↓	0.0	0.004	0.009	0.012	0.014	0.015	0.014	0.012	0.009	0.004	0.0
FINAL CAMBER ↑	0	7	12	17	19	20	19	17	12	7	0

* INCLUDES FUTURE WEARING SURFACE IN SUPERIMPOSED DEAD LOAD.
ALL VALUES ARE SHOWN IN METERS, EXCEPT "FINAL CAMBER" WHICH IS SHOWN IN MILLIMETERS.

DEAD LOAD DEFLECTION TABLE

15.24mm Ø LOW RELAXATION	SPAN B GIRDERS 1 THRU 5										
TENTH POINTS	0	.1	.2	.3	.4	.5	.6	.7	.8	.9	0
CAMBER (GIRDER ALONE IN PLACE) ↑	0.0	0.039	0.075	0.102	0.120	0.126	0.120	0.102	0.075	0.039	0.0
* DEFLECTION DUE TO SUPERIMPOSED D.L. ↓	0.0	0.015	0.028	0.038	0.045	0.048	0.045	0.038	0.028	0.015	0.0
FINAL CAMBER ↑	0	24	47	64	75	78	75	64	47	24	0

* INCLUDES FUTURE WEARING SURFACE IN SUPERIMPOSED DEAD LOAD.
ALL VALUES ARE SHOWN IN METERS, EXCEPT "FINAL CAMBER" WHICH IS SHOWN IN MILLIMETERS.

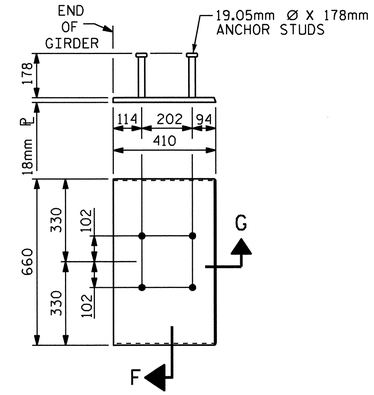

EMBEDDED PLATE "B-1" DETAILS FOR AASHTO TYPE IV GIRDER

(2 REQ'D PER GIRDER)

NOTES

ALL PRESTRESSING STRANDS SHALL BE 7-WIRE LOW-RELAXATION GRADE 270 STRANDS AND SHALL CONFORM TO AASHTO M203M EXCEPT FOR SAMPLING REQUIREMENTS WHICH SHALL BE IN ACCORDANCE WITH THE STANDARD SPECIFICATIONS.

ALL REINFORCING STEEL SHALL BE GRADE 420.

EMBEDDED PLATE "B-1" SHALL BE GALVANIZED IN ACCORDANCE WITH THE SPECIFICATIONS. BEVEL EDGES OF PLATE "B-1" TO GIVE CLOSE FIT BUT NOT TIGHT FIT TO STEEL CASTING FORM.

ANCHOR STUDS SHALL CONFORM TO AASHTO M169 GRADES 1010 THROUGH 1020 OR APPROVED EQUAL, AND SHALL MEET THE TYPE "B" REQUIREMENTS OF SUBSECTION 7.3 OF THE ANSI/AASHTO/AWS D1.5 BRIDGE WELDING CODE.

AT ENDS OF GIRDERS TO BE EMBEDDED IN CONCRETE DIAPHRAGMS OR END WALLS, PRESTRESSING STRANDS MAY EXTEND A MAXIMUM OF 50mm BEYOND THE GIRDER ENDS. OTHERWISE, PRESTRESSING STRANDS SHALL BE CUT FLUSH WITH THE GIRDER ENDS.

THE TRANSFER OF LOAD FROM THE ANCHORAGES TO THE GIRDER SHALL BE DONE WHEN CONCRETE HAS REACHED A COMPRESSIVE STRENGTH OF NOT LESS THAN 27.58 MPa FOR SPANS A,C & D AND 42.05 MPa FOR SPAN B.

DEPENDING ON THE TYPE OF SYSTEM USED TO SUPPORT THE DECK SLAB FORMS, PRESET ANCHORS MAY BE NECESSARY IN THE PRESTRESSED CONCRETE GIRDER.

THE TOP SURFACE OF THE GIRDER, EXCLUDING THE OUTSIDE 100mm, SHALL BE RAKED TO A DEPTH OF 6mm.

WHEN DRAPED STRANDS ARE DETAILED, THE LONGITUDINAL LOCATION OF THE HOLD DOWN DEVICES SHALL BE WITHIN 150mm OF THE LOCATION SHOWN AND THE CENTER OF GRAVITY OF THE GROUP OF DRAPED STRANDS SHALL BE LOCATED WITHIN 13mm OF THE THEORETICAL LOCATION SHOWN.

FOR PRESTRESSED CONCRETE MEMBERS, SEE SPECIAL PROVISIONS.

THE UPLIFT FORCE DUE TO DRAPED STRANDS IN SPAN B IS 102 kN.

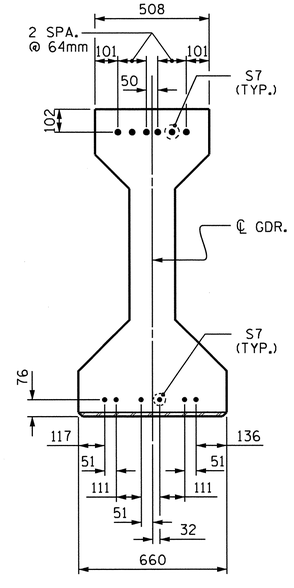

DETAIL "A"

(FOR AASHTO TYPE IV GIRDERS)

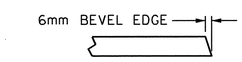

SECTION "G"

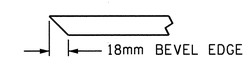

SECTION "F"

(SEE NOTES)

PROJECT NO. R-2413C
GUILFORD-ROCKINGHAM COUNTY
STATION: 24+37.000 -LREV-

SHEET 5 OF 6

STATE OF NORTH CAROLINA
DEPARTMENT OF TRANSPORTATION
RALEIGH

STANDARD
PRESTRESSED CONCRETE GIRDER
CONTINUOUS FOR LIVE LOAD
DETAILS
(LEFT LANE)

REVISIONS						SHEET NO.
NO.	BY:	DATE:	NO.	BY:	DATE:	S-47
1			3			TOTAL SHEETS
2			4			238

NORTH CAROLINA PROFESSIONAL SEAL 022516 ENGINEER EMILY E. MURRAY
10/28/11

ASSEMBLED BY : M.GUDLAUGSSON	DATE : 11-4-10		
CHECKED BY : T.L. AVERETTE	DATE : 12-9-10		
DRAWN BY : ELR 11/91	REV. 10/17/00 RWW/LES		
CHECKED BY : GRP 11/91	REV. 7/10/01RR LES/RDR	REV. 5/1/06 TLA/GM	

19-OCT-2011 14:04
R:\TIPProjects-R\R2413c\Structures\FinalPlans\Str.#2\R-2413C_SD_DL_02.dgn
taverette

STR. #2

STD. NO. PCG11SM

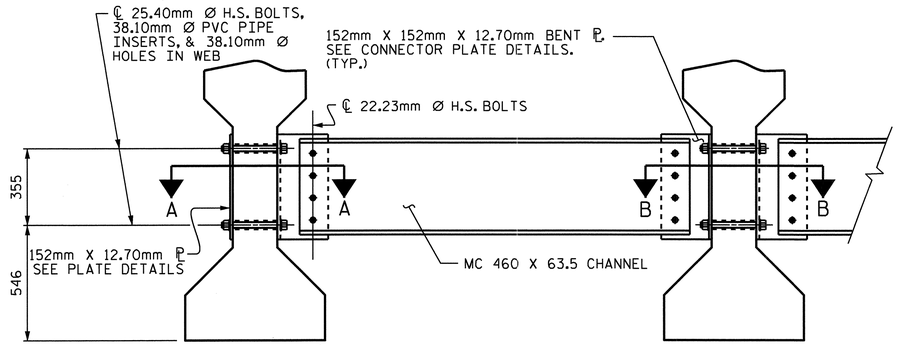

EXTERIOR GIRDER

INTERIOR GIRDER

PART SECTION AT INTERMEDIATE DIAPHRAGM

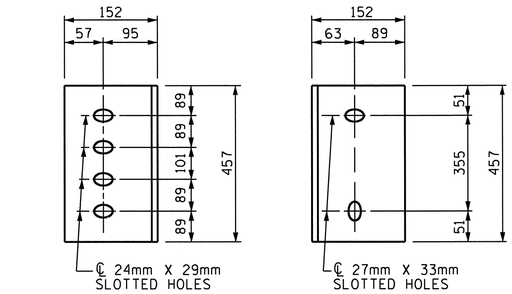

DIAPHRAGM FACE

WEB FACE

CONNECTOR PLATE DETAILS

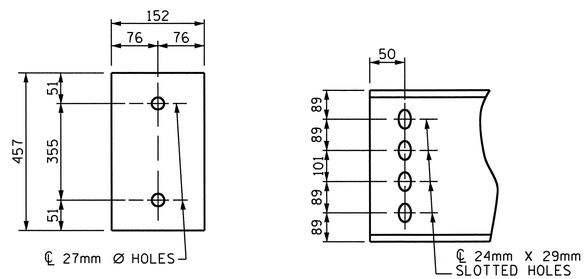

PLATE DETAILS

CHANNEL END

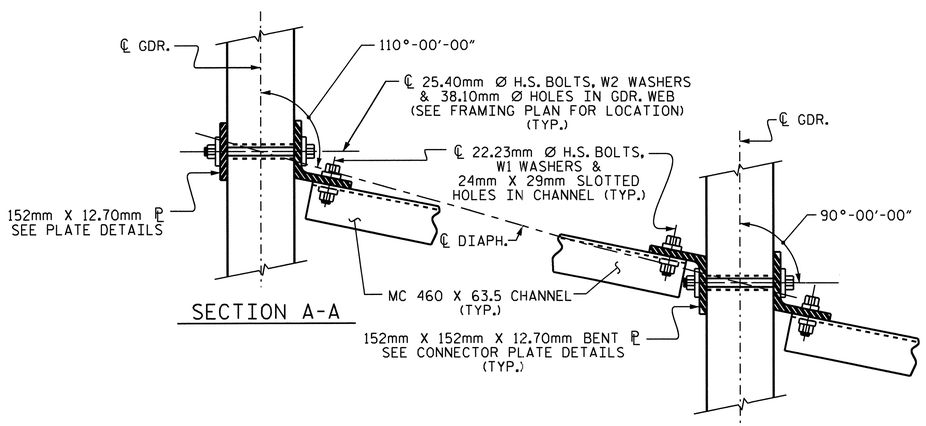

SECTION A-A

SECTION B-B

CONNECTION DETAILS

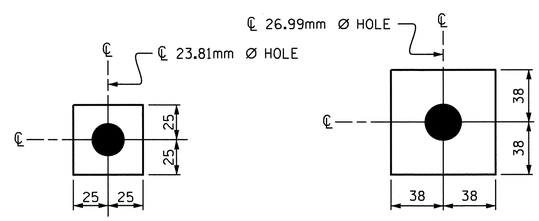

W1

ℙ 11.1 X 50 X 50

USE WITH 22.23mm Ø HVY. HEX NUTS & DIRECT TENSION INDICATOR WASHERS AT DIAPHRAGM CHANNEL TO CONNECTOR PLATE CONNECTIONS

W2

ℙ 11.1 X 76 X 76

USE WITH 25.40mm Ø HVY. HEX NUTS AT CONNECTOR PLATE TO GIRDER CONNECTIONS

WASHER DETAILS

STRUCTURAL STEEL NOTES

ALL INTERMEDIATE DIAPHRAGM STEEL, CONNECTOR PLATES AND PLATE WASHERS SHALL BE AASHTO M270 GRADE 345 OR APPROVED EQUAL.

TENSION ON THE AASHTO M164 BOLTS THROUGH THE CHANNEL MEMBER SHALL BE CALIBRATED USING DIRECT TENSION INDICATOR WASHERS IN ACCORDANCE WITH THE STANDARD SPECIFICATIONS. FOR DIRECT TENSION INDICATORS, SEE SPECIAL PROVISIONS.

TENSION ON THE AASHTO M164 BOLTS THROUGH THE GIRDER WEB SHALL BE SNUG TIGHTENED FOLLOWED BY AN ADDITIONAL 1/4 TURN.

THE PLATES, BENT PLATES, CHANNELS, ANGLES, AND PLATE WASHERS SHALL BE GALVANIZED OR METALLIZED IN ACCORDANCE WITH THE STANDARD SPECIFICATIONS. FOR THERMAL SPRAYED COATINGS (METALLIZATION), SEE SPECIAL PROVISIONS.

FOR METALLIZATION, APPLY AN 8 MIL THICK 99.99 PERCENT ZINC (W-Zn-1) THERMAL SPRAYED COATING WITH A 0.5 MIL THICK SEAL COAT TO ALL STEEL DIAPHRAGM SURFACES IN ACCORDANCE WITH THE THERMAL SPRAYED COATINGS SPECIAL PROVISIONS AND SECTION 442 OF THE STANDARD SPECIFICATIONS.

GALVANIZE THE HIGH STRENGTH BOLTS, NUTS, WASHERS AND DIRECT TENSION INDICATORS IN ACCORDANCE WITH THE STANDARD SPECIFICATIONS. FOR HIGH STRENGTH BOLTS, SEE SPECIAL PROVISIONS.

USE A MINIMUM 11mm THICK PLATE WASHER WITH STANDARD HOLES UNDER EACH BOLT HEAD AND NUT. THE PLATE WASHERS SHALL HAVE SUFFICIENT SIZE TO COVER THE HOLES AFTER INSTALLATION. HARDENED WASHERS AND DIRECT TENSION INDICATORS ARE TO BE USED IN CONJUNCTION WITH THE PLATE WASHERS IN THE CHANNEL MEMBER CONNECTION.

FOR BOLTS THROUGH THE GIRDER WEB, PROVIDE SUFFICIENT LENGTH OF ALL BOLTS TO ACCOMMODATE WASHERS AND THE THICKNESS OF CONNECTING MEMBER PLUS AT LEAST 6mm PROJECTION BEYOND THE NUT.

INTERMEDIATE DIAPHRAGM ASSEMBLY SHALL COMPLY WITH SECTION 1072 OF THE STANDARD SPECIFICATIONS.

CONTRACTOR SHALL SUBMIT TWO SETS OF WORKING DRAWINGS FOR THE INTERMEDIATE DIAPHRAGM ASSEMBLY FOR REVIEW, COMMENTS AND ACCEPTANCE. AFTER REVIEW, COMMENTS, AND ACCEPTANCE, SUBMIT SEVEN SETS FOR DISTRIBUTION.

IN THE EXTERIOR BAYS, TEMPORARY STRUTS SHALL BE PLACED BETWEEN PRESTRESSED GIRDERS ADJACENT TO THE STEEL DIAPHRAGMS. STRUTS SHALL REMAIN IN PLACE 3 DAYS AFTER CONCRETE IS PLACED. ALL AASHTO M164 H.S. BOLTS SHALL BE FULLY TIGHTENED AFTER THE STRUTS HAVE BEEN REMOVED.

THE COST OF THE STEEL DIAPHRAGMS AND ASSEMBLIES SHALL BE INCLUDED IN THE UNIT PRICE BID FOR PRESTRESSED CONCRETE GIRDERS.

PROJECT NO. R-2413C

GUILFORD-ROCKINGHAM COUNTY

STATION: 24+37.000 -LREV-

SHEET 6 OF 6

STATE OF NORTH CAROLINA
DEPARTMENT OF TRANSPORTATION
RALEIGH

STANDARD
INTERMEDIATE
STEEL DIAPHRAGMS
FOR TYPE IV
PRESTRESSED CONCRETE
GIRDERS
(LEFT LANE)

NORTH CAROLINA PROFESSIONAL SEAL 022516 ENGINEER EMILY E. MURRAY
10/28/11

REVISIONS						SHEET NO.
NO.	BY:	DATE:	NO.	BY:	DATE:	S-48
1			3			TOTAL SHEETS
2			4			238

STR. #2

STD.No.PCG12SM

ASSEMBLED BY : M.GUDLAUGSSON DATE : 10-1-10	
CHECKED BY : T.L. AVERETTE DATE : 12-9-10	
DRAWN BY : TLA 6/05	ADDED 10/21/05
CHECKED BY : VC 6/05	REV. 5/1/06RR KMM/GM

05-SEP-2011 11:05
Y:\Structures\Final Plans\Str.#2\R-2413C_SD_G#_02.dgn
mgudlaugsson

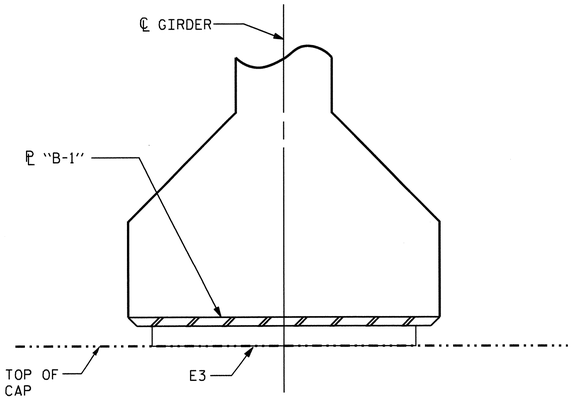

FIXED

SECTION E-E

(@ INTEGRAL END BENTS)

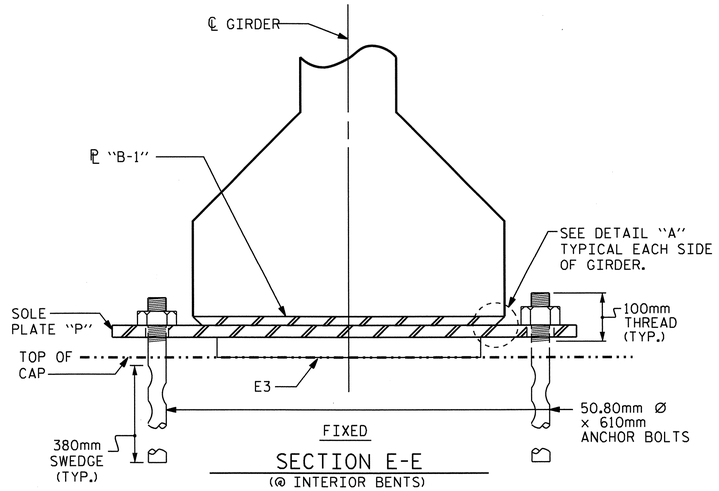

FIXED

SECTION E-E

(@ INTERIOR BENTS)

NOTES

AT ALL FIXED POINTS OF SUPPORT, NUTS FOR ANCHOR BOLTS ARE TO BE TIGHTENED FINGER TIGHT AND THEN BACKED OFF ½ TURN. THE THREAD OF THE NUT AND BOLT SHALL THEN BE BURRED WITH A SHARP POINTED TOOL.

STEEL SOLE PLATES, ANCHOR BOLTS, NUTS, AND WASHERS SHALL BE GALVANIZED IN ACCORDANCE WITH THE STANDARD SPECIFICATIONS.

PRIOR TO WELDING, GRIND THE GALVANIZED SURFACE OF THE PORTION OF THE EMBEDDED PLATE AND SOLE PLATE THAT ARE TO BE WELDED. AFTER WELDING, DAMAGED GALVANIZED SURFACES SHALL BE REPAIRED IN ACCORDANCE WITH THE STANDARD SPECIFICATIONS.

WHEN WELDING THE SOLE PLATE TO THE EMBEDDED PLATE IN THE GIRDER, USE TEMPERATURE INDICATING WAX PENS, OR OTHER SUITABLE MEANS, TO ENSURE THAT THE TEMPERATURE OF THE SOLE PLATE DOES NOT EXCEED 149°C. TEMPERATURES ABOVE THIS MAY DAMAGE THE ELASTOMER.

SOLE PLATE "P", BOLTS, NUTS AND WASHERS SHALL BE INCLUDED IN THE PAY ITEM FOR PRESTRESSED CONCRETE GIRDERS.

ANCHOR BOLTS SHALL MEET THE REQUIREMENTS OF ASTM A449. NUTS SHALL MEET THE REQUIREMENTS OF AASHTO M291M-12 OR AASHTO M292M-2H. WASHERS SHALL MEET THE REQUIREMENTS OF AASHTO M293M. SHOP DRAWINGS ARE NOT REQUIRED FOR ANCHOR BOLTS, NUTS AND WASHERS. SHOP INSPECTION IS REQUIRED.

ALL SURFACES OF BEARING PLATES SHALL BE SMOOTH AND STRAIGHT.

ALL BEARING PLATES SHALL BE AASHTO M270 GRADE 250.

ELASTOMER IN ALL BEARINGS SHALL BE 60 DUROMETER HARDNESS.

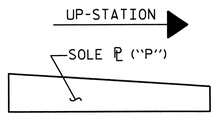

SOLE ℄ PLACEMENT DETAIL

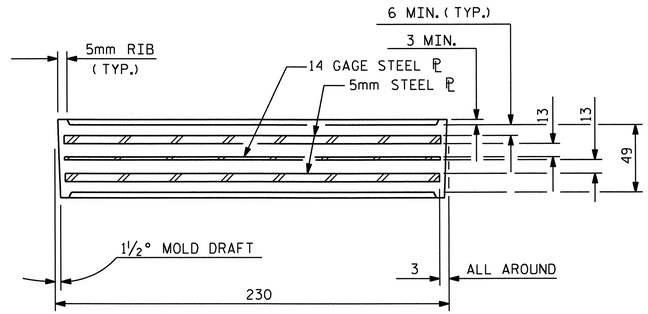

TYPICAL SECTION OF ELASTOMERIC BEARINGS

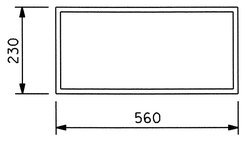

E3 (40 REQ'D)

PLAN VIEW OF ELASTOMERIC BEARING

TYPE IV

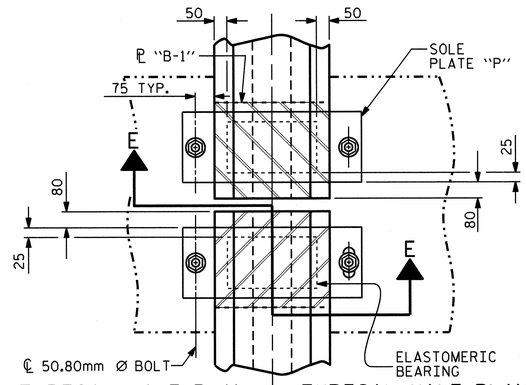

TYPICAL HALF-PLAN (SHOWING CONTINUOUS BENT)

TYPICAL HALF-PLAN (SHOWING SIMPLE SPAN BENT)

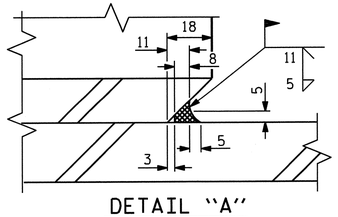

DETAIL "A"

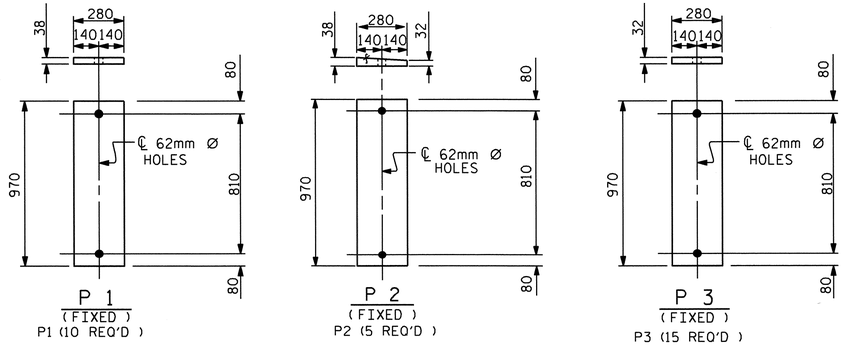

SOLE PLATE DETAILS ("P")

— LOAD RATINGS —	
	MAX.D.L.+L.L.
1372mm PCG -TYPE IV	888 kN

PROJECT NO. R-2413C

GUILFORD-ROCKINGHAM COUNTY

STATION: 24+37.000 -LREV-

STATE OF NORTH CAROLINA
DEPARTMENT OF TRANSPORTATION
RALEIGH

STANDARD ELASTOMERIC BEARING DETAILS

PRESTRESSED CONCRETE GIRDER SUPERSTRUCTURE (LEFT LANE)

NORTH CAROLINA PROFESSIONAL SEAL 022516 ENGINEER EMILY E. McGRAY
10/28/11

REVISIONS							SHEET NO.
NO.	BY:	DATE:	NO.	BY:	DATE:		S-49
1			3				TOTAL SHEETS
2			4				238

ASSEMBLED BY : M.GUDLAUGSSON	DATE : 10-1-10		
CHECKED BY : T.L. AVERETTE	DATE : 12-9-10		
DRAWN BY : WJH 8/89	REV. 10/17/00	RWW/LES	
CHECKED BY : CRK 8/89	REV. 7/10/01	RWW/LES	
	REV. 5/1/06	TLA/GM	

19-OCT-2011 14:05
R:\TIPProjects-R\R2413c\Structures\Final Plans\Str.#2\R-2413C_SD_BG_02.dgn
taverette

STR#2

STD. NO. EB3SM

NOTES

BARRIER RAIL IN A CONTINUOUS UNIT SHALL NOT BE CAST UNTIL ALL SLAB CONCRETE IN THE UNIT HAS BEEN CAST AND HAS REACHED A MINIMUM COMPRESSIVE STRENGTH OF 20.7 MPa.

ALL REINFORCING STEEL IN BARRIER RAILS SHALL BE EPOXY COATED.

GROOVED CONTRACTION JOINTS, 12mm IN DEPTH, SHALL BE TOOLED IN ALL EXPOSED FACES OF THE BARRIER RAIL AND IN ACCORDANCE WITH ARTICLE 825-10(B) OF THE STANDARD SPECIFICATIONS. THE CONTRACTION JOINT SHALL BE LOCATED AT EACH THIRD POINT BETWEEN BARRIER RAIL EXPANSION JOINTS. ONLY ONE CONTRACTION JOINT IS REQUIRED AT MIDPOINT OF BARRIER RAIL SEGMENTS LESS THAN 6.1m IN LENGTH AND NO CONTRACTION JOINTS ARE REQUIRED FOR THOSE SEGMENTS LESS THAN 3.5m IN LENGTH.

BAR TYPES

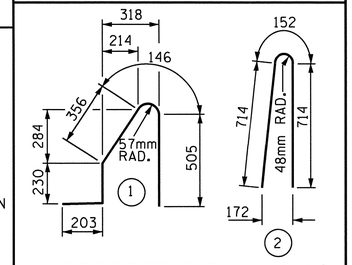

ALL BAR DIMENSIONS ARE OUT TO OUT

BILL OF MATERIAL

FOR CONCRETE BARRIER RAIL ONLY

BAR	NO.	SIZE	TYPE	LENGTH	WEIGHT
* B1	32	#16	STR	3160	157
* B2	96	#16	STR	7120	1061
* B3	80	#16	STR	6880	854
* B4	32	#16	STR	3920	195
* S1	604	#16	1	1440	1350
* S2	604	#16	2	1580	1481

* EPOXY COATED REINFORCING STEEL 5098 kg.

CLASS AA CONCRETE 45.5 CU. METERS

CONCRETE BARRIER RAIL 180.936 METERS

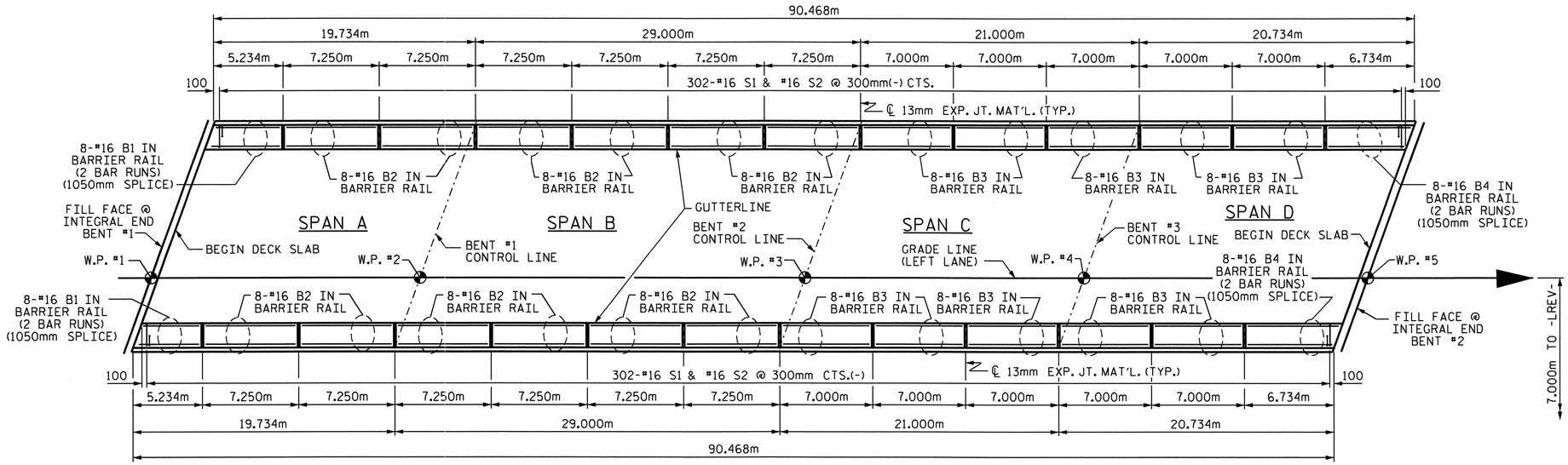

PLAN OF BARRIER RAIL

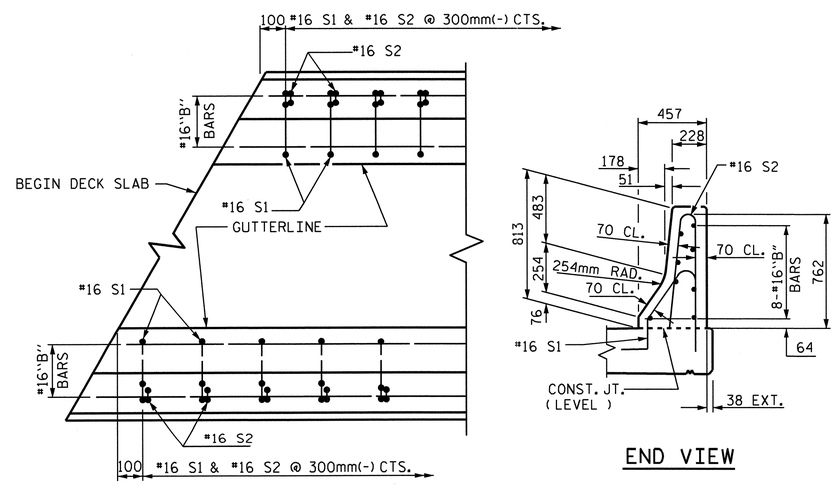

PLAN

END VIEW

END OF RAIL DETAILS

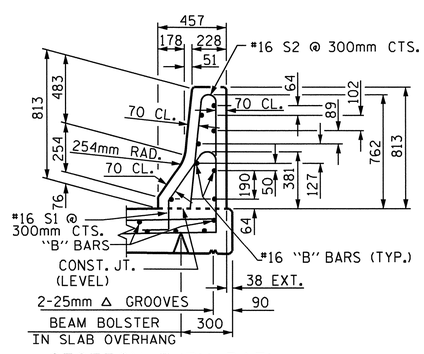

SECTION THRU RAIL

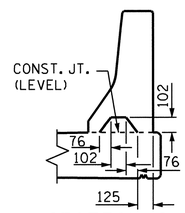

SECTION S-S

AT DAM IN OPEN JOINT
(THIS IS TO BE USED ONLY WHEN SLIP FORM IS USED)

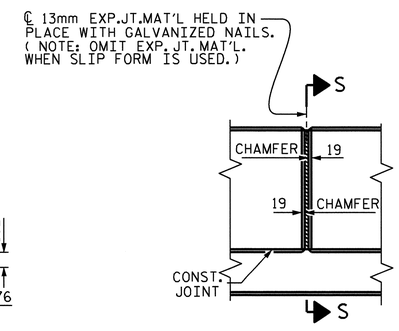

ELEVATION AT EXPANSION JOINTS

BARRIER RAIL DETAILS

PROJECT NO. R-2413C

GUILFORD-ROCKINGHAM COUNTY

STATION: 24+37.000 -LREV-

STATE OF NORTH CAROLINA
DEPARTMENT OF TRANSPORTATION
RALEIGH

STANDARD
CONCRETE BARRIER RAIL
(LEFT LANE)

NORTH CAROLINA PROFESSIONAL SEAL 022516 ENGINEER EMILY E. MURRAY
12/28/11

REVISIONS							SHEET NO.
NO.	BY:	DATE:	NO.	BY:	DATE:		S-50
1			3				TOTAL SHEETS
2			4				238

ASSEMBLED BY : M.GUDLAUGSSON DATE : 10-6-10
CHECKED BY : T.L. AVERETTE DATE : 12-9-10

DRAWN BY : ARB 5/87
CHECKED BY : SJD 9/87

REV. 10/17/00 RWW/LES
REV. 5/7/03R RWW/JTE
REV. 5/1/06 TLA/GM

05-SEP-2011 11:07
Y:\Structures\Final Plans\Str.#2\R-2413C_SD_BR_02.dgn
mgudlaugsson

STR. #2

STD. No. CBR1SM

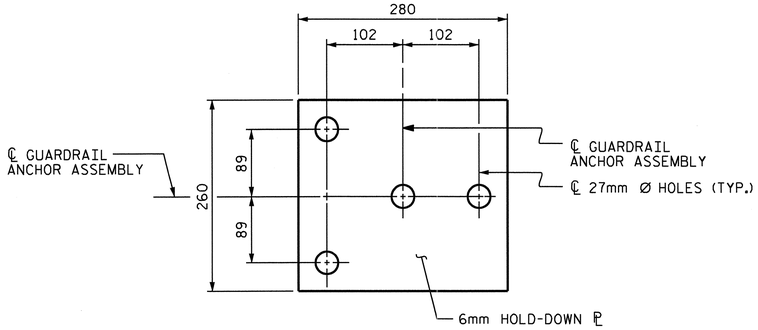

PLAN

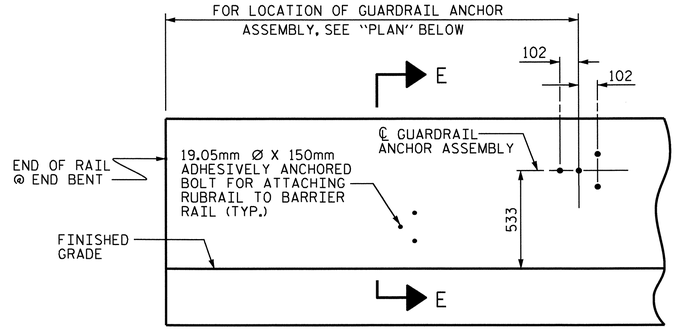

ELEVATION

FOR LOCATION OF RUBRAIL, SEE ROADWAY STD. 862.03

NOTES

THE GUARDRAIL ANCHOR ASSEMBLY SHALL CONSIST OF A 6mm HOLD DOWN PLATE AND 4 - 22.23mm Ø BOLTS WITH NUTS AND WASHERS, RUBRAIL, AND ADHESIVELY ANCHORED BOLTS.

THE HOLD-DOWN PLATE SHALL CONFORM TO AASHTO M270 GRADE 36. AFTER FABRICATION, THE HOLD-DOWN PLATE SHALL BE HOT-DIP GALVANIZED IN ACCORDANCE WITH AASHTO M111.

BOLTS SHALL CONFORM TO THE REQUIREMENTS OF ASTM A307 AND NUTS SHALL CONFORM TO THE REQUIREMENTS OF AASHTO M291. BOLTS, NUTS AND WASHERS SHALL BE GALVANIZED. (AT THE CONTRACTOR'S OPTION, STAINLESS STEEL BOLTS, NUTS AND WASHERS MAY BE USED AS AN ALTERNATE FOR THE 22.23mm Ø GALVANIZED BOLTS, NUTS AND WASHERS. THEY SHALL CONFORM TO OR EXCEED THE MECHANICAL REQUIREMENTS OF ASTM A307. THE USE OF THIS ALTERNATE SHALL BE APPROVED BY THE ENGINEER.)

THE GUARDRAIL ANCHOR ASSEMBLY IS REQUIRED AT ALL POINTS WHERE APPROACH GUARDRAIL IS TO BE ATTACHED TO THE END OF BARRIER RAIL. FOR POINTS OF ATTACHMENT, SEE SKETCH.

AFTER INSTALLATION, THE EXPOSED THREAD OF THE BOLT SHALL BE BURRED WITH A SHARP POINTED TOOL.

THE COST OF THE GUARDRAIL ANCHOR ASSEMBLY SHALL BE INCLUDED IN THE UNIT CONTRACT PRICE BID FOR CONCRETE BARRIER RAIL.

THE 32mm Ø HOLES SHALL BE FORMED OR DRILLED WITH A CORE BIT. IMPACT TOOLS WILL NOT BE PERMITTED. ANY CONCRETE DAMAGED BY THIS WORK SHALL BE REPAIRED TO THE SATISFACTION OF THE ENGINEER.

THE C150 X 12 RUBRAIL IS TO BE ADHESIVELY ANCHORED TO THE RAIL USING THREE 19.05mm Ø X 150mm BOLTS WITH WASHERS. LEVEL ONE FIELD TESTING IS REQUIRED, AND THE YIELD LOAD OF THE 19.05mm Ø BOLTS IS 53.4kN. FOR ADHESIVELY ANCHORED ANCHOR BOLTS OR DOWELS, SEE SPECIAL PROVISIONS. SEE ROADWAY STANDARD 862.03 FOR DETAILS AND LOCATION OF THE RUBRAIL.

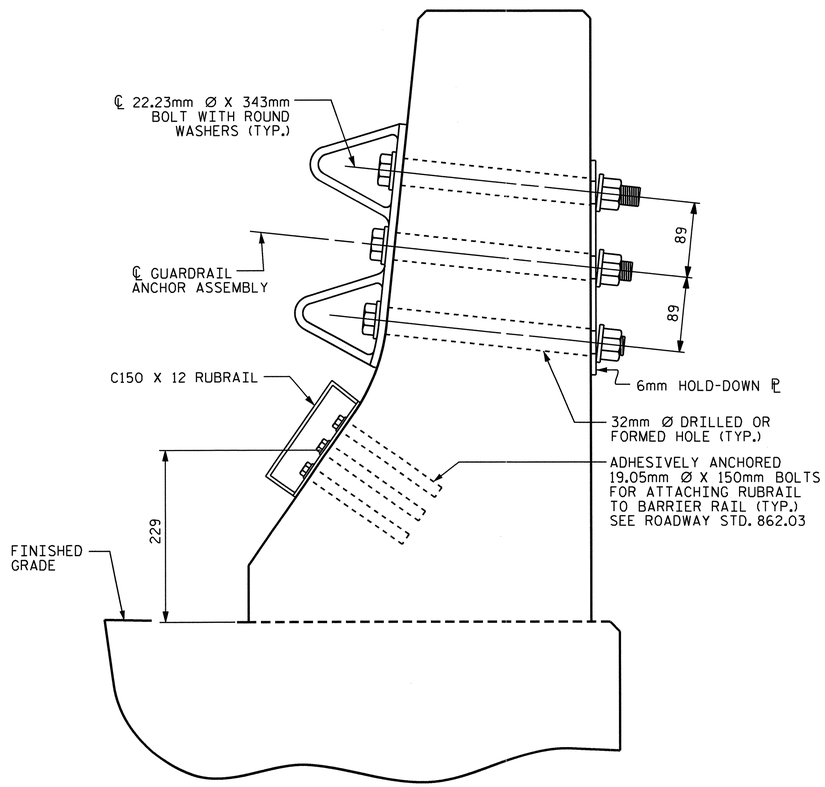

SECTION E-E

GUARDRAIL ANCHOR ASSEMBLY DETAILS

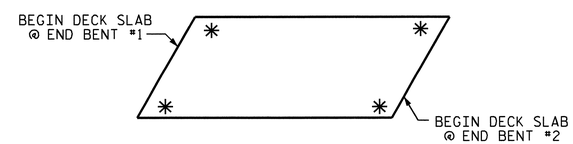

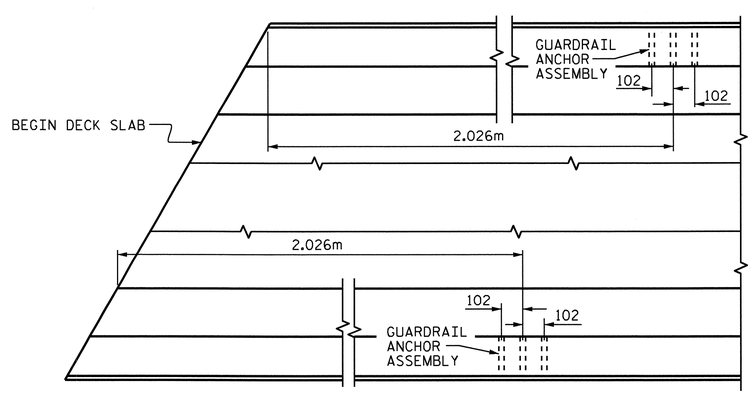

PLAN

LOCATION OF ANCHORS FOR GUARDRAIL

END BENT #1 SHOWN, END BENT #2 SIMILAR

PROJECT NO. R-2413C

GUILFORD-ROCKINGHAM COUNTY

STATION: 24+37.000 -LREV-

STATE OF NORTH CAROLINA
DEPARTMENT OF TRANSPORTATION
RALEIGH

STANDARD

GUARDRAIL ANCHORAGE FOR BARRIER RAIL (LEFT LANE)

NORTH CAROLINA PROFESSIONAL SEAL 022516 ENGINEER EMILY E. MURRAY
10/28/11

REVISIONS						SHEET NO.
NO.	BY:	DATE:	NO.	BY:	DATE:	S-51
1			3			TOTAL SHEETS
2			4			238

STR. #2

STD. NO. GRA2

ASSEMBLED BY : M.GUDLAUGSSON DATE : 9-14-10
CHECKED BY : T.L. AVERETTE DATE : 12-9-10
DRAWN BY : TLA 5/06
CHECKED BY : GM 5/06
ADDED 5/1/06R KMM/GM

05-SEP-2011 11:07
Y:\Structures\Final Plans\Str.#2\R-2413C_SD_BR_02.dgn
mgudlaugsson

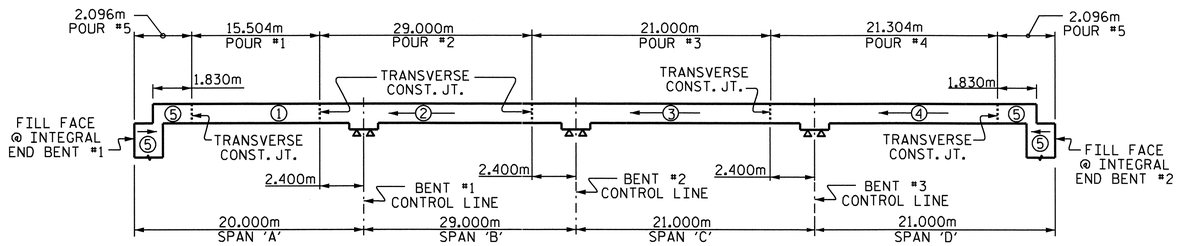

POURING SEQUENCE

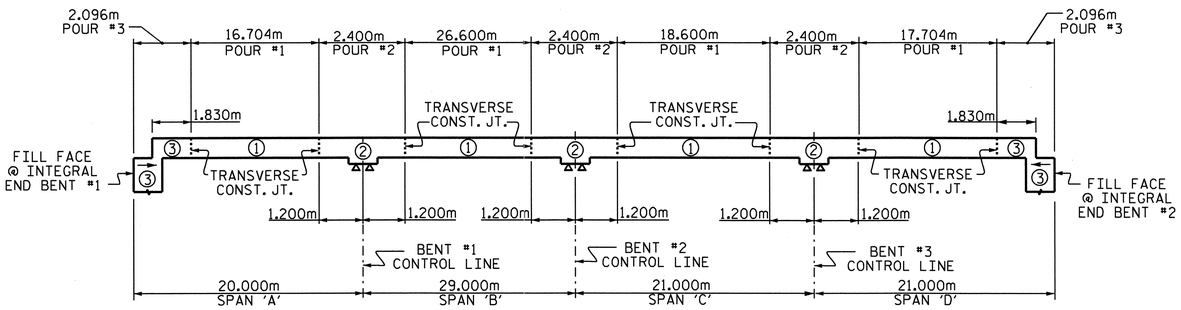

OPTIONAL POURING SEQUENCE

POUR (2) CAN NOT BE STARTED UNTIL BOTH ADJACENT (1) POURS REACH A MINIMUM OF 20.7MPa.

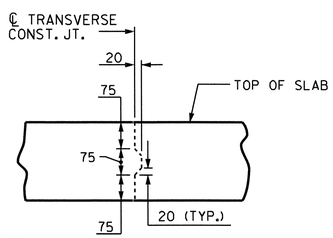

TRANSVERSE CONSTRUCTION JOINT DETAIL

NOTE: REINFORCING STEEL IN SLAB NOT SHOWN.
LONGITUDINAL REINFORCING STEEL SHALL BE CONTINUOUS THRU JOINT

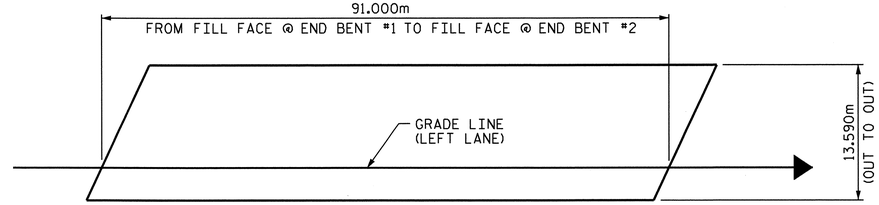

LAYOUT FOR COMPUTING AREA OF REINFORCED CONCRETE DECK SLAB (1236.7 SQ. METER)

BILL OF MATERIAL
SPANS A, B, C & D

BAR	NO.	SIZE	TYPE	LENGTH	WEIGHT
✱ A1	535	#16	STR	13480	11193
✱ A101	4	#16	STR	12600	78
✱ A102	4	#16	STR	11720	73
✱ A103	4	#16	STR	10840	67
✱ A104	4	#16	STR	9960	62
✱ A105	4	#16	STR	9080	56
✱ A106	4	#16	STR	8200	51
✱ A107	4	#16	STR	7320	45
✱ A108	4	#16	STR	6440	40
✱ A109	4	#16	STR	5560	35
✱ A110	4	#16	STR	4680	29
✱ A111	4	#16	STR	3820	24
✱ A112	4	#16	STR	2940	18
✱ A113	4	#16	STR	2060	13
✱ A114	4	#16	STR	1180	7
✱ A115	4	#16	STR	460	3
A2	535	#16	STR	13480	11193
A201	4	#16	STR	12600	78
A202	4	#16	STR	11720	73
A203	4	#16	STR	10840	67
A204	4	#16	STR	9960	62
A205	4	#16	STR	9080	56
A206	4	#16	STR	8200	51
A207	4	#16	STR	7320	45
A208	4	#16	STR	6440	40
A209	4	#16	STR	5560	35
A210	4	#16	STR	4680	29
A211	4	#16	STR	3820	24
A212	4	#16	STR	2940	18
A213	4	#16	STR	2060	13
A214	4	#16	STR	1180	7
A215	4	#16	STR	460	3

BILL OF MATERIAL
SPANS A, B, C & D

BAR	NO.	SIZE	TYPE	LENGTH	WEIGHT
✱ B1	32	#13	STR	8960	285
✱ B2	122	#22	STR	4200	1559
✱ B3	64	#22	STR	18000	3504
✱ B4	58	#22	STR	7500	1323
✱ B5	64	#13	STR	5220	332
✱ B6	32	#13	STR	6620	211
✱ B7	32	#22	STR	15600	1519
✱ B8	29	#22	STR	6300	556
✱ B9	64	#13	STR	5300	337
B10	336	#16	STR	15620	8145
✱ S1	72	#13	1	3560	255
✱ S2	72	#13	1	3320	238
S3	360	#13	4	860	308
K1	20	#13	STR	8520	169
K2	32	#13	STR	2380	76
K3	64	#13	STR	2720	173
K4	32	#13	STR	2520	80
K5	8	#13	STR	2220	18
K6	8	#13	STR	960	8
K7	4	#13	STR	1840	7
K8	8	#13	STR	2000	16
K9	4	#13	STR	1920	8
K10	4	#13	STR	1760	7
K11	45	#13	2	3660	164
K12	30	#13	3	1840	55
K13	24	#13	STR	1940	46
✱ U1	72	#13	5	4660	334
✱ U2	24	#13	5	4060	97
U3	76	#13	6	3600	272
U4	16	#13	6	4360	69
V1	10	#13	STR	1240	12

REINFORCING STEEL = 21427 kg
✱EPOXY COATED REINFORCING STEEL = 22344 kg

BAR TYPES

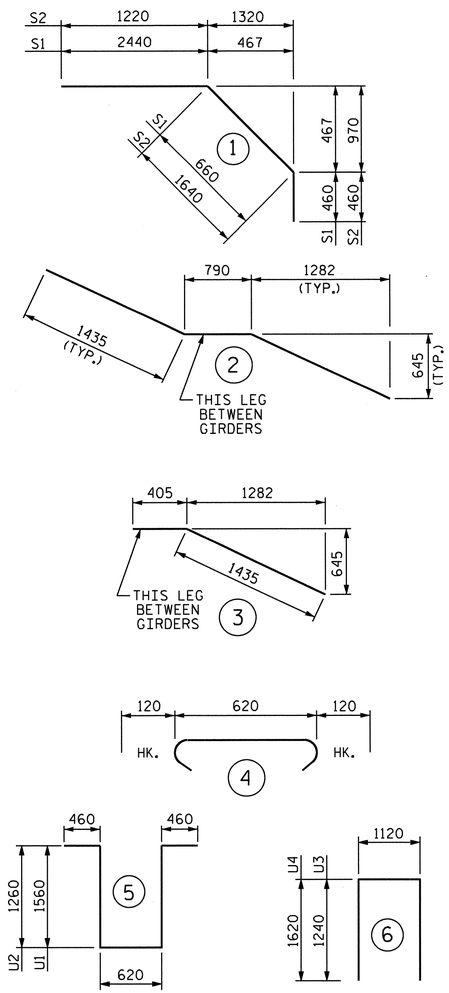

ALL BAR DIMENSIONS ARE OUT TO OUT.

PROJECT NO. R-2413C
GUILFORD-ROCKINGHAM COUNTY
STATION: 24+37.000 -LREV-

GROOVING BRIDGE FLOORS

BRIDGE DECK	1056.7	SQ.METER
APPROACH SLABS	178.0	SQ.METER
TOTAL	1234.7	SQ.METER

SUPERSTRUCTURE REINFORCING STEEL LENGTHS ARE BASED ON THE FOLLOWING MINIMUM SPLICE LENGTHS

BAR SIZE	SUPERSTRUCTURE EXCEPT APPROACH SLABS, PARAPET, AND BARRIER RAIL		APPROACH SLABS		PARAPET AND BARRIER RAIL
	EPOXY COATED	UNCOATED	EPOXY COATED	UNCOATED	
#13	610	540	610	540	840
#16	770	660	770	660	1050
#19	920	790	1190	790	1330
#22	1580	1060			
#25	2080	1390			

SUPERSTRUCTURE BILL OF MATERIAL

	CLASS AA CONCRETE		REINFORCING STEEL	EPOXY COATED REINFORCING STEEL
	(CU. METER)		(kg)	(kg)
SPAN A, B, C, AND D.	POUR 1	60.5		
	POUR 2	124.9		
	POUR 3	93.7		
	POUR 4	94.9		
	● POUR 5	75.5	21427	22344
TOTALS ✱✱	449.5		21427	22344

✱✱ QUANTITIES FOR BARRIER RAIL ARE NOT INCLUDED
● POUR 5 QUANTITY INCLUDES UPPER POUR OF WINGS & INTEGRAL END BENT.

NORTH CAROLINA PROFESSIONAL SEAL 022516 ENGINEER EMILY E. MURRAY
10/28/11

STATE OF NORTH CAROLINA
DEPARTMENT OF TRANSPORTATION
RALEIGH
STANDARD
SUPERSTRUCTURE BILL OF MATERIAL
(LEFT LANE)

REVISIONS						SHEET NO.
NO.	BY:	DATE:	NO.	BY:	DATE:	S-52
1			3			TOTAL SHEETS
2			4			238

ASSEMBLED BY : M.GUDLAUGSSON DATE : 9-7-10
CHECKED BY : T.L. AVERETTE DATE : 12-9-10
DRAWN BY : JMB 5/87 REV. 5/16/97 EEM/RGW
CHECKED BY : SJD 9/87 REV. 5/11/06 TLA/GM

19-OCT-2011 14:06
R:\TIPProjects-R\R2413c\Structures\FinalPlans\Str.#2\R-2413C_SD_BM_02.dgn
taverette

STR. #2

STD. NO. BOM1SM

NOTES:

THE CONTRACTOR SHALL PROVIDE FOR INSTALLATION OF THE 102mm DIAMETER DRAIN PIPE THROUGH THE WING WALL AS REQUIRED FOR REINFORCED BRIDGE APPROACH FILLS. SEE THE ROADWAY PLANS. REINFORCING STEEL IN THE WING WALL MAY BE SHIFTED AS NECESSARY TO CLEAR THE DRAIN PIPE.

THE TOP SURFACE OF THE END BENT CAP AND WINGS, EXCLUDING THE OUTSIDE 100mm AND THE BEARING AREA, SHALL BE RAKED TO A DEPTH OF 6mm.

STIRRUPS AND U1 BARS IN CAP MAY BE SHIFTED AS NECESSARY TO CLEAR #13 V1 BARS.

THE CONTRACTOR'S ATTENTION IS CALLED TO THE FACT THAT THE UPPER PART OF INTEGRAL END BENT AND WINGS ARE TO BE POURED WITH THE SUPERSTRUCTURE.

SEE SUPERSTRUCTURE SHEETS FOR UPPER PART OF INTEGRAL END BENT DETAIL.

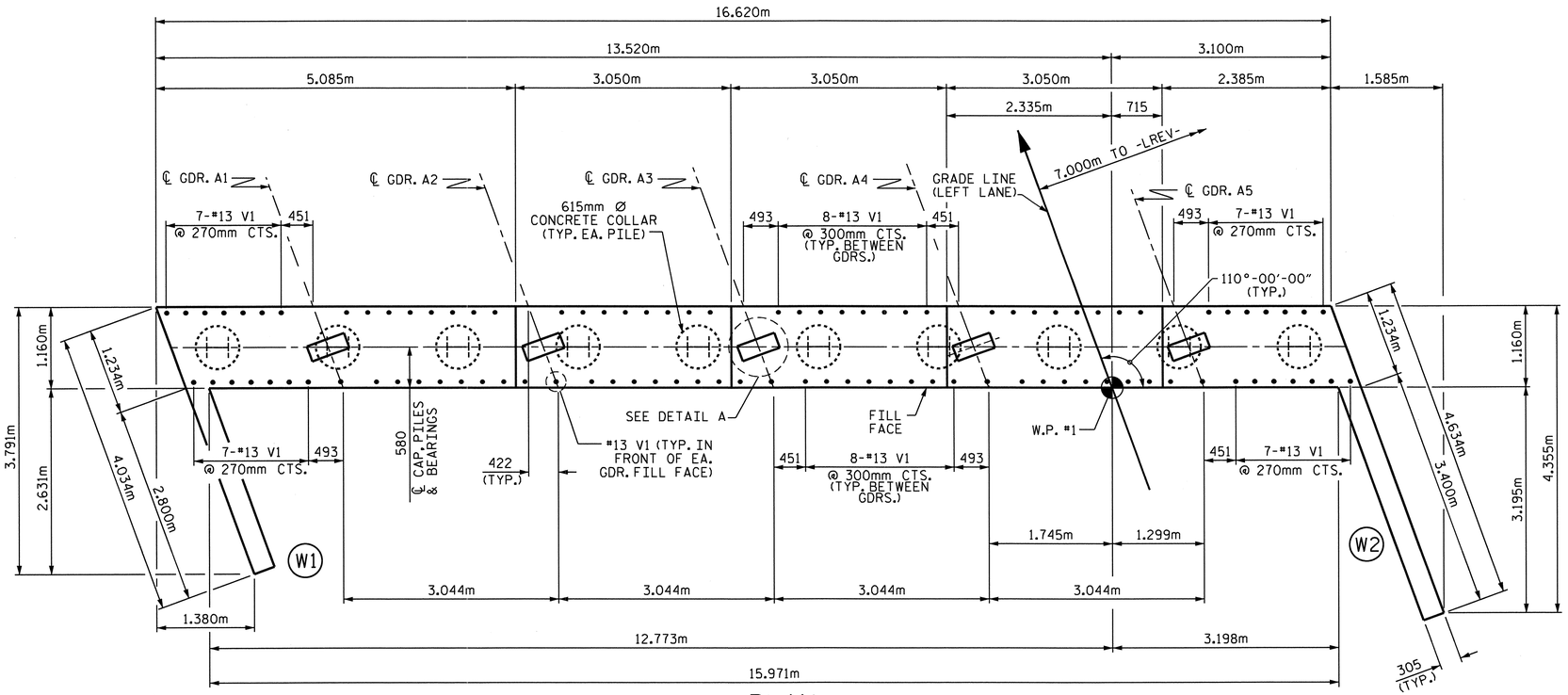

PLAN

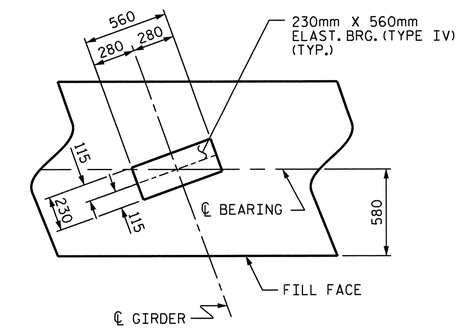

DETAIL A

(TYP. EA. GDR.)

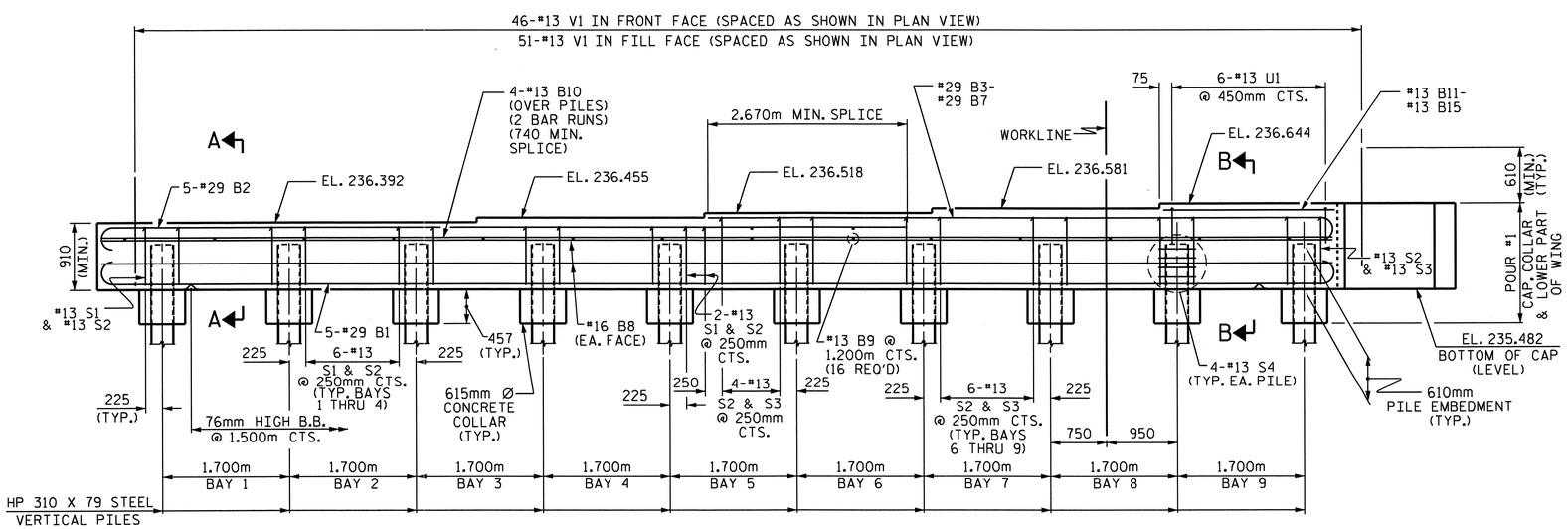

ELEVATION

PROJECT NO. R-2413C

GUILFORD-ROCKINGHAM COUNTY

STATION: 24+37.000 -LREV-

SHEET 1 OF 3

STATE OF NORTH CAROLINA
DEPARTMENT OF TRANSPORTATION
RALEIGH

SUBSTRUCTURE
INTEGRAL END BENT #1
(LEFT LANE)

NORTH CAROLINA PROFESSIONAL SEAL 022516 ENGINEER EMILY E. McGRADY
10/28/11

REVISIONS						SHEET NO.
NO.	BY:	DATE:	NO.	BY:	DATE:	S-53
1			3			TOTAL SHEETS
2			4			238

DRAWN BY : M.GUDLAUGSSON DATE : 01-19-11
CHECKED BY : T.L. AVERETTE DATE : 04-20-11

19-OCT-2011 14:07
R:\TIPProjects-R\R2413c\Structures\Final Plans\Str.#2\R-2413C_SD_E#_02.dgn
taverette

STR. #2

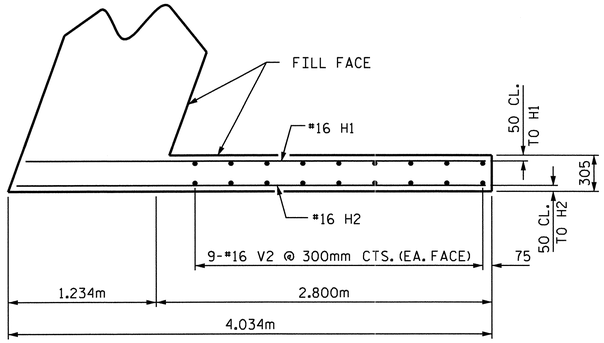

PLAN OF LEFT WING (W1)

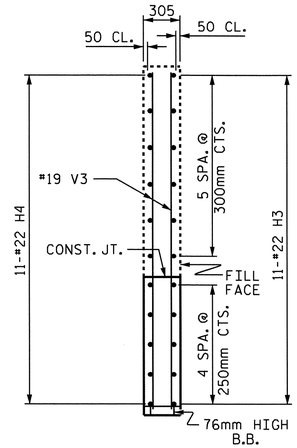

SECTION Y-Y

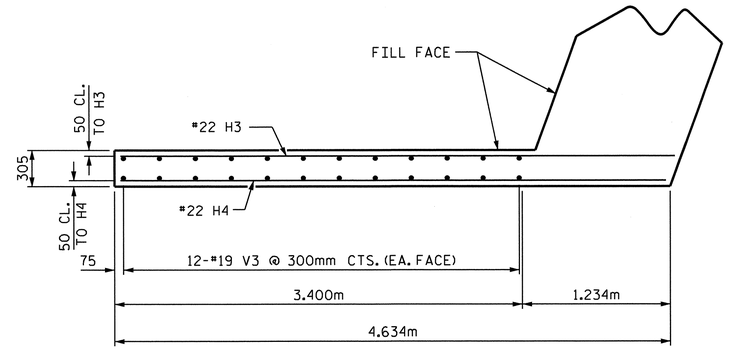

PLAN OF RIGHT WING (W2)

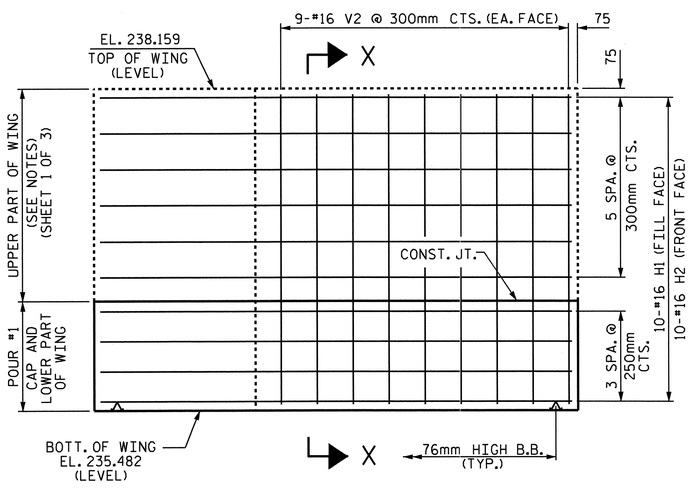

ELEVATION OF LEFT WING (W1)

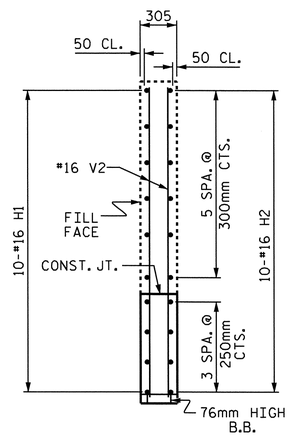

SECTION X-X

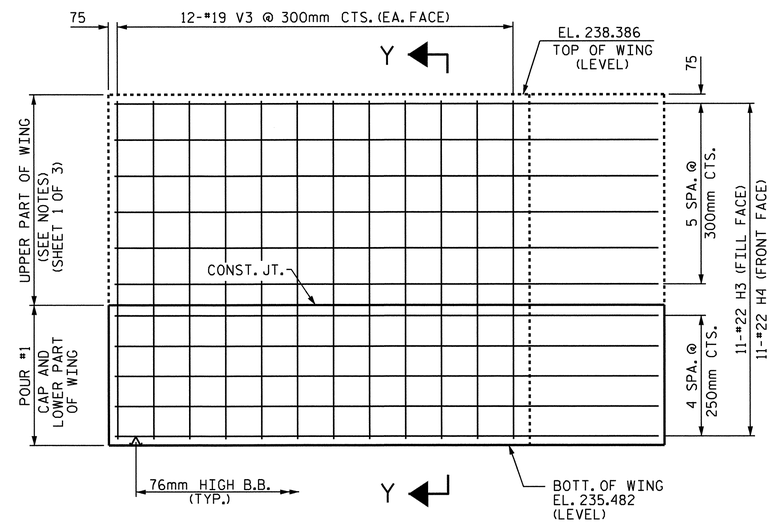

ELEVATION OF RIGHT WING (W2)

PROJECT NO. R-2413C

GUILFORD-ROCKINGHAM COUNTY

STATION: 24+37.000 -LREV-

SHEET 2 OF 3

STATE OF NORTH CAROLINA
DEPARTMENT OF TRANSPORTATION
RALEIGH

SUBSTRUCTURE

INTEGRAL
END BENT #1
(LEFT LANE)

NORTH CAROLINA PROFESSIONAL SEAL 022516 ENGINEER EMILY E. MURRAY
10/28/11

REVISIONS						SHEET NO.
NO.	BY:	DATE:	NO.	BY:	DATE:	S-54
1			3			TOTAL SHEETS
2			4			238

DRAWN BY : M.GUDLAUGSSON DATE : 01-19-11
CHECKED BY : T.L. AVERETTE DATE : 04-20-11

05-SEP-2011 11:10
Y:\Structures\Final Plans\Str.#2\R-2413C_SD_E#_02.dgn
mgudlaugsson

STR. #2

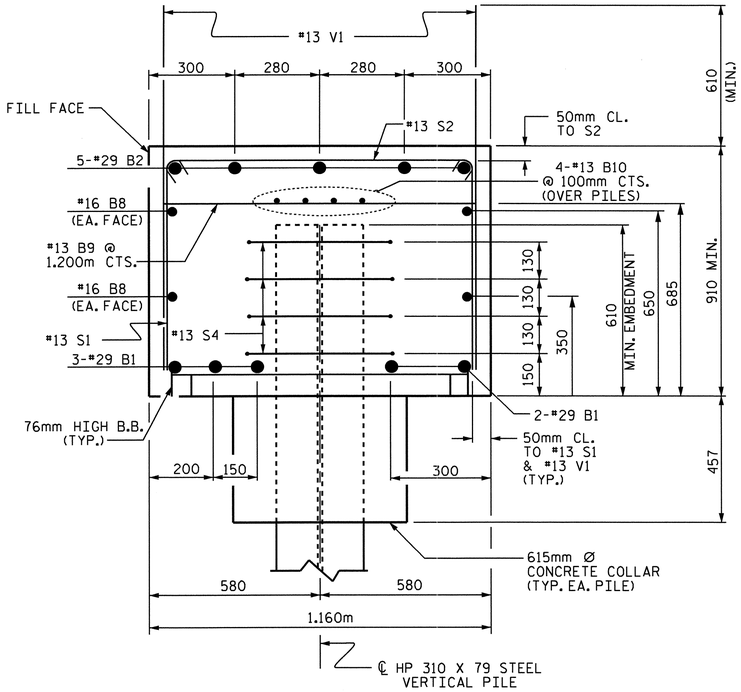

SECTION A-A

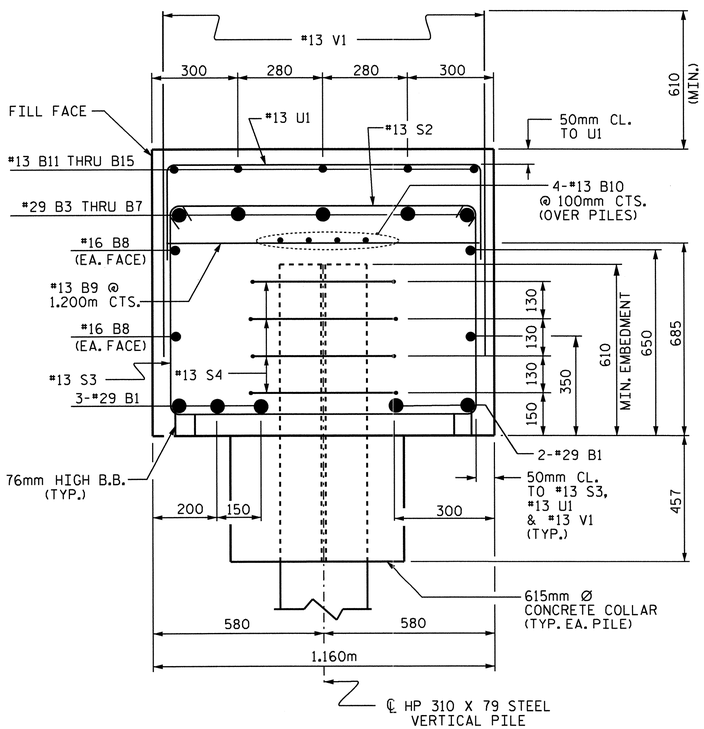

SECTION B-B

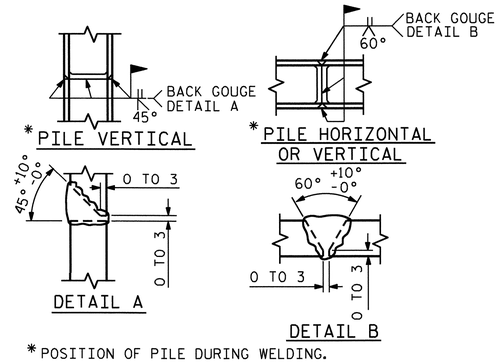

*POSITION OF PILE DURING WELDING.

PILE SPLICE DETAILS

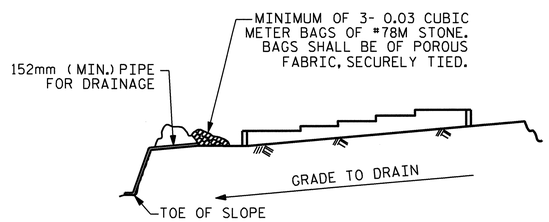

BAGGED STONE AND PIPE SHALL BE PLACED IMMEDIATELY AFTER COMPLETION OF END BENT EXCAVATION. PIPE MAY BE EITHER CONCRETE, CORRUGATED STEEL, CORRUGATED ALUMINUM ALLOY, OR CORRUGATED PLASTIC. PERFORATED PIPE WILL NOT BE ALLOWED.

BAGGED STONE SHALL REMAIN IN PLACE UNTIL THE ENGINEER DIRECTS THAT IT BE REMOVED. THE CONTRACTOR SHALL REMOVE AND DISPOSE OF SILT ACCUMULATIONS AT BAGGED STONE WHEN SO DIRECTED BY THE ENGINEER. BAGS SHALL BE REMOVED AND REPLACED WHENEVER THE ENGINEER DETERMINES THAT THEY HAVE DETERIORATED AND LOST THEIR EFFECTIVENESS.

NO SEPARATE PAYMENT WILL BE MADE FOR THIS WORK AND THE ENTIRE COST OF THIS WORK SHALL BE INCLUDED IN THE UNIT CONTRACT PRICE BID FOR THE SEVERAL PAY ITEMS.

TEMPORARY DRAINAGE AT END BENT

BAR TYPES

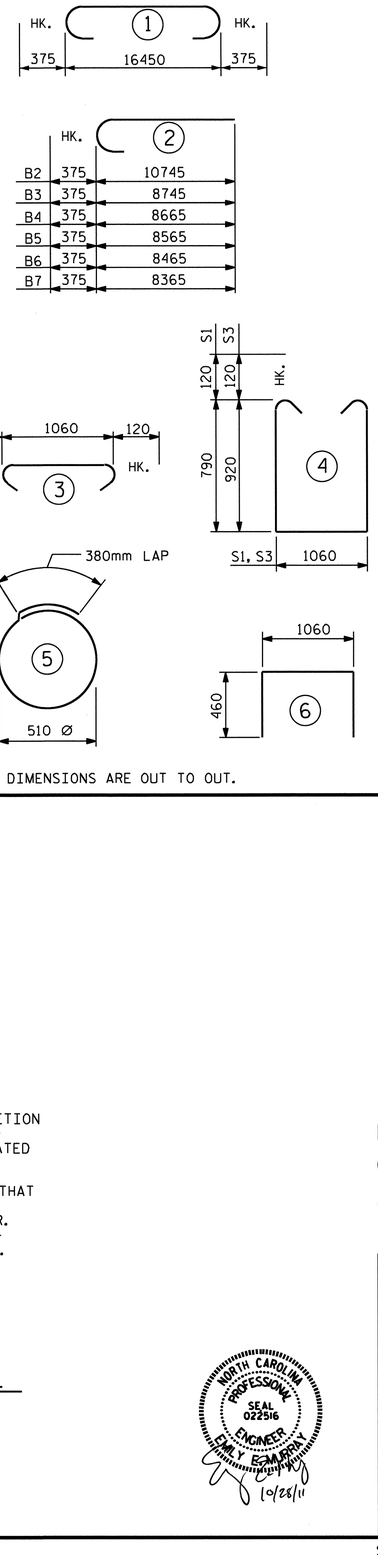

ALL BAR DIMENSIONS ARE OUT TO OUT.

BILL OF MATERIAL

END BENT #1

BAR	NO.	SIZE	TYPE	LENGTH	WEIGHT
B1	5	#29	1	17200	435
B2	5	#29	2	11120	281
B3	1	#29	2	9120	46
B4	1	#29	2	9040	46
B5	1	#29	2	8940	45
B6	1	#29	2	8840	45
B7	1	#29	2	8740	44
B8	4	#16	STR	16500	102
B9	16	#13	STR	1060	17
B10	8	#13	STR	8640	69
B11	1	#13	STR	2660	3
B12	1	#13	STR	2580	3
B13	1	#13	STR	2480	2
B14	1	#13	STR	2380	2
B15	1	#13	STR	2300	2
H1	10	#16	STR	3840	60
H2	10	#16	STR	3900	61
H3	11	#22	STR	4620	155
H4	11	#22	STR	4540	152
S1	27	#13	4	2880	77
S2	56	#13	3	1300	72
S3	29	#13	4	3140	91
S4	40	#13	5	1980	79
U1	6	#13	6	1980	12
V1	97	#13	STR	1460	141
V2	18	#16	STR	2560	72
V3	24	#19	STR	2800	150

REINFORCING STEEL = 2264 kg

CLASS A CONCRETE BREAKDOWN

POUR #1: (CAP, CONCRETE COLLAR & LOWER PART OF WINGS) 23.0 m³

TOTAL CONCRETE 23.0 m³

HP 310 X 79 STEEL PILES
NO. 10 144.5 METERS

PROJECT NO. R-2413C
GUILFORD-ROCKINGHAM COUNTY
STATION: 24+37.000 -LREV-

SHEET 3 OF 3

STATE OF NORTH CAROLINA
DEPARTMENT OF TRANSPORTATION
RALEIGH

SUBSTRUCTURE
INTEGRAL END BENT #1
(LEFT LANE)

NORTH CAROLINA PROFESSIONAL SEAL 022516 ENGINEER EMILY B. MARRAN
10/28/11

REVISIONS						SHEET NO.
NO.	BY:	DATE:	NO.	BY:	DATE:	S-55
1			3			TOTAL SHEETS
2			4			238

STR. #2

DRAWN BY : M.GUDLAUGSSON DATE : 01-19-11
CHECKED BY : T.L. AVERETTE DATE : 04-20-11

05-SEP-2011 11:10
Y:\Structures\Final Plans\Str.#2\R-2413C_SD_E*_02.dgn
mgudlaugsson

NOTES

STIRRUPS AND U1 BARS IN CAP MAY BE SHIFTED AS NECESSARY TO CLEAR ANCHOR BOLTS.

HOOKS ON "V" BARS MAY BE TURNED AS NECESSARY FOR PLACING REINFORCING STEEL.

ALL STEEL IN THE DRILLED PIERS IS INCLUDED IN THE PAY ITEMS FOR "REINFORCING STEEL" AND "SPIRAL COLUMN REINFORCING STEEL".

THE CONTRACTOR'S ATTENTION IS CALLED TO THE FACT THAT THE LONGITUDINAL REINFORCEMENT FOR THE DRILLED PIERS IS DETAILED WITH ONE METER OF EXTRA LENGTH.

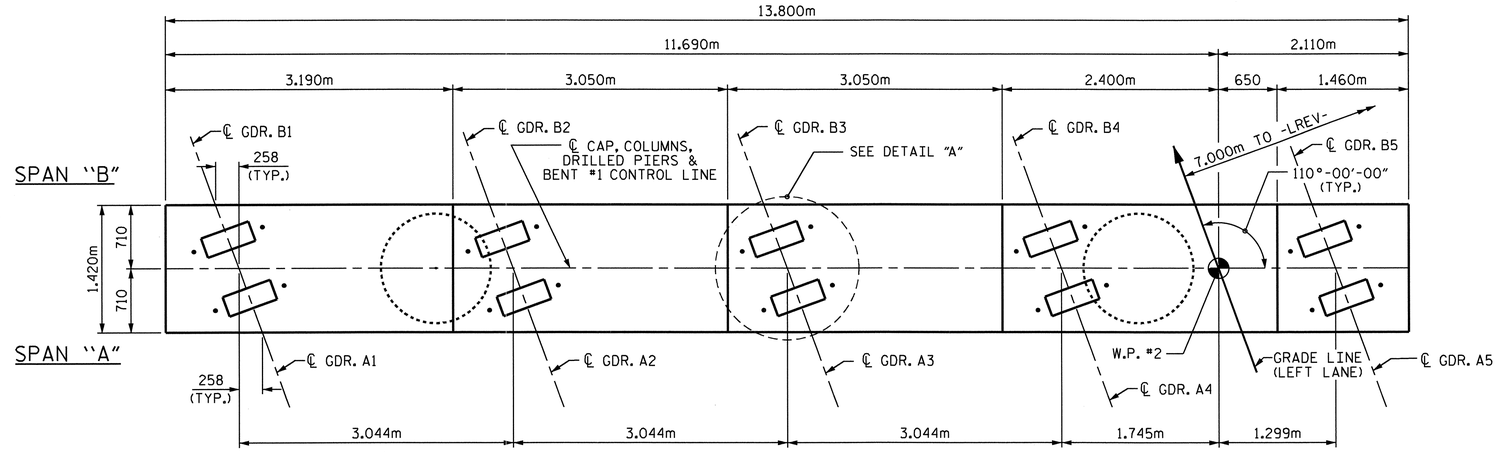

PLAN

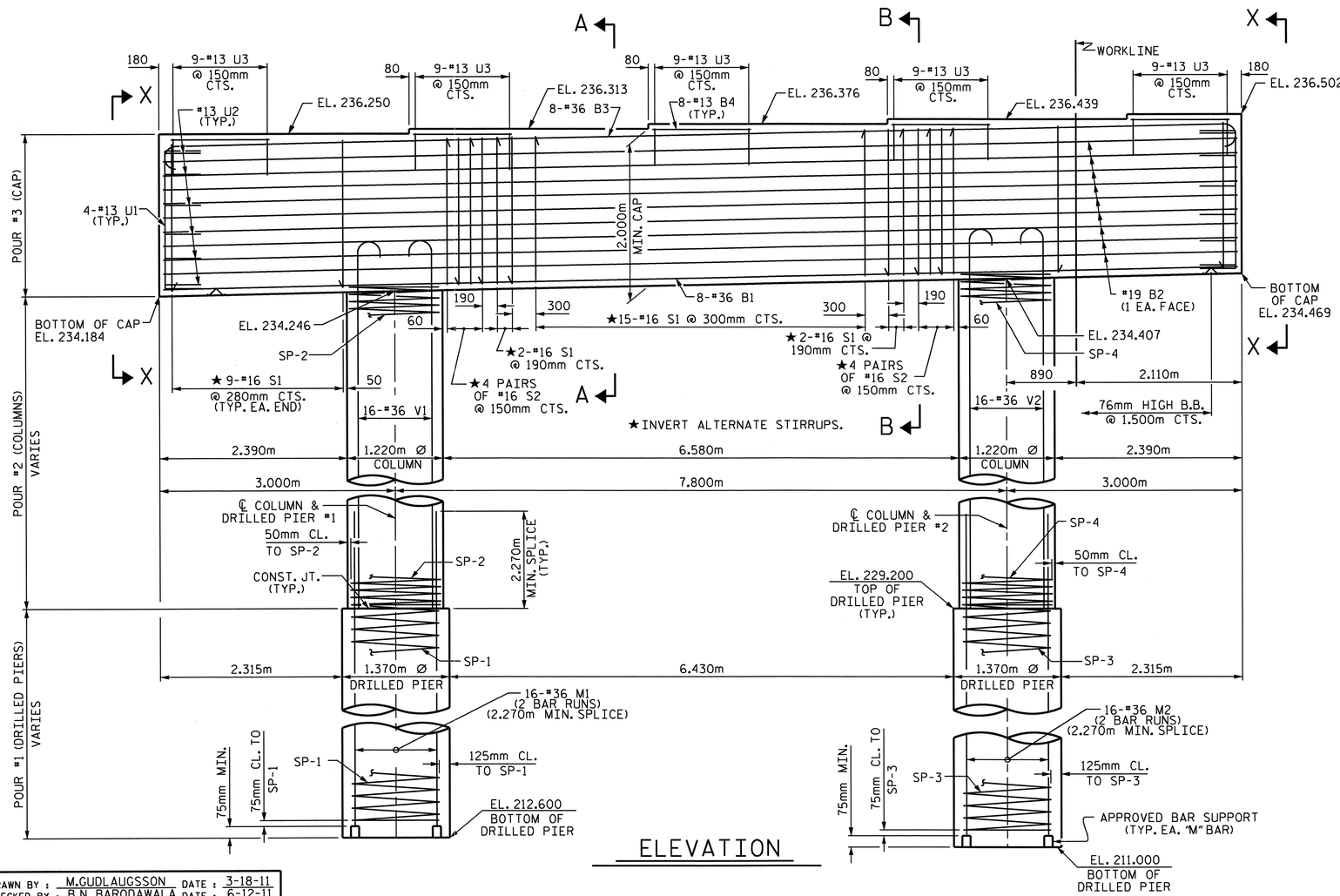

ELEVATION

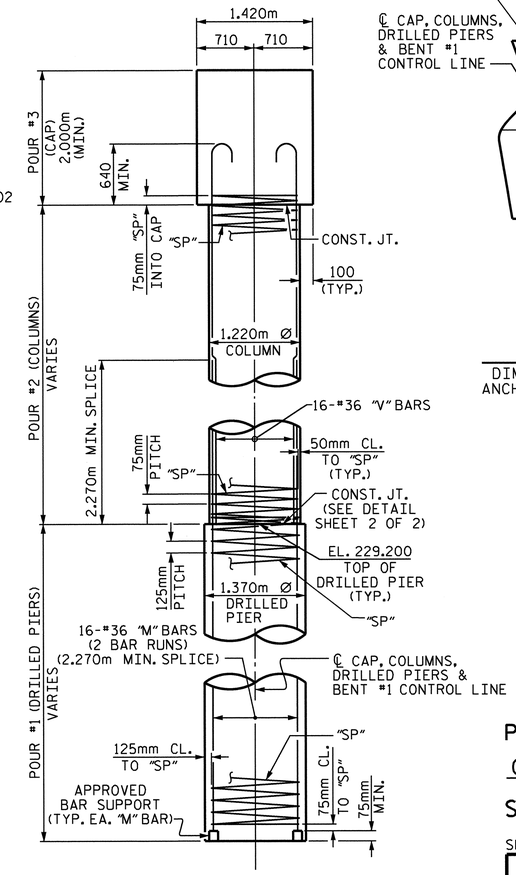

END ELEVATION

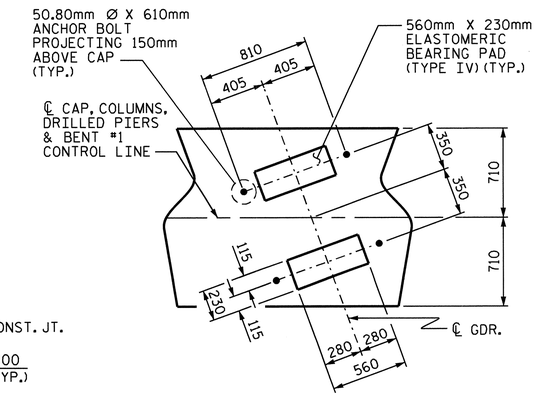

DETAIL "A"

DIMENSIONS FOR BRG. PADS AND ANCHOR BOLTS ARE TYP. EACH GDR.

PROJECT NO. R-2413C

GUILFORD-ROCKINGHAM COUNTY

STATION: 24+37.000 -LREV-

SHEET 1 OF 2

STATE OF NORTH CAROLINA
DEPARTMENT OF TRANSPORTATION
RALEIGH

SUBSTRUCTURE
BENT #1
(LEFT LANE)

NORTH CAROLINA PROFESSIONAL SEAL 022516 ENGINEER EMILY E. MURRAY

10/28/11

REVISIONS						SHEET NO.
NO.	BY:	DATE:	NO.	BY:	DATE:	S-56
1			3			TOTAL SHEETS
2			4			238

STR. #2

DRAWN BY : M.GUDLAUGSSON DATE : 3-18-11
CHECKED BY : B.N. BARODAWALA DATE : 6-12-11

19-OCT-2011 14:10
R:\TIPProjects-R\R2413c\Structures\FinalPlans\Str.#2\R-2413C_SD_B#_02.dgn
taverette

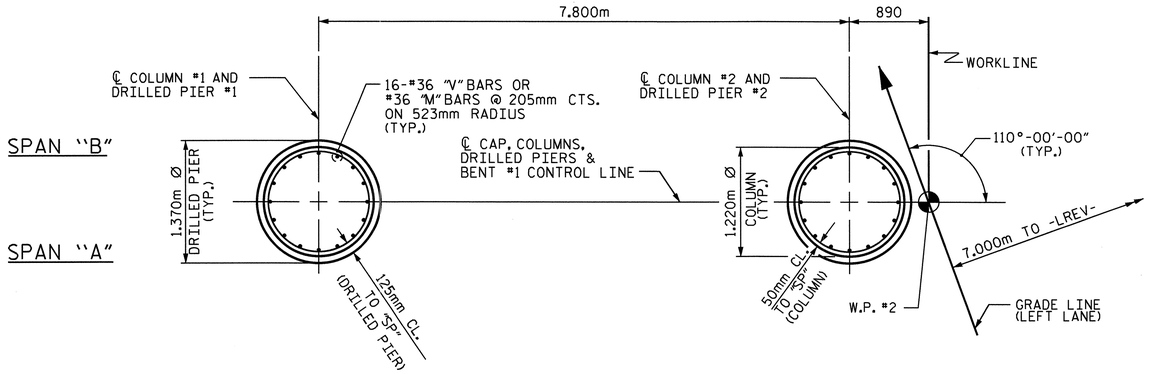

PLAN OF COLUMNS AND DRILLED PIERS

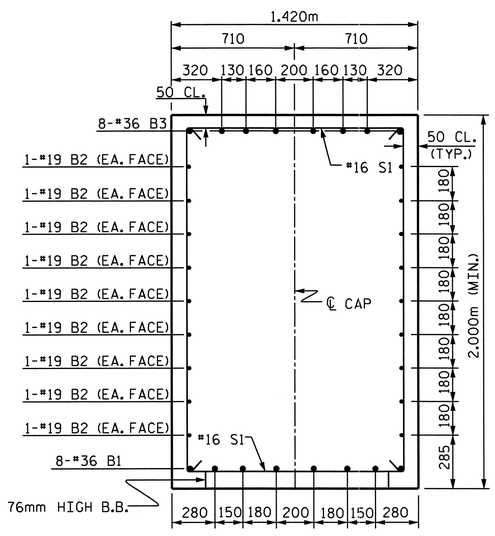

SECTION A-A

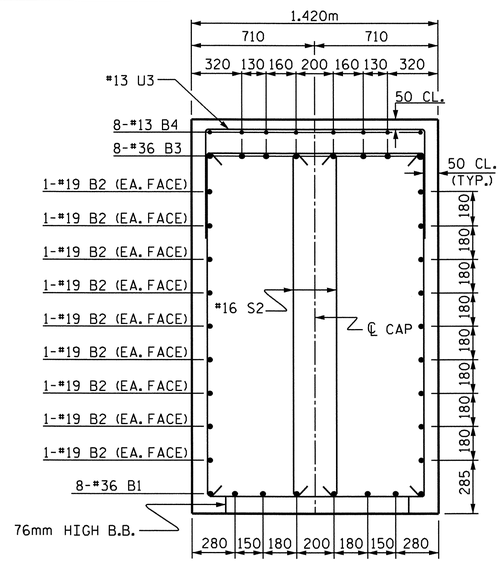

SECTION B-B

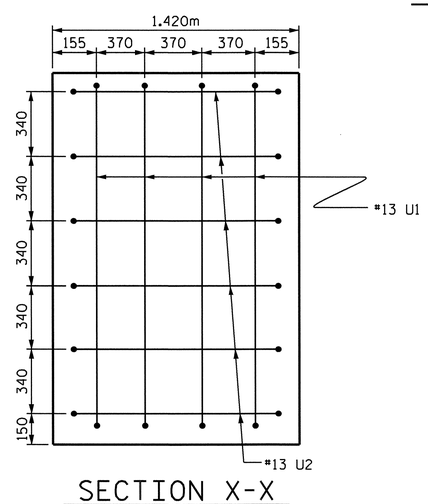

SECTION X-X

BAR TYPES

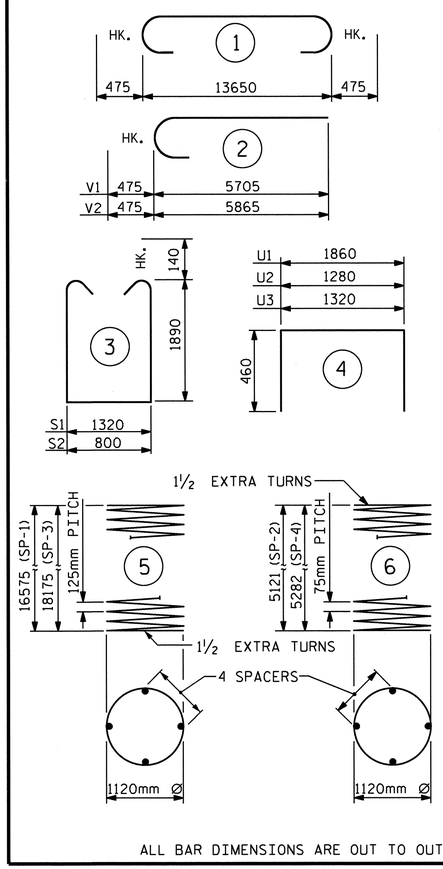

ALL BAR DIMENSIONS ARE OUT TO OUT.

BILL OF MATERIAL

BENT #1

BAR	NO.	SIZE	TYPE	LENGTH	WEIGHT
B1	8	#36	STR	13700	867
B2	18	#19	STR	13700	551
B3	8	#36	1	14600	924
B4	40	#13	STR	1260	50
M1	32	#36	STR	11040	2793
M2	32	#36	STR	11840	2996
S1	37	#16	3	5380	309
S2	16	#16	3	4860	121
U1	8	#13	4	2780	22
U2	12	#13	4	2200	26
U3	45	#13	4	2240	100
V1	16	#36	2	6180	782
V2	16	#36	2	6340	802

REINFORCING STEEL				kg	10343
SP-1	1	✱✱	5	465440	722
SP-2	1	✱✱✱	6	242800	241
SP-3	1	✱✱	5	509880	791
SP-4	1	✱✱✱	6	250260	249

SPIRAL COLUMN REINFORCING STEEL	kg	2003
DRILLED PIER CONCRETE		
POUR #1 (DRILLED PIERS)	m3	51.3
CLASS "A" CONCRETE BREAKDOWN		
POUR #2 (COLUMNS)	m3	12.0
POUR #3 (CAP)	m3	39.8
TOTAL CLASS "A" CONCRETE	m3	51.8
1370mm Ø DRILLED PIERS		34.8m
PERM. STEEL CASING FOR 1370mm Ø DRILLED PIERS		10.4m
SID INSPECTION		1 EACH
CSL TUBES		145.2m

✱✱✱ THE SP-2 & SP-4 SPIRAL REINFORCING STEEL SHALL BE W20 OR D-20 COLD DRAWN WIRE OR #13 PLAIN OR DEFORMED BAR.

✱✱ THE SP-1 & SP-3 SPIRAL REINFORCING STEEL SHALL BE W31 OR D-31 COLD DRAWN WIRE OR #16 PLAIN OR DEFORMED BAR.

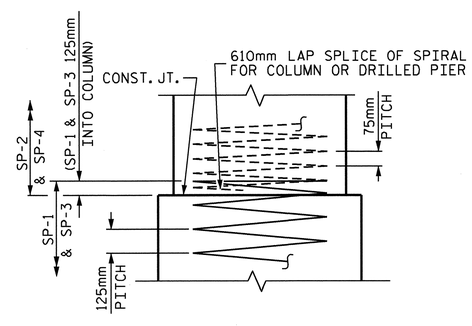

CONSTRUCTION JOINT DETAIL

PROJECT NO. R-2413C

GUILFORD-ROCKINGHAM COUNTY

STATION: 24+37.000 -LREV-

SHEET 2 OF 2

STATE OF NORTH CAROLINA
DEPARTMENT OF TRANSPORTATION
RALEIGH

SUBSTRUCTURE
BENT #1
(LEFT LANE)

NORTH CAROLINA PROFESSIONAL SEAL 022516 ENGINEER EMILY E. MURRAY
10/28/11

REVISIONS						SHEET NO.
NO.	BY:	DATE:	NO.	BY:	DATE:	S-57
1			3			TOTAL SHEETS
2			4			238

STR. #2

DRAWN BY : M.GUDLAUGSSON DATE : 3-18-11
CHECKED BY : B.N. BARODAWALA DATE : 6-12-11

19-OCT-2011 14:10
R:\TIPProjects-R\R2413c\Structures\Final Plans\Str.#2\R-2413C_SD_B#_02.dgn
taverette

NOTES

STIRRUPS AND U1 BARS IN CAP MAY BE SHIFTED AS NECESSARY TO CLEAR ANCHOR BOLTS.

HOOKS ON "V" BARS MAY BE TURNED AS NECESSARY FOR PLACING REINFORCING STEEL.

ALL STEEL IN THE DRILLED PIERS IS INCLUDED IN THE PAY ITEMS FOR "REINFORCING STEEL" AND "SPIRAL COLUMN REINFORCING STEEL".

THE CONTRACTOR'S ATTENTION IS CALLED TO THE FACT THAT THE LONGITUDINAL REINFORCEMENT FOR THE DRILLED PIERS IS DETAILED WITH ONE METER OF EXTRA LENGTH.

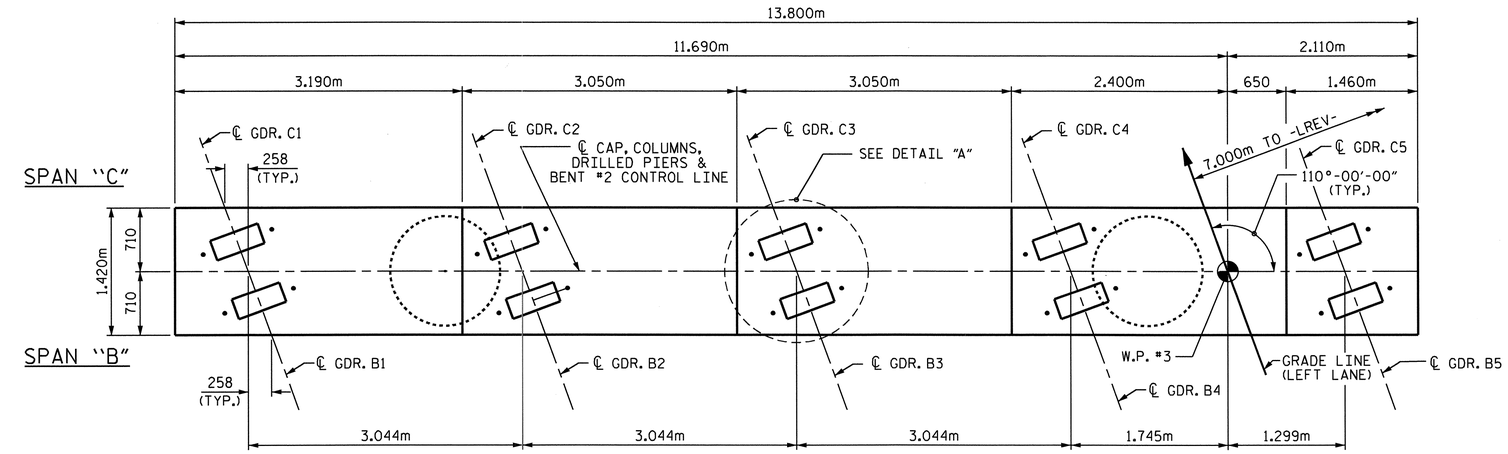

PLAN

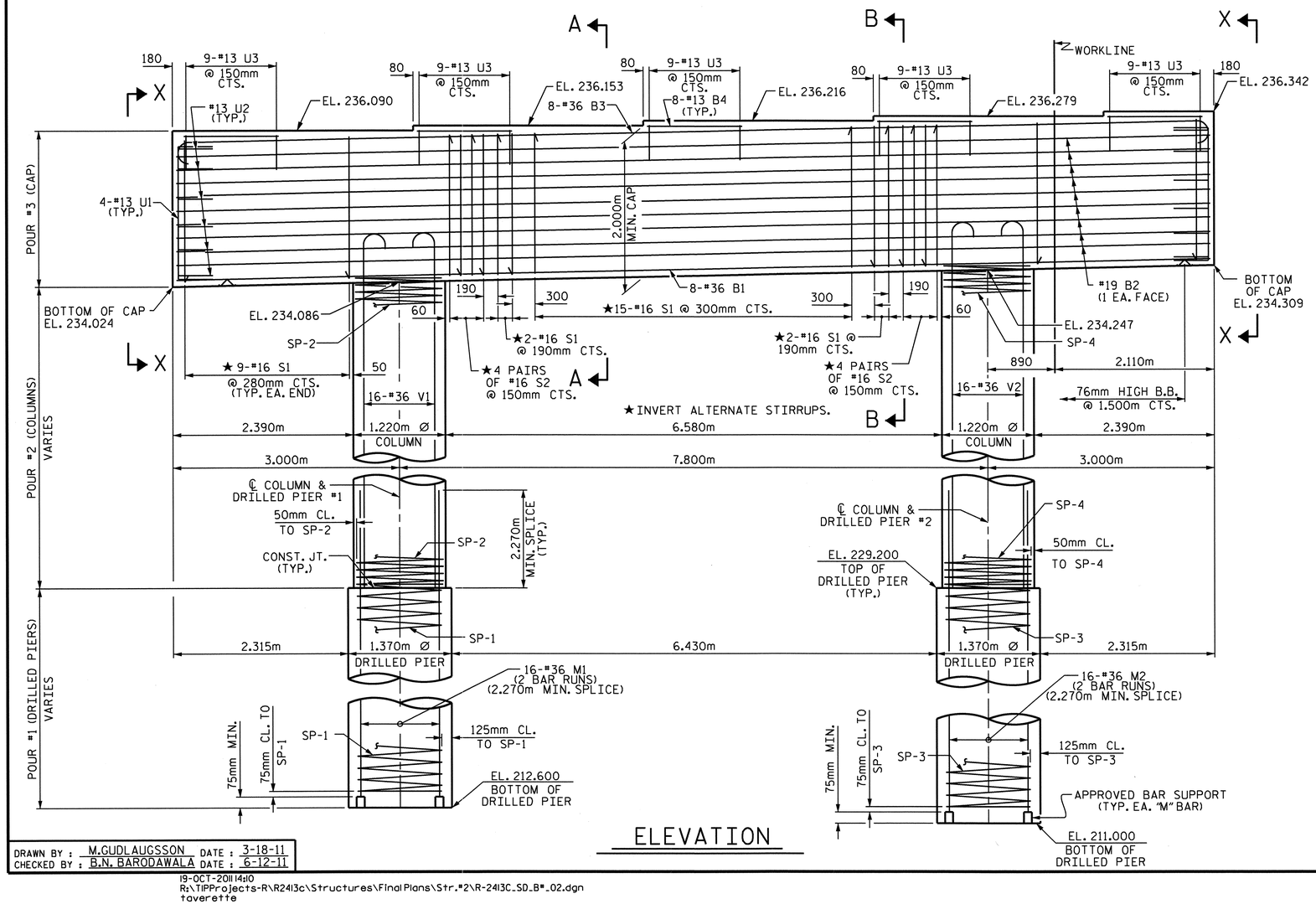

ELEVATION

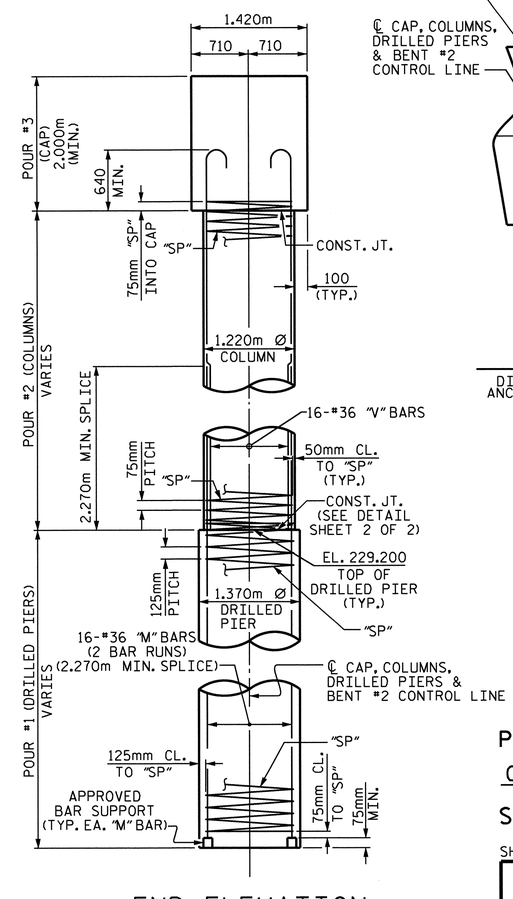

END ELEVATION

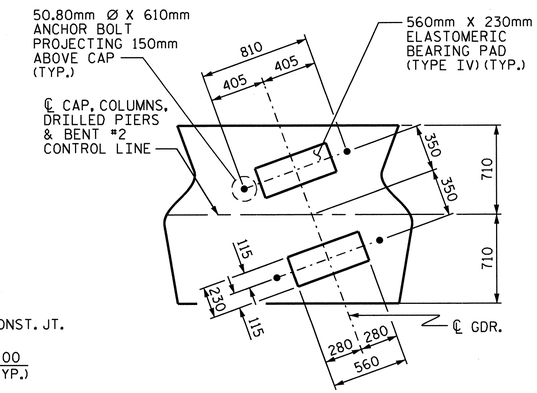

DETAIL "A"

DIMENSIONS FOR BRG. PADS AND ANCHOR BOLTS ARE TYP. EACH GDR.

PROJECT NO. R-2413C

GUILFORD-ROCKINGHAM COUNTY

STATION: 24+37.000 -LREV-

SHEET 1 OF 2

STATE OF NORTH CAROLINA
DEPARTMENT OF TRANSPORTATION
RALEIGH

SUBSTRUCTURE
BENT #2
(LEFT LANE)

NORTH CAROLINA PROFESSIONAL SEAL 022516 ENGINEER EMRY E. MURRAY

10/28/14

REVISIONS						SHEET NO.
NO.	BY:	DATE:	NO.	BY:	DATE:	S-58
1			3			TOTAL SHEETS
2			4			238

STR. #2

DRAWN BY : M.GUDLAUGSSON DATE : 3-18-11
CHECKED BY : B.N. BARODAWALA DATE : 6-12-11

19-OCT-2011 14:10
R:\TIPProjects-R\R2413c\Structures\Final Plans\Str.#2\R-2413C_SD_B*_02.dgn
taverette

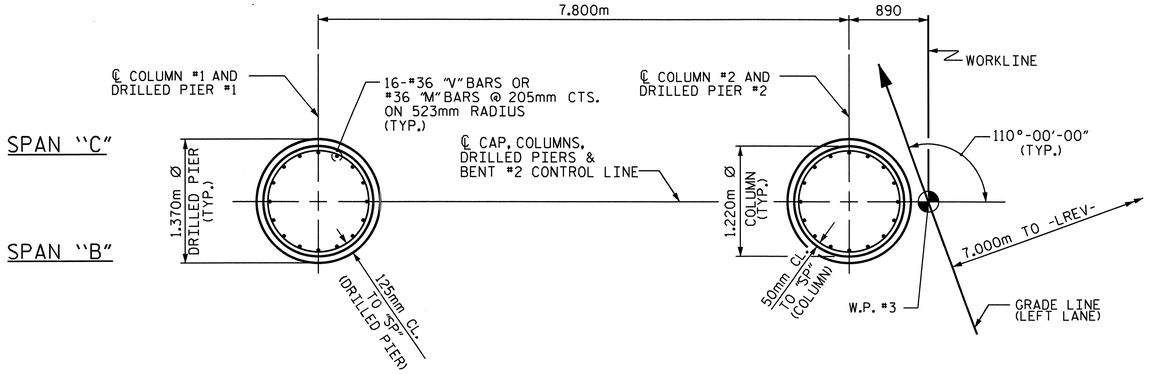

PLAN OF COLUMNS AND DRILLED PIERS

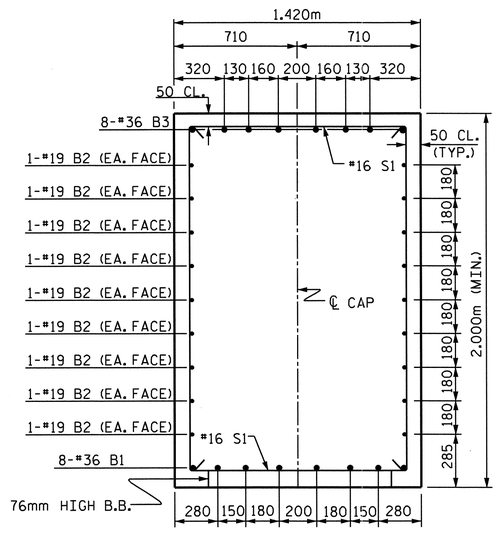

SECTION A-A

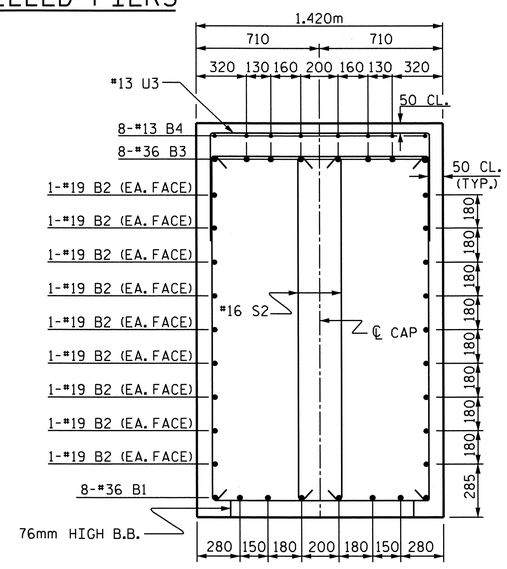

SECTION B-B

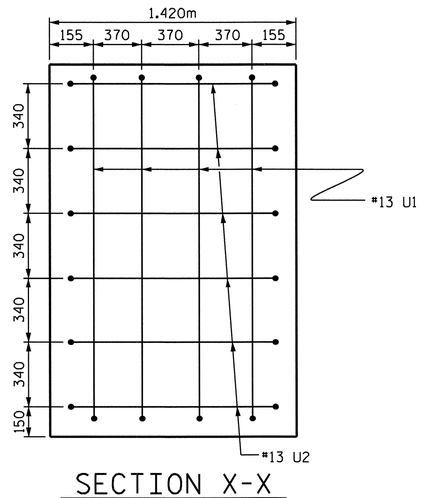

SECTION X-X

BAR TYPES

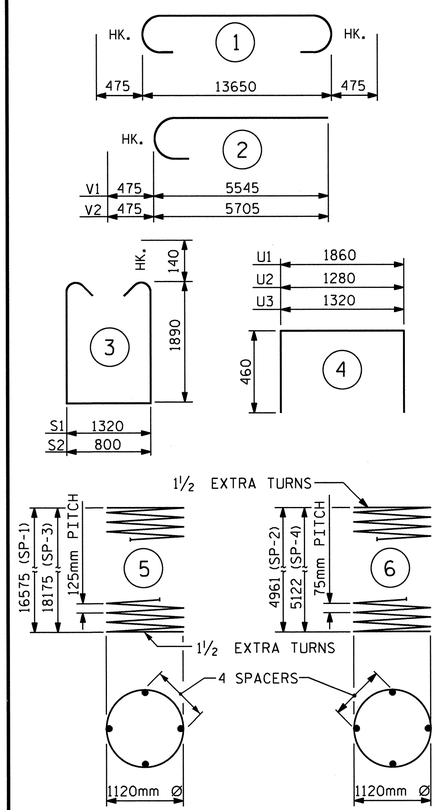

ALL BAR DIMENSIONS ARE OUT TO OUT.

BILL OF MATERIAL

BENT #2

BAR	NO.	SIZE	TYPE	LENGTH	WEIGHT
B1	8	#36	STR	13700	867
B2	18	#19	STR	13700	551
B3	8	#36	1	14600	924
B4	40	#13	STR	1260	50
M1	32	#36	STR	11040	2793
M2	32	#36	STR	11840	2996
S1	37	#16	3	5380	309
S2	16	#16	3	4860	121
U1	8	#13	4	2780	22
U2	12	#13	4	2200	26
U3	45	#13	4	2240	100
V1	16	#36	2	6020	762
V2	16	#36	2	6180	782

REINFORCING STEEL				kg	10303
SP-1	1	✱✱	5	465440	722
SP-2	1	✱✱✱	6	235380	234
SP-3	1	✱✱	5	509880	791
SP-4	1	✱✱✱	6	242840	241

SPIRAL COLUMN REINFORCING STEEL	kg	1988
DRILLED PIER CONCRETE		
POUR #1 (DRILLED PIERS)	m3	51.3
CLASS "A" CONCRETE BREAKDOWN		
POUR #2 (COLUMNS)	m3	11.6
POUR #3 (CAP)	m3	39.8
TOTAL CLASS "A" CONCRETE	m3	51.4
1370mm Ø DRILLED PIERS		34.8m
PERM. STEEL CASING FOR 1370mm Ø DRILLED PIERS		10.4m
SID INSPECTION		1 EACH
CSL TUBES		145.2m

✱✱✱ THE SP-2 & SP-4 SPIRAL REINFORCING STEEL SHALL BE W20 OR D-20 COLD DRAWN WIRE OR #13 PLAIN OR DEFORMED BAR.

✱✱ THE SP-1 & SP-3 SPIRAL REINFORCING STEEL SHALL BE W31 OR D-31 COLD DRAWN WIRE OR #16 PLAIN OR DEFORMED BAR.

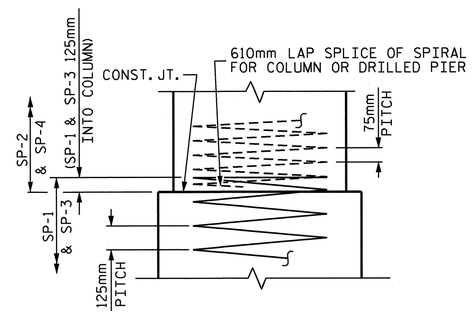

CONSTRUCTION JOINT DETAIL

PROJECT NO. R-2413C

GUILFORD-ROCKINGHAM COUNTY

STATION: 24+37.000 -LREV-

SHEET 2 OF 2

STATE OF NORTH CAROLINA
DEPARTMENT OF TRANSPORTATION
RALEIGH

SUBSTRUCTURE

BENT #2
(LEFT LANE)

NORTH CAROLINA PROFESSIONAL SEAL 022516 ENGINEER LEMAY E. MURRAY
6/28/11

REVISIONS						SHEET NO.
NO.	BY:	DATE:	NO.	BY:	DATE:	S-59
1			3			TOTAL SHEETS
2			4			238

STR. #2

DRAWN BY : M.GUDLAUGSSON DATE : 3-18-11
CHECKED BY : B.N. BARODAWALA DATE : 6-12-11

19-OCT-2011 14:10
R:\TIPProjects-R\R2413c\Structures\Final Plans\Str.#2\R-2413C_SD_B#_02.dgn
taverette

NOTES

STIRRUPS AND U1 BARS IN CAP MAY BE SHIFTED AS NECESSARY TO CLEAR ANCHOR BOLTS.

HOOKS ON "V" BARS MAY BE TURNED AS NECESSARY FOR PLACING REINFORCING STEEL.

ALL STEEL IN THE DRILLED PIERS IS INCLUDED IN THE PAY ITEMS FOR "REINFORCING STEEL" AND "SPIRAL COLUMN REINFORCING STEEL".

THE CONTRACTOR'S ATTENTION IS CALLED TO THE FACT THAT THE LONGITUDINAL REINFORCEMENT FOR THE DRILLED PIERS IS DETAILED WITH ONE METER OF EXTRA LENGTH.

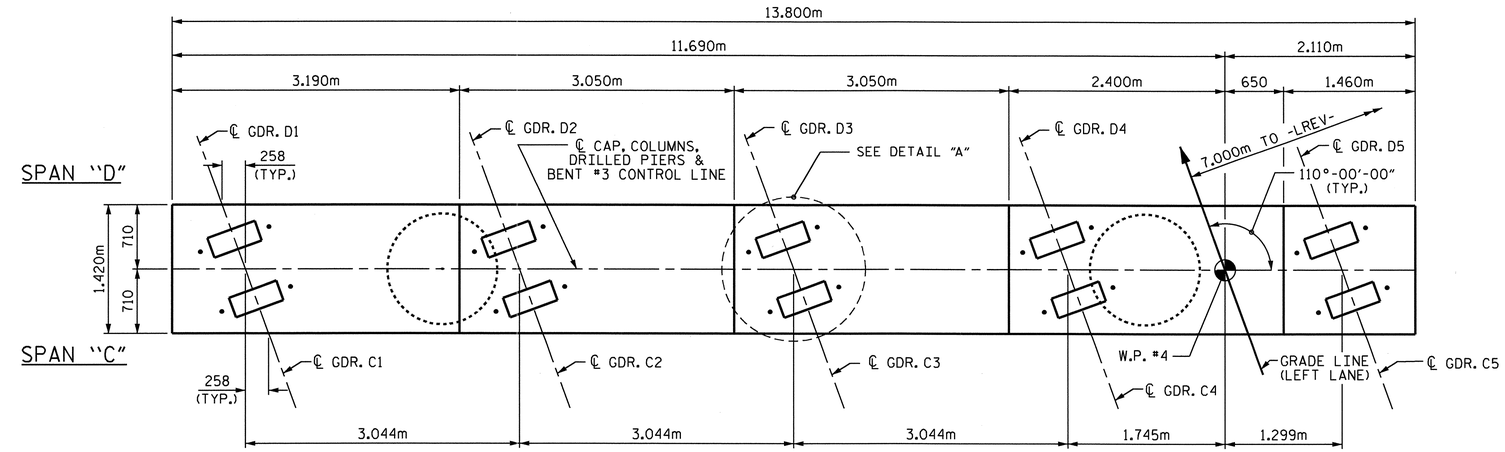

PLAN

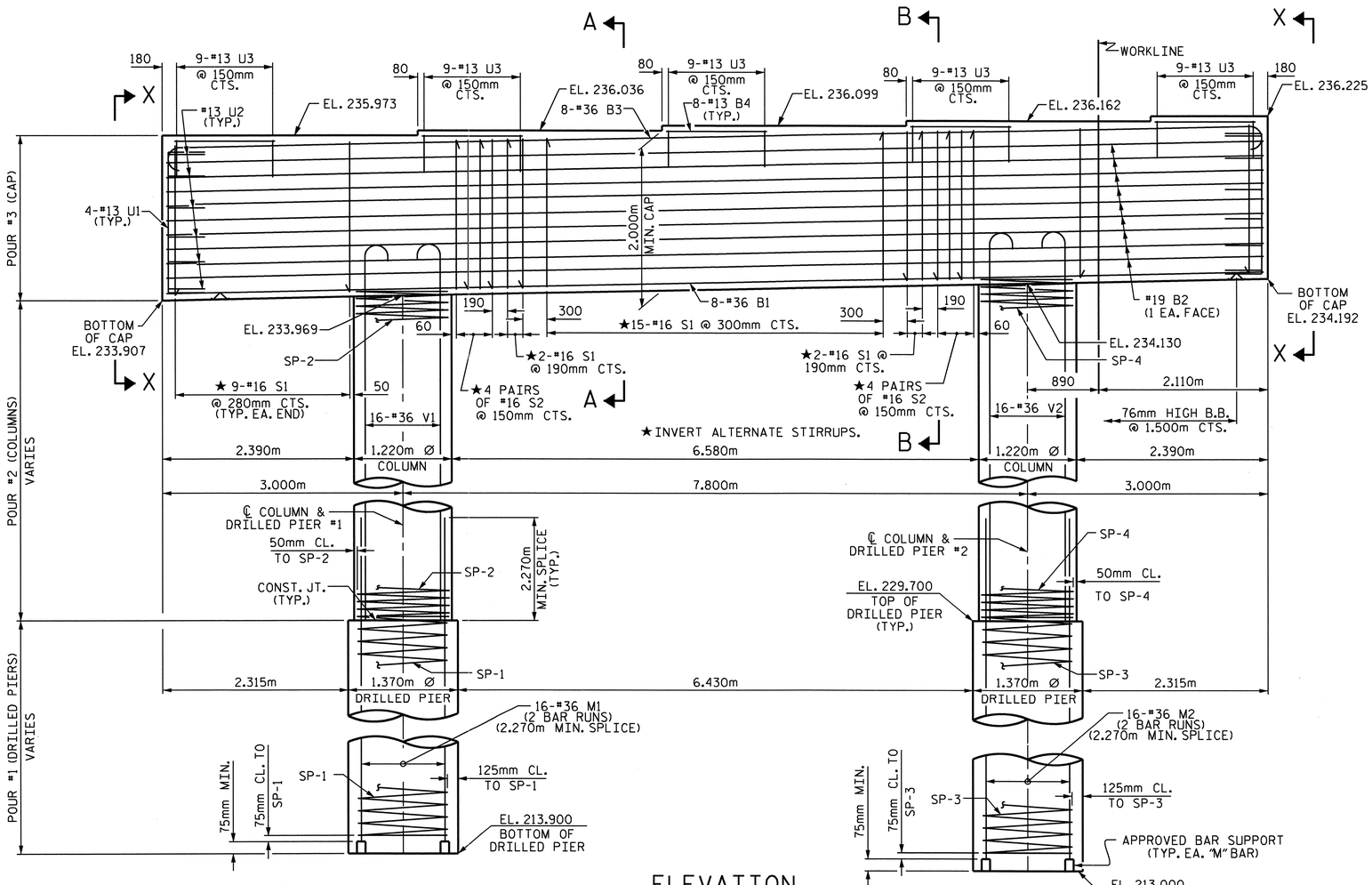

ELEVATION

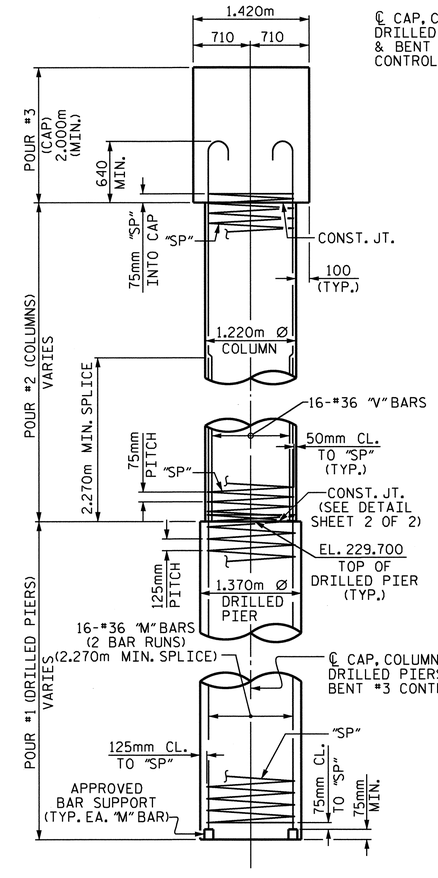

END ELEVATION

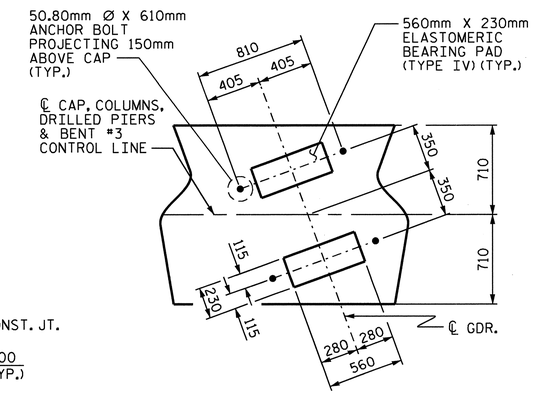

DETAIL "A"

DIMENSIONS FOR BRG. PADS AND ANCHOR BOLTS ARE TYP. EACH GDR.

PROJECT NO. R-2413C

GUILFORD-ROCKINGHAM COUNTY

STATION: 24+37.000 -LREV-

SHEET 1 OF 2

STATE OF NORTH CAROLINA
DEPARTMENT OF TRANSPORTATION
RALEIGH

SUBSTRUCTURE
BENT #3
(LEFT LANE)

NORTH CAROLINA PROFESSIONAL SEAL 022516 ENGINEER EMILY E. MURRAY

10/28/11

REVISIONS								SHEET NO.
NO.	BY:	DATE:	NO.	BY:	DATE:			S-60
1			3					TOTAL SHEETS
2			4					238

STR. #2

DRAWN BY : M.GUDLAUGSSON DATE : 3-18-11
CHECKED BY : B.N. BARODAWALA DATE : 6-12-11

19-OCT-2011 14:11
R:\TIPProjects-R\R2413c\Structures\Final Plans\Str.#2\R-2413C_SD_B#_02.dgn
taverette

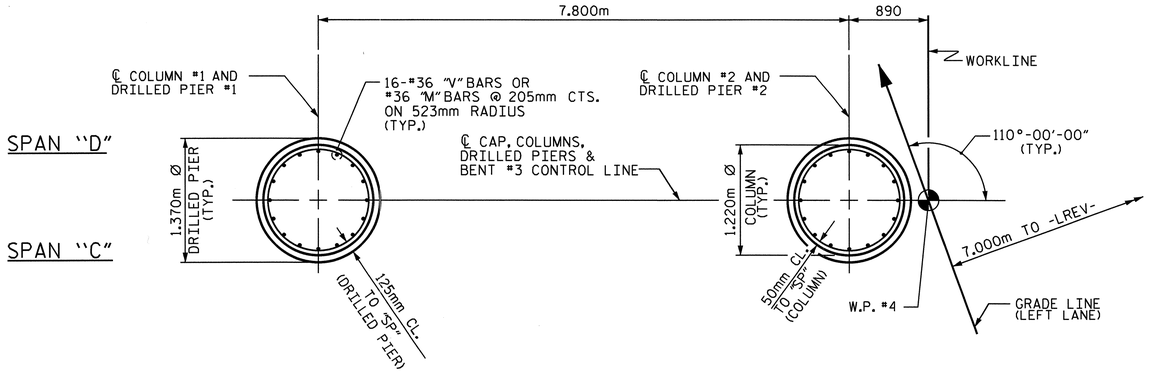

PLAN OF COLUMNS AND DRILLED PIERS

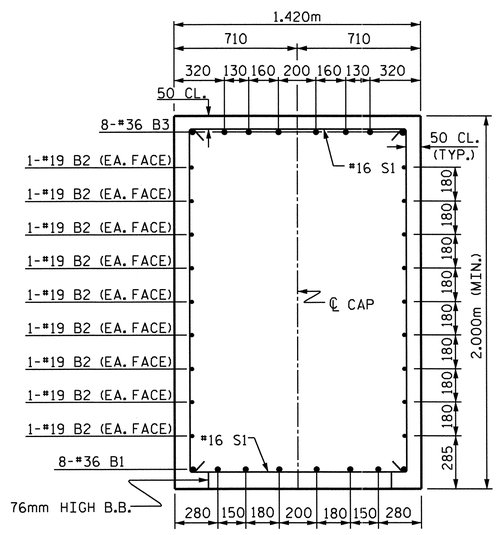

SECTION A-A

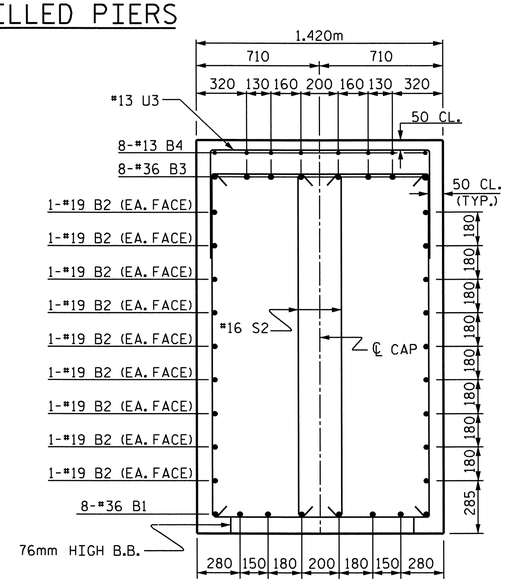

SECTION B-B

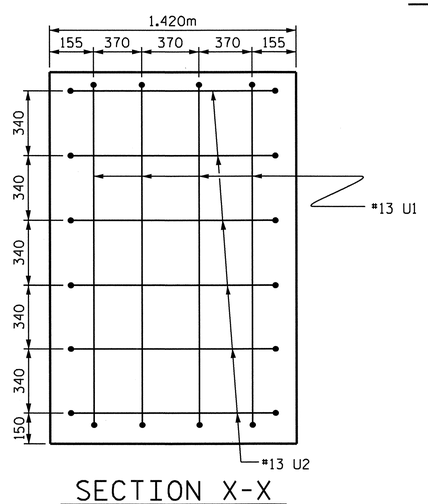

SECTION X-X

BAR TYPES

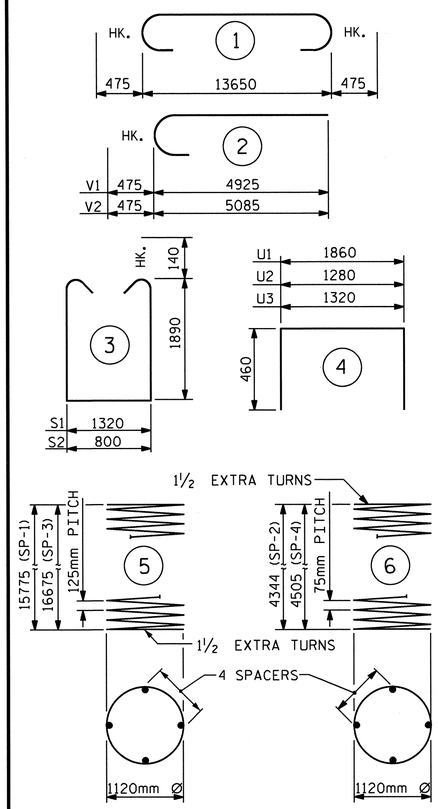

ALL BAR DIMENSIONS ARE OUT TO OUT.

BILL OF MATERIAL

BENT #3

BAR	NO.	SIZE	TYPE	LENGTH	WEIGHT
B1	8	#36	STR	13700	867
B2	18	#19	STR	13700	551
B3	8	#36	1	14600	924
B4	40	#13	STR	1260	50
M1	32	#36	STR	10640	2692
M2	32	#36	STR	11100	2809
S1	37	#16	3	5380	309
S2	16	#16	3	4860	121
U1	8	#13	4	2780	22
U2	12	#13	4	2200	26
U3	45	#13	4	2240	100
V1	16	#36	2	5400	683
V2	16	#36	2	5560	703

REINFORCING STEEL				kg	9857
SP-1	1	✱✱	5	443240	688
SP-2	1	✱✱✱	6	206760	206
SP-3	1	✱✱	5	468220	727
SP-4	1	✱✱✱	6	214220	213

SPIRAL COLUMN REINFORCING STEEL	kg	1834
DRILLED PIER CONCRETE		
POUR #1 (DRILLED PIERS)	m3	47.9
CLASS "A" CONCRETE BREAKDOWN		
POUR #2 (COLUMNS)	m3	10.2
POUR #3 (CAP)	m3	39.8
TOTAL CLASS "A" CONCRETE	m3	50.0
1370mm Ø DRILLED PIERS		32.5m
SID INSPECTION		1 EACH
CSL TUBES		136.0m

✱✱✱ THE SP-2 & SP-4 SPIRAL REINFORCING STEEL SHALL BE W20 OR D-20 COLD DRAWN WIRE OR #13 PLAIN OR DEFORMED BAR.

✱✱ THE SP-1 & SP-3 SPIRAL REINFORCING STEEL SHALL BE W31 OR D-31 COLD DRAWN WIRE OR #16 PLAIN OR DEFORMED BAR.

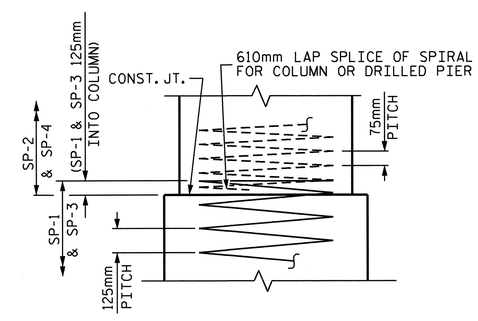

CONSTRUCTION JOINT DETAIL

PROJECT NO. R-2413C

GUILFORD-ROCKINGHAM COUNTY

STATION: 24+37.000 -LREV-

SHEET 2 OF 2

STATE OF NORTH CAROLINA
DEPARTMENT OF TRANSPORTATION
RALEIGH

SUBSTRUCTURE
BENT #3
(LEFT LANE)

NORTH CAROLINA PROFESSIONAL SEAL 022516 ENGINEER EMILY E. MURRAY
10/28/11

REVISIONS						SHEET NO.
NO.	BY:	DATE:	NO.	BY:	DATE:	S-61
1			3			TOTAL SHEETS
2			4			238

STR. #2

DRAWN BY : M.GUDLAUGSSON DATE : 3-18-11
CHECKED BY : B.N. BARODAWALA DATE : 6-12-11

19-OCT-2011 14:11
R:\TIPProjects-R\R2413c\Structures\Final Plans\Str.#2\R-2413C_SD_B#_02.dgn
taverette

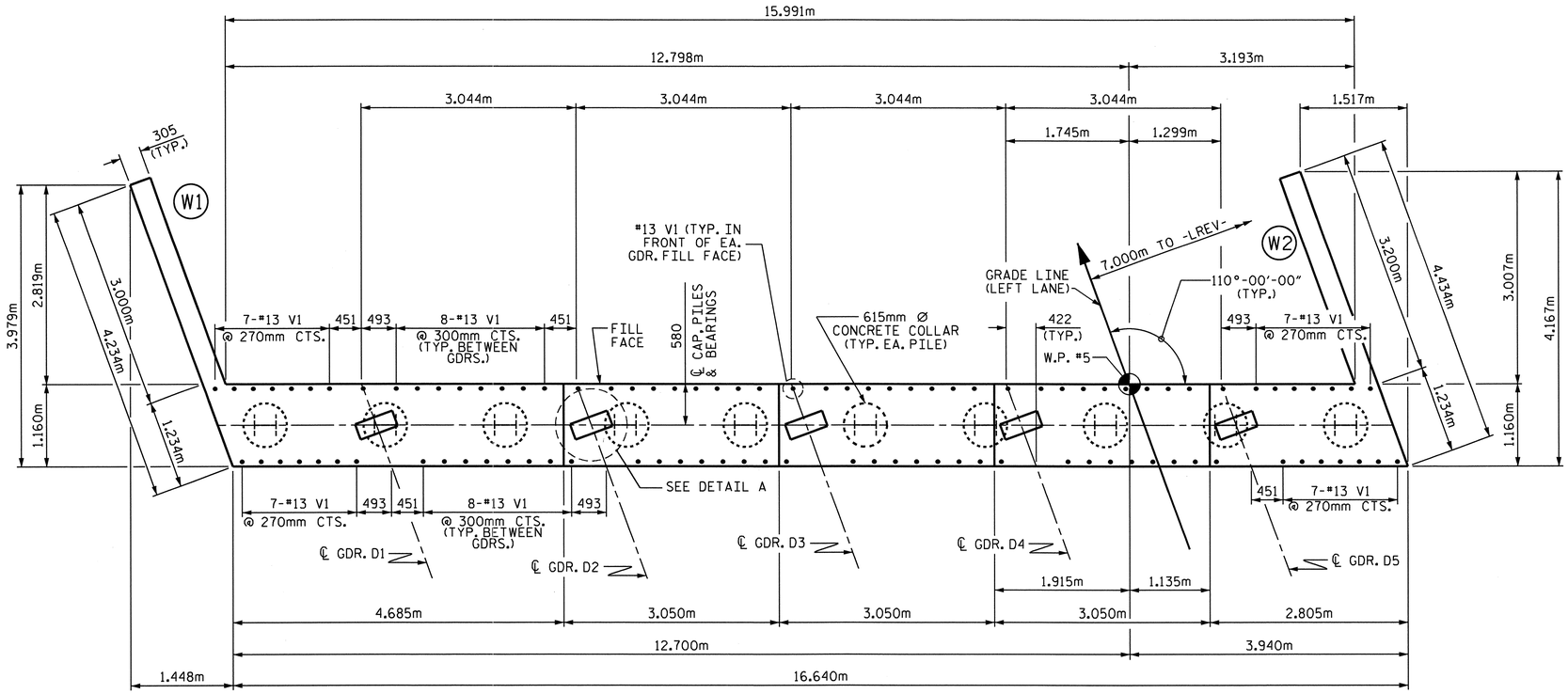

PLAN

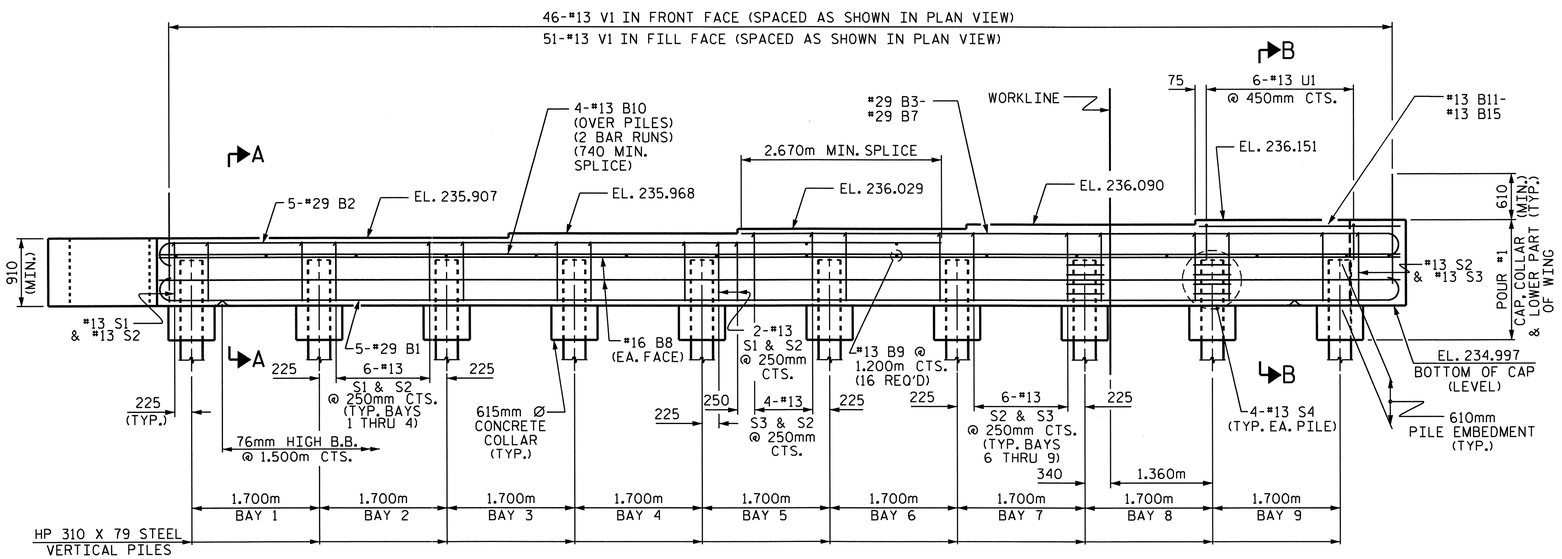

ELEVATION

NOTES:

THE CONTRACTOR SHALL PROVIDE FOR INSTALLATION OF THE 102mm DIAMETER DRAIN PIPE THROUGH THE WING WALL AS REQUIRED FOR REINFORCED BRIDGE APPROACH FILLS, SEE THE ROADWAY PLANS. REINFORCING STEEL IN THE WING WALL MAY BE SHIFTED AS NECESSARY TO CLEAR THE DRAIN PIPE.

THE TOP SURFACE OF THE END BENT CAP AND WINGS, EXCLUDING THE OUTSIDE 100mm AND THE BEARING AREA, SHALL BE RAKED TO A DEPTH OF 6mm.

STIRRUPS AND U1 BARS IN CAP MAY BE SHIFTED AS NECESSARY TO CLEAR #13 V1 BARS.

THE CONTRACTOR'S ATTENTION IS CALLED TO THE FACT THAT THE UPPER PART OF INTEGRAL END BENT AND WINGS ARE TO BE POURED WITH THE SUPERSTRUCTURE.

SEE SUPERSTRUCTURE SHEETS FOR UPPER PART OF INTEGRAL END BENT DETAIL.

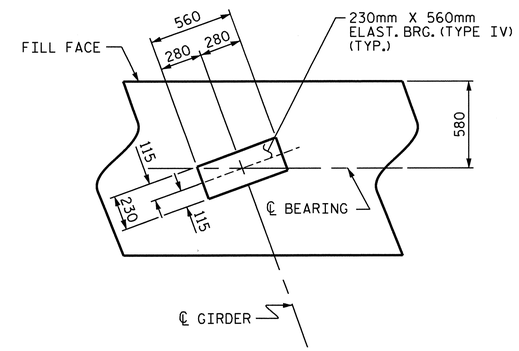

DETAIL A
(TYP. EA. GDR.)

PROJECT NO. R-2413C

GUILFORD-ROCKINGHAM COUNTY

STATION: 24+37.000 -LREV-

SHEET 1 OF 3

STATE OF NORTH CAROLINA
DEPARTMENT OF TRANSPORTATION
RALEIGH

SUBSTRUCTURE
INTEGRAL END BENT #2
(LEFT LANE)

NORTH CAROLINA PROFESSIONAL SEAL 022516 ENGINEER EMILY E. MURRAY
2/28/11

REVISIONS						SHEET NO.
NO.	BY:	DATE:	NO.	BY:	DATE:	S-62
1			3			TOTAL SHEETS
2			4			238

STR. #2

DRAWN BY : M.GUDLAUGSSON DATE : 01-19-11
CHECKED BY : T.L. AVERETTE DATE : 04-20-11

19-OCT-2011 14:11
R:\TIPProjects-R\R2413c\Structures\Final Plans\Str.#2\R-2413C_SD_E#_02.dgn
taverette

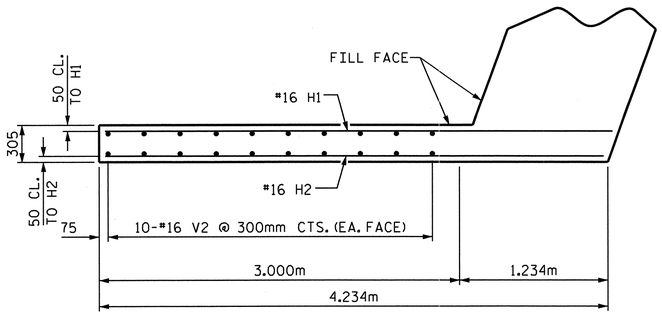

PLAN OF LEFT WING (W1)

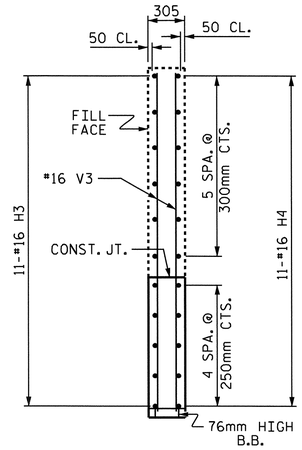

SECTION Y-Y

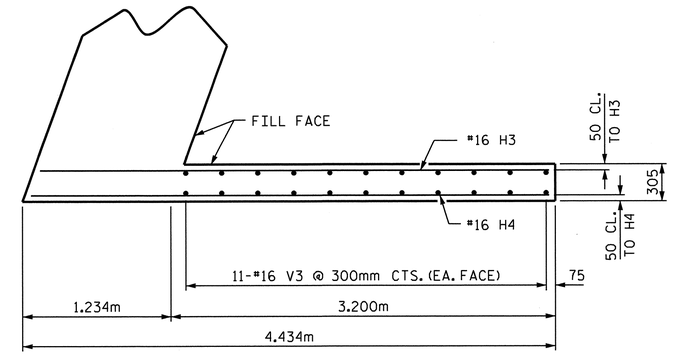

PLAN OF RIGHT WING (W2)

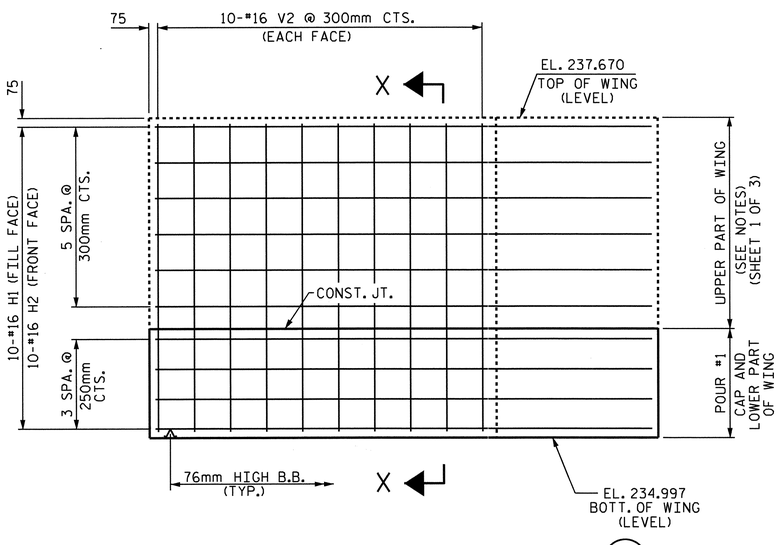

ELEVATION OF LEFT WING (W1)

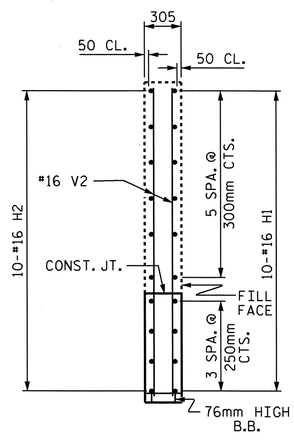

SECTION X-X

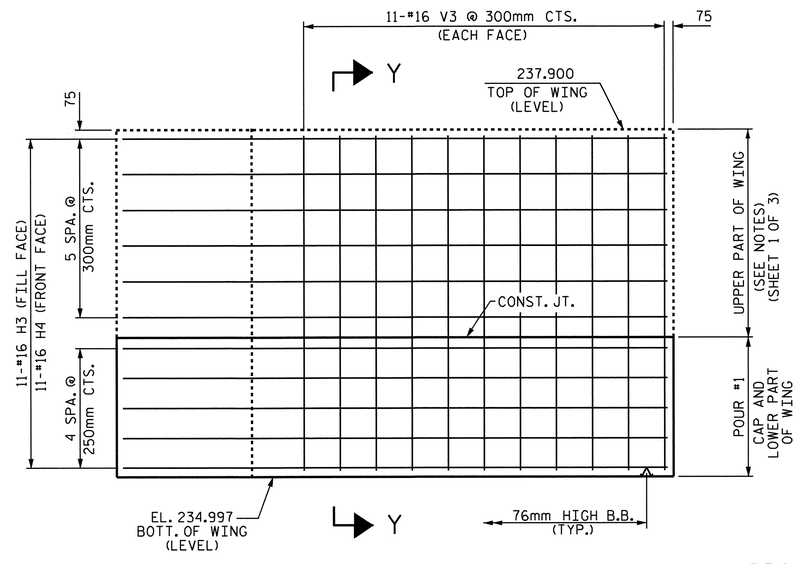

ELEVATION OF RIGHT WING (W2)

PROJECT NO. R-2413C

GUILFORD-ROCKINGHAM COUNTY

STATION: 24+37.000 -LREV-

SHEET 2 OF 3

STATE OF NORTH CAROLINA
DEPARTMENT OF TRANSPORTATION
RALEIGH

SUBSTRUCTURE

INTEGRAL
END BENT #2
(LEFT LANE)

NORTH CAROLINA PROFESSIONAL SEAL 022516 ENGINEER EMILY E. LAMBRAY
10/31/11

REVISIONS						SHEET NO.
NO.	BY:	DATE:	NO.	BY:	DATE:	S-63
1			3			TOTAL SHEETS
2			4			238

DRAWN BY : M.GUDLAUGSSON DATE : 01-19-11
CHECKED BY : T.L. AVERETTE DATE : 04-20-11

31-OCT-2011 14:34
R:\TIPProjects-R\R2413c\Structures\FinalPlans\Str.#2\R-2413C_SD_E*_02.dgn
taverette

STR. #2

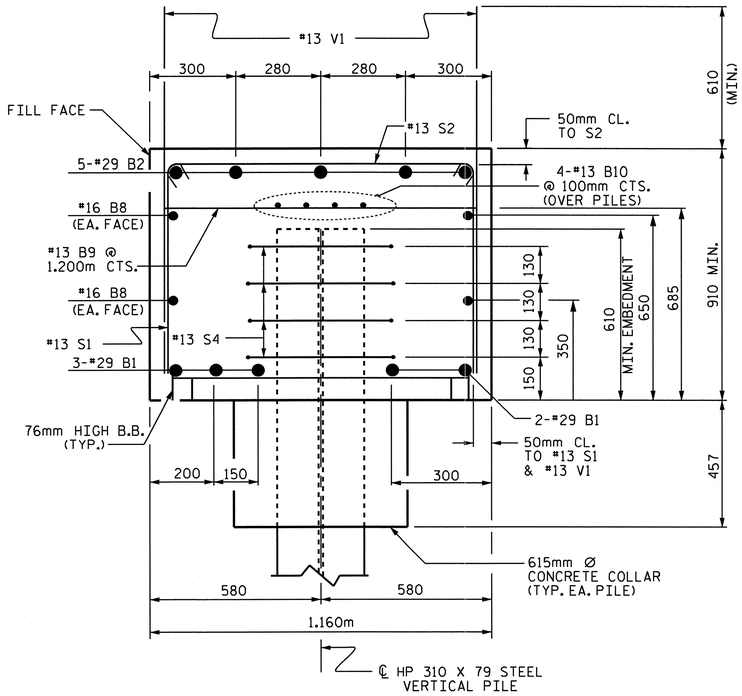

SECTION A-A

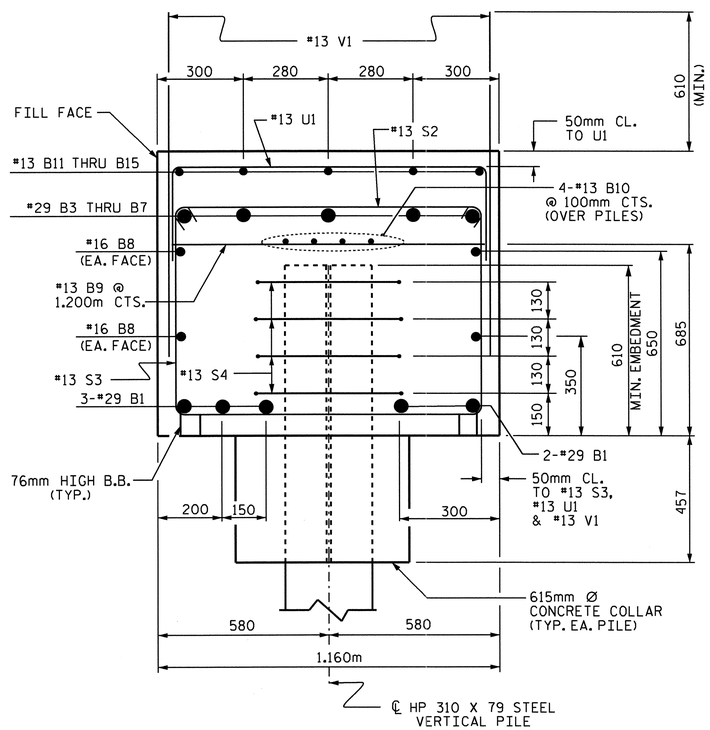

SECTION B-B

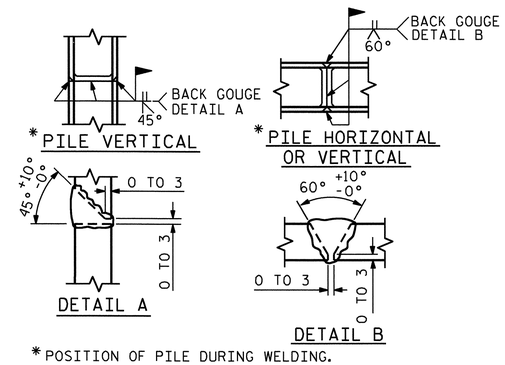

* POSITION OF PILE DURING WELDING.

PILE SPLICE DETAILS

BAR TYPES

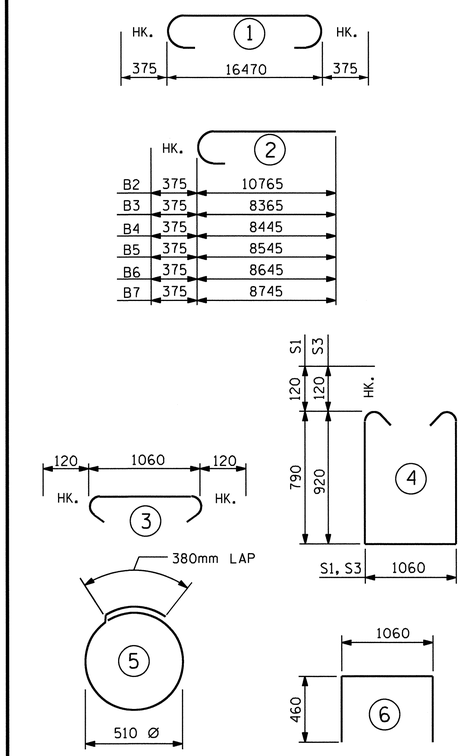

ALL BAR DIMENSIONS ARE OUT TO OUT.

BILL OF MATERIAL
END BENT #2

BAR	NO.	SIZE	TYPE	LENGTH	WEIGHT
B1	5	#29	1	17220	436
B2	5	#29	2	11140	282
B3	1	#29	2	8740	44
B4	1	#29	2	8820	45
B5	1	#29	2	8920	45
B6	1	#29	2	9020	46
B7	1	#29	2	9120	46
B8	4	#16	STR	16520	103
B9	16	#13	STR	1060	17
B10	8	#13	STR	8640	69
B11	1	#13	STR	2300	2
B12	1	#13	STR	2380	2
B13	1	#13	STR	2480	2
B14	1	#13	STR	2580	3
B15	1	#13	STR	2660	3
H1	10	#16	STR	4220	65
H2	10	#16	STR	4140	64
H3	11	#16	STR	4240	72
H4	11	#16	STR	4300	73
S1	27	#13	4	2880	77
S2	56	#13	3	1300	72
S3	29	#13	4	3140	91
S4	40	#13	5	1980	79
U1	6	#13	6	1980	12
V1	97	#13	STR	1460	141
V2	20	#16	STR	2560	79
V3	22	#16	STR	2800	96

REINFORCING STEEL = 2066 KG

CLASS A CONCRETE BREAKDOWN

POUR #1: (CAP, CONCRETE COLLAR & LOWER PART OF WINGS) 22.9 m3

TOTAL CONCRETE 22.9 m3

HP 310 X 79 STEEL PILES
NO. 10 183.0 METERS

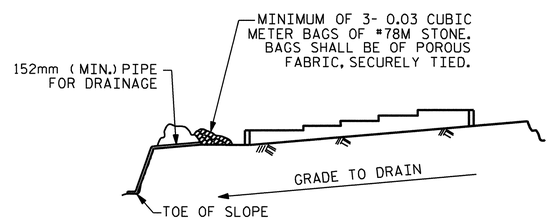

BAGGED STONE AND PIPE SHALL BE PLACED IMMEDIATELY AFTER COMPLETION OF END BENT EXCAVATION. PIPE MAY BE EITHER CONCRETE, CORRUGATED STEEL, CORRUGATED ALUMINUM ALLOY, OR CORRUGATED PLASTIC. PERFORATED PIPE WILL NOT BE ALLOWED.

BAGGED STONE SHALL REMAIN IN PLACE UNTIL THE ENGINEER DIRECTS THAT IT BE REMOVED. THE CONTRACTOR SHALL REMOVE AND DISPOSE OF SILT ACCUMULATIONS AT BAGGED STONE WHEN SO DIRECTED BY THE ENGINEER. BAGS SHALL BE REMOVED AND REPLACED WHENEVER THE ENGINEER DETERMINES THAT THEY HAVE DETERIORATED AND LOST THEIR EFFECTIVENESS.

NO SEPARATE PAYMENT WILL BE MADE FOR THIS WORK AND THE ENTIRE COST OF THIS WORK SHALL BE INCLUDED IN THE UNIT CONTRACT PRICE BID FOR THE SEVERAL PAY ITEMS.

TEMPORARY DRAINAGE AT END BENT

PROJECT NO. R-2413C
GUILFORD-ROCKINGHAM COUNTY
STATION: 24+37.000 -LREV-

SHEET 3 OF 3

STATE OF NORTH CAROLINA
DEPARTMENT OF TRANSPORTATION
RALEIGH

SUBSTRUCTURE
INTEGRAL
END BENT #2
(LEFT LANE)

NORTH CAROLINA PROFESSIONAL SEAL 022516 ENGINEER EMILY E. MURPHY
10/28/11

REVISIONS						SHEET NO.
NO.	BY:	DATE:	NO.	BY:	DATE:	S-64
1			3			TOTAL SHEETS
2			4			238

STR. #2

DRAWN BY : M.GUDLAUGSSON DATE : 01-19-11
CHECKED BY : T.L. AVERETTE DATE : 04-20-11

05-SEP-2011 11:15
Y:\Structures\Final Plans\Str.#2\R-2413C_SD_E*_02.dgn
mgudlaugsson

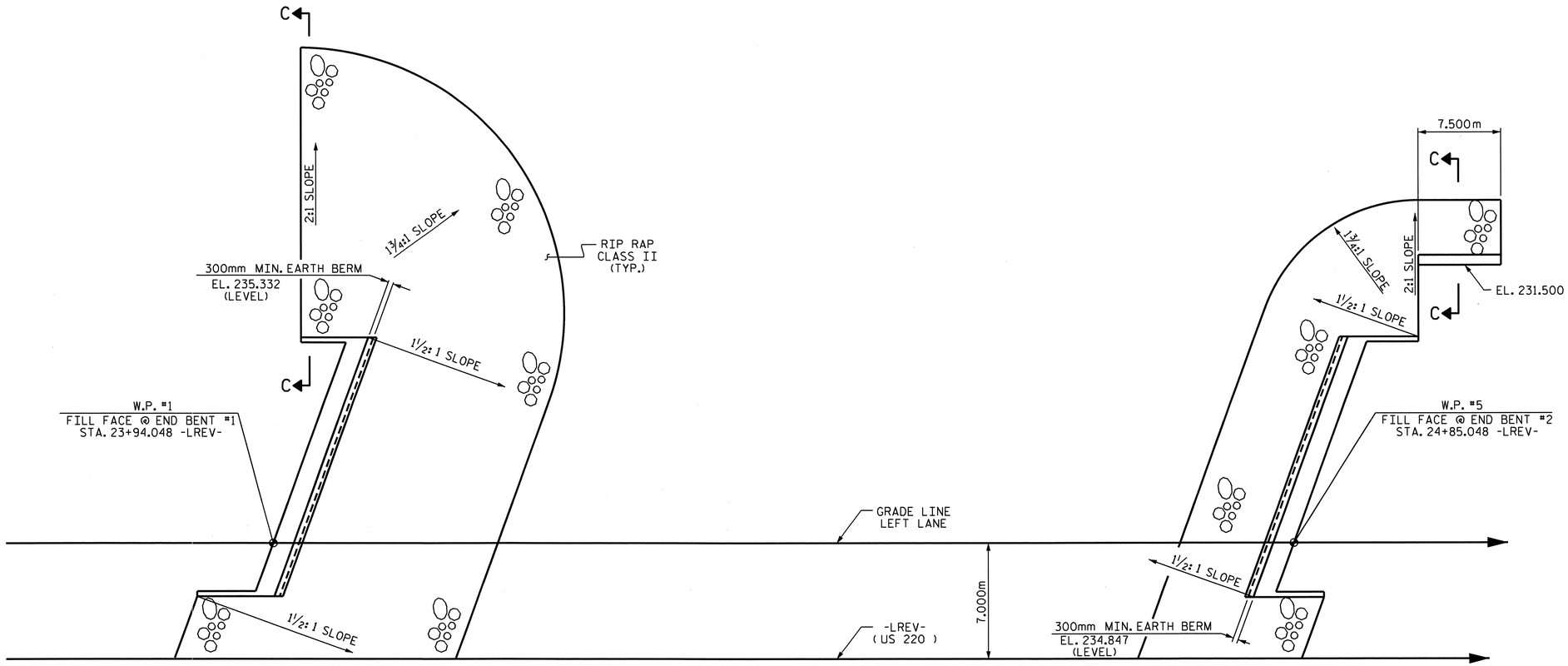

PLAN

ESTIMATED QUANTITIES		
BRIDGE AT STA. 24+37.000 -LREV- LEFT LANE	RIP RAP CLASS II	FILTER FABRIC FOR DRAINAGE
	METRIC TONS	SQUARE METERS
END BENT #1	641	654
END BENT #2	408	416

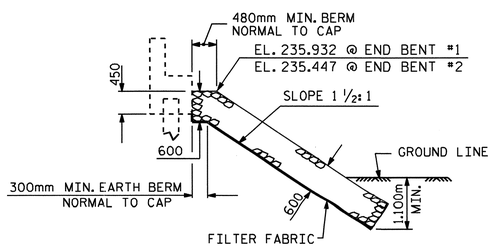

℄ SECTION

BERM RIP RAPPED

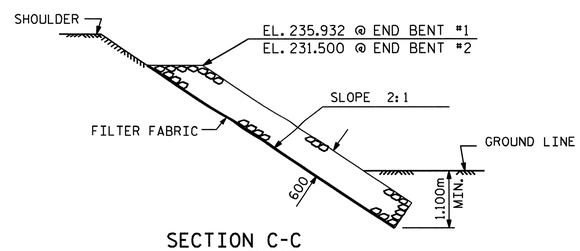

SECTION C-C

PROJECT NO. R-2413C

GUILFORD-ROCKINGHAM COUNTY

STATION: 24+37.000 -LREV-

STATE OF NORTH CAROLINA
DEPARTMENT OF TRANSPORTATION
RALEIGH

RIP RAP DETAILS

LEFT LANE

NORTH CAROLINA PROFESSIONAL SEAL 022516 ENGINEER EMILY E. MURRAY

10/28/11

REVISIONS						SHEET NO.
NO.	BY:	DATE:	NO.	BY:	DATE:	S-65
1			3			TOTAL SHEETS
2			4			238

DRAWN BY : PEGGY PARISI DATE : 5-19-11
CHECKED BY : MIKE PISO DATE : 6-10-11

19-OCT-2011 14:12
R:\TIPProjects-R\R2413c\Structures\FinalPlans\Str.#2\R2413C_sd_RR_02.dgn
taverette

STR. #2

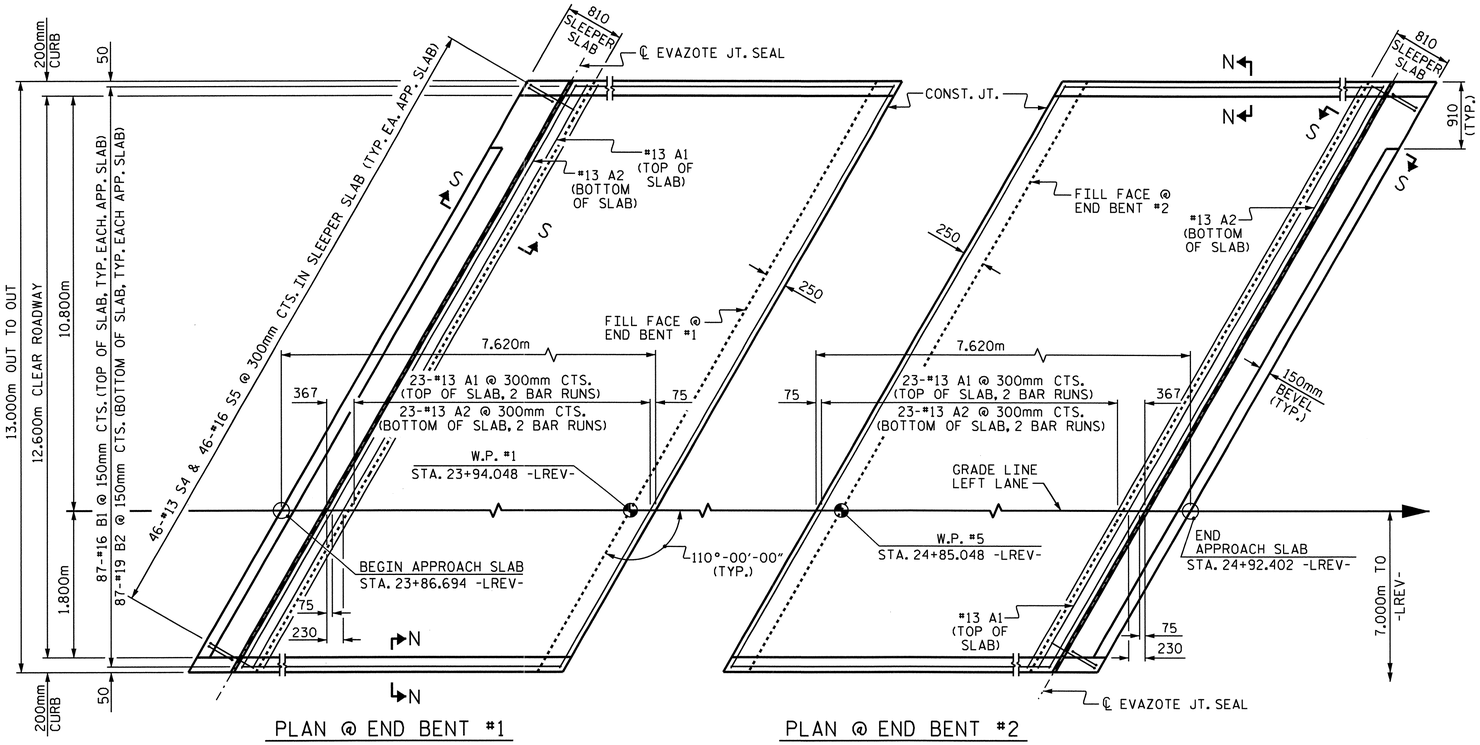

DIMENSIONS SHOWN ARE TYPICAL FOR BOTH APPROACH SLABS. #13 A1 BARS IN SLEEPER SLAB NOT SHOWN FOR CLARITY.

NOTES

APPROACH SLAB SHALL NOT BE CONSTRUCTED PRIOR TO COMPLETION OF THE BRIDGE DECK.

FOR REINFORCED BRIDGE APPROACH FILL INCLUDING FABRIC, IMPERMEABLE GEOMEMBRANE, 102mm Ø DRAINAGE PIPE, #78M STONE, AND SELECT MATERIAL, SEE ROADWAY PLANS.

AREA BETWEEN THE WINGWALL AND APPROACH SLAB SHALL BE GRADED TO DRAIN THE WATER AWAY FROM THE FILL FACE OF THE BRIDGE AND SHALL BE PAVED. SEE ROADWAY PLANS.

THE 150mm COMP. A.B.C. SHALL BE FLUSH WITH THE SLEEPER SLAB AND SHALL EXTEND 300mm OUTSIDE OF EACH EDGE OF THE APPROACH SLAB.

THE CONTRACTOR MAY USE 100mm TYPE B-25.0B ASPHALT CONCRETE BASE COURSE IN LIEU OF 150mm COMP. A.B.C. IF THIS OPTION IS USED, THE BASE COURSE SHALL BE FLUSH WITH THE SLEEPER SLAB, AND THE WIDTH SHALL BE THE SAME AS THAT OF THE APPROACH SLAB.

THE CONTRACTOR MAY USE 125mm CLASS "A" CONCRETE BASE IN LIEU OF 150mm COMP. A.B.C. IF THIS OPTION IS USED, THE CONCRETE BASE SHALL BE FLUSH WITH THE SLEEPER SLAB, AND THE WIDTH SHALL BE THE SAME AS THAT OF THE APPROACH SLAB. THE CONCRETE SHALL BE FINISHED TO A SMOOTH SURFACE AND A LAYER OF 13.6 kg ROOFING FELT SHALL BE PLACED BETWEEN THE CONCRETE BASE AND THE APPROACH SLAB TO PREVENT BOND. THE APPROACH SLAB SHALL NOT BE CAST UNTIL THE CONCRETE BASE HAS REACHED AN AGE OF THREE CURING DAYS.

THE VERTICAL JOINT ON THE RIGHT AND LEFT SIDE OF THE APPROACH SLAB AT THE ENDS OF THE EVAZOTE JOINT SHALL BE FILLED WITH SILICONE OR OTHER APPROVED MATERIAL IN ORDER TO PREVENT BACKFILL FROM ENTERING THE JOINT OPENING.

THE JOINT OPENING AT THE APPROACH SLAB/DECK INTERFACE SHALL BE SAWED NO MORE THAN 12 HOURS AFTER THE APPROACH SLAB IS CAST. THE JOINT SHALL BE CLEANED OF ALL DEBRIS BEFORE THE SEALANT IS APPLIED. THE JOINT SEALER MATERIAL SHALL CONFORM TO THE REQUIREMENTS OF TYPE SL LOW MODULUS SILICONE SEALANT.

WITH EVAZOTE JOINT SEAL

FOR EVAZOTE JOINT SEALS, SEE SPECIAL PROVISIONS.

THE NOMINAL UNCOMPRESSED SEAL WIDTH OF THE EVAZOTE JOINT SEAL SHALL BE 87mm.

FOR ELASTOMERIC CONCRETE, SEE SPECIAL PROVISIONS.

BILL OF MATERIAL

FOR ONE APPROACH SLAB (2 REQ'D)

BAR	NO.	SIZE	TYPE	LENGTH	WEIGHT
* A1	62	#13	STR	7180	442
A2	48	#13	STR	7140	341
* B1	87	#16	STR	6780	915
B2	87	#19	STR	6920	1346
* S4	46	#13	1	1200	55
S5	46	#16	2	880	63

REINFORCING STEEL	kg.	1750
* EPOXY COATED REINFORCING STEEL	kg.	1412
CLASS AA CONCRETE		
POUR #1 - SLAB & CURB	C.M.	28.0
POUR #2 - SLEEPER SLAB	C.M.	3.5
TOTAL	C.M.	31.5

BAR TYPES

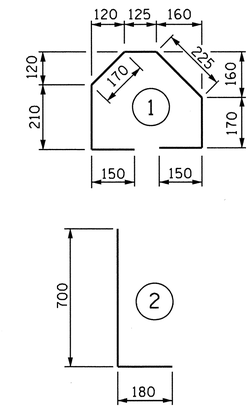

ALL BAR DIMENSIONS ARE OUT TO OUT

SPLICE CHART

BAR	SPLICE
* #13 A1	610
#13 A2	540

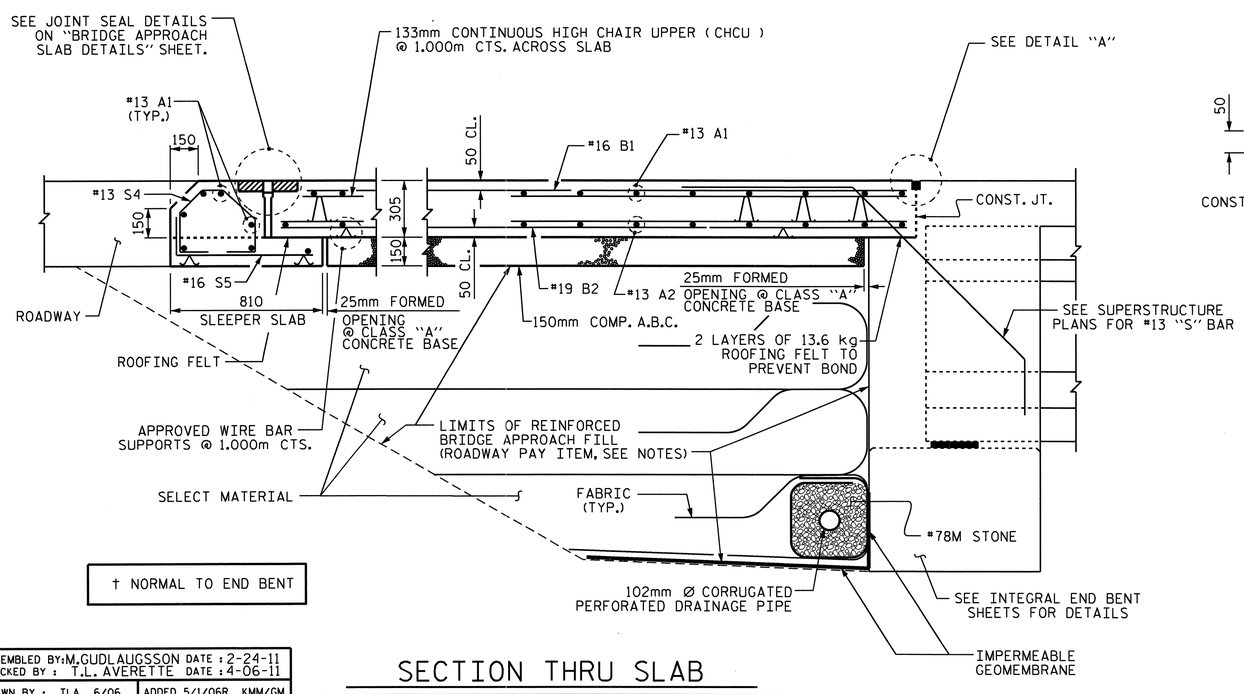

SECTION THRU SLAB

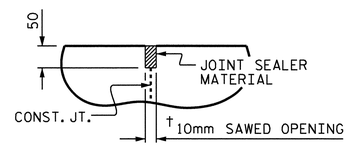

DETAIL "A"

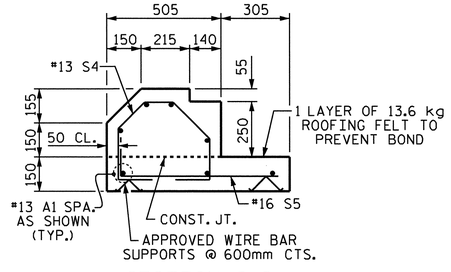

SECTION S-S

SHOWING SLEEPER SLAB

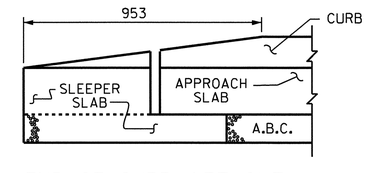

END OF CURB WITHOUT SHOULDER BERM GUTTER

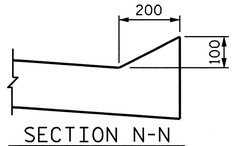

SECTION N-N

PROJECT NO. R-2413C

GUILFORD-ROCKINGHAM COUNTY

STATION: 24+37.000 -LREV-

SHEET 1 OF 2

STATE OF NORTH CAROLINA
DEPARTMENT OF TRANSPORTATION
RALEIGH

STANDARD

BRIDGE APPROACH SLAB FOR INTEGRAL ABUTMENT

(LEFT LANE)

NORTH CAROLINA PROFESSIONAL SEAL 022516 ENGINEER ELLAY E. MURRAY

1-12-11

REVISIONS							SHEET NO.
NO.	BY:	DATE:	NO.	BY:	DATE:		S-66
1			3				TOTAL SHEETS
2			4				238

STR. #2

STD. NO. BAS11SM

ASSEMBLED BY: M. GUDLAUGSSON DATE : 2-24-11
CHECKED BY : T.L. AVERETTE DATE : 4-06-11
DRAWN BY : TLA 6/06
CHECKED BY : GM 6/06
ADDED 5/1/06R KMM/GM

05-SEP-2011 11:17
Y:\Structures\Final Plans\Str.#2\R-2413C_SD_AS_02.dgn
mgudlaugsson

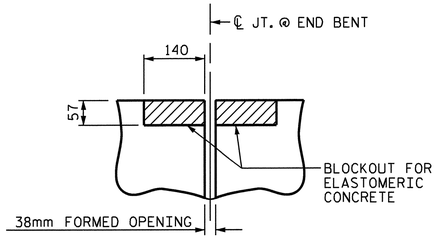

SECTION C-C

EVAZOTE JOINT SEAL (PRE-SAWED ELASTOMERIC CONCRETE DIMENSIONS)

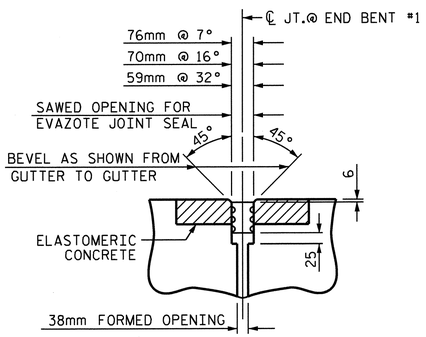

SECTION C-C

EVAZOTE JOINT SEAL @ END BENT #1

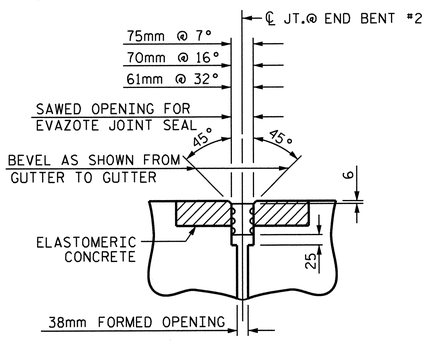

SECTION C-C

EVAZOTE JOINT SEAL @ END BENT #2

ELASTOMERIC CONCRETE	
END BENT NO.	ELASTOMERIC CONCRETE * (CU. m)
1	0.2
2	0.2
TOTAL	0.4

* BASED ON THE MINIMUM BLOCKOUT SHOWN.

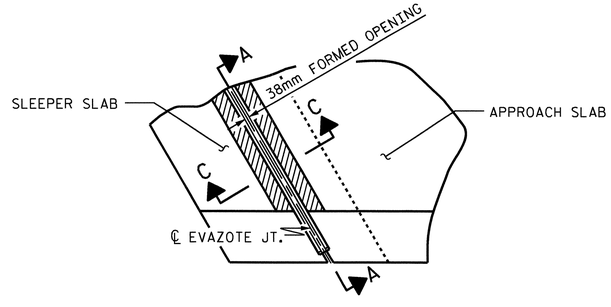

PLAN

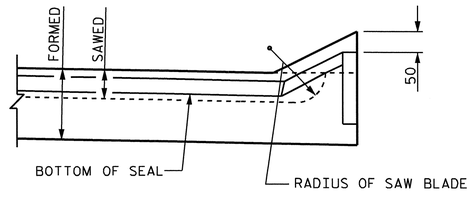

SECTION A-A

JOINT SEAL DETAILS @ SLEEPER SLAB

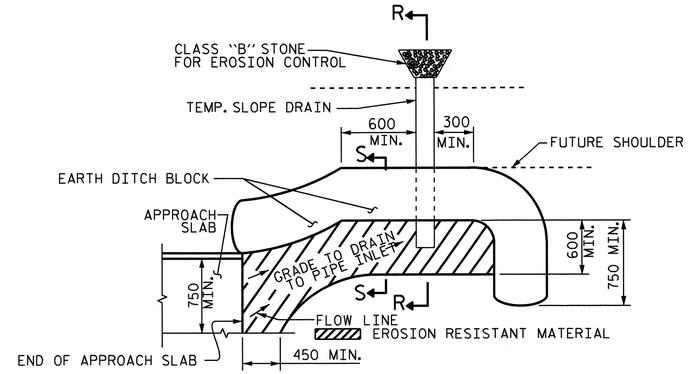

NOTE: IMMEDIATELY AFTER THE CONSTRUCTION OF THE APPROACH SLAB, THE CONTRACTOR SHALL PROVIDE TEMPORARY BERM AND SLOPE DRAIN. CONTRACTOR SHALL GRADE TO PIPE INLET AND PROVIDE EROSION RESISTANT MATERIAL AS SHOWN. THE EROSION RESISTANT MATERIAL SHALL BE EITHER 1) ASPHALT PLANT MIX, TYPE 1 OR TYPE 2, MIN. 50mm DEPTH, 2) EROSION CONTROL MAT, OR 3) CONCRETE, AS DIRECTED BY THE ENGINEER. THE SLOPE DRAIN SHALL CONSIST OF A NON-PERFORATED TEMPORARY DRAINAGE PIPE, 305mm IN DIAMETER.

PLAN VIEW

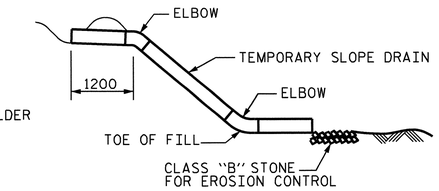

SECTION R-R

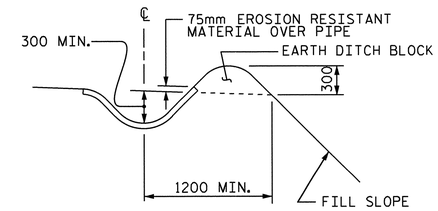

SECTION S-S

TEMPORARY BERM AND SLOPE DRAIN DETAILS

(TO BE USED WHEN SHOULDER BERM GUTTER IS REQUIRED)

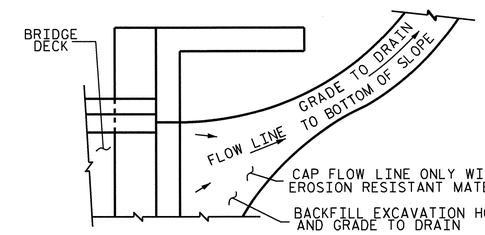

NOTE: IF THE APPROACH SLAB IS NOT CONSTRUCTED IMMEDIATELY AFTER THE BACKFILLING OF THE END BENT EXCAVATION, GRADE TO DRAIN TO THE BOTTOM OF THE SLOPE AND PROVIDE EROSION RESISTANT MATERIAL, SUCH AS FIBERGLASS ROVING OR AS DIRECTED BY THE ENGINEER TO PREVENT SOIL EROSION AND TO PROTECT THE AREA ADJACENT TO THE STRUCTURE. THE CONTRACTOR WILL BE REQUIRED TO REMOVE THESE MATERIALS PRIOR TO CONSTRUCTION OF THE APPROACH SLAB.

TEMPORARY DRAINAGE DETAIL

PROJECT NO. R-2413C

GUILFORD-ROCKINGHAM COUNTY

STATION: 24+37.000 -LREV-

SHEET 2 OF 2

STATE OF NORTH CAROLINA
DEPARTMENT OF TRANSPORTATION
RALEIGH

STANDARD
BRIDGE APPROACH
SLAB DETAILS
(LEFT LANE)

NORTH CAROLINA PROFESSIONAL SEAL 022516 ENGINEER EMILY E. MURRAY
10/28/11

REVISIONS						SHEET NO.
NO.	BY:	DATE:	NO.	BY:	DATE:	S-67
1			3			TOTAL SHEETS
2			4			238

STR. #2

STD. NO. BAS10SM

ASSEMBLED BY: M.GUDLAUGSSON	DATE : 2-24-11
CHECKED BY : T.L. AVERETTE	DATE : 4-06-11
DRAWN BY : FCJ 11/88	REV. 10/17/00 RWW/LES
CHECKED BY : ARB 11/88	REV. 5/7/03 RWW/JTE
	REV. 5/1/06RR MAA/KMM

05-SEP-2011 11:17
Y:\Structures\Final Plans\Str.#2\R-2413C_SD_AS_02.dgn
mgudlaugsson

OVERHANG BRACKET CALCULATION INSTRUCTIONS

AASHTO SHAPES - TYPES III, IV, V, AND VI

1. RECORD KNOWN INFORMATION ON "BRIDGE OVERHANG BRACKET SUMMARY" ON SHEET 2
2. CALCULATE THE MAXIMUM SCREED LOAD PER BRACKET (SLPB) WITH AN ESTIMATED R = 1.5. SLPB = R X W. ROUND VALUE UP TO NEAREST SLPB VALUE INDICATED ON APPROPRIATE TABLE 1-1, 1-2, 1-3, OR 1-4.
3. WITH THE ESTIMATED SLPB, OVERHANG SLAB THICKNESS, "K" VALUE, AND 45° HANGER SAFE WORKING LOAD (SWL), ENTER THE APPROPRIATE TABLE 1-1, 1-2, 1-3, OR 1-4 (BASED ON OVERHANG DIMENSION) AND DETERMINE THE BRACKET SPACING, S.
4. CALCULATE S/D1 AND S/D2, ROUNDING UP TO NEAREST VALUE IN TABLE 2. ENTER TABLE 2 AND DETERMINE R VALUE.
5. CALCULATE REVISED SLPB. ROUND VALUE UP TO NEAREST SLPB VALUE INDICATED ON APPROPRIATE TABLE 1-1, 1-2, 1-3, OR 1-4.
6. WITH THE REVISED SLPB, OVERHANG SLAB THICKNESS, "K" VALUE AND 45 HANGER SAFE WORKING LOAD (SWL), ENTER THE APPROPRIATE TABLE 1-1, 1-2, 1-3 OR 1-4 (BASED ON OVERHANG DIMENSION) AND DETERMINE REVISED BRACKET SPACING, S.
7. CONTINUE ITERATIONS OF STEPS 4-6 UNTIL THE REVISED BRACKET SPACING, S, IS THE SAME AS THE PREVIOUS S VALUE.
8. CHECK LUMBER JOIST SPACING: WITH BRACKET SPACING VALUE, S, ROUND THIS VALUE UP TO THE NEAREST VALUE OF ALLOWABLE SPAN LENGTH OF JOIST OF TABLE 3. USING THIS VALUE, ALONG WITH THE AVERAGE OVERHANG SLAB THICKNESS AND THE LUMBER JOIST SIZE, DETERMINE JOIST SPACING FROM TABLE 3. IF NECESSARY, ADJUST LUMBER JOIST SIZE AND/OR JOIST SPACING TO MEET ALLOWABLE SPAN LENGTH OF JOIST.
9. CONVERSELY, IF THE DESIRED JOIST SPACING IS KNOWN, USE THIS ALONG WITH THE AVERAGE OVERHANG SLAB THICKNESS AND THE LUMBER JOIST SIZE TO DETERMINE IF ALLOWABLE SPAN LENGTH OF JOIST IS GREATER THAN THE BRACKET SPACING, S. IF NECESSARY, ADJUST LUMBER JOIST SIZE TO MEET REQUIREMENTS OF ALLOWABLE SPAN LENGTH OF JOIST AND JOIST SPACING.
10. RECORD REMAINING INFORMATION ON "BRIDGE OVERHANG BRACKET SUMMARY" FORM.
11. SUBMIT FORM AND CALCULATIONS FOR REVIEW AND APPROVAL.

TABLE 1-1

(FOR USE ON **UP TO 2'-0" OVERHANG Ⓛ** & 54" HORIZONTAL LEG LENGTH OF THE OVERHANG BRACKET)

AVG. SLAB THICKNESS Ⓣ (in)	BRACKET Ⓚ DIMENSION (in)	SCREED LOAD PER BRACKET									45° HANGER SWL (lbs)
		2500 lbs.	2250 lbs.	2000 lbs.	1750 lbs.	1500 lbs.	1250 lbs.	1000 lbs.	750 lbs.	0 lbs.	
		BRACKET SPACING									
10	30				2'-1"	2'-7"	3'-2"	3'-8"	4'-2"	5'-9"	4000
		3'-6"	4'-0"	4'-5"	4'-9"	5'-1"	5'-3"	5'-5"	5'-7"	6'-7"	6000
	40				2'-1"	2'-7"	3'-2"	3'-8"	4'-2"	5'-9"	4000
		3'-6"	4'-0"	4'-5"	4'-9"	5'-1"	5'-3"	5'-5"	5'-7"	6'-7"	6000
	50				2'-1"	2'-7"	3'-2"	3'-8"	4'-2"	5'-9"	4000
		3'-6"	4'-0"	4'-5"	4'-9"	5'-1"	5'-3"	5'-5"	5'-7"	6'-7"	6000
12	30					2'-4"	2'-10"	3'-4"	3'-9"	5'-2"	4000
		3'-2"	3'-7"	4'-1"	4'-7"	5'-0"	5'-2"	5'-4"	5'-7"	6'-5"	6000
	40					2'-4"	2'-10"	3'-4"	3'-9"	5'-2"	4000
		3'-2"	3'-7"	4'-1"	4'-7"	5'-0"	5'-2"	5'-4"	5'-7"	6'-5"	6000
	50					2'-4"	2'-10"	3'-4"	3'-9"	5'-2"	4000
		3'-2"	3'-7"	4'-1"	4'-7"	5'-0"	5'-2"	5'-4"	5'-7"	6'-5"	6000
14	30					2'-2"	2'-7"	3'-0"	3'-5"	4'-9"	4000
		2'-10"	3'-4"	3'-9"	4'-2"	4'-7"	5'-0"	5'-4"	5'-7"	6'-4"	6000
	40					2'-2"	2'-7"	3'-0"	3'-5"	4'-9"	4000
		2'-10"	3'-4"	3'-9"	4'-2"	4'-7"	5'-0"	5'-4"	5'-7"	6'-4"	6000
	50					2'-2"	2'-7"	3'-0"	3'-5"	4'-9"	4000
		2'-10"	3'-4"	3'-9"	4'-2"	4'-7"	5'-0"	5'-4"	5'-7"	6'-4"	6000
16	30					2'-0"	2'-4"	2'-9"	3'-2"	4'-4"	4000
		2'-8"	3'-0"	3'-5"	3'-10"	4'-3"	4'-7"	5'-0"	5'-5"	6'-3"	6000
	40					2'-0"	2'-4"	2'-9"	3'-2"	4'-4"	4000
		2'-8"	3'-0"	3'-5"	3'-10"	4'-3"	4'-7"	5'-0"	5'-5"	6'-3"	6000
	50					2'-0"	2'-4"	2'-9"	3'-2"	4'-4"	4000
		2'-8"	3'-0"	3'-5"	3'-10"	4'-3"	4'-7"	5'-0"	5'-5"	6'-3"	6000

TABLE 1-2

(FOR USE ON **OVER 2'-0" TO 2'-6" OVERHANG Ⓛ** & 54" HORIZONTAL LEG LENGTH OF THE OVERHANG BRACKET)

AVG. SLAB THICKNESS Ⓣ (in)	BRACKET Ⓚ DIMENSION (in)	SCREED LOAD PER BRACKET									45° HANGER SWL (lbs)
		2500 lbs.	2250 lbs.	2000 lbs.	1750 lbs.	1500 lbs.	1250 lbs.	1000 lbs.	750 lbs.	0 lbs.	
		BRACKET SPACING									
10	30					2'-4"	2'-9"	3'-3"	3'-8"	5'-1"	4000
		3'-1"	3'-6"	4'-0"	4'-5"	4'-11"	5'-3"	5'-5"	5'-7"	6'-7"	6000
	40					2'-4"	2'-9"	3'-3"	3'-8"	5'-1"	4000
		3'-1"	3'-6"	4'-0"	4'-5"	4'-11"	5'-3"	5'-5"	5'-7"	6'-7"	6000
	50					2'-4"	2'-9"	3'-3"	3'-8"	5'-1"	4000
		3'-1"	3'-6"	4'-0"	4'-5"	4'-11"	5'-3"	5'-5"	5'-7"	6'-7"	6000
12	30					2'-1"	2'-6"	2'-11"	3'-4"	4'-6"	4000
		2'-9"	3'-2"	3'-7"	4'-0"	4'-5"	4'-10"	5'-3"	5'-7"	6'-5"	6000
	40					2'-1"	2'-6"	2'-11"	3'-4"	4'-6"	4000
		2'-9"	3'-2"	3'-7"	4'-0"	4'-5"	4'-10"	5'-3"	5'-7"	6'-5"	6000
	50					2'-1"	2'-6"	2'-11"	3'-4"	4'-6"	4000
		2'-9"	3'-2"	3'-7"	4'-0"	4'-5"	4'-10"	5'-3"	5'-7"	6'-5"	6000
14	30						2'-3"	2'-7"	3'-0"	4'-1"	4000
		2'-6"	2'-10"	3'-3"	3'-7"	4'-0"	4'-4"	4'-9"	5'-1"	6'-3"	6000
	40						2'-3"	2'-7"	3'-0"	4'-1"	4000
		2'-6"	2'-10"	3'-3"	3'-7"	4'-0"	4'-4"	4'-9"	5'-1"	6'-3"	6000
	50						2'-3"	2'-7"	3'-0"	4'-1"	4000
		2'-6"	2'-10"	3'-3"	3'-7"	4'-0"	4'-4"	4'-9"	5'-1"	6'-3"	6000
16	30						2'-1"	2'-5"	2'-9"	3'-9"	4000
		2'-3"	2'-7"	2'-11"	3'-4"	3'-8"	4'-0"	4'-4"	4'-8"	5'-8"	6000
	40						2'-1"	2'-5"	2'-9"	3'-9"	4000
		2'-3"	2'-7"	2'-11"	3'-4"	3'-8"	4'-0"	4'-4"	4'-8"	5'-8"	6000
	50						2'-1"	2'-5"	2'-9"	3'-9"	4000
		2'-3"	2'-7"	2'-11"	3'-4"	3'-8"	4'-0"	4'-4"	4'-8"	5'-8"	6000

TABLE 1-3

(FOR USE ON **OVER 2'-6" TO 3'-0" OVERHANG Ⓛ** & 54" HORIZONTAL LEG LENGTH OF THE OVERHANG BRACKET)

AVG. SLAB THICKNESS Ⓣ (in)	BRACKET Ⓚ DIMENSION (in)	SCREED LOAD PER BRACKET									45° HANGER SWL (lbs)
		2500 lbs.	2250 lbs.	2000 lbs.	1750 lbs.	1500 lbs.	1250 lbs.	1000 lbs.	750 lbs.	0 lbs.	
		BRACKET SPACING									
10	30					2'-1"	2'-6"	2'-11"	3'-4"	4'-6"	4000
						4'-5"	4'-10"	5'-3"	5'-7"	6'-7"	6000
	40					2'-1"	2'-6"	2'-11"	3'-4"	4'-6"	4000
		2'-9"	3'-2"	3'-7"	4'-0"	4'-5"	4'-10"	5'-3"	5'-7"	6'-7"	6000
	50					2'-1"	2'-6"	2'-11"	3'-4"	4'-6"	4000
		2'-9"	3'-2"	3'-7"	4'-0"	4'-5"	4'-10"	5'-3"	5'-7"	6'-7"	6000
12	30						2'-2"	2'-7"	2'-11"	4'-0"	4000
						3'-11"	4'-3"	4'-8"	5'-0"	6'-1"	6000
	40						2'-2"	2'-7"	2'-11"	4'-0"	4000
		2'-5"	2'-10"	3'-2"	3'-6"	3'-11"	4'-3"	4'-8"	5'-0"	6'-1"	6000
	50						2'-2"	2'-7"	2'-11"	4'-0"	4000
		2'-5"	2'-10"	3'-2"	3'-6"	3'-11"	4'-3"	4'-8"	5'-0"	6'-1"	6000
14	30						2'-0"	2'-4"	2'-8"	3'-8"	4000
					3'-2"	3'-6"	3'-10"	4'-2"	4'-6"	5'-6"	6000
	40						2'-0"	2'-4"	2'-8"	3'-8"	4000
		2'-2"	2'-6"	2'-10"	3'-2"	3'-6"	3'-10"	4'-2"	4'-6"	5'-6"	6000
	50						2'-0"	2'-4"	2'-8"	3'-8"	4000
		2'-2"	2'-6"	2'-10"	3'-2"	3'-6"	3'-10"	4'-2"	4'-6"	5'-6"	6000
16	30							2'-1"	2'-5"	3'-4"	4000
					2'-11"	3'-2"	3'-6"	3'-10"	4'-1"	5'-0"	6000
	40							2'-1"	2'-5"	3'-4"	4000
		2'-0"	2'-4"	2'-7"	2'-11"	3'-2"	3'-6"	3'-10"	4'-1"	5'-0"	6000
	50							2'-1"	2'-5"	3'-4"	4000
		2'-0"	2'-4"	2'-7"	2'-11"	3'-2"	3'-6"	3'-10"	4'-1"	5'-0"	6000

TABLE 1-4

(FOR USE ON **OVER 3'-0" TO 3'-6" OVERHANG Ⓛ** & 54" HORIZONTAL LEG LENGTH OF THE OVERHANG BRACKET)

AVG. SLAB THICKNESS Ⓣ (in)	BRACKET Ⓚ DIMENSION (in)	SCREED LOAD PER BRACKET									45° HANGER SWL (lbs)
		2500 lbs.	2250 lbs.	2000 lbs.	1750 lbs.	1500 lbs.	1250 lbs.	1000 lbs.	750 lbs.	0 lbs.	
		BRACKET SPACING									
10	30						2'-1"	2'-5"	2'-9"	3'-10"	4000
						2'-3"	2'-11"	3'-7"	4'-3"	5'-9"	6000
	40						2'-1"	2'-5"	2'-9"	3'-10"	4000
				2'-4"	3'-0"	3'-7"	4'-1"	4'-5"	4'-9"	5'-9"	6000
	50						2'-1"	2'-5"	2'-9"	3'-10"	4000
		2'-4"	2'-8"	3'-0"	3'-4"	3'-8"	4'-1"	4'-5"	4'-9"	5'-9"	6000
12	30							2'-2"	2'-6"	3'-5"	4000
						2'-1"	2'-8"	3'-4"	3'-11"	5'-2"	6000
	40							2'-2"	2'-6"	3'-5"	4000
				2'-2"	2'-9"	3'-4"	3'-7"	3'-11"	4'-3"	5'-2"	6000
	50							2'-2"	2'-6"	3'-5"	4000
		2'-1"	2'-4"	2'-8"	3'-0"	3'-4"	3'-7"	3'-11"	4'-3"	5'-2"	6000
14	30								2'-3"	3'-1"	4000
						2'-0"	2'-6"	3'-1"	3'-8"	4'-8"	6000
	40								2'-3"	3'-1"	4000
				2'-0"	2'-7"	3'-0"	3'-3"	3'-6"	3'-10"	4'-8"	6000
	50								2'-3"	3'-1"	4000
			2'-2"	2'-5"	2'-8"	3'-0"	3'-3"	3'-6"	3'-10"	4'-8"	6000
16	30								2'-0"	2'-9"	4000
							2'-4"	2'-10"	3'-5"	4'-3"	6000
	40								2'-0"	2'-9"	4000
					2'-5"	2'-8"	2'-11"	3'-3"	3'-6"	4'-3"	6000
	50								2'-0"	2'-9"	4000
				2'-2"	2'-5"	2'-8"	2'-11"	3'-3"	3'-6"	4'-3"	6000

DEFINITIONS

SLPB = SCREED LOAD PER BRACKET (R x W)
R = SCREED LOAD FACTOR, OBTAINED FROM TABLE 2
W = WHEEL LOAD
S = BRACKET SPACING
T = AVERAGE SLAB THICKNESS
SWL = SAFE WORKING LOAD
K = DIMENSION DEFINED ON "BRIDGE OVERHANG BRACKET SUMMARY" ON SHEET 2
L = OVERHANG MEASURED FROM EDGE OF TOP FLANGE TO EDGE OF SUPERSTRUCTURE

PROJECT NO. R-2413C
GUILFORD-ROCKINGHAM COUNTY
STATION: 24+37.000 -LREV-

SHEET 1 OF 3

STATE OF NORTH CAROLINA
DEPARTMENT OF TRANSPORTATION
RALEIGH

STANDARD OVERHANG FALSEWORK

AASHTO TYPES
III, IV, V, AND VI
(LEFT LANE)

NORTH CAROLINA PROFESSIONAL SEAL 18788 ENGINEER CHANG-CHUAN VICTOR CHAO

Chang-Chuan Victor Chao
8-5-2011

REVISIONS						SHEET NO.
NO.	BY:	DATE:	NO.	BY:	DATE:	S-68
1			3			TOTAL SHEETS
2			4			238

ASSEMBLED BY:	DATE:
CHECKED BY:	DATE:
DRAWN BY: R. WRIGHT 06/04	REV.
CHECKED BY: C. V. CHAO 06/04	

05-AUG-2011 10:41
C:\OLDFILES0\wdir\victor\OverhangFalsework\TIEBAR&STRUT\R-2413C\R-2413CSTR2_TYPE_IV\R2413CSTR2verHangSheets.dgn
vchao

STR. #2

OF1

BRIDGE OVERHANG BRACKET SUMMARY

TOTAL SCREED WEIGHT = _____ LBS.
NUMBER OF SCREED WHEELS = _____
SCREED WHEEL LOAD (W) = _____ LBS.
SCREED LOAD PER BRACKET = _____ LBS.

PROJECT No. : _____
COUNTY : _____
STATION : _____
DESCRIPTION : _____

DATE : _____
DESIGN BY : _____
CHECK BY : _____

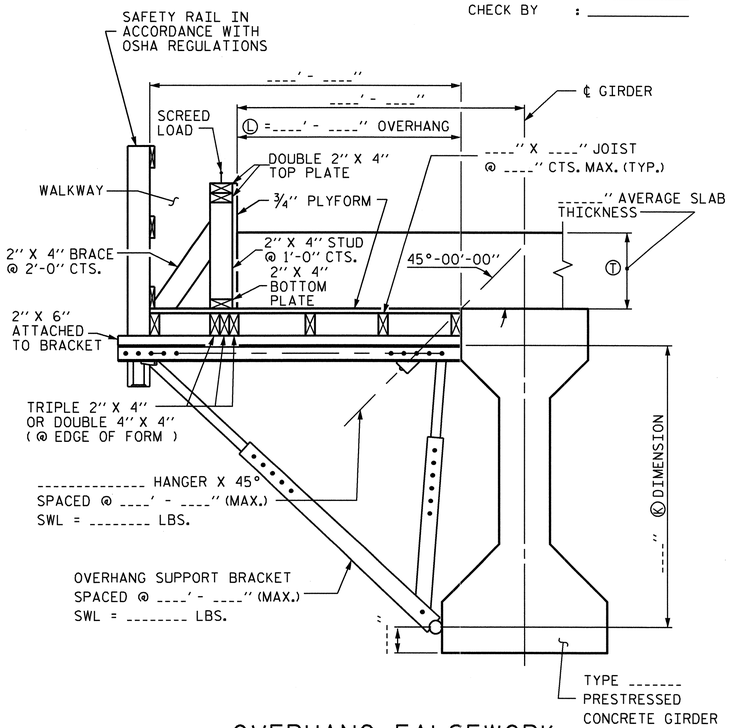

OVERHANG FALSEWORK

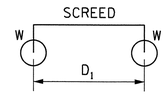

4-WHEEL MACHINE

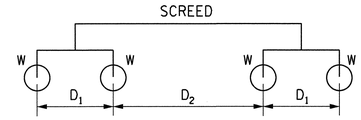

8-WHEEL MACHINE

4 WHEEL MACHINE	
S/D1	R
<= 1.0	1.00
1.1	1.09
1.2	1.17
1.3	1.23
1.4	1.29
1.5	1.33
1.6	1.38
1.7	1.41
1.8	1.44
1.9	1.47
2.0	1.50
2.2	1.55
2.4	1.58
2.6	1.62
2.8	1.64
3.0	1.67
3.5	1.71
4.0	1.75

TABLE 2: SCREED LOAD FACTOR "R"

		THE SCREED LOAD FACTOR R (FOR 8 WHEEL MACHINE)																	
		S/D_2																	
		<= 1.0	1.1	1.2	1.3	1.4	1.5	1.6	1.7	1.8	1.9	2.0	2.2	2.4	2.6	2.8	3.0	3.5	4.0
S/D_1	<= 1.0	1.00	1.09	1.17	1.23	1.29	1.33	1.38	1.41	1.44	1.47	1.50	1.55	1.58	1.62	1.64	1.67	1.71	1.75
	1.1	1.09	1.18	1.26	1.32	1.38	1.42	1.47	1.50	1.54	1.56	1.59	1.64	1.67	1.71	1.73	1.76	1.81	1.84
	1.2	1.17	1.26	1.33	1.40	1.45	1.50	1.54	1.58	1.61	1.64	1.67	1.71	1.75	1.78	1.81	1.83	1.88	1.92
	1.3	1.23	1.32	1.40	1.46	1.52	1.56	1.61	1.64	1.68	1.70	1.73	1.78	1.81	1.85	1.87	1.90	1.95	1.98
	1.4	1.29	1.38	1.45	1.52	1.57	1.62	1.66	1.70	1.73	1.76	1.79	1.83	1.87	1.90	1.93	1.95	2.00	2.07
	1.5	1.33	1.42	1.50	1.56	1.62	1.67	1.71	1.75	1.78	1.81	1.83	1.88	1.92	1.95	1.98	2.00	2.10	2.17
	1.6	1.38	1.47	1.54	1.61	1.66	1.71	1.75	1.79	1.82	1.85	1.88	1.92	1.96	1.99	2.04	2.08	2.18	2.25
	1.7	1.41	1.50	1.58	1.64	1.70	1.75	1.79	1.82	1.86	1.89	1.91	1.96	2.00	2.05	2.11	2.16	2.25	2.32
	1.8	1.44	1.54	1.61	1.68	1.73	1.78	1.82	1.86	1.89	1.92	1.94	1.99	2.06	2.12	2.17	2.22	2.32	2.39
	1.9	1.47	1.56	1.64	1.70	1.76	1.81	1.85	1.89	1.92	1.95	1.97	2.04	2.11	2.18	2.23	2.28	2.38	2.45
	2.0	1.50	1.59	1.67	1.73	1.79	1.83	1.88	1.91	1.94	1.97	2.00	2.09	2.17	2.23	2.29	2.33	2.43	2.50
	2.2	1.55	1.64	1.71	1.78	1.83	1.88	1.92	1.96	1.99	2.04	2.09	2.18	2.26	2.32	2.38	2.42	2.52	2.59
	2.4	1.58	1.67	1.75	1.81	1.87	1.92	1.96	2.00	2.06	2.11	2.17	2.26	2.33	2.40	2.45	2.50	2.60	2.67
	2.6	1.62	1.71	1.78	1.85	1.90	1.95	1.99	2.05	2.12	2.18	2.23	2.32	2.40	2.46	2.52	2.56	2.66	2.73
	2.8	1.64	1.73	1.81	1.87	1.93	1.98	2.04	2.11	2.17	2.23	2.29	2.38	2.45	2.52	2.57	2.62	2.71	2.79
	3.0	1.67	1.76	1.83	1.90	1.95	2.00	2.08	2.16	2.22	2.28	2.33	2.42	2.50	2.56	2.62	2.67	2.76	2.83
	3.5	1.71	1.81	1.88	1.95	2.00	2.10	2.18	2.25	2.32	2.38	2.43	2.52	2.60	2.66	2.71	2.76	2.86	2.93
	4.0	1.75	1.84	1.92	1.98	2.07	2.17	2.25	2.32	2.39	2.45	2.50	2.59	2.67	2.73	2.79	2.83	2.93	3.00

TABLE 3: ALLOWABLE SPAN LENGTH OF JOISTS AND JOIST SPACINGS

AVG. SLAB THICKNESS Ⓣ (IN)	LUMBER JOIST SIZE (IN X IN)	JOIST SPACINGS			
		15 IN	12 IN	10 IN	8 IN
		THE ALLOWABLE SPAN LENGTH OF JOISTS			
10	2 X 4	———	4' - 6"	4' - 9"	5' - 0"
	4 X 4	5' - 9"	6' - 3"	6' - 6"	6' - 7"
12	2 X 4	———	4' - 3"	4' - 9"	5' - 0"
	4 X 4	5' - 3"	6' - 0"	6' - 3"	6' - 5"
14	2 X 4	———	4' - 0"	4' - 6"	5' - 0"
	4 X 4	———	5' - 6"	6' - 0"	6' - 4"
16	2 X 4	———	4' - 0"	4' - 3"	4' - 9"
	4 X 4	———	5' - 3"	5' - 9"	6' - 3"

NOTES

DESIGN INCLUDES CONSTRUCTION LIVE LOAD 20 PSF ON THE AREA SUPPORTED AND 75 PLF AT THE OUTSIDE DECK OF OVERHANGS.

REQUIRED MINIMUM DIAGONAL LEG CAPACITY: 3600 LB WORKING LOAD

THE CONTRACTOR HAS THE OPTION OF SUBMITTING HIS OWN DESIGN FOR OVERHANG FALSEWORK IN ACCORDANCE WITH THE SPECIAL PROVISIONS.

SUBMITTALS UTILIZING THE INSTRUCTIONS AND PROCEDURES DESCRIBED ON SHEET 1 OF 3 SHALL BE IN ACCORDANCE WITH THE APPLICABLE SECTIONS OF THE SPECIFICATIONS AND SPECIAL PROVISIONS, EXCEPT THAT CALCULATIONS FOR OVERHANG FALSEWORK NEED NOT BE SEALED BY A REGISTERED ENGINEER.

FOR OVERHANG FALSEWORK BRACING DESIGN, SEE SHEET 3 OF 3.

PROJECT NO. R-2413C
GUILFORD-ROCKINGHAM COUNTY
STATION: 24+37.000 -LREV-

SHEET 2 OF 3

STATE OF NORTH CAROLINA
DEPARTMENT OF TRANSPORTATION
RALEIGH

STANDARD OVERHANG FALSEWORK

AASHTO TYPES
III, IV, V, AND VI
(LEFT LANE)

NORTH CAROLINA PROFESSIONAL SEAL 18788 ENGINEER CHANG-CHUAN VICTOR CHAO

Chang-Chuan Victor Chao
8-5-2011

ASSEMBLED BY:	DATE:
CHECKED BY:	DATE:
DRAWN BY: R. WRIGHT 06/04	REV.
CHECKED BY: C. V. CHAO 06/04	

REVISIONS						SHEET NO.
NO.	BY:	DATE:	NO.	BY:	DATE:	S-69
1			3			TOTAL SHEETS
2			4			238

05-AUG-2011 10:41
C:\OLDFILESD\wdir\victor\OverhangFalsework\TIEBAR&STRUT\R-2413C\R-2413CSTR2_TYPE_IV\R2413CSTR2verHangSheets.dgn
vchao

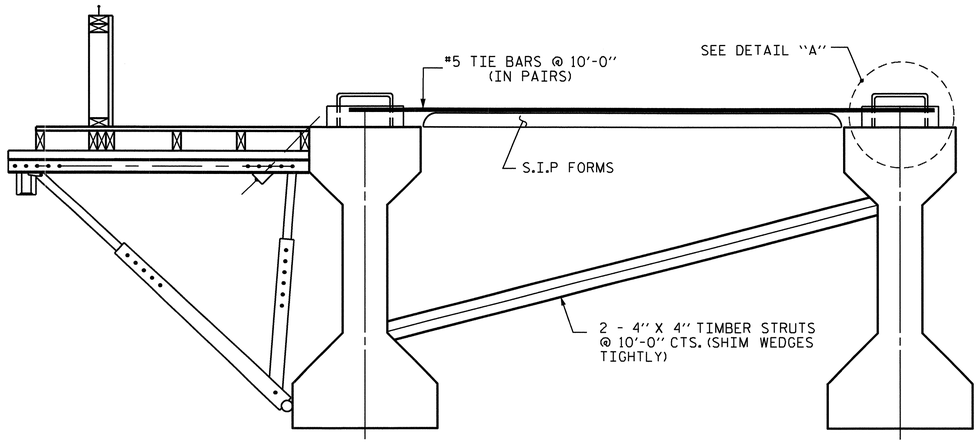

EXTERIOR GIRDER

INTERIOR GIRDER

DETAIL OF REQUIRED OVERHANG FALSEWORK BRACING SYSTEM

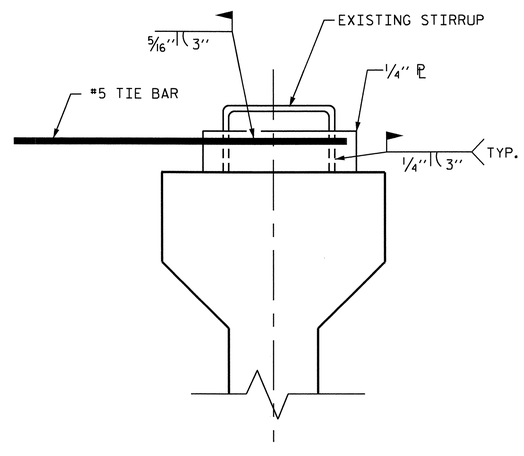

DETAIL "A"

NOTES:

EACH #5 TIE BAR SHALL BE WELDED TO ONE STIRRUP LOOP AS SHOWN IN DETAIL "A". #5 TIE BARS SHALL BE WELDED TO TWO ADJACENT STIRRUPS OF THE EXTERIOR GIRDER AND THE ADJACENT INTERIOR GIRDER BETWEEN PERMANENT DIAPHRAGMS. WELD STEEL PLATES IN BETWEEN THE TIE BARS AND THE STIRRUP LOOP. WELDING TWO TIE BARS TO THE SAME STIRRUP LOOP SHALL NOT BE PERMITTED.

MAXIMUM SPACING BETWEEN THE BRACING (TIE BARS-TIMBER STRUT) IS 10'-0" CTS. #5 TIE BARS SHALL BE LOCATED OVER A TIMBER STRUT.

INSTALL TIE BARS AND TIMBER STRUTS PRIOR TO PLACEMENT OF CONCRETE OR SCREED WEIGHT ONTO THE OVERHANG FALSEWORK.

PROJECT NO. R-2413C

GUILFORD-ROCKINGHAM COUNTY

STATION: 24+37.000 -LREV-

SHEET 3 OF 3

STATE OF NORTH CAROLINA
DEPARTMENT OF TRANSPORTATION
RALEIGH

STANDARD OVERHANG FALSEWORK

AASHTO TYPES
III, IV, V, AND VI
(LEFT LANE)

NORTH CAROLINA PROFESSIONAL SEAL 18788 ENGINEER CHANG-CHUAN VICTOR CHAO

Chang-Chuan Victor Chao
8-5-2011

REVISIONS						SHEET NO.
NO.	BY:	DATE:	NO.	BY:	DATE:	S-70
1			3			TOTAL SHEETS
2			4			238

DRAWN BY: R. WRIGHT 06/04 DATE :

CHECKED BY: C. V. CHAO 06/04 DATE :

05-AUG-2011 10:42
C:\OLDFILESD\wdir\victor\OverhangFalsework\TIEBAR&STRUT\R-2413C\R-2413CSTR2_TYPE_IV\R2413CSTR2verHangSheets.dgn
vchao

STR. #2

OF3

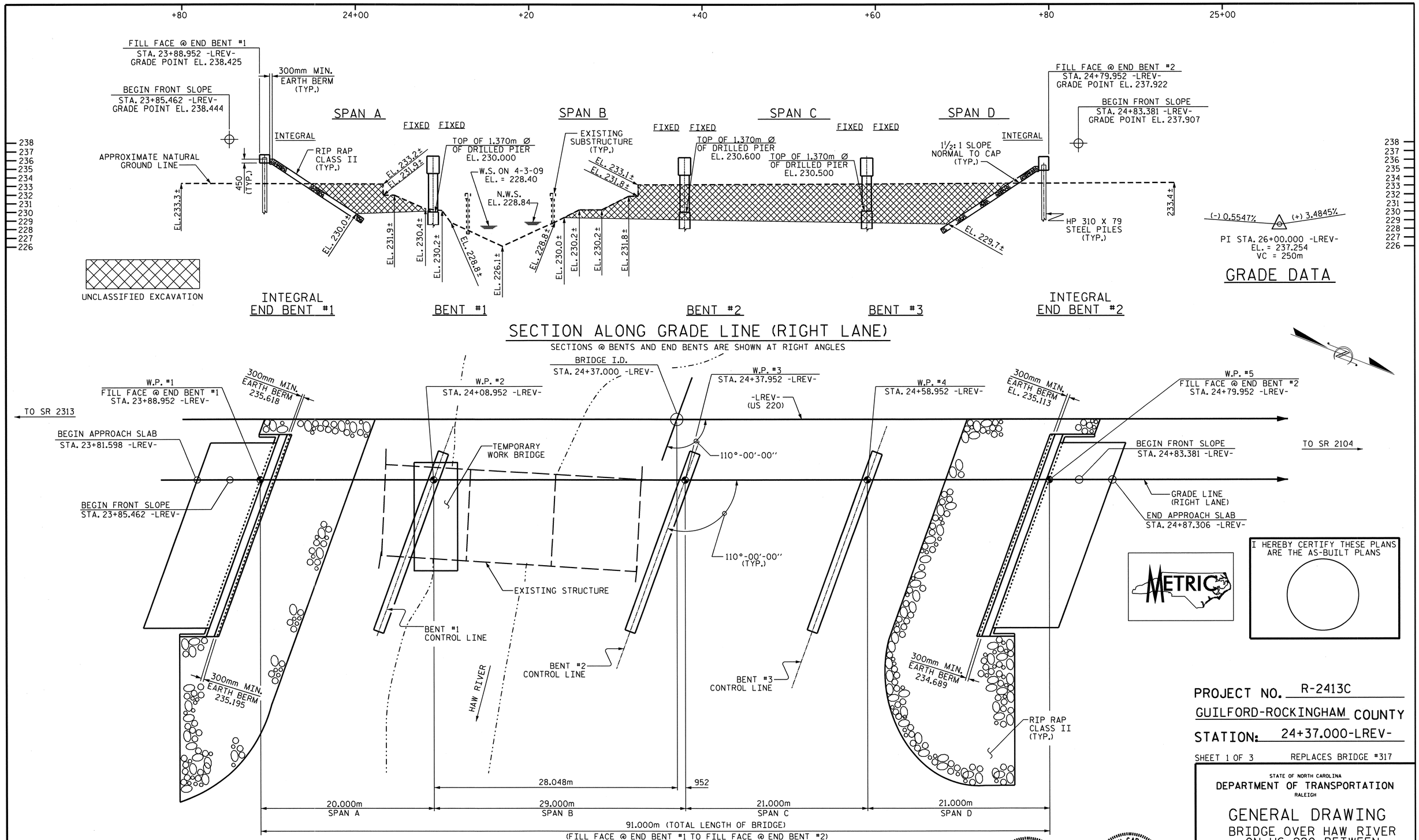

PROJECT NO. R-2413C

GUILFORD-ROCKINGHAM COUNTY

STATION: 24+37.000-LREV-

SHEET 1 OF 3 REPLACES BRIDGE #317

STATE OF NORTH CAROLINA
DEPARTMENT OF TRANSPORTATION
RALEIGH

GENERAL DRAWING

BRIDGE OVER HAW RIVER
ON US 220 BETWEEN
SR 2313 AND SR 2104
(RIGHT LANE)

REVISIONS						SHEET NO.
NO.	BY:	DATE:	NO.	BY:	DATE:	S-71
1			3			TOTAL SHEETS
2			4			238

STR. #3

DRAWN BY : M.GUDLAUGSSON DATE : 5-20-11
CHECKED BY : PEGGY PARISI DATE : 8-2-11

19-OCT-2011 14:13
R:\TIPProjects-R\R2413c\Structures\FinalPlans\Str.#3\R-2413C_SD_GD_03.dgn
taverette

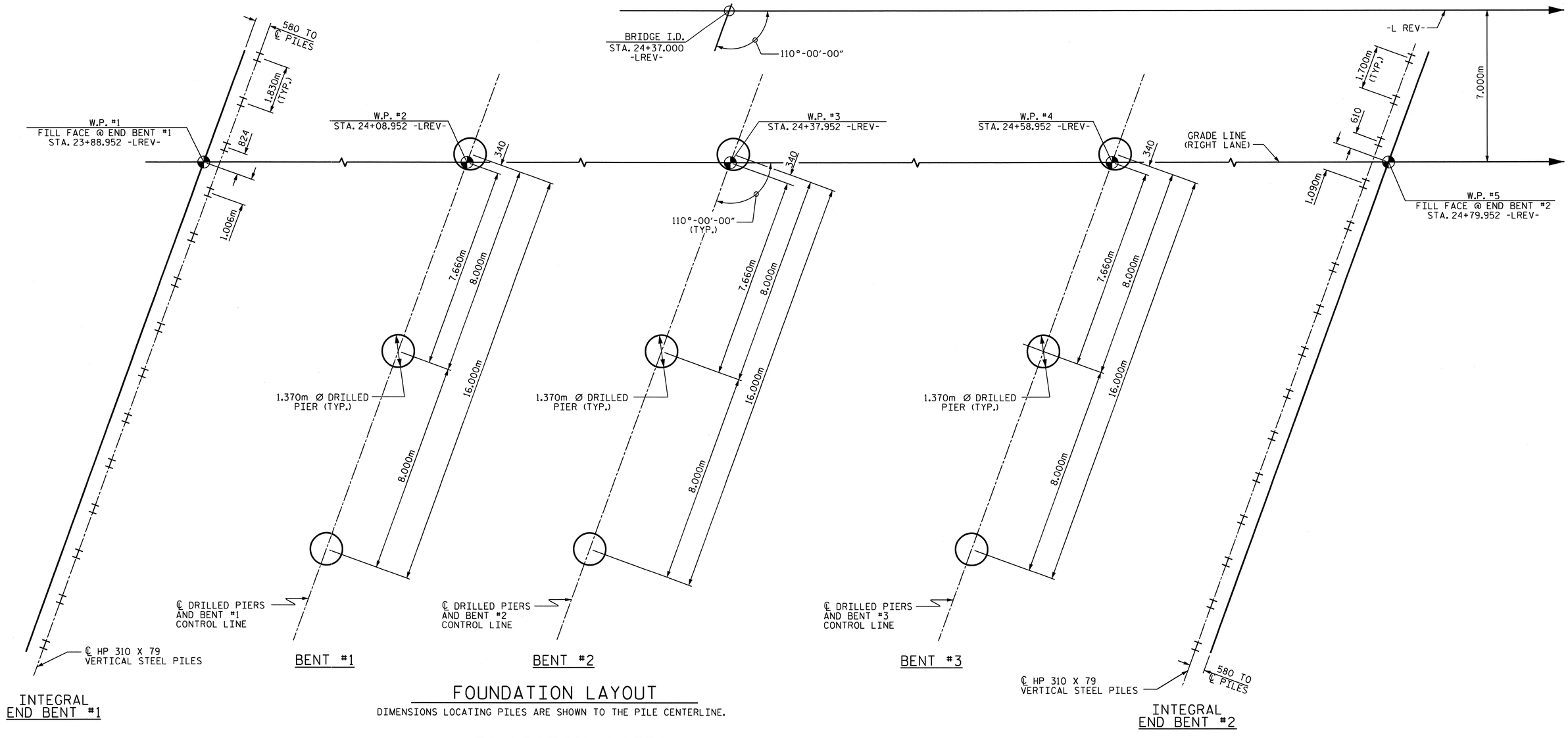

FOUNDATION LAYOUT

DIMENSIONS LOCATING PILES ARE SHOWN TO THE PILE CENTERLINE.

FOUNDATION NOTES

FOR PILES, SEE SPECIAL PROVISIONS.

THE ALLOWABLE BEARING CAPACITY FOR PILES AT END BENT NO. 1 AND END BENT NO. 2 IS 670 kN PER PILE.

DRIVE PILES AT END BENT NO. 1 AND END BENT NO. 2 TO A REQUIRED BEARING CAPACITY OF 1340 kN PER PILE. THE REQUIRED BEARING CAPACITY IS EQUAL TO THE ALLOWABLE BEARING CAPACITY WITH A MINIMUM FACTOR OF SAFETY OF TWO.

THE DRILLED PIERS AT BENT NO. 1, BENT NO. 2 AND BENT NO. 3 ARE DESIGNED FOR BOTH SKIN FRICTION AND END BEARING. CHECK FIELD CONDITIONS FOR THE REQUIRED END BEARING CAPACITY OF 4300 kPa.

DRILLED PIERS AT BENT NO. 1, BENT NO. 2, AND BENT NO. 3 ARE DESIGNED FOR AN APPLIED LOAD OF 4680 kN, 4707 kN, AND 4204 kN EACH AT THE TOP OF THE COLUMN, RESPECTIVELY.

PERMANENT STEEL CASINGS MAY BE REQUIRED FOR DRILLED PIERS AT BENT NO. 1. IF REQUIRED, DO NOT EXTEND PERMANENT CASINGS BELOW ELEVATION 224.0m WITHOUT PRIOR APPROVAL FROM THE ENGINEER. THE ENGINEER WILL DETERMINE THE NEED FOR PERMANENT CASINGS.

INSTALL DRILLED PIERS AT BENT NO. 1, BENT NO. 2, AND BENT NO. 3 THAT EXTEND TO AN ELEVATION NO HIGHER THAN 212.6m, 213.9m, AND 213.0m, RESPECTIVELY, AND SATIFY THE REQUIRED END BEARING CAPACITY.

THE SCOUR CRITICAL ELEVATION FOR BENT NO. 1, BENT NO. 2, AND BENT NO. 3 IS ELEVATION 224.0m. SCOUR CRITICAL ELEVATIONS ARE USED TO MONITOR POSSIBLE SCOUR PROBLEMS DURING THE LIFE OF THE STRUCTURE.

SLURRY CONSTRUCTION IS REQUIRED FOR DRILLED PIERS AT BENT NO. 1, BENT NO. 2 AND BENT NO. 3.

FOR DRILLED PIERS, SEE DRILLED PIERS SPECIAL PROVISION.

IF REQUIRED, INSTALL PERMANENT STEEL CASINGS AT BENT NO. 1 BY VIBRATING, SCREWING OR DRIVING PERMANENT CASINGS BEFORE EXCAVATING OR DISTURBING ANY MATERIAL BELOW ELEVATION 226.8m.

SPT TESTING MAY BE REQUIRED FOR DRILLED PIERS. THE ENGINEER WILL DETERMINE THE NEED FOR SPT TESTING. FOR SPT, SEE DRILLED PIERS SPECIAL PROVISION.

SID INSPECTIONS ARE REQUIRED FOR A MINIMUM OF ONE DRILLED PIER AT EACH INTERIOR BENT. THE ENGINEER WILL DETERMINE WHICH DRILLED PIERS WILL BE TESTED. FOR SID, SEE DRILLED PIERS SPECIAL PROVISION.

CSL TUBES ARE REQUIRED AND CSL TESTING MAY BE REQUIRED FOR DRILLED PIERS. THE ENGINEER WILL DETERMINE THE NEED FOR CSL TESTING. FOR CROSSHOLE SONIC LOGGING, SEE DRILLED PIERS SPECIAL PROVISION.

NORTH CAROLINA PROFESSIONAL SEAL 022516 ENGINEER EMILY E. MURRAY
10/28/11

PROJECT NO. R-2413C
GUILFORD-ROCKINGHAM COUNTY
STATION: 24+37.000 -LREV-

SHEET 2 OF 3

STATE OF NORTH CAROLINA
DEPARTMENT OF TRANSPORTATION
RALEIGH

GENERAL DRAWING
BRIDGE OVER HAW RIVER ON US 220 BETWEEN SR 2313 AND SR 2104 (RIGHT LANE)

REVISIONS						SHEET NO.
NO.	BY:	DATE:	NO.	BY:	DATE:	S-72
1			3			TOTAL SHEETS
2			4			238

STR. #3

DRAWN BY : M.GUDLAUGSSON DATE : 5-20-11
CHECKED BY : PEGGY PARISI DATE : 8-2-11

19-OCT-2011 14:14
R:\TIPProjects-R\R2413c\Structures\Final Plans\Str.#3\R-2413C_SD_GD_03.dgn
taverette

TOTAL BILL OF MATERIAL

	CONSTRUCTION, MAINTENANCE, & REMOVAL OF TEMPORARY ACCESS	REMOVAL OF EXISTING STRUCTURE	1370mm Ø DRILLED PIERS	PERMANENT STEEL CASING FOR 1370mm Ø DRILLED PIER	SID INSPECTION	SPT TESTING	CSL TESTING	UNCLASSIFIED STRUCTURE EXCAVATION	REINFORCED CONCRETE DECK SLAB	GROOVING BRIDGE FLOORS	CLASS A CONCRETE	BRIDGE APPROACH SLABS	REINFORCING STEEL	SPIRAL COLUMN REINFORCING STEEL	1372mm PRESTRESSED CONCRETE GIRDERS		HP 310 X 79 STEEL PILES		CONCRETE BARRIER RAIL	RIP RAP CLASS II (600mm THICK)	FILTER FABRIC FOR DRAINAGE	ELASTOMERIC BEARINGS	EVAZOTE JOINT SEALS	ELECTRICAL CONDUIT SYSTEM
	LUMP SUM	LUMP SUM	METERS	METERS	EACH	EACH	EACH	LUMP SUM	SQ. METERS	SQ. METERS	CU. METERS	LUMP SUM	Kg	Kg	No.	METERS	No.	METERS	METERS	METRIC TONS	SQ. METERS	LUMP SUM	LUMP SUM	LUMP SUM
SUPERSTRUCTURE									1946.5	2059.2		LUMP SUM			28	625.996			180.936			LUMP SUM	LUMP SUM	
END BENT #1											31.0		2791				14	234.5		578	590			
BENT #1			52.2	18.0	1						78.6		15855	2895										
BENT #2			50.1		1						75.9		15294	2699										
BENT #3			52.5		1						75.8		15606	2799										
END BENT #2											31.1		2810				15	274.5		892	909			
TOTAL	LUMP SUM	LUMP SUM	154.8	18.0	3	3	2	LUMP SUM	1946.5	2059.2	292.4	LUMP SUM	52356	8393	28	625.996	29	509.0	180.936	1470	1499	LUMP SUM	LUMP SUM	LUMP SUM

TOTAL BILL OF MATERIAL - ENGLISH

	LUMP SUM	LUMP SUM	LIN. FT.	LIN. FT.	EACH	EACH	EACH	LUMP SUM	SQ. FT.	SQ. FT.	CU. YDS.	LUMP SUM	LBS.	LBS.	No.	LIN. FT.	No.	LIN. FT.	LIN. FT.	TONS	SQ. YD.	LUMP SUM	LUMP SUM	LUMP SUM
TOTAL	LUMP SUM	LUMP SUM	507.9	59.1	3	3	2	LUMP SUM	20,952	22,165	382.4	LUMP SUM	115425	18503	28	1380.08	29	1122	593.62	1620	1793	LUMP SUM	LUMP SUM	LUMP SUM

NOTES

ALL DIMENSIONS ARE IN MILLIMETERS UNLESS OTHERWISE NOTED.

ALL ELEVATIONS ARE IN METERS.

ASSUMED LIVE LOAD = MS 18 OR ALTERNATE LOADING, EXCEPT THAT THE GIRDERS HAVE BEEN DESIGNED FOR MS 22.5.

FOR OTHER DESIGN DATA AND GENERAL NOTES, SEE SHEET SNSM.

THIS BRIDGE HAS BEEN DESIGNED BY THE STRENGTH DESIGN METHOD AS SPECIFIED IN AASHTO STANDARD SPECIFICATIONS.

THE LOCATION OF THE CONSTRUCTION JOINT IN THE DRILLED PIERS IS BASED ON AN APPROXIMATE GROUND LINE ELEVATION. IF THE CONSTRUCTION JOINT IS ABOVE THE ACTUAL GROUND ELEVATION, THE CONTRACTOR SHALL PLACE THE CONSTRUCTION JOINT 300mm BELOW THE GROUND LINE.

NEEDLE BEAMS WILL NOT BE ALLOWED UNLESS OTHERWISE CALLED FOR ON THE PLANS OR APPROVED BY THE ENGINEER.

FOR SUBMITTAL OF WORKING DRAWINGS, SEE SPECIAL PROVISIONS.

FOR FALSEWORK AND FORMWORK, SEE SPECIAL PROVISIONS.

PRESTRESSED CONCRETE DECK PANELS MAY BE USED IN LIEU OF METAL STAY-IN-PLACE FORMS IN ACCORDANCE WITH ARTICLE 420-3 OF THE STANDARD SPECIFICATIONS.

THIS STRUCTURE HAS BEEN DESIGNED IN ACCORDANCE WITH HEC 18, "EVALUATING SCOUR AT BRIDGES", MAY, 2001.

THE EXISTING STRUCTURE CONSISTING OF 3 SPANS, 1 @ 9.98m, 1 @ 9.91m, AND 1 @ 9.98m, WITH A CLEAR ROADWAY WIDTH OF 8.53m AND A REINFORCED CONCRETE DECK ON STEEL I-BEAMS SUPPORTED BY REINFORCED CONCRETE CAP AND STEEL PILES AT THE END BENTS AND REINFORCED CONCRETE CAP AND STEEL PILES (CONCRETE ENCASED) AT THE INTERIOR BENTS, AND LOCATED AT THE SITE OF THE PROPOSED STRUCTURE SHALL BE REMOVED. THE EXISTING BRIDGE IS PRESENTLY POSTED BELOW THE LEGAL LOAD LIMIT. SHOULD THE STRUCTURAL INTEGRITY OF THE BRIDGE FURTHER DETERIORATE, THIS LOAD LIMITATION MAY BE REDUCED AS FOUND NECESSARY DURING THE LIFE OF THE PROJECT.

REMOVAL OF THE EXISTING BRIDGE SHALL BE PERFORMED SO AS NOT TO ALLOW DEBRIS TO FALL INTO THE WATER. THE CONTRACTOR SHALL REMOVE THE BRIDGE AND SUBMIT PLANS FOR DEMOLITION IN ACCORDANCE WITH ARTICLE 402-2 OF THE STANDARD SPECIFICATIONS.

FOR CONSTRUCTION, MAINTENANCE, AND REMOVAL OF TEMPORARY ACCESS, SEE SPECIAL PROVISIONS.

THE SUBSTRUCTURE OF THE EXISTING BRIDGE INDICATED ON THE PLANS IS FROM THE BEST INFORMATION AVAILABLE. SINCE THIS INFORMATION IS SHOWN FOR THE CONVENIENCE OF THE CONTRACTOR, THE CONTRACTOR SHALL HAVE NO CLAIM WHATSOEVER AGAINST THE DEPARTMENT OF TRANSPORTATION FOR ANY DELAYS OR ADDITIONAL COST INCURRED BASED ON DIFFERENCES BETWEEN THE EXISTING BRIDGE SUBSTRUCTURE SHOWN ON THE PLANS AND THE ACTUAL CONDITIONS AT THE PROJECT SITE.

INASMUCH AS THE PAINT SYSTEM ON THE EXISTING STRUCTURAL STEEL CONTAINS LEAD, THE CONTRACTOR'S ATTENTION IS DIRECTED TO ARTICLE 107-1 OF THE STANDARD SPECIFICATIONS. ANY COSTS RESULTING FROM COMPLIANCE WITH APPLICABLE STATE OR FEDERAL REGULATIONS PERTAINING TO HANDLING OF MATERIALS CONTAINING LEAD BASED PAINT SHALL BE INCLUDED IN THE BID PRICE FOR "REMOVAL OF EXISTING STRUCTURE AT STATION 24+37.000 -LREV-".

THE MATERIAL SHOWN IN THE CROSS-HATCHED AREA SHALL BE EXCAVATED FOR A DISTANCE OF 7.000m LEFT AND 20.000m RIGHT OF THE CONTROL LINE AS DIRECTED BY THE ENGINEER. THIS WORK WILL BE PAID FOR AT THE CONTRACT LUMP SUM PRICE FOR UNCLASSIFIED STRUCTURE EXCAVATION. SEE SECTION 412 OF THE STANDARD SPECIFICATION.

REMOVABLE FORMS MAY BE USED IN LIEU OF METAL STAY-IN-PLACE FORMS IN ACCORDANCE WITH ARTICLE 420-3 OF THE STANDARD SPECIFICATIONS.

THIS BRIDGE HAS BEEN DESIGNED IN ACCORDANCE WITH THE REQUIREMENTS OF THE STANDARD SPECIFICATIONS FOR SEISMIC DESIGN OF HIGHWAY BRIDGES FOR SEISMIC PERFORMANCE CATEGORY A.

THE CLASS AA CONCRETE IN THE BRIDGE DECK SHALL CONTAIN FLY ASH OR GROUND GRANULATED BLAST FURNACE SLAG AT THE SUBSTITUTION RATE SPECIFIED IN ARTICLE 1024-1 AND IN ACCORDANCE WITH ARTICLES 1024-5 AND 1024-6 OF THE STANDARD SPECIFICATIONS. NO PAYMENT WILL BE MADE FOR THIS SUBSTITUTION AS IT IS CONSIDERED INCIDENTAL TO THE COST OF THE REINFORCED CONCRETE DECK SLAB.

FOR PRESTRESSED CONCRETE MEMBERS, SEE SPECIAL PROVISIONS.

FOR CRANE SAFETY, SEE SPECIAL PROVISIONS.

FOR GROUT FOR STRUCTURES, SEE SPECIAL PROVISIONS.

FOR CURING CONCRETE, SEE SPECIAL PROVISIONS.

FOR PLACING LOAD ON STRUCTURE MEMBERS, SEE SPECIAL PROVISIONS.

FOR EROSION CONTROL MEASURES SEE EROSION CONTROL PLANS.

FOR METRIC STRUCTURAL STEEL, SEE SPECIAL PROVISIONS.

FOR MASS CONCRETE, SEE SPECIAL PROVISIONS.

BM #6 DISC STAMPED E-170 1965, IN NE WINGWALL OF BRIDGE, 5.4m RT OF STA. 25+94.140 -L- ELEV. 233.273.

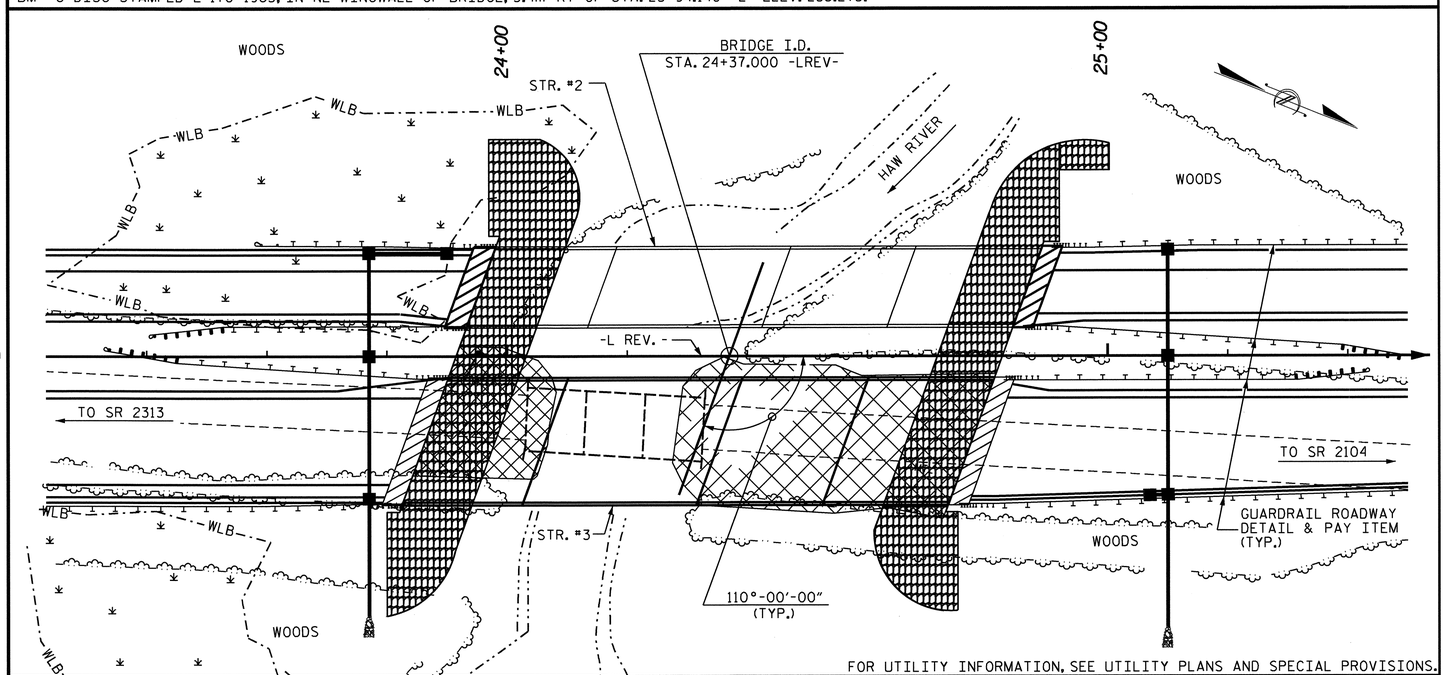

FOR UTILITY INFORMATION, SEE UTILITY PLANS AND SPECIAL PROVISIONS.

LOCATION SKETCH

HYDRAULIC DATA

DESIGN DISCHARGE	=	107.6 m3/s.
FREQUENCY OF DESIGN FLOOD	=	50 YEARS
DESIGN HIGH WATER ELEVATION	=	231.54m
DRAINAGE AREA	=	53.4 Sq.Km
BASE DISCHARGE (Q100)	=	141.6m3/s.
BASE HIGH WATER ELEVATION	=	231.93m

OVERTOPPING FLOOD DATA

OVERTOPPING DISCHARGE	=	> 172.7 m3/s.
FREQUENCY OF OVERTOPPING FLOOD	=	> 500 YEARS
OVERTOPPING FLOOD ELEVATION	=	237.85m

PROJECT NO. R-2413C

GUILFORD-ROCKINGHAM COUNTY

STATION: 24+37.000-LREV-

SHEET 3 OF 3

STATE OF NORTH CAROLINA
DEPARTMENT OF TRANSPORTATION
RALEIGH

GENERAL DRAWING

BRIDGE OVER HAW RIVER ON US 220 BETWEEN SR 2313 AND SR 2104 (RIGHT LANE)

NORTH CAROLINA PROFESSIONAL SEAL 022516 ENGINEER EMILY E. MURRAY
10/28/11

REVISIONS						SHEET NO.
NO.	BY:	DATE:	NO.	BY:	DATE:	S-73
1			3			TOTAL SHEETS
2			4			238

DRAWN BY : M.GUDLAUGSSON DATE : 5-20-11
CHECKED BY : PEGGY PARISI DATE : 8-2-11

19-OCT-2011 14:14
R:\TIPProjects-R\R2413c\Structures\Final Plans\Str.#3\R-2413C_SD_GD_03.dgn
taverette

STR. #3

NOTES

PROVIDE 32mm HIGH BEAM BOLSTERS UPPER AT 1.200m CTS. ATOP THE METAL STAY-IN-PLACE FORMS TO SUPPORT THE BOTTOM MAT OF 'A' BARS. WHEN USING REMOVABLE FORMS, PROVIDE CONTINUOUS HIGH CHAIRS FOR METAL DECK (C.H.C.M.) @ 1.2m CTS. WITH A HEIGHT TO SUPPORT THE BOTTOM MAT OF 'A' BARS A CLEAR DISTANCE OF 65mm ABOVE THE TOP OF THE REMOVABLE FORM.

LONGITUDINAL STEEL MAY BE SHIFTED SLIGHTLY, AS NECESSARY, TO AVOID INTERFERENCE WITH STIRRUPS IN PRESTRESSED CONCRETE GIRDERS.

PREVIOUSLY CAST CONCRETE IN A CONTINUOUS UNIT SHALL HAVE ATTAINED A MINIMUM COMPRESSESIVE STRENGTH OF 20.7 MPa BEFORE ADDITIONAL CONCRETE IS CAST IN THE UNIT.

BARRIER RAIL IN A CONTINUOUS UNIT SHALL NOT BE CAST UNTIL ALL SLAB CONCRETE IN THE UNIT HAS BEEN CAST AND HAS REACHED A MINIMUM COMPRESSIVE STRENGTH OF 20.7 MPa.

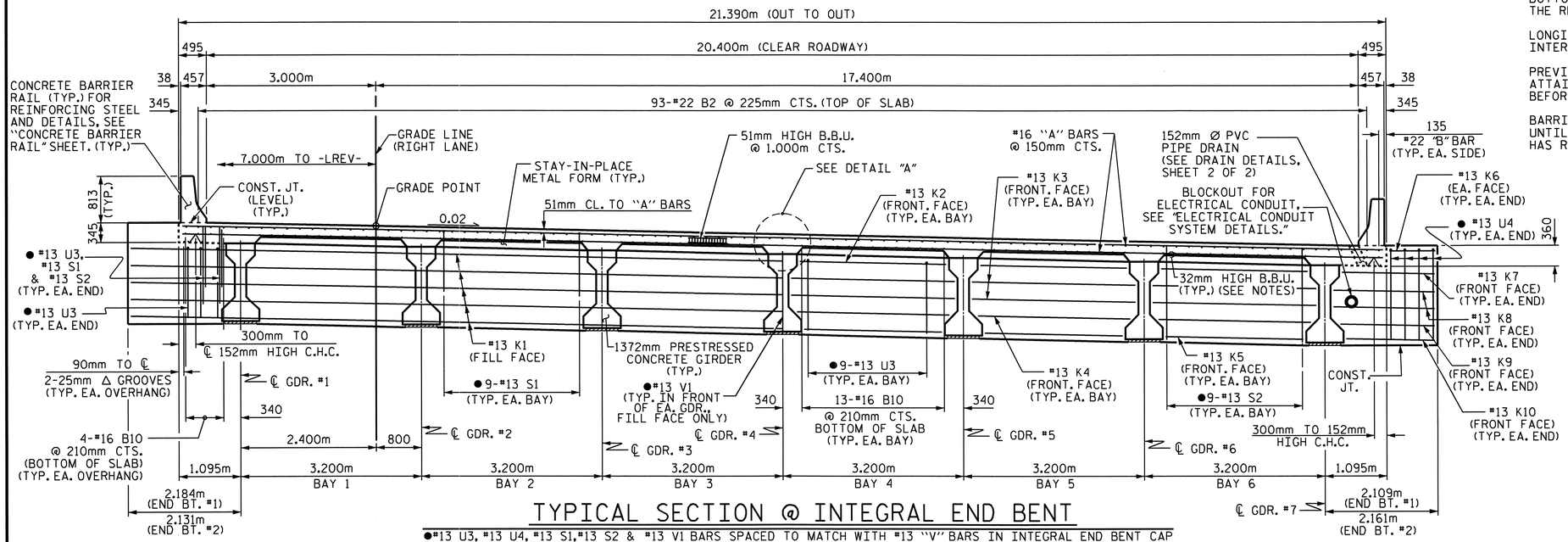

TYPICAL SECTION @ INTEGRAL END BENT

●#13 U3, #13 U4, #13 S1, #13 S2 & #13 V1 BARS SPACED TO MATCH WITH #13 "V" BARS IN INTEGRAL END BENT CAP

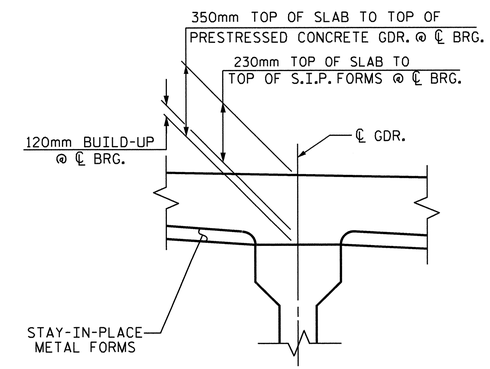

DETAIL "A"

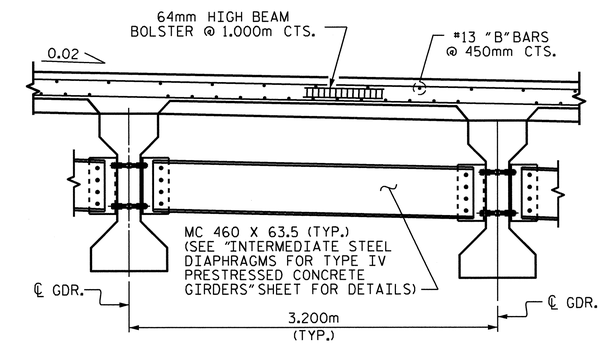

PARTIAL TYPICAL SECTION

AT INTERMEDIATE DIAPHRAGM

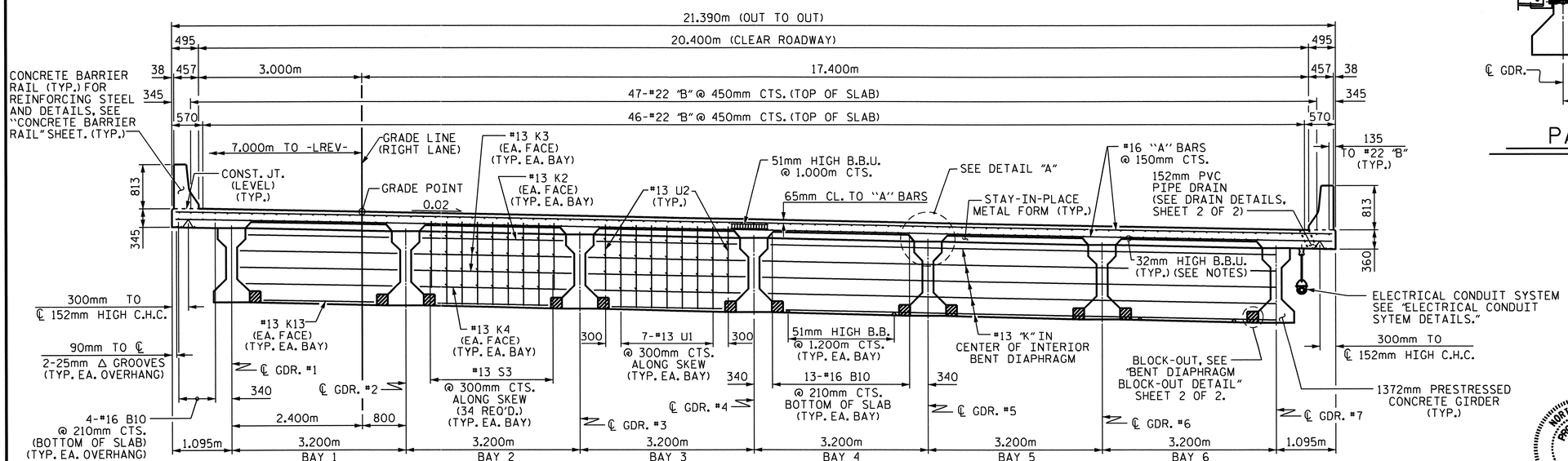

TYPICAL SECTION @ CONTINUOUS BENT DIAPHRAGM

PROJECT NO. R-2413C

GUILFORD-ROCKINGHAM COUNTY

STATION: 24+37.000 -LREV-

SHEET 1 OF 2

STATE OF NORTH CAROLINA
DEPARTMENT OF TRANSPORTATION
RALEIGH

SUPERSTRUCTURE
TYPICAL SECTION
(RIGHT LANE)

NORTH CAROLINA PROFESSIONAL SEAL 022516 ENGINEER EMILY E. MURRAY

10/28/11

REVISIONS						SHEET NO.
NO.	BY:	DATE:	NO.	BY:	DATE:	S-74
1			3			TOTAL SHEETS
2			4			238

STR. #3

DRAWN BY : M.GUDLAUGSSON DATE : 11-08-10
CHECKED BY : T.L. AVERETTE DATE : 3-23-11

05-SEP-2011 11:45
Y:\Structures\Final Plans\Str.#3\R-2413C_SD_TS_03.dgn
mgudlaugsson

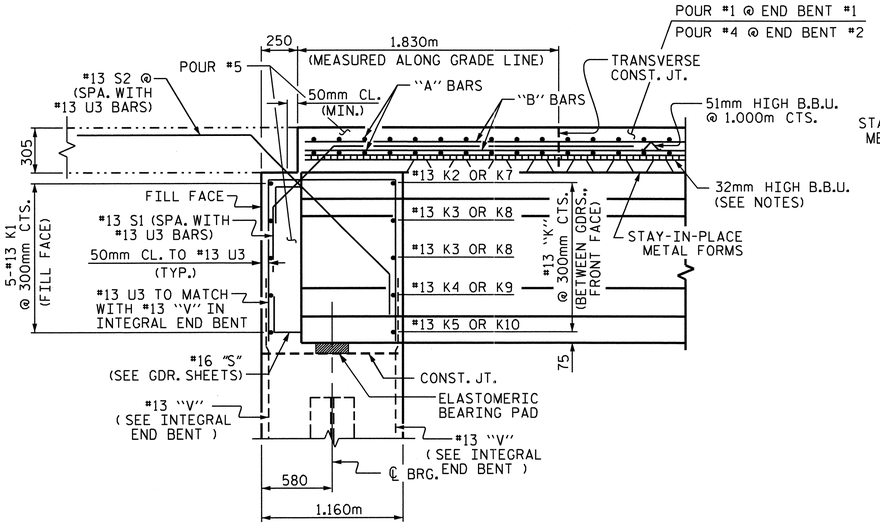

END OF GIRDER DETAIL AT INTEGRAL END BENT

#13 V1 BAR IN FRONT OF GIRDER NOT SHOWN

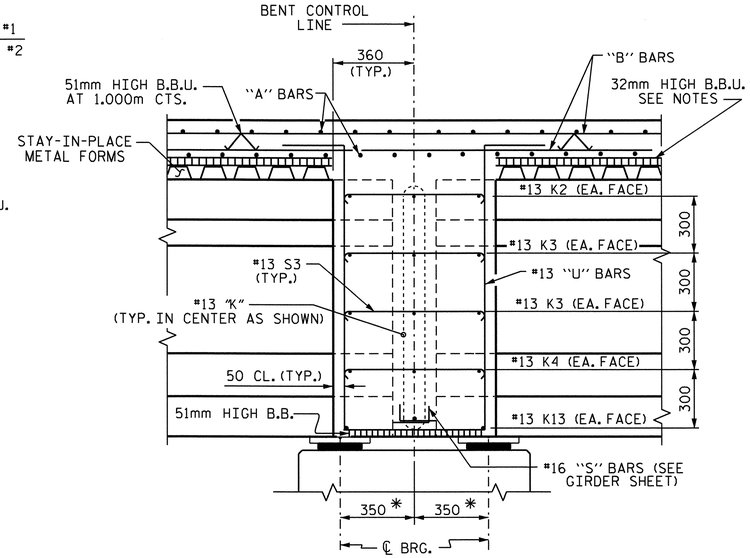

SECTION THRU BENT DIAPHRAGM

* MEASURED ALONG ℄ GIRDER

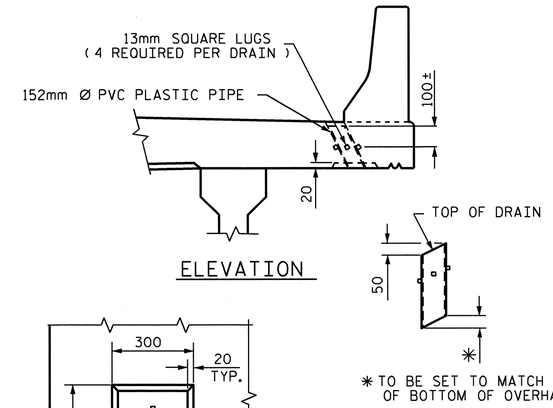

PIPE DETAIL

TOP OF FLOOR DRAINS TO BE SET 10mm BELOW SURFACE OF SLAB.

4 - 13mm SQUARE LUGS TO BE GLUED TO THE PVC PLASTIC PIPE AT EQUAL SPACES AROUND THE PIPE DRAIN APPROXIMATELY 100mm FROM THE TOP OF THE PIPE.

THE 152mm Ø PVC PIPE AND FITTINGS SHALL BE SCHEDULE 40 AND CONFORM TO ASTM D1785.

DRAIN DETAILS

(36 DRAINS REQUIRED)

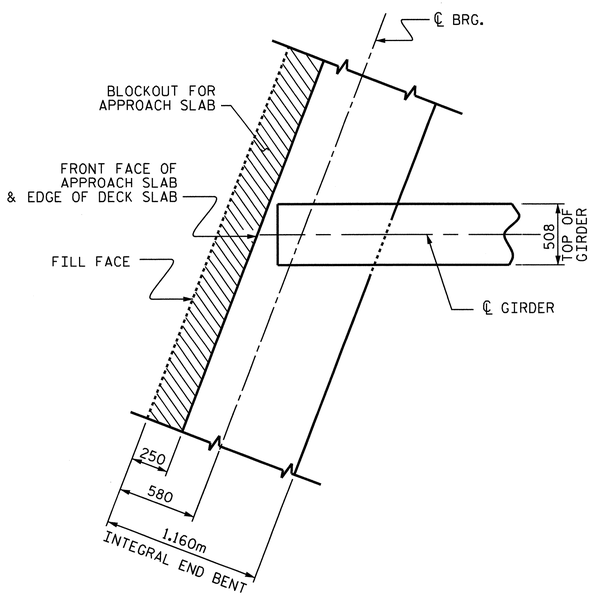

AT INTEGRAL END BENT

(END BENT #1 SHOWN, END BENT #2 SIMILAR)

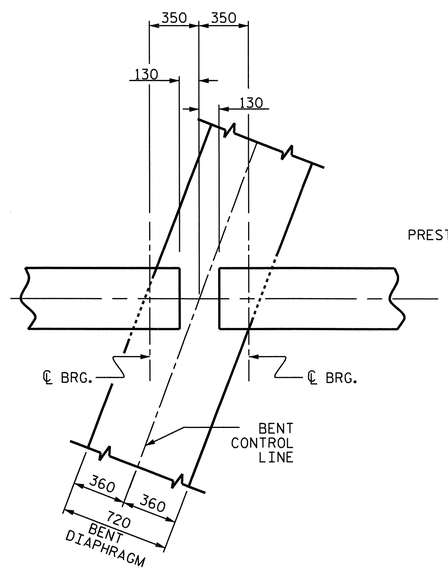

AT BENT DIAPHRAGM

PLAN OF GIRDER

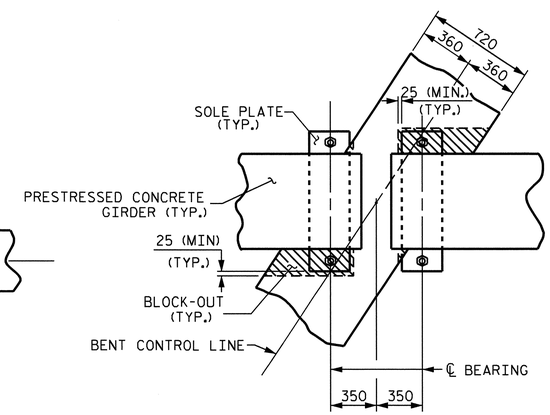

PLAN

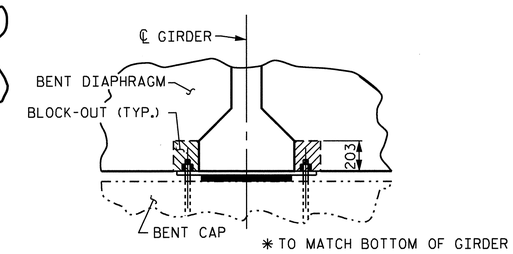

SECTION

BENT DIAPHRAGM BLOCK-OUT DETAIL

PROJECT NO. R-2413C

GUILFORD-ROCKINGHAM COUNTY

STATION: 24+37.000 -LREV-

SHEET 2 OF 2

STATE OF NORTH CAROLINA
DEPARTMENT OF TRANSPORTATION
RALEIGH

SUPERSTRUCTURE
TYPICAL SECTION
(RIGHT LANE)

NORTH CAROLINA PROFESSIONAL SEAL 022516 ENGINEER EMILY E. MARTIN
10/28/11

REVISIONS						SHEET NO.
NO.	BY:	DATE:	NO.	BY:	DATE:	S-75
1			3			TOTAL SHEETS
2			4			238

STR. #3

DRAWN BY : M.GUDLAUGSSON DATE : 11-23-10
CHECKED BY : T.L. AVERETTE DATE : 3-23-11

05-SEP-2011 11:45
Y:\Structures\Final Plans\Str.#3\R-2413C_SD_TS_03.dgn
mgudlaugsson

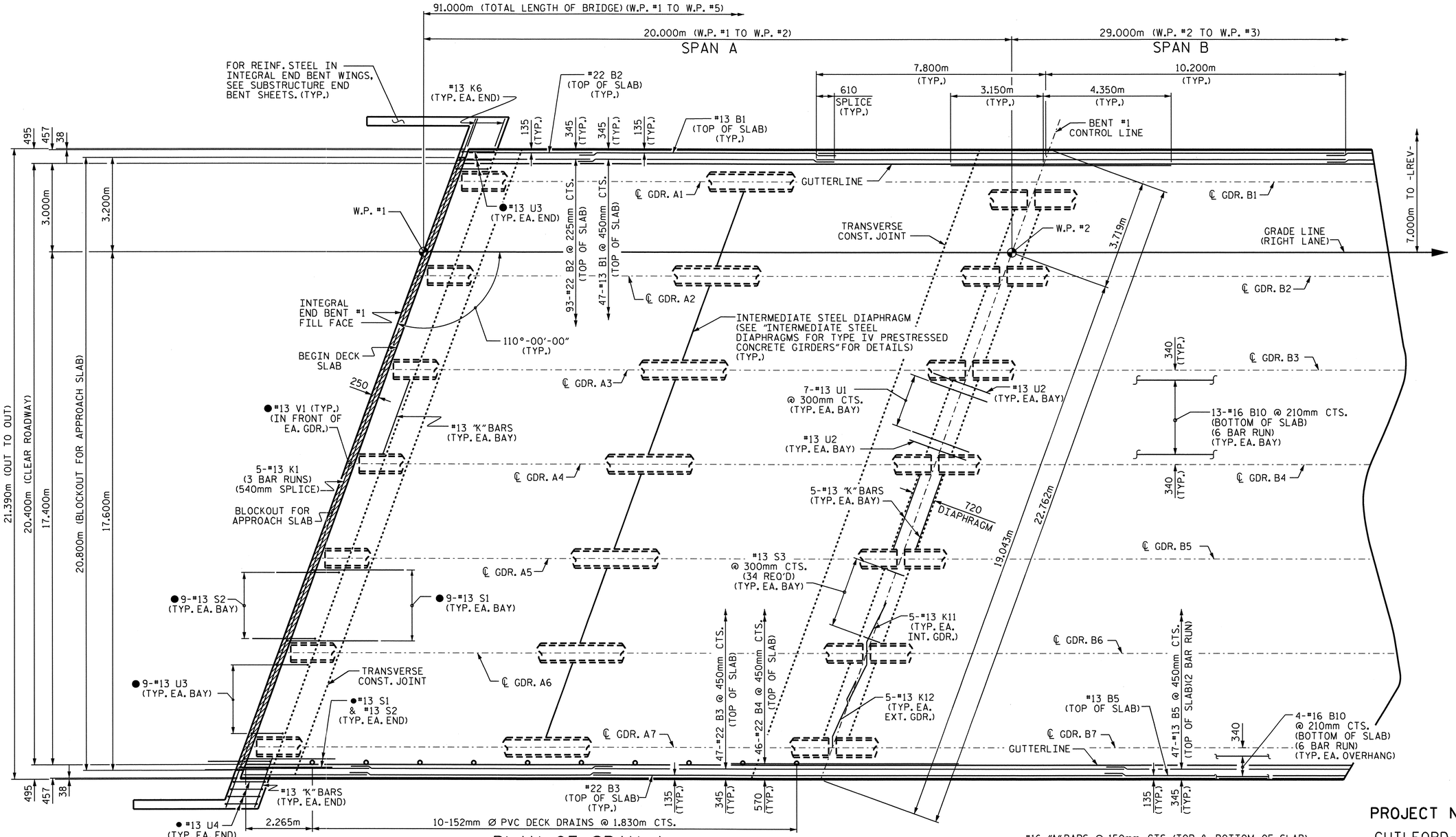

PLAN OF SPAN A

●#13 U3, #13 U4, #13 S1, #13 S2 & #13 V1 BARS SPACED TO MATCH WITH #13 "V" BARS IN INTEGRAL END BENT CAP

PROJECT NO. R-2413C

GUILFORD-ROCKINGHAM COUNTY

STATION: 24+37.000 -LREV-

SHEET 1 OF 5

STATE OF NORTH CAROLINA
DEPARTMENT OF TRANSPORTATION
RALEIGH

SUPERSTRUCTURE

PLAN OF SPANS (RIGHT LANE)

NORTH CAROLINA PROFESSIONAL SEAL 022516 ENGINEER EMILY F. MURRAY

10/28/11

REVISIONS						SHEET NO.
NO.	BY:	DATE:	NO.	BY:	DATE:	S-76
1			3			TOTAL SHEETS
2			4			238

STR. #3

DRAWN BY : M.GUDLAUGSSON DATE : 12-13-10
CHECKED BY : T.L. AVERETTE DATE : 3-23-11

05-SEP-2011 11:44
Y:\Structures\Final Plans\Str.#3\R-2413C_SD_S#_03.dgn
mgudlaugsson

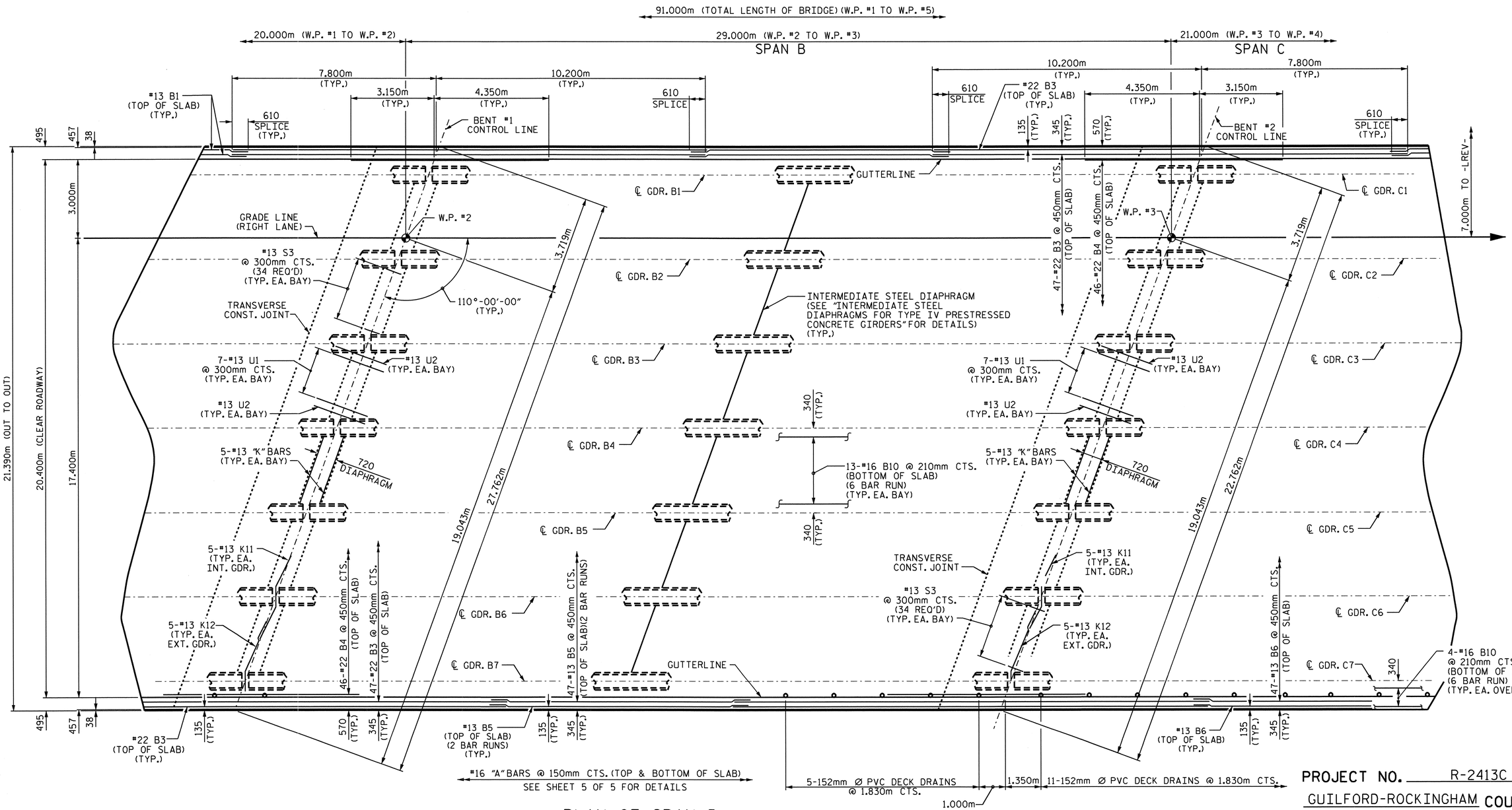

PLAN OF SPAN B

PROJECT NO. R-2413C

GUILFORD-ROCKINGHAM COUNTY

STATION: 24+37.000 -LREV-

SHEET 2 OF 5

STATE OF NORTH CAROLINA
DEPARTMENT OF TRANSPORTATION
RALEIGH

SUPERSTRUCTURE

PLAN OF SPANS (RIGHT LANE)

NORTH CAROLINA PROFESSIONAL SEAL 022516 ENGINEER EMILY E. MURRAY

REVISIONS						SHEET NO.
NO.	BY:	DATE:	NO.	BY:	DATE:	S-77
1			3			TOTAL SHEETS
2			4			238

STR. #3

DRAWN BY : M.GUDLAUGSSON DATE : 12-13-10
CHECKED BY : T.L. AVERETTE DATE : 3-23-11

05-SEP-2011 11:44
Y:\Structures\Final Plans\Str.#3\R-2413C_SD_S#_03.dgn
mgudlaugsson

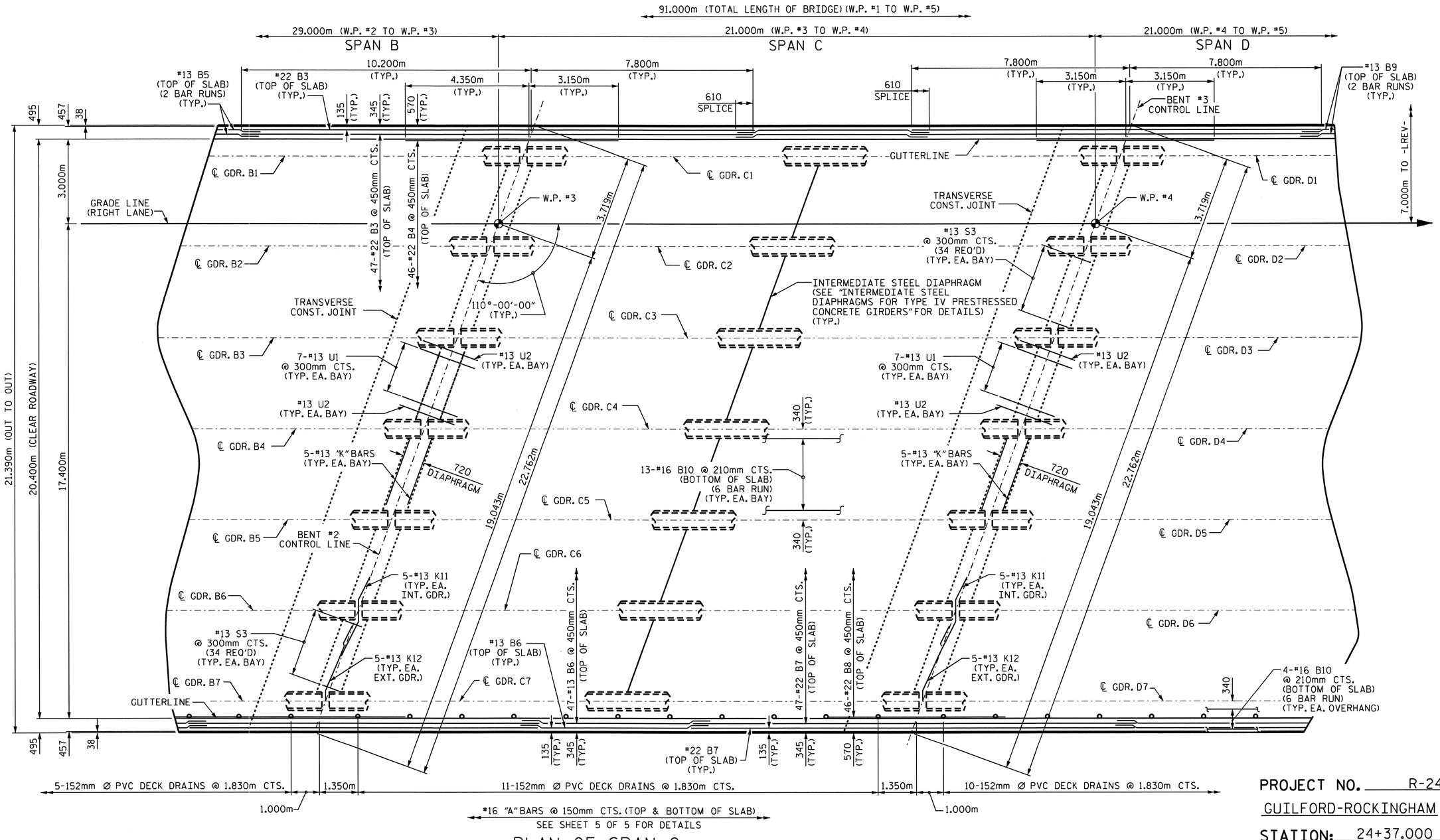

PLAN OF SPAN C

PROJECT NO. R-2413C

GUILFORD-ROCKINGHAM COUNTY

STATION: 24+37.000 -LREV-

SHEET 3 OF 5

STATE OF NORTH CAROLINA
DEPARTMENT OF TRANSPORTATION
RALEIGH

SUPERSTRUCTURE
PLAN OF SPANS
(RIGHT LANE)

NORTH CAROLINA PROFESSIONAL SEAL 022516 ENGINEER EMILY E. MURRAY

10/28/11

REVISIONS							SHEET NO.
NO.	BY:	DATE:	NO.	BY:	DATE:		S-78
1			3				TOTAL SHEETS
2			4				238

DRAWN BY : M.GUDLAUGSSON DATE : 12-13-10
CHECKED BY : T.L. AVERETTE DATE : 3-23-11

05-SEP-2011 11:44
Y:\Structures\Final Plans\Str.#3\R-2413C_SD_S*_03.dgn
mgudlaugsson

STR. #3

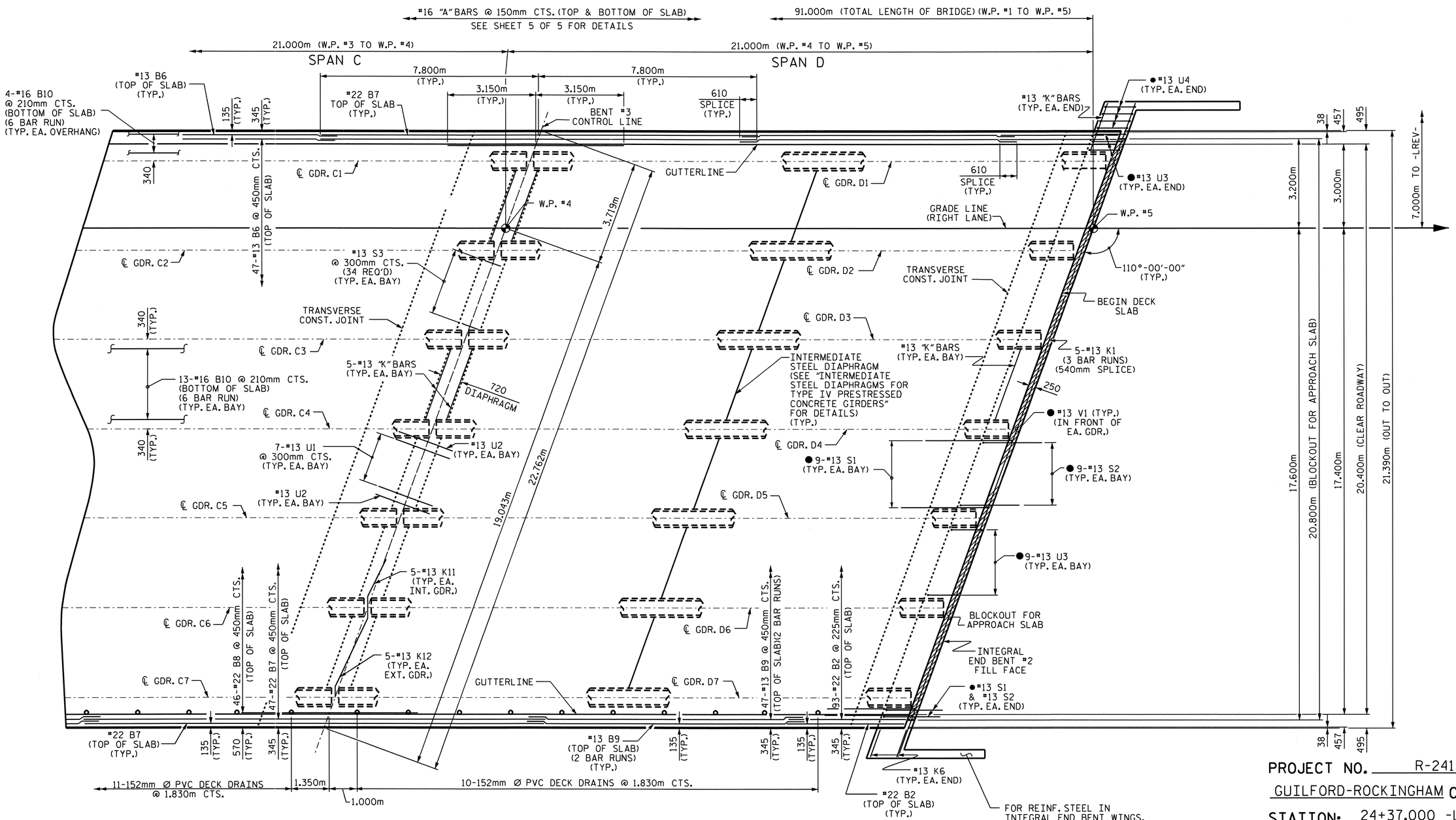

PLAN OF SPAN D

●#13 U3, #13 U4, #13 S1, #13 S2 & #13 V1 BARS SPACED TO MATCH WITH #13 "V" BARS IN INTEGRAL END BENT CAP

PROJECT NO. R-2413C

GUILFORD-ROCKINGHAM COUNTY

STATION: 24+37.000 -LREV-

SHEET 4 OF 5

STATE OF NORTH CAROLINA
DEPARTMENT OF TRANSPORTATION
RALEIGH

SUPERSTRUCTURE
PLAN OF SPANS
(RIGHT LANE)

NORTH CAROLINA PROFESSIONAL SEAL 022516 ENGINEER EMILY E. MURRAY
12/28/11

REVISIONS						SHEET NO.
NO.	BY:	DATE:	NO.	BY:	DATE:	S-79
1			3			TOTAL SHEETS
2			4			238

DRAWN BY : M.GUDLAUGSSON DATE : 12-13-10
CHECKED BY : T.L. AVERETTE DATE : 3-23-11

05-SEP-2011 11:44
Y:\Structures\Final Plans\Str.#3\R-2413C_SD_S#_03.dgn
mgudlaugsson

STR. #3

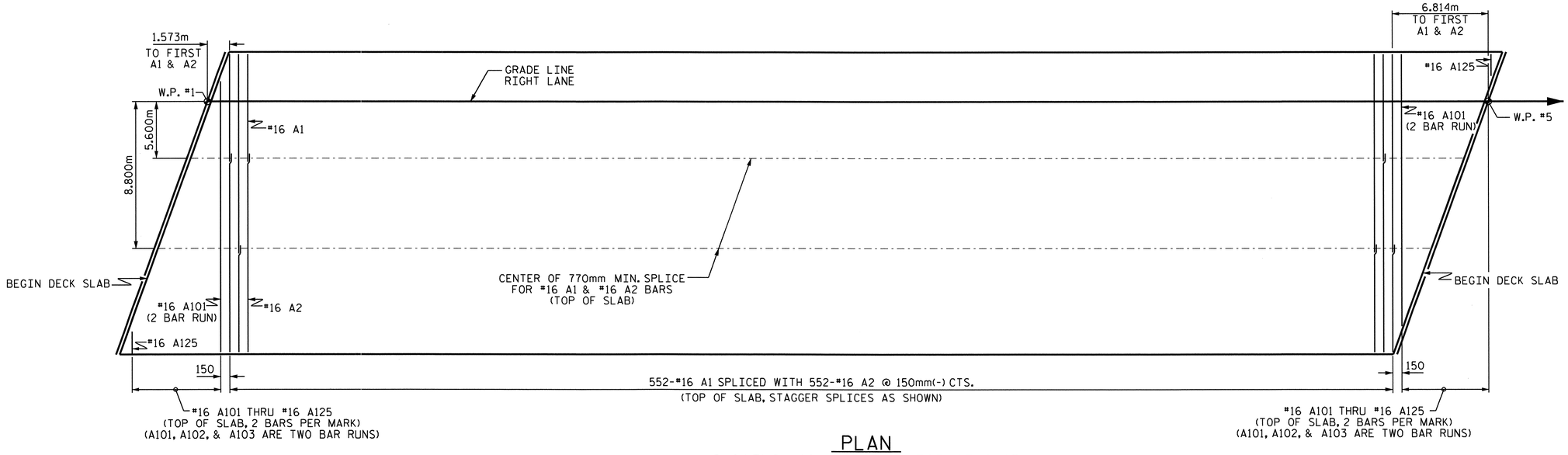

PLAN

SHOWING #16 "A" BARS - TOP OF SLAB

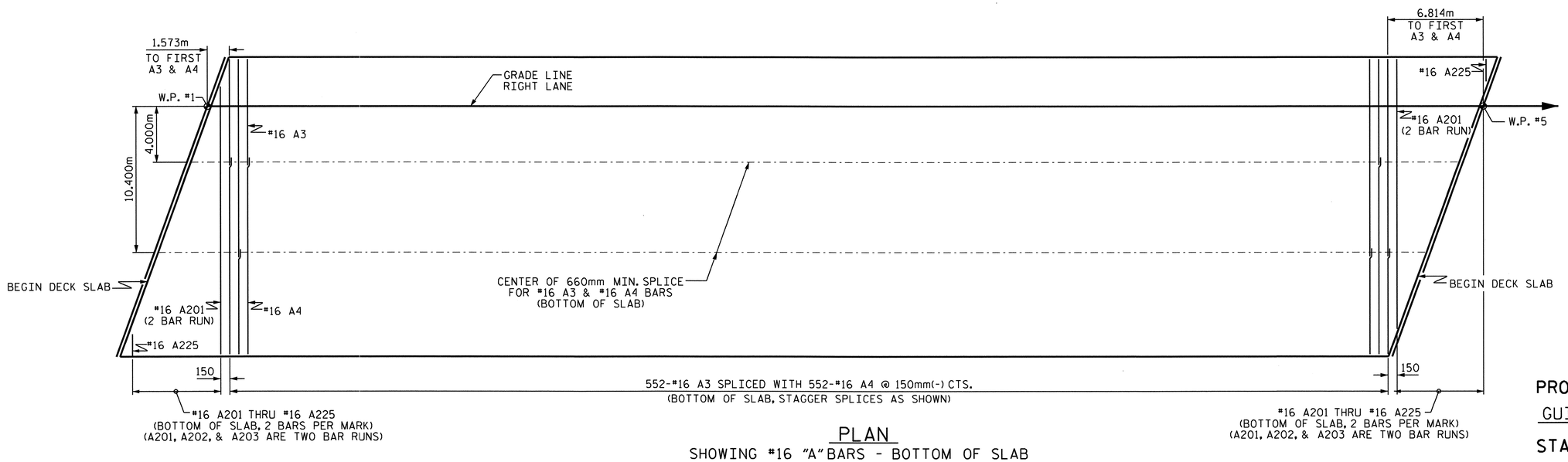

PLAN

SHOWING #16 "A" BARS - BOTTOM OF SLAB

PROJECT NO. R-2413C

GUILFORD-ROCKINGHAM COUNTY

STATION: 24+37.000 -LREV-

SHEET 5 OF 5

STATE OF NORTH CAROLINA
DEPARTMENT OF TRANSPORTATION
RALEIGH

SUPERSTRUCTURE

PLAN OF SPANS
(RIGHT LANE)

NORTH CAROLINA PROFESSIONAL SEAL 022516 ENGINEER EMILY E. MURRAY
10/28/11

REVISIONS						SHEET NO.
NO.	BY:	DATE:	NO.	BY:	DATE:	S-80
1			3			TOTAL SHEETS
2			4			238

DRAWN BY : M.GUDLAUGSSON DATE : 4-12-11
CHECKED BY : T.L. AVERETTE DATE : 4-13-11

05-SEP-2011 11:44
Y:\Structures\Final Plans\Str.#3\R-2413C_SD_S*_03.dgn
mgudlaugsson

STR. #3

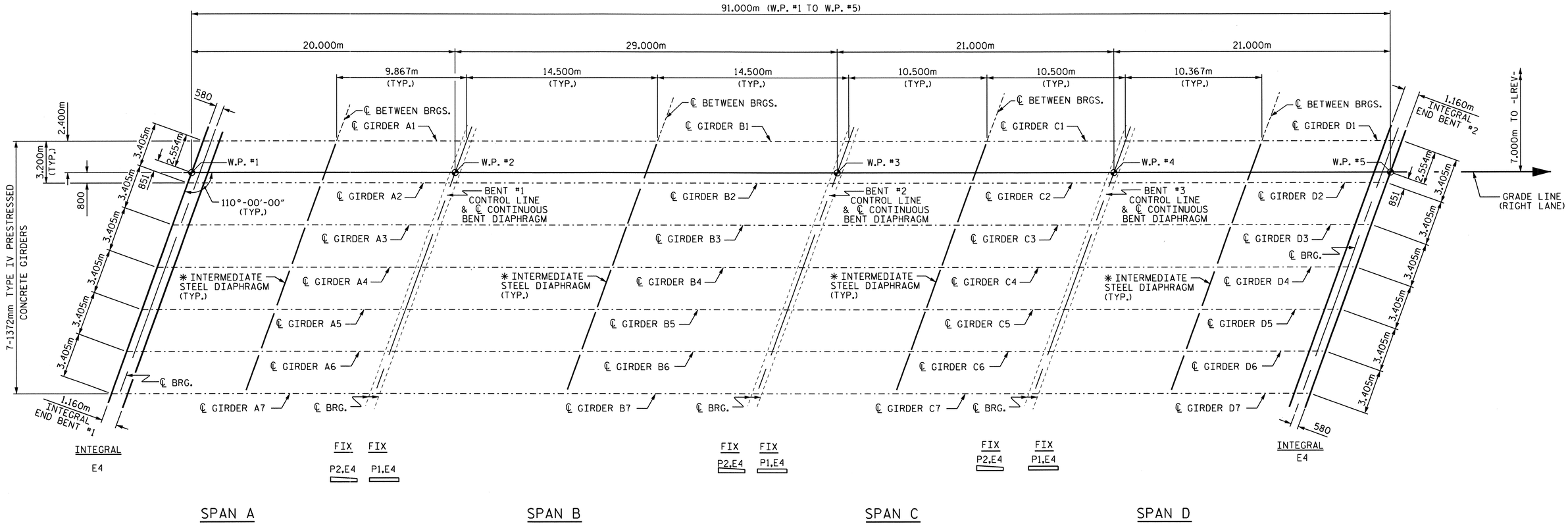

FRAMING PLAN

* NOTE: SEE "INTERMEDIATE STEEL DIAPHRAGMS FOR TYPE IV PRESTRESSED CONCRETE GIRDERS" SHEET FOR DETAILS.

PROJECT NO. R-2413C
GUILFORD-ROCKINGHAM COUNTY
STATION: 24+37.000 -LREV-

STATE OF NORTH CAROLINA
DEPARTMENT OF TRANSPORTATION
RALEIGH

SUPERSTRUCTURE
FRAMING PLAN
(RIGHT LANE)

NORTH CAROLINA PROFESSIONAL SEAL 022516 ENGINEER EMILY E. MARRAX
10/28/11

REVISIONS						SHEET NO.
NO.	BY:	DATE:	NO.	BY:	DATE:	S-81
1			3			TOTAL SHEETS
2			4			238

DRAWN BY : M.GUDLAUGSSON DATE : 11-29-10
CHECKED BY : T.L. AVERETTE DATE : 3-23-11

19-OCT-2011 14:16
R:\TIPProjects-R\R2413c\Structures\FinalPlans\Str.#3\R-2413C_SD_FP_03.dgn
taverette

STR. #3

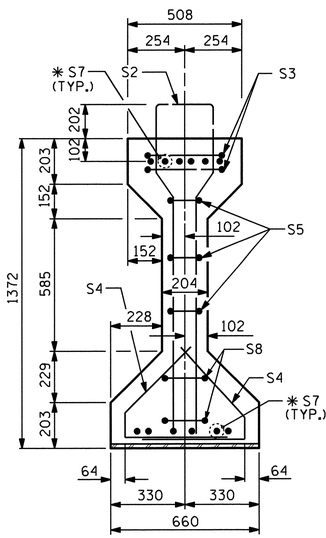

SECTION A-A

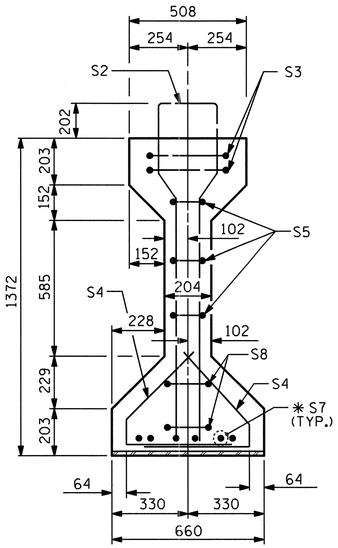

SECTION B-B

*FOR S7 BARS, SEE DETAIL "A" OF PRESTRESSED CONCRETE GIRDER CONTINUOUS FOR LIVE LOAD DETAILS SHEET

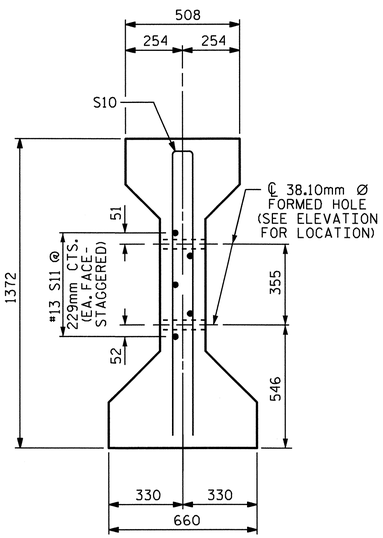

SECTION C-C

(S1 BARS NOT SHOWN)
NOTE: S11 BARS MAY BE SHIFTED SLIGHTLY VERTICALLY TO AVOID STRANDS.

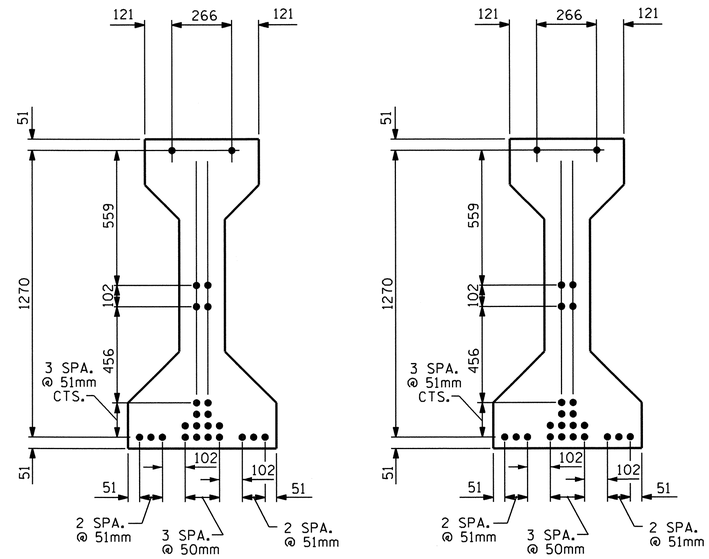

15.24mm Ø LOW RELAXATION STRAND LAYOUT

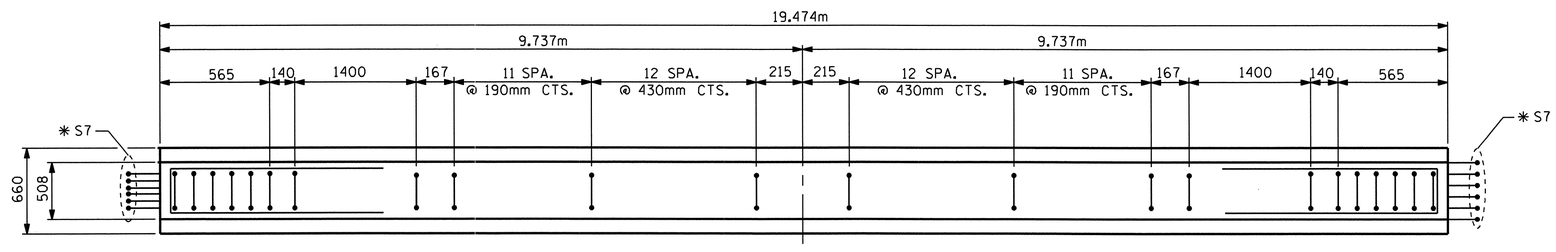

PLAN OF GIRDER

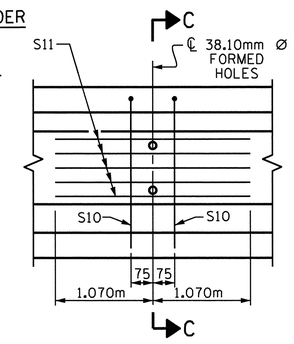

PARTIAL ELEVATION

SHOWING INTERMEDIATE DIAPHRAGM REINFORCING STEEL FOR ALL GIRDERS.

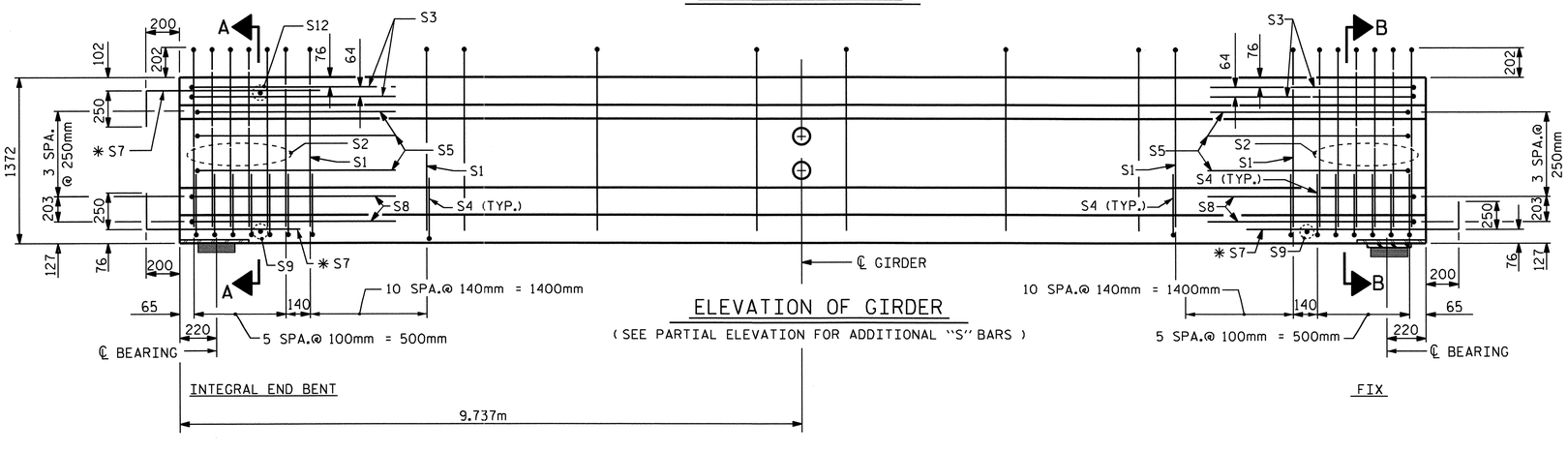

ELEVATION OF GIRDER

(SEE PARTIAL ELEVATION FOR ADDITIONAL "S" BARS)

15.24mm Ø L. R. GRADE 270 STRANDS

AREA (mm²)	ULTIMATE STRENGTH (kN PER STRAND)	APPLIED PRESTRESS (kN PER STRAND)
140.00	260.7	195.5

REINFORCING STEEL FOR ONE GIRDER

BAR	NUMBER	SIZE	TYPE	LENGTH	WEIGHT
S1	70	#13	1	3360	234
S2	12	#19	1	3360	90
S3	4	#13	2	2760	11
S4	68	#13	3	1040	70
S5	6	#13	2	2560	15
* S7	18	#16	STR	1120	31
S8	4	#13	2	2620	10
S9	2	#10	STR	560	1
S10	2	#16	2	2640	8
S11	5	#13	STR	2140	11
S12	1	#10	STR	400	1

* NOTE: S7 BARS SHALL BE BENT BEFORE SHIPMENT. HEAT BENDING SHALL NOT BE ALLOWED.

BAR TYPES

ALL BAR DIMENSIONS ARE OUT-TO-OUT

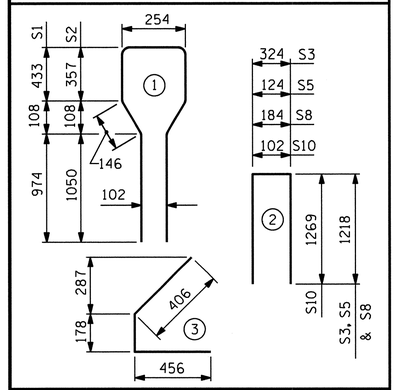

QUANTITIES FOR ONE GIRDER

	REINFORCING STEEL	37.92 MPa CONCRETE	15.24mm Ø L.R. STRANDS
	kg	m³	No.
	482	9.9	24

GIRDERS REQUIRED

NUMBER	LENGTH	TOTAL LENGTH
7	19.474m	136.318m

PROJECT NO. R-2413C

GUILFORD-ROCKINGHAM COUNTY

STATION: 24+37.000 -LREV-

SHEET 1 OF 6

STATE OF NORTH CAROLINA
DEPARTMENT OF TRANSPORTATION
RALEIGH

AASHTO TYPE IV
PRESTRESSED CONCRETE GIRDER
CONTINUOUS FOR LIVE LOAD
SPAN 'A'
(RIGHT LANE)

NORTH CAROLINA PROFESSIONAL SEAL 022516 ENGINEER EMILY E. ZALRAY
10/28/11

REVISIONS							SHEET NO.
NO.	BY:	DATE:	NO.	BY:	DATE:		S-82
1			3				TOTAL SHEETS
2			4				238

STR.#3

STD. NO. PCG6SM

ASSEMBLED BY: M.GUDLAUGSSON DATE: 12-22-10
CHECKED BY : T.L. AVERETTE DATE: 4-05-11

DRAWN BY : ELR 8/91
CHECKED BY : GRP 8/91

REV. 7/17/98 RWW/LES
REV. 10/17/00R RWW/LES
REV. 5/1/06R TLA/GM

05-SEP-2011 11:41
Y:\Structures\Final Plans\Str.#3\R-2413C_SD_G#_03.dgn
mgudlaugsson

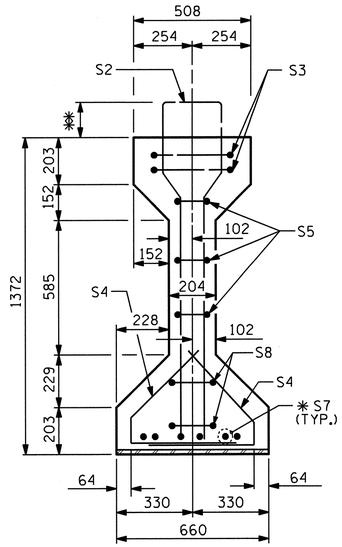

SECTION B-B

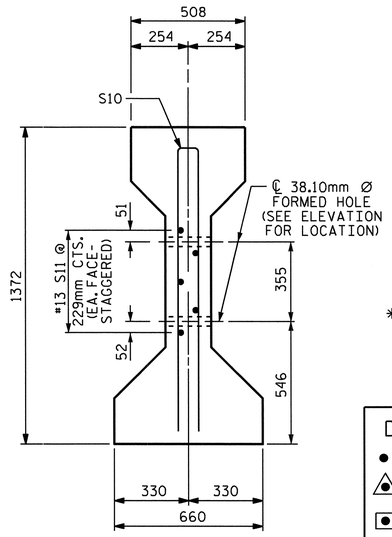

SECTION C-C

(S1 BARS NOT SHOWN)
NOTE: S11 BARS MAY BE SHIFTED SLIGHTLY VERTICALLY TO AVOID STRANDS.

✱✱ NOTE:
THE PROJECTION OF THE S2 & S12 BARS IS 202mm.
THE PROJECTION OF THE S13 BARS IS 172mm.
THE PROJECTION OF THE S1 BARS IS 152mm.

✱ FOR S7 BARS, SEE DETAIL "A" OF PRESTRESSED CONCRETE GIRDER CONTINUOUS FOR LIVE LOAD DETAILS SHEET

DEBONDING LEGEND

- ● FULLY BONDED STRANDS
- △ STRANDS DEBONDED FOR 1.220m FROM END OF GIRDER
- ▣ STRANDS DEBONDED FOR 610mm FROM END OF GIRDER

BOND SHALL BE BROKEN ON STRANDS AS SHOWN FOR THE SPECIFIED LENGTH FROM EACH END OF THE GIRDER. SEE STANDARD SPECIFICATIONS ARTICLE 1078-13.

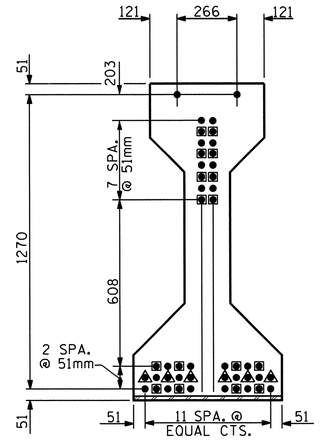

AT END OF GIRDER

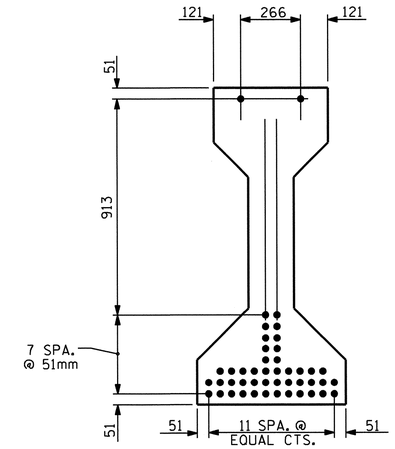

AT ℄ OF GIRDER

15.24mm Ø LOW RELAXATION STRAND LAYOUT

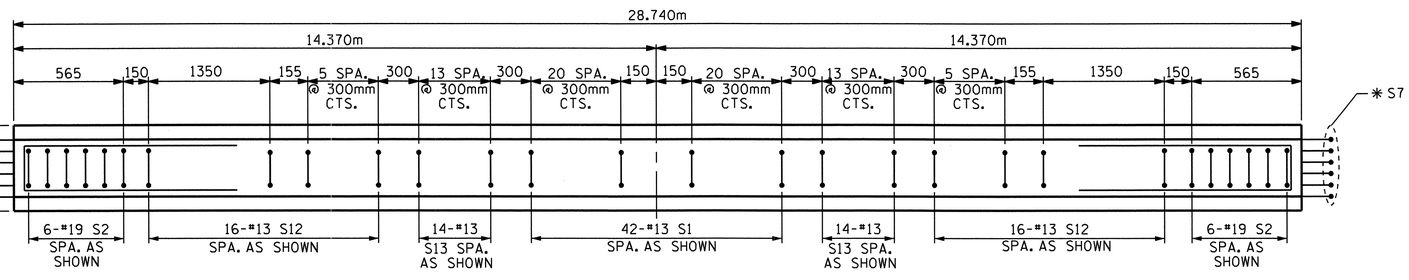

PLAN OF GIRDER

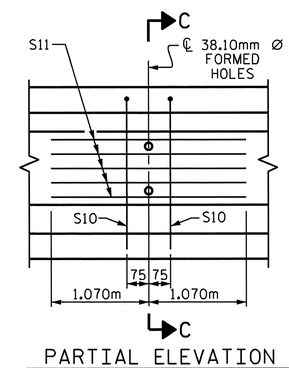

PARTIAL ELEVATION

SHOWING INTERMEDIATE DIAPHRAGM REINFORCING STEEL FOR ALL GIRDERS.

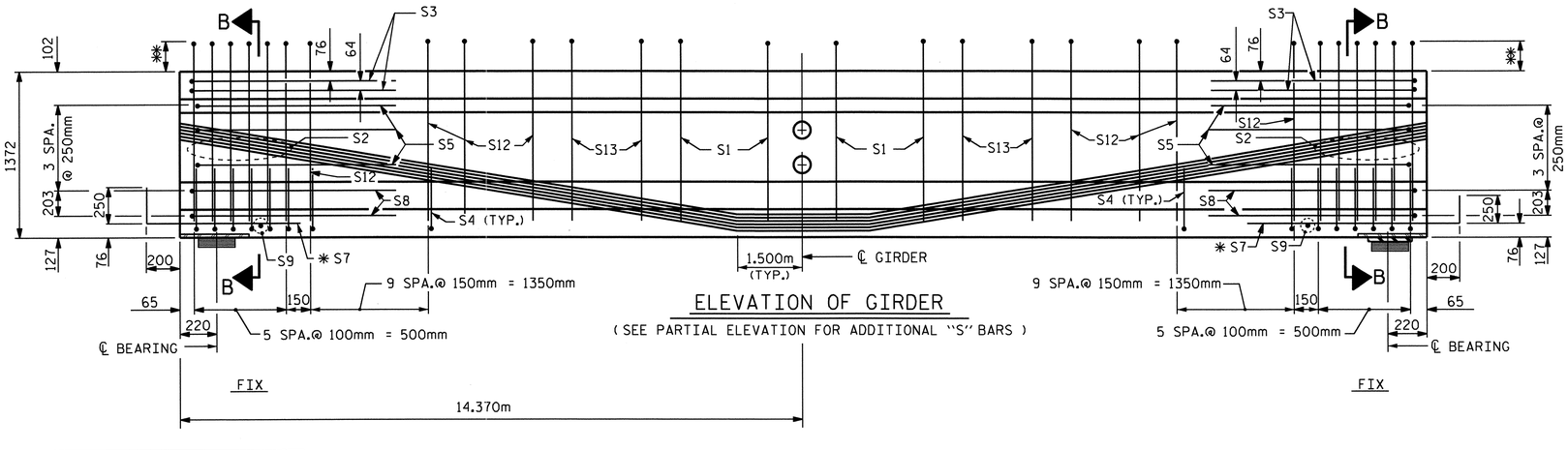

ELEVATION OF GIRDER

(SEE PARTIAL ELEVATION FOR ADDITIONAL "S" BARS)

15.24mm Ø L. R. GRADE 270 STRANDS

AREA (mm²)	ULTIMATE STRENGTH (kN PER STRAND)	APPLIED PRESTRESS (kN PER STRAND)
140.00	260.7	195.5

REINFORCING STEEL FOR ONE GIRDER

BAR	NUMBER	SIZE	TYPE	LENGTH	WEIGHT
S1	42	#13	1	3260	136
S2	12	#19	1	3360	90
S3	4	#13	2	2760	11
S4	64	#13	3	1040	66
S5	6	#13	2	2560	15
✱ S7	12	#16	STR	1120	21
S8	4	#13	2	2620	10
S9	2	#10	STR	560	1
S10	2	#16	2	2640	8
S11	5	#13	STR	2140	11
S12	32	#13	1	3360	107
S13	28	#13	1	3300	92

✱ NOTE: S7 BARS SHALL BE BENT BEFORE SHIPMENT. HEAT BENDING SHALL NOT BE ALLOWED.

BAR TYPES

ALL BAR DIMENSIONS ARE OUT-TO-OUT

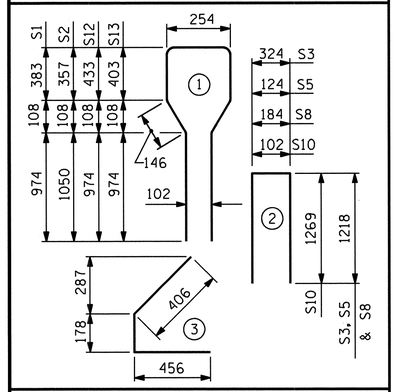

QUANTITIES FOR ONE GIRDER

	REINFORCING STEEL	55.16 MPa CONCRETE	15.24mm Ø L.R. STRANDS
	kg	m³	No.
	568	14.6	46

GIRDERS REQUIRED

NUMBER	LENGTH	TOTAL LENGTH
7	28.740m	201.180m

PROJECT NO. R-2413C

GUILFORD-ROCKINGHAM COUNTY

STATION: 24+37.000 -LREV-

SHEET 2 OF 6

STATE OF NORTH CAROLINA
DEPARTMENT OF TRANSPORTATION
RALEIGH

AASHTO TYPE IV
PRESTRESSED CONCRETE GIRDER
CONTINUOUS FOR LIVE LOAD
SPAN 'B'
(RIGHT LANE)

NORTH CAROLINA PROFESSIONAL SEAL 022516 ENGINEER EMILY E. McMURRAY
10/28/11

REVISIONS						SHEET NO.
NO.	BY:	DATE:	NO.	BY:	DATE:	S-83
1			3			TOTAL SHEETS
2			4			238

ASSEMBLED BY: M.GUDLAUGSSON	DATE: 10-28-10
CHECKED BY : T.L. AVERETTE	DATE: 4-05-11
DRAWN BY : ELR 8/91	REV. 7/17/98 RWW/LES
CHECKED BY : GRP 8/91	REV. 10/17/00R RWW/LES
	REV. 5/1/06R TLA/GM

05-SEP-2011 11:41
Y:\Structures\Final Plans\Str.#3\R-2413C_SD_G#_03.dgn
mgudlaugsson

STR.#3

STD. NO. PCG6SM

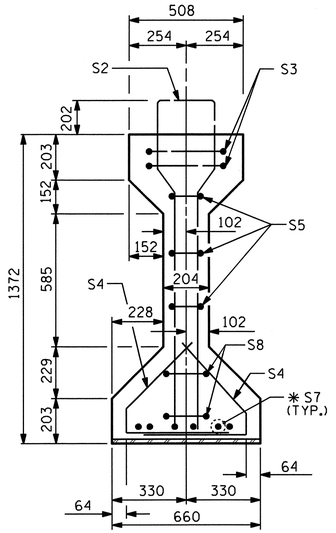

SECTION B-B

✱FOR S7 BARS, SEE DETAIL "A" OF PRESTRESSED CONCRETE GIRDER CONTINUOUS FOR LIVE LOAD DETAILS SHEET

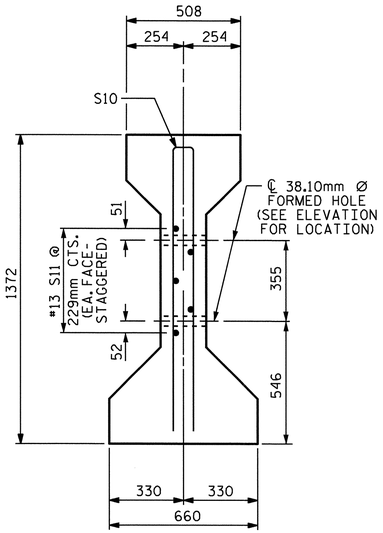

SECTION C-C

(S1 BARS NOT SHOWN)

NOTE: S11 BARS MAY BE SHIFTED SLIGHTLY VERTICALLY TO AVOID STRANDS.

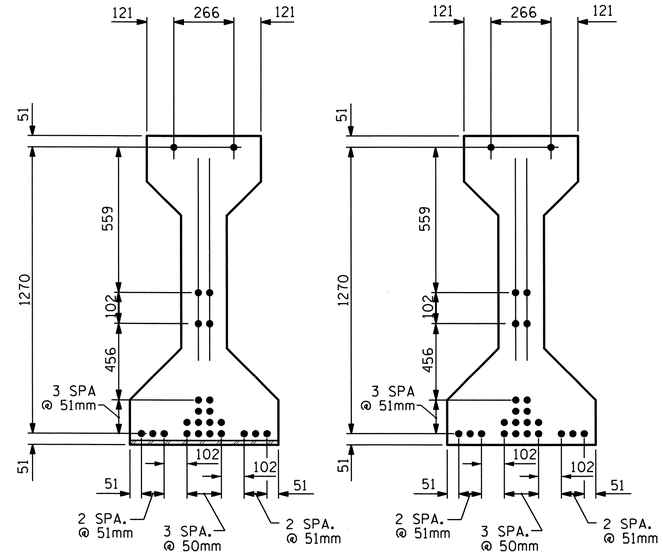

15.24mm Ø LOW RELAXATION STRAND LAYOUT

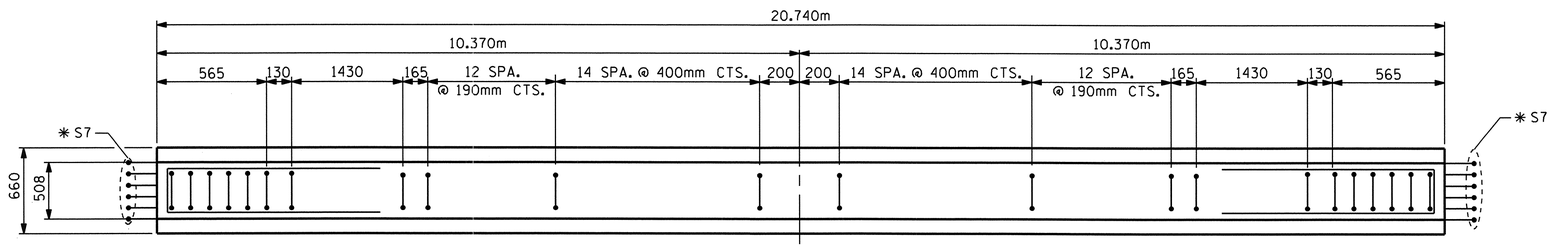

PLAN OF GIRDER

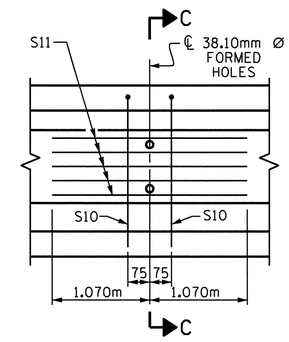

PARTIAL ELEVATION

SHOWING INTERMEDIATE DIAPHRAGM REINFORCING STEEL FOR ALL GIRDERS.

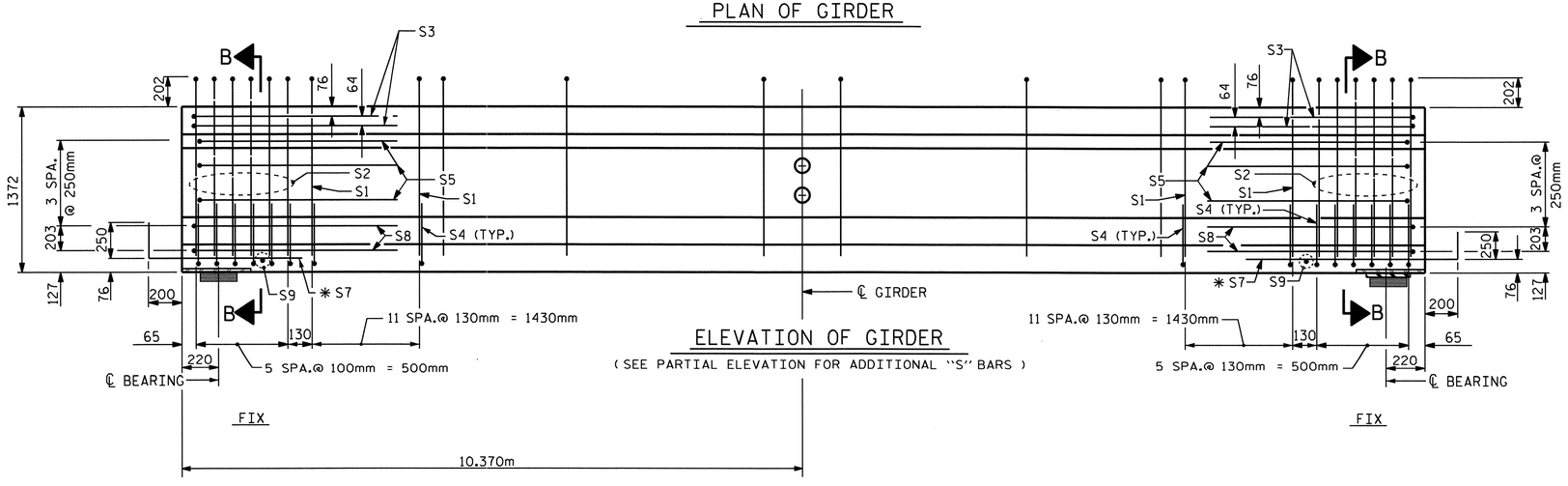

ELEVATION OF GIRDER

(SEE PARTIAL ELEVATION FOR ADDITIONAL "S" BARS)

15.24mm Ø L. R. GRADE 270 STRANDS

AREA (mm²)	ULTIMATE STRENGTH (kN PER STRAND)	APPLIED PRESTRESS (kN PER STRAND)
140.00	260.7	195.5

REINFORCING STEEL FOR ONE GIRDER

BAR	NUMBER	SIZE	TYPE	LENGTH	WEIGHT
S1	78	#13	1	3360	261
S2	12	#19	1	3360	90
S3	4	#13	2	2760	11
S4	72	#13	3	1040	74
S5	6	#13	2	2560	15
✱S7	12	#16	STR	1120	21
S8	4	#13	2	2620	10
S9	2	#10	STR	560	1
S10	2	#16	2	2640	8
S11	5	#13	STR	2140	11

✱NOTE: S7 BARS SHALL BE BENT BEFORE SHIPMENT. HEAT BENDING SHALL NOT BE ALLOWED.

BAR TYPES

ALL BAR DIMENSIONS ARE OUT-TO-OUT

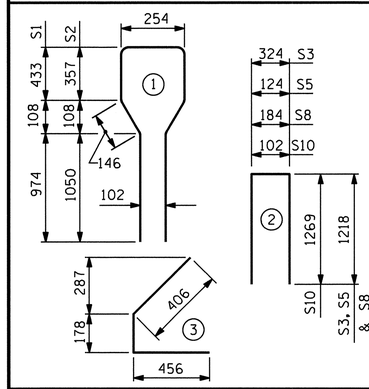

QUANTITIES FOR ONE GIRDER

	REINFORCING STEEL	41.37 MPa CONCRETE	15.24mm Ø L.R. STRANDS
	kg	m³	No.
	502	10.6	24

GIRDERS REQUIRED

NUMBER	LENGTH	TOTAL LENGTH
7	20.740m	145.180m

PROJECT NO. R-2413C

GUILFORD-ROCKINGHAM COUNTY

STATION: 24+37.000 -LREV-

SHEET 3 OF 6

STATE OF NORTH CAROLINA
DEPARTMENT OF TRANSPORTATION
RALEIGH

AASHTO TYPE IV
PRESTRESSED CONCRETE GIRDER
CONTINUOUS FOR LIVE LOAD
SPAN 'C'
(RIGHT LANE)

NORTH CAROLINA PROFESSIONAL SEAL 022516 ENGINEER EMILY G. MURRAY
10/28/11

REVISIONS								SHEET NO.
NO.	BY:	DATE:	NO.	BY:	DATE:			S-84
1			3					TOTAL SHEETS
2			4					238

ASSEMBLED BY : M.GUDLAUGSSON	DATE : 10-28-10		
CHECKED BY : T.L. AVERETTE	DATE : 4-05-11		
DRAWN BY : ELR 8/91	REV. 7/17/98	RWW/LES	
CHECKED BY : GRP 8/91	REV. 10/17/00R	RWW/LES	
	REV. 5/1/06R	TLA/GM	

05-SEP-2011 11:40
Y:\Structures\Final Plans\Str.#3\R-2413C_SD_G#_03.dgn
mgudlaugsson

STR.#3

STD. NO. PCG6SM

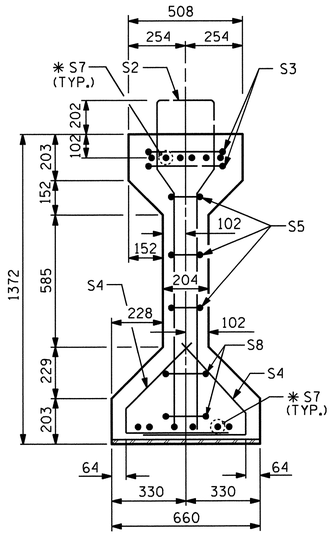

SECTION A-A

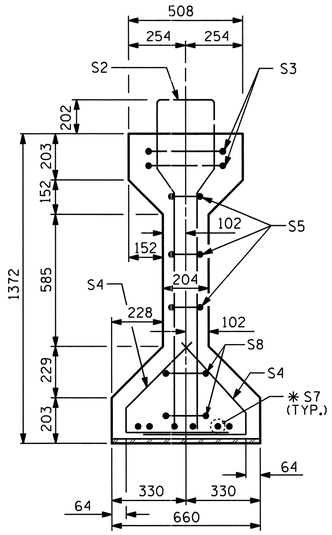

SECTION B-B

* FOR S7 BARS, SEE DETAIL "A" OF PRESTRESSED CONCRETE GIRDER CONTINUOUS FOR LIVE LOAD DETAILS SHEET

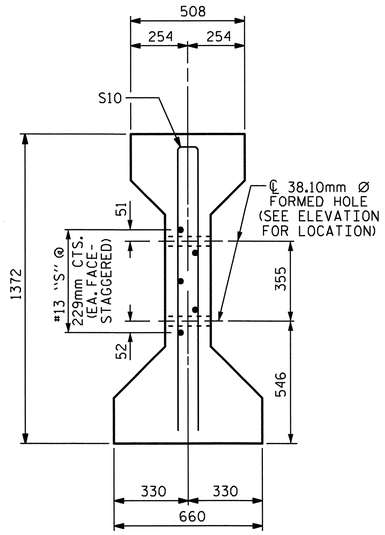

SECTION C-C

(S1 BARS NOT SHOWN)
NOTE: S11 BARS MAY BE SHIFTED SLIGHTLY VERTICALLY TO AVOID STRANDS.

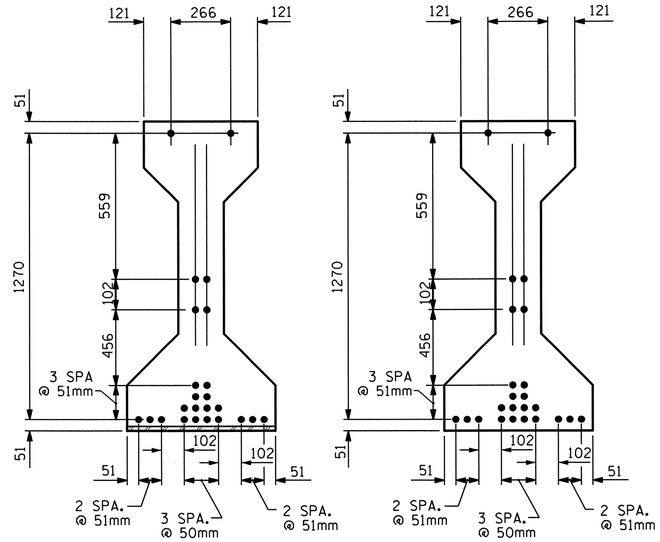

AT END OF GIRDER

AT ℄ OF GIRDER

15.24mm Ø LOW RELAXATION STRAND LAYOUT

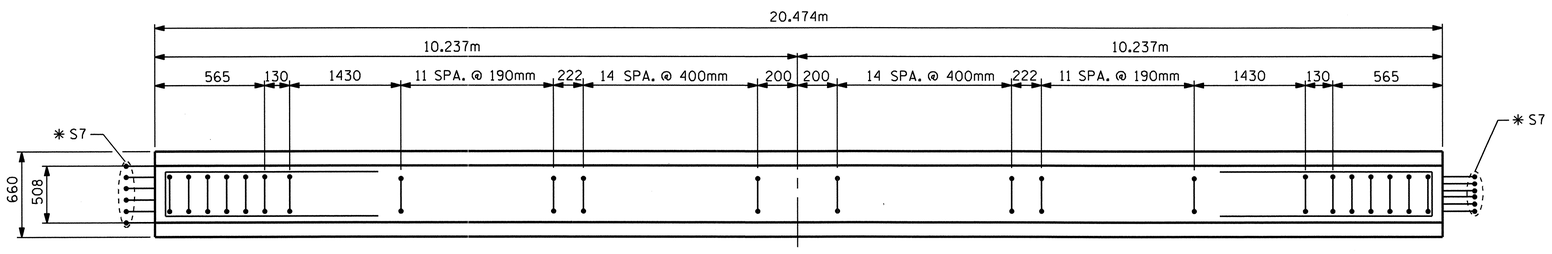

PLAN OF GIRDER

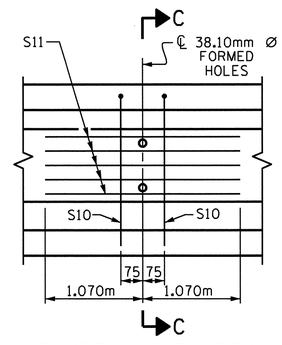

PARTIAL ELEVATION

SHOWING INTERMEDIATE DIAPHRAGM REINFORCING STEEL FOR ALL GIRDERS.

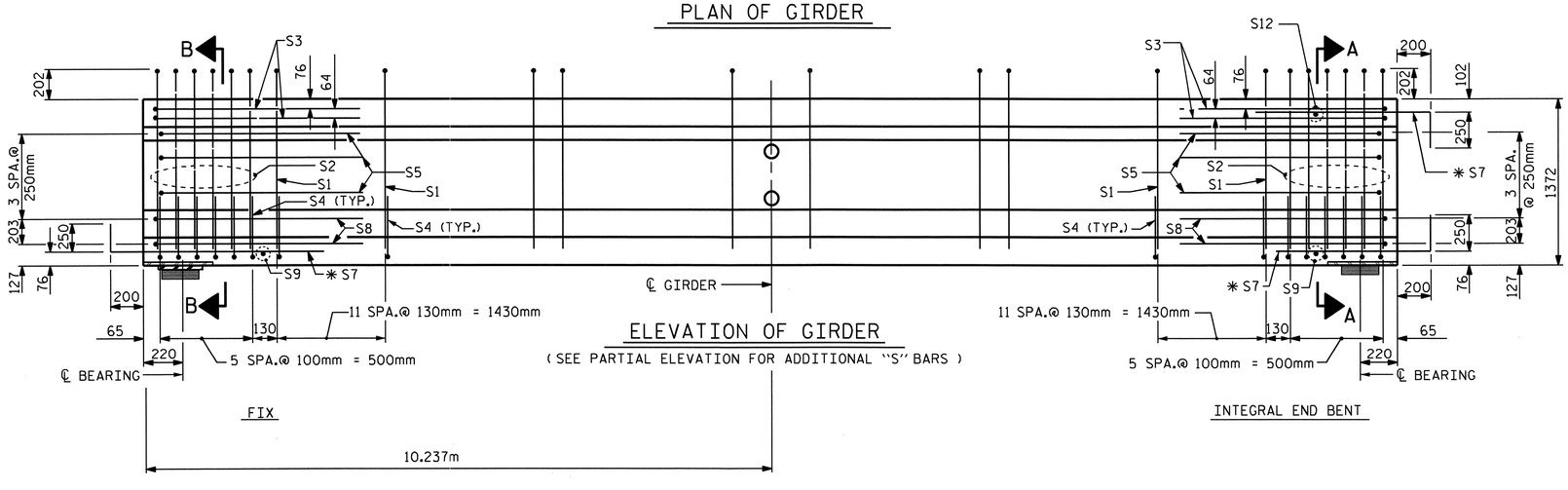

ELEVATION OF GIRDER

(SEE PARTIAL ELEVATION FOR ADDITIONAL "S" BARS)

15.24mm Ø L. R. GRADE 270 STRANDS

AREA (mm²)	ULTIMATE STRENGTH (kN PER STRAND)	APPLIED PRESTRESS (kN PER STRAND)
140.00	260.7	195.5

REINFORCING STEEL FOR ONE GIRDER

BAR	NUMBER	SIZE	TYPE	LENGTH	WEIGHT
S1	76	#13	1	3360	254
S2	12	#19	1	3360	90
S3	4	#13	2	2760	11
S4	72	#13	3	1040	66
S5	6	#13	2	2560	15
* S7	18	#16	STR	1120	31
S8	4	#13	2	2620	10
S9	2	#10	STR	560	1
S10	2	#16	2	2640	8
S11	5	#13	STR	2140	11
S12	1	#10	STR	400	1

* NOTE: S7 BARS SHALL BE BENT BEFORE SHIPMENT. HEAT BENDING SHALL NOT BE ALLOWED.

BAR TYPES

ALL BAR DIMENSIONS ARE OUT-TO-OUT

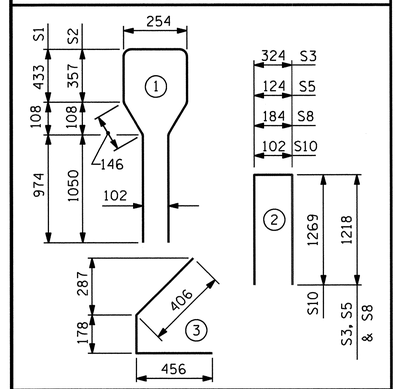

QUANTITIES FOR ONE GIRDER

	REINFORCING STEEL	37.92 MPa CONCRETE	15.24mm Ø L.R. STRANDS
	kg	m³	No.
	498	10.4	24

GIRDERS REQUIRED

NUMBER	LENGTH	TOTAL LENGTH
7	20.474m	143.318m

PROJECT NO. R-2413C

GUILFORD-ROCKINGHAM COUNTY

STATION: 24+37.000 -LREV-

SHEET 4 OF 6

STATE OF NORTH CAROLINA
DEPARTMENT OF TRANSPORTATION
RALEIGH

AASHTO TYPE IV
PRESTRESSED CONCRETE GIRDER
CONTINUOUS FOR LIVE LOAD
SPAN 'D'
(RIGHT LANE)

NORTH CAROLINA PROFESSIONAL SEAL 022516 ENGINEER EMILY E. MURRAY
10/28/11

REVISIONS						SHEET NO.
NO.	BY:	DATE:	NO.	BY:	DATE:	S-85
1			3			TOTAL SHEETS
2			4			238

ASSEMBLED BY : M.GUDLAUGSSON DATE : 10-28-10
CHECKED BY : T.L. AVERETTE DATE : 4-05-11

DRAWN BY : ELR 8/91
CHECKED BY : GRP 8/91

REV. 7/17/98 RWW/LES
REV. 10/17/00R RWW/LES
REV. 5/1/06R TLA/GM

05-SEP-2011 11:40
Y:\Structures\Final Plans\Str.#3\R-2413C_SD_G#_03.dgn
mgudlaugsson

STR.#3

STD. NO. PCG6SM

DEAD LOAD DEFLECTION TABLE FOR SPANS A, C & D

15.24mm Ø LOW RELAXATION	ALL GIRDERS										
TENTH POINTS	0	.1	.2	.3	.4	.5	.6	.7	.8	.9	0
CAMBER (GIRDER ALONE IN PLACE) ↑	0.000	0.012	0.022	0.030	0.035	0.037	0.035	0.030	0.022	0.012	0.000
✱ DEFLECTION DUE TO SUPERIMPOSED D.L. ↓	0.000	0.003	0.007	0.009	0.011	0.012	0.011	0.009	0.007	0.003	0.000
FINAL CAMBER ↑	0	9	15	21	24	25	24	21	15	9	0

✱ INCLUDES FUTURE WEARING SURFACE IN SUPERIMPOSED DEAD LOAD.
ALL VALUES ARE SHOWN IN METERS, EXCEPT "FINAL CAMBER" WHICH IS SHOWN IN MILLIMETERS.

DEAD LOAD DEFLECTION TABLE FOR SPAN B

15.24mm Ø LOW RELAXATION	GIRDERS 1 AND 7											GIRDERS 2, 3, 4, 5 & 6										
TENTH POINTS	0	.1	.2	.3	.4	.5	.6	.7	.8	.9	0	0	.1	.2	.3	.4	.5	.6	.7	.8	.9	0
CAMBER (GIRDER ALONE IN PLACE) ↑	0.000	0.039	0.074	0.101	0.118	0.124	0.118	0.101	0.074	0.039	0.000	0.000	0.039	0.074	0.101	0.118	0.124	0.118	0.101	0.074	0.039	0.000
✱ DEFLECTION DUE TO SUPERIMPOSED D.L. ↓	0.000	0.015	0.029	0.040	0.047	0.049	0.047	0.040	0.029	0.015	0.000	0.000	0.016	0.031	0.043	0.051	0.054	0.051	0.043	0.031	0.016	0.000
FINAL CAMBER ↑	0	24	45	61	71	75	71	61	45	24	0	0	23	43	58	67	70	67	58	43	23	0

✱ INCLUDES FUTURE WEARING SURFACE IN SUPERIMPOSED DEAD LOAD.
ALL VALUES ARE SHOWN IN METERS, EXCEPT "FINAL CAMBER" WHICH IS SHOWN IN MILLIMETERS.

NOTES

ALL PRESTRESSING STRANDS SHALL BE 7-WIRE LOW-RELAXATION GRADE 270 STRANDS AND SHALL CONFORM TO AASHTO M203M EXCEPT FOR SAMPLING REQUIREMENTS WHICH SHALL BE IN ACCORDANCE WITH THE STANDARD SPECIFICATIONS.

ALL REINFORCING STEEL SHALL BE GRADE 420.

EMBEDDED PLATE "B-1" SHALL BE GALVANIZED IN ACCORDANCE WITH THE SPECIFICATIONS. BEVEL EDGES OF PLATE "B-1" TO GIVE CLOSE FIT BUT NOT TIGHT FIT TO STEEL CASTING FORM.

ANCHOR STUDS SHALL CONFORM TO AASHTO M169 GRADES 1010 THROUGH 1020 OR APPROVED EQUAL, AND SHALL MEET THE TYPE "B" REQUIREMENTS OF SUBSECTION 7.3 OF THE ANSI/AASHTO/AWS D1.5 BRIDGE WELDING CODE.

AT ENDS OF GIRDERS TO BE EMBEDDED IN CONCRETE DIAPHRAGMS OR END WALLS, PRESTRESSING STRANDS MAY EXTEND A MAXIMUM OF 50mm BEYOND THE GIRDER ENDS. OTHERWISE, PRESTRESSING STRANDS SHALL BE CUT FLUSH WITH THE GIRDER ENDS.

THE TRANSFER OF LOAD FROM THE ANCHORAGES TO THE GIRDER SHALL BE DONE WHEN CONCRETE HAS REACHED A COMPRESSIVE STRENGTH OF NOT LESS THAN 29.65 MPa FOR SPANS A, C & D AND 48.26 MPa FOR SPAN B.

DEPENDING ON THE TYPE OF SYSTEM USED TO SUPPORT THE DECK SLAB FORMS, PRESET ANCHORS MAY BE NECESSARY IN THE PRESTRESSED CONCRETE GIRDER.

THE TOP SURFACE OF THE GIRDER, EXCLUDING THE OUTSIDE 100mm, SHALL BE RAKED TO A DEPTH OF 6mm.

WHEN DRAPED STRANDS ARE DETAILED, THE LONGITUDINAL LOCATION OF THE HOLD DOWN DEVICES SHALL BE WITHIN 150mm OF THE LOCATION SHOWN AND THE CENTER OF GRAVITY OF THE GROUP OF DRAPED STRANDS SHALL BE LOCATED WITHIN 13mm OF THE THEORETICAL LOCATION SHOWN.

FOR PRESTRESSED CONCRETE MEMBERS, SEE SPECIAL PROVISIONS.

THE UPLIFT FORCE DUE TO DRAPED STRANDS IN SPAN B IS 173 kN.

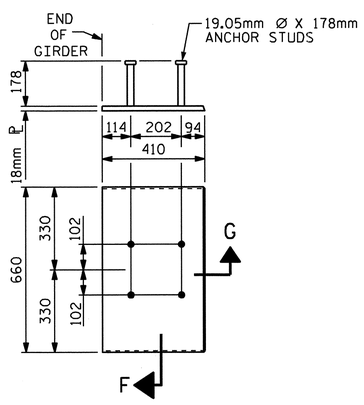

EMBEDDED PLATE "B-1" DETAILS FOR AASHTO TYPE IV GIRDER

(2 REQ'D PER GIRDER)

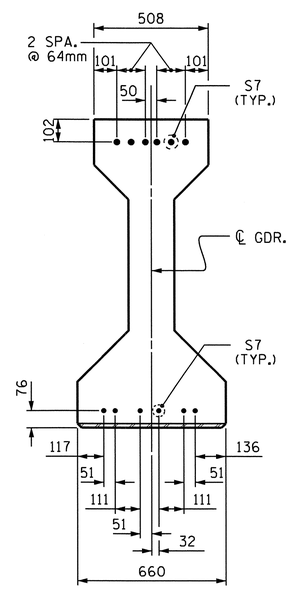

DETAIL "A"

(FOR AASHTO TYPE IV GIRDERS)

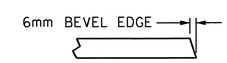

SECTION "G"

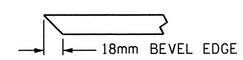

SECTION "F"

(SEE NOTES)

PROJECT NO. R-2413C

GUILFORD-ROCKINGHAM COUNTY

STATION: 24+37.000 -LREV-

SHEET 5 OF 6

STATE OF NORTH CAROLINA
DEPARTMENT OF TRANSPORTATION
RALEIGH

STANDARD
PRESTRESSED CONCRETE GIRDER
CONTINUOUS FOR LIVE LOAD
DETAILS
(RIGHT LANE)

NORTH CAROLINA PROFESSIONAL SEAL 022516 ENGINEER EMILY E. MURRAY
10/28/11

REVISIONS						SHEET NO.
NO.	BY:	DATE:	NO.	BY:	DATE:	S-86
1			3			TOTAL SHEETS
2			4			238

STR. #3

ASSEMBLED BY : M.GUDLAUGSSON DATE : 12-28-10
CHECKED BY : T.L. AVERETTE DATE : 3-23-11

19-OCT-2011 14:17
R:\TIPProjects-R\R2413c\Structures\FinalPlans\Str.#3\R-2413C_SD_DL_03.dgn
taverette

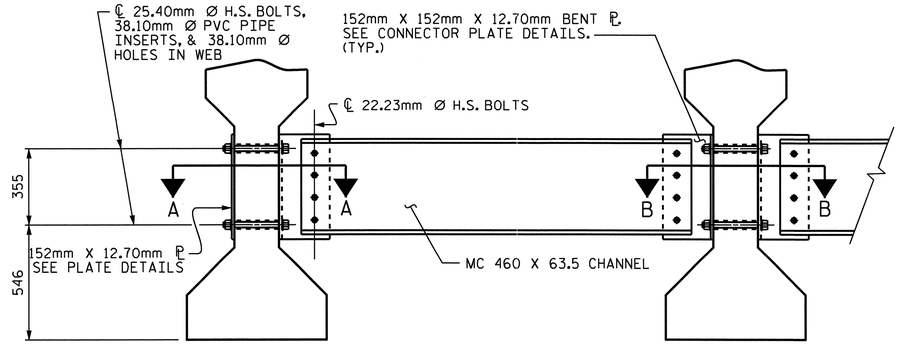

EXTERIOR GIRDER

INTERIOR GIRDER

PART SECTION AT INTERMEDIATE DIAPHRAGM

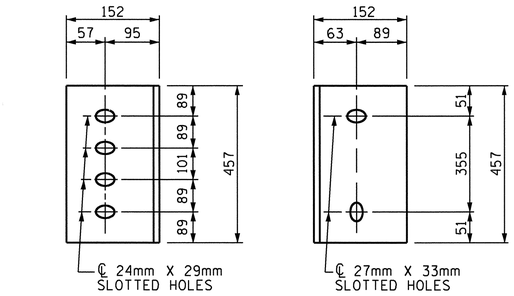

DIAPHRAGM FACE

WEB FACE

CONNECTOR PLATE DETAILS

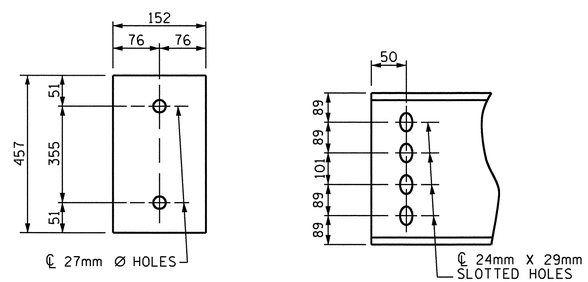

PLATE DETAILS

CHANNEL END

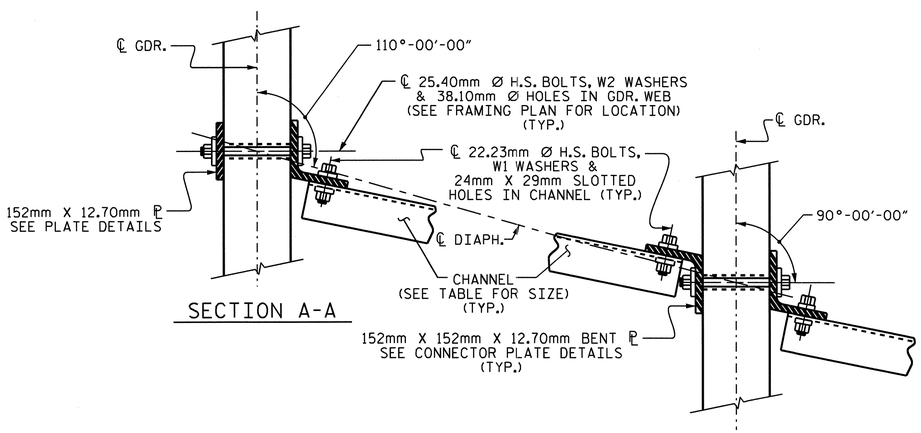

SECTION A-A

SECTION B-B

CONNECTION DETAILS

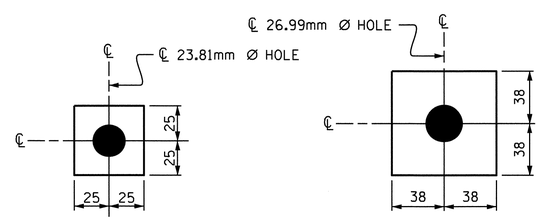

W1

ℙ 11.1 X 50 X 50

USE WITH 22.23mm Ø HVY. HEX NUTS & DIRECT TENSION INDICATOR WASHERS AT DIAPHRAGM CHANNEL TO CONNECTOR PLATE CONNECTIONS

W2

ℙ 11.1 X 76 X 76

USE WITH 25.40mm Ø HVY. HEX NUTS AT CONNECTOR PLATE TO GIRDER CONNECTIONS

WASHER DETAILS

STRUCTURAL STEEL NOTES

ALL INTERMEDIATE DIAPHRAGM STEEL, CONNECTOR PLATES AND PLATE WASHERS SHALL BE AASHTO M270 GRADE 345 OR APPROVED EQUAL.

TENSION ON THE AASHTO M164 BOLTS THROUGH THE CHANNEL MEMBER SHALL BE CALIBRATED USING DIRECT TENSION INDICATOR WASHERS IN ACCORDANCE WITH THE STANDARD SPECIFICATIONS. FOR DIRECT TENSION INDICATORS, SEE SPECIAL PROVISIONS.

TENSION ON THE AASHTO M164 BOLTS THROUGH THE GIRDER WEB SHALL BE SNUG TIGHTENED FOLLOWED BY AN ADDITIONAL 1/4 TURN.

THE PLATES, BENT PLATES, CHANNELS, ANGLES, AND PLATE WASHERS SHALL BE GALVANIZED OR METALLIZED IN ACCORDANCE WITH THE STANDARD SPECIFICATIONS. FOR THERMAL SPRAYED COATINGS (METALLIZATION), SEE SPECIAL PROVISIONS.

FOR METALLIZATION, APPLY AN 8 MIL THICK 99.99 PERCENT ZINC (W-Zn-1) THERMAL SPRAYED COATING WITH A 0.5 MIL THICK SEAL COAT TO ALL STEEL DIAPHRAGM SURFACES IN ACCORDANCE WITH THE THERMAL SPRAYED COATINGS SPECIAL PROVISIONS AND SECTION 442 OF THE STANDARD SPECIFICATIONS.

GALVANIZE THE HIGH STRENGTH BOLTS, NUTS, WASHERS AND DIRECT TENSION INDICATORS IN ACCORDANCE WITH THE STANDARD SPECIFICATIONS. FOR HIGH STRENGTH BOLTS, SEE SPECIAL PROVISIONS.

USE A MINIMUM 11mm THICK PLATE WASHER WITH STANDARD HOLES UNDER EACH BOLT HEAD AND NUT. THE PLATE WASHERS SHALL HAVE SUFFICIENT SIZE TO COVER THE HOLES AFTER INSTALLATION. HARDENED WASHERS AND DIRECT TENSION INDICATORS ARE TO BE USED IN CONJUNCTION WITH THE PLATE WASHERS IN THE CHANNEL MEMBER CONNECTION.

FOR BOLTS THROUGH THE GIRDER WEB, PROVIDE SUFFICIENT LENGTH OF ALL BOLTS TO ACCOMMODATE WASHERS AND THE THICKNESS OF CONNECTING MEMBER PLUS AT LEAST 6mm PROJECTION BEYOND THE NUT.

INTERMEDIATE DIAPHRAGM ASSEMBLY SHALL COMPLY WITH SECTION 1072 OF THE STANDARD SPECIFICATIONS.

CONTRACTOR SHALL SUBMIT TWO SETS OF WORKING DRAWINGS FOR THE INTERMEDIATE DIAPHRAGM ASSEMBLY FOR REVIEW, COMMENTS AND ACCEPTANCE. AFTER REVIEW, COMMENTS, AND ACCEPTANCE, SUBMIT SEVEN SETS FOR DISTRIBUTION.

IN THE EXTERIOR BAYS, TEMPORARY STRUTS SHALL BE PLACED BETWEEN PRESTRESSED GIRDERS ADJACENT TO THE STEEL DIAPHRAGMS. STRUTS SHALL REMAIN IN PLACE 3 DAYS AFTER CONCRETE IS PLACED. ALL AASHTO M164 H.S. BOLTS SHALL BE FULLY TIGHTENED AFTER THE STRUTS HAVE BEEN REMOVED.

THE COST OF THE STEEL DIAPHRAGMS AND ASSEMBLIES SHALL BE INCLUDED IN THE UNIT PRICE BID FOR PRESTRESSED CONCRETE GIRDERS.

PROJECT NO. R-2413C

GUILFORD-ROCKINGHAM COUNTY

STATION: 24+37.000 -LREV-

SHEET 6 OF 6

STATE OF NORTH CAROLINA
DEPARTMENT OF TRANSPORTATION
RALEIGH

STANDARD
INTERMEDIATE
STEEL DIAPHRAGMS
FOR TYPE IV
PRESTRESSED CONCRETE
GIRDERS
(RIGHT LANE)

NORTH CAROLINA PROFESSIONAL SEAL 022516 ENGINEER EMILY E. MURRAY

10/28/11

REVISIONS						SHEET NO.
NO.	BY:	DATE:	NO.	BY:	DATE:	S-87
1			3			TOTAL SHEETS
2			4			238

STR. #3

STD.No.PCG12SM

ASSEMBLED BY : M.GUDLAUGSSON DATE : 10-1-10	
CHECKED BY : T.L. AVERETTE DATE : 3-23-11	
DRAWN BY : TLA 6/05	ADDED 10/21/05
CHECKED BY : VC 6/05	REV. 5/1/06RR KMM/GM

05-SEP-2011 11:40
Y:\Structures\Final Plans\Str.#3\R-2413C_SD_G*_03.dgn
mgudlaugsson

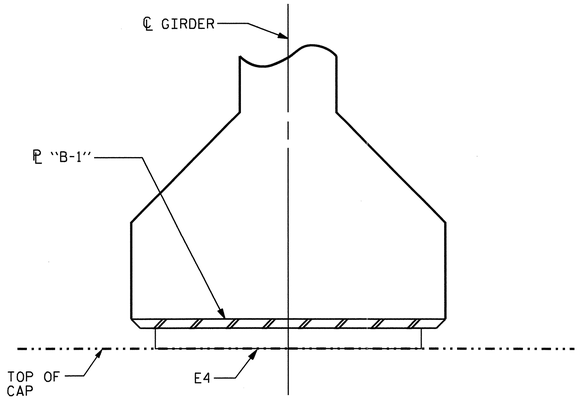

FIXED

SECTION E-E

(@ INTEGRAL END BENTS)

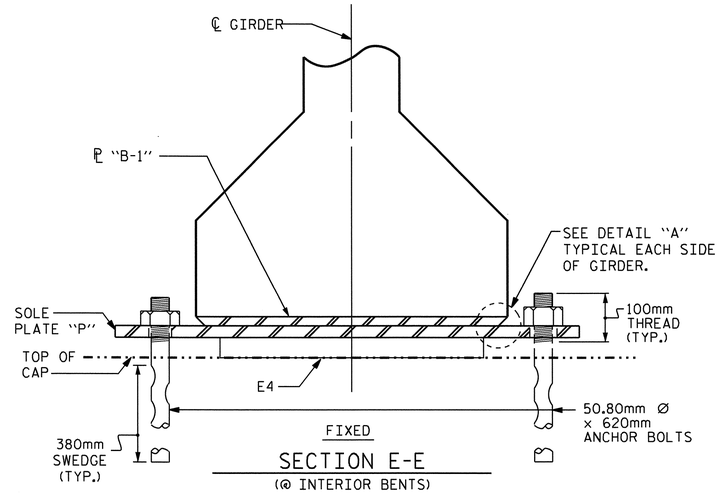

FIXED

SECTION E-E

(@ INTEGRAL END BENTS)

NOTES

AT ALL FIXED POINTS OF SUPPORT, NUTS FOR ANCHOR BOLTS ARE TO BE TIGHTENED FINGER TIGHT AND THEN BACKED OFF ½ TURN. THE THREAD OF THE NUT AND BOLT SHALL THEN BE BURRED WITH A SHARP POINTED TOOL.

STEEL SOLE PLATES, ANCHOR BOLTS, NUTS, AND WASHERS SHALL BE GALVANIZED IN ACCORDANCE WITH THE STANDARD SPECIFICATIONS.

PRIOR TO WELDING, GRIND THE GALVANIZED SURFACE OF THE PORTION OF THE EMBEDDED PLATE AND SOLE PLATE THAT ARE TO BE WELDED. AFTER WELDING, DAMAGED GALVANIZED SURFACES SHALL BE REPAIRED IN ACCORDANCE WITH THE STANDARD SPECIFICATIONS.

WHEN WELDING THE SOLE PLATE TO THE EMBEDDED PLATE IN THE GIRDER, USE TEMPERATURE INDICATING WAX PENS, OR OTHER SUITABLE MEANS, TO ENSURE THAT THE TEMPERATURE OF THE SOLE PLATE DOES NOT EXCEED 149°C. TEMPERATURES ABOVE THIS MAY DAMAGE THE ELASTOMER.

SOLE PLATE "P", BOLTS, NUTS, WASHERS, AND PIPE SLEEVE SHALL BE INCLUDED IN THE PAY ITEM FOR PRESTRESSED CONCRETE GIRDERS.

ANCHOR BOLTS SHALL MEET THE REQUIREMENTS OF ASTM A449. NUTS SHALL MEET THE REQUIREMENTS OF AASHTO M291M-12 OR AASHTO M292M-2H. WASHERS SHALL MEET THE REQUIREMENTS OF AASHTO M293M. SHOP DRAWINGS ARE NOT REQUIRED FOR ANCHOR BOLTS, NUTS AND WASHERS. SHOP INSPECTION IS REQUIRED.

ALL SURFACES OF BEARING PLATES SHALL BE SMOOTH AND STRAIGHT.

ALL BEARING PLATES SHALL BE AASHTO M270 GRADE 250.

ELASTOMER IN ALL BEARINGS SHALL BE 60 DUROMETER HARDNESS.

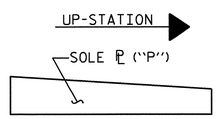

SOLE ℗ PLACEMENT DETAIL

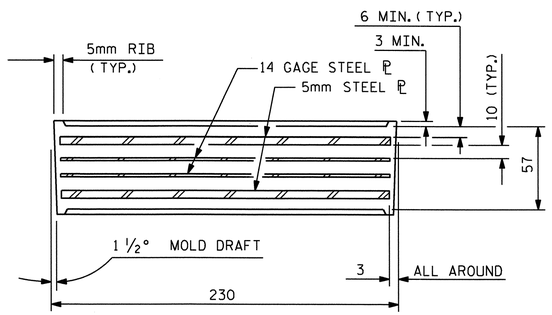

TYPICAL SECTION OF ELASTOMERIC BEARINGS

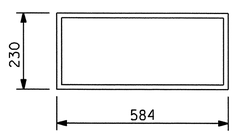

E4 (56 REQ'D)

PLAN VIEW OF ELASTOMERIC BEARING

TYPE V

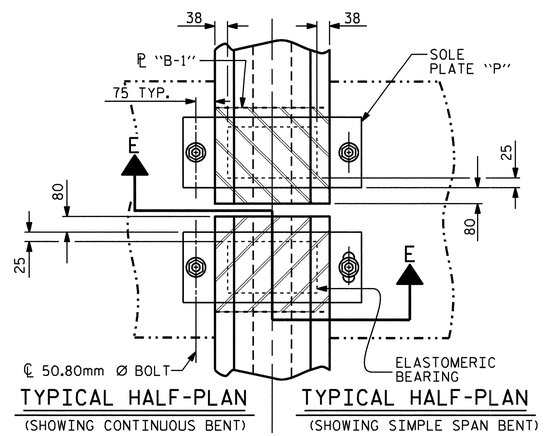

TYPICAL HALF-PLAN

(SHOWING CONTINUOUS BENT)

TYPICAL HALF-PLAN

(SHOWING SIMPLE SPAN BENT)

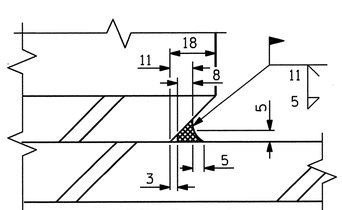

DETAIL "A"

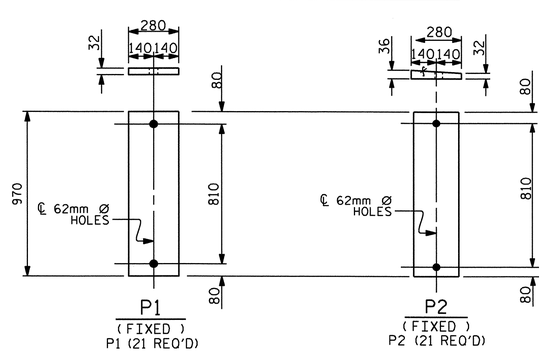

SOLE PLATE DETAILS ("P")

—LOAD RATINGS—	
	MAX.D.L.+ L.L.
TYPE V	926 kN

PROJECT NO. R-2413C

GUILFORD-ROCKINGHAM COUNTY

STATION: 24+37.000 -LREV-

STATE OF NORTH CAROLINA
DEPARTMENT OF TRANSPORTATION
RALEIGH

STANDARD ELASTOMERIC BEARING DETAILS

PRESTRESSED CONCRETE GIRDER SUPERSTRUCTURE (RIGHT LANE)

NORTH CAROLINA PROFESSIONAL SEAL 022516 ENGINEER EMILY E. MURRAY
10/28/11

REVISIONS							SHEET NO.
NO.	BY:	DATE:	NO.	BY:	DATE:		S-88
1			3				TOTAL SHEETS
2			4				238

STR. #3

STD. NO. EB4SM

ASSEMBLED BY : M.GUDLAUGSSON DATE : 10-28-11	
CHECKED BY : T.L. AVERETTE DATE : 3-23-11	
DRAWN BY : EEM 2/97	REV. 8/16/99 RWW/LES
CHECKED BY : VAP 2/97	REV. 10/17/00 RWW/LES
	REV. 5/1/06 TLA/GM

05-SEP-2011 11:42
Y:\Structures\Final Plans\Str.#3\R-2413C_SD_BG_03.dgn
mgudlaugsson

NOTES

BARRIER RAIL IN A CONTINUOUS UNIT SHALL NOT BE CAST UNTIL ALL SLAB CONCRETE IN THE UNIT HAS BEEN CAST AND HAS REACHED A MINIMUM COMPRESSIVE STRENGTH OF 20.7 MPa.

ALL REINFORCING STEEL IN BARRIER RAILS SHALL BE EPOXY COATED.

GROOVED CONTRACTION JOINTS, 12mm IN DEPTH, SHALL BE TOOLED IN ALL EXPOSED FACES OF THE BARRIER RAIL AND IN ACCORDANCE WITH ARTICLE 825-10(B) OF THE STANDARD SPECIFICATIONS. THE CONTRACTION JOINT SHALL BE LOCATED AT EACH THIRD POINT BETWEEN BARRIER RAIL EXPANSION JOINTS. ONLY ONE CONTRACTION JOINT IS REQUIRED AT MIDPOINT OF BARRIER RAIL SEGMENTS LESS THAN 6.1m IN LENGTH AND NO CONTRACTION JOINTS ARE REQUIRED FOR THOSE SEGMENTS LESS THAN 3.5m IN LENGTH.

BAR TYPES

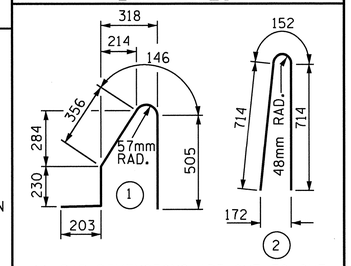

ALL BAR DIMENSIONS ARE OUT TO OUT

BILL OF MATERIAL

FOR CONCRETE BARRIER RAIL ONLY

BAR	NO.	SIZE	TYPE	LENGTH	WEIGHT
* B1	32	#16	STR	3160	157
* B2	96	#16	STR	7120	1061
* B3	80	#16	STR	6880	854
* B4	32	#16	STR	4420	220
* S1	604	#16	1	1440	1350
* S2	604	#16	2	1580	1481

* EPOXY COATED REINFORCING STEEL 5123 kg.

CLASS AA CONCRETE 45.5 CU. METERS

CONCRETE BARRIER RAIL 180.936 METERS

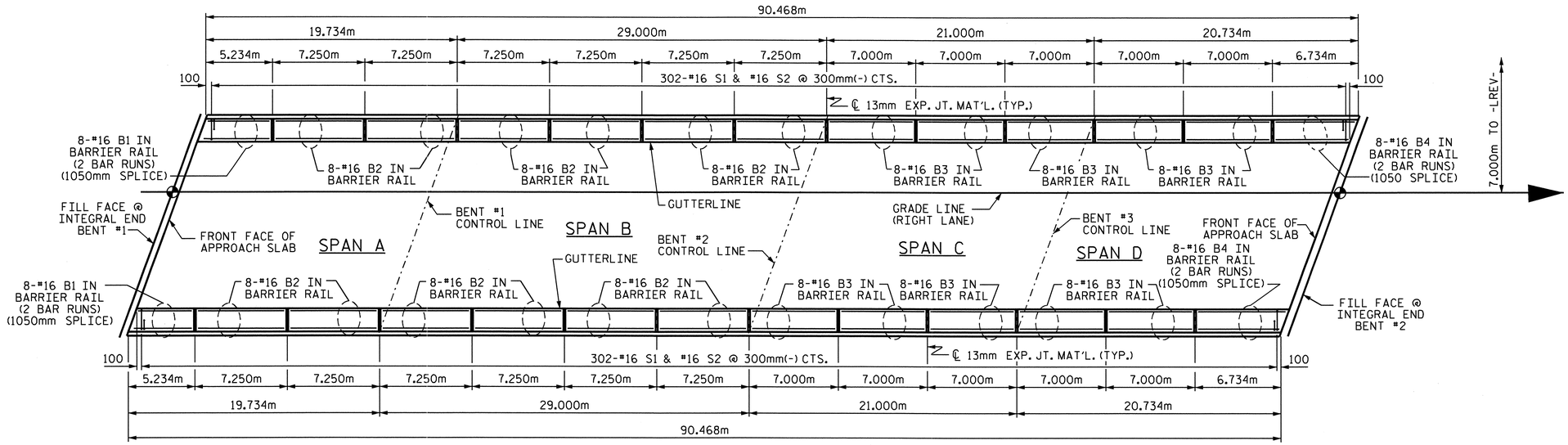

PLAN OF BARRIER RAIL

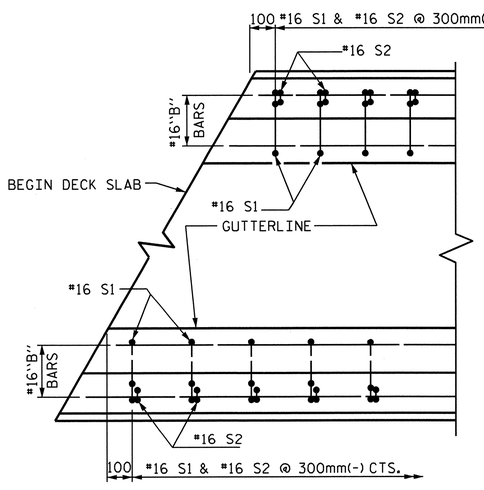

PLAN

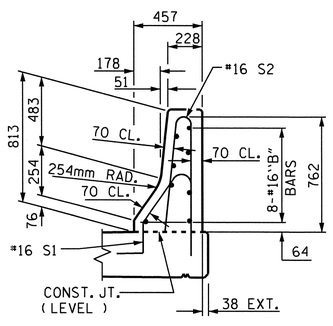

END VIEW

END OF RAIL DETAILS

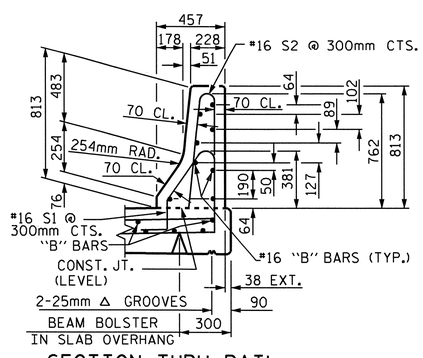

SECTION THRU RAIL

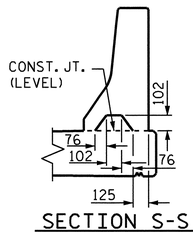

SECTION S-S

AT DAM IN OPEN JOINT
(THIS IS TO BE USED ONLY WHEN SLIP FORM IS USED)

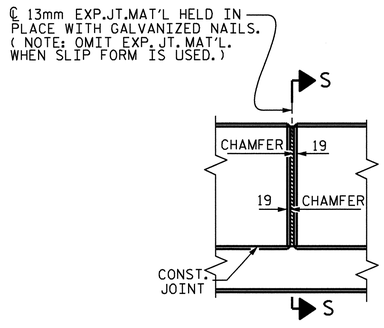

ELEVATION AT EXPANSION JOINTS

BARRIER RAIL DETAILS

PROJECT NO. R-2413C

GUILFORD-ROCKINGHAM COUNTY

STATION: 24+37.000 -LREV-

STATE OF NORTH CAROLINA
DEPARTMENT OF TRANSPORTATION
RALEIGH

STANDARD
CONCRETE BARRIER RAIL
(RIGHT LANE)

NORTH CAROLINA PROFESSIONAL SEAL 022516 ENGINEER EMILY E. MURRAY
10/28/11

REVISIONS								SHEET NO.
NO.	BY:	DATE:	NO.	BY:	DATE:			S-89
1			3					TOTAL SHEETS
2			4					238

ASSEMBLED BY : M.GUDLAUGSSON	DATE : 10-6-10		
CHECKED BY : T.L. AVERETTE	DATE : 3-23-11		
DRAWN BY : ARB 5/87	REV. 10/17/00	RWW/LES	
CHECKED BY : SJD 9/87	REV. 5/7/03R	RWW/JTE	
	REV. 5/1/06	TLA/GM	

05-SEP-2011 11:35
Y:\Structures\Final Plans\Str.#3\R2413C_SD_BR_03.dgn
mgudlaugsson

STR. #3

STD. No. CBR1SM

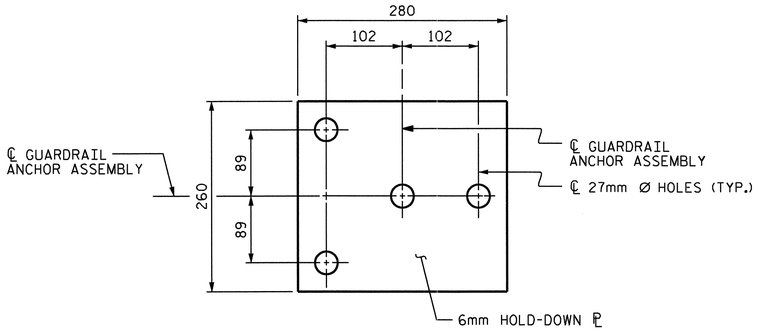

PLAN

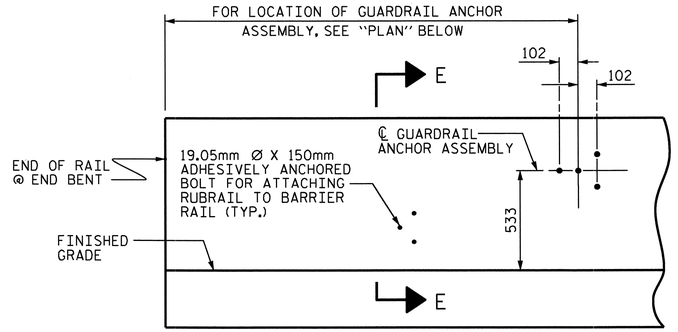

ELEVATION

FOR LOCATION OF RUBRAIL, SEE ROADWAY STD. 862.03

NOTES

THE GUARDRAIL ANCHOR ASSEMBLY SHALL CONSIST OF A 6mm HOLD DOWN PLATE AND 4 - 22.23mm Ø BOLTS WITH NUTS AND WASHERS, RUBRAIL, AND ADHESIVELY ANCHORED BOLTS.

THE HOLD-DOWN PLATE SHALL CONFORM TO AASHTO M270 GRADE 36. AFTER FABRICATION, THE HOLD-DOWN PLATE SHALL BE HOT-DIP GALVANIZED IN ACCORDANCE WITH AASHTO M111.

BOLTS SHALL CONFORM TO THE REQUIREMENTS OF ASTM A307 AND NUTS SHALL CONFORM TO THE REQUIREMENTS OF AASHTO M291. BOLTS, NUTS AND WASHERS SHALL BE GALVANIZED. (AT THE CONTRACTOR'S OPTION, STAINLESS STEEL BOLTS, NUTS AND WASHERS MAY BE USED AS AN ALTERNATE FOR THE 22.23mm Ø GALVANIZED BOLTS, NUTS AND WASHERS. THEY SHALL CONFORM TO OR EXCEED THE MECHANICAL REQUIREMENTS OF ASTM A307. THE USE OF THIS ALTERNATE SHALL BE APPROVED BY THE ENGINEER.)

THE GUARDRAIL ANCHOR ASSEMBLY IS REQUIRED AT ALL POINTS WHERE APPROACH GUARDRAIL IS TO BE ATTACHED TO THE END OF BARRIER RAIL. FOR POINTS OF ATTACHMENT, SEE SKETCH.

AFTER INSTALLATION, THE EXPOSED THREAD OF THE BOLT SHALL BE BURRED WITH A SHARP POINTED TOOL.

THE COST OF THE GUARDRAIL ANCHOR ASSEMBLY SHALL BE INCLUDED IN THE UNIT CONTRACT PRICE BID FOR CONCRETE BARRIER RAIL.

THE 32mm Ø HOLES SHALL BE FORMED OR DRILLED WITH A CORE BIT. IMPACT TOOLS WILL NOT BE PERMITTED. ANY CONCRETE DAMAGED BY THIS WORK SHALL BE REPAIRED TO THE SATISFACTION OF THE ENGINEER.

THE C150 X 12 RUBRAIL IS TO BE ADHESIVELY ANCHORED TO THE RAIL USING THREE 19.05mm Ø X 150mm BOLTS WITH WASHERS. LEVEL ONE FIELD TESTING IS REQUIRED, AND THE YIELD LOAD OF THE 19.05mm Ø BOLTS IS 53.4kN. FOR ADHESIVELY ANCHORED ANCHOR BOLTS OR DOWELS, SEE SPECIAL PROVISIONS. SEE ROADWAY STANDARD 862.03 FOR DETAILS AND LOCATION OF THE RUBRAIL.

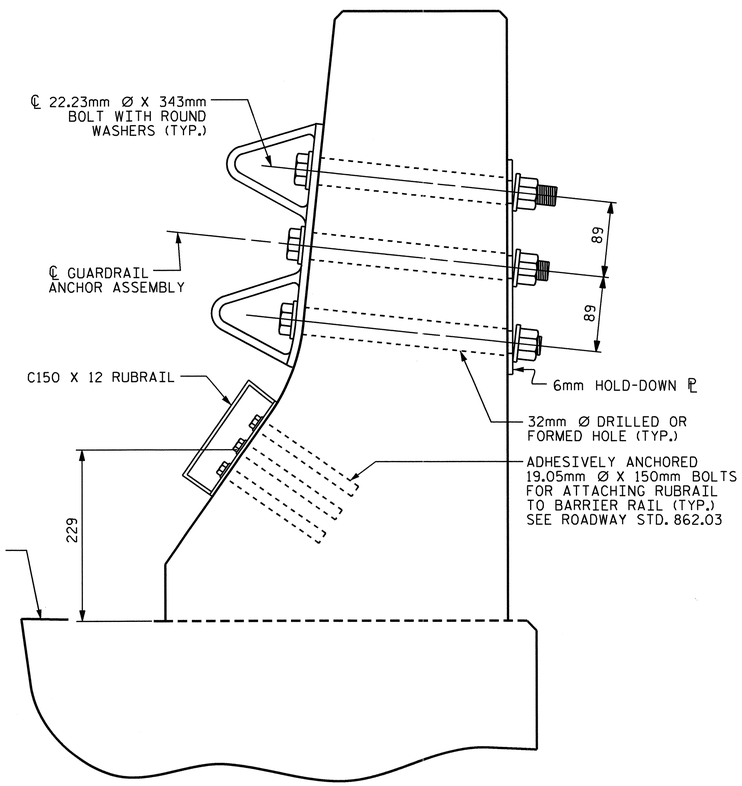

SECTION E-E

GUARDRAIL ANCHOR ASSEMBLY DETAILS

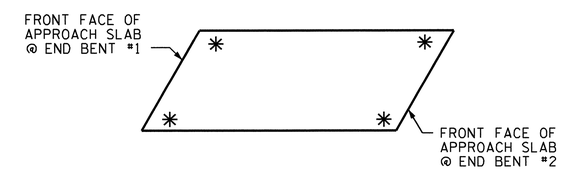

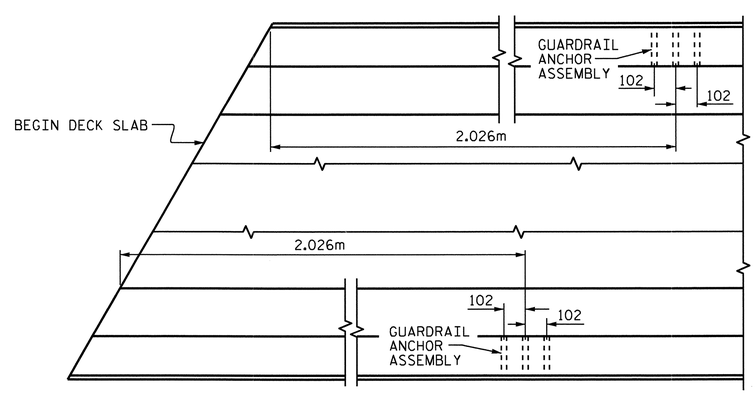

PLAN

LOCATION OF ANCHORS FOR GUARDRAIL

END BENT #1 SHOWN, END BENT #2 SIMILAR

PROJECT NO. R-2413C

GUILFORD-ROCKINGHAM COUNTY

STATION: 24+37.000 -LREV-

STATE OF NORTH CAROLINA
DEPARTMENT OF TRANSPORTATION
RALEIGH

STANDARD

GUARDRAIL ANCHORAGE FOR BARRIER RAIL (RIGHT LANE)

NORTH CAROLINA PROFESSIONAL SEAL 022516 ENGINEER EMILY E. MURRAY
10/28/11

REVISIONS						
NO.	BY:	DATE:	NO.	BY:	DATE:	
1			3			
2			4			

SHEET NO. S-90

TOTAL SHEETS 238

STR. #3

STD. NO. GRA2

ASSEMBLED BY : M.GUDLAUGSSON DATE : 9-14-10
CHECKED BY : T.L. AVERETTE DATE : 4-05-11

DRAWN BY : TLA 5/06
CHECKED BY : GM 5/06

ADDED 5/1/06R KMM/GM

05-SEP-2011 11:35
Y:\Structures\Final Plans\Str.#3\R2413C_SD_BR_03.dgn
mgudlaugsson

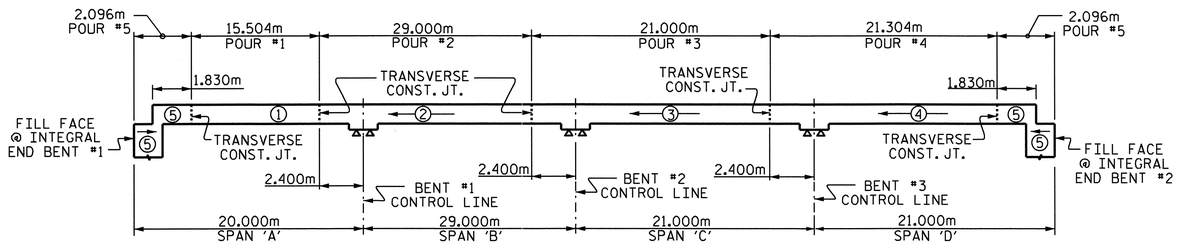

POURING SEQUENCE

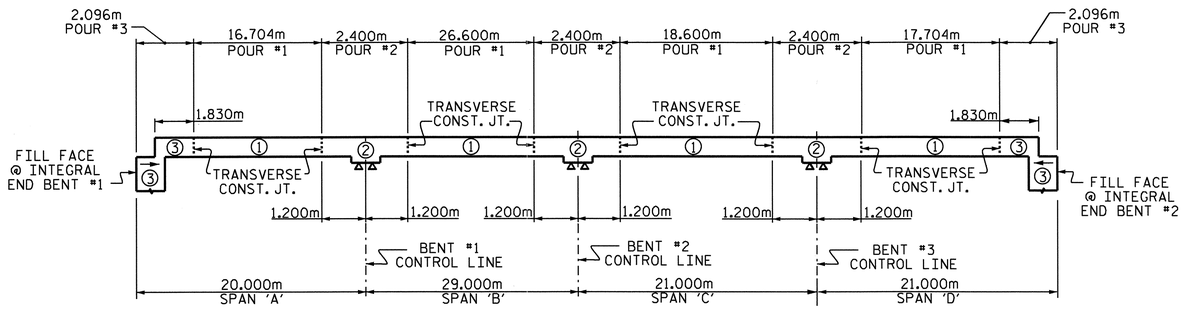

OPTIONAL POURING SEQUENCE

POUR ② CAN NOT BE STARTED UNTIL BOTH ADJACENT ① POURS REACH A MINIMUM OF 20.7MPa.

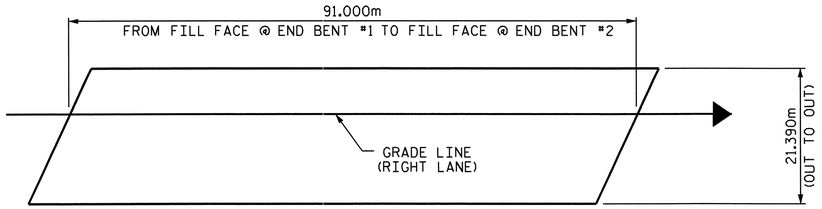

LAYOUT FOR COMPUTING AREA OF REINFORCED CONCRETE DECK SLAB (1946.5 SQ. METER)

BILL OF MATERIAL SPANS A, B, C & D					
BAR	NO.	SIZE	TYPE	LENGTH	WEIGHT
✱ A1	552	#16	STR	9440	8087
✱ A2	552	#16	STR	12640	10829
✱ A101	8	#16	STR	10620	132
✱ A102	8	#16	STR	10220	127
✱ A103	8	#16	STR	9800	122
✱ A104	4	#16	STR	17980	112
✱ A105	4	#16	STR	17160	107
✱ A106	4	#16	STR	16340	101
✱ A107	4	#16	STR	15520	96
✱ A108	4	#16	STR	14680	91
✱ A109	4	#16	STR	13860	86
✱ A110	4	#16	STR	13040	81
✱ A111	4	#16	STR	12220	76
✱ A112	4	#16	STR	11380	71
✱ A113	4	#16	STR	10560	66
✱ A114	4	#16	STR	9740	60
✱ A115	4	#16	STR	8920	55
✱ A116	4	#16	STR	8100	50
✱ A117	4	#16	STR	7260	45
✱ A118	4	#16	STR	6440	40
✱ A119	4	#16	STR	5620	35
✱ A120	4	#16	STR	4800	30
✱ A121	4	#16	STR	3980	25
✱ A122	4	#16	STR	3140	19
✱ A123	4	#16	STR	2320	14
✱ A124	4	#16	STR	1500	9
✱ A125	4	#16	STR	680	4
A3	552	#16	STR	14180	12148
A4	552	#16	STR	7780	6665
A201	8	#16	STR	10560	131
A202	8	#16	STR	10160	126
A203	8	#16	STR	9740	121
A204	4	#16	STR	17980	112
A205	4	#16	STR	17160	107
A206	4	#16	STR	16340	101
A207	4	#16	STR	15520	96
A208	4	#16	STR	14680	91
A209	4	#16	STR	13860	86
A210	4	#16	STR	13040	81
A211	4	#16	STR	12220	76
A212	4	#16	STR	11380	71
A213	4	#16	STR	10560	66
A214	4	#16	STR	9740	60
A215	4	#16	STR	8920	55
A216	4	#16	STR	8100	50
A217	4	#16	STR	7260	45

BILL OF MATERIAL SPANS A, B, C & D					
BAR	NO.	SIZE	TYPE	LENGTH	WEIGHT
A218	4	#16	STR	6440	40
A219	4	#16	STR	5620	35
A220	4	#16	STR	4800	30
A221	4	#16	STR	3980	25
A222	4	#16	STR	3140	19
A223	4	#16	STR	2320	14
A224	4	#16	STR	1500	9
A225	4	#16	STR	680	4
✱ B1	49	#13	STR	8960	436
✱ B2	190	#22	STR	4200	2428
✱ B3	98	#22	STR	18000	5366
✱ B4	92	#22	STR	7500	2099
✱ B5	98	#13	STR	5220	508
✱ B6	49	#13	STR	6620	322
✱ B7	49	#22	STR	15600	2325
✱ B8	46	#22	STR	6300	882
✱ B9	98	#13	STR	5300	516
B10	516	#16	STR	15620	12509
✱ S1	116	#13	1	3560	410
✱ S2	116	#13	1	3320	383
S3	612	#13	4	860	523
K1	30	#13	STR	8660	258
K2	48	#13	STR	2740	131
K3	96	#13	STR	3080	294
K4	48	#13	STR	2900	138
K5	12	#13	STR	2580	31
K6	8	#13	STR	960	8
K7	4	#13	STR	1860	7
K8	8	#13	STR	2020	16
K9	4	#13	STR	1940	8
K10	4	#13	STR	1780	7
K11	75	#13	2	4020	300
K12	30	#13	3	2020	60
K13	36	#13	STR	2300	82
✱ U1	126	#13	5	4660	584
✱ U2	36	#13	5	4060	145
✱ U3	120	#13	6	3600	429
✱ U4	16	#13	6	4360	69
V1	14	#13	STR	1240	17

REINFORCING STEEL = 34853 kg
✱EPOXY COATED REINFORCING STEEL = 37472 kg

BAR TYPES

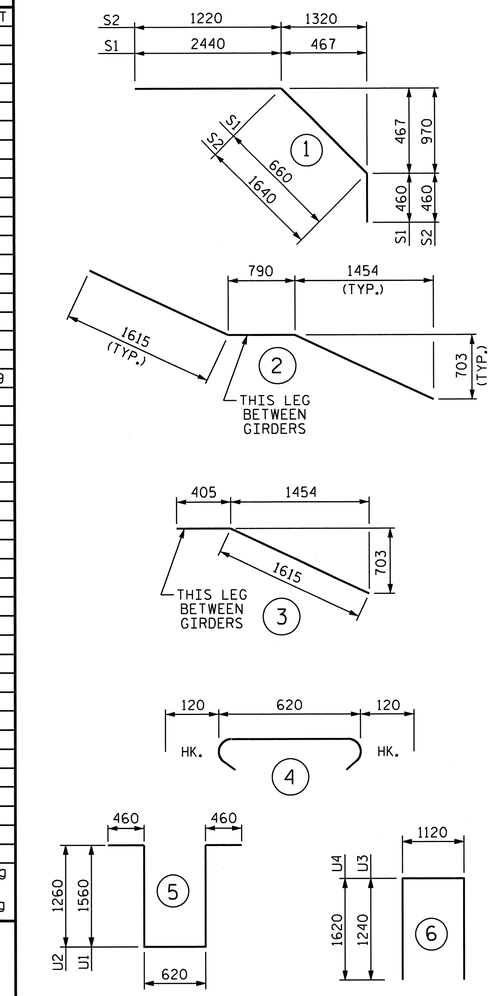

ALL BAR DIMENSIONS ARE OUT TO OUT.

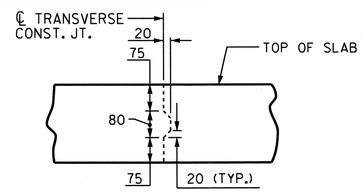

TRANSVERSE CONSTRUCTION JOINT DETAIL

NOTE: REINFORCING STEEL IN SLAB NOT SHOWN. LONGITUDINAL REINFORCING STEEL SHALL BE CONTINUOUS THRU JOINT

GROOVING BRIDGE FLOORS	
BRIDGE DECK	1762.3 SQ.METER
APPROACH SLABS	296.9 SQ.METER
TOTAL	2059.2 SQ.METER

SUPERSTRUCTURE REINFORCING STEEL LENGTHS ARE BASED ON THE FOLLOWING MINIMUM SPLICE LENGTHS

BAR SIZE	SUPERSTRUCTURE EXCEPT APPROACH SLABS, PARAPET, AND BARRIER RAIL		APPROACH SLABS		PARAPET AND BARRIER RAIL
	EPOXY COATED	UNCOATED	EPOXY COATED	UNCOATED	
#13	610	540	610	540	840
#16	770	660	770	660	1050
#19	920	790	1190	790	1330
#22	1580	1060			
#25	2080	1390			

SUPERSTRUCTURE BILL OF MATERIAL

	CLASS AA CONCRETE		REINFORCING STEEL	EPOXY COATED REINFORCING STEEL
	(CU. METER)		(kg)	(kg)
SPAN A, B, C, AND D.	POUR 1	93.3		
	POUR 2	194.3		
	POUR 3	146.1		
	POUR 4	148.0		
	● POUR 5	110.7	34853	37472
TOTALS ✱✱	692.4		34853	37472

✱✱ QUANTITIES FOR BARRIER RAIL ARE NOT INCLUDED
● POUR 5 QUANTITY INCLUDES UPPER POUR OF WINGS & INTEGRAL END BENT.

NORTH CAROLINA PROFESSIONAL SEAL 022516 ENGINEER ELMOY E. MURRAY (9/28/11)

PROJECT NO. R-2413C
GUILFORD-ROCKINGHAM COUNTY
STATION: 24+37.000 -LREV-

STATE OF NORTH CAROLINA
DEPARTMENT OF TRANSPORTATION
RALEIGH

STANDARD
SUPERSTRUCTURE
BILL OF MATERIAL
(RIGHT LANE)

REVISIONS						SHEET NO.
NO.	BY:	DATE:	NO.	BY:	DATE:	S-91
1			3			TOTAL SHEETS
2			4			238

ASSEMBLED BY : M.GUDLAUGSSON DATE : 1-31-11
CHECKED BY : T.L. AVERETTE DATE : 3-23-11
DRAWN BY : JMB 5/87 REV. 5/16/97 EEM/RGW
CHECKED BY : SJD 9/87 REV. 5/1/06 TLA/GM

19-OCT-2011 14:18
R:\TIPProjects-R\R2413c\Structures\Final Plans\Str.#3\R-2413C_SD_BM_03.dgn
taverette

STR. #3

STD. NO. BOM1SM

NOTES:

THE CONTRACTOR SHALL PROVIDE FOR INSTALLATION OF THE 102mm DIAMETER DRAIN PIPE THROUGH THE WING WALL AS REQUIRED FOR REINFORCED BRIDGE APPROACH FILLS, SEE THE ROADWAY PLANS. REINFORCING STEEL IN THE WING WALL MAY BE SHIFTED AS NECESSARY TO CLEAR THE DRAIN PIPE.

THE TOP SURFACE OF THE END BENT CAP AND WINGS, EXCLUDING THE OUTSIDE 100mm AND THE BEARING AREA, SHALL BE RAKED TO A DEPTH OF 6mm.

STIRRUPS IN CAP MAY BE SHIFTED AS NECESSARY TO CLEAR #13 V1 BARS.

THE CONTRACTOR'S ATTENTION IS CALLED TO THE FACT THAT THE UPPER PART OF INTEGRAL END BENT AND WINGS ARE TO BE POURED WITH THE SUPERSTRUCTURE.

SEE SUPERSTRUCTURE SHEETS FOR UPPER PART OF INTEGRAL END BENT DETAIL.

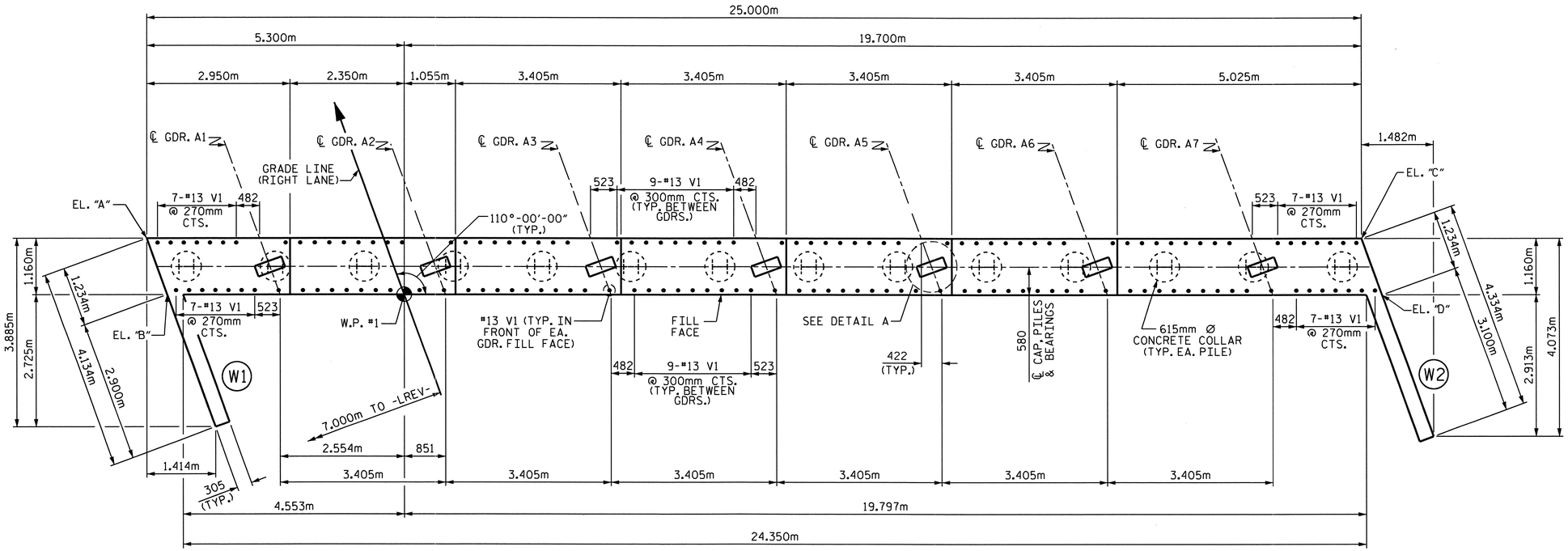

PLAN

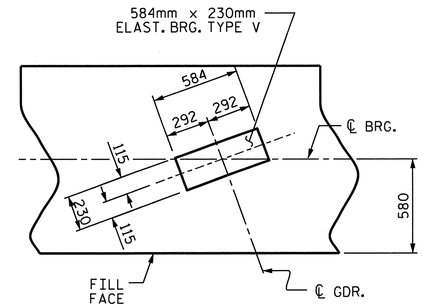

DETAIL A

(TYP. EA. GDR.)

TOP OF PILE ELEVATION	
P1 236.364	P8 236.147
P2 236.332	P9 236.116
P3 236.302	P10 236.085
P4 236.271	P11 236.054
P5 236.240	P12 236.023
P6 236.209	P13 235.992
P7 236.178	P14 235.961

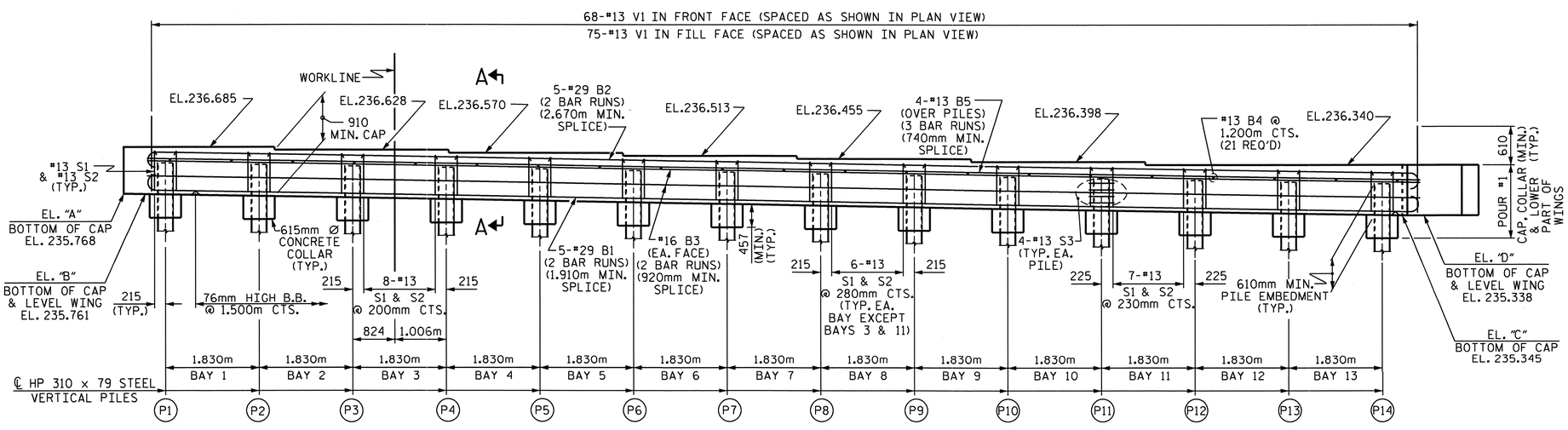

ELEVATION

PROJECT NO. R-2413C

GUILFORD-ROCKINGHAM COUNTY

STATION: 24+37.000 -LREV-

SHEET 1 OF 3

STATE OF NORTH CAROLINA
DEPARTMENT OF TRANSPORTATION
RALEIGH

SUBSTRUCTURE
INTEGRAL
END BENT #1
(RIGHT LANE)

NORTH CAROLINA PROFESSIONAL SEAL 022516 ENGINEER EMILY E. MURRAY
10/28/11

REVISIONS						SHEET NO.
NO.	BY:	DATE:	NO.	BY:	DATE:	S-92
1			3			TOTAL SHEETS
2			4			238

STR. #3

DRAWN BY : M.GUDLAUGSSON DATE : 01-19-11
CHECKED BY : T.L. AVERETTE DATE : 04-26-11

19-OCT-2011 14:22
R:\TIPProjects-R\R2413c\Structures\Final Plans\Str.#3\R-2413C_SD_E#_03.dgn
taverette

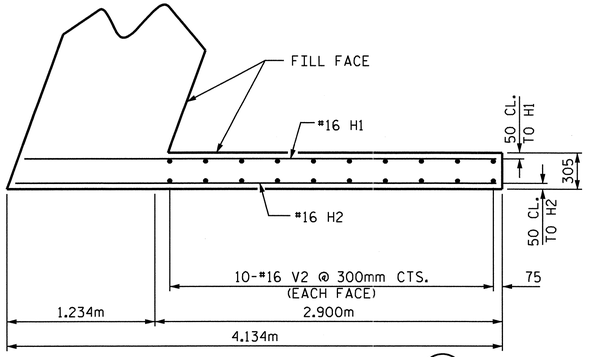

PLAN OF LEFT WING (W1)

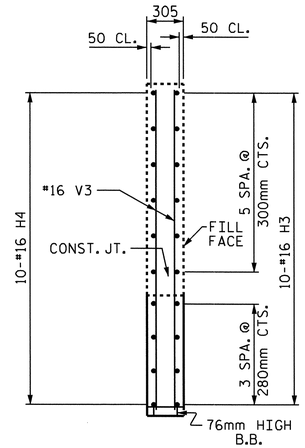

SECTION Y-Y

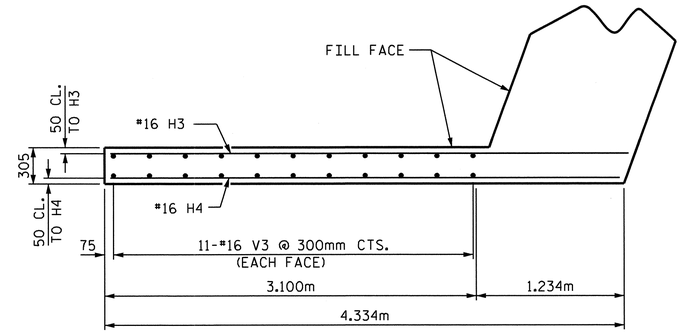

PLAN OF RIGHT WING (W2)

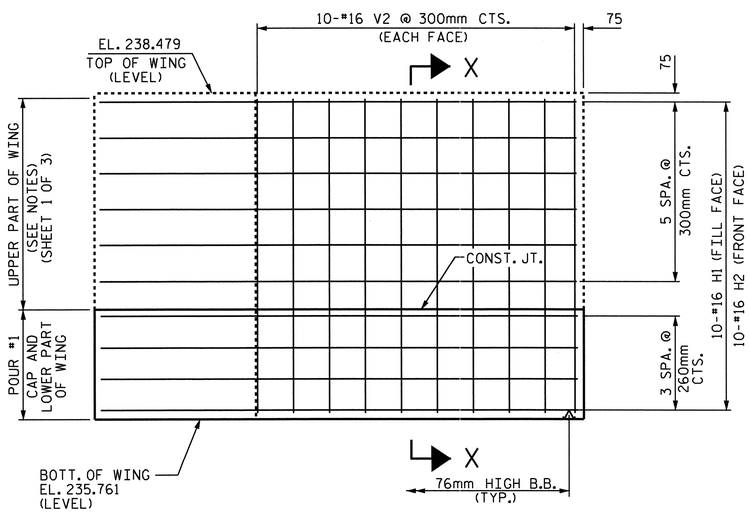

ELEVATION OF LEFT WING (W1)

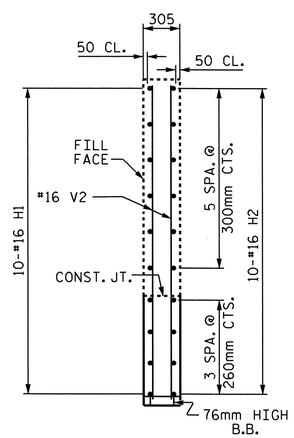

SECTION X-X

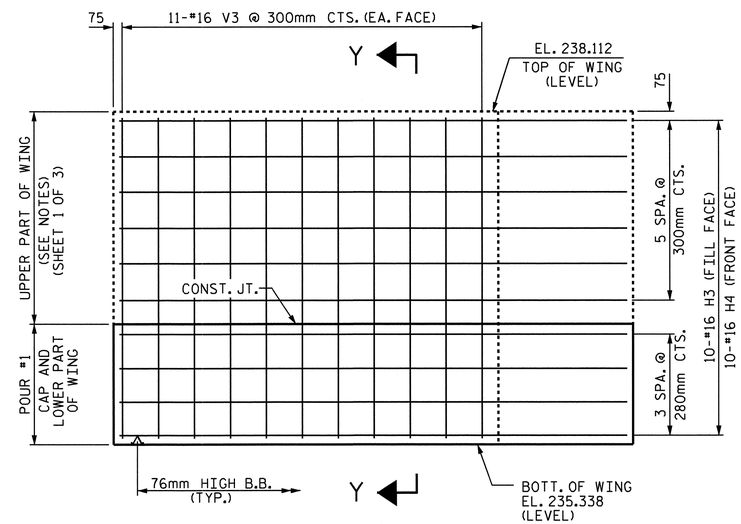

ELEVATION OF RIGHT WING (W2)

PROJECT NO. R-2413C

GUILFORD-ROCKINGHAM COUNTY

STATION: 24+37.000 -LREV-

SHEET 2 OF 3

STATE OF NORTH CAROLINA
DEPARTMENT OF TRANSPORTATION
RALEIGH

SUBSTRUCTURE

INTEGRAL
END BENT #1
(RIGHT LANE)

NORTH CAROLINA PROFESSIONAL SEAL 022516 ENGINEER EMILY E. MURRAY
10/28/11

REVISIONS						SHEET NO.
NO.	BY:	DATE:	NO.	BY:	DATE:	S-93
1			3			TOTAL SHEETS
2			4			238

STR. #3

DRAWN BY : M.GUDLAUGSSON DATE : 01-19-11
CHECKED BY : T.L. AVERETTE DATE : 04-26-11

05-SEP-2011 11:33
Y:\Structures\Final Plans\Str.#3\R-2413C_SD_E*_03.dgn
mgudlaugsson

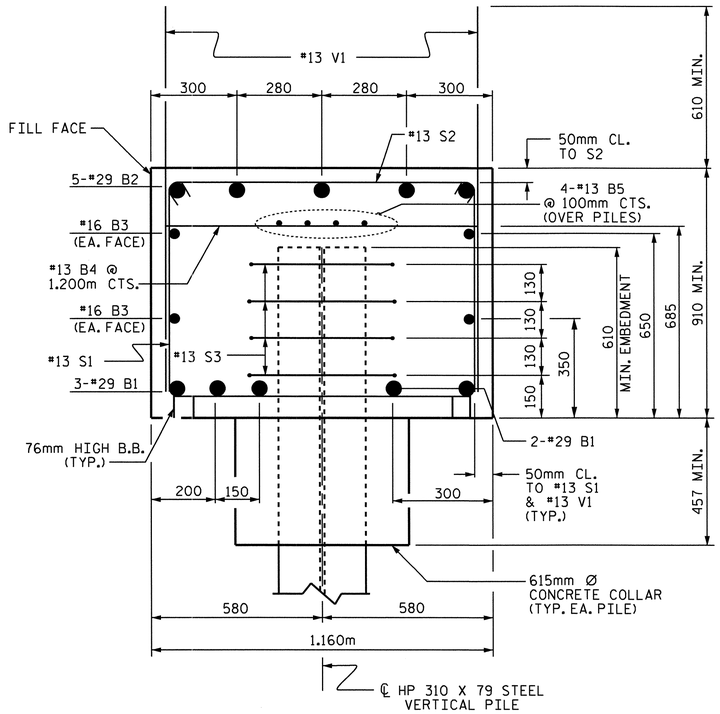

SECTION A-A

BAR TYPES

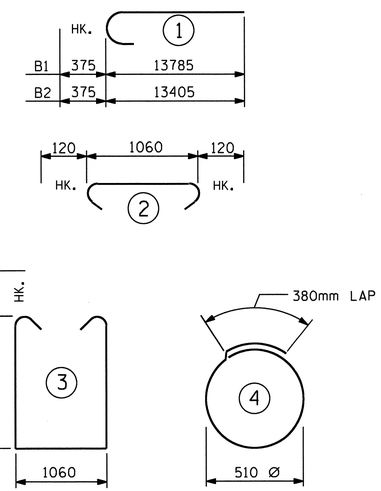

ALL BAR DIMENSIONS ARE OUT TO OUT.

BILL OF MATERIAL
END BENT #1

BAR	NO.	SIZE	TYPE	LENGTH	WEIGHT
B1	10	#29	1	14160	716
B2	10	#29	1	13780	697
B3	8	#16	STR	12920	160
B4	21	#13	STR	1060	22
B5	12	#13	STR	8800	105
H1	10	#16	STR	3920	61
H2	10	#16	STR	4000	62
H3	10	#16	STR	4320	67
H4	10	#16	STR	4240	66
S1	83	#13	3	2880	238
S2	83	#13	2	1300	107
S3	56	#13	4	1980	110
V1	143	#13	STR	1460	208
V2	20	#16	STR	2600	81
V3	22	#16	STR	2660	91

REINFORCING STEEL = 2791 kg

CLASS A CONCRETE BREAKDOWN

POUR #1: (CAP, CONCRETE COLLAR & LOWER PART OF WINGS) 31.0 m3

TOTAL CONCRETE 31.0 m3

HP 310 X 79 STEEL PILES
NO. 14 234.5 METERS

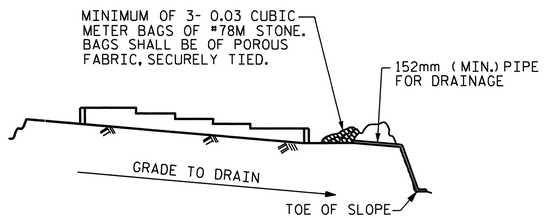

BAGGED STONE AND PIPE SHALL BE PLACED IMMEDIATELY AFTER COMPLETION OF END BENT EXCAVATION. PIPE MAY BE EITHER CONCRETE, CORRUGATED STEEL, CORRUGATED ALUMINUM ALLOY, OR CORRUGATED PLASTIC. PERFORATED PIPE WILL NOT BE ALLOWED.

BAGGED STONE SHALL REMAIN IN PLACE UNTIL THE ENGINEER DIRECTS THAT IT BE REMOVED. THE CONTRACTOR SHALL REMOVE AND DISPOSE OF SILT ACCUMULATIONS AT BAGGED STONE WHEN SO DIRECTED BY THE ENGINEER. BAGS SHALL BE REMOVED AND REPLACED WHENEVER THE ENGINEER DETERMINES THAT THEY HAVE DETERIORATED AND LOST THEIR EFFECTIVENESS.

NO SEPARATE PAYMENT WILL BE MADE FOR THIS WORK AND THE ENTIRE COST OF THIS WORK SHALL BE INCLUDED IN THE UNIT CONTRACT PRICE BID FOR THE SEVERAL PAY ITEMS.

TEMPORARY DRAINAGE AT END BENT

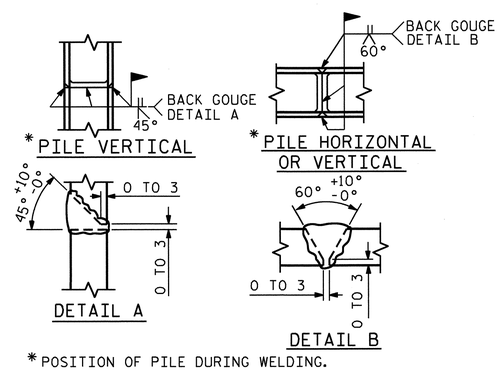

* POSITION OF PILE DURING WELDING.

PILE SPLICE DETAILS

PROJECT NO. R-2413C
GUILFORD-ROCKINGHAM COUNTY
STATION: 24+37.000 -LREV-

SHEET 3 OF 3

STATE OF NORTH CAROLINA
DEPARTMENT OF TRANSPORTATION
RALEIGH

SUBSTRUCTURE
INTEGRAL
END BENT #1
(RIGHT LANE)

NORTH CAROLINA PROFESSIONAL SEAL 022516 ENGINEER EMILY E. MURRAY
10/28/11

REVISIONS						SHEET NO.
NO.	BY:	DATE:	NO.	BY:	DATE:	S-94
1			3			TOTAL SHEETS
2			4			238

DRAWN BY : M.GUDLAUGSSON DATE : 01-19-11
CHECKED BY : T.L. AVERETTE DATE : 04-26-11

05-SEP-2011 11:33
Y:\Structures\Final Plans\Str.#3\R-2413C_SD_E#_03.dgn
mgudlaugsson

STR. #3

NOTES

STIRRUPS AND U3 BARS IN CAP MAY BE SHIFTED AS NECESSARY TO CLEAR ANCHOR BOLTS.

HOOKS ON "V" BARS MAY BE TURNED AS NECESSARY FOR PLACING REINFORCING STEEL.

ALL STEEL IN THE DRILLED PIERS IS INCLUDED IN THE PAY ITEMS FOR "REINFORCING STEEL" AND "SPIRAL COLUMN REINFORCING STEEL".

THE CONTRACTOR'S ATTENTION IS CALLED TO THE FACT THAT THE LONGITUDINAL REINFORCEMENT FOR THE DRILLED PIERS IS DETAILED WITH ONE METER OF EXTRA LENGTH.

THE LOCATION OF THE CONSTRUCTION JOINT IN THE DRILLED PIERS IS BASED ON AN APPROXIMATE GROUND LINE ELEVATION. IF THE CONSTRUCTION JOINT IS ABOVE THE ACTUAL GROUND LINE ELEVATION, THE CONTRACTOR SHALL PLACE THE CONSTRUCTION JOINT 300mm BELOW THE GROUND LINE.

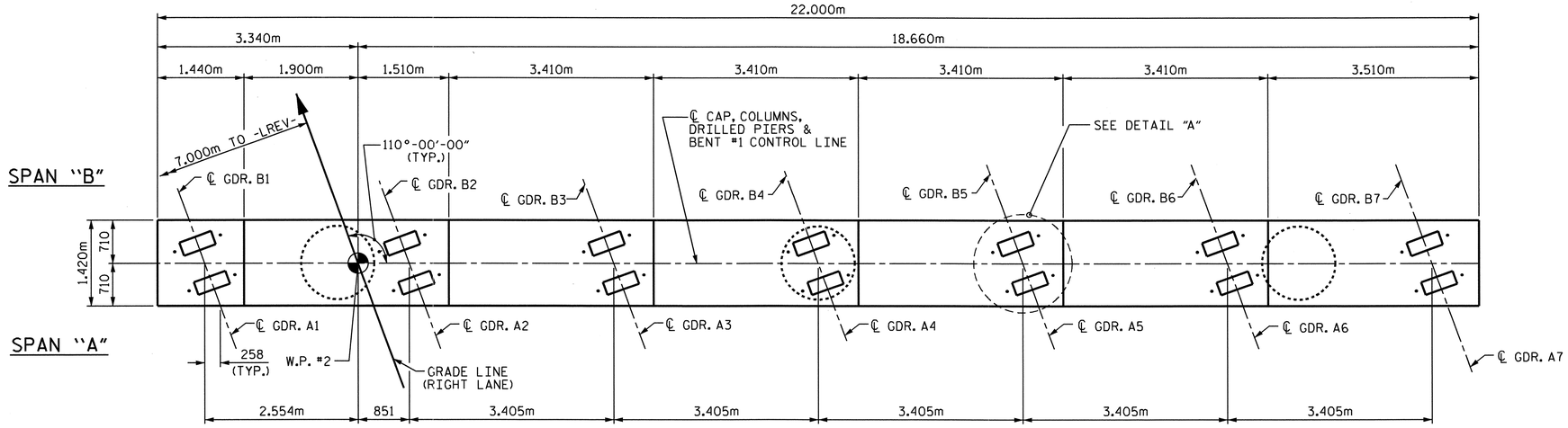

PLAN

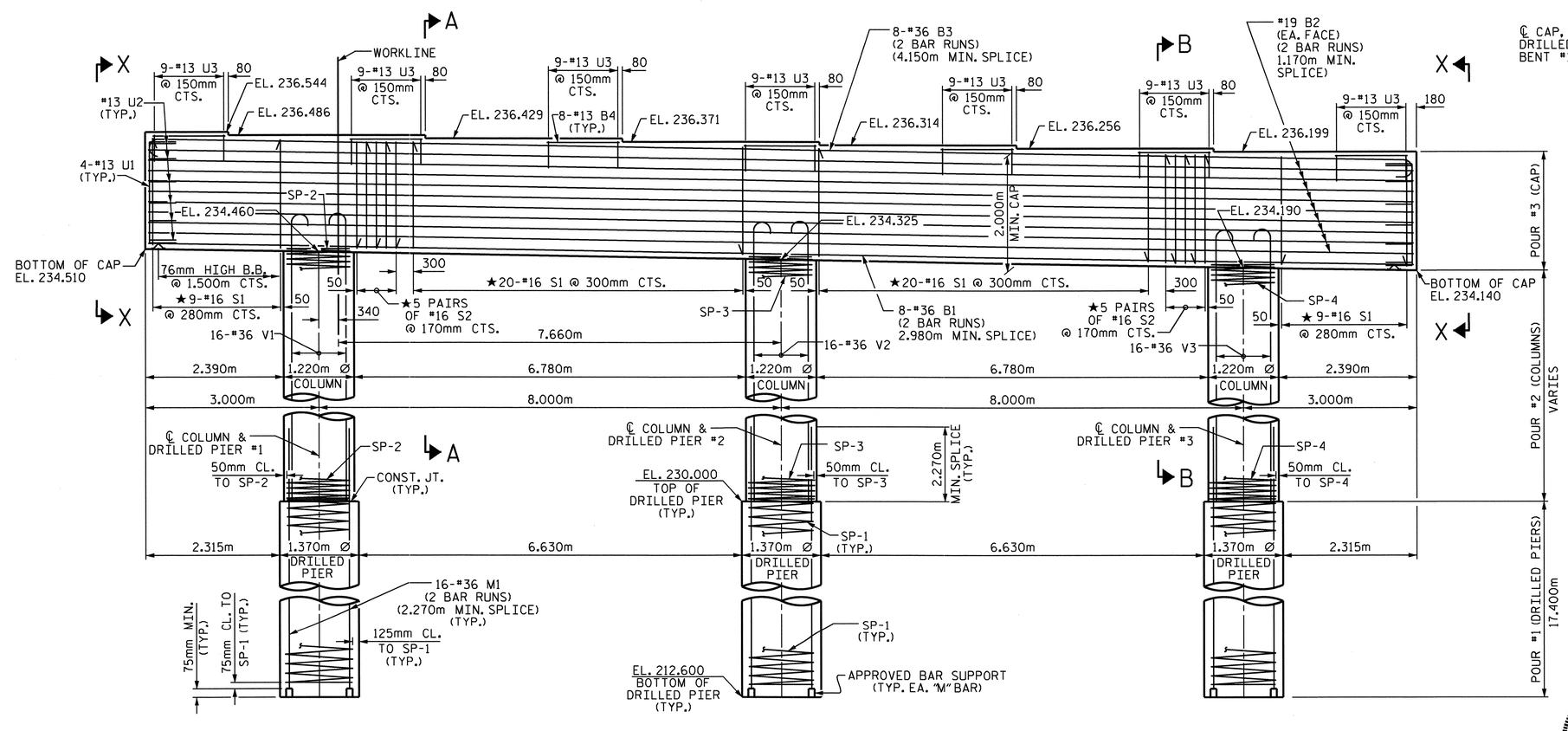

ELEVATION

★INVERT ALTERNATE STIRRUPS.

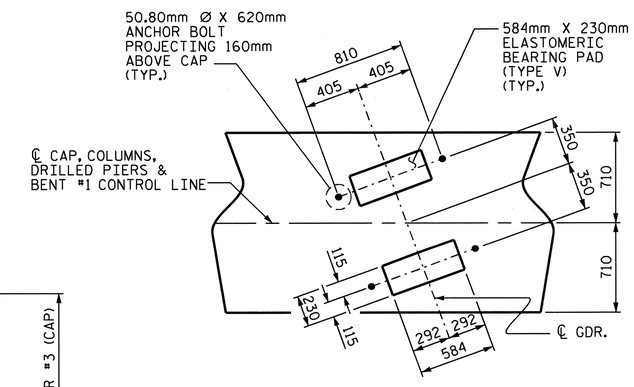

DETAIL A

DIMENSIONS FOR BRG. PADS AND ANCHOR BOLTS ARE TYP. EACH GDR.

PROJECT NO. R-2413C

GUILFORD-ROCKINGHAM COUNTY

STATION: 24+37.000 -LREV-

SHEET 1 OF 2

STATE OF NORTH CAROLINA
DEPARTMENT OF TRANSPORTATION
RALEIGH

SUBSTRUCTURE
BENT #1
(RIGHT LANE)

NORTH CAROLINA PROFESSIONAL SEAL 022516 ENGINEER EMILY E. MURRAY
6/28/11

REVISIONS						SHEET NO.
NO.	BY:	DATE:	NO.	BY:	DATE:	S-95
1			3			TOTAL SHEETS
2			4			238

STR. #3

DRAWN BY : M. GUDLAUGSSON DATE : 3-29-11
CHECKED BY : B.N. BARODAWALA DATE : 6-12-11

19-OCT-2011 14:19
R:\TIPProjects-R\R2413c\Structures\Final Plans\Str.#3\R-2413C_SD_B*_03.dgn
taverette

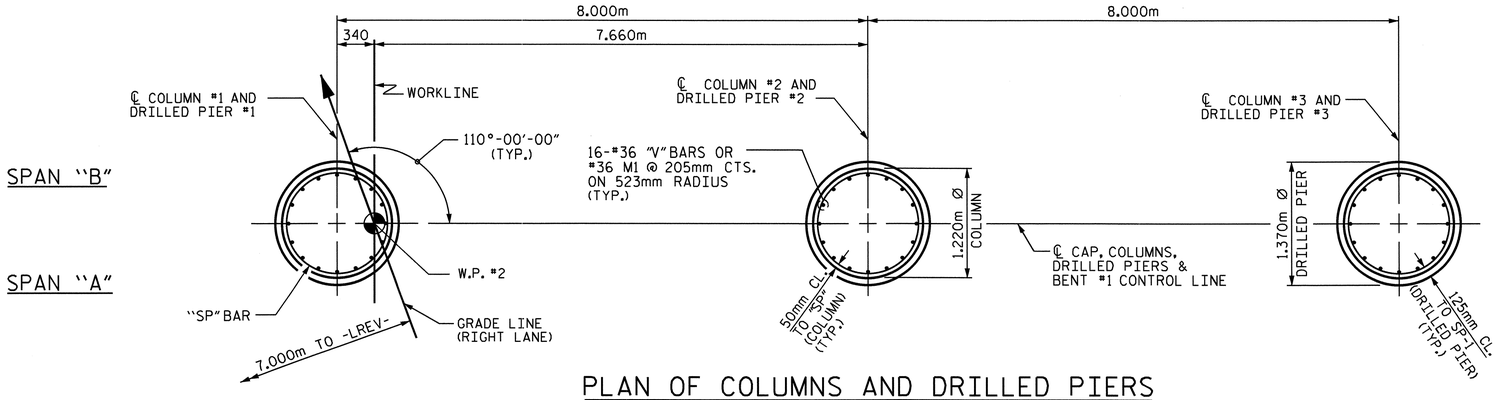

PLAN OF COLUMNS AND DRILLED PIERS

(DIM. & REINFORCING STEEL ARE TYPICAL FOR EACH COLUMN AND DRILLED PIER)

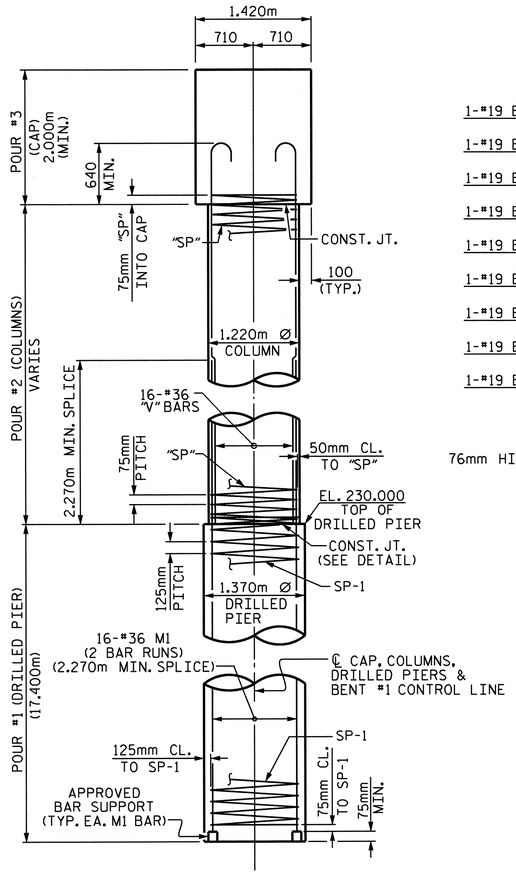

END ELEVATION

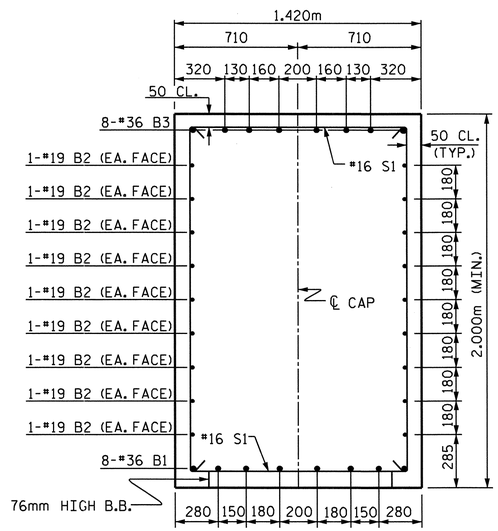

SECTION A-A

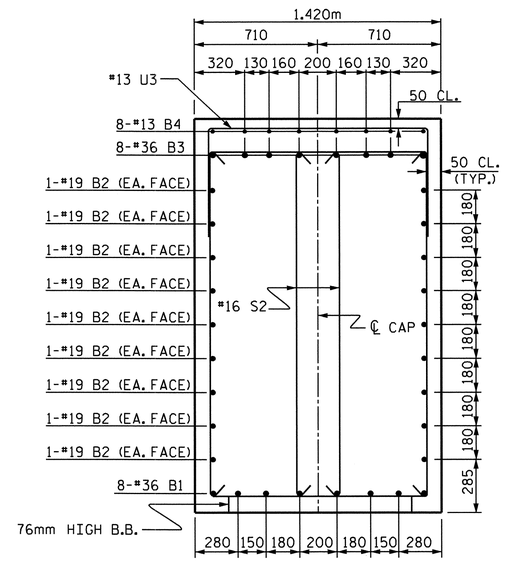

SECTION B-B

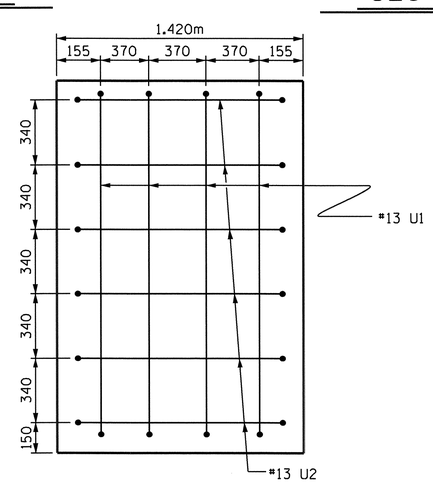

SECTION X-X

BAR TYPES

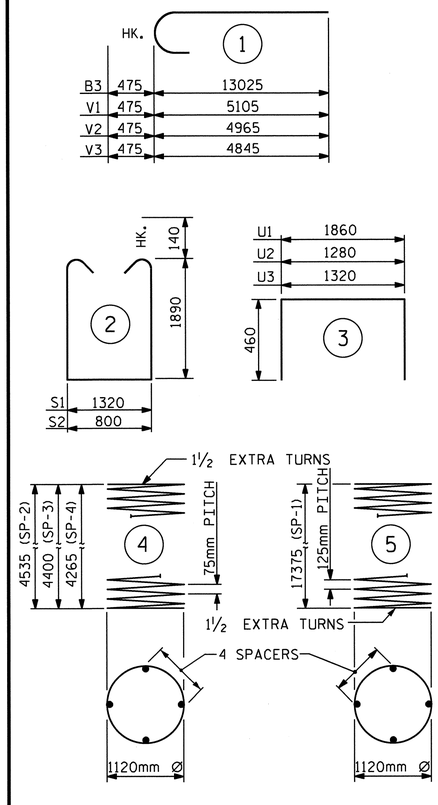

ALL BAR DIMENSIONS ARE OUT TO OUT.

BILL OF MATERIAL

BENT #1

BAR	NO.	SIZE	TYPE	LENGTH	WEIGHT
B1	16	#36	STR	12440	1574
B2	36	#19	STR	11540	929
B3	16	#36	1	13500	1708
B4	56	#13	STR	1260	70
M1	96	#36	STR	11440	8684
S1	58	#16	2	5380	484
S2	20	#16	2	4860	151
U1	8	#13	3	2780	22
U2	12	#13	3	2200	26
U3	63	#13	3	2240	140
V1	16	#36	1	5580	706
V2	16	#36	1	5440	688
V3	16	#36	1	5320	673
REINFORCING STEEL				kg	15855
SP-1	3	✱✱✱	5	487660	2271
SP-2	1	✱✱	4	215620	214
SP-3	1	✱✱	4	209340	208
SP-4	1	✱✱	4	203080	202

SPIRAL COLUMN REINFORCING STEEL kg 2895

DRILLED PIER CONCRETE

POUR #1 (DRILLED PIERS) m3 76.9

CLASS "A" CONCRETE BREAKDOWN

POUR #2 (COLUMNS) m3 15.2

POUR #3 (CAP) m3 63.4

TOTAL CLASS "A" CONCRETE m3 78.6

1370mm Ø DRILLED PIERS 52.2m

PERM. STEEL CASING FOR 1370mm Ø DRILLED PIERS 18.0m

SID INSPECTION 1 EACH

CSL TUBES 217.8m

✱✱ THE SP-2, SP-3 & SP-4 SPIRAL REINFORCING STEEL SHALL BE W20 OR D-20 COLD DRAWN WIRE OR #13 PLAIN OR DEFORMED BAR.

✱✱✱ THE SP-1 SPIRAL REINFORCING STEEL SHALL BE W31 OR D-31 COLD DRAWN WIRE OR #16 PLAIN OR DEFORMED BAR.

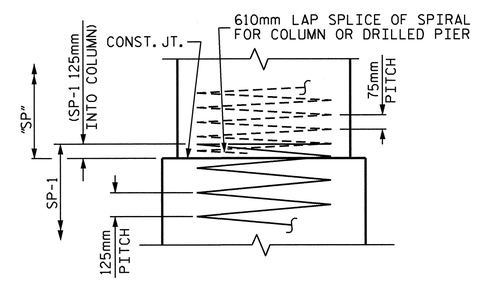

CONSTRUCTION JOINT DETAIL

PROJECT NO. R-2413C

GUILFORD-ROCKINGHAM COUNTY

STATION: 24+37.000 -LREV-

SHEET 2 OF 2

STATE OF NORTH CAROLINA
DEPARTMENT OF TRANSPORTATION
RALEIGH

SUBSTRUCTURE

BENT #1

(RIGHT LANE)

NORTH CAROLINA PROFESSIONAL SEAL 022516 ENGINEER EMILY E. MURRAY

10/28/11

REVISIONS						SHEET NO.
NO.	BY:	DATE:	NO.	BY:	DATE:	S-96
1			3			TOTAL SHEETS
2			4			238

STR. #3

DRAWN BY : M.GUDLAUGSSON DATE : 3-29-11
CHECKED BY : B.N. BARODAWALA DATE : 6-12-11

19-OCT-2011 14:19
R:\TIPProjects-R\R2413c\Structures\Final Plans\Str.#3\R-2413C_SD_B*_03.dgn
taverette

NOTES

STIRRUPS AND U3 BARS IN CAP MAY BE SHIFTED AS NECESSARY TO CLEAR ANCHOR BOLTS.

HOOKS ON "V" BARS MAY BE TURNED AS NECESSARY FOR PLACING REINFORCING STEEL.

ALL STEEL IN THE DRILLED PIERS IS INCLUDED IN THE PAY ITEMS FOR "REINFORCING STEEL" AND "SPIRAL COLUMN REINFORCING STEEL".

THE CONTRACTOR'S ATTENTION IS CALLED TO THE FACT THAT THE LONGITUDINAL REINFORCEMENT FOR THE DRILLED PIERS IS DETAILED WITH ONE METER OF EXTRA LENGTH.

THE LOCATION OF THE CONSTRUCTION JOINT IN THE DRILLED PIERS IS BASED ON AN APPROXIMATE GROUND LINE ELEVATION. IF THE CONSTRUCTION JOINT IS ABOVE THE ACTUAL GROUND LINE ELEVATION, THE CONTRACTOR SHALL PLACE THE CONSTRUCTION JOINT 300mm BELOW THE GROUND LINE.

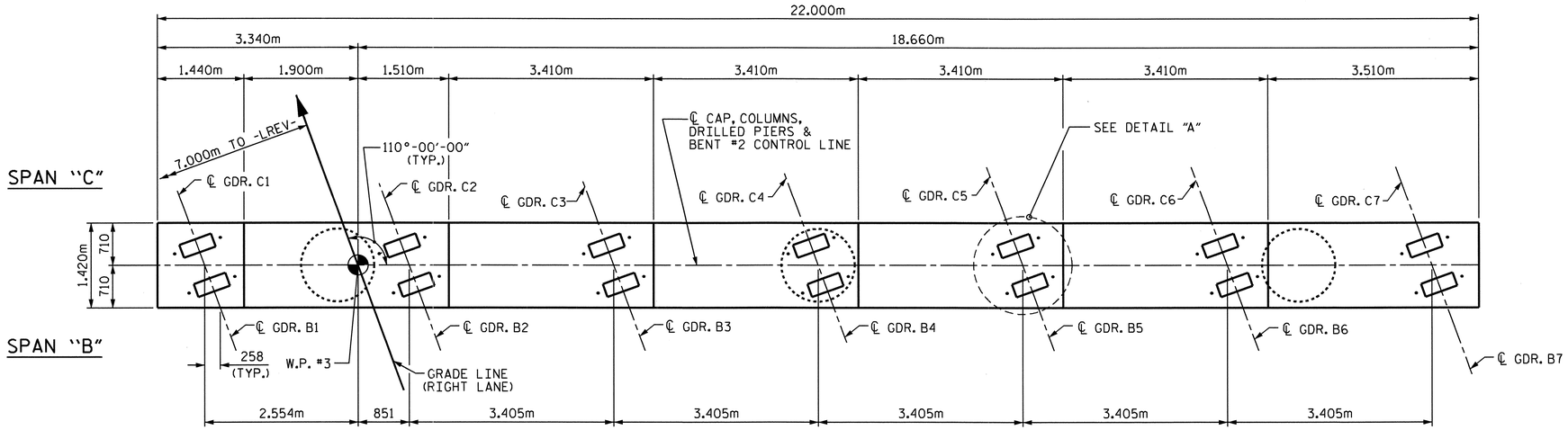

PLAN

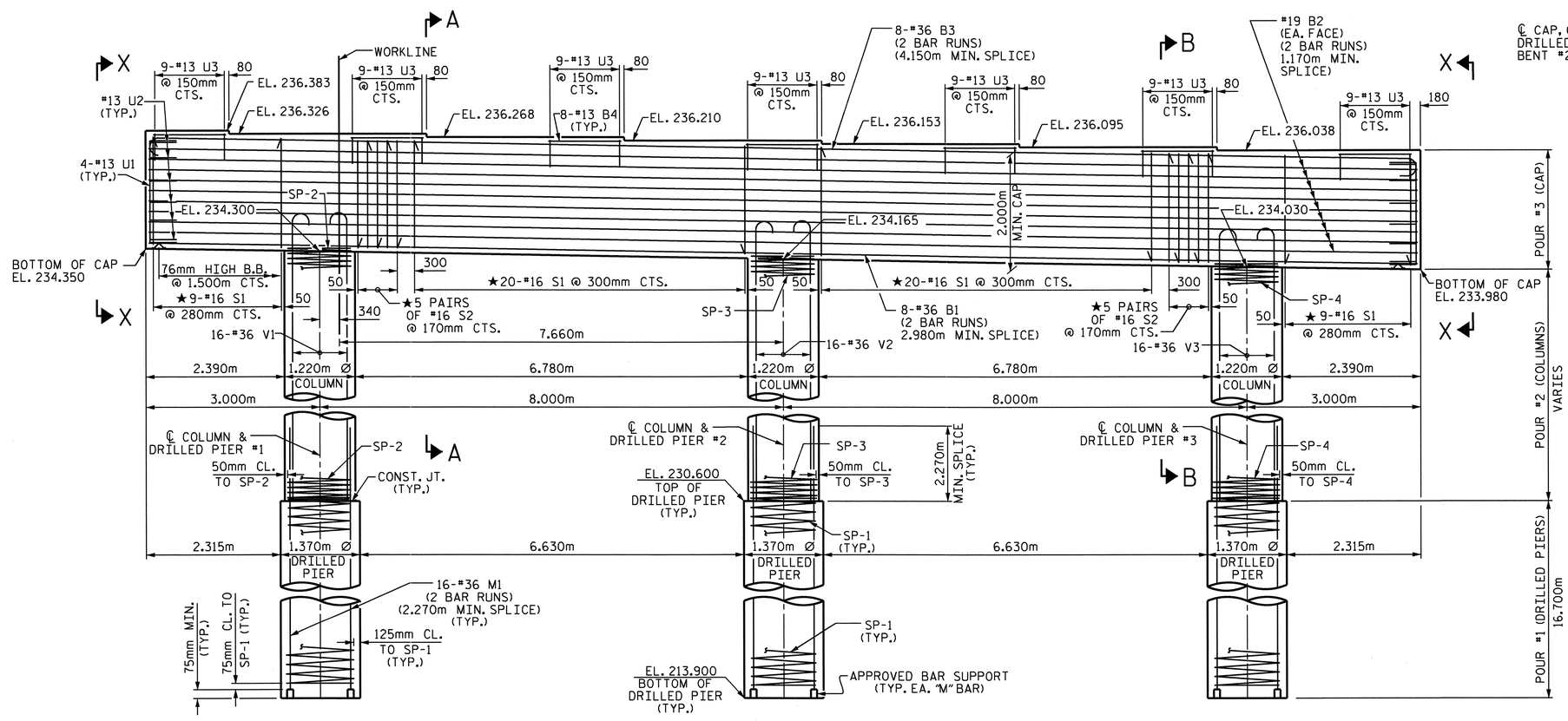

ELEVATION

★INVERT ALTERNATE STIRRUPS.

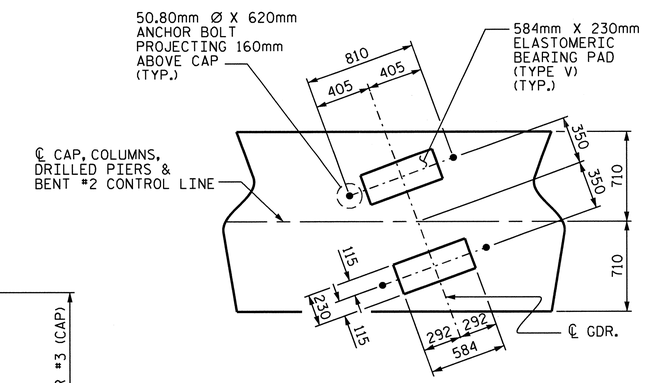

DETAIL A

DIMENSIONS FOR BRG. PADS AND ANCHOR BOLTS ARE TYP. EACH GDR.

PROJECT NO. R-2413C

GUILFORD-ROCKINGHAM COUNTY

STATION: 24+37.000 -LREV-

SHEET 1 OF 2

STATE OF NORTH CAROLINA
DEPARTMENT OF TRANSPORTATION
RALEIGH

SUBSTRUCTURE
BENT #2
(RIGHT LANE)

NORTH CAROLINA PROFESSIONAL SEAL 022516 ENGINEER EMILY E. MURRAY
10/28/11

REVISIONS						SHEET NO.
NO.	BY:	DATE:	NO.	BY:	DATE:	S-97
1			3			TOTAL SHEETS
2			4			238

STR. #3

DRAWN BY : M. GUDLAUGSSON DATE : 3-29-11
CHECKED BY : B.N. BARODAWALA DATE : 6-12-11

19-OCT-2011 14:20
R:\TIPProjects-R\R2413c\Structures\Final Plans\Str.#3\R-2413C_SD_B*_03.dgn
taverette

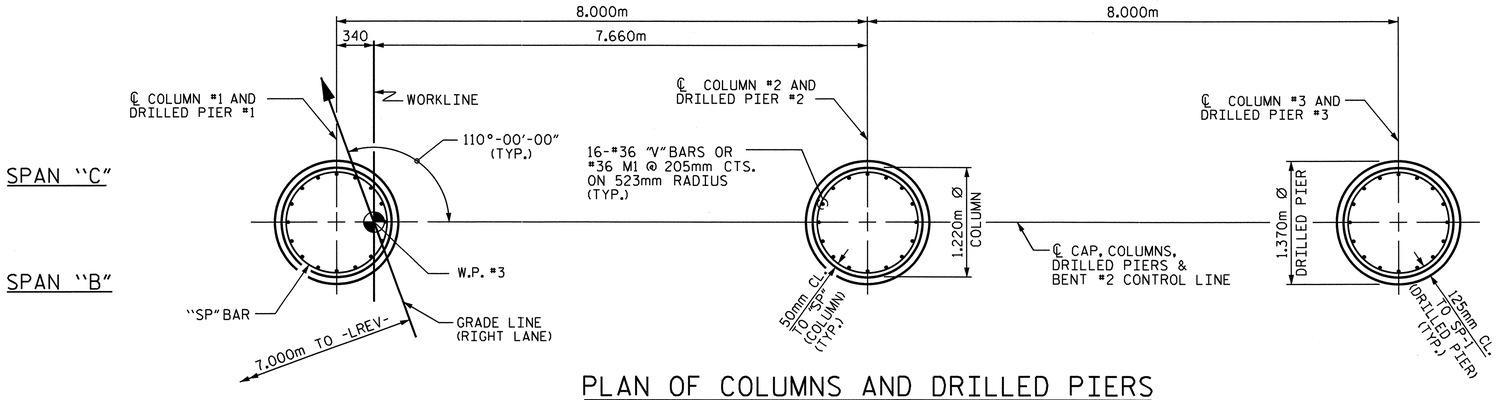

PLAN OF COLUMNS AND DRILLED PIERS

(DIM. & REINFORCING STEEL ARE TYPICAL FOR EACH COLUMN AND DRILLED PIER)

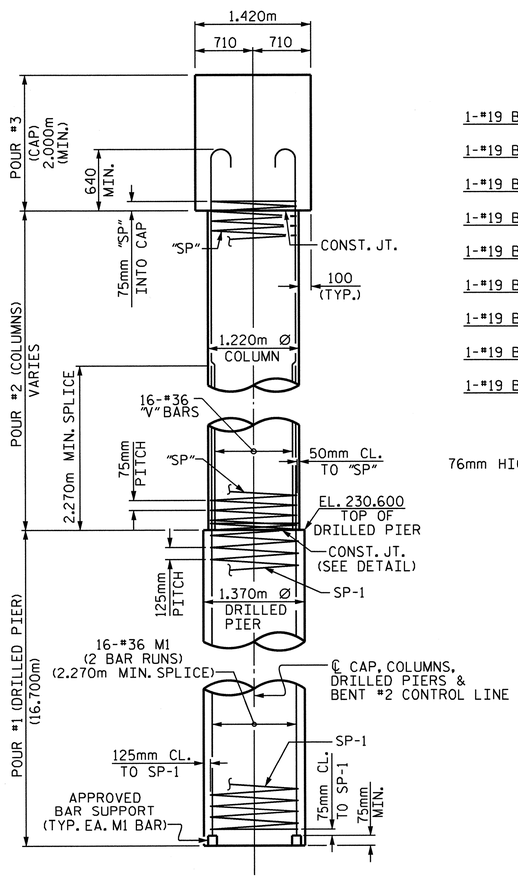

END ELEVATION

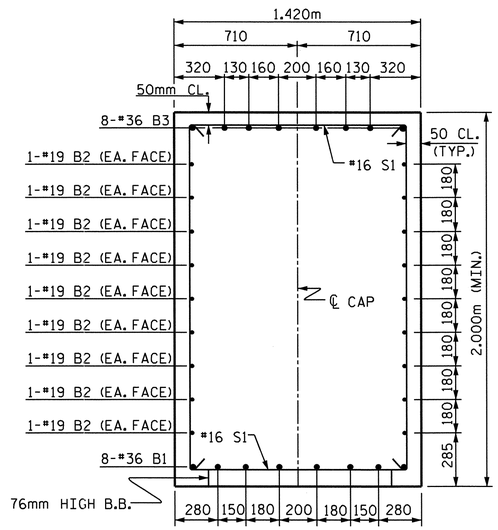

SECTION A-A

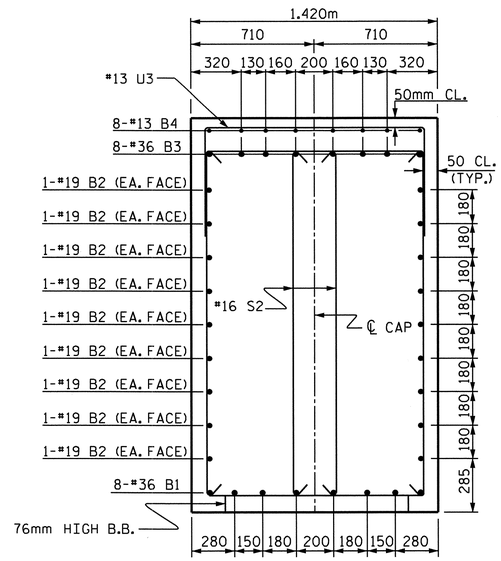

SECTION B-B

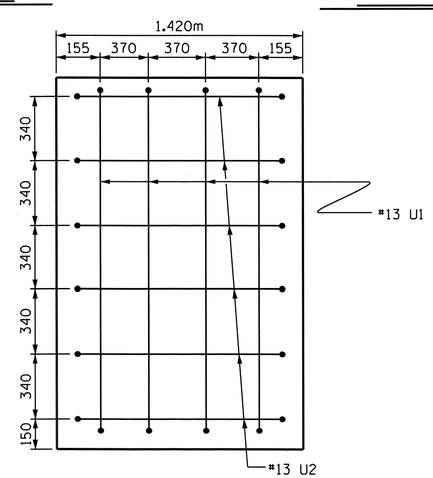

SECTION X-X

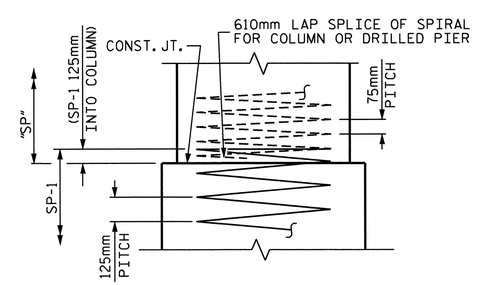

CONSTRUCTION JOINT DETAIL

BAR TYPES

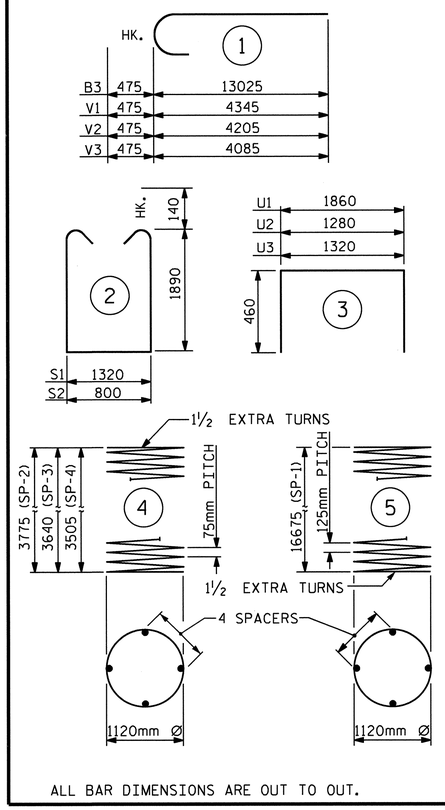

ALL BAR DIMENSIONS ARE OUT TO OUT.

BILL OF MATERIAL

BENT #2

BAR	NO.	SIZE	TYPE	LENGTH	WEIGHT
B1	16	#36	STR	12440	1574
B2	36	#19	STR	11540	929
B3	16	#36	1	13500	1708
B4	56	#13	STR	1260	70
M1	96	#36	STR	11080	8411
S1	58	#16	2	5380	484
S2	20	#16	2	4860	151
U1	8	#13	3	2780	22
U2	12	#13	3	2200	26
U3	63	#13	3	2240	140
V1	16	#36	1	4820	610
V2	16	#36	1	4680	592
V3	16	#36	1	4560	577
REINFORCING STEEL				kg	15294
SP-1	3	✱✱✱	5	468220	2180
SP-2	1	✱✱	4	180360	179
SP-3	1	✱✱	4	174100	173
SP-4	1	✱✱	4	167820	167
SPIRAL COLUMN REINFORCING STEEL				kg	2699
DRILLED PIER CONCRETE					
POUR #1 (DRILLED PIERS)				m3	73.9
CLASS "A" CONCRETE BREAKDOWN					
POUR #2 (COLUMNS)				m3	12.5
POUR #3 (CAP)				m3	63.4
TOTAL CLASS "A" CONCRETE				m3	75.9
1370mm Ø DRILLED PIERS					50.1m
SID INSPECTION					1 EACH
CSL TUBES					209.4m

✱✱ THE SP-2, SP-3 & SP-4 SPIRAL REINFORCING STEEL SHALL BE W20 OR D-20 COLD DRAWN WIRE OR #13 PLAIN OR DEFORMED BAR.

✱✱✱ THE SP-1 SPIRAL REINFORCING STEEL SHALL BE W31 OR D-31 COLD DRAWN WIRE OR #16 PLAIN OR DEFORMED BAR.

PROJECT NO. R-2413C

GUILFORD-ROCKINGHAM COUNTY

STATION: 24+37.000 -LREV-

SHEET 2 OF 2

STATE OF NORTH CAROLINA
DEPARTMENT OF TRANSPORTATION
RALEIGH

SUBSTRUCTURE
BENT #2
(RIGHT LANE)

NORTH CAROLINA PROFESSIONAL SEAL 022516 ENGINEER EMILY E. MURRAY
10/26/11

REVISIONS						
NO.	BY:	DATE:	NO.	BY:	DATE:	
1			3			
2			4			

SHEET NO. S-98

TOTAL SHEETS 238

STR. #3

DRAWN BY : M.GUDLAUGSSON DATE : 3-29-11
CHECKED BY : B.N. BARODAWALA DATE : 6-12-11

19-OCT-2011 14:20
R:\TIPProjects-R\R2413c\Structures\FinalPlans\Str.#3\R-2413C_SD_B#_03.dgn
taverette

NOTES

STIRRUPS AND U3 BARS IN CAP MAY BE SHIFTED AS NECESSARY TO CLEAR ANCHOR BOLTS.

HOOKS ON "V" BARS MAY BE TURNED AS NECESSARY FOR PLACING REINFORCING STEEL.

ALL STEEL IN THE DRILLED PIERS IS INCLUDED IN THE PAY ITEMS FOR "REINFORCING STEEL" AND "SPIRAL COLUMN REINFORCING STEEL".

THE CONTRACTOR'S ATTENTION IS CALLED TO THE FACT THAT THE LONGITUDINAL REINFORCEMENT FOR THE DRILLED PIERS IS DETAILED WITH ONE METER OF EXTRA LENGTH.

THE LOCATION OF THE CONSTRUCTION JOINT IN THE DRILLED PIERS IS BASED ON AN APPROXIMATE GROUND LINE ELEVATION. IF THE CONSTRUCTION JOINT IS ABOVE THE ACTUAL GROUND LINE ELEVATION, THE CONTRACTOR SHALL PLACE THE CONSTRUCTION JOINT 300mm BELOW THE GROUND LINE.

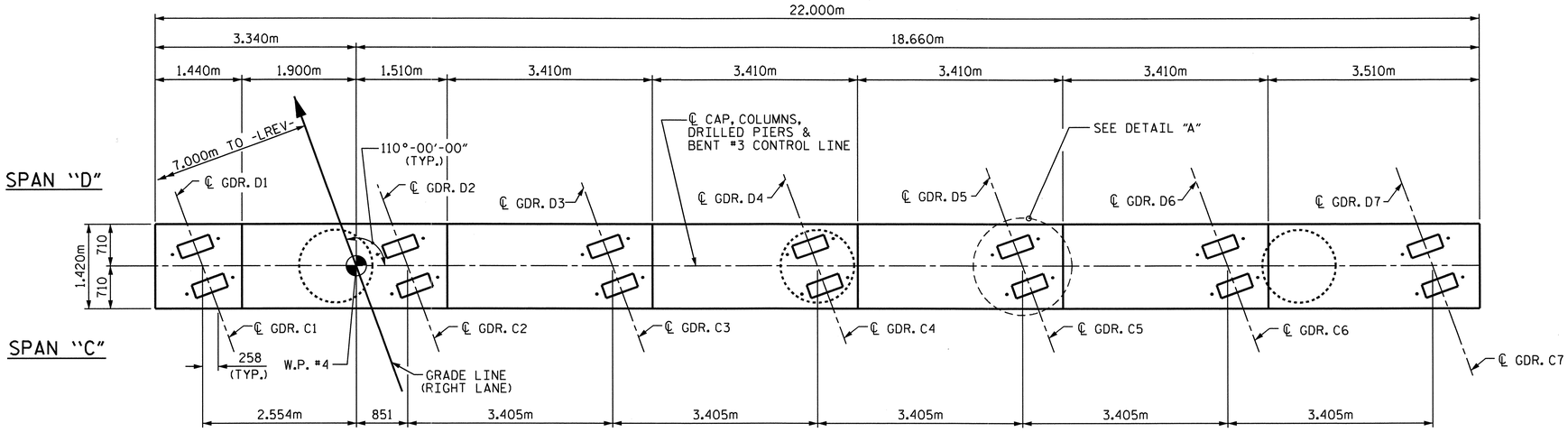

PLAN

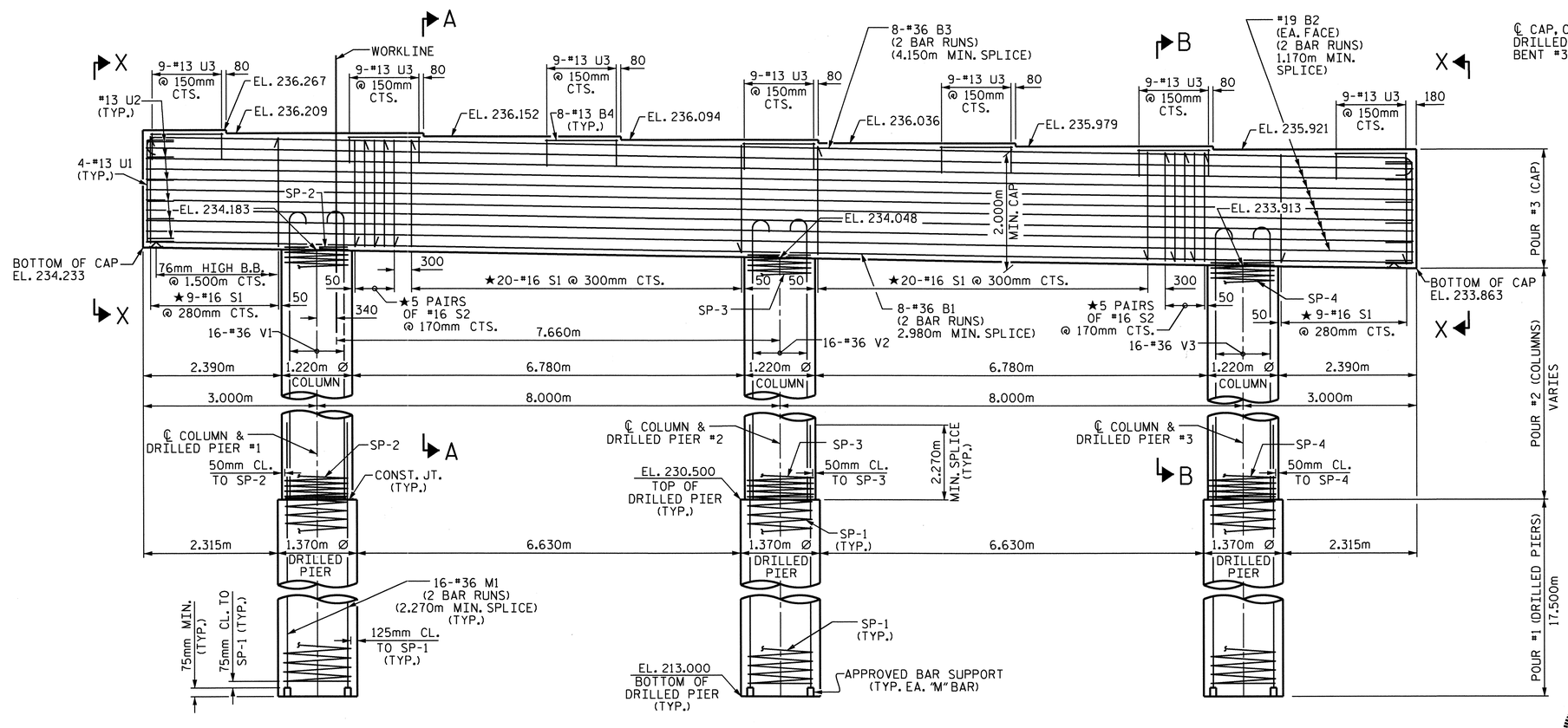

ELEVATION

★INVERT ALTERNATE STIRRUPS.

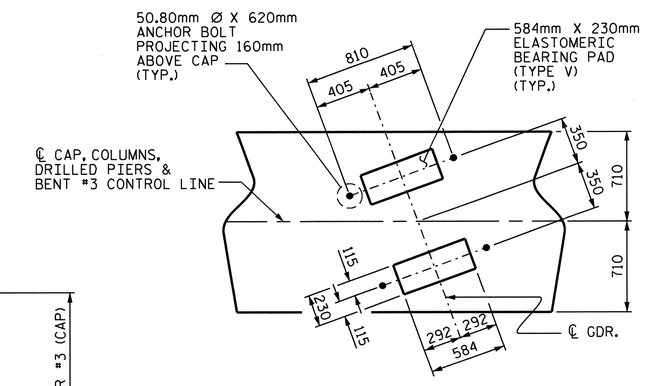

DETAIL A

DIMENSIONS FOR BRG. PADS AND ANCHOR BOLTS ARE TYP. EACH GDR.

PROJECT NO. R-2413C

GUILFORD-ROCKINGHAM COUNTY

STATION: 24+37.000 -LREV-

SHEET 1 OF 2

STATE OF NORTH CAROLINA
DEPARTMENT OF TRANSPORTATION
RALEIGH

SUBSTRUCTURE
BENT #3
(RIGHT LANE)

NORTH CAROLINA PROFESSIONAL SEAL 022516 ENGINEER EMILY E. MURRAY

10/28/11

REVISIONS						SHEET NO.
NO.	BY:	DATE:	NO.	BY:	DATE:	S-99
1			3			TOTAL SHEETS
2			4			238

STR. #3

DRAWN BY : M. GUDLAUGSSON DATE : 3-29-11
CHECKED BY : B.N. BARODAWALA DATE : 6-12-11

19-OCT-2011 14:20
R:\TIPProjects-R\R2413c\Structures\Final Plans\Str.#3\R-2413C_SD_B#_03.dgn
taverette

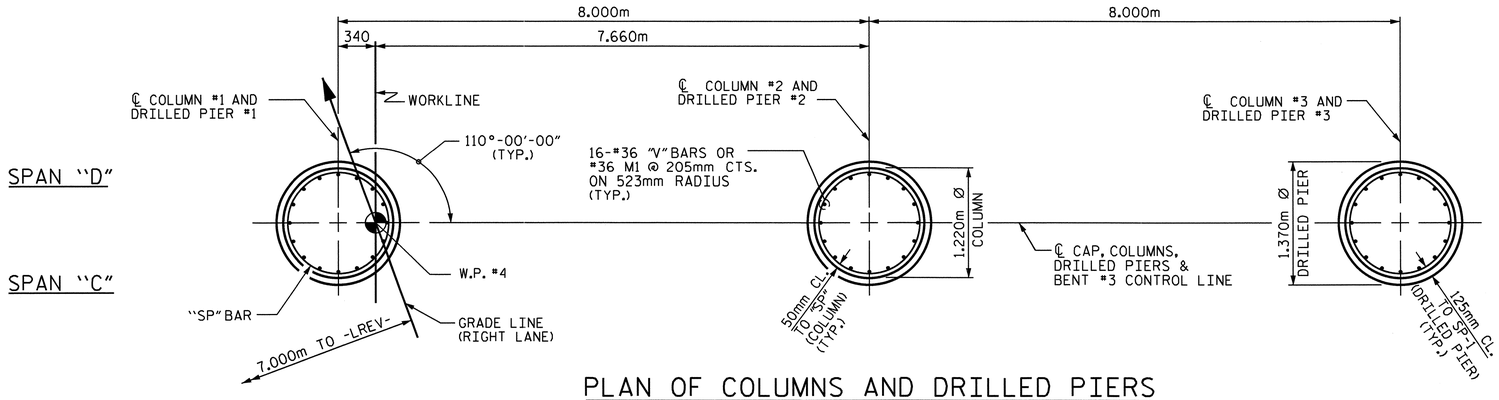

PLAN OF COLUMNS AND DRILLED PIERS

(DIM. & REINFORCING STEEL ARE TYPICAL FOR EACH COLUMN AND DRILLED PIER)

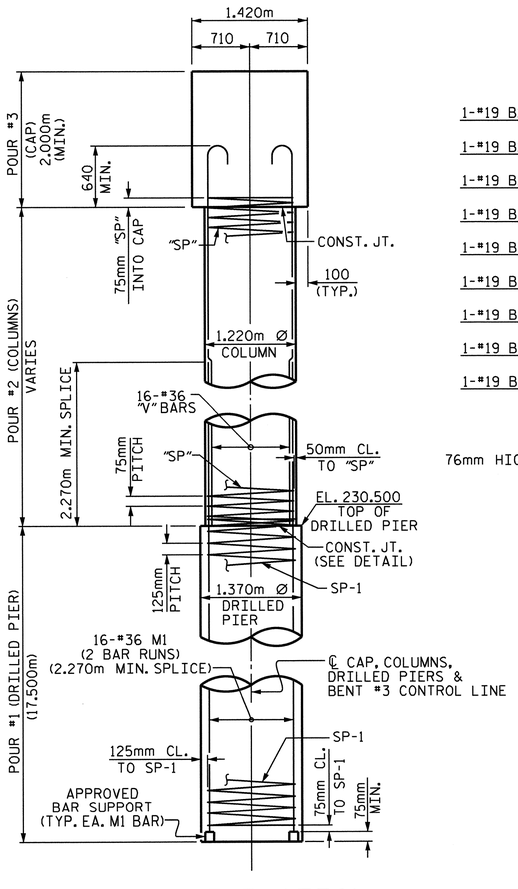

END ELEVATION

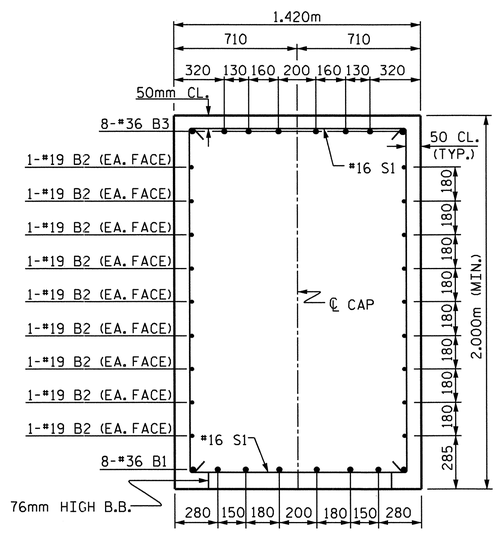

SECTION A-A

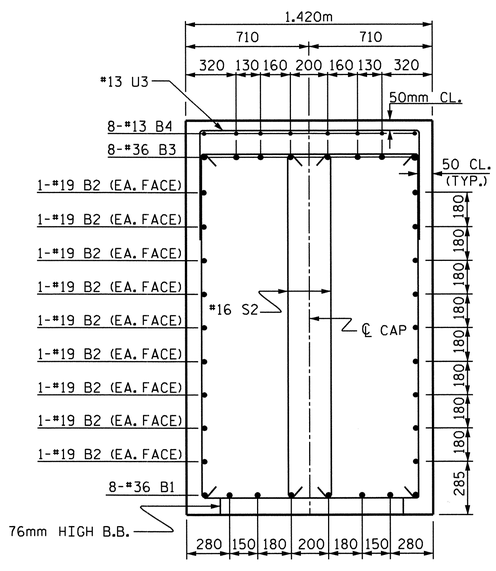

SECTION B-B

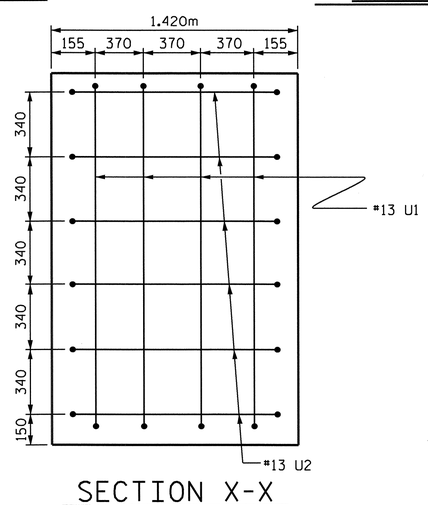

SECTION X-X

BAR TYPES

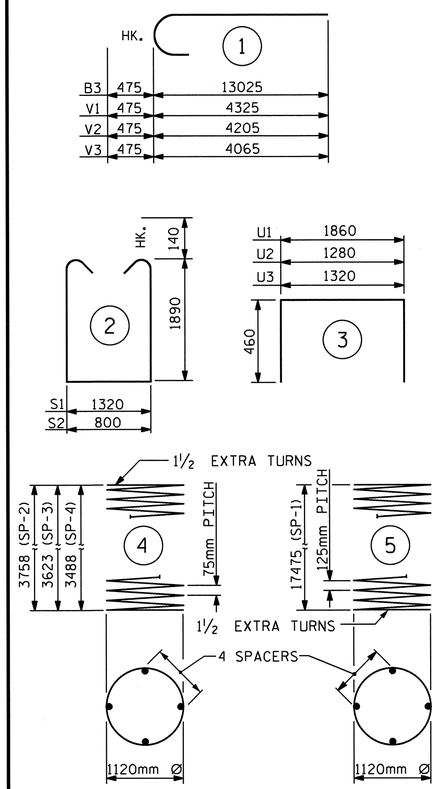

ALL BAR DIMENSIONS ARE OUT TO OUT.

BILL OF MATERIAL

BENT #3

BAR	NO.	SIZE	TYPE	LENGTH	WEIGHT
B1	16	#36	STR	12440	1574
B2	36	#19	STR	11540	929
B3	16	#36	1	13500	1708
B4	56	#13	STR	1260	70
M1	96	#36	STR	11500	8729
S1	58	#16	2	5380	484
S2	20	#16	2	4860	151
U1	8	#13	3	2780	22
U2	12	#13	3	2200	26
U3	63	#13	3	2240	140
V1	16	#36	1	4800	607
V2	16	#36	1	4680	592
V3	16	#36	1	4540	574
REINFORCING STEEL				kg	15606
SP-1	3	✱✱✱	5	490440	2283
SP-2	1	✱✱	4	179560	178
SP-3	1	✱✱	4	173300	172
SP-4	1	✱✱	4	167040	166

SPIRAL COLUMN REINFORCING STEEL kg 2799

DRILLED PIER CONCRETE

POUR #1 (DRILLED PIERS) m3 77.4

CLASS "A" CONCRETE BREAKDOWN

POUR #2 (COLUMNS)	m3	12.4
POUR #3 (CAP)	m3	63.4
TOTAL CLASS "A" CONCRETE	m3	75.8
1370mm Ø DRILLED PIERS		52.5m
SID INSPECTION		1 EACH
CSL TUBES		219.0m

✱✱ THE SP-2, SP-3 & SP-4 SPIRAL REINFORCING STEEL SHALL BE W20 OR D-20 COLD DRAWN WIRE OR #13 PLAIN OR DEFORMED BAR.

✱✱✱ THE SP-1 SPIRAL REINFORCING STEEL SHALL BE W31 OR D-31 COLD DRAWN WIRE OR #16 PLAIN OR DEFORMED BAR.

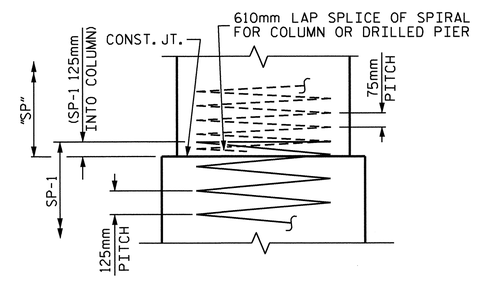

CONSTRUCTION JOINT DETAIL

PROJECT NO. R-2413C

GUILFORD-ROCKINGHAM COUNTY

STATION: 24+37.000 -LREV-

SHEET 2 OF 2

STATE OF NORTH CAROLINA
DEPARTMENT OF TRANSPORTATION
RALEIGH

SUBSTRUCTURE

BENT #3

(RIGHT LANE)

NORTH CAROLINA PROFESSIONAL SEAL 022516 ENGINEER EMILY E. MURRAY

10/28/11

REVISIONS						SHEET NO.
NO.	BY:	DATE:	NO.	BY:	DATE:	S-100
1			3			TOTAL SHEETS
2			4			238

DRAWN BY : M.GUDLAUGSSON DATE : 3-29-11
CHECKED BY : B.N. BARODAWALA DATE : 6-12-11

19-OCT-2011 14:20
R:\TIPProjects-R\R2413c\Structures\Final Plans\Str.#3\R-2413C_SD_B#_03.dgn
taverette

STR. #3

NOTES:

THE CONTRACTOR SHALL PROVIDE FOR INSTALLATION OF THE 102mm DIAMETER DRAIN PIPE THROUGH THE WING WALL AS REQUIRED FOR REINFORCED BRIDGE APPROACH FILLS, SEE THE ROADWAY PLANS. REINFORCING STEEL IN THE WING WALL MAY BE SHIFTED AS NECESSARY TO CLEAR THE DRAIN PIPE.

THE TOP SURFACE OF THE END BENT CAP AND WINGS, EXCLUDING THE OUTSIDE 100mm AND THE BEARING AREA, SHALL BE RAKED TO A DEPTH OF 6mm.

STIRRUPS IN CAP MAY BE SHIFTED AS NECESSARY TO CLEAR #13 V1 BARS.

THE CONTRACTOR'S ATTENTION IS CALLED TO THE FACT THAT THE UPPER PART OF INTEGRAL END BENT AND WINGS ARE TO BE POURED WITH THE SUPERSTRUCTURE.

SEE SUPERSTRUCTURE SHEETS FOR UPPER PART OF INTEGRAL END BENT DETAIL.

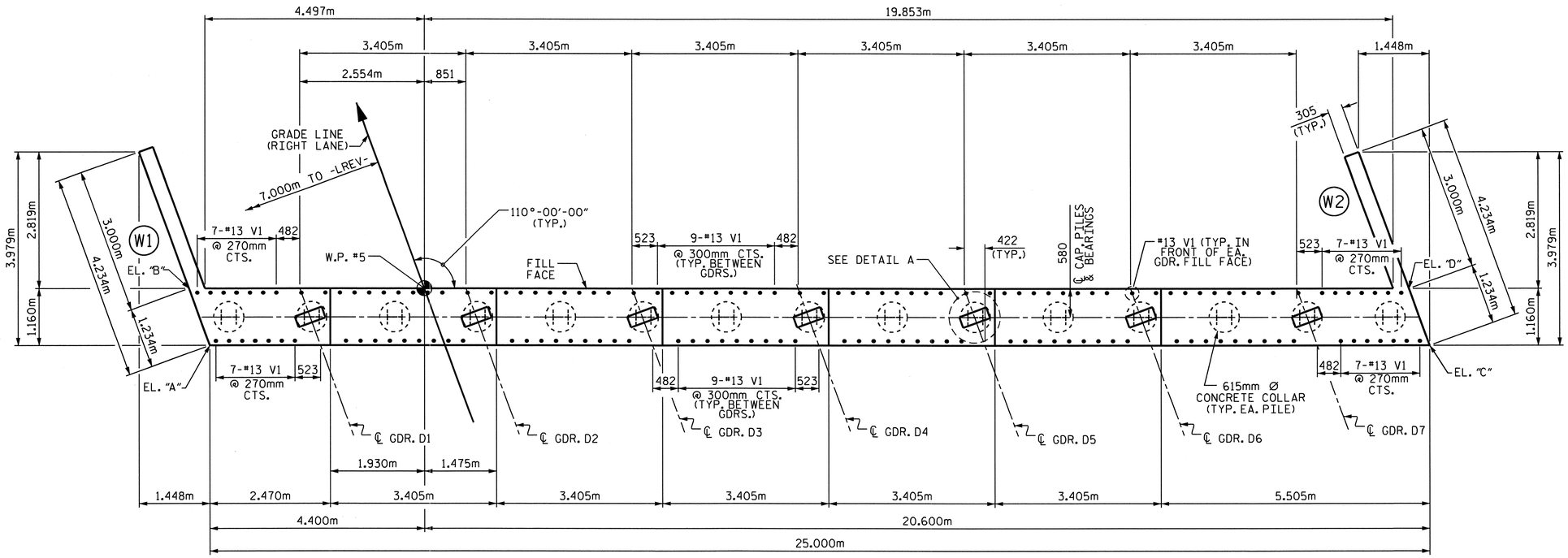

PLAN

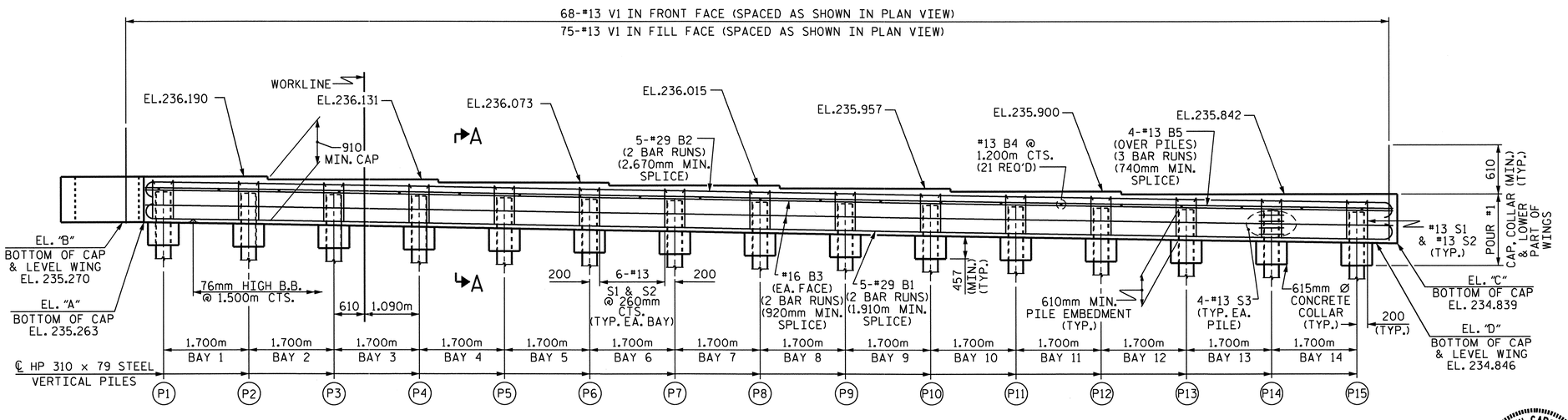

ELEVATION

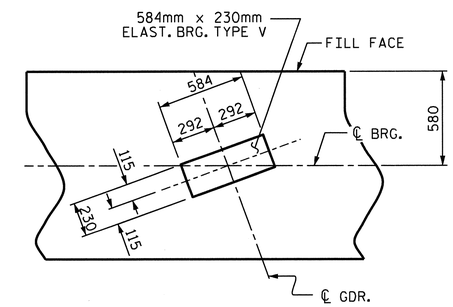

DETAIL "A"

(TYP. EA. GDR.)

TOP OF PILE ELEVATION	
P1 235.867	P9 235.635
P2 235.838	P10 235.607
P3 235.809	P11 235.578
P4 235.780	P12 235.549
P5 235.751	P13 235.520
P6 235.722	P14 235.491
P7 235.693	P15 235.462
P8 235.664	

PROJECT NO. R-2413C

GUILFORD-ROCKINGHAM COUNTY

STATION: 24+37.000 -LREV-

SHEET 1 OF 3

STATE OF NORTH CAROLINA
DEPARTMENT OF TRANSPORTATION
RALEIGH

SUBSTRUCTURE
INTEGRAL
END BENT #2
(RIGHT LANE)

NORTH CAROLINA PROFESSIONAL SEAL 022516 ENGINEER EMILY E. MURRAY
10/28/11

REVISIONS						SHEET NO.
NO.	BY:	DATE:	NO.	BY:	DATE:	S-101
1			3			TOTAL SHEETS
2			4			238

STR. #3

DRAWN BY : M.GUDLAUGSSON DATE : 01-19-11
CHECKED BY : T.L. AVERETTE DATE : 05-02-11

19-OCT-2011 14:23
R:\TIPProjects-R\R2413c\Structures\Final Plans\Str.#3\R-2413C_SD_E*_03.dgn
taverette

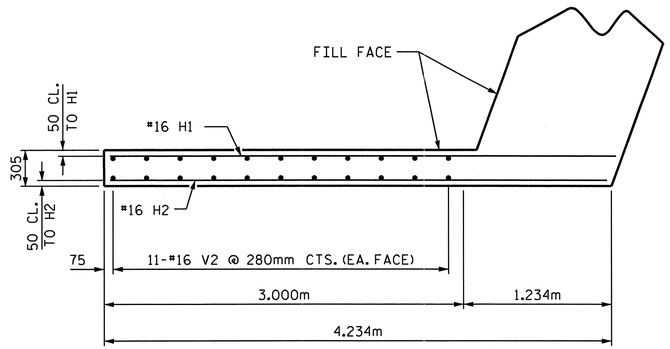

PLAN OF LEFT WING (W1)

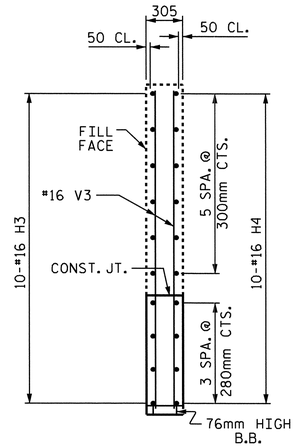

SECTION Y-Y

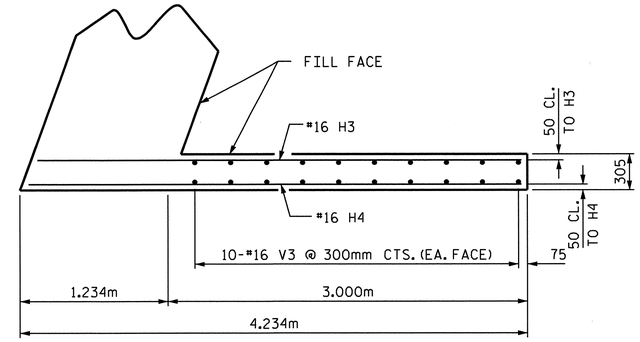

PLAN OF RIGHT WING (W2)

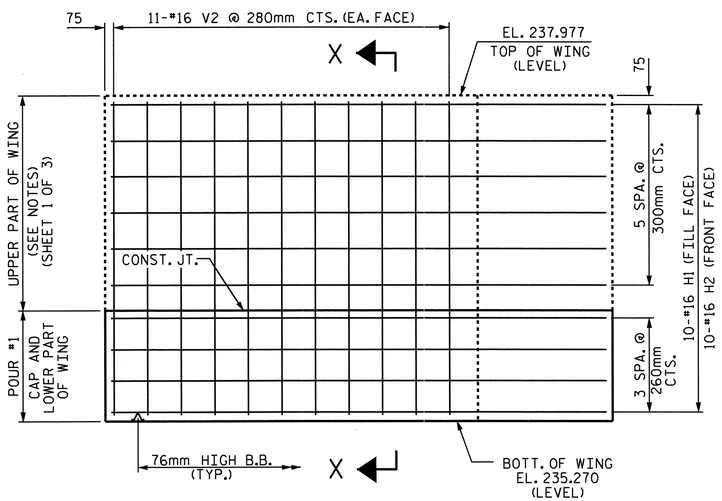

ELEVATION OF LEFT WING (W1)

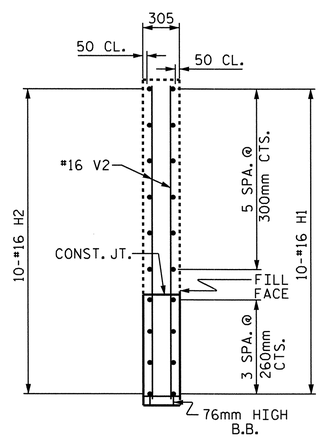

SECTION X-X

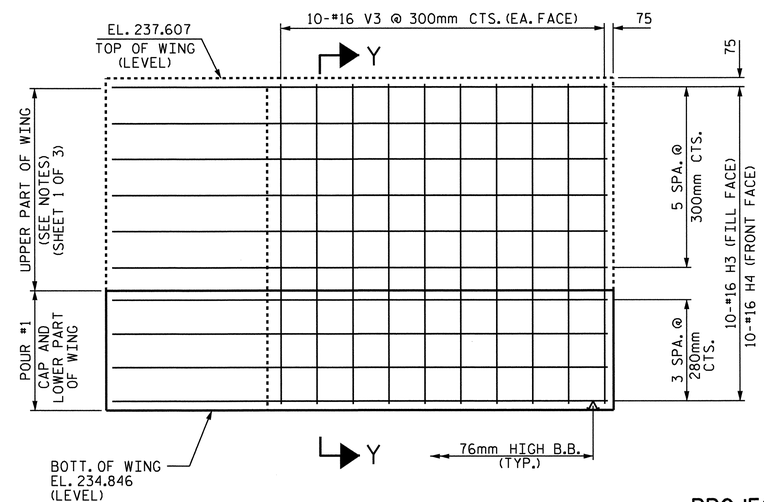

ELEVATION OF RIGHT WING (W2)

PROJECT NO. R-2413C

GUILFORD-ROCKINGHAM COUNTY

STATION: 24+37.000 -LREV-

SHEET 2 OF 3

STATE OF NORTH CAROLINA
DEPARTMENT OF TRANSPORTATION
RALEIGH

SUBSTRUCTURE

INTEGRAL
END BENT #2
(RIGHT LANE)

NORTH CAROLINA PROFESSIONAL SEAL 022516 ENGINEER EMILY E. MURRAY
04/28/11

REVISIONS						SHEET NO.
NO.	BY:	DATE:	NO.	BY:	DATE:	S-102
1			3			TOTAL SHEETS
2			4			238

STR. #3

DRAWN BY : M.GUDLAUGSSON DATE : 01-19-11
CHECKED BY : T.L. AVERETTE DATE : 05-02-11

05-SEP-2011 11:30
Y:\Structures\Final Plans\Str.#3\R-2413C_SD_E#_03.dgn
mgudlaugsson

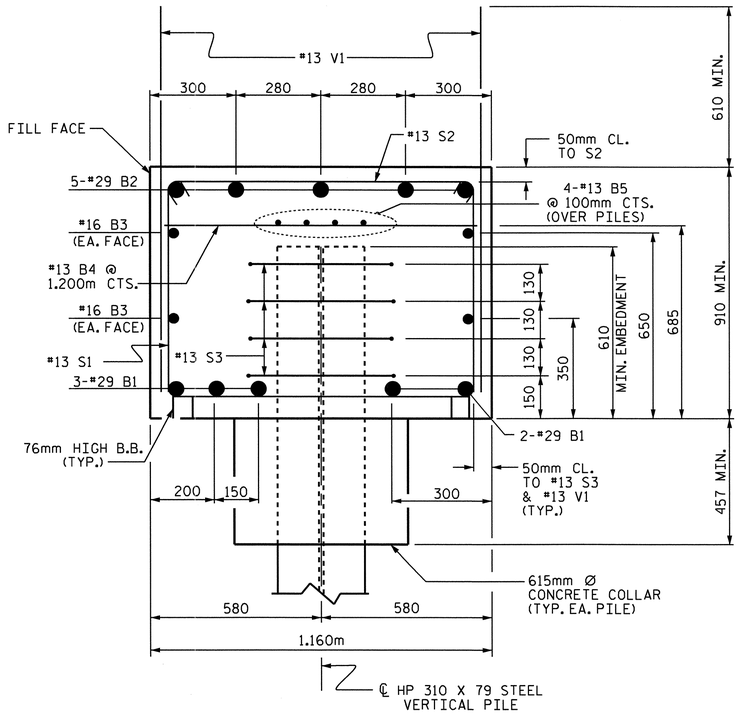

SECTION A-A

BAR TYPES

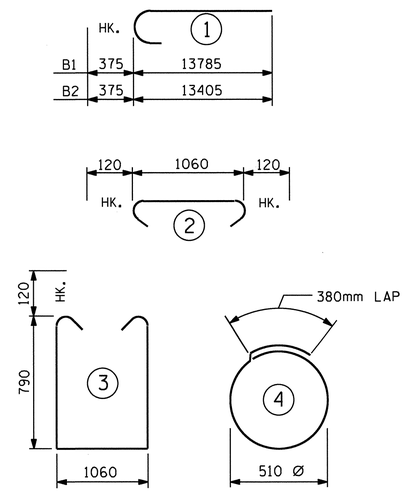

ALL BAR DIMENSIONS ARE OUT TO OUT.

BILL OF MATERIAL
END BENT #2

BAR	NO.	SIZE	TYPE	LENGTH	WEIGHT
B1	10	#29	1	14160	716
B2	10	#29	1	13780	697
B3	8	#16	STR	12920	160
B4	21	#13	STR	1060	22
B5	12	#13	STR	8800	105
H1	10	#16	STR	4220	65
H2	10	#16	STR	4140	64
H3	10	#16	STR	4020	62
H4	10	#16	STR	4100	64
S1	86	#13	3	2880	246
S2	86	#13	2	1300	111
S3	60	#13	4	1980	118
V1	143	#13	STR	1460	208
V2	22	#16	STR	2600	89
V3	20	#16	STR	2660	83

REINFORCING STEEL = 2810 kg

CLASS A CONCRETE BREAKDOWN

POUR #1: (CAP, CONCRETE COLLAR & LOWER PART OF WINGS) 31.1 m3

TOTAL CONCRETE 31.1 m3

HP 310 X 79 STEEL PILES
NO. 15 274.5 METERS

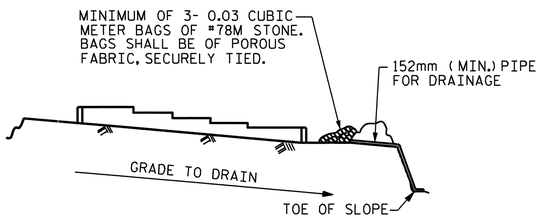

BAGGED STONE AND PIPE SHALL BE PLACED IMMEDIATELY AFTER COMPLETION OF END BENT EXCAVATION. PIPE MAY BE EITHER CONCRETE, CORRUGATED STEEL, CORRUGATED ALUMINUM ALLOY, OR CORRUGATED PLASTIC. PERFORATED PIPE WILL NOT BE ALLOWED.

BAGGED STONE SHALL REMAIN IN PLACE UNTIL THE ENGINEER DIRECTS THAT IT BE REMOVED. THE CONTRACTOR SHALL REMOVE AND DISPOSE OF SILT ACCUMULATIONS AT BAGGED STONE WHEN SO DIRECTED BY THE ENGINEER. BAGS SHALL BE REMOVED AND REPLACED WHENEVER THE ENGINEER DETERMINES THAT THEY HAVE DETERIORATED AND LOST THEIR EFFECTIVENESS.

NO SEPARATE PAYMENT WILL BE MADE FOR THIS WORK AND THE ENTIRE COST OF THIS WORK SHALL BE INCLUDED IN THE UNIT CONTRACT PRICE BID FOR THE SEVERAL PAY ITEMS.

TEMPORARY DRAINAGE AT END BENT

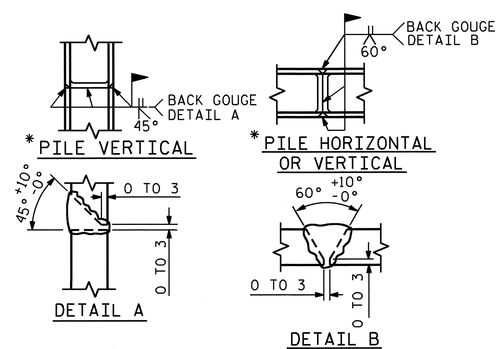

* POSITION OF PILE DURING WELDING.

PILE SPLICE DETAILS

PROJECT NO. R-2413C
GUILFORD-ROCKINGHAM COUNTY
STATION: 24+37.000 -LREV-

SHEET 3 OF 3

STATE OF NORTH CAROLINA
DEPARTMENT OF TRANSPORTATION
RALEIGH

SUBSTRUCTURE
INTEGRAL
END BENT #2
(RIGHT LANE)

NORTH CAROLINA PROFESSIONAL SEAL 022516 ENGINEER EMILY E. MURPHY
10/28/11

REVISIONS						SHEET NO.
NO.	BY:	DATE:	NO.	BY:	DATE:	S-103
1			3			TOTAL SHEETS
2			4			238

STR. #3

DRAWN BY : M.GUDLAUGSSON DATE : 01-19-11
CHECKED BY : T.L. AVERETTE DATE : 05-02-11

05-SEP-2011 11:30
Y:\Structures\Final Plans\Str.#3\R-2413C_SD_E#_03.dgn
mgudlaugsson

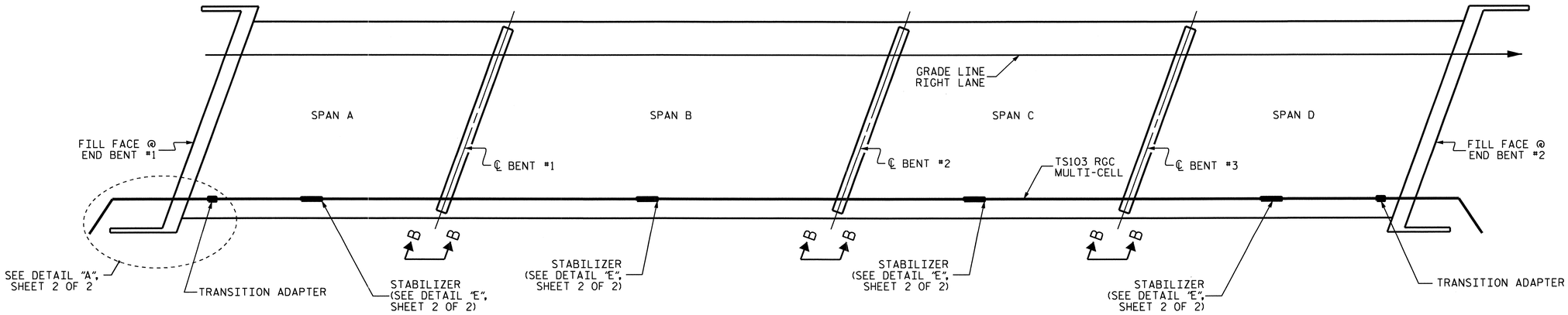

ELECTRICAL CONDUIT LAYOUT

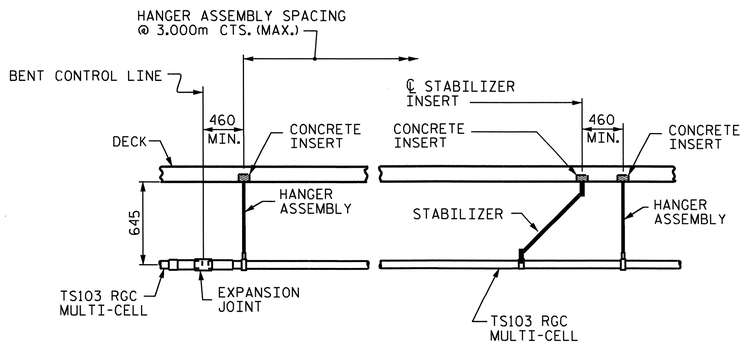

VIEW B-B

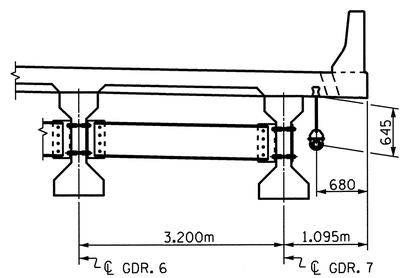

CONDUIT LOCATION

PROJECT NO. R-2413C
GUILFORD-ROCKINGHAM COUNTY
STATION: 24+37.000 -LREV-

SHEET 1 OF 2

STATE OF NORTH CAROLINA
DEPARTMENT OF TRANSPORTATION
RALEIGH

ELECTRICAL CONDUIT SYSTEM DETAILS

RIGHT LANE

NORTH CAROLINA PROFESSIONAL SEAL 022516 ENGINEER EMILY E. MURRAY
6/28/11

REVISIONS						SHEET NO.
NO.	BY:	DATE:	NO.	BY:	DATE:	S-104
1			3			TOTAL SHEETS
2			4			238

DRAWN BY : T.L. AVERETTE DATE : 6-07-11
CHECKED BY : E. MURRAY DATE : 6-08-11

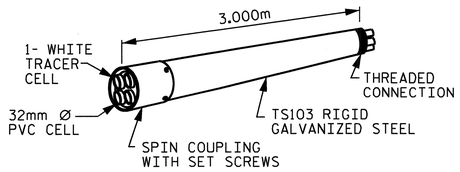

RIGID GALVANIZED (RGC)
MULTI-CELL RACEWAY

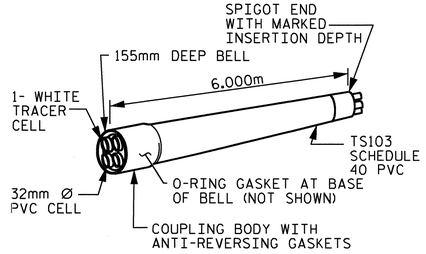

SCHEDULE 40 PVC
MULTI-CELL RACEWAY

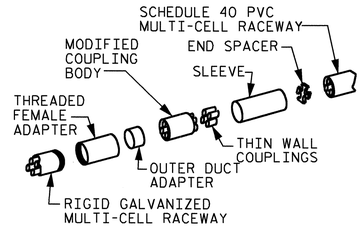

TRANSITION ADAPTER

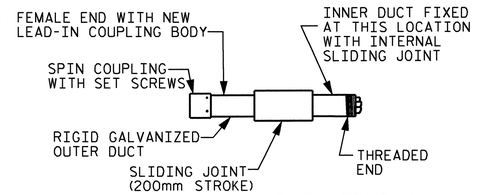

EXPANSION JOINT FITTING

DETAIL "D"

TS103 MULTI-CELL COMPONENTS

NOTES

THE CONTRACTOR SHALL BE RESPONSIBLE FOR DETERMINING THE TOTAL QUANTITY OF CONDUIT NEEDED TO COMPLETE THE WORK AND THAT THE CONDUIT(S) ARE PLACED AT THE NOTED DIMENSION AND ABOVE THE BOTTOM OF THE GIRDER.

THE INSTALLATION OF THE CONDUIT SYSTEM SHALL BE PAID FOR AS LUMP SUM. THE PRICE SHALL INCLUDE ALL CONDUIT, HANGERS, STABILIZERS, EXPANSION JOINTS, CONCRETE INSERTS, PVC SLEEVES AND ALL NECESSARY HARDWARE TO COMPLETE THE WORK.

THE CONTRACTOR SHALL FIELD VERIFY THAT THE CONDUIT SYSTEM IS NOT IN CONFLICT WITH THE GUARDRAIL POSTS.

SEE DETAIL "C" FOR HANGER ASSEMBLY INSTALLATION.

INSTALL SLEEVES PARALLEL TO GIRDERS. SEE DETAIL "B" FOR SLEEVE INSTALLATION.

PROVIDE TRANSITION ADAPTOR AND EXPANSION JOINT FOR CONDUIT AT END BENT 1 AND END BENT 2.

INSTALL STABILIZERS MIDWAY BETWEEN DECK EXPANSION JOINTS. STABILIZERS CAN NOT BE USED INSTEAD OF HANGER ASSEMBLY.

THE CONCRETE SCREW INSERT SHALL HAVE A ROD SIZE OF 15.875mm AND A PULL FORCE OF 580 kg.

FOR ELECTRICAL CONDUIT SYSTEM, SEE SPECIAL PROVISIONS.

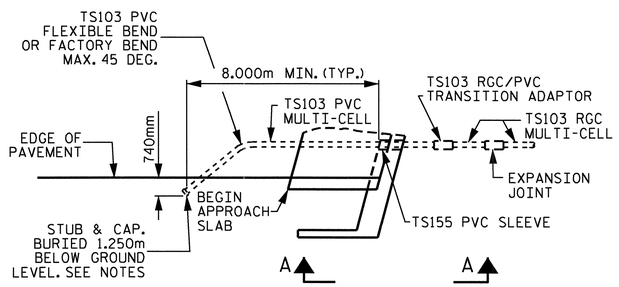

DETAIL "A"

TERMINATION OF CONDUIT AT INTEGRAL END BENT
(END BENT #1 SHOWN, END BENT #2 SIMILAR)

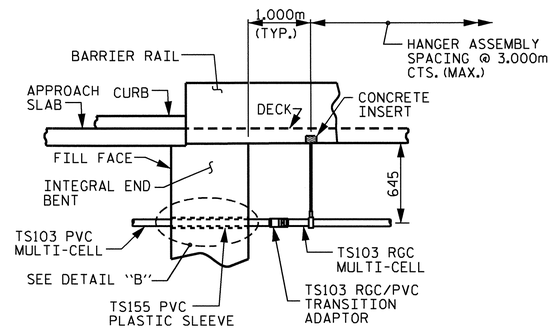

VIEW A-A

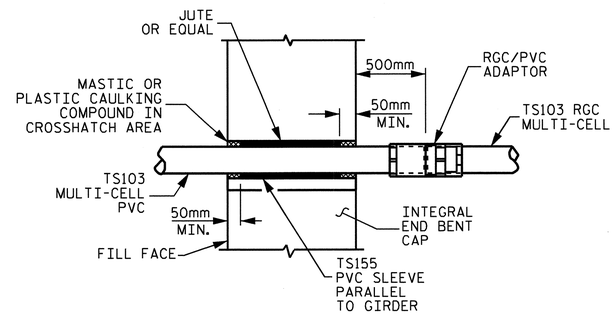

DETAIL "B"

PVC SLEEVE INSTALLATION & RGC/PVC ADAPTOR AT INTEGRAL END BENT.

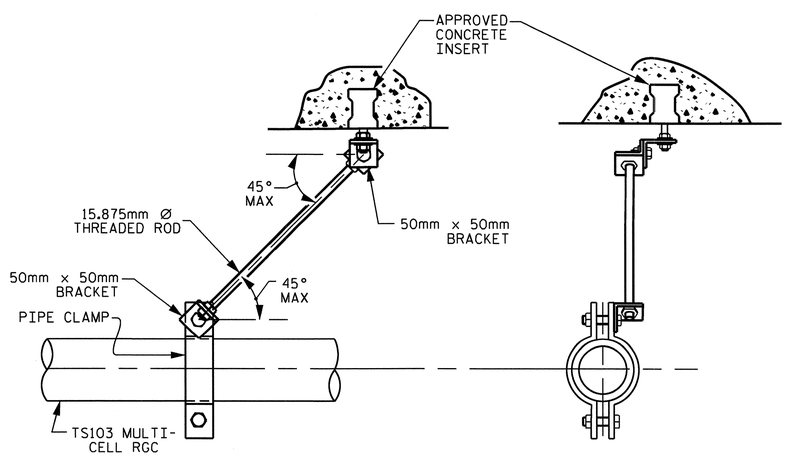

DETAIL "E"

STABILIZER

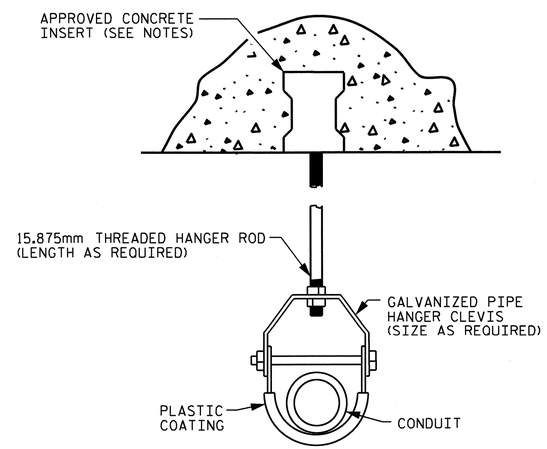

DETAIL "C"

HANGER ASSEMBLY

ELECTRIC CONDUIT DETAILS

PROJECT NO. R-2413C
GUILFORD-ROCKINGHAM COUNTY
STATION: 24+37.000 -LREV-

SHEET 2 OF 2

STATE OF NORTH CAROLINA
DEPARTMENT OF TRANSPORTATION
RALEIGH

STANDARD
ELECTRICAL CONDUIT SYSTEM DETAILS

RIGHT LANE

NORTH CAROLINA PROFESSIONAL SEAL 022516 ENGINEER EMMY E. MURRAY
10/28/11

REVISIONS						SHEET NO.
NO.	BY:	DATE:	NO.	BY:	DATE:	S-105
1			3			TOTAL SHEETS
2			4			238

ASSEMBLED BY : T.L. AVERETTE DATE : 6-07-11
CHECKED BY : E. MURRAY DATE : 6-08-11
DRAWN BY : RWW 2-4-03
CHECKED BY: DBM 2-4-03
REV. 5/1/06 TLA/GM

STR. #3 STD. NO. ECS1SM

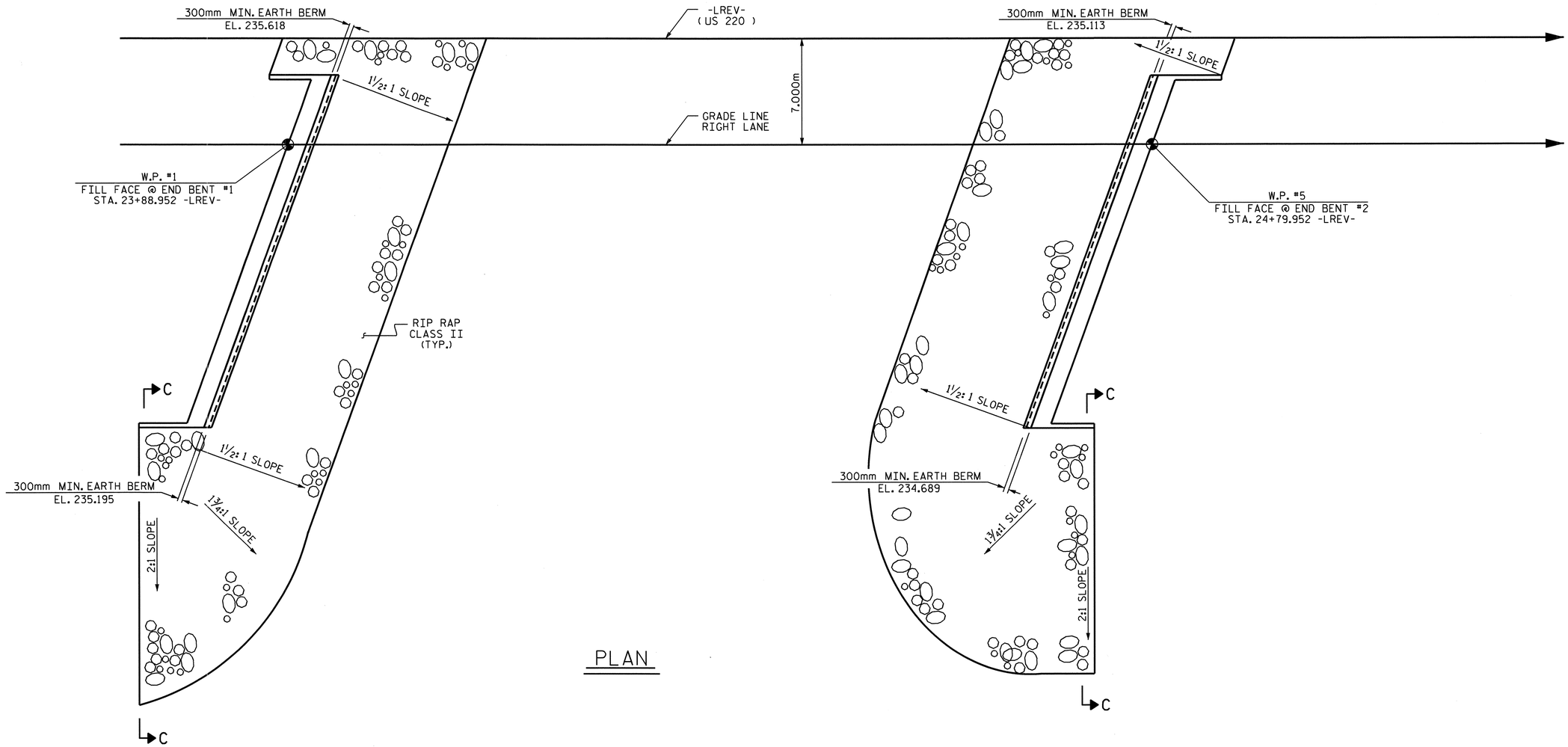

PLAN

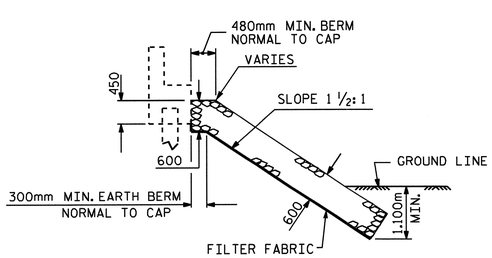

℄ SECTION
BERM RIP RAPPED

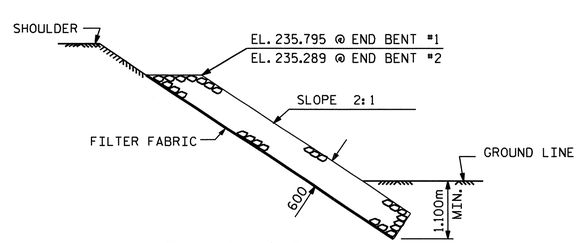

SECTION C-C

ESTIMATED QUANTITIES		
BRIDGE AT STA. 24+37.000 -LREV- RIGHT LANE	RIP RAP CLASS II	FILTER FABRIC FOR DRAINAGE
	METRIC TONS	SQUARE METERS
END BENT #1	578	590
END BENT #2	892	909

PROJECT NO. R-2413C
GUILFORD-ROCKINGHAM COUNTY
STATION: 24+37.000 -LREV-

STATE OF NORTH CAROLINA
DEPARTMENT OF TRANSPORTATION
RALEIGH

RIP RAP
DETAILS

RIGHT LANE

NORTH CAROLINA PROFESSIONAL SEAL 022516 ENGINEER EMILY E. MURRAY
10/28/11

REVISIONS						SHEET NO.
NO.	BY:	DATE:	NO.	BY:	DATE:	S-106
1			3			TOTAL SHEETS
2			4			238

DRAWN BY : PEGGY PARISI DATE : 5-19-11
CHECKED BY : MIKE PISO DATE : 6-10-11

19-OCT-2011 14:25
R:\TIPProjects-R\R2413c\Structures\FinalPlans\Str.*3\R2413C_sd_RR_03.dgn
taverette

STR. #3

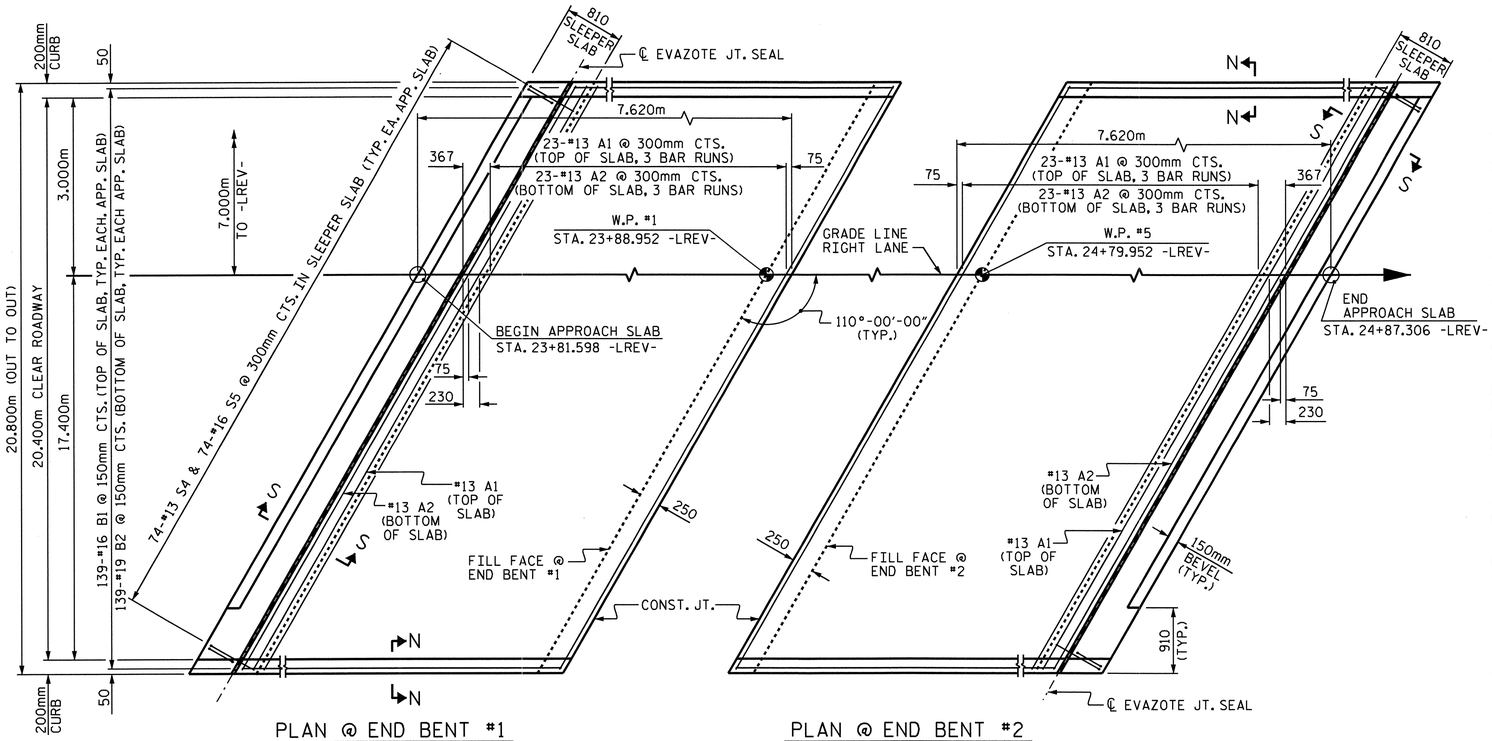

PLAN @ END BENT #1

PLAN @ END BENT #2

DIMENSIONS SHOWN ARE TYPICAL FOR BOTH APPROACH SLABS. #13 A1 BARS IN SLEEPER SLAB NOT SHOWN FOR CLARITY.

NOTES

APPROACH SLAB SHALL NOT BE CONSTRUCTED PRIOR TO COMPLETION OF THE BRIDGE DECK.

FOR REINFORCED BRIDGE APPROACH FILL INCLUDING FABRIC, IMPERMEABLE GEOMEMBRANE, 102mm Ø DRAINAGE PIPE, #78M STONE, AND SELECT MATERIAL, SEE ROADWAY PLANS.

AREA BETWEEN THE WINGWALL AND APPROACH SLAB SHALL BE GRADED TO DRAIN THE WATER AWAY FROM THE FILL FACE OF THE BRIDGE AND SHALL BE PAVED. SEE ROADWAY PLANS.

THE 150mm COMP. A.B.C. SHALL BE FLUSH WITH THE SLEEPER SLAB AND SHALL EXTEND 300mm OUTSIDE OF EACH EDGE OF THE APPROACH SLAB.

THE CONTRACTOR MAY USE 100mm TYPE B-25.0B ASPHALT CONCRETE BASE COURSE IN LIEU OF 150mm COMP. A.B.C. IF THIS OPTION IS USED, THE BASE COURSE SHALL BE FLUSH WITH THE SLEEPER SLAB, AND THE WIDTH SHALL BE THE SAME AS THAT OF THE APPROACH SLAB.

THE CONTRACTOR MAY USE 125mm CLASS "A" CONCRETE BASE IN LIEU OF 150mm COMP. A.B.C. IF THIS OPTION IS USED, THE CONCRETE BASE SHALL BE FLUSH WITH THE SLEEPER SLAB, AND THE WIDTH SHALL BE THE SAME AS THAT OF THE APPROACH SLAB. THE CONCRETE SHALL BE FINISHED TO A SMOOTH SURFACE AND A LAYER OF 13.6 kg ROOFING FELT SHALL BE PLACED BETWEEN THE CONCRETE BASE AND THE APPROACH SLAB TO PREVENT BOND. THE APPROACH SLAB SHALL NOT BE CAST UNTIL THE CONCRETE BASE HAS REACHED AN AGE OF THREE CURING DAYS.

THE VERTICAL JOINT ON THE RIGHT AND LEFT SIDE OF THE APPROACH SLAB AT THE ENDS OF THE EVAZOTE JOINT SHALL BE FILLED WITH SILICONE OR OTHER APPROVED MATERIAL IN ORDER TO PREVENT BACKFILL FROM ENTERING THE JOINT OPENING.

THE JOINT OPENING AT THE APPROACH SLAB/DECK INTERFACE SHALL BE SAWED NO MORE THAN 12 HOURS AFTER THE APPROACH SLAB IS CAST. THE JOINT SHALL BE CLEANED OF ALL DEBRIS BEFORE THE SEALANT IS APPLIED. THE JOINT SEALER MATERIAL SHALL CONFORM TO THE REQUIREMENTS OF TYPE SL LOW MODULUS SILICONE SEALANT.

WITH EVAZOTE JOINT SEAL

FOR EVAZOTE JOINT SEALS, SEE SPECIAL PROVISIONS.

THE NOMINAL UNCOMPRESSED SEAL WIDTH OF THE EVAZOTE JOINT SEAL SHALL BE 87mm.

FOR ELASTOMERIC CONCRETE, SEE SPECIAL PROVISIONS.

BILL OF MATERIAL

FOR ONE APPROACH SLAB (2 REQ'D)

BAR	NO.	SIZE	TYPE	LENGTH	WEIGHT
* A1	93	#13	STR	7760	717
A2	72	#13	STR	7720	553
* B1	139	#16	STR	6780	1463
B2	139	#19	STR	6920	2150
* S4	74	#13	1	1200	88
S5	74	#16	2	880	101

REINFORCING STEEL	kg.	2804
* EPOXY COATED REINFORCING STEEL	kg.	2268
CLASS AA CONCRETE		
POUR #1 - SLAB & CURB	C.M.	44.7
POUR #2 - SLEEPER SLAB	C.M.	5.7
TOTAL	C.M.	50.4

BAR TYPES

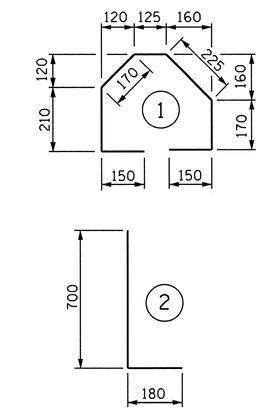

ALL BAR DIMENSIONS ARE OUT TO OUT

SPLICE CHART

BAR	SPLICE
* #13 A1	610
#13 A2	540

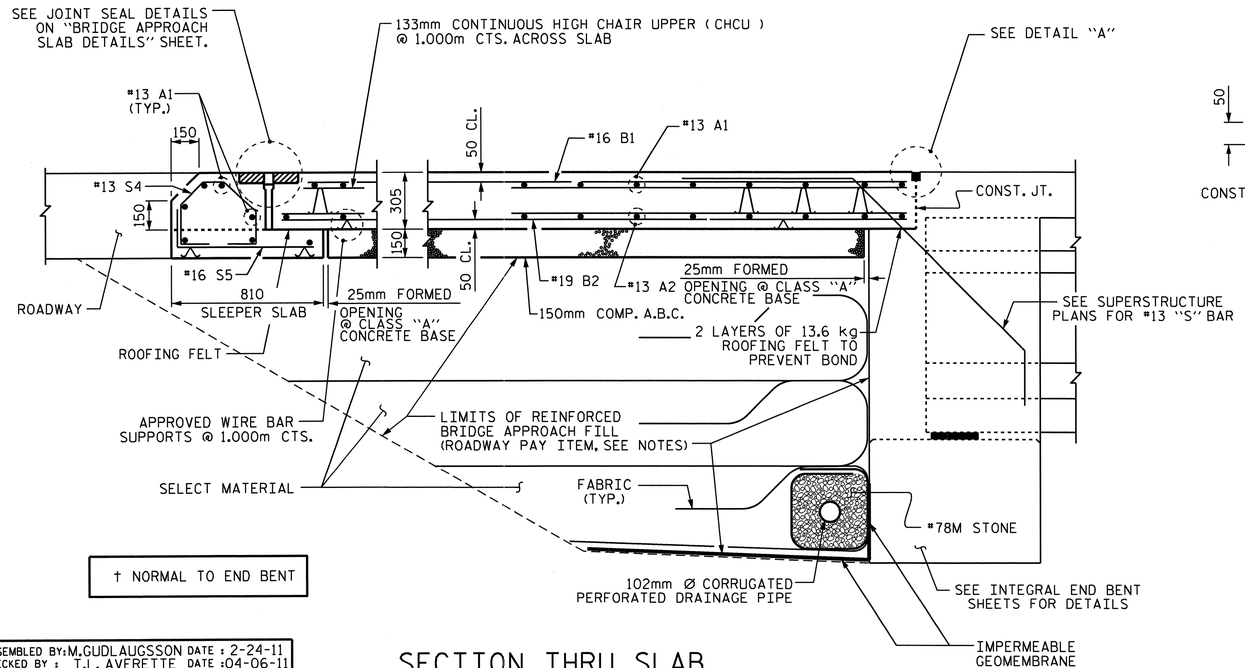

† NORMAL TO END BENT

SECTION THRU SLAB

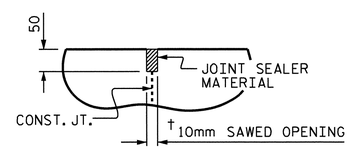

DETAIL "A"

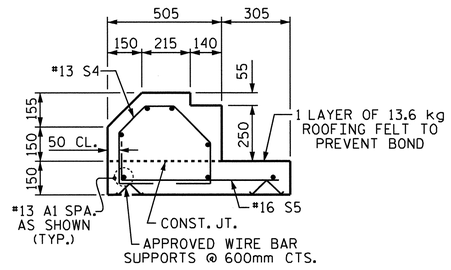

SECTION S-S

SHOWING SLEEPER SLAB

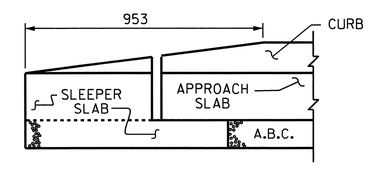

END OF CURB WITHOUT SHOULDER BERM GUTTER

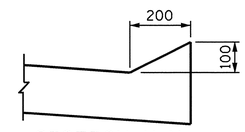

SECTION N-N

PROJECT NO. R-2413C

GUILFORD-ROCKINGHAM COUNTY

STATION: 24+37.000 -LREV-

SHEET 1 OF 2

STATE OF NORTH CAROLINA
DEPARTMENT OF TRANSPORTATION
RALEIGH

STANDARD

BRIDGE APPROACH SLAB FOR INTEGRAL ABUTMENT (RIGHT LANE)

NORTH CAROLINA PROFESSIONAL SEAL 022516 ENGINEER ELMAY E. MURRAY 10/28/11

REVISIONS							SHEET NO.
NO.	BY:	DATE:	NO.	BY:	DATE:		S-107
1			3				TOTAL SHEETS
2			4				238

ASSEMBLED BY: M.GUDLAUGSSON DATE : 2-24-11
CHECKED BY : T.L. AVERETTE DATE : 04-06-11
DRAWN BY : TLA 6/06
CHECKED BY : GM 6/06
ADDED 5/1/06R KMM/GM

05-SEP-2011 11:27
Y:\Structures\Final Plans\Str.#3\R-2413C_SD_AS_03.dgn
mgudlaugsson

STR. # 3

STD. NO. BAS11SM

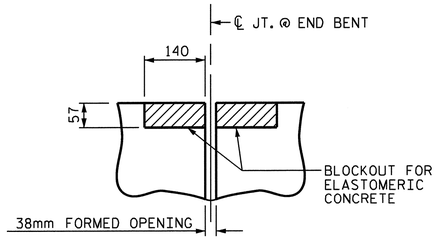

SECTION C-C

EVAZOTE JOINT SEAL (PRE-SAWED ELASTOMERIC CONCRETE DIMENSIONS)

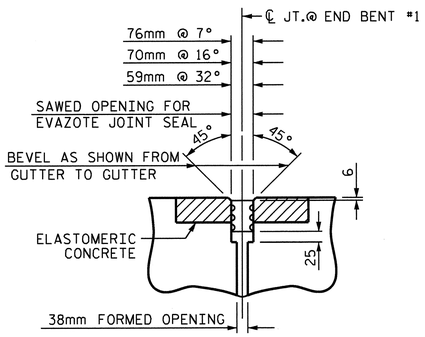

SECTION C-C

EVAZOTE JOINT SEAL @ END BENT #1

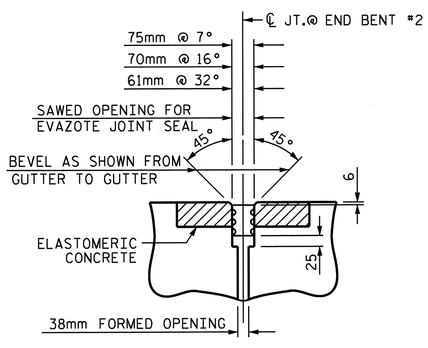

SECTION C-C

EVAZOTE JOINT SEAL @ END BENT #2

ELASTOMERIC CONCRETE	
END BENT NO.	ELASTOMERIC CONCRETE * (CU. m)
1	0.3
2	0.3
TOTAL	0.6

* BASED ON THE MINIMUM BLOCKOUT SHOWN.

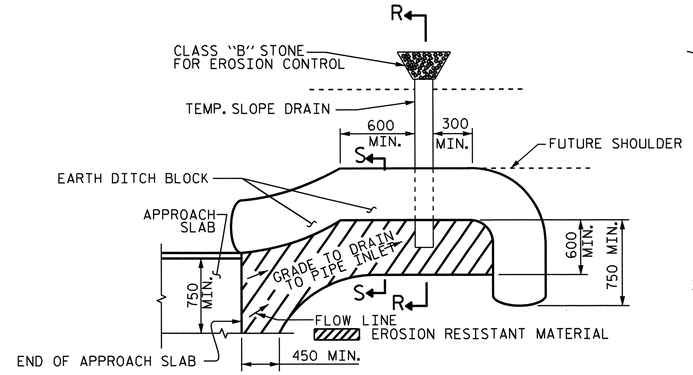

NOTE: IMMEDIATELY AFTER THE CONSTRUCTION OF THE APPROACH SLAB, THE CONTRACTOR SHALL PROVIDE TEMPORARY BERM AND SLOPE DRAIN. CONTRACTOR SHALL GRADE TO PIPE INLET AND PROVIDE EROSION RESISTANT MATERIAL AS SHOWN. THE EROSION RESISTANT MATERIAL SHALL BE EITHER 1) ASPHALT PLANT MIX, TYPE 1 OR TYPE 2, MIN. 50mm DEPTH, 2) EROSION CONTROL MAT, OR 3) CONCRETE, AS DIRECTED BY THE ENGINEER. THE SLOPE DRAIN SHALL CONSIST OF A NON-PERFORATED TEMPORARY DRAINAGE PIPE, 305mm IN DIAMETER.

PLAN VIEW

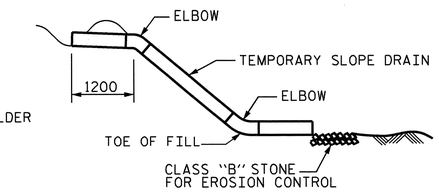

SECTION R-R

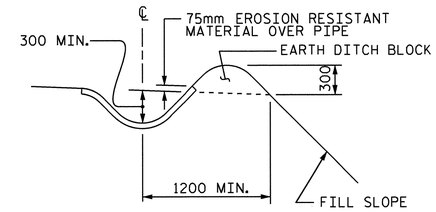

SECTION S-S

TEMPORARY BERM AND SLOPE DRAIN DETAILS

(TO BE USED WHEN SHOULDER BERM GUTTER IS REQUIRED)

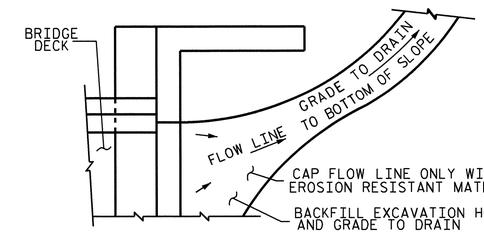

NOTE: IF THE APPROACH SLAB IS NOT CONSTRUCTED IMMEDIATELY AFTER THE BACKFILLING OF THE END BENT EXCAVATION, GRADE TO DRAIN TO THE BOTTOM OF THE SLOPE AND PROVIDE EROSION RESISTANT MATERIAL, SUCH AS FIBERGLASS ROVING OR AS DIRECTED BY THE ENGINEER TO PREVENT SOIL EROSION AND TO PROTECT THE AREA ADJACENT TO THE STRUCTURE. THE CONTRACTOR WILL BE REQUIRED TO REMOVE THESE MATERIALS PRIOR TO CONSTRUCTION OF THE APPROACH SLAB.

TEMPORARY DRAINAGE DETAIL

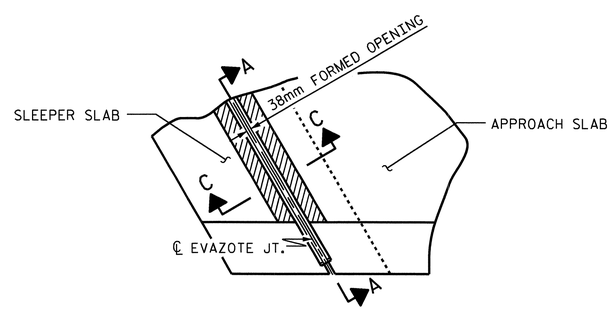

PLAN

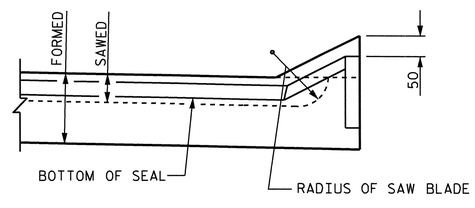

SECTION A-A

JOINT SEAL DETAILS @ SLEEPER SLAB

PROJECT NO. R-2413C

GUILFORD-ROCKINGHAM COUNTY

STATION: 24+37.000 -LREV-

SHEET 2 OF 2

STATE OF NORTH CAROLINA
DEPARTMENT OF TRANSPORTATION
RALEIGH

STANDARD
BRIDGE APPROACH
SLAB DETAILS
(RIGHT LANE)

NORTH CAROLINA PROFESSIONAL SEAL 022516 ENGINEER EMILY E. McMURRAY
10/28/11

REVISIONS						SHEET NO.
NO.	BY:	DATE:	NO.	BY:	DATE:	S-108
1			3			TOTAL SHEETS
2			4			238

STR. #3

STD. NO. BAS10SM

ASSEMBLED BY: M.GUDLAUGSSON	DATE : 2-24-11
CHECKED BY : T.L. AVERETTE	DATE : 4-06-11
DRAWN BY : FCJ 11/88	REV. 10/17/00 RWW/LES
CHECKED BY : ARB 11/88	REV. 5/7/03 RWW/JTE
	REV. 5/1/06RR MAA/KMM

05-SEP-2011 11:27
Y:\Structures\Final Plans\Str.#3\R-2413C_SD_AS_03.dgn
mgudlaugsson

OVERHANG BRACKET CALCULATION INSTRUCTIONS

AASHTO SHAPES - TYPES III, IV, V, AND VI

1. RECORD KNOWN INFORMATION ON "BRIDGE OVERHANG BRACKET SUMMARY" ON SHEET 2
2. CALCULATE THE MAXIMUM SCREED LOAD PER BRACKET (SLPB) WITH AN ESTIMATED R = 1.5. SLPB = R X W. ROUND VALUE UP TO NEAREST SLPB VALUE INDICATED ON APPROPRIATE TABLE 1-1, 1-2, 1-3, OR 1-4.
3. WITH THE ESTIMATED SLPB, OVERHANG SLAB THICKNESS, "K" VALUE, AND 45° HANGER SAFE WORKING LOAD (SWL), ENTER THE APPROPRIATE TABLE 1-1, 1-2, 1-3, OR 1-4 (BASED ON OVERHANG DIMENSION) AND DETERMINE THE BRACKET SPACING, S.
4. CALCULATE S/D1 AND S/D2, ROUNDING UP TO NEAREST VALUE IN TABLE 2. ENTER TABLE 2 AND DETERMINE R VALUE.
5. CALCULATE REVISED SLPB. ROUND VALUE UP TO NEAREST SLPB VALUE INDICATED ON APPROPRIATE TABLE 1-1, 1-2, 1-3, OR 1-4.
6. WITH THE REVISED SLPB, OVERHANG SLAB THICKNESS, "K" VALUE AND 45 HANGER SAFE WORKING LOAD (SWL), ENTER THE APPROPRIATE TABLE 1-1, 1-2, 1-3 OR 1-4 (BASED ON OVERHANG DIMENSION) AND DETERMINE REVISED BRACKET SPACING, S.
7. CONTINUE ITERATIONS OF STEPS 4-6 UNTIL THE REVISED BRACKET SPACING, S, IS THE SAME AS THE PREVIOUS S VALUE.
8. CHECK LUMBER JOIST SPACING: WITH BRACKET SPACING VALUE, S, ROUND THIS VALUE UP TO THE NEAREST VALUE OF ALLOWABLE SPAN LENGTH OF JOIST OF TABLE 3. USING THIS VALUE, ALONG WITH THE AVERAGE OVERHANG SLAB THICKNESS AND THE LUMBER JOIST SIZE, DETERMINE JOIST SPACING FROM TABLE 3. IF NECESSARY, ADJUST LUMBER JOIST SIZE AND/OR JOIST SPACING TO MEET ALLOWABLE SPAN LENGTH OF JOIST.
9. CONVERSELY, IF THE DESIRED JOIST SPACING IS KNOWN, USE THIS ALONG WITH THE AVERAGE OVERHANG SLAB THICKNESS AND THE LUMBER JOIST SIZE TO DETERMINE IF ALLOWABLE SPAN LENGTH OF JOIST IS GREATER THAN THE BRACKET SPACING, S. IF NECESSARY, ADJUST LUMBER JOIST SIZE TO MEET REQUIREMENTS OF ALLOWABLE SPAN LENGTH OF JOIST AND JOIST SPACING.
10. RECORD REMAINING INFORMATION ON "BRIDGE OVERHANG BRACKET SUMMARY" FORM.
11. SUBMIT FORM AND CALCULATIONS FOR REVIEW AND APPROVAL.

TABLE 1-1

(FOR USE ON **UP TO 2'-0" OVERHANG (L)** & 54" HORIZONTAL LEG LENGTH OF THE OVERHANG BRACKET)

AVG. SLAB THICKNESS (T) (in)	BRACKET (K) DIMENSION (in)	SCREED LOAD PER BRACKET									45° HANGER SWL (lbs)
		2500 lbs.	2250 lbs.	2000 lbs.	1750 lbs.	1500 lbs.	1250 lbs.	1000 lbs.	750 lbs.	0 lbs.	
		BRACKET SPACING									
10	30				2'-1"	2'-7"	3'-2"	3'-8"	4'-2"	5'-9"	4000
		3'-6"	4'-0"	4'-5"	4'-9"	5'-1"	5'-3"	5'-5"	5'-7"	6'-7"	6000
	40				2'-1"	2'-7"	3'-2"	3'-8"	4'-2"	5'-9"	4000
		3'-6"	4'-0"	4'-5"	4'-9"	5'-1"	5'-3"	5'-5"	5'-7"	6'-7"	6000
	50				2'-1"	2'-7"	3'-2"	3'-8"	4'-2"	5'-9"	4000
		3'-6"	4'-0"	4'-5"	4'-9"	5'-1"	5'-3"	5'-5"	5'-7"	6'-7"	6000
12	30					2'-4"	2'-10"	3'-4"	3'-9"	5'-2"	4000
		3'-2"	3'-7"	4'-1"	4'-7"	5'-0"	5'-2"	5'-4"	5'-7"	6'-5"	6000
	40					2'-4"	2'-10"	3'-4"	3'-9"	5'-2"	4000
		3'-2"	3'-7"	4'-1"	4'-7"	5'-0"	5'-2"	5'-4"	5'-7"	6'-5"	6000
	50					2'-4"	2'-10"	3'-4"	3'-9"	5'-2"	4000
		3'-2"	3'-7"	4'-1"	4'-7"	5'-0"	5'-2"	5'-4"	5'-7"	6'-5"	6000
14	30					2'-2"	2'-7"	3'-0"	3'-5"	4'-9"	4000
		2'-10"	3'-4"	3'-9"	4'-2"	4'-7"	5'-0"	5'-4"	5'-7"	6'-4"	6000
	40					2'-2"	2'-7"	3'-0"	3'-5"	4'-9"	4000
		2'-10"	3'-4"	3'-9"	4'-2"	4'-7"	5'-0"	5'-4"	5'-7"	6'-4"	6000
	50					2'-2"	2'-7"	3'-0"	3'-5"	4'-9"	4000
		2'-10"	3'-4"	3'-9"	4'-2"	4'-7"	5'-0"	5'-4"	5'-7"	6'-4"	6000
16	30					2'-0"	2'-4"	2'-9"	3'-2"	4'-4"	4000
		2'-8"	3'-0"	3'-5"	3'-10"	4'-3"	4'-7"	5'-0"	5'-5"	6'-3"	6000
	40					2'-0"	2'-4"	2'-9"	3'-2"	4'-4"	4000
		2'-8"	3'-0"	3'-5"	3'-10"	4'-3"	4'-7"	5'-0"	5'-5"	6'-3"	6000
	50					2'-0"	2'-4"	2'-9"	3'-2"	4'-4"	4000
		2'-8"	3'-0"	3'-5"	3'-10"	4'-3"	4'-7"	5'-0"	5'-5"	6'-3"	6000

TABLE 1-2

(FOR USE ON **OVER 2'-0" TO 2'-6" OVERHANG (L)** & 54" HORIZONTAL LEG LENGTH OF THE OVERHANG BRACKET)

AVG. SLAB THICKNESS (T) (in)	BRACKET (K) DIMENSION (in)	SCREED LOAD PER BRACKET									45° HANGER SWL (lbs)
		2500 lbs.	2250 lbs.	2000 lbs.	1750 lbs.	1500 lbs.	1250 lbs.	1000 lbs.	750 lbs.	0 lbs.	
		BRACKET SPACING									
10	30					2'-4"	2'-9"	3'-3"	3'-8"	5'-1"	4000
		3'-1"	3'-6"	4'-0"	4'-5"	4'-11"	5'-3"	5'-5"	5'-7"	6'-7"	6000
	40					2'-4"	2'-9"	3'-3"	3'-8"	5'-1"	4000
		3'-1"	3'-6"	4'-0"	4'-5"	4'-11"	5'-3"	5'-5"	5'-7"	6'-7"	6000
	50					2'-4"	2'-9"	3'-3"	3'-8"	5'-1"	4000
		3'-1"	3'-6"	4'-0"	4'-5"	4'-11"	5'-3"	5'-5"	5'-7"	6'-7"	6000
12	30					2'-1"	2'-6"	2'-11"	3'-4"	4'-6"	4000
		2'-9"	3'-2"	3'-7"	4'-0"	4'-5"	4'-10"	5'-3"	5'-7"	6'-5"	6000
	40					2'-1"	2'-6"	2'-11"	3'-4"	4'-6"	4000
		2'-9"	3'-2"	3'-7"	4'-0"	4'-5"	4'-10"	5'-3"	5'-7"	6'-5"	6000
	50					2'-1"	2'-6"	2'-11"	3'-4"	4'-6"	4000
		2'-9"	3'-2"	3'-7"	4'-0"	4'-5"	4'-10"	5'-3"	5'-7"	6'-5"	6000
14	30						2'-3"	2'-7"	3'-0"	4'-1"	4000
		2'-6"	2'-10"	3'-3"	3'-7"	4'-0"	4'-4"	4'-9"	5'-1"	6'-3"	6000
	40						2'-3"	2'-7"	3'-0"	4'-1"	4000
		2'-6"	2'-10"	3'-3"	3'-7"	4'-0"	4'-4"	4'-9"	5'-1"	6'-3"	6000
	50						2'-3"	2'-7"	3'-0"	4'-1"	4000
		2'-6"	2'-10"	3'-3"	3'-7"	4'-0"	4'-4"	4'-9"	5'-1"	6'-3"	6000
16	30						2'-1"	2'-5"	2'-9"	3'-9"	4000
		2'-3"	2'-7"	2'-11"	3'-4"	3'-8"	4'-0"	4'-4"	4'-8"	5'-8"	6000
	40						2'-1"	2'-5"	2'-9"	3'-9"	4000
		2'-3"	2'-7"	2'-11"	3'-4"	3'-8"	4'-0"	4'-4"	4'-8"	5'-8"	6000
	50						2'-1"	2'-5"	2'-9"	3'-9"	4000
		2'-3"	2'-7"	2'-11"	3'-4"	3'-8"	4'-0"	4'-4"	4'-8"	5'-8"	6000

TABLE 1-3

(FOR USE ON **OVER 2'-6" TO 3'-0" OVERHANG (L)** & 54" HORIZONTAL LEG LENGTH OF THE OVERHANG BRACKET)

AVG. SLAB THICKNESS (T) (in)	BRACKET (K) DIMENSION (in)	SCREED LOAD PER BRACKET									45° HANGER SWL (lbs)
		2500 lbs.	2250 lbs.	2000 lbs.	1750 lbs.	1500 lbs.	1250 lbs.	1000 lbs.	750 lbs.	0 lbs.	
		BRACKET SPACING									
10	30					2'-1"	2'-6"	2'-11"	3'-4"	4'-6"	4000
						4'-5"	4'-10"	5'-3"	5'-7"	6'-7"	6000
	40					2'-1"	2'-6"	2'-11"	3'-4"	4'-6"	4000
		2'-9"	3'-2"	3'-7"	4'-0"	4'-5"	4'-10"	5'-3"	5'-7"	6'-7"	6000
	50					2'-1"	2'-6"	2'-11"	3'-4"	4'-6"	4000
		2'-9"	3'-2"	3'-7"	4'-0"	4'-5"	4'-10"	5'-3"	5'-7"	6'-7"	6000
12	30						2'-2"	2'-7"	2'-11"	4'-0"	4000
						3'-11"	4'-3"	4'-8"	5'-0"	6'-1"	6000
	40						2'-2"	2'-7"	2'-11"	4'-0"	4000
		2'-5"	2'-10"	3'-2"	3'-6"	3'-11"	4'-3"	4'-8"	5'-0"	6'-1"	6000
	50						2'-2"	2'-7"	2'-11"	4'-0"	4000
		2'-5"	2'-10"	3'-2"	3'-6"	3'-11"	4'-3"	4'-8"	5'-0"	6'-1"	6000
14	30						2'-0"	2'-4"	2'-8"	3'-8"	4000
					3'-2"	3'-6"	3'-10"	4'-2"	4'-6"	5'-6"	6000
	40						2'-0"	2'-4"	2'-8"	3'-8"	4000
		2'-2"	2'-6"	2'-10"	3'-2"	3'-6"	3'-10"	4'-2"	4'-6"	5'-6"	6000
	50						2'-0"	2'-4"	2'-8"	3'-8"	4000
		2'-2"	2'-6"	2'-10"	3'-2"	3'-6"	3'-10"	4'-2"	4'-6"	5'-6"	6000
16	30							2'-1"	2'-5"	3'-4"	4000
					2'-11"	3'-2"	3'-6"	3'-10"	4'-1"	5'-0"	6000
	40							2'-1"	2'-5"	3'-4"	4000
		2'-0"	2'-4"	2'-7"	2'-11"	3'-2"	3'-6"	3'-10"	4'-1"	5'-0"	6000
	50							2'-1"	2'-5"	3'-4"	4000
		2'-0"	2'-4"	2'-7"	2'-11"	3'-2"	3'-6"	3'-10"	4'-1"	5'-0"	6000

TABLE 1-4

(FOR USE ON **OVER 3'-0" TO 3'-6" OVERHANG (L)** & 54" HORIZONTAL LEG LENGTH OF THE OVERHANG BRACKET)

AVG. SLAB THICKNESS (T) (in)	BRACKET (K) DIMENSION (in)	SCREED LOAD PER BRACKET									45° HANGER SWL (lbs)
		2500 lbs.	2250 lbs.	2000 lbs.	1750 lbs.	1500 lbs.	1250 lbs.	1000 lbs.	750 lbs.	0 lbs.	
		BRACKET SPACING									
10	30						2'-1"	2'-5"	2'-9"	3'-10"	4000
						2'-3"	2'-11"	3'-7"	4'-3"	5'-9"	6000
	40						2'-1"	2'-5"	2'-9"	3'-10"	4000
				2'-4"	3'-0"	3'-7"	4'-1"	4'-5"	4'-9"	5'-9"	6000
	50						2'-1"	2'-5"	2'-9"	3'-10"	4000
		2'-4"	2'-8"	3'-0"	3'-4"	3'-8"	4'-1"	4'-5"	4'-9"	5'-9"	6000
12	30							2'-2"	2'-6"	3'-5"	4000
						2'-1"	2'-8"	3'-4"	3'-11"	5'-2"	6000
	40							2'-2"	2'-6"	3'-5"	4000
				2'-2"	2'-9"	3'-4"	3'-7"	3'-11"	4'-3"	5'-2"	6000
	50							2'-2"	2'-6"	3'-5"	4000
		2'-1"	2'-4"	2'-8"	3'-0"	3'-4"	3'-7"	3'-11"	4'-3"	5'-2"	6000
14	30								2'-3"	3'-1"	4000
						2'-0"	2'-6"	3'-1"	3'-8"	4'-8"	6000
	40								2'-3"	3'-1"	4000
				2'-0"	2'-7"	3'-0"	3'-3"	3'-6"	3'-10"	4'-8"	6000
	50								2'-3"	3'-1"	4000
			2'-2"	2'-5"	2'-8"	3'-0"	3'-3"	3'-6"	3'-10"	4'-8"	6000
16	30								2'-0"	2'-9"	4000
							2'-4"	2'-10"	3'-5"	4'-3"	6000
	40								2'-0"	2'-9"	4000
					2'-5"	2'-8"	2'-11"	3'-3"	3'-6"	4'-3"	6000
	50								2'-0"	2'-9"	4000
				2'-2"	2'-5"	2'-8"	2'-11"	3'-3"	3'-6"	4'-3"	6000

DEFINITIONS

SLPB = SCREED LOAD PER BRACKET (R x W)
R = SCREED LOAD FACTOR, OBTAINED FROM TABLE 2
W = WHEEL LOAD
S = BRACKET SPACING
T = AVERAGE SLAB THICKNESS
SWL = SAFE WORKING LOAD
K = DIMENSION DEFINED ON "BRIDGE OVERHANG BRACKET SUMMARY" ON SHEET 2
L = OVERHANG MEASURED FROM EDGE OF TOP FLANGE TO EDGE OF SUPERSTRUCTURE

PROJECT NO. R-2413C
GUILFORD-ROCKINGHAM COUNTY
STATION: 24+37.000 -LREV-

SHEET 1 OF 3

STATE OF NORTH CAROLINA
DEPARTMENT OF TRANSPORTATION
RALEIGH

STANDARD OVERHANG FALSEWORK

AASHTO TYPES
III, IV, V, AND VI
(RIGHT LANE)

NORTH CAROLINA PROFESSIONAL SEAL 18788 ENGINEER CHARNG-CHUAN VICTOR CHAO

Charng-Chuan V. Chao
8-5-2011

REVISIONS						SHEET NO.
NO.	BY:	DATE:	NO.	BY:	DATE:	5-109
1			3			TOTAL SHEETS
2			4			238

ASSEMBLED BY:	DATE:
CHECKED BY:	DATE:
DRAWN BY: R. WRIGHT 06/04	REV.
CHECKED BY: C. V. CHAO 06/04	

05-AUG-2011 10:43
C:\OLDFILES\D\wdlr\victor\OverhangFalsework\TIEBAR&STRUT\R-2413C\R-2413CSTR3_TYPE_IV\R2413CSTR3verHangSheets.dgn
vchao

STR. #3

BRIDGE OVERHANG BRACKET SUMMARY

TOTAL SCREED WEIGHT = _____ LBS.
NUMBER OF SCREED WHEELS = _____
SCREED WHEEL LOAD (W) = _____ LBS.
SCREED LOAD PER BRACKET = _____ LBS.

PROJECT No. : _____
COUNTY : _____
STATION : _____
DESCRIPTION : _____

DATE : _____
DESIGN BY : _____
CHECK BY : _____

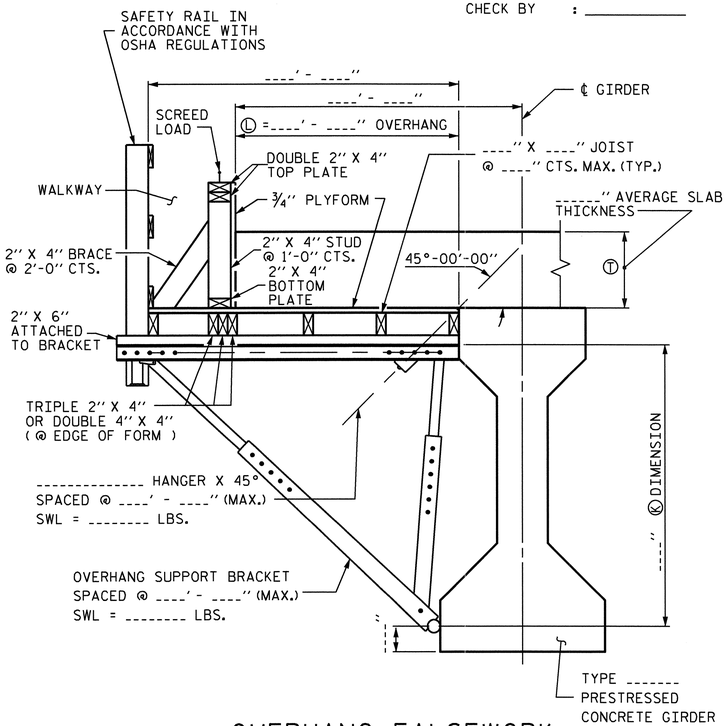

OVERHANG FALSEWORK

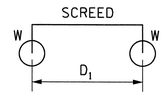

4-WHEEL MACHINE

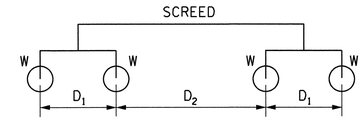

8-WHEEL MACHINE

4 WHEEL MACHINE	
S/D1	R
<= 1.0	1.00
1.1	1.09
1.2	1.17
1.3	1.23
1.4	1.29
1.5	1.33
1.6	1.38
1.7	1.41
1.8	1.44
1.9	1.47
2.0	1.50
2.2	1.55
2.4	1.58
2.6	1.62
2.8	1.64
3.0	1.67
3.5	1.71
4.0	1.75

TABLE 2: SCREED LOAD FACTOR "R"

		THE SCREED LOAD FACTOR R (FOR 8 WHEEL MACHINE)																	
		S/D_2																	
		<= 1.0	1.1	1.2	1.3	1.4	1.5	1.6	1.7	1.8	1.9	2.0	2.2	2.4	2.6	2.8	3.0	3.5	4.0
S/D_1	<= 1.0	1.00	1.09	1.17	1.23	1.29	1.33	1.38	1.41	1.44	1.47	1.50	1.55	1.58	1.62	1.64	1.67	1.71	1.75
	1.1	1.09	1.18	1.26	1.32	1.38	1.42	1.47	1.50	1.54	1.56	1.59	1.64	1.67	1.71	1.73	1.76	1.81	1.84
	1.2	1.17	1.26	1.33	1.40	1.45	1.50	1.54	1.58	1.61	1.64	1.67	1.71	1.75	1.78	1.81	1.83	1.88	1.92
	1.3	1.23	1.32	1.40	1.46	1.52	1.56	1.61	1.64	1.68	1.70	1.73	1.78	1.81	1.85	1.87	1.90	1.95	1.98
	1.4	1.29	1.38	1.45	1.52	1.57	1.62	1.66	1.70	1.73	1.76	1.79	1.83	1.87	1.90	1.93	1.95	2.00	2.07
	1.5	1.33	1.42	1.50	1.56	1.62	1.67	1.71	1.75	1.78	1.81	1.83	1.88	1.92	1.95	1.98	2.00	2.10	2.17
	1.6	1.38	1.47	1.54	1.61	1.66	1.71	1.75	1.79	1.82	1.85	1.88	1.92	1.96	1.99	2.04	2.08	2.18	2.25
	1.7	1.41	1.50	1.58	1.64	1.70	1.75	1.79	1.82	1.86	1.89	1.91	1.96	2.00	2.05	2.11	2.16	2.25	2.32
	1.8	1.44	1.54	1.61	1.68	1.73	1.78	1.82	1.86	1.89	1.92	1.94	1.99	2.06	2.12	2.17	2.22	2.32	2.39
	1.9	1.47	1.56	1.64	1.70	1.76	1.81	1.85	1.89	1.92	1.95	1.97	2.04	2.11	2.18	2.23	2.28	2.38	2.45
	2.0	1.50	1.59	1.67	1.73	1.79	1.83	1.88	1.91	1.94	1.97	2.00	2.09	2.17	2.23	2.29	2.33	2.43	2.50
	2.2	1.55	1.64	1.71	1.78	1.83	1.88	1.92	1.96	1.99	2.04	2.09	2.18	2.26	2.32	2.38	2.42	2.52	2.59
	2.4	1.58	1.67	1.75	1.81	1.87	1.92	1.96	2.00	2.06	2.11	2.17	2.26	2.33	2.40	2.45	2.50	2.60	2.67
	2.6	1.62	1.71	1.78	1.85	1.90	1.95	1.99	2.05	2.12	2.18	2.23	2.32	2.40	2.46	2.52	2.56	2.66	2.73
	2.8	1.64	1.73	1.81	1.87	1.93	1.98	2.04	2.11	2.17	2.23	2.29	2.38	2.45	2.52	2.57	2.62	2.71	2.79
	3.0	1.67	1.76	1.83	1.90	1.95	2.00	2.08	2.16	2.22	2.28	2.33	2.42	2.50	2.56	2.62	2.67	2.76	2.83
	3.5	1.71	1.81	1.88	1.95	2.00	2.10	2.18	2.25	2.32	2.38	2.43	2.52	2.60	2.66	2.71	2.76	2.86	2.93
	4.0	1.75	1.84	1.92	1.98	2.07	2.17	2.25	2.32	2.39	2.45	2.50	2.59	2.67	2.73	2.79	2.83	2.93	3.00

NOTES

DESIGN INCLUDES CONSTRUCTION LIVE LOAD 20 PSF ON THE AREA SUPPORTED AND 75 PLF AT THE OUTSIDE DECK OF OVERHANGS.

REQUIRED MINIMUM DIAGONAL LEG CAPACITY: 3600 LB WORKING LOAD

THE CONTRACTOR HAS THE OPTION OF SUBMITTING HIS OWN DESIGN FOR OVERHANG FALSEWORK IN ACCORDANCE WITH THE SPECIAL PROVISIONS.

SUBMITTALS UTILIZING THE INSTRUCTIONS AND PROCEDURES DESCRIBED ON SHEET 1 OF 3 SHALL BE IN ACCORDANCE WITH THE APPLICABLE SECTIONS OF THE SPECIFICATIONS AND SPECIAL PROVISIONS, EXCEPT THAT CALCULATIONS FOR OVERHANG FALSEWORK NEED NOT BE SEALED BY A REGISTERED ENGINEER.

FOR OVERHANG FALSEWORK BRACING DESIGN, SEE SHEET 3 OF 3.

TABLE 3: ALLOWABLE SPAN LENGTH OF JOISTS AND JOIST SPACINGS

AVG. SLAB THICKNESS Ⓣ (IN)	LUMBER JOIST SIZE (IN X IN)	JOIST SPACINGS			
		15 IN	12 IN	10 IN	8 IN
		THE ALLOWABLE SPAN LENGTH OF JOISTS			
10	2 X 4	———	4' - 6"	4' - 9"	5' - 0"
	4 X 4	5' - 9"	6' - 3"	6' - 6"	6' - 7"
12	2 X 4	———	4' - 3"	4' - 9"	5' - 0"
	4 X 4	5' - 3"	6' - 0"	6' - 3"	6' - 5"
14	2 X 4	———	4' - 0"	4' - 6"	5' - 0"
	4 X 4	———	5' - 6"	6' - 0"	6' - 4"
16	2 X 4	———	4' - 0"	4' - 3"	4' - 9"
	4 X 4	———	5' - 3"	5' - 9"	6' - 3"

PROJECT NO. R-2413C
GUILFORD-ROCKINGHAM COUNTY
STATION: 24+37.000 -LREV-

SHEET 2 OF 3

STATE OF NORTH CAROLINA
DEPARTMENT OF TRANSPORTATION
RALEIGH

STANDARD OVERHANG FALSEWORK

AASHTO TYPES
III, IV, V, AND VI
(RIGHT LANE)

NORTH CAROLINA PROFESSIONAL SEAL 18788 ENGINEER CHANG-CHUAN VICTOR CHAO

Chang-Chuan V. Chao
8-5-2011

ASSEMBLED BY:	DATE:
CHECKED BY:	DATE:
DRAWN BY: R. WRIGHT 06/04	REV.
CHECKED BY: C. V. CHAO 06/04	

REVISIONS						SHEET NO.
NO.	BY:	DATE:	NO.	BY:	DATE:	S-110
1			3			TOTAL SHEETS
2			4			238

05-AUG-2011 10:44
C:\OLDFILESD\wdlr\victor\OverhangFalsework\TIEBAR&STRUT\R-2413C\R-2413CSTR3_TYPE_IV\R2413CSTR3verHangSheets.dgn
vchao

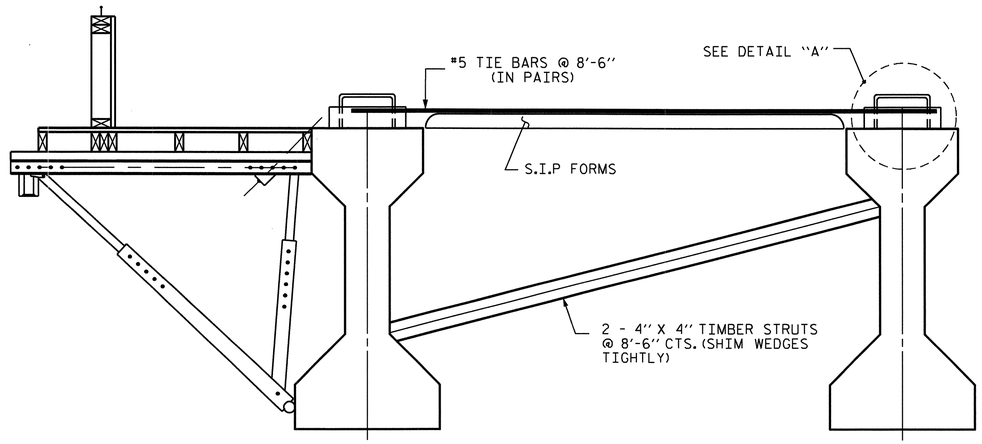

EXTERIOR GIRDER INTERIOR GIRDER

DETAIL OF REQUIRED OVERHANG FALSEWORK BRACING SYSTEM

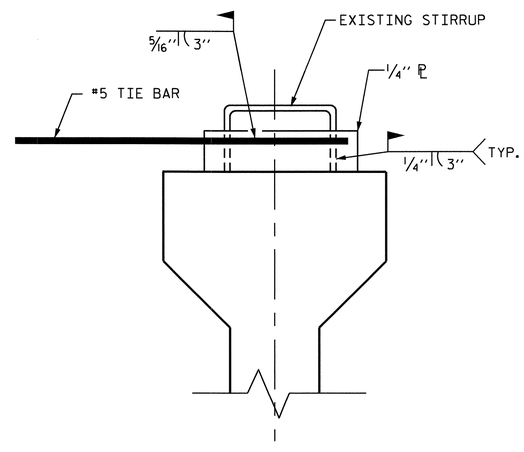

DETAIL "A"

NOTES:

EACH #5 TIE BAR SHALL BE WELDED TO ONE STIRRUP LOOP AS SHOWN IN DETAIL "A". #5 TIE BARS SHALL BE WELDED TO TWO ADJACENT STIRRUPS OF THE EXTERIOR GIRDER AND THE ADJACENT INTERIOR GIRDER BETWEEN PERMANENT DIAPHRAGMS. WELD STEEL PLATES IN BETWEEN THE TIE BARS AND THE STIRRUP LOOP. WELDING TWO TIE BARS TO THE SAME STIRRUP LOOP SHALL NOT BE PERMITTED.

MAXIMUM SPACING BETWEEN THE BRACING (TIE BARS-TIMBER STRUT) IS 8'-6" CTS. #5 TIE BARS SHALL BE LOCATED OVER A TIMBER STRUT.

INSTALL TIE BARS AND TIMBER STRUTS PRIOR TO PLACEMENT OF CONCRETE OR SCREED WEIGHT ONTO THE OVERHANG FALSEWORK.

PROJECT NO. R-2413C

GUILFORD-ROCKINGHAM COUNTY

STATION: 24+37.000 -LREV-

SHEET 3 OF 3

STATE OF NORTH CAROLINA
DEPARTMENT OF TRANSPORTATION
RALEIGH

STANDARD OVERHANG FALSEWORK

AASHTO TYPES
III, IV, V, AND VI
(RIGHT LANE)

NORTH CAROLINA PROFESSIONAL SEAL 18788 ENGINEER CHENG-CHUAN VICTOR CHAO

Cheng-Chuan V. Chao
8-5-2011

REVISIONS						SHEET NO.
NO.	BY:	DATE:	NO.	BY:	DATE:	S-111
1			3			TOTAL SHEETS
2			4			238

DRAWN BY: R. WRIGHT 06/04 DATE : _____
CHECKED BY: C. V. CHAO 06/04 DATE : _____

05-AUG-2011 10:44
C:\OLDFILESD\wdlr\victor\OverhangFalsework\TIEBAR&STRUT\R-2413C\R-2413CSTR3_TYPE_IV\R2413CSTR3verHangSheets.dgn
vchao

STR. #3 OF3

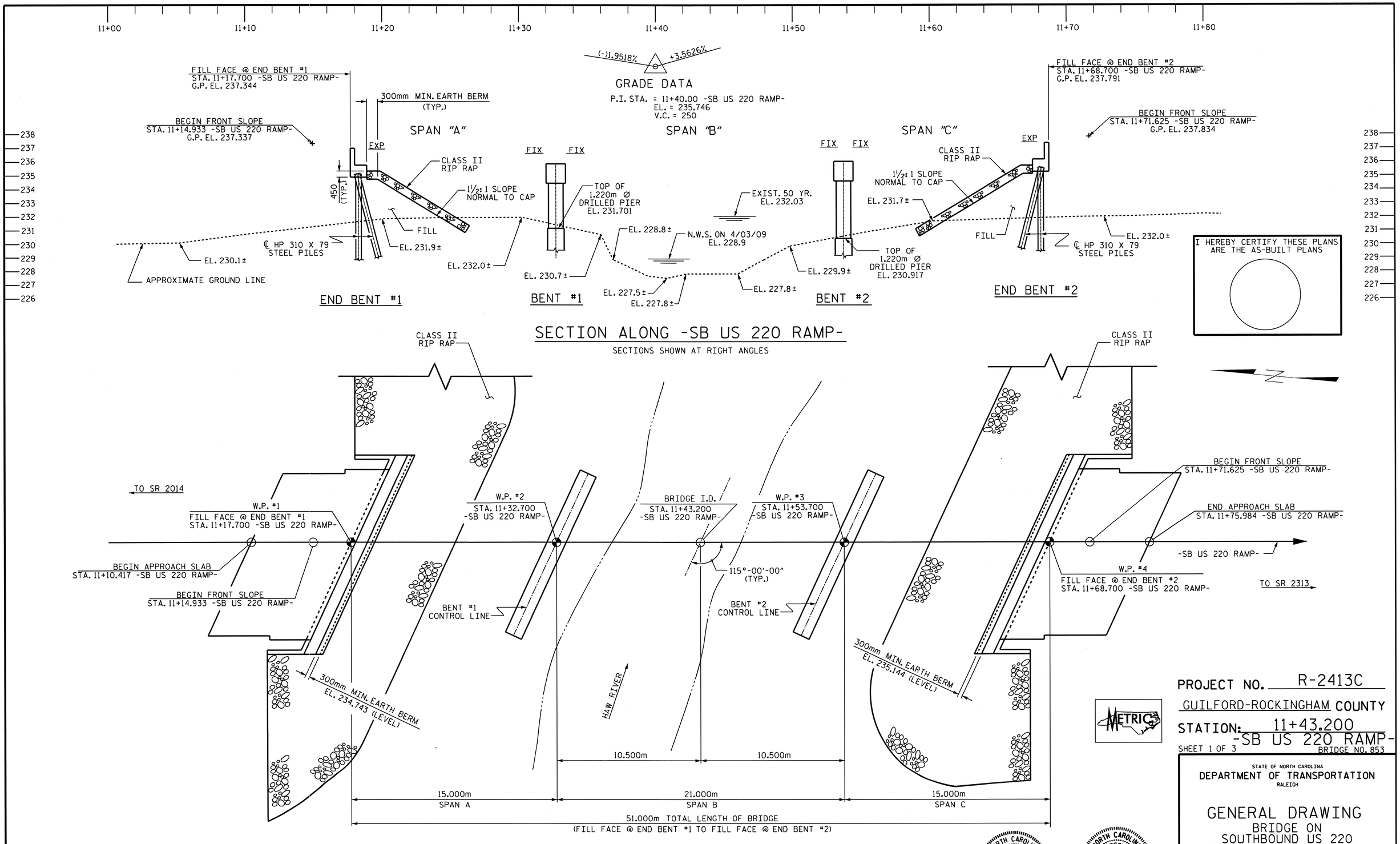

PROJECT NO. R-2413C

GUILFORD-ROCKINGHAM COUNTY

STATION: 11+43.200
-SB US 220 RAMP-

SHEET 1 OF 3

BRIDGE NO. 853

STATE OF NORTH CAROLINA
DEPARTMENT OF TRANSPORTATION
RALEIGH

GENERAL DRAWING

BRIDGE ON
SOUTHBOUND US 220
RAMP OVER HAW RIVER
BETWEEN US 158 AND NC 150

REVISIONS						SHEET NO.
NO.	BY:	DATE:	NO.	BY:	DATE:	S-112
1			3			TOTAL SHEETS
2			4			238

DRAWN BY : M.GUDLAUGSSON DATE : 05-04-11
CHECKED BY : PEGGY PARISI DATE : 07-20-11

05-SEP-2011 13:09
Y:\Structures\Final Plans\Str.#4\R-2413C_SD_GD_04.dgn
mgudlaugsson

STR. #4

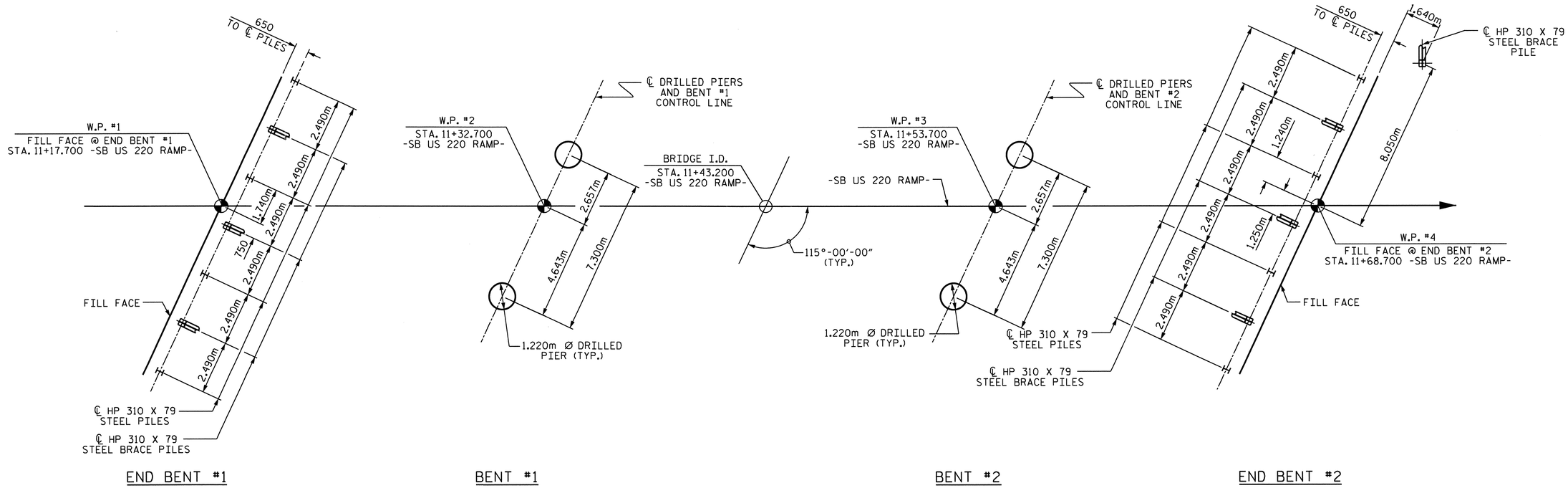

FOUNDATION LAYOUT

DIMENSIONS LOCATING PILES ARE SHOWN TO THE PILE CENTERLINE.
END BENT BRACE PILES ARE BATTERED AT 250:1000

FOUNDATION NOTES

FOR PILES, SEE SPECIAL PROVISIONS.

DRIVE PILES AT END BENT NO. 1 AND END BENT NO. 2 TO A REQUIRED BEARING CAPACITY OF 1340 kN PER PILE. THE REQUIRED BEARING CAPACITY IS EQUAL TO THE ALLOWABLE BEARING CAPACITY WITH A MINIMUM FACTOR OF SAFETY OF TWO.

THE ALLOWABLE BEARING CAPACITY FOR PILES AT END BENT NO. 1 AND END BENT NO. 2 IS 670 kN PER PILE.

DRILLED PIERS AT BENT NO. 1 AND BENT NO. 2 ARE DESIGNED FOR BOTH SKIN FRICTION AND END BEARING. CHECK FIELD CONDITIONS FOR THE REQUIRED END BEARING CAPACITY OF 7200 kPa.

DRILLED PIERS AT BENT NO. 1 ARE DESIGNED FOR AN APPLIED LOAD OF 3149 kN EACH AT THE TOP OF THE COLUMN.

DRILLED PIERS AT BENT NO. 2 ARE DESIGNED FOR AN APPLIED LOAD OF 3000 kN EACH AT THE TOP OF THE COLUMN.

PERMANENT STEEL CASINGS MAY BE REQUIRED FOR DRILLED PIERS AT BENT NO. 1. IF REQUIRED, DO NOT EXTEND PERMANENT CASINGS BELOW ELEVATION 219.7m (LEFT) AND 217.7m (RIGHT), RESPECTIVELY WITHOUT PRIOR APPROVAL FROM THE ENGINEER. THE ENGINEER WILL DETERMINE THE NEED FOR PERMANENT CASINGS.

THE SCOUR CRITICAL ELEVATION FOR BENT NO. 1 IS ELEVATION 223.3m. SCOUR CRITICAL ELEVATIONS ARE USED TO MONITOR POSSIBLE SCOUR PROBLEMS DURING THE LIFE OF THE STRUCTURE.

THE SCOUR CRITICAL ELEVATION FOR BENT NO. 2 IS ELEVATION 223.5m. SCOUR CRITICAL ELEVATIONS ARE USED TO MONITOR POSSIBLE SCOUR PROBLEMS DURING THE LIFE OF THE STRUCTURE.

FOR DRILLED PIERS, SEE DRILLED PIERS SPECIAL PROVISION.

IF REQUIRED, INSTALL PERMANENT STEEL CASINGS AT BENT NO. 1 BY VIBRATING, SCREWING OR DRIVING PERMANENT CASING BEFORE EXCAVATING OR DISTURBING ANY MATERIAL BELOW ELEVATION 223.8m.

INSTALL DRILLED PIERS AT BENT NO. 1 THAT EXTEND TO AN ELEVATION NO HIGHER THAN 217.5m (LEFT) AND 215.5m (RIGHT), SATISFY THE REQUIRED END BEARING CAPACITY AND HAVE A MINIMUM PENETRATION OF 1.5m INTO ROCK AS DEFINED BY THE DRILLED PIERS SPECIAL PROVISION.

INSTALL DRILLED PIERS AT BENT NO. 2 THAT EXTEND TO AN ELEVATION NO HIGHER THAN 217.5m, SATISFY THE REQUIRED END BEARING CAPACITY AND HAVE A MINIMUM PENETRATION OF 1.0m INTO ROCK AS DEFINED BY THE DRILLED PIERS SPECIAL PROVISION.

SID INSPECTIONS MAY BE REQUIRED FOR DRILLED PIERS. THE ENGINEER WILL DETERMINE THE NEED FOR SID INSPECTIONS. FOR SID INSPECTIONS, SEE DRILLED PIERS SPECIAL PROVISION.

CSL TUBES ARE REQUIRED AND CSL TESTING MAY BE REQUIRED FOR DRILLED PIERS. THE ENGINEER WILL DETERMINE THE NEED FOR CSL TESTING. FOR CSL TESTING, SEE DRILLED PIERS SPECIAL PROVISIONS.

OBSERVE A ONE MONTH WAITING PERIOD AFTER CONSTRUCTING THE EMBANKMENT TO THE BOTTOM OF CAP ELEVATION BEFORE BEGINNING END BENT CONSTRUCTION AT END BENT NO. 1.

NORTH CAROLINA PROFESSIONAL SEAL 022516 ENGINEER EMILY E. MURRAY
10/28/11

PROJECT NO. R-2413C
GUILFORD-ROCKINGHAM COUNTY
STATION: 11+43.200 -SB US 220 RAMP-
SHEET 2 OF 3

STATE OF NORTH CAROLINA
DEPARTMENT OF TRANSPORTATION
RALEIGH

GENERAL DRAWING
BRIDGE ON
SOUTHBOUND US 220
RAMP OVER HAW RIVER
BETWEEN US 158 AND NC 150

REVISIONS						SHEET NO.
NO.	BY:	DATE:	NO.	BY:	DATE:	S-113
1			3			TOTAL SHEETS
2			4			238

DRAWN BY : M.GUDLAUGSSON DATE : 05-04-11
CHECKED BY : PEGGY PARISI DATE : 07-20-11

05-SEP-2011 13:09
Y:\Structures\Final Plans\Str.#4\R-2413C_SD_GD_04.dgn
mgudlaugsson

STR. #4

B.M. #6: DISK STAMPED E-170 1965 IN NE WINGWALL OF BRIDGE
5.4m RT. OF -L- STA 25+94.14 EL 233.273

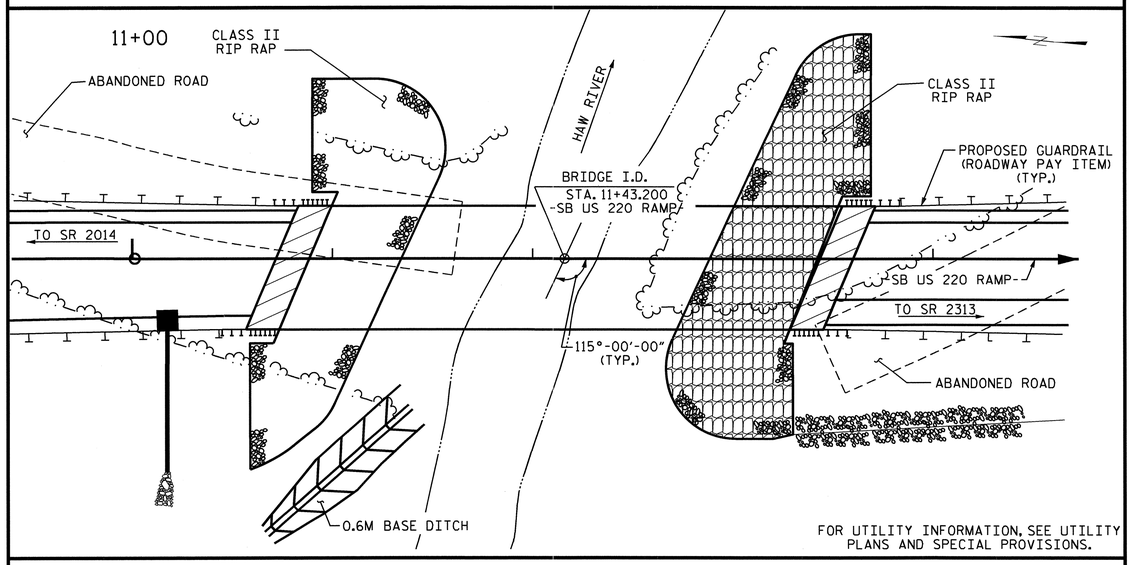

LOCATION SKETCH

NOTES

ALL DIMENSIONS ARE IN MILLIMETERS UNLESS OTHERWISE NOTED.

ALL ELEVATIONS ARE IN METERS.

ASSUMED LIVE LOAD = MS 18 OR ALTERNATE LOADING, EXCEPT THAT THE GIRDERS HAVE BEEN DESIGNED FOR MS 22.5.

FOR OTHER DESIGN DATA AND GENERAL NOTES, SEE SHEET SNSM.

THIS BRIDGE HAS BEEN DESIGNED BY THE STRENGTH DESIGN METHOD AS SPECIFIED IN AASHTO STANDARD SPECIFICATIONS.

THE LOCATION OF THE CONSTRUCTION JOINT IN THE DRILLED PIERS IS BASED ON AN APPROXIMATE GROUND LINE ELEVATION. IF THE CONSTRUCTION JOINT IS ABOVE THE ACTUAL GROUND ELEVATION, THE CONTRACTOR SHALL PLACE THE CONSTRUCTION JOINT 300mm BELOW THE GROUND LINE.

NEEDLE BEAMS WILL NOT BE ALLOWED UNLESS OTHERWISE CALLED FOR ON THE PLANS OR APPROVED BY THE ENGINEER.

FOR SUBMITTAL OF WORKING DRAWINGS, SEE SPECIAL PROVISIONS.

FOR FALSEWORK AND FORMWORK, SEE SPECIAL PROVISIONS.

PRESTRESSED CONCRETE DECK PANELS MAY BE USED IN LIEU OF METAL STAY-IN-PLACE FORMS IN ACCORDANCE WITH ARTICLE 420-3 OF THE STANDARD SPECIFICATIONS.

THIS STRUCTURE HAS BEEN DESIGNED IN ACCORDANCE WITH HEC 18, "EVALUATING SCOUR AT BRIDGES", MAY, 2001.

REMOVABLE FORMS MAY BE USED IN LIEU OF METAL STAY-IN-PLACE FORMS IN ACCORDANCE WITH ARTICLE 420-3 OF THE STANDARD SPECIFICATIONS.

THIS BRIDGE HAS BEEN DESIGNED IN ACCORDANCE WITH THE REQUIREMENTS OF THE STANDARD SPECIFICATIONS FOR SEISMIC DESIGN OF HIGHWAY BRIDGES FOR SEISMIC PERFORMANCE CATEGORY A.

THE CLASS AA CONCRETE IN THE BRIDGE DECK SHALL CONTAIN FLY ASH OR GROUND GRANULATED BLAST FURNACE SLAG AT THE SUBSTITUTION RATE SPECIFIED IN ARTICLE 1024-1 AND IN ACCORDANCE WITH ARTICLES 1024-5 AND 1024-6 OF THE STANDARD SPECIFICATIONS. NO PAYMENT WILL BE MADE FOR THIS SUBSTITUTION AS IT IS CONSIDERED INCIDENTAL TO THE COST OF THE REINFORCED CONCRETE DECK SLAB.

FOR PRESTRESSED CONCRETE MEMBERS, SEE SPECIAL PROVISIONS.

FOR CRANE SAFETY, SEE SPECIAL PROVISIONS.

FOR GROUT FOR STRUCTURES, SEE SPECIAL PROVISIONS.

FOR CURING CONCRETE, SEE SPECIAL PROVISIONS.

FOR PLACING LOAD ON STRUCTURE MEMBERS, SEE SPECIAL PROVISIONS.

FOR EROSION CONTROL MEASURES SEE EROSION CONTROL PLANS.

FOR METRIC STRUCTURAL STEEL, SEE SPECIAL PROVISIONS.

HYDRAULIC DATA

DESIGN DISCHARGE	=	107.6 M^3/S
FREQUENCY OF DESIGN FLOOD	=	50 YR.
DESIGN HIGH WATER ELEVATION	=	232.05 m
DRAINAGE AREA	=	53.4 KM^2
BASE DISCHARGE (Q100)	=	141.6 M^3/S
BASE HIGH WATER ELEVATION	=	232.54 m

OVERTOPPING FLOOD DATA

OVERTOPPING DISCHARGE	=	>266.2 M^3/S
FREQUENCY OF OVERTOPPING FLOOD	=	500+ YR.
OVERTOPPING FLOOD ELEVATION	=	237.42 m

TOTAL BILL OF MATERIAL

	1220mm Ø DRILLED PIERS IN SOIL	1220mm Ø DRILLED PIERS NOT IN SOIL	PERMANENT STEEL CASING FOR 1220mm Ø DRILLED PIER	SID INSPECTION	CSL TESTING	REINFORCED CONCRETE DECK SLAB	GROOVING BRIDGE FLOORS	CLASS A CONCRETE	BRIDGE APPROACH SLABS	REINFORCING STEEL	SPIRAL COLUMN REINFORCING STEEL	1143mm PRESTRESSED CONCRETE GIRDERS		HP 310 X 79 STEEL PILES		CONCRETE BARRIER RAIL	RIP RAP CLASS II (600mm THICK)	FILTER FABRIC FOR DRAINAGE	ELASTOMERIC BEARINGS	EXPANSION JOINT SEALS
	METERS	METERS	METERS	EACH	EACH	SQ. METERS	SQ. METERS	CU. METERS	LUMP SUM	Kg	Kg	No.	METERS	No.	METERS	METERS	METRIC TONS	SQ. METERS	LUMP SUM	LUMP SUM
SUPERSTRUCTURE						623.1	678.3		LUMP SUM			15	246.700			113.006			LUMP SUM	LUMP SUM
END BENT #1								26.0		2180				7	99.0		215	219		
BENT #1	26.0	4.6	26.0		1			28.3		6983	1385									
BENT #2	19.6	7.4						30.1		6605	1327									
END BENT #2								26.8		2214				8	64.0		260	265		
TOTAL	45.6	12.0	26.0	1	1	623.1	678.3	111.2	LUMP SUM	17982	2712	15	246.700	15	163.0	113.006	475	484	LUMP SUM	LUMP SUM

TOTAL BILL OF MATERIAL - ENGLISH

	LIN. FT.	LIN. FT.	LIN. FT.	EACH	EACH	SQ. FT.	SQ. FT.	CU. YDS.	LUMP SUM	LBS.	LBS.	No.	LIN. FT.	No.	LIN. FT.	LIN. FT.	TONS	SQ. YDS.	LUMP SUM	LUMP SUM
	149.6	39.4	85.3	1	1	6707.0	7301.2	145.4	LUMP SUM	39,643	5979	15	809.38	15	535	370.75	524	579	LUMP SUM	LUMP SUM

PROJECT NO. R-2413C
GUILFORD-ROCKINGHAM COUNTY
STATION: 11+43.200
-SB US 220 RAMP-
SHEET 3 OF 3

NORTH CAROLINA PROFESSIONAL SEAL 022516 ENGINEER EMILY E. MURRAY
10/28/11

STATE OF NORTH CAROLINA
DEPARTMENT OF TRANSPORTATION
RALEIGH

GENERAL DRAWING
BRIDGE ON SOUTHBOUND US 220 RAMP OVER HAW RIVER BETWEEN US 158 AND NC 150

REVISIONS						SHEET NO.
NO.	BY:	DATE:	NO.	BY:	DATE:	S-114
1			3			TOTAL SHEETS
2			4			238

DRAWN BY : M.GUDLAUGSSON DATE : 05-04-11
CHECKED BY : PEGGY PARISI DATE : 07-20-11

19-OCT-2011 14:26
R:\TIPProjects-R\R2413c\Structures\Final Plans\Str.#4\R-2413C_SD_GD_04.dgn
taverette

STR. #4

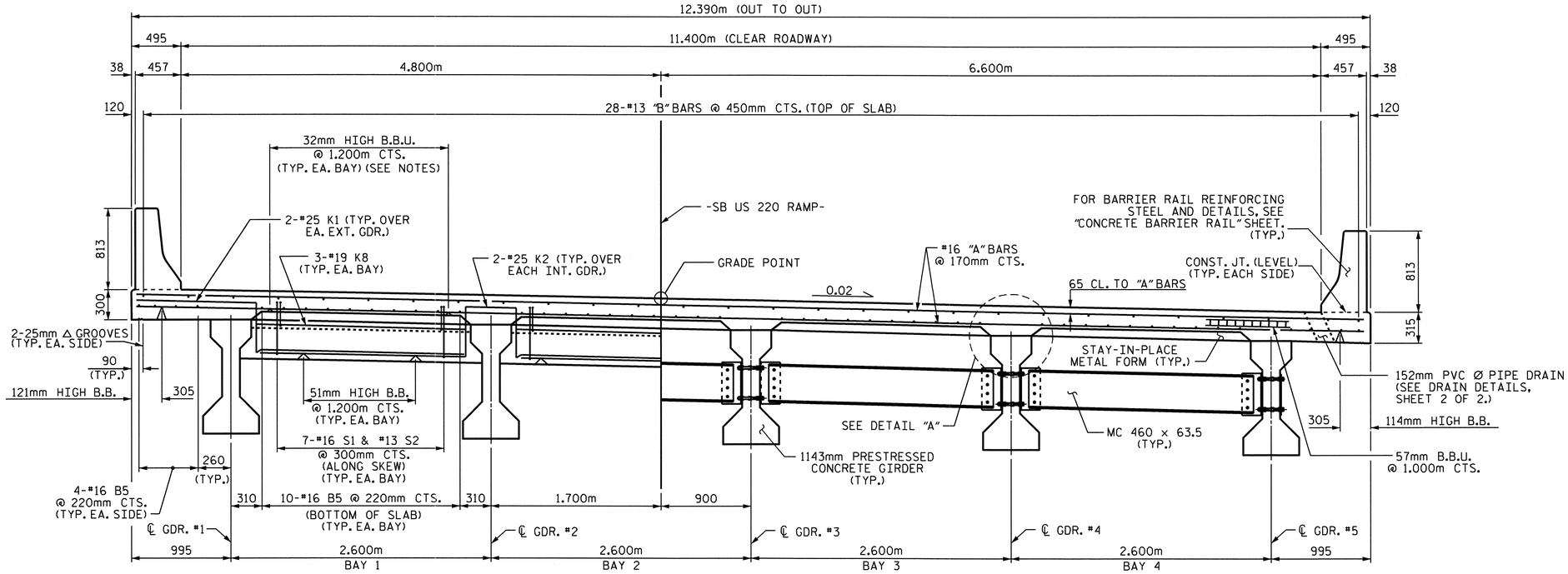

TYPICAL HALF SECTION

SHOWING END BENT DIAPHRAGMS

TYPICAL HALF SECTION

SHOWING INTERMEDIATE DIAPHRAGMS

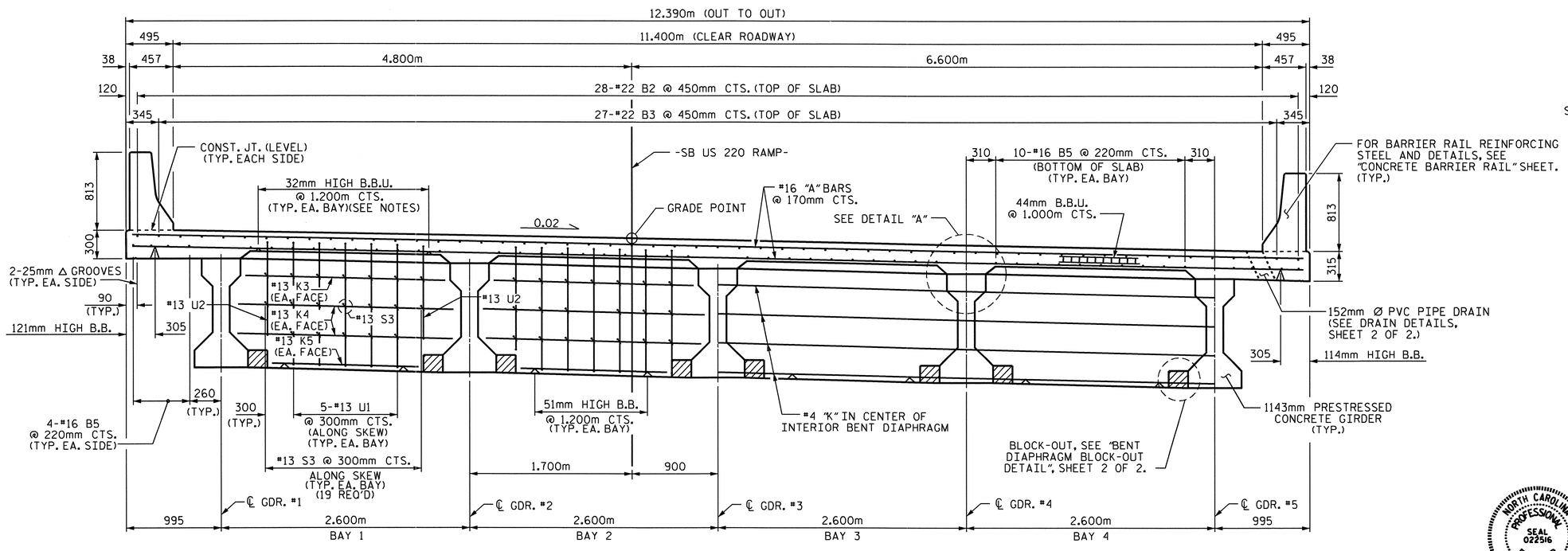

TYPICAL SECTION

SHOWING BENT DIAPHRAGMS
@ BENTS #1 & #2

NOTES

PROVIDE 32mm HIGH BEAM BOLSTERS UPPER AT 1.2m CTS. ATOP THE METAL STAY-IN-PLACE FORMS TO SUPPORT THE BOTTOM MAT OF 'A' BARS. WHEN USING REMOVABLE FORMS, PROVIDE CONTINUOUS HIGH CHAIRS FOR METAL DECK (C.H.C.M.) @ 1.2m CTS. WITH A HEIGHT TO SUPPORT THE BOTTOM MAT OF 'A' BARS A CLEAR DISTANCE OF 65mm ABOVE THE TOP OF THE REMOVABLE FORM.

LONGITUDINAL STEEL MAY BE SHIFTED SLIGHTLY, AS NECESSARY, TO AVOID INTERFERENCE WITH STIRRUPS IN PRESTRESSED CONCRETE GIRDERS.

BARRIER RAIL IN A CONTINOUS UNIT SHALL NOT BE CAST UNTIL ALL SLAB CONCRETE IN THE UNIT HAS BEEN CAST AND HAS REACHED A MINIMUM COMPRESSIVE STRENGTH OF 20.7 MPa.

PVC DECK DRAINS SHALL BE PAINTED WITH TWO COATS OF BROWN PRIMER MEETING THE REQUIREMENTS OF ARTICLE 1080-12 OF THE STANDARD SPECIFICATIONS. EACH COAT SHALL BE 0.050mm THICK. DECK DRAINS SHALL BE ROUGHENED PRIOR TO PAINTING. NO SEPARATE PAYMENT SHALL BE MADE FOR PAINTING PVC DECK DRAINS AS THIS IS CONSIDERED INCIDENTAL TO THE PAY ITEM FOR REINFORCED CONCRETE DECK SLAB.

#16 G1 BAR MAY BE SHIFTED SLIGHTLY, AS NECESSARY, TO CLEAR REINFORCING STEEL AND STIRRUPS.

PREVIOUSLY CAST CONCRETE IN A CONTINUOUS UNIT SHALL HAVE ATTAINED A MINIMUM COMPRESSIVE STRENGTH OF 20.7 MPa BEFORE ADDITIONAL CONCRETE IS CAST IN THE UNIT.

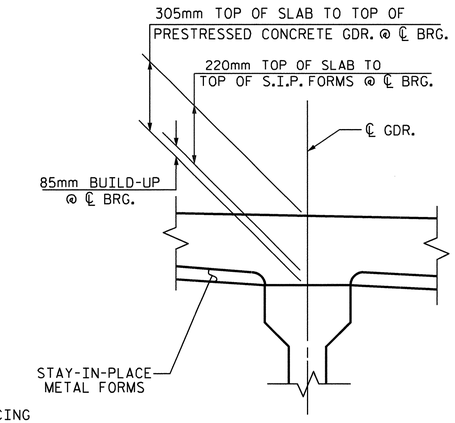

DETAIL "A"

PROJECT NO. R-2413C

GUILFORD-ROCKINGHAM COUNTY

STATION: 11+43.200 -SB US 220 RAMP-

SHEET 1 OF 2

STATE OF NORTH CAROLINA
DEPARTMENT OF TRANSPORTATION
RALEIGH

SUPERSTRUCTURE

TYPICAL SECTION

REVISIONS								SHEET NO.
NO.	BY:	DATE:	NO.	BY:	DATE:			S-115
1			3					TOTAL SHEETS
2			4					238

NORTH CAROLINA PROFESSIONAL SEAL 022516 ENGINEER EMILY E. MURRAY
10/28/11

DRAWN BY : M.GUDLAUGSSON DATE : 7-30-10
CHECKED BY : T.L. AVERETTE DATE : 9-20-10

05-SEP-2011 13:08
Y:\Structures\Final Plans\Str.#4\R-2413C_SD_TS_04.dgn
mgudlaugsson

STR. #4

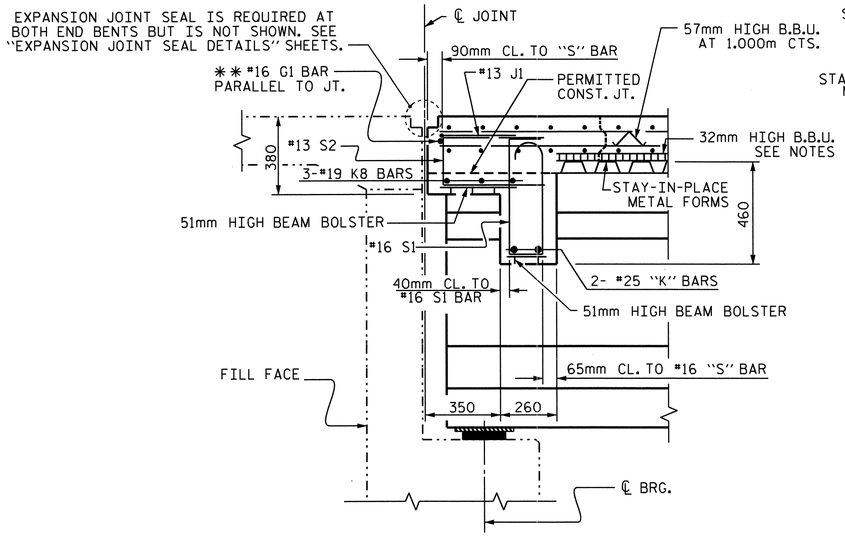

SECTION A-A

✱✱ #16 "G" BAR MAY BE SHIFTED SLIGHTLY, AS NECESSARY, TO CLEAR REINFORCING STEEL AND STIRRUPS.

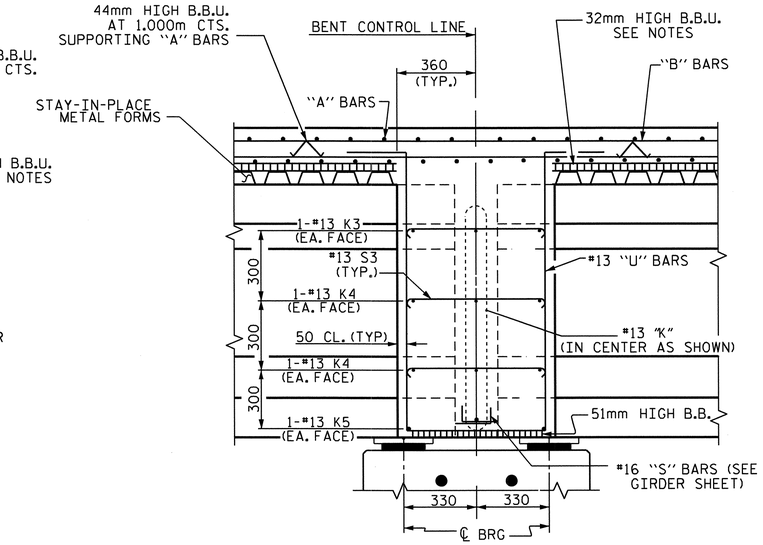

SECTION B-B

● MEASURED ALONG ℄ GDR.

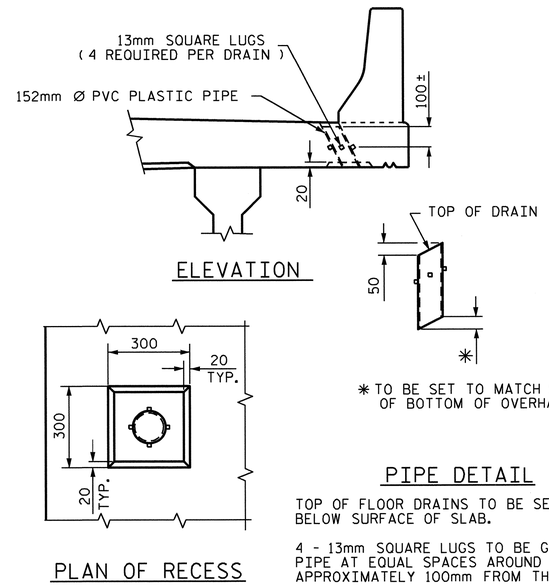

ELEVATION

PLAN OF RECESS

PIPE DETAIL

TOP OF FLOOR DRAINS TO BE SET 10mm BELOW SURFACE OF SLAB.

4 - 13mm SQUARE LUGS TO BE GLUED TO THE PVC PLASTIC PIPE AT EQUAL SPACES AROUND THE PIPE DRAIN APPROXIMATELY 100mm FROM THE TOP OF THE PIPE.

THE 152mm Ø PVC PIPE AND FITTINGS SHALL BE SCHEDULE 40 AND CONFORM TO ASTM D1785.

DRAIN DETAILS

(14 DRAINS REQUIRED)

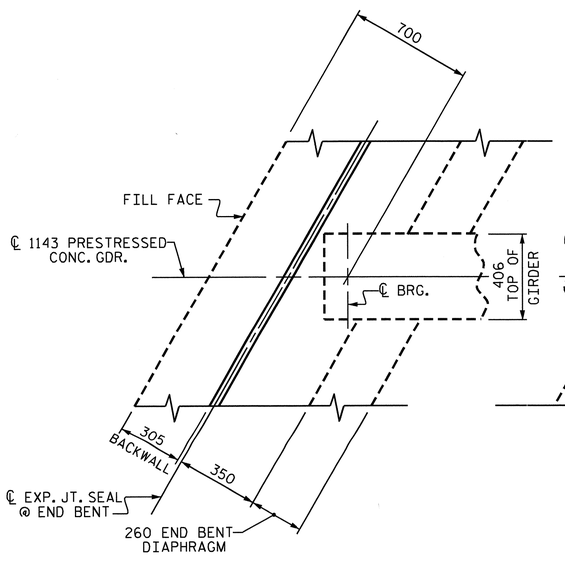

END BENT DIAPHRAGM

(END BENT #1 SHOWN, END BENT #2 SIMILAR)

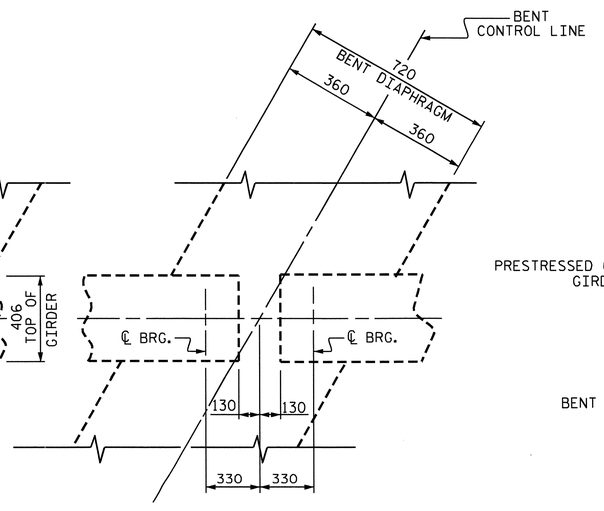

BENT DIAPHRAGM

PLAN

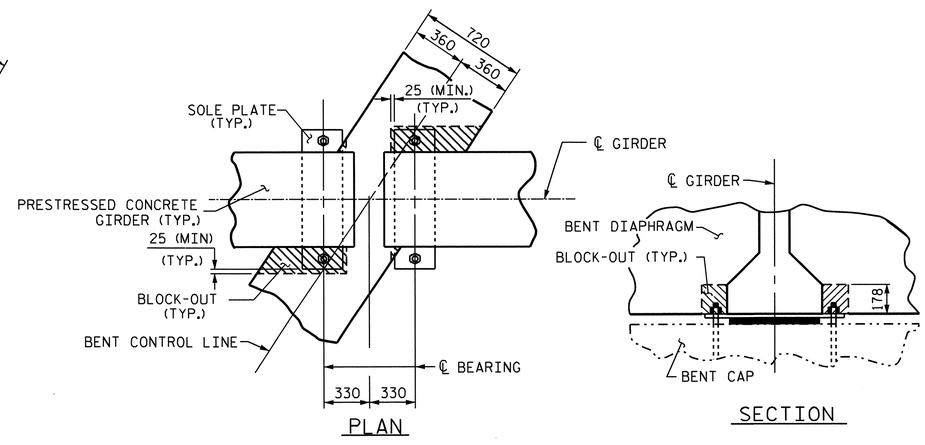

PLAN

SECTION

BENT DIAPHRAGM BLOCK-OUT DETAIL

PROJECT NO. R-2413C

GUILFORD-ROCKINGHAM COUNTY

STATION: 11+43.200 -SB US 220 RAMP-

SHEET 2 OF 2

STATE OF NORTH CAROLINA
DEPARTMENT OF TRANSPORTATION
RALEIGH

SUPERSTRUCTURE
TYPICAL SECTION DETAILS

NORTH CAROLINA PROFESSIONAL SEAL 022516 ENGINEER EMILY E. MURRAY

10/28/11

REVISIONS						SHEET NO.
NO.	BY:	DATE:	NO.	BY:	DATE:	S-116
1			3			TOTAL SHEETS
2			4			238

STR. #4

DRAWN BY : M.GUDLAUGSSON DATE : 8-15-10
CHECKED BY : T.L. AVERETTE DATE : 9-20-10

51.000m (TOTAL LENGTH OF BRIDGE) (W.P. #1 TO W.P. #4)

15.000m (W.P. #1 TO W.P. #2) SPAN A

21.000m (W.P. #2 TO W.P. #3) SPAN B

#16 A101 THRU #16 A116 @ 170mm CTS. (TOP OF SLAB) (2 BARS PER MARK)
#16 A201 THRU #16 A216 @ 170mm CTS. (BOTTOM OF SLAB) (2 BARS PER MARK)

170

2.980m TO FIRST #16 A1 AND #16 A2

261-#16 A1 @ 170mm CTS. (TOP OF SLAB)
261-#16 A2 @ 170mm CTS. (BOTTOM OF SLAB)

℄ BETWEEN BEARINGS

6.000m (TYP. EACH #22 B2)

2.300m (TYP. EACH #22 B3)

3.200m (TYP. EACH #22 B3)

7.800m (TYP. EACH #22 B2)

610 SPLICE (TYP.)

345 (TYP.)

120 (TYP.)

38 495 457 4.800m 6.600m 12.390m (OUT TO OUT) 11.400m (CLEAR ROADWAY)

5.992m

7-#16 S1 & #13 S2 @ 300mm CTS. (TYP. EA. BAY)

42-#13 J1 SEE "EXP. JT. SEAL DETAILS" SHEET

28-#13 B1 @ 450mm CTS. (TOP OF SLAB)(2 BAR RUN)

℄ GDR. A1

℄ GDR. A2

℄ GDR. A3

℄ GDR. A4

℄ GDR. A5

℄ GDR. B1

℄ GDR. B2

℄ GDR. B3

℄ GDR. B4

℄ GDR. B5

GUTTERLINE

720 DIAPHRAGM

4-#13 K6 (TYP. EA. INT. GDR.)

4-#13 K7 (TYP. EA. EXT. GDR.)

TRANSVERSE CONST. JOINT (SEE TRANSVERSE CONST. JT. DETAIL)

5.843m

27-#22 B3 @ 450mm CTS. (TOP OF SLAB)

28-#22 B2 @ 450mm CTS. (TOP OF SLAB)

150

260 END BENT DIAPHRAGM

13.671m

5-#13 U1 @ 300mm CTS. (TYP. EA. BAY)

#13 U2

WP #2

-SB US 220 RAMP-

WP #1

FILL FACE @ END BENT #1

#13 S3 @ 300mm CTS. (TYP. EA. BAY) (19 REQ'D)

115°-00'-00" (TYP.)

7.679m

2-#25 K2 (TYP. OVER EA. INT. GDR.)

#16 G1 (PARALLEL TO JT.)

4-#13 "K" BARS (TYP. EA. BAY)

310 (TYP.)

#16 A101 OR #16 A201

#16 A1 OR #16 A2

INTERMEDIATE STEEL DIAPHRAGM (SEE "INTERMEDIATE STEEL DIAPHRAGM FOR TYPE III PRESTRESSED CONCRETE GIRDERS" FOR DETAILS) (TYP.)

7.828m

10-#16 B5 @ 220mm CTS. (3 BAR RUN) (BOTTOM OF SLAB) (TYP. EA. BAY)

260 (TYP.)

3-#19 K8 (TYP. EA. BAY)

A A B B

℄ EXP. JT. SEAL @ END BENT #1

2-#25 K1 (TYP. OVER EA. EXT. GDR.)

BENT #1 CONTROL LINE

4-#16 B5 @ 220mm CTS. (BOTT. OF SLAB) (3 BAR RUN) (TYP. EA. SIDE)

2.700m

7-152mm Ø PVC DECK DRAINS @ 1.820m CTS.

PLAN OF SPAN A

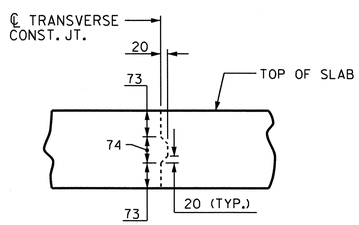

TRANSVERSE CONSTRUCTION JOINT DETAIL

NOTE: REINFORCING STEEL IN SLAB NOT SHOWN. LONGITUDINAL REINFORCING STEEL SHALL BE CONTINUOUS THRU JOINT

PROJECT NO. R-2413C

GUILFORD-ROCKINGHAM COUNTY

STATION: 11+43.200 -SB US 220 RAMP-

SHEET 1 OF 3

STATE OF NORTH CAROLINA
DEPARTMENT OF TRANSPORTATION
RALEIGH

SUPERSTRUCTURE

PLAN OF SPAN A

NORTH CAROLINA PROFESSIONAL SEAL 022516 ENGINEER EMILY E. MURRAY

10/28/11

REVISIONS						
NO.	BY:	DATE:	NO.	BY:	DATE:	
1			3			
2			4			

SHEET NO. S-117

TOTAL SHEETS 238

STR. #4

DRAWN BY : M.GUDLAUGSSON DATE : 8-15-10
CHECKED BY : T.L. AVERETTE DATE : 9-20-10

05-SEP-2011 13:06
Y:\Structures\Final Plans\Str.#4\R-2413C_SD_S#_04.dgn
mgudlaugsson

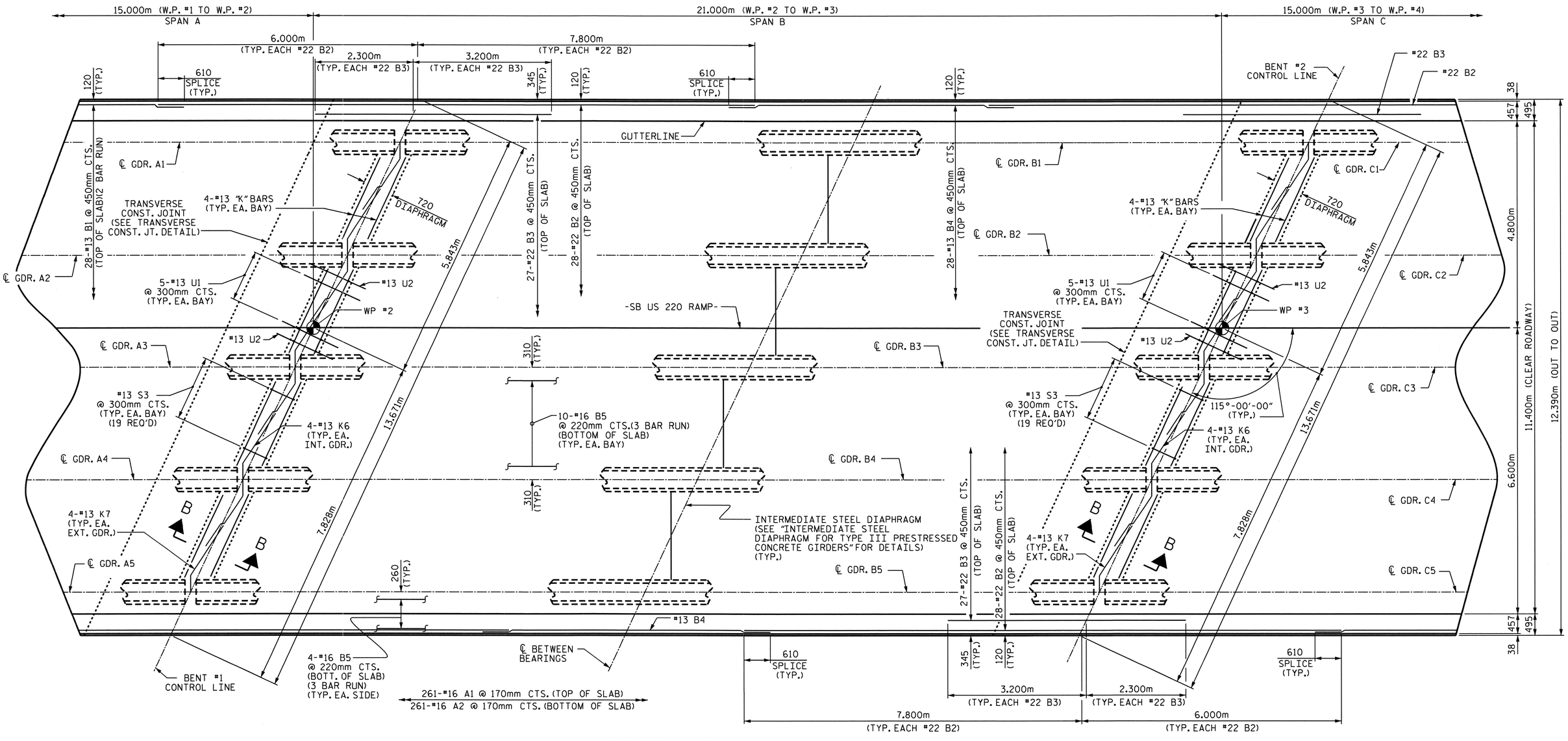

PLAN OF SPAN B

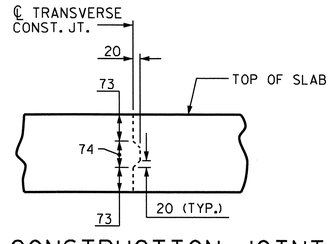

TRANSVERSE CONSTRUCTION JOINT DETAIL

NOTE: REINFORCING STEEL IN SLAB NOT SHOWN.
LONGITUDINAL REINFORCING STEEL SHALL BE
CONTINUOUS THRU JOINT

PROJECT NO. R-2413C
GUILFORD-ROCKINGHAM COUNTY
STATION: 11+43.200
-SB US 220 RAMP-
SHEET 2 OF 3

STATE OF NORTH CAROLINA
DEPARTMENT OF TRANSPORTATION
RALEIGH

SUPERSTRUCTURE

PLAN OF SPAN B

NORTH CAROLINA PROFESSIONAL SEAL 022516 ENGINEER EMILY E. MURRAY
10/28/11

REVISIONS						SHEET NO.
NO.	BY:	DATE:	NO.	BY:	DATE:	S-118
1			3			TOTAL SHEETS
2			4			238

STR. #4

DRAWN BY : M.GUDLAUGSSON DATE : 8-15-10
CHECKED BY : T.L. AVERETTE DATE : 9-20-10

05-SEP-2011 13:06
Y:\Structures\Final Plans\Str.#4\R-2413C_SD_S#_04.dgn
mgudlaugsson

51.000m (TOTAL LENGTH OF BRIDGE) (W.P. #1 TO W.P. #4)

21.000m (W.P. #2 TO W.P. #3)
SPAN B

15.000m (W.P. #3 TO W.P. #4)
SPAN C

261-#16 A1 @ 170mm CTS. (TOP OF SLAB)
261-#16 A2 @ 170mm CTS. (BOTTOM OF SLAB)

3.820m
TO FIRST #16 A1 AND #16 A2

7.800m
(TYP. EACH #22 B2)

6.000m
(TYP. EACH #22 B2)

3.200m
(TYP. EACH #22 B3)

2.300m
(TYP. EACH #22 B3)

170

#16 A101 THRU #16 A116 @ 170mm CTS. (TOP OF SLAB) (2 BARS PER MARK)
#16 A201 THRU #16 A216 @ 170mm CTS. (BOTTOM OF SLAB) (2 BARS PER MARK)

120 (TYP.)

610 SPLICE (TYP.)

345 (TYP.)

℄ BETWEEN BEARINGS

38
457
495

GUTTERLINE

℄ GDR. B1

28-#13 B4 @ 450mm CTS. (TOP OF SLAB)

4-#13 "K" BARS (TYP. EA. BAY)

720 DIAPHRAGM

27-#22 B3 @ 450mm CTS. (TOP OF SLAB)

28-#22 B2 @ 450mm CTS. (TOP OF SLAB)

#16 A101 OR #16 A201

#16 A1 OR #16 A2

28-#13 B1 @ 450mm CTS. (TOP OF SLAB)(2 BAR RUN)

℄ GDR. C1

℄ GDR. B2

℄ GDR. C2

42-#13 J1
SEE "EXP. JT. SEAL DETAILS" SHEET

4.800m

5.843m

5.693m

5-#13 U1 @ 300mm CTS. (TYP. EA. BAY)

#13 U2

WP #3

-SB US 220 RAMP-

2-#25 K2 (TYP. OVER EA. INT. GDR.)

7-#16 S1 & #13 S2 @ 300mm CTS. (TYP. EA. BAY)

WP #4

℄ GDR. B3

℄ GDR. C3

150

260 END BENT DIAPHRAGM

FILL FACE @ END BENT #2

#13 S3 @ 300mm CTS. (TYP. EA. BAY) (19 REQ'D)

115°-00'-00" (TYP.)

13.671m

TRANSVERSE CONST. JOINT (SEE TRANSVERSE CONST. JT. DETAIL)

℄ GDR. C4

11.400m (CLEAR ROADWAY)

12.390m (OUT TO OUT)

6.600m

310 (TYP.)

℄ GDR. B4

10-#16 B5 @ 220mm CTS. (3 BAR RUN) (BOTTOM OF SLAB) (TYP. EA. BAY)

4-#13 K6 (TYP. EA. INT. GDR.)

4-#13 K7 (TYP. EA. EXT. GDR.)

7.828m

INTERMEDIATE STEEL DIAPHRAGM (SEE "INTERMEDIATE STEEL DIAPHRAGM FOR TYPE III PRESTRESSED CONCRETE GIRDERS" FOR DETAILS) (TYP.)

#16 G1 (PARALLEL TO JT.)

7.978m

3-#19 K8 (TYP. EA. BAY)

℄ GDR. B5

260

℄ GDR. C5

2-#25 K1 (TYP. OVER EA. EXT. GDR.)

GUTTERLINE

4-#16 B5 @ 220mm CTS. (BOTT. OF SLAB) (3 BAR RUN) (TYP. EA. SIDE)

℄ EXP. JT. SEAL @ END BENT #2

BENT #2 CONTROL LINE

7-152mm Ø PVC DECK DRAINS @ 1.820m CTS.

2.700m

PLAN OF SPAN C

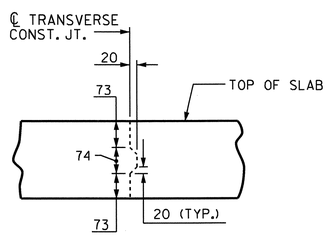

TRANSVERSE CONSTRUCTION JOINT DETAIL

NOTE: REINFORCING STEEL IN SLAB NOT SHOWN. LONGITUDINAL REINFORCING STEEL SHALL BE CONTINUOUS THRU JOINT

PROJECT NO. R-2413C

GUILFORD-ROCKINGHAM COUNTY

STATION: 11+43.200
-SB US 220 RAMP-

SHEET 3 OF 3

STATE OF NORTH CAROLINA
DEPARTMENT OF TRANSPORTATION
RALEIGH

SUPERSTRUCTURE

PLAN OF SPAN C

NORTH CAROLINA PROFESSIONAL SEAL 022516 ENGINEER EMILY E. MURRAY
9/28/11

REVISIONS						SHEET NO.
NO.	BY:	DATE:	NO.	BY:	DATE:	S-119
1			3			TOTAL SHEETS
2			4			238

STR. #4

DRAWN BY : M.GUDLAUGSSON DATE : 8-15-10
CHECKED BY : T.L. AVERETTE DATE : 9-20-10

05-SEP-2011 3:06
Y:\Structures\Final Plans\Str.#4\R-2413C_SD_S#_04.dgn
mgudlaugsson

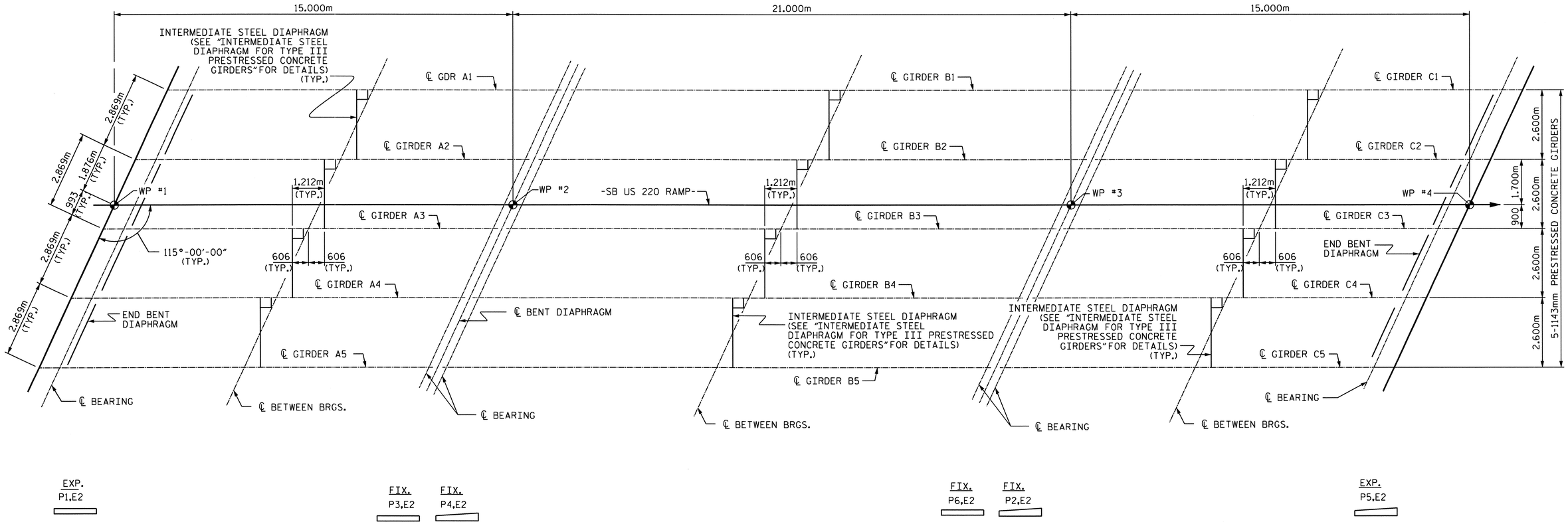

FRAMING PLAN

PROJECT NO. R-2413C
GUILFORD-ROCKINGHAM COUNTY
STATION: 11+43.200
-SB US 220 RAMP-

STATE OF NORTH CAROLINA
DEPARTMENT OF TRANSPORTATION
RALEIGH

SUPERSTRUCTURE
FRAMING PLAN

NORTH CAROLINA PROFESSIONAL SEAL 025616 ENGINEER BILY E. MURRAY
10/28/11

REVISIONS						SHEET NO.
NO.	BY:	DATE:	NO.	BY:	DATE:	S-120
1			3			TOTAL SHEETS
2			4			238

DRAWN BY : M.GUDLAUGSSON DATE : 7-30-10
CHECKED BY : T.L. AVERETTE DATE : 9-20-10

05-SEP-2011 13:05
Y:\Structures\Final Plans\Str.#4\R-2413C_SD_FP_04.dgn
mgudlaugsson

STR. #4

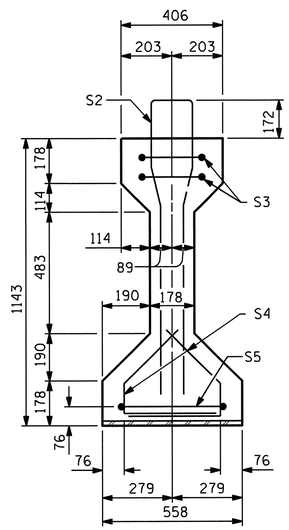

SECTION A-A

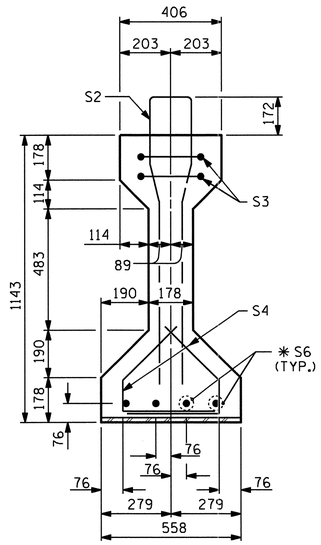

SECTION B-B

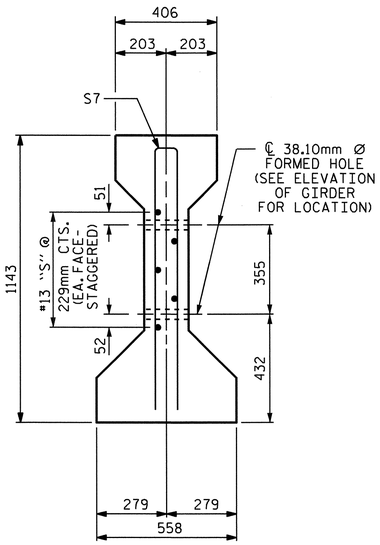

SECTION C-C

(S1 BARS NOT SHOWN)

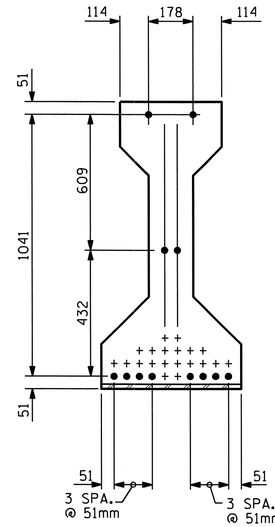

AT END OF GIRDER

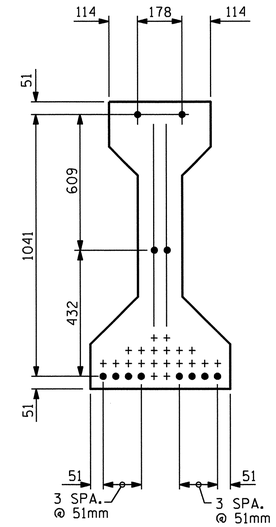

AT ℄ OF GIRDER

15.24mm Ø LOW RELAXATION STRAND LAYOUT

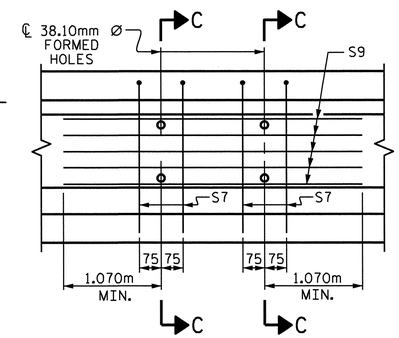

PARTIAL ELEVATION

SHOWING INTERMEDIATE DIAPHRAGM REINFORCING STEEL FOR GIRDER Nos. 2,3 & 4.

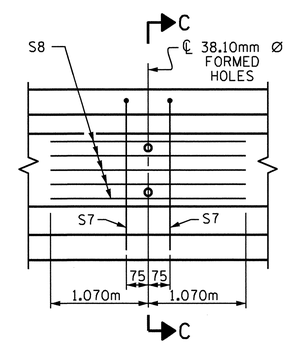

PARTIAL ELEVATION

SHOWING INTERMEDIATE DIAPHRAGM REINFORCING STEEL FOR GIRDER Nos. 1 & 5.

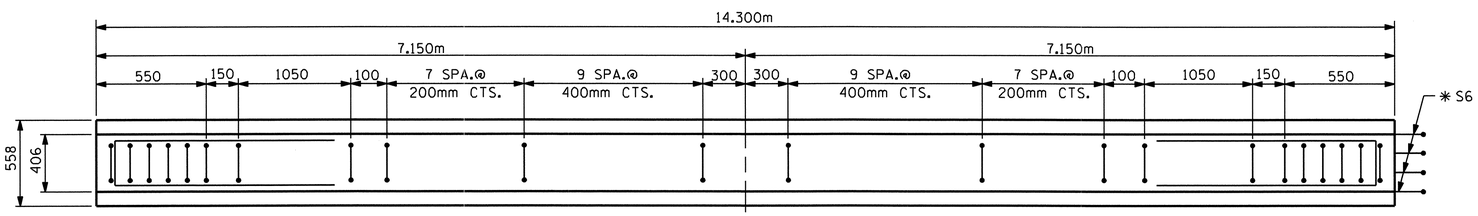

PLAN OF GIRDER

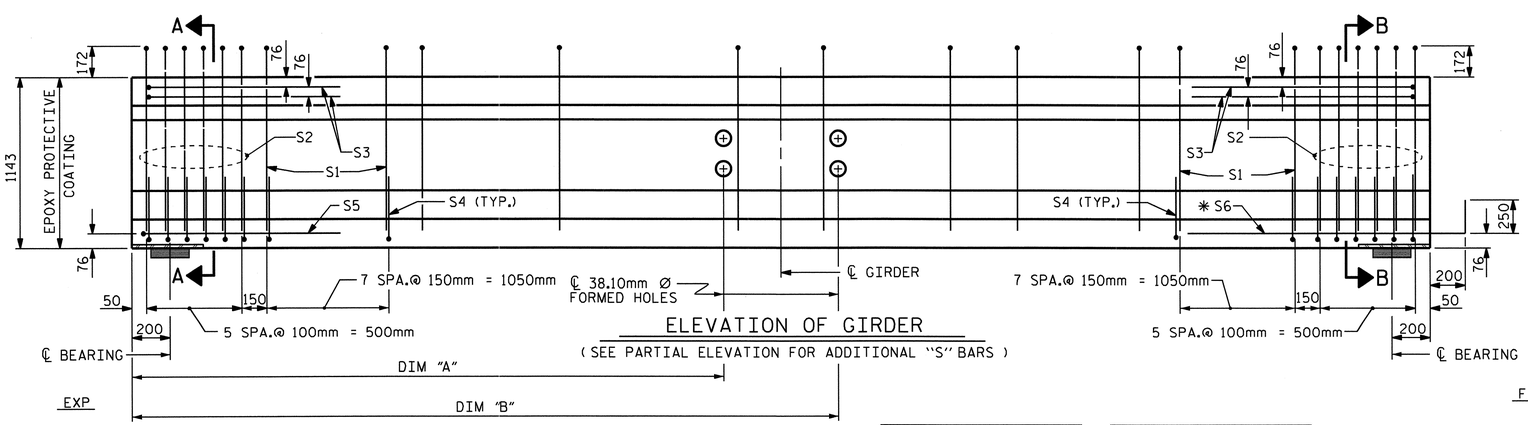

ELEVATION OF GIRDER

(SEE PARTIAL ELEVATION FOR ADDITIONAL "S" BARS)

GDR.	DIM. "A"	DIM. "B"
GDR. A1	6.544m	——
GDR. A2	6.544m	7.756m
GDR. A3	6.544m	7.756m
GDR. A4	6.544m	7.756m
GDR. A5	——	7.756m

GDR.	DIM. "A"	DIM. "B"
GDR. C1	——	7.756m
GDR. C2	6.544m	7.756m
GDR. C3	6.544m	7.756m
GDR. C4	6.544m	7.756m
GDR. C5	6.544m	——

15.24mm Ø L. R. GRADE 270 STRANDS

AREA (mm²)	ULTIMATE STRENGTH (kN PER STRAND)	APPLIED PRESTRESS (kN PER STRAND)
140.00	260.7	195.5

REINFORCING STEEL FOR ONE GIRDER

	BAR	NUMBER	SIZE	TYPE	LENGTH	WEIGHT
	S1	50	#13	1	2640	131
	S2	12	#19	1	2640	70
	S3	4	#13	3	2660	11
	S4	56	#13	2	840	47
	S5	1	#13	3	2900	3
	✱ S6	4	#16	STR	1120	7
EXTERIOR GDR.	S7	2	#16	3	2180	7
INTERIOR GDR.	S7	4	#16	3	2180	14
EXTERIOR GDR.	S8	5	#13	STR	2140	11
INTERIOR GDR.	S9	5	#13	STR	3360	17

✱ NOTE: S6 BARS SHALL BE BENT BEFORE SHIPMENT. HEAT BENDING SHALL NOT BE ALLOWED.

BAR TYPES

ALL BAR DIMENSIONS ARE OUT-TO-OUT

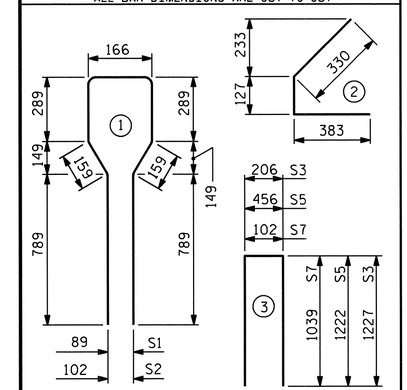

QUANTITIES FOR ONE GIRDER

	REINFORCING STEEL	34.50 MPa CONCRETE	15.24mm Ø L.R. STRANDS
	kg	m³	No.
EXTERIOR GDR.	287	5.2	12
INTERIOR GDR.	300	5.2	12

GIRDERS REQUIRED

NUMBER	LENGTH	TOTAL LENGTH
10	14.300m	143.000m

PROJECT NO. R-2413C

GUILFORD-ROCKINGHAM COUNTY

STATION: 11+43.200 -SB US 220 RAMP-

SHEET 1 OF 3

STATE OF NORTH CAROLINA
DEPARTMENT OF TRANSPORTATION
RALEIGH

SPAN A & C

AASHTO TYPE III
PRESTRESSED CONCRETE GIRDER
CONTINUOUS FOR LIVE LOAD

NORTH CAROLINA PROFESSIONAL SEAL 022516 ENGINEER EMILY E. MURRAY
10/28/11

REVISIONS							SHEET NO.
NO.	BY:	DATE:	NO.	BY:	DATE:		S-121
1			3				TOTAL SHEETS
2			4				238

ASSEMBLED BY : M.GUDLAUGSSON DATE : 12-3-10
CHECKED BY : T.L. AVERETTE DATE : 12-8-10

DRAWN BY : ELR 8/91
CHECKED BY : GRP 8/91

REV. 7/17/98 RWW/LES
REV. 10/17/00R RWW/LES
REV. 5/1/06R TLA/GM

06-SEP-2011 14:10
Y:\Structures\Final Plans\Str.#4\R-2413C_SD_G#_04.dgn
mgudlaugsson

STR. #4

STD. NO. PCG5SM

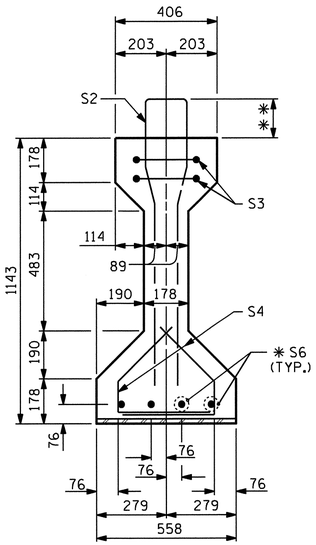

SECTION B-B

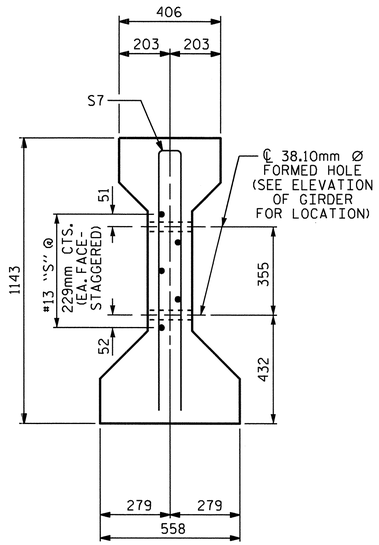

SECTION C-C

(S1 BARS NOT SHOWN)

✱✱ NOTE:
THE PROJECTION OF THE S2 AND S10 BARS IS 172mm.
THE PROJECTION OF THE S1 BARS IS 152mm.

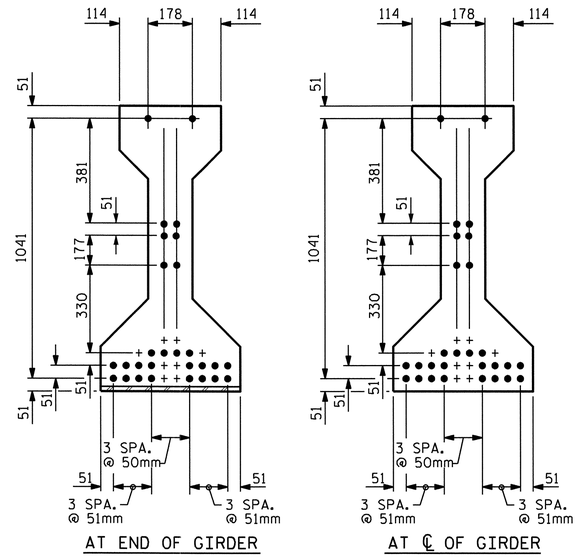

15.24mm Ø LOW RELAXATION STRAND LAYOUT

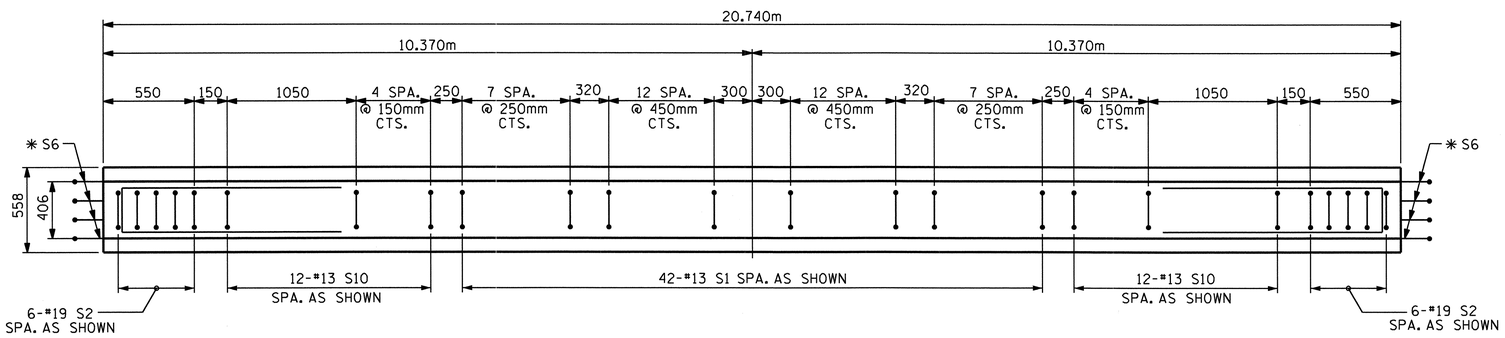

PLAN OF GIRDER

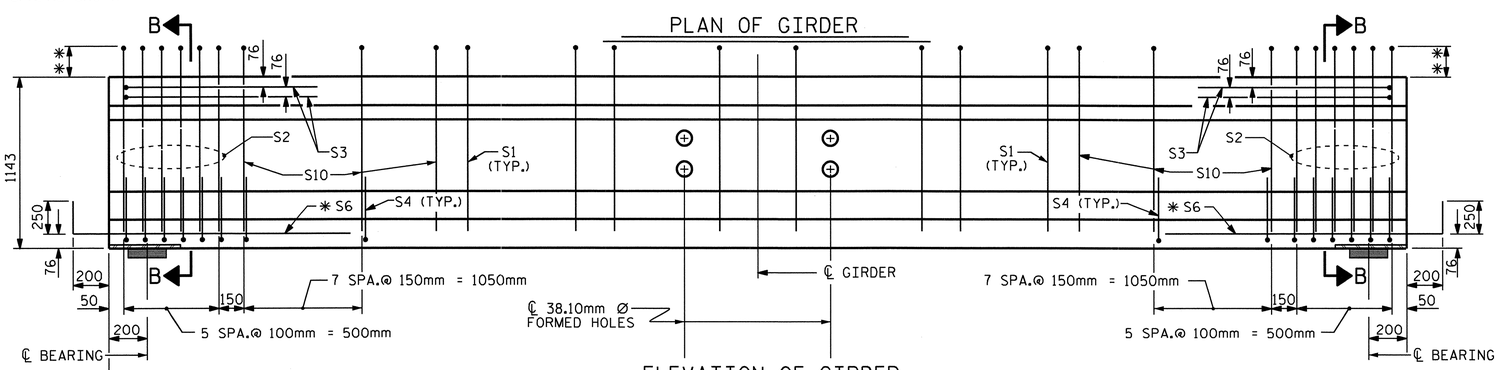

ELEVATION OF GIRDER

(SEE PARTIAL ELEVATION FOR ADDITIONAL "S" BARS)

GDR.	DIM. "A"	DIM. "B"
GDR. 1	9.764m	—
GDR. 2	9.764m	10.976m
GDR. 3	9.764m	10.976m
GDR. 4	9.764m	10.976m
GDR. 5	—	10.976m

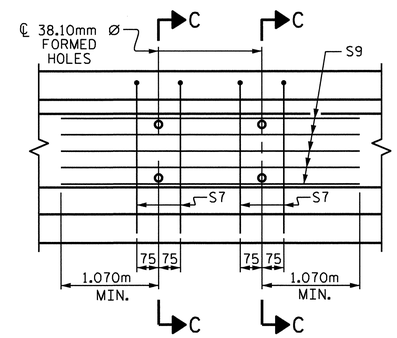

PARTIAL ELEVATION

SHOWING INTERMEDIATE DIAPHRAGM
REINFORCING STEEL FOR GIRDER Nos. 2,3 & 4.

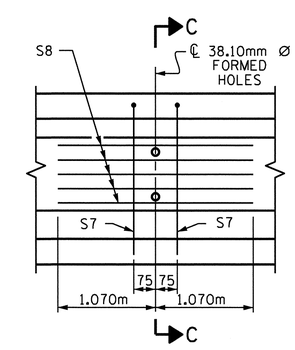

PARTIAL ELEVATION

SHOWING INTERMEDIATE DIAPHRAGM
REINFORCING STEEL FOR GIRDER Nos. 1 & 5.

NORTH CAROLINA PROFESSIONAL SEAL 022516 ENGINEER TIMOTHY E. MURRAY
10/28/11

15.24mm Ø L. R. GRADE 270 STRANDS

AREA (mm²)	ULTIMATE STRENGTH (kN PER STRAND)	APPLIED PRESTRESS (kN PER STRAND)
140.00	260.7	195.5

REINFORCING STEEL FOR ONE GIRDER

	BAR	NUMBER	SIZE	TYPE	LENGTH	WEIGHT
	S1	42	#13	1	2600	109
	S2	12	#19	1	2640	71
	S3	4	#13	3	2660	11
	S4	56	#13	2	840	47
	✱ S6	8	#16	STR	1120	14
EXTERIOR GDR.	S7	2	#16	3	2180	7
INTERIOR GDR.	S7	4	#16	3	2180	14
EXTERIOR GDR.	S8	5	#13	STR	2140	11
INTERIOR GDR.	S9	5	#13	STR	3360	17
	S10	24	#13	1	2640	63

✱ NOTE: S6 BARS SHALL BE BENT BEFORE SHIPMENT. HEAT BENDING SHALL NOT BE ALLOWED.

BAR TYPES

ALL BAR DIMENSIONS ARE OUT-TO-OUT

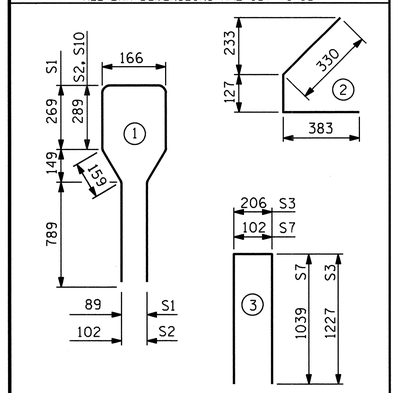

QUANTITIES FOR ONE GIRDER

	REINFORCING STEEL (kg)	55.16 MPa CONCRETE (m³)	15.24mm Ø L.R. STRANDS (No.)
EXTERIOR GDR.	333	7.5	28
INTERIOR GDR.	346	7.5	28

GIRDERS REQUIRED

NUMBER	LENGTH	TOTAL LENGTH
5	20.740m	103.700m

PROJECT NO. R-2413C
GUILFORD-ROCKINGHAM COUNTY
STATION: 11+43.200
-SB US 220 RAMP-
SHEET 2 OF 3

STATE OF NORTH CAROLINA
DEPARTMENT OF TRANSPORTATION
RALEIGH

SPAN B

AASHTO TYPE III
PRESTRESSED CONCRETE GIRDER
CONTINUOUS FOR LIVE LOAD

ASSEMBLED BY : M.GUDLAUGSSON	DATE : 12-3-10				
CHECKED BY : T.L. AVERETTE	DATE : 12-8-10				
DRAWN BY : ELR 8/91	REV. 7/17/98 RWW/LES				
CHECKED BY : GRP 8/91	REV. 10/17/00R RWW/LES				
	REV. 5/1/06R TLA/GM				

REVISIONS

NO.	BY:	DATE:	NO.	BY:	DATE:
1			3		
2			4		

SHEET NO. S-122
TOTAL SHEETS 238

05-SEP-2011 12:59
Y:\Structures\Final Plans\Str.#4\R-2413C_SD_G#_04.dgn
mgudlaugsson

STR. #4

STD. NO. PCG5SM

DEAD LOAD DEFLECTION TABLE

15.24mm Ø LOW RELAXATION	SPANS A & C ALL GIRDERS											SPAN B ALL GIRDERS										
TENTH POINTS	0	.1	.2	.3	.4	.5	.6	.7	.8	.9	0	0	.1	.2	.3	.4	.5	.6	.7	.8	.9	0
CAMBER (GIRDER ALONE IN PLACE) ↑	0.0	0.004	0.008	0.011	0.013	0.013	0.013	0.011	0.008	0.004	0.0	0.0	0.019	0.036	0.049	0.058	0.061	0.058	0.049	0.036	0.019	0.0
* DEFLECTION DUE TO SUPERIMPOSED D.L. ↓	0.0	0.002	0.003	0.005	0.006	0.006	0.006	0.005	0.003	0.002	0.0	0.0	0.007	0.013	0.018	0.022	0.023	0.022	0.018	0.013	0.007	0.0
FINAL CAMBER ↑	0	2	5	6	7	7	7	6	5	2	0	0	12	23	31	36	38	36	31	23	12	0

* INCLUDES FUTURE WEARING SURFACE IN SUPERIMPOSED DEAD LOAD.
ALL VALUES ARE SHOWN IN METERS, EXCEPT "FINAL CAMBER" WHICH IS SHOWN IN MILLIMETERS.

NOTES

ALL PRESTRESSING STRANDS SHALL BE 7-WIRE LOW-RELAXATION GRADE 270 STRANDS AND SHALL CONFORM TO AASHTO M203M EXCEPT FOR SAMPLING REQUIREMENTS WHICH SHALL BE IN ACCORDANCE WITH THE STANDARD SPECIFICATIONS.

ALL REINFORCING STEEL SHALL BE GRADE 420.

APPLY EPOXY PROTECTIVE COATING TO END OF GIRDER SURFACES INDICATED IN ELEVATION VIEW.

EMBEDDED PLATE "B-1" SHALL BE GALVANIZED IN ACCORDANCE WITH THE SPECIFICATIONS. BEVEL EDGES OF PLATE "B-1" TO GIVE CLOSE FIT BUT NOT TIGHT FIT TO STEEL CASTING FORM.

ANCHOR STUDS SHALL CONFORM TO AASHTO M169 GRADES 1010 THROUGH 1020 OR APPROVED EQUAL, AND SHALL MEET THE TYPE "B" REQUIREMENTS OF SUBSECTION 7.3 OF THE ANSI/AASHTO/AWS D1.5 BRIDGE WELDING CODE.

AT ENDS OF GIRDERS TO BE EMBEDDED IN CONCRETE DIAPHRAGMS OR END WALLS, PRESTRESSING STRANDS MAY EXTEND A MAXIMUM OF 50mm BEYOND THE GIRDER ENDS. OTHERWISE, PRESTRESSING STRANDS SHALL BE CUT FLUSH WITH THE GIRDER ENDS.

THE TRANSFER OF LOAD FROM THE ANCHORAGES TO THE GIRDER SHALL BE DONE WHEN CONCRETE HAS REACHED A COMPRESSIVE STRENGTH OF NOT LESS THAN 27.58 MPa. FOR SPANS A AND C AND 43.44 MPa. FOR SPAN B.

DEPENDING ON THE TYPE OF SYSTEM USED TO SUPPORT THE DECK SLAB FORMS, PRESET ANCHORS MAY BE NECESSARY IN THE PRESTRESSED CONCRETE GIRDER.

THE TOP SURFACE OF THE GIRDER, EXCLUDING THE OUTSIDE 100mm, SHALL BE RAKED TO A DEPTH OF 6mm.

FOR PRESTRESSED CONCRETE MEMBERS, SEE SPECIAL PROVISIONS.

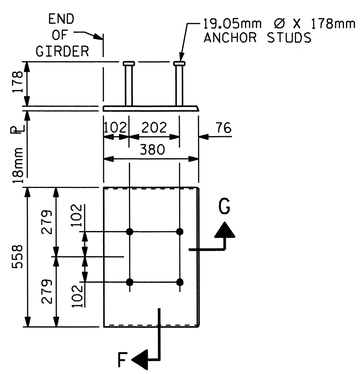

EMBEDDED PLATE "B-1" DETAILS FOR AASHTO TYPE III GIRDER

(2 REQ'D PER GIRDER)

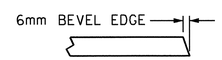

SECTION "G"

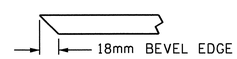

SECTION "F"

(SEE NOTES)

PROJECT NO. R-2413C

GUILFORD-ROCKINGHAM COUNTY

STATION: 11+43.200 -SB US 220 RAMP-

SHEET 3 OF 3

STATE OF NORTH CAROLINA
DEPARTMENT OF TRANSPORTATION
RALEIGH

STANDARD
PRESTRESSED CONCRETE GIRDER
CONTINUOUS FOR LIVE LOAD
DETAILS

NORTH CAROLINA PROFESSIONAL SEAL 022516 ENGINEER EMILY E. MURRAY
10/28/11

REVISIONS						SHEET NO.
NO.	BY:	DATE:	NO.	BY:	DATE:	S-123
1			3			TOTAL SHEETS
2			4			238

ASSEMBLED BY : M.GUDLAUGSSON DATE : 9-3-10
CHECKED BY : T.L. AVERETTE DATE : 12-8-10

DRAWN BY : ELR 11/91
CHECKED BY : GRP 11/91

REV. 10/17/00 RWW/LES
REV. 7/10/01RR LES/RDR
REV. 5/1/06 TLA/GM

05-SEP-2011 12:58
Y:\Structures\Final Plans\Str.#4\R-2413C_SD_DL_04.dgn
mgudlaugsson

STR. #4

STD. NO. PCG11SM

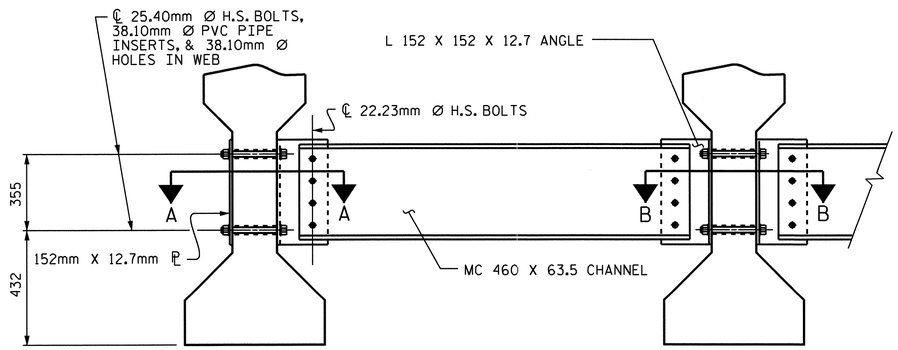

EXTERIOR GIRDER

INTERIOR GIRDER

PART SECTION AT INTERMEDIATE DIAPHRAGM

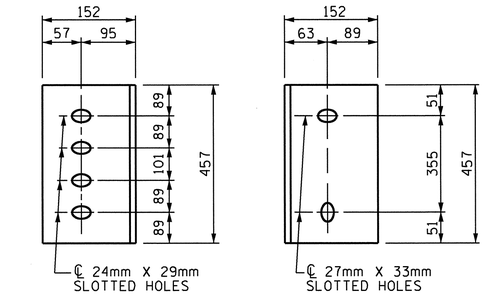

DIAPHRAGM FACE

WEB FACE

CONNECTOR PLATE DETAILS

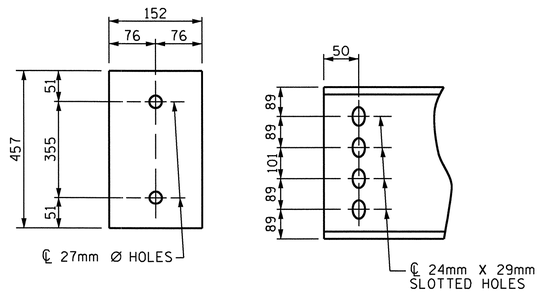

PLATE DETAILS

CHANNEL END

STRUCTURAL STEEL NOTES

ALL INTERMEDIATE DIAPHRAGM STEEL, CONNECTOR PLATES AND PLATE WASHERS SHALL BE AASHTO M270 GRADE 345 OR APPROVED EQUAL.

TENSION ON THE AASHTO M164 BOLTS THROUGH THE CHANNEL MEMBER SHALL BE CALIBRATED USING DIRECT TENSION INDICATOR WASHERS IN ACCORDANCE WITH THE STANDARD SPECIFICATIONS. FOR DIRECT TENSION INDICATORS, SEE SPECIAL PROVISIONS.

TENSION ON THE AASHTO M164 BOLTS THROUGH THE GIRDER WEB SHALL BE SNUG TIGHTENED FOLLOWED BY AN ADDITIONAL 1/4 TURN.

THE PLATES, BENT PLATES, CHANNELS, ANGLES, AND PLATE WASHERS SHALL BE GALVANIZED OR METALLIZED IN ACCORDANCE WITH THE STANDARD SPECIFICATIONS. FOR THERMAL SPRAYED COATINGS (METALLIZATION), SEE SPECIAL PROVISIONS.

FOR METALLIZATION, APPLY AN 8 MIL THICK 99.99 PERCENT ZINC (W-Zn-1) THERMAL SPRAYED COATING WITH A 0.5 MIL THICK SEAL COAT TO ALL STEEL DIAPHRAGM SURFACES IN ACCORDANCE WITH THE THERMAL SPRAYED COATINGS SPECIAL PROVISIONS AND SECTION 442 OF THE STANDARD SPECIFICATIONS.

GALVANIZE THE HIGH STRENGTH BOLTS, NUTS, WASHERS AND DIRECT TENSION INDICATORS IN ACCORDANCE WITH THE STANDARD SPECIFICATIONS. FOR HIGH STRENGTH BOLTS, SEE SPECIAL PROVISIONS.

USE A MINIMUM 11mm THICK PLATE WASHER WITH STANDARD HOLES UNDER EACH BOLT HEAD AND NUT. THE PLATE WASHERS SHALL HAVE SUFFICIENT SIZE TO COVER THE HOLES AFTER INSTALLATION. HARDENED WASHERS AND DIRECT TENSION INDICATORS ARE TO BE USED IN CONJUNCTION WITH THE PLATE WASHERS IN THE CHANNEL MEMBER CONNECTION.

FOR BOLTS THROUGH THE GIRDER WEB, PROVIDE SUFFICIENT LENGTH OF ALL BOLTS TO ACCOMMODATE WASHERS AND THE THICKNESS OF CONNECTING MEMBER PLUS AT LEAST 6mm PROJECTION BEYOND THE NUT.

INTERMEDIATE DIAPHRAGM ASSEMBLY SHALL COMPLY WITH SECTION 1072 OF THE STANDARD SPECIFICATIONS.

CONTRACTOR SHALL SUBMIT TWO SETS OF WORKING DRAWINGS FOR THE INTERMEDIATE DIAPHRAGM ASSEMBLY FOR REVIEW, COMMENTS AND ACCEPTANCE. AFTER REVIEW, COMMENTS, AND ACCEPTANCE, SUBMIT SEVEN SETS FOR DISTRIBUTION.

IN THE EXTERIOR BAYS, TEMPORARY STRUTS SHALL BE PLACED BETWEEN PRESTRESSED GIRDERS ADJACENT TO THE STEEL DIAPHRAGMS. STRUTS SHALL REMAIN IN PLACE 3 DAYS AFTER CONCRETE IS PLACED. ALL AASHTO M164 H.S. BOLTS SHALL BE FULLY TIGHTENED AFTER THE STRUTS HAVE BEEN REMOVED.

THE COST OF THE STEEL DIAPHRAGMS AND ASSEMBLIES SHALL BE INCLUDED IN THE UNIT PRICE BID FOR PRESTRESSED CONCRETE GIRDERS.

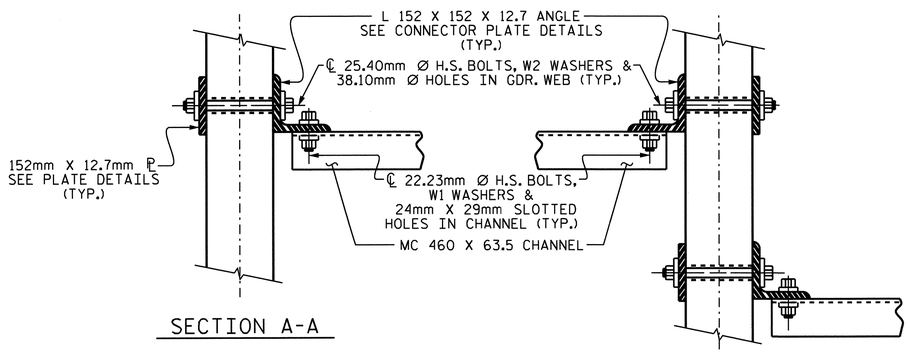

SECTION A-A

SECTION B-B

CONNECTION DETAILS

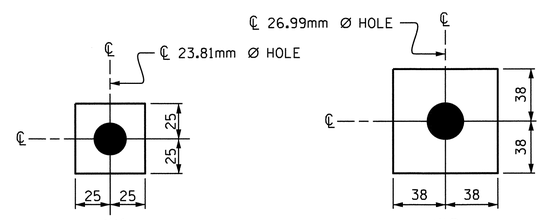

W1

ℙ 11.1 X 50 X 50

USE WITH 22.23mm Ø HVY. HEX NUTS & DIRECT TENSION INDICATOR WASHERS AT DIAPHRAGM CHANNEL TO CONNECTOR PLATE CONNECTIONS

W2

ℙ 11.1 X 76 X 76

USE WITH 25.40mm Ø HVY. HEX NUTS AT CONNECTOR PLATE TO GIRDER CONNECTIONS

WASHER DETAILS

NORTH CAROLINA PROFESSIONAL SEAL 022516 ENGINEER EMILY E. MURRAY

10/28/11

PROJECT NO. R-2413C

GUILFORD-ROCKINGHAM COUNTY

STATION: 11+43.200

-SB US 220 RAMP-

STATE OF NORTH CAROLINA
DEPARTMENT OF TRANSPORTATION
RALEIGH

STANDARD

INTERMEDIATE STEEL DIAPHRAGMS FOR TYPE III PRESTRESSED CONCRETE GIRDERS

REVISIONS							SHEET NO.
NO.	BY:	DATE:	NO.	BY:	DATE:		S-124
1			3				TOTAL SHEETS
2			4				238

ASSEMBLED BY : M.GUDLAUGSSON DATE : 9-3-10
CHECKED BY : T.L. AVERETTE DATE : 9-20-10

DRAWN BY : TLA 6/05
CHECKED BY : VC 6/05

ADDED 10/21/05
REV. 5/1/06RR KMM/GM

05-SEP-2011 12:58
Y:\Structures\Final Plans\Str.#4\R-2413C_SD_G#_04.dgn
mgudlaugsson

STR. #4

STD.No.PCG12SM

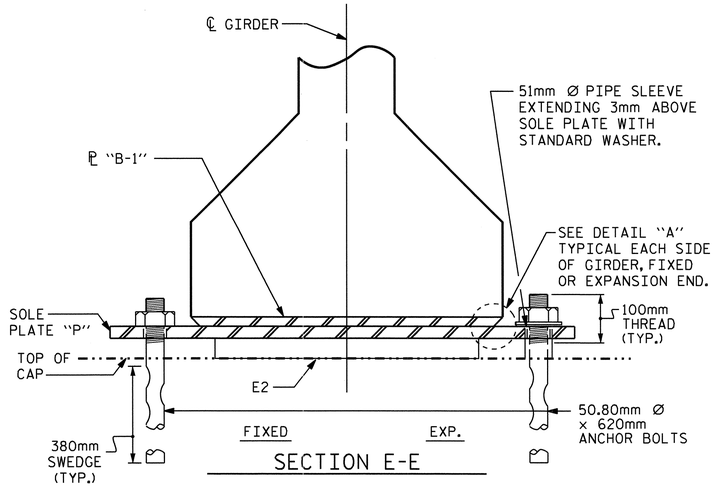

SECTION E-E

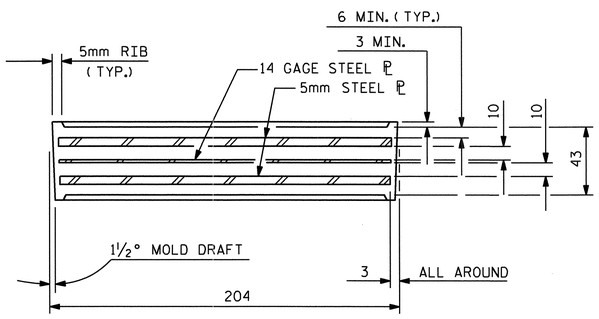

TYPICAL SECTION OF ELASTOMERIC BEARINGS

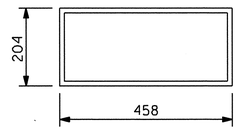

E2 (30 REQ'D)

PLAN VIEW OF ELASTOMERIC BEARING

TYPE III

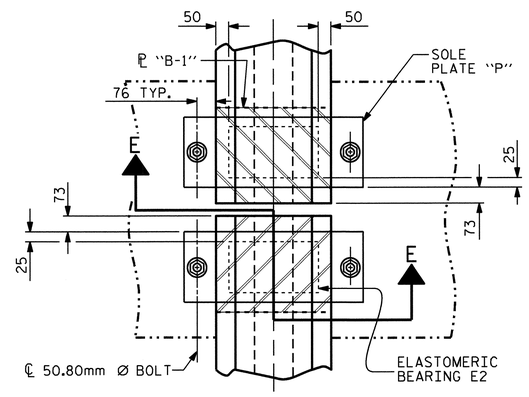

TYPICAL PLAN

NOTES

AT ALL FIXED POINTS OF SUPPORT, NUTS FOR ANCHOR BOLTS ARE TO BE TIGHTENED FINGER TIGHT AND THEN BACKED OFF ½ TURN. THE THREAD OF THE NUT AND BOLT SHALL THEN BE BURRED WITH A SHARP POINTED TOOL.

THE 51mm Ø PIPE SLEEVE SHALL BE CUT FROM SCHEDULE 40 PVC PLASTIC PIPE. THE PVC PLASTIC PIPE SHALL MEET THE REQUIREMENTS OF ASTM D1785.

STEEL SOLE PLATES, ANCHOR BOLTS, NUTS, AND WASHERS SHALL BE GALVANIZED IN ACCORDANCE WITH THE STANDARD SPECIFICATIONS.

PRIOR TO WELDING, GRIND THE GALVANIZED SURFACE OF THE PORTION OF THE EMBEDDED PLATE AND SOLE PLATE THAT ARE TO BE WELDED. AFTER WELDING, DAMAGED GALVANIZED SURFACES SHALL BE REPAIRED IN ACCORDANCE WITH THE STANDARD SPECIFICATIONS.

WHEN WELDING THE SOLE PLATE TO THE EMBEDDED PLATE IN THE GIRDER, USE TEMPERATURE INDICATING WAX PENS, OR OTHER SUITABLE MEANS, TO ENSURE THAT THE TEMPERATURE OF THE SOLE PLATE DOES NOT EXCEED 149°C. TEMPERATURES ABOVE THIS MAY DAMAGE THE ELASTOMER.

SOLE PLATE "P", BOLTS, NUTS, WASHERS, AND PIPE SLEEVE SHALL BE INCLUDED IN THE PAY ITEM FOR PRESTRESSED CONCRETE GIRDERS.

ANCHOR BOLTS SHALL MEET THE REQUIREMENTS OF ASTM A449. NUTS SHALL MEET THE REQUIREMENTS OF AASHTO M291M-12 OR AASHTO M292M-2H. WASHERS SHALL MEET THE REQUIREMENTS OF AASHTO M293M. SHOP DRAWINGS ARE NOT REQUIRED FOR ANCHOR BOLTS, NUTS AND WASHERS. SHOP INSPECTION IS REQUIRED.

ALL SURFACES OF BEARING PLATES SHALL BE SMOOTH AND STRAIGHT.

ALL BEARING PLATES SHALL BE AASHTO M270 GRADE 250.

ELASTOMER IN ALL BEARINGS SHALL BE 60 DUROMETER HARDNESS.

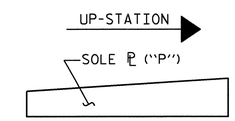

SOLE ℙ PLACEMENT DETAIL

— LOAD RATINGS —	
	MAX.D.L.+L.L.
TYPE III	644 kN

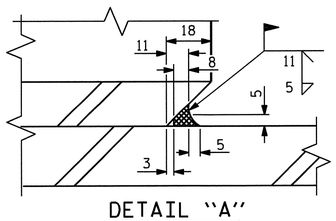

DETAIL "A"

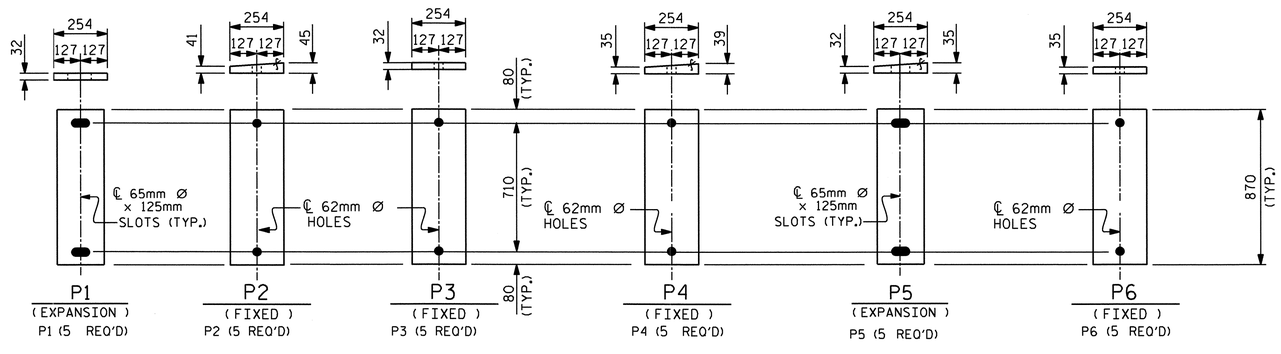

SOLE PLATE DETAILS ("P")

PROJECT NO. R-2413C

GUILFORD-ROCKINGHAM COUNTY

STATION: 11+43.200 -SB US 220 RAMP-

STATE OF NORTH CAROLINA
DEPARTMENT OF TRANSPORTATION
RALEIGH

STANDARD
ELASTOMERIC BEARING DETAILS
PRESTRESSED CONCRETE GIRDER SUPERSTRUCTURE

NORTH CAROLINA PROFESSIONAL SEAL 022516 ENGINEER EMILY E. McMURRAY
10/28/11

REVISIONS						SHEET NO.
NO.	BY:	DATE:	NO.	BY:	DATE:	S-125
1			3			TOTAL SHEETS
2			4			238

ASSEMBLED BY :	M.GUDLAUGSSON	DATE:	10-20-10
CHECKED BY :	T.L. AVERETTE	DATE:	9-20-10
DRAWN BY :	WJH 8/89	REV. 10/17/00	RWW/LES
CHECKED BY :	CRK 8/89	REV. 7/10/01	RWW/LES
		REV. 5/1/06	TLA/GM

STR. #4

STD. NO. EB3SM

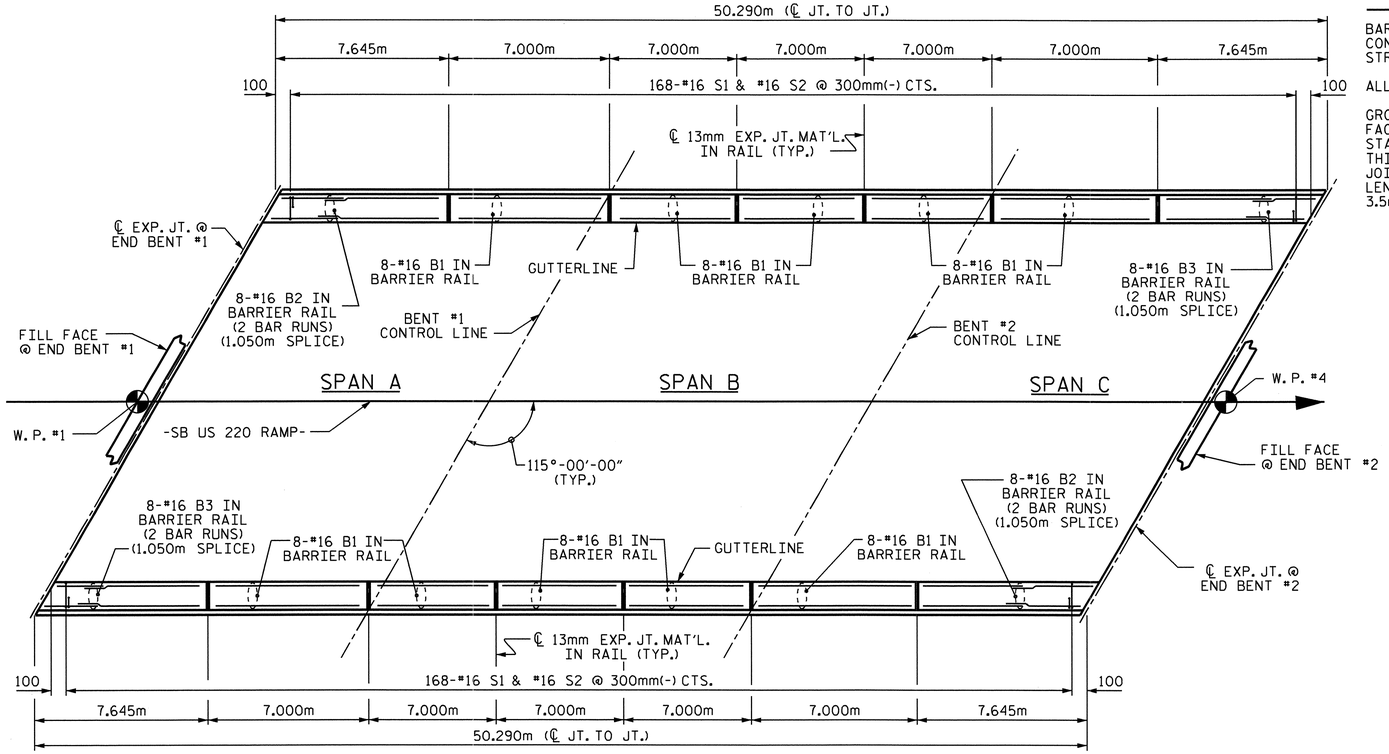

PLAN OF BARRIER RAIL

NOTES

BARRIER RAIL IN A CONTINUOUS UNIT SHALL NOT BE CAST UNTIL ALL SLAB CONCRETE IN THE UNIT HAS BEEN CAST AND HAS REACHED A MINIMUM COMPRESSIVE STRENGTH OF 20.7 MPa.

ALL REINFORCING STEEL IN BARRIER RAILS SHALL BE EPOXY COATED.

GROOVED CONTRACTION JOINTS, 12mm IN DEPTH, SHALL BE TOOLED IN ALL EXPOSED FACES OF THE BARRIER RAIL AND IN ACCORDANCE WITH ARTICLE 825-10(B) OF THE STANDARD SPECIFICATIONS. THE CONTRACTION JOINT SHALL BE LOCATED AT EACH THIRD POINT BETWEEN BARRIER RAIL EXPANSION JOINTS. ONLY ONE CONTRACTION JOINT IS REQUIRED AT MIDPOINT OF BARRIER RAIL SEGMENTS LESS THAN 6.1m IN LENGTH AND NO CONTRACTION JOINTS ARE REQUIRED FOR THOSE SEGMENTS LESS THAN 3.5m IN LENGTH.

BAR TYPES

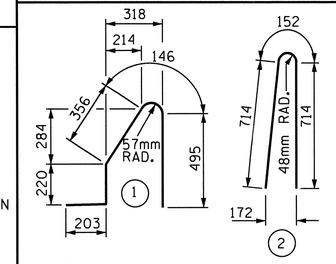

ALL BAR DIMENSIONS ARE OUT TO OUT

BILL OF MATERIAL

FOR CONCRETE BARRIER RAIL ONLY

BAR	NO.	SIZE	TYPE	LENGTH	WEIGHT
* B1	80	#16	STR	6880	854
* B2	32	#16	STR	4380	218
* B3	32	#16	STR	4280	213
* S1	336	#16	1	1420	740
* S2	336	#16	2	1580	824

* EPOXY COATED REINFORCING STEEL	2849 kg
CLASS AA CONCRETE	25.2 CU. METER
CONCRETE BARRIER RAIL	
SUPERSTRUCTURE	100.580 METERS
● APPROACH SLABS	12.426 METERS
TOTAL	113.006 METERS

● FOR EPOXY COATED REINFORCING STEEL AND CLASS AA CONCRETE IN THE BARRIER RAIL ON THE APPROACH SLABS, SEE "BRIDGE APPROACH SLAB DETAILS" SHEET.

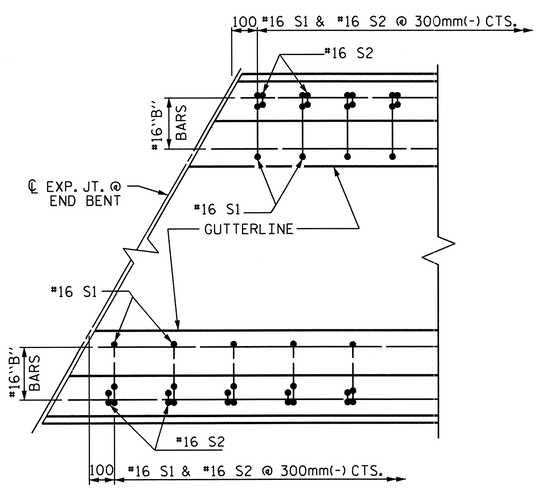

PLAN

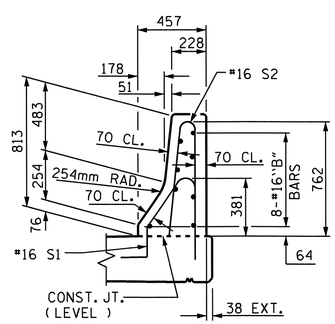

END VIEW

END OF RAIL DETAILS

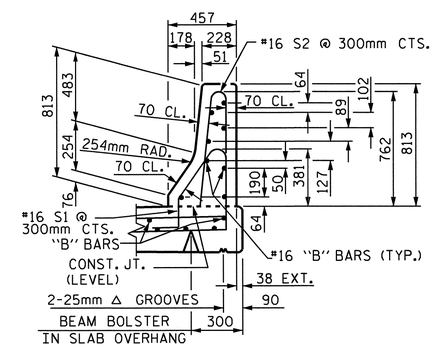

SECTION THRU RAIL

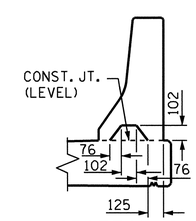

SECTION S-S

AT DAM IN OPEN JOINT
(THIS IS TO BE USED ONLY WHEN SLIP FORM IS USED)

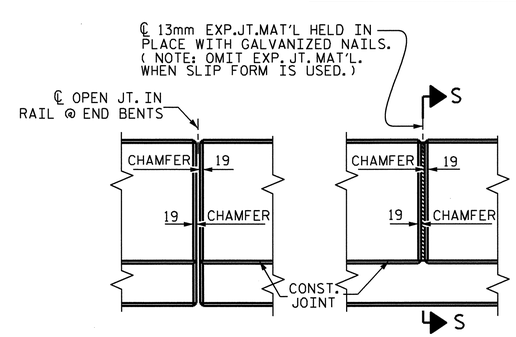

ELEVATION AT EXPANSION JOINTS

BARRIER RAIL DETAILS

PROJECT NO. R-2413C

GUILFORD-ROCKINGHAM COUNTY

STATION: 11+43.200 -SB US 220 RAMP-

STATE OF NORTH CAROLINA
DEPARTMENT OF TRANSPORTATION
RALEIGH

STANDARD

CONCRETE BARRIER RAIL

NORTH CAROLINA PROFESSIONAL SEAL 022516 ENGINEER EMILY E. McMURRAY 6/28/11

REVISIONS							SHEET NO.
NO.	BY:	DATE:	NO.	BY:	DATE:		S-126
1			3				TOTAL SHEETS
2			4				238

ASSEMBLED BY : M.GUDLAUGSSON	DATE : 9-3-10		
CHECKED BY : T.L. AVERETTE	DATE : 9-20-10		
DRAWN BY : ARB 5/87	REV. 10/17/00	RWW/LES	
CHECKED BY : SJD 9/87	REV. 5/7/03R	RWW/JTE	
	REV. 5/1/06	TLA/GM	

05-SEP-2011 12:50
Y:\Structures\Final Plans\Str.#4\R-2413C_SD_BR_04.dgn
mgudlaugsson

STR. #4

STD. No. CBR1SM

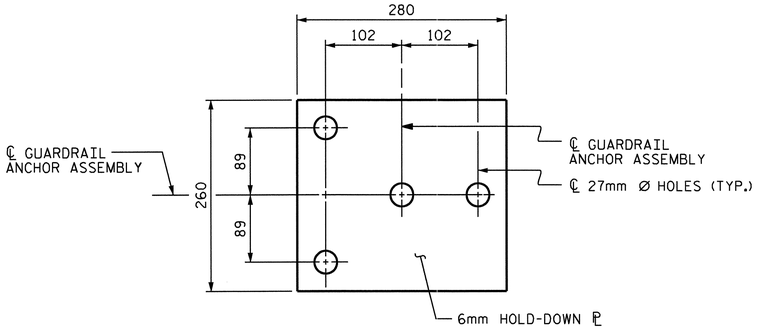

PLAN

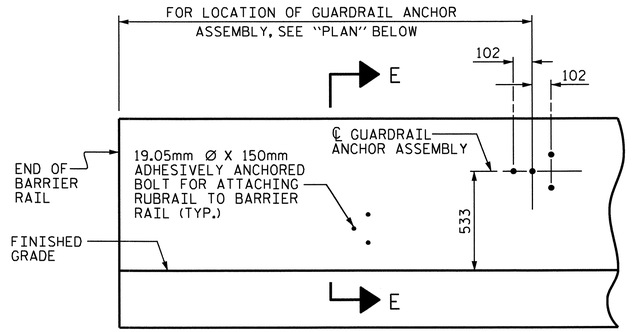

ELEVATION

FOR LOCATION OF RUBRAIL, SEE ROADWAY STD. 862.03

NOTES

THE GUARDRAIL ANCHOR ASSEMBLY SHALL CONSIST OF A 6mm HOLD DOWN PLATE AND 4 - 22.23mm Ø BOLTS WITH NUTS AND WASHERS, RUBRAIL, AND ADHESIVELY ANCHORED BOLTS.

THE HOLD-DOWN PLATE SHALL CONFORM TO AASHTO M270 GRADE 36. AFTER FABRICATION, THE HOLD-DOWN PLATE SHALL BE HOT-DIP GALVANIZED IN ACCORDANCE WITH AASHTO M111.

BOLTS SHALL CONFORM TO THE REQUIREMENTS OF ASTM A307 AND NUTS SHALL CONFORM TO THE REQUIREMENTS OF AASHTO M291. BOLTS, NUTS AND WASHERS SHALL BE GALVANIZED. (AT THE CONTRACTOR'S OPTION, STAINLESS STEEL BOLTS, NUTS AND WASHERS MAY BE USED AS AN ALTERNATE FOR THE 22.23mm Ø GALVANIZED BOLTS, NUTS AND WASHERS. THEY SHALL CONFORM TO OR EXCEED THE MECHANICAL REQUIREMENTS OF ASTM A307. THE USE OF THIS ALTERNATE SHALL BE APPROVED BY THE ENGINEER.)

THE GUARDRAIL ANCHOR ASSEMBLY IS REQUIRED AT ALL POINTS WHERE APPROACH GUARDRAIL IS TO BE ATTACHED TO THE END OF BARRIER RAIL. FOR POINTS OF ATTACHMENT, SEE SKETCH.

AFTER INSTALLATION, THE EXPOSED THREAD OF THE BOLT SHALL BE BURRED WITH A SHARP POINTED TOOL.

THE COST OF THE GUARDRAIL ANCHOR ASSEMBLY SHALL BE INCLUDED IN THE UNIT CONTRACT PRICE BID FOR CONCRETE BARRIER RAIL.

THE 32mm Ø HOLES SHALL BE FORMED OR DRILLED WITH A CORE BIT. IMPACT TOOLS WILL NOT BE PERMITTED. ANY CONCRETE DAMAGED BY THIS WORK SHALL BE REPAIRED TO THE SATISFACTION OF THE ENGINEER.

THE C150 X 12 RUBRAIL IS TO BE ADHESIVELY ANCHORED TO THE RAIL USING THREE 19.05mm Ø X 150mm BOLTS WITH WASHERS. LEVEL ONE FIELD TESTING IS REQUIRED, AND THE YIELD LOAD OF THE 19.05mm Ø BOLTS IS 53.4kN. FOR ADHESIVELY ANCHORED ANCHOR BOLTS OR DOWELS, SEE SPECIAL PROVISIONS. SEE ROADWAY STANDARD 862.03 FOR DETAILS AND LOCATION OF THE RUBRAIL.

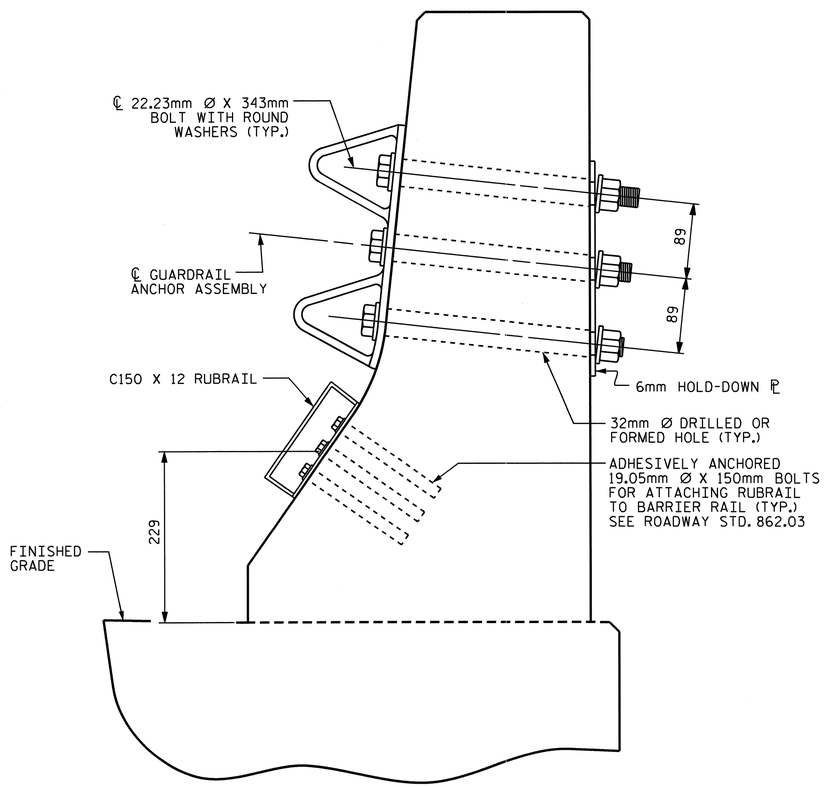

SECTION E-E

GUARDRAIL ANCHOR ASSEMBLY DETAILS

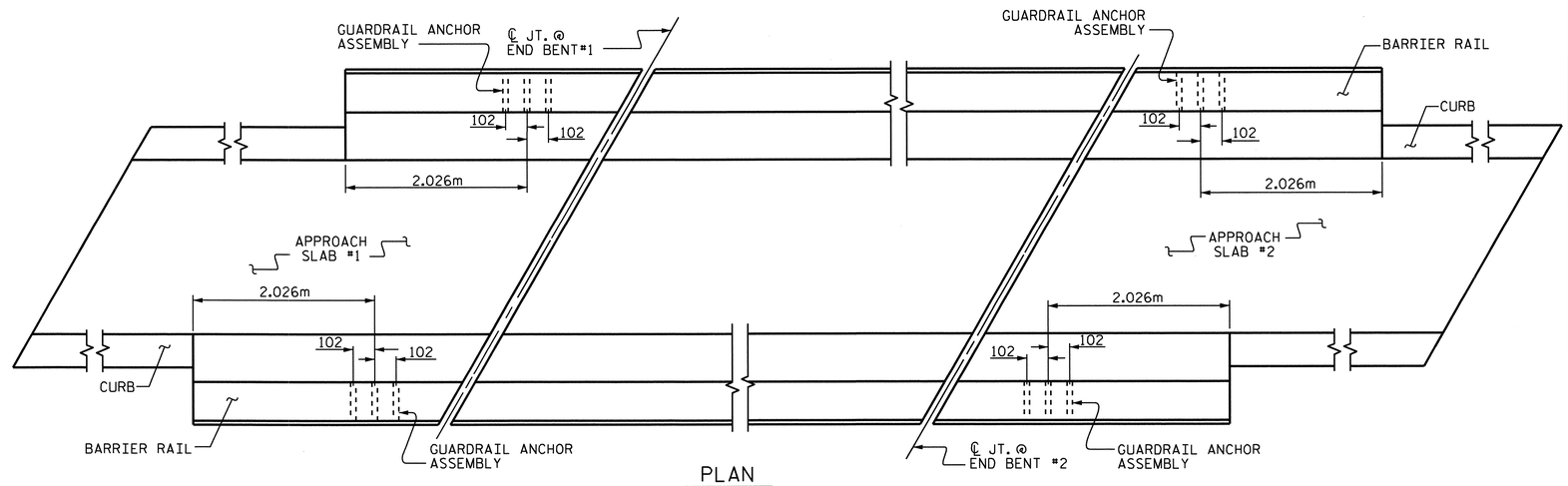

PLAN

LOCATION OF ANCHORS FOR GUARDRAIL

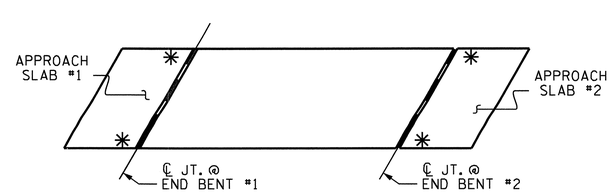

SKETCH SHOWING POINTS OF ATTACHMENTS

✳ DENOTES B-77 GUARDRAIL ANCHOR ASSEMBLY

PROJECT NO. R-2413C

GUILFORD-ROCKINGHAM COUNTY

STATION: 11+43.200 -SB US 220 RAMP-

STATE OF NORTH CAROLINA
DEPARTMENT OF TRANSPORTATION
RALEIGH

STANDARD

GUARDRAIL ANCHORAGE FOR BARRIER RAIL

NORTH CAROLINA PROFESSIONAL SEAL 022516 ENGINEER EMILY K. MARRAY
10/28/11

REVISIONS						SHEET NO.
NO.	BY:	DATE:	NO.	BY:	DATE:	S-127
1			3			TOTAL SHEETS
2			4			238

STR. #4 STD. NO. GRA2

ASSEMBLED BY : M.GUDLAUGSSON DATE : 12-3-10
CHECKED BY : T.L. AVERETTE DATE : 12-8-10
DRAWN BY : TLA 5/06
CHECKED BY : GM 5/06
ADDED 5/1/06R KMM/GM

05-SEP-2011 12:50
Y:\Structures\Final Plans\Str.#4\R-2413C_SD_BR_04.dgn
mgudlaugsson

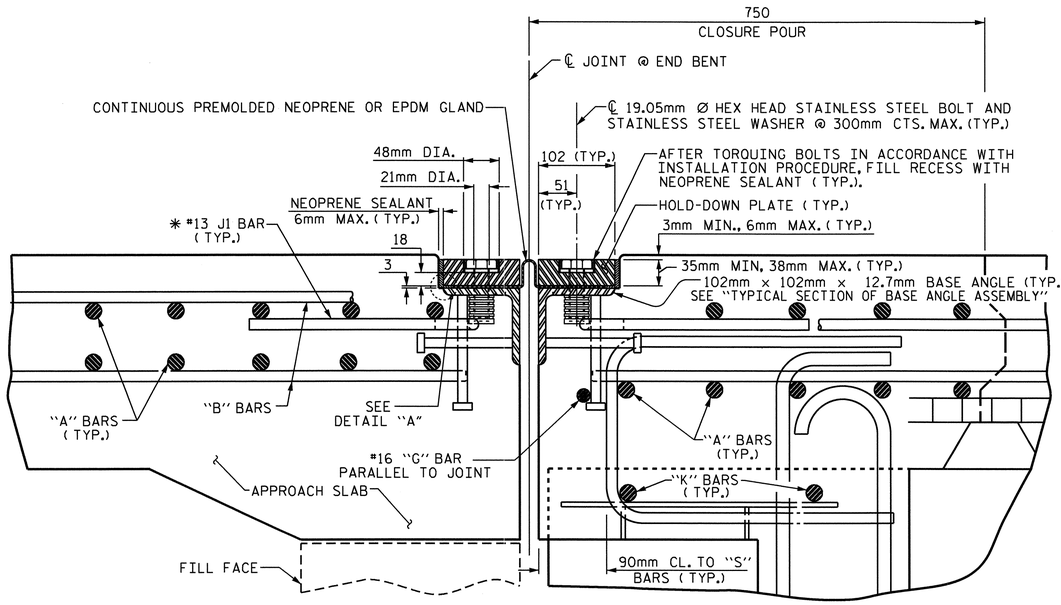

EXPANSION JOINT DETAILS

SECTION NORMAL TO JOINT -- PRESTRESSED GIRDER SUPERSTRUCTURE

* THE QUANTITY OF #13 J1 BARS ON THE BILL OF MATERIAL IS BASED ON 300mm CENTERS. J1 BARS SHALL BE PLACED AT EACH VERTICAL STUD ANCHOR BOLT. IN THE EVENT THAT THE NUMBER OF VERTICAL STUD ANCHOR BOLTS EXCEEDS THE NUMBER OF J1 BARS SPECIFIED, ADDITIONAL J1 BARS WILL NOT BE REQUIRED.

INSTALLATION PROCEDURE

1. A TEMPLATE OR OTHER SUITABLE DEVICE SHALL BE USED TO FORM THE TOP OF THE EXPANSION JOINT SEAL BLOCKOUT TO THE PROPER DEPTH AND WIDTH. THE TEMPLATE SHALL BE 105mm TO 108mm WIDE AND OF SUCH THICKNESS AS TO PROVIDE FOR CORRECT FINAL ELEVATION OF TOP OF HOLD-DOWN PLATES. THE TEMPLATE SHALL BE ATTACHED TO THE BASE ANGLE ASSEMBLY WITH THE 19.05mm Ø HEX HEAD BOLTS PROVIDED FOR THE HOLD-DOWN PLATES. A 25mm Ø HOLE SHALL BE PROVIDED IN THE TEMPLATE CENTERED OVER EACH WEEP HOLE IN THE 102mm X 102mm X 12.7mm BASE ANGLE. OTHER METHODS OF INSURING DRAINAGE THROUGH WEEP HOLES MAY BE EMPLOYED SUBJECT TO ENGINEER'S APPROVAL.
2. AFTER THE CONCRETE HAS BEEN CAST ON BOTH SIDES OF THE JOINT, REMOVE THE TEMPLATE. THOROUGHLY CLEAN THE BOLT HOLES AND THE ANGLE PLATE. REMOVE ANY EXCESS CONCRETE THAT COMES OUT OF THE WEEP HOLES. ANY DAMAGED STEEL SHALL BE COATED WITH A MINIMUM THICKNESS OF 0.100mm (DRY) OF ZINC-RICH PAINT IN ACCORDANCE WITH THE STANDARD SPECIFICATIONS.
3. LAY THE GLAND ON THE BASE ANGLE AND FIELD MARK THE GLAND FOR THE BOLT HOLES. HOLES IN THE GLAND SHALL BE PUNCHED 22mm IN DIAMETER WITH A HAND PUNCH.
4. IN ORDER TO CHECK FOR PROPER ALIGNMENT, PLACE THE GLAND AND HOLD-DOWN PLATES ON THE BASE ANGLE. DO NOT APPLY NEOPRENE SEALANT. BOLT THE HOLD-DOWN PLATES TO THE BASE ANGLE BUT DO NOT TIGHTEN. THE ENGINEER SHALL INSPECT THE JOINT SEAL DEVICE FOR PROPER ALIGNMENT.
5. AFTER INSPECTION, REMOVE THE HOLD-DOWN PLATES AND GLAND. APPLY NEOPRENE SEALANT TO THE BASE ANGLE IN ACCORDANCE WITH THE "INSTALLATION SKETCH". PLACE GLAND AND HOLD-DOWN PLATES ON THE BASE ANGLE. BOLT THE HOLD-DOWN PLATES TO THE BASE ANGLE ASSEMBLY AND TORQUE THE BOLTS TO 119.3 N-m WITH A TORQUE WRENCH. THE TORQUE WRENCH SHALL BE CALIBRATED IN ACCORDANCE WITH SECTION 440-10 (D) OF THE STANDARD SPECIFICATIONS. CHECK THE TORQUE AFTER THREE (3) HOURS AND, IF NECESSARY, RETIGHTEN TO 119.3 N-m. A FINAL CHECK SHALL BE MADE AT SEVEN (7) DAYS. TORQUE SHALL NOT BE LESS THAN 108.5 N-m AFTER SEVEN (7) DAYS.
6. AFTER PROPER TORQUING, CLEAN THE BOLT HOLE RECESSES AND THE RECESS BETWEEN THE JOINT SEAL DEVICE AND CONCRETE, COMPLETELY FILL THESE RECESSES WITH NEOPRENE SEALANT.

GENERAL NOTES

1. FOR EXPANSION JOINT SEALS, SEE SPECIAL PROVISIONS.
2. ALL PLATES AND ANGLES SHALL CONFORM TO AASHTO M270 GRADE 250 STEEL OR APPROVED EQUAL. ALL HOLD-DOWN BOLTS SHALL CONFORM TO ASTM F593 ALLOY 304 STAINLESS STEEL. WASHERS SHALL CONFORM TO ASTM F844 EXCEPT THEY SHALL BE MADE FROM ALLOY 304 STAINLESS STEEL. ALL STUD ANCHORS SHALL CONFORM TO AASHTO M169, GRADES 1010 THRU 1020 OR APPROVED EQUAL. ALL CONCRETE INSERTS SHALL BE CLOSED END AND SHALL CONFORM TO AASHTO M169, GRADE 12L14. TENSILE CAPACITY SHALL BE 13.3 kN MIN.
3. A PREMOLDED CORRUGATED OR NON-CORRUGATED GLAND SHALL BE USED FOR JOINTS SKEWED BETWEEN 50° THRU 130°. FOR JOINTS SKEWED LESS THAN 50° OR MORE THAN 130°, ONLY A CORRUGATED GLAND SHALL BE USED.
4. CLOSED END FERRULES AND STUD ANCHORS SHALL BE SHOP WELDED AND ALL HOLES SHALL BE SHOP DRILLED AS SHOWN ON PLANS. STUD ANCHORS SHALL BE ELECTRIC ARC END WELDED WITH COMPLETE FUSION.
5. SURFACES COMING IN CONTACT WITH NEOPRENE SHALL BE GROUND SMOOTH PRIOR TO METALLIZING.
6. UPON COMPLETION OF SHOP FABRICATION, THE HOLD DOWN PLATE AND BASE ANGLE ASSEMBLY AS SHOWN IN THE "TYPICAL SECTION OF BASE ANGLE ASSEMBLY", SHALL BE METALLIZED. SEE SPECIAL PROVISION FOR THERMAL SPRAYED COATINGS (METALLIZATION).
7. BASE ANGLE ASSEMBLY SHALL BE CONTINUOUS FOR THE LENGTH OF THE JOINT. AT CROWN BREAKS, THE ENDS OF THE BASE ANGLE ASSEMBLY SHALL BE CUT PARALLEL TO THE BRIDGE CENTERLINE FOR SKEWS LESS THAN 80° AND GREATER THAN 100°. FINISHED WELD SHALL BE GROUND SMOOTH AND COATED WITH A MINIMUM THICKNESS OF 0.100mm (DRY) OF ZINC-RICH PAINT IN ACCORDANCE WITH THE STANDARD SPECIFICATIONS.
8. FIELD SPLICES OF HOLD-DOWN PLATES SHALL BE KEPT TO A MINIMUM. CONTRACTOR SHALL FURNISH DETAILED PLANS SHOWING PROPOSED SPLICE LOCATIONS FOR APPROVAL. HOLD-DOWN PLATES SHALL NOT EXCEED 6.1m LENGTHS UNLESS APPROVED BY THE ENGINEER.
9. NO ALTERNATE JOINT DETAILS SHALL BE PERMITTED IN LIEU OF THOSE SHOWN ON THESE PLANS.
10. THE CONTRACTOR MAY, AT HIS OPTION, USE ADHESIVELY ANCHORED ANCHOR BOLTS IN PLACE OF CONCRETE INSERTS FOR COVER PLATES. THE YIELD LOAD OF THE 19.05mm DIA. BOLT IS 44.5 kN. FIELD TESTING OF THE ADHESIVE BONDING SYSTEM IS NOT REQUIRED.

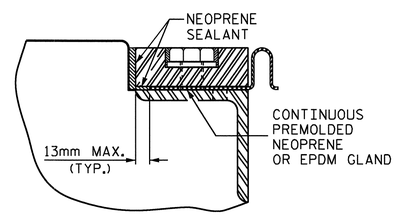

DETAIL "A"

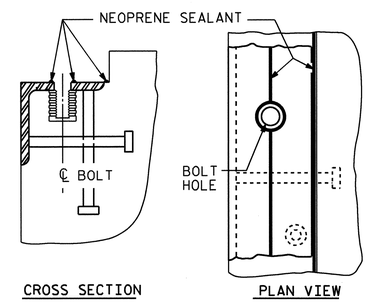

INSTALLATION SKETCH

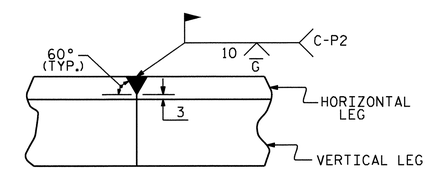

DETAIL- FIELD WELD SPLICE OF BASE ANGLE

MOVEMENT AND SETTING AT JOINT					
END BENT NO.	SKEW ANGLE	TOTAL MOVEMENT (ALONG ℄ RDWY)	PERPENDICULAR JOINT OPENING AT 7° C	PERPENDICULAR JOINT OPENING AT 16° C	PERPENDICULAR JOINT OPENING AT 32° C
1	115°-00'-00"	18mm	36mm	33mm	28mm
2	115°-00'-00"	18mm	36mm	33mm	28mm

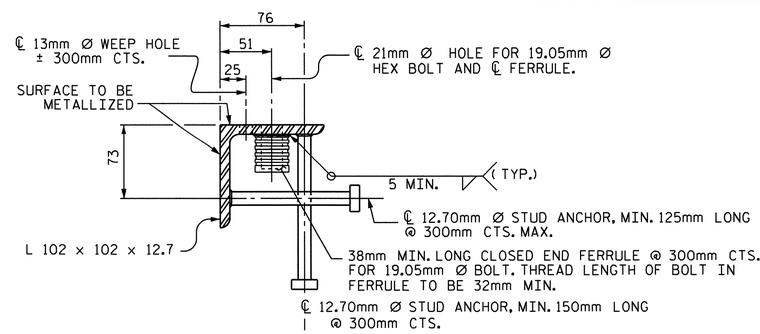

TYPICAL SECTION OF BASE ANGLE ASSEMBLY

NORTH CAROLINA PROFESSIONAL SEAL 022516 ENGINEER EMILY E. MURRAY
10/28/11

PROJECT NO. R-2413C
GUILFORD-ROCKINGHAM COUNTY
STATION: 11+43.200
-SB US 220 RAMP-
SHEET 1 OF 2

STATE OF NORTH CAROLINA
DEPARTMENT OF TRANSPORTATION
RALEIGH

STANDARD

EXPANSION JOINT SEAL DETAILS

ASSEMBLED BY : M.GUDLAUGSSON DATE : 11-10-10			
CHECKED BY : T.L. AVERETTE DATE : 12-8-10			
DRAWN BY : REK 9/87	REV. 10/17/00	RWW/LES	
CHECKED BY : CRK 10/87	REV. 5/7/03R	RWW/JTE	
	REV. 5/1/06	TLA/GM	

REVISIONS						SHEET NO.
NO.	BY:	DATE:	NO.	BY:	DATE:	S-128
1			3			TOTAL SHEETS
2			4			238

STR. #4

STD. NO. EJS1SM

05-SEP-2011 12:49
Y:\Structures\Final Plans\Str.#4\R-2413C_SD_JS_04.dgn
mgudlaugsson

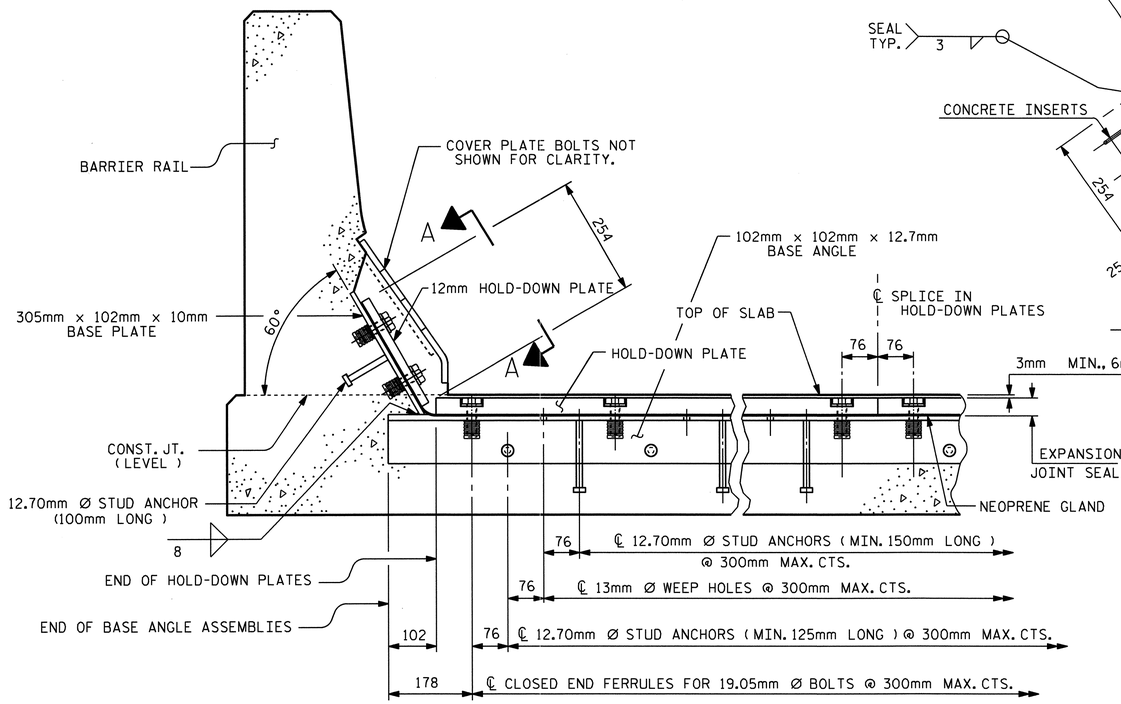

SECTION THRU RAIL NORMAL TO JOINT

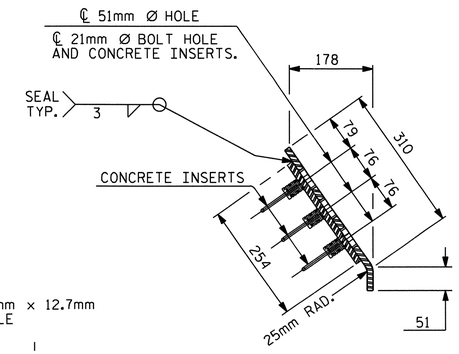

END VIEW

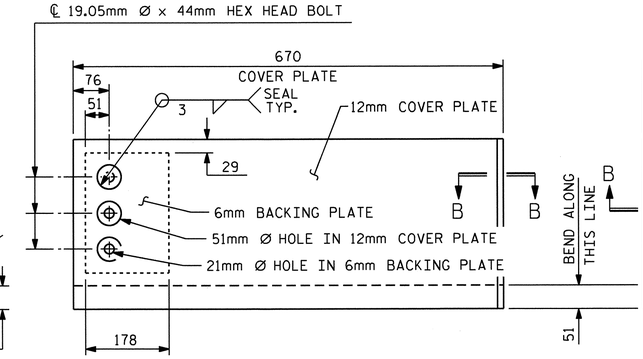

TYPE I - ELEVATION VIEW

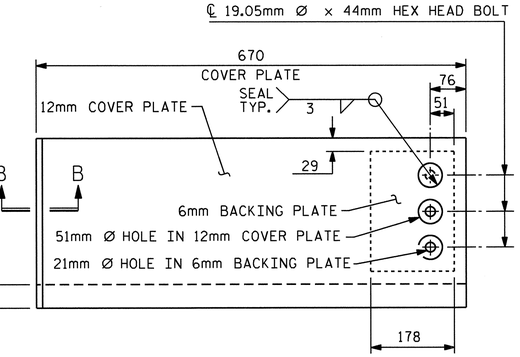

TYPE II - ELEVATION VIEW

COVER PLATE DETAILS

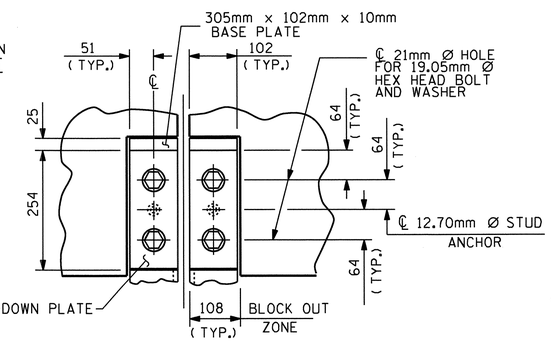

SECTION A - A

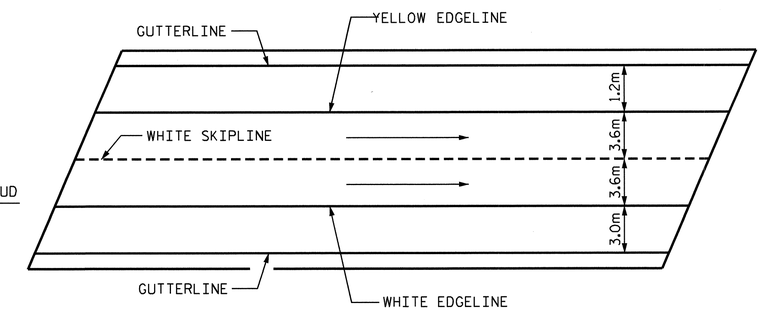

PAVEMENT MARKING ALIGNMENT

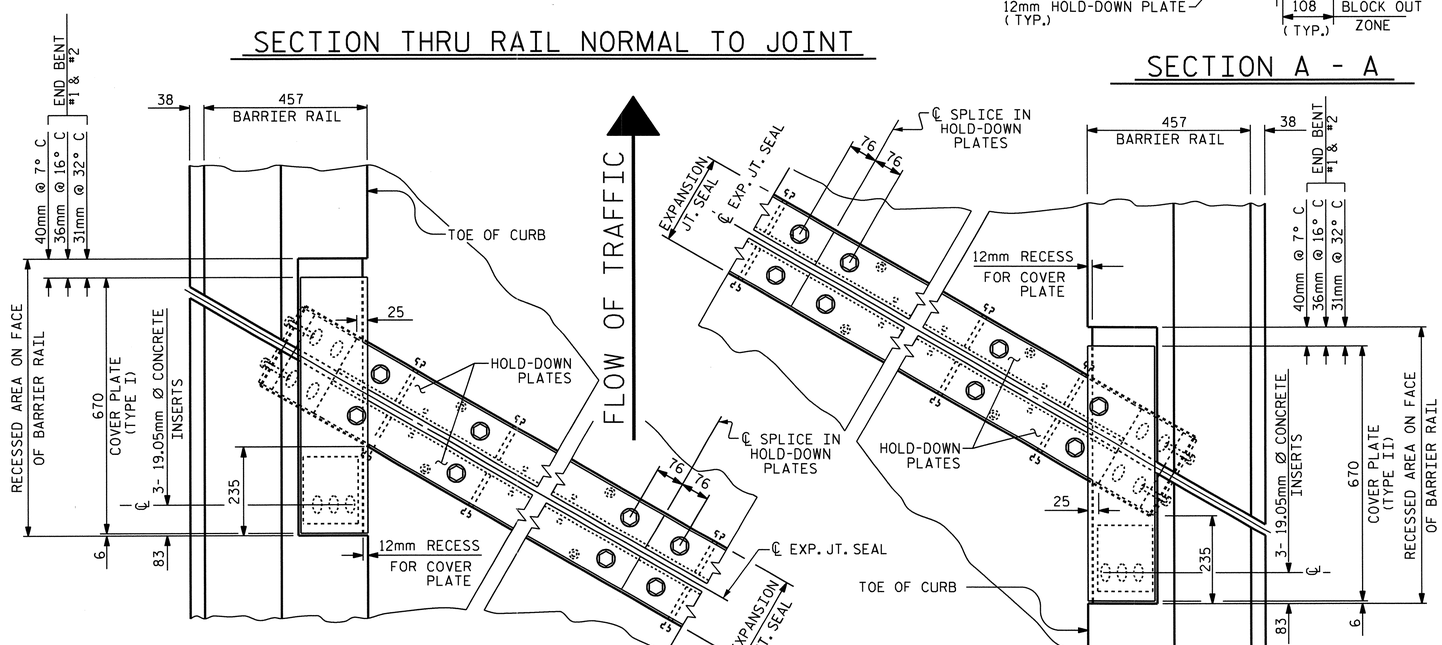

PLAN OF EXPANSION JOINT SEAL - LEFT SIDE

PLAN OF EXPANSION JOINT SEAL - RIGHT SIDE

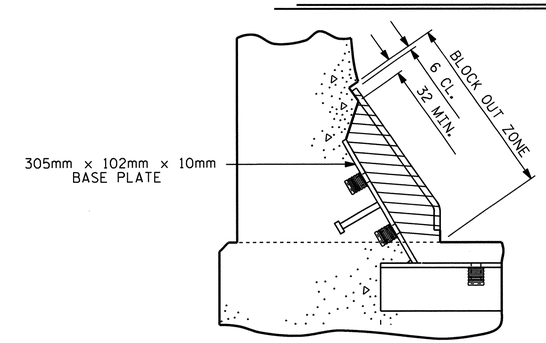

BLOCK OUT DETAIL

SEE "SECTION A - A" FOR OTHER DETAILS.

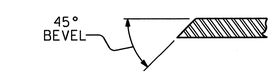

SECTION B - B

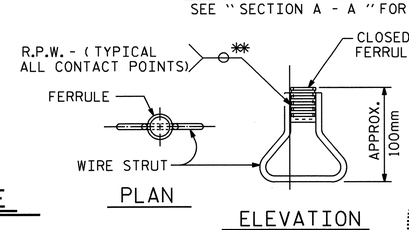

CONCRETE INSERT

** EACH WELDED ATTACHMENT OF WIRE TO FERRULE SHALL DEVELOP THE TENSILE STRENGTH OF THE WIRE.

PROJECT NO. R-2413C

GUILFORD-ROCKINGHAM COUNTY

STATION: 11+43.200

SHEET 2 OF 2 -SB US 220 RAMP-

STATE OF NORTH CAROLINA
DEPARTMENT OF TRANSPORTATION
RALEIGH

STANDARD

EXPANSION JOINT SEAL DETAILS FOR BARRIER RAIL

NORTH CAROLINA PROFESSIONAL SEAL 022516 ENGINEER EMILY E. MURRAY 10/28/10

ASSEMBLED BY : M.GUDLAUGSSON DATE : 11-10-10	
CHECKED BY : T.L. AVERETTE DATE : 12-8-10	
DRAWN BY : REK 9/87	REV. 7/17/98 RWW/LES
CHECKED BY : CRK 10/87	REV. 10/17/00 RWW/LES
	REV. 5/1/06 TLA/GM

REVISIONS							SHEET NO.
NO.	BY:	DATE:	NO.	BY:	DATE:		S-129
1			3				TOTAL SHEETS
2			4				238

STR. #4

STD. NO. EJS2SM

19-OCT-2011 14:32
R:\TIPProjects-R\R2413c\Structures\Final Plans\Str.#4\R-2413C_SD_JS_04.dgn
taverette

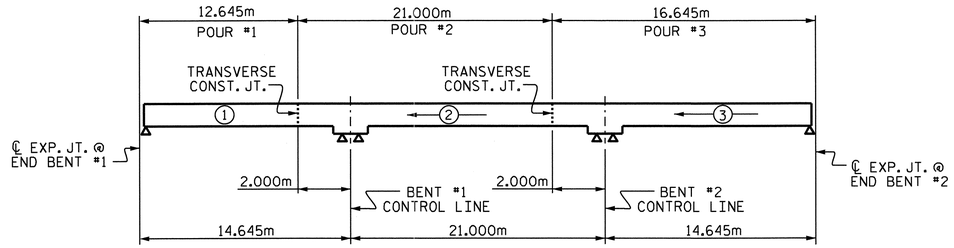

POURING SEQUENCE

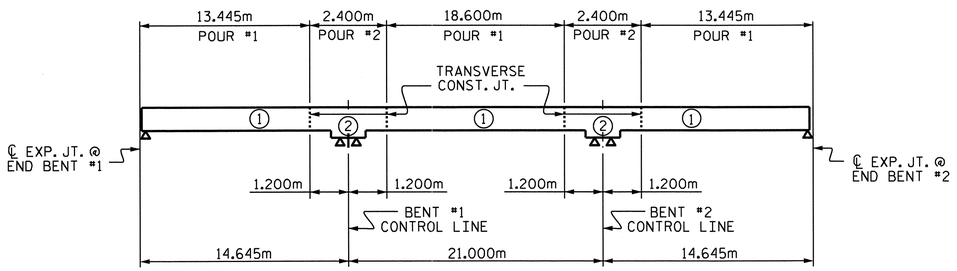

OPTIONAL POURING SEQUENCE

POUR ② CAN NOT BE STARTED UNTIL BOTH ADJACENT ① POURS REACH A MINIMUM OF 20.7MPa.

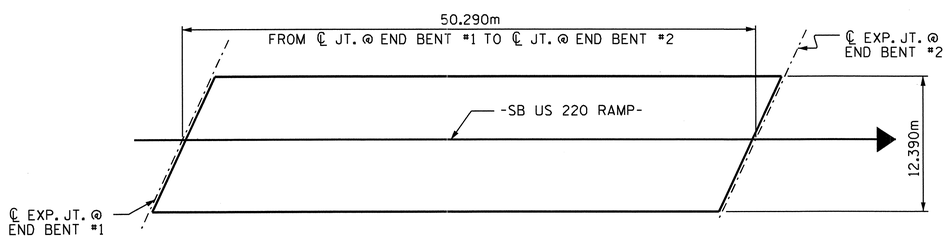

LAYOUT FOR COMPUTING AREA OF REINFORCED CONCRETE DECK SLAB (623.1 SQ. METER)

BILL OF MATERIAL — SPANS A, B, C

BAR	NO.	SIZE	TYPE	LENGTH	WEIGHT
✱ A1	261	#16	STR	12280	4974
✱ A101	4	#16	STR	11480	71
✱ A102	4	#16	STR	10740	67
✱ A103	4	#16	STR	10020	62
✱ A104	4	#16	STR	9280	58
✱ A105	4	#16	STR	8560	53
✱ A106	4	#16	STR	7820	49
✱ A107	4	#16	STR	7100	44
✱ A108	4	#16	STR	6360	39
✱ A109	4	#16	STR	5640	35
✱ A110	4	#16	STR	4900	30
✱ A111	4	#16	STR	4180	26
✱ A112	4	#16	STR	3440	21
✱ A113	4	#16	STR	2720	17
✱ A114	4	#16	STR	1980	12
✱ A115	4	#16	STR	1260	8
✱ A116	4	#16	STR	540	3
A2	261	#16	STR	12280	4974
A201	4	#16	STR	11800	73
A202	4	#16	STR	11080	69
A203	4	#16	STR	10340	64
A204	4	#16	STR	9620	60
A205	4	#16	STR	8880	55
A206	4	#16	STR	8160	51
A207	4	#16	STR	7420	46
A208	4	#16	STR	6700	42
A209	4	#16	STR	5960	37
A210	4	#16	STR	5240	33
A211	4	#16	STR	4500	28
A212	4	#16	STR	3780	23
A213	4	#16	STR	3040	19

BILL OF MATERIAL — SPANS A, B, C

BAR	NO.	SIZE	TYPE	LENGTH	WEIGHT
A214	4	#16	STR	2320	14
A215	4	#16	STR	1600	10
A216	4	#16	STR	870	5
✱ B1	112	#13	STR	4900	546
✱ B2	56	#22	STR	13800	2351
✱ B3	54	#22	STR	5500	903
✱ B4	28	#13	STR	6620	184
B5	144	#16	STR	17160	3835
✱ G1	2	#16	STR	13560	42
✱ J1	84	#13	9	440	37
✱ S1	56	#16	3	1500	130
✱ S2	56	#13	4	1120	62
S3	152	#13	5	840	127
✱ K1	8	#25	1	4020	128
✱ K2	12	#25	2	6040	288
K3	16	#13	STR	2260	36
K4	32	#13	STR	2500	80
K5	16	#13	STR	1900	30
K6	24	#13	8	3500	83
K7	16	#13	7	1780	28
K8	24	#19	STR	2300	123
✱ U1	40	#13	6	4100	163
✱ U2	16	#13	6	3500	56

REINFORCING STEEL = 9945 kg

✱EPOXY COATED REINFORCING STEEL = 10459 kg

BAR TYPES

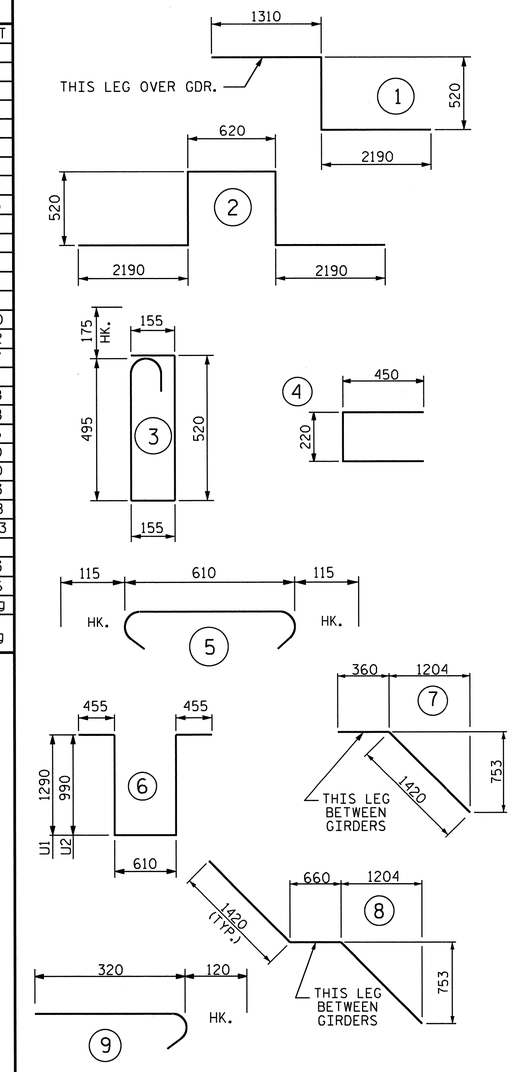

ALL BAR DIMENSIONS ARE OUT TO OUT.

GROOVING BRIDGE FLOORS		
BRIDGE DECK	524.3	SQ.METER
APPROACH SLABS	154.0	SQ.METER
TOTAL	678.3	SQ.METER

SUPERSTRUCTURE REINFORCING STEEL LENGTHS ARE BASED ON THE FOLLOWING MINIMUM SPLICE LENGTHS

BAR SIZE	SUPERSTRUCTURE EXCEPT APPROACH SLABS, PARAPET, AND BARRIER RAIL		APPROACH SLABS		PARAPET AND BARRIER RAIL
	EPOXY COATED	UNCOATED	EPOXY COATED	UNCOATED	
#13	610	540	610	540	840
#16	770	660	770	660	1050
#19	920	790	1190	790	1330
#22	1580	1060			
#25	2080	1390			

SUPERSTRUCTURE BILL OF MATERIAL

	CLASS AA CONCRETE		REINFORCING STEEL	EPOXY COATED REINFORCING STEEL
	(CU. METER)		(kg)	(kg)
SPAN A, B, AND C	POUR 1	43.3		
	POUR 2	78.2		
	POUR 3	65.6	9945	10459
TOTALS ✱✱	187.1		9945	10459

✱✱ QUANTITIES FOR BARRIER RAIL ARE NOT INCLUDED

PROJECT NO. R-2413C
GUILFORD-ROCKINGHAM COUNTY
STATION: 11+43.200
-SB US 220 RAMP-

STATE OF NORTH CAROLINA
DEPARTMENT OF TRANSPORTATION
RALEIGH

STANDARD
SUPERSTRUCTURE BILL OF MATERIAL

NORTH CAROLINA PROFESSIONAL SEAL 022516 ENGINEER EMILY E. MURRAY
10/28/11

REVISIONS								SHEET NO.
NO.	BY:	DATE:	NO.	BY:	DATE:			S-130
1			3					TOTAL SHEETS
2			4					238

ASSEMBLED BY : M.GUDLAUGSSON DATE : 9-7-10
CHECKED BY : T.L. AVERETTE DATE : 9-20-10
DRAWN BY : JMB 5/87 REV. 5/16/97 EEM/RGW
CHECKED BY : SJD 9/87 REV. 5/1/06 TLA/GM

05-SEP-2011 12:48
Y:\Structures\Final Plans\Str.#4\R-2413C_SD_BM_04.dgn
mgudlaugsson

STR. #4

STD. NO. BOM1SM

NOTES

STIRRUPS & U1 BARS IN CAP MAY BE SHIFTED AS NECESSARY TO CLEAR ANCHOR BOLTS.

BACKWALL SHALL BE PLACED BEFORE APPLYING THE EPOXY PROTECTIVE COATING.

THE TOP SURFACE AREAS OF THE END BENT CAP SHALL BE CURED IN ACCORDANCE WITH THE STANDARD SPECIFICATIONS EXCEPT THE MEMBRANE CURING COMPOUND METHOD SHALL NOT BE USED.

THE CONTRACTOR SHALL PROVIDE FOR THE INSTALLATION OF THE 102mm Ø DRAIN PIPE THROUGH THE WING WALL AS REQUIRED FOR REINFORCED BRIDGE APPROACH FILLS. SEE THE ROADWAY PLANS. REINFORCING STEEL IN THE WING WALL MAY BE SHIFTED AS NECESSARY TO CLEAR THE DRAIN PIPE.

THE TOP SURFACE OF THE END BENT CAP EXCEPT THE BRIDGE SEAT BUILDUPS SHALL BE SLOPED TRANSVERSELY FROM THE FILL FACE TO THE BACK FACE AT A RATE OF 2%.

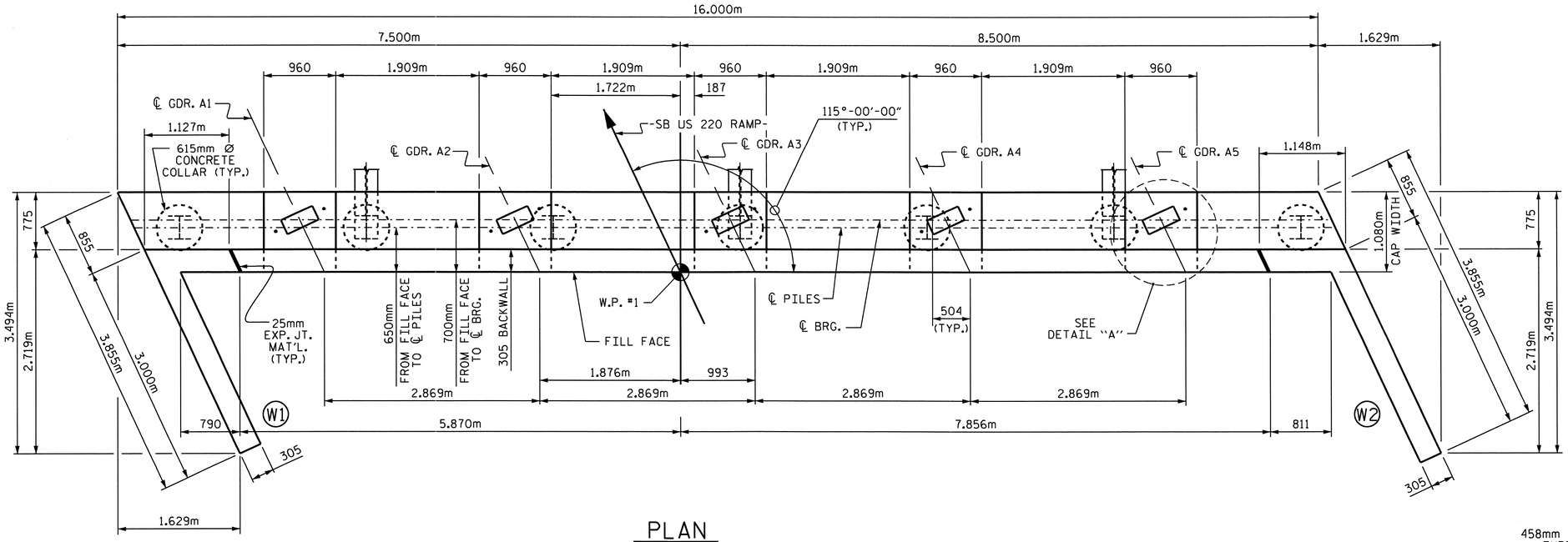

PLAN

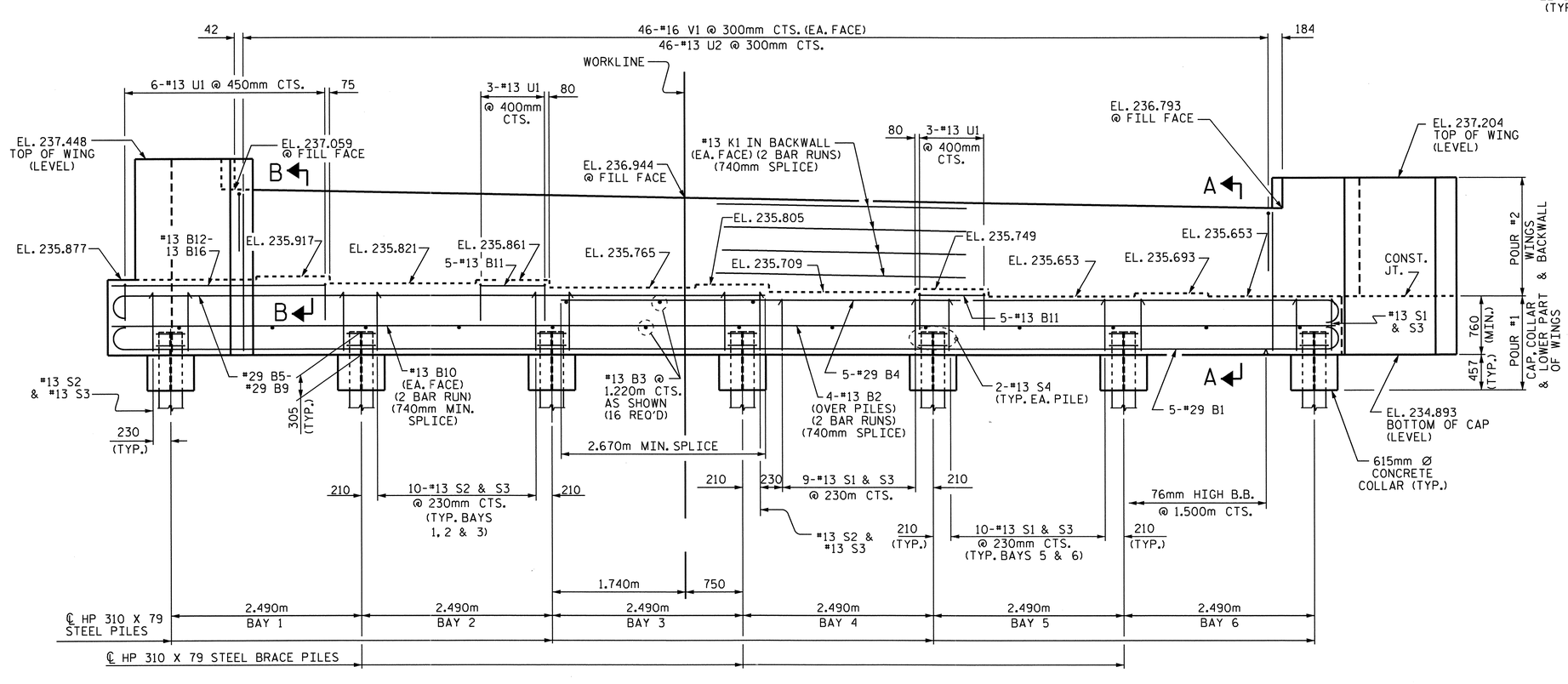

ELEVATION

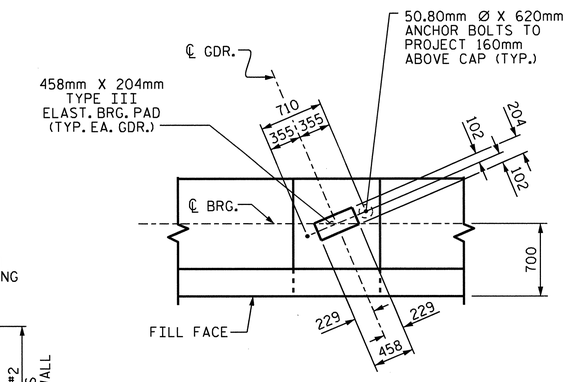

DETAIL "A"

(TYP. EA. BRG.)

PROJECT NO. R-2413C

GUILFORD-ROCKINGHAM COUNTY

STATION: 11+43.200 -SB US 220 RAMP-

SHEET 1 OF 3

STATE OF NORTH CAROLINA
DEPARTMENT OF TRANSPORTATION
RALEIGH

SUBSTRUCTURE

END BENT #1

NORTH CAROLINA PROFESSIONAL SEAL 022516 ENGINEER EMILY E. MURRAY
10/28/11

REVISIONS						SHEET NO.
NO.	BY:	DATE:	NO.	BY:	DATE:	S-131
1			3			TOTAL SHEETS
2			4			238

STR. #4

DRAWN BY : B.N.BARODAWALA DATE : 4-12-11
CHECKED BY : PEGGY PARISI DATE : 4-28-11

05-SEP-2011 12:47
Y:\Structures\Final Plans\Str.#4\R-2413C_SD_EB_04.dgn
mgudlaugsson

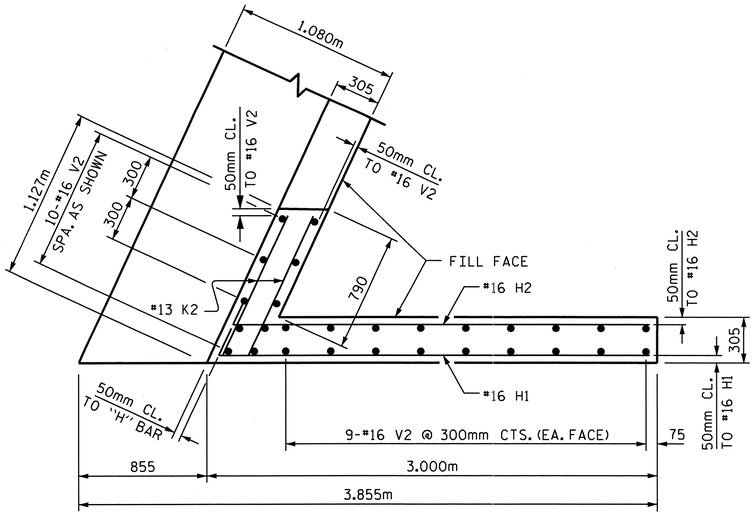

PLAN OF WING W1

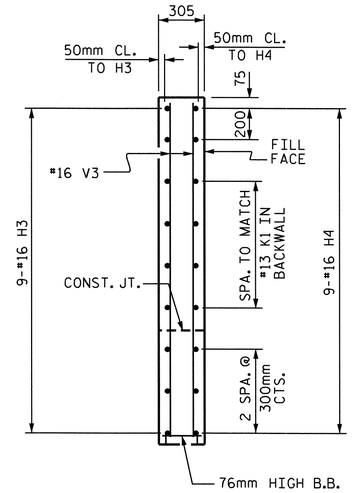

SECTION Y-Y

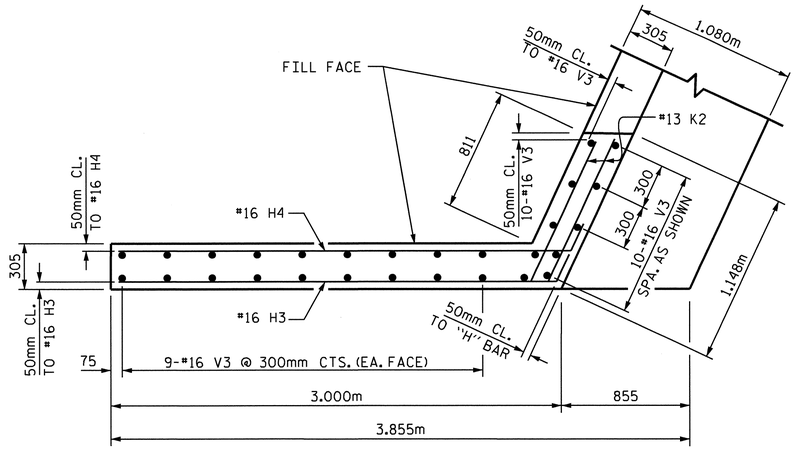

PLAN OF WING W2

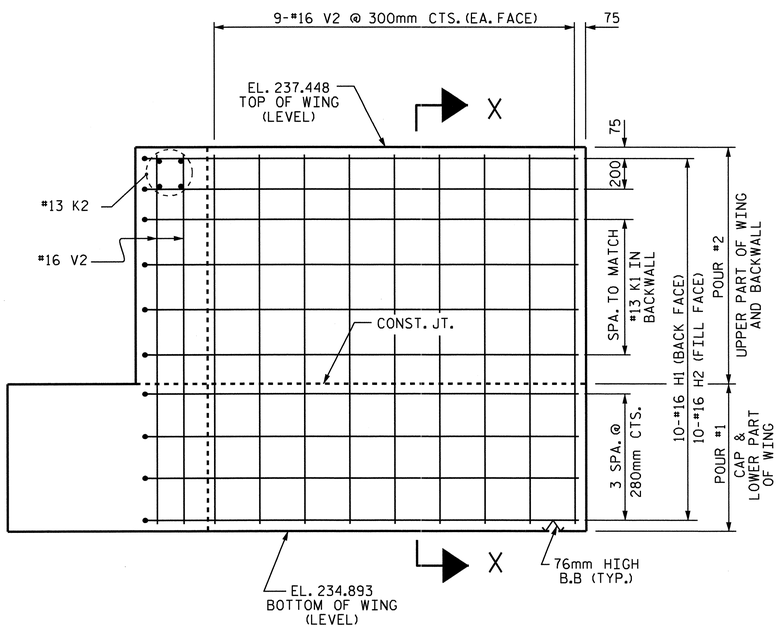

ELEVATION OF WING W1

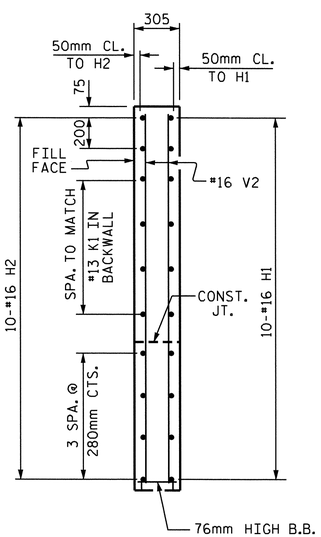

SECTION X-X

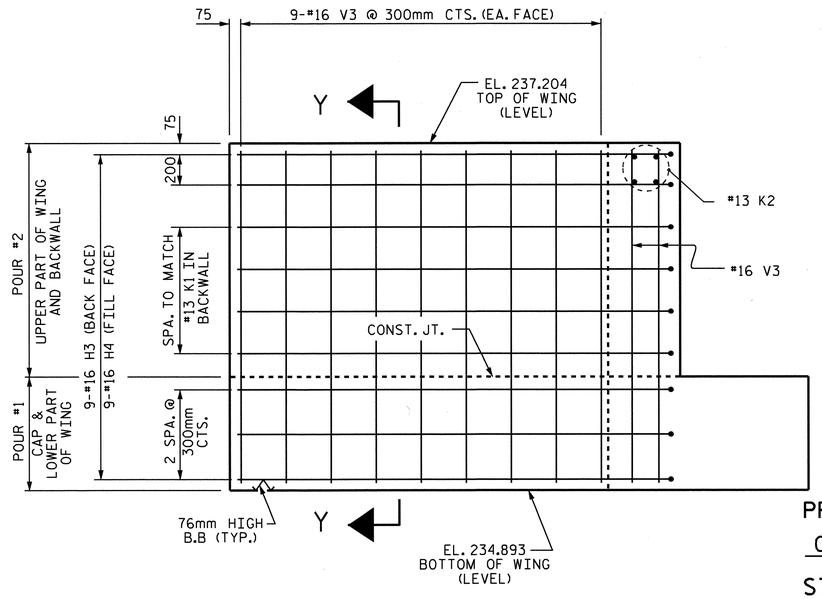

ELEVATION OF WING W2

PROJECT NO. R-2413C

GUILFORD-ROCKINGHAM COUNTY

STATION: 11+43.200

-SB US 220 RAMP-

SHEET 2 OF 3

STATE OF NORTH CAROLINA
DEPARTMENT OF TRANSPORTATION
RALEIGH

SUBSTRUCTURE

END BENT #1

NORTH CAROLINA PROFESSIONAL SEAL 022516 ENGINEER EMILY E. MURRAY
4/28/11

REVISIONS						SHEET NO.
NO.	BY:	DATE:	NO.	BY:	DATE:	S-132
1			3			TOTAL SHEETS
2			4			238

STR. #4

DRAWN BY : B.N.BARODAWALA DATE : 4-12-11
CHECKED BY : PEGGY PARISI DATE : 4-28-11

19-OCT-2011 14:33
R:\TIPProjects-R\R2413c\Structures\FinalPlans\Str.#4\R-2413C_SD_EB_04.dgn
taverette

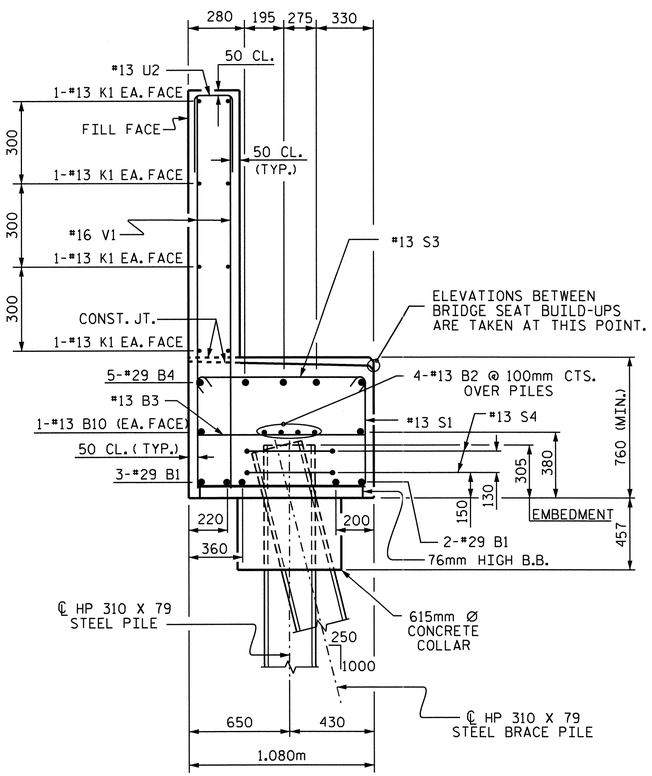

SECTION A-A

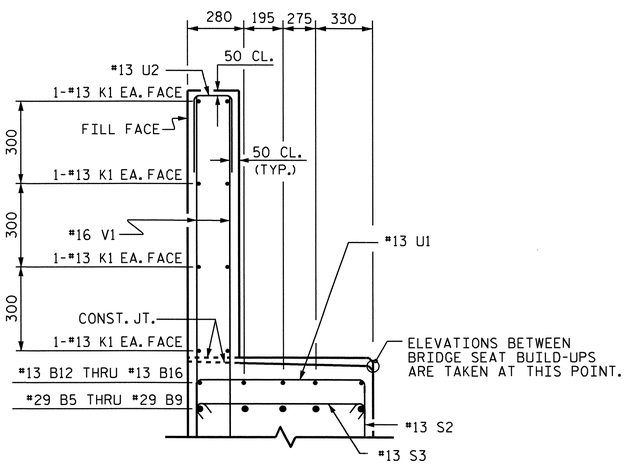

SECTION B-B

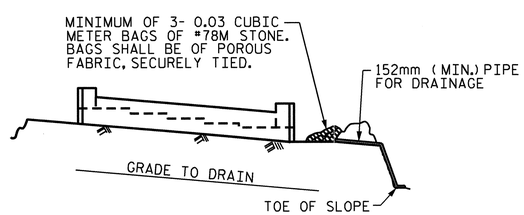

BAGGED STONE AND PIPE SHALL BE PLACED IMMEDIATELY AFTER COMPLETION OF END BENT EXCAVATION. PIPE MAY BE EITHER CONCRETE, CORRUGATED STEEL, CORRUGATED ALUMINUM ALLOY, OR CORRUGATED PLASTIC. PERFORATED PIPE WILL NOT BE ALLOWED.

BAGGED STONE SHALL REMAIN IN PLACE UNTIL THE ENGINEER DIRECTS THAT IT BE REMOVED. THE CONTRACTOR SHALL REMOVE AND DISPOSE OF SILT ACCUMULATIONS AT BAGGED STONE WHEN SO DIRECTED BY THE ENGINEER. BAGS SHALL BE REMOVED AND REPLACED WHENEVER THE ENGINEER DETERMINES THAT THEY HAVE DETERIORATED AND LOST THEIR EFFECTIVENESS.

NO SEPARATE PAYMENT WILL BE MADE FOR THIS WORK AND THE ENTIRE COST OF THIS WORK SHALL BE INCLUDED IN THE UNIT CONTRACT PRICE BID FOR THE SEVERAL PAY ITEMS.

TEMPORARY DRAINAGE AT END BENT

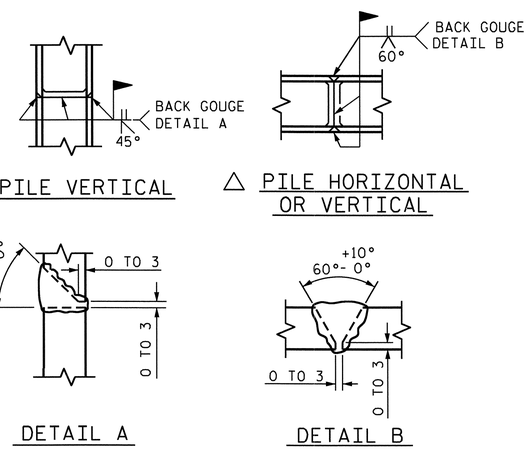

△ PILE VERTICAL

△ PILE HORIZONTAL OR VERTICAL

DETAIL A

DETAIL B

△ POSITION OF PILE DURING WELDING.

PILE SPLICE DETAILS

BAR TYPES

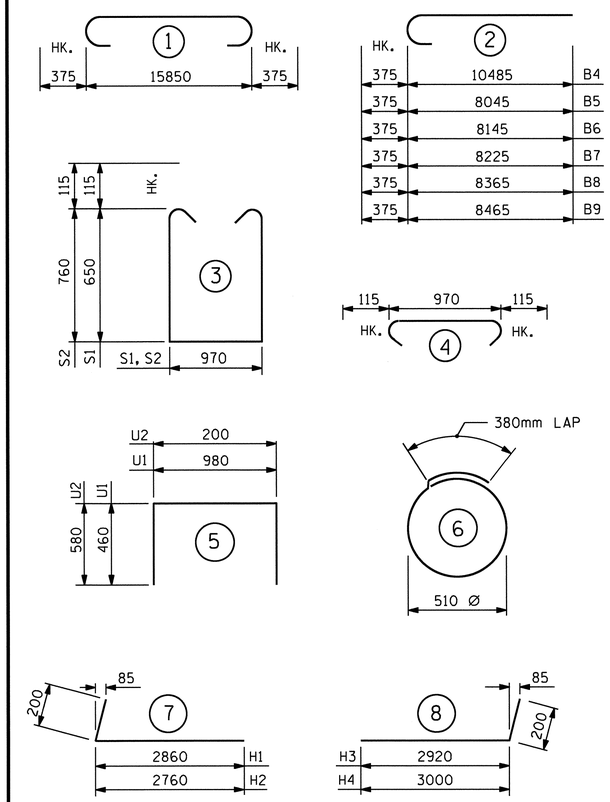

ALL BAR DIMENSIONS ARE OUT TO OUT.

BILL OF MATERIAL

END BENT #1

BAR	NO.	SIZE	TYPE	LENGTH	WEIGHT
B1	5	#29	1	16600	420
B2	8	#13	STR	8320	66
B3	16	#13	STR	980	16
B4	5	#29	2	10860	275
B5	1	#29	2	8420	43
B6	1	#29	2	8520	43
B7	1	#29	2	8600	44
B8	1	#29	2	8740	44
B9	1	#29	2	8840	45
B10	4	#13	STR	8320	33
B11	10	#13	STR	860	9
B12	1	#13	STR	2300	2
B13	1	#13	STR	2400	2
B14	1	#13	STR	2500	2
B15	1	#13	STR	2620	3
B16	1	#13	STR	2740	3
H1	10	#16	7	3060	47
H2	10	#16	7	2960	46
H3	9	#16	8	3120	44
H4	9	#16	8	3200	45
K1	16	#13	STR	8320	132
K2	8	#13	STR	1020	8
S1	30	#13	3	2500	75
S2	32	#13	3	2720	87
S3	62	#13	4	1200	74
S4	14	#13	6	1980	28
U1	12	#13	5	1900	23
U2	46	#13	5	1360	62
V1	92	#16	STR	1800	257
V2	28	#16	STR	2440	106
V3	28	#16	STR	2200	96

REINFORCING STEEL = 2180 kg.

POUR #1 CAP, LOWER PART OF WINGS, & CONCRETE PILE COLLARS	17.5	m3
POUR #2 BACKWALL & UPPER PART OF WINGS	8.5	m3
CLASS "A" CONCRETE TOTAL	26.0	m3

HP 310 x 79 STEEL PILES
No. 7 METERS 99.0

PROJECT NO. R-2413C
GUILFORD-ROCKINGHAM COUNTY
STATION: 11+43.200
-SB US 220 RAMP-

SHEET 3 OF 3

STATE OF NORTH CAROLINA
DEPARTMENT OF TRANSPORTATION
RALEIGH

SUBSTRUCTURE

END BENT #1

NORTH CAROLINA PROFESSIONAL SEAL 022516 ENGINEER EMILY E. MURRAY
6/28/11

REVISIONS						SHEET NO.
NO.	BY:	DATE:	NO.	BY:	DATE:	S-133
1			3			TOTAL SHEETS
2			4			238

STR. #4

DRAWN BY : B.N.BARODAWALA DATE : 4-12-11
CHECKED BY : PEGGY PARISI DATE : 4-28-11

05-SEP-2011 12:47
Y:\Structures\Final Plans\Str.#4\R-2413C_SD_EB_04.dgn
mgudlaugsson

NOTES:

STIRRUPS AND U1 BARS IN CAP MAY BE SHIFTED AS NECESSARY TO CLEAR ANCHOR BOLTS.

HOOKS ON "V" BARS MAY BE TURNED AS NECESSARY FOR PLACING REINFORCING STEEL.

ALL STEEL IN THE DRILLED PIERS IS INCLUDED IN THE PAY ITEMS FOR "REINFORCING STEEL" AND "SPIRAL COLUMN REINFORCING STEEL".

THE CONTRACTOR'S ATTENTION IS CALLED TO THE FACT THAT THE LONITUDINAL REINFORCEMENT FOR THE DRILLED PIERS IS DETAILED WITH ONE METER OF EXTRA LENGTH.

THE LOCATION OF THE CONSTRUCTION JOINT IN THE DRILLED PIERS IS BASED ON AN APPROXIMATE GROUND LINE ELEVATION. IF THE CONSTRUCTION JOINT IS ABOVE THE ACTUAL GROUND LINE ELEVATION, THE CONTRACTOR SHALL PLACE THE CONSTRUCTION JOINT 300mm BELOW THE GROUND LINE.

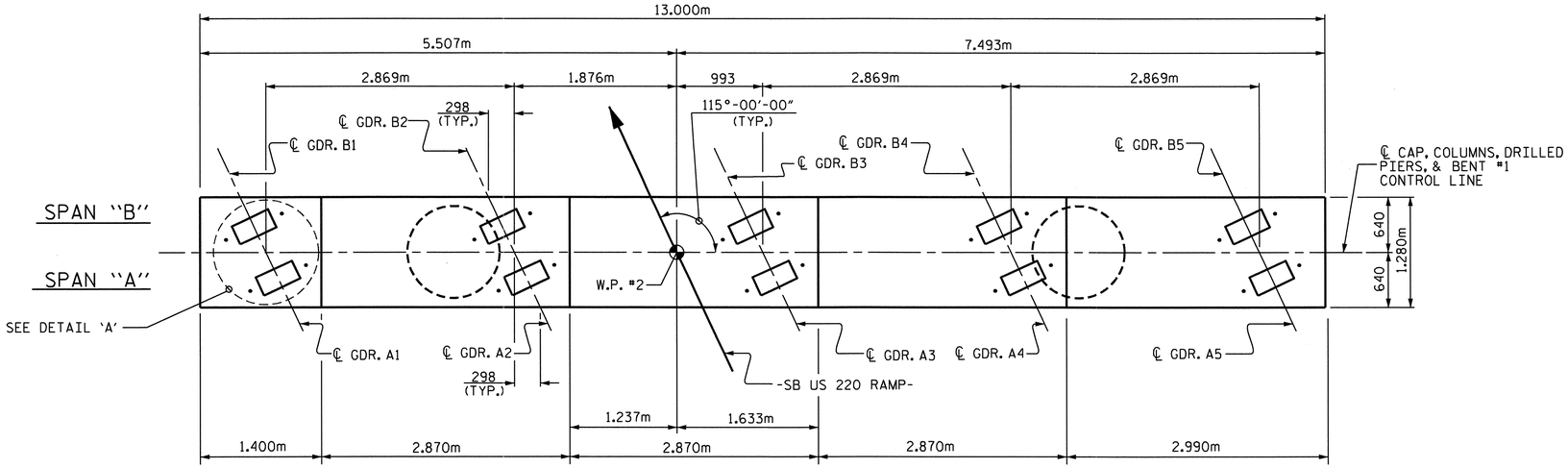

PLAN

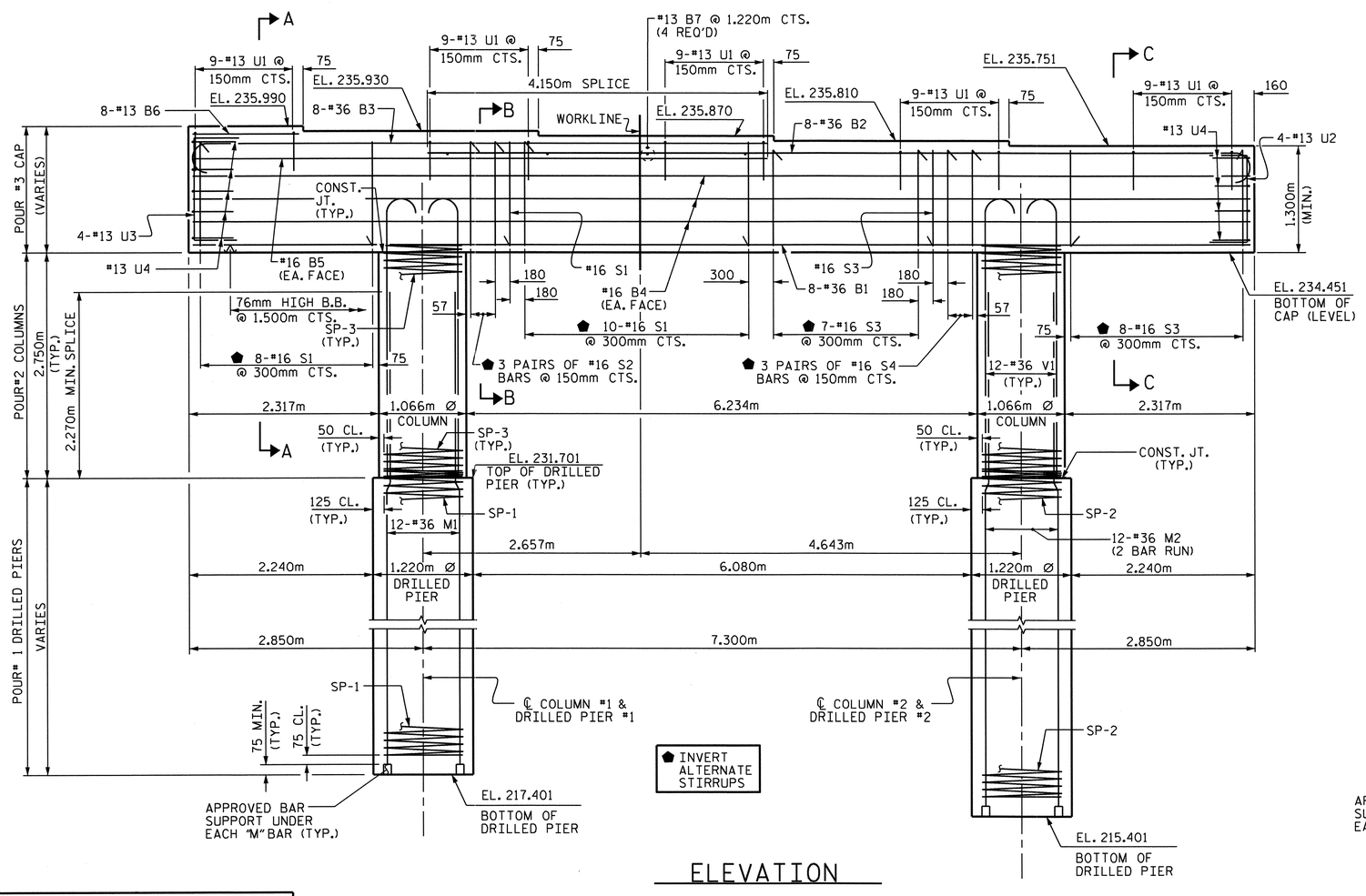

ELEVATION

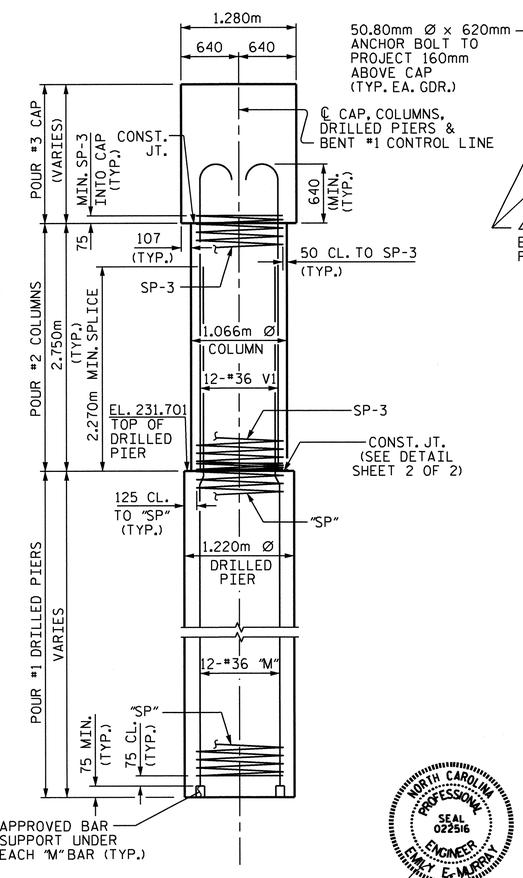

END ELEVATION

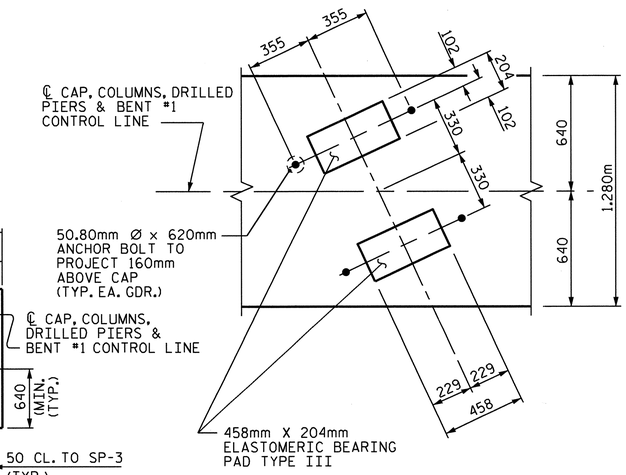

DETAIL "A"

DIMENSIONS ARE TYPICAL FOR EACH GIRDER.

PROJECT NO. R-2413C

GUILFORD-ROCKINGHAM COUNTY

STATION: 11+43.200

-SB US 220 RAMP-

SHEET 1 OF 2

STATE OF NORTH CAROLINA
DEPARTMENT OF TRANSPORTATION
RALEIGH

SUBSTRUCTURE

BENT #1

NORTH CAROLINA PROFESSIONAL SEAL 022516 ENGINEER ELMAY E. MURRAY

10/28/11

REVISIONS						SHEET NO.
NO.	BY:	DATE:	NO.	BY:	DATE:	S-134
1			3			TOTAL SHEETS
2			4			238

STR. #4

DRAWN BY : PEGGY PARISI DATE : 3-30-11
CHECKED BY : B.N. BARODAWALA DATE : 7-25-11

19-OCT-2011 14:34
R:\TIPProjects-R\R2413c\Structures\Final Plans\Str.#4\R-2413C_SD_B1.dgn
taverette

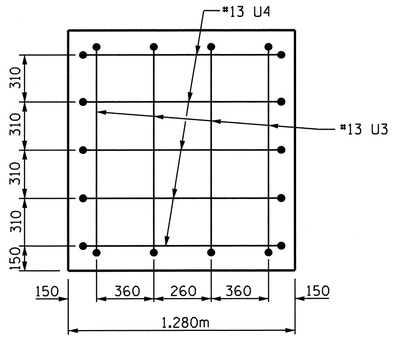

LEFT END VIEW

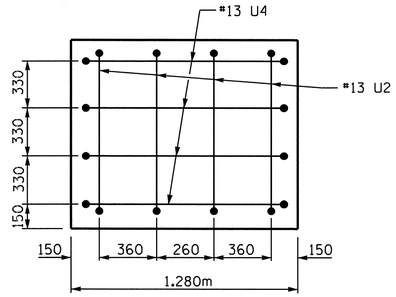

RIGHT END VIEW

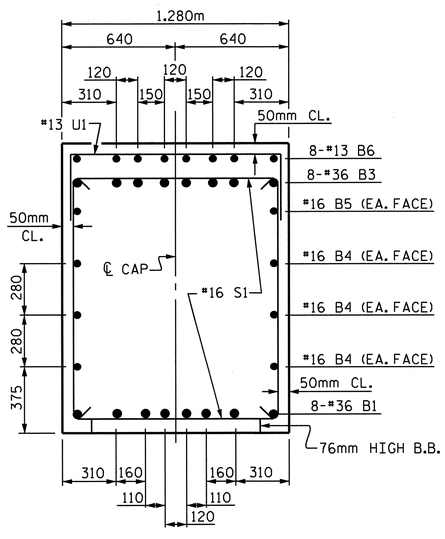

SECTION A-A

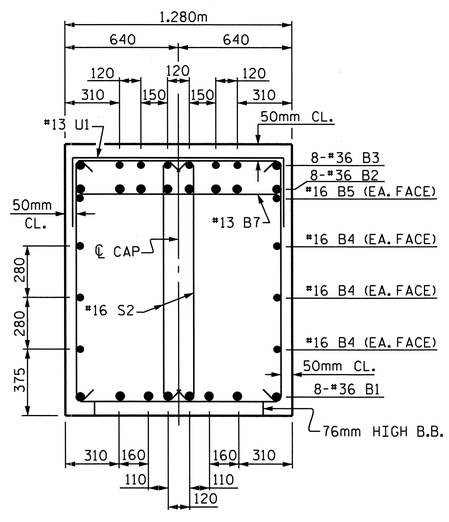

SECTION B-B

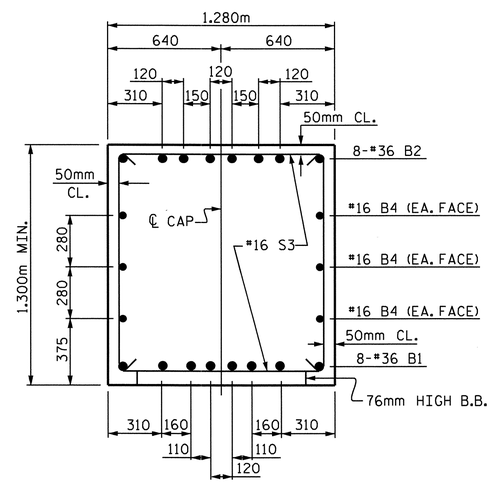

SECTION C-C

BAR TYPES

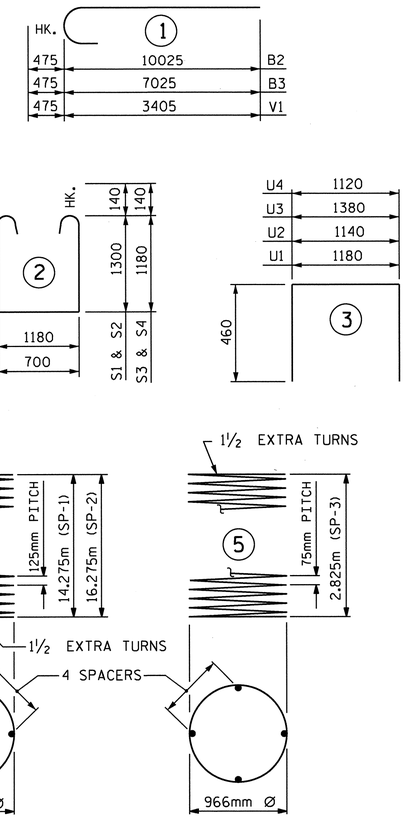

ALL BAR DIMENSIONS ARE OUT TO OUT

BILL OF MATERIAL

BENT #1

BAR	NO.	SIZE	TYPE	LENGTH	WEIGHT
B1	8	36	STR	12900	816
B2	8	36	1	10500	664
B3	8	36	1	7500	474
B4	6	16	STR	12900	120
B5	2	16	STR	7040	22
B6	8	13	STR	1300	10
B7	4	13	STR	1180	5
M1	12	36	STR	17500	1660
M2	24	36	STR	10900	2068
S1	19	16	2	4060	120
S2	6	16	2	3580	33
S3	16	16	2	3820	95
S4	6	16	2	3340	31
U1	45	13	3	2100	94
U2	4	13	3	2060	8
U3	4	13	3	2300	9
U4	9	13	3	2040	18
V1	24	36	1	3880	736
REINFORCING STEEL					6983 KG
SPIRAL REINFORCING STEEL					
SP-1	1	✱✱	4	347100	539
SP-2	1	✱✱	4	395100	613
SP-3	2	✱	5	117340	233
SPIRAL REINFORCING STEEL					1385 KG

CLASS "A" CONCRETE BREAKDOWN		
POUR #2 COLUMNS	m^3	4.9
POUR #3 CAP	m^3	23.4
CLASS "A" CONCRETE TOTAL	m^3	28.3
DRILLED PIER CONCRETE		
POUR #1 DRILLED PIERS	m^3	35.8
PERMANENT STEEL CASING FOR 1.220m Ø DRILLED PIERS	METERS	26.0
1.220m Ø DRILLED PIERS NOT IN SOIL	METERS	4.6
1.220m Ø DRILLED PIERS IN SOIL	METERS	26.0
CSL TESTING	EACH	1
CSL TUBES	METERS	128.4

✱ THE SP-3 SPIRAL REINFORCING STEEL SHALL BE W20 OR D-20 COLD DRAWN WIRE OR #13 PLAIN OR DEFORMED BAR.

✱✱ THE SP-1 AND SP-2 SPIRAL REINFORCING STEEL SHALL BE W31 OR D-31 COLD DRAWN WIRE OR #16 PLAIN OR DEFORMED BAR.

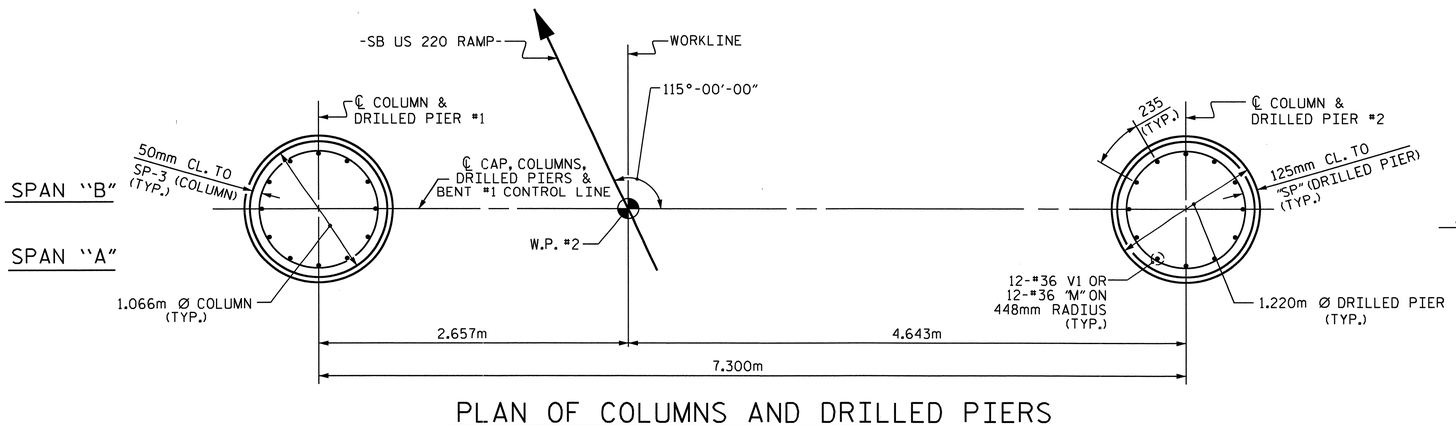

PLAN OF COLUMNS AND DRILLED PIERS

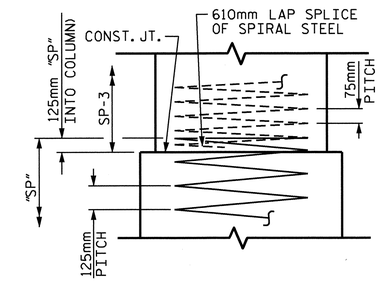

CONSTRUCTION JOINT DETAIL

PROJECT NO. R-2413C

GUILFORD-ROCKINGHAM COUNTY

STATION: 11+43.200 -SB US 220 RAMP-

SHEET 2 OF 2

STATE OF NORTH CAROLINA
DEPARTMENT OF TRANSPORTATION
RALEIGH

SUBSTRUCTURE

BENT #1

NORTH CAROLINA PROFESSIONAL SEAL 022516 ENGINEER EMILY E. MURRAY

10/28/11

REVISIONS						SHEET NO.
NO.	BY:	DATE:	NO.	BY:	DATE:	S-135
1			3			TOTAL SHEETS
2			4			238

DRAWN BY : PEGGY PARISI DATE : 3-30-11
CHECKED BY : B.N. BARODAWALA DATE : 7-25-11

19-OCT-2011 14:34
R:\TIPProjects-R\R2413c\Structures\FinalPlans\Str.#4\R-2413C_SD_B1.dgn
taverette

STR. #4

NOTES:

STIRRUPS AND U1 BARS IN CAP MAY BE SHIFTED AS NECESSARY TO CLEAR ANCHOR BOLTS.

HOOKS ON "V" BARS MAY BE TURNED AS NECESSARY FOR PLACING REINFORCING STEEL.

ALL STEEL IN THE DRILLED PIERS IS INCLUDED IN THE PAY ITEMS FOR "REINFORCING STEEL" AND "SPIRAL COLUMN REINFORCING STEEL".

THE CONTRACTOR'S ATTENTION IS CALLED TO THE FACT THAT THE LONGITUDINAL REINFORCEMENT FOR THE DRILLED PIERS IS DETAILED WITH ONE METER OF EXTRA LENGTH.

THE LOCATION OF THE CONSTRUCTION JOINT IN THE DRILLED PIERS IS BASED ON AN APPROXIMATE GROUND LINE ELEVATION. IF THE CONSTRUCTION JOINT IS ABOVE THE ACTUAL GROUND LINE ELEVATION, THE CONTRACTOR SHALL PLACE THE CONSTRUCTION JOINT 300mm BELOW THE GROUND LINE.

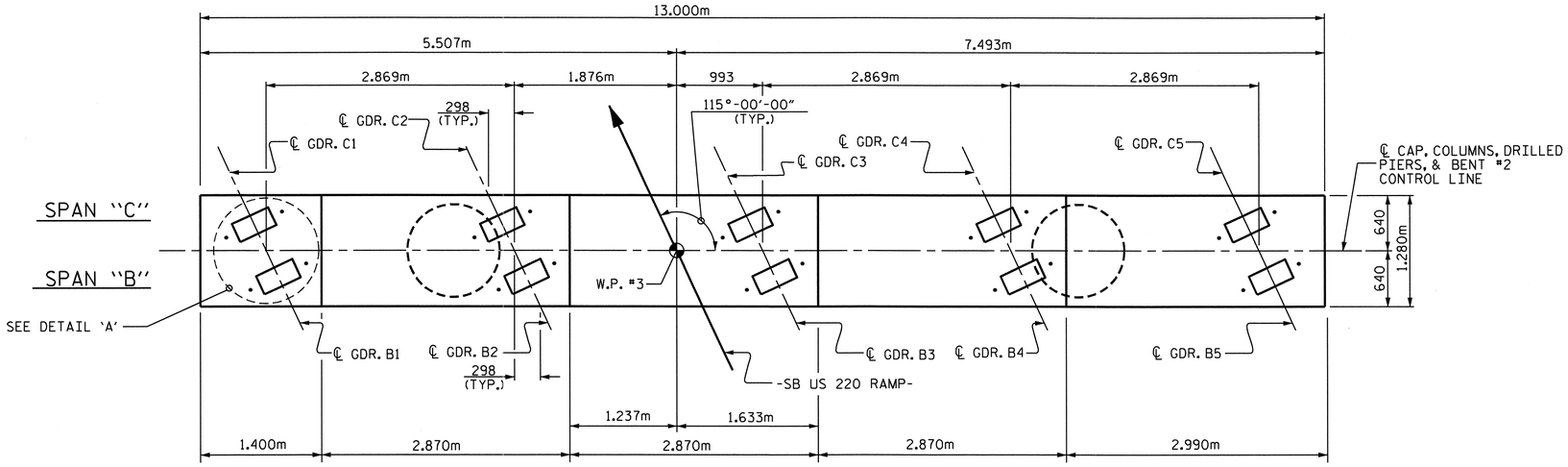

PLAN

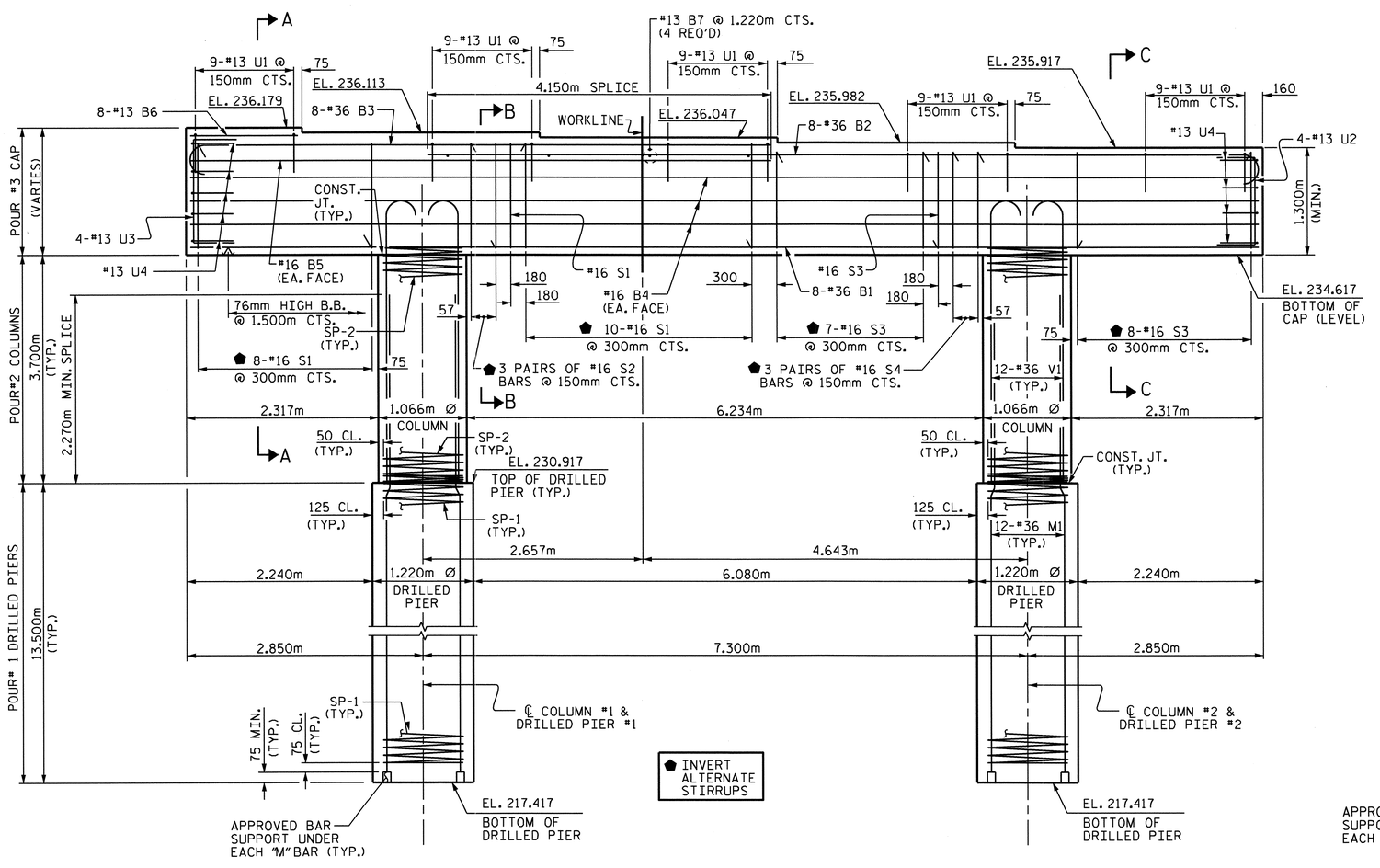

ELEVATION

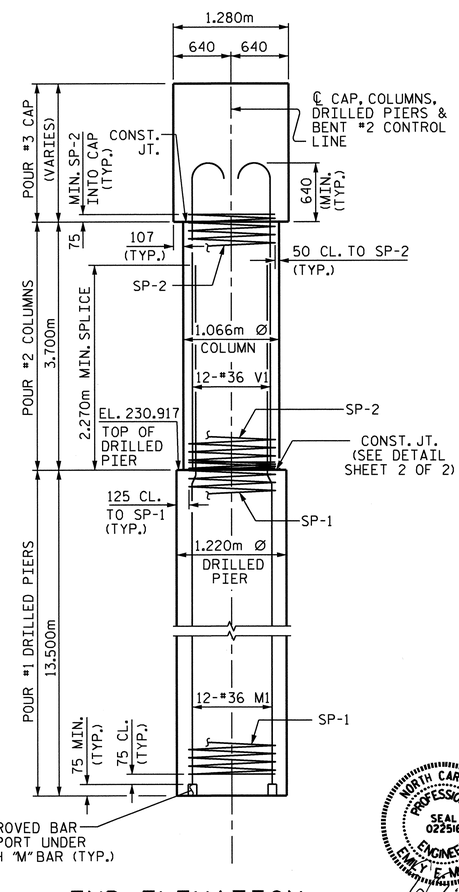

END ELEVATION

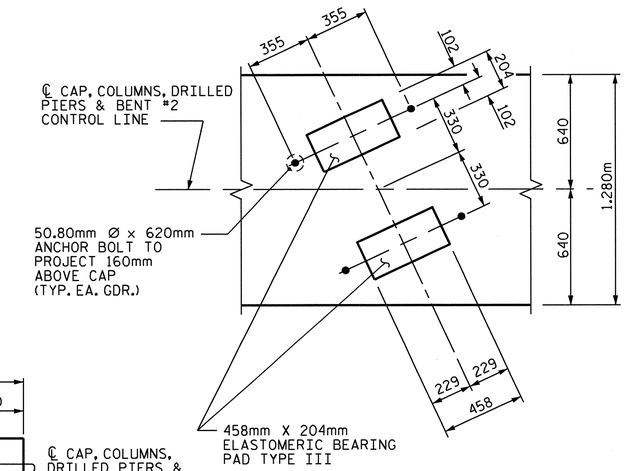

DETAIL "A"

DIMENSIONS ARE TYPICAL FOR EACH GIRDER.

PROJECT NO. R-2413C

GUILFORD-ROCKINGHAM COUNTY

STATION: 11+43.200

-SB US 220 RAMP-

SHEET 1 OF 2

STATE OF NORTH CAROLINA
DEPARTMENT OF TRANSPORTATION
RALEIGH

SUBSTRUCTURE

BENT #2

NORTH CAROLINA PROFESSIONAL SEAL 022516 ENGINEER EMILY E. MURRAY
10/25/11

REVISIONS						SHEET NO.
NO.	BY:	DATE:	NO.	BY:	DATE:	S-136
1			3			TOTAL SHEETS
2			4			238

STR. #4

DRAWN BY : PEGGY PARISI DATE : 3-30-11
CHECKED BY : B.N. BARODAWALA DATE : 7-25-11

19-OCT-2011 14:35
R:\TIPProjects-R\R2413c\Structures\Final Plans\Str.#4\R-2413C_SD_B2.dgn
taverette

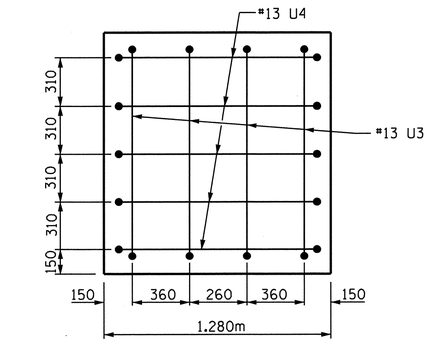

LEFT END VIEW

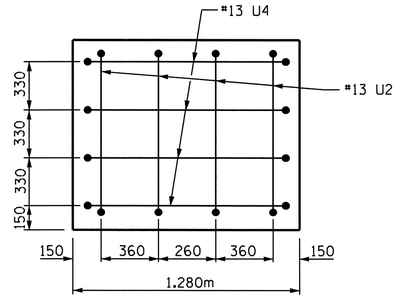

RIGHT END VIEW

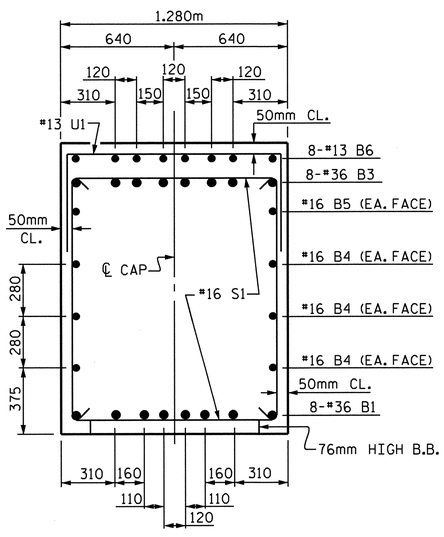

SECTION A-A

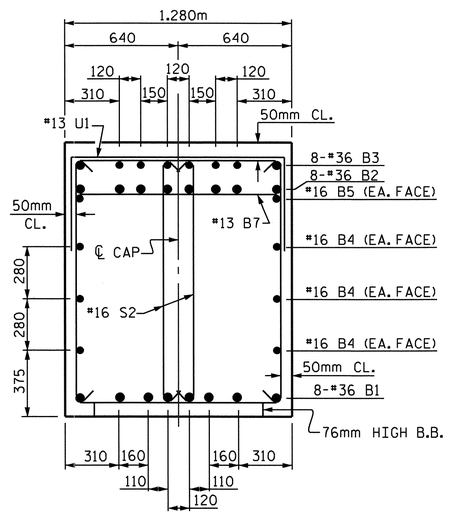

SECTION B-B

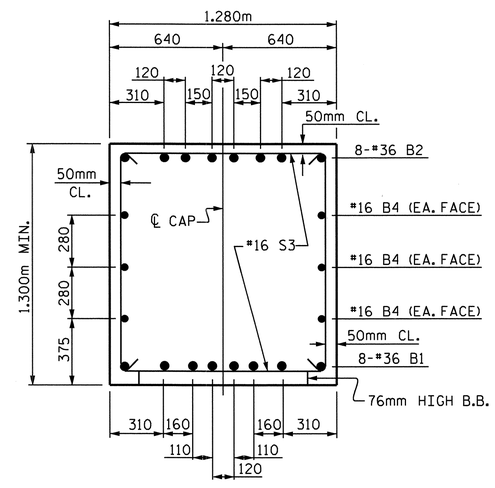

SECTION C-C

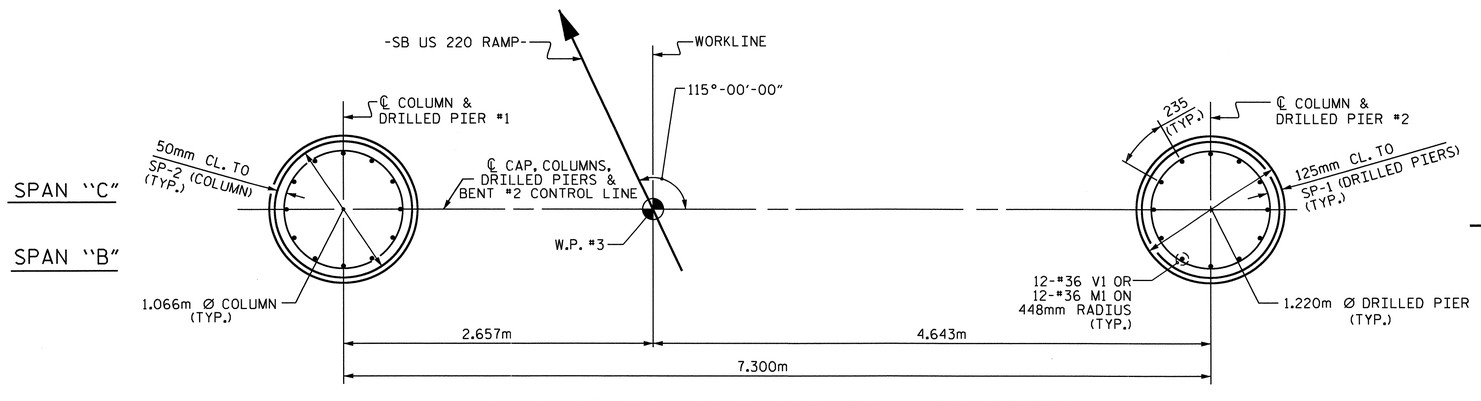

PLAN OF COLUMNS AND DRILLED PIERS

BAR TYPES

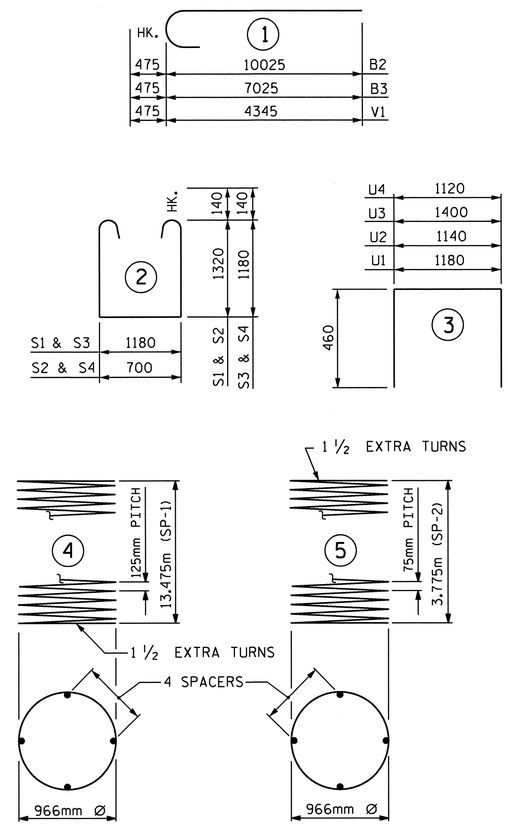

ALL BAR DIMENSIONS ARE OUT TO OUT

BILL OF MATERIAL

BENT #2

BAR	NO.	SIZE	TYPE	LENGTH	WEIGHT
B1	8	36	STR	12900	816
B2	8	36	1	10500	664
B3	8	36	1	7500	474
B4	6	16	STR	12900	120
B5	2	16	STR	7040	22
B6	8	13	STR	1300	10
B7	4	13	STR	1180	5
M1	24	36	STR	16700	3169
S1	19	16	2	4100	121
S2	6	16	2	3620	34
S3	16	16	2	3820	95
S4	6	16	2	3340	31
U1	45	13	3	2100	94
U2	4	13	3	2060	8
U3	4	13	3	2320	9
U4	9	13	3	2040	18
V1	24	36	1	4820	915
REINFORCING STEEL					6605 KG
SPIRAL REINFORCING STEEL					
SP-1	2	✱✱	4	327900	1018
SP-2	2	✱	5	155280	309
SPIRAL REINFORCING STEEL					1327 KG

CLASS "A" CONCRETE BREAKDOWN

POUR #2 COLUMNS	m^3	6.6
POUR #3 CAP	m^3	23.5
CLASS "A" CONCRETE TOTAL	m^3	30.1

DRILLED PIER CONCRETE
POUR #1 DRILLED PIERS m^3 31.6

1.220m Ø DRILLED PIERS NOT IN SOIL METERS 7.4

1.220m Ø DRILLED PIERS IN SOIL METERS 19.6

CSL TUBES METERS 114.0

✱ THE SP-2 SPIRAL REINFORCING STEEL SHALL BE W20 OR D-20 COLD DRAWN WIRE OR #13 PLAIN OR DEFORMED BAR.

✱✱ THE SP-1 SPIRAL REINFORCING STEEL SHALL BE W31 OR D-31 COLD DRAWN WIRE OR #16 PLAIN OR DEFORMED BAR.

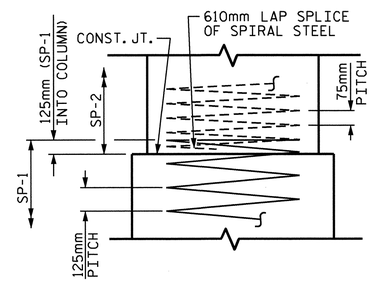

CONSTRUCTION JOINT DETAIL

PROJECT NO. R-2413C
GUILFORD-ROCKINGHAM COUNTY
STATION: 11+43.200
-SB US 220 RAMP-

SHEET 2 OF 2

STATE OF NORTH CAROLINA
DEPARTMENT OF TRANSPORTATION
RALEIGH

SUBSTRUCTURE

BENT #2

NORTH CAROLINA PROFESSIONAL SEAL 022516 ENGINEER EMILY E. MURRAY
10/28/11

REVISIONS						SHEET NO.
NO.	BY:	DATE:	NO.	BY:	DATE:	S-137
1			3			TOTAL SHEETS
2			4			238

DRAWN BY : PEGGY PARISI DATE : 3-30-11
CHECKED BY : B.N. BARODAWALA DATE : 7-25-11

19-OCT-2011 14:36
R:\TIPProjects-R\R2413c\Structures\Final Plans\Str.#4\R-2413C_SD_B2.dgn
taverette

STR. #4

NOTES

STIRRUPS & U1 BARS IN CAP MAY BE SHIFTED AS NECESSARY TO CLEAR ANCHOR BOLTS.

BACKWALL SHALL BE PLACED BEFORE APPLYING THE EPOXY PROTECTIVE COATING.

THE TOP SURFACE AREAS OF THE END BENT CAP SHALL BE CURED IN ACCORDANCE WITH THE STANDARD SPECIFICATIONS EXCEPT THE MEMBRANE CURING COMPOUND METHOD SHALL NOT BE USED.

THE CONTRACTOR SHALL PROVIDE FOR THE INSTALLATION OF THE 102mm Ø DRAIN PIPE THROUGH THE WING WALL AS REQUIRED FOR REINFORCED BRIDGE APPROACH FILLS. SEE THE ROADWAY PLANS. REINFORCING STEEL IN THE WING WALL MAY BE SHIFTED AS NECESSARY TO CLEAR THE DRAIN PIPE.

THE TOP SURFACE OF THE END BENT CAP EXCEPT THE BRIDGE SEAT BUILDUPS SHALL BE SLOPED TRANSVERSELY FROM THE FILL FACE TO THE BACK FACE AT A RATE OF 2%.

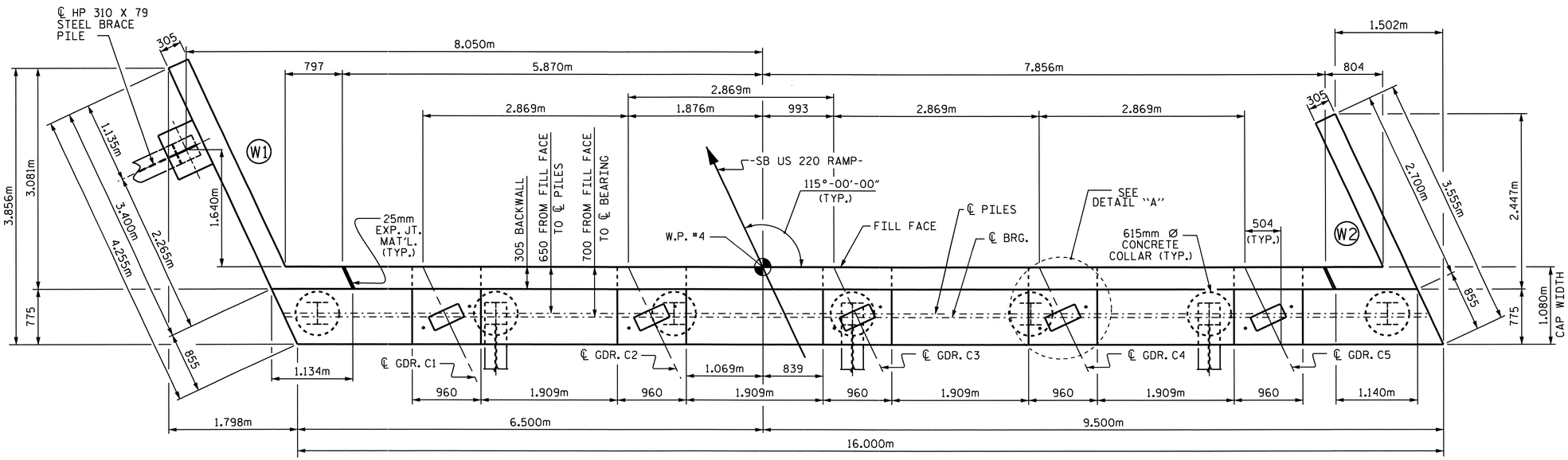

PLAN

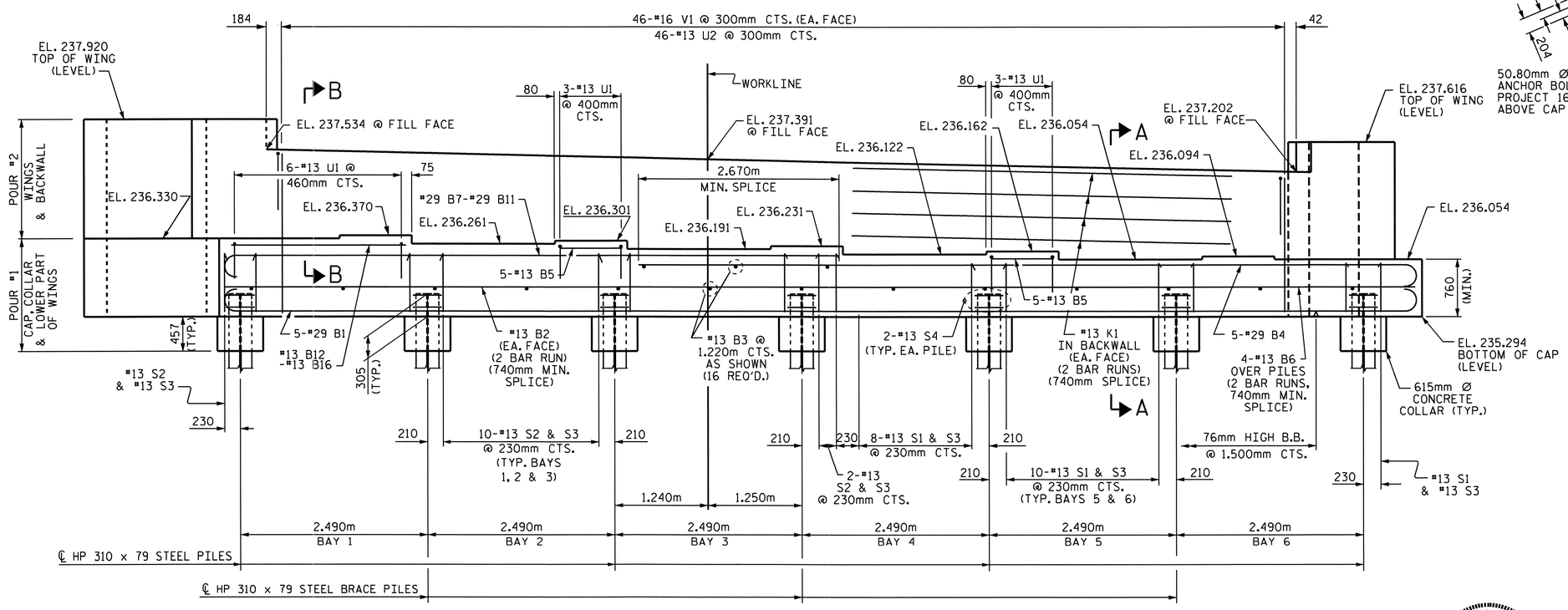

ELEVATION

WING BRACE PILE NOT SHOWN FOR CLARITY.

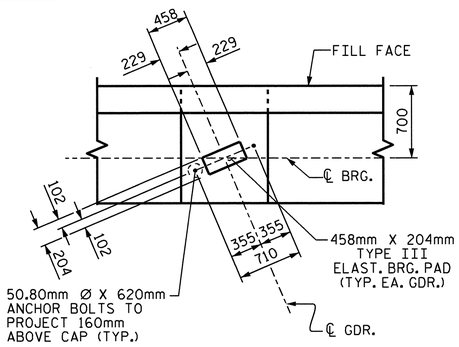

DETAIL "A"

(TYP. EA. BRG.)

PROJECT NO. R-2413C

GUILFORD-ROCKINGHAM COUNTY

STATION: 11+43.200 -SB US 220 RAMP-

SHEET 1 OF 3

STATE OF NORTH CAROLINA
DEPARTMENT OF TRANSPORTATION
RALEIGH

SUBSTRUCTURE

END BENT #2

NORTH CAROLINA PROFESSIONAL SEAL 022516 ENGINEER EMILY E. MURRAY
4/28/11

REVISIONS							SHEET NO.
NO.	BY:	DATE:	NO.	BY:	DATE:		S-138
1			3				TOTAL SHEETS
2			4				238

STR. #4

DRAWN BY : B.N.BARODAWALA DATE : 4-12-11
CHECKED BY : PEGGY PARISI DATE : 4-28-11

05-SEP-2011 12:46
Y:\Structures\Final Plans\Str.#4\R-2413C_SD_EB_04.dgn
mgudlaugsson

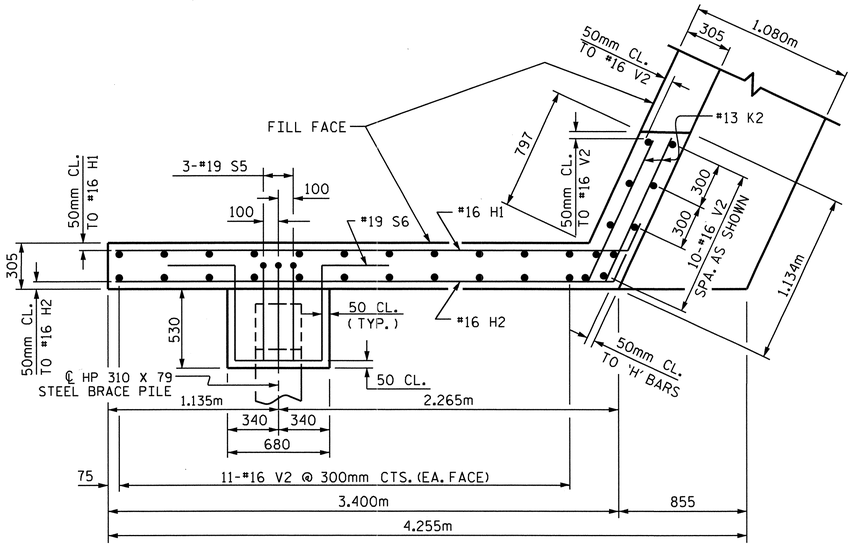

PLAN OF WING W1

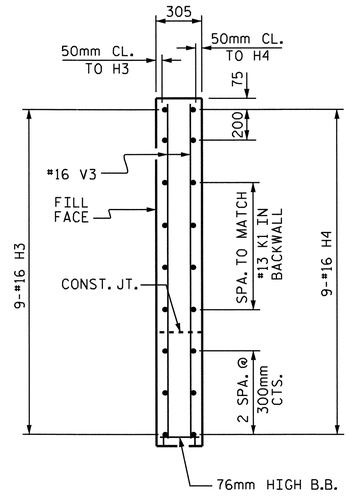

SECTION Y-Y

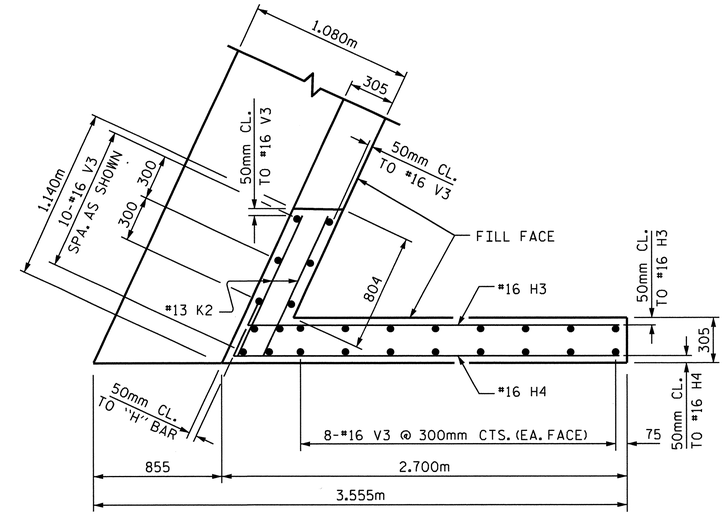

PLAN OF WING W2

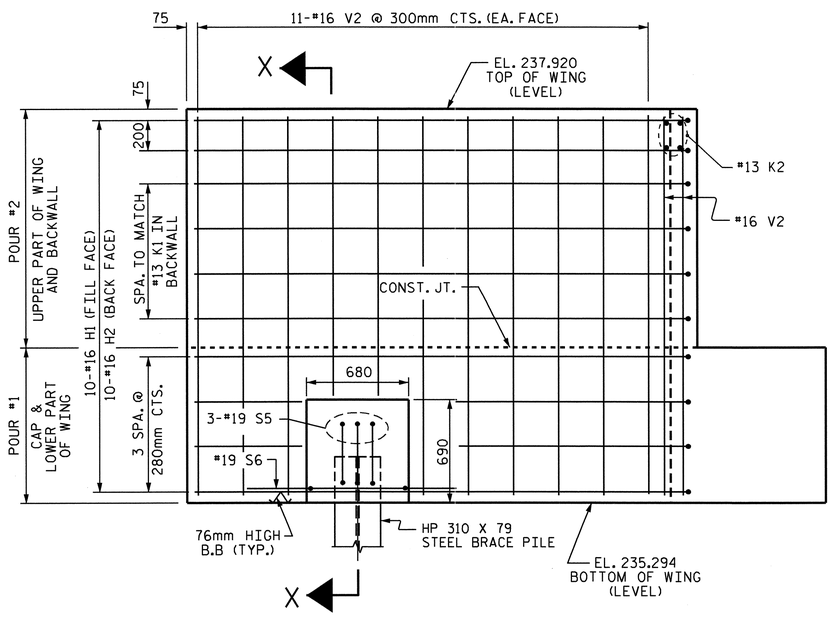

ELEVATION OF WING W1

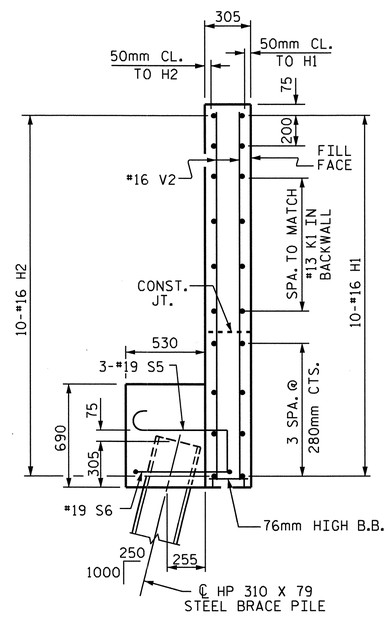

SECTION X-X

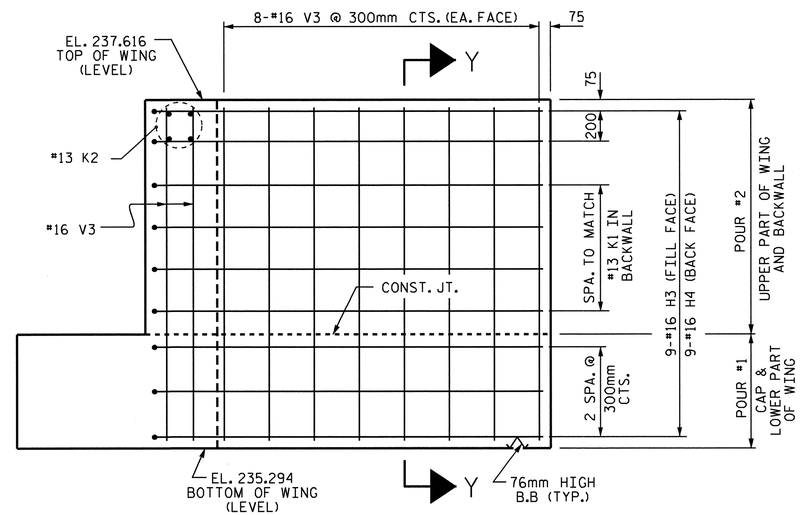

ELEVATION OF WING W2

PROJECT NO. R-2413C

GUILFORD-ROCKINGHAM COUNTY

STATION: 11+43.200

SHEET 2 OF 3 -SB US 220 RAMP-

STATE OF NORTH CAROLINA
DEPARTMENT OF TRANSPORTATION
RALEIGH

SUBSTRUCTURE

END BENT #2

NORTH CAROLINA PROFESSIONAL SEAL 022516 ENGINEER EMILY E. MURPHY
10/28/11

REVISIONS						SHEET NO.
NO.	BY:	DATE:	NO.	BY:	DATE:	S-139
1			3			TOTAL SHEETS
2			4			238

STR. #4

DRAWN BY : B.N.BARODAWALA DATE : 4-12-11
CHECKED BY : PEGGY PARISI DATE : 4-28-11

19-OCT-2011 14:37
R:\TIPProjects-R\R2413c\Structures\Final Plans\Str.#4\R-2413C_SD_EB_04.dgn
taverette

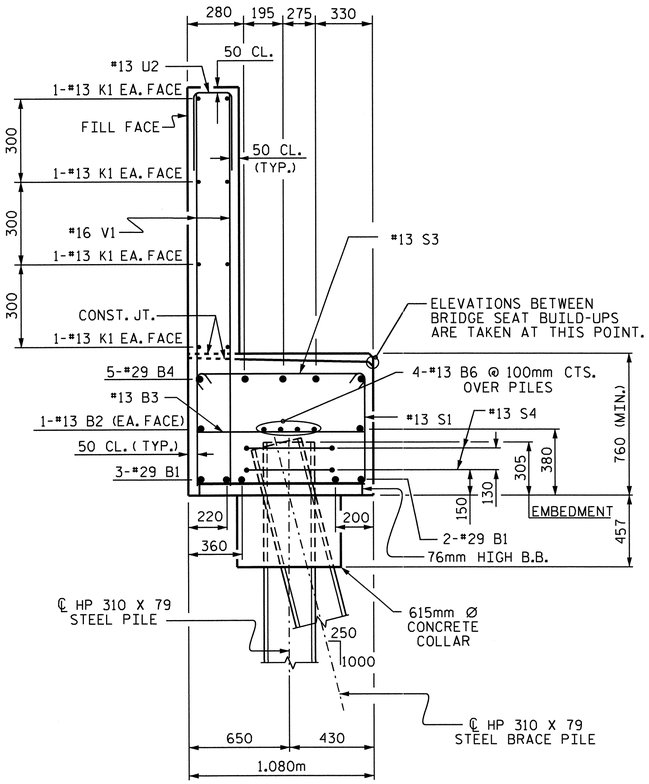

SECTION A-A

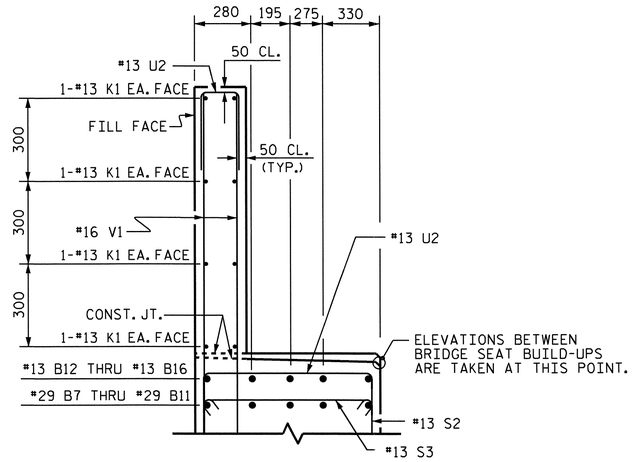

SECTION B-B

BAR TYPES

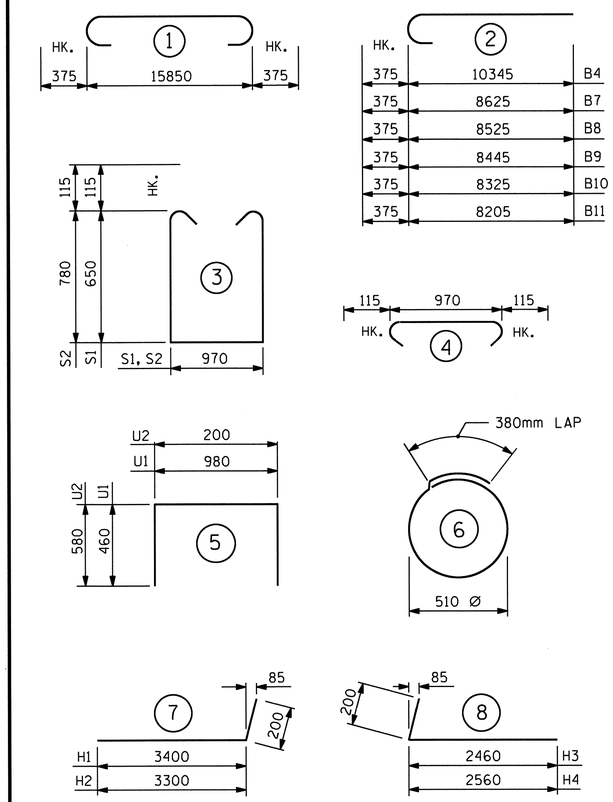

ALL BAR DIMENSIONS ARE OUT TO OUT.

BILL OF MATERIAL

END BENT #2

BAR	NO.	SIZE	TYPE	LENGTH	WEIGHT
B1	5	#29	1	16600	420
B2	4	#13	STR	8320	33
B3	16	#13	STR	980	16
B4	5	#29	2	10720	271
B5	10	#13	STR	860	9
B6	8	#13	STR	8320	66
B7	1	#29	2	9000	46
B8	1	#29	2	8900	45
B9	1	#29	2	8820	45
B10	1	#29	2	8700	44
B11	1	#29	2	8580	43
B12	1	#13	STR	2880	3
B13	1	#13	STR	2800	3
B14	1	#13	STR	2700	3
B15	1	#13	STR	2580	3
B16	1	#13	STR	2460	2
H1	10	#16	7	3600	56
H2	10	#16	7	3500	54
H3	9	#16	8	2660	37
H4	9	#16	8	2760	39
K1	16	#13	STR	8320	132
K2	8	#13	STR	1020	8
S1	29	#13	3	2500	72
S2	33	#13	3	2760	91
S3	62	#13	4	1200	74
S4	14	#13	6	1980	28
S5	3	#19	10	1140	8
S6	1	#19	9	2700	6
U1	12	#13	5	1900	23
U2	46	#13	5	1360	62
V1	92	#16	STR	1800	257
V2	32	#16	STR	2520	125
V3	26	#16	STR	2220	90

REINFORCING STEEL = 2214 kg.

POUR #1
CAP, LOWER PART OF WINGS, & CONCRETE PILE COLLARS 18.2 m3
POUR #2
BACKWALL & UPPER PART OF WINGS 8.6 m3
CLASS "A" CONCRETE TOTAL 26.8 m3

HP 310 x 79 STEEL PILES
No. 8 METERS 64.0

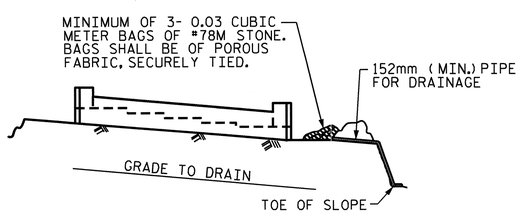

BAGGED STONE AND PIPE SHALL BE PLACED IMMEDIATELY AFTER COMPLETION OF END BENT EXCAVATION. PIPE MAY BE EITHER CONCRETE, CORRUGATED STEEL, CORRUGATED ALUMINUM ALLOY, OR CORRUGATED PLASTIC. PERFORATED PIPE WILL NOT BE ALLOWED.

BAGGED STONE SHALL REMAIN IN PLACE UNTIL THE ENGINEER DIRECTS THAT IT BE REMOVED. THE CONTRACTOR SHALL REMOVE AND DISPOSE OF SILT ACCUMULATIONS AT BAGGED STONE WHEN SO DIRECTED BY THE ENGINEER. BAGS SHALL BE REMOVED AND REPLACED WHENEVER THE ENGINEER DETERMINES THAT THEY HAVE DETERIORATED AND LOST THEIR EFFECTIVENESS.

NO SEPARATE PAYMENT WILL BE MADE FOR THIS WORK AND THE ENTIRE COST OF THIS WORK SHALL BE INCLUDED IN THE UNIT CONTRACT PRICE BID FOR THE SEVERAL PAY ITEMS.

TEMPORARY DRAINAGE AT END BENT

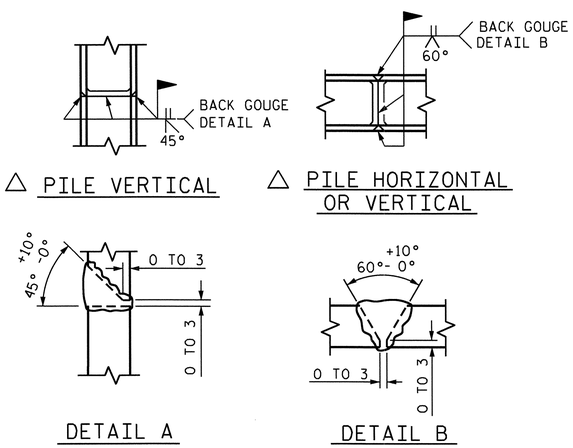

△ PILE VERTICAL

△ PILE HORIZONTAL OR VERTICAL

DETAIL A

DETAIL B

△ POSITION OF PILE DURING WELDING.

PILE SPLICE DETAILS

PROJECT NO. R-2413C

GUILFORD-ROCKINGHAM COUNTY

STATION: 11+43.200

SHEET 3 OF 3 -SB US 220 RAMP-

STATE OF NORTH CAROLINA
DEPARTMENT OF TRANSPORTATION
RALEIGH

SUBSTRUCTURE

END BENT #2

NORTH CAROLINA PROFESSIONAL SEAL 022516 ENGINEER EMILY E. MURRAY
10/28/11

REVISIONS						SHEET NO.
NO.	BY:	DATE:	NO.	BY:	DATE:	S-140
1			3			TOTAL SHEETS
2			4			238

STR. #4

DRAWN BY : B.N.BARODAWALA DATE : 4-12-11
CHECKED BY : PEGGY PARISI DATE : 4-28-11

05-SEP-2011 12:46
Y:\Structures\Final Plans\Str.#4\R-2413C_SD_EB_04.dgn
mgudlaugsson

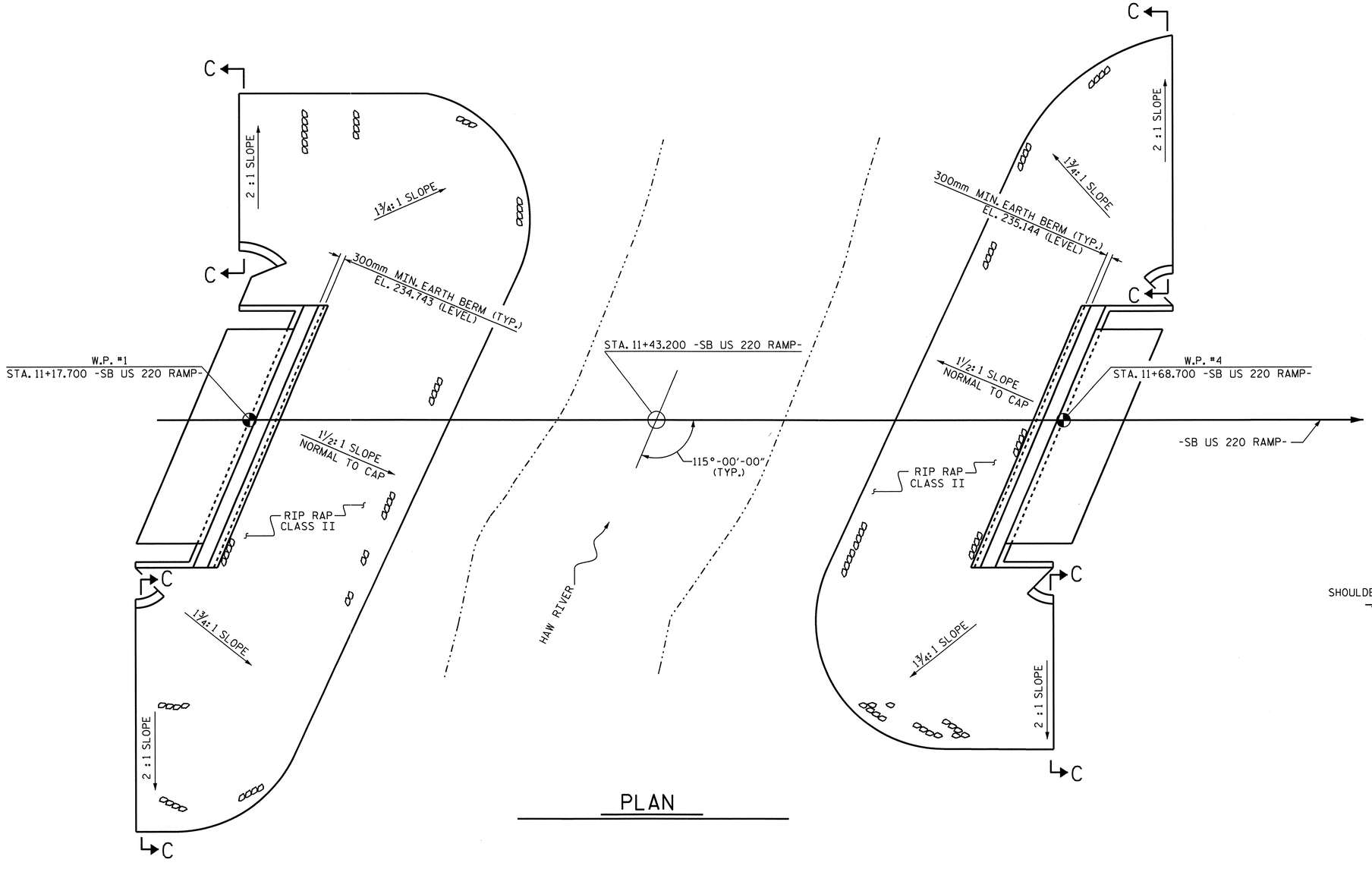

PLAN

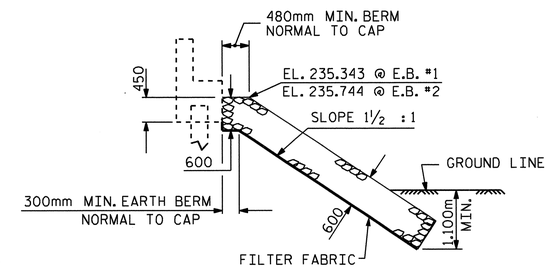

℄ SECTION

BERM RIP RAPPED

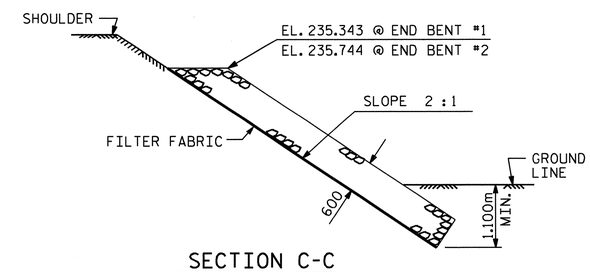

SECTION C-C

PROJECT NO. R-2413C

GUILFORD-ROCKINGHAM COUNTY

STATION: 11+43.200
-SB US 220 RAMP-

ESTIMATED QUANTITIES		
BRIDGE AT STA. 11+43.200 -SB US 220 RP-	RIP RAP CLASS II (600mm THICK)	FILTER FABRIC FOR DRAINAGE
	METRIC TON	SQUARE METERS
END BENT #1	215	219
END BENT #2	260	265

NORTH CAROLINA PROFESSIONAL SEAL 022516 ENGINEER EMILY E. MURRAY
10/28/11

STATE OF NORTH CAROLINA
DEPARTMENT OF TRANSPORTATION
RALEIGH

RIP RAP DETAILS

REVISIONS						SHEET NO.
NO.	BY:	DATE:	NO.	BY:	DATE:	S-141
1			3			TOTAL SHEETS
2			4			238

DRAWN BY : PEGGY PARISI DATE : 2-3-11
CHECKED BY : MIKE PISO DATE : 6-10-11

05-SEP-2011 12:42
Y:\Structures\Final Plans\Str.#4\R-2413C_SD_RR_04.dgn
mgudlaugsson

STR #4

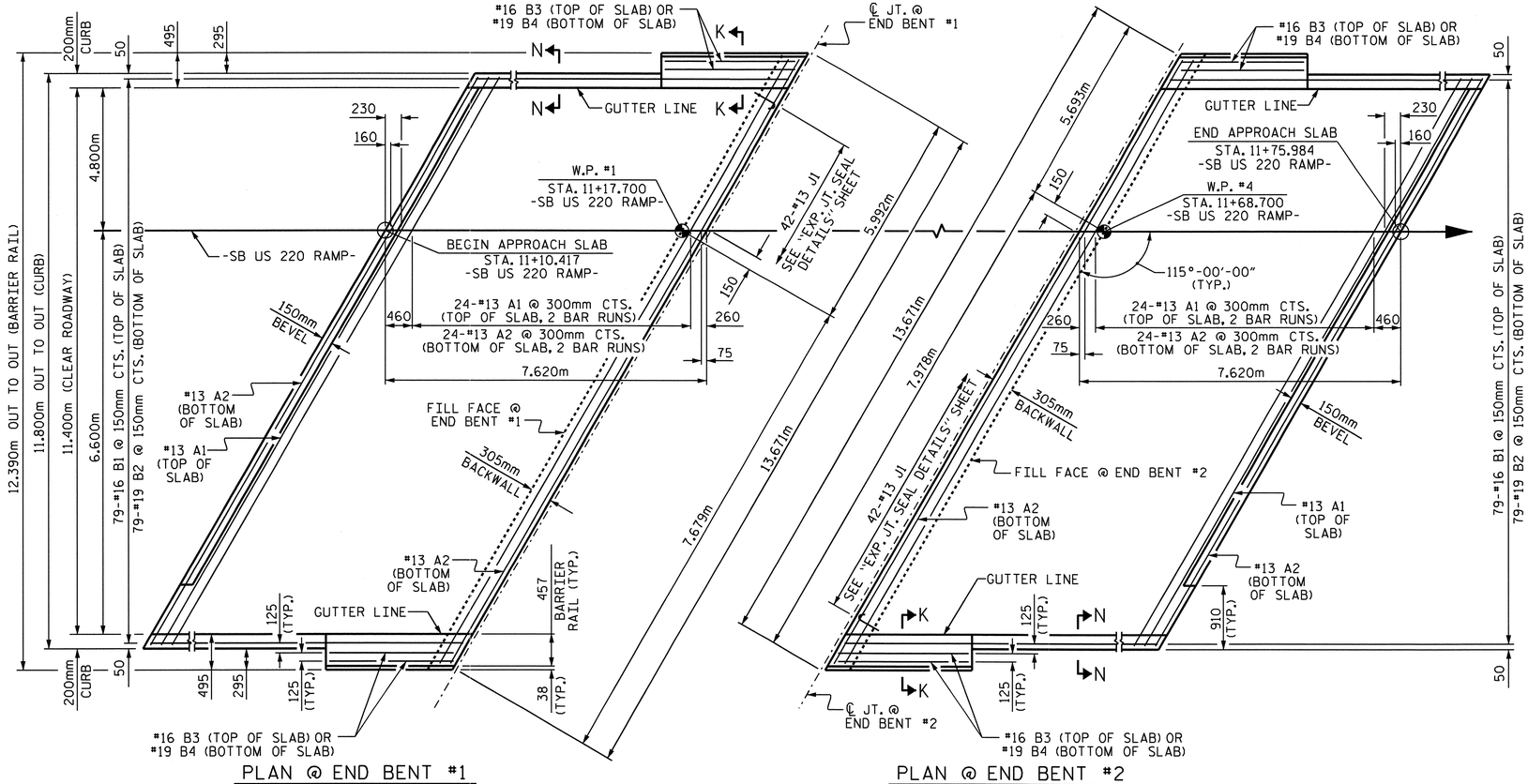

PLAN @ END BENT #1

PLAN @ END BENT #2

DIMENSIONS SHOWN ARE TYPICAL FOR BOTH APPROACH SLABS.
FOR BARRIER RAIL ON THE APPROACH SLAB DETAILS, REINFORCING STEEL AND BILL OF MATERIAL, SEE SHEET 2 OF 2.

NOTES

THE CONCRETE BARRIER RAIL ON THE APPROACH SLAB IS INCLUDED IN THE CONCRETE BARRIER RAIL QUANTITY FOR THE SUPERSTRUCTURE.

APPROACH SLAB SHALL NOT BE CONSTRUCTED PRIOR TO COMPLETION OF THE BRIDGE DECK.

FOR REINFORCED BRIDGE APPROACH FILL INCLUDING FABRIC, IMPERMEABLE GEOMEMBRANE, 102mm Ø DRAINAGE PIPE, #78M STONE, AND SELECT MATERIAL, SEE ROADWAY PLANS.

AREA BETWEEN THE WINGWALL AND APPROACH SLAB SHALL BE GRADED TO DRAIN THE WATER AWAY FROM THE FILL FACE OF THE BRIDGE AND SHALL BE PAVED. SEE ROADWAY PLANS.

THE 150mm COMP. A.B.C. SHALL BE FLUSH WITH THE ROADWAY END OF THE APPROACH SLAB AND SHALL EXTEND 300mm OUTSIDE OF EACH EDGE OF THE APPROACH SLAB.

THE CONTRACTOR MAY USE 100mm TYPE B-25.0B ASPHALT CONCRETE BASE COURSE IN LIEU OF 150mm COMP. A.B.C. IF THIS OPTION IS USED, THE BASE COURSE SHALL BE FLUSH WITH THE ROADWAY END OF THE APPROACH SLAB, AND THE WIDTH SHALL BE THE SAME AS THAT OF THE APPROACH SLAB.

THE CONTRACTOR MAY USE 125mm CLASS "A" CONCRETE BASE IN LIEU OF 150mm COMP. A.B.C. IF THIS OPTION IS USED, THE CONCRETE BASE SHALL BE FLUSH WITH THE ROADWAY END OF THE APPROACH SLAB, AND THE WIDTH SHALL BE THE SAME AS THAT OF THE APPROACH SLAB. THE CONCRETE SHALL BE FINISHED TO A SMOOTH SURFACE AND A LAYER OF 13.6 kg ROOFING FELT SHALL BE PLACED BETWEEN THE CONCRETE BASE AND THE APPROACH SLAB TO PREVENT BOND. THE APPROACH SLAB SHALL NOT BE CAST UNTIL THE CONCRETE BASE HAS REACHED AN AGE OF THREE CURING DAYS.

FOR EXPANSION JOINT SEALS, SEE SPECIAL PROVISIONS.

THE BARRIER RAIL ON EACH APPROACH SLAB SHALL NOT BE CAST UNTIL ALL APPROACH SLAB CONCRETE HAS BEEN CAST AND HAS REACHED A MINIMUM COMPRESSIVE STRENGTH OF 20.7 MPa.

ALL REINFORCING STEEL IN BARRIER RAILS SHALL BE EPOXY COATED.

BILL OF MATERIAL

APPROACH SLAB @ EB #1

BAR	NO.	SIZE	TYPE	LENGTH	WEIGHT
* A1	50	#13	STR	7100	353
A2	52	#13	STR	7060	365
* B1	79	#16	STR	7220	885
B2	79	#19	STR	7500	1324
* B3	4	#16	STR	2940	18
B4	4	#19	STR	2940	26
* J1	42	#13	3	440	18
REINFORCING STEEL				kg.	1715
● * EPOXY COATED REINFORCING STEEL				kg.	1274
● CLASS AA CONCRETE				C.M.	28.5

APPROACH SLAB @ EB #2

BAR	NO.	SIZE	TYPE	LENGTH	WEIGHT
* A1	50	#13	STR	7100	353
A2	52	#13	STR	7060	365
* B1	79	#16	STR	7220	885
B2	79	#19	STR	7500	1324
* B3	4	#16	STR	2940	18
B4	4	#19	STR	2940	26
* J1	42	#13	3	440	18
REINFORCING STEEL				kg.	1715
● * EPOXY COATED REINFORCING STEEL				kg.	1274
● CLASS AA CONCRETE				C.M.	28.5

BAR TYPE

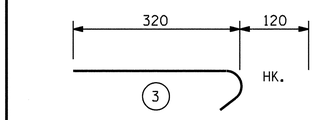

ALL BAR DIMENSIONS ARE OUT TO OUT

● QUANTITIES FOR BARRIER RAIL ON APPROACH SLAB ARE NOT INCLUDED. SEE SHEET 2 OF 2.

SPLICE CHART

BAR	SPLICE
#13 A1	610
#13 A2	540

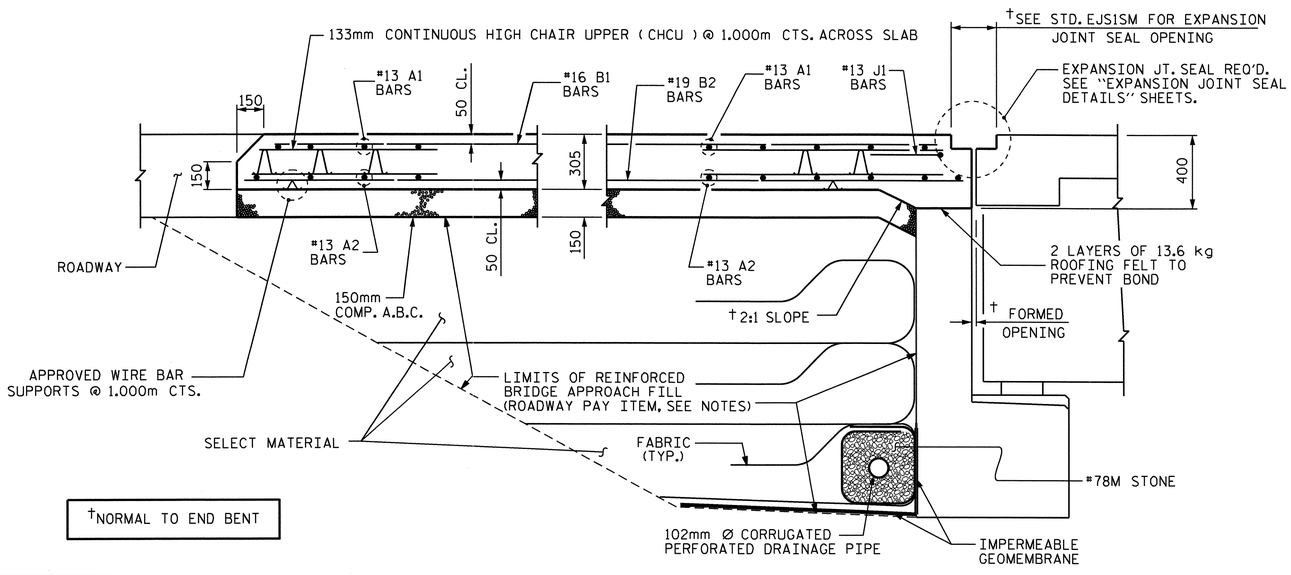

†NORMAL TO END BENT

SECTION THRU SLAB

BARRIER RAIL AND CURB NOT SHOWN

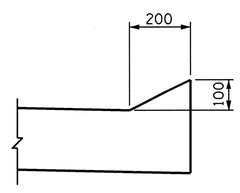

SECTION N-N

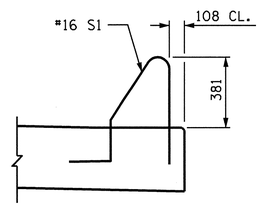

SECTION K-K

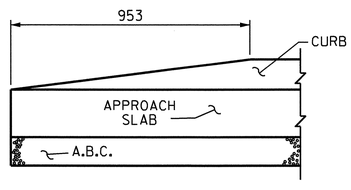

END OF CURB WITHOUT SHOULDER BERM GUTTER

CURB DETAILS

PROJECT NO. R-2413C

GUILFORD-ROCKINGHAM COUNTY

STATION: 11+43.200
-SB US 220 RAMP-

SHEET 1 OF 2

STATE OF NORTH CAROLINA
DEPARTMENT OF TRANSPORTATION
RALEIGH

STANDARD

BRIDGE APPROACH SLAB FOR FLEXIBLE PAVEMENT

NORTH CAROLINA PROFESSIONAL SEAL 022516 ENGINEER EMILY E. MURRAY
10/28/11

REVISIONS								SHEET NO.
NO.	BY:	DATE:	NO.	BY:	DATE:			S-142
1			3					TOTAL SHEETS
2			4					238

ASSEMBLED BY : T.L. AVERETTE DATE : 04-14-11
CHECKED BY : PEGGY PARISI DATE : 04-15-11

DRAWN BY : FCJ 6/87
CHECKED BY : EGA 6/87

REV. 7/10/01 RWW/LES
REV. 5/7/03R RWW/JTE
REV. 5/1/06R KMM/GM

05-SEP-2011 12:41
Y:\Structures\Final Plans\Str.#4\R2413C_sd_AS_04.dgn
mgudlaugsson

STR #4 STD. NO. BAS4SM

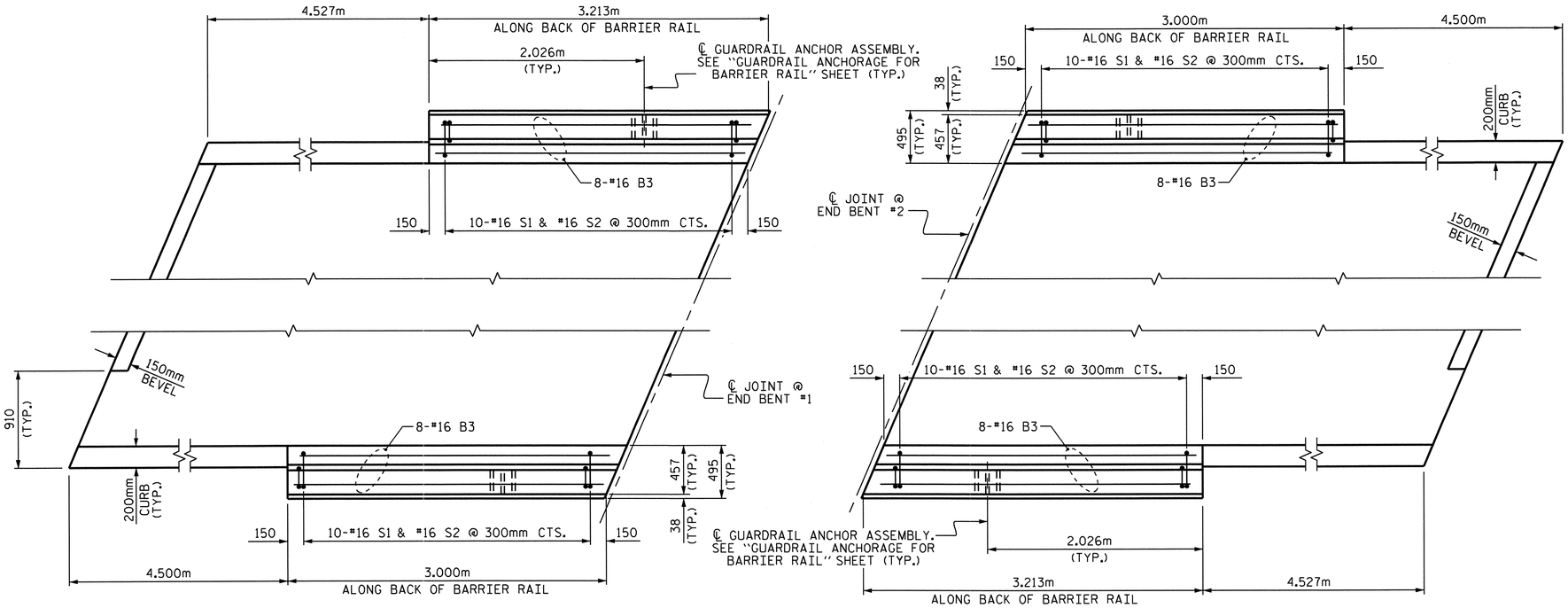

PLAN OF BARRIER RAIL ON APPROACH SLABS

BAR TYPES

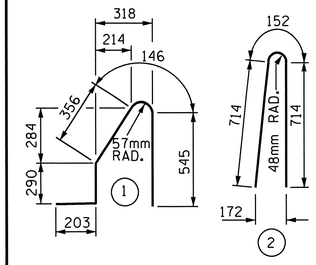

ALL BAR DIMENSIONS ARE OUT TO OUT

BILL OF MATERIAL

FOR CONCRETE BARRIER RAIL ON BOTH APPROACH SLABS ONLY

BAR	NO.	SIZE	TYPE	LENGTH	WEIGHT
* B3	32	#16	STR	2940	146
* S1	40	#16	1	1540	96
* S2	40	#16	2	1580	98
* EPOXY COATED REINFORCING STEEL				kg.	340
CLASS AA CONCRETE				C.M.	3.1
CONCRETE BARRIER RAIL				METERS	12.426

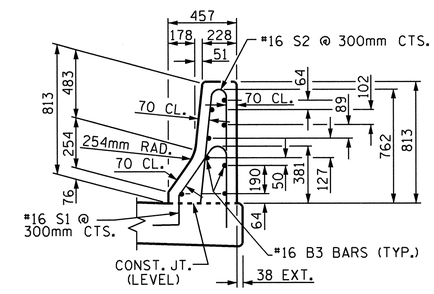

SECTION THRU RAIL

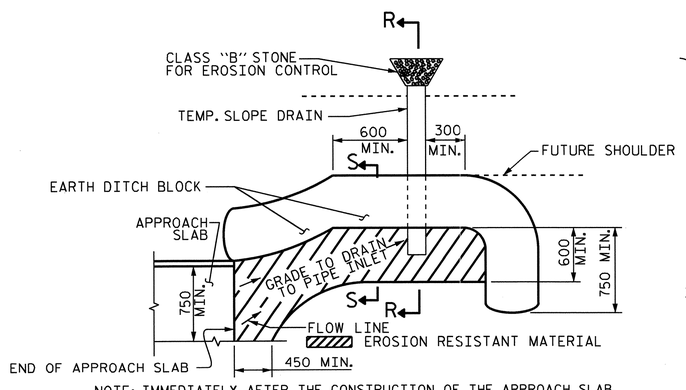

NOTE: IMMEDIATELY AFTER THE CONSTRUCTION OF THE APPROACH SLAB, THE CONTRACTOR SHALL PROVIDE TEMPORARY BERM AND SLOPE DRAIN. CONTRACTOR SHALL GRADE TO PIPE INLET AND PROVIDE EROSION RESISTANT MATERIAL AS SHOWN. THE EROSION RESISTANT MATERIAL SHALL BE EITHER 1) ASPHALT PLANT MIX, TYPE I OR TYPE 2, MIN. 50mm DEPTH, 2) EROSION CONTROL MAT, OR 3) CONCRETE, AS DIRECTED BY THE ENGINEER. THE SLOPE DRAIN SHALL CONSIST OF A NON-PERFORATED TEMPORARY DRAINAGE PIPE, 305mm IN DIAMETER.

PLAN VIEW

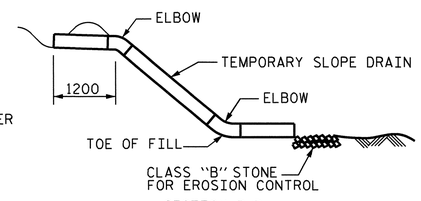

SECTION R-R

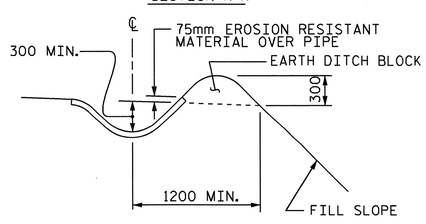

SECTION S-S

TEMPORARY BERM AND SLOPE DRAIN DETAILS

(TO BE USED WHEN SHOULDER BERM GUTTER IS REQUIRED)

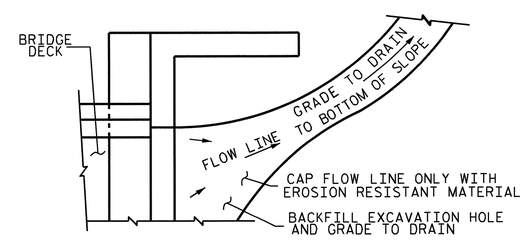

NOTE: IF THE APPROACH SLAB IS NOT CONSTRUCTED IMMEDIATELY AFTER THE BACKFILLING OF THE END BENT EXCAVATION, GRADE TO DRAIN TO THE BOTTOM OF THE SLOPE AND PROVIDE EROSION RESISTANT MATERIAL, SUCH AS FIBERGLASS ROVING OR AS DIRECTED BY THE ENGINEER TO PREVENT SOIL EROSION AND TO PROTECT THE AREA ADJACENT TO THE STRUCTURE. THE CONTRACTOR WILL BE REQUIRED TO REMOVE THESE MATERIALS PRIOR TO CONSTRUCTION OF THE APPROACH SLAB.

TEMPORARY DRAINAGE DETAIL

PROJECT NO. R-2413C

GUILFORD-ROCKINGHAM COUNTY

STATION: 11+43.200 -SB US 220 RP-

SHEET 2 OF 2

STATE OF NORTH CAROLINA
DEPARTMENT OF TRANSPORTATION
RALEIGH

STANDARD
BRIDGE APPROACH
SLAB DETAILS

NORTH CAROLINA PROFESSIONAL SEAL 022516 ENGINEER EMILY E. MURRAY
1/20/11

REVISIONS							SHEET NO.
NO.	BY:	DATE:	NO.	BY:	DATE:		S-143
1			3				TOTAL SHEETS
2			4				238

ASSEMBLED BY : T.L. AVERETTE	DATE : 04-14-11
CHECKED BY : PEGGY PARISI	DATE : 04-15-11
DRAWN BY : FCJ 11/88	REV. 10/17/00 RWW/LES
CHECKED BY : ARB 11/88	REV. 5/7/03 RWW/JTE
	REV. 5/1/06RR MAA/KMM

05-SEP-2011 12:40
Y:\Structures\Final Plans\Str.#4\R2413C_sd_AS_04.dgn
mgudlaugsson

STR #4

STD. NO. BAS10SM

OVERHANG BRACKET CALCULATION INSTRUCTIONS

AASHTO SHAPES - TYPES III, IV, V, AND VI

1. RECORD KNOWN INFORMATION ON "BRIDGE OVERHANG BRACKET SUMMARY" ON SHEET 2
2. CALCULATE THE MAXIMUM SCREED LOAD PER BRACKET (SLPB) WITH AN ESTIMATED R = 1.5. SLPB = R X W. ROUND VALUE UP TO NEAREST SLPB VALUE INDICATED ON APPROPRIATE TABLE 1-1, 1-2, 1-3, OR 1-4.
3. WITH THE ESTIMATED SLPB, OVERHANG SLAB THICKNESS, "K" VALUE, AND 45° HANGER SAFE WORKING LOAD (SWL), ENTER THE APPROPRIATE TABLE 1-1, 1-2, 1-3, OR 1-4 (BASED ON OVERHANG DIMENSION) AND DETERMINE THE BRACKET SPACING, S.
4. CALCULATE S/D1 AND S/D2, ROUNDING UP TO NEAREST VALUE IN TABLE 2. ENTER TABLE 2 AND DETERMINE R VALUE.
5. CALCULATE REVISED SLPB. ROUND VALUE UP TO NEAREST SLPB VALUE INDICATED ON APPROPRIATE TABLE 1-1, 1-2, 1-3, OR 1-4.
6. WITH THE REVISED SLPB, OVERHANG SLAB THICKNESS, "K" VALUE AND 45 HANGER SAFE WORKING LOAD (SWL), ENTER THE APPROPRIATE TABLE 1-1, 1-2, 1-3 OR 1-4 (BASED ON OVERHANG DIMENSION) AND DETERMINE REVISED BRACKET SPACING, S.
7. CONTINUE ITERATIONS OF STEPS 4-6 UNTIL THE REVISED BRACKET SPACING, S, IS THE SAME AS THE PREVIOUS S VALUE.
8. CHECK LUMBER JOIST SPACING: WITH BRACKET SPACING VALUE, S, ROUND THIS VALUE UP TO THE NEAREST VALUE OF ALLOWABLE SPAN LENGTH OF JOIST OF TABLE 3. USING THIS VALUE, ALONG WITH THE AVERAGE OVERHANG SLAB THICKNESS AND THE LUMBER JOIST SIZE, DETERMINE JOIST SPACING FROM TABLE 3. IF NECESSARY, ADJUST LUMBER JOIST SIZE AND/OR JOIST SPACING TO MEET ALLOWABLE SPAN LENGTH OF JOIST.
9. CONVERSELY, IF THE DESIRED JOIST SPACING IS KNOWN, USE THIS ALONG WITH THE AVERAGE OVERHANG SLAB THICKNESS AND THE LUMBER JOIST SIZE TO DETERMINE IF ALLOWABLE SPAN LENGTH OF JOIST IS GREATER THAN THE BRACKET SPACING, S. IF NECESSARY, ADJUST LUMBER JOIST SIZE TO MEET REQUIREMENTS OF ALLOWABLE SPAN LENGTH OF JOIST AND JOIST SPACING.
10. RECORD REMAINING INFORMATION ON "BRIDGE OVERHANG BRACKET SUMMARY" FORM.
11. SUBMIT FORM AND CALCULATIONS FOR REVIEW AND APPROVAL.

TABLE 1-1

(FOR USE ON **UP TO 2'-0" OVERHANG (L)** & 54" HORIZONTAL LEG LENGTH OF THE OVERHANG BRACKET)

AVG. SLAB THICKNESS (T) (in)	BRACKET (K) DIMENSION (in)	SCREED LOAD PER BRACKET									45° HANGER SWL (lbs)
		2500 lbs.	2250 lbs.	2000 lbs.	1750 lbs.	1500 lbs.	1250 lbs.	1000 lbs.	750 lbs.	0 lbs.	
		BRACKET SPACING									
10	30				2'-1"	2'-7"	3'-2"	3'-8"	4'-2"	5'-9"	4000
		3'-6"	4'-0"	4'-5"	4'-9"	5'-1"	5'-3"	5'-5"	5'-7"	6'-7"	6000
	40				2'-1"	2'-7"	3'-2"	3'-8"	4'-2"	5'-9"	4000
		3'-6"	4'-0"	4'-5"	4'-9"	5'-1"	5'-3"	5'-5"	5'-7"	6'-7"	6000
	50				2'-1"	2'-7"	3'-2"	3'-8"	4'-2"	5'-9"	4000
		3'-6"	4'-0"	4'-5"	4'-9"	5'-1"	5'-3"	5'-5"	5'-7"	6'-7"	6000
12	30					2'-4"	2'-10"	3'-4"	3'-9"	5'-2"	4000
		3'-2"	3'-7"	4'-1"	4'-7"	5'-0"	5'-2"	5'-4"	5'-7"	6'-5"	6000
	40					2'-4"	2'-10"	3'-4"	3'-9"	5'-2"	4000
		3'-2"	3'-7"	4'-1"	4'-7"	5'-0"	5'-2"	5'-4"	5'-7"	6'-5"	6000
	50					2'-4"	2'-10"	3'-4"	3'-9"	5'-2"	4000
		3'-2"	3'-7"	4'-1"	4'-7"	5'-0"	5'-2"	5'-4"	5'-7"	6'-5"	6000
14	30					2'-2"	2'-7"	3'-0"	3'-5"	4'-9"	4000
		2'-10"	3'-4"	3'-9"	4'-2"	4'-7"	5'-0"	5'-4"	5'-7"	6'-4"	6000
	40					2'-2"	2'-7"	3'-0"	3'-5"	4'-9"	4000
		2'-10"	3'-4"	3'-9"	4'-2"	4'-7"	5'-0"	5'-4"	5'-7"	6'-4"	6000
	50					2'-2"	2'-7"	3'-0"	3'-5"	4'-9"	4000
		2'-10"	3'-4"	3'-9"	4'-2"	4'-7"	5'-0"	5'-4"	5'-7"	6'-4"	6000
16	30					2'-0"	2'-4"	2'-9"	3'-2"	4'-4"	4000
		2'-8"	3'-0"	3'-5"	3'-10"	4'-3"	4'-7"	5'-0"	5'-5"	6'-3"	6000
	40					2'-0"	2'-4"	2'-9"	3'-2"	4'-4"	4000
		2'-8"	3'-0"	3'-5"	3'-10"	4'-3"	4'-7"	5'-0"	5'-5"	6'-3"	6000
	50					2'-0"	2'-4"	2'-9"	3'-2"	4'-4"	4000
		2'-8"	3'-0"	3'-5"	3'-10"	4'-3"	4'-7"	5'-0"	5'-5"	6'-3"	6000

TABLE 1-2

(FOR USE ON **OVER 2'-0" TO 2'-6" OVERHANG (L)** & 54" HORIZONTAL LEG LENGTH OF THE OVERHANG BRACKET)

AVG. SLAB THICKNESS (T) (in)	BRACKET (K) DIMENSION (in)	SCREED LOAD PER BRACKET									45° HANGER SWL (lbs)
		2500 lbs.	2250 lbs.	2000 lbs.	1750 lbs.	1500 lbs.	1250 lbs.	1000 lbs.	750 lbs.	0 lbs.	
		BRACKET SPACING									
10	30					2'-4"	2'-9"	3'-3"	3'-8"	5'-1"	4000
		3'-1"	3'-6"	4'-0"	4'-5"	4'-11"	5'-3"	5'-5"	5'-7"	6'-7"	6000
	40					2'-4"	2'-9"	3'-3"	3'-8"	5'-1"	4000
		3'-1"	3'-6"	4'-0"	4'-5"	4'-11"	5'-3"	5'-5"	5'-7"	6'-7"	6000
	50					2'-4"	2'-9"	3'-3"	3'-8"	5'-1"	4000
		3'-1"	3'-6"	4'-0"	4'-5"	4'-11"	5'-3"	5'-5"	5'-7"	6'-7"	6000
12	30					2'-1"	2'-6"	2'-11"	3'-4"	4'-6"	4000
		2'-9"	3'-2"	3'-7"	4'-0"	4'-5"	4'-10"	5'-3"	5'-7"	6'-5"	6000
	40					2'-1"	2'-6"	2'-11"	3'-4"	4'-6"	4000
		2'-9"	3'-2"	3'-7"	4'-0"	4'-5"	4'-10"	5'-3"	5'-7"	6'-5"	6000
	50					2'-1"	2'-6"	2'-11"	3'-4"	4'-6"	4000
		2'-9"	3'-2"	3'-7"	4'-0"	4'-5"	4'-10"	5'-3"	5'-7"	6'-5"	6000
14	30						2'-3"	2'-7"	3'-0"	4'-1"	4000
		2'-6"	2'-10"	3'-3"	3'-7"	4'-0"	4'-4"	4'-9"	5'-1"	6'-3"	6000
	40						2'-3"	2'-7"	3'-0"	4'-1"	4000
		2'-6"	2'-10"	3'-3"	3'-7"	4'-0"	4'-4"	4'-9"	5'-1"	6'-3"	6000
	50						2'-3"	2'-7"	3'-0"	4'-1"	4000
		2'-6"	2'-10"	3'-3"	3'-7"	4'-0"	4'-4"	4'-9"	5'-1"	6'-3"	6000
16	30						2'-1"	2'-5"	2'-9"	3'-9"	4000
		2'-3"	2'-7"	2'-11"	3'-4"	3'-8"	4'-0"	4'-4"	4'-8"	5'-8"	6000
	40						2'-1"	2'-5"	2'-9"	3'-9"	4000
		2'-3"	2'-7"	2'-11"	3'-4"	3'-8"	4'-0"	4'-4"	4'-8"	5'-8"	6000
	50						2'-1"	2'-5"	2'-9"	3'-9"	4000
		2'-3"	2'-7"	2'-11"	3'-4"	3'-8"	4'-0"	4'-4"	4'-8"	5'-8"	6000

TABLE 1-3

(FOR USE ON **OVER 2'-6" TO 3'-0" OVERHANG (L)** & 54" HORIZONTAL LEG LENGTH OF THE OVERHANG BRACKET)

AVG. SLAB THICKNESS (T) (in)	BRACKET (K) DIMENSION (in)	SCREED LOAD PER BRACKET									45° HANGER SWL (lbs)
		2500 lbs.	2250 lbs.	2000 lbs.	1750 lbs.	1500 lbs.	1250 lbs.	1000 lbs.	750 lbs.	0 lbs.	
		BRACKET SPACING									
10	30					2'-1"	2'-6"	2'-11"	3'-4"	4'-6"	4000
						4'-5"	4'-10"	5'-3"	5'-7"	6'-7"	6000
	40					2'-1"	2'-6"	2'-11"	3'-4"	4'-6"	4000
		2'-9"	3'-2"	3'-7"	4'-0"	4'-5"	4'-10"	5'-3"	5'-7"	6'-7"	6000
	50					2'-1"	2'-6"	2'-11"	3'-4"	4'-6"	4000
		2'-9"	3'-2"	3'-7"	4'-0"	4'-5"	4'-10"	5'-3"	5'-7"	6'-7"	6000
12	30						2'-2"	2'-7"	2'-11"	4'-0"	4000
						3'-11"	4'-3"	4'-8"	5'-0"	6'-1"	6000
	40						2'-2"	2'-7"	2'-11"	4'-0"	4000
		2'-5"	2'-10"	3'-2"	3'-6"	3'-11"	4'-3"	4'-8"	5'-0"	6'-1"	6000
	50						2'-2"	2'-7"	2'-11"	4'-0"	4000
		2'-5"	2'-10"	3'-2"	3'-6"	3'-11"	4'-3"	4'-8"	5'-0"	6'-1"	6000
14	30						2'-0"	2'-4"	2'-8"	3'-8"	4000
					3'-2"	3'-6"	3'-10"	4'-2"	4'-6"	5'-6"	6000
	40						2'-0"	2'-4"	2'-8"	3'-8"	4000
		2'-2"	2'-6"	2'-10"	3'-2"	3'-6"	3'-10"	4'-2"	4'-6"	5'-6"	6000
	50						2'-0"	2'-4"	2'-8"	3'-8"	4000
		2'-2"	2'-6"	2'-10"	3'-2"	3'-6"	3'-10"	4'-2"	4'-6"	5'-6"	6000
16	30							2'-1"	2'-5"	3'-4"	4000
					2'-11"	3'-2"	3'-6"	3'-10"	4'-1"	5'-0"	6000
	40							2'-1"	2'-5"	3'-4"	4000
		2'-0"	2'-4"	2'-7"	2'-11"	3'-2"	3'-6"	3'-10"	4'-1"	5'-0"	6000
	50							2'-1"	2'-5"	3'-4"	4000
		2'-0"	2'-4"	2'-7"	2'-11"	3'-2"	3'-6"	3'-10"	4'-1"	5'-0"	6000

TABLE 1-4

(FOR USE ON **OVER 3'-0" TO 3'-6" OVERHANG (L)** & 54" HORIZONTAL LEG LENGTH OF THE OVERHANG BRACKET)

AVG. SLAB THICKNESS (T) (in)	BRACKET (K) DIMENSION (in)	SCREED LOAD PER BRACKET									45° HANGER SWL (lbs)
		2500 lbs.	2250 lbs.	2000 lbs.	1750 lbs.	1500 lbs.	1250 lbs.	1000 lbs.	750 lbs.	0 lbs.	
		BRACKET SPACING									
10	30						2'-1"	2'-5"	2'-9"	3'-10"	4000
						2'-3"	2'-11"	3'-7"	4'-3"	5'-9"	6000
	40						2'-1"	2'-5"	2'-9"	3'-10"	4000
				2'-4"	3'-0"	3'-7"	4'-1"	4'-5"	4'-9"	5'-9"	6000
	50						2'-1"	2'-5"	2'-9"	3'-10"	4000
		2'-4"	2'-8"	3'-0"	3'-4"	3'-8"	4'-1"	4'-5"	4'-9"	5'-9"	6000
12	30							2'-2"	2'-6"	3'-5"	4000
						2'-1"	2'-8"	3'-4"	3'-11"	5'-2"	6000
	40							2'-2"	2'-6"	3'-5"	4000
				2'-2"	2'-9"	3'-4"	3'-7"	3'-11"	4'-3"	5'-2"	6000
	50							2'-2"	2'-6"	3'-5"	4000
		2'-1"	2'-4"	2'-8"	3'-0"	3'-4"	3'-7"	3'-11"	4'-3"	5'-2"	6000
14	30								2'-3"	3'-1"	4000
						2'-0"	2'-6"	3'-1"	3'-8"	4'-8"	6000
	40								2'-3"	3'-1"	4000
				2'-0"	2'-7"	3'-0"	3'-3"	3'-6"	3'-10"	4'-8"	6000
	50								2'-3"	3'-1"	4000
			2'-2"	2'-5"	2'-8"	3'-0"	3'-3"	3'-6"	3'-10"	4'-8"	6000
16	30								2'-0"	2'-9"	4000
							2'-4"	2'-10"	3'-5"	4'-3"	6000
	40								2'-0"	2'-9"	4000
					2'-5"	2'-8"	2'-11"	3'-3"	3'-6"	4'-3"	6000
	50								2'-0"	2'-9"	4000
				2'-2"	2'-5"	2'-8"	2'-11"	3'-3"	3'-6"	4'-3"	6000

DEFINITIONS

SLPB = SCREED LOAD PER BRACKET (R x W)
R = SCREED LOAD FACTOR, OBTAINED FROM TABLE 2
W = WHEEL LOAD
S = BRACKET SPACING
T = AVERAGE SLAB THICKNESS
SWL = SAFE WORKING LOAD
K = DIMENSION DEFINED ON "BRIDGE OVERHANG BRACKET SUMMARY" ON SHEET 2
L = OVERHANG MEASURED FROM EDGE OF TOP FLANGE TO EDGE OF SUPERSTRUCTURE

PROJECT NO. R-2413C
GUILFORD-ROCKINGHAM COUNTY
STATION: 11+43.200
-SB US 220 RAMP-
SHEET 1 OF 3

STATE OF NORTH CAROLINA
DEPARTMENT OF TRANSPORTATION
RALEIGH

STANDARD OVERHANG FALSEWORK

AASHTO TYPES
III, IV, V, AND VI

NORTH CAROLINA PROFESSIONAL SEAL 18788 ENGINEER CHANG-CHUAN VICTOR CHAO

Chang-Chuan V. Chao
8-5-2011

REVISIONS						SHEET NO.
NO.	BY:	DATE:	NO.	BY:	DATE:	S-144
1			3			TOTAL SHEETS
2			4			238

ASSEMBLED BY:	DATE:
CHECKED BY:	DATE:
DRAWN BY: R. WRIGHT 06/04	REV.
CHECKED BY: C. V. CHAO 06/04	

05-AUG-2011 10:46
C:\OLDFILESD\wdlr\victor\OverhangFalsework\TIEBAR&STRUT\R-2413C\R-2413CSTR4_TYPE_III\R2413CSTR4verHangSheets.dgn
vchao

STR. #4

OF1

BRIDGE OVERHANG BRACKET SUMMARY

TOTAL SCREED WEIGHT = _____ LBS.
NUMBER OF SCREED WHEELS = _____
SCREED WHEEL LOAD (W) = _____LBS.
SCREED LOAD PER BRACKET = _____ LBS.

PROJECT No. : _____
COUNTY : _____
STATION : _____
DESCRIPTION : _____

DATE : _____
DESIGN BY : _____
CHECK BY : _____

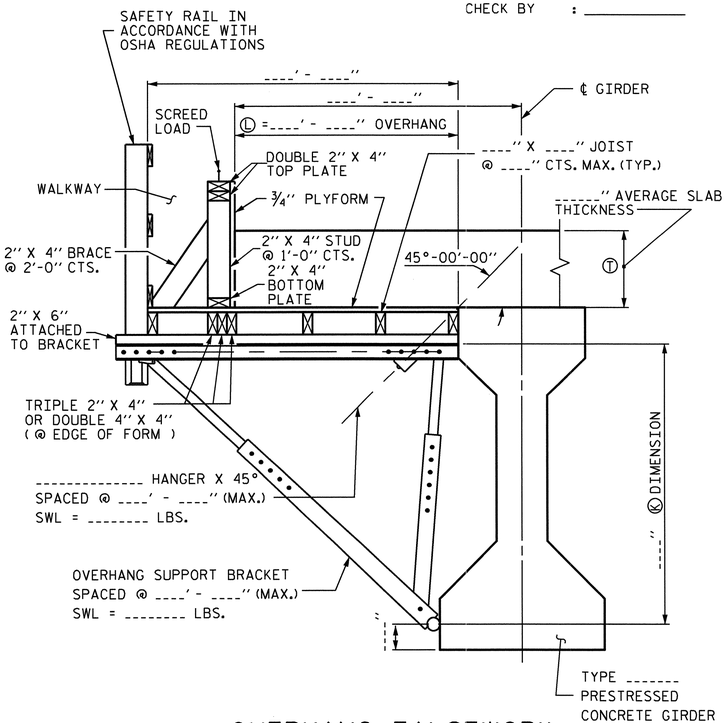

OVERHANG FALSEWORK

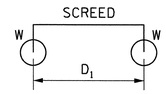

4-WHEEL MACHINE

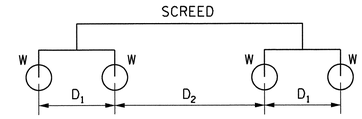

8-WHEEL MACHINE

4 WHEEL MACHINE	
S/D1	R
<= 1.0	1.00
1.1	1.09
1.2	1.17
1.3	1.23
1.4	1.29
1.5	1.33
1.6	1.38
1.7	1.41
1.8	1.44
1.9	1.47
2.0	1.50
2.2	1.55
2.4	1.58
2.6	1.62
2.8	1.64
3.0	1.67
3.5	1.71
4.0	1.75

TABLE 2: SCREED LOAD FACTOR "R"

		THE SCREED LOAD FACTOR R (FOR 8 WHEEL MACHINE)																	
		S/D_2																	
		<= 1.0	1.1	1.2	1.3	1.4	1.5	1.6	1.7	1.8	1.9	2.0	2.2	2.4	2.6	2.8	3.0	3.5	4.0
S/D_1	<= 1.0	1.00	1.09	1.17	1.23	1.29	1.33	1.38	1.41	1.44	1.47	1.50	1.55	1.58	1.62	1.64	1.67	1.71	1.75
	1.1	1.09	1.18	1.26	1.32	1.38	1.42	1.47	1.50	1.54	1.56	1.59	1.64	1.67	1.71	1.73	1.76	1.81	1.84
	1.2	1.17	1.26	1.33	1.40	1.45	1.50	1.54	1.58	1.61	1.64	1.67	1.71	1.75	1.78	1.81	1.83	1.88	1.92
	1.3	1.23	1.32	1.40	1.46	1.52	1.56	1.61	1.64	1.68	1.70	1.73	1.78	1.81	1.85	1.87	1.90	1.95	1.98
	1.4	1.29	1.38	1.45	1.52	1.57	1.62	1.66	1.70	1.73	1.76	1.79	1.83	1.87	1.90	1.93	1.95	2.00	2.07
	1.5	1.33	1.42	1.50	1.56	1.62	1.67	1.71	1.75	1.78	1.81	1.83	1.88	1.92	1.95	1.98	2.00	2.10	2.17
	1.6	1.38	1.47	1.54	1.61	1.66	1.71	1.75	1.79	1.82	1.85	1.88	1.92	1.96	1.99	2.04	2.08	2.18	2.25
	1.7	1.41	1.50	1.58	1.64	1.70	1.75	1.79	1.82	1.86	1.89	1.91	1.96	2.00	2.05	2.11	2.16	2.25	2.32
	1.8	1.44	1.54	1.61	1.68	1.73	1.78	1.82	1.86	1.89	1.92	1.94	1.99	2.06	2.12	2.17	2.22	2.32	2.39
	1.9	1.47	1.56	1.64	1.70	1.76	1.81	1.85	1.89	1.92	1.95	1.97	2.04	2.11	2.18	2.23	2.28	2.38	2.45
	2.0	1.50	1.59	1.67	1.73	1.79	1.83	1.88	1.91	1.94	1.97	2.00	2.09	2.17	2.23	2.29	2.33	2.43	2.50
	2.2	1.55	1.64	1.71	1.78	1.83	1.88	1.92	1.96	1.99	2.04	2.09	2.18	2.26	2.32	2.38	2.42	2.52	2.59
	2.4	1.58	1.67	1.75	1.81	1.87	1.92	1.96	2.00	2.06	2.11	2.17	2.26	2.33	2.40	2.45	2.50	2.60	2.67
	2.6	1.62	1.71	1.78	1.85	1.90	1.95	1.99	2.05	2.12	2.18	2.23	2.32	2.40	2.46	2.52	2.56	2.66	2.73
	2.8	1.64	1.73	1.81	1.87	1.93	1.98	2.04	2.11	2.17	2.23	2.29	2.38	2.45	2.52	2.57	2.62	2.71	2.79
	3.0	1.67	1.76	1.83	1.90	1.95	2.00	2.08	2.16	2.22	2.28	2.33	2.42	2.50	2.56	2.62	2.67	2.76	2.83
	3.5	1.71	1.81	1.88	1.95	2.00	2.10	2.18	2.25	2.32	2.38	2.43	2.52	2.60	2.66	2.71	2.76	2.86	2.93
	4.0	1.75	1.84	1.92	1.98	2.07	2.17	2.25	2.32	2.39	2.45	2.50	2.59	2.67	2.73	2.79	2.83	2.93	3.00

TABLE 3: ALLOWABLE SPAN LENGTH OF JOISTS AND JOIST SPACINGS

AVG. SLAB THICKNESS Ⓣ (IN)	LUMBER JOIST SIZE (IN X IN)	JOIST SPACINGS			
		15 IN	12 IN	10 IN	8 IN
		THE ALLOWABLE SPAN LENGTH OF JOISTS			
10	2 X 4	———	4' - 6"	4' - 9"	5' - 0"
	4 X 4	5' - 9"	6' - 3"	6' - 6"	6' - 7"
12	2 X 4	———	4' - 3"	4' - 9"	5' - 0"
	4 X 4	5' - 3"	6' - 0"	6' - 3"	6' - 5"
14	2 X 4	———	4' - 0"	4' - 6"	5' - 0"
	4 X 4	———	5' - 6"	6' - 0"	6' - 4"
16	2 X 4	———	4' - 0"	4' - 3"	4' - 9"
	4 X 4	———	5' - 3"	5' - 9"	6' - 3"

NOTES

DESIGN INCLUDES CONSTRUCTION LIVE LOAD 20 PSF ON THE AREA SUPPORTED AND 75 PLF AT THE OUTSIDE DECK OF OVERHANGS.

REQUIRED MINIMUM DIAGONAL LEG CAPACITY: 3600 LB WORKING LOAD

THE CONTRACTOR HAS THE OPTION OF SUBMITTING HIS OWN DESIGN FOR OVERHANG FALSEWORK IN ACCORDANCE WITH THE SPECIAL PROVISIONS.

SUBMITTALS UTILIZING THE INSTRUCTIONS AND PROCEDURES DESCRIBED ON SHEET 1 OF 3 SHALL BE IN ACCORDANCE WITH THE APPLICABLE SECTIONS OF THE SPECIFICATIONS AND SPECIAL PROVISIONS, EXCEPT THAT CALCULATIONS FOR OVERHANG FALSEWORK NEED NOT BE SEALED BY A REGISTERED ENGINEER.

FOR OVERHANG FALSEWORK BRACING DESIGN, SEE SHEET 3 OF 3.

PROJECT NO. R-2413C
GUILFORD-ROCKINGHAM COUNTY
STATION: 11+43.200
-SB US 220 RAMP-
SHEET 2 OF 3

STATE OF NORTH CAROLINA
DEPARTMENT OF TRANSPORTATION
RALEIGH

STANDARD OVERHANG FALSEWORK

AASHTO TYPES
III, IV, V, AND VI

NORTH CAROLINA PROFESSIONAL SEAL 18788 ENGINEER CHANG-CHUAN VICTOR CHAO

Chang-Chuan V. Chao
8-5-2011

REVISIONS						SHEET NO.
NO.	BY:	DATE:	NO.	BY:	DATE:	5-145
1			3			TOTAL SHEETS
2			4			238

ASSEMBLED BY:	DATE:
CHECKED BY:	DATE:
DRAWN BY: R. WRIGHT 06/04	REV.
CHECKED BY: C. V. CHAO 06/04	

05-AUG-2011 10:46
C:\OLDFILESD\wdlr\victor\OverhangFalsework\TIEBAR&STRUT\R-2413C\R-2413CSTR4_TYPE_III\R2413CSTR4verHangSheets.dgn
vchao

STR. #4

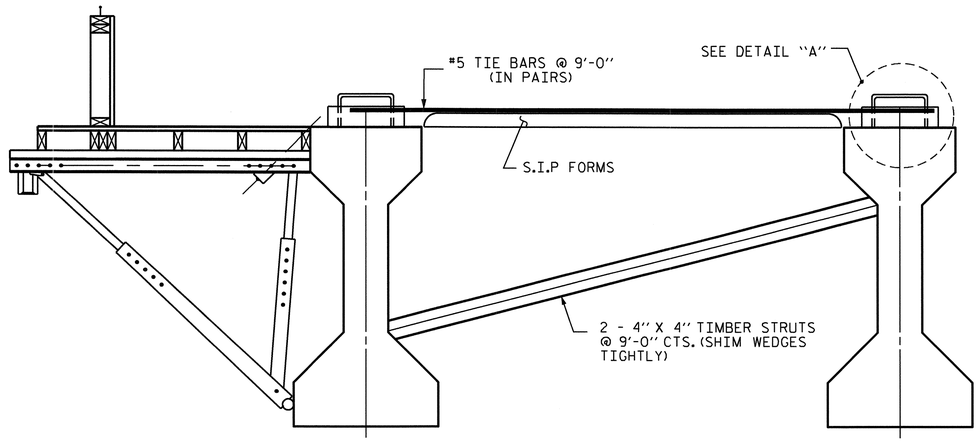

EXTERIOR GIRDER INTERIOR GIRDER

DETAIL OF REQUIRED OVERHANG FALSEWORK BRACING SYSTEM

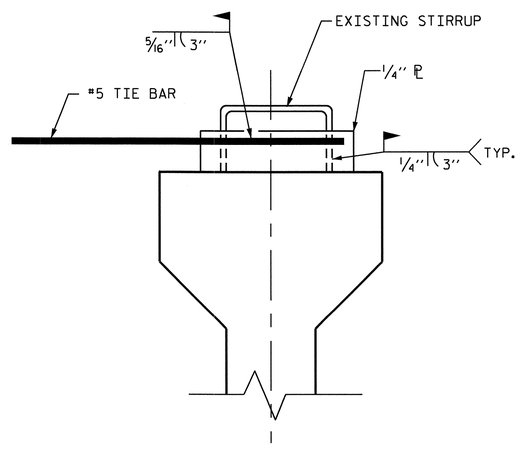

DETAIL "A"

NOTES:

EACH #5 TIE BAR SHALL BE WELDED TO ONE STIRRUP LOOP AS SHOWN IN DETAIL "A". #5 TIE BARS SHALL BE WELDED TO TWO ADJACENT STIRRUPS OF THE EXTERIOR GIRDER AND THE ADJACENT INTERIOR GIRDER BETWEEN PERMANENT DIAPHRAGMS. WELD STEEL PLATES IN BETWEEN THE TIE BARS AND THE STIRRUP LOOP. WELDING TWO TIE BARS TO THE SAME STIRRUP LOOP SHALL NOT BE PERMITTED.

MAXIMUM SPACING BETWEEN THE BRACING (TIE BARS-TIMBER STRUT) IS 9'-0" CTS. #5 TIE BARS SHALL BE LOCATED OVER A TIMBER STRUT.

INSTALL TIE BARS AND TIMBER STRUTS PRIOR TO PLACEMENT OF CONCRETE OR SCREED WEIGHT ONTO THE OVERHANG FALSEWORK.

PROJECT NO. R-2413C
GUILFORD-ROCKINGHAM COUNTY
STATION: 11+43.200
-SB US 220 RAMP-

SHEET 3 OF 3

STATE OF NORTH CAROLINA
DEPARTMENT OF TRANSPORTATION
RALEIGH

STANDARD OVERHANG FALSEWORK

AASHTO TYPES
III, IV, V, AND VI

NORTH CAROLINA PROFESSIONAL SEAL 18788 ENGINEER CHANG-CHUAN VICTOR CHAO

Chang-Chuan V. Chao
8-5-2011

REVISIONS						SHEET NO.
NO.	BY:	DATE:	NO.	BY:	DATE:	S-146
1			3			TOTAL SHEETS
2			4			238

DRAWN BY: R. WRIGHT 06/04 DATE :
CHECKED BY: C. V. CHAO 06/04 DATE :

05-AUG-2011 10:47
C:\OLDFILESD\wdir\victor\OverhangFalsework\TIEBAR&STRUT\R-2413C\R-2413CSTR4_TYPE_III\R2413CSTR4verHangSheets.dgn
vchao

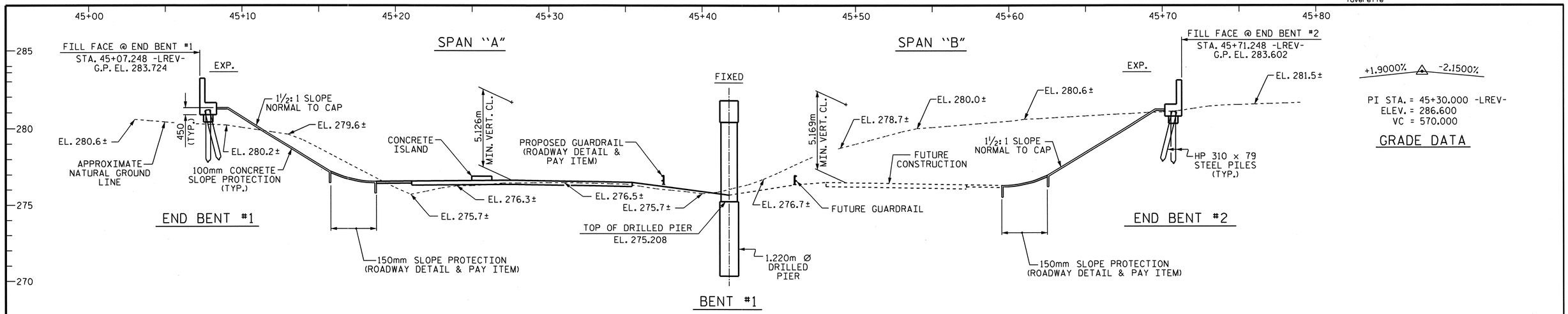

SECTION ALONG CONTROL LINE LEFT LANE

(BENTS ON SECTION AT RIGHT ANGLES TO BENTS)
(EXISTING GROUND LINE AND ELEVATIONS ARE ALONG -LREV-)

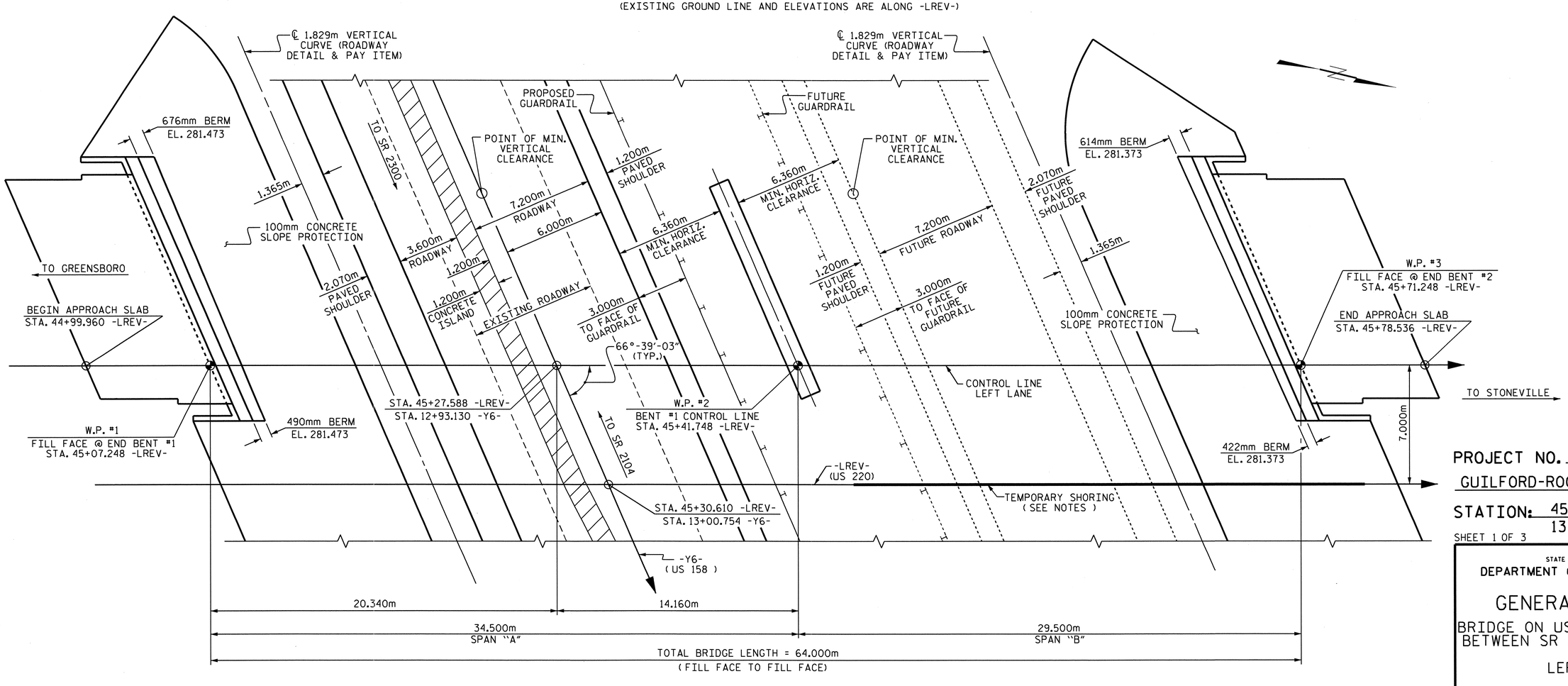

PLAN

(PILES NOT SHOWN FOR CLARITY)

METRIC

NORTH CAROLINA PROFESSIONAL SEAL 12274 ENGINEER OMAR R. AZIZI
10/31/11

NORTH CAROLINA PROFESSIONAL SEAL 022516 ENGINEER EMILY E. MURRAY
10/31/11

PROJECT NO. R-2413C

GUILFORD-ROCKINGHAM COUNTY

STATION: 45+30.610 -LREV-
13+00.754 -Y6-

SHEET 1 OF 3 BRIDGE #854

STATE OF NORTH CAROLINA
DEPARTMENT OF TRANSPORTATION
RALEIGH

GENERAL DRAWING

BRIDGE ON US 220 OVER US 158
BETWEEN SR 2104 AND SR 2300

LEFT LANE

REVISIONS						SHEET NO.
NO.	BY:	DATE:	NO.	BY:	DATE:	S-147
1			3			TOTAL SHEETS
2			4			238

DRAWN BY : T.L. AVERETTE DATE : 01-25-11
CHECKED BY : PEGGY PARISI DATE : 05-03-11

STR. #5

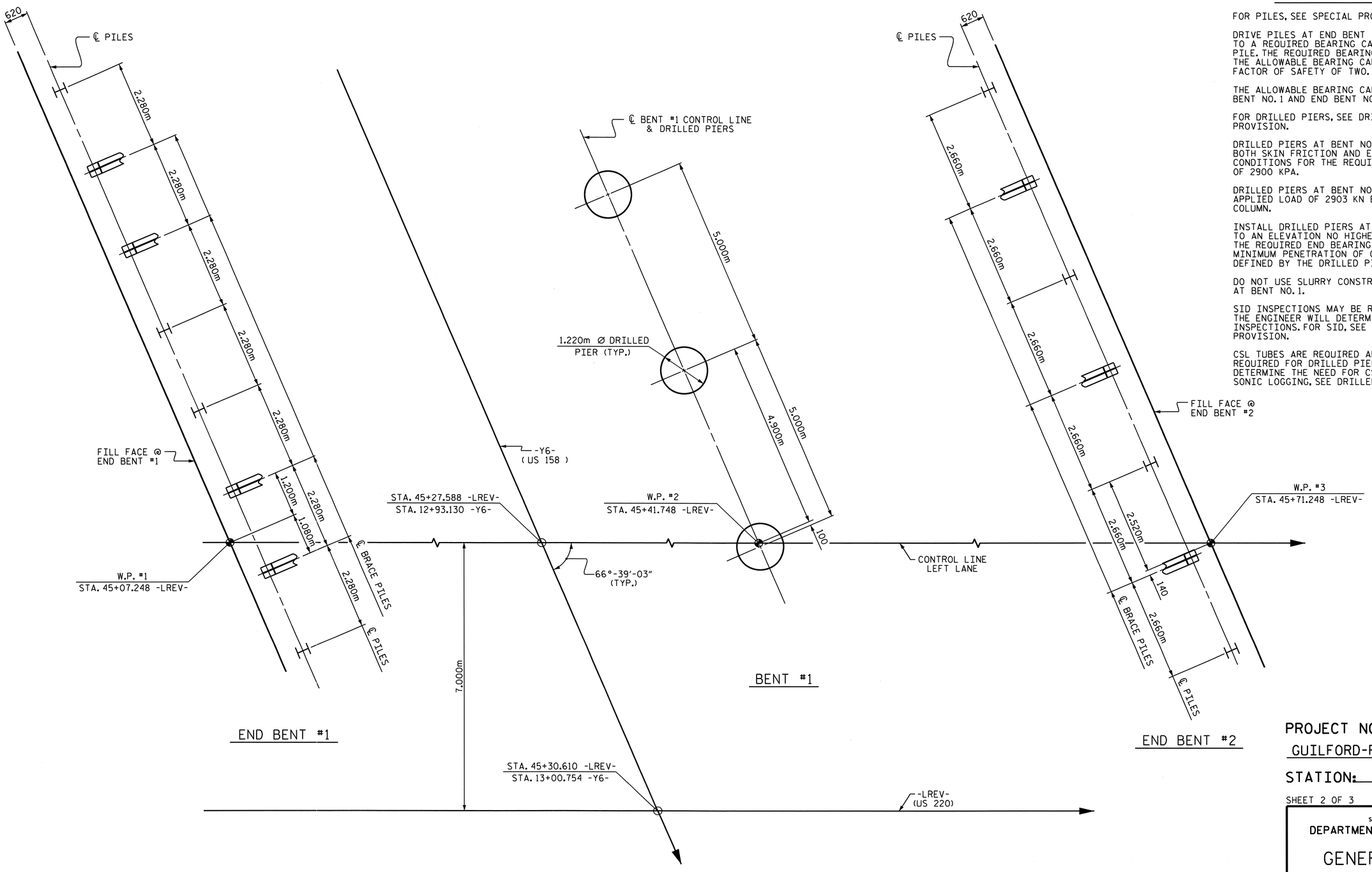

FOUNDATION NOTES

FOR PILES, SEE SPECIAL PROVISIONS.

DRIVE PILES AT END BENT NO. 1 AND END BENT NO. 2 TO A REQUIRED BEARING CAPACITY OF 1060 KN PER PILE. THE REQUIRED BEARING CAPACITY IS EQUAL TO THE ALLOWABLE BEARING CAPACITY WITH A MINIMUM FACTOR OF SAFETY OF TWO.

THE ALLOWABLE BEARING CAPACITY FOR PILES AT END BENT NO. 1 AND END BENT NO. 2 IS 530 KN PER PILE.

FOR DRILLED PIERS, SEE DRILLED PIERS SPECIAL PROVISION.

DRILLED PIERS AT BENT NO. 1 ARE DESIGNED FOR BOTH SKIN FRICTION AND END BEARING. CHECK FIELD CONDITIONS FOR THE REQUIRED END BEARING CAPACITY OF 2900 KPA.

DRILLED PIERS AT BENT NO. 1 ARE DESIGNED FOR AN APPLIED LOAD OF 2903 KN EACH AT THE TOP OF THE COLUMN.

INSTALL DRILLED PIERS AT BENT NO. 1 THAT EXTEND TO AN ELEVATION NO HIGHER THAN 270.4 m, SATISFY THE REQUIRED END BEARING CAPACITY AND HAVE A MINIMUM PENETRATION OF ONE METER INTO ROCK AS DEFINED BY THE DRILLED PIERS SPECIAL PROVISION.

DO NOT USE SLURRY CONSTRUCTION FOR DRILLED PIERS AT BENT NO. 1.

SID INSPECTIONS MAY BE REQUIRED FOR DRILLED PIERS. THE ENGINEER WILL DETERMINE THE NEED FOR SID INSPECTIONS. FOR SID, SEE DRILLED PIERS SPECIAL PROVISION.

CSL TUBES ARE REQUIRED AND CSL TESTING MAY BE REQUIRED FOR DRILLED PIERS. THE ENGINEER WILL DETERMINE THE NEED FOR CSL TESTING. FOR CROSSHOLE SONIC LOGGING, SEE DRILLED PIERS SPECIAL PROVISION.

FOUNDATION LAYOUT

ALL PILES ARE HP 310 x 79 STEEL PILES.
DIMENSIONS LOCATING PILES ARE SHOWN TO THE PILE CENTERLINE.
BRACE PILES AT END BENTS ARE TO BE BATTERED @ 250 : 1000

PROJECT NO. R-2413C
GUILFORD-ROCKINGHAM COUNTY
STATION: 45+30.610 -LREV-
13+00.754 -Y6-

SHEET 2 OF 3

STATE OF NORTH CAROLINA
DEPARTMENT OF TRANSPORTATION
RALEIGH

GENERAL DRAWING

BRIDGE ON US 220 OVER US 158
BETWEEN SR 2104 AND SR 2300

LEFT LANE

NORTH CAROLINA PROFESSIONAL SEAL 022516 ENGINEER EMILY E. MURRAY
10/28/11

REVISIONS						SHEET NO.
NO.	BY:	DATE:	NO.	BY:	DATE:	S-148
1			3			TOTAL SHEETS
2			4			238

DRAWN BY : T.L. AVERETTE DATE : 01-25-11
CHECKED BY : PEGGY PARISI DATE : 05-03-11

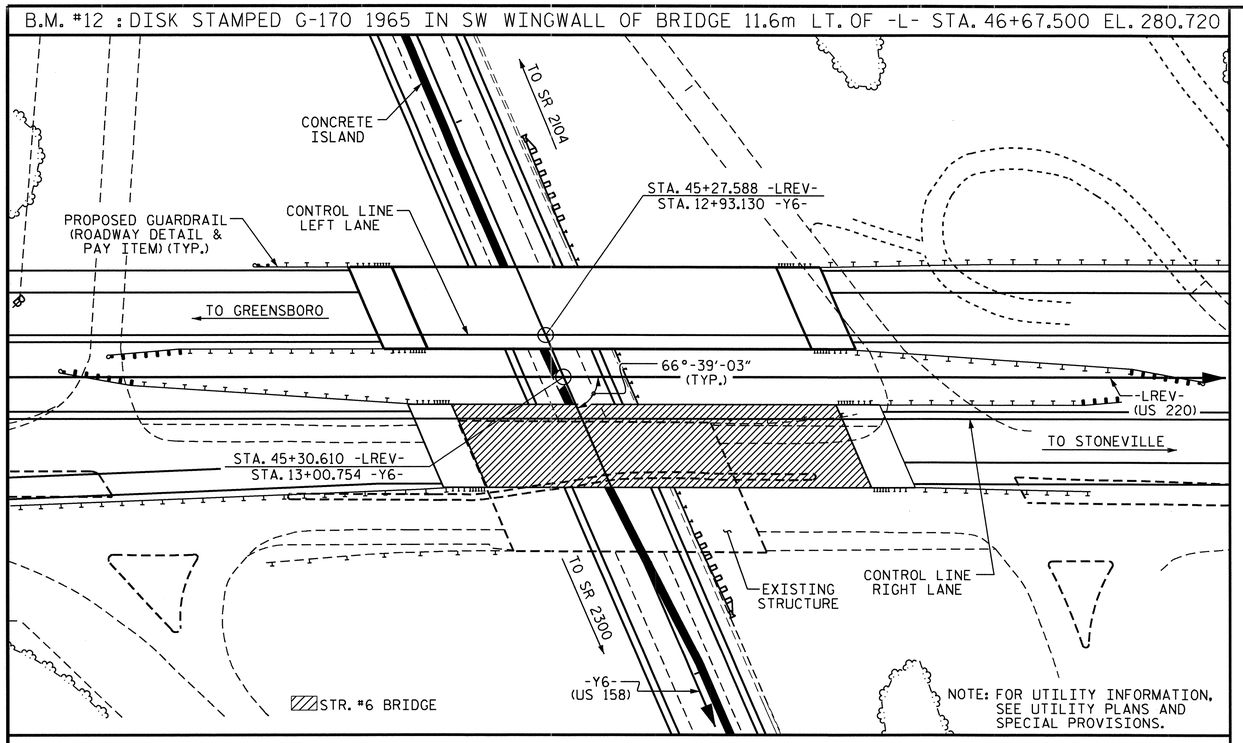

LOCATION SKETCH

NOTES

ALL DIMENSIONS ARE IN MILLIMETERS UNLESS OTHERWISE NOTED.

ALL ELEVATIONS ARE IN METERS.

ASSUMED LIVE LOAD = MS 18 OR ALTERNATE LOADING, EXCEPT THAT THE GIRDERS HAVE BEEN DESIGNED FOR MS 22.5.

FOR OTHER DESIGN DATA AND GENERAL NOTES, SEE SHEET SNSM.

THIS BRIDGE HAS BEEN DESIGNED BY THE STRENGTH DESIGN METHOD AS SPECIFIED IN AASHTO STANDARD SPECIFICATIONS.

ALL STRUCTURAL STEEL SHALL BE AASHTO M270 GRADE 345W AND PAINTED IN ACCORDANCE WITH SYSTEM 4 OF ARTICLE 442-7 OF THE STANDARD SPECIFICATIONS UNLESS OTHERWISE NOTED ON THE PLANS.

THE LOCATION OF THE CONSTRUCTION JOINT IN THE DRILLED PIERS IS BASED ON AN APPROXIMATE GROUND LINE ELEVATION. IF THE CONSTRUCTION JOINT IS ABOVE THE ACTUAL GROUND ELEVATION, THE CONTRACTOR SHALL PLACE THE CONSTRUCTION JOINT 300mm BELOW THE GROUND LINE.

FOR MAINTENANCE AND PROTECTION OF TRAFFIC BENEATH PROPOSED STRUCTURE, SEE SPECIAL PROVISIONS.

WORK SHALL NOT BE STARTED ON THIS BRIDGE UNTIL ROADWAY SECTION HAS BEEN EXCAVATED.

NEEDLE BEAMS WILL NOT BE ALLOWED UNLESS OTHERWISE CALLED FOR ON THE PLANS OR APPROVED BY THE ENGINEER.

FOR SUBMITTAL OF WORKING DRAWINGS, SEE SPECIAL PROVISIONS.

FOR METRIC STRUCTURAL STEEL, SEE SPECIAL PROVISIONS.

FOR FALSEWORK AND FORMWORK, SEE SPECIAL PROVISIONS.

FOR MAINTENANCE OF TRAFFIC, SEE TRAFFIC CONTROL PLANS.

REMOVABLE FORMS MAY BE USED IN LIEU OF METAL STAY-IN-PLACE FORMS IN ACCORDANCE WITH ARTICLE 420-3 OF THE STANDARD SPECIFICATIONS.

THE CLASS AA CONCRETE IN THE BRIDGE DECK SHALL CONTAIN FLY ASH OR GROUND GRANULATED BLAST FURNACE SLAG AT THE SUBSTITUTION RATE SPECIFIED IN ARTICLE 1024-1 AND IN ACCORDANCE WITH ARTICLES 1024-5 AND 1024-6 OF THE STANDARD SPECIFICATIONS. NO PAYMENT WILL BE MADE FOR THIS SUBSTITUTION AS IT IS CONSIDERED INCIDENTAL TO THE COST OF THE REINFORCED CONCRETE DECK SLAB.

THIS BRIDGE HAS BEEN DESIGNED IN ACCORDANCE WITH THE REQUIREMENTS OF THE AASHTO STANDARD SPECIFICATIONS FOR SEISMIC DESIGN OF HIGHWAY BRIDGES FOR SEISMIC PERFORMANCE CATEGORY A.

FOR CRANE SAFETY, SEE SPECIAL PROVISIONS.

FOR GROUT FOR STRUCTURES, SEE SPECIAL PROVISIONS.

FOR CURING CONCRETE, SEE SPECIAL PROVISIONS.

FOR PLACING LOAD ON STRUCTURE MEMBERS, SEE SPECIAL PROVISIONS.

FOR EROSION CONTROL MEASURES SEE EROSION CONTROL PLANS.

FOR SHIPPING STEEL STRUCTURAL MEMBERS, SEE SPECIAL PROVISIONS.

FOR LIMITS OF TEMPORARY SHORING FOR MAINTENANCE OF TRAFFIC, SEE TRAFFIC CONTROL PLANS. FOR PAY ITEM FOR TEMPORARY SHORING FOR MAINTENANCE OF TRAFFIC, SEE ROADWAY PLANS.

TOTAL BILL OF MATERIAL - METRIC

LEFT LANE BRIDGE	1220mm Ø DRILLED PIERS IN SOIL	1220mm Ø DRILLED PIERS NOT IN SOIL	SID INSPECTION	CSL TESTING	REINFORCED CONCRETE DECK SLAB	GROOVING BRIDGE FLOORS	CLASS A CONCRETE	BRIDGE APPROACH SLABS	REINFORCING STEEL	SPIRAL COLUMN REINFORCING STEEL	STRUCTURAL STEEL	HP 310 X 79 STEEL PILES		CONCRETE BARRIER RAIL	100mm SLOPE PROTECTION	POT BEARINGS	ELASTOMERIC BEARINGS	EXPANSION JOINT SEALS
	METERS	METERS	EACH	EACH	SQ. METERS	SQ. METERS	CU. METERS	LUMP SUM	kg	kg	APPROX. kg	NO.	METERS	METERS	SQ. METERS	LUMP SUM	LUMP SUM	LUMP SUM
SUPERSTRUCTURE					860.2	907.9		LUMP SUM			127,800			138.984		LUMP SUM	LUMP SUM	LUMP SUM
END BENT #1							26.8		2,380			8	22.4		271.7			
BENT #1	7.9	6.8					36.7		5,310	1,227								
END BENT #2							26.5		2,390			7	41.3		271.9			
TOTAL	7.9	6.8	1	1	860.2	907.9	90.0	LUMP SUM	10,080	1,227	127,800	15	63.7	138.984	543.6	LUMP SUM	LUMP SUM	LUMP SUM

TOTAL BILL OF MATERIAL - ENGLISH

	LIN. FT.	LIN. FT.	EACH	EACH	SQ. FT.	SQ. FT.	CU. YD.	LUMP SUM	LBS.	LBS.	APPROX. LBS.	NO.	LIN. FT.	LIN. FT.	SQ. YD.	LUMP SUM	LUMP SUM	LUMP SUM
TOTAL	25.9	22.3	1	1	9,259	9,773	117.7	LUMP SUM	22,223	2,705	281,750	15	209	455.98	650	LUMP SUM	LUMP SUM	LUMP SUM

PROJECT NO. R-2413C

GUILFORD-ROCKINGHAM COUNTY

STATION: 45+30.610 -LREV-
13+00.754 -Y6-

SHEET 3 OF 3

STATE OF NORTH CAROLINA
DEPARTMENT OF TRANSPORTATION
RALEIGH

GENERAL DRAWING

BRIDGE ON US 220 OVER US 158 BETWEEN SR 2104 AND SR 2300

LEFT LANE

NORTH CAROLINA PROFESSIONAL SEAL 022516 ENGINEER
EMIL E. MARRAY
10/28/11

REVISIONS						SHEET NO.
NO.	BY:	DATE:	NO.	BY:	DATE:	S-149
1			3			TOTAL SHEETS
2			4			238

DRAWN BY : T.L. AVERETTE DATE : 01-25-11
CHECKED BY : PEGGY PARISI DATE : 05-03-11

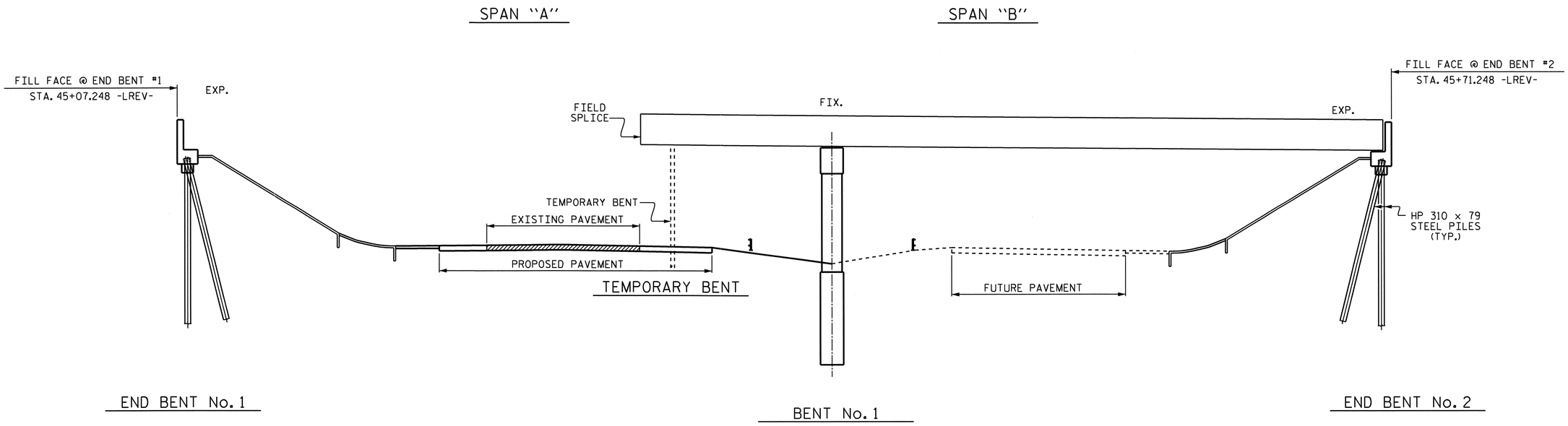

STAGE I GIRDER ERECTION

(SECTIONS AT BENT & END BENTS ARE AT RIGHT ANGLES)

ERECTION NOTES

ERECT A MINIMUM OF TWO GIRDERS WITH ALL DIAPHRAGMS/CROSSFRAMES BETWEEN THE GIRDERS IN PLACE AND THE BOLTS TIGHTENED PRIOR TO RELEASING THE GIRDERS.

ERECT EACH SUBSEQUENT GIRDER WITH DIAPHRAGMS/CROSSFRAMES CONNECTING TO THE ADJACENT PREVIOUSLY ERECTED GIRDER AND TIGHTEN ALL BOLTS BEFORE RELEASING THE GIRDER.

THE STRUCTURAL STEEL SHALL BE SUPPORTED DURING ERECTION IN ITS CAMBERED POSITION. A MINIMUM OF ONE TEMPORARY BENT SHALL BE USED IN SPAN "A".

TEMPORARY BENT SHALL SUPPORT ALL GIRDERS IN THE TYPICAL SECTION.

PLACEMENT OF TEMPORARY BENT SHALL BE COORDINATED WITH TRAFFIC PHASING REQUIREMENTS. SEE TRAFFIC CONTROL PLANS.

TEMPORARY BENT SHALL REMAIN IN PLACE UNTIL ALL DIAPHRAGMS/CROSSFRAMES ARE IN PLACE AND ALL HIGH STRENGTH BOLTS ARE TIGHTENED.

TEMPORARY BENT SHALL PROVIDE BEARING AT CONNECTOR PLATE LOCATIONS. WHEN CONNECTOR PLATES ARE USED AS TEMPORARY BEARING STIFFENERS, DIAPHRAGMS MUST BE ATTACHED.

THE CONTRACTOR'S ERECTION PLANS SHALL INCLUDE A METHOD OF TEMPORARY BENT REMOVAL THAT WILL UNIFORMLY TRANSFER THE STRUCTURAL WEIGHT TO THE DIAPHRAGMS/CROSSFRAMES AND THE GIRDERS WILL REMAIN IN THE CAMBERED POSITIONS.

PLANS FOR TEMPORARY BENT ERECTION AND REMOVAL SHALL BE SUBMITTED TO THE ENGINEER FOR REVIEW.

THE CONTRACTOR IS RESPONSIBLE FOR DESIGNING THE TEMPORARY BENT. THE DESIGNS SHALL BE COMPLETED BY A PROFESSIONAL ENGINEER REGISTERED IN THE STATE OF NORTH CAROLINA. THE CONTRACTOR SHALL SUBMIT SIGNED AND SEALED WORKING DRAWINGS AND CALCULATIONS FOR APPROVAL BY THE ENGINEER.

DURING THE GIRDER ERECTION PROCEDURE, THE CONTRACTOR IS RESPONSIBLE FOR PROVIDING TEMPORARY LATERAL BRACING AND OTHER MEANS OF SUPPORT, AS REQUIRED, TO ENSURE STABILITY OF THE GIRDERS, AVOID UPLIFT OF THE GIRDERS AT THE TEMPORARY BENTS AND TO ENSURE PLUMBNESS OF THE GIRDERS IN THE FINAL CONDITION.

NO SEPARATE MEASUREMENT OR PAYMENT WILL BE MADE FOR PROVIDING THE TEMPORARY BENTS. THE COST FOR ALL MATERIALS, EQUIPMENT, TOOLS, LABOR AND ANY INCIDENTALS NECESSARY TO PROVIDE THE TEMPORARY BENTS SHALL BE CONSIDERED INCIDENTAL TO THE LUMP SUM BID PRICE FOR STRUCTURAL STEEL.

THE CONTRACTOR MAY SUBMIT AN ALTERNATE ERECTION METHOD TO THE ENGINEER FOR REVIEW AND APPROVAL.

PROJECT NO. R-2413C
GUILFORD-ROCKINGHAM COUNTY
STATION: 45+30.610 -LREV-

NORTH CAROLINA PROFESSIONAL SEAL 022516 ENGINEER ELMER E. MURRAY
10/28/11

STATE OF NORTH CAROLINA
DEPARTMENT OF TRANSPORTATION
RALEIGH

GIRDER ERECTION DETAILS

REVISIONS						SHEET NO.
NO.	BY:	DATE:	NO.	BY:	DATE:	S-150
1			3			TOTAL SHEETS
2			4			238

DRAWN BY : PEGGY PARISI DATE : 6-1-11
CHECKED BY : T.L. AVERETTE DATE : 7-26-11

05-SEP-2011 13:44
Y:\Structures\Final Plans\Str.#5\R2413C_sd_GD_05.dgn
mgudlaugsson

STR. #5

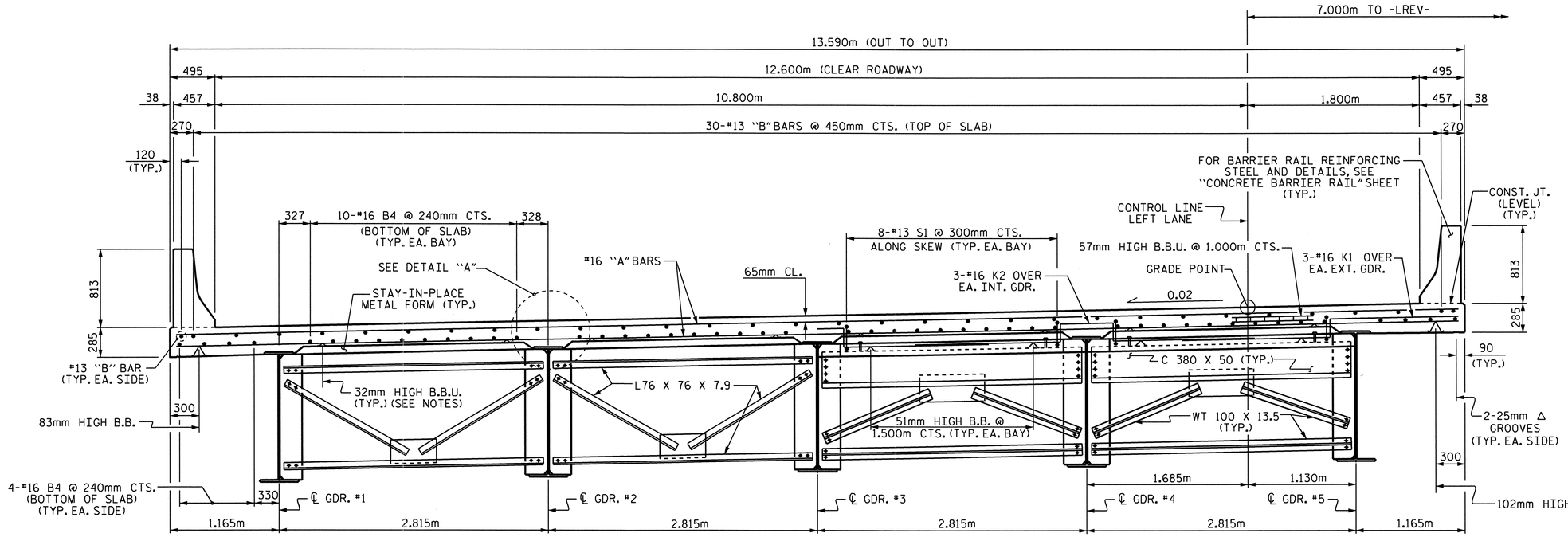

HALF SECTION @ INTERMEDIATE DIAPHRAGMS

SHOWING TYPE D3, SEE "FRAMING PLAN"

HALF SECTION @ END BENT DIAPHRAGMS

SHOWING TYPE D1, SEE "FRAMING PLAN"

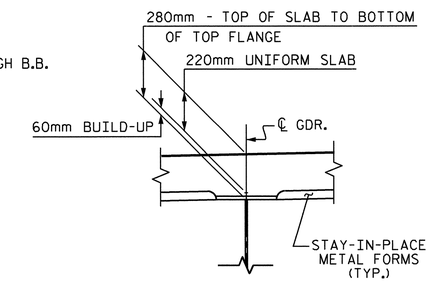

DETAIL "A"

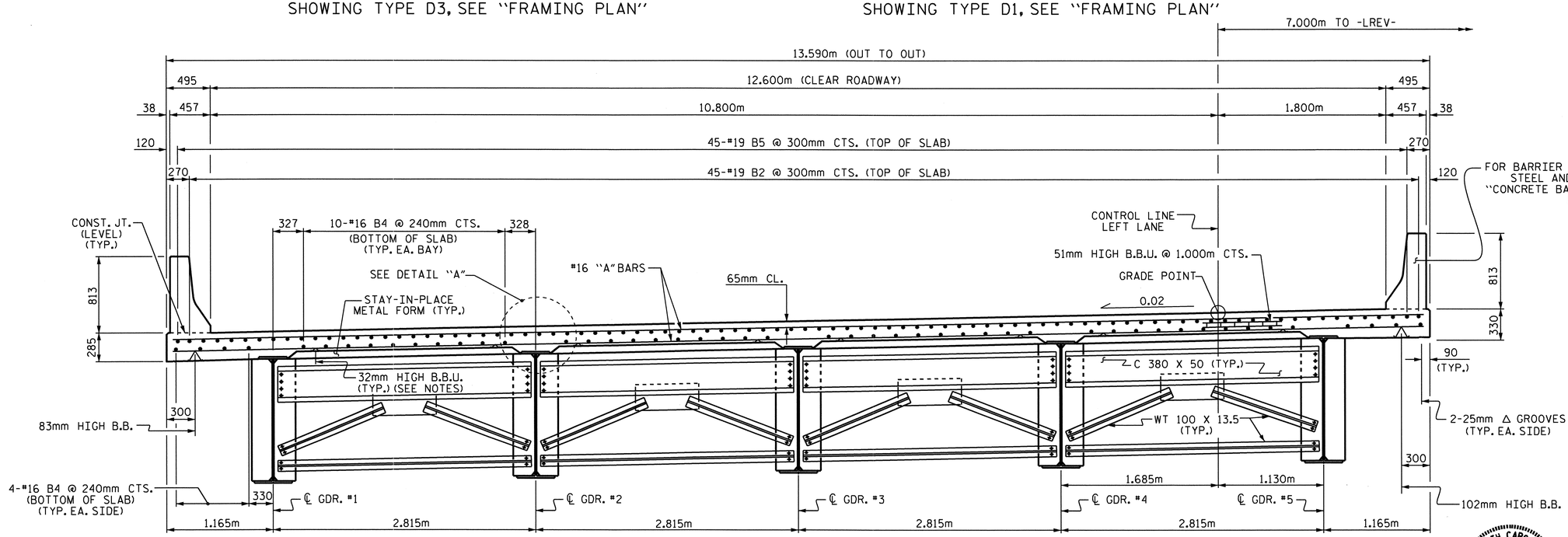

TYPICAL SECTION @ BENT DIAPHRAGMS

SHOWING TYPE D2, SEE "FRAMING PLAN"

NOTES

PROVIDE 32mm HIGH BEAM BOLSTERS UPPER AT 1.2m CTS. ATOP THE METAL STAY-IN-PLACE FORMS TO SUPPORT THE BOTTOM MAT OF 'A' BARS. WHEN USING REMOVABLE FORMS, PROVIDE CONTINUOUS HIGH CHAIRS FOR METAL DECK (C.H.C.M.) @ 1.2m CTS. WITH A HEIGHT TO SUPPORT THE BOTTOM MAT OF 'A' BARS A CLEAR DISTANCE OF 65mm ABOVE THE TOP OF THE REMOVABLE FORM.

METAL STAY-IN-PLACE FORMS SHALL NOT BE WELDED TO BEAM OR GIRDER FLANGES IN THE ZONES REQUIRING CHARPY V-NOTCH TEST. SEE STRUCTURAL STEEL DETAIL SHEETS.

PREVIOUSLY CAST CONCRETE IN A CONTINUOUS UNIT SHALL HAVE ATTAINED A MINIMUM COMPRESSIVE STRENGTH OF 20.7 MPa BEFORE ADDITIONAL CONCRETE IS CAST IN THE UNIT.

STRUCTURAL STEEL ERECTION IN A CONTINUOUS UNIT SHALL BE COMPLETE BEFORE FALSEWORK OR FORMS ARE PLACED ON THE UNIT.

THE CONTRACTOR MAY, WHEN NECESSARY, PROPOSE A SCHEME FOR AVOIDING INTERFERENCE BETWEEN METAL STAY-IN-PLACE FORM SUPPORTS OR FORMS AND BEAM/GIRDER STIFFENERS OR CONNECTOR PLATES. THE PROPOSAL SHALL BE INDICATED, AS APPROPRIATE, ON EITHER THE STEEL WORKING DRAWINGS OR THE METAL STAY-IN-PLACE FORM WORKING DRAWINGS.

THE CONTRACTOR SHALL ADJUST THE GIRDER BUILDUPS AS NECESSARY TO INCORPORATE A MAXIMUM PERMISSIBLE VARIATION IN POT BEARING DEPTH OF 13mm, SEE SPECIAL PROVISION FOR POT BEARINGS.

BARRIER RAIL IN A CONTINUOUS UNIT SHALL NOT BE CAST UNTIL ALL SLAB CONCRETE IN THE UNIT HAS BEEN CAST AND HAS REACHED A MINIMUM COMPRESSIVE STRENGTH OF 20.7 MPa.

PROJECT NO. R-2413C

GUILFORD-ROCKINGHAM COUNTY

STATION: 45+30.610 -LREV-

SHEET 1 OF 2

STATE OF NORTH CAROLINA
DEPARTMENT OF TRANSPORTATION
RALEIGH

SUPERSTRUCTURE

TYPICAL SECTION AND DETAILS

LEFT LANE

NORTH CAROLINA PROFESSIONAL SEAL 022516 ENGINEER
EMILY K. MURRAY
10/26/11

REVISIONS							SHEET NO.
NO.	BY:	DATE:	NO.	BY:	DATE:		S-151
1			3				TOTAL SHEETS
2			4				238

DRAWN BY : T.L. AVERETTE DATE : 09-01-10
CHECKED BY : PEGGY PARISI DATE : 09-16-10

STR. #5

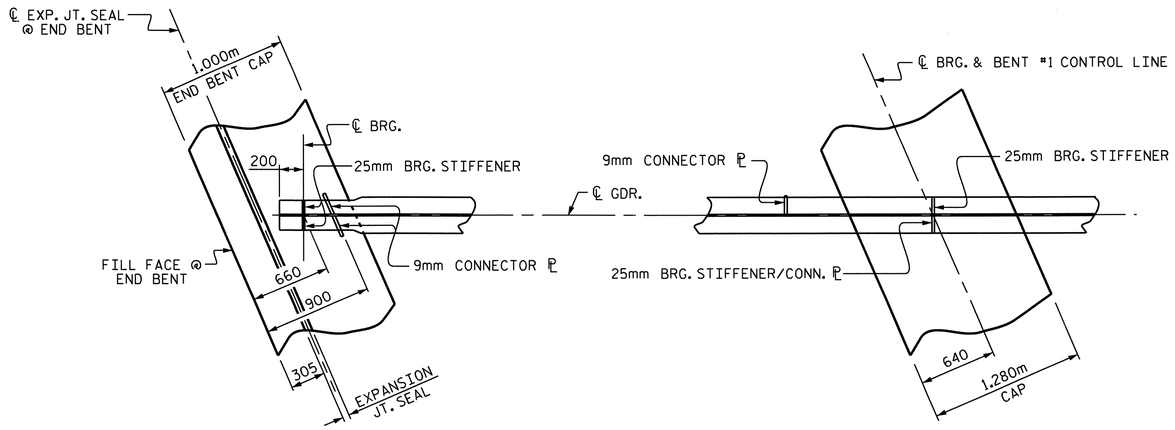

PLAN OF GIRDER AT END BENT JOINT

(END BENT #1 SHOWN, END BENT #2 SIMILAR)

PLAN OF GIRDER AT BENT #1

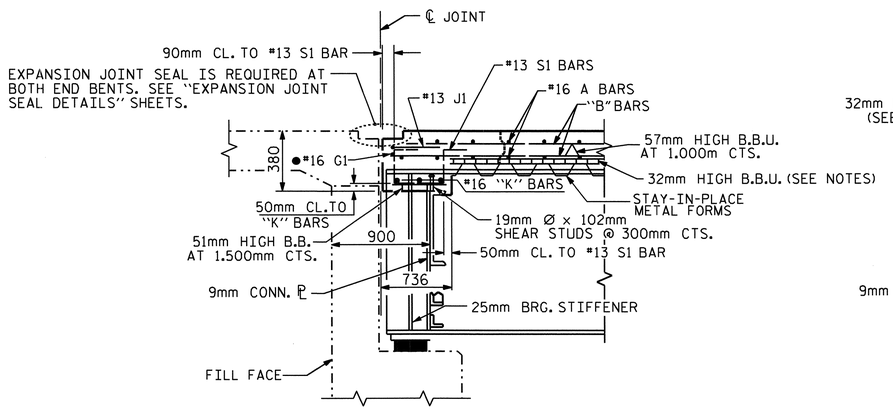

SECTION THRU END BENT DIAPHRAGM

● #16 G1 BAR MAY BE SHIFTED SLIGHTLY, AS NECESSARY, TO CLEAR DIAPHRAGM AND REINFORCING STEEL.

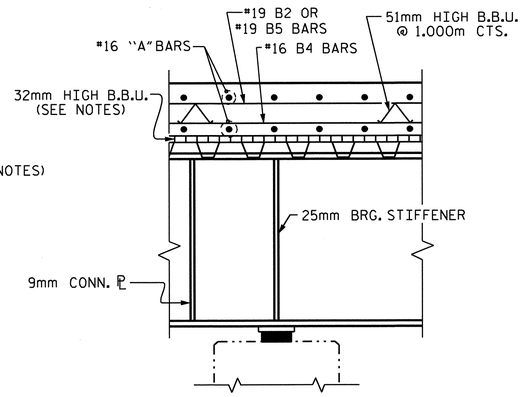

SECTION AT BENT

(CROSSFRAME NOT SHOWN FOR CLARITY)

PROJECT NO. R-2413C

GUILFORD-ROCKINGHAM COUNTY

STATION: 45+30.610 -LREV-

SHEET 2 OF 2

STATE OF NORTH CAROLINA
DEPARTMENT OF TRANSPORTATION
RALEIGH

SUPERSTRUCTURE

TYPICAL SECTION AND DETAILS

LEFT LANE

NORTH CAROLINA PROFESSIONAL SEAL 022516 ENGINEER EMILY E. MURRAY

10/28/10

REVISIONS						SHEET NO.
NO.	BY:	DATE:	NO.	BY:	DATE:	S-152
1			3			TOTAL SHEETS
2			4			238

DRAWN BY : T.L. AVERETTE DATE : 09-01-10
CHECKED BY : PEGGY PARISI DATE : 09-16-10

STR. #5

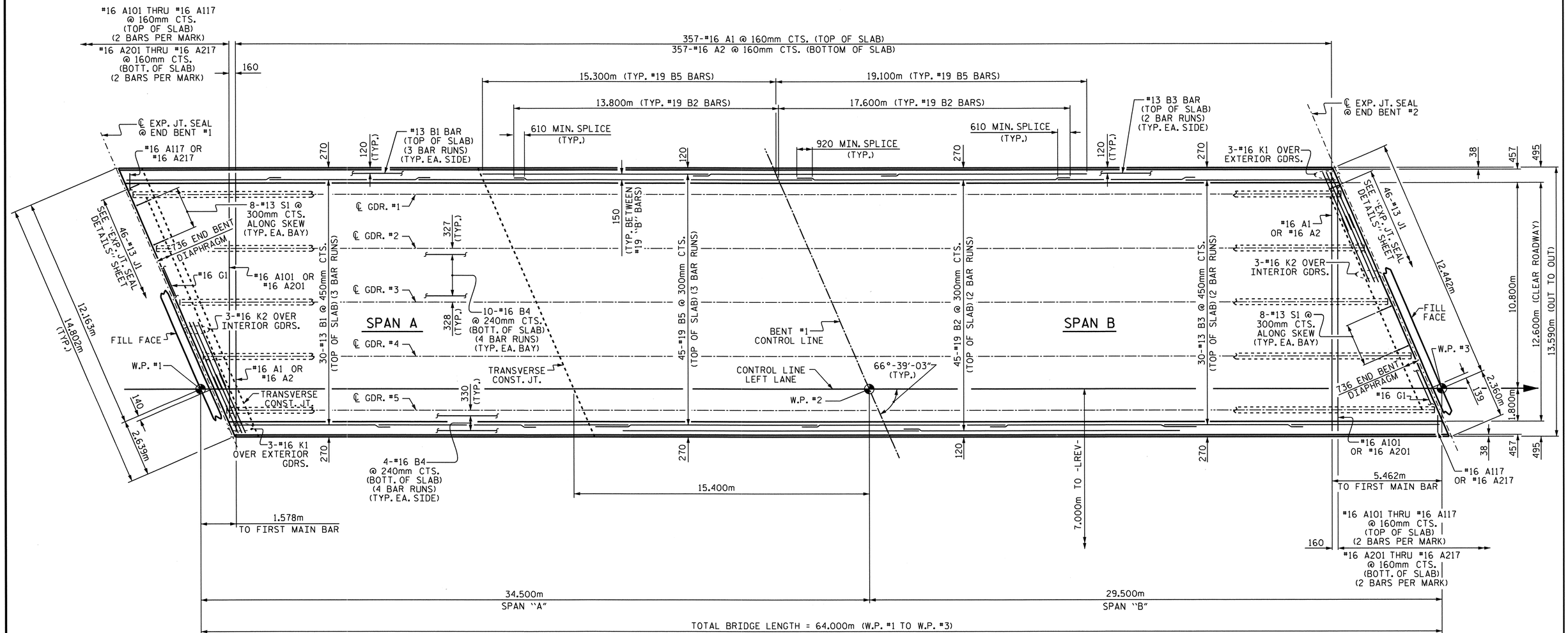

PLAN OF SPANS

FOR REINFORCING STEEL IN CONCRETE BARRIER RAIL, SEE "CONCRETE BARRIER RAIL" SHEET.

PROJECT NO. R-2413C

GUILFORD-ROCKINGHAM COUNTY

STATION: 45+30.610 -LREV-

STATE OF NORTH CAROLINA
DEPARTMENT OF TRANSPORTATION
RALEIGH

SUPERSTRUCTURE

PLAN OF SPANS
LEFT LANE

NORTH CAROLINA PROFESSIONAL SEAL 022516 ENGINEER EMRY E. MURRAY
10/28/11

REVISIONS							SHEET NO.
NO.	BY:	DATE:	NO.	BY:	DATE:		S-153
1			3				TOTAL SHEETS
2			4				238

DRAWN BY : T.L. AVERETTE DATE : 09-01-10
CHECKED BY : PEGGY PARISI DATE : 09-16-10

05-SEP-2011 13:38
Y:\Structures\Final Plans\Str.#5\R2413C_sd_SI_05.dgn
mgudlaugsson

STR. #5

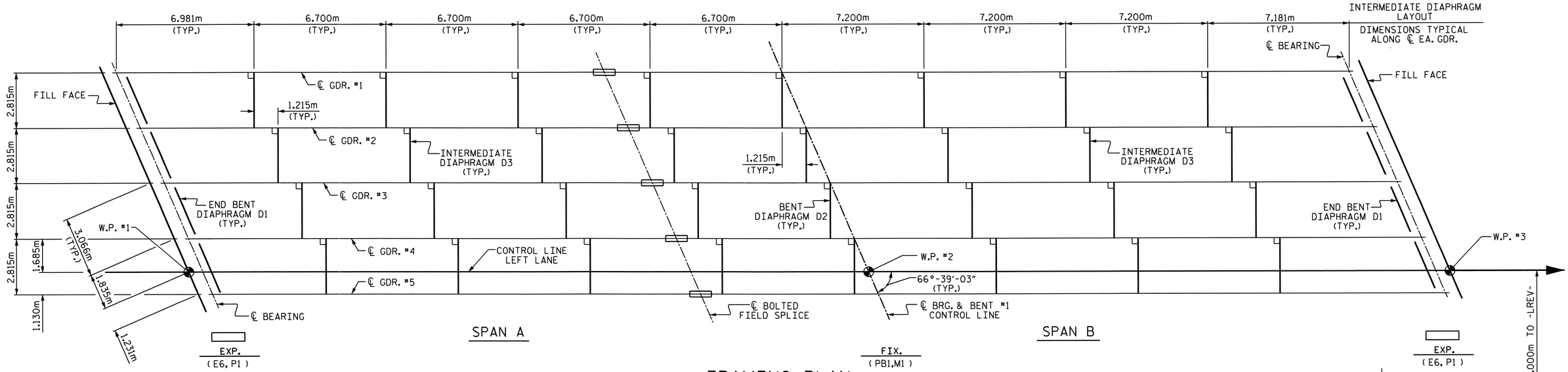

FRAMING PLAN

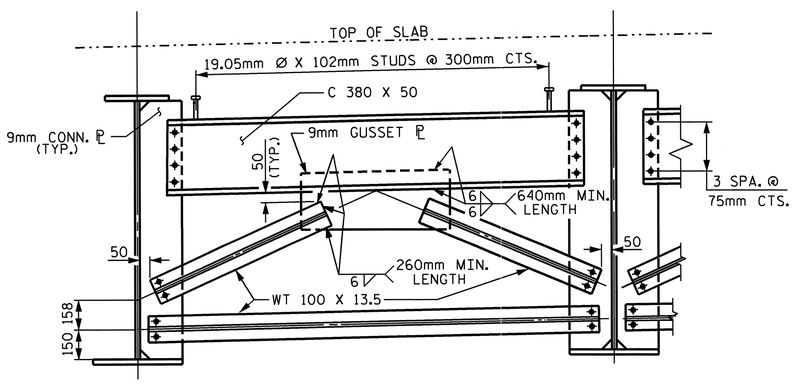

END BENT DIAPHRAGM-D1

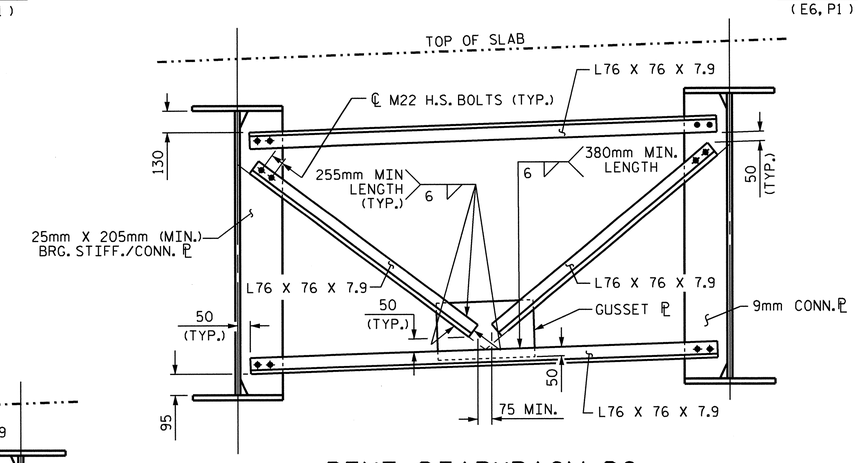

BENT DIAPHRAGM-D2

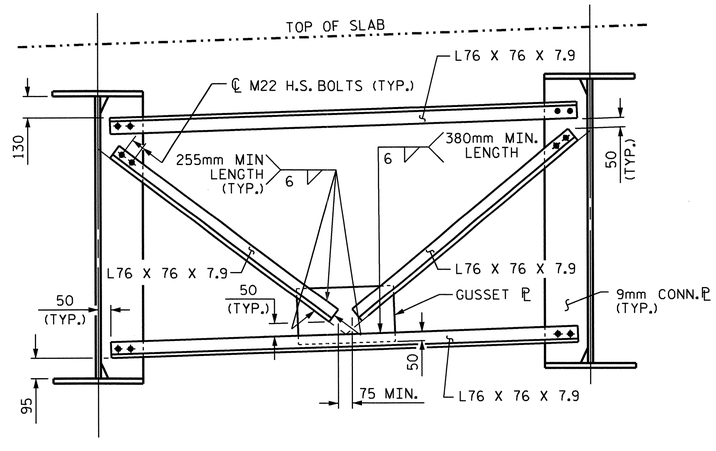

INTERMEDIATE DIAPHRAGM-D3

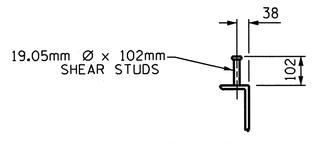

SHEAR STUD DETAILS

(@ CHANNELS)

PROJECT NO. R-2413C

GUILFORD-ROCKINGHAM COUNTY

STATION: 45+30.610 -LREV-

SHEET 1 OF 4

STATE OF NORTH CAROLINA
DEPARTMENT OF TRANSPORTATION
RALEIGH

SUPERSTRUCTURE
FRAMING PLAN
LEFT LANE

NORTH CAROLINA PROFESSIONAL SEAL 022516 ENGINEER EMILY E. MURRAY
10/28/11

REVISIONS						SHEET NO.
NO.	BY:	DATE:	NO.	BY:	DATE:	S-154
1			3			TOTAL SHEETS
2			4			238

DRAWN BY : T.L. AVERETTE DATE : 09-01-10
CHECKED BY : PEGGY PARISI DATE : 09-16-10

STR. #5

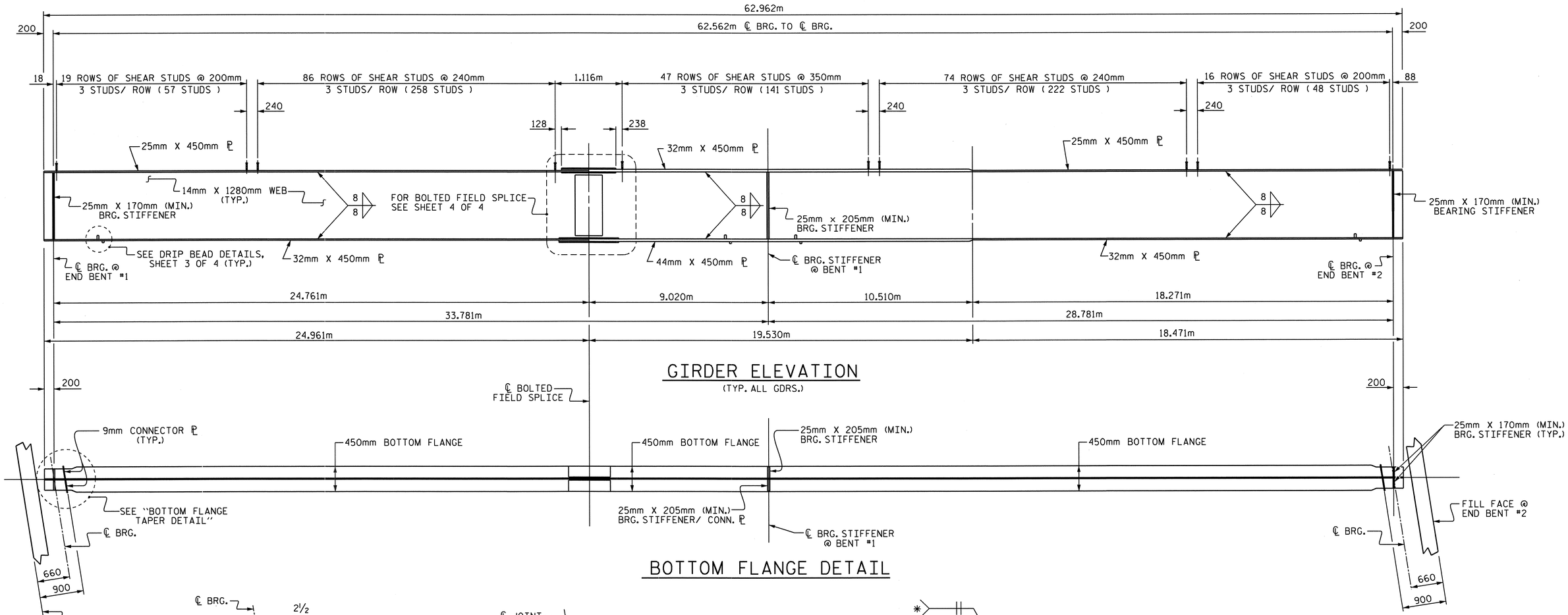

GIRDER ELEVATION

(TYP. ALL GDRS.)

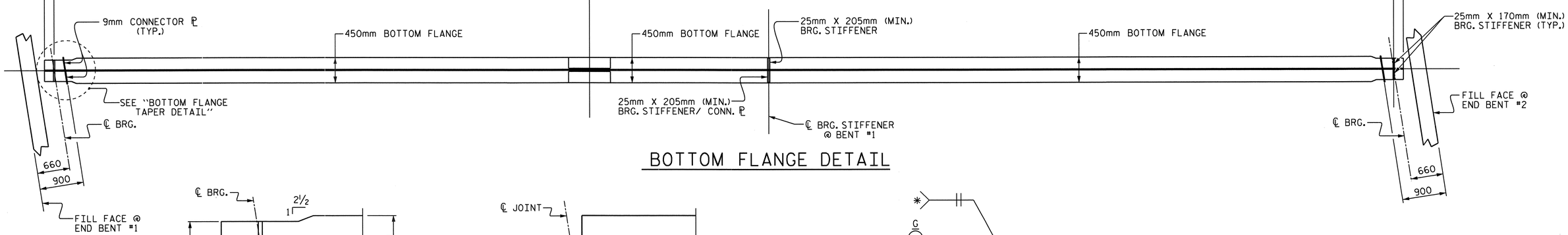

BOTTOM FLANGE DETAIL

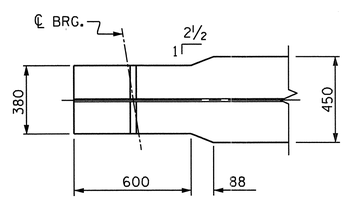

BOTTOM FLANGE TAPER DETAIL

(TYP. EA. END)

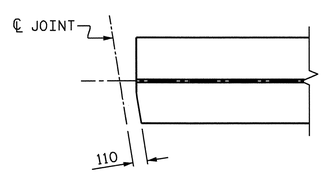

TOP FLANGE CLIP DETAIL

(TYP. AT BOTH ENDS OF GIRDER)

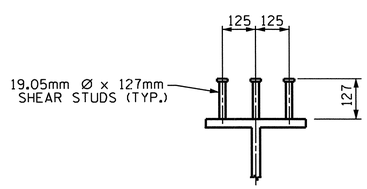

SHEAR STUD DETAILS

ON GIRDERS

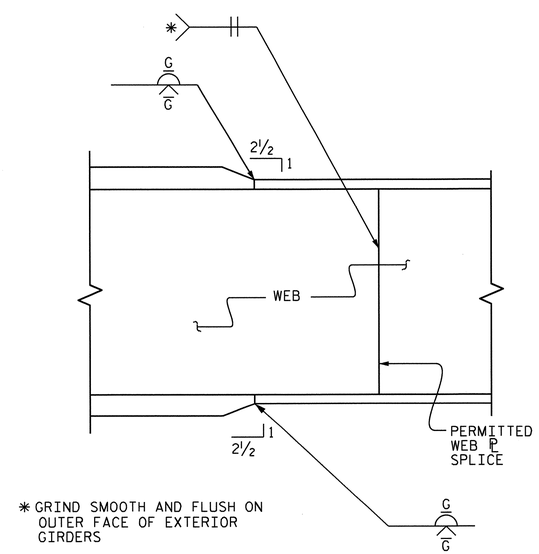

* GRIND SMOOTH AND FLUSH ON OUTER FACE OF EXTERIOR GIRDERS

ELEVATION

TYPICAL FLANGE AND WEB BUTT JOINT

PROJECT NO. R-2413C

GUILFORD-ROCKINGHAM COUNTY

STATION: 45+30.610 -LREV-

SHEET 2 OF 4

STATE OF NORTH CAROLINA
DEPARTMENT OF TRANSPORTATION
RALEIGH

SUPERSTRUCTURE

STRUCTURAL STEEL DETAILS LEFT LANE

NORTH CAROLINA PROFESSIONAL SEAL 022516 ENGINEER EMILY E. MURRAY
10/28/10

REVISIONS						SHEET NO.
NO.	BY:	DATE:	NO.	BY:	DATE:	S-155
1			3			TOTAL SHEETS
2			4			238

DRAWN BY : T.L. AVERETTE DATE : 09-01-10
CHECKED BY : PEGGY PARISI DATE : 09-16-10

STR. #5

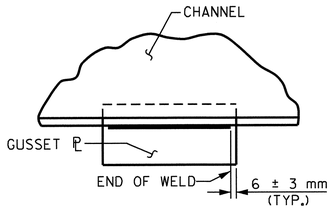

TYPICAL GUSSET PLATE CONNECTION

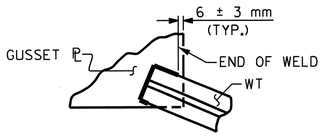

TYPICAL "TEE" TO GUSSET PLATE CONNECTION

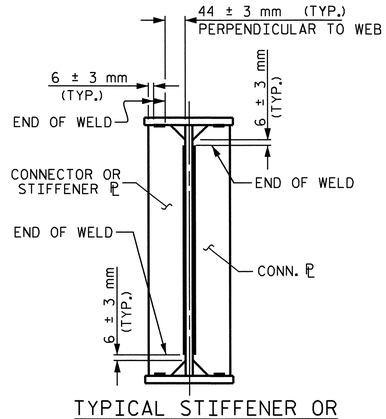

TYPICAL STIFFENER OR
CONNECTOR PLATE CONNECTIONS

WELD TERMINATION DETAILS

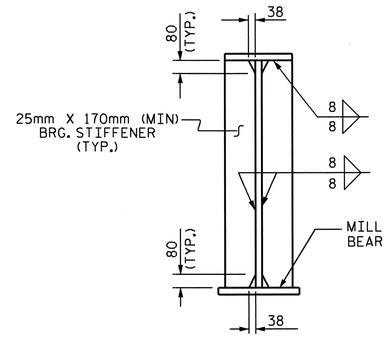

@ END BENTS

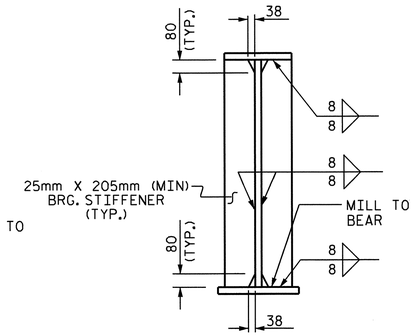

@ BENTS

NOTE:
THE BEARING STIFFENER SHALL BE WELDED TO THE BOTTOM FLANGE ONLY WHEN USED AS A CONNECTOR ℙ.

BEARING STIFFENER

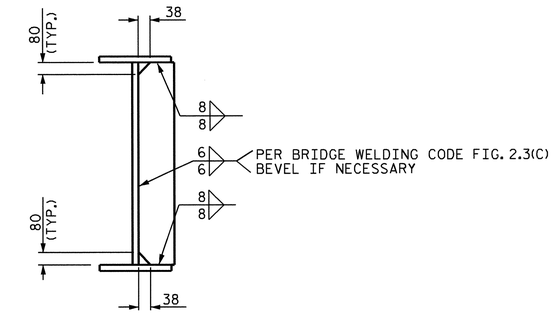

CONNECTOR PLATE

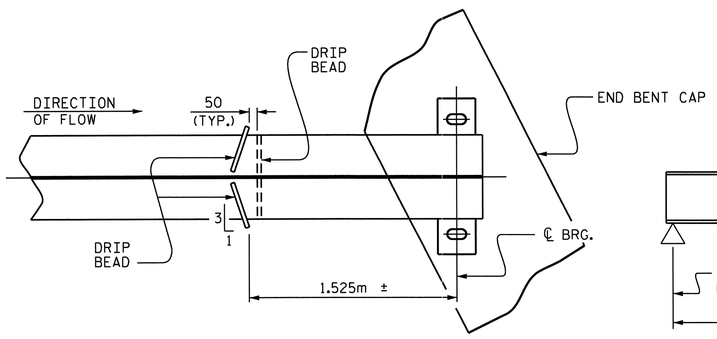

PART PLAN - BOTTOM FLANGE

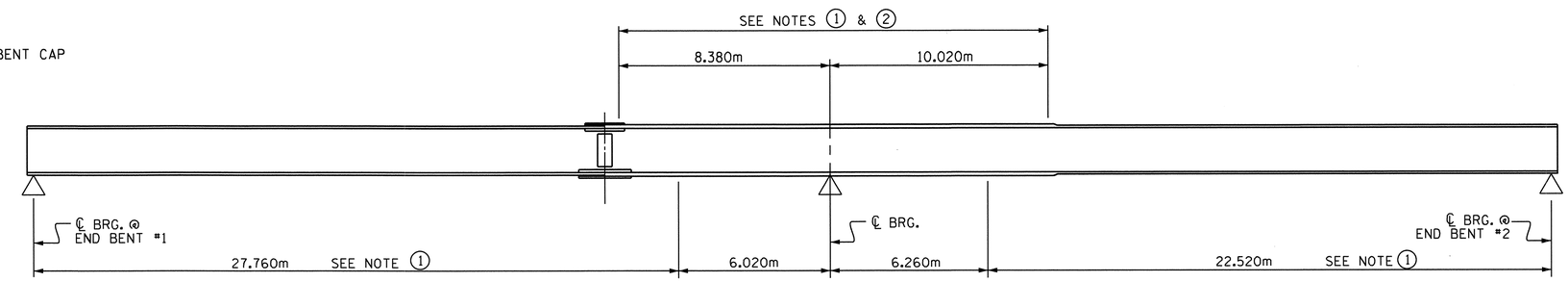

GIRDER MAKE UP

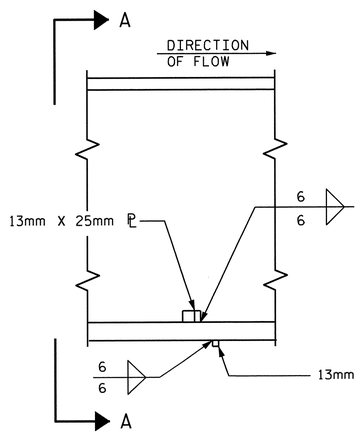

SECTION

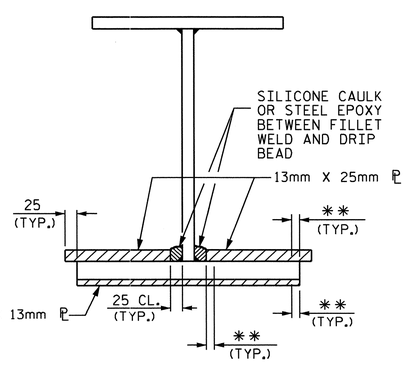

VIEW A-A

**SEE "WELD TERMINATION DETAILS"

DRIP BEAD DETAILS

NOTE 1: CHARPY V-NOTCH TESTS ARE REQUIRED FOR ALL TOP OR BOTTOM FLANGE PLATES WHICH FALL WITHIN THESE LIMITS, ALL WEB PLATES, AND ALL SPLICE PLATES. IF A PERMITTED SHOP FLANGE SPLICE IS NOT USED, CHARPY V-NOTCH TESTS WILL BE REQUIRED FOR THE ENTIRE FLANGE PLATE. FOR CHARPY V-NOTCH TESTS, SEE ARTICLE 1072-9 OF THE STANDARD SPECIFICATIONS.

NOTE 2: NO WELDING OF FORMS OR FALSEWORK TO THE TOP FLANGE WILL BE PERMITTED IN THIS REGION.

CHARPY V-NOTCH TESTS FOR CONTINUOUS PLATE GIRDERS

PROJECT NO. R-2413C
GUILFORD-ROCKINGHAM COUNTY
STATION: 45+30.610 -LREV-

SHEET 3 OF 4

STATE OF NORTH CAROLINA
DEPARTMENT OF TRANSPORTATION
RALEIGH

SUPERSTRUCTURE

STRUCTURAL STEEL
DETAILS
LEFT LANE

NORTH CAROLINA PROFESSIONAL SEAL 022516 ENGINEER EMILY E. MURRAY
10/28/11

REVISIONS						SHEET NO.
NO.	BY:	DATE:	NO.	BY:	DATE:	S-156
1			3			TOTAL SHEETS
2			4			238

DRAWN BY : T.L. AVERETTE DATE : 09-01-10
CHECKED BY : PEGGY PARISI DATE : 09-16-10

STR. #5

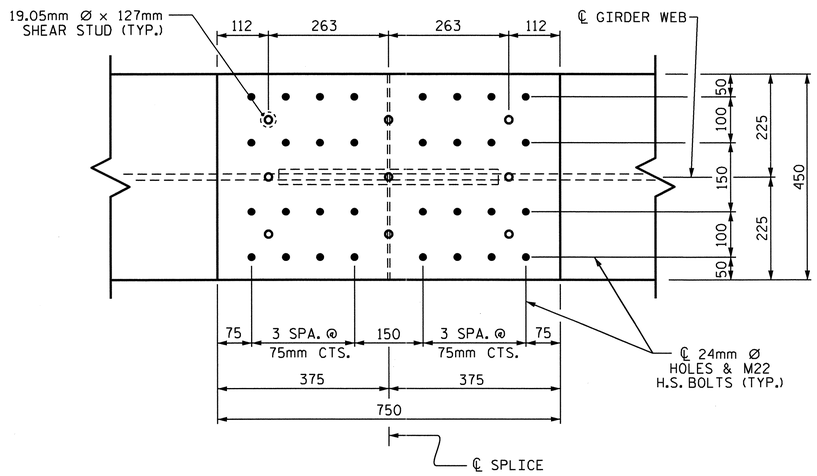

PLAN (TOP OF TOP FLANGE)

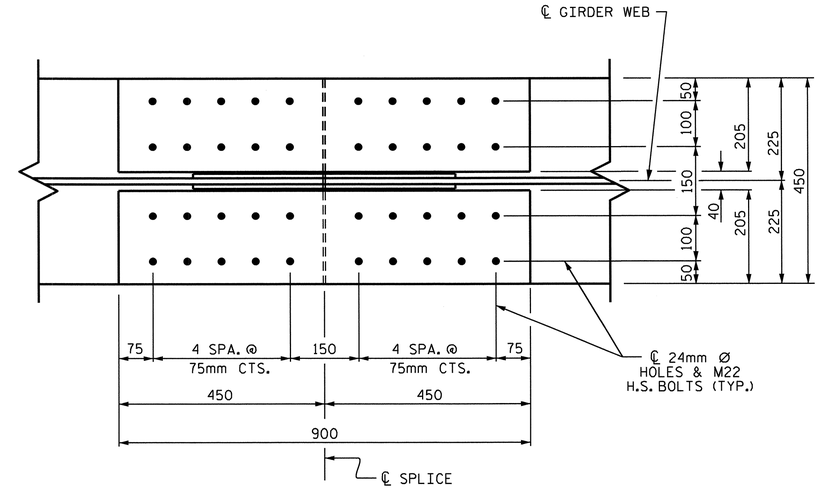

PLAN (TOP OF BOTTOM FLANGE)

NOTES

ALL STRUCTURAL STEEL SHALL BE AASHTO M270 GRADE 345W AND PAINTED IN ACCORDANCE WITH SYSTEM 4 OF ARTICLE 442-7 OF THE STANDARD SPECIFICATIONS UNLESS OTHERWISE NOTED ON THE PLANS.

ALL DIMENSIONS SHOWN ARE HORIZONTAL OR VERTICAL, UNLESS OTHERWISE NOTED.

ALL FIELD CONNECTIONS TO BE 22.23mm DIA. HIGH STRENGTH BOLTS UNLESS OTHERWISE NOTED. FOR HIGH STRENGTH BOLTS, SEE SPECIAL PROVISIONS.

BEARING STIFFENERS ARE TO BE PLACED NORMAL TO THE WEB OF THE GIRDER AND SHALL BE PLUMB.

PERMITTED FLANGE AND WEB SHOP SPLICES SHALL NOT BE LOCATED WITHIN 4.5 METERS OF MAXIMUM DEAD LOAD DEFLECTION (NOR WITHIN 4.5 METERS OF INTERMEDIATE BEARINGS OF CONTINUOUS UNITS). KEEP 600mm MINIMUM BETWEEN WEB AND FLANGE SHOP SPLICES. KEEP 150mm MINIMUM BETWEEN CONNECTOR PLATE OR TRANSVERSE STIFFENER WELDS AND WEB OR FLANGE SHOP SPLICES.

STUDS ON GIRDERS MAY BE SHIFTED UP TO 25mm IF NECESSARY TO CLEAR FLANGE SPLICE WELD.

TENSION ON THE AASHTO M164 BOLTS SHALL BE CALIBRATED USING DIRECT TENSION INDICATOR WASHERS. FOR DIRECT TENSION INDICATORS, SEE SPECIAL PROVISIONS.

END OF GIRDERS SHALL BE PLUMB.

BEARING STIFFENER MAY REQUIRE COPING IF WIDER THAN BOTTOM FLANGE TO AVOID INTERFERENCE WITH THE ANCHOR BOLT.

FOR SHIPPING STEEL STRUCTURAL MEMBERS, SEE SPECIAL PROVISIONS.

FABRICATORS SHALL DETAIL DIAPHRAGM MEMBERS AND CONNECTIONS FOR FULL DEAD LOAD FIT UP. GIRDERS SHALL BE PLUMB AFTER THE FULL AMOUNT OF DEAD LOAD IS APPLIED.

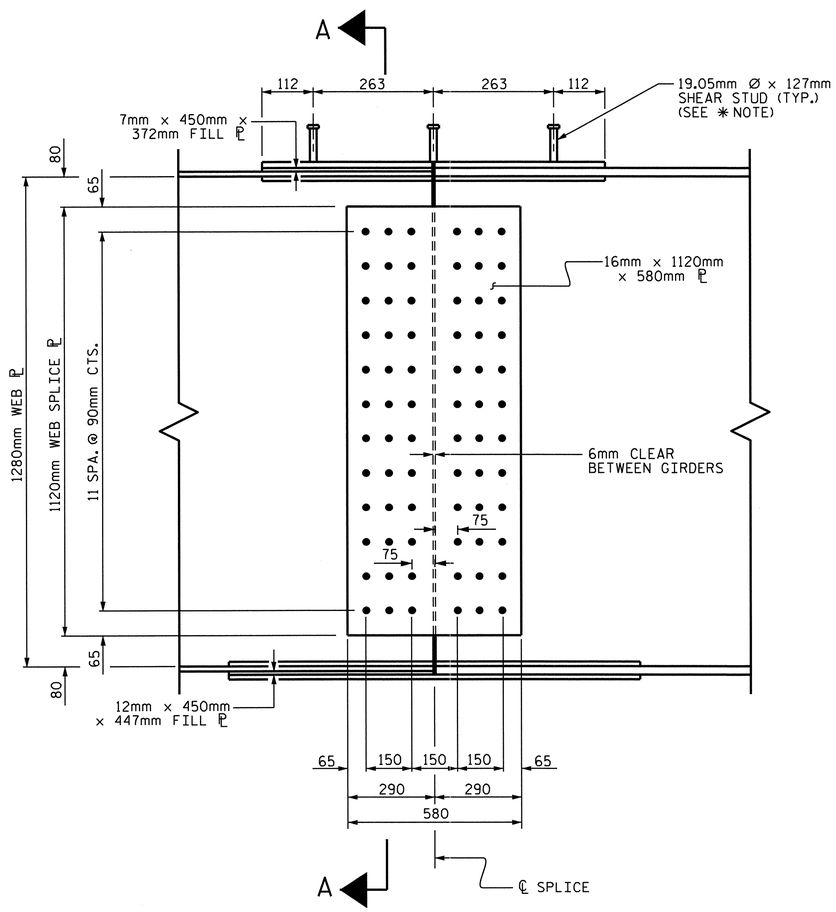

ELEVATION

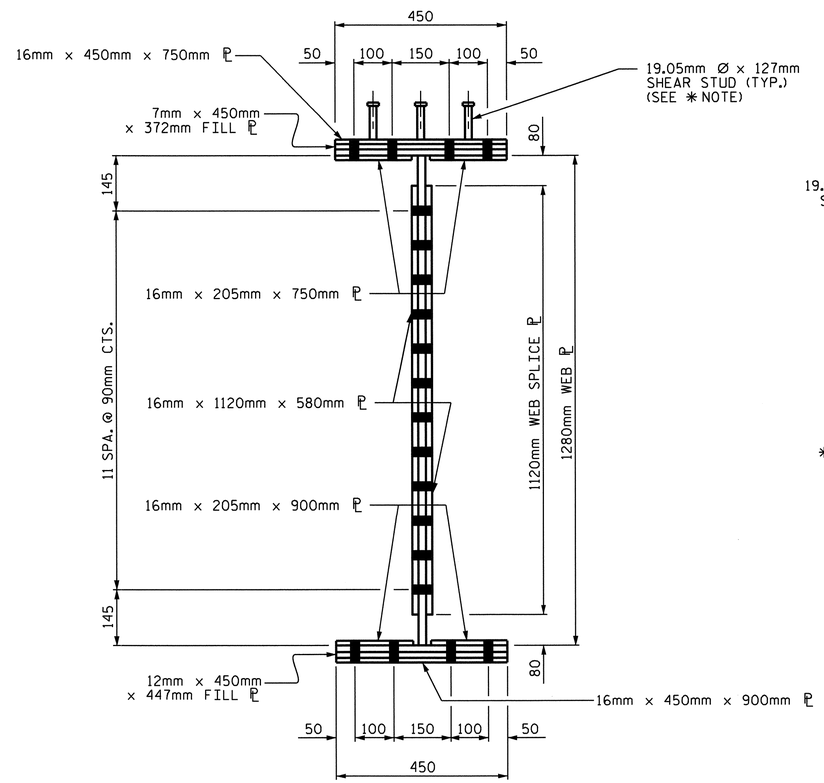

SECTION A-A

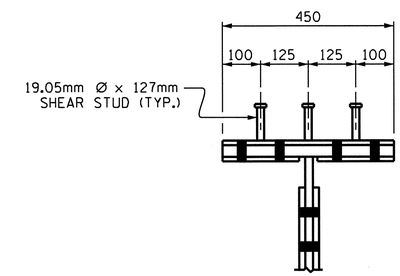

SHEAR STUD DETAIL
FOR TOP FLANGE SPLICE PLATE

✳ NOTE: SHEAR STUDS ARE TO BE SHOP WELDED ON TOP OF PLATE BEFORE FIELD ASSEMBLY

BOLTED FIELD SPLICE DETAILS

PROJECT NO. R-2413C
GUILFORD-ROCKINGHAM COUNTY
STATION: 45+30.610 -LREV-

SHEET 4 OF 4

STATE OF NORTH CAROLINA
DEPARTMENT OF TRANSPORTATION
RALEIGH

SUPERSTRUCTURE

STRUCTURAL STEEL DETAILS
LEFT LANE

NORTH CAROLINA PROFESSIONAL SEAL 022516 ENGINEER EMILY E. MURRAY
10/28/14

REVISIONS						SHEET NO.
NO.	BY:	DATE:	NO.	BY:	DATE:	S-157
1			3			TOTAL SHEETS
2			4			238

DRAWN BY : T.L. AVERETTE DATE : 09-01-10
CHECKED BY : PEGGY PARISI DATE : 09-16-10

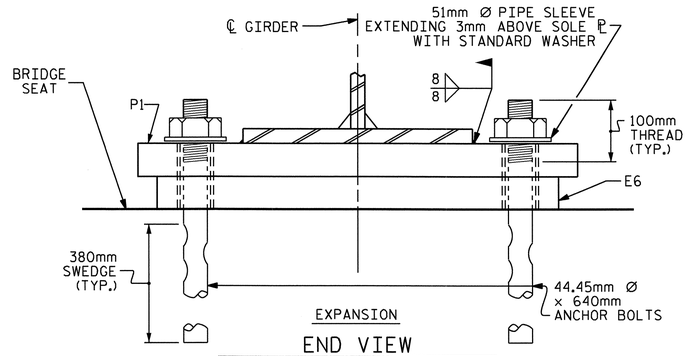

EXPANSION

END VIEW

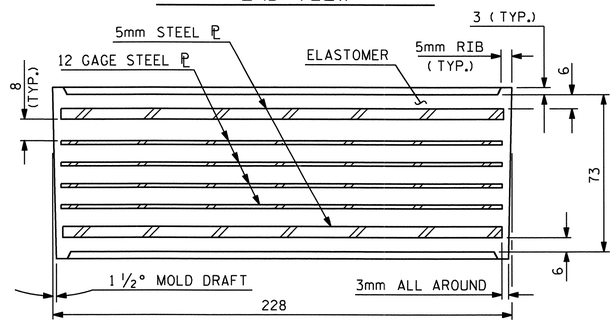

TYPICAL SECTION OF ELASTOMERIC BEARINGS

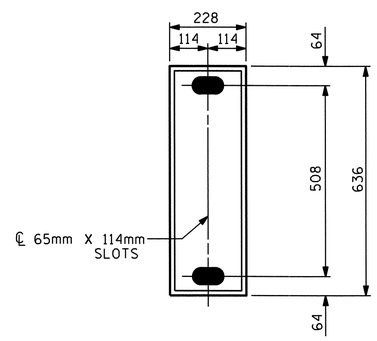

E6 (10 REQ'D)

PLAN VIEW OF ELASTOMERIC BEARING

TYPE III

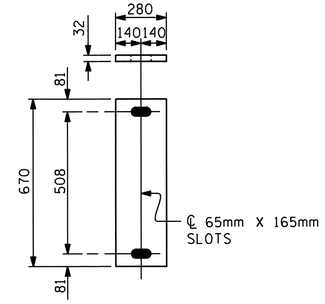

P1

(EXPANSION)

P1 (10 REQ'D)

SOLE PLATE DETAILS (P1)

NOTES

THE 51mm Ø PIPE SLEEVE SHALL BE CUT FROM SCHEDULE 40 PVC PLASTIC PIPE. THE PVC PLASTIC PIPE SHALL MEET THE REQUIREMENTS OF ASTM D1785.

THE PAYMENT FOR THE PIPE SLEEVES SHALL BE INCLUDED IN THE SEVERAL PAY ITEMS.

FOR AASHTO M270 GRADE 345W STRUCTURAL STEEL, SOLE PLATE SHALL BE AASHTO M270 GRADE 345W AND SHALL NOT BE GALVANIZED. ANCHOR BOLTS AND NUTS SHALL BE GALVANIZED IN ACCORDANCE WITH THE STANDARD SPECIFICATIONS.

ANCHOR BOLTS SHALL MEET THE REQUIREMENTS OF ASTM A449. NUTS SHALL MEET THE REQUIREMENTS OF AASHTO M291M-12 OR AASHTO M292M-2H. WASHERS SHALL MEET THE REQUIREMENTS OF AASHTO M293M. SHOP DRAWINGS ARE NOT REQUIRED FOR ANCHOR BOLTS, NUTS AND WASHERS. SHOP INSPECTION IS REQUIRED.

WHEN FIELD WELDING THE SOLE PLATE TO THE GIRDER FLANGE, USE TEMPERATURE INDICATING WAX PENS, OR OTHER SUITABLE MEANS, TO ENSURE THAT THE TEMPERATURE OF THE SOLE PLATE DOES NOT EXCEED 149°C. TEMPERATURES ABOVE THIS MAY DAMAGE THE ELASTOMER.

ALL SURFACES OF BEARING PLATES SHALL BE SMOOTH AND STRAIGHT.

THE CONTRACTOR'S ATTENTION IS CALLED TO THE FOLLOWING PROCEDURE, WHICH MAY BE REQUIRED BY THE ENGINEER, TO RESET ELASTOMERIC BEARINGS DUE TO GIRDER TRANSLATION AND END ROTATION:

ONCE THE DECK HAS CURED, THE GIRDERS SHALL BE JACKED AND THE ELASTOMERIC BEARING SLOTS CENTERED AS NEARLY AS PRACTICAL ABOUT THE BEARING STIFFENER. THIS OPERATION SHALL BE PERFORMED AT APPROXIMATELY 16° C.

THE CONTRACTOR MAY PROPOSE ALTERNATE METHODS, PROVIDED DETAILS ARE SUBMITTED TO THE ENGINEER FOR REVIEW AND APPROVAL.

LOAD RATINGS	
	MAX.D.L.+ L.L.
TYPE III	674 kN

PROJECT NO. R-2413C

GUILFORD-ROCKINGHAM COUNTY

STATION: 45+30.610 -LREV-

STATE OF NORTH CAROLINA
DEPARTMENT OF TRANSPORTATION
RALEIGH

STANDARD ELASTOMERIC BEARING DETAILS

(STEEL SUPERSTRUCTURE)
LEFT LANE

NORTH CAROLINA PROFESSIONAL SEAL 022516 ENGINEER EMILY E. MURRAY
10/25/11

REVISIONS						
NO.	BY:	DATE:	NO.	BY:	DATE:	
1			3			
2			4			

SHEET NO. S-158

TOTAL SHEETS 238

STR. #5

STD. NO. EB1SM

ASSEMBLED BY : T.L. AVERETTE	DATE : 09-09-10	
CHECKED BY : PEGGY PARISI	DATE : 09-16-10	
DRAWN BY : JMB 11/87	REV. 8/16/99	MAB/LES
CHECKED BY : ARB 11/87	REV. 10/17/00	RWW/LES
	REV. 5/1/06	TLA/GM

05-SEP-2011 13:33
Y:\Structures\Final Plans\Str.#5\R2413C_sd_BG_05.dgn
mgudlaugsson

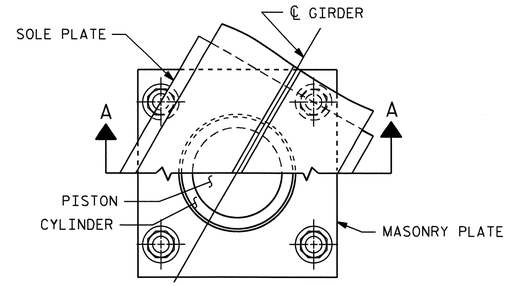

CUT-AWAY PLAN

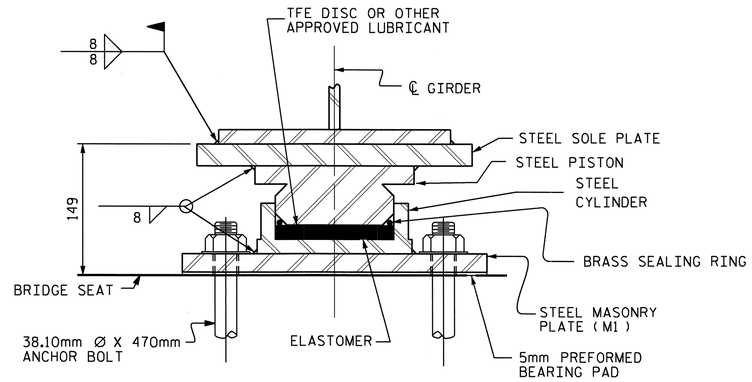

SECTION A-A

PB1, FIXED

(5 REQ'D.)

POT BEARING DETAILS

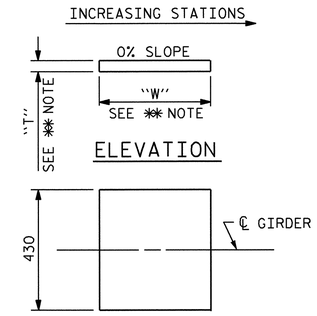

PLAN

✱✱ NOTE:
DIMENSIONS "W" AND "T" ARE TO BE DETERMINED BY THE MANUFACTURER.

SOLE PLATE DETAILS

NOTES

FOR POT BEARINGS, SEE SPECIAL PROVISIONS.

AT ALL POINTS OF SUPPORT AT BENT #1, NUTS FOR ANCHOR BOLTS SHALL BE TIGHTENED FINGER TIGHT AND GIVEN AN ADDITIONAL 1/4 TURN. THE THREAD OF THE NUT AND BOLT SHALL THEN BE BURRED WITH A SHARP POINTED TOOL.

WHEN WELDING THE SOLE PLATE TO THE GIRDER, USE TEMPERATURE INDICATING WAX PENS, OR OTHER SUITABLE MEANS, TO ENSURE THAT THE TEMPERATURE OF THE BEARING DOES NOT EXCEED 121°C TEMPERATURES ABOVE THIS MAY DAMAGE THE TFE OR ELASTOMER.

SOLE PLATES SHOULD BE WELDED TO BEAM FLANGES BEFORE FALSEWORK IS PLACED.

ALL SURFACES OF BEARING PLATES SHALL BE SMOOTH AND STRAIGHT.

FOR THERMAL SPRAYED COATINGS (METALLIZATION), SEE SPECIAL PROVISIONS.

THE CONTRACTOR MAY SUBSTITUTE DISC BEARINGS FOR THE POT BEARINGS SHOWN. FOR OPTIONAL DISC BEARINGS, SEE SPECIAL PROVISIONS.

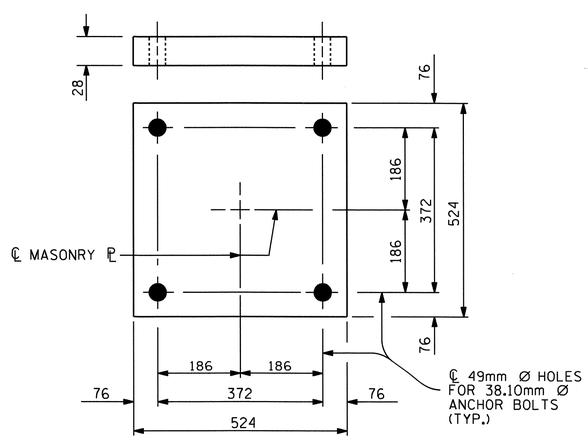

PLAN

M1 (5 REQ'D.)

MASONRY PLATE DETAILS

TABLE FOR LOADS AND MOVEMENTS						
BEARING	LOCATION	VERTICAL LOAD (kN)			LATERAL LOAD (kN)	TOTAL MOVEMENT (mm)
		DEAD	LIVE	TOTAL		
PB1 (FIXED)	BENT #1	1057	410	1467	212	0

PROJECT NO. R-2413C

GUILFORD-ROCKINGHAM COUNTY

STATION: 45+30.610 -LREV-

STATE OF NORTH CAROLINA
DEPARTMENT OF TRANSPORTATION
RALEIGH

STANDARD

POT BEARING DETAILS LEFT LANE

NORTH CAROLINA PROFESSIONAL SEAL 022516 ENGINEER EMILY E. MURRAY
10/28/11

REVISIONS							SHEET NO.
NO.	BY:	DATE:	NO.	BY:	DATE:		S-159
1			3				TOTAL SHEETS
2			4				238

ASSEMBLED BY : T.L. AVERETTE DATE : 09-09-10
CHECKED BY : PEGGY PARISI DATE : 09-16-10

DRAWN BY : RWW 8/99
CHECKED BY : LES 8/99

REV. 7/10/01 LES/RWW
REV. 5/7/03 RWW/JTE
REV. 5/1/06R TLA/GM

19-OCT-2011 12:03
R:\TIPProjects-R\R2413c\Structures\Final Plans\Str.#5\R2413C_sd_BG_05.dgn
taverette

STR. #5 PB1SM.STD

DEAD LOAD DEFLECTION TABLE FOR SPAN A

	ALL GIRDERS																				
@ TWENTIETH POINTS BETWEEN ℄ BEARINGS	0	.05	.10	.15	.20	.25	.30	.35	.40	.45	.50	.55	.60	.65	.70	.75	.80	.85	.90	.95	0
DEFLECTION DUE TO WEIGHT OF GIRDER	0.000	0.002	0.004	0.006	0.008	0.009	0.010	0.011	0.011	0.011	0.011	0.010	0.009	0.008	0.007	0.006	0.004	0.003	0.002	0.001	0.000
DEFLECTION DUE TO WEIGHT OF SLAB *	0.000	0.009	0.017	0.025	0.032	0.038	0.043	0.046	0.047	0.047	0.046	0.044	0.040	0.035	0.030	0.024	0.018	0.012	0.007	0.003	0.000
DEFLECTION DUE TO WEIGHT OF BARRIER RAIL	0.000	0.001	0.001	0.002	0.003	0.003	0.003	0.004	0.004	0.004	0.004	0.004	0.003	0.003	0.002	0.002	0.001	0.001	0.001	0.000	0.000
TOTAL DEAD LOAD DEFLECTION	0.000	0.012	0.022	0.033	0.043	0.050	0.056	0.061	0.062	0.062	0.061	0.058	0.052	0.046	0.039	0.032	0.023	0.016	0.010	0.004	0.000
VERTICAL CURVE ORDINATE	0.000	0.002	0.004	0.005	0.007	0.008	0.009	0.009	0.010	0.010	0.010	0.010	0.010	0.009	0.009	0.008	0.007	0.005	0.004	0.002	0.000
REQUIRED CAMBER	0	14	26	38	50	58	65	70	72	72	71	68	62	55	48	40	30	21	14	6	0

* INCLUDES SLAB, BUILDUPS & STAY-IN-PLACE FORMS.
ALL VALUES ARE SHOWN IN METERS EXCEPT "REQUIRED CAMBER", WHICH IS GIVEN IN MILLIMETERS.

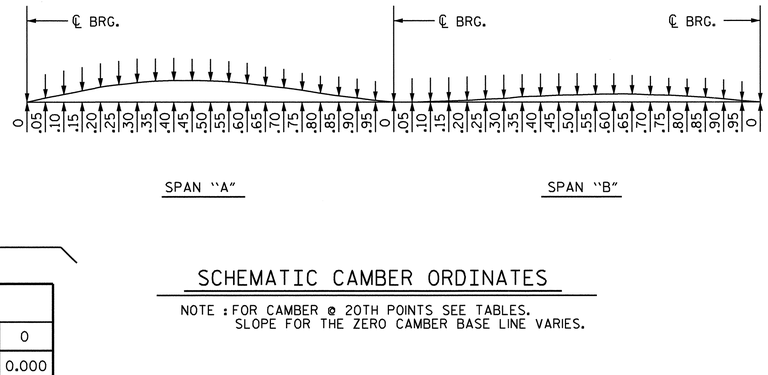

SCHEMATIC CAMBER ORDINATES

NOTE : FOR CAMBER @ 20TH POINTS SEE TABLES.
SLOPE FOR THE ZERO CAMBER BASE LINE VARIES.

DEAD LOAD DEFLECTION TABLE FOR SPAN B

	ALL GIRDERS																				
@ TWENTIETH POINTS BETWEEN ℄ BEARINGS	0	.05	.10	.15	.20	.25	.30	.35	.40	.45	.50	.55	.60	.65	.70	.75	.80	.85	.90	.95	0
DEFLECTION DUE TO WEIGHT OF GIRDER	0.000	0.000	0.000	0.000	0.000	0.001	0.001	0.002	0.002	0.003	0.003	0.004	0.004	0.004	0.003	0.003	0.003	0.002	0.001	0.001	0.000
DEFLECTION DUE TO WEIGHT OF SLAB *	0.000	-0.001	-0.001	0.000	0.001	0.003	0.005	0.008	0.010	0.012	0.013	0.014	0.015	0.015	0.014	0.013	0.011	0.009	0.006	0.003	0.000
DEFLECTION DUE TO WEIGHT OF BARRIER RAIL	0.000	0.000	0.000	0.000	0.000	0.000	0.000	0.001	0.001	0.001	0.001	0.001	0.001	0.001	0.001	0.001	0.001	0.001	0.001	0.000	0.000
TOTAL DEAD LOAD DEFLECTION	0.000	-0.001	-0.001	0.000	0.001	0.004	0.006	0.011	0.013	0.016	0.017	0.019	0.020	0.020	0.018	0.017	0.015	0.012	0.008	0.004	0.000
VERTICAL CURVE ORDINATE	0.000	0.001	0.003	0.004	0.005	0.006	0.006	0.007	0.007	0.007	0.007	0.007	0.007	0.007	0.006	0.006	0.005	0.004	0.003	0.001	0.000
REQUIRED CAMBER	0	0	2	4	6	10	12	18	20	23	24	26	27	27	24	23	20	16	11	5	0

* INCLUDES SLAB, BUILDUPS & STAY-IN-PLACE FORMS.
ALL VALUES ARE SHOWN IN METERS EXCEPT "REQUIRED CAMBER", WHICH IS GIVEN IN MILLIMETERS.

PROJECT NO. R-2413C
GUILFORD-ROCKINGHAM COUNTY
STATION: 45+30.610 -LREV-

NORTH CAROLINA PROFESSIONAL SEAL 022516 ENGINEER EMILY E. MURRAY
10/28/11

STATE OF NORTH CAROLINA
DEPARTMENT OF TRANSPORTATION
RALEIGH
SUPERSTRUCTURE
DEAD LOAD DEFLECTIONS
LEFT LANE

REVISIONS						SHEET NO.
NO.	BY:	DATE:	NO.	BY:	DATE:	S-160
1			3			TOTAL SHEETS
2			4			238

DRAWN BY : T.L. AVERETTE DATE : 09-01-10
CHECKED BY : PEGGY PARISI DATE : 09-16-10

NOTES

BARRIER RAIL IN A CONTINUOUS UNIT SHALL NOT BE CAST UNTIL ALL SLAB CONCRETE IN THE UNIT HAS BEEN CAST AND HAS REACHED A MINIMUM COMPRESSIVE STRENGTH OF 20.7 MPa.

ALL REINFORCING STEEL IN BARRIER RAILS SHALL BE EPOXY COATED.

GROOVED CONTRACTION JOINTS, 12mm IN DEPTH, SHALL BE TOOLED IN ALL EXPOSED FACES OF THE BARRIER RAIL AND IN ACCORDANCE WITH ARTICLE 825-10(B) OF THE STANDARD SPECIFICATIONS. THE CONTRACTION JOINT SHALL BE LOCATED AT EACH THIRD POINT BETWEEN BARRIER RAIL EXPANSION JOINTS. ONLY ONE CONTRACTION JOINT IS REQUIRED AT MIDPOINT OF BARRIER RAIL SEGMENTS LESS THAN 6.1m IN LENGTH AND NO CONTRACTION JOINTS ARE REQUIRED FOR THOSE SEGMENTS LESS THAN 3.5m IN LENGTH.

BAR TYPES

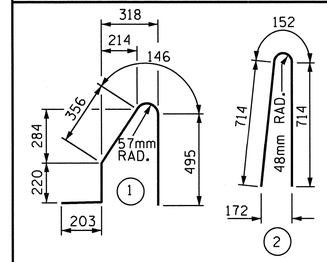

ALL BAR DIMENSIONS ARE OUT TO OUT

BILL OF MATERIAL

FOR CONCRETE BARRIER RAIL ON BRIDGE DECK ONLY

BAR	NO.	SIZE	TYPE	LENGTH	WEIGHT
* S1	422	#16	1	1420	930
* S2	422	#16	2	1580	1035
* B1	32	#16	STR	5020	249
* B2	48	#16	STR	8280	617
* B3	48	#16	STR	7080	527
* B4	32	#16	STR	4320	215

* EPOXY COATED REINFORCING STEEL 3573 kg

CLASS AA CONCRETE 31.8 CU. METER

CONCRETE BARRIER RAIL
SUPERSTRUCTURE 126.590 METERS
● APPROACH SLABS 12.394 METERS
TOTAL 138.984 METERS

● FOR EPOXY COATED REINFORCING STEEL AND CLASS AA CONCRETE IN THE BARRIER RAIL ON THE APPROACH SLABS, SEE "BRIDGE APPROACH SLAB DETAILS" SHEET.

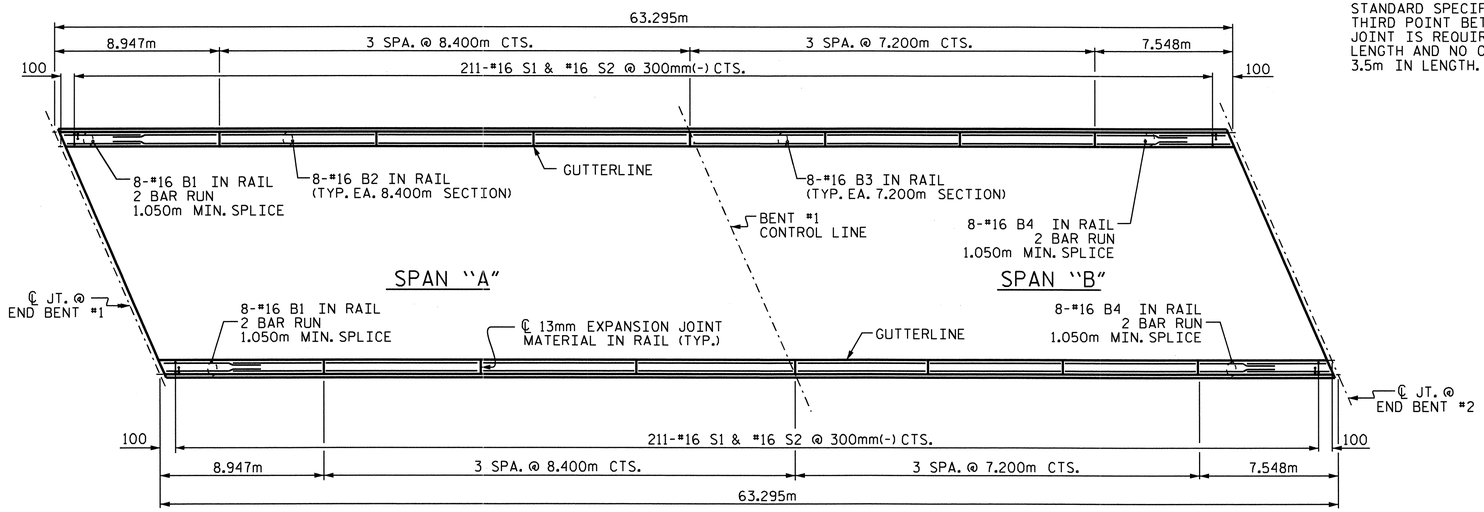

PLAN

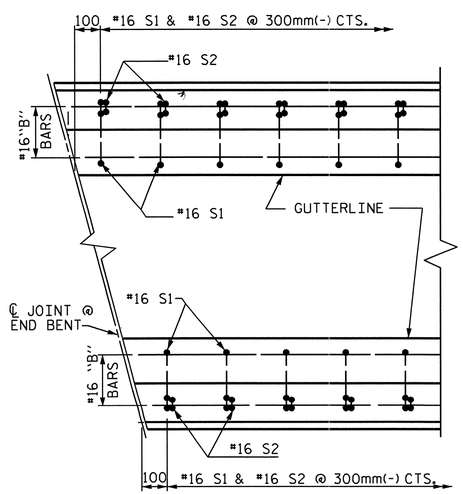

PLAN

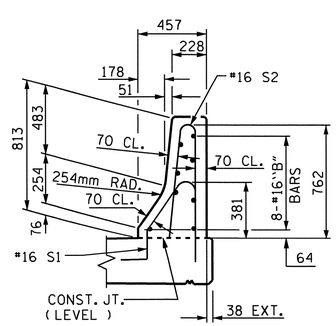

END VIEW

END OF RAIL DETAILS

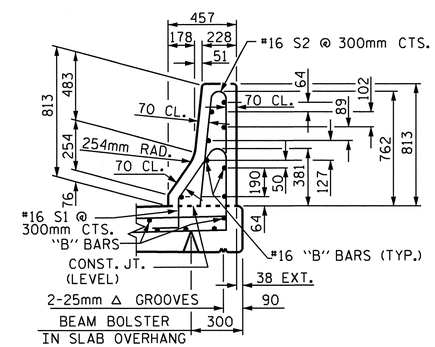

SECTION THRU RAIL

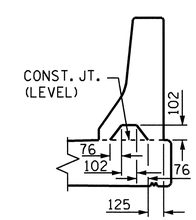

SECTION S-S

AT DAM IN OPEN JOINT
(THIS IS TO BE USED ONLY
WHEN SLIP FORM IS USED)

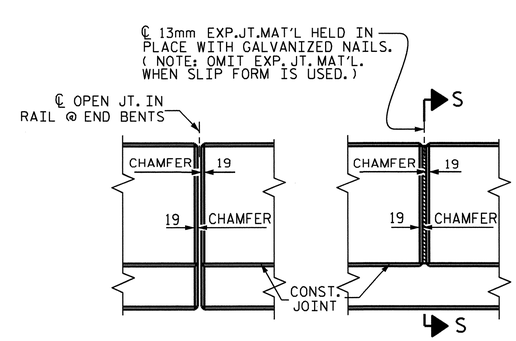

ELEVATION AT EXPANSION JOINTS

BARRIER RAIL DETAILS

PROJECT NO. R-2413C
GUILFORD-ROCKINGHAM COUNTY
STATION: 45+30.610 -LREV-

STATE OF NORTH CAROLINA
DEPARTMENT OF TRANSPORTATION
RALEIGH

STANDARD
CONCRETE
BARRIER RAIL
LEFT LANE

NORTH CAROLINA PROFESSIONAL SEAL 022516 ENGINEER EMRY ECHARRAY
10/28/10

REVISIONS						SHEET NO.
NO.	BY:	DATE:	NO.	BY:	DATE:	S-161
1			3			TOTAL SHEETS
2			4			238

STR. #5 STD. No. CBR1SM

ASSEMBLED BY : T.L. AVERETTE DATE : 09-13-10
CHECKED BY : PEGGY PARISI DATE : 09-16-10

DRAWN BY : ARB 5/87
CHECKED BY : SJD 9/87

REV. 10/17/00 RWW/LES
REV. 5/7/03R RWW/JTE
REV. 5/1/06 TLA/GM

05-SEP-2011 13:29
Y:\Structures\Final Plans\Str.#5\R2413C_sd_BR_05.dgn
mgudlaugsson

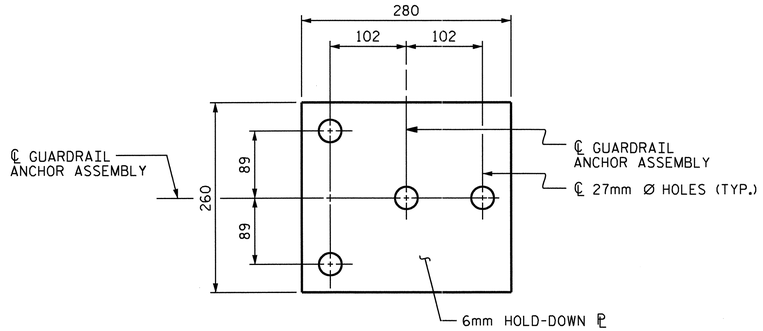

PLAN

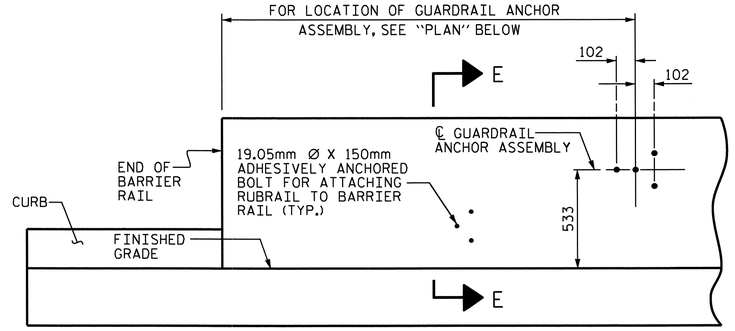

ELEVATION

FOR LOCATION OF RUBRAIL, SEE ROADWAY STD. 862.03

NOTES

THE GUARDRAIL ANCHOR ASSEMBLY SHALL CONSIST OF A 6mm HOLD DOWN PLATE AND 4 - 22.23mm Ø BOLTS WITH NUTS AND WASHERS, RUBRAIL, AND ADHESIVELY ANCHORED BOLTS.

THE HOLD-DOWN PLATE SHALL CONFORM TO AASHTO M270 GRADE 36. AFTER FABRICATION, THE HOLD-DOWN PLATE SHALL BE HOT-DIP GALVANIZED IN ACCORDANCE WITH AASHTO M111.

BOLTS SHALL CONFORM TO THE REQUIREMENTS OF ASTM A307 AND NUTS SHALL CONFORM TO THE REQUIREMENTS OF AASHTO M291. BOLTS, NUTS AND WASHERS SHALL BE GALVANIZED. (AT THE CONTRACTOR'S OPTION, STAINLESS STEEL BOLTS, NUTS AND WASHERS MAY BE USED AS AN ALTERNATE FOR THE 22.23mm Ø GALVANIZED BOLTS, NUTS AND WASHERS. THEY SHALL CONFORM TO OR EXCEED THE MECHANICAL REQUIREMENTS OF ASTM A307. THE USE OF THIS ALTERNATE SHALL BE APPROVED BY THE ENGINEER.)

THE GUARDRAIL ANCHOR ASSEMBLY IS REQUIRED AT ALL POINTS WHERE APPROACH GUARDRAIL IS TO BE ATTACHED TO THE END OF BARRIER RAIL. FOR POINTS OF ATTACHMENT, SEE SKETCH.

AFTER INSTALLATION, THE EXPOSED THREAD OF THE BOLT SHALL BE BURRED WITH A SHARP POINTED TOOL.

THE COST OF THE GUARDRAIL ANCHOR ASSEMBLY SHALL BE INCLUDED IN THE UNIT CONTRACT PRICE BID FOR CONCRETE BARRIER RAIL.

THE 32mm Ø HOLES SHALL BE FORMED OR DRILLED WITH A CORE BIT. IMPACT TOOLS WILL NOT BE PERMITTED. ANY CONCRETE DAMAGED BY THIS WORK SHALL BE REPAIRED TO THE SATISFACTION OF THE ENGINEER.

THE C150 X 12 RUBRAIL IS TO BE ADHESIVELY ANCHORED TO THE RAIL USING THREE 19.05mm Ø X 150mm BOLTS WITH WASHERS. LEVEL ONE FIELD TESTING IS REQUIRED, AND THE YIELD LOAD OF THE 19.05mm Ø BOLTS IS 53.4kN. FOR ADHESIVELY ANCHORED ANCHOR BOLTS OR DOWELS, SEE SPECIAL PROVISIONS. SEE ROADWAY STANDARD 862.03 FOR DETAILS AND LOCATION OF THE RUBRAIL.

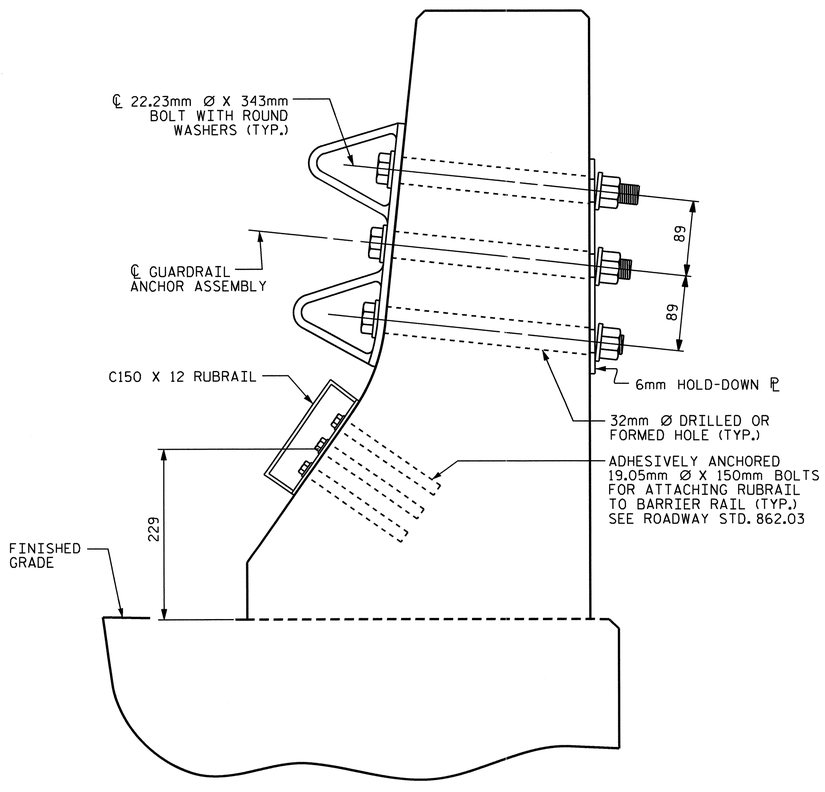

SECTION E-E

GUARDRAIL ANCHOR ASSEMBLY DETAILS

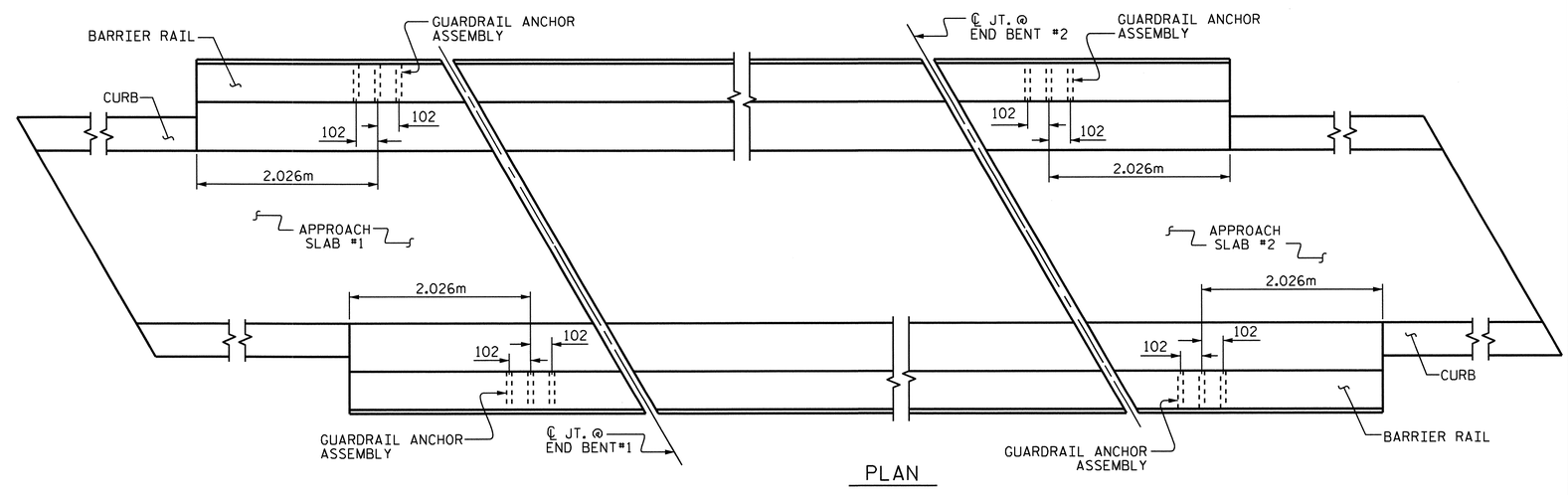

PLAN

LOCATION OF ANCHORS FOR GUARDRAIL

PROJECT NO. R-2413C

GUILFORD-ROCKINGHAM COUNTY

STATION: 45+30.610 -LREV-

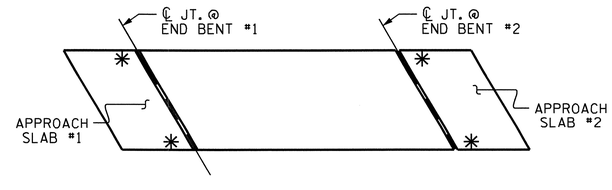

SKETCH SHOWING POINTS OF ATTACHMENTS

✳ DENOTES B-77 GUARDRAIL ANCHOR ASSEMBLY

NORTH CAROLINA PROFESSIONAL SEAL 022516 ENGINEER EMILY E. MURRAY
10/28/11

STATE OF NORTH CAROLINA
DEPARTMENT OF TRANSPORTATION
RALEIGH

STANDARD

GUARDRAIL ANCHORAGE FOR BARRIER RAIL

LEFT LANE

REVISIONS						SHEET NO.
NO.	BY:	DATE:	NO.	BY:	DATE:	S-162
1			3			TOTAL SHEETS
2			4			238

STR. #5 STD. NO. GRA2

ASSEMBLED BY : T.L. AVERETTE	DATE : 09-13-10
CHECKED BY : PEGGY PARISI	DATE : 09-16-10
DRAWN BY : TLA 5/06	ADDED 5/1/06R KMM/GM
CHECKED BY : GM 5/06	

05-SEP-2011 13:29
Y:\Structures\Final Plans\Str.#5\R2413C_sd_BR_05.dgn
mgudlaugsson

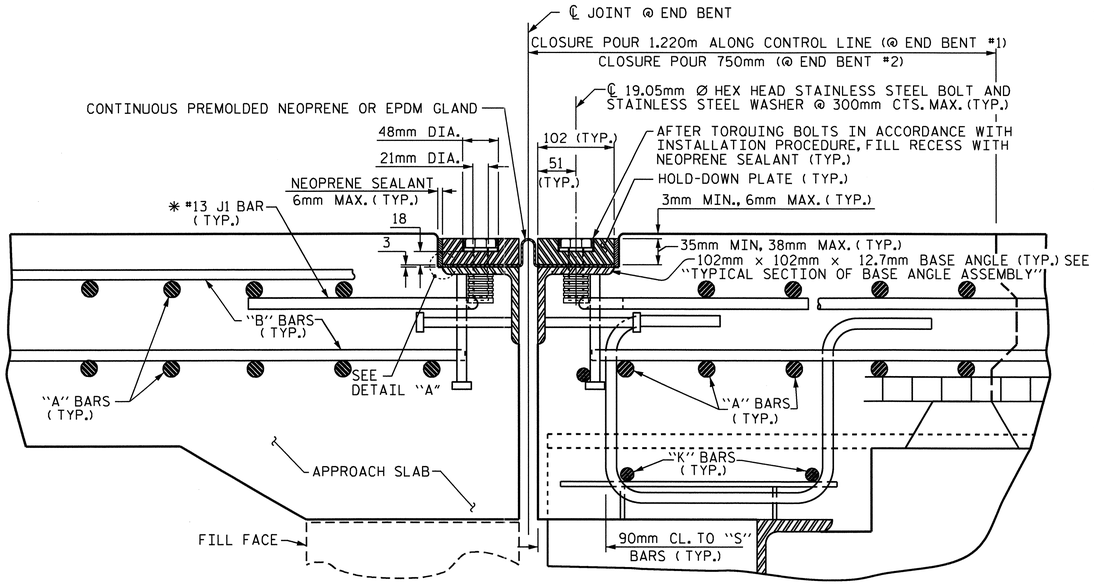

EXPANSION JOINT DETAILS

SECTION NORMAL TO JOINT -- STEEL SUPERSTRUCTURE

* THE QUANTITY OF #13 J1 BARS ON THE BILL OF MATERIAL IS BASED ON 300mm CENTERS. J1 BARS SHALL BE PLACED AT EACH VERTICAL STUD ANCHOR BOLT. IN THE EVENT THAT THE NUMBER OF VERTICAL STUD ANCHOR BOLTS EXCEEDS THE NUMBER OF J1 BARS SPECIFIED, ADDITIONAL J1 BARS WILL NOT BE REQUIRED.

INSTALLATION PROCEDURE

1. A TEMPLATE OR OTHER SUITABLE DEVICE SHALL BE USED TO FORM THE TOP OF THE EXPANSION JOINT SEAL BLOCKOUT TO THE PROPER DEPTH AND WIDTH. THE TEMPLATE SHALL BE 105mm TO 108mm WIDE AND OF SUCH THICKNESS AS TO PROVIDE FOR CORRECT FINAL ELEVATION OF TOP OF HOLD-DOWN PLATES. THE TEMPLATE SHALL BE ATTACHED TO THE BASE ANGLE ASSEMBLY WITH THE 19.05mm Ø HEX HEAD BOLTS PROVIDED FOR THE HOLD-DOWN PLATES. A 25mm Ø HOLE SHALL BE PROVIDED IN THE TEMPLATE CENTERED OVER EACH WEEP HOLE IN THE 102mm X 102mm X 12.7mm BASE ANGLE. OTHER METHODS OF INSURING DRAINAGE THROUGH WEEP HOLES MAY BE EMPLOYED SUBJECT TO ENGINEER'S APPROVAL.
2. AFTER THE CONCRETE HAS BEEN CAST ON BOTH SIDES OF THE JOINT, REMOVE THE TEMPLATE. THOROUGHLY CLEAN THE BOLT HOLES AND THE ANGLE PLATE. REMOVE ANY EXCESS CONCRETE THAT COMES OUT OF THE WEEP HOLES. ANY DAMAGED STEEL SHALL BE COATED WITH A MINIMUM THICKNESS OF 0.100mm (DRY) OF ZINC-RICH PAINT IN ACCORDANCE WITH THE STANDARD SPECIFICATIONS.
3. LAY THE GLAND ON THE BASE ANGLE AND FIELD MARK THE GLAND FOR THE BOLT HOLES. HOLES IN THE GLAND SHALL BE PUNCHED 22mm IN DIAMETER WITH A HAND PUNCH.
4. IN ORDER TO CHECK FOR PROPER ALIGNMENT, PLACE THE GLAND AND HOLD-DOWN PLATES ON THE BASE ANGLE. DO NOT APPLY NEOPRENE SEALANT. BOLT THE HOLD-DOWN PLATES TO THE BASE ANGLE BUT DO NOT TIGHTEN. THE ENGINEER SHALL INSPECT THE JOINT SEAL DEVICE FOR PROPER ALIGNMENT.
5. AFTER INSPECTION, REMOVE THE HOLD-DOWN PLATES AND GLAND. APPLY NEOPRENE SEALANT TO THE BASE ANGLE IN ACCORDANCE WITH THE "INSTALLATION SKETCH". PLACE GLAND AND HOLD-DOWN PLATES ON THE BASE ANGLE. BOLT THE HOLD-DOWN PLATES TO THE BASE ANGLE ASSEMBLY AND TORQUE THE BOLTS TO 119.3 N-m WITH A TORQUE WRENCH. THE TORQUE WRENCH SHALL BE CALIBRATED IN ACCORDANCE WITH SECTION 440-10 (D) OF THE STANDARD SPECIFICATIONS. CHECK THE TORQUE AFTER THREE (3) HOURS AND, IF NECESSARY, RETIGHTEN TO 119.3 N-m. A FINAL CHECK SHALL BE MADE AT SEVEN (7) DAYS. TORQUE SHALL NOT BE LESS THAN 108.5 N-m AFTER SEVEN (7) DAYS.
6. AFTER PROPER TORQUING, CLEAN THE BOLT HOLE RECESSES AND THE RECESS BETWEEN THE JOINT SEAL DEVICE AND CONCRETE, COMPLETELY FILL THESE RECESSES WITH NEOPRENE SEALANT.

GENERAL NOTES

1. FOR EXPANSION JOINT SEALS, SEE SPECIAL PROVISIONS.
2. ALL PLATES AND ANGLES SHALL CONFORM TO AASHTO M270 GRADE 250 STEEL OR APPROVED EQUAL. ALL HOLD-DOWN BOLTS SHALL CONFORM TO ASTM F593 ALLOY 304 STAINLESS STEEL. WASHERS SHALL CONFORM TO ASTM F844 EXCEPT THEY SHALL BE MADE FROM ALLOY 304 STAINLESS STEEL. ALL STUD ANCHORS SHALL CONFORM TO AASHTO M169, GRADES 1010 THRU 1020 OR APPROVED EQUAL. ALL CONCRETE INSERTS SHALL BE CLOSED END AND SHALL CONFORM TO AASHTO M169, GRADE 12L14. TENSILE CAPACITY SHALL BE 13.3 kN MIN.
3. A PREMOLDED CORRUGATED OR NON-CORRUGATED GLAND SHALL BE USED FOR JOINTS SKEWED BETWEEN 50° THRU 130° . FOR JOINTS SKEWED LESS THAN 50° OR MORE THAN 130° , ONLY A CORRUGATED GLAND SHALL BE USED.
4. CLOSED END FERRULES AND STUD ANCHORS SHALL BE SHOP WELDED AND ALL HOLES SHALL BE SHOP DRILLED AS SHOWN ON PLANS. STUD ANCHORS SHALL BE ELECTRIC ARC END WELDED WITH COMPLETE FUSION.
5. SURFACES COMING IN CONTACT WITH NEOPRENE SHALL BE GROUND SMOOTH PRIOR TO METALLIZING.
6. UPON COMPLETION OF SHOP FABRICATION, THE HOLD DOWN PLATE AND BASE ANGLE ASSEMBLY AS SHOWN IN THE "TYPICAL SECTION OF BASE ANGLE ASSEMBLY", SHALL BE METALLIZED. SEE SPECIAL PROVISION FOR THERMAL SPRAYED COATINGS (METALLIZATION).
7. BASE ANGLE ASSEMBLY SHALL BE CONTINUOUS FOR THE LENGTH OF THE JOINT. AT CROWN BREAKS, THE ENDS OF THE BASE ANGLE ASSEMBLY SHALL BE CUT PARALLEL TO THE BRIDGE CENTERLINE FOR SKEWS LESS THAN 80° AND GREATER THAN 100°. FINISHED WELD SHALL BE GROUND SMOOTH AND COATED WITH A MINIMUM THICKNESS OF 0.100mm (DRY) OF ZINC-RICH PAINT IN ACCORDANCE WITH THE STANDARD SPECIFICATIONS.
8. FIELD SPLICES OF HOLD-DOWN PLATES SHALL BE KEPT TO A MINIMUM. CONTRACTOR SHALL FURNISH DETAILED PLANS SHOWING PROPOSED SPLICE LOCATIONS FOR APPROVAL. HOLD-DOWN PLATES SHALL NOT EXCEED 6.1m LENGTHS UNLESS APPROVED BY THE ENGINEER.
9. NO ALTERNATE JOINT DETAILS SHALL BE PERMITTED IN LIEU OF THOSE SHOWN ON THESE PLANS.
10. THE CONTRACTOR MAY, AT HIS OPTION, USE ADHESIVELY ANCHORED ANCHOR BOLTS IN PLACE OF CONCRETE INSERTS FOR COVER PLATES. THE YIELD LOAD OF THE 19.05mm DIA. BOLT IS 44.5 kN. FIELD TESTING OF THE ADHESIVE BONDING SYSTEM IS NOT REQUIRED.

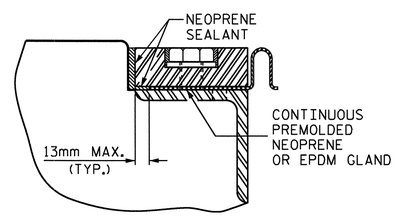

DETAIL "A"

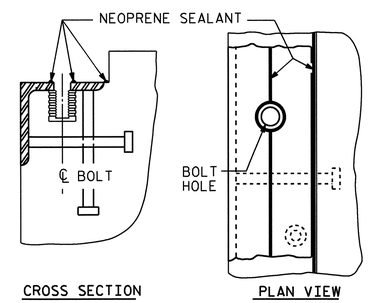

INSTALLATION SKETCH

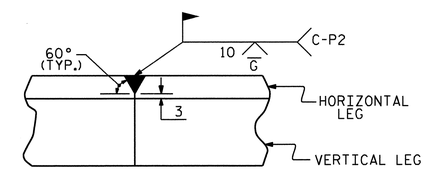

DETAIL- FIELD WELD SPLICE OF BASE ANGLE

MOVEMENT AND SETTING AT JOINT					
END BENT NO.	SKEW ANGLE	TOTAL MOVEMENT (ALONG ℄ RDWY)	PERPENDICULAR JOINT OPENING AT 7° C	PERPENDICULAR JOINT OPENING AT 16° C	PERPENDICULAR JOINT OPENING AT 32° C
1	66°-39'-03"	28mm	42mm	38mm	30mm
2	66°-39'-03"	24mm	39mm	36mm	29mm

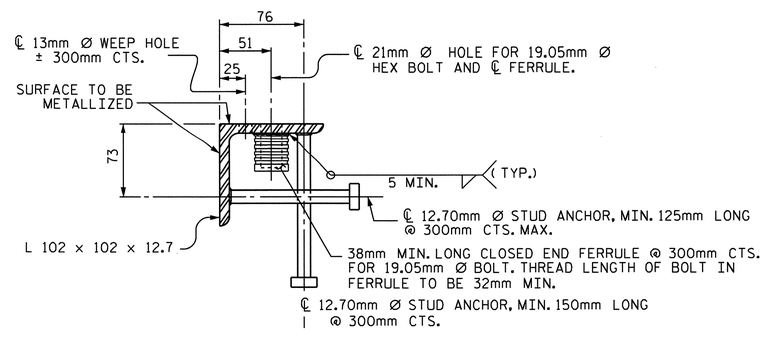

TYPICAL SECTION OF BASE ANGLE ASSEMBLY

PROJECT NO. R-2413C

GUILFORD-ROCKINGHAM COUNTY

STATION: 45+30.610 -LREV-

SHEET 1 OF 2

STATE OF NORTH CAROLINA
DEPARTMENT OF TRANSPORTATION
RALEIGH

STANDARD

EXPANSION JOINT SEAL DETAILS

LEFT LANE

NORTH CAROLINA PROFESSIONAL SEAL 022516 ENGINEER EMILY E. MURRAY 10/28/11

REVISIONS								SHEET NO.
NO.	BY:	DATE:	NO.	BY:	DATE:			S-163
1			3					TOTAL SHEETS
2			4					238

ASSEMBLED BY : T.L. AVERETTE		DATE : 11-10-10	
CHECKED BY : PEGGY PARISI		DATE : 07-26-11	
DRAWN BY : REK 9/87	REV. 10/17/00	RWW/LES	
CHECKED BY : CRK 10/87	REV. 5/7/03R	RWW/JTE	
	REV. 5/1/06	TLA/GM	

05-SEP-2011 13:27
Y:\Structures\Final Plans\Str.#5\R2413C_sd_JS_05.dgn
mgudlaugsson

STR. #5

STD. NO. EJS1SM

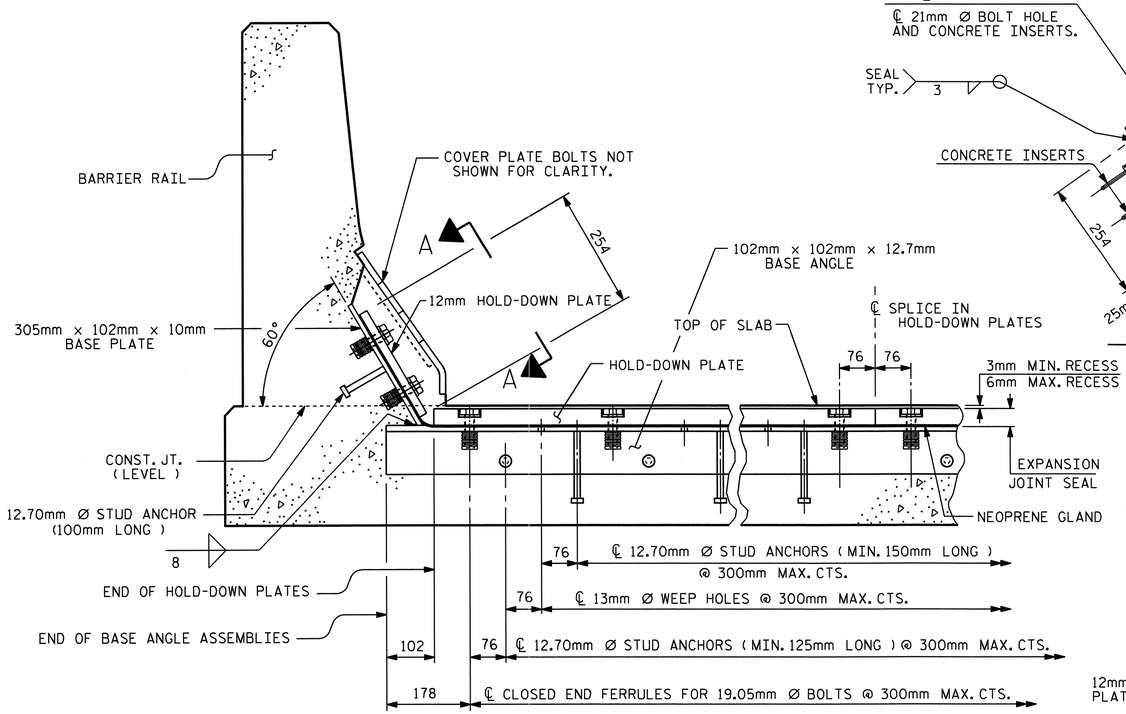

SECTION THRU RAIL NORMAL TO JOINT

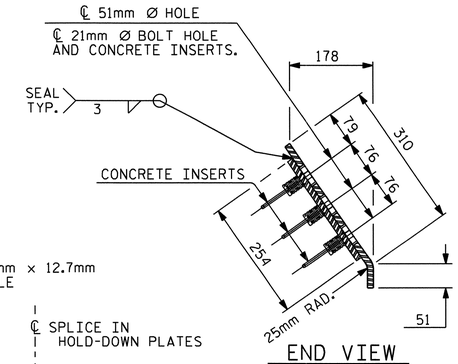

END VIEW

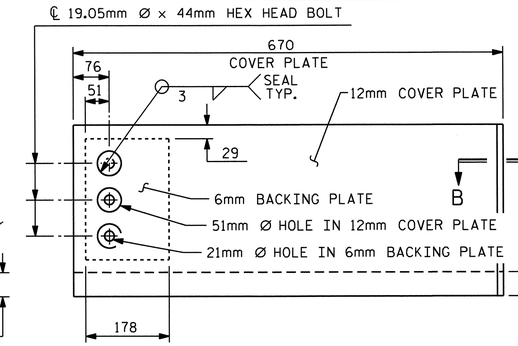

TYPE I - ELEVATION VIEW

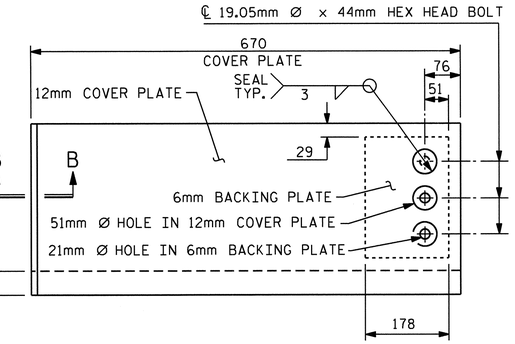

TYPE II - ELEVATION VIEW

COVER PLATE DETAILS

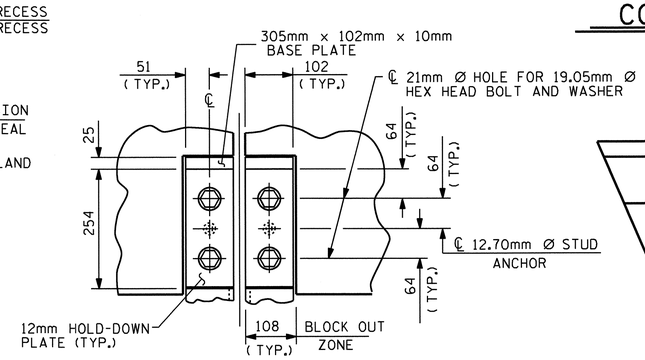

SECTION A - A

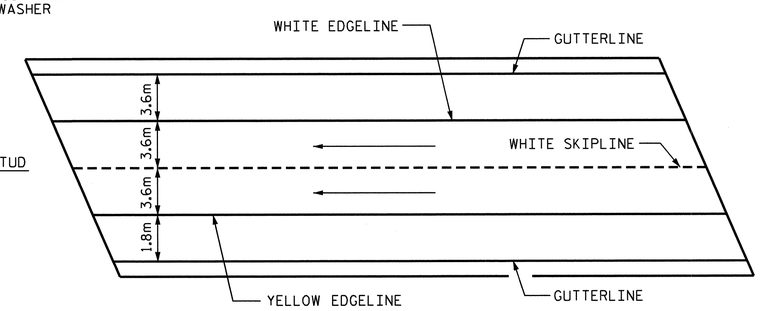

PAVEMENT MARKING ALIGNMENT

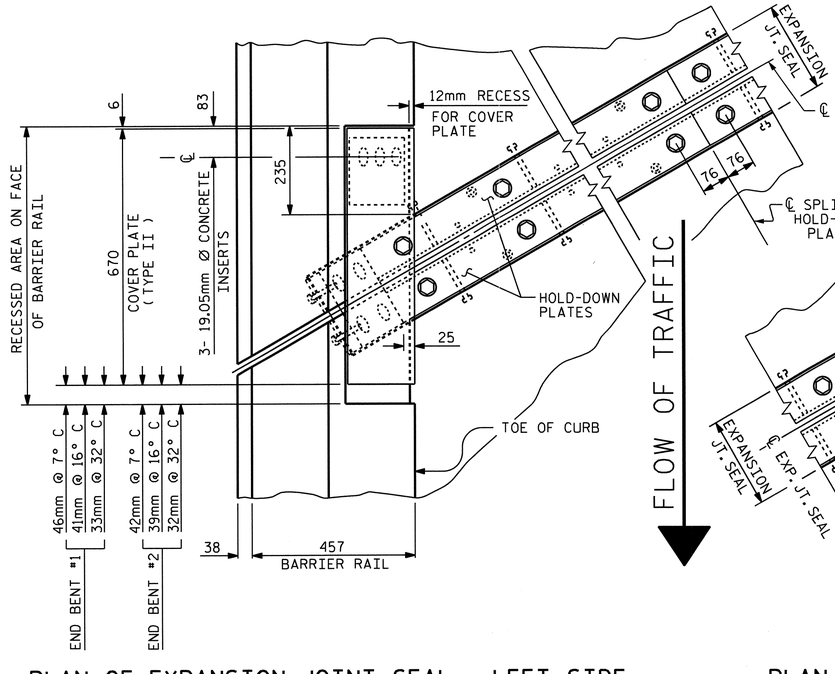

PLAN OF EXPANSION JOINT SEAL - LEFT SIDE

FLOW OF TRAFFIC

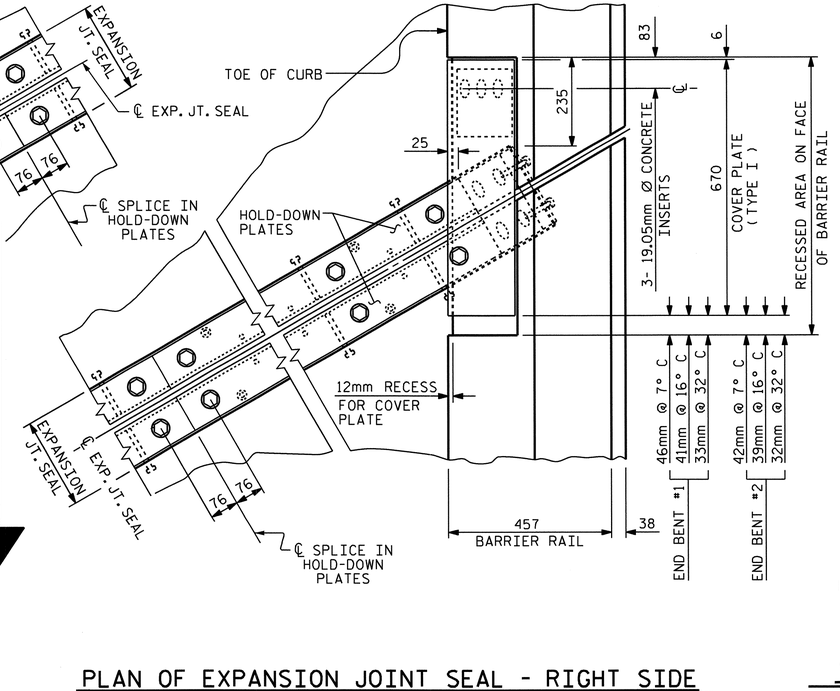

PLAN OF EXPANSION JOINT SEAL - RIGHT SIDE

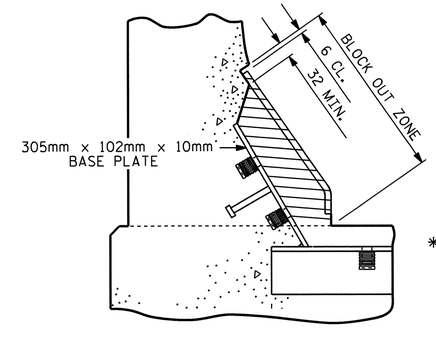

BLOCK OUT DETAIL

SEE "SECTION A - A" FOR OTHER DETAILS.

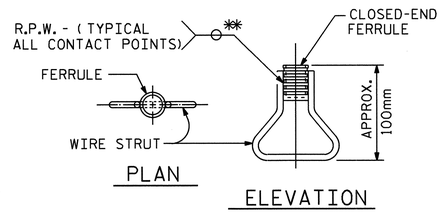

CONCRETE INSERT

** EACH WELDED ATTACHMENT OF WIRE TO FERRULE SHALL DEVELOP THE TENSILE STRENGTH OF THE WIRE.

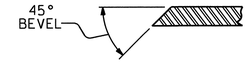

SECTION B - B

PROJECT NO. R-2413C

GUILFORD-ROCKINGHAM COUNTY

STATION: 45+30.610 -LREV-

SHEET 2 OF 2

STATE OF NORTH CAROLINA
DEPARTMENT OF TRANSPORTATION
RALEIGH

STANDARD
EXPANSION JOINT
SEAL DETAILS
FOR BARRIER RAIL
LEFT LANE

NORTH CAROLINA PROFESSIONAL SEAL 022516 ENGINEER EMILY E. MURRAY
10/28/11

REVISIONS							SHEET NO.
NO.	BY:	DATE:	NO.	BY:	DATE:		S-164
1			3				TOTAL SHEETS
2			4				238

ASSEMBLED BY : T.L. AVERETTE		DATE : 11-10-10	
CHECKED BY : PEGGY PARISI		DATE : 07-25-11	
DRAWN BY : REK 9/87	REV. 7/17/98	RWW/LES	
CHECKED BY : CRK 10/87	REV. 10/17/00	RWW/LES	
	REV. 5/1/06	TLA/GM	

05-SEP-2011 13:27
Y:\Structures\Final Plans\Str.#5\R2413C_sd_JS_05.dgn
mgudlaugsson

STR. #5

STD. NO. EJS2SM

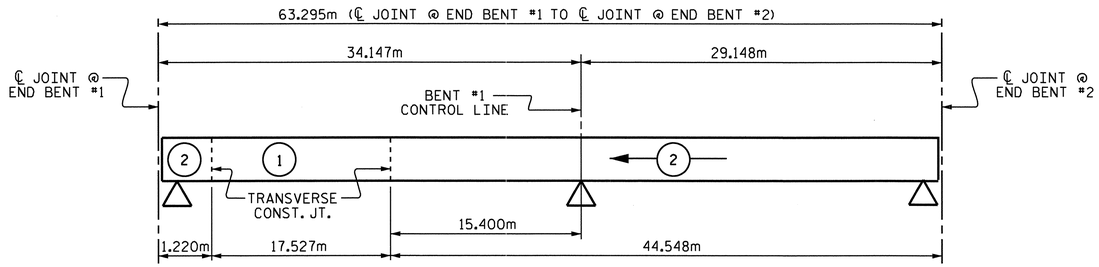

POURING SEQUENCE

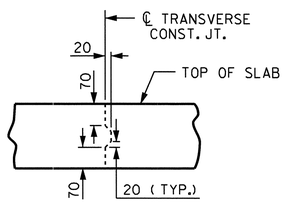

TRANSVERSE CONSTRUCTION JOINT DETAIL

NOTE: REINFORCING STEEL IN SLAB NOT SHOWN.
LONGITUDINAL REINFORCING STEEL SHALL
BE CONTINUOUS THROUGH JOINT.

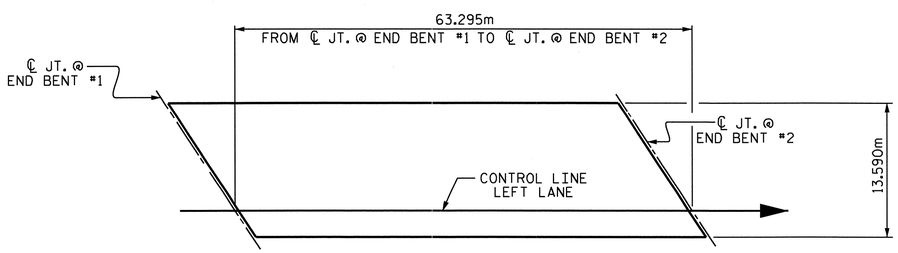

LAYOUT FOR COMPUTING AREA OF REINFORCED CONCRETE DECK SLAB

(SQ. METER = 860.2)

REINFORCING BAR SCHEDULE

SPANS A & B

BAR	NUM	SZ	TYP	LENGTH	WEIGHT
*A1	357	16	STR	13480	7469
A2	357	16	STR	13480	7469
*A101	4	16	STR	13120	81
*A102	4	16	STR	12380	77
*A103	4	16	STR	11640	72
*A104	4	16	STR	10900	68
*A105	4	16	STR	10160	63
*A106	4	16	STR	9420	58
*A107	4	16	STR	8680	54
*A108	4	16	STR	7920	49
*A109	4	16	STR	7180	45
*A110	4	16	STR	6440	40
*A111	4	16	STR	5700	35
*A112	4	16	STR	4960	31
*A113	4	16	STR	4220	26
*A114	4	16	STR	3480	22
*A115	4	16	STR	2740	17
*A116	4	16	STR	2000	12
*A117	4	16	STR	1260	8
A201	4	16	STR	13120	81
A202	4	16	STR	12380	77
A203	4	16	STR	11640	72
A204	4	16	STR	10900	68
A205	4	16	STR	10160	63
A206	4	16	STR	9420	58
A207	4	16	STR	8680	54
A208	4	16	STR	7920	49
A209	4	16	STR	7180	45
A210	4	16	STR	6440	40
A211	4	16	STR	5700	35
A212	4	16	STR	4960	31
A213	4	16	STR	4220	26
A214	4	16	STR	3480	22
A215	4	16	STR	2740	17
A216	4	16	STR	2000	12
A217	4	16	STR	1260	8
*B1	96	13	STR	7380	704
*B2	90	19	STR	16160	3251
*B3	64	13	STR	6360	405
B4	192	16	STR	16300	4857
*B5	135	19	STR	12080	3645
*G1	2	16	STR	14680	46
*J1	92	13	4	440	40
*K1	12	16	1	3360	63
*K2	18	16	2	4320	121
*S1	64	13	3	1340	85

REINFORCING STEEL KG 13084

* EPOXY COATED REINFORCING STEEL KG 16587

BAR TYPES

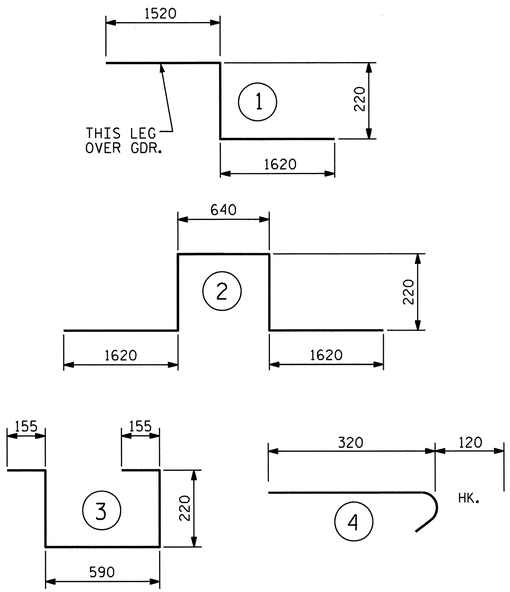

ALL BAR DIMENSIONS ARE OUT TO OUT

SUPERSTRUCTURE BILL OF MATERIAL

	CLASS AA CONCRETE	REINFORCING STEEL	EPOXY COATED REINFORCING STEEL
	(CU. METER)	(kg)	(kg)
POUR #1	61.0		
POUR #2	161.5		
TOTALS **	222.5	13,084	16,587

** QUANTITIES FOR BARRIER RAIL ARE NOT INCLUDED

SUPERSTRUCTURE REINFORCING STEEL LENGTHS ARE BASED ON THE FOLLOWING MINIMUM SPLICE LENGTHS

BAR SIZE	SUPERSTRUCTURE EXCEPT APPROACH SLABS, PARAPET, AND BARRIER RAIL		APPROACH SLABS		PARAPET AND BARRIER RAIL
	EPOXY COATED	UNCOATED	EPOXY COATED	UNCOATED	
#13	610	540	610	540	840
#16	770	660	770	660	1050
#19	920	790	1190	790	1330
#22	1580	1060			
#25	2080	1390			

GROOVING BRIDGE FLOORS

BRIDGE DECK	736.2	SQ. METER
APPROACH SLABS	171.7	SQ. METER
TOTAL	907.9	SQ. METER

PROJECT NO. R-2413C
GUILFORD-ROCKINGHAM COUNTY
STATION: 45+30.610 -LREV-

STATE OF NORTH CAROLINA
DEPARTMENT OF TRANSPORTATION
RALEIGH

SUPERSTRUCTURE

BILL OF MATERIAL
LEFT LANE

NORTH CAROLINA PROFESSIONAL SEAL 022516 ENGINEER LARRY E. MURRAY
10/28/11

REVISIONS						SHEET NO.
NO.	BY:	DATE:	NO.	BY:	DATE:	S-165
1			3			TOTAL SHEETS
2			4			238

DRAWN BY : T.L. AVERETTE DATE : 09-13-10
CHECKED BY : PEGGY PARISI DATE : 09-16-10

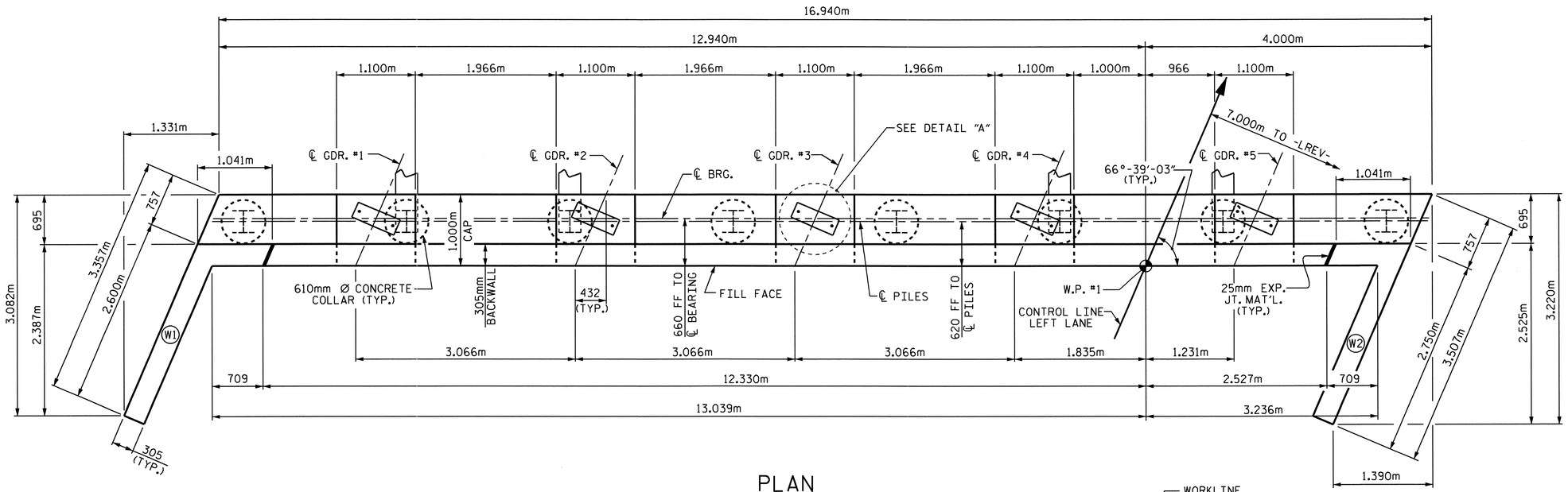

PLAN

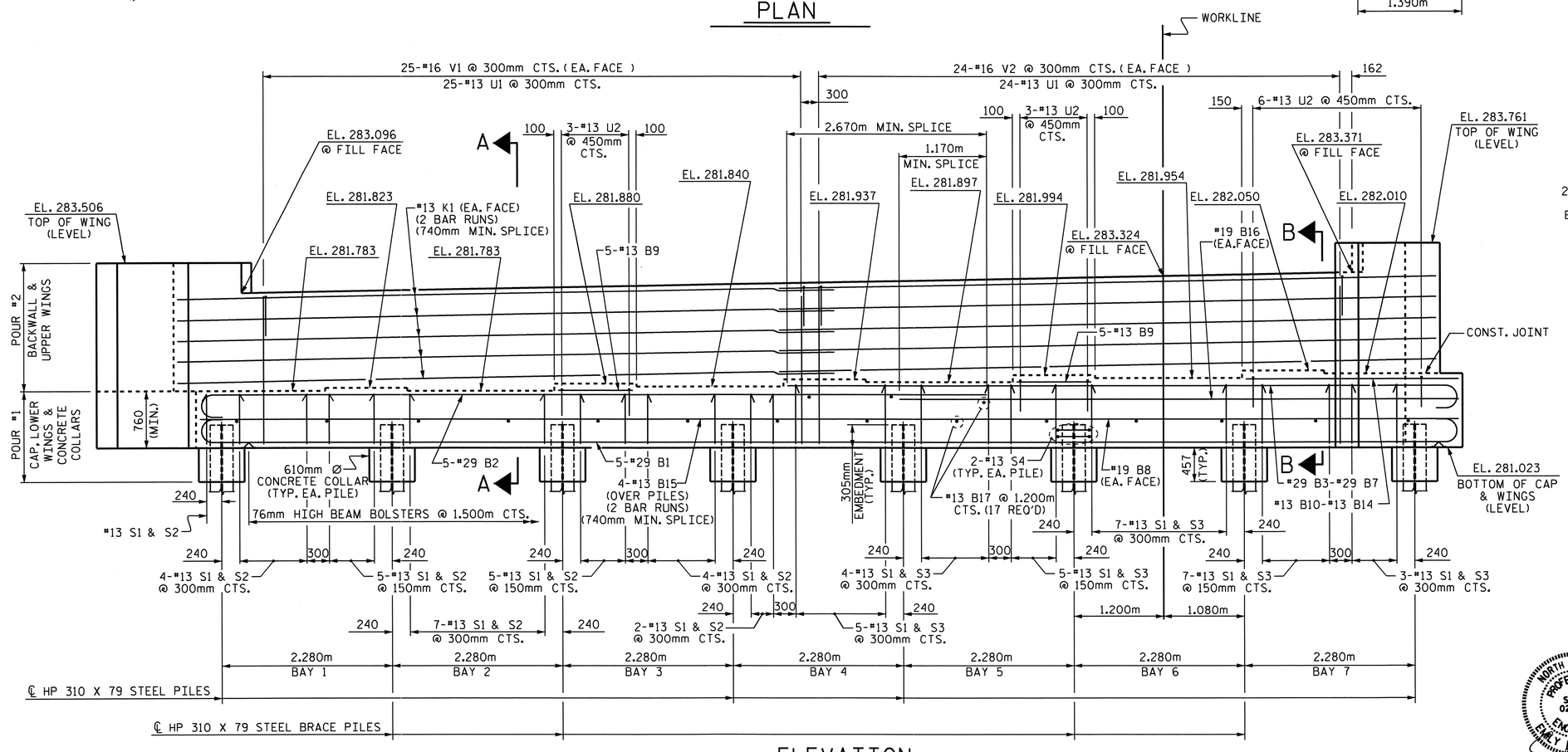

ELEVATION

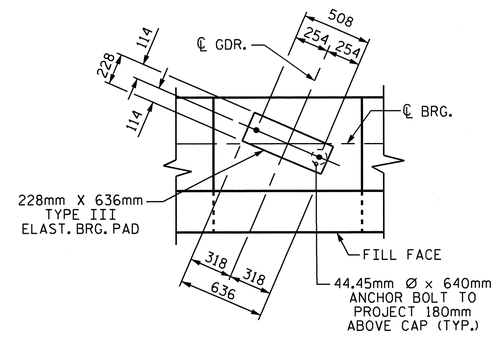

DETAIL "A"

(TYP. EA. GDR.)

NOTES

STIRRUPS AND U1 BARS IN CAP MAY BE SHIFTED AS NECESSARY TO CLEAR ANCHOR BOLTS.

BACKWALL SHALL BE PLACED BEFORE APPLYING THE EPOXY PROTECTIVE COATING.

THE TOP SURFACE AREAS OF THE END BENT CAPS SHALL BE CURED IN ACCORDANCE WITH THE STANDARD SPECIFICATIONS EXCEPT THE MEMBRANE CURING COMPOUND METHOD SHALL NOT BE USED.

THE TOP SURFACE OF THE END BENT CAP EXCEPT THE BRIDGE SEAT BUILDUPS SHALL BE SLOPED TRANSVERSELY FROM THE FILL FACE TO THE BACK FACE AT THE RATE OF 2%.

THE CONTRACTOR SHALL PROVIDE FOR INSTALLATION OF THE 102mm DIAMETER DRAIN PIPE THROUGH THE WING WALL AS REQUIRED FOR REINFORCED BRIDGE APPROACH FILLS. SEE THE ROADWAY PLANS. REINFORCING STEEL IN THE WING WALL MAY BE SHIFTED AS NECESSARY TO CLEAR THE DRAIN PIPE.

EPOXY COAT THE END BENT CAP AFTER ADJUSTMENTS ARE MADE TO BEARINGS.

PROJECT NO. R-2413C
GUILFORD-ROCKINGHAM COUNTY
STATION: 45+30.610 -LREV-

SHEET 1 OF 3

STATE OF NORTH CAROLINA
DEPARTMENT OF TRANSPORTATION
RALEIGH

SUBSTRUCTURE

END BENT #1
LEFT LANE

NORTH CAROLINA PROFESSIONAL SEAL 022516 ENGINEER EMILY E. MURRAY
10/28/11

REVISIONS							SHEET NO.
NO.	BY:	DATE:	NO.	BY:	DATE:		S-166
1			3				TOTAL SHEETS
2			4				238

DRAWN BY : T.L. AVERETTE DATE : 1-31-11
CHECKED BY : PEGGY PARISI DATE : 4-05-11

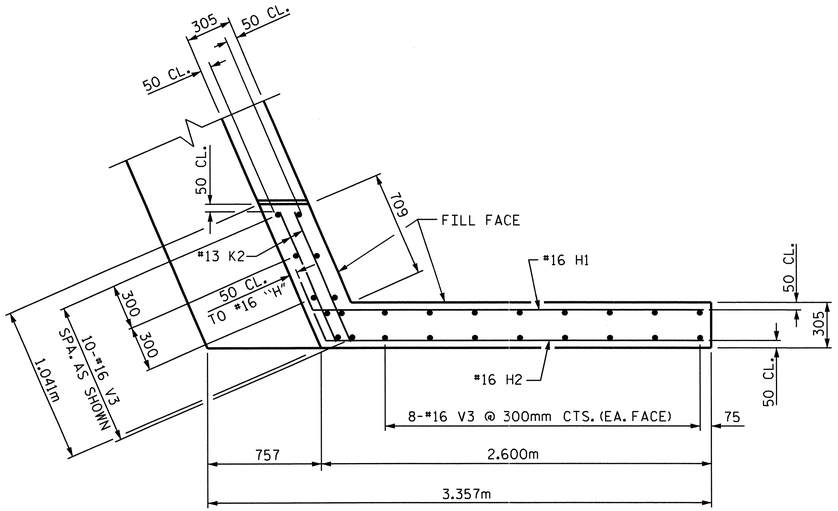

PLAN OF WING W1

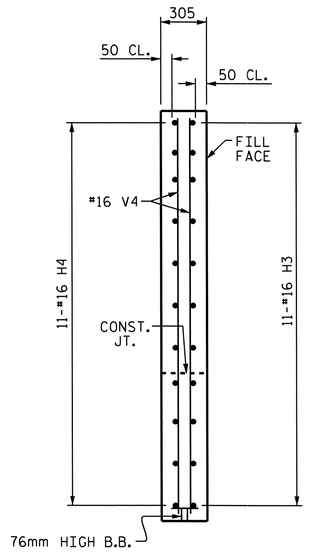

SECTION Y-Y

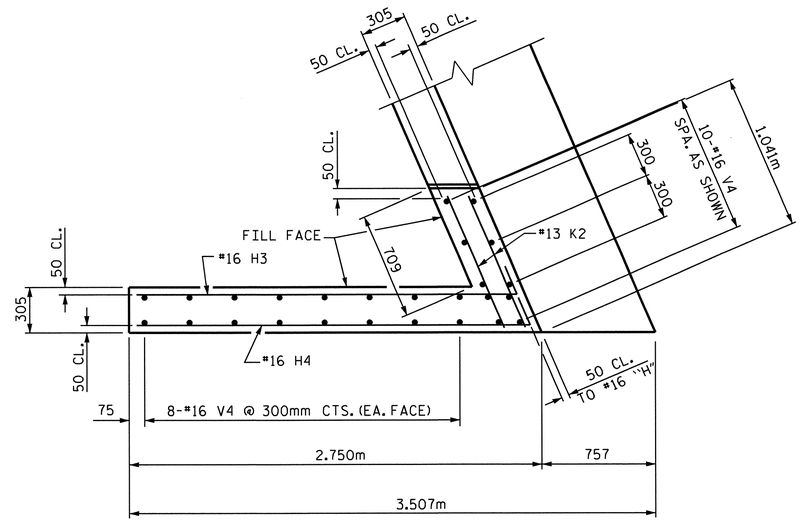

PLAN OF WING W2

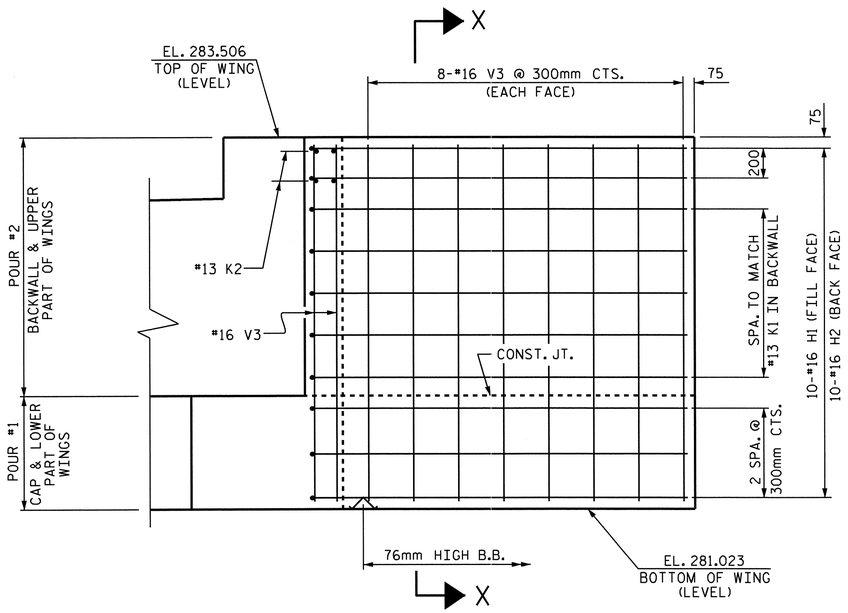

ELEVATION OF WING W1

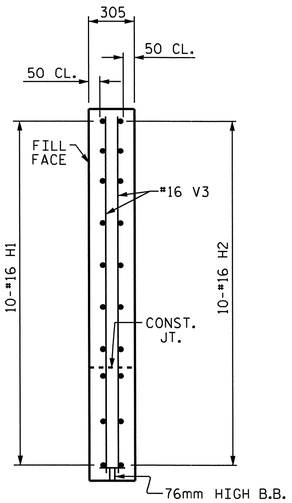

SECTION X-X

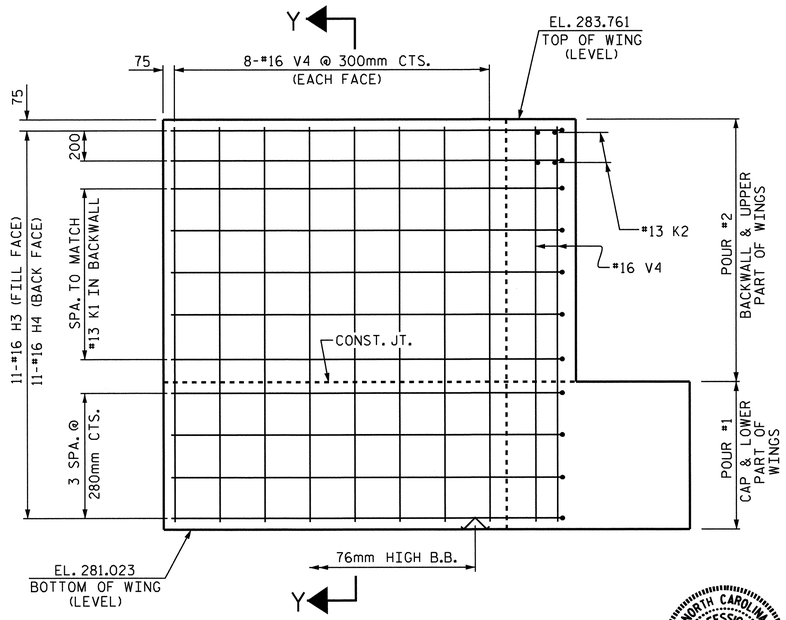

ELEVATION OF WING W2

PROJECT NO. R-2413C
GUILFORD-ROCKINGHAM COUNTY
STATION: 45+30.610 -LREV-

SHEET 2 OF 3

STATE OF NORTH CAROLINA
DEPARTMENT OF TRANSPORTATION
RALEIGH

SUBSTRUCTURE

END BENT #1
LEFT LANE

NORTH CAROLINA PROFESSIONAL SEAL 022516 ENGINEER EMILY E. MURRAY
1/28/11

REVISIONS						SHEET NO.
NO.	BY:	DATE:	NO.	BY:	DATE:	S-167
1			3			TOTAL SHEETS
2			4			238

DRAWN BY : T.L. AVERETTE DATE : 1-31-11
CHECKED BY : PEGGY PARISI DATE : 4-05-11

STR.#5

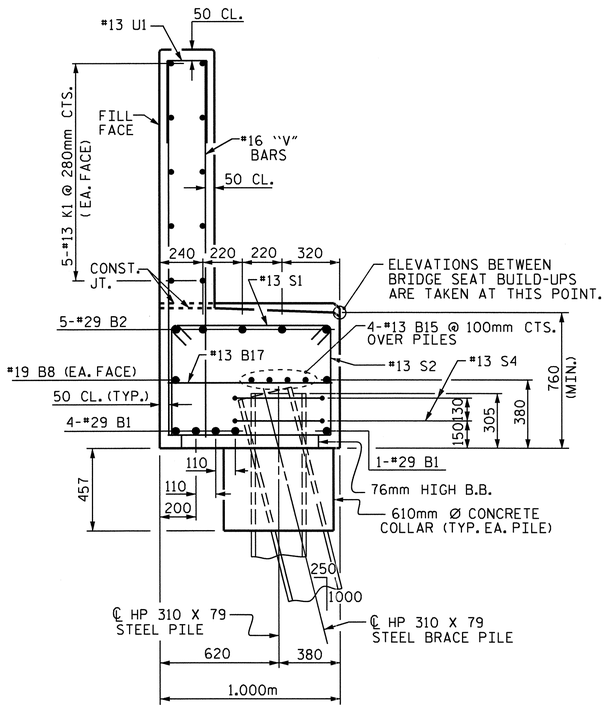

SECTION A-A

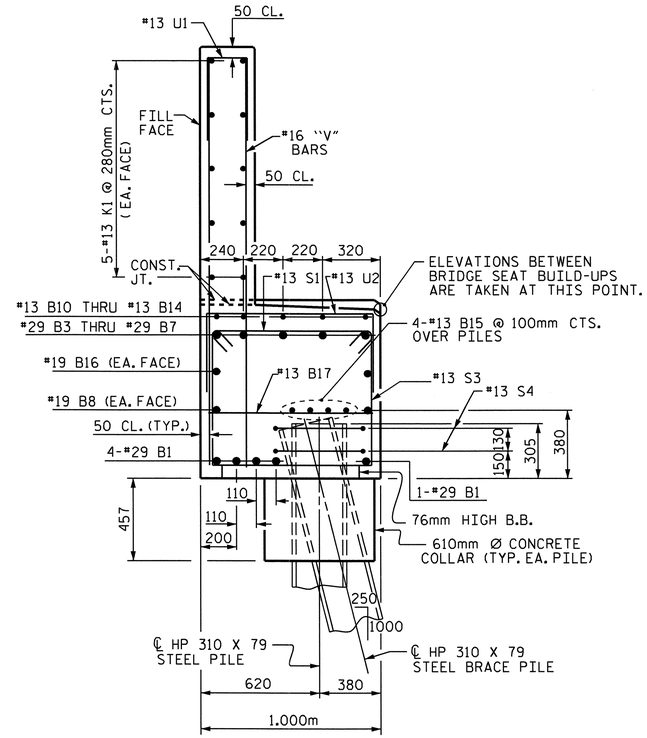

SECTION B-B

BAR TYPES

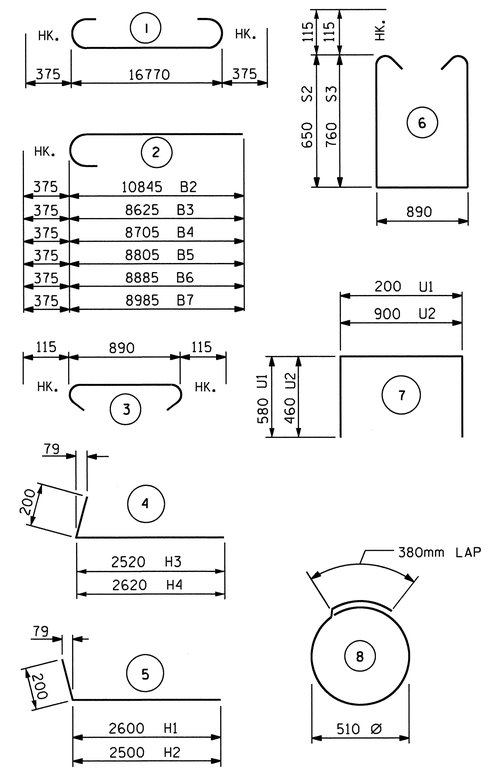

ALL BAR DIMENSIONS ARE OUT TO OUT.

BILL OF MATERIAL
END BENT #1

BAR	NO.	SIZE	TYPE	LENGTH	WEIGHT
B1	5	#29	1	17520	443
B2	5	#29	2	11220	284
B3	1	#29	2	9000	46
B4	1	#29	2	9080	46
B5	1	#29	2	9180	46
B6	1	#29	2	9260	47
B7	1	#29	2	9360	47
B8	2	#19	STR	16820	75
B9	10	#13	STR	1000	10
B10	1	#13	STR	2520	3
B11	1	#13	STR	2600	3
B12	1	#13	STR	2680	3
B13	1	#13	STR	2780	3
B14	1	#13	STR	2880	3
B15	8	#13	STR	8800	70
B16	2	#19	STR	7160	32
B17	17	#13	STR	900	15
H1	10	#16	5	2800	43
H2	10	#16	5	2700	42
H3	11	#16	4	2720	46
H4	11	#16	4	2820	48
K1	20	#13	STR	8800	175
K2	8	#13	STR	920	7
S1	59	#13	3	1120	66
S2	28	#13	6	2420	67
S3	31	#13	6	2640	81
S4	16	#13	8	1980	31
U1	49	#13	7	1360	66
U2	12	#13	7	1820	22
V1	50	#16	STR	1960	152
V2	48	#16	STR	2100	156
V3	26	#16	STR	2380	96
V4	26	#16	STR	2620	106

TOTAL REINFORCING STEEL = 2,380 kg

CLASS A CONCRETE BREAKDOWN

POUR #1 (CAP, LOWER WINGS & CONCRETE COLLARS)	m3	17.1
POUR #2 (BACKWALL & UPPER WINGS)	m3	9.7
TOTAL CLASS A CONCRETE	m3	26.8

HP 310 X 79 STEEL PILES
NO. 8 METERS 22.4

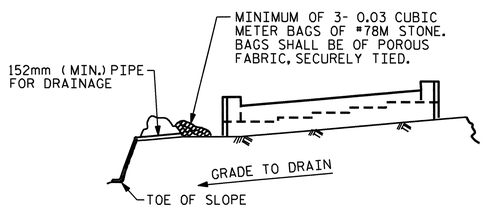

BAGGED STONE AND PIPE SHALL BE PLACED IMMEDIATELY AFTER COMPLETION OF END BENT EXCAVATION. PIPE MAY BE EITHER CONCRETE, CORRUGATED STEEL, CORRUGATED ALUMINUM ALLOY, OR CORRUGATED PLASTIC. PERFORATED PIPE WILL NOT BE ALLOWED.

BAGGED STONE SHALL REMAIN IN PLACE UNTIL THE ENGINEER DIRECTS THAT IT BE REMOVED. THE CONTRACTOR SHALL REMOVE AND DISPOSE OF SILT ACCUMULATIONS AT BAGGED STONE WHEN SO DIRECTED BY THE ENGINEER. BAGS SHALL BE REMOVED AND REPLACED WHENEVER THE ENGINEER DETERMINES THAT THEY HAVE DETERIORATED AND LOST THEIR EFFECTIVENESS.

NO SEPARATE PAYMENT WILL BE MADE FOR THIS WORK AND THE ENTIRE COST OF THIS WORK SHALL BE INCLUDED IN THE UNIT CONTRACT PRICE BID FOR THE SEVERAL PAY ITEMS.

TEMPORARY DRAINAGE AT END BENT

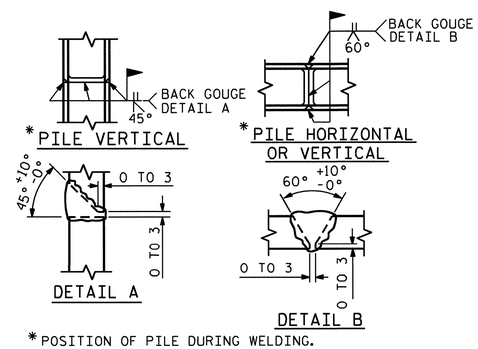

*POSITION OF PILE DURING WELDING.

PILE SPLICE DETAILS

PROJECT NO. R-2413C
GUILFORD-ROCKINGHAM COUNTY
STATION: 45+30.610 -LREV-

SHEET 3 OF 3

STATE OF NORTH CAROLINA
DEPARTMENT OF TRANSPORTATION
RALEIGH

SUBSTRUCTURE
END BENT #1
LEFT LANE

NORTH CAROLINA PROFESSIONAL SEAL 022516 ENGINEER EMILY P. MURRAY
10/28/11

REVISIONS								SHEET NO.
NO.	BY:	DATE:	NO.	BY:	DATE:			S-168
1			3					TOTAL SHEETS
2			4					238

DRAWN BY : T.L. AVERETTE DATE : 1-31-11
CHECKED BY : PEGGY PARISI DATE : 4-05-11

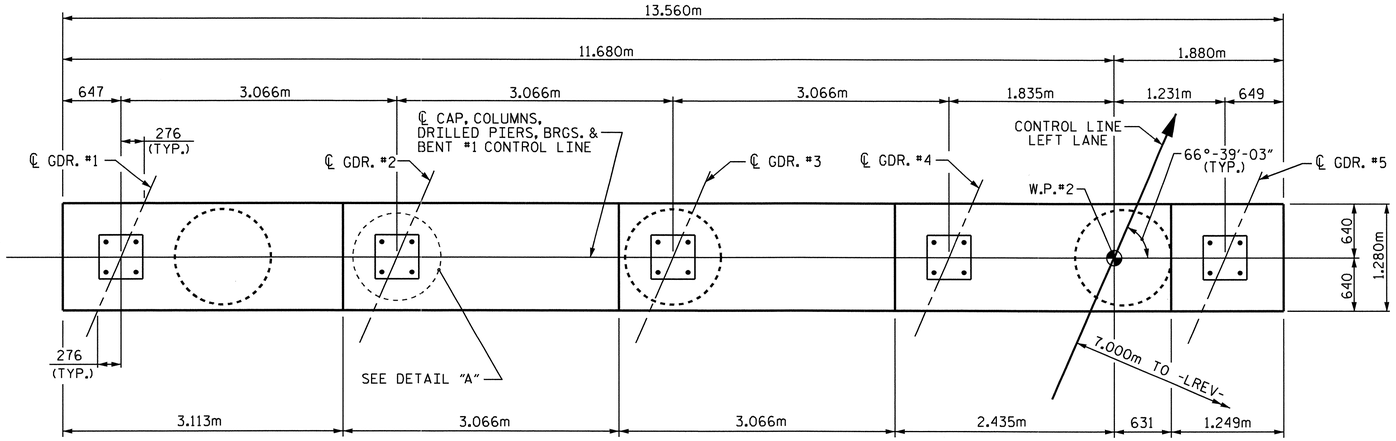

SPAN "B"

SPAN "A"

PLAN

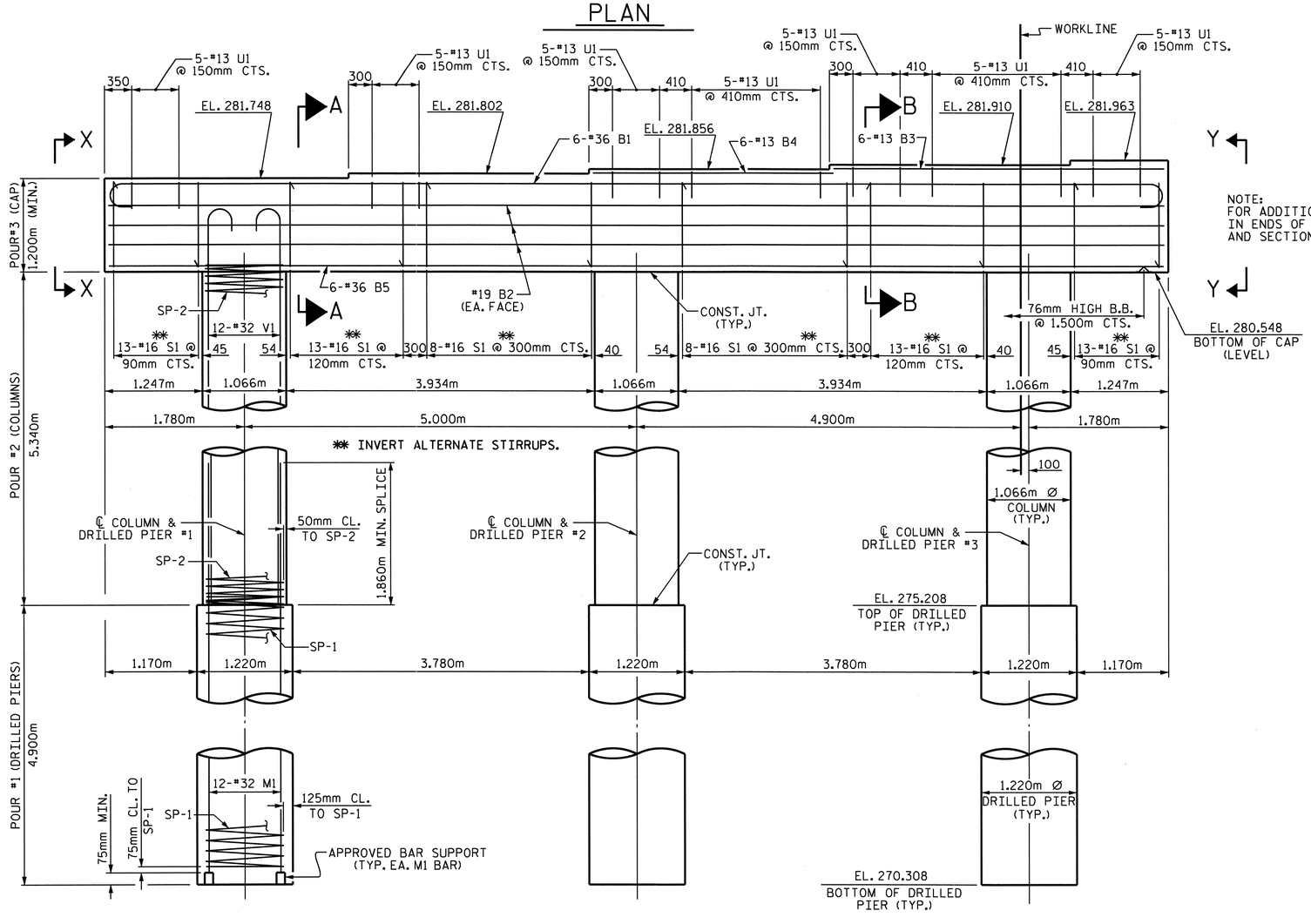

ELEVATION

(DIMENSIONS AND REINFORCING STEEL ARE TYPICAL FOR EACH COLUMN & DRILLED PIER)

NOTE:
FOR ADDITIONAL REINFORCING STEEL IN ENDS OF CAP, SEE SECTION X-X AND SECTION Y-Y ON SHEET 2 OF 2.

NOTES

STIRRUPS AND U1 BARS IN CAP MAY BE SHIFTED AS NECESSARY TO CLEAR ANCHOR BOLTS.

HOOKS ON "V" BARS MAY BE TURNED AS NECESSARY FOR PLACING REINFORCING STEEL.

ALL STEEL IN THE DRILLED PIERS IS INCLUDED IN THE PAY ITEMS FOR "REINFORCING STEEL" AND "SPIRAL COLUMN REINFORCING STEEL".

THE CONTRACTOR'S ATTENTION IS CALLED TO THE FACT THAT THE LONGITUDINAL REINFORCEMENT FOR THE DRILLED PIERS IS DETAILED WITH ONE METER OF EXTRA LENGTH.

THE LOCATION OF THE CONSTRUCTION JOINT IN THE DRILLED PIERS IS BASED ON AN APPROXIMATE GROUND LINE ELEVATION. IF THE CONSTRUCTION JOINT IS ABOVE THE ACTUAL GROUND LINE ELEVATION, THE CONTRACTOR SHALL PLACE THE CONSTRUCTION JOINT 300mm BELOW THE GROUND LINE.

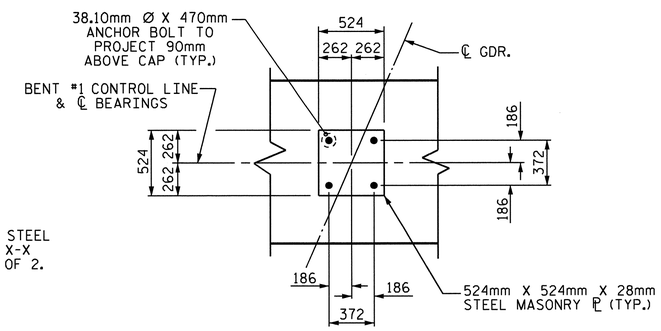

DETAIL "A"

(TYP. EA. GDR.)

PROJECT NO. R-2413C
GUILFORD-ROCKINGHAM COUNTY
STATION: 45+30.610 -LREV-

SHEET 1 OF 2

STATE OF NORTH CAROLINA
DEPARTMENT OF TRANSPORTATION
RALEIGH

SUBSTRUCTURE
BENT #1
LEFT LANE

NORTH CAROLINA PROFESSIONAL SEAL 022516 ENGINEER EMILY E. MURRAY
10/28/11

REVISIONS						
NO.	BY:	DATE:	NO.	BY:	DATE:	
1			3			
2			4			

SHEET NO. S-169
TOTAL SHEETS 238

DRAWN BY : T.L. AVERETTE DATE : 10-14-10
CHECKED BY : PEGGY PARISI DATE : 04-21-11

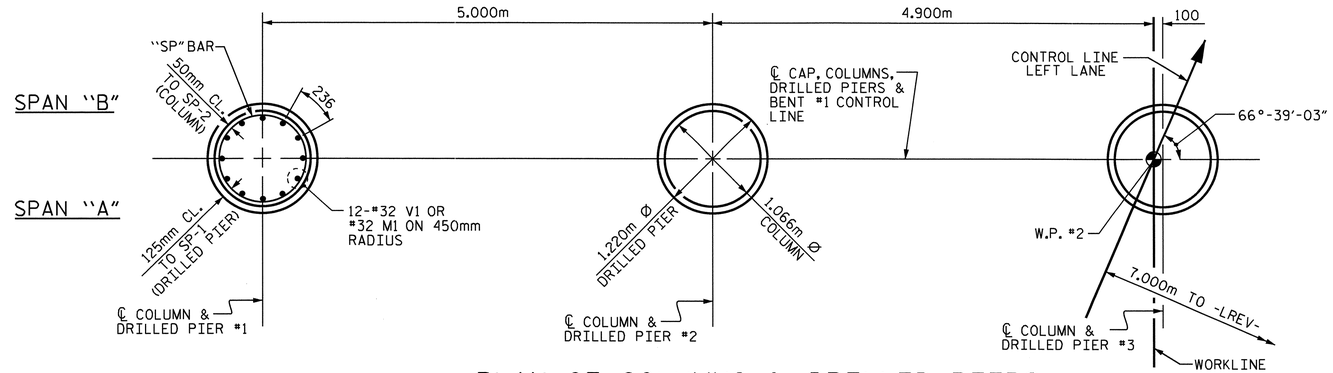

PLAN OF COLUMNS & DRILLED PIERS

(DIMENSIONS AND REINFORCING STEEL ARE TYPICAL FOR EACH COLUMN & DRILLED PIER)

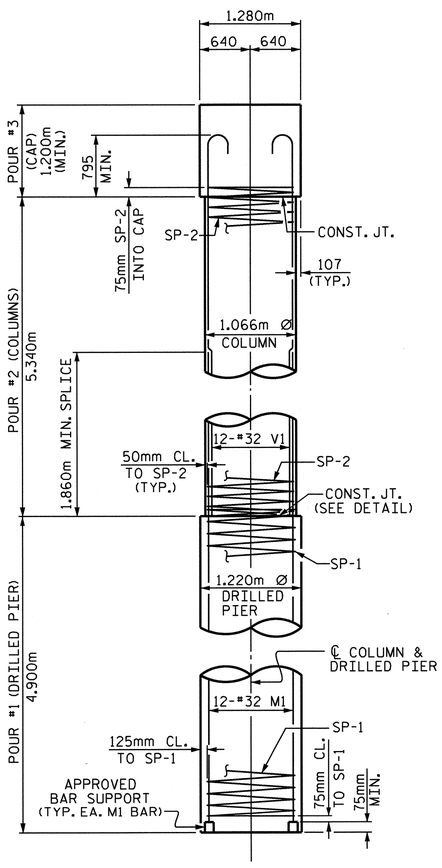

END ELEVATION

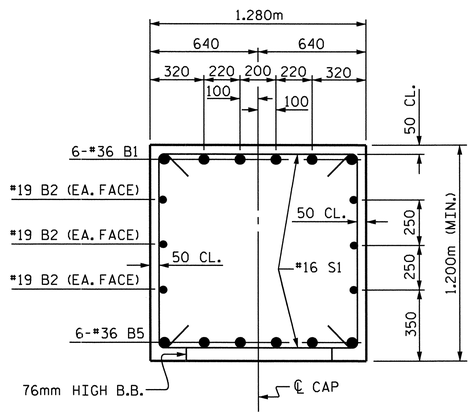

SECTION A-A

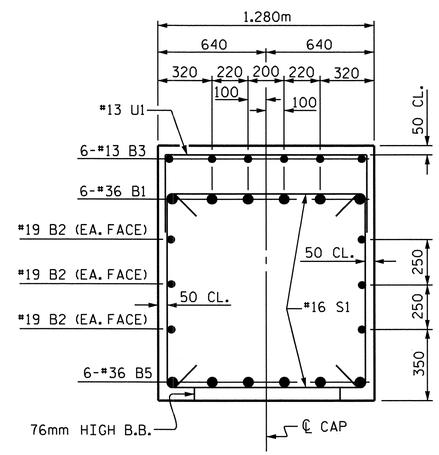

SECTION B-B

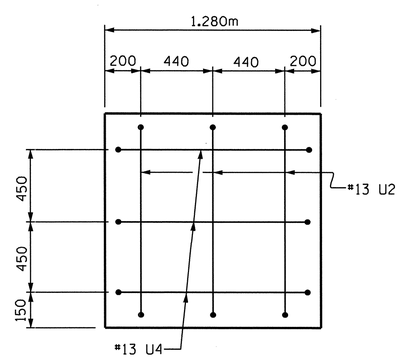

SECTION X-X

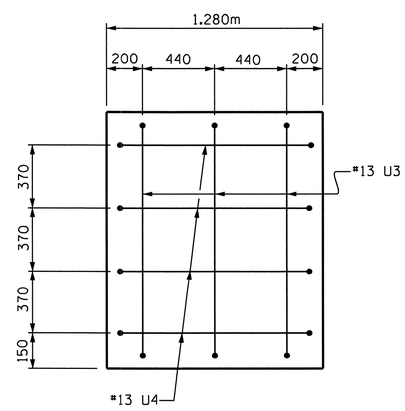

SECTION Y-Y

BAR TYPES

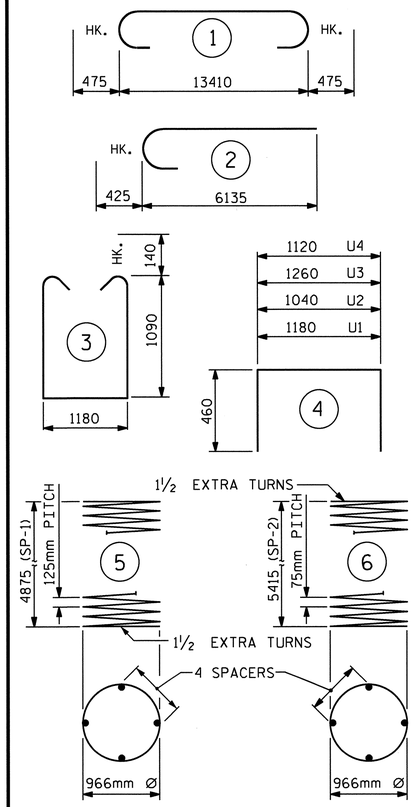

ALL BAR DIMENSIONS ARE OUT TO OUT.

BILL OF MATERIAL

BENT #1

BAR	NO.	SIZE	TYPE	LENGTH	WEIGHT
B1	6	#36	1	14360	681
B2	6	#19	STR	13460	180
B3	6	#13	STR	4200	25
B4	6	#13	STR	3060	18
B5	6	#36	STR	13460	639
M1	36	#32	STR	7680	1771
S1	68	#16	3	3640	384
U1	35	#13	4	2100	73
U2	3	#13	4	1960	6
U3	3	#13	4	2180	7
U4	7	#13	4	2040	14
V1	36	#32	2	6560	1512

TOTAL REINFORCING STEEL = 5310 kg

SP-1	3	✱✱	5	121500	566
SP-2	3	✱✱✱	6	221640	661

SPIRAL COLUMN REINFORCING STEEL 1227 kg

DRILLED PIER CONCRETE BREAKDOWN

POUR #1 (DRILLED PIERS)	m3	17.2

CLASS "A" CONCRETE BREAKDOWN

POUR #2 (COLUMNS)	m3	14.3
POUR #3 (CAP)	m3	22.4
TOTAL CLASS "A" CONCRETE	m3	36.7

1220mm Ø DRILLED PIER NOT IN SOIL	6.8m
1220mm Ø DRILLED PIER IN SOIL	7.9m
CSL TUBES	67.8m

✱✱✱ THE SP-2 SPIRAL REINFORCING STEEL SHALL BE W20 OR D-20 COLD DRAWN WIRE OR #13 PLAIN OR DEFORMED BAR.

✱✱ THE SP-1 SPIRAL REINFORCING STEEL SHALL BE W31 OR D-31 COLD DRAWN WIRE OR #16 PLAIN OR DEFORMED BAR.

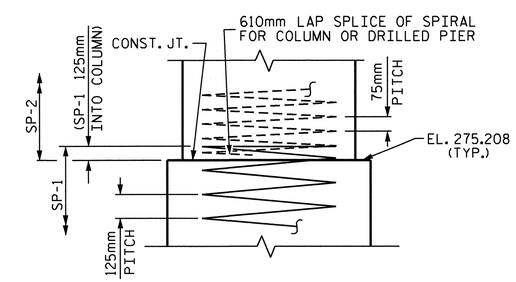

CONSTRUCTION JOINT DETAIL

PROJECT NO. R-2413C

GUILFORD-ROCKINGHAM COUNTY

STATION: 45+30.610 -LREV-

SHEET 2 OF 2

STATE OF NORTH CAROLINA
DEPARTMENT OF TRANSPORTATION
RALEIGH

SUBSTRUCTURE

BENT #1
LEFT LANE

NORTH CAROLINA PROFESSIONAL SEAL 022516 ENGINEER EMILY E. MURRAY
10/28/11

REVISIONS						SHEET NO.
NO.	BY:	DATE:	NO.	BY:	DATE:	S-170
1			3			TOTAL SHEETS
2			4			238

DRAWN BY : T.L. AVERETTE DATE : 10-14-10
CHECKED BY : PEGGY PARISI DATE : 04-21-11

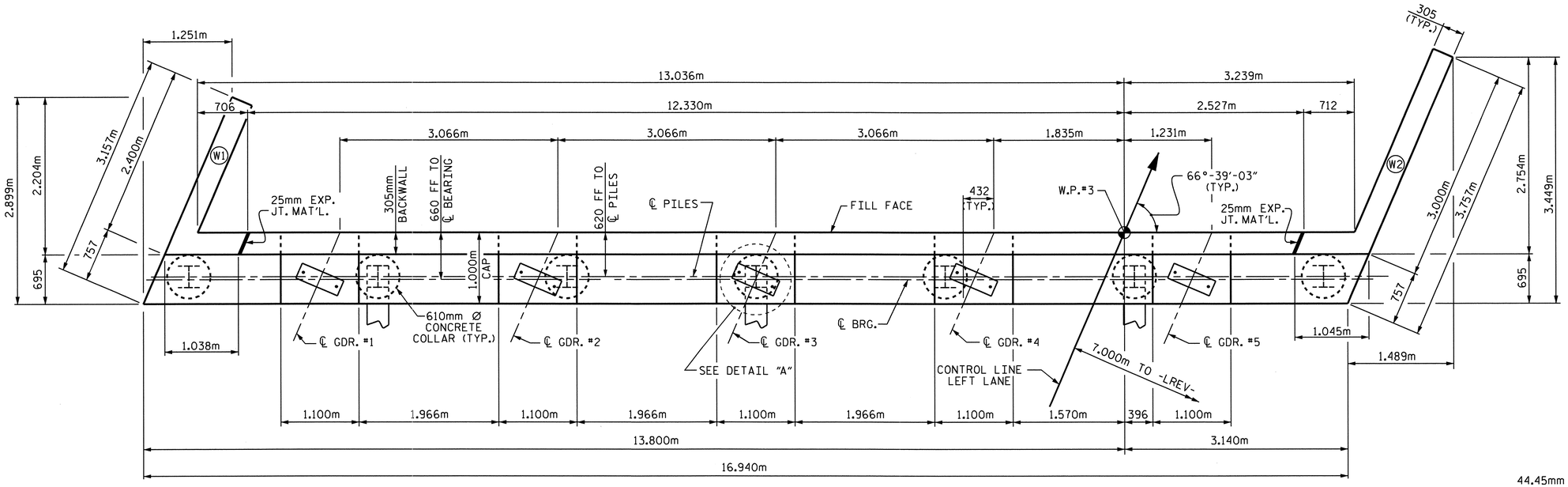

PLAN

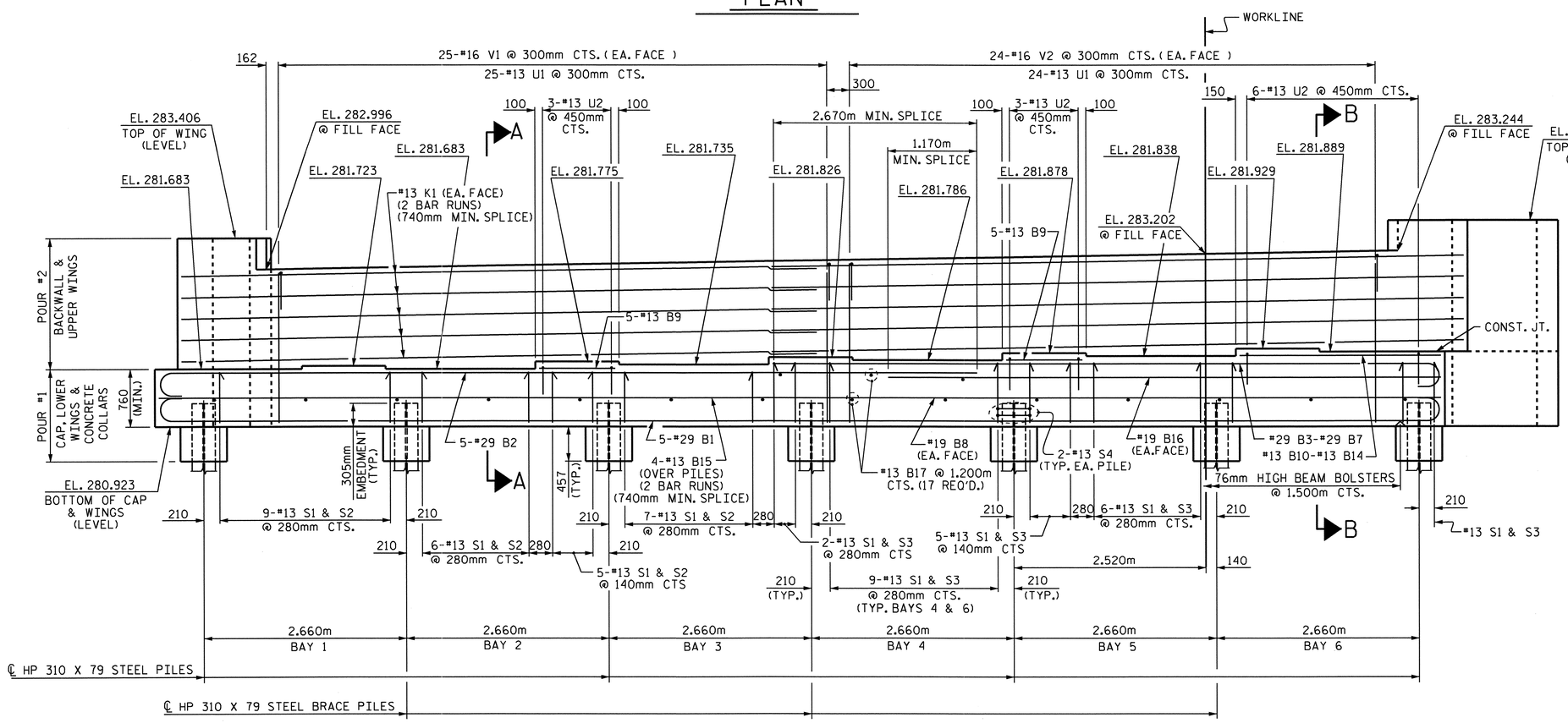

ELEVATION

NOTES

STIRRUPS AND U1 BARS IN CAP MAY BE SHIFTED AS NECESSARY TO CLEAR ANCHOR BOLTS.

BACKWALL SHALL BE PLACED BEFORE APPLYING THE EPOXY PROTECTIVE COATING.

THE TOP SURFACE AREAS OF THE END BENT CAPS SHALL BE CURED IN ACCORDANCE WITH THE STANDARD SPECIFICATIONS EXCEPT THE MEMBRANE CURING COMPOUND METHOD SHALL NOT BE USED.

THE TOP SURFACE OF THE END BENT CAP EXCEPT THE BRIDGE SEAT BUILDUPS SHALL BE SLOPED TRANSVERSELY FROM THE FILL FACE TO THE BACK FACE AT THE RATE OF 2%.

THE CONTRACTOR SHALL PROVIDE FOR INSTALLATION OF THE 102mm DIAMETER DRAIN PIPE THROUGH THE WING WALL AS REQUIRED FOR REINFORCED BRIDGE APPROACH FILLS. SEE THE ROADWAY PLANS. REINFORCING STEEL IN THE WING WALL MAY BE SHIFTED AS NECESSARY TO CLEAR THE DRAIN PIPE.

EPOXY COAT THE END BENT CAP AFTER ADJUSTMENTS ARE MADE TO BEARINGS.

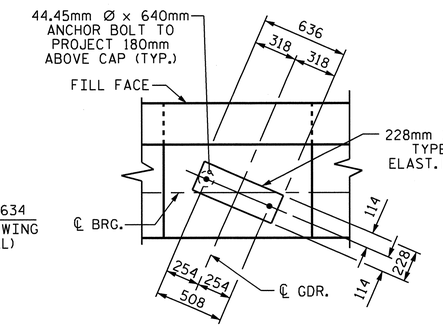

DETAIL "A"

(TYP. EA. GDR.)

PROJECT NO. R-2413C

GUILFORD-ROCKINGHAM COUNTY

STATION: 45+30.610 -LREV-

SHEET 1 OF 3

STATE OF NORTH CAROLINA
DEPARTMENT OF TRANSPORTATION
RALEIGH

SUBSTRUCTURE

END BENT #2
LEFT LANE

NORTH CAROLINA PROFESSIONAL SEAL 022516 ENGINEER EMILY E. MURRAY
10/28/11

REVISIONS								SHEET NO.
NO.	BY:	DATE:	NO.	BY:	DATE:			S-171
1			3					TOTAL SHEETS
2			4					238

DRAWN BY : T.L. AVERETTE DATE : 9-15-10
CHECKED BY : PEGGY PARISI DATE : 4-05-11

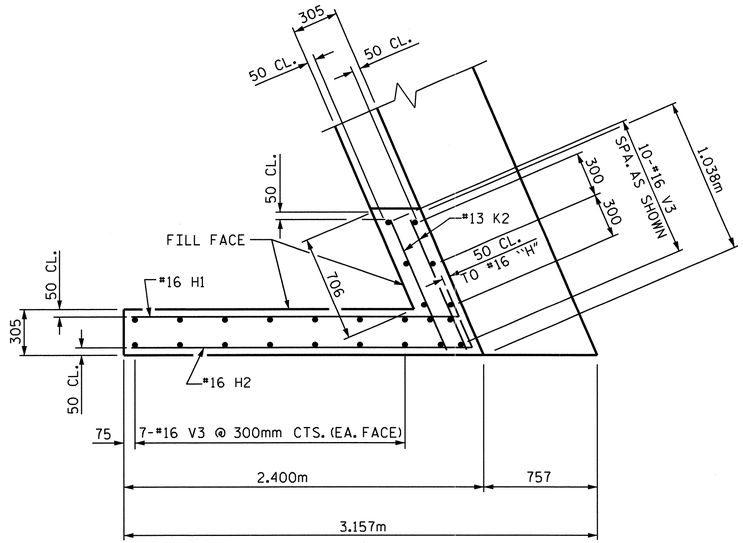

PLAN OF WING W1

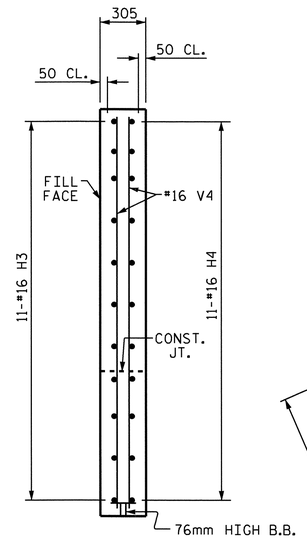

SECTION Y-Y

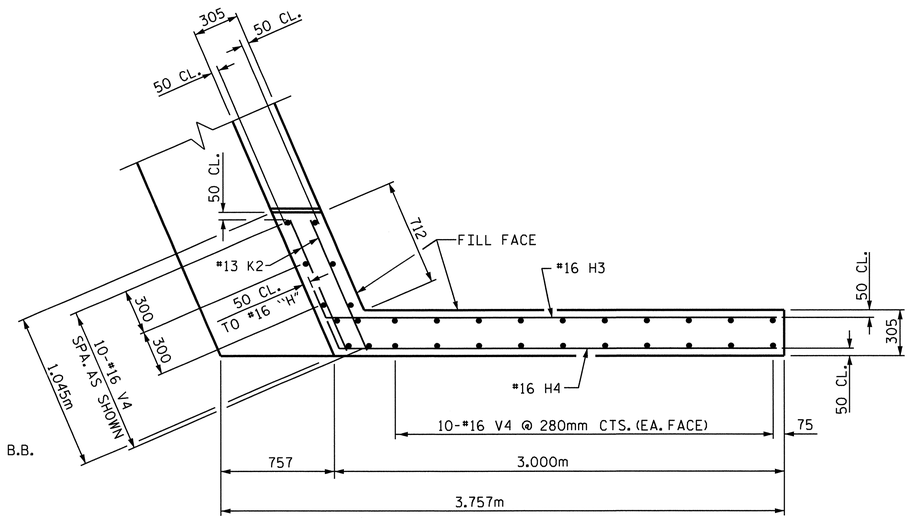

PLAN OF WING W2

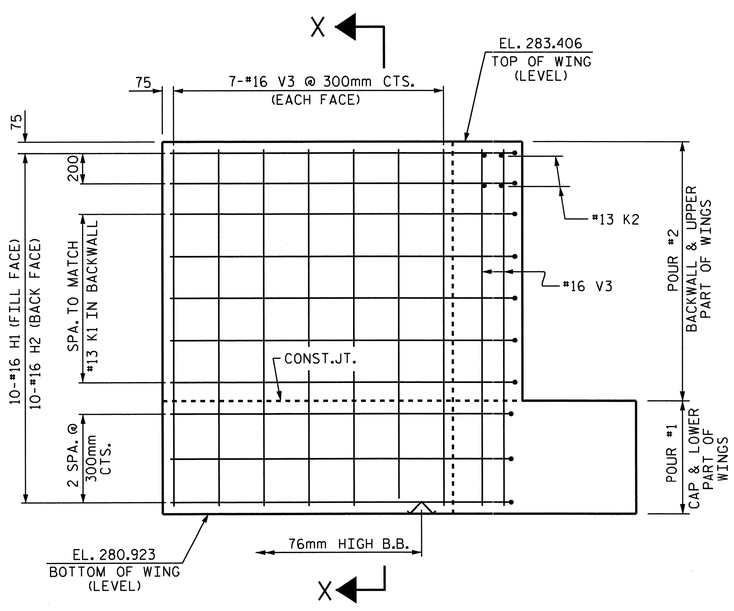

ELEVATION OF WING W1

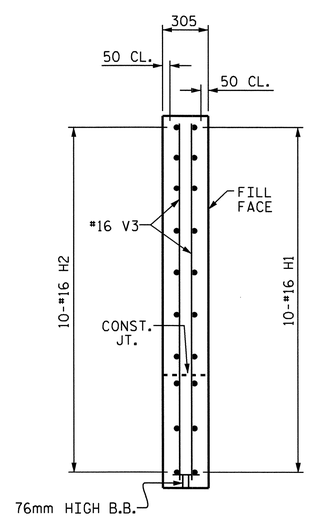

SECTION X-X

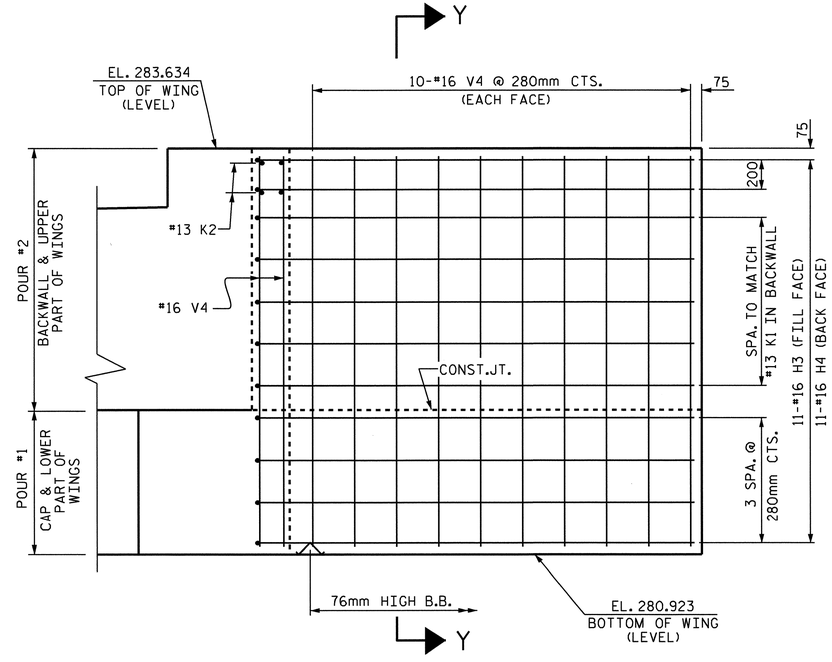

ELEVATION OF WING W2

NORTH CAROLINA PROFESSIONAL SEAL 022516 ENGINEER EMILY E. MURRAY
10/28/11

PROJECT NO. R-2413C
GUILFORD-ROCKINGHAM COUNTY
STATION: 45+30.610 -LREV-

SHEET 2 OF 3

STATE OF NORTH CAROLINA
DEPARTMENT OF TRANSPORTATION
RALEIGH

SUBSTRUCTURE

END BENT #2
LEFT LANE

REVISIONS						SHEET NO.
NO.	BY:	DATE:	NO.	BY:	DATE:	S-172
1			3			TOTAL SHEETS
2			4			238

DRAWN BY : T.L. AVERETTE DATE : 9-15-10
CHECKED BY : PEGGY PARISI DATE : 4-05-11

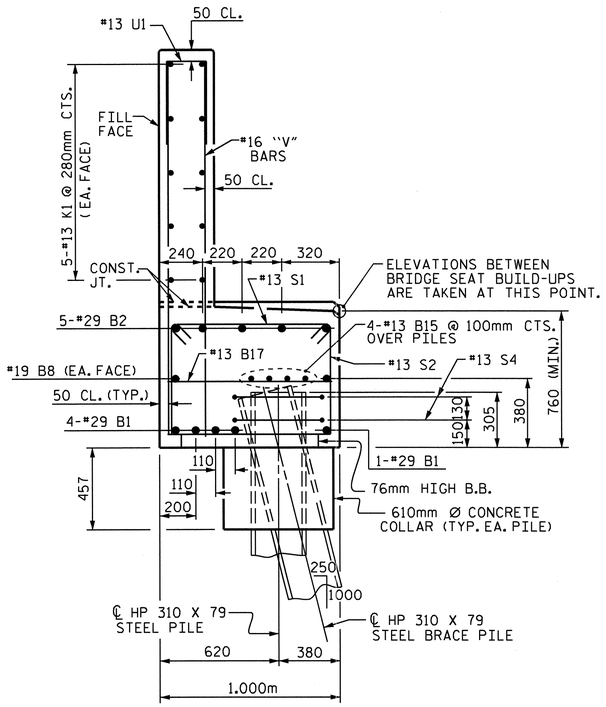

SECTION A-A

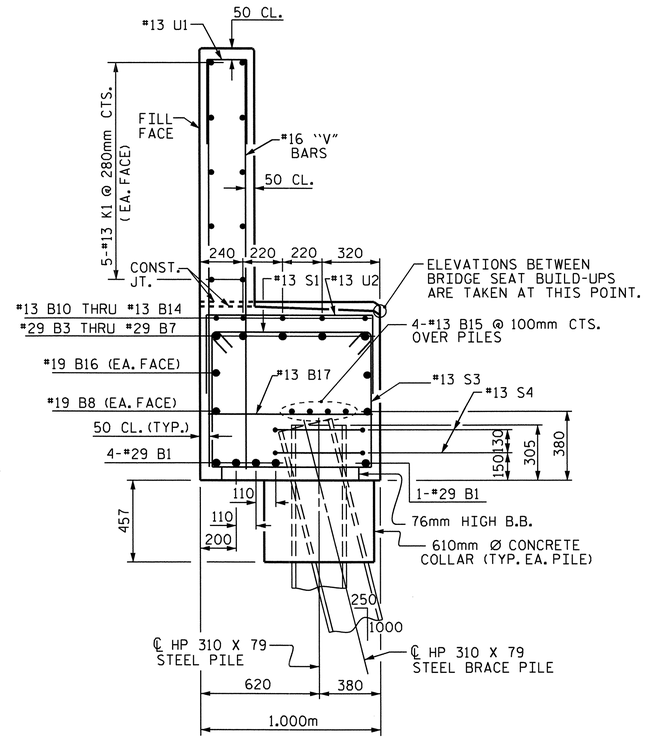

SECTION B-B

BAR TYPES

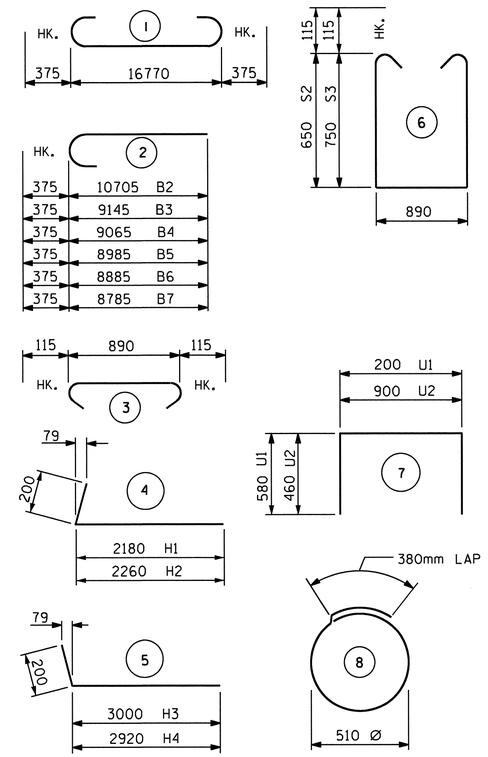

ALL BAR DIMENSIONS ARE OUT TO OUT.

BILL OF MATERIAL
END BENT #2

BAR	NO.	SIZE	TYPE	LENGTH	WEIGHT
B1	5	#29	1	17520	443
B2	5	#29	2	11080	280
B3	1	#29	2	9520	48
B4	1	#29	2	9440	48
B5	1	#29	2	9360	47
B6	1	#29	2	9260	47
B7	1	#29	2	9160	46
B8	2	#19	STR	16820	75
B9	10	#13	STR	1000	10
B10	1	#13	STR	3020	3
B11	1	#13	STR	2960	3
B12	1	#13	STR	2860	3
B13	1	#13	STR	2780	3
B14	1	#13	STR	2660	3
B15	8	#13	STR	8800	70
B16	2	#19	STR	7320	33
B17	17	#13	STR	900	15
H1	10	#16	4	2380	37
H2	10	#16	4	2460	38
H3	11	#16	5	3200	55
H4	11	#16	5	3120	53
K1	20	#13	STR	8800	175
K2	8	#13	STR	920	7
S1	59	#13	3	1120	66
S2	27	#13	6	2420	65
S3	32	#13	6	2620	83
S4	14	#13	8	1980	28
U1	49	#13	7	1360	66
U2	12	#13	7	1820	22
V1	50	#16	STR	1960	152
V2	48	#16	STR	2100	156
V3	24	#16	STR	2380	89
V4	30	#16	STR	2600	121

TOTAL REINFORCING STEEL = 2,390 kg

CLASS A CONCRETE BREAKDOWN

POUR #1 (CAP, LOWER WINGS & CONCRETE COLLARS)	m³ 16.9
POUR #2 (BACKWALL & UPPER WINGS)	m³ 9.6
TOTAL CLASS A CONCRETE	m³ 26.5

HP 310 X 79 STEEL PILES
NO. 7 METERS 41.3

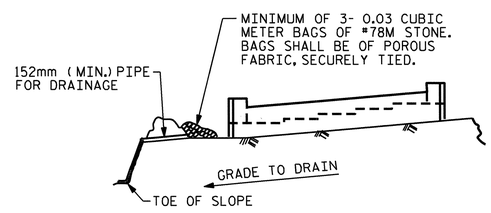

BAGGED STONE AND PIPE SHALL BE PLACED IMMEDIATELY AFTER COMPLETION OF END BENT EXCAVATION. PIPE MAY BE EITHER CONCRETE, CORRUGATED STEEL, CORRUGATED ALUMINUM ALLOY, OR CORRUGATED PLASTIC. PERFORATED PIPE WILL NOT BE ALLOWED.

BAGGED STONE SHALL REMAIN IN PLACE UNTIL THE ENGINEER DIRECTS THAT IT BE REMOVED. THE CONTRACTOR SHALL REMOVE AND DISPOSE OF SILT ACCUMULATIONS AT BAGGED STONE WHEN SO DIRECTED BY THE ENGINEER. BAGS SHALL BE REMOVED AND REPLACED WHENEVER THE ENGINEER DETERMINES THAT THEY HAVE DETERIORATED AND LOST THEIR EFFECTIVENESS.

NO SEPARATE PAYMENT WILL BE MADE FOR THIS WORK AND THE ENTIRE COST OF THIS WORK SHALL BE INCLUDED IN THE UNIT CONTRACT PRICE BID FOR THE SEVERAL PAY ITEMS.

TEMPORARY DRAINAGE AT END BENT

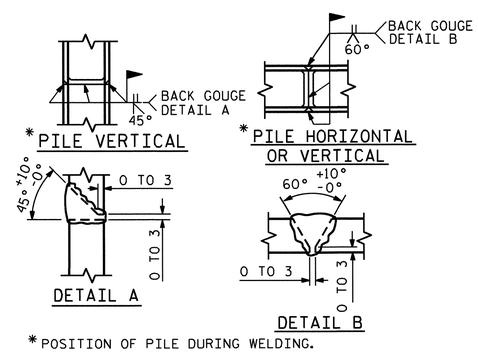

* POSITION OF PILE DURING WELDING.

PILE SPLICE DETAILS

PROJECT NO. R-2413C
GUILFORD-ROCKINGHAM COUNTY
STATION: 45+30.610 -LREV-

SHEET 3 OF 3

STATE OF NORTH CAROLINA
DEPARTMENT OF TRANSPORTATION
RALEIGH

SUBSTRUCTURE
END BENT #2
LEFT LANE

NORTH CAROLINA PROFESSIONAL SEAL 022516 ENGINEER
LINCY E. MURRAY
10/28/11

REVISIONS							SHEET NO.
NO.	BY:	DATE:	NO.	BY:	DATE:		S-173
1			3				TOTAL SHEETS
2			4				238

DRAWN BY : T.L. AVERETTE DATE : 10-04-10
CHECKED BY : PEGGY PARISI DATE : 4-05-11

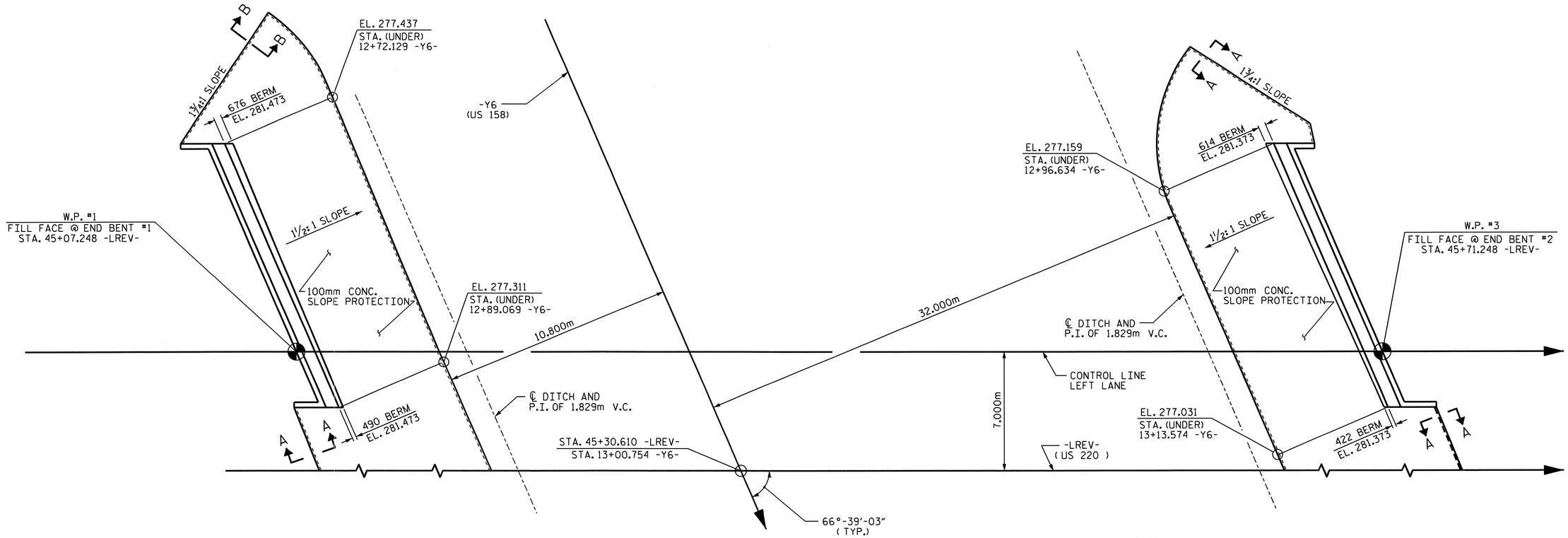

PLAN

BRIDGE @ STA. 45+30.610 -LREV- (LEFT LANE)	100mm SLOPE PROTECTION	* WELDED WIRE FABRIC 1520mm WIDE
	SQUARE METERS	APPROX. METERS
END BENT #1	271.7	198.1
END BENT #2	271.9	198.2

* QUANTITY SHOWN IS BASED ON 1520mm POURS.

NOTES

SLOPE PROTECTION SHALL BE PLACED UNDER THE ENDS OF THE BRIDGE AS SHOWN IN THE DETAILS. STRAIGHT EDGING WILL NOT BE REQUIRED UNLESS, IN THE OPINION OF THE ENGINEER, VISUAL INSPECTION INDICATES A NEED FOR IT. MEASUREMENT AND PAYMENT SHALL BE AS PRESCRIBED IN SECTION 462 OF THE STANDARD SPECIFICATIONS.

SLOPE PROTECTION SHALL CONSIST OF 100mm POURED-IN-PLACE CONCRETE PAVING AS SHOWN IN THE DETAILS ON THIS SHEET. CONCRETE SHALL BE CLASS "B". THE CONCRETE SURFACE SHALL BE FLOATED WITH A WOODEN FLOAT AND FINISHED. WELDED WIRE FABRIC REINFORCING SHALL BE 152 X 152 - W9.1 X W9.1, 1520mm WIDE. SLOPE PROTECTION SHALL BE POURED IN 1520mm STRIPS AS SHOWN IN THE "POURING DETAIL" WITH 600mm LONG #13 BARS PLACED ALONG THE SLOPE BETWEEN STRIPS AT 450mm MAXIMUM SPACING. SLOPE PROTECTION MAY BE POURED IN ALTERNATE 1220mm AND 1520mm STRIPS AS SHOWN IN THE "OPTIONAL POURING DETAIL" WITH ADJACENT RUNS OF WELDED WIRE FABRIC LAPPING AT LEAST 152mm. THE COST OF THE WELDED WIRE FABRIC AND #13 BARS, IF USED, SHALL BE INCLUDED IN THE CONTRACT UNIT PRICE BID PER SQUARE METER FOR SLOPE PROTECTION.

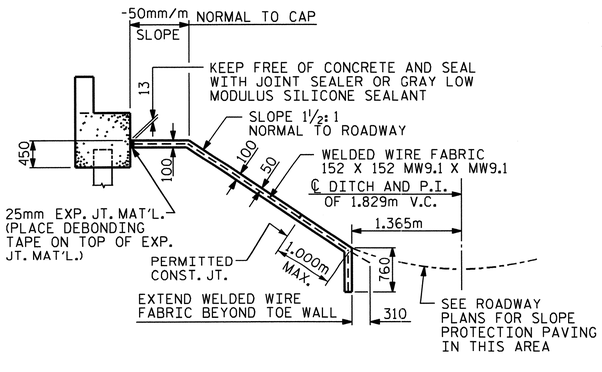

SECTION ALONG ℄ ROADWAY WHEN FILL CATCHES IN DITCH

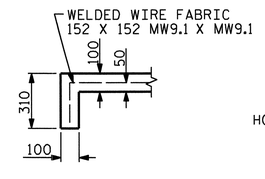

SECTION A-A

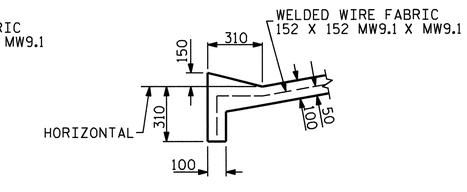

SECTION B-B

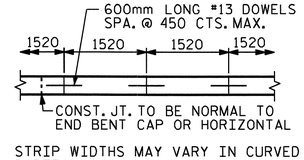

STRIP WIDTHS MAY VARY IN CURVED PORTION.

POURING DETAIL

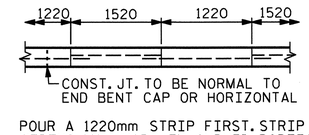

POUR A 1220mm STRIP FIRST. STRIP WIDTHS MAY VARY IN CURVED PORTION.

OPTIONAL POURING DETAIL

PROJECT NO. R-2413C

GUILFORD-ROCKINGHAM COUNTY

STATION: 45+30.610 -LREV-

STATE OF NORTH CAROLINA
DEPARTMENT OF TRANSPORTATION
RALEIGH

STANDARD SLOPE PROTECTION DETAILS LEFT LANE

NORTH CAROLINA PROFESSIONAL SEAL 022516 ENGINEER EMILY E. MURRAY
10/28/11

REVISIONS							SHEET NO.
NO.	BY:	DATE:	NO.	BY:	DATE:		S-174
1			3				TOTAL SHEETS
2			4				238

STR. #5

STD. NO. SP1SM

ASSEMBLED BY : T.L. AVERETTE		DATE : 01-25-11	
CHECKED BY : M.L. RORIE		DATE : 07-29-11	
DRAWN BY : ELR 5/92	REV. 7/10/01	LES/RDR	
CHECKED BY : GRP 6/92	REV. 5/7/03	RWW/JTE	
	REV. 5/1/06	TLA/GM	

13-SEP-2011 11:58
Z:\TIPProjects-R\R2413c\Structures\Final Plans\Str.#5\R2413C_sd_SP_05.dgn
emurray

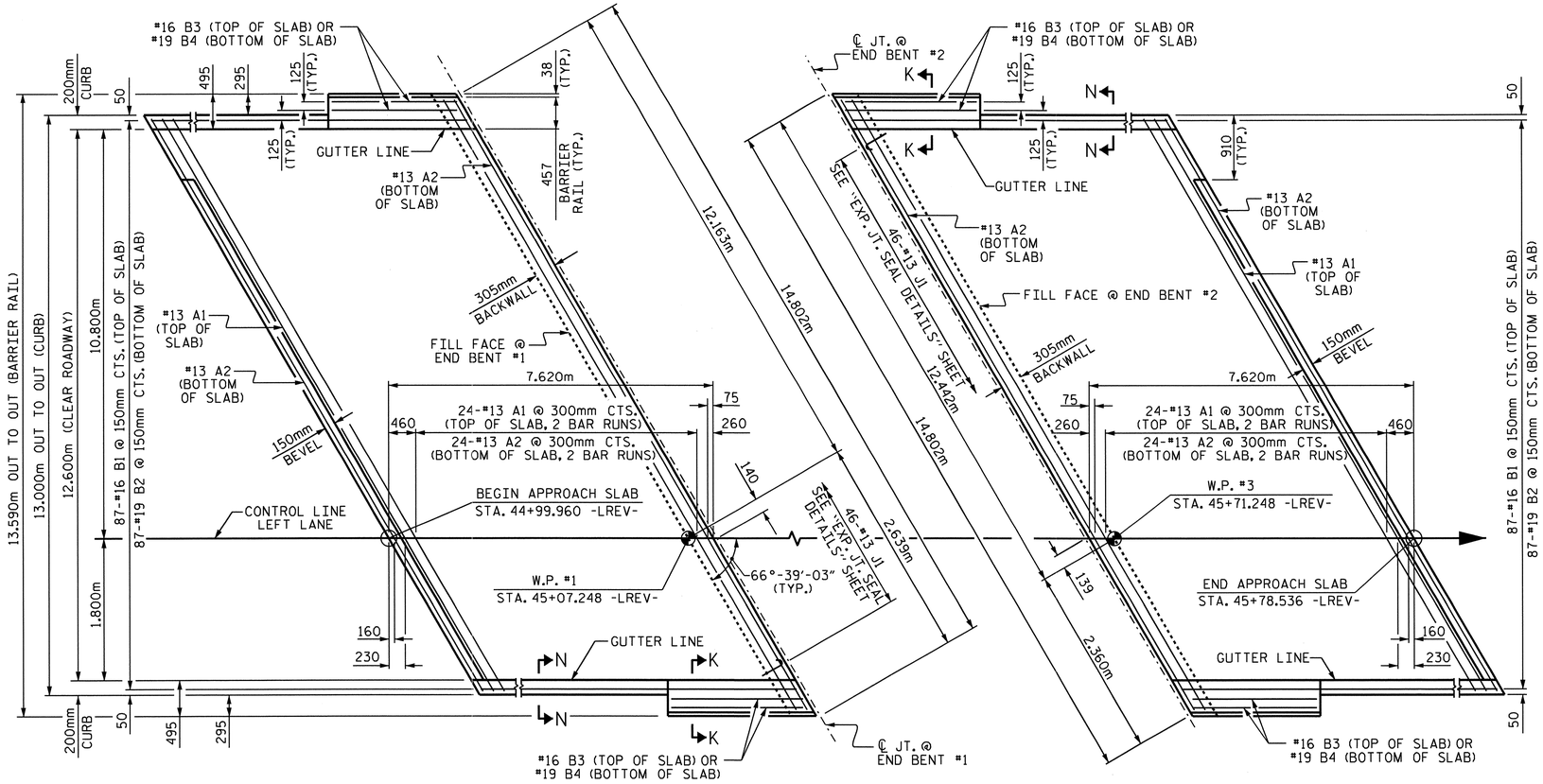

PLAN @ END BENT #1

PLAN @ END BENT #2

DIMENSIONS SHOWN ARE TYPICAL FOR BOTH APPROACH SLABS.
FOR BARRIER RAIL ON THE APPROACH SLAB DETAILS, REINFORCING STEEL AND BILL OF MATERIAL, SEE SHEET 2 OF 2.

NOTES

THE CONCRETE BARRIER RAIL ON THE APPROACH SLAB IS INCLUDED IN THE CONCRETE BARRIER RAIL QUANTITY FOR THE SUPERSTRUCTURE.

APPROACH SLAB SHALL NOT BE CONSTRUCTED PRIOR TO COMPLETION OF THE BRIDGE DECK.

FOR REINFORCED BRIDGE APPROACH FILL INCLUDING FABRIC, IMPERMEABLE GEOMEMBRANE, 102mm Ø DRAINAGE PIPE, #78M STONE, AND SELECT MATERIAL, SEE ROADWAY PLANS.

AREA BETWEEN THE WINGWALL AND APPROACH SLAB SHALL BE GRADED TO DRAIN THE WATER AWAY FROM THE FILL FACE OF THE BRIDGE AND SHALL BE PAVED. SEE ROADWAY PLANS.

THE 150mm COMP. A.B.C. SHALL BE FLUSH WITH THE ROADWAY END OF THE APPROACH SLAB AND SHALL EXTEND 300mm OUTSIDE OF EACH EDGE OF THE APPROACH SLAB.

THE CONTRACTOR MAY USE 100mm TYPE B-25.0B ASPHALT CONCRETE BASE COURSE IN LIEU OF 150mm COMP. A.B.C. IF THIS OPTION IS USED, THE BASE COURSE SHALL BE FLUSH WITH THE ROADWAY END OF THE APPROACH SLAB, AND THE WIDTH SHALL BE THE SAME AS THAT OF THE APPROACH SLAB.

THE CONTRACTOR MAY USE 125mm CLASS "A" CONCRETE BASE IN LIEU OF 150mm COMP. A.B.C. IF THIS OPTION IS USED, THE CONCRETE BASE SHALL BE FLUSH WITH THE ROADWAY END OF THE APPROACH SLAB, AND THE WIDTH SHALL BE THE SAME AS THAT OF THE APPROACH SLAB. THE CONCRETE SHALL BE FINISHED TO A SMOOTH SURFACE AND A LAYER OF 13.6 kg ROOFING FELT SHALL BE PLACED BETWEEN THE CONCRETE BASE AND THE APPROACH SLAB TO PREVENT BOND. THE APPROACH SLAB SHALL NOT BE CAST UNTIL THE CONCRETE BASE HAS REACHED AN AGE OF THREE CURING DAYS.

FOR EXPANSION JOINT SEALS, SEE SPECIAL PROVISIONS.

THE BARRIER RAIL ON EACH APPROACH SLAB SHALL NOT BE CAST UNTIL ALL APPROACH SLAB CONCRETE HAS BEEN CAST AND HAS REACHED A MINIMUM COMPRESSIVE STRENGTH OF 20.7 MPa.

ALL REINFORCING STEEL IN BARRIER RAILS SHALL BE EPOXY COATED.

SPLICE CHART

BAR	SPLICE
#13 A1	610
#13 A2	540

BILL OF MATERIAL

APPROACH SLAB @ EB #1

BAR	NO.	SIZE	TYPE	LENGTH	WEIGHT
* A1	50	#13	STR	7660	381
A2	52	#13	STR	7620	394
* B1	87	#16	STR	7240	978
B2	87	#19	STR	7500	1458
* B3	4	#16	STR	2920	18
B4	4	#19	STR	2920	26
* J1	46	#13	3	440	20
REINFORCING STEEL				kg.	1878
● * EPOXY COATED REINFORCING STEEL				kg.	1397
● CLASS AA CONCRETE				m3	31.3

APPROACH SLAB @ EB #2

BAR	NO.	SIZE	TYPE	LENGTH	WEIGHT
* A1	50	#13	STR	7660	381
A2	52	#13	STR	7620	394
* B1	87	#16	STR	7240	978
B2	87	#19	STR	7500	1458
* B3	4	#16	STR	2920	18
B4	4	#19	STR	2920	26
* J1	46	#13	3	440	20
REINFORCING STEEL				kg.	1878
● * EPOXY COATED REINFORCING STEEL				kg.	1397
● CLASS AA CONCRETE				m3	31.3

BAR TYPE

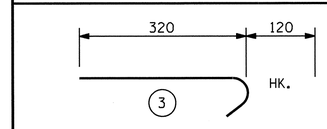

ALL BAR DIMENSIONS ARE OUT TO OUT

● QUANTITIES FOR BARRIER RAIL ON APPROACH SLAB ARE NOT INCLUDED. SEE SHEET 2 OF 2.

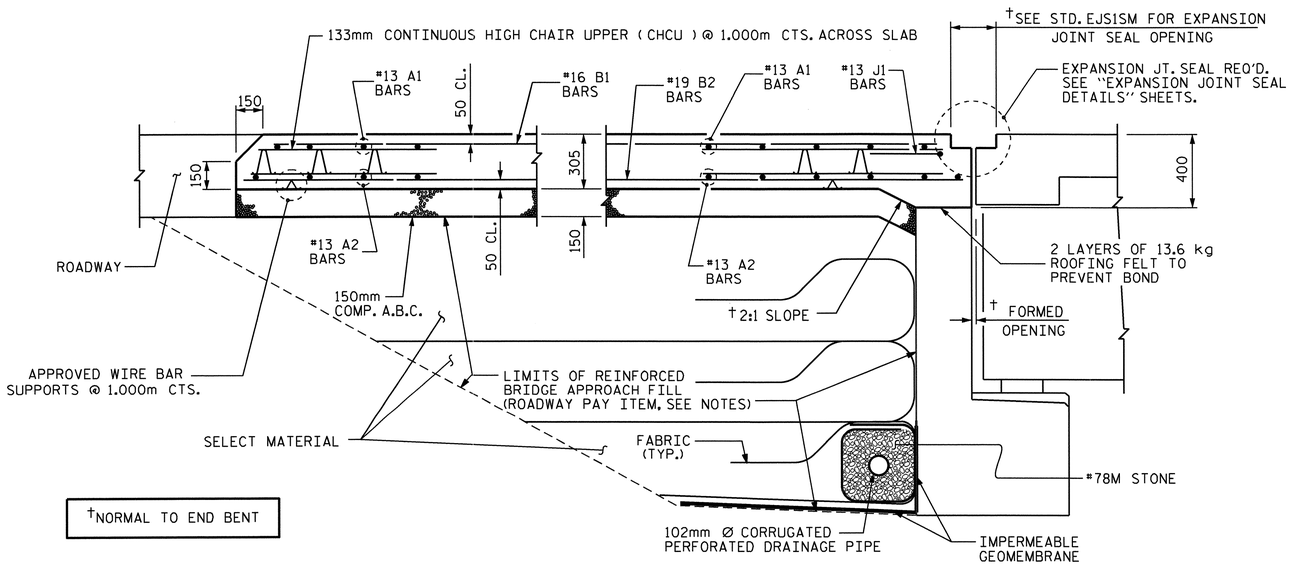

†NORMAL TO END BENT

SECTION THRU SLAB

BARRIER RAIL AND CURB NOT SHOWN

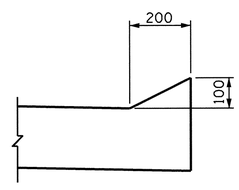

SECTION N-N

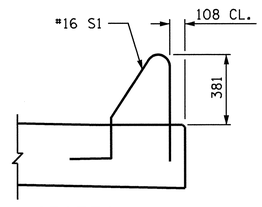

SECTION K-K

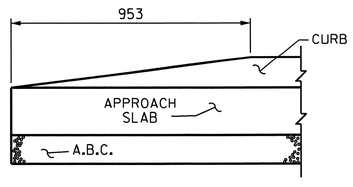

END OF CURB WITHOUT SHOULDER BERM GUTTER

CURB DETAILS

PROJECT NO. R-2413C

GUILFORD-ROCKINGHAM COUNTY

STATION: 45+30.610 -LREV-

SHEET 1 OF 2

STATE OF NORTH CAROLINA
DEPARTMENT OF TRANSPORTATION
RALEIGH

STANDARD

BRIDGE APPROACH SLAB FOR FLEXIBLE PAVEMENT

LEFT LANE

NORTH CAROLINA PROFESSIONAL SEAL 022516 ENGINEER EMILY E. MURRAY
10/28/11

REVISIONS						SHEET NO.
NO.	BY:	DATE:	NO.	BY:	DATE:	S-175
1			3			TOTAL SHEETS
2			4			238

STR #5 STD. NO. BAS4SM

ASSEMBLED BY : T.L. AVERETTE	DATE : 11-16-10	
CHECKED BY : PEGGY PARISI	DATE : 11-18-10	
DRAWN BY : FCJ 6/87	REV. 7/10/01	RWW/LES
CHECKED BY : EGA 6/87	REV. 5/7/03R	RWW/JTE
	REV. 5/1/06R	KMM/GM

05-SEP-2011 13:20
Y:\Structures\Final Plans\Str.#5\R2413C_sd_AS_05.dgn
mgudlaugsson

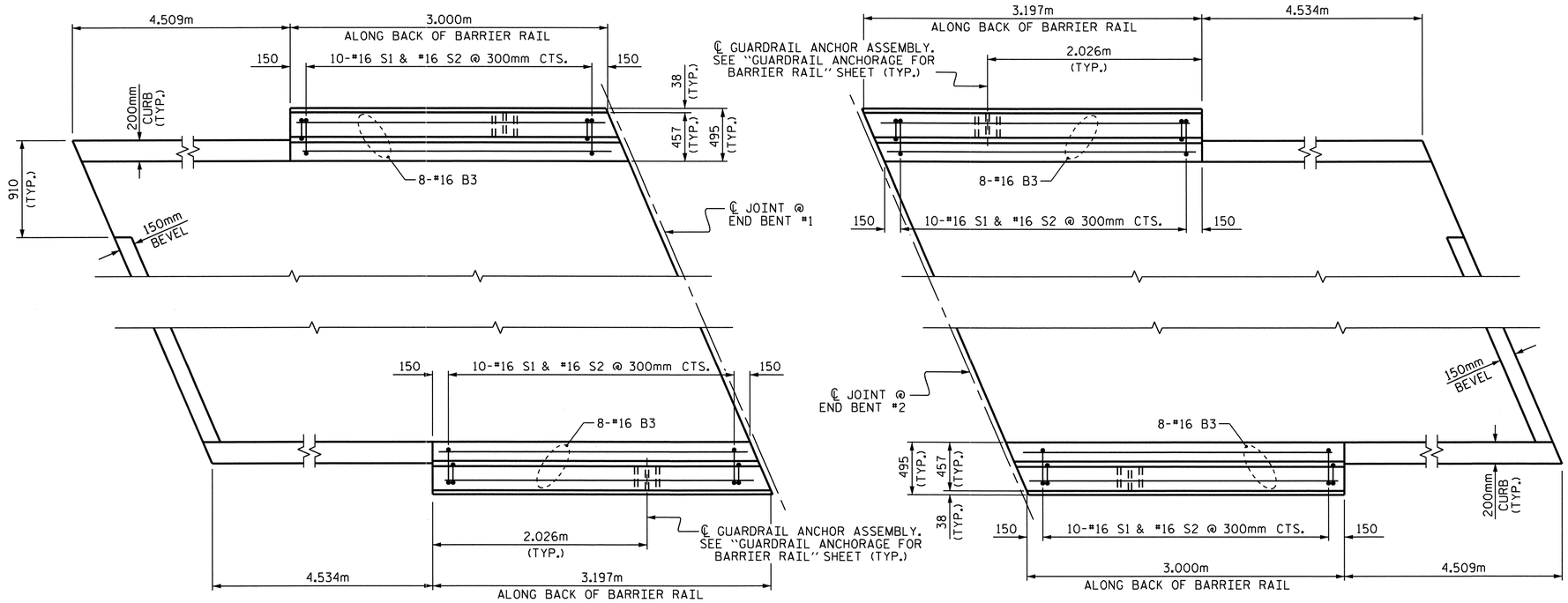

PLAN OF BARRIER RAIL ON APPROACH SLABS

BAR TYPES

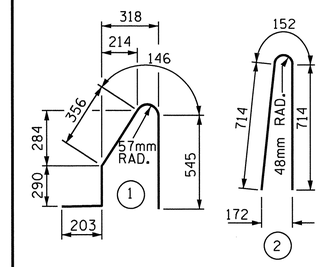

ALL BAR DIMENSIONS ARE OUT TO OUT

BILL OF MATERIAL

FOR CONCRETE BARRIER RAIL ON BOTH APPROACH SLABS ONLY

BAR	NO.	SIZE	TYPE	LENGTH	WEIGHT
* B3	32	#16	STR	2920	145
* S1	40	#16	1	1540	96
* S2	40	#16	2	1580	98
* EPOXY COATED REINFORCING STEEL				kg.	339
CLASS AA CONCRETE				m3	3.1
CONCRETE BARRIER RAIL				METERS	12.394

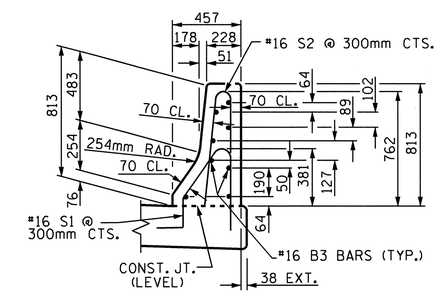

SECTION THRU RAIL

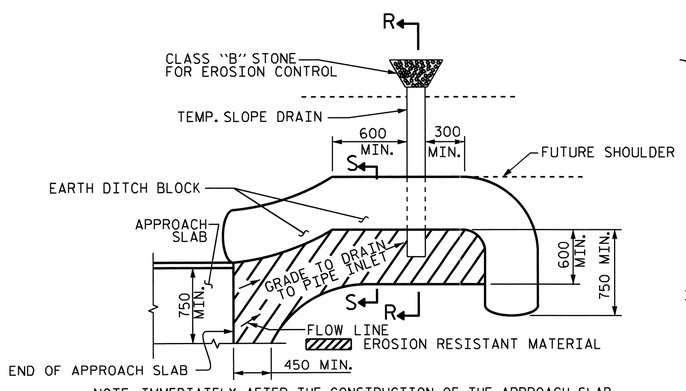

NOTE: IMMEDIATELY AFTER THE CONSTRUCTION OF THE APPROACH SLAB, THE CONTRACTOR SHALL PROVIDE TEMPORARY BERM AND SLOPE DRAIN. CONTRACTOR SHALL GRADE TO PIPE INLET AND PROVIDE EROSION RESISTANT MATERIAL AS SHOWN. THE EROSION RESISTANT MATERIAL SHALL BE EITHER 1) ASPHALT PLANT MIX, TYPE I OR TYPE 2, MIN. 50mm DEPTH, 2) EROSION CONTROL MAT, OR 3) CONCRETE, AS DIRECTED BY THE ENGINEER. THE SLOPE DRAIN SHALL CONSIST OF A NON-PERFORATED TEMPORARY DRAINAGE PIPE, 305mm IN DIAMETER.

PLAN VIEW

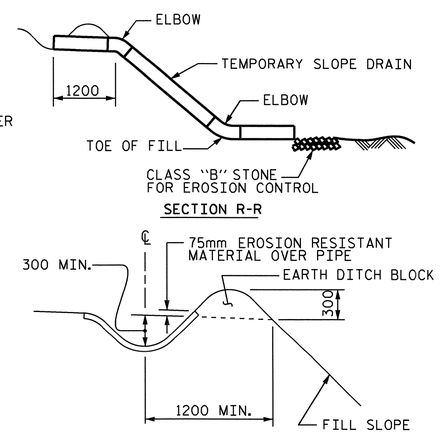

SECTION S-S

TEMPORARY BERM AND SLOPE DRAIN DETAILS

(TO BE USED WHEN SHOULDER BERM GUTTER IS REQUIRED)

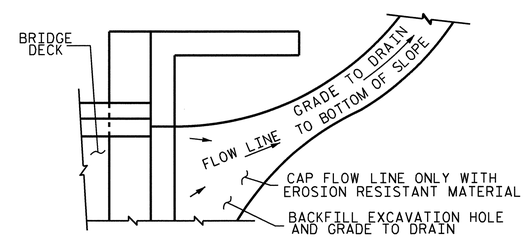

NOTE: IF THE APPROACH SLAB IS NOT CONSTRUCTED IMMEDIATELY AFTER THE BACKFILLING OF THE END BENT EXCAVATION, GRADE TO DRAIN TO THE BOTTOM OF THE SLOPE AND PROVIDE EROSION RESISTANT MATERIAL, SUCH AS FIBERGLASS ROVING OR AS DIRECTED BY THE ENGINEER TO PREVENT SOIL EROSION AND TO PROTECT THE AREA ADJACENT TO THE STRUCTURE. THE CONTRACTOR WILL BE REQUIRED TO REMOVE THESE MATERIALS PRIOR TO CONSTRUCTION OF THE APPROACH SLAB.

TEMPORARY DRAINAGE DETAIL

PROJECT NO. R-2413C

GUILFORD-ROCKINGHAM COUNTY

STATION: 45+30.610 -LREV-

SHEET 2 OF 2

STATE OF NORTH CAROLINA
DEPARTMENT OF TRANSPORTATION
RALEIGH

STANDARD
BRIDGE APPROACH
SLAB DETAILS

LEFT LANE

NORTH CAROLINA PROFESSIONAL SEAL 022516 ENGINEER EMILY E. MURRAY
12/28/11

REVISIONS								SHEET NO.
NO.	BY:	DATE:	NO.	BY:	DATE:			S-176
1			3					TOTAL SHEETS
2			4					238

ASSEMBLED BY : T.L. AVERETTE DATE : 11-16-10
CHECKED BY : PEGGY PARISI DATE : 11-18-10

DRAWN BY : FCJ 11/88
CHECKED BY : ARB 11/88

REV. 10/17/00 RWW/LES
REV. 5/1/03 RWW/JTE
REV. 5/1/06RR MAA/KMM

05-SEP-2011 13:20
Y:\Structures\Final Plans\Str.#5\R2413C_sd_AS_05.dgn
mgudlaugsson

STR #5

STD. NO. BAS10SM

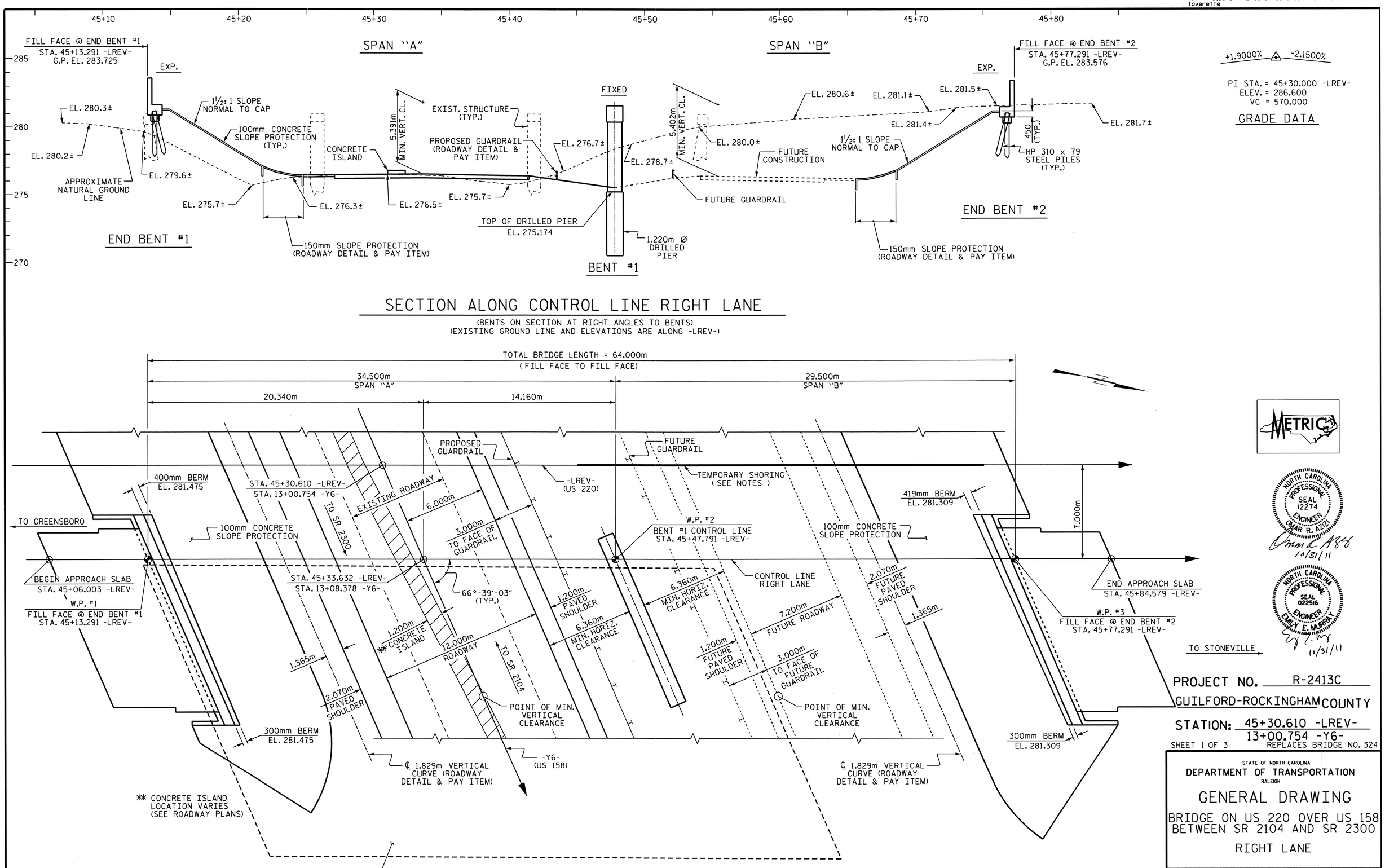

METRIC

NORTH CAROLINA PROFESSIONAL SEAL 12274 ENGINEER OMAR R. AZIZ
10/31/11

NORTH CAROLINA PROFESSIONAL SEAL 022516 ENGINEER EMILY E. MURRAY
10/31/11

PROJECT NO. R-2413C

GUILFORD-ROCKINGHAM COUNTY

STATION: 45+30.610 -LREV-
13+00.754 -Y6-

SHEET 1 OF 3

REPLACES BRIDGE NO. 324

STATE OF NORTH CAROLINA
DEPARTMENT OF TRANSPORTATION
RALEIGH

GENERAL DRAWING

BRIDGE ON US 220 OVER US 158
BETWEEN SR 2104 AND SR 2300

RIGHT LANE

REVISIONS						SHEET NO.
NO.	BY:	DATE:	NO.	BY:	DATE:	S-177
1			3			TOTAL SHEETS
2			4			238

DRAWN BY : T.L. AVERETTE DATE : 02-16-11
CHECKED BY : PEGGY PARISI DATE : 05-04-11

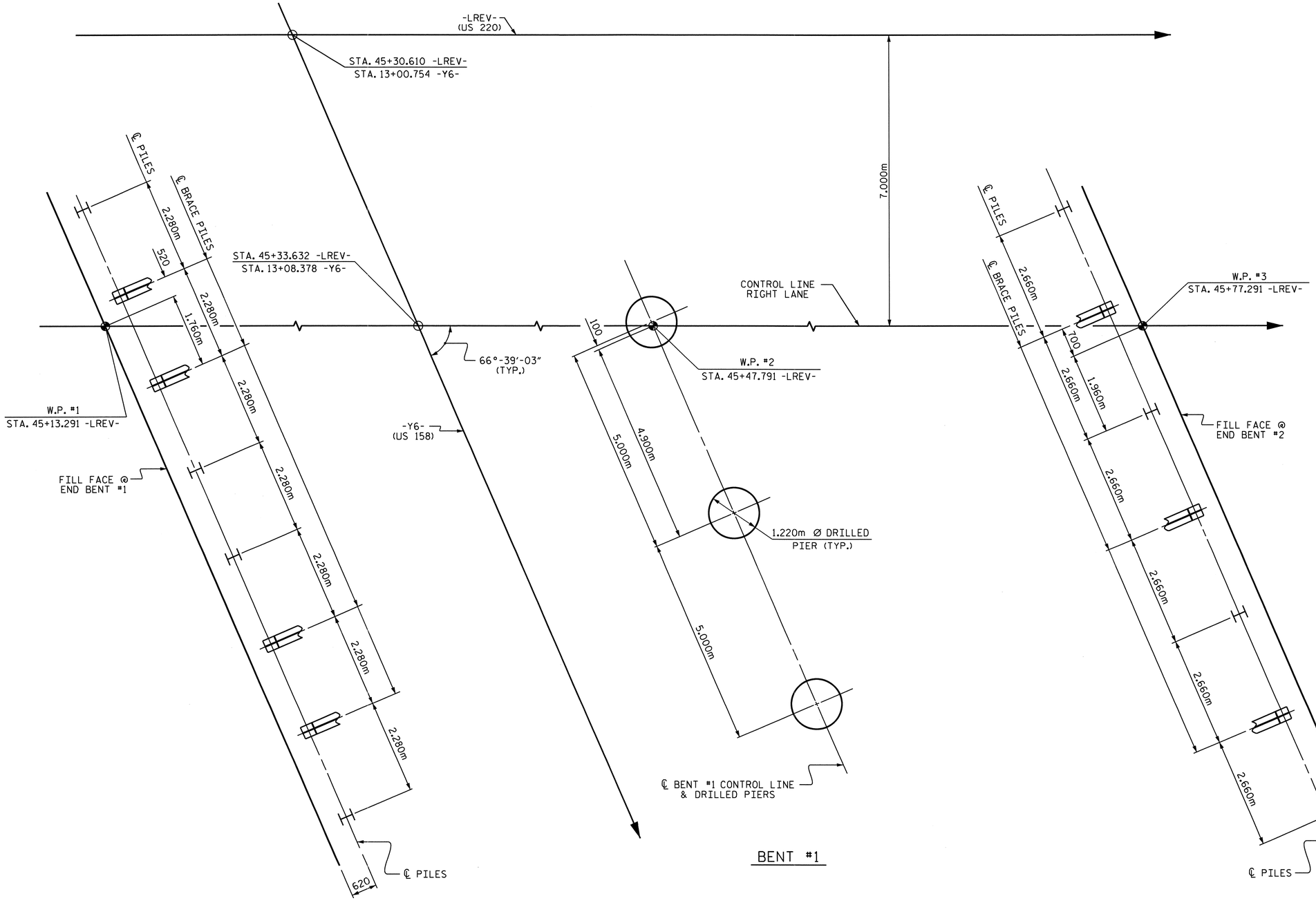

FOUNDATION LAYOUT

ALL PILES ARE HP 310 x 79 STEEL PILES.
DIMENSIONS LOCATING PILES ARE SHOWN TO THE PILE CENTERLINE.
BRACE PILES AT END BENTS ARE TO BE BATTERED @ 250 :1000

FOUNDATION NOTES

FOR PILES, SEE SPECIAL PROVISIONS.

DRIVE PILES AT END BENT NO. 1 AND END BENT NO. 2 TO A REQUIRED BEARING CAPACITY OF 1060 KN PER PILE. THE REQUIRED BEARING CAPACITY IS EQUAL TO THE ALLOWABLE BEARING CAPACITY WITH A MINIMUM FACTOR OF SAFETY OF TWO.

THE ALLOWABLE BEARING CAPACITY FOR PILES AT END BENT NO. 1 AND END BENT NO. 2 IS 530 KN PER PILE.

FOR DRILLED PIERS, SEE DRILLED PIERS SPECIAL PROVISION.

DRILLED PIERS AT BENT NO. 1 ARE DESIGNED FOR BOTH SKIN FRICTION AND END BEARING. CHECK FIELD CONDITIONS FOR THE REQUIRED END BEARING CAPACITY OF 2900 KPA.

DRILLED PIERS AT BENT NO. 1 ARE DESIGNED FOR AN APPLIED LOAD OF 2903 KN EACH AT THE TOP OF THE COLUMN.

INSTALL DRILLED PIERS AT BENT NO. 1 THAT EXTEND TO AN ELEVATION NO HIGHER THAN 270.5 m, SATISFY THE REQUIRED END BEARING CAPACITY AND HAVE A MINIMUM PENETRATION OF ONE METER INTO ROCK AS DEFINED BY THE DRILLED PIERS SPECIAL PROVISION.

DO NOT USE SLURRY CONSTRUCTION FOR DRILLED PIERS AT BENT NO. 1.

SID INSPECTIONS MAY BE REQUIRED FOR DRILLED PIERS. THE ENGINEER WILL DETERMINE THE NEED FOR SID INSPECTIONS. FOR SID, SEE DRILLED PIERS SPECIAL PROVISION.

CSL TUBES ARE REQUIRED AND CSL TESTING MAY BE REQUIRED FOR DRILLED PIERS. THE ENGINEER WILL DETERMINE THE NEED FOR CSL TESTING. FOR CROSSHOLE SONIC LOGGING, SEE DRILLED PIERS SPECIAL PROVISION.

PROJECT NO. R-2413C
GUILFORD-ROCKINGHAM COUNTY
STATION: 45+30.610 -LREV-
13+00.754 -Y6-
SHEET 2 OF 3

STATE OF NORTH CAROLINA
DEPARTMENT OF TRANSPORTATION
RALEIGH

GENERAL DRAWING

BRIDGE ON US 220 OVER US 158
BETWEEN SR 2104 AND SR 2300

RIGHT LANE

NORTH CAROLINA PROFESSIONAL SEAL 022516 ENGINEER EMILY E. McMURRAY
10/28/11

REVISIONS						SHEET NO.
NO.	BY:	DATE:	NO.	BY:	DATE:	S-178
1			3			TOTAL SHEETS
2			4			238

DRAWN BY : T.L. AVERETTE DATE : 02-16-11
CHECKED BY : PEGGY PARISI DATE : 05-04-11

B.M. #12 : DISK STAMPED G-170 1965 IN SW WINGWALL OF BRIDGE 11.6m LT. OF -L- STA. 46+67.500 EL. 280.720

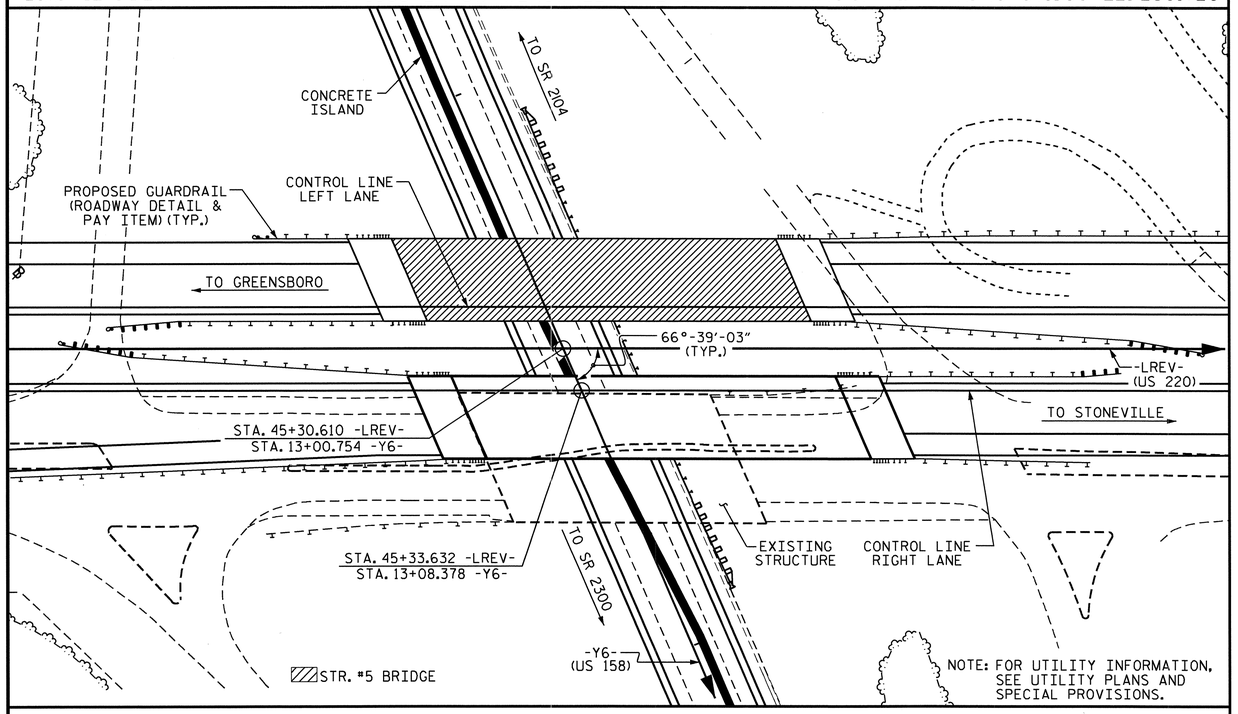

LOCATION SKETCH

NOTES

ALL DIMENSIONS ARE IN MILLIMETERS UNLESS OTHERWISE NOTED.

ALL ELEVATIONS ARE IN METERS.

ASSUMED LIVE LOAD = MS 18 OR ALTERNATE LOADING, EXCEPT THAT THE GIRDERS HAVE BEEN DESIGNED FOR MS 22.5.

FOR OTHER DESIGN DATA AND GENERAL NOTES, SEE SHEET SNSM.

THIS BRIDGE HAS BEEN DESIGNED BY THE STRENGTH DESIGN METHOD AS SPECIFIED IN AASHTO STANDARD SPECIFICATIONS.

ALL STRUCTURAL STEEL SHALL BE AASHTO M270 GRADE 345W AND PAINTED IN ACCORDANCE WITH SYSTEM 4 OF ARTICLE 442-7 OF THE STANDARD SPECIFICATIONS UNLESS OTHERWISE NOTED ON THE PLANS.

THE LOCATION OF THE CONSTRUCTION JOINT IN THE DRILLED PIERS IS BASED ON AN APPROXIMATE GROUND LINE ELEVATION. IF THE CONSTRUCTION JOINT IS ABOVE THE ACTUAL GROUND ELEVATION, THE CONTRACTOR SHALL PLACE THE CONSTRUCTION JOINT 300mm BELOW THE GROUND LINE.

FOR MAINTENANCE AND PROTECTION OF TRAFFIC BENEATH PROPOSED STRUCTURE, SEE SPECIAL PROVISIONS.

WORK SHALL NOT BE STARTED ON THIS BRIDGE UNTIL ROADWAY SECTION HAS BEEN EXCAVATED.

NEEDLE BEAMS WILL NOT BE ALLOWED UNLESS OTHERWISE CALLED FOR ON THE PLANS OR APPROVED BY THE ENGINEER.

FOR SUBMITTAL OF WORKING DRAWINGS, SEE SPECIAL PROVISIONS.

FOR METRIC STRUCTURAL STEEL, SEE SPECIAL PROVISIONS.

FOR FALSEWORK AND FORMWORK, SEE SPECIAL PROVISIONS.

FOR MAINTENANCE OF TRAFFIC, SEE TRAFFIC CONTROL PLANS.

REMOVABLE FORMS MAY BE USED IN LIEU OF METAL STAY-IN-PLACE FORMS IN ACCORDANCE WITH ARTICLE 420-3 OF THE STANDARD SPECIFICATIONS.

THE CLASS AA CONCRETE IN THE BRIDGE DECK SHALL CONTAIN FLY ASH OR GROUND GRANULATED BLAST FURNACE SLAG AT THE SUBSTITUTION RATE SPECIFIED IN ARTICLE 1024-1 AND IN ACCORDANCE WITH ARTICLES 1024-5 AND 1024-6 OF THE STANDARD SPECIFICATIONS. NO PAYMENT WILL BE MADE FOR THIS SUBSTITUTION AS IT IS CONSIDERED INCIDENTAL TO THE COST OF THE REINFORCED CONCRETE DECK SLAB.

THIS BRIDGE HAS BEEN DESIGNED IN ACCORDANCE WITH THE REQUIREMENTS OF THE AASHTO STANDARD SPECIFICATIONS FOR SEISMIC DESIGN OF HIGHWAY BRIDGES FOR SEISMIC PERFORMANCE CATEGORY A.

FOR CRANE SAFETY, SEE SPECIAL PROVISIONS.

FOR GROUT FOR STRUCTURES, SEE SPECIAL PROVISIONS.

FOR CURING CONCRETE, SEE SPECIAL PROVISIONS.

FOR PLACING LOAD ON STRUCTURE MEMBERS, SEE SPECIAL PROVISIONS.

FOR EROSION CONTROL MEASURES SEE EROSION CONTROL PLANS.

FOR SHIPPING STEEL STRUCTURAL MEMBERS, SEE SPECIAL PROVISIONS.

FOR LIMITS OF TEMPORARY SHORING FOR MAINTENANCE OF TRAFFIC, SEE TRAFFIC CONTROL PLANS. FOR PAY ITEM FOR TEMPORARY SHORING FOR MAINTENANCE OF TRAFFIC, SEE ROADWAY PLANS.

AFTER SERVING AS A TEMPORARY STRUCTURE, THE EXISTING STRUCTURE CONSISTING OF 3 SPANS (1 @ 13.259m, 1 @ 16.002m, AND 1 @ 13.259m) WITH A CLEAR ROADWAY WIDTH OF 20.727m CONSISTING OF A CONCRETE DECK ON STEEL I-BEAMS SUPPORTED BY REINFORCED CONCRETE POSTS AND BEAMS AT INTERIOR BENTS AND REINFORCED CONCRETE SPILL THRUS AT THE END BENTS AND LOCATED AT THE SITE OF THE PROPOSED STRUCTURE, SHALL BE REMOVED. THE EXISTING BRIDGE IS PRESENTLY NOT POSTED FOR LOAD LIMIT. SHOULD THE STRUCTURAL INTEGRITY OF THE BRIDGE FURTHER DETERIORATE, A LOAD LIMITATION MAY BE POSTED AS FOUND NECESSARY DURING THE LIFE OF THE PROJECT.

THE SUBSTRUCTURE OF THE EXISTING BRIDGE INDICATED ON THE PLANS IS FROM THE BEST INFORMATION AVAILABLE. SINCE THIS INFORMATION IS SHOWN FOR THE CONVENIENCE OF THE CONTRACTOR, THE CONTRACTOR SHALL HAVE NO CLAIM WHATSOEVER AGAINST THE DEPARTMENT OF TRANSPORTATION FOR ANY DELAYS OR ADDITIONAL COST INCURRED BASED ON DIFFERENCES BETWEEN THE EXISTING BRIDGE SUBSTRUCTURE SHOWN ON THE PLANS AND THE ACTUAL CONDITIONS AT THE PROJECT SITE.

INASMUCH AS THE PAINT SYSTEM ON THE EXISTING STRUCTURAL STEEL CONTAINS LEAD, THE CONTRACTOR'S ATTENTION IS DIRECTED TO ARTICLE 107-1, OF THE STANDARD SPECIFICATIONS. ANY COSTS RESULTING FROM COMPLIANCE WITH APPLICABLE STATE OR FEDERAL REGULATIONS PERTAINING TO HANDLING OF MATERIALS CONTAINING LEAD BASED PAINT SHALL BE INCLUDED IN THE BID PRICE FOR "REMOVAL OF EXISTING STRUCTURE AT STATION 45+30.610 -LREV-."

TOTAL BILL OF MATERIAL - METRIC

RIGHT LANE BRIDGE	REMOVAL OF EXISTING STRUCTURE	1220mm Ø DRILLED PIERS IN SOIL	1220mm Ø DRILLED PIERS NOT IN SOIL	SID INSPECTION	CSL TESTING	REINFORCED CONCRETE DECK SLAB	GROOVING BRIDGE FLOORS	CLASS A CONCRETE	BRIDGE APPROACH SLABS	REINFORCING STEEL	SPIRAL COLUMN REINFORCING STEEL	STRUCTURAL STEEL	HP 310 X 79 STEEL PILES		CONCRETE BARRIER RAIL	100mm SLOPE PROTECTION	POT BEARINGS	ELASTOMERIC BEARINGS	EXPANSION JOINT SEALS
	LUMP SUM	METERS	METERS	EACH	EACH	SQ. METERS	SQ. METERS	CU. METERS	LUMP SUM	kg	kg	APPROX. kg	NO.	METERS	METERS	SQ. METERS	LUMP SUM	LUMP SUM	LUMP SUM
SUPERSTRUCTURE	LUMP SUM					860.2	907.9		LUMP SUM			127,800			138.984		LUMP SUM	LUMP SUM	LUMP SUM
END BENT #1								26.9		2,391			8	26.4		260.4			
BENT #1		6.9	7.2					36.9		5,268	1,206								
END BENT #2								26.8		2,382			7	28.0		281.5			
TOTAL	LUMP SUM	6.9	7.2	1	1	860.2	907.9	90.6	LUMP SUM	10,041	1,206	127,800	15	54.4	138.984	541.9	LUMP SUM	LUMP SUM	LUMP SUM

TOTAL BILL OF MATERIAL - ENGLISH

	LUMP SUM	LIN. FT.	LIN. FT.	EACH	EACH	SQ. FT.	SQ. FT.	CU. YD.	LUMP SUM	LBS.	LBS.	APPROX. LBS.	NO.	LIN. FT.	LIN. FT.	SQ. YD.	LUMP SUM	LUMP SUM	LUMP SUM
TOTAL	LUMP SUM	22.6	23.6	1	1	9,259	9,773	118.5	LUMP SUM	22,136	2,659	281,750	15	178	455.98	648	LUMP SUM	LUMP SUM	LUMP SUM

PROJECT NO. R-2413C
GUILFORD-ROCKINGHAM COUNTY
STATION: 45+30.610 -LREV-
13+00.754 -Y6-
SHEET 3 OF 3

NORTH CAROLINA PROFESSIONAL SEAL 022516 ENGINEER EMILY E. MURRAY
10/28/11

STATE OF NORTH CAROLINA
DEPARTMENT OF TRANSPORTATION
RALEIGH

GENERAL DRAWING
BRIDGE ON US 220 OVER US 158 BETWEEN SR 2104 AND SR 2300
RIGHT LANE

REVISIONS						SHEET NO.
NO.	BY:	DATE:	NO.	BY:	DATE:	S-179
1			3			TOTAL SHEETS
2			4			238

DRAWN BY : T.L. AVERETTE DATE : 02-16-11
CHECKED BY : PEGGY PARISI DATE : 05-04-11

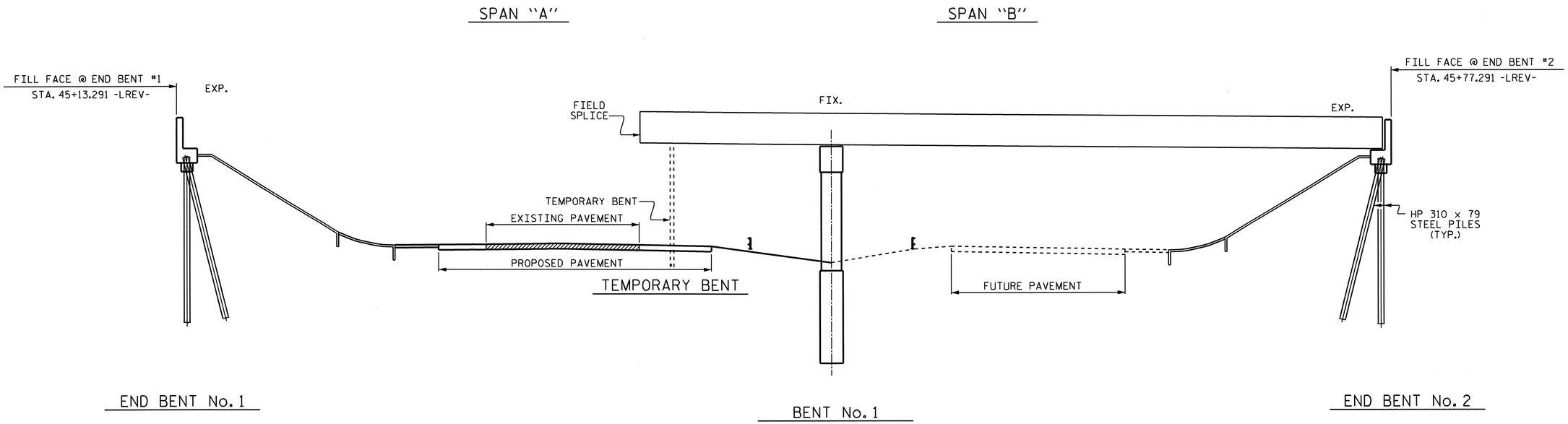

STAGE I GIRDER ERECTION

(SECTIONS AT BENT & END BENTS ARE AT RIGHT ANGLES)

ERECTION NOTES

ERECT A MINIMUM OF TWO GIRDERS WITH ALL DIAPHRAGMS/CROSSFRAMES BETWEEN THE GIRDERS IN PLACE AND THE BOLTS TIGHTENED PRIOR TO RELEASING THE GIRDERS.

ERECT EACH SUBSEQUENT GIRDER WITH DIAPHRAGMS/CROSSFRAMES CONNECTING TO THE ADJACENT PREVIOUSLY ERECTED GIRDER AND TIGHTEN ALL BOLTS BEFORE RELEASING THE GIRDER.

THE STRUCTURAL STEEL SHALL BE SUPPORTED DURING ERECTION IN ITS CAMBERED POSITION. A MINIMUM OF ONE TEMPORARY BENT SHALL BE USED IN SPAN "A".

TEMPORARY BENT SHALL SUPPORT ALL GIRDERS IN THE TYPICAL SECTION.

PLACEMENT OF TEMPORARY BENT SHALL BE COORDINATED WITH TRAFFIC PHASING REQUIREMENTS. SEE TRAFFIC CONTROL PLANS.

TEMPORARY BENT SHALL REMAIN IN PLACE UNTIL ALL DIAPHRAGMS/CROSSFRAMES ARE IN PLACE AND ALL HIGH STRENGTH BOLTS ARE TIGHTENED.

TEMPORARY BENT SHALL PROVIDE BEARING AT CONNECTOR PLATE LOCATIONS. WHEN CONNECTOR PLATES ARE USED AS TEMPORARY BEARING STIFFENERS, DIAPHRAGMS MUST BE ATTACHED.

THE CONTRACTOR'S ERECTION PLANS SHALL INCLUDE A METHOD OF TEMPORARY BENT REMOVAL THAT WILL UNIFORMLY TRANSFER THE STRUCTURAL WEIGHT TO THE DIAPHRAGMS/CROSSFRAMES AND THE GIRDERS WILL REMAIN IN THE CAMBERED POSITIONS.

PLANS FOR TEMPORARY BENT ERECTION AND REMOVAL SHALL BE SUBMITTED TO THE ENGINEER FOR REVIEW.

THE CONTRACTOR IS RESPONSIBLE FOR DESIGNING THE TEMPORARY BENT. THE DESIGNS SHALL BE COMPLETED BY A PROFESSIONAL ENGINEER REGISTERED IN THE STATE OF NORTH CAROLINA. THE CONTRACTOR SHALL SUBMIT SIGNED AND SEALED WORKING DRAWINGS AND CALCULATIONS FOR APPROVAL BY THE ENGINEER.

DURING THE GIRDER ERECTION PROCEDURE, THE CONTRACTOR IS RESPONSIBLE FOR PROVIDING TEMPORARY LATERAL BRACING AND OTHER MEANS OF SUPPORT, AS REQUIRED, TO ENSURE STABILITY OF THE GIRDERS, AVOID UPLIFT OF THE GIRDERS AT THE TEMPORARY BENTS AND TO ENSURE PLUMBNESS OF THE GIRDERS IN THE FINAL CONDITION.

NO SEPARATE MEASUREMENT OR PAYMENT WILL BE MADE FOR PROVIDING THE TEMPORARY BENTS. THE COST FOR ALL MATERIALS, EQUIPMENT, TOOLS, LABOR AND ANY INCIDENTALS NECESSARY TO PROVIDE THE TEMPORARY BENTS SHALL BE CONSIDERED INCIDENTAL TO THE LUMP SUM BID PRICE FOR STRUCTURAL STEEL.

THE CONTRACTOR MAY SUBMIT AN ALTERNATE ERECTION METHOD TO THE ENGINEER FOR REVIEW AND APPROVAL.

PROJECT NO. R-2413C
GUILFORD-ROCKINGHAM COUNTY
STATION: 45+30.610 -LREV-

NORTH CAROLINA PROFESSIONAL SEAL 022516 ENGINEER EMILY E. MURRAY
10/28/11

STATE OF NORTH CAROLINA
DEPARTMENT OF TRANSPORTATION
RALEIGH

GIRDER ERECTION DETAILS

REVISIONS						SHEET NO.
NO.	BY:	DATE:	NO.	BY:	DATE:	S-180
1			3			TOTAL SHEETS
2			4			238

DRAWN BY : PEGGY PARISI DATE : 6-1-11
CHECKED BY : T.L. AVERETTE DATE : 7-27-11

05-SEP-2011 14:15
Y:\Structures\Final Plans\Str.#6\R2413C_sd_GD_06.dgn
mgudlaugsson

STR. #6

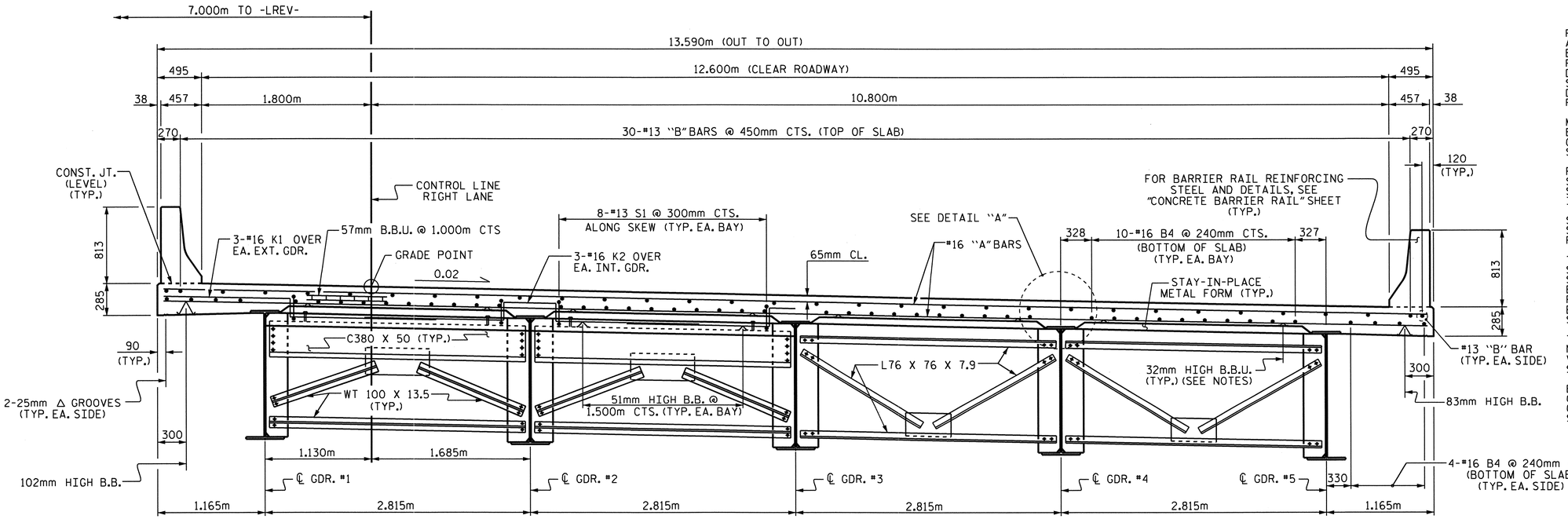

HALF SECTION @ END BENT DIAPHRAGMS

SHOWING TYPE D1, SEE "FRAMING PLAN"

HALF SECTION @ INTERMEDIATE DIAPHRAGMS

SHOWING TYPE D3, SEE "FRAMING PLAN"

NOTES

PROVIDE 32mm HIGH BEAM BOLSTERS UPPER AT 1.2m CTS. ATOP THE METAL STAY-IN-PLACE FORMS TO SUPPORT THE BOTTOM MAT OF 'A' BARS. WHEN USING REMOVABLE FORMS, PROVIDE CONTINUOUS HIGH CHAIRS FOR METAL DECK (C.H.C.M.) @ 1.2m CTS. WITH A HEIGHT TO SUPPORT THE BOTTOM MAT OF 'A' BARS A CLEAR DISTANCE OF 65mm ABOVE THE TOP OF THE REMOVABLE FORM.

METAL STAY-IN-PLACE FORMS SHALL NOT BE WELDED TO BEAM OR GIRDER FLANGES IN THE ZONES REQUIRING CHARPY V-NOTCH TEST. SEE STRUCTURAL STEEL DETAIL SHEETS.

PREVIOUSLY CAST CONCRETE IN A CONTINUOUS UNIT SHALL HAVE ATTAINED A MINIMUM COMPRESSIVE STRENGTH OF 20.7 MPa BEFORE ADDITIONAL CONCRETE IS CAST IN THE UNIT.

STRUCTURAL STEEL ERECTION IN A CONTINUOUS UNIT SHALL BE COMPLETE BEFORE FALSEWORK OR FORMS ARE PLACED ON THE UNIT.

THE CONTRACTOR MAY, WHEN NECESSARY, PROPOSE A SCHEME FOR AVOIDING INTERFERENCE BETWEEN METAL STAY-IN-PLACE FORM SUPPORTS OR FORMS AND BEAM/GIRDER STIFFENERS OR CONNECTOR PLATES. THE PROPOSAL SHALL BE INDICATED, AS APPROPRIATE, ON EITHER THE STEEL WORKING DRAWINGS OR THE METAL STAY-IN-PLACE FORM WORKING DRAWINGS.

THE CONTRACTOR SHALL ADJUST THE GIRDER BUILDUPS AS NECESSARY TO INCORPORATE A MAXIMUM PERMISSIBLE VARIATION IN POT BEARING DEPTH OF 13mm, SEE SPECIAL PROVISION FOR POT BEARINGS.

BARRIER RAIL IN A CONTINUOUS UNIT SHALL NOT BE CAST UNTIL ALL SLAB CONCRETE IN THE UNIT HAS BEEN CAST AND HAS REACHED A MINIMUM COMPRESSIVE STRENGTH OF 20.7 MPa.

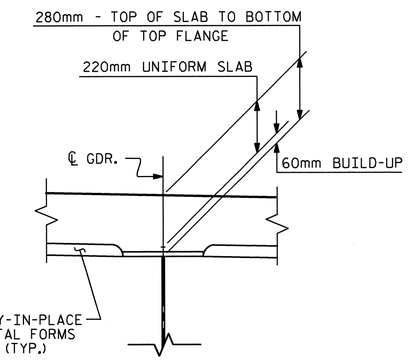

DETAIL "A"

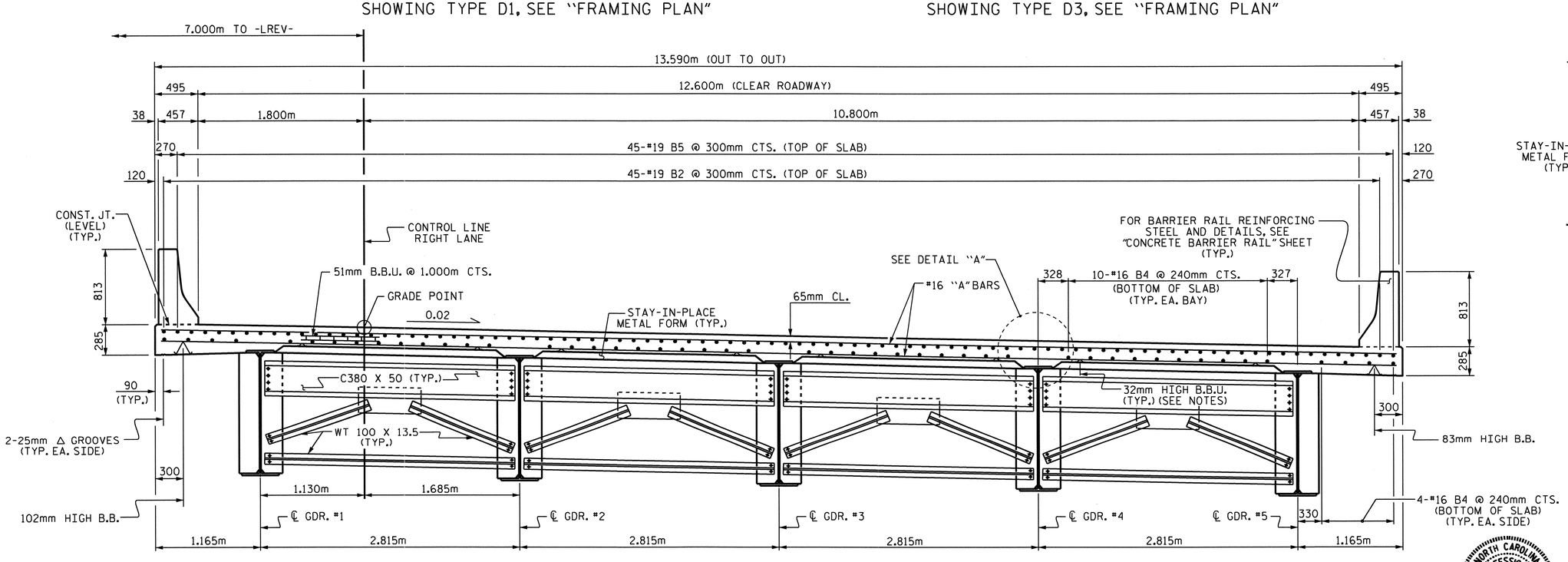

TYPICAL SECTION @ BENT DIAPHRAGMS

SHOWING TYPE D2, SEE "FRAMING PLAN"

PROJECT NO. R-2413C

GUILFORD-ROCKINGHAM COUNTY

STATION: 45+30.610 -LREV-

SHEET 1 OF 2

STATE OF NORTH CAROLINA
DEPARTMENT OF TRANSPORTATION
RALEIGH

SUPERSTRUCTURE

TYPICAL SECTION AND DETAILS

RIGHT LANE

NORTH CAROLINA PROFESSIONAL SEAL 022516 ENGINEER L.M.Y. E. MURPHY 10/25/10

REVISIONS							SHEET NO.
NO.	BY:	DATE:	NO.	BY:	DATE:		S-181
1			3				TOTAL SHEETS
2			4				238

DRAWN BY : T.L. AVERETTE DATE : 09-29-10
CHECKED BY : PEGGY PARISI DATE : 10-28-10

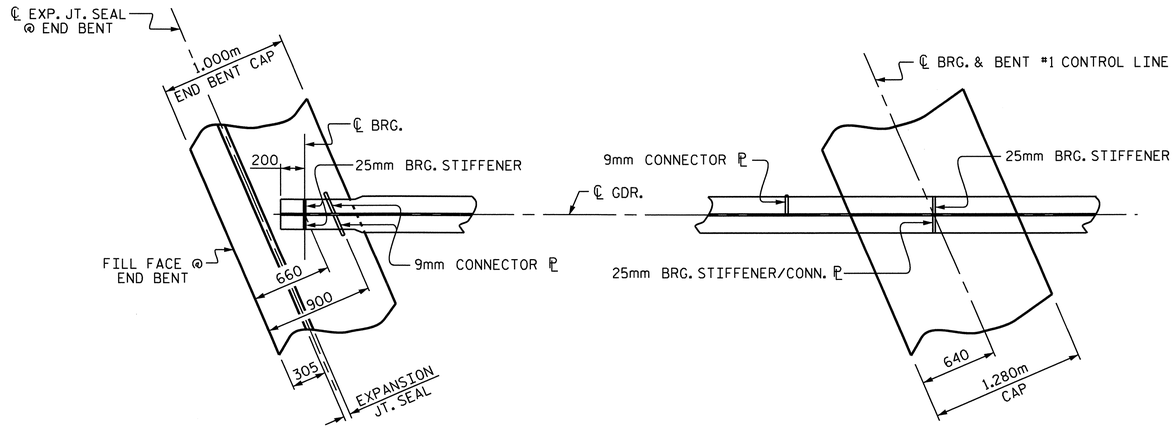

PLAN OF GIRDER AT END BENT JOINT

(END BENT #1 SHOWN, END BENT #2 SIMILAR)

PLAN OF GIRDER AT BENT #1

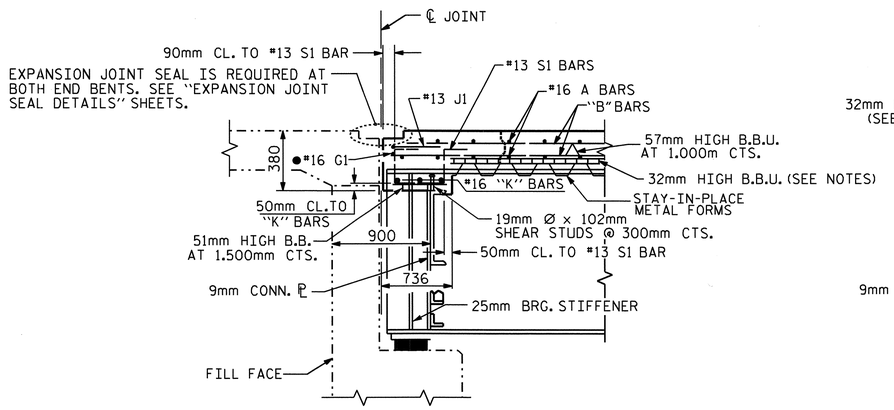

SECTION THRU END BENT DIAPHRAGM

● #16 G1 BAR MAY BE SHIFTED SLIGHTLY, AS NECESSARY, TO CLEAR DIAPHRAGM AND REINFORCING STEEL.

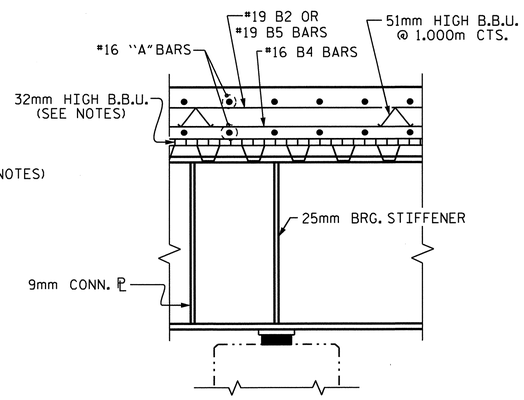

SECTION AT BENT

(CROSSFRAME NOT SHOWN FOR CLARITY)

PROJECT NO. R-2413C

GUILFORD-ROCKINGHAM COUNTY

STATION: 45+30.610 -LREV-

SHEET 2 OF 2

STATE OF NORTH CAROLINA
DEPARTMENT OF TRANSPORTATION
RALEIGH

SUPERSTRUCTURE

TYPICAL SECTION AND DETAILS

RIGHT LANE

NORTH CAROLINA PROFESSIONAL SEAL 022516 ENGINEER EMILY F. MURRAY
10/28/10

REVISIONS						SHEET NO.
NO.	BY:	DATE:	NO.	BY:	DATE:	S-182
1			3			TOTAL SHEETS
2			4			238

DRAWN BY : T.L. AVERETTE DATE : 09-29-10
CHECKED BY : PEGGY PARISI DATE : 10-28-10

STR. #6

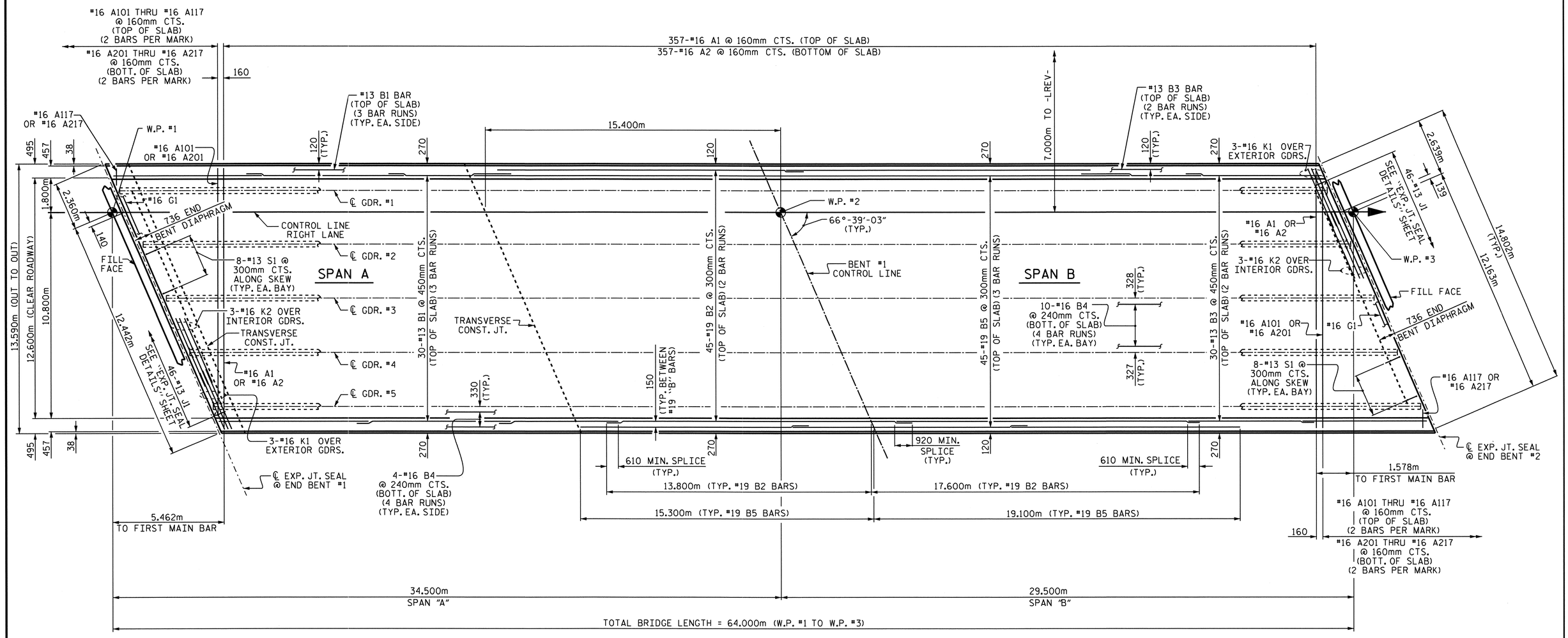

PLAN OF SPANS

FOR REINFORCING STEEL IN CONCRETE BARRIER RAIL, SEE "CONCRETE BARRIER RAIL" SHEET.

PROJECT NO. R-2413C

GUILFORD-ROCKINGHAM COUNTY

STATION: 45+30.610 -LREV-

NORTH CAROLINA PROFESSIONAL SEAL 022516 ENGINEER EMILY E. KURPAN

10/11/28

STATE OF NORTH CAROLINA
DEPARTMENT OF TRANSPORTATION
RALEIGH

SUPERSTRUCTURE

PLAN OF SPANS
RIGHT LANE

REVISIONS								SHEET NO.
NO.	BY:	DATE:	NO.	BY:	DATE:			S-183
1			3					TOTAL SHEETS
2			4					238

DRAWN BY : T.L. AVERETTE DATE : 9-29-10
CHECKED BY : PEGGY PARISI DATE : 10-28-10

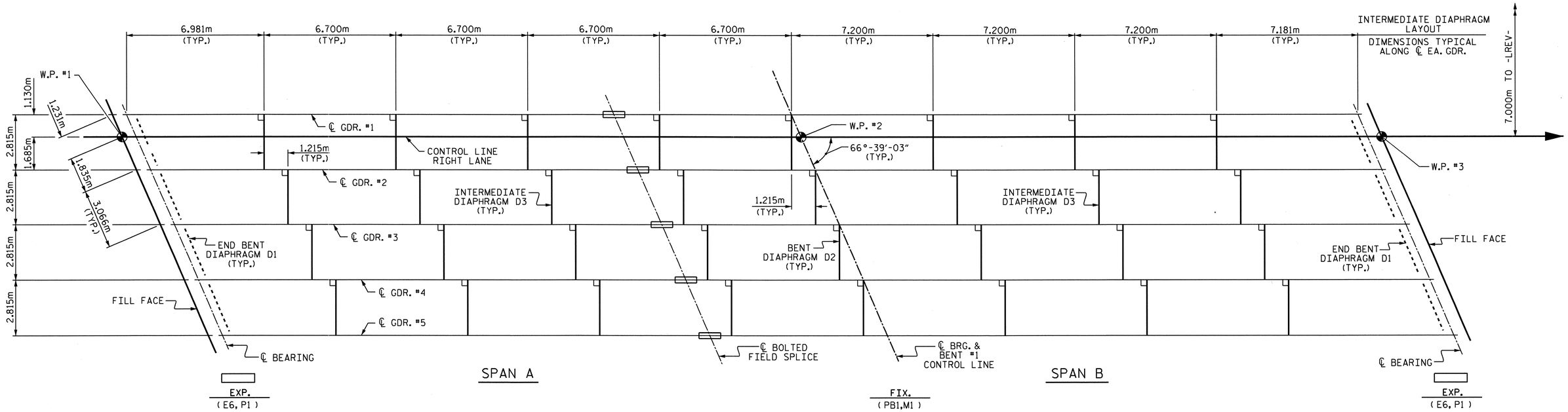

FRAMING PLAN

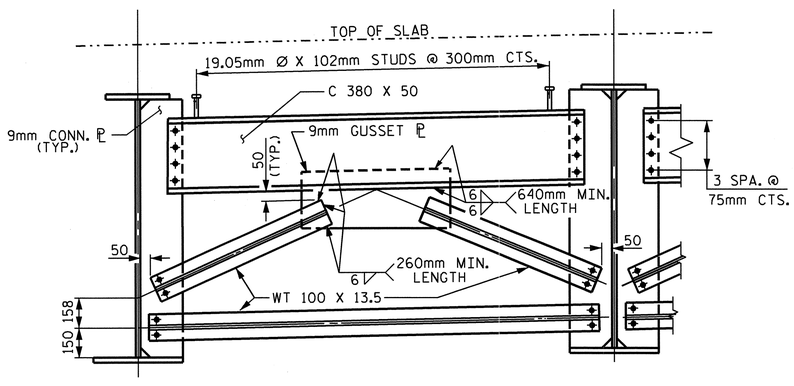

END BENT DIAPHRAGM-D1

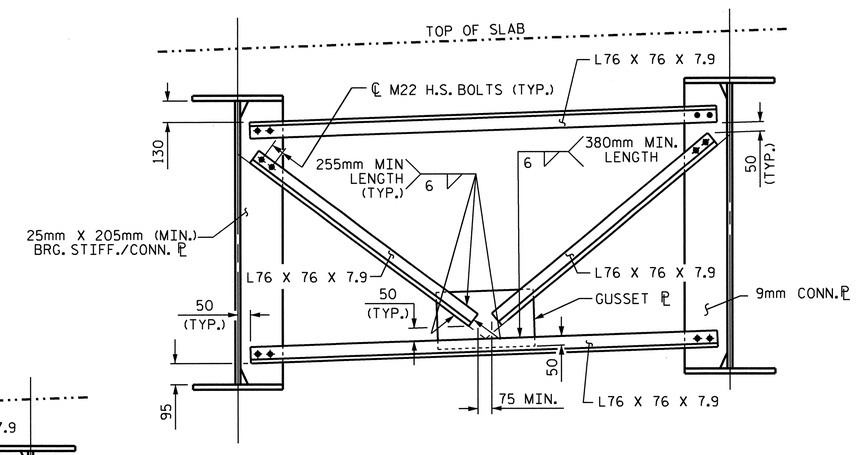

BENT DIAPHRAGM-D2

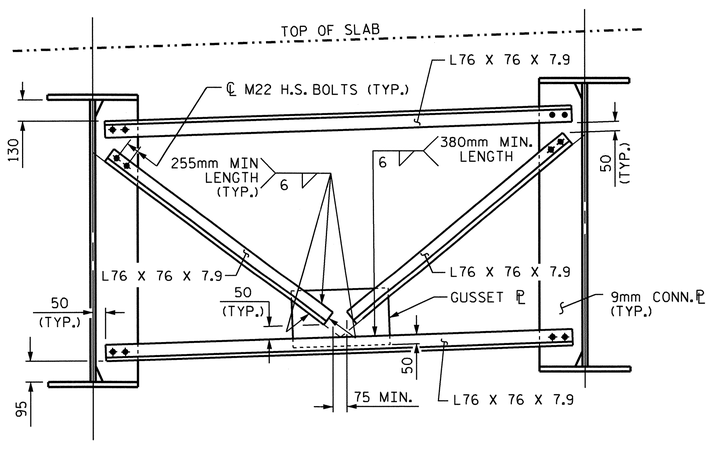

INTERMEDIATE DIAPHRAGM-D3

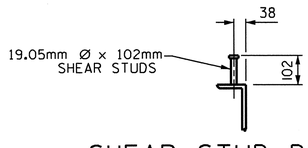

SHEAR STUD DETAILS

(@ CHANNELS)

PROJECT NO. R-2413C

GUILFORD-ROCKINGHAM COUNTY

STATION: 45+30.610 -LREV-

SHEET 1 OF 4

STATE OF NORTH CAROLINA
DEPARTMENT OF TRANSPORTATION
RALEIGH

SUPERSTRUCTURE
FRAMING PLAN
RIGHT LANE

NORTH CAROLINA PROFESSIONAL SEAL 022516 ENGINEER EMILY E. MURRAY
10/28/11

REVISIONS						SHEET NO.
NO.	BY:	DATE:	NO.	BY:	DATE:	S-184
1			3			TOTAL SHEETS
2			4			238

DRAWN BY : T.L. AVERETTE DATE : 09-29-10
CHECKED BY : PEGGY PARISI DATE : 10-28-10

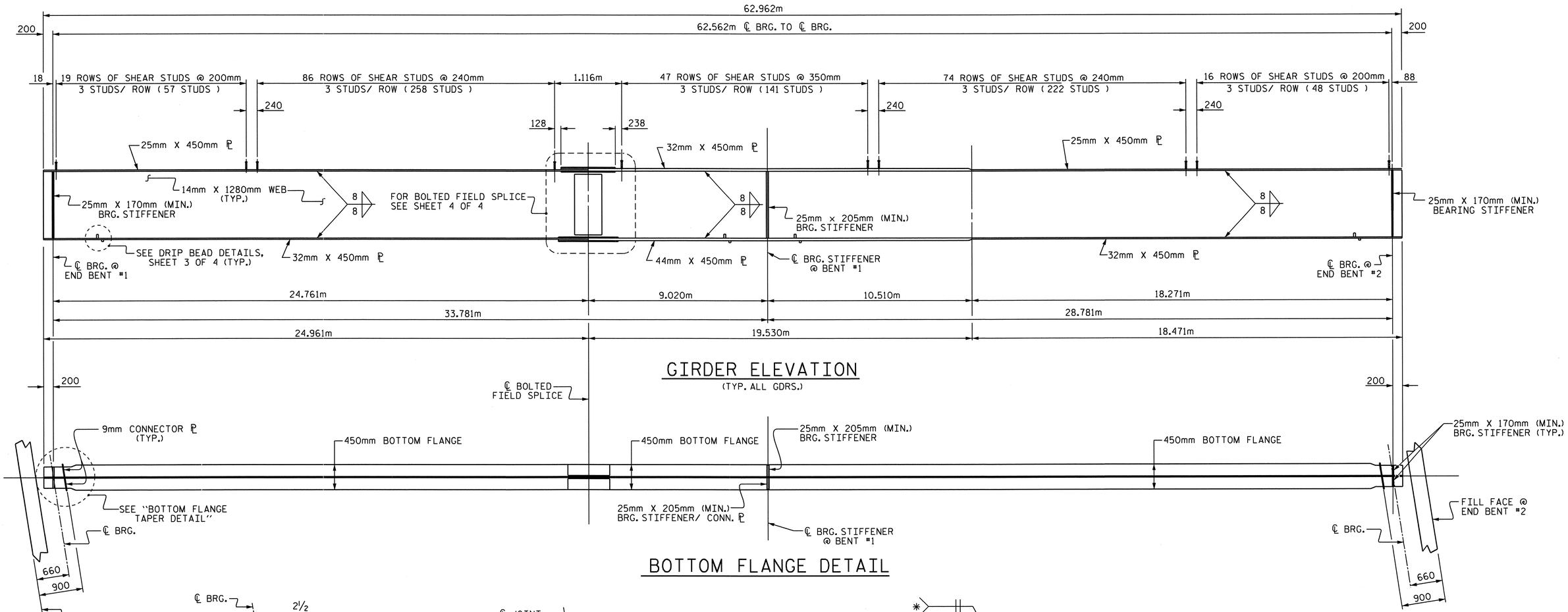

GIRDER ELEVATION

(TYP. ALL GDRS.)

BOTTOM FLANGE DETAIL

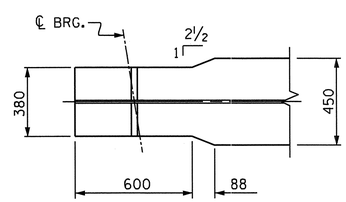

BOTTOM FLANGE TAPER DETAIL

(TYP. EA. END)

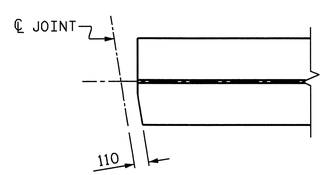

TOP FLANGE CLIP DETAIL

(TYP. AT BOTH ENDS OF GIRDER)

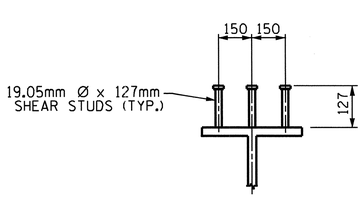

SHEAR STUD DETAILS

ON GIRDERS

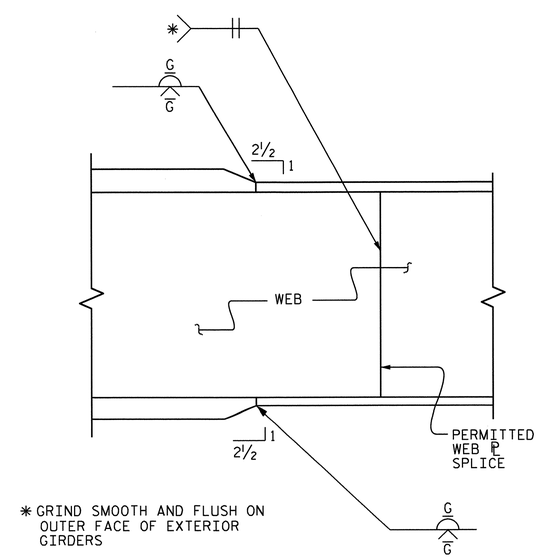

* GRIND SMOOTH AND FLUSH ON OUTER FACE OF EXTERIOR GIRDERS

ELEVATION

TYPICAL FLANGE AND WEB BUTT JOINT

PROJECT NO. R-2413C

GUILFORD-ROCKINGHAM COUNTY

STATION: 45+30.610 -LREV-

SHEET 2 OF 4

STATE OF NORTH CAROLINA
DEPARTMENT OF TRANSPORTATION
RALEIGH

SUPERSTRUCTURE

STRUCTURAL STEEL DETAILS
RIGHT LANE

NORTH CAROLINA PROFESSIONAL SEAL 022516 ENGINEER EMILY E. MURRAY
10/28/11

REVISIONS						SHEET NO.
NO.	BY:	DATE:	NO.	BY:	DATE:	S-185
1			3			TOTAL SHEETS
2			4			238

DRAWN BY : T.L. AVERETTE DATE : 09-29-10
CHECKED BY : PEGGY PARISI DATE : 10-28-10

STR. #6

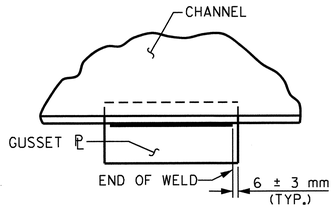

TYPICAL GUSSET PLATE CONNECTION

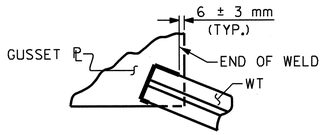

TYPICAL "TEE" TO GUSSET PLATE CONNECTION

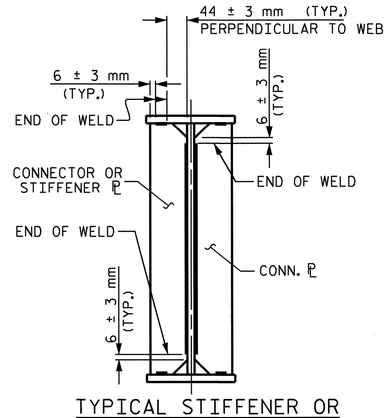

TYPICAL STIFFENER OR
CONNECTOR PLATE CONNECTIONS

WELD TERMINATION DETAILS

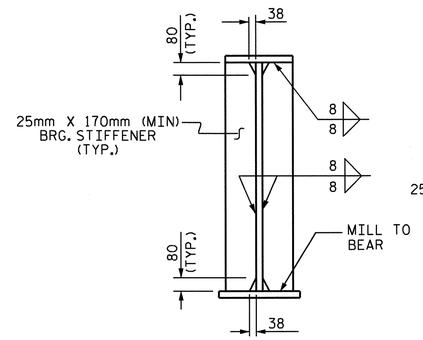

@ END BENTS

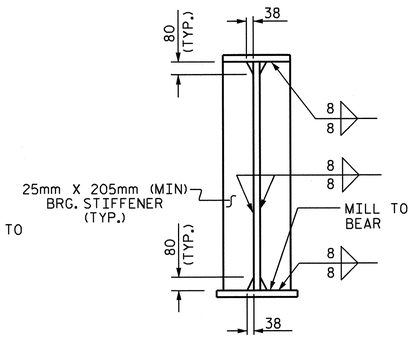

@ BENTS

NOTE:
THE BEARING STIFFENER SHALL BE WELDED TO THE BOTTOM FLANGE ONLY WHEN USED AS A CONNECTOR ℙ.

BEARING STIFFENER

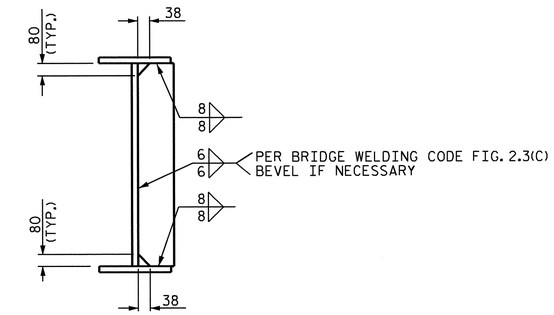

CONNECTOR PLATE

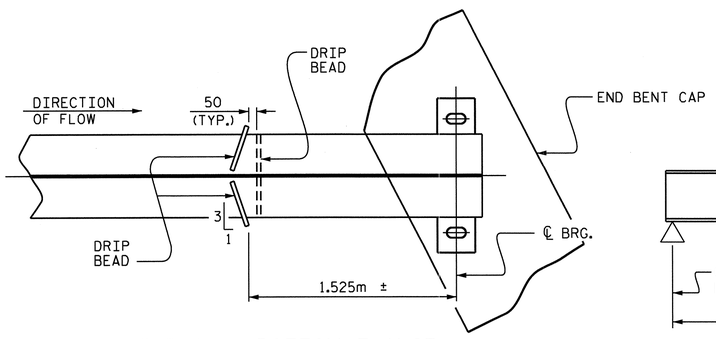

PART PLAN - BOTTOM FLANGE

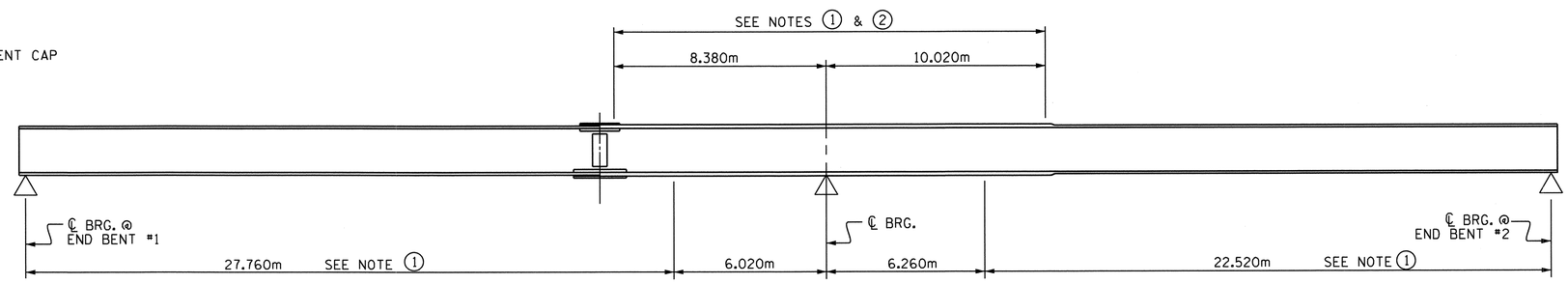

GIRDER MAKE UP

NOTE 1: CHARPY V-NOTCH TESTS ARE REQUIRED FOR ALL TOP OR BOTTOM FLANGE PLATES WHICH FALL WITHIN THESE LIMITS, ALL WEB PLATES, AND ALL SPLICE PLATES. IF A PERMITTED SHOP FLANGE SPLICE IS NOT USED, CHARPY V-NOTCH TESTS WILL BE REQUIRED FOR THE ENTIRE FLANGE PLATE. FOR CHARPY V-NOTCH TESTS, SEE ARTICLE 1072-9 OF THE STANDARD SPECIFICATIONS.

NOTE 2: NO WELDING OF FORMS OR FALSEWORK TO THE TOP FLANGE WILL BE PERMITTED IN THIS REGION.

CHARPY V-NOTCH TESTS FOR CONTINUOUS PLATE GIRDERS

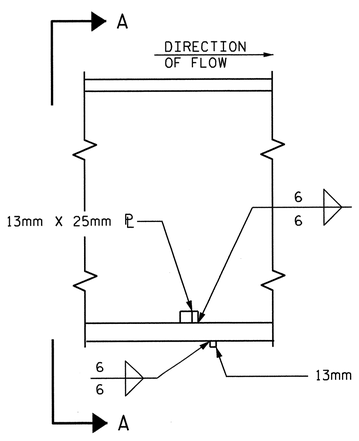

SECTION

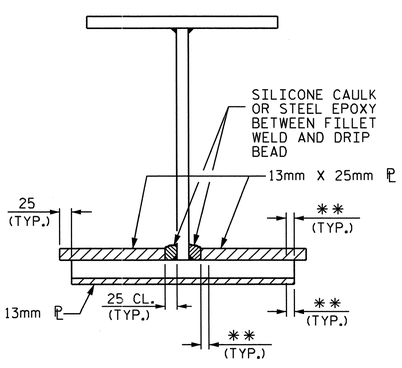

VIEW A-A

**SEE "WELD TERMINATION DETAILS"

DRIP BEAD DETAILS

PROJECT NO. R-2413C
GUILFORD-ROCKINGHAM COUNTY
STATION: 45+30.610 -LREV-

SHEET 3 OF 4

STATE OF NORTH CAROLINA
DEPARTMENT OF TRANSPORTATION
RALEIGH

SUPERSTRUCTURE

STRUCTURAL STEEL
DETAILS
RIGHT LANE

NORTH CAROLINA PROFESSIONAL SEAL 022516 ENGINEER EMILY E. MURRAY
10/28/11

REVISIONS						SHEET NO.
NO.	BY:	DATE:	NO.	BY:	DATE:	S-186
1			3			TOTAL SHEETS
2			4			238

DRAWN BY : T.L. AVERETTE DATE : 09-29-10
CHECKED BY : PEGGY PARISI DATE : 10-28-10

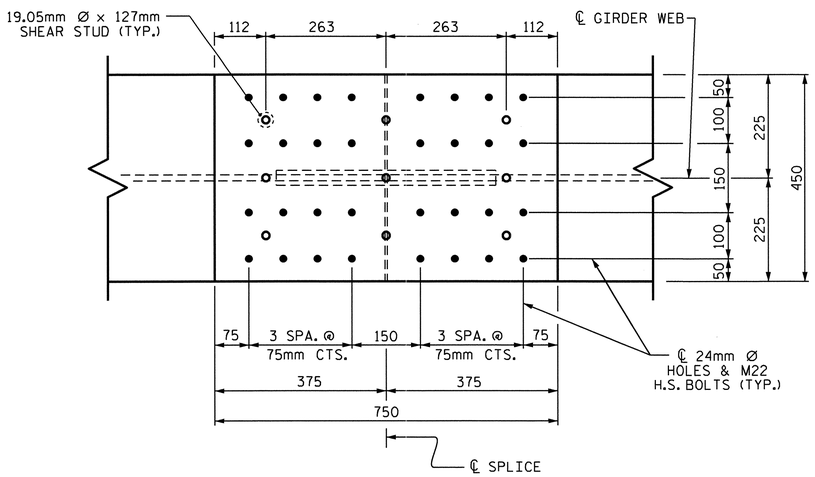

PLAN (TOP OF TOP FLANGE)

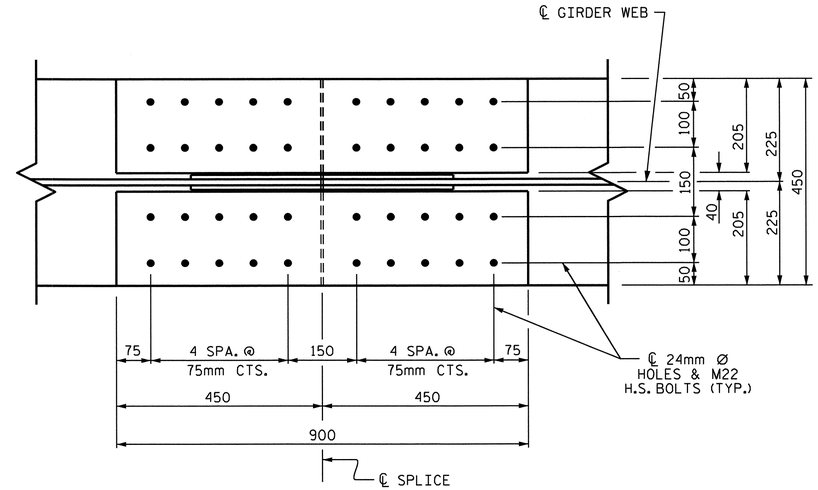

PLAN (TOP OF BOTTOM FLANGE)

NOTES

ALL STRUCTURAL STEEL SHALL BE AASHTO M270 GRADE 345W AND PAINTED IN ACCORDANCE WITH SYSTEM 4 OF ARTICLE 442-7 OF THE STANDARD SPECIFICATIONS UNLESS OTHERWISE NOTED ON THE PLANS.

ALL DIMENSIONS SHOWN ARE HORIZONTAL OR VERTICAL, UNLESS OTHERWISE NOTED.

ALL FIELD CONNECTIONS TO BE 22.23mm DIA. HIGH STRENGTH BOLTS UNLESS OTHERWISE NOTED. FOR HIGH STRENGTH BOLTS, SEE SPECIAL PROVISIONS.

BEARING STIFFENERS ARE TO BE PLACED NORMAL TO THE WEB OF THE GIRDER AND SHALL BE PLUMB.

PERMITTED FLANGE AND WEB SHOP SPLICES SHALL NOT BE LOCATED WITHIN 4.5 METERS OF MAXIMUM DEAD LOAD DEFLECTION (NOR WITHIN 4.5 METERS OF INTERMEDIATE BEARINGS OF CONTINUOUS UNITS). KEEP 600mm MINIMUM BETWEEN WEB AND FLANGE SHOP SPLICES. KEEP 150mm MINIMUM BETWEEN CONNECTOR PLATE OR TRANSVERSE STIFFENER WELDS AND WEB OR FLANGE SHOP SPLICES.

STUDS ON GIRDERS MAY BE SHIFTED UP TO 25mm IF NECESSARY TO CLEAR FLANGE SPLICE WELD.

TENSION ON THE AASHTO M164 BOLTS SHALL BE CALIBRATED USING DIRECT TENSION INDICATOR WASHERS. FOR DIRECT TENSION INDICATORS, SEE SPECIAL PROVISIONS.

END OF GIRDERS SHALL BE PLUMB.

BEARING STIFFENER MAY REQUIRE COPING IF WIDER THAN BOTTOM FLANGE TO AVOID INTERFERENCE WITH THE ANCHOR BOLT.

FOR SHIPPING STEEL STRUCTURAL MEMBERS, SEE SPECIAL PROVISIONS.

FABRICATORS SHALL DETAIL DIAPHRAGM MEMBERS AND CONNECTIONS FOR FULL DEAD LOAD FIT UP. GIRDERS SHALL BE PLUMB AFTER THE FULL AMOUNT OF DEAD LOAD IS APPLIED.

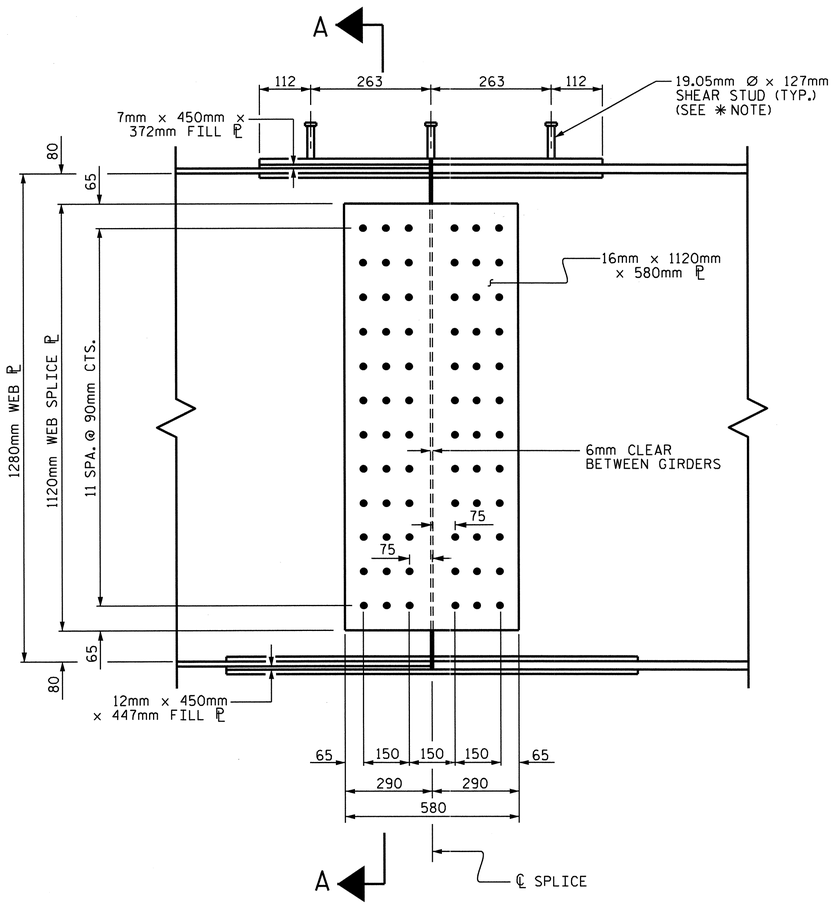

ELEVATION

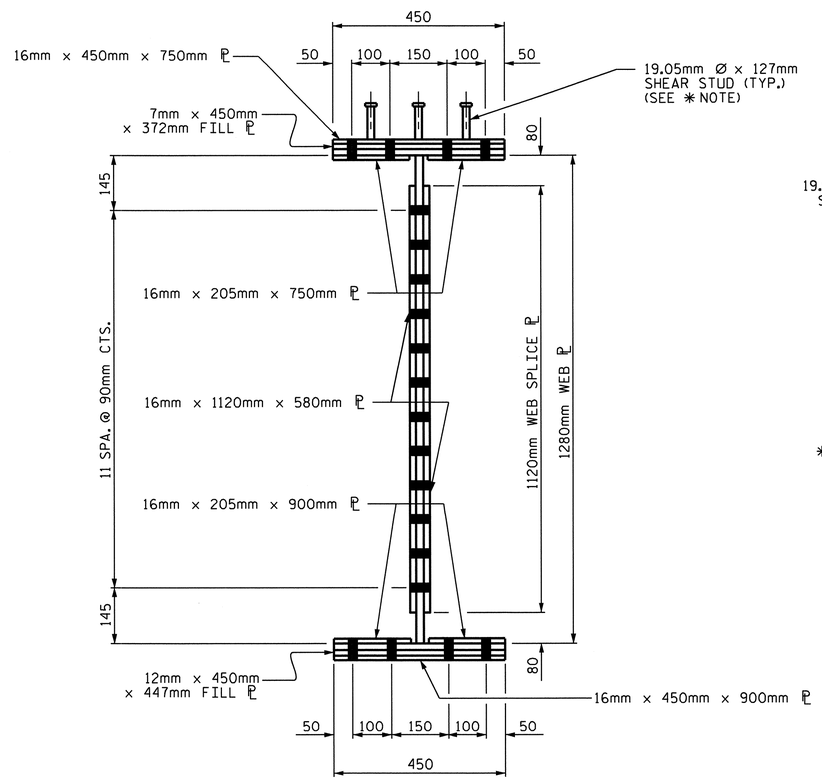

SECTION A-A

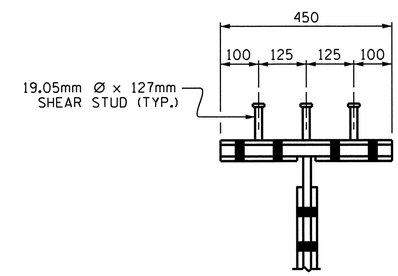

SHEAR STUD DETAIL
FOR TOP FLANGE SPLICE PLATE

✱ NOTE: SHEAR STUDS ARE TO BE SHOP WELDED ON TOP OF PLATE BEFORE FIELD ASSEMBLY

BOLTED FIELD SPLICE DETAILS

PROJECT NO. R-2413C
GUILFORD-ROCKINGHAM COUNTY
STATION: 45+30.610 -LREV-

SHEET 4 OF 4

STATE OF NORTH CAROLINA
DEPARTMENT OF TRANSPORTATION
RALEIGH

SUPERSTRUCTURE

STRUCTURAL STEEL DETAILS
RIGHT LANE

NORTH CAROLINA PROFESSIONAL SEAL 022516 ENGINEER EMILY E. MURRAY
10/28/11

REVISIONS						SHEET NO.
NO.	BY:	DATE:	NO.	BY:	DATE:	S-187
1			3			TOTAL SHEETS
2			4			238

DRAWN BY : T.L. AVERETTE DATE : 09-29-10
CHECKED BY : PEGGY PARISI DATE : 10-28-10

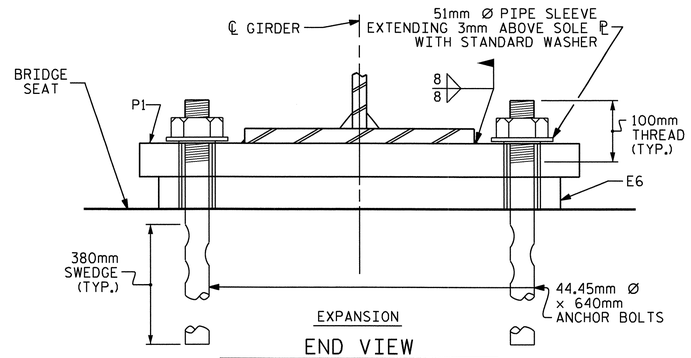

END VIEW

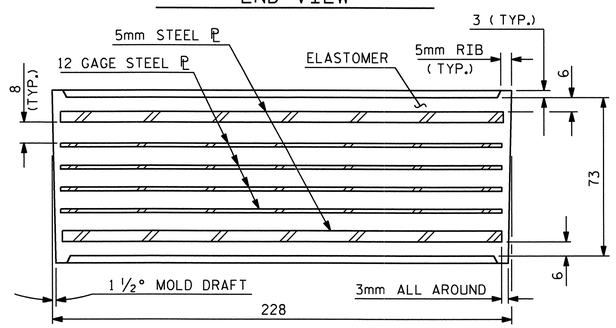

TYPICAL SECTION OF ELASTOMERIC BEARINGS

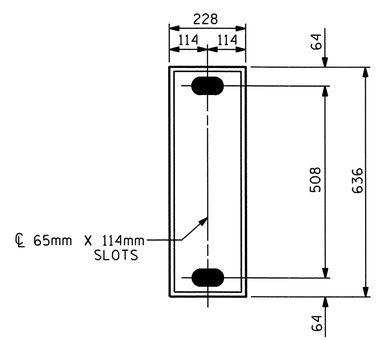

E6 (10 REQ'D)

PLAN VIEW OF ELASTOMERIC BEARING

TYPE III

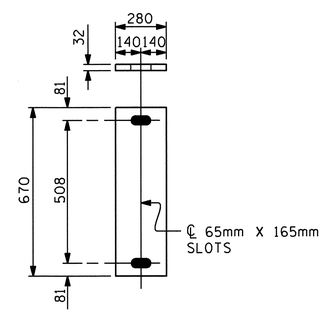

P1
(EXPANSION)
P1 (10 REQ'D)

SOLE PLATE DETAILS (P1)

NOTES

THE 51mm Ø PIPE SLEEVE SHALL BE CUT FROM SCHEDULE 40 PVC PLASTIC PIPE. THE PVC PLASTIC PIPE SHALL MEET THE REQUIREMENTS OF ASTM D1785.

THE PAYMENT FOR THE PIPE SLEEVES SHALL BE INCLUDED IN THE SEVERAL PAY ITEMS.

FOR AASHTO M270 GRADE 345W STRUCTURAL STEEL, SOLE PLATE SHALL BE AASHTO M270 GRADE 345W AND SHALL NOT BE GALVANIZED, ANCHOR BOLTS AND NUTS SHALL BE GALVANIZED IN ACCORDANCE WITH THE STANDARD SPECIFICATIONS.

ANCHOR BOLTS SHALL MEET THE REQUIREMENTS OF ASTM A449. NUTS SHALL MEET THE REQUIREMENTS OF AASHTO M291M-12 OR AASHTO M292M-2H. WASHERS SHALL MEET THE REQUIREMENTS OF AASHTO M293M. SHOP DRAWINGS ARE NOT REQUIRED FOR ANCHOR BOLTS, NUTS AND WASHERS. SHOP INSPECTION IS REQUIRED.

WHEN FIELD WELDING THE SOLE PLATE TO THE GIRDER FLANGE, USE TEMPERATURE INDICATING WAX PENS, OR OTHER SUITABLE MEANS, TO ENSURE THAT THE TEMPERATURE OF THE SOLE PLATE DOES NOT EXCEED 149°C. TEMPERATURES ABOVE THIS MAY DAMAGE THE ELASTOMER.

ALL SURFACES OF BEARING PLATES SHALL BE SMOOTH AND STRAIGHT.

THE CONTRACTOR'S ATTENTION IS CALLED TO THE FOLLOWING PROCEDURE, WHICH MAY BE REQUIRED BY THE ENGINEER, TO RESET ELASTOMERIC BEARINGS DUE TO GIRDER TRANSLATION AND END ROTATION:

ONCE THE DECK HAS CURED, THE GIRDERS SHALL BE JACKED AND THE ELASTOMERIC BEARING SLOTS CENTERED AS NEARLY AS PRACTICAL ABOUT THE BEARING STIFFENER. THIS OPERATION SHALL BE PERFORMED AT APPROXIMATELY 16° C.

THE CONTRACTOR MAY PROPOSE ALTERNATE METHODS, PROVIDED DETAILS ARE SUBMITTED TO THE ENGINEER FOR REVIEW AND APPROVAL.

—LOAD RATINGS—	
	MAX.D.L.+ L.L.
TYPE III	674 kN

PROJECT NO. R-2413C
GUILFORD-ROCKINGHAM COUNTY
STATION: 45+30.610 -LREV-

STATE OF NORTH CAROLINA
DEPARTMENT OF TRANSPORTATION
RALEIGH

STANDARD
ELASTOMERIC BEARING
DETAILS
(STEEL SUPERSTRUCTURE)
RIGHT LANE

NORTH CAROLINA PROFESSIONAL SEAL 022516 ENGINEER EMILY E. MURRAY
10/28/11

REVISIONS						SHEET NO.
NO.	BY:	DATE:	NO.	BY:	DATE:	S-188
1			3			TOTAL SHEETS
2			4			238

ASSEMBLED BY : T.L. AVERETTE DATE : 09-29-10
CHECKED BY : PEGGY PARISI DATE : 10-28-10

DRAWN BY : JMB 11/87	REV. 8/16/99	MAB/LES
CHECKED BY : ARB 11/87	REV. 10/17/00	RWW/LES
	REV. 5/1/06	TLA/GM

05-SEP-2011 14:10
Y:\Structures\Final Plans\Str.#6\R2413C_sd_BG_06.dgn
mgudlaugsson

STR. #6

STD. NO. EB1SM

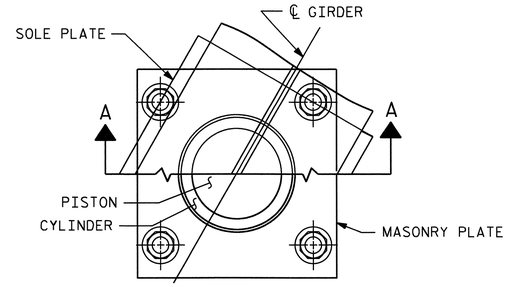

CUT-AWAY PLAN

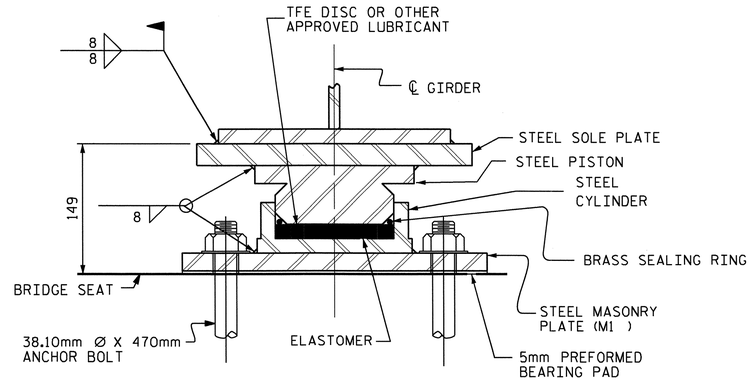

SECTION A-A

PB1, FIXED

(5 REQ'D.)

POT BEARING DETAILS

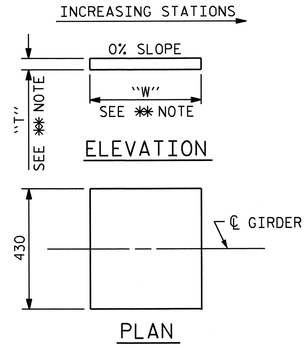

✻✻ NOTE:
DIMENSIONS "W" AND "T" ARE TO BE DETERMINED BY THE MANUFACTURER.

SOLE PLATE DETAILS

NOTES

FOR POT BEARINGS, SEE SPECIAL PROVISIONS.

AT ALL POINTS OF SUPPORT AT BENT #1, NUTS FOR ANCHOR BOLTS SHALL BE TIGHTENED FINGER TIGHT AND GIVEN AN ADDITIONAL 1/4 TURN. THE THREAD OF THE NUT AND BOLT SHALL THEN BE BURRED WITH A SHARP POINTED TOOL.

WHEN WELDING THE SOLE PLATE TO THE GIRDER, USE TEMPERATURE INDICATING WAX PENS, OR OTHER SUITABLE MEANS, TO ENSURE THAT THE TEMPERATURE OF THE BEARING DOES NOT EXCEED 121°C TEMPERATURES ABOVE THIS MAY DAMAGE THE TFE OR ELASTOMER.

SOLE PLATES SHOULD BE WELDED TO BEAM FLANGES BEFORE FALSEWORK IS PLACED.

ALL SURFACES OF BEARING PLATES SHALL BE SMOOTH AND STRAIGHT.

FOR THERMAL SPRAYED COATINGS (METALLIZATION), SEE SPECIAL PROVISIONS.

THE CONTRACTOR MAY SUBSTITUTE DISC BEARINGS FOR THE POT BEARINGS SHOWN. FOR OPTIONAL DISC BEARINGS, SEE SPECIAL PROVISIONS.

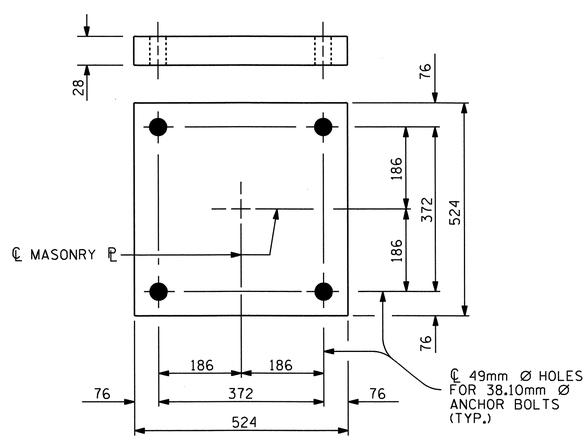

PLAN

M1 (5 REQ'D.)

MASONRY PLATE DETAILS

TABLE FOR LOADS AND MOVEMENTS						
BEARING	LOCATION	VERTICAL LOAD (kN)			LATERAL LOAD (kN)	TOTAL MOVEMENT (mm)
		DEAD	LIVE	TOTAL		
PB1 (FIXED)	BENT #1	1057	410	1467	212	0

PROJECT NO. R-2413C

GUILFORD-ROCKINGHAM COUNTY

STATION: 45+30.610 -LREV-

STATE OF NORTH CAROLINA
DEPARTMENT OF TRANSPORTATION
RALEIGH

STANDARD

POT BEARING DETAILS RIGHT LANE

NORTH CAROLINA PROFESSIONAL SEAL 022516 ENGINEER EMILY E. MURRAY
10/28/11

REVISIONS						SHEET NO.
NO.	BY:	DATE:	NO.	BY:	DATE:	S-189
1			3			TOTAL SHEETS
2			4			238

STR. #6 PB1SM.STD

ASSEMBLED BY : T.L. AVERETTE	DATE : 09-09-10		
CHECKED BY : PEGGY PARISI	DATE : 10-28-10		
DRAWN BY : RWW 8/99	REV. 7/10/01	LES/RWW	
CHECKED BY : LES 8/99	REV. 5/7/03	RWW/JTE	
	REV. 5/1/06R	TLA/GM	

19-OCT-2011 14:54
R:\TIPProjects-R\R2413c\Structures\Final Plans\Str.#6\R2413C_sd_BG_06.dgn
taverette

DEAD LOAD DEFLECTION TABLE FOR SPAN A

	ALL GIRDERS																				
@ TWENTIETH POINTS BETWEEN ℄ BEARINGS	0	.05	.10	.15	.20	.25	.30	.35	.40	.45	.50	.55	.60	.65	.70	.75	.80	.85	.90	.95	0
DEFLECTION DUE TO WEIGHT OF GIRDER	0.000	0.002	0.004	0.006	0.008	0.009	0.010	0.011	0.011	0.011	0.011	0.010	0.009	0.008	0.007	0.006	0.004	0.003	0.002	0.001	0.000
DEFLECTION DUE TO WEIGHT OF SLAB *	0.000	0.009	0.017	0.025	0.032	0.038	0.043	0.046	0.047	0.047	0.046	0.044	0.040	0.035	0.030	0.024	0.018	0.012	0.007	0.003	0.000
DEFLECTION DUE TO WEIGHT OF BARRIER RAIL	0.000	0.001	0.001	0.002	0.003	0.003	0.003	0.004	0.004	0.004	0.004	0.004	0.003	0.003	0.002	0.002	0.001	0.001	0.001	0.000	0.000
TOTAL DEAD LOAD DEFLECTION	0.000	0.012	0.022	0.033	0.043	0.050	0.056	0.061	0.062	0.062	0.061	0.058	0.052	0.046	0.039	0.032	0.023	0.016	0.010	0.004	0.000
VERTICAL CURVE ORDINATE	0.000	0.002	0.004	0.005	0.007	0.008	0.009	0.009	0.010	0.010	0.010	0.010	0.010	0.009	0.009	0.008	0.007	0.005	0.004	0.002	0.000
REQUIRED CAMBER	0	14	26	38	50	58	65	70	72	72	71	68	62	55	48	40	30	21	14	6	0

* INCLUDES SLAB, BUILDUPS & STAY-IN-PLACE FORMS.
ALL VALUES ARE SHOWN IN METERS EXCEPT "REQUIRED CAMBER", WHICH IS GIVEN IN MILLIMETERS.

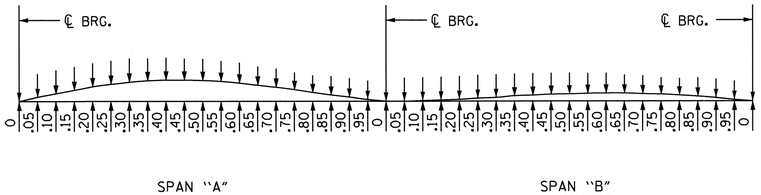

SCHEMATIC CAMBER ORDINATES

NOTE : FOR CAMBER @ 20TH POINTS SEE TABLES.
SLOPE FOR THE ZERO CAMBER BASE LINE VARIES.

DEAD LOAD DEFLECTION TABLE FOR SPAN B

	ALL GIRDERS																				
@ TWENTIETH POINTS BETWEEN ℄ BEARINGS	0	.05	.10	.15	.20	.25	.30	.35	.40	.45	.50	.55	.60	.65	.70	.75	.80	.85	.90	.95	0
DEFLECTION DUE TO WEIGHT OF GIRDER	0.000	0.000	0.000	0.000	0.000	0.001	0.001	0.002	0.002	0.003	0.003	0.004	0.004	0.004	0.003	0.003	0.003	0.002	0.001	0.001	0.000
DEFLECTION DUE TO WEIGHT OF SLAB *	0.000	-0.001	-0.001	0.000	0.001	0.003	0.005	0.008	0.010	0.012	0.013	0.014	0.015	0.015	0.014	0.013	0.011	0.009	0.006	0.003	0.000
DEFLECTION DUE TO WEIGHT OF BARRIER RAIL	0.000	0.000	0.000	0.000	0.000	0.000	0.000	0.001	0.001	0.001	0.001	0.001	0.001	0.001	0.001	0.001	0.001	0.001	0.001	0.000	0.000
TOTAL DEAD LOAD DEFLECTION	0.000	-0.001	-0.001	0.000	0.001	0.004	0.006	0.011	0.013	0.016	0.017	0.019	0.020	0.020	0.018	0.017	0.015	0.012	0.008	0.004	0.000
VERTICAL CURVE ORDINATE	0.000	0.001	0.003	0.004	0.005	0.006	0.006	0.007	0.007	0.007	0.007	0.007	0.007	0.007	0.006	0.006	0.005	0.004	0.003	0.001	0.000
REQUIRED CAMBER	0	0	2	4	6	10	12	18	20	23	24	26	27	27	24	23	20	16	11	5	0

* INCLUDES SLAB, BUILDUPS & STAY-IN-PLACE FORMS.
ALL VALUES ARE SHOWN IN METERS EXCEPT "REQUIRED CAMBER", WHICH IS GIVEN IN MILLIMETERS.

PROJECT NO. R-2413C
GUILFORD-ROCKINGHAM COUNTY
STATION: 45+30.610 -LREV-

STATE OF NORTH CAROLINA
DEPARTMENT OF TRANSPORTATION
RALEIGH

SUPERSTRUCTURE
DEAD LOAD DEFLECTIONS
RIGHT LANE

NORTH CAROLINA PROFESSIONAL SEAL 022516 ENGINEER EMILY F. MURRAY
10/28/11

REVISIONS						SHEET NO.
NO.	BY:	DATE:	NO.	BY:	DATE:	S-190
1			3			TOTAL SHEETS
2			4			238

DRAWN BY : T.L. AVERETTE DATE : 09-29-10
CHECKED BY : PEGGY ADKINS DATE : 10-28-10

STR. #6

NOTES

BARRIER RAIL IN A CONTINUOUS UNIT SHALL NOT BE CAST UNTIL ALL SLAB CONCRETE IN THE UNIT HAS BEEN CAST AND HAS REACHED A MINIMUM COMPRESSIVE STRENGTH OF 20.7 MPa.

ALL REINFORCING STEEL IN BARRIER RAILS SHALL BE EPOXY COATED.

GROOVED CONTRACTION JOINTS, 12mm IN DEPTH, SHALL BE TOOLED IN ALL EXPOSED FACES OF THE BARRIER RAIL AND IN ACCORDANCE WITH ARTICLE 825-10(B) OF THE STANDARD SPECIFICATIONS. THE CONTRACTION JOINT SHALL BE LOCATED AT EACH THIRD POINT BETWEEN BARRIER RAIL EXPANSION JOINTS. ONLY ONE CONTRACTION JOINT IS REQUIRED AT MIDPOINT OF BARRIER RAIL SEGMENTS LESS THAN 6.1m IN LENGTH AND NO CONTRACTION JOINTS ARE REQUIRED FOR THOSE SEGMENTS LESS THAN 3.5m IN LENGTH.

BAR TYPES

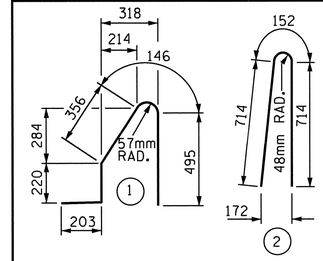

ALL BAR DIMENSIONS ARE OUT TO OUT

BILL OF MATERIAL

FOR CONCRETE BARRIER RAIL ON BRIDGE DECK ONLY

BAR	NO.	SIZE	TYPE	LENGTH	WEIGHT
✱ S1	422	#16	1	1420	930
✱ S2	422	#16	2	1580	1035
✱ B1	32	#16	STR	5020	249
✱ B2	48	#16	STR	8280	617
✱ B3	48	#16	STR	7080	527
✱ B4	32	#16	STR	4320	215

✱ EPOXY COATED REINFORCING STEEL 3573 kg

CLASS AA CONCRETE 31.8 CU. METER

CONCRETE BARRIER RAIL
SUPERSTRUCTURE 126.590 METERS
● APPROACH SLABS 12.394 METERS
TOTAL 138.984 METERS

● FOR EPOXY COATED REINFORCING STEEL AND CLASS AA CONCRETE IN THE BARRIER RAIL ON THE APPROACH SLABS, SEE "BRIDGE APPROACH SLAB DETAILS" SHEET.

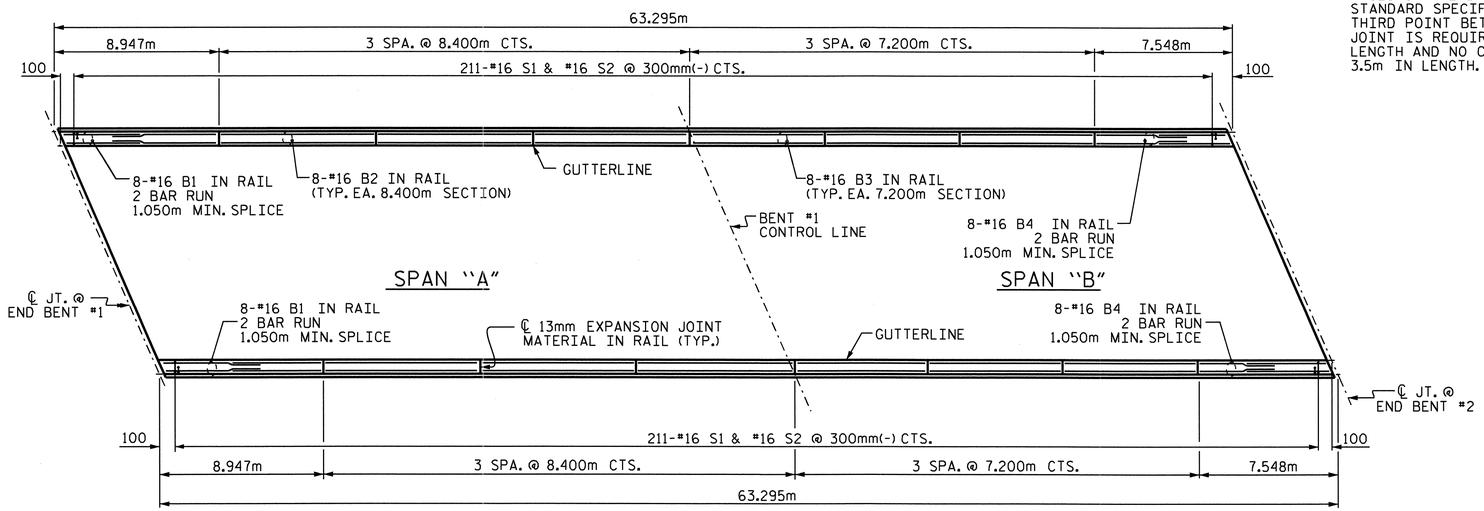

PLAN

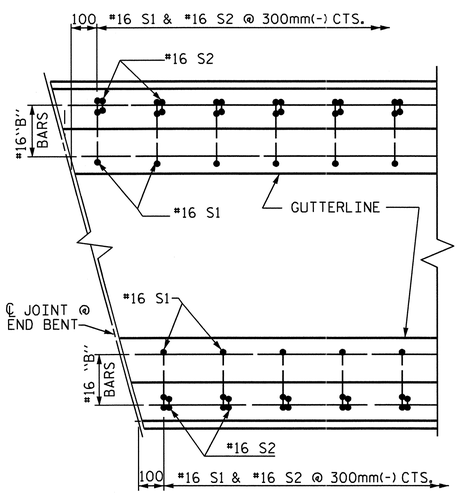

PLAN

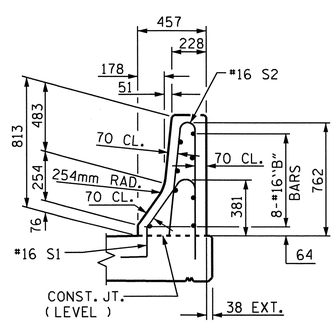

END VIEW

END OF RAIL DETAILS

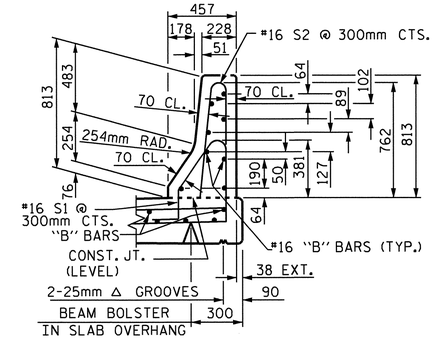

SECTION THRU RAIL

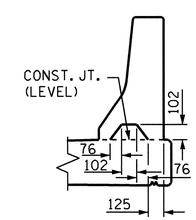

SECTION S-S

AT DAM IN OPEN JOINT
(THIS IS TO BE USED ONLY
WHEN SLIP FORM IS USED)

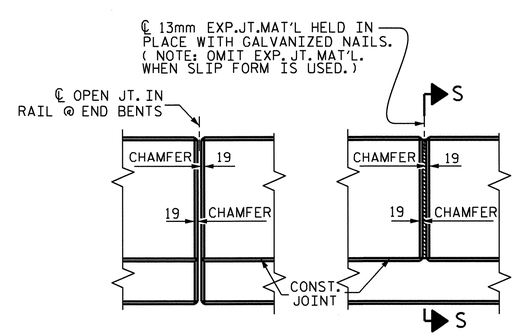

ELEVATION AT EXPANSION JOINTS

BARRIER RAIL DETAILS

PROJECT NO. R-2413C

GUILFORD-ROCKINGHAM COUNTY

STATION: 45+30.610 -LREV-

STATE OF NORTH CAROLINA
DEPARTMENT OF TRANSPORTATION
RALEIGH

STANDARD
CONCRETE
BARRIER RAIL
RIGHT LANE

NORTH CAROLINA PROFESSIONAL SEAL 022516 ENGINEER EMILY E. MURRAY
10/28/11

REVISIONS							SHEET NO.
NO.	BY:	DATE:	NO.	BY:	DATE:		S-191
1			3				TOTAL SHEETS
2			4				238

STR. #6

STD. No. CBR1SM

ASSEMBLED BY : T.L. AVERETTE DATE : 09-13-10
CHECKED BY : PEGGY PARISI DATE : 09-16-10

DRAWN BY : ARB 5/87
CHECKED BY : SJD 9/87

REV. 10/17/00 RWW/LES
REV. 5/7/03R RWW/JTE
REV. 5/1/06 TLA/GM

05-SEP-2011 14:02
Y:\Structures\Final Plans\Str.#6\R2413C_sd_BR_06.DGN
mgudlaugsson

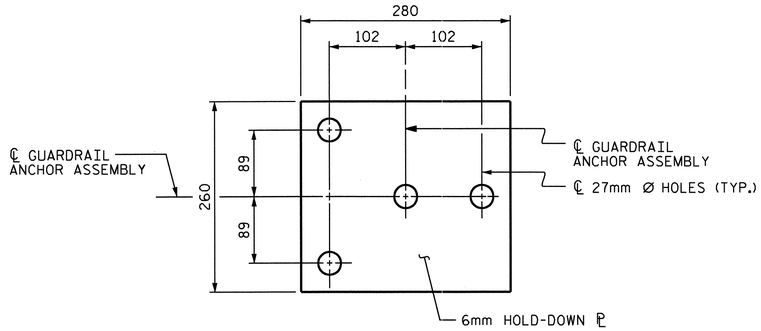

PLAN

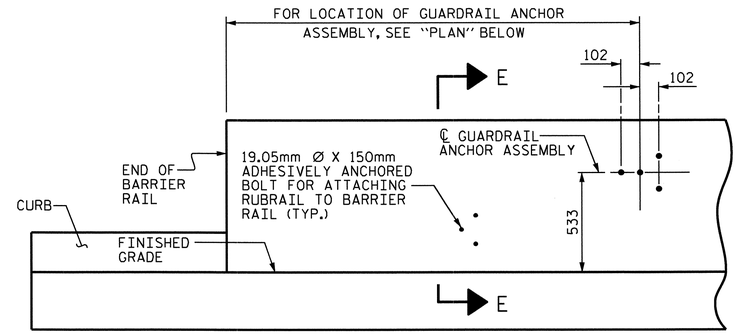

ELEVATION

FOR LOCATION OF RUBRAIL, SEE ROADWAY STD. 862.03

NOTES

THE GUARDRAIL ANCHOR ASSEMBLY SHALL CONSIST OF A 6mm HOLD DOWN PLATE AND 4 - 22.23mm Ø BOLTS WITH NUTS AND WASHERS, RUBRAIL, AND ADHESIVELY ANCHORED BOLTS.

THE HOLD-DOWN PLATE SHALL CONFORM TO AASHTO M270 GRADE 36. AFTER FABRICATION, THE HOLD-DOWN PLATE SHALL BE HOT-DIP GALVANIZED IN ACCORDANCE WITH AASHTO M111.

BOLTS SHALL CONFORM TO THE REQUIREMENTS OF ASTM A307 AND NUTS SHALL CONFORM TO THE REQUIREMENTS OF AASHTO M291. BOLTS, NUTS AND WASHERS SHALL BE GALVANIZED. (AT THE CONTRACTOR'S OPTION, STAINLESS STEEL BOLTS, NUTS AND WASHERS MAY BE USED AS AN ALTERNATE FOR THE 22.23mm Ø GALVANIZED BOLTS, NUTS AND WASHERS. THEY SHALL CONFORM TO OR EXCEED THE MECHANICAL REQUIREMENTS OF ASTM A307. THE USE OF THIS ALTERNATE SHALL BE APPROVED BY THE ENGINEER.)

THE GUARDRAIL ANCHOR ASSEMBLY IS REQUIRED AT ALL POINTS WHERE APPROACH GUARDRAIL IS TO BE ATTACHED TO THE END OF BARRIER RAIL. FOR POINTS OF ATTACHMENT, SEE SKETCH.

AFTER INSTALLATION, THE EXPOSED THREAD OF THE BOLT SHALL BE BURRED WITH A SHARP POINTED TOOL.

THE COST OF THE GUARDRAIL ANCHOR ASSEMBLY SHALL BE INCLUDED IN THE UNIT CONTRACT PRICE BID FOR CONCRETE BARRIER RAIL.

THE 32mm Ø HOLES SHALL BE FORMED OR DRILLED WITH A CORE BIT. IMPACT TOOLS WILL NOT BE PERMITTED. ANY CONCRETE DAMAGED BY THIS WORK SHALL BE REPAIRED TO THE SATISFACTION OF THE ENGINEER.

THE C150 X 12 RUBRAIL IS TO BE ADHESIVELY ANCHORED TO THE RAIL USING THREE 19.05mm Ø X 150mm BOLTS WITH WASHERS. LEVEL ONE FIELD TESTING IS REQUIRED, AND THE YIELD LOAD OF THE 19.05mm Ø BOLTS IS 53.4kN. FOR ADHESIVELY ANCHORED ANCHOR BOLTS OR DOWELS, SEE SPECIAL PROVISIONS. SEE ROADWAY STANDARD 862.03 FOR DETAILS AND LOCATION OF THE RUBRAIL.

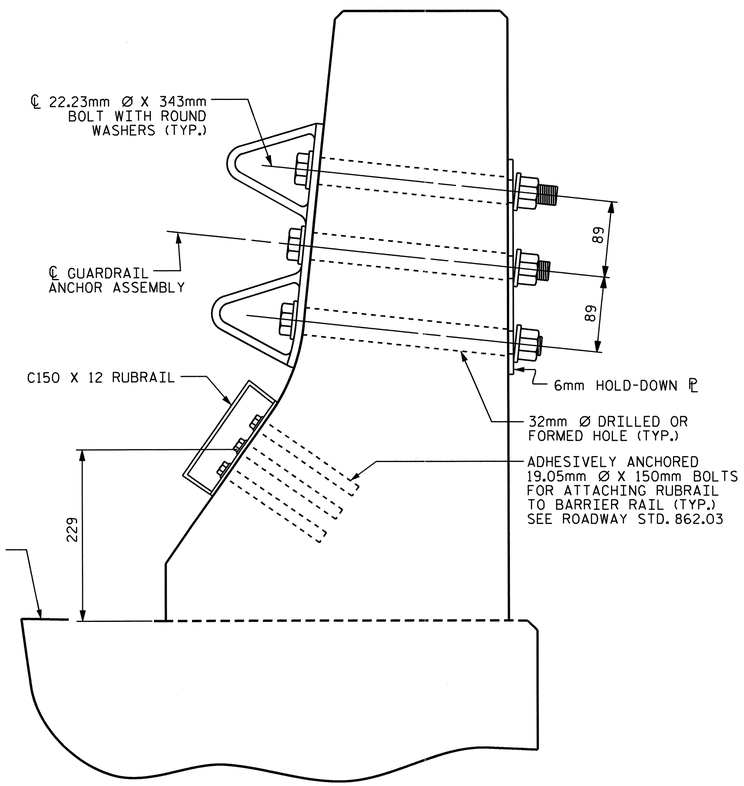

SECTION E-E

GUARDRAIL ANCHOR ASSEMBLY DETAILS

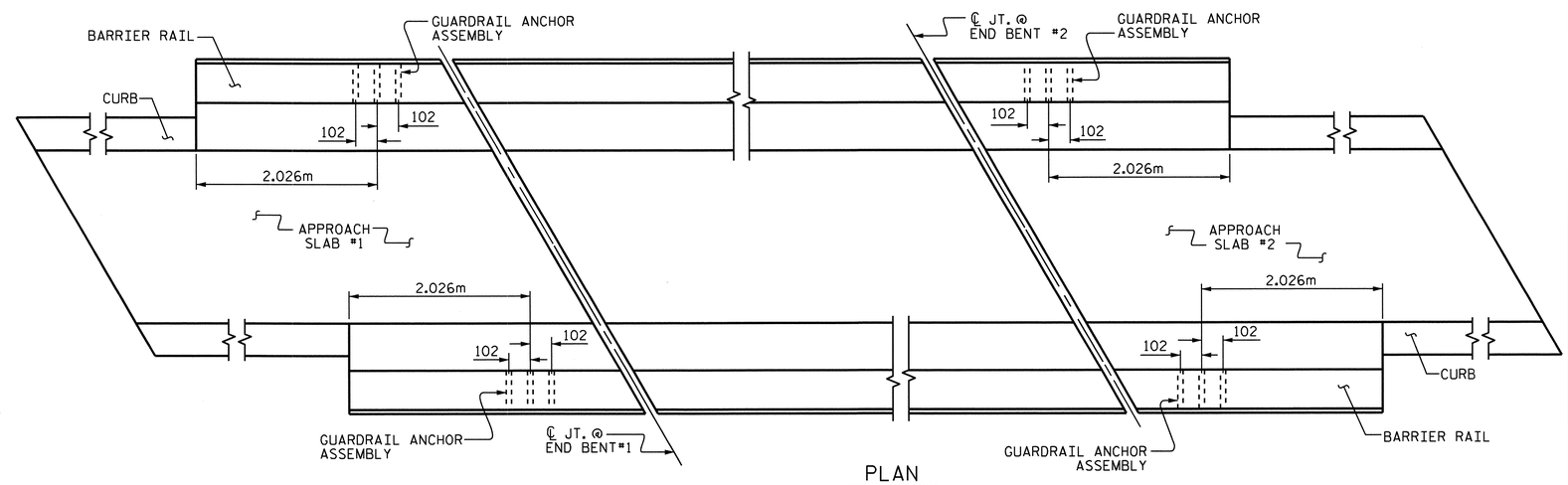

PLAN

LOCATION OF ANCHORS FOR GUARDRAIL

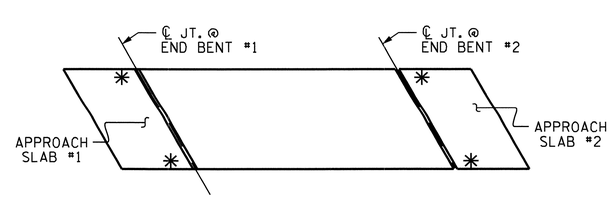

SKETCH SHOWING POINTS OF ATTACHMENTS

✳ DENOTES B-77 GUARDRAIL ANCHOR ASSEMBLY

PROJECT NO. R-2413C

GUILFORD-ROCKINGHAM COUNTY

STATION: 45+30.610 -LREV-

STATE OF NORTH CAROLINA
DEPARTMENT OF TRANSPORTATION
RALEIGH

STANDARD

GUARDRAIL ANCHORAGE FOR BARRIER RAIL RIGHT LANE

NORTH CAROLINA PROFESSIONAL SEAL 022516 ENGINEER EMILY E. MURRAY
10/26/11

REVISIONS						SHEET NO.
NO.	BY:	DATE:	NO.	BY:	DATE:	S-192
1			3			TOTAL SHEETS
2			4			238

STR. #6 STD. NO. GRA2

ASSEMBLED BY : T.L. AVERETTE DATE : 09-13-10
CHECKED BY : PEGGY PARISI DATE : 09-16-10
DRAWN BY : TLA 5/06
CHECKED BY : GM 5/06
ADDED 5/1/06R KMM/GM

05-SEP-2011 14:02
Y:\Structures\Final Plans\Str.#6\R2413C_sd_BR_06.DGN
mgudlaugsson

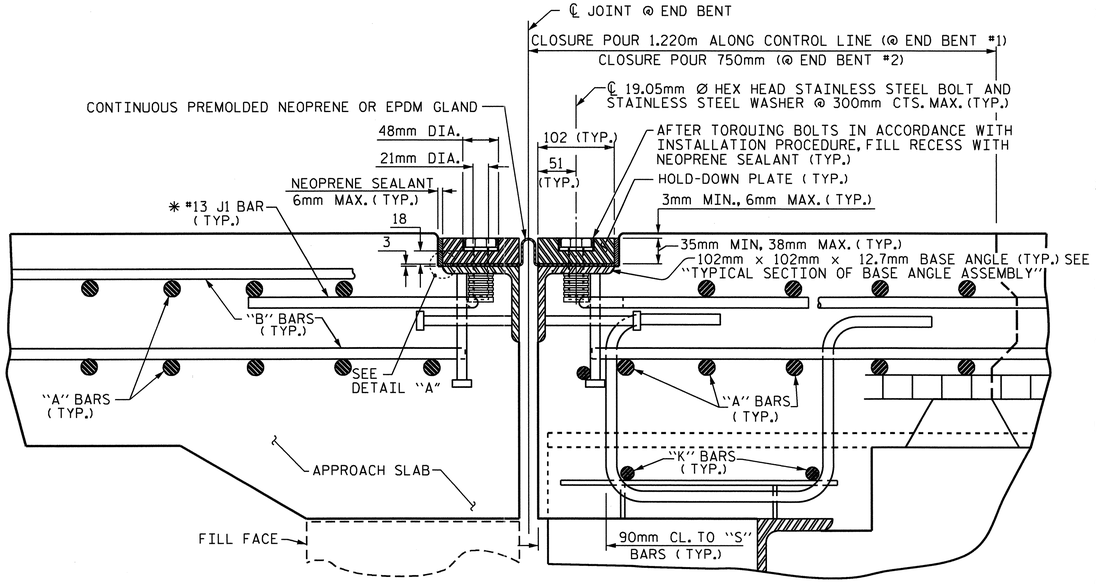

EXPANSION JOINT DETAILS

SECTION NORMAL TO JOINT -- STEEL SUPERSTRUCTURE

✱ THE QUANTITY OF #13 J1 BARS ON THE BILL OF MATERIAL IS BASED ON 300mm CENTERS. J1 BARS SHALL BE PLACED AT EACH VERTICAL STUD ANCHOR BOLT. IN THE EVENT THAT THE NUMBER OF VERTICAL STUD ANCHOR BOLTS EXCEEDS THE NUMBER OF J1 BARS SPECIFIED, ADDITIONAL J1 BARS WILL NOT BE REQUIRED.

INSTALLATION PROCEDURE

1. A TEMPLATE OR OTHER SUITABLE DEVICE SHALL BE USED TO FORM THE TOP OF THE EXPANSION JOINT SEAL BLOCKOUT TO THE PROPER DEPTH AND WIDTH. THE TEMPLATE SHALL BE 105mm TO 108mm WIDE AND OF SUCH THICKNESS AS TO PROVIDE FOR CORRECT FINAL ELEVATION OF TOP OF HOLD-DOWN PLATES. THE TEMPLATE SHALL BE ATTACHED TO THE BASE ANGLE ASSEMBLY WITH THE 19.05mm Ø HEX HEAD BOLTS PROVIDED FOR THE HOLD-DOWN PLATES. A 25mm Ø HOLE SHALL BE PROVIDED IN THE TEMPLATE CENTERED OVER EACH WEEP HOLE IN THE 102mm X 102mm X 12.7mm BASE ANGLE. OTHER METHODS OF INSURING DRAINAGE THROUGH WEEP HOLES MAY BE EMPLOYED SUBJECT TO ENGINEER'S APPROVAL.
2. AFTER THE CONCRETE HAS BEEN CAST ON BOTH SIDES OF THE JOINT, REMOVE THE TEMPLATE. THOROUGHLY CLEAN THE BOLT HOLES AND THE ANGLE PLATE. REMOVE ANY EXCESS CONCRETE THAT COMES OUT OF THE WEEP HOLES. ANY DAMAGED STEEL SHALL BE COATED WITH A MINIMUM THICKNESS OF 0.100mm (DRY) OF ZINC-RICH PAINT IN ACCORDANCE WITH THE STANDARD SPECIFICATIONS.
3. LAY THE GLAND ON THE BASE ANGLE AND FIELD MARK THE GLAND FOR THE BOLT HOLES. HOLES IN THE GLAND SHALL BE PUNCHED 22mm IN DIAMETER WITH A HAND PUNCH.
4. IN ORDER TO CHECK FOR PROPER ALIGNMENT, PLACE THE GLAND AND HOLD-DOWN PLATES ON THE BASE ANGLE. DO NOT APPLY NEOPRENE SEALANT. BOLT THE HOLD-DOWN PLATES TO THE BASE ANGLE BUT DO NOT TIGHTEN. THE ENGINEER SHALL INSPECT THE JOINT SEAL DEVICE FOR PROPER ALIGNMENT.
5. AFTER INSPECTION, REMOVE THE HOLD-DOWN PLATES AND GLAND. APPLY NEOPRENE SEALANT TO THE BASE ANGLE IN ACCORDANCE WITH THE "INSTALLATION SKETCH". PLACE GLAND AND HOLD-DOWN PLATES ON THE BASE ANGLE. BOLT THE HOLD-DOWN PLATES TO THE BASE ANGLE ASSEMBLY AND TORQUE THE BOLTS TO 119.3 N-m WITH A TORQUE WRENCH. THE TORQUE WRENCH SHALL BE CALIBRATED IN ACCORDANCE WITH SECTION 440-10 (D) OF THE STANDARD SPECIFICATIONS. CHECK THE TORQUE AFTER THREE (3) HOURS AND, IF NECESSARY, RETIGHTEN TO 119.3 N-m. A FINAL CHECK SHALL BE MADE AT SEVEN (7) DAYS. TORQUE SHALL NOT BE LESS THAN 108.5 N-m AFTER SEVEN (7) DAYS.
6. AFTER PROPER TORQUING, CLEAN THE BOLT HOLE RECESSES AND THE RECESS BETWEEN THE JOINT SEAL DEVICE AND CONCRETE, COMPLETELY FILL THESE RECESSES WITH NEOPRENE SEALANT.

GENERAL NOTES

1. FOR EXPANSION JOINT SEALS, SEE SPECIAL PROVISIONS.
2. ALL PLATES AND ANGLES SHALL CONFORM TO AASHTO M270 GRADE 250 STEEL OR APPROVED EQUAL. ALL HOLD-DOWN BOLTS SHALL CONFORM TO ASTM F593 ALLOY 304 STAINLESS STEEL. WASHERS SHALL CONFORM TO ASTM F844 EXCEPT THEY SHALL BE MADE FROM ALLOY 304 STAINLESS STEEL. ALL STUD ANCHORS SHALL CONFORM TO AASHTO M169, GRADES 1010 THRU 1020 OR APPROVED EQUAL. ALL CONCRETE INSERTS SHALL BE CLOSED END AND SHALL CONFORM TO AASHTO M169, GRADE 12L14. TENSILE CAPACITY SHALL BE 13.3 kN MIN.
3. A PREMOLDED CORRUGATED OR NON-CORRUGATED GLAND SHALL BE USED FOR JOINTS SKEWED BETWEEN 50° THRU 130° . FOR JOINTS SKEWED LESS THAN 50° OR MORE THAN 130° , ONLY A CORRUGATED GLAND SHALL BE USED.
4. CLOSED END FERRULES AND STUD ANCHORS SHALL BE SHOP WELDED AND ALL HOLES SHALL BE SHOP DRILLED AS SHOWN ON PLANS. STUD ANCHORS SHALL BE ELECTRIC ARC END WELDED WITH COMPLETE FUSION.
5. SURFACES COMING IN CONTACT WITH NEOPRENE SHALL BE GROUND SMOOTH PRIOR TO METALLIZING.
6. UPON COMPLETION OF SHOP FABRICATION, THE HOLD DOWN PLATE AND BASE ANGLE ASSEMBLY AS SHOWN IN THE "TYPICAL SECTION OF BASE ANGLE ASSEMBLY", SHALL BE METALLIZED. SEE SPECIAL PROVISION FOR THERMAL SPRAYED COATINGS (METALLIZATION).
7. BASE ANGLE ASSEMBLY SHALL BE CONTINUOUS FOR THE LENGTH OF THE JOINT. AT CROWN BREAKS, THE ENDS OF THE BASE ANGLE ASSEMBLY SHALL BE CUT PARALLEL TO THE BRIDGE CENTERLINE FOR SKEWS LESS THAN 80° AND GREATER THAN 100°. FINISHED WELD SHALL BE GROUND SMOOTH AND COATED WITH A MINIMUM THICKNESS OF 0.100mm (DRY) OF ZINC-RICH PAINT IN ACCORDANCE WITH THE STANDARD SPECIFICATIONS.
8. FIELD SPLICES OF HOLD-DOWN PLATES SHALL BE KEPT TO A MINIMUM. CONTRACTOR SHALL FURNISH DETAILED PLANS SHOWING PROPOSED SPLICE LOCATIONS FOR APPROVAL. HOLD-DOWN PLATES SHALL NOT EXCEED 6.1m LENGTHS UNLESS APPROVED BY THE ENGINEER.
9. NO ALTERNATE JOINT DETAILS SHALL BE PERMITTED IN LIEU OF THOSE SHOWN ON THESE PLANS.
10. THE CONTRACTOR MAY, AT HIS OPTION, USE ADHESIVELY ANCHORED ANCHOR BOLTS IN PLACE OF CONCRETE INSERTS FOR COVER PLATES. THE YIELD LOAD OF THE 19.05mm DIA. BOLT IS 44.5 kN. FIELD TESTING OF THE ADHESIVE BONDING SYSTEM IS NOT REQUIRED.

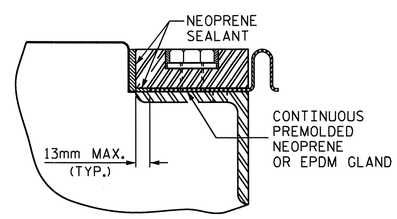

DETAIL "A"

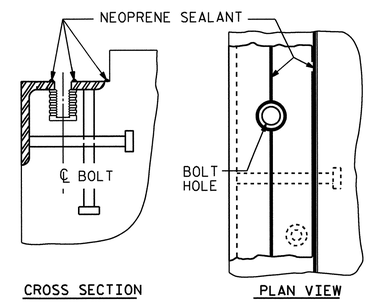

INSTALLATION SKETCH

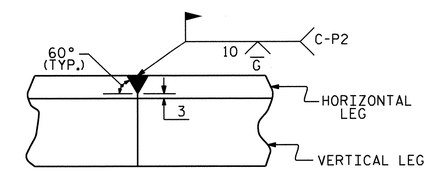

DETAIL- FIELD WELD SPLICE OF BASE ANGLE

MOVEMENT AND SETTING AT JOINT					
END BENT NO.	SKEW ANGLE	TOTAL MOVEMENT (ALONG ℄ RDWY)	PERPENDICULAR JOINT OPENING AT 7° C	PERPENDICULAR JOINT OPENING AT 16° C	PERPENDICULAR JOINT OPENING AT 32° C
1	66°-39'-03"	28mm	42mm	38mm	30mm
2	66°-39'-03"	24mm	39mm	36mm	29mm

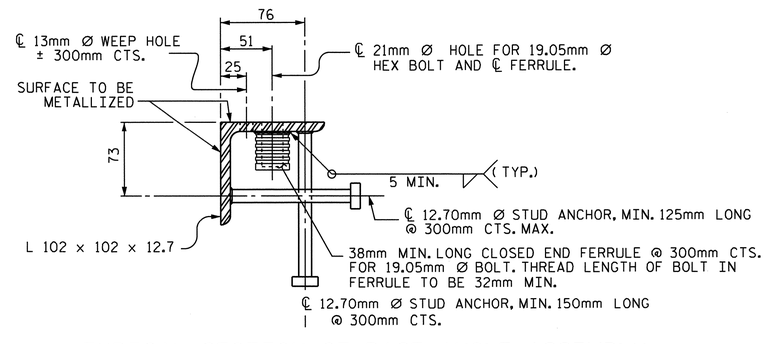

TYPICAL SECTION OF BASE ANGLE ASSEMBLY

PROJECT NO. R-2413C

GUILFORD-ROCKINGHAM COUNTY

STATION: 45+30.610 -LREV-

SHEET 1 OF 2

STATE OF NORTH CAROLINA
DEPARTMENT OF TRANSPORTATION
RALEIGH

STANDARD
EXPANSION JOINT SEAL DETAILS
RIGHT LANE

REVISIONS						SHEET NO.
NO.	BY:	DATE:	NO.	BY:	DATE:	S-193
1			3			TOTAL SHEETS
2			4			238

NORTH CAROLINA PROFESSIONAL SEAL 022516 ENGINEER ELMER E. MURRAY 10/28/11

ASSEMBLED BY : T.L. AVERETTE		DATE : 11-10-10	
CHECKED BY : PEGGY PARISI		DATE : 07-26-11	
DRAWN BY : REK 9/87	REV. 10/17/00	RWW/LES	
CHECKED BY : CRK 10/87	REV. 5/7/03R	RWW/JTE	
	REV. 5/1/06	TLA/GM	

05-SEP-2011 14:00
Y:\Structures\Final Plans\Str.#6\R2413C_sd_JS_06.dgn
mgudlaugsson

STR. #6

STD. NO. EJS1SM

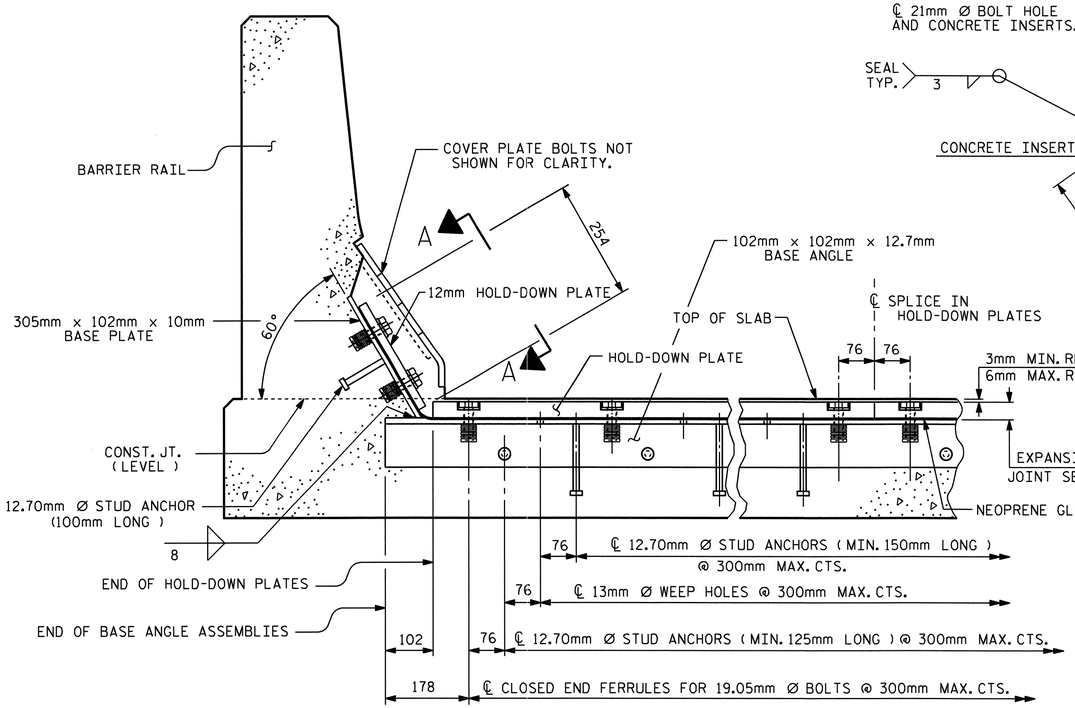

SECTION THRU RAIL NORMAL TO JOINT

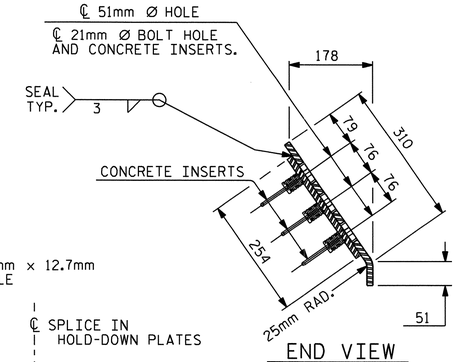

END VIEW

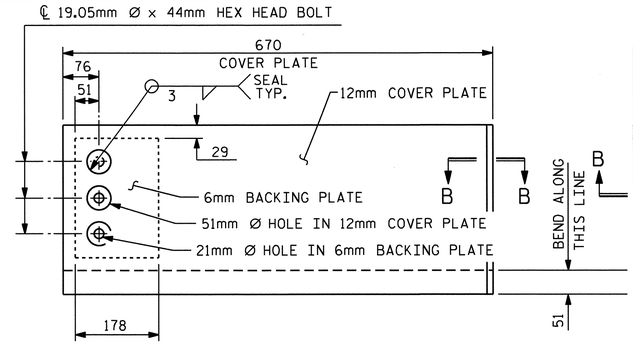

TYPE I - ELEVATION VIEW

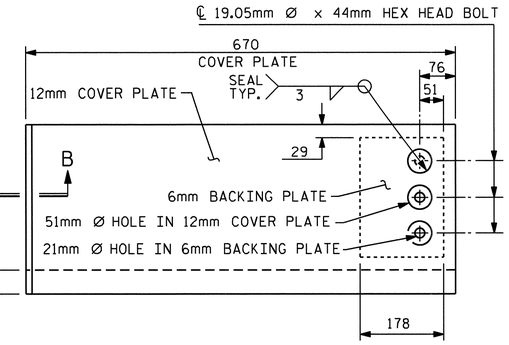

TYPE II - ELEVATION VIEW

COVER PLATE DETAILS

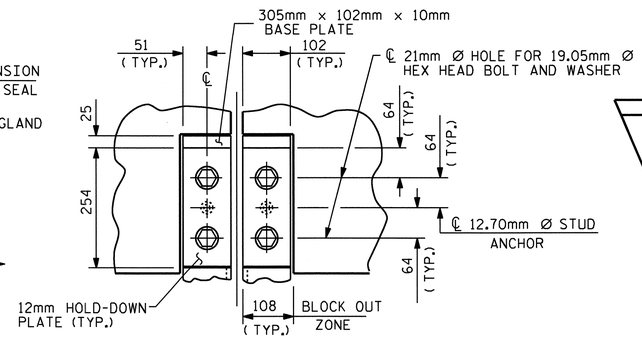

SECTION A - A

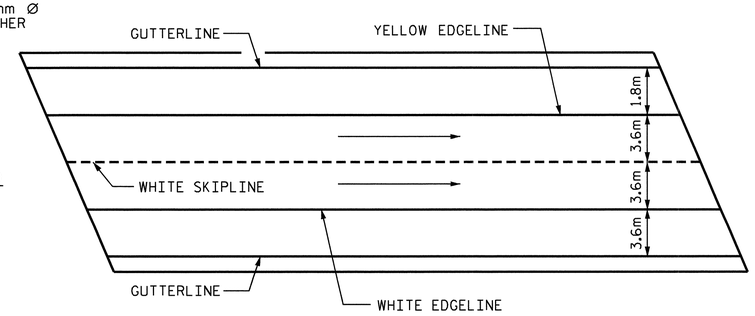

PAVEMENT MARKING ALIGNMENT

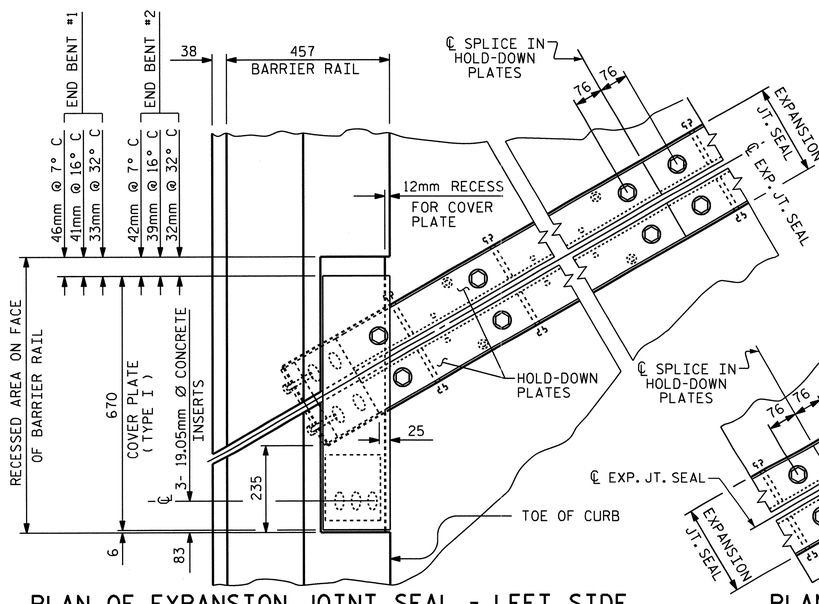

PLAN OF EXPANSION JOINT SEAL - LEFT SIDE

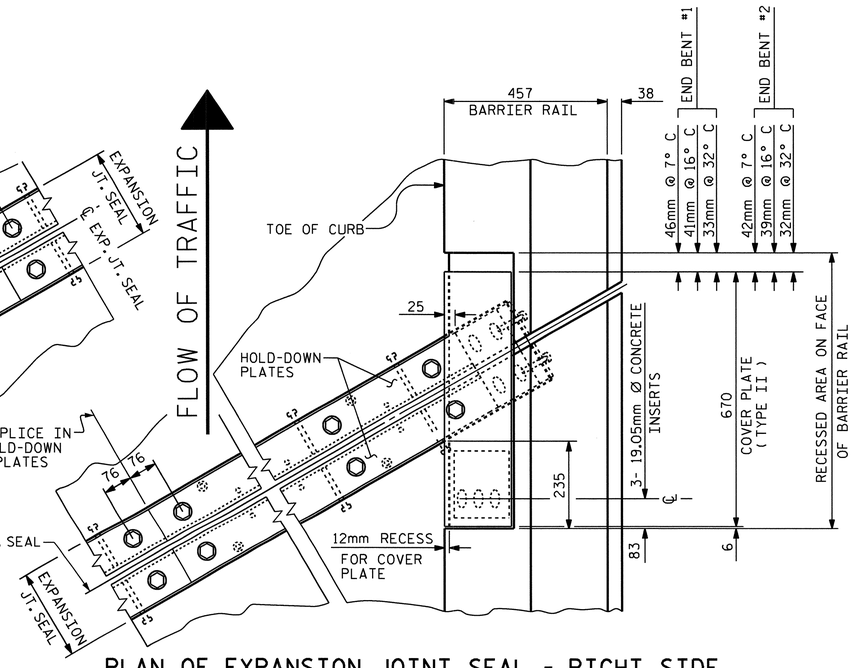

PLAN OF EXPANSION JOINT SEAL - RIGHT SIDE

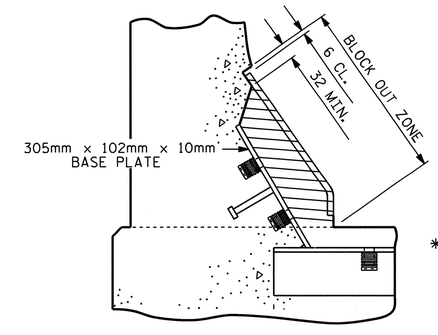

BLOCK OUT DETAIL

SEE "SECTION A - A" FOR OTHER DETAILS.

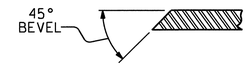

SECTION B - B

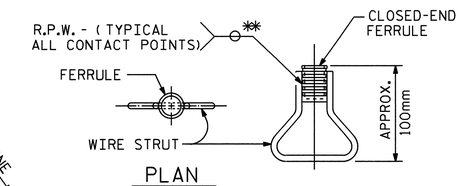

PLAN

ELEVATION

CONCRETE INSERT

** EACH WELDED ATTACHMENT OF WIRE TO FERRULE SHALL DEVELOP THE TENSILE STRENGTH OF THE WIRE.

PROJECT NO. R-2413C

GUILFORD-ROCKINGHAM COUNTY

STATION: 45+30.610 -LREV-

SHEET 2 OF 2

STATE OF NORTH CAROLINA
DEPARTMENT OF TRANSPORTATION
RALEIGH

STANDARD EXPANSION JOINT SEAL DETAILS FOR BARRIER RAIL RIGHT LANE

NORTH CAROLINA PROFESSIONAL SEAL 022516 ENGINEER EMILY E. MURRAY
10/28/11

ASSEMBLED BY : T.L. AVERETTE	DATE : 11-10-10
CHECKED BY : PEGGY PARISI	DATE : 07-26-11

DRAWN BY : REK 9/87	REV. 7/17/98 RWW/LES
CHECKED BY : CRK 10/87	REV. 10/17/00 RWW/LES
	REV. 5/1/06 TLA/GM

REVISIONS								SHEET NO.
NO.	BY:	DATE:	NO.	BY:	DATE:			S-194
1			3					TOTAL SHEETS
2			4					238

STR. #6

STD. NO. EJS2SM

05-SEP-2011 14:00
Y:\Structures\Final Plans\Str.#6\R2413C_sd_JS_06.dgn
mgudlaugsson

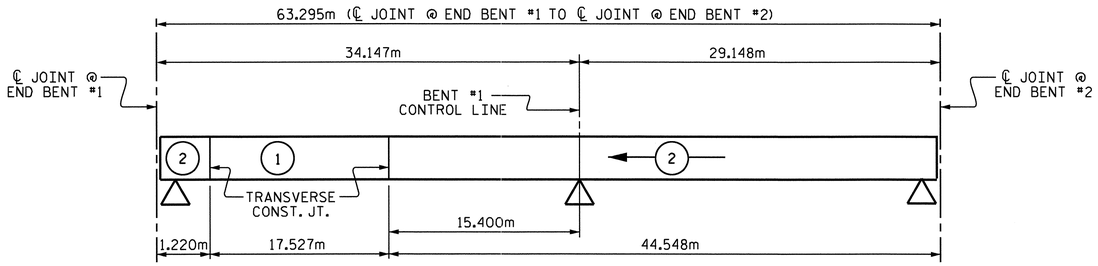

POURING SEQUENCE

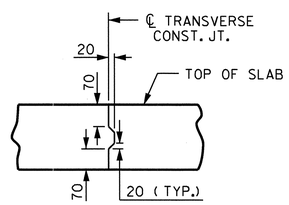

TRANSVERSE CONSTRUCTION JOINT DETAIL

NOTE: REINFORCING STEEL IN SLAB NOT SHOWN. LONGITUDINAL REINFORCING STEEL SHALL BE CONTINUOUS THROUGH JOINT.

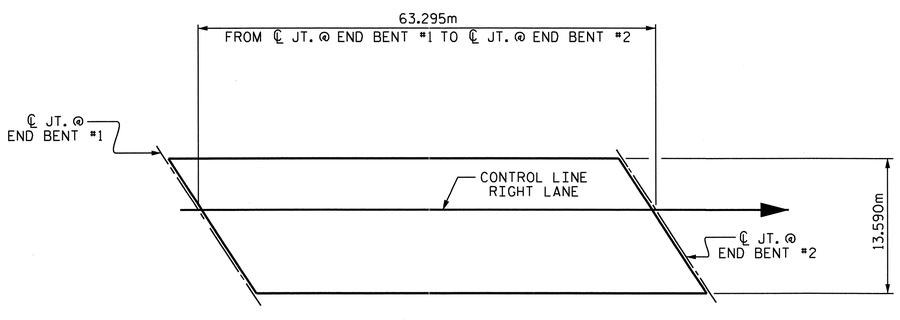

LAYOUT FOR COMPUTING AREA OF REINFORCED CONCRETE DECK SLAB

(SQ. METER = 860.2)

REINFORCING BAR SCHEDULE

SPANS A & B

BAR	NUM	SZ	TYP	LENGTH	WEIGHT
*A1	357	16	STR	13480	7469
A2	357	16	STR	13480	7469
*A101	4	16	STR	13120	81
*A102	4	16	STR	12380	77
*A103	4	16	STR	11640	72
*A104	4	16	STR	10900	68
*A105	4	16	STR	10160	63
*A106	4	16	STR	9420	58
*A107	4	16	STR	8680	54
*A108	4	16	STR	7920	49
*A109	4	16	STR	7180	45
*A110	4	16	STR	6440	40
*A111	4	16	STR	5700	35
*A112	4	16	STR	4960	31
*A113	4	16	STR	4220	26
*A114	4	16	STR	3480	22
*A115	4	16	STR	2740	17
*A116	4	16	STR	2000	12
*A117	4	16	STR	1260	8
A201	4	16	STR	13120	81
A202	4	16	STR	12380	77
A203	4	16	STR	11640	72
A204	4	16	STR	10900	68
A205	4	16	STR	10160	63
A206	4	16	STR	9420	58
A207	4	16	STR	8680	54
A208	4	16	STR	7920	49
A209	4	16	STR	7180	45
A210	4	16	STR	6440	40
A211	4	16	STR	5700	35
A212	4	16	STR	4960	31
A213	4	16	STR	4220	26
A214	4	16	STR	3480	22
A215	4	16	STR	2740	17
A216	4	16	STR	2000	12
A217	4	16	STR	1260	8
*B1	96	13	STR	7380	704
*B2	90	19	STR	16160	3251
*B3	64	13	STR	6360	405
B4	192	16	STR	16300	4857
*B5	135	19	STR	12080	3645
*G1	2	16	STR	14680	46
*J1	92	13	4	440	40
*K1	12	16	1	3360	63
*K2	18	16	2	4320	121
*S1	64	13	3	1340	85

REINFORCING STEEL KG 13084

* EPOXY COATED REINFORCING STEEL KG 16587

BAR TYPES

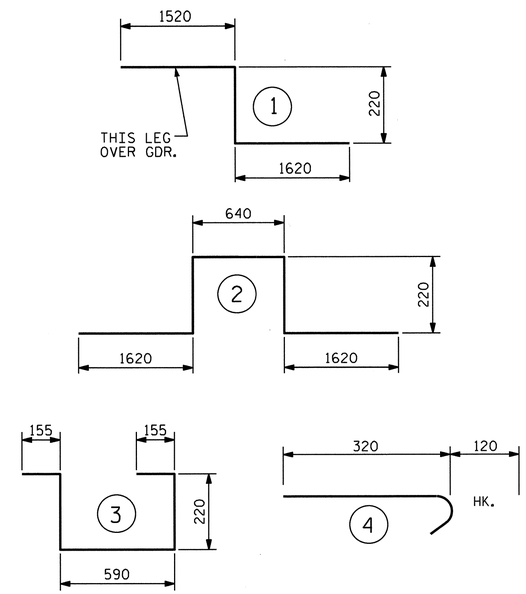

ALL BAR DIMENSIONS ARE OUT TO OUT

SUPERSTRUCTURE BILL OF MATERIAL

	CLASS AA CONCRETE	REINFORCING STEEL	EPOXY COATED REINFORCING STEEL
	(CU. METER)	(kg)	(kg)
POUR #1	61.0		
POUR #2	161.5		
TOTALS **	222.5	13,084	16,587

** QUANTITIES FOR BARRIER RAIL ARE NOT INCLUDED

SUPERSTRUCTURE REINFORCING STEEL LENGTHS ARE BASED ON THE FOLLOWING MINIMUM SPLICE LENGTHS

BAR SIZE	SUPERSTRUCTURE EXCEPT APPROACH SLABS, PARAPET, AND BARRIER RAIL		APPROACH SLABS		PARAPET AND BARRIER RAIL
	EPOXY COATED	UNCOATED	EPOXY COATED	UNCOATED	
#13	610	540	610	540	840
#16	770	660	770	660	1050
#19	920	790	1190	790	1330
#22	1580	1060			
#25	2080	1390			

GROOVING BRIDGE FLOORS

BRIDGE DECK	736.2	SQ. METER
APPROACH SLABS	171.7	SQ. METER
TOTAL	907.9	SQ. METER

PROJECT NO. R-2413C
GUILFORD-ROCKINGHAM COUNTY
STATION: 45+30.610 -LREV-

STATE OF NORTH CAROLINA
DEPARTMENT OF TRANSPORTATION
RALEIGH

SUPERSTRUCTURE
BILL OF MATERIAL
RIGHT LANE

NORTH CAROLINA PROFESSIONAL SEAL 022516 ENGINEER EMILY E. McFRAY
10/28/11

REVISIONS						SHEET NO.
NO.	BY:	DATE:	NO.	BY:	DATE:	S-195
1			3			TOTAL SHEETS
2			4			238

DRAWN BY : T.L. AVERETTE DATE : 09-13-10
CHECKED BY : PEGGY PARISI DATE : 09-16-10

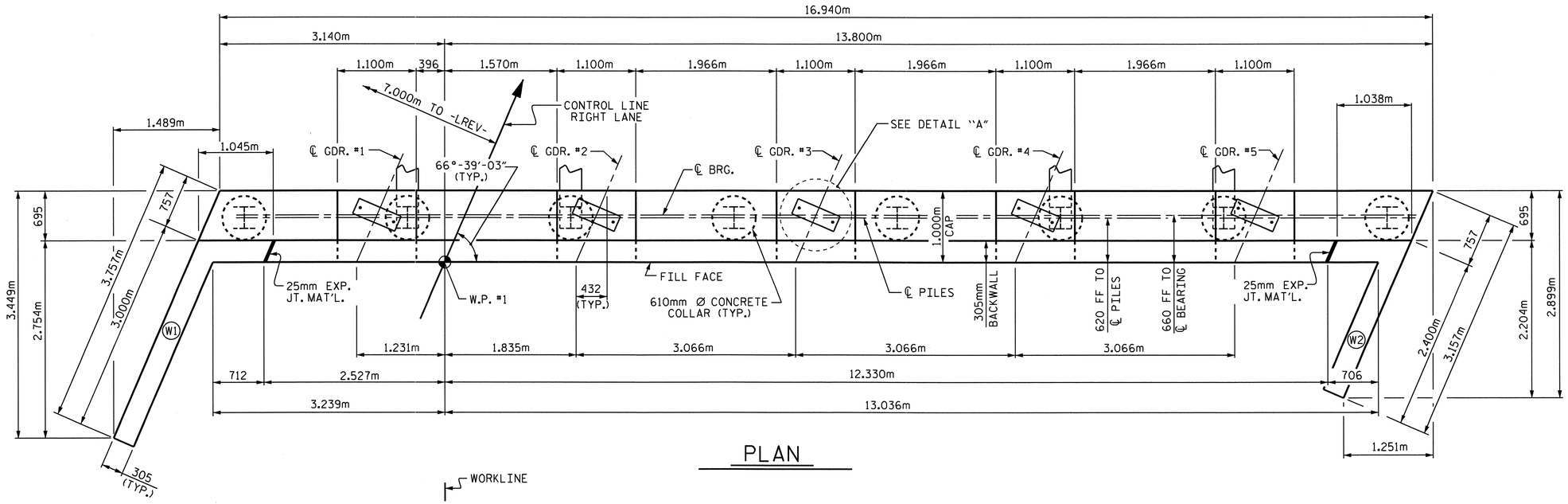

PLAN

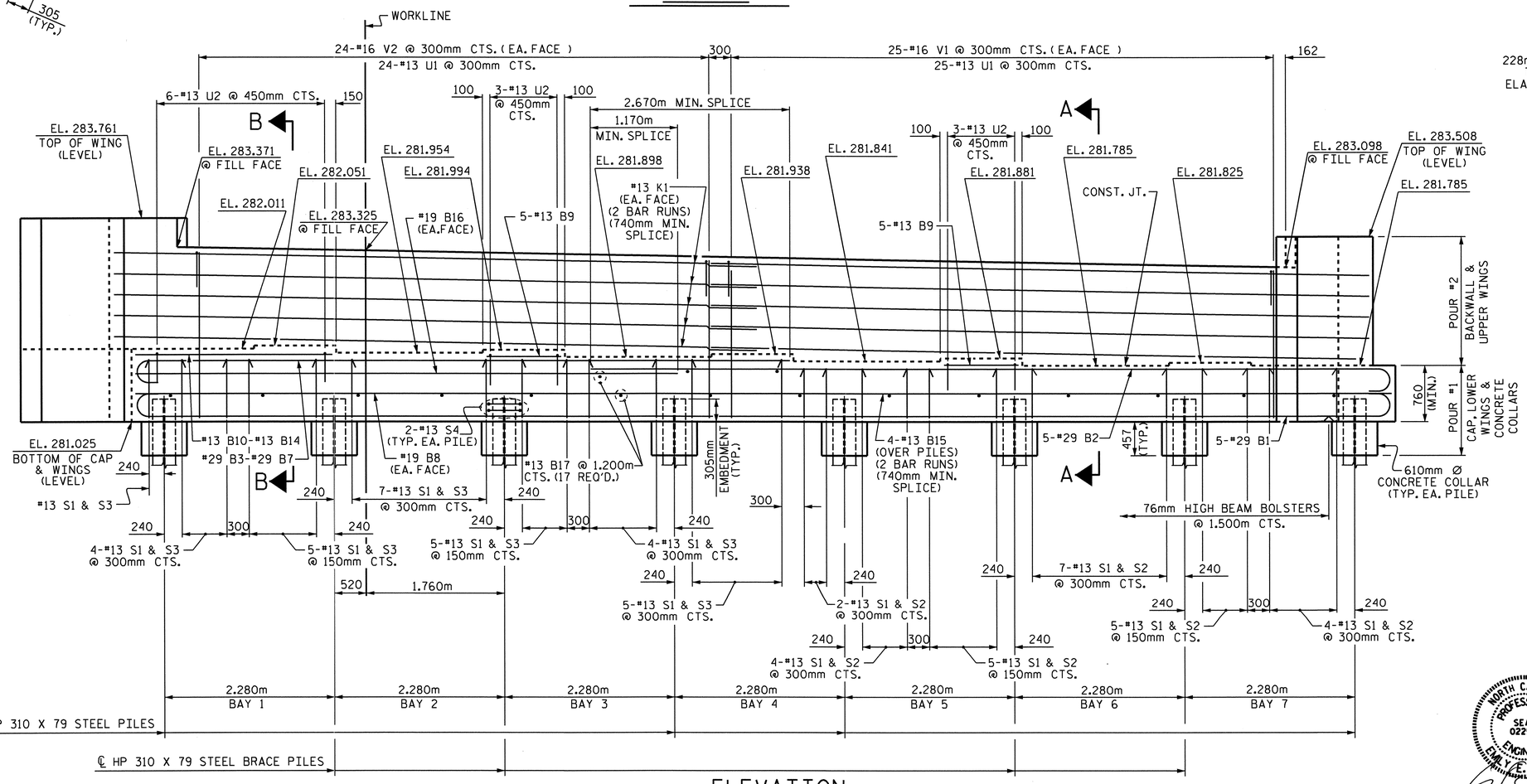

ELEVATION

NOTES

STIRRUPS AND U1 BARS IN CAP MAY BE SHIFTED AS NECESSARY TO CLEAR ANCHOR BOLTS.

BACKWALL SHALL BE PLACED BEFORE APPLYING THE EPOXY PROTECTIVE COATING.

THE TOP SURFACE AREAS OF THE END BENT CAPS SHALL BE CURED IN ACCORDANCE WITH THE STANDARD SPECIFICATIONS EXCEPT THE MEMBRANE CURING COMPOUND METHOD SHALL NOT BE USED.

THE TOP SURFACE OF THE END BENT CAP EXCEPT THE BRIDGE SEAT BUILDUPS SHALL BE SLOPED TRANSVERSELY FROM THE FILL FACE TO THE BACK FACE AT THE RATE OF 2%.

THE CONTRACTOR SHALL PROVIDE FOR INSTALLATION OF THE 102mm DIAMETER DRAIN PIPE THROUGH THE WING WALL AS REQUIRED FOR REINFORCED BRIDGE APPROACH FILLS. SEE THE ROADWAY PLANS. REINFORCING STEEL IN THE WING WALL MAY BE SHIFTED AS NECESSARY TO CLEAR THE DRAIN PIPE.

EPOXY COAT THE END BENT CAP AFTER ADJUSTMENTS ARE MADE TO BEARINGS.

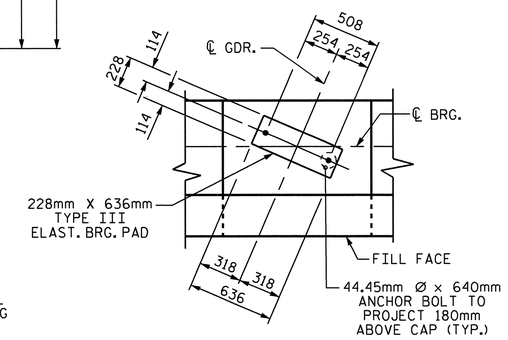

DETAIL "A"

(TYP. EA. GDR.)

PROJECT NO. R-2413C

GUILFORD-ROCKINGHAM COUNTY

STATION: 45+30.610 -LREV-

SHEET 1 OF 3

STATE OF NORTH CAROLINA
DEPARTMENT OF TRANSPORTATION
RALEIGH

SUBSTRUCTURE

END BENT #1
RIGHT LANE

NORTH CAROLINA PROFESSIONAL SEAL 022516 ENGINEER EMILY E. MURRAY

10/26/11

REVISIONS								SHEET NO.
NO.	BY:	DATE:	NO.	BY:	DATE:			S-196
1			3					TOTAL SHEETS
2			4					238

DRAWN BY : T.L. AVERETTE DATE : 10-04-10
CHECKED BY : PEGGY PARISI DATE : 4-14-11

STR.#6

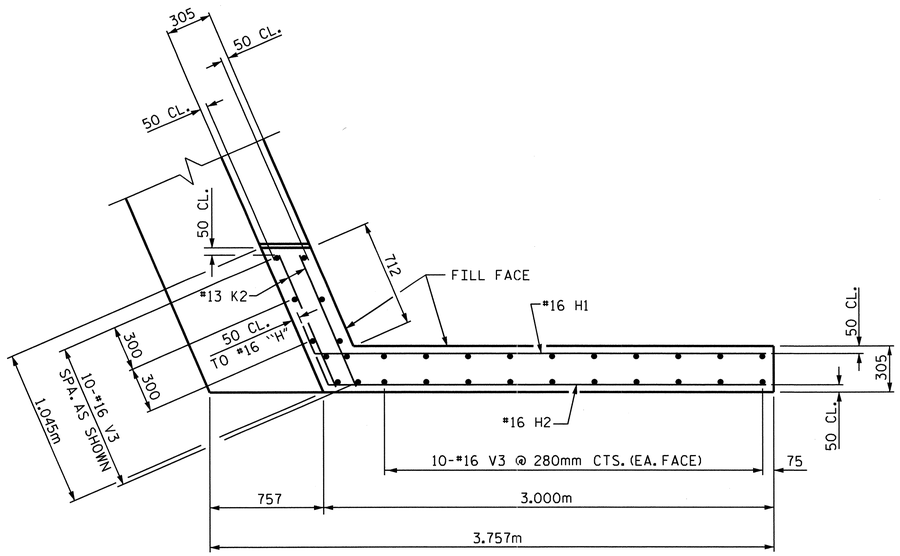

PLAN OF WING W1

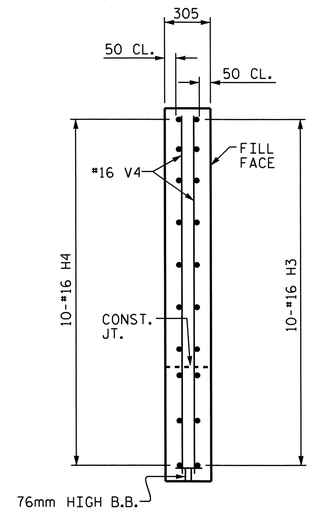

SECTION Y-Y

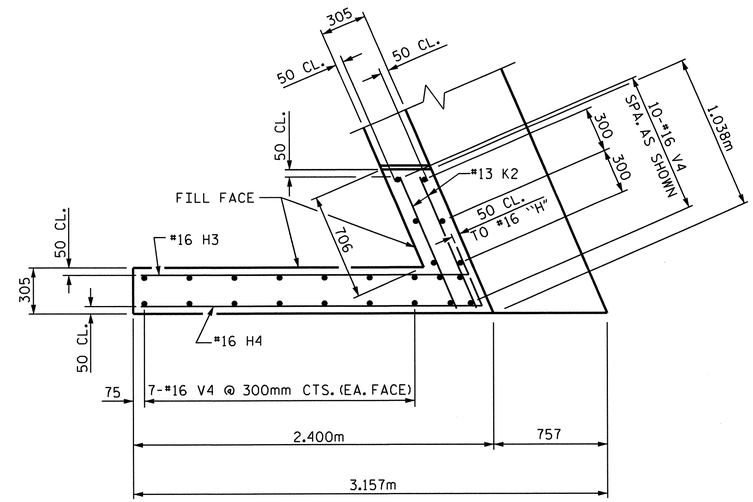

PLAN OF WING W2

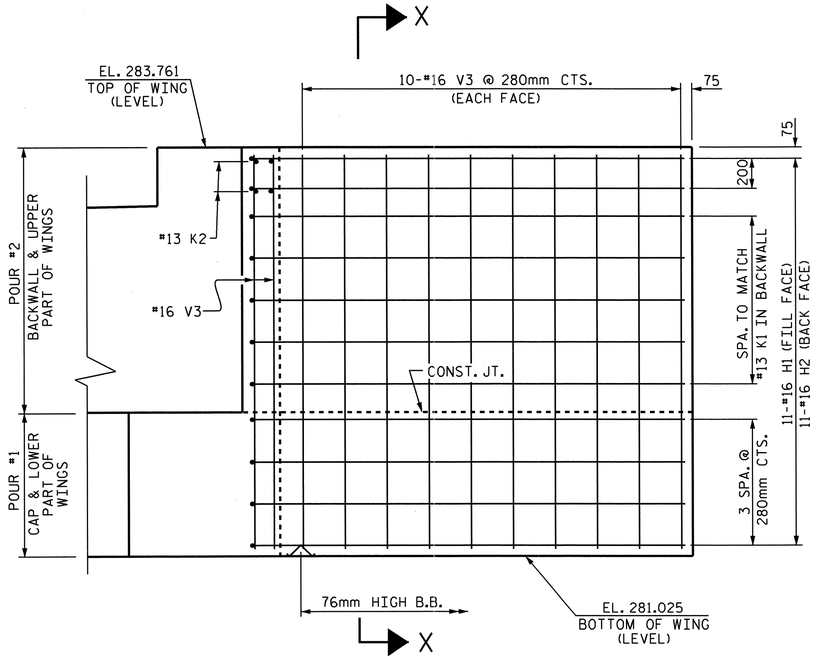

ELEVATION OF WING W1

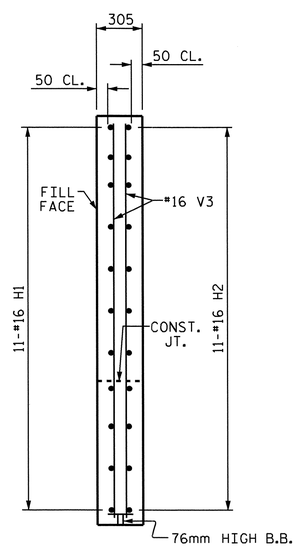

SECTION X-X

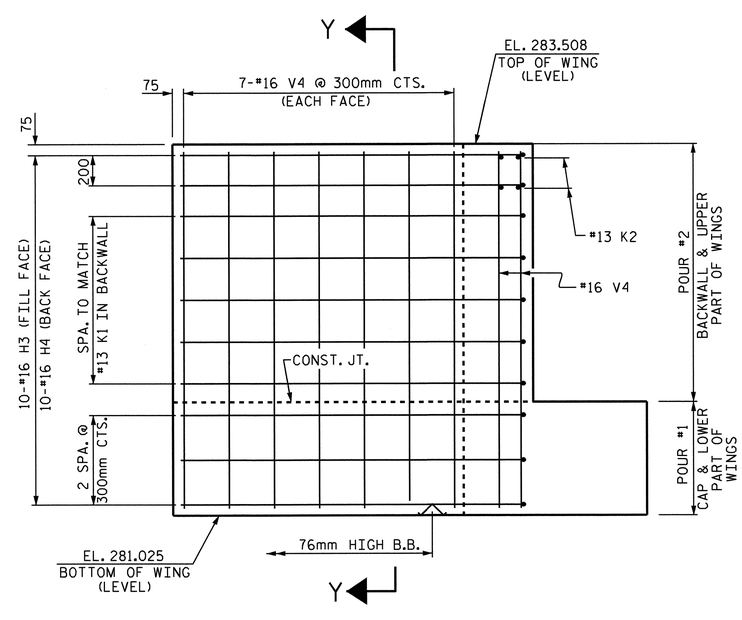

ELEVATION OF WING W2

PROJECT NO. R-2413C

GUILFORD-ROCKINGHAM COUNTY

STATION: 45+30.610 -LREV-

SHEET 2 OF 3

STATE OF NORTH CAROLINA
DEPARTMENT OF TRANSPORTATION
RALEIGH

SUBSTRUCTURE

END BENT #1
RIGHT LANE

REVISIONS						SHEET NO.
NO.	BY:	DATE:	NO.	BY:	DATE:	S-197
1			3			TOTAL SHEETS
2			4			238

DRAWN BY : T.L. AVERETTE DATE : 10-04-10
CHECKED BY : PEGGY PARISI DATE : 4-14-11

STR.#6

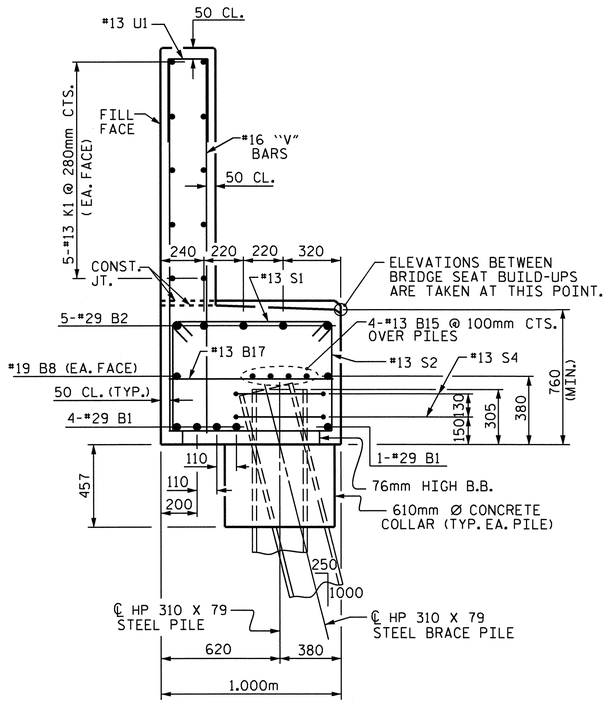

SECTION A-A

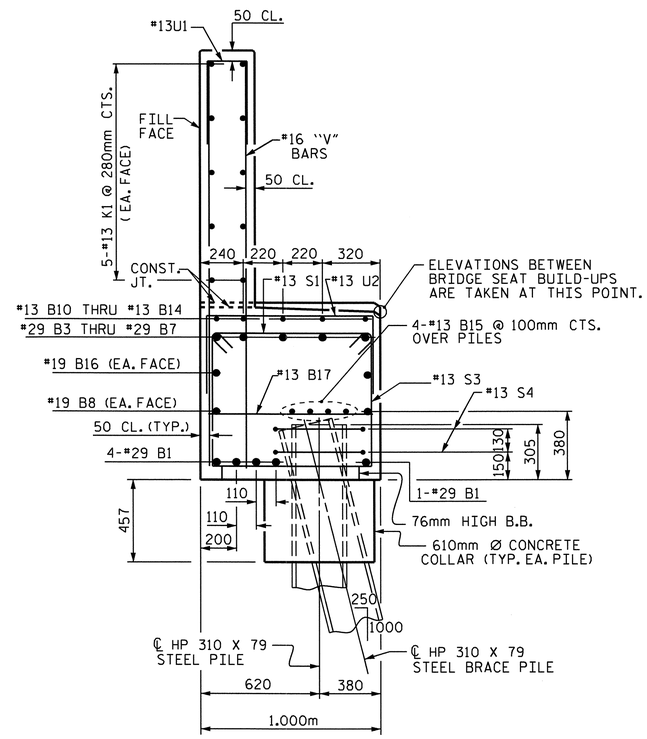

SECTION B-B

BAR TYPES

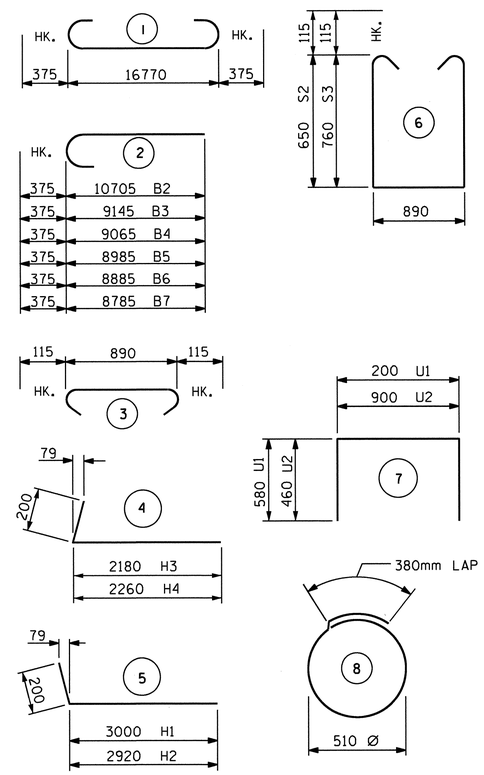

ALL BAR DIMENSIONS ARE OUT TO OUT.

BILL OF MATERIAL
END BENT #1

BAR	NO.	SIZE	TYPE	LENGTH	WEIGHT
B1	5	#29	1	17520	443
B2	5	#29	2	11080	280
B3	1	#29	2	9520	48
B4	1	#29	2	9440	48
B5	1	#29	2	9360	47
B6	1	#29	2	9260	47
B7	1	#29	2	9160	46
B8	2	#19	STR	16820	75
B9	10	#13	STR	1000	10
B10	1	#13	STR	3020	3
B11	1	#13	STR	2960	3
B12	1	#13	STR	2860	3
B13	1	#13	STR	2780	3
B14	1	#13	STR	2660	3
B15	8	#13	STR	8800	70
B16	2	#19	STR	7320	33
B17	17	#13	STR	900	15
H1	11	#16	5	3200	55
H2	11	#16	5	3120	53
H3	10	#16	4	2380	37
H4	10	#16	4	2460	38
K1	20	#13	STR	8800	175
K2	8	#13	STR	920	7
S1	58	#13	3	1120	65
S2	27	#13	6	2420	65
S3	31	#13	6	2640	81
S4	16	#13	8	1980	31
U1	49	#13	7	1360	66
U2	12	#13	7	1820	22
V1	50	#16	STR	1960	152
V2	48	#16	STR	2100	156
V3	30	#16	STR	2620	122
V4	24	#16	STR	2380	89

TOTAL REINFORCING STEEL = 2,391 kg

CLASS A CONCRETE BREAKDOWN

POUR #1 (CAP, LOWER WINGS & CONCRETE COLLARS)	m³	17.2
POUR #2 (BACKWALL & UPPER WINGS)	m³	9.7
TOTAL CLASS A CONCRETE	m³	26.9

HP 310 X 79 STEEL PILES
NO. 8 METERS 26.4

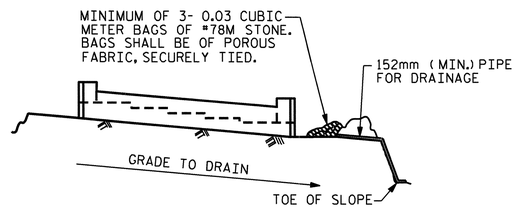

BAGGED STONE AND PIPE SHALL BE PLACED IMMEDIATELY AFTER COMPLETION OF END BENT EXCAVATION. PIPE MAY BE EITHER CONCRETE, CORRUGATED STEEL, CORRUGATED ALUMINUM ALLOY, OR CORRUGATED PLASTIC. PERFORATED PIPE WILL NOT BE ALLOWED.

BAGGED STONE SHALL REMAIN IN PLACE UNTIL THE ENGINEER DIRECTS THAT IT BE REMOVED. THE CONTRACTOR SHALL REMOVE AND DISPOSE OF SILT ACCUMULATIONS AT BAGGED STONE WHEN SO DIRECTED BY THE ENGINEER. BAGS SHALL BE REMOVED AND REPLACED WHENEVER THE ENGINEER DETERMINES THAT THEY HAVE DETERIORATED AND LOST THEIR EFFECTIVENESS.

NO SEPARATE PAYMENT WILL BE MADE FOR THIS WORK AND THE ENTIRE COST OF THIS WORK SHALL BE INCLUDED IN THE UNIT CONTRACT PRICE BID FOR THE SEVERAL PAY ITEMS.

TEMPORARY DRAINAGE AT END BENT

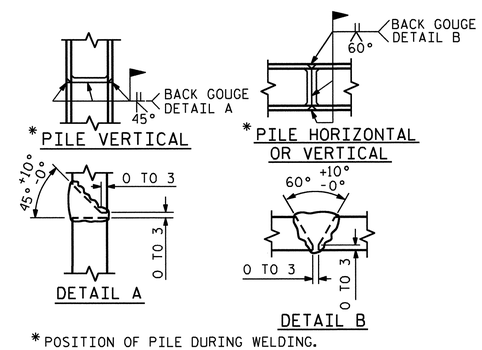

*POSITION OF PILE DURING WELDING.

PILE SPLICE DETAILS

PROJECT NO. R-2413C
GUILFORD-ROCKINGHAM COUNTY
STATION: 45+30.610 -LREV-

SHEET 3 OF 3

STATE OF NORTH CAROLINA
DEPARTMENT OF TRANSPORTATION
RALEIGH

SUBSTRUCTURE

END BENT #1
RIGHT LANE

NORTH CAROLINA PROFESSIONAL SEAL 022516 ENGINEER EMILY E. McFARLAN
4/28/11

REVISIONS							SHEET NO.
NO.	BY:	DATE:	NO.	BY:	DATE:		S-198
1			3				TOTAL SHEETS
2			4				238

DRAWN BY : T.L. AVERETTE DATE : 10-04-10
CHECKED BY : PEGGY PARISI DATE : 4-14-11

STR.#6

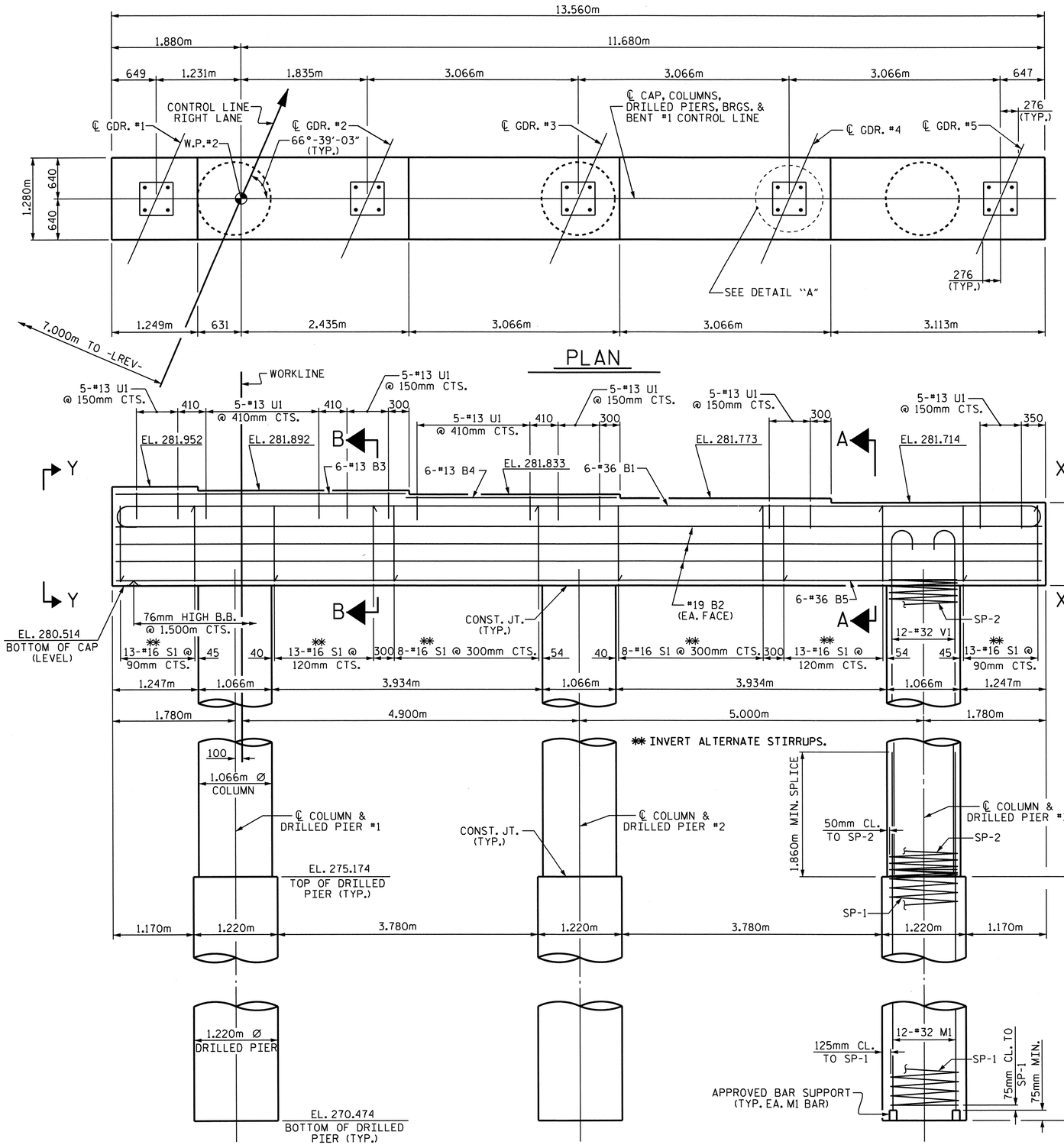

ELEVATION

(DIMENSIONS AND REINFORCING STEEL ARE TYPICAL FOR EACH COLUMN & DRILLED PIER)

NOTES

STIRRUPS AND U1 BARS IN CAP MAY BE SHIFTED AS NECESSARY TO CLEAR ANCHOR BOLTS.

HOOKS ON "V" BARS MAY BE TURNED AS NECESSARY FOR PLACING REINFORCING STEEL.

ALL STEEL IN THE DRILLED PIERS IS INCLUDED IN THE PAY ITEMS FOR "REINFORCING STEEL" AND "SPIRAL COLUMN REINFORCING STEEL".

THE CONTRACTOR'S ATTENTION IS CALLED TO THE FACT THAT THE LONGITUDINAL REINFORCEMENT FOR THE DRILLED PIERS IS DETAILED WITH ONE METER OF EXTRA LENGTH.

THE LOCATION OF THE CONSTRUCTION JOINT IN THE DRILLED PIERS IS BASED ON AN APPROXIMATE GROUND LINE ELEVATION. IF THE CONSTRUCTION JOINT IS ABOVE THE ACTUAL GROUND LINE ELEVATION, THE CONTRACTOR SHALL PLACE THE CONSTRUCTION JOINT 300mm BELOW THE GROUND LINE.

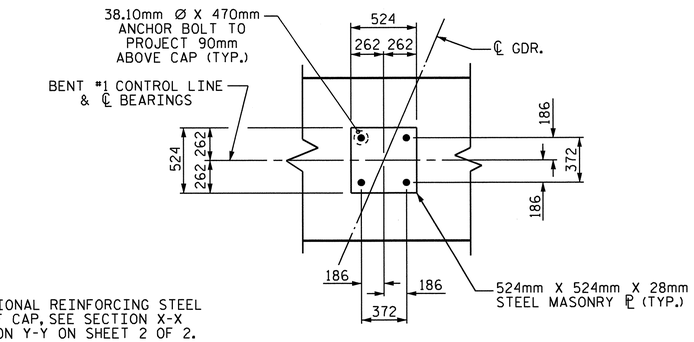

NOTE:
FOR ADDITIONAL REINFORCING STEEL IN ENDS OF CAP, SEE SECTION X-X AND SECTION Y-Y ON SHEET 2 OF 2.

DETAIL "A"

(TYP. EA. GDR.)

PROJECT NO. R-2413C

GUILFORD-ROCKINGHAM COUNTY

STATION: 45+30.610 -LREV-

SHEET 1 OF 2

STATE OF NORTH CAROLINA
DEPARTMENT OF TRANSPORTATION
RALEIGH

SUBSTRUCTURE
BENT #1
RIGHT LANE

NORTH CAROLINA PROFESSIONAL SEAL 022516 ENGINEER EMILY E. MORRAY
10/31/11

REVISIONS						SHEET NO.
NO.	BY:	DATE:	NO.	BY:	DATE:	S-199
1			3			TOTAL SHEETS
2			4			238

DRAWN BY : T.L. AVERETTE DATE : 10-15-10
CHECKED BY : PEGGY PARISI DATE : 04-21-11

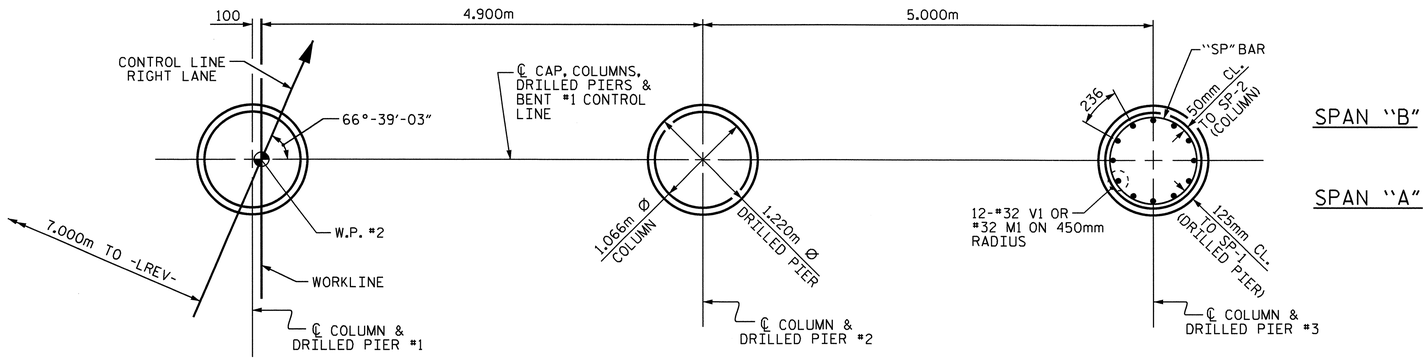

PLAN OF COLUMNS & DRILLED PIERS

(DIMENSIONS AND REINFORCING STEEL ARE TYPICAL FOR EACH COLUMN & DRILLED PIER)

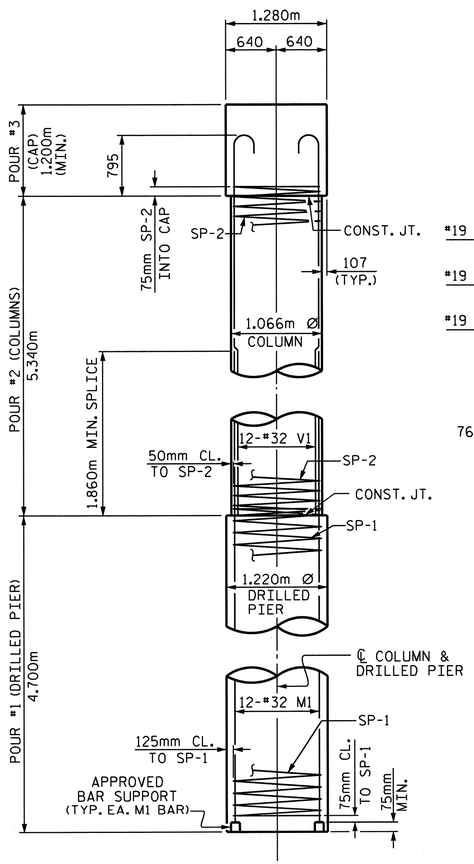

END ELEVATION

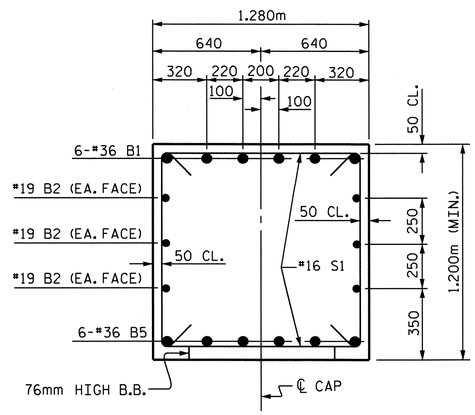

SECTION A-A

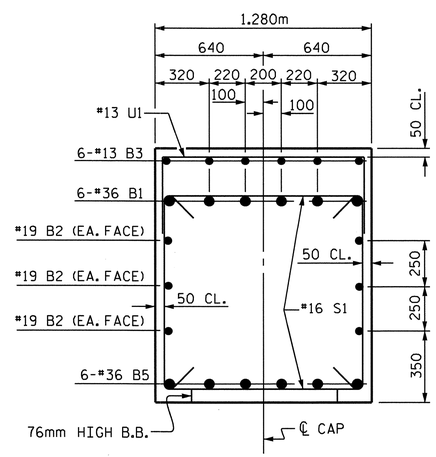

SECTION B-B

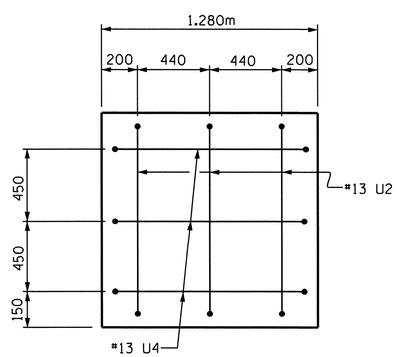

SECTION X-X

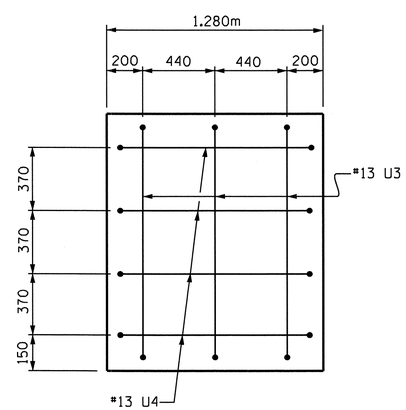

SECTION Y-Y

BAR TYPES

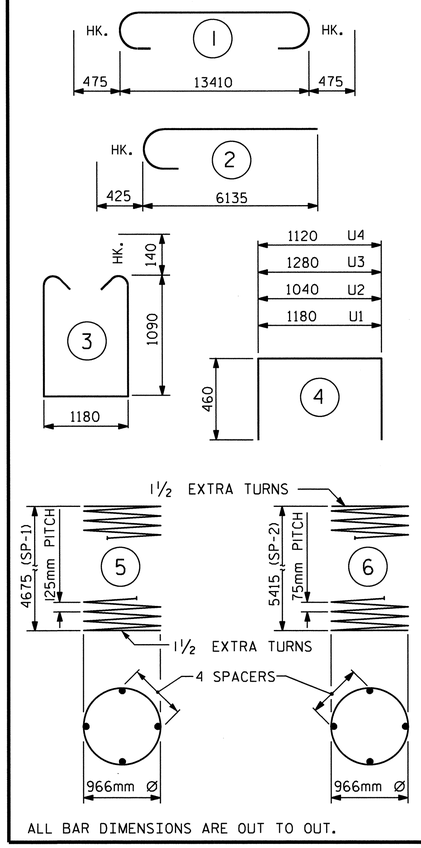

ALL BAR DIMENSIONS ARE OUT TO OUT.

BILL OF MATERIAL

BENT #1

BAR	NO.	SIZE	TYPE	LENGTH	WEIGHT
B1	6	#36	1	14360	681
B2	6	#19	STR	13460	180
B3	6	#13	STR	4200	25
B4	6	#13	STR	3060	18
B5	6	#36	STR	13460	639
M1	36	#32	STR	7500	1729
S1	68	#16	3	3640	384
U1	35	#13	4	2100	73
U2	3	#13	4	1960	6
U3	3	#13	4	2200	7
U4	7	#13	4	2040	14
V1	36	#32	2	6560	1512

TOTAL REINFORCING STEEL = 5268 kg

SP-1	3	✱✱	5	117000	545
SP-2	3	✱✱✱	6	221640	661

SPIRAL COLUMN REINFORCING STEEL 1206 kg

DRILLED PIER CONCRETE BREAKDOWN

POUR #1 (DRILLED PIERS)	m³	16.5

CLASS "A" CONCRETE BREAKDOWN

POUR #2 (COLUMNS)	m³	14.3
POUR #3 (CAP)	m³	22.6
TOTAL CLASS "A" CONCRETE	m³	36.9

1220mm Ø DRILLED PIERS NOT IN SOIL	7.2m
1220mm Ø DRILLED PIERS IN SOIL	6.9m
CSL TUBES	65.4m

✱✱✱ THE SP-2 SPIRAL REINFORCING STEEL SHALL BE W20 OR D-20 COLD DRAWN WIRE OR #13 PLAIN OR DEFORMED BAR.

✱✱ THE SP-1 SPIRAL REINFORCING STEEL SHALL BE W31 OR D-31 COLD DRAWN WIRE OR #16 PLAIN OR DEFORMED BAR.

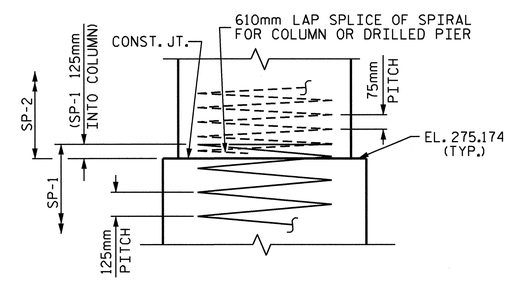

CONSTRUCTION JOINT DETAIL

PROJECT NO. R-2413C

GUILFORD-ROCKINGHAM COUNTY

STATION: 45+30.610 -LREV-

SHEET 2 OF 2

STATE OF NORTH CAROLINA
DEPARTMENT OF TRANSPORTATION
RALEIGH

SUBSTRUCTURE
BENT #1
RIGHT LANE

NORTH CAROLINA PROFESSIONAL SEAL 022516 ENGINEER EMILY E. MURRAY
10/31/11

REVISIONS						SHEET NO.
NO.	BY:	DATE:	NO.	BY:	DATE:	S-200
1			3			TOTAL SHEETS
2			4			238

DRAWN BY : T.L. AVERETTE DATE : 10-15-10
CHECKED BY : PEGGY PARISI DATE : 04-21-11

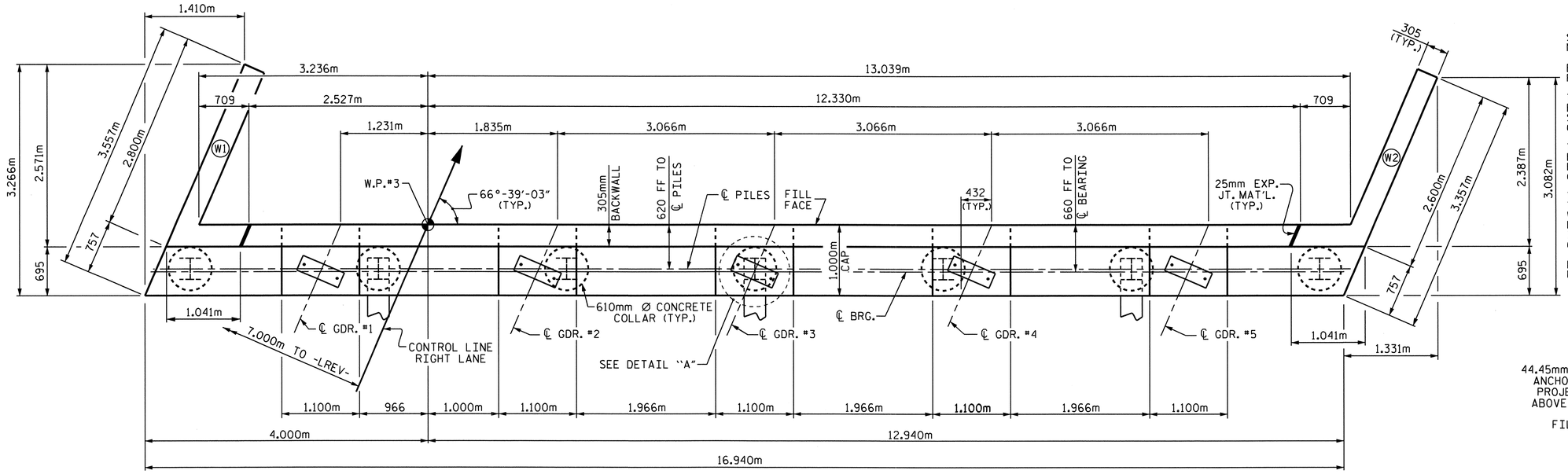

PLAN

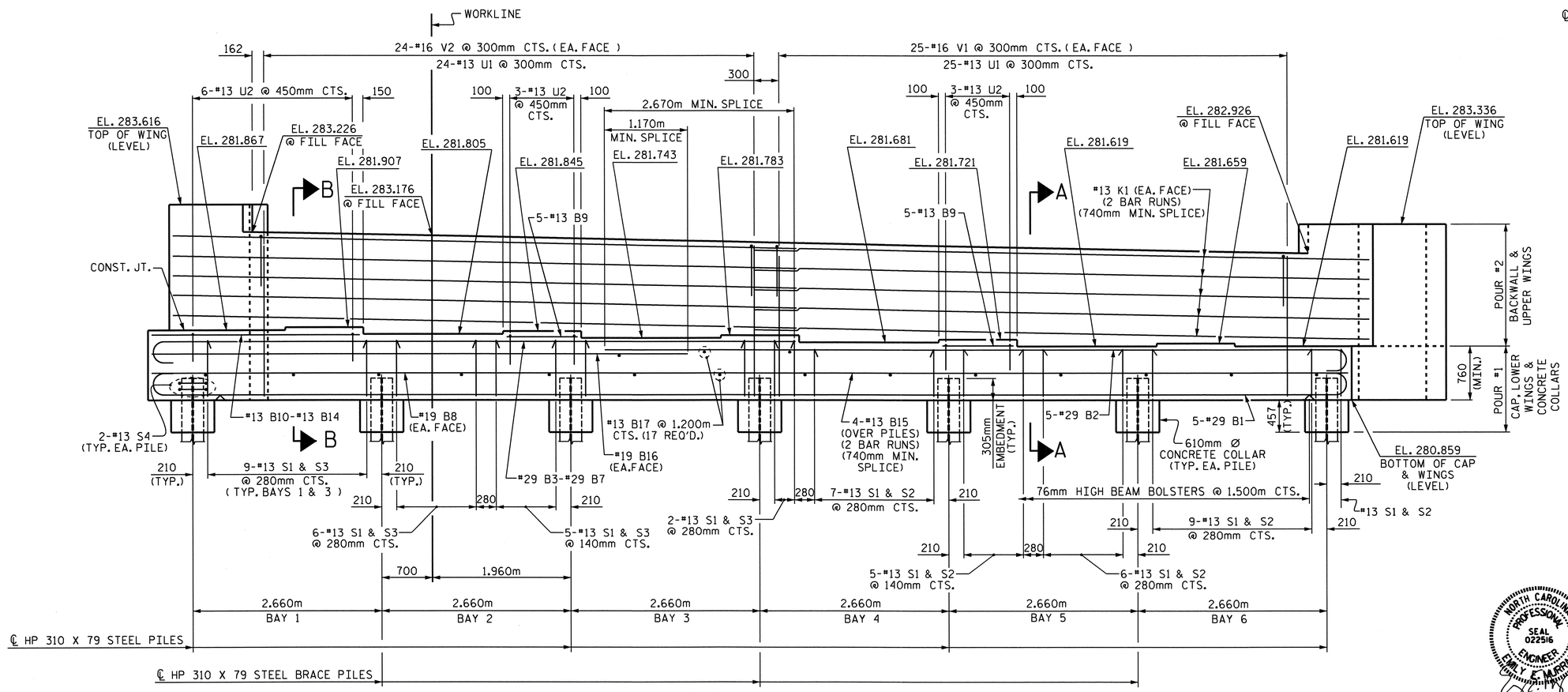

ELEVATION

NOTES

STIRRUPS AND U1 BARS IN CAP MAY BE SHIFTED AS NECESSARY TO CLEAR ANCHOR BOLTS.

BACKWALL SHALL BE PLACED BEFORE APPLYING THE EPOXY PROTECTIVE COATING.

THE TOP SURFACE AREAS OF THE END BENT CAPS SHALL BE CURED IN ACCORDANCE WITH THE STANDARD SPECIFICATIONS EXCEPT THE MEMBRANE CURING COMPOUND METHOD SHALL NOT BE USED.

THE TOP SURFACE OF THE END BENT CAP EXCEPT THE BRIDGE SEAT BUILDUPS SHALL BE SLOPED TRANSVERSELY FROM THE FILL FACE TO THE BACK FACE AT THE RATE OF 2%.

THE CONTRACTOR SHALL PROVIDE FOR INSTALLATION OF THE 102mm DIAMETER DRAIN PIPE THROUGH THE WING WALL AS REQUIRED FOR REINFORCED BRIDGE APPROACH FILLS, SEE THE ROADWAY PLANS. REINFORCING STEEL IN THE WING WALL MAY BE SHIFTED AS NECESSARY TO CLEAR THE DRAIN PIPE.

EPOXY COAT THE END BENT CAP AFTER ADJUSTMENTS ARE MADE TO BEARINGS.

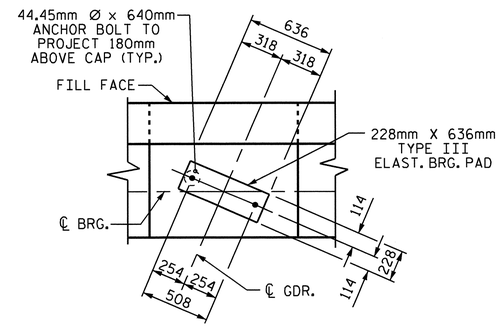

DETAIL "A"

(TYP. EA. GDR.)

PROJECT NO. R-2413C

GUILFORD-ROCKINGHAM COUNTY

STATION: 45+30.610 -LREV-

SHEET 1 OF 3

STATE OF NORTH CAROLINA
DEPARTMENT OF TRANSPORTATION
RALEIGH

SUBSTRUCTURE

END BENT #2
RIGHT LANE

NORTH CAROLINA PROFESSIONAL SEAL 022516 ENGINEER EMILY E. MURRAY
10/28/11

REVISIONS							SHEET NO.
NO.	BY:	DATE:	NO.	BY:	DATE:		S-201
1			3				TOTAL SHEETS
2			4				238

DRAWN BY : T.L. AVERETTE DATE : 10-05-10
CHECKED BY : PEGGY PARISI DATE : 4-14-11

STR.#6

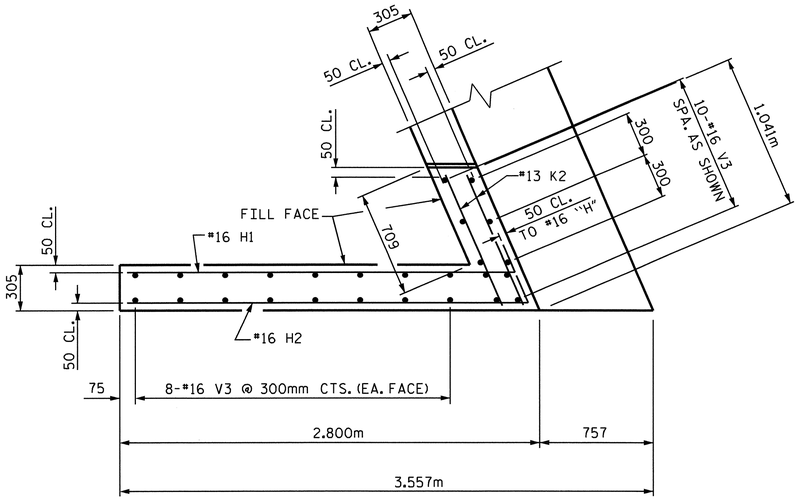

PLAN OF WING W1

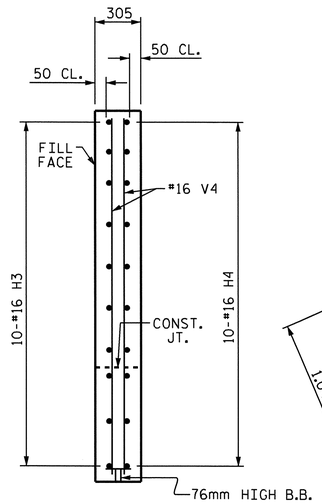

SECTION Y-Y

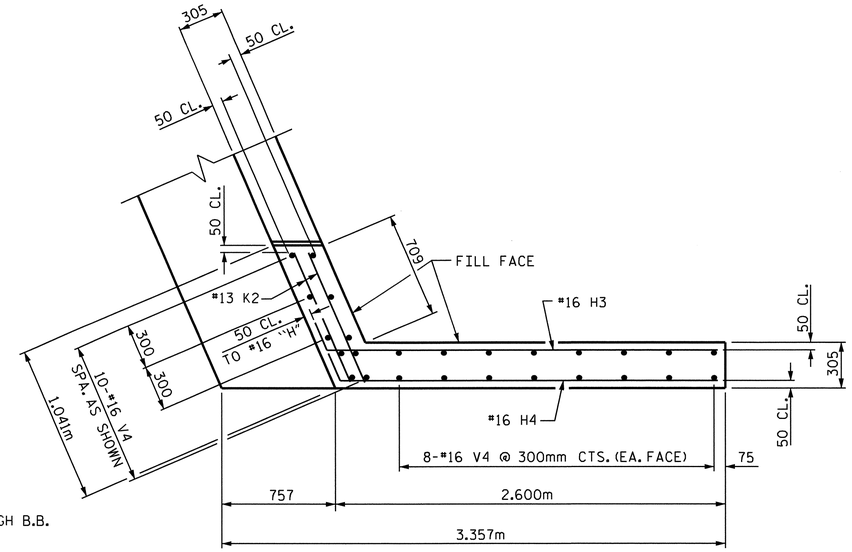

PLAN OF WING W2

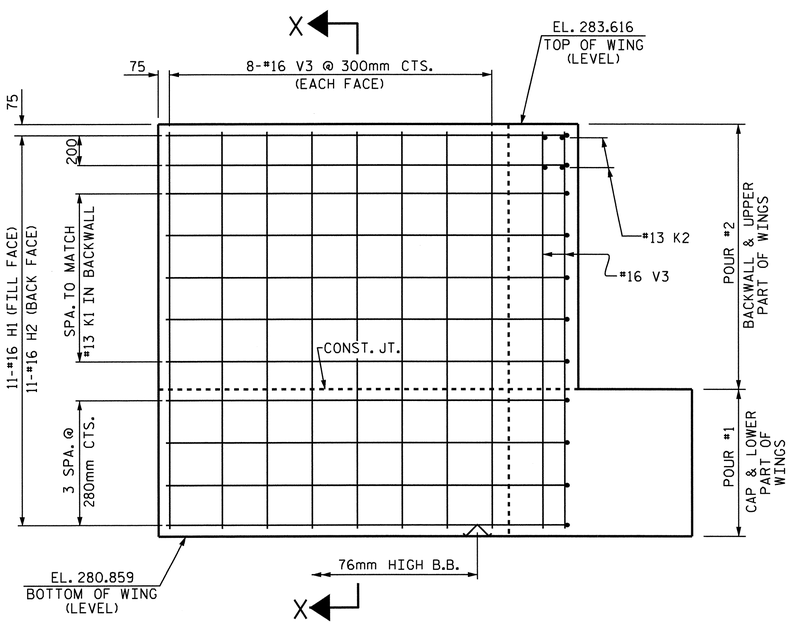

ELEVATION OF WING W1

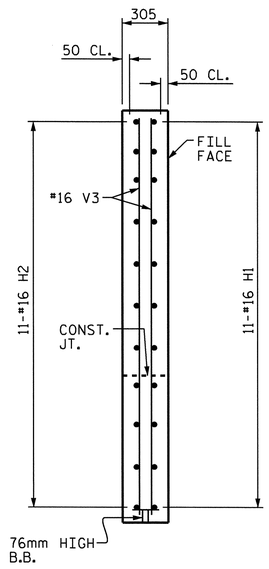

SECTION X-X

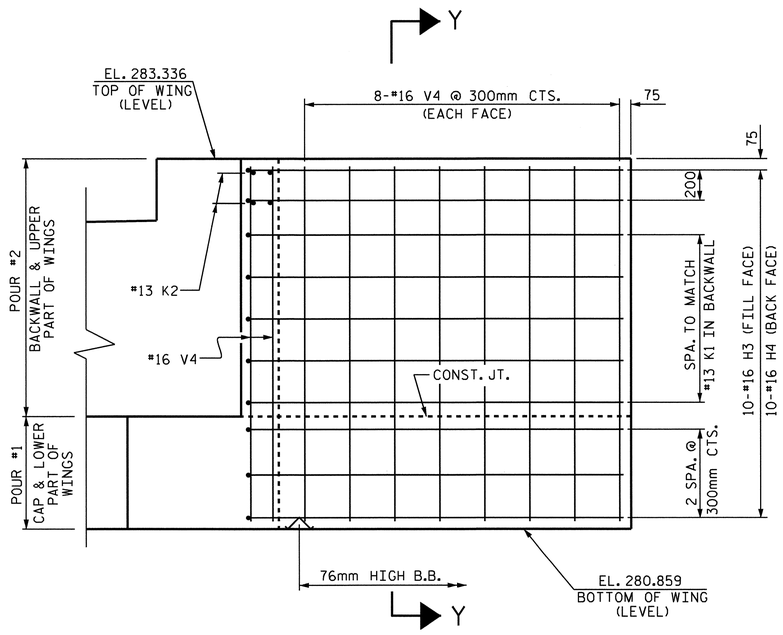

ELEVATION OF WING W2

NORTH CAROLINA PROFESSIONAL SEAL 022516 ENGINEER EMILY E. MURRAY
1/28/11

PROJECT NO. R-2413C
GUILFORD-ROCKINGHAM COUNTY
STATION: 45+30.610 -LREV-

SHEET 2 OF 3

STATE OF NORTH CAROLINA
DEPARTMENT OF TRANSPORTATION
RALEIGH

SUBSTRUCTURE

END BENT #2
RIGHT LANE

REVISIONS						SHEET NO.
NO.	BY:	DATE:	NO.	BY:	DATE:	S-202
1			3			TOTAL SHEETS
2			4			238

DRAWN BY : T.L. AVERETTE DATE : 10-05-10
CHECKED BY : PEGGY PARISI DATE : 4-14-11

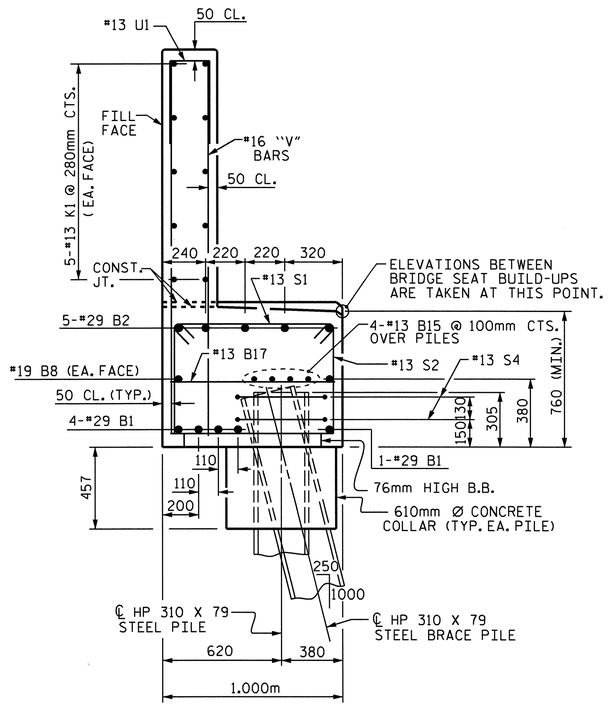

SECTION A-A

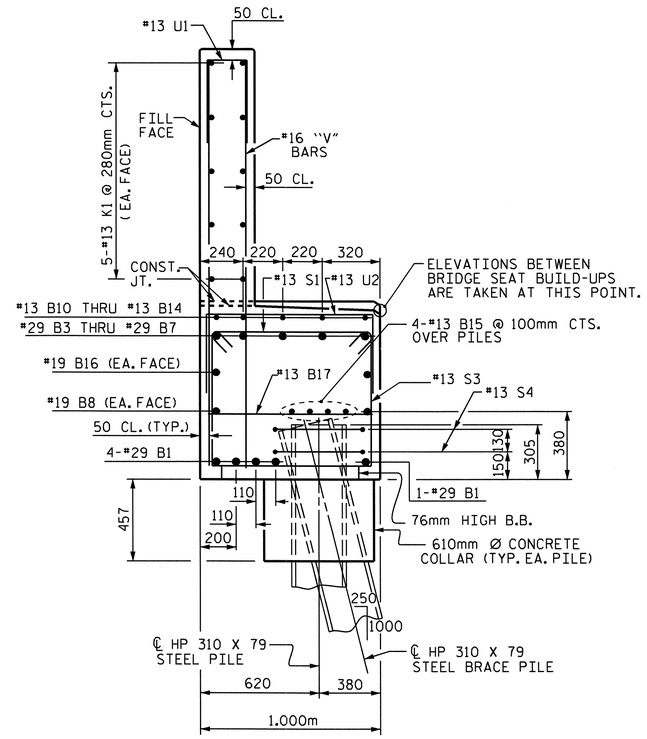

SECTION B-B

BAR TYPES

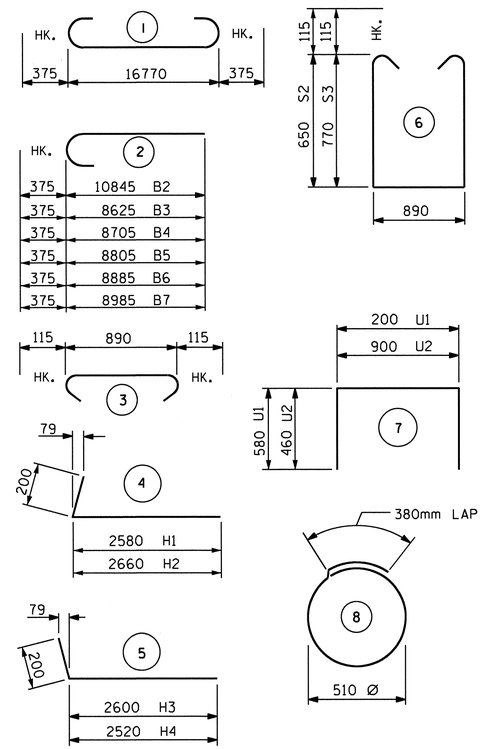

ALL BAR DIMENSIONS ARE OUT TO OUT.

BILL OF MATERIAL
END BENT #2

BAR	NO.	SIZE	TYPE	LENGTH	WEIGHT
B1	5	#29	1	17520	443
B2	5	#29	2	11220	284
B3	1	#29	2	9000	46
B4	1	#29	2	9080	46
B5	1	#29	2	9180	46
B6	1	#29	2	9260	47
B7	1	#29	2	9360	47
B8	2	#19	STR	16820	75
B9	10	#13	STR	1000	10
B10	1	#13	STR	2520	3
B11	1	#13	STR	2600	3
B12	1	#13	STR	2680	3
B13	1	#13	STR	2780	3
B14	1	#13	STR	2880	3
B15	8	#13	STR	8800	70
B16	2	#19	STR	7160	32
B17	17	#13	STR	900	15
H1	11	#16	4	2780	47
H2	11	#16	4	2860	49
H3	10	#16	5	2800	43
H4	10	#16	5	2720	42
K1	20	#13	STR	8800	175
K2	8	#13	STR	920	7
S1	59	#13	3	1120	66
S2	28	#13	6	2420	67
S3	31	#13	6	2660	82
S4	14	#13	8	1980	28
U1	49	#13	7	1360	66
U2	12	#13	7	1820	22
V1	50	#16	STR	1960	152
V2	48	#16	STR	2120	158
V3	26	#16	STR	2640	107
V4	26	#16	STR	2360	95

TOTAL REINFORCING STEEL = 2,382 kg

CLASS A CONCRETE BREAKDOWN

POUR #1 (CAP, LOWER WINGS & CONCRETE COLLARS)	m3	17.1
POUR #2 (BACKWALL & UPPER WINGS)	m3	9.7
TOTAL CLASS A CONCRETE	m3	26.8

HP 310 X 79 STEEL PILES
NO. 7 METERS 28.0

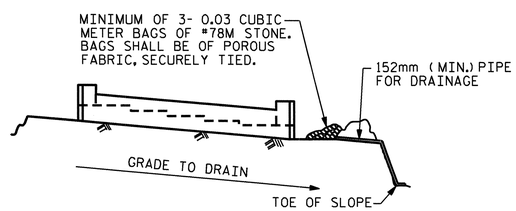

BAGGED STONE AND PIPE SHALL BE PLACED IMMEDIATELY AFTER COMPLETION OF END BENT EXCAVATION. PIPE MAY BE EITHER CONCRETE, CORRUGATED STEEL, CORRUGATED ALUMINUM ALLOY, OR CORRUGATED PLASTIC. PERFORATED PIPE WILL NOT BE ALLOWED.

BAGGED STONE SHALL REMAIN IN PLACE UNTIL THE ENGINEER DIRECTS THAT IT BE REMOVED. THE CONTRACTOR SHALL REMOVE AND DISPOSE OF SILT ACCUMULATIONS AT BAGGED STONE WHEN SO DIRECTED BY THE ENGINEER. BAGS SHALL BE REMOVED AND REPLACED WHENEVER THE ENGINEER DETERMINES THAT THEY HAVE DETERIORATED AND LOST THEIR EFFECTIVENESS.

NO SEPARATE PAYMENT WILL BE MADE FOR THIS WORK AND THE ENTIRE COST OF THIS WORK SHALL BE INCLUDED IN THE UNIT CONTRACT PRICE BID FOR THE SEVERAL PAY ITEMS.

TEMPORARY DRAINAGE AT END BENT

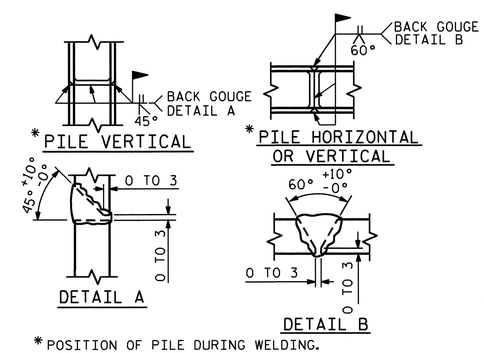

*POSITION OF PILE DURING WELDING.

PILE SPLICE DETAILS

PROJECT NO. R-2413C
GUILFORD-ROCKINGHAM COUNTY
STATION: 45+30.610 -LREV-

SHEET 3 OF 3

STATE OF NORTH CAROLINA
DEPARTMENT OF TRANSPORTATION
RALEIGH

SUBSTRUCTURE
END BENT #2
RIGHT LANE

NORTH CAROLINA PROFESSIONAL SEAL 022516 ENGINEER EMILY E. MURRAY
10/28/11

REVISIONS						SHEET NO.
NO.	BY:	DATE:	NO.	BY:	DATE:	S-203
1			3			TOTAL SHEETS
2			4			238

DRAWN BY : T.L. AVERETTE DATE : 10-05-10
CHECKED BY : PEGGY PARISI DATE : 4-14-11

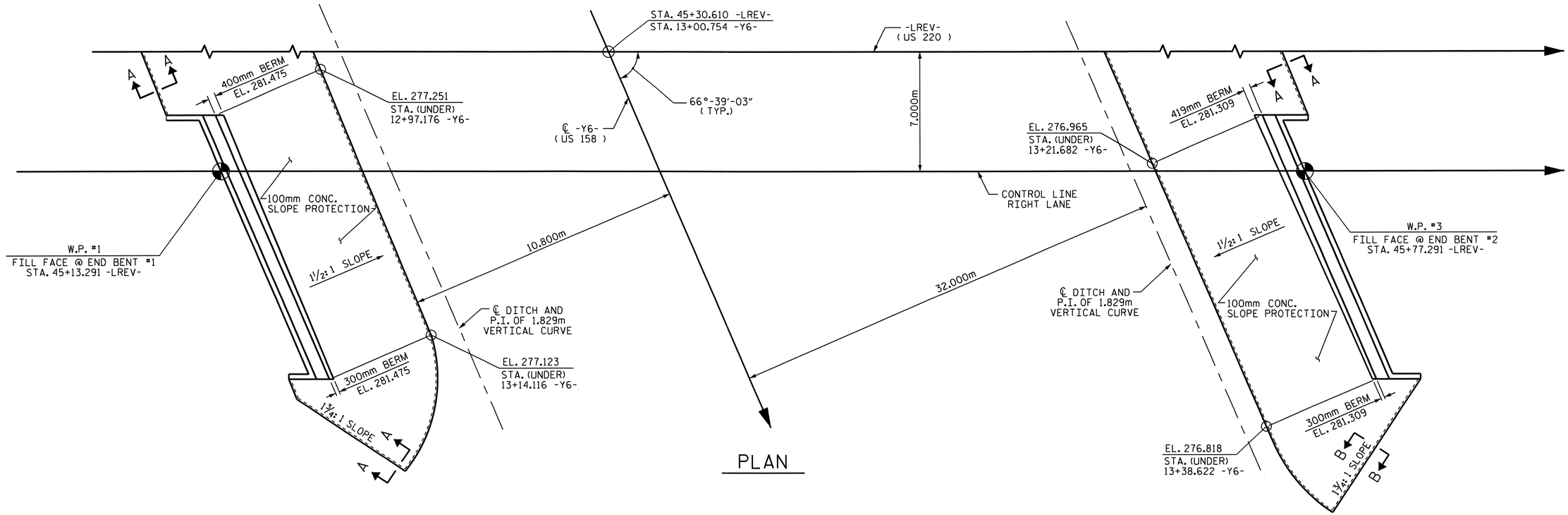

NOTES

SLOPE PROTECTION SHALL BE PLACED UNDER THE ENDS OF THE BRIDGE AS SHOWN IN THE DETAILS. STRAIGHT EDGING WILL NOT BE REQUIRED UNLESS, IN THE OPINION OF THE ENGINEER, VISUAL INSPECTION INDICATES A NEED FOR IT. MEASUREMENT AND PAYMENT SHALL BE AS PRESCRIBED IN SECTION 462 OF THE STANDARD SPECIFICATIONS.

SLOPE PROTECTION SHALL CONSIST OF 100mm POURED-IN-PLACE CONCRETE PAVING AS SHOWN IN THE DETAILS ON THIS SHEET. CONCRETE SHALL BE CLASS "B". THE CONCRETE SURFACE SHALL BE FLOATED WITH A WOODEN FLOAT AND FINISHED. WELDED WIRE FABRIC REINFORCING SHALL BE 152 X 152 - W9.1 X W9.1, 1520mm WIDE. SLOPE PROTECTION SHALL BE POURED IN 1520mm STRIPS AS SHOWN IN THE "POURING DETAIL" WITH 600mm LONG #13 BARS PLACED ALONG THE SLOPE BETWEEN STRIPS AT 450mm MAXIMUM SPACING. SLOPE PROTECTION MAY BE POURED IN ALTERNATE 1220mm AND 1520mm STRIPS AS SHOWN IN THE "OPTIONAL POURING DETAIL" WITH ADJACENT RUNS OF WELDED WIRE FABRIC LAPPING AT LEAST 152mm. THE COST OF THE WELDED WIRE FABRIC AND #13 BARS, IF USED, SHALL BE INCLUDED IN THE CONTRACT UNIT PRICE BID PER SQUARE METER FOR SLOPE PROTECTION.

BRIDGE @ STA. 45+30.610 -LREV- (RIGHT LANE)	100mm SLOPE PROTECTION	* WELDED WIRE FABRIC 1520mm WIDE
	SQUARE METERS	APPROX. METERS
END BENT #1	260.4	189.9
END BENT #2	281.5	205.2

* QUANTITY SHOWN IS BASED ON 1520mm POURS.

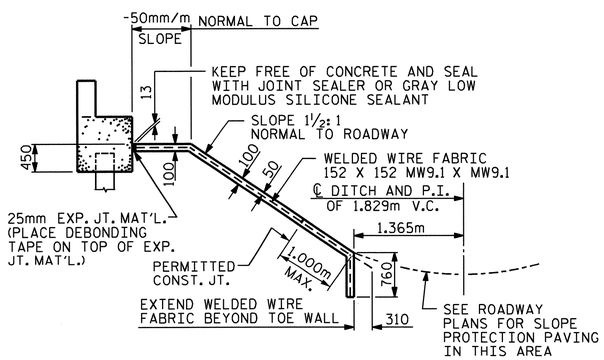

SECTION ALONG ℄ ROADWAY WHEN FILL CATCHES IN DITCH

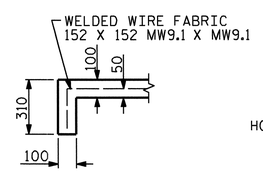

SECTION A-A

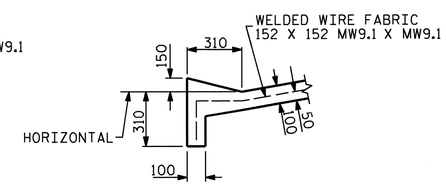

SECTION B-B

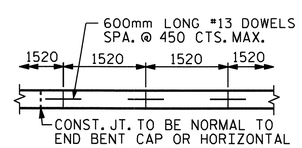

STRIP WIDTHS MAY VARY IN CURVED PORTION.

POURING DETAIL

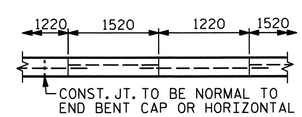

POUR A 1220mm STRIP FIRST. STRIP WIDTHS MAY VARY IN CURVED PORTION.

OPTIONAL POURING DETAIL

PROJECT NO. R-2413C
GUILFORD-ROCKINGHAM COUNTY
STATION: 45+30.610 -LREV-

STATE OF NORTH CAROLINA
DEPARTMENT OF TRANSPORTATION
RALEIGH

STANDARD SLOPE PROTECTION DETAILS RIGHT LANE

NORTH CAROLINA PROFESSIONAL SEAL 022516 ENGINEER EMILY E. MURRAY
10/28/11

REVISIONS							SHEET NO.
NO.	BY:	DATE:	NO.	BY:	DATE:		S-204
1			3				TOTAL SHEETS
2			4				238

STR. #6

STD. NO. SP1SM

ASSEMBLED BY : T.L. AVERETTE		DATE : 02-16-11	
CHECKED BY : M.L. RORIE		DATE : 07-29-11	
DRAWN BY : ELR 5/92	REV. 7/10/01	LES/RDR	
CHECKED BY : GRP 6/92	REV. 5/7/03	RWW/JTE	
	REV. 5/1/06	TLA/GM	

13-SEP-2011 10:12
Z:\TIPProjects-R\R2413c\Structures\Final Plans\Str.#6\R2413C_sd_SP_06.dgn
emurray

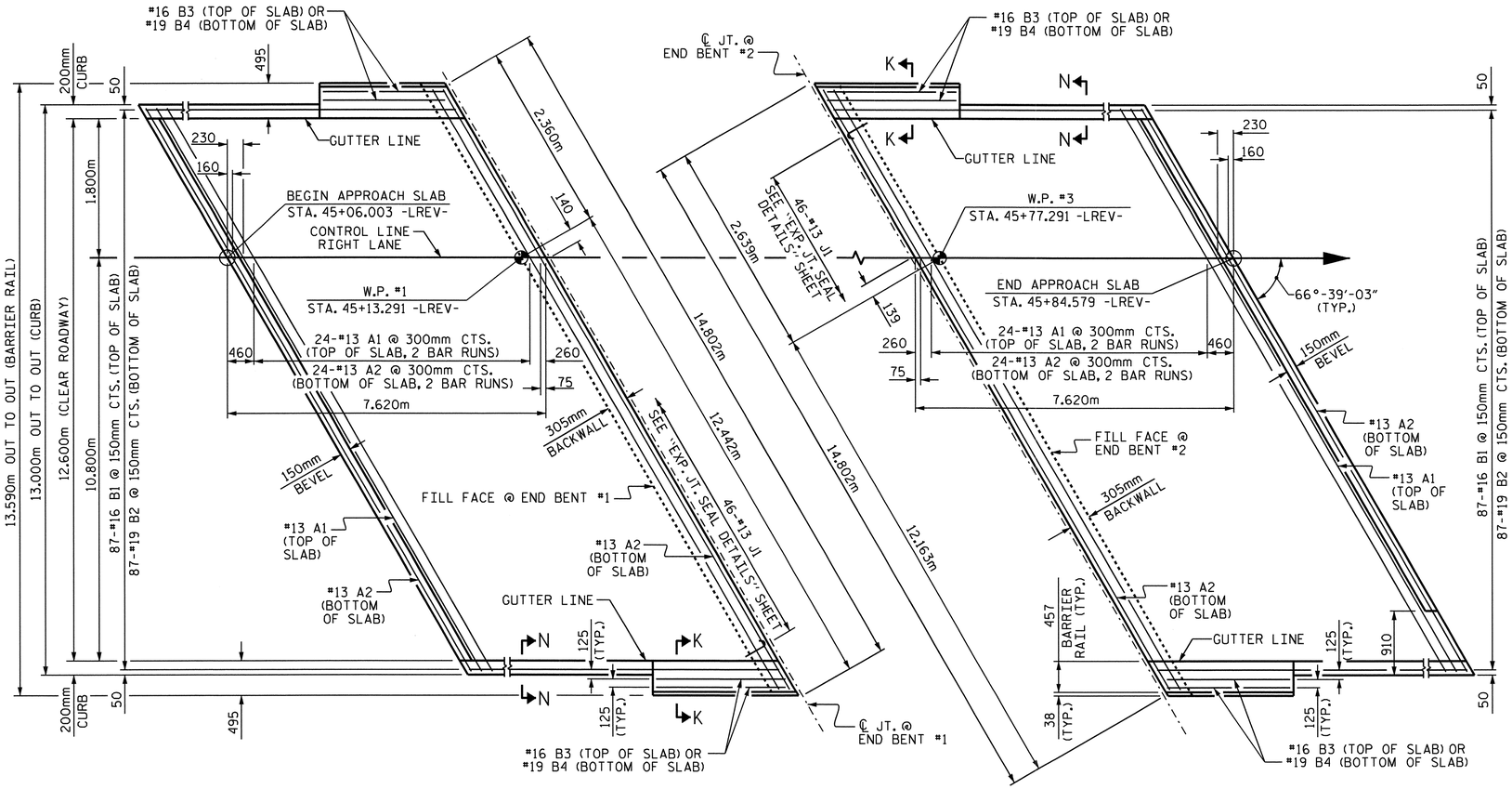

PLAN @ END BENT #1

PLAN @ END BENT #2

DIMENSIONS SHOWN ARE TYPICAL FOR BOTH APPROACH SLABS.
FOR BARRIER RAIL ON THE APPROACH SLAB DETAILS, REINFORCING STEEL AND BILL OF MATERIAL, SEE SHEET 2 OF 2.

NOTES

THE CONCRETE BARRIER RAIL ON THE APPROACH SLAB IS INCLUDED IN THE CONCRETE BARRIER RAIL QUANTITY FOR THE SUPERSTRUCTURE.

APPROACH SLAB SHALL NOT BE CONSTRUCTED PRIOR TO COMPLETION OF THE BRIDGE DECK.

FOR REINFORCED BRIDGE APPROACH FILL INCLUDING FABRIC, IMPERMEABLE GEOMEMBRANE, 102mm Ø DRAINAGE PIPE, #78M STONE, AND SELECT MATERIAL, SEE ROADWAY PLANS.

AREA BETWEEN THE WINGWALL AND APPROACH SLAB SHALL BE GRADED TO DRAIN THE WATER AWAY FROM THE FILL FACE OF THE BRIDGE AND SHALL BE PAVED. SEE ROADWAY PLANS.

THE 150mm COMP. A.B.C. SHALL BE FLUSH WITH THE ROADWAY END OF THE APPROACH SLAB AND SHALL EXTEND 300mm OUTSIDE OF EACH EDGE OF THE APPROACH SLAB.

THE CONTRACTOR MAY USE 100mm TYPE B-25.0B ASPHALT CONCRETE BASE COURSE IN LIEU OF 150mm COMP. A.B.C. IF THIS OPTION IS USED, THE BASE COURSE SHALL BE FLUSH WITH THE ROADWAY END OF THE APPROACH SLAB, AND THE WIDTH SHALL BE THE SAME AS THAT OF THE APPROACH SLAB.

THE CONTRACTOR MAY USE 125mm CLASS "A" CONCRETE BASE IN LIEU OF 150mm COMP. A.B.C. IF THIS OPTION IS USED, THE CONCRETE BASE SHALL BE FLUSH WITH THE ROADWAY END OF THE APPROACH SLAB, AND THE WIDTH SHALL BE THE SAME AS THAT OF THE APPROACH SLAB. THE CONCRETE SHALL BE FINISHED TO A SMOOTH SURFACE AND A LAYER OF 13.6 kg ROOFING FELT SHALL BE PLACED BETWEEN THE CONCRETE BASE AND THE APPROACH SLAB TO PREVENT BOND. THE APPROACH SLAB SHALL NOT BE CAST UNTIL THE CONCRETE BASE HAS REACHED AN AGE OF THREE CURING DAYS.

FOR EXPANSION JOINT SEALS, SEE SPECIAL PROVISIONS.

THE BARRIER RAIL ON EACH APPROACH SLAB SHALL NOT BE CAST UNTIL ALL APPROACH SLAB CONCRETE HAS BEEN CAST AND HAS REACHED A MINIMUM COMPRESSIVE STRENGTH OF 20.7 MPa.

ALL REINFORCING STEEL IN BARRIER RAILS SHALL BE EPOXY COATED.

SPLICE CHART

BAR	SPLICE
#13 A1	610
#13 A2	540

BILL OF MATERIAL

APPROACH SLAB @ EB #1

BAR	NO.	SIZE	TYPE	LENGTH	WEIGHT
* A1	50	#13	STR	7660	381
A2	52	#13	STR	7620	394
* B1	87	#16	STR	7240	978
B2	87	#19	STR	7500	1458
* B3	4	#16	STR	2920	18
B4	4	#19	STR	2920	26
* J1	46	#13	3	440	20
REINFORCING STEEL				kg.	1878
● * EPOXY COATED REINFORCING STEEL				kg.	1397
● CLASS AA CONCRETE				m³	31.3

APPROACH SLAB @ EB #2

BAR	NO.	SIZE	TYPE	LENGTH	WEIGHT
* A1	50	#13	STR	7660	381
A2	52	#13	STR	7620	394
* B1	87	#16	STR	7240	978
B2	87	#19	STR	7500	1458
* B3	4	#16	STR	2920	18
B4	4	#19	STR	2920	26
* J1	46	#13	3	440	20
REINFORCING STEEL				kg.	1878
● * EPOXY COATED REINFORCING STEEL				kg.	1397
● CLASS AA CONCRETE				m³	31.3

BAR TYPE

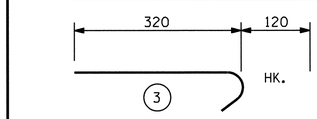

ALL BAR DIMENSIONS ARE OUT TO OUT

● QUANTITIES FOR BARRIER RAIL ON APPROACH SLAB ARE NOT INCLUDED. SEE SHEET 2 OF 2.

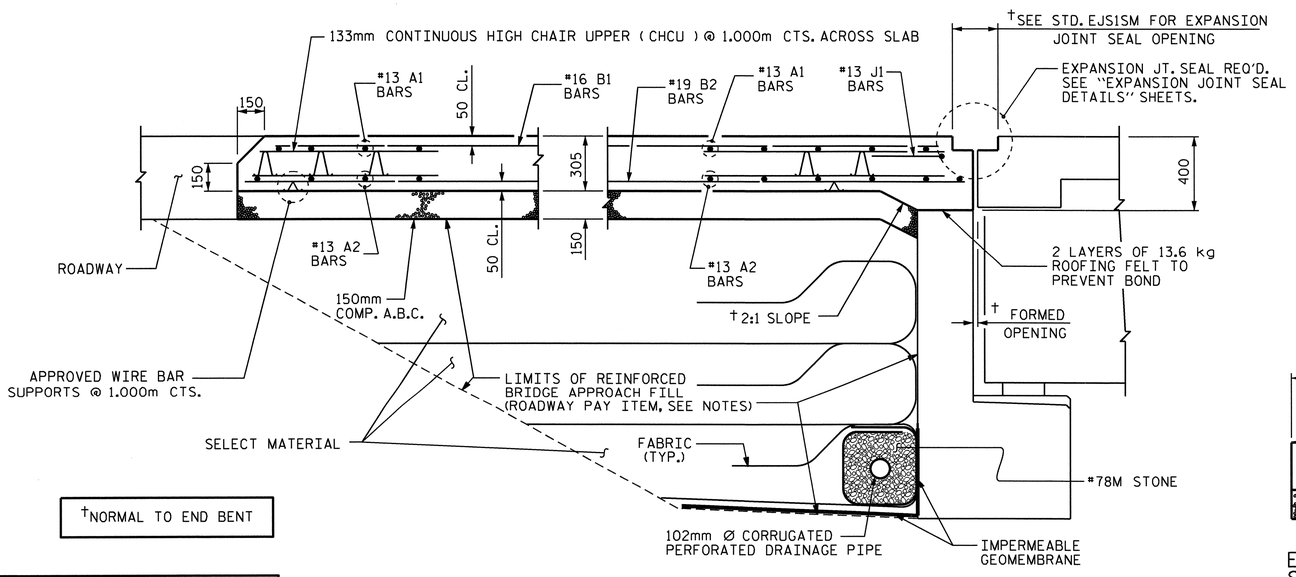

†NORMAL TO END BENT

SECTION THRU SLAB

BARRIER RAIL AND CURB NOT SHOWN

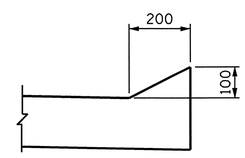

SECTION N-N

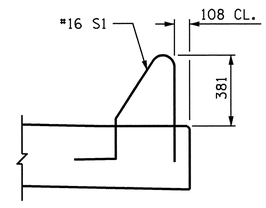

SECTION K-K

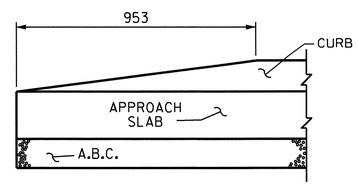

END OF CURB WITHOUT SHOULDER BERM GUTTER

CURB DETAILS

PROJECT NO. R-2413C
GUILFORD-ROCKINGHAM COUNTY
STATION: 45+30.610 -LREV-

SHEET 1 OF 2

STATE OF NORTH CAROLINA
DEPARTMENT OF TRANSPORTATION
RALEIGH

STANDARD

BRIDGE APPROACH SLAB FOR FLEXIBLE PAVEMENT

RIGHT LANE

NORTH CAROLINA PROFESSIONAL SEAL 022516 ENGINEER LEMUY E. MURRAY
6/28/11

ASSEMBLED BY : T.L. AVERETTE	DATE : 11-16-10		
CHECKED BY : PEGGY PARISI	DATE : 11-18-10		
DRAWN BY : FCJ 6/87	REV. 7/10/01	RWW/LES	
CHECKED BY : EGA 6/87	REV. 5/7/03R	RWW/JTE	
	REV. 5/1/06R	KMM/GM	

REVISIONS								SHEET NO.
NO.	BY:	DATE:	NO.	BY:	DATE:			S-205
1			3					TOTAL SHEETS
2			4					238

STR #6 STD. NO. BAS4SM

05-SEP-2011 13:52
Y:\Structures\Final Plans\Str.#6\R2413C_sd_AS_06.dgn
mgudlaugsson

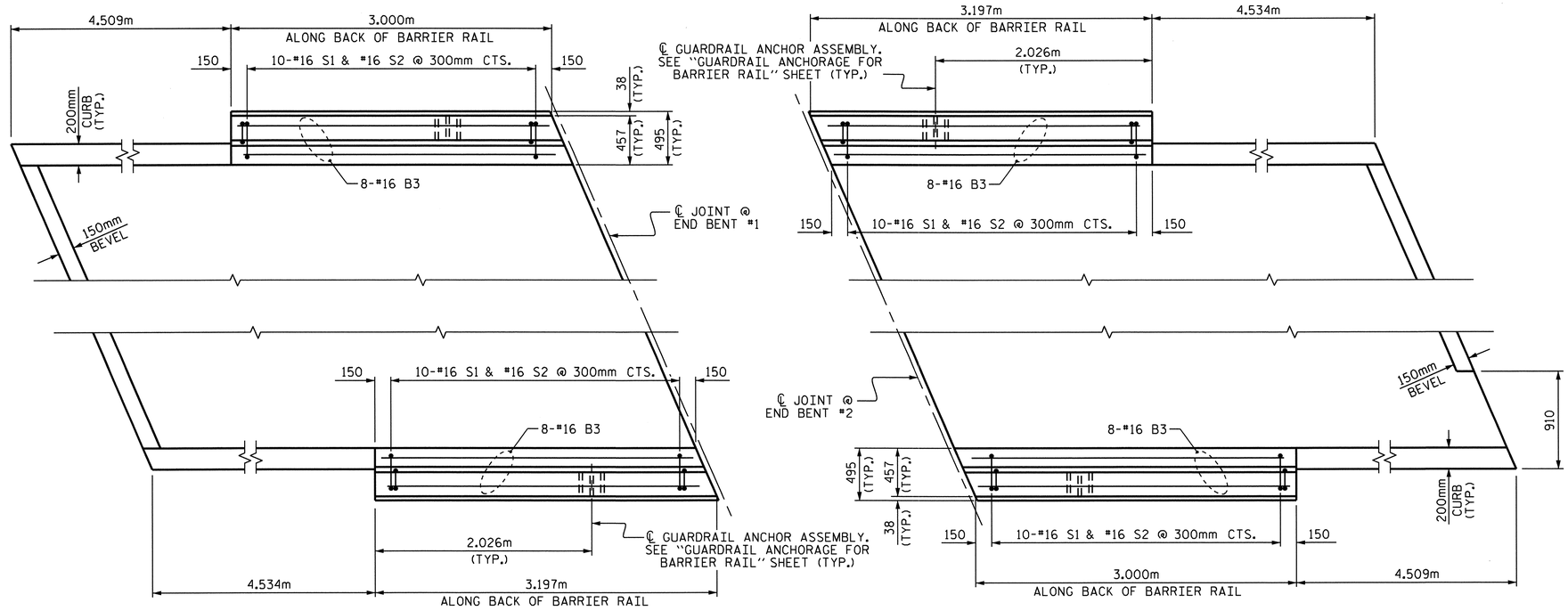

PLAN OF BARRIER RAIL ON APPROACH SLABS

BAR TYPES

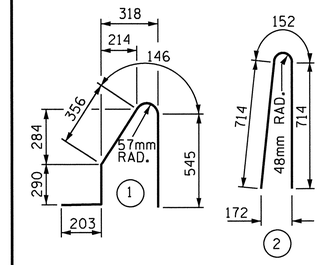

ALL BAR DIMENSIONS ARE OUT TO OUT

BILL OF MATERIAL

FOR CONCRETE BARRIER RAIL ON BOTH APPROACH SLABS ONLY

BAR	NO.	SIZE	TYPE	LENGTH	WEIGHT
* B3	32	#16	STR	2920	145
* S1	40	#16	1	1540	96
* S2	40	#16	2	1580	98
* EPOXY COATED REINFORCING STEEL				kg.	339
CLASS AA CONCRETE				m3	3.1
CONCRETE BARRIER RAIL				METERS	12.394

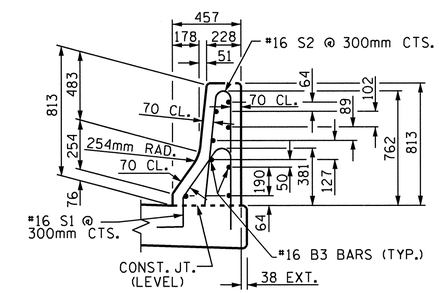

SECTION THRU RAIL

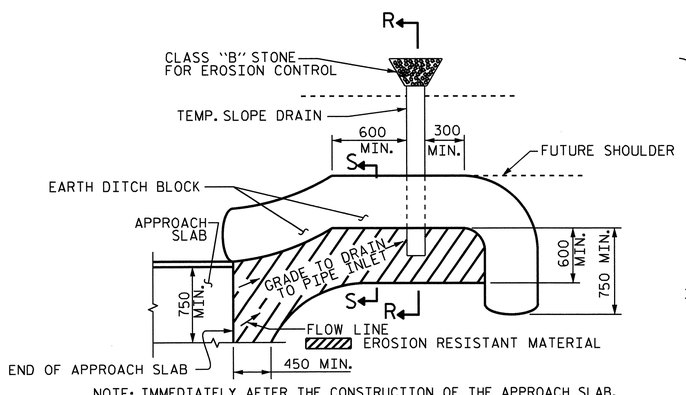

NOTE: IMMEDIATELY AFTER THE CONSTRUCTION OF THE APPROACH SLAB, THE CONTRACTOR SHALL PROVIDE TEMPORARY BERM AND SLOPE DRAIN. CONTRACTOR SHALL GRADE TO PIPE INLET AND PROVIDE EROSION RESISTANT MATERIAL AS SHOWN. THE EROSION RESISTANT MATERIAL SHALL BE EITHER 1) ASPHALT PLANT MIX, TYPE 1 OR TYPE 2, MIN. 50mm DEPTH, 2) EROSION CONTROL MAT, OR 3) CONCRETE, AS DIRECTED BY THE ENGINEER. THE SLOPE DRAIN SHALL CONSIST OF A NON-PERFORATED TEMPORARY DRAINAGE PIPE, 305mm IN DIAMETER.

PLAN VIEW

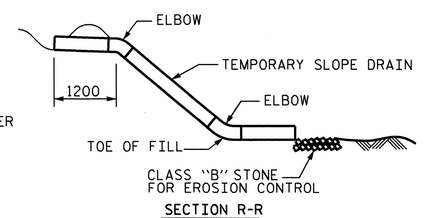

SECTION R-R

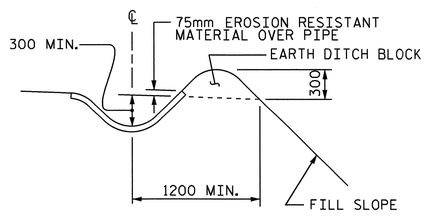

SECTION S-S

TEMPORARY BERM AND SLOPE DRAIN DETAILS

(TO BE USED WHEN SHOULDER BERM GUTTER IS REQUIRED)

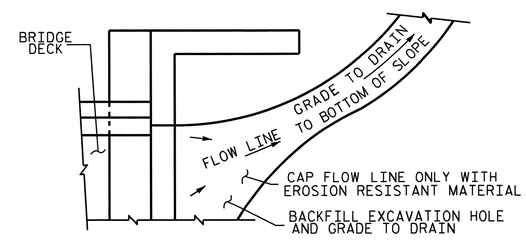

NOTE: IF THE APPROACH SLAB IS NOT CONSTRUCTED IMMEDIATELY AFTER THE BACKFILLING OF THE END BENT EXCAVATION, GRADE TO DRAIN TO THE BOTTOM OF THE SLOPE AND PROVIDE EROSION RESISTANT MATERIAL, SUCH AS FIBERGLASS ROVING OR AS DIRECTED BY THE ENGINEER TO PREVENT SOIL EROSION AND TO PROTECT THE AREA ADJACENT TO THE STRUCTURE. THE CONTRACTOR WILL BE REQUIRED TO REMOVE THESE MATERIALS PRIOR TO CONSTRUCTION OF THE APPROACH SLAB.

TEMPORARY DRAINAGE DETAIL

PROJECT NO. R-2413C

GUILFORD-ROCKINGHAM COUNTY

STATION: 45+30.610 -LREV-

SHEET 2 OF 2

STATE OF NORTH CAROLINA
DEPARTMENT OF TRANSPORTATION
RALEIGH

STANDARD
BRIDGE APPROACH
SLAB DETAILS

RIGHT LANE

NORTH CAROLINA PROFESSIONAL SEAL 022516 ENGINEER EMILY E. MURRAY
6/28/11

REVISIONS								SHEET NO.
NO.	BY:	DATE:	NO.	BY:	DATE:			S-206
1			3					TOTAL SHEETS
2			4					238

ASSEMBLED BY : T.L. AVERETTE DATE : 11-16-10
CHECKED BY : PEGGY PARISI DATE : 11-18-10

DRAWN BY : FCJ 11/88
CHECKED BY : ARB 11/88

REV. 10/17/00 RWW/LES
REV. 5/7/03 RWW/JTE
REV. 5/1/06RR MAA/KMM

05-SEP-2011 13:52
Y:\Structures\Final Plans\Str.#6\R2413C_sd_AS_06.dgn
mgudlaugsson

STR #6

STD. NO. BAS10SM

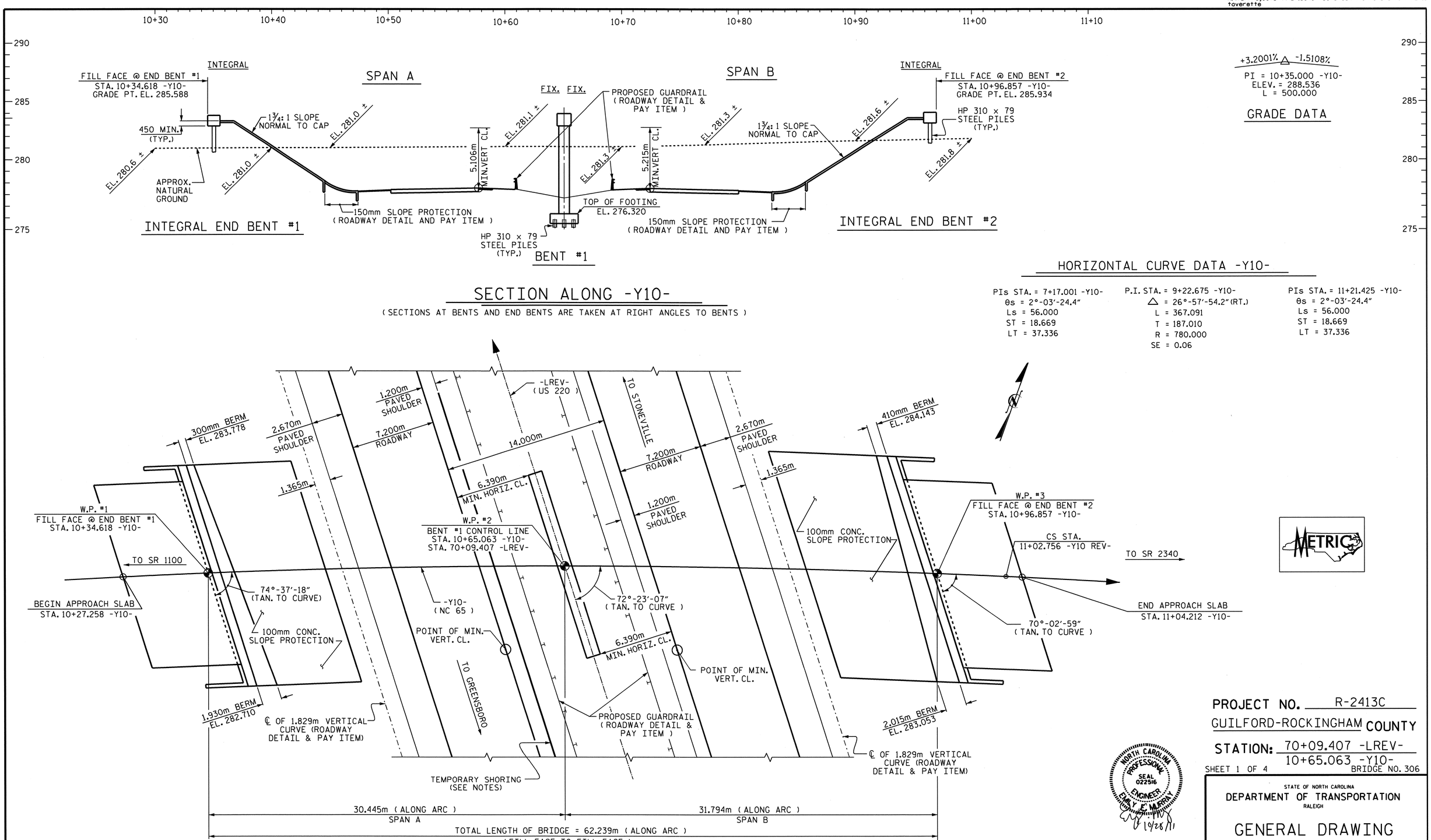

PROJECT NO. R-2413C
GUILFORD-ROCKINGHAM COUNTY
STATION: 70+09.407 -LREV-
10+65.063 -Y10-
SHEET 1 OF 4 BRIDGE NO. 306

NORTH CAROLINA PROFESSIONAL SEAL 022516 ENGINEER EMILY E. MURRAY 10/28/11

NORTH CAROLINA PROFESSIONAL SEAL 12274 ENGINEER OMAR R. AZIZI 10/28/11

STATE OF NORTH CAROLINA
DEPARTMENT OF TRANSPORTATION
RALEIGH

GENERAL DRAWING
BRIDGE ON NC 65 OVER US 220
BETWEEN SR 1100 AND SR 2340

REVISIONS						SHEET NO.
NO.	BY:	DATE:	NO.	BY:	DATE:	S-207
1			3			TOTAL SHEETS
2			4			238

DRAWN BY : T.L. AVERETTE DATE : 5-18-11
CHECKED BY : PEGGY PARISI DATE : 5-19-11

STR.#7

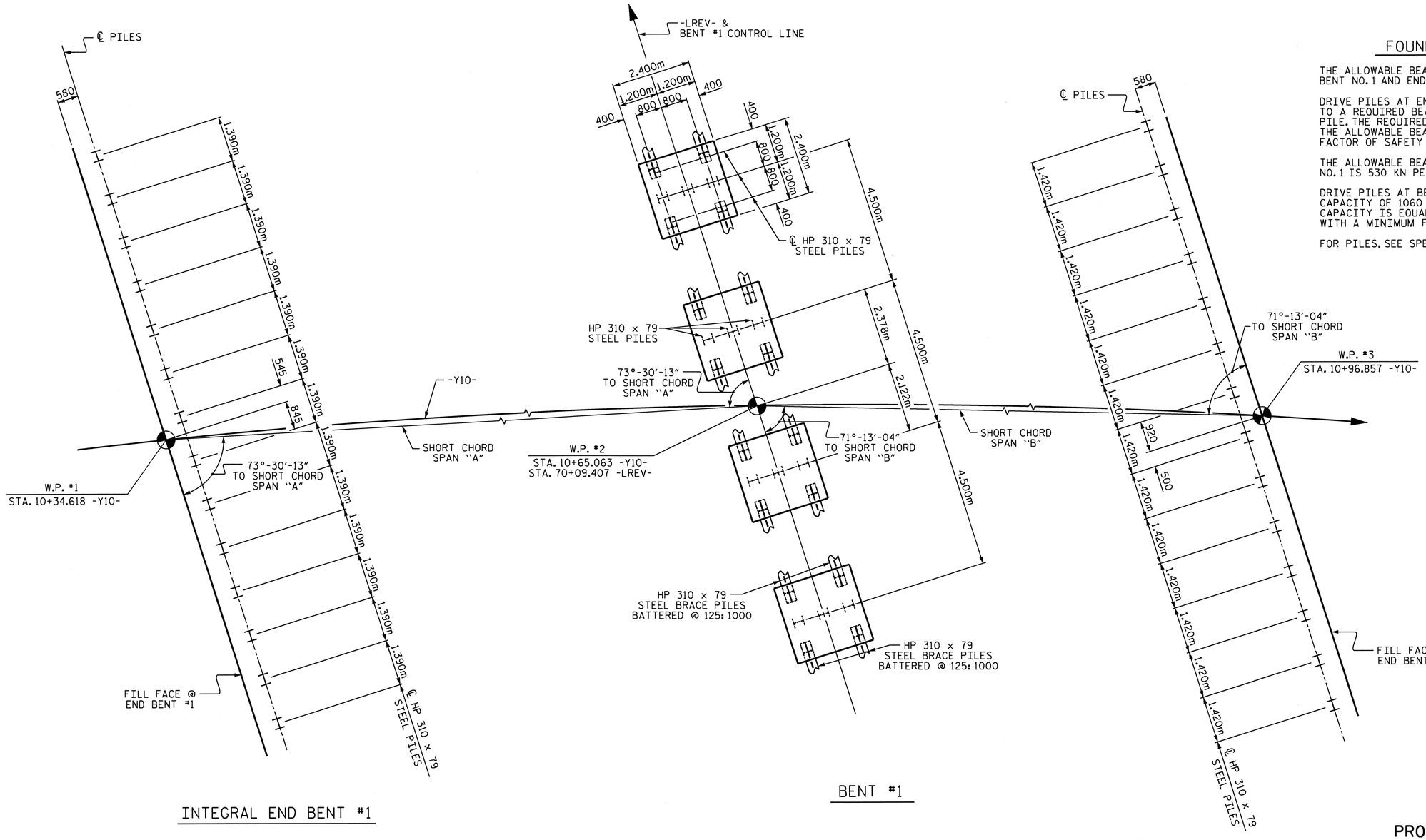

INTEGRAL END BENT #1

BENT #1

INTEGRAL END BENT #2

FOUNDATION NOTES

THE ALLOWABLE BEARING CAPACITY FOR PILES AT END BENT NO. 1 AND END BENT NO. 2 IS 670 KN PER PILE.

DRIVE PILES AT END BENT NO. 1 AND END BENT NO. 2 TO A REQUIRED BEARING CAPACITY OF 1340 KN PER PILE. THE REQUIRED BEARING CAPACITY IS EQUAL TO THE ALLOWABLE BEARING CAPACITY WITH A MINIMUM FACTOR OF SAFETY OF TWO.

THE ALLOWABLE BEARING CAPACITY FOR PILES AT BENT NO. 1 IS 530 KN PER PILE.

DRIVE PILES AT BENT NO. 1 TO A REQUIRED BEARING CAPACITY OF 1060 KN PER PILE. THE REQUIRED BEARING CAPACITY IS EQUAL TO THE ALLOWABLE BEARING CAPACITY WITH A MINIMUM FACTOR OF SAFETY OF TWO.

FOR PILES, SEE SPECIAL PROVISIONS.

FOUNDATION LAYOUT

DIMENSIONS LOCATING PILES ARE SHOWN TO THE PILE CENTERLINE.
DIMENSIONS, PILE TYPE, AND LOCATION ARE TYPICAL FOR EACH BENT FOOTING.

PROJECT NO. R-2413C
GUILFORD-ROCKINGHAM COUNTY
STATION: 70+09.407 -LREV-
10+65.063 -Y10-

SHEET 2 OF 4

STATE OF NORTH CAROLINA
DEPARTMENT OF TRANSPORTATION
RALEIGH

GENERAL DRAWING

BRIDGE ON NC 65 OVER US 220
BETWEEN SR 1100 AND SR 2340

NORTH CAROLINA PROFESSIONAL SEAL 022516 ENGINEER EMILY E. MURRAY
8/28/11

REVISIONS						
NO.	BY:	DATE:	NO.	BY:	DATE:	
1			3			
2			4			

SHEET NO. S-208
TOTAL SHEETS 238

DRAWN BY : T.L. AVERETTE DATE : 5-18-11
CHECKED BY : PEGGY PARISI DATE : 5-19-11

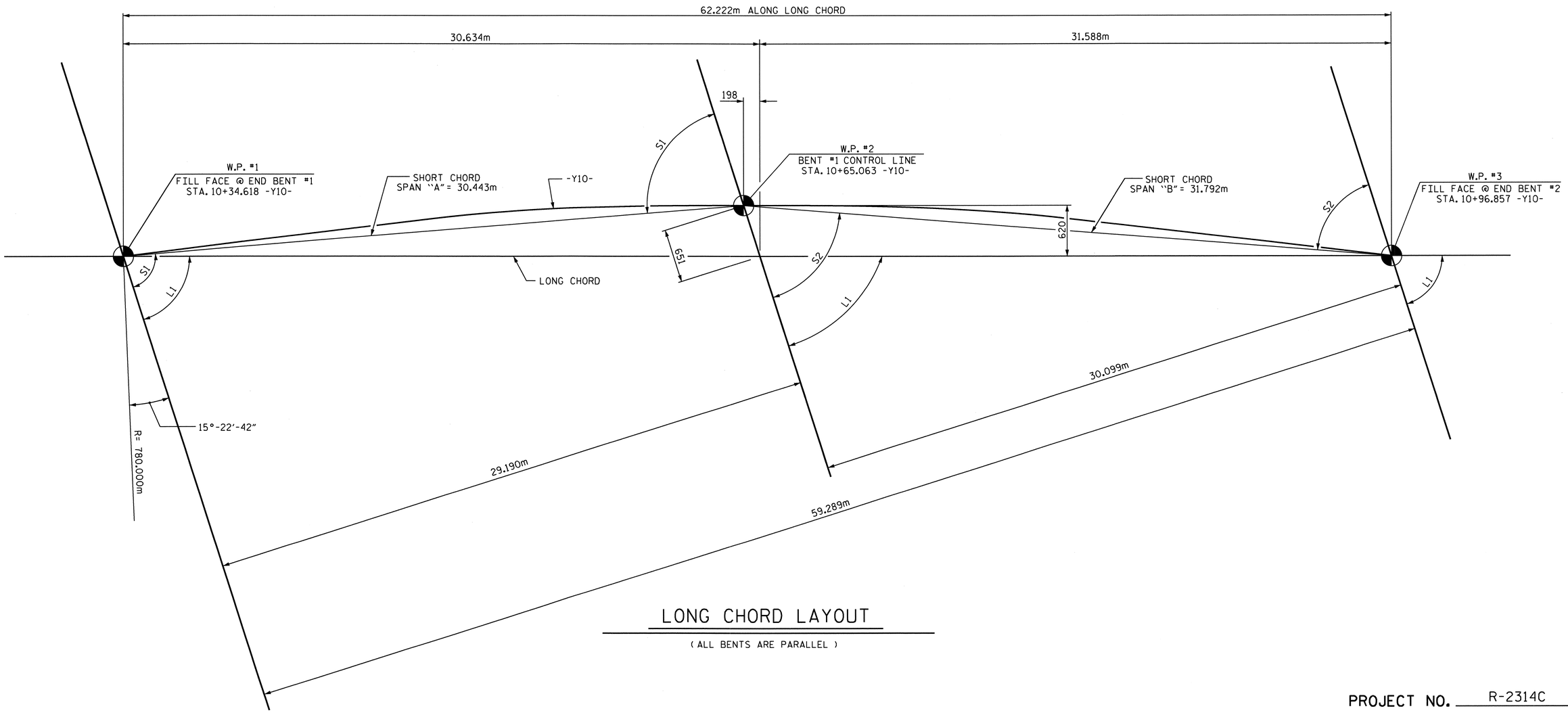

LONG CHORD LAYOUT

(ALL BENTS ARE PARALLEL)

ANGLES			
LONG CHORD		SHORT CHORD	
L1	72°-20'-09"	S1	73°-30'-13"
		S2	71°-13'-04"

HORIZONTAL CURVE DATA -Y10-

P.I. STA. = 9+22.675 -Y10-
△ = 26°-57'-54.2" (RT.)
L = 367.091
T = 187.010
R = 780.000
SE = 0.06

NORTH CAROLINA PROFESSIONAL SEAL 022516 ENGINEER EMILY E. MURRAY
12/28/11

PROJECT NO. R-2314C
GUILFORD-ROCKINGHAM COUNTY
STATION: 70+09.407 -LREV-
10+65.063 -Y10-

SHEET 3 OF 4

STATE OF NORTH CAROLINA
DEPARTMENT OF TRANSPORTATION
RALEIGH

GENERAL DRAWING

BRIDGE ON NC 65 OVER US 220
BETWEEN SR 1100 AND SR 2340

REVISIONS						SHEET NO.
NO.	BY:	DATE:	NO.	BY:	DATE:	S-209
1			3			TOTAL SHEETS
2			4			238

DRAWN BY : T.L. AVERETTE DATE : 5-18-11
CHECKED BY : PEGGY PARISI DATE : 5-19-11

B.M. #18: RR SPIKE IN BASE OF POWER POLE 23.6m RT. OF -L- STA. 71+74.20 EL. 281.180

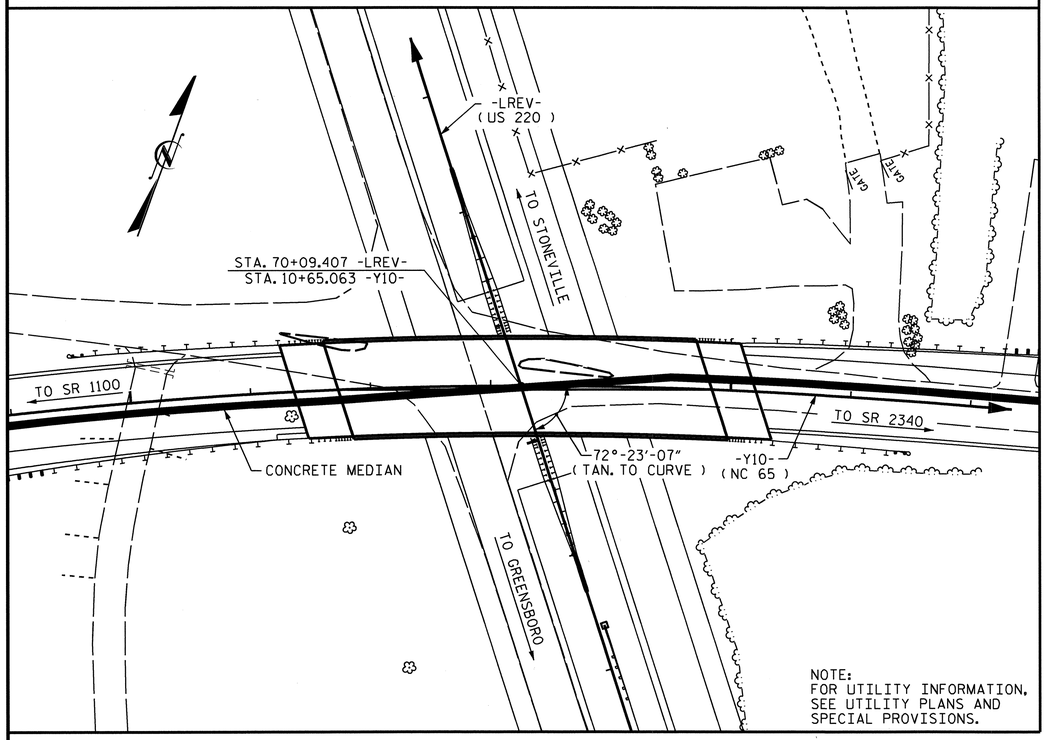

LOCATION SKETCH

NOTES

ALL DIMENSIONS ARE IN MILLIMETERS UNLESS OTHERWISE NOTED.

ALL ELEVATIONS ARE IN METERS.

ASSUMED LIVE LOAD = MS 18 OR ALTERNATE LOADING, EXCEPT THAT THE GIRDERS HAVE BEEN DESIGNED FOR MS 22.5.

FOR OTHER DESIGN DATA AND GENERAL NOTES, SEE SHEET SNSM.

THIS BRIDGE HAS BEEN DESIGNED BY THE STRENGTH DESIGN METHOD AS SPECIFIED IN AASHTO STANDARD SPECIFICATIONS.

PRESTRESSED CONCRETE DECK PANELS MAY BE USED IN LIEU OF METAL STAY-IN-PLACE FORMS IN ACCORDANCE WITH ARTICLE 420-3 OF THE STANDARD SPECIFICATIONS.

REMOVABLE FORMS MAY BE USED IN LIEU OF METAL STAY-IN-PLACE FORMS IN ACCORDANCE WITH ARTICLE 420-3 OF THE STANDARD SPECIFICATIONS.

THE CLASS AA CONCRETE IN THE BRIDGE DECK SHALL CONTAIN FLY ASH OR GROUND GRANULATED BLAST FURNACE SLAG AT THE SUBSTITUTION RATE SPECIFIED IN ARTICLE 1024-1 AND IN ACCORDANCE WITH ARTICLES 1024-5 AND 1024-6 OF THE STANDARD SPECIFICATIONS. NO PAYMENT WILL BE MADE FOR THIS SUBSTITUTION AS IT IS CONSIDERED INCIDENTAL TO THE COST OF THE REINFORCED CONCRETE DECK SLAB.

NEEDLE BEAMS WILL NOT BE ALLOWED UNLESS OTHERWISE CALLED FOR ON THE PLANS OR APPROVED BY THE ENGINEER.

FOR SUBMITTAL OF WORKING DRAWINGS, SEE SPECIAL PROVISIONS.

FOR FALSEWORK AND FORMWORK, SEE SPECIAL PROVISIONS.

FOR MAINTENANCE AND PROTECTION OF TRAFFIC BENEATH PROPOSED STRUCTURE, SEE SPECIAL PROVISIONS.

FOR CRANE SAFETY, SEE SPECIAL PROVISIONS.

FOR GROUT FOR STRUCTURES, SEE SPECIAL PROVISIONS.

FOR CURING CONCRETE, SEE SPECIAL PROVISIONS.

FOR PLACING LOAD ON STRUCTURE MEMBERS, SEE SPECIAL PROVISIONS.

FOR MAINTENANCE OF TRAFFIC, SEE TRAFFIC CONTROL PLANS.

WORK SHALL NOT BE STARTED ON THIS BRIDGE UNTIL ROADWAY SECTION HAS BEEN EXCAVATED.

THIS BRIDGE HAS BEEN DESIGNED IN ACCORDANCE WITH THE REQUIREMENTS OF THE STANDARD SPECIFICATIONS FOR SEISMIC DESIGN OF HIGHWAY BRIDGES FOR SEISMIC PERFORMANCE CATEGORY A.

FOR EROSION CONTROL MEASURES, SEE EROSION CONTROL PLANS.

FOR PRESTRESSED CONCRETE MEMBERS, SEE SPECIAL PROVISIONS.

FOR METRIC STRUCTURAL STEEL, SEE SPECIAL PROVISIONS.

FOR LIMITS OF TEMPORARY SHORING FOR MAINTENANCE OF TRAFFIC, SEE TRAFFIC CONTROL PLANS. FOR PAY ITEM FOR TEMPORARY SHORING FOR MAINTENANCE OF TRAFFIC, SEE ROADWAY PLANS.

TOTAL BILL OF MATERIAL - METRIC

	FOUNDATION EXCAVATION FOR BENT	REINFORCED CONCRETE DECK SLAB	GROOVING BRIDGE FLOORS	CLASS A CONCRETE	BRIDGE APPROACH SLABS	REINFORCING STEEL	SPIRAL COLUMN REINFORCING STEEL	1372mm PRESTRESSED CONCRETE GIRDERS		HP 310 X 79 STEEL PILES		CONCRETE BARRIER RAIL	100mm SLOPE PROTECTION	ELASTOMERIC BEARINGS	EVAZOTE JOINT SEALS
	LUMP SUM	SQ. METERS	SQ. METERS	CU. METERS	LUMP SUM	kg	kg	NO.	METERS	NO.	METERS	METERS	SQ. METERS	LUMP SUM	LUMP SUM
SUPERSTRUCTURE		1032.5	1115.8		LUMP SUM			14	428.384			123.430		LUMP SUM	LUMP SUM
END BENT #1				25.6		2,354				14	219.8		223		
BENT #1	LUMP SUM			66.4		5,639	1082			28	201.6				
END BENT #2				26.7		2,401				14	254.8		252		
TOTAL	LUMP SUM	1032.5	1115.8	118.7	LUMP SUM	10,394	1082	14	428.384	56	676.2	123.430	475	LUMP SUM	LUMP SUM

TOTAL BILL OF MATERIAL - ENGLISH

	LUMP SUM	SQ. FT.	SQ. FT.	CU. YD.	LUMP SUM	LBS.	LBS.	NO.	LIN. FT.	NO.	LIN. FT.	LIN. FT.	SQ. YD.	LUMP SUM	LUMP SUM
TOTAL	LUMP SUM	11,114	12,010	155.3	LUMP SUM	22,915	2,385	14	1405.46	56	2218	404.95	568	LUMP SUM	LUMP SUM

PROJECT NO. R-2413C
GUILFORD-ROCKINGHAM COUNTY
STATION: 70+09.407 -LREV-
10+65.063 -Y10-

SHEET 4 OF 4

STATE OF NORTH CAROLINA
DEPARTMENT OF TRANSPORTATION
RALEIGH

GENERAL DRAWING

BRIDGE ON NC 65 OVER US 220
BETWEEN SR 1100 AND SR 2340

NORTH CAROLINA PROFESSIONAL SEAL 022516 ENGINEER EMILY K. MURRAY
10/28/11

REVISIONS						SHEET NO.
NO.	BY:	DATE:	NO.	BY:	DATE:	S-210
1			3			TOTAL SHEETS
2			4			238

DRAWN BY : T.L. AVERETTE DATE : 5-25-11
CHECKED BY : PEGGY PARISI DATE : 5-26-11

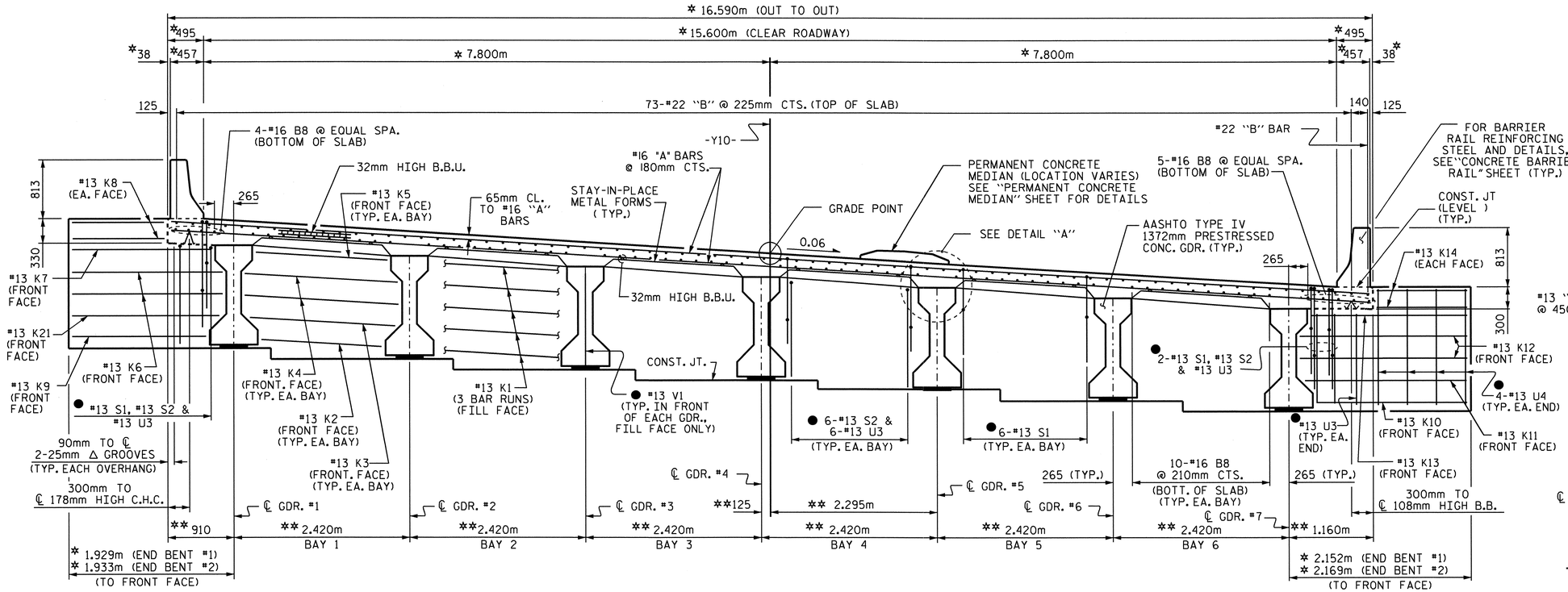

TYPICAL SECTION @ INTEGRAL END BENT

* RADIAL DIMENSION
** RADIAL DIMENSION THRU WORKPOINT
● #13 U3, #13 U4, #13 S1 #13 S2 & #13 V1 BARS SPACED TO MATCH WITH #13 "V" BARS IN INTEGRAL END BENT CAP

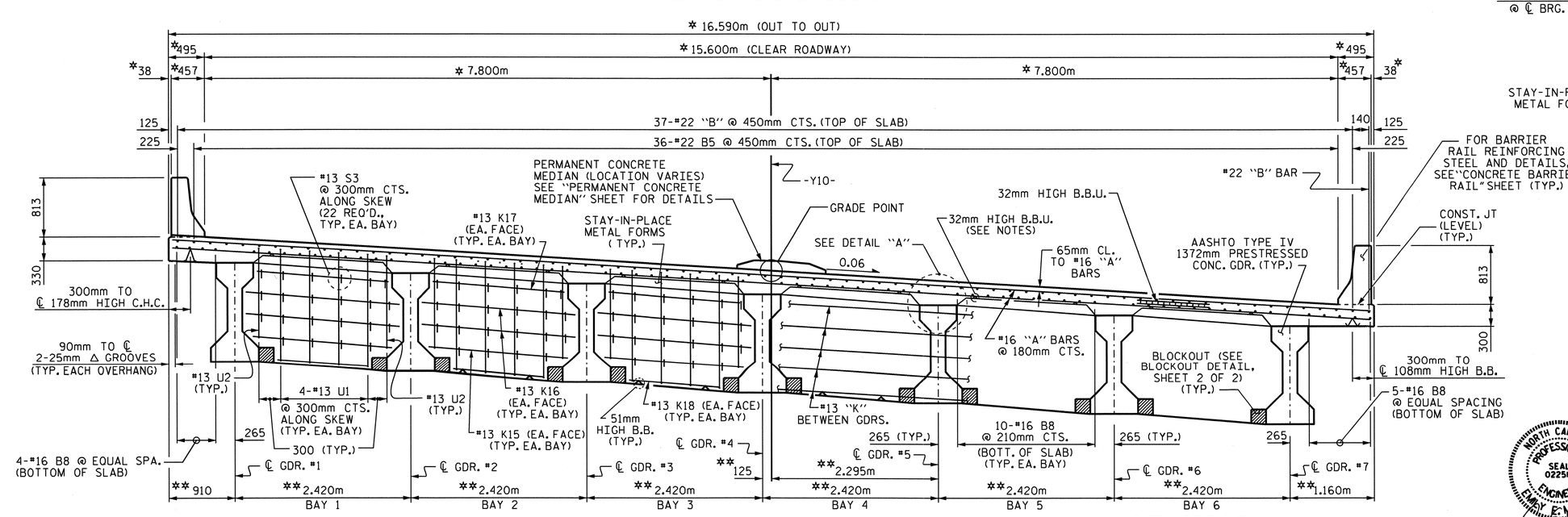

TYPICAL SECTION @ CONTINUOUS BENT DIAPHGRAM

* RADIAL DIMENSION
** RADIAL DIMENSION THRU WORKPOINT

NOTES

PROVIDE 32mm HIGH BEAM BOLSTERS UPPER AT 1.2m CTS. ATOP THE METAL STAY-IN-PLACE FORMS TO SUPPORT THE BOTTOM MAT OF 'A' BARS. WHEN USING REMOVABLE FORMS, PROVIDE CONTINUOUS HIGH CHAIRS FOR METAL DECK (C.H.C.M.) @ 1.2m CTS. WITH A HEIGHT TO SUPPORT THE BOTTOM MAT OF 'A' BARS A CLEAR DISTANCE OF 65mm ABOVE THE TOP OF THE REMOVABLE FORM.

LONGITUDINAL STEEL MAY BE SHIFTED SLIGHTLY, AS NECESSARY, TO AVOID INTERFERENCE WITH STIRRUPS IN PRESTRESSED CONCRETE GIRDERS.

PREVIOUSLY CAST CONCRETE IN A CONTINUOUS UNIT SHALL HAVE ATTAINED A MINIMUM COMPRESSIVE STRENGTH OF 20.7 MPa BEFORE ADDITIONAL CONCRETE IS CAST IN THE UNIT.

BARRIER RAIL IN A CONTINUOUS UNIT SHALL NOT BE CAST UNTIL ALL SLAB CONCRETE IN THE UNIT HAS BEEN CAST AND HAS REACHED A MINIMUM COMPRESSIVE STRENGTH OF 20.7 MPa.

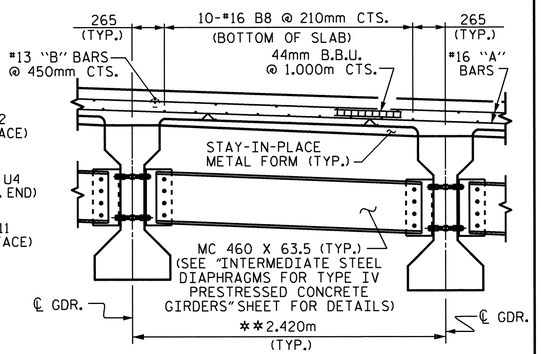

PARTIAL TYPICAL SECTION

AT INTERMEDIATE DIAPHRAGM

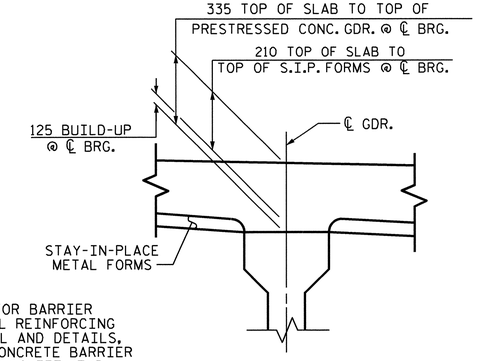

DETAIL "A"

(TYP. EACH GDR.)

PROJECT NO. R-2413C

GUILFORD-ROCKINGHAM COUNTY

STATION: 70+09.407-LREV-

SHEET 1 OF 2

STATE OF NORTH CAROLINA
DEPARTMENT OF TRANSPORTATION
RALEIGH

SUPERSTRUCTURE

TYPICAL SECTION

NORTH CAROLINA PROFESSIONAL SEAL 022516 ENGINEER EMRY C. MURRAY
10/28/11

REVISIONS							SHEET NO.
NO.	BY:	DATE:	NO.	BY:	DATE:		S-211
1			3				TOTAL SHEETS
2			4				238

STR. #7

DRAWN BY : B.N.BARODAWALA DATE : 11-1-10
CHECKED BY : T.L. AVERETTE DATE : 3-24-11

05-SEP-2011 14:44
Y:\Structures\Final Plans\Str.#7\R-2413C_SD_TS_07.dgn
mgudlaugsson

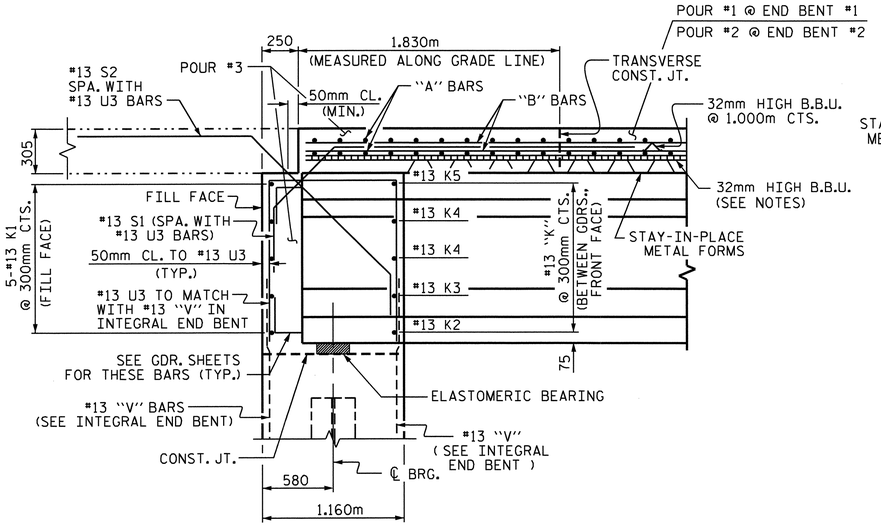

END OF GIRDER DETAIL AT INTEGRAL END BENT

#13 V1 BAR IN FRONT OF GIRDER NOT SHOWN

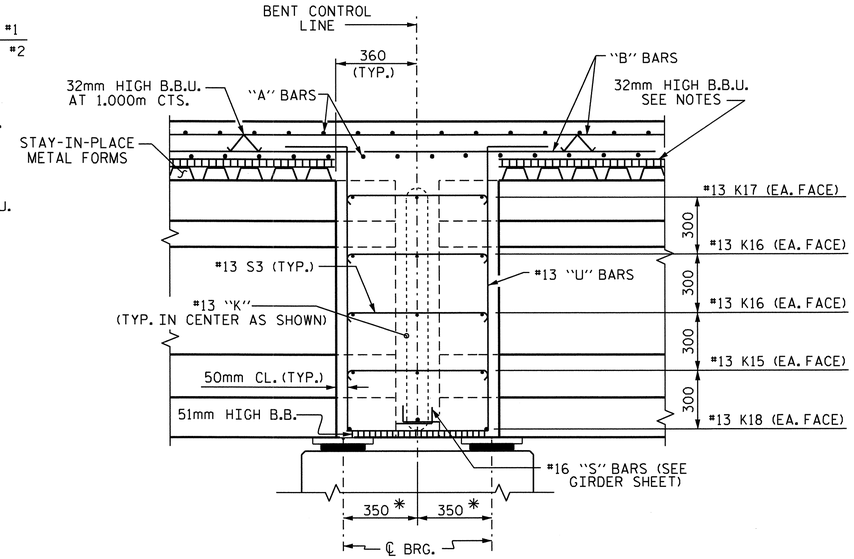

SECTION THRU BENT DIAPHRAGM

* MEASURED ALONG ℄ GDR.

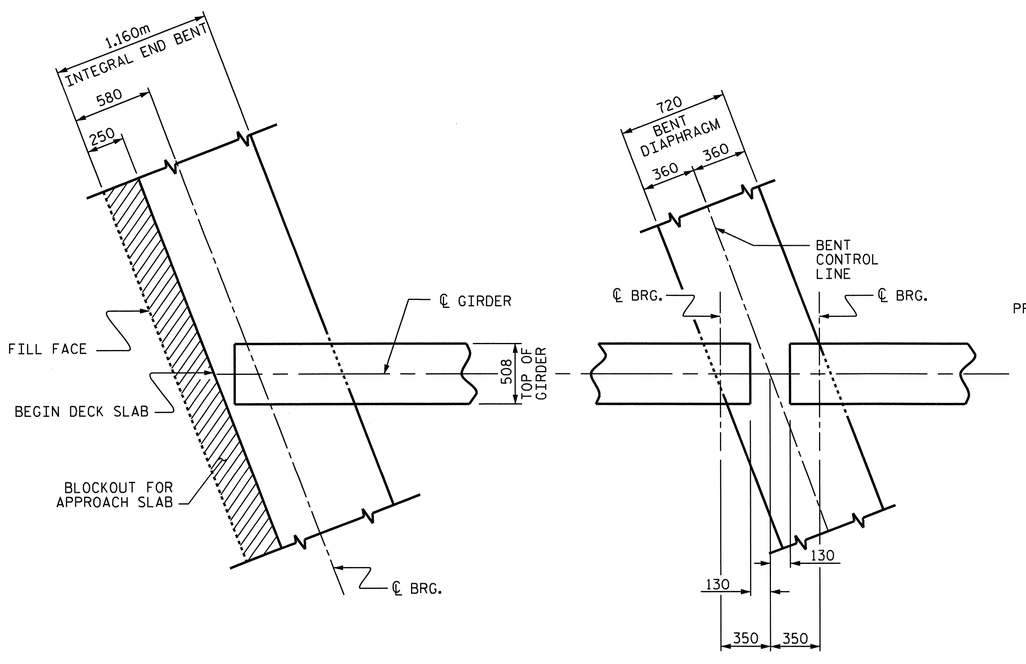

AT INTEGRAL END BENT

(END BENT #1 SHOWN, END BENT #2 SIMILAR)

AT BENT DIAPHRAGM

PLAN OF GIRDER

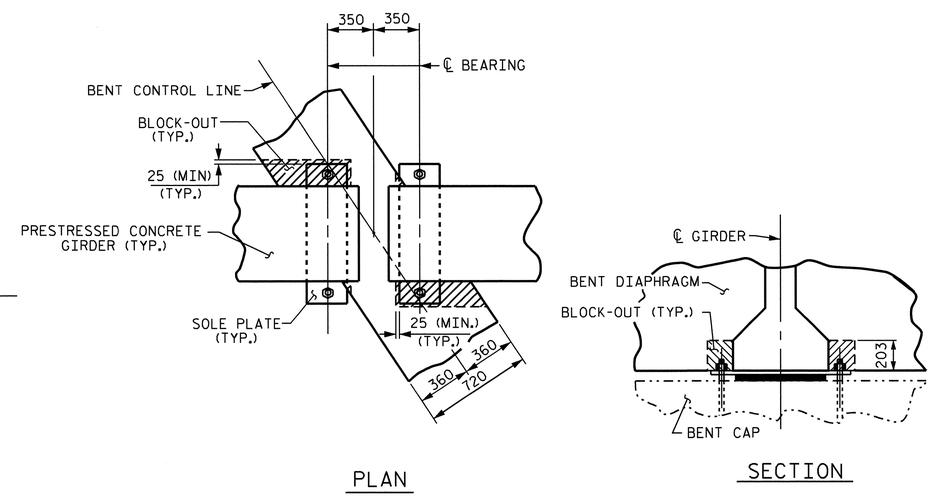

PLAN

SECTION

BENT DIAPHRAGM BLOCK-OUT DETAIL

PROJECT NO. R-2413C

GUIFORD-ROCKINGHAM COUNTY

STATION: 70+09.407-LREV-

SHEET 2 OF 2

STATE OF NORTH CAROLINA
DEPARTMENT OF TRANSPORTATION
RALEIGH

SUPERSTRUCTURE
TYPICAL SECTION

NORTH CAROLINA PROFESSIONAL SEAL 022516 ENGINEER EMILY E. MURRAY
10/28/11

REVISIONS							SHEET NO.
NO.	BY:	DATE:	NO.	BY:	DATE:		S-212
1			3				TOTAL SHEETS
2			4				238

STR. #7

DRAWN BY : B.N.BARODAWALA DATE : 11-1-10
CHECKED BY : T.L.AVERETTE DATE : 3-24-11

05-SEP-2011 14:44
Y:\Structures\Final Plans\Str.#7\R-2413C_SD_TS_07.dgn
mgudlaugsson

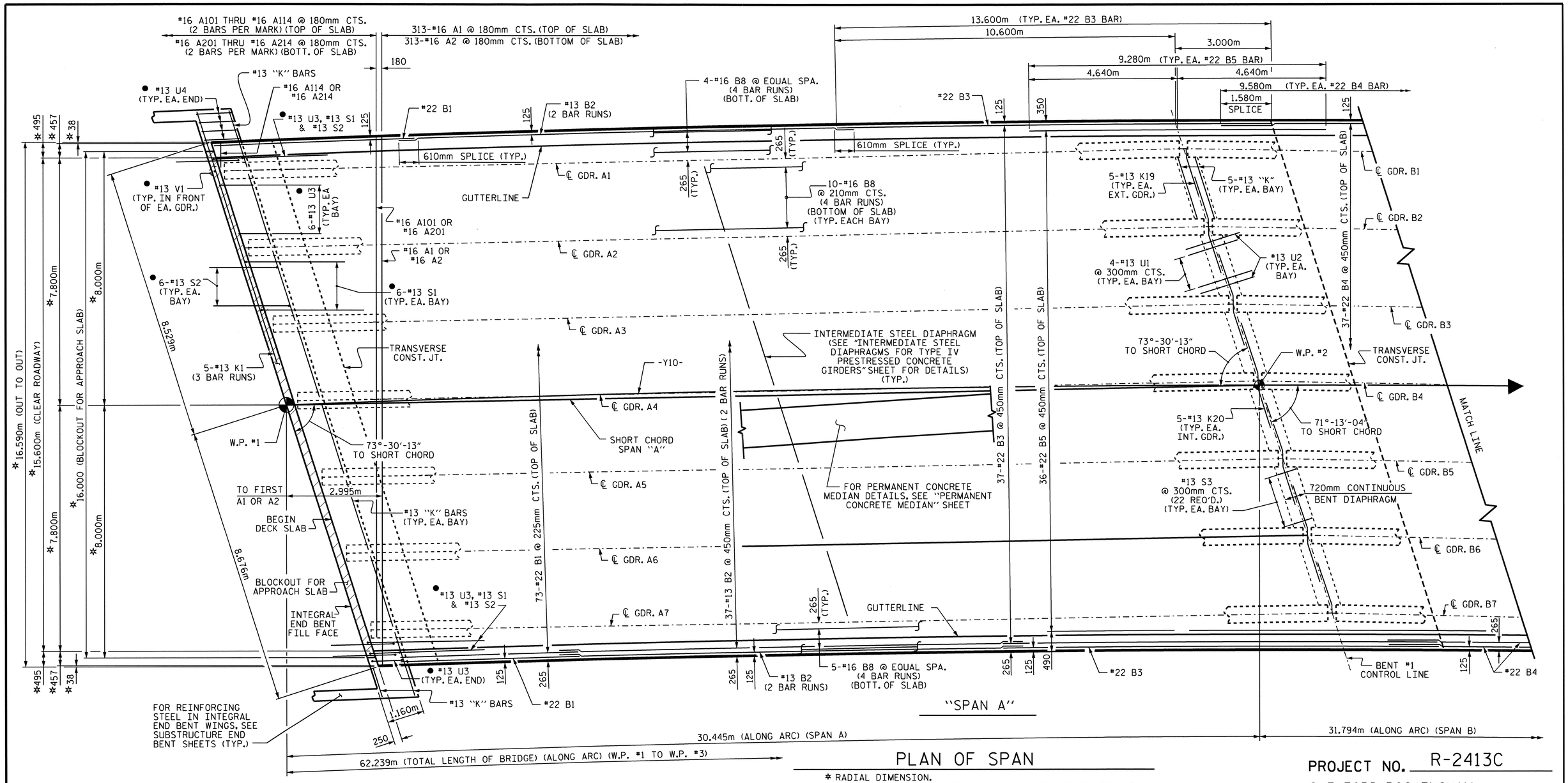

PLAN OF SPAN

* RADIAL DIMENSION.

● #13 U3, #13 U4, #13 S1, #13 S2 & #13 V1 BARS SPACED TO MATCH WITH #13 "V" BARS IN INTEGRAL END BENT CAP.

#16 "A" BARS ARE SPACED PERPENDICULAR TO THE LONG CHORD.

FOR LOCATION OF INTERMEDIATE DIAPHRAGMS, SEE "PRESTRESSED CONCRETE GIRDER" SHEETS.

FOR LOCATION OF TRANSVERSE CONSTRUCTION JOINTS, SEE "SUPERSTRUCTURE BILL OF MATERIAL" SHEET.

FOR BARRIER RAIL REINFORCING STEEL AND DETAILS, SEE "CONCRETE BARRIER RAIL" SHEET (TYP.)

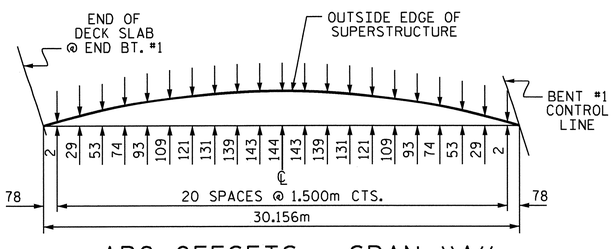

ARC OFFSETS - SPAN "A"

LEFT SIDE

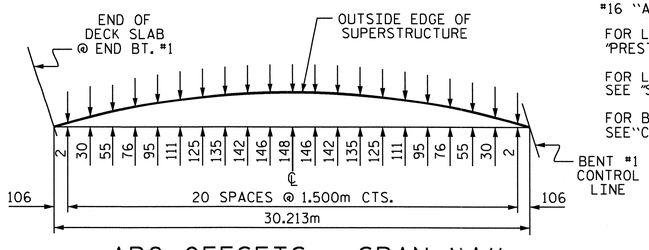

ARC OFFSETS - SPAN "A"

RIGHT SIDE

PROJECT NO. R-2413C

GUILFORD-ROCKINGHAM COUNTY

STATION: 70+09.407-LREV-

SHEET 1 OF 2

STATE OF NORTH CAROLINA
DEPARTMENT OF TRANSPORTATION
RALEIGH

SUPERSTRUCTURE

PLAN OF SPANS

NORTH CAROLINA PROFESSIONAL SEAL 022516 ENGINEER EMILY S. MURRAY

10/28/11

REVISIONS						SHEET NO.
NO.	BY:	DATE:	NO.	BY:	DATE:	S-213
1			3			TOTAL SHEETS
2			4			238

STR. #7

DRAWN BY : B.N.BARODAWALA DATE : 11-1-10
CHECKED BY : T.L.AVERETTE DATE : 3-24-11

05-SEP-2011 14:43
Y:\Structures\Final Plans\Str.#7\R-2413C_SD_PS_07.dgn
mgudlaugsson

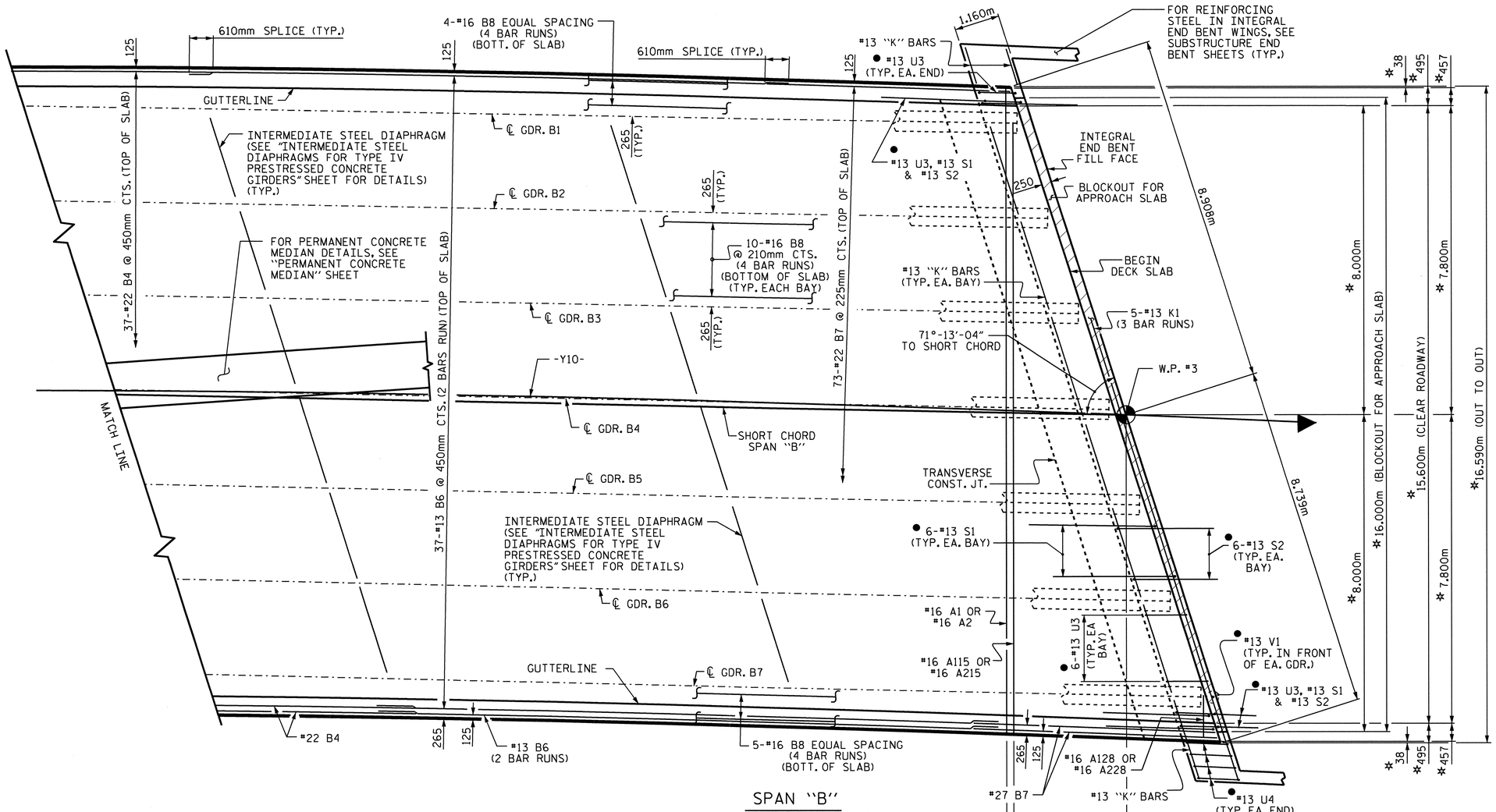

PLAN OF SPAN

SPAN "B"

3.067m TO FIRST A1 OR A2

31.794m (ALONG ARC) (SPAN B)

62.239m (TOTAL LENGTH OF BRIDGE) (ALONG ARC) (W.P. #1 TO W.P. #3)

180 #16 A115 THRU #16 A128 @ 180mm CTS. (2BARS PER MARK) (TOP OF SLAB)

313-#16 A1 @ 180mm CTS. (TOP OF SLAB)

313-#16 A2 @ 180mm CTS. (BOTTOM OF SLAB)

#16 A215 THRU #16 A228 @ 180mm CTS. (2 BARS PER MARK) (BOTT. OF SLAB)

* RADIAL DIMENSION.

● #13 U3, #13 U4, #13 S1, #13 S2 & #13 V1 BARS SPACED TO MATCH WITH #13 "V" BARS IN INTEGRAL END BENT CAP.

#16 "A" BARS ARE SPACED PERPENDICULAR TO THE LONG CHORD.

FOR LOCATION OF INTERMEDIATE DIAPHRAGMS, SEE "PRESTRESSED CONCRETE GIRDER" SHEETS.

FOR LOCATION OF TRANSVERSE CONSTRUCTION JOINTS, SEE "SUPERSTRUCTURE BILL OF MATERIAL" SHEET.

FOR BARRIER RAIL REINFORCING STEEL AND DETAILS, SEE "CONCRETE BARRIER RAIL" SHEET (TYP.)

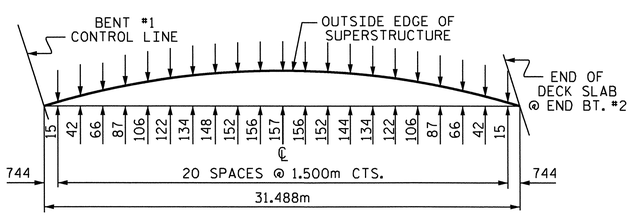

ARC OFFSETS - SPAN "B"

LEFT SIDE

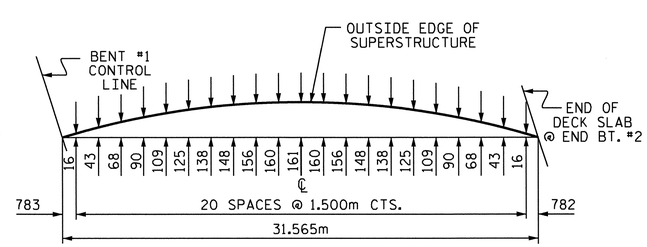

ARC OFFSETS - SPAN "B"

RIGHT SIDE

PROJECT NO. R-2413C

GUILFORD-ROCKINGHAM COUNTY

STATION: 70+09.407-LREV-

SHEET 2 OF 2

STATE OF NORTH CAROLINA
DEPARTMENT OF TRANSPORTATION
RALEIGH

SUPERSTRUCTURE
PLAN OF SPANS

NORTH CAROLINA PROFESSIONAL SEAL 022516 ENGINEER EMILY E. MURRAY
6/28/11

REVISIONS						SHEET NO.
NO.	BY:	DATE:	NO.	BY:	DATE:	S-214
1			3			TOTAL SHEETS
2			4			238

STR. #7

DRAWN BY : B.N.BARODAWALA DATE : 11-1-10
CHECKED BY : T.L.AVERETTE DATE : 3-24-11

05-SEP-2011 14:43
Y:\Structures\Final Plans\Str.#7\R-2413C_SD_PS_07.dgn
mgudlaugsson

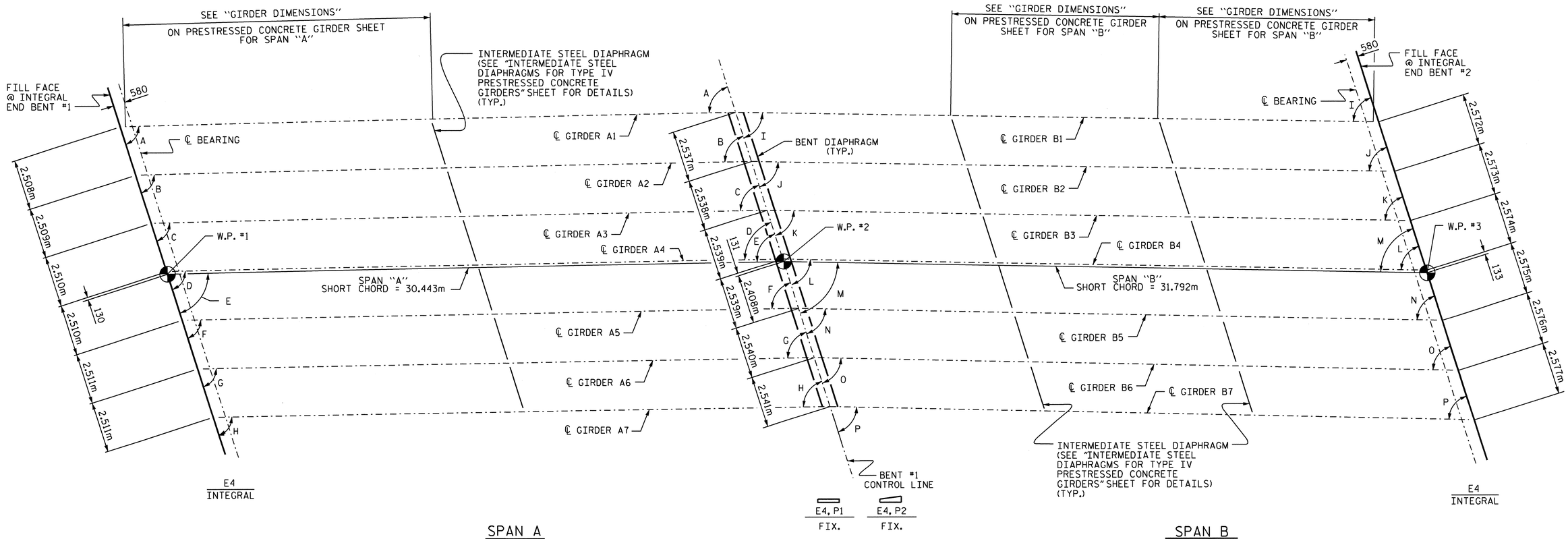

GIRDER LAYOUT

ANGLES			
A	73°-39′-46″	I	71°-24′-02″
B	73°-36′-39″	J	71°-20′-28″
C	73°-33′-31″	K	71°-16′-52″
D	73°-30′-22″	L	71°-13′-15″
E	73°-30′-13″	M	71°-13′-04″
F	73°-27′-12″	N	71°-09′-37″
G	73°-24′-01″	O	71°-05′-57″
H	73°-20′-48″	P	71°-02′-16″

PROJECT NO. R-2413C
GUILFORD-ROCKINGHAM COUNTY
STATION: 70+09.407-LREV-

STATE OF NORTH CAROLINA
DEPARTMENT OF TRANSPORTATION
RALEIGH

SUPERSTRUCTURE
FRAMING PLAN

NORTH CAROLINA PROFESSIONAL SEAL 022516 ENGINEER EMILY E. MURRAY
10/28/11

REVISIONS						SHEET NO.
NO.	BY:	DATE:	NO.	BY:	DATE:	S-215
1			3			TOTAL SHEETS
2			4			238

DRAWN BY : B.N.BARODAWALA DATE : 11-23-10
CHECKED BY : T.L.AVERETTE DATE : 3-24-11

05-SEP-2011 14:42
Y:\Structures\Final Plans\Str.#7\R-2413C_SD_FP_07.dgn
mgudlaugsson

STR. #7

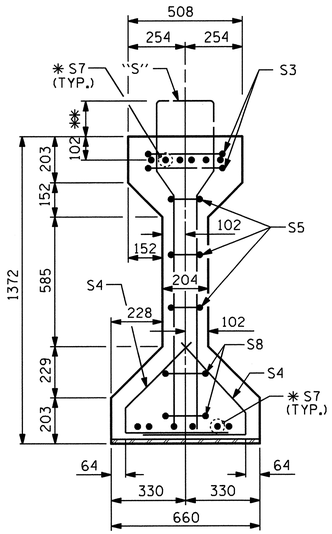

SECTION A-A

✱ FOR S7 BARS, SEE DETAIL "A" OF PRESTRESSED CONCRETE GIRDER CONTINUOUS FOR LIVE LOAD DETAILS SHEET

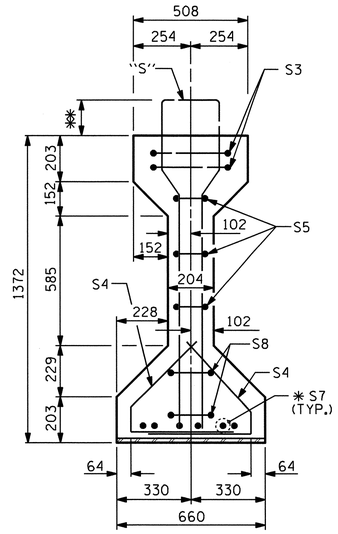

SECTION B-B

✱✱ THE PROJECTION OF THE S2 & S12 BARS IS 202mm
THE PROJECTION OF THE S13 IS 172mm
THE PROJECTION OF THE S1 BARS IS 152mm

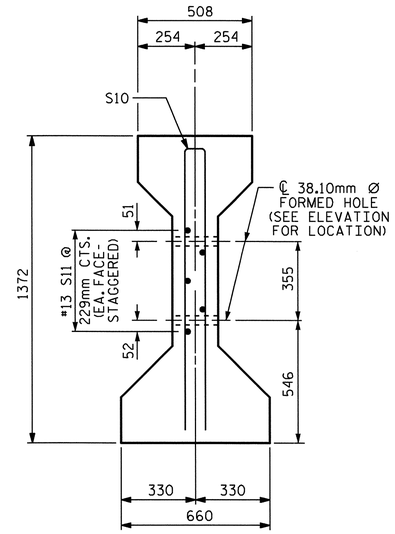

SECTION C-C

(S1 BARS NOT SHOWN)
NOTE: S11 BARS MAY BE SHIFTED SLIGHTLY VERTICALLY TO AVOID STRANDS

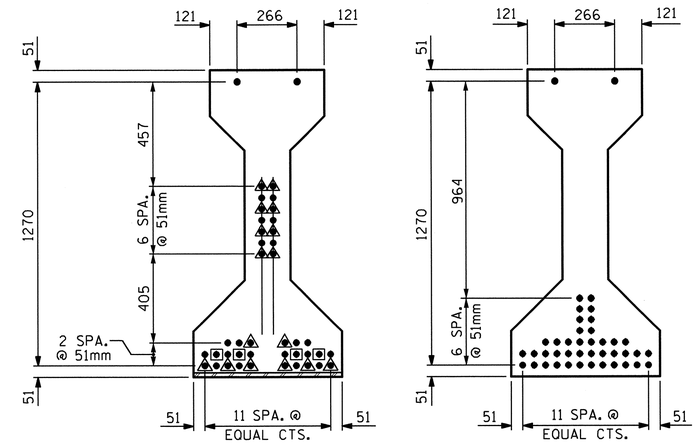

AT END OF GIRDER — AT ℄ OF GIRDER

15.24mm Ø LOW RELAXATION STRAND LAYOUT

DEBONDING LEGEND

- ● FULLY BONDED STRANDS
- STRANDS DEBONDED FOR 610mm FROM END OF GIRDER
- STRANDS DEBONDED FOR 1.220m FROM END OF GIRDER

GIRDER DIMENSIONS			
GIRDER NO.	DIM. "A" (m)	DIM. "B" (m)	DIM. "C" (mm)
1	29.906	14.953	506
2	29.912	14.956	512
3	29.920	14.960	520
4	29.928	14.964	528
5	29.936	14.968	536
6	29.944	14.972	544
7	29.954	14.977	554

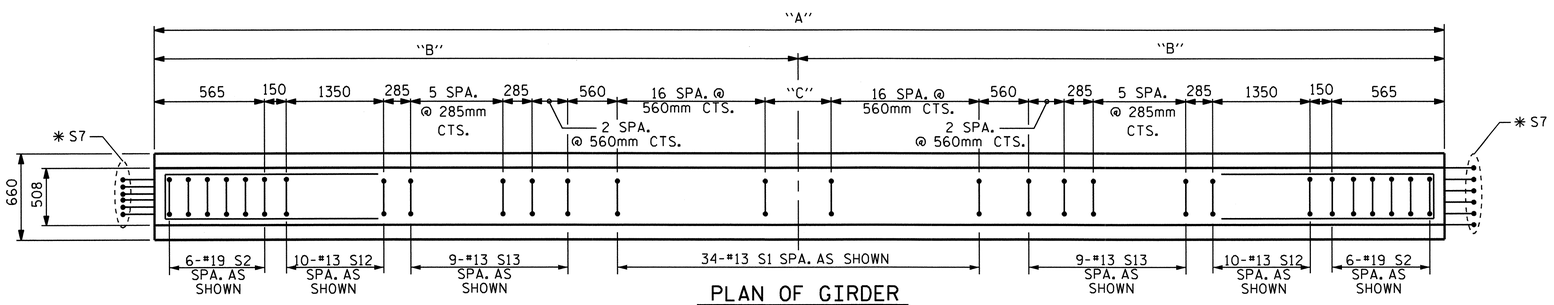

PLAN OF GIRDER

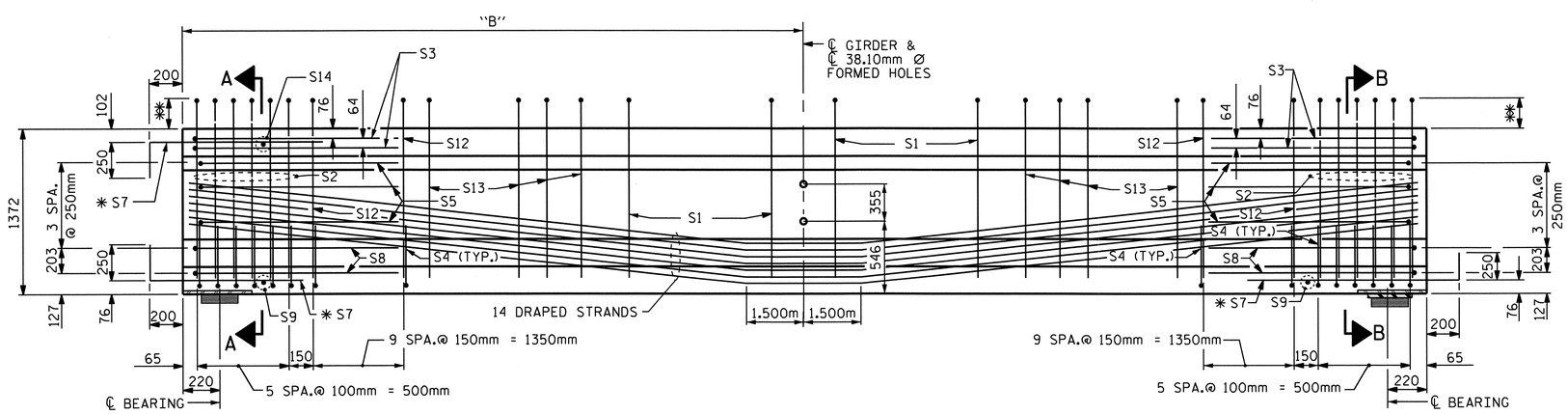

INTEGRAL END BENT — FIX

ELEVATION OF GIRDER

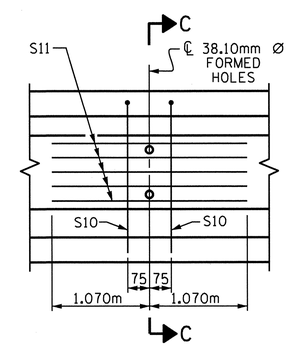

PARTIAL ELEVATION

SHOWING INTERMEDIATE DIAPHRAGM REINFORCING STEEL FOR ALL GIRDERS

15.24mm Ø L. R. GRADE 270 STRANDS		
AREA (mm²)	ULTIMATE STRENGTH (KN PER STRAND)	APPLIED PRESTRESS (KN PER STRAND)
140.00	260.7	195.5

REINFORCING STEEL FOR ONE GIRDER

BAR	NUMBER	SIZE	TYPE	LENGTH	WEIGHT
S1	34	#13	1	3260	110
S2	12	#19	1	3360	90
S3	4	#13	2	2760	11
S4	64	#13	3	1040	66
S5	6	#13	2	2560	15
✱ S7	18	#16	STR	1120	31
S8	4	#13	2	2620	10
S9	2	#10	STR	560	1
S10	2	#16	2	2640	8
S11	5	#13	STR	2140	11
S12	20	#13	1	3360	67
S13	18	#13	1	3300	59
S14	1	#10	STR	400	1

✱ NOTE: S7 BARS SHALL BE BENT BEFORE SHIPMENT. HEAT BENDING SHALL NOT BE ALLOWED.

BAR TYPES

ALL BAR DIMENSIONS ARE OUT-TO-OUT

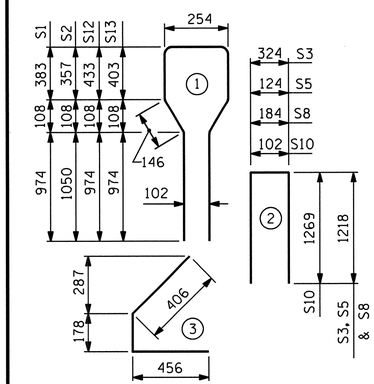

QUANTITIES FOR ONE GIRDER

	REINFORCING STEEL	55.16 MPa CONCRETE	15.24mm Ø L.R. STRANDS
	kg	m³	No.
	480	15.2	42

GIRDERS REQUIRED

NUMBER	LENGTH	TOTAL LENGTH
7	VARIES	209.500m

PROJECT NO. R-2413C
GUILFORD-ROCKINGHAM COUNTY
STATION: 70+09.407-LREV-

SHEET 1 OF 3

STATE OF NORTH CAROLINA
DEPARTMENT OF TRANSPORTATION
RALEIGH

STANDARD

AASHTO TYPE IV
PRESTRESSED CONCRETE GIRDER
CONTINUOUS FOR LIVE LOAD
SPAN A

NORTH CAROLINA PROFESSIONAL SEAL 022516 ENGINEER TIMOTHY E. MURRAY 10/28/11

REVISIONS							SHEET NO.
NO.	BY:	DATE:	NO.	BY:	DATE:		S-216
1			3				TOTAL SHEETS
2			4				238

STR. #7

STD. NO. PCG6SM

ASSEMBLED BY : B.N.BARODAWALA	DATE : 12-1-10
CHECKED BY : T.L.AVERETTE	DATE : 3-24-11
DRAWN BY : ELR 8/91	REV. 7/17/98 RWW/LES
CHECKED BY : GRP 8/91	REV. 10/17/00R RWW/LES
	REV. 5/1/06R TLA/GM

05-SEP-2011 14:41
Y:\Structures\Final Plans\Str.#7\R-2413C_SD_G_07.dgn
mgudlaugsson

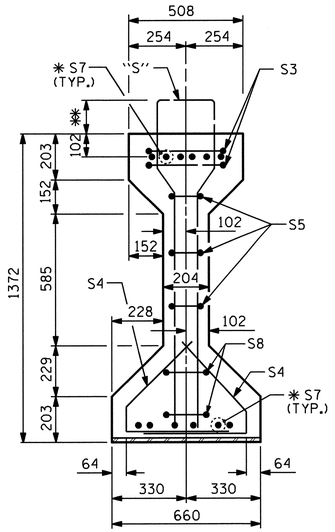

SECTION A-A

✱ FOR S7 BARS, SEE DETAIL "A" OF PRESTRESSED CONCRETE GIRDER CONTINUOUS FOR LIVE LOAD DETAILS SHEET

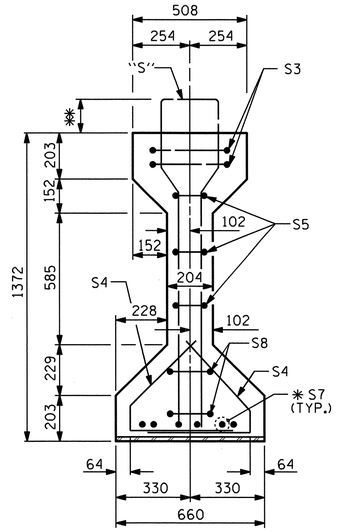

SECTION B-B

✱✱ THE PROJECTION OF THE S2 & S12 BARS IS 202mm
THE PROJECTION OF THE S13 IS 172mm
THE PROJECTION OF THE S1 BARS IS 152mm

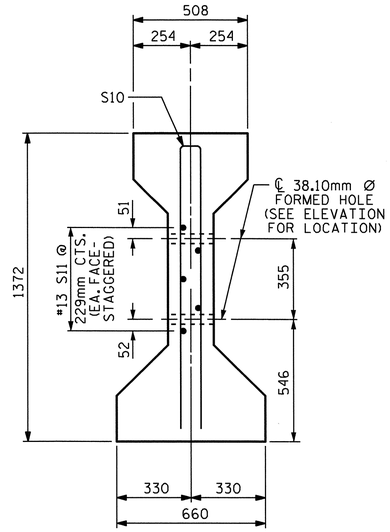

SECTION C-C

(S1 BARS NOT SHOWN)
NOTE: S11 BARS MAY BE SHIFTED SLIGHTLY VERTICALLY TO AVOID STRANDS

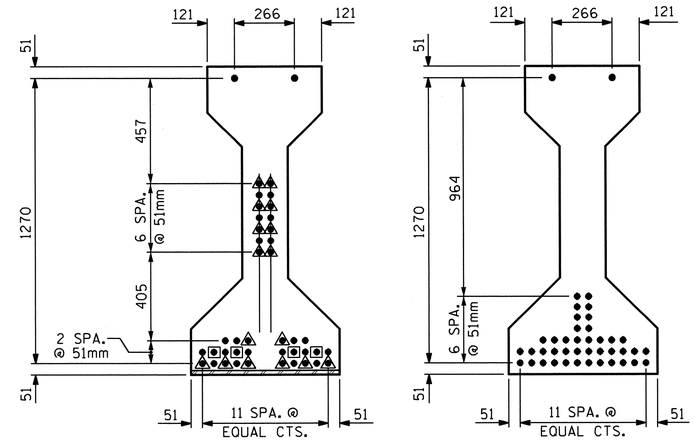

15.24mm Ø LOW RELAXATION STRAND LAYOUT

DEBONDING LEGEND

- ● FULLY BONDED STRANDS
- STRANDS DEBONDED FOR 610mm FROM END OF GIRDER
- STRANDS DEBONDED FOR 1.220m FROM END OF GIRDER

GIRDER DIMENSIONS					
GIRDER NO.	DIM. "A" (m)	DIM. "B" (m)	DIM. "C" (mm)	DIM. "D" (m)	DIM. "E" (m)
1	31.236	15.618	326	10.486	10.265
2	31.246	15.623	336	10.490	10.267
3	31.258	15.629	348	10.493	10.271
4	31.268	15.634	358	10.497	10.275
5	31.280	15.640	370	10.501	10.279
6	31.292	15.646	382	10.504	10.284
7	31.304	15.652	394	10.508	10.288

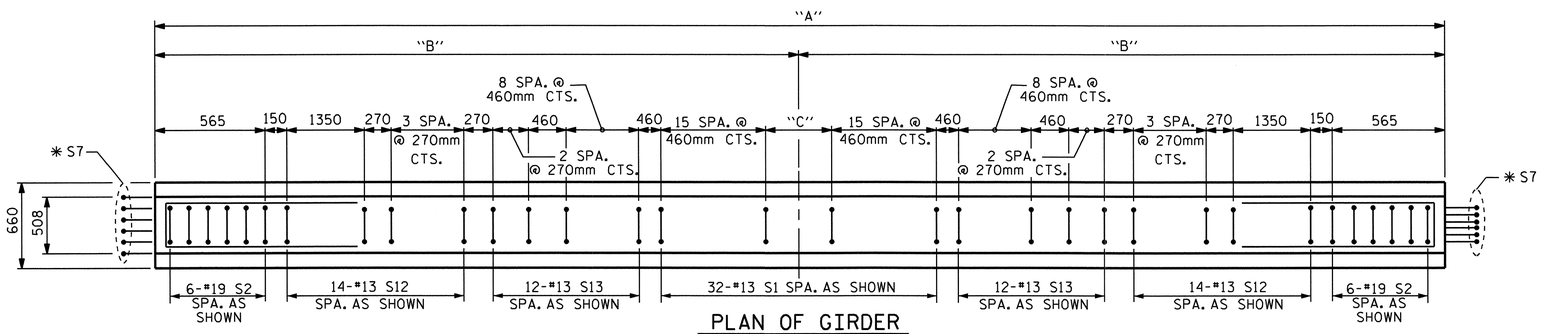

PLAN OF GIRDER

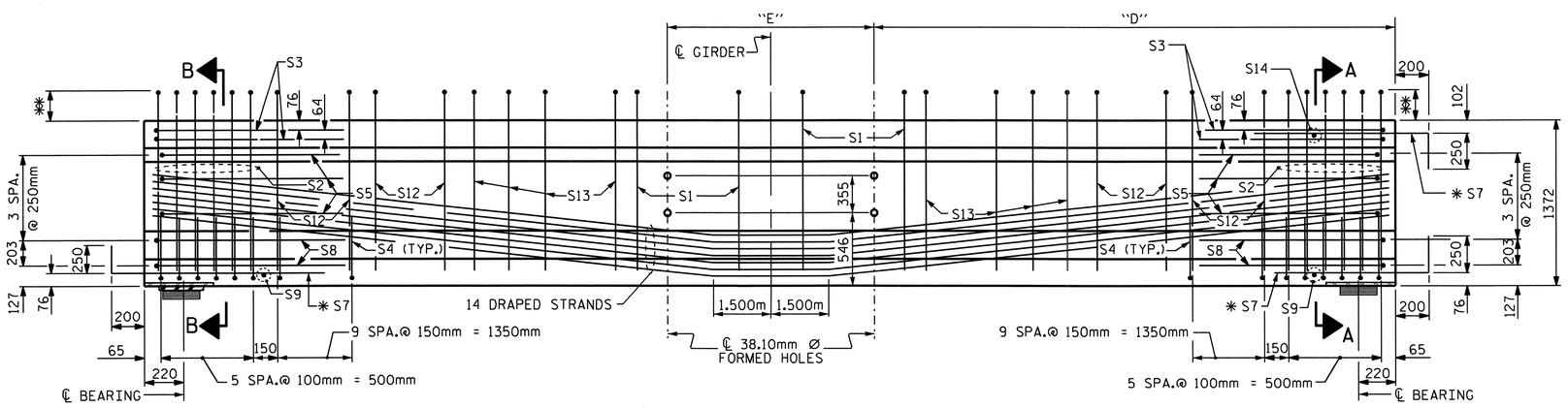

FIX

ELEVATION OF GIRDER

INTEGRAL END BENT

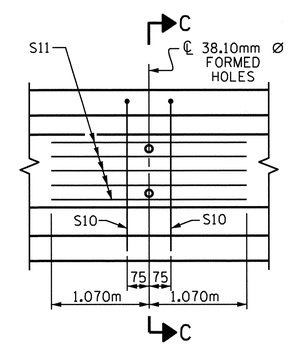

PARTIAL ELEVATION

SHOWING INTERMEDIATE DIAPHRAGM REINFORCING STEEL FOR ALL GIRDERS

15.24mm Ø L. R. GRADE 270 STRANDS

AREA (mm^2)	ULTIMATE STRENGTH (kN PER STRAND)	APPLIED PRESTRESS (kN PER STRAND)
140.00	260.7	195.5

REINFORCING STEEL FOR ONE GIRDER

BAR	NUMBER	SIZE	TYPE	LENGTH	WEIGHT
S1	32	#13	1	3260	104
S2	12	#19	1	3360	90
S3	4	#13	2	2760	11
S4	64	#13	3	1040	66
S5	6	#13	2	2560	15
✱ S7	18	#16	STR	1120	31
S8	4	#13	2	2620	10
S9	2	#10	STR	560	1
S10	4	#16	2	2640	16
S11	10	#13	STR	2140	21
S12	28	#13	1	3360	94
S13	24	#13	1	3300	79
S14	1	#10	STR	400	1

✱ NOTE: S7 BARS SHALL BE BENT BEFORE SHIPMENT. HEAT BENDING SHALL NOT BE ALLOWED.

BAR TYPES

ALL BAR DIMENSIONS ARE OUT-TO-OUT

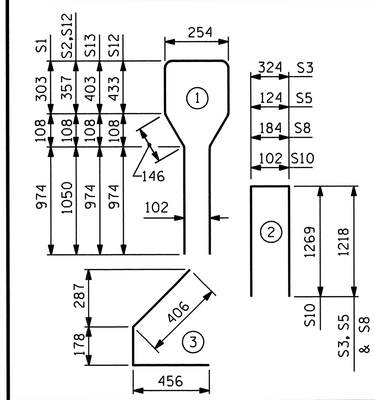

QUANTITIES FOR ONE GIRDER

	REINFORCING STEEL	58.61 MPa CONCRETE	15.24mm Ø L.R. STRANDS
	kg	m^3	No.
	539	15.9	42

GIRDERS REQUIRED

NUMBER	LENGTH	TOTAL LENGTH
7	VARIES	218.884m

PROJECT NO. R-2413C
GUILFORD-ROCKINGHAM COUNTY
STATION: 70+09.407-LREV-

SHEET 2 OF 3

STATE OF NORTH CAROLINA
DEPARTMENT OF TRANSPORTATION
RALEIGH

STANDARD

AASHTO TYPE IV
PRESTRESSED CONCRETE GIRDER
CONTINUOUS FOR LIVE LOAD
SPAN B

NORTH CAROLINA PROFESSIONAL SEAL 022516 ENGINEER EMILY E. MURRAY
10/28/11

REVISIONS							SHEET NO.
NO.	BY:	DATE:	NO.	BY:	DATE:		S-217
1			3				TOTAL SHEETS
2			4				238

STR. #7

STD. NO. PCG6SM

ASSEMBLED BY : B.N.BARODAWALA	DATE : 12-1-10
CHECKED BY : T.L.AVERETTE	DATE : 3-24-11
DRAWN BY : ELR 8/91	REV. 7/17/98 RWW/LES
CHECKED BY : GRP 8/91	REV. 10/17/00R RWW/LES
	REV. 5/1/06R TLA/GM

05-SEP-2011 14:40
Y:\Structures\Final Plans\Str.#7\R-2413C_SD_G_07.dgn
mgudlaugsson

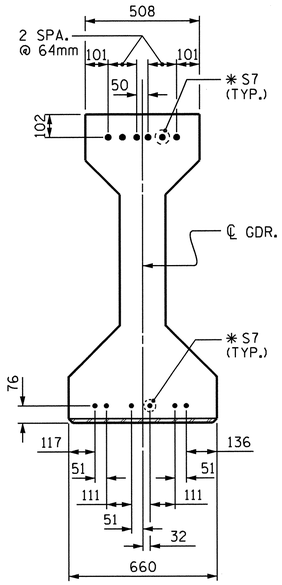

DETAIL "A"

(FOR AASHTO TYPE IV GIRDERS)

NOTES

ALL PRESTRESSING STRANDS SHALL BE 7-WIRE LOW-RELAXATION GRADE 270 STRANDS AND SHALL CONFORM TO AASHTO M203M EXCEPT FOR SAMPLING REQUIREMENTS WHICH SHALL BE IN ACCORDANCE WITH THE STANDARD SPECIFICATIONS.

ALL REINFORCING STEEL SHALL BE GRADE 420.

APPLY EPOXY PROTECTIVE COATING TO END OF GIRDER SURFACES INDICATED IN ELEVATION VIEW.

EMBEDDED PLATE "B-1" SHALL BE GALVANIZED IN ACCORDANCE WITH THE SPECIFICATIONS. BEVEL EDGES OF PLATE "B-1" TO GIVE CLOSE FIT BUT NOT TIGHT FIT TO STEEL CASTING FORM.

ANCHOR STUDS SHALL CONFORM TO AASHTO M169 GRADES 1010 THROUGH 1020 OR APPROVED EQUAL, AND SHALL MEET THE TYPE "B" REQUIREMENTS OF SUBSECTION 7.3 OF THE ANSI/AASHTO/AWS D1.5 BRIDGE WELDING CODE.

AT ENDS OF GIRDERS TO BE EMBEDDED IN CONCRETE DIAPHRAGMS OR END WALLS, PRESTRESSING STRANDS MAY EXTEND A MAXIMUM OF 50mm BEYOND THE GIRDER ENDS. OTHERWISE, PRESTRESSING STRANDS SHALL BE CUT FLUSH WITH THE GIRDER ENDS.

THE TRANSFER OF LOAD FROM THE ANCHORAGES TO THE GIRDER SHALL BE DONE WHEN CONCRETE HAS REACHED A COMPRESSIVE STRENGTH OF NOT LESS THAN 44.13 MPa. FOR SPAN A GIRDER AND 46.19 MPa FOR SPAN B GIRDER.

DEPENDING ON THE TYPE OF SYSTEM USED TO SUPPORT THE DECK SLAB FORMS, PRESET ANCHORS MAY BE NECESSARY IN THE PRESTRESSED CONCRETE GIRDER.

THE TOP SURFACE OF THE GIRDER, EXCLUDING THE OUTSIDE 100mm, SHALL BE RAKED TO A DEPTH OF 6mm.

WHEN DRAPED STRANDS ARE DETAILED, THE LONGITUDINAL LOCATION OF THE HOLD DOWN DEVICES SHALL BE WITHIN 150mm OF THE LOCATION SHOWN AND THE CENTER OF GRAVITY OF THE GROUP OF DRAPED STRANDS SHALL BE LOCATED WITHIN 13mm OF THE THEORETICAL LOCATION SHOWN.

FOR PRESTRESSED CONCRETE MEMBERS, SEE SPECIAL PROVISIONS.

THE UPLIFT FORCE DUE TO DRAPED STRANDS IS 103kN FOR SPAN A AND 98 kN FOR SPAN B.

DEAD LOAD DEFLECTION TABLE FOR SPAN A

15.24mm Ø LOW RELAXATION	GIRDERS 1 THRU 7										
TENTH POINTS	0	.1	.2	.3	.4	.5	.6	.7	.8	.9	0
CAMBER (GIRDER ALONE IN PLACE) ↑	0.000	0.041	0.078	0.107	0.126	0.132	0.126	0.107	0.078	0.041	0.000
* DEFLECTION DUE TO SUPERIMPOSED D.L. ↓	0.000	0.015	0.028	0.039	0.046	0.049	0.046	0.039	0.028	0.015	0.000
FINAL CAMBER ↑	0	26	50	68	80	83	80	68	50	26	0

* INCLUDES FUTURE WEARING SURFACE IN SUPERIMPOSED DEAD LOAD.
ALL VALUES ARE SHOWN IN METERS, EXCEPT "FINAL CAMBER" WHICH IS SHOWN IN MILLIMETERS.

DEAD LOAD DEFLECTION TABLE FOR SPAN B

15.24mm Ø LOW RELAXATION	GIRDERS 1 THRU 7										
TENTH POINTS	0	.1	.2	.3	.4	.5	.6	.7	.8	.9	0
CAMBER (GIRDER ALONE IN PLACE) ↑	0.000	0.042	0.079	0.109	0.127	0.134	0.127	0.109	0.079	0.042	0.000
* DEFLECTION DUE TO SUPERIMPOSED D.L. ↓	0.000	0.017	0.033	0.045	0.053	0.057	0.053	0.045	0.033	0.017	0.000
FINAL CAMBER ↑	0	25	46	64	74	77	74	64	46	25	0

* INCLUDES FUTURE WEARING SURFACE IN SUPERIMPOSED DEAD LOAD.
ALL VALUES ARE SHOWN IN METERS, EXCEPT "FINAL CAMBER" WHICH IS SHOWN IN MILLIMETERS.

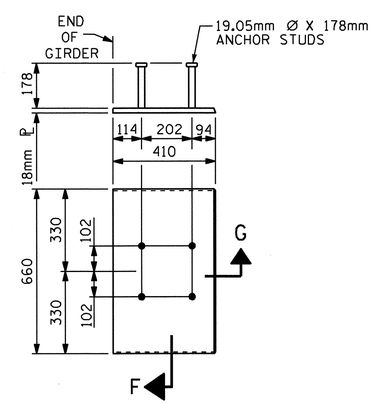

EMBEDDED PLATE "B-1" DETAILS FOR AASHTO TYPE IV GIRDER

(2 REQ'D PER GIRDER)

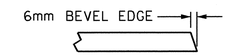

SECTION "G"

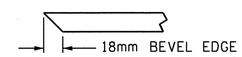

SECTION "F"

(SEE NOTES)

PROJECT NO. R-2413C

GUILFORD-ROCKINGHAM COUNTY

STATION: 70+09.407-LREV-

SHEET 3 OF 3

STATE OF NORTH CAROLINA
DEPARTMENT OF TRANSPORTATION
RALEIGH

STANDARD
PRESTRESSED CONCRETE GIRDER
CONTINUOUS FOR LIVE LOAD
DETAILS

NORTH CAROLINA PROFESSIONAL SEAL 022516 ENGINEER EMILY E. MURRAY
10/28/11

REVISIONS						SHEET NO.
NO.	BY:	DATE:	NO.	BY:	DATE:	S-218
1			3			TOTAL SHEETS
2			4			238

STR. #7

STD. NO. PCG11SM

ASSEMBLED BY : B.N.BARODAWALA DATE : 12-1-10
CHECKED BY : T.L.AVERETTE DATE : 3-24-11

DRAWN BY : ELR 11/91
CHECKED BY : GRP 11/91

REV. 10/17/00 RWW/LES
REV. 7/10/01RR LES/RDR
REV. 5/1/06 TLA/GM

19-OCT-2011 13:47
R:\TIPProjects-R\R2413c\Structures\FinalPlans\Str.#7\R-2413C_SD_G_07.dgn
taverette

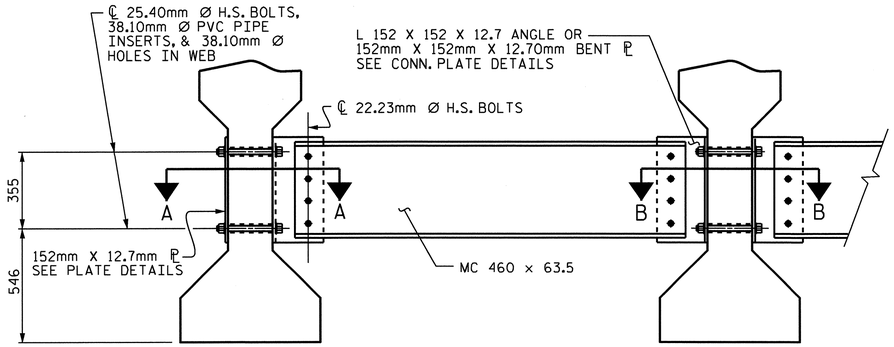

EXTERIOR GIRDER

INTERIOR GIRDER

PART SECTION AT INTERMEDIATE DIAPHRAGM

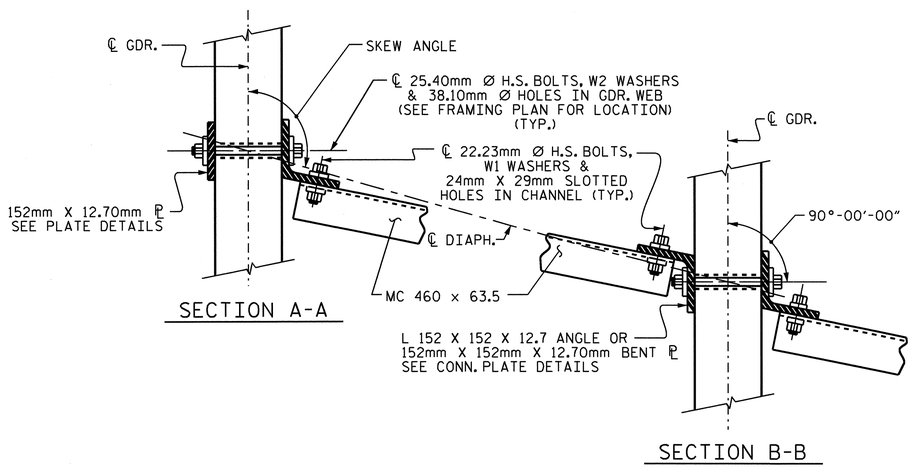

SECTION A-A

SECTION B-B

CONNECTION DETAILS

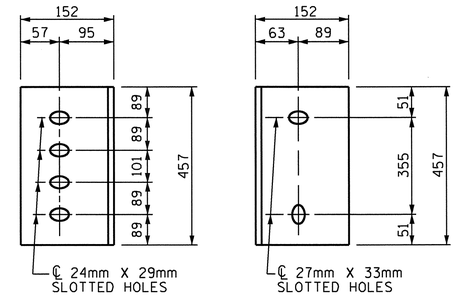

DIAPHRAGM FACE

WEB FACE

CONNECTOR PLATE DETAILS

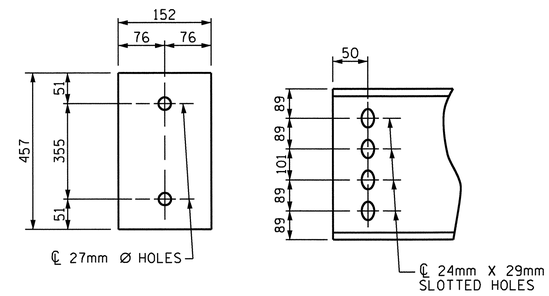

PLATE DETAILS

CHANNEL END

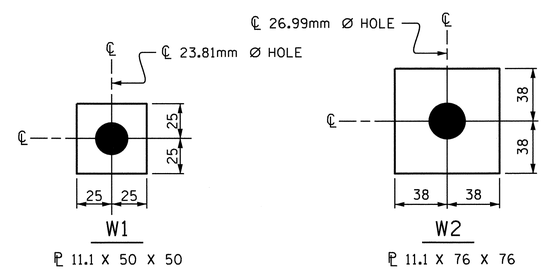

ℙ 11.1 X 50 X 50

USE WITH 22.23mm Ø HVY. HEX NUTS & DIRECT TENSION INDICATOR WASHERS AT DIAPHRAGM CHANNEL TO CONNECTOR PLATE CONNECTIONS

ℙ 11.1 X 76 X 76

USE WITH 25.40mm Ø HVY. HEX NUTS AT CONNECTOR PLATE TO GIRDER CONNECTIONS

WASHER DETAILS

STRUCTURAL STEEL NOTES

ALL INTERMEDIATE DIAPHRAGM STEEL, CONNECTOR PLATES AND PLATE WASHERS SHALL BE AASHTO M270 GRADE 345 OR APPROVED EQUAL.

TENSION ON THE AASHTO M164 BOLTS THROUGH THE CHANNEL MEMBER SHALL BE CALIBRATED USING DIRECT TENSION INDICATOR WASHERS IN ACCORDANCE WITH THE STANDARD SPECIFICATIONS. FOR DIRECT TENSION INDICATORS, SEE SPECIAL PROVISIONS.

TENSION ON THE AASHTO M164 BOLTS THROUGH THE GIRDER WEB SHALL BE SNUG TIGHTENED FOLLOWED BY AN ADDITIONAL 1/4 TURN.

THE PLATES, BENT PLATES, CHANNELS, ANGLES, AND PLATE WASHERS SHALL BE GALVANIZED OR METALLIZED IN ACCORDANCE WITH THE STANDARD SPECIFICATIONS. FOR THERMAL SPRAYED COATINGS (METALLIZATION), SEE SPECIAL PROVISIONS.

FOR METALLIZATION, APPLY AN 8 MIL THICK 99.99 PERCENT ZINC (W-Zn-1) THERMAL SPRAYED COATING WITH A 0.5 MIL THICK SEAL COAT TO ALL STEEL DIAPHRAGM SURFACES IN ACCORDANCE WITH THE THERMAL SPRAYED COATINGS SPECIAL PROVISIONS AND SECTION 442 OF THE STANDARD SPECIFICATIONS.

GALVANIZE THE HIGH STRENGTH BOLTS, NUTS, WASHERS AND DIRECT TENSION INDICATORS IN ACCORDANCE WITH THE STANDARD SPECIFICATIONS. FOR HIGH STRENGTH BOLTS, SEE SPECIAL PROVISIONS.

USE A MINIMUM 11mm THICK PLATE WASHER WITH STANDARD HOLES UNDER EACH BOLT HEAD AND NUT. THE PLATE WASHERS SHALL HAVE SUFFICIENT SIZE TO COVER THE HOLES AFTER INSTALLATION. HARDENED WASHERS AND DIRECT TENSION INDICATORS ARE TO BE USED IN CONJUNCTION WITH THE PLATE WASHERS IN THE CHANNEL MEMBER CONNECTION.

FOR BOLTS THROUGH THE GIRDER WEB, PROVIDE SUFFICIENT LENGTH OF ALL BOLTS TO ACCOMMODATE WASHERS AND THE THICKNESS OF CONNECTING MEMBER PLUS AT LEAST 6mm PROJECTION BEYOND THE NUT.

INTERMEDIATE DIAPHRAGM ASSEMBLY SHALL COMPLY WITH SECTION 1072 OF THE STANDARD SPECIFICATIONS.

CONTRACTOR SHALL SUBMIT TWO SETS OF WORKING DRAWINGS FOR THE INTERMEDIATE DIAPHRAGM ASSEMBLY FOR REVIEW, COMMENTS AND ACCEPTANCE. AFTER REVIEW, COMMENTS, AND ACCEPTANCE, SUBMIT SEVEN SETS FOR DISTRIBUTION.

IN THE EXTERIOR BAYS, TEMPORARY STRUTS SHALL BE PLACED BETWEEN PRESTRESSED GIRDERS ADJACENT TO THE STEEL DIAPHRAGMS. STRUTS SHALL REMAIN IN PLACE 3 DAYS AFTER CONCRETE IS PLACED. ALL AASHTO M164 H.S. BOLTS SHALL BE FULLY TIGHTENED AFTER THE STRUTS HAVE BEEN REMOVED.

THE COST OF THE STEEL DIAPHRAGMS AND ASSEMBLIES SHALL BE INCLUDED IN THE UNIT PRICE BID FOR PRESTRESSED CONCRETE GIRDERS.

PROJECT NO. R-2413C

GUILFORD-ROCKINGHAM COUNTY

STATION: 70+09.407-LREV-

STATE OF NORTH CAROLINA
DEPARTMENT OF TRANSPORTATION
RALEIGH

STANDARD

INTERMEDIATE STEEL DIAPHRAGMS FOR TYPE IV PRESTRESSED CONCRETE GIRDERS

NORTH CAROLINA PROFESSIONAL SEAL 022516 ENGINEER ELMEY E. MURRAY 10/28/11

REVISIONS						SHEET NO.
NO.	BY:	DATE:	NO.	BY:	DATE:	S-219
1			3			TOTAL SHEETS
2			4			238

ASSEMBLED BY : B.N.BARODAWALA DATE : 12-1-10
CHECKED BY : T.L.AVERETTE DATE : 3-24-11

DRAWN BY : TLA 6/05
CHECKED BY : VC 6/05

ADDED 10/21/05
REV. 5/1/06RR KMM/GM

05-SEP-2011 14:40
Y:\Structures\Final Plans\Str.#7\R-2413C_SD_Dp_07.dgn
mgudlaugsson

STR. #7

STD.No.PCG12SM

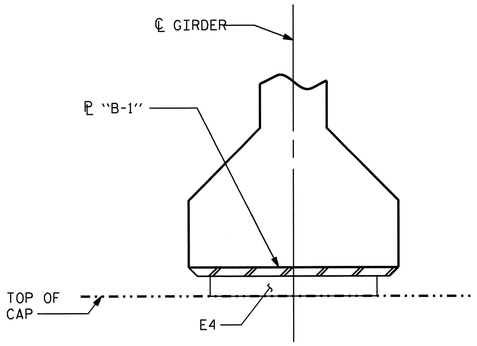

INTEGRAL

SECTION E-E

@ INTEGRAL END BENTS

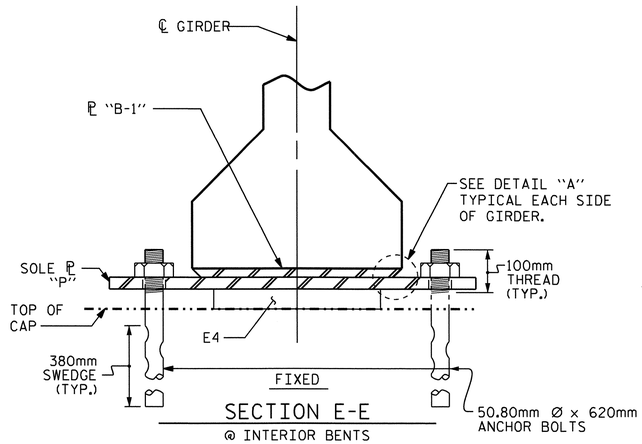

SECTION E-E

@ INTERIOR BENTS

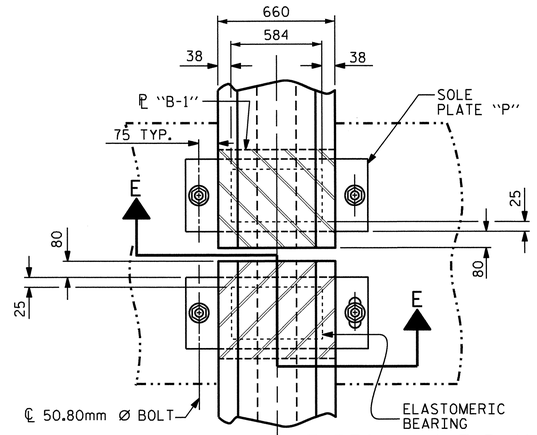

TYPICAL HALF-PLAN

(SHOWING CONTINUOUS BENT)

TYPICAL HALF-PLAN

(SHOWING SIMPLE SPAN BENT)

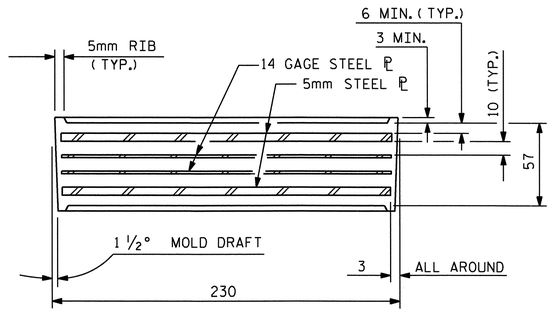

TYPICAL SECTION OF ELASTOMERIC BEARINGS

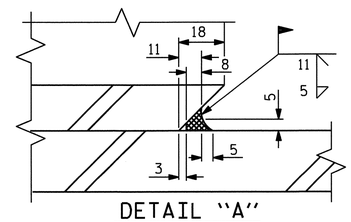

DETAIL "A"

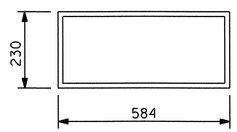

E4 (28 REQ'D)

PLAN VIEW OF ELASTOMERIC BEARING

TYPE V

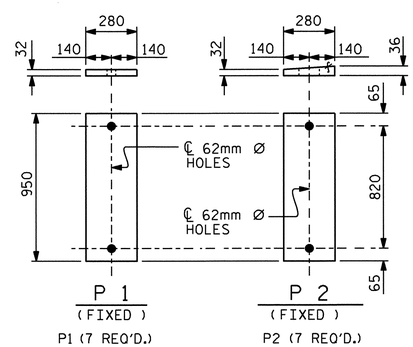

SOLE PLATE DETAILS ("P")

NOTES

AT ALL FIXED POINTS OF SUPPORT, NUTS FOR ANCHOR BOLTS ARE TO BE TIGHTENED FINGER TIGHT AND THEN BACKED OFF 1/2 TURN. THE THREAD OF THE NUT AND BOLT SHALL THEN BE BURRED WITH A SHARP POINTED TOOL.

STEEL SOLE PLATES, ANCHOR BOLTS, NUTS, AND WASHERS SHALL BE GALVANIZED IN ACCORDANCE WITH THE STANDARD SPECIFICATIONS.

PRIOR TO WELDING, GRIND THE GALVANIZED SURFACE OF THE PORTION OF THE EMBEDDED PLATE AND SOLE PLATE THAT ARE TO BE WELDED. AFTER WELDING, DAMAGED GALVANIZED SURFACES SHALL BE REPAIRED IN ACCORDANCE WITH THE STANDARD SPECIFICATIONS.

WHEN WELDING THE SOLE PLATE TO THE EMBEDDED PLATE IN THE GIRDER, USE TEMPERATURE INDICATING WAX PENS, OR OTHER SUITABLE MEANS, TO ENSURE THAT THE TEMPERATURE OF THE SOLE PLATE DOES NOT EXCEED 149°C. TEMPERATURES ABOVE THIS MAY DAMAGE THE ELASTOMER.

SOLE PLATE "P", BOLTS, NUTS, WASHERS, AND PIPE SLEEVE SHALL BE INCLUDED IN THE PAY ITEM FOR PRESTRESSED CONCRETE GIRDERS.

ANCHOR BOLTS SHALL MEET THE REQUIREMENTS OF ASTM A449. NUTS SHALL MEET THE REQUIREMENTS OF AASHTO M291M-12 OR AASHTO M292M-2H. WASHERS SHALL MEET THE REQUIREMENTS OF AASHTO M293M. SHOP DRAWINGS ARE NOT REQUIRED FOR ANCHOR BOLTS, NUTS AND WASHERS. SHOP INSPECTION IS REQUIRED.

ALL SURFACES OF BEARING PLATES SHALL BE SMOOTH AND STRAIGHT.

ALL BEARING PLATES SHALL BE AASHTO M270 GRADE 250.

ELASTOMER IN ALL BEARINGS SHALL BE 60 DUROMETER HARDNESS.

—LOAD RATINGS—	
	MAX.D.L.+ L.L.
TYPE V	926 kN

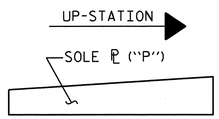

SOLE ℗ PLACEMENT DETAIL

PROJECT NO. R-2413C

GUILFORD-ROCKINGHAM COUNTY

STATION: 70+09.407-LREV-

STATE OF NORTH CAROLINA
DEPARTMENT OF TRANSPORTATION
RALEIGH

STANDARD
ELASTOMERIC BEARING
DETAILS

PRESTRESSED CONCRETE GIRDER
SUPERSTRUCTURE

NORTH CAROLINA PROFESSIONAL SEAL 022516 ENGINEER EMILY E. MURRAY 10/28/11

REVISIONS						SHEET NO.
NO.	BY:	DATE:	NO.	BY:	DATE:	S-220
1			3			TOTAL SHEETS
2			4			238

ASSEMBLED BY : B.N.BARODAWALA	DATE : 12-1-10
CHECKED BY : T.L.AVERETTE	DATE : 3-24-11
DRAWN BY : EEM 2/97	REV. 8/16/99 RWW/LES
CHECKED BY : VAP 2/97	REV. 10/17/00 RWW/LES
	REV. 5/1/06 TLA/GM

05-SEP-2011 14:39
Y:\Structures\Final Plans\Str.#7\R-2413C_SD_BG_07.dgn
mgudlugsson

STR. #7

STD. NO. EB4SM

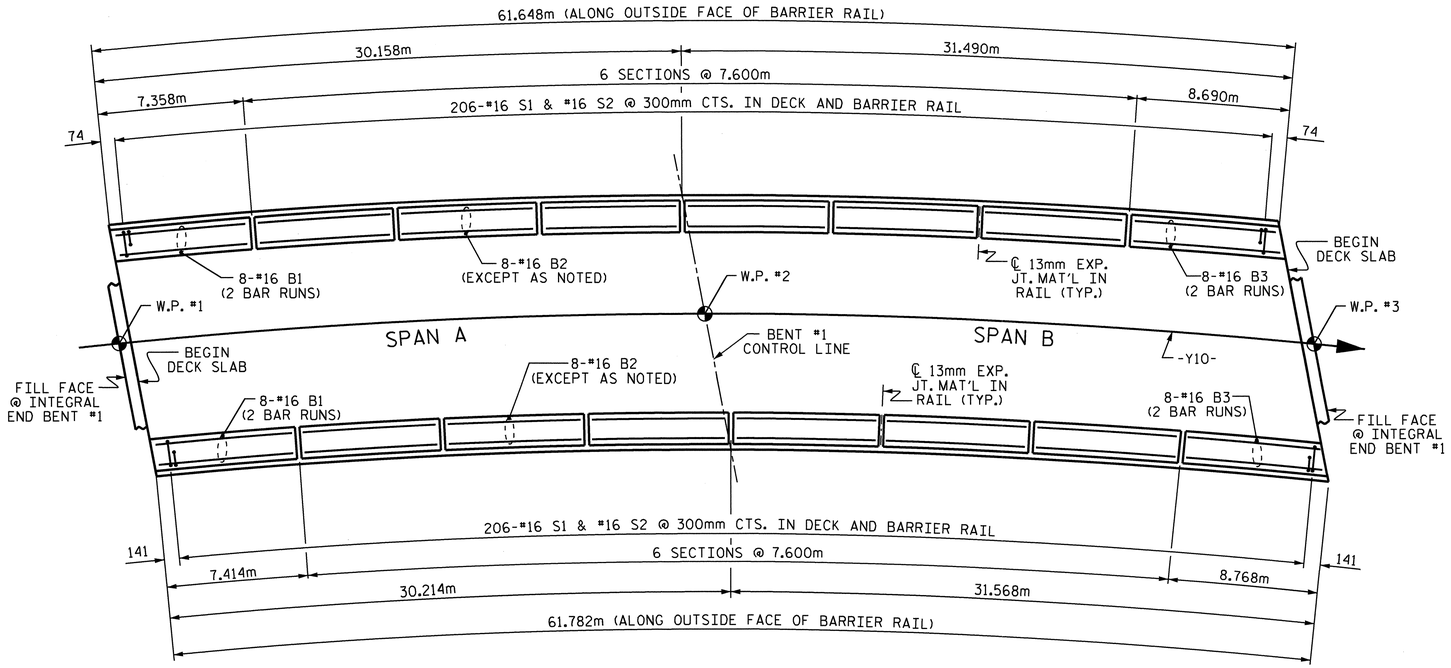

PLAN

NOTES

THE BARRIER RAIL IN CONTINUOUS UNIT SHALL NOT BE CAST UNTIL ALL SLAB CONCRETE IN THE UNIT HAS BEEN CAST AND HAS REACHED A MINIMUM COMPRESSIVE STRENGTH OF 20.7 MPa.

ALL REINFORCING STEEL IN BARRIER RAILS SHALL BE EPOXY COATED.

GROOVED CONTRACTION JOINTS, 12mm IN DEPTH, SHALL BE TOOLED IN ALL EXPOSED FACES OF THE BARRIER RAIL AND IN ACCORDANCE WITH ARTICLE 825-10(B) OF THE STANDARD SPECIFICATIONS. THE CONTRACTION JOINT SHALL BE LOCATED AT EACH THIRD POINT BETWEEN BARRIER RAIL EXPANSION JOINTS. ONLY ONE CONTRACTION JOINT IS REQUIRED AT MIDPOINT OF BARRIER RAIL SEGMENTS LESS THAN 6.1m IN LENGTH AND NO CONTRACTION JOINTS ARE REQUIRED FOR THOSE SEGMENTS LESS THAN 3.5m IN LENGTH.

BAR TYPES

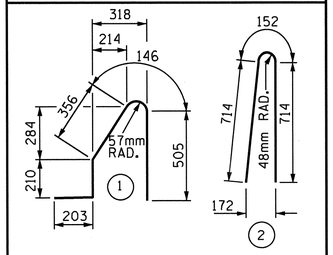

ALL BAR DIMENSIONS ARE OUT TO OUT

BILL OF MATERIAL

FOR CONCRETE BARRIER RAIL ONLY

BAR	NO.	SIZE	TYPE	LENGTH	WEIGHT
* B1	32	#16	STR	4200	209
* B2	96	#16	STR	7480	1114
* B3	32	#16	STR	4840	240
* S1	412	#16	1	1420	908
* S2	412	#16	2	1580	1010

* EPOXY COATED REINFORCING STEEL 3481 kg

CLASS AA CONCRETE 31.0 CU. METER

CONCRETE BARRIER RAIL 123.430 METERS

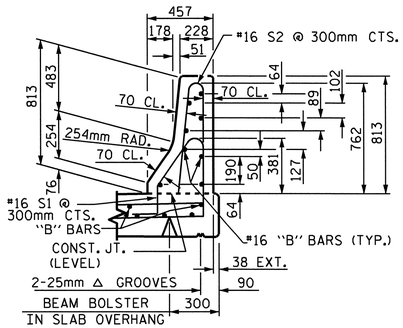

SECTION THRU RAIL

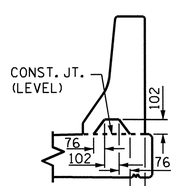

SECTION S-S

AT DAM IN OPEN JOINT
(THIS IS TO BE USED ONLY WHEN SLIP FORM IS USED)

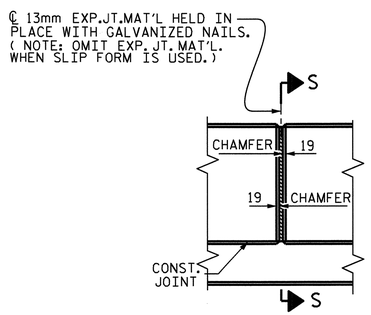

BARRIER RAIL DETAILS

PROJECT NO. R-2413C

GUILFORD-ROCKINGHAM COUNTY

STATION: 70+09.407-LREV-

STATE OF NORTH CAROLINA
DEPARTMENT OF TRANSPORTATION
RALEIGH

STANDARD

CONCRETE BARRIER RAIL

NORTH CAROLINA PROFESSIONAL SEAL 022516 ENGINEER EMILY E. MURRAY
10/28/11

REVISIONS								SHEET NO.
NO.	BY:	DATE:	NO.	BY:	DATE:			S-221
1			3					TOTAL SHEETS
2			4					238

ASSEMBLED BY : B.N.BARODAWALA DATE : 11-12-10
CHECKED BY : T.L.AVERETTE DATE : 3-24-11

DRAWN BY : ARB 5/87
CHECKED BY : SJD 9/87

REV. 10/17/00 RWW/LES
REV. 5/7/03R RWW/JTE
REV. 5/1/06 TLA/GM

05-SEP-2011 14:34
Y:\Structures\Final Plans\Str.#7\R-2413C_SD_BR_07.dgn
mgudlaugsson

STR. #7

STD. No. CBR1SM

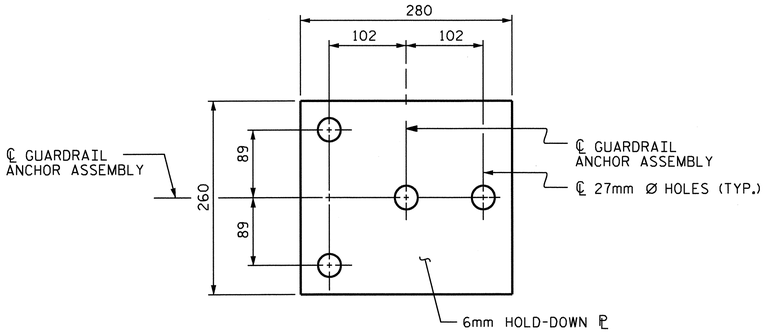

PLAN

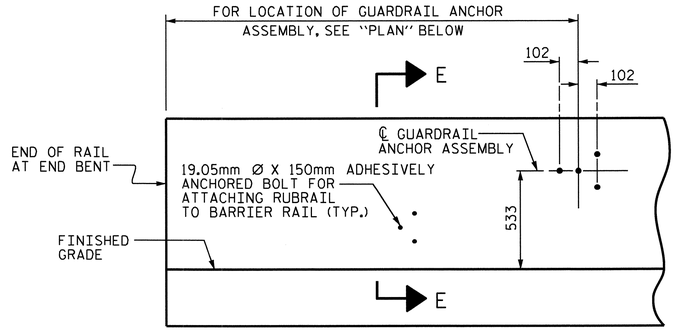

ELEVATION

FOR LOCATION OF RUBRAIL, SEE ROADWAY STD. 862.03

NOTES

THE GUARDRAIL ANCHOR ASSEMBLY SHALL CONSIST OF A 6mm HOLD DOWN PLATE AND 4 - 22.23mm Ø BOLTS WITH NUTS AND WASHERS, RUBRAIL, AND ADHESIVELY ANCHORED BOLTS.

THE HOLD-DOWN PLATE SHALL CONFORM TO AASHTO M270 GRADE 36. AFTER FABRICATION, THE HOLD-DOWN PLATE SHALL BE HOT-DIP GALVANIZED IN ACCORDANCE WITH AASHTO M111.

BOLTS SHALL CONFORM TO THE REQUIREMENTS OF ASTM A307 AND NUTS SHALL CONFORM TO THE REQUIREMENTS OF AASHTO M291. BOLTS, NUTS AND WASHERS SHALL BE GALVANIZED. (AT THE CONTRACTOR'S OPTION, STAINLESS STEEL BOLTS, NUTS AND WASHERS MAY BE USED AS AN ALTERNATE FOR THE 22.23mm Ø GALVANIZED BOLTS, NUTS AND WASHERS. THEY SHALL CONFORM TO OR EXCEED THE MECHANICAL REQUIREMENTS OF ASTM A307. THE USE OF THIS ALTERNATE SHALL BE APPROVED BY THE ENGINEER.)

THE GUARDRAIL ANCHOR ASSEMBLY IS REQUIRED AT ALL POINTS WHERE APPROACH GUARDRAIL IS TO BE ATTACHED TO THE END OF BARRIER RAIL. FOR POINTS OF ATTACHMENT, SEE SKETCH.

AFTER INSTALLATION, THE EXPOSED THREAD OF THE BOLT SHALL BE BURRED WITH A SHARP POINTED TOOL.

THE COST OF THE GUARDRAIL ANCHOR ASSEMBLY SHALL BE INCLUDED IN THE UNIT CONTRACT PRICE BID FOR CONCRETE BARRIER RAIL.

THE 32mm Ø HOLES SHALL BE FORMED OR DRILLED WITH A CORE BIT. IMPACT TOOLS WILL NOT BE PERMITTED. ANY CONCRETE DAMAGED BY THIS WORK SHALL BE REPAIRED TO THE SATISFACTION OF THE ENGINEER.

THE C150 X 12 RUBRAIL IS TO BE ADHESIVELY ANCHORED TO THE RAIL USING THREE 19.05mm Ø X 150mm BOLTS WITH WASHERS. LEVEL ONE FIELD TESTING IS REQUIRED, AND THE YIELD LOAD OF THE 19.05mm Ø BOLTS IS 53.4kN. FOR ADHESIVELY ANCHORED ANCHOR BOLTS OR DOWELS, SEE SPECIAL PROVISIONS. SEE ROADWAY STANDARD 862.03 FOR DETAILS AND LOCATION OF THE RUBRAIL.

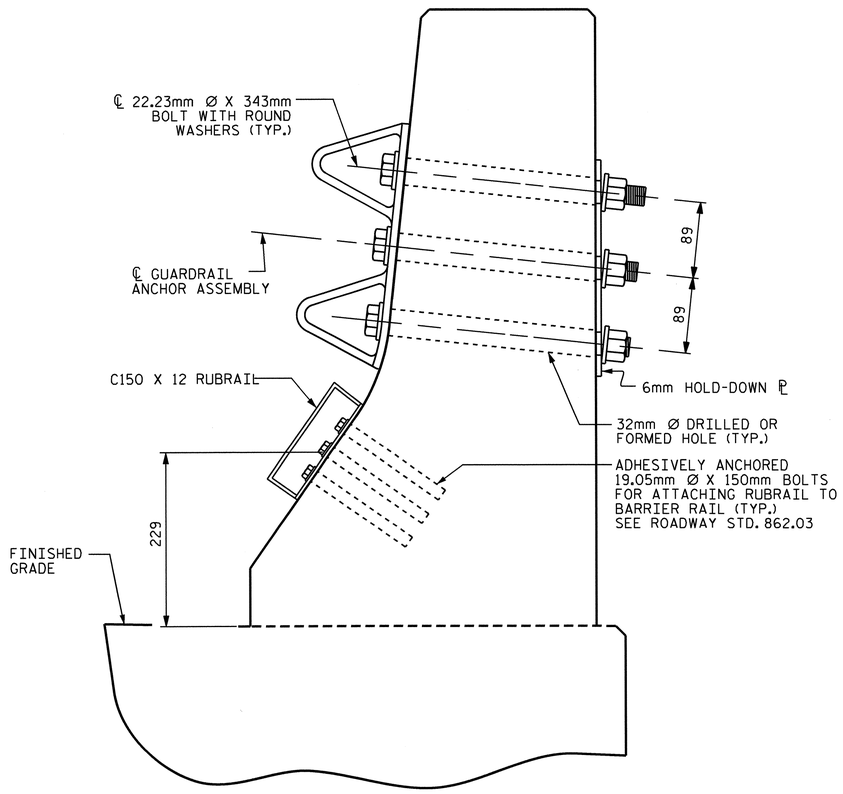

SECTION E-E

GUARDRAIL ANCHOR ASSEMBLY DETAILS

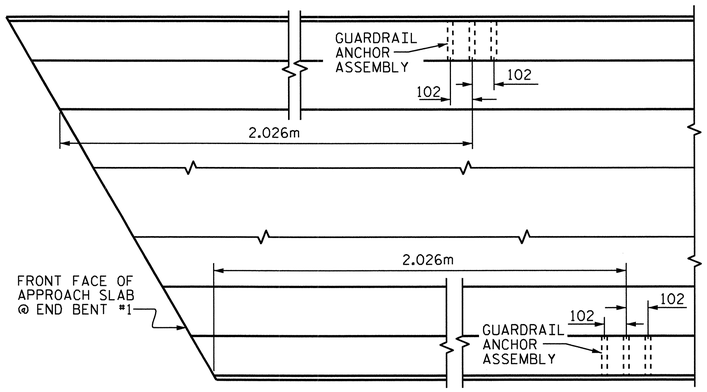

PLAN

LOCATION OF ANCHORS FOR GUARDRAIL

END BENT #1 SHOWN, END BENT #2 SIMILAR.

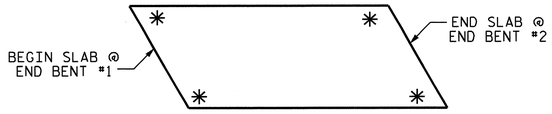

SKETCH SHOWING POINTS OF ATTACHMENTS

✳ DENOTES GUARDRAIL ANCHOR ASSEMBLY

PROJECT NO. R-2413C

GUILFORD-ROCKINGHAM COUNTY

STATION: 70+09.407-LREV-

STATE OF NORTH CAROLINA
DEPARTMENT OF TRANSPORTATION
RALEIGH

STANDARD

GUARDRAIL ANCHORAGE FOR BARRIER RAIL

NORTH CAROLINA PROFESSIONAL SEAL 022516 ENGINEER TIMOTHY E. MURRAY (10/28/11)

REVISIONS						SHEET NO.
NO.	BY:	DATE:	NO.	BY:	DATE:	S-222
1			3			TOTAL SHEETS
2			4			238

STR. #7

(SHT 3) STD. NO. GRA2

ASSEMBLED BY : B.N.BARODAWALA	DATE : 11-12-10
CHECKED BY : T.L.AVERETTE	DATE : 3-24-11
DRAWN BY : TLA 5/06	ADDED 5/1/06R KMM/GM
CHECKED BY : GM 5/06	

05-SEP-2011 14:34
T:\Structures\Final Plans\Str.#7\R-2413C_SD_BR_07.dgn
mgudlaugsson

SUPERSTRUCTURE BILL OF MATERIAL

	CLASS AA CONCRETE		REINFORCING STEEL	EPOXY COATED REINFORCING STEEL
	(CU. METER)		(kg)	(kg)
SPAN A AND B	POUR 1	118.8	16675	17087
	POUR 2	152.1		
	POUR 3 •	83.7		
TOTALS ✱✱	TOTAL	354.6	16675	17087

✱✱ QUANTITIES FOR BARRIER RAIL ARE NOT INCLUDED

• POUR 3 QUANTITY INCLUDES UPPER POUR OF WINGS & INTEGRAL END BENT

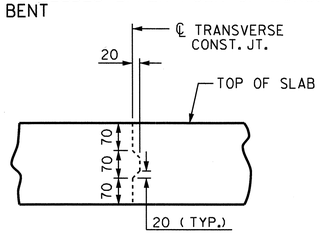

TRANSVERSE CONSTRUCTION JOINT DETAIL

NOTE: REINFORCING STEEL IN SLAB NOT SHOWN. LONGITUDINAL REINFORCING STEEL SHALL BE CONTINUOUS THRU JOINT.

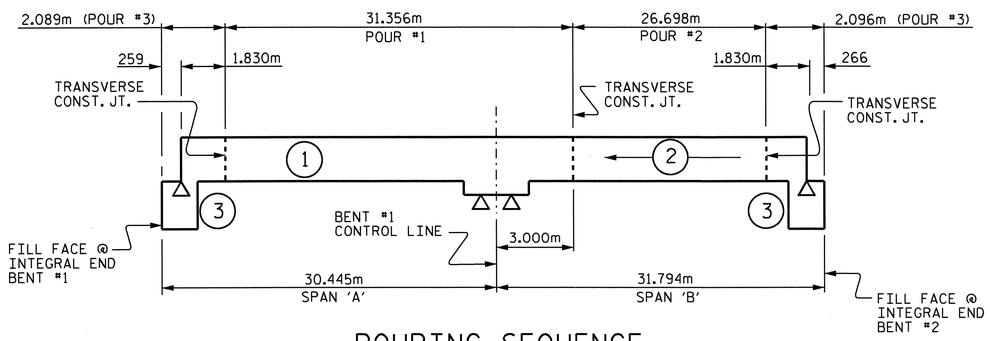

POURING SEQUENCE

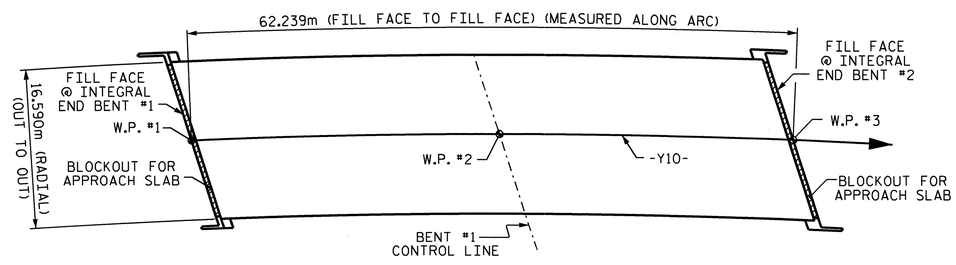

LAYOUT FOR COMPUTING AREA OF REINFORCED CONCRETE DECK SLAB (1032.5 SQ. METER)

BILL OF MATERIAL

SPANS A & B

BAR	NO.	SIZE	TYPE	LENGTH	WEIGHT	BAR	NO.	SIZE	TYPE	LENGTH	WEIGHT
✱A1	313	#16	STR	16480	8006	✱B1	74	#22	STR	6100	1373
✱A101	2	#16	STR	15640	49	✱B2	76	#13	STR	7660	579
✱A102	2	#16	STR	14480	45	✱B3	38	#22	STR	13600	1572
✱A103	2	#16	STR	13340	41	✱B4	38	#22	STR	9580	1107
✱A104	2	#16	STR	12200	38	✱B5	36	#22	STR	9280	1016
✱A105	2	#16	STR	11060	34	✱B6	76	#13	STR	8000	604
✱A106	2	#16	STR	9920	31	✱B7	74	#22	STR	6300	1418
✱A107	2	#16	STR	8760	27	B8	276	#16	STR	16000	6854
✱A108	2	#16	STR	7620	24						
✱A109	2	#16	STR	6480	20	K1	30	#13	STR	6940	207
✱A110	2	#16	STR	5340	17	K2	12	#13	STR	1720	21
✱A111	2	#16	STR	4180	13	K3	12	#13	STR	2080	25
✱A112	2	#16	STR	3040	9	K4	24	#13	STR	2200	52
✱A113	2	#16	STR	1900	6	K5	12	#13	STR	1880	22
✱A114	2	#16	STR	760	2	K6	4	#13	STR	1800	7
✱A115	2	#16	STR	15660	49	K7	2	#13	STR	1640	3
✱A116	2	#16	STR	14540	45	K8	8	#13	STR	940	7
✱A117	2	#16	STR	13420	42	K9	2	#13	STR	1560	3
✱A118	2	#16	STR	12300	38	K10	2	#13	STR	1760	3
✱A119	2	#16	STR	11180	35	K11	2	#13	STR	1920	4
✱A120	2	#16	STR	10060	31	K12	4	#13	STR	2000	8
✱A121	2	#16	STR	8960	28	K13	2	#13	STR	1840	4
✱A122	2	#16	STR	7840	24	K14	8	#13	STR	920	7
✱A123	2	#16	STR	6720	21	K15	12	#13	STR	2000	24
✱A124	2	#16	STR	5600	17	K16	24	#13	STR	2200	52
✱A125	2	#16	STR	4500	14	K17	12	#13	STR	1900	23
✱A126	2	#16	STR	3380	10	K18	12	#13	STR	1300	16
✱A127	2	#16	STR	2260	7	K19	10	#13	4	1560	16
✱A128	2	#16	STR	1140	4	K20	25	#13	5	3120	78
						K21	2	#13	STR	1720	3
A2	313	#16	STR	16480	8006						
A201	2	#16	STR	15640	49	✱S1	78	#13	1	3560	276
A202	2	#16	STR	14480	45	✱S2	78	#13	1	3320	257
A203	2	#16	STR	13340	41	S3	132	#13	3	860	113
A204	2	#16	STR	12200	38						
A205	2	#16	STR	11060	34	✱ U1	24	#13	6	4620	110
A206	2	#16	STR	9920	31	✱ U2	12	#13	6	4020	48
A207	2	#16	STR	8760	27	U3	82	#13	2	3780	308
A208	2	#16	STR	7620	24	U4	16	#13	2	4340	69
A209	2	#16	STR	6480	20						
A210	2	#16	STR	5340	17	V1	14	#13	STR	1340	19
A211	2	#16	STR	4180	13	REINFORCING STEEL				= 16675	kg
A212	2	#16	STR	3040	9	✱EPOXY COATED REINFORCING STEEL				= 17087	kg
A213	2	#16	STR	1900	6						
A214	2	#16	STR	760	2						
A215	2	#16	STR	15660	49						
A216	2	#16	STR	14540	45						
A217	2	#16	STR	13420	42						
A218	2	#16	STR	12300	38						
A219	2	#16	STR	11180	35						
A220	2	#16	STR	10060	31						
A221	2	#16	STR	8960	28						
A222	2	#16	STR	7840	24						
A223	2	#16	STR	6720	21						
A224	2	#16	STR	5600	17						
A225	2	#16	STR	4500	14						
A226	2	#16	STR	3380	10						
A227	2	#16	STR	2260	7						
A228	2	#16	STR	1140	4						

BAR TYPES

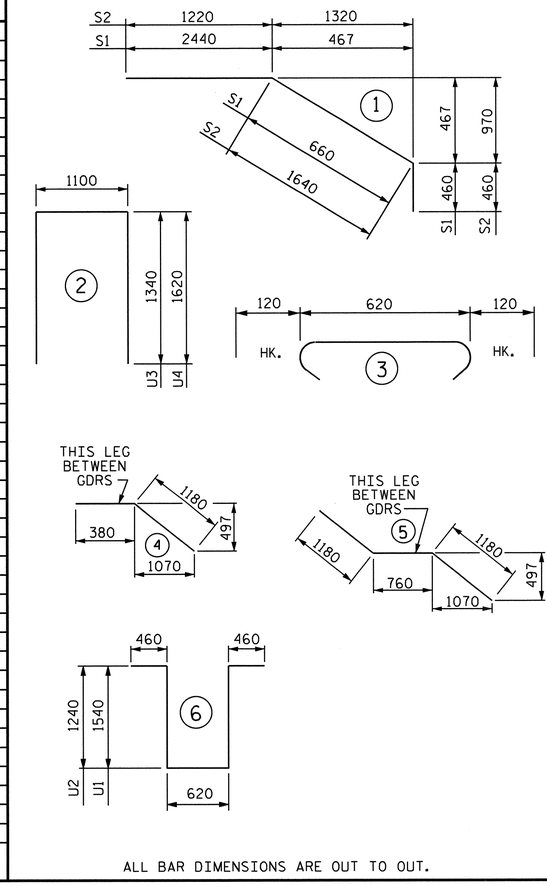

ALL BAR DIMENSIONS ARE OUT TO OUT.

GROOVING BRIDGE FLOORS	
BRIDGE DECK	906.0 SQ.METER
APPROACH SLABS	209.8 SQ.METER
TOTAL	1115.8 SQ.METER

SUPERSTRUCTURE REINFORCING STEEL LENGTHS ARE BASED ON THE FOLLOWING MINIMUM SPLICE LENGTHS					
BAR SIZE	SUPERSTRUCTURE EXCEPT APPROACH SLABS, PARAPET, AND BARRIER RAIL		APPROACH SLABS		PARAPET AND BARRIER RAIL
	EPOXY COATED	UNCOATED	EPOXY COATED	UNCOATED	
#13	610	540	610	540	840
#16	770	660	770	660	1050
#19	920	790	1190	790	1330
#22	1580	1060			
#25	2080	1390			

PROJECT NO. R-2413C

GUILFORD-ROCKINGHAM COUNTY

STATION: 70+09.407-LREV-

STATE OF NORTH CAROLINA
DEPARTMENT OF TRANSPORTATION
RALEIGH

STANDARD
SUPERSTRUCTURE BILL OF MATERIAL

NORTH CAROLINA PROFESSIONAL SEAL 022516 ENGINEER E.M.L.K. E.M.MURRAY 06/28/10

REVISIONS						SHEET NO.
NO.	BY:	DATE:	NO.	BY:	DATE:	S-223
1			3			TOTAL SHEETS
2			4			238

STR. #7

STD. NO. BOM2SM

ASSEMBLED BY : B.N.BARODAWALA	DATE : 12-13-10
CHECKED BY : T.L.AVERETTE	DATE : 3-24-11
DRAWN BY : JMB 5/87	REV. 5/16/97 EEM/RGW
CHECKED BY : SJD 9/87	REV. 5/1/06 TLA/GM

25-OCT-2011 11:58
R:\TIPProjects-R\R2413c\Structures\FinalPlans\Str.#7\R-2413C_SD_BM_07.dgn
taverette

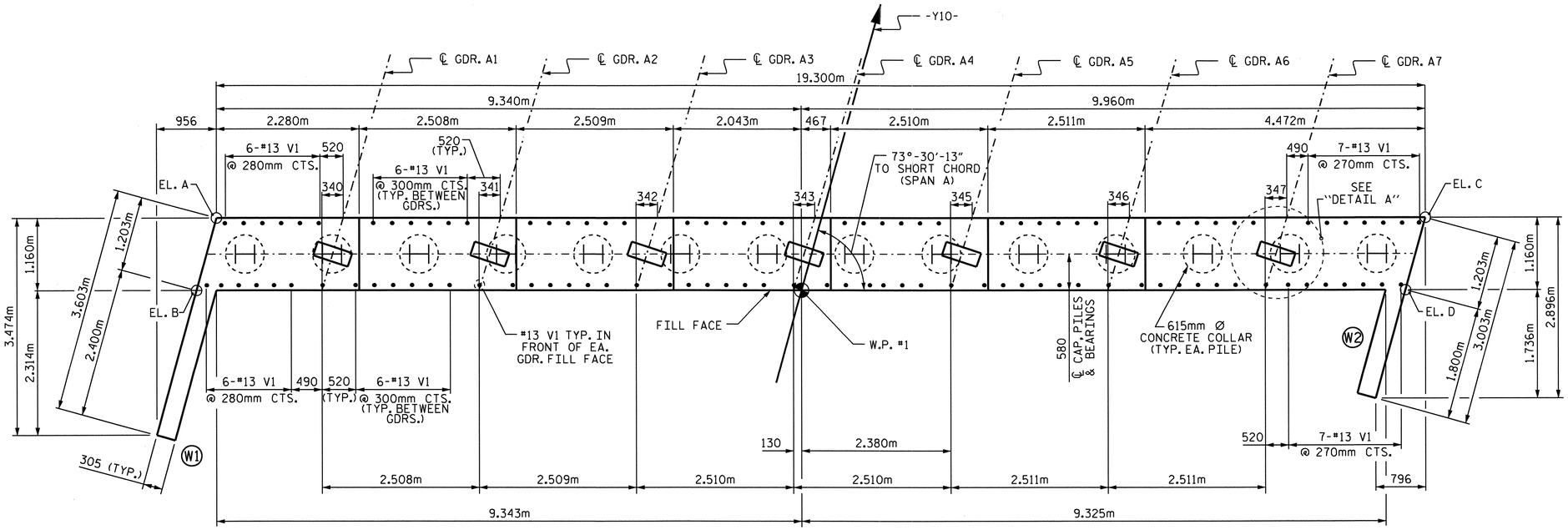

PLAN

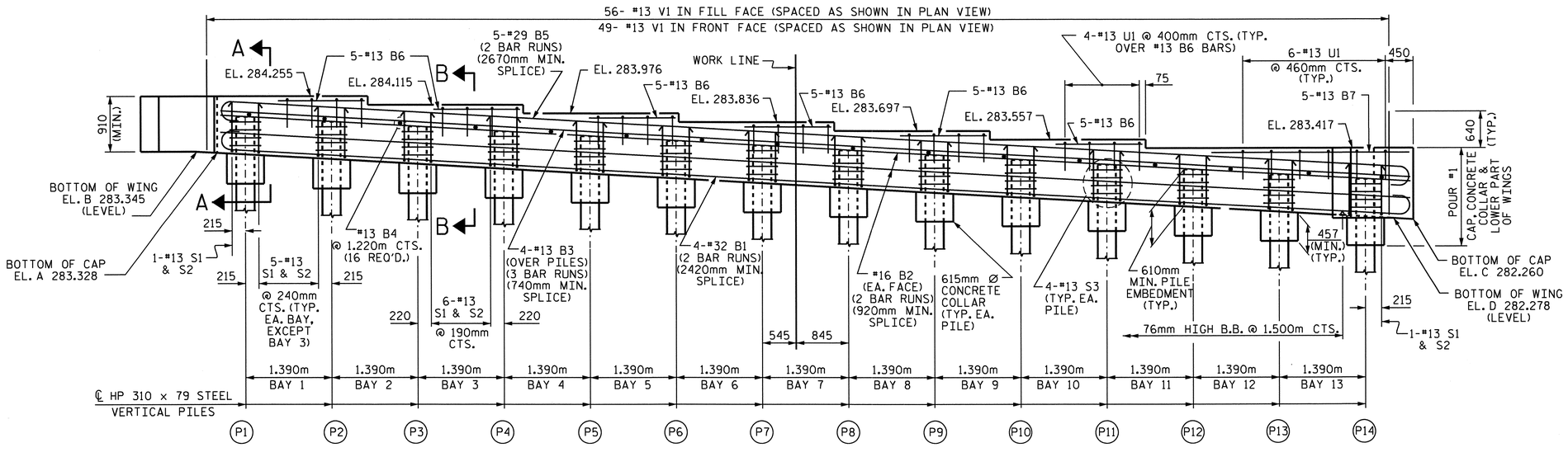

ELEVATION

NOTES:

THE CONTRACTOR SHALL PROVIDE FOR INSTALLATION OF THE 102mm DIAMETER DRAIN PIPE THROUGH THE WING WALL AS REQUIRED FOR REINFORCED BRIDGE APPROACH FILLS. SEE THE ROADWAY PLANS. REINFORCING STEEL IN THE WING WALL MAY BE SHIFTED AS NECESSARY TO CLEAR THE DRAIN PIPE.

THE TOP SURFACE OF THE END BENT CAP AND WINGS, EXCLUDING THE OUTSIDE 100mm AND THE BEARING AREA, SHALL BE RAKED TO A DEPTH OF 6mm.

STIRRUPS AND #13 U1 BARS IN CAP MAY BE SHIFTED AS NECESSARY TO CLEAR #13 V1.

THE CONTRACTOR'S ATTENTION IS CALLED TO THE FACT THAT THE UPPER PART OF INTEGRAL END BENT AND WINGS ARE TO BE POURED WITH THE SUPERSTRUCTURE.

SEE SUPERSTRUCTURE SHEET FOR UPPER PART OF INTEGRAL END BENT DETAIL.

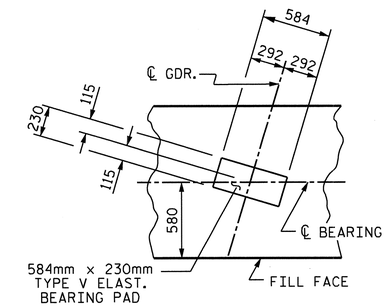

DETAIL A

(TYP. EA. GDR.)

TOP OF PILE ELEVATION	
P1 283.921	P8 283.382
P2 283.844	P9 283.305
P3 283.767	P10 283.229
P4 283.690	P11 283.152
P5 283.613	P12 283.075
P6 283.536	P13 282.998
P7 283.459	P14 282.921

PROJECT NO. R-2413C

GUILFORD-ROCKINGHAM COUNTY

STATION: 70+09.407-LREV-

SHEET 1 OF 3

STATE OF NORTH CAROLINA
DEPARTMENT OF TRANSPORTATION
RALEIGH

SUBSTRUCTURE
INTEGRAL
END BENT #1

NORTH CAROLINA PROFESSIONAL SEAL 022516 ENGINEER EMILY E. McMURRAY
10/28/11

REVISIONS						SHEET NO.
NO.	BY:	DATE:	NO.	BY:	DATE:	S-224
1			3			TOTAL SHEETS
2			4			238

STR. #7

DRAWN BY : B.N.BARODAWALA DATE : 12-29-10
CHECKED BY : T.L.AVERETTE DATE : 5-13-11

19-OCT-2011 11:33
R:\TIPProjects-R\R2413c\Structures\FinalPlans\Str.#7\R-2413C_SD_EB_07.dgn
taverette

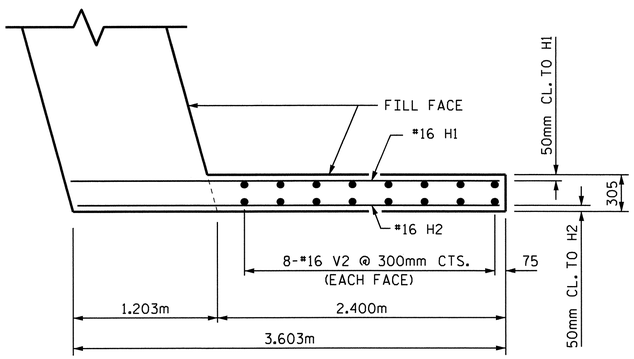

PLAN OF LEFT WING (W1)

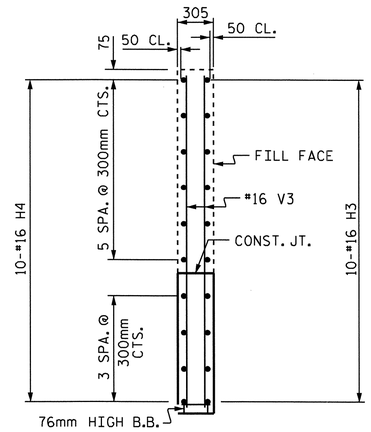

SECTION Y-Y

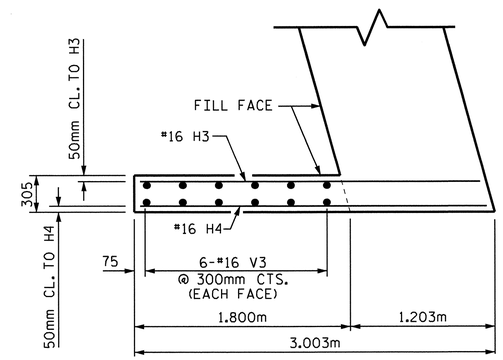

PLAN OF RIGHT WING (W2)

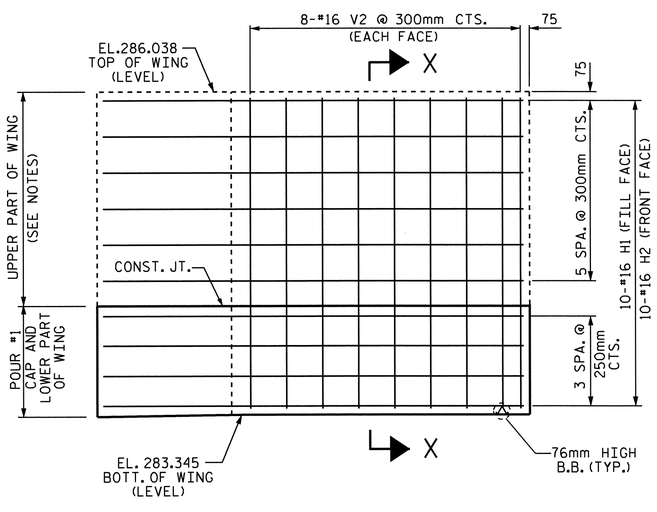

ELEVATION OF LEFT WING (W1)

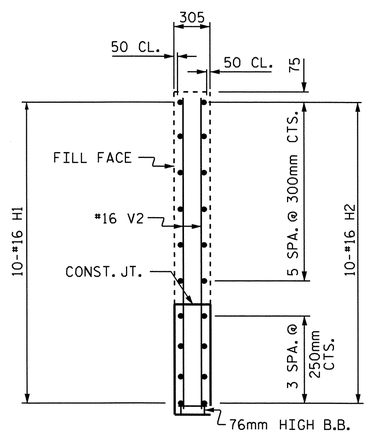

SECTION X-X

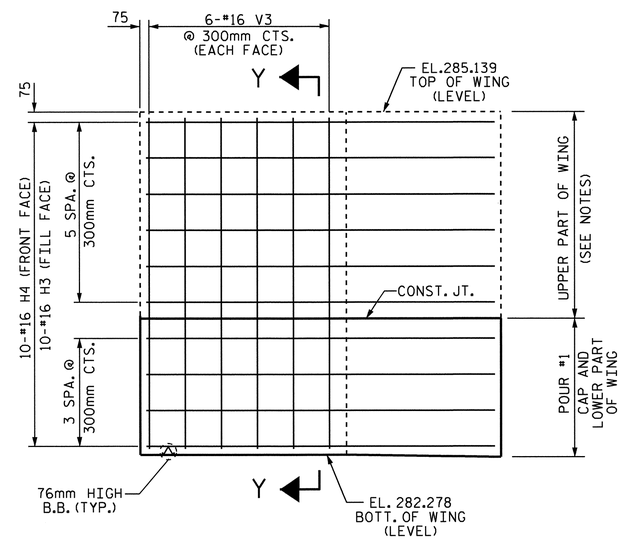

ELEVATION OF RIGHT WING (W2)

PROJECT NO. R-2413C

GUILFORD-ROCKINGHAM COUNTY

STATION: 70+09.407 -LREV-

SHEET 2 OF 3

STATE OF NORTH CAROLINA
DEPARTMENT OF TRANSPORTATION
RALEIGH

SUBSTRUCTURE

INTEGRAL
END BENT #1

NORTH CAROLINA PROFESSIONAL SEAL 022516 ENGINEER EMILY E. MURRAY
10/28/11

REVISIONS						SHEET NO.
NO.	BY:	DATE:	NO.	BY:	DATE:	S-225
1			3			TOTAL SHEETS
2			4			238

STR. #7

DRAWN BY : B.N.BARODAWALA DATE : 12-29-10
CHECKED BY : T.L.AVERETTE DATE : 5-13-11

05-SEP-2011 14:31
Y:\Structures\Final Plans\Str.#7\R-2413C_SD_EB_07.dgn
mgudlaugsson

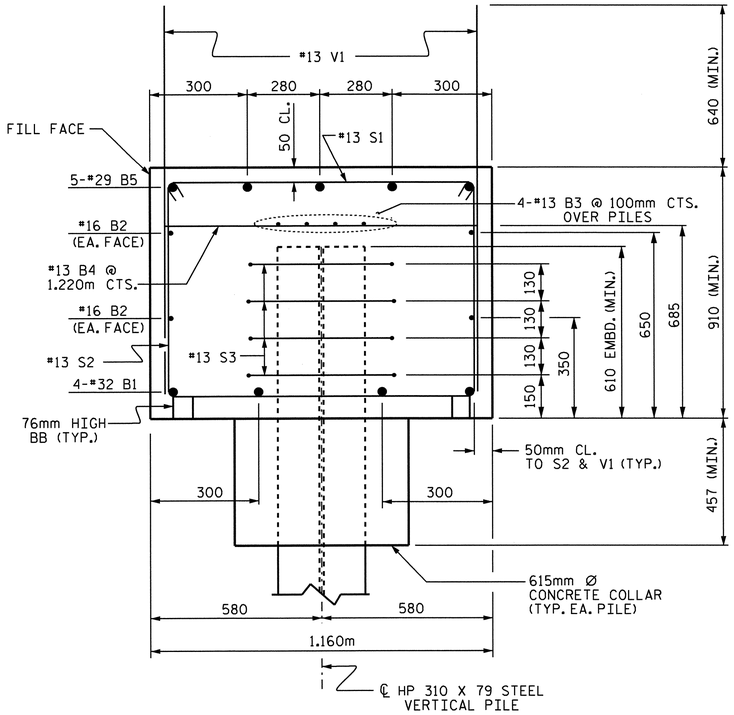

SECTION A-A

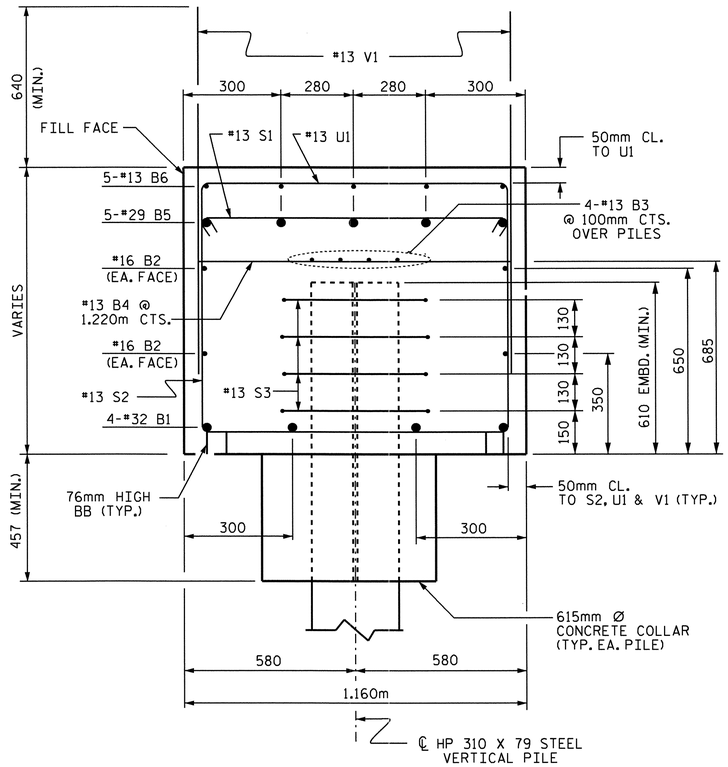

SECTION B-B

BAR TYPES

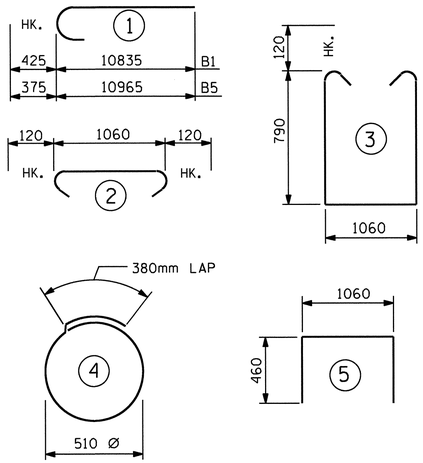

ALL BAR DIMENSIONS ARE OUT TO OUT.

BILL OF MATERIAL
END BENT #1

BAR	NO.	SIZE	TYPE	LENGTH	WEIGHT
B1	8	#32	1	11260	577
B2	8	#16	STR	10080	125
B3	12	#13	STR	6900	82
B4	16	#13	STR	1060	17
B5	10	#29	1	11340	574
B6	30	#13	STR	1400	42
B7	5	#13	STR	2800	14
H1	10	#16	STR	3560	55
H2	10	#16	STR	3520	55
H3	10	#16	STR	2820	44
H4	10	#16	STR	2880	45
S1	68	#13	2	1300	88
S2	68	#13	3	2880	195
S3	56	#13	4	1980	110
U1	30	#13	5	1980	59
V1	105	#13	STR	1500	157
V2	16	#16	STR	2580	64
V3	12	#16	STR	2760	51
REINFORCING STEEL				=	2354 kg

CLASS A CONCRETE BREAKDOWN

POUR #1: (CAP, CONCRETE COLLARS & LOWER PART OF WINGS 25.6 m3

TOTAL CONCRETE 25.6 m3

HP 310 X 79 STEEL PILES
NO. 14 219.8 METERS

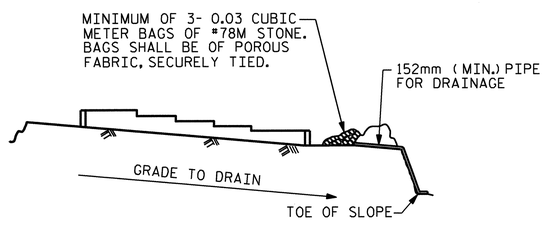

BAGGED STONE AND PIPE SHALL BE PLACED IMMEDIATELY AFTER COMPLETION OF END BENT EXCAVATION. PIPE MAY BE EITHER CONCRETE, CORRUGATED STEEL, CORRUGATED ALUMINUM ALLOY, OR CORRUGATED PLASTIC. PERFORATED PIPE WILL NOT BE ALLOWED.

BAGGED STONE SHALL REMAIN IN PLACE UNTIL THE ENGINEER DIRECTS THAT IT BE REMOVED. THE CONTRACTOR SHALL REMOVE AND DISPOSE OF SILT ACCUMULATIONS AT BAGGED STONE WHEN SO DIRECTED BY THE ENGINEER. BAGS SHALL BE REMOVED AND REPLACED WHENEVER THE ENGINEER DETERMINES THAT THEY HAVE DETERIORATED AND LOST THEIR EFFECTIVENESS.

NO SEPARATE PAYMENT WILL BE MADE FOR THIS WORK AND THE ENTIRE COST OF THIS WORK SHALL BE INCLUDED IN THE UNIT CONTRACT PRICE BID FOR THE SEVERAL PAY ITEMS.

TEMPORARY DRAINAGE AT END BENT

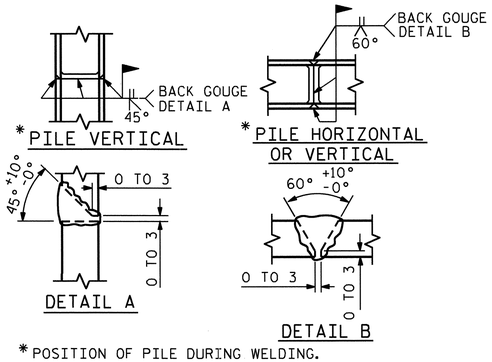

* POSITION OF PILE DURING WELDING.

PILE SPLICE DETAILS

PROJECT NO. R-2413C
GUILFORD-ROCKINGHAM COUNTY
STATION: 70+09.407 -LREV-

SHEET 3 OF 3

STATE OF NORTH CAROLINA
DEPARTMENT OF TRANSPORTATION
RALEIGH

SUBSTRUCTURE
INTEGRAL
END BENT #1

NORTH CAROLINA PROFESSIONAL SEAL 022516 ENGINEER EMILY E. MURRAY
10/28/11

REVISIONS						SHEET NO.
NO.	BY:	DATE:	NO.	BY:	DATE:	S-226
1			3			TOTAL SHEETS
2			4			238

STR. #7

DRAWN BY : B.N.BARODAWALA DATE : 12-29-10
CHECKED BY : T.L.AVERETTE DATE : 5-13-11

05-SEP-2011 14:31
Y:\Structures\Final Plans\Str.#7\R-2413C_SD_EB_07.dgn
mgudlaugsson

NOTES

STIRRUPS AND U1 BARS IN CAP MAY BE SHIFTED AS NECESSARY TO CLEAR ANCHOR BOLTS.

HOOKS ON "V" BARS MAY BE TURNED AS NECESSARY FOR PLACING REINFORCING STEEL.

FOR PILE SPLICE DETAILS, SEE END BENT #1 OR #2, SHEET 3 OF 3.

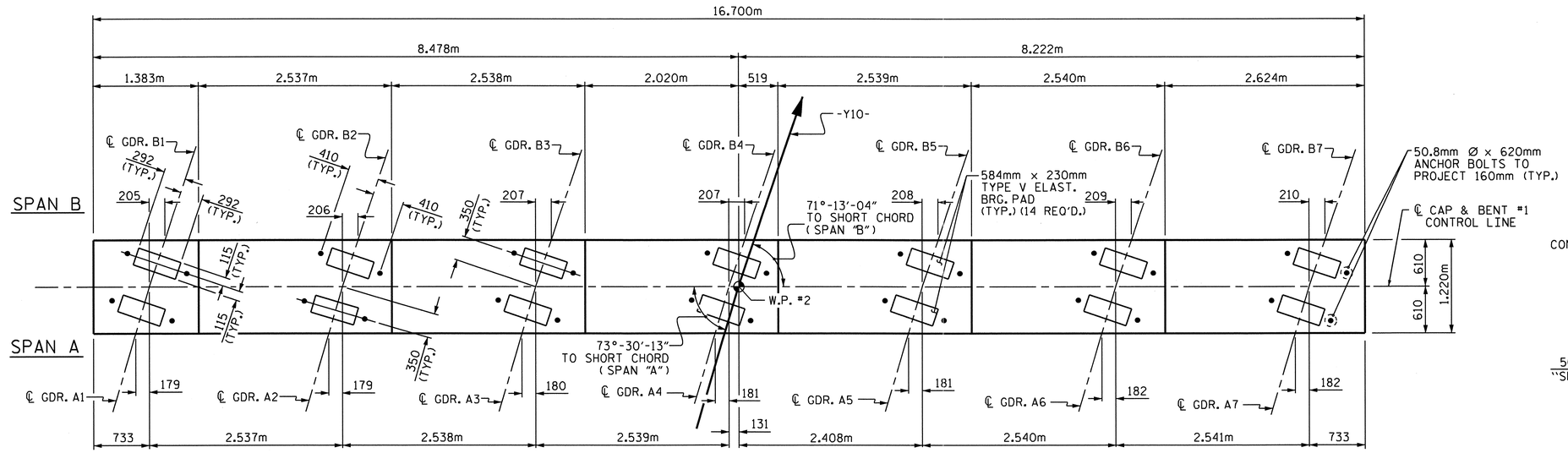

PLAN

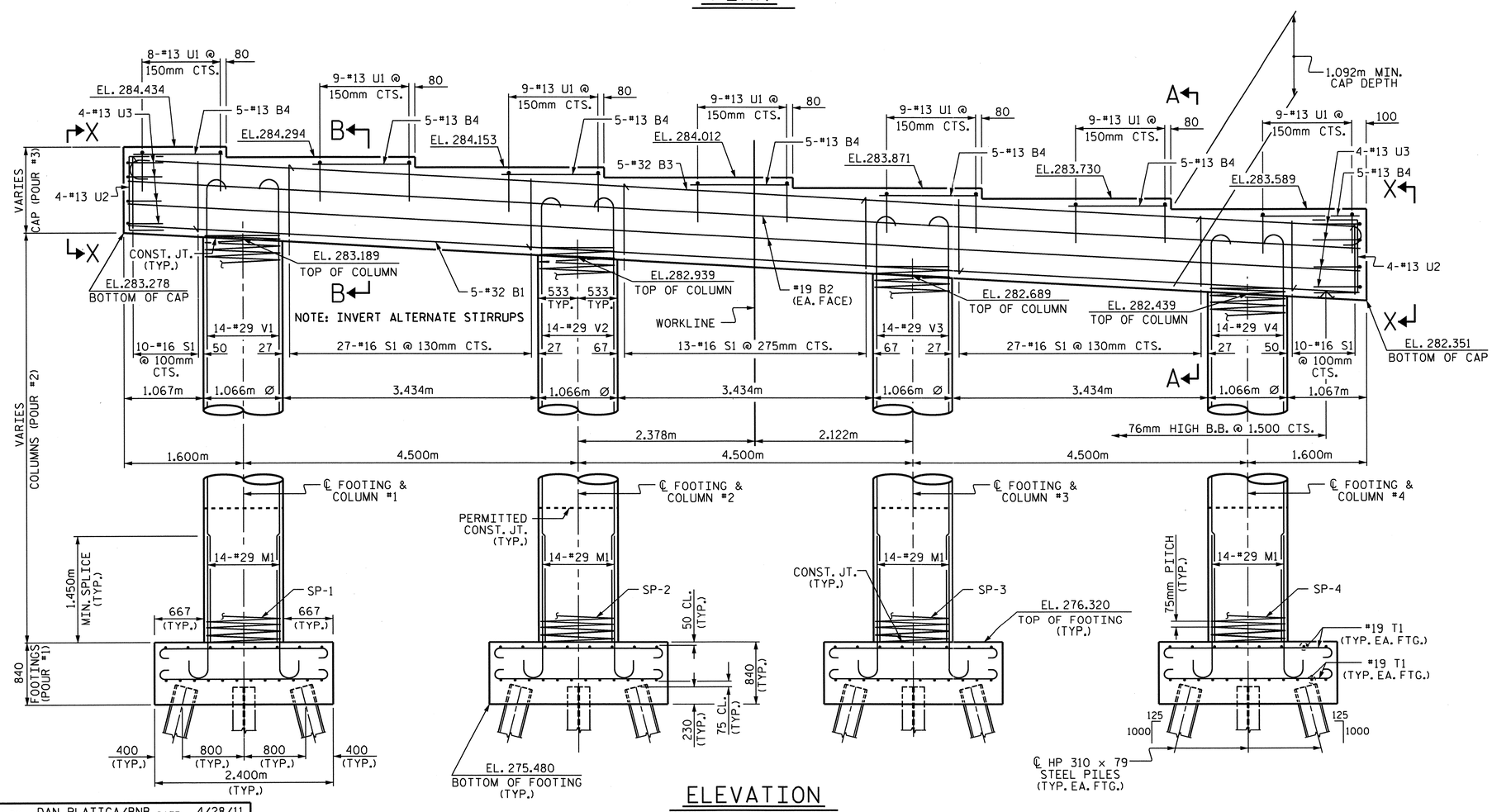

ELEVATION

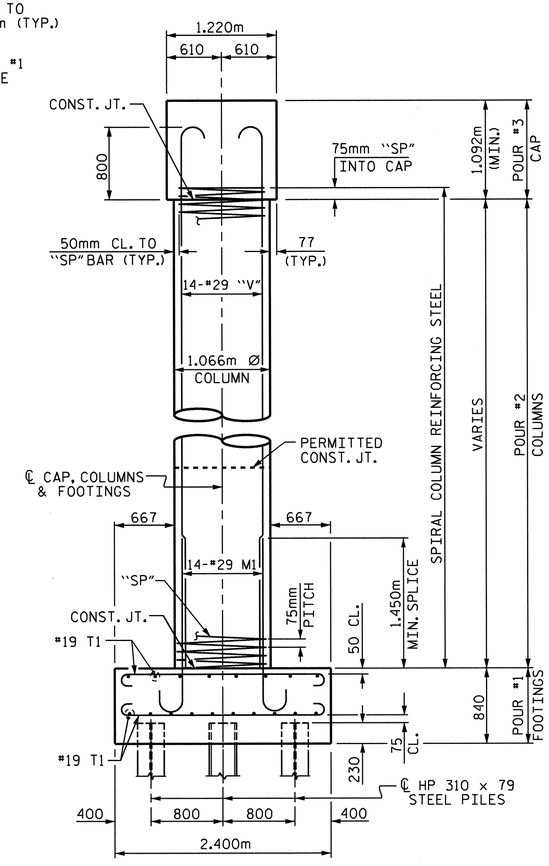

END ELEVATION

PROJECT NO. R-2413C

GUILFORD-ROCKINGHAM COUNTY

STATION: 70+09.407 -LREV-

SHEET 1 OF 2

STATE OF NORTH CAROLINA
DEPARTMENT OF TRANSPORTATION
RALEIGH

SUBSTRUCTURE

BENT #1

NORTH CAROLINA PROFESSIONAL SEAL 022516 ENGINEER EMILY E. MURRAY

REVISIONS						SHEET NO.
NO.	BY:	DATE:	NO.	BY:	DATE:	S-227
1			3			TOTAL SHEETS
2			4			238

DRAWN BY : DAN PLATICA/BNB DATE : 4/28/11
CHECKED BY : T.L. AVERETTE DATE : 5/26/11

19-OCT-2011 11:32
R:\TIPProjects-R\R2413c\Structures\FinalPlans\Str.#7\R2413C_sd_B1_07.dgn
taverette

STR. #7

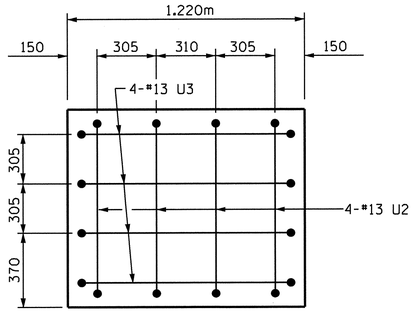

SECTION X-X

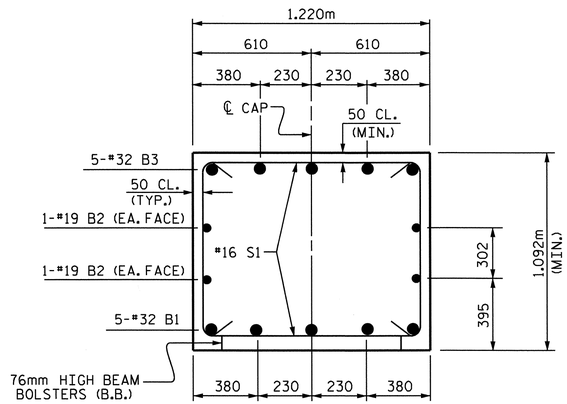

SECTION A-A

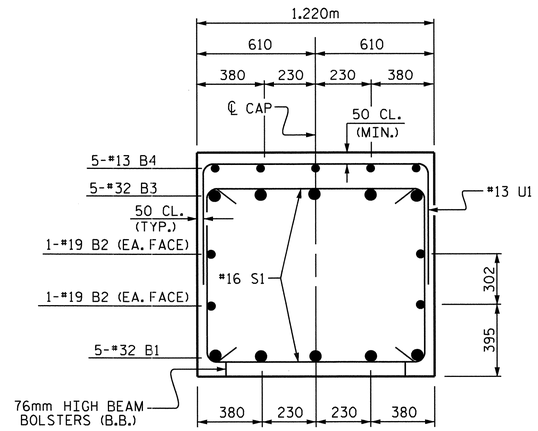

SECTION B-B

BAR TYPES

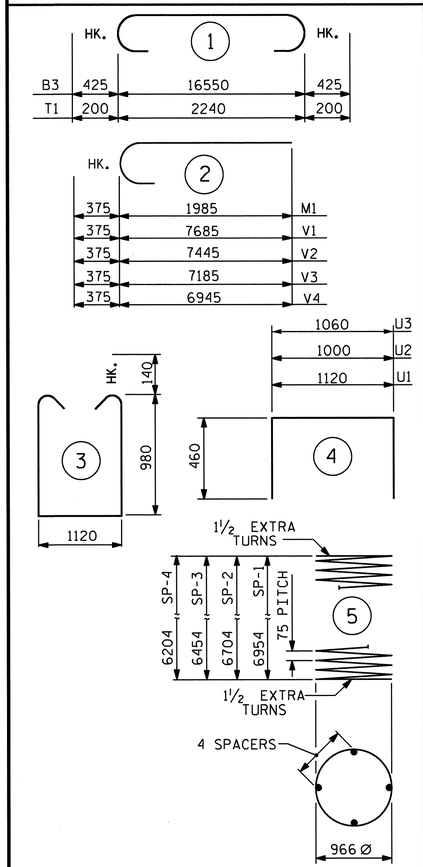

ALL BAR DIMENSIONS ARE OUT TO OUT.

BILL OF MATERIAL

BENT #1

BAR	NO.	SIZE	TYPE	LENGTH	WEIGHT
B1	5	32	STR	16600	532
B2	4	19	STR	16600	148
B3	5	32	1	17400	557
B4	35	13	STR	1280	45
M1	56	29	2	2360	669
S1	87	16	3	3360	454
T1	152	19	1	2640	897
U1	62	13	4	2040	126
U2	8	13	4	1920	15
U3	8	13	4	1980	16
V1	14	29	2	8060	571
V2	14	29	2	7820	554
V3	14	29	2	7560	536
V4	14	29	2	7320	519
SP-1	1	**	5	287520	286
SP-2	1	**	5	277040	275
SP-3	1	**	5	266560	265
SP-4	1	**	5	257560	256
REINFORCING STEEL				kg	5639
SPIRAL COLUMN REINFORCING STEEL				kg	1082

CLASS A CONCRETE BREAKDOWN

POUR #1	(FOOTINGS)	19.4	m^3
POUR #2	(COLUMNS)	23.2	m^3
POUR #3	(CAP)	23.8	m^3
TOTAL		66.4	m^3

HP 310 x 79 STEEL PILES

NO. 28	METERS	201.6

FOUNDATION EXCAVATION FOR BENT #1 — LUMP SUM

** SP-1 THRU SP-4 SPIRAL REINFORCING STEEL SHALL BE W20 OR D-20 COLD DRAWN WIRE OR #13 PLAIN OR DEFORMED BAR.

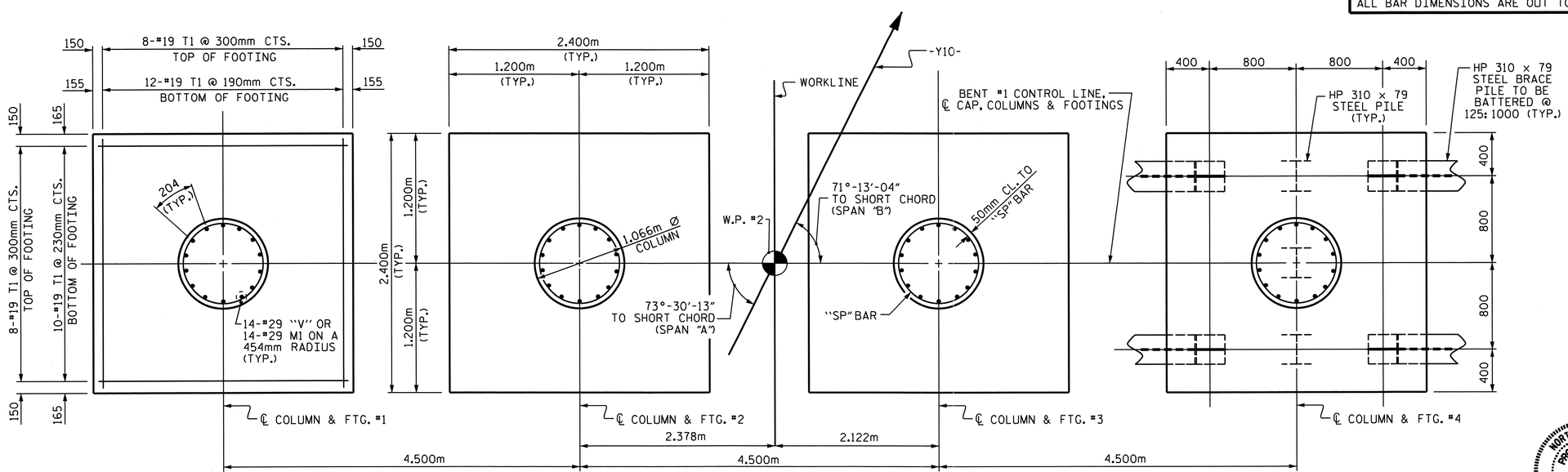

PLAN OF COLUMNS AND FOOTINGS

(FOOTING DIMENSIONS, REINFORCING STEEL & PILES ARE TYPICAL EACH FOOTING)

PROJECT NO. R-2413C

GUILFORD-ROCKINGHAM COUNTY

STATION: 70+09.407 -LREV-

SHEET 2 OF 2

STATE OF NORTH CAROLINA
DEPARTMENT OF TRANSPORTATION
RALEIGH

SUBSTRUCTURE

BENT #1

NORTH CAROLINA PROFESSIONAL SEAL 022516 ENGINEER L. E. MURRAY

10/28/11

REVISIONS						SHEET NO.
NO.	BY:	DATE:	NO.	BY:	DATE:	S-228
1			3			TOTAL SHEETS
2			4			238

STR. #7

DRAWN BY : DAN PLATICA/BNB DATE : 4/28/11
CHECKED BY : T.L. AVERETTE DATE : 5/26/11

19-OCT-2011 11:30
R:\TIPProjects-R\R2413c\Structures\FinalPlans\Str.#7\R2413C_sd_B1_07.dgn
taverette

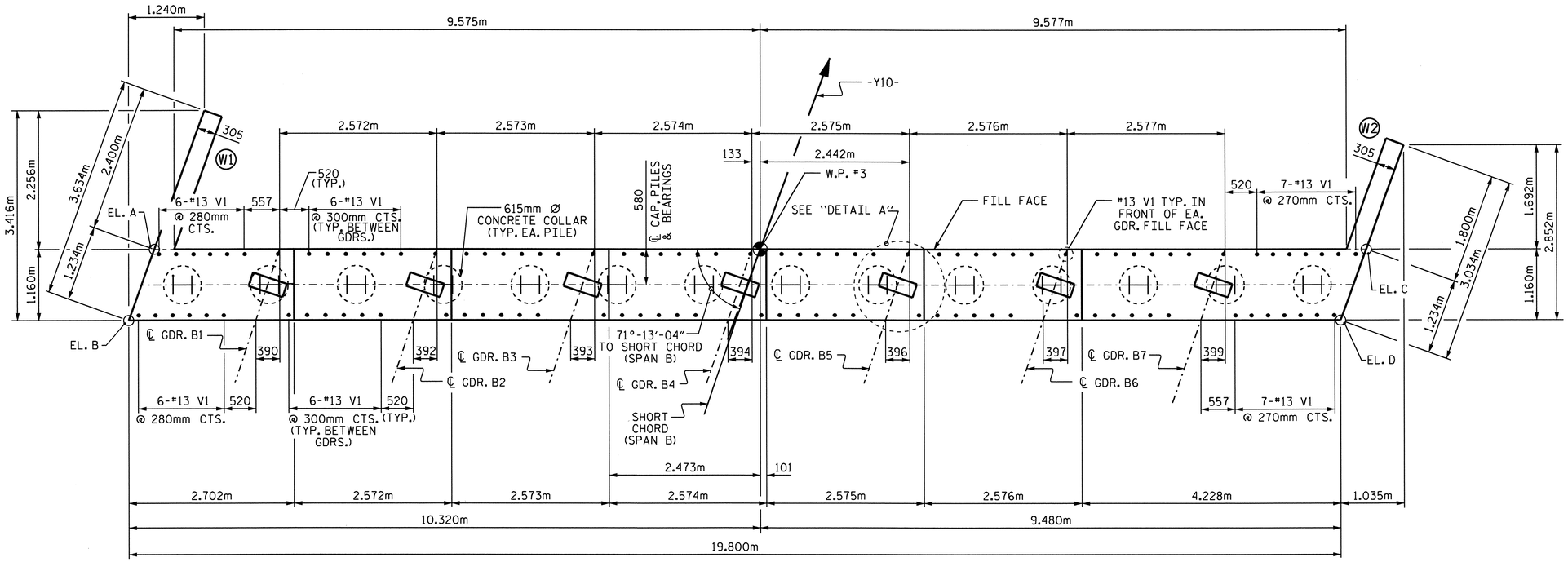

PLAN

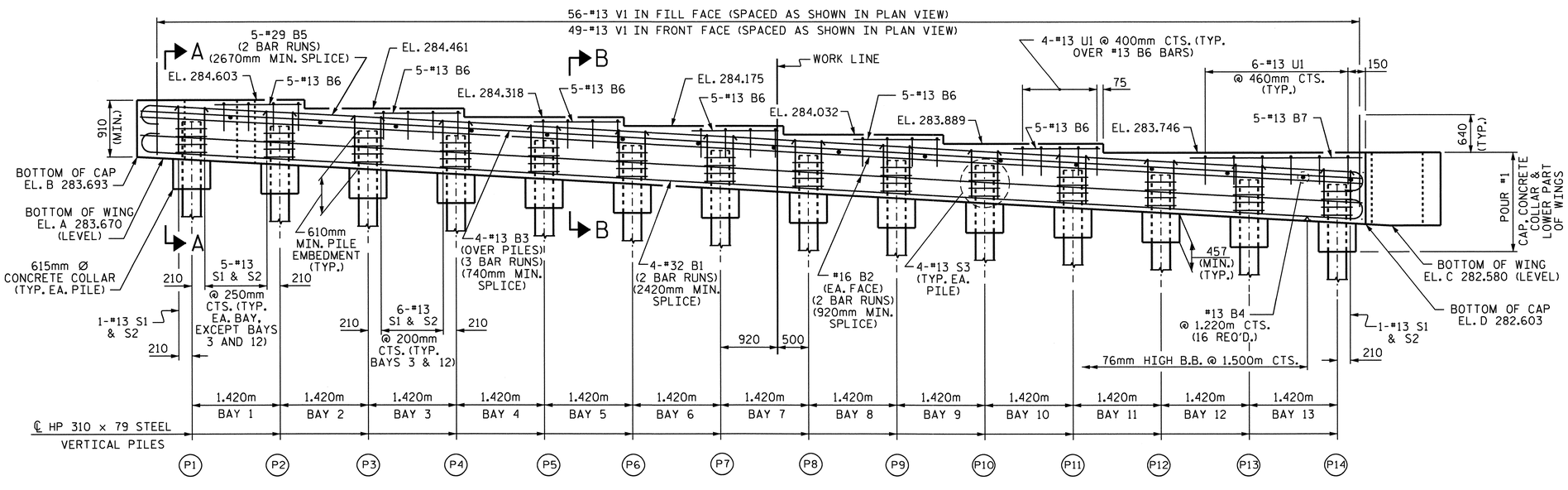

ELEVATION

NOTES:

THE CONTRACTOR SHALL PROVIDE FOR INSTALLATION OF THE 102mm DIAMETER DRAIN PIPE THROUGH THE WING WALL AS REQUIRED FOR REINFORCED BRIDGE APPROACH FILLS. SEE THE ROADWAY PLANS. REINFORCING STEEL IN THE WING WALL MAY BE SHIFTED AS NECESSARY TO CLEAR THE DRAIN PIPE.

THE TOP SURFACE OF THE END BENT CAP AND WINGS, EXCLUDING THE OUTSIDE 100mm AND THE BEARING AREA, SHALL BE RAKED TO A DEPTH OF 6mm.

STIRRUPS AND #13 U1 BARS IN CAP MAY BE SHIFTED AS NECESSARY TO CLEAR #13 V1.

THE CONTRACTOR'S ATTENTION IS CALLED TO THE FACT THAT THE UPPER PART OF INTEGRAL END BENT AND WINGS ARE TO BE POURED WITH THE SUPERSTRUCTURE.

SEE SUPERSTRUCTURE SHEET FOR UPPER PART OF INTEGRAL END BENT DETAIL.

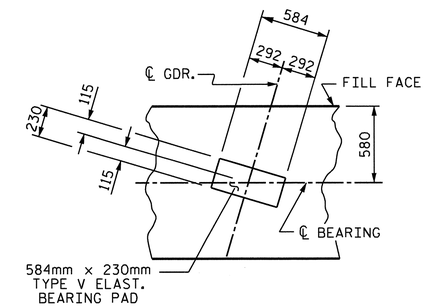

DETAIL A

(TYP. EA. GDR.)

TOP OF PILE ELEVATION	
P1 284.263	P8 283.716
P2 284.185	P9 283.638
P3 284.107	P10 283.560
P4 284.029	P11 283.482
P5 283.950	P12 283.403
P6 283.872	P13 283.325
P7 283.794	P14 283.247

PROJECT NO. R-2413C

GUILFORD-ROCKINGHAM COUNTY

STATION: 70+09.407 -LREV-

SHEET 1 OF 3

STATE OF NORTH CAROLINA
DEPARTMENT OF TRANSPORTATION
RALEIGH

SUBSTRUCTURE
INTEGRAL END BENT #2

NORTH CAROLINA PROFESSIONAL SEAL 022516 ENGINEER EMILY E. MURRAY
10/28/11

REVISIONS								SHEET NO.
NO.	BY:	DATE:	NO.	BY:	DATE:			S-229
1			3					TOTAL SHEETS
2			4					238

STR. #7

DRAWN BY : B.N.BARODAWALA DATE : 12-29-10
CHECKED BY : T.L.AVERETTE DATE : 5-13-11

05-SEP-2011 14:30
Y:\Structures\Final Plans\Str.#7\R-2413C_SD_EB_07.dgn
mgudlaugsson

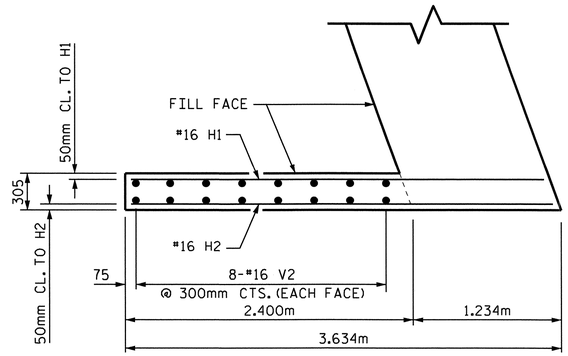

PLAN OF LEFT WING (W1)

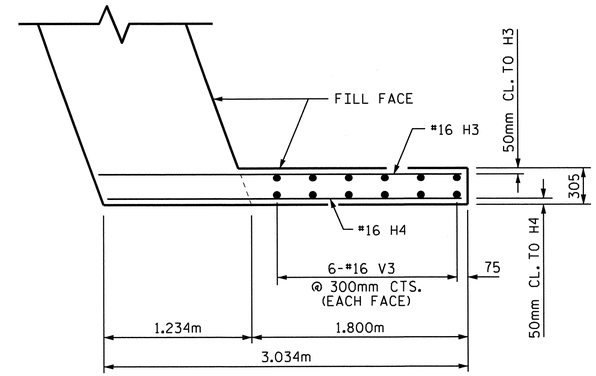

PLAN OF RIGHT WING (W2)

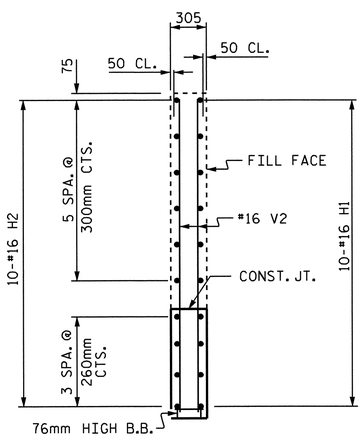

SECTION Y-Y

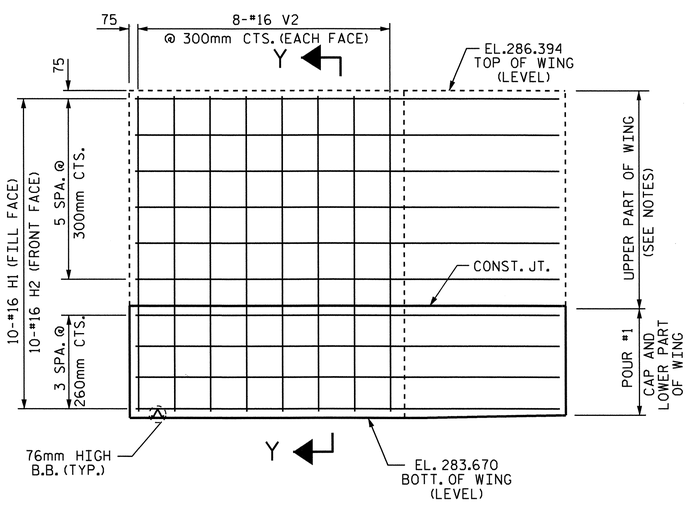

ELEVATION OF LEFT WING (W1)

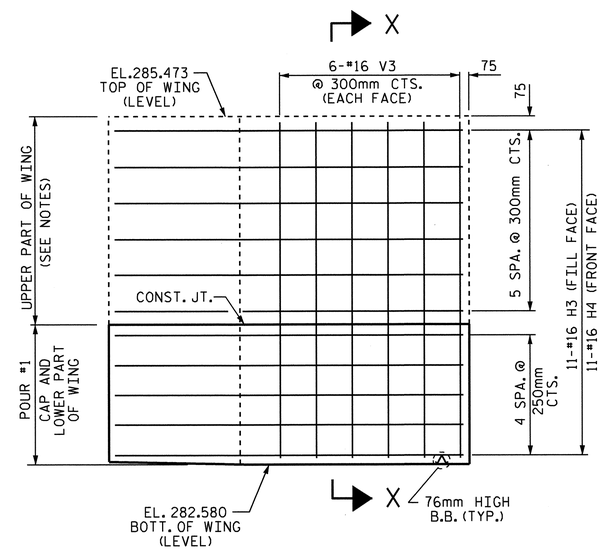

ELEVATION OF RIGHT WING (W2)

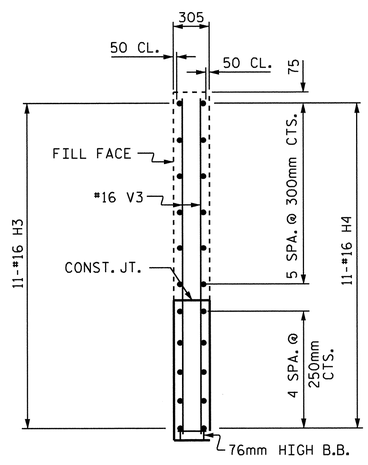

SECTION X-X

PROJECT NO. R-2413C

GUILFORD-ROCKINGHAM COUNTY

STATION: 70+09.407 -LREV-

SHEET 2 OF 3

STATE OF NORTH CAROLINA
DEPARTMENT OF TRANSPORTATION
RALEIGH

SUBSTRUCTURE

INTEGRAL
END BENT #2

NORTH CAROLINA PROFESSIONAL SEAL 022516 ENGINEER EMILY E. MURRAY
10/28/11

REVISIONS						SHEET NO.
NO.	BY:	DATE:	NO.	BY:	DATE:	S-230
1			3			TOTAL SHEETS
2			4			238

STR. #7

DRAWN BY : B.N.BARODAWALA DATE : 12-29-10
CHECKED BY : T.L.AVERETTE DATE : 5-13-11

05-SEP-2011 14:30
Y:\Structures\Final Plans\Str.#7\R-2413C_SD_EB_07.dgn
mgudlaugsson

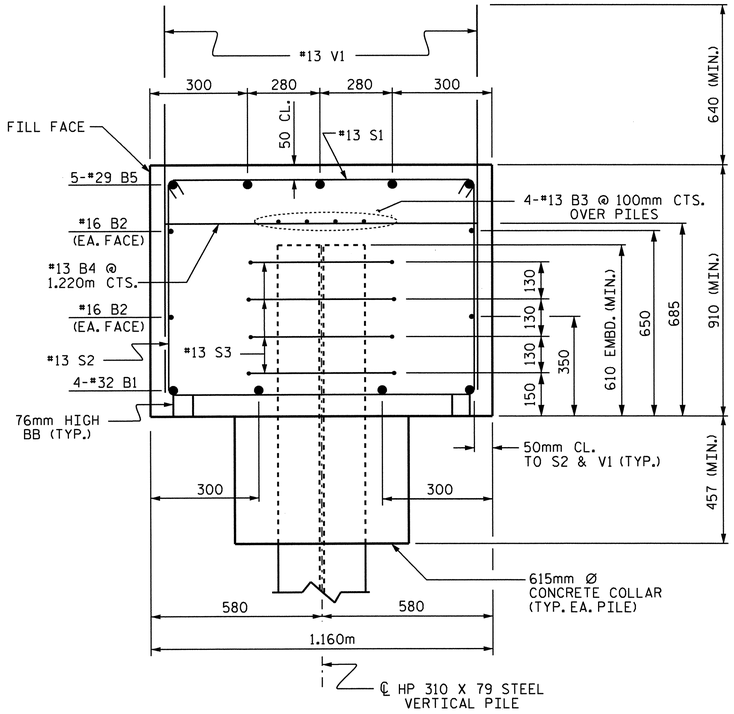

SECTION A-A

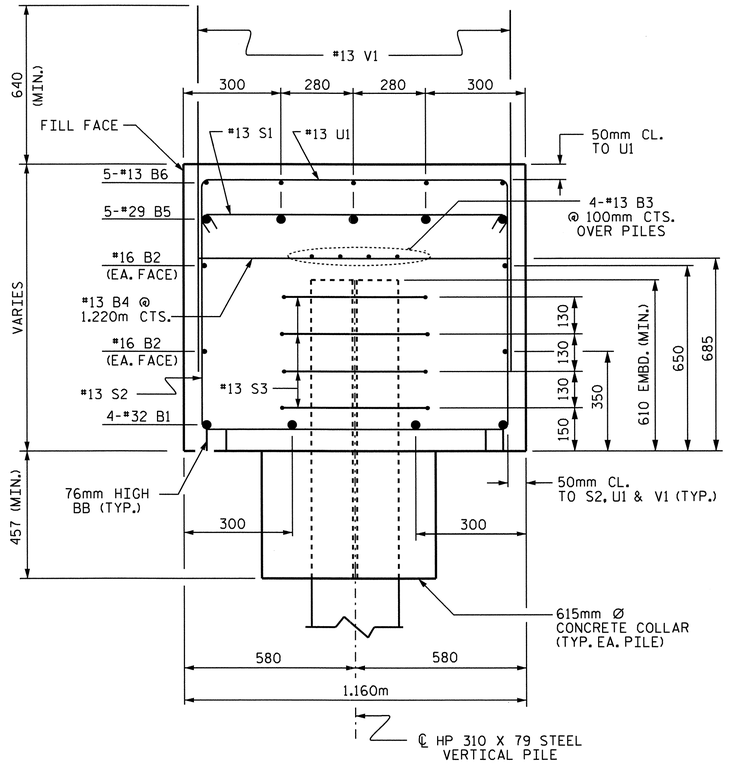

SECTION B-B

BAR TYPES

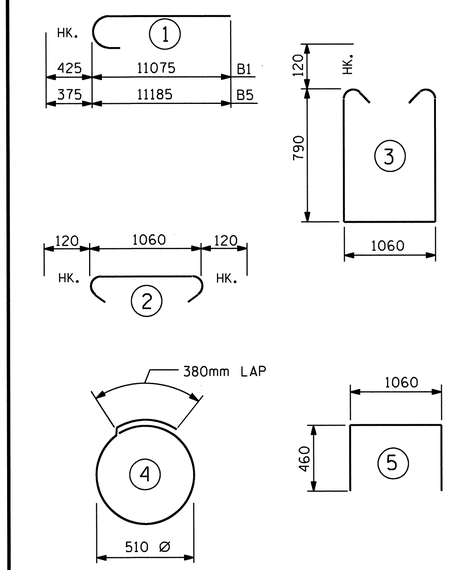

ALL BAR DIMENSIONS ARE OUT TO OUT.

BILL OF MATERIAL
END BENT #2

BAR	NO.	SIZE	TYPE	LENGTH	WEIGHT
B1	8	#32	1	11500	589
B2	8	#16	STR	10380	129
B3	12	#13	STR	7100	85
B4	16	#13	STR	1060	17
B5	10	#29	1	11560	585
B6	30	#13	STR	1400	42
B7	5	#13	STR	2920	15
H1	10	#16	STR	3440	53
H2	10	#16	STR	3500	54
H3	11	#16	STR	3020	52
H4	11	#16	STR	2940	50
S1	69	#13	2	1300	89
S2	69	#13	3	2880	198
S3	56	#13	4	1980	110
U1	30	#13	5	1980	59
V1	105	#13	STR	1500	157
V2	16	#16	STR	2620	65
V3	12	#16	STR	2780	52

REINFORCING STEEL = 2401 kg

CLASS A CONCRETE BREAKDOWN

POUR #1: (CAP, CONCRETE COLLARs & LOWER PART OF WINGS 26.7 m3

TOTAL CONCRETE 26.7 m3

HP 310 X 79 STEEL PILES
NO. 14 254.8 METERS

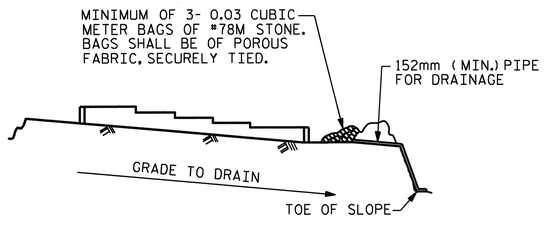

BAGGED STONE AND PIPE SHALL BE PLACED IMMEDIATELY AFTER COMPLETION OF END BENT EXCAVATION. PIPE MAY BE EITHER CONCRETE, CORRUGATED STEEL, CORRUGATED ALUMINUM ALLOY, OR CORRUGATED PLASTIC. PERFORATED PIPE WILL NOT BE ALLOWED.

BAGGED STONE SHALL REMAIN IN PLACE UNTIL THE ENGINEER DIRECTS THAT IT BE REMOVED. THE CONTRACTOR SHALL REMOVE AND DISPOSE OF SILT ACCUMULATIONS AT BAGGED STONE WHEN SO DIRECTED BY THE ENGINEER. BAGS SHALL BE REMOVED AND REPLACED WHENEVER THE ENGINEER DETERMINES THAT THEY HAVE DETERIORATED AND LOST THEIR EFFECTIVENESS.

NO SEPARATE PAYMENT WILL BE MADE FOR THIS WORK AND THE ENTIRE COST OF THIS WORK SHALL BE INCLUDED IN THE UNIT CONTRACT PRICE BID FOR THE SEVERAL PAY ITEMS.

TEMPORARY DRAINAGE AT END BENT

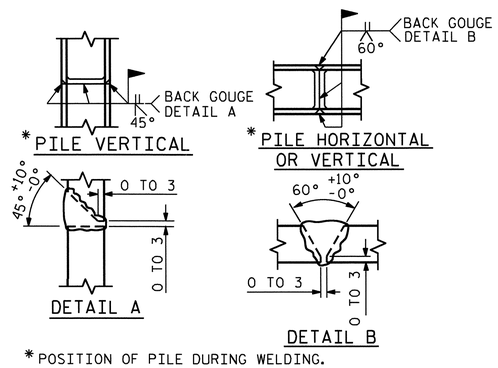

*POSITION OF PILE DURING WELDING.

PILE SPLICE DETAILS

PROJECT NO. R-2413C
GUILFORD-ROCKINGHAM COUNTY
STATION: 70+09.407 -LREV-

SHEET 3 OF 3

STATE OF NORTH CAROLINA
DEPARTMENT OF TRANSPORTATION
RALEIGH

SUBSTRUCTURE
INTEGRAL
END BENT #2

NORTH CAROLINA PROFESSIONAL SEAL 022516 ENGINEER EMILY E. MURRAY
10/28/11

REVISIONS								SHEET NO.
NO.	BY:	DATE:	NO.	BY:	DATE:			S-231
1			3					TOTAL SHEETS
2			4					238

DRAWN BY : B.N.BARODAWALA DATE : 12-29-10
CHECKED BY : T.L.AVERETTE DATE : 5-13-11

05-SEP-2011 14:30
Y:\Structures\Final Plans\Str.#7\R-2413C_SD_EB_07.dgn
mgudlaugsson

STR. #7

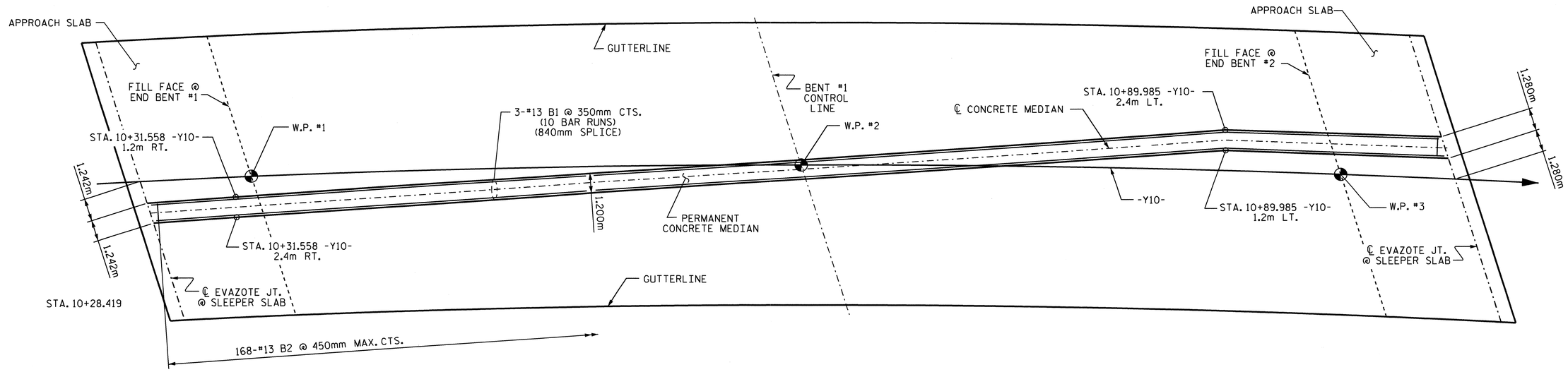

SPAN A

SPAN B

PLAN

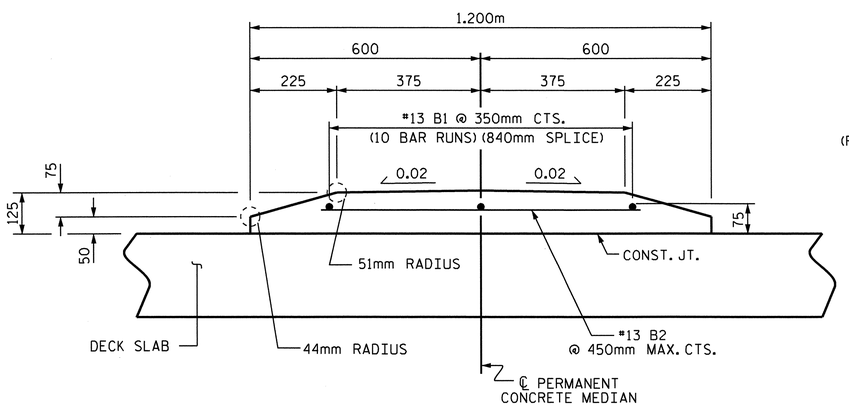

SECTION THRU CONCRETE MEDIAN

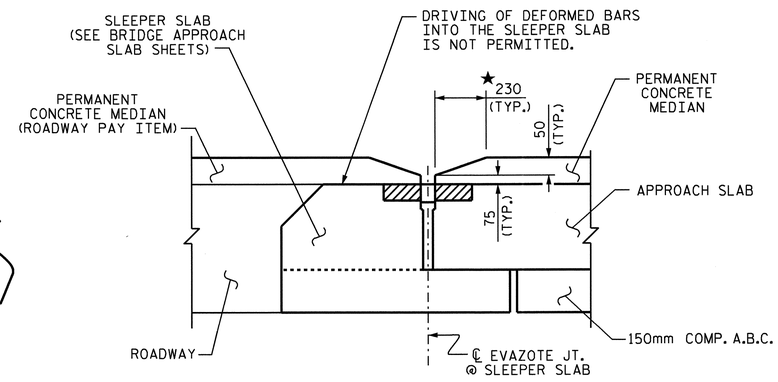

SECTION AT EVAZOTE JOINT

★ NORMAL TO JOINT

BILL OF MATERIAL					
CONCRETE MEDIAN					
BAR	NO.	SIZE	TYPE	LENGTH	WEIGHT
* B1	30	13	STR	8240	246
* B2	168	13	STR	800	134
* EPOXY COATED REINFORCING STEEL					380 kg
CLASS AA CONCRETE					10.2 m3

PROJECT NO. R-2413C

GUILFORD-ROCKINGHAM COUNTY

STATION: 70+09.407-LREV-

PERMANENT CONCRETE MEDIAN DETAILS

NOTES

NO SEPARATE MEASUREMENT OR PAYMENT WILL BE MADE FOR MATERIALS OR LABOR TO CONSTRUCT THE CONCRETE MEDIAN. THE ENTIRE COST OF THIS WORK SHALL BE INCLUDED IN THE SQUARE FOOT CONTRACT PRICE BID FOR THE REINFORCED CONCRETE DECK SLAB.

FOR LOCATION OF CONCRETE MEDIAN, SEE ROADWAY PLANS.

ALL REINFORCING STEEL IN CONCRETE MEDIANS SHALL BE EPOXY COATED.

#13 B1 BARS MAY BE FIELD BENT AS NECESSARY.

NORTH CAROLINA PROFESSIONAL SEAL 022516 ENGINEER EMILY E. MURRAY

10/24/11

STATE OF NORTH CAROLINA
DEPARTMENT OF TRANSPORTATION
RALEIGH

SUPERSTRUCTURE

PERMANENT CONCRETE MEDIAN

REVISIONS						SHEET NO.
NO.	BY:	DATE:	NO.	BY:	DATE:	S-232
1			3			TOTAL SHEETS
2			4			238

DRAWN BY : B.N.BARODAWALA DATE : 4-7-11
CHECKED BY : T.L.AVERETTE DATE : 6-2-11

19-OCT-2011 11:25
R:\TIPProjects-R\R2413c\Structures\FinalPlans\Str.#7\R-2413C_SD_CM_07.dgn
taverette

STR. #7

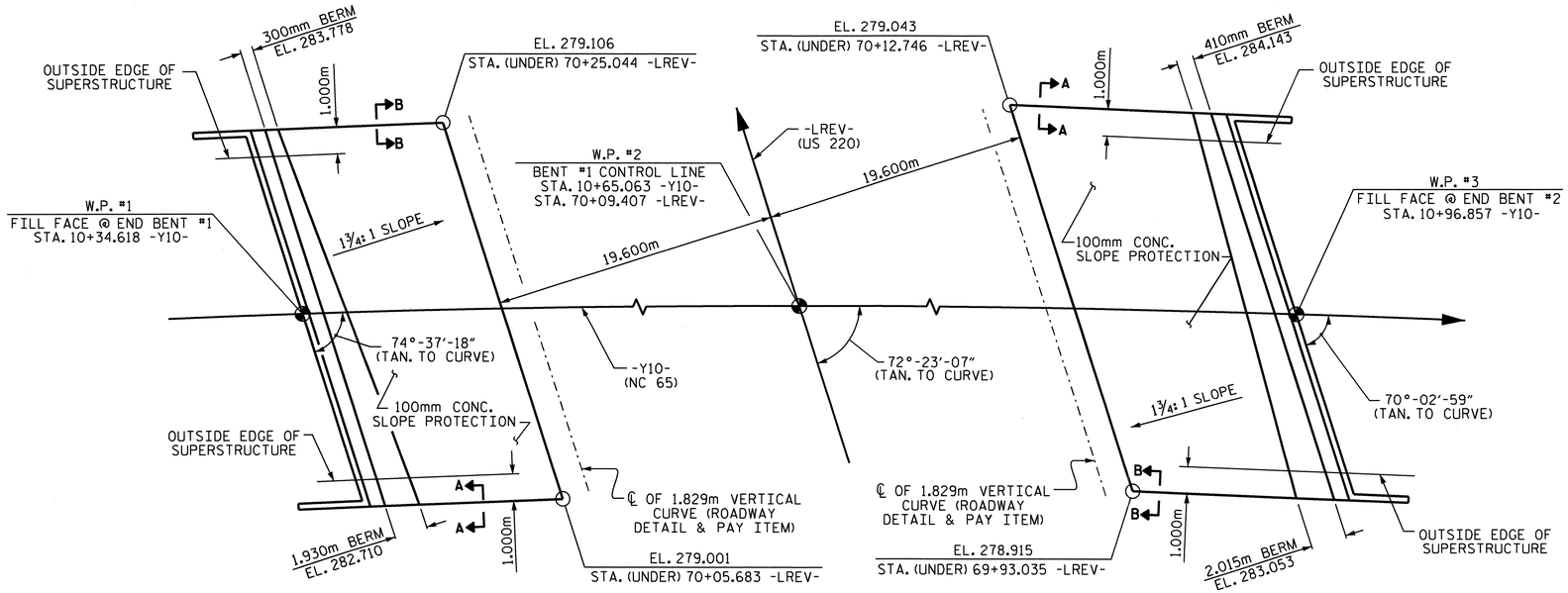

PLAN

GENERAL NOTES

SLOPE PROTECTION SHALL BE PLACED UNDER THE ENDS OF THE BRIDGE AS SHOWN IN THE DETAILS. STRAIGHT EDGING WILL NOT BE REQUIRED UNLESS, IN THE OPINION OF THE ENGINEER, VISUAL INSPECTION INDICATES A NEED FOR IT. MEASUREMENT AND PAYMENT SHALL BE AS PRESCRIBED IN SECTION 462 OF THE STANDARD SPECIFICATIONS.

SLOPE PROTECTION SHALL CONSIST OF 100mm POURED-IN-PLACE CONCRETE PAVING AS SHOWN IN THE DETAILS ON THIS SHEET. CONCRETE SHALL BE CLASS "B". THE CONCRETE SURFACE SHALL BE FLOATED WITH A WOODEN FLOAT AND FINISHED. WELDED WIRE FABRIC REINFORCING SHALL BE 152 X 152 - W9.1 X W9.1, 1520mm WIDE. SLOPE PROTECTION SHALL BE POURED IN 1520mm STRIPS AS SHOWN IN THE "POURING DETAIL" WITH 600mm LONG #13 BARS PLACED ALONG THE SLOPE BETWEEN STRIPS AT 450mm MAXIMUM SPACING. SLOPE PROTECTION MAY BE POURED IN ALTERNATE 1220mm AND 1520mm STRIPS AS SHOWN IN THE "OPTIONAL POURING DETAIL" WITH ADJACENT RUNS OF WELDED WIRE FABRIC LAPPING AT LEAST 152mm. THE COST OF THE WELDED WIRE FABRIC AND #13 BARS, IF USED, SHALL BE INCLUDED IN THE CONTRACT UNIT PRICE BID PER SQUARE METER FOR SLOPE PROTECTION.

BRIDGE @ STA. 70+09.407 -LREV-	100mm SLOPE PROTECTION	* WELDED WIRE FABRIC 1520mm WIDE
	SQUARE METERS	APPROX. METERS
END BENT 1	223	163
END BENT 2	252	183

* QUANTITY SHOWN IS BASED ON 1520mm POURS.

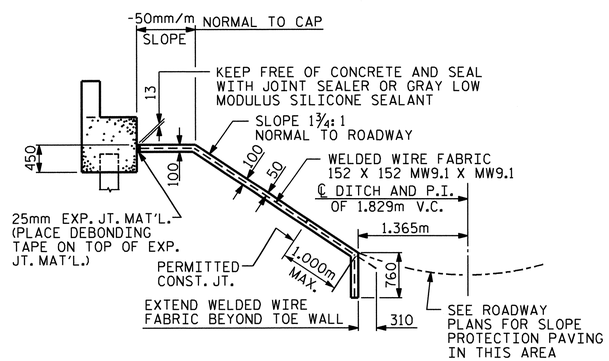

SECTION ALONG ℄ ROADWAY WHEN FILL CATCHES IN DITCH

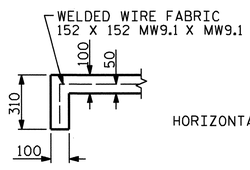

SECTION A-A

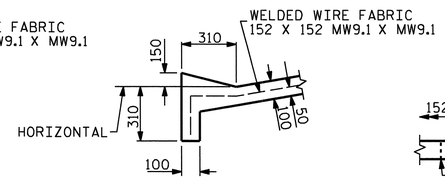

SECTION B-B

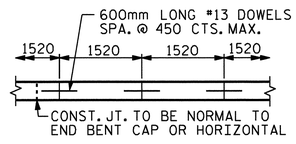

STRIP WIDTHS MAY VARY IN CURVED PORTION.

POURING DETAIL

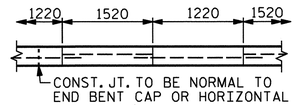

POUR A 1220mm STRIP FIRST. STRIP WIDTHS MAY VARY IN CURVED PORTION.

OPTIONAL POURING DETAIL

PROJECT NO. R-2413C
GUILFORD-ROCKINGHAM COUNTY
STATION: 70+09.407 -LREV-

STATE OF NORTH CAROLINA
DEPARTMENT OF TRANSPORTATION
RALEIGH

STANDARD SLOPE PROTECTION DETAILS

NORTH CAROLINA PROFESSIONAL SEAL 022516 ENGINEER EMILY E. MURRAY
8/28/11

ASSEMBLED BY : T.L. AVERETTE	DATE : 5-25-11
CHECKED BY : PEGGY PARISI	DATE : 6-01-11

DRAWN BY : ELR 5/92	REV. 7/10/01	LES/RDR
CHECKED BY : GRP 6/92	REV. 5/7/03	RWW/JTE
	REV. 5/1/06	TLA/GM

REVISIONS								SHEET NO.
NO.	BY:	DATE:	NO.	BY:	DATE:			S-233
1			3					TOTAL SHEETS
2			4					238

13-SEP-2011 10:16
Z:\TIPProjects-R\R2413c\Structures\Final Plans\Str.#7\R2413C_sd_SP_07.dgn
emurray

STR. #7

STD. NO. SP1SM

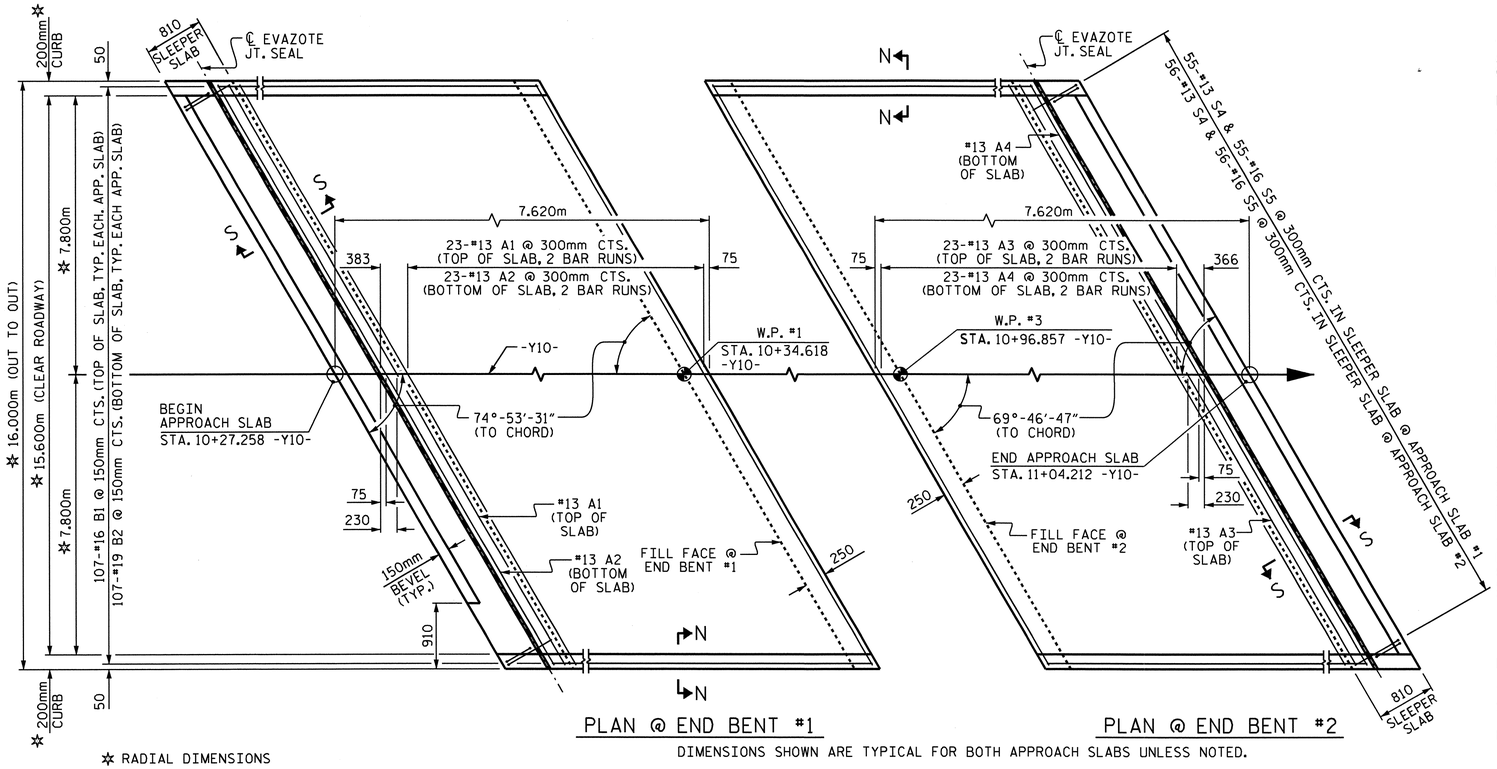

PLAN @ END BENT #1

PLAN @ END BENT #2

✱ RADIAL DIMENSIONS

DIMENSIONS SHOWN ARE TYPICAL FOR BOTH APPROACH SLABS UNLESS NOTED.

#13 "A" BARS IN SLEEPER SLAB NOT SHOWN FOR CLARITY.

PERMANENT CONCRETE MEDIAN NOT SHOWN FOR CLARITY. SEE "PERMANENT CONCRETE MEDIAN" SHEET FOR DETAILS.

NOTES

APPROACH SLAB SHALL NOT BE CONSTRUCTED PRIOR TO COMPLETION OF THE BRIDGE DECK.

FOR REINFORCED BRIDGE APPROACH FILL INCLUDING FABRIC, IMPERMEABLE GEOMEMBRANE, 102mm Ø DRAINAGE PIPE, #78M STONE, AND SELECT MATERIAL, SEE ROADWAY PLANS.

AREA BETWEEN THE WINGWALL AND APPROACH SLAB SHALL BE GRADED TO DRAIN THE WATER AWAY FROM THE FILL FACE OF THE BRIDGE AND SHALL BE PAVED. SEE ROADWAY PLANS.

THE 150mm COMP. A.B.C. SHALL BE FLUSH WITH THE SLEEPER SLAB AND SHALL EXTEND 300mm OUTSIDE OF EACH EDGE OF THE APPROACH SLAB.

THE CONTRACTOR MAY USE 100mm TYPE B-25.0B ASPHALT CONCRETE BASE COURSE IN LIEU OF 150mm COMP. A.B.C. IF THIS OPTION IS USED, THE BASE COURSE SHALL BE FLUSH WITH THE SLEEPER SLAB, AND THE WIDTH SHALL BE THE SAME AS THAT OF THE APPROACH SLAB.

THE CONTRACTOR MAY USE 125mm CLASS "A" CONCRETE BASE IN LIEU OF 150mm COMP. A.B.C. IF THIS OPTION IS USED, THE CONCRETE BASE SHALL BE FLUSH WITH THE SLEEPER SLAB, AND THE WIDTH SHALL BE THE SAME AS THAT OF THE APPROACH SLAB. THE CONCRETE SHALL BE FINISHED TO A SMOOTH SURFACE AND A LAYER OF 13.6 kg ROOFING FELT SHALL BE PLACED BETWEEN THE CONCRETE BASE AND THE APPROACH SLAB TO PREVENT BOND. THE APPROACH SLAB SHALL NOT BE CAST UNTIL THE CONCRETE BASE HAS REACHED AN AGE OF THREE CURING DAYS.

THE VERTICAL JOINT ON THE RIGHT AND LEFT SIDE OF THE APPROACH SLAB AT THE ENDS OF THE EVAZOTE JOINT SHALL BE FILLED WITH SILICONE OR OTHER APPROVED MATERIAL IN ORDER TO PREVENT BACKFILL FROM ENTERING THE JOINT OPENING.

THE JOINT OPENING AT THE APPROACH SLAB/DECK INTERFACE SHALL BE SAWED NO MORE THAN 12 HOURS AFTER THE APPROACH SLAB IS CAST. THE JOINT SHALL BE CLEANED OF ALL DEBRIS BEFORE THE SEALANT IS APPLIED. THE JOINT SEALER MATERIAL SHALL CONFORM TO THE REQUIREMENTS OF TYPE SL LOW MODULUS SILICONE SEALANT.

WITH EVAZOTE JOINT SEAL

FOR EVAZOTE JOINT SEALS, SEE SPECIAL PROVISIONS.

THE NOMINAL UNCOMPRESSED SEAL WIDTH OF THE EVAZOTE JOINT SEAL SHALL BE 87mm.

FOR ELASTOMERIC CONCRETE, SEE SPECIAL PROVISIONS.

BILL OF MATERIAL

FOR APPROACH SLAB #1

BAR	NO.	SIZE	TYPE	LENGTH	WEIGHT
✱ A1	62	#13	STR	8560	528
A2	48	#13	STR	8520	407
✱ B1	107	#16	STR	6800	1129
B2	107	#19	STR	6940	1660
✱ S4	55	#13	1	1200	66
S5	55	#16	2	880	75
REINFORCING STEEL				kg.	2142
✱ EPOXY COATED REINFORCING STEEL				kg.	1723
CLASS AA CONCRETE					
POUR #1 - SLAB & CURB				C.M.	34.8
POUR #2 - SLEEPER SLAB				C.M.	4.3
TOTAL				C.M.	39.1

FOR APPROACH SLAB #2

BAR	NO.	SIZE	TYPE	LENGTH	WEIGHT
✱ A3	62	#13	STR	8780	541
A4	48	#13	STR	8760	418
✱ B1	107	#16	STR	6760	1123
B2	107	#19	STR	6920	1655
✱ S4	56	#13	1	1200	67
S5	56	#16	2	880	76
REINFORCING STEEL				kg.	2149
✱ EPOXY COATED REINFORCING STEEL				kg.	1731
CLASS AA CONCRETE					
POUR #1 - SLAB & CURB				C.M.	34.8
POUR #2 - SLEEPER SLAB				C.M.	4.4
TOTAL				C.M.	39.2

SPLICE CHART

BAR	SPLICE
✱ #13 A1 & #13 A3	610
#13 A2 & #13 A4	540

BAR TYPES

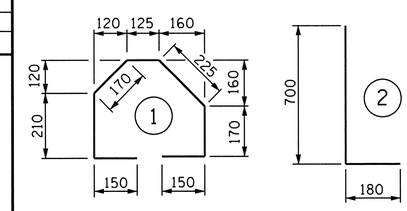

ALL BAR DIMENSIONS ARE OUT TO OUT

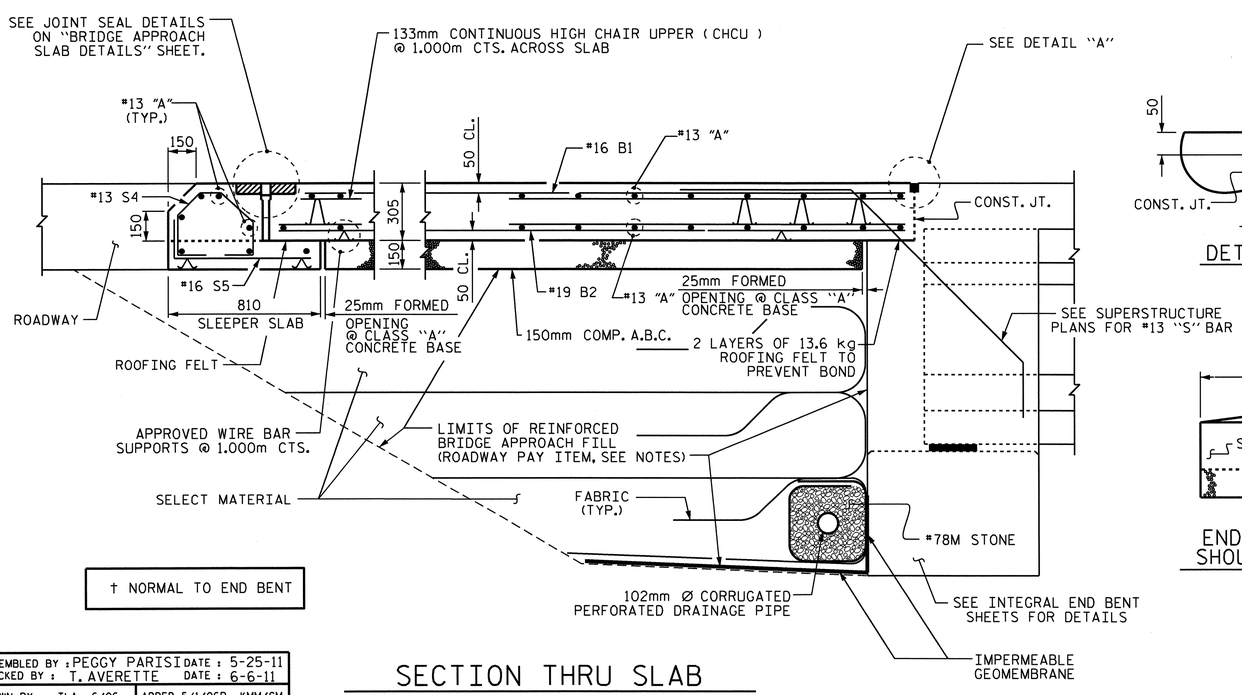

† NORMAL TO END BENT

SECTION THRU SLAB

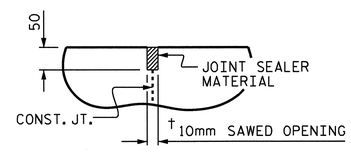

DETAIL "A"

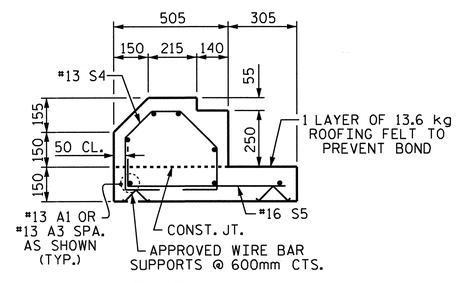

SECTION S-S

SHOWING SLEEPER SLAB

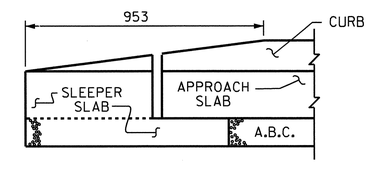

END OF CURB WITHOUT SHOULDER BERM GUTTER

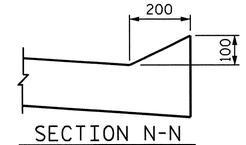

SECTION N-N

NORTH CAROLINA PROFESSIONAL SEAL 022516 ENGINEER EMILY E. MURRAY
10/28/11

PROJECT NO. R-2413C

GUILFORD-ROCKINGHAM COUNTY

STATION: 70+09.407 -LREV-

SHEET 1 OF 2

STATE OF NORTH CAROLINA
DEPARTMENT OF TRANSPORTATION
RALEIGH

STANDARD

BRIDGE APPROACH SLAB FOR INTEGRAL ABUTMENT

REVISIONS							SHEET NO.
NO.	BY:	DATE:	NO.	BY:	DATE:		S-234
1			3				TOTAL SHEETS
2			4				238

ASSEMBLED BY : PEGGY PARISI DATE : 5-25-11
CHECKED BY : T. AVERETTE DATE : 6-6-11
DRAWN BY : TLA 6/06
CHECKED BY : GM 6/06
ADDED 5/1/06R KMM/GM

05-SEP-2011 14:24
Y:\Structures\Final Plans\Str.#7\r2413c_sd_as_07.dgn
mgudlaugsson

STR. #7

STD. NO. BAS11SM

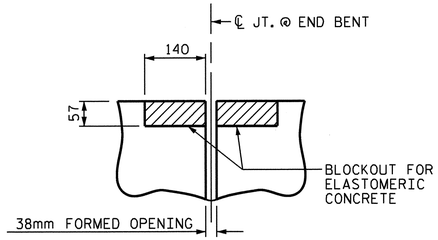

SECTION C-C

EVAZOTE JOINT SEAL (PRE-SAWED ELASTOMERIC CONCRETE DIMENSIONS)

ELASTOMERIC CONCRETE	
END BENT NO.	ELASTOMERIC CONCRETE * (CU. m)
1	0.3
2	0.3
TOTAL	0.6

* BASED ON THE MINIMUM BLOCKOUT SHOWN.

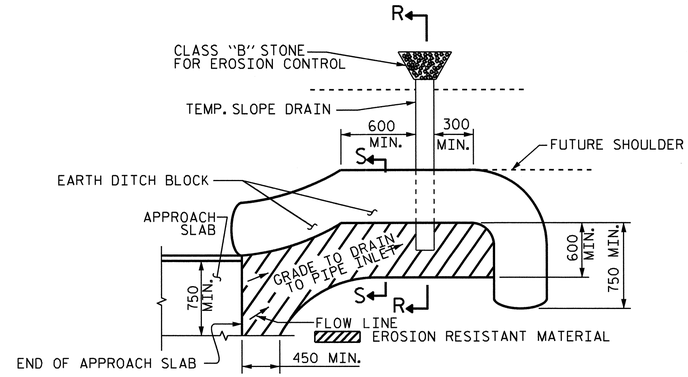

NOTE: IMMEDIATELY AFTER THE CONSTRUCTION OF THE APPROACH SLAB, THE CONTRACTOR SHALL PROVIDE TEMPORARY BERM AND SLOPE DRAIN. CONTRACTOR SHALL GRADE TO PIPE INLET AND PROVIDE EROSION RESISTANT MATERIAL AS SHOWN. THE EROSION RESISTANT MATERIAL SHALL BE EITHER 1) ASPHALT PLANT MIX, TYPE 1 OR TYPE 2, MIN. 50mm DEPTH, 2) EROSION CONTROL MAT, OR 3) CONCRETE, AS DIRECTED BY THE ENGINEER. THE SLOPE DRAIN SHALL CONSIST OF A NON-PERFORATED TEMPORARY DRAINAGE PIPE, 305mm IN DIAMETER.

PLAN VIEW

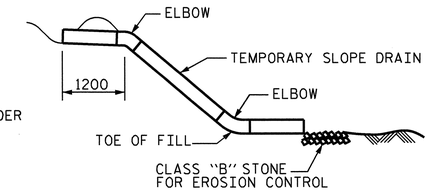

SECTION R-R

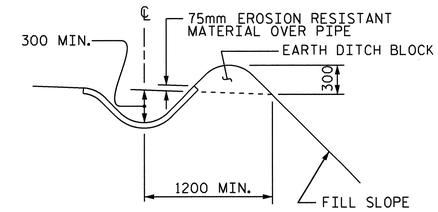

SECTION S-S

TEMPORARY BERM AND SLOPE DRAIN DETAILS

(TO BE USED WHEN SHOULDER BERM GUTTER IS REQUIRED)

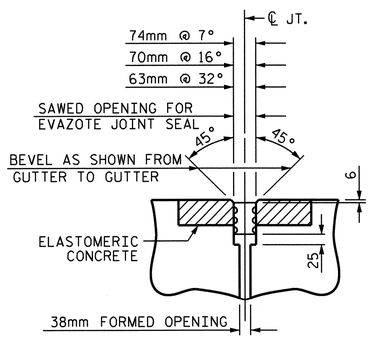

SECTION C-C

EVAZOTE JOINT SEAL

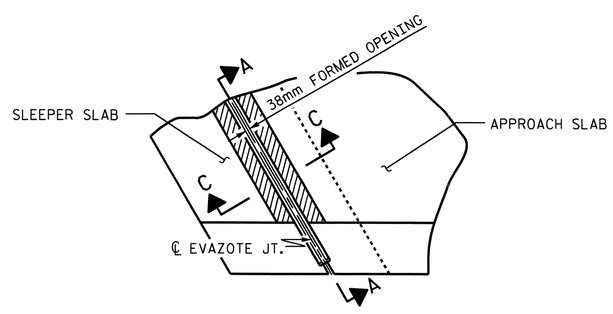

PLAN

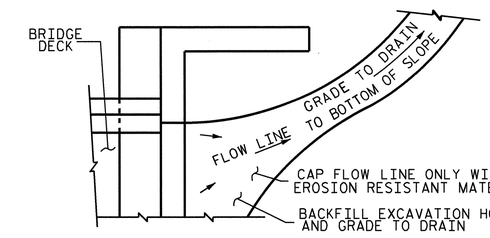

NOTE: IF THE APPROACH SLAB IS NOT CONSTRUCTED IMMEDIATELY AFTER THE BACKFILLING OF THE END BENT EXCAVATION, GRADE TO DRAIN TO THE BOTTOM OF THE SLOPE AND PROVIDE EROSION RESISTANT MATERIAL, SUCH AS FIBERGLASS ROVING OR AS DIRECTED BY THE ENGINEER TO PREVENT SOIL EROSION AND TO PROTECT THE AREA ADJACENT TO THE STRUCTURE. THE CONTRACTOR WILL BE REQUIRED TO REMOVE THESE MATERIALS PRIOR TO CONSTRUCTION OF THE APPROACH SLAB.

TEMPORARY DRAINAGE DETAIL

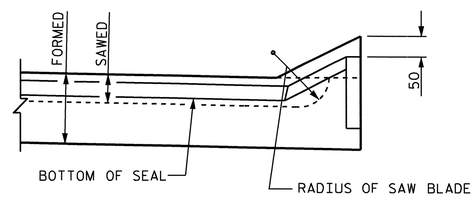

SECTION A-A

JOINT SEAL DETAILS @ SLEEPER SLAB

PROJECT NO. R-2413C

GUILFORD-ROCKINGHAM COUNTY

STATION: 70+09.407 -LREV-

SHEET 2 OF 2

STATE OF NORTH CAROLINA
DEPARTMENT OF TRANSPORTATION
RALEIGH

STANDARD
BRIDGE APPROACH
SLAB DETAILS

NORTH CAROLINA PROFESSIONAL SEAL 022516 ENGINEER EMILY E. MURRAY 10/28/11

REVISIONS							SHEET NO.
NO.	BY:	DATE:	NO.	BY:	DATE:		S-235
1			3				TOTAL SHEETS
2			4				238

STR. #7

STD. NO. BASIOSM

ASSEMBLED BY: PEGGY PARISI	DATE: 5-25-11
CHECKED BY: T. AVERETTE	DATE: 6-6-11
DRAWN BY: FCJ 11/88	REV. 10/17/00 RWW/LES
CHECKED BY: ARB 11/88	REV. 5/7/03 RWW/JTE
	REV. 5/1/06RR MAA/KMM

05-SEP-2011 14:49
Y:\Structures\Final Plans\Str.#7\r2413c_sd_as_07.dgn
mgudlaugsson

OVERHANG BRACKET CALCULATION INSTRUCTIONS

AASHTO SHAPES - TYPES III, IV, V, AND VI

1. RECORD KNOWN INFORMATION ON "BRIDGE OVERHANG BRACKET SUMMARY" ON SHEET 2
2. CALCULATE THE MAXIMUM SCREED LOAD PER BRACKET (SLPB) WITH AN ESTIMATED R = 1.5. SLPB = R X W. ROUND VALUE UP TO NEAREST SLPB VALUE INDICATED ON APPROPRIATE TABLE 1-1, 1-2, 1-3, OR 1-4.
3. WITH THE ESTIMATED SLPB, OVERHANG SLAB THICKNESS, "K" VALUE, AND 45° HANGER SAFE WORKING LOAD (SWL), ENTER THE APPROPRIATE TABLE 1-1, 1-2, 1-3, OR 1-4 (BASED ON OVERHANG DIMENSION) AND DETERMINE THE BRACKET SPACING, S.
4. CALCULATE S/D1 AND S/D2, ROUNDING UP TO NEAREST VALUE IN TABLE 2. ENTER TABLE 2 AND DETERMINE R VALUE.
5. CALCULATE REVISED SLPB. ROUND VALUE UP TO NEAREST SLPB VALUE INDICATED ON APPROPRIATE TABLE 1-1, 1-2, 1-3, OR 1-4.
6. WITH THE REVISED SLPB, OVERHANG SLAB THICKNESS, "K" VALUE AND 45 HANGER SAFE WORKING LOAD (SWL), ENTER THE APPROPRIATE TABLE 1-1, 1-2, 1-3 OR 1-4 (BASED ON OVERHANG DIMENSION) AND DETERMINE REVISED BRACKET SPACING, S.
7. CONTINUE ITERATIONS OF STEPS 4-6 UNTIL THE REVISED BRACKET SPACING, S, IS THE SAME AS THE PREVIOUS S VALUE.
8. CHECK LUMBER JOIST SPACING: WITH BRACKET SPACING VALUE, S, ROUND THIS VALUE UP TO THE NEAREST VALUE OF ALLOWABLE SPAN LENGTH OF JOIST OF TABLE 3. USING THIS VALUE, ALONG WITH THE AVERAGE OVERHANG SLAB THICKNESS AND THE LUMBER JOIST SIZE, DETERMINE JOIST SPACING FROM TABLE 3. IF NECESSARY, ADJUST LUMBER JOIST SIZE AND/OR JOIST SPACING TO MEET ALLOWABLE SPAN LENGTH OF JOIST.
9. CONVERSELY, IF THE DESIRED JOIST SPACING IS KNOWN, USE THIS ALONG WITH THE AVERAGE OVERHANG SLAB THICKNESS AND THE LUMBER JOIST SIZE TO DETERMINE IF ALLOWABLE SPAN LENGTH OF JOIST IS GREATER THAN THE BRACKET SPACING, S. IF NECESSARY, ADJUST LUMBER JOIST SIZE TO MEET REQUIREMENTS OF ALLOWABLE SPAN LENGTH OF JOIST AND JOIST SPACING.
10. RECORD REMAINING INFORMATION ON "BRIDGE OVERHANG BRACKET SUMMARY" FORM.
11. SUBMIT FORM AND CALCULATIONS FOR REVIEW AND APPROVAL.

TABLE 1-1

(FOR USE ON **UP TO 2'-0" OVERHANG (L)** & 54" HORIZONTAL LEG LENGTH OF THE OVERHANG BRACKET)

AVG. SLAB THICKNESS (T) (in)	BRACKET (K) DIMENSION (in)	SCREED LOAD PER BRACKET									45° HANGER SWL (lbs)
		2500 lbs.	2250 lbs.	2000 lbs.	1750 lbs.	1500 lbs.	1250 lbs.	1000 lbs.	750 lbs.	0 lbs.	
		BRACKET SPACING									
10	30				2'-1"	2'-7"	3'-2"	3'-8"	4'-2"	5'-9"	4000
		3'-6"	4'-0"	4'-5"	4'-9"	5'-1"	5'-3"	5'-5"	5'-7"	6'-7"	6000
	40				2'-1"	2'-7"	3'-2"	3'-8"	4'-2"	5'-9"	4000
		3'-6"	4'-0"	4'-5"	4'-9"	5'-1"	5'-3"	5'-5"	5'-7"	6'-7"	6000
	50				2'-1"	2'-7"	3'-2"	3'-8"	4'-2"	5'-9"	4000
		3'-6"	4'-0"	4'-5"	4'-9"	5'-1"	5'-3"	5'-5"	5'-7"	6'-7"	6000
12	30					2'-4"	2'-10"	3'-4"	3'-9"	5'-2"	4000
		3'-2"	3'-7"	4'-1"	4'-7"	5'-0"	5'-2"	5'-4"	5'-7"	6'-5"	6000
	40					2'-4"	2'-10"	3'-4"	3'-9"	5'-2"	4000
		3'-2"	3'-7"	4'-1"	4'-7"	5'-0"	5'-2"	5'-4"	5'-7"	6'-5"	6000
	50					2'-4"	2'-10"	3'-4"	3'-9"	5'-2"	4000
		3'-2"	3'-7"	4'-1"	4'-7"	5'-0"	5'-2"	5'-4"	5'-7"	6'-5"	6000
14	30					2'-2"	2'-7"	3'-0"	3'-5"	4'-9"	4000
		2'-10"	3'-4"	3'-9"	4'-2"	4'-7"	5'-0"	5'-4"	5'-7"	6'-4"	6000
	40					2'-2"	2'-7"	3'-0"	3'-5"	4'-9"	4000
		2'-10"	3'-4"	3'-9"	4'-2"	4'-7"	5'-0"	5'-4"	5'-7"	6'-4"	6000
	50					2'-2"	2'-7"	3'-0"	3'-5"	4'-9"	4000
		2'-10"	3'-4"	3'-9"	4'-2"	4'-7"	5'-0"	5'-4"	5'-7"	6'-4"	6000
16	30					2'-0"	2'-4"	2'-9"	3'-2"	4'-4"	4000
		2'-8"	3'-0"	3'-5"	3'-10"	4'-3"	4'-7"	5'-0"	5'-5"	6'-3"	6000
	40					2'-0"	2'-4"	2'-9"	3'-2"	4'-4"	4000
		2'-8"	3'-0"	3'-5"	3'-10"	4'-3"	4'-7"	5'-0"	5'-5"	6'-3"	6000
	50					2'-0"	2'-4"	2'-9"	3'-2"	4'-4"	4000
		2'-8"	3'-0"	3'-5"	3'-10"	4'-3"	4'-7"	5'-0"	5'-5"	6'-3"	6000

TABLE 1-2

(FOR USE ON **OVER 2'-0" TO 2'-6" OVERHANG (L)** & 54" HORIZONTAL LEG LENGTH OF THE OVERHANG BRACKET)

AVG. SLAB THICKNESS (T) (in)	BRACKET (K) DIMENSION (in)	SCREED LOAD PER BRACKET									45° HANGER SWL (lbs)
		2500 lbs.	2250 lbs.	2000 lbs.	1750 lbs.	1500 lbs.	1250 lbs.	1000 lbs.	750 lbs.	0 lbs.	
		BRACKET SPACING									
10	30					2'-4"	2'-9"	3'-3"	3'-8"	5'-1"	4000
		3'-1"	3'-6"	4'-0"	4'-5"	4'-11"	5'-3"	5'-5"	5'-7"	6'-7"	6000
	40					2'-4"	2'-9"	3'-3"	3'-8"	5'-1"	4000
		3'-1"	3'-6"	4'-0"	4'-5"	4'-11"	5'-3"	5'-5"	5'-7"	6'-7"	6000
	50					2'-4"	2'-9"	3'-3"	3'-8"	5'-1"	4000
		3'-1"	3'-6"	4'-0"	4'-5"	4'-11"	5'-3"	5'-5"	5'-7"	6'-7"	6000
12	30					2'-1"	2'-6"	2'-11"	3'-4"	4'-6"	4000
		2'-9"	3'-2"	3'-7"	4'-0"	4'-5"	4'-10"	5'-3"	5'-7"	6'-5"	6000
	40					2'-1"	2'-6"	2'-11"	3'-4"	4'-6"	4000
		2'-9"	3'-2"	3'-7"	4'-0"	4'-5"	4'-10"	5'-3"	5'-7"	6'-5"	6000
	50					2'-1"	2'-6"	2'-11"	3'-4"	4'-6"	4000
		2'-9"	3'-2"	3'-7"	4'-0"	4'-5"	4'-10"	5'-3"	5'-7"	6'-5"	6000
14	30					2'-3"	2'-7"	3'-0"	4'-1"	4000
		2'-6"	2'-10"	3'-3"	3'-7"	4'-0"	4'-4"	4'-9"	5'-1"	6'-3"	6000
	40					2'-3"	2'-7"	3'-0"	4'-1"	4000
		2'-6"	2'-10"	3'-3"	3'-7"	4'-0"	4'-4"	4'-9"	5'-1"	6'-3"	6000
	50					2'-3"	2'-7"	3'-0"	4'-1"	4000
		2'-6"	2'-10"	3'-3"	3'-7"	4'-0"	4'-4"	4'-9"	5'-1"	6'-3"	6000
16	30					2'-1"	2'-5"	2'-9"	3'-9"	4000
		2'-3"	2'-7"	2'-11"	3'-4"	3'-8"	4'-0"	4'-4"	4'-8"	5'-8"	6000
	40					2'-1"	2'-5"	2'-9"	3'-9"	4000
		2'-3"	2'-7"	2'-11"	3'-4"	3'-8"	4'-0"	4'-4"	4'-8"	5'-8"	6000
	50					2'-1"	2'-5"	2'-9"	3'-9"	4000
		2'-3"	2'-7"	2'-11"	3'-4"	3'-8"	4'-0"	4'-4"	4'-8"	5'-8"	6000

TABLE 1-3

(FOR USE ON **OVER 2'-6" TO 3'-0" OVERHANG (L)** & 54" HORIZONTAL LEG LENGTH OF THE OVERHANG BRACKET)

AVG. SLAB THICKNESS (T) (in)	BRACKET (K) DIMENSION (in)	SCREED LOAD PER BRACKET									45° HANGER SWL (lbs)
		2500 lbs.	2250 lbs.	2000 lbs.	1750 lbs.	1500 lbs.	1250 lbs.	1000 lbs.	750 lbs.	0 lbs.	
		BRACKET SPACING									
10	30					2'-1"	2'-6"	2'-11"	3'-4"	4'-6"	4000
						4'-5"	4'-10"	5'-3"	5'-7"	6'-7"	6000
	40					2'-1"	2'-6"	2'-11"	3'-4"	4'-6"	4000
		2'-9"	3'-2"	3'-7"	4'-0"	4'-5"	4'-10"	5'-3"	5'-7"	6'-7"	6000
	50					2'-1"	2'-6"	2'-11"	3'-4"	4'-6"	4000
		2'-9"	3'-2"	3'-7"	4'-0"	4'-5"	4'-10"	5'-3"	5'-7"	6'-7"	6000
12	30						2'-2"	2'-7"	2'-11"	4'-0"	4000
						3'-11"	4'-3"	4'-8"	5'-0"	6'-1"	6000
	40						2'-2"	2'-7"	2'-11"	4'-0"	4000
		2'-5"	2'-10"	3'-2"	3'-6"	3'-11"	4'-3"	4'-8"	5'-0"	6'-1"	6000
	50						2'-2"	2'-7"	2'-11"	4'-0"	4000
		2'-5"	2'-10"	3'-2"	3'-6"	3'-11"	4'-3"	4'-8"	5'-0"	6'-1"	6000
14	30						2'-0"	2'-4"	2'-8"	3'-8"	4000
					3'-2"	3'-6"	3'-10"	4'-2"	4'-6"	5'-6"	6000
	40						2'-0"	2'-4"	2'-8"	3'-8"	4000
		2'-2"	2'-6"	2'-10"	3'-2"	3'-6"	3'-10"	4'-2"	4'-6"	5'-6"	6000
	50						2'-0"	2'-4"	2'-8"	3'-8"	4000
		2'-2"	2'-6"	2'-10"	3'-2"	3'-6"	3'-10"	4'-2"	4'-6"	5'-6"	6000
16	30							2'-1"	2'-5"	3'-4"	4000
					2'-11"	3'-2"	3'-6"	3'-10"	4'-1"	5'-0"	6000
	40							2'-1"	2'-5"	3'-4"	4000
		2'-0"	2'-4"	2'-7"	2'-11"	3'-2"	3'-6"	3'-10"	4'-1"	5'-0"	6000
	50							2'-1"	2'-5"	3'-4"	4000
		2'-0"	2'-4"	2'-7"	2'-11"	3'-2"	3'-6"	3'-10"	4'-1"	5'-0"	6000

TABLE 1-4

(FOR USE ON **OVER 3'-0" TO 3'-6" OVERHANG (L)** & 54" HORIZONTAL LEG LENGTH OF THE OVERHANG BRACKET)

AVG. SLAB THICKNESS (T) (in)	BRACKET (K) DIMENSION (in)	SCREED LOAD PER BRACKET									45° HANGER SWL (lbs)
		2500 lbs.	2250 lbs.	2000 lbs.	1750 lbs.	1500 lbs.	1250 lbs.	1000 lbs.	750 lbs.	0 lbs.	
		BRACKET SPACING									
10	30						2'-1"	2'-5"	2'-9"	3'-10"	4000
						2'-3"	2'-11"	3'-7"	4'-3"	5'-9"	6000
	40						2'-1"	2'-5"	2'-9"	3'-10"	4000
				2'-4"	3'-0"	3'-7"	4'-1"	4'-5"	4'-9"	5'-9"	6000
	50						2'-1"	2'-5"	2'-9"	3'-10"	4000
		2'-4"	2'-8"	3'-0"	3'-4"	3'-8"	4'-1"	4'-5"	4'-9"	5'-9"	6000
12	30							2'-2"	2'-6"	3'-5"	4000
						2'-1"	2'-8"	3'-4"	3'-11"	5'-2"	6000
	40							2'-2"	2'-6"	3'-5"	4000
				2'-2"	2'-9"	3'-4"	3'-7"	3'-11"	4'-3"	5'-2"	6000
	50							2'-2"	2'-6"	3'-5"	4000
		2'-1"	2'-4"	2'-8"	3'-0"	3'-4"	3'-7"	3'-11"	4'-3"	5'-2"	6000
14	30								2'-3"	3'-1"	4000
						2'-0"	2'-6"	3'-1"	3'-8"	4'-8"	6000
	40								2'-3"	3'-1"	4000
				2'-0"	2'-7"	3'-0"	3'-3"	3'-6"	3'-10"	4'-8"	6000
	50								2'-3"	3'-1"	4000
			2'-2"	2'-5"	2'-8"	3'-0"	3'-3"	3'-6"	3'-10"	4'-8"	6000
16	30								2'-0"	2'-9"	4000
							2'-4"	2'-10"	3'-5"	4'-3"	6000
	40								2'-0"	2'-9"	4000
						2'-5"	2'-8"	2'-11"	3'-3"	3'-6"	6000
	50								2'-0"	2'-9"	4000
				2'-2"	2'-5"	2'-8"	2'-11"	3'-3"	3'-6"	4'-3"	6000

DEFINITIONS

SLPB = SCREED LOAD PER BRACKET (R x W)
R = SCREED LOAD FACTOR, OBTAINED FROM TABLE 2
W = WHEEL LOAD
S = BRACKET SPACING
T = AVERAGE SLAB THICKNESS
SWL = SAFE WORKING LOAD
K = DIMENSION DEFINED ON "BRIDGE OVERHANG BRACKET SUMMARY" ON SHEET 2
L = OVERHANG MEASURED FROM EDGE OF TOP FLANGE TO EDGE OF SUPERSTRUCTURE

PROJECT NO. R-2413C
GUILFORD-ROCKINGHAM COUNTY
STATION: 70+09.407 -LREV-

SHEET 1 OF 3

STATE OF NORTH CAROLINA
DEPARTMENT OF TRANSPORTATION
RALEIGH

STANDARD OVERHANG FALSEWORK

AASHTO TYPES
III, IV, V, AND VI

NORTH CAROLINA PROFESSIONAL SEAL 18788 ENGINEER CHANG-CHUAN VICTOR CHAO

Chang-Chuan V. Chao
8-5-2011

REVISIONS						SHEET NO.
NO.	BY:	DATE:	NO.	BY:	DATE:	S-236
1			3			TOTAL SHEETS
2			4			238

ASSEMBLED BY: DATE:
CHECKED BY: DATE:
DRAWN BY: R. WRIGHT 06/04
CHECKED BY: C. V. CHAO 06/04
REV.

05-AUG-2011 10:48
C:\OLDFILESD\wdir\victor\OverhangFalsework\TIEBAR&STRUT\R-2413C\R-2413CSTR7_TYPE_IV\R2413CSTR7verHangSheets.dgn
vchao

STR. #7

OF1

BRIDGE OVERHANG BRACKET SUMMARY

TOTAL SCREED WEIGHT = _____ LBS.
NUMBER OF SCREED WHEELS = _____
SCREED WHEEL LOAD (W) = _____LBS.
SCREED LOAD PER BRACKET = _____ LBS.

PROJECT No. : _____
COUNTY : _____
STATION : _____
DESCRIPTION : _____

DATE : _____
DESIGN BY : _____
CHECK BY : _____

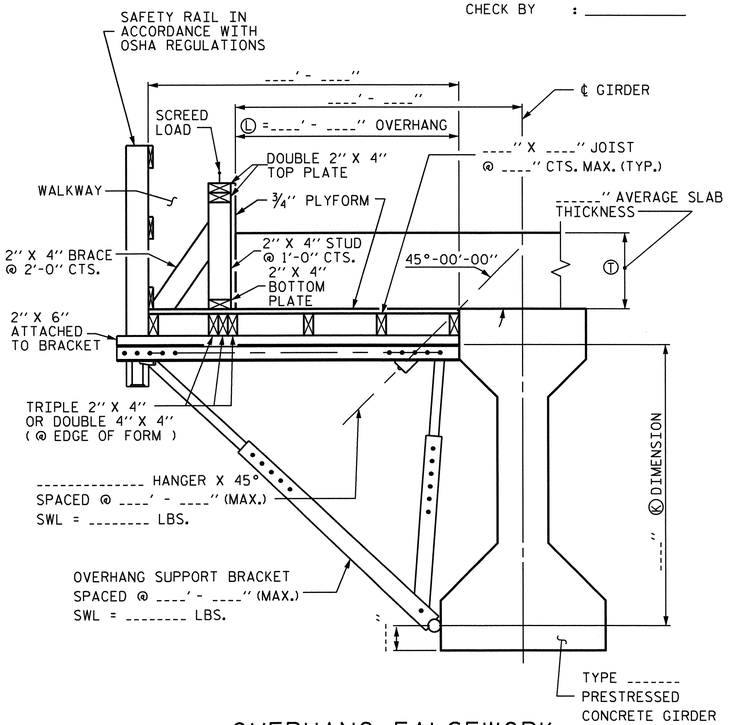

OVERHANG FALSEWORK

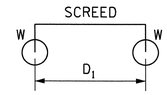

4-WHEEL MACHINE

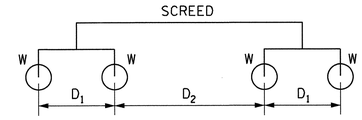

8-WHEEL MACHINE

4 WHEEL MACHINE	
S/D1	R
<= 1.0	1.00
1.1	1.09
1.2	1.17
1.3	1.23
1.4	1.29
1.5	1.33
1.6	1.38
1.7	1.41
1.8	1.44
1.9	1.47
2.0	1.50
2.2	1.55
2.4	1.58
2.6	1.62
2.8	1.64
3.0	1.67
3.5	1.71
4.0	1.75

TABLE 2: SCREED LOAD FACTOR "R"

		THE SCREED LOAD FACTOR R (FOR 8 WHEEL MACHINE)																	
		S/D_2																	
		<= 1.0	1.1	1.2	1.3	1.4	1.5	1.6	1.7	1.8	1.9	2.0	2.2	2.4	2.6	2.8	3.0	3.5	4.0
S/D_1	<= 1.0	1.00	1.09	1.17	1.23	1.29	1.33	1.38	1.41	1.44	1.47	1.50	1.55	1.58	1.62	1.64	1.67	1.71	1.75
	1.1	1.09	1.18	1.26	1.32	1.38	1.42	1.47	1.50	1.54	1.56	1.59	1.64	1.67	1.71	1.73	1.76	1.81	1.84
	1.2	1.17	1.26	1.33	1.40	1.45	1.50	1.54	1.58	1.61	1.64	1.67	1.71	1.75	1.78	1.81	1.83	1.88	1.92
	1.3	1.23	1.32	1.40	1.46	1.52	1.56	1.61	1.64	1.68	1.70	1.73	1.78	1.81	1.85	1.87	1.90	1.95	1.98
	1.4	1.29	1.38	1.45	1.52	1.57	1.62	1.66	1.70	1.73	1.76	1.79	1.83	1.87	1.90	1.93	1.95	2.00	2.07
	1.5	1.33	1.42	1.50	1.56	1.62	1.67	1.71	1.75	1.78	1.81	1.83	1.88	1.92	1.95	1.98	2.00	2.10	2.17
	1.6	1.38	1.47	1.54	1.61	1.66	1.71	1.75	1.79	1.82	1.85	1.88	1.92	1.96	1.99	2.04	2.08	2.18	2.25
	1.7	1.41	1.50	1.58	1.64	1.70	1.75	1.79	1.82	1.86	1.89	1.91	1.96	2.00	2.05	2.11	2.16	2.25	2.32
	1.8	1.44	1.54	1.61	1.68	1.73	1.78	1.82	1.86	1.89	1.92	1.94	1.99	2.06	2.12	2.17	2.22	2.32	2.39
	1.9	1.47	1.56	1.64	1.70	1.76	1.81	1.85	1.89	1.92	1.95	1.97	2.04	2.11	2.18	2.23	2.28	2.38	2.45
	2.0	1.50	1.59	1.67	1.73	1.79	1.83	1.88	1.91	1.94	1.97	2.00	2.09	2.17	2.23	2.29	2.33	2.43	2.50
	2.2	1.55	1.64	1.71	1.78	1.83	1.88	1.92	1.96	1.99	2.04	2.09	2.18	2.26	2.32	2.38	2.42	2.52	2.59
	2.4	1.58	1.67	1.75	1.81	1.87	1.92	1.96	2.00	2.06	2.11	2.17	2.26	2.33	2.40	2.45	2.50	2.60	2.67
	2.6	1.62	1.71	1.78	1.85	1.90	1.95	1.99	2.05	2.12	2.18	2.23	2.32	2.40	2.46	2.52	2.56	2.66	2.73
	2.8	1.64	1.73	1.81	1.87	1.93	1.98	2.04	2.11	2.17	2.23	2.29	2.38	2.45	2.52	2.57	2.62	2.71	2.79
	3.0	1.67	1.76	1.83	1.90	1.95	2.00	2.08	2.16	2.22	2.28	2.33	2.42	2.50	2.56	2.62	2.67	2.76	2.83
	3.5	1.71	1.81	1.88	1.95	2.00	2.10	2.18	2.25	2.32	2.38	2.43	2.52	2.60	2.66	2.71	2.76	2.86	2.93
	4.0	1.75	1.84	1.92	1.98	2.07	2.17	2.25	2.32	2.39	2.45	2.50	2.59	2.67	2.73	2.79	2.83	2.93	3.00

NOTES

DESIGN INCLUDES CONSTRUCTION LIVE LOAD 20 PSF ON THE AREA SUPPORTED AND 75 PLF AT THE OUTSIDE DECK OF OVERHANGS.

REQUIRED MINIMUM DIAGONAL LEG CAPACITY: 3600 LB WORKING LOAD

THE CONTRACTOR HAS THE OPTION OF SUBMITTING HIS OWN DESIGN FOR OVERHANG FALSEWORK IN ACCORDANCE WITH THE SPECIAL PROVISIONS.

SUBMITTALS UTILIZING THE INSTRUCTIONS AND PROCEDURES DESCRIBED ON SHEET 1 OF 3 SHALL BE IN ACCORDANCE WITH THE APPLICABLE SECTIONS OF THE SPECIFICATIONS AND SPECIAL PROVISIONS. EXCEPT THAT CALCULATIONS FOR OVERHANG FALSEWORK NEED NOT BE SEALED BY A REGISTERED ENGINEER.

FOR OVERHANG FALSEWORK BRACING DESIGN, SEE SHEET 3 OF 3.

TABLE 3: ALLOWABLE SPAN LENGTH OF JOISTS AND JOIST SPACINGS

AVG. SLAB THICKNESS Ⓣ (IN)	LUMBER JOIST SIZE (IN X IN)	JOIST SPACINGS			
		15 IN	12 IN	10 IN	8 IN
		THE ALLOWABLE SPAN LENGTH OF JOISTS			
10	2 X 4	———	4' - 6"	4' - 9"	5' - 0"
	4 X 4	5' - 9"	6' - 3"	6' - 6"	6' - 7"
12	2 X 4	———	4' - 3"	4' - 9"	5' - 0"
	4 X 4	5' - 3"	6' - 0"	6' - 3"	6' - 5"
14	2 X 4	———	4' - 0"	4' - 6"	5' - 0"
	4 X 4	———	5' - 6"	6' - 0"	6' - 4"
16	2 X 4	———	4' - 0"	4' - 3"	4' - 9"
	4 X 4	———	5' - 3"	5' - 9"	6' - 3"

PROJECT NO. R-2413C
GUILFORD-ROCKINGHAM COUNTY
STATION: 70+09.407 -LREV-

SHEET 2 OF 3

STATE OF NORTH CAROLINA
DEPARTMENT OF TRANSPORTATION
RALEIGH

STANDARD OVERHANG FALSEWORK

AASHTO TYPES
III, IV, V, AND VI

NORTH CAROLINA PROFESSIONAL SEAL 18788 ENGINEER CHANG-CHUAN VICTOR CHAO
Chang-Chuan V. Chao
8-5-2011

REVISIONS						SHEET NO.
NO.	BY:	DATE:	NO.	BY:	DATE:	5-237
1			3			TOTAL SHEETS
2			4			238

ASSEMBLED BY:	DATE:
CHECKED BY:	DATE:
DRAWN BY: R. WRIGHT 06/04	REV.
CHECKED BY: C. V. CHAO 06/04	

05-AUG-2011 10:48
C:\OLDFILESD\wdlr\victor\OverhangFalsework\TIEBAR&STRUT\R-2413C\R-2413CSTR7_TYPE_IV\R2413CSTR7verHangSheets.dgn
vchao

STR. #7

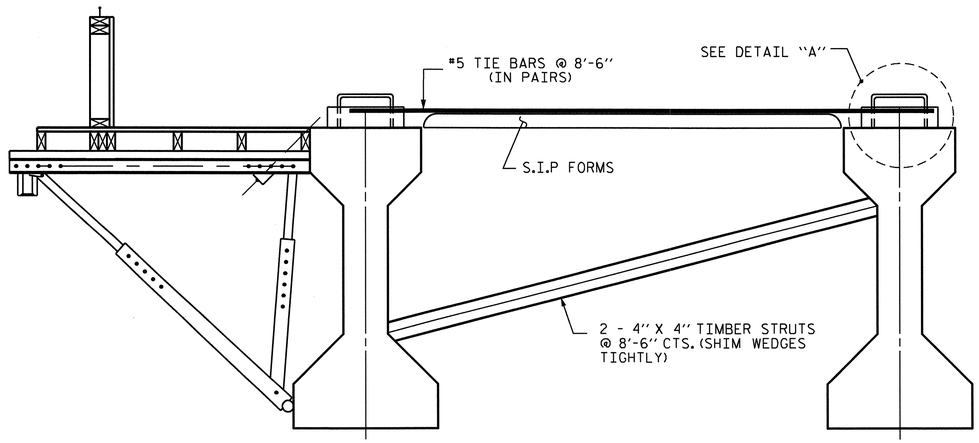

EXTERIOR GIRDER INTERIOR GIRDER

DETAIL OF REQUIRED OVERHANG FALSEWORK BRACING SYSTEM

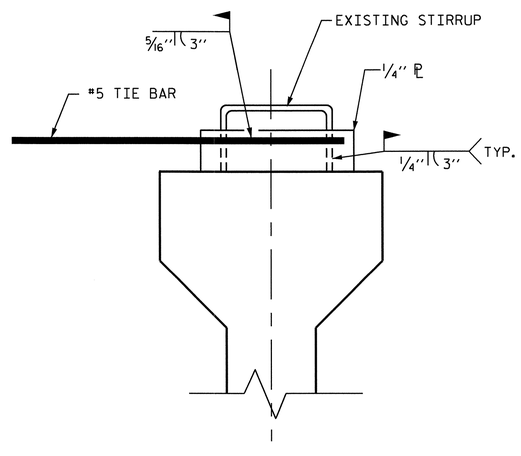

DETAIL "A"

NOTES:

EACH #5 TIE BAR SHALL BE WELDED TO ONE STIRRUP LOOP AS SHOWN IN DETAIL "A". #5 TIE BARS SHALL BE WELDED TO TWO ADJACENT STIRRUPS OF THE EXTERIOR GIRDER AND THE ADJACENT INTERIOR GIRDER BETWEEN PERMANENT DIAPHRAGMS. WELD STEEL PLATES IN BETWEEN THE TIE BARS AND THE STIRRUP LOOP. WELDING TWO TIE BARS TO THE SAME STIRRUP LOOP SHALL NOT BE PERMITTED.

MAXIMUM SPACING BETWEEN THE BRACING (TIE BARS-TIMBER STRUT) IS 8'-6" CTS. #5 TIE BARS SHALL BE LOCATED OVER A TIMBER STRUT.

INSTALL TIE BARS AND TIMBER STRUTS PRIOR TO PLACEMENT OF CONCRETE OR SCREED WEIGHT ONTO THE OVERHANG FALSEWORK.

PROJECT NO. R-2413C
GUILFORD-ROCKINGHAM COUNTY
STATION: 70+09.407 -LREV-

SHEET 3 OF 3

STATE OF NORTH CAROLINA
DEPARTMENT OF TRANSPORTATION
RALEIGH

STANDARD OVERHANG FALSEWORK

AASHTO TYPES
III, IV, V, AND VI

NORTH CAROLINA PROFESSIONAL SEAL 18788 ENGINEER CHANG-CHUAN VICTOR CHAO

Chang-Chuan V. Chao
8-5-2011

REVISIONS						SHEET NO.
NO.	BY:	DATE:	NO.	BY:	DATE:	S-238
1			3			TOTAL SHEETS
2			4			238

DRAWN BY: R. WRIGHT 06/04 DATE :
CHECKED BY: C. V. CHAO 06/04 DATE :

05-AUG-2011 10:49
C:\OLDFILESD\wdlr\victor\OverhangFalsework\TIEBAR&STRUT\R-2413C\R-2413CSTR7_TYPE_IV\R2413CSTR7verHangSheets.dgn
vchao

STR. #7 OF3

B.M. #15: RR SPIKE IN BASE OF 610mm OAK, 13.0m RT. OF STA. 56+63.60 -L-, EL. 256.945.

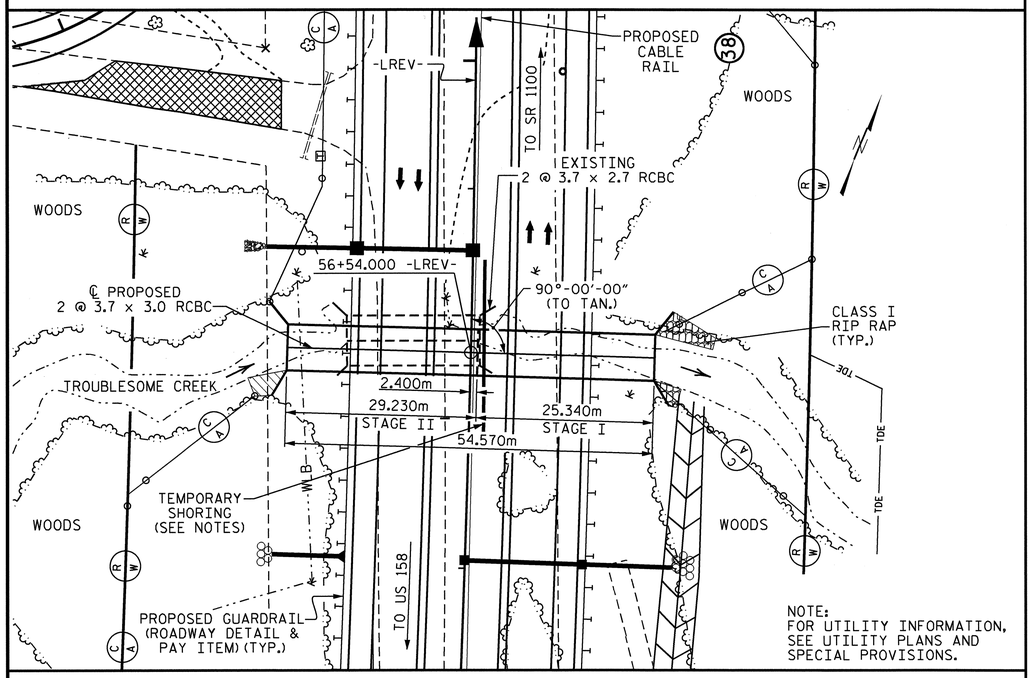

LOCATION SKETCH

GRADE DATA

GRADE POINT ELEVATION @ STA. 56+54.000 -LREV-	= 255.609
BED ELEVATION @ STA. 56+54.000 -LREV-	= 248.060
ROADWAY SLOPES	= 2 : 1

HYDRAULIC DATA

DESIGN DISCHARGE	= 45.3 m3/s
FREQUENCY OF DESIGN FLOOD	= 50 YEARS
DESIGN HIGH WATER ELEVATION	= 251.66 ⬟
DRAINAGE AREA	= 11.65 Sq. Km.
BASE DISCHARGE (Q100)	= 53.8 m3/s
BASE HIGH WATER ELEVATION	= 252.00

OVERTOPPING FLOOD DATA

OVERTOPPING DISCHARGE	= > 82.1 m3/s
FREQUENCY OF OVERTOPPING FLOOD	= 500+ YEARS
OVERTOPPING FLOOD ELEVATION	= 255.51

⬟ FROM HEC RAS SECTION 107568

TOTAL STRUCTURE QUANTITIES

MATERIALS	CLASS A CONCRETE	REINFORCING STEEL	FOUNDATION COND. MAT'L.
(UNITS)	CU. METERS	kg	METRIC TONS
STAGE I	236.0	22543	138
STAGE II	270.2	25765	160
TOTAL	506.2	48308	298
CULVERT EXCAVATION ---------- LUMP SUM			
REMOVAL OF EXISTING STRUCTURE ---------- LUMP SUM			

TOTAL STRUCTURE QUANTITIES -ENGLISH-

MATERIALS	CLASS A CONCRETE	REINFORCING STEEL	FOUNDATION COND. MAT'L.
(UNITS)	CU. YD.	LB	TONS
STAGE I	308.7	49699	152
STAGE II	353.4	56802	176
TOTAL	662.1	106501	328
CULVERT EXCAVATION ---------- LUMP SUM			
REMOVAL OF EXISTING STRUCTURE ---------- LUMP SUM			

NOTES

ASSUMED LIVE LOAD ----------MS18 OR ALTERNATE LOADING.

DESIGN FILL---------- 4.76m

FOR OTHER DESIGN DATA AND NOTES SEE STANDARD NOTE SHEET.

76mm Ø WEEP HOLES INDICATED TO BE IN ACCORDANCE WITH THE SPECIFICATIONS.

CONCRETE IN CULVERT TO BE POURED IN ORDER SHOWN ON SHEET 2 OF 5. (SEE CONSTRUCTION SEQUENCE DETAIL, SHEET 2 OF 5.)

THE RESIDENT ENGINEER SHALL CHECK THE LENGTH OF CULVERT BEFORE STAKING IT OUT TO MAKE CERTAIN THAT IT WILL PROPERLY TAKE CARE OF THE FILL.

DIMENSIONS FOR WING LAYOUT AS WELL AS ADDITIONAL REINFORCING STEEL EMBEDDED IN BARREL ARE SHOWN ON WING SHEET.

TRANSVERSE CONSTRUCTION JOINTS SHALL BE USED IN THE BARREL, SPACED TO LIMIT THE POURS TO A MAXIMUM OF 21.000m. LOCATION OF JOINTS SHALL BE SUBJECT TO APPROVAL OF THE ENGINEER.

AT THE CONTRACTOR'S OPTION, HE MAY SPLICE THE VERTICAL REINFORCING STEEL IN THE INTERIOR FACE OF EXTERIOR WALL AND BOTH FACES OF INTERIOR WALLS ABOVE LOWER WALL CONSTRUCTION JOINT. THE SPLICE LENGTH SHALL BE AS PROVIDED IN THE SPLICE LENGTH CHART SHOWN ON THE PLANS. EXTRA WEIGHT OF STEEL DUE TO THE SPLICES SHALL BE PAID FOR BY THE CONTRACTOR.

ALL DIMENSIONS ARE IN MILLIMETERS UNLESS OTHERWISE NOTED.

ALL ELEVATIONS ARE IN METERS.

FOR CULVERT DIVERSION DETAILS AND PAY ITEM, SEE EROSION CONTROL PLANS.

A 900mm STRIP OF FILTER FABRIC SHALL BE ATTACHED TO THE FILL FACE OF THE WING COVERING THE ENTIRE LENGTH OF THE EXPANSION JOINT.

FOR SUBMITTAL OF WORKING DRAWINGS, SEE SPECIAL PROVISIONS.

FOR FALSEWORK AND FORMWORK, SEE SPECIAL PROVISIONS.

THE EXISTING 2 @ 3.7 x 2.7 REINFORCED CONCRETE BOX CULVERT LOCATED AT THE PROPOSED SITE SHALL BE REMOVED.

NO PRECAST REINFORCED CONCTRETE BOX CULVERT OPTION WILL BE ALLOWED..

FOR CRANE SAFETY, SEE SPECIAL PROVISIONS.

FOR GROUT FOR STRUCTURES, SEE SPECIAL PROVISIONS.

FOR MAINTENANCE OF TRAFFIC, SEE TRAFFIC CONTROL PLANS.

FOR LIMITS OF TEMPORARY SHORING FOR MAINTENANCE OF TRAFFIC, SEE TRAFFIC CONTROL PLANS. FOR PAY ITEM FOR TEMPORARY SHORING FOR MAINTENANCE OF TRAFFIC, SEE ROADWAY PLANS.

STRUCTURE QUANTITIES (STAGE I)

(PHASE I)

CLASS A CONCRETE
BARREL @ 3.18 m^3/m 80.6 m^3
WING ETC. 6.2 m^3
TOTAL 86.8 m^3

REINFORCING STEEL
BARREL 8783 kg
WING ETC. 270 kg
TOTAL 9053 kg

CULVERT EXCAVATION ---------- LUMP SUM
FOUNDATION COND. MAT'L --------- 76 METRIC TONS

(PHASE II)

CLASS A CONCRETE
BARREL @ 5.61 m^3/m 142.2 m^3
WING ETC. 7.0 m^3
TOTAL 149.2 m^3

REINFORCING STEEL
BARREL 13220 kg
WING ETC. 270 kg
TOTAL 13490 kg

CULVERT EXCAVATION ---------- LUMP SUM
FOUNDATION COND. MAT'L --------- 62 METRIC TONS

STRUCTURE QUANTITIES (STAGE II)

(PHASE III)

CLASS A CONCRETE
BARREL @ 3.18 m^3/m 93.0 m^3
WING ETC. 6.2 m^3
TOTAL 99.2 m^3

REINFORCING STEEL
BARREL 10069 kg
WING ETC. 270 kg
TOTAL 10339 kg

CULVERT EXCAVATION ---------- LUMP SUM
FOUNDATION COND. MAT'L --------- 88 METRIC TONS

(PHASE IV)

CLASS A CONCRETE
BARREL @ 5.61 m^3/m 164.0 m^3
WING ETC. 7.0 m^3
TOTAL 171.0 m^3

REINFORCING STEEL
BARREL 15156 kg
WING ETC. 270 kg
TOTAL 15426 kg

CULVERT EXCAVATION ---------- LUMP SUM
FOUNDATION COND. MAT'L --------- 72 METRIC TONS

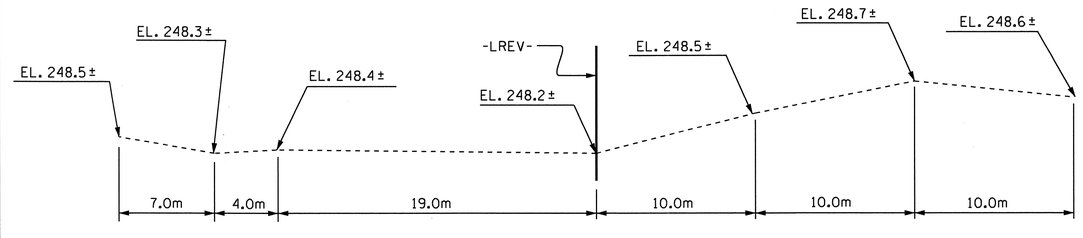

PROFILE ALONG ℄ CULVERT

METRIC

PROJECT NO. R-2413C
GUILFORD-ROCKINGHAM COUNTY
STATION: 56+54.000 -LREV-

SHEET 1 OF 5 CULVERT #292

STATE OF NORTH CAROLINA
DEPARTMENT OF TRANSPORTATION
RALEIGH

DOUBLE 3.700m X 3.000m
CONCRETE BOX CULVERT
90° SKEW

NORTH CAROLINA PROFESSIONAL SEAL 12274 ENGINEER OMAR R. AZIZ
10/28/14

NORTH CAROLINA PROFESSIONAL SEAL 022516 ENGINEER EMILY E. MURRAY
10/28/14

REVISIONS								SHEET NO.
NO.	BY:	DATE:	NO.	BY:	DATE:			C-1
1			3					TOTAL SHEETS
2			4					8

STR. #8

ASSEMBLED BY : PEGGY PARISI DATE : 6-17-11
CHECKED BY : B.N. BARODAWALA DATE : 8-16-11

DRAWN BY : EEM 6/97
CHECKED BY : ARB 7/97

19-OCT-2011 11:23
R:\TIPProjects-R\R2413c\Structures\FinalPlans\Str.#8\r2413c_SD_CU_08.dgn
taverette

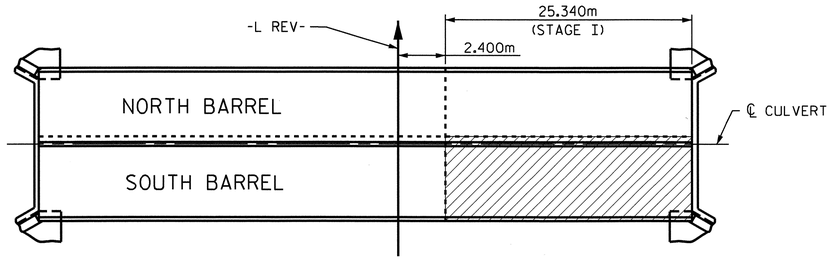

PLAN OF FLOOR SLAB STAGE I (PHASE I)

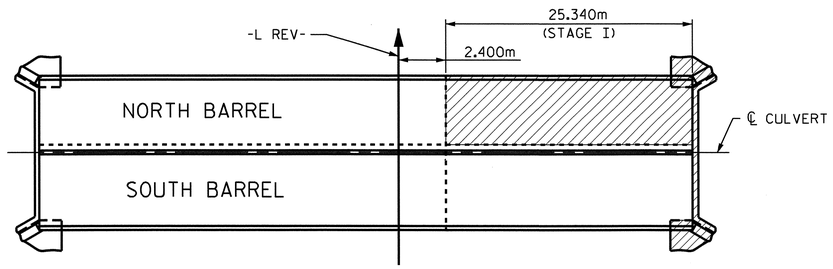

PLAN OF FLOOR SLAB STAGE I (PHASE II)

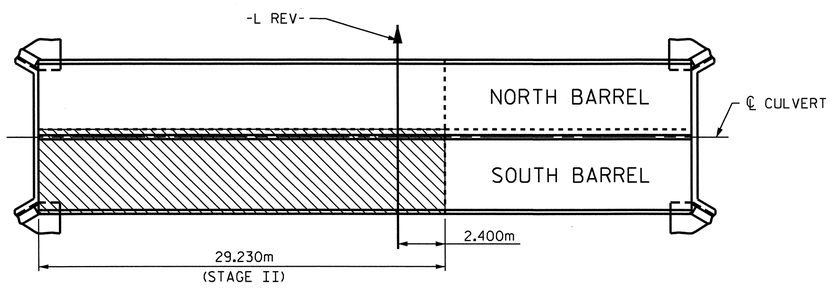

PLAN OF FLOOR SLAB STAGE II (PHASE III)

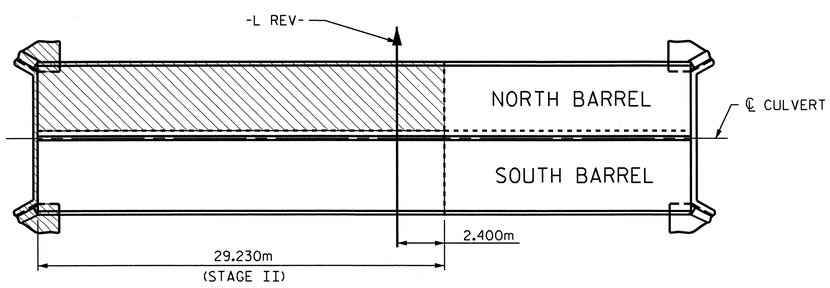

PLAN OF FLOOR SLAB STAGE II (PHASE IV)

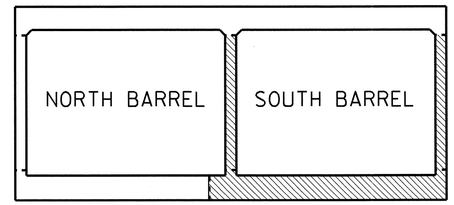

PHASE I & III ELEVATION
(LOOKING DOWNSTREAM)

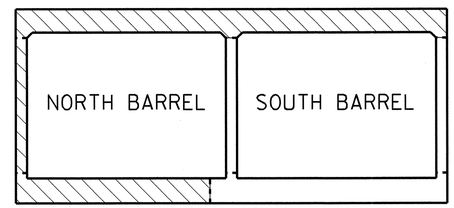

PHASE II & IV ELEVATION
(LOOKING DOWNSTREAM)

CONCRETE IN CULVERT TO BE POURED IN THE FOLLOWING ORDER:

1. STAGE I (PHASE I)
- SOUTH BARREL OUTLET WING FOOTING, SOUTH BARREL FLOOR SLAB, INCLUDING 100mm OF SOUTH BARREL WALLS AND OUTLET WINGWALL
- REMAINING PORTION OF SOUTH BARREL WALLS AND OUTLET WING FULL HEIGHT

2. STAGE I (PHASE II)
- NORTH BARREL OUTLET WING FOOTING, NORTH BARREL FLOOR SLAB, INCLUDING 100mm OF NORTH BARREL EXTERIOR WALL AND OUTLET WINGWALL
- REMAINING PORTION OF NORTH BARREL WALL AND OUTLET WING FULL HEIGHT
- ENTIRE ROOF SLAB FOR STAGE I AND OUTLET HEADWALL

3. STAGE II (PHASE III)
- SOUTH BARREL INLET WING FOOTING, SOUTH BARREL FLOOR SLAB, INCLUDING 100mm OF SOUTH BARREL WALLS AND INLET WINGWALL
- REMAINING PORTIONS OF SOUTH BARREL WALLS AND INLET WING FULL HEIGHT

4. STAGE II (PHASE IV)
- NORTH BARREL INLET WING FOOTING, NORTH BARREL FLOOR SLAB, INCLUDING 100mm OF NORTH BARREL EXTERIOR WALL AND INLET WINGWALL
- REMAINING PORTION OF NORTH BARREL WALL AND INLET WING FULL HEIGHT
- ENTIRE ROOF SLAB FOR STAGE II AND INLET HEADWALL

CONSTRUCTION SEQUENCE

PROJECT NO. R-2413C
GUILFORD-ROCKINGHAM COUNTY
STATION: 56+54.000 -LREV-

SHEET 2 OF 5

STATE OF NORTH CAROLINA
DEPARTMENT OF TRANSPORTATION
RALEIGH

DOUBLE 3.700m X 3.000m
CONCRETE BOX CULVERT

90° SKEW

NORTH CAROLINA PROFESSIONAL SEAL 022516 ENGINEER EMILY E. MURRAY
10/28/11

REVISIONS						SHEET NO.
NO.	BY:	DATE:	NO.	BY:	DATE:	C-2
1			3			TOTAL SHEETS
2			4			8

STR.#8

DRAWN BY : PEGGY PARISI DATE : 6-27-11
CHECKED BY : B. N. BARODAWALA DATE : 8-16-11

19-OCT-2011 11:22
R:\TIPProjects-R\R2413c\Structures\Final Plans\Str.#8\r2413c_SD_CU_08.dgn
toverette

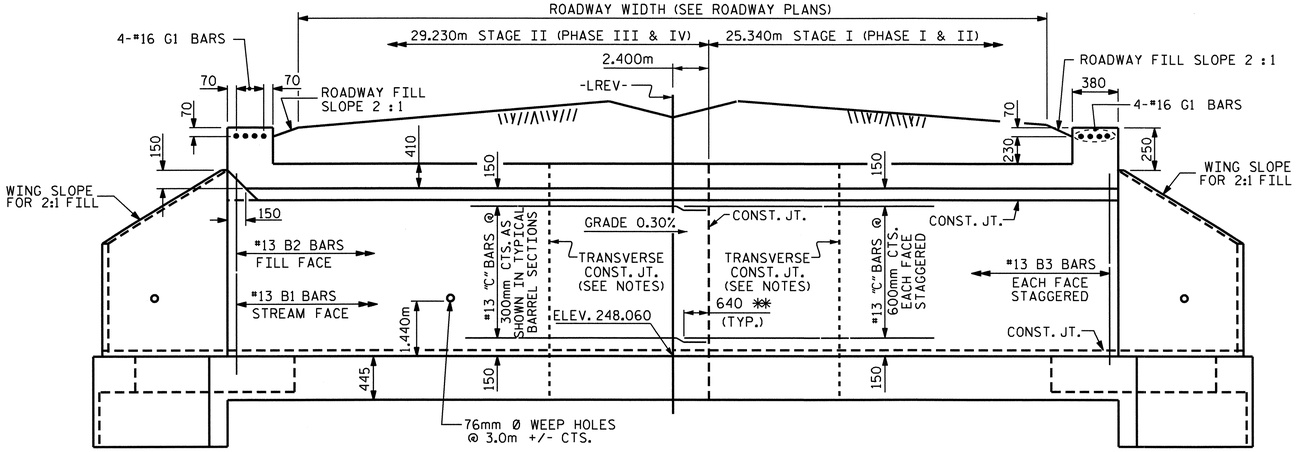

CULVERT SECTION NORMAL TO ROADWAY

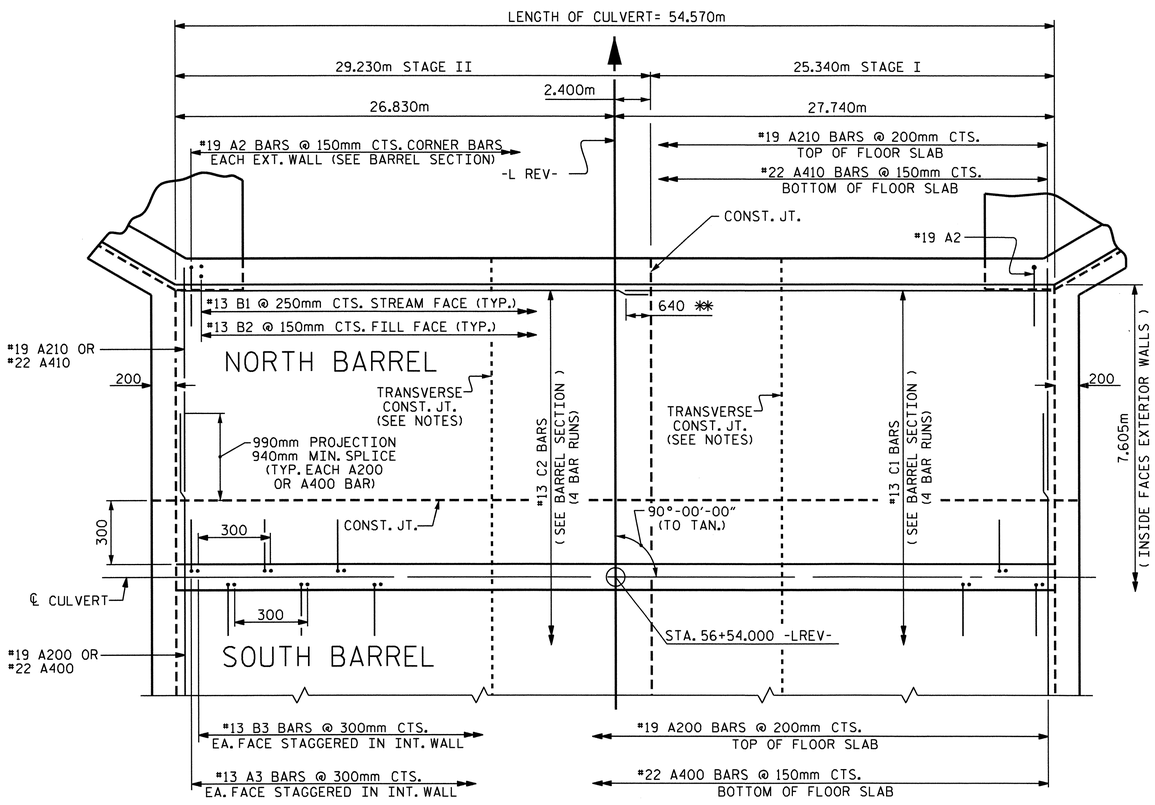

PART PLAN - FLOOR SLAB

✱✱ 640 MIN. PROJECTION (590 MIN. SPLICE) (TYP. EACH C1 BAR)

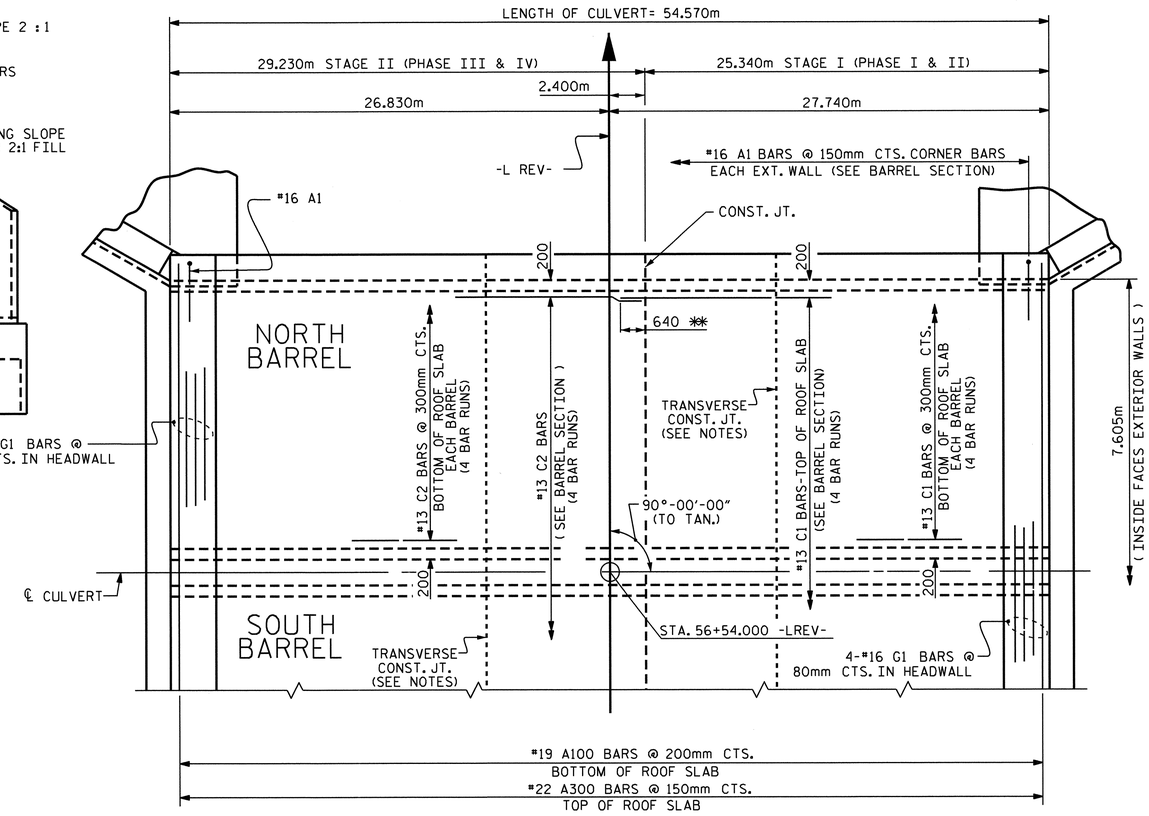

PART PLAN - ROOF SLAB

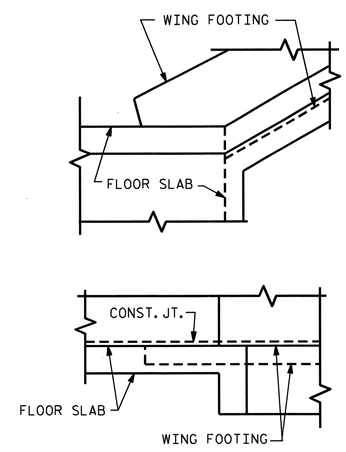

DETAIL

CONNECTION OF WING FOOTING AND FLOOR SLAB WHEN SLAB IS THICKER THAN FOOTING

PROJECT NO. R-2413C

GUILFORD-ROCKINGHAM COUNTY

STATION: 56+54.000 -LREV-

SHEET 3 OF 5

STATE OF NORTH CAROLINA
DEPARTMENT OF TRANSPORTATION
RALEIGH

DOUBLE 3.700m X 3.000m CONCRETE BOX CULVERT

90° SKEW

NORTH CAROLINA PROFESSIONAL SEAL 022516 ENGINEER EMILY E. MURRAY 10/28/11

REVISIONS								SHEET NO.
NO.	BY:	DATE:	NO.	BY:	DATE:			C-3
1			3					TOTAL SHEETS 8
2			4					

ASSEMBLED BY : PEGGY PARISI DATE : 6-27-11
CHECKED BY : B.N. BARODAWALA DATE : 8-16-11

DRAWN BY : EEM 6/97
CHECKED BY : ARB 7/97

13-SEP-2011 10:49
W:\Structures\Final Plans\Str.#8\r2413c_SD_CU_08.dgn
bbarodawala

STR.#8 STD. No. CB290sm

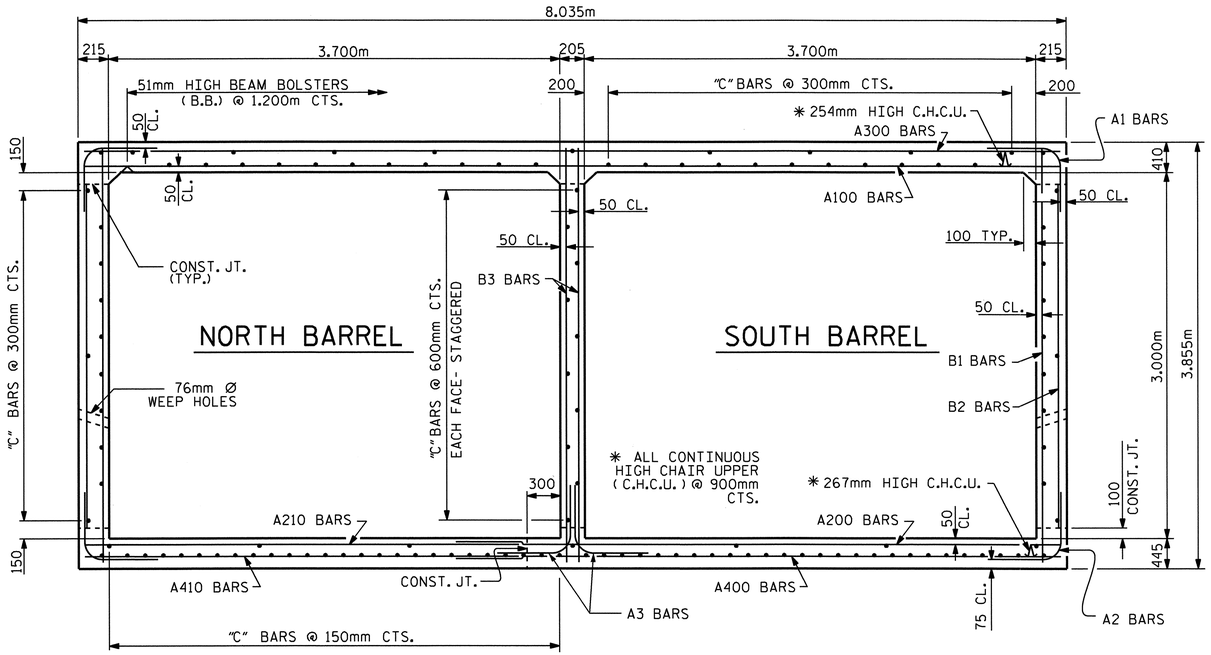

RIGHT ANGLE SECTION OF BARREL

THERE ARE 124 "C" BARS IN SECTION OF BARREL.
(LOOKING DOWNSTREAM)

BILL OF MATERIAL STAGE I

PHASE I

BAR	NO.	SIZE	TYPE	LENGTH	WEIGHT
A1	169	#16	6	2040	535
A2	169	#19	6	1900	718
A3	169	#13	6	1900	319
A200	127	#19	STR	5360	1521
A400	169	#22	STR	5360	2756
B1	102	#13	STR	3720	377
B2	169	#13	STR	2800	470
B3	169	#13	STR	3720	625
C1	212	#13	STR	6940	1462
REINFORCING STEEL =					8783 kg

PHASE II

BAR	NO.	SIZE	TYPE	LENGTH	WEIGHT
A1	169	#16	6	2040	535
A2	169	#19	6	1900	718
A100	127	#19	STR	7900	2242
A210	127	#19	STR	3520	999
A300	169	#22	STR	7900	4061
A410	169	#22	STR	3520	1810
B1	102	#13	STR	3720	377
B2	169	#13	STR	2800	470
C1	284	#13	STR	6940	1959
G1	4	#16	STR	7920	49
REINFORCING STEEL =					13220 kg

BILL OF MATERIAL STAGE II

PHASE III

BAR	NO.	SIZE	TYPE	LENGTH	WEIGHT
A1	195	#16	6	2040	617
A2	195	#19	6	1900	828
A3	195	#13	6	1900	368
A200	146	#19	STR	5360	1749
A400	195	#22	STR	5360	3179
B1	117	#13	STR	3720	433
B2	195	#13	STR	2800	543
B3	195	#13	STR	3720	721
C2	212	#13	STR	7740	1631
REINFORCING STEEL =					10069 kg

PHASE IV

BAR	NO.	SIZE	TYPE	LENGTH	WEIGHT
A1	195	#16	6	2040	617
A2	195	#19	6	1900	828
A100	146	#19	STR	7900	2578
A210	146	#19	STR	3520	1149
A300	195	#22	STR	7900	4686
A410	195	#22	STR	3520	2088
B1	117	#13	STR	3720	433
B2	195	#13	STR	2800	543
C2	284	#13	STR	7740	2185
G1	4	#16	STR	7920	49
REINFORCING STEEL =					15156 kg

SPLICE LENGTHS CHART

BAR	SIZE	SPLICE LENGTH
A200	19	940
A210	19	940
A400	22	940
A410	22	940
B1	13	540
B3	13	540
C1	13	590
C2	13	590

BAR TYPE

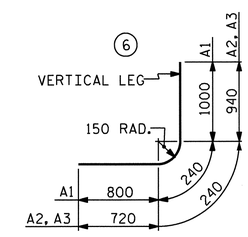

DIMENSIONS ARE OUT TO OUT

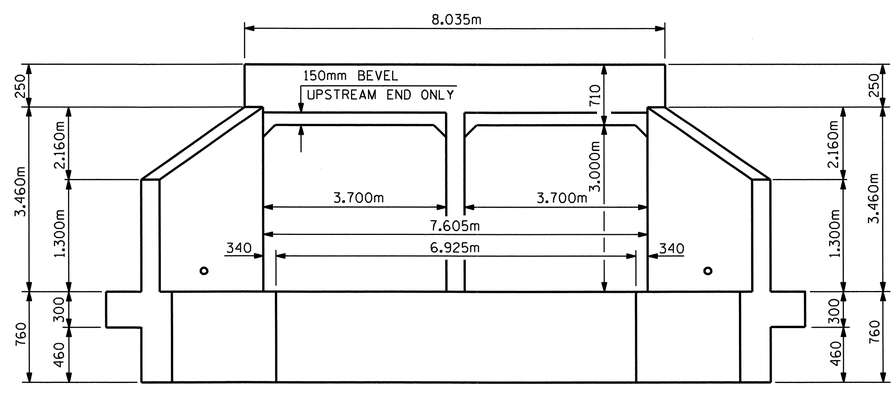

END ELEVATION NORMAL TO SKEW

PROJECT NO. R-2413C
GUILFORD-ROCKINGHAM COUNTY
STATION: 56+54.000 -LREV-

SHEET 4 OF 5

STATE OF NORTH CAROLINA
DEPARTMENT OF TRANSPORTATION
RALEIGH

DOUBLE 3.700m X 3.000m CONCRETE BOX CULVERT

90° SKEW

NORTH CAROLINA PROFESSIONAL SEAL 022516 ENGINEER EMILY E. MURRAY
10/28/11

REVISIONS						SHEET NO.
NO.	BY:	DATE:	NO.	BY:	DATE:	C-4
1			3			TOTAL SHEETS
2			4			8

STR.#8

DRAWN BY : PEGGY PARISI DATE : 6-27-11
CHECKED BY : B.N. BARODAWALA DATE : 8-16-11

19-OCT-2011 11:21
R:\TIPProjects-R\R2413c\Structures\FinalPlans\Str.#8\r2413c_SD_CU_08.dgn
taverette

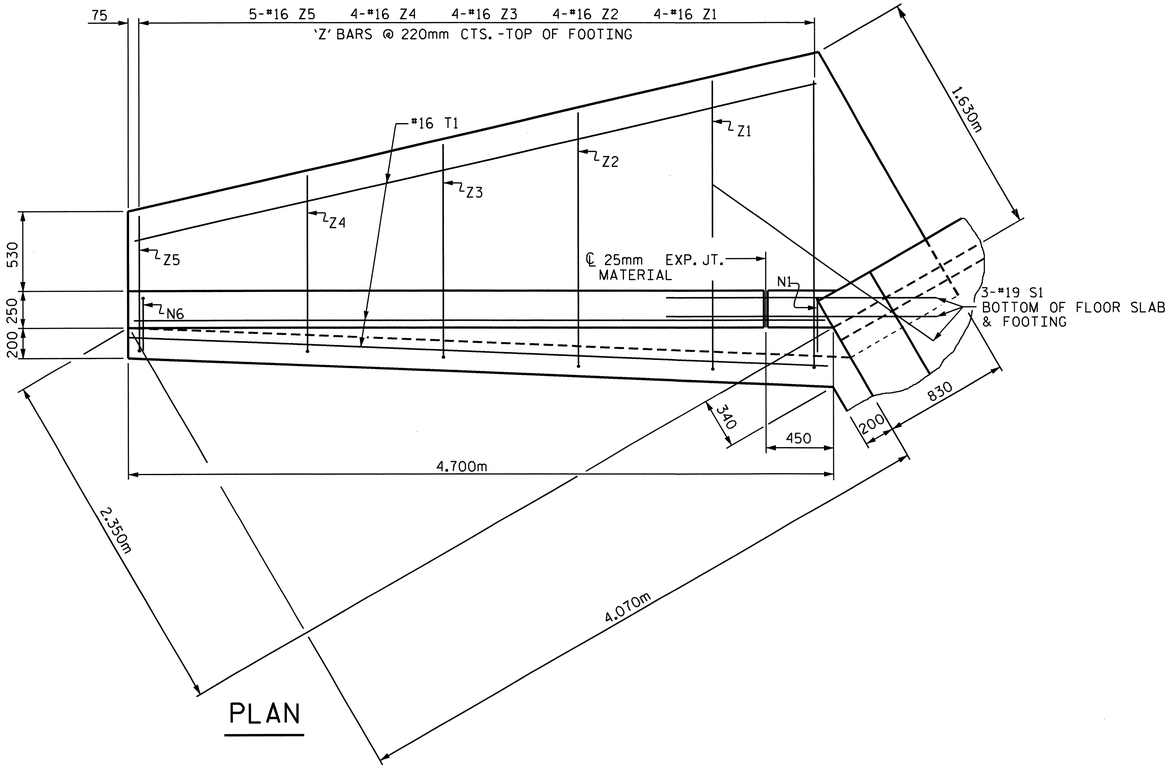

PLAN

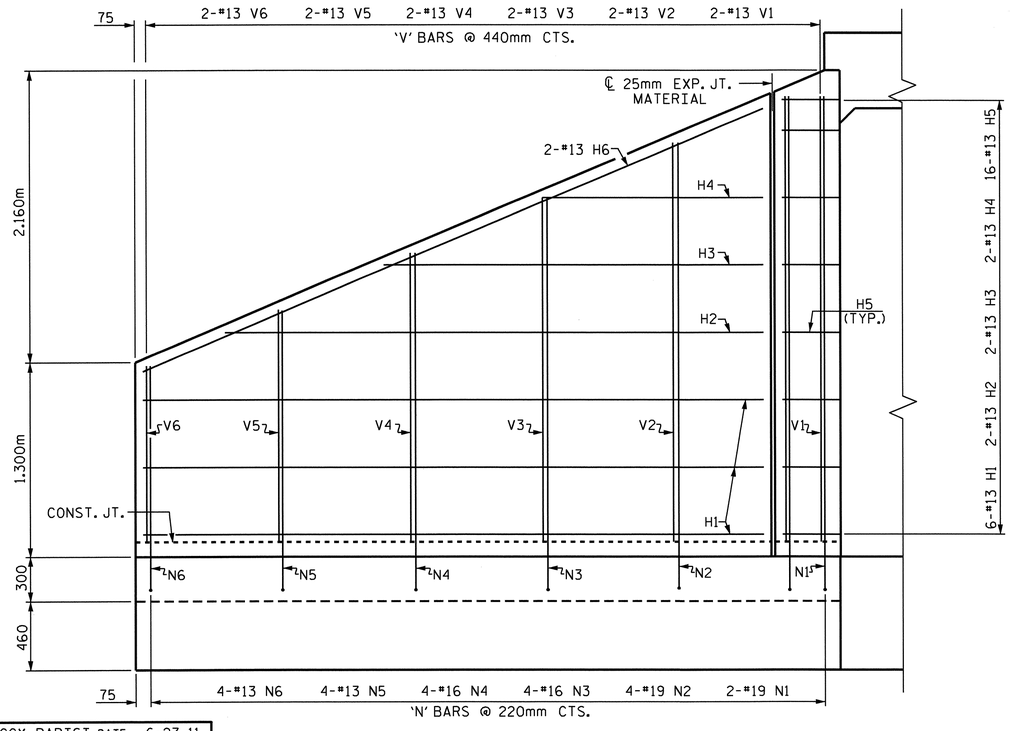

ELEVATION

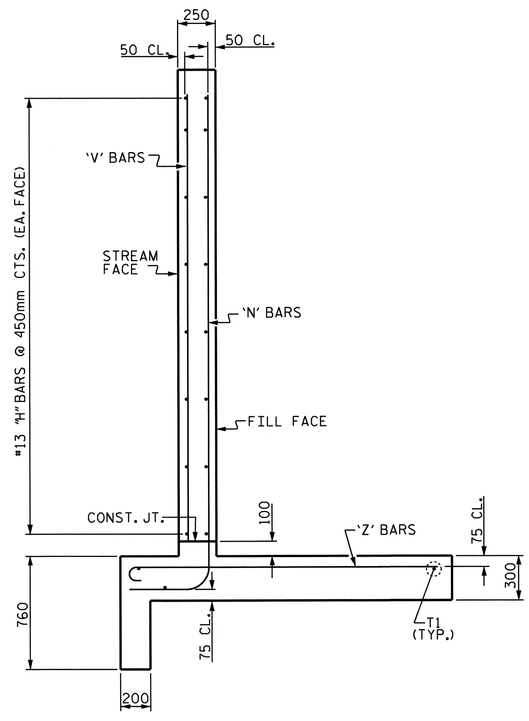

TYPICAL WING SECTION

BAR TYPES

ALL BAR DIMENSIONS ARE OUT TO OUT.

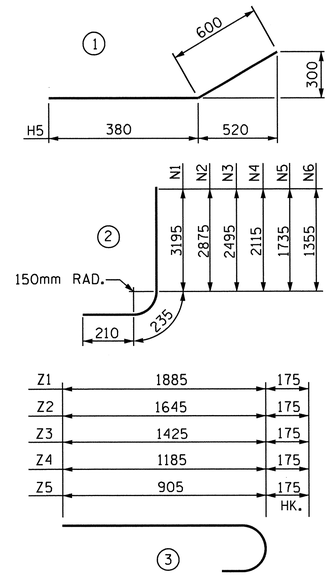

BILL OF MATERIAL (FOR ONE WING)

BAR	NO.	SIZE	TYPE	LENGTH	WEIGHT
H1	6	13	STR	4140	25
H2	2	13	STR	3600	7
H3	2	13	STR	2560	5
H4	2	13	STR	1520	3
H5	16	13	1	980	16
H6	2	13	STR	4500	9
N1	2	19	2	3640	16
N2	4	19	2	3320	30
N3	4	16	2	2940	18
N4	4	16	2	2560	16
N5	4	13	2	2180	9
N6	4	13	2	1800	7
S1	3	19	STR	1800	12
T1	3	16	STR	4700	22
V1	2	13	STR	3020	6
V2	2	13	STR	2700	5
V3	2	13	STR	2320	5
V4	2	13	STR	1940	4
V5	2	13	STR	1560	3
V6	2	13	STR	1180	2
Z1	4	16	3	2060	13
Z2	4	16	3	1820	11
Z3	4	16	3	1600	10
Z4	4	16	3	1360	8
Z5	5	16	3	1080	8

REINFORCING STEEL FOR 1 WING 270 kg

CLASS A CONCRETE

1 WING (EACH PHASE)	5.6 m3
END CURTAIN WALL (PHASE I)	0.6 m3
END CURTAIN WALL (PHASE II)	0.5 m3
END CURTAIN WALL (PHASE III)	0.6 m3
END CURTAIN WALL (PHASE IV)	0.5 m3
1 HEADWALL (PHASE II)	0.9 m3
1 HEADWALL (PHASE IV)	0.9 m3

TOTAL STAGE I (PHASE I & II) 13.2 m3

TOTAL STAGE II (PHASE III & IV) 13.2 m3

PROJECT NO. R-2413C

GUILFORD-ROCKINGHAM COUNTY

STATION: 56+54.000 -LREV-

SHEET 5 OF 5

STATE OF NORTH CAROLINA
DEPARTMENT OF TRANSPORTATION
RALEIGH

STANDARD WINGS FOR CONCRETE BOX CULVERT

H = 3.000m SLOPE = 2:1
90° SKEW

NORTH CAROLINA PROFESSIONAL SEAL 022516 ENGINEER EMILY E. MURRAY
10/28/11

REVISIONS						
NO.	BY:	DATE:	NO.	BY:	DATE:	
1			3			
2			4			

SHEET NO. C-5
TOTAL SHEETS 8

ASSEMBLED BY : PEGGY PARISI DATE : 6-27-11
CHECKED BY : B.N. BARODAWALA DATE : 8-16-11

DRAWN BY : FPP 06/97
CHECKED BY : VAP 06/97

13-SEP-2011 10:50
W:\Structures\Final Plans\Str.#8\r2413c_SD_CU_08.dgn
bbarodawala

STR. #8

STD. NO. CW9030

B.M. #15: RR SPIKE IN BASE OF 610mm OAK, 13.0m RT. OF -L- STA. 56+63.60, EL. 256.945

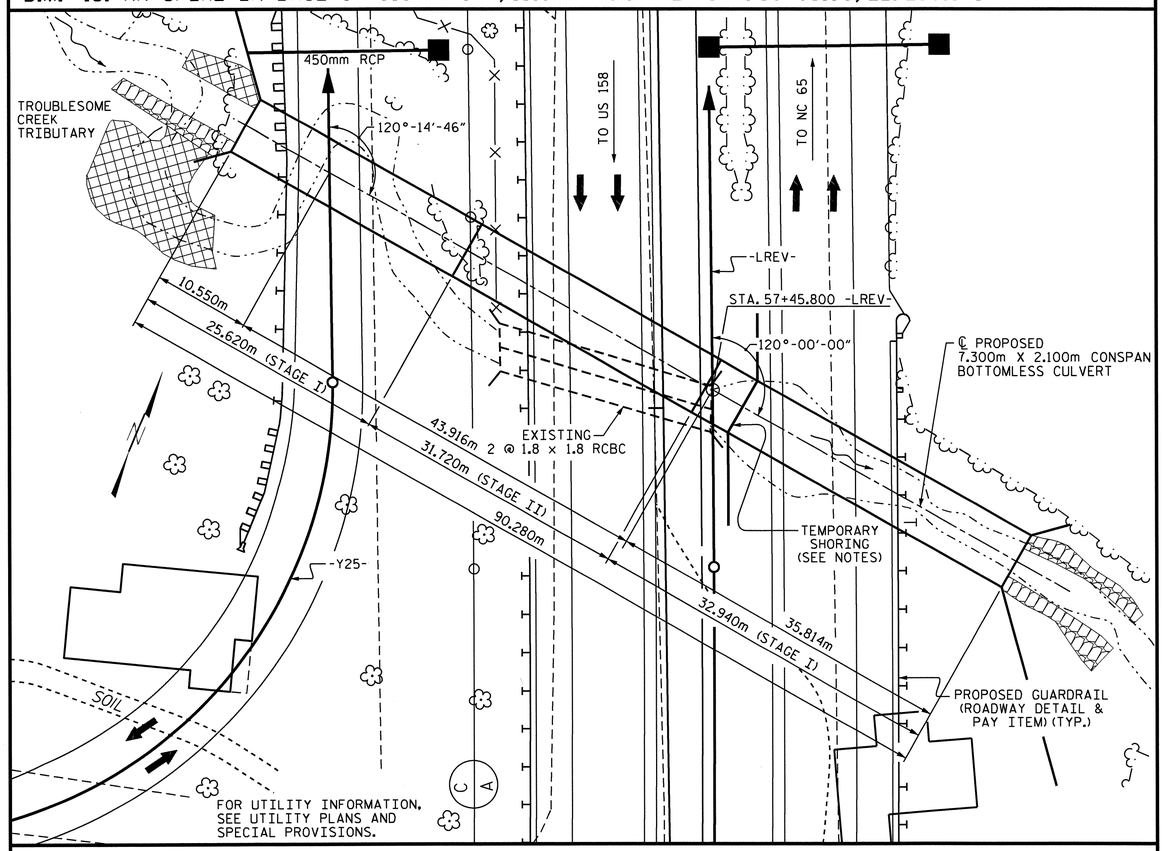

LOCATION SKETCH

NOTES:

ASSUMED LIVE LOAD ----------MS18 OR ALTERNATE LOADING.

ALL DIMENSIONS ARE IN MILLIMETERS UNLESS OTHERWISE NOTED.

ALL ELEVATIONS ARE IN METERS.

MAXIMUM DESIGN FILL---------- 4.85m

FOR OTHER DESIGN DATA AND NOTES, SEE STANDARD NOTE SHEET.

FOR CULVERT DIVERSION DETAILS AND PAY ITEM, SEE EROSION CONTROL PLANS.

THE RESIDENT ENGINEER SHALL CHECK THE LENGTH OF CULVERT BEFORE STAKING IT OUT TO MAKE CERTAIN THAT IT WILL PROPERLY TAKE CARE OF THE FILL.

A 900mm STRIP OF FILTER FABRIC SHALL BE ATTACHED TO THE FILL FACE OF THE WING COVERING THE ENTIRE LENGTH OF THE EXPANSION JOINT.

THE EXISTING DOUBLE BARRREL 1.8m X 1.8m REINFORCED CONCRETE BOX CULVERT LOCATED AT THE SAME LOCATION AS THE PROPOSED CULVERT SHALL BE REMOVED. (APPROXIMATE LENGTH = 22.0m)

FOR WING FOOTINGS, THE CONTRACTOR HAS THE OPTION TO KEY THE FOOTINGS 305mm INTO ROCK. IF WING FOOTINGS ARE NOT KEYED INTO ROCK, RIP RAP SHALL BE REQUIRED. RIP RAP SHALL NOT BE PLACED ABOVE THE STREAM BED. SEE DETAILS ON SHEET 3 OF 3.

FOR CRANE SAFETY, SEE SPECIAL PROVISIONS.

FOR GROUT FOR STRUCTURES, SEE SPECIAL PROVISIONS.

FOR CURING CONCRETE, SEE SPECIAL PROVISIONS.

FOR LIMITS OF TEMPORARY SHORING FOR MAINTENANCE OF TRAFFIC, SEE TRAFFIC CONTROL PLANS. FOR PAY ITEM FOR TEMPORARY SHORING FOR MAINTENANCE OF TRAFFIC, SEE ROADWAY PLANS.

THE PRECAST CULVERT SECTIONS AND WINGS SHALL BE DESIGNED TO HANDLE FULL DEPTH HYDROSTATIC PRESSURE IF WEEP HOLES ARE NOT UTILIZED. IF PROVIDED, WEEP HOLES SHALL BE LOCATED A MINIMUM HEIGHT OF 150mm ABOVE THE NORMAL FLOW LINE AND HAVE A MAXIMUM SPACING OF 3.000m.

THE ALLOWABLE BEARING CAPACITY FOR CULVERT STRIP FOOTINGS OF BOTTOMLESS CULVERT IS 480 KPA.

KEY BOTTOMLESS CULVERT FOOTINGS AT STATION 57+45.800 -LREV- ± AT LEAST 300mm INTO ROCK WITH A MINIMUM THICKNESS AS SHOWN ON THE PLANS.

TO PROVIDE PROTECTION FROM POSSIBLE SCOUR, THE FOOTINGS SHALL NOT BE CONSTRUCTED AT AN ELEVATION HIGHER THAN SHOWN ON THE PLANS.

SCOUR PROTECTION IS REQUIRED AT THE WINGS. RIP RAP NOT TO BE PLACED ABOVE THE STREAMBED.

THE SCOUR CRITICAL ELEVATION IS THE AS BUILT BOTTOM OF FOOTING ELEVATION. THE SCOUR CRITICAL ELEVATIONS ARE FOR USE BY MAINTENANCE FORCES TO MONITOR POSSIBLE SCOUR PROBLEMS DURING THE LIFE OF THE STRUCTURE.

FOR BLASTING ADJACENT TO HIGHWAY STRUCTURES, SEE STANDARD SPECIFICATIONS ARTICLE 410-11.

THE BOTTOM OF FOOTING ELEVATIONS MAY BE LOWERED IN ORDER TO SATISFY BEARING CAPACITY AND MINIMUM ROCK EMBEDMENT REQUIREMENTS.

THIS STRUCTURE HAS BEEN DESIGNED IN ACCORDANCE WITH HEC 18 "EVALUATING SCOUR AT BRIDGES", MAY 2001

FOR PRECAST REINFORCED CONCRETE THREE-SIDED CULVERT, SEE SPECIAL PROVISIONS.

FOR SUBMITTAL OF WORKING DRAWINGS, SEE SPECIAL PROVISIONS.

FOR FALSEWORK AND FORMWORK, SEE SPECIAL PROVISIONS.

THE 450mm DIA. PIPE THROUGH THE WING OF THE CULVERT SHALL BE LOCATED BY THE ENGINEER. THE REINFORCING STEEL SHALL BE FIELD BENT AS NECESSARY TO CLEAR PIPE.

TOTAL STRUCTURE QUANTITIES

REMOVAL OF EXISTING STRUCTURE	LUMP SUM
PRECAST REINFORCED CONCRETE THREE-SIDED CULVERT @ STA. 57+45.800 -LREV-	LUMP SUM
CLASS A CONCRETE	167.4 CU. METERS
RIP RAP CLASS I	36 METRIC TONS

TOTAL STRUCTURE QUANTITIES -ENGLISH-

REMOVAL OF EXISTING STRUCTURE	LUMP SUM
PRECAST REINFORCED CONCRETE THREE-SIDED CULVERT @ STA. 57+45.800 -LREV-	LUMP SUM
CLASS A CONCRETE	219.0 CU. YD.
RIP RAP CLASS I	40 TONS

GRADE DATA

GRADE POINT ELEVATION @ STA. 57+45.800 -LREV-	= 256.850
BED ELEVATION @ STA. 57+45.800 -LREV-	= 250.310
ROADWAY SLOPES	= 2 :1

HYDRAULIC DATA

DESIGN DISCHARGE	= 34.0 m3/s
FREQUENCY OF DESIGN FLOOD	= 50 YEARS
DESIGN HIGH WATER ELEVATION	= 254.530
DRAINAGE AREA	= 2.09 Sq. Km.
BASE DISCHARGE (Q100)	= 36.8 m3/s
BASE HIGH WATER ELEVATION	= 254.800

OVERTOPPING FLOOD DATA

OVERTOPPING DISCHARGE	= 34.0 m3/s
FREQUENCY OF OVERTOPPING FLOOD	= 50 YEARS
OVERTOPPING FLOOD ELEVATION	= 254.440 *

* OVERTOPS -Y25- IN 50 YR AND FLOWS TO TROUBLESOME CREEK

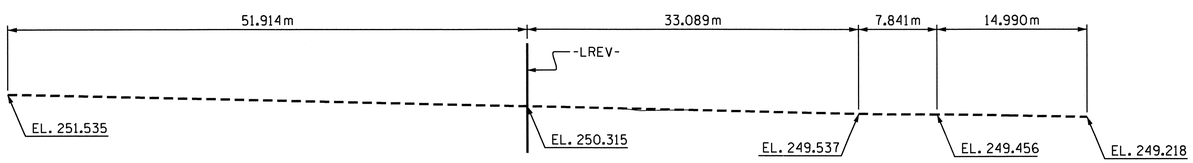

PROFILE ALONG ℄ CULVERT

PROJECT NO. R-2413C

GUILFORD-ROCKINGHAM COUNTY

STATION: 57+45.800 -LREV-

SHEET 1 OF 3

STATE OF NORTH CAROLINA
DEPARTMENT OF TRANSPORTATION
RALEIGH

7.300m X 2.100m PRECAST REINFORCED CONCRETE THREE-SIDED CULVERT ON US 220 AT TROUBLESOME CREEK TRIBUTARY 120° SKEW

REVISIONS								SHEET NO.
NO.	BY:	DATE:	NO.	BY:	DATE:			C-6
1			3					TOTAL SHEETS
2			4					8

NORTH CAROLINA PROFESSIONAL SEAL 12274 ENGINEER OMAR R. AZIZI 10/31/11

NORTH CAROLINA PROFESSIONAL SEAL 022516 ENGINEER EMILY E. MURRAY 10/31/11

DRAWN BY : PEGGY PARISI DATE : 6-2-11
CHECKED BY : B.N. BARODAWALA DATE : 8-29-11

31-OCT-2011 07:42
R:\TIPProjects-R\R2413c\Structures\FinalPlans\Str.#9\R2413C_sd_CU_09.dgn
taverette

STR. #9

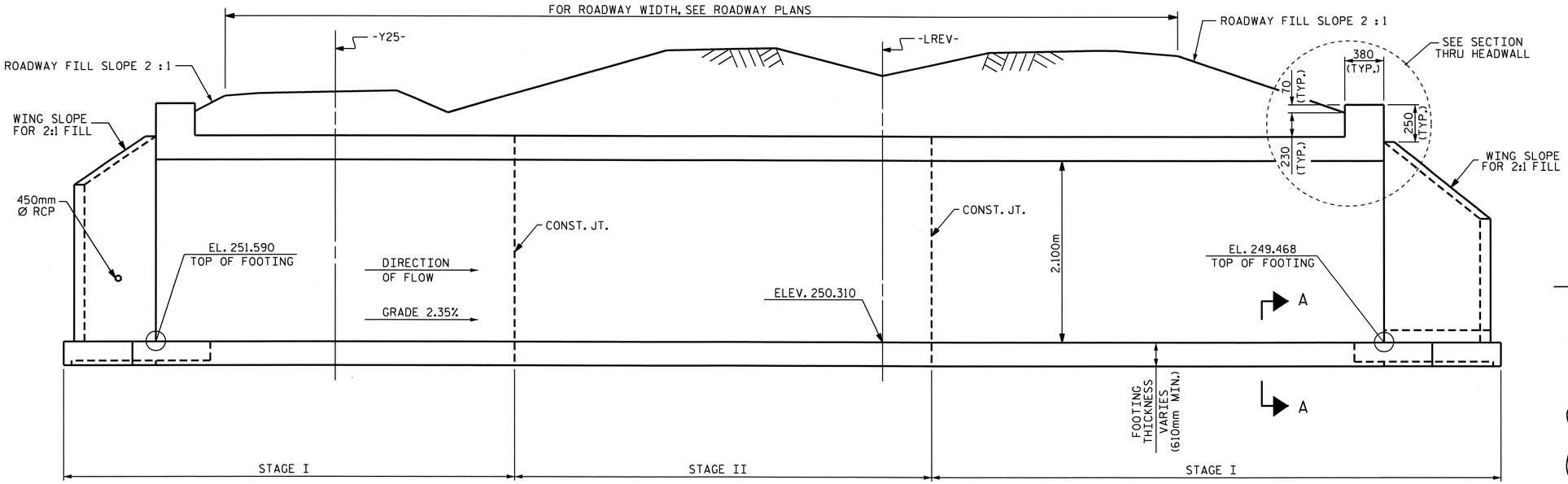

CULVERT SECTION NORMAL TO ROADWAY

NOTE : SEE SHEET 3 OF 3 FOR SECTION A-A

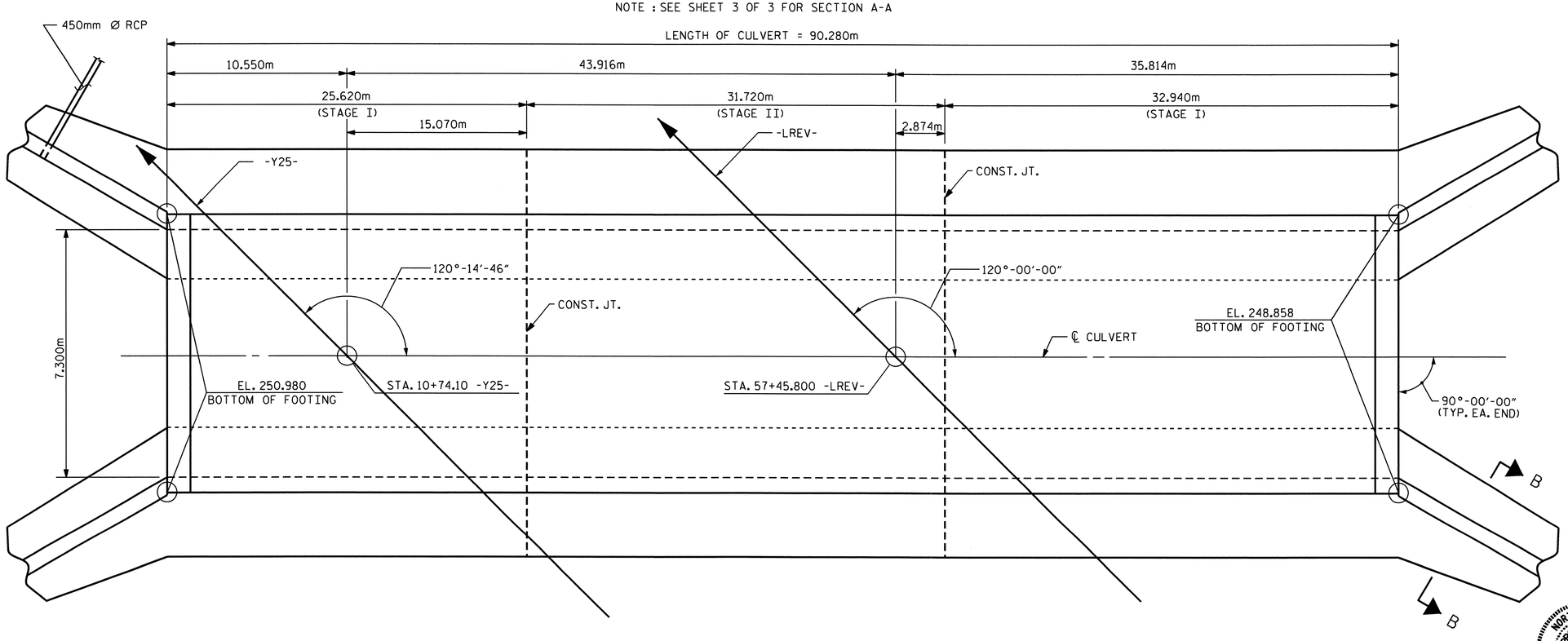

LENGTH FOR PRECAST THREE-SIDED CULVERT

BAR TYPE

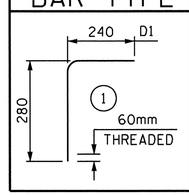

BAR SCHEDULE

FOR ONE HEADWALL
2 REQUIRED

BAR	NO.	SIZE	TYPE	LENGTH	WEIGHT
D1	27	19	1	520	31
G1	2	16	STR	7600	24
S2	3	25	STR	7600	91
TOTAL				LBS.	146

DETAIL A

** APPROVED GALVANIZED CONCRETE INSERTS HAVING A MINIMUM WORKING LOAD TENSION CAPACITY OF 2.5 KIPS.

DIA. =20mm, NO. REQUIRED 54

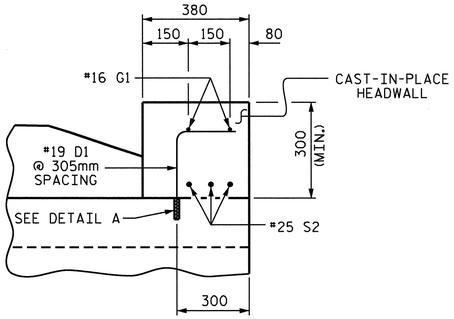

SECTION THRU HEADWALL

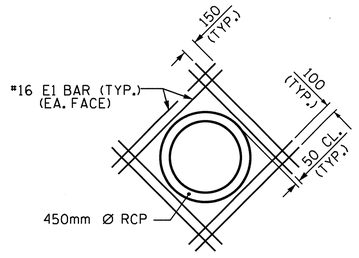

DETAIL OF REINFORCING AROUND 450mm Ø PIPE IN WING WALL

(16-#16 E1 REINFORCING STEEL L=1.200m)

PROJECT NO. R-2413C

GUILFORD-ROCKINGHAM COUNTY

STATION: 57+45.800 -LREV-

SHEET 2 OF 3

STATE OF NORTH CAROLINA
DEPARTMENT OF TRANSPORTATION
RALEIGH

PRECAST REINFORCED CONCRETE THREE-SIDED CULVERT

120° SKEW

NORTH CAROLINA PROFESSIONAL SEAL 022516 ENGINEER EMILY E. MURRAY
10/28/11

REVISIONS						SHEET NO.
NO.	BY:	DATE:	NO.	BY:	DATE:	C-7
1			3			TOTAL SHEETS
2			4			8

ASSEMBLED BY : PEGGY PARISI DATE : 8-26-11
CHECKED BY : B.N. BARODAWALA DATE : 8-29-11

13-SEP-2011 10:47
W:\Structures\Final Plans\Str.#9\R2413C_sd_CU_09.dgn
bbarodawala

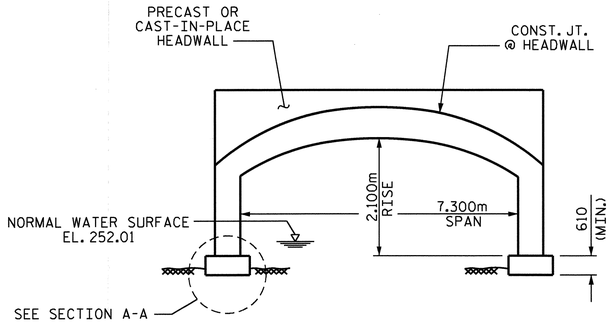

ARCH ALTERNATIVE

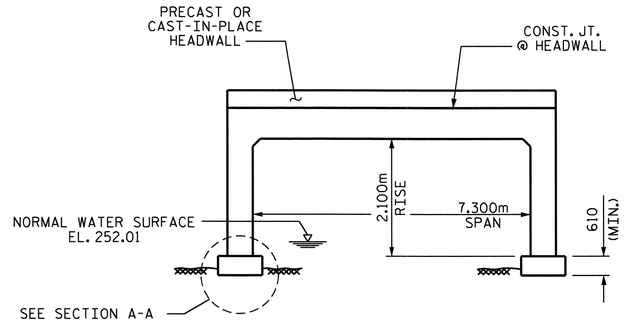

FLAT TOPPED ALTERNATIVE

RIGHT ANGLE SECTION OF PRECAST CONCRETE THREE-SIDED CULVERT

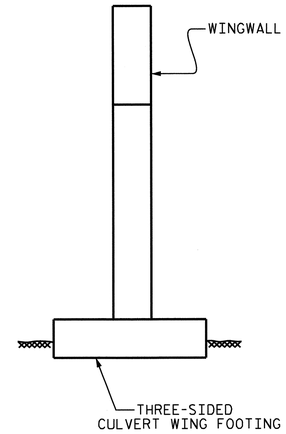

SECTION B-B

CURTAIN WALL NOT REQUIRED WHEN FOOTINGS ARE KEYED INTO ROCK

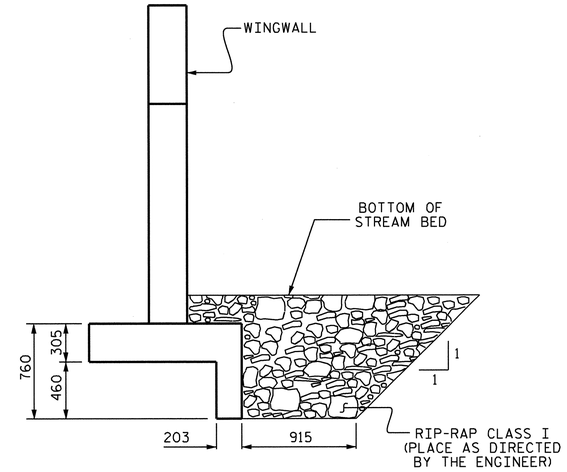

SECTION B-B

WHEN FOOTINGS CANNOT BE KEYED INTO ROCK

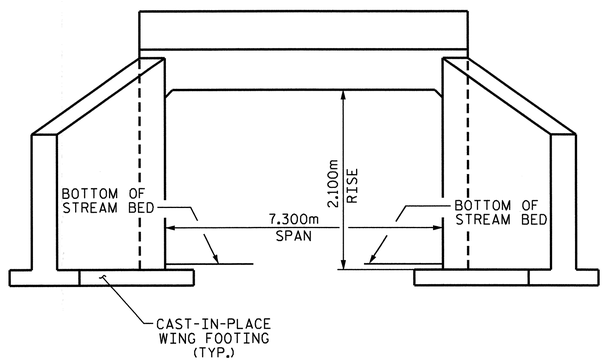

END ELEVATION

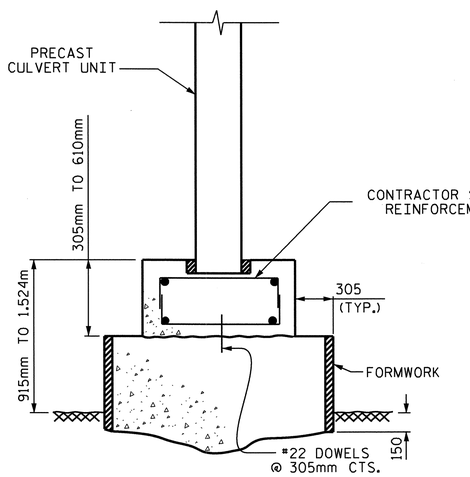

SECTION A-A

OPTION 1
SUB-FTG TO BE USED WHEN FTG. CANNOT BE KEYED INTO ROCK

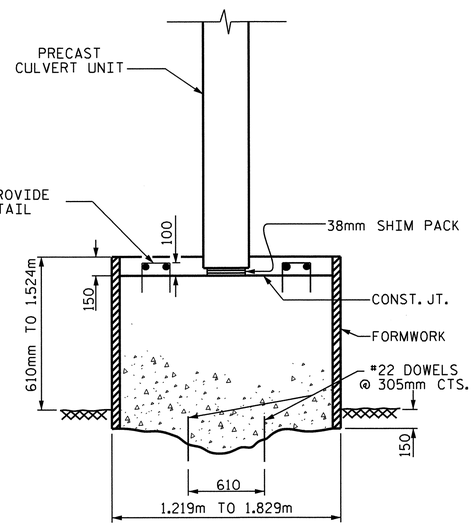

SECTION A-A

OPTION 2
MONOLITHIC SUB-FTG. AND FTG. TO BE USED WHEN FTG. CANNOT BE KEYED INTO ROCK

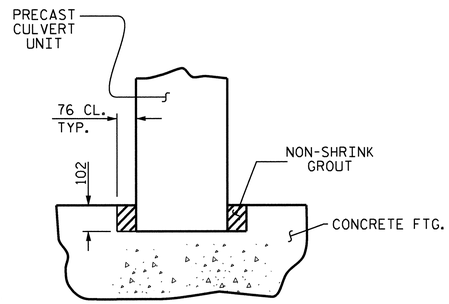

KEYWAY DETAIL

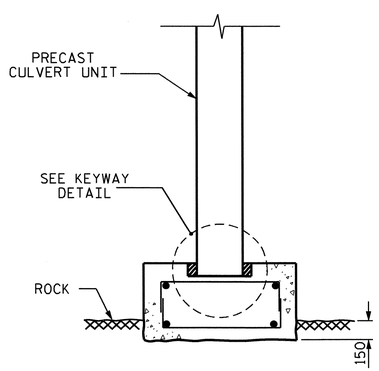

SECTION A-A

FTG. KEYED INTO ROCK

PROJECT NO. R-2413C

GUILFORD-ROCKINGHAM COUNTY

STATION: 57+45.800 -LREV-

SHEET 3 OF 3

STATE OF NORTH CAROLINA
DEPARTMENT OF TRANSPORTATION
RALEIGH

PRECAST REINFORCED CONCRETE THREE-SIDED CULVERT

120° SKEW

NORTH CAROLINA PROFESSIONAL SEAL 022516 ENGINEER EMILY E. MURRAY
6/21/11

REVISIONS						SHEET NO.
NO.	BY:	DATE:	NO.	BY:	DATE:	C-8
1			3			TOTAL SHEETS
2			4			8

ASSEMBLED BY : PEGGY PARISI DATE : 6-22-11
CHECKED BY : B.N. BARODAWALA DATE : 6-29-11

31-OCT-2011 14:28
R:\TIPProjects-R\R2413c\Structures\FinalPlans\Str.#9\R2413C_sd_CU_09.dgn
taverette

STR. #9

GEOTECHNICAL ENGINEER	ENGINEER
NORTH CAROLINA PROFESSIONAL SEAL 038176 ENGINEER SHIHAI ZHANG 9-1-2011	
SIGNATURE DATE	SIGNATURE DATE

METRIC

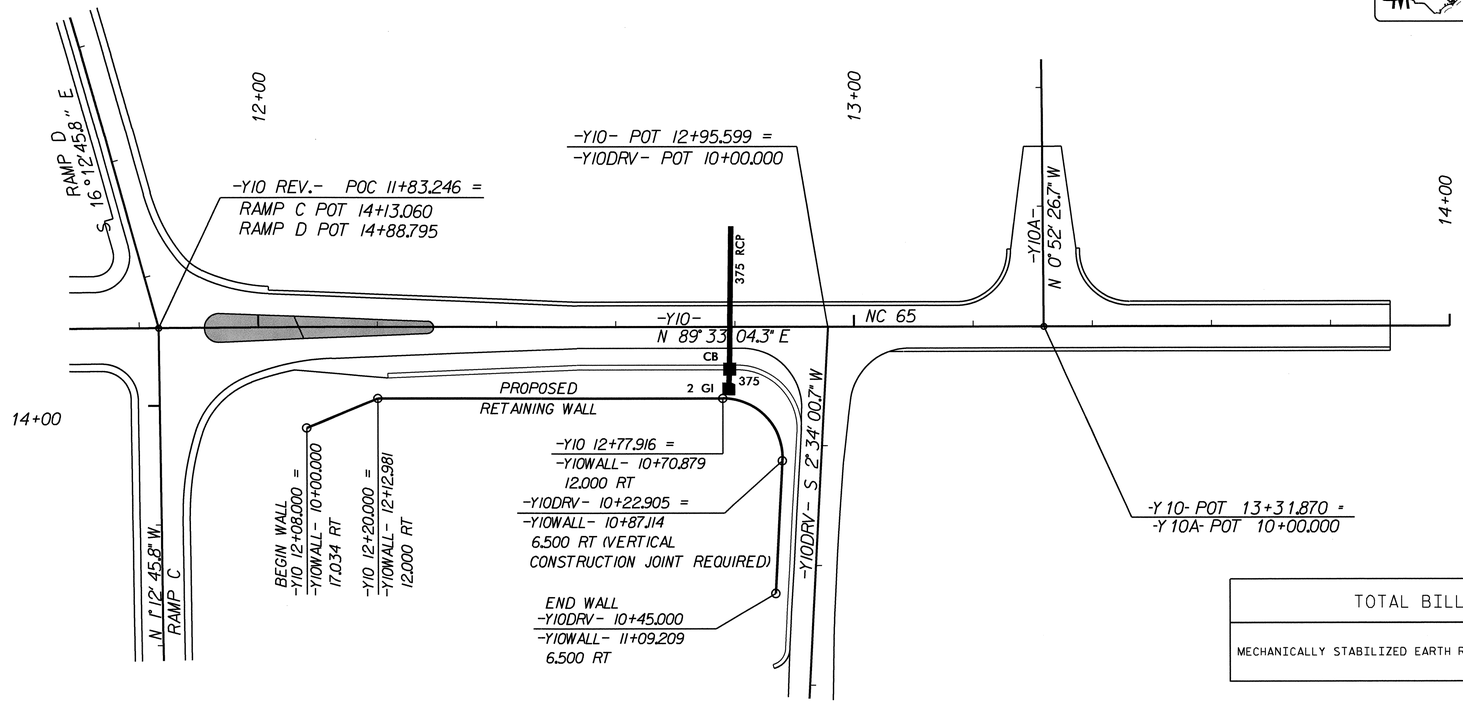

(THE WALL ENVELOPE DOES NOT ACCURATELY DEPICT THE ACTUAL FACE OF THE WALL.)

TOTAL BILL OF MATERIAL	
MECHANICALLY STABILIZED EARTH RETAINING WALLS	230 SQUARE METERS (2476 SQ. FT)

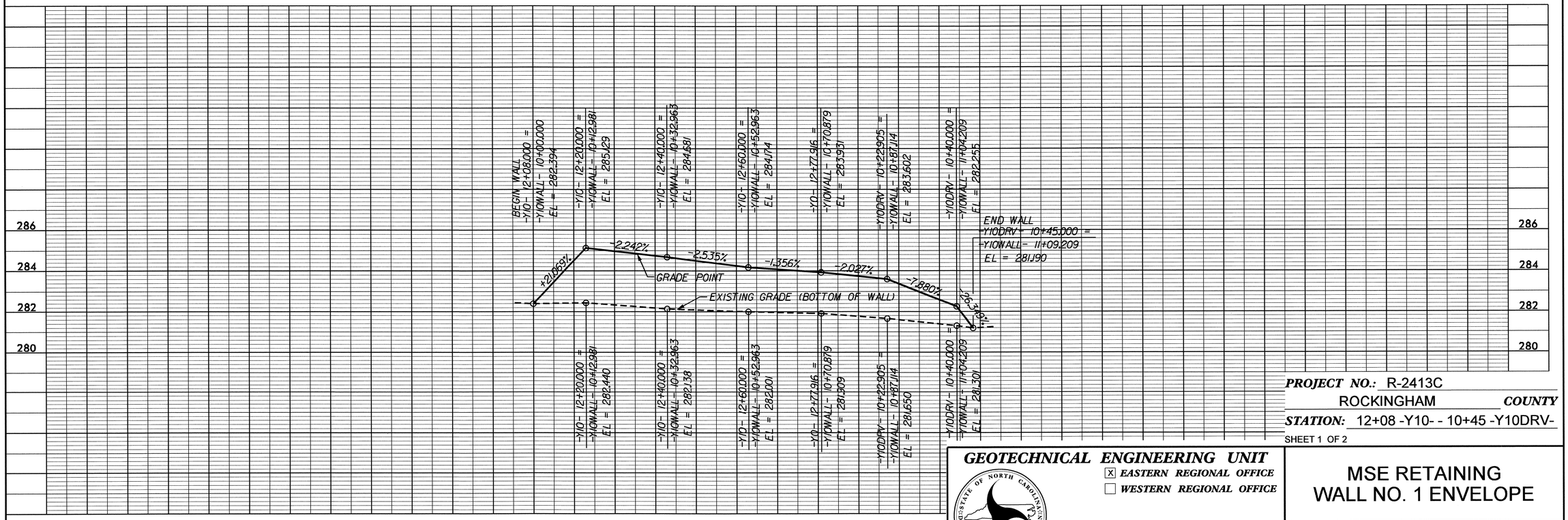

PROJECT NO.:	R-2413C
	ROCKINGHAM COUNTY
STATION:	12+08 -Y10- - 10+45 -Y10DRV-

SHEET 1 OF 2

PREPARED BY: S. ZHANG	DATE: 08/2011
REVIEWED BY: J. BATTS	DATE: 08/2011

GEOTECHNICAL ENGINEERING UNIT

[X] EASTERN REGIONAL OFFICE
[ ] WESTERN REGIONAL OFFICE

STATE OF NORTH CAROLINA DEPARTMENT OF TRANSPORTATION RALEIGH

MSE RETAINING WALL NO. 1 ENVELOPE

REVISIONS								SHEET NO.
NO.	BY	DATE	NO.	BY	DATE			W-1
1			3					TOTAL SHEETS
2			4					2

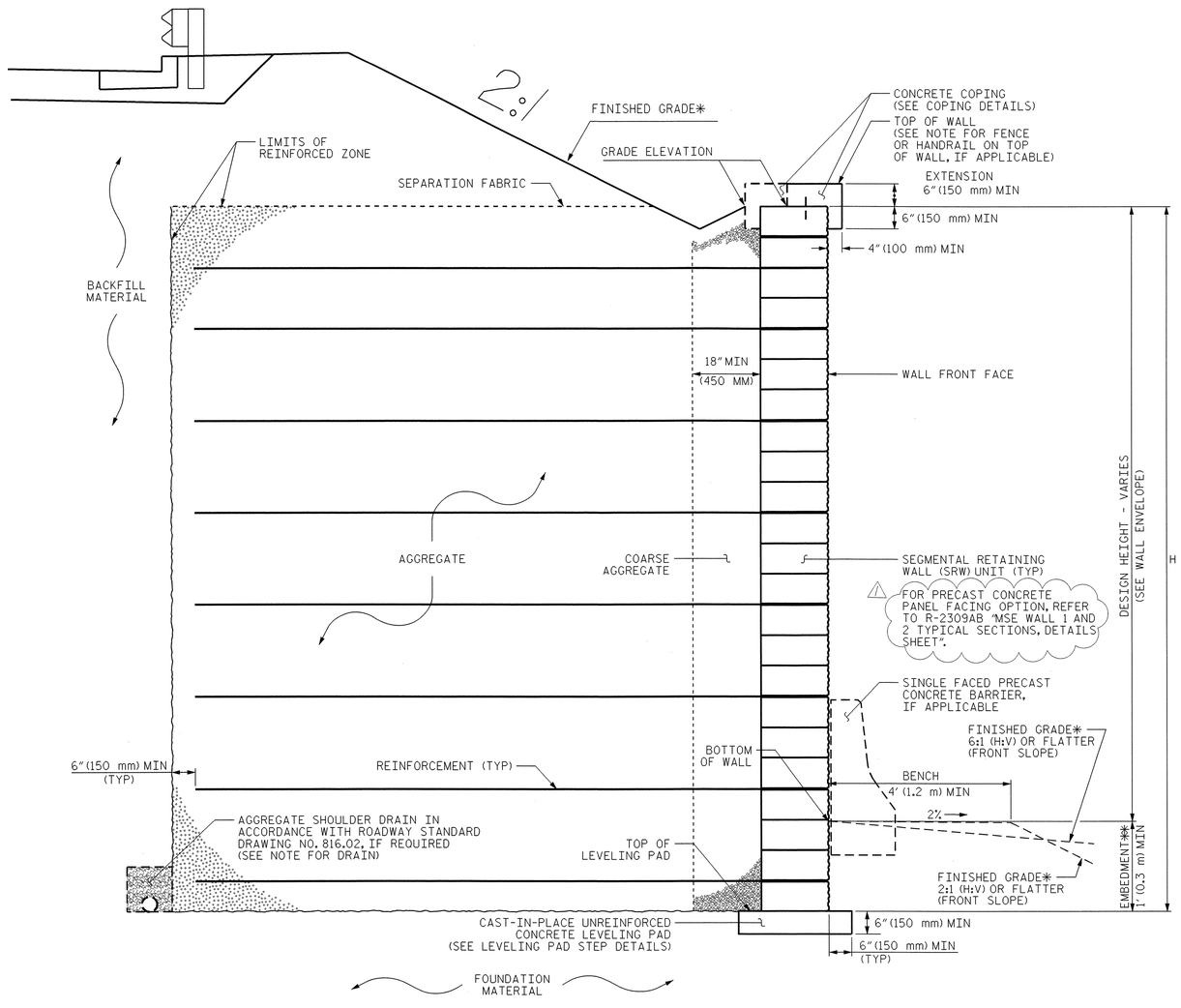

MSE WALL WITH SRW UNITS - TYPICAL SECTION (NTS)

*SEE ROADWAY PLANS FOR FINISHED GRADE AND DITCH DETAILS.
**SEE MSE RETAINING WALLS PROVISION FOR EMBEDMENT REQUIREMENTS.

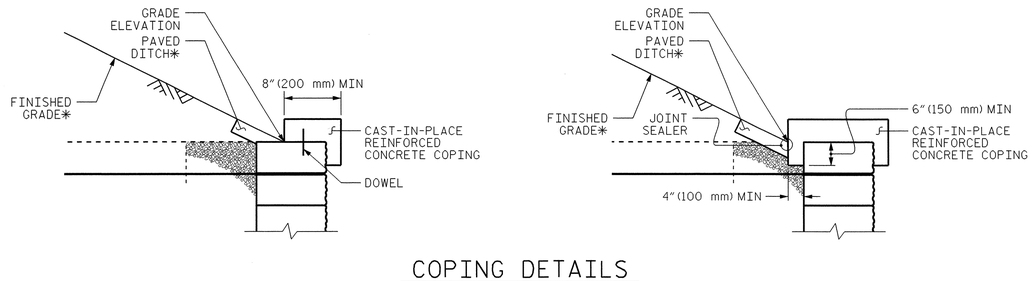

COPING DETAILS

AT THE CONTRACTOR'S OPTION, CONNECT COPING TO SRW UNITS WITH DOWELS OR EXTEND COPING DOWN BACK OF SRW UNITS.
*SEE ROADWAY PLANS FOR FINISHED GRADE AND DITCH DETAILS.

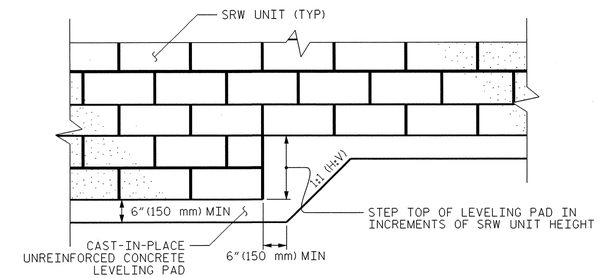

LEVELING PAD STEP DETAILS

SEGMENTAL RETAINING WALL (SRW) UNITS

NOTES:

FOR PRECAST CONCRETE PANEL FACING OPTION, SEE R-2309AB "MSE WALL 1 AND 2 TYPICAL SECTIONS, DETAILS SHEET" (WEEP HOLES NOT REQUIRED IN COPING).

FOR MECHANICALLY STABILIZED EARTH (MSE) RETAINING WALLS, SEE MECHANICALLY STABILIZED EARTH RETAINING WALLS PROVISION.

FOR STEEL BEAM GUARDRAIL, SEE ROADWAY PLANS AND SECTION 862 OF THE STANDARD SPECIFICATIONS.

CAST-IN-PLACE REINFORCED CONCRETE COPING IS REQUIRED FOR RETAINING WALL NO. 1.

A DRAIN IS REQUIRED FOR RETAINING WALL NO. 1.

BEFORE BEGINNING MSE WALL DESIGN FOR RETAINING WALL NO. 1, SURVEY WALL LOCATION AND SUBMIT A REVISED WALL PROFILE VIEW (WALL ENVELOPE) FOR REVIEW. DO NOT START WALL DESIGN OR CONSTRUCTION UNTIL THE REVISED WALL ENVELOPE IS ACCEPTED.

DESIGN RETAINING WALL NO. 1 FOR WALL HEIGHTS EQUAL TO THE DESIGN HEIGHT (DIFFERENCE BETWEEN GRADE ELEVATION AND BOTTOM OF WALL ELEAVATION) PLUS EMBEDMENT (DIFFERENCE BETWEEN BOTTOM OF WALL ELEVATION AND TOP OF LEVELING PAD ELEVATION).

DESIGN RETAINING WALL NO. 1 FOR THE FOLLOWING:
1) MINIMUM DESIGN LIFE = 75 YEARS
2) MINIMUM REINFORCEMENT LENGTH TO HEIGHT (H) RATIO = 0.9 (MINIMUM LENGTH 6 FT [1.8 M])
3) AGGREGATE PARAMETERS:

STANDARD SIZE NO. (IN ACCORDANCE WITH SECTION 1005 OF THE STANDARD SPECIFICATIONS)	UNIT WEIGHT (γ) PCF(kN/m³)	FRICTION ANGLE (ϕ) DEGREES	COHESION (c) PSF(kPa)
1S, 2S, 2MS AND 4S (FINE AGGREGATE)	125 (19.6)	34	0
5, 57, 57M, 6M, 67 AND 78M (COARSE AGGREGATE)	110 (17.3)	38	0

4) IN-SITU ASSUMED MATERIAL PARAMETERS:

MATERIAL TYPE	UNIT WEIGHT (γ) PCF(kN/m³)	FRICTION ANGLE (ϕ) DEGREES	COHESION (c) PSF(kPa)
BACKFILL	120 (18.8)	30	0
FOUNDATION	120 (18.8)	0	800 (38)

DESIGN RETAINING WALL NO. 1 FOR A LIVE LOAD (TRAFFIC) SURCHARGE.

EXISTING OR FUTURE OBSTRUCTIONS SUCH AS FOUNDATIONS, GUARDRAIL, FENCE OR HANDRAIL POSTS, PAVEMENTS, PIPES, INLETS OR UTILITIES WILL INTERFERE WITH REINFORCEMENT FOR RETAINING WALL NO. 1.

DO NOT PLACE LEVELING PAD CONCRETE, AGGREGATE OR REINFORCEMENT FOR RETAINING WALL NO. 1 UNTIL EXCAVATION DIMENSIONS AND FOUNDATION MATERIAL ARE APPROVED.

A VERTICAL CONSTRUCTION JOINT (INCLUDING FACING AND COPING) IS REQUIRED AT -Y10DRV- 10+22.905 (-Y10WALL- 10+70.879). AT THE LOCATION OF R/W LINE, SOIL REINFORCEMENT FOR WALL ON EITHER SIDE OF THIS JOINT SHALL NOT OVERLAP R/W LINE.

PREPARED BY: S. ZHANG	DATE: 08/2011
REVIEWED BY: J. BATTS	DATE: 08/2011

METRIC

GEOTECHNICAL ENGINEER	ENGINEER
NORTH CAROLINA PROFESSIONAL SEAL 038176 ENGINEER SHUAI ZHANG 1-30-2012	
SIGNATURE DATE	SIGNATURE DATE

PROJECT NO.: R-2413C
ROCKINGHAM ***COUNTY***
STATION: 12+08 -Y10- - 10+45 -Y10DRV-
SHEET 2 OF 2

GEOTECHNICAL ENGINEERING UNIT
☒ ***EASTERN REGIONAL OFFICE***
☐ ***WESTERN REGIONAL OFFICE***

STATE OF NORTH CAROLINA
DEPARTMENT OF TRANSPORTATION
RALEIGH

MSE RETAINING WALL NO. 1 TYPICAL AND NOTES

REVISIONS						SHEET NO.
NO.	BY	DATE	NO.	BY	DATE	W-2
1	SZ	01/2012	3			TOTAL SHEETS
2			4			2

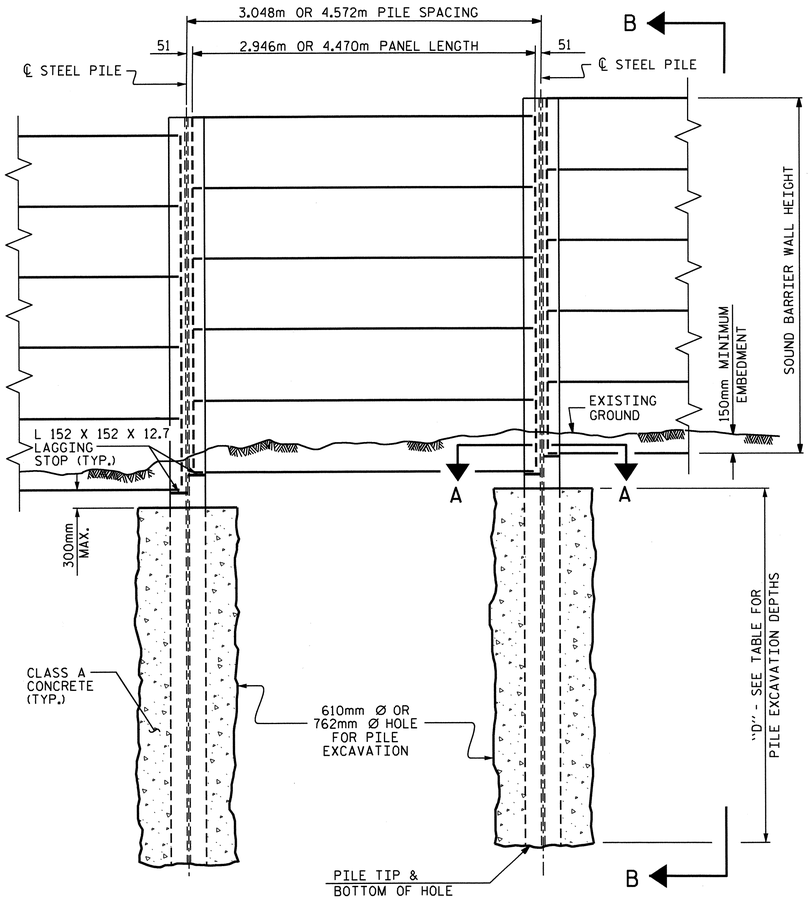

ELEVATION

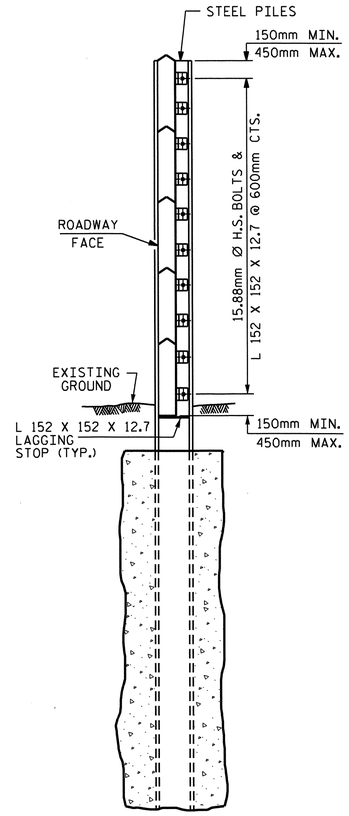

SECTION B-B

PILE EXCAVATION

WALL STATIONS	WALL HEIGHT (m)	DEPTH "D" FOR 3.048m PILE SPACING		DEPTH "D" FOR 4.572m PILE SPACING		DEPTH "D" FOR 11.000m PILE SPACING
		610mm Ø SHAFT	762mm Ø SHAFT	610mm Ø SHAFT	762mm Ø SHAFT	762mm Ø SHAFT
10+00 TO 10+40	2.6 - 3.8	6.59	6.25	7.20	6.86	
10+40 TO 10+60	3.4 - 3.8	4.67	4.49	5.06	4.85	
10+60 TO 10+80	3.7 - 4.0	4.61	4.30	5.25	4.88	
10+80 TO 11+40	4.0 - 4.1	6.41	6.13	7.02	6.68	7.87
11+40 TO 11+60	3.9 -4.27	5.74	5.46	6.28	5.98	
11+60 TO 12+15	4.2 - 4.27	4.39	4.09	5.00	4.67	
12+15 TO 13+20	4.3 - 4.7	4.61	4.30	5.25	4.88	
13+20 TO 13+80	4.3 - 4.7	4.24	3.94	4.91	4.55	
13+80 TO 15+00	4.3 - 4.7	4.06	3.75	4.67	4.30	
15+00 TO 15+55	4.3 - 4.6	4.12	3.82	4.76	4.39	
15+55 TO 17+60	3.8 - 4.27	3.85	3.54	4.49	4.12	
17+60 TO 18+04.762	3.3 - 3.8	3.66	3.39	4.24	3.91	

NOTES

FOR SOUND BARRIER WALL, SEE SPECIAL PROVISIONS.

CONSTRUCT SOUND BARRIER WALL TO LINES AND GRADES SHOWN ON THE ROADWAY PLANS.

PROVIDE PANELS WITH A FLAT BOTTOM.

USE STEEL PILES, ANGLES, AND LAGGING STOPS MEETING THE REQUIREMENTS OF AASHTO M270, GRADE 345. GALVANIZE ALL STEEL COMPONENTS INCLUDING PILES, ANGLES, LAGGING STOPS, BOLTS, NUTS, AND WASHERS IN ACCORDANCE WITH SECTION 1076 OF THE STANDARD SPECIFICATIONS. REPAIR ANY DAMAGED GALVANIZATION IN ACCORDANCE WITH ARTICLE 1076-6 OF THE STANDARD SPECIFICATIONS.

VERIFY THE LOCATION OF UNDERGROUND UTILITIES BEFORE DRILLING HOLES TO ENSURE SUFFICIENT CLEARANCE IS AVAILABLE.

AT THE CONTRACTOR'S OPTION, USE AN APPROVED NON-SHRINK NON-METALLIC GROUT BETWEEN THE FLANGES OF THE STEEL PILES TO SUPPORT THE BOTTOM PANEL IN LIEU OF LAGGING STOPS.

ADJUST PILE EXCAVATION ELEVATIONS TO MAINTAIN 150mm MINIMUM EMBEDMENT OF THE BOTTOM PANEL.

USE CLASS AA AND CLASS A CONCRETE FOR PANELS AND PILE EXCAVATION BACKFILL, RESPECTIVELY, IN ACCORDANCE WITH ARTICLE 1000-4 OF THE STANDARD SPECIFICATIONS.

PROVIDE PLATES AND ANGLES TO SECURE PANELS 150mm LONG AS MEASURED ALONG THE STEEL PILE.

AT THE CONTRACTOR'S OPTION, USE EITHER 'W' OR 'HP' PILES THAT SATISFY THE MINIMUM PILE SIZE REQUIRED IN THE "EXPOSURE CATEGORY" TABLE. PILES SMALLER THAN W310 OR HP310 ARE NOT PERMITTED. AT TURNS WITH A 914mm DIAMETER HOLE FOR PILE EXCAVATION, USE ONLY W310 OR HP310 PILES, AS SHOWN.

AT THE CONTRACTOR'S OPTION, USE EITHER 3.048m OR 4.572m PILE SPACINGS, AND EITHER 610mm FOOT OR 762mm DIAMETER HOLES FOR PILE EXCAVATION EXCEPT FOR WALL TURNS AND SPANNING THE CULVERT. THE CONTRACTOR SHALL USE 11.000m PILE SPACING AND 762mm DIA. HOLES FOR PILE EXCAVATION TO SPAN THE CULVERT. SEE SHEET 2 OF 6 FOR DETAILS.

FOR WALL TURNS, PROVIDE HOLES FOR PILE EXCAVATION AS SHOWN ON THE PLANS. A 610mm DIAMETER HOLE FOR PILE EXCAVATION IS NOT AN OPTION. FOR 914mm DIAMETER HOLES AT TURNS, USE DEPTHS DESIGNATED FOR 762mm DIAMETER HOLES. DO NOT SPLICE STEEL PILES.

FOR SOUND BARRIER WALL STATIONS, OFFSETS, AND WALL ENVELOPE, SEE ROADWAY PLANS.

AT THE CONTRACTORS OPTION, CONCRETE PILES MAY BE USED IN LEIU OF STEEL PILES EXCEPT THAT THE TWO PILES ADJACENT TO THE CULVERT SHALL BE STEEL PILES TO SUPPORT THE 10.900m PANELS AS SHOWN ON SHEET 2 OF 6. SEE OPTIONAL SOUND BARRIER WALL DETAILS.

EXPOSURE CATEGORY B

DESIGN WIND PRESSURE =
0.958kpa (0m< H≤4.27m); 1.197kpa (4.27m< H≤8.84m)

PILE SPACING	MAXIMUM WALL HEIGHT (H)	MINIMUM W SIZE STEEL PILES	MINIMUM HP SIZE STEEL PILES
3.048m	H ≤ 8.84m	W 310 X 60 W 360 X 72	HP 310 X 79 HP 360 X 108
4.572m	H ≤ 7.62m	W 310 X 60 W 360 X 72	HP 310 X 79 HP 360 X 108
	7.62m < H ≤ 8.84m	W 310 X 74 W 360 X 72	HP 310 X 79 HP 360 X 108
11.000m			HP 360 X 108

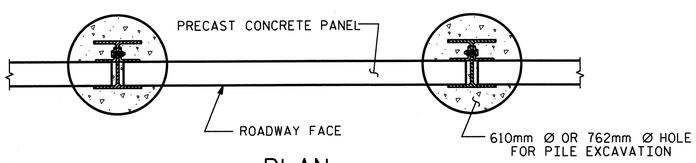

PLAN

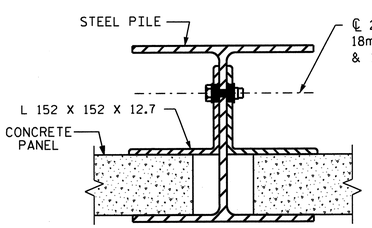

CONNECTION DETAIL

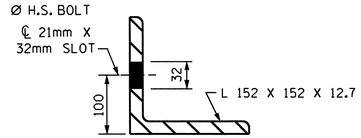

ANGLE DETAIL

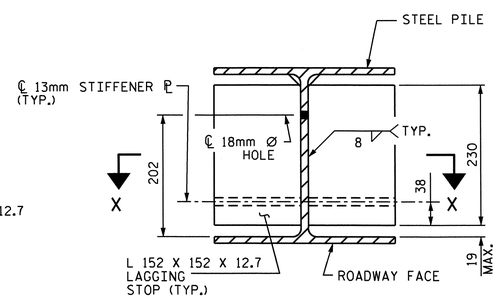

SECTION A-A

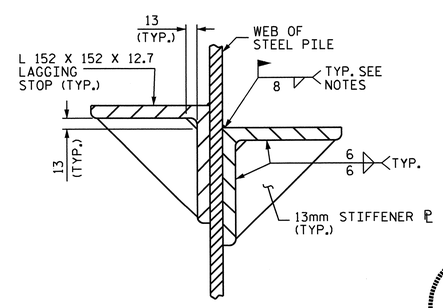

SECTION X-X

PROJECT NO. R-2413C
GUILFORD-ROCKINGHAM COUNTY
STATION: 56+58.570 -LREV-
10+00.000 -NW3-

SHEET 1 OF 6

STATE OF NORTH CAROLINA
DEPARTMENT OF TRANSPORTATION
RALEIGH

SOUND BARRIER WALL

NORTH CAROLINA PROFESSIONAL SEAL 12274 ENGINEER OMAR R. AZIZ
12/21/11

NORTH CAROLINA PROFESSIONAL SEAL 022516 ENGINEER EMILY E. MURRAY
12/21/11

REVISIONS							SHEET NO.
NO.	BY:	DATE:	NO.	BY:	DATE:		SW-1
1			3				TOTAL SHEETS
2			4				6

ASSEMBLED BY : E. E. MURRAY		DATE : 10-25-11	
CHECKED BY : T. L. AVERETTE		DATE : 10-28-11	
DRAWN BY : JAD 5/01	REV. 2/4/03	RWW/CVC	
CHECKED BY : RDR 5/01	REV. 5/7/03	RWW/JTE	
	REV. 5/1/06RR	KMM/GM	

20-DEC-2011 16:19
Z:\TIPProjects-R\R2413c\Structures\Final Plans\Str.#11\R2413C_sd_SBW_11.dgn
emurray

STR. #11

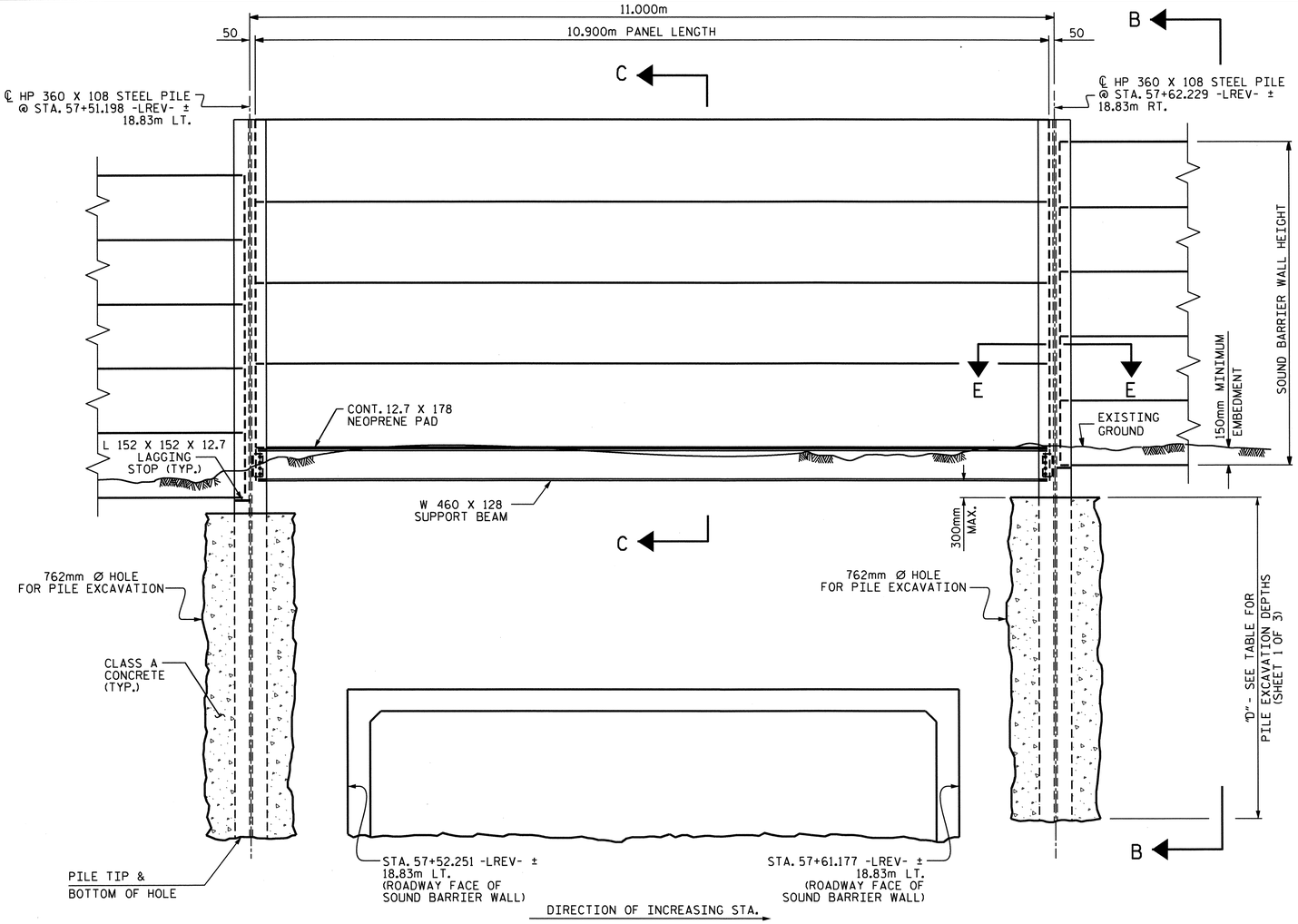

ELEVATION

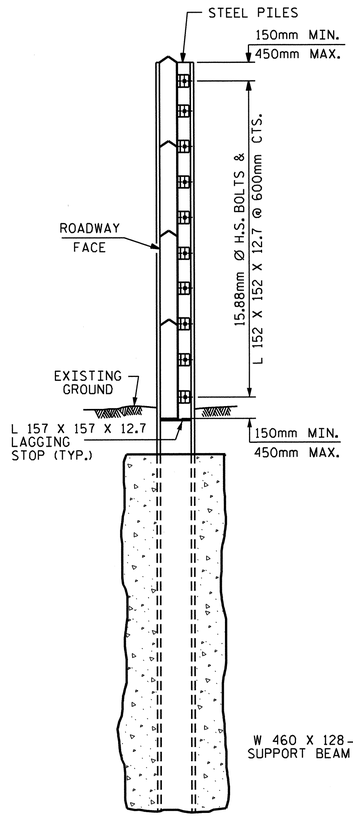

SECTION B-B

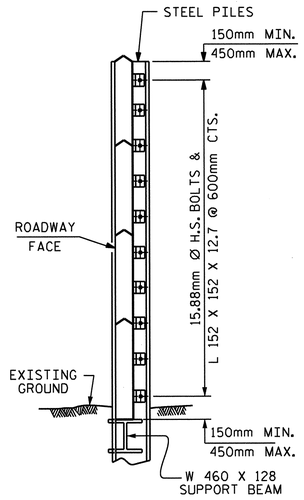

SECTION C-C

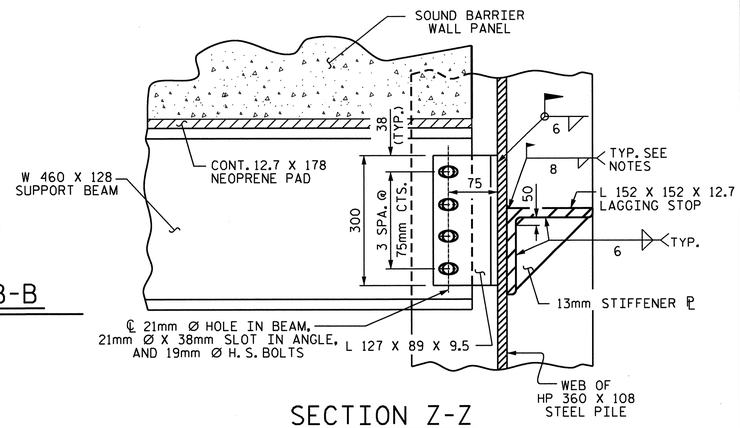

SECTION Z-Z

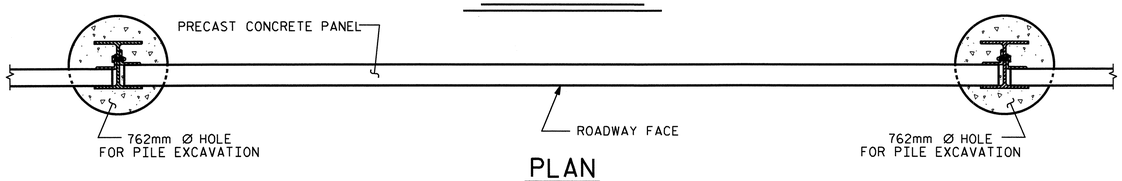

PLAN

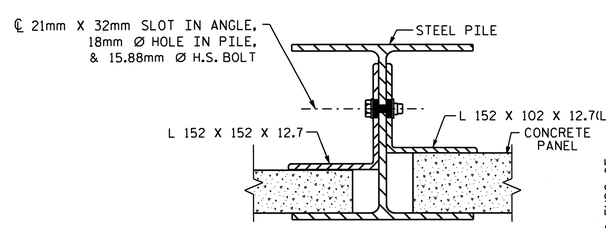

CONNECTION DETAIL

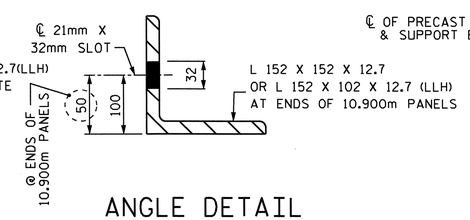

ANGLE DETAIL

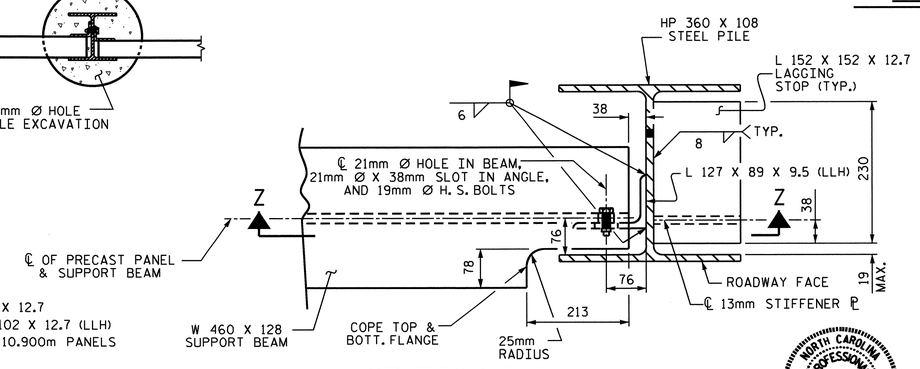

SECTION E-E

NOTE: PRECAST PANELS NOT SHOWN FOR CLARITY.

PROJECT NO. R-2413C

GUILFORD-ROCKINGHAM COUNTY

STATION: 56+58.570 -LREV-
10+00.00 -NW3-

SHEET 2 OF 6

STATE OF NORTH CAROLINA
DEPARTMENT OF TRANSPORTATION
RALEIGH

SOUND BARRIER WALL

DETAILS FOR 11.000m PILE SPACING
FROM STA. 57+51.198 -LREV- ± TO 57+62.229 -LREV- ±

NORTH CAROLINA PROFESSIONAL SEAL 022516 ENGINEER EMCY E. MURRAY
11/22/11

REVISIONS						SHEET NO. SW-2
NO.	BY:	DATE:	NO.	BY:	DATE:	TOTAL SHEETS 6
1			3			
2			4			

DRAWN BY : E. E. MURRAY DATE : 10/26/2011
CHECKED BY : _____ DATE : _____

22-NOV-2011 09:35
Z:\TIPProjects-R\R2413c\Structures\FinalPlans\Str.*11\R2413C_sd_SBW_13.dgn
emurray

STR. #11

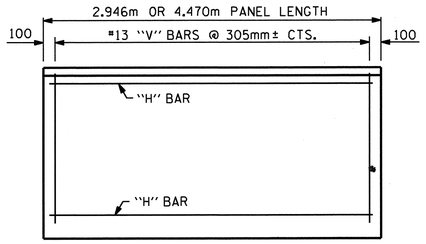

FRONT ELEVATION OF UPPER PRECAST PANELS

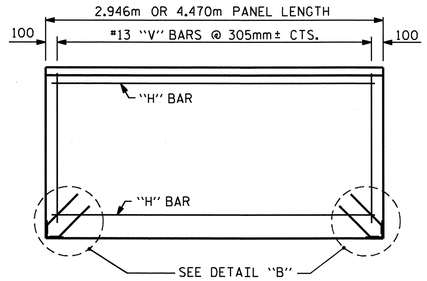

FRONT ELEVATION OF BOTTOM PRECAST PANEL

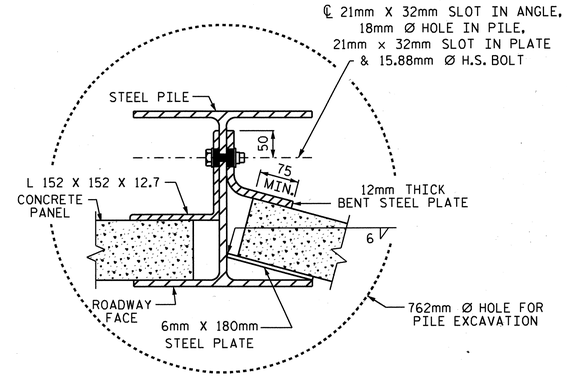

TYPICAL WALL TURN DETAIL

(USE ONLY FOR TURNS 15° OR LESS, CONCAVE TOWARD ROADWAY)

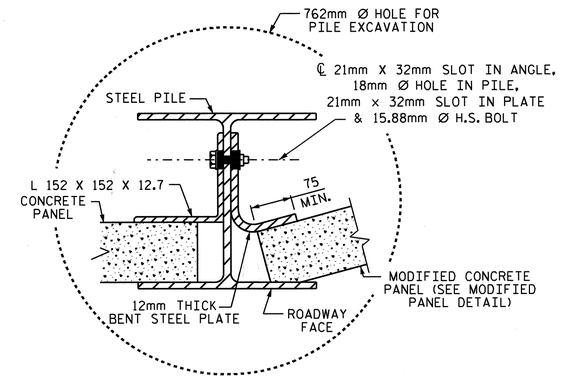

TYPICAL WALL TURN DETAIL

(USE ONLY FOR TURNS 15° OR LESS, CONVEX TOWARD ROADWAY)

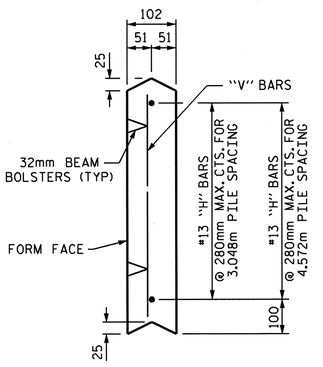

UPPER PANEL

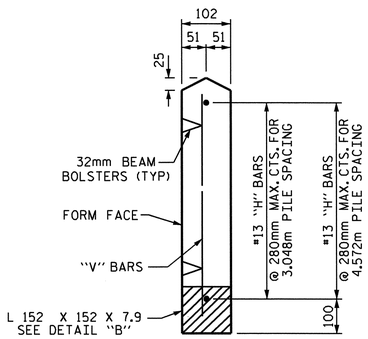

BOTTOM PANEL

SECTION THROUGH PRECAST PANELS

(FOR 2.946m AND 4.470m PANELS)

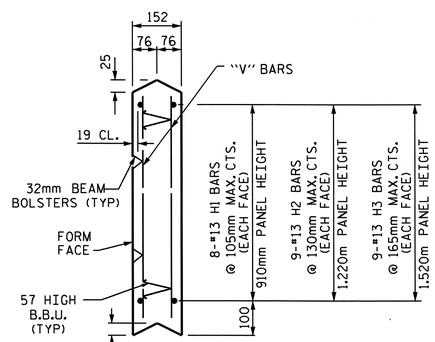

UPPER PANEL

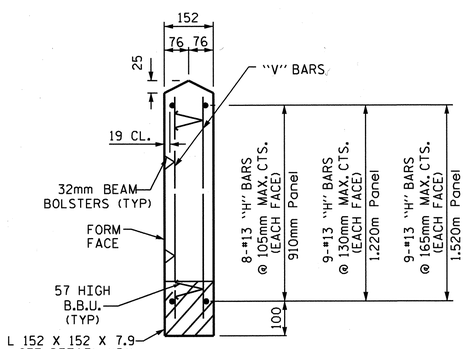

BOTTOM PANEL

SECTION THROUGH PRECAST PANELS

(FOR 10.900m PANELS)

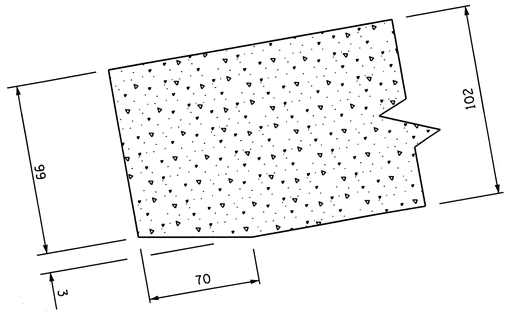

MODIFIED PANEL DETAIL

(USE ONLY FOR TURNS 15° OR LESS, CONVEX TOWARD ROADWAY)

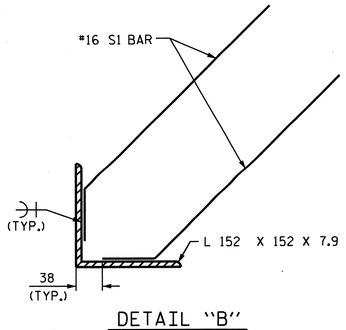

DETAIL "B"

ADDITIONAL BARS FOR ONE BOTTOM PANEL					
NO.	BAR	SIZE	TYPE	LENGTH	WEIGHT (kg)
4	S1	#16	1	460	3

BAR TYPE

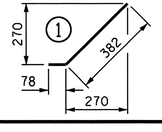

QUANTITIES FOR ONE PRECAST PANEL (FOR 3.048m PILE SPACING)													
PANEL HEIGHT	CLASS AA CONCRETE	BAR TYPES											
		HORIZONTAL						VERTICAL					
	C.M.	NO.	BAR	SIZE	TYPE	LENGTH	WEIGHT (kg)	NO.	BAR	SIZE	TYPE	LENGTH	WEIGHT (kg)
610	0.19	3	H1	#13	STR	2840	8	10	V1	#13	STR	500	5
910	0.28	4	H2	#13	STR	2840	11	10	V2	#13	STR	800	8
1220	0.37	5	H3	#13	STR	2840	14	10	V3	#13	STR	1120	11

QUANTITIES FOR ONE PRECAST PANEL (FOR 4.572m PILE SPACING)													
PANEL HEIGHT	CLASS AA CONCRETE	BAR TYPES											
		HORIZONTAL						VERTICAL					
	C.M.	NO.	BAR	SIZE	TYPE	LENGTH	WEIGHT (kg)	NO.	BAR	SIZE	TYPE	LENGTH	WEIGHT (kg)
910	0.42	4	H1	#13	STR	4360	17	15	V1	#13	STR	800	12
1220	0.56	5	H2	#13	STR	4360	22	15	V2	#13	STR	1120	17
1520	0.70	6	H3	#13	STR	4360	26	15	V3	#13	STR	1420	21
1830	0.84	7	H4	#13	STR	4360	30	15	V4	#13	STR	1720	26

QUANTITIES FOR ONE PRECAST PANEL (FOR 11.000m PILE SPACING)													
PANEL HEIGHT	CLASS AA CONCRETE	BAR TYPES											
		HORIZONTAL						VERTICAL					
	C.M.	NO.	BAR	SIZE	TYPE	LENGTH	WEIGHT (kg)	NO.	BAR	SIZE	TYPE	LENGTH	WEIGHT (kg)
910	1.51	16	H1	#13	STR	10800	172	72	V1	#13	STR	800	57
1220	2.02	18	H2	#13	STR	10800	193	72	V2	#13	STR	1120	80
1520	2.52	18	H3	#13	STR	10800	193	72	V3	#13	STR	1420	102

BILL OF MATERIAL	
SOUND BARRIER WALL	3,328.6 SQ. M.
	(35,830 SQ FT)
QUANTITIES PROVIDED ARE APPROXIMATE AND ARE FOR BID PURPOSES ONLY.	

PROJECT NO. R-2413C

GUILFORD-ROCKINGHAM COUNTY

STATION: 56+58.570 -LREV-
10+00.000 -NW3-

SHEET 3 OF 6

STATE OF NORTH CAROLINA
DEPARTMENT OF TRANSPORTATION
RALEIGH

SOUND BARRIER WALL DETAILS

NORTH CAROLINA PROFESSIONAL SEAL 022516 ENGINEER E.M.Y. & MURRAY
11/22/11

ASSEMBLED BY : E.E.MURRAY DATE : 10-25-11
CHECKED BY : T.L. AVERETTE DATE : 10-28-11

DRAWN BY : JAD 5/01
CHECKED BY : RDR 5/01

REV. 7/10/01 RWW/LES
REV. 5/7/03 RWW/JTE
REV. 5/1/06R KMM/GM

REVISIONS						SHEET NO.
NO.	BY:	DATE:	NO.	BY:	DATE:	SW-3
1			3			TOTAL SHEETS
2			4			6

STR. #11

22-NOV-2011 09:35
Z:\TIPProjects-R\R2413c\Structures\Final Plans\Str.#11\R2413C_sd_SBW_13.dgn
emurray

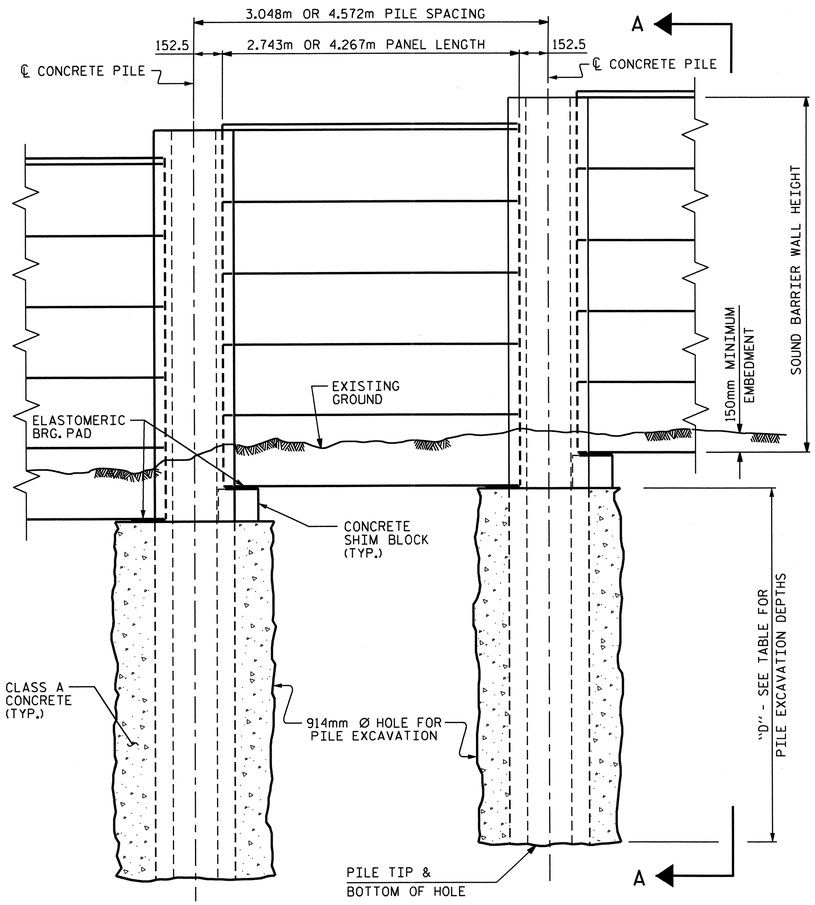

ELEVATION

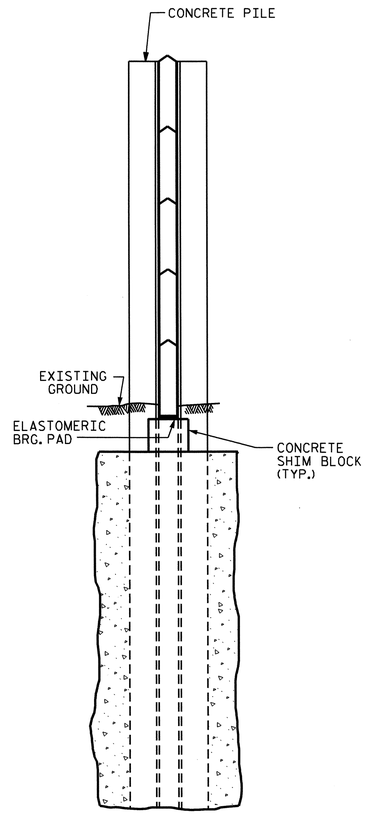

SECTION A-A

PILE EXCAVATION			
WALL STATIONS	WALL HEIGHT (m)	DEPTH "D" FOR 3.048m PILE SPACING	DEPTH "D" FOR 4.572m PILE SPACING
		914mm Ø SHAFT	914mm Ø SHAFT
10+00 TO 10+40	2.6 - 3.8	5.95	6.59
10+40 TO 10+60	3.4 - 3.8	3.78	4.67
10+60 TO 10+80	3.7 - 4.0	4.06	4.61
* 10+80 TO 11+40	4.0 - 4.1	5.89	6.41
11+40 TO 11+60	3.9 -4.27	5.22	5.74
11+60 TO 12+15	4.2 - 4.27	3.88	4.39
12+15 TO 13+20	4.3 - 4.7	4.06	4.61
13+20 TO 13+80	4.3 - 4.7	3.72	4.24
13+80 TO 15+00	4.3 - 4.7	3.54	4.06
15+00 TO 15+55	4.3 - 4.6	3.57	4.12
15+55 TO 17+60	3.8 - 4.27	3.33	3.85
17+60 TO 18+04.762	3.3 - 3.8	3.17	3.66

* PILES ADJACENT TO CULVERT SHALL BE STEEL AND HAVE A 762mm Ø PILE EXCAVATION HOLE TO A DEPTH OF 7.87m. FOR STEEL PILE AND 10.900m PANEL DETAILS, SEE SHEETS 2 & 3 OF 6.

NOTES

FOR SOUND BARRIER WALL, SEE SPECIAL PROVISIONS.

CONSTRUCT SOUND BARRIER WALL TO LINES AND GRADES SHOWN ON THE ROADWAY PLANS.

PROVIDE PANELS WITH A FLAT BOTTOM.

VERIFY THE LOCATION OF UNDERGROUND UTILITIES BEFORE DRILLING HOLES TO ENSURE SUFFICIENT CLEARANCE IS AVAILABLE.

ADJUST PILE EXCAVATION ELEVATIONS TO MAINTAIN 150mm MINIMUM EMBEDMENT OF THE BOTTOM PANEL.

USE CLASS AA FOR PANELS AND CLASS A FOR CONCRETE PILE EXCAVATION BACKFILL, IN ACCORDANCE WITH ARTICLE 1000-4 OF THE STANDARD SPECIFICATIONS.

AT THE CONTRACTOR'S OPTION, USE EITHER 3.048m OR 4.572m PILE SPACINGS.

FOR SOUND BARRIER WALL STATIONS, OFFSETS, AND WALL ENVELOPE, SEE ROADWAY PLANS.

PLACE 25mm Ø BACKER RODS FULL HEIGHT ON EACH SIDE OF THE PRECAST PANELS. SET AND SEAL THE BACKER ROD IN PLACE WITH SEALANT THAT CONFORMS WITH ARTICLE 1028-4 OF THE STANDARD SPECIFICATIONS.

FOR SUBMITTAL OF WORKING DRAWINGS, SEE SPECIAL PROVISIONS.

FOR FALSEWORK AND FORMWORK, SEE SPECIAL PROVISIONS.

STEEL PILES SHALL BE USED ADJACENT TO CULVERT TO SUPPORT THE 10.900m PANELS. SEE SHEETS 1 THROUGH 3 OF 6 FOR DETAILS AND APPLICABLE NOTES.

EXPOSURE CATEGORY B - PILE REINF. STEEL

DESIGN WIND PRESSURE =
0.958kpa (0m < H ≤ 4.27m); 1.197kpa (4.27m < H ≤ 7.620m)

PILE TYPE I			
PILE SPACING	MAXIMUM WALL HEIGHT (H)	VERTICAL REINFORCING STEEL	TIES
3.048m	H ≤ 7.62m	4 - #19 EA. FACE	#10 @ 405mm CTS.
4.572m	H ≤ 7.62m	4 - #22 EA. FACE	#10 @ 405mm CTS.

PILE TYPE II			
PILE SPACING	MAXIMUM WALL HEIGHT (H)	VERTICAL REINFORCING STEEL	TIES
3.048m	H ≤ 7.62m	4 - #19 EA. FACE	#10 @ 405mm CTS.
4.572m	H ≤ 7.62m	4 - #19 EA. FACE	#10 @ 405mm CTS.

PILE TYPE III			
PILE SPACING	MAXIMUM WALL HEIGHT (H)	VERTICAL REINFORCING STEEL	TIES
3.048m	H ≤ 7.62m	3 - #22 SHORT FACE 4 - #22 LONG FACE	#10 @ 405mm CTS.
4.572m	H ≤ 7.62m	3 - #25 SHORT FACE 4 - #25 LONG FACE	#10 @ 405mm CTS.

PILE TYPE III ALT.			
PILE SPACING	MAXIMUM WALL HEIGHT (H)	VERTICAL REINFORCING STEEL	TIES
3.048m	H ≤ 7.62m	3 - #22 SHORT FACE 4 - #22 LONG FACE	#10 @ 405mm CTS.
4.572m	H ≤ 7.62m	3 - #25 SHORT FACE 4 - #25 LONG FACE	#10 @ 405mm CTS.

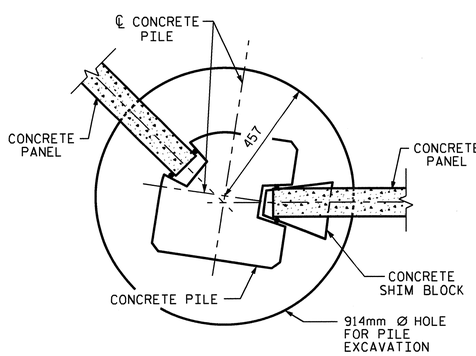

15° TO 45° TURNS
(PILE TYPE III)

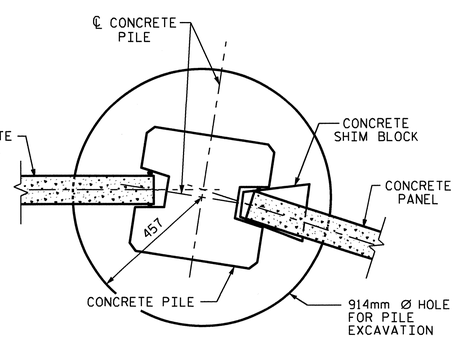

0° TO 15° TURNS
(PILE TYPE I)

TYPICAL WALL TURN DETAILS

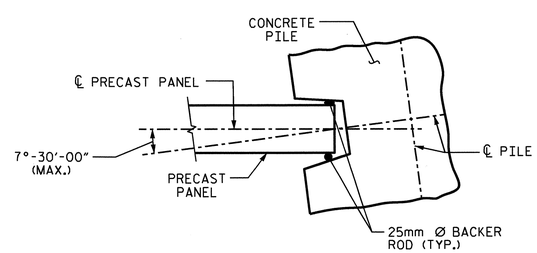

PILE ROTATION LIMIT FOR WALL TURN

(ROTATE THE CONCRETE PILE ±7°-30'-00" TO ACCOMODATE WALL TURN.)

BILL OF MATERIAL	
SOUND BARRIER WALL	3,328.6 SQ. M.
QUANTITIES PROVIDED ARE APPROXIMATE AND ARE FOR BID PURPOSES ONLY.	

PROJECT NO. R-2413C
GUILFORD-ROCKINGHAM COUNTY
STATION: 56+58.570 -LREV-
10+00.000 -NW3-

SHEET 4 OF 6

STATE OF NORTH CAROLINA
DEPARTMENT OF TRANSPORTATION
RALEIGH

OPTIONAL
SOUND BARRIER WALL

NORTH CAROLINA PROFESSIONAL SEAL 12274 ENGINEER OMAR R. AZIZI
12/21/11

NORTH CAROLINA PROFESSIONAL SEAL 022546 ENGINEER EMILY E. MURRAY
12/20/11

REVISIONS						SHEET NO.
NO.	BY:	DATE:	NO.	BY:	DATE:	SW-4
1			3			TOTAL SHEETS
2			4			6

ASSEMBLED BY : E. E. MURRAY DATE : 10-27-11
CHECKED BY : T. L. AVERETTE DATE : 10-27-11
DRAWN BY : MAA 6/11
CHECKED BY : GM 6/11
ADDED 10/1/11

20-DEC-2011 16:18
Z:\TIPProjects-R\R2413c\Structures\FinalPlans\Str.#11\R2413C_sd_SBW_11.dgn
emurray

STR. #11

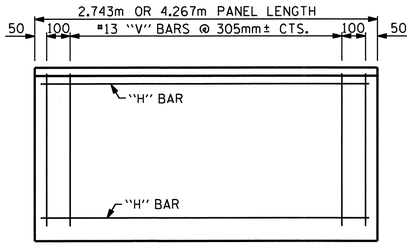

FRONT ELEVATION OF UPPER PRECAST PANELS

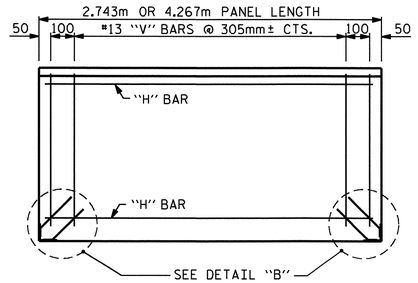

FRONT ELEVATION OF BOTTOM PRECAST PANEL

QUANTITIES FOR ONE PRECAST PANEL (FOR 3.048m PILE SPACING)													
PANEL HEIGHT	CLASS AA CONCRETE	BAR TYPES											
		HORIZONTAL						VERTICAL					
	C.M.	NO.	BAR	SIZE	TYPE	LENGTH	WEIGHT (kg)	NO.	BAR	SIZE	TYPE	LENGTH	WEIGHT (kg)
610	0.17	3	H1	#13	STR	2640	8	11	V1	#13	STR	500	5
910	0.25	4	H2	#13	STR	2640	11	11	V2	#13	STR	800	9
1220	0.34	5	H3	#13	STR	2640	13	11	V3	#13	STR	1120	12

QUANTITIES FOR ONE PRECAST PANEL (FOR 4.572m PILE SPACING)													
PANEL HEIGHT	CLASS AA CONCRETE	BAR TYPES											
		HORIZONTAL						VERTICAL					
	C.M.	NO.	BAR	SIZE	TYPE	LENGTH	WEIGHT (kg)	NO.	BAR	SIZE	TYPE	LENGTH	WEIGHT (kg)
910	0.40	4	H1	#13	STR	4160	17	16	V1	#13	STR	800	13
1220	0.53	5	H2	#13	STR	4160	21	16	V2	#13	STR	1120	18
1520	0.66	6	H3	#13	STR	4160	25	16	V3	#13	STR	1420	23
1830	0.80	7	H4	#13	STR	4160	29	16	V4	#13	STR	1720	27

ADDITIONAL BARS FOR ONE BOTTOM PANEL					
NO.	BAR	SIZE	TYPE	LENGTH	WEIGHT (kg)
4	S1	16	1	457	3

BAR TYPE

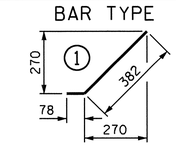

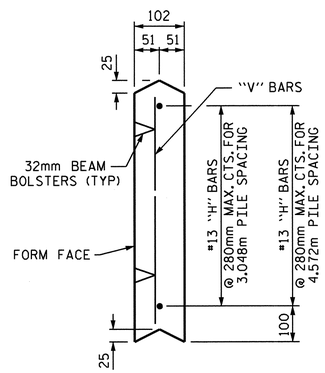

UPPER PANEL

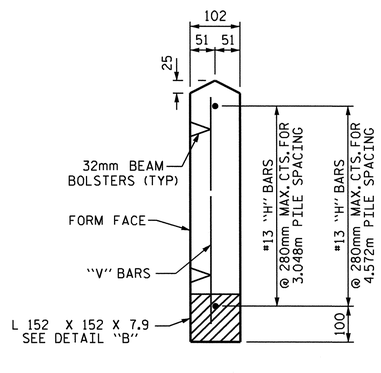

BOTTOM PANEL

SECTION THROUGH PRECAST PANELS

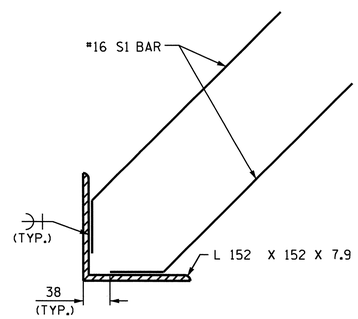

DETAIL "B"

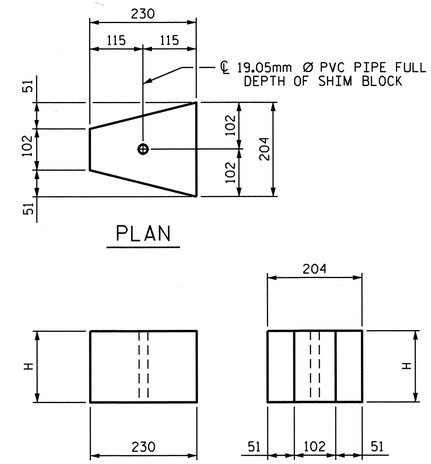

CONCRETE SHIM BLOCK

H = 75mm, 150mm OR 305mm

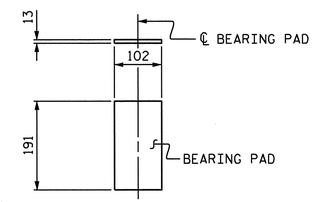

ELASTOMERIC BEARING DETAILS

ELASTOMER IN BEARINGS SHALL BE 50 DUROMETER HARDNESS.

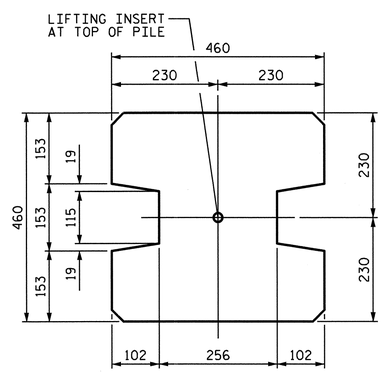

TYPE - I
(AREA = 0.181 SQ. M.)

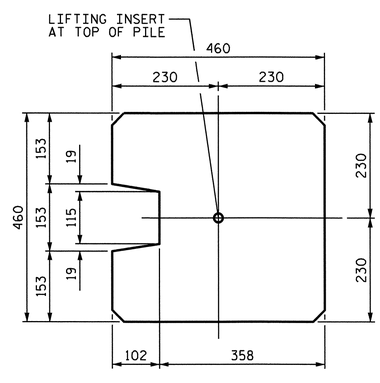

TYPE - II
(AREA = 0.194 SQ. M.)

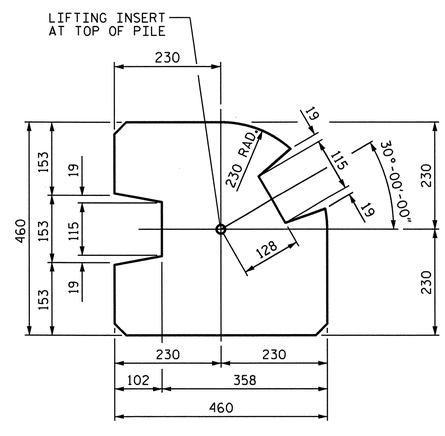

TYPE - III
(AREA = 0.170 SQ. M.)

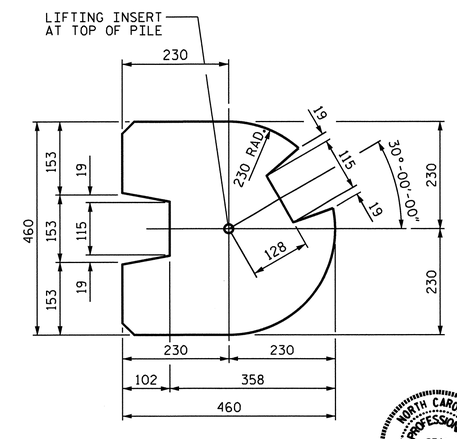

TYPE - III (ALT.)
(AREA = 0.159 SQ. M.)

PILE DETAIL

(ALL CORNERS TO BE CHAMFERED 25mm)

PROJECT NO. R-2413C
GUILFORD-ROCKINGHAM COUNTY
STATION: 56+58.570 -LREV-
10+00.000 -NW3-

SHEET 5 OF 6

STATE OF NORTH CAROLINA
DEPARTMENT OF TRANSPORTATION
RALEIGH

OPTIONAL SOUND BARRIER WALL DETAILS

NORTH CAROLINA PROFESSIONAL SEAL 022516 ENGINEER
EMMY E. MURRAY
11/22/11

ASSEMBLED BY : E. E. MURRAY	DATE : 10-27-11
CHECKED BY : T. L. AVERETTE	DATE : 10-27-11
DRAWN BY : MAA 6/11	ADDED 8/31/11
CHECKED BY : GM 6/11	

REVISIONS								SHEET NO.
NO.	BY:	DATE:	NO.	BY:	DATE:			SW-5
1			3					TOTAL SHEETS
2			4					6

STR. #11

22-NOV-2011 09:35
Z:\TIPProjects-R\R2413c\Structures\FinalPlans\Str.#11\R2413C_sd_SBW_13.dgn
emurray

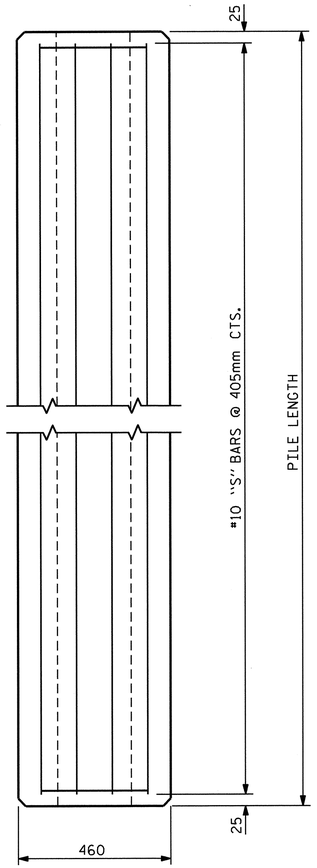

ELEVATION

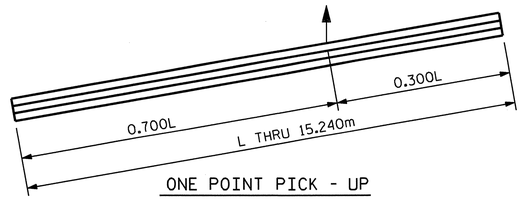

ONE POINT PICK - UP

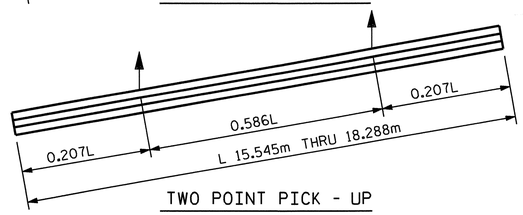

TWO POINT PICK - UP

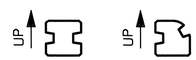

PICK - UP POINTS

NOTES

CONCRETE DESIGN DATA : f'c = 34.47 MPa

PROPOSED DEVICES FOR LIFTING PILES, RECESS DETAILS, AND PATCHING MATERIAL SHALL BE DETAILED IN SHOP DRAWINGS. AFTER ATTACHMENTS HAVE BEEN REMOVED, OPENINGS SHALL BE REPAIRED SUCH THAT THE APPEARANCE OF THE PILE IS UNIFORM.

WHERE CAST-IN-PLACE LIFTING DEVICES ARE NOT USED, PICK-UP POINTS TO BE INDICATED WITH A BLACK MARK 50mm WIDE.

THE SLIP-FORM METHOD OF CASTING PILES WILL NOT BE PERMITTED.

ALL CORNERS TO BE CHAMFERED 25mm.

QUANTITIES FOR ONE PRECAST CONCRETE PILE

LENGTH	APPROX. PILE WT. METRIC TONS	ONE PICK-UP POINT		TWO PICK-UP POINT	
		0.300L	0.700L	0.207L	0.586L
3.048m	1.42	914mm	2.134m		
4.572m	2.13	1.372m	3.200m		
6.096m	2.85	1.829m	4.267m		
7.620m	3.57	2.286m	5.334m		
9.144m	4.26	2.743m	6.401m		
10.668m	4.98	3.200m	7.468m		
12.192m	5.70	3.658m	8.534m		
13.716m	6.40	4.115m	9.601m		
15.240m	7.11	4.572m	10.668m		
16.764m	7.83			3.470m	9.824m
18.288m	8.55			3.786m	10.717m

BAR TYPES

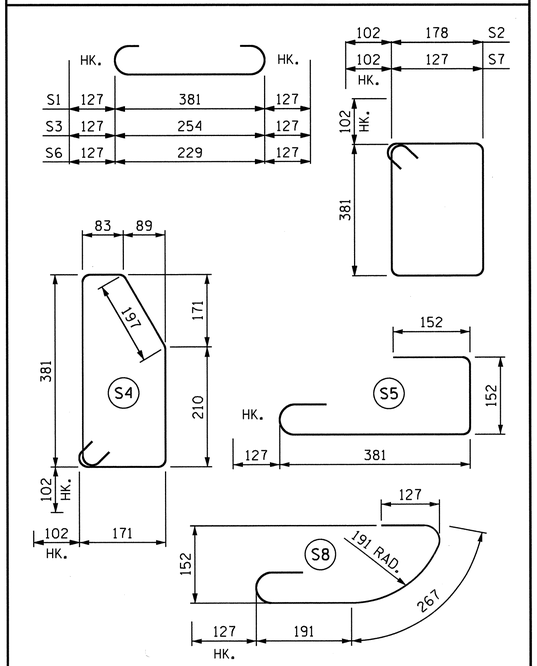

ALL BAR DIMENSIONS ARE OUT TO OUT.

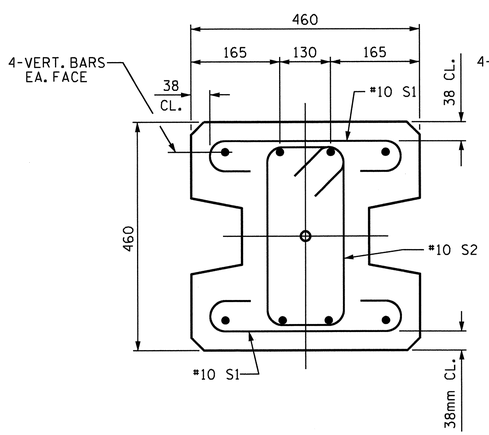

TYPE - I

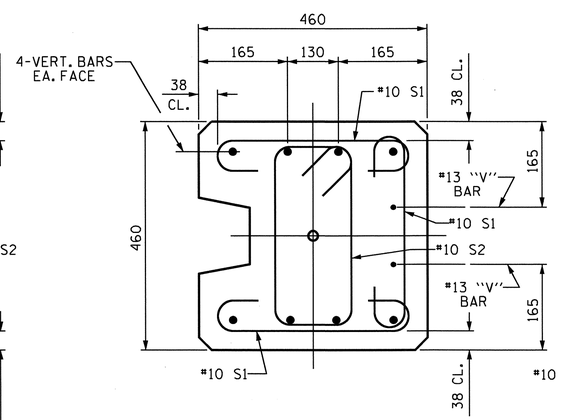

TYPE - II

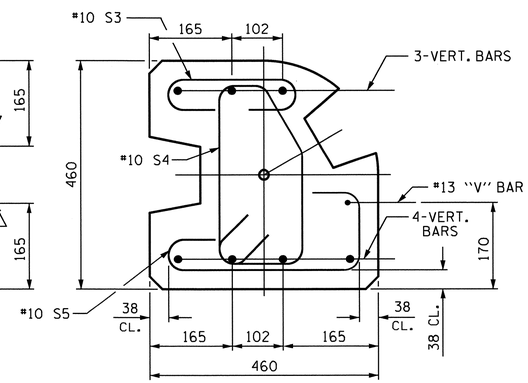

TYPE - III

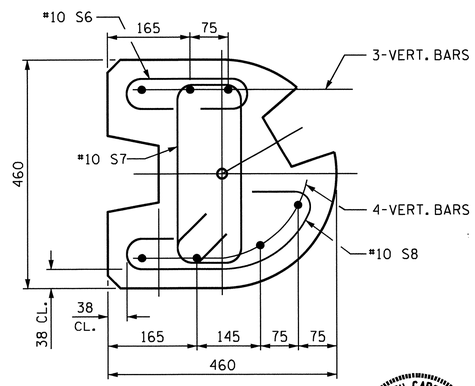

TYPE - III (ALT.)

PILE DETAIL

SEE EXPOSURE CATEGORY CHART FOR VERT. BAR PILE REINFORCING (SHEET 1 OF 3)

NORTH CAROLINA PROFESSIONAL SEAL 022516 ENGINEER EMILY E. MURRAY

11/22/11

PROJECT NO. R-2413C

GUILFORD-ROCKINGHAM COUNTY

STATION: 56+58.570 -LREV-
10+00.000 -NW3-

SHEET 6 OF 6

STATE OF NORTH CAROLINA
DEPARTMENT OF TRANSPORTATION
RALEIGH

OPTIONAL SOUND BARRIER WALL DETAILS

REVISIONS							
NO.	BY:	DATE:	NO.	BY:	DATE:		
1			3				
2			4				

SHEET NO. SW-6

TOTAL SHEETS 6

ASSEMBLED BY : E. E. MURRAY		DATE : 10-27-11
CHECKED BY : T. L. AVERETTE		DATE : 10-27-11
DRAWN BY : MAA 6/11	ADDED	8/31/11
CHECKED BY : GM 6/11		

22-NOV-2011 09:35
Z:\TIPProjects-R\R2413c\Structures\FinalPlans\Str.#11\R2413C_sd_SBW_13.dgn
emurray

STR. #11

STANDARD NOTES

DESIGN DATA:

SPECIFICATIONS	A.A.S.H.T.O. (CURRENT)
LIVE LOAD	SEE PLANS
IMPACT ALLOWANCE	SEE A.A.S.H.T.O.
STRESS IN EXTREME FIBER OF	
STRUCTURAL STEEL - AASHTO M270 GRADE 250	140 MPa
- AASHTO M270 GRADE 345W	190 MPa
- AASHTO M270 GRADE 345	190 MPa
REINFORCING STEEL IN TENSION	
GRADE 420	165 MPa
CONCRETE IN COMPRESSION	8.3 MPa
CONCRETE IN SHEAR	SEE A.A.S.H.T.O.
STRUCTURAL TIMBER - TREATED OR	
UNTREATED - EXTREME FIBER STRESS	12 MPa
COMPRESSION PERPENDICULAR TO GRAIN OF TIMBER	2.6 MPa
EQUIVALENT FLUID PRESSURE OF EARTH	480 kg/m^3 (MINIMUM)

MATERIAL AND WORKMANSHIP:

EXCEPT AS MAY OTHERWISE BE SPECIFIED ON PLANS OR IN THE SPECIAL PROVISIONS, ALL MATERIAL AND WORKMANSHIP SHALL BE IN ACCORDANCE WITH THE 2006 "STANDARD SPECIFICATIONS FOR ROADS AND STRUCTURES" OF THE N. C. DEPARTMENT OF TRANSPORTATION.

STEEL SHEET PILING FOR PERMANENT OR TEMPORARY APPLICATIONS SHALL BE HOT ROLLED.

CONCRETE:

UNLESS OTHERWISE REQUIRED ON PLANS, CLASS A CONCRETE SHALL BE USED FOR ALL PORTIONS OF ALL STRUCTURES WITH THE EXCEPTION THAT: CLASS AA CONCRETE SHALL BE USED IN BRIDGE SUPERSTRUCTURES, ABUTMENT BACKWALLS, AND APPROACH SLABS; CLASS B CONCRETE SHALL BE USED FOR SLOPE PROTECTION AND RIP RAP; AND CLASS S SHALL BE USED FOR UNDERWATER FOOTING SEALS.

CONCRETE CHAMFERS:

UNLESS OTHERWISE NOTED ON THE PLANS, ALL EXPOSED CORNERS ON STRUCTURES SHALL BE CHAMFERED 19mm WITH THE FOLLOWING EXCEPTIONS: TOP CORNERS OF CURBS MAY BE ROUNDED TO 38mm RADIUS WHICH IS BUILT INTO CURB FORMS; CORNERS OF TRANSVERSE FLOOR EXPANSION JOINTS SHALL BE ROUNDED WITH A 6mm FINISHING TOOL UNLESS OTHERWISE REQUIRED ON PLANS; AND CORNERS OF EXPANSION JOINTS IN THE ROADWAY FACES AND TOPS OF CURBS AND SIDEWALKS SHALL BE ROUNDED TO A 6mm RADIUS WITH A FINISHING STONE OR TOOL UNLESS OTHERWISE REQUIRED ON PLANS.

DOWELS:

DOWELS WHEN INDICATED ON PLANS AS FOR CULVERT EXTENSIONS, SHALL BE EMBEDDED AT LEAST 300mm INTO THE OLD CONCRETE AND GROUTED INTO PLACE WITH 1 :2 CEMENT MORTAR.

ALLOWANCE FOR DEAD LOAD DEFLECTION, SETTLEMENT, ETC. IN CASTING SUPERSTRUCTURES:

BRIDGES SHALL BE BUILT ON THE GRADE OR VERTICAL CURVE SHOWN ON PLANS. SLABS, CURBS AND PARAPETS SHALL CONFORM TO THE GRADE OR CURVE.

ALL DIMENSIONS WHICH ARE GIVEN IN SECTION AND ARE AFFECTED BY DEAD LOAD DEFLECTIONS ARE DIMENSIONS AT CENTER LINE OF BEARING UNLESS OTHERWISE NOTED ON PLANS. IN SETTING FORMS FOR STEEL BEAM BRIDGES AND PRESTRESSED CONCRETE GIRDER BRIDGES, ADJUSTMENTS SHALL BE MADE DUE TO THE DEAD LOAD DEFLECTIONS FOR THE ELEVATIONS SHOWN. WHERE BLOCKS ARE SHOWN OVER BEAMS FOR BUILDING UP TO THE SLAB, THE VERTICAL DIMENSIONS OF THE BLOCKS SHALL BE ADJUSTED BETWEEN BEARINGS TO COMPENSATE FOR DEAD LOAD DEFLECTIONS, VERTICAL CURVE ORDINATE, AND ACTUAL BEAM CAMBER. WHERE BOTTOM OF SLAB IS IN LINE WITH BOTTOM OF TOP FLANGES, DEPTH OF SLAB BETWEEN BEARINGS SHALL BE ADJUSTED TO COMPENSATE FOR DEAD LOAD DEFLECTION, VERTICAL CURVE ORDINATE, AND ACTUAL BEAM CAMBER.

IN SETTING FALSEWORK AND FORMS FOR REINFORCED CONCRETE SPANS, AN ALLOWANCE SHALL BE MADE FOR DEAD LOAD DEFLECTIONS, SETTLEMENT OF FALSEWORK, AND PERMANENT CAMBER WHICH SHALL BE PROVIDED FOR IN ADDITION TO THE ELEVATIONS SHOWN. AFTER REMOVAL OF THE FALSEWORK, THE FINISHED STRUCTURES SHALL CONFORM TO THE PROFILE AND ELEVATIONS SHOWN ON THE PLANS AND CONSTRUCTION ELEVATIONS FURNISHED BY THE ENGINEER.

DETAILED DRAWINGS FOR FALSEWORK OR FORMS FOR BRIDGE SUPERSTRUCTURE AND ANY STRUCTURE OR PARTS OF A STRUCTURE AS NOTED ON THE PLANS SHALL BE SUBMITTED TO THE ENGINEER FOR APPROVAL BEFORE CONSTRUCTION OF THE FALSEWORK OR FORMS IS STARTED.

REINFORCING STEEL:

ALL REINFORCING STEEL SHALL BE DEFORMED. DIMENSIONS RELATIVE TO PLACEMENT OF REINFORCING ARE TO CENTERS OF BARS UNLESS OTHERWISE INDICATED IN THE PLANS. DIMENSIONS ON BAR DETAILS ARE TO CENTERS OF BARS OR ARE OUT TO OUT AS INDICATED ON PLANS.

WIRE BAR SUPPORTS SHALL BE PROVIDED FOR REINFORCING STEEL WHERE INDICATED ON THE PLANS. WHEN BAR SUPPORT PIECES ARE PLACED IN CONTINUOUS LINES, THEY SHALL BE SO PLACED THAT THE ENDS OF THE SUPPORTING WIRES SHALL BE LAPPED TO LOCK LEGS ON ADJOINING PIECES.

STRUCTURAL STEEL:

AT THE CONTRACTOR'S OPTION, HE MAY SUBSTITUTE 22.23mm Ø SHEAR STUDS FOR THE 19.05mm Ø STUDS SPECIFIED ON THE PLANS. THIS SUBSTITUTION SHALL BE MADE AT THE RATE OF 3 -22.23mm Ø STUDS FOR 4 - 19.05mm Ø STUDS, AND STUD SPACING CHANGES SHALL BE MADE AS NECESSARY TO PROVIDE THE SAME EQUIVALENT NUMBER OF 22.23mm Ø STUDS ALONG THE BEAM AS SHOWN FOR 19.05mm Ø STUDS BASED ON THE RATIO OF 3 - 22.23mm Ø STUDS FOR 4 - 19.05mm Ø STUDS. STUDS OF THE LENGTH SPECIFIED ON THE PLANS MUST BE PROVIDED. THE MAXIMUM SPACING SHALL BE 610mm.

EXCEPT AT THE INTERIOR SUPPORTS OF CONTINUOUS BEAMS WHERE THE COVER PLATE IS IN CONTACT WITH BEARING PLATE, THE CONTRACTOR MAY, AT HIS OPTION, SUBSTITUTE FOR THE COVER PLATES DESIGNATED ON THE PLANS COVER PLATES OF THE EQUIVALENT AREA PROVIDED THESE PLATES ARE AT LEAST 8mm IN THICKNESS AND DO NOT EXCEED A WIDTH EQUAL TO THE FLANGE WIDTH LESS 50mm OR A THICKNESS EQUAL TO 2 TIMES THE FLANGE THICKNESS. THE SIZE OF FILLET WELDS SHALL CONFORM TO THE REQUIREMENTS OF THE CURRENT ANSI/AASHTO/AWS "BRIDGE WELDING CODE". ELECTROSLAG WELDING WILL NOT BE PERMITTED.

PLACEMENT OF BEAM OR GIRDER MEMBERS ON TRUCKS FOR HAULING SHALL BE DONE IN COMPLIANCE WITH LIMITS SHOWN ON SKETCHES PROVIDED TO THE MATERIALS AND TEST UNIT APPROVED BY THE STRUCTURE DESIGN UNIT DATED MAY 8, 1991. THESE SKETCHES PRIMARILY LIMIT THE UNSUPPORTED CANTILEVER LENGTH OF MEMBERS. WHEN THE CONTRACTOR WISHES TO PLACE MEMBERS ON TRUCKS NOT IN ACCORDANCE WITH THESE LIMITS, TO SHIP BY RAIL, TO ATTACH SHIPPING RESTRAINTS TO THE MEMBERS OR TO INVERT MEMBERS, HE SHALL SUBMIT A SKETCH FOR APPROVAL PRIOR TO SHIPPING. SEE ALSO ARTICLE 1072-1 1.

WITH THE SOLE EXCEPTION OF EDGES AT SURFACES WHICH BEAR ON OTHER SURFACES, ALL SHARP EDGES AND ENDS OF SHAPES AND PLATES SHALL BE SLIGHTLY ROUNDED BY SUITABLE MEANS TO A RADIUS OF APPROXIMATELY 2mm OR EQUIVALENT FLAT SURFACE AT A SUITABLE ANGLE PRIOR TO PAINTING, GALVANIZING, OR METALLIZING.

HANDRAILS AND POSTS:

METAL STANDARDS AND FACES OF THE CONCRETE END POSTS FOR THE METAL RAIL SHALL BE SET NORMAL TO THE GRADE OF THE CURB, UNLESS OTHERWISE SHOWN ON PLANS. THE METAL RAIL AND TOPS OF CONCRETE POSTS USED WITH THE ALUMINUM RAIL SHALL BE BUILT PARALLEL TO THE GRADE OF THE CURB.

METAL HANDRAILS SHALL BE IN ACCORDANCE WITH THE PLANS. RAILS SHALL BE AS MANUFACTURED FOR BRIDGE RAILING. CASTINGS SHALL BE OF A UNIFORM APPEARANCE. FINS AND OTHER DEFORMATIONS RESULTING FROM CASTING OR OTHERWISE SHALL BE REMOVED IN A MANNER SO THAT A UNIFORM COLORING OF THE COMPLETED CASTING SHALL BE OBTAINED. CASTINGS WITH DISCOLORATIONS OR OF NON-UNIFORM COLORING WILL NOT BE ACCEPTED. CERTIFIED MILL REPORTS ARE REQUIRED FOR METAL RAILS AND POSTS.

SPECIAL NOTES:

GENERALLY, IN CASE OF DISCREPANCY, THIS STANDARD SHEET OF NOTES SHALL GOVERN OVER THE SPECIFICATIONS, BUT THE REMAINDER OF THE PLANS SHALL GOVERN OVER NOTES HEREON, AND SPECIAL PROVISIONS SHALL GOVERN OVER ALL. SEE SPECIFICATIONS ARTICLE 105-4.

METRIC

JANUARY, 1990