TIP PROJECT: R-2413C

CONTRACT: C200800B

STATE OF NORTH CAROLINA
DIVISION OF HIGHWAYS

# GUILFORD–ROCKINGHAM COUNTIES

**LOCATION: US 220 FROM SOUTH OF HAW RIVER TO THE INTERSECTION OF US 220 AND EXISTING NC 68**

**TYPE OF WORK: GRADING, DRAINAGE, STRUCTURES, CULVERTS, PAVING, SIGNING, ITS & SIGNALS**

METRIC

ALL DIMENSIONS IN THESE PLANS ARE IN METERS AND /OR MILLIMETERS UNLESS OTHERWISE NOTED

| STATE | STATE PROJECT REFERENCE NO. | SHEET NO. | TOTAL SHEETS |
|---|---|---|---|
| N.C. | R-2413C | | |

| STATE PROJ. NO. | F. A. PROJ. NO. | DESCRIPTION |
|---|---|---|
| 34429.1.3 (6.499008T) | | P.E. |
| 34429.2.4 (6.499008T) | | R/W |
| 34429.3.7 (6.499008T) | | CONST. |

**PART 2 0F 2**

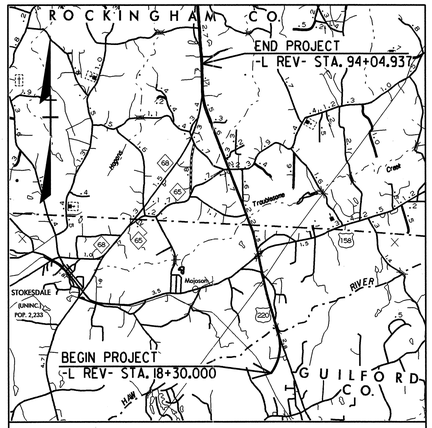


VICINITY MAP

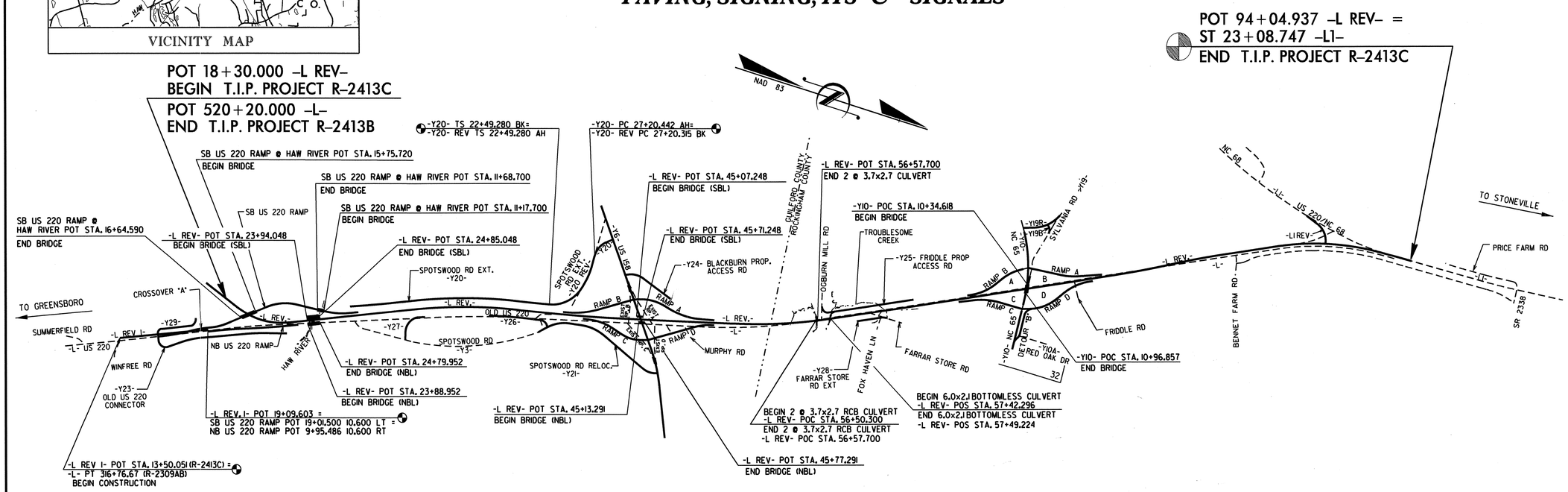


# STRUCTURES

STATE OF NORTH CAROLINA DEPARTMENT OF TRANSPORTATION

## DESIGN DATA

ADT 2012 = 37400
ADT 2032 = 64000
DHV = 11 %
D = 65 %
T = 15 %*
*( 10% TTST + 5% DUALS )
V = 110 km/h
FUNC. CLASS.: INTERSTATE

## PROJECT LENGTH

| | | |
|---|---|---|
| LENGTH ROADWAY T.I.P PROJECT R-2413C | 7.406 | KM. |
| LENGTH STRUCTURES T.I.P. PROJECT R-2413C | 0.169 | KM. |
| TOTAL LENGTH T.I.P. PROJECT R-2413C | 7.575 | KM. |

NOTE: SB LANE BRIDGE STATIONING USED TO DETERMINE LENGTH OF ROADWAY & STRUCTURES

Prepared In the Office of:

**DIVISION OF HIGHWAYS**

2006 STANDARD SPECIFICATIONS

LETTING DATE:
FEBRUARY 21, 2012


OMAR R. AZIZI, P.E.
PROJECT ENGINEER

EMILY MURRAY, P.E.
PROJECT DESIGN ENGINEER

STRUCTURE DESIGN UNIT
1000 Birch Ridge Dr.
Raleigh, N.C. 27610


DIVISION OF HIGHWAYS
STATE OF NORTH CAROLINA

STATE OF NORTH CAROLINA
DIVISION OF HIGHWAYS

**PART 2 0F 2**

# GUILFORD–ROCKINGHAM COUNTIES

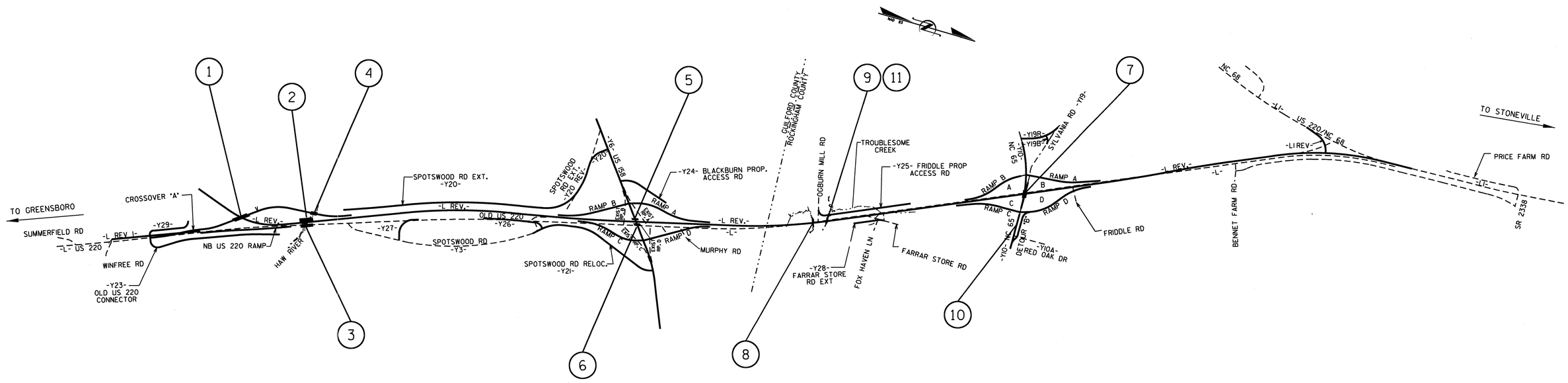


## INDEX

| STR. # | STATION | DESCRIPTION | SHEET # |
|---|---|---|---|
| 1 | 20+06.118 -LREV- | BRIDGE ON US 220 RAMP OVER NC68 CONNECTOR BETWEEN NC 150 AND US 158 | S-1 THRU S-33 |
| 2 | 24+37.000 -LREV- | LEFT LANE BRIDGE OVER HAW RIVER ON US 220 BETWEEN SR 2313 AND SR 2104 | S-34 THRU S-70 |
| 3 | 24+37.000 -LREV- | RIGHT LANE BRIDGE OVER HAW RIVER ON US 220 BETWEEN SR 2313 AND SR 2104 | S-71 THRU S-111 |
| 4 | 11+43.200 -SB US 220 RAMP- | BRIDGE ON SOUTHBOUND US 220 RAMP OVER HAW RIVER BETWEEN US 158 AND NC 150 | S-112 THRU S-146 |
| 5 | 45+30.610 -LREV- | LEFT LANE BRIDGE ON US 220 OVER US 158 BETWEEN SR 2104 AND SR 2300 | S-147 THRU S-176 |
| 6 | 45+30.610 -LREV- | RIGHT LANE BRIDGE ON US 220 OVER US 158 BETWEEN SR 2104 AND SR 2300 | S-177 THRU S-206 |
| 7 | 70+09.407 -LREV- | BRIDGE ON NC 65 OVER US 220 BETWEEN SR 1100 AND SR 2340 | S-207 THRU S-238 |
| 8 | 56+54.000 -LREV- | DOUBLE 3.7 × 3.0 RCBC | C-1 THRU C-5 |
| 9 | 57+45.800 -LREV- | 7.3 X 2.1 PRECAST REINF.CONC.THREE SIDED CULVERT | C-6 THRU C-8 |
| 10 | 12+08.000 -Y10- | MSE RETAINING WALL | W-1 THRU W-2 |
| 11 | 56+58.570 -LREV- | SOUND BARRIER WALL | SW-1 THRU SW-6 |

PROJECT NO. R-2413C
GUILFORD-ROCKINGHAM COUNTY

STATE OF NORTH CAROLINA
DEPARTMENT OF TRANSPORTATION
RALEIGH

INDEX

| REVISIONS | | | | | | |
|---|---|---|---|---|---|---|
| NO. | BY: | DATE: | NO. | BY: | DATE: | |
| 1 | | | 3 | | | |
| 2 | | | 4 | | | |

DRAWN BY : PEGGY PARISI DATE : 9-2-11
CHECKED BY : E. MURRAY DATE : 9-13-11

22-NOV-2011 09:38
Z:\TIPProjects-R\R2413c\Structures\Final Plans\R2413C_sd_TSH_01.dgn
emurray

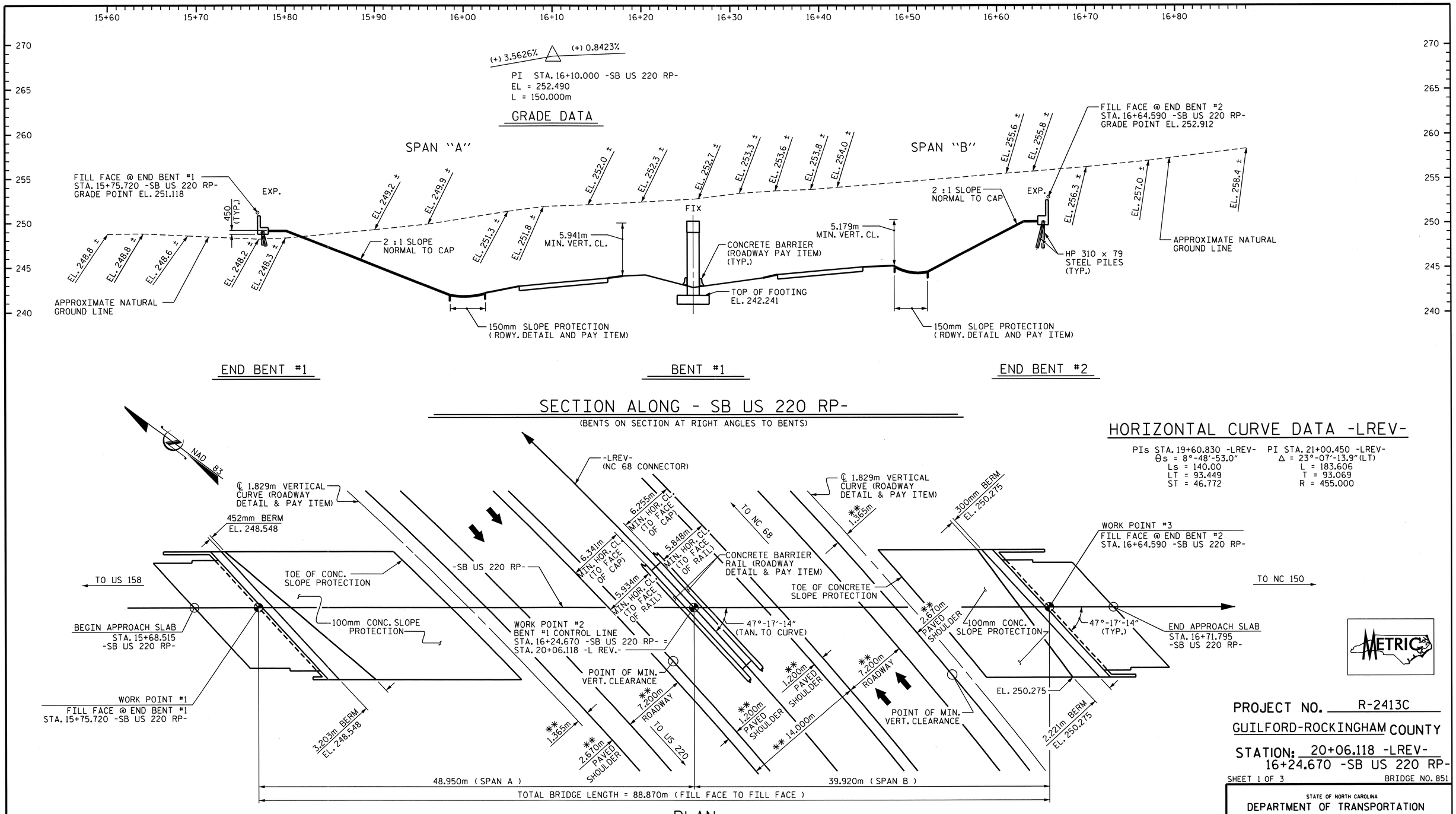


## HORIZONTAL CURVE DATA -LREV-

| PIs STA. 19+60.830 -LREV- | PI STA. 21+00.450 -LREV- |
|---|---|
| θs = 8°-48'-53.0" | Δ = 23°-07'-13.9"(LT) |
| Ls = 140.00 | L = 183.606 |
| LT = 93.449 | T = 93.069 |
| ST = 46.772 | R = 455.000 |

METRIC

PROJECT NO. R-2413C

GUILFORD-ROCKINGHAM COUNTY

STATION: 20+06.118 -LREV-
16+24.670 -SB US 220 RP-

SHEET 1 OF 3 BRIDGE NO. 851

STATE OF NORTH CAROLINA
DEPARTMENT OF TRANSPORTATION
RALEIGH

# GENERAL DRAWING
FOR BRIDGE ON US 220
RAMP OVER NC 68
CONNECTOR BETWEEN
NC 150 AND US 158

NORTH CAROLINA PROFESSIONAL SEAL 022516 ENGINEER EMILY E. MURRAY
10/28/11

NORTH CAROLINA PROFESSIONAL SEAL 12274 ENGINEER OMAR R. AZIZ
10/28/11

| REVISIONS | | | | | | | SHEET NO. |
|---|---|---|---|---|---|---|---|
| NO. | BY: | DATE: | NO. | BY: | DATE: | | S-1 |
| 1 | | | 3 | | | | TOTAL SHEETS |
| 2 | | | 4 | | | | 237 |

DRAWN BY : NMR/T.L. AVERETTE DATE : 06-06-11
CHECKED BY : PEGGY PARISI DATE : 07-26-11

19-OCT-2011 13:50
R:\TIPProjects-R\R2413c\Structures\FinalPlans\Str.#1\R2413C_sd_GD_01.dgn
toveratte

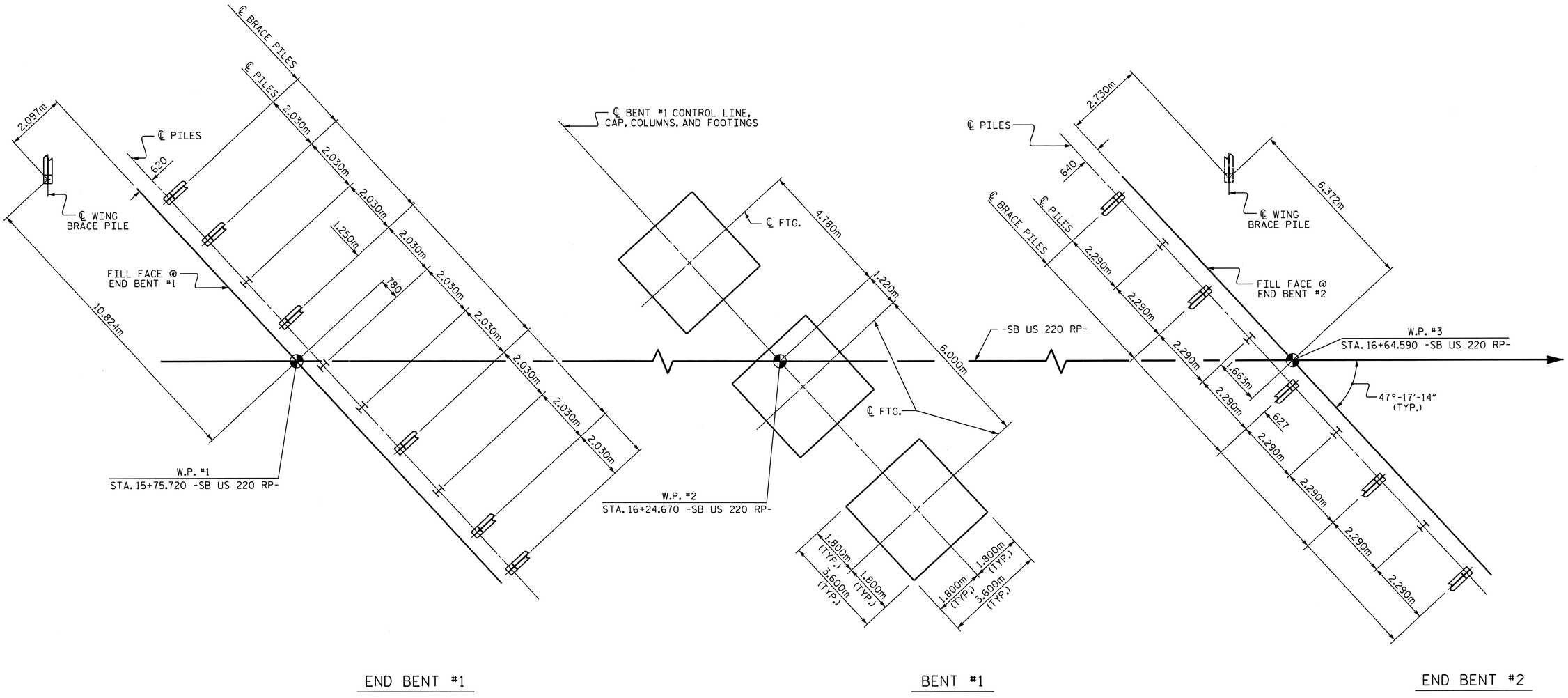


## FOUNDATION LAYOUT

ALL PILES ARE HP 310 x 79 STEEL PILES.
DIMENSIONS LOCATING PILES ARE TO THE PILE CENTERLINE.
BRACE PILES AT END BENTS ARE TO BE BATTERED @ 250 : 1000

## FOUNDATION NOTES

THE ALLOWABLE BEARING CAPACITY FOR PILES AT END BENT NO. 1 AND END BENT NO. 2 IS 530 KN PER PILE.

DRIVE PILES AT END BENT NO. 1 AND END BENT NO. 2 TO A REQUIRED BEARING CAPACITY OF 1060 KN PER PILE. THE REQUIRED BEARING CAPACITY IS EQUAL TO THE ALLOWABLE BEARING CAPACITY WITH A MINIMUM FACTOR OF SAFETY OF TWO.

THE ALLOWABLE BEARING CAPACITY FOR SPREAD FOOTINGS AT BENT NO. 1 IS 380 KPA.

THE REQUIRED BEARING CAPACITY FOR SPREAD FOOTINGS AT BENT NO. 1 IS 1140 KPA. CHECK FIELD CONDITIONS FOR THE REQUIRED BEARING CAPACITY JUST BEFORE PLACING CONCRETE.

FOR BLASTING ADJACENT TO HIGHWAY STRUCTURES, SEE ARTICLE 410-11 OF THE STANDARD SPECIFICATIONS.

FOR PILES, SEE SPECIAL PROVISIONS.

PROJECT NO. R-2413C
GUILFORD-ROCKINGHAM COUNTY
STATION: 20+06.118 -LREV-
16+24.670 -SB US 220 RP-
SHEET 2 OF 3

NORTH CAROLINA PROFESSIONAL SEAL 022516 ENGINEER EMILY E. MURRAY
10/28/11

STATE OF NORTH CAROLINA
DEPARTMENT OF TRANSPORTATION
RALEIGH

GENERAL DRAWING
FOR BRIDGE ON US 220
RAMP OVER NC 68
CONNECTOR BETWEEN
NC 150 AND US 158

| REVISIONS | | | | | | SHEET NO. |
|---|---|---|---|---|---|---|
| NO. | BY: | DATE: | NO. | BY: | DATE: | S-2 |
| 1 | | | 3 | | | TOTAL SHEETS |
| 2 | | | 4 | | | 237 |

DRAWN BY : T.L. AVERETTE DATE : 06-06-11
CHECKED BY : PEGGY PARISI DATE : 07-26-11

13-SEP-2011 09:51
W:\Structures\FinalPlans\Str.#1\R2413C_sd_GD_01.dgn
bbaroddawala

BM #5 R.R. SPIKE IN BASE OF POWER POLE 21.7m RT. OF -L- STA. 22+36.500 EL. 244.580

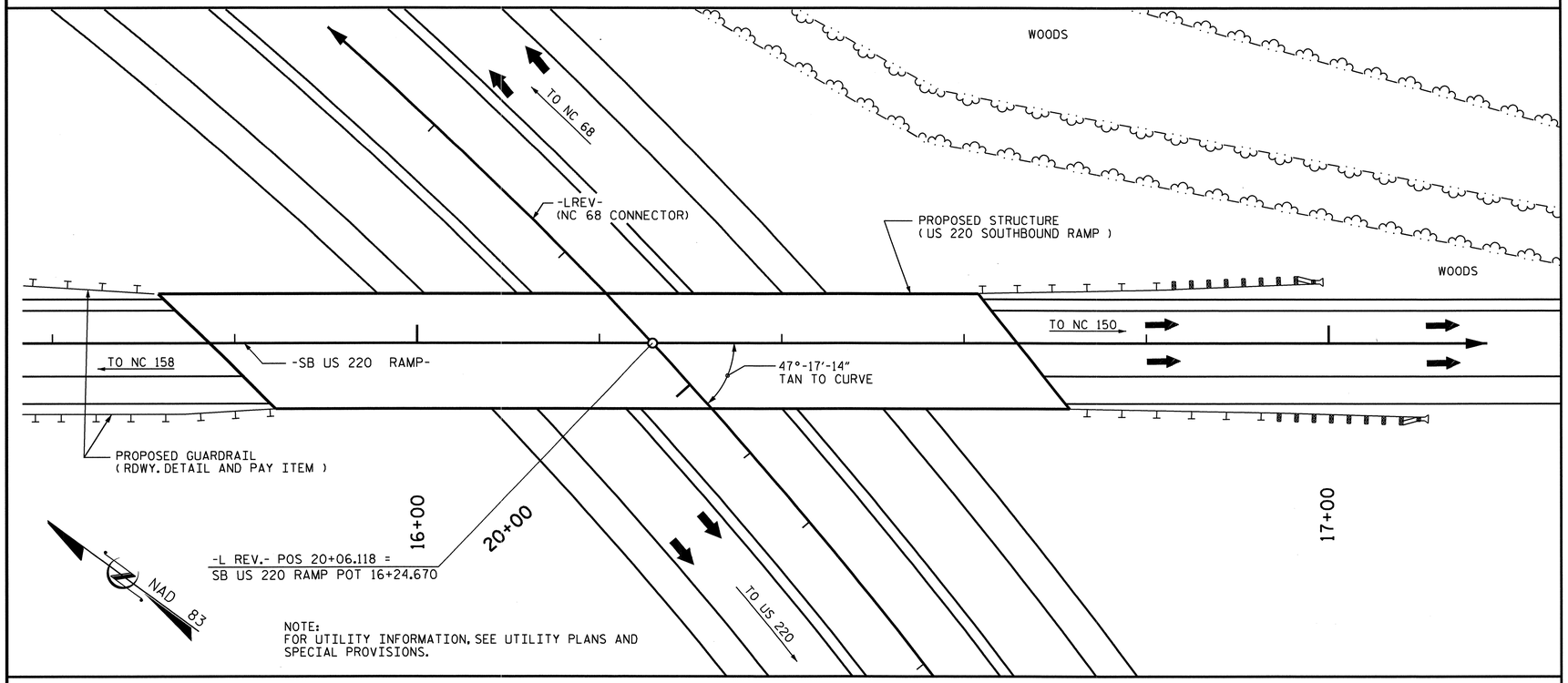


LOCATION SKETCH

## NOTES

ALL DIMENSIONS ARE IN MILLIMETERS UNLESS OTHERWISE NOTED.

ALL ELEVATIONS ARE IN METERS.

ASSUMED LIVE LOAD = MS 18 OR ALTERNATE LOADING, EXCEPT THAT THE GIRDERS HAVE BEEN DESIGNED FOR MS 22.5.

FOR OTHER DESIGN DATA AND GENERAL NOTES, SEE SHEET SNSM.

FOR EROSION CONTROL MEASURES SEE EROSION CONTROL PLANS.

THIS BRIDGE HAS BEEN DESIGNED BY THE STRENGTH DESIGN METHOD AS SPECIFIED IN AASHTO STANDARD SPECIFICATIONS.

ALL STRUCTURAL STEEL SHALL BE AASHTO M270 GRADE 345W AND PAINTED IN ACCORDANCE WITH SYSTEM 4 OF ARTICLE 442-7 OF THE STANDARD SPECIFICATIONS UNLESS OTHERWISE NOTED ON THE PLANS.

REMOVABLE FORMS MAY BE USED IN LIEU OF METAL STAY-IN-PLACE FORMS IN ACCORDANCE WITH ARTICLE 420-3 OF THE STANDARD SPECIFICATIONS.

WORK SHALL NOT BE STARTED ON THIS BRIDGE UNTIL ROADWAY SECTION HAS BEEN EXCAVATED.

THE CLASS AA CONCRETE IN THE BRIDGE DECK SHALL CONTAIN FLY ASH OR GROUND GRANULATED BLAST FURNACE SLAG AT THE SUBSTITUTION RATE SPECIFIED IN ARTICLE 1024-1 AND IN ACCORDANCE WITH ARTICLES 1024-5 AND 1024-6 OF THE STANDARD SPECIFICATIONS. NO PAYMENT WILL BE MADE FOR THIS SUBSTITUTION AS IT IS CONSIDERED INCIDENTAL TO THE COST OF THE REINFORCED CONCRETE DECK SLAB.

FOR SUBMITTAL OF WORKING DRAWINGS, SEE SPECIAL PROVISIONS.

FOR FALSEWORK AND FORMWORK, SEE SPECIAL PROVISIONS.

FOR CRANE SAFETY, SEE SPECIAL PROVISIONS.

FOR GROUT FOR STRUCTURES, SEE SPECIAL PROVISIONS.

FOR CURING CONCRETE, SEE SPECIAL PROVISIONS.

FOR PLACING LOAD ON STRUCTURE MEMBERS, SEE SPECIAL PROVISIONS.

THE USE OF NEEDLE BEAMS TO SUPPORT THE DECK SLAB WILL ONLY BE ALLOWED IN THE ACUTE CORNER OF THE SLAB.

THIS BRIDGE HAS BEEN DESIGNED IN ACCORDANCE WITH THE REQUIREMENTS OF THE STANDARD SPECIFICATIONS FOR SEISMIC DESIGN OF HIGHWAY BRIDGES FOR SEISMIC PERFORMANCE CATEGORY A.

FOR SHIPPING STEEL STRUCTURAL MEMBERS, SEE SPECIAL PROVISIONS.

FOR METRIC STRUCTURAL STEEL, SEE SPECIAL PROVISIONS.

## TOTAL BILL OF MATERIAL

| | FOUNDATION EXCAVATION FOR BENT | REINFORCED CONCRETE DECK SLAB | GROOVING BRIDGE FLOORS | CLASS A CONCRETE | BRIDGE APPROACH SLABS | REINFORCING STEEL | SPIRAL COLUMN REINFORCING STEEL | STRUCTURAL STEEL | HP 310 X 79 STEEL PILES | | CONCRETE BARRIER RAIL | 100mm SLOPE PROTECTION | POT BEARINGS | ELASTOMERIC BEARINGS | EXPANSION JOINT SEALS |
|---|---|---|---|---|---|---|---|---|---|---|---|---|---|---|---|
| | | SQ. METERS | SQ. METERS | CU. METERS | LUMP SUM | kg | kg | APPROX. kg | NO. | METERS | METERS | SQ. METERS | LUMP SUM | LUMP SUM | LUMP SUM |
| SUPERSTRUCTURE | | 1090.2 | 1071.3 | | LUMP SUM | | | 246,000 | | | 188.820 | | LUMP SUM | LUMP SUM | LUMP SUM |
| | | | | | | | | | | | | | | | |
| END BENT #1 | | | | 39.3 | | 2,905 | | | 11 | 92.3 | | 319 | | | |
| | | | | | | | | | | | | | | | |
| BENT #1 | LUMP SUM | | | 90.5 | | 7,308 | 927 | | | | | | | | |
| | | | | | | | | | | | | | | | |
| END BENT #2 | | | | 41.5 | | 3,108 | | | 10 | 115.7 | | 218 | | | |
| | | | | | | | | | | | | | | | |
| TOTAL | LUMP SUM | 1090.2 | 1071.3 | 171.3 | LUMP SUM | 13,321 | 927 | 246,000 | 21 | 208.0 | 188.820 | 537 | LUMP SUM | LUMP SUM | LUMP SUM |

## TOTAL BILL OF MATERIAL - ENGLISH

| | | | | | | | | | | | | | | | |
|---|---|---|---|---|---|---|---|---|---|---|---|---|---|---|---|
| | LUMP SUM | SQ. FT. | SQ. FT. | CU. YDS. | LUMP SUM | LBS. | LBS. | APPROX. LBS. | NO. | LIN. FT. | LIN. FT. | SQ. YD. | LUMP SUM | LUMP SUM | LUMP SUM |
| TOTAL | LUMP SUM | 11,735 | 11,531 | 224.1 | LUMP SUM | 29,368 | 2,044 | 542,337 | 21 | 682 | 619.49 | 642 | LUMP SUM | LUMP SUM | LUMP SUM |

PROJECT NO. R-2413C

GUILFORD-ROCKINGHAM COUNTY

STATION: 20+06.118 -LREV-
16+24.670 -SB US 220 RP-

SHEET 3 OF 3

NORTH CAROLINA PROFESSIONAL SEAL 022516 ENGINEER EMILY E. MURPHY

10/28/11

STATE OF NORTH CAROLINA
DEPARTMENT OF TRANSPORTATION
RALEIGH

GENERAL DRAWING
FOR BRIDGE ON US 220
RAMP OVER NC 68
CONNECTOR BETWEEN
NC 150 AND US 158

| REVISIONS | | | | | | SHEET NO. |
|---|---|---|---|---|---|---|
| NO. | BY: | DATE: | NO. | BY: | DATE: | S-3 |
| 1 | | | 3 | | | TOTAL SHEETS |
| 2 | | | 4 | | | 237 |

DRAWN BY : NMR/T.L. AVERETTE DATE : 06-06-11
CHECKED BY : PEGGY PARISI DATE : 07-26-11

19-OCT-2011 13:51
R:\TIPProjects-R\R2413c\Structures\Final Plans\Str.#1\R2413C_sd_GD_01.dgn
taverette

STR #1

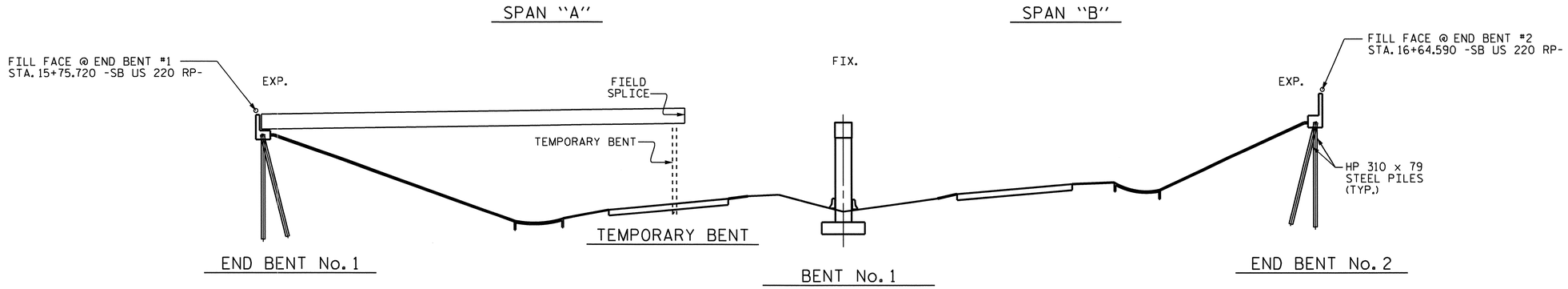


## STAGE I GIRDER ERECTION

( SECTIONS AT BENT & END BENTS ARE AT RIGHT ANGLES )

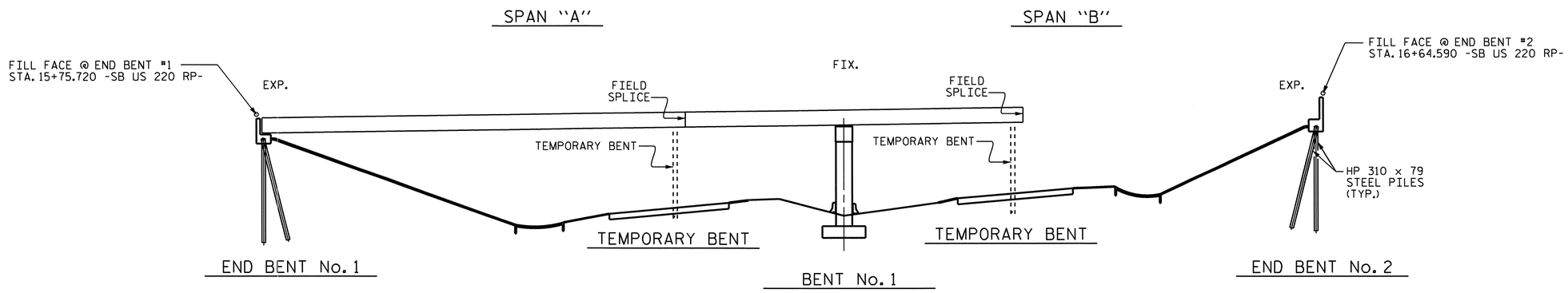


## STAGE II GIRDER ERECTION

( SECTIONS AT BENT & END BENTS ARE AT RIGHT ANGLES )

## ERECTION NOTES

ERECT A MINIMUM OF TWO GIRDERS WITH ALL DIAPHRAGMS/CROSSFRAMES BETWEEN THE GIRDERS IN PLACE AND THE BOLTS TIGHTENED PRIOR TO RELEASING THE GIRDERS.

ERECT EACH SUBSEQUENT GIRDER WITH DIAPHRAGMS/CROSSFRAMES CONNECTING TO THE ADJACENT PREVIOUSLY ERECTED GIRDER AND TIGHTEN ALL BOLTS BEFORE RELEASING THE GIRDER.

THE STRUCTURAL STEEL SHALL BE SUPPORTED DURING ERECTION IN ITS CAMBERED POSITION. A MINIMUM OF ONE TEMPORARY BENT SHALL BE USED IN BOTH SPANS "A" & "B".

TEMPORARY BENTS SHALL SUPPORT ALL GIRDERS IN THE TYPICAL SECTION.

TEMPORARY BENTS SHALL REMAIN IN PLACE UNTIL ALL DIAPHRAGMS/CROSSFRAMES ARE IN PLACE AND ALL HIGH STRENGTH BOLTS ARE TIGHTENED.

TEMPORARY BENTS SHALL PROVIDE BEARING AT CONNECTOR PLATE LOCATIONS. WHEN CONNECTOR PLATES ARE USED AS TEMPORARY BEARING STIFFENERS, DIAPHRAGMS MUST BE ATTACHED.

THE CONTRACTOR'S ERECTION PLANS SHALL INCLUDE A METHOD OF TEMPORARY BENT REMOVAL THAT WILL UNIFORMLY TRANSFER THE STRUCTURAL WEIGHT TO THE DIAPHRAGMS/CROSSFRAMES AND THE GIRDERS WILL REMAIN IN THE CAMBERED POSITIONS.

PLANS FOR TEMPORARY BENT ERECTION AND REMOVAL SHALL BE SUBMITTED TO THE ENGINEER FOR REVIEW.

THE CONTRACTOR IS RESPONSIBLE FOR DESIGNING THE TEMPORARY BENTS. THE DESIGNS SHALL BE COMPLETED BY A PROFESSIONAL ENGINEER REGISTERED IN THE STATE OF NORTH CAROLINA. THE CONTRACTOR SHALL SUBMIT SIGNED AND SEALED WORKING DRAWINGS AND CALCULATIONS FOR APPROVAL BY THE ENGINEER.

DURING THE GIRDER ERECTION PROCEDURE, THE CONTRACTOR IS RESPONSIBLE FOR PROVIDING TEMPORARY LATERAL BRACING AND OTHER MEANS OF SUPPORT, AS REQUIRED, TO ENSURE STABILITY OF THE GIRDERS, AVOID UPLIFT OF THE GIRDERS AT THE TEMPORARY BENTS AND TO ENSURE PLUMBNESS OF THE GIRDERS IN THE FINAL CONDITION.

NO SEPARATE MEASUREMENT OR PAYMENT WILL BE MADE FOR PROVIDING THE TEMPORARY BENTS. THE COST FOR ALL MATERIALS, EQUIPMENT, TOOLS, LABOR AND ANY INCIDENTALS NECESSARY TO PROVIDE THE TEMPORARY BENTS SHALL BE CONSIDERED INCIDENTAL TO THE LUMP SUM BID PRICE FOR STRUCTURAL STEEL.

THE CONTRACTOR MAY SUBMIT AN ALTERNATE ERECTION METHOD TO THE ENGINEER FOR REVIEW AND APPROVAL.

PROJECT NO. R-2413C
GUILFORD-ROCKINGHAM COUNTY
STATION: 20+06.118 -LREV-

NORTH CAROLINA PROFESSIONAL SEAL 022516 ENGINEER EMILY E. MURRAY
10/28/11

STATE OF NORTH CAROLINA
DEPARTMENT OF TRANSPORTATION
RALEIGH

GIRDER ERECTION DETAILS

| REVISIONS | | | | | | SHEET NO. |
|---|---|---|---|---|---|---|
| NO. | BY: | DATE: | NO. | BY: | DATE: | S-4 |
| 1 | | | 3 | | | TOTAL SHEETS |
| 2 | | | 4 | | | 237 |

DRAWN BY : PEGGY PARISI DATE : 6-1-11
CHECKED BY : T.L. AVERETTE DATE : 7-28-11

13-SEP-2011 10:33
W:\Structures\Final Plans\Str.#1\R2413C_sd_GD_01.dgn
bbarodawala

STR. #1

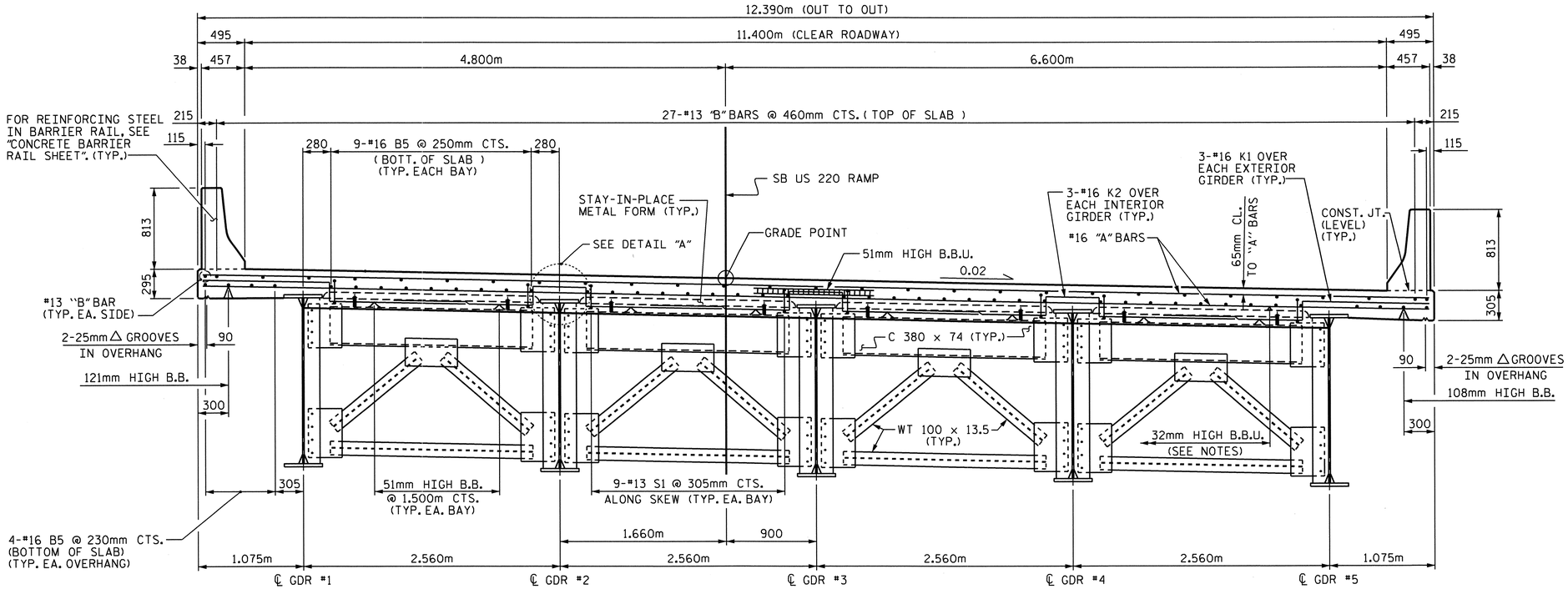


## TYPICAL SECTION @ END BENT DIAPHRAGM

SHOWING TYPE D1, SEE "FRAMING PLAN"

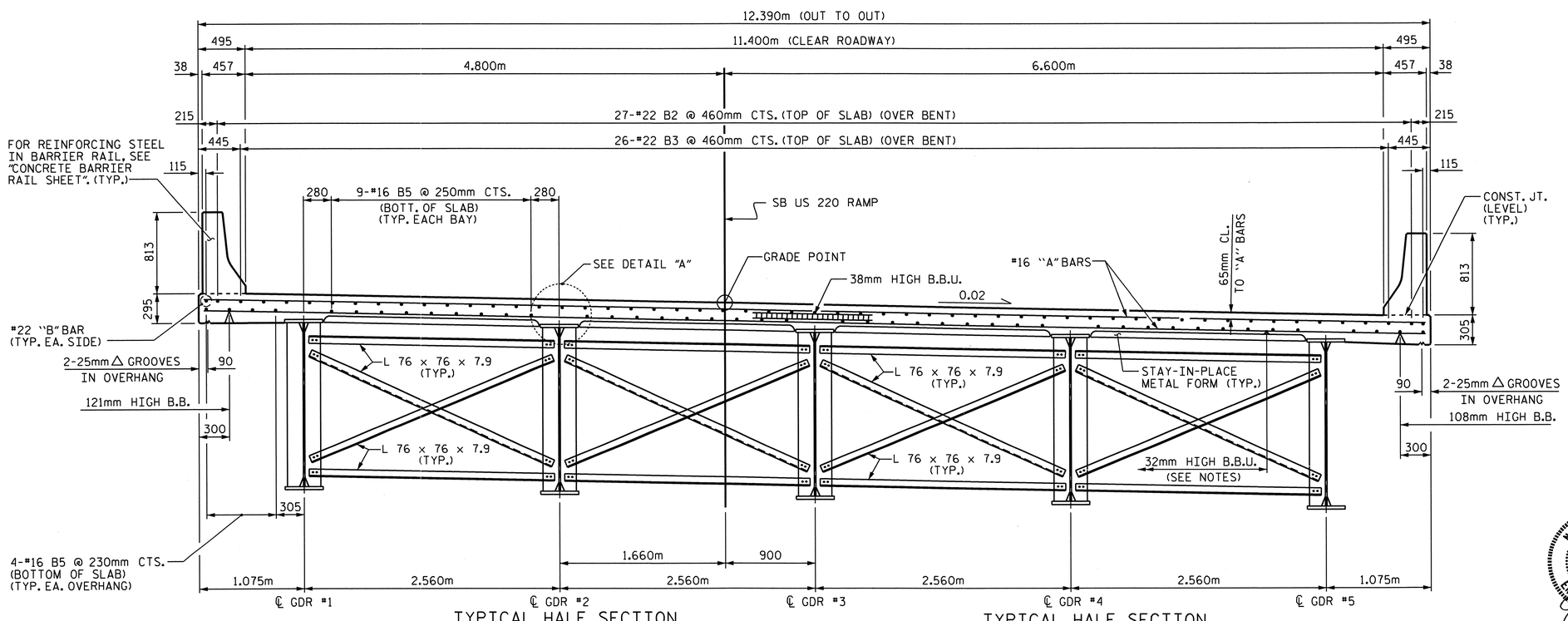


## TYPICAL HALF SECTION @ BENT DIAPHRAGM

SHOWING TYPE D2, SEE "FRAMING PLAN"

## TYPICAL HALF SECTION @ INTERMEDIATE DIAPHRAGM

SHOWING TYPE D3, SEE "FRAMING PLAN"

## ---- NOTES ----

PROVIDE 32mm HIGH BEAM BOLSTERS UPPER AT 1.2m CTS. ATOP THE METAL STAY-IN-PLACE FORMS TO SUPPORT THE BOTTOM MAT OF 'A' BARS. WHEN USING REMOVABLE FORMS, PROVIDE CONTINUOUS HIGH CHAIRS FOR METAL DECK (C.H.C.M.) @ 1.2m CTS. WITH A HEIGHT TO SUPPORT THE BOTTOM MAT OF 'A' BARS A CLEAR DISTANCE OF 65mm ABOVE THE TOP OF THE REMOVABLE FORM.

METAL STAY-IN-PLACE FORMS SHALL NOT BE WELDED TO GIRDER FLANGES IN THE ZONES REQUIRING CHARPY V-NOTCH TEST. SEE STRUCTURAL STEEL DETAIL SHEETS.

PREVIOUSLY CAST CONCRETE IN A CONTINUOUS UNIT SHALL HAVE ATTAINED A MINIMUM COMPRESSIVE STRENGTH OF 20.7 MPa BEFORE ADDITIONAL CONCRETE IS CAST IN THE UNIT.

BARRIER RAIL IN A CONTINUOUS UNIT SHALL NOT BE CAST UNTIL ALL SLAB CONCRETE IN THE UNIT HAS BEEN CAST AND HAS REACHED A MINIMUM COMPRESSIVE STRENGTH OF 20.7 MPa.

STRUCTURAL STEEL ERECTION IN A CONTINUOUS UNIT SHALL BE COMPLETE BEFORE FALSEWORK OR FORMS ARE PLACED ON THE UNIT.

THE CONTRACTOR MAY, WHEN NECESSARY, PROPOSE A SCHEME FOR AVOIDING INTERFERENCE BETWEEN METAL STAY-IN-PLACE FORM SUPPORTS OR FORMS AND GIRDER STIFFENERS OR CONNECTOR PLATES. THE PROPOSAL SHALL BE INDICATED, AS APPROPRIATE, ON EITHER THE STEEL WORKING DRAWINGS OR THE METAL STAY-IN- PLACE FORM WORKING DRAWINGS.

THE CONTRACTOR SHALL ADJUST THE GIRDER BUILDUPS AS NECESSARY TO INCORPORATE A MAXIMUM PERMISSIBLE VARIATION IN POT BEARING DEPTH OF 13mm, SEE SPECIAL PROVISION FOR POT BEARINGS.

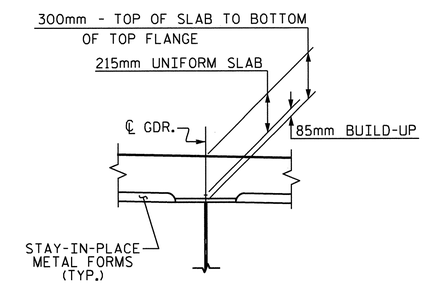


## DETAIL "A"

PROJECT NO. R-2413C

GUILFORD-ROCKINGHAM COUNTY

STATION: 20+06.118 -LREV-

SHEET 1 OF 2

STATE OF NORTH CAROLINA
DEPARTMENT OF TRANSPORTATION
RALEIGH

SUPERSTRUCTURE

TYPICAL SECTIONS

NORTH CAROLINA PROFESSIONAL SEAL 022516 ENGINEER EMILY E. MURRAY

10/28/11

| REVISIONS | | | | | | SHEET NO. |
|---|---|---|---|---|---|---|
| NO. | BY: | DATE: | NO. | BY: | DATE: | S-5 |
| 1 | | | 3 | | | TOTAL SHEETS |
| 2 | | | 4 | | | 237 |

DRAWN BY : NMR/T.L. AVERETTE DATE : 6-29-11
CHECKED BY : PEGGY PARISI DATE : 7-26-11

19-OCT-2011 13:51
R:\TIPProjects-R\R2413c\Structures\Final Plans\Str_#1\R2413C_sd_TS_01.dgn
taverette

STR. #1

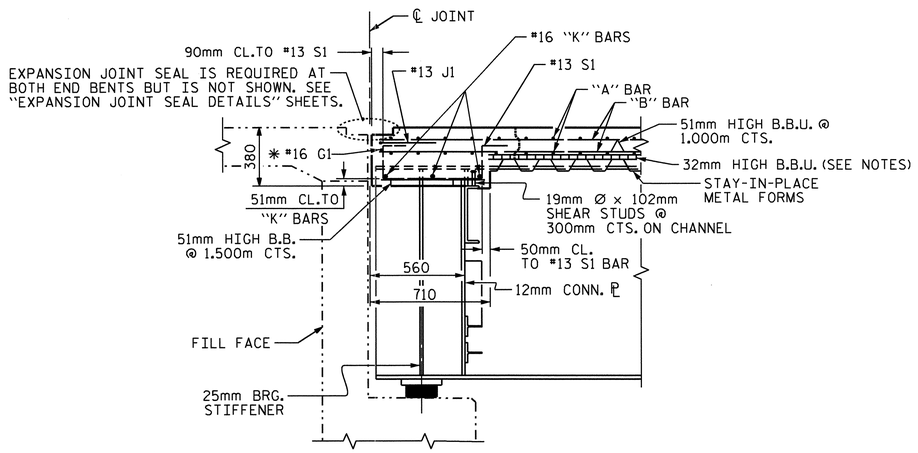


SECTION THRU END BENT DIAPHRAGM

* #16 G1 BAR MAY BE SHIFTED SLIGHTLY, AS NECESSARY, TO CLEAR DIAPHRAGM AND REINFORCING STEEL.

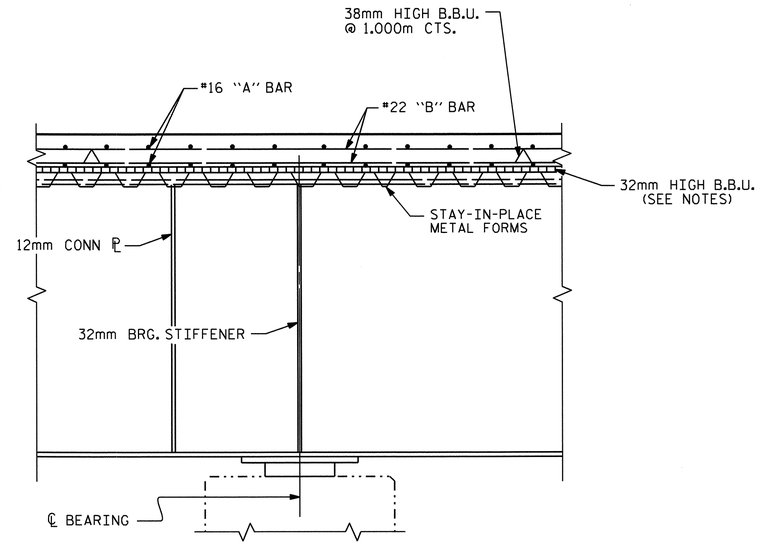


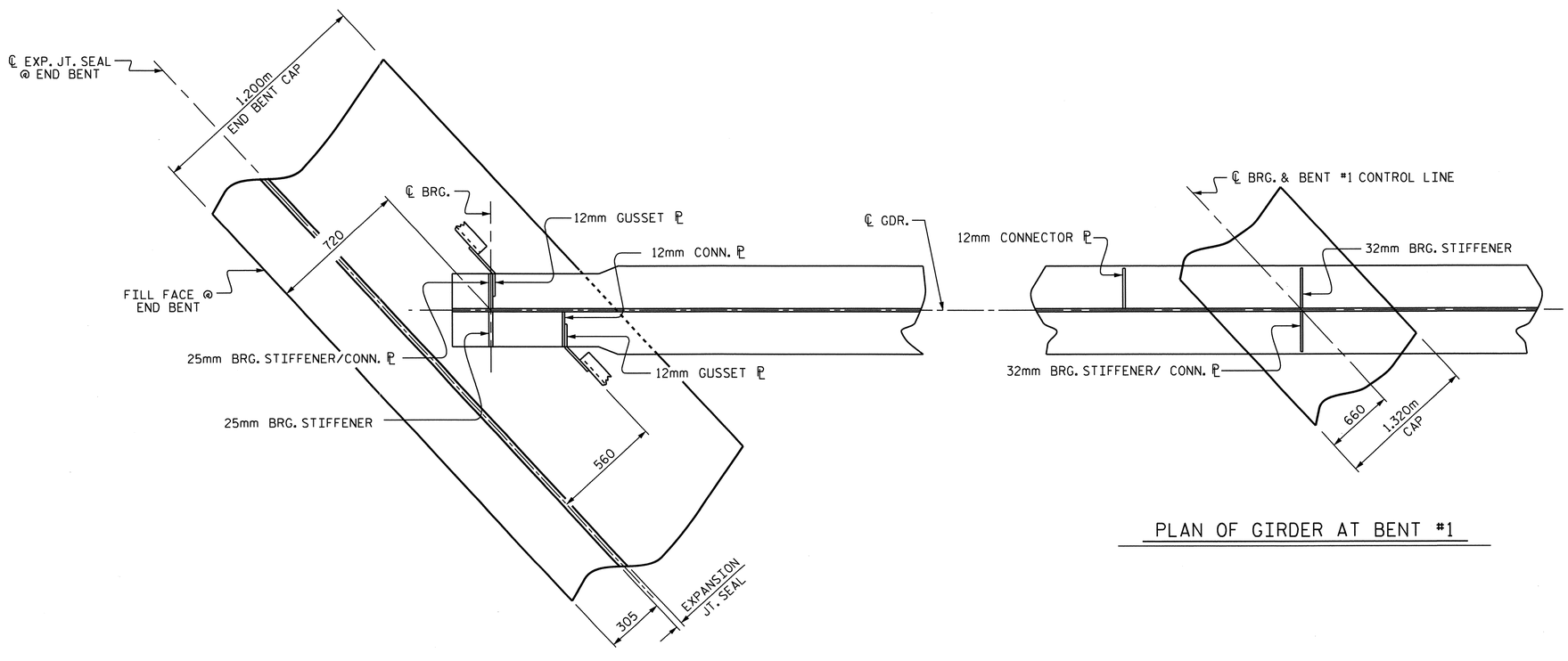


PLAN OF GIRDER AT END BENT JOINT

( END BENT #1 SHOWN, END BENT #2 SIMILAR )

PLAN OF GIRDER AT BENT #1

PROJECT NO. R-2413C

GUILFORD-ROCKINGHAM COUNTY

STATION: 20+06.118 -LREV-

SHEET 2 OF 2

STATE OF NORTH CAROLINA
DEPARTMENT OF TRANSPORTATION
RALEIGH

SUPERSTRUCTURE

# TYPICAL SECTION DETAILS

NORTH CAROLINA PROFESSIONAL SEAL 022516 ENGINEER EMILY E. McGRAY

Emily E. McGray 10/28/11

| REVISIONS | | | | | | SHEET NO. |
|---|---|---|---|---|---|---|
| NO. | BY: | DATE: | NO. | BY: | DATE: | S-6 |
| 1 | | | 3 | | | TOTAL SHEETS |
| 2 | | | 4 | | | 237 |

DRAWN BY : NMR/T.L. AVERETTE DATE : 6-29-11
CHECKED BY : PEGGY PARISI DATE : 7-26-11

19-OCT-2011 13:52
R:\TIPProjects-R\R2413c\Structures\Final Plans\Str.#1\R2413C_sd_TS_01.dgn
taverette

STR. #1

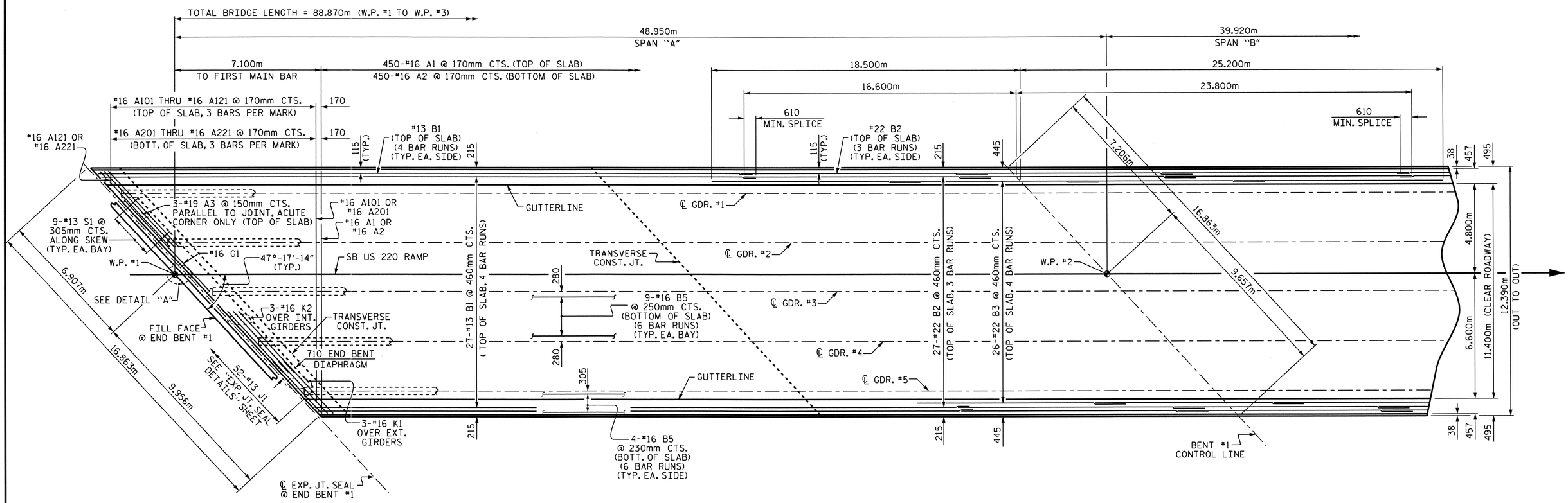


## PLAN OF SPAN "A"

FOR LOCATION OF TRANSVERSE CONSTRUCTION JOINTS, SEE POURING SEQUENCE ON SUPERSTRUCTURE BILL OF MATERIAL SHEET.

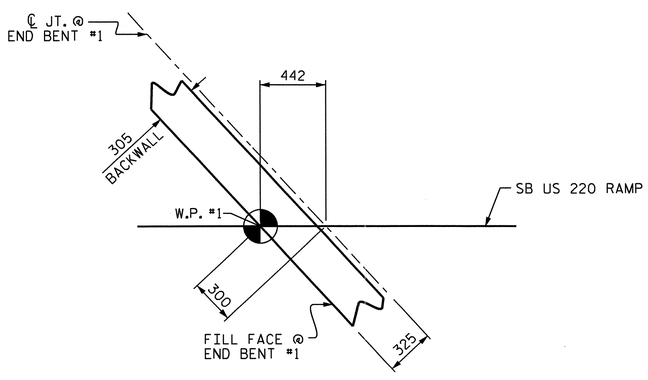


## DETAIL "A"

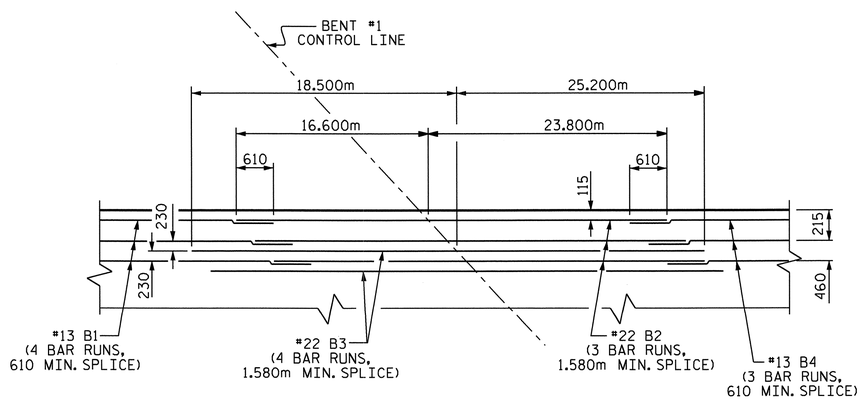


## TOP OF SLAB REINFORCING LAYOUT

@ BENT #1

PROJECT NO. R-2413C

GUILFORD-ROCKINGHAM COUNTY

STATION: 20+06.118 -LREV-

SHEET 1 OF 2

STATE OF NORTH CAROLINA
DEPARTMENT OF TRANSPORTATION
RALEIGH

SUPERSTRUCTURE

PLAN OF SPAN "A"

NORTH CAROLINA PROFESSIONAL SEAL 022516 ENGINEER CLAY E. MURRAY
10/28/11

| REVISIONS | | | | | | | SHEET NO. |
|---|---|---|---|---|---|---|---|
| NO. | BY: | DATE: | NO. | BY: | DATE: | | S-7 |
| 1 | | | 3 | | | | TOTAL SHEETS |
| 2 | | | 4 | | | | 237 |

DRAWN BY : T.L. AVERETTE DATE : 6-29-11
CHECKED BY : PEGGY PARISI DATE : 7-26-11

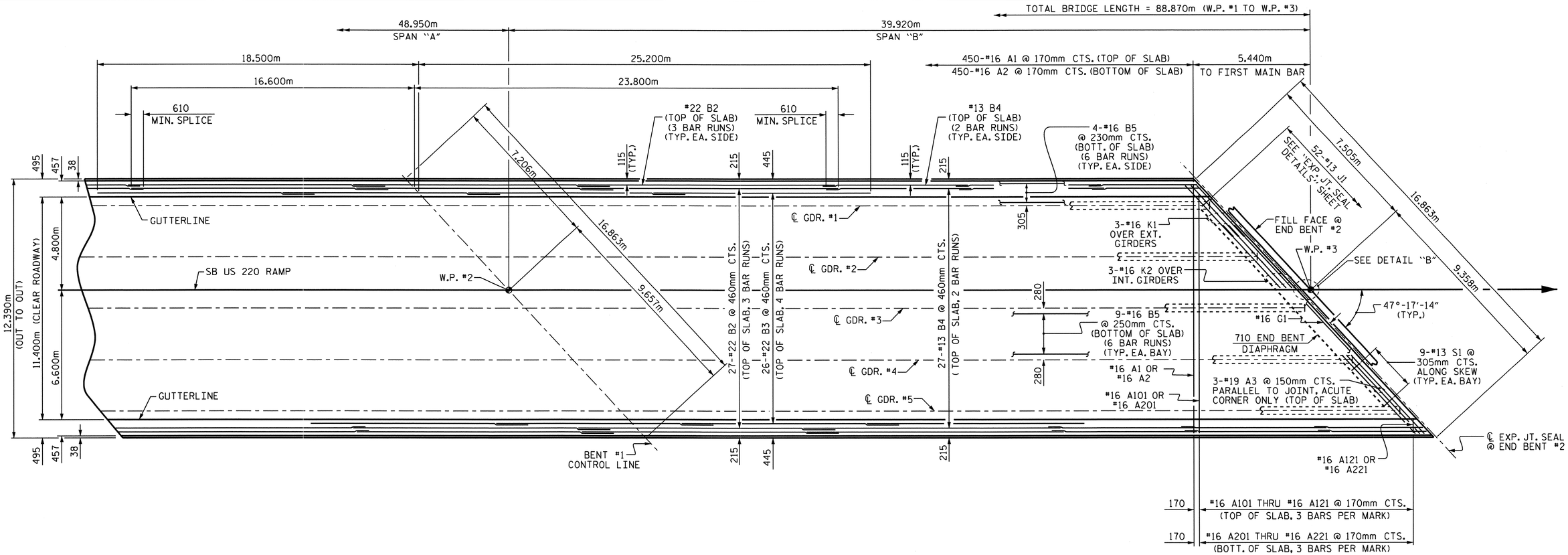


## PLAN OF SPAN "B"

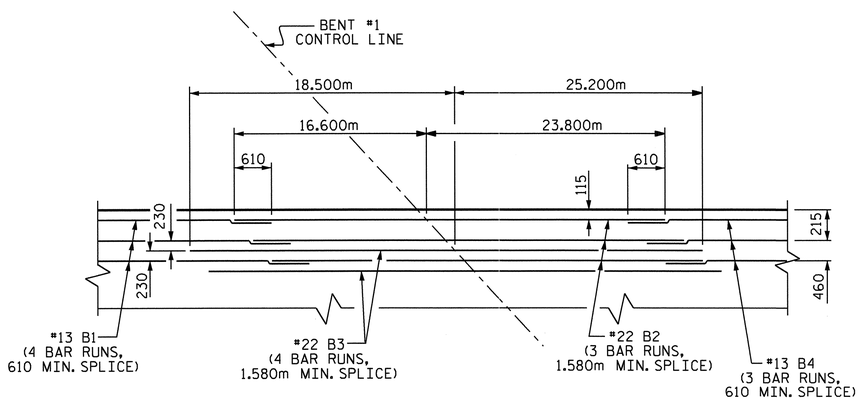


## TOP OF SLAB REINFORCING LAYOUT

@ BENT #1

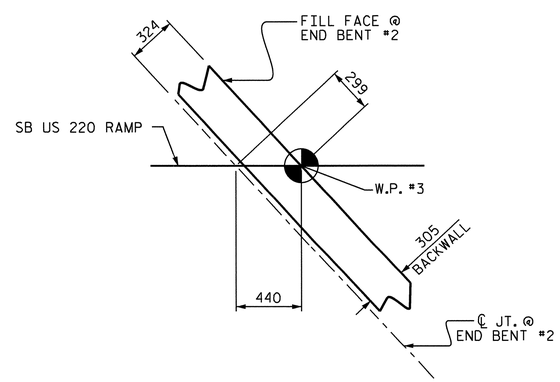


## DETAIL "B"

PROJECT NO. R-2413C

GUILFORD-ROCKINGHAM COUNTY

STATION: 20+06.118 -LREV-

SHEET 2 OF 2

STATE OF NORTH CAROLINA
DEPARTMENT OF TRANSPORTATION
RALEIGH

SUPERSTRUCTURE

PLAN OF SPAN "B"

NORTH CAROLINA PROFESSIONAL SEAL 022516 ENGINEER L. Y. E. MURRAY

10/28/11

| REVISIONS | | | | | | SHEET NO. |
|---|---|---|---|---|---|---|
| NO. | BY: | DATE: | NO. | BY: | DATE: | S-8 |
| 1 | | | 3 | | | TOTAL SHEETS |
| 2 | | | 4 | | | 237 |

DRAWN BY : T.L. AVERETTE DATE : 6-29-11
CHECKED BY : PEGGY PARISI DATE : 7-26-11

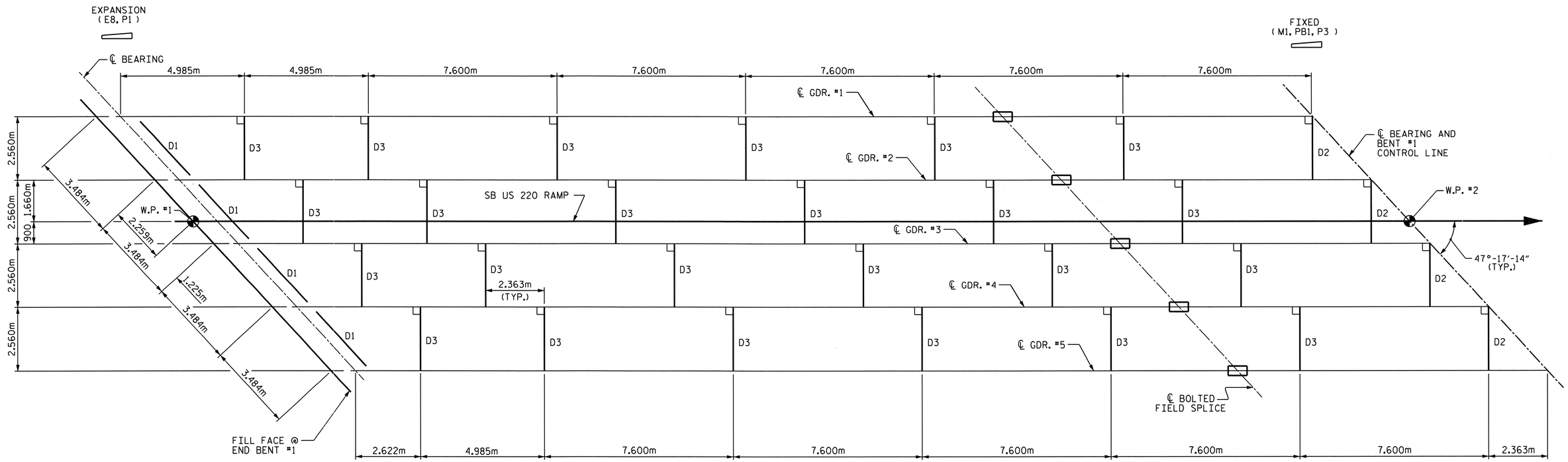


SPAN "A"

PROJECT NO. R-2413C

GUILFORD-ROCKINGHAM COUNTY

STATION: 20+06.118 -LREV-

SHEET 1 OF 2

STATE OF NORTH CAROLINA
DEPARTMENT OF TRANSPORTATION
RALEIGH

# FRAMING PLAN OF CONTINUOUS SPAN "A"

NORTH CAROLINA PROFESSIONAL SEAL 022516 ENGINEER ELMER E. MURRAY

10/28/11

| REVISIONS | | | | | | SHEET NO. |
|---|---|---|---|---|---|---|
| NO. | BY: | DATE: | NO. | BY: | DATE: | S-9 |
| 1 | | | 3 | | | TOTAL SHEETS |
| 2 | | | 4 | | | 237 |

DRAWN BY : NMR/T.L. AVERETTE DATE : 6-29-11
CHECKED BY : PEGGY PARISI DATE : 7-26-11

19-OCT-2011 13:53
R:\TIPProjects-R\R2413c\Structures\FinalPlans\Str.#1\R2413C_sd_FP_01.dgn
taverette

STR. #1

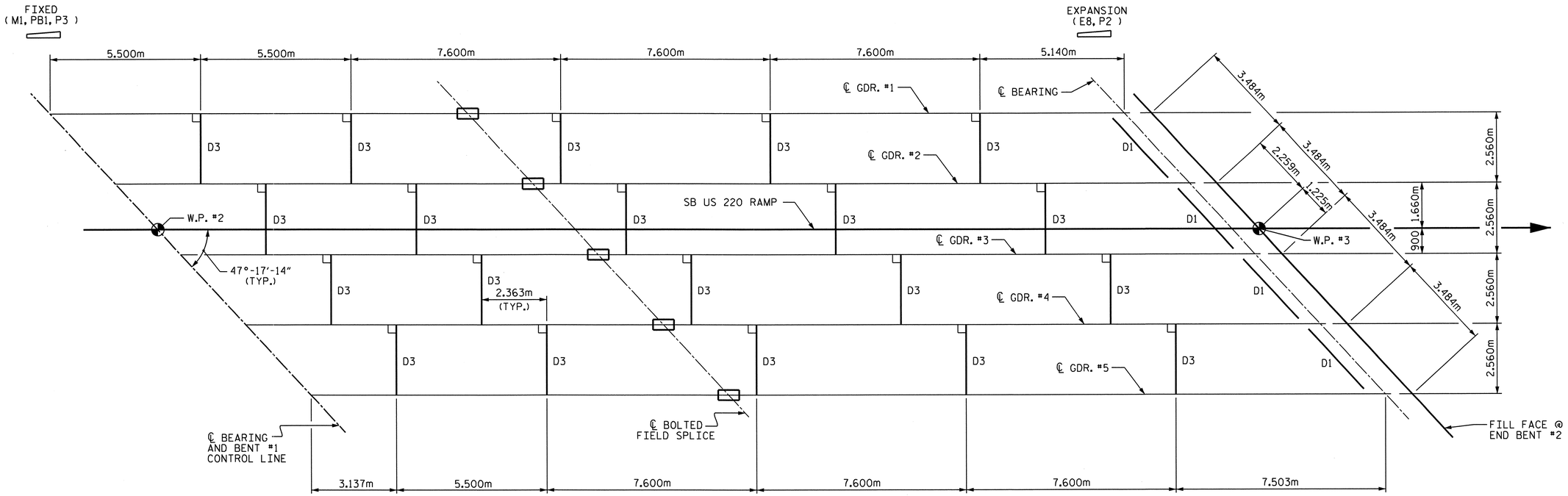


## SPAN "B"

FOR BENT DIAPHRAGM D2, SEE SHEET 1 OF 2

PROJECT NO. R-2413C

GUILFORD-ROCKINGHAM COUNTY

STATION: 20+06.118 -LREV-

SHEET 2 OF 2

STATE OF NORTH CAROLINA
DEPARTMENT OF TRANSPORTATION
RALEIGH

# FRAMING PLAN OF CONTINUOUS SPAN "B"

NORTH CAROLINA PROFESSIONAL SEAL 022516 ENGINEER EMILY E. McGRAW

10/28/11

| REVISIONS | | | | | | SHEET NO. |
|---|---|---|---|---|---|---|
| NO. | BY: | DATE: | NO. | BY: | DATE: | S-10 |
| 1 | | | 3 | | | TOTAL SHEETS |
| 2 | | | 4 | | | 237 |

DRAWN BY : NMR/T.L. AVERETTE DATE : 6-29-11
CHECKED BY : PEGGY PARISI DATE : 7-26-11

19-OCT-2011 13:53
R:\TIPProjects-R\R2413c\Structures\FinalPlans\Str.#1\R2413C_sd_FP_01.dgn
taverette

STR. #1

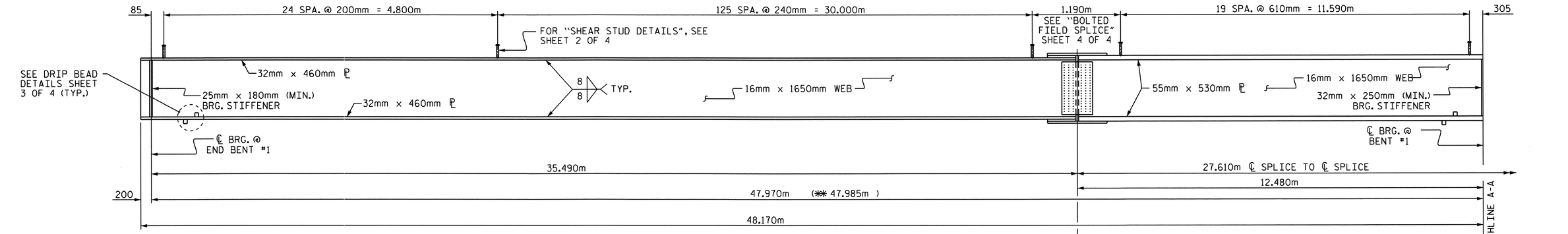


## GIRDER ELEVATION

(TYPICAL ALL GIRDERS)

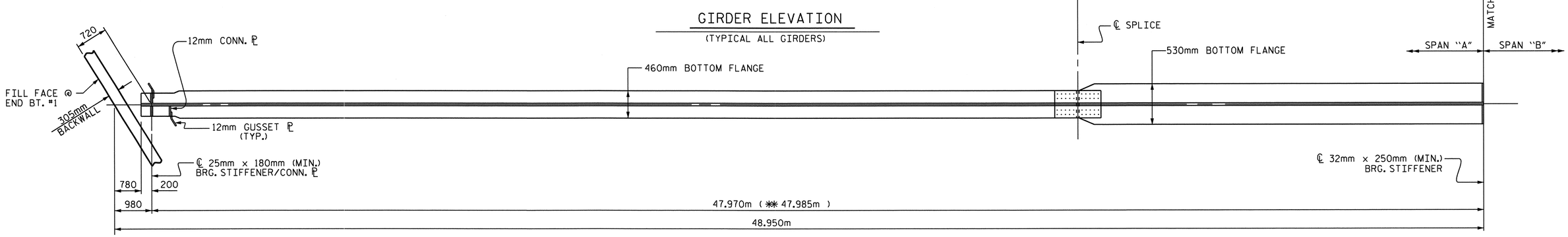


## BOTTOM FLANGE DETAIL

** SLOPE DISTANCE

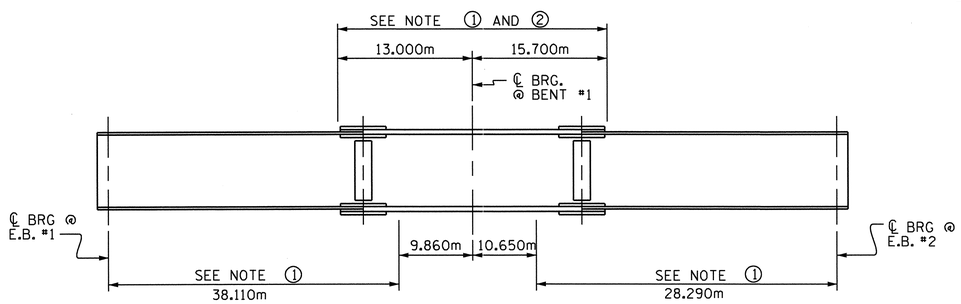


## GIRDER MAKE UP

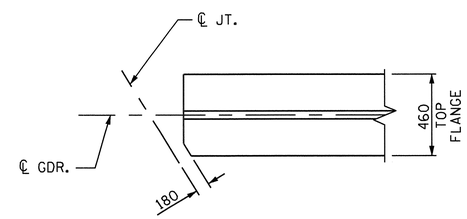


## TOP FLANGE CLIP DETAIL

(TYP. EA. END)

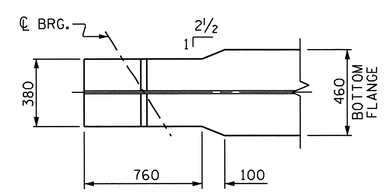


## BOTTOM FLANGE TAPER DETAIL

(TYP. EA. END)

NOTE ①: CHARPY V-NOTCH TESTS ARE REQUIRED FOR ALL TOP OR BOTTOM FLANGE PLATES WHICH FALL WITHIN THESE LIMITS, ALL WEB PLATES, AND ALL SPLICE PLATES. IF A PERMITTED SHOP FLANGE SPLICE IS NOT USED, CHARPY V-NOTCH TESTS WILL BE REQUIRED FOR THE ENTIRE FLANGE PLATE. FOR CHARPY V-NOTCH TESTS, SEE ARTICLE 1072-9 OF THE STANDARD SPECIFICATIONS.

NOTE ②: NO WELDING OF FORMS OR FALSEWORK TO THE TOP FLANGE WILL BE PERMITTED IN THIS REGION.

## CHARPY V-NOTCH TESTS FOR CONTINUOUS PLATE GIRDERS

PROJECT NO. R-2413C
GUILFORD-ROCKINGHAM COUNTY
STATION: 20+06.118 -LREV-

SHEET 1 OF 4

STATE OF NORTH CAROLINA
DEPARTMENT OF TRANSPORTATION
RALEIGH

# SUPERSTRUCTURE STRUCTURAL STEEL DETAILS SPAN "A"

NORTH CAROLINA PROFESSIONAL SEAL 022516 ENGINEER EMILY E. MURRAY
10/28/11

| REVISIONS | | | | | | SHEET NO. |
|---|---|---|---|---|---|---|
| NO. | BY: | DATE: | NO. | BY: | DATE: | S-11 |
| 1 | | | 3 | | | TOTAL SHEETS |
| 2 | | | 4 | | | 237 |

STR #1

DRAWN BY : NMR/T.L. AVERETTE DATE : 6-28-11
CHECKED BY : PEGGY PARISI DATE : 7-26-11

13-SEP-2011 10:29
W:\Structures\Final Plans\Str.#1\R2413C_sd_SS_01.dgn
bbarodawala

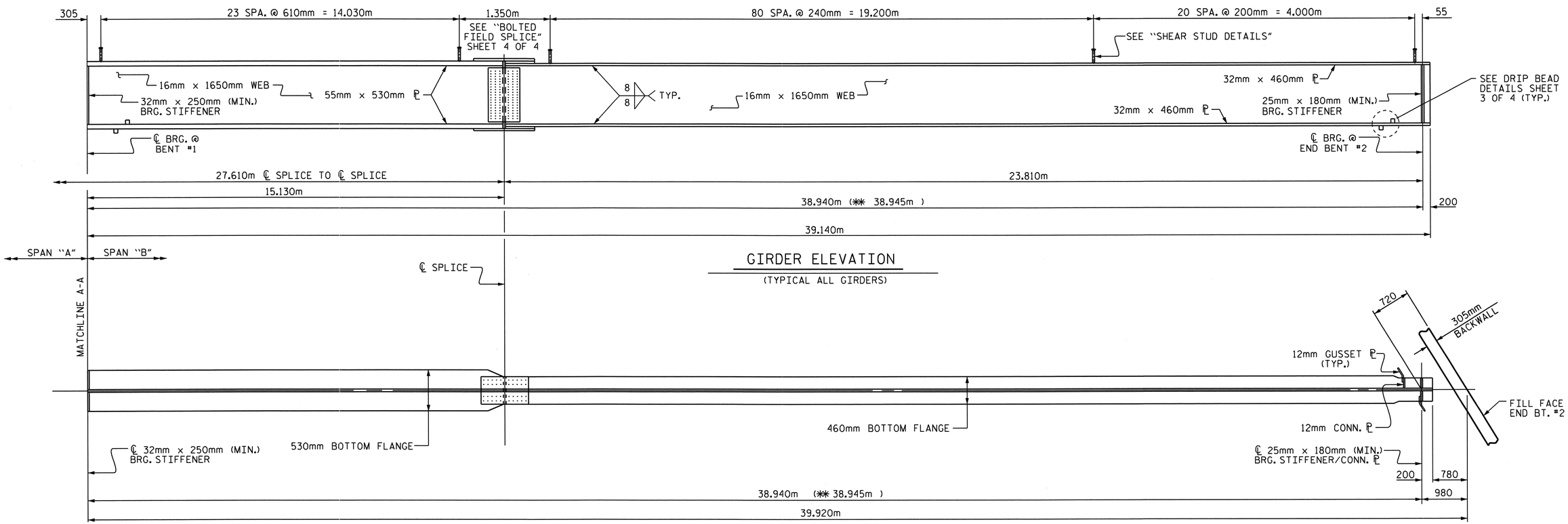


GIRDER ELEVATION

(TYPICAL ALL GIRDERS)

BOTTOM FLANGE DETAIL

✱✱ SLOPE DISTANCE

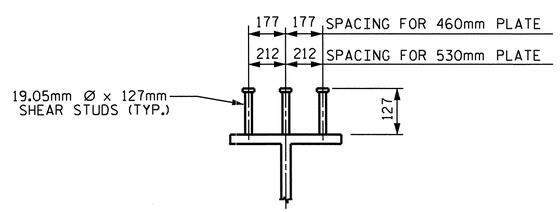


SHEAR STUD DETAILS

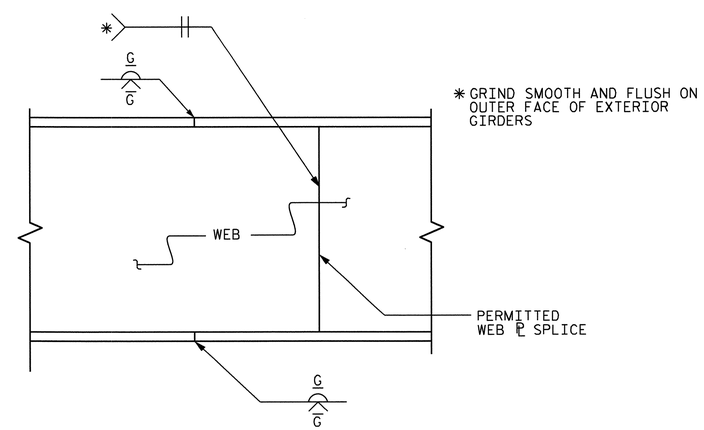


ELEVATION

TYPICAL FLANGE AND WEB BUTT JOINT

PROJECT NO. R-2413C

GUILFORD-ROCKINGHAM COUNTY

STATION: 20+06.118 -LREV-

SHEET 2 OF 4

STATE OF NORTH CAROLINA
DEPARTMENT OF TRANSPORTATION
RALEIGH

# SUPERSTRUCTURE STRUCTURAL STEEL DETAILS SPAN "B"

NORTH CAROLINA PROFESSIONAL SEAL 022516 ENGINEER TIMOTHY E. MURRAY 10/28/11

| REVISIONS | | | | | | SHEET NO. |
|---|---|---|---|---|---|---|
| NO. | BY: | DATE: | NO. | BY: | DATE: | S-12 |
| 1 | | | 3 | | | TOTAL SHEETS |
| 2 | | | 4 | | | 237 |

DRAWN BY : NMR/T.L. AVERETTE DATE : 6-28-11
CHECKED BY : PEGGY PARISI DATE : 7-26-11

13-SEP-2011 10:29
W:\Structures\Final Plans\Str.#1\R2413C_sd_SS_01.dgn
bbarodawala

STR #1

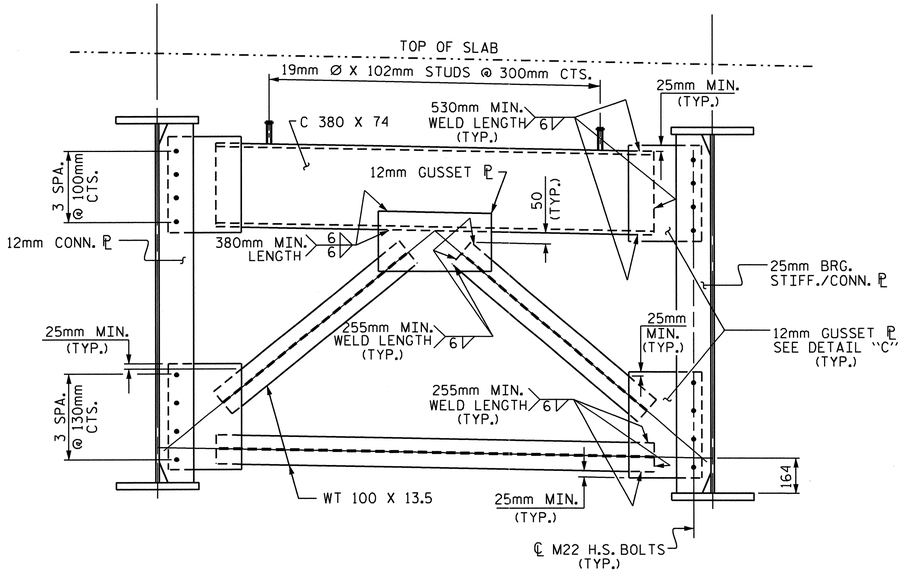


TYPICAL END BENT CROSSFRAME ( D1 )

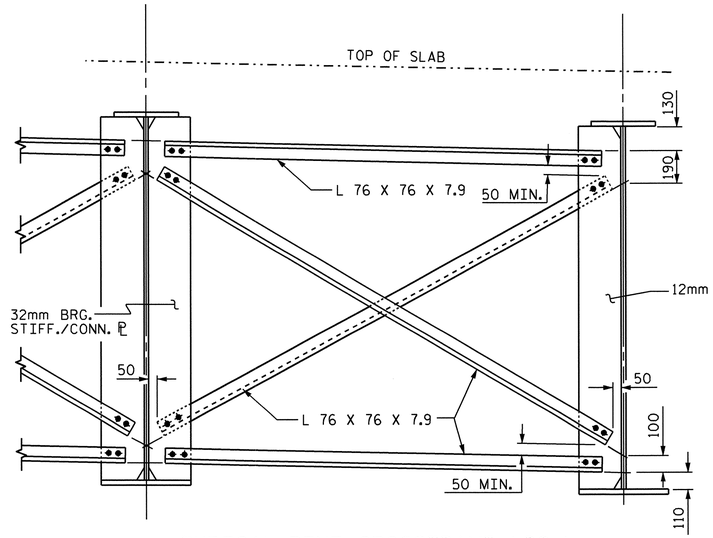


TYPICAL BENT CROSSFRAME ( D2 )

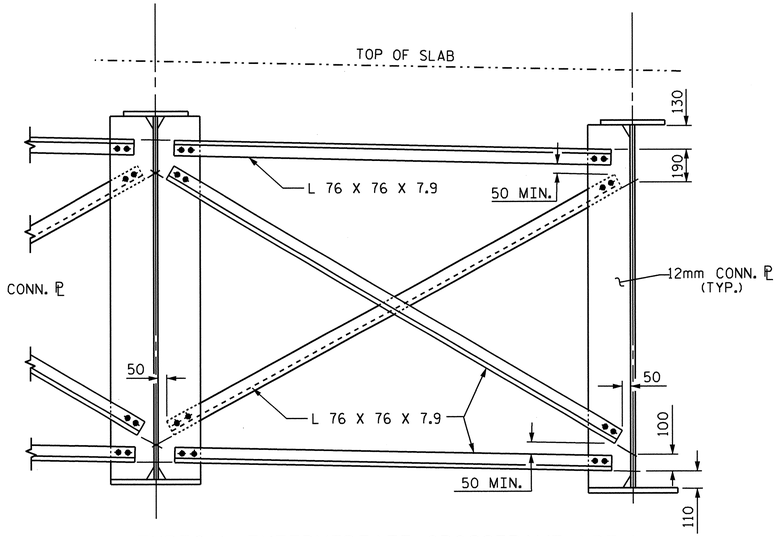


TYPICAL INTERMEDIATE CROSSFRAME ( D3 )

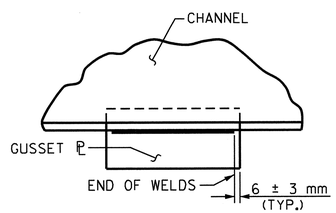


TYPICAL GUSSET PLATE CONNECTION

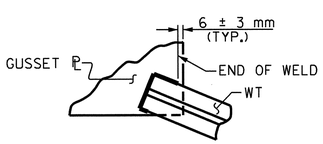


TYPICAL "TEE" TO GUSSET PLATE CONNECTION

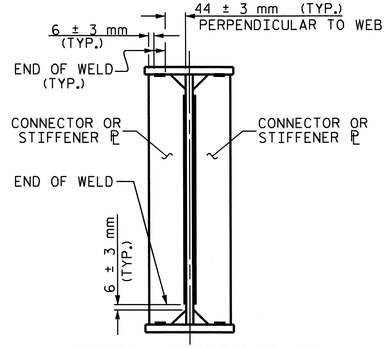


TYPICAL STIFFENER OR CONNECTOR PLATE CONNECTIONS

WELD TERMINATION DETAILS

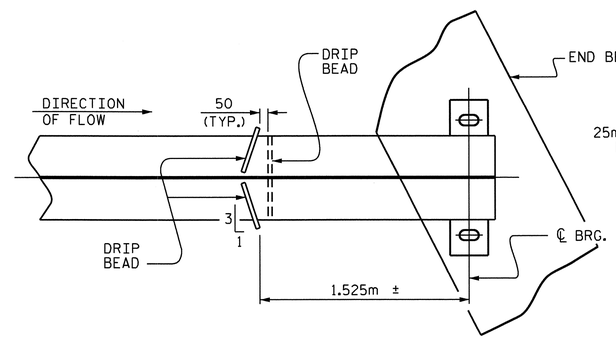


PART PLAN - BOTTOM FLANGE

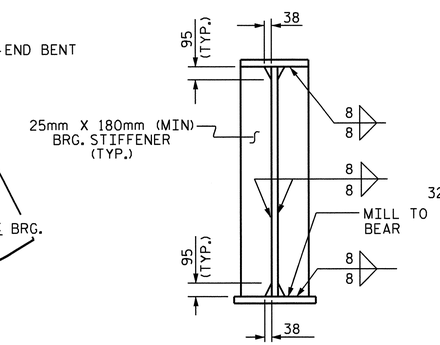


@ END BENTS

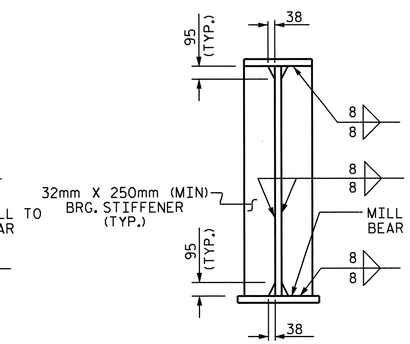


@ BENTS

NOTE:
THE BEARING STIFFENER SHALL BE WELDED TO THE BOTTOM FLANGE ONLY WHEN USED AS A CONNECTOR ℙ.

BEARING STIFFENER

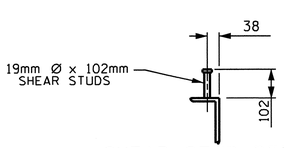


SHEAR STUD DETAILS

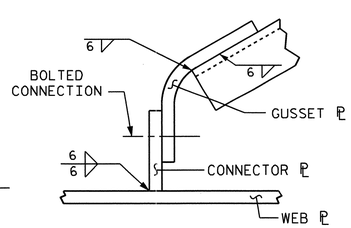


DETAIL "C"

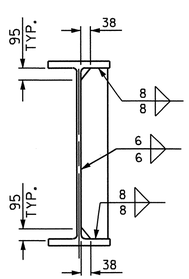


CONNECTOR PLATE DETAIL

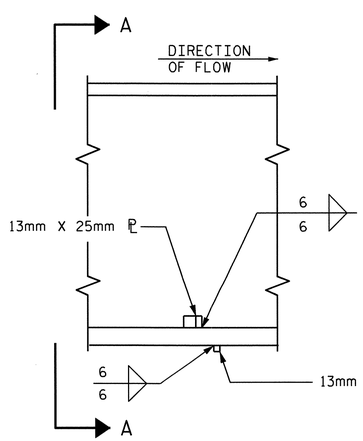


SECTION

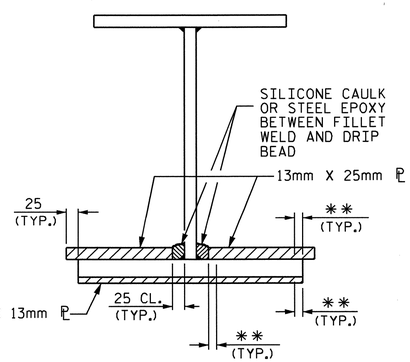


VIEW A-A

**SEE "WELD TERMINATION DETAILS"

DRIP BEAD DETAILS

PROJECT NO. R-2413C

GUILFORD-ROCKINGHAM COUNTY

STATION: 20+06.118 -LREV-

SHEET 3 OF 4

STATE OF NORTH CAROLINA
DEPARTMENT OF TRANSPORTATION
RALEIGH

# SUPERSTRUCTURE STRUCTURAL STEEL DETAILS

NORTH CAROLINA PROFESSIONAL SEAL 022516 ENGINEER TIMOTHY E. MURRAY
10/28/11

| REVISIONS | | | | | | SHEET NO. |
|---|---|---|---|---|---|---|
| NO. | BY: | DATE: | NO. | BY: | DATE: | S-13 |
| 1 | | | 3 | | | TOTAL SHEETS |
| 2 | | | 4 | | | 237 |

DRAWN BY : NMR/T.L. AVERETTE DATE : 6-28-11
CHECKED BY : PEGGY PARISI DATE : 7-26-11

19-OCT-2011 13:54
R:\TIPProjects-R\R2413c\Structures\FinalPlans\Str.#1\R2413C_sd_SS_01.dgn
taverette

STR. #1

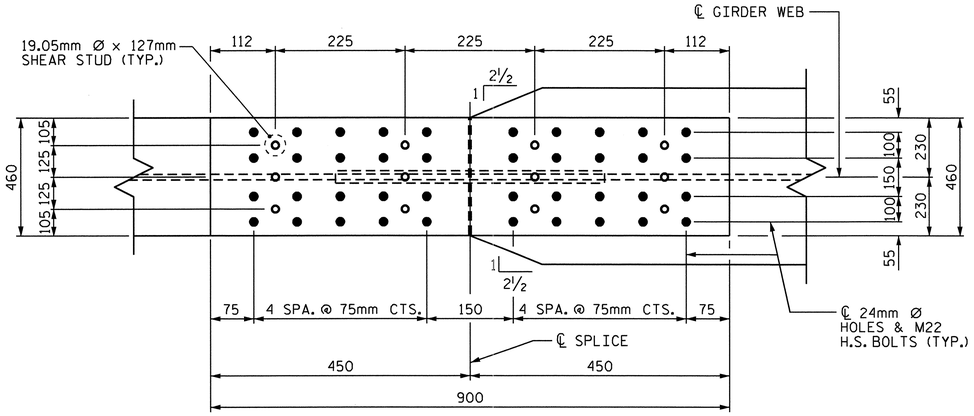


PLAN (TOP OF TOP FLANGE)

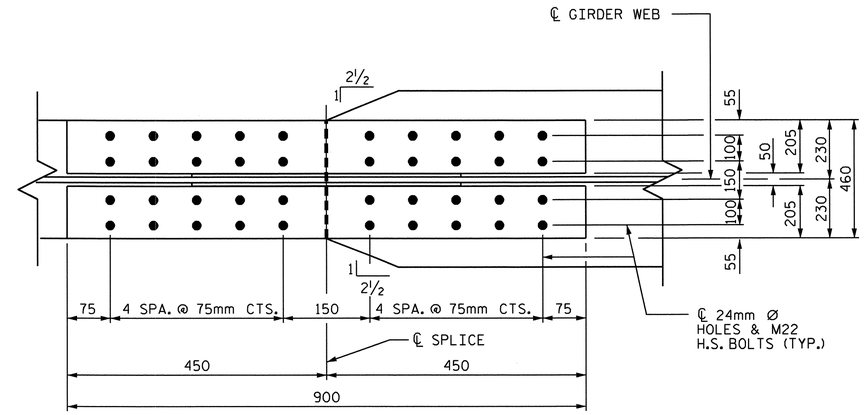


PLAN (TOP OF BOTTOM FLANGE)

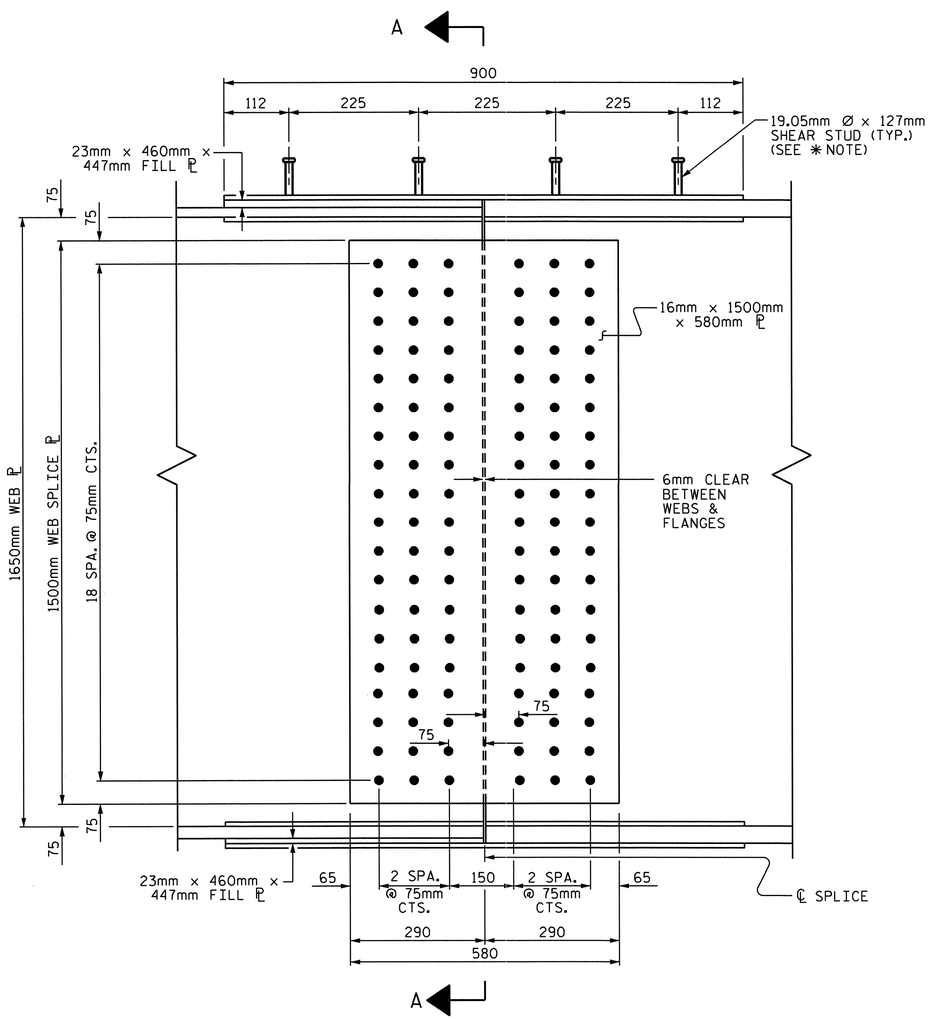


ELEVATION

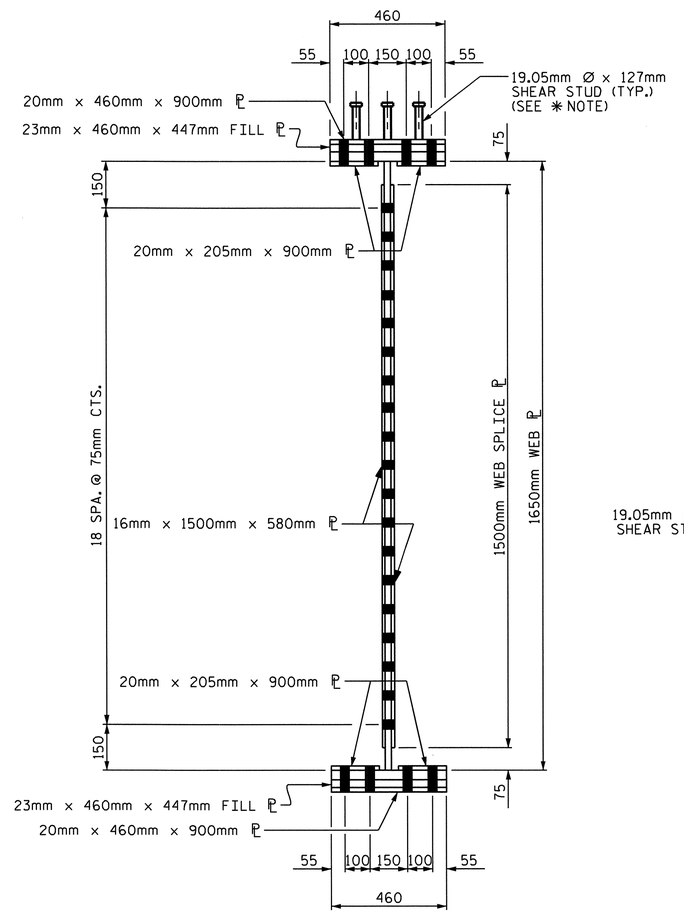


SECTION A-A

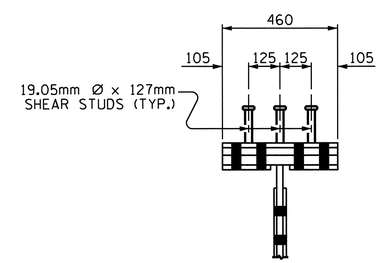


SHEAR STUD DETAIL FOR TOP FLANGE SPLICE PLATE

✱ NOTE: SHEAR STUDS ARE TO BE SHOP WELDED ON TOP OF PLATE BEFORE FIELD ASSEMBLY.

## NOTES

ALL STRUCTURAL STEEL SHALL BE AASHTO M270 GRADE 345W AND PAINTED IN ACCORDANCE WITH SYSTEM 4 OF ARTICLE 442-7 OF THE STANDARD SPECIFICATIONS UNLESS OTHERWISE NOTED ON THE PLANS.

ALL DIMENSIONS SHOWN ARE HORIZONTAL OR VERTICAL, UNLESS OTHERWISE NOTED.

ALL FIELD CONNECTIONS TO BE 22.23mm DIA. HIGH STRENGTH BOLTS UNLESS OTHERWISE NOTED. FOR HIGH STRENGTH BOLTS, SEE SPECIAL PROVISIONS.

BEARING STIFFENERS ARE TO BE PLACED NORMAL TO THE WEB OF THE GIRDER AND SHALL BE PLUMB.

PERMITTED FLANGE AND WEB SHOP SPLICES SHALL NOT BE LOCATED WITHIN 4.5 METERS OF MAXIMUM DEAD LOAD DEFLECTION (NOR WITHIN 4.5 METERS OF INTERMEDIATE BEARINGS OF CONTINUOUS UNITS). KEEP 600mm MINIMUM BETWEEN WEB AND FLANGE SHOP SPLICES. KEEP 150mm MINIMUM BETWEEN CONNECTOR PLATE OR TRANSVERSE STIFFENER WELDS AND WEB OR FLANGE SHOP SPLICES.

STUDS ON GIRDERS MAY BE SHIFTED UP TO 25mm IF NECESSARY TO CLEAR FLANGE SPLICE WELD.

TENSION ON THE AASHTO M164 BOLTS SHALL BE CALIBRATED USING DIRECT TENSION INDICATOR WASHERS. FOR DIRECT TENSION INDICATORS, SEE SPECIAL PROVISIONS.

END OF GIRDERS SHALL BE PLUMB.

BEARING STIFFENER MAY REQUIRE COPING IF WIDER THAN BOTTOM FLANGE TO AVOID INTERFERENCE WITH THE ANCHOR BOLT.

FOR SHIPPING STEEL STRUCTURAL MEMBERS, SEE SPECIAL PROVISIONS.

FABRICATORS SHALL DETAIL DIAPHRAGM MEMBERS AND CONNECTIONS FOR FULL DEAD LOAD FIT UP. GIRDERS SHALL BE PLUMB AFTER THE FULL AMOUNT OF DEAD LOAD IS APPLIED.

# BOLTED FIELD SPLICE DETAILS

(TYPICAL EACH FIELD SPLICE)

PROJECT NO. R-2413C
GUILFORD-ROCKINGHAM COUNTY
STATION: 20+06.118 -LREV-

SHEET 4 OF 4

STATE OF NORTH CAROLINA
DEPARTMENT OF TRANSPORTATION
RALEIGH

SUPERSTRUCTURE
STRUCTURAL STEEL
DETAILS
BOLTED FIELD SPLICE

NORTH CAROLINA PROFESSIONAL SEAL 022516 ENGINEER EMILY E. MURRAY
10/28/11

| REVISIONS | | | | | | SHEET NO. |
|---|---|---|---|---|---|---|
| NO. | BY: | DATE: | NO. | BY: | DATE: | S-14 |
| 1 | | | 3 | | | TOTAL SHEETS |
| 2 | | | 4 | | | 237 |

DRAWN BY : NMR/T.L. AVERETTE DATE : 6-28-11
CHECKED BY : PEGGY PARISI DATE : 7-26-11

13-SEP-2011 10:29
W:\Structures\Final Plans\Str.#1\R2413C_sd_SS_01.dgn
bbarodawala

STR. #1

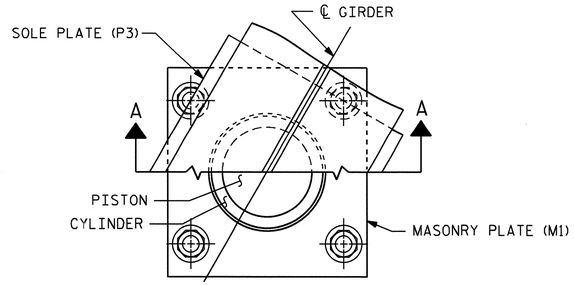


CUT-AWAY PLAN

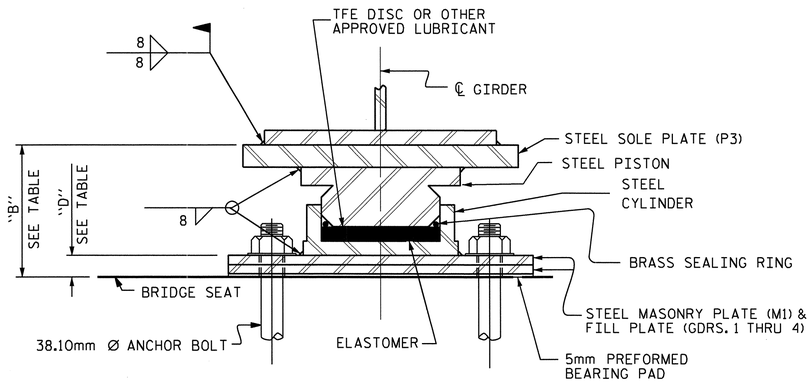


SECTION A-A

PB1, FIXED

( 5 REQUIRED )

## POT BEARING DETAILS

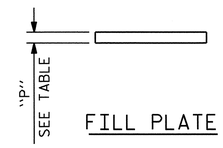


FILL PLATE

| GIRDER | DIMENSION "B" | DIMENSION "D" | DIMENSION "P" |
|---|---|---|---|
| 1 | 197 | 62 | 25 |
| 2 | 192 | 57 | 20 |
| 3 | 188 | 53 | 16 |
| 4 | 181 | 46 | 9 |
| 5 | 172 | 37 | - |

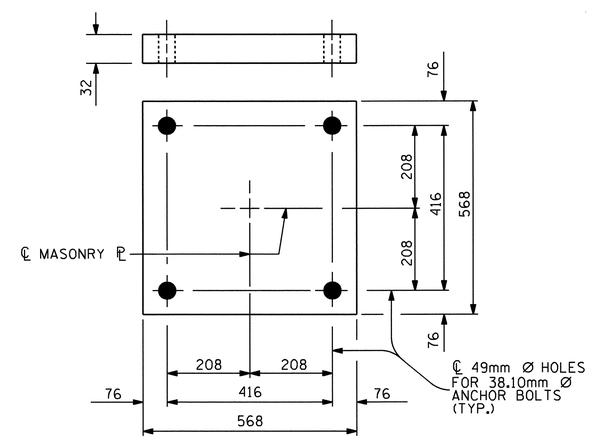


M1

( 5 REQUIRED )

## MASONRY PLATE DETAILS (M1)

## NOTES

FOR POT BEARINGS, SEE SPECIAL PROVISIONS.

AT ALL POINTS OF SUPPORT, NUTS FOR ANCHOR BOLTS SHALL BE TIGHTENED FINGER TIGHT AND GIVEN AN ADDITIONAL 1/4 TURN. THE THREAD OF THE NUT AND BOLT SHALL THEN BE BURRED WITH A SHARP POINTED TOOL.

WHEN WELDING THE SOLE PLATE TO THE GIRDER, USE TEMPERATURE INDICATING WAX PENS, OR OTHER SUITABLE MEANS, TO ENSURE THAT THE TEMPERATURE OF THE BEARING DOES NOT EXCEED 121°C TEMPERATURES ABOVE THIS MAY DAMAGE THE TFE OR ELASTOMER.

SOLE PLATES SHOULD BE WELDED TO BEAM FLANGES BEFORE FALSEWORK IS PLACED.

ALL SURFACES OF BEARING PLATES SHALL BE SMOOTH AND STRAIGHT.

FOR THERMAL SPRAYED COATINGS (METALLIZATION), SEE SPECIAL PROVISIONS.

THE CONTRACTOR MAY SUBSTITUTE DISC BEARINGS FOR THE POT BEARINGS SHOWN. FOR OPTIONAL DISC BEARINGS, SEE SPECIAL PROVISIONS.

AT THE CONTRACTOR'S OPTION, FILL PLATES (WHERE USED) MAY BE COMBINED WITH MASONRY PLATES.

THE CONTRACTOR SHALL ADJUST THE GIRDER BUILDUPS AS NECESSARY TO INCORPORATE A MAXIMUM PERMISSIBLE VARIATION IN POT BEARING DEPTH OF 13mm, SEE SPECIAL PROVISION FOR POT BEARINGS.

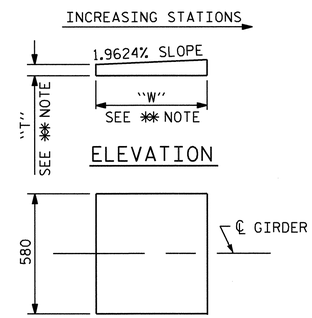


✱✱ NOTE:
DIMENSIONS "W" AND "T" ARE TO BE DETERMINED BY THE MANUFACTURER.

## SOLE PLATE DETAILS (P3)

PROJECT NO. R-2413C

GUILFORD-ROCKINGHAM COUNTY

STATION: 20+06.118 -LREV-

TABLE FOR LOADS AND MOVEMENTS

| BEARING | LOCATION | VERTICAL LOAD ( kN ) | | | LATERAL LOAD ( kN ) | TOTAL MOVEMENT ( mm ) |
|---|---|---|---|---|---|---|
| | | DEAD | LIVE | TOTAL | | |
| | | | | | | |
| PB1 (FIXED) | BENT #1 | 1520 | 491 | 2011 | 304 | 0 |
| | | | | | | |

STATE OF NORTH CAROLINA
DEPARTMENT OF TRANSPORTATION
RALEIGH

STANDARD

POT BEARING DETAILS

| REVISIONS | | | | | | SHEET NO. |
|---|---|---|---|---|---|---|
| NO. | BY: | DATE: | NO. | BY: | DATE: | S-15 |
| 1 | | | 3 | | | TOTAL SHEETS |
| 2 | | | 4 | | | 237 |

STR. #1 PB1SM.STD

ASSEMBLED BY : T.L. AVERETTE DATE : 06-23-11
CHECKED BY : PEGGY PARISI DATE : 07-26-11

DRAWN BY : RWW 8/99
CHECKED BY : LES 8/99

REV. 7/10/01 LES/RWW
REV. 5/7/03 RWW/JTE
REV. 5/1/06R TLA/GM

19-OCT-2011 13:56
R:\TIPProjects-R\R2413c\Structures\Final Plans\Str.#1\R2413C_sd_BG_01.dgn
taverette

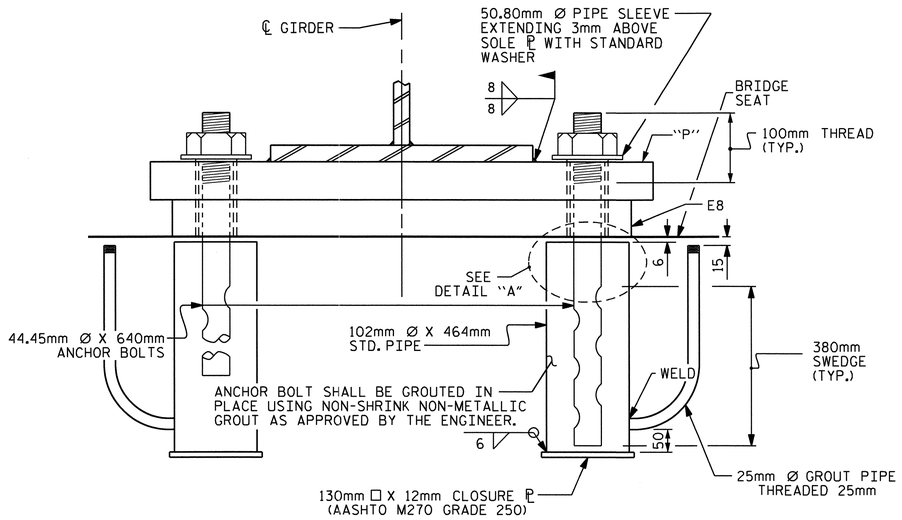


EXPANSION

END VIEW

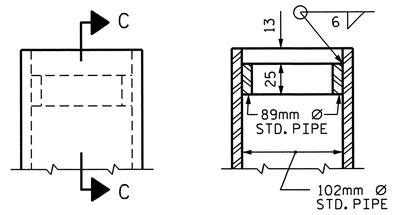


SECTION C-C

DETAIL "A"

| LOAD RATINGS | |
|---|---|
| | MAX.D.L.+ L.L. |
| | |
| TYPE IV | 809 kN |
| | |

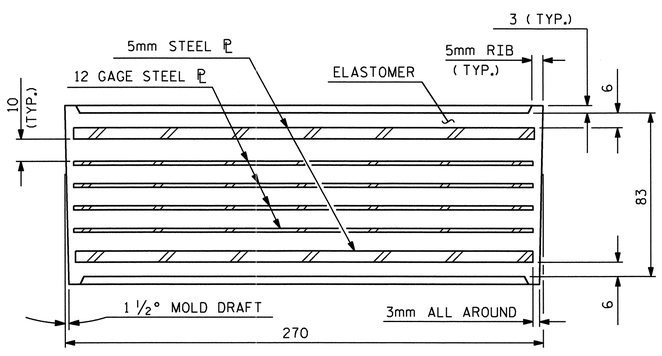


TYPICAL SECTION OF ELASTOMERIC BEARING

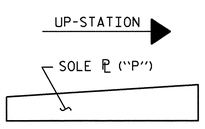


SOLE ℙ PLACEMENT DETAIL

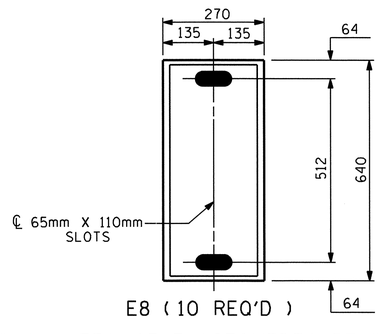


E8 ( 10 REQ'D )

PLAN VIEW OF ELASTOMERIC BEARING

TYPE IV

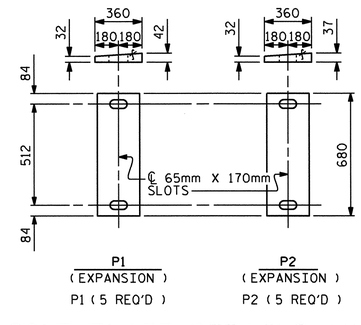


SOLE PLATE DETAILS ( "P" )

## NOTES

THE 51mm Ø PIPE SLEEVE SHALL BE CUT FROM SCHEDULE 40 PVC PLASTIC PIPE. THE PVC PLASTIC PIPE SHALL MEET THE REQUIREMENTS OF ASTM D1785.

THE PAYMENT FOR THE PIPE SLEEVES SHALL BE INCLUDED IN THE SEVERAL PAY ITEMS.

FOR AASHTO M270 GRADE 345W STRUCTURAL STEEL, SOLE PLATE SHALL BE AASHTO M270 GRADE 345W AND SHALL NOT BE GALVANIZED, ANCHOR BOLTS AND NUTS SHALL BE GALVANIZED IN ACCORDANCE WITH THE STANDARD SPECIFICATIONS.

ANCHOR BOLTS SHALL MEET THE REQUIREMENTS OF ASTM A449. NUTS SHALL MEET THE REQUIREMENTS OF AASHTO M291M-12 OR AASHTO M292M-2H. WASHERS SHALL MEET THE REQUIREMENTS OF AASHTO M293M. SHOP DRAWINGS ARE NOT REQUIRED FOR ANCHOR BOLTS, NUTS AND WASHERS. SHOP INSPECTION IS REQUIRED.

WHEN FIELD WELDING THE SOLE PLATE TO THE GIRDER FLANGE, USE TEMPERATURE INDICATING WAX PENS, OR OTHER SUITABLE MEANS, TO ENSURE THAT THE TEMPERATURE OF THE SOLE PLATE DOES NOT EXCEED 149°C. TEMPERATURES ABOVE THIS MAY DAMAGE THE ELASTOMER.

ALL SURFACES OF BEARING PLATES SHALL BE SMOOTH AND STRAIGHT.

THE CLOSURE PLATE, GROUT PIPE AND STANDARD PIPE FOR THE EXPANSION ASSEMBLY NEED NOT BE GALVANIZED.

THE CONTRACTOR'S ATTENTION IS CALLED TO THE FOLLOWING PROCEDURES TO ACCOMODATE GIRDER TRANSLATION AND END ROTATION:

1. ONCE THE DECK HAS CURED, THE GIRDERS SHALL BE JACKED AND THE ANCHOR BOLTS, SOLE PLATE, AND ELASTOMERIC BEARING SLOTS SHALL BE CENTERED AS NEARLY AS PRACTICAL ABOUT THE BEARING STIFFENER. THIS OPERATION SHALL BE PERFORMED AT APPROXIMATELY 16° C.
2. AFTER CENTERING THE SLOTS AND ANCHOR BOLTS, THE SOLE PLATES SHALL BE FIELD WELDED TO THE GIRDER FLANGES AND ANCHOR BOLTS GROUTED.

THE CONTRACTOR MAY PROPOSE ALTERNATE METHODS, PROVIDED DETAILS ARE SUBMITTED TO THE ENGINEER FOR REVIEW AND APPROVAL.

PROJECT NO. R-2413C
GUILFORD-ROCKINGHAM COUNTY
STATION: 20+06.118 -LREV-

NORTH CAROLINA PROFESSIONAL SEAL 022516 ENGINEER EMILY E. MURRAY
10/28/11

STATE OF NORTH CAROLINA
DEPARTMENT OF TRANSPORTATION
RALEIGH

STANDARD
ELASTOMERIC BEARING DETAILS
( STEEL SUPERSTRUCTURE )

| REVISIONS | | | | | | | SHEET NO. |
|---|---|---|---|---|---|---|---|
| NO. | BY: | DATE: | NO. | BY: | DATE: | | S-16 |
| 1 | | | 3 | | | | TOTAL SHEETS |
| 2 | | | 4 | | | | 237 |

| | | | |
|---|---|---|---|
| ASSEMBLED BY : T.L. AVERETTE | | DATE : | 6-23-11 |
| CHECKED BY : PEGGY PARISI | | DATE : | 7-26-11 |
| DRAWN BY : EEM 10/95 | REV. 8/16/99 | | MAB/LES |
| CHECKED BY : PEK 10/95 | REV. 10/17/00 | | RWW/LES |
| | REV. 5/1/06 | | TLA/GM |

STR. #1

STD. NO. EB2SM

13-SEP-2011 09:54
W:\Structures\Final Plans\Str.#1\R2413C_sd_BG_01.dgn
bbarodawala

## DEAD LOAD DEFLECTION TABLE FOR EXTERIOR GIRDERS - SPAN A

| | GIRDERS #1 & #5 | | | | | | | | | | | | | | | | | | | | |
|---|---|---|---|---|---|---|---|---|---|---|---|---|---|---|---|---|---|---|---|---|---|
| @ TWENTIETH POINTS BETWEEN ℄ BEARINGS | 0 | .05 | .10 | .15 | .20 | .25 | .30 | .35 | .40 | .45 | .50 | .55 | .60 | .65 | .70 | .75 | .80 | .85 | .90 | .95 | 0 |
| DEFLECTION DUE TO WEIGHT OF GIRDER | 0.000 | 0.006 | 0.011 | 0.016 | 0.020 | 0.024 | 0.027 | 0.029 | 0.030 | 0.030 | 0.029 | 0.027 | 0.025 | 0.022 | 0.018 | 0.014 | 0.011 | 0.007 | 0.004 | 0.002 | 0.000 |
| DEFLECTION DUE TO WEIGHT OF SLAB ✱ | 0.000 | 0.016 | 0.032 | 0.046 | 0.059 | 0.070 | 0.078 | 0.083 | 0.086 | 0.086 | 0.084 | 0.079 | 0.072 | 0.063 | 0.053 | 0.043 | 0.032 | 0.022 | 0.013 | 0.005 | 0.000 |
| DEFLECTION DUE TO WEIGHT OF BARRIER RAIL | 0.000 | 0.002 | 0.003 | 0.005 | 0.006 | 0.007 | 0.008 | 0.008 | 0.008 | 0.009 | 0.008 | 0.008 | 0.007 | 0.006 | 0.005 | 0.004 | 0.003 | 0.002 | 0.001 | 0.001 | 0.000 |
| TOTAL DEAD LOAD DEFLECTION | 0.000 | 0.024 | 0.046 | 0.067 | 0.085 | 0.101 | 0.113 | 0.120 | 0.124 | 0.125 | 0.121 | 0.114 | 0.104 | 0.091 | 0.076 | 0.061 | 0.046 | 0.031 | 0.018 | 0.008 | 0.000 |
| VERTICAL CURVE ORDINATE | 0.000 | 0.010 | 0.019 | 0.027 | 0.033 | 0.039 | 0.044 | 0.048 | 0.050 | 0.052 | 0.052 | 0.052 | 0.050 | 0.048 | 0.044 | 0.039 | 0.033 | 0.027 | 0.019 | 0.010 | 0.000 |
| REQUIRED CAMBER | 0 | 34 | 65 | 94 | 118 | 140 | 157 | 168 | 174 | 177 | 173 | 166 | 154 | 139 | 120 | 100 | 79 | 58 | 37 | 18 | 0 |

✱ INCLUDES SLAB, BUILDUPS & STAY-IN-PLACE FORMS.
ALL VALUES ARE SHOWN IN METERS EXCEPT "REQUIRED CAMBER", WHICH IS GIVEN IN MILLIMETERS.

## DEAD LOAD DEFLECTION TABLE FOR INTERIOR GIRDERS - SPAN A

| | GIRDERS #2, #3, & #4 | | | | | | | | | | | | | | | | | | | | |
|---|---|---|---|---|---|---|---|---|---|---|---|---|---|---|---|---|---|---|---|---|---|
| @ TWENTIETH POINTS BETWEEN ℄ BEARINGS | 0 | .05 | .10 | .15 | .20 | .25 | .30 | .35 | .40 | .45 | .50 | .55 | .60 | .65 | .70 | .75 | .80 | .85 | .90 | .95 | 0 |
| DEFLECTION DUE TO WEIGHT OF GIRDER | 0.000 | 0.006 | 0.011 | 0.016 | 0.020 | 0.024 | 0.027 | 0.029 | 0.030 | 0.030 | 0.029 | 0.027 | 0.025 | 0.022 | 0.018 | 0.014 | 0.011 | 0.007 | 0.004 | 0.002 | 0.000 |
| DEFLECTION DUE TO WEIGHT OF SLAB ✱ | 0.000 | 0.016 | 0.032 | 0.046 | 0.059 | 0.069 | 0.078 | 0.083 | 0.086 | 0.086 | 0.083 | 0.079 | 0.072 | 0.063 | 0.053 | 0.042 | 0.032 | 0.022 | 0.013 | 0.005 | 0.000 |
| DEFLECTION DUE TO WEIGHT OF BARRIER RAIL | 0.000 | 0.002 | 0.003 | 0.004 | 0.006 | 0.007 | 0.007 | 0.008 | 0.008 | 0.008 | 0.008 | 0.008 | 0.007 | 0.006 | 0.005 | 0.004 | 0.003 | 0.002 | 0.001 | 0.001 | 0.000 |
| TOTAL DEAD LOAD DEFLECTION | 0.000 | 0.024 | 0.046 | 0.066 | 0.085 | 0.100 | 0.112 | 0.120 | 0.124 | 0.124 | 0.120 | 0.114 | 0.104 | 0.091 | 0.076 | 0.060 | 0.046 | 0.031 | 0.018 | 0.008 | 0.000 |
| VERTICAL CURVE ORDINATE | 0.000 | 0.010 | 0.019 | 0.027 | 0.033 | 0.039 | 0.044 | 0.048 | 0.050 | 0.052 | 0.052 | 0.052 | 0.050 | 0.048 | 0.044 | 0.039 | 0.033 | 0.027 | 0.019 | 0.010 | 0.000 |
| REQUIRED CAMBER | 0 | 34 | 65 | 93 | 118 | 139 | 156 | 168 | 174 | 176 | 172 | 166 | 154 | 139 | 120 | 99 | 79 | 58 | 37 | 18 | 0 |

✱ INCLUDES SLAB, BUILDUPS & STAY-IN-PLACE FORMS.
ALL VALUES ARE SHOWN IN METERS EXCEPT "REQUIRED CAMBER", WHICH IS GIVEN IN MILLIMETERS.

## DEAD LOAD DEFLECTION TABLE FOR EXTERIOR GIRDERS - SPAN B

| | GIRDERS #1 & #5 | | | | | | | | | | | | | | | | | | | | |
|---|---|---|---|---|---|---|---|---|---|---|---|---|---|---|---|---|---|---|---|---|---|
| @ TWENTIETH POINTS BETWEEN ℄ BEARINGS | 0 | .05 | .10 | .15 | .20 | .25 | .30 | .35 | .40 | .45 | .50 | .55 | .60 | .65 | .70 | .75 | .80 | .85 | .90 | .95 | 0 |
| DEFLECTION DUE TO WEIGHT OF GIRDER | 0.000 | -0.001 | -0.001 | -0.001 | 0.000 | 0.001 | 0.002 | 0.003 | 0.004 | 0.005 | 0.006 | 0.006 | 0.007 | 0.007 | 0.007 | 0.006 | 0.005 | 0.004 | 0.003 | 0.002 | 0.000 |
| DEFLECTION DUE TO WEIGHT OF SLAB ✱ | 0.000 | -0.003 | -0.004 | -0.003 | -0.002 | 0.000 | 0.002 | 0.005 | 0.007 | 0.010 | 0.012 | 0.014 | 0.015 | 0.016 | 0.016 | 0.015 | 0.013 | 0.010 | 0.007 | 0.004 | 0.000 |
| DEFLECTION DUE TO WEIGHT OF BARRIER RAIL | 0.000 | 0.000 | 0.000 | 0.000 | 0.000 | 0.000 | 0.000 | 0.001 | 0.001 | 0.001 | 0.001 | 0.002 | 0.002 | 0.002 | 0.002 | 0.002 | 0.001 | 0.001 | 0.001 | 0.000 | 0.000 |
| TOTAL DEAD LOAD DEFLECTION | 0.000 | -0.004 | -0.005 | -0.004 | -0.002 | 0.001 | 0.004 | 0.009 | 0.012 | 0.016 | 0.019 | 0.022 | 0.024 | 0.025 | 0.025 | 0.023 | 0.019 | 0.015 | 0.011 | 0.006 | 0.000 |
| VERTICAL CURVE ORDINATE | 0.000 | 0.007 | 0.012 | 0.018 | 0.022 | 0.026 | 0.029 | 0.031 | 0.033 | 0.034 | 0.034 | 0.034 | 0.033 | 0.031 | 0.029 | 0.026 | 0.022 | 0.018 | 0.012 | 0.007 | 0.000 |
| REQUIRED CAMBER | 0 | 3 | 7 | 14 | 20 | 27 | 33 | 40 | 45 | 50 | 53 | 56 | 57 | 56 | 54 | 49 | 41 | 33 | 23 | 13 | 0 |

✱ INCLUDES SLAB, BUILDUPS & STAY-IN-PLACE FORMS.
ALL VALUES ARE SHOWN IN METERS EXCEPT "REQUIRED CAMBER", WHICH IS GIVEN IN MILLIMETERS.

## DEAD LOAD DEFLECTION TABLE FOR INTERIOR GIRDERS - SPAN B

| | GIRDERS #2, #3, & #4 | | | | | | | | | | | | | | | | | | | | |
|---|---|---|---|---|---|---|---|---|---|---|---|---|---|---|---|---|---|---|---|---|---|
| @ TWENTIETH POINTS BETWEEN ℄ BEARINGS | 0 | .05 | .10 | .15 | .20 | .25 | .30 | .35 | .40 | .45 | .50 | .55 | .60 | .65 | .70 | .75 | .80 | .85 | .90 | .95 | 0 |
| DEFLECTION DUE TO WEIGHT OF GIRDER | 0.000 | -0.001 | -0.001 | -0.001 | 0.000 | 0.001 | 0.002 | 0.003 | 0.004 | 0.005 | 0.006 | 0.006 | 0.007 | 0.007 | 0.007 | 0.006 | 0.005 | 0.004 | 0.003 | 0.002 | 0.000 |
| DEFLECTION DUE TO WEIGHT OF SLAB ✱ | 0.000 | -0.003 | -0.004 | -0.003 | -0.002 | 0.000 | 0.002 | 0.005 | 0.007 | 0.010 | 0.012 | 0.014 | 0.015 | 0.016 | 0.016 | 0.015 | 0.013 | 0.010 | 0.007 | 0.004 | 0.000 |
| DEFLECTION DUE TO WEIGHT OF BARRIER RAIL | 0.000 | 0.000 | 0.000 | 0.000 | 0.000 | 0.000 | 0.000 | 0.001 | 0.001 | 0.001 | 0.001 | 0.002 | 0.002 | 0.002 | 0.002 | 0.002 | 0.001 | 0.001 | 0.001 | 0.000 | 0.000 |
| TOTAL DEAD LOAD DEFLECTION | 0.000 | -0.004 | -0.005 | -0.004 | -0.002 | 0.001 | 0.004 | 0.009 | 0.012 | 0.016 | 0.019 | 0.022 | 0.024 | 0.025 | 0.025 | 0.023 | 0.019 | 0.015 | 0.011 | 0.006 | 0.000 |
| VERTICAL CURVE ORDINATE | 0.000 | 0.007 | 0.012 | 0.018 | 0.022 | 0.026 | 0.029 | 0.031 | 0.033 | 0.034 | 0.034 | 0.034 | 0.033 | 0.031 | 0.029 | 0.026 | 0.022 | 0.018 | 0.012 | 0.007 | 0.000 |
| REQUIRED CAMBER | 0 | 3 | 7 | 14 | 20 | 27 | 33 | 40 | 45 | 50 | 53 | 56 | 57 | 56 | 54 | 49 | 41 | 33 | 23 | 13 | 0 |

✱ INCLUDES SLAB, BUILDUPS & STAY-IN-PLACE FORMS.
ALL VALUES ARE SHOWN IN METERS EXCEPT "REQUIRED CAMBER", WHICH IS GIVEN IN MILLIMETERS.

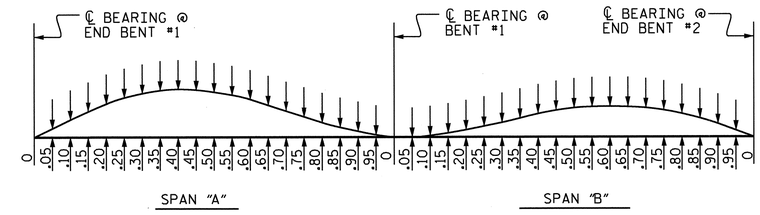


### SCHEMATIC CAMBER ORDINATES

NOTE : FOR CAMBER @ 20TH POINTS SEE TABLES.
SLOPE FOR THE ZERO CAMBER BASE LINE VARIES.

PROJECT NO. R-2413C
GUILFORD-ROCKINGHAM COUNTY
STATION: 20+06.118 -LREV-

NORTH CAROLINA PROFESSIONAL SEAL 022516 ENGINEER EMILY E. MURRAY
10/28/11

STATE OF NORTH CAROLINA
DEPARTMENT OF TRANSPORTATION
RALEIGH

SUPERSTRUCTURE
# DEAD LOAD DEFLECTIONS

| REVISIONS | | | | | | SHEET NO. |
|---|---|---|---|---|---|---|
| NO. | BY: | DATE: | NO. | BY: | DATE: | S-17 |
| 1 | | | 3 | | | TOTAL SHEETS |
| 2 | | | 4 | | | 237 |

DRAWN BY : T.L. AVERETTE DATE : 6-30-11
CHECKED BY : PEGGY PARISI DATE : 7-26-11

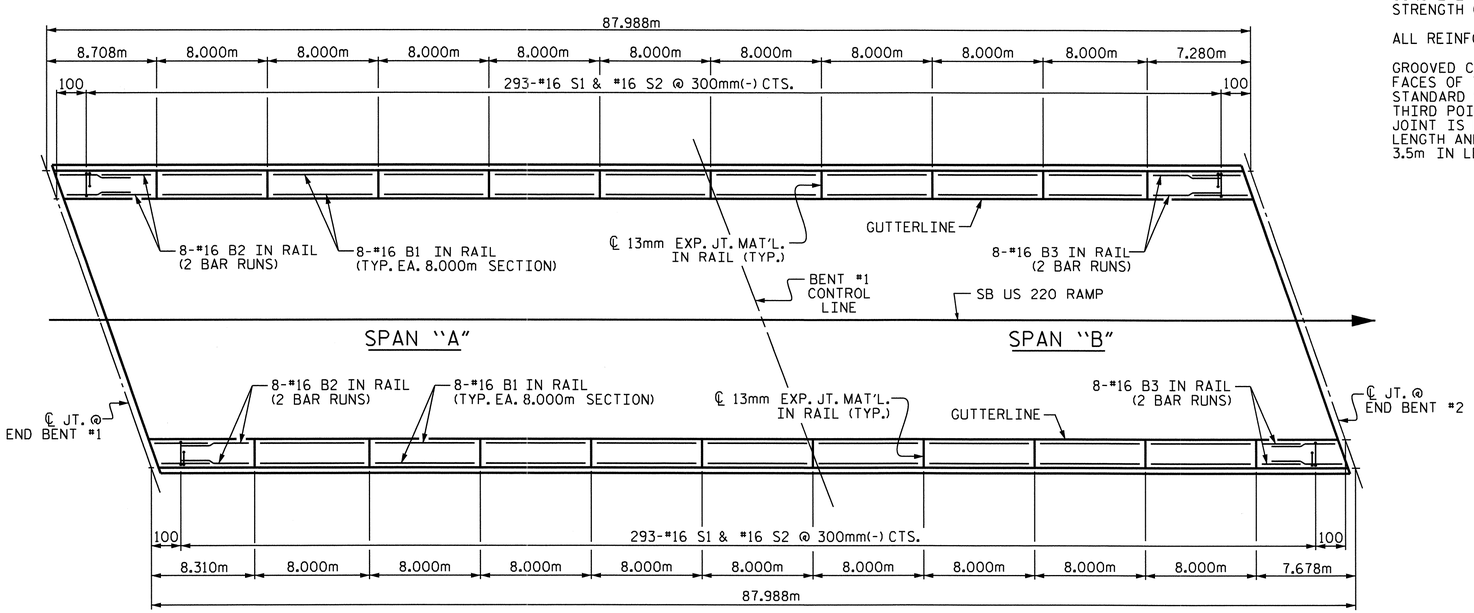


PLAN

## NOTES

THE BARRIER RAIL IN A CONTINUOUS UNIT SHALL NOT BE CAST UNTIL ALL SLAB CONCRETE IN THE UNIT HAS BEEN CAST AND HAS REACHED A MINIMUM COMPRESSIVE STRENGTH OF 20.7 MPa.

ALL REINFORCING STEEL IN BARRIER RAILS SHALL BE EPOXY COATED.

GROOVED CONTRACTION JOINTS, 12mm IN DEPTH, SHALL BE TOOLED IN ALL EXPOSED FACES OF THE BARRIER RAIL AND IN ACCORDANCE WITH ARTICLE 825-10(B) OF THE STANDARD SPECIFICATIONS. THE CONTRACTION JOINT SHALL BE LOCATED AT EACH THIRD POINT BETWEEN BARRIER RAIL EXPANSION JOINTS. ONLY ONE CONTRACTION JOINT IS REQUIRED AT MIDPOINT OF BARRIER RAIL SEGMENTS LESS THAN 6.1m IN LENGTH AND NO CONTRACTION JOINTS ARE REQUIRED FOR THOSE SEGMENTS LESS THAN 3.5m IN LENGTH.

## BAR TYPES

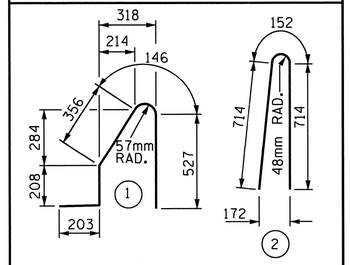


ALL BAR DIMENSIONS ARE OUT TO OUT

## BILL OF MATERIAL

FOR CONCRETE BARRIER RAIL ONLY

| BAR | NO. | SIZE | TYPE | LENGTH | WEIGHT |
|---|---|---|---|---|---|
| * S1 | 586 | #16 | 1 | 1440 | 1310 |
| * S2 | 586 | #16 | 2 | 1580 | 1437 |
| * B1 | 144 | #16 | STR | 7880 | 1761 |
| * B2 | 32 | #16 | STR | 4780 | 237 |
| * B3 | 32 | #16 | STR | 4260 | 212 |

| | |
|---|---|
| * EPOXY COATED REINFORCING STEEL | 4957 kg |
| CLASS AA CONCRETE | 44.2 CU. METER |
| CONCRETE BARRIER RAIL | |
| SUPERSTRUCTURE | 175.976 METERS |
| ● APPROACH SLABS | 12.844 METERS |
| TOTAL | 188.820 METERS |

● FOR EPOXY COATED REINFORCING STEEL AND CLASS AA CONCRETE IN THE BARRIER RAIL ON THE APPROACH SLABS, SEE "BRIDGE APPROACH SLAB DETAILS" SHEET.

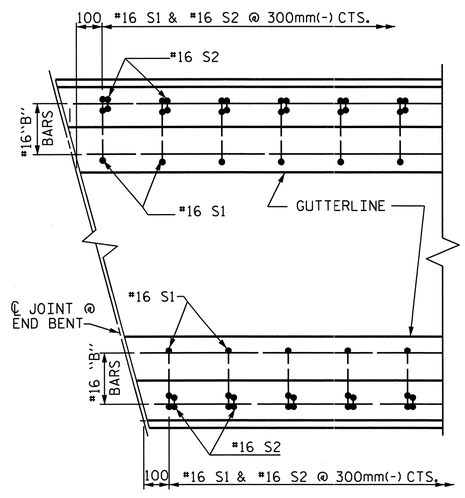


PLAN

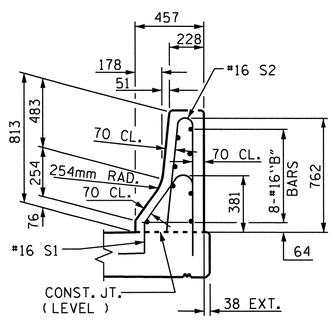


END VIEW

## END OF RAIL DETAILS

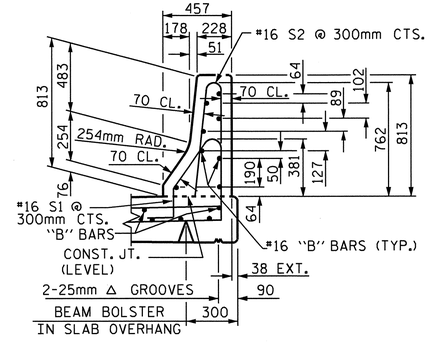


SECTION THRU RAIL

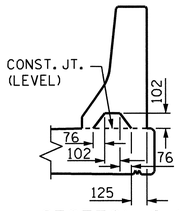


SECTION S-S

AT DAM IN OPEN JOINT
( THIS IS TO BE USED ONLY WHEN SLIP FORM IS USED )

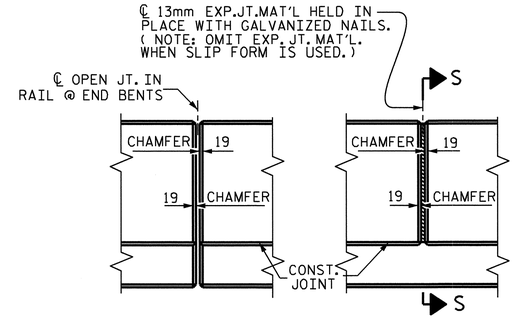


ELEVATION AT EXPANSION JOINTS

## BARRIER RAIL DETAILS

NORTH CAROLINA PROFESSIONAL SEAL 022516 ENGINEER EARLY E. MURRAY
10/28/11

PROJECT NO. R-2413C

GUILFORD-ROCKINGHAM COUNTY

STATION: 20+06.118 -LREV-

STATE OF NORTH CAROLINA
DEPARTMENT OF TRANSPORTATION
RALEIGH

STANDARD

CONCRETE BARRIER RAIL

| REVISIONS | | | | | | SHEET NO. |
|---|---|---|---|---|---|---|
| NO. | BY: | DATE: | NO. | BY: | DATE: | S-18 |
| 1 | | | 3 | | | TOTAL SHEETS |
| 2 | | | 4 | | | 237 |

STR. #1

STD. No. CBR1SM

| | | | |
|---|---|---|---|
| ASSEMBLED BY : T.L. AVERETTE | DATE : 10-10 | | |
| CHECKED BY : PEGGY PARISI | DATE : 10-10 | | |
| DRAWN BY : ARB 5/87 | REV. 10/17/00 | RWW/LES | |
| CHECKED BY : SJD 9/87 | REV. 5/7/03R | RWW/JTE | |
| | REV. 5/1/06 | TLA/GM | |

13-SEP-2011 09:53
W:\Structures\Final Plans\Str.#1\R2413C_sd_BR_01.dgn
bbarodawala

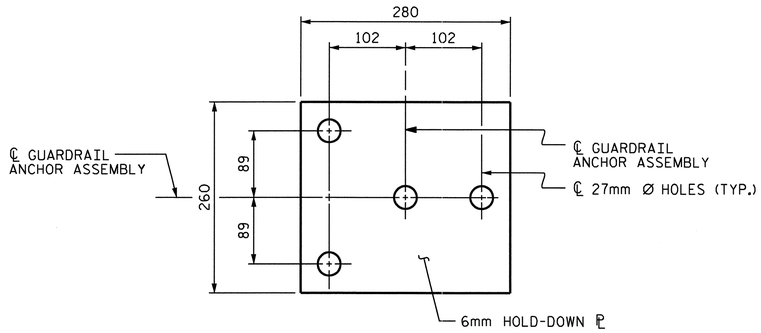


PLAN

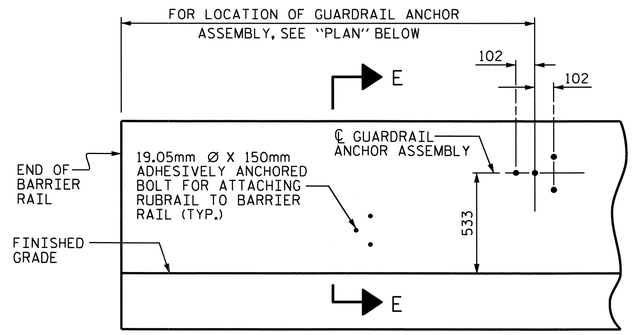


ELEVATION

FOR LOCATION OF RUBRAIL, SEE ROADWAY STD. 862.03

## NOTES

THE GUARDRAIL ANCHOR ASSEMBLY SHALL CONSIST OF A 6mm HOLD DOWN PLATE AND 4 - 22.23mm Ø BOLTS WITH NUTS AND WASHERS, RUBRAIL, AND ADHESIVELY ANCHORED BOLTS.

THE HOLD-DOWN PLATE SHALL CONFORM TO AASHTO M270 GRADE 36. AFTER FABRICATION, THE HOLD-DOWN PLATE SHALL BE HOT-DIP GALVANIZED IN ACCORDANCE WITH AASHTO M111.

BOLTS SHALL CONFORM TO THE REQUIREMENTS OF ASTM A307 AND NUTS SHALL CONFORM TO THE REQUIREMENTS OF AASHTO M291. BOLTS, NUTS AND WASHERS SHALL BE GALVANIZED. (AT THE CONTRACTOR'S OPTION, STAINLESS STEEL BOLTS, NUTS AND WASHERS MAY BE USED AS AN ALTERNATE FOR THE 22.23mm Ø GALVANIZED BOLTS, NUTS AND WASHERS. THEY SHALL CONFORM TO OR EXCEED THE MECHANICAL REQUIREMENTS OF ASTM A307. THE USE OF THIS ALTERNATE SHALL BE APPROVED BY THE ENGINEER.)

THE GUARDRAIL ANCHOR ASSEMBLY IS REQUIRED AT ALL POINTS WHERE APPROACH GUARDRAIL IS TO BE ATTACHED TO THE END OF BARRIER RAIL. FOR POINTS OF ATTACHMENT, SEE SKETCH.

AFTER INSTALLATION, THE EXPOSED THREAD OF THE BOLT SHALL BE BURRED WITH A SHARP POINTED TOOL.

THE COST OF THE GUARDRAIL ANCHOR ASSEMBLY SHALL BE INCLUDED IN THE UNIT CONTRACT PRICE BID FOR CONCRETE BARRIER RAIL.

THE 32mm Ø HOLES SHALL BE FORMED OR DRILLED WITH A CORE BIT. IMPACT TOOLS WILL NOT BE PERMITTED. ANY CONCRETE DAMAGED BY THIS WORK SHALL BE REPAIRED TO THE SATISFACTION OF THE ENGINEER.

THE C150 X 12 RUBRAIL IS TO BE ADHESIVELY ANCHORED TO THE RAIL USING THREE 19.05mm Ø X 150mm BOLTS WITH WASHERS. LEVEL ONE FIELD TESTING IS REQUIRED, AND THE YIELD LOAD OF THE 19.05mm Ø BOLTS IS 53.4kN. FOR ADHESIVELY ANCHORED ANCHOR BOLTS OR DOWELS, SEE SPECIAL PROVISIONS. SEE ROADWAY STANDARD 862.03 FOR DETAILS AND LOCATION OF THE RUBRAIL.

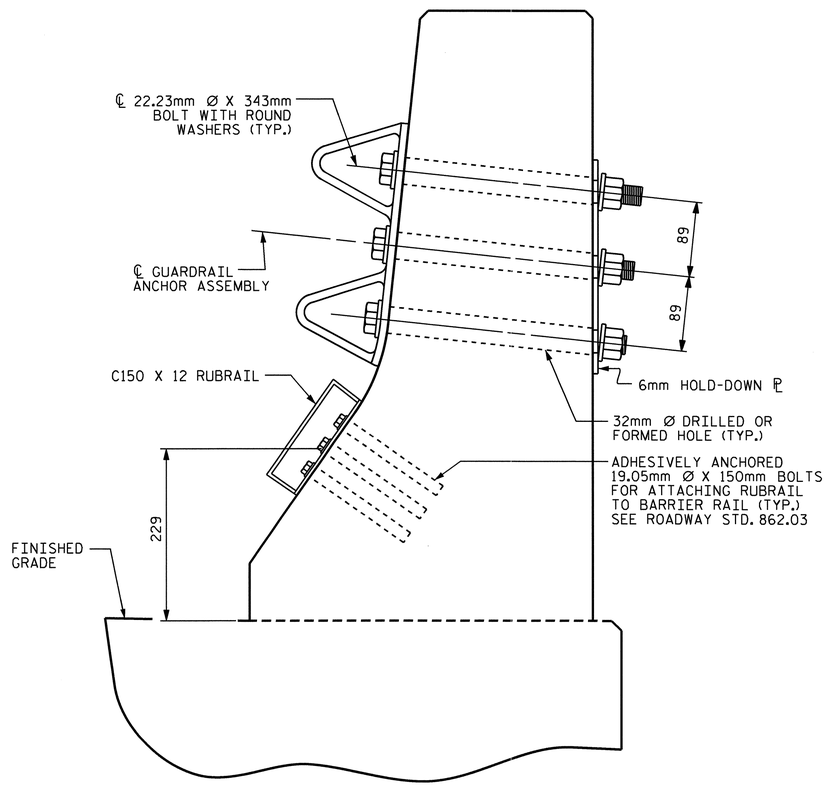


SECTION E-E

## GUARDRAIL ANCHOR ASSEMBLY DETAILS

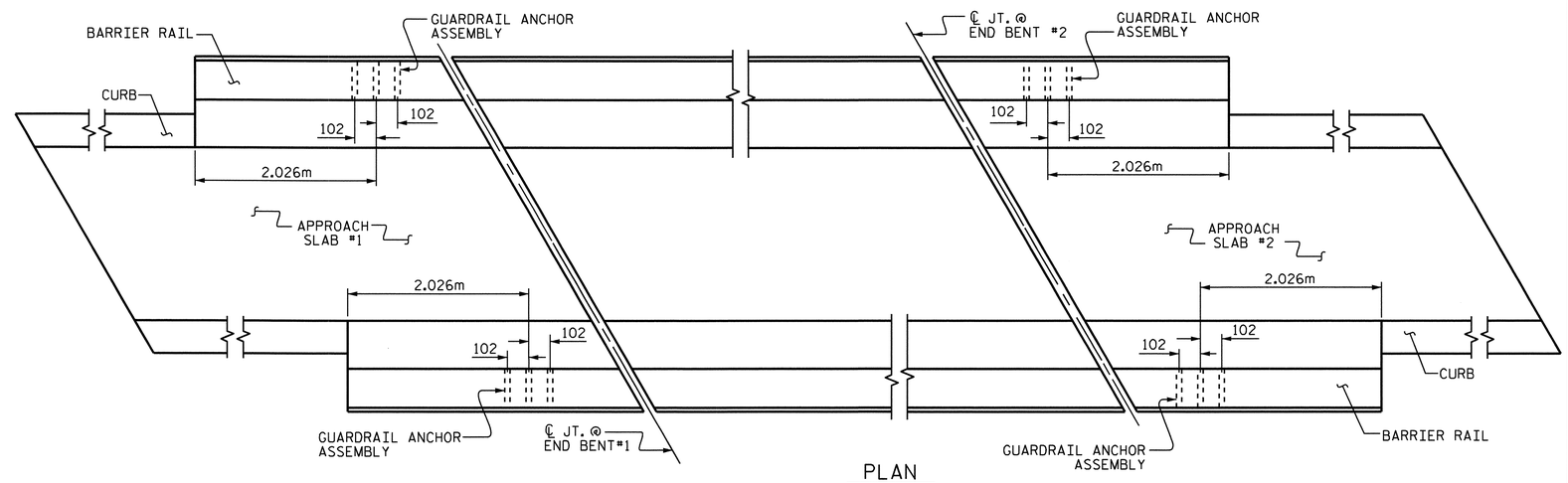


PLAN

## LOCATION OF ANCHORS FOR GUARDRAIL

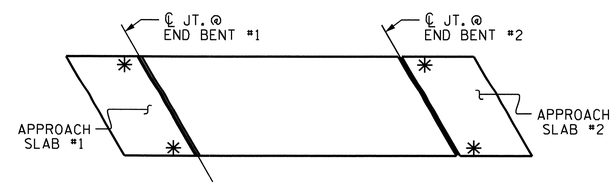


SKETCH SHOWING POINTS OF ATTACHMENTS

✳ DENOTES B-77 GUARDRAIL ANCHOR ASSEMBLY

PROJECT NO. R-2413C

GUILFORD-ROCKINGHAM COUNTY

STATION: 20+06.118 -LREV-

STATE OF NORTH CAROLINA
DEPARTMENT OF TRANSPORTATION
RALEIGH

STANDARD

# GUARDRAIL ANCHORAGE FOR BARRIER RAIL

NORTH CAROLINA PROFESSIONAL SEAL 022516 ENGINEER EMILY E. MURRAY
10/28/11

| REVISIONS | | | | | | SHEET NO. |
|---|---|---|---|---|---|---|
| NO. | BY: | DATE: | NO. | BY: | DATE: | S-19 |
| 1 | | | 3 | | | TOTAL SHEETS |
| 2 | | | 4 | | | 237 |

STR. #1 STD. NO. GRA2

ASSEMBLED BY : T.L. AVERETTE DATE : 10-10
CHECKED BY : PEGGY PARISI DATE : 10-10
DRAWN BY : TLA 5/06
CHECKED BY : GM 5/06
ADDED 5/1/06R KMM/GM

13-SEP-2011 09:53
W:\Structures\Final Plans\Str.#1\R2413C_sd_BR_01.dgn
bbarodawala

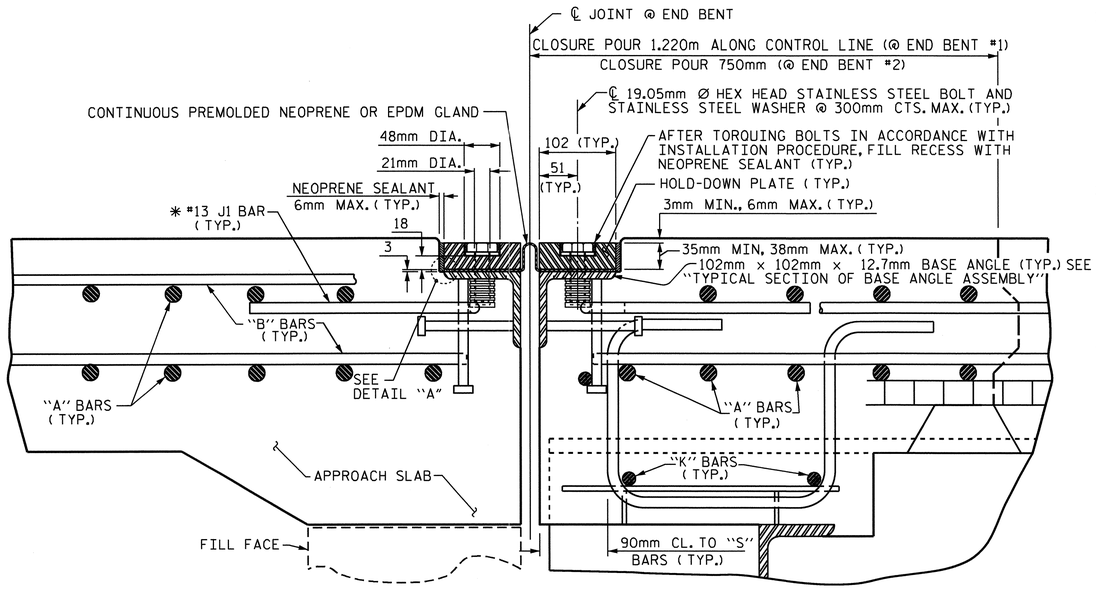


# EXPANSION JOINT DETAILS

SECTION NORMAL TO JOINT -- STEEL SUPERSTRUCTURE

* THE QUANTITY OF #13 J1 BARS ON THE BILL OF MATERIAL IS BASED ON 300mm CENTERS. J1 BARS SHALL BE PLACED AT EACH VERTICAL STUD ANCHOR BOLT. IN THE EVENT THAT THE NUMBER OF VERTICAL STUD ANCHOR BOLTS EXCEEDS THE NUMBER OF J1 BARS SPECIFIED, ADDITIONAL J1 BARS WILL NOT BE REQUIRED.

## INSTALLATION PROCEDURE

1. A TEMPLATE OR OTHER SUITABLE DEVICE SHALL BE USED TO FORM THE TOP OF THE EXPANSION JOINT SEAL BLOCKOUT TO THE PROPER DEPTH AND WIDTH. THE TEMPLATE SHALL BE 105mm TO 108mm WIDE AND OF SUCH THICKNESS AS TO PROVIDE FOR CORRECT FINAL ELEVATION OF TOP OF HOLD-DOWN PLATES. THE TEMPLATE SHALL BE ATTACHED TO THE BASE ANGLE ASSEMBLY WITH THE 19.05mm Ø HEX HEAD BOLTS PROVIDED FOR THE HOLD-DOWN PLATES. A 25mm Ø HOLE SHALL BE PROVIDED IN THE TEMPLATE CENTERED OVER EACH WEEP HOLE IN THE 102mm X 102mm X 12.7mm BASE ANGLE. OTHER METHODS OF INSURING DRAINAGE THROUGH WEEP HOLES MAY BE EMPLOYED SUBJECT TO ENGINEER'S APPROVAL.
2. AFTER THE CONCRETE HAS BEEN CAST ON BOTH SIDES OF THE JOINT, REMOVE THE TEMPLATE. THOROUGHLY CLEAN THE BOLT HOLES AND THE ANGLE PLATE. REMOVE ANY EXCESS CONCRETE THAT COMES OUT OF THE WEEP HOLES. ANY DAMAGED STEEL SHALL BE COATED WITH A MINIMUM THICKNESS OF 0.100mm (DRY) OF ZINC-RICH PAINT IN ACCORDANCE WITH THE STANDARD SPECIFICATIONS.
3. LAY THE GLAND ON THE BASE ANGLE AND FIELD MARK THE GLAND FOR THE BOLT HOLES. HOLES IN THE GLAND SHALL BE PUNCHED 22mm IN DIAMETER WITH A HAND PUNCH.
4. IN ORDER TO CHECK FOR PROPER ALIGNMENT, PLACE THE GLAND AND HOLD-DOWN PLATES ON THE BASE ANGLE. DO NOT APPLY NEOPRENE SEALANT. BOLT THE HOLD-DOWN PLATES TO THE BASE ANGLE BUT DO NOT TIGHTEN. THE ENGINEER SHALL INSPECT THE JOINT SEAL DEVICE FOR PROPER ALIGNMENT.
5. AFTER INSPECTION, REMOVE THE HOLD-DOWN PLATES AND GLAND. APPLY NEOPRENE SEALANT TO THE BASE ANGLE IN ACCORDANCE WITH THE "INSTALLATION SKETCH". PLACE GLAND AND HOLD-DOWN PLATES ON THE BASE ANGLE. BOLT THE HOLD-DOWN PLATES TO THE BASE ANGLE ASSEMBLY AND TORQUE THE BOLTS TO 119.3 N-m WITH A TORQUE WRENCH. THE TORQUE WRENCH SHALL BE CALIBRATED IN ACCORDANCE WITH SECTION 440-10 (D) OF THE STANDARD SPECIFICATIONS. CHECK THE TORQUE AFTER THREE (3) HOURS AND, IF NECESSARY, RETIGHTEN TO 119.3 N-m. A FINAL CHECK SHALL BE MADE AT SEVEN (7) DAYS. TORQUE SHALL NOT BE LESS THAN 108.5 N-m AFTER SEVEN (7) DAYS.
6. AFTER PROPER TORQUING, CLEAN THE BOLT HOLE RECESSES AND THE RECESS BETWEEN THE JOINT SEAL DEVICE AND CONCRETE, COMPLETELY FILL THESE RECESSES WITH NEOPRENE SEALANT.

## GENERAL NOTES

1. FOR EXPANSION JOINT SEALS, SEE SPECIAL PROVISIONS.
2. ALL PLATES AND ANGLES SHALL CONFORM TO AASHTO M270 GRADE 250 STEEL OR APPROVED EQUAL. ALL HOLD-DOWN BOLTS SHALL CONFORM TO ASTM F593 ALLOY 304 STAINLESS STEEL. WASHERS SHALL CONFORM TO ASTM F844 EXCEPT THEY SHALL BE MADE FROM ALLOY 304 STAINLESS STEEL. ALL STUD ANCHORS SHALL CONFORM TO AASHTO M169, GRADES 1010 THRU 1020 OR APPROVED EQUAL. ALL CONCRETE INSERTS SHALL BE CLOSED END AND SHALL CONFORM TO AASHTO M169, GRADE 12L14. TENSILE CAPACITY SHALL BE 13.3 kN MIN.
3. A PREMOLDED CORRUGATED OR NON-CORRUGATED GLAND SHALL BE USED FOR JOINTS SKEWED BETWEEN 50° THRU 130° . FOR JOINTS SKEWED LESS THAN 50° OR MORE THAN 130° , ONLY A CORRUGATED GLAND SHALL BE USED.
4. CLOSED END FERRULES AND STUD ANCHORS SHALL BE SHOP WELDED AND ALL HOLES SHALL BE SHOP DRILLED AS SHOWN ON PLANS. STUD ANCHORS SHALL BE ELECTRIC ARC END WELDED WITH COMPLETE FUSION.
5. SURFACES COMING IN CONTACT WITH NEOPRENE SHALL BE GROUND SMOOTH PRIOR TO METALLIZING.
6. UPON COMPLETION OF SHOP FABRICATION, THE HOLD DOWN PLATE AND BASE ANGLE ASSEMBLY AS SHOWN IN THE "TYPICAL SECTION OF BASE ANGLE ASSEMBLY", SHALL BE METALLIZED. SEE SPECIAL PROVISION FOR THERMAL SPRAYED COATINGS (METALLIZATION).
7. BASE ANGLE ASSEMBLY SHALL BE CONTINUOUS FOR THE LENGTH OF THE JOINT. AT CROWN BREAKS, THE ENDS OF THE BASE ANGLE ASSEMBLY SHALL BE CUT PARALLEL TO THE BRIDGE CENTERLINE FOR SKEWS LESS THAN 80° AND GREATER THAN 100°. FINISHED WELD SHALL BE GROUND SMOOTH AND COATED WITH A MINIMUM THICKNESS OF 0.100mm (DRY) OF ZINC-RICH PAINT IN ACCORDANCE WITH THE STANDARD SPECIFICATIONS.
8. FIELD SPLICES OF HOLD-DOWN PLATES SHALL BE KEPT TO A MINIMUM. CONTRACTOR SHALL FURNISH DETAILED PLANS SHOWING PROPOSED SPLICE LOCATIONS FOR APPROVAL. HOLD-DOWN PLATES SHALL NOT EXCEED 6.1m LENGTHS UNLESS APPROVED BY THE ENGINEER.
9. NO ALTERNATE JOINT DETAILS SHALL BE PERMITTED IN LIEU OF THOSE SHOWN ON THESE PLANS.
10. THE CONTRACTOR MAY, AT HIS OPTION, USE ADHESIVELY ANCHORED ANCHOR BOLTS IN PLACE OF CONCRETE INSERTS FOR COVER PLATES. THE YIELD LOAD OF THE 19.05mm DIA. BOLT IS 44.5 kN. FIELD TESTING OF THE ADHESIVE BONDING SYSTEM IS NOT REQUIRED.

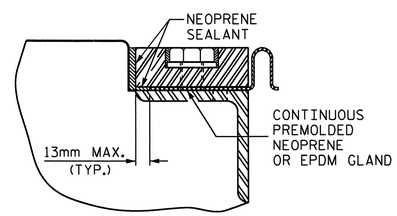


DETAIL "A"

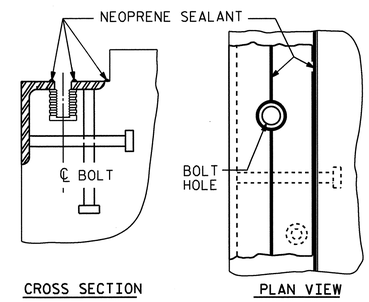


INSTALLATION SKETCH

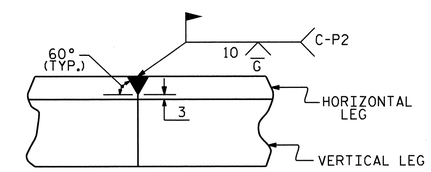


DETAIL- FIELD WELD SPLICE OF BASE ANGLE

| MOVEMENT AND SETTING AT JOINT | | | | | |
|---|---|---|---|---|---|
| END BENT NO. | SKEW ANGLE | TOTAL MOVEMENT (ALONG ℄ RDWY) | PERPENDICULAR JOINT OPENING AT 7° C | PERPENDICULAR JOINT OPENING AT 16° C | PERPENDICULAR JOINT OPENING AT 32° C |
| | | | | | |
| 1 | 47°-17'-14" | 40mm | 44mm | 39mm | 31mm |
| 2 | 47°-17'-14" | 33mm | 41mm | 37mm | 30mm |
| | | | | | |

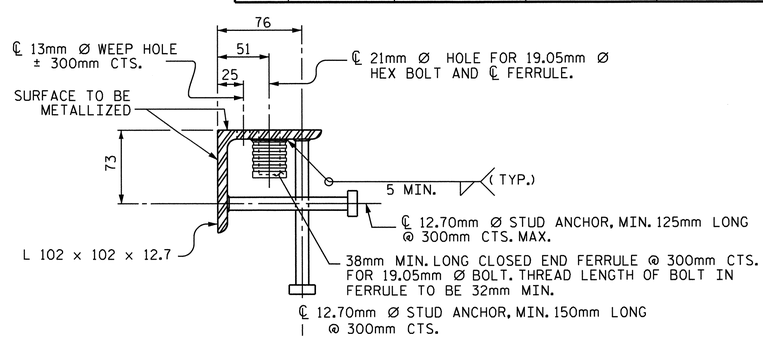


TYPICAL SECTION OF BASE ANGLE ASSEMBLY

PROJECT NO. R-2413C

GUILFORD-ROCKINGHAM COUNTY

STATION: 20+06.118 -LREV-

SHEET 1 OF 2

STATE OF NORTH CAROLINA
DEPARTMENT OF TRANSPORTATION
RALEIGH

STANDARD

EXPANSION JOINT SEAL DETAILS

NORTH CAROLINA PROFESSIONAL SEAL 022516 ENGINEER EMILY E. McMURRAY
10/28/11

| REVISIONS | | | | | | | SHEET NO. |
|---|---|---|---|---|---|---|---|
| NO. | BY: | DATE: | NO. | BY: | DATE: | | S-20 |
| 1 | | | 3 | | | | TOTAL SHEETS |
| 2 | | | 4 | | | | 237 |

| | | | |
|---|---|---|---|
| ASSEMBLED BY : T.L. AVERETTE | | DATE : 6-29-11 | |
| CHECKED BY : PEGGY PARISI | | DATE : 7-28-11 | |
| DRAWN BY : REK 9/87 | REV. 10/17/00 | RWW/LES | |
| CHECKED BY : CRK 10/87 | REV. 5/7/03R | RWW/JTE | |
| | REV. 5/1/06 | TLA/GM | |

13-SEP-2011 09:51
W:\Structures\Final Plans\Str.#1\R2413C_sd_JS_01.dgn
bbarodawala

STR. #1

STD. NO. EJS1SM

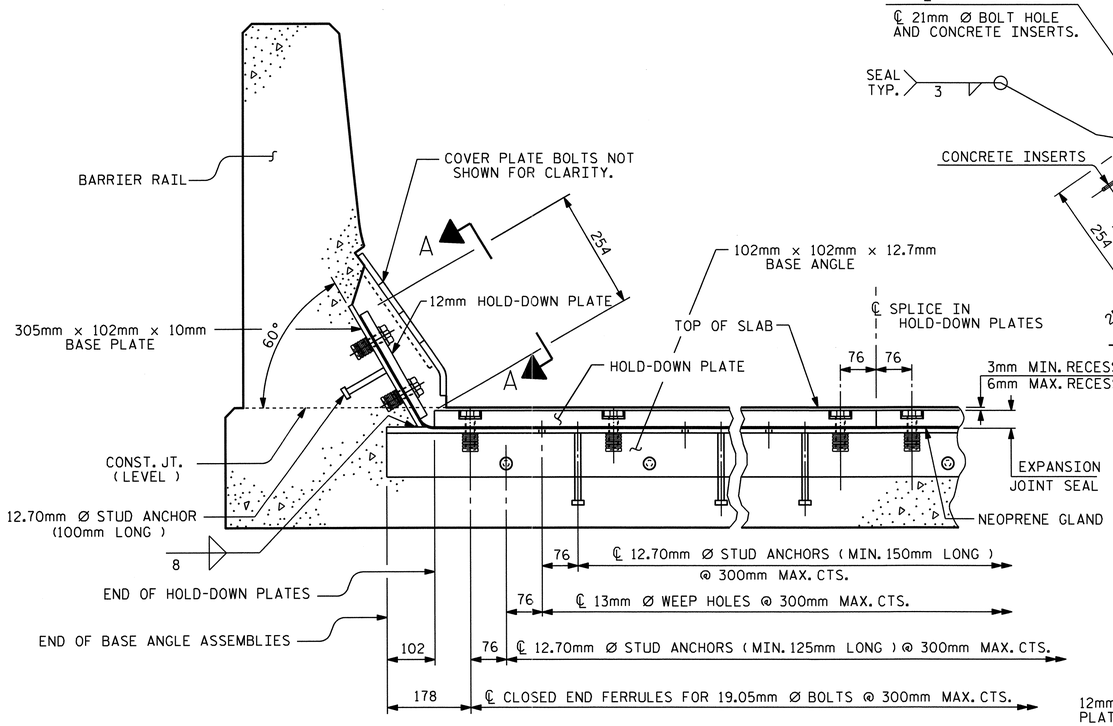


SECTION THRU RAIL NORMAL TO JOINT

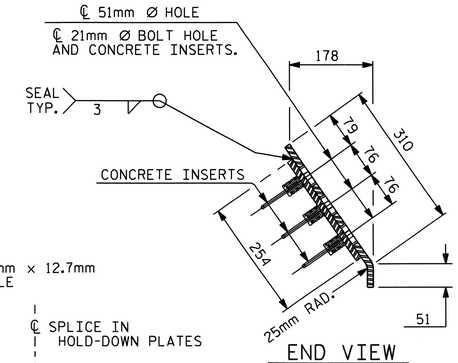


END VIEW

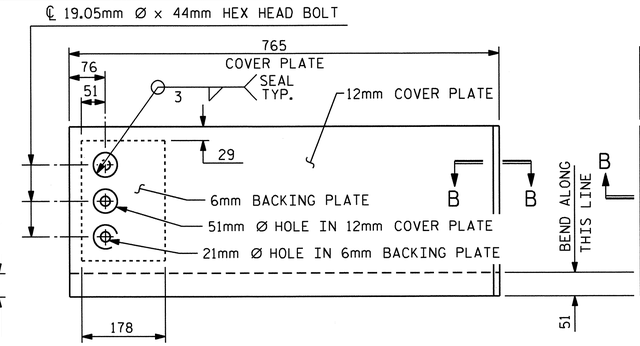


TYPE I - ELEVATION VIEW

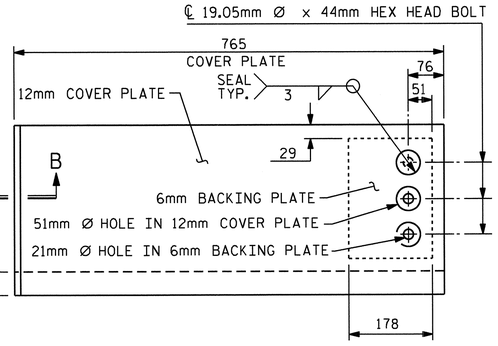


TYPE II - ELEVATION VIEW

COVER PLATE DETAILS

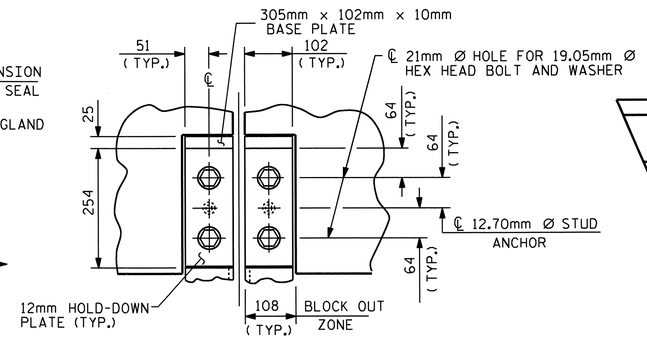


SECTION A - A

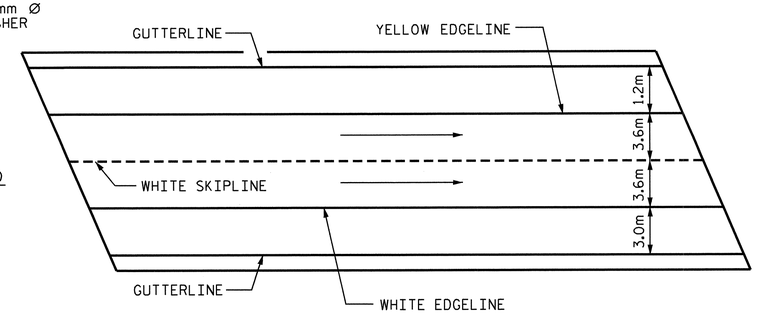


PAVEMENT MARKING ALIGNMENT

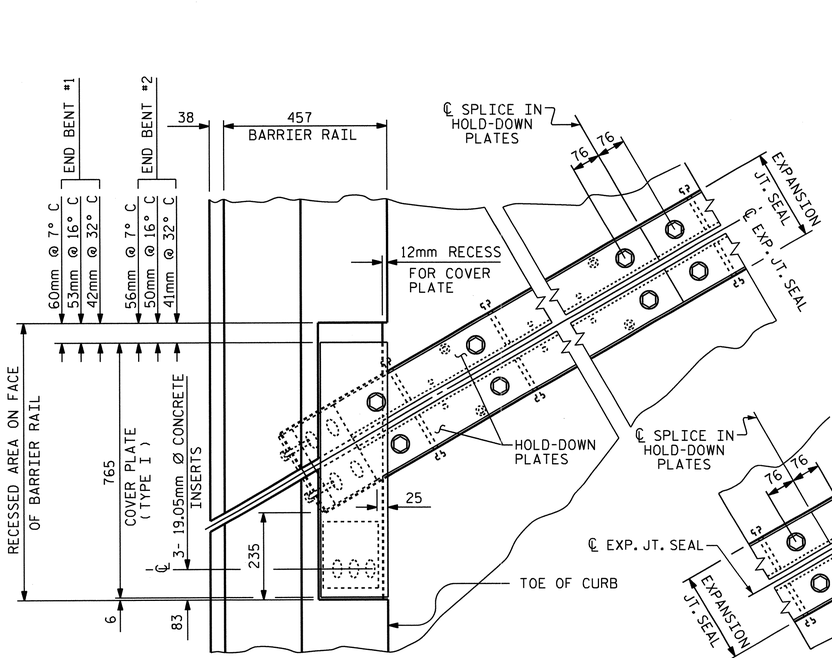


PLAN OF EXPANSION JOINT SEAL - LEFT SIDE

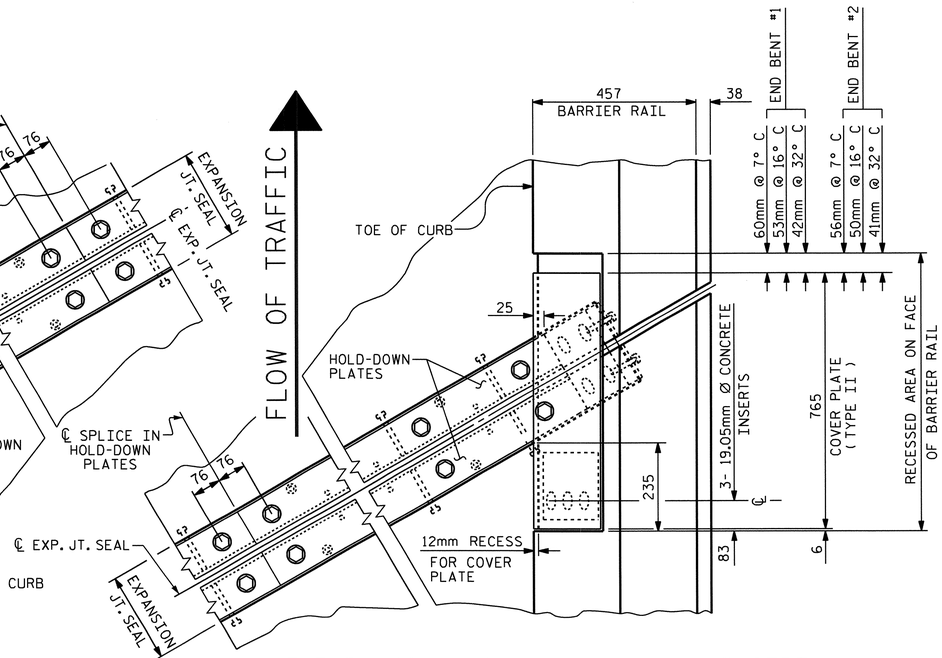


PLAN OF EXPANSION JOINT SEAL - RIGHT SIDE

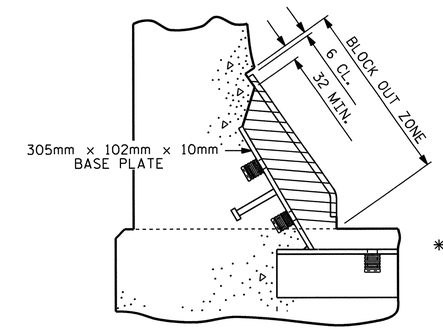


BLOCK OUT DETAIL

SEE "SECTION A - A" FOR OTHER DETAILS.

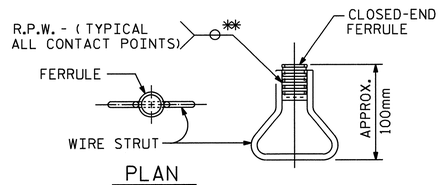


PLAN

ELEVATION

CONCRETE INSERT

** EACH WELDED ATTACHMENT OF WIRE TO FERRULE SHALL DEVELOP THE TENSILE STRENGTH OF THE WIRE.

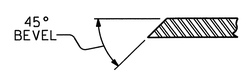


SECTION B - B

PROJECT NO. R-2413C

GUILFORD-ROCKINGHAM COUNTY

STATION: 20+06.118 -LREV-

SHEET 2 OF 2

STATE OF NORTH CAROLINA
DEPARTMENT OF TRANSPORTATION
RALEIGH

STANDARD EXPANSION JOINT SEAL DETAILS FOR BARRIER RAIL

NORTH CAROLINA PROFESSIONAL SEAL 022516 ENGINEER EMILY E. MURRAY
10/28/11

| REVISIONS | | | | | | | | SHEET NO. |
|---|---|---|---|---|---|---|---|---|
| NO. | BY: | DATE: | NO. | BY: | DATE: | | | S-21 |
| 1 | | | 3 | | | | | TOTAL SHEETS |
| 2 | | | 4 | | | | | 237 |

| | | | |
|---|---|---|---|
| ASSEMBLED BY : T.L. AVERETTE | | DATE : 6-29-11 | |
| CHECKED BY : PEGGY PARISI | | DATE : 7-28-11 | |
| DRAWN BY : REK 9/87 | REV. 7/17/98 | RWW/LES | |
| CHECKED BY : CRK 10/87 | REV. 10/17/00 | RWW/LES | |
| | REV. 5/1/06 | TLA/GM | |

13-SEP-2011 09:51
W:\Structures\Final Plans\Str.#1\R2413C_sd_JS_01.dgn
bbarodawala

STR. #1

STD. NO. EJS2SM

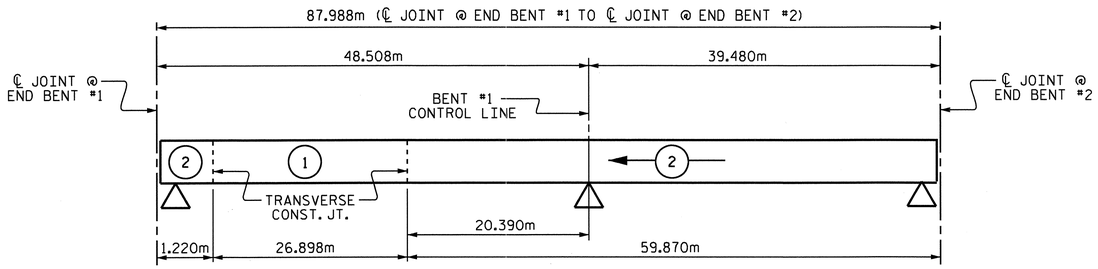


## POURING SEQUENCE

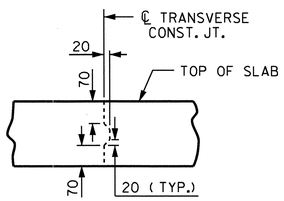


## TRANSVERSE CONSTRUCTION JOINT DETAIL

NOTE: REINFORCING STEEL IN SLAB NOT SHOWN.
LONGITUDINAL REINFORCING STEEL SHALL
BE CONTINUOUS THROUGH JOINT.

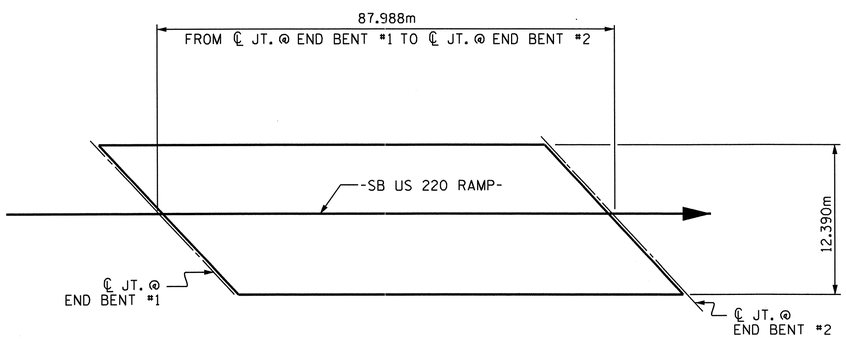


## LAYOUT FOR COMPUTING AREA OF REINFORCED CONCRETE DECK SLAB

( SQ. METER = 1090.2 )

| SUPERSTRUCTURE REINFORCING STEEL LENGTHS ARE BASED ON THE FOLLOWING MINIMUM SPLICE LENGTHS | | | | | |
|---|---|---|---|---|---|
| BAR SIZE | SUPERSTRUCTURE EXCEPT APPROACH SLABS, PARAPET, AND BARRIER RAIL | | APPROACH SLABS | | PARAPET AND BARRIER RAIL |
| | EPOXY COATED | UNCOATED | EPOXY COATED | UNCOATED | |
| #13 | 610 | 540 | 610 | 540 | 840 |
| #16 | 770 | 660 | 770 | 660 | 1050 |
| #19 | 920 | 790 | 1190 | 790 | 1330 |
| #22 | 1580 | 1060 | | | |
| #25 | 2080 | 1390 | | | |

| GROOVING BRIDGE FLOORS | | |
|---|---|---|
| APPROACH SLABS | 152.6 | SQ.METER |
| BRIDGE DECK | 918.7 | SQ.METER |
| TOTAL | 1071.3 | SQ.METER |

## REINFORCING BAR SCHEDULE

### SPANS A & B

| BAR | NO | SIZE | TYPE | LENGTH | WEIGHT |
|---|---|---|---|---|---|
| *A1 | 450 | 16 | STR | 12280 | 8576 |
| A2 | 450 | 16 | STR | 12280 | 8576 |
| *A3 | 6 | 19 | STR | 5000 | 67 |
| *A101 | 6 | 16 | STR | 11800 | 110 |
| *A102 | 6 | 16 | STR | 11240 | 105 |
| *A103 | 6 | 16 | STR | 10680 | 99 |
| *A104 | 6 | 16 | STR | 10140 | 94 |
| *A105 | 6 | 16 | STR | 9580 | 89 |
| *A106 | 6 | 16 | STR | 9020 | 84 |
| *A107 | 6 | 16 | STR | 8480 | 79 |
| *A108 | 6 | 16 | STR | 7920 | 74 |
| *A109 | 6 | 16 | STR | 7380 | 69 |
| *A110 | 6 | 16 | STR | 6820 | 64 |
| *A111 | 6 | 16 | STR | 6260 | 58 |
| *A112 | 6 | 16 | STR | 5720 | 53 |
| *A113 | 6 | 16 | STR | 5160 | 48 |
| *A114 | 6 | 16 | STR | 4600 | 43 |
| *A115 | 6 | 16 | STR | 4060 | 38 |
| *A116 | 6 | 16 | STR | 3500 | 33 |
| *A117 | 6 | 16 | STR | 2960 | 28 |
| *A118 | 6 | 16 | STR | 2400 | 22 |
| *A119 | 6 | 16 | STR | 1840 | 17 |
| *A120 | 6 | 16 | STR | 1300 | 12 |
| *A121 | 6 | 16 | STR | 740 | 7 |
| A201 | 6 | 16 | STR | 11800 | 110 |
| A202 | 6 | 16 | STR | 11240 | 105 |
| A203 | 6 | 16 | STR | 10680 | 99 |
| A204 | 6 | 16 | STR | 10140 | 94 |
| A205 | 6 | 16 | STR | 9580 | 89 |
| A206 | 6 | 16 | STR | 9020 | 84 |
| A207 | 6 | 16 | STR | 8480 | 79 |
| A208 | 6 | 16 | STR | 7920 | 74 |
| A209 | 6 | 16 | STR | 7380 | 69 |
| A210 | 6 | 16 | STR | 6820 | 64 |
| A211 | 6 | 16 | STR | 6260 | 58 |
| A212 | 6 | 16 | STR | 5720 | 53 |
| A213 | 6 | 16 | STR | 5160 | 48 |
| A214 | 6 | 16 | STR | 4600 | 43 |
| A215 | 6 | 16 | STR | 4060 | 38 |
| A216 | 6 | 16 | STR | 3500 | 33 |
| A217 | 6 | 16 | STR | 2960 | 28 |
| A218 | 6 | 16 | STR | 2400 | 22 |
| A219 | 6 | 16 | STR | 1840 | 17 |
| A220 | 6 | 16 | STR | 1300 | 12 |
| A221 | 6 | 16 | STR | 740 | 7 |
| *B1 | 116 | 13 | STR | 8580 | 989 |
| *B2 | 87 | 22 | STR | 14520 | 3843 |
| *B3 | 104 | 22 | STR | 12120 | 3834 |
| *B4 | 58 | 13 | STR | 8420 | 485 |
| B5 | 264 | 16 | STR | 15200 | 6228 |
| *G1 | 2 | 16 | STR | 16720 | 52 |
| *J1 | 104 | 13 | 4 | 440 | 45 |
| *K1 | 12 | 16 | 1 | 3720 | 69 |
| *K2 | 18 | 16 | 2 | 4660 | 130 |
| *S1 | 72 | 13 | 3 | 1260 | 90 |

| | | |
|---|---|---|
| REINFORCING STEEL | kg | 16,030 |
| *EPOXY COATED REINFORCING STEEL | kg | 19,406 |

## BAR TYPES

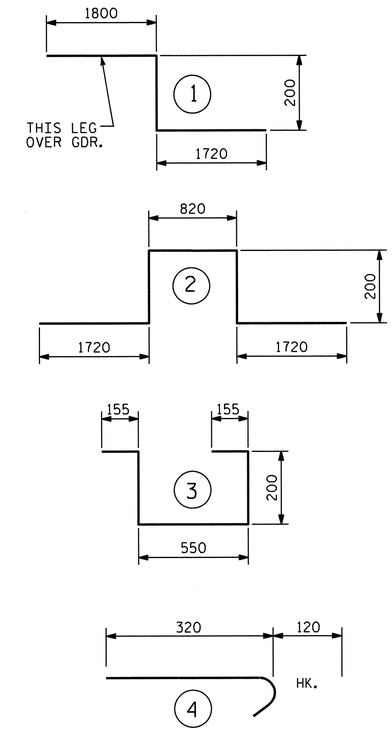


ALL BAR DIMENSIONS ARE OUT TO OUT

## SUPERSTRUCTURE BILL OF MATERIAL

| | CLASS AA CONCRETE | REINFORCING STEEL | EPOXY COATED REINFORCING STEEL |
|---|---|---|---|
| | ( CU.METER) | (kg) | (kg) |
| POUR #1 | 84.5 | | |
| POUR #2 | 194.2 | | |
| TOTALS** | 278.7 | 16,030 | 19,406 |

** QUANTITIES FOR BARRIER RAIL ARE NOT INCLUDED

PROJECT NO. R-2413C
GUILFORD-ROCKINGHAM COUNTY
STATION: 20+06.118 -LREV-

STATE OF NORTH CAROLINA
DEPARTMENT OF TRANSPORTATION
RALEIGH

STANDARD
SUPERSTRUCTURE BILL OF MATERIAL

NORTH CAROLINA PROFESSIONAL SEAL 022516 ENGINEER EMILY E. MURRAY
10/28/11

| REVISIONS | | | | | | SHEET NO. |
|---|---|---|---|---|---|---|
| NO. | BY: | DATE: | NO. | BY: | DATE: | S-22 |
| 1 | | | 3 | | | TOTAL SHEETS |
| 2 | | | 4 | | | 237 |

DRAWN BY : NMR/T.L. AVERETTE DATE : 6-30-11
CHECKED BY : PEGGY PARISI DATE : 7-26-11

19-OCT-2011 13:57
R:\TIPProjects-R\R2413c\Structures\Final Plans\Str.#1\R2413C_sd_BM_01.dgn
taverette

STR. #1

STD. NO. BOM1SM

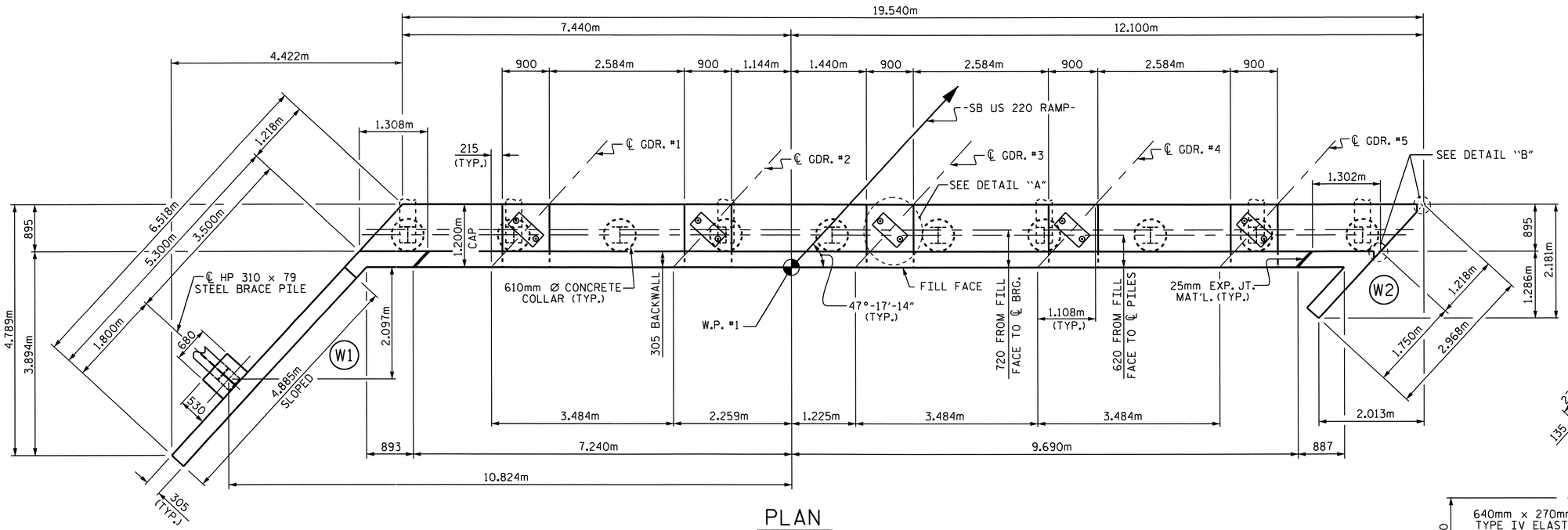


## PLAN

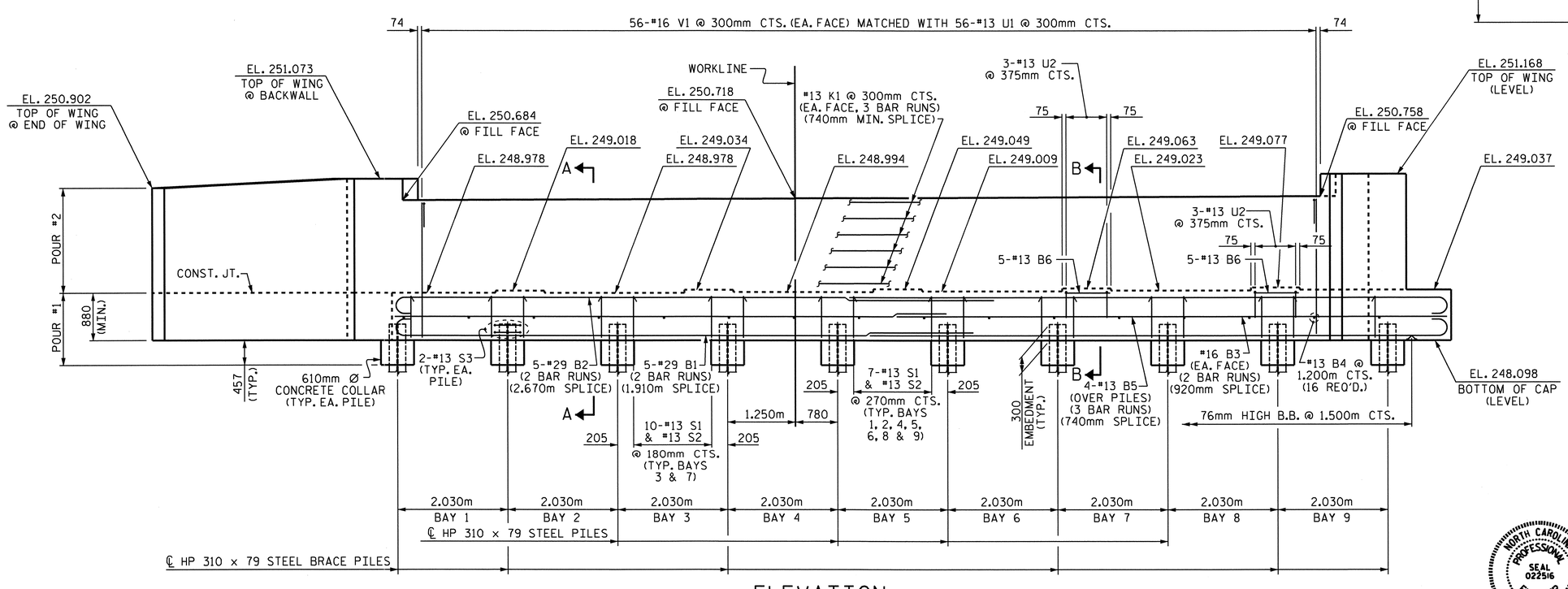


NOTE: FOR CLARITY, WING BRACE PILE IS NOT SHOWN IN ELEVATION VIEW.

## ELEVATION

## NOTES

STIRRUPS AND U1 BARS IN CAP MAY BE SHIFTED AS NECESSARY TO CLEAR ANCHOR BOLTS.

BACKWALL SHALL BE PLACED BEFORE APPLYING THE EPOXY PROTECTIVE COATING.

THE TOP SURFACE AREAS OF THE END BENT CAPS SHALL BE CURED IN ACCORDANCE WITH THE STANDARD SPECIFICATIONS EXCEPT THE MEMBRANE CURING COMPOUND METHOD SHALL NOT BE USED.

THE TOP SURFACE OF THE END BENT CAP EXCEPT THE BRIDGE SEAT BUILDUPS SHALL BE SLOPED TRANSVERSELY FROM THE FILL FACE TO THE BACK FACE AT A RATE OF 2%.

THE CONTRACTOR SHALL PROVIDE FOR THE INSTALLATION OF THE 102mm Ø DRAIN PIPE THROUGH THE WING WALL AS REQUIRED FOR REINFORCED BRIDGE APPROACH FILL. SEE THE ROADWAY PLANS. REINFORCING STEEL IN THE WING WALL MAY BE SHIFTED AS NECESSARY TO CLEAR THE DRAIN PIPE.

EPOXY COAT THE END BENT CAP AFTER ADJUSTMENTS ARE MADE TO BEARINGS AND ANCHOR BOLTS ARE GROUTED.

FOR PIPE INSERT DETAILS, SEE BEARINGS SHEET.

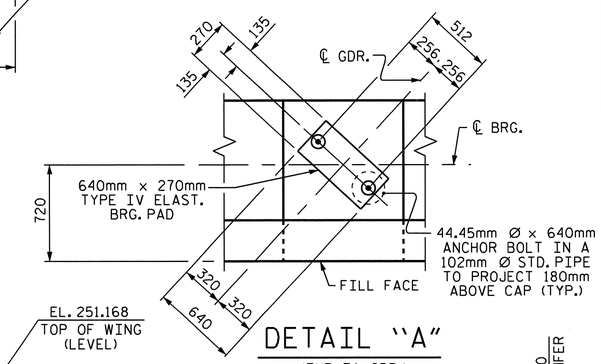


## DETAIL "A"

(TYP. EA. GDR.)

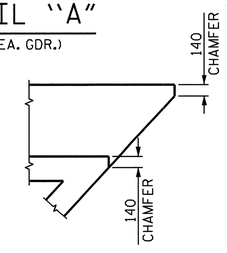


## DETAIL "B"

PROJECT NO. R-2413C

GUILFORD-ROCKINGHAM COUNTY

STATION: 20+06.118 -LREV-

SHEET 1 OF 3

STATE OF NORTH CAROLINA
DEPARTMENT OF TRANSPORTATION
RALEIGH

SUBSTRUCTURE

END BENT #1

NORTH CAROLINA PROFESSIONAL SEAL 022516 ENGINEER EMILY E. MURRAY
10/28/11

| REVISIONS | | | | | | | SHEET NO. |
|---|---|---|---|---|---|---|---|
| NO. | BY: | DATE: | NO. | BY: | DATE: | | S-23 |
| 1 | | | 3 | | | | TOTAL SHEETS |
| 2 | | | 4 | | | | 237 |

DRAWN BY : T.L. AVERETTE DATE : 6-23-11
CHECKED BY : PEGGY PARISI DATE : 7-28-11

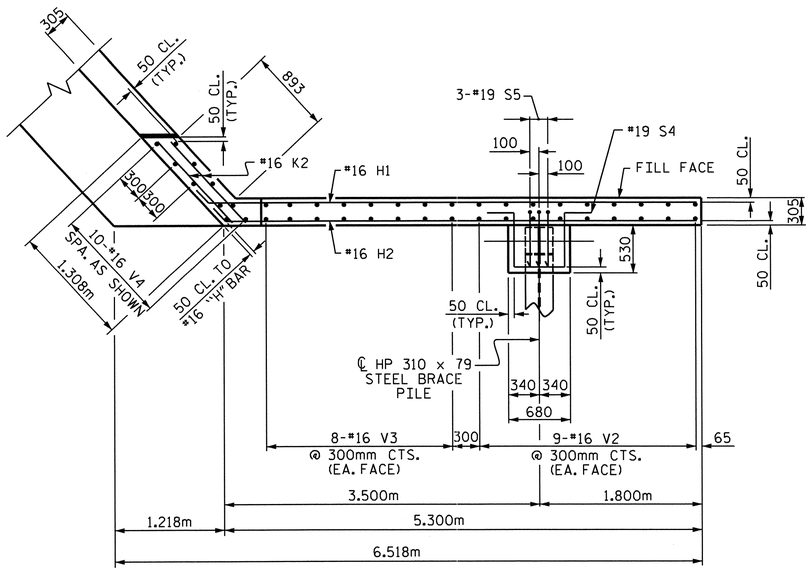


PLAN OF LEFT WING (W1)

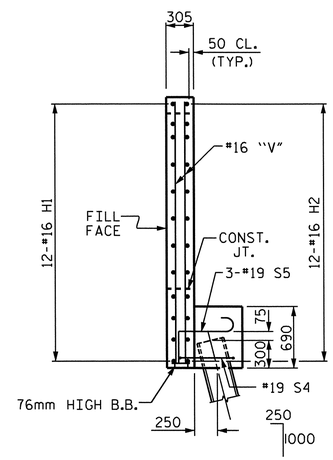


SECTION X-X

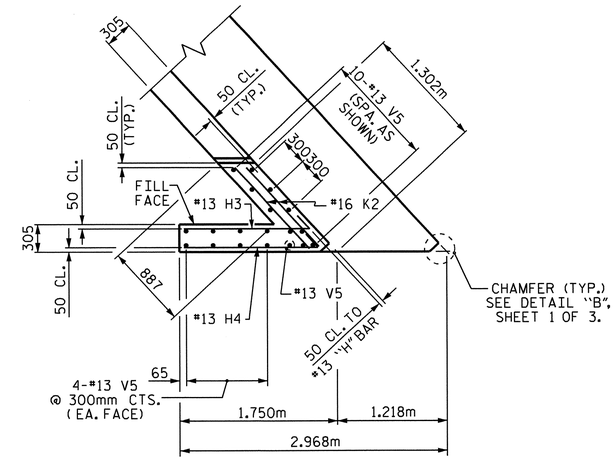


PLAN OF RIGHT WING (W2)

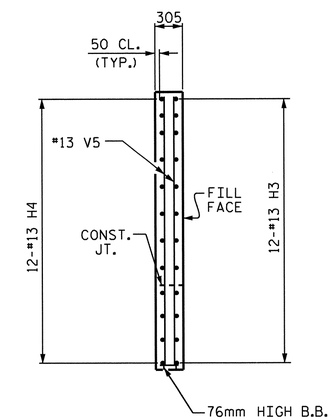


SECTION Y-Y

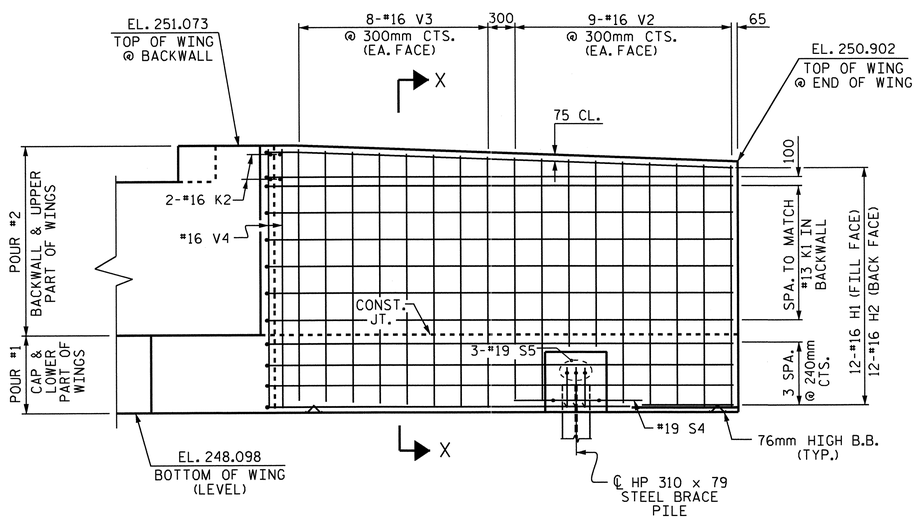


ELEVATION OF LEFT WING (W1)

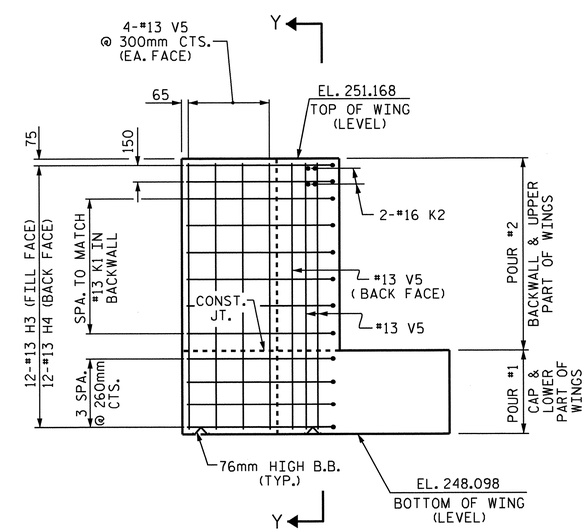


ELEVATION OF RIGHT WING (W2)

NORTH CAROLINA PROFESSIONAL SEAL 022516 ENGINEER ELMER E. MURRAY
10/28/11

PROJECT NO. R-2413C
GUILFORD-ROCKINGHAM COUNTY
STATION: 20+06.118 -LREV-

SHEET 2 OF 3

STATE OF NORTH CAROLINA
DEPARTMENT OF TRANSPORTATION
RALEIGH

SUBSTRUCTURE
END BENT #1

| REVISIONS | | | | | | | | SHEET NO. |
|---|---|---|---|---|---|---|---|---|
| NO. | BY: | DATE: | NO. | BY: | DATE: | | | S-24 |
| 1 | | | 3 | | | | | TOTAL SHEETS |
| 2 | | | 4 | | | | | 237 |

DRAWN BY : T.L. AVERETTE DATE : 6-23-11
CHECKED BY : PEGGY PARISI DATE : 7-28-11

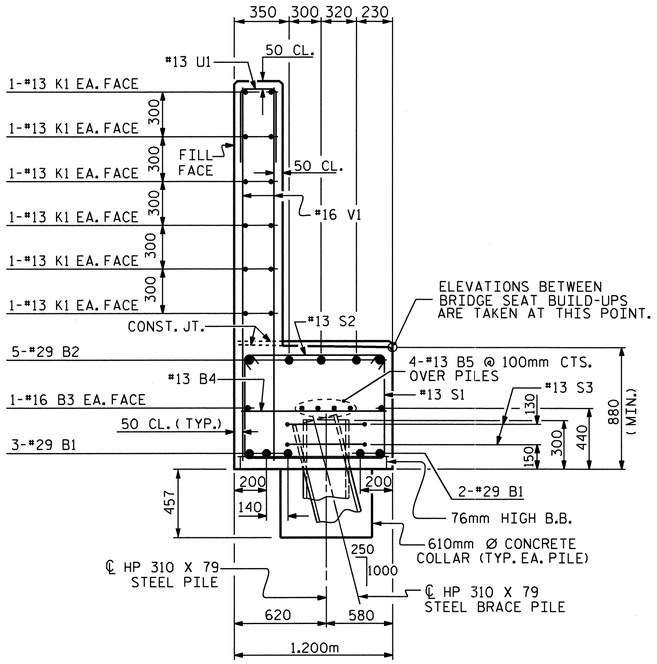


## SECTION A-A

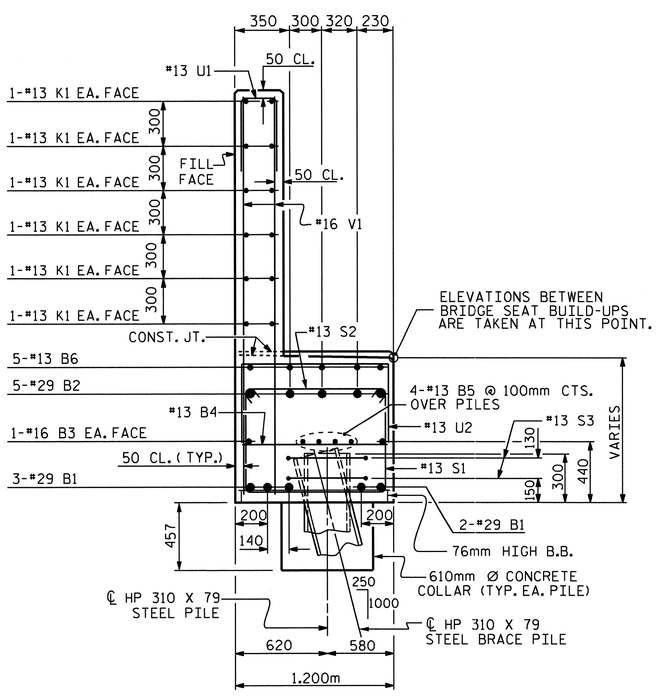


## SECTION B-B

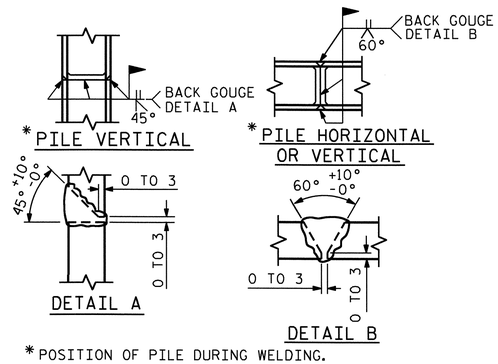


* POSITION OF PILE DURING WELDING.

## PILE SPLICE DETAILS

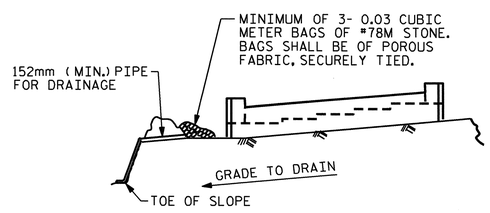


BAGGED STONE AND PIPE SHALL BE PLACED IMMEDIATELY AFTER COMPLETION OF END BENT EXCAVATION. PIPE MAY BE EITHER CONCRETE, CORRUGATED STEEL, CORRUGATED ALUMINUM ALLOY, OR CORRUGATED PLASTIC. PERFORATED PIPE WILL NOT BE ALLOWED.

BAGGED STONE SHALL REMAIN IN PLACE UNTIL THE ENGINEER DIRECTS THAT IT BE REMOVED. THE CONTRACTOR SHALL REMOVE AND DISPOSE OF SILT ACCUMULATIONS AT BAGGED STONE WHEN SO DIRECTED BY THE ENGINEER. BAGS SHALL BE REMOVED AND REPLACED WHENEVER THE ENGINEER DETERMINES THAT THEY HAVE DETERIORATED AND LOST THEIR EFFECTIVENESS.

NO SEPARATE PAYMENT WILL BE MADE FOR THIS WORK AND THE ENTIRE COST OF THIS WORK SHALL BE INCLUDED IN THE UNIT CONTRACT PRICE BID FOR THE SEVERAL PAY ITEMS.

## TEMPORARY DRAINAGE AT END BENT

## BAR TYPES

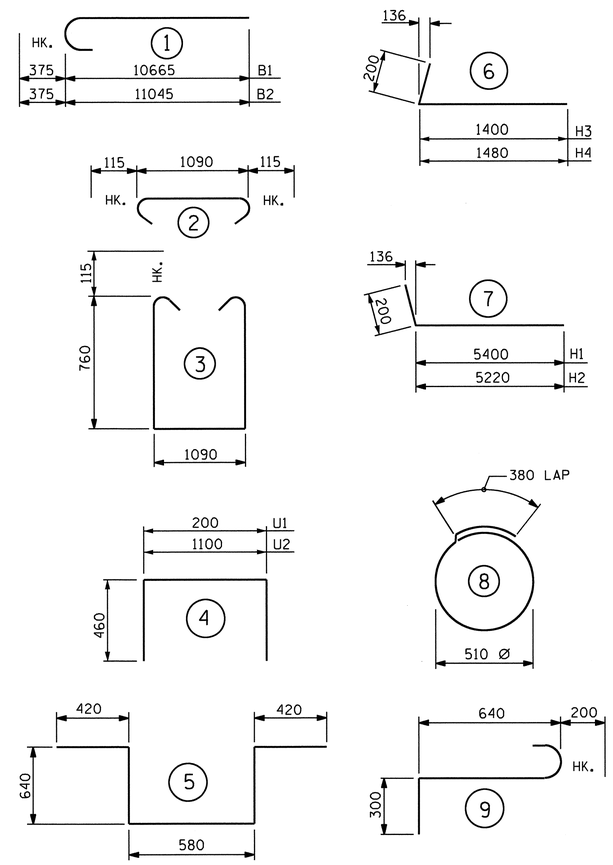


ALL BAR DIMENSIONS ARE OUT TO OUT.

## BILL OF MATERIAL

### END BENT #1

| BAR | NUM | SZ | TYP | LENGTH | WEIGHT |
|---|---|---|---|---|---|
| B1 | 10 | 29 | 1 | 11040 | 559 |
| B2 | 10 | 29 | 1 | 11420 | 578 |
| B3 | 4 | 16 | STR | 10180 | 63 |
| B4 | 16 | 13 | STR | 1100 | 17 |
| B5 | 12 | 13 | STR | 6980 | 83 |
| B6 | 10 | 13 | STR | 800 | 8 |
| H1 | 12 | 16 | 7 | 5600 | 104 |
| H2 | 12 | 16 | 7 | 5420 | 101 |
| H3 | 12 | 13 | 6 | 1600 | 19 |
| H4 | 12 | 13 | 6 | 1680 | 20 |
| K1 | 36 | 13 | STR | 6980 | 250 |
| K2 | 8 | 16 | STR | 1120 | 14 |
| S1 | 69 | 13 | 3 | 2840 | 195 |
| S2 | 69 | 13 | 2 | 1320 | 91 |
| S3 | 20 | 13 | 8 | 1980 | 39 |
| S4 | 1 | 19 | 5 | 2700 | 6 |
| S5 | 3 | 19 | 9 | 1140 | 8 |
| U1 | 56 | 13 | 4 | 1120 | 62 |
| U2 | 6 | 13 | 4 | 2020 | 12 |
| V1 | 112 | 16 | STR | 2480 | 431 |
| V2 | 18 | 16 | STR | 2700 | 75 |
| V3 | 16 | 16 | STR | 2800 | 70 |
| V4 | 10 | 16 | STR | 2860 | 44 |
| V5 | 19 | 13 | STR | 2960 | 56 |
| REINFORCING STEEL | | | | KG. | 2,905 |

CLASS A CONCRETE BREAKDOWN

| | | |
|---|---|---|
| POUR #1 (CAP, LOWER WINGS, WING BRACE PILE FTG. & CONCRETE COLLARS) | C.M. | 24.9 |
| POUR #2 (BACKWALL & UPPER WINGS) | C.M. | 14.4 |
| TOTAL CLASS A CONCRETE | C.M. | 39.3 |

HP 310 X 79 STEEL PILES

| | | |
|---|---|---|
| NO. 11 | METERS | 92.3 |

PROJECT NO. R-2413C

GUILFORD-ROCKINGHAM COUNTY

STATION: 20+06.118 -LREV-

SHEET 3 OF 3

STATE OF NORTH CAROLINA
DEPARTMENT OF TRANSPORTATION
RALEIGH

SUBSTRUCTURE

END BENT #1

NORTH CAROLINA PROFESSIONAL SEAL 022516 ENGINEER EMILY E. MURRAY
10/28/11

| REVISIONS | | | | | | SHEET NO. |
|---|---|---|---|---|---|---|
| NO. | BY: | DATE: | NO. | BY: | DATE: | S-25 |
| 1 | | | 3 | | | TOTAL SHEETS |
| 2 | | | 4 | | | 237 |

DRAWN BY : T.L. AVERETTE DATE : 6-23-11
CHECKED BY : PEGGY PARISI DATE : 7-28-11

## NOTES

STIRRUPS AND U1 BARS IN CAP MAY BE SHIFTED AS NECESSARY TO CLEAR ANCHOR BOLTS.

HOOKS ON "V" BARS MAY BE TURNED AS NECESSARY FOR PLACING REINFORCING STEEL.

INVERT ALTERNATE STIRRUPS.

THE CONTRACTOR'S ATTENTION IS CALLED TO THE FACT THAT THE M1 BARS IN THE SPREAD FOOTINGS ARE DETAILED WITH ONE METER OF EXTRA LENGTH.

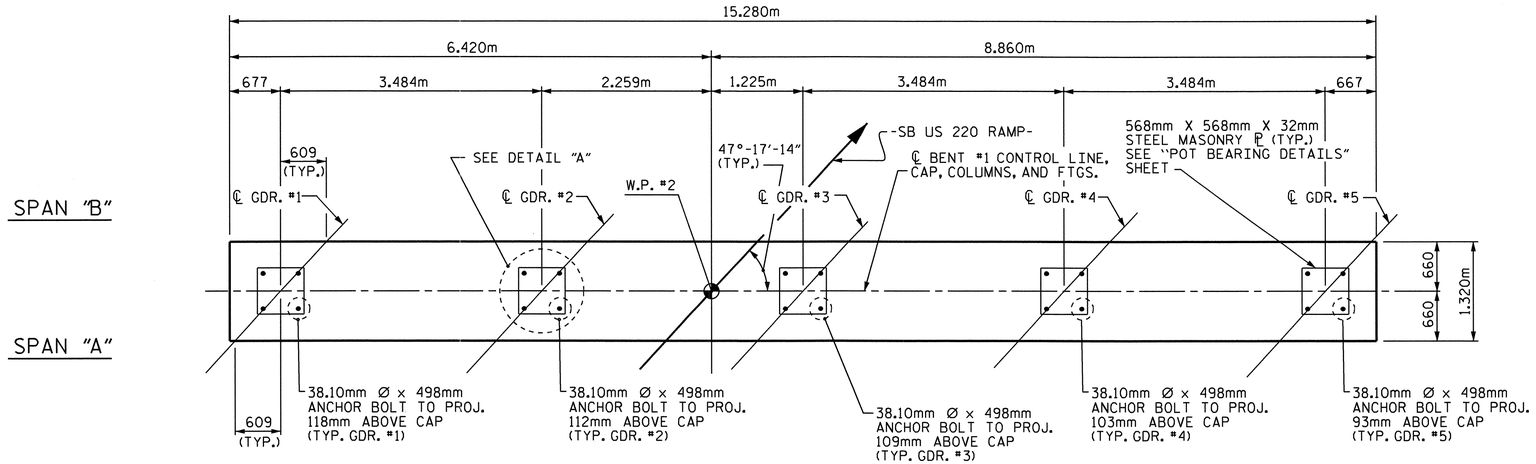


## PLAN

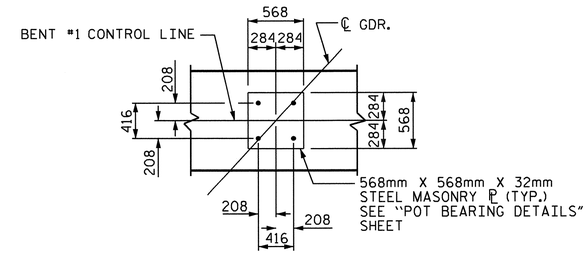


## DETAIL "A"

(TYP. EA. GDR.)

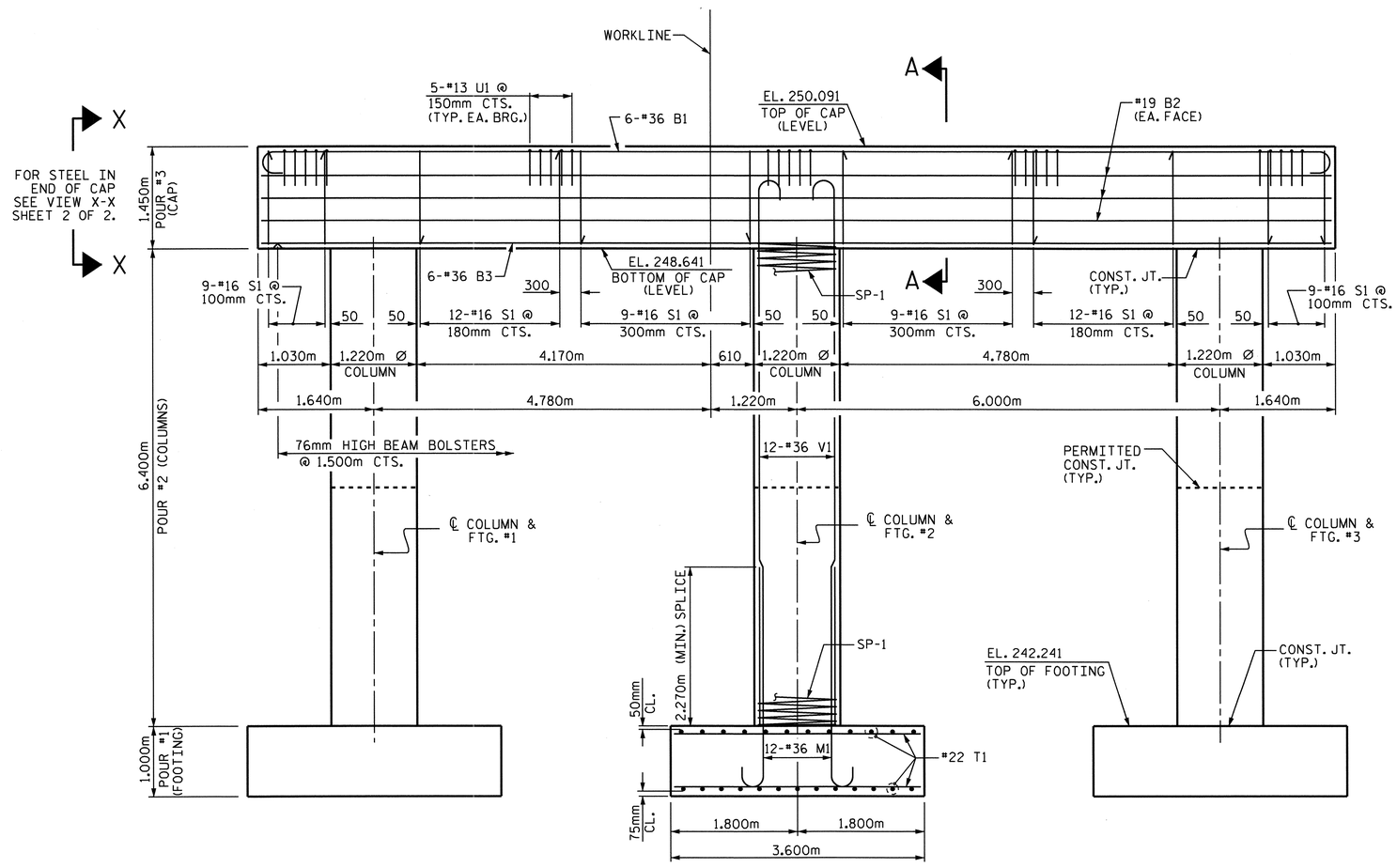


## ELEVATION

(DIMENSIONS AND REINFORCING STEEL FOR EACH COLUMN & FOOTING ARE TYPICAL)

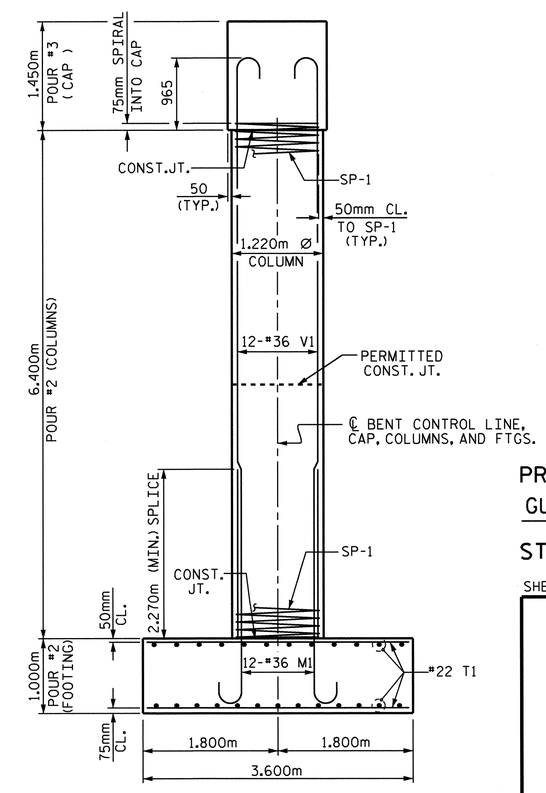


## END ELEVATION

NORTH CAROLINA PROFESSIONAL SEAL 022516 ENGINEER EMILY E. MURRAY
10/28/11

PROJECT NO. R-2413C

GUILFORD-ROCKINGHAM COUNTY

STATION: 20+06.118 -LREV-

SHEET 1 OF 2

STATE OF NORTH CAROLINA
DEPARTMENT OF TRANSPORTATION
RALEIGH

SUBSTRUCTURE

BENT #1

| REVISIONS | | | | | | SHEET NO. |
|---|---|---|---|---|---|---|
| NO. | BY: | DATE: | NO. | BY: | DATE: | S-26 |
| 1 | | | 3 | | | TOTAL SHEETS |
| 2 | | | 4 | | | 237 |

DRAWN BY : MJH/T.L. AVERETTE DATE : 6-22-11
CHECKED BY : PEGGY PARISI DATE : 7-28-11

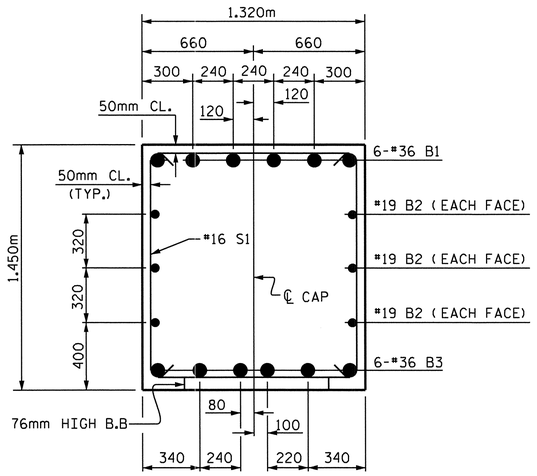


## SECTION A-A

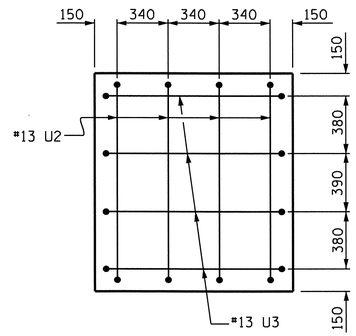


## VIEW X-X

( TYP. EA. END )

## BAR TYPES

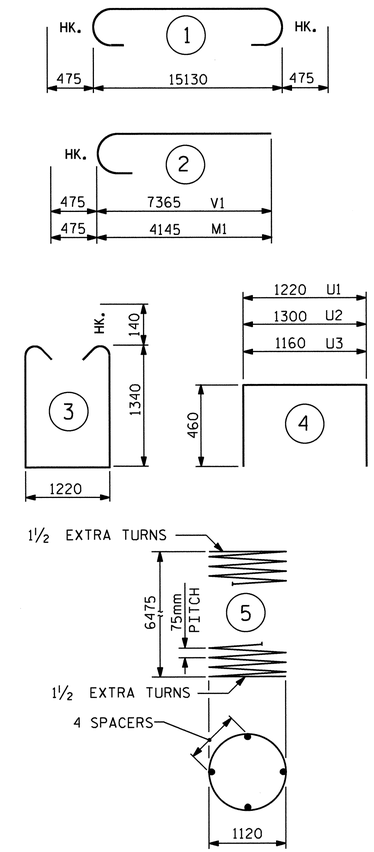


ALL BAR DIMENSIONS ARE OUT TO OUT.

## BILL OF MATERIAL

### BENT NO. 1

| BAR | NO. | SIZE | TYPE | LENGTH | WEIGHT |
|---|---|---|---|---|---|
| B1 | 6 | #36 | 1 | 16080 | 763 |
| B2 | 6 | #19 | STR. | 15180 | 204 |
| B3 | 6 | #36 | STR. | 15180 | 720 |
| M1 | 36 | #36 | 2 | 4620 | 1315 |
| S1 | 60 | #16 | 3 | 4180 | 389 |
| T1 | 150 | #22 | STR. | 3500 | 1597 |
| U1 | 25 | #13 | 4 | 2140 | 53 |
| U2 | 8 | #13 | 4 | 2220 | 18 |
| U3 | 8 | #13 | 4 | 2080 | 17 |
| V1 | 36 | #36 | 2 | 7840 | 2232 |
| TOTAL REINFORCING STEEL | | | | kg | 7308 |

| SPIRAL COLUMN REINFORCING STEEL | | | | | |
|---|---|---|---|---|---|
| SP-1 | 3 | ** | 5 | 310840 | 927 |
| TOTAL SPIRAL STEEL | | | | kg | 927 |

| CLASS A CONCRETE BREAKDOWN | | |
|---|---|---|
| POUR #1 (FOOTINGS) | $m^3$ | 38.9 |
| POUR #2 (COLUMNS) | $m^3$ | 22.4 |
| POUR #3 (CAP) | $m^3$ | 29.2 |
| TOTAL CLASS A CONCRETE | $m^3$ | 90.5 |

FOUNDATION EXCAVATION LUMP SUM

**THE SP-1 SPIRAL REINFORCING STEEL SHALL BE W20 OR D-20 COLD DRAWN WIRE OR #13 PLAIN OR DEFORMED BAR.

THE CONTRACTOR'S ATTENTION IS CALLED TO THE FACT THAT THE LONGITUDINAL REINFORCEMENT FOR THE COLUMNS IS DETAILED WITH ONE METER OF EXTRA LENGTH.

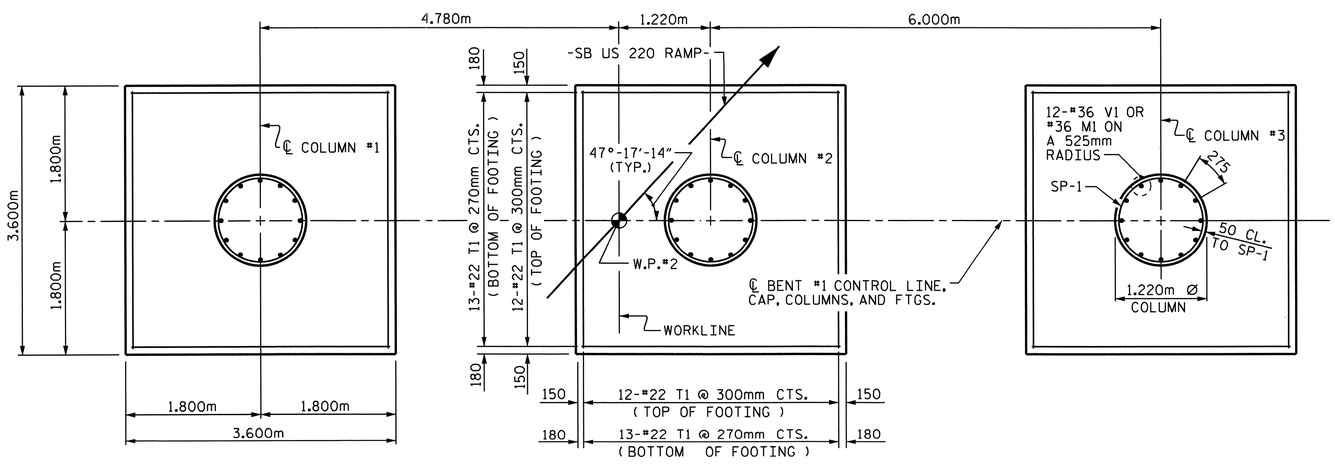


## PLAN OF FOOTINGS

(DIMENSIONS AND REINFORCING STEEL FOR EACH COLUMN & FOOTING ARE TYPICAL)

PROJECT NO. R-2413C
GUILFORD-ROCKINGHAM COUNTY
STATION: 20+06.118 -LREV-

SHEET 2 OF 2

STATE OF NORTH CAROLINA
DEPARTMENT OF TRANSPORTATION
RALEIGH

SUBSTRUCTURE

BENT #1

NORTH CAROLINA PROFESSIONAL SEAL 022516 ENGINEER EMILY E. McARRAY
10/26/11

| REVISIONS | | | | | | SHEET NO. |
|---|---|---|---|---|---|---|
| NO. | BY: | DATE: | NO. | BY: | DATE: | S-27 |
| 1 | | | 3 | | | TOTAL SHEETS |
| 2 | | | 4 | | | 237 |

DRAWN BY : MJH/T.L. AVERETTE DATE : 6-22-11
CHECKED BY : PEGGY PARISI DATE : 7-28-11

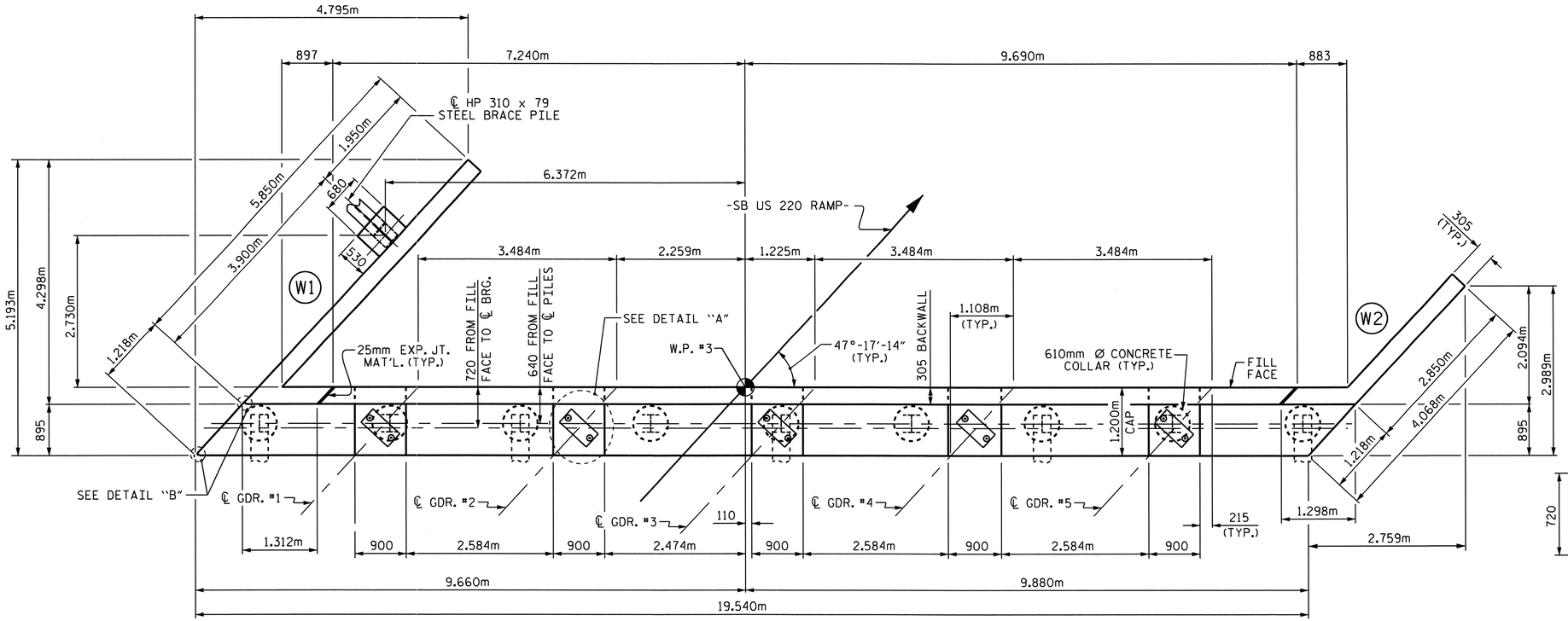


## PLAN

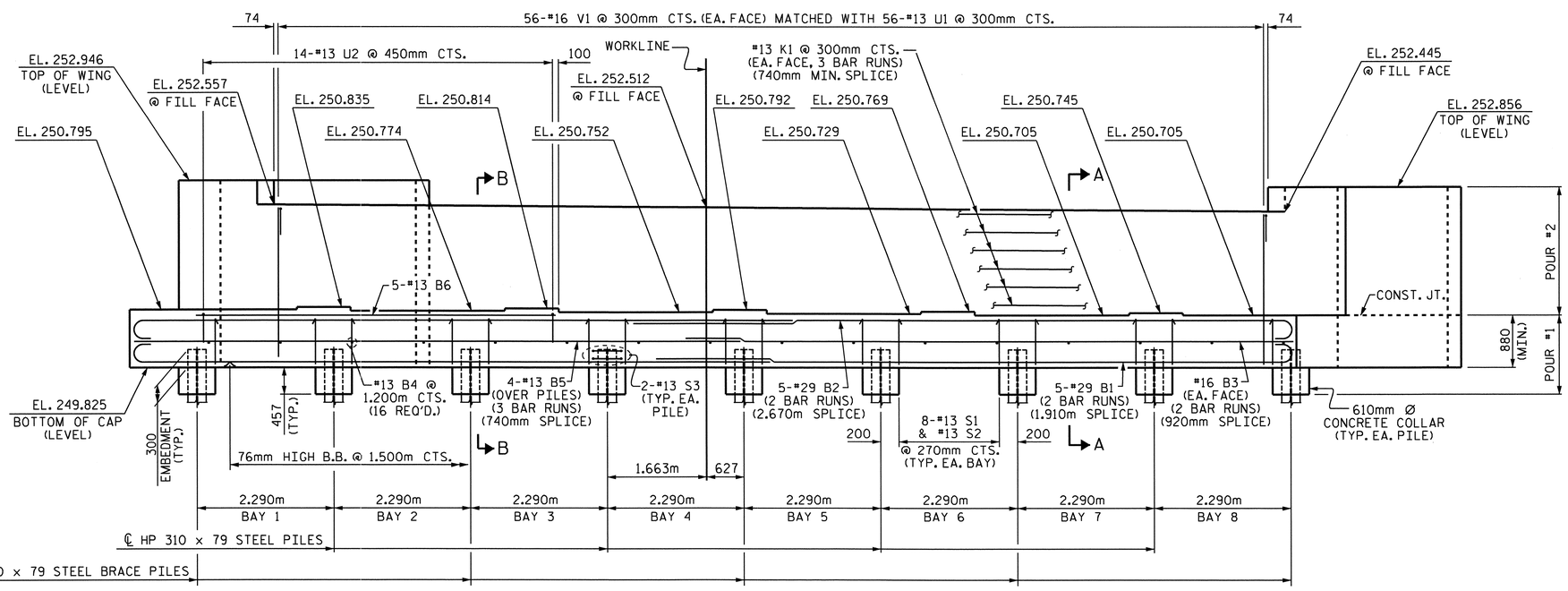


## ELEVATION

NOTE: FOR CLARITY, WING BRACE PILE IS NOT SHOWN IN ELEVATION VIEW.

## NOTES

STIRRUPS AND U1 BARS IN CAP MAY BE SHIFTED AS NECESSARY TO CLEAR ANCHOR BOLTS.

BACKWALL SHALL BE PLACED BEFORE APPLYING THE EPOXY PROTECTIVE COATING.

THE TOP SURFACE AREAS OF THE END BENT CAPS SHALL BE CURED IN ACCORDANCE WITH THE STANDARD SPECIFICATIONS EXCEPT THE MEMBRANE CURING COMPOUND METHOD SHALL NOT BE USED.

THE TOP SURFACE OF THE END BENT CAP EXCEPT THE BRIDGE SEAT BUILDUPS SHALL BE SLOPED TRANSVERSELY FROM THE FILL FACE TO THE BACK FACE AT A RATE OF 2%.

THE CONTRACTOR SHALL PROVIDE FOR THE INSTALLATION OF THE 102mm Ø DRAIN PIPE THROUGH THE WING WALL AS REQUIRED FOR REINFORCED BRIDGE APPROACH FILL, SEE THE ROADWAY PLANS. REINFORCING STEEL IN THE WING WALL MAY BE SHIFTED AS NECESSARY TO CLEAR THE DRAIN PIPE.

EPOXY COAT THE END BENT CAP AFTER ADJUSTMENTS ARE MADE TO BEARINGS AND ANCHOR BOLTS ARE GROUTED.

FOR PIPE INSERT DETAILS, SEE BEARINGS SHEET.

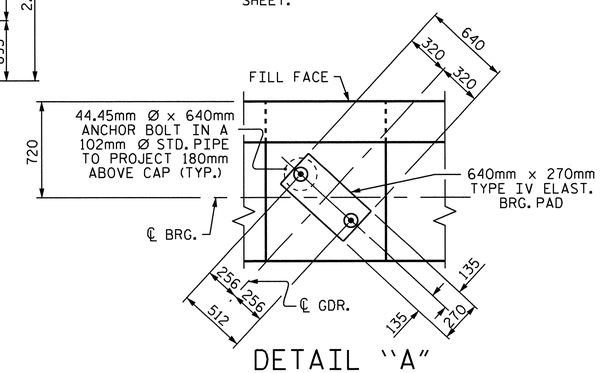


## DETAIL "A"

(TYP. EA. GDR.)

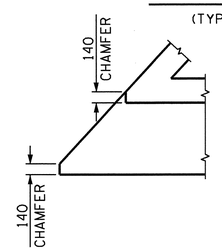


## DETAIL "B"

PROJECT NO. R-2413C

GUILFORD-ROCKINGHAM COUNTY

STATION: 20+06.118 -LREV-

SHEET 1 OF 3

STATE OF NORTH CAROLINA
DEPARTMENT OF TRANSPORTATION
RALEIGH

SUBSTRUCTURE

END BENT #2

NORTH CAROLINA PROFESSIONAL SEAL 022516 ENGINEER EMILY E. MURRAY
10/28/14

| REVISIONS | | | | | | | SHEET NO. |
|---|---|---|---|---|---|---|---|
| NO. | BY: | DATE: | NO. | BY: | DATE: | | S-28 |
| 1 | | | 3 | | | | TOTAL SHEETS |
| 2 | | | 4 | | | | 237 |

DRAWN BY : T.L AVERETTE DATE : 6-23-11
CHECKED BY : PEGGY PARISI DATE : 7-28-11

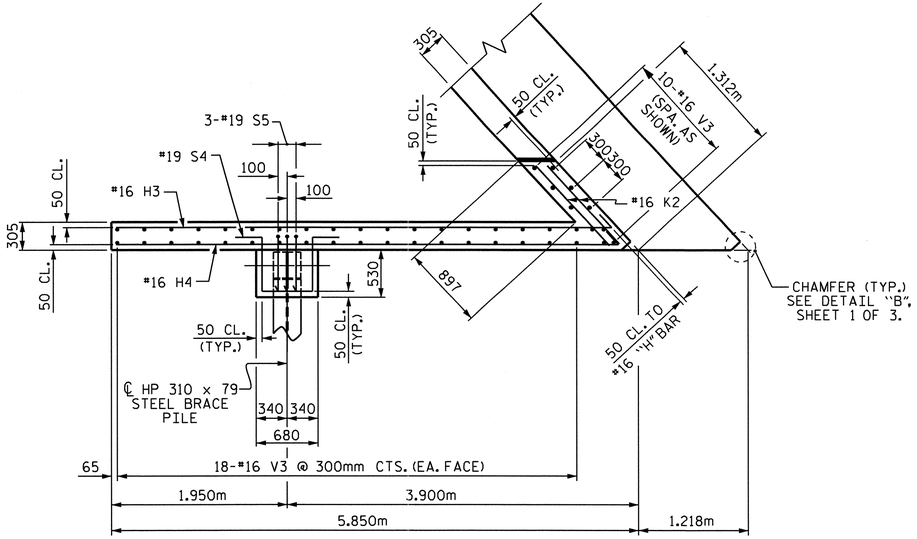


## PLAN OF LEFT WING (W1)

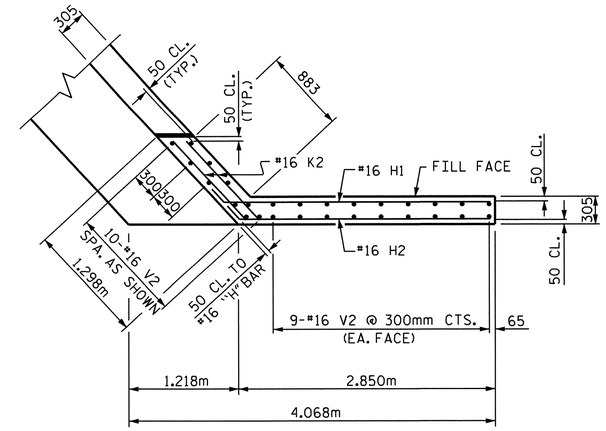


## PLAN OF RIGHT WING (W2)

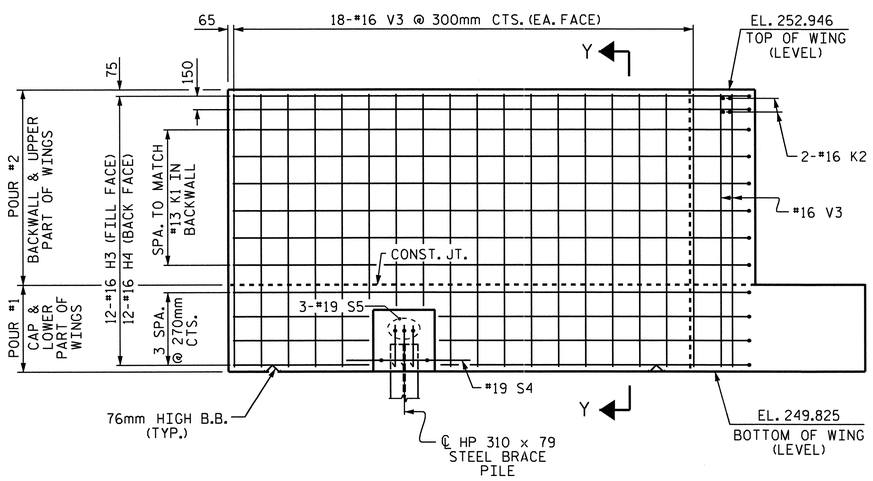


## ELEVATION OF LEFT WING (W1)

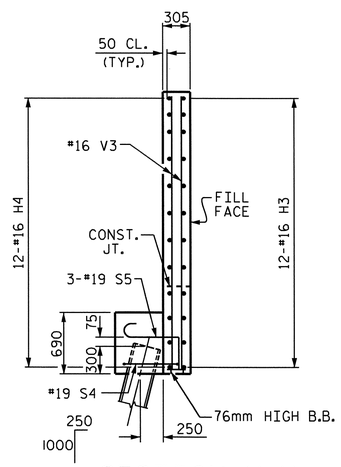


## SECTION Y-Y

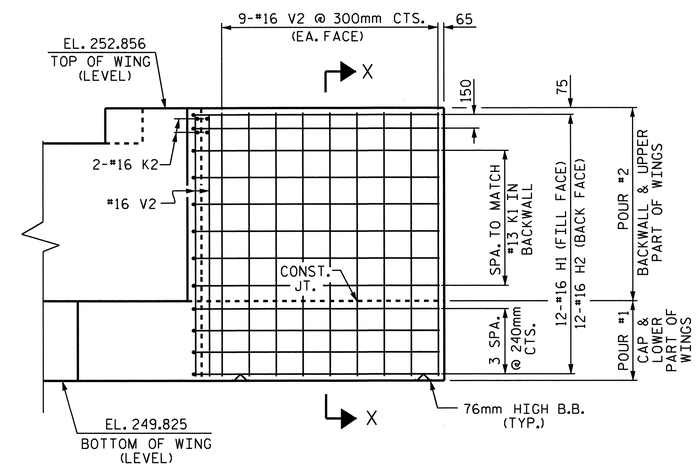


## ELEVATION OF RIGHT WING (W2)

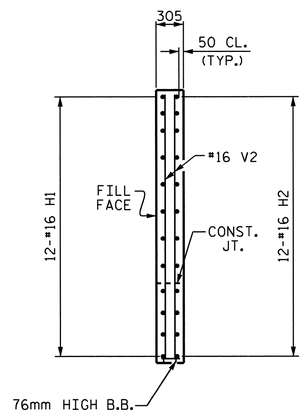


## SECTION X-X

PROJECT NO. R-2413C

GUILFORD-ROCKINGHAM COUNTY

STATION: 20+06.118 -LREV-

SHEET 2 OF 3

STATE OF NORTH CAROLINA
DEPARTMENT OF TRANSPORTATION
RALEIGH

SUBSTRUCTURE

END BENT #2

NORTH CAROLINA PROFESSIONAL SEAL 022516 ENGINEER EMILY E. MURRAY
10/28/11

| REVISIONS | | | | | | SHEET NO. |
|---|---|---|---|---|---|---|
| NO. | BY: | DATE: | NO. | BY: | DATE: | S-29 |
| 1 | | | 3 | | | TOTAL SHEETS |
| 2 | | | 4 | | | 237 |

DRAWN BY : T.L. AVERETTE DATE : 6-23-11
CHECKED BY : PEGGY PARISI DATE : 7-28-11

STR. #1

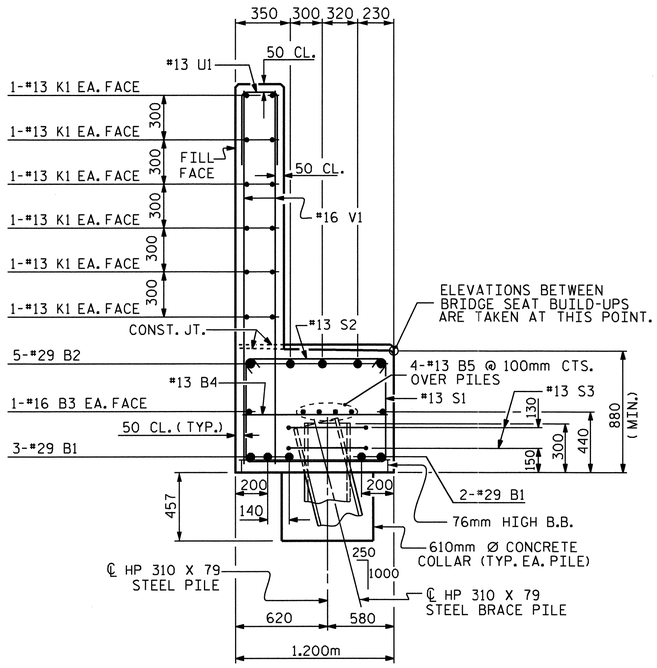


## SECTION A-A

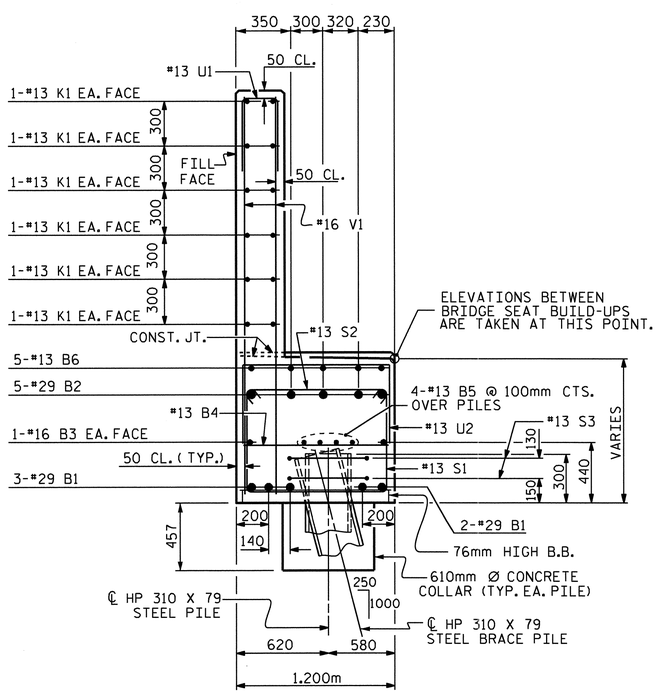


## SECTION B-B

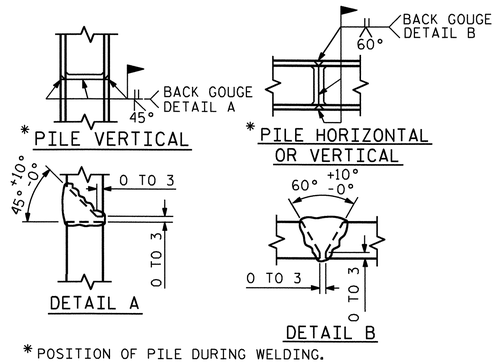


* POSITION OF PILE DURING WELDING.

## PILE SPLICE DETAILS

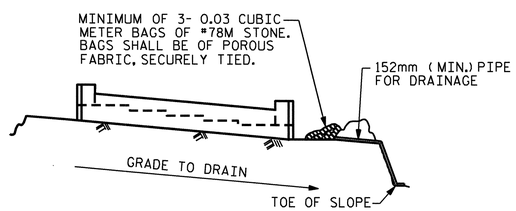


BAGGED STONE AND PIPE SHALL BE PLACED IMMEDIATELY AFTER COMPLETION OF END BENT EXCAVATION. PIPE MAY BE EITHER CONCRETE, CORRUGATED STEEL, CORRUGATED ALUMINUM ALLOY, OR CORRUGATED PLASTIC. PERFORATED PIPE WILL NOT BE ALLOWED.

BAGGED STONE SHALL REMAIN IN PLACE UNTIL THE ENGINEER DIRECTS THAT IT BE REMOVED. THE CONTRACTOR SHALL REMOVE AND DISPOSE OF SILT ACCUMULATIONS AT BAGGED STONE WHEN SO DIRECTED BY THE ENGINEER. BAGS SHALL BE REMOVED AND REPLACED WHENEVER THE ENGINEER DETERMINES THAT THEY HAVE DETERIORATED AND LOST THEIR EFFECTIVENESS.

NO SEPARATE PAYMENT WILL BE MADE FOR THIS WORK AND THE ENTIRE COST OF THIS WORK SHALL BE INCLUDED IN THE UNIT CONTRACT PRICE BID FOR THE SEVERAL PAY ITEMS.

## TEMPORARY DRAINAGE AT END BENT

## BAR TYPES

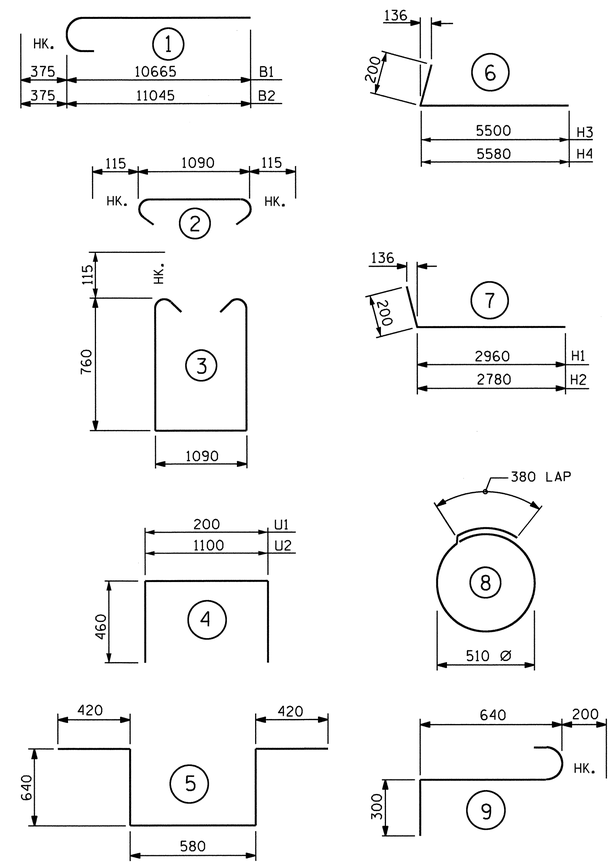


ALL BAR DIMENSIONS ARE OUT TO OUT.

## BILL OF MATERIAL

### END BENT #2

| BAR | NUM | SZ | TYP | LENGTH | WEIGHT |
|---|---|---|---|---|---|
| B1 | 10 | 29 | 1 | 11040 | 559 |
| B2 | 10 | 29 | 1 | 11420 | 578 |
| B3 | 4 | 16 | STR | 10180 | 63 |
| B4 | 16 | 13 | STR | 1100 | 17 |
| B5 | 12 | 13 | STR | 6980 | 83 |
| B6 | 5 | 13 | STR | 6020 | 30 |
| H1 | 12 | 16 | 7 | 3160 | 59 |
| H2 | 12 | 16 | 7 | 2980 | 56 |
| H3 | 12 | 16 | 6 | 5700 | 106 |
| H4 | 12 | 16 | 6 | 5780 | 108 |
| K1 | 36 | 13 | STR | 6980 | 250 |
| K2 | 8 | 16 | STR | 1120 | 14 |
| S1 | 64 | 13 | 3 | 2840 | 181 |
| S2 | 64 | 13 | 2 | 1320 | 84 |
| S3 | 18 | 13 | 8 | 1980 | 35 |
| S4 | 1 | 19 | 5 | 2700 | 6 |
| S5 | 3 | 19 | 9 | 1140 | 8 |
| U1 | 56 | 13 | 4 | 1120 | 62 |
| U2 | 14 | 13 | 4 | 2020 | 28 |
| V1 | 112 | 16 | STR | 2520 | 438 |
| V2 | 28 | 16 | STR | 2920 | 127 |
| V3 | 46 | 16 | STR | 3020 | 216 |
| REINFORCING STEEL | | | | KG. | 3,108 |

CLASS A CONCRETE BREAKDOWN

| | | |
|---|---|---|
| POUR #1 (CAP, LOWER WINGS, WING BRACE PILE FTG. & CONCRETE COLLARS) | C.M. | 25.5 |
| POUR #2 (BACKWALL & UPPER WINGS) | C.M. | 16.0 |
| TOTAL CLASS A CONCRETE | C.M. | 41.5 |

HP 310 X 79 STEEL PILES

| | | |
|---|---|---|
| NO. 10 | METERS | 115.7 |

PROJECT NO. R-2413C
GUILFORD-ROCKINGHAM COUNTY
STATION: 20+06.118 -LREV-

SHEET 3 OF 3

STATE OF NORTH CAROLINA
DEPARTMENT OF TRANSPORTATION
RALEIGH

SUBSTRUCTURE
END BENT #2

NORTH CAROLINA PROFESSIONAL SEAL 022516 ENGINEER EMILY E. McGRADY 10/28/11

| REVISIONS | | | | | | SHEET NO. |
|---|---|---|---|---|---|---|
| NO. | BY: | DATE: | NO. | BY: | DATE: | S-30 |
| 1 | | | 3 | | | TOTAL SHEETS |
| 2 | | | 4 | | | 237 |

DRAWN BY : T.L. AVERETTE DATE : 6-23-11
CHECKED BY : PEGGY PARISI DATE : 7-28-11

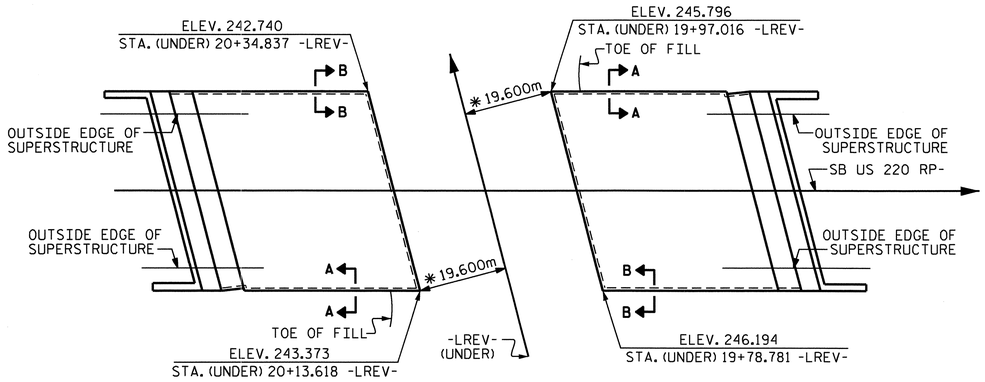


## PLAN OF SLOPE PROTECTION

* RADIAL DIMENSION

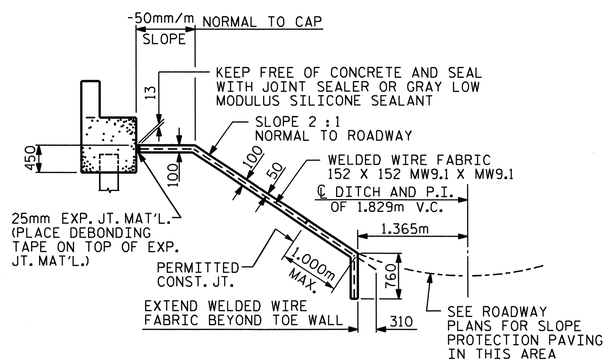


SECTION ALONG ℄ ROADWAY WHEN FILL CATCHES IN DITCH

## GENERAL NOTES

SLOPE PROTECTION SHALL BE PLACED UNDER THE ENDS OF THE BRIDGE AS SHOWN IN THE DETAILS. STRAIGHT EDGING WILL NOT BE REQUIRED UNLESS, IN THE OPINION OF THE ENGINEER, VISUAL INSPECTION INDICATES A NEED FOR IT. MEASUREMENT AND PAYMENT SHALL BE AS PRESCRIBED IN SECTION 462 OF THE STANDARD SPECIFICATIONS. FOR BERM WIDTH, SEE GENERAL DRAWING.

SLOPE PROTECTION SHALL CONSIST OF 100mm POURED-IN-PLACE CONCRETE PAVING AS SHOWN IN THE DETAILS ON THIS SHEET. CONCRETE SHALL BE CLASS "B". THE CONCRETE SURFACE SHALL BE FLOATED WITH A WOODEN FLOAT AND FINISHED. WELDED WIRE FABRIC REINFORCING SHALL BE 152 X 152 - W9.1 X W9.1, 1520mm WIDE. SLOPE PROTECTION SHALL BE POURED IN 1520mm STRIPS AS SHOWN IN THE "POURING DETAIL" WITH 600mm LONG #13 BARS PLACED ALONG THE SLOPE BETWEEN STRIPS AT 450mm MAXIMUM SPACING. SLOPE PROTECTION MAY BE POURED IN ALTERNATE 1220mm AND 1520mm STRIPS AS SHOWN IN THE "OPTIONAL POURING DETAIL" WITH ADJACENT RUNS OF WELDED WIRE FABRIC LAPPING AT LEAST 152mm. THE COST OF THE WELDED WIRE FABRIC AND #13 BARS, IF USED, SHALL BE INCLUDED IN THE CONTRACT UNIT PRICE BID PER SQUARE METER FOR SLOPE PROTECTION.

| BRIDGE @ STA. 20+06.118 -LREV- | 100 mm SLOPE PROTECTION | * WELDED WIRE FABRIC 1520mm WIDE |
|---|---|---|
| | SQUARE METERS | APPROX. METERS |
| END BENT 1 | 319 | 233 |
| END BENT 2 | 218 | 159 |

* QUANTITY SHOWN IS BASED ON 1520mm POURS.

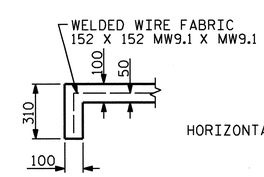


SECTION A-A

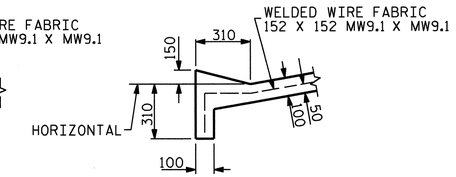


SECTION B-B

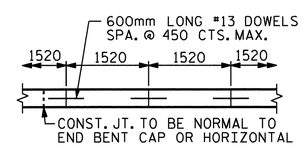


STRIP WIDTHS MAY VARY IN CURVED PORTION.

POURING DETAIL

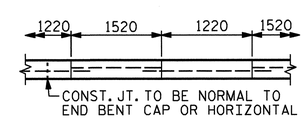


POUR A 1220mm STRIP FIRST. STRIP WIDTHS MAY VARY IN CURVED PORTION.

OPTIONAL POURING DETAIL

NORTH CAROLINA PROFESSIONAL SEAL 025516 ENGINEER GARY S. MURPHY

10/28/11

PROJECT NO. R-2413C

GUILFORD-ROCKINGHAM COUNTY

STATION: 20+06.118 -LREV-

STATE OF NORTH CAROLINA
DEPARTMENT OF TRANSPORTATION
RALEIGH

# STANDARD SLOPE PROTECTION DETAILS

| REVISIONS | | | | | | SHEET NO. |
|---|---|---|---|---|---|---|
| NO. | BY: | DATE: | NO. | BY: | DATE: | S-31 |
| 1 | | | 3 | | | TOTAL SHEETS |
| 2 | | | 4 | | | 237 |

STR. #1

STD. NO. SP1SM

| | | | |
|---|---|---|---|
| ASSEMBLED BY : M.GUDLAUGSSON | DATE : 7-6-11 | | |
| CHECKED BY : T.L. AVERETTE | DATE : 8-2-11 | | |
| DRAWN BY : ELR 5/92 | REV. 7/10/01 | LES/RDR | |
| CHECKED BY : GRP 6/92 | REV. 5/7/03 | RWW/JTE | |
| | REV. 5/1/06 | TLA/GM | |

19-OCT-2011 14:00
R:\TIPProjects-R\R2413c\Structures\Final Plans\Str.#1\R2413C_sd_SP_01.dgn
taverette

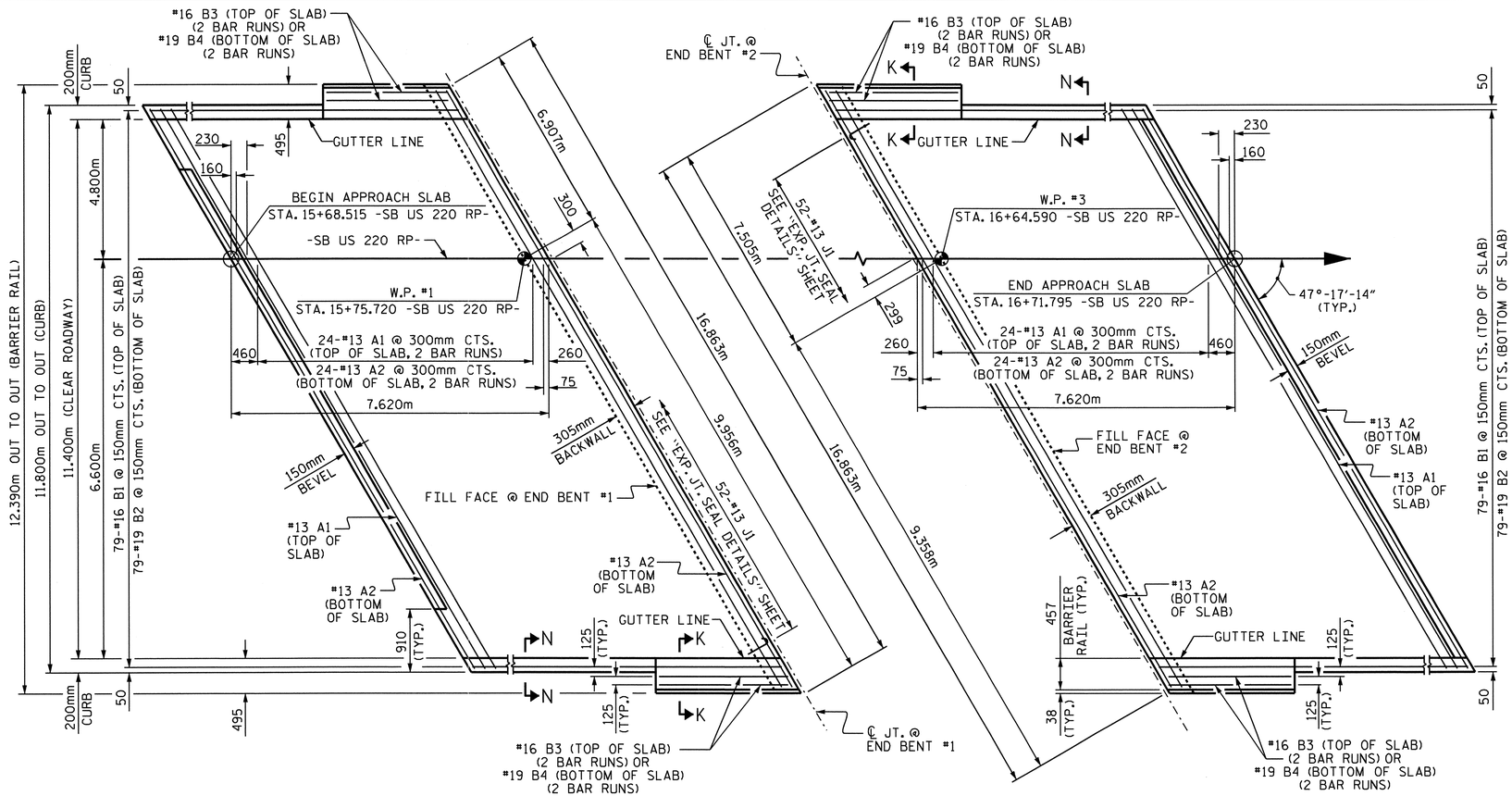


PLAN @ END BENT #1

PLAN @ END BENT #2

DIMENSIONS SHOWN ARE TYPICAL FOR BOTH APPROACH SLABS.
FOR BARRIER RAIL ON THE APPROACH SLAB DETAILS, REINFORCING STEEL AND BILL OF MATERIAL, SEE SHEET 2 OF 2.

## NOTES

THE CONCRETE BARRIER RAIL ON THE APPROACH SLAB IS INCLUDED IN THE CONCRETE BARRIER RAIL QUANTITY FOR THE SUPERSTRUCTURE.

APPROACH SLAB SHALL NOT BE CONSTRUCTED PRIOR TO COMPLETION OF THE BRIDGE DECK.

FOR REINFORCED BRIDGE APPROACH FILL INCLUDING FABRIC, IMPERMEABLE GEOMEMBRANE, 102mm Ø DRAINAGE PIPE, #78M STONE, AND SELECT MATERIAL, SEE ROADWAY PLANS.

AREA BETWEEN THE WINGWALL AND APPROACH SLAB SHALL BE GRADED TO DRAIN THE WATER AWAY FROM THE FILL FACE OF THE BRIDGE AND SHALL BE PAVED. SEE ROADWAY PLANS.

THE 150mm COMP. A.B.C. SHALL BE FLUSH WITH THE ROADWAY END OF THE APPROACH SLAB AND SHALL EXTEND 300mm OUTSIDE OF EACH EDGE OF THE APPROACH SLAB.

THE CONTRACTOR MAY USE 100mm TYPE B-25.0B ASPHALT CONCRETE BASE COURSE IN LIEU OF 150mm COMP. A.B.C. IF THIS OPTION IS USED, THE BASE COURSE SHALL BE FLUSH WITH THE ROADWAY END OF THE APPROACH SLAB, AND THE WIDTH SHALL BE THE SAME AS THAT OF THE APPROACH SLAB.

THE CONTRACTOR MAY USE 125mm CLASS "A" CONCRETE BASE IN LIEU OF 150mm COMP. A.B.C. IF THIS OPTION IS USED, THE CONCRETE BASE SHALL BE FLUSH WITH THE ROADWAY END OF THE APPROACH SLAB, AND THE WIDTH SHALL BE THE SAME AS THAT OF THE APPROACH SLAB. THE CONCRETE SHALL BE FINISHED TO A SMOOTH SURFACE AND A LAYER OF 13.6 kg ROOFING FELT SHALL BE PLACED BETWEEN THE CONCRETE BASE AND THE APPROACH SLAB TO PREVENT BOND. THE APPROACH SLAB SHALL NOT BE CAST UNTIL THE CONCRETE BASE HAS REACHED AN AGE OF THREE CURING DAYS.

FOR EXPANSION JOINT SEALS, SEE SPECIAL PROVISIONS.

THE BARRIER RAIL ON EACH APPROACH SLAB SHALL NOT BE CAST UNTIL ALL APPROACH SLAB CONCRETE HAS BEEN CAST AND HAS REACHED A MINIMUM COMPRESSIVE STRENGTH OF 20.7 MPa.

ALL REINFORCING STEEL IN BARRIER RAILS SHALL BE EPOXY COATED.

## BILL OF MATERIAL
### FOR ONE APPROACH SLAB (2 REQ'D)

| BAR | NO. | SIZE | TYPE | LENGTH | WEIGHT |
|---|---|---|---|---|---|
| * A1 | 50 | #13 | STR | 8680 | 431 |
| A2 | 52 | #13 | STR | 8640 | 447 |
| * B1 | 79 | #16 | STR | 7140 | 875 |
| B2 | 79 | #19 | STR | 7480 | 1321 |
| * B3 | 8 | #16 | STR | 2140 | 27 |
| B4 | 8 | #19 | STR | 2000 | 36 |
| * J1 | 52 | #13 | 3 | 440 | 23 |
| REINFORCING STEEL | | | | kg. | 1804 |
| ● * EPOXY COATED REINFORCING STEEL | | | | kg. | 1356 |
| ● CLASS AA CONCRETE | | | | C.M. | 28.6 |

BAR TYPE

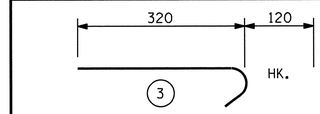


ALL BAR DIMENSIONS ARE OUT TO OUT

● QUANTITIES FOR BARRIER RAIL ON APPROACH SLAB ARE NOT INCLUDED. SEE SHEET 2 OF 2.

## SPLICE CHART

| BAR | SPLICE |
|---|---|
| #13 A1 | 610 |
| #13 A2 | 540 |
| #16 B3 | 1050 |
| #19 B4 | 790 |

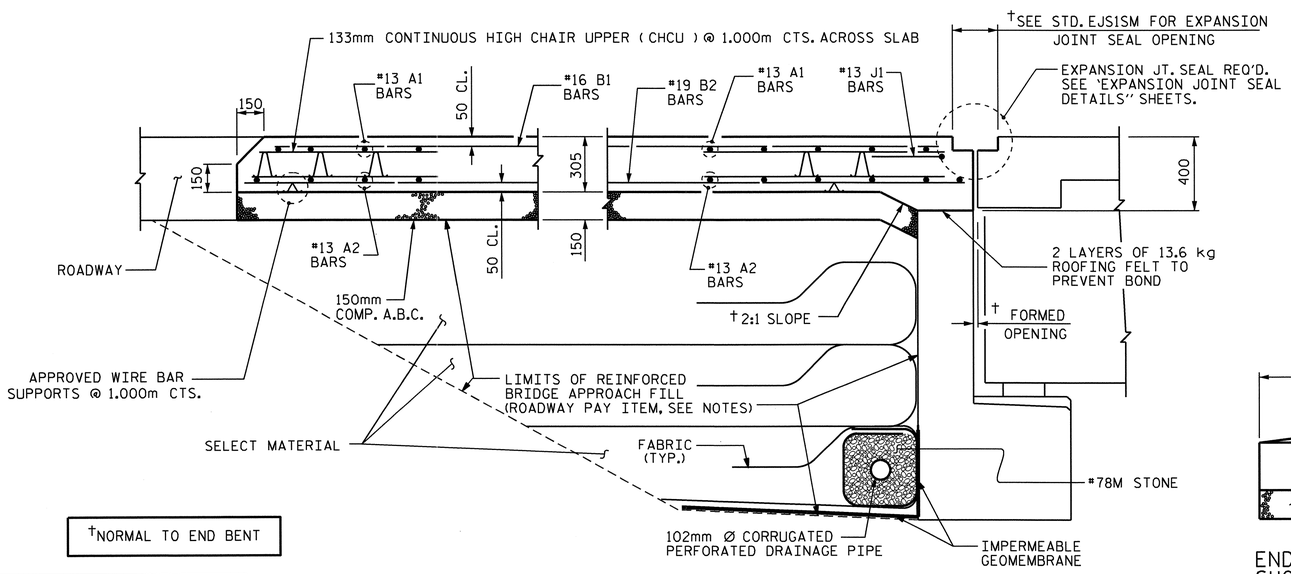


†NORMAL TO END BENT

SECTION THRU SLAB

BARRIER RAIL AND CURB NOT SHOWN

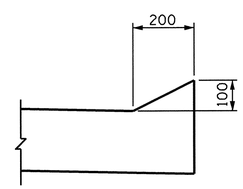


SECTION N-N

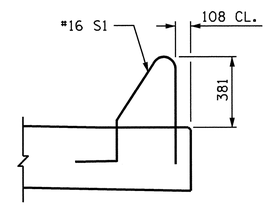


SECTION K-K

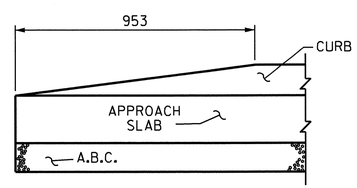


END OF CURB WITHOUT SHOULDER BERM GUTTER

CURB DETAILS

PROJECT NO. R-2413C
GUILFORD-ROCKINGHAM COUNTY
STATION: 20+06.118 -LREV-

SHEET 1 OF 2

STATE OF NORTH CAROLINA
DEPARTMENT OF TRANSPORTATION
RALEIGH

STANDARD

BRIDGE APPROACH SLAB FOR FLEXIBLE PAVEMENT

NORTH CAROLINA PROFESSIONAL SEAL 022516 ENGINEER EMILY E. MURRAY
10/28/11

| REVISIONS | | | | | | | SHEET NO. |
|---|---|---|---|---|---|---|---|
| NO. | BY: | DATE: | NO. | BY: | DATE: | | S-32 |
| 1 | | | 3 | | | | TOTAL SHEETS |
| 2 | | | 4 | | | | 237 |

STR #1 STD. NO. BAS4SM

| | |
|---|---|
| ASSEMBLED BY : T.L. AVERETTE | DATE : 11-29-10 |
| CHECKED BY : PEGGY PARISI | DATE : 05-05-11 |
| DRAWN BY : FCJ 6/87 | REV. 7/10/01 RWW/LES |
| CHECKED BY : EGA 6/87 | REV. 5/7/03R RWW/JTE |
| | REV. 5/1/06R KMM/GM |

13-SEP-2011 10:23
W:\Structures\Final Plans\Str.#1\R2413C_sd_AS_01.dgn
bbarodawala

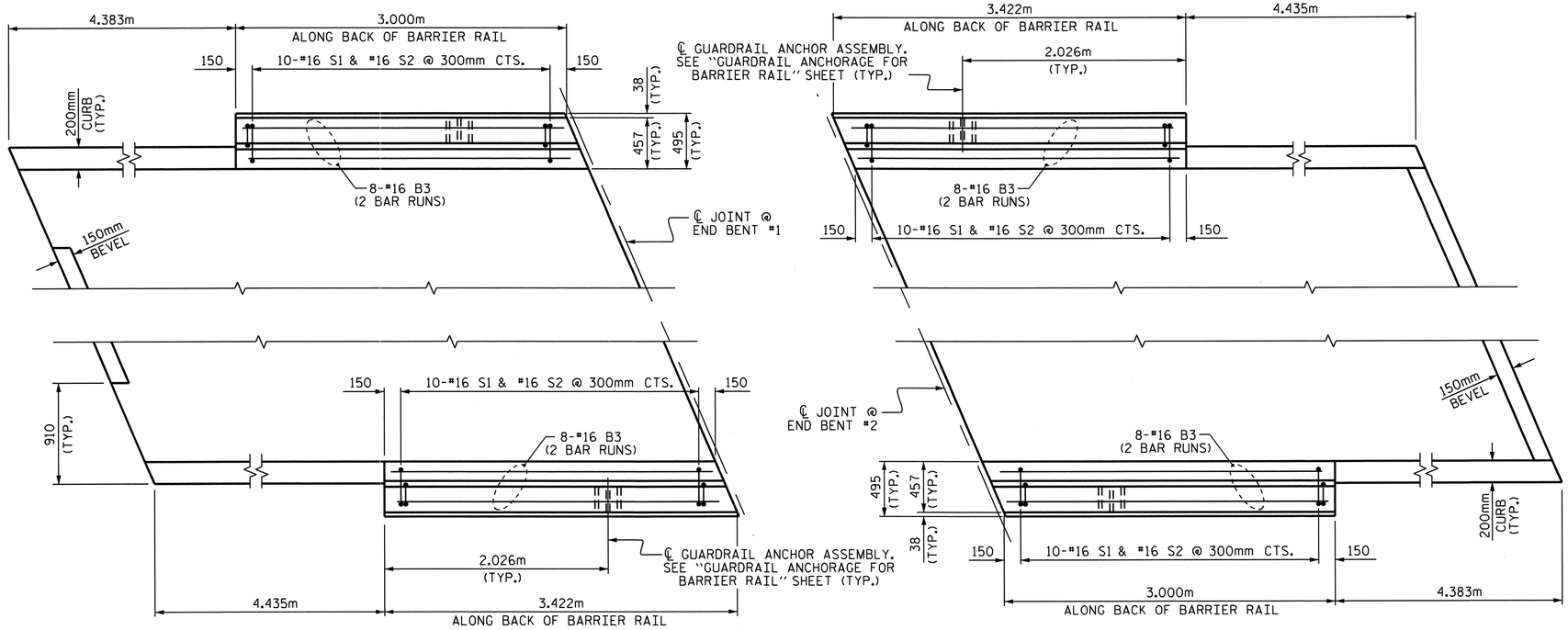


## PLAN OF BARRIER RAIL ON APPROACH SLABS

## BAR TYPES

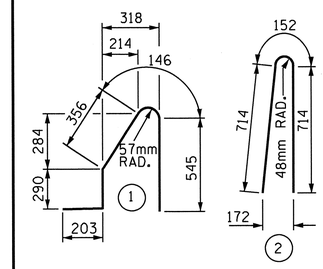


ALL BAR DIMENSIONS ARE OUT TO OUT

## BILL OF MATERIAL

FOR CONCRETE BARRIER RAIL ON BOTH APPROACH SLABS ONLY

| BAR | NO. | SIZE | TYPE | LENGTH | WEIGHT |
|---|---|---|---|---|---|
| * B3 | 64 | #16 | STR | 2140 | 213 |
| | | | | | |
| * S1 | 40 | #16 | 1 | 1540 | 96 |
| * S2 | 40 | #16 | 2 | 1580 | 98 |
| | | | | | |
| * EPOXY COATED REINFORCING STEEL | | | | kg. | 407 |
| CLASS AA CONCRETE | | | | C. M. | 3.2 |
| CONCRETE BARRIER RAIL | | | | METERS | 12.844 |

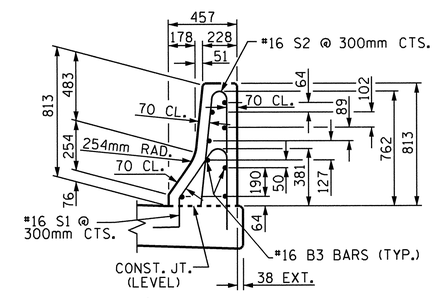


## SECTION THRU RAIL

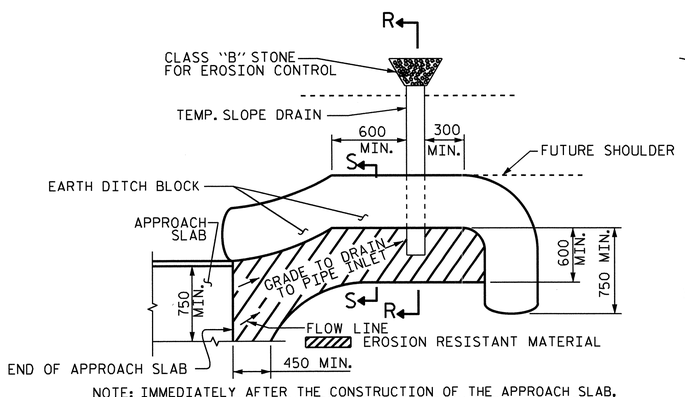


NOTE: IMMEDIATELY AFTER THE CONSTRUCTION OF THE APPROACH SLAB, THE CONTRACTOR SHALL PROVIDE TEMPORARY BERM AND SLOPE DRAIN. CONTRACTOR SHALL GRADE TO PIPE INLET AND PROVIDE EROSION RESISTANT MATERIAL AS SHOWN. THE EROSION RESISTANT MATERIAL SHALL BE EITHER 1) ASPHALT PLANT MIX, TYPE 1 OR TYPE 2, MIN. 50mm DEPTH, 2) EROSION CONTROL MAT, OR 3) CONCRETE, AS DIRECTED BY THE ENGINEER. THE SLOPE DRAIN SHALL CONSIST OF A NON-PERFORATED TEMPORARY DRAINAGE PIPE, 305mm IN DIAMETER.

PLAN VIEW

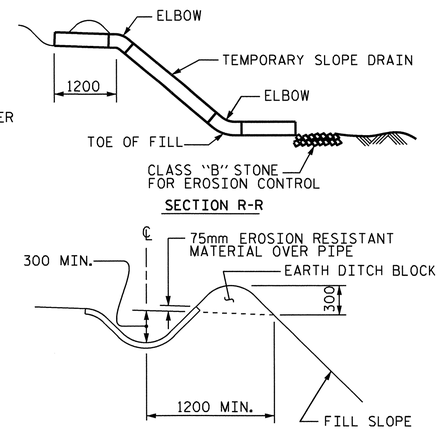


SECTION S-S

## TEMPORARY BERM AND SLOPE DRAIN DETAILS

(TO BE USED WHEN SHOULDER BERM GUTTER IS REQUIRED)

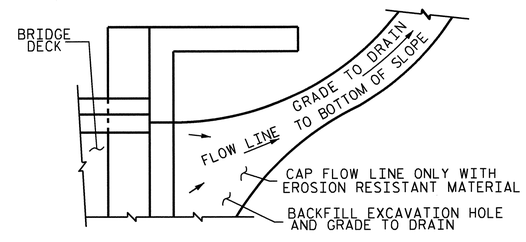


NOTE: IF THE APPROACH SLAB IS NOT CONSTRUCTED IMMEDIATELY AFTER THE BACKFILLING OF THE END BENT EXCAVATION, GRADE TO DRAIN TO THE BOTTOM OF THE SLOPE AND PROVIDE EROSION RESISTANT MATERIAL, SUCH AS FIBERGLASS ROVING OR AS DIRECTED BY THE ENGINEER TO PREVENT SOIL EROSION AND TO PROTECT THE AREA ADJACENT TO THE STRUCTURE. THE CONTRACTOR WILL BE REQUIRED TO REMOVE THESE MATERIALS PRIOR TO CONSTRUCTION OF THE APPROACH SLAB.

## TEMPORARY DRAINAGE DETAIL

PROJECT NO. R-2413C

GUILFORD-ROCKINGHAM COUNTY

STATION: 20+06.118 -LREV-

SHEET 2 OF 2

STATE OF NORTH CAROLINA
DEPARTMENT OF TRANSPORTATION
RALEIGH

STANDARD
BRIDGE APPROACH
SLAB DETAILS

NORTH CAROLINA PROFESSIONAL SEAL 022516 ENGINEER EMILY E. McFRAY

| REVISIONS | | | | | | | | SHEET NO. |
|---|---|---|---|---|---|---|---|---|
| NO. | BY: | DATE: | NO. | BY: | DATE: | | | S-33 |
| 1 | | | 3 | | | | | TOTAL SHEETS |
| 2 | | | 4 | | | | | 237 |

STR #1

STD. NO. BAS10SM

| | | | |
|---|---|---|---|
| ASSEMBLED BY : T.L. AVERETTE | DATE : 11-29-10 | | |
| CHECKED BY : PEGGY PARISI | DATE : 05-05-11 | | |
| DRAWN BY : FCJ 11/88 | REV. 10/17/00 | RWW/LES | |
| CHECKED BY : ARB 11/88 | REV. 5/7/03 | RWW/JTE | |
| | REV. 5/1/06RR | MAA/KMM | |

13-SEP-2011 10:23
W:\Structures\Final Plans\Str.#1\R2413C_sd_AS_01.dgn
bbarodawala

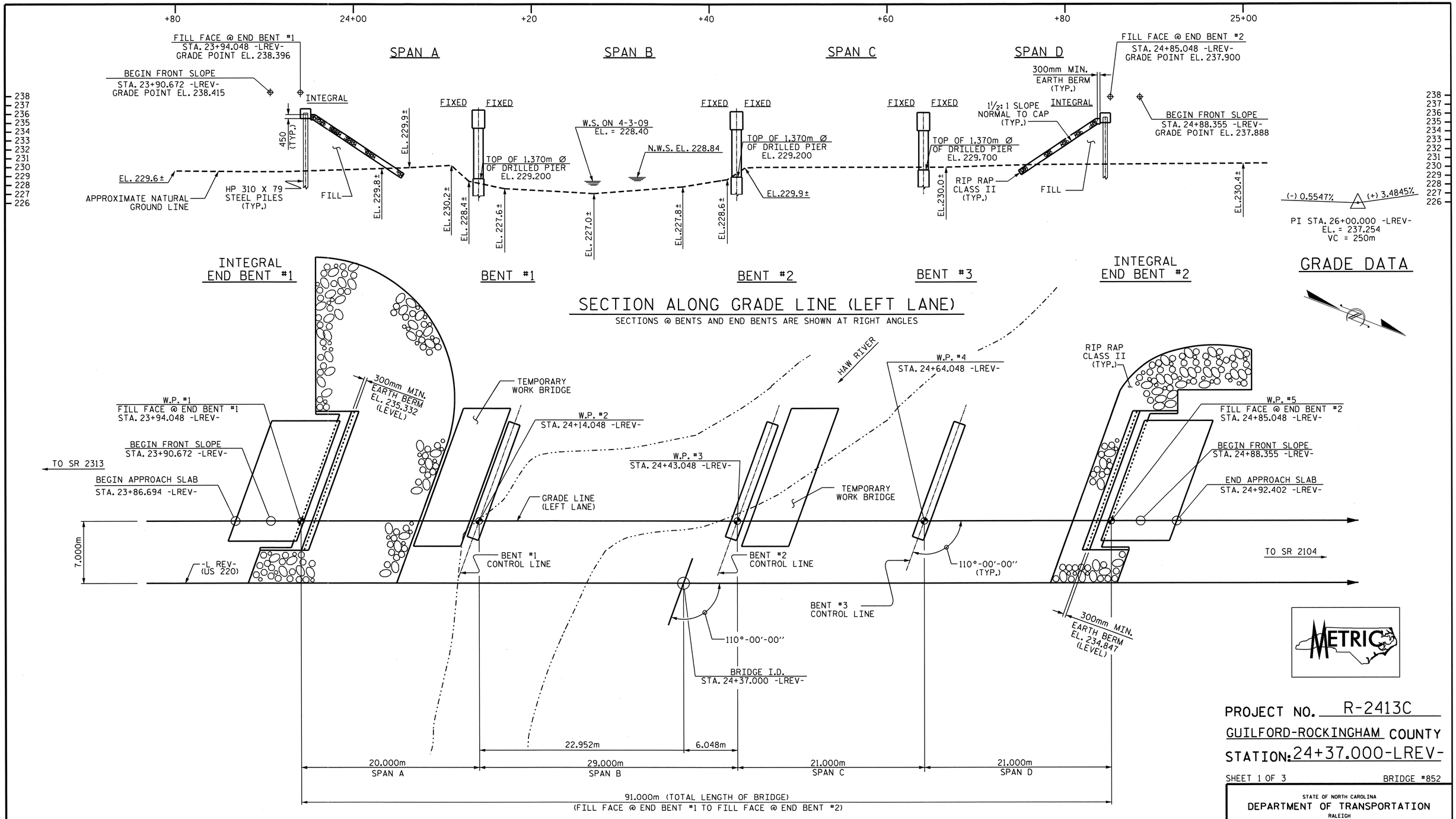


PLAN

PILES NOT SHOWN FOR CLARITY

I HEREBY CERTIFY THESE PLANS ARE THE AS-BUILT PLANS

NORTH CAROLINA PROFESSIONAL SEAL 12274 ENGINEER OMAR R. AZIZI
10/28/11

NORTH CAROLINA PROFESSIONAL SEAL 022516 ENGINEER EMILY E. MURPHY
10/28/11

PROJECT NO. R-2413C

GUILFORD-ROCKINGHAM COUNTY

STATION: 24+37.000-LREV-

SHEET 1 OF 3 BRIDGE #852

STATE OF NORTH CAROLINA
DEPARTMENT OF TRANSPORTATION
RALEIGH

# GENERAL DRAWING
BRIDGE OVER HAW RIVER
ON US 220 BETWEEN
SR 2313 AND SR 2104
(LEFT LANE)

| REVISIONS | | | | | | SHEET NO. |
|---|---|---|---|---|---|---|
| NO. | BY: | DATE: | NO. | BY: | DATE: | S-34 |
| 1 | | | 3 | | | TOTAL SHEETS |
| 2 | | | 4 | | | 238 |

STR. #2

DRAWN BY : M.GUDLAUGSSON DATE : 5-23-11
CHECKED BY : PEGGY PARISI DATE : 7-30-11

19-OCT-2011 14:01
R:\TIPProjects-R\R2413c\Structures\Final Plans\Str.#2\R-2413C_SD_GD_02.dgn
taverette

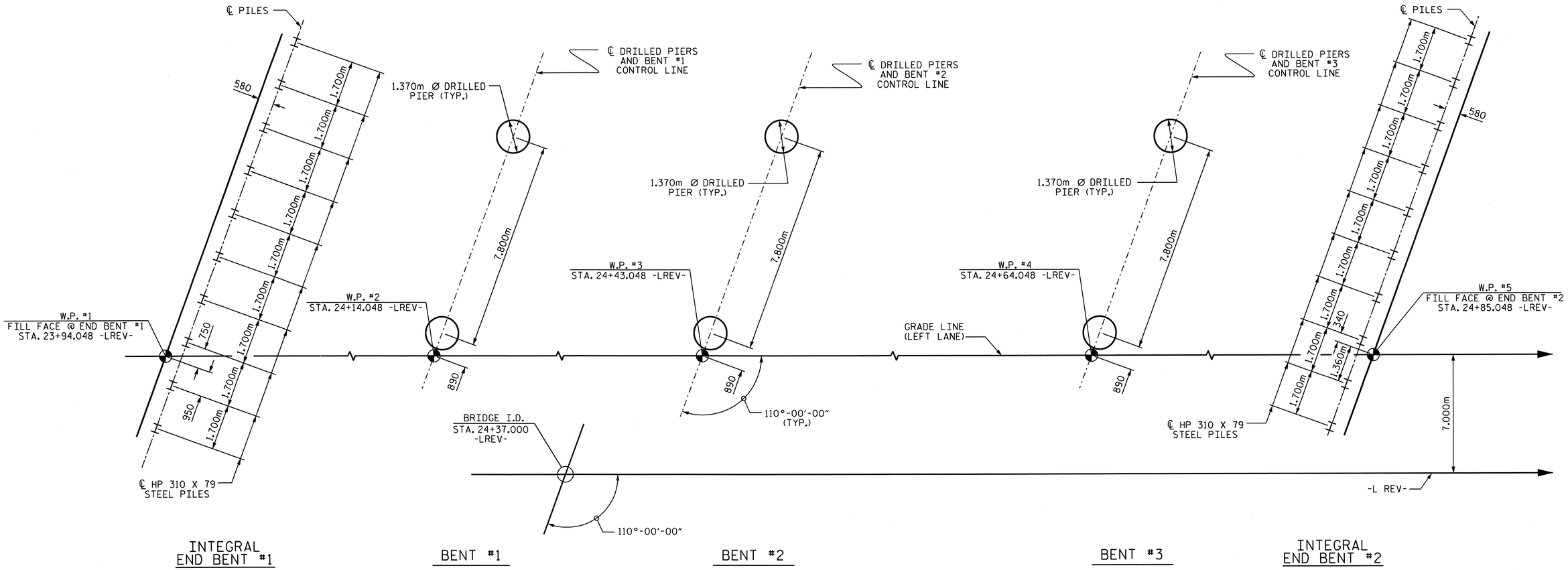


## FOUNDATION LAYOUT

DIMENSIONS LOCATING PILES ARE SHOWN TO THE PILE CENTERLINE.

## FOUNDATION NOTES

FOR PILES, SEE SPECIAL PROVISIONS.

THE ALLOWABLE BEARING CAPACITY FOR PILES AT END BENT NO.1 AND END BENT NO. 2 IS 670 kN PER PILE.

DRIVE PILES AT END BENT NO. 1 AND END BENT NO. 2 TO A REQUIRED BEARING CAPACITY OF 1340 kN PER PILE. THE REQUIRED BEARING CAPACITY IS EQUAL TO THE ALLOWABLE BEARING CAPACITY WITH A MINIMUM FACTOR OF SAFETY OF TWO.

THE DRILLED PIERS AT BENT NO. 1, BENT NO. 2, AND BENT NO. 3 ARE DESIGNED FOR BOTH SKIN FRICTION AND END BEARING. CHECK FIELD CONDITIONS FOR THE REQUIRED END BEARING CAPACITY OF 4300 kPa, 5000 kPa AND 4300 kPa, RESPECTIVELY.

DRILLED PIERS AT BENT NO. 1, BENT NO. 2, AND BENT NO. 3 ARE DESIGNED FOR AN APPLIED LOAD OF 4565 kN, 4618 kN, AND 4132 kN EACH AT THE TOP OF THE COLUMN, RESPECTIVELY.

PERMANENT STEEL CASINGS MAY BE REQUIRED FOR DRILLED PIERS AT BENT NO. 1 AND BENT NO. 2 (RIGHT SIDE). IF REQUIRED, DO NOT EXTEND PERMANENT CASINGS BELOW ELEVATIONS 224.0m WITHOUT PRIOR APPROVAL FROM THE ENGINEER. THE ENGINEER WILL DETERMINE THE NEED FOR PERMANENT CASINGS.

PERMANENT STEEL CASINGS ARE REQUIRED FOR DRILLED PIER AT BENT NO.2 (LEFT SIDE). DO NOT EXTEND PERMANENT CASINGS BELOW ELEVATION 224.0m WITHOUT PRIOR APPROVAL FROM THE ENGINEER.

OBSERVE A TWO MONTH WAITING PERIOD AFTER CONSTRUCTING THE EMBANKMENT TO WITHIN 0.6m OF FINISHED GRADE BEFORE BEGINNING END BENT CONSTRUCTION AT END BENT NO. 1 AND END BENT NO. 2.

INSTALL DRILLED PIERS AT BENT NO. 1 AND BENT NO.2 THAT EXTEND TO ELEVATIONS NO HIGHER THAN 212.6m (LT), AND 211.0m (RT.), AND SATISFY THE REQUIRED END BEARING CAPACITY.

INSTALL DRILLED PIERS AT BENT NO.3 THAT EXTEND TO ELEVATIONS NO HIGHER THAN 213.9 (LT) AND 213.0m (RT), AND SATISFY THE REQUIRED END BEARING CAPACITY.

SLURRY CONSTRUCTION IS REQUIRED FOR DRILLED PIERS AT BENT NO. 1, BENT NO. 2, AND BENT NO. 3.

THE SCOUR CRITICAL ELEVATION FOR BENT NO. 1, BENT NO. 2, AND BENT NO. 3 IS ELEVATION 224.0m. SCOUR CRITICAL ELEVATIONS ARE USED TO MONITOR POSSIBLE SCOUR PROBLEMS DURING THE LIFE OF THE STRUCTURE.

FOR DRILLED PIERS, SEE DRILLED PIERS SPECIAL PROVISION.

IF REQUIRED, INSTALL PERMANENT STEEL CASINGS AT BENT NO. 1 AND BENT NO. 2 BY VIBRATING, SCREWING OR DRIVING PERMANENT CASINGS BEFORE EXCAVATING OR DISTURBING ANY MATERIAL BELOW ELEVATION 225.2m AND 226.4m, RESPECTIVELY.

SPT TESTING MAY BE REQUIRED FOR DRILLED PIERS. THE ENGINEER WILL DETERMINE THE NEED FOR SPT TESTING. FOR SPT, SEE DRILLED PIERS SPECIAL PROVISION.

SID INSPECTIONS ARE REQUIRED FOR A MINIMUM OF ONE DRILLED PIER AT EACH INTERIOR BENT. THE ENGINEER WILL DETERMINE WHICH DRILLED PIERS WILL BE TESTED. FOR SID, SEE DRILLED PIERS SPECIAL PROVISION.

CSL TUBES ARE REQUIRED AND CSL TESTING MAY BE REQUIRED FOR DRILLED PIERS. THE ENGINEER WILL DETERMINE THE NEED FOR CSL TESTING. FOR CROSSHOLE SONIC LOGGING, SEE DRILLED PIERS SPECIAL PROVISION.

NORTH CAROLINA PROFESSIONAL SEAL 022516 ENGINEER EMILY E. MURRAY
10/25/11

PROJECT NO. R-2413C
GUILFORD-ROCKINGHAM COUNTY
STATION: 24+37.000 -LREV-

SHEET 2 OF 3

STATE OF NORTH CAROLINA
DEPARTMENT OF TRANSPORTATION
RALEIGH

GENERAL DRAWING
BRIDGE OVER HAW RIVER
ON US 220 BETWEEN
SR 2313 AND SR 2104
(LEFT LANE)

| REVISIONS | | | | | | SHEET NO. |
|---|---|---|---|---|---|---|
| NO. | BY: | DATE: | NO. | BY: | DATE: | S-35 |
| 1 | | | 3 | | | TOTAL SHEETS |
| 2 | | | 4 | | | 238 |

STR. #2

DRAWN BY : M.GUDLAUGSSON DATE : 5-23-11
CHECKED BY : PEGGY PARISI DATE : 7-30-11

28-OCT-2011 16:03
Z:\TIPProjects-R\R2413c\Structures\Final Plans\Str.#2\R-2413C_SD_GD_02.dgn
emurray

## TOTAL BILL OF MATERIAL

| | CONSTRUCTION, MAINTENANCE, & REMOVAL OF TEMPORARY ACCESS | 1370mm Ø DRILLED PIERS | PERMANENT STEEL CASING FOR 1370mm Ø DRILLED PIER | SID INSPECTION | SPT TESTING | CSL TESTING | REINFORCED CONCRETE DECK SLAB | GROOVING BRIDGE FLOORS | CLASS A CONCRETE | BRIDGE APPROACH SLABS | REINFORCING STEEL | SPIRAL COLUMN REINFORCING STEEL | 1372mm PRESTRESSED CONCRETE GIRDERS | | HP 310 X 79 STEEL PILES | | CONCRETE BARRIER RAIL | RIP RAP CLASS II (600mm THICK) | FILTER FABRIC FOR DRAINAGE | ELASTOMERIC BEARINGS | EVAZOTE JOINT SEALS |
|---|---|---|---|---|---|---|---|---|---|---|---|---|---|---|---|---|---|---|---|---|---|
| | LUMP SUM | METERS | METERS | EACH | EACH | EACH | SQ. METERS | SQ. METERS | CU. METERS | LUMP SUM | Kg | Kg | No. | METERS | No. | METERS | METERS | METRIC TONS | SQ. METERS | LUMP SUM | LUMP SUM |
| SUPERSTRUCTURE | | | | | | | 1236.7 | 1234.7 | | LUMP SUM | | | 20 | 447.140 | | | 180.936 | | | LUMP SUM | LUMP SUM |
| END BENT #1 | | | | | | | | | 23.0 | | 2264 | | | | 10 | 144.5 | | 641 | 654 | | |
| BENT #1 | | 34.8 | 10.4 | 1 | | | | | 51.8 | | 10343 | 2003 | | | | | | | | | |
| BENT #2 | | 34.8 | 10.4 | 1 | | | | | 51.4 | | 10303 | 1988 | | | | | | | | | |
| BENT #3 | | 32.5 | | 1 | | | | | 50.0 | | 9857 | 1834 | | | | | | | | | |
| END BENT #2 | | | | | | | | | 22.9 | | 2066 | | | | 10 | 183.0 | | 408 | 416 | | |
| TOTAL | LUMP SUM | 102.1 | 20.8 | 3 | 3 | 2 | 1236.7 | 1234.7 | 199.1 | LUMP SUM | 34,833 | 5825 | 20 | 447.140 | 20 | 327.5 | 180.936 | 1049 | 1070 | LUMP SUM | LUMP SUM |

## TOTAL BILL OF MATERIAL - ENGLISH

| | | | | | | | | | | | | | | | | | | | | | |
|---|---|---|---|---|---|---|---|---|---|---|---|---|---|---|---|---|---|---|---|---|---|
| | LUMP SUM | LIN. FT. | LIN. FT. | EACH | EACH | EACH | SQ. FT. | SQ. FT. | CU. YDS. | LUMP SUM | LBS. | LBS. | No. | LIN. FT. | No. | LIN. FT. | LIN. FT. | TONS | SQ. YD. | LUMP SUM | LUMP SUM |
| TOTAL | LUMP SUM | 335.0 | 68.2 | 3 | 3 | 2 | 13,312 | 13,290 | 260.4 | LUMP SUM | 76,794 | 12,842 | 20 | 1466.98 | 20 | 1074 | 593.62 | 1156 | 1280 | LUMP SUM | LUMP SUM |

## HYDRAULIC DATA

| | | |
|---|---|---|
| DESIGN DISCHARGE | = | 107.6 $m^3/s$ |
| FREQUENCY OF DESIGN FLOOD | = | 50 YEARS |
| DESIGN HIGH WATER ELEVATION | = | 231.54m |
| DRAINAGE AREA | = | 53.4 Sq.Km |
| BASE DISCHARGE (Q100) | = | 141.6$m^3/s$ |
| BASE HIGH WATER ELEVATION | = | 231.93m |

## OVERTOPPING FLOOD DATA

| | | |
|---|---|---|
| OVERTOPPING DISCHARGE | = | > 172.7 $m^3/s$ |
| FREQUENCY OF OVERTOPPING FLOOD | = | > 500 YEARS |
| OVERTOPPING FLOOD ELEVATION | = | 237.85m |

BM #6 DISC STAMPED E-170 1965, IN NE WINGWALL OF BRIDGE, 5.4m RT OF STA. 25+94.140 -L- ELEV. 233.273.

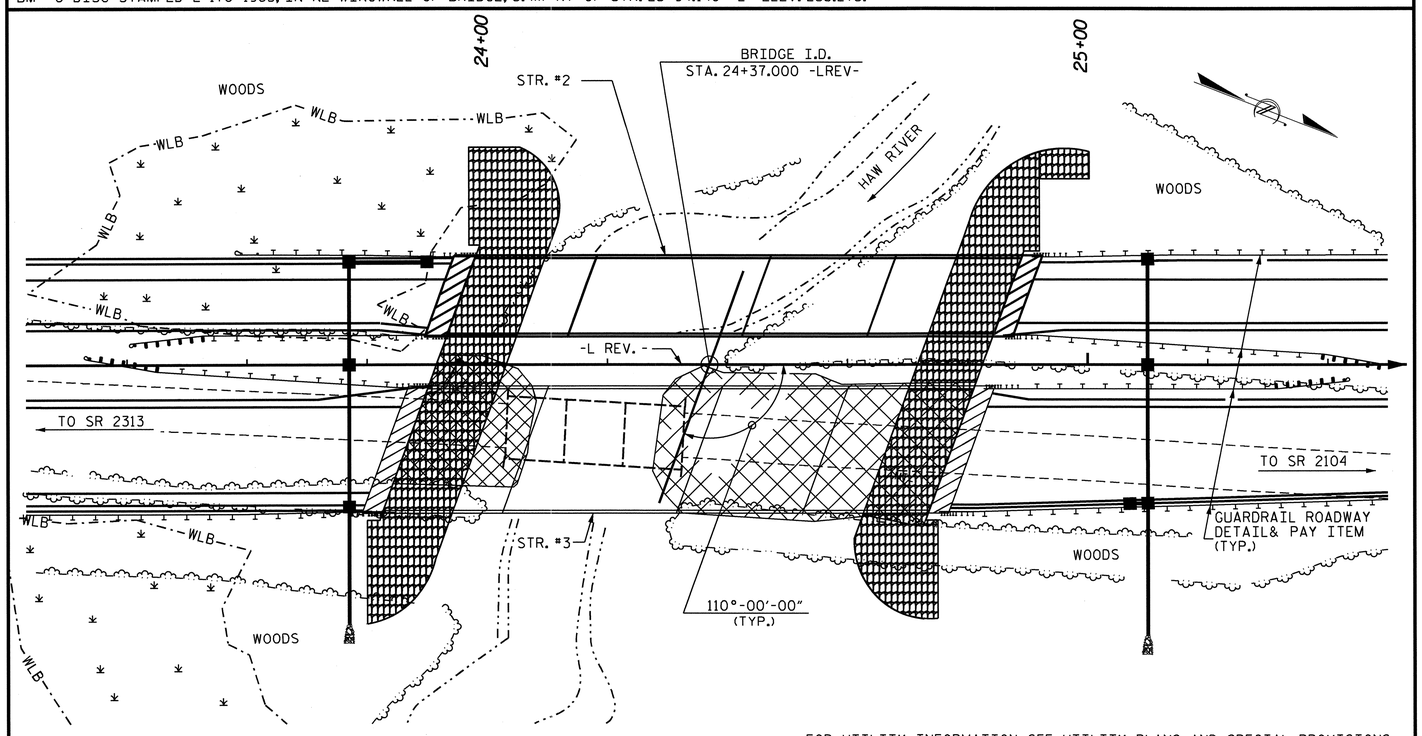


FOR UTILITY INFORMATION, SEE UTILITY PLANS AND SPECIAL PROVISIONS.

LOCATION SKETCH

## NOTES

ALL DIMENSIONS ARE IN MILLIMETERS UNLESS OTHERWISE NOTED.

ALL ELEVATIONS ARE IN METERS.

ASSUMED LIVE LOAD = MS 18 OR ALTERNATE LOADING, EXCEPT THAT THE GIRDERS HAVE BEEN DESIGNED FOR MS 22.5.

FOR OTHER DESIGN DATA AND GENERAL NOTES, SEE SHEET SNSM.

THIS BRIDGE HAS BEEN DESIGNED BY THE STRENGTH DESIGN METHOD AS SPECIFIED IN AASHTO STANDARD SPECIFICATIONS.

THE LOCATION OF THE CONSTRUCTION JOINT IN THE DRILLED PIERS FOR BENT #3 IS BASED ON AN APPROXIMATE GROUND LINE ELEVATION. IF THE CONSTRUCTION JOINT IS ABOVE THE ACTUAL GROUND ELEVATION, THE CONTRACTOR SHALL PLACE THE CONSTRUCTION JOINT 300mm BELOW THE GROUND LINE.

NEEDLE BEAMS WILL NOT BE ALLOWED UNLESS OTHERWISE CALLED FOR ON THE PLANS OR APPROVED BY THE ENGINEER.

FOR SUBMITTAL OF WORKING DRAWINGS, SEE SPECIAL PROVISIONS.

FOR FALSEWORK AND FORMWORK, SEE SPECIAL PROVISIONS.

PRESTRESSED CONCRETE DECK PANELS MAY BE USED IN LIEU OF METAL STAY-IN-PLACE FORMS IN ACCORDANCE WITH ARTICLE 420-3 OF THE STANDARD SPECIFICATIONS.

THIS STRUCTURE HAS BEEN DESIGNED IN ACCORDANCE WITH HEC 18, "EVALUATING SCOUR AT BRIDGES", MAY, 2001.

FOR CONSTRUCTION, MAINTENANCE, AND REMOVAL OF TEMPORARY ACCESS, SEE SPECIAL PROVISIONS.

REMOVABLE FORMS MAY BE USED IN LIEU OF METAL STAY-IN-PLACE FORMS IN ACCORDANCE WITH ARTICLE 420-3 OF THE STANDARD SPECIFICATIONS.

THIS BRIDGE HAS BEEN DESIGNED IN ACCORDANCE WITH THE REQUIREMENTS OF THE STANDARD SPECIFICATIONS FOR SEISMIC DESIGN OF HIGHWAY BRIDGES FOR SEISMIC PERFORMANCE CATEGORY A.

THE CLASS AA CONCRETE IN THE BRIDGE DECK SHALL CONTAIN FLY ASH OR GROUND GRANULATED BLAST FURNACE SLAG AT THE SUBSTITUTION RATE SPECIFIED IN ARTICLE 1024-1 AND IN ACCORDANCE WITH ARTICLES 1024-5 AND 1024-6 OF THE STANDARD SPECIFICATIONS. NO PAYMENT WILL BE MADE FOR THIS SUBSTITUTION AS IT IS CONSIDERED INCIDENTAL TO THE COST OF THE REINFORCED CONCRETE DECK SLAB.

FOR PRESTRESSED CONCRETE MEMBERS, SEE SPECIAL PROVISIONS.

FOR CRANE SAFETY, SEE SPECIAL PROVISIONS.

FOR GROUT FOR STRUCTURES, SEE SPECIAL PROVISIONS.

FOR CURING CONCRETE, SEE SPECIAL PROVISIONS.

FOR PLACING LOAD ON STRUCTURE MEMBERS, SEE SPECIAL PROVISIONS.

FOR EROSION CONTROL MEASURES SEE EROSION CONTROL PLANS.

FOR METRIC STRUCTURAL STEEL, SEE SPECIAL PROVISIONS.

FOR MASS CONCRETE, SEE SPECIAL PROVISIONS.

PROJECT NO. R-2413C
GUILFORD-ROCKINGHAM COUNTY
STATION: 24+37.000-LREV-

SHEET 3 OF 3

STATE OF NORTH CAROLINA
DEPARTMENT OF TRANSPORTATION
RALEIGH

GENERAL DRAWING
BRIDGE OVER HAW RIVER ON US 220 BETWEEN SR 2313 AND SR 2104 (LEFT LANE)

NORTH CAROLINA PROFESSIONAL SEAL 022516 ENGINEER EMILY E. MURRAY
10/28/11

| REVISIONS | | | | | | SHEET NO. |
|---|---|---|---|---|---|---|
| NO. | BY: | DATE: | NO. | BY: | DATE: | S-36 |
| 1 | | | 3 | | | TOTAL SHEETS |
| 2 | | | 4 | | | 238 |

DRAWN BY : M.GUDLAUGSSON DATE : 5-23-11
CHECKED BY : PEGGY PARISI DATE : 7-30-11

19-OCT-2011 14:02
R:\TIPProjects-R\R2413c\Structures\Final Plans\Str.#2\R-2413C_SD_GD_02.dgn
taverette

STR. #2

## NOTES

PROVIDE 32mm HIGH BEAM BOLSTERS UPPER AT 1.200m CTS. ATOP THE METAL STAY-IN-PLACE FORMS TO SUPPORT THE BOTTOM MAT OF 'A' BARS. WHEN USING REMOVABLE FORMS, PROVIDE CONTINUOUS HIGH CHAIRS FOR METAL DECK (C.H.C.M.) @ 1.2m CTS. WITH A HEIGHT TO SUPPORT THE BOTTOM MAT OF 'A' BARS A CLEAR DISTANCE OF 65mm ABOVE THE TOP OF THE REMOVABLE FORM.

LONGITUDINAL STEEL MAY BE SHIFTED SLIGHTLY, AS NECESSARY, TO AVOID INTERFERENCE WITH STIRRUPS IN PRESTRESSED CONCRETE GIRDERS.

PREVIOUSLY CAST CONCRETE IN A CONTINUOUS UNIT SHALL HAVE ATTAINED A MINIMUM COMPRESSESIVE STRENGTH OF 20.7 MPa BEFORE ADDITIONAL CONCRETE IS CAST IN THE UNIT.

BARRIER RAIL IN A CONTINUOUS UNIT SHALL NOT BE CAST UNTIL ALL SLAB CONCRETE IN THE UNIT HAS BEEN CAST AND HAS REACHED A MINIMUM COMPRESSIVE STRENGTH OF 20.7 MPa.

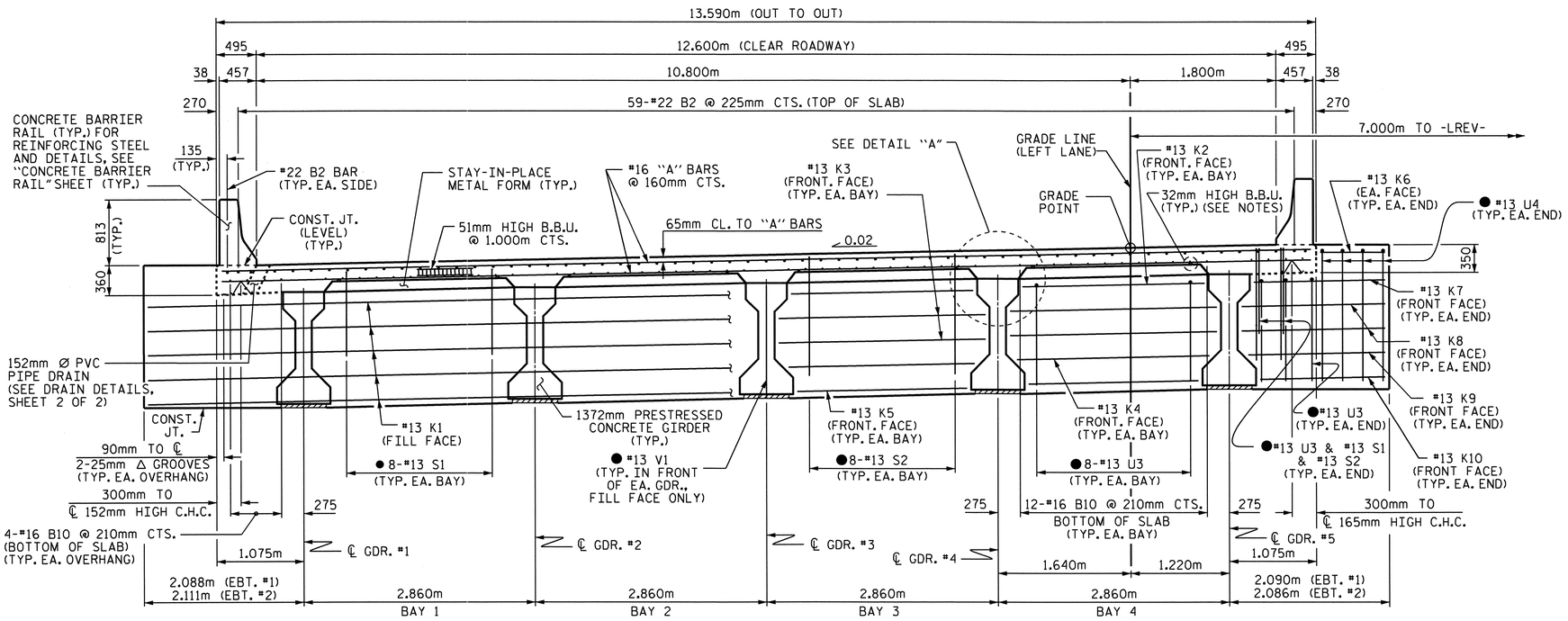


## TYPICAL SECTION @ INTEGRAL END BENT

● #13 U3, #13 U4, #13 S1, #13 S2, & #13 V1 BARS SPACED TO MATCH WITH #13 "V" BARS IN INTEGRAL END BENT CAP

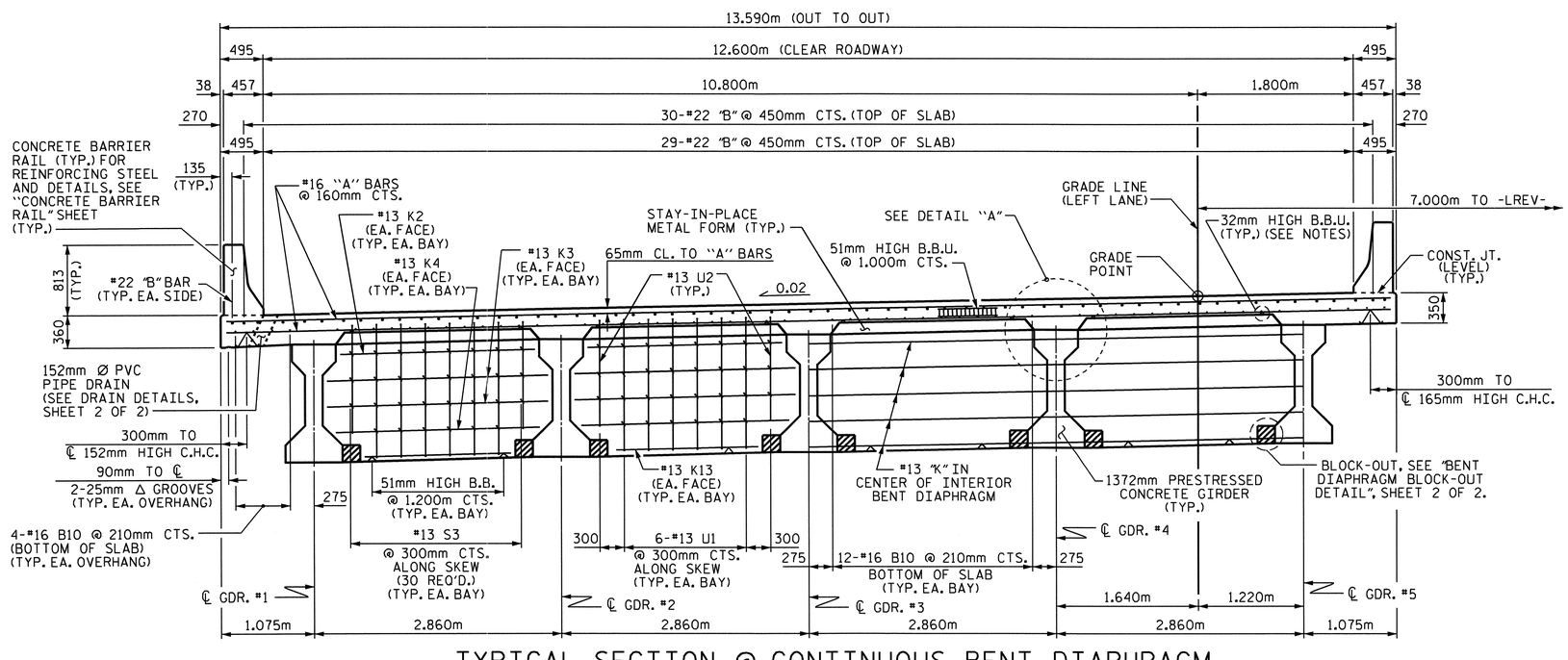


## TYPICAL SECTION @ CONTINUOUS BENT DIAPHRAGM

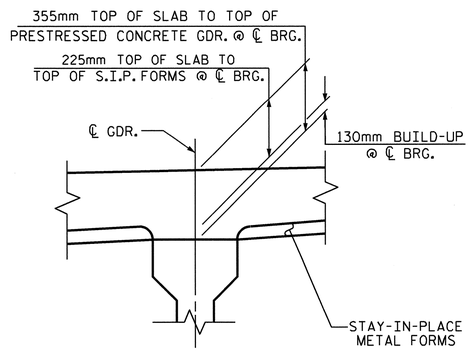


## DETAIL "A"

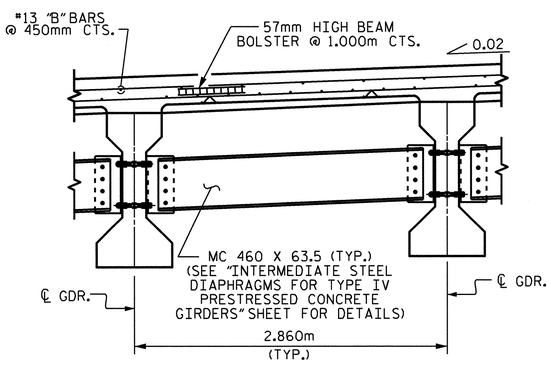


## PARTIAL TYPICAL SECTION

AT INTERMEDIATE DIAPHRAGM

PROJECT NO. R-2413C

GUILFORD-ROCKINGHAM COUNTY

STATION: 24+37.000 -LREV-

SHEET 1 OF 2

STATE OF NORTH CAROLINA
DEPARTMENT OF TRANSPORTATION
RALEIGH

SUPERSTRUCTURE

TYPICAL SECTION (LEFT LANE)

NORTH CAROLINA PROFESSIONAL SEAL 022516 ENGINEER EMILY E. MURRAY 10/28/11

| REVISIONS | | | | | | SHEET NO. |
|---|---|---|---|---|---|---|
| NO. | BY: | DATE: | NO. | BY: | DATE: | S-37 |
| 1 | | | 3 | | | TOTAL SHEETS |
| 2 | | | 4 | | | 238 |

DRAWN BY : M.GUDLAUGSSON DATE : 10-8-10
CHECKED BY : T.L. AVERETTE DATE : 1-19-11

05-SEP-2011 10:59
Y:\Structures\Final Plans\Str.#2\R-2413C_SD_TS_02.dgn
mgudlaugsson

STR.#2

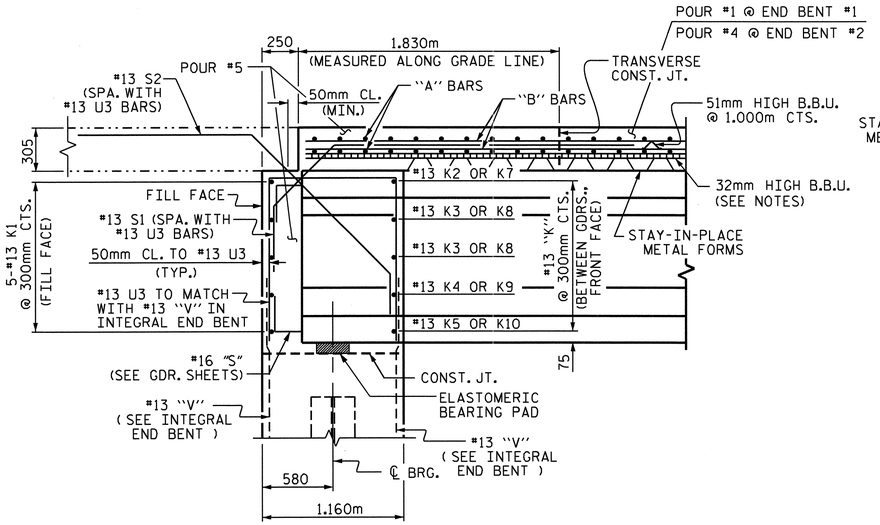


## END OF GIRDER DETAIL AT INTEGRAL END BENT

#13 V1 BAR IN FRONT OF GIRDER NOT SHOWN

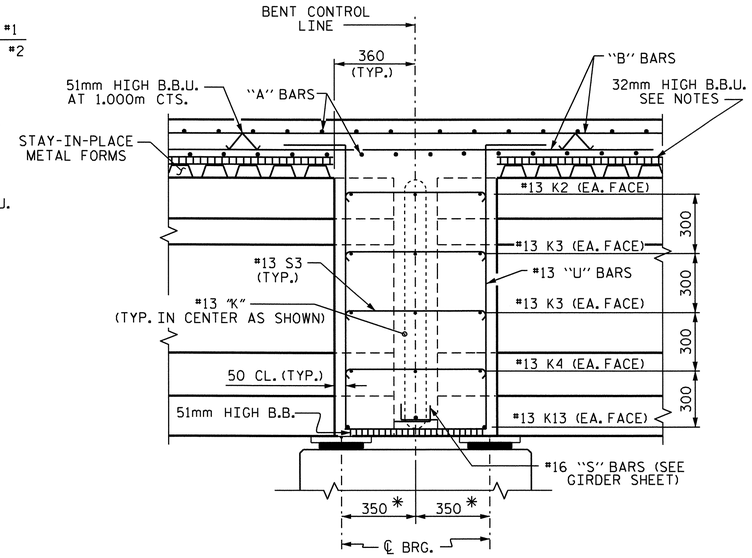


## SECTION THRU BENT DIAPHRAGM

* MEASURED ALONG ℄ GDR.

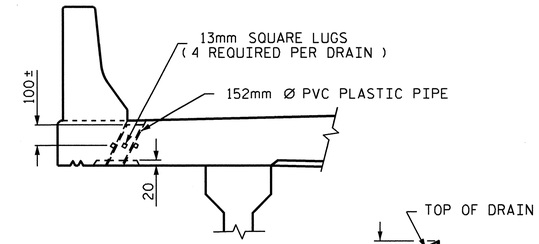


## ELEVATION

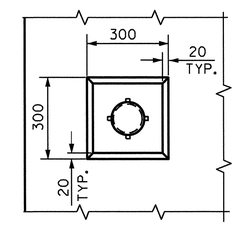


## PLAN OF RECESS

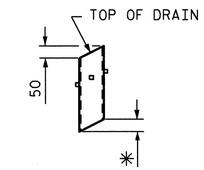


* TO BE SET TO MATCH SLOPE OF BOTTOM OF OVERHANG

## PIPE DETAIL

TOP OF FLOOR DRAINS TO BE SET 10mm BELOW SURFACE OF SLAB.

4 - 13mm SQUARE LUGS TO BE GLUED TO THE PVC PLASTIC PIPE AT EQUAL SPACES AROUND THE PIPE DRAIN APPROXIMATELY 100mm FROM THE TOP OF THE PIPE.

THE 152mm Ø PVC PIPE AND FITTINGS SHALL BE SCHEDULE 40 AND CONFORM TO ASTM D1785.

## DRAIN DETAILS

(21 DRAINS REQUIRED)

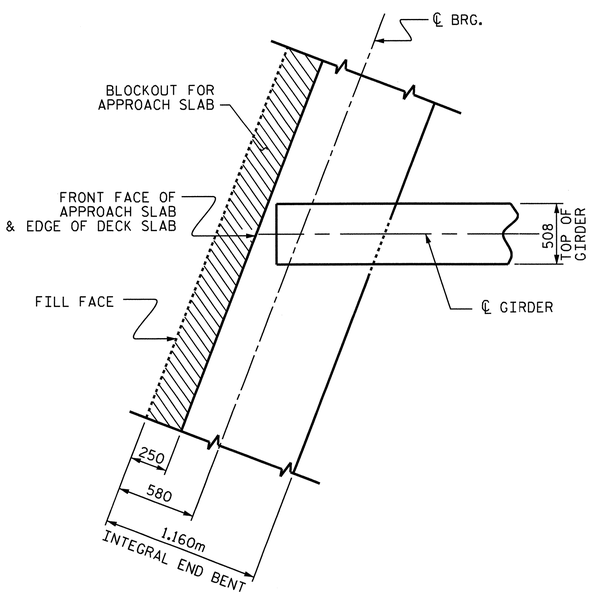


## AT INTEGRAL END BENT

(END BENT #1 SHOWN, END BENT #2 SIMILAR)

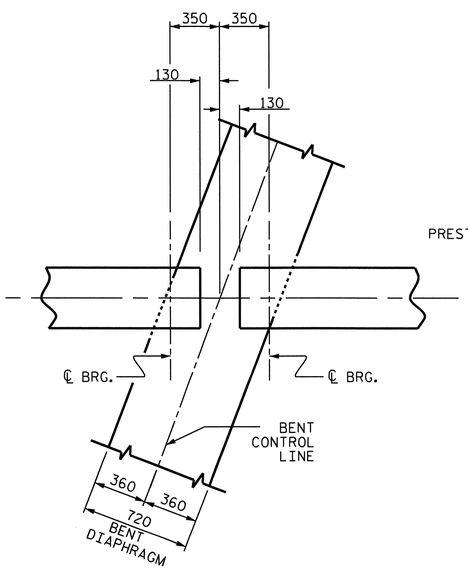


## AT BENT DIAPHRAGM

## PLAN OF GIRDER

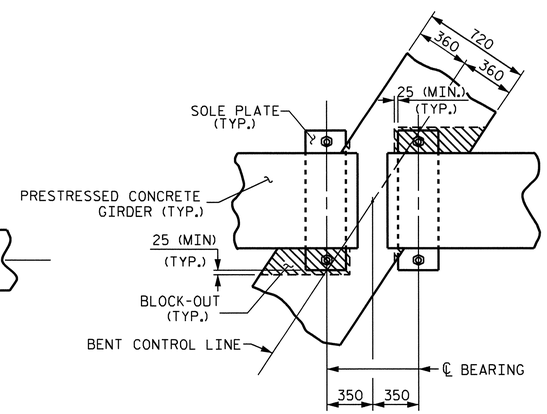


## PLAN

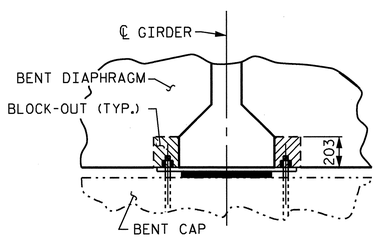


## SECTION

## BENT DIAPHRAGM BLOCK-OUT DETAIL

PROJECT NO. R-2413C

GUILFORD-ROCKINGHAM COUNTY

STATION: 24+37.000 -LREV-

SHEET 2 OF 2

STATE OF NORTH CAROLINA
DEPARTMENT OF TRANSPORTATION
RALEIGH

SUPERSTRUCTURE
TYPICAL SECTION
(LEFT LANE)

NORTH CAROLINA PROFESSIONAL SEAL 022516 ENGINEER EMILY E. MURRAY
10/28/11

| REVISIONS | | | | | | SHEET NO. |
|---|---|---|---|---|---|---|
| NO. | BY: | DATE: | NO. | BY: | DATE: | S-38 |
| 1 | | | 3 | | | TOTAL SHEETS |
| 2 | | | 4 | | | 238 |

STR. #2

DRAWN BY : M.GUDLAUGSSON DATE : 10-12-10
CHECKED BY : T.L. AVERETTE DATE : 12-9-10

05-SEP-2011 10:59
Y:\Structures\Final Plans\Str.#2\R-2413C_SD_TS_02.dgn
mgudlaugsson

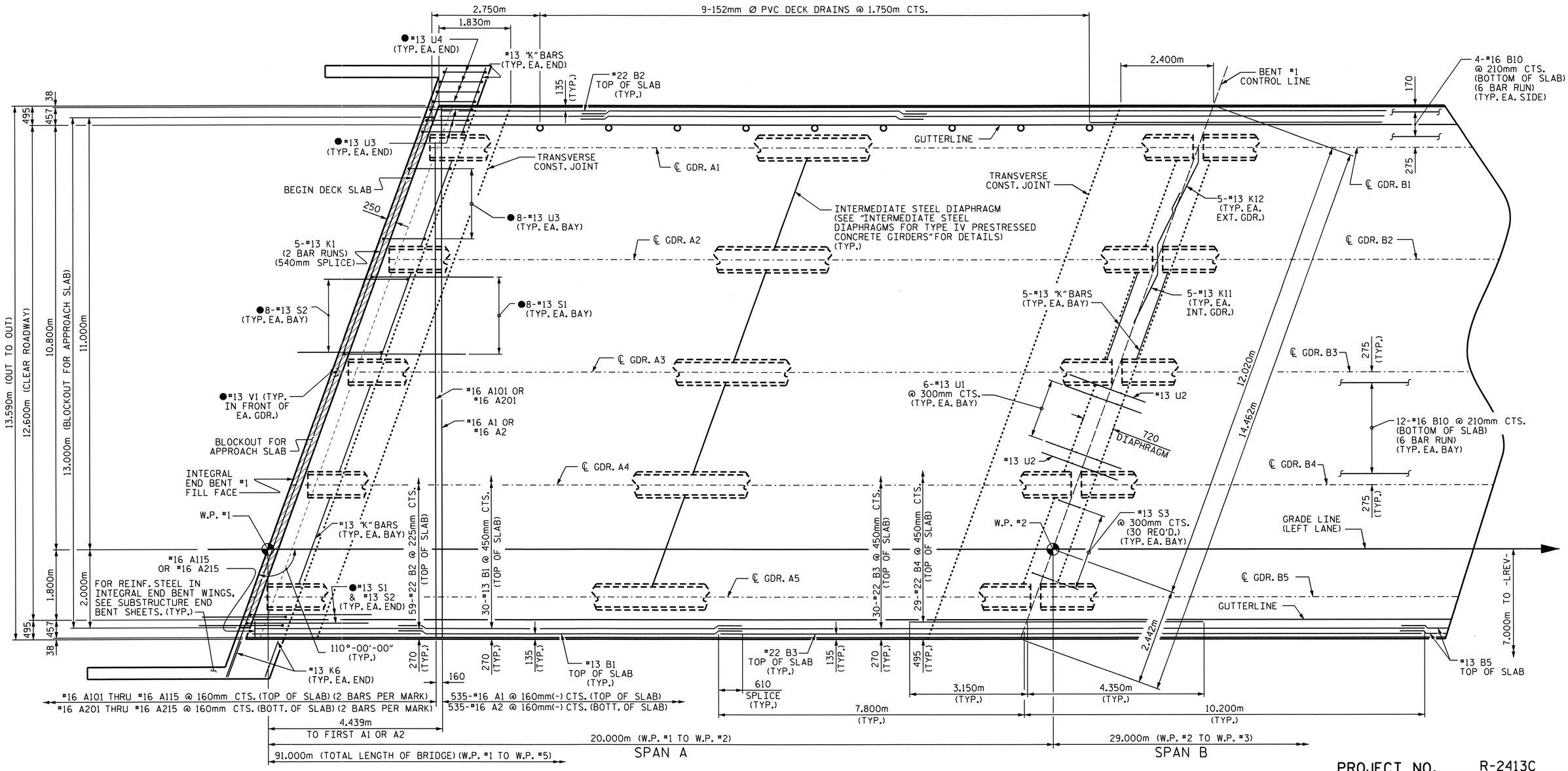


## PLAN OF SPANS

●#13 U3, #13 U4, #13 S1, #13 S2 & #13 V1 BARS SPACED TO MATCH WITH #13 "V" BARS IN INTEGRAL END BENT CAP

PROJECT NO. R-2413C

GUILFORD-ROCKINGHAM COUNTY

STATION: 24+37.000 -LREV-

SHEET 1 OF 3

STATE OF NORTH CAROLINA
DEPARTMENT OF TRANSPORTATION
RALEIGH

SUPERSTRUCTURE
PLAN OF SPANS
(LEFT LANE)

NORTH CAROLINA PROFESSIONAL SEAL 022516 ENGINEER EMILY E. MURRAY
1/28/11

| REVISIONS | | | | | | SHEET NO. |
|---|---|---|---|---|---|---|
| NO. | BY: | DATE: | NO. | BY: | DATE: | S-39 |
| 1 | | | 3 | | | TOTAL SHEETS |
| 2 | | | 4 | | | 238 |

STR. #2

DRAWN BY : M.GUDLAUGSSON DATE : 11-2-10
CHECKED BY : T.L. AVERETTE DATE : 1-19-11

05-SEP-2011 11:01
Y:\Structures\Final Plans\Str.#2\R-2413C_SD_S*_02.dgn
mgudlaugsson

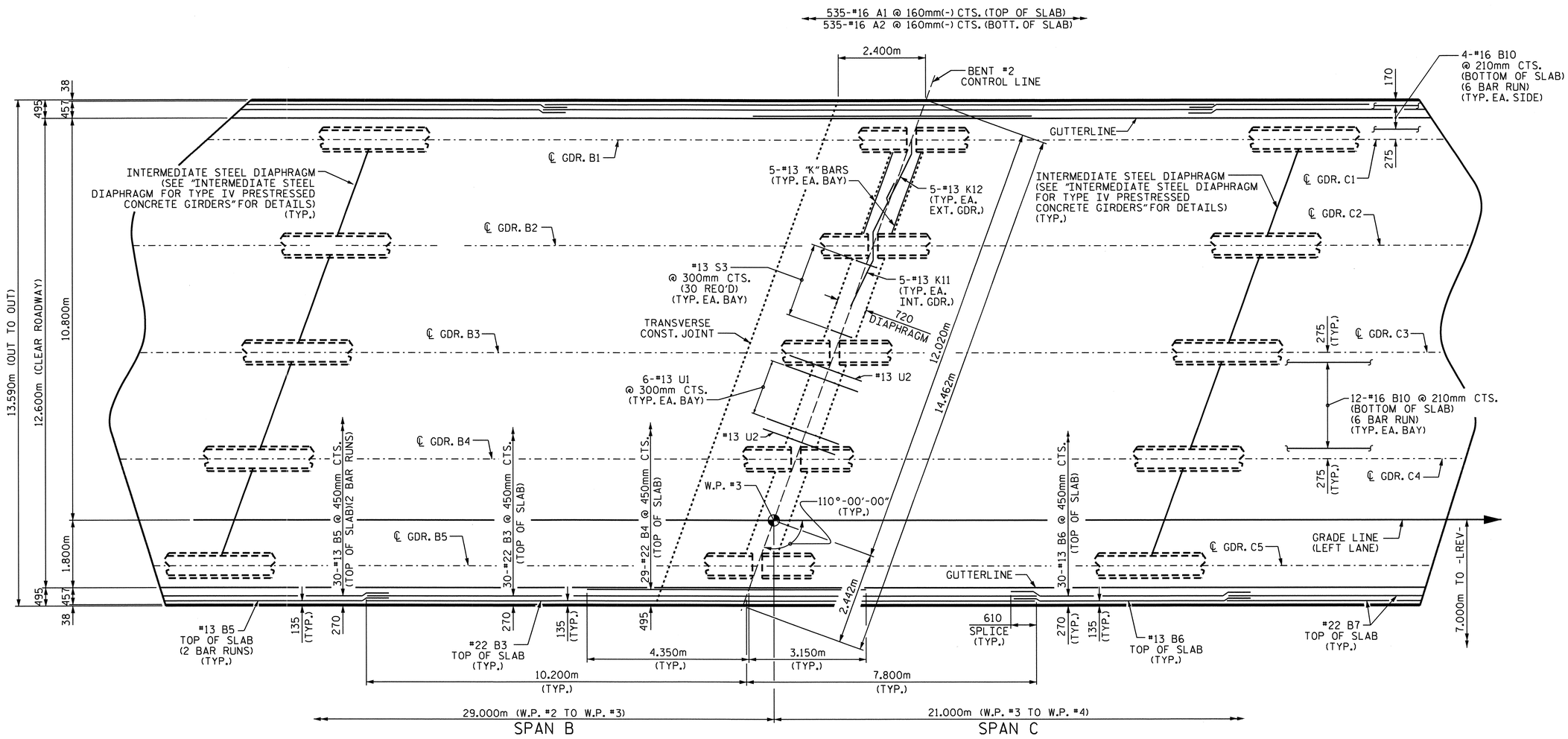


PLAN OF SPANS

PROJECT NO. R-2413C

GUILFORD-ROCKINGHAM COUNTY

STATION: 24+37.000 -LREV-

SHEET 2 OF 3

STATE OF NORTH CAROLINA
DEPARTMENT OF TRANSPORTATION
RALEIGH

SUPERSTRUCTURE
PLAN OF SPANS
(LEFT LANE)

NORTH CAROLINA PROFESSIONAL SEAL 022516 ENGINEER EMILY E. McMURRAY
10/28/11

| REVISIONS | | | | | | SHEET NO. |
|---|---|---|---|---|---|---|
| NO. | BY: | DATE: | NO. | BY: | DATE: | S-40 |
| 1 | | | 3 | | | TOTAL SHEETS |
| 2 | | | 4 | | | 238 |

STR. #2

DRAWN BY : M.GUDLAUGSSON DATE : 11-2-10
CHECKED BY : T.L. AVERETTE DATE : 1-19-11

05-SEP-2011 11:01
Y:\Structures\Final Plans\Str.#2\R-2413C_SD_S#_02.dgn
mgudlaugsson

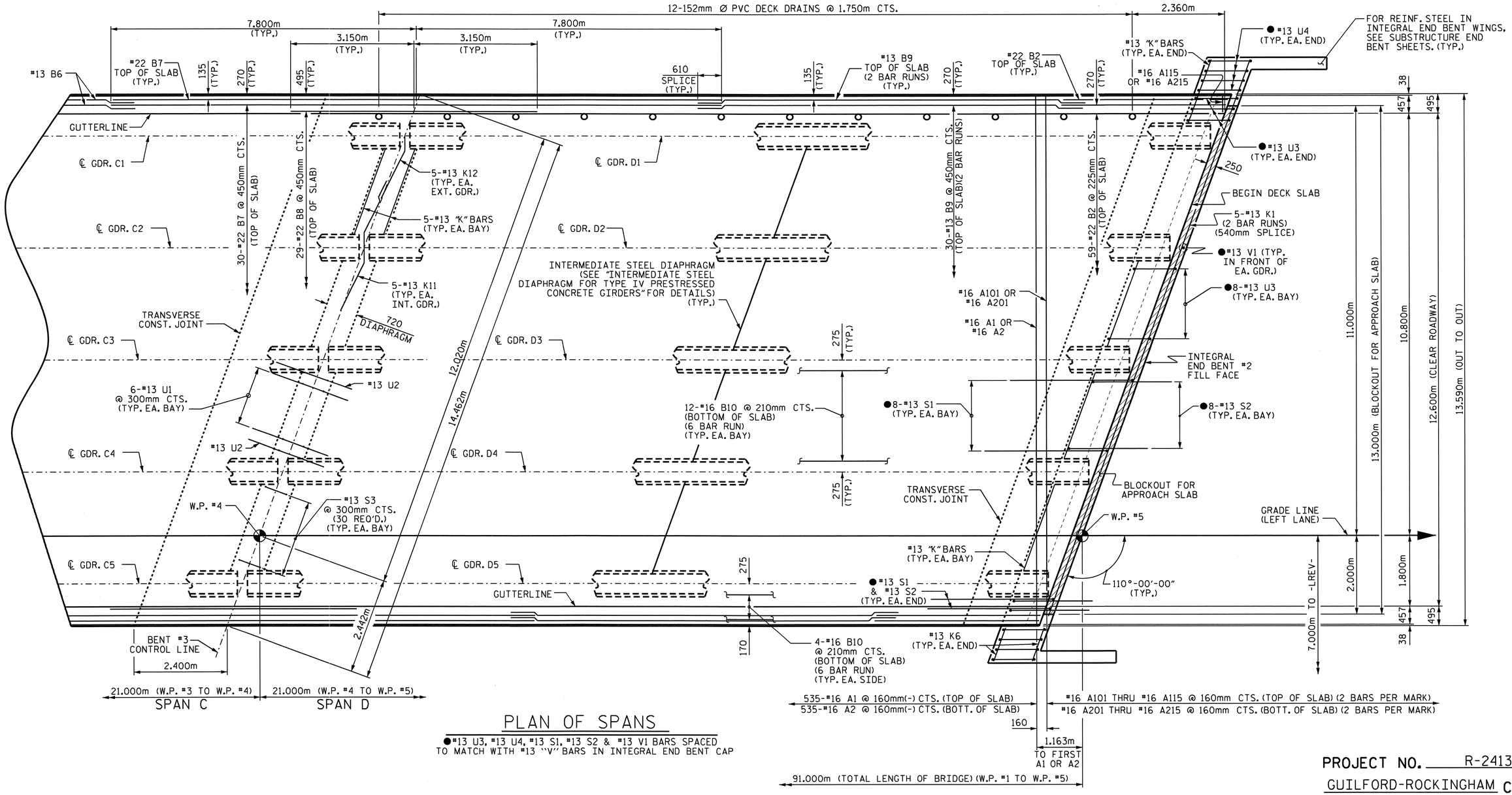


## PLAN OF SPANS

●#13 U3, #13 U4, #13 S1, #13 S2 & #13 V1 BARS SPACED TO MATCH WITH #13 "V" BARS IN INTEGRAL END BENT CAP

**PROJECT NO.** R-2413C

GUILFORD-ROCKINGHAM **COUNTY**

**STATION:** 24+37.000 -LREV-

SHEET 3 OF 3

STATE OF NORTH CAROLINA
**DEPARTMENT OF TRANSPORTATION**
RALEIGH

SUPERSTRUCTURE

PLAN OF SPANS (LEFT LANE)

NORTH CAROLINA PROFESSIONAL SEAL 022516 ENGINEER EMILY E. MARRAY
10/28/11

| REVISIONS | | | | | | SHEET NO. |
|---|---|---|---|---|---|---|
| NO. | BY: | DATE: | NO. | BY: | DATE: | S-41 |
| 1 | | | 3 | | | TOTAL SHEETS |
| 2 | | | 4 | | | 238 |

DRAWN BY : M.GUDLAUGSSON DATE : 11-2-10
CHECKED BY : T.L. AVERETTE DATE : 1-19-11

05-SEP-2011 11:02
Y:\Structures\Final Plans\Str.#2\R-2413C_SD_S#_02.dgn
mgudlaugsson

STR. #2

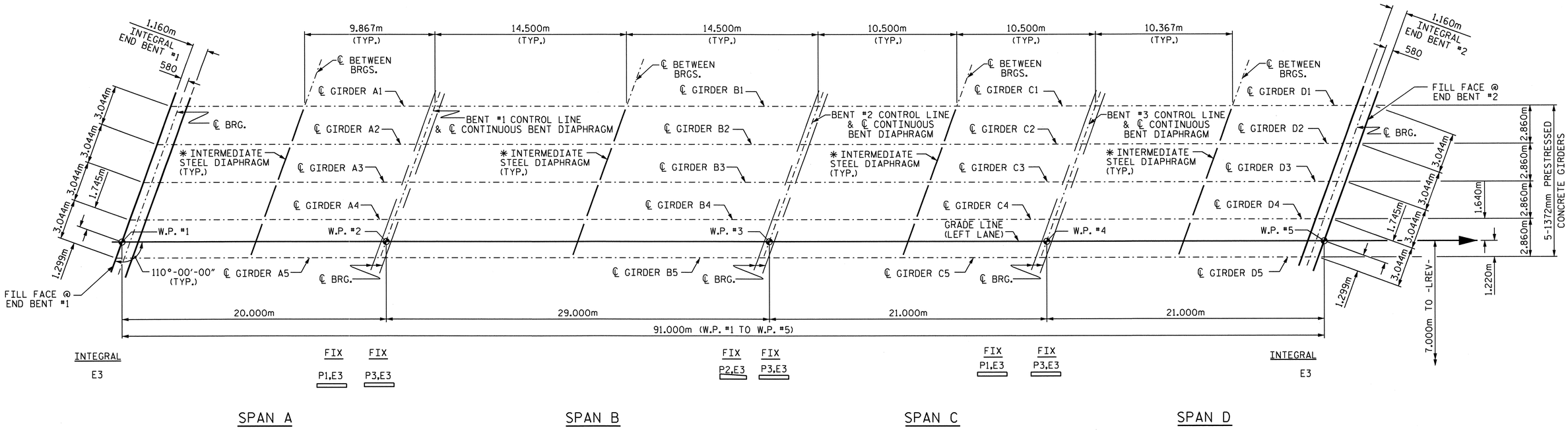


# FRAMING PLAN

* NOTE: SEE "INTERMEDIATE STEEL DIAPHRAGMS FOR TYPE IV PRESTRESSED CONCRETE GIRDERS" SHEET FOR DETAILS.

PROJECT NO. R-2413C
GUILFORD-ROCKINGHAM COUNTY
STATION: 24+37.000 -LREV-

STATE OF NORTH CAROLINA
DEPARTMENT OF TRANSPORTATION
RALEIGH

SUPERSTRUCTURE
FRAMING PLAN
(LEFT LANE)

NORTH CAROLINA PROFESSIONAL SEAL 022516 ENGINEER EMILY E. MURRAY
12/28/11

| REVISIONS | | | | | | SHEET NO. |
|---|---|---|---|---|---|---|
| NO. | BY: | DATE: | NO. | BY: | DATE: | S-42 |
| 1 | | | 3 | | | TOTAL SHEETS |
| 2 | | | 4 | | | 238 |

DRAWN BY : M.GUDLAUGSSON DATE : 10-1-10
CHECKED BY : T.L. AVERETTE DATE : 12-9-10

19-OCT-2011 14:03
R:\TIPProjects-R\R2413c\Structures\FinalPlans\Str.#2\R-2413C_SD_FP_02.dgn
taverette

STR. #2

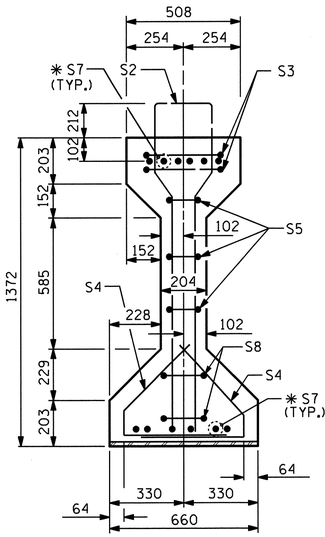


SECTION A-A

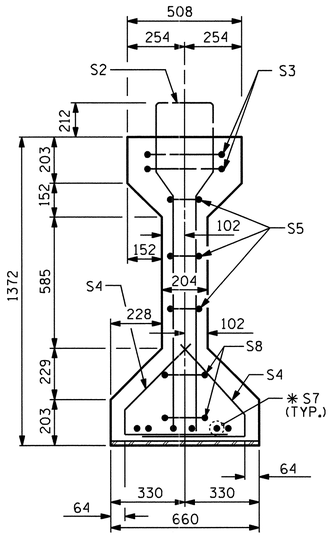


SECTION B-B

✱ FOR S7 BARS, SEE DETAIL "A" OF PRESTRESSED CONCRETE GIRDER CONTINUOUS FOR LIVE LOAD DETAILS SHEET

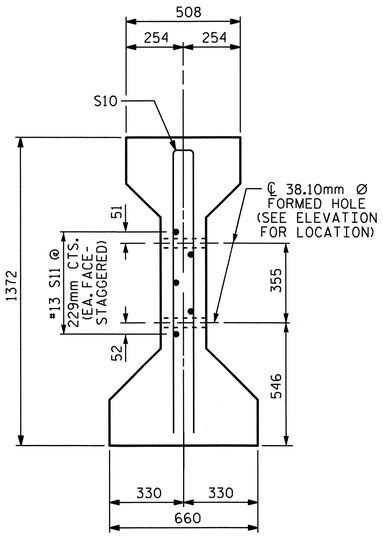


SECTION C-C

(S1 BARS NOT SHOWN)

NOTE: S11 BARS MAY BE SHIFTED SLIGHTLY VERTICALLY TO AVOID STRANDS.

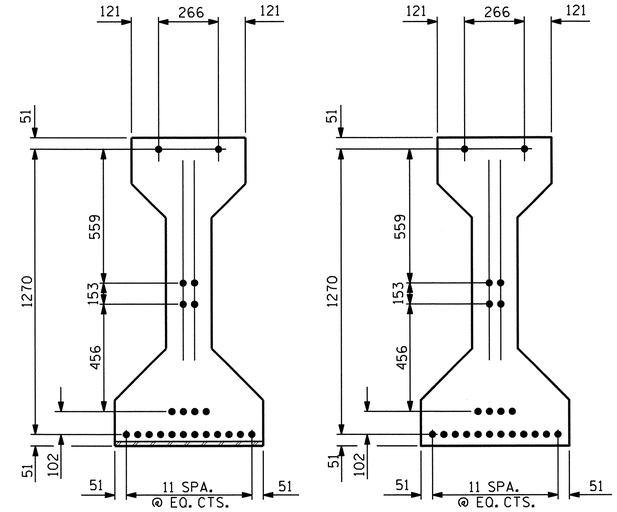


15.24mm Ø LOW RELAXATION STRAND LAYOUT

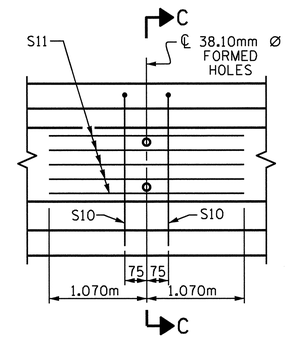


PARTIAL ELEVATION

SHOWING INTERMEDIATE DIAPHRAGM REINFORCING STEEL FOR ALL GIRDERS

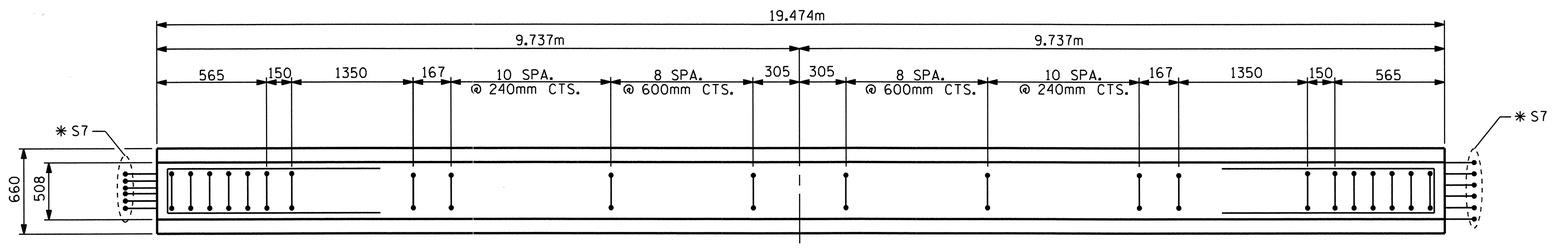


PLAN OF GIRDER

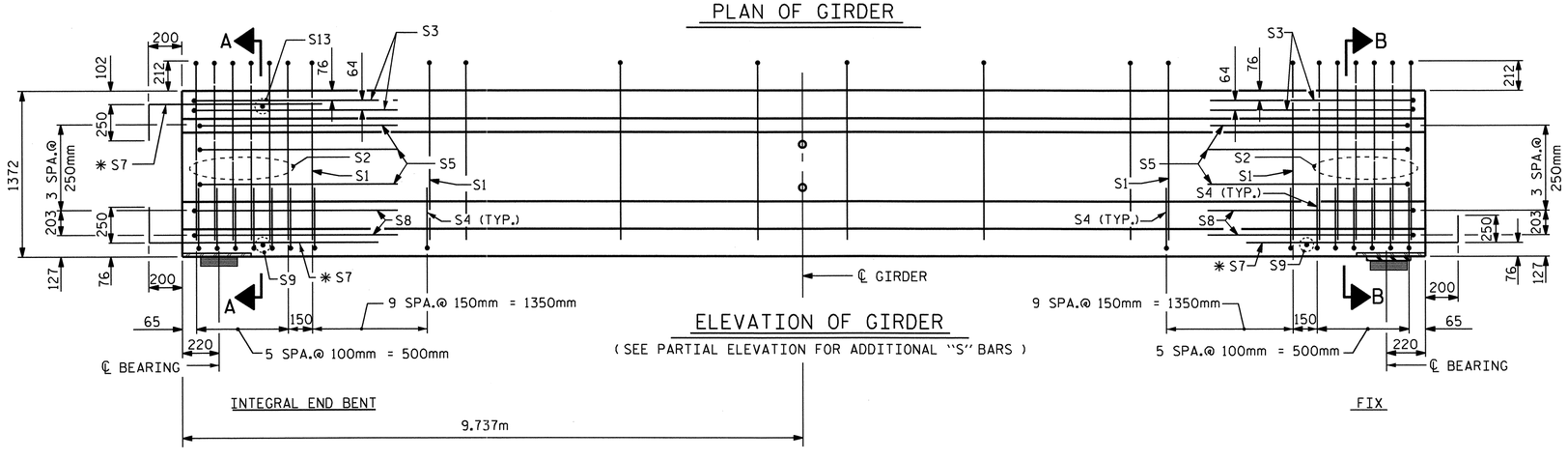


ELEVATION OF GIRDER

( SEE PARTIAL ELEVATION FOR ADDITIONAL "S" BARS )

## 15.24mm Ø L. R. GRADE 270 STRANDS

| AREA (mm²) | ULTIMATE STRENGTH (kN PER STRAND) | APPLIED PRESTRESS (kN PER STRAND) |
|---|---|---|
| 140.00 | 260.7 | 195.5 |

## REINFORCING STEEL FOR ONE GIRDER

| BAR | NUMBER | SIZE | TYPE | LENGTH | WEIGHT |
|---|---|---|---|---|---|
| S1 | 58 | #13 | 1 | 3380 | 195 |
| S2 | 12 | #19 | 1 | 3380 | 91 |
| S3 | 4 | #13 | 2 | 2760 | 11 |
| S4 | 64 | #13 | 3 | 1040 | 66 |
| S5 | 6 | #13 | 2 | 2560 | 15 |
| ✱S7 | 18 | #16 | STR | 1120 | 31 |
| S8 | 4 | #13 | 2 | 2620 | 10 |
| S9 | 2 | #10 | STR | 560 | 1 |
| S10 | 2 | #16 | 2 | 2640 | 8 |
| S11 | 5 | #13 | STR | 2140 | 11 |
| S13 | 1 | #10 | STR | 400 | 1 |

✱NOTE: S7 BARS SHALL BE BENT BEFORE SHIPMENT. HEAT BENDING SHALL NOT BE ALLOWED.

## BAR TYPES

ALL BAR DIMENSIONS ARE OUT-TO-OUT

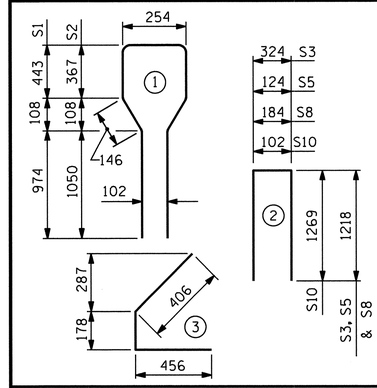


## QUANTITIES FOR ONE GIRDER

| | REINFORCING STEEL | 37.92MPa CONCRETE | 15.24mm Ø L.R. STRANDS |
|---|---|---|---|
| | kg | m³ | No. |
| | 440 | 9.9 | 22 |
| | | | |

## GIRDERS REQUIRED

| NUMBER | LENGTH | TOTAL LENGTH |
|---|---|---|
| 5 | 19.474m | 97.370m |
| | | |
| | | |

PROJECT NO. R-2413C

GUILFORD-ROCKINGHAM COUNTY

STATION: 24+37.000 -LREV-

SHEET 1 OF 6

STATE OF NORTH CAROLINA
DEPARTMENT OF TRANSPORTATION
RALEIGH

AASHTO TYPE IV
PRESTRESSED CONCRETE GIRDER
CONTINUOUS FOR LIVE LOAD
SPAN 'A'
(LEFT LANE)

NORTH CAROLINA PROFESSIONAL SEAL 022516 ENGINEER EMILY E. MURRAY
10/28/11

| REVISIONS | | | | | | | | SHEET NO. |
|---|---|---|---|---|---|---|---|---|
| NO. | BY: | DATE: | NO. | BY: | DATE: | | | S-43 |
| 1 | | | 3 | | | | | TOTAL SHEETS |
| 2 | | | 4 | | | | | 238 |

STR.#2

STD. NO. PCG6SM

| | | |
|---|---|---|
| ASSEMBLED BY: M.GUDLAUGSSON | DATE: 10-28-10 | |
| CHECKED BY : T.L. AVERETTE | DATE: 12-9-10 | |
| DRAWN BY : ELR 8/91 | REV. 7/17/98 | RWW/LES |
| CHECKED BY : GRP 8/91 | REV. 10/17/00R | RWW/LES |
| | REV. 5/1/06R | TLA/GM |

05-SEP-2011 11:03
Y:\Structures\Final Plans\Str.#2\R-2413C_SD_G#_02.dgn
mgudlaugsson

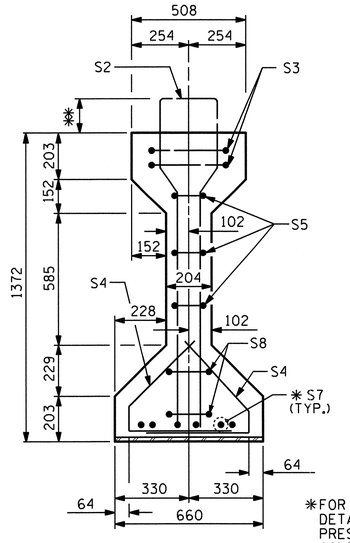


SECTION B-B

*FOR S7 BARS, SEE DETAIL "A" OF PRESTRESSED CONCRETE GIRDER CONTINUOUS FOR LIVE LOAD DETAILS SHEET

** NOTE:
THE PROJECTION OF THE S2 & S12 BARS IS 212mm.
THE PROJECTION OF THE S13 BARS IS 172mm.
THE PROJECTION OF THE S1 BARS IS 152mm.

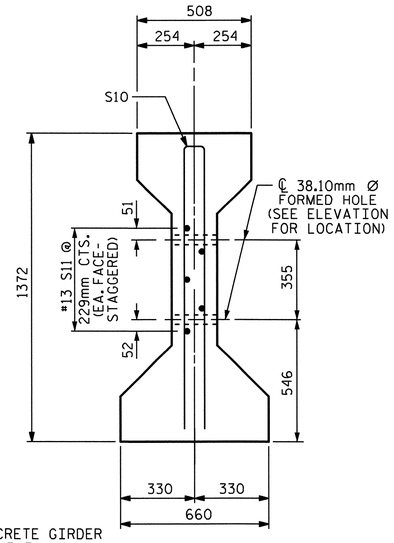


SECTION C-C

(S1 BARS NOT SHOWN)
NOTE: S11 BARS MAY BE SHIFTED SLIGHTLY VERTICALLY TO AVOID STRANDS.

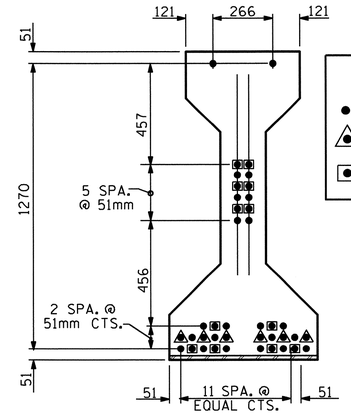


AT END OF GIRDER

DEBONDING LEGEND

- ● FULLY BONDED STRANDS
- △ STRANDS DEBONDED FOR 1.220m FROM END OF GIRDER
- ▣ STRANDS DEBONDED FOR 610mm FROM END OF GIRDER

BOND SHALL BE BROKEN ON STRANDS AS SHOWN FOR THE SPECIFIED LENGTH FROM EACH END OF THE GIRDER. SEE STANDARD SPECIFICATIONS ARTICLE 1078-13.

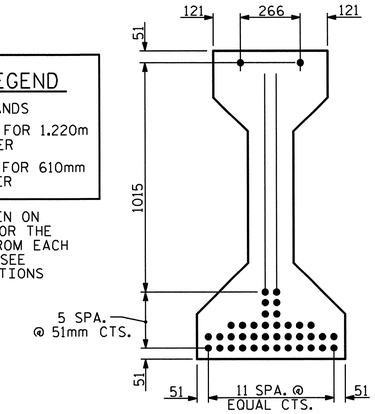


AT ℄ OF GIRDER

15.24mm Ø LOW RELAXATION STRAND LAYOUT

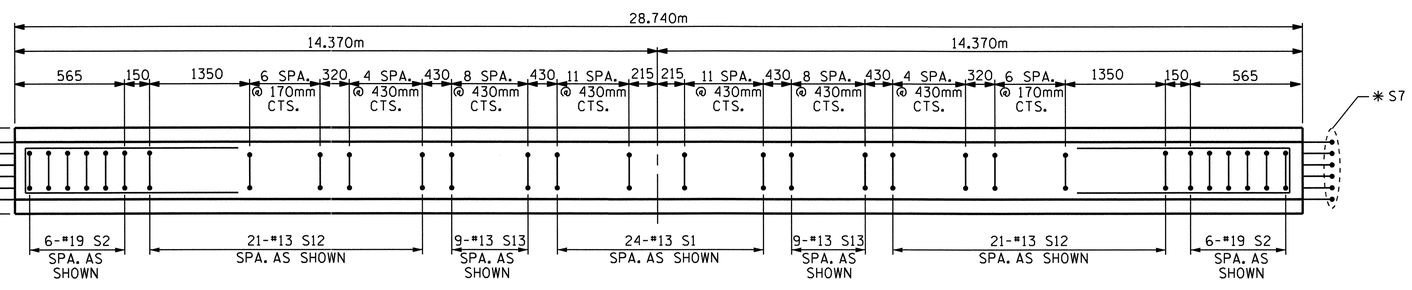


PLAN OF GIRDER

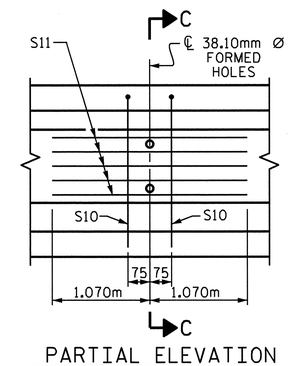


PARTIAL ELEVATION

SHOWING INTERMEDIATE DIAPHRAGM REINFORCING STEEL FOR ALL GIRDERS.

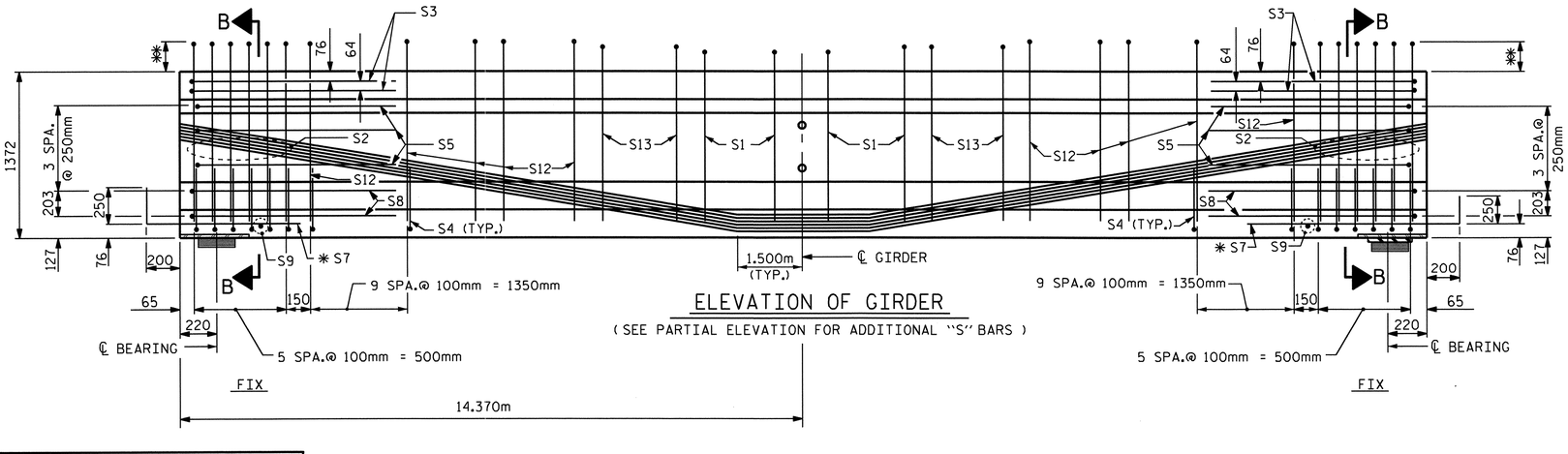


ELEVATION OF GIRDER

(SEE PARTIAL ELEVATION FOR ADDITIONAL "S" BARS)

## 15.24mm Ø L. R. GRADE 270 STRANDS

| AREA (mm²) | ULTIMATE STRENGTH (kN PER STRAND) | APPLIED PRESTRESS (kN PER STRAND) |
|---|---|---|
| 140.00 | 260.7 | 195.5 |

## REINFORCING STEEL FOR ONE GIRDER

| BAR | NUMBER | SIZE | TYPE | LENGTH | WEIGHT |
|---|---|---|---|---|---|
| S1 | 24 | #13 | 1 | 3260 | 78 |
| S2 | 12 | #19 | 1 | 3380 | 91 |
| S3 | 4 | #13 | 2 | 2760 | 11 |
| S4 | 64 | #13 | 3 | 1040 | 66 |
| S5 | 6 | #13 | 2 | 2560 | 15 |
| * S7 | 12 | #16 | STR | 1120 | 21 |
| S8 | 4 | #13 | 2 | 2620 | 10 |
| S9 | 2 | #10 | STR | 560 | 1 |
| S10 | 2 | #16 | 2 | 2640 | 8 |
| S11 | 5 | #13 | STR | 2140 | 11 |
| S12 | 42 | #13 | 1 | 3380 | 141 |
| S13 | 18 | #13 | 1 | 3300 | 59 |

* NOTE: S7 BARS SHALL BE BENT BEFORE SHIPMENT. HEAT BENDING SHALL NOT BE ALLOWED.

## BAR TYPES

ALL BAR DIMENSIONS ARE OUT-TO-OUT

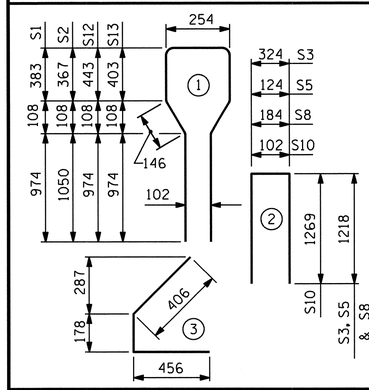


## QUANTITIES FOR ONE GIRDER

| | REINFORCING STEEL | 55.15 MPa CONCRETE | 15.24mm Ø L.R. STRANDS |
|---|---|---|---|
| | kg | m³ | No. |
| | 512 | 14.6 | 40 |

## GIRDERS REQUIRED

| NUMBER | LENGTH | TOTAL LENGTH |
|---|---|---|
| 5 | 28.740m | 143.700m |

PROJECT NO. R-2413C

GUILFORD-ROCKINGHAM COUNTY

STATION: 24+37.000 -LREV-

SHEET 2 OF 6

STATE OF NORTH CAROLINA
DEPARTMENT OF TRANSPORTATION
RALEIGH

AASHTO TYPE IV
PRESTRESSED CONCRETE GIRDER
CONTINUOUS FOR LIVE LOAD
SPAN 'B'
(LEFT LANE)

NORTH CAROLINA PROFESSIONAL SEAL 022516 ENGINEER EMILY E. MURRAY
10/28/11

| REVISIONS | | | | | | SHEET NO. |
|---|---|---|---|---|---|---|
| NO. | BY: | DATE: | NO. | BY: | DATE: | S-44 |
| 1 | | | 3 | | | TOTAL SHEETS |
| 2 | | | 4 | | | 238 |

| | | |
|---|---|---|
| ASSEMBLED BY: M.GUDLAUGSSON | DATE: 10-28-10 | |
| CHECKED BY : T.L. AVERETTE | DATE: 12-9-10 | |
| DRAWN BY : ELR 8/91 | REV. 7/17/98 | RWW/LES |
| CHECKED BY : GRP 8/91 | REV. 10/17/00R | RWW/LES |
| | REV. 5/1/06R | TLA/GM |

05-SEP-2011 11:04
Y:\Structures\Final Plans\Str.#2\R-2413C_SD_G#_02.dgn
mgudlaugsson

STR.#2

STD. NO. PCG6SM

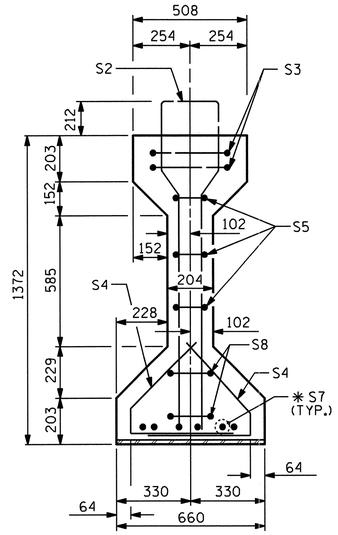


SECTION B-B

*FOR S7 BARS, SEE DETAIL "A" OF PRESTRESSED CONCRETE GIRDER CONTINUOUS FOR LIVE LOAD DETAILS SHEET

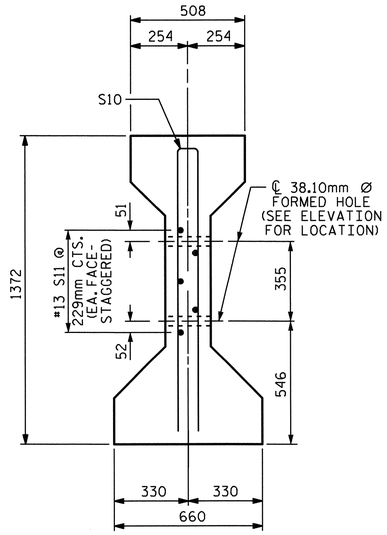


SECTION C-C

(S1 BARS NOT SHOWN)

NOTE: S11 BARS MAY BE SHIFTED SLIGHTLY VERTICALLY TO AVOID STRANDS.

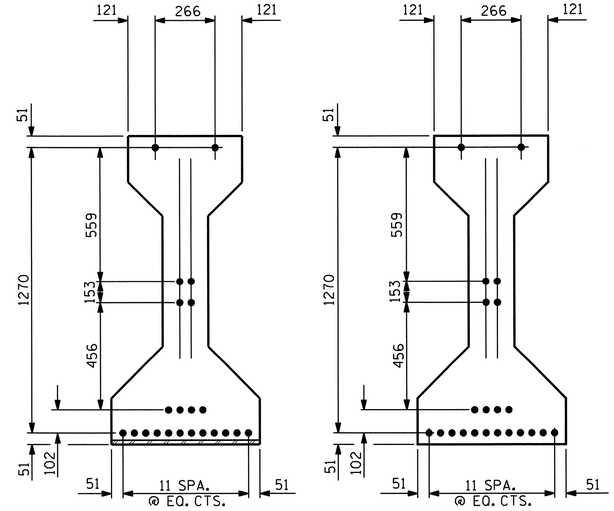


15.24mm Ø LOW RELAXATION STRAND LAYOUT

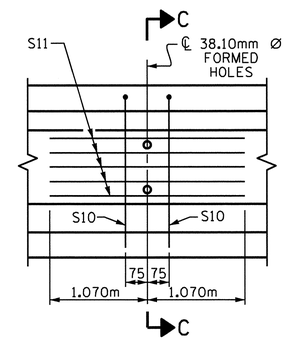


PARTIAL ELEVATION

SHOWING INTERMEDIATE DIAPHRAGM REINFORCING STEEL FOR ALL GIRDERS

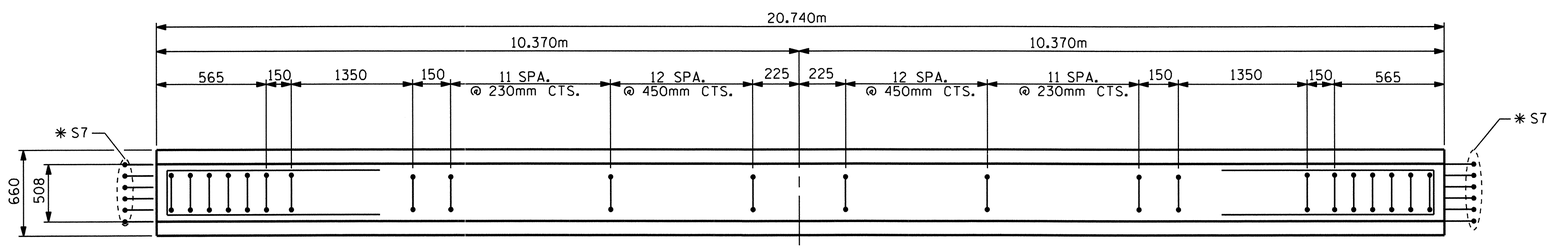


PLAN OF GIRDER

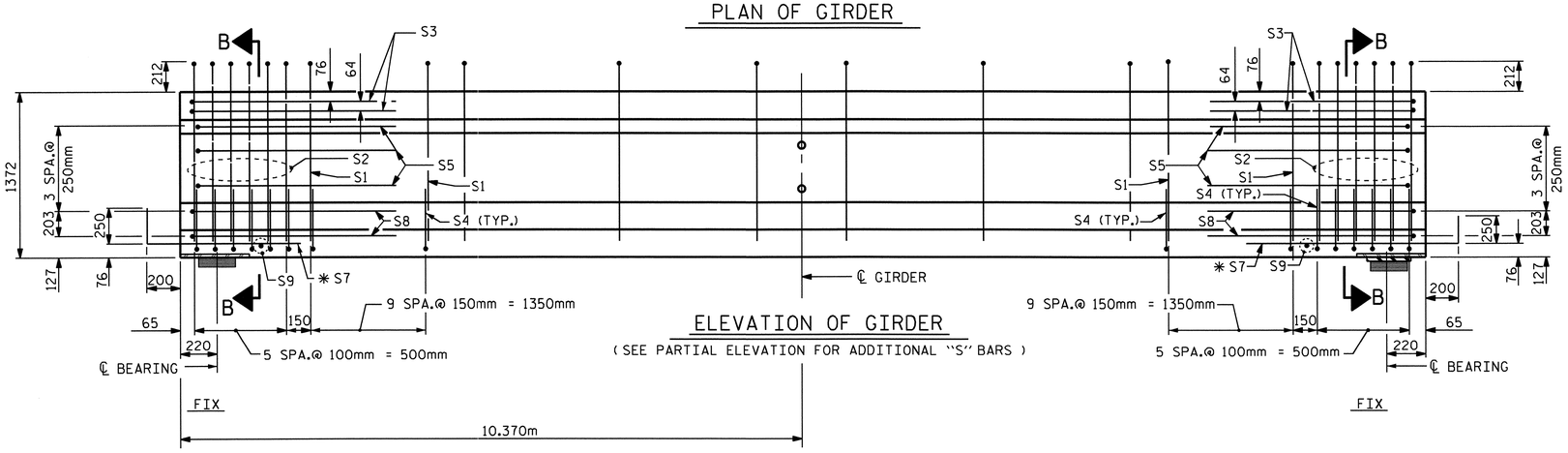


ELEVATION OF GIRDER

( SEE PARTIAL ELEVATION FOR ADDITIONAL "S" BARS )

## 15.24mm Ø L. R. GRADE 270 STRANDS

| AREA (mm²) | ULTIMATE STRENGTH (kN PER STRAND) | APPLIED PRESTRESS (kN PER STRAND) |
|---|---|---|
| 140.00 | 260.7 | 195.5 |

## REINFORCING STEEL FOR ONE GIRDER

| BAR | NUMBER | SIZE | TYPE | LENGTH | WEIGHT |
|---|---|---|---|---|---|
| S1 | 68 | #13 | 1 | 3380 | 228 |
| S2 | 12 | #19 | 1 | 3380 | 91 |
| S3 | 4 | #13 | 2 | 2760 | 11 |
| S4 | 64 | #13 | 3 | 1040 | 66 |
| S5 | 6 | #13 | 2 | 2560 | 15 |
| * S7 | 12 | #16 | STR | 1120 | 21 |
| S8 | 4 | #13 | 2 | 2620 | 10 |
| S9 | 2 | #10 | STR | 560 | 1 |
| S10 | 2 | #16 | 2 | 2640 | 8 |
| S11 | 5 | #13 | STR | 2140 | 11 |
| | | | | | |

* NOTE: S7 BARS SHALL BE BENT BEFORE SHIPMENT. HEAT BENDING SHALL NOT BE ALLOWED.

## BAR TYPES

ALL BAR DIMENSIONS ARE OUT-TO-OUT

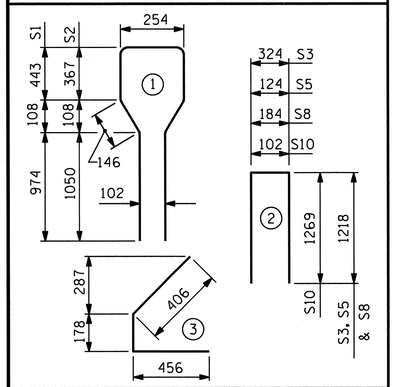


## QUANTITIES FOR ONE GIRDER

| | REINFORCING STEEL | 37.92 MPa CONCRETE | 15.24mm Ø L.R. STRANDS |
|---|---|---|---|
| | kg | m³ | No. |
| | 462 | 10.6 | 22 |
| | | | |

## GIRDERS REQUIRED

| NUMBER | LENGTH | TOTAL LENGTH |
|---|---|---|
| 5 | 20.740m | 103.700m |
| | | |
| | | |

PROJECT NO. R-2413C

GUILFORD-ROCKINGHAM COUNTY

STATION: 24+37.000 -LREV-

SHEET 3 OF 6

STATE OF NORTH CAROLINA
DEPARTMENT OF TRANSPORTATION
RALEIGH

AASHTO TYPE IV
PRESTRESSED CONCRETE GIRDER
CONTINUOUS FOR LIVE LOAD
SPAN 'C'
(LEFT LANE)

NORTH CAROLINA PROFESSIONAL SEAL 022516 ENGINEER EMILY F. GUMPHREY
10/28/11

| REVISIONS | | | | | | | | SHEET NO. |
|---|---|---|---|---|---|---|---|---|
| NO. | BY: | DATE: | NO. | BY: | DATE: | | | S-45 |
| 1 | | | 3 | | | | | TOTAL SHEETS |
| 2 | | | 4 | | | | | 238 |

| | | | |
|---|---|---|---|
| ASSEMBLED BY: M.GUDLAUGSSON | DATE: 10-28-10 | | |
| CHECKED BY : T.L. AVERETTE | DATE: 12-9-10 | | |
| DRAWN BY : ELR 8/91 | REV. 7/17/98 | RWW/LES | |
| CHECKED BY : GRP 8/91 | REV. 10/17/00R | RWW/LES | |
| | REV. 5/1/06R | TLA/GM | |

05-SEP-2011 11:04
Y:\Structures\Final Plans\Str.#2\R-2413C_SD_G*_02.dgn
mgudlaugsson

STR.#2

STD. NO. PCG6SM

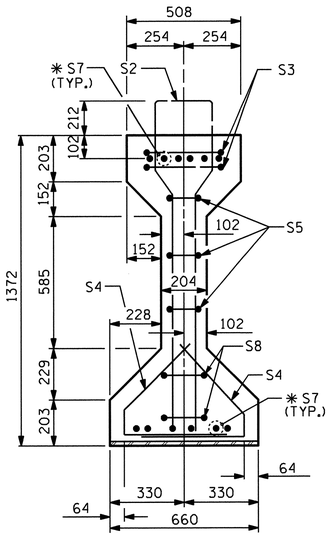


SECTION A-A

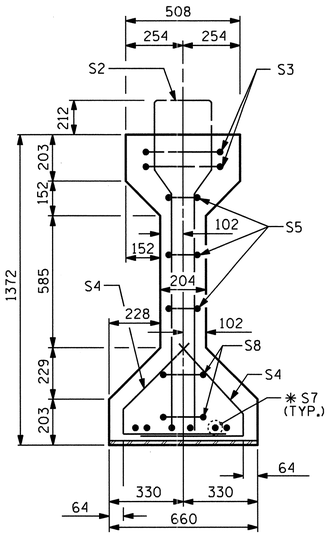


SECTION B-B

✱ FOR S7 BARS, SEE DETAIL "A" OF PRESTRESSED CONCRETE GIRDER CONTINUOUS FOR LIVE LOAD DETAILS SHEET

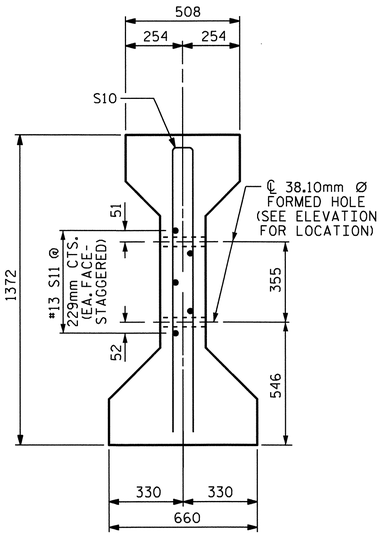


SECTION C-C

(S1 BARS NOT SHOWN)

NOTE: S11 BARS MAY BE SHIFTED SLIGHTLY VERTICALLY TO AVOID STRANDS.

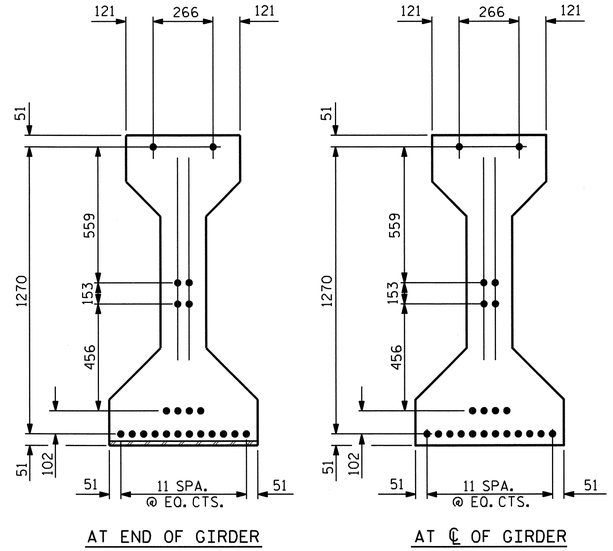


15.24mm Ø LOW RELAXATION STRAND LAYOUT

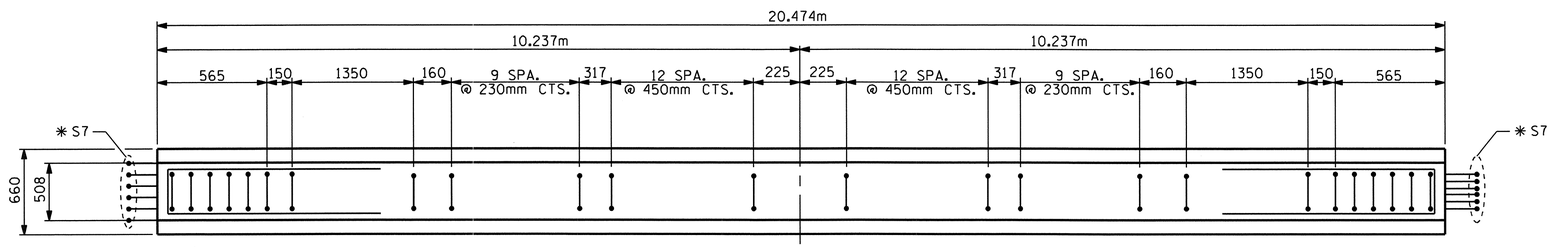


PLAN OF GIRDER

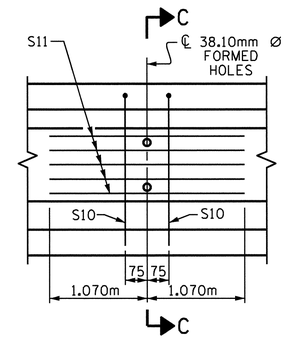


PARTIAL ELEVATION

SHOWING INTERMEDIATE DIAPHRAGM REINFORCING STEEL FOR ALL GIRDERS

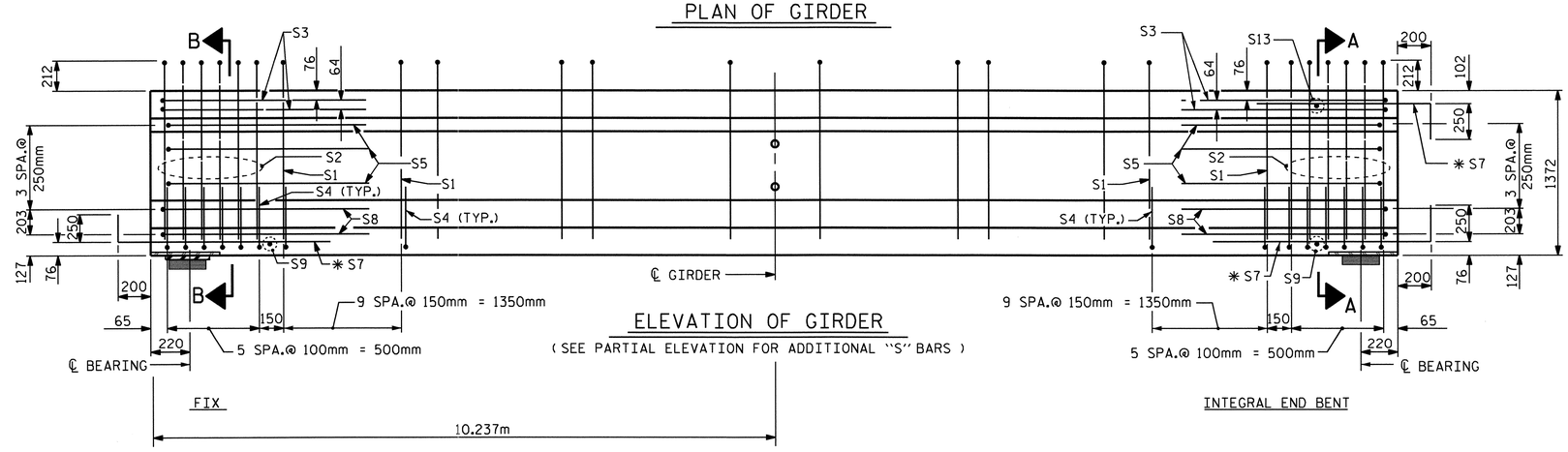


ELEVATION OF GIRDER

( SEE PARTIAL ELEVATION FOR ADDITIONAL "S" BARS )

## 15.24mm Ø L. R. GRADE 270 STRANDS

| AREA (mm²) | ULTIMATE STRENGTH (kN PER STRAND) | APPLIED PRESTRESS (kN PER STRAND) |
|---|---|---|
| 140.00 | 260.7 | 195.5 |

## REINFORCING STEEL FOR ONE GIRDER

| BAR | NUMBER | SIZE | TYPE | LENGTH | WEIGHT |
|---|---|---|---|---|---|
| S1 | 66 | #13 | 1 | 3380 | 222 |
| S2 | 12 | #19 | 1 | 3380 | 91 |
| S3 | 4 | #13 | 2 | 2760 | 11 |
| S4 | 64 | #13 | 3 | 1040 | 66 |
| S5 | 6 | #13 | 2 | 2560 | 15 |
| ✱ S7 | 18 | #16 | STR | 1120 | 31 |
| S8 | 4 | #13 | 2 | 2620 | 10 |
| S9 | 2 | #10 | STR | 560 | 1 |
| S10 | 2 | #16 | 2 | 2640 | 8 |
| S11 | 5 | #13 | STR | 2140 | 11 |
| S13 | 1 | #10 | STR | 400 | 1 |

✱ NOTE: S7 BARS SHALL BE BENT BEFORE SHIPMENT. HEAT BENDING SHALL NOT BE ALLOWED.

## BAR TYPES

ALL BAR DIMENSIONS ARE OUT-TO-OUT

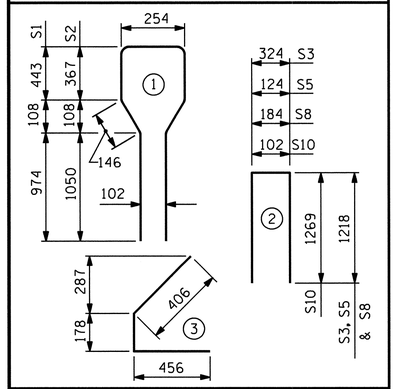


## QUANTITIES FOR ONE GIRDER

| | REINFORCING STEEL | 37.92 MPa CONCRETE | 15.24mm Ø L.R. STRANDS |
|---|---|---|---|
| | kg | m³ | No. |
| | 467 | 10.4 | 22 |

## GIRDERS REQUIRED

| NUMBER | LENGTH | TOTAL LENGTH |
|---|---|---|
| 5 | 20.474m | 102.370m |

PROJECT NO. R-2413C

GUILFORD-ROCKINGHAM COUNTY

STATION: 24+37.000 -LREV-

SHEET 4 OF 6

STATE OF NORTH CAROLINA
DEPARTMENT OF TRANSPORTATION
RALEIGH

AASHTO TYPE IV
PRESTRESSED CONCRETE GIRDER
CONTINUOUS FOR LIVE LOAD
SPAN 'D'
(LEFT LANE)

NORTH CAROLINA PROFESSIONAL SEAL 022516 ENGINEER EMILY F. SARRAY 10/28/11

| | |
|---|---|
| ASSEMBLED BY: M.GUDLAUGSSON | DATE: 10-28-10 |
| CHECKED BY : T.L. AVERETTE | DATE: 12-9-10 |
| DRAWN BY : ELR 8/91 | REV. 7/17/98 RWW/LES |
| CHECKED BY : GRP 8/91 | REV. 10/17/00R RWW/LES |
| | REV. 5/1/06R TLA/GM |

REVISIONS

| NO. | BY: | DATE: | NO. | BY: | DATE: |
|---|---|---|---|---|---|
| 1 | | | 3 | | |
| 2 | | | 4 | | |

SHEET NO. S-46

TOTAL SHEETS 238

STR.#2

STD. NO. PCG6SM

05-SEP-2011 11:04
Y:\Structures\Final Plans\Str.#2\R-2413C_SD_G#_02.dgn
mgudlaugsson

## DEAD LOAD DEFLECTION TABLE

| 15.24mm Ø LOW RELAXATION | SPANS A,C & D GIRDERS 1 THRU 5 | | | | | | | | | | |
|---|---|---|---|---|---|---|---|---|---|---|---|
| TENTH POINTS | 0 | .1 | .2 | .3 | .4 | .5 | .6 | .7 | .8 | .9 | 0 |
| CAMBER (GIRDER ALONE IN PLACE) ↑ | 0.0 | 0.011 | 0.021 | 0.029 | 0.033 | 0.035 | 0.033 | 0.029 | 0.021 | 0.011 | 0.0 |
| * DEFLECTION DUE TO SUPERIMPOSED D.L. ↓ | 0.0 | 0.004 | 0.009 | 0.012 | 0.014 | 0.015 | 0.014 | 0.012 | 0.009 | 0.004 | 0.0 |
| FINAL CAMBER ↑ | 0 | 7 | 12 | 17 | 19 | 20 | 19 | 17 | 12 | 7 | 0 |

* INCLUDES FUTURE WEARING SURFACE IN SUPERIMPOSED DEAD LOAD.
ALL VALUES ARE SHOWN IN METERS, EXCEPT "FINAL CAMBER" WHICH IS SHOWN IN MILLIMETERS.

## DEAD LOAD DEFLECTION TABLE

| 15.24mm Ø LOW RELAXATION | SPAN B GIRDERS 1 THRU 5 | | | | | | | | | | |
|---|---|---|---|---|---|---|---|---|---|---|---|
| TENTH POINTS | 0 | .1 | .2 | .3 | .4 | .5 | .6 | .7 | .8 | .9 | 0 |
| CAMBER (GIRDER ALONE IN PLACE) ↑ | 0.0 | 0.039 | 0.075 | 0.102 | 0.120 | 0.126 | 0.120 | 0.102 | 0.075 | 0.039 | 0.0 |
| * DEFLECTION DUE TO SUPERIMPOSED D.L. ↓ | 0.0 | 0.015 | 0.028 | 0.038 | 0.045 | 0.048 | 0.045 | 0.038 | 0.028 | 0.015 | 0.0 |
| FINAL CAMBER ↑ | 0 | 24 | 47 | 64 | 75 | 78 | 75 | 64 | 47 | 24 | 0 |

* INCLUDES FUTURE WEARING SURFACE IN SUPERIMPOSED DEAD LOAD.
ALL VALUES ARE SHOWN IN METERS, EXCEPT "FINAL CAMBER" WHICH IS SHOWN IN MILLIMETERS.

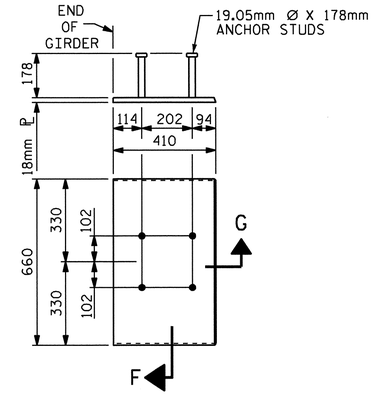


## EMBEDDED PLATE "B-1" DETAILS FOR AASHTO TYPE IV GIRDER

(2 REQ'D PER GIRDER)

## NOTES

ALL PRESTRESSING STRANDS SHALL BE 7-WIRE LOW-RELAXATION GRADE 270 STRANDS AND SHALL CONFORM TO AASHTO M203M EXCEPT FOR SAMPLING REQUIREMENTS WHICH SHALL BE IN ACCORDANCE WITH THE STANDARD SPECIFICATIONS.

ALL REINFORCING STEEL SHALL BE GRADE 420.

EMBEDDED PLATE "B-1" SHALL BE GALVANIZED IN ACCORDANCE WITH THE SPECIFICATIONS. BEVEL EDGES OF PLATE "B-1" TO GIVE CLOSE FIT BUT NOT TIGHT FIT TO STEEL CASTING FORM.

ANCHOR STUDS SHALL CONFORM TO AASHTO M169 GRADES 1010 THROUGH 1020 OR APPROVED EQUAL, AND SHALL MEET THE TYPE "B" REQUIREMENTS OF SUBSECTION 7.3 OF THE ANSI/AASHTO/AWS D1.5 BRIDGE WELDING CODE.

AT ENDS OF GIRDERS TO BE EMBEDDED IN CONCRETE DIAPHRAGMS OR END WALLS, PRESTRESSING STRANDS MAY EXTEND A MAXIMUM OF 50mm BEYOND THE GIRDER ENDS. OTHERWISE, PRESTRESSING STRANDS SHALL BE CUT FLUSH WITH THE GIRDER ENDS.

THE TRANSFER OF LOAD FROM THE ANCHORAGES TO THE GIRDER SHALL BE DONE WHEN CONCRETE HAS REACHED A COMPRESSIVE STRENGTH OF NOT LESS THAN 27.58 MPa FOR SPANS A,C & D AND 42.05 MPa FOR SPAN B.

DEPENDING ON THE TYPE OF SYSTEM USED TO SUPPORT THE DECK SLAB FORMS, PRESET ANCHORS MAY BE NECESSARY IN THE PRESTRESSED CONCRETE GIRDER.

THE TOP SURFACE OF THE GIRDER, EXCLUDING THE OUTSIDE 100mm, SHALL BE RAKED TO A DEPTH OF 6mm.

WHEN DRAPED STRANDS ARE DETAILED, THE LONGITUDINAL LOCATION OF THE HOLD DOWN DEVICES SHALL BE WITHIN 150mm OF THE LOCATION SHOWN AND THE CENTER OF GRAVITY OF THE GROUP OF DRAPED STRANDS SHALL BE LOCATED WITHIN 13mm OF THE THEORETICAL LOCATION SHOWN.

FOR PRESTRESSED CONCRETE MEMBERS, SEE SPECIAL PROVISIONS.

THE UPLIFT FORCE DUE TO DRAPED STRANDS IN SPAN B IS 102 kN.

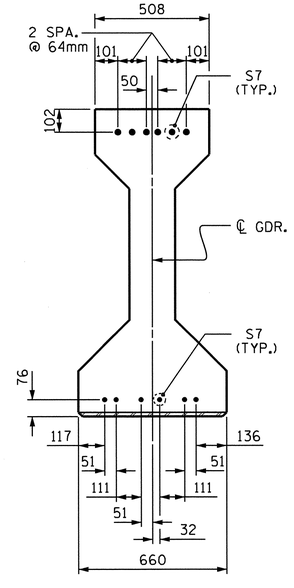


## DETAIL "A"

(FOR AASHTO TYPE IV GIRDERS)

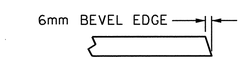


## SECTION "G"

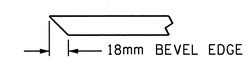


## SECTION "F"

(SEE NOTES)

PROJECT NO. R-2413C
GUILFORD-ROCKINGHAM COUNTY
STATION: 24+37.000 -LREV-

SHEET 5 OF 6

STATE OF NORTH CAROLINA
DEPARTMENT OF TRANSPORTATION
RALEIGH

STANDARD
PRESTRESSED CONCRETE GIRDER
CONTINUOUS FOR LIVE LOAD
DETAILS
(LEFT LANE)

| REVISIONS | | | | | | SHEET NO. |
|---|---|---|---|---|---|---|
| NO. | BY: | DATE: | NO. | BY: | DATE: | S-47 |
| 1 | | | 3 | | | TOTAL SHEETS |
| 2 | | | 4 | | | 238 |

NORTH CAROLINA PROFESSIONAL SEAL 022516 ENGINEER EMILY E. MURRAY
10/28/11

| | | | |
|---|---|---|---|
| ASSEMBLED BY : M.GUDLAUGSSON | DATE : 11-4-10 | | |
| CHECKED BY : T.L. AVERETTE | DATE : 12-9-10 | | |
| DRAWN BY : ELR 11/91 | REV. 10/17/00 RWW/LES | | |
| CHECKED BY : GRP 11/91 | REV. 7/10/01RR LES/RDR | REV. 5/1/06 TLA/GM | |

19-OCT-2011 14:04
R:\TIPProjects-R\R2413c\Structures\FinalPlans\Str.#2\R-2413C_SD_DL_02.dgn
taverette

STR. #2

STD. NO. PCG11SM

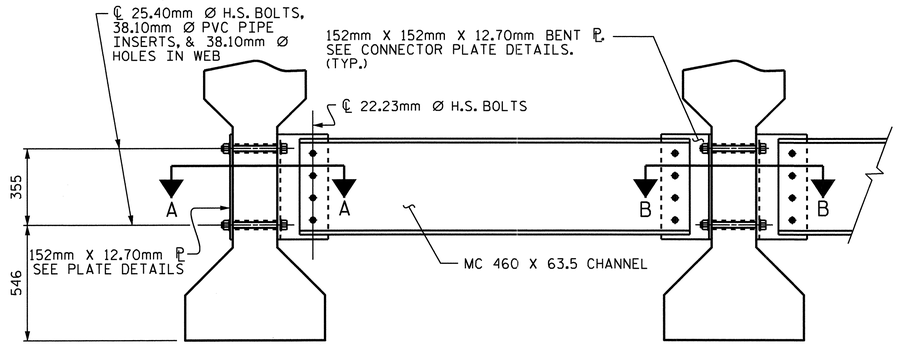


EXTERIOR GIRDER

INTERIOR GIRDER

## PART SECTION AT INTERMEDIATE DIAPHRAGM

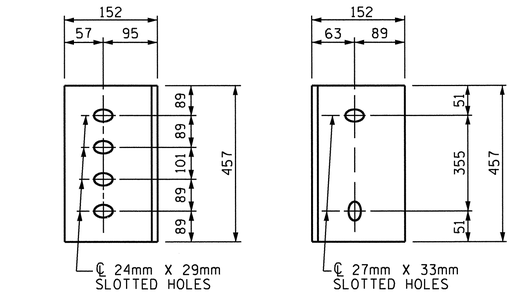


DIAPHRAGM FACE

WEB FACE

## CONNECTOR PLATE DETAILS

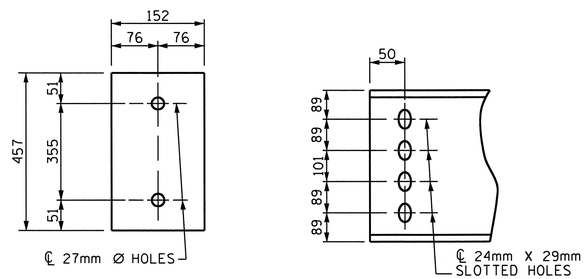


PLATE DETAILS

CHANNEL END

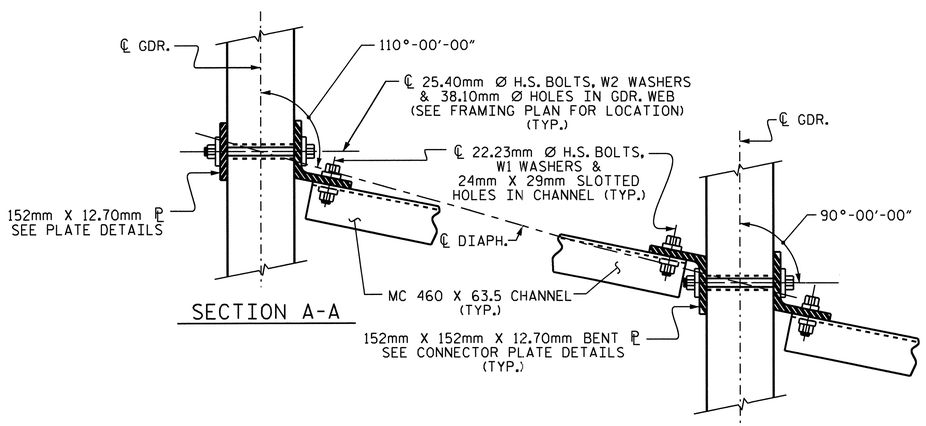


SECTION A-A

SECTION B-B

## CONNECTION DETAILS

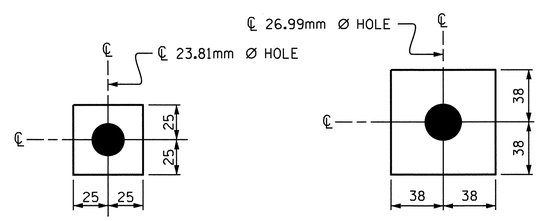


W1

ℙ 11.1 X 50 X 50

USE WITH 22.23mm Ø HVY. HEX NUTS & DIRECT TENSION INDICATOR WASHERS AT DIAPHRAGM CHANNEL TO CONNECTOR PLATE CONNECTIONS

W2

ℙ 11.1 X 76 X 76

USE WITH 25.40mm Ø HVY. HEX NUTS AT CONNECTOR PLATE TO GIRDER CONNECTIONS

## WASHER DETAILS

## STRUCTURAL STEEL NOTES

ALL INTERMEDIATE DIAPHRAGM STEEL, CONNECTOR PLATES AND PLATE WASHERS SHALL BE AASHTO M270 GRADE 345 OR APPROVED EQUAL.

TENSION ON THE AASHTO M164 BOLTS THROUGH THE CHANNEL MEMBER SHALL BE CALIBRATED USING DIRECT TENSION INDICATOR WASHERS IN ACCORDANCE WITH THE STANDARD SPECIFICATIONS. FOR DIRECT TENSION INDICATORS, SEE SPECIAL PROVISIONS.

TENSION ON THE AASHTO M164 BOLTS THROUGH THE GIRDER WEB SHALL BE SNUG TIGHTENED FOLLOWED BY AN ADDITIONAL 1/4 TURN.

THE PLATES, BENT PLATES, CHANNELS, ANGLES, AND PLATE WASHERS SHALL BE GALVANIZED OR METALLIZED IN ACCORDANCE WITH THE STANDARD SPECIFICATIONS. FOR THERMAL SPRAYED COATINGS (METALLIZATION), SEE SPECIAL PROVISIONS.

FOR METALLIZATION, APPLY AN 8 MIL THICK 99.99 PERCENT ZINC (W-Zn-1) THERMAL SPRAYED COATING WITH A 0.5 MIL THICK SEAL COAT TO ALL STEEL DIAPHRAGM SURFACES IN ACCORDANCE WITH THE THERMAL SPRAYED COATINGS SPECIAL PROVISIONS AND SECTION 442 OF THE STANDARD SPECIFICATIONS.

GALVANIZE THE HIGH STRENGTH BOLTS, NUTS, WASHERS AND DIRECT TENSION INDICATORS IN ACCORDANCE WITH THE STANDARD SPECIFICATIONS. FOR HIGH STRENGTH BOLTS, SEE SPECIAL PROVISIONS.

USE A MINIMUM 11mm THICK PLATE WASHER WITH STANDARD HOLES UNDER EACH BOLT HEAD AND NUT. THE PLATE WASHERS SHALL HAVE SUFFICIENT SIZE TO COVER THE HOLES AFTER INSTALLATION. HARDENED WASHERS AND DIRECT TENSION INDICATORS ARE TO BE USED IN CONJUNCTION WITH THE PLATE WASHERS IN THE CHANNEL MEMBER CONNECTION.

FOR BOLTS THROUGH THE GIRDER WEB, PROVIDE SUFFICIENT LENGTH OF ALL BOLTS TO ACCOMMODATE WASHERS AND THE THICKNESS OF CONNECTING MEMBER PLUS AT LEAST 6mm PROJECTION BEYOND THE NUT.

INTERMEDIATE DIAPHRAGM ASSEMBLY SHALL COMPLY WITH SECTION 1072 OF THE STANDARD SPECIFICATIONS.

CONTRACTOR SHALL SUBMIT TWO SETS OF WORKING DRAWINGS FOR THE INTERMEDIATE DIAPHRAGM ASSEMBLY FOR REVIEW, COMMENTS AND ACCEPTANCE. AFTER REVIEW, COMMENTS, AND ACCEPTANCE, SUBMIT SEVEN SETS FOR DISTRIBUTION.

IN THE EXTERIOR BAYS, TEMPORARY STRUTS SHALL BE PLACED BETWEEN PRESTRESSED GIRDERS ADJACENT TO THE STEEL DIAPHRAGMS. STRUTS SHALL REMAIN IN PLACE 3 DAYS AFTER CONCRETE IS PLACED. ALL AASHTO M164 H.S. BOLTS SHALL BE FULLY TIGHTENED AFTER THE STRUTS HAVE BEEN REMOVED.

THE COST OF THE STEEL DIAPHRAGMS AND ASSEMBLIES SHALL BE INCLUDED IN THE UNIT PRICE BID FOR PRESTRESSED CONCRETE GIRDERS.

PROJECT NO. R-2413C

GUILFORD-ROCKINGHAM COUNTY

STATION: 24+37.000 -LREV-

SHEET 6 OF 6

STATE OF NORTH CAROLINA
DEPARTMENT OF TRANSPORTATION
RALEIGH

STANDARD
INTERMEDIATE
STEEL DIAPHRAGMS
FOR TYPE IV
PRESTRESSED CONCRETE
GIRDERS
(LEFT LANE)

NORTH CAROLINA PROFESSIONAL SEAL 022516 ENGINEER EMILY E. MURRAY
10/28/11

| REVISIONS | | | | | | SHEET NO. |
|---|---|---|---|---|---|---|
| NO. | BY: | DATE: | NO. | BY: | DATE: | S-48 |
| 1 | | | 3 | | | TOTAL SHEETS |
| 2 | | | 4 | | | 238 |

STR. #2

STD.No.PCG12SM

| | |
|---|---|
| ASSEMBLED BY : M.GUDLAUGSSON DATE : 10-1-10 | |
| CHECKED BY : T.L. AVERETTE DATE : 12-9-10 | |
| DRAWN BY : TLA 6/05 | ADDED 10/21/05 |
| CHECKED BY : VC 6/05 | REV. 5/1/06RR KMM/GM |

05-SEP-2011 11:05
Y:\Structures\Final Plans\Str.#2\R-2413C_SD_G#_02.dgn
mgudlaugsson

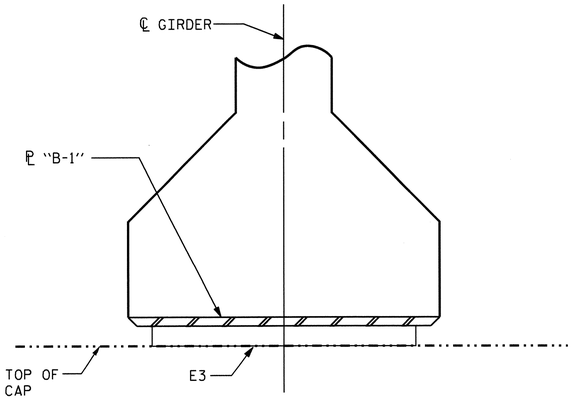


FIXED

## SECTION E-E

(@ INTEGRAL END BENTS)

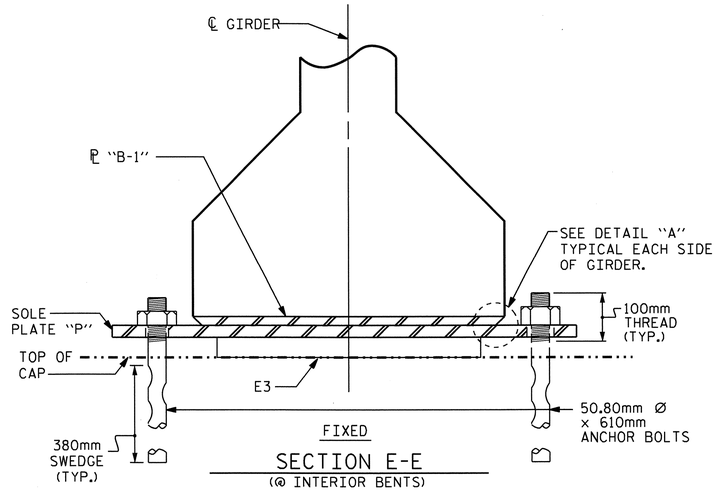


FIXED

## SECTION E-E

(@ INTERIOR BENTS)

## NOTES

AT ALL FIXED POINTS OF SUPPORT, NUTS FOR ANCHOR BOLTS ARE TO BE TIGHTENED FINGER TIGHT AND THEN BACKED OFF ½ TURN. THE THREAD OF THE NUT AND BOLT SHALL THEN BE BURRED WITH A SHARP POINTED TOOL.

STEEL SOLE PLATES, ANCHOR BOLTS, NUTS, AND WASHERS SHALL BE GALVANIZED IN ACCORDANCE WITH THE STANDARD SPECIFICATIONS.

PRIOR TO WELDING, GRIND THE GALVANIZED SURFACE OF THE PORTION OF THE EMBEDDED PLATE AND SOLE PLATE THAT ARE TO BE WELDED. AFTER WELDING, DAMAGED GALVANIZED SURFACES SHALL BE REPAIRED IN ACCORDANCE WITH THE STANDARD SPECIFICATIONS.

WHEN WELDING THE SOLE PLATE TO THE EMBEDDED PLATE IN THE GIRDER, USE TEMPERATURE INDICATING WAX PENS, OR OTHER SUITABLE MEANS, TO ENSURE THAT THE TEMPERATURE OF THE SOLE PLATE DOES NOT EXCEED 149°C. TEMPERATURES ABOVE THIS MAY DAMAGE THE ELASTOMER.

SOLE PLATE "P", BOLTS, NUTS AND WASHERS SHALL BE INCLUDED IN THE PAY ITEM FOR PRESTRESSED CONCRETE GIRDERS.

ANCHOR BOLTS SHALL MEET THE REQUIREMENTS OF ASTM A449. NUTS SHALL MEET THE REQUIREMENTS OF AASHTO M291M-12 OR AASHTO M292M-2H. WASHERS SHALL MEET THE REQUIREMENTS OF AASHTO M293M. SHOP DRAWINGS ARE NOT REQUIRED FOR ANCHOR BOLTS, NUTS AND WASHERS. SHOP INSPECTION IS REQUIRED.

ALL SURFACES OF BEARING PLATES SHALL BE SMOOTH AND STRAIGHT.

ALL BEARING PLATES SHALL BE AASHTO M270 GRADE 250.

**ELASTOMER IN ALL BEARINGS SHALL BE 60 DUROMETER HARDNESS.**

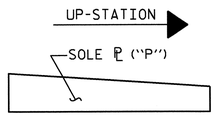


## SOLE ℄ PLACEMENT DETAIL

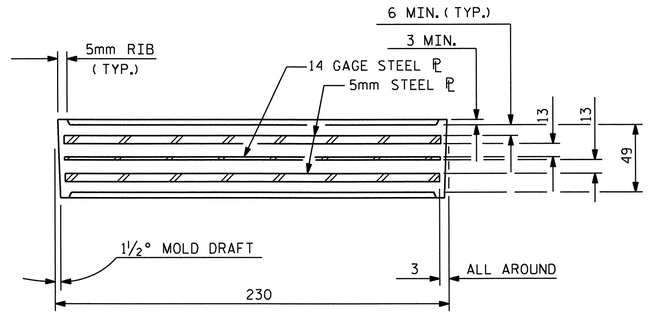


TYPICAL SECTION OF ELASTOMERIC BEARINGS

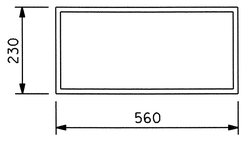


E3 (40 REQ'D)

PLAN VIEW OF ELASTOMERIC BEARING

## TYPE IV

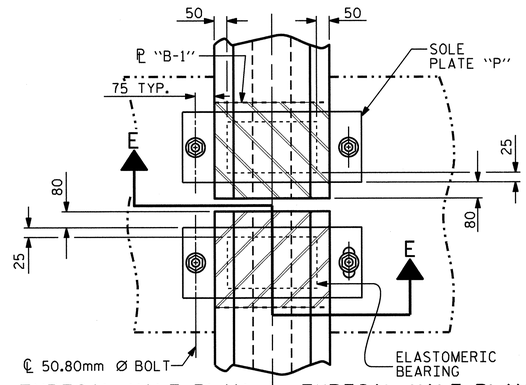


TYPICAL HALF-PLAN (SHOWING CONTINUOUS BENT)

TYPICAL HALF-PLAN (SHOWING SIMPLE SPAN BENT)

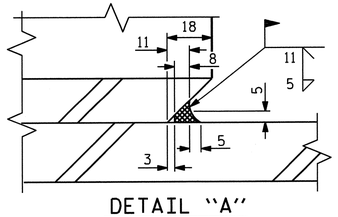


DETAIL "A"

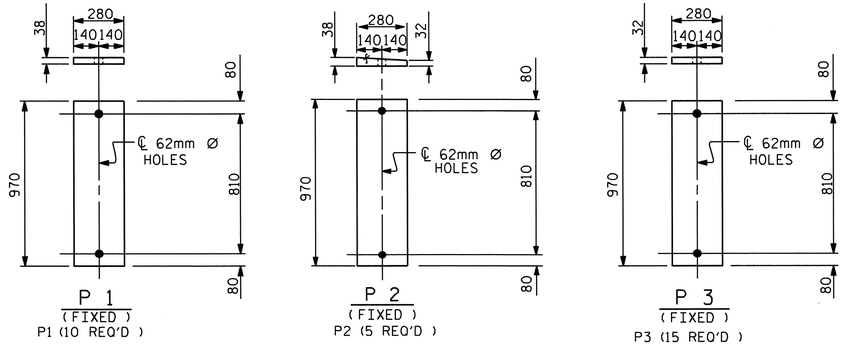


## SOLE PLATE DETAILS ("P")

| — LOAD RATINGS — | |
|---|---|
| | MAX.D.L.+L.L. |
| 1372mm PCG -TYPE IV | 888 kN |

PROJECT NO. R-2413C

GUILFORD-ROCKINGHAM COUNTY

STATION: 24+37.000 -LREV-

STATE OF NORTH CAROLINA
DEPARTMENT OF TRANSPORTATION
RALEIGH

# STANDARD ELASTOMERIC BEARING DETAILS

PRESTRESSED CONCRETE GIRDER SUPERSTRUCTURE (LEFT LANE)

NORTH CAROLINA PROFESSIONAL SEAL 022516 ENGINEER EMILY E. McGRAY
10/28/11

| REVISIONS | | | | | | | SHEET NO. |
|---|---|---|---|---|---|---|---|
| NO. | BY: | DATE: | NO. | BY: | DATE: | | S-49 |
| 1 | | | 3 | | | | TOTAL SHEETS |
| 2 | | | 4 | | | | 238 |

| | | | |
|---|---|---|---|
| ASSEMBLED BY : M.GUDLAUGSSON | DATE : 10-1-10 | | |
| CHECKED BY : T.L. AVERETTE | DATE : 12-9-10 | | |
| DRAWN BY : WJH 8/89 | REV. 10/17/00 | RWW/LES | |
| CHECKED BY : CRK 8/89 | REV. 7/10/01 | RWW/LES | |
| | REV. 5/1/06 | TLA/GM | |

19-OCT-2011 14:05
R:\TIPProjects-R\R2413c\Structures\Final Plans\Str.#2\R-2413C_SD_BG_02.dgn
taverette

STR#2

STD. NO. EB3SM

## NOTES

BARRIER RAIL IN A CONTINUOUS UNIT SHALL NOT BE CAST UNTIL ALL SLAB CONCRETE IN THE UNIT HAS BEEN CAST AND HAS REACHED A MINIMUM COMPRESSIVE STRENGTH OF 20.7 MPa.

ALL REINFORCING STEEL IN BARRIER RAILS SHALL BE EPOXY COATED.

GROOVED CONTRACTION JOINTS, 12mm IN DEPTH, SHALL BE TOOLED IN ALL EXPOSED FACES OF THE BARRIER RAIL AND IN ACCORDANCE WITH ARTICLE 825-10(B) OF THE STANDARD SPECIFICATIONS. THE CONTRACTION JOINT SHALL BE LOCATED AT EACH THIRD POINT BETWEEN BARRIER RAIL EXPANSION JOINTS. ONLY ONE CONTRACTION JOINT IS REQUIRED AT MIDPOINT OF BARRIER RAIL SEGMENTS LESS THAN 6.1m IN LENGTH AND NO CONTRACTION JOINTS ARE REQUIRED FOR THOSE SEGMENTS LESS THAN 3.5m IN LENGTH.

## BAR TYPES

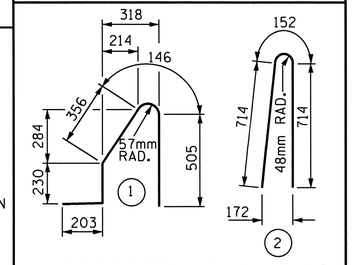


ALL BAR DIMENSIONS ARE OUT TO OUT

## BILL OF MATERIAL

FOR CONCRETE BARRIER RAIL ONLY

| BAR | NO. | SIZE | TYPE | LENGTH | WEIGHT |
|---|---|---|---|---|---|
| * B1 | 32 | #16 | STR | 3160 | 157 |
| * B2 | 96 | #16 | STR | 7120 | 1061 |
| * B3 | 80 | #16 | STR | 6880 | 854 |
| * B4 | 32 | #16 | STR | 3920 | 195 |
| | | | | | |
| * S1 | 604 | #16 | 1 | 1440 | 1350 |
| * S2 | 604 | #16 | 2 | 1580 | 1481 |
| | | | | | |

* EPOXY COATED REINFORCING STEEL 5098 kg.

CLASS AA CONCRETE 45.5 CU. METERS

CONCRETE BARRIER RAIL 180.936 METERS

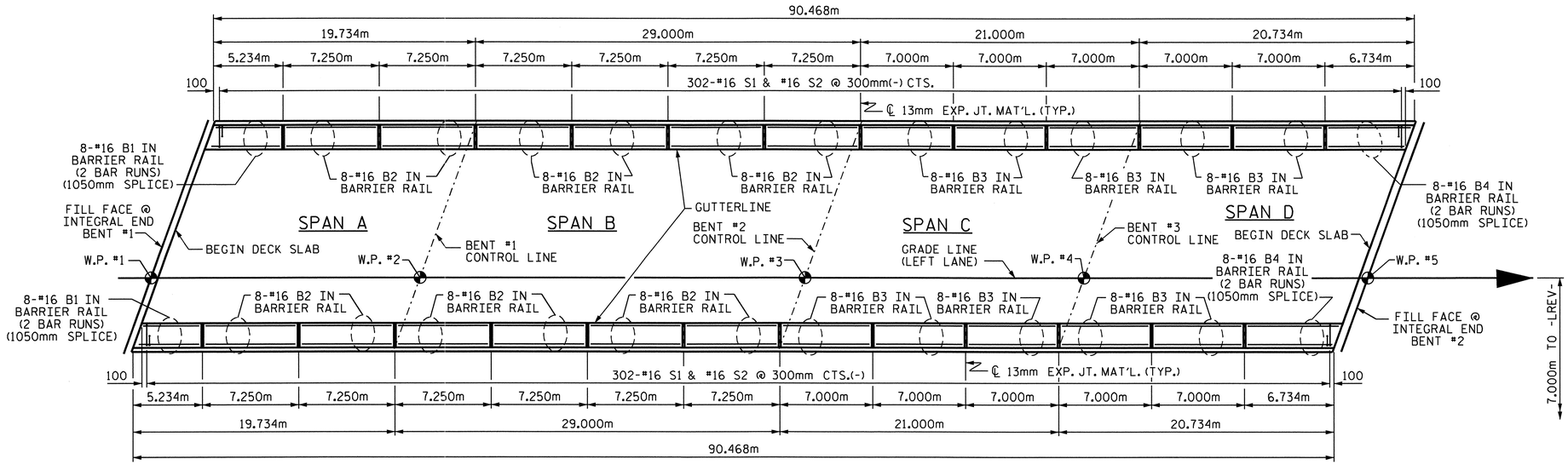


## PLAN OF BARRIER RAIL

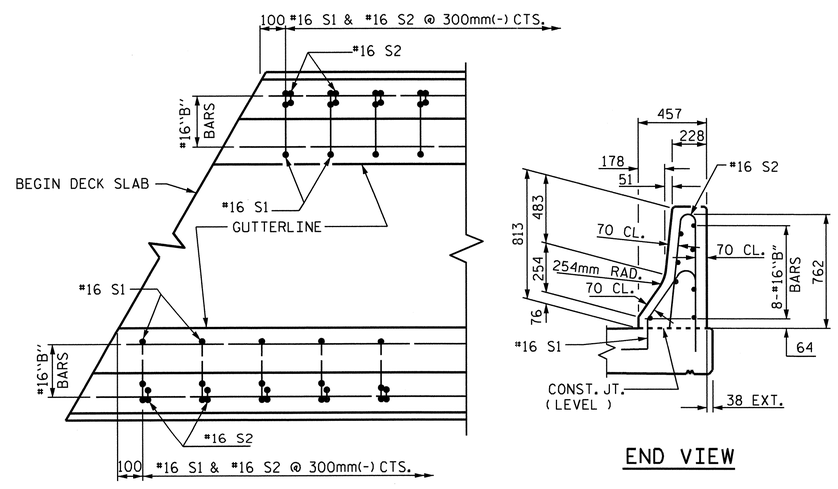


PLAN

END VIEW

## END OF RAIL DETAILS

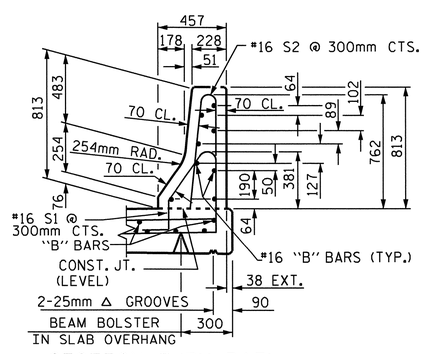


SECTION THRU RAIL

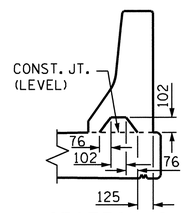


SECTION S-S

AT DAM IN OPEN JOINT
( THIS IS TO BE USED ONLY WHEN SLIP FORM IS USED )

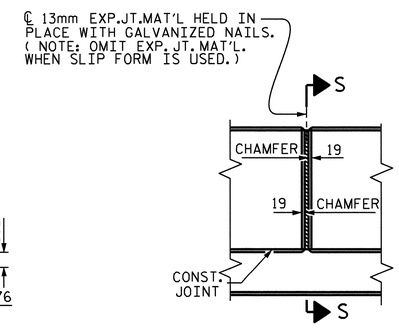


ELEVATION AT EXPANSION JOINTS

## BARRIER RAIL DETAILS

PROJECT NO. R-2413C

GUILFORD-ROCKINGHAM COUNTY

STATION: 24+37.000 -LREV-

STATE OF NORTH CAROLINA
DEPARTMENT OF TRANSPORTATION
RALEIGH

STANDARD
CONCRETE BARRIER RAIL
(LEFT LANE)

NORTH CAROLINA PROFESSIONAL SEAL 022516 ENGINEER EMILY E. MURRAY
12/28/11

| REVISIONS | | | | | | | SHEET NO. |
|---|---|---|---|---|---|---|---|
| NO. | BY: | DATE: | NO. | BY: | DATE: | | S-50 |
| 1 | | | 3 | | | | TOTAL SHEETS |
| 2 | | | 4 | | | | 238 |

ASSEMBLED BY : M.GUDLAUGSSON DATE : 10-6-10
CHECKED BY : T.L. AVERETTE DATE : 12-9-10

DRAWN BY : ARB 5/87
CHECKED BY : SJD 9/87

REV. 10/17/00 RWW/LES
REV. 5/7/03R RWW/JTE
REV. 5/1/06 TLA/GM

05-SEP-2011 11:07
Y:\Structures\Final Plans\Str.#2\R-2413C_SD_BR_02.dgn
mgudlaugsson

STR. #2

STD. No. CBR1SM

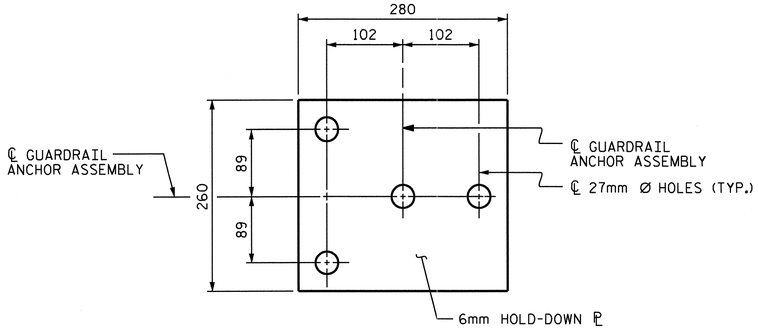


PLAN

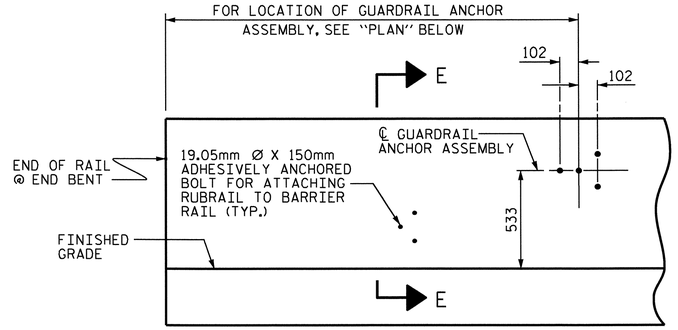


ELEVATION

FOR LOCATION OF RUBRAIL, SEE ROADWAY STD. 862.03

## NOTES

THE GUARDRAIL ANCHOR ASSEMBLY SHALL CONSIST OF A 6mm HOLD DOWN PLATE AND 4 - 22.23mm Ø BOLTS WITH NUTS AND WASHERS, RUBRAIL, AND ADHESIVELY ANCHORED BOLTS.

THE HOLD-DOWN PLATE SHALL CONFORM TO AASHTO M270 GRADE 36. AFTER FABRICATION, THE HOLD-DOWN PLATE SHALL BE HOT-DIP GALVANIZED IN ACCORDANCE WITH AASHTO M111.

BOLTS SHALL CONFORM TO THE REQUIREMENTS OF ASTM A307 AND NUTS SHALL CONFORM TO THE REQUIREMENTS OF AASHTO M291. BOLTS, NUTS AND WASHERS SHALL BE GALVANIZED. (AT THE CONTRACTOR'S OPTION, STAINLESS STEEL BOLTS, NUTS AND WASHERS MAY BE USED AS AN ALTERNATE FOR THE 22.23mm Ø GALVANIZED BOLTS, NUTS AND WASHERS. THEY SHALL CONFORM TO OR EXCEED THE MECHANICAL REQUIREMENTS OF ASTM A307. THE USE OF THIS ALTERNATE SHALL BE APPROVED BY THE ENGINEER.)

THE GUARDRAIL ANCHOR ASSEMBLY IS REQUIRED AT ALL POINTS WHERE APPROACH GUARDRAIL IS TO BE ATTACHED TO THE END OF BARRIER RAIL. FOR POINTS OF ATTACHMENT, SEE SKETCH.

AFTER INSTALLATION, THE EXPOSED THREAD OF THE BOLT SHALL BE BURRED WITH A SHARP POINTED TOOL.

THE COST OF THE GUARDRAIL ANCHOR ASSEMBLY SHALL BE INCLUDED IN THE UNIT CONTRACT PRICE BID FOR CONCRETE BARRIER RAIL.

THE 32mm Ø HOLES SHALL BE FORMED OR DRILLED WITH A CORE BIT. IMPACT TOOLS WILL NOT BE PERMITTED. ANY CONCRETE DAMAGED BY THIS WORK SHALL BE REPAIRED TO THE SATISFACTION OF THE ENGINEER.

THE C150 X 12 RUBRAIL IS TO BE ADHESIVELY ANCHORED TO THE RAIL USING THREE 19.05mm Ø X 150mm BOLTS WITH WASHERS. LEVEL ONE FIELD TESTING IS REQUIRED, AND THE YIELD LOAD OF THE 19.05mm Ø BOLTS IS 53.4kN. FOR ADHESIVELY ANCHORED ANCHOR BOLTS OR DOWELS, SEE SPECIAL PROVISIONS. SEE ROADWAY STANDARD 862.03 FOR DETAILS AND LOCATION OF THE RUBRAIL.

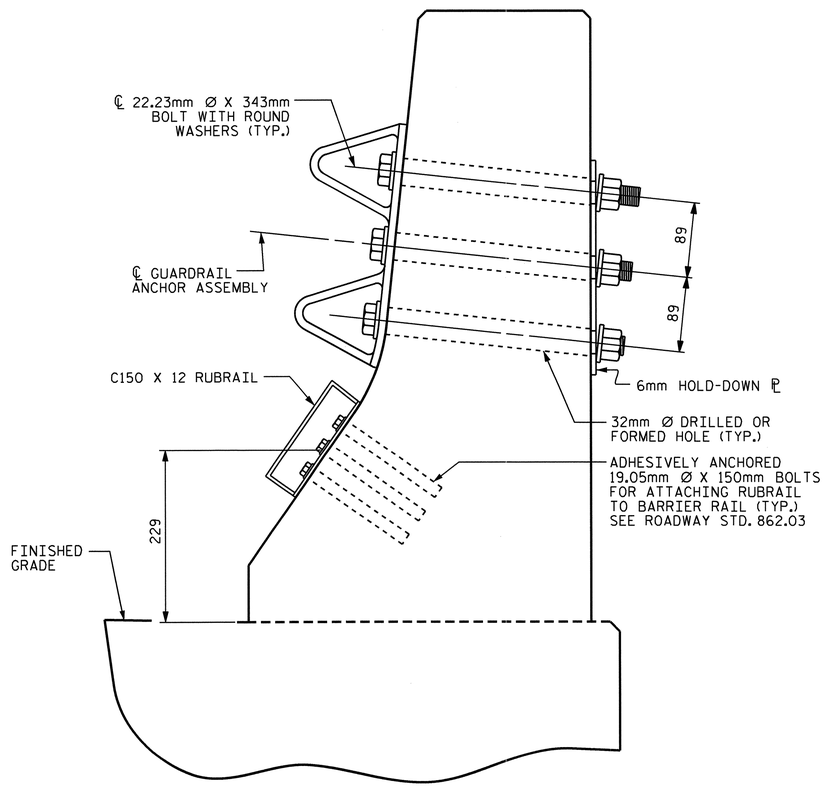


SECTION E-E

## GUARDRAIL ANCHOR ASSEMBLY DETAILS

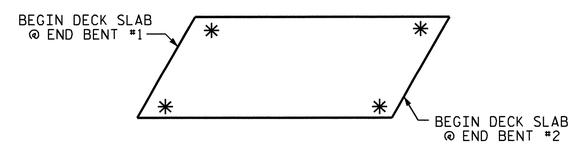


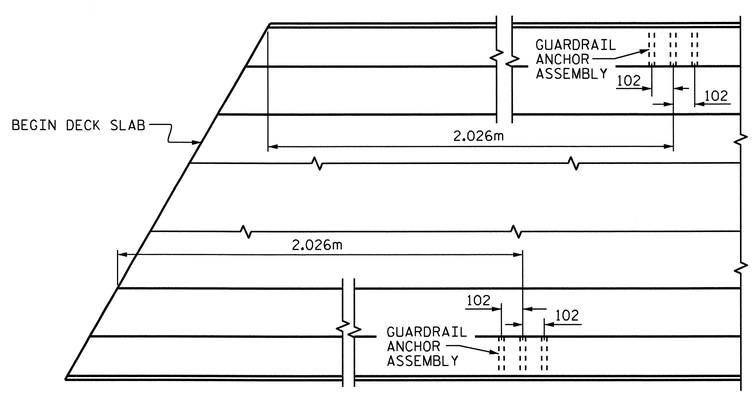


PLAN

## LOCATION OF ANCHORS FOR GUARDRAIL

END BENT #1 SHOWN, END BENT #2 SIMILAR

PROJECT NO. R-2413C

GUILFORD-ROCKINGHAM COUNTY

STATION: 24+37.000 -LREV-

STATE OF NORTH CAROLINA
DEPARTMENT OF TRANSPORTATION
RALEIGH

STANDARD

GUARDRAIL ANCHORAGE FOR BARRIER RAIL (LEFT LANE)

NORTH CAROLINA PROFESSIONAL SEAL 022516 ENGINEER EMILY E. MURRAY
10/28/11

| REVISIONS | | | | | | SHEET NO. |
|---|---|---|---|---|---|---|
| NO. | BY: | DATE: | NO. | BY: | DATE: | S-51 |
| 1 | | | 3 | | | TOTAL SHEETS |
| 2 | | | 4 | | | 238 |

STR. #2

STD. NO. GRA2

ASSEMBLED BY : M.GUDLAUGSSON DATE : 9-14-10
CHECKED BY : T.L. AVERETTE DATE : 12-9-10
DRAWN BY : TLA 5/06
CHECKED BY : GM 5/06
ADDED 5/1/06R KMM/GM

05-SEP-2011 11:07
Y:\Structures\Final Plans\Str.#2\R-2413C_SD_BR_02.dgn
mgudlaugsson

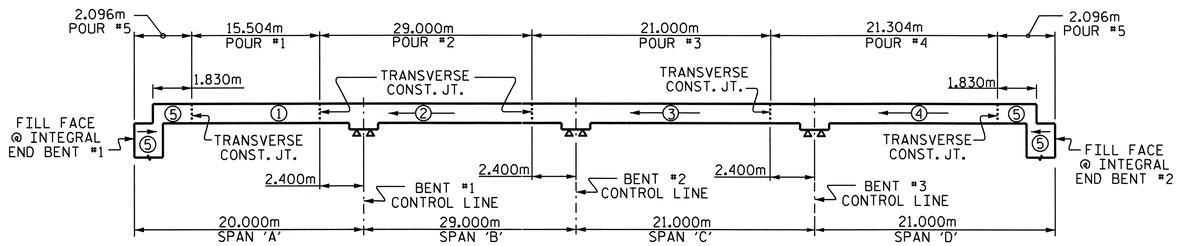


## POURING SEQUENCE

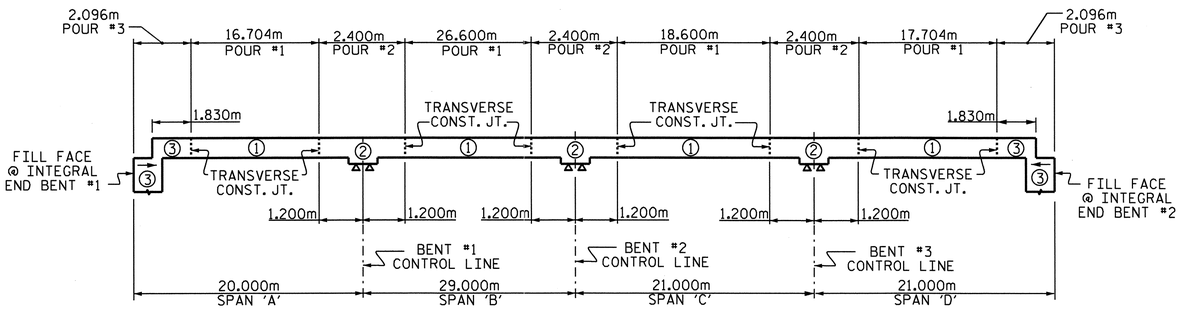


## OPTIONAL POURING SEQUENCE

POUR (2) CAN NOT BE STARTED UNTIL BOTH ADJACENT (1) POURS REACH A MINIMUM OF 20.7MPa.

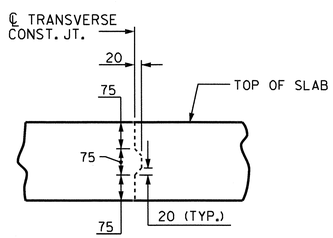


## TRANSVERSE CONSTRUCTION JOINT DETAIL

NOTE: REINFORCING STEEL IN SLAB NOT SHOWN.
LONGITUDINAL REINFORCING STEEL SHALL BE CONTINUOUS THRU JOINT

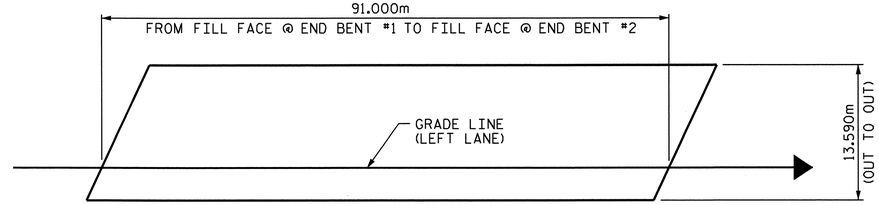


## LAYOUT FOR COMPUTING AREA OF REINFORCED CONCRETE DECK SLAB (1236.7 SQ. METER)

## BILL OF MATERIAL
### SPANS A, B, C & D

| BAR | NO. | SIZE | TYPE | LENGTH | WEIGHT |
|---|---|---|---|---|---|
| ✱ A1 | 535 | #16 | STR | 13480 | 11193 |
| ✱ A101 | 4 | #16 | STR | 12600 | 78 |
| ✱ A102 | 4 | #16 | STR | 11720 | 73 |
| ✱ A103 | 4 | #16 | STR | 10840 | 67 |
| ✱ A104 | 4 | #16 | STR | 9960 | 62 |
| ✱ A105 | 4 | #16 | STR | 9080 | 56 |
| ✱ A106 | 4 | #16 | STR | 8200 | 51 |
| ✱ A107 | 4 | #16 | STR | 7320 | 45 |
| ✱ A108 | 4 | #16 | STR | 6440 | 40 |
| ✱ A109 | 4 | #16 | STR | 5560 | 35 |
| ✱ A110 | 4 | #16 | STR | 4680 | 29 |
| ✱ A111 | 4 | #16 | STR | 3820 | 24 |
| ✱ A112 | 4 | #16 | STR | 2940 | 18 |
| ✱ A113 | 4 | #16 | STR | 2060 | 13 |
| ✱ A114 | 4 | #16 | STR | 1180 | 7 |
| ✱ A115 | 4 | #16 | STR | 460 | 3 |
| | | | | | |
| A2 | 535 | #16 | STR | 13480 | 11193 |
| A201 | 4 | #16 | STR | 12600 | 78 |
| A202 | 4 | #16 | STR | 11720 | 73 |
| A203 | 4 | #16 | STR | 10840 | 67 |
| A204 | 4 | #16 | STR | 9960 | 62 |
| A205 | 4 | #16 | STR | 9080 | 56 |
| A206 | 4 | #16 | STR | 8200 | 51 |
| A207 | 4 | #16 | STR | 7320 | 45 |
| A208 | 4 | #16 | STR | 6440 | 40 |
| A209 | 4 | #16 | STR | 5560 | 35 |
| A210 | 4 | #16 | STR | 4680 | 29 |
| A211 | 4 | #16 | STR | 3820 | 24 |
| A212 | 4 | #16 | STR | 2940 | 18 |
| A213 | 4 | #16 | STR | 2060 | 13 |
| A214 | 4 | #16 | STR | 1180 | 7 |
| A215 | 4 | #16 | STR | 460 | 3 |

## BILL OF MATERIAL
### SPANS A, B, C & D

| BAR | NO. | SIZE | TYPE | LENGTH | WEIGHT |
|---|---|---|---|---|---|
| ✱ B1 | 32 | #13 | STR | 8960 | 285 |
| ✱ B2 | 122 | #22 | STR | 4200 | 1559 |
| ✱ B3 | 64 | #22 | STR | 18000 | 3504 |
| ✱ B4 | 58 | #22 | STR | 7500 | 1323 |
| ✱ B5 | 64 | #13 | STR | 5220 | 332 |
| ✱ B6 | 32 | #13 | STR | 6620 | 211 |
| ✱ B7 | 32 | #22 | STR | 15600 | 1519 |
| ✱ B8 | 29 | #22 | STR | 6300 | 556 |
| ✱ B9 | 64 | #13 | STR | 5300 | 337 |
| B10 | 336 | #16 | STR | 15620 | 8145 |
| | | | | | |
| ✱ S1 | 72 | #13 | 1 | 3560 | 255 |
| ✱ S2 | 72 | #13 | 1 | 3320 | 238 |
| S3 | 360 | #13 | 4 | 860 | 308 |
| | | | | | |
| K1 | 20 | #13 | STR | 8520 | 169 |
| K2 | 32 | #13 | STR | 2380 | 76 |
| K3 | 64 | #13 | STR | 2720 | 173 |
| K4 | 32 | #13 | STR | 2520 | 80 |
| K5 | 8 | #13 | STR | 2220 | 18 |
| K6 | 8 | #13 | STR | 960 | 8 |
| K7 | 4 | #13 | STR | 1840 | 7 |
| K8 | 8 | #13 | STR | 2000 | 16 |
| K9 | 4 | #13 | STR | 1920 | 8 |
| K10 | 4 | #13 | STR | 1760 | 7 |
| K11 | 45 | #13 | 2 | 3660 | 164 |
| K12 | 30 | #13 | 3 | 1840 | 55 |
| K13 | 24 | #13 | STR | 1940 | 46 |
| | | | | | |
| ✱ U1 | 72 | #13 | 5 | 4660 | 334 |
| ✱ U2 | 24 | #13 | 5 | 4060 | 97 |
| U3 | 76 | #13 | 6 | 3600 | 272 |
| U4 | 16 | #13 | 6 | 4360 | 69 |
| | | | | | |
| V1 | 10 | #13 | STR | 1240 | 12 |

REINFORCING STEEL = 21427 kg
✱EPOXY COATED REINFORCING STEEL = 22344 kg

## BAR TYPES

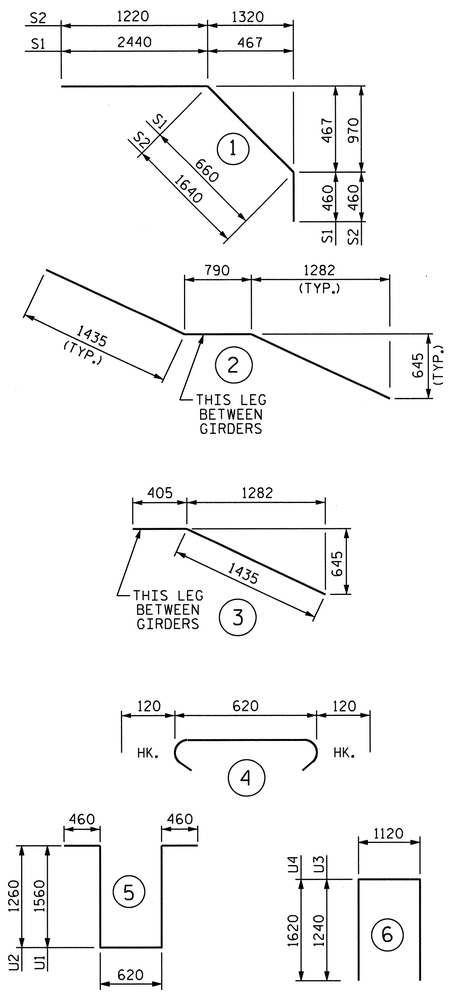


ALL BAR DIMENSIONS ARE OUT TO OUT.

PROJECT NO. R-2413C
GUILFORD-ROCKINGHAM COUNTY
STATION: 24+37.000 -LREV-

## GROOVING BRIDGE FLOORS

| | | |
|---|---|---|
| BRIDGE DECK | 1056.7 | SQ.METER |
| APPROACH SLABS | 178.0 | SQ.METER |
| TOTAL | 1234.7 | SQ.METER |

## SUPERSTRUCTURE REINFORCING STEEL LENGTHS ARE BASED ON THE FOLLOWING MINIMUM SPLICE LENGTHS

| BAR SIZE | SUPERSTRUCTURE EXCEPT APPROACH SLABS, PARAPET, AND BARRIER RAIL | | APPROACH SLABS | | PARAPET AND BARRIER RAIL |
|---|---|---|---|---|---|
| | EPOXY COATED | UNCOATED | EPOXY COATED | UNCOATED | |
| #13 | 610 | 540 | 610 | 540 | 840 |
| #16 | 770 | 660 | 770 | 660 | 1050 |
| #19 | 920 | 790 | 1190 | 790 | 1330 |
| #22 | 1580 | 1060 | | | |
| #25 | 2080 | 1390 | | | |

## SUPERSTRUCTURE BILL OF MATERIAL

| | CLASS AA CONCRETE | | REINFORCING STEEL | EPOXY COATED REINFORCING STEEL |
|---|---|---|---|---|
| | ( CU. METER ) | | ( kg ) | ( kg ) |
| SPAN A, B, C, AND D. | POUR 1 | 60.5 | | |
| | POUR 2 | 124.9 | | |
| | POUR 3 | 93.7 | | |
| | POUR 4 | 94.9 | | |
| | ● POUR 5 | 75.5 | 21427 | 22344 |
| TOTALS ✱✱ | 449.5 | | 21427 | 22344 |

✱✱ QUANTITIES FOR BARRIER RAIL ARE NOT INCLUDED
● POUR 5 QUANTITY INCLUDES UPPER POUR OF WINGS & INTEGRAL END BENT.

NORTH CAROLINA PROFESSIONAL SEAL 022516 ENGINEER EMILY E. MURRAY
10/28/11

STATE OF NORTH CAROLINA
DEPARTMENT OF TRANSPORTATION
RALEIGH
STANDARD
SUPERSTRUCTURE BILL OF MATERIAL
(LEFT LANE)

| REVISIONS | | | | | | SHEET NO. |
|---|---|---|---|---|---|---|
| NO. | BY: | DATE: | NO. | BY: | DATE: | S-52 |
| 1 | | | 3 | | | TOTAL SHEETS |
| 2 | | | 4 | | | 238 |

ASSEMBLED BY : M.GUDLAUGSSON DATE : 9-7-10
CHECKED BY : T.L. AVERETTE DATE : 12-9-10
DRAWN BY : JMB 5/87 REV. 5/16/97 EEM/RGW
CHECKED BY : SJD 9/87 REV. 5/11/06 TLA/GM

19-OCT-2011 14:06
R:\TIPProjects-R\R2413c\Structures\FinalPlans\Str.#2\R-2413C_SD_BM_02.dgn
taverette

STR. #2

STD. NO. BOM1SM

## NOTES:

THE CONTRACTOR SHALL PROVIDE FOR INSTALLATION OF THE 102mm DIAMETER DRAIN PIPE THROUGH THE WING WALL AS REQUIRED FOR REINFORCED BRIDGE APPROACH FILLS. SEE THE ROADWAY PLANS. REINFORCING STEEL IN THE WING WALL MAY BE SHIFTED AS NECESSARY TO CLEAR THE DRAIN PIPE.

THE TOP SURFACE OF THE END BENT CAP AND WINGS, EXCLUDING THE OUTSIDE 100mm AND THE BEARING AREA, SHALL BE RAKED TO A DEPTH OF 6mm.

STIRRUPS AND U1 BARS IN CAP MAY BE SHIFTED AS NECESSARY TO CLEAR #13 V1 BARS.

THE CONTRACTOR'S ATTENTION IS CALLED TO THE FACT THAT THE UPPER PART OF INTEGRAL END BENT AND WINGS ARE TO BE POURED WITH THE SUPERSTRUCTURE.

SEE SUPERSTRUCTURE SHEETS FOR UPPER PART OF INTEGRAL END BENT DETAIL.

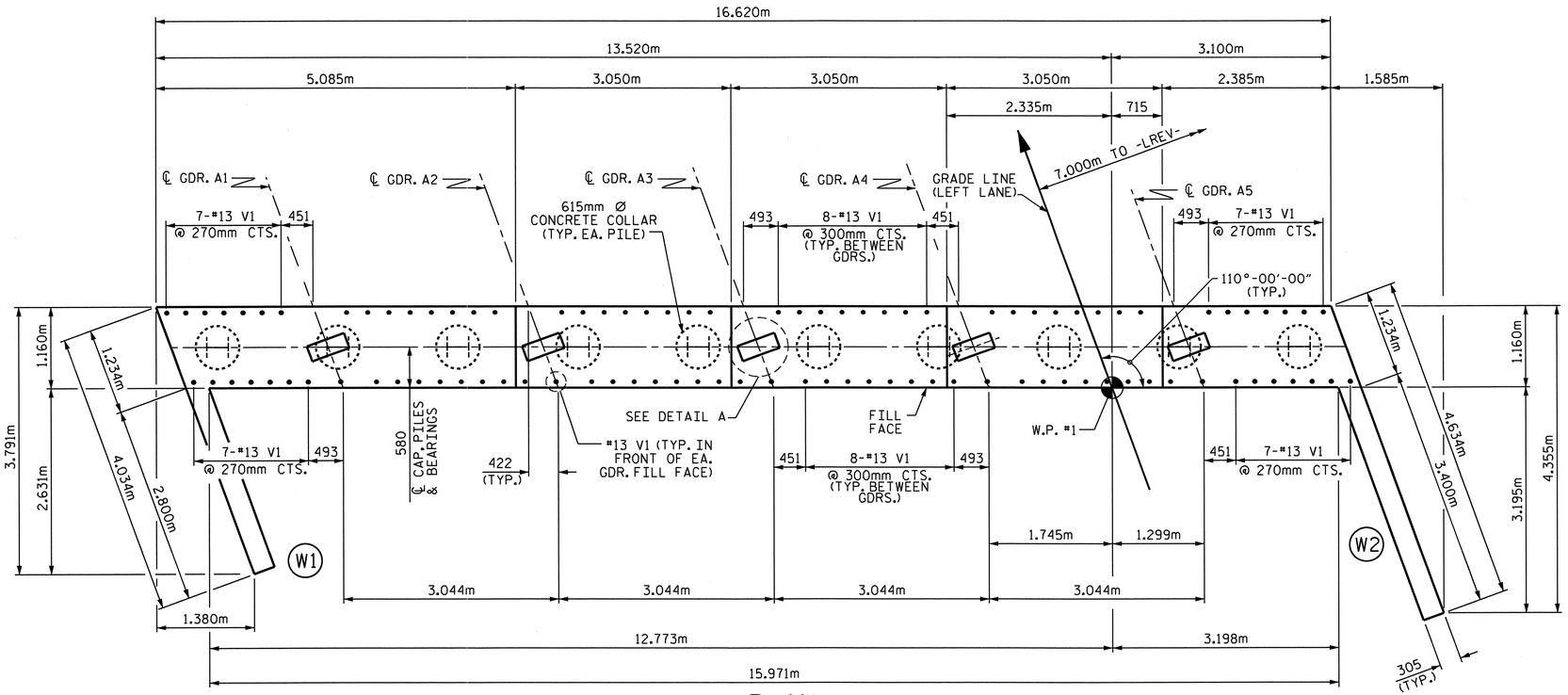


## PLAN

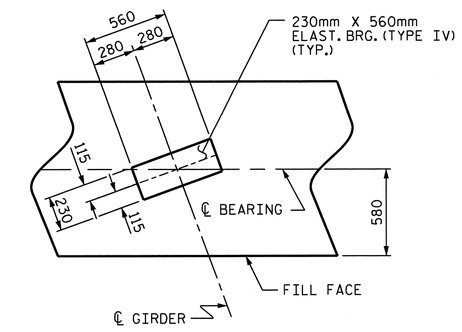


## DETAIL A

(TYP. EA. GDR.)

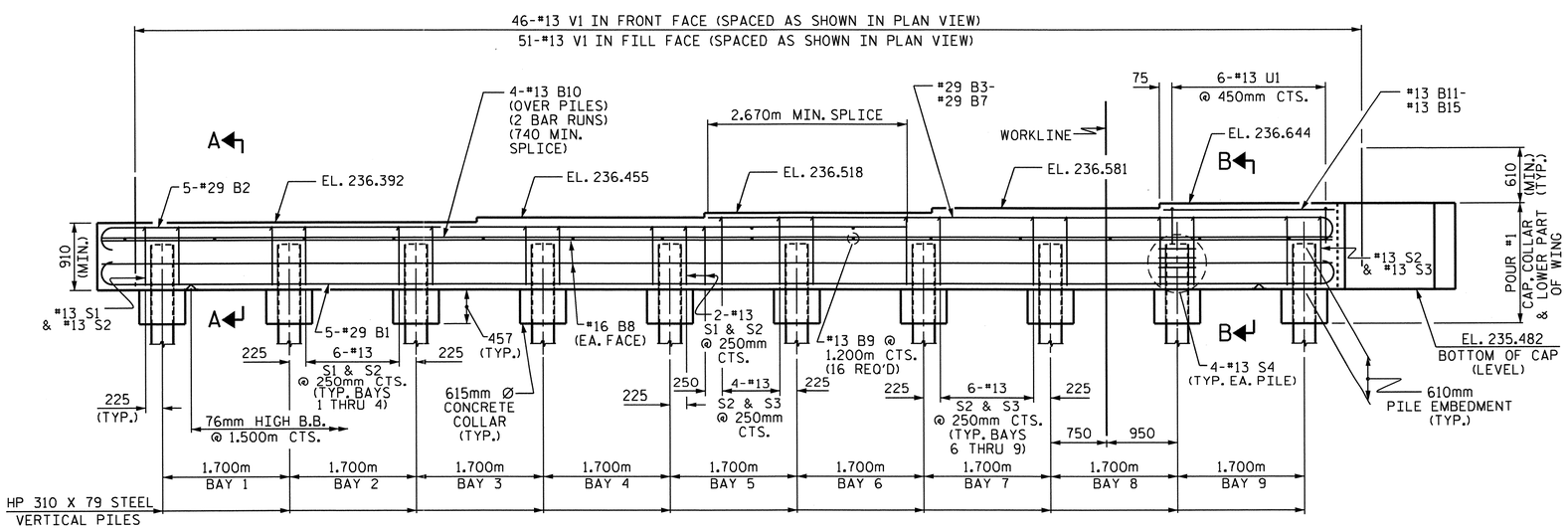


## ELEVATION

PROJECT NO. R-2413C

GUILFORD-ROCKINGHAM COUNTY

STATION: 24+37.000 -LREV-

SHEET 1 OF 3

STATE OF NORTH CAROLINA
DEPARTMENT OF TRANSPORTATION
RALEIGH

SUBSTRUCTURE
INTEGRAL END BENT #1
(LEFT LANE)

NORTH CAROLINA PROFESSIONAL SEAL 022516 ENGINEER EMILY E. McGRADY
10/28/11

| REVISIONS | | | | | | SHEET NO. |
|---|---|---|---|---|---|---|
| NO. | BY: | DATE: | NO. | BY: | DATE: | S-53 |
| 1 | | | 3 | | | TOTAL SHEETS |
| 2 | | | 4 | | | 238 |

DRAWN BY : M.GUDLAUGSSON DATE : 01-19-11
CHECKED BY : T.L. AVERETTE DATE : 04-20-11

19-OCT-2011 14:07
R:\TIPProjects-R\R2413c\Structures\Final Plans\Str.#2\R-2413C_SD_E#_02.dgn
taverette

STR. #2

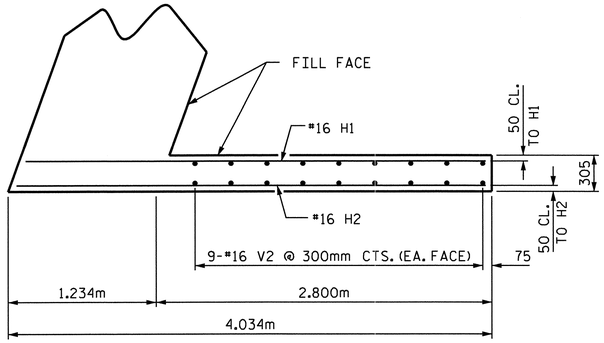


PLAN OF LEFT WING (W1)

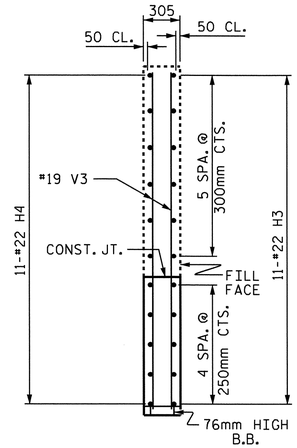


SECTION Y-Y

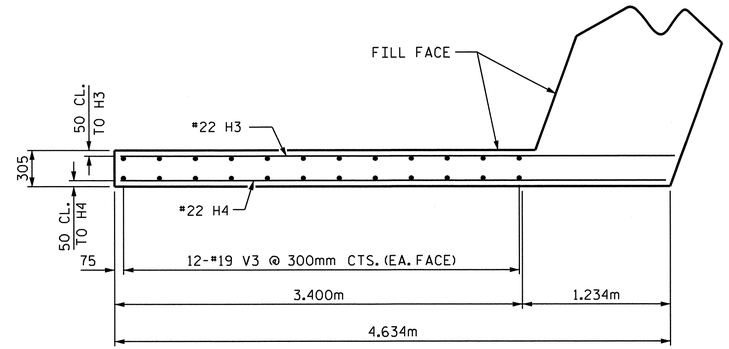


PLAN OF RIGHT WING (W2)

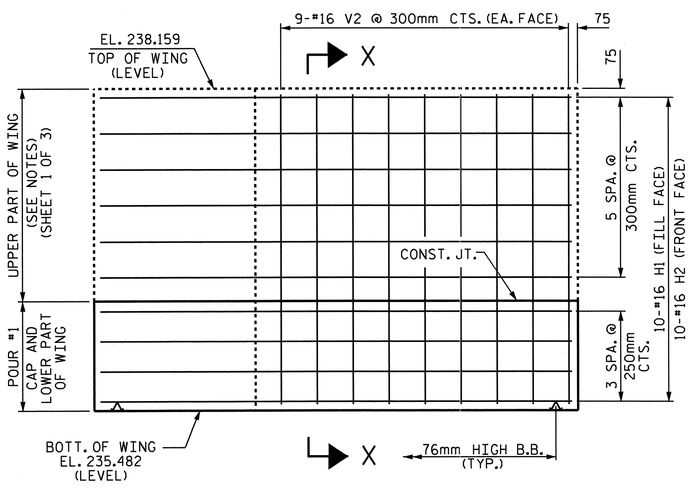


ELEVATION OF LEFT WING (W1)

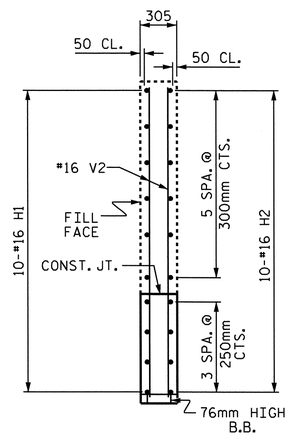


SECTION X-X

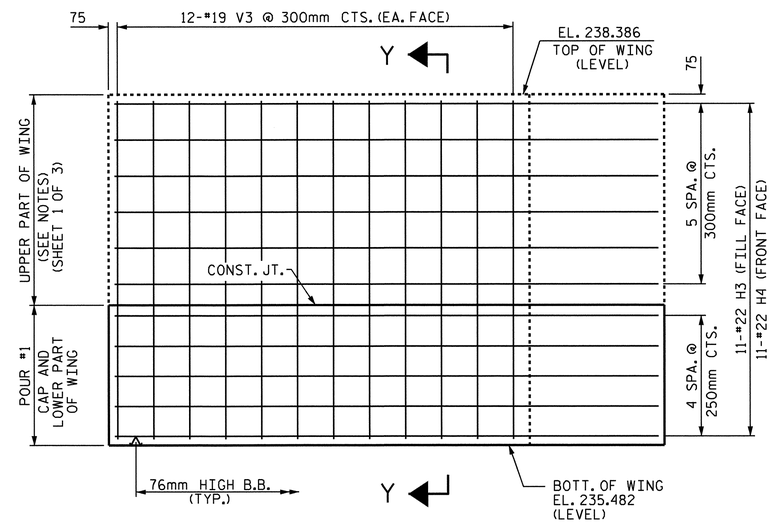


ELEVATION OF RIGHT WING (W2)

PROJECT NO. R-2413C

GUILFORD-ROCKINGHAM COUNTY

STATION: 24+37.000 -LREV-

SHEET 2 OF 3

STATE OF NORTH CAROLINA
DEPARTMENT OF TRANSPORTATION
RALEIGH

SUBSTRUCTURE

INTEGRAL
END BENT #1
(LEFT LANE)

NORTH CAROLINA PROFESSIONAL SEAL 022516 ENGINEER EMILY E. MURRAY
10/28/11

| REVISIONS | | | | | | SHEET NO. |
|---|---|---|---|---|---|---|
| NO. | BY: | DATE: | NO. | BY: | DATE: | S-54 |
| 1 | | | 3 | | | TOTAL SHEETS |
| 2 | | | 4 | | | 238 |

DRAWN BY : M.GUDLAUGSSON DATE : 01-19-11
CHECKED BY : T.L. AVERETTE DATE : 04-20-11

05-SEP-2011 11:10
Y:\Structures\Final Plans\Str.#2\R-2413C_SD_E#_02.dgn
mgudlaugsson

STR. #2

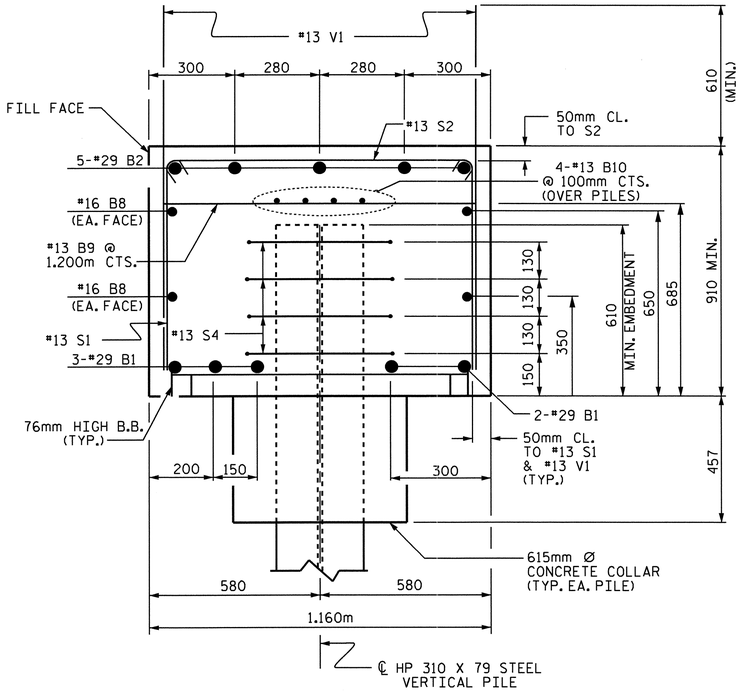


## SECTION A-A

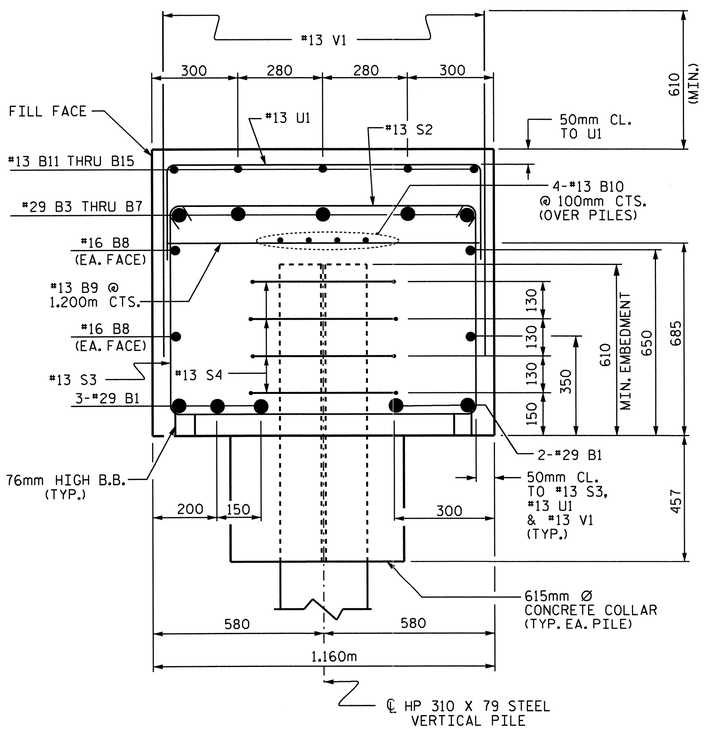


## SECTION B-B

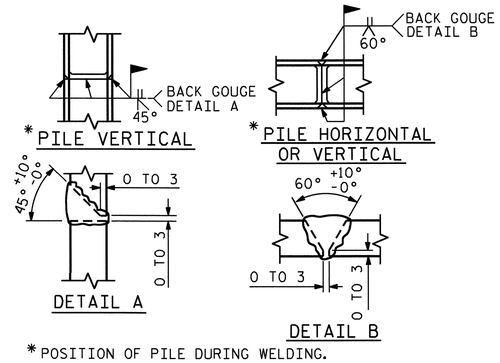


*POSITION OF PILE DURING WELDING.

## PILE SPLICE DETAILS

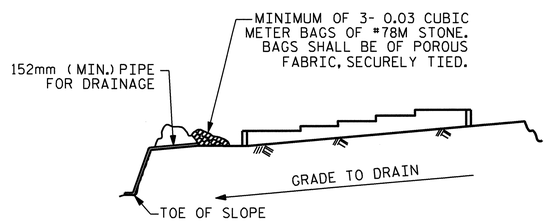


BAGGED STONE AND PIPE SHALL BE PLACED IMMEDIATELY AFTER COMPLETION OF END BENT EXCAVATION. PIPE MAY BE EITHER CONCRETE, CORRUGATED STEEL, CORRUGATED ALUMINUM ALLOY, OR CORRUGATED PLASTIC. PERFORATED PIPE WILL NOT BE ALLOWED.

BAGGED STONE SHALL REMAIN IN PLACE UNTIL THE ENGINEER DIRECTS THAT IT BE REMOVED. THE CONTRACTOR SHALL REMOVE AND DISPOSE OF SILT ACCUMULATIONS AT BAGGED STONE WHEN SO DIRECTED BY THE ENGINEER. BAGS SHALL BE REMOVED AND REPLACED WHENEVER THE ENGINEER DETERMINES THAT THEY HAVE DETERIORATED AND LOST THEIR EFFECTIVENESS.

NO SEPARATE PAYMENT WILL BE MADE FOR THIS WORK AND THE ENTIRE COST OF THIS WORK SHALL BE INCLUDED IN THE UNIT CONTRACT PRICE BID FOR THE SEVERAL PAY ITEMS.

## TEMPORARY DRAINAGE AT END BENT

## BAR TYPES

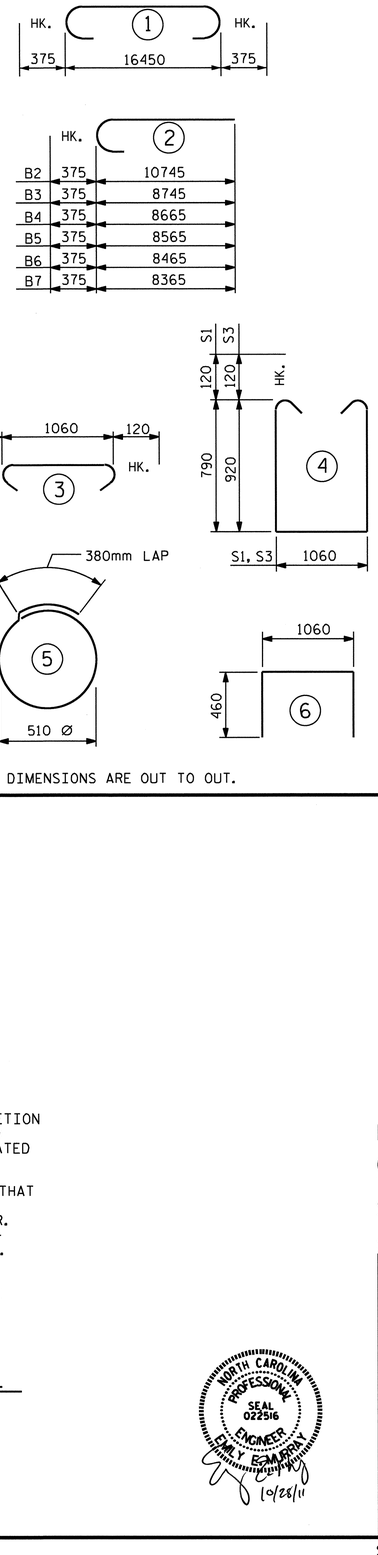


ALL BAR DIMENSIONS ARE OUT TO OUT.

## BILL OF MATERIAL

### END BENT #1

| BAR | NO. | SIZE | TYPE | LENGTH | WEIGHT |
|---|---|---|---|---|---|
| B1 | 5 | #29 | 1 | 17200 | 435 |
| B2 | 5 | #29 | 2 | 11120 | 281 |
| B3 | 1 | #29 | 2 | 9120 | 46 |
| B4 | 1 | #29 | 2 | 9040 | 46 |
| B5 | 1 | #29 | 2 | 8940 | 45 |
| B6 | 1 | #29 | 2 | 8840 | 45 |
| B7 | 1 | #29 | 2 | 8740 | 44 |
| B8 | 4 | #16 | STR | 16500 | 102 |
| B9 | 16 | #13 | STR | 1060 | 17 |
| B10 | 8 | #13 | STR | 8640 | 69 |
| B11 | 1 | #13 | STR | 2660 | 3 |
| B12 | 1 | #13 | STR | 2580 | 3 |
| B13 | 1 | #13 | STR | 2480 | 2 |
| B14 | 1 | #13 | STR | 2380 | 2 |
| B15 | 1 | #13 | STR | 2300 | 2 |
| | | | | | |
| H1 | 10 | #16 | STR | 3840 | 60 |
| H2 | 10 | #16 | STR | 3900 | 61 |
| H3 | 11 | #22 | STR | 4620 | 155 |
| H4 | 11 | #22 | STR | 4540 | 152 |
| | | | | | |
| S1 | 27 | #13 | 4 | 2880 | 77 |
| S2 | 56 | #13 | 3 | 1300 | 72 |
| S3 | 29 | #13 | 4 | 3140 | 91 |
| S4 | 40 | #13 | 5 | 1980 | 79 |
| | | | | | |
| U1 | 6 | #13 | 6 | 1980 | 12 |
| | | | | | |
| V1 | 97 | #13 | STR | 1460 | 141 |
| V2 | 18 | #16 | STR | 2560 | 72 |
| V3 | 24 | #19 | STR | 2800 | 150 |

REINFORCING STEEL = 2264 kg

CLASS A CONCRETE BREAKDOWN

POUR #1: (CAP, CONCRETE COLLAR & LOWER PART OF WINGS) 23.0 m³

TOTAL CONCRETE 23.0 m³

HP 310 X 79 STEEL PILES
NO. 10 144.5 METERS

PROJECT NO. R-2413C
GUILFORD-ROCKINGHAM COUNTY
STATION: 24+37.000 -LREV-

SHEET 3 OF 3

STATE OF NORTH CAROLINA
DEPARTMENT OF TRANSPORTATION
RALEIGH

SUBSTRUCTURE
INTEGRAL END BENT #1
(LEFT LANE)

NORTH CAROLINA PROFESSIONAL SEAL 022516 ENGINEER EMILY B. MARRAN
10/28/11

| REVISIONS | | | | | | SHEET NO. |
|---|---|---|---|---|---|---|
| NO. | BY: | DATE: | NO. | BY: | DATE: | S-55 |
| 1 | | | 3 | | | TOTAL SHEETS |
| 2 | | | 4 | | | 238 |

STR. #2

DRAWN BY : M.GUDLAUGSSON DATE : 01-19-11
CHECKED BY : T.L. AVERETTE DATE : 04-20-11

05-SEP-2011 11:10
Y:\Structures\Final Plans\Str.#2\R-2413C_SD_E*_02.dgn
mgudlaugsson

## NOTES

STIRRUPS AND U1 BARS IN CAP MAY BE SHIFTED AS NECESSARY TO CLEAR ANCHOR BOLTS.

HOOKS ON "V" BARS MAY BE TURNED AS NECESSARY FOR PLACING REINFORCING STEEL.

ALL STEEL IN THE DRILLED PIERS IS INCLUDED IN THE PAY ITEMS FOR "REINFORCING STEEL" AND "SPIRAL COLUMN REINFORCING STEEL".

THE CONTRACTOR'S ATTENTION IS CALLED TO THE FACT THAT THE LONGITUDINAL REINFORCEMENT FOR THE DRILLED PIERS IS DETAILED WITH ONE METER OF EXTRA LENGTH.

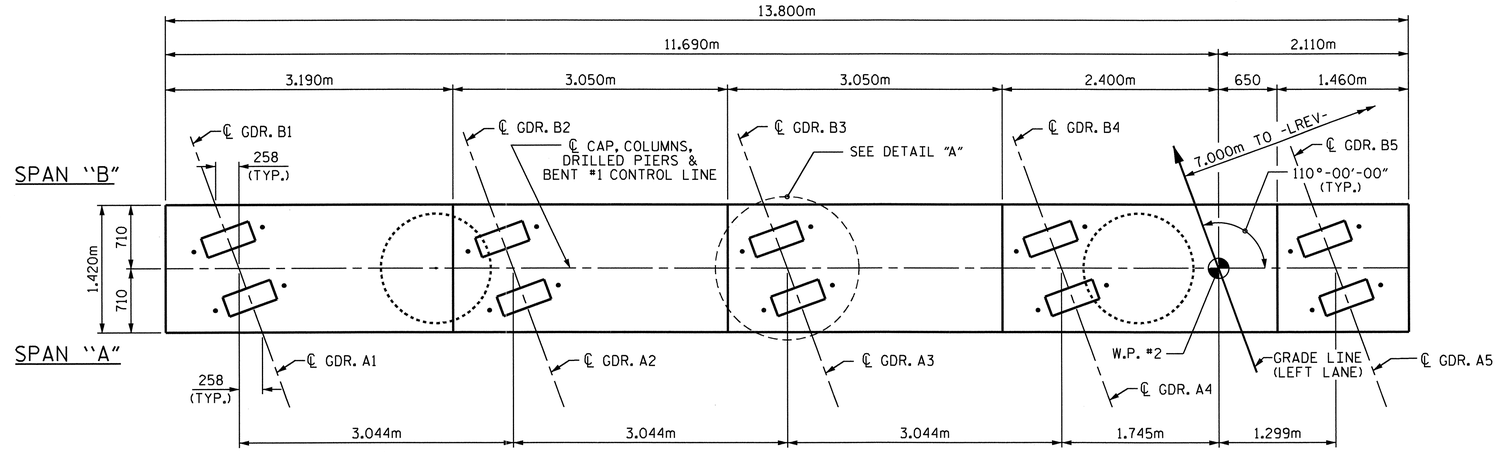


## PLAN

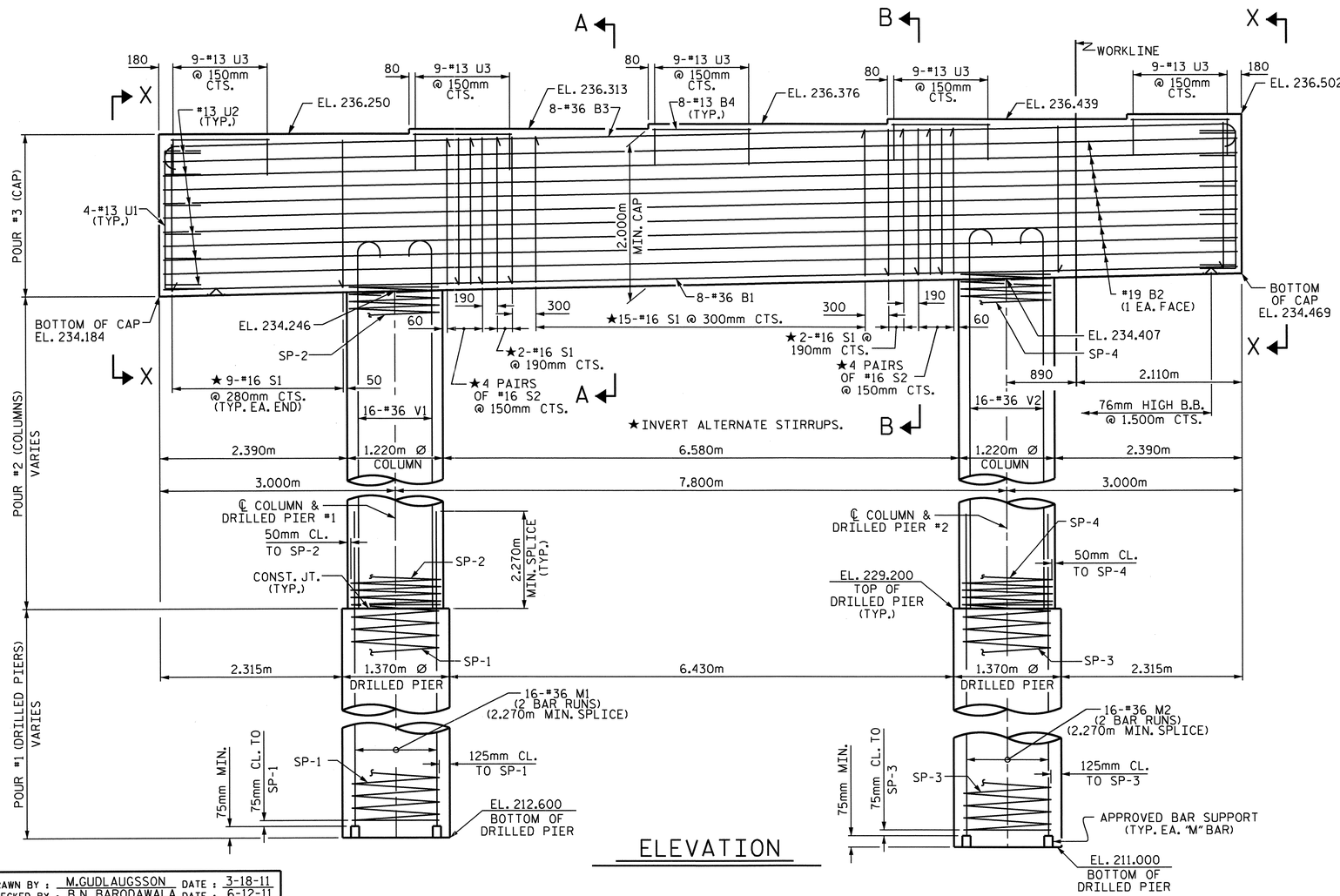


## ELEVATION

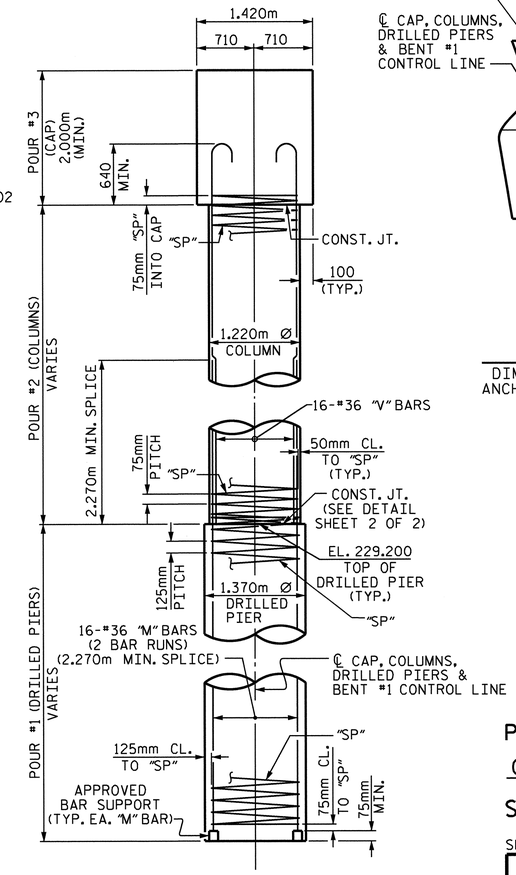


## END ELEVATION

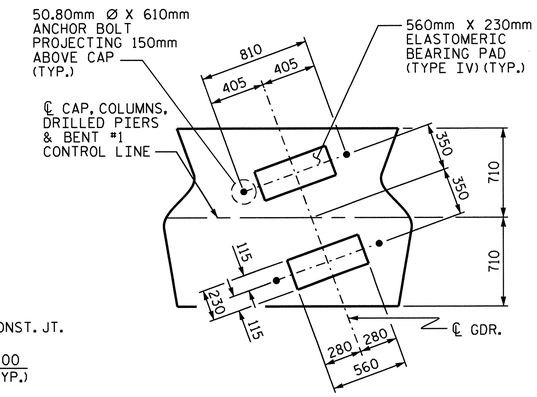


## DETAIL "A"

DIMENSIONS FOR BRG. PADS AND ANCHOR BOLTS ARE TYP. EACH GDR.

PROJECT NO. R-2413C

GUILFORD-ROCKINGHAM COUNTY

STATION: 24+37.000 -LREV-

SHEET 1 OF 2

STATE OF NORTH CAROLINA
DEPARTMENT OF TRANSPORTATION
RALEIGH

SUBSTRUCTURE
BENT #1
(LEFT LANE)

NORTH CAROLINA PROFESSIONAL SEAL 022516 ENGINEER EMILY E. MURRAY

10/28/11

| REVISIONS | | | | | | SHEET NO. |
|---|---|---|---|---|---|---|
| NO. | BY: | DATE: | NO. | BY: | DATE: | S-56 |
| 1 | | | 3 | | | TOTAL SHEETS |
| 2 | | | 4 | | | 238 |

STR. #2

DRAWN BY : M.GUDLAUGSSON DATE : 3-18-11
CHECKED BY : B.N. BARODAWALA DATE : 6-12-11

19-OCT-2011 14:10
R:\TIPProjects-R\R2413c\Structures\FinalPlans\Str.#2\R-2413C_SD_B#_02.dgn
taverette

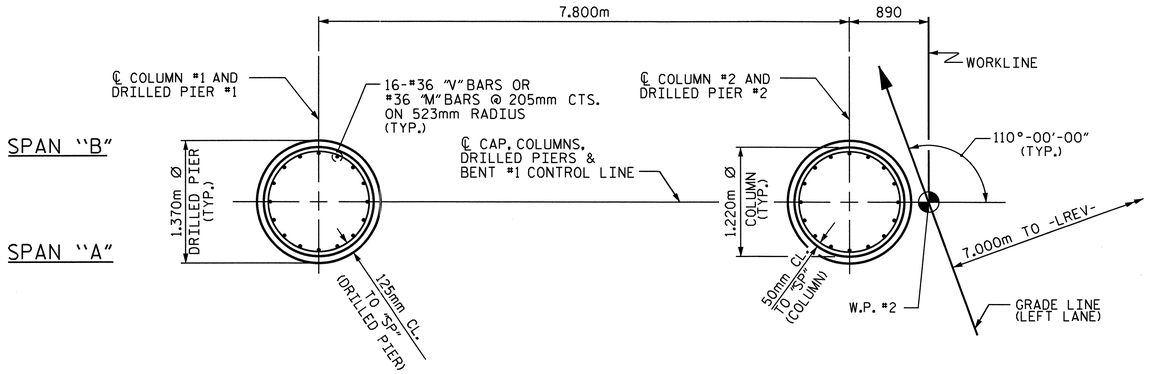


## PLAN OF COLUMNS AND DRILLED PIERS

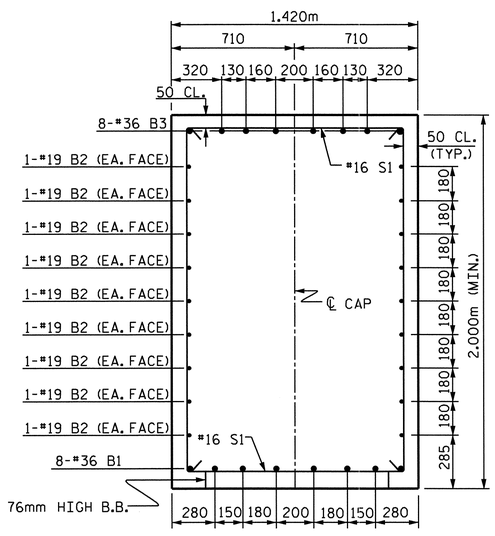


## SECTION A-A

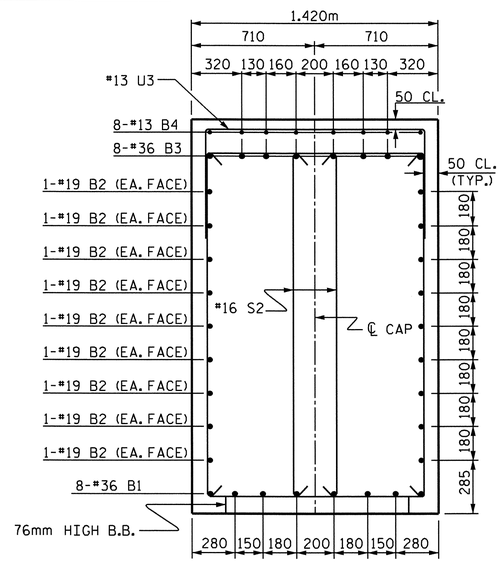


## SECTION B-B

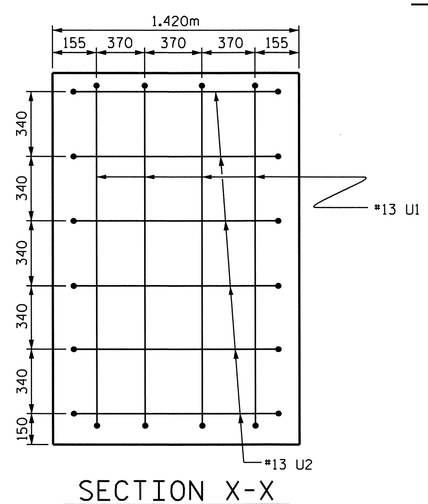


## SECTION X-X

## BAR TYPES

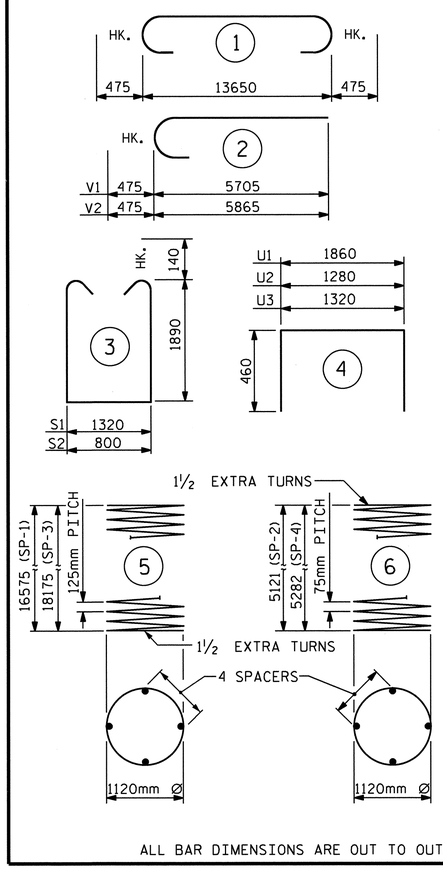


ALL BAR DIMENSIONS ARE OUT TO OUT.

## BILL OF MATERIAL

### BENT #1

| BAR | NO. | SIZE | TYPE | LENGTH | WEIGHT |
|---|---|---|---|---|---|
| B1 | 8 | #36 | STR | 13700 | 867 |
| B2 | 18 | #19 | STR | 13700 | 551 |
| B3 | 8 | #36 | 1 | 14600 | 924 |
| B4 | 40 | #13 | STR | 1260 | 50 |
| | | | | | |
| M1 | 32 | #36 | STR | 11040 | 2793 |
| M2 | 32 | #36 | STR | 11840 | 2996 |
| | | | | | |
| S1 | 37 | #16 | 3 | 5380 | 309 |
| S2 | 16 | #16 | 3 | 4860 | 121 |
| | | | | | |
| U1 | 8 | #13 | 4 | 2780 | 22 |
| U2 | 12 | #13 | 4 | 2200 | 26 |
| U3 | 45 | #13 | 4 | 2240 | 100 |
| | | | | | |
| V1 | 16 | #36 | 2 | 6180 | 782 |
| V2 | 16 | #36 | 2 | 6340 | 802 |

| REINFORCING STEEL | | | | kg | 10343 |
|---|---|---|---|---|---|
| SP-1 | 1 | ✱✱ | 5 | 465440 | 722 |
| SP-2 | 1 | ✱✱✱ | 6 | 242800 | 241 |
| SP-3 | 1 | ✱✱ | 5 | 509880 | 791 |
| SP-4 | 1 | ✱✱✱ | 6 | 250260 | 249 |

| SPIRAL COLUMN REINFORCING STEEL | kg | 2003 |
|---|---|---|
| DRILLED PIER CONCRETE | | |
| POUR #1 (DRILLED PIERS) | m3 | 51.3 |
| CLASS "A" CONCRETE BREAKDOWN | | |
| POUR #2 (COLUMNS) | m3 | 12.0 |
| POUR #3 (CAP) | m3 | 39.8 |
| TOTAL CLASS "A" CONCRETE | m3 | 51.8 |
| 1370mm Ø DRILLED PIERS | | 34.8m |
| PERM. STEEL CASING FOR 1370mm Ø DRILLED PIERS | | 10.4m |
| SID INSPECTION | | 1 EACH |
| CSL TUBES | | 145.2m |

✱✱✱ THE SP-2 & SP-4 SPIRAL REINFORCING STEEL SHALL BE W20 OR D-20 COLD DRAWN WIRE OR #13 PLAIN OR DEFORMED BAR.

✱✱ THE SP-1 & SP-3 SPIRAL REINFORCING STEEL SHALL BE W31 OR D-31 COLD DRAWN WIRE OR #16 PLAIN OR DEFORMED BAR.

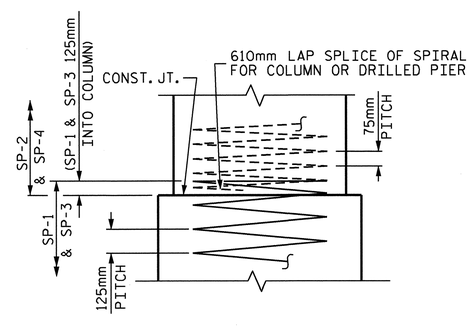


## CONSTRUCTION JOINT DETAIL

PROJECT NO. R-2413C

GUILFORD-ROCKINGHAM COUNTY

STATION: 24+37.000 -LREV-

SHEET 2 OF 2

STATE OF NORTH CAROLINA
DEPARTMENT OF TRANSPORTATION
RALEIGH

SUBSTRUCTURE
BENT #1
(LEFT LANE)

NORTH CAROLINA PROFESSIONAL SEAL 022516 ENGINEER EMILY E. MURRAY
10/28/11

| REVISIONS | | | | | | SHEET NO. |
|---|---|---|---|---|---|---|
| NO. | BY: | DATE: | NO. | BY: | DATE: | S-57 |
| 1 | | | 3 | | | TOTAL SHEETS |
| 2 | | | 4 | | | 238 |

STR. #2

DRAWN BY : M.GUDLAUGSSON DATE : 3-18-11
CHECKED BY : B.N. BARODAWALA DATE : 6-12-11

19-OCT-2011 14:10
R:\TIPProjects-R\R2413c\Structures\Final Plans\Str.#2\R-2413C_SD_B#_02.dgn
taverette

## NOTES

STIRRUPS AND U1 BARS IN CAP MAY BE SHIFTED AS NECESSARY TO CLEAR ANCHOR BOLTS.

HOOKS ON "V" BARS MAY BE TURNED AS NECESSARY FOR PLACING REINFORCING STEEL.

ALL STEEL IN THE DRILLED PIERS IS INCLUDED IN THE PAY ITEMS FOR "REINFORCING STEEL" AND "SPIRAL COLUMN REINFORCING STEEL".

THE CONTRACTOR'S ATTENTION IS CALLED TO THE FACT THAT THE LONGITUDINAL REINFORCEMENT FOR THE DRILLED PIERS IS DETAILED WITH ONE METER OF EXTRA LENGTH.

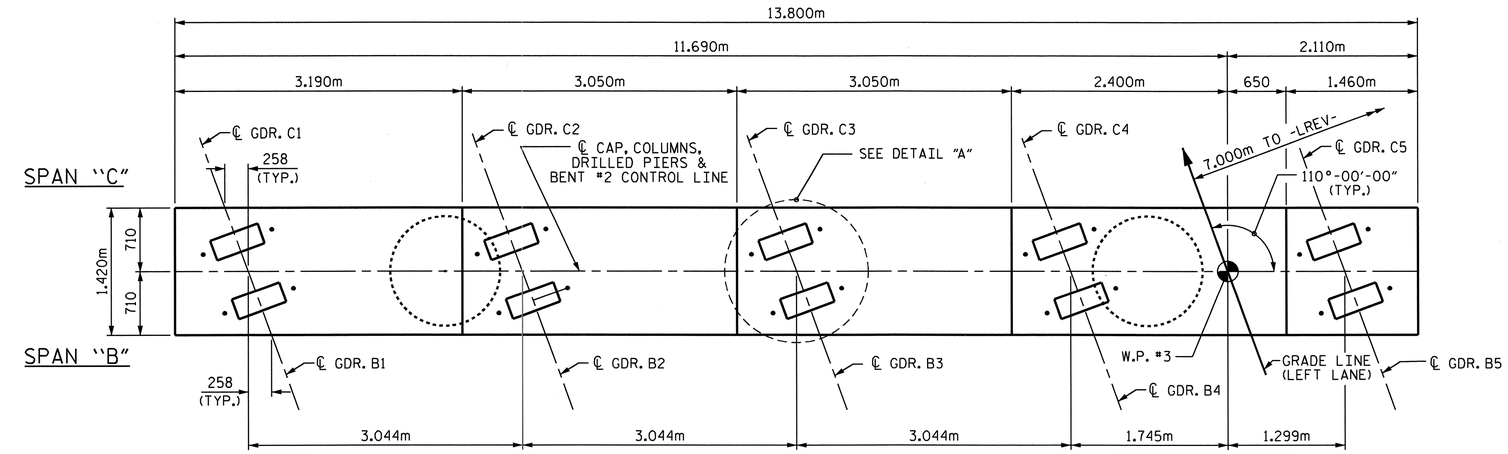


## PLAN

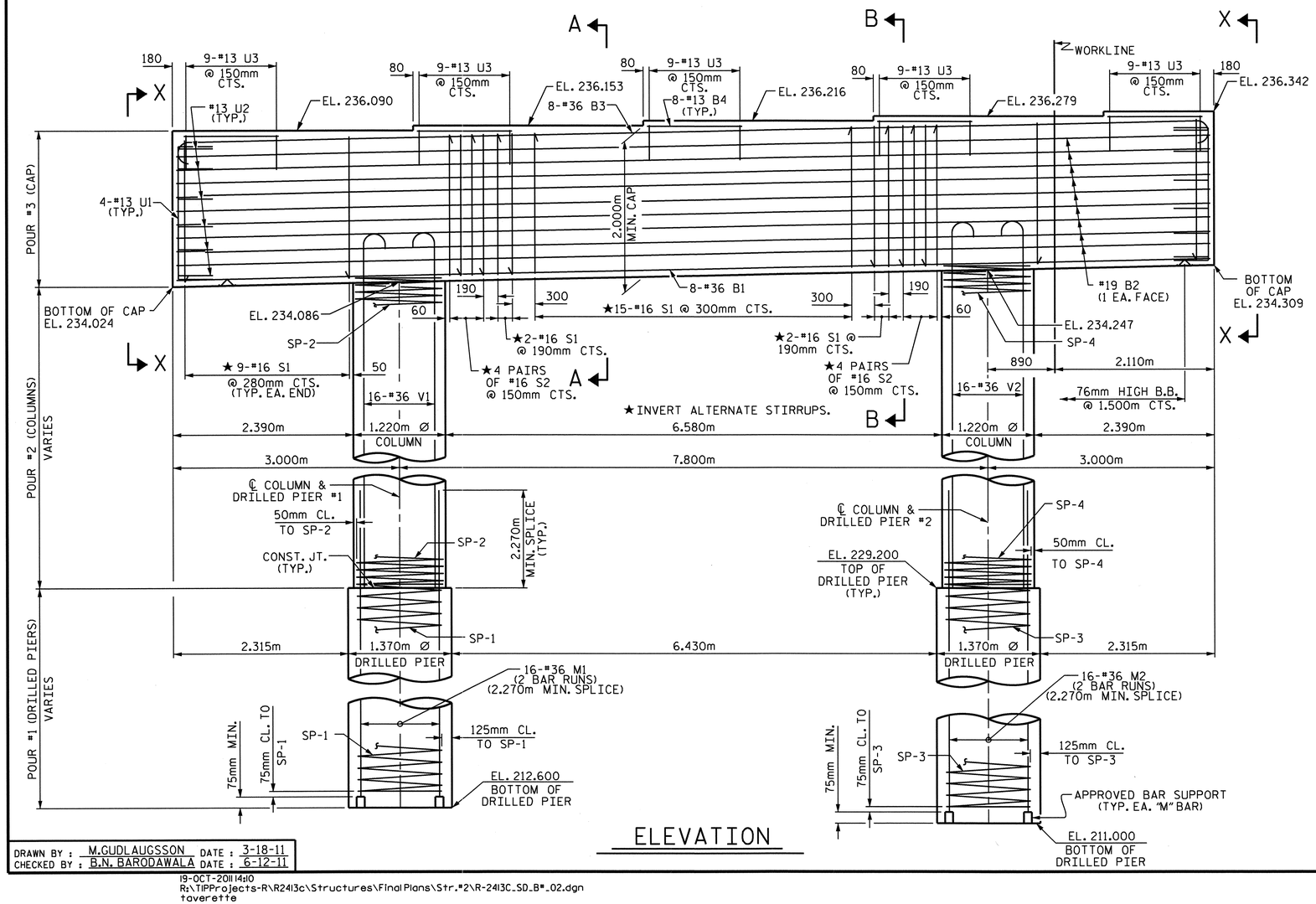


## ELEVATION

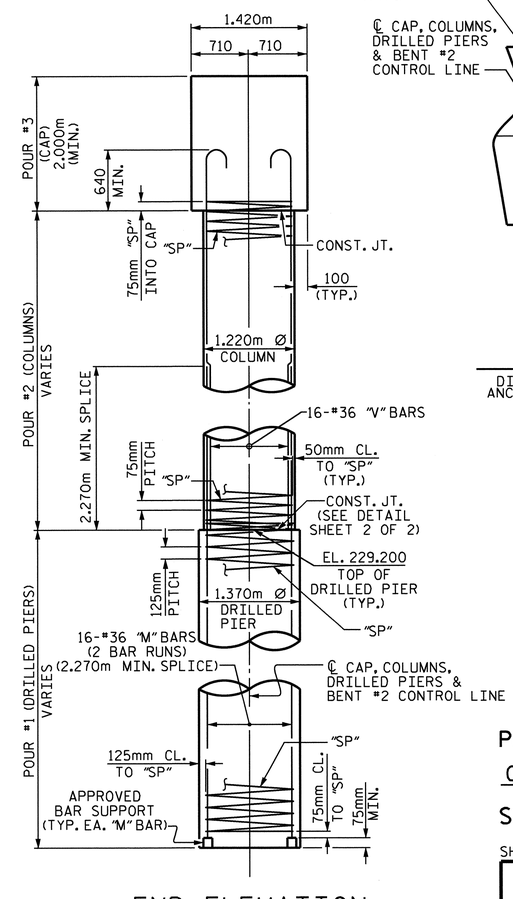


## END ELEVATION

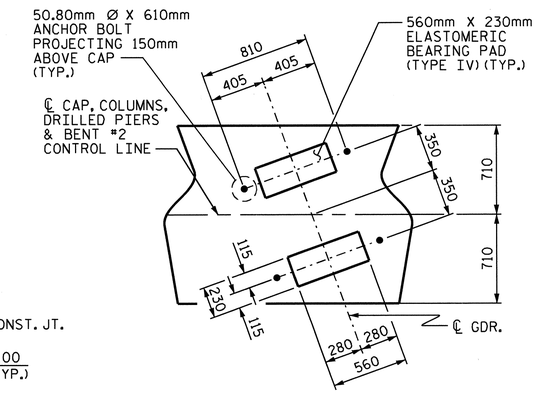


## DETAIL "A"

DIMENSIONS FOR BRG. PADS AND ANCHOR BOLTS ARE TYP. EACH GDR.

PROJECT NO. R-2413C

GUILFORD-ROCKINGHAM COUNTY

STATION: 24+37.000 -LREV-

SHEET 1 OF 2

STATE OF NORTH CAROLINA
DEPARTMENT OF TRANSPORTATION
RALEIGH

SUBSTRUCTURE
BENT #2
(LEFT LANE)

NORTH CAROLINA PROFESSIONAL SEAL 022516 ENGINEER EMRY E. MURRAY

10/28/14

| REVISIONS | | | | | | SHEET NO. |
|---|---|---|---|---|---|---|
| NO. | BY: | DATE: | NO. | BY: | DATE: | S-58 |
| 1 | | | 3 | | | TOTAL SHEETS |
| 2 | | | 4 | | | 238 |

STR. #2

DRAWN BY : M.GUDLAUGSSON DATE : 3-18-11
CHECKED BY : B.N. BARODAWALA DATE : 6-12-11

19-OCT-2011 14:10
R:\TIPProjects-R\R2413c\Structures\Final Plans\Str.#2\R-2413C_SD_B*_02.dgn
taverette

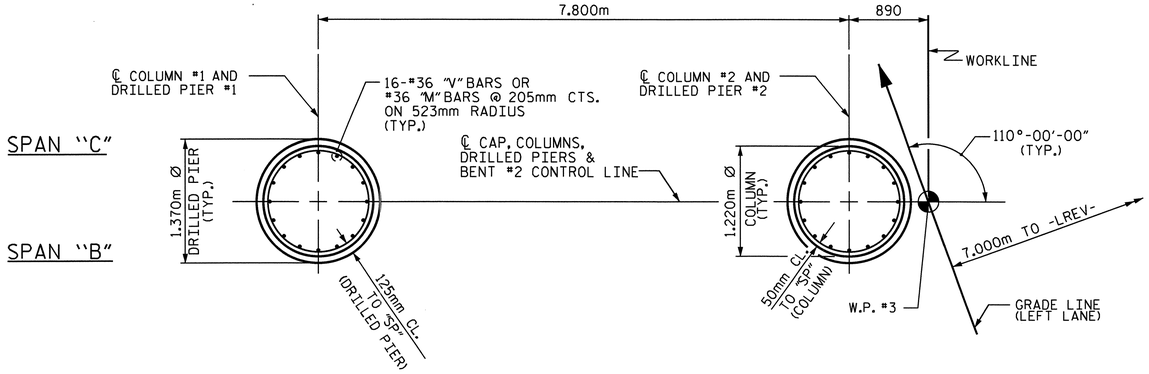


## PLAN OF COLUMNS AND DRILLED PIERS

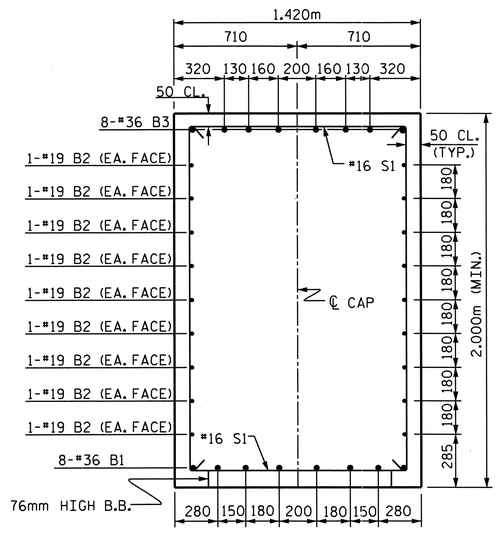


## SECTION A-A

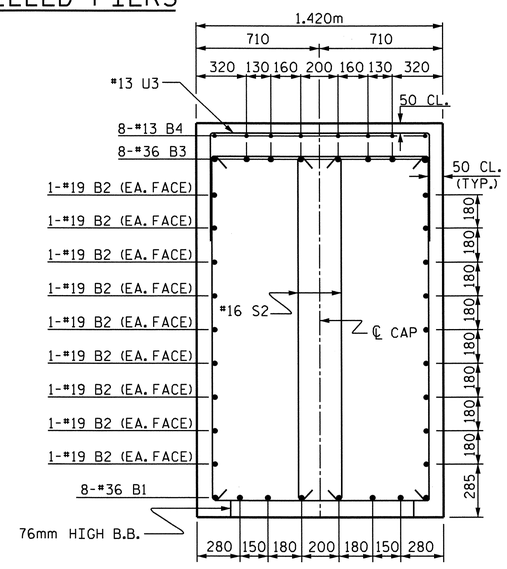


## SECTION B-B

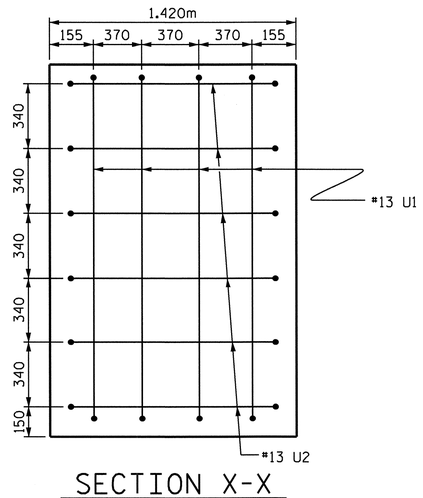


## SECTION X-X

## BAR TYPES

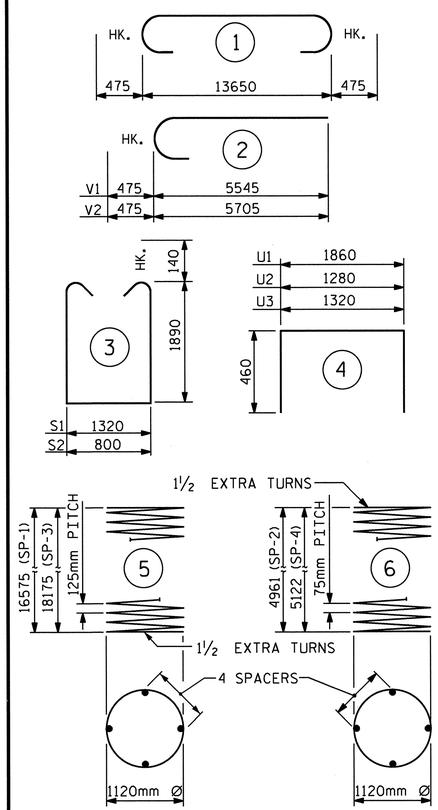


ALL BAR DIMENSIONS ARE OUT TO OUT.

## BILL OF MATERIAL

### BENT #2

| BAR | NO. | SIZE | TYPE | LENGTH | WEIGHT |
|---|---|---|---|---|---|
| B1 | 8 | #36 | STR | 13700 | 867 |
| B2 | 18 | #19 | STR | 13700 | 551 |
| B3 | 8 | #36 | 1 | 14600 | 924 |
| B4 | 40 | #13 | STR | 1260 | 50 |
| | | | | | |
| M1 | 32 | #36 | STR | 11040 | 2793 |
| M2 | 32 | #36 | STR | 11840 | 2996 |
| | | | | | |
| S1 | 37 | #16 | 3 | 5380 | 309 |
| S2 | 16 | #16 | 3 | 4860 | 121 |
| | | | | | |
| U1 | 8 | #13 | 4 | 2780 | 22 |
| U2 | 12 | #13 | 4 | 2200 | 26 |
| U3 | 45 | #13 | 4 | 2240 | 100 |
| | | | | | |
| V1 | 16 | #36 | 2 | 6020 | 762 |
| V2 | 16 | #36 | 2 | 6180 | 782 |

| REINFORCING STEEL | | | | kg | 10303 |
|---|---|---|---|---|---|
| SP-1 | 1 | ✱✱ | 5 | 465440 | 722 |
| SP-2 | 1 | ✱✱✱ | 6 | 235380 | 234 |
| SP-3 | 1 | ✱✱ | 5 | 509880 | 791 |
| SP-4 | 1 | ✱✱✱ | 6 | 242840 | 241 |

| SPIRAL COLUMN REINFORCING STEEL | kg | 1988 |
|---|---|---|
| DRILLED PIER CONCRETE | | |
| POUR #1 (DRILLED PIERS) | m3 | 51.3 |
| CLASS "A" CONCRETE BREAKDOWN | | |
| POUR #2 (COLUMNS) | m3 | 11.6 |
| POUR #3 (CAP) | m3 | 39.8 |
| TOTAL CLASS "A" CONCRETE | m3 | 51.4 |
| 1370mm Ø DRILLED PIERS | | 34.8m |
| PERM. STEEL CASING FOR 1370mm Ø DRILLED PIERS | | 10.4m |
| SID INSPECTION | | 1 EACH |
| CSL TUBES | | 145.2m |

✱✱✱ THE SP-2 & SP-4 SPIRAL REINFORCING STEEL SHALL BE W20 OR D-20 COLD DRAWN WIRE OR #13 PLAIN OR DEFORMED BAR.

✱✱ THE SP-1 & SP-3 SPIRAL REINFORCING STEEL SHALL BE W31 OR D-31 COLD DRAWN WIRE OR #16 PLAIN OR DEFORMED BAR.

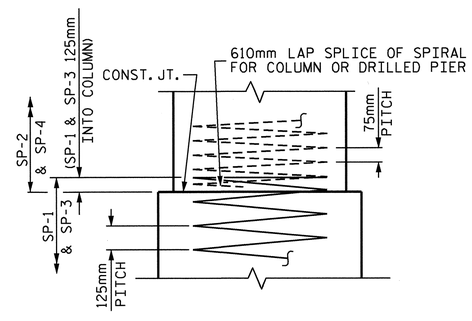


## CONSTRUCTION JOINT DETAIL

PROJECT NO. R-2413C

GUILFORD-ROCKINGHAM COUNTY

STATION: 24+37.000 -LREV-

SHEET 2 OF 2

STATE OF NORTH CAROLINA
DEPARTMENT OF TRANSPORTATION
RALEIGH

SUBSTRUCTURE

BENT #2
(LEFT LANE)

NORTH CAROLINA PROFESSIONAL SEAL 022516 ENGINEER LEMAY E. MURRAY
6/28/11

| REVISIONS | | | | | | SHEET NO. |
|---|---|---|---|---|---|---|
| NO. | BY: | DATE: | NO. | BY: | DATE: | S-59 |
| 1 | | | 3 | | | TOTAL SHEETS |
| 2 | | | 4 | | | 238 |

STR. #2

DRAWN BY : M.GUDLAUGSSON DATE : 3-18-11
CHECKED BY : B.N. BARODAWALA DATE : 6-12-11

19-OCT-2011 14:10
R:\TIPProjects-R\R2413c\Structures\Final Plans\Str.#2\R-2413C_SD_B#_02.dgn
taverette

## NOTES

STIRRUPS AND U1 BARS IN CAP MAY BE SHIFTED AS NECESSARY TO CLEAR ANCHOR BOLTS.

HOOKS ON "V" BARS MAY BE TURNED AS NECESSARY FOR PLACING REINFORCING STEEL.

ALL STEEL IN THE DRILLED PIERS IS INCLUDED IN THE PAY ITEMS FOR "REINFORCING STEEL" AND "SPIRAL COLUMN REINFORCING STEEL".

THE CONTRACTOR'S ATTENTION IS CALLED TO THE FACT THAT THE LONGITUDINAL REINFORCEMENT FOR THE DRILLED PIERS IS DETAILED WITH ONE METER OF EXTRA LENGTH.

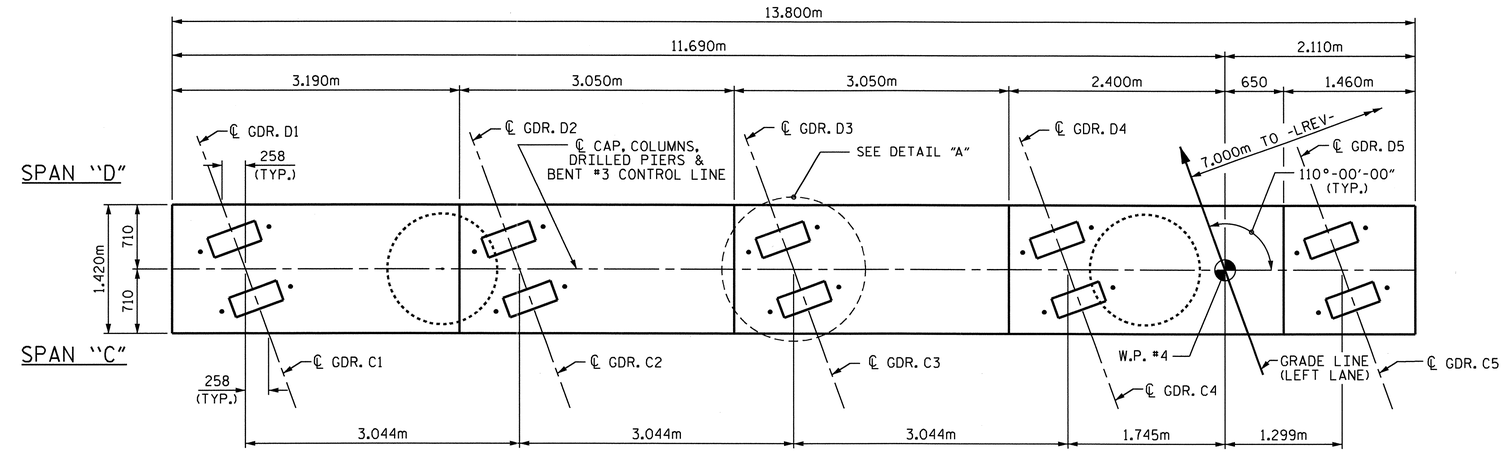


PLAN

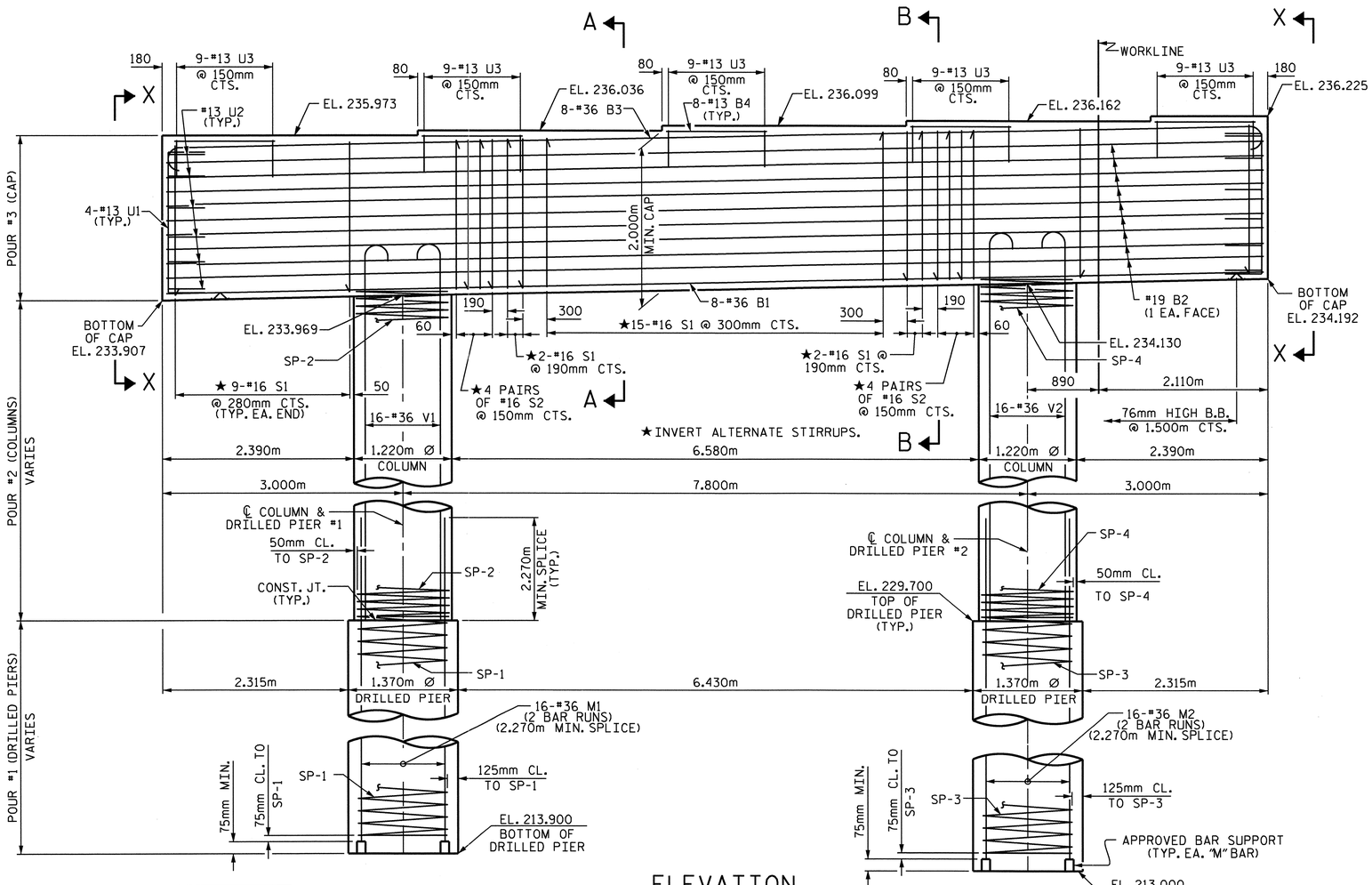


ELEVATION

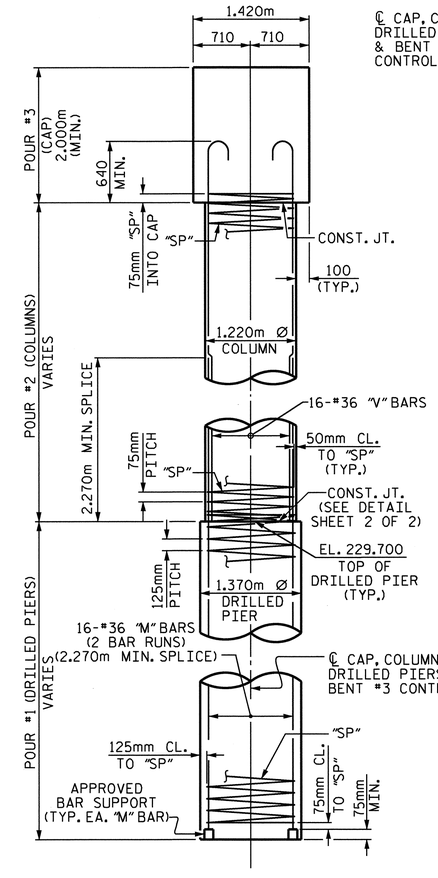


END ELEVATION

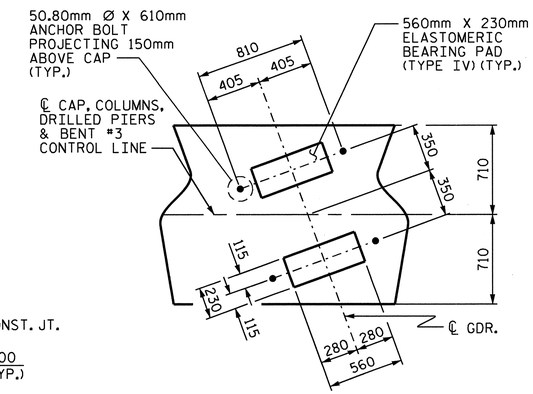


DETAIL "A"

DIMENSIONS FOR BRG. PADS AND ANCHOR BOLTS ARE TYP. EACH GDR.

PROJECT NO. R-2413C

GUILFORD-ROCKINGHAM COUNTY

STATION: 24+37.000 -LREV-

SHEET 1 OF 2

STATE OF NORTH CAROLINA
DEPARTMENT OF TRANSPORTATION
RALEIGH

SUBSTRUCTURE
BENT #3
(LEFT LANE)

NORTH CAROLINA PROFESSIONAL SEAL 022516 ENGINEER EMILY E. MURRAY

10/28/11

| REVISIONS | | | | | | | | SHEET NO. |
|---|---|---|---|---|---|---|---|---|
| NO. | BY: | DATE: | NO. | BY: | DATE: | | | S-60 |
| 1 | | | 3 | | | | | TOTAL SHEETS |
| 2 | | | 4 | | | | | 238 |

STR. #2

DRAWN BY : M.GUDLAUGSSON DATE : 3-18-11
CHECKED BY : B.N. BARODAWALA DATE : 6-12-11

19-OCT-2011 14:11
R:\TIPProjects-R\R2413c\Structures\Final Plans\Str.#2\R-2413C_SD_B#_02.dgn
taverette

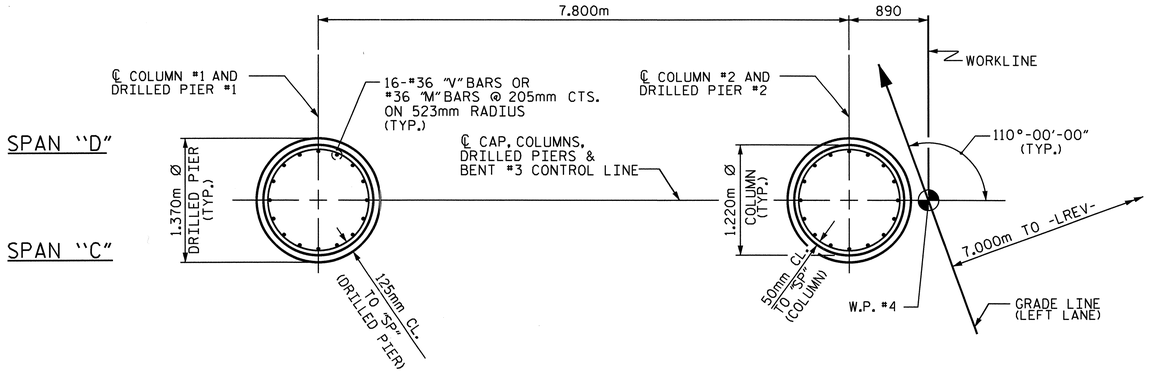


## PLAN OF COLUMNS AND DRILLED PIERS

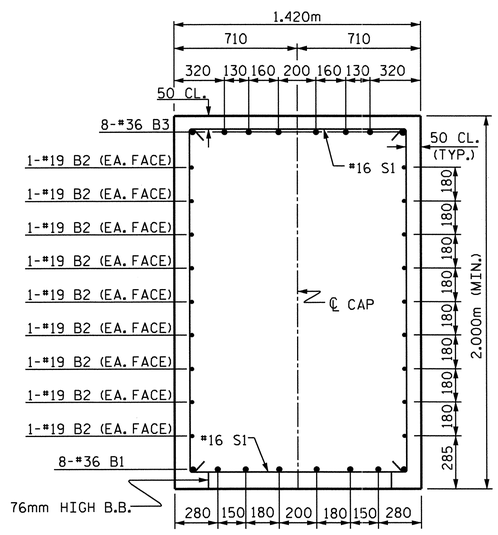


## SECTION A-A

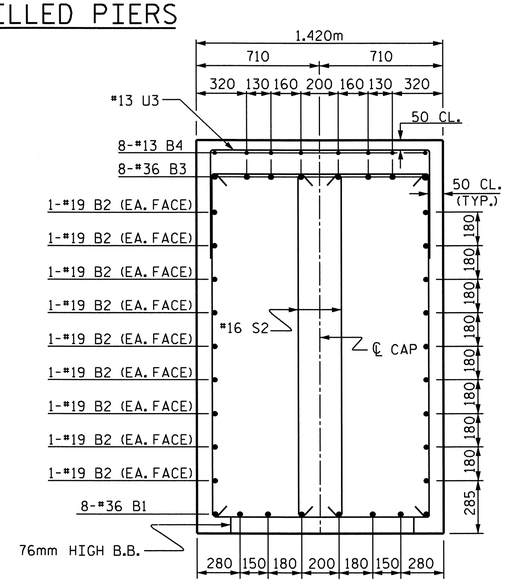


## SECTION B-B

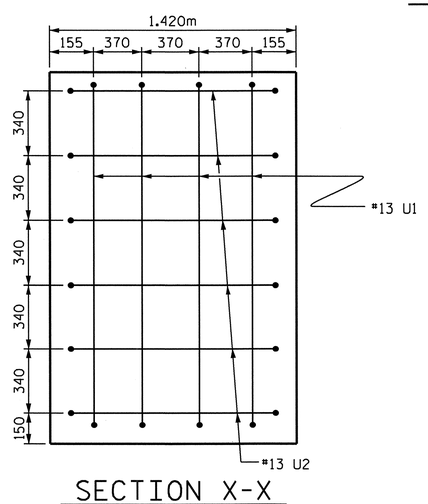


## SECTION X-X

## BAR TYPES

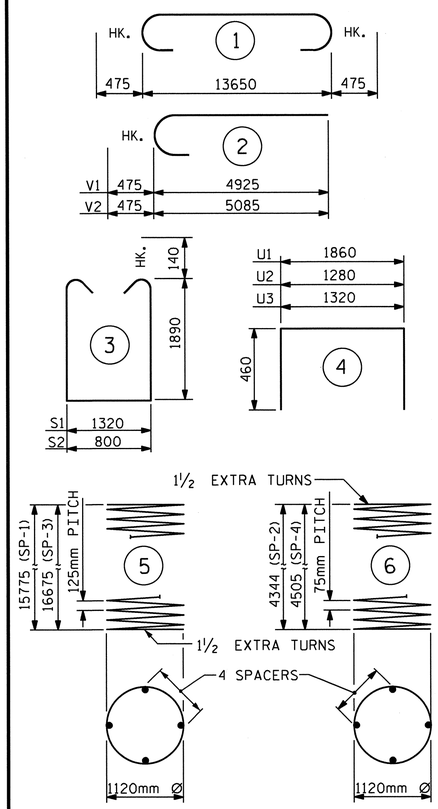


ALL BAR DIMENSIONS ARE OUT TO OUT.

## BILL OF MATERIAL

### BENT #3

| BAR | NO. | SIZE | TYPE | LENGTH | WEIGHT |
|---|---|---|---|---|---|
| B1 | 8 | #36 | STR | 13700 | 867 |
| B2 | 18 | #19 | STR | 13700 | 551 |
| B3 | 8 | #36 | 1 | 14600 | 924 |
| B4 | 40 | #13 | STR | 1260 | 50 |
| | | | | | |
| M1 | 32 | #36 | STR | 10640 | 2692 |
| M2 | 32 | #36 | STR | 11100 | 2809 |
| | | | | | |
| S1 | 37 | #16 | 3 | 5380 | 309 |
| S2 | 16 | #16 | 3 | 4860 | 121 |
| | | | | | |
| U1 | 8 | #13 | 4 | 2780 | 22 |
| U2 | 12 | #13 | 4 | 2200 | 26 |
| U3 | 45 | #13 | 4 | 2240 | 100 |
| | | | | | |
| V1 | 16 | #36 | 2 | 5400 | 683 |
| V2 | 16 | #36 | 2 | 5560 | 703 |

| REINFORCING STEEL | | | | kg | 9857 |
|---|---|---|---|---|---|
| SP-1 | 1 | ✱✱ | 5 | 443240 | 688 |
| SP-2 | 1 | ✱✱✱ | 6 | 206760 | 206 |
| SP-3 | 1 | ✱✱ | 5 | 468220 | 727 |
| SP-4 | 1 | ✱✱✱ | 6 | 214220 | 213 |

| SPIRAL COLUMN REINFORCING STEEL | kg | 1834 |
|---|---|---|
| DRILLED PIER CONCRETE | | |
| POUR #1 (DRILLED PIERS) | m3 | 47.9 |
| CLASS "A" CONCRETE BREAKDOWN | | |
| POUR #2 (COLUMNS) | m3 | 10.2 |
| POUR #3 (CAP) | m3 | 39.8 |
| TOTAL CLASS "A" CONCRETE | m3 | 50.0 |
| 1370mm Ø DRILLED PIERS | | 32.5m |
| SID INSPECTION | | 1 EACH |
| CSL TUBES | | 136.0m |

✱✱✱ THE SP-2 & SP-4 SPIRAL REINFORCING STEEL SHALL BE W20 OR D-20 COLD DRAWN WIRE OR #13 PLAIN OR DEFORMED BAR.

✱✱ THE SP-1 & SP-3 SPIRAL REINFORCING STEEL SHALL BE W31 OR D-31 COLD DRAWN WIRE OR #16 PLAIN OR DEFORMED BAR.

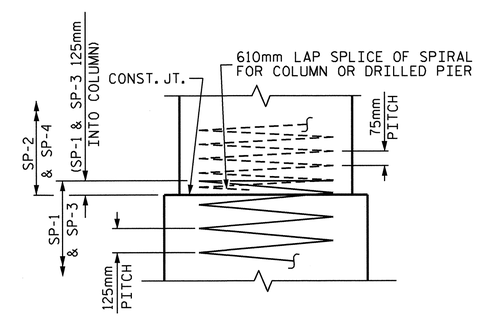


## CONSTRUCTION JOINT DETAIL

PROJECT NO. R-2413C

GUILFORD-ROCKINGHAM COUNTY

STATION: 24+37.000 -LREV-

SHEET 2 OF 2

STATE OF NORTH CAROLINA
DEPARTMENT OF TRANSPORTATION
RALEIGH

SUBSTRUCTURE
BENT #3
(LEFT LANE)

NORTH CAROLINA PROFESSIONAL SEAL 022516 ENGINEER EMILY E. MURRAY
10/28/11

| REVISIONS | | | | | | SHEET NO. |
|---|---|---|---|---|---|---|
| NO. | BY: | DATE: | NO. | BY: | DATE: | S-61 |
| 1 | | | 3 | | | TOTAL SHEETS |
| 2 | | | 4 | | | 238 |

STR. #2

DRAWN BY : M.GUDLAUGSSON DATE : 3-18-11
CHECKED BY : B.N. BARODAWALA DATE : 6-12-11

19-OCT-2011 14:11
R:\TIPProjects-R\R2413c\Structures\Final Plans\Str.#2\R-2413C_SD_B#_02.dgn
taverette

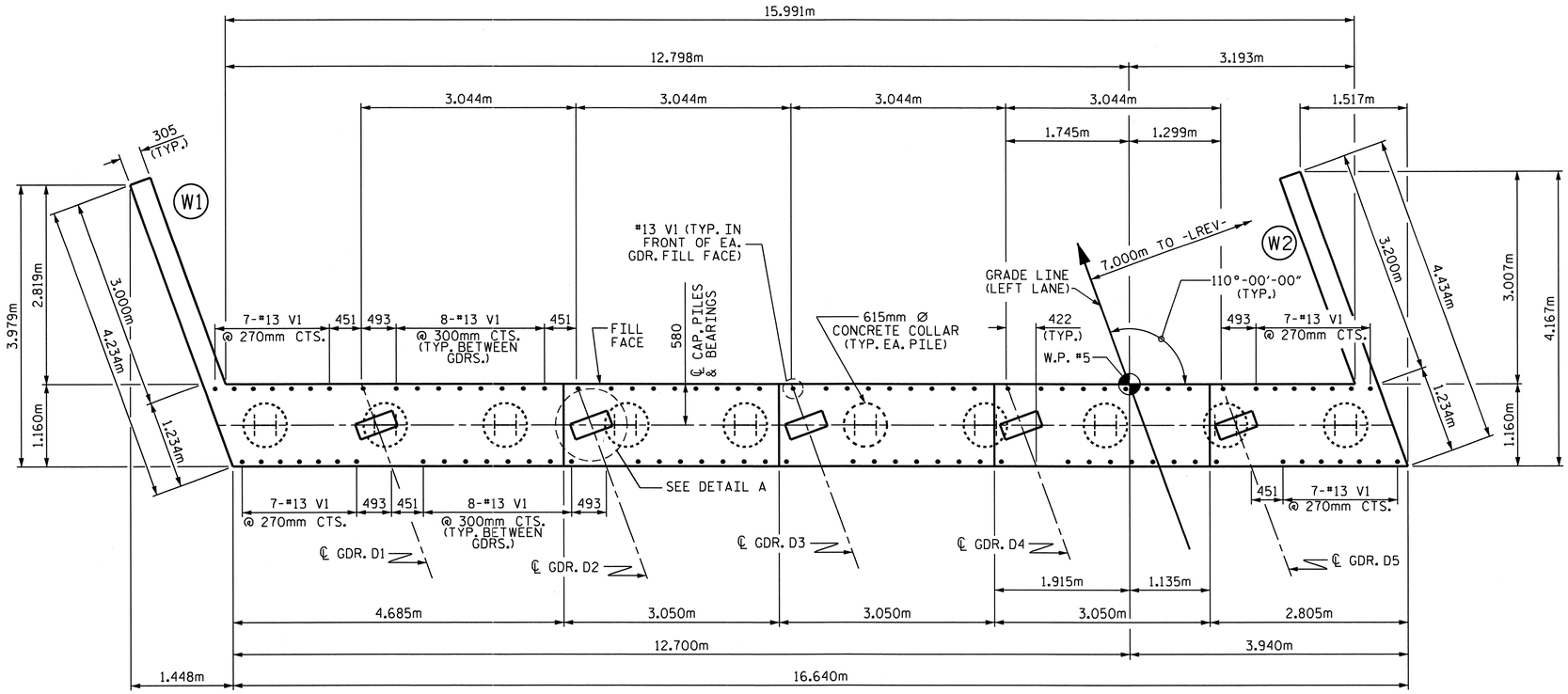


## PLAN

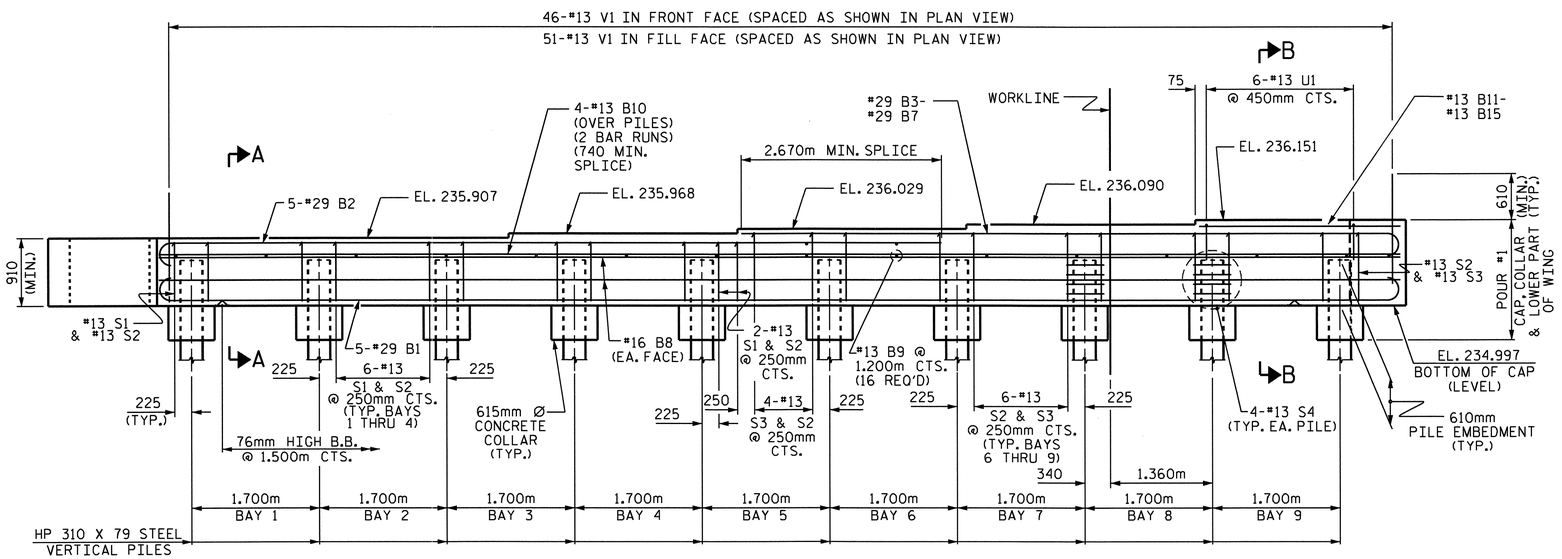


## ELEVATION

## NOTES:

THE CONTRACTOR SHALL PROVIDE FOR INSTALLATION OF THE 102mm DIAMETER DRAIN PIPE THROUGH THE WING WALL AS REQUIRED FOR REINFORCED BRIDGE APPROACH FILLS, SEE THE ROADWAY PLANS. REINFORCING STEEL IN THE WING WALL MAY BE SHIFTED AS NECESSARY TO CLEAR THE DRAIN PIPE.

THE TOP SURFACE OF THE END BENT CAP AND WINGS, EXCLUDING THE OUTSIDE 100mm AND THE BEARING AREA, SHALL BE RAKED TO A DEPTH OF 6mm.

STIRRUPS AND U1 BARS IN CAP MAY BE SHIFTED AS NECESSARY TO CLEAR #13 V1 BARS.

THE CONTRACTOR'S ATTENTION IS CALLED TO THE FACT THAT THE UPPER PART OF INTEGRAL END BENT AND WINGS ARE TO BE POURED WITH THE SUPERSTRUCTURE.

SEE SUPERSTRUCTURE SHEETS FOR UPPER PART OF INTEGRAL END BENT DETAIL.

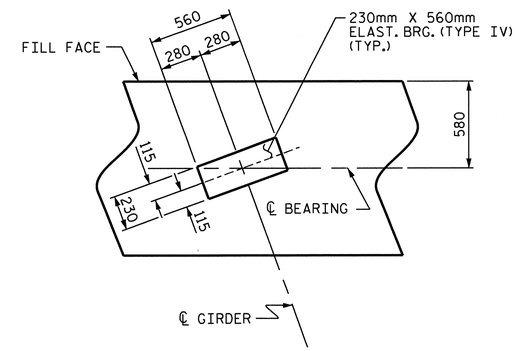


## DETAIL A
(TYP. EA. GDR.)

PROJECT NO. R-2413C

GUILFORD-ROCKINGHAM COUNTY

STATION: 24+37.000 -LREV-

SHEET 1 OF 3

STATE OF NORTH CAROLINA
DEPARTMENT OF TRANSPORTATION
RALEIGH

SUBSTRUCTURE
INTEGRAL END BENT #2
(LEFT LANE)

NORTH CAROLINA PROFESSIONAL SEAL 022516 ENGINEER EMILY E. MURRAY
2/28/11

| REVISIONS | | | | | | SHEET NO. |
|---|---|---|---|---|---|---|
| NO. | BY: | DATE: | NO. | BY: | DATE: | S-62 |
| 1 | | | 3 | | | TOTAL SHEETS |
| 2 | | | 4 | | | 238 |

STR. #2

DRAWN BY : M.GUDLAUGSSON DATE : 01-19-11
CHECKED BY : T.L. AVERETTE DATE : 04-20-11

19-OCT-2011 14:11
R:\TIPProjects-R\R2413c\Structures\Final Plans\Str.#2\R-2413C_SD_E#_02.dgn
taverette

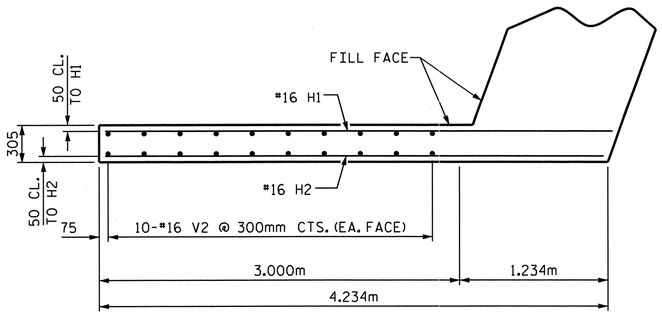


PLAN OF LEFT WING (W1)

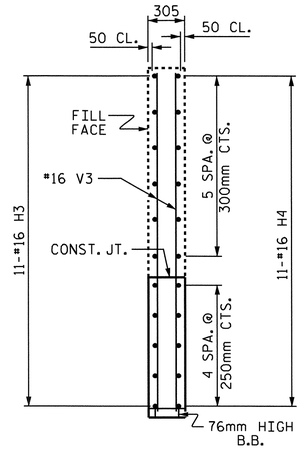


SECTION Y-Y

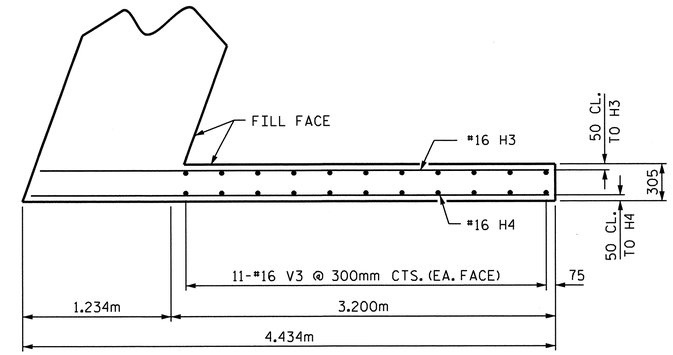


PLAN OF RIGHT WING (W2)

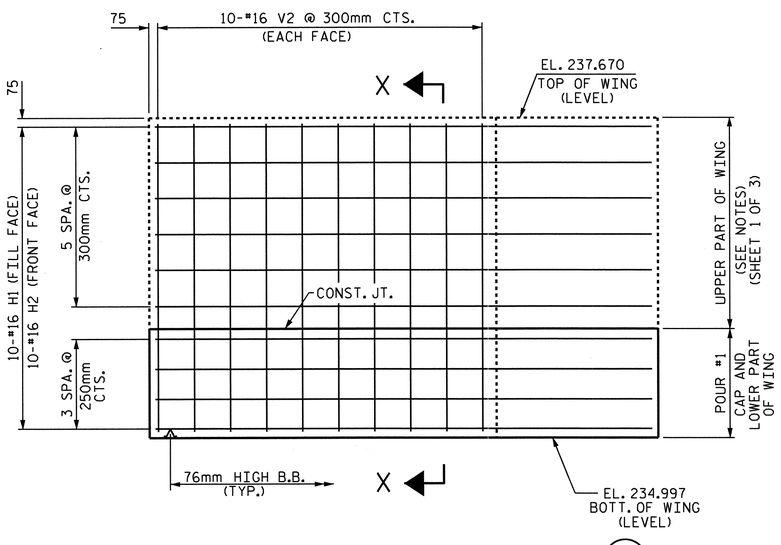


ELEVATION OF LEFT WING (W1)

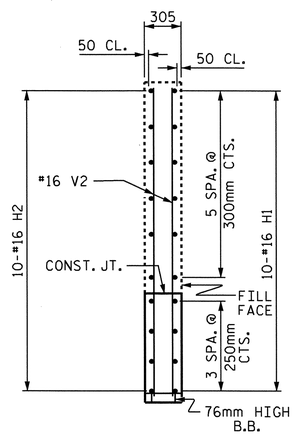


SECTION X-X

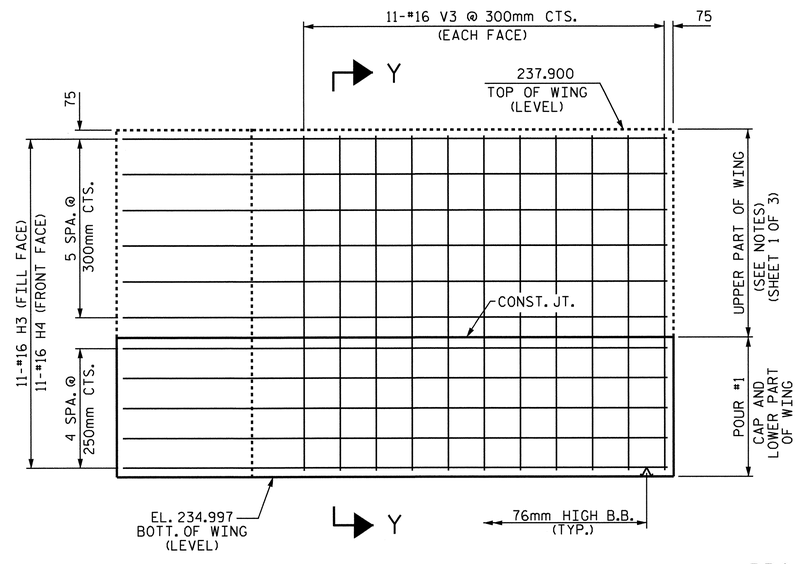


ELEVATION OF RIGHT WING (W2)

PROJECT NO. R-2413C

GUILFORD-ROCKINGHAM COUNTY

STATION: 24+37.000 -LREV-

SHEET 2 OF 3

STATE OF NORTH CAROLINA
DEPARTMENT OF TRANSPORTATION
RALEIGH

SUBSTRUCTURE

INTEGRAL
END BENT #2
(LEFT LANE)

NORTH CAROLINA PROFESSIONAL SEAL 022516 ENGINEER EMILY E. LAMBRAY
10/31/11

| REVISIONS | | | | | | SHEET NO. |
|---|---|---|---|---|---|---|
| NO. | BY: | DATE: | NO. | BY: | DATE: | S-63 |
| 1 | | | 3 | | | TOTAL SHEETS |
| 2 | | | 4 | | | 238 |

DRAWN BY : M.GUDLAUGSSON DATE : 01-19-11
CHECKED BY : T.L. AVERETTE DATE : 04-20-11

31-OCT-2011 14:34
R:\TIPProjects-R\R2413c\Structures\FinalPlans\Str.#2\R-2413C_SD_E*_02.dgn
taverette

STR. #2

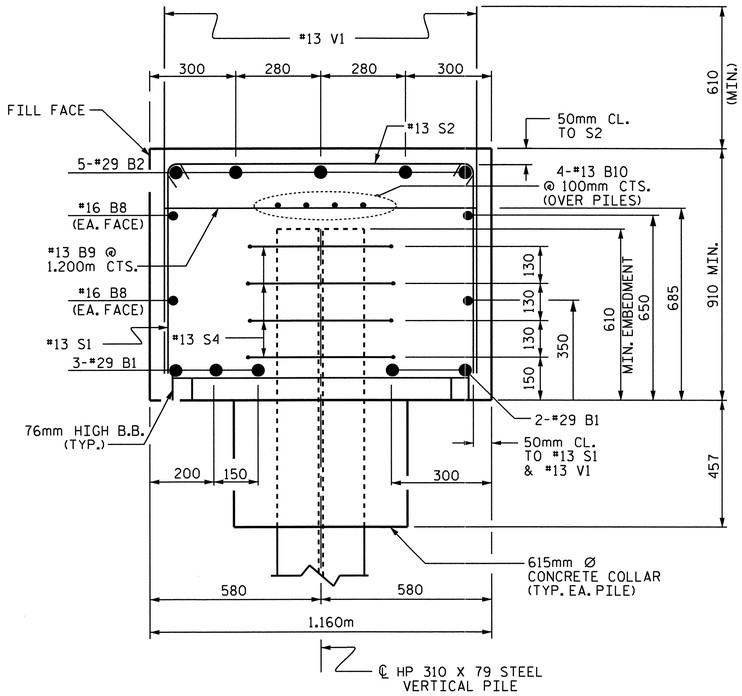


## SECTION A-A

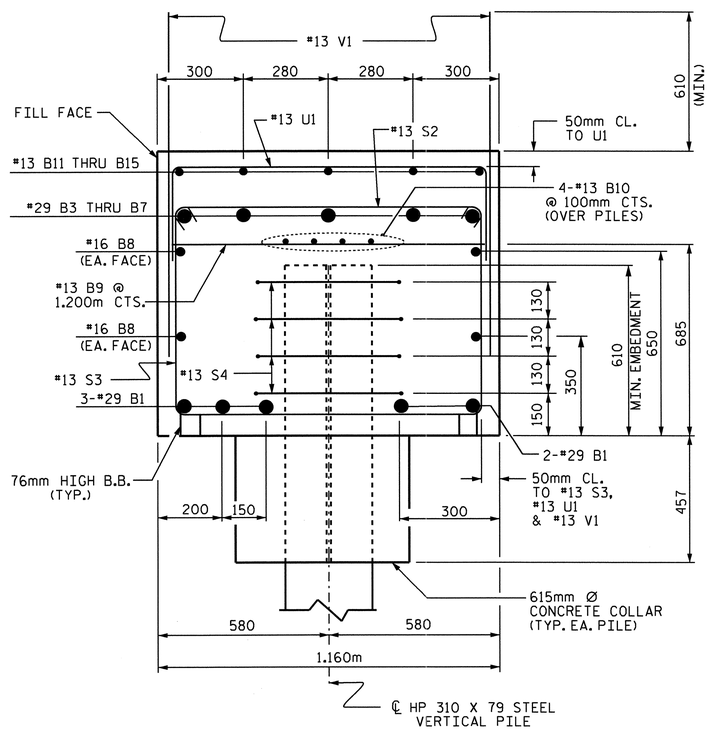


## SECTION B-B

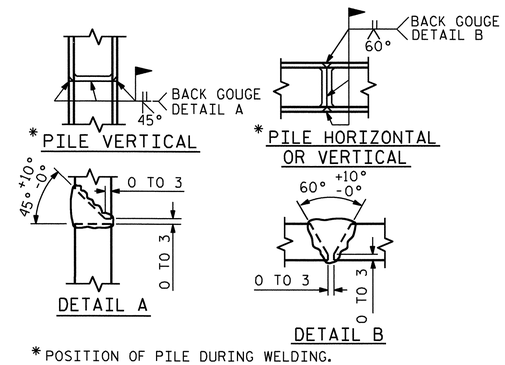


* POSITION OF PILE DURING WELDING.

## PILE SPLICE DETAILS

### BAR TYPES

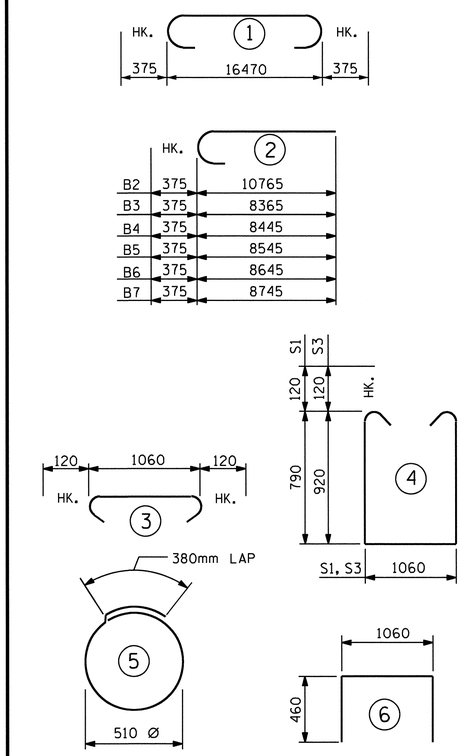


ALL BAR DIMENSIONS ARE OUT TO OUT.

### BILL OF MATERIAL
### END BENT #2

| BAR | NO. | SIZE | TYPE | LENGTH | WEIGHT |
|---|---|---|---|---|---|
| B1 | 5 | #29 | 1 | 17220 | 436 |
| B2 | 5 | #29 | 2 | 11140 | 282 |
| B3 | 1 | #29 | 2 | 8740 | 44 |
| B4 | 1 | #29 | 2 | 8820 | 45 |
| B5 | 1 | #29 | 2 | 8920 | 45 |
| B6 | 1 | #29 | 2 | 9020 | 46 |
| B7 | 1 | #29 | 2 | 9120 | 46 |
| B8 | 4 | #16 | STR | 16520 | 103 |
| B9 | 16 | #13 | STR | 1060 | 17 |
| B10 | 8 | #13 | STR | 8640 | 69 |
| B11 | 1 | #13 | STR | 2300 | 2 |
| B12 | 1 | #13 | STR | 2380 | 2 |
| B13 | 1 | #13 | STR | 2480 | 2 |
| B14 | 1 | #13 | STR | 2580 | 3 |
| B15 | 1 | #13 | STR | 2660 | 3 |
| | | | | | |
| H1 | 10 | #16 | STR | 4220 | 65 |
| H2 | 10 | #16 | STR | 4140 | 64 |
| H3 | 11 | #16 | STR | 4240 | 72 |
| H4 | 11 | #16 | STR | 4300 | 73 |
| | | | | | |
| S1 | 27 | #13 | 4 | 2880 | 77 |
| S2 | 56 | #13 | 3 | 1300 | 72 |
| S3 | 29 | #13 | 4 | 3140 | 91 |
| S4 | 40 | #13 | 5 | 1980 | 79 |
| | | | | | |
| U1 | 6 | #13 | 6 | 1980 | 12 |
| | | | | | |
| V1 | 97 | #13 | STR | 1460 | 141 |
| V2 | 20 | #16 | STR | 2560 | 79 |
| V3 | 22 | #16 | STR | 2800 | 96 |

REINFORCING STEEL = 2066 KG

CLASS A CONCRETE BREAKDOWN

POUR #1: (CAP, CONCRETE COLLAR & LOWER PART OF WINGS) 22.9 m3

TOTAL CONCRETE 22.9 m3

HP 310 X 79 STEEL PILES
NO. 10 183.0 METERS

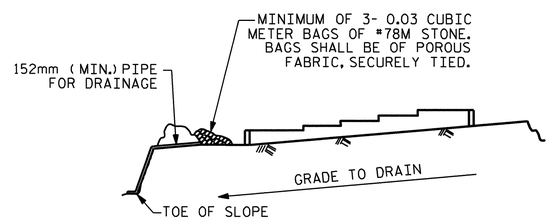


BAGGED STONE AND PIPE SHALL BE PLACED IMMEDIATELY AFTER COMPLETION OF END BENT EXCAVATION. PIPE MAY BE EITHER CONCRETE, CORRUGATED STEEL, CORRUGATED ALUMINUM ALLOY, OR CORRUGATED PLASTIC. PERFORATED PIPE WILL NOT BE ALLOWED.

BAGGED STONE SHALL REMAIN IN PLACE UNTIL THE ENGINEER DIRECTS THAT IT BE REMOVED. THE CONTRACTOR SHALL REMOVE AND DISPOSE OF SILT ACCUMULATIONS AT BAGGED STONE WHEN SO DIRECTED BY THE ENGINEER. BAGS SHALL BE REMOVED AND REPLACED WHENEVER THE ENGINEER DETERMINES THAT THEY HAVE DETERIORATED AND LOST THEIR EFFECTIVENESS.

NO SEPARATE PAYMENT WILL BE MADE FOR THIS WORK AND THE ENTIRE COST OF THIS WORK SHALL BE INCLUDED IN THE UNIT CONTRACT PRICE BID FOR THE SEVERAL PAY ITEMS.

## TEMPORARY DRAINAGE AT END BENT

PROJECT NO. R-2413C
GUILFORD-ROCKINGHAM COUNTY
STATION: 24+37.000 -LREV-

SHEET 3 OF 3

STATE OF NORTH CAROLINA
DEPARTMENT OF TRANSPORTATION
RALEIGH

SUBSTRUCTURE
INTEGRAL
END BENT #2
(LEFT LANE)

NORTH CAROLINA PROFESSIONAL SEAL 022516 ENGINEER EMILY E. MURPHY
10/28/11

| REVISIONS | | | | | | SHEET NO. |
|---|---|---|---|---|---|---|
| NO. | BY: | DATE: | NO. | BY: | DATE: | S-64 |
| 1 | | | 3 | | | TOTAL SHEETS |
| 2 | | | 4 | | | 238 |

STR. #2

DRAWN BY : M.GUDLAUGSSON DATE : 01-19-11
CHECKED BY : T.L. AVERETTE DATE : 04-20-11

05-SEP-2011 11:15
Y:\Structures\Final Plans\Str.#2\R-2413C_SD_E*_02.dgn
mgudlaugsson

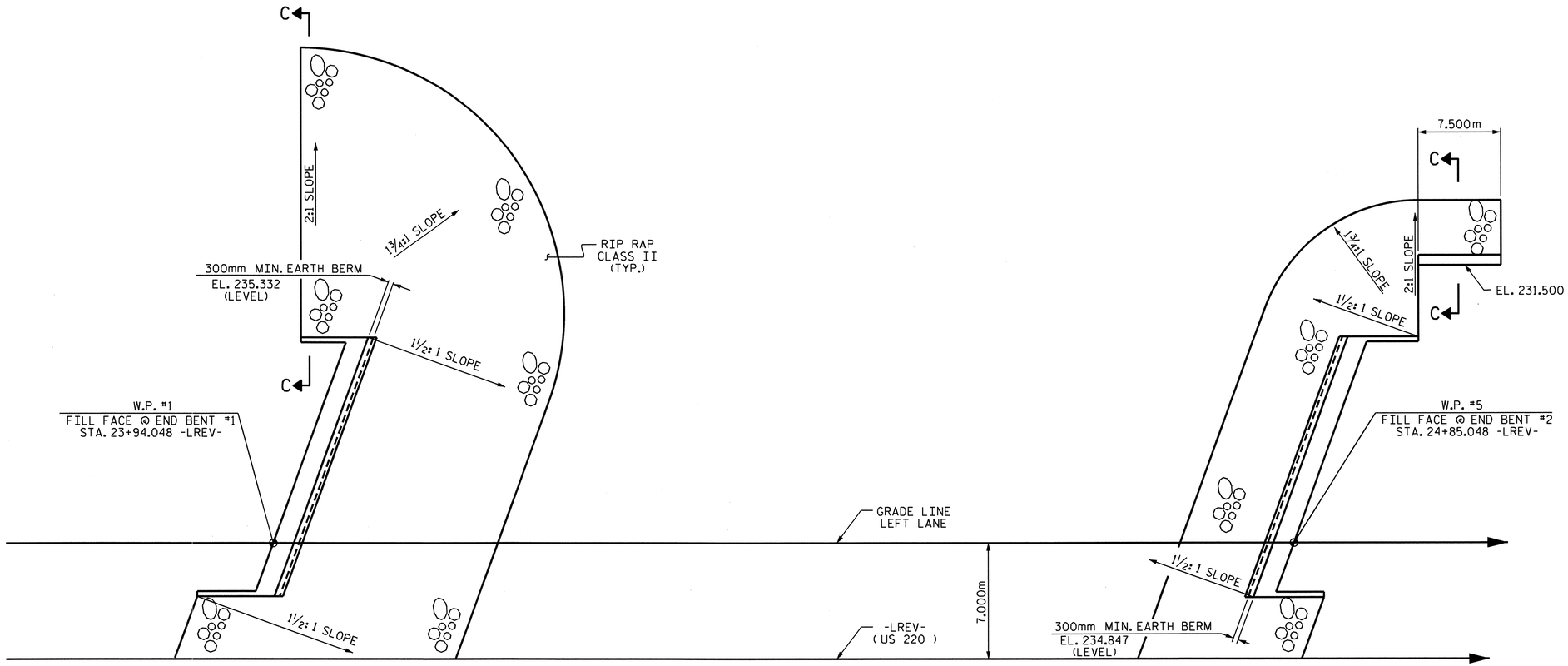


PLAN

| ESTIMATED QUANTITIES | | |
|---|---|---|
| BRIDGE AT STA. 24+37.000 -LREV- LEFT LANE | RIP RAP CLASS II | FILTER FABRIC FOR DRAINAGE |
| | METRIC TONS | SQUARE METERS |
| END BENT #1 | 641 | 654 |
| END BENT #2 | 408 | 416 |

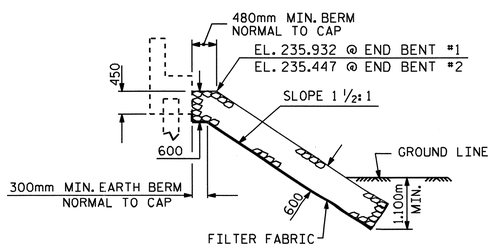


℄ SECTION

BERM RIP RAPPED

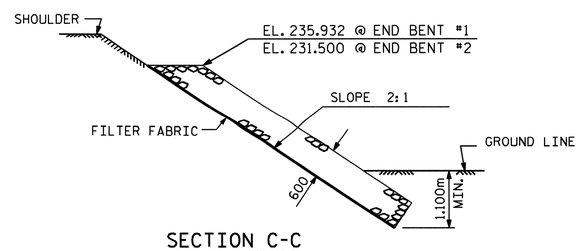


SECTION C-C

PROJECT NO. R-2413C

GUILFORD-ROCKINGHAM COUNTY

STATION: 24+37.000 -LREV-

STATE OF NORTH CAROLINA
DEPARTMENT OF TRANSPORTATION
RALEIGH

RIP RAP DETAILS

LEFT LANE

NORTH CAROLINA PROFESSIONAL SEAL 022516 ENGINEER EMILY E. MURRAY

10/28/11

| REVISIONS | | | | | | SHEET NO. |
|---|---|---|---|---|---|---|
| NO. | BY: | DATE: | NO. | BY: | DATE: | S-65 |
| 1 | | | 3 | | | TOTAL SHEETS |
| 2 | | | 4 | | | 238 |

DRAWN BY : PEGGY PARISI DATE : 5-19-11
CHECKED BY : MIKE PISO DATE : 6-10-11

19-OCT-2011 14:12
R:\TIPProjects-R\R2413c\Structures\FinalPlans\Str.#2\R2413C_sd_RR_02.dgn
taverette

STR. #2

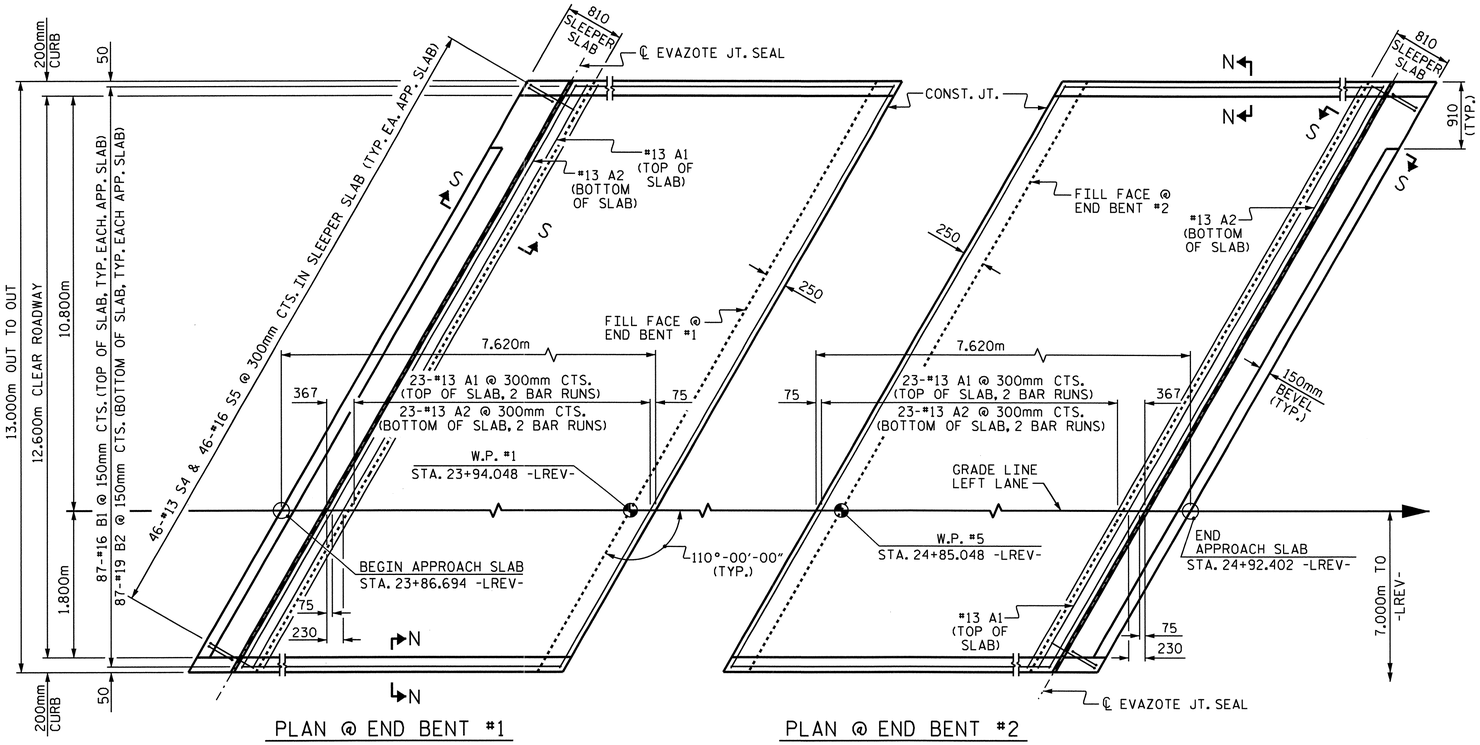


DIMENSIONS SHOWN ARE TYPICAL FOR BOTH APPROACH SLABS. #13 A1 BARS IN SLEEPER SLAB NOT SHOWN FOR CLARITY.

## NOTES

APPROACH SLAB SHALL NOT BE CONSTRUCTED PRIOR TO COMPLETION OF THE BRIDGE DECK.

FOR REINFORCED BRIDGE APPROACH FILL INCLUDING FABRIC, IMPERMEABLE GEOMEMBRANE, 102mm Ø DRAINAGE PIPE, #78M STONE, AND SELECT MATERIAL, SEE ROADWAY PLANS.

AREA BETWEEN THE WINGWALL AND APPROACH SLAB SHALL BE GRADED TO DRAIN THE WATER AWAY FROM THE FILL FACE OF THE BRIDGE AND SHALL BE PAVED. SEE ROADWAY PLANS.

THE 150mm COMP. A.B.C. SHALL BE FLUSH WITH THE SLEEPER SLAB AND SHALL EXTEND 300mm OUTSIDE OF EACH EDGE OF THE APPROACH SLAB.

THE CONTRACTOR MAY USE 100mm TYPE B-25.0B ASPHALT CONCRETE BASE COURSE IN LIEU OF 150mm COMP. A.B.C. IF THIS OPTION IS USED, THE BASE COURSE SHALL BE FLUSH WITH THE SLEEPER SLAB, AND THE WIDTH SHALL BE THE SAME AS THAT OF THE APPROACH SLAB.

THE CONTRACTOR MAY USE 125mm CLASS "A" CONCRETE BASE IN LIEU OF 150mm COMP. A.B.C. IF THIS OPTION IS USED, THE CONCRETE BASE SHALL BE FLUSH WITH THE SLEEPER SLAB, AND THE WIDTH SHALL BE THE SAME AS THAT OF THE APPROACH SLAB. THE CONCRETE SHALL BE FINISHED TO A SMOOTH SURFACE AND A LAYER OF 13.6 kg ROOFING FELT SHALL BE PLACED BETWEEN THE CONCRETE BASE AND THE APPROACH SLAB TO PREVENT BOND. THE APPROACH SLAB SHALL NOT BE CAST UNTIL THE CONCRETE BASE HAS REACHED AN AGE OF THREE CURING DAYS.

THE VERTICAL JOINT ON THE RIGHT AND LEFT SIDE OF THE APPROACH SLAB AT THE ENDS OF THE EVAZOTE JOINT SHALL BE FILLED WITH SILICONE OR OTHER APPROVED MATERIAL IN ORDER TO PREVENT BACKFILL FROM ENTERING THE JOINT OPENING.

THE JOINT OPENING AT THE APPROACH SLAB/DECK INTERFACE SHALL BE SAWED NO MORE THAN 12 HOURS AFTER THE APPROACH SLAB IS CAST. THE JOINT SHALL BE CLEANED OF ALL DEBRIS BEFORE THE SEALANT IS APPLIED. THE JOINT SEALER MATERIAL SHALL CONFORM TO THE REQUIREMENTS OF TYPE SL LOW MODULUS SILICONE SEALANT.

WITH EVAZOTE JOINT SEAL

FOR EVAZOTE JOINT SEALS, SEE SPECIAL PROVISIONS.

THE NOMINAL UNCOMPRESSED SEAL WIDTH OF THE EVAZOTE JOINT SEAL SHALL BE 87mm.

FOR ELASTOMERIC CONCRETE, SEE SPECIAL PROVISIONS.

## BILL OF MATERIAL

FOR ONE APPROACH SLAB (2 REQ'D)

| BAR | NO. | SIZE | TYPE | LENGTH | WEIGHT |
|---|---|---|---|---|---|
| * A1 | 62 | #13 | STR | 7180 | 442 |
| A2 | 48 | #13 | STR | 7140 | 341 |
| * B1 | 87 | #16 | STR | 6780 | 915 |
| B2 | 87 | #19 | STR | 6920 | 1346 |
| * S4 | 46 | #13 | 1 | 1200 | 55 |
| S5 | 46 | #16 | 2 | 880 | 63 |

| | | |
|---|---|---|
| REINFORCING STEEL | kg. | 1750 |
| * EPOXY COATED REINFORCING STEEL | kg. | 1412 |
| CLASS AA CONCRETE | | |
| POUR #1 - SLAB & CURB | C.M. | 28.0 |
| POUR #2 - SLEEPER SLAB | C.M. | 3.5 |
| TOTAL | C.M. | 31.5 |

## BAR TYPES

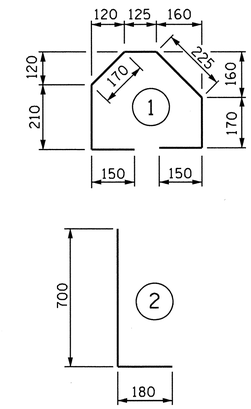


ALL BAR DIMENSIONS ARE OUT TO OUT

## SPLICE CHART

| BAR | SPLICE |
|---|---|
| * #13 A1 | 610 |
| #13 A2 | 540 |

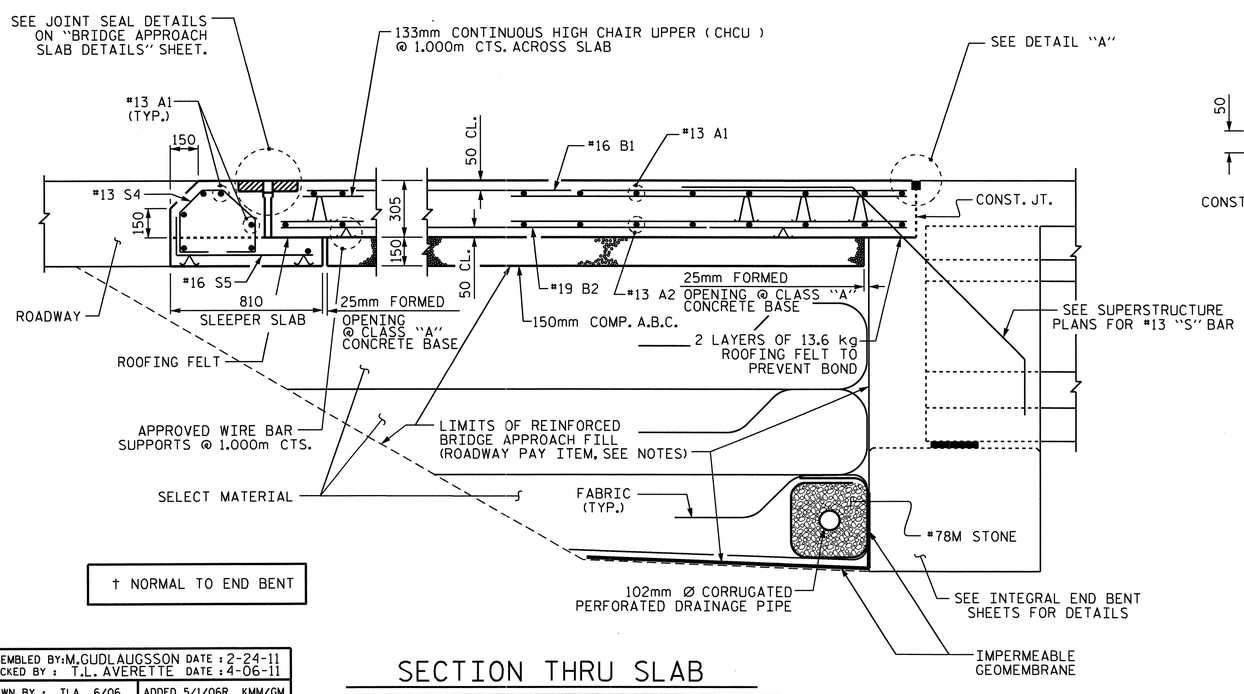


SECTION THRU SLAB

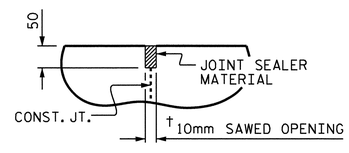


DETAIL "A"

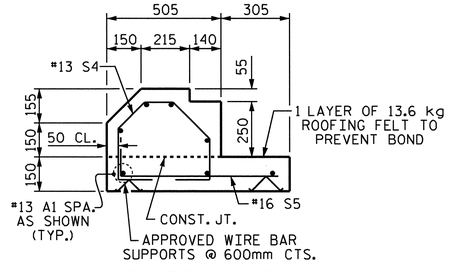


SECTION S-S

SHOWING SLEEPER SLAB

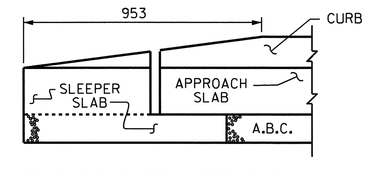


END OF CURB WITHOUT SHOULDER BERM GUTTER

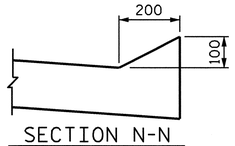


SECTION N-N

PROJECT NO. R-2413C

GUILFORD-ROCKINGHAM COUNTY

STATION: 24+37.000 -LREV-

SHEET 1 OF 2

STATE OF NORTH CAROLINA
DEPARTMENT OF TRANSPORTATION
RALEIGH

STANDARD

BRIDGE APPROACH SLAB FOR INTEGRAL ABUTMENT

(LEFT LANE)

NORTH CAROLINA PROFESSIONAL SEAL 022516 ENGINEER ELLAY E. MURRAY

1-12-11

| REVISIONS | | | | | | | SHEET NO. |
|---|---|---|---|---|---|---|---|
| NO. | BY: | DATE: | NO. | BY: | DATE: | | S-66 |
| 1 | | | 3 | | | | TOTAL SHEETS |
| 2 | | | 4 | | | | 238 |

STR. #2

STD. NO. BAS11SM

ASSEMBLED BY: M. GUDLAUGSSON DATE : 2-24-11
CHECKED BY : T.L. AVERETTE DATE : 4-06-11
DRAWN BY : TLA 6/06
CHECKED BY : GM 6/06
ADDED 5/1/06R KMM/GM

05-SEP-2011 11:17
Y:\Structures\Final Plans\Str.#2\R-2413C_SD_AS_02.dgn
mgudlaugsson

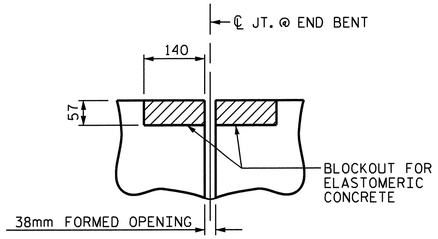


SECTION C-C

EVAZOTE JOINT SEAL (PRE-SAWED ELASTOMERIC CONCRETE DIMENSIONS)

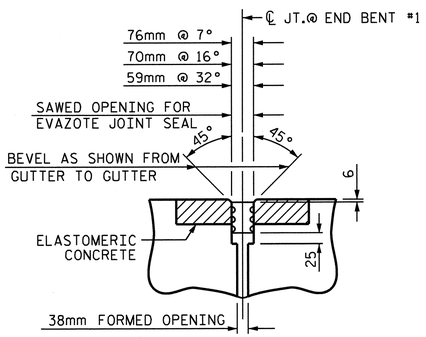


SECTION C-C

EVAZOTE JOINT SEAL @ END BENT #1

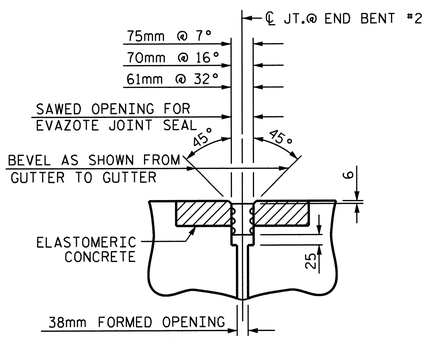


SECTION C-C

EVAZOTE JOINT SEAL @ END BENT #2

| ELASTOMERIC CONCRETE | |
|---|---|
| END BENT NO. | ELASTOMERIC CONCRETE * (CU. m) |
| 1 | 0.2 |
| 2 | 0.2 |
| TOTAL | 0.4 |

* BASED ON THE MINIMUM BLOCKOUT SHOWN.

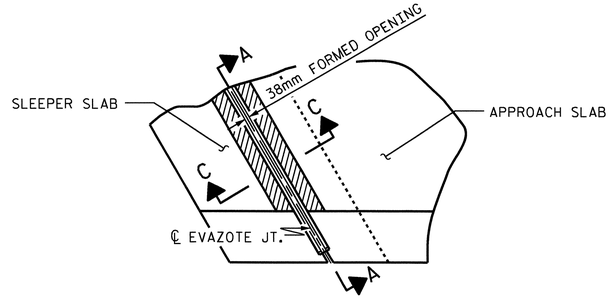


PLAN

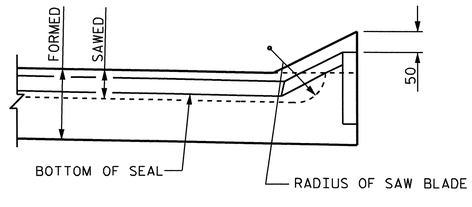


SECTION A-A

JOINT SEAL DETAILS @ SLEEPER SLAB

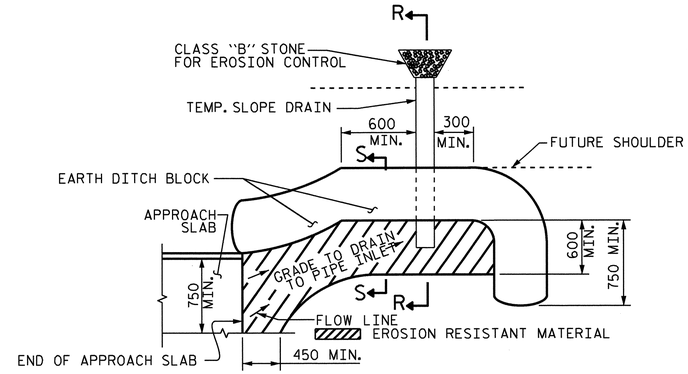


NOTE: IMMEDIATELY AFTER THE CONSTRUCTION OF THE APPROACH SLAB, THE CONTRACTOR SHALL PROVIDE TEMPORARY BERM AND SLOPE DRAIN. CONTRACTOR SHALL GRADE TO PIPE INLET AND PROVIDE EROSION RESISTANT MATERIAL AS SHOWN. THE EROSION RESISTANT MATERIAL SHALL BE EITHER 1) ASPHALT PLANT MIX, TYPE 1 OR TYPE 2, MIN. 50mm DEPTH, 2) EROSION CONTROL MAT, OR 3) CONCRETE, AS DIRECTED BY THE ENGINEER. THE SLOPE DRAIN SHALL CONSIST OF A NON-PERFORATED TEMPORARY DRAINAGE PIPE, 305mm IN DIAMETER.

PLAN VIEW

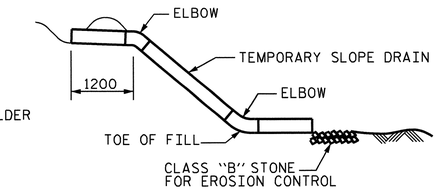


SECTION R-R

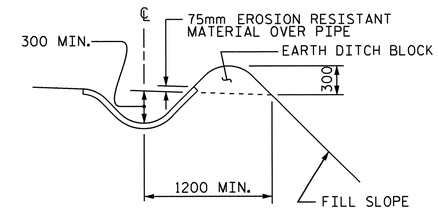


SECTION S-S

TEMPORARY BERM AND SLOPE DRAIN DETAILS

(TO BE USED WHEN SHOULDER BERM GUTTER IS REQUIRED)

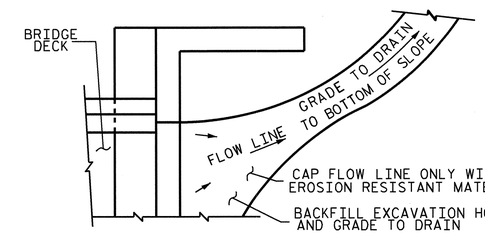


NOTE: IF THE APPROACH SLAB IS NOT CONSTRUCTED IMMEDIATELY AFTER THE BACKFILLING OF THE END BENT EXCAVATION, GRADE TO DRAIN TO THE BOTTOM OF THE SLOPE AND PROVIDE EROSION RESISTANT MATERIAL, SUCH AS FIBERGLASS ROVING OR AS DIRECTED BY THE ENGINEER TO PREVENT SOIL EROSION AND TO PROTECT THE AREA ADJACENT TO THE STRUCTURE. THE CONTRACTOR WILL BE REQUIRED TO REMOVE THESE MATERIALS PRIOR TO CONSTRUCTION OF THE APPROACH SLAB.

TEMPORARY DRAINAGE DETAIL

PROJECT NO. R-2413C

GUILFORD-ROCKINGHAM COUNTY

STATION: 24+37.000 -LREV-

SHEET 2 OF 2

STATE OF NORTH CAROLINA
DEPARTMENT OF TRANSPORTATION
RALEIGH

STANDARD
BRIDGE APPROACH
SLAB DETAILS
(LEFT LANE)

NORTH CAROLINA PROFESSIONAL SEAL 022516 ENGINEER EMILY E. MURRAY
10/28/11

| REVISIONS | | | | | | SHEET NO. |
|---|---|---|---|---|---|---|
| NO. | BY: | DATE: | NO. | BY: | DATE: | S-67 |
| 1 | | | 3 | | | TOTAL SHEETS |
| 2 | | | 4 | | | 238 |

STR. #2

STD. NO. BAS10SM

| | |
|---|---|
| ASSEMBLED BY: M.GUDLAUGSSON | DATE : 2-24-11 |
| CHECKED BY : T.L. AVERETTE | DATE : 4-06-11 |
| DRAWN BY : FCJ 11/88 | REV. 10/17/00 RWW/LES |
| CHECKED BY : ARB 11/88 | REV. 5/7/03 RWW/JTE |
| | REV. 5/1/06RR MAA/KMM |

05-SEP-2011 11:17
Y:\Structures\Final Plans\Str.#2\R-2413C_SD_AS_02.dgn
mgudlaugsson

# OVERHANG BRACKET CALCULATION INSTRUCTIONS

## AASHTO SHAPES - TYPES III, IV, V, AND VI

1. RECORD KNOWN INFORMATION ON "BRIDGE OVERHANG BRACKET SUMMARY" ON SHEET 2
2. CALCULATE THE MAXIMUM SCREED LOAD PER BRACKET (SLPB) WITH AN ESTIMATED R = 1.5. SLPB = R X W. ROUND VALUE UP TO NEAREST SLPB VALUE INDICATED ON APPROPRIATE TABLE 1-1, 1-2, 1-3, OR 1-4.
3. WITH THE ESTIMATED SLPB, OVERHANG SLAB THICKNESS, "K" VALUE, AND 45° HANGER SAFE WORKING LOAD (SWL), ENTER THE APPROPRIATE TABLE 1-1, 1-2, 1-3, OR 1-4 (BASED ON OVERHANG DIMENSION) AND DETERMINE THE BRACKET SPACING, S.
4. CALCULATE S/D1 AND S/D2, ROUNDING UP TO NEAREST VALUE IN TABLE 2. ENTER TABLE 2 AND DETERMINE R VALUE.
5. CALCULATE REVISED SLPB. ROUND VALUE UP TO NEAREST SLPB VALUE INDICATED ON APPROPRIATE TABLE 1-1, 1-2, 1-3, OR 1-4.
6. WITH THE REVISED SLPB, OVERHANG SLAB THICKNESS, "K" VALUE AND 45 HANGER SAFE WORKING LOAD (SWL), ENTER THE APPROPRIATE TABLE 1-1, 1-2, 1-3 OR 1-4 (BASED ON OVERHANG DIMENSION) AND DETERMINE REVISED BRACKET SPACING, S.
7. CONTINUE ITERATIONS OF STEPS 4-6 UNTIL THE REVISED BRACKET SPACING, S, IS THE SAME AS THE PREVIOUS S VALUE.
8. CHECK LUMBER JOIST SPACING: WITH BRACKET SPACING VALUE, S, ROUND THIS VALUE UP TO THE NEAREST VALUE OF ALLOWABLE SPAN LENGTH OF JOIST OF TABLE 3. USING THIS VALUE, ALONG WITH THE AVERAGE OVERHANG SLAB THICKNESS AND THE LUMBER JOIST SIZE, DETERMINE JOIST SPACING FROM TABLE 3. IF NECESSARY, ADJUST LUMBER JOIST SIZE AND/OR JOIST SPACING TO MEET ALLOWABLE SPAN LENGTH OF JOIST.
9. CONVERSELY, IF THE DESIRED JOIST SPACING IS KNOWN, USE THIS ALONG WITH THE AVERAGE OVERHANG SLAB THICKNESS AND THE LUMBER JOIST SIZE TO DETERMINE IF ALLOWABLE SPAN LENGTH OF JOIST IS GREATER THAN THE BRACKET SPACING, S. IF NECESSARY, ADJUST LUMBER JOIST SIZE TO MEET REQUIREMENTS OF ALLOWABLE SPAN LENGTH OF JOIST AND JOIST SPACING.
10. RECORD REMAINING INFORMATION ON "BRIDGE OVERHANG BRACKET SUMMARY" FORM.
11. SUBMIT FORM AND CALCULATIONS FOR REVIEW AND APPROVAL.

### TABLE 1-1

(FOR USE ON **UP TO 2'-0" OVERHANG Ⓛ** & 54" HORIZONTAL LEG LENGTH OF THE OVERHANG BRACKET)

| AVG. SLAB THICKNESS Ⓣ (in) | BRACKET Ⓚ DIMENSION (in) | SCREED LOAD PER BRACKET | | | | | | | | | 45° HANGER SWL (lbs) |
|---|---|---|---|---|---|---|---|---|---|---|---|
| | | 2500 lbs. | 2250 lbs. | 2000 lbs. | 1750 lbs. | 1500 lbs. | 1250 lbs. | 1000 lbs. | 750 lbs. | 0 lbs. | |
| | | BRACKET SPACING | | | | | | | | | |
| 10 | 30 | | | | 2'-1" | 2'-7" | 3'-2" | 3'-8" | 4'-2" | 5'-9" | 4000 |
| | | 3'-6" | 4'-0" | 4'-5" | 4'-9" | 5'-1" | 5'-3" | 5'-5" | 5'-7" | 6'-7" | 6000 |
| | 40 | | | | 2'-1" | 2'-7" | 3'-2" | 3'-8" | 4'-2" | 5'-9" | 4000 |
| | | 3'-6" | 4'-0" | 4'-5" | 4'-9" | 5'-1" | 5'-3" | 5'-5" | 5'-7" | 6'-7" | 6000 |
| | 50 | | | | 2'-1" | 2'-7" | 3'-2" | 3'-8" | 4'-2" | 5'-9" | 4000 |
| | | 3'-6" | 4'-0" | 4'-5" | 4'-9" | 5'-1" | 5'-3" | 5'-5" | 5'-7" | 6'-7" | 6000 |
| 12 | 30 | | | | | 2'-4" | 2'-10" | 3'-4" | 3'-9" | 5'-2" | 4000 |
| | | 3'-2" | 3'-7" | 4'-1" | 4'-7" | 5'-0" | 5'-2" | 5'-4" | 5'-7" | 6'-5" | 6000 |
| | 40 | | | | | 2'-4" | 2'-10" | 3'-4" | 3'-9" | 5'-2" | 4000 |
| | | 3'-2" | 3'-7" | 4'-1" | 4'-7" | 5'-0" | 5'-2" | 5'-4" | 5'-7" | 6'-5" | 6000 |
| | 50 | | | | | 2'-4" | 2'-10" | 3'-4" | 3'-9" | 5'-2" | 4000 |
| | | 3'-2" | 3'-7" | 4'-1" | 4'-7" | 5'-0" | 5'-2" | 5'-4" | 5'-7" | 6'-5" | 6000 |
| 14 | 30 | | | | | 2'-2" | 2'-7" | 3'-0" | 3'-5" | 4'-9" | 4000 |
| | | 2'-10" | 3'-4" | 3'-9" | 4'-2" | 4'-7" | 5'-0" | 5'-4" | 5'-7" | 6'-4" | 6000 |
| | 40 | | | | | 2'-2" | 2'-7" | 3'-0" | 3'-5" | 4'-9" | 4000 |
| | | 2'-10" | 3'-4" | 3'-9" | 4'-2" | 4'-7" | 5'-0" | 5'-4" | 5'-7" | 6'-4" | 6000 |
| | 50 | | | | | 2'-2" | 2'-7" | 3'-0" | 3'-5" | 4'-9" | 4000 |
| | | 2'-10" | 3'-4" | 3'-9" | 4'-2" | 4'-7" | 5'-0" | 5'-4" | 5'-7" | 6'-4" | 6000 |
| 16 | 30 | | | | | 2'-0" | 2'-4" | 2'-9" | 3'-2" | 4'-4" | 4000 |
| | | 2'-8" | 3'-0" | 3'-5" | 3'-10" | 4'-3" | 4'-7" | 5'-0" | 5'-5" | 6'-3" | 6000 |
| | 40 | | | | | 2'-0" | 2'-4" | 2'-9" | 3'-2" | 4'-4" | 4000 |
| | | 2'-8" | 3'-0" | 3'-5" | 3'-10" | 4'-3" | 4'-7" | 5'-0" | 5'-5" | 6'-3" | 6000 |
| | 50 | | | | | 2'-0" | 2'-4" | 2'-9" | 3'-2" | 4'-4" | 4000 |
| | | 2'-8" | 3'-0" | 3'-5" | 3'-10" | 4'-3" | 4'-7" | 5'-0" | 5'-5" | 6'-3" | 6000 |

### TABLE 1-2

(FOR USE ON **OVER 2'-0" TO 2'-6" OVERHANG Ⓛ** & 54" HORIZONTAL LEG LENGTH OF THE OVERHANG BRACKET)

| AVG. SLAB THICKNESS Ⓣ (in) | BRACKET Ⓚ DIMENSION (in) | SCREED LOAD PER BRACKET | | | | | | | | | 45° HANGER SWL (lbs) |
|---|---|---|---|---|---|---|---|---|---|---|---|
| | | 2500 lbs. | 2250 lbs. | 2000 lbs. | 1750 lbs. | 1500 lbs. | 1250 lbs. | 1000 lbs. | 750 lbs. | 0 lbs. | |
| | | BRACKET SPACING | | | | | | | | | |
| 10 | 30 | | | | | 2'-4" | 2'-9" | 3'-3" | 3'-8" | 5'-1" | 4000 |
| | | 3'-1" | 3'-6" | 4'-0" | 4'-5" | 4'-11" | 5'-3" | 5'-5" | 5'-7" | 6'-7" | 6000 |
| | 40 | | | | | 2'-4" | 2'-9" | 3'-3" | 3'-8" | 5'-1" | 4000 |
| | | 3'-1" | 3'-6" | 4'-0" | 4'-5" | 4'-11" | 5'-3" | 5'-5" | 5'-7" | 6'-7" | 6000 |
| | 50 | | | | | 2'-4" | 2'-9" | 3'-3" | 3'-8" | 5'-1" | 4000 |
| | | 3'-1" | 3'-6" | 4'-0" | 4'-5" | 4'-11" | 5'-3" | 5'-5" | 5'-7" | 6'-7" | 6000 |
| 12 | 30 | | | | | 2'-1" | 2'-6" | 2'-11" | 3'-4" | 4'-6" | 4000 |
| | | 2'-9" | 3'-2" | 3'-7" | 4'-0" | 4'-5" | 4'-10" | 5'-3" | 5'-7" | 6'-5" | 6000 |
| | 40 | | | | | 2'-1" | 2'-6" | 2'-11" | 3'-4" | 4'-6" | 4000 |
| | | 2'-9" | 3'-2" | 3'-7" | 4'-0" | 4'-5" | 4'-10" | 5'-3" | 5'-7" | 6'-5" | 6000 |
| | 50 | | | | | 2'-1" | 2'-6" | 2'-11" | 3'-4" | 4'-6" | 4000 |
| | | 2'-9" | 3'-2" | 3'-7" | 4'-0" | 4'-5" | 4'-10" | 5'-3" | 5'-7" | 6'-5" | 6000 |
| 14 | 30 | | | | | | 2'-3" | 2'-7" | 3'-0" | 4'-1" | 4000 |
| | | 2'-6" | 2'-10" | 3'-3" | 3'-7" | 4'-0" | 4'-4" | 4'-9" | 5'-1" | 6'-3" | 6000 |
| | 40 | | | | | | 2'-3" | 2'-7" | 3'-0" | 4'-1" | 4000 |
| | | 2'-6" | 2'-10" | 3'-3" | 3'-7" | 4'-0" | 4'-4" | 4'-9" | 5'-1" | 6'-3" | 6000 |
| | 50 | | | | | | 2'-3" | 2'-7" | 3'-0" | 4'-1" | 4000 |
| | | 2'-6" | 2'-10" | 3'-3" | 3'-7" | 4'-0" | 4'-4" | 4'-9" | 5'-1" | 6'-3" | 6000 |
| 16 | 30 | | | | | | 2'-1" | 2'-5" | 2'-9" | 3'-9" | 4000 |
| | | 2'-3" | 2'-7" | 2'-11" | 3'-4" | 3'-8" | 4'-0" | 4'-4" | 4'-8" | 5'-8" | 6000 |
| | 40 | | | | | | 2'-1" | 2'-5" | 2'-9" | 3'-9" | 4000 |
| | | 2'-3" | 2'-7" | 2'-11" | 3'-4" | 3'-8" | 4'-0" | 4'-4" | 4'-8" | 5'-8" | 6000 |
| | 50 | | | | | | 2'-1" | 2'-5" | 2'-9" | 3'-9" | 4000 |
| | | 2'-3" | 2'-7" | 2'-11" | 3'-4" | 3'-8" | 4'-0" | 4'-4" | 4'-8" | 5'-8" | 6000 |

### TABLE 1-3

(FOR USE ON **OVER 2'-6" TO 3'-0" OVERHANG Ⓛ** & 54" HORIZONTAL LEG LENGTH OF THE OVERHANG BRACKET)

| AVG. SLAB THICKNESS Ⓣ (in) | BRACKET Ⓚ DIMENSION (in) | SCREED LOAD PER BRACKET | | | | | | | | | 45° HANGER SWL (lbs) |
|---|---|---|---|---|---|---|---|---|---|---|---|
| | | 2500 lbs. | 2250 lbs. | 2000 lbs. | 1750 lbs. | 1500 lbs. | 1250 lbs. | 1000 lbs. | 750 lbs. | 0 lbs. | |
| | | BRACKET SPACING | | | | | | | | | |
| 10 | 30 | | | | | 2'-1" | 2'-6" | 2'-11" | 3'-4" | 4'-6" | 4000 |
| | | | | | | 4'-5" | 4'-10" | 5'-3" | 5'-7" | 6'-7" | 6000 |
| | 40 | | | | | 2'-1" | 2'-6" | 2'-11" | 3'-4" | 4'-6" | 4000 |
| | | 2'-9" | 3'-2" | 3'-7" | 4'-0" | 4'-5" | 4'-10" | 5'-3" | 5'-7" | 6'-7" | 6000 |
| | 50 | | | | | 2'-1" | 2'-6" | 2'-11" | 3'-4" | 4'-6" | 4000 |
| | | 2'-9" | 3'-2" | 3'-7" | 4'-0" | 4'-5" | 4'-10" | 5'-3" | 5'-7" | 6'-7" | 6000 |
| 12 | 30 | | | | | | 2'-2" | 2'-7" | 2'-11" | 4'-0" | 4000 |
| | | | | | | 3'-11" | 4'-3" | 4'-8" | 5'-0" | 6'-1" | 6000 |
| | 40 | | | | | | 2'-2" | 2'-7" | 2'-11" | 4'-0" | 4000 |
| | | 2'-5" | 2'-10" | 3'-2" | 3'-6" | 3'-11" | 4'-3" | 4'-8" | 5'-0" | 6'-1" | 6000 |
| | 50 | | | | | | 2'-2" | 2'-7" | 2'-11" | 4'-0" | 4000 |
| | | 2'-5" | 2'-10" | 3'-2" | 3'-6" | 3'-11" | 4'-3" | 4'-8" | 5'-0" | 6'-1" | 6000 |
| 14 | 30 | | | | | | 2'-0" | 2'-4" | 2'-8" | 3'-8" | 4000 |
| | | | | | 3'-2" | 3'-6" | 3'-10" | 4'-2" | 4'-6" | 5'-6" | 6000 |
| | 40 | | | | | | 2'-0" | 2'-4" | 2'-8" | 3'-8" | 4000 |
| | | 2'-2" | 2'-6" | 2'-10" | 3'-2" | 3'-6" | 3'-10" | 4'-2" | 4'-6" | 5'-6" | 6000 |
| | 50 | | | | | | 2'-0" | 2'-4" | 2'-8" | 3'-8" | 4000 |
| | | 2'-2" | 2'-6" | 2'-10" | 3'-2" | 3'-6" | 3'-10" | 4'-2" | 4'-6" | 5'-6" | 6000 |
| 16 | 30 | | | | | | | 2'-1" | 2'-5" | 3'-4" | 4000 |
| | | | | | 2'-11" | 3'-2" | 3'-6" | 3'-10" | 4'-1" | 5'-0" | 6000 |
| | 40 | | | | | | | 2'-1" | 2'-5" | 3'-4" | 4000 |
| | | 2'-0" | 2'-4" | 2'-7" | 2'-11" | 3'-2" | 3'-6" | 3'-10" | 4'-1" | 5'-0" | 6000 |
| | 50 | | | | | | | 2'-1" | 2'-5" | 3'-4" | 4000 |
| | | 2'-0" | 2'-4" | 2'-7" | 2'-11" | 3'-2" | 3'-6" | 3'-10" | 4'-1" | 5'-0" | 6000 |

### TABLE 1-4

(FOR USE ON **OVER 3'-0" TO 3'-6" OVERHANG Ⓛ** & 54" HORIZONTAL LEG LENGTH OF THE OVERHANG BRACKET)

| AVG. SLAB THICKNESS Ⓣ (in) | BRACKET Ⓚ DIMENSION (in) | SCREED LOAD PER BRACKET | | | | | | | | | 45° HANGER SWL (lbs) |
|---|---|---|---|---|---|---|---|---|---|---|---|
| | | 2500 lbs. | 2250 lbs. | 2000 lbs. | 1750 lbs. | 1500 lbs. | 1250 lbs. | 1000 lbs. | 750 lbs. | 0 lbs. | |
| | | BRACKET SPACING | | | | | | | | | |
| 10 | 30 | | | | | | 2'-1" | 2'-5" | 2'-9" | 3'-10" | 4000 |
| | | | | | | 2'-3" | 2'-11" | 3'-7" | 4'-3" | 5'-9" | 6000 |
| | 40 | | | | | | 2'-1" | 2'-5" | 2'-9" | 3'-10" | 4000 |
| | | | | 2'-4" | 3'-0" | 3'-7" | 4'-1" | 4'-5" | 4'-9" | 5'-9" | 6000 |
| | 50 | | | | | | 2'-1" | 2'-5" | 2'-9" | 3'-10" | 4000 |
| | | 2'-4" | 2'-8" | 3'-0" | 3'-4" | 3'-8" | 4'-1" | 4'-5" | 4'-9" | 5'-9" | 6000 |
| 12 | 30 | | | | | | | 2'-2" | 2'-6" | 3'-5" | 4000 |
| | | | | | | 2'-1" | 2'-8" | 3'-4" | 3'-11" | 5'-2" | 6000 |
| | 40 | | | | | | | 2'-2" | 2'-6" | 3'-5" | 4000 |
| | | | | 2'-2" | 2'-9" | 3'-4" | 3'-7" | 3'-11" | 4'-3" | 5'-2" | 6000 |
| | 50 | | | | | | | 2'-2" | 2'-6" | 3'-5" | 4000 |
| | | 2'-1" | 2'-4" | 2'-8" | 3'-0" | 3'-4" | 3'-7" | 3'-11" | 4'-3" | 5'-2" | 6000 |
| 14 | 30 | | | | | | | | 2'-3" | 3'-1" | 4000 |
| | | | | | | 2'-0" | 2'-6" | 3'-1" | 3'-8" | 4'-8" | 6000 |
| | 40 | | | | | | | | 2'-3" | 3'-1" | 4000 |
| | | | | 2'-0" | 2'-7" | 3'-0" | 3'-3" | 3'-6" | 3'-10" | 4'-8" | 6000 |
| | 50 | | | | | | | | 2'-3" | 3'-1" | 4000 |
| | | | 2'-2" | 2'-5" | 2'-8" | 3'-0" | 3'-3" | 3'-6" | 3'-10" | 4'-8" | 6000 |
| 16 | 30 | | | | | | | | 2'-0" | 2'-9" | 4000 |
| | | | | | | | 2'-4" | 2'-10" | 3'-5" | 4'-3" | 6000 |
| | 40 | | | | | | | | 2'-0" | 2'-9" | 4000 |
| | | | | | 2'-5" | 2'-8" | 2'-11" | 3'-3" | 3'-6" | 4'-3" | 6000 |
| | 50 | | | | | | | | 2'-0" | 2'-9" | 4000 |
| | | | | 2'-2" | 2'-5" | 2'-8" | 2'-11" | 3'-3" | 3'-6" | 4'-3" | 6000 |

DEFINITIONS

SLPB = SCREED LOAD PER BRACKET (R x W)
R = SCREED LOAD FACTOR, OBTAINED FROM TABLE 2
W = WHEEL LOAD
S = BRACKET SPACING
T = AVERAGE SLAB THICKNESS
SWL = SAFE WORKING LOAD
K = DIMENSION DEFINED ON "BRIDGE OVERHANG BRACKET SUMMARY" ON SHEET 2
L = OVERHANG MEASURED FROM EDGE OF TOP FLANGE TO EDGE OF SUPERSTRUCTURE

PROJECT NO. R-2413C
GUILFORD-ROCKINGHAM COUNTY
STATION: 24+37.000 -LREV-

SHEET 1 OF 3

STATE OF NORTH CAROLINA
DEPARTMENT OF TRANSPORTATION
RALEIGH

STANDARD OVERHANG FALSEWORK

AASHTO TYPES
III, IV, V, AND VI
(LEFT LANE)

NORTH CAROLINA PROFESSIONAL SEAL 18788 ENGINEER CHANG-CHUAN VICTOR CHAO

Chang-Chuan Victor Chao
8-5-2011

| REVISIONS | | | | | | SHEET NO. |
|---|---|---|---|---|---|---|
| NO. | BY: | DATE: | NO. | BY: | DATE: | S-68 |
| 1 | | | 3 | | | TOTAL SHEETS |
| 2 | | | 4 | | | 238 |

| | |
|---|---|
| ASSEMBLED BY: | DATE: |
| CHECKED BY: | DATE: |
| DRAWN BY: R. WRIGHT 06/04 | REV. |
| CHECKED BY: C. V. CHAO 06/04 | |

05-AUG-2011 10:41
C:\OLDFILES0\wdir\victor\OverhangFalsework\TIEBAR&STRUT\R-2413C\R-2413CSTR2_TYPE_IV\R2413CSTR2verHangSheets.dgn
vchao

STR. #2

OF1

## BRIDGE OVERHANG BRACKET SUMMARY

TOTAL SCREED WEIGHT = _____ LBS.
NUMBER OF SCREED WHEELS = _____
SCREED WHEEL LOAD (W) = _____ LBS.
SCREED LOAD PER BRACKET = _____ LBS.

PROJECT No. : _____
COUNTY : _____
STATION : _____
DESCRIPTION : _____

DATE : _____
DESIGN BY : _____
CHECK BY : _____

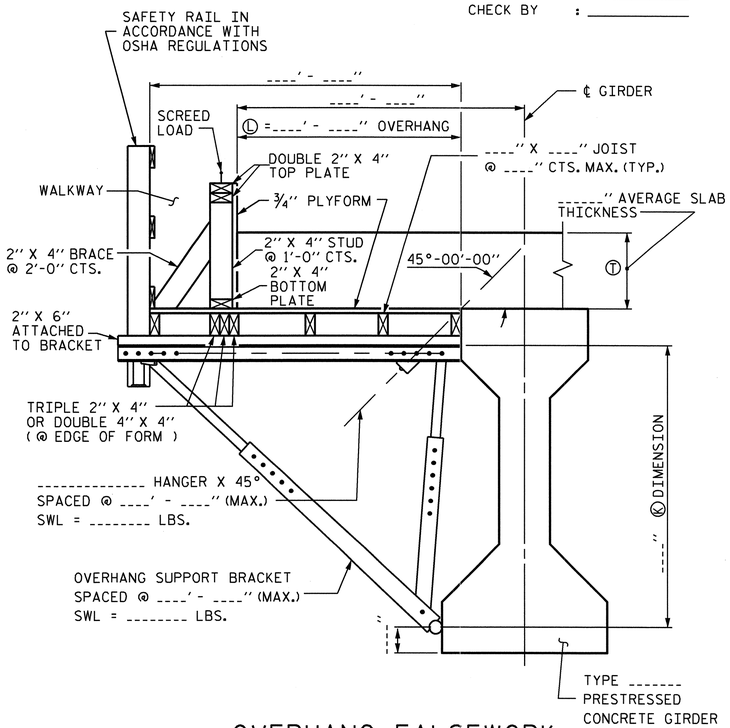


OVERHANG FALSEWORK

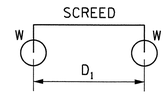


4-WHEEL MACHINE

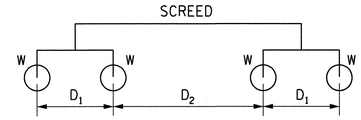


8-WHEEL MACHINE

| 4 WHEEL MACHINE | |
|---|---|
| S/D1 | R |
| <= 1.0 | 1.00 |
| 1.1 | 1.09 |
| 1.2 | 1.17 |
| 1.3 | 1.23 |
| 1.4 | 1.29 |
| 1.5 | 1.33 |
| 1.6 | 1.38 |
| 1.7 | 1.41 |
| 1.8 | 1.44 |
| 1.9 | 1.47 |
| 2.0 | 1.50 |
| 2.2 | 1.55 |
| 2.4 | 1.58 |
| 2.6 | 1.62 |
| 2.8 | 1.64 |
| 3.0 | 1.67 |
| 3.5 | 1.71 |
| 4.0 | 1.75 |

## TABLE 2: SCREED LOAD FACTOR "R"

| | | THE SCREED LOAD FACTOR R (FOR 8 WHEEL MACHINE) | | | | | | | | | | | | | | | | | |
|---|---|---|---|---|---|---|---|---|---|---|---|---|---|---|---|---|---|---|---|
| | | $S/D_2$ | | | | | | | | | | | | | | | | | |
| | | <= 1.0 | 1.1 | 1.2 | 1.3 | 1.4 | 1.5 | 1.6 | 1.7 | 1.8 | 1.9 | 2.0 | 2.2 | 2.4 | 2.6 | 2.8 | 3.0 | 3.5 | 4.0 |
| $S/D_1$ | <= 1.0 | 1.00 | 1.09 | 1.17 | 1.23 | 1.29 | 1.33 | 1.38 | 1.41 | 1.44 | 1.47 | 1.50 | 1.55 | 1.58 | 1.62 | 1.64 | 1.67 | 1.71 | 1.75 |
| | 1.1 | 1.09 | 1.18 | 1.26 | 1.32 | 1.38 | 1.42 | 1.47 | 1.50 | 1.54 | 1.56 | 1.59 | 1.64 | 1.67 | 1.71 | 1.73 | 1.76 | 1.81 | 1.84 |
| | 1.2 | 1.17 | 1.26 | 1.33 | 1.40 | 1.45 | 1.50 | 1.54 | 1.58 | 1.61 | 1.64 | 1.67 | 1.71 | 1.75 | 1.78 | 1.81 | 1.83 | 1.88 | 1.92 |
| | 1.3 | 1.23 | 1.32 | 1.40 | 1.46 | 1.52 | 1.56 | 1.61 | 1.64 | 1.68 | 1.70 | 1.73 | 1.78 | 1.81 | 1.85 | 1.87 | 1.90 | 1.95 | 1.98 |
| | 1.4 | 1.29 | 1.38 | 1.45 | 1.52 | 1.57 | 1.62 | 1.66 | 1.70 | 1.73 | 1.76 | 1.79 | 1.83 | 1.87 | 1.90 | 1.93 | 1.95 | 2.00 | 2.07 |
| | 1.5 | 1.33 | 1.42 | 1.50 | 1.56 | 1.62 | 1.67 | 1.71 | 1.75 | 1.78 | 1.81 | 1.83 | 1.88 | 1.92 | 1.95 | 1.98 | 2.00 | 2.10 | 2.17 |
| | 1.6 | 1.38 | 1.47 | 1.54 | 1.61 | 1.66 | 1.71 | 1.75 | 1.79 | 1.82 | 1.85 | 1.88 | 1.92 | 1.96 | 1.99 | 2.04 | 2.08 | 2.18 | 2.25 |
| | 1.7 | 1.41 | 1.50 | 1.58 | 1.64 | 1.70 | 1.75 | 1.79 | 1.82 | 1.86 | 1.89 | 1.91 | 1.96 | 2.00 | 2.05 | 2.11 | 2.16 | 2.25 | 2.32 |
| | 1.8 | 1.44 | 1.54 | 1.61 | 1.68 | 1.73 | 1.78 | 1.82 | 1.86 | 1.89 | 1.92 | 1.94 | 1.99 | 2.06 | 2.12 | 2.17 | 2.22 | 2.32 | 2.39 |
| | 1.9 | 1.47 | 1.56 | 1.64 | 1.70 | 1.76 | 1.81 | 1.85 | 1.89 | 1.92 | 1.95 | 1.97 | 2.04 | 2.11 | 2.18 | 2.23 | 2.28 | 2.38 | 2.45 |
| | 2.0 | 1.50 | 1.59 | 1.67 | 1.73 | 1.79 | 1.83 | 1.88 | 1.91 | 1.94 | 1.97 | 2.00 | 2.09 | 2.17 | 2.23 | 2.29 | 2.33 | 2.43 | 2.50 |
| | 2.2 | 1.55 | 1.64 | 1.71 | 1.78 | 1.83 | 1.88 | 1.92 | 1.96 | 1.99 | 2.04 | 2.09 | 2.18 | 2.26 | 2.32 | 2.38 | 2.42 | 2.52 | 2.59 |
| | 2.4 | 1.58 | 1.67 | 1.75 | 1.81 | 1.87 | 1.92 | 1.96 | 2.00 | 2.06 | 2.11 | 2.17 | 2.26 | 2.33 | 2.40 | 2.45 | 2.50 | 2.60 | 2.67 |
| | 2.6 | 1.62 | 1.71 | 1.78 | 1.85 | 1.90 | 1.95 | 1.99 | 2.05 | 2.12 | 2.18 | 2.23 | 2.32 | 2.40 | 2.46 | 2.52 | 2.56 | 2.66 | 2.73 |
| | 2.8 | 1.64 | 1.73 | 1.81 | 1.87 | 1.93 | 1.98 | 2.04 | 2.11 | 2.17 | 2.23 | 2.29 | 2.38 | 2.45 | 2.52 | 2.57 | 2.62 | 2.71 | 2.79 |
| | 3.0 | 1.67 | 1.76 | 1.83 | 1.90 | 1.95 | 2.00 | 2.08 | 2.16 | 2.22 | 2.28 | 2.33 | 2.42 | 2.50 | 2.56 | 2.62 | 2.67 | 2.76 | 2.83 |
| | 3.5 | 1.71 | 1.81 | 1.88 | 1.95 | 2.00 | 2.10 | 2.18 | 2.25 | 2.32 | 2.38 | 2.43 | 2.52 | 2.60 | 2.66 | 2.71 | 2.76 | 2.86 | 2.93 |
| | 4.0 | 1.75 | 1.84 | 1.92 | 1.98 | 2.07 | 2.17 | 2.25 | 2.32 | 2.39 | 2.45 | 2.50 | 2.59 | 2.67 | 2.73 | 2.79 | 2.83 | 2.93 | 3.00 |

## TABLE 3: ALLOWABLE SPAN LENGTH OF JOISTS AND JOIST SPACINGS

| AVG. SLAB THICKNESS Ⓣ (IN) | LUMBER JOIST SIZE (IN X IN) | JOIST SPACINGS | | | |
|---|---|---|---|---|---|
| | | 15 IN | 12 IN | 10 IN | 8 IN |
| | | THE ALLOWABLE SPAN LENGTH OF JOISTS | | | |
| 10 | 2 X 4 | ——— | 4' - 6" | 4' - 9" | 5' - 0" |
| | 4 X 4 | 5' - 9" | 6' - 3" | 6' - 6" | 6' - 7" |
| 12 | 2 X 4 | ——— | 4' - 3" | 4' - 9" | 5' - 0" |
| | 4 X 4 | 5' - 3" | 6' - 0" | 6' - 3" | 6' - 5" |
| 14 | 2 X 4 | ——— | 4' - 0" | 4' - 6" | 5' - 0" |
| | 4 X 4 | ——— | 5' - 6" | 6' - 0" | 6' - 4" |
| 16 | 2 X 4 | ——— | 4' - 0" | 4' - 3" | 4' - 9" |
| | 4 X 4 | ——— | 5' - 3" | 5' - 9" | 6' - 3" |

## NOTES

DESIGN INCLUDES CONSTRUCTION LIVE LOAD 20 PSF ON THE AREA SUPPORTED AND 75 PLF AT THE OUTSIDE DECK OF OVERHANGS.

REQUIRED MINIMUM DIAGONAL LEG CAPACITY: 3600 LB WORKING LOAD

THE CONTRACTOR HAS THE OPTION OF SUBMITTING HIS OWN DESIGN FOR OVERHANG FALSEWORK IN ACCORDANCE WITH THE SPECIAL PROVISIONS.

SUBMITTALS UTILIZING THE INSTRUCTIONS AND PROCEDURES DESCRIBED ON SHEET 1 OF 3 SHALL BE IN ACCORDANCE WITH THE APPLICABLE SECTIONS OF THE SPECIFICATIONS AND SPECIAL PROVISIONS, EXCEPT THAT CALCULATIONS FOR OVERHANG FALSEWORK NEED NOT BE SEALED BY A REGISTERED ENGINEER.

FOR OVERHANG FALSEWORK BRACING DESIGN, SEE SHEET 3 OF 3.

PROJECT NO. R-2413C
GUILFORD-ROCKINGHAM COUNTY
STATION: 24+37.000 -LREV-

SHEET 2 OF 3

STATE OF NORTH CAROLINA
DEPARTMENT OF TRANSPORTATION
RALEIGH

STANDARD OVERHANG FALSEWORK

AASHTO TYPES
III, IV, V, AND VI
(LEFT LANE)

NORTH CAROLINA PROFESSIONAL SEAL 18788 ENGINEER CHANG-CHUAN VICTOR CHAO

Chang-Chuan Victor Chao
8-5-2011

| ASSEMBLED BY: | DATE: |
|---|---|
| CHECKED BY: | DATE: |
| DRAWN BY: R. WRIGHT 06/04 | REV. |
| CHECKED BY: C. V. CHAO 06/04 | |

| REVISIONS | | | | | | SHEET NO. |
|---|---|---|---|---|---|---|
| NO. | BY: | DATE: | NO. | BY: | DATE: | S-69 |
| 1 | | | 3 | | | TOTAL SHEETS |
| 2 | | | 4 | | | 238 |

05-AUG-2011 10:41
C:\OLDFILESD\wdir\victor\OverhangFalsework\TIEBAR&STRUT\R-2413C\R-2413CSTR2_TYPE_IV\R2413CSTR2verHangSheets.dgn
vchao

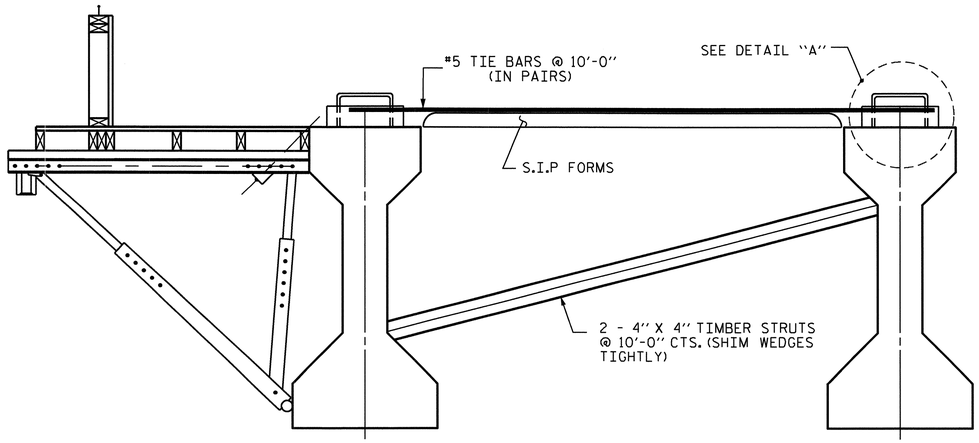


EXTERIOR GIRDER

INTERIOR GIRDER

## DETAIL OF REQUIRED OVERHANG FALSEWORK BRACING SYSTEM

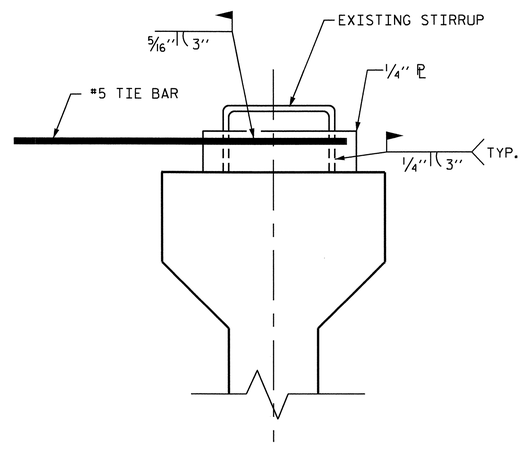


DETAIL "A"

## NOTES:

EACH #5 TIE BAR SHALL BE WELDED TO ONE STIRRUP LOOP AS SHOWN IN DETAIL "A". #5 TIE BARS SHALL BE WELDED TO TWO ADJACENT STIRRUPS OF THE EXTERIOR GIRDER AND THE ADJACENT INTERIOR GIRDER BETWEEN PERMANENT DIAPHRAGMS. WELD STEEL PLATES IN BETWEEN THE TIE BARS AND THE STIRRUP LOOP. WELDING TWO TIE BARS TO THE SAME STIRRUP LOOP SHALL NOT BE PERMITTED.

MAXIMUM SPACING BETWEEN THE BRACING (TIE BARS-TIMBER STRUT) IS 10'-0" CTS. #5 TIE BARS SHALL BE LOCATED OVER A TIMBER STRUT.

INSTALL TIE BARS AND TIMBER STRUTS PRIOR TO PLACEMENT OF CONCRETE OR SCREED WEIGHT ONTO THE OVERHANG FALSEWORK.

PROJECT NO. R-2413C

GUILFORD-ROCKINGHAM COUNTY

STATION: 24+37.000 -LREV-

SHEET 3 OF 3

STATE OF NORTH CAROLINA
DEPARTMENT OF TRANSPORTATION
RALEIGH

STANDARD OVERHANG FALSEWORK

AASHTO TYPES
III, IV, V, AND VI
(LEFT LANE)

NORTH CAROLINA PROFESSIONAL SEAL 18788 ENGINEER CHANG-CHUAN VICTOR CHAO

Chang-Chuan Victor Chao
8-5-2011

| REVISIONS | | | | | | SHEET NO. |
|---|---|---|---|---|---|---|
| NO. | BY: | DATE: | NO. | BY: | DATE: | S-70 |
| 1 | | | 3 | | | TOTAL SHEETS |
| 2 | | | 4 | | | 238 |

DRAWN BY: R. WRIGHT 06/04 DATE :

CHECKED BY: C. V. CHAO 06/04 DATE :

05-AUG-2011 10:42
C:\OLDFILESD\wdir\victor\OverhangFalsework\TIEBAR&STRUT\R-2413C\R-2413CSTR2_TYPE_IV\R2413CSTR2verHangSheets.dgn
vchao

STR. #2

OF3

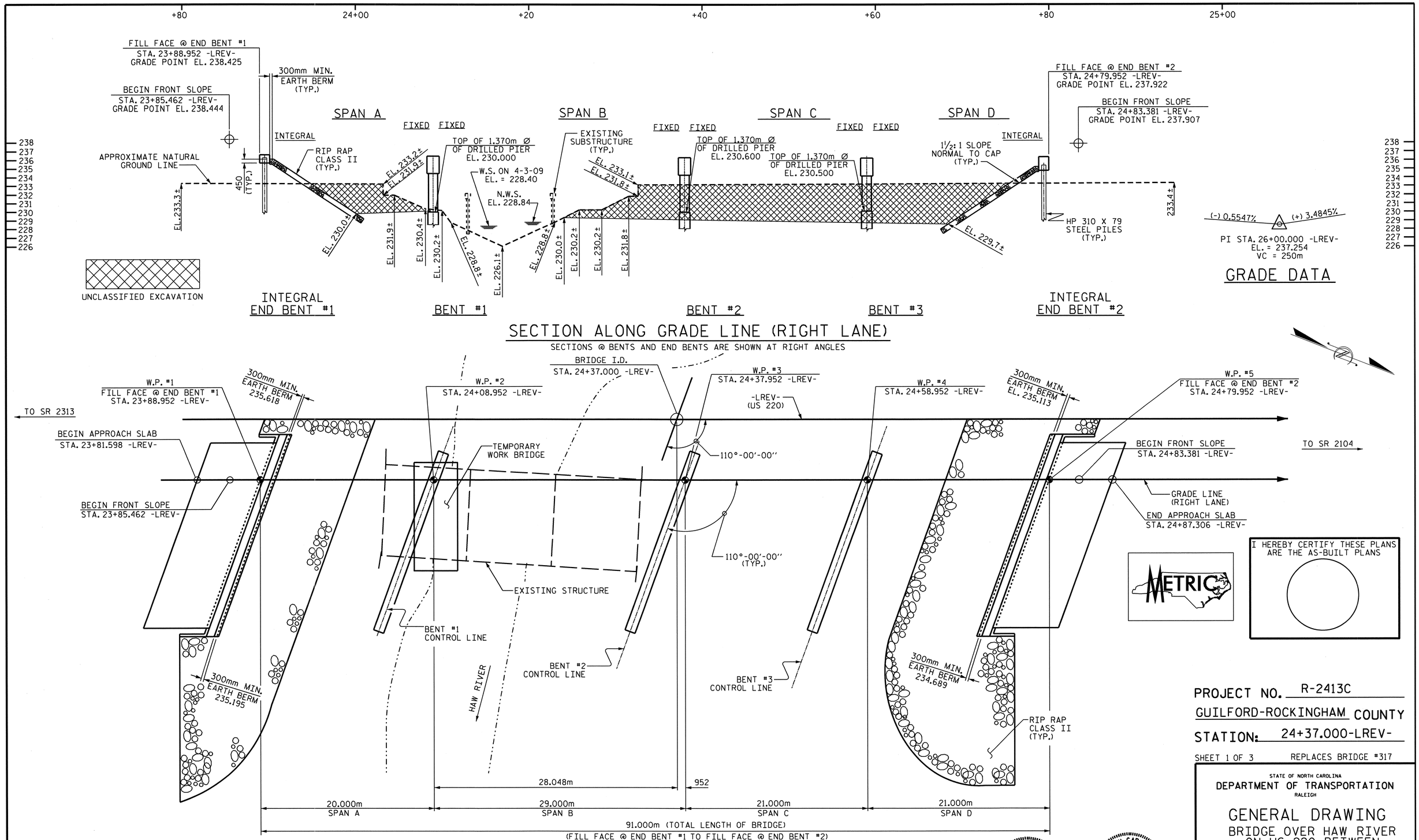


PROJECT NO. R-2413C

GUILFORD-ROCKINGHAM COUNTY

STATION: 24+37.000-LREV-

SHEET 1 OF 3 REPLACES BRIDGE #317

STATE OF NORTH CAROLINA
DEPARTMENT OF TRANSPORTATION
RALEIGH

# GENERAL DRAWING

BRIDGE OVER HAW RIVER
ON US 220 BETWEEN
SR 2313 AND SR 2104
(RIGHT LANE)

| REVISIONS | | | | | | SHEET NO. |
|---|---|---|---|---|---|---|
| NO. | BY: | DATE: | NO. | BY: | DATE: | S-71 |
| 1 | | | 3 | | | TOTAL SHEETS |
| 2 | | | 4 | | | 238 |

STR. #3

DRAWN BY : M.GUDLAUGSSON DATE : 5-20-11
CHECKED BY : PEGGY PARISI DATE : 8-2-11

19-OCT-2011 14:13
R:\TIPProjects-R\R2413c\Structures\FinalPlans\Str.#3\R-2413C_SD_GD_03.dgn
taverette

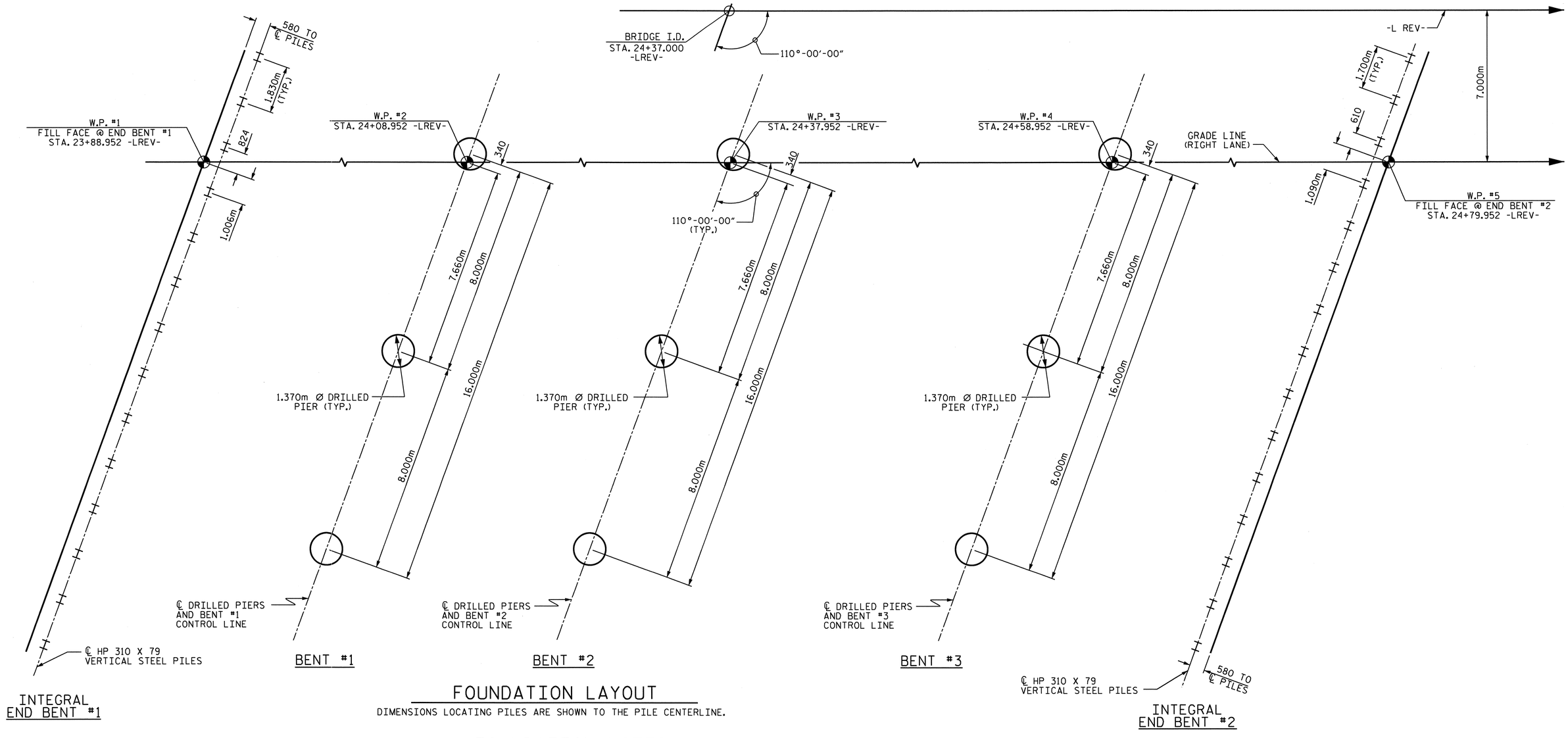


## FOUNDATION LAYOUT

DIMENSIONS LOCATING PILES ARE SHOWN TO THE PILE CENTERLINE.

## FOUNDATION NOTES

FOR PILES, SEE SPECIAL PROVISIONS.

THE ALLOWABLE BEARING CAPACITY FOR PILES AT END BENT NO. 1 AND END BENT NO. 2 IS 670 kN PER PILE.

DRIVE PILES AT END BENT NO. 1 AND END BENT NO. 2 TO A REQUIRED BEARING CAPACITY OF 1340 kN PER PILE. THE REQUIRED BEARING CAPACITY IS EQUAL TO THE ALLOWABLE BEARING CAPACITY WITH A MINIMUM FACTOR OF SAFETY OF TWO.

THE DRILLED PIERS AT BENT NO. 1, BENT NO. 2 AND BENT NO. 3 ARE DESIGNED FOR BOTH SKIN FRICTION AND END BEARING. CHECK FIELD CONDITIONS FOR THE REQUIRED END BEARING CAPACITY OF 4300 kPa.

DRILLED PIERS AT BENT NO. 1, BENT NO. 2, AND BENT NO. 3 ARE DESIGNED FOR AN APPLIED LOAD OF 4680 kN, 4707 kN, AND 4204 kN EACH AT THE TOP OF THE COLUMN, RESPECTIVELY.

PERMANENT STEEL CASINGS MAY BE REQUIRED FOR DRILLED PIERS AT BENT NO. 1. IF REQUIRED, DO NOT EXTEND PERMANENT CASINGS BELOW ELEVATION 224.0m WITHOUT PRIOR APPROVAL FROM THE ENGINEER. THE ENGINEER WILL DETERMINE THE NEED FOR PERMANENT CASINGS.

INSTALL DRILLED PIERS AT BENT NO. 1, BENT NO. 2, AND BENT NO. 3 THAT EXTEND TO AN ELEVATION NO HIGHER THAN 212.6m, 213.9m, AND 213.0m, RESPECTIVELY, AND SATIFY THE REQUIRED END BEARING CAPACITY.

THE SCOUR CRITICAL ELEVATION FOR BENT NO. 1, BENT NO. 2, AND BENT NO. 3 IS ELEVATION 224.0m. SCOUR CRITICAL ELEVATIONS ARE USED TO MONITOR POSSIBLE SCOUR PROBLEMS DURING THE LIFE OF THE STRUCTURE.

SLURRY CONSTRUCTION IS REQUIRED FOR DRILLED PIERS AT BENT NO. 1, BENT NO. 2 AND BENT NO. 3.

FOR DRILLED PIERS, SEE DRILLED PIERS SPECIAL PROVISION.

IF REQUIRED, INSTALL PERMANENT STEEL CASINGS AT BENT NO. 1 BY VIBRATING, SCREWING OR DRIVING PERMANENT CASINGS BEFORE EXCAVATING OR DISTURBING ANY MATERIAL BELOW ELEVATION 226.8m.

SPT TESTING MAY BE REQUIRED FOR DRILLED PIERS. THE ENGINEER WILL DETERMINE THE NEED FOR SPT TESTING. FOR SPT, SEE DRILLED PIERS SPECIAL PROVISION.

SID INSPECTIONS ARE REQUIRED FOR A MINIMUM OF ONE DRILLED PIER AT EACH INTERIOR BENT. THE ENGINEER WILL DETERMINE WHICH DRILLED PIERS WILL BE TESTED. FOR SID, SEE DRILLED PIERS SPECIAL PROVISION.

CSL TUBES ARE REQUIRED AND CSL TESTING MAY BE REQUIRED FOR DRILLED PIERS. THE ENGINEER WILL DETERMINE THE NEED FOR CSL TESTING. FOR CROSSHOLE SONIC LOGGING, SEE DRILLED PIERS SPECIAL PROVISION.

NORTH CAROLINA PROFESSIONAL SEAL 022516 ENGINEER EMILY E. MURRAY
10/28/11

PROJECT NO. R-2413C
GUILFORD-ROCKINGHAM COUNTY
STATION: 24+37.000 -LREV-

SHEET 2 OF 3

STATE OF NORTH CAROLINA
DEPARTMENT OF TRANSPORTATION
RALEIGH

GENERAL DRAWING
BRIDGE OVER HAW RIVER ON US 220 BETWEEN SR 2313 AND SR 2104 (RIGHT LANE)

| REVISIONS | | | | | | SHEET NO. |
|---|---|---|---|---|---|---|
| NO. | BY: | DATE: | NO. | BY: | DATE: | S-72 |
| 1 | | | 3 | | | TOTAL SHEETS |
| 2 | | | 4 | | | 238 |

STR. #3

DRAWN BY : M.GUDLAUGSSON DATE : 5-20-11
CHECKED BY : PEGGY PARISI DATE : 8-2-11

19-OCT-2011 14:14
R:\TIPProjects-R\R2413c\Structures\Final Plans\Str.#3\R-2413C_SD_GD_03.dgn
taverette

## TOTAL BILL OF MATERIAL

| | CONSTRUCTION, MAINTENANCE, & REMOVAL OF TEMPORARY ACCESS | REMOVAL OF EXISTING STRUCTURE | 1370mm Ø DRILLED PIERS | PERMANENT STEEL CASING FOR 1370mm Ø DRILLED PIER | SID INSPECTION | SPT TESTING | CSL TESTING | UNCLASSIFIED STRUCTURE EXCAVATION | REINFORCED CONCRETE DECK SLAB | GROOVING BRIDGE FLOORS | CLASS A CONCRETE | BRIDGE APPROACH SLABS | REINFORCING STEEL | SPIRAL COLUMN REINFORCING STEEL | 1372mm PRESTRESSED CONCRETE GIRDERS | | HP 310 X 79 STEEL PILES | | CONCRETE BARRIER RAIL | RIP RAP CLASS II (600mm THICK) | FILTER FABRIC FOR DRAINAGE | ELASTOMERIC BEARINGS | EVAZOTE JOINT SEALS | ELECTRICAL CONDUIT SYSTEM |
|---|---|---|---|---|---|---|---|---|---|---|---|---|---|---|---|---|---|---|---|---|---|---|---|---|
| | LUMP SUM | LUMP SUM | METERS | METERS | EACH | EACH | EACH | LUMP SUM | SQ. METERS | SQ. METERS | CU. METERS | LUMP SUM | Kg | Kg | No. | METERS | No. | METERS | METERS | METRIC TONS | SQ. METERS | LUMP SUM | LUMP SUM | LUMP SUM |
| SUPERSTRUCTURE | | | | | | | | | 1946.5 | 2059.2 | | LUMP SUM | | | 28 | 625.996 | | | 180.936 | | | LUMP SUM | LUMP SUM | |
| END BENT #1 | | | | | | | | | | | 31.0 | | 2791 | | | | 14 | 234.5 | | 578 | 590 | | | |
| BENT #1 | | | 52.2 | 18.0 | 1 | | | | | | 78.6 | | 15855 | 2895 | | | | | | | | | | |
| BENT #2 | | | 50.1 | | 1 | | | | | | 75.9 | | 15294 | 2699 | | | | | | | | | | |
| BENT #3 | | | 52.5 | | 1 | | | | | | 75.8 | | 15606 | 2799 | | | | | | | | | | |
| END BENT #2 | | | | | | | | | | | 31.1 | | 2810 | | | | 15 | 274.5 | | 892 | 909 | | | |
| TOTAL | LUMP SUM | LUMP SUM | 154.8 | 18.0 | 3 | 3 | 2 | LUMP SUM | 1946.5 | 2059.2 | 292.4 | LUMP SUM | 52356 | 8393 | 28 | 625.996 | 29 | 509.0 | 180.936 | 1470 | 1499 | LUMP SUM | LUMP SUM | LUMP SUM |

## TOTAL BILL OF MATERIAL - ENGLISH

| | | | | | | | | | | | | | | | | | | | | | | | | |
|---|---|---|---|---|---|---|---|---|---|---|---|---|---|---|---|---|---|---|---|---|---|---|---|---|
| | LUMP SUM | LUMP SUM | LIN. FT. | LIN. FT. | EACH | EACH | EACH | LUMP SUM | SQ. FT. | SQ. FT. | CU. YDS. | LUMP SUM | LBS. | LBS. | No. | LIN. FT. | No. | LIN. FT. | LIN. FT. | TONS | SQ. YD. | LUMP SUM | LUMP SUM | LUMP SUM |
| TOTAL | LUMP SUM | LUMP SUM | 507.9 | 59.1 | 3 | 3 | 2 | LUMP SUM | 20,952 | 22,165 | 382.4 | LUMP SUM | 115425 | 18503 | 28 | 1380.08 | 29 | 1122 | 593.62 | 1620 | 1793 | LUMP SUM | LUMP SUM | LUMP SUM |

## NOTES

ALL DIMENSIONS ARE IN MILLIMETERS UNLESS OTHERWISE NOTED.

ALL ELEVATIONS ARE IN METERS.

ASSUMED LIVE LOAD = MS 18 OR ALTERNATE LOADING, EXCEPT THAT THE GIRDERS HAVE BEEN DESIGNED FOR MS 22.5.

FOR OTHER DESIGN DATA AND GENERAL NOTES, SEE SHEET SNSM.

THIS BRIDGE HAS BEEN DESIGNED BY THE STRENGTH DESIGN METHOD AS SPECIFIED IN AASHTO STANDARD SPECIFICATIONS.

THE LOCATION OF THE CONSTRUCTION JOINT IN THE DRILLED PIERS IS BASED ON AN APPROXIMATE GROUND LINE ELEVATION. IF THE CONSTRUCTION JOINT IS ABOVE THE ACTUAL GROUND ELEVATION, THE CONTRACTOR SHALL PLACE THE CONSTRUCTION JOINT 300mm BELOW THE GROUND LINE.

NEEDLE BEAMS WILL NOT BE ALLOWED UNLESS OTHERWISE CALLED FOR ON THE PLANS OR APPROVED BY THE ENGINEER.

FOR SUBMITTAL OF WORKING DRAWINGS, SEE SPECIAL PROVISIONS.

FOR FALSEWORK AND FORMWORK, SEE SPECIAL PROVISIONS.

PRESTRESSED CONCRETE DECK PANELS MAY BE USED IN LIEU OF METAL STAY-IN-PLACE FORMS IN ACCORDANCE WITH ARTICLE 420-3 OF THE STANDARD SPECIFICATIONS.

THIS STRUCTURE HAS BEEN DESIGNED IN ACCORDANCE WITH HEC 18, "EVALUATING SCOUR AT BRIDGES", MAY, 2001.

THE EXISTING STRUCTURE CONSISTING OF 3 SPANS, 1 @ 9.98m, 1 @ 9.91m, AND 1 @ 9.98m, WITH A CLEAR ROADWAY WIDTH OF 8.53m AND A REINFORCED CONCRETE DECK ON STEEL I-BEAMS SUPPORTED BY REINFORCED CONCRETE CAP AND STEEL PILES AT THE END BENTS AND REINFORCED CONCRETE CAP AND STEEL PILES (CONCRETE ENCASED) AT THE INTERIOR BENTS, AND LOCATED AT THE SITE OF THE PROPOSED STRUCTURE SHALL BE REMOVED. THE EXISTING BRIDGE IS PRESENTLY POSTED BELOW THE LEGAL LOAD LIMIT. SHOULD THE STRUCTURAL INTEGRITY OF THE BRIDGE FURTHER DETERIORATE, THIS LOAD LIMITATION MAY BE REDUCED AS FOUND NECESSARY DURING THE LIFE OF THE PROJECT.

REMOVAL OF THE EXISTING BRIDGE SHALL BE PERFORMED SO AS NOT TO ALLOW DEBRIS TO FALL INTO THE WATER. THE CONTRACTOR SHALL REMOVE THE BRIDGE AND SUBMIT PLANS FOR DEMOLITION IN ACCORDANCE WITH ARTICLE 402-2 OF THE STANDARD SPECIFICATIONS.

FOR CONSTRUCTION, MAINTENANCE, AND REMOVAL OF TEMPORARY ACCESS, SEE SPECIAL PROVISIONS.

THE SUBSTRUCTURE OF THE EXISTING BRIDGE INDICATED ON THE PLANS IS FROM THE BEST INFORMATION AVAILABLE. SINCE THIS INFORMATION IS SHOWN FOR THE CONVENIENCE OF THE CONTRACTOR, THE CONTRACTOR SHALL HAVE NO CLAIM WHATSOEVER AGAINST THE DEPARTMENT OF TRANSPORTATION FOR ANY DELAYS OR ADDITIONAL COST INCURRED BASED ON DIFFERENCES BETWEEN THE EXISTING BRIDGE SUBSTRUCTURE SHOWN ON THE PLANS AND THE ACTUAL CONDITIONS AT THE PROJECT SITE.

INASMUCH AS THE PAINT SYSTEM ON THE EXISTING STRUCTURAL STEEL CONTAINS LEAD, THE CONTRACTOR'S ATTENTION IS DIRECTED TO ARTICLE 107-1 OF THE STANDARD SPECIFICATIONS. ANY COSTS RESULTING FROM COMPLIANCE WITH APPLICABLE STATE OR FEDERAL REGULATIONS PERTAINING TO HANDLING OF MATERIALS CONTAINING LEAD BASED PAINT SHALL BE INCLUDED IN THE BID PRICE FOR "REMOVAL OF EXISTING STRUCTURE AT STATION 24+37.000 -LREV-".

THE MATERIAL SHOWN IN THE CROSS-HATCHED AREA SHALL BE EXCAVATED FOR A DISTANCE OF 7.000m LEFT AND 20.000m RIGHT OF THE CONTROL LINE AS DIRECTED BY THE ENGINEER. THIS WORK WILL BE PAID FOR AT THE CONTRACT LUMP SUM PRICE FOR UNCLASSIFIED STRUCTURE EXCAVATION. SEE SECTION 412 OF THE STANDARD SPECIFICATION.

REMOVABLE FORMS MAY BE USED IN LIEU OF METAL STAY-IN-PLACE FORMS IN ACCORDANCE WITH ARTICLE 420-3 OF THE STANDARD SPECIFICATIONS.

THIS BRIDGE HAS BEEN DESIGNED IN ACCORDANCE WITH THE REQUIREMENTS OF THE STANDARD SPECIFICATIONS FOR SEISMIC DESIGN OF HIGHWAY BRIDGES FOR SEISMIC PERFORMANCE CATEGORY A.

THE CLASS AA CONCRETE IN THE BRIDGE DECK SHALL CONTAIN FLY ASH OR GROUND GRANULATED BLAST FURNACE SLAG AT THE SUBSTITUTION RATE SPECIFIED IN ARTICLE 1024-1 AND IN ACCORDANCE WITH ARTICLES 1024-5 AND 1024-6 OF THE STANDARD SPECIFICATIONS. NO PAYMENT WILL BE MADE FOR THIS SUBSTITUTION AS IT IS CONSIDERED INCIDENTAL TO THE COST OF THE REINFORCED CONCRETE DECK SLAB.

FOR PRESTRESSED CONCRETE MEMBERS, SEE SPECIAL PROVISIONS.

FOR CRANE SAFETY, SEE SPECIAL PROVISIONS.

FOR GROUT FOR STRUCTURES, SEE SPECIAL PROVISIONS.

FOR CURING CONCRETE, SEE SPECIAL PROVISIONS.

FOR PLACING LOAD ON STRUCTURE MEMBERS, SEE SPECIAL PROVISIONS.

FOR EROSION CONTROL MEASURES SEE EROSION CONTROL PLANS.

FOR METRIC STRUCTURAL STEEL, SEE SPECIAL PROVISIONS.

FOR MASS CONCRETE, SEE SPECIAL PROVISIONS.

BM #6 DISC STAMPED E-170 1965, IN NE WINGWALL OF BRIDGE, 5.4m RT OF STA. 25+94.140 -L- ELEV. 233.273.

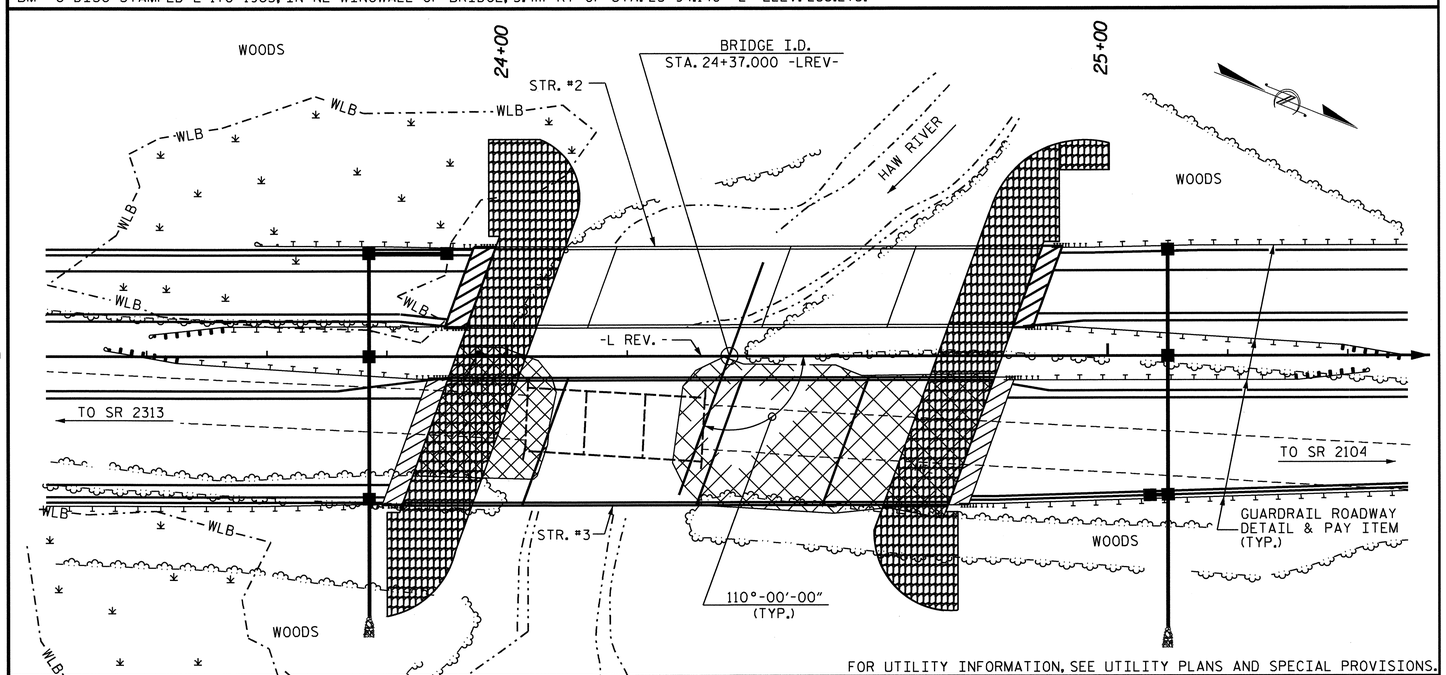


FOR UTILITY INFORMATION, SEE UTILITY PLANS AND SPECIAL PROVISIONS.

## LOCATION SKETCH

## HYDRAULIC DATA

| | | |
|---|---|---|
| DESIGN DISCHARGE | = | 107.6 m3/s. |
| FREQUENCY OF DESIGN FLOOD | = | 50 YEARS |
| DESIGN HIGH WATER ELEVATION | = | 231.54m |
| DRAINAGE AREA | = | 53.4 Sq.Km |
| BASE DISCHARGE (Q100) | = | 141.6m3/s. |
| BASE HIGH WATER ELEVATION | = | 231.93m |

## OVERTOPPING FLOOD DATA

| | | |
|---|---|---|
| OVERTOPPING DISCHARGE | = | > 172.7 m3/s. |
| FREQUENCY OF OVERTOPPING FLOOD | = | > 500 YEARS |
| OVERTOPPING FLOOD ELEVATION | = | 237.85m |

PROJECT NO. R-2413C

GUILFORD-ROCKINGHAM COUNTY

STATION: 24+37.000-LREV-

SHEET 3 OF 3

STATE OF NORTH CAROLINA
DEPARTMENT OF TRANSPORTATION
RALEIGH

# GENERAL DRAWING

BRIDGE OVER HAW RIVER ON US 220 BETWEEN SR 2313 AND SR 2104 (RIGHT LANE)

NORTH CAROLINA PROFESSIONAL SEAL 022516 ENGINEER EMILY E. MURRAY
10/28/11

| REVISIONS | | | | | | SHEET NO. |
|---|---|---|---|---|---|---|
| NO. | BY: | DATE: | NO. | BY: | DATE: | S-73 |
| 1 | | | 3 | | | TOTAL SHEETS |
| 2 | | | 4 | | | 238 |

DRAWN BY : M.GUDLAUGSSON DATE : 5-20-11
CHECKED BY : PEGGY PARISI DATE : 8-2-11

19-OCT-2011 14:14
R:\TIPProjects-R\R2413c\Structures\Final Plans\Str.#3\R-2413C_SD_GD_03.dgn
taverette

STR. #3

## NOTES

PROVIDE 32mm HIGH BEAM BOLSTERS UPPER AT 1.200m CTS. ATOP THE METAL STAY-IN-PLACE FORMS TO SUPPORT THE BOTTOM MAT OF 'A' BARS. WHEN USING REMOVABLE FORMS, PROVIDE CONTINUOUS HIGH CHAIRS FOR METAL DECK (C.H.C.M.) @ 1.2m CTS. WITH A HEIGHT TO SUPPORT THE BOTTOM MAT OF 'A' BARS A CLEAR DISTANCE OF 65mm ABOVE THE TOP OF THE REMOVABLE FORM.

LONGITUDINAL STEEL MAY BE SHIFTED SLIGHTLY, AS NECESSARY, TO AVOID INTERFERENCE WITH STIRRUPS IN PRESTRESSED CONCRETE GIRDERS.

PREVIOUSLY CAST CONCRETE IN A CONTINUOUS UNIT SHALL HAVE ATTAINED A MINIMUM COMPRESSESIVE STRENGTH OF 20.7 MPa BEFORE ADDITIONAL CONCRETE IS CAST IN THE UNIT.

BARRIER RAIL IN A CONTINUOUS UNIT SHALL NOT BE CAST UNTIL ALL SLAB CONCRETE IN THE UNIT HAS BEEN CAST AND HAS REACHED A MINIMUM COMPRESSIVE STRENGTH OF 20.7 MPa.

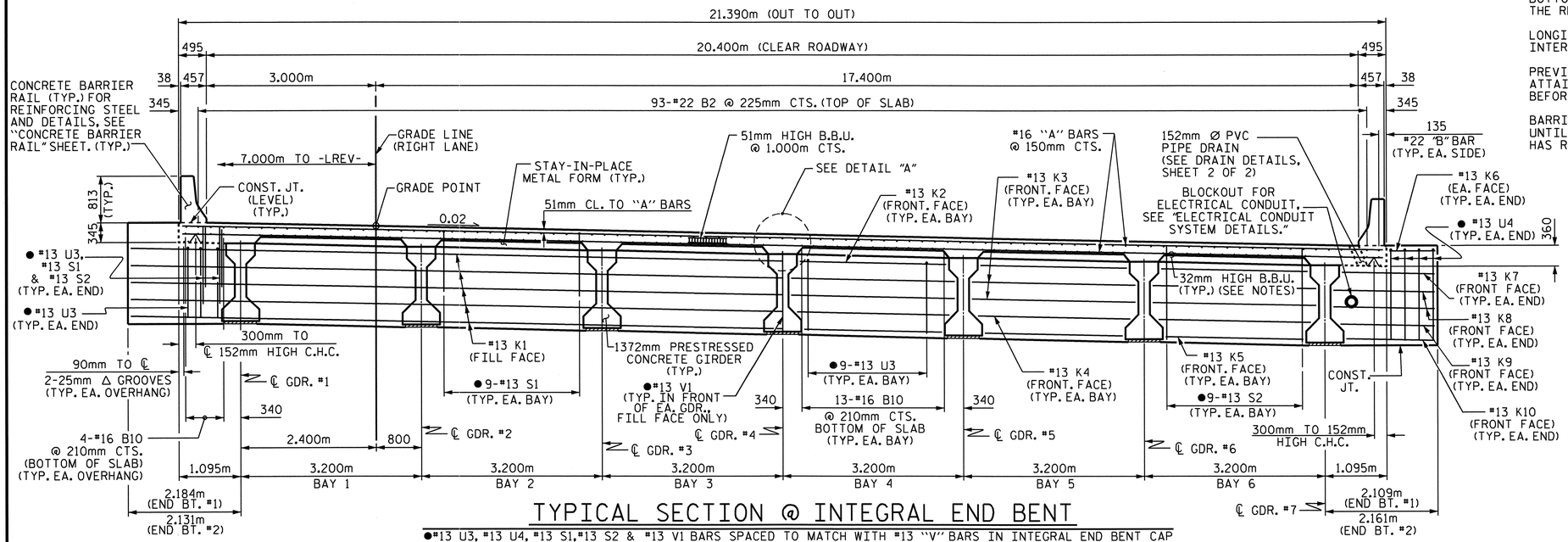


## TYPICAL SECTION @ INTEGRAL END BENT

●#13 U3, #13 U4, #13 S1, #13 S2 & #13 V1 BARS SPACED TO MATCH WITH #13 "V" BARS IN INTEGRAL END BENT CAP

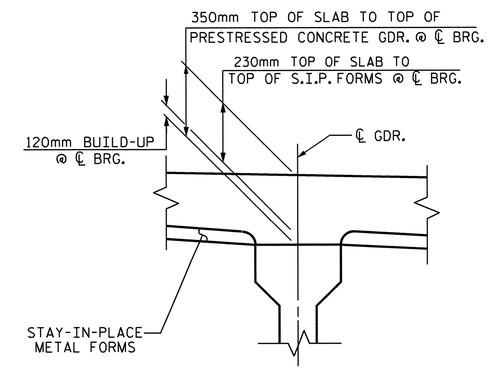


## DETAIL "A"

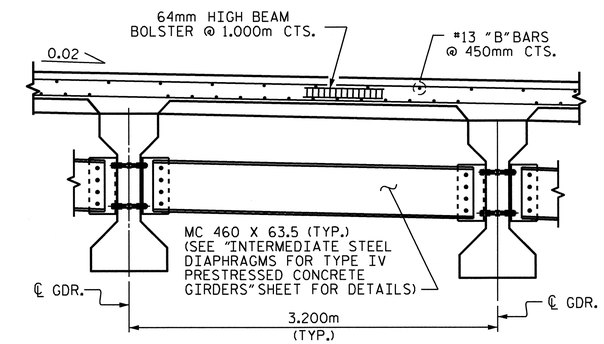


## PARTIAL TYPICAL SECTION

AT INTERMEDIATE DIAPHRAGM

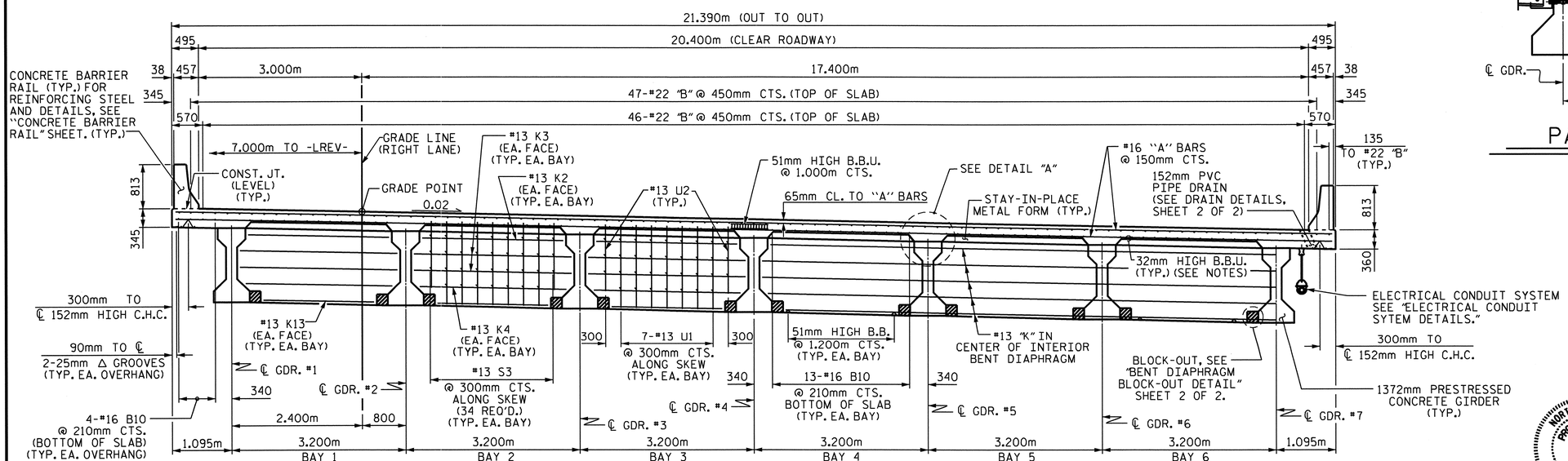


## TYPICAL SECTION @ CONTINUOUS BENT DIAPHRAGM

PROJECT NO. R-2413C

GUILFORD-ROCKINGHAM COUNTY

STATION: 24+37.000 -LREV-

SHEET 1 OF 2

STATE OF NORTH CAROLINA
DEPARTMENT OF TRANSPORTATION
RALEIGH

SUPERSTRUCTURE
TYPICAL SECTION
(RIGHT LANE)

NORTH CAROLINA PROFESSIONAL SEAL 022516 ENGINEER EMILY E. MURRAY

10/28/11

| REVISIONS | | | | | | SHEET NO. |
|---|---|---|---|---|---|---|
| NO. | BY: | DATE: | NO. | BY: | DATE: | S-74 |
| 1 | | | 3 | | | TOTAL SHEETS |
| 2 | | | 4 | | | 238 |

STR. #3

DRAWN BY : M.GUDLAUGSSON DATE : 11-08-10
CHECKED BY : T.L. AVERETTE DATE : 3-23-11

05-SEP-2011 11:45
Y:\Structures\Final Plans\Str.#3\R-2413C_SD_TS_03.dgn
mgudlaugsson

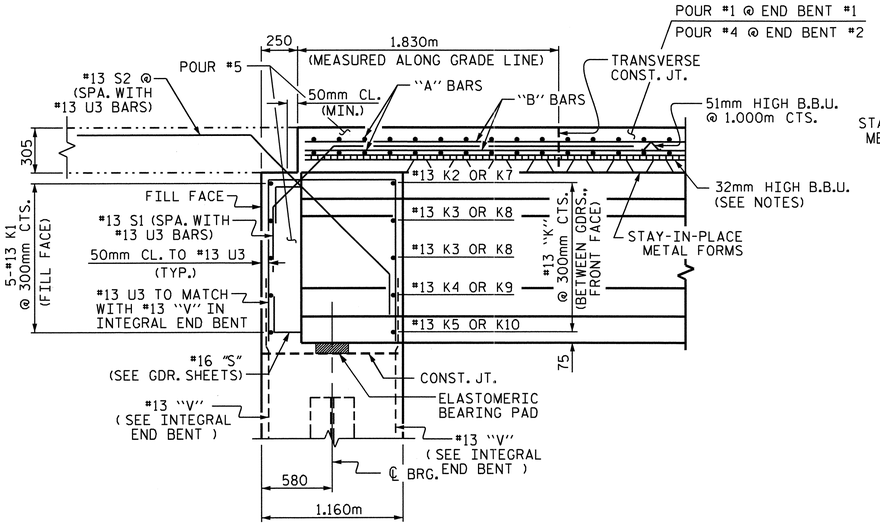


## END OF GIRDER DETAIL AT INTEGRAL END BENT

#13 V1 BAR IN FRONT OF GIRDER NOT SHOWN

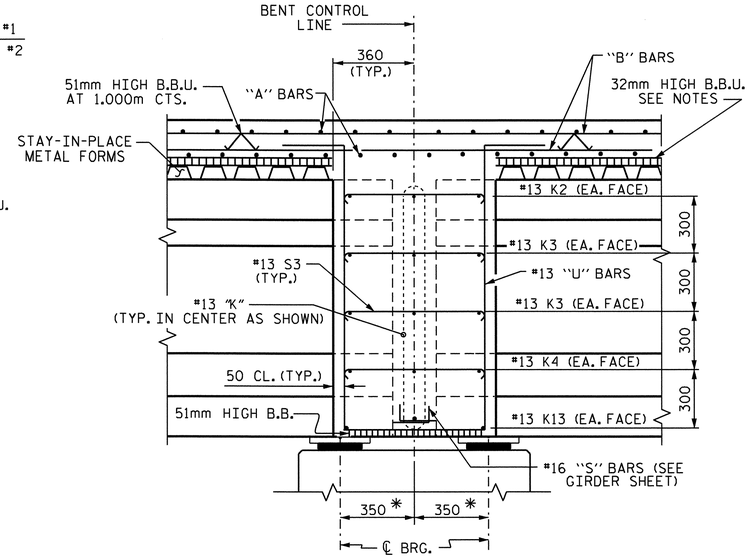


## SECTION THRU BENT DIAPHRAGM

* MEASURED ALONG ℄ GIRDER

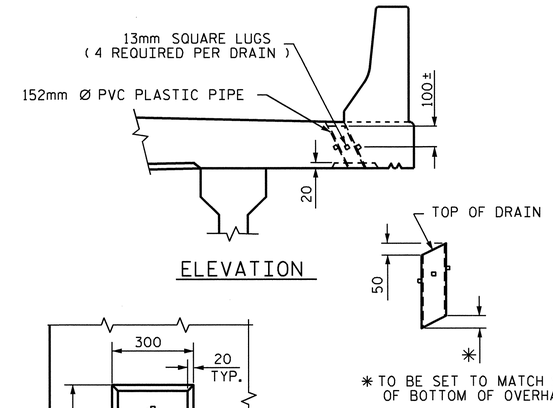


## PIPE DETAIL

TOP OF FLOOR DRAINS TO BE SET 10mm BELOW SURFACE OF SLAB.

4 - 13mm SQUARE LUGS TO BE GLUED TO THE PVC PLASTIC PIPE AT EQUAL SPACES AROUND THE PIPE DRAIN APPROXIMATELY 100mm FROM THE TOP OF THE PIPE.

THE 152mm Ø PVC PIPE AND FITTINGS SHALL BE SCHEDULE 40 AND CONFORM TO ASTM D1785.

## DRAIN DETAILS

(36 DRAINS REQUIRED)

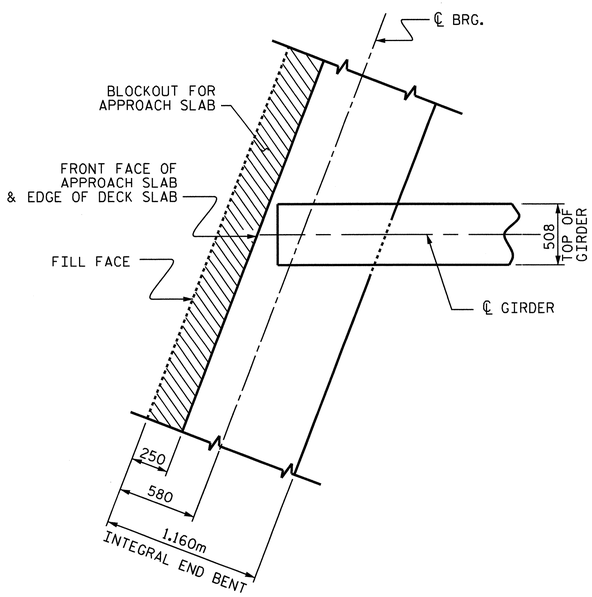


## AT INTEGRAL END BENT

(END BENT #1 SHOWN, END BENT #2 SIMILAR)

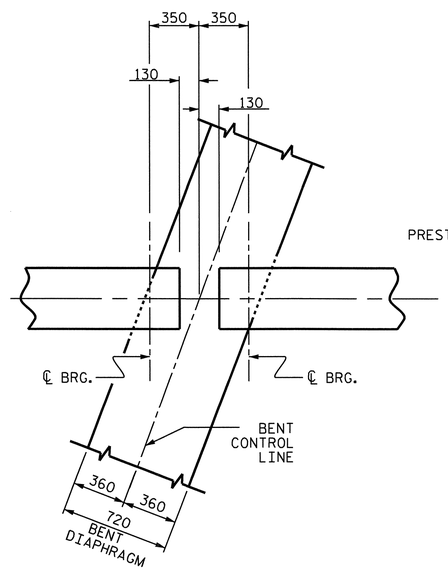


## AT BENT DIAPHRAGM

## PLAN OF GIRDER

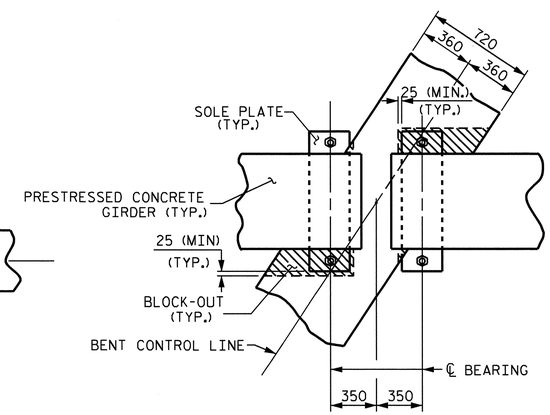


PLAN

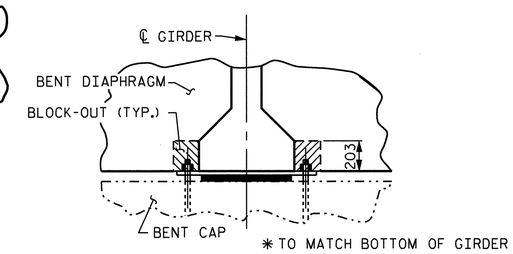


SECTION

## BENT DIAPHRAGM BLOCK-OUT DETAIL

PROJECT NO. R-2413C

GUILFORD-ROCKINGHAM COUNTY

STATION: 24+37.000 -LREV-

SHEET 2 OF 2

STATE OF NORTH CAROLINA
DEPARTMENT OF TRANSPORTATION
RALEIGH

SUPERSTRUCTURE
TYPICAL SECTION
(RIGHT LANE)

NORTH CAROLINA PROFESSIONAL SEAL 022516 ENGINEER EMILY E. MARTIN
10/28/11

| REVISIONS | | | | | | SHEET NO. |
|---|---|---|---|---|---|---|
| NO. | BY: | DATE: | NO. | BY: | DATE: | S-75 |
| 1 | | | 3 | | | TOTAL SHEETS |
| 2 | | | 4 | | | 238 |

STR. #3

DRAWN BY : M.GUDLAUGSSON DATE : 11-23-10
CHECKED BY : T.L. AVERETTE DATE : 3-23-11

05-SEP-2011 11:45
Y:\Structures\Final Plans\Str.#3\R-2413C_SD_TS_03.dgn
mgudlaugsson

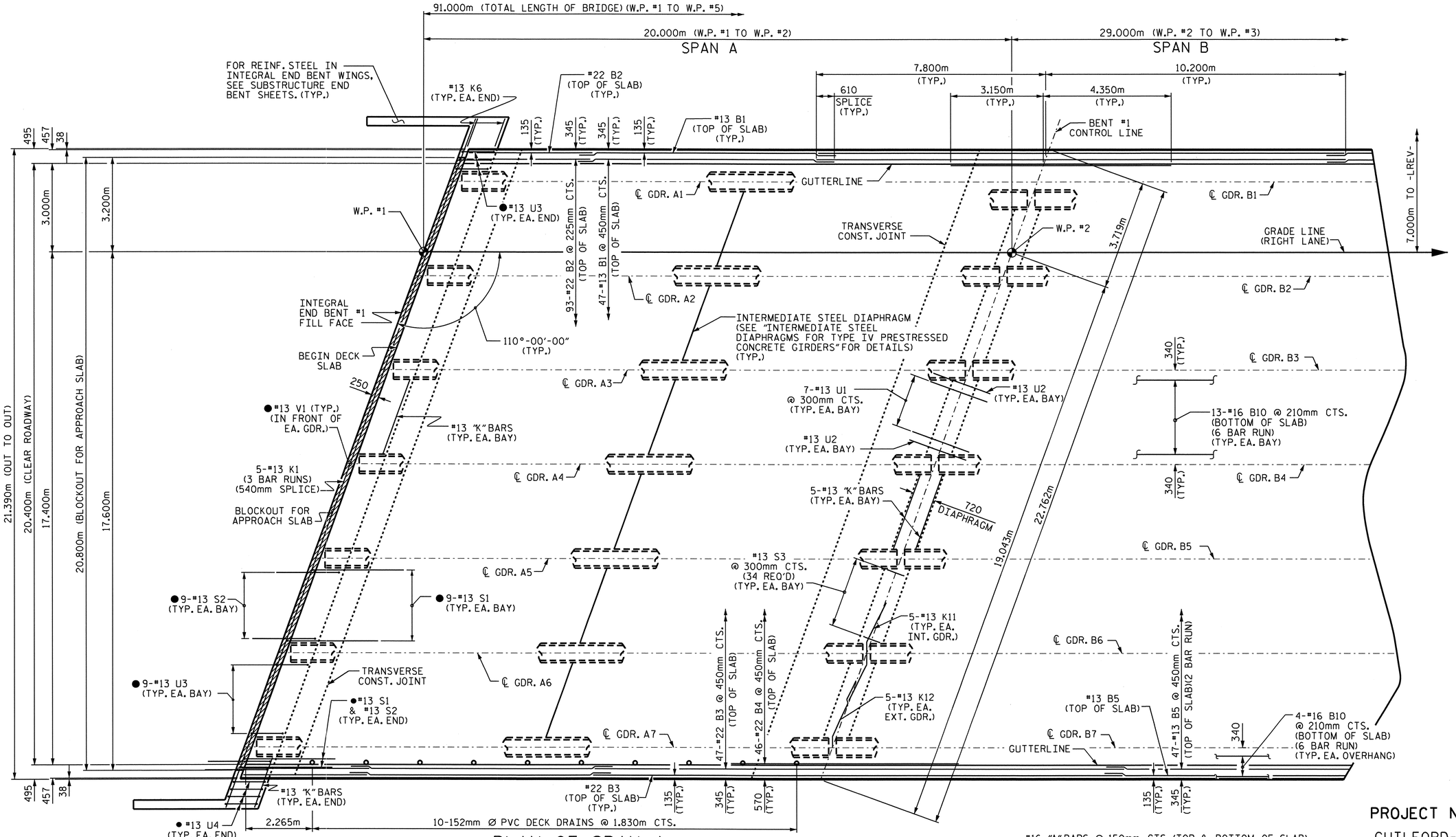


## PLAN OF SPAN A

●#13 U3, #13 U4, #13 S1, #13 S2 & #13 V1 BARS SPACED TO MATCH WITH #13 "V" BARS IN INTEGRAL END BENT CAP

PROJECT NO. R-2413C

GUILFORD-ROCKINGHAM COUNTY

STATION: 24+37.000 -LREV-

SHEET 1 OF 5

STATE OF NORTH CAROLINA
DEPARTMENT OF TRANSPORTATION
RALEIGH

SUPERSTRUCTURE

PLAN OF SPANS (RIGHT LANE)

NORTH CAROLINA PROFESSIONAL SEAL 022516 ENGINEER EMILY F. MURRAY

10/28/11

| REVISIONS | | | | | | SHEET NO. |
|---|---|---|---|---|---|---|
| NO. | BY: | DATE: | NO. | BY: | DATE: | S-76 |
| 1 | | | 3 | | | TOTAL SHEETS |
| 2 | | | 4 | | | 238 |

STR. #3

DRAWN BY : M.GUDLAUGSSON DATE : 12-13-10
CHECKED BY : T.L. AVERETTE DATE : 3-23-11

05-SEP-2011 11:44
Y:\Structures\Final Plans\Str.#3\R-2413C_SD_S#_03.dgn
mgudlaugsson

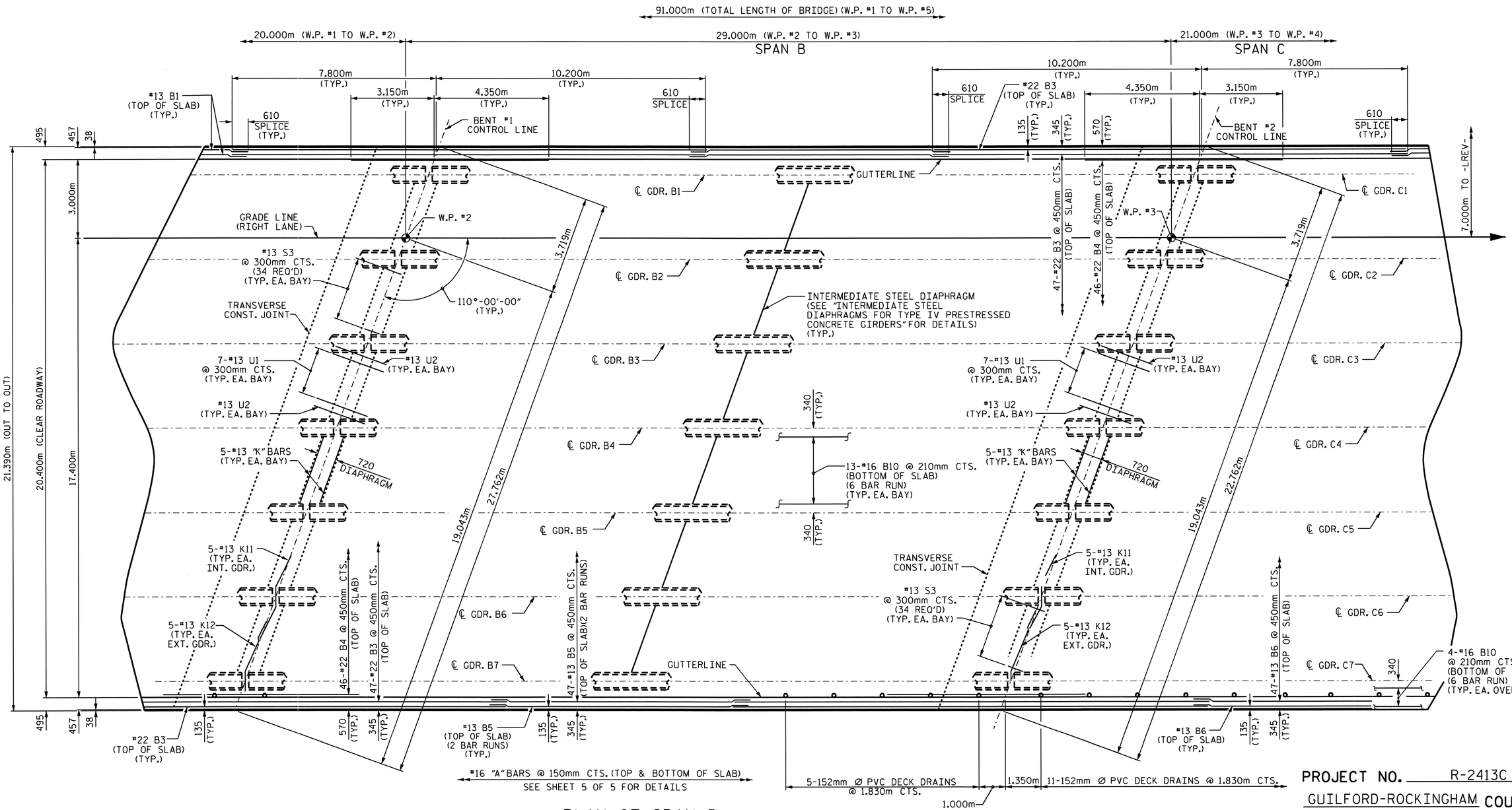


PLAN OF SPAN B

**PROJECT NO.** R-2413C

GUILFORD-ROCKINGHAM **COUNTY**

**STATION:** 24+37.000 -LREV-

SHEET 2 OF 5

STATE OF NORTH CAROLINA
**DEPARTMENT OF TRANSPORTATION**
RALEIGH

SUPERSTRUCTURE

PLAN OF SPANS (RIGHT LANE)

NORTH CAROLINA PROFESSIONAL SEAL 022516 ENGINEER CLARY E. MURRAY 10/28/11

| REVISIONS | | | | | | SHEET NO. |
|---|---|---|---|---|---|---|
| NO. | BY: | DATE: | NO. | BY: | DATE: | S-77 |
| 1 | | | 3 | | | TOTAL SHEETS |
| 2 | | | 4 | | | 238 |

STR. #3

DRAWN BY : M.GUDLAUGSSON DATE : 12-13-10
CHECKED BY : T.L. AVERETTE DATE : 3-23-11

05-SEP-2011 11:44
Y:\Structures\Final Plans\Str.#3\R-2413C_SD_S*_03.dgn
mgudlaugsson

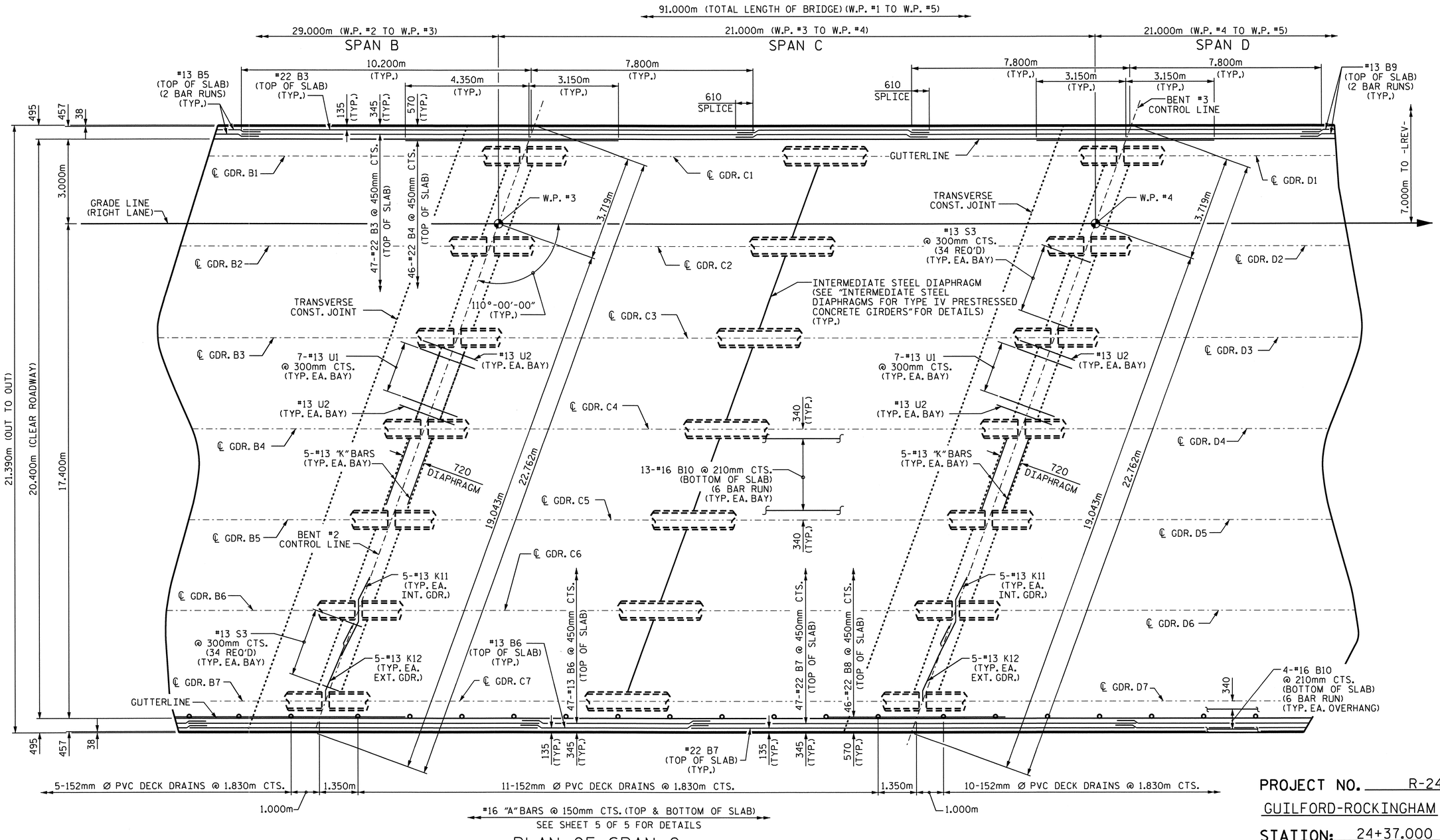


PLAN OF SPAN C

PROJECT NO. R-2413C

GUILFORD-ROCKINGHAM COUNTY

STATION: 24+37.000 -LREV-

SHEET 3 OF 5

STATE OF NORTH CAROLINA
DEPARTMENT OF TRANSPORTATION
RALEIGH

SUPERSTRUCTURE
PLAN OF SPANS
(RIGHT LANE)

NORTH CAROLINA PROFESSIONAL SEAL 022516 ENGINEER EMILY E. MURRAY

10/28/11

| REVISIONS | | | | | | | SHEET NO. |
|---|---|---|---|---|---|---|---|
| NO. | BY: | DATE: | NO. | BY: | DATE: | | S-78 |
| 1 | | | 3 | | | | TOTAL SHEETS |
| 2 | | | 4 | | | | 238 |

DRAWN BY : M.GUDLAUGSSON DATE : 12-13-10
CHECKED BY : T.L. AVERETTE DATE : 3-23-11

05-SEP-2011 11:44
Y:\Structures\Final Plans\Str.#3\R-2413C_SD_S*_03.dgn
mgudlaugsson

STR. #3

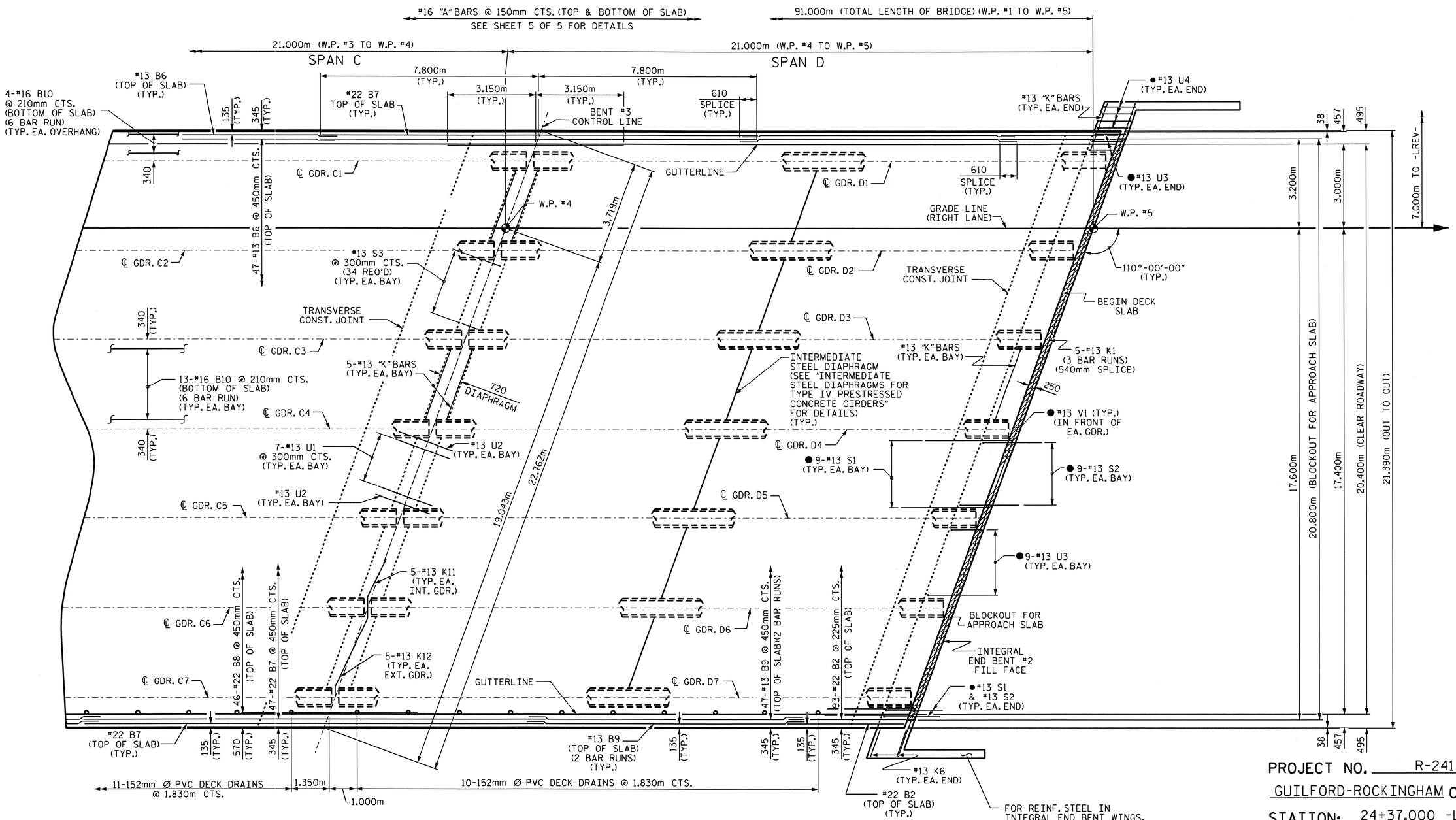


## PLAN OF SPAN D

●#13 U3, #13 U4, #13 S1, #13 S2 & #13 V1 BARS SPACED TO MATCH WITH #13 "V" BARS IN INTEGRAL END BENT CAP

PROJECT NO. R-2413C

GUILFORD-ROCKINGHAM COUNTY

STATION: 24+37.000 -LREV-

SHEET 4 OF 5

STATE OF NORTH CAROLINA
DEPARTMENT OF TRANSPORTATION
RALEIGH

SUPERSTRUCTURE
PLAN OF SPANS
(RIGHT LANE)

NORTH CAROLINA PROFESSIONAL SEAL 022516 ENGINEER EMILY E. MURRAY
12/28/11

| REVISIONS | | | | | | SHEET NO. |
|---|---|---|---|---|---|---|
| NO. | BY: | DATE: | NO. | BY: | DATE: | S-79 |
| 1 | | | 3 | | | TOTAL SHEETS |
| 2 | | | 4 | | | 238 |

DRAWN BY : M.GUDLAUGSSON DATE : 12-13-10
CHECKED BY : T.L. AVERETTE DATE : 3-23-11

05-SEP-2011 11:44
Y:\Structures\Final Plans\Str.#3\R-2413C_SD_S#_03.dgn
mgudlaugsson

STR. #3

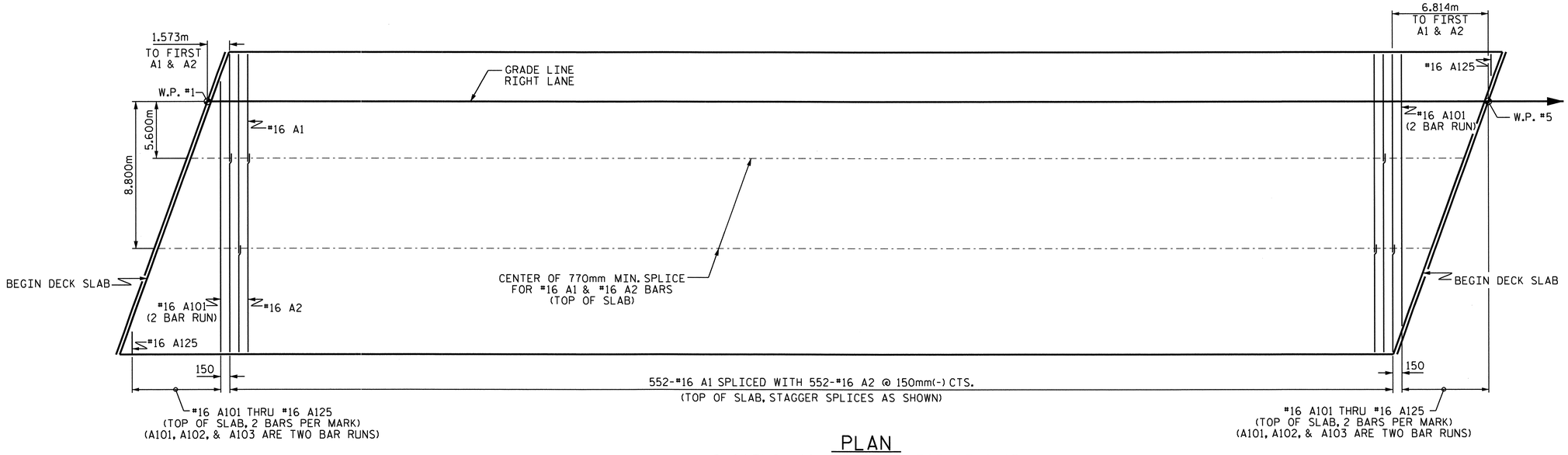


## PLAN

SHOWING #16 "A" BARS - TOP OF SLAB

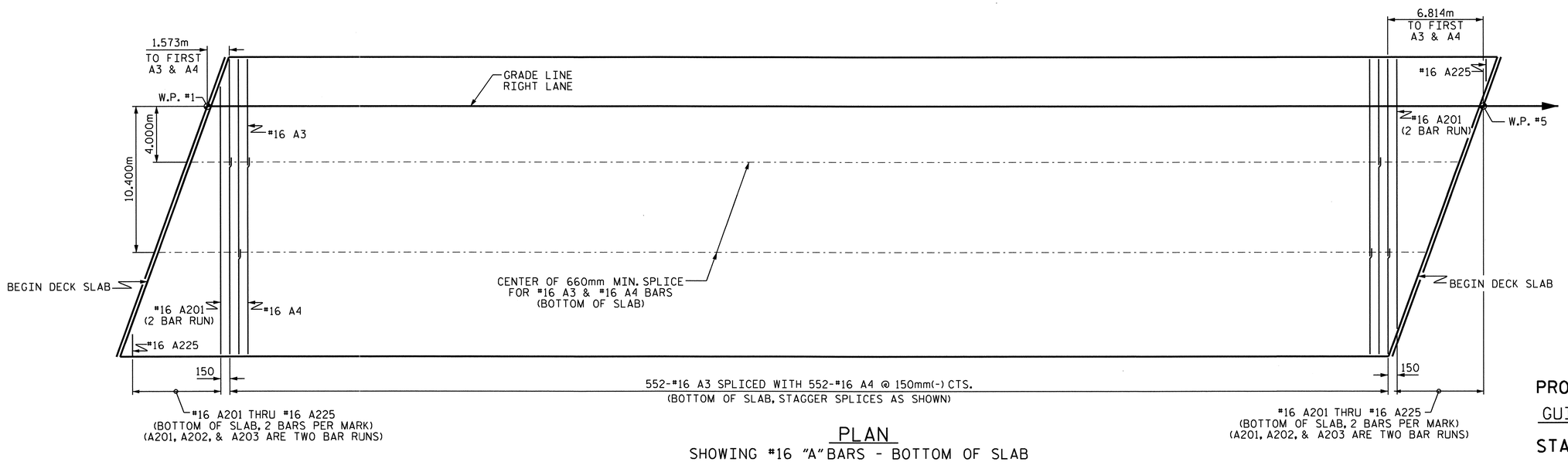


## PLAN

SHOWING #16 "A" BARS - BOTTOM OF SLAB

PROJECT NO. R-2413C

GUILFORD-ROCKINGHAM COUNTY

STATION: 24+37.000 -LREV-

SHEET 5 OF 5

STATE OF NORTH CAROLINA
DEPARTMENT OF TRANSPORTATION
RALEIGH

SUPERSTRUCTURE

PLAN OF SPANS
(RIGHT LANE)

NORTH CAROLINA PROFESSIONAL SEAL 022516 ENGINEER EMILY E. MURRAY
10/28/11

| REVISIONS | | | | | | SHEET NO. |
|---|---|---|---|---|---|---|
| NO. | BY: | DATE: | NO. | BY: | DATE: | S-80 |
| 1 | | | 3 | | | TOTAL SHEETS |
| 2 | | | 4 | | | 238 |

DRAWN BY : M.GUDLAUGSSON DATE : 4-12-11
CHECKED BY : T.L. AVERETTE DATE : 4-13-11

05-SEP-2011 11:44
Y:\Structures\Final Plans\Str.#3\R-2413C_SD_S*_03.dgn
mgudlaugsson

STR. #3

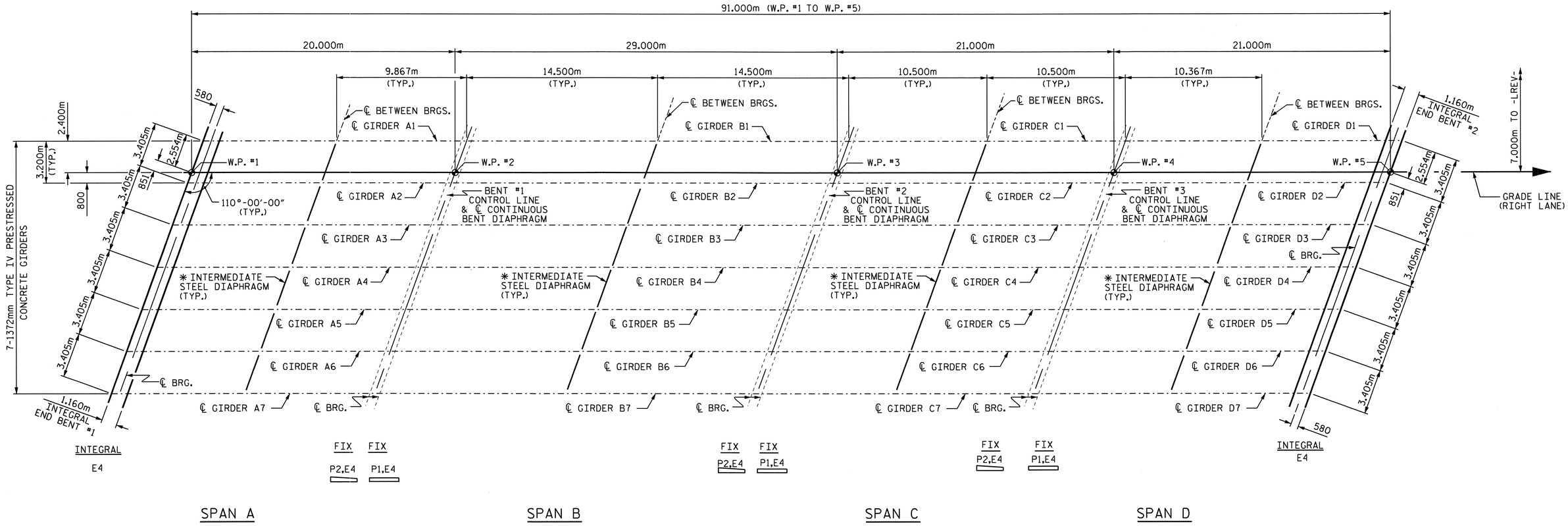


# FRAMING PLAN

* NOTE: SEE "INTERMEDIATE STEEL DIAPHRAGMS FOR TYPE IV PRESTRESSED CONCRETE GIRDERS" SHEET FOR DETAILS.

PROJECT NO. R-2413C
GUILFORD-ROCKINGHAM COUNTY
STATION: 24+37.000 -LREV-

STATE OF NORTH CAROLINA
DEPARTMENT OF TRANSPORTATION
RALEIGH

SUPERSTRUCTURE
FRAMING PLAN
(RIGHT LANE)

NORTH CAROLINA PROFESSIONAL SEAL 022516 ENGINEER EMILY E. MARRAX
10/28/11

| REVISIONS | | | | | | SHEET NO. |
|---|---|---|---|---|---|---|
| NO. | BY: | DATE: | NO. | BY: | DATE: | S-81 |
| 1 | | | 3 | | | TOTAL SHEETS |
| 2 | | | 4 | | | 238 |

DRAWN BY : M.GUDLAUGSSON DATE : 11-29-10
CHECKED BY : T.L. AVERETTE DATE : 3-23-11

19-OCT-2011 14:16
R:\TIPProjects-R\R2413c\Structures\FinalPlans\Str.#3\R-2413C_SD_FP_03.dgn
taverette

STR. #3

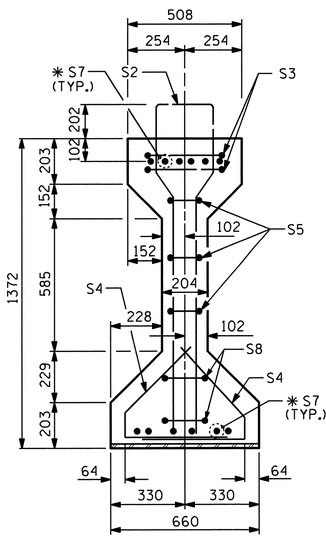


SECTION A-A

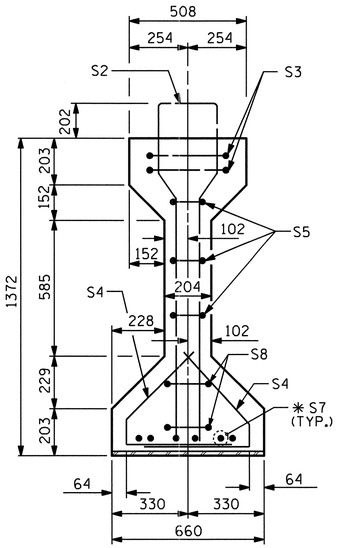


SECTION B-B

*FOR S7 BARS, SEE DETAIL "A" OF PRESTRESSED CONCRETE GIRDER CONTINUOUS FOR LIVE LOAD DETAILS SHEET

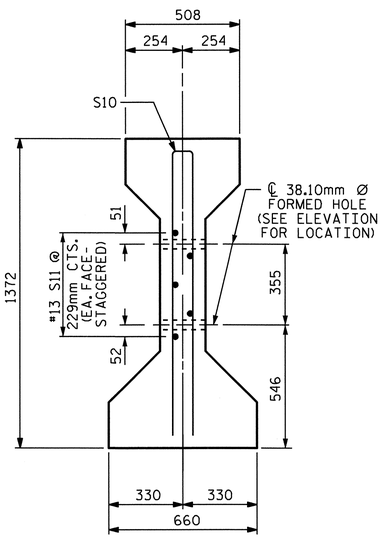


SECTION C-C

(S1 BARS NOT SHOWN)
NOTE: S11 BARS MAY BE SHIFTED SLIGHTLY VERTICALLY TO AVOID STRANDS.

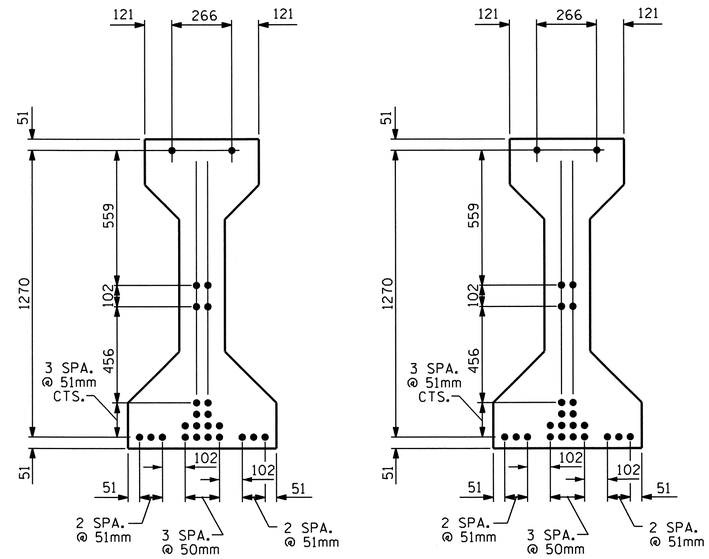


15.24mm Ø LOW RELAXATION STRAND LAYOUT

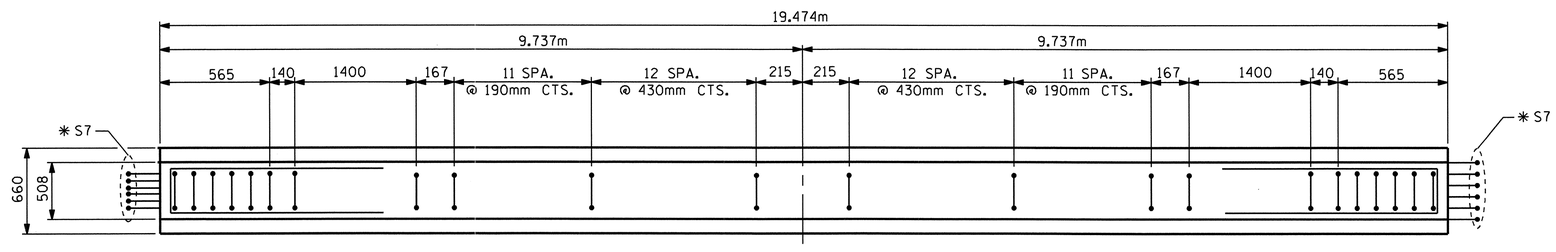


PLAN OF GIRDER

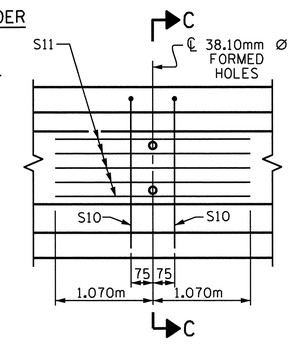


PARTIAL ELEVATION

SHOWING INTERMEDIATE DIAPHRAGM REINFORCING STEEL FOR ALL GIRDERS.

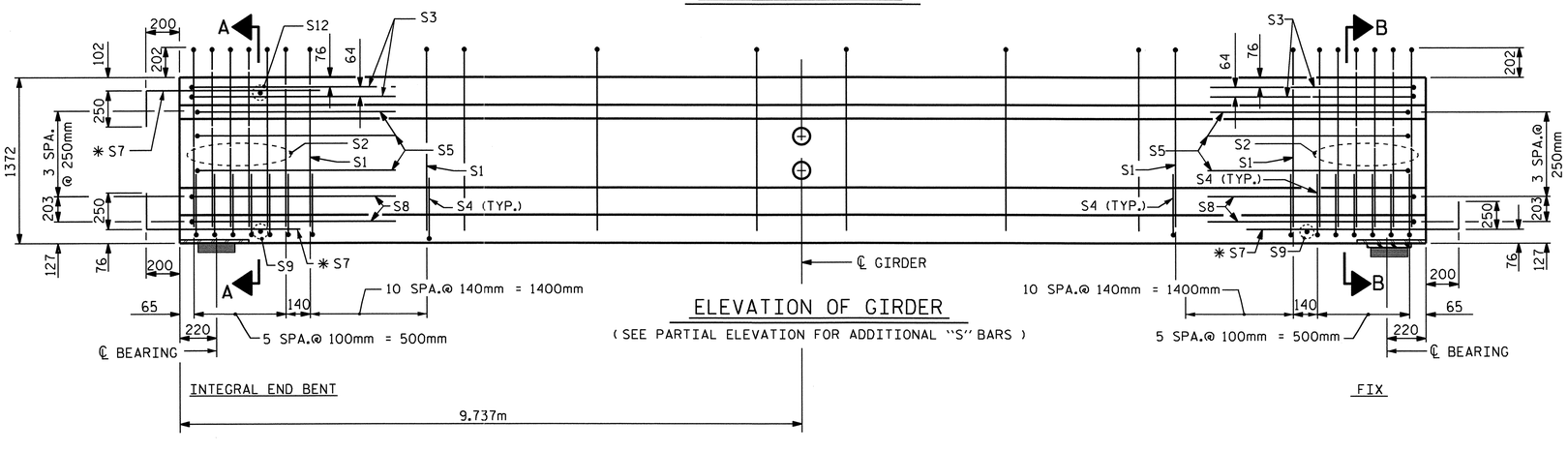


ELEVATION OF GIRDER

( SEE PARTIAL ELEVATION FOR ADDITIONAL "S" BARS )

## 15.24mm Ø L. R. GRADE 270 STRANDS

| AREA (mm²) | ULTIMATE STRENGTH (kN PER STRAND) | APPLIED PRESTRESS (kN PER STRAND) |
|---|---|---|
| 140.00 | 260.7 | 195.5 |

## REINFORCING STEEL FOR ONE GIRDER

| BAR | NUMBER | SIZE | TYPE | LENGTH | WEIGHT |
|---|---|---|---|---|---|
| S1 | 70 | #13 | 1 | 3360 | 234 |
| S2 | 12 | #19 | 1 | 3360 | 90 |
| S3 | 4 | #13 | 2 | 2760 | 11 |
| S4 | 68 | #13 | 3 | 1040 | 70 |
| S5 | 6 | #13 | 2 | 2560 | 15 |
| * S7 | 18 | #16 | STR | 1120 | 31 |
| S8 | 4 | #13 | 2 | 2620 | 10 |
| S9 | 2 | #10 | STR | 560 | 1 |
| S10 | 2 | #16 | 2 | 2640 | 8 |
| S11 | 5 | #13 | STR | 2140 | 11 |
| S12 | 1 | #10 | STR | 400 | 1 |

* NOTE: S7 BARS SHALL BE BENT BEFORE SHIPMENT. HEAT BENDING SHALL NOT BE ALLOWED.

## BAR TYPES

ALL BAR DIMENSIONS ARE OUT-TO-OUT

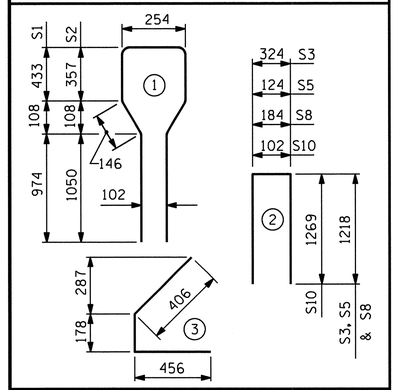


## QUANTITIES FOR ONE GIRDER

| | REINFORCING STEEL | 37.92 MPa CONCRETE | 15.24mm Ø L.R. STRANDS |
|---|---|---|---|
| | kg | m³ | No. |
| | 482 | 9.9 | 24 |

## GIRDERS REQUIRED

| NUMBER | LENGTH | TOTAL LENGTH |
|---|---|---|
| 7 | 19.474m | 136.318m |

PROJECT NO. R-2413C

GUILFORD-ROCKINGHAM COUNTY

STATION: 24+37.000 -LREV-

SHEET 1 OF 6

STATE OF NORTH CAROLINA
DEPARTMENT OF TRANSPORTATION
RALEIGH

AASHTO TYPE IV
PRESTRESSED CONCRETE GIRDER
CONTINUOUS FOR LIVE LOAD
SPAN 'A'
(RIGHT LANE)

NORTH CAROLINA PROFESSIONAL SEAL 022516 ENGINEER EMILY E. ZALRAY
10/28/11

| REVISIONS | | | | | | | SHEET NO. |
|---|---|---|---|---|---|---|---|
| NO. | BY: | DATE: | NO. | BY: | DATE: | | S-82 |
| 1 | | | 3 | | | | TOTAL SHEETS |
| 2 | | | 4 | | | | 238 |

STR.#3

STD. NO. PCG6SM

ASSEMBLED BY: M.GUDLAUGSSON DATE: 12-22-10
CHECKED BY : T.L. AVERETTE DATE: 4-05-11

DRAWN BY : ELR 8/91
CHECKED BY : GRP 8/91

REV. 7/17/98 RWW/LES
REV. 10/17/00R RWW/LES
REV. 5/1/06R TLA/GM

05-SEP-2011 11:41
Y:\Structures\Final Plans\Str.#3\R-2413C_SD_G#_03.dgn
mgudlaugsson

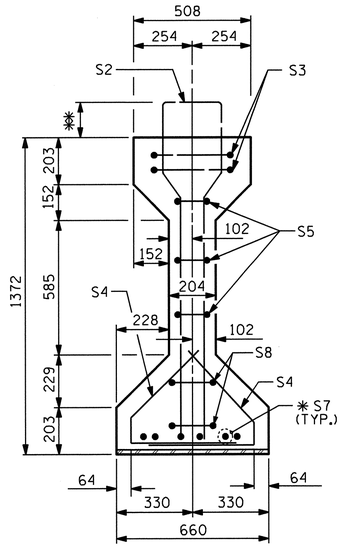


SECTION B-B

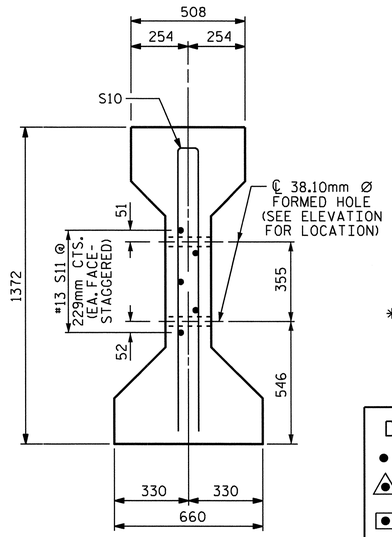


SECTION C-C

(S1 BARS NOT SHOWN)
NOTE: S11 BARS MAY BE SHIFTED SLIGHTLY VERTICALLY TO AVOID STRANDS.

✱✱ NOTE:
THE PROJECTION OF THE S2 & S12 BARS IS 202mm.
THE PROJECTION OF THE S13 BARS IS 172mm.
THE PROJECTION OF THE S1 BARS IS 152mm.

✱ FOR S7 BARS, SEE DETAIL "A" OF PRESTRESSED CONCRETE GIRDER CONTINUOUS FOR LIVE LOAD DETAILS SHEET

## DEBONDING LEGEND

- ● FULLY BONDED STRANDS
- △ STRANDS DEBONDED FOR 1.220m FROM END OF GIRDER
- ▣ STRANDS DEBONDED FOR 610mm FROM END OF GIRDER

BOND SHALL BE BROKEN ON STRANDS AS SHOWN FOR THE SPECIFIED LENGTH FROM EACH END OF THE GIRDER. SEE STANDARD SPECIFICATIONS ARTICLE 1078-13.

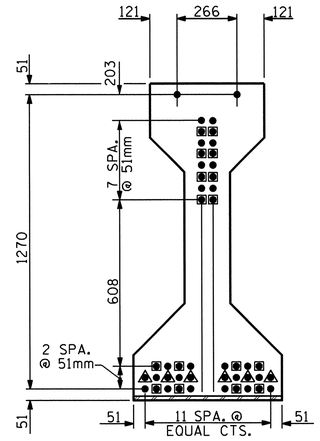


AT END OF GIRDER

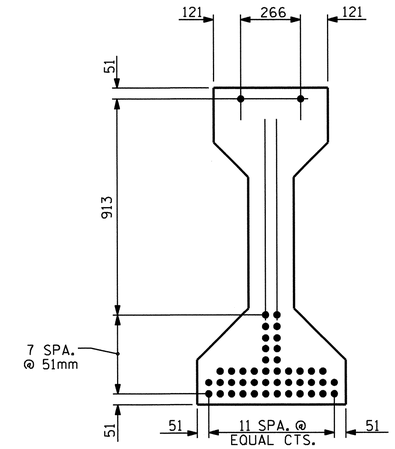


AT ℄ OF GIRDER

15.24mm Ø LOW RELAXATION STRAND LAYOUT

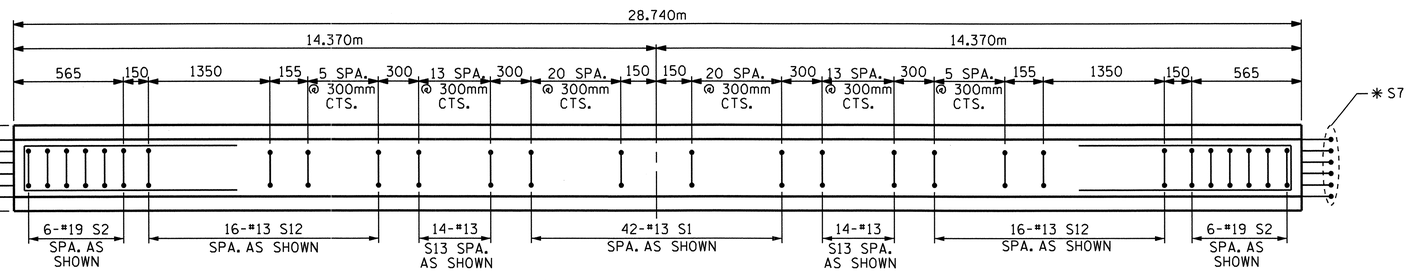


PLAN OF GIRDER

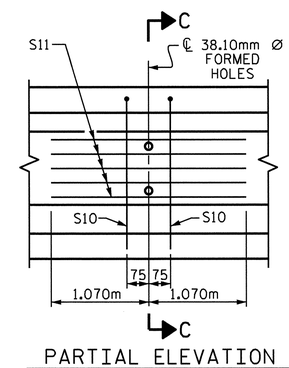


PARTIAL ELEVATION

SHOWING INTERMEDIATE DIAPHRAGM REINFORCING STEEL FOR ALL GIRDERS.

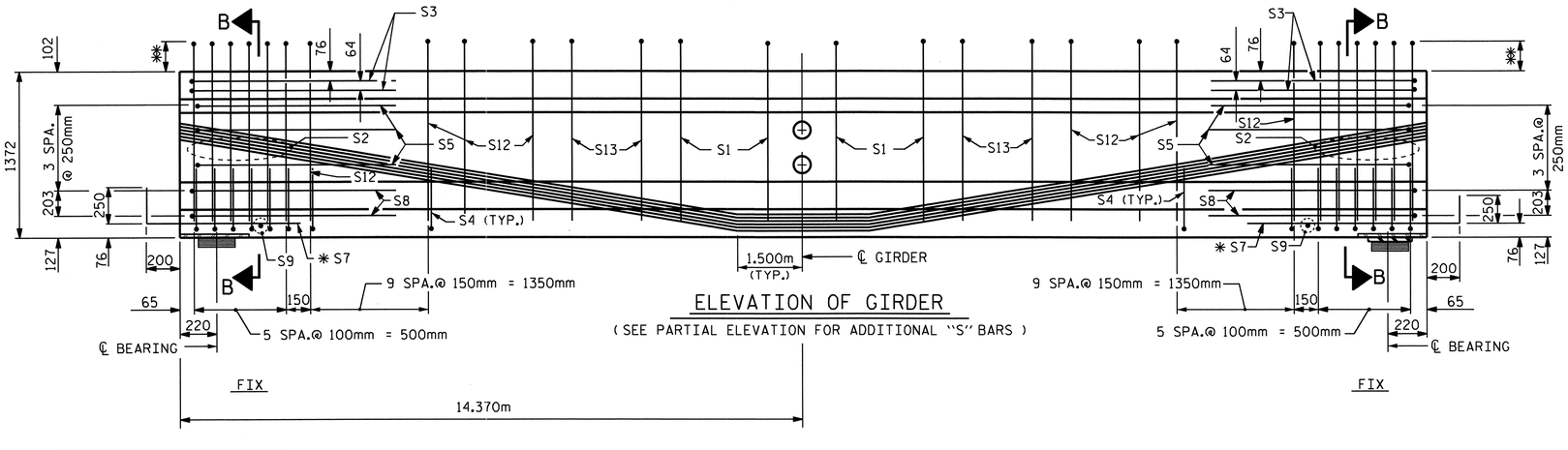


ELEVATION OF GIRDER

( SEE PARTIAL ELEVATION FOR ADDITIONAL "S" BARS )

## 15.24mm Ø L. R. GRADE 270 STRANDS

| AREA (mm²) | ULTIMATE STRENGTH (kN PER STRAND) | APPLIED PRESTRESS (kN PER STRAND) |
|---|---|---|
| 140.00 | 260.7 | 195.5 |

## REINFORCING STEEL FOR ONE GIRDER

| BAR | NUMBER | SIZE | TYPE | LENGTH | WEIGHT |
|---|---|---|---|---|---|
| S1 | 42 | #13 | 1 | 3260 | 136 |
| S2 | 12 | #19 | 1 | 3360 | 90 |
| S3 | 4 | #13 | 2 | 2760 | 11 |
| S4 | 64 | #13 | 3 | 1040 | 66 |
| S5 | 6 | #13 | 2 | 2560 | 15 |
| ✱ S7 | 12 | #16 | STR | 1120 | 21 |
| S8 | 4 | #13 | 2 | 2620 | 10 |
| S9 | 2 | #10 | STR | 560 | 1 |
| S10 | 2 | #16 | 2 | 2640 | 8 |
| S11 | 5 | #13 | STR | 2140 | 11 |
| S12 | 32 | #13 | 1 | 3360 | 107 |
| S13 | 28 | #13 | 1 | 3300 | 92 |

✱ NOTE: S7 BARS SHALL BE BENT BEFORE SHIPMENT. HEAT BENDING SHALL NOT BE ALLOWED.

## BAR TYPES

ALL BAR DIMENSIONS ARE OUT-TO-OUT

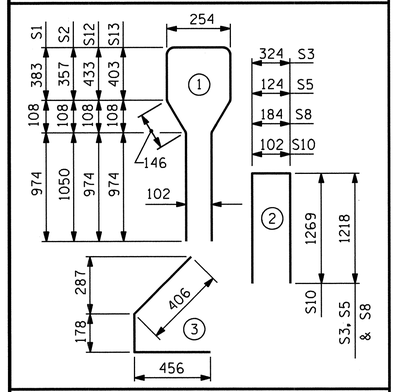


## QUANTITIES FOR ONE GIRDER

| | REINFORCING STEEL | 55.16 MPa CONCRETE | 15.24mm Ø L.R. STRANDS |
|---|---|---|---|
| | kg | m³ | No. |
| | 568 | 14.6 | 46 |

## GIRDERS REQUIRED

| NUMBER | LENGTH | TOTAL LENGTH |
|---|---|---|
| 7 | 28.740m | 201.180m |

PROJECT NO. R-2413C

GUILFORD-ROCKINGHAM COUNTY

STATION: 24+37.000 -LREV-

SHEET 2 OF 6

STATE OF NORTH CAROLINA
DEPARTMENT OF TRANSPORTATION
RALEIGH

AASHTO TYPE IV
PRESTRESSED CONCRETE GIRDER
CONTINUOUS FOR LIVE LOAD
SPAN 'B'
(RIGHT LANE)

NORTH CAROLINA PROFESSIONAL SEAL 022516 ENGINEER EMILY E. McMURRAY
10/28/11

| REVISIONS | | | | | | SHEET NO. |
|---|---|---|---|---|---|---|
| NO. | BY: | DATE: | NO. | BY: | DATE: | S-83 |
| 1 | | | 3 | | | TOTAL SHEETS |
| 2 | | | 4 | | | 238 |

| | |
|---|---|
| ASSEMBLED BY: M.GUDLAUGSSON | DATE: 10-28-10 |
| CHECKED BY : T.L. AVERETTE | DATE: 4-05-11 |
| DRAWN BY : ELR 8/91 | REV. 7/17/98 RWW/LES |
| CHECKED BY : GRP 8/91 | REV. 10/17/00R RWW/LES |
| | REV. 5/1/06R TLA/GM |

05-SEP-2011 11:41
Y:\Structures\Final Plans\Str.#3\R-2413C_SD_G#_03.dgn
mgudlaugsson

STR.#3

STD. NO. PCG6SM

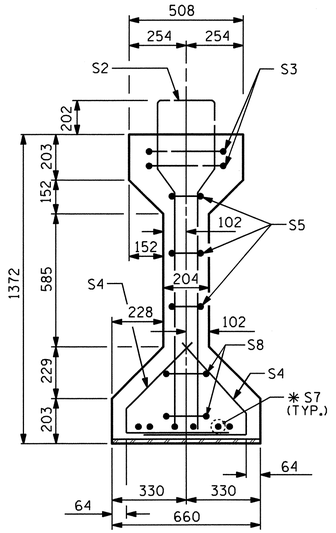


SECTION B-B

✱FOR S7 BARS, SEE DETAIL "A" OF PRESTRESSED CONCRETE GIRDER CONTINUOUS FOR LIVE LOAD DETAILS SHEET

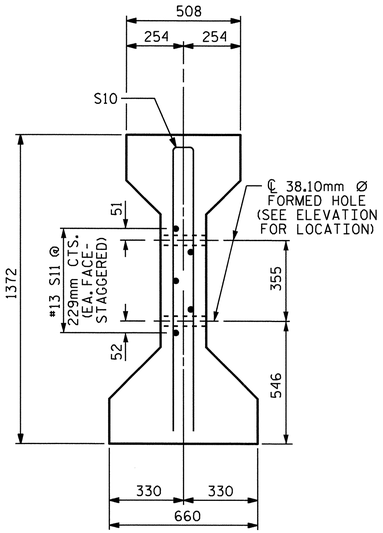


SECTION C-C

(S1 BARS NOT SHOWN)

NOTE: S11 BARS MAY BE SHIFTED SLIGHTLY VERTICALLY TO AVOID STRANDS.

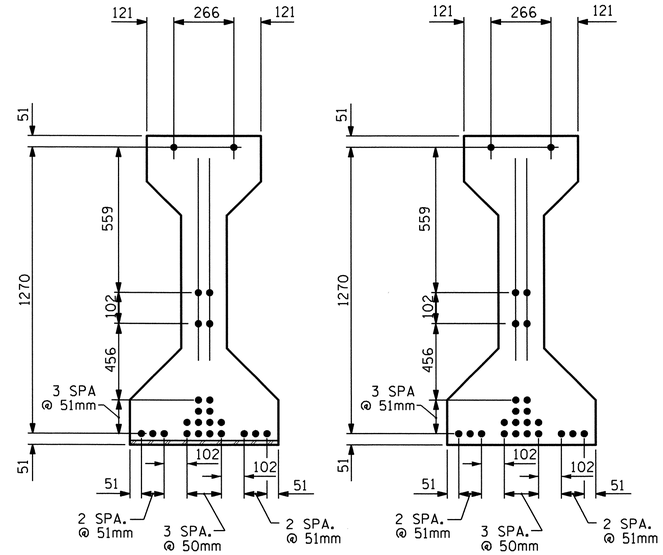


15.24mm Ø LOW RELAXATION STRAND LAYOUT

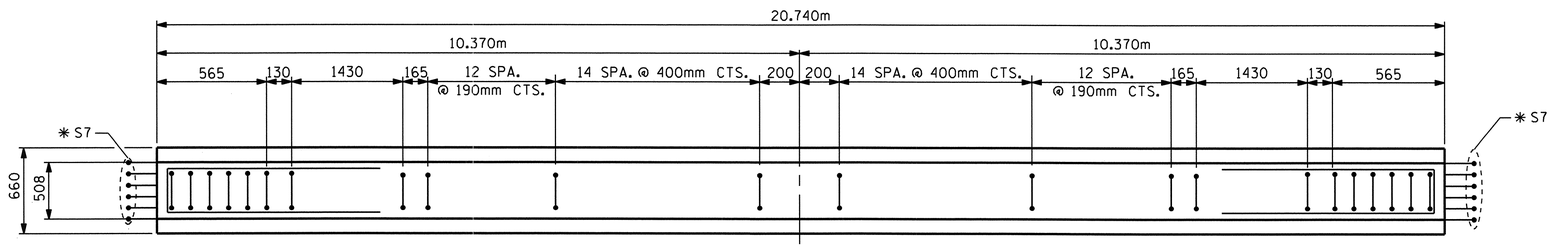


PLAN OF GIRDER

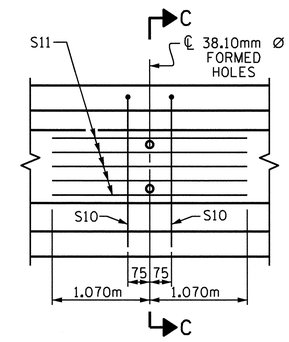


PARTIAL ELEVATION

SHOWING INTERMEDIATE DIAPHRAGM REINFORCING STEEL FOR ALL GIRDERS.

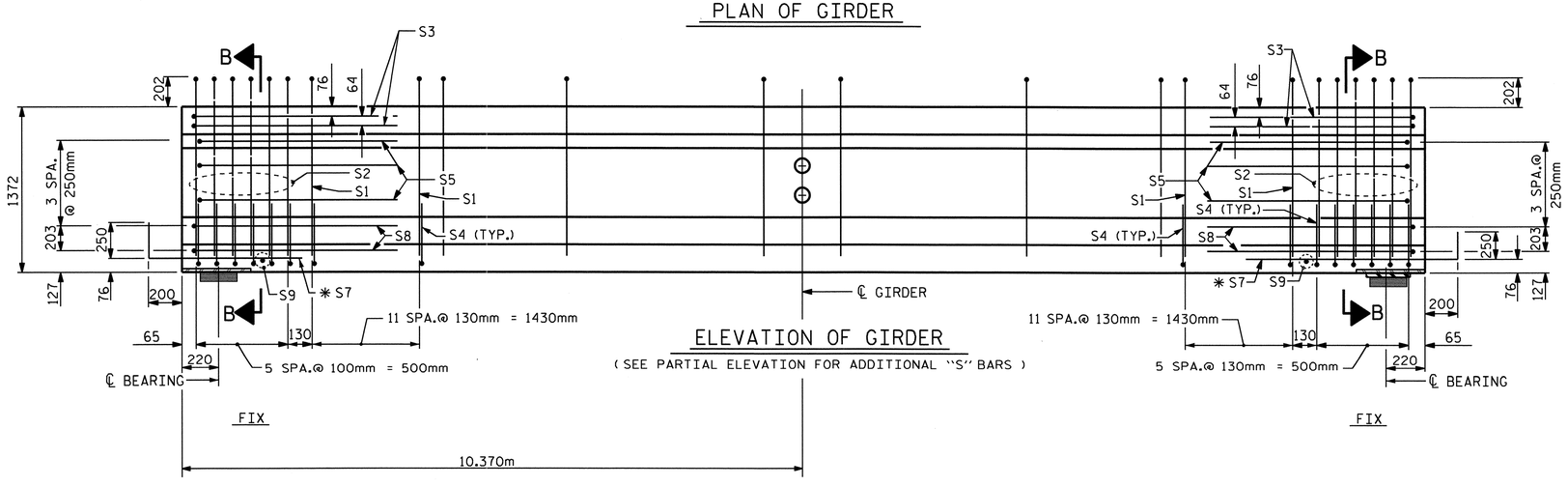


ELEVATION OF GIRDER

( SEE PARTIAL ELEVATION FOR ADDITIONAL "S" BARS )

## 15.24mm Ø L. R. GRADE 270 STRANDS

| AREA (mm²) | ULTIMATE STRENGTH (kN PER STRAND) | APPLIED PRESTRESS (kN PER STRAND) |
|---|---|---|
| 140.00 | 260.7 | 195.5 |

## REINFORCING STEEL FOR ONE GIRDER

| BAR | NUMBER | SIZE | TYPE | LENGTH | WEIGHT |
|---|---|---|---|---|---|
| S1 | 78 | #13 | 1 | 3360 | 261 |
| S2 | 12 | #19 | 1 | 3360 | 90 |
| S3 | 4 | #13 | 2 | 2760 | 11 |
| S4 | 72 | #13 | 3 | 1040 | 74 |
| S5 | 6 | #13 | 2 | 2560 | 15 |
| ✱S7 | 12 | #16 | STR | 1120 | 21 |
| S8 | 4 | #13 | 2 | 2620 | 10 |
| S9 | 2 | #10 | STR | 560 | 1 |
| S10 | 2 | #16 | 2 | 2640 | 8 |
| S11 | 5 | #13 | STR | 2140 | 11 |

✱NOTE: S7 BARS SHALL BE BENT BEFORE SHIPMENT. HEAT BENDING SHALL NOT BE ALLOWED.

## BAR TYPES

ALL BAR DIMENSIONS ARE OUT-TO-OUT

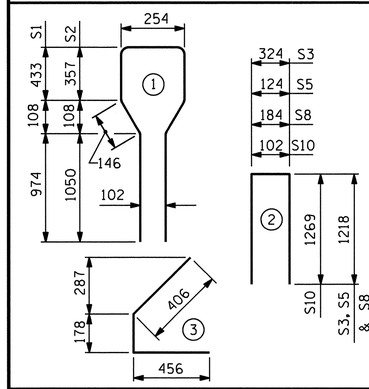


## QUANTITIES FOR ONE GIRDER

| | REINFORCING STEEL | 41.37 MPa CONCRETE | 15.24mm Ø L.R. STRANDS |
|---|---|---|---|
| | kg | m³ | No. |
| | 502 | 10.6 | 24 |

## GIRDERS REQUIRED

| NUMBER | LENGTH | TOTAL LENGTH |
|---|---|---|
| 7 | 20.740m | 145.180m |

PROJECT NO. R-2413C

GUILFORD-ROCKINGHAM COUNTY

STATION: 24+37.000 -LREV-

SHEET 3 OF 6

STATE OF NORTH CAROLINA
DEPARTMENT OF TRANSPORTATION
RALEIGH

AASHTO TYPE IV
PRESTRESSED CONCRETE GIRDER
CONTINUOUS FOR LIVE LOAD
SPAN 'C'
(RIGHT LANE)

NORTH CAROLINA PROFESSIONAL SEAL 022516 ENGINEER EMILY G. MURRAY
10/28/11

| REVISIONS | | | | | | | | SHEET NO. |
|---|---|---|---|---|---|---|---|---|
| NO. | BY: | DATE: | NO. | BY: | DATE: | | | S-84 |
| 1 | | | 3 | | | | | TOTAL SHEETS |
| 2 | | | 4 | | | | | 238 |

| | | | |
|---|---|---|---|
| ASSEMBLED BY : M.GUDLAUGSSON | DATE : 10-28-10 | | |
| CHECKED BY : T.L. AVERETTE | DATE : 4-05-11 | | |
| DRAWN BY : ELR 8/91 | REV. 7/17/98 | RWW/LES | |
| CHECKED BY : GRP 8/91 | REV. 10/17/00R | RWW/LES | |
| | REV. 5/1/06R | TLA/GM | |

05-SEP-2011 11:40
Y:\Structures\Final Plans\Str.#3\R-2413C_SD_G#_03.dgn
mgudlaugsson

STR.#3

STD. NO. PCG6SM

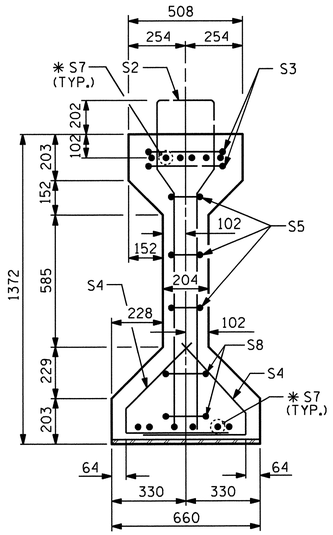


SECTION A-A

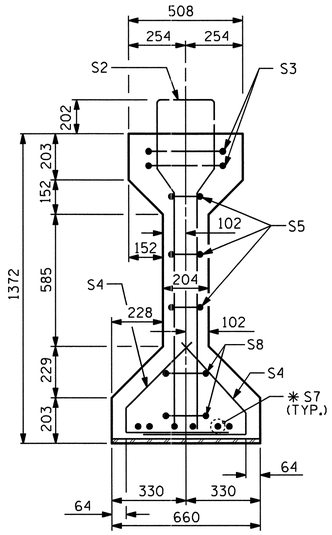


SECTION B-B

* FOR S7 BARS, SEE DETAIL "A" OF PRESTRESSED CONCRETE GIRDER CONTINUOUS FOR LIVE LOAD DETAILS SHEET

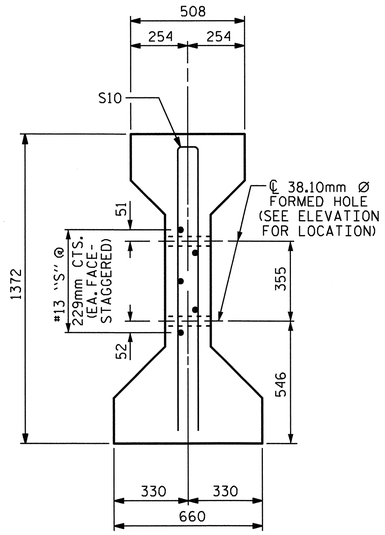


SECTION C-C

(S1 BARS NOT SHOWN)
NOTE: S11 BARS MAY BE SHIFTED SLIGHTLY VERTICALLY TO AVOID STRANDS.

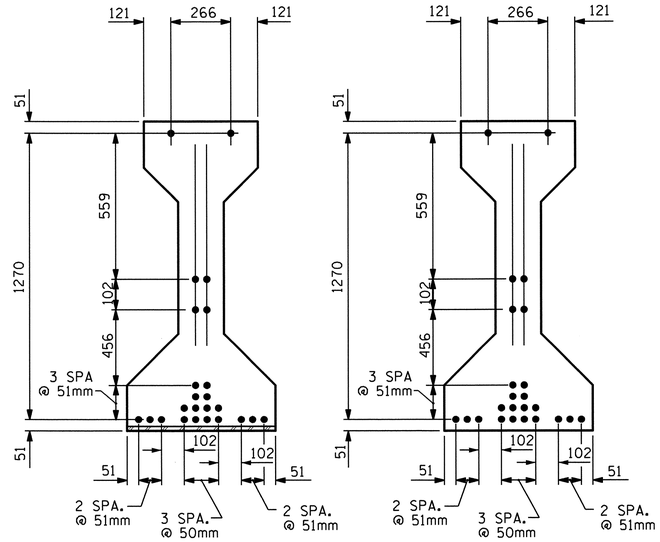


AT END OF GIRDER

AT ℄ OF GIRDER

15.24mm Ø LOW RELAXATION STRAND LAYOUT

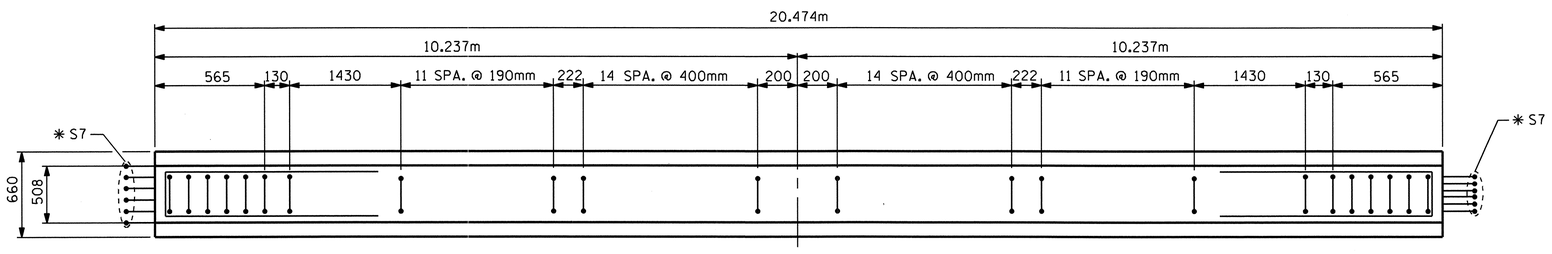


PLAN OF GIRDER

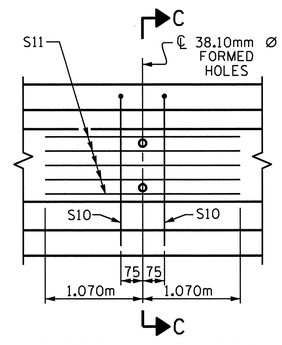


PARTIAL ELEVATION

SHOWING INTERMEDIATE DIAPHRAGM REINFORCING STEEL FOR ALL GIRDERS.

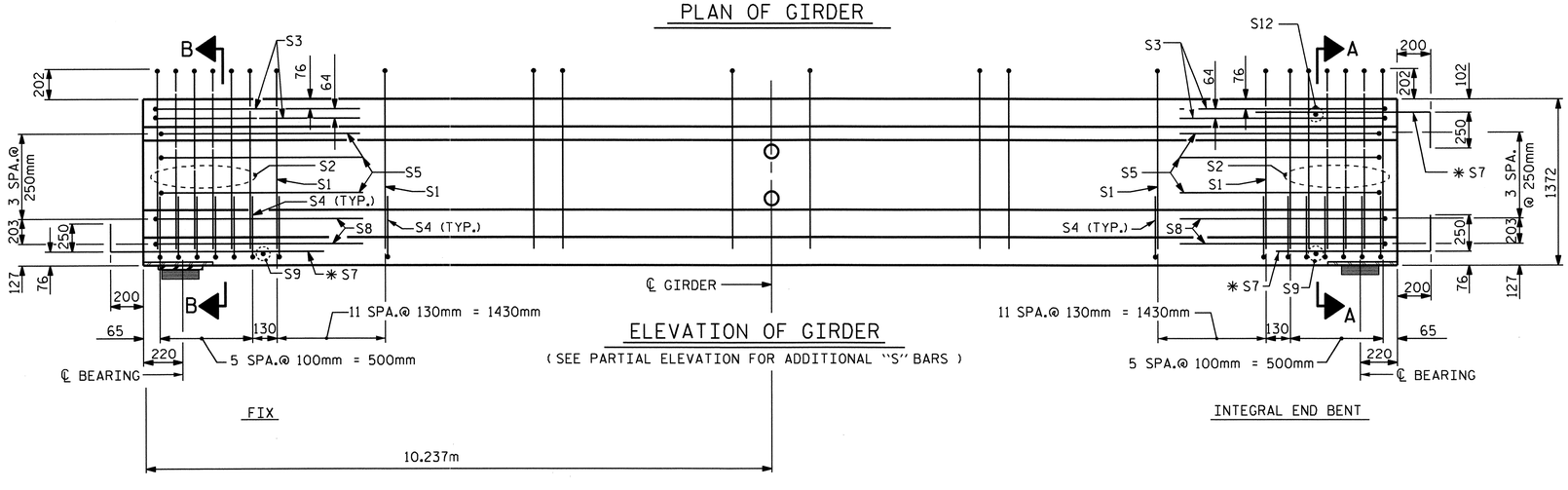


ELEVATION OF GIRDER

( SEE PARTIAL ELEVATION FOR ADDITIONAL "S" BARS )

## 15.24mm Ø L. R. GRADE 270 STRANDS

| AREA (mm²) | ULTIMATE STRENGTH (kN PER STRAND) | APPLIED PRESTRESS (kN PER STRAND) |
|---|---|---|
| 140.00 | 260.7 | 195.5 |

## REINFORCING STEEL FOR ONE GIRDER

| BAR | NUMBER | SIZE | TYPE | LENGTH | WEIGHT |
|---|---|---|---|---|---|
| S1 | 76 | #13 | 1 | 3360 | 254 |
| S2 | 12 | #19 | 1 | 3360 | 90 |
| S3 | 4 | #13 | 2 | 2760 | 11 |
| S4 | 72 | #13 | 3 | 1040 | 66 |
| S5 | 6 | #13 | 2 | 2560 | 15 |
| * S7 | 18 | #16 | STR | 1120 | 31 |
| S8 | 4 | #13 | 2 | 2620 | 10 |
| S9 | 2 | #10 | STR | 560 | 1 |
| S10 | 2 | #16 | 2 | 2640 | 8 |
| S11 | 5 | #13 | STR | 2140 | 11 |
| S12 | 1 | #10 | STR | 400 | 1 |

* NOTE: S7 BARS SHALL BE BENT BEFORE SHIPMENT. HEAT BENDING SHALL NOT BE ALLOWED.

## BAR TYPES

ALL BAR DIMENSIONS ARE OUT-TO-OUT

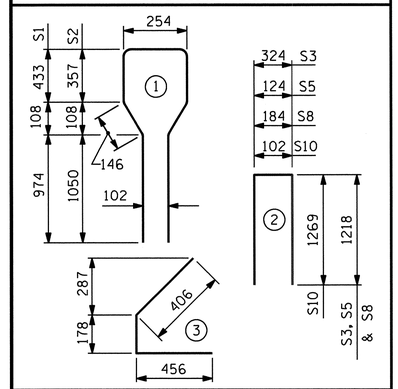


## QUANTITIES FOR ONE GIRDER

| | REINFORCING STEEL | 37.92 MPa CONCRETE | 15.24mm Ø L.R. STRANDS |
|---|---|---|---|
| | kg | m³ | No. |
| | 498 | 10.4 | 24 |

## GIRDERS REQUIRED

| NUMBER | LENGTH | TOTAL LENGTH |
|---|---|---|
| 7 | 20.474m | 143.318m |

PROJECT NO. R-2413C

GUILFORD-ROCKINGHAM COUNTY

STATION: 24+37.000 -LREV-

SHEET 4 OF 6

STATE OF NORTH CAROLINA
DEPARTMENT OF TRANSPORTATION
RALEIGH

AASHTO TYPE IV
PRESTRESSED CONCRETE GIRDER
CONTINUOUS FOR LIVE LOAD
SPAN 'D'
(RIGHT LANE)

NORTH CAROLINA PROFESSIONAL SEAL 022516 ENGINEER EMILY E. MURRAY
10/28/11

| REVISIONS | | | | | | SHEET NO. |
|---|---|---|---|---|---|---|
| NO. | BY: | DATE: | NO. | BY: | DATE: | S-85 |
| 1 | | | 3 | | | TOTAL SHEETS |
| 2 | | | 4 | | | 238 |

ASSEMBLED BY : M.GUDLAUGSSON DATE : 10-28-10
CHECKED BY : T.L. AVERETTE DATE : 4-05-11

DRAWN BY : ELR 8/91
CHECKED BY : GRP 8/91

REV. 7/17/98 RWW/LES
REV. 10/17/00R RWW/LES
REV. 5/1/06R TLA/GM

05-SEP-2011 11:40
Y:\Structures\Final Plans\Str.#3\R-2413C_SD_G#_03.dgn
mgudlaugsson

STR.#3

STD. NO. PCG6SM

## DEAD LOAD DEFLECTION TABLE FOR SPANS A, C & D

| 15.24mm Ø LOW RELAXATION | ALL GIRDERS | | | | | | | | | | |
|---|---|---|---|---|---|---|---|---|---|---|---|
| TENTH POINTS | 0 | .1 | .2 | .3 | .4 | .5 | .6 | .7 | .8 | .9 | 0 |
| CAMBER (GIRDER ALONE IN PLACE) ↑ | 0.000 | 0.012 | 0.022 | 0.030 | 0.035 | 0.037 | 0.035 | 0.030 | 0.022 | 0.012 | 0.000 |
| ✱ DEFLECTION DUE TO SUPERIMPOSED D.L. ↓ | 0.000 | 0.003 | 0.007 | 0.009 | 0.011 | 0.012 | 0.011 | 0.009 | 0.007 | 0.003 | 0.000 |
| FINAL CAMBER ↑ | 0 | 9 | 15 | 21 | 24 | 25 | 24 | 21 | 15 | 9 | 0 |

✱ INCLUDES FUTURE WEARING SURFACE IN SUPERIMPOSED DEAD LOAD.
ALL VALUES ARE SHOWN IN METERS, EXCEPT "FINAL CAMBER" WHICH IS SHOWN IN MILLIMETERS.

## DEAD LOAD DEFLECTION TABLE FOR SPAN B

| 15.24mm Ø LOW RELAXATION | GIRDERS 1 AND 7 | | | | | | | | | | | GIRDERS 2, 3, 4, 5 & 6 | | | | | | | | | | |
|---|---|---|---|---|---|---|---|---|---|---|---|---|---|---|---|---|---|---|---|---|---|---|
| TENTH POINTS | 0 | .1 | .2 | .3 | .4 | .5 | .6 | .7 | .8 | .9 | 0 | 0 | .1 | .2 | .3 | .4 | .5 | .6 | .7 | .8 | .9 | 0 |
| CAMBER (GIRDER ALONE IN PLACE) ↑ | 0.000 | 0.039 | 0.074 | 0.101 | 0.118 | 0.124 | 0.118 | 0.101 | 0.074 | 0.039 | 0.000 | 0.000 | 0.039 | 0.074 | 0.101 | 0.118 | 0.124 | 0.118 | 0.101 | 0.074 | 0.039 | 0.000 |
| ✱ DEFLECTION DUE TO SUPERIMPOSED D.L. ↓ | 0.000 | 0.015 | 0.029 | 0.040 | 0.047 | 0.049 | 0.047 | 0.040 | 0.029 | 0.015 | 0.000 | 0.000 | 0.016 | 0.031 | 0.043 | 0.051 | 0.054 | 0.051 | 0.043 | 0.031 | 0.016 | 0.000 |
| FINAL CAMBER ↑ | 0 | 24 | 45 | 61 | 71 | 75 | 71 | 61 | 45 | 24 | 0 | 0 | 23 | 43 | 58 | 67 | 70 | 67 | 58 | 43 | 23 | 0 |

✱ INCLUDES FUTURE WEARING SURFACE IN SUPERIMPOSED DEAD LOAD.
ALL VALUES ARE SHOWN IN METERS, EXCEPT "FINAL CAMBER" WHICH IS SHOWN IN MILLIMETERS.

## NOTES

ALL PRESTRESSING STRANDS SHALL BE 7-WIRE LOW-RELAXATION GRADE 270 STRANDS AND SHALL CONFORM TO AASHTO M203M EXCEPT FOR SAMPLING REQUIREMENTS WHICH SHALL BE IN ACCORDANCE WITH THE STANDARD SPECIFICATIONS.

ALL REINFORCING STEEL SHALL BE GRADE 420.

EMBEDDED PLATE "B-1" SHALL BE GALVANIZED IN ACCORDANCE WITH THE SPECIFICATIONS. BEVEL EDGES OF PLATE "B-1" TO GIVE CLOSE FIT BUT NOT TIGHT FIT TO STEEL CASTING FORM.

ANCHOR STUDS SHALL CONFORM TO AASHTO M169 GRADES 1010 THROUGH 1020 OR APPROVED EQUAL, AND SHALL MEET THE TYPE "B" REQUIREMENTS OF SUBSECTION 7.3 OF THE ANSI/AASHTO/AWS D1.5 BRIDGE WELDING CODE.

AT ENDS OF GIRDERS TO BE EMBEDDED IN CONCRETE DIAPHRAGMS OR END WALLS, PRESTRESSING STRANDS MAY EXTEND A MAXIMUM OF 50mm BEYOND THE GIRDER ENDS. OTHERWISE, PRESTRESSING STRANDS SHALL BE CUT FLUSH WITH THE GIRDER ENDS.

THE TRANSFER OF LOAD FROM THE ANCHORAGES TO THE GIRDER SHALL BE DONE WHEN CONCRETE HAS REACHED A COMPRESSIVE STRENGTH OF NOT LESS THAN 29.65 MPa FOR SPANS A, C & D AND 48.26 MPa FOR SPAN B.

DEPENDING ON THE TYPE OF SYSTEM USED TO SUPPORT THE DECK SLAB FORMS, PRESET ANCHORS MAY BE NECESSARY IN THE PRESTRESSED CONCRETE GIRDER.

THE TOP SURFACE OF THE GIRDER, EXCLUDING THE OUTSIDE 100mm, SHALL BE RAKED TO A DEPTH OF 6mm.

WHEN DRAPED STRANDS ARE DETAILED, THE LONGITUDINAL LOCATION OF THE HOLD DOWN DEVICES SHALL BE WITHIN 150mm OF THE LOCATION SHOWN AND THE CENTER OF GRAVITY OF THE GROUP OF DRAPED STRANDS SHALL BE LOCATED WITHIN 13mm OF THE THEORETICAL LOCATION SHOWN.

FOR PRESTRESSED CONCRETE MEMBERS, SEE SPECIAL PROVISIONS.

THE UPLIFT FORCE DUE TO DRAPED STRANDS IN SPAN B IS 173 kN.

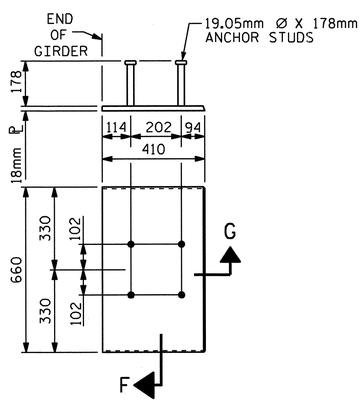


EMBEDDED PLATE "B-1" DETAILS FOR AASHTO TYPE IV GIRDER

(2 REQ'D PER GIRDER)

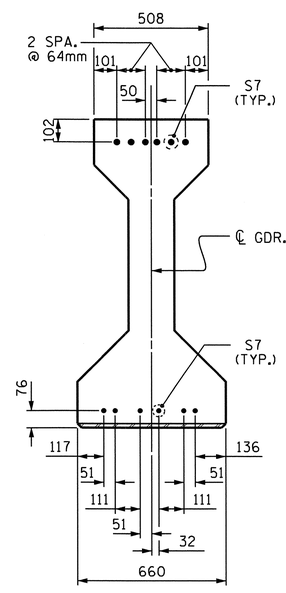


DETAIL "A"

(FOR AASHTO TYPE IV GIRDERS)

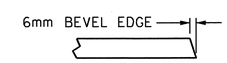


SECTION "G"

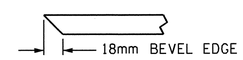


SECTION "F"

(SEE NOTES)

PROJECT NO. R-2413C

GUILFORD-ROCKINGHAM COUNTY

STATION: 24+37.000 -LREV-

SHEET 5 OF 6

STATE OF NORTH CAROLINA
DEPARTMENT OF TRANSPORTATION
RALEIGH

STANDARD
PRESTRESSED CONCRETE GIRDER
CONTINUOUS FOR LIVE LOAD
DETAILS
(RIGHT LANE)

NORTH CAROLINA PROFESSIONAL SEAL 022516 ENGINEER EMILY E. MURRAY
10/28/11

| REVISIONS | | | | | | SHEET NO. |
|---|---|---|---|---|---|---|
| NO. | BY: | DATE: | NO. | BY: | DATE: | S-86 |
| 1 | | | 3 | | | TOTAL SHEETS |
| 2 | | | 4 | | | 238 |

STR. #3

ASSEMBLED BY : M.GUDLAUGSSON DATE : 12-28-10
CHECKED BY : T.L. AVERETTE DATE : 3-23-11

19-OCT-2011 14:17
R:\TIPProjects-R\R2413c\Structures\FinalPlans\Str.#3\R-2413C_SD_DL_03.dgn
taverette

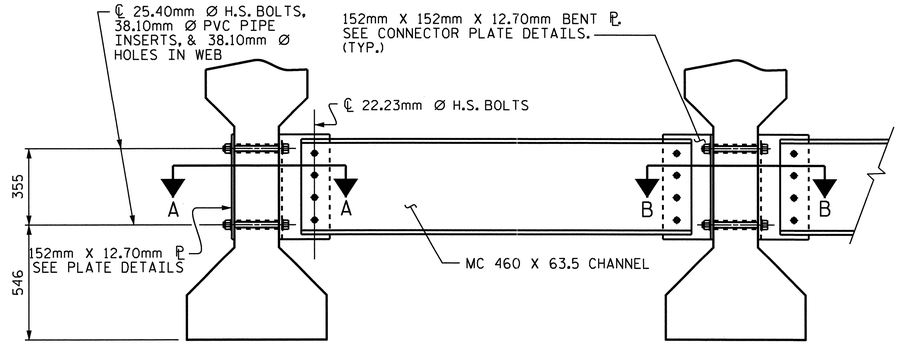


EXTERIOR GIRDER

INTERIOR GIRDER

## PART SECTION AT INTERMEDIATE DIAPHRAGM

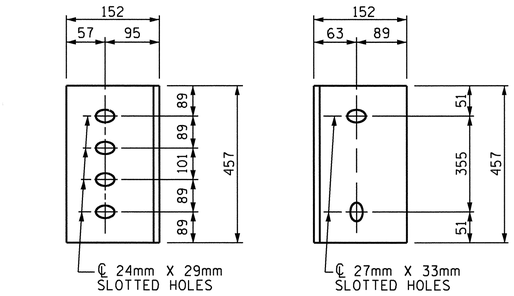


DIAPHRAGM FACE

WEB FACE

## CONNECTOR PLATE DETAILS

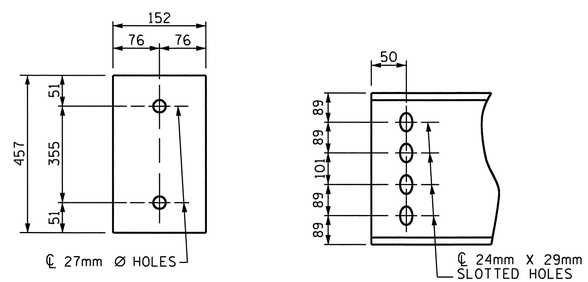


PLATE DETAILS

CHANNEL END

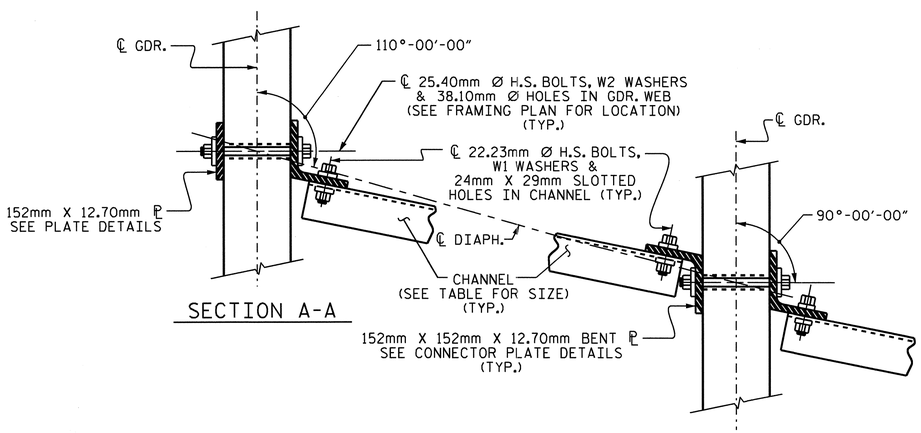


SECTION A-A

SECTION B-B

## CONNECTION DETAILS

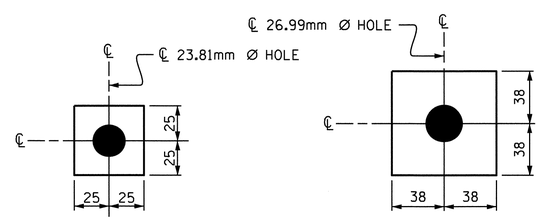


W1

ℙ 11.1 X 50 X 50

USE WITH 22.23mm Ø HVY. HEX NUTS & DIRECT TENSION INDICATOR WASHERS AT DIAPHRAGM CHANNEL TO CONNECTOR PLATE CONNECTIONS

W2

ℙ 11.1 X 76 X 76

USE WITH 25.40mm Ø HVY. HEX NUTS AT CONNECTOR PLATE TO GIRDER CONNECTIONS

## WASHER DETAILS

## STRUCTURAL STEEL NOTES

ALL INTERMEDIATE DIAPHRAGM STEEL, CONNECTOR PLATES AND PLATE WASHERS SHALL BE AASHTO M270 GRADE 345 OR APPROVED EQUAL.

TENSION ON THE AASHTO M164 BOLTS THROUGH THE CHANNEL MEMBER SHALL BE CALIBRATED USING DIRECT TENSION INDICATOR WASHERS IN ACCORDANCE WITH THE STANDARD SPECIFICATIONS. FOR DIRECT TENSION INDICATORS, SEE SPECIAL PROVISIONS.

TENSION ON THE AASHTO M164 BOLTS THROUGH THE GIRDER WEB SHALL BE SNUG TIGHTENED FOLLOWED BY AN ADDITIONAL 1/4 TURN.

THE PLATES, BENT PLATES, CHANNELS, ANGLES, AND PLATE WASHERS SHALL BE GALVANIZED OR METALLIZED IN ACCORDANCE WITH THE STANDARD SPECIFICATIONS. FOR THERMAL SPRAYED COATINGS (METALLIZATION), SEE SPECIAL PROVISIONS.

FOR METALLIZATION, APPLY AN 8 MIL THICK 99.99 PERCENT ZINC (W-Zn-1) THERMAL SPRAYED COATING WITH A 0.5 MIL THICK SEAL COAT TO ALL STEEL DIAPHRAGM SURFACES IN ACCORDANCE WITH THE THERMAL SPRAYED COATINGS SPECIAL PROVISIONS AND SECTION 442 OF THE STANDARD SPECIFICATIONS.

GALVANIZE THE HIGH STRENGTH BOLTS, NUTS, WASHERS AND DIRECT TENSION INDICATORS IN ACCORDANCE WITH THE STANDARD SPECIFICATIONS. FOR HIGH STRENGTH BOLTS, SEE SPECIAL PROVISIONS.

USE A MINIMUM 11mm THICK PLATE WASHER WITH STANDARD HOLES UNDER EACH BOLT HEAD AND NUT. THE PLATE WASHERS SHALL HAVE SUFFICIENT SIZE TO COVER THE HOLES AFTER INSTALLATION. HARDENED WASHERS AND DIRECT TENSION INDICATORS ARE TO BE USED IN CONJUNCTION WITH THE PLATE WASHERS IN THE CHANNEL MEMBER CONNECTION.

FOR BOLTS THROUGH THE GIRDER WEB, PROVIDE SUFFICIENT LENGTH OF ALL BOLTS TO ACCOMMODATE WASHERS AND THE THICKNESS OF CONNECTING MEMBER PLUS AT LEAST 6mm PROJECTION BEYOND THE NUT.

INTERMEDIATE DIAPHRAGM ASSEMBLY SHALL COMPLY WITH SECTION 1072 OF THE STANDARD SPECIFICATIONS.

CONTRACTOR SHALL SUBMIT TWO SETS OF WORKING DRAWINGS FOR THE INTERMEDIATE DIAPHRAGM ASSEMBLY FOR REVIEW, COMMENTS AND ACCEPTANCE. AFTER REVIEW, COMMENTS, AND ACCEPTANCE, SUBMIT SEVEN SETS FOR DISTRIBUTION.

IN THE EXTERIOR BAYS, TEMPORARY STRUTS SHALL BE PLACED BETWEEN PRESTRESSED GIRDERS ADJACENT TO THE STEEL DIAPHRAGMS. STRUTS SHALL REMAIN IN PLACE 3 DAYS AFTER CONCRETE IS PLACED. ALL AASHTO M164 H.S. BOLTS SHALL BE FULLY TIGHTENED AFTER THE STRUTS HAVE BEEN REMOVED.

THE COST OF THE STEEL DIAPHRAGMS AND ASSEMBLIES SHALL BE INCLUDED IN THE UNIT PRICE BID FOR PRESTRESSED CONCRETE GIRDERS.

PROJECT NO. R-2413C

GUILFORD-ROCKINGHAM COUNTY

STATION: 24+37.000 -LREV-

SHEET 6 OF 6

STATE OF NORTH CAROLINA
DEPARTMENT OF TRANSPORTATION
RALEIGH

STANDARD
INTERMEDIATE
STEEL DIAPHRAGMS
FOR TYPE IV
PRESTRESSED CONCRETE
GIRDERS
(RIGHT LANE)

NORTH CAROLINA PROFESSIONAL SEAL 022516 ENGINEER EMILY E. MURRAY

10/28/11

| REVISIONS | | | | | | SHEET NO. |
|---|---|---|---|---|---|---|
| NO. | BY: | DATE: | NO. | BY: | DATE: | S-87 |
| 1 | | | 3 | | | TOTAL SHEETS |
| 2 | | | 4 | | | 238 |

STR. #3

STD.No.PCG12SM

| | |
|---|---|
| ASSEMBLED BY : M.GUDLAUGSSON DATE : 10-1-10 | |
| CHECKED BY : T.L. AVERETTE DATE : 3-23-11 | |
| DRAWN BY : TLA 6/05 | ADDED 10/21/05 |
| CHECKED BY : VC 6/05 | REV. 5/1/06RR KMM/GM |

05-SEP-2011 11:40
Y:\Structures\Final Plans\Str.#3\R-2413C_SD_G*_03.dgn
mgudlaugsson

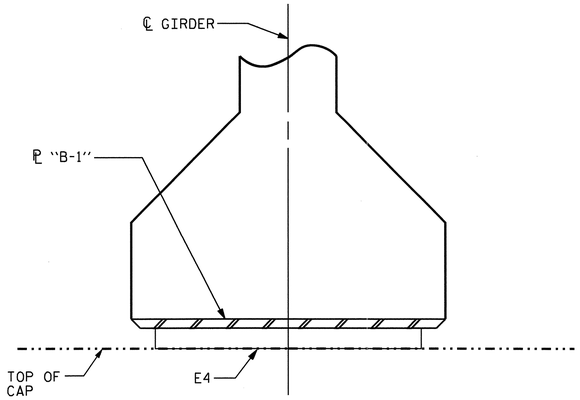


FIXED

## SECTION E-E

(@ INTEGRAL END BENTS)

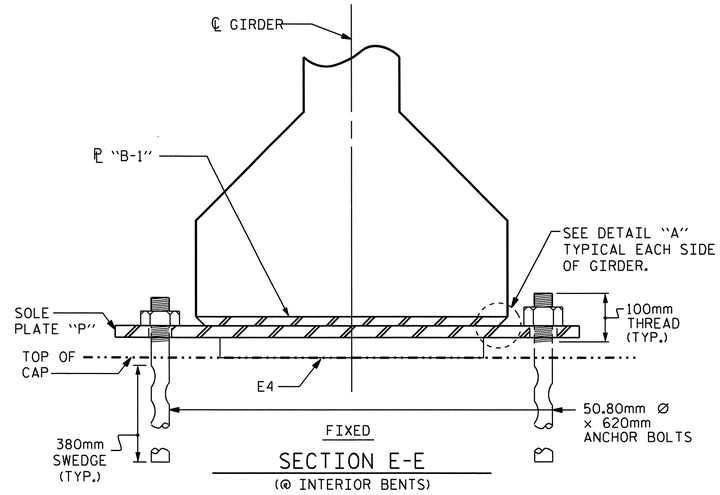


FIXED

## SECTION E-E

(@ INTEGRAL END BENTS)

## NOTES

AT ALL FIXED POINTS OF SUPPORT, NUTS FOR ANCHOR BOLTS ARE TO BE TIGHTENED FINGER TIGHT AND THEN BACKED OFF ½ TURN. THE THREAD OF THE NUT AND BOLT SHALL THEN BE BURRED WITH A SHARP POINTED TOOL.

STEEL SOLE PLATES, ANCHOR BOLTS, NUTS, AND WASHERS SHALL BE GALVANIZED IN ACCORDANCE WITH THE STANDARD SPECIFICATIONS.

PRIOR TO WELDING, GRIND THE GALVANIZED SURFACE OF THE PORTION OF THE EMBEDDED PLATE AND SOLE PLATE THAT ARE TO BE WELDED. AFTER WELDING, DAMAGED GALVANIZED SURFACES SHALL BE REPAIRED IN ACCORDANCE WITH THE STANDARD SPECIFICATIONS.

WHEN WELDING THE SOLE PLATE TO THE EMBEDDED PLATE IN THE GIRDER, USE TEMPERATURE INDICATING WAX PENS, OR OTHER SUITABLE MEANS, TO ENSURE THAT THE TEMPERATURE OF THE SOLE PLATE DOES NOT EXCEED 149°C. TEMPERATURES ABOVE THIS MAY DAMAGE THE ELASTOMER.

SOLE PLATE "P", BOLTS, NUTS, WASHERS, AND PIPE SLEEVE SHALL BE INCLUDED IN THE PAY ITEM FOR PRESTRESSED CONCRETE GIRDERS.

ANCHOR BOLTS SHALL MEET THE REQUIREMENTS OF ASTM A449. NUTS SHALL MEET THE REQUIREMENTS OF AASHTO M291M-12 OR AASHTO M292M-2H. WASHERS SHALL MEET THE REQUIREMENTS OF AASHTO M293M. SHOP DRAWINGS ARE NOT REQUIRED FOR ANCHOR BOLTS, NUTS AND WASHERS. SHOP INSPECTION IS REQUIRED.

ALL SURFACES OF BEARING PLATES SHALL BE SMOOTH AND STRAIGHT.

ALL BEARING PLATES SHALL BE AASHTO M270 GRADE 250.

**ELASTOMER IN ALL BEARINGS SHALL BE 60 DUROMETER HARDNESS.**

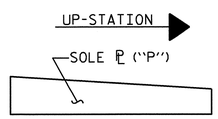


## SOLE ℗ PLACEMENT DETAIL

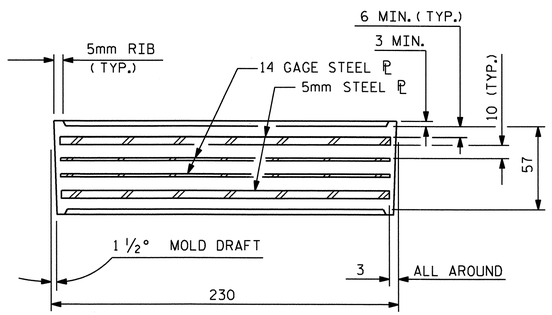


## TYPICAL SECTION OF ELASTOMERIC BEARINGS

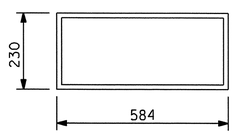


E4 (56 REQ'D)

## PLAN VIEW OF ELASTOMERIC BEARING

## TYPE V

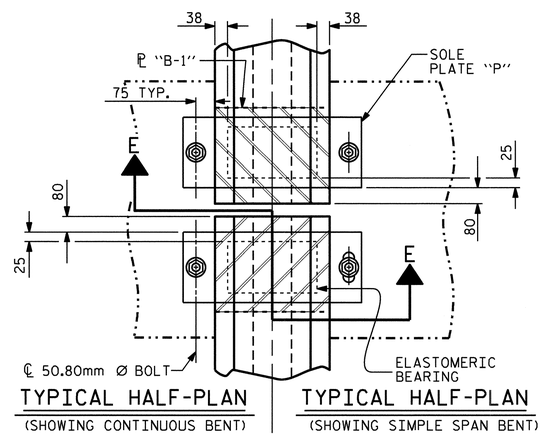


## TYPICAL HALF-PLAN

(SHOWING CONTINUOUS BENT)

## TYPICAL HALF-PLAN

(SHOWING SIMPLE SPAN BENT)

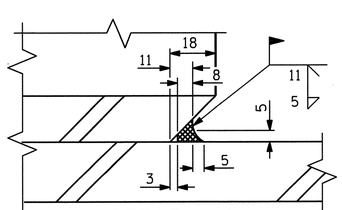


## DETAIL "A"

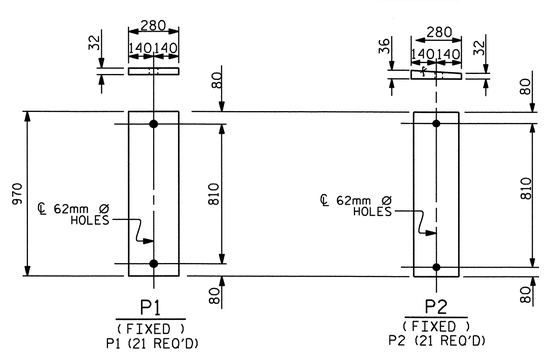


## SOLE PLATE DETAILS ("P")

| —LOAD RATINGS— | |
|---|---|
| | MAX.D.L.+ L.L. |
| TYPE V | 926 kN |
| | |
| | |

PROJECT NO. R-2413C

GUILFORD-ROCKINGHAM COUNTY

STATION: 24+37.000 -LREV-

STATE OF NORTH CAROLINA
DEPARTMENT OF TRANSPORTATION
RALEIGH

# STANDARD ELASTOMERIC BEARING DETAILS

PRESTRESSED CONCRETE GIRDER SUPERSTRUCTURE (RIGHT LANE)

NORTH CAROLINA PROFESSIONAL SEAL 022516 ENGINEER EMILY E. MURRAY
10/28/11

| REVISIONS | | | | | | | SHEET NO. |
|---|---|---|---|---|---|---|---|
| NO. | BY: | DATE: | NO. | BY: | DATE: | | S-88 |
| 1 | | | 3 | | | | TOTAL SHEETS |
| 2 | | | 4 | | | | 238 |

STR. #3

STD. NO. EB4SM

| | |
|---|---|
| ASSEMBLED BY : M.GUDLAUGSSON DATE : 10-28-11 | |
| CHECKED BY : T.L. AVERETTE DATE : 3-23-11 | |
| DRAWN BY : EEM 2/97 | REV. 8/16/99 RWW/LES |
| CHECKED BY : VAP 2/97 | REV. 10/17/00 RWW/LES |
| | REV. 5/1/06 TLA/GM |

05-SEP-2011 11:42
Y:\Structures\Final Plans\Str.#3\R-2413C_SD_BG_03.dgn
mgudlaugsson

## NOTES

BARRIER RAIL IN A CONTINUOUS UNIT SHALL NOT BE CAST UNTIL ALL SLAB CONCRETE IN THE UNIT HAS BEEN CAST AND HAS REACHED A MINIMUM COMPRESSIVE STRENGTH OF 20.7 MPa.

ALL REINFORCING STEEL IN BARRIER RAILS SHALL BE EPOXY COATED.

GROOVED CONTRACTION JOINTS, 12mm IN DEPTH, SHALL BE TOOLED IN ALL EXPOSED FACES OF THE BARRIER RAIL AND IN ACCORDANCE WITH ARTICLE 825-10(B) OF THE STANDARD SPECIFICATIONS. THE CONTRACTION JOINT SHALL BE LOCATED AT EACH THIRD POINT BETWEEN BARRIER RAIL EXPANSION JOINTS. ONLY ONE CONTRACTION JOINT IS REQUIRED AT MIDPOINT OF BARRIER RAIL SEGMENTS LESS THAN 6.1m IN LENGTH AND NO CONTRACTION JOINTS ARE REQUIRED FOR THOSE SEGMENTS LESS THAN 3.5m IN LENGTH.

## BAR TYPES

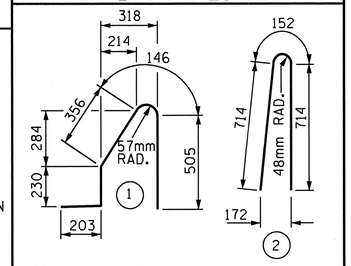


ALL BAR DIMENSIONS ARE OUT TO OUT

## BILL OF MATERIAL

FOR CONCRETE BARRIER RAIL ONLY

| BAR | NO. | SIZE | TYPE | LENGTH | WEIGHT |
|---|---|---|---|---|---|
| * B1 | 32 | #16 | STR | 3160 | 157 |
| * B2 | 96 | #16 | STR | 7120 | 1061 |
| * B3 | 80 | #16 | STR | 6880 | 854 |
| * B4 | 32 | #16 | STR | 4420 | 220 |
| | | | | | |
| * S1 | 604 | #16 | 1 | 1440 | 1350 |
| * S2 | 604 | #16 | 2 | 1580 | 1481 |

* EPOXY COATED REINFORCING STEEL 5123 kg.

CLASS AA CONCRETE 45.5 CU. METERS

CONCRETE BARRIER RAIL 180.936 METERS

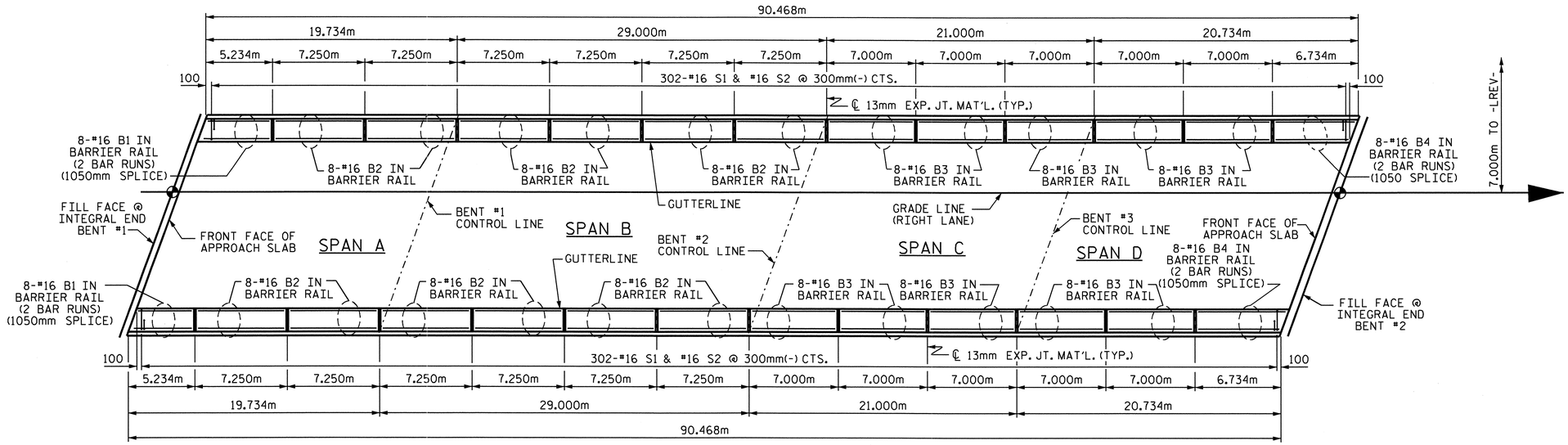


## PLAN OF BARRIER RAIL

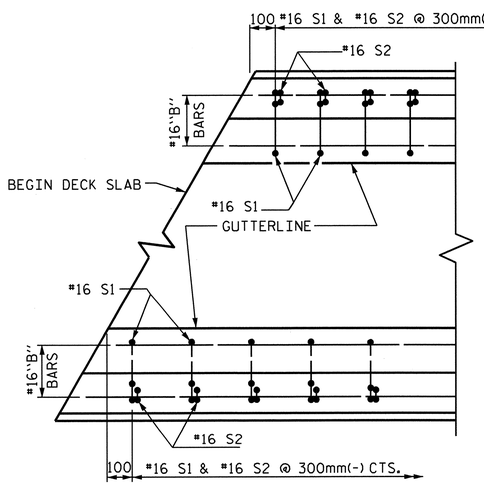


PLAN

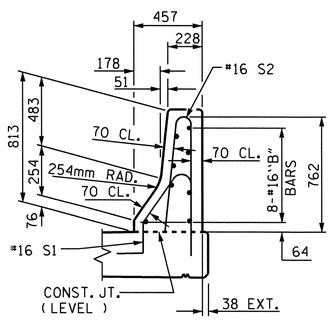


END VIEW

## END OF RAIL DETAILS

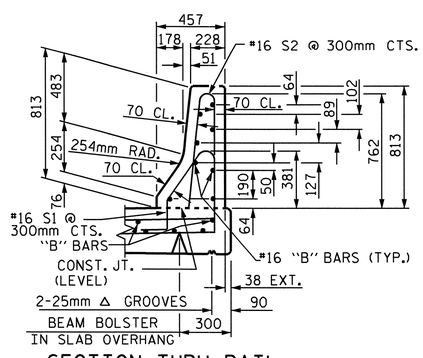


SECTION THRU RAIL

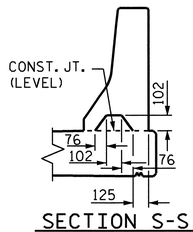


SECTION S-S

AT DAM IN OPEN JOINT
( THIS IS TO BE USED ONLY WHEN SLIP FORM IS USED )

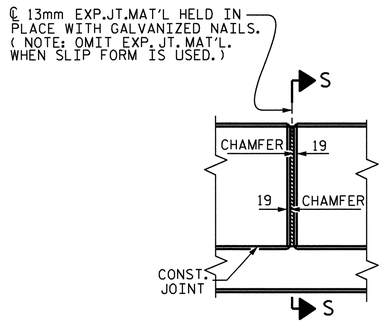


ELEVATION AT EXPANSION JOINTS

## BARRIER RAIL DETAILS

PROJECT NO. R-2413C

GUILFORD-ROCKINGHAM COUNTY

STATION: 24+37.000 -LREV-

STATE OF NORTH CAROLINA
DEPARTMENT OF TRANSPORTATION
RALEIGH

STANDARD
CONCRETE BARRIER RAIL
(RIGHT LANE)

NORTH CAROLINA PROFESSIONAL SEAL 022516 ENGINEER EMILY E. MURRAY
10/28/11

| REVISIONS | | | | | | | | SHEET NO. |
|---|---|---|---|---|---|---|---|---|
| NO. | BY: | DATE: | NO. | BY: | DATE: | | | S-89 |
| 1 | | | 3 | | | | | TOTAL SHEETS |
| 2 | | | 4 | | | | | 238 |

| | | | |
|---|---|---|---|
| ASSEMBLED BY : M.GUDLAUGSSON | DATE : 10-6-10 | | |
| CHECKED BY : T.L. AVERETTE | DATE : 3-23-11 | | |
| DRAWN BY : ARB 5/87 | REV. 10/17/00 | RWW/LES | |
| CHECKED BY : SJD 9/87 | REV. 5/7/03R | RWW/JTE | |
| | REV. 5/1/06 | TLA/GM | |

05-SEP-2011 11:35
Y:\Structures\Final Plans\Str.#3\R2413C_SD_BR_03.dgn
mgudlaugsson

STR. #3

STD. No. CBR1SM

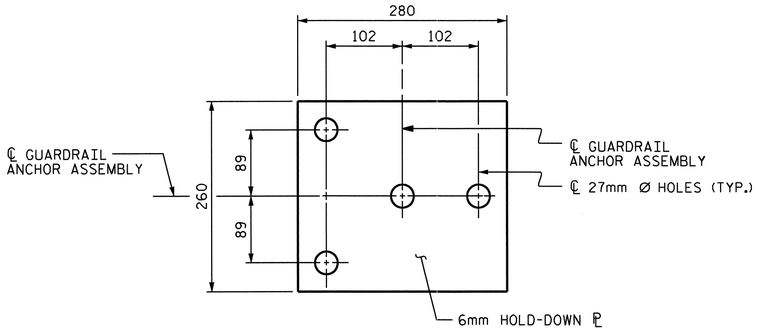


PLAN

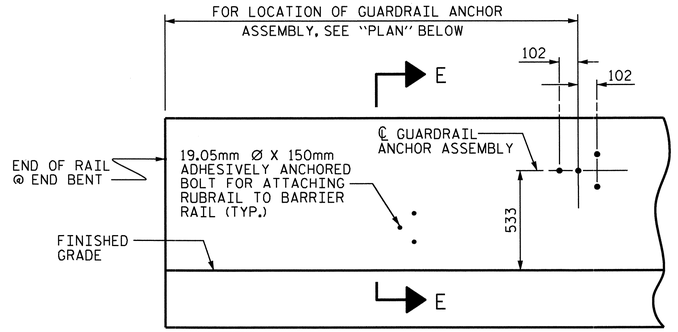


ELEVATION

FOR LOCATION OF RUBRAIL, SEE ROADWAY STD. 862.03

## NOTES

THE GUARDRAIL ANCHOR ASSEMBLY SHALL CONSIST OF A 6mm HOLD DOWN PLATE AND 4 - 22.23mm Ø BOLTS WITH NUTS AND WASHERS, RUBRAIL, AND ADHESIVELY ANCHORED BOLTS.

THE HOLD-DOWN PLATE SHALL CONFORM TO AASHTO M270 GRADE 36. AFTER FABRICATION, THE HOLD-DOWN PLATE SHALL BE HOT-DIP GALVANIZED IN ACCORDANCE WITH AASHTO M111.

BOLTS SHALL CONFORM TO THE REQUIREMENTS OF ASTM A307 AND NUTS SHALL CONFORM TO THE REQUIREMENTS OF AASHTO M291. BOLTS, NUTS AND WASHERS SHALL BE GALVANIZED. (AT THE CONTRACTOR'S OPTION, STAINLESS STEEL BOLTS, NUTS AND WASHERS MAY BE USED AS AN ALTERNATE FOR THE 22.23mm Ø GALVANIZED BOLTS, NUTS AND WASHERS. THEY SHALL CONFORM TO OR EXCEED THE MECHANICAL REQUIREMENTS OF ASTM A307. THE USE OF THIS ALTERNATE SHALL BE APPROVED BY THE ENGINEER.)

THE GUARDRAIL ANCHOR ASSEMBLY IS REQUIRED AT ALL POINTS WHERE APPROACH GUARDRAIL IS TO BE ATTACHED TO THE END OF BARRIER RAIL. FOR POINTS OF ATTACHMENT, SEE SKETCH.

AFTER INSTALLATION, THE EXPOSED THREAD OF THE BOLT SHALL BE BURRED WITH A SHARP POINTED TOOL.

THE COST OF THE GUARDRAIL ANCHOR ASSEMBLY SHALL BE INCLUDED IN THE UNIT CONTRACT PRICE BID FOR CONCRETE BARRIER RAIL.

THE 32mm Ø HOLES SHALL BE FORMED OR DRILLED WITH A CORE BIT. IMPACT TOOLS WILL NOT BE PERMITTED. ANY CONCRETE DAMAGED BY THIS WORK SHALL BE REPAIRED TO THE SATISFACTION OF THE ENGINEER.

THE C150 X 12 RUBRAIL IS TO BE ADHESIVELY ANCHORED TO THE RAIL USING THREE 19.05mm Ø X 150mm BOLTS WITH WASHERS. LEVEL ONE FIELD TESTING IS REQUIRED, AND THE YIELD LOAD OF THE 19.05mm Ø BOLTS IS 53.4kN. FOR ADHESIVELY ANCHORED ANCHOR BOLTS OR DOWELS, SEE SPECIAL PROVISIONS. SEE ROADWAY STANDARD 862.03 FOR DETAILS AND LOCATION OF THE RUBRAIL.

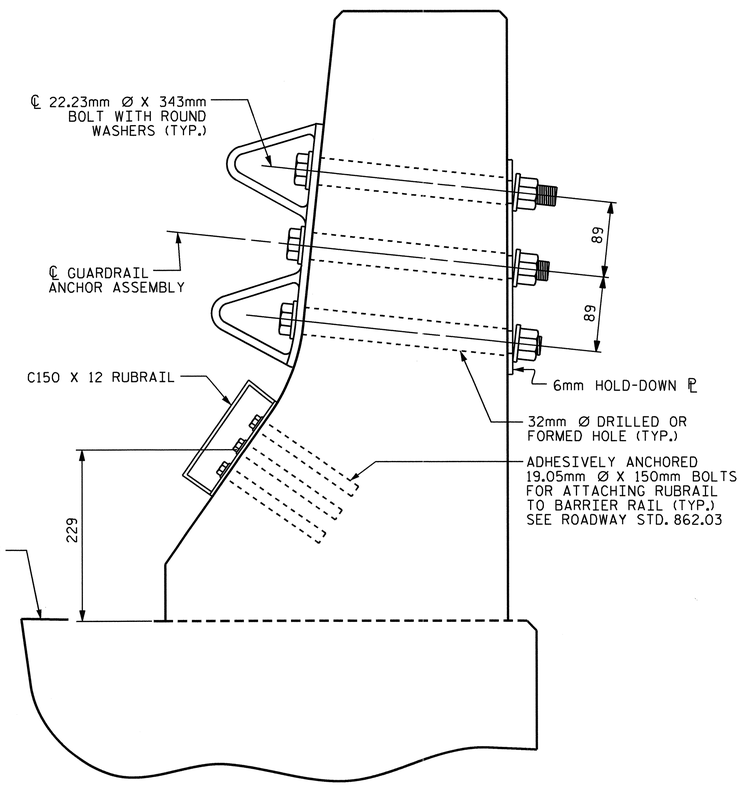


SECTION E-E

## GUARDRAIL ANCHOR ASSEMBLY DETAILS

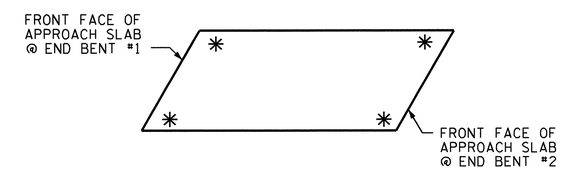


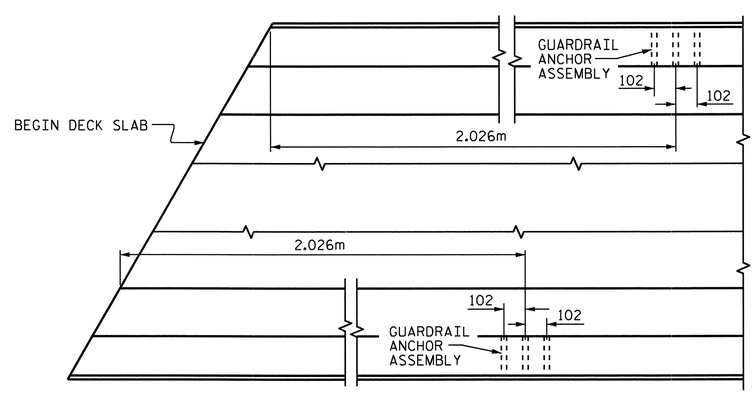


PLAN

## LOCATION OF ANCHORS FOR GUARDRAIL

END BENT #1 SHOWN, END BENT #2 SIMILAR

PROJECT NO. R-2413C

GUILFORD-ROCKINGHAM COUNTY

STATION: 24+37.000 -LREV-

STATE OF NORTH CAROLINA
DEPARTMENT OF TRANSPORTATION
RALEIGH

STANDARD

# GUARDRAIL ANCHORAGE FOR BARRIER RAIL (RIGHT LANE)

NORTH CAROLINA PROFESSIONAL SEAL 022516 ENGINEER EMILY E. MURRAY
10/28/11

| REVISIONS | | | | | | |
|---|---|---|---|---|---|---|
| NO. | BY: | DATE: | NO. | BY: | DATE: | |
| 1 | | | 3 | | | |
| 2 | | | 4 | | | |

SHEET NO. S-90

TOTAL SHEETS 238

STR. #3

STD. NO. GRA2

ASSEMBLED BY : M.GUDLAUGSSON DATE : 9-14-10
CHECKED BY : T.L. AVERETTE DATE : 4-05-11

DRAWN BY : TLA 5/06
CHECKED BY : GM 5/06

ADDED 5/1/06R KMM/GM

05-SEP-2011 11:35
Y:\Structures\Final Plans\Str.#3\R2413C_SD_BR_03.dgn
mgudlaugsson

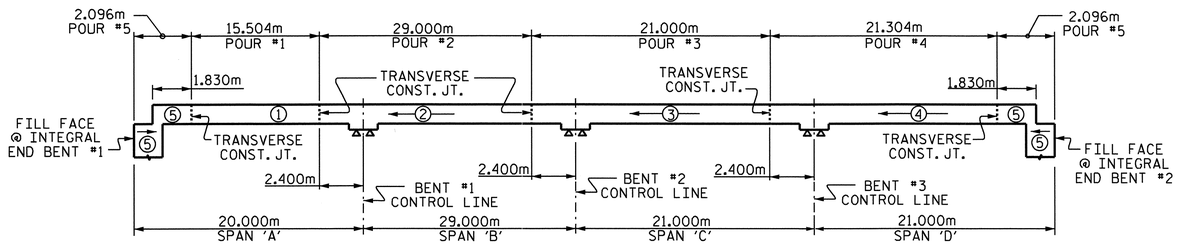


## POURING SEQUENCE

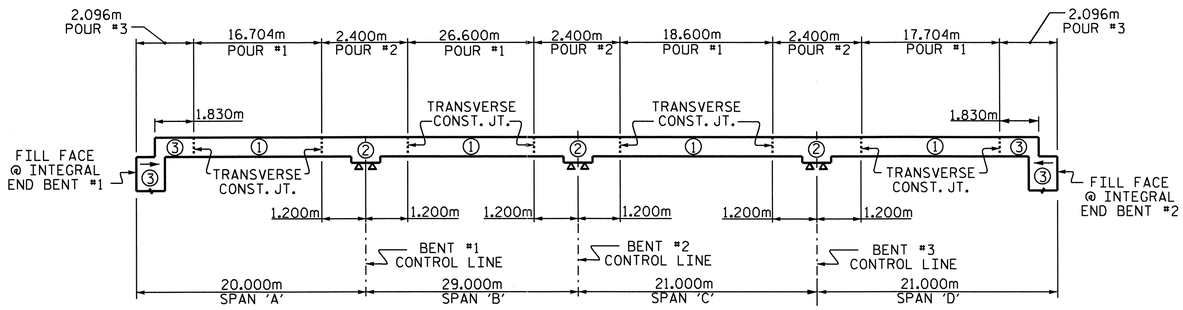


## OPTIONAL POURING SEQUENCE

POUR ② CAN NOT BE STARTED UNTIL BOTH ADJACENT ① POURS REACH A MINIMUM OF 20.7MPa.

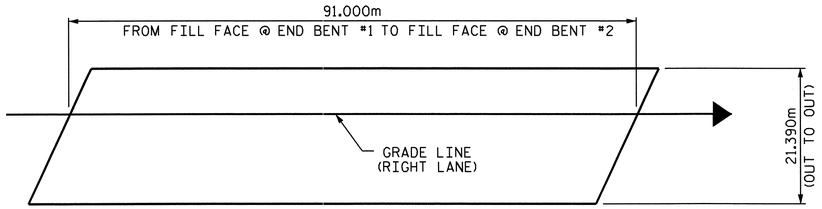


## LAYOUT FOR COMPUTING AREA OF REINFORCED CONCRETE DECK SLAB (1946.5 SQ. METER)

| BILL OF MATERIAL SPANS A, B, C & D | | | | | |
|---|---|---|---|---|---|
| BAR | NO. | SIZE | TYPE | LENGTH | WEIGHT |
| ✱ A1 | 552 | #16 | STR | 9440 | 8087 |
| ✱ A2 | 552 | #16 | STR | 12640 | 10829 |
| ✱ A101 | 8 | #16 | STR | 10620 | 132 |
| ✱ A102 | 8 | #16 | STR | 10220 | 127 |
| ✱ A103 | 8 | #16 | STR | 9800 | 122 |
| ✱ A104 | 4 | #16 | STR | 17980 | 112 |
| ✱ A105 | 4 | #16 | STR | 17160 | 107 |
| ✱ A106 | 4 | #16 | STR | 16340 | 101 |
| ✱ A107 | 4 | #16 | STR | 15520 | 96 |
| ✱ A108 | 4 | #16 | STR | 14680 | 91 |
| ✱ A109 | 4 | #16 | STR | 13860 | 86 |
| ✱ A110 | 4 | #16 | STR | 13040 | 81 |
| ✱ A111 | 4 | #16 | STR | 12220 | 76 |
| ✱ A112 | 4 | #16 | STR | 11380 | 71 |
| ✱ A113 | 4 | #16 | STR | 10560 | 66 |
| ✱ A114 | 4 | #16 | STR | 9740 | 60 |
| ✱ A115 | 4 | #16 | STR | 8920 | 55 |
| ✱ A116 | 4 | #16 | STR | 8100 | 50 |
| ✱ A117 | 4 | #16 | STR | 7260 | 45 |
| ✱ A118 | 4 | #16 | STR | 6440 | 40 |
| ✱ A119 | 4 | #16 | STR | 5620 | 35 |
| ✱ A120 | 4 | #16 | STR | 4800 | 30 |
| ✱ A121 | 4 | #16 | STR | 3980 | 25 |
| ✱ A122 | 4 | #16 | STR | 3140 | 19 |
| ✱ A123 | 4 | #16 | STR | 2320 | 14 |
| ✱ A124 | 4 | #16 | STR | 1500 | 9 |
| ✱ A125 | 4 | #16 | STR | 680 | 4 |
| | | | | | |
| A3 | 552 | #16 | STR | 14180 | 12148 |
| A4 | 552 | #16 | STR | 7780 | 6665 |
| A201 | 8 | #16 | STR | 10560 | 131 |
| A202 | 8 | #16 | STR | 10160 | 126 |
| A203 | 8 | #16 | STR | 9740 | 121 |
| A204 | 4 | #16 | STR | 17980 | 112 |
| A205 | 4 | #16 | STR | 17160 | 107 |
| A206 | 4 | #16 | STR | 16340 | 101 |
| A207 | 4 | #16 | STR | 15520 | 96 |
| A208 | 4 | #16 | STR | 14680 | 91 |
| A209 | 4 | #16 | STR | 13860 | 86 |
| A210 | 4 | #16 | STR | 13040 | 81 |
| A211 | 4 | #16 | STR | 12220 | 76 |
| A212 | 4 | #16 | STR | 11380 | 71 |
| A213 | 4 | #16 | STR | 10560 | 66 |
| A214 | 4 | #16 | STR | 9740 | 60 |
| A215 | 4 | #16 | STR | 8920 | 55 |
| A216 | 4 | #16 | STR | 8100 | 50 |
| A217 | 4 | #16 | STR | 7260 | 45 |

| BILL OF MATERIAL SPANS A, B, C & D | | | | | |
|---|---|---|---|---|---|
| BAR | NO. | SIZE | TYPE | LENGTH | WEIGHT |
| A218 | 4 | #16 | STR | 6440 | 40 |
| A219 | 4 | #16 | STR | 5620 | 35 |
| A220 | 4 | #16 | STR | 4800 | 30 |
| A221 | 4 | #16 | STR | 3980 | 25 |
| A222 | 4 | #16 | STR | 3140 | 19 |
| A223 | 4 | #16 | STR | 2320 | 14 |
| A224 | 4 | #16 | STR | 1500 | 9 |
| A225 | 4 | #16 | STR | 680 | 4 |
| | | | | | |
| ✱ B1 | 49 | #13 | STR | 8960 | 436 |
| ✱ B2 | 190 | #22 | STR | 4200 | 2428 |
| ✱ B3 | 98 | #22 | STR | 18000 | 5366 |
| ✱ B4 | 92 | #22 | STR | 7500 | 2099 |
| ✱ B5 | 98 | #13 | STR | 5220 | 508 |
| ✱ B6 | 49 | #13 | STR | 6620 | 322 |
| ✱ B7 | 49 | #22 | STR | 15600 | 2325 |
| ✱ B8 | 46 | #22 | STR | 6300 | 882 |
| ✱ B9 | 98 | #13 | STR | 5300 | 516 |
| B10 | 516 | #16 | STR | 15620 | 12509 |
| | | | | | |
| ✱ S1 | 116 | #13 | 1 | 3560 | 410 |
| ✱ S2 | 116 | #13 | 1 | 3320 | 383 |
| S3 | 612 | #13 | 4 | 860 | 523 |
| | | | | | |
| K1 | 30 | #13 | STR | 8660 | 258 |
| K2 | 48 | #13 | STR | 2740 | 131 |
| K3 | 96 | #13 | STR | 3080 | 294 |
| K4 | 48 | #13 | STR | 2900 | 138 |
| K5 | 12 | #13 | STR | 2580 | 31 |
| K6 | 8 | #13 | STR | 960 | 8 |
| K7 | 4 | #13 | STR | 1860 | 7 |
| K8 | 8 | #13 | STR | 2020 | 16 |
| K9 | 4 | #13 | STR | 1940 | 8 |
| K10 | 4 | #13 | STR | 1780 | 7 |
| K11 | 75 | #13 | 2 | 4020 | 300 |
| K12 | 30 | #13 | 3 | 2020 | 60 |
| K13 | 36 | #13 | STR | 2300 | 82 |
| | | | | | |
| ✱ U1 | 126 | #13 | 5 | 4660 | 584 |
| ✱ U2 | 36 | #13 | 5 | 4060 | 145 |
| ✱ U3 | 120 | #13 | 6 | 3600 | 429 |
| ✱ U4 | 16 | #13 | 6 | 4360 | 69 |
| | | | | | |
| V1 | 14 | #13 | STR | 1240 | 17 |

REINFORCING STEEL = 34853 kg
✱EPOXY COATED REINFORCING STEEL = 37472 kg

## BAR TYPES

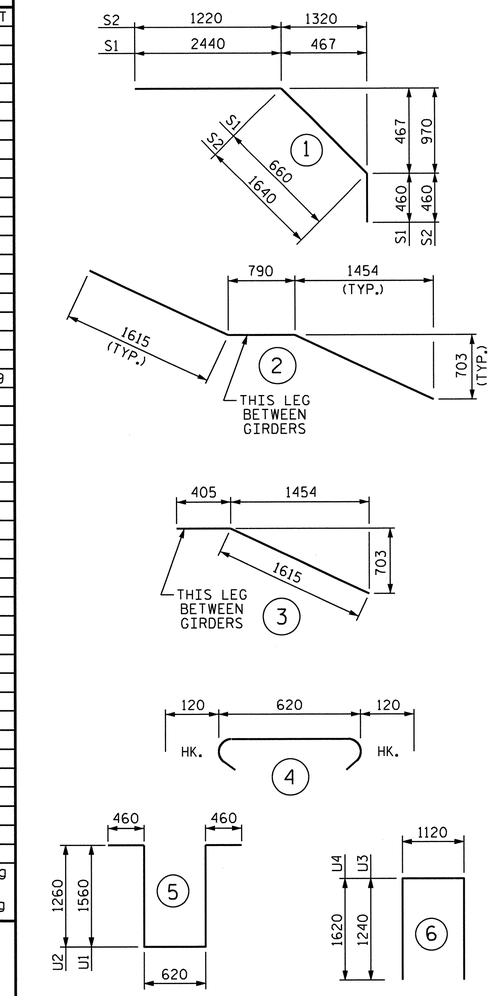


ALL BAR DIMENSIONS ARE OUT TO OUT.

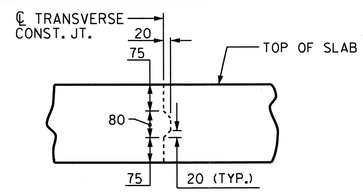


## TRANSVERSE CONSTRUCTION JOINT DETAIL

NOTE: REINFORCING STEEL IN SLAB NOT SHOWN. LONGITUDINAL REINFORCING STEEL SHALL BE CONTINUOUS THRU JOINT

| GROOVING BRIDGE FLOORS | |
|---|---|
| BRIDGE DECK | 1762.3 SQ.METER |
| APPROACH SLABS | 296.9 SQ.METER |
| TOTAL | 2059.2 SQ.METER |

SUPERSTRUCTURE REINFORCING STEEL LENGTHS ARE BASED ON THE FOLLOWING MINIMUM SPLICE LENGTHS

| BAR SIZE | SUPERSTRUCTURE EXCEPT APPROACH SLABS, PARAPET, AND BARRIER RAIL | | APPROACH SLABS | | PARAPET AND BARRIER RAIL |
|---|---|---|---|---|---|
| | EPOXY COATED | UNCOATED | EPOXY COATED | UNCOATED | |
| #13 | 610 | 540 | 610 | 540 | 840 |
| #16 | 770 | 660 | 770 | 660 | 1050 |
| #19 | 920 | 790 | 1190 | 790 | 1330 |
| #22 | 1580 | 1060 | | | |
| #25 | 2080 | 1390 | | | |

## SUPERSTRUCTURE BILL OF MATERIAL

| | CLASS AA CONCRETE | | REINFORCING STEEL | EPOXY COATED REINFORCING STEEL |
|---|---|---|---|---|
| | (CU. METER) | | (kg) | (kg) |
| SPAN A, B, C, AND D. | POUR 1 | 93.3 | | |
| | POUR 2 | 194.3 | | |
| | POUR 3 | 146.1 | | |
| | POUR 4 | 148.0 | | |
| | ● POUR 5 | 110.7 | 34853 | 37472 |
| TOTALS ✱✱ | 692.4 | | 34853 | 37472 |

✱✱ QUANTITIES FOR BARRIER RAIL ARE NOT INCLUDED
● POUR 5 QUANTITY INCLUDES UPPER POUR OF WINGS & INTEGRAL END BENT.

NORTH CAROLINA PROFESSIONAL SEAL 022516 ENGINEER ELMOY E. MURRAY (9/28/11)

PROJECT NO. R-2413C
GUILFORD-ROCKINGHAM COUNTY
STATION: 24+37.000 -LREV-

STATE OF NORTH CAROLINA
DEPARTMENT OF TRANSPORTATION
RALEIGH

STANDARD
SUPERSTRUCTURE
BILL OF MATERIAL
(RIGHT LANE)

| REVISIONS | | | | | | SHEET NO. |
|---|---|---|---|---|---|---|
| NO. | BY: | DATE: | NO. | BY: | DATE: | S-91 |
| 1 | | | 3 | | | TOTAL SHEETS |
| 2 | | | 4 | | | 238 |

ASSEMBLED BY : M.GUDLAUGSSON DATE : 1-31-11
CHECKED BY : T.L. AVERETTE DATE : 3-23-11
DRAWN BY : JMB 5/87 REV. 5/16/97 EEM/RGW
CHECKED BY : SJD 9/87 REV. 5/1/06 TLA/GM

19-OCT-2011 14:18
R:\TIPProjects-R\R2413c\Structures\Final Plans\Str.#3\R-2413C_SD_BM_03.dgn
taverette

STR. #3

STD. NO. BOM1SM

## NOTES:

THE CONTRACTOR SHALL PROVIDE FOR INSTALLATION OF THE 102mm DIAMETER DRAIN PIPE THROUGH THE WING WALL AS REQUIRED FOR REINFORCED BRIDGE APPROACH FILLS, SEE THE ROADWAY PLANS. REINFORCING STEEL IN THE WING WALL MAY BE SHIFTED AS NECESSARY TO CLEAR THE DRAIN PIPE.

THE TOP SURFACE OF THE END BENT CAP AND WINGS, EXCLUDING THE OUTSIDE 100mm AND THE BEARING AREA, SHALL BE RAKED TO A DEPTH OF 6mm.

STIRRUPS IN CAP MAY BE SHIFTED AS NECESSARY TO CLEAR #13 V1 BARS.

THE CONTRACTOR'S ATTENTION IS CALLED TO THE FACT THAT THE UPPER PART OF INTEGRAL END BENT AND WINGS ARE TO BE POURED WITH THE SUPERSTRUCTURE.

SEE SUPERSTRUCTURE SHEETS FOR UPPER PART OF INTEGRAL END BENT DETAIL.

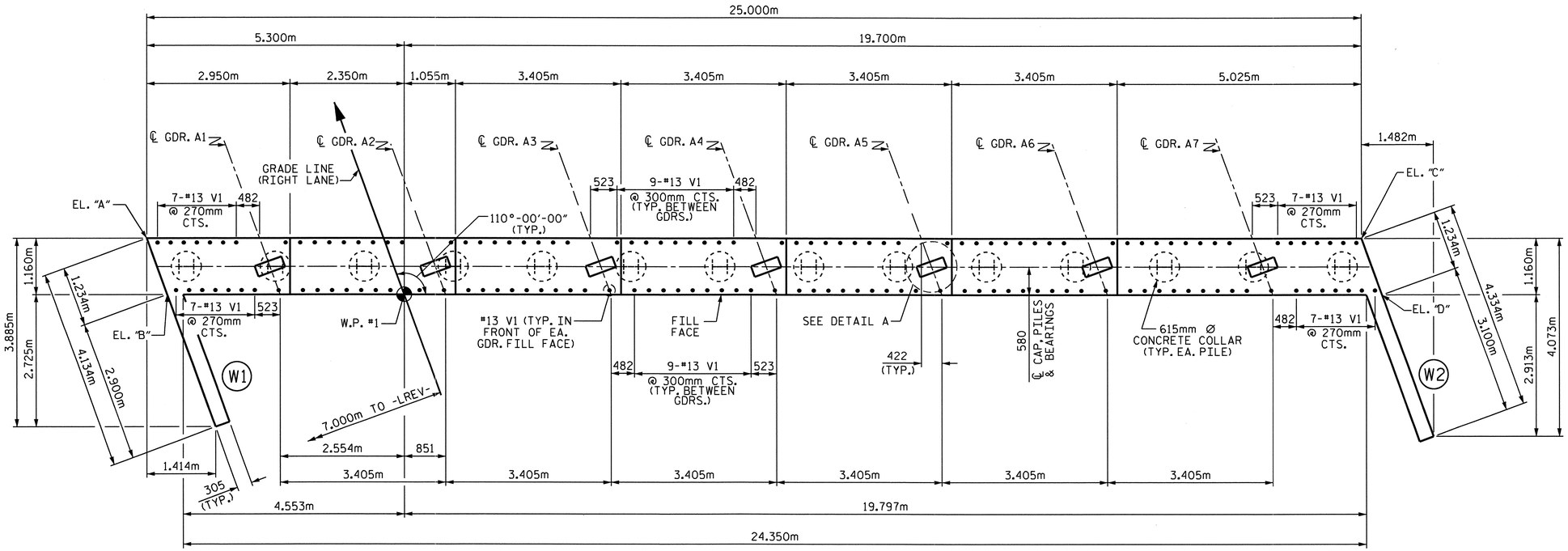


PLAN

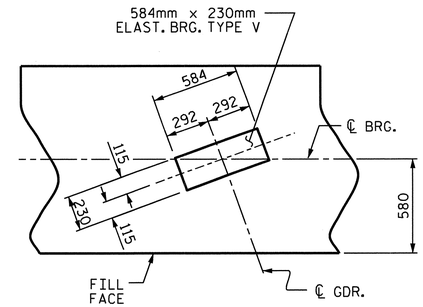


DETAIL A

(TYP. EA. GDR.)

| TOP OF PILE ELEVATION | |
|---|---|
| P1 236.364 | P8 236.147 |
| P2 236.332 | P9 236.116 |
| P3 236.302 | P10 236.085 |
| P4 236.271 | P11 236.054 |
| P5 236.240 | P12 236.023 |
| P6 236.209 | P13 235.992 |
| P7 236.178 | P14 235.961 |

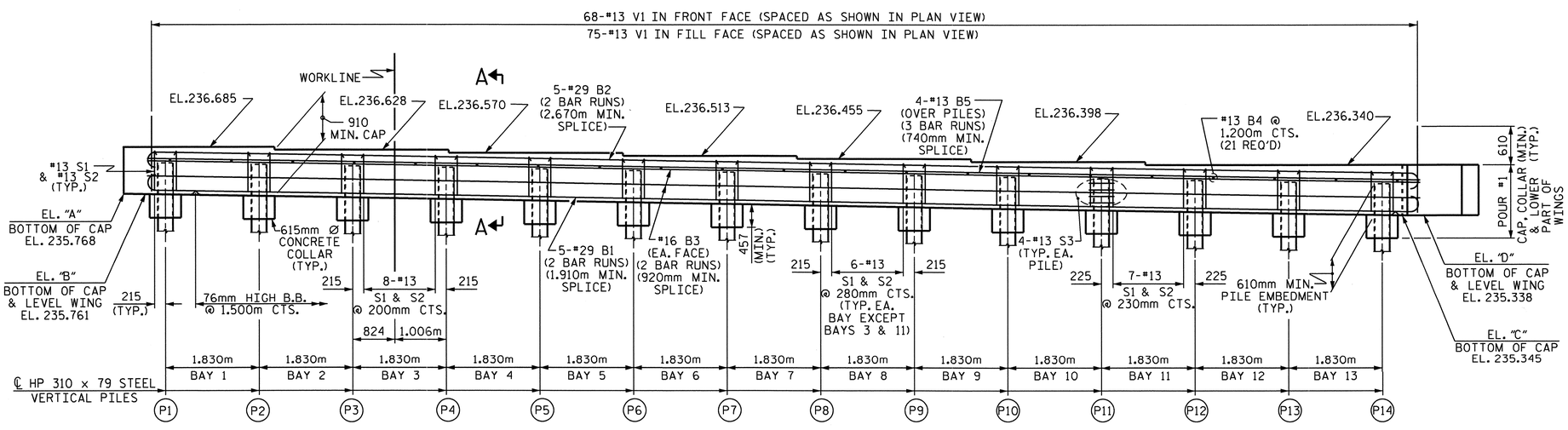


ELEVATION

PROJECT NO. R-2413C

GUILFORD-ROCKINGHAM COUNTY

STATION: 24+37.000 -LREV-

SHEET 1 OF 3

STATE OF NORTH CAROLINA
DEPARTMENT OF TRANSPORTATION
RALEIGH

SUBSTRUCTURE
INTEGRAL
END BENT #1
(RIGHT LANE)

NORTH CAROLINA PROFESSIONAL SEAL 022516 ENGINEER EMILY E. MURRAY
10/28/11

| REVISIONS | | | | | | SHEET NO. |
|---|---|---|---|---|---|---|
| NO. | BY: | DATE: | NO. | BY: | DATE: | S-92 |
| 1 | | | 3 | | | TOTAL SHEETS |
| 2 | | | 4 | | | 238 |

STR. #3

DRAWN BY : M.GUDLAUGSSON DATE : 01-19-11
CHECKED BY : T.L. AVERETTE DATE : 04-26-11

19-OCT-2011 14:22
R:\TIPProjects-R\R2413c\Structures\Final Plans\Str.#3\R-2413C_SD_E#_03.dgn
taverette

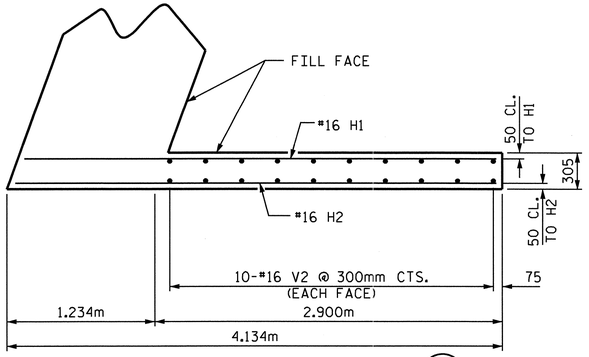


PLAN OF LEFT WING (W1)

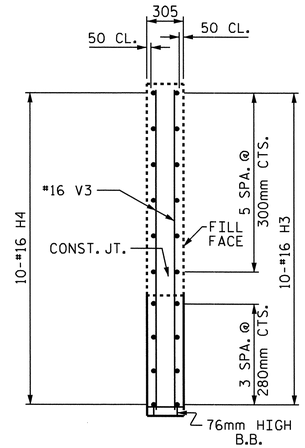


SECTION Y-Y

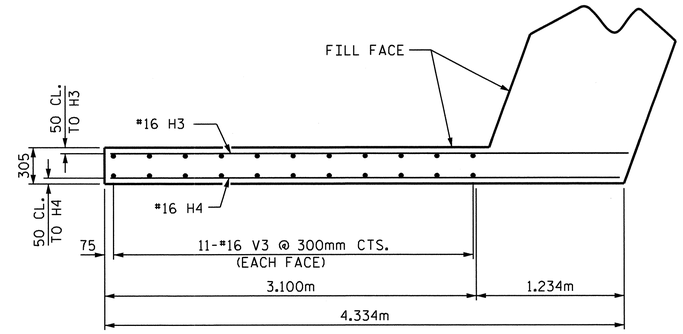


PLAN OF RIGHT WING (W2)

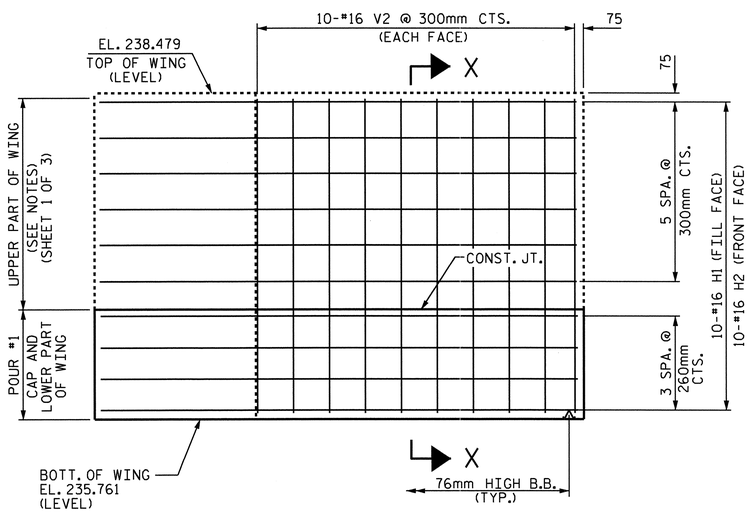


ELEVATION OF LEFT WING (W1)

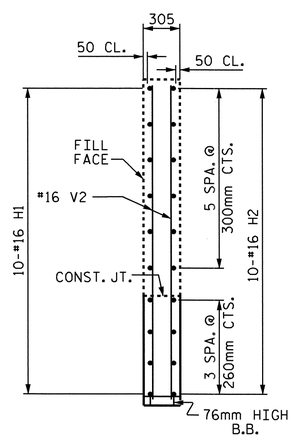


SECTION X-X

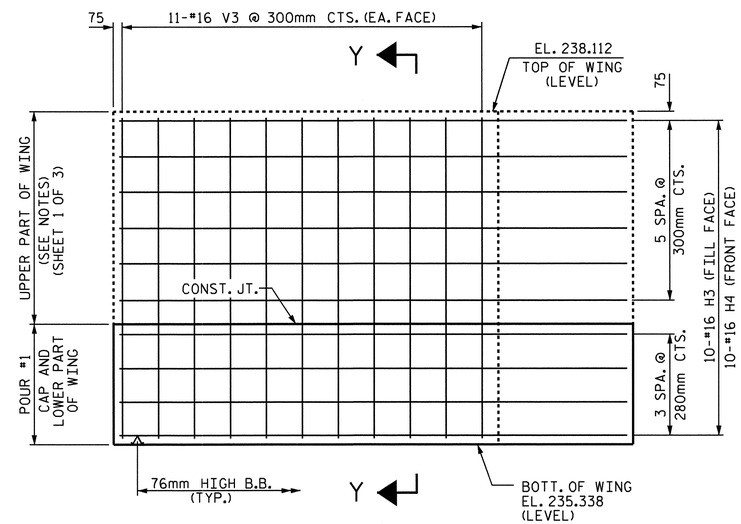


ELEVATION OF RIGHT WING (W2)

PROJECT NO. R-2413C

GUILFORD-ROCKINGHAM COUNTY

STATION: 24+37.000 -LREV-

SHEET 2 OF 3

STATE OF NORTH CAROLINA
DEPARTMENT OF TRANSPORTATION
RALEIGH

SUBSTRUCTURE

INTEGRAL
END BENT #1
(RIGHT LANE)

NORTH CAROLINA PROFESSIONAL SEAL 022516 ENGINEER EMILY E. MURRAY
10/28/11

| REVISIONS | | | | | | SHEET NO. |
|---|---|---|---|---|---|---|
| NO. | BY: | DATE: | NO. | BY: | DATE: | S-93 |
| 1 | | | 3 | | | TOTAL SHEETS |
| 2 | | | 4 | | | 238 |

STR. #3

DRAWN BY : M.GUDLAUGSSON DATE : 01-19-11
CHECKED BY : T.L. AVERETTE DATE : 04-26-11

05-SEP-2011 11:33
Y:\Structures\Final Plans\Str.#3\R-2413C_SD_E*_03.dgn
mgudlaugsson

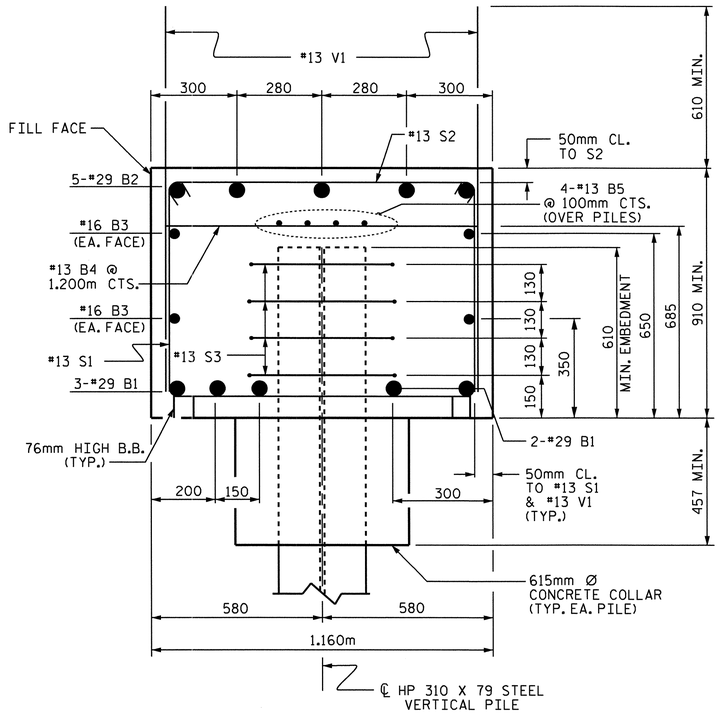


## SECTION A-A

## BAR TYPES

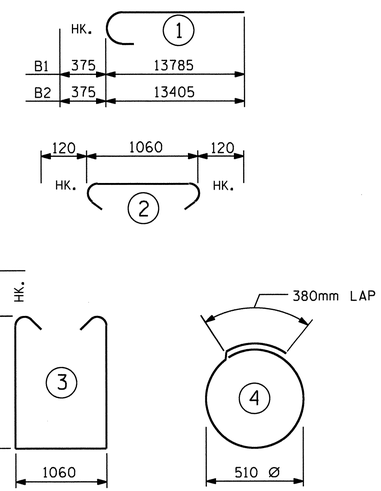


ALL BAR DIMENSIONS ARE OUT TO OUT.

## BILL OF MATERIAL
### END BENT #1

| BAR | NO. | SIZE | TYPE | LENGTH | WEIGHT |
|---|---|---|---|---|---|
| B1 | 10 | #29 | 1 | 14160 | 716 |
| B2 | 10 | #29 | 1 | 13780 | 697 |
| B3 | 8 | #16 | STR | 12920 | 160 |
| B4 | 21 | #13 | STR | 1060 | 22 |
| B5 | 12 | #13 | STR | 8800 | 105 |
| | | | | | |
| H1 | 10 | #16 | STR | 3920 | 61 |
| H2 | 10 | #16 | STR | 4000 | 62 |
| H3 | 10 | #16 | STR | 4320 | 67 |
| H4 | 10 | #16 | STR | 4240 | 66 |
| | | | | | |
| S1 | 83 | #13 | 3 | 2880 | 238 |
| S2 | 83 | #13 | 2 | 1300 | 107 |
| S3 | 56 | #13 | 4 | 1980 | 110 |
| | | | | | |
| V1 | 143 | #13 | STR | 1460 | 208 |
| V2 | 20 | #16 | STR | 2600 | 81 |
| V3 | 22 | #16 | STR | 2660 | 91 |

REINFORCING STEEL = 2791 kg

CLASS A CONCRETE BREAKDOWN

POUR #1: (CAP, CONCRETE COLLAR & LOWER PART OF WINGS) 31.0 m3

TOTAL CONCRETE 31.0 m3

HP 310 X 79 STEEL PILES
NO. 14 234.5 METERS

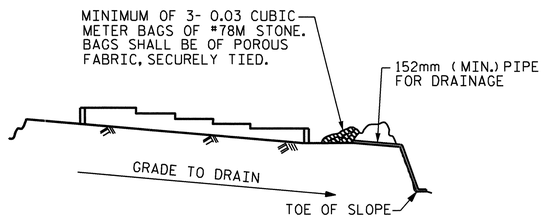


BAGGED STONE AND PIPE SHALL BE PLACED IMMEDIATELY AFTER COMPLETION OF END BENT EXCAVATION. PIPE MAY BE EITHER CONCRETE, CORRUGATED STEEL, CORRUGATED ALUMINUM ALLOY, OR CORRUGATED PLASTIC. PERFORATED PIPE WILL NOT BE ALLOWED.

BAGGED STONE SHALL REMAIN IN PLACE UNTIL THE ENGINEER DIRECTS THAT IT BE REMOVED. THE CONTRACTOR SHALL REMOVE AND DISPOSE OF SILT ACCUMULATIONS AT BAGGED STONE WHEN SO DIRECTED BY THE ENGINEER. BAGS SHALL BE REMOVED AND REPLACED WHENEVER THE ENGINEER DETERMINES THAT THEY HAVE DETERIORATED AND LOST THEIR EFFECTIVENESS.

NO SEPARATE PAYMENT WILL BE MADE FOR THIS WORK AND THE ENTIRE COST OF THIS WORK SHALL BE INCLUDED IN THE UNIT CONTRACT PRICE BID FOR THE SEVERAL PAY ITEMS.

## TEMPORARY DRAINAGE AT END BENT

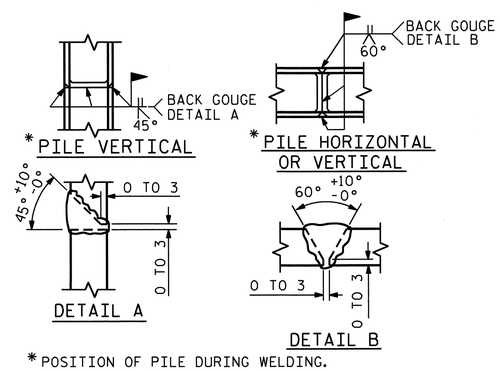


* POSITION OF PILE DURING WELDING.

## PILE SPLICE DETAILS

PROJECT NO. R-2413C
GUILFORD-ROCKINGHAM COUNTY
STATION: 24+37.000 -LREV-

SHEET 3 OF 3

STATE OF NORTH CAROLINA
DEPARTMENT OF TRANSPORTATION
RALEIGH

SUBSTRUCTURE
INTEGRAL
END BENT #1
(RIGHT LANE)

NORTH CAROLINA PROFESSIONAL SEAL 022516 ENGINEER EMILY E. MURRAY
10/28/11

| REVISIONS | | | | | | SHEET NO. |
|---|---|---|---|---|---|---|
| NO. | BY: | DATE: | NO. | BY: | DATE: | S-94 |
| 1 | | | 3 | | | TOTAL SHEETS |
| 2 | | | 4 | | | 238 |

DRAWN BY : M.GUDLAUGSSON DATE : 01-19-11
CHECKED BY : T.L. AVERETTE DATE : 04-26-11

05-SEP-2011 11:33
Y:\Structures\Final Plans\Str.#3\R-2413C_SD_E#_03.dgn
mgudlaugsson

STR. #3

## NOTES

STIRRUPS AND U3 BARS IN CAP MAY BE SHIFTED AS NECESSARY TO CLEAR ANCHOR BOLTS.

HOOKS ON "V" BARS MAY BE TURNED AS NECESSARY FOR PLACING REINFORCING STEEL.

ALL STEEL IN THE DRILLED PIERS IS INCLUDED IN THE PAY ITEMS FOR "REINFORCING STEEL" AND "SPIRAL COLUMN REINFORCING STEEL".

THE CONTRACTOR'S ATTENTION IS CALLED TO THE FACT THAT THE LONGITUDINAL REINFORCEMENT FOR THE DRILLED PIERS IS DETAILED WITH ONE METER OF EXTRA LENGTH.

THE LOCATION OF THE CONSTRUCTION JOINT IN THE DRILLED PIERS IS BASED ON AN APPROXIMATE GROUND LINE ELEVATION. IF THE CONSTRUCTION JOINT IS ABOVE THE ACTUAL GROUND LINE ELEVATION, THE CONTRACTOR SHALL PLACE THE CONSTRUCTION JOINT 300mm BELOW THE GROUND LINE.

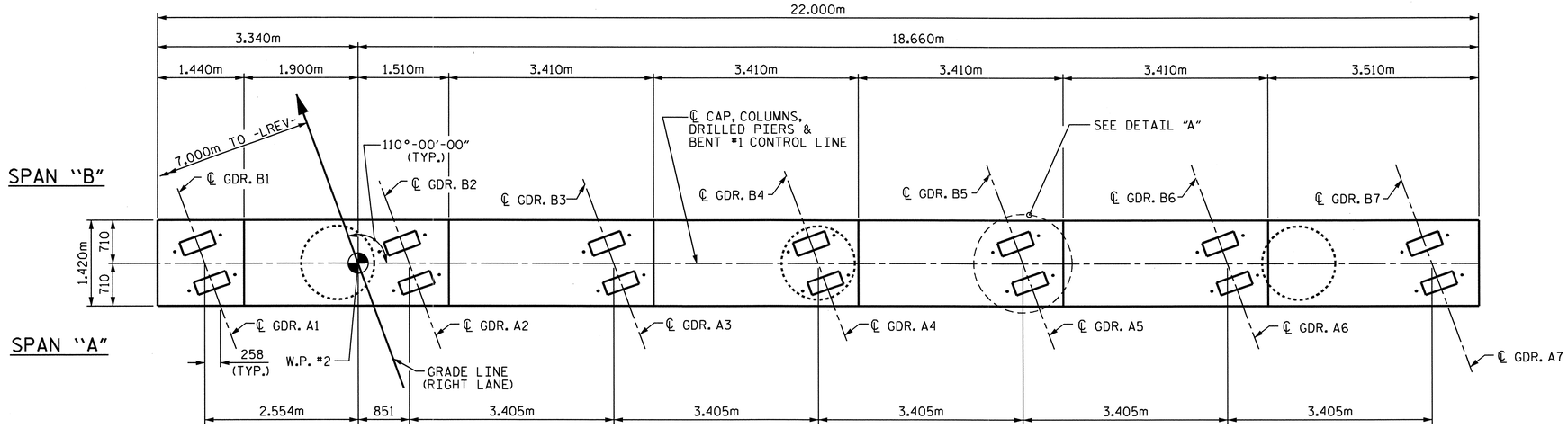


## PLAN

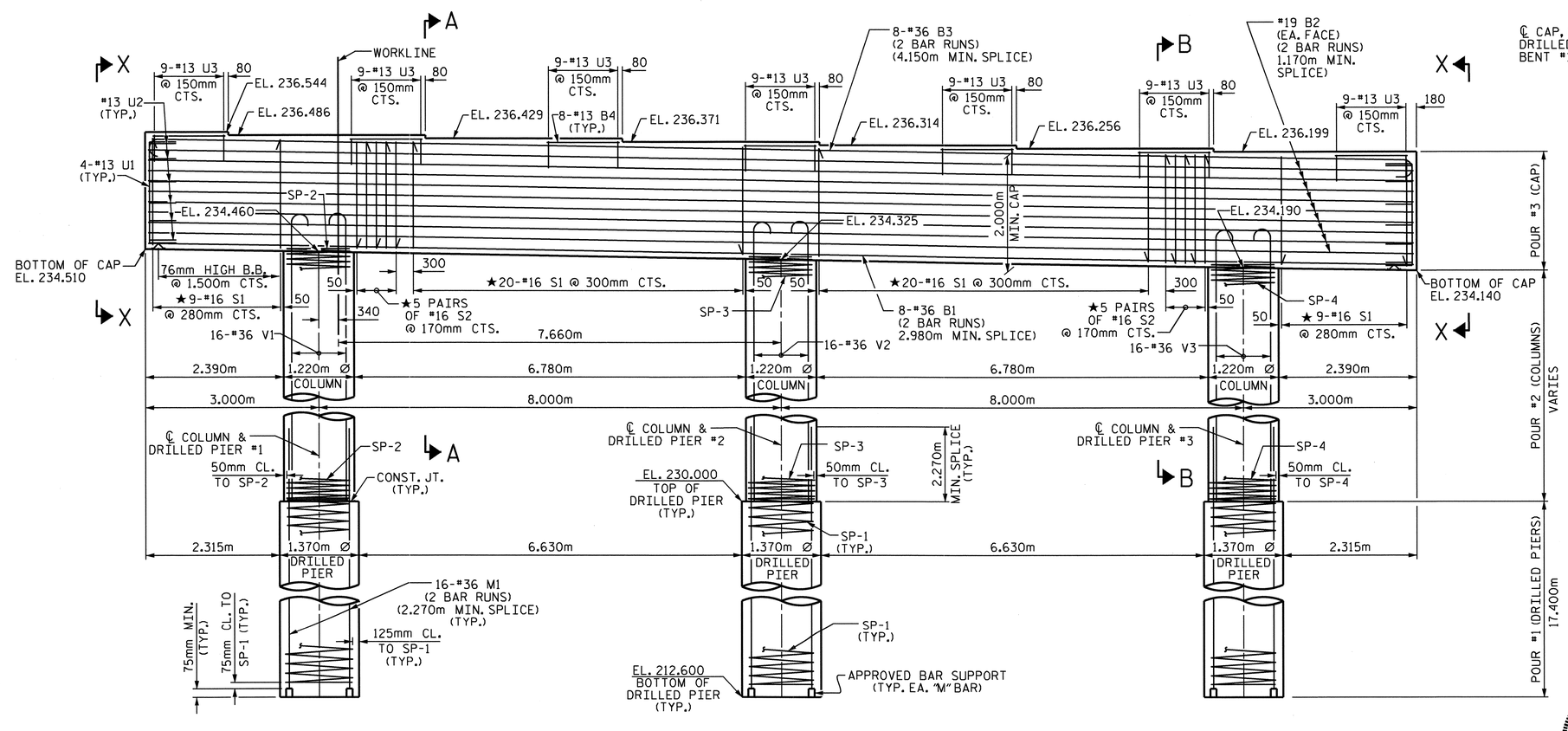


## ELEVATION

★INVERT ALTERNATE STIRRUPS.

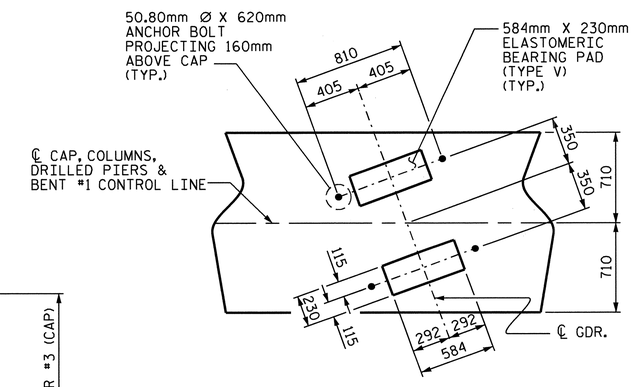


## DETAIL A

DIMENSIONS FOR BRG. PADS AND ANCHOR BOLTS ARE TYP. EACH GDR.

PROJECT NO. R-2413C

GUILFORD-ROCKINGHAM COUNTY

STATION: 24+37.000 -LREV-

SHEET 1 OF 2

STATE OF NORTH CAROLINA
DEPARTMENT OF TRANSPORTATION
RALEIGH

SUBSTRUCTURE
BENT #1
(RIGHT LANE)

NORTH CAROLINA PROFESSIONAL SEAL 022516 ENGINEER EMILY E. MURRAY
6/28/11

| REVISIONS | | | | | | SHEET NO. |
|---|---|---|---|---|---|---|
| NO. | BY: | DATE: | NO. | BY: | DATE: | S-95 |
| 1 | | | 3 | | | TOTAL SHEETS |
| 2 | | | 4 | | | 238 |

STR. #3

DRAWN BY : M. GUDLAUGSSON DATE : 3-29-11
CHECKED BY : B.N. BARODAWALA DATE : 6-12-11

19-OCT-2011 14:19
R:\TIPProjects-R\R2413c\Structures\Final Plans\Str.#3\R-2413C_SD_B*_03.dgn
taverette

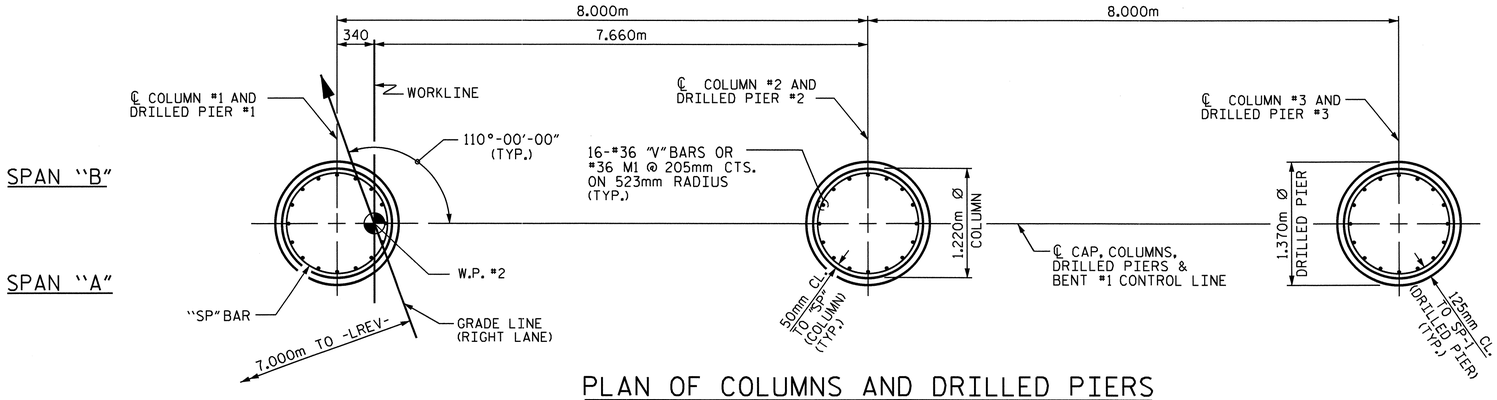


## PLAN OF COLUMNS AND DRILLED PIERS

(DIM. & REINFORCING STEEL ARE TYPICAL FOR EACH COLUMN AND DRILLED PIER)

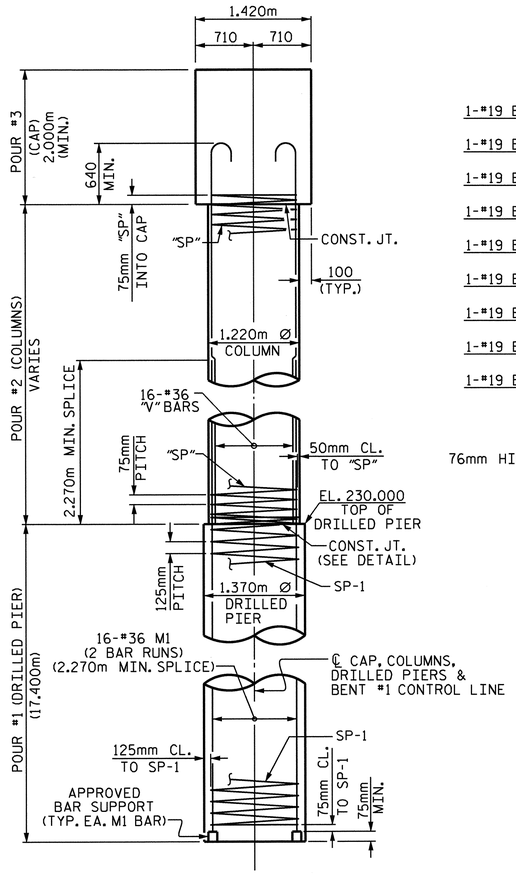


## END ELEVATION

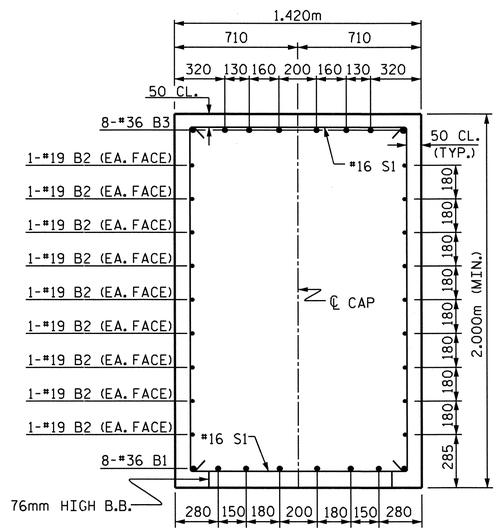


## SECTION A-A

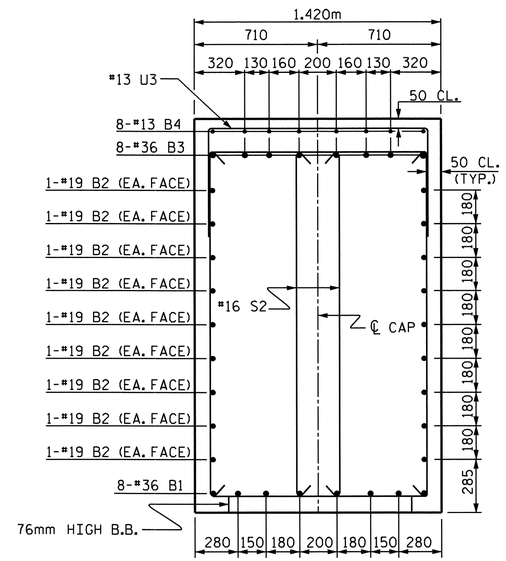


## SECTION B-B

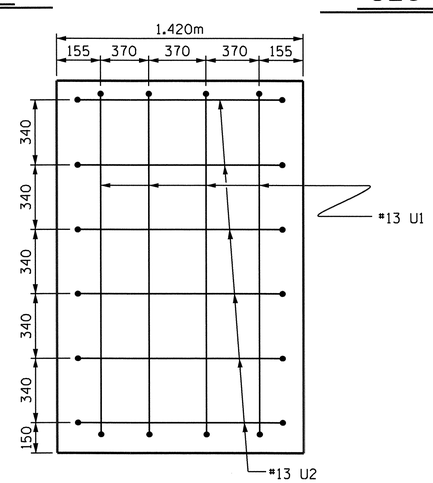


## SECTION X-X

## BAR TYPES

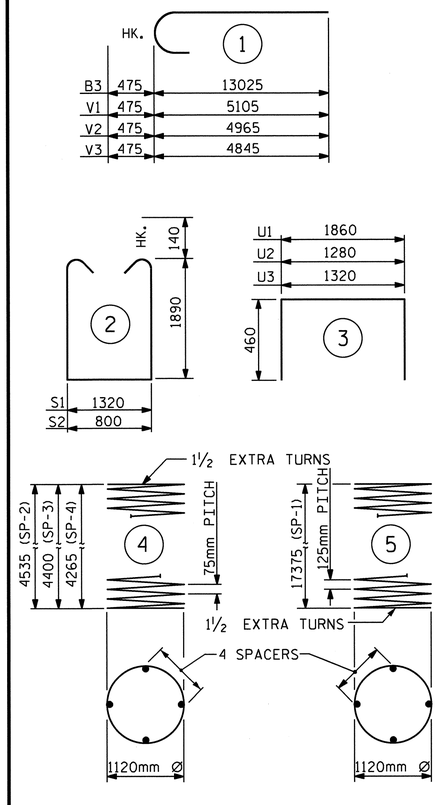


ALL BAR DIMENSIONS ARE OUT TO OUT.

## BILL OF MATERIAL

### BENT #1

| BAR | NO. | SIZE | TYPE | LENGTH | WEIGHT |
|---|---|---|---|---|---|
| B1 | 16 | #36 | STR | 12440 | 1574 |
| B2 | 36 | #19 | STR | 11540 | 929 |
| B3 | 16 | #36 | 1 | 13500 | 1708 |
| B4 | 56 | #13 | STR | 1260 | 70 |
| | | | | | |
| M1 | 96 | #36 | STR | 11440 | 8684 |
| | | | | | |
| S1 | 58 | #16 | 2 | 5380 | 484 |
| S2 | 20 | #16 | 2 | 4860 | 151 |
| | | | | | |
| U1 | 8 | #13 | 3 | 2780 | 22 |
| U2 | 12 | #13 | 3 | 2200 | 26 |
| U3 | 63 | #13 | 3 | 2240 | 140 |
| | | | | | |
| V1 | 16 | #36 | 1 | 5580 | 706 |
| V2 | 16 | #36 | 1 | 5440 | 688 |
| V3 | 16 | #36 | 1 | 5320 | 673 |
| REINFORCING STEEL | | | | kg | 15855 |
| SP-1 | 3 | ✱✱✱ | 5 | 487660 | 2271 |
| SP-2 | 1 | ✱✱ | 4 | 215620 | 214 |
| SP-3 | 1 | ✱✱ | 4 | 209340 | 208 |
| SP-4 | 1 | ✱✱ | 4 | 203080 | 202 |

SPIRAL COLUMN REINFORCING STEEL kg 2895

DRILLED PIER CONCRETE

POUR #1 (DRILLED PIERS) m3 76.9

CLASS "A" CONCRETE BREAKDOWN

POUR #2 (COLUMNS) m3 15.2

POUR #3 (CAP) m3 63.4

TOTAL CLASS "A" CONCRETE m3 78.6

1370mm Ø DRILLED PIERS 52.2m

PERM. STEEL CASING FOR 1370mm Ø DRILLED PIERS 18.0m

SID INSPECTION 1 EACH

CSL TUBES 217.8m

✱✱ THE SP-2, SP-3 & SP-4 SPIRAL REINFORCING STEEL SHALL BE W20 OR D-20 COLD DRAWN WIRE OR #13 PLAIN OR DEFORMED BAR.

✱✱✱ THE SP-1 SPIRAL REINFORCING STEEL SHALL BE W31 OR D-31 COLD DRAWN WIRE OR #16 PLAIN OR DEFORMED BAR.

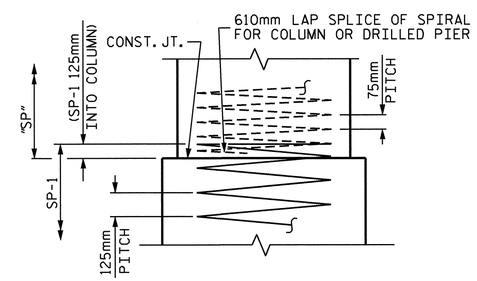


## CONSTRUCTION JOINT DETAIL

PROJECT NO. R-2413C

GUILFORD-ROCKINGHAM COUNTY

STATION: 24+37.000 -LREV-

SHEET 2 OF 2

STATE OF NORTH CAROLINA
DEPARTMENT OF TRANSPORTATION
RALEIGH

SUBSTRUCTURE

BENT #1

(RIGHT LANE)

NORTH CAROLINA PROFESSIONAL SEAL 022516 ENGINEER EMILY E. MURRAY

10/28/11

| REVISIONS | | | | | | SHEET NO. |
|---|---|---|---|---|---|---|
| NO. | BY: | DATE: | NO. | BY: | DATE: | S-96 |
| 1 | | | 3 | | | TOTAL SHEETS |
| 2 | | | 4 | | | 238 |

STR. #3

DRAWN BY : M.GUDLAUGSSON DATE : 3-29-11
CHECKED BY : B.N. BARODAWALA DATE : 6-12-11

19-OCT-2011 14:19
R:\TIPProjects-R\R2413c\Structures\Final Plans\Str.#3\R-2413C_SD_B*_03.dgn
taverette

## NOTES

STIRRUPS AND U3 BARS IN CAP MAY BE SHIFTED AS NECESSARY TO CLEAR ANCHOR BOLTS.

HOOKS ON "V" BARS MAY BE TURNED AS NECESSARY FOR PLACING REINFORCING STEEL.

ALL STEEL IN THE DRILLED PIERS IS INCLUDED IN THE PAY ITEMS FOR "REINFORCING STEEL" AND "SPIRAL COLUMN REINFORCING STEEL".

THE CONTRACTOR'S ATTENTION IS CALLED TO THE FACT THAT THE LONGITUDINAL REINFORCEMENT FOR THE DRILLED PIERS IS DETAILED WITH ONE METER OF EXTRA LENGTH.

THE LOCATION OF THE CONSTRUCTION JOINT IN THE DRILLED PIERS IS BASED ON AN APPROXIMATE GROUND LINE ELEVATION. IF THE CONSTRUCTION JOINT IS ABOVE THE ACTUAL GROUND LINE ELEVATION, THE CONTRACTOR SHALL PLACE THE CONSTRUCTION JOINT 300mm BELOW THE GROUND LINE.

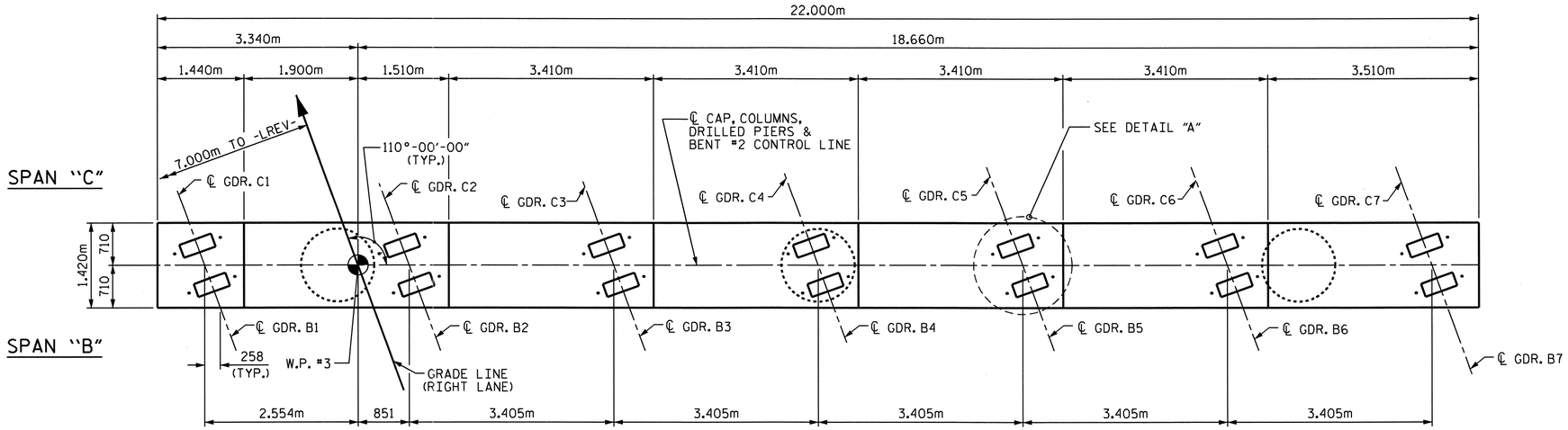


## PLAN

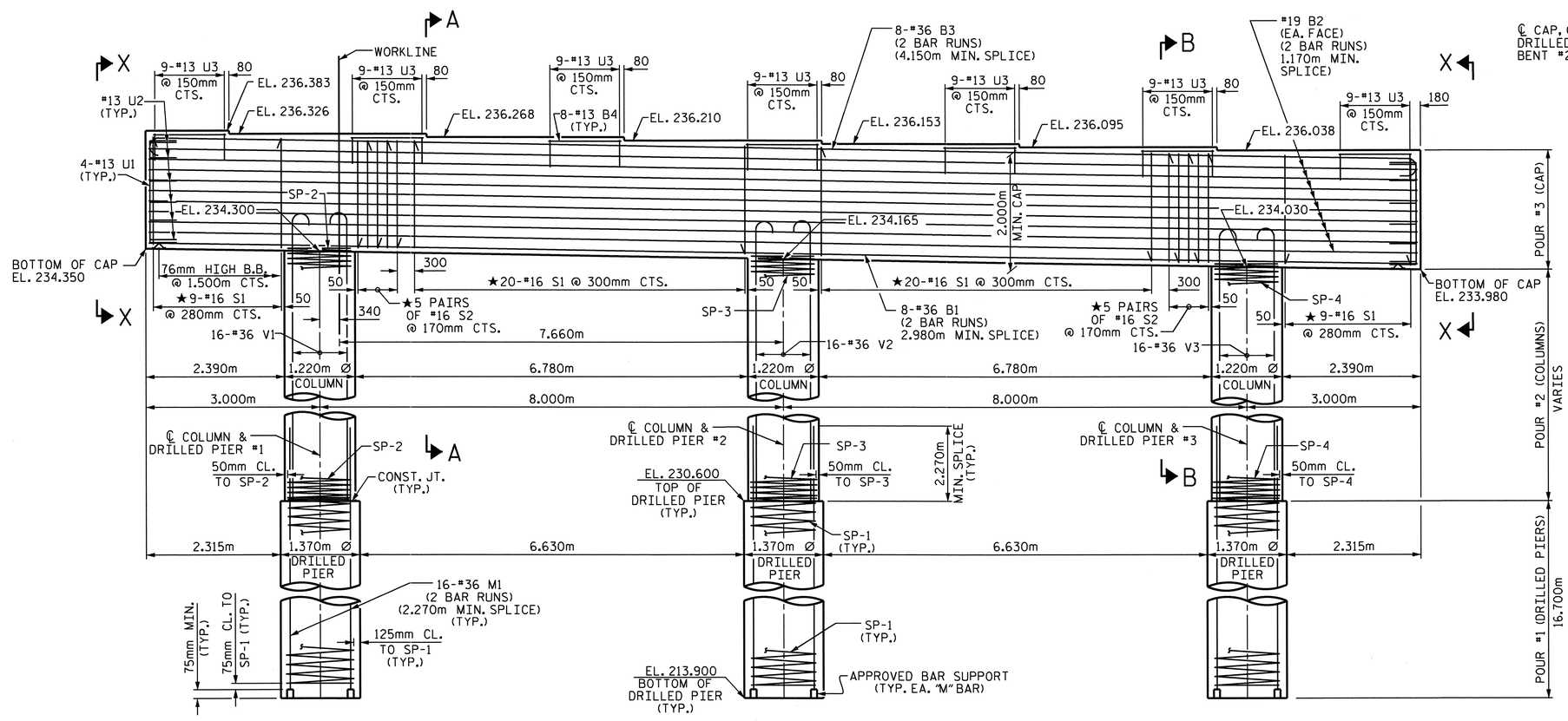


## ELEVATION

★INVERT ALTERNATE STIRRUPS.

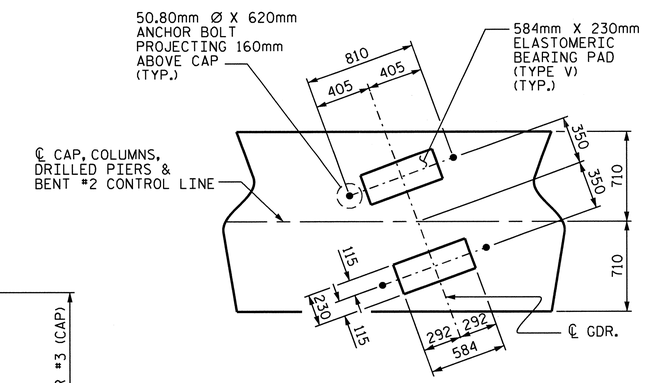


## DETAIL A

DIMENSIONS FOR BRG. PADS AND ANCHOR BOLTS ARE TYP. EACH GDR.

PROJECT NO. R-2413C

GUILFORD-ROCKINGHAM COUNTY

STATION: 24+37.000 -LREV-

SHEET 1 OF 2

STATE OF NORTH CAROLINA
DEPARTMENT OF TRANSPORTATION
RALEIGH

SUBSTRUCTURE
BENT #2
(RIGHT LANE)

NORTH CAROLINA PROFESSIONAL SEAL 022516 ENGINEER EMILY E. MURRAY
10/28/11

| REVISIONS | | | | | | SHEET NO. |
|---|---|---|---|---|---|---|
| NO. | BY: | DATE: | NO. | BY: | DATE: | S-97 |
| 1 | | | 3 | | | TOTAL SHEETS |
| 2 | | | 4 | | | 238 |

STR. #3

DRAWN BY : M. GUDLAUGSSON DATE : 3-29-11
CHECKED BY : B.N. BARODAWALA DATE : 6-12-11

19-OCT-2011 14:20
R:\TIPProjects-R\R2413c\Structures\Final Plans\Str.#3\R-2413C_SD_B*_03.dgn
taverette

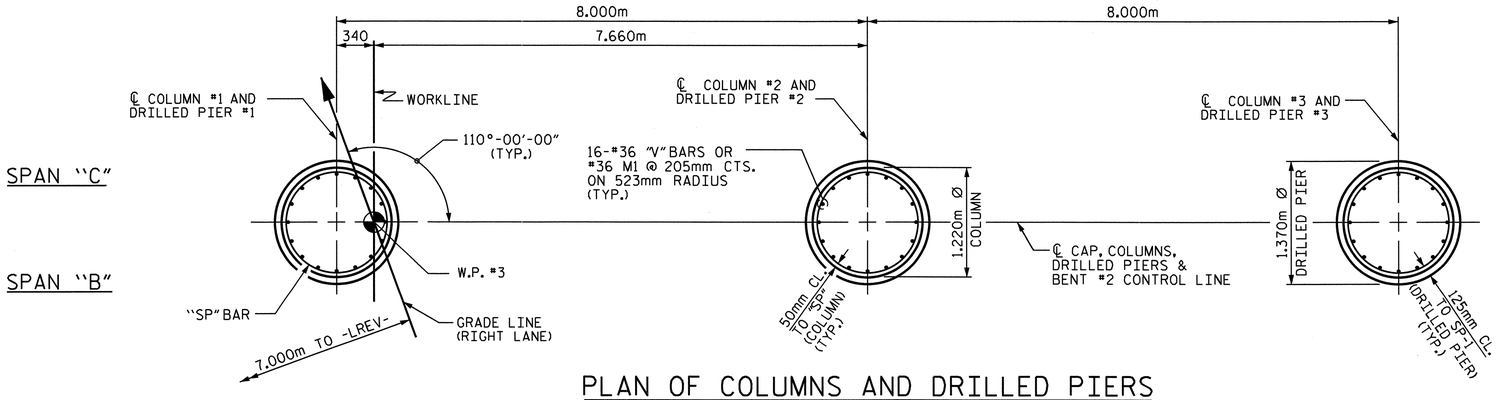


## PLAN OF COLUMNS AND DRILLED PIERS

(DIM. & REINFORCING STEEL ARE TYPICAL FOR EACH COLUMN AND DRILLED PIER)

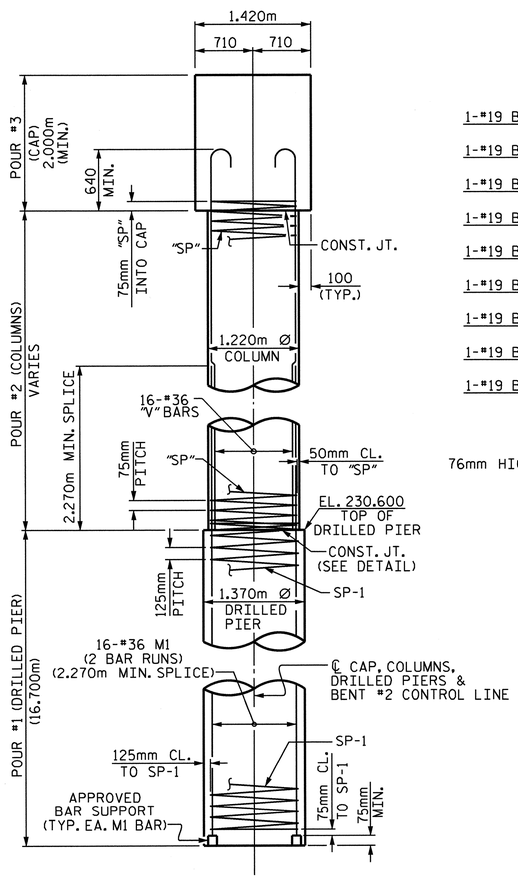


## END ELEVATION

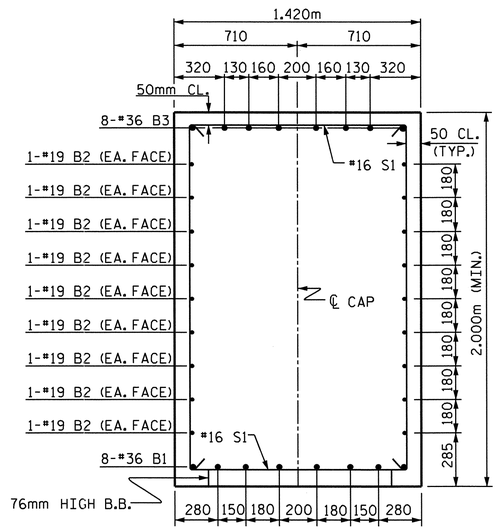


## SECTION A-A

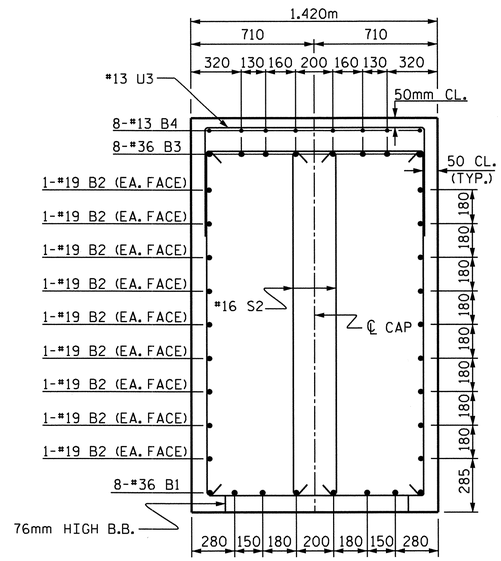


## SECTION B-B

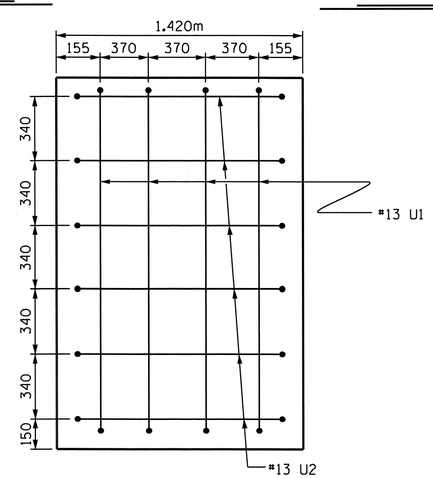


## SECTION X-X

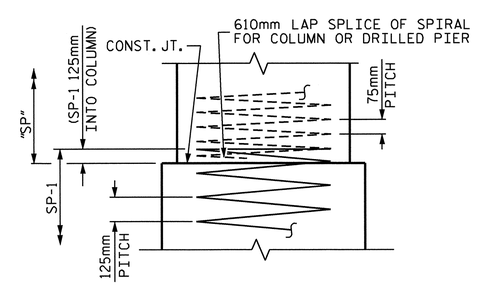


## CONSTRUCTION JOINT DETAIL

## BAR TYPES

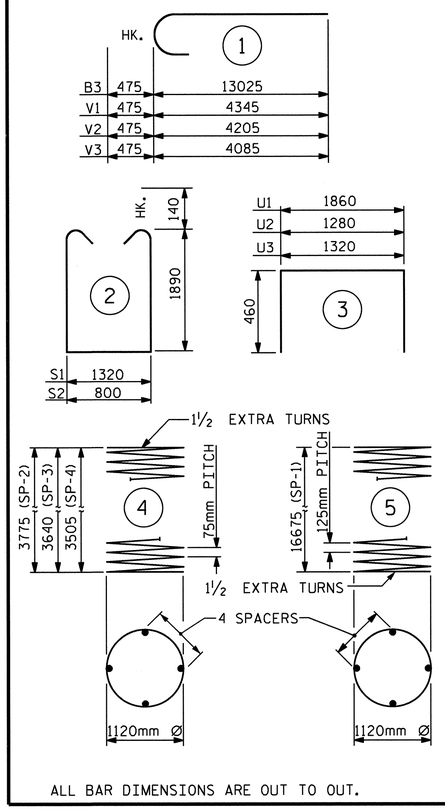


ALL BAR DIMENSIONS ARE OUT TO OUT.

## BILL OF MATERIAL

### BENT #2

| BAR | NO. | SIZE | TYPE | LENGTH | WEIGHT |
|---|---|---|---|---|---|
| B1 | 16 | #36 | STR | 12440 | 1574 |
| B2 | 36 | #19 | STR | 11540 | 929 |
| B3 | 16 | #36 | 1 | 13500 | 1708 |
| B4 | 56 | #13 | STR | 1260 | 70 |
| M1 | 96 | #36 | STR | 11080 | 8411 |
| S1 | 58 | #16 | 2 | 5380 | 484 |
| S2 | 20 | #16 | 2 | 4860 | 151 |
| U1 | 8 | #13 | 3 | 2780 | 22 |
| U2 | 12 | #13 | 3 | 2200 | 26 |
| U3 | 63 | #13 | 3 | 2240 | 140 |
| V1 | 16 | #36 | 1 | 4820 | 610 |
| V2 | 16 | #36 | 1 | 4680 | 592 |
| V3 | 16 | #36 | 1 | 4560 | 577 |
| REINFORCING STEEL | | | | kg | 15294 |
| SP-1 | 3 | ✱✱✱ | 5 | 468220 | 2180 |
| SP-2 | 1 | ✱✱ | 4 | 180360 | 179 |
| SP-3 | 1 | ✱✱ | 4 | 174100 | 173 |
| SP-4 | 1 | ✱✱ | 4 | 167820 | 167 |
| SPIRAL COLUMN REINFORCING STEEL | | | | kg | 2699 |
| DRILLED PIER CONCRETE | | | | | |
| POUR #1 (DRILLED PIERS) | | | | m3 | 73.9 |
| CLASS "A" CONCRETE BREAKDOWN | | | | | |
| POUR #2 (COLUMNS) | | | | m3 | 12.5 |
| POUR #3 (CAP) | | | | m3 | 63.4 |
| TOTAL CLASS "A" CONCRETE | | | | m3 | 75.9 |
| 1370mm Ø DRILLED PIERS | | | | | 50.1m |
| SID INSPECTION | | | | | 1 EACH |
| CSL TUBES | | | | | 209.4m |

✱✱ THE SP-2, SP-3 & SP-4 SPIRAL REINFORCING STEEL SHALL BE W20 OR D-20 COLD DRAWN WIRE OR #13 PLAIN OR DEFORMED BAR.

✱✱✱ THE SP-1 SPIRAL REINFORCING STEEL SHALL BE W31 OR D-31 COLD DRAWN WIRE OR #16 PLAIN OR DEFORMED BAR.

PROJECT NO. R-2413C

GUILFORD-ROCKINGHAM COUNTY

STATION: 24+37.000 -LREV-

SHEET 2 OF 2

STATE OF NORTH CAROLINA
DEPARTMENT OF TRANSPORTATION
RALEIGH

SUBSTRUCTURE
BENT #2
(RIGHT LANE)

NORTH CAROLINA PROFESSIONAL SEAL 022516 ENGINEER EMILY E. MURRAY
10/26/11

| REVISIONS | | | | | | |
|---|---|---|---|---|---|---|
| NO. | BY: | DATE: | NO. | BY: | DATE: | |
| 1 | | | 3 | | | |
| 2 | | | 4 | | | |

SHEET NO. S-98

TOTAL SHEETS 238

STR. #3

DRAWN BY : M.GUDLAUGSSON DATE : 3-29-11
CHECKED BY : B.N. BARODAWALA DATE : 6-12-11

19-OCT-2011 14:20
R:\TIPProjects-R\R2413c\Structures\FinalPlans\Str.#3\R-2413C_SD_B#_03.dgn
taverette

## NOTES

STIRRUPS AND U3 BARS IN CAP MAY BE SHIFTED AS NECESSARY TO CLEAR ANCHOR BOLTS.

HOOKS ON "V" BARS MAY BE TURNED AS NECESSARY FOR PLACING REINFORCING STEEL.

ALL STEEL IN THE DRILLED PIERS IS INCLUDED IN THE PAY ITEMS FOR "REINFORCING STEEL" AND "SPIRAL COLUMN REINFORCING STEEL".

THE CONTRACTOR'S ATTENTION IS CALLED TO THE FACT THAT THE LONGITUDINAL REINFORCEMENT FOR THE DRILLED PIERS IS DETAILED WITH ONE METER OF EXTRA LENGTH.

THE LOCATION OF THE CONSTRUCTION JOINT IN THE DRILLED PIERS IS BASED ON AN APPROXIMATE GROUND LINE ELEVATION. IF THE CONSTRUCTION JOINT IS ABOVE THE ACTUAL GROUND LINE ELEVATION, THE CONTRACTOR SHALL PLACE THE CONSTRUCTION JOINT 300mm BELOW THE GROUND LINE.

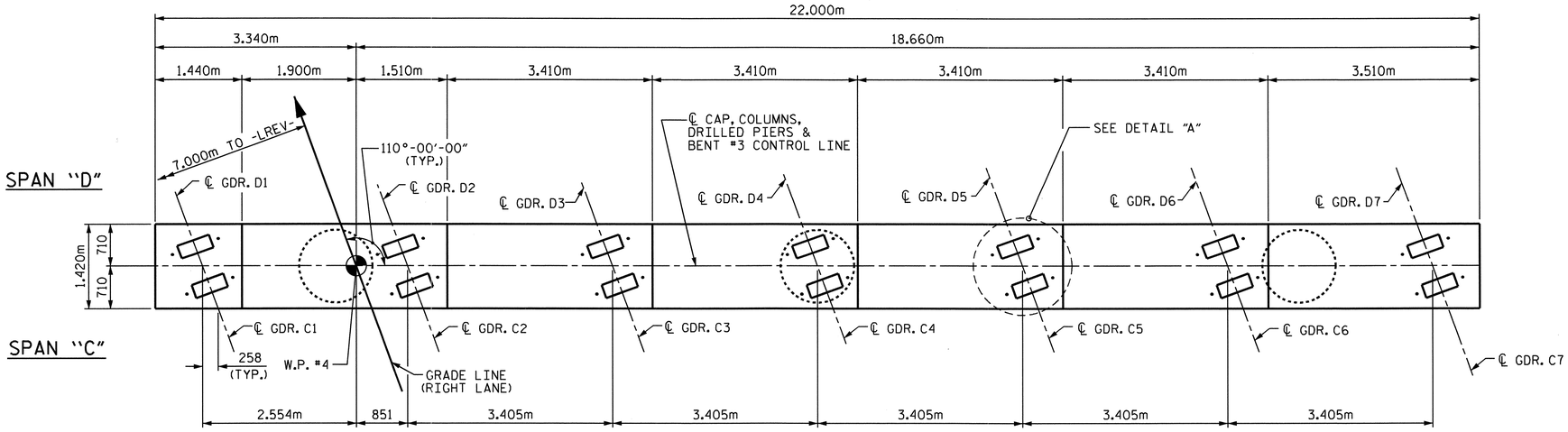


## PLAN

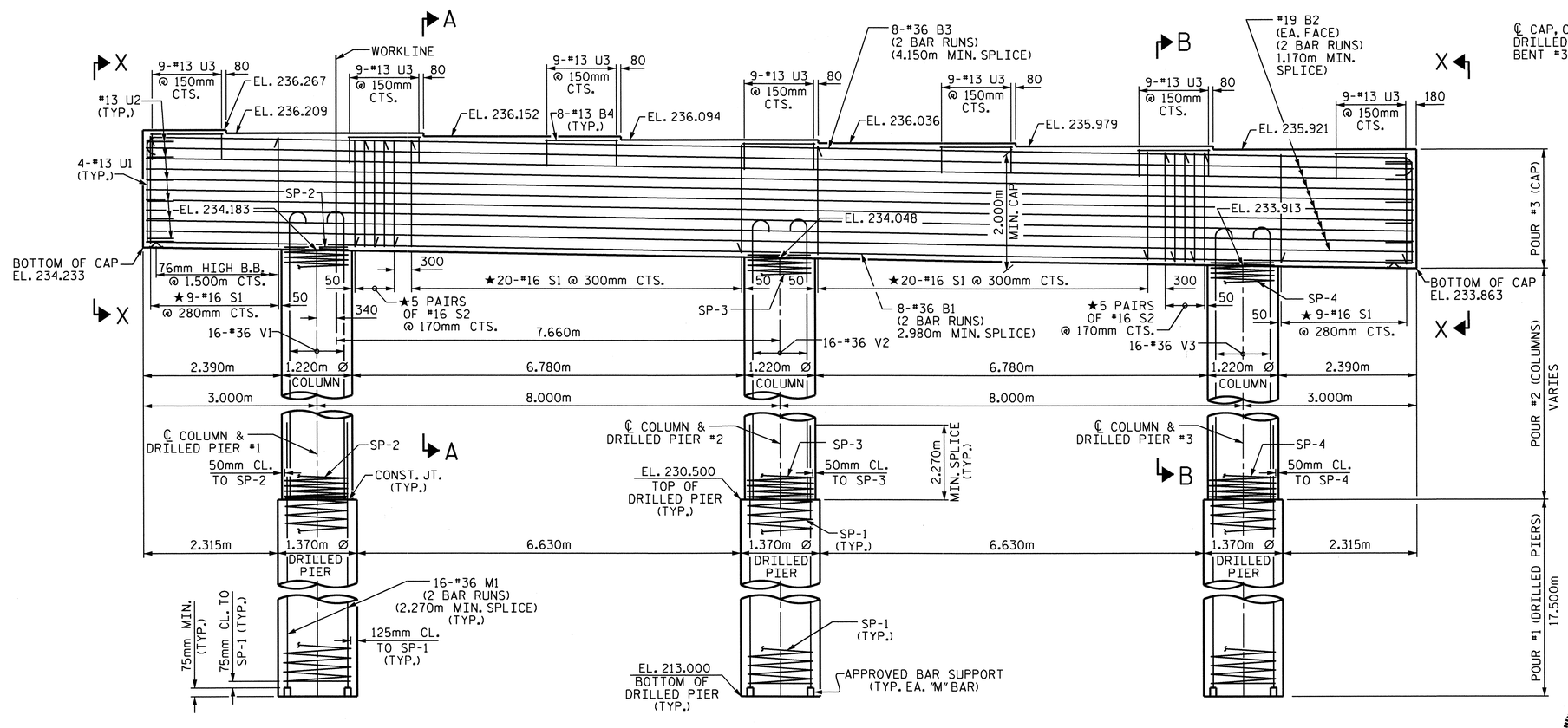


## ELEVATION

★INVERT ALTERNATE STIRRUPS.

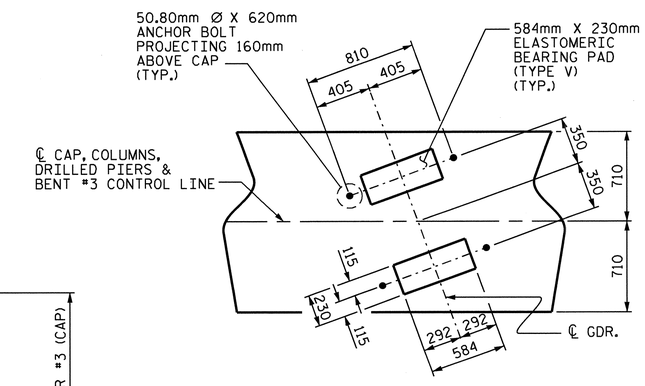


## DETAIL A

DIMENSIONS FOR BRG. PADS AND ANCHOR BOLTS ARE TYP. EACH GDR.

PROJECT NO. R-2413C

GUILFORD-ROCKINGHAM COUNTY

STATION: 24+37.000 -LREV-

SHEET 1 OF 2

STATE OF NORTH CAROLINA
DEPARTMENT OF TRANSPORTATION
RALEIGH

SUBSTRUCTURE
BENT #3
(RIGHT LANE)

NORTH CAROLINA PROFESSIONAL SEAL 022516 ENGINEER EMILY E. MURRAY

10/28/11

| REVISIONS | | | | | | SHEET NO. |
|---|---|---|---|---|---|---|
| NO. | BY: | DATE: | NO. | BY: | DATE: | S-99 |
| 1 | | | 3 | | | TOTAL SHEETS |
| 2 | | | 4 | | | 238 |

STR. #3

DRAWN BY : M. GUDLAUGSSON DATE : 3-29-11
CHECKED BY : B.N. BARODAWALA DATE : 6-12-11

19-OCT-2011 14:20
R:\TIPProjects-R\R2413c\Structures\Final Plans\Str.#3\R-2413C_SD_B#_03.dgn
taverette

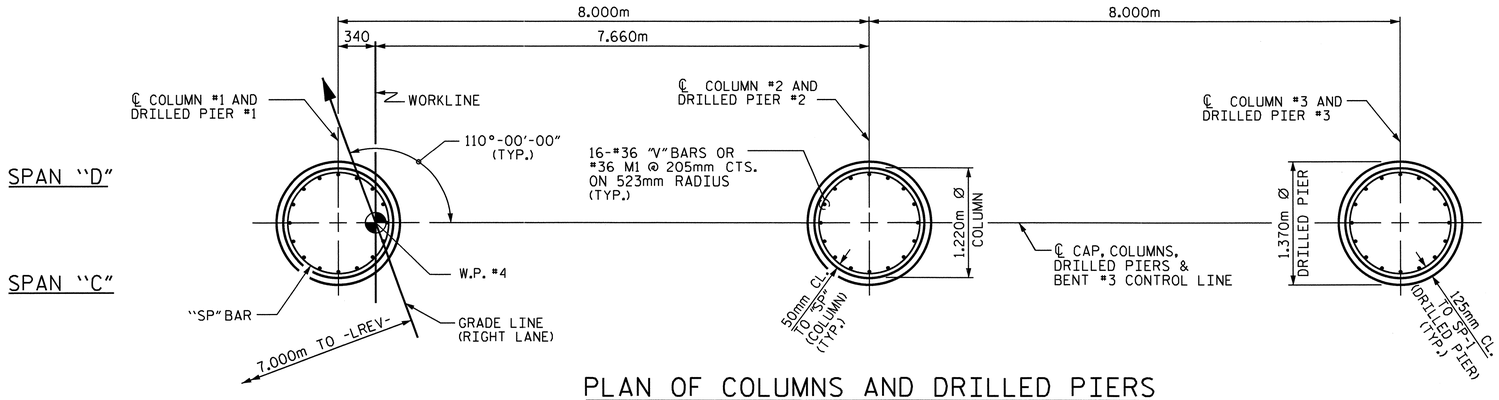


## PLAN OF COLUMNS AND DRILLED PIERS

(DIM. & REINFORCING STEEL ARE TYPICAL FOR EACH COLUMN AND DRILLED PIER)

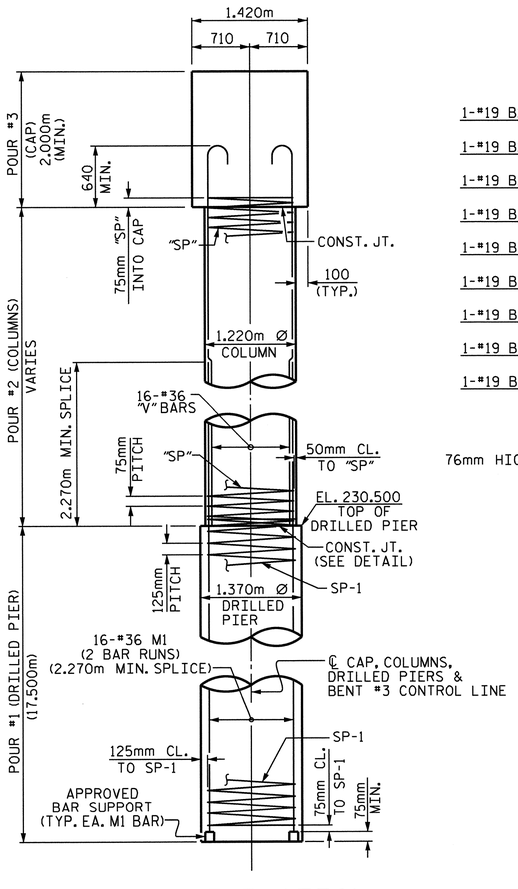


## END ELEVATION

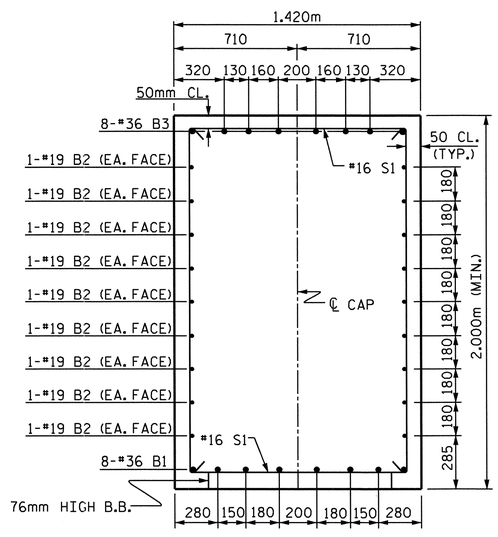


## SECTION A-A

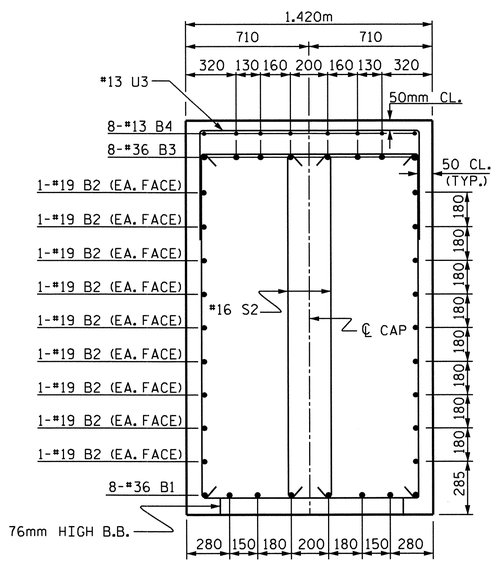


## SECTION B-B

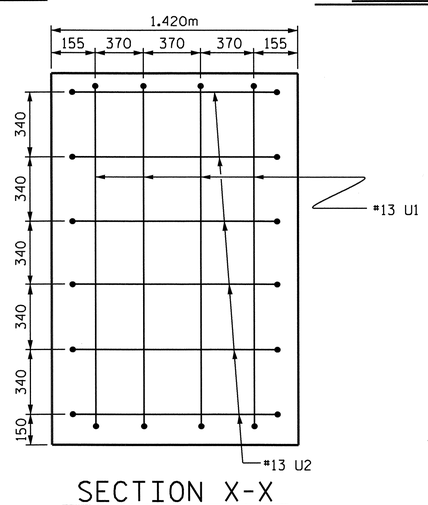


## SECTION X-X

## BAR TYPES

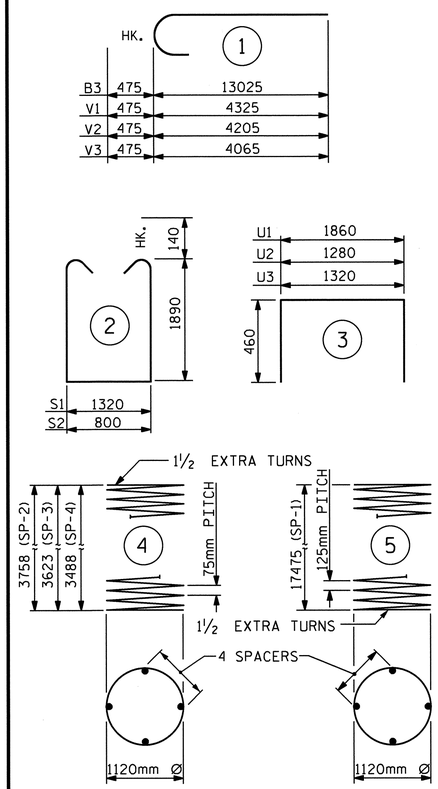


ALL BAR DIMENSIONS ARE OUT TO OUT.

## BILL OF MATERIAL

### BENT #3

| BAR | NO. | SIZE | TYPE | LENGTH | WEIGHT |
|---|---|---|---|---|---|
| B1 | 16 | #36 | STR | 12440 | 1574 |
| B2 | 36 | #19 | STR | 11540 | 929 |
| B3 | 16 | #36 | 1 | 13500 | 1708 |
| B4 | 56 | #13 | STR | 1260 | 70 |
| | | | | | |
| M1 | 96 | #36 | STR | 11500 | 8729 |
| | | | | | |
| S1 | 58 | #16 | 2 | 5380 | 484 |
| S2 | 20 | #16 | 2 | 4860 | 151 |
| | | | | | |
| U1 | 8 | #13 | 3 | 2780 | 22 |
| U2 | 12 | #13 | 3 | 2200 | 26 |
| U3 | 63 | #13 | 3 | 2240 | 140 |
| | | | | | |
| V1 | 16 | #36 | 1 | 4800 | 607 |
| V2 | 16 | #36 | 1 | 4680 | 592 |
| V3 | 16 | #36 | 1 | 4540 | 574 |
| REINFORCING STEEL | | | | kg | 15606 |
| SP-1 | 3 | ✱✱✱ | 5 | 490440 | 2283 |
| SP-2 | 1 | ✱✱ | 4 | 179560 | 178 |
| SP-3 | 1 | ✱✱ | 4 | 173300 | 172 |
| SP-4 | 1 | ✱✱ | 4 | 167040 | 166 |

SPIRAL COLUMN REINFORCING STEEL kg 2799

DRILLED PIER CONCRETE

POUR #1 (DRILLED PIERS) m3 77.4

CLASS "A" CONCRETE BREAKDOWN

| | | |
|---|---|---|
| POUR #2 (COLUMNS) | m3 | 12.4 |
| POUR #3 (CAP) | m3 | 63.4 |
| TOTAL CLASS "A" CONCRETE | m3 | 75.8 |
| 1370mm Ø DRILLED PIERS | | 52.5m |
| SID INSPECTION | | 1 EACH |
| CSL TUBES | | 219.0m |

✱✱ THE SP-2, SP-3 & SP-4 SPIRAL REINFORCING STEEL SHALL BE W20 OR D-20 COLD DRAWN WIRE OR #13 PLAIN OR DEFORMED BAR.

✱✱✱ THE SP-1 SPIRAL REINFORCING STEEL SHALL BE W31 OR D-31 COLD DRAWN WIRE OR #16 PLAIN OR DEFORMED BAR.

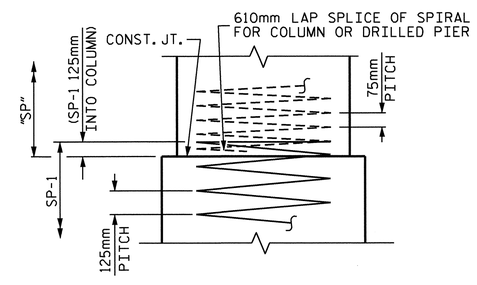


## CONSTRUCTION JOINT DETAIL

PROJECT NO. R-2413C

GUILFORD-ROCKINGHAM COUNTY

STATION: 24+37.000 -LREV-

SHEET 2 OF 2

STATE OF NORTH CAROLINA
DEPARTMENT OF TRANSPORTATION
RALEIGH

SUBSTRUCTURE

BENT #3

(RIGHT LANE)

NORTH CAROLINA PROFESSIONAL SEAL 022516 ENGINEER EMILY E. MURRAY

10/28/11

| REVISIONS | | | | | | SHEET NO. |
|---|---|---|---|---|---|---|
| NO. | BY: | DATE: | NO. | BY: | DATE: | S-100 |
| 1 | | | 3 | | | TOTAL SHEETS |
| 2 | | | 4 | | | 238 |

DRAWN BY : M.GUDLAUGSSON DATE : 3-29-11
CHECKED BY : B.N. BARODAWALA DATE : 6-12-11

19-OCT-2011 14:20
R:\TIPProjects-R\R2413c\Structures\Final Plans\Str.#3\R-2413C_SD_B#_03.dgn
taverette

STR. #3

## NOTES:

THE CONTRACTOR SHALL PROVIDE FOR INSTALLATION OF THE 102mm DIAMETER DRAIN PIPE THROUGH THE WING WALL AS REQUIRED FOR REINFORCED BRIDGE APPROACH FILLS, SEE THE ROADWAY PLANS. REINFORCING STEEL IN THE WING WALL MAY BE SHIFTED AS NECESSARY TO CLEAR THE DRAIN PIPE.

THE TOP SURFACE OF THE END BENT CAP AND WINGS, EXCLUDING THE OUTSIDE 100mm AND THE BEARING AREA, SHALL BE RAKED TO A DEPTH OF 6mm.

STIRRUPS IN CAP MAY BE SHIFTED AS NECESSARY TO CLEAR #13 V1 BARS.

THE CONTRACTOR'S ATTENTION IS CALLED TO THE FACT THAT THE UPPER PART OF INTEGRAL END BENT AND WINGS ARE TO BE POURED WITH THE SUPERSTRUCTURE.

SEE SUPERSTRUCTURE SHEETS FOR UPPER PART OF INTEGRAL END BENT DETAIL.

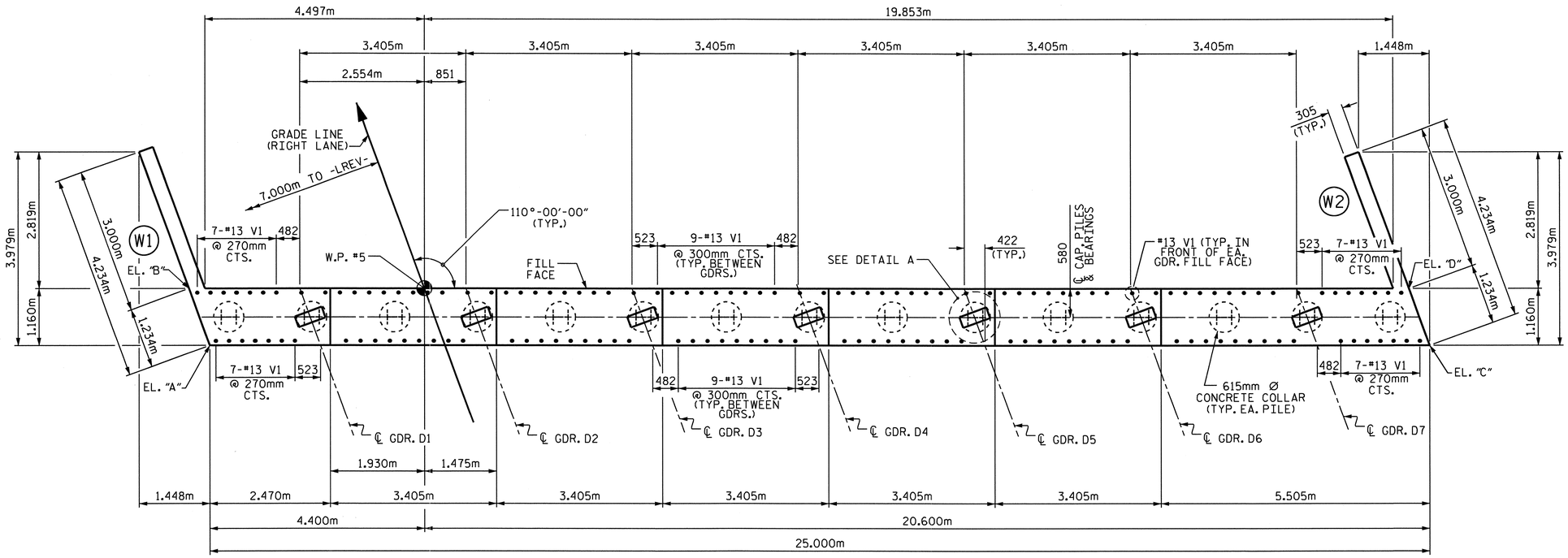


## PLAN

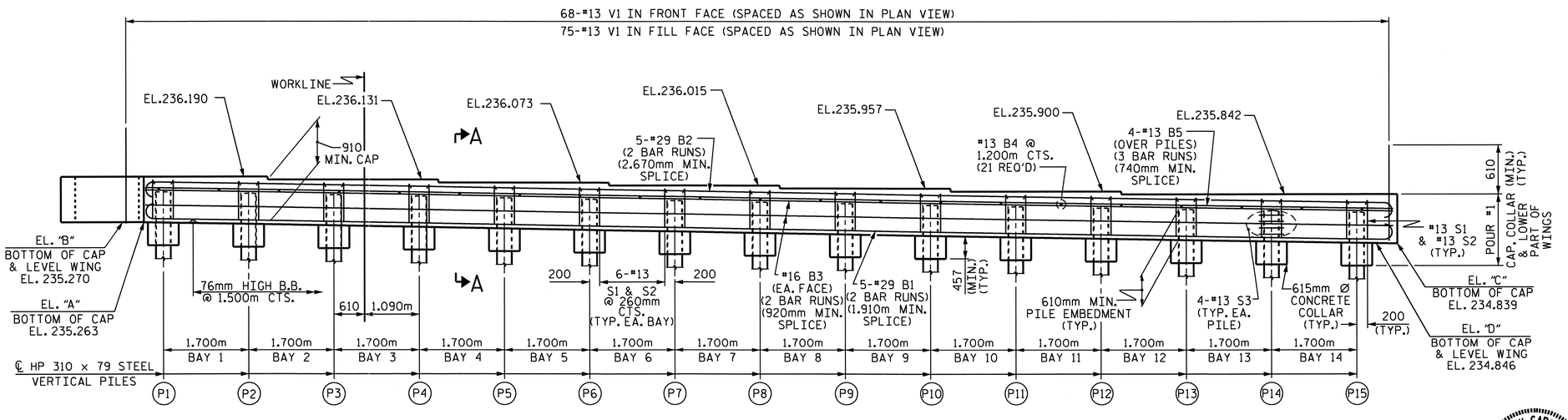


## ELEVATION

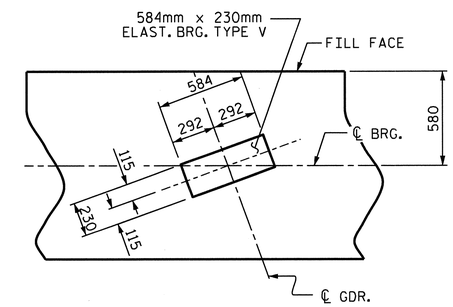


## DETAIL "A"

(TYP. EA. GDR.)

| TOP OF PILE ELEVATION | |
|---|---|
| P1 235.867 | P9 235.635 |
| P2 235.838 | P10 235.607 |
| P3 235.809 | P11 235.578 |
| P4 235.780 | P12 235.549 |
| P5 235.751 | P13 235.520 |
| P6 235.722 | P14 235.491 |
| P7 235.693 | P15 235.462 |
| P8 235.664 | |

PROJECT NO. R-2413C

GUILFORD-ROCKINGHAM COUNTY

STATION: 24+37.000 -LREV-

SHEET 1 OF 3

STATE OF NORTH CAROLINA
DEPARTMENT OF TRANSPORTATION
RALEIGH

SUBSTRUCTURE
INTEGRAL
END BENT #2
(RIGHT LANE)

NORTH CAROLINA PROFESSIONAL SEAL 022516 ENGINEER EMILY E. MURRAY
10/28/11

| REVISIONS | | | | | | SHEET NO. |
|---|---|---|---|---|---|---|
| NO. | BY: | DATE: | NO. | BY: | DATE: | S-101 |
| 1 | | | 3 | | | TOTAL SHEETS |
| 2 | | | 4 | | | 238 |

STR. #3

DRAWN BY : M.GUDLAUGSSON DATE : 01-19-11
CHECKED BY : T.L. AVERETTE DATE : 05-02-11

19-OCT-2011 14:23
R:\TIPProjects-R\R2413c\Structures\Final Plans\Str.#3\R-2413C_SD_E*_03.dgn
taverette

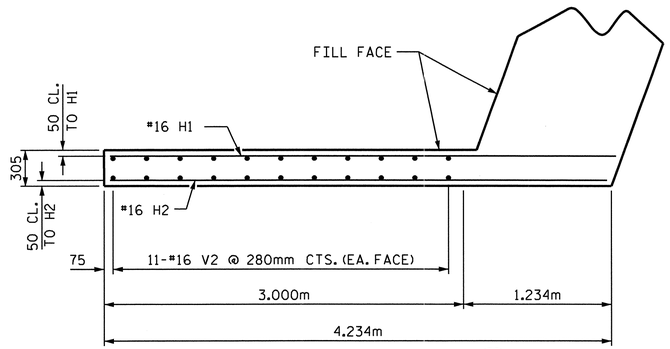


PLAN OF LEFT WING (W1)

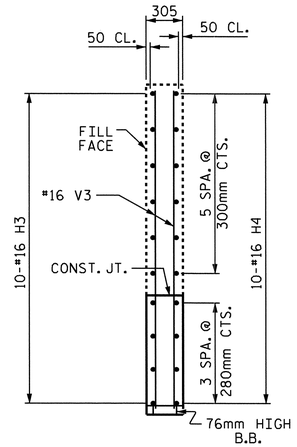


SECTION Y-Y

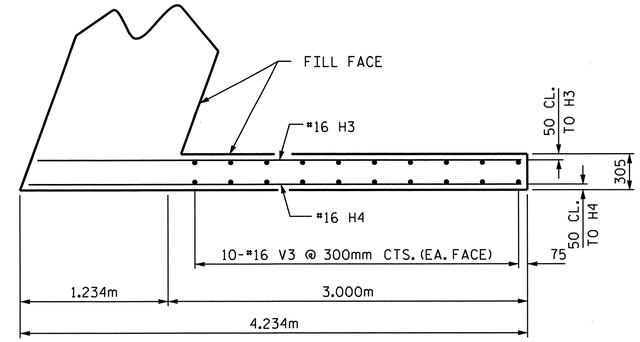


PLAN OF RIGHT WING (W2)

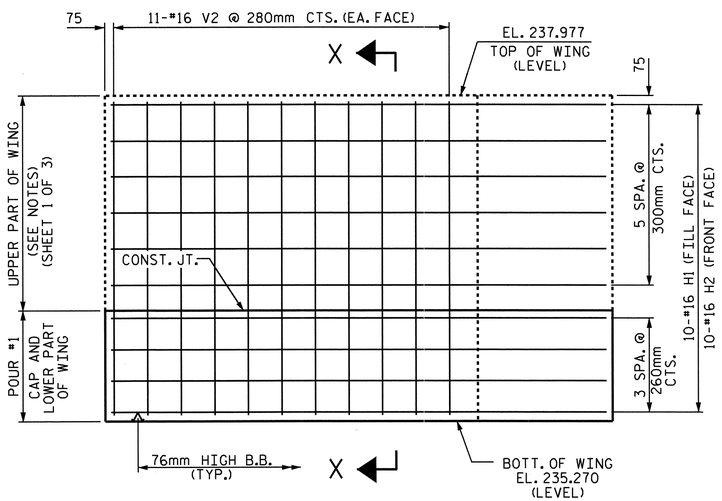


ELEVATION OF LEFT WING (W1)

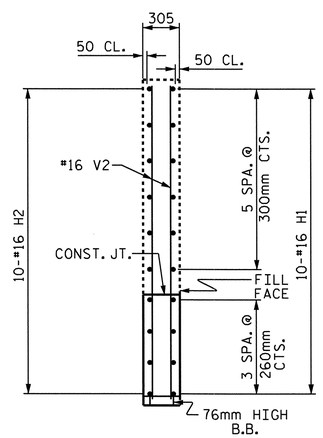


SECTION X-X

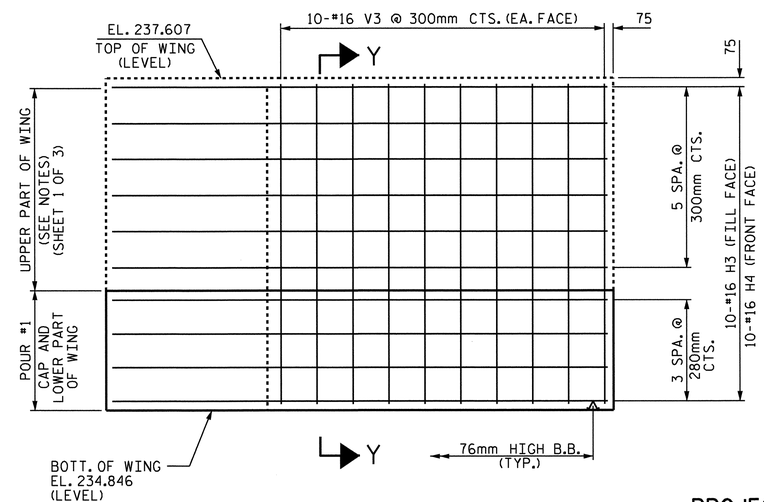


ELEVATION OF RIGHT WING (W2)

PROJECT NO. R-2413C

GUILFORD-ROCKINGHAM COUNTY

STATION: 24+37.000 -LREV-

SHEET 2 OF 3

STATE OF NORTH CAROLINA
DEPARTMENT OF TRANSPORTATION
RALEIGH

SUBSTRUCTURE

INTEGRAL
END BENT #2
(RIGHT LANE)

NORTH CAROLINA PROFESSIONAL SEAL 022516 ENGINEER EMILY E. MURRAY
04/28/11

| REVISIONS | | | | | | SHEET NO. |
|---|---|---|---|---|---|---|
| NO. | BY: | DATE: | NO. | BY: | DATE: | S-102 |
| 1 | | | 3 | | | TOTAL SHEETS |
| 2 | | | 4 | | | 238 |

STR. #3

DRAWN BY : M.GUDLAUGSSON DATE : 01-19-11
CHECKED BY : T.L. AVERETTE DATE : 05-02-11

05-SEP-2011 11:30
Y:\Structures\Final Plans\Str.#3\R-2413C_SD_E#_03.dgn
mgudlaugsson

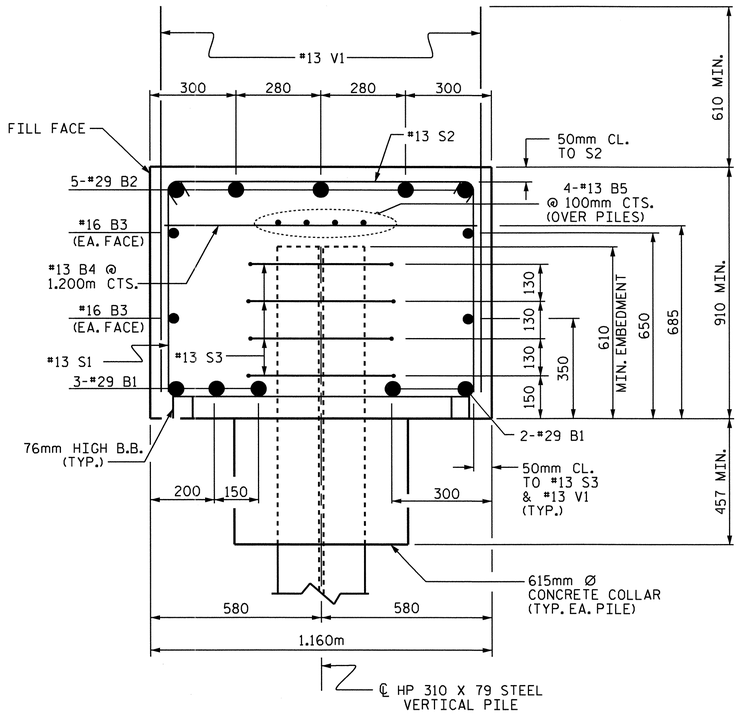


## SECTION A-A

## BAR TYPES

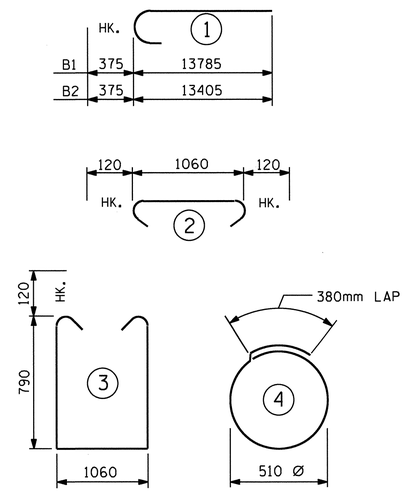


ALL BAR DIMENSIONS ARE OUT TO OUT.

## BILL OF MATERIAL
### END BENT #2

| BAR | NO. | SIZE | TYPE | LENGTH | WEIGHT |
|---|---|---|---|---|---|
| B1 | 10 | #29 | 1 | 14160 | 716 |
| B2 | 10 | #29 | 1 | 13780 | 697 |
| B3 | 8 | #16 | STR | 12920 | 160 |
| B4 | 21 | #13 | STR | 1060 | 22 |
| B5 | 12 | #13 | STR | 8800 | 105 |
| | | | | | |
| H1 | 10 | #16 | STR | 4220 | 65 |
| H2 | 10 | #16 | STR | 4140 | 64 |
| H3 | 10 | #16 | STR | 4020 | 62 |
| H4 | 10 | #16 | STR | 4100 | 64 |
| | | | | | |
| S1 | 86 | #13 | 3 | 2880 | 246 |
| S2 | 86 | #13 | 2 | 1300 | 111 |
| S3 | 60 | #13 | 4 | 1980 | 118 |
| | | | | | |
| V1 | 143 | #13 | STR | 1460 | 208 |
| V2 | 22 | #16 | STR | 2600 | 89 |
| V3 | 20 | #16 | STR | 2660 | 83 |

REINFORCING STEEL = 2810 kg

CLASS A CONCRETE BREAKDOWN

POUR #1: (CAP, CONCRETE COLLAR & LOWER PART OF WINGS) 31.1 m3

TOTAL CONCRETE 31.1 m3

HP 310 X 79 STEEL PILES
NO. 15 274.5 METERS

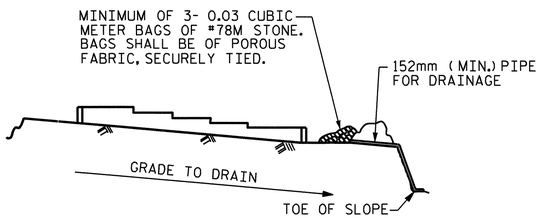


BAGGED STONE AND PIPE SHALL BE PLACED IMMEDIATELY AFTER COMPLETION OF END BENT EXCAVATION. PIPE MAY BE EITHER CONCRETE, CORRUGATED STEEL, CORRUGATED ALUMINUM ALLOY, OR CORRUGATED PLASTIC. PERFORATED PIPE WILL NOT BE ALLOWED.

BAGGED STONE SHALL REMAIN IN PLACE UNTIL THE ENGINEER DIRECTS THAT IT BE REMOVED. THE CONTRACTOR SHALL REMOVE AND DISPOSE OF SILT ACCUMULATIONS AT BAGGED STONE WHEN SO DIRECTED BY THE ENGINEER. BAGS SHALL BE REMOVED AND REPLACED WHENEVER THE ENGINEER DETERMINES THAT THEY HAVE DETERIORATED AND LOST THEIR EFFECTIVENESS.

NO SEPARATE PAYMENT WILL BE MADE FOR THIS WORK AND THE ENTIRE COST OF THIS WORK SHALL BE INCLUDED IN THE UNIT CONTRACT PRICE BID FOR THE SEVERAL PAY ITEMS.

## TEMPORARY DRAINAGE AT END BENT

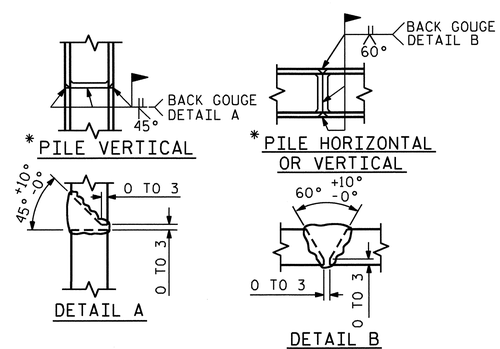


* POSITION OF PILE DURING WELDING.

## PILE SPLICE DETAILS

PROJECT NO. R-2413C
GUILFORD-ROCKINGHAM COUNTY
STATION: 24+37.000 -LREV-

SHEET 3 OF 3

STATE OF NORTH CAROLINA
DEPARTMENT OF TRANSPORTATION
RALEIGH

SUBSTRUCTURE
INTEGRAL
END BENT #2
(RIGHT LANE)

NORTH CAROLINA PROFESSIONAL SEAL 022516 ENGINEER EMILY E. MURPHY
10/28/11

| REVISIONS | | | | | | SHEET NO. |
|---|---|---|---|---|---|---|
| NO. | BY: | DATE: | NO. | BY: | DATE: | S-103 |
| 1 | | | 3 | | | TOTAL SHEETS |
| 2 | | | 4 | | | 238 |

STR. #3

DRAWN BY : M.GUDLAUGSSON DATE : 01-19-11
CHECKED BY : T.L. AVERETTE DATE : 05-02-11

05-SEP-2011 11:30
Y:\Structures\Final Plans\Str.#3\R-2413C_SD_E#_03.dgn
mgudlaugsson

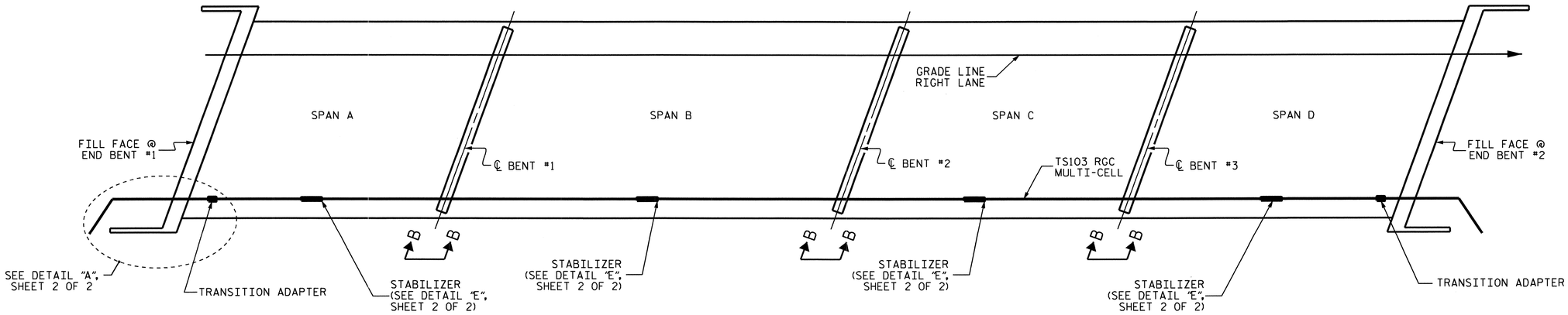


## ELECTRICAL CONDUIT LAYOUT

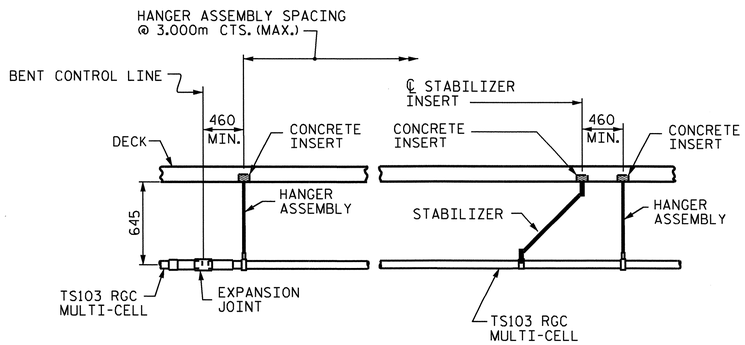


## VIEW B-B

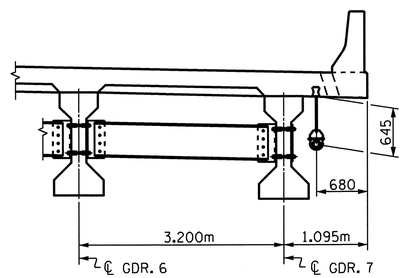


## CONDUIT LOCATION

PROJECT NO. R-2413C
GUILFORD-ROCKINGHAM COUNTY
STATION: 24+37.000 -LREV-

SHEET 1 OF 2

STATE OF NORTH CAROLINA
DEPARTMENT OF TRANSPORTATION
RALEIGH

# ELECTRICAL CONDUIT SYSTEM DETAILS

## RIGHT LANE

NORTH CAROLINA PROFESSIONAL SEAL 022516 ENGINEER EMILY E. MURRAY
6/28/11

| REVISIONS | | | | | | SHEET NO. |
|---|---|---|---|---|---|---|
| NO. | BY: | DATE: | NO. | BY: | DATE: | S-104 |
| 1 | | | 3 | | | TOTAL SHEETS |
| 2 | | | 4 | | | 238 |

DRAWN BY : T.L. AVERETTE DATE : 6-07-11
CHECKED BY : E. MURRAY DATE : 6-08-11

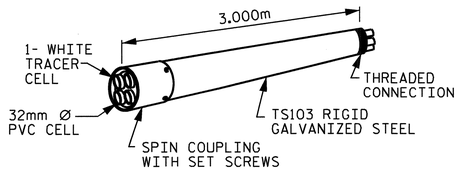


RIGID GALVANIZED (RGC)
MULTI-CELL RACEWAY

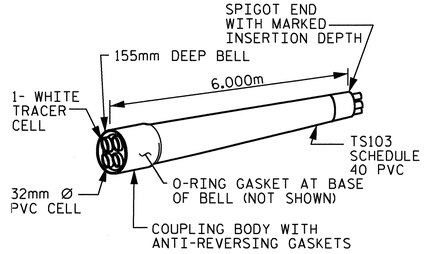


SCHEDULE 40 PVC
MULTI-CELL RACEWAY

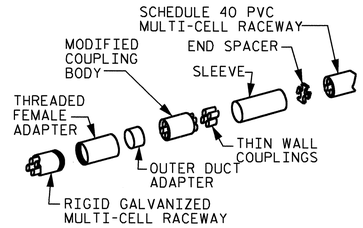


TRANSITION ADAPTER

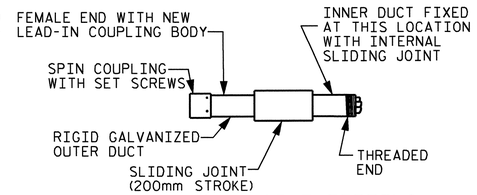


EXPANSION JOINT FITTING

## DETAIL "D"

TS103 MULTI-CELL COMPONENTS

## NOTES

THE CONTRACTOR SHALL BE RESPONSIBLE FOR DETERMINING THE TOTAL QUANTITY OF CONDUIT NEEDED TO COMPLETE THE WORK AND THAT THE CONDUIT(S) ARE PLACED AT THE NOTED DIMENSION AND ABOVE THE BOTTOM OF THE GIRDER.

THE INSTALLATION OF THE CONDUIT SYSTEM SHALL BE PAID FOR AS LUMP SUM. THE PRICE SHALL INCLUDE ALL CONDUIT, HANGERS, STABILIZERS, EXPANSION JOINTS, CONCRETE INSERTS, PVC SLEEVES AND ALL NECESSARY HARDWARE TO COMPLETE THE WORK.

THE CONTRACTOR SHALL FIELD VERIFY THAT THE CONDUIT SYSTEM IS NOT IN CONFLICT WITH THE GUARDRAIL POSTS.

SEE DETAIL "C" FOR HANGER ASSEMBLY INSTALLATION.

INSTALL SLEEVES PARALLEL TO GIRDERS. SEE DETAIL "B" FOR SLEEVE INSTALLATION.

PROVIDE TRANSITION ADAPTOR AND EXPANSION JOINT FOR CONDUIT AT END BENT 1 AND END BENT 2.

INSTALL STABILIZERS MIDWAY BETWEEN DECK EXPANSION JOINTS. STABILIZERS CAN NOT BE USED INSTEAD OF HANGER ASSEMBLY.

THE CONCRETE SCREW INSERT SHALL HAVE A ROD SIZE OF 15.875mm AND A PULL FORCE OF 580 kg.

FOR ELECTRICAL CONDUIT SYSTEM, SEE SPECIAL PROVISIONS.

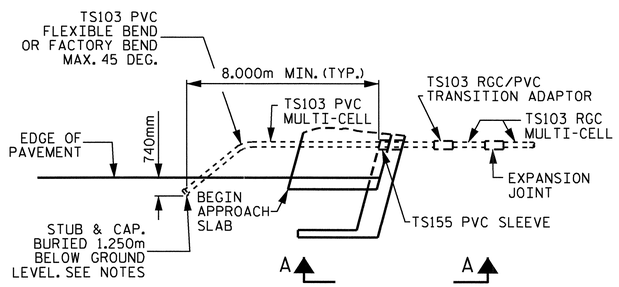


## DETAIL "A"

TERMINATION OF CONDUIT AT INTEGRAL END BENT
(END BENT #1 SHOWN, END BENT #2 SIMILAR)

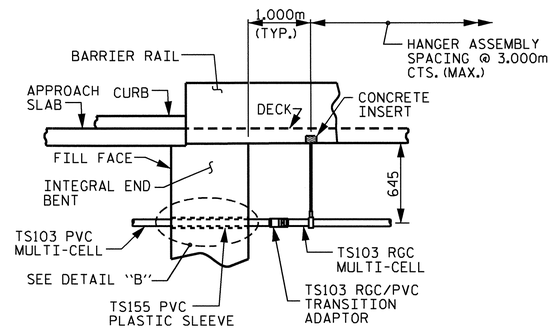


## VIEW A-A

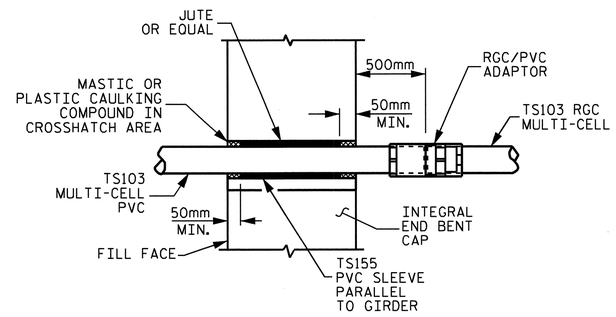


## DETAIL "B"

PVC SLEEVE INSTALLATION & RGC/PVC ADAPTOR AT INTEGRAL END BENT.

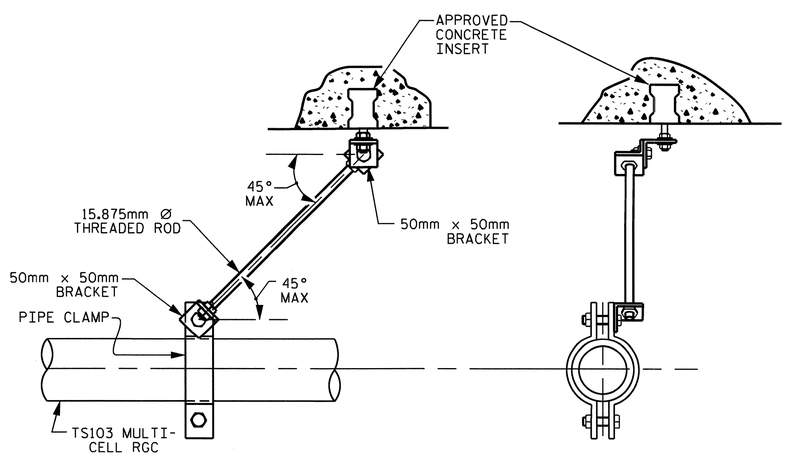


## DETAIL "E"

STABILIZER

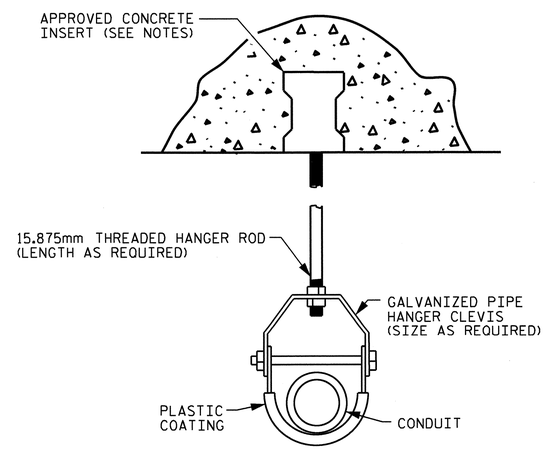


## DETAIL "C"

HANGER ASSEMBLY

# ELECTRIC CONDUIT DETAILS

PROJECT NO. R-2413C
GUILFORD-ROCKINGHAM COUNTY
STATION: 24+37.000 -LREV-

SHEET 2 OF 2

STATE OF NORTH CAROLINA
DEPARTMENT OF TRANSPORTATION
RALEIGH

STANDARD
ELECTRICAL CONDUIT SYSTEM DETAILS

RIGHT LANE

NORTH CAROLINA PROFESSIONAL SEAL 022516 ENGINEER EMMY E. MURRAY
10/28/11

| REVISIONS | | | | | | SHEET NO. |
|---|---|---|---|---|---|---|
| NO. | BY: | DATE: | NO. | BY: | DATE: | S-105 |
| 1 | | | 3 | | | TOTAL SHEETS |
| 2 | | | 4 | | | 238 |

ASSEMBLED BY : T.L. AVERETTE DATE : 6-07-11
CHECKED BY : E. MURRAY DATE : 6-08-11
DRAWN BY : RWW 2-4-03
CHECKED BY: DBM 2-4-03
REV. 5/1/06 TLA/GM

STR. #3 STD. NO. ECS1SM

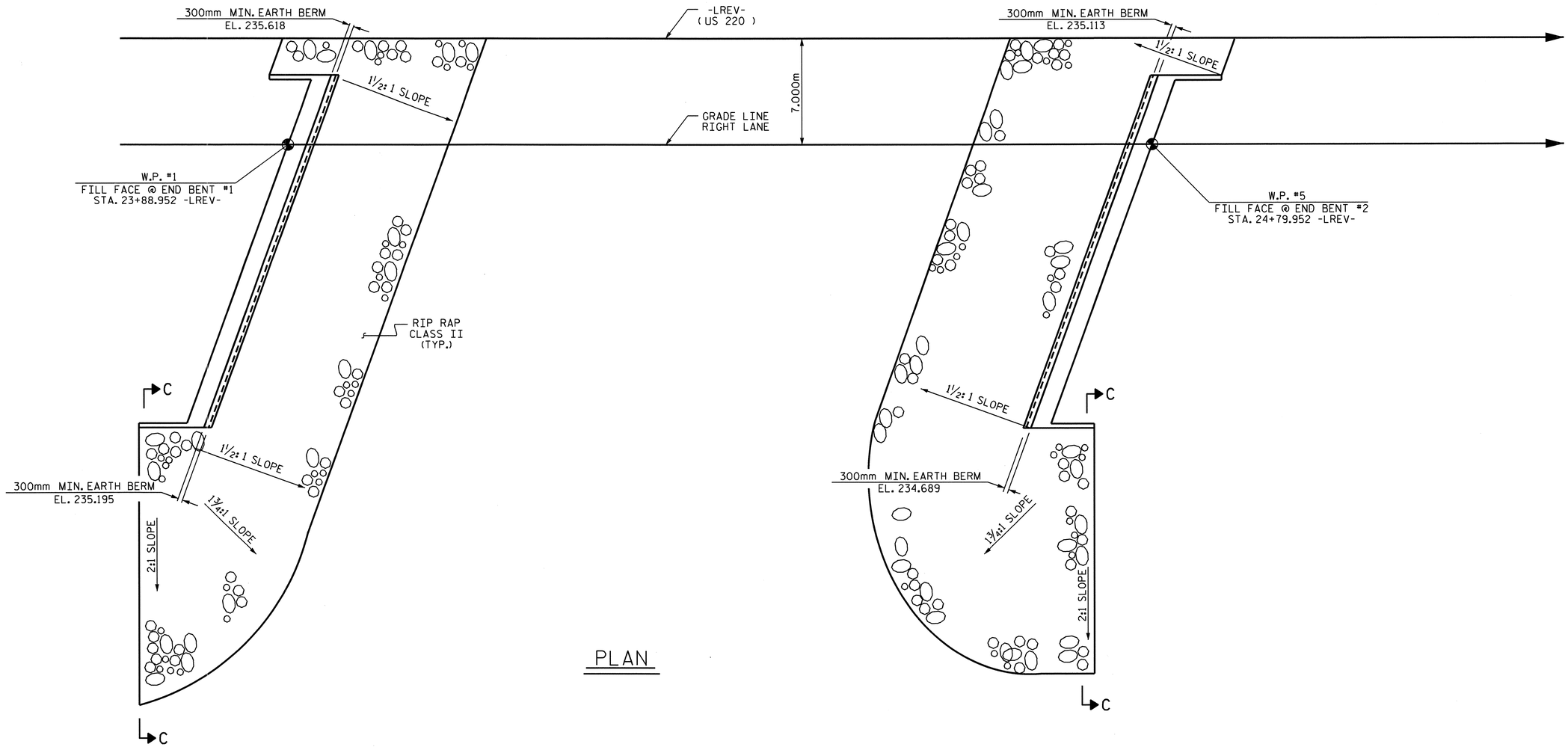


PLAN

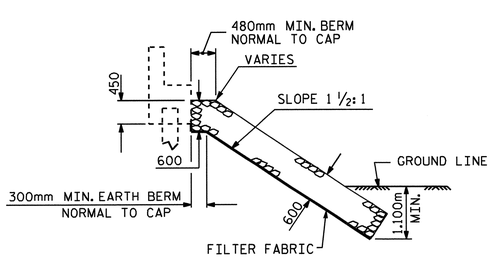


℄ SECTION
BERM RIP RAPPED

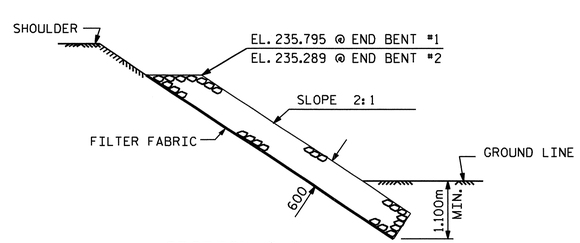


SECTION C-C

| ESTIMATED QUANTITIES | | |
|---|---|---|
| BRIDGE AT STA. 24+37.000 -LREV- RIGHT LANE | RIP RAP CLASS II | FILTER FABRIC FOR DRAINAGE |
| | METRIC TONS | SQUARE METERS |
| END BENT #1 | 578 | 590 |
| END BENT #2 | 892 | 909 |

PROJECT NO. R-2413C
GUILFORD-ROCKINGHAM COUNTY
STATION: 24+37.000 -LREV-

STATE OF NORTH CAROLINA
DEPARTMENT OF TRANSPORTATION
RALEIGH

RIP RAP
DETAILS

RIGHT LANE

NORTH CAROLINA PROFESSIONAL SEAL 022516 ENGINEER EMILY E. MURRAY
10/28/11

| REVISIONS | | | | | | SHEET NO. |
|---|---|---|---|---|---|---|
| NO. | BY: | DATE: | NO. | BY: | DATE: | S-106 |
| 1 | | | 3 | | | TOTAL SHEETS |
| 2 | | | 4 | | | 238 |

DRAWN BY : PEGGY PARISI DATE : 5-19-11
CHECKED BY : MIKE PISO DATE : 6-10-11

19-OCT-2011 14:25
R:\TIPProjects-R\R2413c\Structures\FinalPlans\Str.*3\R2413C_sd_RR_03.dgn
taverette

STR. #3

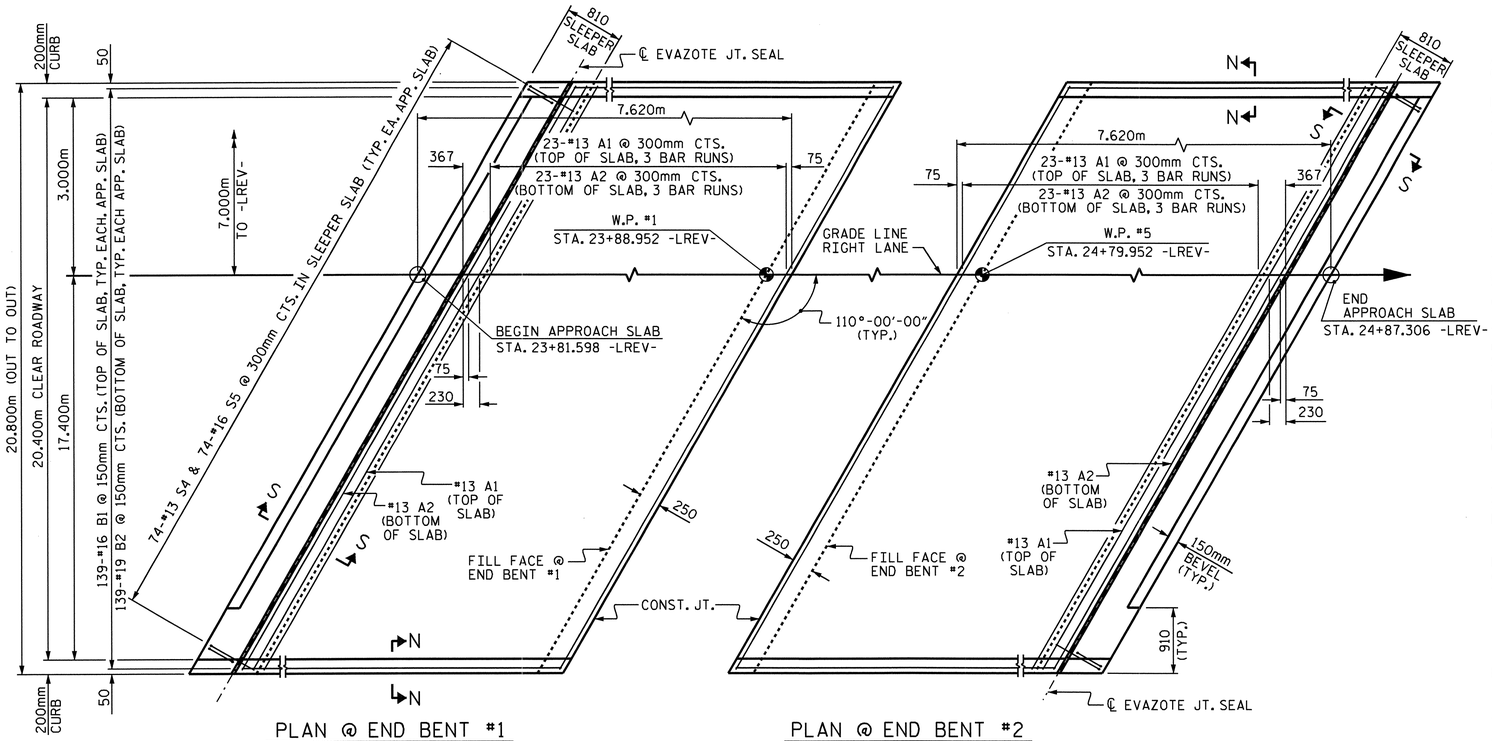


PLAN @ END BENT #1

PLAN @ END BENT #2

DIMENSIONS SHOWN ARE TYPICAL FOR BOTH APPROACH SLABS. #13 A1 BARS IN SLEEPER SLAB NOT SHOWN FOR CLARITY.

## NOTES

APPROACH SLAB SHALL NOT BE CONSTRUCTED PRIOR TO COMPLETION OF THE BRIDGE DECK.

FOR REINFORCED BRIDGE APPROACH FILL INCLUDING FABRIC, IMPERMEABLE GEOMEMBRANE, 102mm Ø DRAINAGE PIPE, #78M STONE, AND SELECT MATERIAL, SEE ROADWAY PLANS.

AREA BETWEEN THE WINGWALL AND APPROACH SLAB SHALL BE GRADED TO DRAIN THE WATER AWAY FROM THE FILL FACE OF THE BRIDGE AND SHALL BE PAVED. SEE ROADWAY PLANS.

THE 150mm COMP. A.B.C. SHALL BE FLUSH WITH THE SLEEPER SLAB AND SHALL EXTEND 300mm OUTSIDE OF EACH EDGE OF THE APPROACH SLAB.

THE CONTRACTOR MAY USE 100mm TYPE B-25.0B ASPHALT CONCRETE BASE COURSE IN LIEU OF 150mm COMP. A.B.C. IF THIS OPTION IS USED, THE BASE COURSE SHALL BE FLUSH WITH THE SLEEPER SLAB, AND THE WIDTH SHALL BE THE SAME AS THAT OF THE APPROACH SLAB.

THE CONTRACTOR MAY USE 125mm CLASS "A" CONCRETE BASE IN LIEU OF 150mm COMP. A.B.C. IF THIS OPTION IS USED, THE CONCRETE BASE SHALL BE FLUSH WITH THE SLEEPER SLAB, AND THE WIDTH SHALL BE THE SAME AS THAT OF THE APPROACH SLAB. THE CONCRETE SHALL BE FINISHED TO A SMOOTH SURFACE AND A LAYER OF 13.6 kg ROOFING FELT SHALL BE PLACED BETWEEN THE CONCRETE BASE AND THE APPROACH SLAB TO PREVENT BOND. THE APPROACH SLAB SHALL NOT BE CAST UNTIL THE CONCRETE BASE HAS REACHED AN AGE OF THREE CURING DAYS.

THE VERTICAL JOINT ON THE RIGHT AND LEFT SIDE OF THE APPROACH SLAB AT THE ENDS OF THE EVAZOTE JOINT SHALL BE FILLED WITH SILICONE OR OTHER APPROVED MATERIAL IN ORDER TO PREVENT BACKFILL FROM ENTERING THE JOINT OPENING.

THE JOINT OPENING AT THE APPROACH SLAB/DECK INTERFACE SHALL BE SAWED NO MORE THAN 12 HOURS AFTER THE APPROACH SLAB IS CAST. THE JOINT SHALL BE CLEANED OF ALL DEBRIS BEFORE THE SEALANT IS APPLIED. THE JOINT SEALER MATERIAL SHALL CONFORM TO THE REQUIREMENTS OF TYPE SL LOW MODULUS SILICONE SEALANT.

WITH EVAZOTE JOINT SEAL

FOR EVAZOTE JOINT SEALS, SEE SPECIAL PROVISIONS.

THE NOMINAL UNCOMPRESSED SEAL WIDTH OF THE EVAZOTE JOINT SEAL SHALL BE 87mm.

FOR ELASTOMERIC CONCRETE, SEE SPECIAL PROVISIONS.

## BILL OF MATERIAL

FOR ONE APPROACH SLAB (2 REQ'D)

| BAR | NO. | SIZE | TYPE | LENGTH | WEIGHT |
|---|---|---|---|---|---|
| * A1 | 93 | #13 | STR | 7760 | 717 |
| A2 | 72 | #13 | STR | 7720 | 553 |
| * B1 | 139 | #16 | STR | 6780 | 1463 |
| B2 | 139 | #19 | STR | 6920 | 2150 |
| * S4 | 74 | #13 | 1 | 1200 | 88 |
| S5 | 74 | #16 | 2 | 880 | 101 |

| | | |
|---|---|---|
| REINFORCING STEEL | kg. | 2804 |
| * EPOXY COATED REINFORCING STEEL | kg. | 2268 |
| CLASS AA CONCRETE | | |
| POUR #1 - SLAB & CURB | C.M. | 44.7 |
| POUR #2 - SLEEPER SLAB | C.M. | 5.7 |
| TOTAL | C.M. | 50.4 |

## BAR TYPES

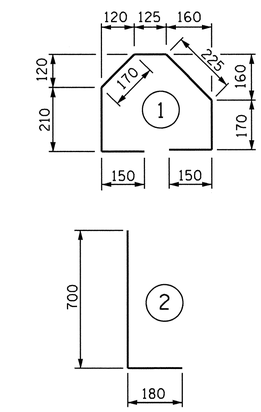


ALL BAR DIMENSIONS ARE OUT TO OUT

## SPLICE CHART

| BAR | SPLICE |
|---|---|
| * #13 A1 | 610 |
| #13 A2 | 540 |

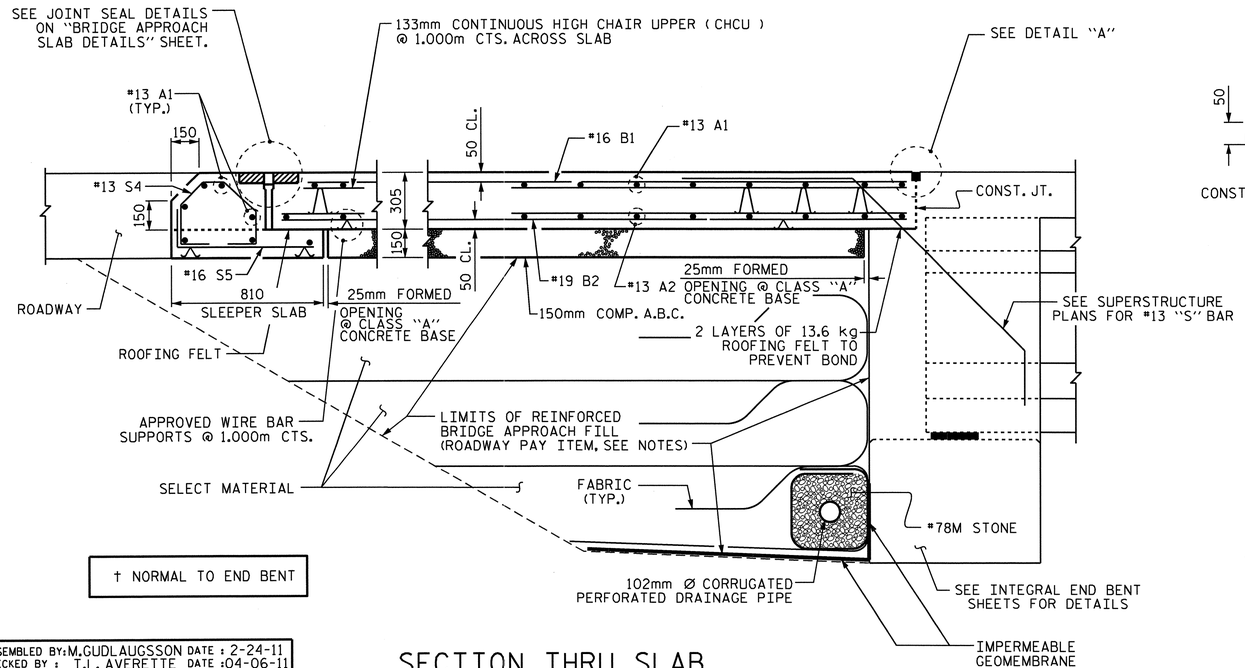


† NORMAL TO END BENT

SECTION THRU SLAB

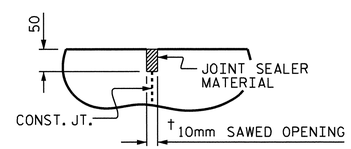


DETAIL "A"

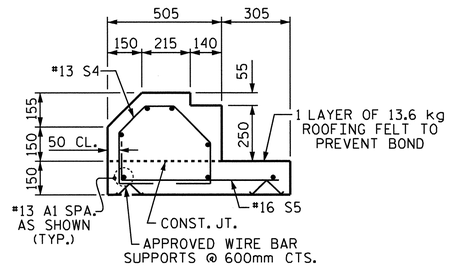


SECTION S-S

SHOWING SLEEPER SLAB

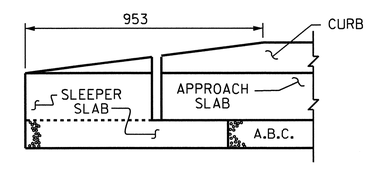


END OF CURB WITHOUT SHOULDER BERM GUTTER

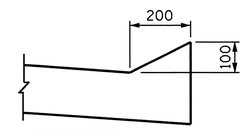


SECTION N-N

PROJECT NO. R-2413C

GUILFORD-ROCKINGHAM COUNTY

STATION: 24+37.000 -LREV-

SHEET 1 OF 2

STATE OF NORTH CAROLINA
DEPARTMENT OF TRANSPORTATION
RALEIGH

STANDARD

BRIDGE APPROACH SLAB FOR INTEGRAL ABUTMENT (RIGHT LANE)

NORTH CAROLINA PROFESSIONAL SEAL 022516 ENGINEER ELMAY E. MURRAY 10/28/11

| REVISIONS | | | | | | | SHEET NO. |
|---|---|---|---|---|---|---|---|
| NO. | BY: | DATE: | NO. | BY: | DATE: | | S-107 |
| 1 | | | 3 | | | | TOTAL SHEETS |
| 2 | | | 4 | | | | 238 |

ASSEMBLED BY: M.GUDLAUGSSON DATE : 2-24-11
CHECKED BY : T.L. AVERETTE DATE : 04-06-11
DRAWN BY : TLA 6/06
CHECKED BY : GM 6/06
ADDED 5/1/06R KMM/GM

05-SEP-2011 11:27
Y:\Structures\Final Plans\Str.#3\R-2413C_SD_AS_03.dgn
mgudlaugsson

STR. # 3

STD. NO. BAS11SM

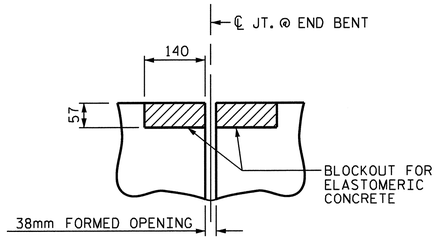


SECTION C-C

EVAZOTE JOINT SEAL (PRE-SAWED ELASTOMERIC CONCRETE DIMENSIONS)

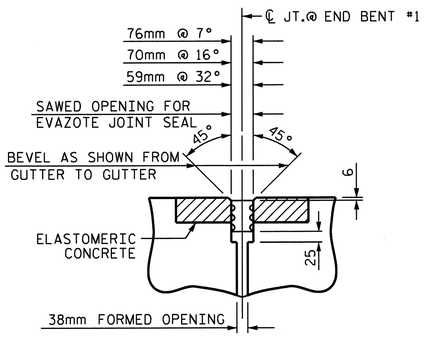


SECTION C-C

EVAZOTE JOINT SEAL @ END BENT #1

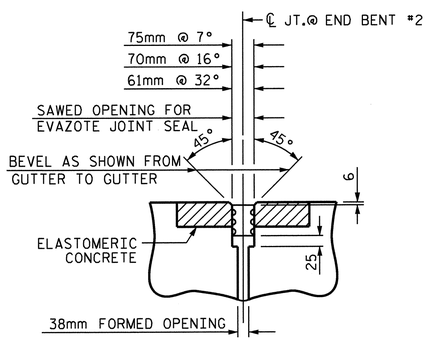


SECTION C-C

EVAZOTE JOINT SEAL @ END BENT #2

| ELASTOMERIC CONCRETE | |
|---|---|
| END BENT NO. | ELASTOMERIC CONCRETE * (CU. m) |
| 1 | 0.3 |
| 2 | 0.3 |
| TOTAL | 0.6 |

* BASED ON THE MINIMUM BLOCKOUT SHOWN.

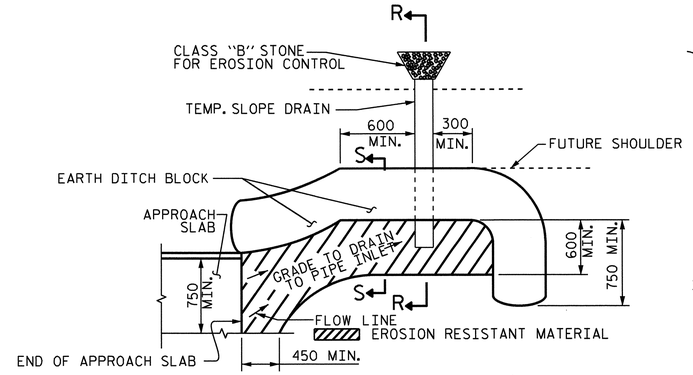


NOTE: IMMEDIATELY AFTER THE CONSTRUCTION OF THE APPROACH SLAB, THE CONTRACTOR SHALL PROVIDE TEMPORARY BERM AND SLOPE DRAIN. CONTRACTOR SHALL GRADE TO PIPE INLET AND PROVIDE EROSION RESISTANT MATERIAL AS SHOWN. THE EROSION RESISTANT MATERIAL SHALL BE EITHER 1) ASPHALT PLANT MIX, TYPE 1 OR TYPE 2, MIN. 50mm DEPTH, 2) EROSION CONTROL MAT, OR 3) CONCRETE, AS DIRECTED BY THE ENGINEER. THE SLOPE DRAIN SHALL CONSIST OF A NON-PERFORATED TEMPORARY DRAINAGE PIPE, 305mm IN DIAMETER.

PLAN VIEW

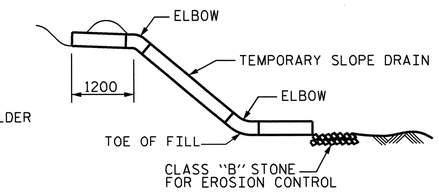


SECTION R-R

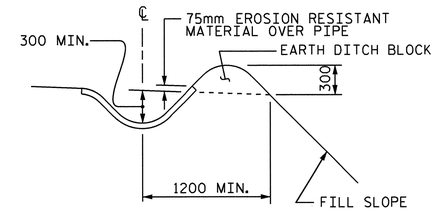


SECTION S-S

# TEMPORARY BERM AND SLOPE DRAIN DETAILS

(TO BE USED WHEN SHOULDER BERM GUTTER IS REQUIRED)

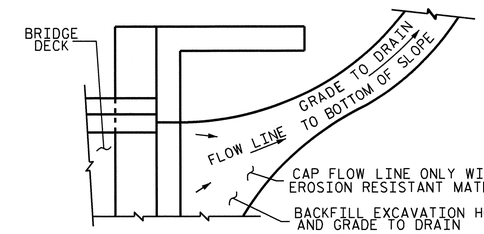


NOTE: IF THE APPROACH SLAB IS NOT CONSTRUCTED IMMEDIATELY AFTER THE BACKFILLING OF THE END BENT EXCAVATION, GRADE TO DRAIN TO THE BOTTOM OF THE SLOPE AND PROVIDE EROSION RESISTANT MATERIAL, SUCH AS FIBERGLASS ROVING OR AS DIRECTED BY THE ENGINEER TO PREVENT SOIL EROSION AND TO PROTECT THE AREA ADJACENT TO THE STRUCTURE. THE CONTRACTOR WILL BE REQUIRED TO REMOVE THESE MATERIALS PRIOR TO CONSTRUCTION OF THE APPROACH SLAB.

TEMPORARY DRAINAGE DETAIL

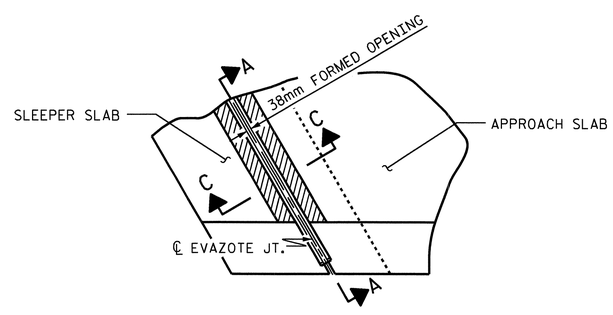


PLAN

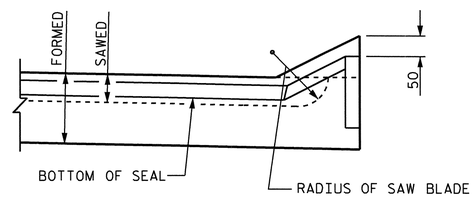


SECTION A-A

# JOINT SEAL DETAILS @ SLEEPER SLAB

PROJECT NO. R-2413C

GUILFORD-ROCKINGHAM COUNTY

STATION: 24+37.000 -LREV-

SHEET 2 OF 2

STATE OF NORTH CAROLINA
DEPARTMENT OF TRANSPORTATION
RALEIGH

STANDARD
BRIDGE APPROACH
SLAB DETAILS
(RIGHT LANE)

NORTH CAROLINA PROFESSIONAL SEAL 022516 ENGINEER EMILY E. McMURRAY
10/28/11

| REVISIONS | | | | | | SHEET NO. |
|---|---|---|---|---|---|---|
| NO. | BY: | DATE: | NO. | BY: | DATE: | S-108 |
| 1 | | | 3 | | | TOTAL SHEETS |
| 2 | | | 4 | | | 238 |

STR. #3

STD. NO. BAS10SM

| | |
|---|---|
| ASSEMBLED BY: M.GUDLAUGSSON | DATE : 2-24-11 |
| CHECKED BY : T.L. AVERETTE | DATE : 4-06-11 |
| DRAWN BY : FCJ 11/88 | REV. 10/17/00 RWW/LES |
| CHECKED BY : ARB 11/88 | REV. 5/7/03 RWW/JTE |
| | REV. 5/1/06RR MAA/KMM |

05-SEP-2011 11:27
Y:\Structures\Final Plans\Str.#3\R-2413C_SD_AS_03.dgn
mgudlaugsson

# OVERHANG BRACKET CALCULATION INSTRUCTIONS

## AASHTO SHAPES - TYPES III, IV, V, AND VI

1. RECORD KNOWN INFORMATION ON "BRIDGE OVERHANG BRACKET SUMMARY" ON SHEET 2
2. CALCULATE THE MAXIMUM SCREED LOAD PER BRACKET (SLPB) WITH AN ESTIMATED R = 1.5. SLPB = R X W. ROUND VALUE UP TO NEAREST SLPB VALUE INDICATED ON APPROPRIATE TABLE 1-1, 1-2, 1-3, OR 1-4.
3. WITH THE ESTIMATED SLPB, OVERHANG SLAB THICKNESS, "K" VALUE, AND 45° HANGER SAFE WORKING LOAD (SWL), ENTER THE APPROPRIATE TABLE 1-1, 1-2, 1-3, OR 1-4 (BASED ON OVERHANG DIMENSION) AND DETERMINE THE BRACKET SPACING, S.
4. CALCULATE S/D1 AND S/D2, ROUNDING UP TO NEAREST VALUE IN TABLE 2. ENTER TABLE 2 AND DETERMINE R VALUE.
5. CALCULATE REVISED SLPB. ROUND VALUE UP TO NEAREST SLPB VALUE INDICATED ON APPROPRIATE TABLE 1-1, 1-2, 1-3, OR 1-4.
6. WITH THE REVISED SLPB, OVERHANG SLAB THICKNESS, "K" VALUE AND 45 HANGER SAFE WORKING LOAD (SWL), ENTER THE APPROPRIATE TABLE 1-1, 1-2, 1-3 OR 1-4 (BASED ON OVERHANG DIMENSION) AND DETERMINE REVISED BRACKET SPACING, S.
7. CONTINUE ITERATIONS OF STEPS 4-6 UNTIL THE REVISED BRACKET SPACING, S, IS THE SAME AS THE PREVIOUS S VALUE.
8. CHECK LUMBER JOIST SPACING: WITH BRACKET SPACING VALUE, S, ROUND THIS VALUE UP TO THE NEAREST VALUE OF ALLOWABLE SPAN LENGTH OF JOIST OF TABLE 3. USING THIS VALUE, ALONG WITH THE AVERAGE OVERHANG SLAB THICKNESS AND THE LUMBER JOIST SIZE, DETERMINE JOIST SPACING FROM TABLE 3. IF NECESSARY, ADJUST LUMBER JOIST SIZE AND/OR JOIST SPACING TO MEET ALLOWABLE SPAN LENGTH OF JOIST.
9. CONVERSELY, IF THE DESIRED JOIST SPACING IS KNOWN, USE THIS ALONG WITH THE AVERAGE OVERHANG SLAB THICKNESS AND THE LUMBER JOIST SIZE TO DETERMINE IF ALLOWABLE SPAN LENGTH OF JOIST IS GREATER THAN THE BRACKET SPACING, S. IF NECESSARY, ADJUST LUMBER JOIST SIZE TO MEET REQUIREMENTS OF ALLOWABLE SPAN LENGTH OF JOIST AND JOIST SPACING.
10. RECORD REMAINING INFORMATION ON "BRIDGE OVERHANG BRACKET SUMMARY" FORM.
11. SUBMIT FORM AND CALCULATIONS FOR REVIEW AND APPROVAL.

### TABLE 1-1

(FOR USE ON **UP TO 2'-0" OVERHANG (L)** & 54" HORIZONTAL LEG LENGTH OF THE OVERHANG BRACKET)

| AVG. SLAB THICKNESS (T) (in) | BRACKET (K) DIMENSION (in) | SCREED LOAD PER BRACKET | | | | | | | | | 45° HANGER SWL (lbs) |
|---|---|---|---|---|---|---|---|---|---|---|---|
| | | 2500 lbs. | 2250 lbs. | 2000 lbs. | 1750 lbs. | 1500 lbs. | 1250 lbs. | 1000 lbs. | 750 lbs. | 0 lbs. | |
| | | BRACKET SPACING | | | | | | | | | |
| 10 | 30 | | | | 2'-1" | 2'-7" | 3'-2" | 3'-8" | 4'-2" | 5'-9" | 4000 |
| | | 3'-6" | 4'-0" | 4'-5" | 4'-9" | 5'-1" | 5'-3" | 5'-5" | 5'-7" | 6'-7" | 6000 |
| | 40 | | | | 2'-1" | 2'-7" | 3'-2" | 3'-8" | 4'-2" | 5'-9" | 4000 |
| | | 3'-6" | 4'-0" | 4'-5" | 4'-9" | 5'-1" | 5'-3" | 5'-5" | 5'-7" | 6'-7" | 6000 |
| | 50 | | | | 2'-1" | 2'-7" | 3'-2" | 3'-8" | 4'-2" | 5'-9" | 4000 |
| | | 3'-6" | 4'-0" | 4'-5" | 4'-9" | 5'-1" | 5'-3" | 5'-5" | 5'-7" | 6'-7" | 6000 |
| 12 | 30 | | | | | 2'-4" | 2'-10" | 3'-4" | 3'-9" | 5'-2" | 4000 |
| | | 3'-2" | 3'-7" | 4'-1" | 4'-7" | 5'-0" | 5'-2" | 5'-4" | 5'-7" | 6'-5" | 6000 |
| | 40 | | | | | 2'-4" | 2'-10" | 3'-4" | 3'-9" | 5'-2" | 4000 |
| | | 3'-2" | 3'-7" | 4'-1" | 4'-7" | 5'-0" | 5'-2" | 5'-4" | 5'-7" | 6'-5" | 6000 |
| | 50 | | | | | 2'-4" | 2'-10" | 3'-4" | 3'-9" | 5'-2" | 4000 |
| | | 3'-2" | 3'-7" | 4'-1" | 4'-7" | 5'-0" | 5'-2" | 5'-4" | 5'-7" | 6'-5" | 6000 |
| 14 | 30 | | | | | 2'-2" | 2'-7" | 3'-0" | 3'-5" | 4'-9" | 4000 |
| | | 2'-10" | 3'-4" | 3'-9" | 4'-2" | 4'-7" | 5'-0" | 5'-4" | 5'-7" | 6'-4" | 6000 |
| | 40 | | | | | 2'-2" | 2'-7" | 3'-0" | 3'-5" | 4'-9" | 4000 |
| | | 2'-10" | 3'-4" | 3'-9" | 4'-2" | 4'-7" | 5'-0" | 5'-4" | 5'-7" | 6'-4" | 6000 |
| | 50 | | | | | 2'-2" | 2'-7" | 3'-0" | 3'-5" | 4'-9" | 4000 |
| | | 2'-10" | 3'-4" | 3'-9" | 4'-2" | 4'-7" | 5'-0" | 5'-4" | 5'-7" | 6'-4" | 6000 |
| 16 | 30 | | | | | 2'-0" | 2'-4" | 2'-9" | 3'-2" | 4'-4" | 4000 |
| | | 2'-8" | 3'-0" | 3'-5" | 3'-10" | 4'-3" | 4'-7" | 5'-0" | 5'-5" | 6'-3" | 6000 |
| | 40 | | | | | 2'-0" | 2'-4" | 2'-9" | 3'-2" | 4'-4" | 4000 |
| | | 2'-8" | 3'-0" | 3'-5" | 3'-10" | 4'-3" | 4'-7" | 5'-0" | 5'-5" | 6'-3" | 6000 |
| | 50 | | | | | 2'-0" | 2'-4" | 2'-9" | 3'-2" | 4'-4" | 4000 |
| | | 2'-8" | 3'-0" | 3'-5" | 3'-10" | 4'-3" | 4'-7" | 5'-0" | 5'-5" | 6'-3" | 6000 |

### TABLE 1-2

(FOR USE ON **OVER 2'-0" TO 2'-6" OVERHANG (L)** & 54" HORIZONTAL LEG LENGTH OF THE OVERHANG BRACKET)

| AVG. SLAB THICKNESS (T) (in) | BRACKET (K) DIMENSION (in) | SCREED LOAD PER BRACKET | | | | | | | | | 45° HANGER SWL (lbs) |
|---|---|---|---|---|---|---|---|---|---|---|---|
| | | 2500 lbs. | 2250 lbs. | 2000 lbs. | 1750 lbs. | 1500 lbs. | 1250 lbs. | 1000 lbs. | 750 lbs. | 0 lbs. | |
| | | BRACKET SPACING | | | | | | | | | |
| 10 | 30 | | | | | 2'-4" | 2'-9" | 3'-3" | 3'-8" | 5'-1" | 4000 |
| | | 3'-1" | 3'-6" | 4'-0" | 4'-5" | 4'-11" | 5'-3" | 5'-5" | 5'-7" | 6'-7" | 6000 |
| | 40 | | | | | 2'-4" | 2'-9" | 3'-3" | 3'-8" | 5'-1" | 4000 |
| | | 3'-1" | 3'-6" | 4'-0" | 4'-5" | 4'-11" | 5'-3" | 5'-5" | 5'-7" | 6'-7" | 6000 |
| | 50 | | | | | 2'-4" | 2'-9" | 3'-3" | 3'-8" | 5'-1" | 4000 |
| | | 3'-1" | 3'-6" | 4'-0" | 4'-5" | 4'-11" | 5'-3" | 5'-5" | 5'-7" | 6'-7" | 6000 |
| 12 | 30 | | | | | 2'-1" | 2'-6" | 2'-11" | 3'-4" | 4'-6" | 4000 |
| | | 2'-9" | 3'-2" | 3'-7" | 4'-0" | 4'-5" | 4'-10" | 5'-3" | 5'-7" | 6'-5" | 6000 |
| | 40 | | | | | 2'-1" | 2'-6" | 2'-11" | 3'-4" | 4'-6" | 4000 |
| | | 2'-9" | 3'-2" | 3'-7" | 4'-0" | 4'-5" | 4'-10" | 5'-3" | 5'-7" | 6'-5" | 6000 |
| | 50 | | | | | 2'-1" | 2'-6" | 2'-11" | 3'-4" | 4'-6" | 4000 |
| | | 2'-9" | 3'-2" | 3'-7" | 4'-0" | 4'-5" | 4'-10" | 5'-3" | 5'-7" | 6'-5" | 6000 |
| 14 | 30 | | | | | | 2'-3" | 2'-7" | 3'-0" | 4'-1" | 4000 |
| | | 2'-6" | 2'-10" | 3'-3" | 3'-7" | 4'-0" | 4'-4" | 4'-9" | 5'-1" | 6'-3" | 6000 |
| | 40 | | | | | | 2'-3" | 2'-7" | 3'-0" | 4'-1" | 4000 |
| | | 2'-6" | 2'-10" | 3'-3" | 3'-7" | 4'-0" | 4'-4" | 4'-9" | 5'-1" | 6'-3" | 6000 |
| | 50 | | | | | | 2'-3" | 2'-7" | 3'-0" | 4'-1" | 4000 |
| | | 2'-6" | 2'-10" | 3'-3" | 3'-7" | 4'-0" | 4'-4" | 4'-9" | 5'-1" | 6'-3" | 6000 |
| 16 | 30 | | | | | | 2'-1" | 2'-5" | 2'-9" | 3'-9" | 4000 |
| | | 2'-3" | 2'-7" | 2'-11" | 3'-4" | 3'-8" | 4'-0" | 4'-4" | 4'-8" | 5'-8" | 6000 |
| | 40 | | | | | | 2'-1" | 2'-5" | 2'-9" | 3'-9" | 4000 |
| | | 2'-3" | 2'-7" | 2'-11" | 3'-4" | 3'-8" | 4'-0" | 4'-4" | 4'-8" | 5'-8" | 6000 |
| | 50 | | | | | | 2'-1" | 2'-5" | 2'-9" | 3'-9" | 4000 |
| | | 2'-3" | 2'-7" | 2'-11" | 3'-4" | 3'-8" | 4'-0" | 4'-4" | 4'-8" | 5'-8" | 6000 |

### TABLE 1-3

(FOR USE ON **OVER 2'-6" TO 3'-0" OVERHANG (L)** & 54" HORIZONTAL LEG LENGTH OF THE OVERHANG BRACKET)

| AVG. SLAB THICKNESS (T) (in) | BRACKET (K) DIMENSION (in) | SCREED LOAD PER BRACKET | | | | | | | | | 45° HANGER SWL (lbs) |
|---|---|---|---|---|---|---|---|---|---|---|---|
| | | 2500 lbs. | 2250 lbs. | 2000 lbs. | 1750 lbs. | 1500 lbs. | 1250 lbs. | 1000 lbs. | 750 lbs. | 0 lbs. | |
| | | BRACKET SPACING | | | | | | | | | |
| 10 | 30 | | | | | 2'-1" | 2'-6" | 2'-11" | 3'-4" | 4'-6" | 4000 |
| | | | | | | 4'-5" | 4'-10" | 5'-3" | 5'-7" | 6'-7" | 6000 |
| | 40 | | | | | 2'-1" | 2'-6" | 2'-11" | 3'-4" | 4'-6" | 4000 |
| | | 2'-9" | 3'-2" | 3'-7" | 4'-0" | 4'-5" | 4'-10" | 5'-3" | 5'-7" | 6'-7" | 6000 |
| | 50 | | | | | 2'-1" | 2'-6" | 2'-11" | 3'-4" | 4'-6" | 4000 |
| | | 2'-9" | 3'-2" | 3'-7" | 4'-0" | 4'-5" | 4'-10" | 5'-3" | 5'-7" | 6'-7" | 6000 |
| 12 | 30 | | | | | | 2'-2" | 2'-7" | 2'-11" | 4'-0" | 4000 |
| | | | | | | 3'-11" | 4'-3" | 4'-8" | 5'-0" | 6'-1" | 6000 |
| | 40 | | | | | | 2'-2" | 2'-7" | 2'-11" | 4'-0" | 4000 |
| | | 2'-5" | 2'-10" | 3'-2" | 3'-6" | 3'-11" | 4'-3" | 4'-8" | 5'-0" | 6'-1" | 6000 |
| | 50 | | | | | | 2'-2" | 2'-7" | 2'-11" | 4'-0" | 4000 |
| | | 2'-5" | 2'-10" | 3'-2" | 3'-6" | 3'-11" | 4'-3" | 4'-8" | 5'-0" | 6'-1" | 6000 |
| 14 | 30 | | | | | | 2'-0" | 2'-4" | 2'-8" | 3'-8" | 4000 |
| | | | | | 3'-2" | 3'-6" | 3'-10" | 4'-2" | 4'-6" | 5'-6" | 6000 |
| | 40 | | | | | | 2'-0" | 2'-4" | 2'-8" | 3'-8" | 4000 |
| | | 2'-2" | 2'-6" | 2'-10" | 3'-2" | 3'-6" | 3'-10" | 4'-2" | 4'-6" | 5'-6" | 6000 |
| | 50 | | | | | | 2'-0" | 2'-4" | 2'-8" | 3'-8" | 4000 |
| | | 2'-2" | 2'-6" | 2'-10" | 3'-2" | 3'-6" | 3'-10" | 4'-2" | 4'-6" | 5'-6" | 6000 |
| 16 | 30 | | | | | | | 2'-1" | 2'-5" | 3'-4" | 4000 |
| | | | | | 2'-11" | 3'-2" | 3'-6" | 3'-10" | 4'-1" | 5'-0" | 6000 |
| | 40 | | | | | | | 2'-1" | 2'-5" | 3'-4" | 4000 |
| | | 2'-0" | 2'-4" | 2'-7" | 2'-11" | 3'-2" | 3'-6" | 3'-10" | 4'-1" | 5'-0" | 6000 |
| | 50 | | | | | | | 2'-1" | 2'-5" | 3'-4" | 4000 |
| | | 2'-0" | 2'-4" | 2'-7" | 2'-11" | 3'-2" | 3'-6" | 3'-10" | 4'-1" | 5'-0" | 6000 |

### TABLE 1-4

(FOR USE ON **OVER 3'-0" TO 3'-6" OVERHANG (L)** & 54" HORIZONTAL LEG LENGTH OF THE OVERHANG BRACKET)

| AVG. SLAB THICKNESS (T) (in) | BRACKET (K) DIMENSION (in) | SCREED LOAD PER BRACKET | | | | | | | | | 45° HANGER SWL (lbs) |
|---|---|---|---|---|---|---|---|---|---|---|---|
| | | 2500 lbs. | 2250 lbs. | 2000 lbs. | 1750 lbs. | 1500 lbs. | 1250 lbs. | 1000 lbs. | 750 lbs. | 0 lbs. | |
| | | BRACKET SPACING | | | | | | | | | |
| 10 | 30 | | | | | | 2'-1" | 2'-5" | 2'-9" | 3'-10" | 4000 |
| | | | | | | 2'-3" | 2'-11" | 3'-7" | 4'-3" | 5'-9" | 6000 |
| | 40 | | | | | | 2'-1" | 2'-5" | 2'-9" | 3'-10" | 4000 |
| | | | | 2'-4" | 3'-0" | 3'-7" | 4'-1" | 4'-5" | 4'-9" | 5'-9" | 6000 |
| | 50 | | | | | | 2'-1" | 2'-5" | 2'-9" | 3'-10" | 4000 |
| | | 2'-4" | 2'-8" | 3'-0" | 3'-4" | 3'-8" | 4'-1" | 4'-5" | 4'-9" | 5'-9" | 6000 |
| 12 | 30 | | | | | | | 2'-2" | 2'-6" | 3'-5" | 4000 |
| | | | | | | 2'-1" | 2'-8" | 3'-4" | 3'-11" | 5'-2" | 6000 |
| | 40 | | | | | | | 2'-2" | 2'-6" | 3'-5" | 4000 |
| | | | | 2'-2" | 2'-9" | 3'-4" | 3'-7" | 3'-11" | 4'-3" | 5'-2" | 6000 |
| | 50 | | | | | | | 2'-2" | 2'-6" | 3'-5" | 4000 |
| | | 2'-1" | 2'-4" | 2'-8" | 3'-0" | 3'-4" | 3'-7" | 3'-11" | 4'-3" | 5'-2" | 6000 |
| 14 | 30 | | | | | | | | 2'-3" | 3'-1" | 4000 |
| | | | | | | 2'-0" | 2'-6" | 3'-1" | 3'-8" | 4'-8" | 6000 |
| | 40 | | | | | | | | 2'-3" | 3'-1" | 4000 |
| | | | | 2'-0" | 2'-7" | 3'-0" | 3'-3" | 3'-6" | 3'-10" | 4'-8" | 6000 |
| | 50 | | | | | | | | 2'-3" | 3'-1" | 4000 |
| | | | 2'-2" | 2'-5" | 2'-8" | 3'-0" | 3'-3" | 3'-6" | 3'-10" | 4'-8" | 6000 |
| 16 | 30 | | | | | | | | 2'-0" | 2'-9" | 4000 |
| | | | | | | | 2'-4" | 2'-10" | 3'-5" | 4'-3" | 6000 |
| | 40 | | | | | | | | 2'-0" | 2'-9" | 4000 |
| | | | | | 2'-5" | 2'-8" | 2'-11" | 3'-3" | 3'-6" | 4'-3" | 6000 |
| | 50 | | | | | | | | 2'-0" | 2'-9" | 4000 |
| | | | | 2'-2" | 2'-5" | 2'-8" | 2'-11" | 3'-3" | 3'-6" | 4'-3" | 6000 |

DEFINITIONS

SLPB = SCREED LOAD PER BRACKET (R x W)
R = SCREED LOAD FACTOR, OBTAINED FROM TABLE 2
W = WHEEL LOAD
S = BRACKET SPACING
T = AVERAGE SLAB THICKNESS
SWL = SAFE WORKING LOAD
K = DIMENSION DEFINED ON "BRIDGE OVERHANG BRACKET SUMMARY" ON SHEET 2
L = OVERHANG MEASURED FROM EDGE OF TOP FLANGE TO EDGE OF SUPERSTRUCTURE

PROJECT NO. R-2413C
GUILFORD-ROCKINGHAM COUNTY
STATION: 24+37.000 -LREV-

SHEET 1 OF 3

STATE OF NORTH CAROLINA
DEPARTMENT OF TRANSPORTATION
RALEIGH

STANDARD OVERHANG FALSEWORK

AASHTO TYPES
III, IV, V, AND VI
(RIGHT LANE)

NORTH CAROLINA PROFESSIONAL SEAL 18788 ENGINEER CHARNG-CHUAN VICTOR CHAO

Charng-Chuan V. Chao
8-5-2011

| REVISIONS | | | | | | SHEET NO. |
|---|---|---|---|---|---|---|
| NO. | BY: | DATE: | NO. | BY: | DATE: | 5-109 |
| 1 | | | 3 | | | TOTAL SHEETS |
| 2 | | | 4 | | | 238 |

| | |
|---|---|
| ASSEMBLED BY: | DATE: |
| CHECKED BY: | DATE: |
| DRAWN BY: R. WRIGHT 06/04 | REV. |
| CHECKED BY: C. V. CHAO 06/04 | |

05-AUG-2011 10:43
C:\OLDFILES\D\wdlr\victor\OverhangFalsework\TIEBAR&STRUT\R-2413C\R-2413CSTR3_TYPE_IV\R2413CSTR3verHangSheets.dgn
vchao

STR. #3

## BRIDGE OVERHANG BRACKET SUMMARY

TOTAL SCREED WEIGHT = _____ LBS.
NUMBER OF SCREED WHEELS = _____
SCREED WHEEL LOAD (W) = _____ LBS.
SCREED LOAD PER BRACKET = _____ LBS.

PROJECT No. : _____
COUNTY : _____
STATION : _____
DESCRIPTION : _____

DATE : _____
DESIGN BY : _____
CHECK BY : _____

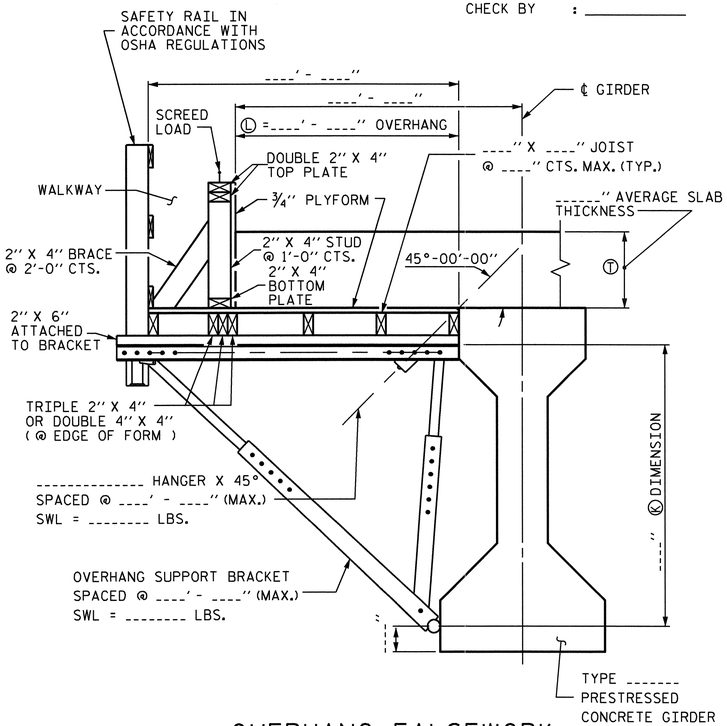


OVERHANG FALSEWORK

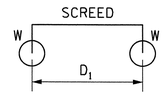


4-WHEEL MACHINE

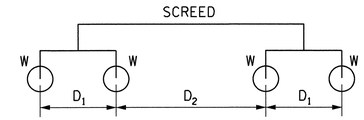


8-WHEEL MACHINE

| 4 WHEEL MACHINE | |
|---|---|
| S/D1 | R |
| <= 1.0 | 1.00 |
| 1.1 | 1.09 |
| 1.2 | 1.17 |
| 1.3 | 1.23 |
| 1.4 | 1.29 |
| 1.5 | 1.33 |
| 1.6 | 1.38 |
| 1.7 | 1.41 |
| 1.8 | 1.44 |
| 1.9 | 1.47 |
| 2.0 | 1.50 |
| 2.2 | 1.55 |
| 2.4 | 1.58 |
| 2.6 | 1.62 |
| 2.8 | 1.64 |
| 3.0 | 1.67 |
| 3.5 | 1.71 |
| 4.0 | 1.75 |

## TABLE 2: SCREED LOAD FACTOR "R"

| | | THE SCREED LOAD FACTOR R (FOR 8 WHEEL MACHINE) | | | | | | | | | | | | | | | | | |
|---|---|---|---|---|---|---|---|---|---|---|---|---|---|---|---|---|---|---|---|
| | | $S/D_2$ | | | | | | | | | | | | | | | | | |
| | | <= 1.0 | 1.1 | 1.2 | 1.3 | 1.4 | 1.5 | 1.6 | 1.7 | 1.8 | 1.9 | 2.0 | 2.2 | 2.4 | 2.6 | 2.8 | 3.0 | 3.5 | 4.0 |
| $S/D_1$ | <= 1.0 | 1.00 | 1.09 | 1.17 | 1.23 | 1.29 | 1.33 | 1.38 | 1.41 | 1.44 | 1.47 | 1.50 | 1.55 | 1.58 | 1.62 | 1.64 | 1.67 | 1.71 | 1.75 |
| | 1.1 | 1.09 | 1.18 | 1.26 | 1.32 | 1.38 | 1.42 | 1.47 | 1.50 | 1.54 | 1.56 | 1.59 | 1.64 | 1.67 | 1.71 | 1.73 | 1.76 | 1.81 | 1.84 |
| | 1.2 | 1.17 | 1.26 | 1.33 | 1.40 | 1.45 | 1.50 | 1.54 | 1.58 | 1.61 | 1.64 | 1.67 | 1.71 | 1.75 | 1.78 | 1.81 | 1.83 | 1.88 | 1.92 |
| | 1.3 | 1.23 | 1.32 | 1.40 | 1.46 | 1.52 | 1.56 | 1.61 | 1.64 | 1.68 | 1.70 | 1.73 | 1.78 | 1.81 | 1.85 | 1.87 | 1.90 | 1.95 | 1.98 |
| | 1.4 | 1.29 | 1.38 | 1.45 | 1.52 | 1.57 | 1.62 | 1.66 | 1.70 | 1.73 | 1.76 | 1.79 | 1.83 | 1.87 | 1.90 | 1.93 | 1.95 | 2.00 | 2.07 |
| | 1.5 | 1.33 | 1.42 | 1.50 | 1.56 | 1.62 | 1.67 | 1.71 | 1.75 | 1.78 | 1.81 | 1.83 | 1.88 | 1.92 | 1.95 | 1.98 | 2.00 | 2.10 | 2.17 |
| | 1.6 | 1.38 | 1.47 | 1.54 | 1.61 | 1.66 | 1.71 | 1.75 | 1.79 | 1.82 | 1.85 | 1.88 | 1.92 | 1.96 | 1.99 | 2.04 | 2.08 | 2.18 | 2.25 |
| | 1.7 | 1.41 | 1.50 | 1.58 | 1.64 | 1.70 | 1.75 | 1.79 | 1.82 | 1.86 | 1.89 | 1.91 | 1.96 | 2.00 | 2.05 | 2.11 | 2.16 | 2.25 | 2.32 |
| | 1.8 | 1.44 | 1.54 | 1.61 | 1.68 | 1.73 | 1.78 | 1.82 | 1.86 | 1.89 | 1.92 | 1.94 | 1.99 | 2.06 | 2.12 | 2.17 | 2.22 | 2.32 | 2.39 |
| | 1.9 | 1.47 | 1.56 | 1.64 | 1.70 | 1.76 | 1.81 | 1.85 | 1.89 | 1.92 | 1.95 | 1.97 | 2.04 | 2.11 | 2.18 | 2.23 | 2.28 | 2.38 | 2.45 |
| | 2.0 | 1.50 | 1.59 | 1.67 | 1.73 | 1.79 | 1.83 | 1.88 | 1.91 | 1.94 | 1.97 | 2.00 | 2.09 | 2.17 | 2.23 | 2.29 | 2.33 | 2.43 | 2.50 |
| | 2.2 | 1.55 | 1.64 | 1.71 | 1.78 | 1.83 | 1.88 | 1.92 | 1.96 | 1.99 | 2.04 | 2.09 | 2.18 | 2.26 | 2.32 | 2.38 | 2.42 | 2.52 | 2.59 |
| | 2.4 | 1.58 | 1.67 | 1.75 | 1.81 | 1.87 | 1.92 | 1.96 | 2.00 | 2.06 | 2.11 | 2.17 | 2.26 | 2.33 | 2.40 | 2.45 | 2.50 | 2.60 | 2.67 |
| | 2.6 | 1.62 | 1.71 | 1.78 | 1.85 | 1.90 | 1.95 | 1.99 | 2.05 | 2.12 | 2.18 | 2.23 | 2.32 | 2.40 | 2.46 | 2.52 | 2.56 | 2.66 | 2.73 |
| | 2.8 | 1.64 | 1.73 | 1.81 | 1.87 | 1.93 | 1.98 | 2.04 | 2.11 | 2.17 | 2.23 | 2.29 | 2.38 | 2.45 | 2.52 | 2.57 | 2.62 | 2.71 | 2.79 |
| | 3.0 | 1.67 | 1.76 | 1.83 | 1.90 | 1.95 | 2.00 | 2.08 | 2.16 | 2.22 | 2.28 | 2.33 | 2.42 | 2.50 | 2.56 | 2.62 | 2.67 | 2.76 | 2.83 |
| | 3.5 | 1.71 | 1.81 | 1.88 | 1.95 | 2.00 | 2.10 | 2.18 | 2.25 | 2.32 | 2.38 | 2.43 | 2.52 | 2.60 | 2.66 | 2.71 | 2.76 | 2.86 | 2.93 |
| | 4.0 | 1.75 | 1.84 | 1.92 | 1.98 | 2.07 | 2.17 | 2.25 | 2.32 | 2.39 | 2.45 | 2.50 | 2.59 | 2.67 | 2.73 | 2.79 | 2.83 | 2.93 | 3.00 |

## NOTES

DESIGN INCLUDES CONSTRUCTION LIVE LOAD 20 PSF ON THE AREA SUPPORTED AND 75 PLF AT THE OUTSIDE DECK OF OVERHANGS.

REQUIRED MINIMUM DIAGONAL LEG CAPACITY: 3600 LB WORKING LOAD

THE CONTRACTOR HAS THE OPTION OF SUBMITTING HIS OWN DESIGN FOR OVERHANG FALSEWORK IN ACCORDANCE WITH THE SPECIAL PROVISIONS.

SUBMITTALS UTILIZING THE INSTRUCTIONS AND PROCEDURES DESCRIBED ON SHEET 1 OF 3 SHALL BE IN ACCORDANCE WITH THE APPLICABLE SECTIONS OF THE SPECIFICATIONS AND SPECIAL PROVISIONS, EXCEPT THAT CALCULATIONS FOR OVERHANG FALSEWORK NEED NOT BE SEALED BY A REGISTERED ENGINEER.

FOR OVERHANG FALSEWORK BRACING DESIGN, SEE SHEET 3 OF 3.

## TABLE 3: ALLOWABLE SPAN LENGTH OF JOISTS AND JOIST SPACINGS

| AVG. SLAB THICKNESS Ⓣ (IN) | LUMBER JOIST SIZE (IN X IN) | JOIST SPACINGS | | | |
|---|---|---|---|---|---|
| | | 15 IN | 12 IN | 10 IN | 8 IN |
| | | THE ALLOWABLE SPAN LENGTH OF JOISTS | | | |
| 10 | 2 X 4 | ——— | 4' - 6" | 4' - 9" | 5' - 0" |
| | 4 X 4 | 5' - 9" | 6' - 3" | 6' - 6" | 6' - 7" |
| 12 | 2 X 4 | ——— | 4' - 3" | 4' - 9" | 5' - 0" |
| | 4 X 4 | 5' - 3" | 6' - 0" | 6' - 3" | 6' - 5" |
| 14 | 2 X 4 | ——— | 4' - 0" | 4' - 6" | 5' - 0" |
| | 4 X 4 | ——— | 5' - 6" | 6' - 0" | 6' - 4" |
| 16 | 2 X 4 | ——— | 4' - 0" | 4' - 3" | 4' - 9" |
| | 4 X 4 | ——— | 5' - 3" | 5' - 9" | 6' - 3" |

PROJECT NO. R-2413C
GUILFORD-ROCKINGHAM COUNTY
STATION: 24+37.000 -LREV-

SHEET 2 OF 3

STATE OF NORTH CAROLINA
DEPARTMENT OF TRANSPORTATION
RALEIGH

STANDARD OVERHANG FALSEWORK

AASHTO TYPES
III, IV, V, AND VI
(RIGHT LANE)

NORTH CAROLINA PROFESSIONAL SEAL 18788 ENGINEER CHANG-CHUAN VICTOR CHAO

Chang-Chuan V. Chao
8-5-2011

| ASSEMBLED BY: | DATE: |
|---|---|
| CHECKED BY: | DATE: |
| DRAWN BY: R. WRIGHT 06/04 | REV. |
| CHECKED BY: C. V. CHAO 06/04 | |

| REVISIONS | | | | | | SHEET NO. |
|---|---|---|---|---|---|---|
| NO. | BY: | DATE: | NO. | BY: | DATE: | S-110 |
| 1 | | | 3 | | | TOTAL SHEETS |
| 2 | | | 4 | | | 238 |

05-AUG-2011 10:44
C:\OLDFILESD\wdlr\victor\OverhangFalsework\TIEBAR&STRUT\R-2413C\R-2413CSTR3_TYPE_IV\R2413CSTR3verHangSheets.dgn
vchao

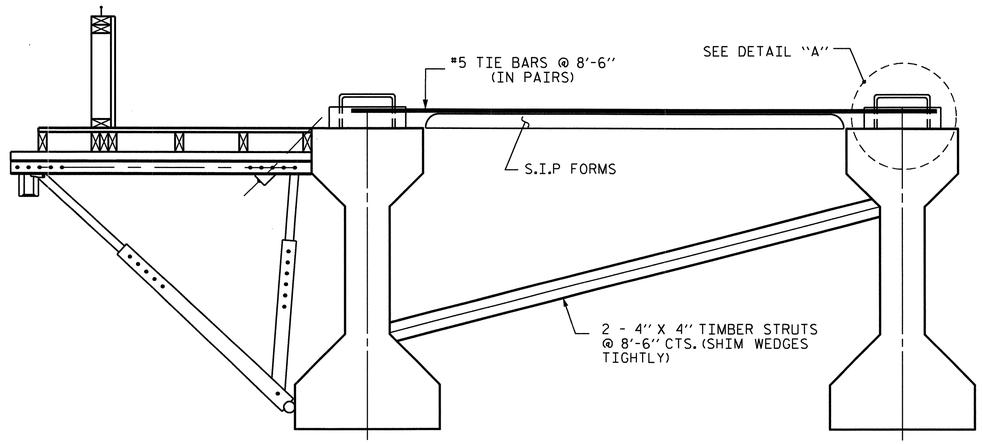


EXTERIOR GIRDER INTERIOR GIRDER

## DETAIL OF REQUIRED OVERHANG FALSEWORK BRACING SYSTEM

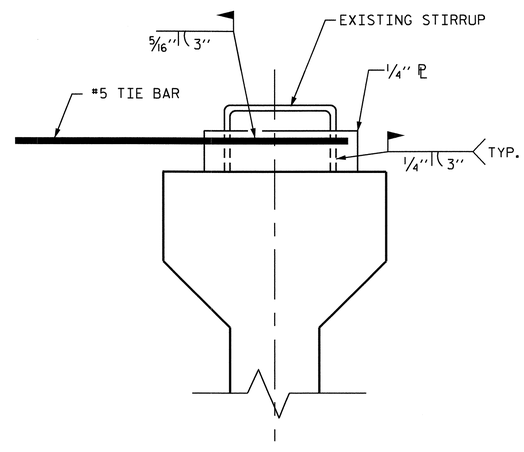


DETAIL "A"

## NOTES:

EACH #5 TIE BAR SHALL BE WELDED TO ONE STIRRUP LOOP AS SHOWN IN DETAIL "A". #5 TIE BARS SHALL BE WELDED TO TWO ADJACENT STIRRUPS OF THE EXTERIOR GIRDER AND THE ADJACENT INTERIOR GIRDER BETWEEN PERMANENT DIAPHRAGMS. WELD STEEL PLATES IN BETWEEN THE TIE BARS AND THE STIRRUP LOOP. WELDING TWO TIE BARS TO THE SAME STIRRUP LOOP SHALL NOT BE PERMITTED.

MAXIMUM SPACING BETWEEN THE BRACING (TIE BARS-TIMBER STRUT) IS 8'-6" CTS. #5 TIE BARS SHALL BE LOCATED OVER A TIMBER STRUT.

INSTALL TIE BARS AND TIMBER STRUTS PRIOR TO PLACEMENT OF CONCRETE OR SCREED WEIGHT ONTO THE OVERHANG FALSEWORK.

PROJECT NO. R-2413C

GUILFORD-ROCKINGHAM COUNTY

STATION: 24+37.000 -LREV-

SHEET 3 OF 3

STATE OF NORTH CAROLINA
DEPARTMENT OF TRANSPORTATION
RALEIGH

STANDARD OVERHANG FALSEWORK

AASHTO TYPES
III, IV, V, AND VI
(RIGHT LANE)

NORTH CAROLINA PROFESSIONAL SEAL 18788 ENGINEER CHENG-CHUAN VICTOR CHAO

Cheng-Chuan V. Chao
8-5-2011

| REVISIONS | | | | | | SHEET NO. |
|---|---|---|---|---|---|---|
| NO. | BY: | DATE: | NO. | BY: | DATE: | S-111 |
| 1 | | | 3 | | | TOTAL SHEETS |
| 2 | | | 4 | | | 238 |

DRAWN BY: R. WRIGHT 06/04 DATE : _____
CHECKED BY: C. V. CHAO 06/04 DATE : _____

05-AUG-2011 10:44
C:\OLDFILESD\wdlr\victor\OverhangFalsework\TIEBAR&STRUT\R-2413C\R-2413CSTR3_TYPE_IV\R2413CSTR3verHangSheets.dgn
vchao

STR. #3 OF3

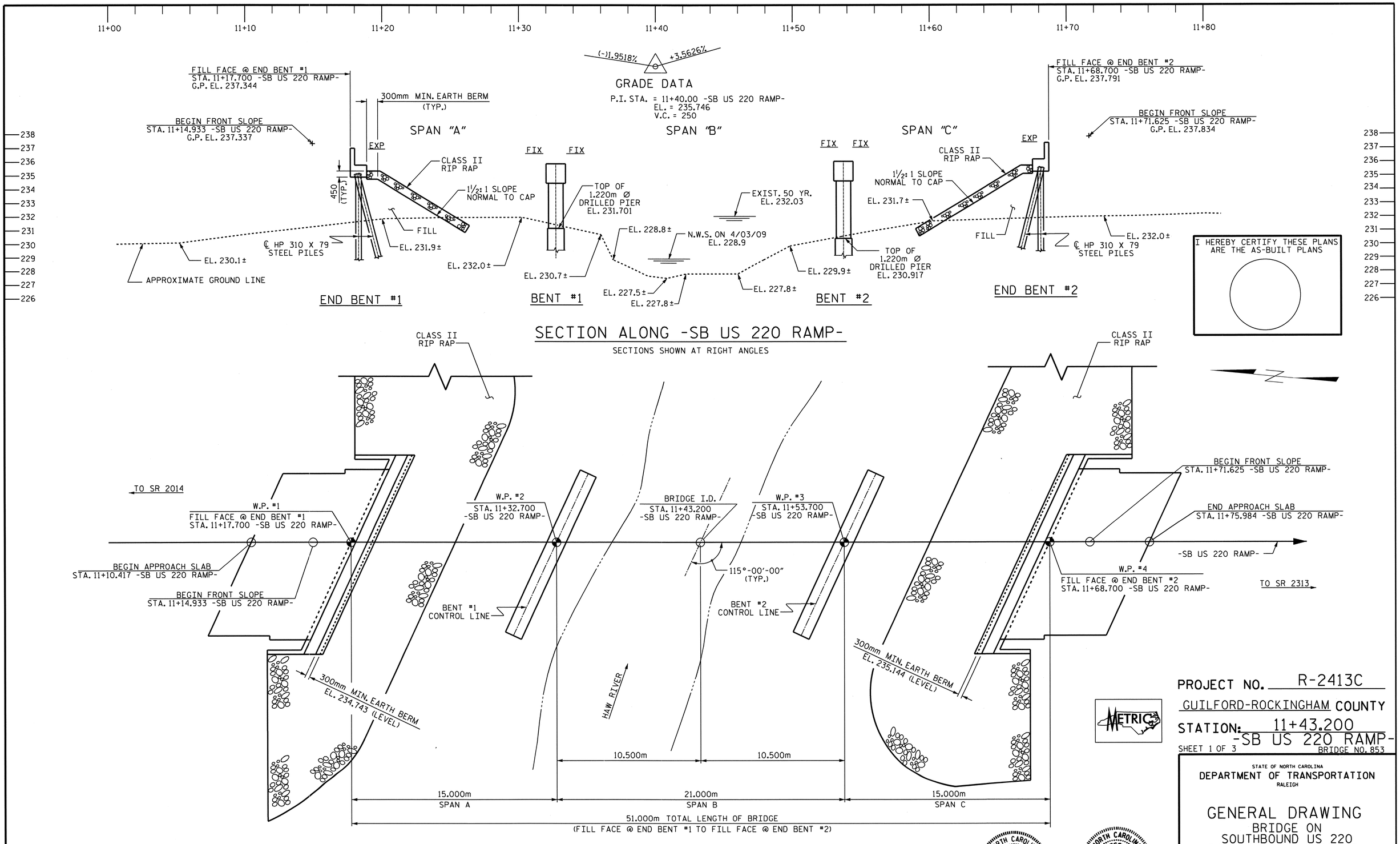


PROJECT NO. R-2413C

GUILFORD-ROCKINGHAM COUNTY

STATION: 11+43.200
-SB US 220 RAMP-

SHEET 1 OF 3

BRIDGE NO. 853

STATE OF NORTH CAROLINA
DEPARTMENT OF TRANSPORTATION
RALEIGH

# GENERAL DRAWING

BRIDGE ON
SOUTHBOUND US 220
RAMP OVER HAW RIVER
BETWEEN US 158 AND NC 150

| REVISIONS | | | | | | SHEET NO. |
|---|---|---|---|---|---|---|
| NO. | BY: | DATE: | NO. | BY: | DATE: | S-112 |
| 1 | | | 3 | | | TOTAL SHEETS |
| 2 | | | 4 | | | 238 |

DRAWN BY : M.GUDLAUGSSON DATE : 05-04-11
CHECKED BY : PEGGY PARISI DATE : 07-20-11

05-SEP-2011 13:09
Y:\Structures\Final Plans\Str.#4\R-2413C_SD_GD_04.dgn
mgudlaugsson

STR. #4

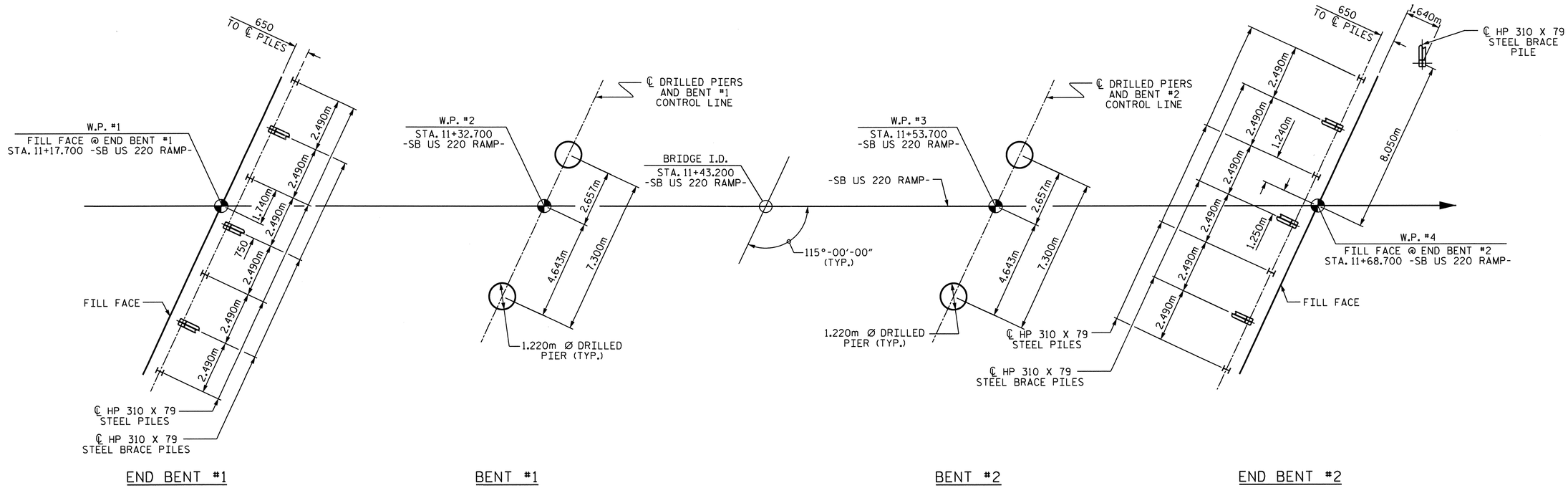


## FOUNDATION LAYOUT

DIMENSIONS LOCATING PILES ARE SHOWN TO THE PILE CENTERLINE.
END BENT BRACE PILES ARE BATTERED AT 250:1000

## FOUNDATION NOTES

FOR PILES, SEE SPECIAL PROVISIONS.

DRIVE PILES AT END BENT NO. 1 AND END BENT NO. 2 TO A REQUIRED BEARING CAPACITY OF 1340 kN PER PILE. THE REQUIRED BEARING CAPACITY IS EQUAL TO THE ALLOWABLE BEARING CAPACITY WITH A MINIMUM FACTOR OF SAFETY OF TWO.

THE ALLOWABLE BEARING CAPACITY FOR PILES AT END BENT NO. 1 AND END BENT NO. 2 IS 670 kN PER PILE.

DRILLED PIERS AT BENT NO. 1 AND BENT NO. 2 ARE DESIGNED FOR BOTH SKIN FRICTION AND END BEARING. CHECK FIELD CONDITIONS FOR THE REQUIRED END BEARING CAPACITY OF 7200 kPa.

DRILLED PIERS AT BENT NO. 1 ARE DESIGNED FOR AN APPLIED LOAD OF 3149 kN EACH AT THE TOP OF THE COLUMN.

DRILLED PIERS AT BENT NO. 2 ARE DESIGNED FOR AN APPLIED LOAD OF 3000 kN EACH AT THE TOP OF THE COLUMN.

PERMANENT STEEL CASINGS MAY BE REQUIRED FOR DRILLED PIERS AT BENT NO. 1. IF REQUIRED, DO NOT EXTEND PERMANENT CASINGS BELOW ELEVATION 219.7m (LEFT) AND 217.7m (RIGHT), RESPECTIVELY WITHOUT PRIOR APPROVAL FROM THE ENGINEER. THE ENGINEER WILL DETERMINE THE NEED FOR PERMANENT CASINGS.

THE SCOUR CRITICAL ELEVATION FOR BENT NO. 1 IS ELEVATION 223.3m. SCOUR CRITICAL ELEVATIONS ARE USED TO MONITOR POSSIBLE SCOUR PROBLEMS DURING THE LIFE OF THE STRUCTURE.

THE SCOUR CRITICAL ELEVATION FOR BENT NO. 2 IS ELEVATION 223.5m. SCOUR CRITICAL ELEVATIONS ARE USED TO MONITOR POSSIBLE SCOUR PROBLEMS DURING THE LIFE OF THE STRUCTURE.

FOR DRILLED PIERS, SEE DRILLED PIERS SPECIAL PROVISION.

IF REQUIRED, INSTALL PERMANENT STEEL CASINGS AT BENT NO. 1 BY VIBRATING, SCREWING OR DRIVING PERMANENT CASING BEFORE EXCAVATING OR DISTURBING ANY MATERIAL BELOW ELEVATION 223.8m.

INSTALL DRILLED PIERS AT BENT NO. 1 THAT EXTEND TO AN ELEVATION NO HIGHER THAN 217.5m (LEFT) AND 215.5m (RIGHT), SATISFY THE REQUIRED END BEARING CAPACITY AND HAVE A MINIMUM PENETRATION OF 1.5m INTO ROCK AS DEFINED BY THE DRILLED PIERS SPECIAL PROVISION.

INSTALL DRILLED PIERS AT BENT NO. 2 THAT EXTEND TO AN ELEVATION NO HIGHER THAN 217.5m, SATISFY THE REQUIRED END BEARING CAPACITY AND HAVE A MINIMUM PENETRATION OF 1.0m INTO ROCK AS DEFINED BY THE DRILLED PIERS SPECIAL PROVISION.

SID INSPECTIONS MAY BE REQUIRED FOR DRILLED PIERS. THE ENGINEER WILL DETERMINE THE NEED FOR SID INSPECTIONS. FOR SID INSPECTIONS, SEE DRILLED PIERS SPECIAL PROVISION.

CSL TUBES ARE REQUIRED AND CSL TESTING MAY BE REQUIRED FOR DRILLED PIERS. THE ENGINEER WILL DETERMINE THE NEED FOR CSL TESTING. FOR CSL TESTING, SEE DRILLED PIERS SPECIAL PROVISIONS.

OBSERVE A ONE MONTH WAITING PERIOD AFTER CONSTRUCTING THE EMBANKMENT TO THE BOTTOM OF CAP ELEVATION BEFORE BEGINNING END BENT CONSTRUCTION AT END BENT NO. 1.

NORTH CAROLINA PROFESSIONAL SEAL 022516 ENGINEER EMILY E. MURRAY
10/28/11

PROJECT NO. R-2413C
GUILFORD-ROCKINGHAM COUNTY
STATION: 11+43.200 -SB US 220 RAMP-
SHEET 2 OF 3

STATE OF NORTH CAROLINA
DEPARTMENT OF TRANSPORTATION
RALEIGH

GENERAL DRAWING
BRIDGE ON
SOUTHBOUND US 220
RAMP OVER HAW RIVER
BETWEEN US 158 AND NC 150

| REVISIONS | | | | | | SHEET NO. |
|---|---|---|---|---|---|---|
| NO. | BY: | DATE: | NO. | BY: | DATE: | S-113 |
| 1 | | | 3 | | | TOTAL SHEETS |
| 2 | | | 4 | | | 238 |

DRAWN BY : M.GUDLAUGSSON DATE : 05-04-11
CHECKED BY : PEGGY PARISI DATE : 07-20-11

05-SEP-2011 13:09
Y:\Structures\Final Plans\Str.#4\R-2413C_SD_GD_04.dgn
mgudlaugsson

STR. #4

B.M. #6: DISK STAMPED E-170 1965 IN NE WINGWALL OF BRIDGE
5.4m RT. OF -L- STA 25+94.14 EL 233.273

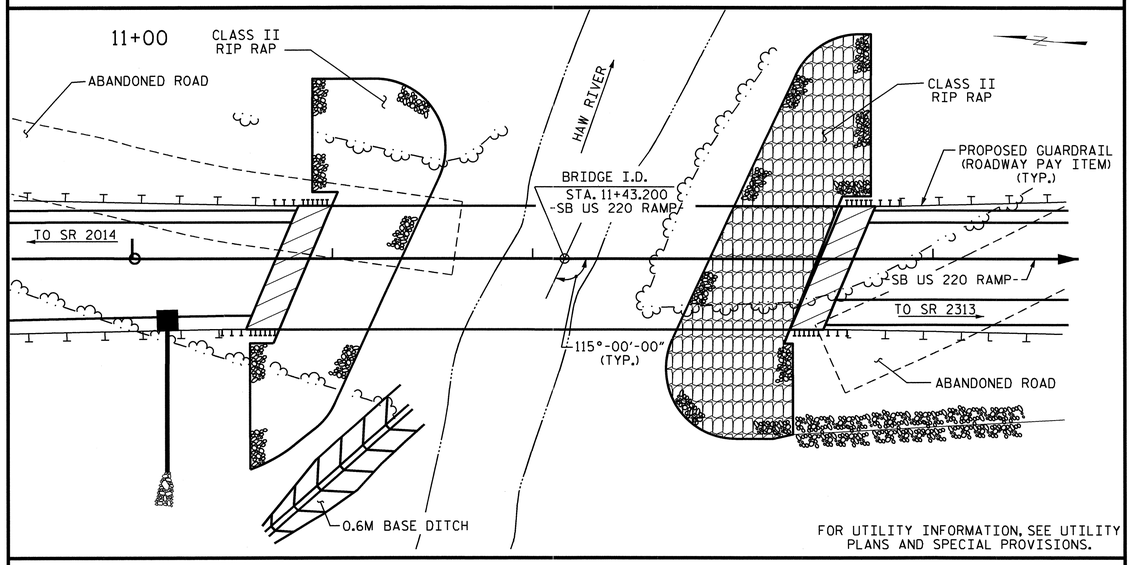


LOCATION SKETCH

## NOTES

ALL DIMENSIONS ARE IN MILLIMETERS UNLESS OTHERWISE NOTED.

ALL ELEVATIONS ARE IN METERS.

ASSUMED LIVE LOAD = MS 18 OR ALTERNATE LOADING, EXCEPT THAT THE GIRDERS HAVE BEEN DESIGNED FOR MS 22.5.

FOR OTHER DESIGN DATA AND GENERAL NOTES, SEE SHEET SNSM.

THIS BRIDGE HAS BEEN DESIGNED BY THE STRENGTH DESIGN METHOD AS SPECIFIED IN AASHTO STANDARD SPECIFICATIONS.

THE LOCATION OF THE CONSTRUCTION JOINT IN THE DRILLED PIERS IS BASED ON AN APPROXIMATE GROUND LINE ELEVATION. IF THE CONSTRUCTION JOINT IS ABOVE THE ACTUAL GROUND ELEVATION, THE CONTRACTOR SHALL PLACE THE CONSTRUCTION JOINT 300mm BELOW THE GROUND LINE.

NEEDLE BEAMS WILL NOT BE ALLOWED UNLESS OTHERWISE CALLED FOR ON THE PLANS OR APPROVED BY THE ENGINEER.

FOR SUBMITTAL OF WORKING DRAWINGS, SEE SPECIAL PROVISIONS.

FOR FALSEWORK AND FORMWORK, SEE SPECIAL PROVISIONS.

PRESTRESSED CONCRETE DECK PANELS MAY BE USED IN LIEU OF METAL STAY-IN-PLACE FORMS IN ACCORDANCE WITH ARTICLE 420-3 OF THE STANDARD SPECIFICATIONS.

THIS STRUCTURE HAS BEEN DESIGNED IN ACCORDANCE WITH HEC 18, "EVALUATING SCOUR AT BRIDGES", MAY, 2001.

REMOVABLE FORMS MAY BE USED IN LIEU OF METAL STAY-IN-PLACE FORMS IN ACCORDANCE WITH ARTICLE 420-3 OF THE STANDARD SPECIFICATIONS.

THIS BRIDGE HAS BEEN DESIGNED IN ACCORDANCE WITH THE REQUIREMENTS OF THE STANDARD SPECIFICATIONS FOR SEISMIC DESIGN OF HIGHWAY BRIDGES FOR SEISMIC PERFORMANCE CATEGORY A.

THE CLASS AA CONCRETE IN THE BRIDGE DECK SHALL CONTAIN FLY ASH OR GROUND GRANULATED BLAST FURNACE SLAG AT THE SUBSTITUTION RATE SPECIFIED IN ARTICLE 1024-1 AND IN ACCORDANCE WITH ARTICLES 1024-5 AND 1024-6 OF THE STANDARD SPECIFICATIONS. NO PAYMENT WILL BE MADE FOR THIS SUBSTITUTION AS IT IS CONSIDERED INCIDENTAL TO THE COST OF THE REINFORCED CONCRETE DECK SLAB.

FOR PRESTRESSED CONCRETE MEMBERS, SEE SPECIAL PROVISIONS.

FOR CRANE SAFETY, SEE SPECIAL PROVISIONS.

FOR GROUT FOR STRUCTURES, SEE SPECIAL PROVISIONS.

FOR CURING CONCRETE, SEE SPECIAL PROVISIONS.

FOR PLACING LOAD ON STRUCTURE MEMBERS, SEE SPECIAL PROVISIONS.

FOR EROSION CONTROL MEASURES SEE EROSION CONTROL PLANS.

FOR METRIC STRUCTURAL STEEL, SEE SPECIAL PROVISIONS.

## HYDRAULIC DATA

| | | |
|---|---|---|
| DESIGN DISCHARGE | = | 107.6 $M^3/S$ |
| FREQUENCY OF DESIGN FLOOD | = | 50 YR. |
| DESIGN HIGH WATER ELEVATION | = | 232.05 m |
| DRAINAGE AREA | = | 53.4 $KM^2$ |
| BASE DISCHARGE (Q100) | = | 141.6 $M^3/S$ |
| BASE HIGH WATER ELEVATION | = | 232.54 m |

## OVERTOPPING FLOOD DATA

| | | |
|---|---|---|
| OVERTOPPING DISCHARGE | = | >266.2 $M^3/S$ |
| FREQUENCY OF OVERTOPPING FLOOD | = | 500+ YR. |
| OVERTOPPING FLOOD ELEVATION | = | 237.42 m |

## TOTAL BILL OF MATERIAL

| | 1220mm Ø DRILLED PIERS IN SOIL | 1220mm Ø DRILLED PIERS NOT IN SOIL | PERMANENT STEEL CASING FOR 1220mm Ø DRILLED PIER | SID INSPECTION | CSL TESTING | REINFORCED CONCRETE DECK SLAB | GROOVING BRIDGE FLOORS | CLASS A CONCRETE | BRIDGE APPROACH SLABS | REINFORCING STEEL | SPIRAL COLUMN REINFORCING STEEL | 1143mm PRESTRESSED CONCRETE GIRDERS | | HP 310 X 79 STEEL PILES | | CONCRETE BARRIER RAIL | RIP RAP CLASS II (600mm THICK) | FILTER FABRIC FOR DRAINAGE | ELASTOMERIC BEARINGS | EXPANSION JOINT SEALS |
|---|---|---|---|---|---|---|---|---|---|---|---|---|---|---|---|---|---|---|---|---|
| | METERS | METERS | METERS | EACH | EACH | SQ. METERS | SQ. METERS | CU. METERS | LUMP SUM | Kg | Kg | No. | METERS | No. | METERS | METERS | METRIC TONS | SQ. METERS | LUMP SUM | LUMP SUM |
| SUPERSTRUCTURE | | | | | | 623.1 | 678.3 | | LUMP SUM | | | 15 | 246.700 | | | 113.006 | | | LUMP SUM | LUMP SUM |
| END BENT #1 | | | | | | | | 26.0 | | 2180 | | | | 7 | 99.0 | | 215 | 219 | | |
| BENT #1 | 26.0 | 4.6 | 26.0 | | 1 | | | 28.3 | | 6983 | 1385 | | | | | | | | | |
| BENT #2 | 19.6 | 7.4 | | | | | | 30.1 | | 6605 | 1327 | | | | | | | | | |
| END BENT #2 | | | | | | | | 26.8 | | 2214 | | | | 8 | 64.0 | | 260 | 265 | | |
| TOTAL | 45.6 | 12.0 | 26.0 | 1 | 1 | 623.1 | 678.3 | 111.2 | LUMP SUM | 17982 | 2712 | 15 | 246.700 | 15 | 163.0 | 113.006 | 475 | 484 | LUMP SUM | LUMP SUM |

## TOTAL BILL OF MATERIAL - ENGLISH

| | LIN. FT. | LIN. FT. | LIN. FT. | EACH | EACH | SQ. FT. | SQ. FT. | CU. YDS. | LUMP SUM | LBS. | LBS. | No. | LIN. FT. | No. | LIN. FT. | LIN. FT. | TONS | SQ. YDS. | LUMP SUM | LUMP SUM |
|---|---|---|---|---|---|---|---|---|---|---|---|---|---|---|---|---|---|---|---|---|
| | 149.6 | 39.4 | 85.3 | 1 | 1 | 6707.0 | 7301.2 | 145.4 | LUMP SUM | 39,643 | 5979 | 15 | 809.38 | 15 | 535 | 370.75 | 524 | 579 | LUMP SUM | LUMP SUM |

PROJECT NO. R-2413C
GUILFORD-ROCKINGHAM COUNTY
STATION: 11+43.200
-SB US 220 RAMP-
SHEET 3 OF 3

NORTH CAROLINA PROFESSIONAL SEAL 022516 ENGINEER EMILY E. MURRAY
10/28/11

STATE OF NORTH CAROLINA
DEPARTMENT OF TRANSPORTATION
RALEIGH

GENERAL DRAWING
BRIDGE ON SOUTHBOUND US 220 RAMP OVER HAW RIVER BETWEEN US 158 AND NC 150

| REVISIONS | | | | | | SHEET NO. |
|---|---|---|---|---|---|---|
| NO. | BY: | DATE: | NO. | BY: | DATE: | S-114 |
| 1 | | | 3 | | | TOTAL SHEETS |
| 2 | | | 4 | | | 238 |

DRAWN BY : M.GUDLAUGSSON DATE : 05-04-11
CHECKED BY : PEGGY PARISI DATE : 07-20-11

19-OCT-2011 14:26
R:\TIPProjects-R\R2413c\Structures\Final Plans\Str.#4\R-2413C_SD_GD_04.dgn
taverette

STR. #4

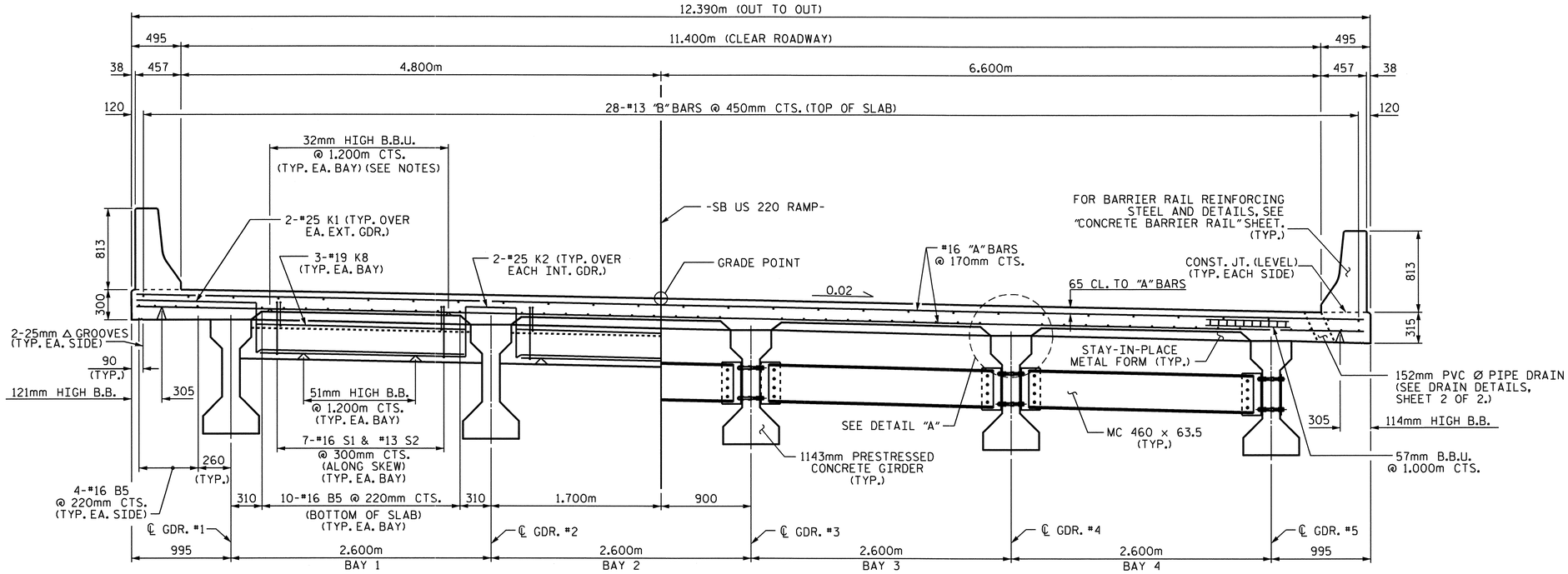


## TYPICAL HALF SECTION

SHOWING END BENT DIAPHRAGMS

## TYPICAL HALF SECTION

SHOWING INTERMEDIATE DIAPHRAGMS

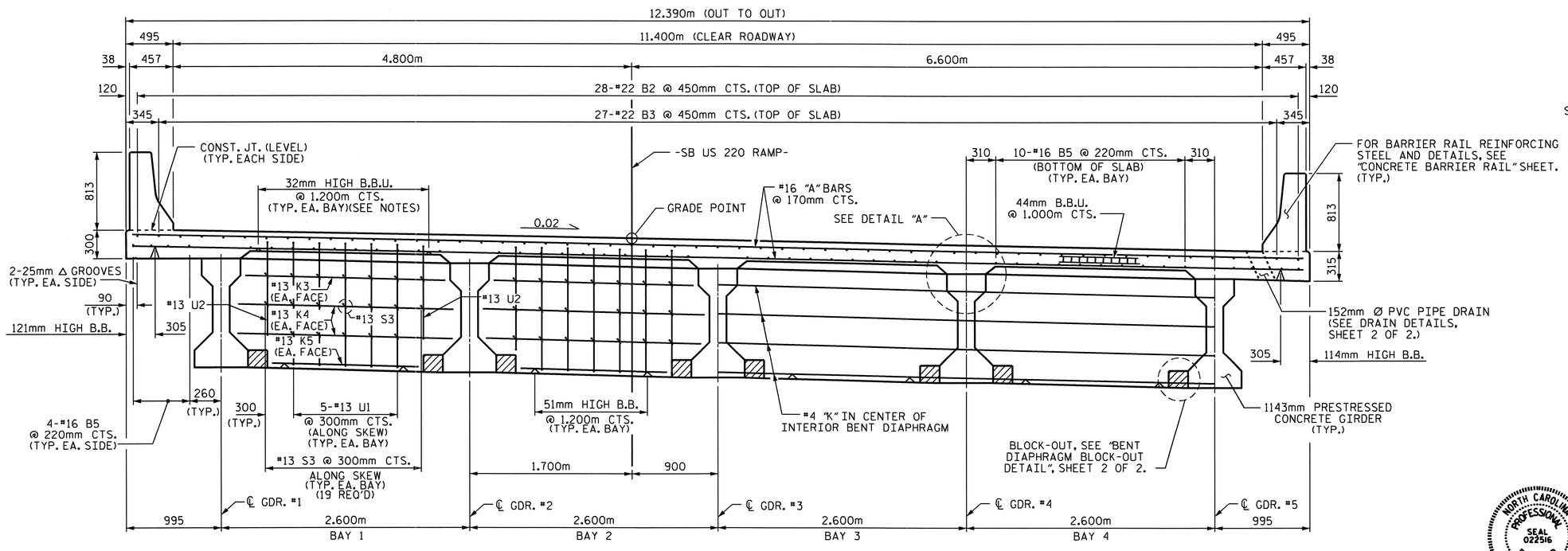


## TYPICAL SECTION

SHOWING BENT DIAPHRAGMS
@ BENTS #1 & #2

# NOTES

PROVIDE 32mm HIGH BEAM BOLSTERS UPPER AT 1.2m CTS. ATOP THE METAL STAY-IN-PLACE FORMS TO SUPPORT THE BOTTOM MAT OF 'A' BARS. WHEN USING REMOVABLE FORMS, PROVIDE CONTINUOUS HIGH CHAIRS FOR METAL DECK (C.H.C.M.) @ 1.2m CTS. WITH A HEIGHT TO SUPPORT THE BOTTOM MAT OF 'A' BARS A CLEAR DISTANCE OF 65mm ABOVE THE TOP OF THE REMOVABLE FORM.

LONGITUDINAL STEEL MAY BE SHIFTED SLIGHTLY, AS NECESSARY, TO AVOID INTERFERENCE WITH STIRRUPS IN PRESTRESSED CONCRETE GIRDERS.

BARRIER RAIL IN A CONTINOUS UNIT SHALL NOT BE CAST UNTIL ALL SLAB CONCRETE IN THE UNIT HAS BEEN CAST AND HAS REACHED A MINIMUM COMPRESSIVE STRENGTH OF 20.7 MPa.

PVC DECK DRAINS SHALL BE PAINTED WITH TWO COATS OF BROWN PRIMER MEETING THE REQUIREMENTS OF ARTICLE 1080-12 OF THE STANDARD SPECIFICATIONS. EACH COAT SHALL BE 0.050mm THICK. DECK DRAINS SHALL BE ROUGHENED PRIOR TO PAINTING. NO SEPARATE PAYMENT SHALL BE MADE FOR PAINTING PVC DECK DRAINS AS THIS IS CONSIDERED INCIDENTAL TO THE PAY ITEM FOR REINFORCED CONCRETE DECK SLAB.

#16 G1 BAR MAY BE SHIFTED SLIGHTLY, AS NECESSARY, TO CLEAR REINFORCING STEEL AND STIRRUPS.

PREVIOUSLY CAST CONCRETE IN A CONTINUOUS UNIT SHALL HAVE ATTAINED A MINIMUM COMPRESSIVE STRENGTH OF 20.7 MPa BEFORE ADDITIONAL CONCRETE IS CAST IN THE UNIT.

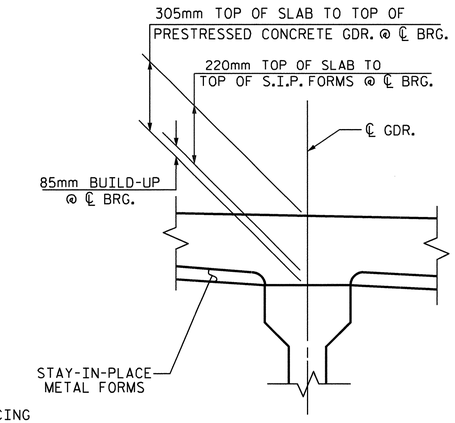


## DETAIL "A"

PROJECT NO. R-2413C

GUILFORD-ROCKINGHAM COUNTY

STATION: 11+43.200 -SB US 220 RAMP-

SHEET 1 OF 2

STATE OF NORTH CAROLINA
DEPARTMENT OF TRANSPORTATION
RALEIGH

SUPERSTRUCTURE

TYPICAL SECTION

| REVISIONS | | | | | | | | SHEET NO. |
|---|---|---|---|---|---|---|---|---|
| NO. | BY: | DATE: | NO. | BY: | DATE: | | | S-115 |
| 1 | | | 3 | | | | | TOTAL SHEETS |
| 2 | | | 4 | | | | | 238 |

NORTH CAROLINA PROFESSIONAL SEAL 022516 ENGINEER EMILY E. MURRAY
10/28/11

DRAWN BY : M.GUDLAUGSSON DATE : 7-30-10
CHECKED BY : T.L. AVERETTE DATE : 9-20-10

05-SEP-2011 13:08
Y:\Structures\Final Plans\Str.#4\R-2413C_SD_TS_04.dgn
mgudlaugsson

STR. #4

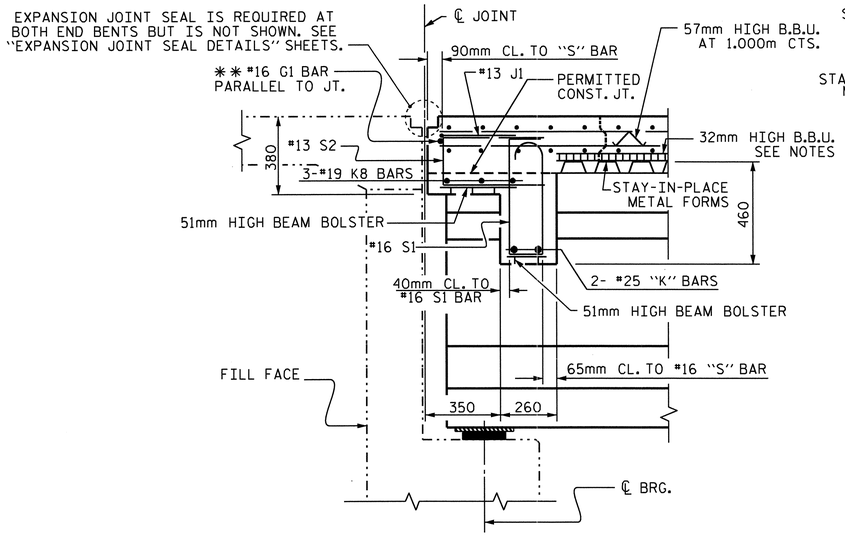


## SECTION A-A

✱✱ #16 "G" BAR MAY BE SHIFTED SLIGHTLY, AS NECESSARY, TO CLEAR REINFORCING STEEL AND STIRRUPS.

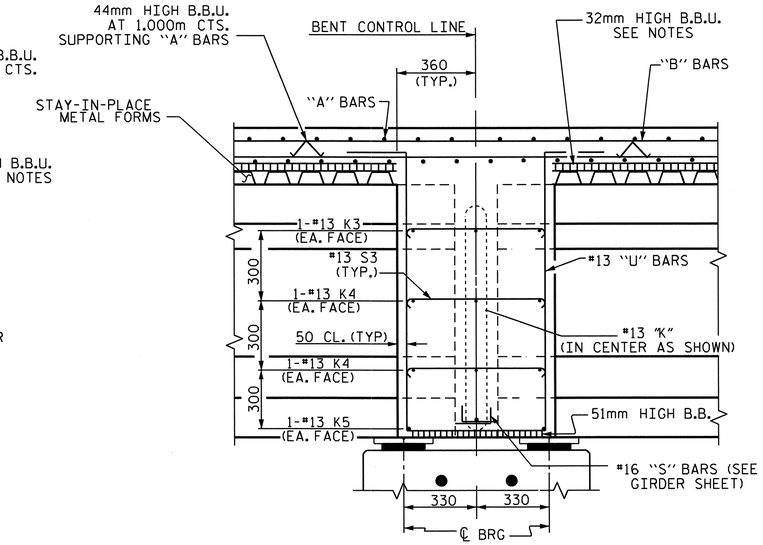


## SECTION B-B

● MEASURED ALONG ℄ GDR.

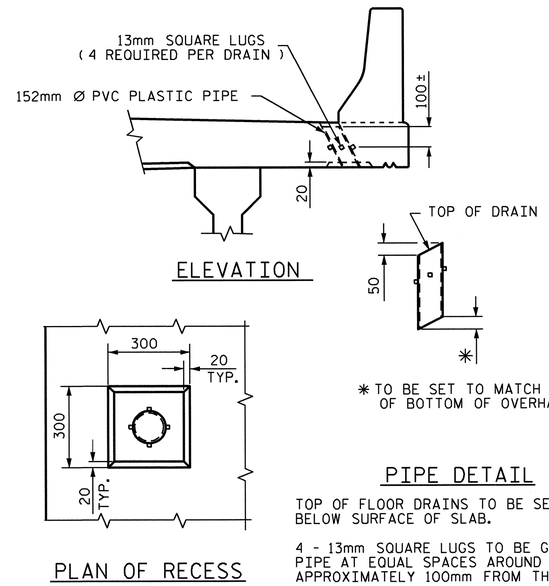


ELEVATION

PLAN OF RECESS

## PIPE DETAIL

TOP OF FLOOR DRAINS TO BE SET 10mm BELOW SURFACE OF SLAB.

4 - 13mm SQUARE LUGS TO BE GLUED TO THE PVC PLASTIC PIPE AT EQUAL SPACES AROUND THE PIPE DRAIN APPROXIMATELY 100mm FROM THE TOP OF THE PIPE.

THE 152mm Ø PVC PIPE AND FITTINGS SHALL BE SCHEDULE 40 AND CONFORM TO ASTM D1785.

## DRAIN DETAILS

(14 DRAINS REQUIRED)

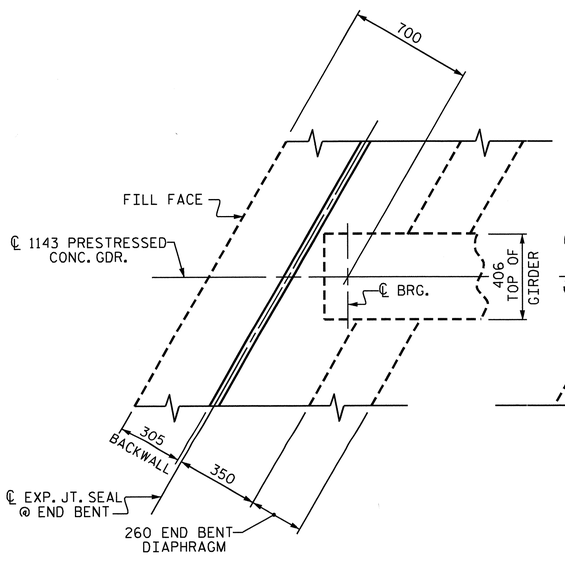


END BENT DIAPHRAGM

(END BENT #1 SHOWN, END BENT #2 SIMILAR)

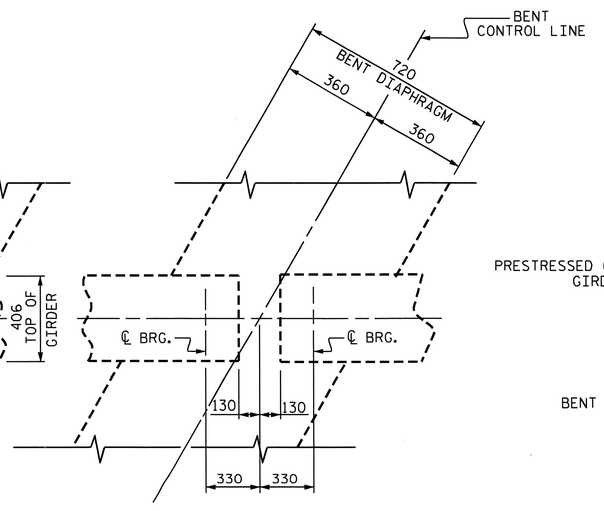


BENT DIAPHRAGM

PLAN

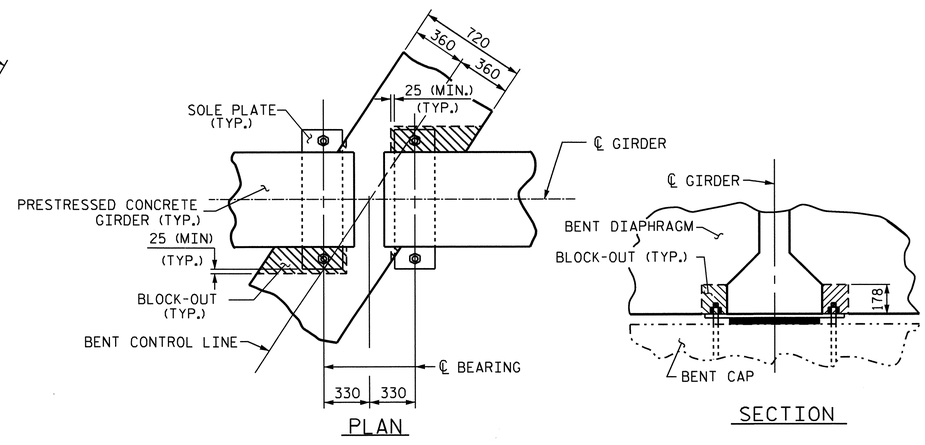


PLAN

SECTION

## BENT DIAPHRAGM BLOCK-OUT DETAIL

PROJECT NO. R-2413C

GUILFORD-ROCKINGHAM COUNTY

STATION: 11+43.200 -SB US 220 RAMP-

SHEET 2 OF 2

STATE OF NORTH CAROLINA
DEPARTMENT OF TRANSPORTATION
RALEIGH

SUPERSTRUCTURE
TYPICAL SECTION DETAILS

NORTH CAROLINA PROFESSIONAL SEAL 022516 ENGINEER EMILY E. MURRAY

10/28/11

| REVISIONS | | | | | | SHEET NO. |
|---|---|---|---|---|---|---|
| NO. | BY: | DATE: | NO. | BY: | DATE: | S-116 |
| 1 | | | 3 | | | TOTAL SHEETS |
| 2 | | | 4 | | | 238 |

STR. #4

DRAWN BY : M.GUDLAUGSSON DATE : 8-15-10
CHECKED BY : T.L. AVERETTE DATE : 9-20-10

51.000m (TOTAL LENGTH OF BRIDGE) (W.P. #1 TO W.P. #4)

15.000m (W.P. #1 TO W.P. #2) SPAN A

21.000m (W.P. #2 TO W.P. #3) SPAN B

#16 A101 THRU #16 A116 @ 170mm CTS. (TOP OF SLAB) (2 BARS PER MARK)
#16 A201 THRU #16 A216 @ 170mm CTS. (BOTTOM OF SLAB) (2 BARS PER MARK)

170

2.980m TO FIRST #16 A1 AND #16 A2

261-#16 A1 @ 170mm CTS. (TOP OF SLAB)
261-#16 A2 @ 170mm CTS. (BOTTOM OF SLAB)

℄ BETWEEN BEARINGS

6.000m (TYP. EACH #22 B2)

2.300m (TYP. EACH #22 B3)

3.200m (TYP. EACH #22 B3)

7.800m (TYP. EACH #22 B2)

610 SPLICE (TYP.)

345 (TYP.)

120 (TYP.)

38 495 457 4.800m 6.600m 12.390m (OUT TO OUT) 11.400m (CLEAR ROADWAY)

5.992m

7-#16 S1 & #13 S2 @ 300mm CTS. (TYP. EA. BAY)

42-#13 J1 SEE "EXP. JT. SEAL DETAILS" SHEET

28-#13 B1 @ 450mm CTS. (TOP OF SLAB)(2 BAR RUN)

℄ GDR. A1

℄ GDR. A2

℄ GDR. A3

℄ GDR. A4

℄ GDR. A5

℄ GDR. B1

℄ GDR. B2

℄ GDR. B3

℄ GDR. B4

℄ GDR. B5

GUTTERLINE

720 DIAPHRAGM

4-#13 K6 (TYP. EA. INT. GDR.)

4-#13 K7 (TYP. EA. EXT. GDR.)

TRANSVERSE CONST. JOINT (SEE TRANSVERSE CONST. JT. DETAIL)

5.843m

27-#22 B3 @ 450mm CTS. (TOP OF SLAB)

28-#22 B2 @ 450mm CTS. (TOP OF SLAB)

150

260 END BENT DIAPHRAGM

13.671m

5-#13 U1 @ 300mm CTS. (TYP. EA. BAY)

#13 U2

WP #2

-SB US 220 RAMP-

WP #1

FILL FACE @ END BENT #1

#13 S3 @ 300mm CTS. (TYP. EA. BAY) (19 REQ'D)

115°-00'-00" (TYP.)

7.679m

2-#25 K2 (TYP. OVER EA. INT. GDR.)

#16 G1 (PARALLEL TO JT.)

4-#13 "K" BARS (TYP. EA. BAY)

310 (TYP.)

#16 A101 OR #16 A201

#16 A1 OR #16 A2

INTERMEDIATE STEEL DIAPHRAGM (SEE "INTERMEDIATE STEEL DIAPHRAGM FOR TYPE III PRESTRESSED CONCRETE GIRDERS" FOR DETAILS) (TYP.)

7.828m

10-#16 B5 @ 220mm CTS. (3 BAR RUN) (BOTTOM OF SLAB) (TYP. EA. BAY)

260 (TYP.)

3-#19 K8 (TYP. EA. BAY)

A A B B

℄ EXP. JT. SEAL @ END BENT #1

2-#25 K1 (TYP. OVER EA. EXT. GDR.)

BENT #1 CONTROL LINE

4-#16 B5 @ 220mm CTS. (BOTT. OF SLAB) (3 BAR RUN) (TYP. EA. SIDE)

2.700m

7-152mm Ø PVC DECK DRAINS @ 1.820m CTS.

## PLAN OF SPAN A

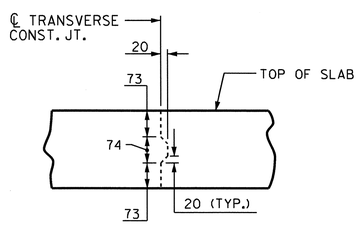


## TRANSVERSE CONSTRUCTION JOINT DETAIL

NOTE: REINFORCING STEEL IN SLAB NOT SHOWN. LONGITUDINAL REINFORCING STEEL SHALL BE CONTINUOUS THRU JOINT

PROJECT NO. R-2413C

GUILFORD-ROCKINGHAM COUNTY

STATION: 11+43.200 -SB US 220 RAMP-

SHEET 1 OF 3

STATE OF NORTH CAROLINA
DEPARTMENT OF TRANSPORTATION
RALEIGH

SUPERSTRUCTURE

PLAN OF SPAN A

NORTH CAROLINA PROFESSIONAL SEAL 022516 ENGINEER EMILY E. MURRAY

10/28/11

| REVISIONS | | | | | | |
|---|---|---|---|---|---|---|
| NO. | BY: | DATE: | NO. | BY: | DATE: | |
| 1 | | | 3 | | | |
| 2 | | | 4 | | | |

SHEET NO. S-117

TOTAL SHEETS 238

STR. #4

DRAWN BY : M.GUDLAUGSSON DATE : 8-15-10
CHECKED BY : T.L. AVERETTE DATE : 9-20-10

05-SEP-2011 13:06
Y:\Structures\Final Plans\Str.#4\R-2413C_SD_S#_04.dgn
mgudlaugsson

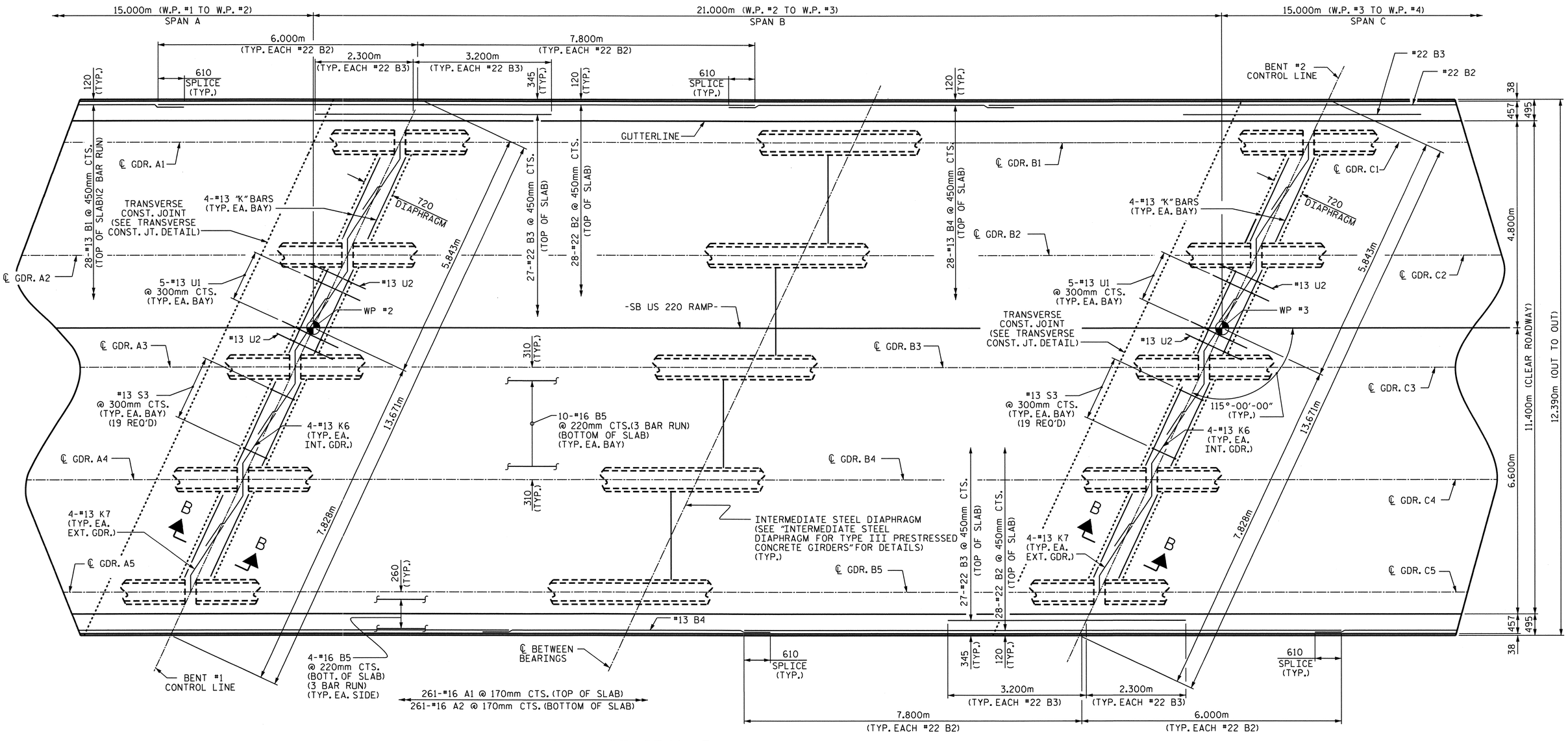


## PLAN OF SPAN B

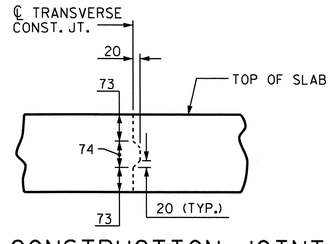


## TRANSVERSE CONSTRUCTION JOINT DETAIL

NOTE: REINFORCING STEEL IN SLAB NOT SHOWN.
LONGITUDINAL REINFORCING STEEL SHALL BE
CONTINUOUS THRU JOINT

PROJECT NO. R-2413C
GUILFORD-ROCKINGHAM COUNTY
STATION: 11+43.200
-SB US 220 RAMP-
SHEET 2 OF 3

STATE OF NORTH CAROLINA
DEPARTMENT OF TRANSPORTATION
RALEIGH

SUPERSTRUCTURE

PLAN OF SPAN B

NORTH CAROLINA PROFESSIONAL SEAL 022516 ENGINEER EMILY E. MURRAY
10/28/11

| REVISIONS | | | | | | SHEET NO. |
|---|---|---|---|---|---|---|
| NO. | BY: | DATE: | NO. | BY: | DATE: | S-118 |
| 1 | | | 3 | | | TOTAL SHEETS |
| 2 | | | 4 | | | 238 |

STR. #4

DRAWN BY : M.GUDLAUGSSON DATE : 8-15-10
CHECKED BY : T.L. AVERETTE DATE : 9-20-10

05-SEP-2011 13:06
Y:\Structures\Final Plans\Str.#4\R-2413C_SD_S#_04.dgn
mgudlaugsson

51.000m (TOTAL LENGTH OF BRIDGE) (W.P. #1 TO W.P. #4)

21.000m (W.P. #2 TO W.P. #3)
SPAN B

15.000m (W.P. #3 TO W.P. #4)
SPAN C

261-#16 A1 @ 170mm CTS. (TOP OF SLAB)
261-#16 A2 @ 170mm CTS. (BOTTOM OF SLAB)

3.820m
TO FIRST #16 A1 AND #16 A2

7.800m
(TYP. EACH #22 B2)

6.000m
(TYP. EACH #22 B2)

3.200m
(TYP. EACH #22 B3)

2.300m
(TYP. EACH #22 B3)

170

#16 A101 THRU #16 A116 @ 170mm CTS. (TOP OF SLAB) (2 BARS PER MARK)
#16 A201 THRU #16 A216 @ 170mm CTS. (BOTTOM OF SLAB) (2 BARS PER MARK)

120 (TYP.)

610 SPLICE (TYP.)

345 (TYP.)

℄ BETWEEN BEARINGS

38
457
495

GUTTERLINE

℄ GDR. B1

28-#13 B4 @ 450mm CTS. (TOP OF SLAB)

4-#13 "K" BARS (TYP. EA. BAY)

720 DIAPHRAGM

27-#22 B3 @ 450mm CTS. (TOP OF SLAB)

28-#22 B2 @ 450mm CTS. (TOP OF SLAB)

#16 A101 OR #16 A201

#16 A1 OR #16 A2

28-#13 B1 @ 450mm CTS. (TOP OF SLAB)(2 BAR RUN)

℄ GDR. C1

℄ GDR. B2

℄ GDR. C2

42-#13 J1
SEE "EXP. JT. SEAL DETAILS" SHEET

4.800m

5.843m

5.693m

5-#13 U1 @ 300mm CTS. (TYP. EA. BAY)

#13 U2

WP #3

-SB US 220 RAMP-

2-#25 K2 (TYP. OVER EA. INT. GDR.)

7-#16 S1 & #13 S2 @ 300mm CTS. (TYP. EA. BAY)

WP #4

℄ GDR. B3

℄ GDR. C3

150

260 END BENT DIAPHRAGM

FILL FACE @ END BENT #2

#13 S3 @ 300mm CTS. (TYP. EA. BAY) (19 REQ'D)

115°-00'-00" (TYP.)

13.671m

TRANSVERSE CONST. JOINT (SEE TRANSVERSE CONST. JT. DETAIL)

℄ GDR. C4

11.400m (CLEAR ROADWAY)

12.390m (OUT TO OUT)

6.600m

310 (TYP.)

℄ GDR. B4

10-#16 B5 @ 220mm CTS. (3 BAR RUN) (BOTTOM OF SLAB) (TYP. EA. BAY)

4-#13 K6 (TYP. EA. INT. GDR.)

4-#13 K7 (TYP. EA. EXT. GDR.)

7.828m

INTERMEDIATE STEEL DIAPHRAGM (SEE "INTERMEDIATE STEEL DIAPHRAGM FOR TYPE III PRESTRESSED CONCRETE GIRDERS" FOR DETAILS) (TYP.)

#16 G1 (PARALLEL TO JT.)

7.978m

3-#19 K8 (TYP. EA. BAY)

℄ GDR. B5

260

℄ GDR. C5

2-#25 K1 (TYP. OVER EA. EXT. GDR.)

GUTTERLINE

4-#16 B5 @ 220mm CTS. (BOTT. OF SLAB) (3 BAR RUN) (TYP. EA. SIDE)

℄ EXP. JT. SEAL @ END BENT #2

BENT #2 CONTROL LINE

7-152mm Ø PVC DECK DRAINS @ 1.820m CTS.

2.700m

## PLAN OF SPAN C

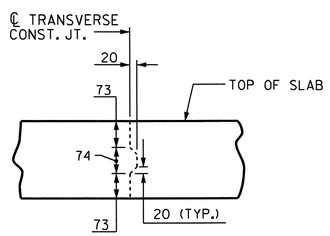


## TRANSVERSE CONSTRUCTION JOINT DETAIL

NOTE: REINFORCING STEEL IN SLAB NOT SHOWN. LONGITUDINAL REINFORCING STEEL SHALL BE CONTINUOUS THRU JOINT

PROJECT NO. R-2413C

GUILFORD-ROCKINGHAM COUNTY

STATION: 11+43.200
-SB US 220 RAMP-

SHEET 3 OF 3

STATE OF NORTH CAROLINA
DEPARTMENT OF TRANSPORTATION
RALEIGH

SUPERSTRUCTURE

PLAN OF SPAN C

NORTH CAROLINA PROFESSIONAL SEAL 022516 ENGINEER EMILY E. MURRAY
9/28/11

| REVISIONS | | | | | | SHEET NO. |
|---|---|---|---|---|---|---|
| NO. | BY: | DATE: | NO. | BY: | DATE: | S-119 |
| 1 | | | 3 | | | TOTAL SHEETS |
| 2 | | | 4 | | | 238 |

STR. #4

DRAWN BY : M.GUDLAUGSSON DATE : 8-15-10
CHECKED BY : T.L. AVERETTE DATE : 9-20-10

05-SEP-2011 3:06
Y:\Structures\Final Plans\Str.#4\R-2413C_SD_S#_04.dgn
mgudlaugsson

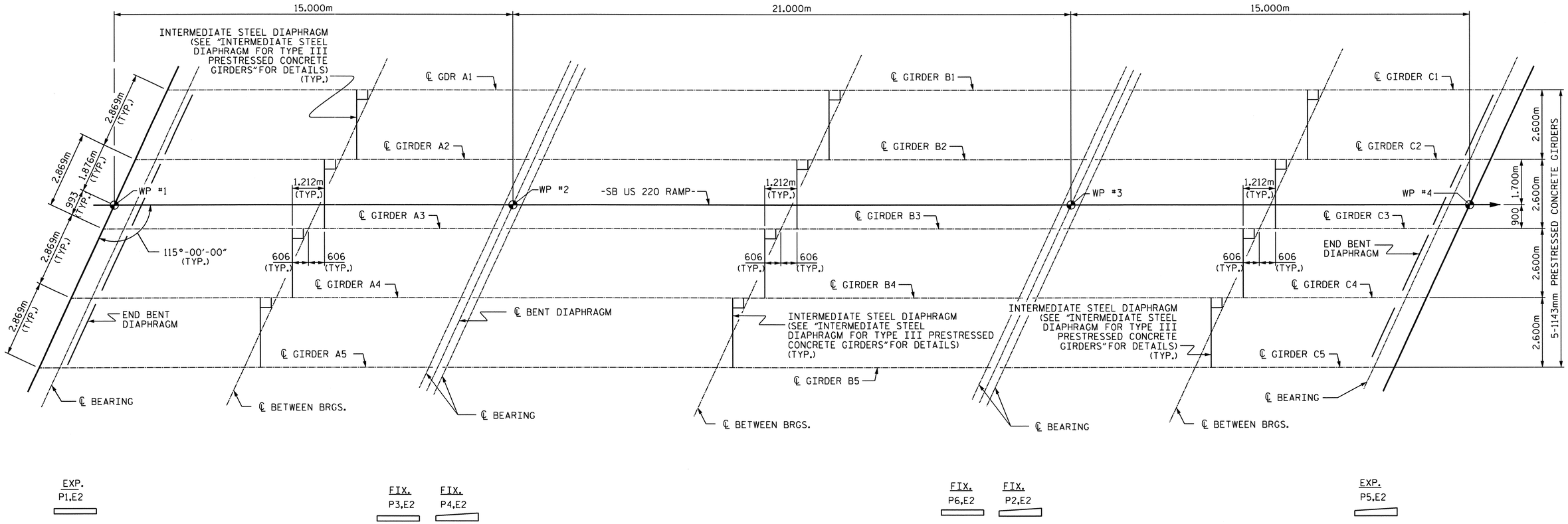


# FRAMING PLAN

PROJECT NO. R-2413C
GUILFORD-ROCKINGHAM COUNTY
STATION: 11+43.200
-SB US 220 RAMP-

STATE OF NORTH CAROLINA
DEPARTMENT OF TRANSPORTATION
RALEIGH

SUPERSTRUCTURE
FRAMING PLAN

NORTH CAROLINA PROFESSIONAL SEAL 025616 ENGINEER BILY E. MURRAY
10/28/11

| REVISIONS | | | | | | SHEET NO. |
|---|---|---|---|---|---|---|
| NO. | BY: | DATE: | NO. | BY: | DATE: | S-120 |
| 1 | | | 3 | | | TOTAL SHEETS |
| 2 | | | 4 | | | 238 |

DRAWN BY : M.GUDLAUGSSON DATE : 7-30-10
CHECKED BY : T.L. AVERETTE DATE : 9-20-10

05-SEP-2011 13:05
Y:\Structures\Final Plans\Str.#4\R-2413C_SD_FP_04.dgn
mgudlaugsson

STR. #4

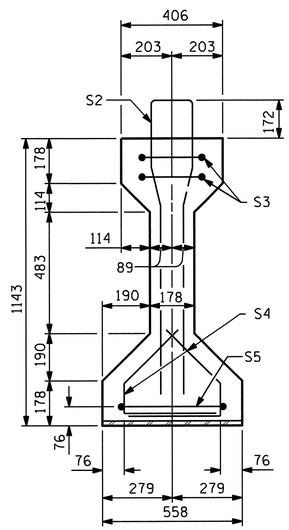


SECTION A-A

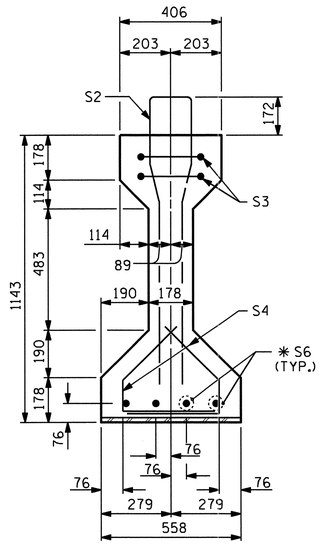


SECTION B-B

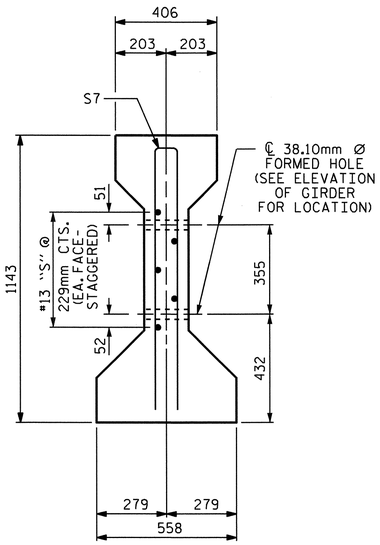


SECTION C-C

(S1 BARS NOT SHOWN)

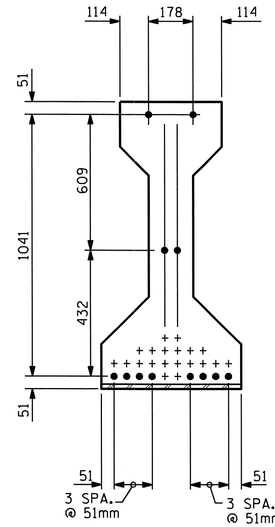


AT END OF GIRDER

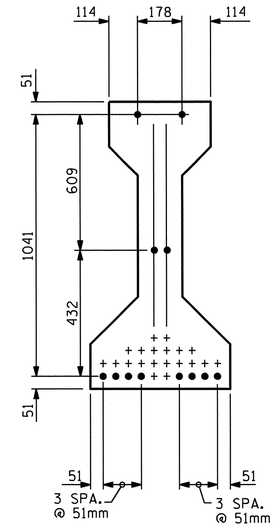


AT ℄ OF GIRDER

15.24mm Ø LOW RELAXATION STRAND LAYOUT

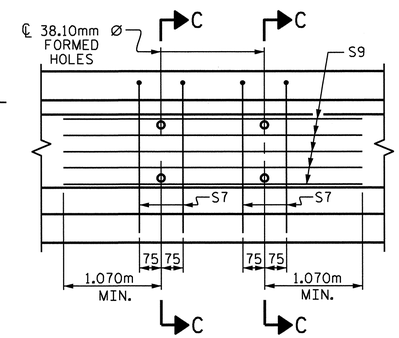


PARTIAL ELEVATION

SHOWING INTERMEDIATE DIAPHRAGM REINFORCING STEEL FOR GIRDER Nos. 2,3 & 4.

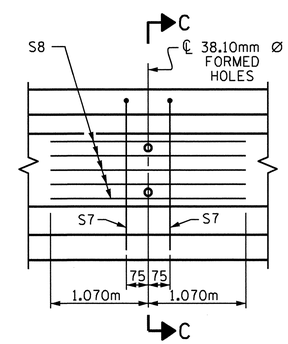


PARTIAL ELEVATION

SHOWING INTERMEDIATE DIAPHRAGM REINFORCING STEEL FOR GIRDER Nos. 1 & 5.

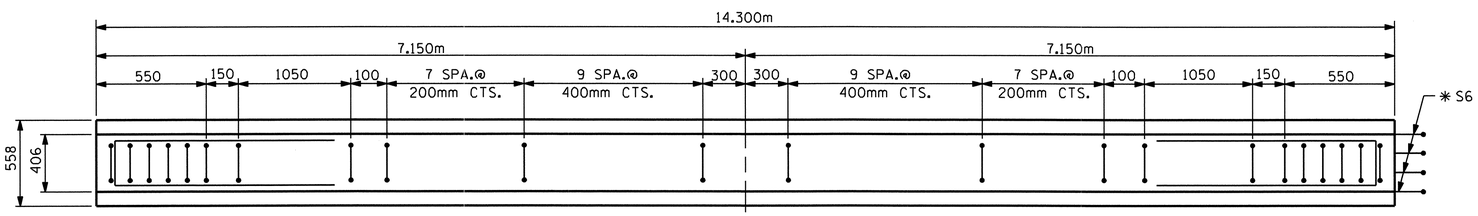


PLAN OF GIRDER

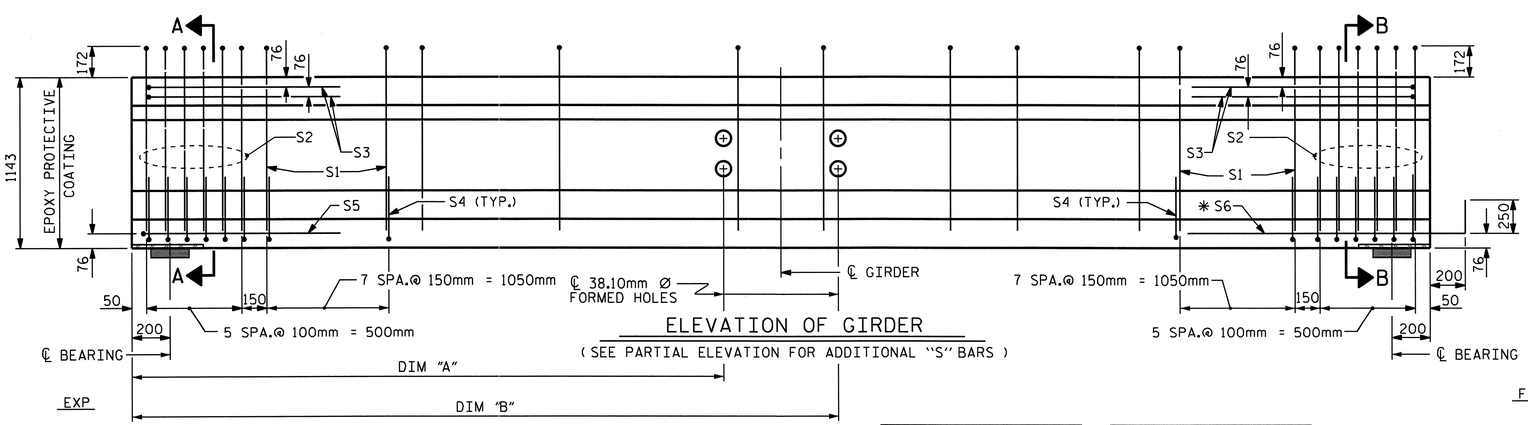


ELEVATION OF GIRDER

( SEE PARTIAL ELEVATION FOR ADDITIONAL "S" BARS )

| GDR. | DIM. "A" | DIM. "B" |
|---|---|---|
| GDR. A1 | 6.544m | —— |
| GDR. A2 | 6.544m | 7.756m |
| GDR. A3 | 6.544m | 7.756m |
| GDR. A4 | 6.544m | 7.756m |
| GDR. A5 | —— | 7.756m |

| GDR. | DIM. "A" | DIM. "B" |
|---|---|---|
| GDR. C1 | —— | 7.756m |
| GDR. C2 | 6.544m | 7.756m |
| GDR. C3 | 6.544m | 7.756m |
| GDR. C4 | 6.544m | 7.756m |
| GDR. C5 | 6.544m | —— |

## 15.24mm Ø L. R. GRADE 270 STRANDS

| AREA (mm²) | ULTIMATE STRENGTH (kN PER STRAND) | APPLIED PRESTRESS (kN PER STRAND) |
|---|---|---|
| 140.00 | 260.7 | 195.5 |

## REINFORCING STEEL FOR ONE GIRDER

| | BAR | NUMBER | SIZE | TYPE | LENGTH | WEIGHT |
|---|---|---|---|---|---|---|
| | S1 | 50 | #13 | 1 | 2640 | 131 |
| | S2 | 12 | #19 | 1 | 2640 | 70 |
| | S3 | 4 | #13 | 3 | 2660 | 11 |
| | S4 | 56 | #13 | 2 | 840 | 47 |
| | S5 | 1 | #13 | 3 | 2900 | 3 |
| | ✱ S6 | 4 | #16 | STR | 1120 | 7 |
| EXTERIOR GDR. | S7 | 2 | #16 | 3 | 2180 | 7 |
| INTERIOR GDR. | S7 | 4 | #16 | 3 | 2180 | 14 |
| EXTERIOR GDR. | S8 | 5 | #13 | STR | 2140 | 11 |
| INTERIOR GDR. | S9 | 5 | #13 | STR | 3360 | 17 |

✱ NOTE: S6 BARS SHALL BE BENT BEFORE SHIPMENT. HEAT BENDING SHALL NOT BE ALLOWED.

## BAR TYPES

ALL BAR DIMENSIONS ARE OUT-TO-OUT

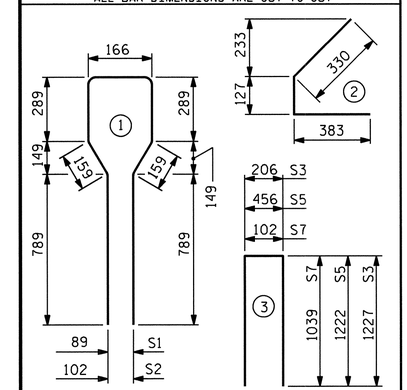


## QUANTITIES FOR ONE GIRDER

| | REINFORCING STEEL | 34.50 MPa CONCRETE | 15.24mm Ø L.R. STRANDS |
|---|---|---|---|
| | kg | m³ | No. |
| EXTERIOR GDR. | 287 | 5.2 | 12 |
| INTERIOR GDR. | 300 | 5.2 | 12 |

## GIRDERS REQUIRED

| NUMBER | LENGTH | TOTAL LENGTH |
|---|---|---|
| 10 | 14.300m | 143.000m |

PROJECT NO. R-2413C

GUILFORD-ROCKINGHAM COUNTY

STATION: 11+43.200 -SB US 220 RAMP-

SHEET 1 OF 3

STATE OF NORTH CAROLINA
DEPARTMENT OF TRANSPORTATION
RALEIGH

SPAN A & C

AASHTO TYPE III
PRESTRESSED CONCRETE GIRDER
CONTINUOUS FOR LIVE LOAD

NORTH CAROLINA PROFESSIONAL SEAL 022516 ENGINEER EMILY E. MURRAY
10/28/11

| REVISIONS | | | | | | | SHEET NO. |
|---|---|---|---|---|---|---|---|
| NO. | BY: | DATE: | NO. | BY: | DATE: | | S-121 |
| 1 | | | 3 | | | | TOTAL SHEETS |
| 2 | | | 4 | | | | 238 |

ASSEMBLED BY : M.GUDLAUGSSON DATE : 12-3-10
CHECKED BY : T.L. AVERETTE DATE : 12-8-10

DRAWN BY : ELR 8/91
CHECKED BY : GRP 8/91

REV. 7/17/98 RWW/LES
REV. 10/17/00R RWW/LES
REV. 5/1/06R TLA/GM

06-SEP-2011 14:10
Y:\Structures\Final Plans\Str.#4\R-2413C_SD_G#_04.dgn
mgudlaugsson

STR. #4

STD. NO. PCG5SM

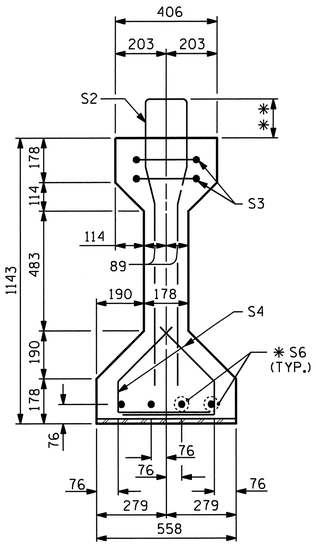


SECTION B-B

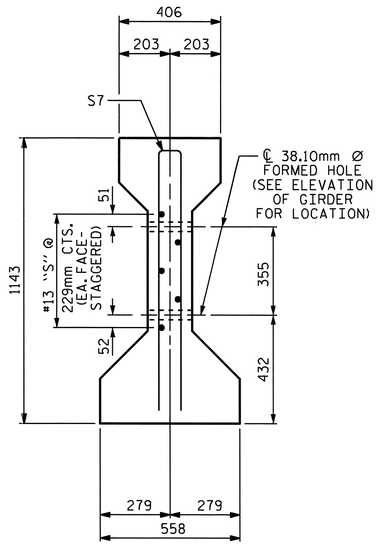


SECTION C-C

(S1 BARS NOT SHOWN)

✱✱ NOTE:
THE PROJECTION OF THE S2 AND S10 BARS IS 172mm.
THE PROJECTION OF THE S1 BARS IS 152mm.

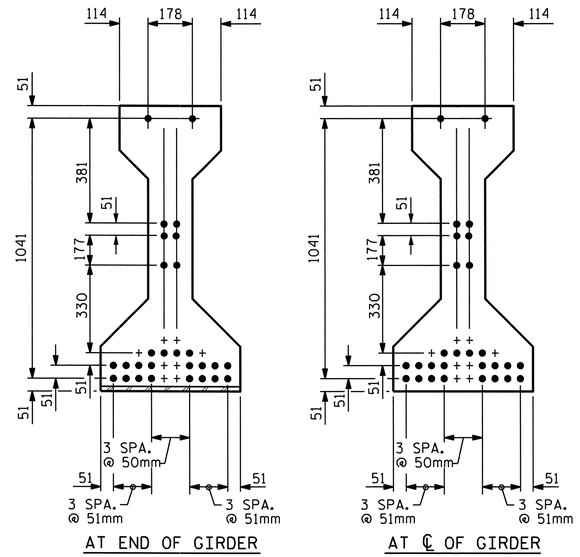


15.24mm Ø LOW RELAXATION STRAND LAYOUT

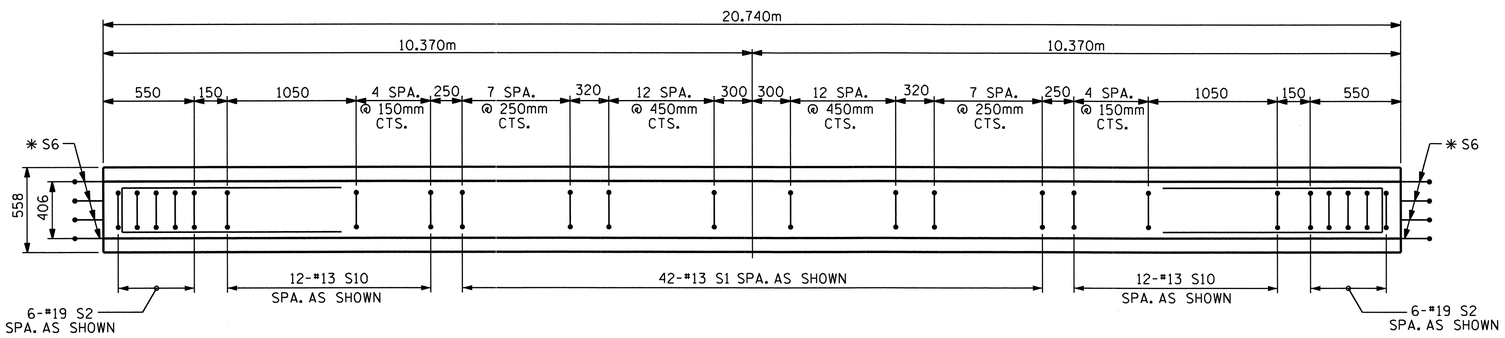


PLAN OF GIRDER

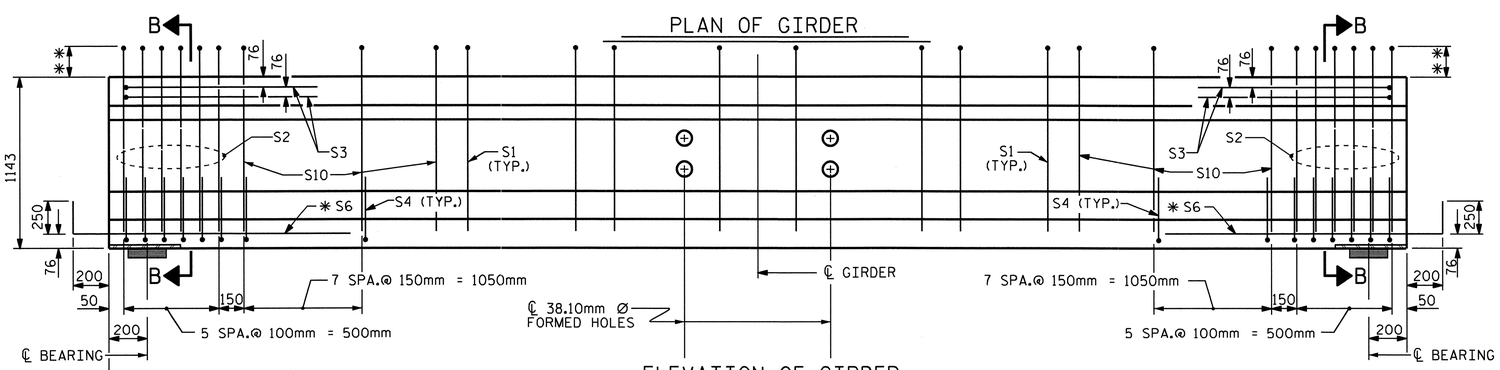


ELEVATION OF GIRDER

(SEE PARTIAL ELEVATION FOR ADDITIONAL "S" BARS)

| GDR. | DIM. "A" | DIM. "B" |
|---|---|---|
| GDR. 1 | 9.764m | — |
| GDR. 2 | 9.764m | 10.976m |
| GDR. 3 | 9.764m | 10.976m |
| GDR. 4 | 9.764m | 10.976m |
| GDR. 5 | — | 10.976m |

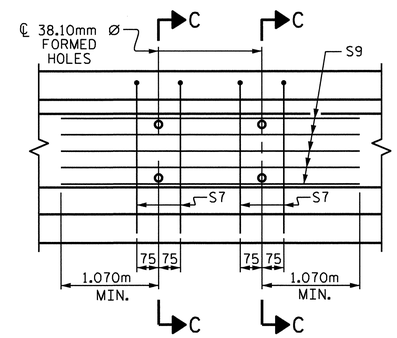


PARTIAL ELEVATION

SHOWING INTERMEDIATE DIAPHRAGM
REINFORCING STEEL FOR GIRDER Nos. 2,3 & 4.

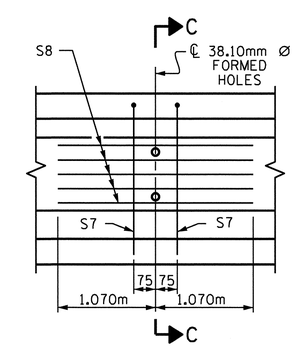


PARTIAL ELEVATION

SHOWING INTERMEDIATE DIAPHRAGM
REINFORCING STEEL FOR GIRDER Nos. 1 & 5.

NORTH CAROLINA PROFESSIONAL SEAL 022516 ENGINEER TIMOTHY E. MURRAY
10/28/11

## 15.24mm Ø L. R. GRADE 270 STRANDS

| AREA (mm²) | ULTIMATE STRENGTH (kN PER STRAND) | APPLIED PRESTRESS (kN PER STRAND) |
|---|---|---|
| 140.00 | 260.7 | 195.5 |

## REINFORCING STEEL FOR ONE GIRDER

| | BAR | NUMBER | SIZE | TYPE | LENGTH | WEIGHT |
|---|---|---|---|---|---|---|
| | S1 | 42 | #13 | 1 | 2600 | 109 |
| | S2 | 12 | #19 | 1 | 2640 | 71 |
| | S3 | 4 | #13 | 3 | 2660 | 11 |
| | S4 | 56 | #13 | 2 | 840 | 47 |
| | ✱ S6 | 8 | #16 | STR | 1120 | 14 |
| EXTERIOR GDR. | S7 | 2 | #16 | 3 | 2180 | 7 |
| INTERIOR GDR. | S7 | 4 | #16 | 3 | 2180 | 14 |
| EXTERIOR GDR. | S8 | 5 | #13 | STR | 2140 | 11 |
| INTERIOR GDR. | S9 | 5 | #13 | STR | 3360 | 17 |
| | S10 | 24 | #13 | 1 | 2640 | 63 |

✱ NOTE: S6 BARS SHALL BE BENT BEFORE SHIPMENT. HEAT BENDING SHALL NOT BE ALLOWED.

## BAR TYPES

ALL BAR DIMENSIONS ARE OUT-TO-OUT

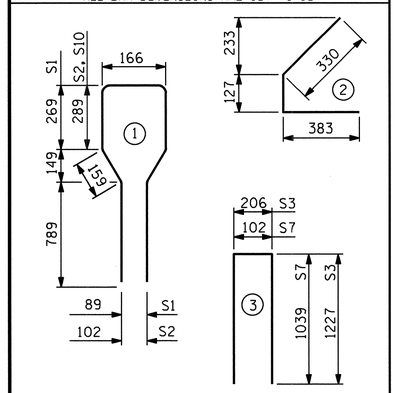


## QUANTITIES FOR ONE GIRDER

| | REINFORCING STEEL (kg) | 55.16 MPa CONCRETE (m³) | 15.24mm Ø L.R. STRANDS (No.) |
|---|---|---|---|
| EXTERIOR GDR. | 333 | 7.5 | 28 |
| INTERIOR GDR. | 346 | 7.5 | 28 |

## GIRDERS REQUIRED

| NUMBER | LENGTH | TOTAL LENGTH |
|---|---|---|
| 5 | 20.740m | 103.700m |

PROJECT NO. R-2413C
GUILFORD-ROCKINGHAM COUNTY
STATION: 11+43.200
-SB US 220 RAMP-
SHEET 2 OF 3

STATE OF NORTH CAROLINA
DEPARTMENT OF TRANSPORTATION
RALEIGH

SPAN B

AASHTO TYPE III
PRESTRESSED CONCRETE GIRDER
CONTINUOUS FOR LIVE LOAD

| | | | | | |
|---|---|---|---|---|---|
| ASSEMBLED BY : M.GUDLAUGSSON | DATE : 12-3-10 | | | | |
| CHECKED BY : T.L. AVERETTE | DATE : 12-8-10 | | | | |
| DRAWN BY : ELR 8/91 | REV. 7/17/98 RWW/LES | | | | |
| CHECKED BY : GRP 8/91 | REV. 10/17/00R RWW/LES | | | | |
| | REV. 5/1/06R TLA/GM | | | | |

REVISIONS

| NO. | BY: | DATE: | NO. | BY: | DATE: |
|---|---|---|---|---|---|
| 1 | | | 3 | | |
| 2 | | | 4 | | |

SHEET NO. S-122
TOTAL SHEETS 238

05-SEP-2011 12:59
Y:\Structures\Final Plans\Str.#4\R-2413C_SD_G#_04.dgn
mgudlaugsson

STR. #4

STD. NO. PCG5SM

## DEAD LOAD DEFLECTION TABLE

| 15.24mm Ø LOW RELAXATION | SPANS A & C ALL GIRDERS | | | | | | | | | | | SPAN B ALL GIRDERS | | | | | | | | | | |
|---|---|---|---|---|---|---|---|---|---|---|---|---|---|---|---|---|---|---|---|---|---|---|
| TENTH POINTS | 0 | .1 | .2 | .3 | .4 | .5 | .6 | .7 | .8 | .9 | 0 | 0 | .1 | .2 | .3 | .4 | .5 | .6 | .7 | .8 | .9 | 0 |
| CAMBER (GIRDER ALONE IN PLACE) ↑ | 0.0 | 0.004 | 0.008 | 0.011 | 0.013 | 0.013 | 0.013 | 0.011 | 0.008 | 0.004 | 0.0 | 0.0 | 0.019 | 0.036 | 0.049 | 0.058 | 0.061 | 0.058 | 0.049 | 0.036 | 0.019 | 0.0 |
| * DEFLECTION DUE TO SUPERIMPOSED D.L. ↓ | 0.0 | 0.002 | 0.003 | 0.005 | 0.006 | 0.006 | 0.006 | 0.005 | 0.003 | 0.002 | 0.0 | 0.0 | 0.007 | 0.013 | 0.018 | 0.022 | 0.023 | 0.022 | 0.018 | 0.013 | 0.007 | 0.0 |
| FINAL CAMBER ↑ | 0 | 2 | 5 | 6 | 7 | 7 | 7 | 6 | 5 | 2 | 0 | 0 | 12 | 23 | 31 | 36 | 38 | 36 | 31 | 23 | 12 | 0 |

* INCLUDES FUTURE WEARING SURFACE IN SUPERIMPOSED DEAD LOAD.
ALL VALUES ARE SHOWN IN METERS, EXCEPT "FINAL CAMBER" WHICH IS SHOWN IN MILLIMETERS.

## NOTES

ALL PRESTRESSING STRANDS SHALL BE 7-WIRE LOW-RELAXATION GRADE 270 STRANDS AND SHALL CONFORM TO AASHTO M203M EXCEPT FOR SAMPLING REQUIREMENTS WHICH SHALL BE IN ACCORDANCE WITH THE STANDARD SPECIFICATIONS.

ALL REINFORCING STEEL SHALL BE GRADE 420.

APPLY EPOXY PROTECTIVE COATING TO END OF GIRDER SURFACES INDICATED IN ELEVATION VIEW.

EMBEDDED PLATE "B-1" SHALL BE GALVANIZED IN ACCORDANCE WITH THE SPECIFICATIONS. BEVEL EDGES OF PLATE "B-1" TO GIVE CLOSE FIT BUT NOT TIGHT FIT TO STEEL CASTING FORM.

ANCHOR STUDS SHALL CONFORM TO AASHTO M169 GRADES 1010 THROUGH 1020 OR APPROVED EQUAL, AND SHALL MEET THE TYPE "B" REQUIREMENTS OF SUBSECTION 7.3 OF THE ANSI/AASHTO/AWS D1.5 BRIDGE WELDING CODE.

AT ENDS OF GIRDERS TO BE EMBEDDED IN CONCRETE DIAPHRAGMS OR END WALLS, PRESTRESSING STRANDS MAY EXTEND A MAXIMUM OF 50mm BEYOND THE GIRDER ENDS. OTHERWISE, PRESTRESSING STRANDS SHALL BE CUT FLUSH WITH THE GIRDER ENDS.

THE TRANSFER OF LOAD FROM THE ANCHORAGES TO THE GIRDER SHALL BE DONE WHEN CONCRETE HAS REACHED A COMPRESSIVE STRENGTH OF NOT LESS THAN 27.58 MPa. FOR SPANS A AND C AND 43.44 MPa. FOR SPAN B.

DEPENDING ON THE TYPE OF SYSTEM USED TO SUPPORT THE DECK SLAB FORMS, PRESET ANCHORS MAY BE NECESSARY IN THE PRESTRESSED CONCRETE GIRDER.

THE TOP SURFACE OF THE GIRDER, EXCLUDING THE OUTSIDE 100mm, SHALL BE RAKED TO A DEPTH OF 6mm.

FOR PRESTRESSED CONCRETE MEMBERS, SEE SPECIAL PROVISIONS.

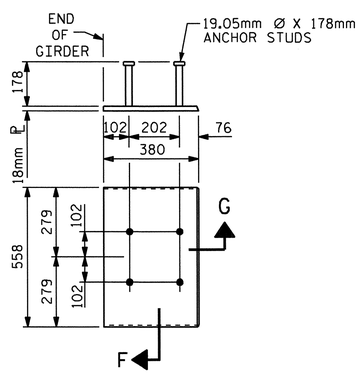


EMBEDDED PLATE "B-1" DETAILS FOR AASHTO TYPE III GIRDER

(2 REQ'D PER GIRDER)

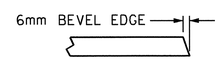


SECTION "G"

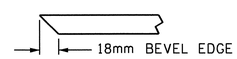


SECTION "F"

(SEE NOTES)

PROJECT NO. R-2413C

GUILFORD-ROCKINGHAM COUNTY

STATION: 11+43.200 -SB US 220 RAMP-

SHEET 3 OF 3

STATE OF NORTH CAROLINA
DEPARTMENT OF TRANSPORTATION
RALEIGH

STANDARD
PRESTRESSED CONCRETE GIRDER
CONTINUOUS FOR LIVE LOAD
DETAILS

NORTH CAROLINA PROFESSIONAL SEAL 022516 ENGINEER EMILY E. MURRAY
10/28/11

| REVISIONS | | | | | | SHEET NO. |
|---|---|---|---|---|---|---|
| NO. | BY: | DATE: | NO. | BY: | DATE: | S-123 |
| 1 | | | 3 | | | TOTAL SHEETS |
| 2 | | | 4 | | | 238 |

ASSEMBLED BY : M.GUDLAUGSSON DATE : 9-3-10
CHECKED BY : T.L. AVERETTE DATE : 12-8-10

DRAWN BY : ELR 11/91
CHECKED BY : GRP 11/91

REV. 10/17/00 RWW/LES
REV. 7/10/01RR LES/RDR
REV. 5/1/06 TLA/GM

05-SEP-2011 12:58
Y:\Structures\Final Plans\Str.#4\R-2413C_SD_DL_04.dgn
mgudlaugsson

STR. #4

STD. NO. PCG11SM

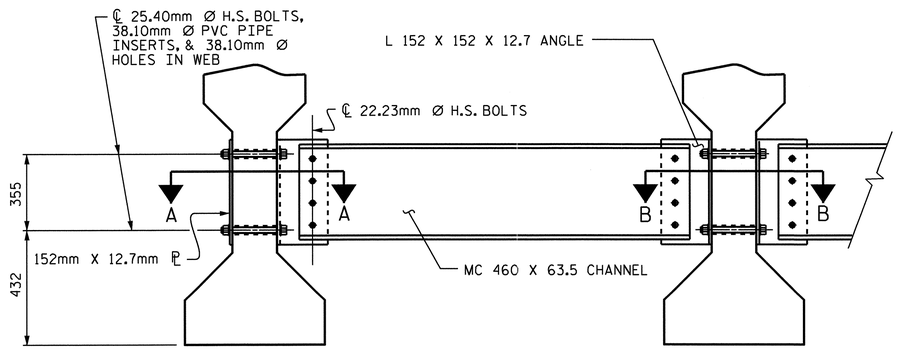


EXTERIOR GIRDER

INTERIOR GIRDER

## PART SECTION AT INTERMEDIATE DIAPHRAGM

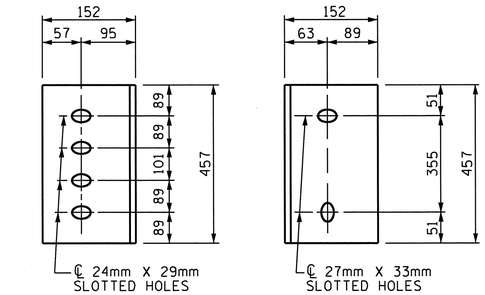


DIAPHRAGM FACE

WEB FACE

## CONNECTOR PLATE DETAILS

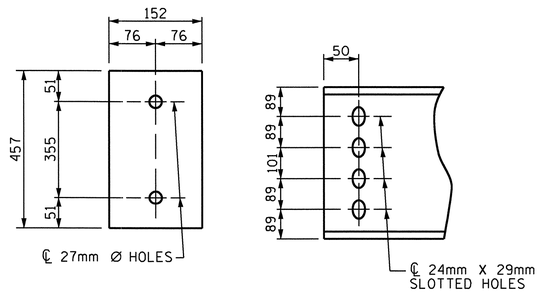


PLATE DETAILS

CHANNEL END

## STRUCTURAL STEEL NOTES

ALL INTERMEDIATE DIAPHRAGM STEEL, CONNECTOR PLATES AND PLATE WASHERS SHALL BE AASHTO M270 GRADE 345 OR APPROVED EQUAL.

TENSION ON THE AASHTO M164 BOLTS THROUGH THE CHANNEL MEMBER SHALL BE CALIBRATED USING DIRECT TENSION INDICATOR WASHERS IN ACCORDANCE WITH THE STANDARD SPECIFICATIONS. FOR DIRECT TENSION INDICATORS, SEE SPECIAL PROVISIONS.

TENSION ON THE AASHTO M164 BOLTS THROUGH THE GIRDER WEB SHALL BE SNUG TIGHTENED FOLLOWED BY AN ADDITIONAL 1/4 TURN.

THE PLATES, BENT PLATES, CHANNELS, ANGLES, AND PLATE WASHERS SHALL BE GALVANIZED OR METALLIZED IN ACCORDANCE WITH THE STANDARD SPECIFICATIONS. FOR THERMAL SPRAYED COATINGS (METALLIZATION), SEE SPECIAL PROVISIONS.

FOR METALLIZATION, APPLY AN 8 MIL THICK 99.99 PERCENT ZINC (W-Zn-1) THERMAL SPRAYED COATING WITH A 0.5 MIL THICK SEAL COAT TO ALL STEEL DIAPHRAGM SURFACES IN ACCORDANCE WITH THE THERMAL SPRAYED COATINGS SPECIAL PROVISIONS AND SECTION 442 OF THE STANDARD SPECIFICATIONS.

GALVANIZE THE HIGH STRENGTH BOLTS, NUTS, WASHERS AND DIRECT TENSION INDICATORS IN ACCORDANCE WITH THE STANDARD SPECIFICATIONS. FOR HIGH STRENGTH BOLTS, SEE SPECIAL PROVISIONS.

USE A MINIMUM 11mm THICK PLATE WASHER WITH STANDARD HOLES UNDER EACH BOLT HEAD AND NUT. THE PLATE WASHERS SHALL HAVE SUFFICIENT SIZE TO COVER THE HOLES AFTER INSTALLATION. HARDENED WASHERS AND DIRECT TENSION INDICATORS ARE TO BE USED IN CONJUNCTION WITH THE PLATE WASHERS IN THE CHANNEL MEMBER CONNECTION.

FOR BOLTS THROUGH THE GIRDER WEB, PROVIDE SUFFICIENT LENGTH OF ALL BOLTS TO ACCOMMODATE WASHERS AND THE THICKNESS OF CONNECTING MEMBER PLUS AT LEAST 6mm PROJECTION BEYOND THE NUT.

INTERMEDIATE DIAPHRAGM ASSEMBLY SHALL COMPLY WITH SECTION 1072 OF THE STANDARD SPECIFICATIONS.

CONTRACTOR SHALL SUBMIT TWO SETS OF WORKING DRAWINGS FOR THE INTERMEDIATE DIAPHRAGM ASSEMBLY FOR REVIEW, COMMENTS AND ACCEPTANCE. AFTER REVIEW, COMMENTS, AND ACCEPTANCE, SUBMIT SEVEN SETS FOR DISTRIBUTION.

IN THE EXTERIOR BAYS, TEMPORARY STRUTS SHALL BE PLACED BETWEEN PRESTRESSED GIRDERS ADJACENT TO THE STEEL DIAPHRAGMS. STRUTS SHALL REMAIN IN PLACE 3 DAYS AFTER CONCRETE IS PLACED. ALL AASHTO M164 H.S. BOLTS SHALL BE FULLY TIGHTENED AFTER THE STRUTS HAVE BEEN REMOVED.

THE COST OF THE STEEL DIAPHRAGMS AND ASSEMBLIES SHALL BE INCLUDED IN THE UNIT PRICE BID FOR PRESTRESSED CONCRETE GIRDERS.

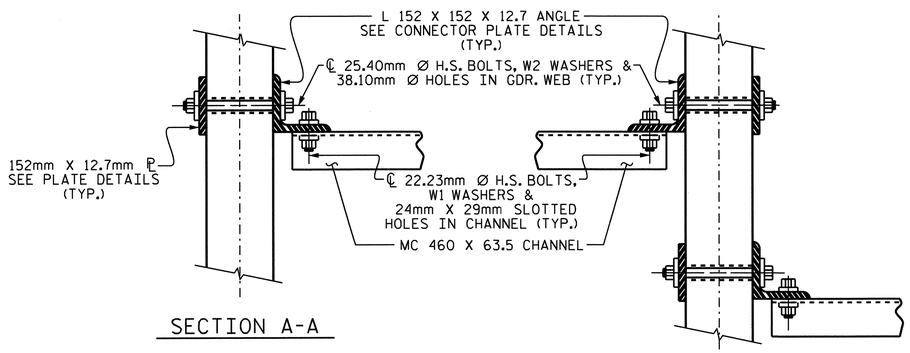


SECTION A-A

SECTION B-B

## CONNECTION DETAILS

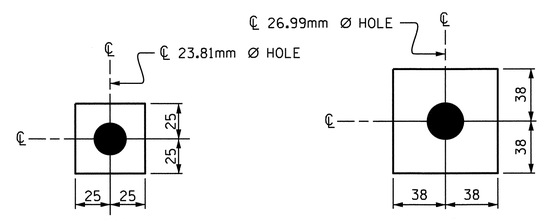


W1

ℙ 11.1 X 50 X 50

USE WITH 22.23mm Ø HVY. HEX NUTS & DIRECT TENSION INDICATOR WASHERS AT DIAPHRAGM CHANNEL TO CONNECTOR PLATE CONNECTIONS

W2

ℙ 11.1 X 76 X 76

USE WITH 25.40mm Ø HVY. HEX NUTS AT CONNECTOR PLATE TO GIRDER CONNECTIONS

## WASHER DETAILS

NORTH CAROLINA PROFESSIONAL SEAL 022516 ENGINEER EMILY E. MURRAY

10/28/11

PROJECT NO. R-2413C

GUILFORD-ROCKINGHAM COUNTY

STATION: 11+43.200

-SB US 220 RAMP-

STATE OF NORTH CAROLINA
DEPARTMENT OF TRANSPORTATION
RALEIGH

STANDARD

INTERMEDIATE STEEL DIAPHRAGMS FOR TYPE III PRESTRESSED CONCRETE GIRDERS

| REVISIONS | | | | | | | SHEET NO. |
|---|---|---|---|---|---|---|---|
| NO. | BY: | DATE: | NO. | BY: | DATE: | | S-124 |
| 1 | | | 3 | | | | TOTAL SHEETS |
| 2 | | | 4 | | | | 238 |

ASSEMBLED BY : M.GUDLAUGSSON DATE : 9-3-10
CHECKED BY : T.L. AVERETTE DATE : 9-20-10

DRAWN BY : TLA 6/05
CHECKED BY : VC 6/05

ADDED 10/21/05
REV. 5/1/06RR KMM/GM

05-SEP-2011 12:58
Y:\Structures\Final Plans\Str.#4\R-2413C_SD_G#_04.dgn
mgudlaugsson

STR. #4

STD.No.PCG12SM

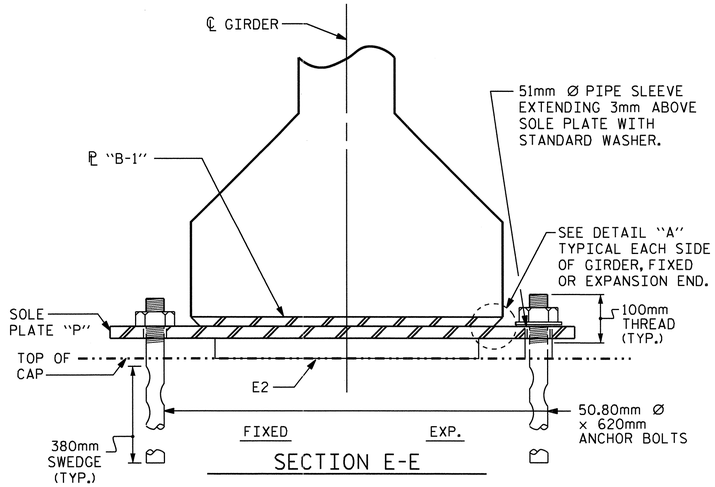


SECTION E-E

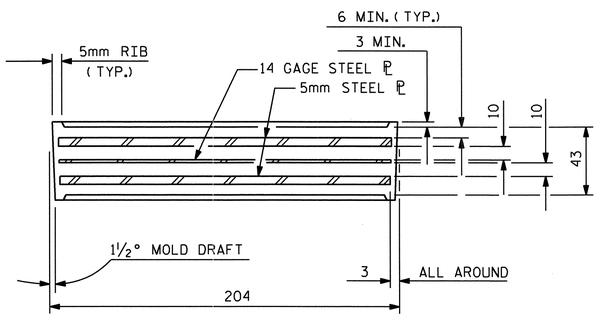


TYPICAL SECTION OF ELASTOMERIC BEARINGS

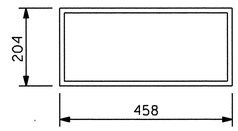


E2 (30 REQ'D)

PLAN VIEW OF ELASTOMERIC BEARING

TYPE III

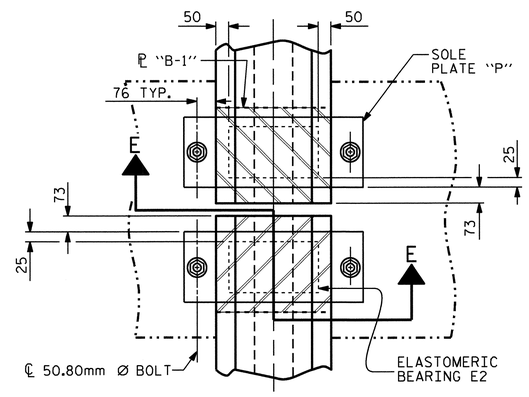


TYPICAL PLAN

## NOTES

AT ALL FIXED POINTS OF SUPPORT, NUTS FOR ANCHOR BOLTS ARE TO BE TIGHTENED FINGER TIGHT AND THEN BACKED OFF ½ TURN. THE THREAD OF THE NUT AND BOLT SHALL THEN BE BURRED WITH A SHARP POINTED TOOL.

THE 51mm Ø PIPE SLEEVE SHALL BE CUT FROM SCHEDULE 40 PVC PLASTIC PIPE. THE PVC PLASTIC PIPE SHALL MEET THE REQUIREMENTS OF ASTM D1785.

STEEL SOLE PLATES, ANCHOR BOLTS, NUTS, AND WASHERS SHALL BE GALVANIZED IN ACCORDANCE WITH THE STANDARD SPECIFICATIONS.

PRIOR TO WELDING, GRIND THE GALVANIZED SURFACE OF THE PORTION OF THE EMBEDDED PLATE AND SOLE PLATE THAT ARE TO BE WELDED. AFTER WELDING, DAMAGED GALVANIZED SURFACES SHALL BE REPAIRED IN ACCORDANCE WITH THE STANDARD SPECIFICATIONS.

WHEN WELDING THE SOLE PLATE TO THE EMBEDDED PLATE IN THE GIRDER, USE TEMPERATURE INDICATING WAX PENS, OR OTHER SUITABLE MEANS, TO ENSURE THAT THE TEMPERATURE OF THE SOLE PLATE DOES NOT EXCEED 149°C. TEMPERATURES ABOVE THIS MAY DAMAGE THE ELASTOMER.

SOLE PLATE "P", BOLTS, NUTS, WASHERS, AND PIPE SLEEVE SHALL BE INCLUDED IN THE PAY ITEM FOR PRESTRESSED CONCRETE GIRDERS.

ANCHOR BOLTS SHALL MEET THE REQUIREMENTS OF ASTM A449. NUTS SHALL MEET THE REQUIREMENTS OF AASHTO M291M-12 OR AASHTO M292M-2H. WASHERS SHALL MEET THE REQUIREMENTS OF AASHTO M293M. SHOP DRAWINGS ARE NOT REQUIRED FOR ANCHOR BOLTS, NUTS AND WASHERS. SHOP INSPECTION IS REQUIRED.

ALL SURFACES OF BEARING PLATES SHALL BE SMOOTH AND STRAIGHT.

ALL BEARING PLATES SHALL BE AASHTO M270 GRADE 250.

**ELASTOMER IN ALL BEARINGS SHALL BE 60 DUROMETER HARDNESS.**

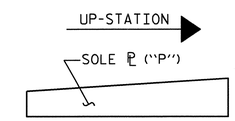


SOLE ℙ PLACEMENT DETAIL

| — LOAD RATINGS — | |
|---|---|
| | MAX.D.L.+L.L. |
| TYPE III | 644 kN |

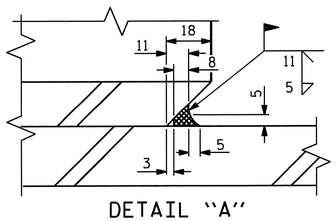


DETAIL "A"

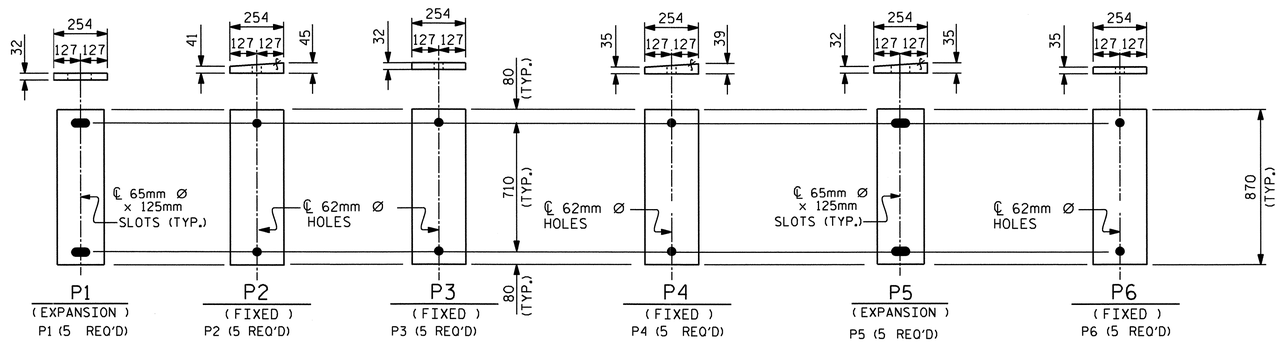


SOLE PLATE DETAILS ("P")

PROJECT NO. R-2413C

GUILFORD-ROCKINGHAM COUNTY

STATION: 11+43.200 -SB US 220 RAMP-

STATE OF NORTH CAROLINA
DEPARTMENT OF TRANSPORTATION
RALEIGH

STANDARD
ELASTOMERIC BEARING DETAILS
PRESTRESSED CONCRETE GIRDER SUPERSTRUCTURE

NORTH CAROLINA PROFESSIONAL SEAL 022516 ENGINEER EMILY E. McMURRAY
10/28/11

| REVISIONS | | | | | | SHEET NO. |
|---|---|---|---|---|---|---|
| NO. | BY: | DATE: | NO. | BY: | DATE: | S-125 |
| 1 | | | 3 | | | TOTAL SHEETS |
| 2 | | | 4 | | | 238 |

| | | | |
|---|---|---|---|
| ASSEMBLED BY : | M.GUDLAUGSSON | DATE: | 10-20-10 |
| CHECKED BY : | T.L. AVERETTE | DATE: | 9-20-10 |
| DRAWN BY : | WJH 8/89 | REV. 10/17/00 | RWW/LES |
| CHECKED BY : | CRK 8/89 | REV. 7/10/01 | RWW/LES |
| | | REV. 5/1/06 | TLA/GM |

STR. #4

STD. NO. EB3SM

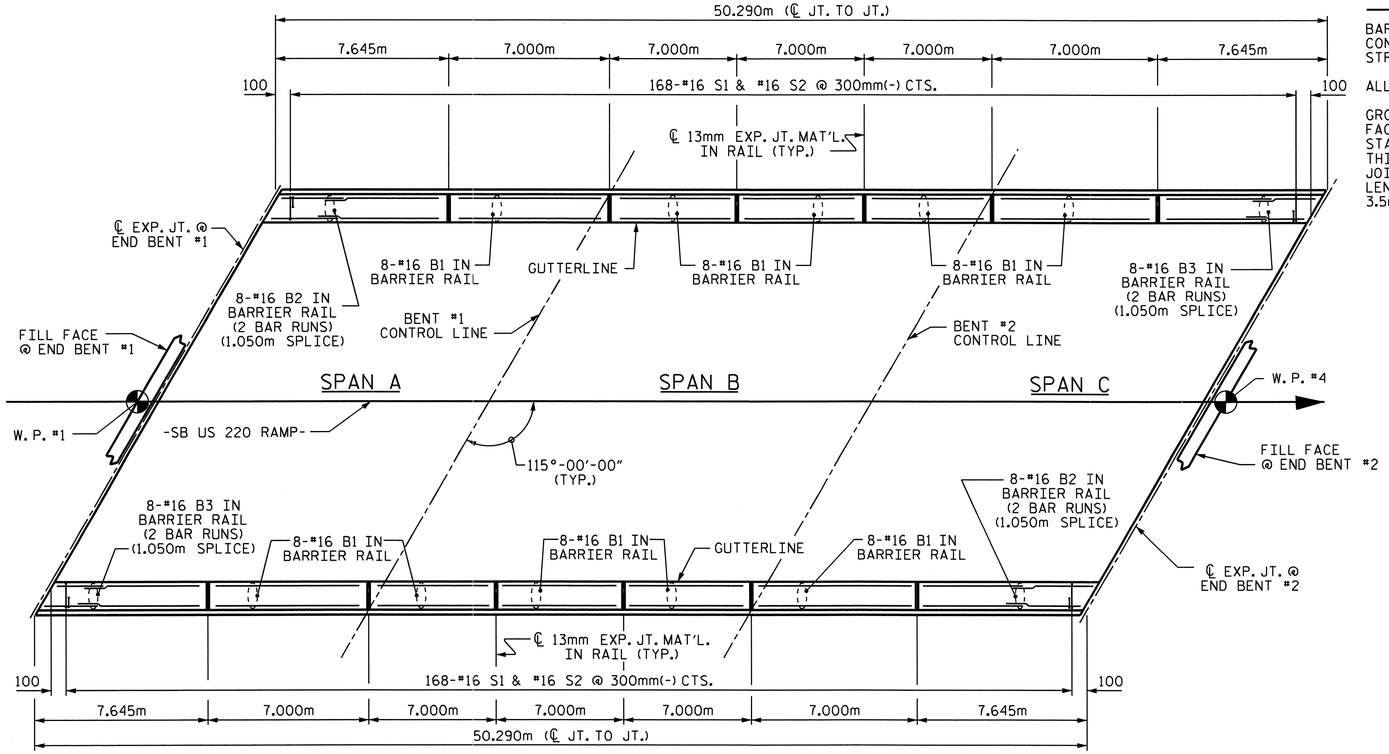


## PLAN OF BARRIER RAIL

## NOTES

BARRIER RAIL IN A CONTINUOUS UNIT SHALL NOT BE CAST UNTIL ALL SLAB CONCRETE IN THE UNIT HAS BEEN CAST AND HAS REACHED A MINIMUM COMPRESSIVE STRENGTH OF 20.7 MPa.

ALL REINFORCING STEEL IN BARRIER RAILS SHALL BE EPOXY COATED.

GROOVED CONTRACTION JOINTS, 12mm IN DEPTH, SHALL BE TOOLED IN ALL EXPOSED FACES OF THE BARRIER RAIL AND IN ACCORDANCE WITH ARTICLE 825-10(B) OF THE STANDARD SPECIFICATIONS. THE CONTRACTION JOINT SHALL BE LOCATED AT EACH THIRD POINT BETWEEN BARRIER RAIL EXPANSION JOINTS. ONLY ONE CONTRACTION JOINT IS REQUIRED AT MIDPOINT OF BARRIER RAIL SEGMENTS LESS THAN 6.1m IN LENGTH AND NO CONTRACTION JOINTS ARE REQUIRED FOR THOSE SEGMENTS LESS THAN 3.5m IN LENGTH.

## BAR TYPES

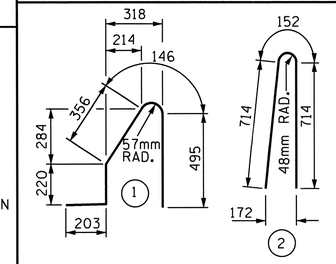


ALL BAR DIMENSIONS ARE OUT TO OUT

## BILL OF MATERIAL

FOR CONCRETE BARRIER RAIL ONLY

| BAR | NO. | SIZE | TYPE | LENGTH | WEIGHT |
|---|---|---|---|---|---|
| * B1 | 80 | #16 | STR | 6880 | 854 |
| * B2 | 32 | #16 | STR | 4380 | 218 |
| * B3 | 32 | #16 | STR | 4280 | 213 |
| | | | | | |
| * S1 | 336 | #16 | 1 | 1420 | 740 |
| * S2 | 336 | #16 | 2 | 1580 | 824 |
| | | | | | |

| | |
|---|---|
| * EPOXY COATED REINFORCING STEEL | 2849 kg |
| CLASS AA CONCRETE | 25.2 CU. METER |
| CONCRETE BARRIER RAIL | |
| SUPERSTRUCTURE | 100.580 METERS |
| ● APPROACH SLABS | 12.426 METERS |
| TOTAL | 113.006 METERS |

● FOR EPOXY COATED REINFORCING STEEL AND CLASS AA CONCRETE IN THE BARRIER RAIL ON THE APPROACH SLABS, SEE "BRIDGE APPROACH SLAB DETAILS" SHEET.

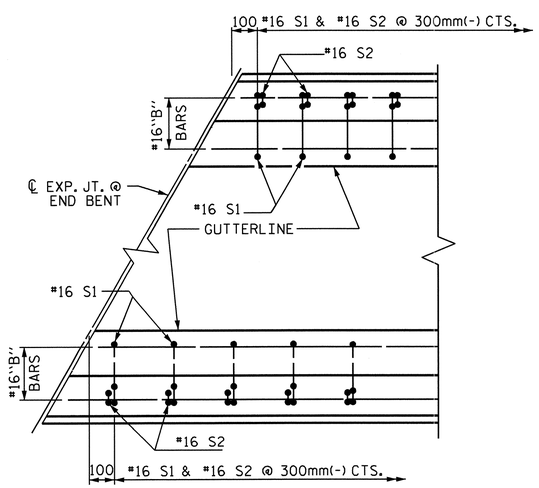


PLAN

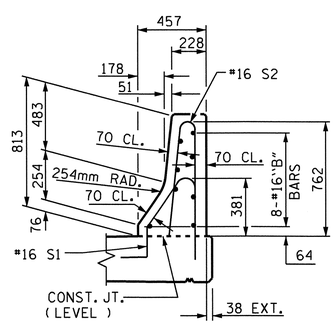


END VIEW

## END OF RAIL DETAILS

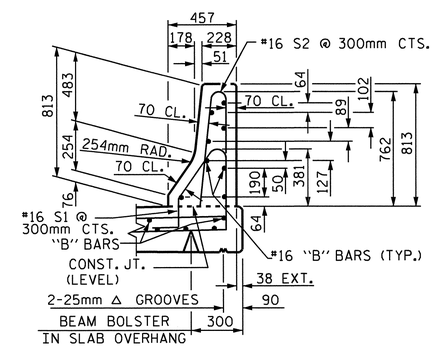


SECTION THRU RAIL

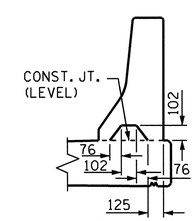


SECTION S-S

AT DAM IN OPEN JOINT
( THIS IS TO BE USED ONLY WHEN SLIP FORM IS USED )

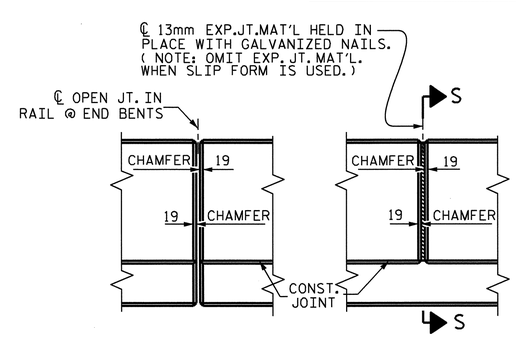


ELEVATION AT EXPANSION JOINTS

## BARRIER RAIL DETAILS

PROJECT NO. R-2413C

GUILFORD-ROCKINGHAM COUNTY

STATION: 11+43.200 -SB US 220 RAMP-

STATE OF NORTH CAROLINA
DEPARTMENT OF TRANSPORTATION
RALEIGH

STANDARD

CONCRETE BARRIER RAIL

NORTH CAROLINA PROFESSIONAL SEAL 022516 ENGINEER EMILY E. McMURRAY 6/28/11

| REVISIONS | | | | | | | SHEET NO. |
|---|---|---|---|---|---|---|---|
| NO. | BY: | DATE: | NO. | BY: | DATE: | | S-126 |
| 1 | | | 3 | | | | TOTAL SHEETS |
| 2 | | | 4 | | | | 238 |

| | | | |
|---|---|---|---|
| ASSEMBLED BY : M.GUDLAUGSSON | DATE : 9-3-10 | | |
| CHECKED BY : T.L. AVERETTE | DATE : 9-20-10 | | |
| DRAWN BY : ARB 5/87 | REV. 10/17/00 | RWW/LES | |
| CHECKED BY : SJD 9/87 | REV. 5/7/03R | RWW/JTE | |
| | REV. 5/1/06 | TLA/GM | |

05-SEP-2011 12:50
Y:\Structures\Final Plans\Str.#4\R-2413C_SD_BR_04.dgn
mgudlaugsson

STR. #4

STD. No. CBR1SM

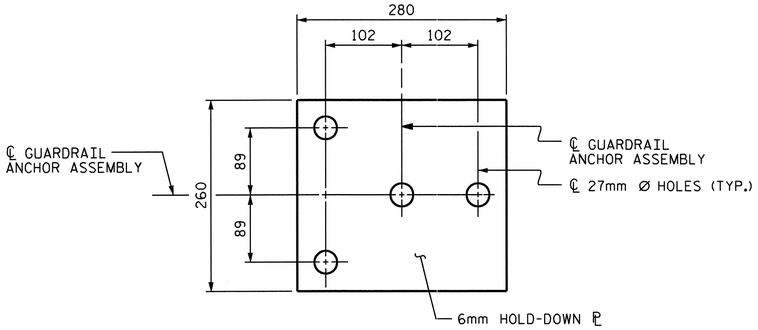


PLAN

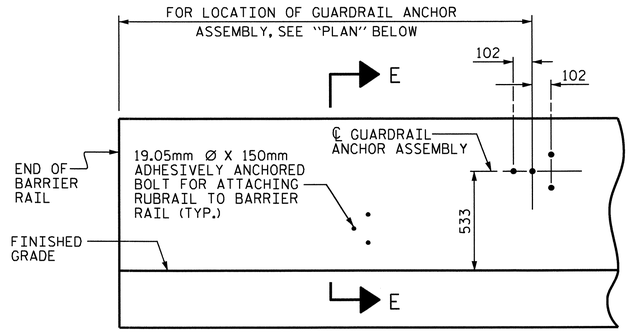


ELEVATION

FOR LOCATION OF RUBRAIL, SEE ROADWAY STD. 862.03

## NOTES

THE GUARDRAIL ANCHOR ASSEMBLY SHALL CONSIST OF A 6mm HOLD DOWN PLATE AND 4 - 22.23mm Ø BOLTS WITH NUTS AND WASHERS, RUBRAIL, AND ADHESIVELY ANCHORED BOLTS.

THE HOLD-DOWN PLATE SHALL CONFORM TO AASHTO M270 GRADE 36. AFTER FABRICATION, THE HOLD-DOWN PLATE SHALL BE HOT-DIP GALVANIZED IN ACCORDANCE WITH AASHTO M111.

BOLTS SHALL CONFORM TO THE REQUIREMENTS OF ASTM A307 AND NUTS SHALL CONFORM TO THE REQUIREMENTS OF AASHTO M291. BOLTS, NUTS AND WASHERS SHALL BE GALVANIZED. (AT THE CONTRACTOR'S OPTION, STAINLESS STEEL BOLTS, NUTS AND WASHERS MAY BE USED AS AN ALTERNATE FOR THE 22.23mm Ø GALVANIZED BOLTS, NUTS AND WASHERS. THEY SHALL CONFORM TO OR EXCEED THE MECHANICAL REQUIREMENTS OF ASTM A307. THE USE OF THIS ALTERNATE SHALL BE APPROVED BY THE ENGINEER.)

THE GUARDRAIL ANCHOR ASSEMBLY IS REQUIRED AT ALL POINTS WHERE APPROACH GUARDRAIL IS TO BE ATTACHED TO THE END OF BARRIER RAIL. FOR POINTS OF ATTACHMENT, SEE SKETCH.

AFTER INSTALLATION, THE EXPOSED THREAD OF THE BOLT SHALL BE BURRED WITH A SHARP POINTED TOOL.

THE COST OF THE GUARDRAIL ANCHOR ASSEMBLY SHALL BE INCLUDED IN THE UNIT CONTRACT PRICE BID FOR CONCRETE BARRIER RAIL.

THE 32mm Ø HOLES SHALL BE FORMED OR DRILLED WITH A CORE BIT. IMPACT TOOLS WILL NOT BE PERMITTED. ANY CONCRETE DAMAGED BY THIS WORK SHALL BE REPAIRED TO THE SATISFACTION OF THE ENGINEER.

THE C150 X 12 RUBRAIL IS TO BE ADHESIVELY ANCHORED TO THE RAIL USING THREE 19.05mm Ø X 150mm BOLTS WITH WASHERS. LEVEL ONE FIELD TESTING IS REQUIRED, AND THE YIELD LOAD OF THE 19.05mm Ø BOLTS IS 53.4kN. FOR ADHESIVELY ANCHORED ANCHOR BOLTS OR DOWELS, SEE SPECIAL PROVISIONS. SEE ROADWAY STANDARD 862.03 FOR DETAILS AND LOCATION OF THE RUBRAIL.

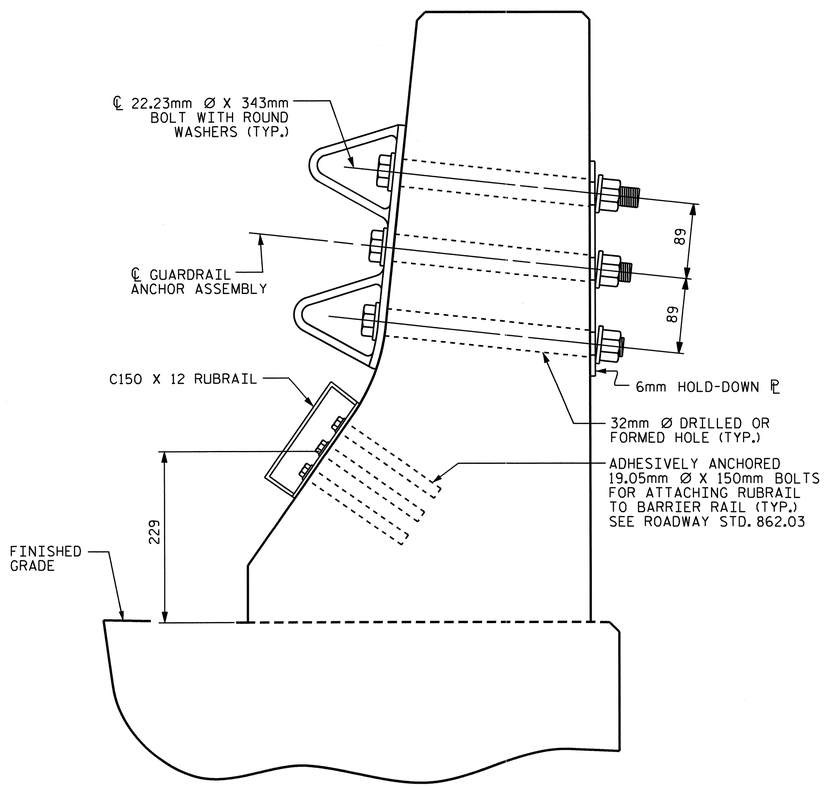


SECTION E-E

GUARDRAIL ANCHOR ASSEMBLY DETAILS

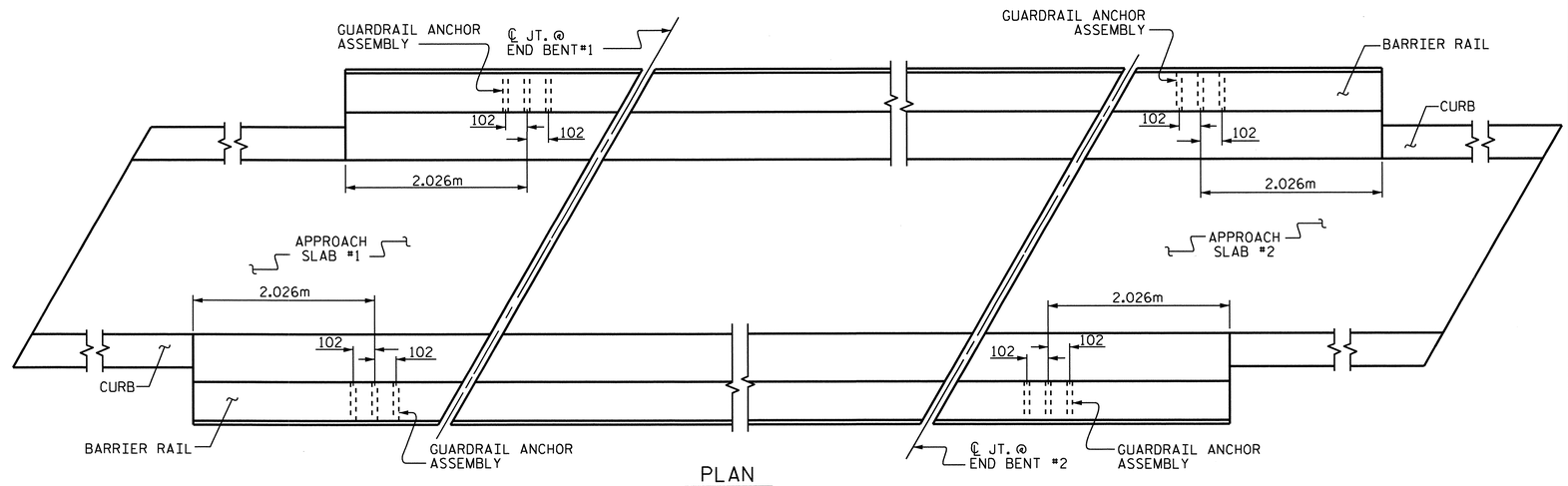


PLAN

LOCATION OF ANCHORS FOR GUARDRAIL

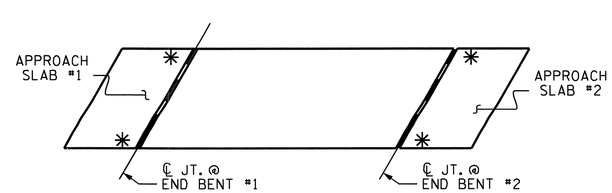


SKETCH SHOWING POINTS OF ATTACHMENTS

✳ DENOTES B-77 GUARDRAIL ANCHOR ASSEMBLY

PROJECT NO. R-2413C

GUILFORD-ROCKINGHAM COUNTY

STATION: 11+43.200 -SB US 220 RAMP-

STATE OF NORTH CAROLINA
DEPARTMENT OF TRANSPORTATION
RALEIGH

STANDARD

GUARDRAIL ANCHORAGE FOR BARRIER RAIL

NORTH CAROLINA PROFESSIONAL SEAL 022516 ENGINEER EMILY K. MARRAY
10/28/11

| REVISIONS | | | | | | SHEET NO. |
|---|---|---|---|---|---|---|
| NO. | BY: | DATE: | NO. | BY: | DATE: | S-127 |
| 1 | | | 3 | | | TOTAL SHEETS |
| 2 | | | 4 | | | 238 |

STR. #4 STD. NO. GRA2

ASSEMBLED BY : M.GUDLAUGSSON DATE : 12-3-10
CHECKED BY : T.L. AVERETTE DATE : 12-8-10
DRAWN BY : TLA 5/06
CHECKED BY : GM 5/06
ADDED 5/1/06R KMM/GM

05-SEP-2011 12:50
Y:\Structures\Final Plans\Str.#4\R-2413C_SD_BR_04.dgn
mgudlaugsson

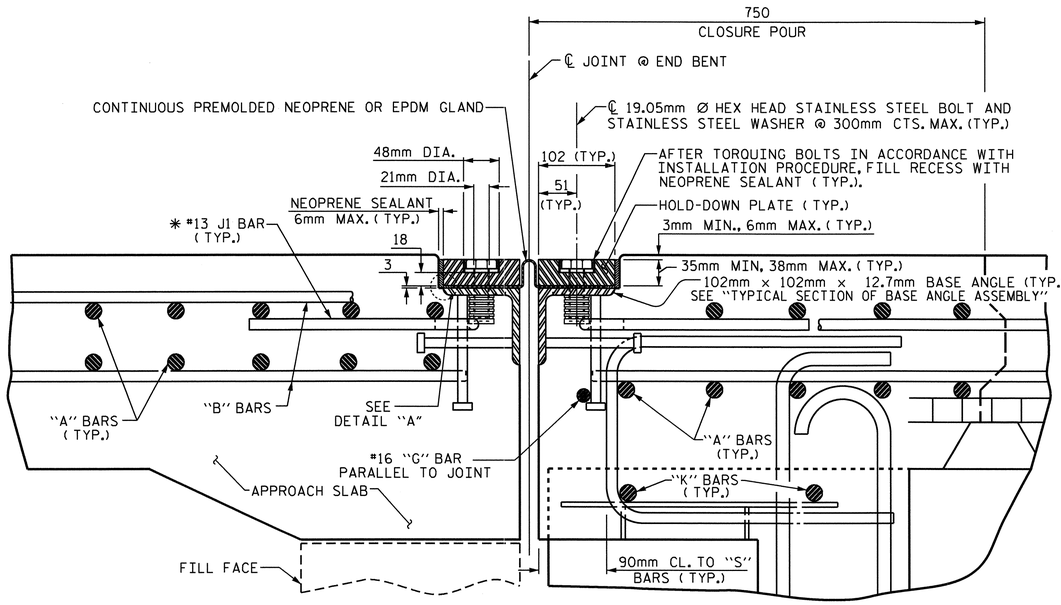


# EXPANSION JOINT DETAILS

SECTION NORMAL TO JOINT -- PRESTRESSED GIRDER SUPERSTRUCTURE

* THE QUANTITY OF #13 J1 BARS ON THE BILL OF MATERIAL IS BASED ON 300mm CENTERS. J1 BARS SHALL BE PLACED AT EACH VERTICAL STUD ANCHOR BOLT. IN THE EVENT THAT THE NUMBER OF VERTICAL STUD ANCHOR BOLTS EXCEEDS THE NUMBER OF J1 BARS SPECIFIED, ADDITIONAL J1 BARS WILL NOT BE REQUIRED.

## INSTALLATION PROCEDURE

1. A TEMPLATE OR OTHER SUITABLE DEVICE SHALL BE USED TO FORM THE TOP OF THE EXPANSION JOINT SEAL BLOCKOUT TO THE PROPER DEPTH AND WIDTH. THE TEMPLATE SHALL BE 105mm TO 108mm WIDE AND OF SUCH THICKNESS AS TO PROVIDE FOR CORRECT FINAL ELEVATION OF TOP OF HOLD-DOWN PLATES. THE TEMPLATE SHALL BE ATTACHED TO THE BASE ANGLE ASSEMBLY WITH THE 19.05mm Ø HEX HEAD BOLTS PROVIDED FOR THE HOLD-DOWN PLATES. A 25mm Ø HOLE SHALL BE PROVIDED IN THE TEMPLATE CENTERED OVER EACH WEEP HOLE IN THE 102mm X 102mm X 12.7mm BASE ANGLE. OTHER METHODS OF INSURING DRAINAGE THROUGH WEEP HOLES MAY BE EMPLOYED SUBJECT TO ENGINEER'S APPROVAL.
2. AFTER THE CONCRETE HAS BEEN CAST ON BOTH SIDES OF THE JOINT, REMOVE THE TEMPLATE. THOROUGHLY CLEAN THE BOLT HOLES AND THE ANGLE PLATE. REMOVE ANY EXCESS CONCRETE THAT COMES OUT OF THE WEEP HOLES. ANY DAMAGED STEEL SHALL BE COATED WITH A MINIMUM THICKNESS OF 0.100mm (DRY) OF ZINC-RICH PAINT IN ACCORDANCE WITH THE STANDARD SPECIFICATIONS.
3. LAY THE GLAND ON THE BASE ANGLE AND FIELD MARK THE GLAND FOR THE BOLT HOLES. HOLES IN THE GLAND SHALL BE PUNCHED 22mm IN DIAMETER WITH A HAND PUNCH.
4. IN ORDER TO CHECK FOR PROPER ALIGNMENT, PLACE THE GLAND AND HOLD-DOWN PLATES ON THE BASE ANGLE. DO NOT APPLY NEOPRENE SEALANT. BOLT THE HOLD-DOWN PLATES TO THE BASE ANGLE BUT DO NOT TIGHTEN. THE ENGINEER SHALL INSPECT THE JOINT SEAL DEVICE FOR PROPER ALIGNMENT.
5. AFTER INSPECTION, REMOVE THE HOLD-DOWN PLATES AND GLAND. APPLY NEOPRENE SEALANT TO THE BASE ANGLE IN ACCORDANCE WITH THE "INSTALLATION SKETCH". PLACE GLAND AND HOLD-DOWN PLATES ON THE BASE ANGLE. BOLT THE HOLD-DOWN PLATES TO THE BASE ANGLE ASSEMBLY AND TORQUE THE BOLTS TO 119.3 N-m WITH A TORQUE WRENCH. THE TORQUE WRENCH SHALL BE CALIBRATED IN ACCORDANCE WITH SECTION 440-10 (D) OF THE STANDARD SPECIFICATIONS. CHECK THE TORQUE AFTER THREE (3) HOURS AND, IF NECESSARY, RETIGHTEN TO 119.3 N-m. A FINAL CHECK SHALL BE MADE AT SEVEN (7) DAYS. TORQUE SHALL NOT BE LESS THAN 108.5 N-m AFTER SEVEN (7) DAYS.
6. AFTER PROPER TORQUING, CLEAN THE BOLT HOLE RECESSES AND THE RECESS BETWEEN THE JOINT SEAL DEVICE AND CONCRETE, COMPLETELY FILL THESE RECESSES WITH NEOPRENE SEALANT.

## GENERAL NOTES

1. FOR EXPANSION JOINT SEALS, SEE SPECIAL PROVISIONS.
2. ALL PLATES AND ANGLES SHALL CONFORM TO AASHTO M270 GRADE 250 STEEL OR APPROVED EQUAL. ALL HOLD-DOWN BOLTS SHALL CONFORM TO ASTM F593 ALLOY 304 STAINLESS STEEL. WASHERS SHALL CONFORM TO ASTM F844 EXCEPT THEY SHALL BE MADE FROM ALLOY 304 STAINLESS STEEL. ALL STUD ANCHORS SHALL CONFORM TO AASHTO M169, GRADES 1010 THRU 1020 OR APPROVED EQUAL. ALL CONCRETE INSERTS SHALL BE CLOSED END AND SHALL CONFORM TO AASHTO M169, GRADE 12L14. TENSILE CAPACITY SHALL BE 13.3 kN MIN.
3. A PREMOLDED CORRUGATED OR NON-CORRUGATED GLAND SHALL BE USED FOR JOINTS SKEWED BETWEEN 50° THRU 130°. FOR JOINTS SKEWED LESS THAN 50° OR MORE THAN 130°, ONLY A CORRUGATED GLAND SHALL BE USED.
4. CLOSED END FERRULES AND STUD ANCHORS SHALL BE SHOP WELDED AND ALL HOLES SHALL BE SHOP DRILLED AS SHOWN ON PLANS. STUD ANCHORS SHALL BE ELECTRIC ARC END WELDED WITH COMPLETE FUSION.
5. SURFACES COMING IN CONTACT WITH NEOPRENE SHALL BE GROUND SMOOTH PRIOR TO METALLIZING.
6. UPON COMPLETION OF SHOP FABRICATION, THE HOLD DOWN PLATE AND BASE ANGLE ASSEMBLY AS SHOWN IN THE "TYPICAL SECTION OF BASE ANGLE ASSEMBLY", SHALL BE METALLIZED. SEE SPECIAL PROVISION FOR THERMAL SPRAYED COATINGS (METALLIZATION).
7. BASE ANGLE ASSEMBLY SHALL BE CONTINUOUS FOR THE LENGTH OF THE JOINT. AT CROWN BREAKS, THE ENDS OF THE BASE ANGLE ASSEMBLY SHALL BE CUT PARALLEL TO THE BRIDGE CENTERLINE FOR SKEWS LESS THAN 80° AND GREATER THAN 100°. FINISHED WELD SHALL BE GROUND SMOOTH AND COATED WITH A MINIMUM THICKNESS OF 0.100mm (DRY) OF ZINC-RICH PAINT IN ACCORDANCE WITH THE STANDARD SPECIFICATIONS.
8. FIELD SPLICES OF HOLD-DOWN PLATES SHALL BE KEPT TO A MINIMUM. CONTRACTOR SHALL FURNISH DETAILED PLANS SHOWING PROPOSED SPLICE LOCATIONS FOR APPROVAL. HOLD-DOWN PLATES SHALL NOT EXCEED 6.1m LENGTHS UNLESS APPROVED BY THE ENGINEER.
9. NO ALTERNATE JOINT DETAILS SHALL BE PERMITTED IN LIEU OF THOSE SHOWN ON THESE PLANS.
10. THE CONTRACTOR MAY, AT HIS OPTION, USE ADHESIVELY ANCHORED ANCHOR BOLTS IN PLACE OF CONCRETE INSERTS FOR COVER PLATES. THE YIELD LOAD OF THE 19.05mm DIA. BOLT IS 44.5 kN. FIELD TESTING OF THE ADHESIVE BONDING SYSTEM IS NOT REQUIRED.

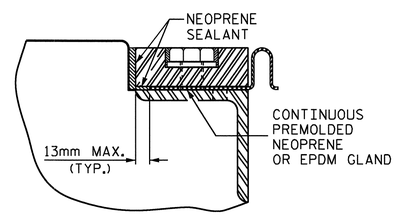


DETAIL "A"

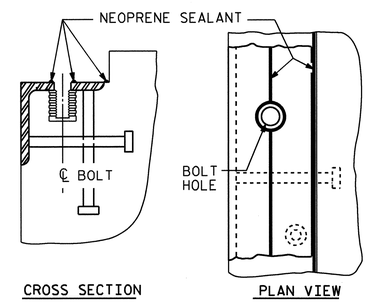


INSTALLATION SKETCH

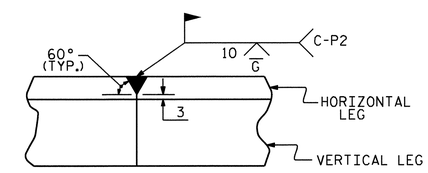


DETAIL- FIELD WELD SPLICE OF BASE ANGLE

| MOVEMENT AND SETTING AT JOINT | | | | | |
|---|---|---|---|---|---|
| END BENT NO. | SKEW ANGLE | TOTAL MOVEMENT (ALONG ℄ RDWY) | PERPENDICULAR JOINT OPENING AT 7° C | PERPENDICULAR JOINT OPENING AT 16° C | PERPENDICULAR JOINT OPENING AT 32° C |
| 1 | 115°-00'-00" | 18mm | 36mm | 33mm | 28mm |
| 2 | 115°-00'-00" | 18mm | 36mm | 33mm | 28mm |

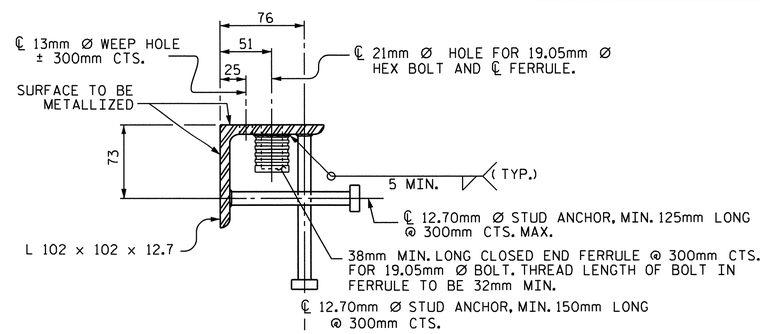


TYPICAL SECTION OF BASE ANGLE ASSEMBLY

NORTH CAROLINA PROFESSIONAL SEAL 022516 ENGINEER EMILY E. MURRAY
10/28/11

PROJECT NO. R-2413C
GUILFORD-ROCKINGHAM COUNTY
STATION: 11+43.200
-SB US 220 RAMP-
SHEET 1 OF 2

STATE OF NORTH CAROLINA
DEPARTMENT OF TRANSPORTATION
RALEIGH

STANDARD

EXPANSION JOINT SEAL DETAILS

| ASSEMBLED BY : M.GUDLAUGSSON DATE : 11-10-10 | | | |
|---|---|---|---|
| CHECKED BY : T.L. AVERETTE DATE : 12-8-10 | | | |
| DRAWN BY : REK 9/87 | REV. 10/17/00 | RWW/LES | |
| CHECKED BY : CRK 10/87 | REV. 5/7/03R | RWW/JTE | |
| | REV. 5/1/06 | TLA/GM | |

| REVISIONS | | | | | | SHEET NO. |
|---|---|---|---|---|---|---|
| NO. | BY: | DATE: | NO. | BY: | DATE: | S-128 |
| 1 | | | 3 | | | TOTAL SHEETS |
| 2 | | | 4 | | | 238 |

STR. #4

STD. NO. EJS1SM

05-SEP-2011 12:49
Y:\Structures\Final Plans\Str.#4\R-2413C_SD_JS_04.dgn
mgudlaugsson

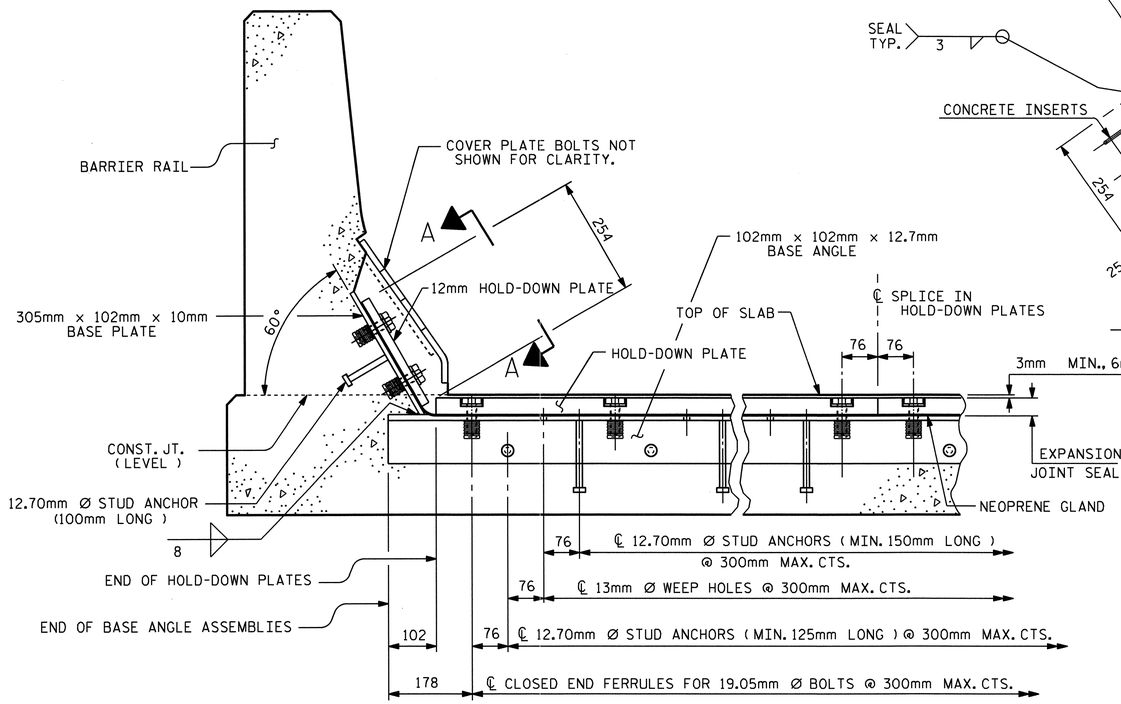


SECTION THRU RAIL NORMAL TO JOINT

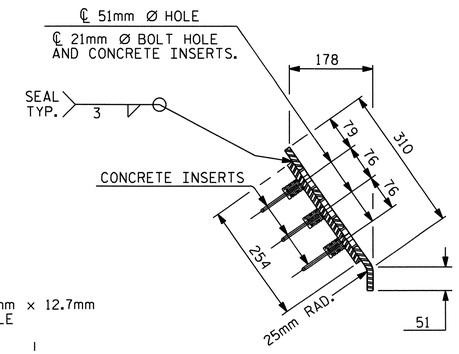


END VIEW

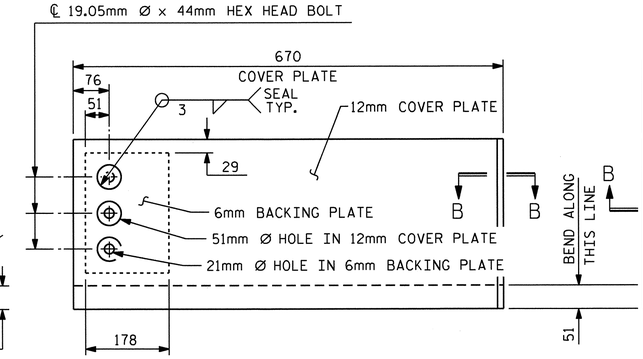


TYPE I - ELEVATION VIEW

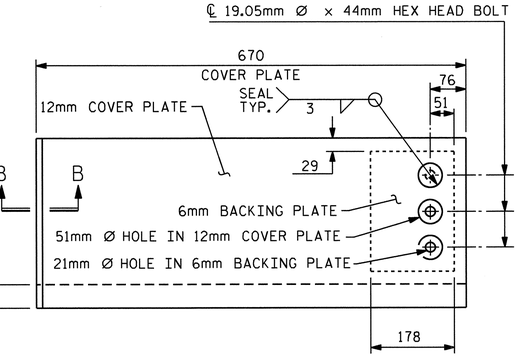


TYPE II - ELEVATION VIEW

COVER PLATE DETAILS

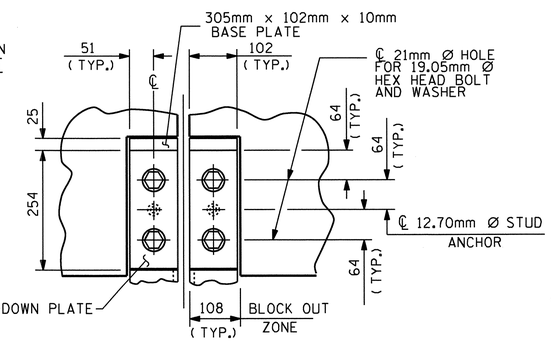


SECTION A - A

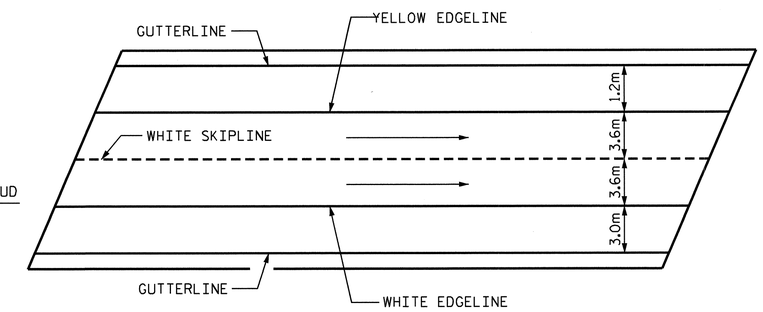


PAVEMENT MARKING ALIGNMENT

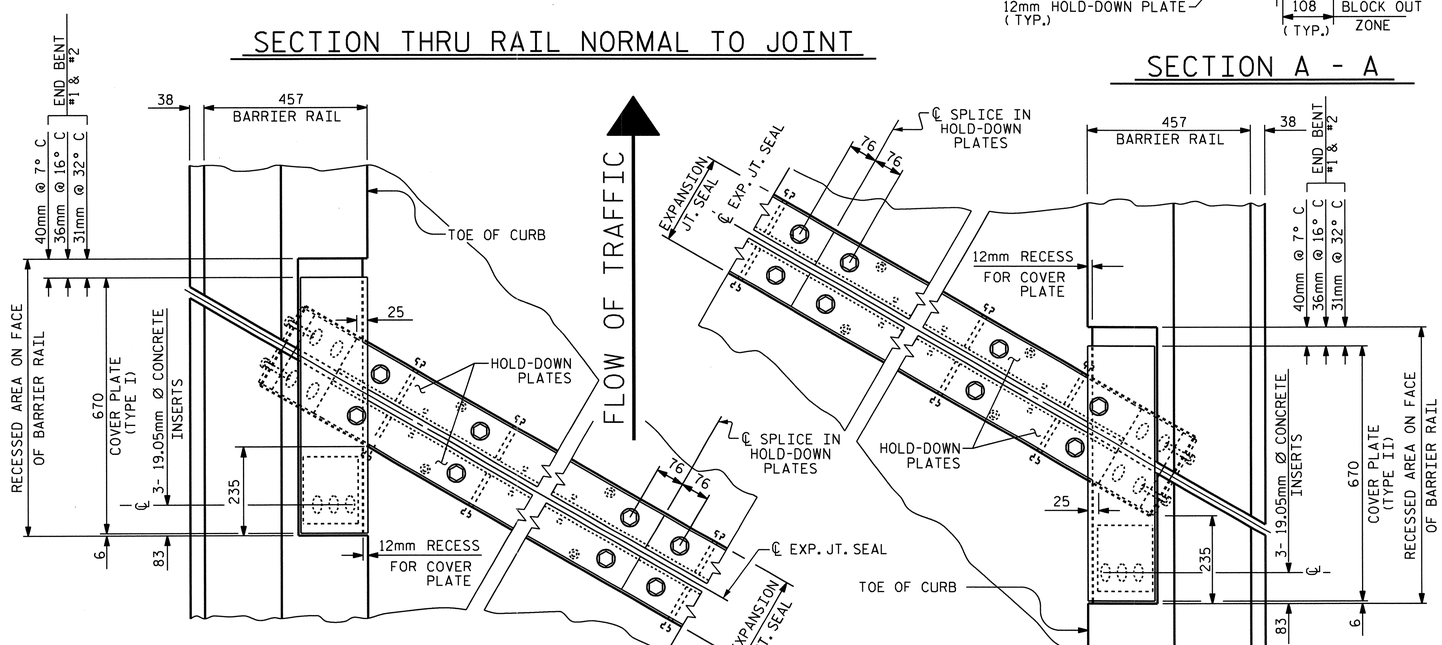


PLAN OF EXPANSION JOINT SEAL - LEFT SIDE




PLAN OF EXPANSION JOINT SEAL - RIGHT SIDE

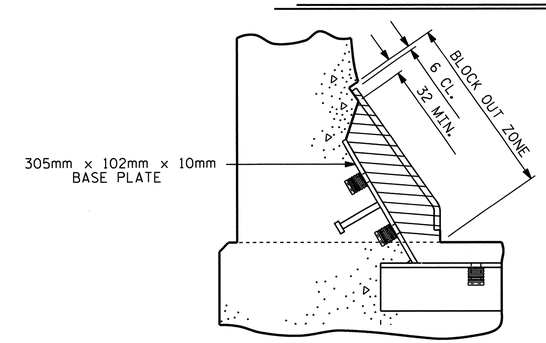


BLOCK OUT DETAIL

SEE "SECTION A - A" FOR OTHER DETAILS.

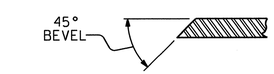


SECTION B - B

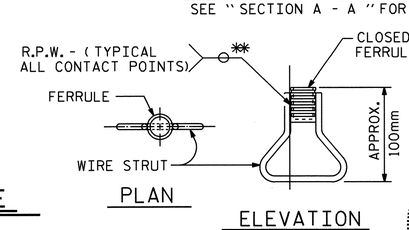


CONCRETE INSERT

** EACH WELDED ATTACHMENT OF WIRE TO FERRULE SHALL DEVELOP THE TENSILE STRENGTH OF THE WIRE.

PROJECT NO. R-2413C

GUILFORD-ROCKINGHAM COUNTY

STATION: 11+43.200

SHEET 2 OF 2 -SB US 220 RAMP-

STATE OF NORTH CAROLINA
DEPARTMENT OF TRANSPORTATION
RALEIGH

STANDARD

EXPANSION JOINT SEAL DETAILS FOR BARRIER RAIL

NORTH CAROLINA PROFESSIONAL SEAL 022516 ENGINEER EMILY E. MURRAY 10/28/10

| ASSEMBLED BY : M.GUDLAUGSSON DATE : 11-10-10 | |
|---|---|
| CHECKED BY : T.L. AVERETTE DATE : 12-8-10 | |
| DRAWN BY : REK 9/87 | REV. 7/17/98 RWW/LES |
| CHECKED BY : CRK 10/87 | REV. 10/17/00 RWW/LES |
| | REV. 5/1/06 TLA/GM |

| REVISIONS | | | | | | | SHEET NO. |
|---|---|---|---|---|---|---|---|
| NO. | BY: | DATE: | NO. | BY: | DATE: | | S-129 |
| 1 | | | 3 | | | | TOTAL SHEETS |
| 2 | | | 4 | | | | 238 |

STR. #4

STD. NO. EJS2SM

19-OCT-2011 14:32
R:\TIPProjects-R\R2413c\Structures\Final Plans\Str.#4\R-2413C_SD_JS_04.dgn
taverette

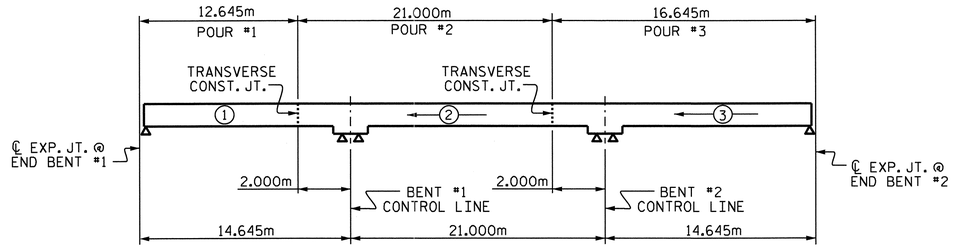


## POURING SEQUENCE

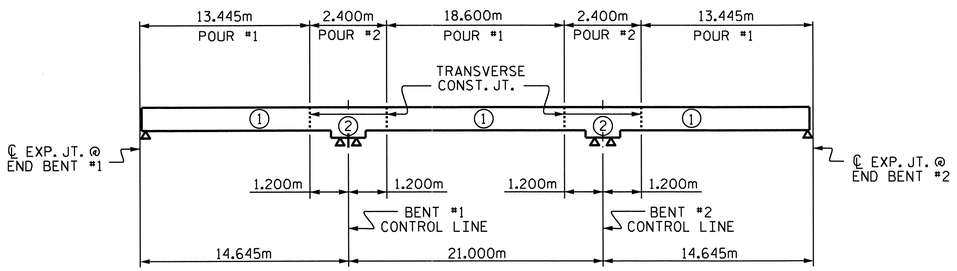


## OPTIONAL POURING SEQUENCE

POUR ② CAN NOT BE STARTED UNTIL BOTH ADJACENT ① POURS REACH A MINIMUM OF 20.7MPa.

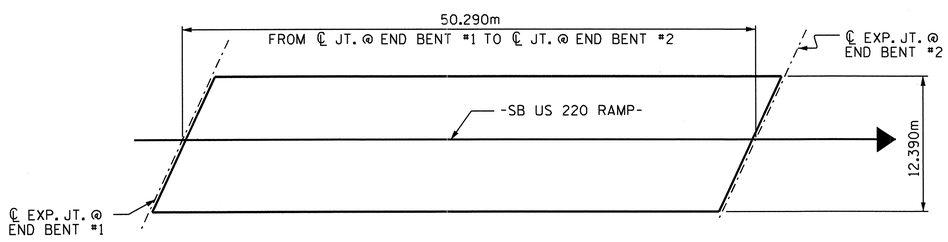


## LAYOUT FOR COMPUTING AREA OF REINFORCED CONCRETE DECK SLAB (623.1 SQ. METER)

## BILL OF MATERIAL — SPANS A, B, C

| BAR | NO. | SIZE | TYPE | LENGTH | WEIGHT |
|---|---|---|---|---|---|
| ✱ A1 | 261 | #16 | STR | 12280 | 4974 |
| ✱ A101 | 4 | #16 | STR | 11480 | 71 |
| ✱ A102 | 4 | #16 | STR | 10740 | 67 |
| ✱ A103 | 4 | #16 | STR | 10020 | 62 |
| ✱ A104 | 4 | #16 | STR | 9280 | 58 |
| ✱ A105 | 4 | #16 | STR | 8560 | 53 |
| ✱ A106 | 4 | #16 | STR | 7820 | 49 |
| ✱ A107 | 4 | #16 | STR | 7100 | 44 |
| ✱ A108 | 4 | #16 | STR | 6360 | 39 |
| ✱ A109 | 4 | #16 | STR | 5640 | 35 |
| ✱ A110 | 4 | #16 | STR | 4900 | 30 |
| ✱ A111 | 4 | #16 | STR | 4180 | 26 |
| ✱ A112 | 4 | #16 | STR | 3440 | 21 |
| ✱ A113 | 4 | #16 | STR | 2720 | 17 |
| ✱ A114 | 4 | #16 | STR | 1980 | 12 |
| ✱ A115 | 4 | #16 | STR | 1260 | 8 |
| ✱ A116 | 4 | #16 | STR | 540 | 3 |
| | | | | | |
| A2 | 261 | #16 | STR | 12280 | 4974 |
| A201 | 4 | #16 | STR | 11800 | 73 |
| A202 | 4 | #16 | STR | 11080 | 69 |
| A203 | 4 | #16 | STR | 10340 | 64 |
| A204 | 4 | #16 | STR | 9620 | 60 |
| A205 | 4 | #16 | STR | 8880 | 55 |
| A206 | 4 | #16 | STR | 8160 | 51 |
| A207 | 4 | #16 | STR | 7420 | 46 |
| A208 | 4 | #16 | STR | 6700 | 42 |
| A209 | 4 | #16 | STR | 5960 | 37 |
| A210 | 4 | #16 | STR | 5240 | 33 |
| A211 | 4 | #16 | STR | 4500 | 28 |
| A212 | 4 | #16 | STR | 3780 | 23 |
| A213 | 4 | #16 | STR | 3040 | 19 |

## BILL OF MATERIAL — SPANS A, B, C

| BAR | NO. | SIZE | TYPE | LENGTH | WEIGHT |
|---|---|---|---|---|---|
| A214 | 4 | #16 | STR | 2320 | 14 |
| A215 | 4 | #16 | STR | 1600 | 10 |
| A216 | 4 | #16 | STR | 870 | 5 |
| | | | | | |
| ✱ B1 | 112 | #13 | STR | 4900 | 546 |
| ✱ B2 | 56 | #22 | STR | 13800 | 2351 |
| ✱ B3 | 54 | #22 | STR | 5500 | 903 |
| ✱ B4 | 28 | #13 | STR | 6620 | 184 |
| B5 | 144 | #16 | STR | 17160 | 3835 |
| | | | | | |
| ✱ G1 | 2 | #16 | STR | 13560 | 42 |
| | | | | | |
| ✱ J1 | 84 | #13 | 9 | 440 | 37 |
| | | | | | |
| ✱ S1 | 56 | #16 | 3 | 1500 | 130 |
| ✱ S2 | 56 | #13 | 4 | 1120 | 62 |
| S3 | 152 | #13 | 5 | 840 | 127 |
| | | | | | |
| ✱ K1 | 8 | #25 | 1 | 4020 | 128 |
| ✱ K2 | 12 | #25 | 2 | 6040 | 288 |
| K3 | 16 | #13 | STR | 2260 | 36 |
| K4 | 32 | #13 | STR | 2500 | 80 |
| K5 | 16 | #13 | STR | 1900 | 30 |
| K6 | 24 | #13 | 8 | 3500 | 83 |
| K7 | 16 | #13 | 7 | 1780 | 28 |
| K8 | 24 | #19 | STR | 2300 | 123 |
| | | | | | |
| ✱ U1 | 40 | #13 | 6 | 4100 | 163 |
| ✱ U2 | 16 | #13 | 6 | 3500 | 56 |

REINFORCING STEEL = 9945 kg

✱EPOXY COATED REINFORCING STEEL = 10459 kg

## BAR TYPES

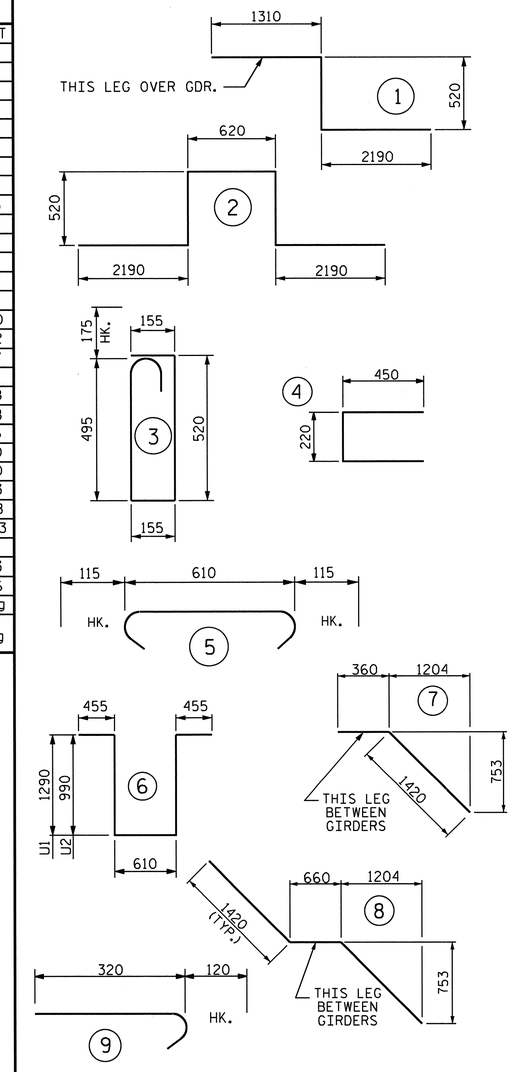


ALL BAR DIMENSIONS ARE OUT TO OUT.

| GROOVING BRIDGE FLOORS | | |
|---|---|---|
| BRIDGE DECK | 524.3 | SQ.METER |
| APPROACH SLABS | 154.0 | SQ.METER |
| TOTAL | 678.3 | SQ.METER |

SUPERSTRUCTURE REINFORCING STEEL LENGTHS ARE BASED ON THE FOLLOWING MINIMUM SPLICE LENGTHS

| BAR SIZE | SUPERSTRUCTURE EXCEPT APPROACH SLABS, PARAPET, AND BARRIER RAIL | | APPROACH SLABS | | PARAPET AND BARRIER RAIL |
|---|---|---|---|---|---|
| | EPOXY COATED | UNCOATED | EPOXY COATED | UNCOATED | |
| #13 | 610 | 540 | 610 | 540 | 840 |
| #16 | 770 | 660 | 770 | 660 | 1050 |
| #19 | 920 | 790 | 1190 | 790 | 1330 |
| #22 | 1580 | 1060 | | | |
| #25 | 2080 | 1390 | | | |

## SUPERSTRUCTURE BILL OF MATERIAL

| | CLASS AA CONCRETE | | REINFORCING STEEL | EPOXY COATED REINFORCING STEEL |
|---|---|---|---|---|
| | (CU. METER) | | (kg) | (kg) |
| SPAN A, B, AND C | POUR 1 | 43.3 | | |
| | POUR 2 | 78.2 | | |
| | POUR 3 | 65.6 | 9945 | 10459 |
| TOTALS ✱✱ | 187.1 | | 9945 | 10459 |

✱✱ QUANTITIES FOR BARRIER RAIL ARE NOT INCLUDED

PROJECT NO. R-2413C
GUILFORD-ROCKINGHAM COUNTY
STATION: 11+43.200
-SB US 220 RAMP-

STATE OF NORTH CAROLINA
DEPARTMENT OF TRANSPORTATION
RALEIGH

STANDARD
SUPERSTRUCTURE BILL OF MATERIAL

NORTH CAROLINA PROFESSIONAL SEAL 022516 ENGINEER EMILY E. MURRAY
10/28/11

| REVISIONS | | | | | | | | SHEET NO. |
|---|---|---|---|---|---|---|---|---|
| NO. | BY: | DATE: | NO. | BY: | DATE: | | | S-130 |
| 1 | | | 3 | | | | | TOTAL SHEETS |
| 2 | | | 4 | | | | | 238 |

ASSEMBLED BY : M.GUDLAUGSSON DATE : 9-7-10
CHECKED BY : T.L. AVERETTE DATE : 9-20-10
DRAWN BY : JMB 5/87 REV. 5/16/97 EEM/RGW
CHECKED BY : SJD 9/87 REV. 5/1/06 TLA/GM

05-SEP-2011 12:48
Y:\Structures\Final Plans\Str.#4\R-2413C_SD_BM_04.dgn
mgudlaugsson

STR. #4

STD. NO. BOM1SM

## NOTES

STIRRUPS & U1 BARS IN CAP MAY BE SHIFTED AS NECESSARY TO CLEAR ANCHOR BOLTS.

BACKWALL SHALL BE PLACED BEFORE APPLYING THE EPOXY PROTECTIVE COATING.

THE TOP SURFACE AREAS OF THE END BENT CAP SHALL BE CURED IN ACCORDANCE WITH THE STANDARD SPECIFICATIONS EXCEPT THE MEMBRANE CURING COMPOUND METHOD SHALL NOT BE USED.

THE CONTRACTOR SHALL PROVIDE FOR THE INSTALLATION OF THE 102mm Ø DRAIN PIPE THROUGH THE WING WALL AS REQUIRED FOR REINFORCED BRIDGE APPROACH FILLS. SEE THE ROADWAY PLANS. REINFORCING STEEL IN THE WING WALL MAY BE SHIFTED AS NECESSARY TO CLEAR THE DRAIN PIPE.

THE TOP SURFACE OF THE END BENT CAP EXCEPT THE BRIDGE SEAT BUILDUPS SHALL BE SLOPED TRANSVERSELY FROM THE FILL FACE TO THE BACK FACE AT A RATE OF 2%.

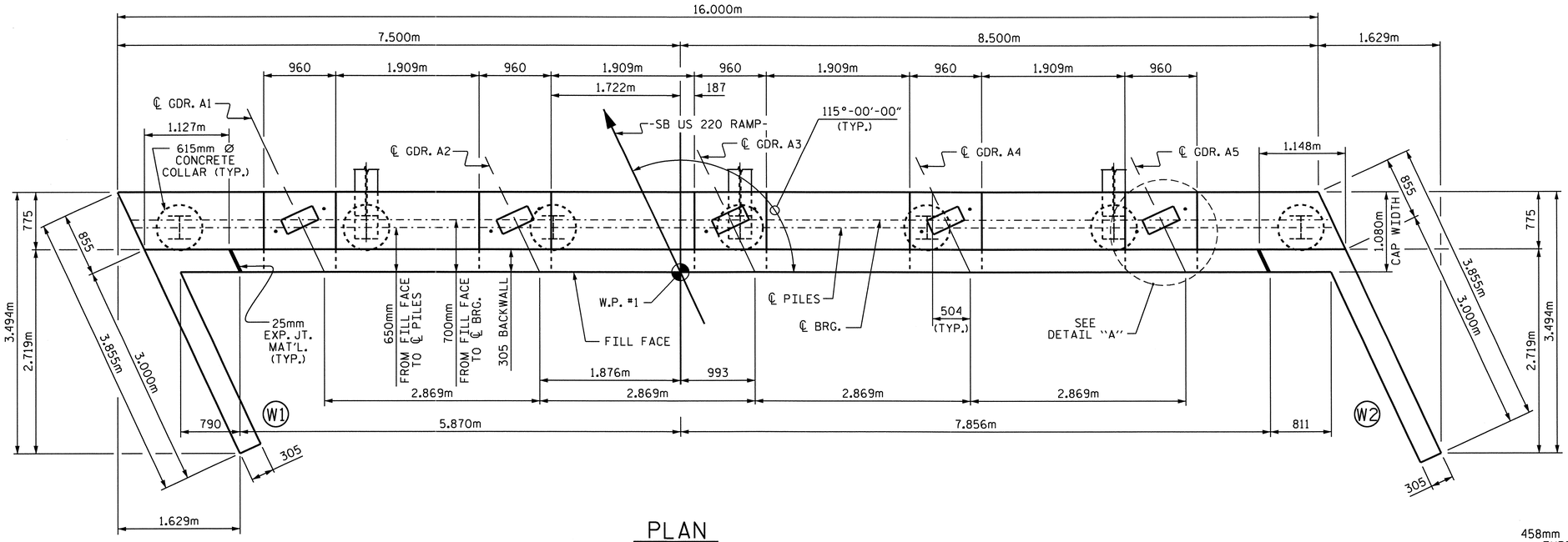


PLAN

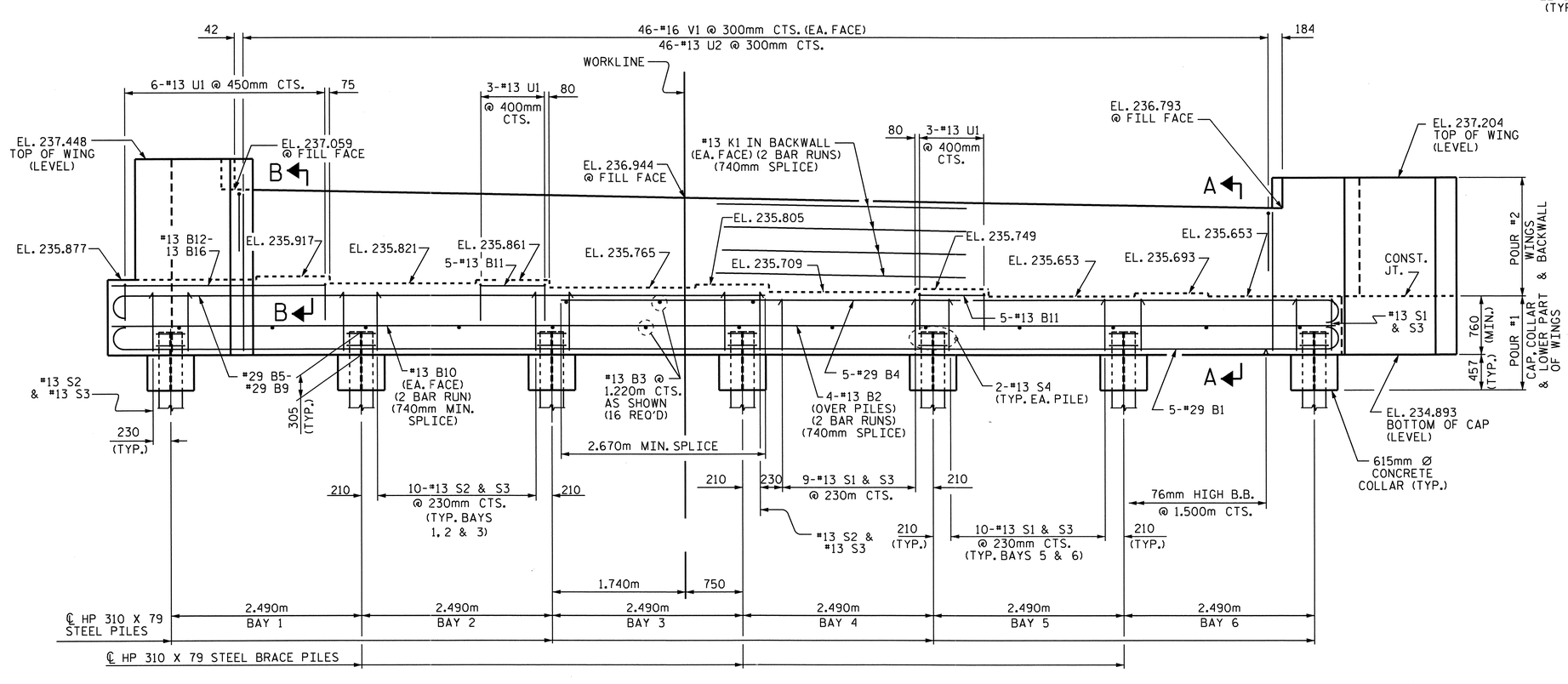


ELEVATION

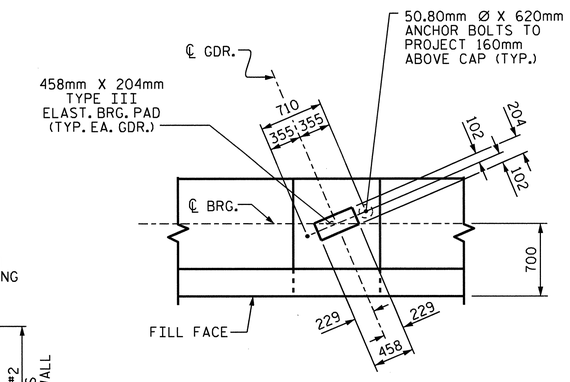


DETAIL "A"

(TYP. EA. BRG.)

PROJECT NO. R-2413C

GUILFORD-ROCKINGHAM COUNTY

STATION: 11+43.200 -SB US 220 RAMP-

SHEET 1 OF 3

STATE OF NORTH CAROLINA
DEPARTMENT OF TRANSPORTATION
RALEIGH

SUBSTRUCTURE

END BENT #1

NORTH CAROLINA PROFESSIONAL SEAL 022516 ENGINEER EMILY E. MURRAY
10/28/11

| REVISIONS | | | | | | SHEET NO. |
|---|---|---|---|---|---|---|
| NO. | BY: | DATE: | NO. | BY: | DATE: | S-131 |
| 1 | | | 3 | | | TOTAL SHEETS |
| 2 | | | 4 | | | 238 |

STR. #4

DRAWN BY : B.N.BARODAWALA DATE : 4-12-11
CHECKED BY : PEGGY PARISI DATE : 4-28-11

05-SEP-2011 12:47
Y:\Structures\Final Plans\Str.#4\R-2413C_SD_EB_04.dgn
mgudlaugsson

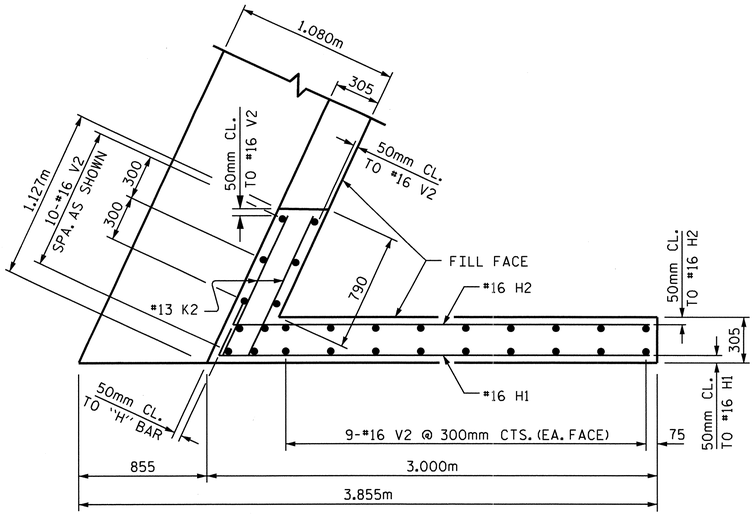


PLAN OF WING W1

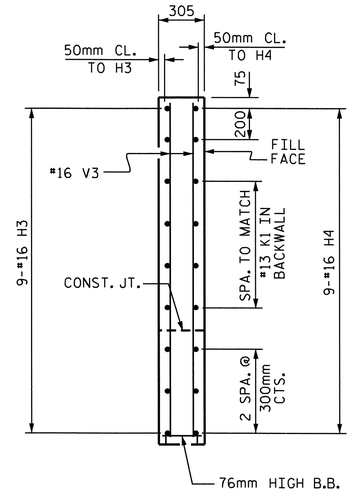


SECTION Y-Y

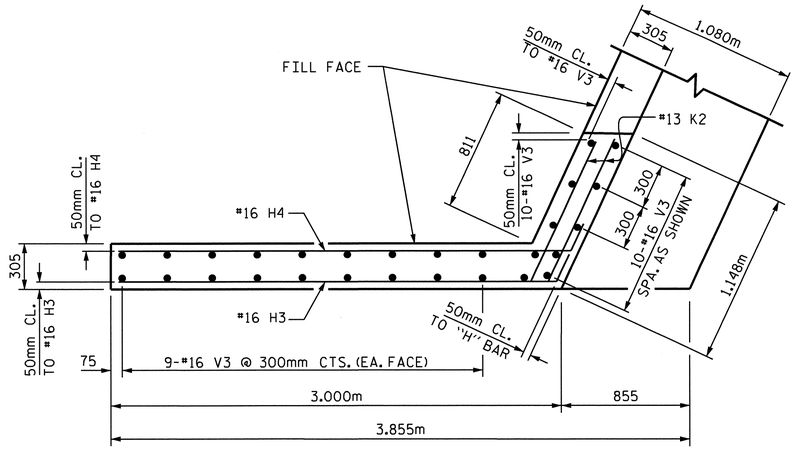


PLAN OF WING W2

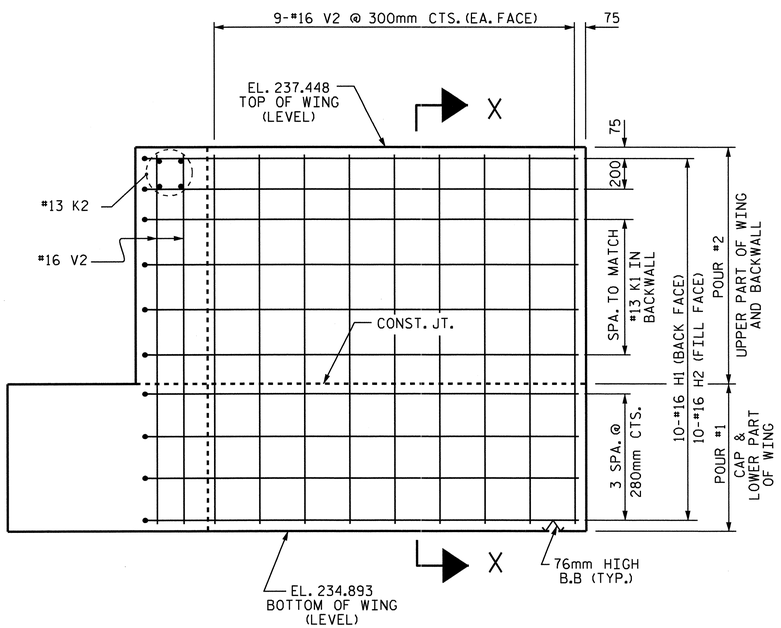


ELEVATION OF WING W1

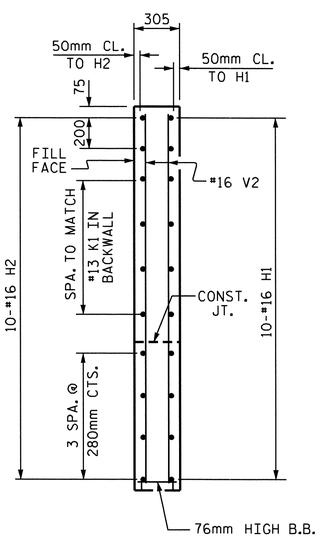


SECTION X-X

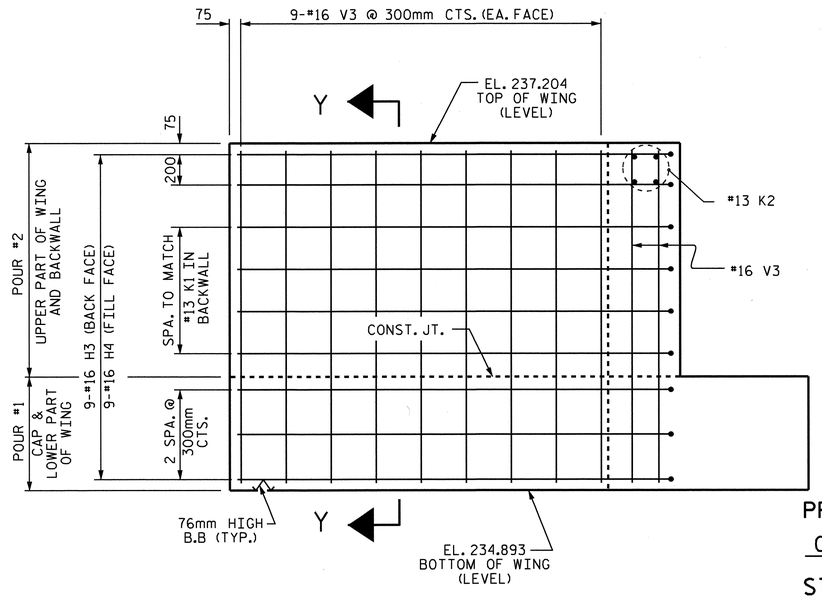


ELEVATION OF WING W2

PROJECT NO. R-2413C

GUILFORD-ROCKINGHAM COUNTY

STATION: 11+43.200

-SB US 220 RAMP-

SHEET 2 OF 3

STATE OF NORTH CAROLINA
DEPARTMENT OF TRANSPORTATION
RALEIGH

SUBSTRUCTURE

END BENT #1

NORTH CAROLINA PROFESSIONAL SEAL 022516 ENGINEER EMILY E. MURRAY
4/28/11

| REVISIONS | | | | | | SHEET NO. |
|---|---|---|---|---|---|---|
| NO. | BY: | DATE: | NO. | BY: | DATE: | S-132 |
| 1 | | | 3 | | | TOTAL SHEETS |
| 2 | | | 4 | | | 238 |

STR. #4

DRAWN BY : B.N.BARODAWALA DATE : 4-12-11
CHECKED BY : PEGGY PARISI DATE : 4-28-11

19-OCT-2011 14:33
R:\TIPProjects-R\R2413c\Structures\FinalPlans\Str.#4\R-2413C_SD_EB_04.dgn
taverette

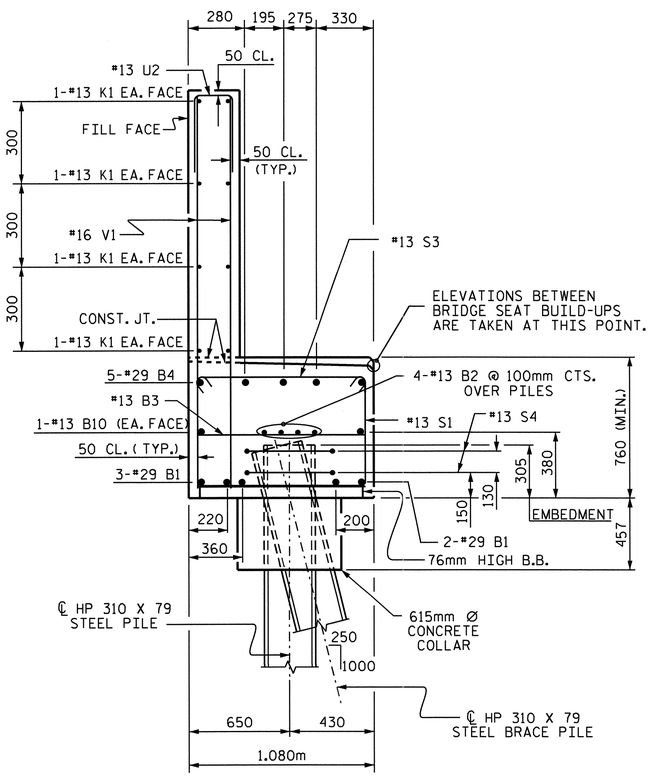


SECTION A-A

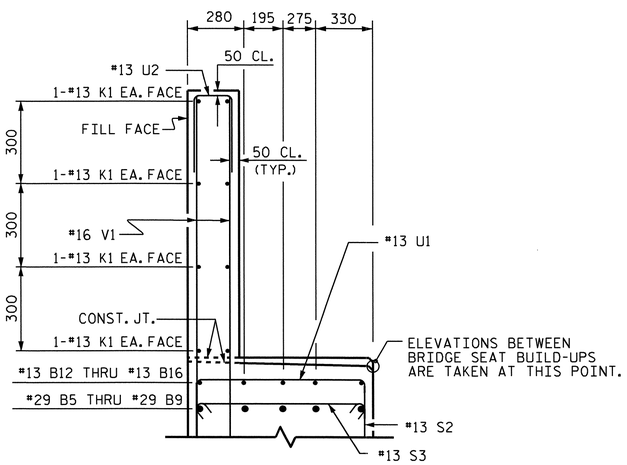


SECTION B-B

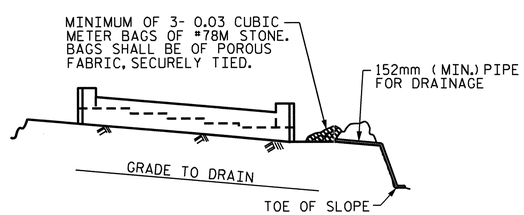


BAGGED STONE AND PIPE SHALL BE PLACED IMMEDIATELY AFTER COMPLETION OF END BENT EXCAVATION. PIPE MAY BE EITHER CONCRETE, CORRUGATED STEEL, CORRUGATED ALUMINUM ALLOY, OR CORRUGATED PLASTIC. PERFORATED PIPE WILL NOT BE ALLOWED.

BAGGED STONE SHALL REMAIN IN PLACE UNTIL THE ENGINEER DIRECTS THAT IT BE REMOVED. THE CONTRACTOR SHALL REMOVE AND DISPOSE OF SILT ACCUMULATIONS AT BAGGED STONE WHEN SO DIRECTED BY THE ENGINEER. BAGS SHALL BE REMOVED AND REPLACED WHENEVER THE ENGINEER DETERMINES THAT THEY HAVE DETERIORATED AND LOST THEIR EFFECTIVENESS.

NO SEPARATE PAYMENT WILL BE MADE FOR THIS WORK AND THE ENTIRE COST OF THIS WORK SHALL BE INCLUDED IN THE UNIT CONTRACT PRICE BID FOR THE SEVERAL PAY ITEMS.

TEMPORARY DRAINAGE AT END BENT

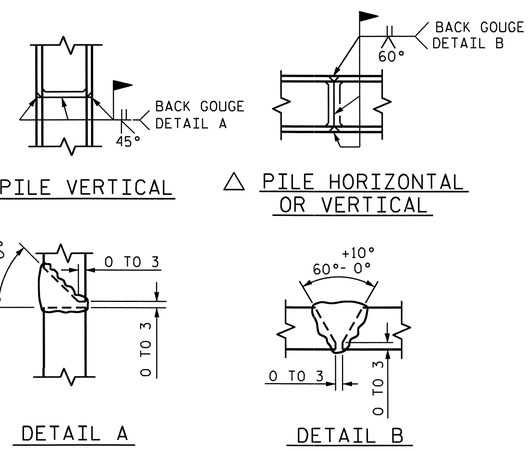


△ PILE VERTICAL

△ PILE HORIZONTAL OR VERTICAL

DETAIL A

DETAIL B

△ POSITION OF PILE DURING WELDING.

PILE SPLICE DETAILS

## BAR TYPES

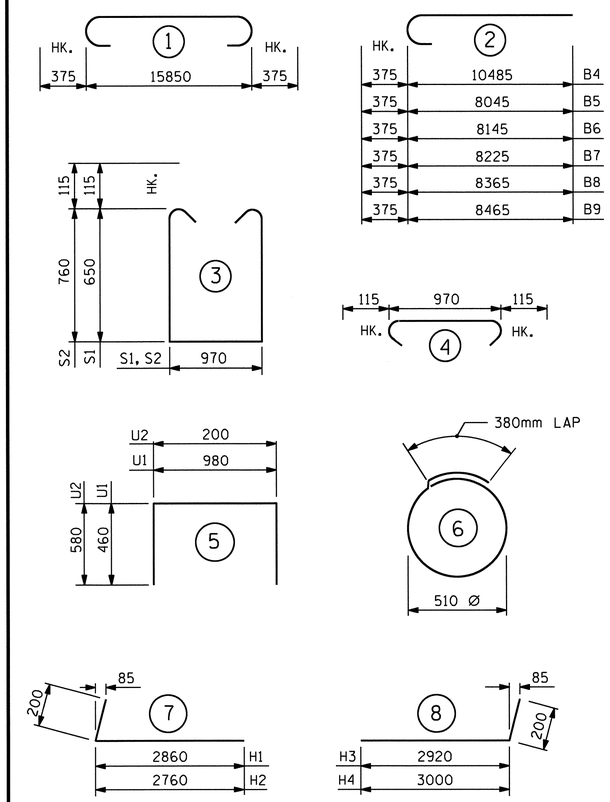


ALL BAR DIMENSIONS ARE OUT TO OUT.

## BILL OF MATERIAL

### END BENT #1

| BAR | NO. | SIZE | TYPE | LENGTH | WEIGHT |
|---|---|---|---|---|---|
| B1 | 5 | #29 | 1 | 16600 | 420 |
| B2 | 8 | #13 | STR | 8320 | 66 |
| B3 | 16 | #13 | STR | 980 | 16 |
| B4 | 5 | #29 | 2 | 10860 | 275 |
| B5 | 1 | #29 | 2 | 8420 | 43 |
| B6 | 1 | #29 | 2 | 8520 | 43 |
| B7 | 1 | #29 | 2 | 8600 | 44 |
| B8 | 1 | #29 | 2 | 8740 | 44 |
| B9 | 1 | #29 | 2 | 8840 | 45 |
| B10 | 4 | #13 | STR | 8320 | 33 |
| B11 | 10 | #13 | STR | 860 | 9 |
| B12 | 1 | #13 | STR | 2300 | 2 |
| B13 | 1 | #13 | STR | 2400 | 2 |
| B14 | 1 | #13 | STR | 2500 | 2 |
| B15 | 1 | #13 | STR | 2620 | 3 |
| B16 | 1 | #13 | STR | 2740 | 3 |
| | | | | | |
| H1 | 10 | #16 | 7 | 3060 | 47 |
| H2 | 10 | #16 | 7 | 2960 | 46 |
| H3 | 9 | #16 | 8 | 3120 | 44 |
| H4 | 9 | #16 | 8 | 3200 | 45 |
| | | | | | |
| K1 | 16 | #13 | STR | 8320 | 132 |
| K2 | 8 | #13 | STR | 1020 | 8 |
| | | | | | |
| S1 | 30 | #13 | 3 | 2500 | 75 |
| S2 | 32 | #13 | 3 | 2720 | 87 |
| S3 | 62 | #13 | 4 | 1200 | 74 |
| S4 | 14 | #13 | 6 | 1980 | 28 |
| | | | | | |
| U1 | 12 | #13 | 5 | 1900 | 23 |
| U2 | 46 | #13 | 5 | 1360 | 62 |
| | | | | | |
| V1 | 92 | #16 | STR | 1800 | 257 |
| V2 | 28 | #16 | STR | 2440 | 106 |
| V3 | 28 | #16 | STR | 2200 | 96 |

REINFORCING STEEL = 2180 kg.

| | | |
|---|---|---|
| POUR #1<br>CAP, LOWER PART OF WINGS, & CONCRETE PILE COLLARS | 17.5 | m3 |
| POUR #2<br>BACKWALL & UPPER PART OF WINGS | 8.5 | m3 |
| CLASS "A" CONCRETE TOTAL | 26.0 | m3 |

HP 310 x 79 STEEL PILES
No. 7 METERS 99.0

PROJECT NO. R-2413C
GUILFORD-ROCKINGHAM COUNTY
STATION: 11+43.200
-SB US 220 RAMP-

SHEET 3 OF 3

STATE OF NORTH CAROLINA
DEPARTMENT OF TRANSPORTATION
RALEIGH

SUBSTRUCTURE

END BENT #1

NORTH CAROLINA PROFESSIONAL SEAL 022516 ENGINEER EMILY E. MURRAY
6/28/11

| REVISIONS | | | | | | SHEET NO. |
|---|---|---|---|---|---|---|
| NO. | BY: | DATE: | NO. | BY: | DATE: | S-133 |
| 1 | | | 3 | | | TOTAL SHEETS |
| 2 | | | 4 | | | 238 |

STR. #4

DRAWN BY : B.N.BARODAWALA DATE : 4-12-11
CHECKED BY : PEGGY PARISI DATE : 4-28-11

05-SEP-2011 12:47
Y:\Structures\Final Plans\Str.#4\R-2413C_SD_EB_04.dgn
mgudlaugsson

## NOTES:

STIRRUPS AND U1 BARS IN CAP MAY BE SHIFTED AS NECESSARY TO CLEAR ANCHOR BOLTS.

HOOKS ON "V" BARS MAY BE TURNED AS NECESSARY FOR PLACING REINFORCING STEEL.

ALL STEEL IN THE DRILLED PIERS IS INCLUDED IN THE PAY ITEMS FOR "REINFORCING STEEL" AND "SPIRAL COLUMN REINFORCING STEEL".

THE CONTRACTOR'S ATTENTION IS CALLED TO THE FACT THAT THE LONITUDINAL REINFORCEMENT FOR THE DRILLED PIERS IS DETAILED WITH ONE METER OF EXTRA LENGTH.

THE LOCATION OF THE CONSTRUCTION JOINT IN THE DRILLED PIERS IS BASED ON AN APPROXIMATE GROUND LINE ELEVATION. IF THE CONSTRUCTION JOINT IS ABOVE THE ACTUAL GROUND LINE ELEVATION, THE CONTRACTOR SHALL PLACE THE CONSTRUCTION JOINT 300mm BELOW THE GROUND LINE.

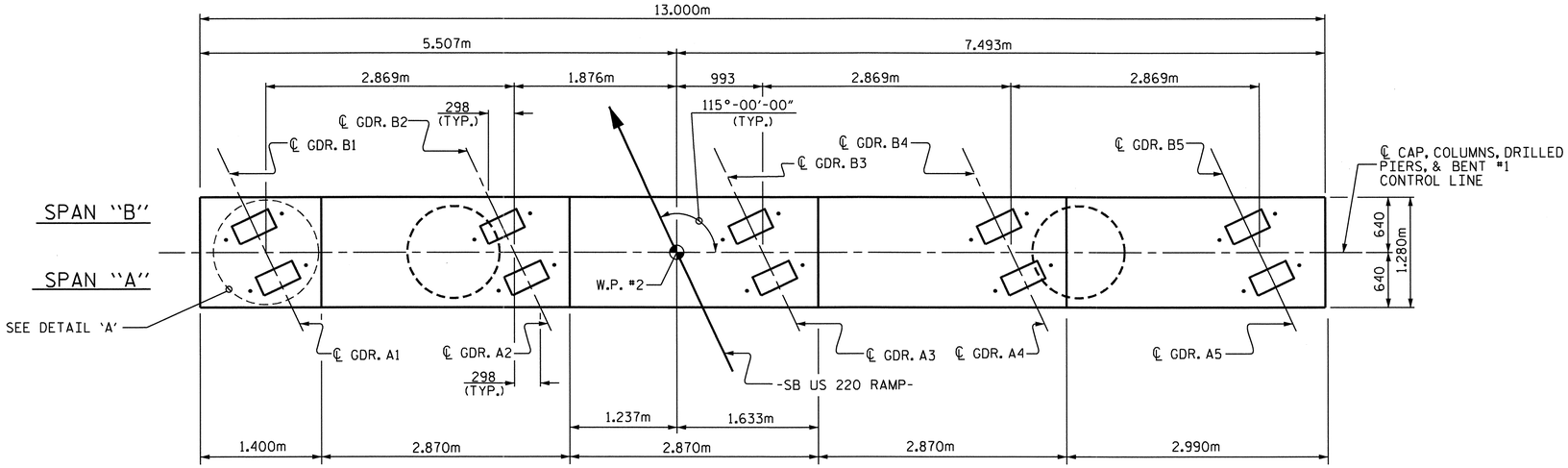


PLAN

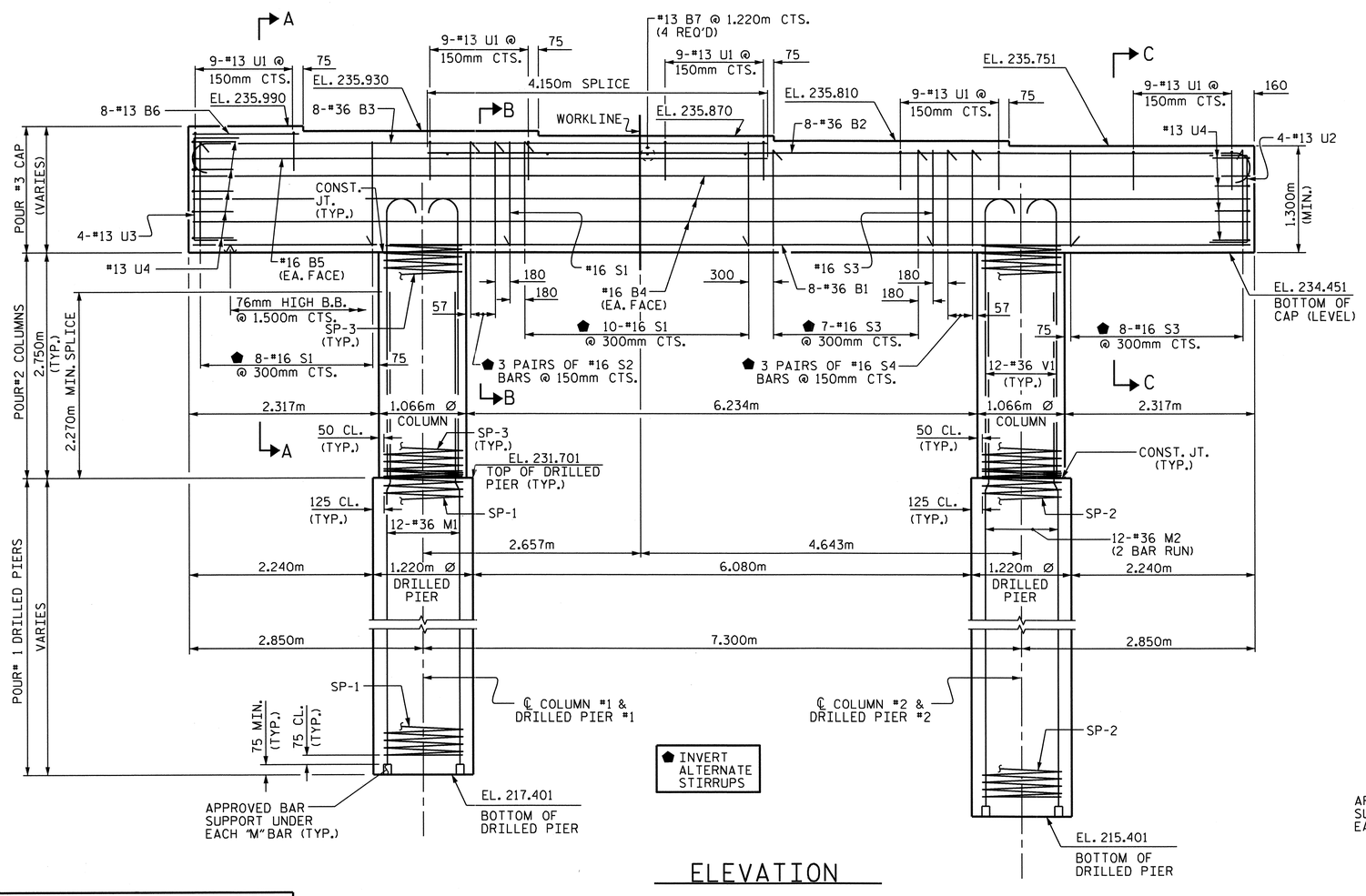


ELEVATION

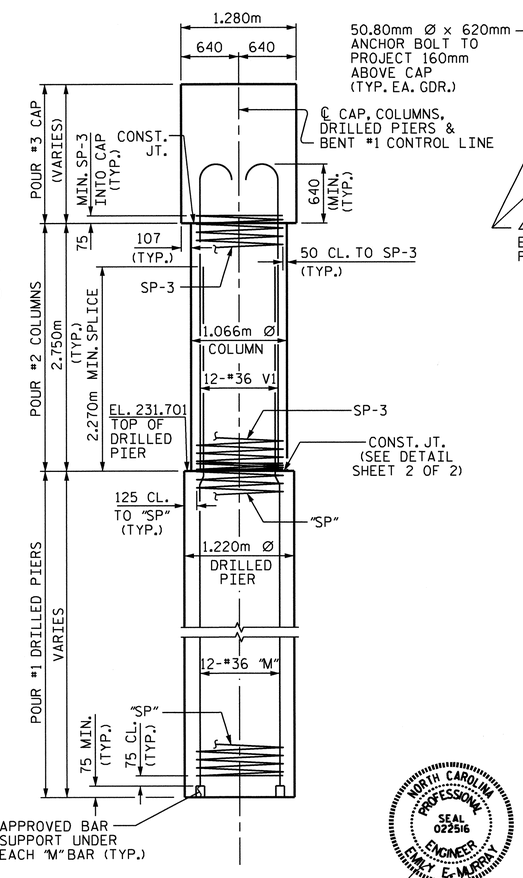


END ELEVATION

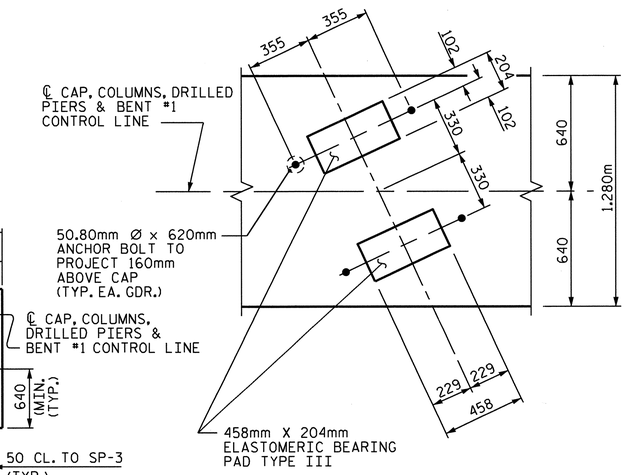


DETAIL "A"

DIMENSIONS ARE TYPICAL FOR EACH GIRDER.

PROJECT NO. R-2413C

GUILFORD-ROCKINGHAM COUNTY

STATION: 11+43.200

-SB US 220 RAMP-

SHEET 1 OF 2

STATE OF NORTH CAROLINA
DEPARTMENT OF TRANSPORTATION
RALEIGH

SUBSTRUCTURE

BENT #1

NORTH CAROLINA PROFESSIONAL SEAL 022516 ENGINEER ELMAY E. MURRAY

10/28/11

| REVISIONS | | | | | | SHEET NO. |
|---|---|---|---|---|---|---|
| NO. | BY: | DATE: | NO. | BY: | DATE: | S-134 |
| 1 | | | 3 | | | TOTAL SHEETS |
| 2 | | | 4 | | | 238 |

STR. #4

DRAWN BY : PEGGY PARISI DATE : 3-30-11
CHECKED BY : B.N. BARODAWALA DATE : 7-25-11

19-OCT-2011 14:34
R:\TIPProjects-R\R2413c\Structures\Final Plans\Str.#4\R-2413C_SD_B1.dgn
taverette

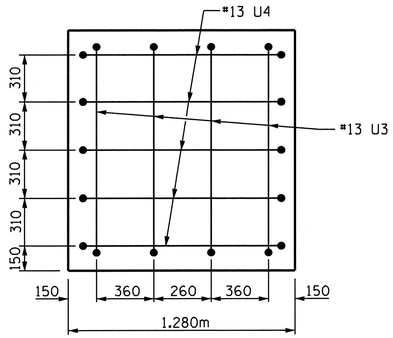


LEFT END VIEW

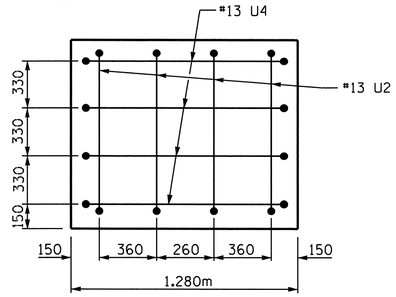


RIGHT END VIEW

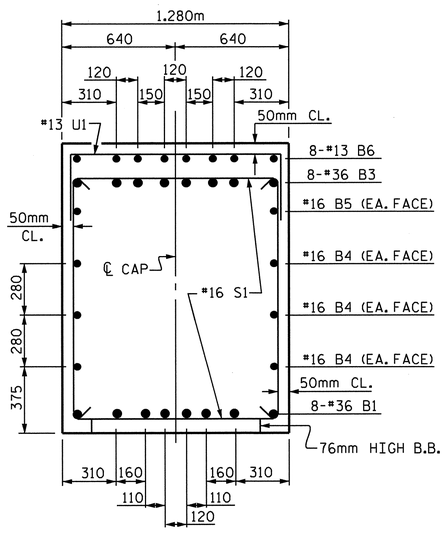


SECTION A-A

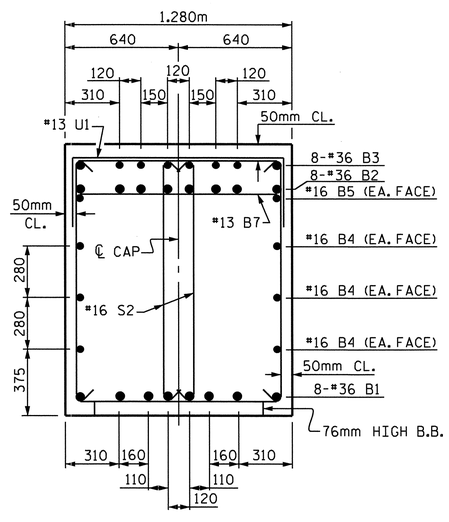


SECTION B-B

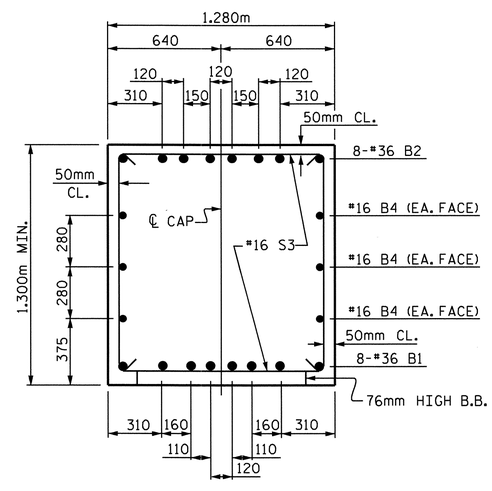


SECTION C-C

## BAR TYPES

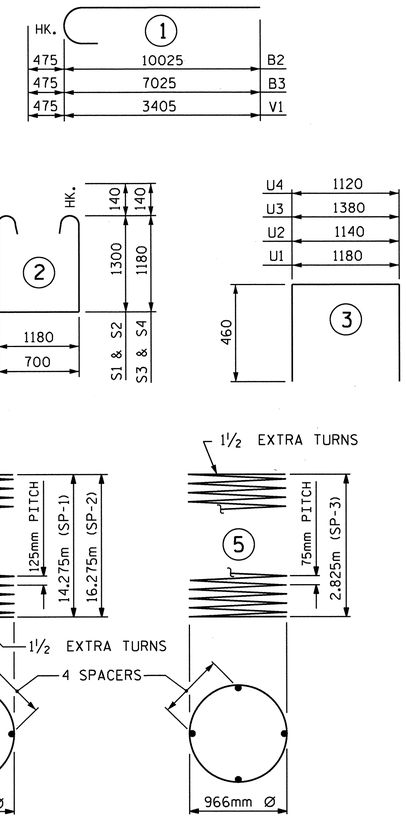


ALL BAR DIMENSIONS ARE OUT TO OUT

## BILL OF MATERIAL

### BENT #1

| BAR | NO. | SIZE | TYPE | LENGTH | WEIGHT |
|---|---|---|---|---|---|
| B1 | 8 | 36 | STR | 12900 | 816 |
| B2 | 8 | 36 | 1 | 10500 | 664 |
| B3 | 8 | 36 | 1 | 7500 | 474 |
| B4 | 6 | 16 | STR | 12900 | 120 |
| B5 | 2 | 16 | STR | 7040 | 22 |
| B6 | 8 | 13 | STR | 1300 | 10 |
| B7 | 4 | 13 | STR | 1180 | 5 |
| | | | | | |
| M1 | 12 | 36 | STR | 17500 | 1660 |
| M2 | 24 | 36 | STR | 10900 | 2068 |
| | | | | | |
| S1 | 19 | 16 | 2 | 4060 | 120 |
| S2 | 6 | 16 | 2 | 3580 | 33 |
| S3 | 16 | 16 | 2 | 3820 | 95 |
| S4 | 6 | 16 | 2 | 3340 | 31 |
| | | | | | |
| U1 | 45 | 13 | 3 | 2100 | 94 |
| U2 | 4 | 13 | 3 | 2060 | 8 |
| U3 | 4 | 13 | 3 | 2300 | 9 |
| U4 | 9 | 13 | 3 | 2040 | 18 |
| | | | | | |
| V1 | 24 | 36 | 1 | 3880 | 736 |
| REINFORCING STEEL | | | | | 6983 KG |
| SPIRAL REINFORCING STEEL | | | | | |
| SP-1 | 1 | ✱✱ | 4 | 347100 | 539 |
| SP-2 | 1 | ✱✱ | 4 | 395100 | 613 |
| SP-3 | 2 | ✱ | 5 | 117340 | 233 |
| | | | | | |
| SPIRAL REINFORCING STEEL | | | | | 1385 KG |

| | | |
|---|---|---|
| CLASS "A" CONCRETE BREAKDOWN | | |
| POUR #2 COLUMNS | $m^3$ | 4.9 |
| POUR #3 CAP | $m^3$ | 23.4 |
| CLASS "A" CONCRETE TOTAL | $m^3$ | 28.3 |
| DRILLED PIER CONCRETE | | |
| POUR #1 DRILLED PIERS | $m^3$ | 35.8 |
| PERMANENT STEEL CASING FOR 1.220m Ø DRILLED PIERS | METERS | 26.0 |
| 1.220m Ø DRILLED PIERS NOT IN SOIL | METERS | 4.6 |
| 1.220m Ø DRILLED PIERS IN SOIL | METERS | 26.0 |
| CSL TESTING | EACH | 1 |
| CSL TUBES | METERS | 128.4 |

✱ THE SP-3 SPIRAL REINFORCING STEEL SHALL BE W20 OR D-20 COLD DRAWN WIRE OR #13 PLAIN OR DEFORMED BAR.

✱✱ THE SP-1 AND SP-2 SPIRAL REINFORCING STEEL SHALL BE W31 OR D-31 COLD DRAWN WIRE OR #16 PLAIN OR DEFORMED BAR.

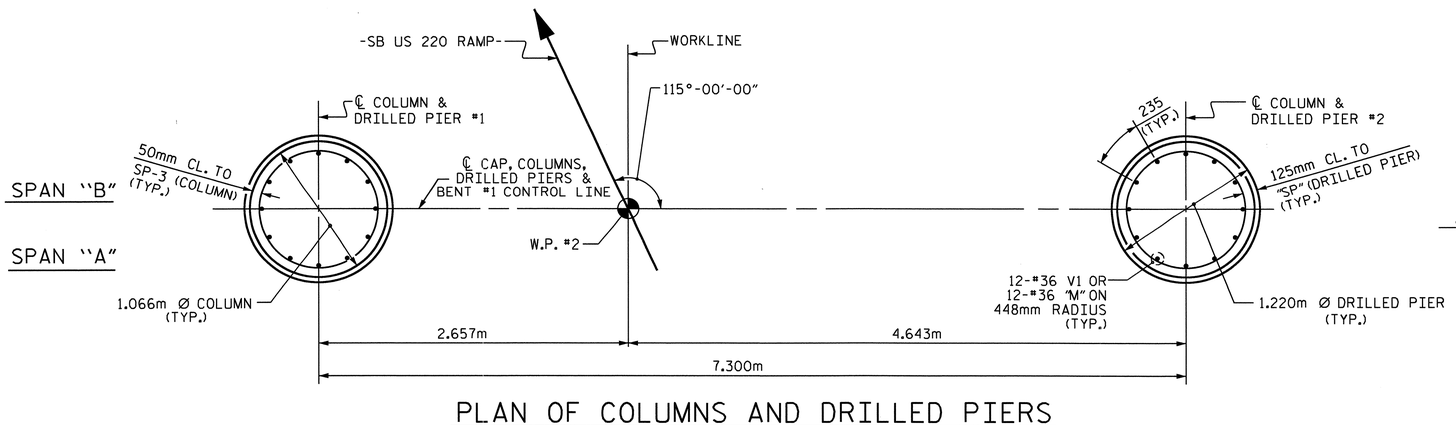


PLAN OF COLUMNS AND DRILLED PIERS

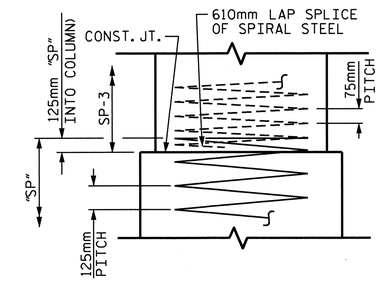


CONSTRUCTION JOINT DETAIL

PROJECT NO. R-2413C

GUILFORD-ROCKINGHAM COUNTY

STATION: 11+43.200 -SB US 220 RAMP-

SHEET 2 OF 2

STATE OF NORTH CAROLINA
DEPARTMENT OF TRANSPORTATION
RALEIGH

SUBSTRUCTURE

BENT #1

NORTH CAROLINA PROFESSIONAL SEAL 022516 ENGINEER EMILY E. MURRAY

10/28/11

| REVISIONS | | | | | | SHEET NO. |
|---|---|---|---|---|---|---|
| NO. | BY: | DATE: | NO. | BY: | DATE: | S-135 |
| 1 | | | 3 | | | TOTAL SHEETS |
| 2 | | | 4 | | | 238 |

DRAWN BY : PEGGY PARISI DATE : 3-30-11
CHECKED BY : B.N. BARODAWALA DATE : 7-25-11

19-OCT-2011 14:34
R:\TIPProjects-R\R2413c\Structures\FinalPlans\Str.#4\R-2413C_SD_B1.dgn
taverette

STR. #4

## NOTES:

STIRRUPS AND U1 BARS IN CAP MAY BE SHIFTED AS NECESSARY TO CLEAR ANCHOR BOLTS.

HOOKS ON "V" BARS MAY BE TURNED AS NECESSARY FOR PLACING REINFORCING STEEL.

ALL STEEL IN THE DRILLED PIERS IS INCLUDED IN THE PAY ITEMS FOR "REINFORCING STEEL" AND "SPIRAL COLUMN REINFORCING STEEL".

THE CONTRACTOR'S ATTENTION IS CALLED TO THE FACT THAT THE LONGITUDINAL REINFORCEMENT FOR THE DRILLED PIERS IS DETAILED WITH ONE METER OF EXTRA LENGTH.

THE LOCATION OF THE CONSTRUCTION JOINT IN THE DRILLED PIERS IS BASED ON AN APPROXIMATE GROUND LINE ELEVATION. IF THE CONSTRUCTION JOINT IS ABOVE THE ACTUAL GROUND LINE ELEVATION, THE CONTRACTOR SHALL PLACE THE CONSTRUCTION JOINT 300mm BELOW THE GROUND LINE.

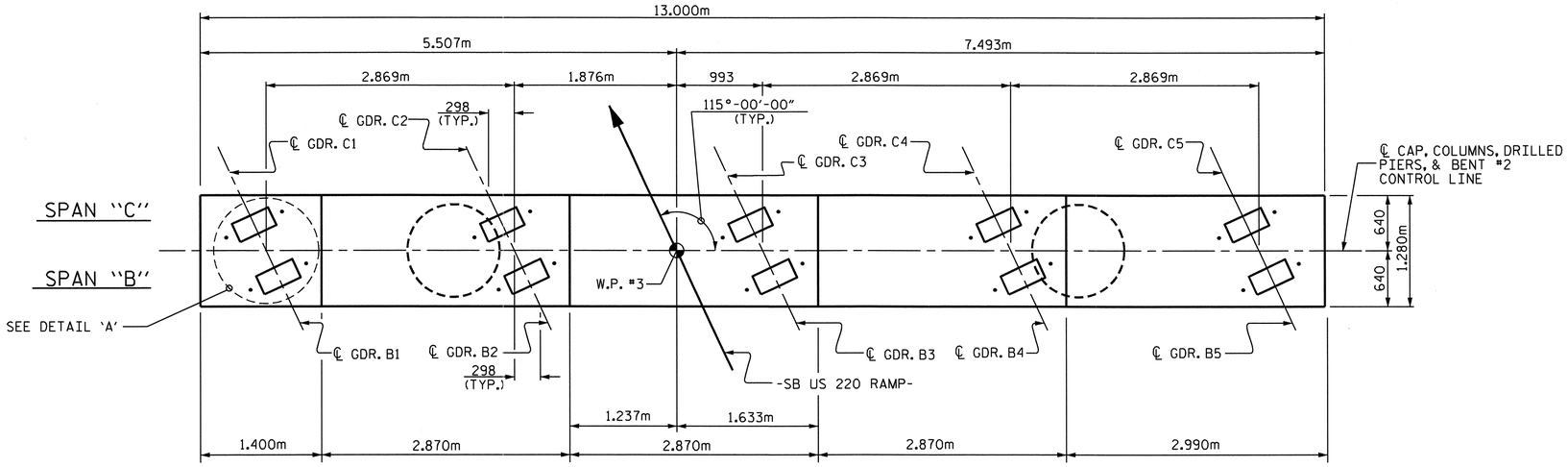


## PLAN

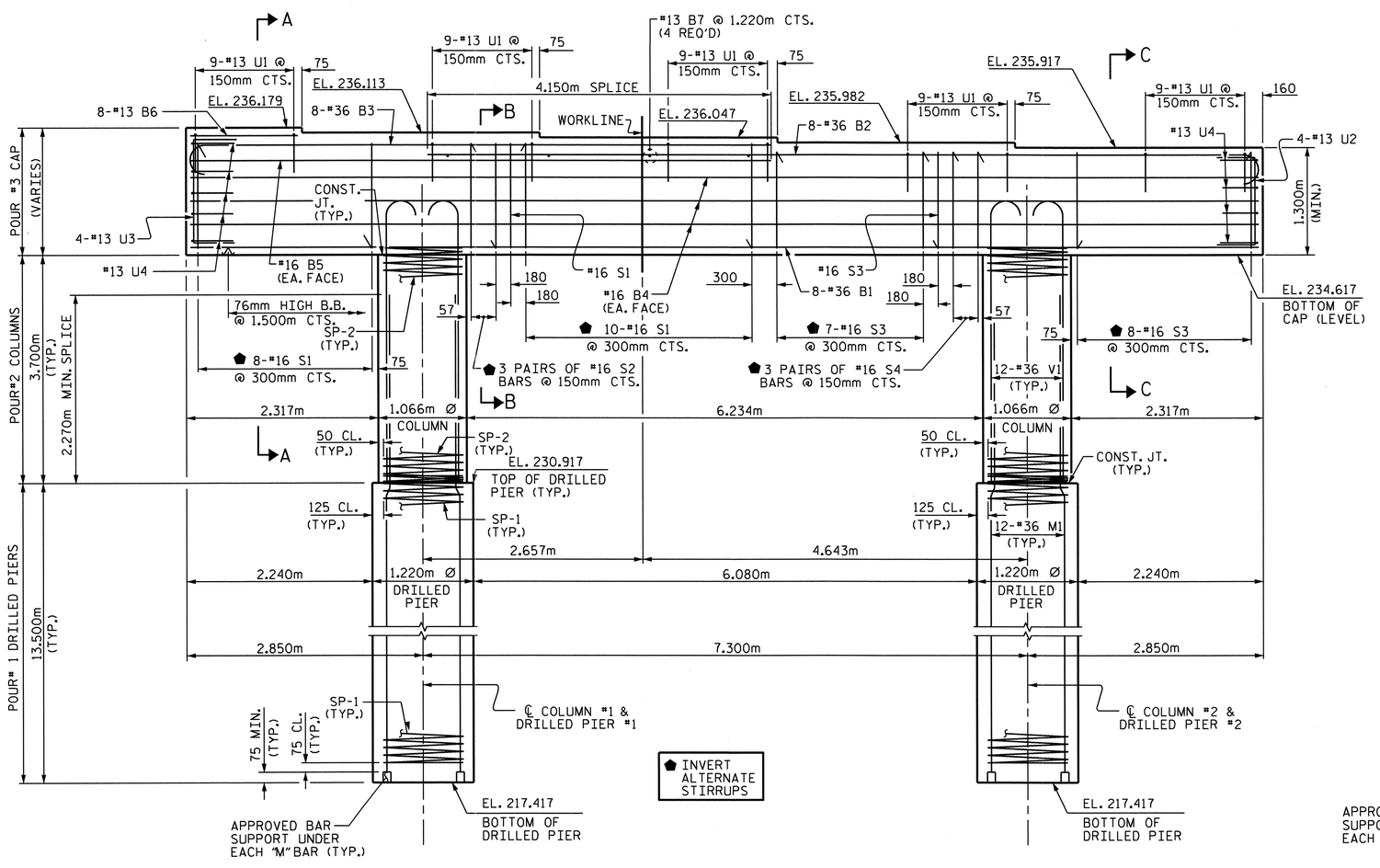


## ELEVATION

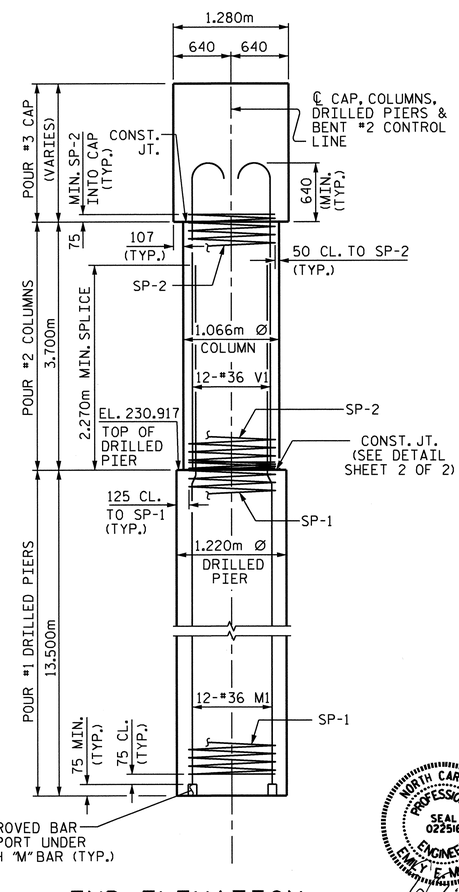


## END ELEVATION

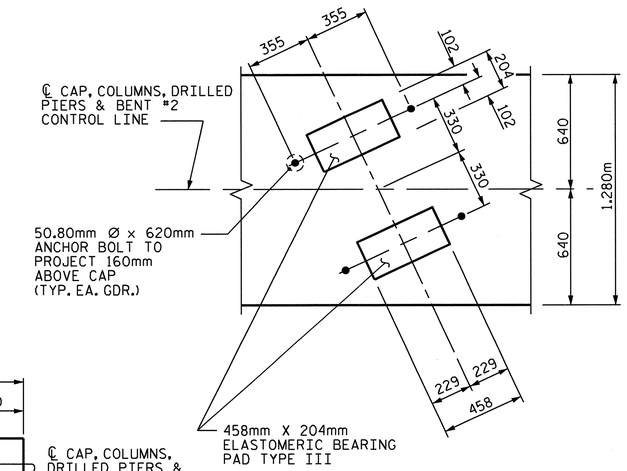


## DETAIL "A"

DIMENSIONS ARE TYPICAL FOR EACH GIRDER.

PROJECT NO. R-2413C

GUILFORD-ROCKINGHAM COUNTY

STATION: 11+43.200

-SB US 220 RAMP-

SHEET 1 OF 2

STATE OF NORTH CAROLINA
DEPARTMENT OF TRANSPORTATION
RALEIGH

SUBSTRUCTURE

BENT #2

NORTH CAROLINA PROFESSIONAL SEAL 022516 ENGINEER EMILY E. MURRAY
10/25/11

| REVISIONS | | | | | | SHEET NO. |
|---|---|---|---|---|---|---|
| NO. | BY: | DATE: | NO. | BY: | DATE: | S-136 |
| 1 | | | 3 | | | TOTAL SHEETS |
| 2 | | | 4 | | | 238 |

STR. #4

DRAWN BY : PEGGY PARISI DATE : 3-30-11
CHECKED BY : B.N. BARODAWALA DATE : 7-25-11

19-OCT-2011 14:35
R:\TIPProjects-R\R2413c\Structures\Final Plans\Str.#4\R-2413C_SD_B2.dgn
taverette

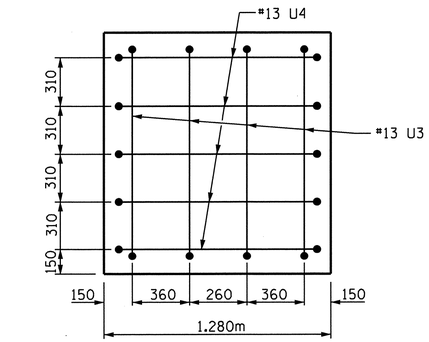


LEFT END VIEW

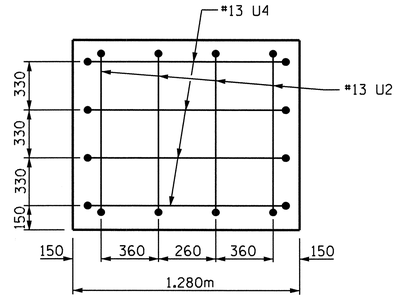


RIGHT END VIEW

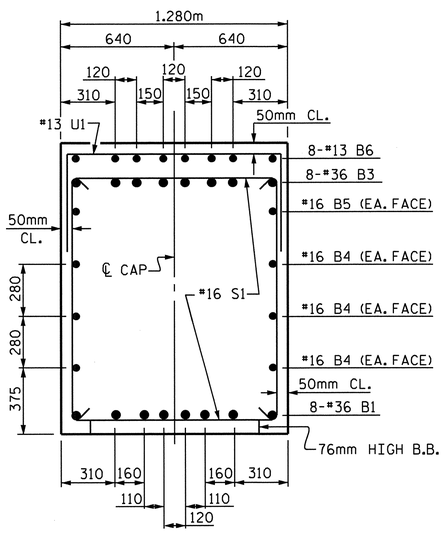


SECTION A-A

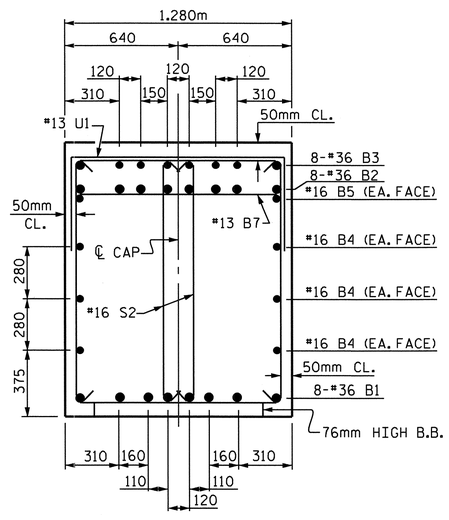


SECTION B-B

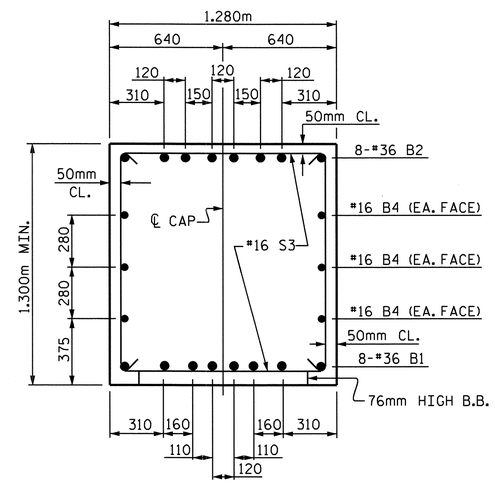


SECTION C-C

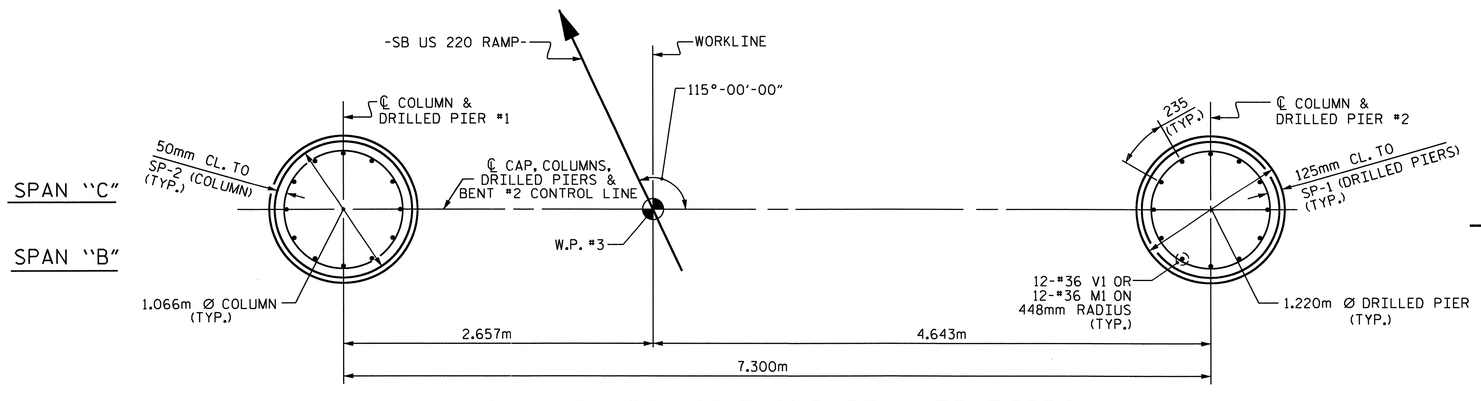


PLAN OF COLUMNS AND DRILLED PIERS

## BAR TYPES

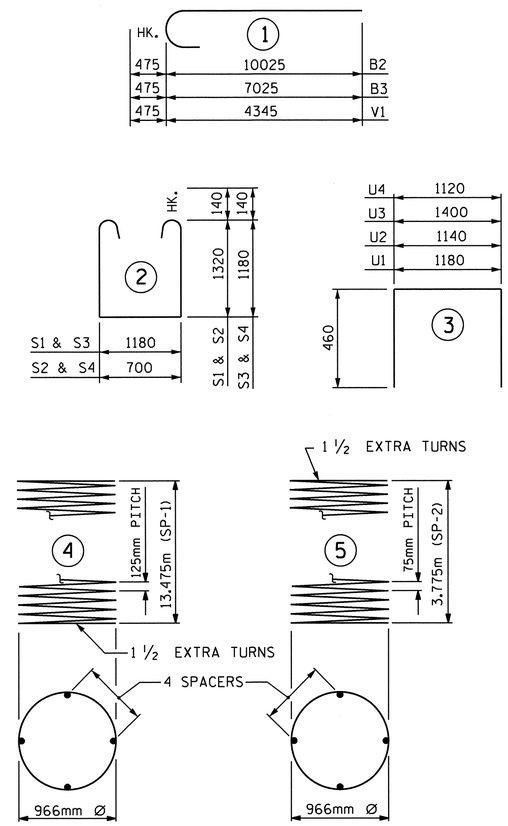


ALL BAR DIMENSIONS ARE OUT TO OUT

## BILL OF MATERIAL

### BENT #2

| BAR | NO. | SIZE | TYPE | LENGTH | WEIGHT |
|---|---|---|---|---|---|
| B1 | 8 | 36 | STR | 12900 | 816 |
| B2 | 8 | 36 | 1 | 10500 | 664 |
| B3 | 8 | 36 | 1 | 7500 | 474 |
| B4 | 6 | 16 | STR | 12900 | 120 |
| B5 | 2 | 16 | STR | 7040 | 22 |
| B6 | 8 | 13 | STR | 1300 | 10 |
| B7 | 4 | 13 | STR | 1180 | 5 |
| M1 | 24 | 36 | STR | 16700 | 3169 |
| S1 | 19 | 16 | 2 | 4100 | 121 |
| S2 | 6 | 16 | 2 | 3620 | 34 |
| S3 | 16 | 16 | 2 | 3820 | 95 |
| S4 | 6 | 16 | 2 | 3340 | 31 |
| U1 | 45 | 13 | 3 | 2100 | 94 |
| U2 | 4 | 13 | 3 | 2060 | 8 |
| U3 | 4 | 13 | 3 | 2320 | 9 |
| U4 | 9 | 13 | 3 | 2040 | 18 |
| V1 | 24 | 36 | 1 | 4820 | 915 |
| REINFORCING STEEL | | | | | 6605 KG |
| SPIRAL REINFORCING STEEL | | | | | |
| SP-1 | 2 | ✱✱ | 4 | 327900 | 1018 |
| SP-2 | 2 | ✱ | 5 | 155280 | 309 |
| SPIRAL REINFORCING STEEL | | | | | 1327 KG |

CLASS "A" CONCRETE BREAKDOWN

| | | |
|---|---|---|
| POUR #2 COLUMNS | $m^3$ | 6.6 |
| POUR #3 CAP | $m^3$ | 23.5 |
| CLASS "A" CONCRETE TOTAL | $m^3$ | 30.1 |

DRILLED PIER CONCRETE
POUR #1 DRILLED PIERS $m^3$ 31.6

1.220m Ø DRILLED PIERS NOT IN SOIL METERS 7.4

1.220m Ø DRILLED PIERS IN SOIL METERS 19.6

CSL TUBES METERS 114.0

✱ THE SP-2 SPIRAL REINFORCING STEEL SHALL BE W20 OR D-20 COLD DRAWN WIRE OR #13 PLAIN OR DEFORMED BAR.

✱✱ THE SP-1 SPIRAL REINFORCING STEEL SHALL BE W31 OR D-31 COLD DRAWN WIRE OR #16 PLAIN OR DEFORMED BAR.

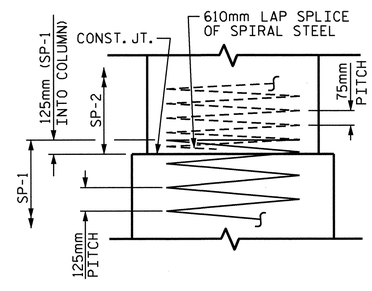


CONSTRUCTION JOINT DETAIL

PROJECT NO. R-2413C
GUILFORD-ROCKINGHAM COUNTY
STATION: 11+43.200
-SB US 220 RAMP-

SHEET 2 OF 2

STATE OF NORTH CAROLINA
DEPARTMENT OF TRANSPORTATION
RALEIGH

SUBSTRUCTURE

BENT #2

NORTH CAROLINA PROFESSIONAL SEAL 022516 ENGINEER EMILY E. MURRAY
10/28/11

| REVISIONS | | | | | | SHEET NO. |
|---|---|---|---|---|---|---|
| NO. | BY: | DATE: | NO. | BY: | DATE: | S-137 |
| 1 | | | 3 | | | TOTAL SHEETS |
| 2 | | | 4 | | | 238 |

DRAWN BY : PEGGY PARISI DATE : 3-30-11
CHECKED BY : B.N. BARODAWALA DATE : 7-25-11

19-OCT-2011 14:36
R:\TIPProjects-R\R2413c\Structures\Final Plans\Str.#4\R-2413C_SD_B2.dgn
taverette

STR. #4

## NOTES

STIRRUPS & U1 BARS IN CAP MAY BE SHIFTED AS NECESSARY TO CLEAR ANCHOR BOLTS.

BACKWALL SHALL BE PLACED BEFORE APPLYING THE EPOXY PROTECTIVE COATING.

THE TOP SURFACE AREAS OF THE END BENT CAP SHALL BE CURED IN ACCORDANCE WITH THE STANDARD SPECIFICATIONS EXCEPT THE MEMBRANE CURING COMPOUND METHOD SHALL NOT BE USED.

THE CONTRACTOR SHALL PROVIDE FOR THE INSTALLATION OF THE 102mm Ø DRAIN PIPE THROUGH THE WING WALL AS REQUIRED FOR REINFORCED BRIDGE APPROACH FILLS. SEE THE ROADWAY PLANS. REINFORCING STEEL IN THE WING WALL MAY BE SHIFTED AS NECESSARY TO CLEAR THE DRAIN PIPE.

THE TOP SURFACE OF THE END BENT CAP EXCEPT THE BRIDGE SEAT BUILDUPS SHALL BE SLOPED TRANSVERSELY FROM THE FILL FACE TO THE BACK FACE AT A RATE OF 2%.

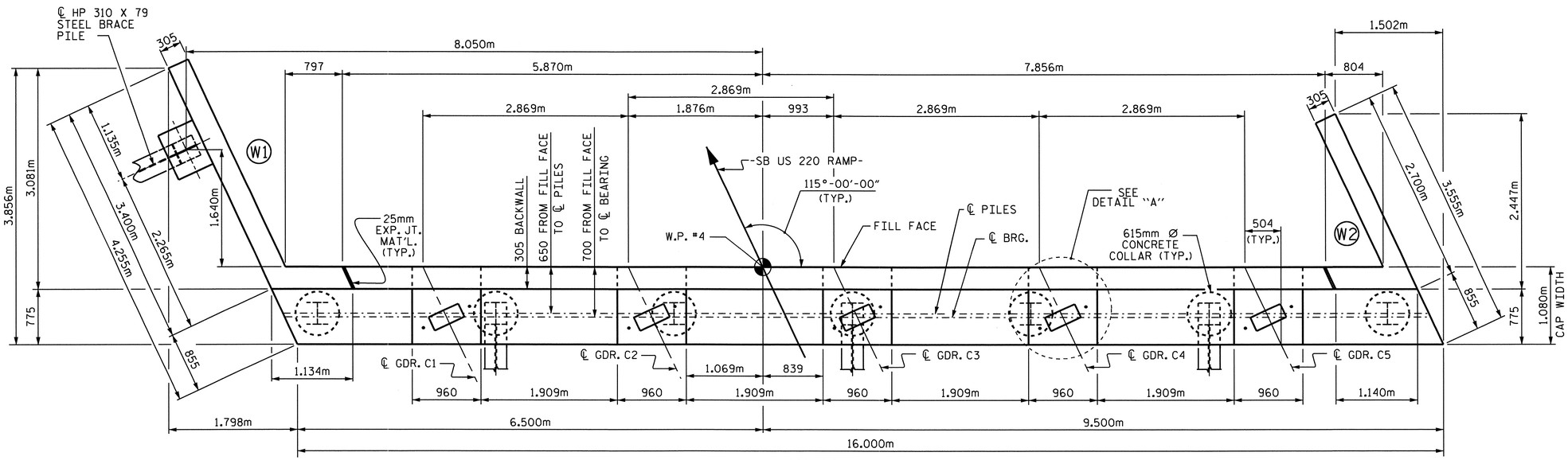


## PLAN

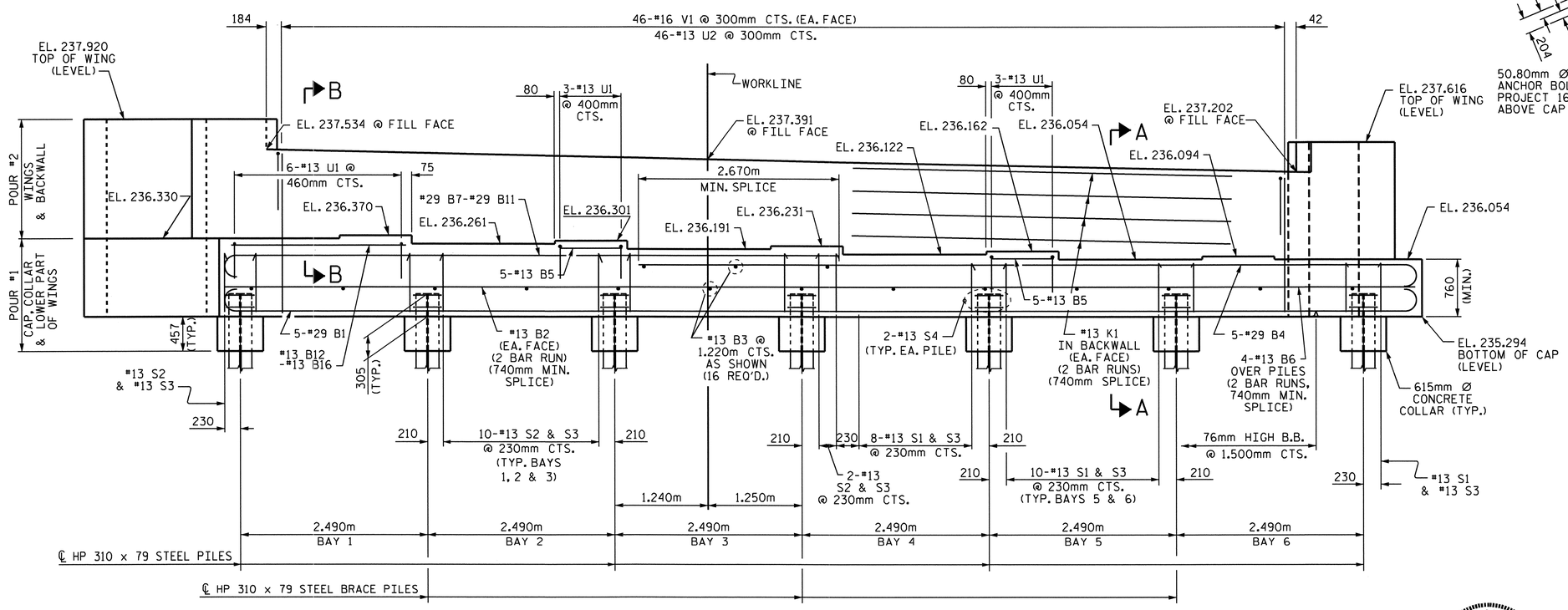


## ELEVATION

WING BRACE PILE NOT SHOWN FOR CLARITY.

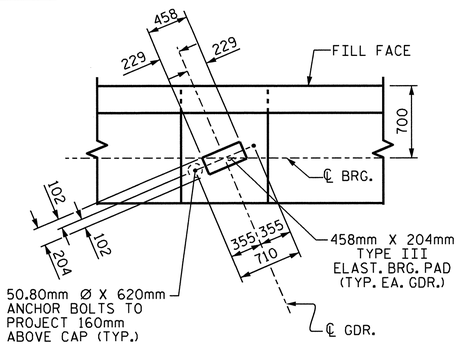


## DETAIL "A"

(TYP. EA. BRG.)

PROJECT NO. R-2413C

GUILFORD-ROCKINGHAM COUNTY

STATION: 11+43.200 -SB US 220 RAMP-

SHEET 1 OF 3

STATE OF NORTH CAROLINA
DEPARTMENT OF TRANSPORTATION
RALEIGH

SUBSTRUCTURE

END BENT #2

NORTH CAROLINA PROFESSIONAL SEAL 022516 ENGINEER EMILY E. MURRAY
4/28/11

| REVISIONS | | | | | | | SHEET NO. |
|---|---|---|---|---|---|---|---|
| NO. | BY: | DATE: | NO. | BY: | DATE: | | S-138 |
| 1 | | | 3 | | | | TOTAL SHEETS |
| 2 | | | 4 | | | | 238 |

STR. #4

DRAWN BY : B.N.BARODAWALA DATE : 4-12-11
CHECKED BY : PEGGY PARISI DATE : 4-28-11

05-SEP-2011 12:46
Y:\Structures\Final Plans\Str.#4\R-2413C_SD_EB_04.dgn
mgudlaugsson

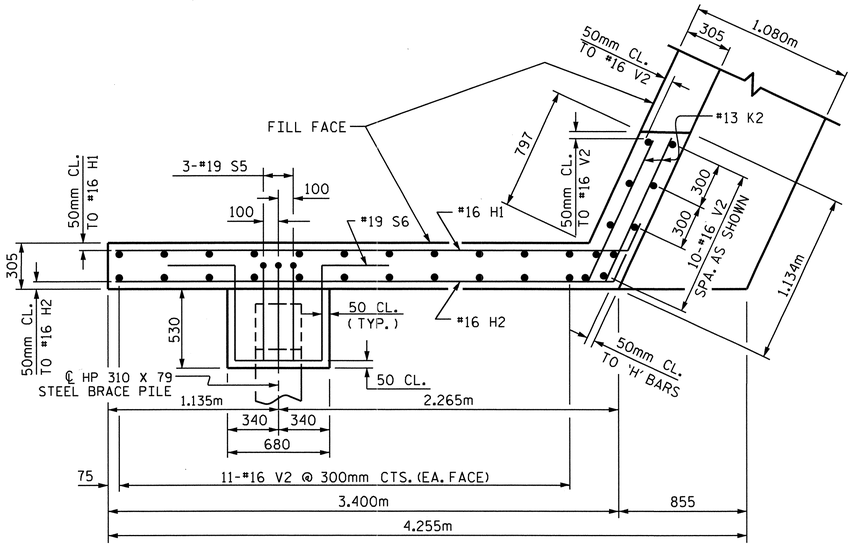


PLAN OF WING W1

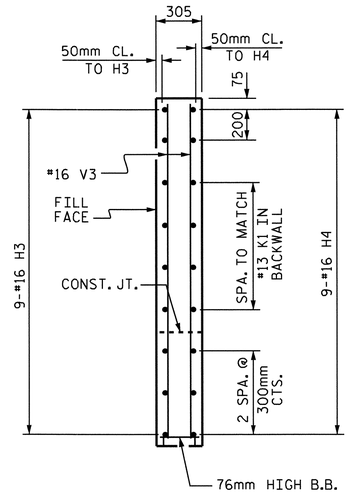


SECTION Y-Y

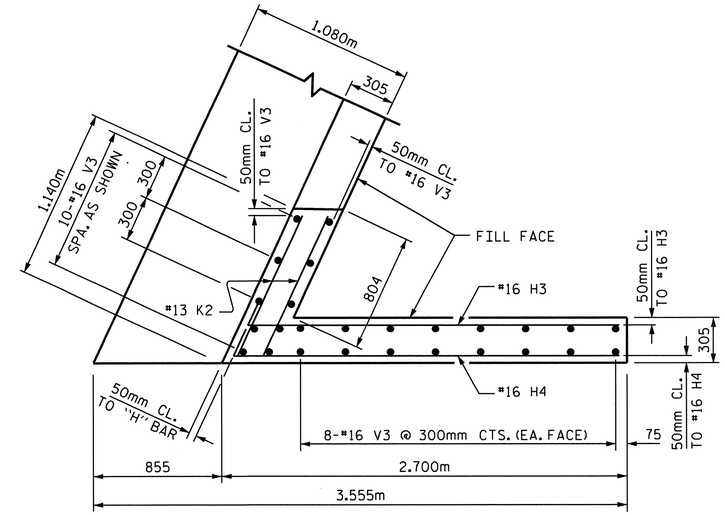


PLAN OF WING W2

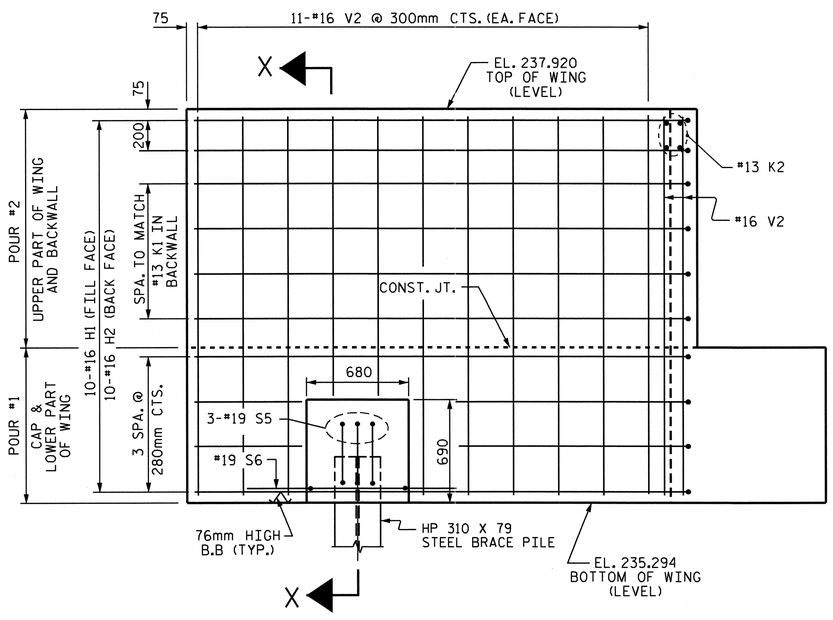


ELEVATION OF WING W1

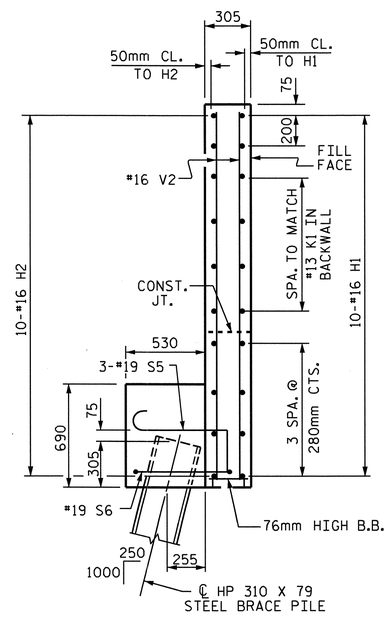


SECTION X-X

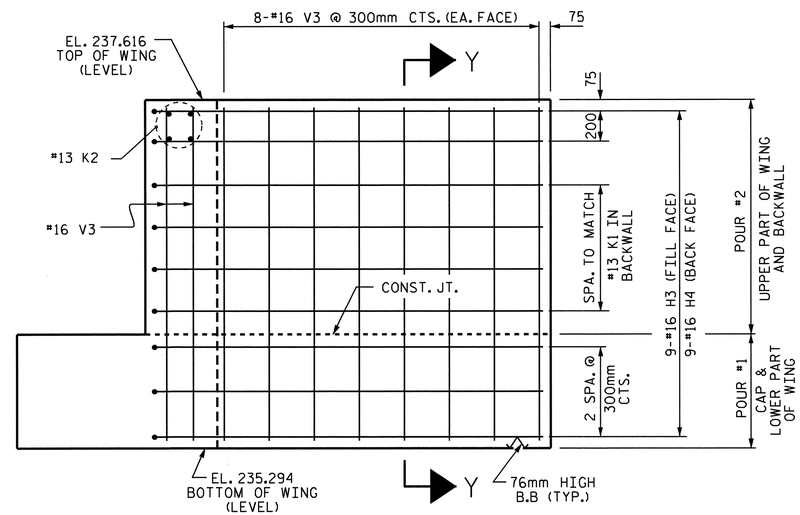


ELEVATION OF WING W2

PROJECT NO. R-2413C

GUILFORD-ROCKINGHAM COUNTY

STATION: 11+43.200

SHEET 2 OF 3 -SB US 220 RAMP-

STATE OF NORTH CAROLINA
DEPARTMENT OF TRANSPORTATION
RALEIGH

SUBSTRUCTURE

END BENT #2

NORTH CAROLINA PROFESSIONAL SEAL 022516 ENGINEER EMILY E. MURPHY
10/28/11

| REVISIONS | | | | | | SHEET NO. |
|---|---|---|---|---|---|---|
| NO. | BY: | DATE: | NO. | BY: | DATE: | S-139 |
| 1 | | | 3 | | | TOTAL SHEETS |
| 2 | | | 4 | | | 238 |

STR. #4

DRAWN BY : B.N.BARODAWALA DATE : 4-12-11
CHECKED BY : PEGGY PARISI DATE : 4-28-11

19-OCT-2011 14:37
R:\TIPProjects-R\R2413c\Structures\Final Plans\Str.#4\R-2413C_SD_EB_04.dgn
taverette

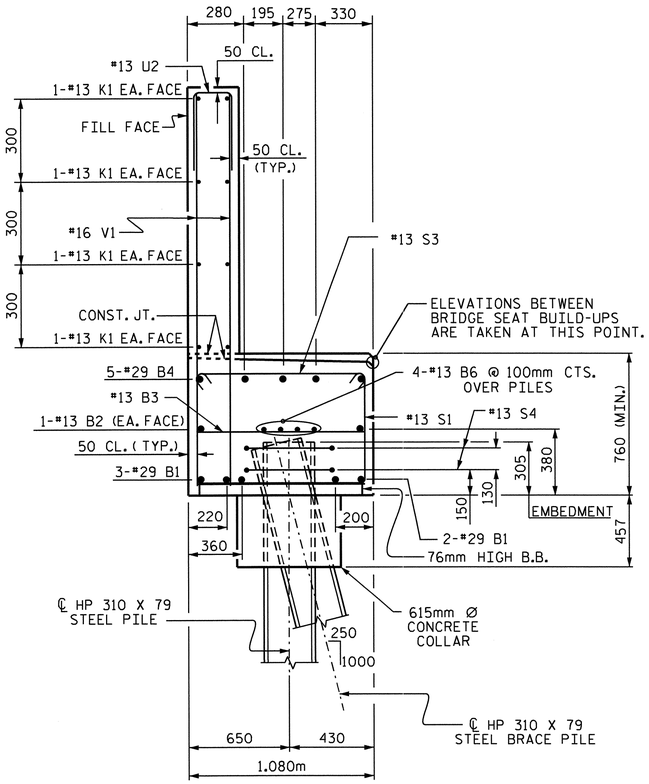


SECTION A-A

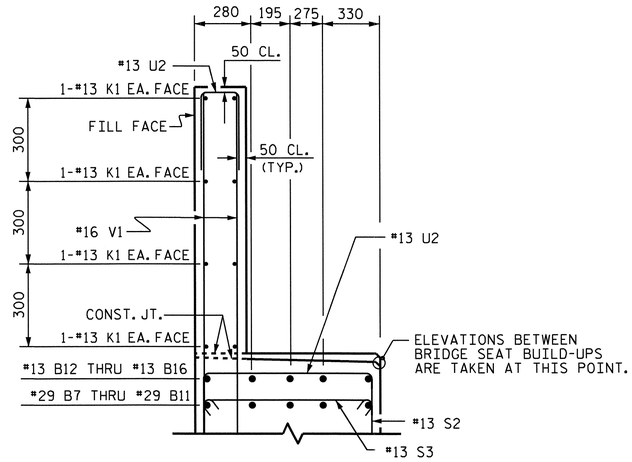


SECTION B-B

## BAR TYPES

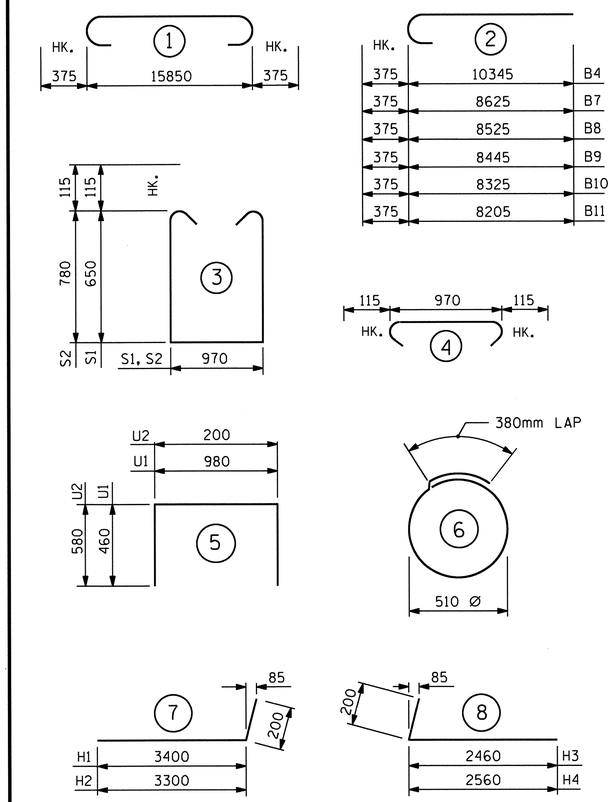


ALL BAR DIMENSIONS ARE OUT TO OUT.

## BILL OF MATERIAL

### END BENT #2

| BAR | NO. | SIZE | TYPE | LENGTH | WEIGHT |
|---|---|---|---|---|---|
| B1 | 5 | #29 | 1 | 16600 | 420 |
| B2 | 4 | #13 | STR | 8320 | 33 |
| B3 | 16 | #13 | STR | 980 | 16 |
| B4 | 5 | #29 | 2 | 10720 | 271 |
| B5 | 10 | #13 | STR | 860 | 9 |
| B6 | 8 | #13 | STR | 8320 | 66 |
| B7 | 1 | #29 | 2 | 9000 | 46 |
| B8 | 1 | #29 | 2 | 8900 | 45 |
| B9 | 1 | #29 | 2 | 8820 | 45 |
| B10 | 1 | #29 | 2 | 8700 | 44 |
| B11 | 1 | #29 | 2 | 8580 | 43 |
| B12 | 1 | #13 | STR | 2880 | 3 |
| B13 | 1 | #13 | STR | 2800 | 3 |
| B14 | 1 | #13 | STR | 2700 | 3 |
| B15 | 1 | #13 | STR | 2580 | 3 |
| B16 | 1 | #13 | STR | 2460 | 2 |
| | | | | | |
| H1 | 10 | #16 | 7 | 3600 | 56 |
| H2 | 10 | #16 | 7 | 3500 | 54 |
| H3 | 9 | #16 | 8 | 2660 | 37 |
| H4 | 9 | #16 | 8 | 2760 | 39 |
| | | | | | |
| K1 | 16 | #13 | STR | 8320 | 132 |
| K2 | 8 | #13 | STR | 1020 | 8 |
| | | | | | |
| S1 | 29 | #13 | 3 | 2500 | 72 |
| S2 | 33 | #13 | 3 | 2760 | 91 |
| S3 | 62 | #13 | 4 | 1200 | 74 |
| S4 | 14 | #13 | 6 | 1980 | 28 |
| S5 | 3 | #19 | 10 | 1140 | 8 |
| S6 | 1 | #19 | 9 | 2700 | 6 |
| | | | | | |
| U1 | 12 | #13 | 5 | 1900 | 23 |
| U2 | 46 | #13 | 5 | 1360 | 62 |
| | | | | | |
| V1 | 92 | #16 | STR | 1800 | 257 |
| V2 | 32 | #16 | STR | 2520 | 125 |
| V3 | 26 | #16 | STR | 2220 | 90 |

REINFORCING STEEL = 2214 kg.

POUR #1
CAP, LOWER PART OF WINGS, & CONCRETE PILE COLLARS 18.2 m3
POUR #2
BACKWALL & UPPER PART OF WINGS 8.6 m3
CLASS "A" CONCRETE TOTAL 26.8 m3

HP 310 x 79 STEEL PILES
No. 8 METERS 64.0

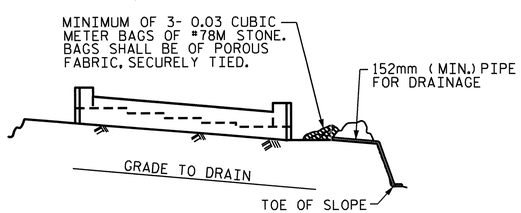


BAGGED STONE AND PIPE SHALL BE PLACED IMMEDIATELY AFTER COMPLETION OF END BENT EXCAVATION. PIPE MAY BE EITHER CONCRETE, CORRUGATED STEEL, CORRUGATED ALUMINUM ALLOY, OR CORRUGATED PLASTIC. PERFORATED PIPE WILL NOT BE ALLOWED.

BAGGED STONE SHALL REMAIN IN PLACE UNTIL THE ENGINEER DIRECTS THAT IT BE REMOVED. THE CONTRACTOR SHALL REMOVE AND DISPOSE OF SILT ACCUMULATIONS AT BAGGED STONE WHEN SO DIRECTED BY THE ENGINEER. BAGS SHALL BE REMOVED AND REPLACED WHENEVER THE ENGINEER DETERMINES THAT THEY HAVE DETERIORATED AND LOST THEIR EFFECTIVENESS.

NO SEPARATE PAYMENT WILL BE MADE FOR THIS WORK AND THE ENTIRE COST OF THIS WORK SHALL BE INCLUDED IN THE UNIT CONTRACT PRICE BID FOR THE SEVERAL PAY ITEMS.

## TEMPORARY DRAINAGE AT END BENT

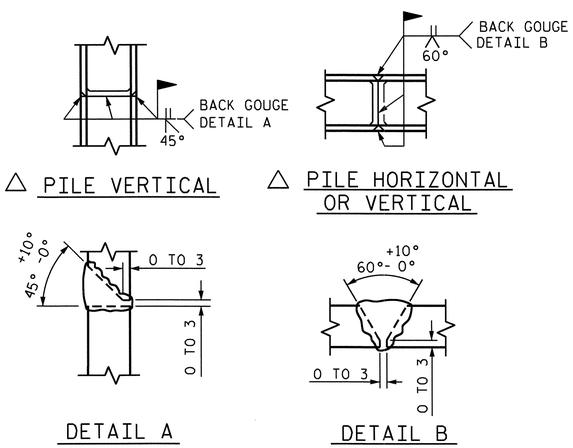


△ PILE VERTICAL

△ PILE HORIZONTAL OR VERTICAL

DETAIL A

DETAIL B

△ POSITION OF PILE DURING WELDING.

## PILE SPLICE DETAILS

PROJECT NO. R-2413C

GUILFORD-ROCKINGHAM COUNTY

STATION: 11+43.200

SHEET 3 OF 3 -SB US 220 RAMP-

STATE OF NORTH CAROLINA
DEPARTMENT OF TRANSPORTATION
RALEIGH

SUBSTRUCTURE

END BENT #2

NORTH CAROLINA PROFESSIONAL SEAL 022516 ENGINEER EMILY E. MURRAY
10/28/11

| REVISIONS | | | | | | SHEET NO. |
|---|---|---|---|---|---|---|
| NO. | BY: | DATE: | NO. | BY: | DATE: | S-140 |
| 1 | | | 3 | | | TOTAL SHEETS |
| 2 | | | 4 | | | 238 |

STR. #4

DRAWN BY : B.N.BARODAWALA DATE : 4-12-11
CHECKED BY : PEGGY PARISI DATE : 4-28-11

05-SEP-2011 12:46
Y:\Structures\Final Plans\Str.#4\R-2413C_SD_EB_04.dgn
mgudlaugsson

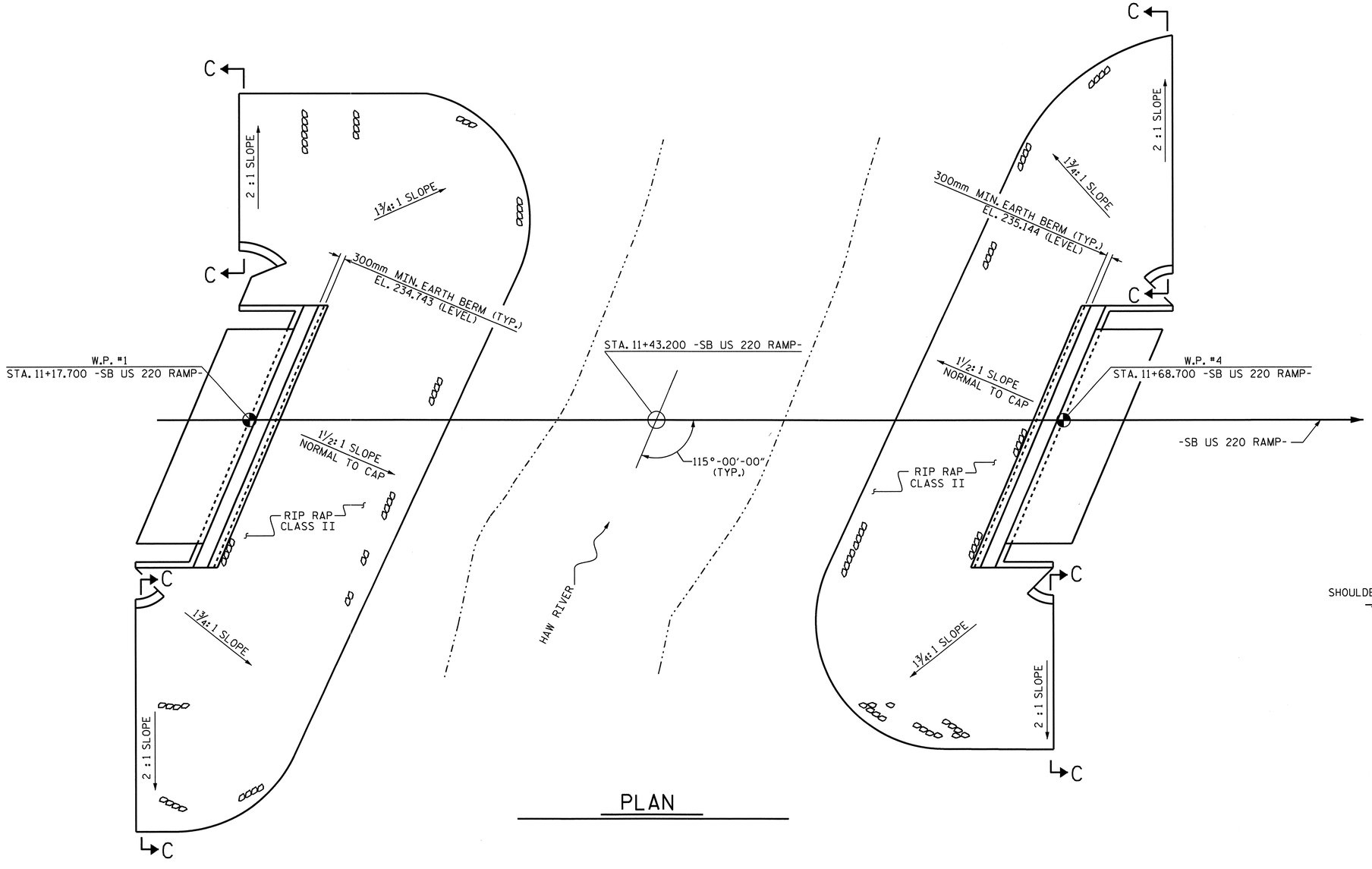


PLAN

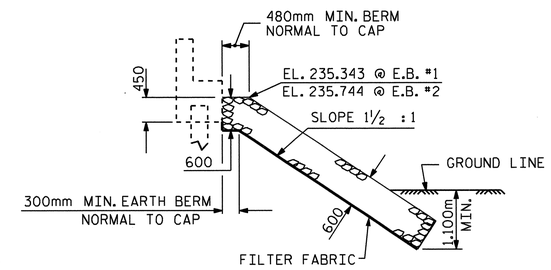


℄ SECTION

BERM RIP RAPPED

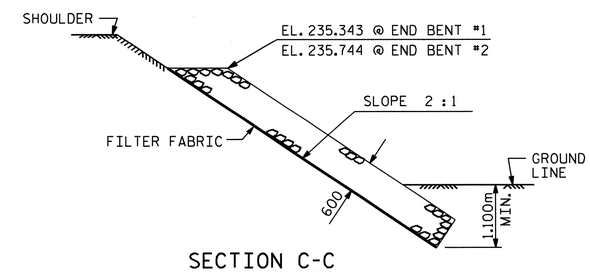


SECTION C-C

PROJECT NO. R-2413C

GUILFORD-ROCKINGHAM COUNTY

STATION: 11+43.200
-SB US 220 RAMP-

| ESTIMATED QUANTITIES | | |
|---|---|---|
| BRIDGE AT STA. 11+43.200 -SB US 220 RP- | RIP RAP CLASS II (600mm THICK) | FILTER FABRIC FOR DRAINAGE |
| | METRIC TON | SQUARE METERS |
| END BENT #1 | 215 | 219 |
| END BENT #2 | 260 | 265 |

NORTH CAROLINA PROFESSIONAL SEAL 022516 ENGINEER EMILY E. MURRAY
10/28/11

STATE OF NORTH CAROLINA
DEPARTMENT OF TRANSPORTATION
RALEIGH

RIP RAP DETAILS

| REVISIONS | | | | | | SHEET NO. |
|---|---|---|---|---|---|---|
| NO. | BY: | DATE: | NO. | BY: | DATE: | S-141 |
| 1 | | | 3 | | | TOTAL SHEETS |
| 2 | | | 4 | | | 238 |

DRAWN BY : PEGGY PARISI DATE : 2-3-11
CHECKED BY : MIKE PISO DATE : 6-10-11

05-SEP-2011 12:42
Y:\Structures\Final Plans\Str.#4\R-2413C_SD_RR_04.dgn
mgudlaugsson

STR #4

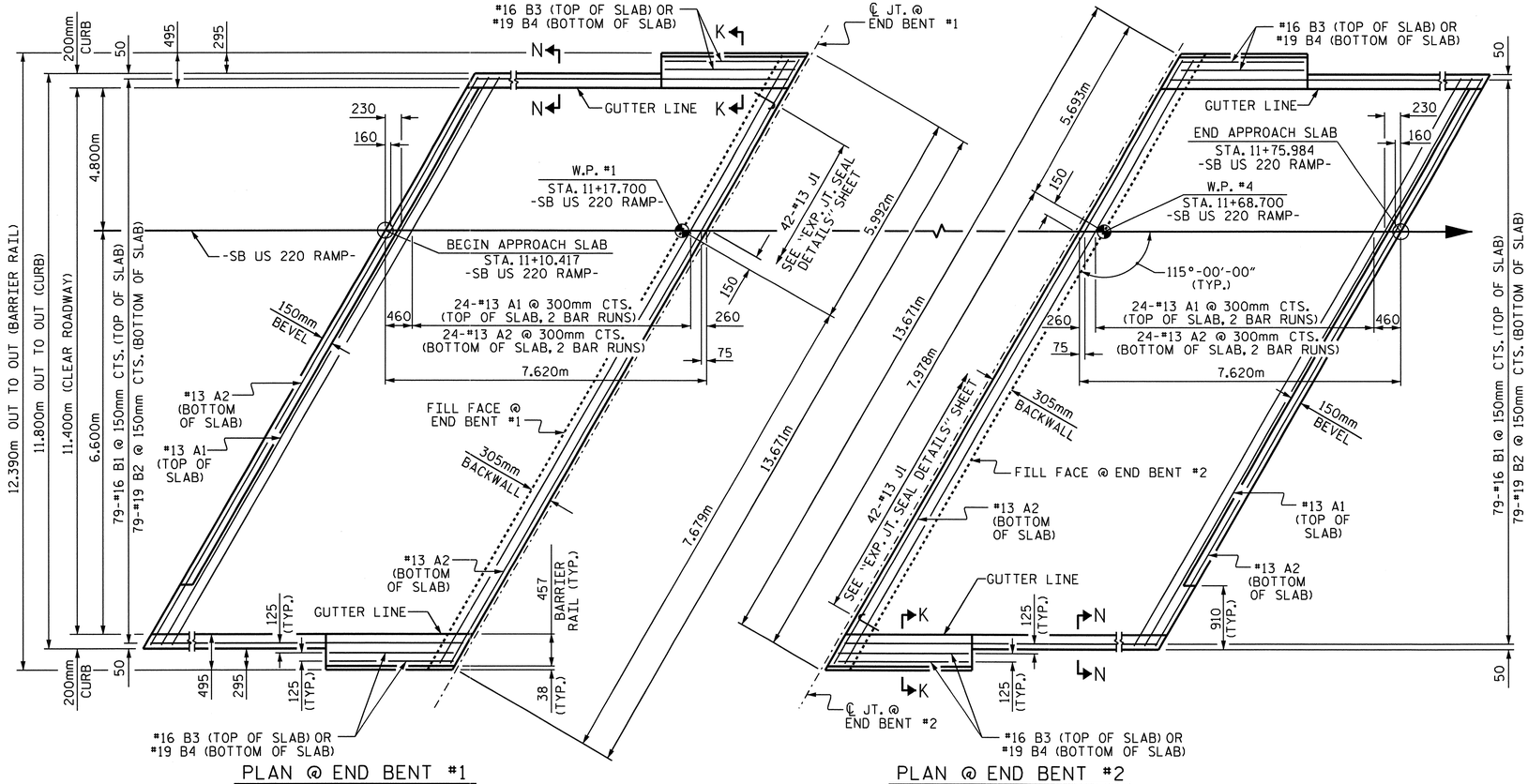


PLAN @ END BENT #1

PLAN @ END BENT #2

DIMENSIONS SHOWN ARE TYPICAL FOR BOTH APPROACH SLABS.
FOR BARRIER RAIL ON THE APPROACH SLAB DETAILS, REINFORCING STEEL AND BILL OF MATERIAL, SEE SHEET 2 OF 2.

## NOTES

THE CONCRETE BARRIER RAIL ON THE APPROACH SLAB IS INCLUDED IN THE CONCRETE BARRIER RAIL QUANTITY FOR THE SUPERSTRUCTURE.

APPROACH SLAB SHALL NOT BE CONSTRUCTED PRIOR TO COMPLETION OF THE BRIDGE DECK.

FOR REINFORCED BRIDGE APPROACH FILL INCLUDING FABRIC, IMPERMEABLE GEOMEMBRANE, 102mm Ø DRAINAGE PIPE, #78M STONE, AND SELECT MATERIAL, SEE ROADWAY PLANS.

AREA BETWEEN THE WINGWALL AND APPROACH SLAB SHALL BE GRADED TO DRAIN THE WATER AWAY FROM THE FILL FACE OF THE BRIDGE AND SHALL BE PAVED. SEE ROADWAY PLANS.

THE 150mm COMP. A.B.C. SHALL BE FLUSH WITH THE ROADWAY END OF THE APPROACH SLAB AND SHALL EXTEND 300mm OUTSIDE OF EACH EDGE OF THE APPROACH SLAB.

THE CONTRACTOR MAY USE 100mm TYPE B-25.0B ASPHALT CONCRETE BASE COURSE IN LIEU OF 150mm COMP. A.B.C. IF THIS OPTION IS USED, THE BASE COURSE SHALL BE FLUSH WITH THE ROADWAY END OF THE APPROACH SLAB, AND THE WIDTH SHALL BE THE SAME AS THAT OF THE APPROACH SLAB.

THE CONTRACTOR MAY USE 125mm CLASS "A" CONCRETE BASE IN LIEU OF 150mm COMP. A.B.C. IF THIS OPTION IS USED, THE CONCRETE BASE SHALL BE FLUSH WITH THE ROADWAY END OF THE APPROACH SLAB, AND THE WIDTH SHALL BE THE SAME AS THAT OF THE APPROACH SLAB. THE CONCRETE SHALL BE FINISHED TO A SMOOTH SURFACE AND A LAYER OF 13.6 kg ROOFING FELT SHALL BE PLACED BETWEEN THE CONCRETE BASE AND THE APPROACH SLAB TO PREVENT BOND. THE APPROACH SLAB SHALL NOT BE CAST UNTIL THE CONCRETE BASE HAS REACHED AN AGE OF THREE CURING DAYS.

FOR EXPANSION JOINT SEALS, SEE SPECIAL PROVISIONS.

THE BARRIER RAIL ON EACH APPROACH SLAB SHALL NOT BE CAST UNTIL ALL APPROACH SLAB CONCRETE HAS BEEN CAST AND HAS REACHED A MINIMUM COMPRESSIVE STRENGTH OF 20.7 MPa.

ALL REINFORCING STEEL IN BARRIER RAILS SHALL BE EPOXY COATED.

## BILL OF MATERIAL

### APPROACH SLAB @ EB #1

| BAR | NO. | SIZE | TYPE | LENGTH | WEIGHT |
|---|---|---|---|---|---|
| * A1 | 50 | #13 | STR | 7100 | 353 |
| A2 | 52 | #13 | STR | 7060 | 365 |
| * B1 | 79 | #16 | STR | 7220 | 885 |
| B2 | 79 | #19 | STR | 7500 | 1324 |
| * B3 | 4 | #16 | STR | 2940 | 18 |
| B4 | 4 | #19 | STR | 2940 | 26 |
| * J1 | 42 | #13 | 3 | 440 | 18 |
| REINFORCING STEEL | | | | kg. | 1715 |
| ● * EPOXY COATED REINFORCING STEEL | | | | kg. | 1274 |
| ● CLASS AA CONCRETE | | | | C.M. | 28.5 |

### APPROACH SLAB @ EB #2

| BAR | NO. | SIZE | TYPE | LENGTH | WEIGHT |
|---|---|---|---|---|---|
| * A1 | 50 | #13 | STR | 7100 | 353 |
| A2 | 52 | #13 | STR | 7060 | 365 |
| * B1 | 79 | #16 | STR | 7220 | 885 |
| B2 | 79 | #19 | STR | 7500 | 1324 |
| * B3 | 4 | #16 | STR | 2940 | 18 |
| B4 | 4 | #19 | STR | 2940 | 26 |
| * J1 | 42 | #13 | 3 | 440 | 18 |
| REINFORCING STEEL | | | | kg. | 1715 |
| ● * EPOXY COATED REINFORCING STEEL | | | | kg. | 1274 |
| ● CLASS AA CONCRETE | | | | C.M. | 28.5 |

### BAR TYPE

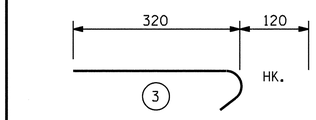


ALL BAR DIMENSIONS ARE OUT TO OUT

● QUANTITIES FOR BARRIER RAIL ON APPROACH SLAB ARE NOT INCLUDED. SEE SHEET 2 OF 2.

## SPLICE CHART

| BAR | SPLICE |
|---|---|
| #13 A1 | 610 |
| #13 A2 | 540 |

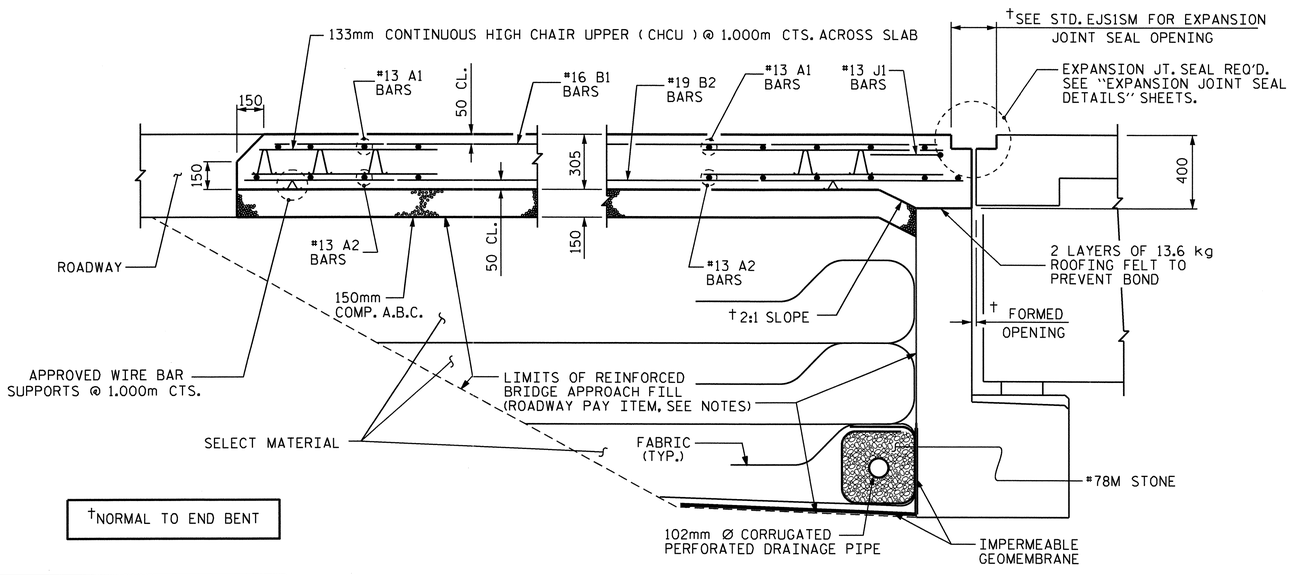


†NORMAL TO END BENT

SECTION THRU SLAB

BARRIER RAIL AND CURB NOT SHOWN

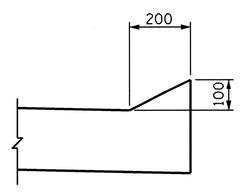


SECTION N-N

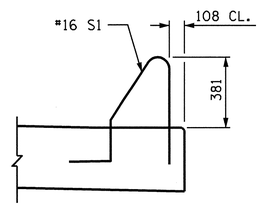


SECTION K-K

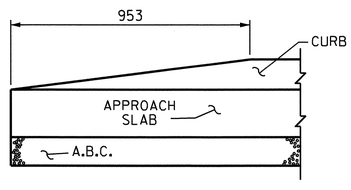


END OF CURB WITHOUT SHOULDER BERM GUTTER

CURB DETAILS

PROJECT NO. R-2413C

GUILFORD-ROCKINGHAM COUNTY

STATION: 11+43.200
-SB US 220 RAMP-

SHEET 1 OF 2

STATE OF NORTH CAROLINA
DEPARTMENT OF TRANSPORTATION
RALEIGH

STANDARD

BRIDGE APPROACH SLAB FOR FLEXIBLE PAVEMENT

NORTH CAROLINA PROFESSIONAL SEAL 022516 ENGINEER EMILY E. MURRAY
10/28/11

| REVISIONS | | | | | | | | SHEET NO. |
|---|---|---|---|---|---|---|---|---|
| NO. | BY: | DATE: | NO. | BY: | DATE: | | | S-142 |
| 1 | | | 3 | | | | | TOTAL SHEETS |
| 2 | | | 4 | | | | | 238 |

ASSEMBLED BY : T.L. AVERETTE DATE : 04-14-11
CHECKED BY : PEGGY PARISI DATE : 04-15-11

DRAWN BY : FCJ 6/87
CHECKED BY : EGA 6/87

REV. 7/10/01 RWW/LES
REV. 5/7/03R RWW/JTE
REV. 5/1/06R KMM/GM

05-SEP-2011 12:41
Y:\Structures\Final Plans\Str.#4\R2413C_sd_AS_04.dgn
mgudlaugsson

STR #4 STD. NO. BAS4SM

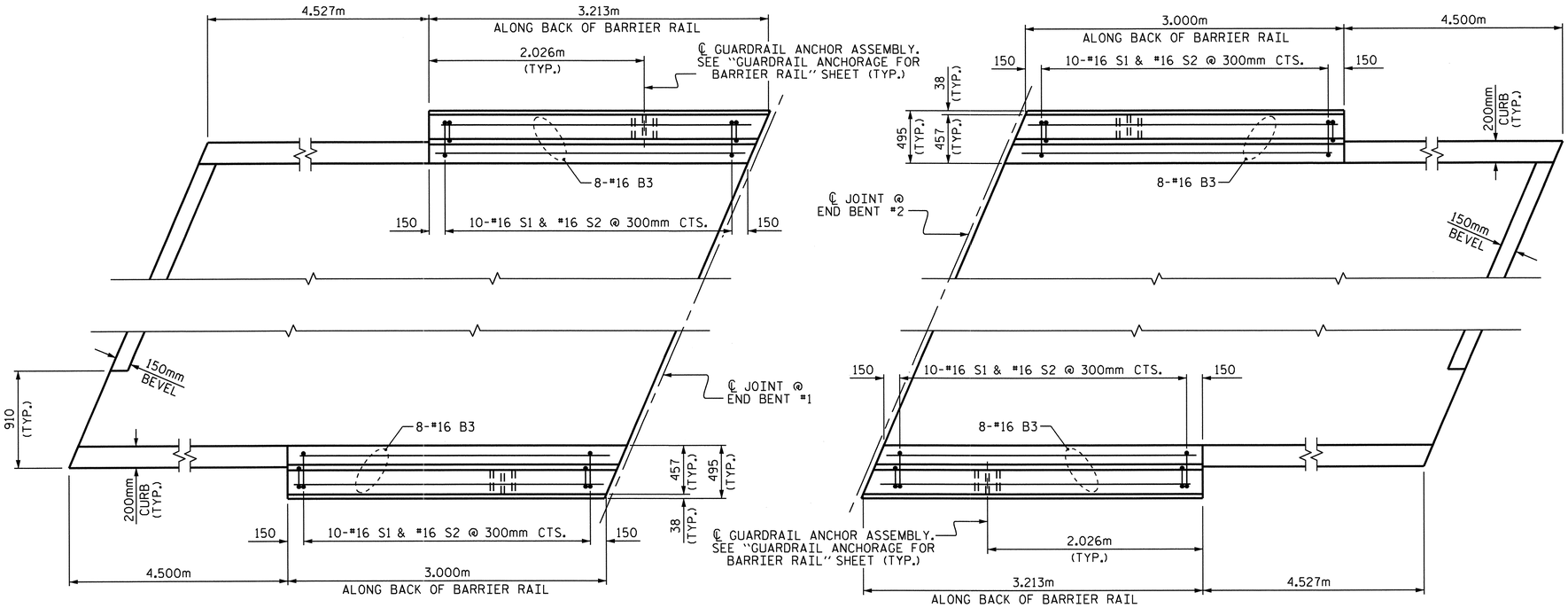


## PLAN OF BARRIER RAIL ON APPROACH SLABS

## BAR TYPES

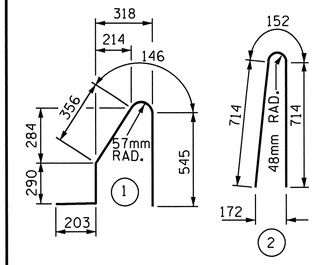


ALL BAR DIMENSIONS ARE OUT TO OUT

## BILL OF MATERIAL

FOR CONCRETE BARRIER RAIL ON BOTH APPROACH SLABS ONLY

| BAR | NO. | SIZE | TYPE | LENGTH | WEIGHT |
|---|---|---|---|---|---|
| * B3 | 32 | #16 | STR | 2940 | 146 |
| | | | | | |
| * S1 | 40 | #16 | 1 | 1540 | 96 |
| * S2 | 40 | #16 | 2 | 1580 | 98 |
| | | | | | |
| * EPOXY COATED REINFORCING STEEL | | | | kg. | 340 |
| CLASS AA CONCRETE | | | | C.M. | 3.1 |
| CONCRETE BARRIER RAIL | | | | METERS | 12.426 |

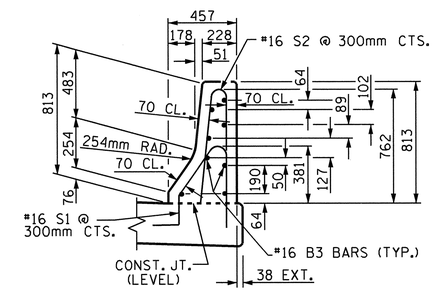


## SECTION THRU RAIL

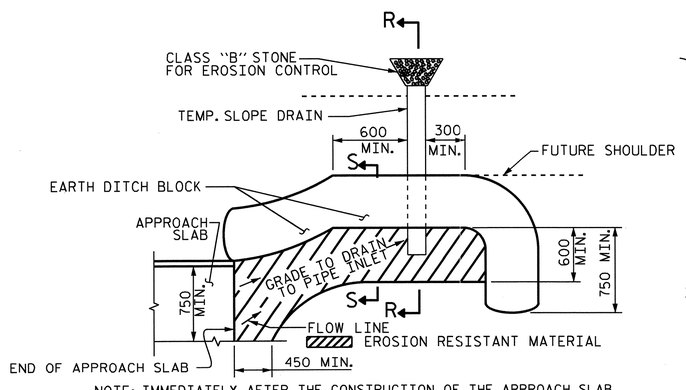


NOTE: IMMEDIATELY AFTER THE CONSTRUCTION OF THE APPROACH SLAB, THE CONTRACTOR SHALL PROVIDE TEMPORARY BERM AND SLOPE DRAIN. CONTRACTOR SHALL GRADE TO PIPE INLET AND PROVIDE EROSION RESISTANT MATERIAL AS SHOWN. THE EROSION RESISTANT MATERIAL SHALL BE EITHER 1) ASPHALT PLANT MIX, TYPE I OR TYPE 2, MIN. 50mm DEPTH, 2) EROSION CONTROL MAT, OR 3) CONCRETE, AS DIRECTED BY THE ENGINEER. THE SLOPE DRAIN SHALL CONSIST OF A NON-PERFORATED TEMPORARY DRAINAGE PIPE, 305mm IN DIAMETER.

PLAN VIEW

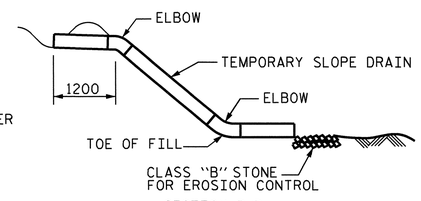


SECTION R-R

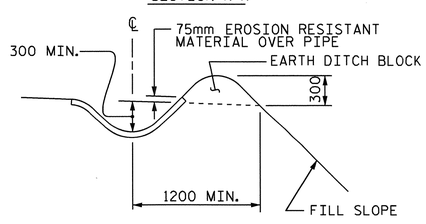


SECTION S-S

## TEMPORARY BERM AND SLOPE DRAIN DETAILS

(TO BE USED WHEN SHOULDER BERM GUTTER IS REQUIRED)

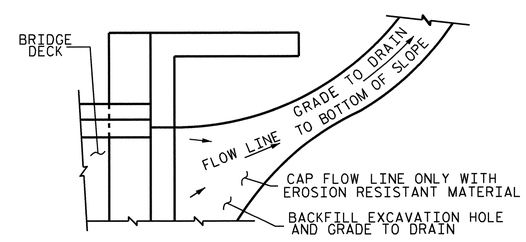


NOTE: IF THE APPROACH SLAB IS NOT CONSTRUCTED IMMEDIATELY AFTER THE BACKFILLING OF THE END BENT EXCAVATION, GRADE TO DRAIN TO THE BOTTOM OF THE SLOPE AND PROVIDE EROSION RESISTANT MATERIAL, SUCH AS FIBERGLASS ROVING OR AS DIRECTED BY THE ENGINEER TO PREVENT SOIL EROSION AND TO PROTECT THE AREA ADJACENT TO THE STRUCTURE. THE CONTRACTOR WILL BE REQUIRED TO REMOVE THESE MATERIALS PRIOR TO CONSTRUCTION OF THE APPROACH SLAB.

## TEMPORARY DRAINAGE DETAIL

PROJECT NO. R-2413C

GUILFORD-ROCKINGHAM COUNTY

STATION: 11+43.200 -SB US 220 RP-

SHEET 2 OF 2

STATE OF NORTH CAROLINA
DEPARTMENT OF TRANSPORTATION
RALEIGH

STANDARD
BRIDGE APPROACH
SLAB DETAILS

NORTH CAROLINA PROFESSIONAL SEAL 022516 ENGINEER EMILY E. MURRAY
1/20/11

| REVISIONS | | | | | | | SHEET NO. |
|---|---|---|---|---|---|---|---|
| NO. | BY: | DATE: | NO. | BY: | DATE: | | S-143 |
| 1 | | | 3 | | | | TOTAL SHEETS |
| 2 | | | 4 | | | | 238 |

| | |
|---|---|
| ASSEMBLED BY : T.L. AVERETTE | DATE : 04-14-11 |
| CHECKED BY : PEGGY PARISI | DATE : 04-15-11 |
| DRAWN BY : FCJ 11/88 | REV. 10/17/00 RWW/LES |
| CHECKED BY : ARB 11/88 | REV. 5/7/03 RWW/JTE |
| | REV. 5/1/06RR MAA/KMM |

05-SEP-2011 12:40
Y:\Structures\Final Plans\Str.#4\R2413C_sd_AS_04.dgn
mgudlaugsson

STR #4

STD. NO. BAS10SM

# OVERHANG BRACKET CALCULATION INSTRUCTIONS

## AASHTO SHAPES - TYPES III, IV, V, AND VI

1. RECORD KNOWN INFORMATION ON "BRIDGE OVERHANG BRACKET SUMMARY" ON SHEET 2
2. CALCULATE THE MAXIMUM SCREED LOAD PER BRACKET (SLPB) WITH AN ESTIMATED R = 1.5. SLPB = R X W. ROUND VALUE UP TO NEAREST SLPB VALUE INDICATED ON APPROPRIATE TABLE 1-1, 1-2, 1-3, OR 1-4.
3. WITH THE ESTIMATED SLPB, OVERHANG SLAB THICKNESS, "K" VALUE, AND 45° HANGER SAFE WORKING LOAD (SWL), ENTER THE APPROPRIATE TABLE 1-1, 1-2, 1-3, OR 1-4 (BASED ON OVERHANG DIMENSION) AND DETERMINE THE BRACKET SPACING, S.
4. CALCULATE S/D1 AND S/D2, ROUNDING UP TO NEAREST VALUE IN TABLE 2. ENTER TABLE 2 AND DETERMINE R VALUE.
5. CALCULATE REVISED SLPB. ROUND VALUE UP TO NEAREST SLPB VALUE INDICATED ON APPROPRIATE TABLE 1-1, 1-2, 1-3, OR 1-4.
6. WITH THE REVISED SLPB, OVERHANG SLAB THICKNESS, "K" VALUE AND 45 HANGER SAFE WORKING LOAD (SWL), ENTER THE APPROPRIATE TABLE 1-1, 1-2, 1-3 OR 1-4 (BASED ON OVERHANG DIMENSION) AND DETERMINE REVISED BRACKET SPACING, S.
7. CONTINUE ITERATIONS OF STEPS 4-6 UNTIL THE REVISED BRACKET SPACING, S, IS THE SAME AS THE PREVIOUS S VALUE.
8. CHECK LUMBER JOIST SPACING: WITH BRACKET SPACING VALUE, S, ROUND THIS VALUE UP TO THE NEAREST VALUE OF ALLOWABLE SPAN LENGTH OF JOIST OF TABLE 3. USING THIS VALUE, ALONG WITH THE AVERAGE OVERHANG SLAB THICKNESS AND THE LUMBER JOIST SIZE, DETERMINE JOIST SPACING FROM TABLE 3. IF NECESSARY, ADJUST LUMBER JOIST SIZE AND/OR JOIST SPACING TO MEET ALLOWABLE SPAN LENGTH OF JOIST.
9. CONVERSELY, IF THE DESIRED JOIST SPACING IS KNOWN, USE THIS ALONG WITH THE AVERAGE OVERHANG SLAB THICKNESS AND THE LUMBER JOIST SIZE TO DETERMINE IF ALLOWABLE SPAN LENGTH OF JOIST IS GREATER THAN THE BRACKET SPACING, S. IF NECESSARY, ADJUST LUMBER JOIST SIZE TO MEET REQUIREMENTS OF ALLOWABLE SPAN LENGTH OF JOIST AND JOIST SPACING.
10. RECORD REMAINING INFORMATION ON "BRIDGE OVERHANG BRACKET SUMMARY" FORM.
11. SUBMIT FORM AND CALCULATIONS FOR REVIEW AND APPROVAL.

### TABLE 1-1

(FOR USE ON **UP TO 2'-0" OVERHANG (L)** & 54" HORIZONTAL LEG LENGTH OF THE OVERHANG BRACKET)

| AVG. SLAB THICKNESS (T) (in) | BRACKET (K) DIMENSION (in) | SCREED LOAD PER BRACKET | | | | | | | | | 45° HANGER SWL (lbs) |
|---|---|---|---|---|---|---|---|---|---|---|---|
| | | 2500 lbs. | 2250 lbs. | 2000 lbs. | 1750 lbs. | 1500 lbs. | 1250 lbs. | 1000 lbs. | 750 lbs. | 0 lbs. | |
| | | BRACKET SPACING | | | | | | | | | |
| 10 | 30 | | | | 2'-1" | 2'-7" | 3'-2" | 3'-8" | 4'-2" | 5'-9" | 4000 |
| | | 3'-6" | 4'-0" | 4'-5" | 4'-9" | 5'-1" | 5'-3" | 5'-5" | 5'-7" | 6'-7" | 6000 |
| | 40 | | | | 2'-1" | 2'-7" | 3'-2" | 3'-8" | 4'-2" | 5'-9" | 4000 |
| | | 3'-6" | 4'-0" | 4'-5" | 4'-9" | 5'-1" | 5'-3" | 5'-5" | 5'-7" | 6'-7" | 6000 |
| | 50 | | | | 2'-1" | 2'-7" | 3'-2" | 3'-8" | 4'-2" | 5'-9" | 4000 |
| | | 3'-6" | 4'-0" | 4'-5" | 4'-9" | 5'-1" | 5'-3" | 5'-5" | 5'-7" | 6'-7" | 6000 |
| 12 | 30 | | | | | 2'-4" | 2'-10" | 3'-4" | 3'-9" | 5'-2" | 4000 |
| | | 3'-2" | 3'-7" | 4'-1" | 4'-7" | 5'-0" | 5'-2" | 5'-4" | 5'-7" | 6'-5" | 6000 |
| | 40 | | | | | 2'-4" | 2'-10" | 3'-4" | 3'-9" | 5'-2" | 4000 |
| | | 3'-2" | 3'-7" | 4'-1" | 4'-7" | 5'-0" | 5'-2" | 5'-4" | 5'-7" | 6'-5" | 6000 |
| | 50 | | | | | 2'-4" | 2'-10" | 3'-4" | 3'-9" | 5'-2" | 4000 |
| | | 3'-2" | 3'-7" | 4'-1" | 4'-7" | 5'-0" | 5'-2" | 5'-4" | 5'-7" | 6'-5" | 6000 |
| 14 | 30 | | | | | 2'-2" | 2'-7" | 3'-0" | 3'-5" | 4'-9" | 4000 |
| | | 2'-10" | 3'-4" | 3'-9" | 4'-2" | 4'-7" | 5'-0" | 5'-4" | 5'-7" | 6'-4" | 6000 |
| | 40 | | | | | 2'-2" | 2'-7" | 3'-0" | 3'-5" | 4'-9" | 4000 |
| | | 2'-10" | 3'-4" | 3'-9" | 4'-2" | 4'-7" | 5'-0" | 5'-4" | 5'-7" | 6'-4" | 6000 |
| | 50 | | | | | 2'-2" | 2'-7" | 3'-0" | 3'-5" | 4'-9" | 4000 |
| | | 2'-10" | 3'-4" | 3'-9" | 4'-2" | 4'-7" | 5'-0" | 5'-4" | 5'-7" | 6'-4" | 6000 |
| 16 | 30 | | | | | 2'-0" | 2'-4" | 2'-9" | 3'-2" | 4'-4" | 4000 |
| | | 2'-8" | 3'-0" | 3'-5" | 3'-10" | 4'-3" | 4'-7" | 5'-0" | 5'-5" | 6'-3" | 6000 |
| | 40 | | | | | 2'-0" | 2'-4" | 2'-9" | 3'-2" | 4'-4" | 4000 |
| | | 2'-8" | 3'-0" | 3'-5" | 3'-10" | 4'-3" | 4'-7" | 5'-0" | 5'-5" | 6'-3" | 6000 |
| | 50 | | | | | 2'-0" | 2'-4" | 2'-9" | 3'-2" | 4'-4" | 4000 |
| | | 2'-8" | 3'-0" | 3'-5" | 3'-10" | 4'-3" | 4'-7" | 5'-0" | 5'-5" | 6'-3" | 6000 |

### TABLE 1-2

(FOR USE ON **OVER 2'-0" TO 2'-6" OVERHANG (L)** & 54" HORIZONTAL LEG LENGTH OF THE OVERHANG BRACKET)

| AVG. SLAB THICKNESS (T) (in) | BRACKET (K) DIMENSION (in) | SCREED LOAD PER BRACKET | | | | | | | | | 45° HANGER SWL (lbs) |
|---|---|---|---|---|---|---|---|---|---|---|---|
| | | 2500 lbs. | 2250 lbs. | 2000 lbs. | 1750 lbs. | 1500 lbs. | 1250 lbs. | 1000 lbs. | 750 lbs. | 0 lbs. | |
| | | BRACKET SPACING | | | | | | | | | |
| 10 | 30 | | | | | 2'-4" | 2'-9" | 3'-3" | 3'-8" | 5'-1" | 4000 |
| | | 3'-1" | 3'-6" | 4'-0" | 4'-5" | 4'-11" | 5'-3" | 5'-5" | 5'-7" | 6'-7" | 6000 |
| | 40 | | | | | 2'-4" | 2'-9" | 3'-3" | 3'-8" | 5'-1" | 4000 |
| | | 3'-1" | 3'-6" | 4'-0" | 4'-5" | 4'-11" | 5'-3" | 5'-5" | 5'-7" | 6'-7" | 6000 |
| | 50 | | | | | 2'-4" | 2'-9" | 3'-3" | 3'-8" | 5'-1" | 4000 |
| | | 3'-1" | 3'-6" | 4'-0" | 4'-5" | 4'-11" | 5'-3" | 5'-5" | 5'-7" | 6'-7" | 6000 |
| 12 | 30 | | | | | 2'-1" | 2'-6" | 2'-11" | 3'-4" | 4'-6" | 4000 |
| | | 2'-9" | 3'-2" | 3'-7" | 4'-0" | 4'-5" | 4'-10" | 5'-3" | 5'-7" | 6'-5" | 6000 |
| | 40 | | | | | 2'-1" | 2'-6" | 2'-11" | 3'-4" | 4'-6" | 4000 |
| | | 2'-9" | 3'-2" | 3'-7" | 4'-0" | 4'-5" | 4'-10" | 5'-3" | 5'-7" | 6'-5" | 6000 |
| | 50 | | | | | 2'-1" | 2'-6" | 2'-11" | 3'-4" | 4'-6" | 4000 |
| | | 2'-9" | 3'-2" | 3'-7" | 4'-0" | 4'-5" | 4'-10" | 5'-3" | 5'-7" | 6'-5" | 6000 |
| 14 | 30 | | | | | | 2'-3" | 2'-7" | 3'-0" | 4'-1" | 4000 |
| | | 2'-6" | 2'-10" | 3'-3" | 3'-7" | 4'-0" | 4'-4" | 4'-9" | 5'-1" | 6'-3" | 6000 |
| | 40 | | | | | | 2'-3" | 2'-7" | 3'-0" | 4'-1" | 4000 |
| | | 2'-6" | 2'-10" | 3'-3" | 3'-7" | 4'-0" | 4'-4" | 4'-9" | 5'-1" | 6'-3" | 6000 |
| | 50 | | | | | | 2'-3" | 2'-7" | 3'-0" | 4'-1" | 4000 |
| | | 2'-6" | 2'-10" | 3'-3" | 3'-7" | 4'-0" | 4'-4" | 4'-9" | 5'-1" | 6'-3" | 6000 |
| 16 | 30 | | | | | | 2'-1" | 2'-5" | 2'-9" | 3'-9" | 4000 |
| | | 2'-3" | 2'-7" | 2'-11" | 3'-4" | 3'-8" | 4'-0" | 4'-4" | 4'-8" | 5'-8" | 6000 |
| | 40 | | | | | | 2'-1" | 2'-5" | 2'-9" | 3'-9" | 4000 |
| | | 2'-3" | 2'-7" | 2'-11" | 3'-4" | 3'-8" | 4'-0" | 4'-4" | 4'-8" | 5'-8" | 6000 |
| | 50 | | | | | | 2'-1" | 2'-5" | 2'-9" | 3'-9" | 4000 |
| | | 2'-3" | 2'-7" | 2'-11" | 3'-4" | 3'-8" | 4'-0" | 4'-4" | 4'-8" | 5'-8" | 6000 |

### TABLE 1-3

(FOR USE ON **OVER 2'-6" TO 3'-0" OVERHANG (L)** & 54" HORIZONTAL LEG LENGTH OF THE OVERHANG BRACKET)

| AVG. SLAB THICKNESS (T) (in) | BRACKET (K) DIMENSION (in) | SCREED LOAD PER BRACKET | | | | | | | | | 45° HANGER SWL (lbs) |
|---|---|---|---|---|---|---|---|---|---|---|---|
| | | 2500 lbs. | 2250 lbs. | 2000 lbs. | 1750 lbs. | 1500 lbs. | 1250 lbs. | 1000 lbs. | 750 lbs. | 0 lbs. | |
| | | BRACKET SPACING | | | | | | | | | |
| 10 | 30 | | | | | 2'-1" | 2'-6" | 2'-11" | 3'-4" | 4'-6" | 4000 |
| | | | | | | 4'-5" | 4'-10" | 5'-3" | 5'-7" | 6'-7" | 6000 |
| | 40 | | | | | 2'-1" | 2'-6" | 2'-11" | 3'-4" | 4'-6" | 4000 |
| | | 2'-9" | 3'-2" | 3'-7" | 4'-0" | 4'-5" | 4'-10" | 5'-3" | 5'-7" | 6'-7" | 6000 |
| | 50 | | | | | 2'-1" | 2'-6" | 2'-11" | 3'-4" | 4'-6" | 4000 |
| | | 2'-9" | 3'-2" | 3'-7" | 4'-0" | 4'-5" | 4'-10" | 5'-3" | 5'-7" | 6'-7" | 6000 |
| 12 | 30 | | | | | | 2'-2" | 2'-7" | 2'-11" | 4'-0" | 4000 |
| | | | | | | 3'-11" | 4'-3" | 4'-8" | 5'-0" | 6'-1" | 6000 |
| | 40 | | | | | | 2'-2" | 2'-7" | 2'-11" | 4'-0" | 4000 |
| | | 2'-5" | 2'-10" | 3'-2" | 3'-6" | 3'-11" | 4'-3" | 4'-8" | 5'-0" | 6'-1" | 6000 |
| | 50 | | | | | | 2'-2" | 2'-7" | 2'-11" | 4'-0" | 4000 |
| | | 2'-5" | 2'-10" | 3'-2" | 3'-6" | 3'-11" | 4'-3" | 4'-8" | 5'-0" | 6'-1" | 6000 |
| 14 | 30 | | | | | | 2'-0" | 2'-4" | 2'-8" | 3'-8" | 4000 |
| | | | | | 3'-2" | 3'-6" | 3'-10" | 4'-2" | 4'-6" | 5'-6" | 6000 |
| | 40 | | | | | | 2'-0" | 2'-4" | 2'-8" | 3'-8" | 4000 |
| | | 2'-2" | 2'-6" | 2'-10" | 3'-2" | 3'-6" | 3'-10" | 4'-2" | 4'-6" | 5'-6" | 6000 |
| | 50 | | | | | | 2'-0" | 2'-4" | 2'-8" | 3'-8" | 4000 |
| | | 2'-2" | 2'-6" | 2'-10" | 3'-2" | 3'-6" | 3'-10" | 4'-2" | 4'-6" | 5'-6" | 6000 |
| 16 | 30 | | | | | | | 2'-1" | 2'-5" | 3'-4" | 4000 |
| | | | | | 2'-11" | 3'-2" | 3'-6" | 3'-10" | 4'-1" | 5'-0" | 6000 |
| | 40 | | | | | | | 2'-1" | 2'-5" | 3'-4" | 4000 |
| | | 2'-0" | 2'-4" | 2'-7" | 2'-11" | 3'-2" | 3'-6" | 3'-10" | 4'-1" | 5'-0" | 6000 |
| | 50 | | | | | | | 2'-1" | 2'-5" | 3'-4" | 4000 |
| | | 2'-0" | 2'-4" | 2'-7" | 2'-11" | 3'-2" | 3'-6" | 3'-10" | 4'-1" | 5'-0" | 6000 |

### TABLE 1-4

(FOR USE ON **OVER 3'-0" TO 3'-6" OVERHANG (L)** & 54" HORIZONTAL LEG LENGTH OF THE OVERHANG BRACKET)

| AVG. SLAB THICKNESS (T) (in) | BRACKET (K) DIMENSION (in) | SCREED LOAD PER BRACKET | | | | | | | | | 45° HANGER SWL (lbs) |
|---|---|---|---|---|---|---|---|---|---|---|---|
| | | 2500 lbs. | 2250 lbs. | 2000 lbs. | 1750 lbs. | 1500 lbs. | 1250 lbs. | 1000 lbs. | 750 lbs. | 0 lbs. | |
| | | BRACKET SPACING | | | | | | | | | |
| 10 | 30 | | | | | | 2'-1" | 2'-5" | 2'-9" | 3'-10" | 4000 |
| | | | | | | 2'-3" | 2'-11" | 3'-7" | 4'-3" | 5'-9" | 6000 |
| | 40 | | | | | | 2'-1" | 2'-5" | 2'-9" | 3'-10" | 4000 |
| | | | | 2'-4" | 3'-0" | 3'-7" | 4'-1" | 4'-5" | 4'-9" | 5'-9" | 6000 |
| | 50 | | | | | | 2'-1" | 2'-5" | 2'-9" | 3'-10" | 4000 |
| | | 2'-4" | 2'-8" | 3'-0" | 3'-4" | 3'-8" | 4'-1" | 4'-5" | 4'-9" | 5'-9" | 6000 |
| 12 | 30 | | | | | | | 2'-2" | 2'-6" | 3'-5" | 4000 |
| | | | | | | 2'-1" | 2'-8" | 3'-4" | 3'-11" | 5'-2" | 6000 |
| | 40 | | | | | | | 2'-2" | 2'-6" | 3'-5" | 4000 |
| | | | | 2'-2" | 2'-9" | 3'-4" | 3'-7" | 3'-11" | 4'-3" | 5'-2" | 6000 |
| | 50 | | | | | | | 2'-2" | 2'-6" | 3'-5" | 4000 |
| | | 2'-1" | 2'-4" | 2'-8" | 3'-0" | 3'-4" | 3'-7" | 3'-11" | 4'-3" | 5'-2" | 6000 |
| 14 | 30 | | | | | | | | 2'-3" | 3'-1" | 4000 |
| | | | | | | 2'-0" | 2'-6" | 3'-1" | 3'-8" | 4'-8" | 6000 |
| | 40 | | | | | | | | 2'-3" | 3'-1" | 4000 |
| | | | | 2'-0" | 2'-7" | 3'-0" | 3'-3" | 3'-6" | 3'-10" | 4'-8" | 6000 |
| | 50 | | | | | | | | 2'-3" | 3'-1" | 4000 |
| | | | 2'-2" | 2'-5" | 2'-8" | 3'-0" | 3'-3" | 3'-6" | 3'-10" | 4'-8" | 6000 |
| 16 | 30 | | | | | | | | 2'-0" | 2'-9" | 4000 |
| | | | | | | | 2'-4" | 2'-10" | 3'-5" | 4'-3" | 6000 |
| | 40 | | | | | | | | 2'-0" | 2'-9" | 4000 |
| | | | | | 2'-5" | 2'-8" | 2'-11" | 3'-3" | 3'-6" | 4'-3" | 6000 |
| | 50 | | | | | | | | 2'-0" | 2'-9" | 4000 |
| | | | | 2'-2" | 2'-5" | 2'-8" | 2'-11" | 3'-3" | 3'-6" | 4'-3" | 6000 |

DEFINITIONS

SLPB = SCREED LOAD PER BRACKET (R x W)
R = SCREED LOAD FACTOR, OBTAINED FROM TABLE 2
W = WHEEL LOAD
S = BRACKET SPACING
T = AVERAGE SLAB THICKNESS
SWL = SAFE WORKING LOAD
K = DIMENSION DEFINED ON "BRIDGE OVERHANG BRACKET SUMMARY" ON SHEET 2
L = OVERHANG MEASURED FROM EDGE OF TOP FLANGE TO EDGE OF SUPERSTRUCTURE

PROJECT NO. R-2413C
GUILFORD-ROCKINGHAM COUNTY
STATION: 11+43.200
-SB US 220 RAMP-
SHEET 1 OF 3

STATE OF NORTH CAROLINA
DEPARTMENT OF TRANSPORTATION
RALEIGH

STANDARD OVERHANG FALSEWORK

AASHTO TYPES
III, IV, V, AND VI

NORTH CAROLINA PROFESSIONAL SEAL 18788 ENGINEER CHANG-CHUAN VICTOR CHAO

Chang-Chuan V. Chao
8-5-2011

| REVISIONS | | | | | | SHEET NO. |
|---|---|---|---|---|---|---|
| NO. | BY: | DATE: | NO. | BY: | DATE: | S-144 |
| 1 | | | 3 | | | TOTAL SHEETS |
| 2 | | | 4 | | | 238 |

| | |
|---|---|
| ASSEMBLED BY: | DATE: |
| CHECKED BY: | DATE: |
| DRAWN BY: R. WRIGHT 06/04 | REV. |
| CHECKED BY: C. V. CHAO 06/04 | |

05-AUG-2011 10:46
C:\OLDFILESD\wdlr\victor\OverhangFalsework\TIEBAR&STRUT\R-2413C\R-2413CSTR4_TYPE_III\R2413CSTR4verHangSheets.dgn
vchao

STR. #4

OF1

## BRIDGE OVERHANG BRACKET SUMMARY

TOTAL SCREED WEIGHT = _____ LBS.
NUMBER OF SCREED WHEELS = _____
SCREED WHEEL LOAD (W) = _____LBS.
SCREED LOAD PER BRACKET = _____ LBS.

PROJECT No. : _____
COUNTY : _____
STATION : _____
DESCRIPTION : _____

DATE : _____
DESIGN BY : _____
CHECK BY : _____

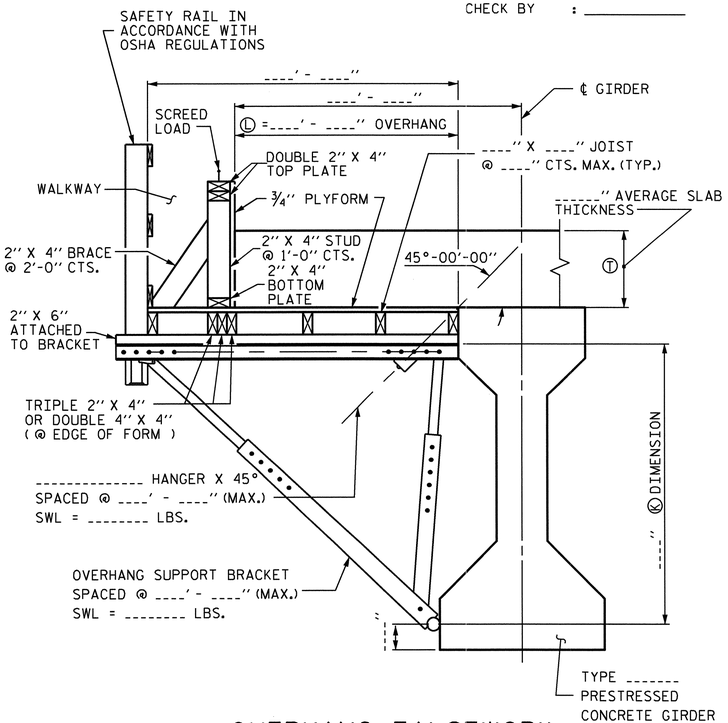


OVERHANG FALSEWORK

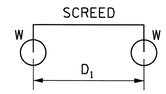


4-WHEEL MACHINE

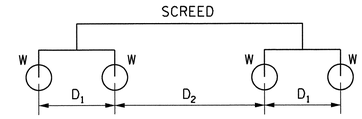


8-WHEEL MACHINE

| 4 WHEEL MACHINE | |
|---|---|
| S/D1 | R |
| <= 1.0 | 1.00 |
| 1.1 | 1.09 |
| 1.2 | 1.17 |
| 1.3 | 1.23 |
| 1.4 | 1.29 |
| 1.5 | 1.33 |
| 1.6 | 1.38 |
| 1.7 | 1.41 |
| 1.8 | 1.44 |
| 1.9 | 1.47 |
| 2.0 | 1.50 |
| 2.2 | 1.55 |
| 2.4 | 1.58 |
| 2.6 | 1.62 |
| 2.8 | 1.64 |
| 3.0 | 1.67 |
| 3.5 | 1.71 |
| 4.0 | 1.75 |

## TABLE 2: SCREED LOAD FACTOR "R"

| | | THE SCREED LOAD FACTOR R (FOR 8 WHEEL MACHINE) | | | | | | | | | | | | | | | | | |
|---|---|---|---|---|---|---|---|---|---|---|---|---|---|---|---|---|---|---|---|
| | | $S/D_2$ | | | | | | | | | | | | | | | | | |
| | | <= 1.0 | 1.1 | 1.2 | 1.3 | 1.4 | 1.5 | 1.6 | 1.7 | 1.8 | 1.9 | 2.0 | 2.2 | 2.4 | 2.6 | 2.8 | 3.0 | 3.5 | 4.0 |
| $S/D_1$ | <= 1.0 | 1.00 | 1.09 | 1.17 | 1.23 | 1.29 | 1.33 | 1.38 | 1.41 | 1.44 | 1.47 | 1.50 | 1.55 | 1.58 | 1.62 | 1.64 | 1.67 | 1.71 | 1.75 |
| | 1.1 | 1.09 | 1.18 | 1.26 | 1.32 | 1.38 | 1.42 | 1.47 | 1.50 | 1.54 | 1.56 | 1.59 | 1.64 | 1.67 | 1.71 | 1.73 | 1.76 | 1.81 | 1.84 |
| | 1.2 | 1.17 | 1.26 | 1.33 | 1.40 | 1.45 | 1.50 | 1.54 | 1.58 | 1.61 | 1.64 | 1.67 | 1.71 | 1.75 | 1.78 | 1.81 | 1.83 | 1.88 | 1.92 |
| | 1.3 | 1.23 | 1.32 | 1.40 | 1.46 | 1.52 | 1.56 | 1.61 | 1.64 | 1.68 | 1.70 | 1.73 | 1.78 | 1.81 | 1.85 | 1.87 | 1.90 | 1.95 | 1.98 |
| | 1.4 | 1.29 | 1.38 | 1.45 | 1.52 | 1.57 | 1.62 | 1.66 | 1.70 | 1.73 | 1.76 | 1.79 | 1.83 | 1.87 | 1.90 | 1.93 | 1.95 | 2.00 | 2.07 |
| | 1.5 | 1.33 | 1.42 | 1.50 | 1.56 | 1.62 | 1.67 | 1.71 | 1.75 | 1.78 | 1.81 | 1.83 | 1.88 | 1.92 | 1.95 | 1.98 | 2.00 | 2.10 | 2.17 |
| | 1.6 | 1.38 | 1.47 | 1.54 | 1.61 | 1.66 | 1.71 | 1.75 | 1.79 | 1.82 | 1.85 | 1.88 | 1.92 | 1.96 | 1.99 | 2.04 | 2.08 | 2.18 | 2.25 |
| | 1.7 | 1.41 | 1.50 | 1.58 | 1.64 | 1.70 | 1.75 | 1.79 | 1.82 | 1.86 | 1.89 | 1.91 | 1.96 | 2.00 | 2.05 | 2.11 | 2.16 | 2.25 | 2.32 |
| | 1.8 | 1.44 | 1.54 | 1.61 | 1.68 | 1.73 | 1.78 | 1.82 | 1.86 | 1.89 | 1.92 | 1.94 | 1.99 | 2.06 | 2.12 | 2.17 | 2.22 | 2.32 | 2.39 |
| | 1.9 | 1.47 | 1.56 | 1.64 | 1.70 | 1.76 | 1.81 | 1.85 | 1.89 | 1.92 | 1.95 | 1.97 | 2.04 | 2.11 | 2.18 | 2.23 | 2.28 | 2.38 | 2.45 |
| | 2.0 | 1.50 | 1.59 | 1.67 | 1.73 | 1.79 | 1.83 | 1.88 | 1.91 | 1.94 | 1.97 | 2.00 | 2.09 | 2.17 | 2.23 | 2.29 | 2.33 | 2.43 | 2.50 |
| | 2.2 | 1.55 | 1.64 | 1.71 | 1.78 | 1.83 | 1.88 | 1.92 | 1.96 | 1.99 | 2.04 | 2.09 | 2.18 | 2.26 | 2.32 | 2.38 | 2.42 | 2.52 | 2.59 |
| | 2.4 | 1.58 | 1.67 | 1.75 | 1.81 | 1.87 | 1.92 | 1.96 | 2.00 | 2.06 | 2.11 | 2.17 | 2.26 | 2.33 | 2.40 | 2.45 | 2.50 | 2.60 | 2.67 |
| | 2.6 | 1.62 | 1.71 | 1.78 | 1.85 | 1.90 | 1.95 | 1.99 | 2.05 | 2.12 | 2.18 | 2.23 | 2.32 | 2.40 | 2.46 | 2.52 | 2.56 | 2.66 | 2.73 |
| | 2.8 | 1.64 | 1.73 | 1.81 | 1.87 | 1.93 | 1.98 | 2.04 | 2.11 | 2.17 | 2.23 | 2.29 | 2.38 | 2.45 | 2.52 | 2.57 | 2.62 | 2.71 | 2.79 |
| | 3.0 | 1.67 | 1.76 | 1.83 | 1.90 | 1.95 | 2.00 | 2.08 | 2.16 | 2.22 | 2.28 | 2.33 | 2.42 | 2.50 | 2.56 | 2.62 | 2.67 | 2.76 | 2.83 |
| | 3.5 | 1.71 | 1.81 | 1.88 | 1.95 | 2.00 | 2.10 | 2.18 | 2.25 | 2.32 | 2.38 | 2.43 | 2.52 | 2.60 | 2.66 | 2.71 | 2.76 | 2.86 | 2.93 |
| | 4.0 | 1.75 | 1.84 | 1.92 | 1.98 | 2.07 | 2.17 | 2.25 | 2.32 | 2.39 | 2.45 | 2.50 | 2.59 | 2.67 | 2.73 | 2.79 | 2.83 | 2.93 | 3.00 |

## TABLE 3: ALLOWABLE SPAN LENGTH OF JOISTS AND JOIST SPACINGS

| AVG. SLAB THICKNESS Ⓣ (IN) | LUMBER JOIST SIZE (IN X IN) | JOIST SPACINGS | | | |
|---|---|---|---|---|---|
| | | 15 IN | 12 IN | 10 IN | 8 IN |
| | | THE ALLOWABLE SPAN LENGTH OF JOISTS | | | |
| 10 | 2 X 4 | ——— | 4' - 6" | 4' - 9" | 5' - 0" |
| | 4 X 4 | 5' - 9" | 6' - 3" | 6' - 6" | 6' - 7" |
| 12 | 2 X 4 | ——— | 4' - 3" | 4' - 9" | 5' - 0" |
| | 4 X 4 | 5' - 3" | 6' - 0" | 6' - 3" | 6' - 5" |
| 14 | 2 X 4 | ——— | 4' - 0" | 4' - 6" | 5' - 0" |
| | 4 X 4 | ——— | 5' - 6" | 6' - 0" | 6' - 4" |
| 16 | 2 X 4 | ——— | 4' - 0" | 4' - 3" | 4' - 9" |
| | 4 X 4 | ——— | 5' - 3" | 5' - 9" | 6' - 3" |

## NOTES

DESIGN INCLUDES CONSTRUCTION LIVE LOAD 20 PSF ON THE AREA SUPPORTED AND 75 PLF AT THE OUTSIDE DECK OF OVERHANGS.

REQUIRED MINIMUM DIAGONAL LEG CAPACITY: 3600 LB WORKING LOAD

THE CONTRACTOR HAS THE OPTION OF SUBMITTING HIS OWN DESIGN FOR OVERHANG FALSEWORK IN ACCORDANCE WITH THE SPECIAL PROVISIONS.

SUBMITTALS UTILIZING THE INSTRUCTIONS AND PROCEDURES DESCRIBED ON SHEET 1 OF 3 SHALL BE IN ACCORDANCE WITH THE APPLICABLE SECTIONS OF THE SPECIFICATIONS AND SPECIAL PROVISIONS, EXCEPT THAT CALCULATIONS FOR OVERHANG FALSEWORK NEED NOT BE SEALED BY A REGISTERED ENGINEER.

FOR OVERHANG FALSEWORK BRACING DESIGN, SEE SHEET 3 OF 3.

PROJECT NO. R-2413C
GUILFORD-ROCKINGHAM COUNTY
STATION: 11+43.200
-SB US 220 RAMP-
SHEET 2 OF 3

STATE OF NORTH CAROLINA
DEPARTMENT OF TRANSPORTATION
RALEIGH

STANDARD OVERHANG FALSEWORK

AASHTO TYPES
III, IV, V, AND VI

NORTH CAROLINA PROFESSIONAL SEAL 18788 ENGINEER CHANG-CHUAN VICTOR CHAO

Chang-Chuan V. Chao
8-5-2011

| REVISIONS | | | | | | SHEET NO. |
|---|---|---|---|---|---|---|
| NO. | BY: | DATE: | NO. | BY: | DATE: | 5-145 |
| 1 | | | 3 | | | TOTAL SHEETS |
| 2 | | | 4 | | | 238 |

| | |
|---|---|
| ASSEMBLED BY: | DATE: |
| CHECKED BY: | DATE: |
| DRAWN BY: R. WRIGHT 06/04 | REV. |
| CHECKED BY: C. V. CHAO 06/04 | |

05-AUG-2011 10:46
C:\OLDFILESD\wdlr\victor\OverhangFalsework\TIEBAR&STRUT\R-2413C\R-2413CSTR4_TYPE_III\R2413CSTR4verHangSheets.dgn
vchao

STR. #4

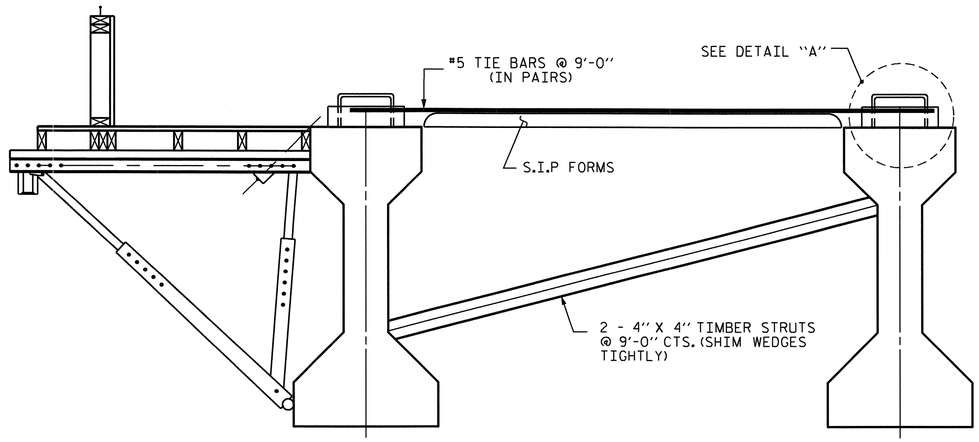


EXTERIOR GIRDER INTERIOR GIRDER

## DETAIL OF REQUIRED OVERHANG FALSEWORK BRACING SYSTEM

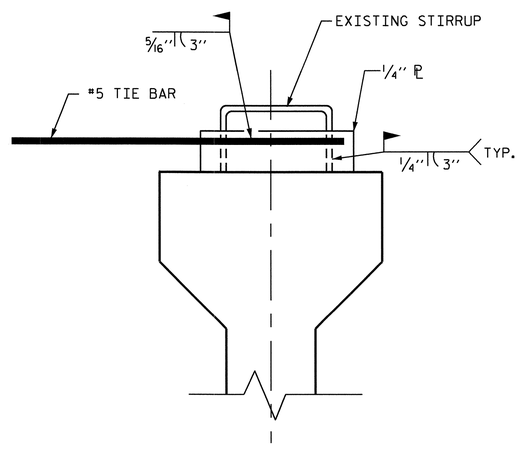


DETAIL "A"

NOTES:

EACH #5 TIE BAR SHALL BE WELDED TO ONE STIRRUP LOOP AS SHOWN IN DETAIL "A". #5 TIE BARS SHALL BE WELDED TO TWO ADJACENT STIRRUPS OF THE EXTERIOR GIRDER AND THE ADJACENT INTERIOR GIRDER BETWEEN PERMANENT DIAPHRAGMS. WELD STEEL PLATES IN BETWEEN THE TIE BARS AND THE STIRRUP LOOP. WELDING TWO TIE BARS TO THE SAME STIRRUP LOOP SHALL NOT BE PERMITTED.

MAXIMUM SPACING BETWEEN THE BRACING (TIE BARS-TIMBER STRUT) IS 9'-0" CTS. #5 TIE BARS SHALL BE LOCATED OVER A TIMBER STRUT.

INSTALL TIE BARS AND TIMBER STRUTS PRIOR TO PLACEMENT OF CONCRETE OR SCREED WEIGHT ONTO THE OVERHANG FALSEWORK.

PROJECT NO. R-2413C
GUILFORD-ROCKINGHAM COUNTY
STATION: 11+43.200
-SB US 220 RAMP-

SHEET 3 OF 3

STATE OF NORTH CAROLINA
DEPARTMENT OF TRANSPORTATION
RALEIGH

STANDARD OVERHANG FALSEWORK

AASHTO TYPES
III, IV, V, AND VI

NORTH CAROLINA PROFESSIONAL SEAL 18788 ENGINEER CHANG-CHUAN VICTOR CHAO

Chang-Chuan V. Chao
8-5-2011

| REVISIONS | | | | | | SHEET NO. |
|---|---|---|---|---|---|---|
| NO. | BY: | DATE: | NO. | BY: | DATE: | S-146 |
| 1 | | | 3 | | | TOTAL SHEETS |
| 2 | | | 4 | | | 238 |

DRAWN BY: R. WRIGHT 06/04 DATE :
CHECKED BY: C. V. CHAO 06/04 DATE :

05-AUG-2011 10:47
C:\OLDFILESD\wdir\victor\OverhangFalsework\TIEBAR&STRUT\R-2413C\R-2413CSTR4_TYPE_III\R2413CSTR4verHangSheets.dgn
vchao

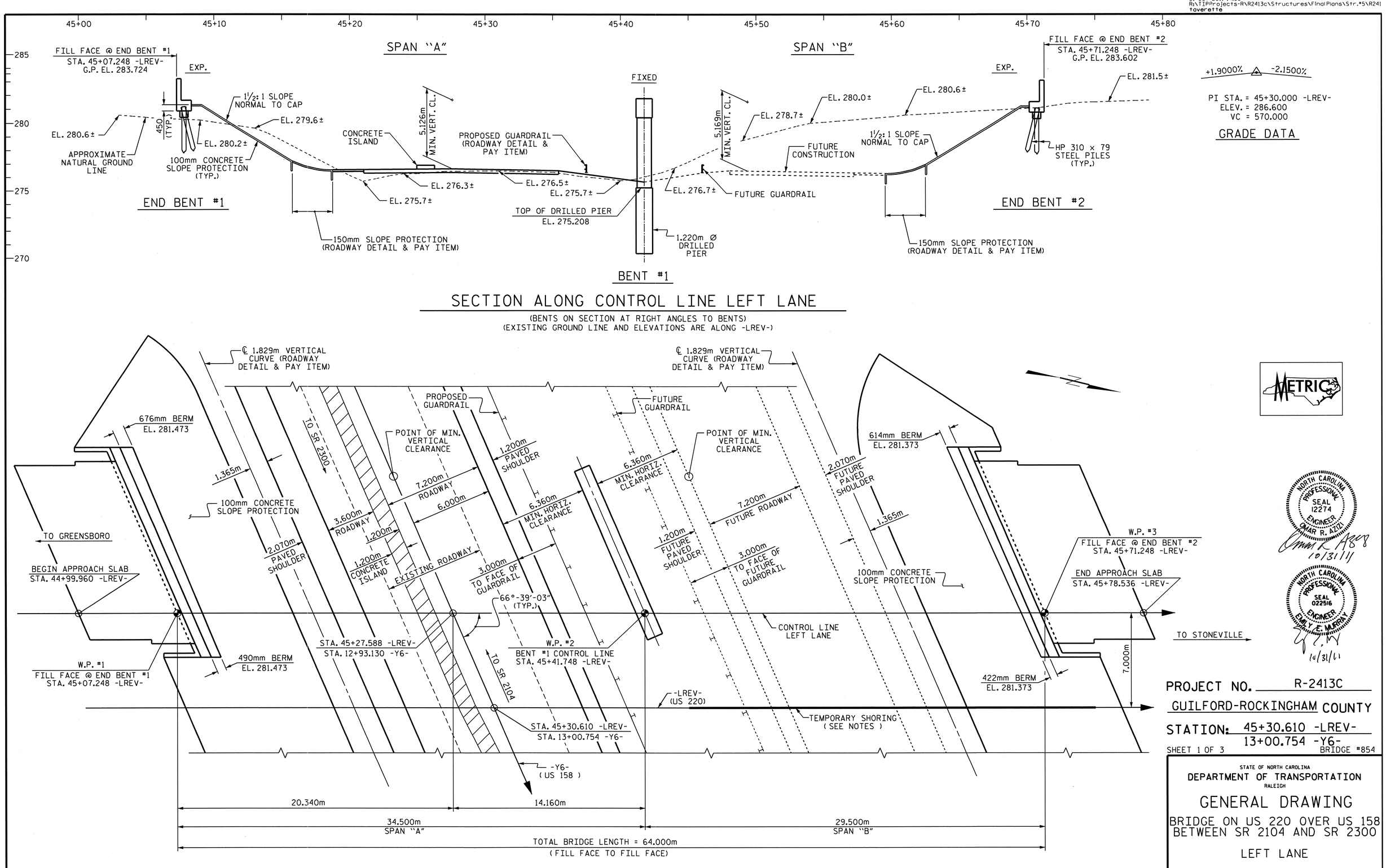


PROJECT NO. R-2413C

GUILFORD-ROCKINGHAM COUNTY

STATION: 45+30.610 -LREV-
13+00.754 -Y6-

SHEET 1 OF 3 BRIDGE #854

STATE OF NORTH CAROLINA
DEPARTMENT OF TRANSPORTATION
RALEIGH

# GENERAL DRAWING

BRIDGE ON US 220 OVER US 158
BETWEEN SR 2104 AND SR 2300

LEFT LANE

| REVISIONS | | | | | | SHEET NO. |
|---|---|---|---|---|---|---|
| NO. | BY: | DATE: | NO. | BY: | DATE: | S-147 |
| 1 | | | 3 | | | TOTAL SHEETS |
| 2 | | | 4 | | | 238 |

DRAWN BY : T.L. AVERETTE DATE : 01-25-11
CHECKED BY : PEGGY PARISI DATE : 05-03-11

STR. #5

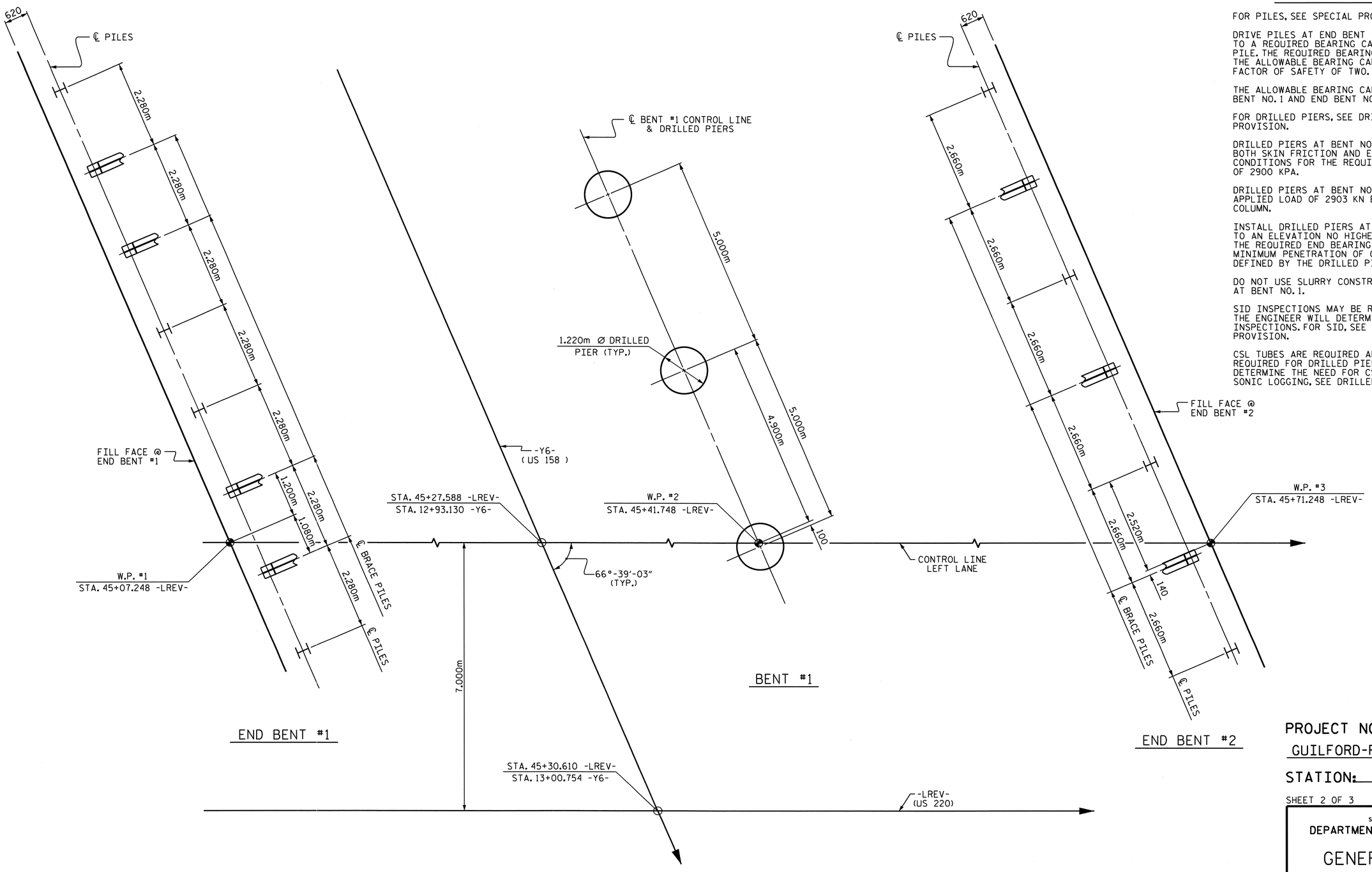


## FOUNDATION NOTES

FOR PILES, SEE SPECIAL PROVISIONS.

DRIVE PILES AT END BENT NO. 1 AND END BENT NO. 2 TO A REQUIRED BEARING CAPACITY OF 1060 KN PER PILE. THE REQUIRED BEARING CAPACITY IS EQUAL TO THE ALLOWABLE BEARING CAPACITY WITH A MINIMUM FACTOR OF SAFETY OF TWO.

THE ALLOWABLE BEARING CAPACITY FOR PILES AT END BENT NO. 1 AND END BENT NO. 2 IS 530 KN PER PILE.

FOR DRILLED PIERS, SEE DRILLED PIERS SPECIAL PROVISION.

DRILLED PIERS AT BENT NO. 1 ARE DESIGNED FOR BOTH SKIN FRICTION AND END BEARING. CHECK FIELD CONDITIONS FOR THE REQUIRED END BEARING CAPACITY OF 2900 KPA.

DRILLED PIERS AT BENT NO. 1 ARE DESIGNED FOR AN APPLIED LOAD OF 2903 KN EACH AT THE TOP OF THE COLUMN.

INSTALL DRILLED PIERS AT BENT NO. 1 THAT EXTEND TO AN ELEVATION NO HIGHER THAN 270.4 m, SATISFY THE REQUIRED END BEARING CAPACITY AND HAVE A MINIMUM PENETRATION OF ONE METER INTO ROCK AS DEFINED BY THE DRILLED PIERS SPECIAL PROVISION.

DO NOT USE SLURRY CONSTRUCTION FOR DRILLED PIERS AT BENT NO. 1.

SID INSPECTIONS MAY BE REQUIRED FOR DRILLED PIERS. THE ENGINEER WILL DETERMINE THE NEED FOR SID INSPECTIONS. FOR SID, SEE DRILLED PIERS SPECIAL PROVISION.

CSL TUBES ARE REQUIRED AND CSL TESTING MAY BE REQUIRED FOR DRILLED PIERS. THE ENGINEER WILL DETERMINE THE NEED FOR CSL TESTING. FOR CROSSHOLE SONIC LOGGING, SEE DRILLED PIERS SPECIAL PROVISION.

## FOUNDATION LAYOUT

ALL PILES ARE HP 310 x 79 STEEL PILES.
DIMENSIONS LOCATING PILES ARE SHOWN TO THE PILE CENTERLINE.
BRACE PILES AT END BENTS ARE TO BE BATTERED @ 250 : 1000

PROJECT NO. R-2413C
GUILFORD-ROCKINGHAM COUNTY
STATION: 45+30.610 -LREV-
13+00.754 -Y6-

SHEET 2 OF 3

STATE OF NORTH CAROLINA
DEPARTMENT OF TRANSPORTATION
RALEIGH

GENERAL DRAWING

BRIDGE ON US 220 OVER US 158
BETWEEN SR 2104 AND SR 2300

LEFT LANE

NORTH CAROLINA PROFESSIONAL SEAL 022516 ENGINEER EMILY E. MURRAY
10/28/11

| REVISIONS | | | | | | SHEET NO. |
|---|---|---|---|---|---|---|
| NO. | BY: | DATE: | NO. | BY: | DATE: | S-148 |
| 1 | | | 3 | | | TOTAL SHEETS |
| 2 | | | 4 | | | 238 |

DRAWN BY : T.L. AVERETTE DATE : 01-25-11
CHECKED BY : PEGGY PARISI DATE : 05-03-11

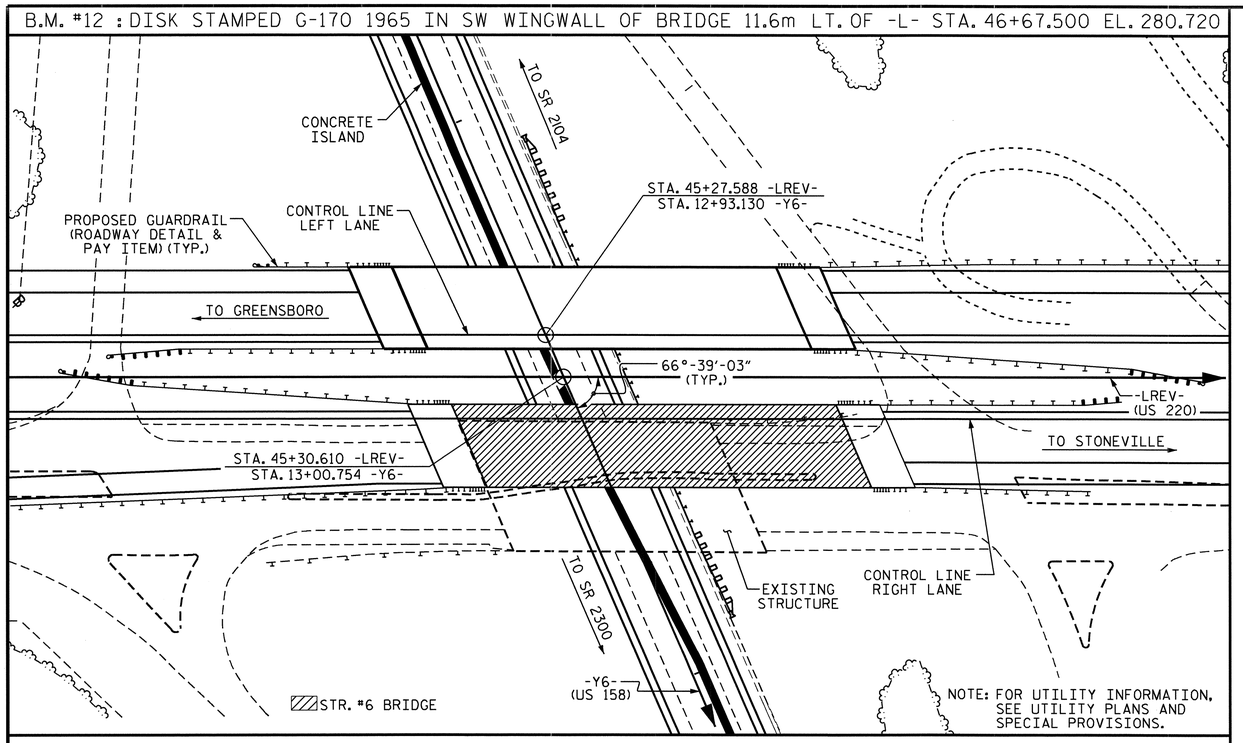


LOCATION SKETCH

## NOTES

ALL DIMENSIONS ARE IN MILLIMETERS UNLESS OTHERWISE NOTED.

ALL ELEVATIONS ARE IN METERS.

ASSUMED LIVE LOAD = MS 18 OR ALTERNATE LOADING, EXCEPT THAT THE GIRDERS HAVE BEEN DESIGNED FOR MS 22.5.

FOR OTHER DESIGN DATA AND GENERAL NOTES, SEE SHEET SNSM.

THIS BRIDGE HAS BEEN DESIGNED BY THE STRENGTH DESIGN METHOD AS SPECIFIED IN AASHTO STANDARD SPECIFICATIONS.

ALL STRUCTURAL STEEL SHALL BE AASHTO M270 GRADE 345W AND PAINTED IN ACCORDANCE WITH SYSTEM 4 OF ARTICLE 442-7 OF THE STANDARD SPECIFICATIONS UNLESS OTHERWISE NOTED ON THE PLANS.

THE LOCATION OF THE CONSTRUCTION JOINT IN THE DRILLED PIERS IS BASED ON AN APPROXIMATE GROUND LINE ELEVATION. IF THE CONSTRUCTION JOINT IS ABOVE THE ACTUAL GROUND ELEVATION, THE CONTRACTOR SHALL PLACE THE CONSTRUCTION JOINT 300mm BELOW THE GROUND LINE.

FOR MAINTENANCE AND PROTECTION OF TRAFFIC BENEATH PROPOSED STRUCTURE, SEE SPECIAL PROVISIONS.

WORK SHALL NOT BE STARTED ON THIS BRIDGE UNTIL ROADWAY SECTION HAS BEEN EXCAVATED.

NEEDLE BEAMS WILL NOT BE ALLOWED UNLESS OTHERWISE CALLED FOR ON THE PLANS OR APPROVED BY THE ENGINEER.

FOR SUBMITTAL OF WORKING DRAWINGS, SEE SPECIAL PROVISIONS.

FOR METRIC STRUCTURAL STEEL, SEE SPECIAL PROVISIONS.

FOR FALSEWORK AND FORMWORK, SEE SPECIAL PROVISIONS.

FOR MAINTENANCE OF TRAFFIC, SEE TRAFFIC CONTROL PLANS.

REMOVABLE FORMS MAY BE USED IN LIEU OF METAL STAY-IN-PLACE FORMS IN ACCORDANCE WITH ARTICLE 420-3 OF THE STANDARD SPECIFICATIONS.

THE CLASS AA CONCRETE IN THE BRIDGE DECK SHALL CONTAIN FLY ASH OR GROUND GRANULATED BLAST FURNACE SLAG AT THE SUBSTITUTION RATE SPECIFIED IN ARTICLE 1024-1 AND IN ACCORDANCE WITH ARTICLES 1024-5 AND 1024-6 OF THE STANDARD SPECIFICATIONS. NO PAYMENT WILL BE MADE FOR THIS SUBSTITUTION AS IT IS CONSIDERED INCIDENTAL TO THE COST OF THE REINFORCED CONCRETE DECK SLAB.

THIS BRIDGE HAS BEEN DESIGNED IN ACCORDANCE WITH THE REQUIREMENTS OF THE AASHTO STANDARD SPECIFICATIONS FOR SEISMIC DESIGN OF HIGHWAY BRIDGES FOR SEISMIC PERFORMANCE CATEGORY A.

FOR CRANE SAFETY, SEE SPECIAL PROVISIONS.

FOR GROUT FOR STRUCTURES, SEE SPECIAL PROVISIONS.

FOR CURING CONCRETE, SEE SPECIAL PROVISIONS.

FOR PLACING LOAD ON STRUCTURE MEMBERS, SEE SPECIAL PROVISIONS.

FOR EROSION CONTROL MEASURES SEE EROSION CONTROL PLANS.

FOR SHIPPING STEEL STRUCTURAL MEMBERS, SEE SPECIAL PROVISIONS.

FOR LIMITS OF TEMPORARY SHORING FOR MAINTENANCE OF TRAFFIC, SEE TRAFFIC CONTROL PLANS. FOR PAY ITEM FOR TEMPORARY SHORING FOR MAINTENANCE OF TRAFFIC, SEE ROADWAY PLANS.

## TOTAL BILL OF MATERIAL - METRIC

| LEFT LANE BRIDGE | 1220mm Ø DRILLED PIERS IN SOIL | 1220mm Ø DRILLED PIERS NOT IN SOIL | SID INSPECTION | CSL TESTING | REINFORCED CONCRETE DECK SLAB | GROOVING BRIDGE FLOORS | CLASS A CONCRETE | BRIDGE APPROACH SLABS | REINFORCING STEEL | SPIRAL COLUMN REINFORCING STEEL | STRUCTURAL STEEL | HP 310 X 79 STEEL PILES | | CONCRETE BARRIER RAIL | 100mm SLOPE PROTECTION | POT BEARINGS | ELASTOMERIC BEARINGS | EXPANSION JOINT SEALS |
|---|---|---|---|---|---|---|---|---|---|---|---|---|---|---|---|---|---|---|
| | METERS | METERS | EACH | EACH | SQ. METERS | SQ. METERS | CU. METERS | LUMP SUM | kg | kg | APPROX. kg | NO. | METERS | METERS | SQ. METERS | LUMP SUM | LUMP SUM | LUMP SUM |
| SUPERSTRUCTURE | | | | | 860.2 | 907.9 | | LUMP SUM | | | 127,800 | | | 138.984 | | LUMP SUM | LUMP SUM | LUMP SUM |
| END BENT #1 | | | | | | | 26.8 | | 2,380 | | | 8 | 22.4 | | 271.7 | | | |
| BENT #1 | 7.9 | 6.8 | | | | | 36.7 | | 5,310 | 1,227 | | | | | | | | |
| END BENT #2 | | | | | | | 26.5 | | 2,390 | | | 7 | 41.3 | | 271.9 | | | |
| TOTAL | 7.9 | 6.8 | 1 | 1 | 860.2 | 907.9 | 90.0 | LUMP SUM | 10,080 | 1,227 | 127,800 | 15 | 63.7 | 138.984 | 543.6 | LUMP SUM | LUMP SUM | LUMP SUM |

## TOTAL BILL OF MATERIAL - ENGLISH

| | LIN. FT. | LIN. FT. | EACH | EACH | SQ. FT. | SQ. FT. | CU. YD. | LUMP SUM | LBS. | LBS. | APPROX. LBS. | NO. | LIN. FT. | LIN. FT. | SQ. YD. | LUMP SUM | LUMP SUM | LUMP SUM |
|---|---|---|---|---|---|---|---|---|---|---|---|---|---|---|---|---|---|---|
| TOTAL | 25.9 | 22.3 | 1 | 1 | 9,259 | 9,773 | 117.7 | LUMP SUM | 22,223 | 2,705 | 281,750 | 15 | 209 | 455.98 | 650 | LUMP SUM | LUMP SUM | LUMP SUM |

PROJECT NO. R-2413C

GUILFORD-ROCKINGHAM COUNTY

STATION: 45+30.610 -LREV-
13+00.754 -Y6-

SHEET 3 OF 3

STATE OF NORTH CAROLINA
DEPARTMENT OF TRANSPORTATION
RALEIGH

GENERAL DRAWING

BRIDGE ON US 220 OVER US 158 BETWEEN SR 2104 AND SR 2300

LEFT LANE

NORTH CAROLINA PROFESSIONAL SEAL 022516 ENGINEER
EMIL E. MARRAY
10/28/11

| REVISIONS | | | | | | SHEET NO. |
|---|---|---|---|---|---|---|
| NO. | BY: | DATE: | NO. | BY: | DATE: | S-149 |
| 1 | | | 3 | | | TOTAL SHEETS |
| 2 | | | 4 | | | 238 |

DRAWN BY : T.L. AVERETTE DATE : 01-25-11
CHECKED BY : PEGGY PARISI DATE : 05-03-11

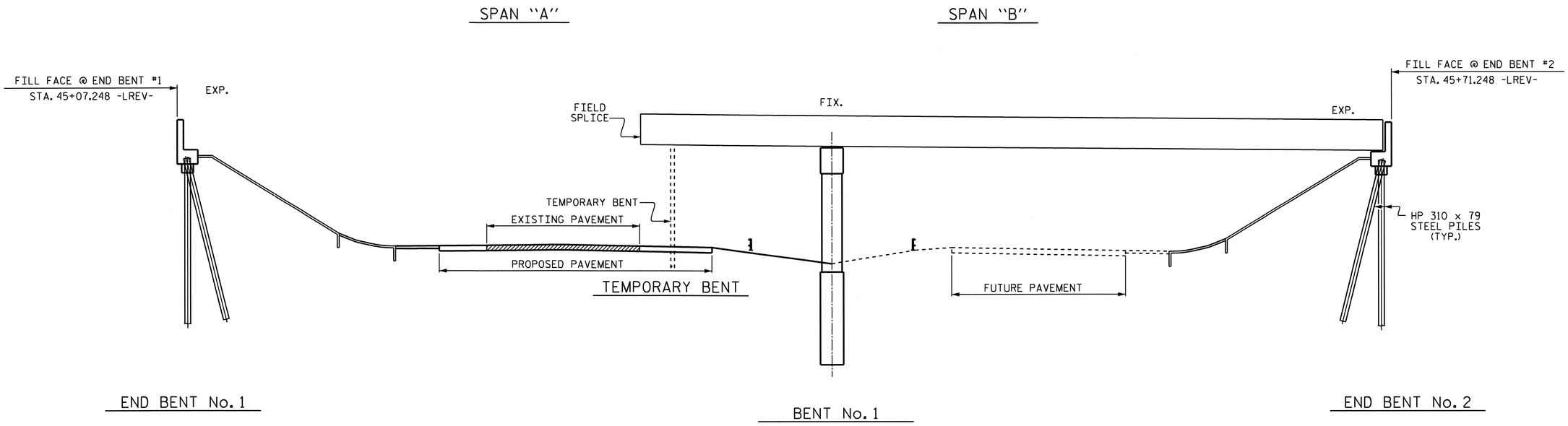


## STAGE I GIRDER ERECTION

( SECTIONS AT BENT & END BENTS ARE AT RIGHT ANGLES )

## ERECTION NOTES

ERECT A MINIMUM OF TWO GIRDERS WITH ALL DIAPHRAGMS/CROSSFRAMES BETWEEN THE GIRDERS IN PLACE AND THE BOLTS TIGHTENED PRIOR TO RELEASING THE GIRDERS.

ERECT EACH SUBSEQUENT GIRDER WITH DIAPHRAGMS/CROSSFRAMES CONNECTING TO THE ADJACENT PREVIOUSLY ERECTED GIRDER AND TIGHTEN ALL BOLTS BEFORE RELEASING THE GIRDER.

THE STRUCTURAL STEEL SHALL BE SUPPORTED DURING ERECTION IN ITS CAMBERED POSITION. A MINIMUM OF ONE TEMPORARY BENT SHALL BE USED IN SPAN "A".

TEMPORARY BENT SHALL SUPPORT ALL GIRDERS IN THE TYPICAL SECTION.

PLACEMENT OF TEMPORARY BENT SHALL BE COORDINATED WITH TRAFFIC PHASING REQUIREMENTS. SEE TRAFFIC CONTROL PLANS.

TEMPORARY BENT SHALL REMAIN IN PLACE UNTIL ALL DIAPHRAGMS/CROSSFRAMES ARE IN PLACE AND ALL HIGH STRENGTH BOLTS ARE TIGHTENED.

TEMPORARY BENT SHALL PROVIDE BEARING AT CONNECTOR PLATE LOCATIONS. WHEN CONNECTOR PLATES ARE USED AS TEMPORARY BEARING STIFFENERS, DIAPHRAGMS MUST BE ATTACHED.

THE CONTRACTOR'S ERECTION PLANS SHALL INCLUDE A METHOD OF TEMPORARY BENT REMOVAL THAT WILL UNIFORMLY TRANSFER THE STRUCTURAL WEIGHT TO THE DIAPHRAGMS/CROSSFRAMES AND THE GIRDERS WILL REMAIN IN THE CAMBERED POSITIONS.

PLANS FOR TEMPORARY BENT ERECTION AND REMOVAL SHALL BE SUBMITTED TO THE ENGINEER FOR REVIEW.

THE CONTRACTOR IS RESPONSIBLE FOR DESIGNING THE TEMPORARY BENT. THE DESIGNS SHALL BE COMPLETED BY A PROFESSIONAL ENGINEER REGISTERED IN THE STATE OF NORTH CAROLINA. THE CONTRACTOR SHALL SUBMIT SIGNED AND SEALED WORKING DRAWINGS AND CALCULATIONS FOR APPROVAL BY THE ENGINEER.

DURING THE GIRDER ERECTION PROCEDURE, THE CONTRACTOR IS RESPONSIBLE FOR PROVIDING TEMPORARY LATERAL BRACING AND OTHER MEANS OF SUPPORT, AS REQUIRED, TO ENSURE STABILITY OF THE GIRDERS, AVOID UPLIFT OF THE GIRDERS AT THE TEMPORARY BENTS AND TO ENSURE PLUMBNESS OF THE GIRDERS IN THE FINAL CONDITION.

NO SEPARATE MEASUREMENT OR PAYMENT WILL BE MADE FOR PROVIDING THE TEMPORARY BENTS. THE COST FOR ALL MATERIALS, EQUIPMENT, TOOLS, LABOR AND ANY INCIDENTALS NECESSARY TO PROVIDE THE TEMPORARY BENTS SHALL BE CONSIDERED INCIDENTAL TO THE LUMP SUM BID PRICE FOR STRUCTURAL STEEL.

THE CONTRACTOR MAY SUBMIT AN ALTERNATE ERECTION METHOD TO THE ENGINEER FOR REVIEW AND APPROVAL.

PROJECT NO. R-2413C
GUILFORD-ROCKINGHAM COUNTY
STATION: 45+30.610 -LREV-

NORTH CAROLINA PROFESSIONAL SEAL 022516 ENGINEER ELMER E. MURRAY
10/28/11

STATE OF NORTH CAROLINA
DEPARTMENT OF TRANSPORTATION
RALEIGH

GIRDER ERECTION DETAILS

| REVISIONS | | | | | | SHEET NO. |
|---|---|---|---|---|---|---|
| NO. | BY: | DATE: | NO. | BY: | DATE: | S-150 |
| 1 | | | 3 | | | TOTAL SHEETS |
| 2 | | | 4 | | | 238 |

DRAWN BY : PEGGY PARISI DATE : 6-1-11
CHECKED BY : T.L. AVERETTE DATE : 7-26-11

05-SEP-2011 13:44
Y:\Structures\Final Plans\Str.#5\R2413C_sd_GD_05.dgn
mgudlaugsson

STR. #5

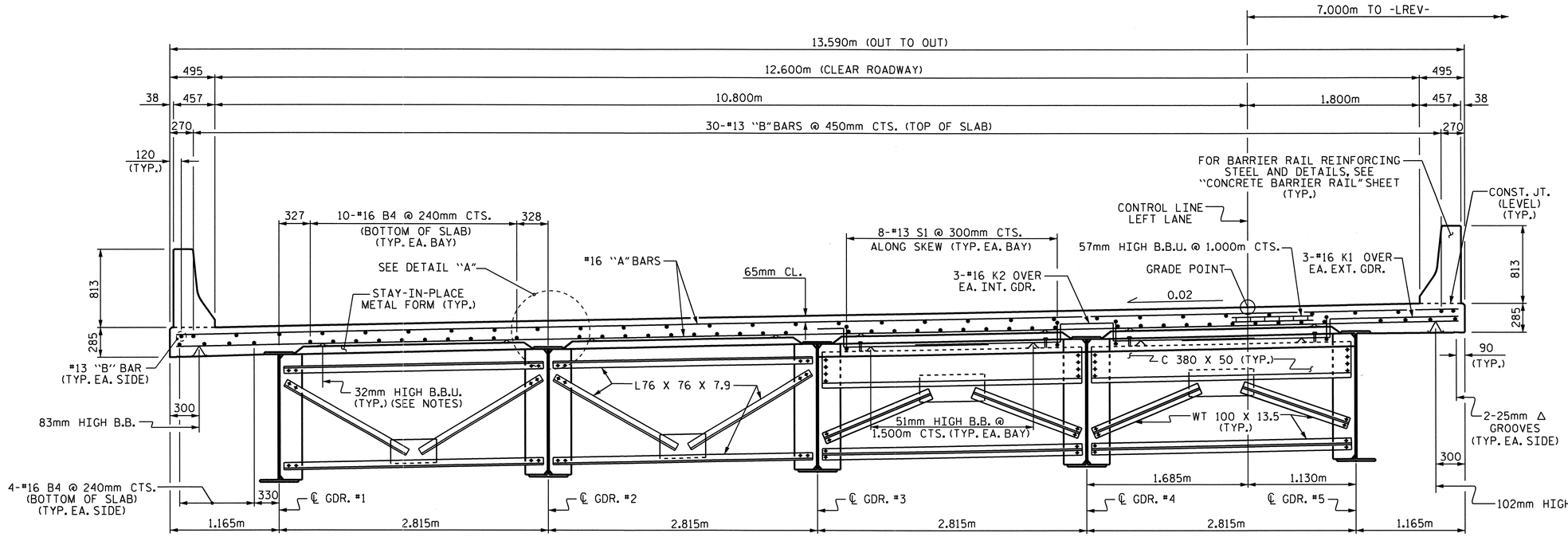


## HALF SECTION @ INTERMEDIATE DIAPHRAGMS

SHOWING TYPE D3, SEE "FRAMING PLAN"

## HALF SECTION @ END BENT DIAPHRAGMS

SHOWING TYPE D1, SEE "FRAMING PLAN"

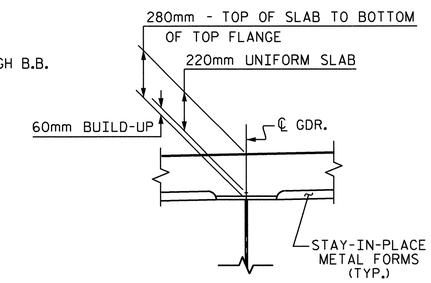


## DETAIL "A"

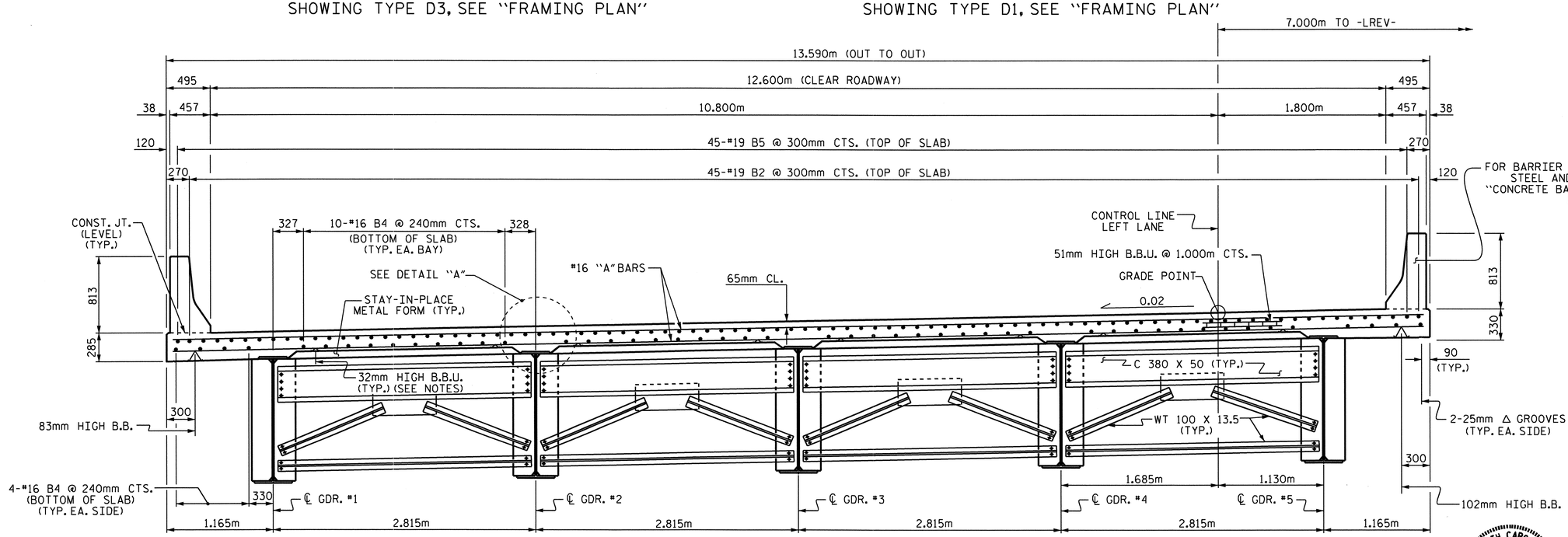


## TYPICAL SECTION @ BENT DIAPHRAGMS

SHOWING TYPE D2, SEE "FRAMING PLAN"

## NOTES

PROVIDE 32mm HIGH BEAM BOLSTERS UPPER AT 1.2m CTS. ATOP THE METAL STAY-IN-PLACE FORMS TO SUPPORT THE BOTTOM MAT OF 'A' BARS. WHEN USING REMOVABLE FORMS, PROVIDE CONTINUOUS HIGH CHAIRS FOR METAL DECK (C.H.C.M.) @ 1.2m CTS. WITH A HEIGHT TO SUPPORT THE BOTTOM MAT OF 'A' BARS A CLEAR DISTANCE OF 65mm ABOVE THE TOP OF THE REMOVABLE FORM.

METAL STAY-IN-PLACE FORMS SHALL NOT BE WELDED TO BEAM OR GIRDER FLANGES IN THE ZONES REQUIRING CHARPY V-NOTCH TEST. SEE STRUCTURAL STEEL DETAIL SHEETS.

PREVIOUSLY CAST CONCRETE IN A CONTINUOUS UNIT SHALL HAVE ATTAINED A MINIMUM COMPRESSIVE STRENGTH OF 20.7 MPa BEFORE ADDITIONAL CONCRETE IS CAST IN THE UNIT.

STRUCTURAL STEEL ERECTION IN A CONTINUOUS UNIT SHALL BE COMPLETE BEFORE FALSEWORK OR FORMS ARE PLACED ON THE UNIT.

THE CONTRACTOR MAY, WHEN NECESSARY, PROPOSE A SCHEME FOR AVOIDING INTERFERENCE BETWEEN METAL STAY-IN-PLACE FORM SUPPORTS OR FORMS AND BEAM/GIRDER STIFFENERS OR CONNECTOR PLATES. THE PROPOSAL SHALL BE INDICATED, AS APPROPRIATE, ON EITHER THE STEEL WORKING DRAWINGS OR THE METAL STAY-IN-PLACE FORM WORKING DRAWINGS.

THE CONTRACTOR SHALL ADJUST THE GIRDER BUILDUPS AS NECESSARY TO INCORPORATE A MAXIMUM PERMISSIBLE VARIATION IN POT BEARING DEPTH OF 13mm, SEE SPECIAL PROVISION FOR POT BEARINGS.

BARRIER RAIL IN A CONTINUOUS UNIT SHALL NOT BE CAST UNTIL ALL SLAB CONCRETE IN THE UNIT HAS BEEN CAST AND HAS REACHED A MINIMUM COMPRESSIVE STRENGTH OF 20.7 MPa.

PROJECT NO. R-2413C

GUILFORD-ROCKINGHAM COUNTY

STATION: 45+30.610 -LREV-

SHEET 1 OF 2

STATE OF NORTH CAROLINA
DEPARTMENT OF TRANSPORTATION
RALEIGH

SUPERSTRUCTURE

# TYPICAL SECTION AND DETAILS

## LEFT LANE

NORTH CAROLINA PROFESSIONAL SEAL 022516 ENGINEER
EMILY K. MURRAY
10/26/11

| REVISIONS | | | | | | | SHEET NO. |
|---|---|---|---|---|---|---|---|
| NO. | BY: | DATE: | NO. | BY: | DATE: | | S-151 |
| 1 | | | 3 | | | | TOTAL SHEETS |
| 2 | | | 4 | | | | 238 |

DRAWN BY : T.L. AVERETTE DATE : 09-01-10
CHECKED BY : PEGGY PARISI DATE : 09-16-10

STR. #5

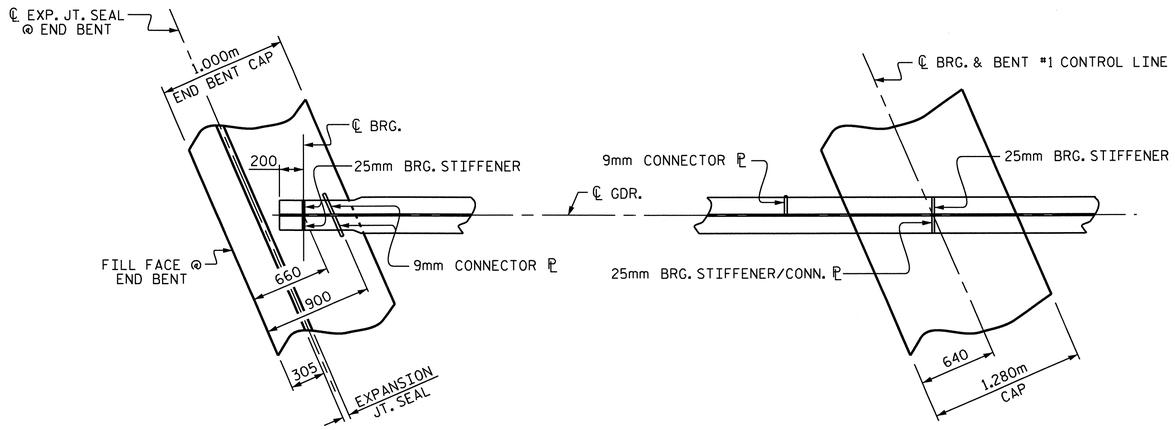


## PLAN OF GIRDER AT END BENT JOINT

(END BENT #1 SHOWN, END BENT #2 SIMILAR)

## PLAN OF GIRDER AT BENT #1

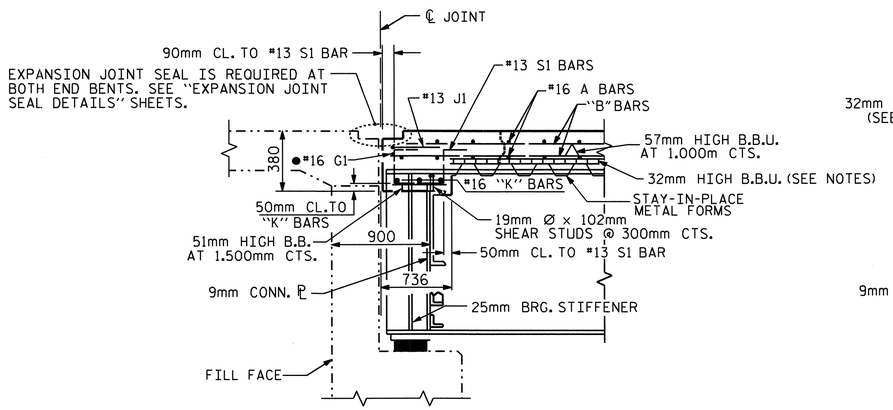


## SECTION THRU END BENT DIAPHRAGM

● #16 G1 BAR MAY BE SHIFTED SLIGHTLY, AS NECESSARY, TO CLEAR DIAPHRAGM AND REINFORCING STEEL.

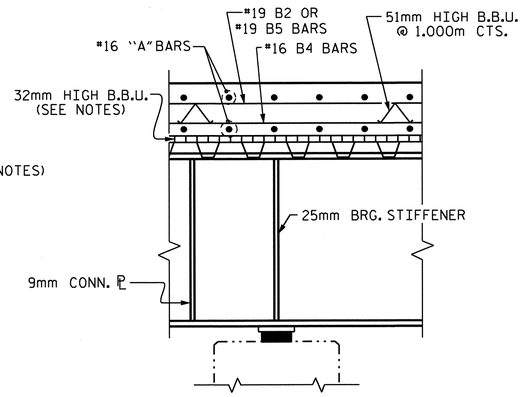


## SECTION AT BENT

(CROSSFRAME NOT SHOWN FOR CLARITY)

PROJECT NO. R-2413C

GUILFORD-ROCKINGHAM COUNTY

STATION: 45+30.610 -LREV-

SHEET 2 OF 2

STATE OF NORTH CAROLINA
DEPARTMENT OF TRANSPORTATION
RALEIGH

SUPERSTRUCTURE

# TYPICAL SECTION AND DETAILS

## LEFT LANE

NORTH CAROLINA PROFESSIONAL SEAL 022516 ENGINEER EMILY E. LAMBERT

10/28/10

| REVISIONS | | | | | | SHEET NO. |
|---|---|---|---|---|---|---|
| NO. | BY: | DATE: | NO. | BY: | DATE: | S-152 |
| 1 | | | 3 | | | TOTAL SHEETS |
| 2 | | | 4 | | | 238 |

DRAWN BY : T.L. AVERETTE DATE : 09-01-10
CHECKED BY : PEGGY PARISI DATE : 09-16-10

STR. #5

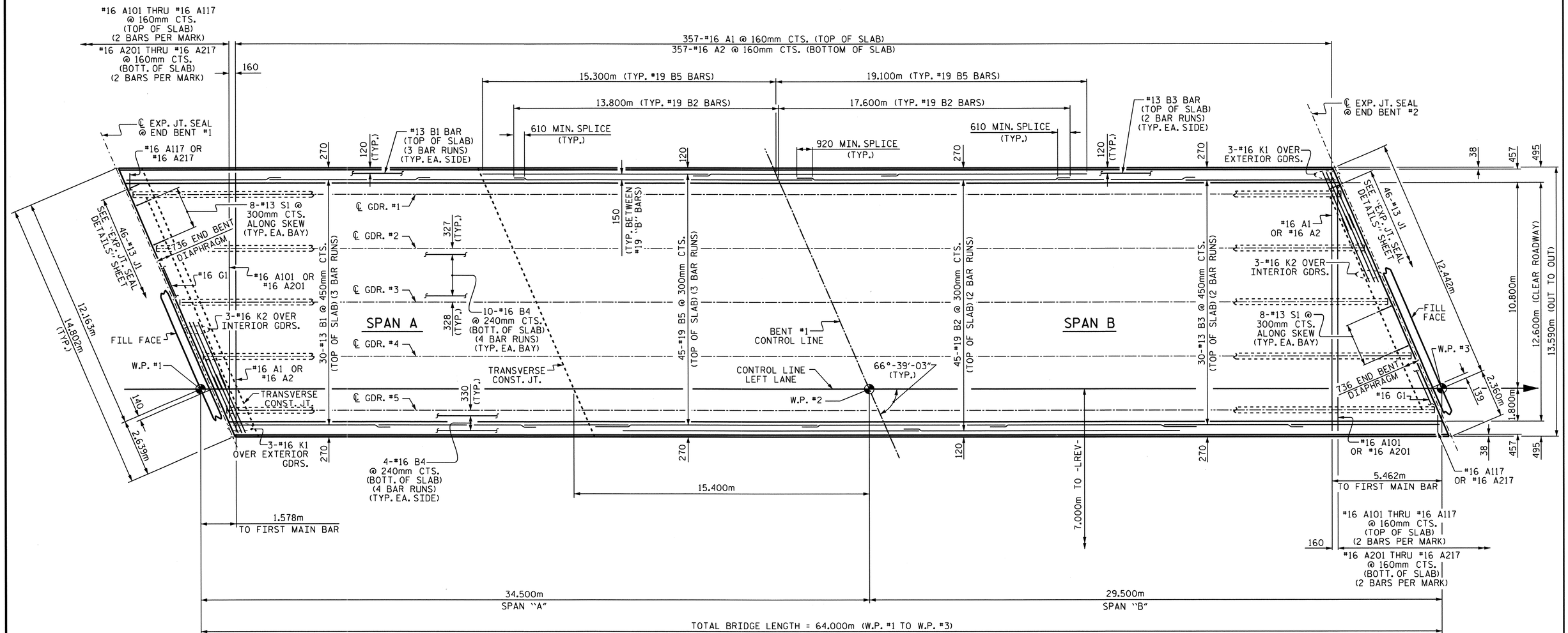


## PLAN OF SPANS

FOR REINFORCING STEEL IN CONCRETE BARRIER RAIL, SEE "CONCRETE BARRIER RAIL" SHEET.

PROJECT NO. R-2413C

GUILFORD-ROCKINGHAM COUNTY

STATION: 45+30.610 -LREV-

STATE OF NORTH CAROLINA
DEPARTMENT OF TRANSPORTATION
RALEIGH

SUPERSTRUCTURE

PLAN OF SPANS
LEFT LANE

NORTH CAROLINA PROFESSIONAL SEAL 022516 ENGINEER EMRY E. MURRAY
10/28/11

| REVISIONS | | | | | | | SHEET NO. |
|---|---|---|---|---|---|---|---|
| NO. | BY: | DATE: | NO. | BY: | DATE: | | S-153 |
| 1 | | | 3 | | | | TOTAL SHEETS |
| 2 | | | 4 | | | | 238 |

DRAWN BY : T.L. AVERETTE DATE : 09-01-10
CHECKED BY : PEGGY PARISI DATE : 09-16-10

05-SEP-2011 13:38
Y:\Structures\Final Plans\Str.#5\R2413C_sd_SI_05.dgn
mgudlaugsson

STR. #5

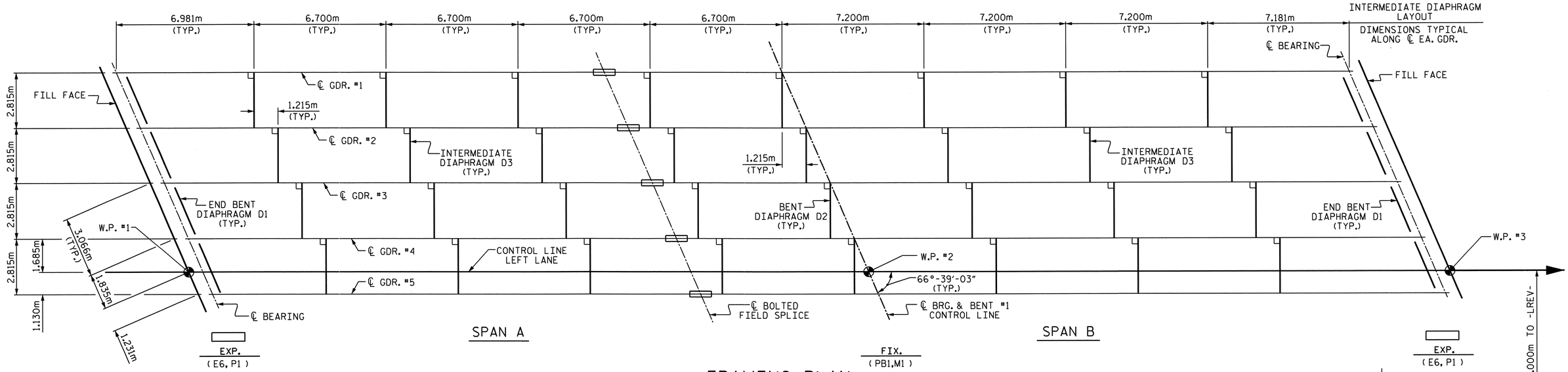


## FRAMING PLAN

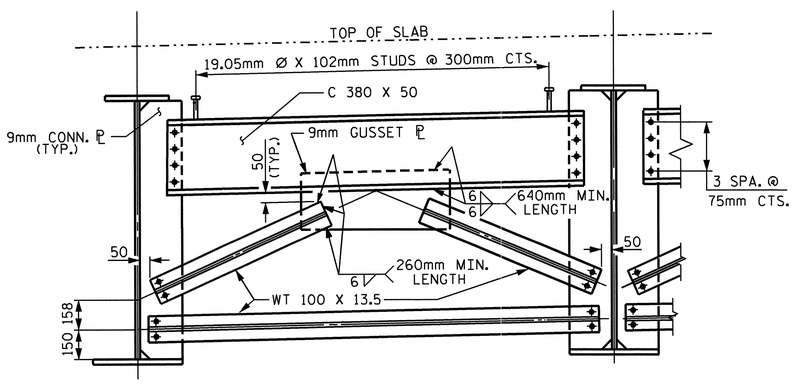


## END BENT DIAPHRAGM-D1

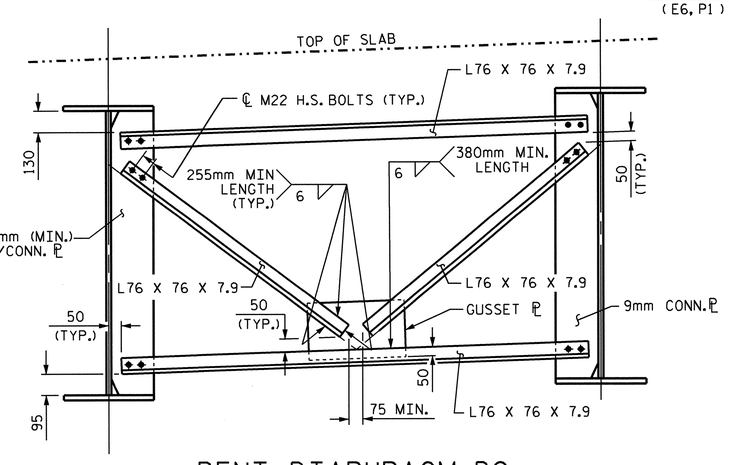


## BENT DIAPHRAGM-D2

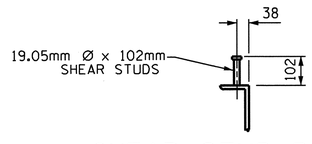


## SHEAR STUD DETAILS

( @ CHANNELS )

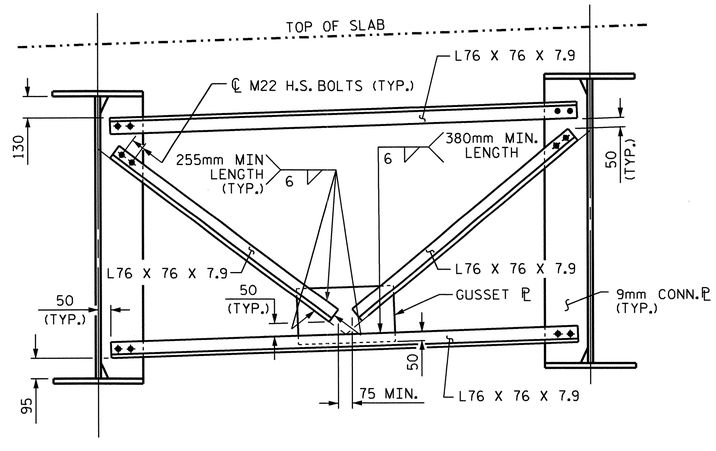


## INTERMEDIATE DIAPHRAGM-D3

PROJECT NO. R-2413C

GUILFORD-ROCKINGHAM COUNTY

STATION: 45+30.610 -LREV-

SHEET 1 OF 4

STATE OF NORTH CAROLINA
DEPARTMENT OF TRANSPORTATION
RALEIGH

SUPERSTRUCTURE

FRAMING PLAN
LEFT LANE

NORTH CAROLINA PROFESSIONAL SEAL 022516 ENGINEER EMILY E. MURPHY
10/28/11

| REVISIONS | | | | | | SHEET NO. |
|---|---|---|---|---|---|---|
| NO. | BY: | DATE: | NO. | BY: | DATE: | S-154 |
| 1 | | | 3 | | | TOTAL SHEETS |
| 2 | | | 4 | | | 238 |

DRAWN BY : T.L. AVERETTE DATE : 09-01-10
CHECKED BY : PEGGY PARISI DATE : 09-16-10

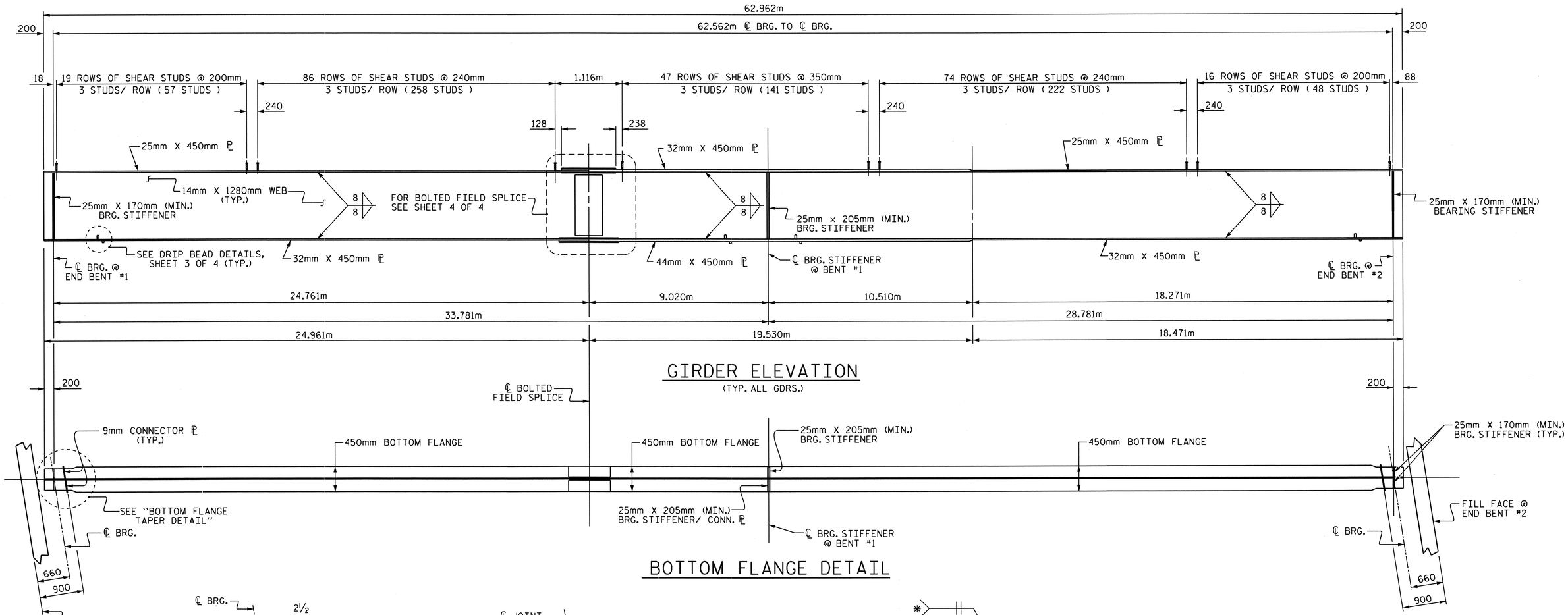


## GIRDER ELEVATION

(TYP. ALL GDRS.)

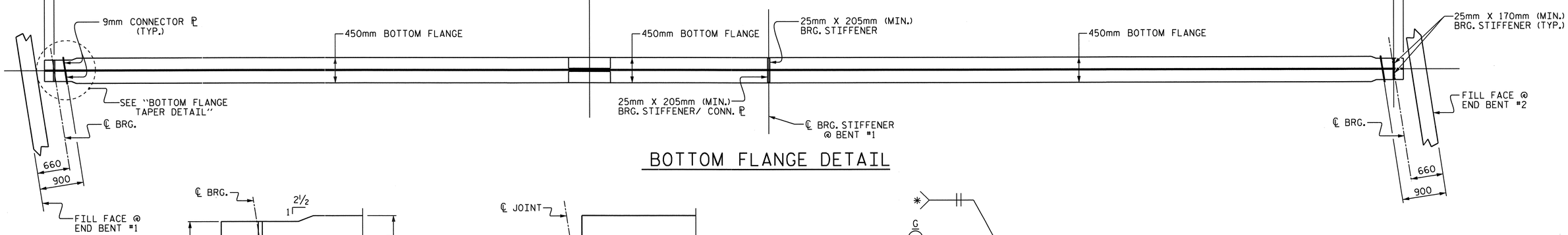


## BOTTOM FLANGE DETAIL

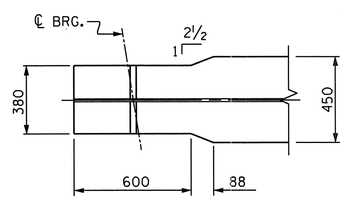


## BOTTOM FLANGE TAPER DETAIL

(TYP. EA. END)

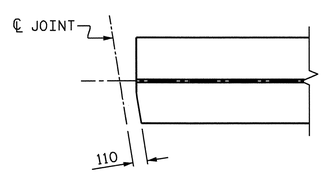


## TOP FLANGE CLIP DETAIL

(TYP. AT BOTH ENDS OF GIRDER)

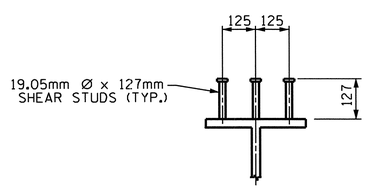


## SHEAR STUD DETAILS

ON GIRDERS

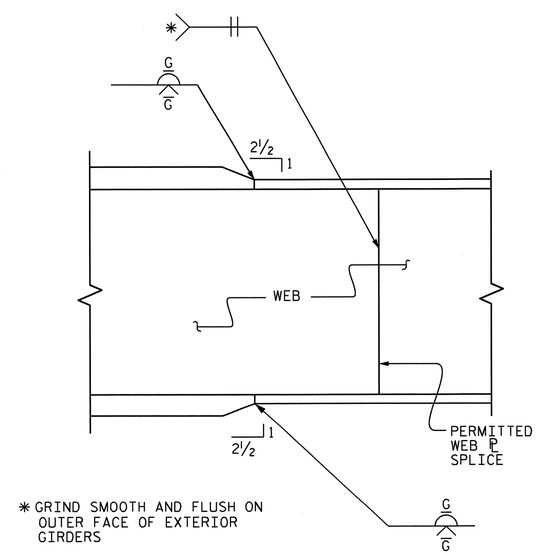


* GRIND SMOOTH AND FLUSH ON OUTER FACE OF EXTERIOR GIRDERS

ELEVATION

## TYPICAL FLANGE AND WEB BUTT JOINT

PROJECT NO. R-2413C

GUILFORD-ROCKINGHAM COUNTY

STATION: 45+30.610 -LREV-

SHEET 2 OF 4

STATE OF NORTH CAROLINA
DEPARTMENT OF TRANSPORTATION
RALEIGH

SUPERSTRUCTURE

STRUCTURAL STEEL DETAILS LEFT LANE

NORTH CAROLINA PROFESSIONAL SEAL 022516 ENGINEER EMILY E. MURRAY
10/28/10

| REVISIONS | | | | | | SHEET NO. |
|---|---|---|---|---|---|---|
| NO. | BY: | DATE: | NO. | BY: | DATE: | S-155 |
| 1 | | | 3 | | | TOTAL SHEETS |
| 2 | | | 4 | | | 238 |

DRAWN BY : T.L. AVERETTE DATE : 09-01-10
CHECKED BY : PEGGY PARISI DATE : 09-16-10

STR. #5

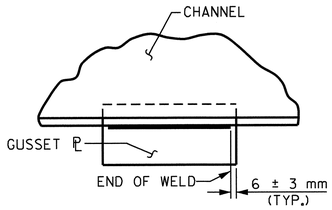


TYPICAL GUSSET PLATE CONNECTION

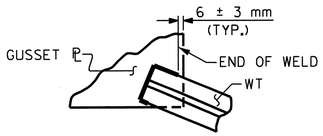


TYPICAL "TEE" TO GUSSET PLATE CONNECTION

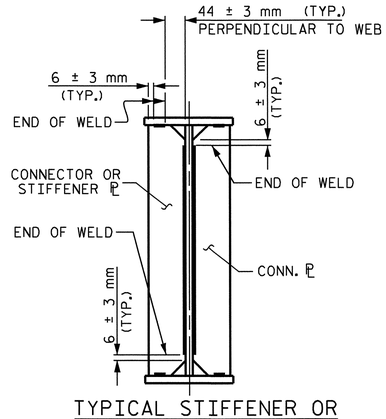


TYPICAL STIFFENER OR
CONNECTOR PLATE CONNECTIONS

## WELD TERMINATION DETAILS

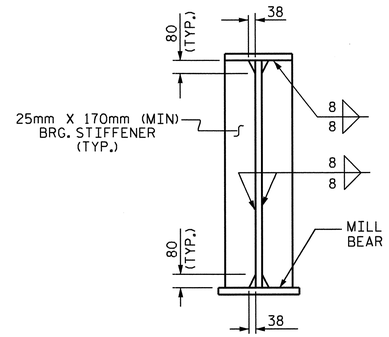


@ END BENTS

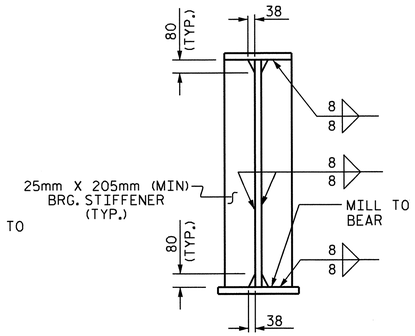


@ BENTS

NOTE:
THE BEARING STIFFENER SHALL BE WELDED TO THE BOTTOM FLANGE ONLY WHEN USED AS A CONNECTOR ℙ.

## BEARING STIFFENER

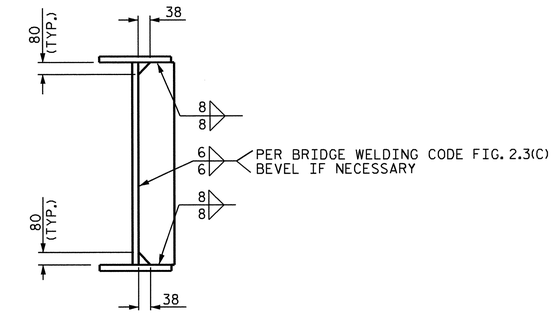


## CONNECTOR PLATE

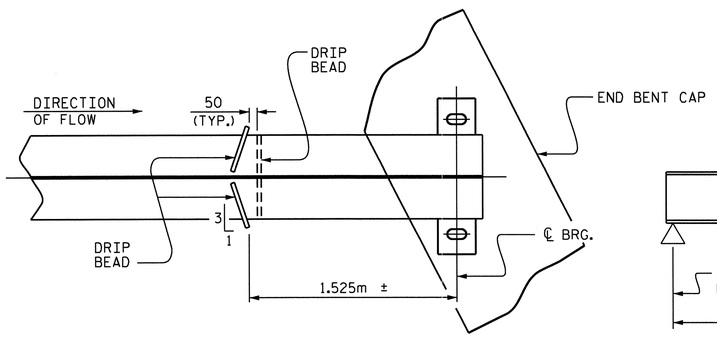


PART PLAN - BOTTOM FLANGE

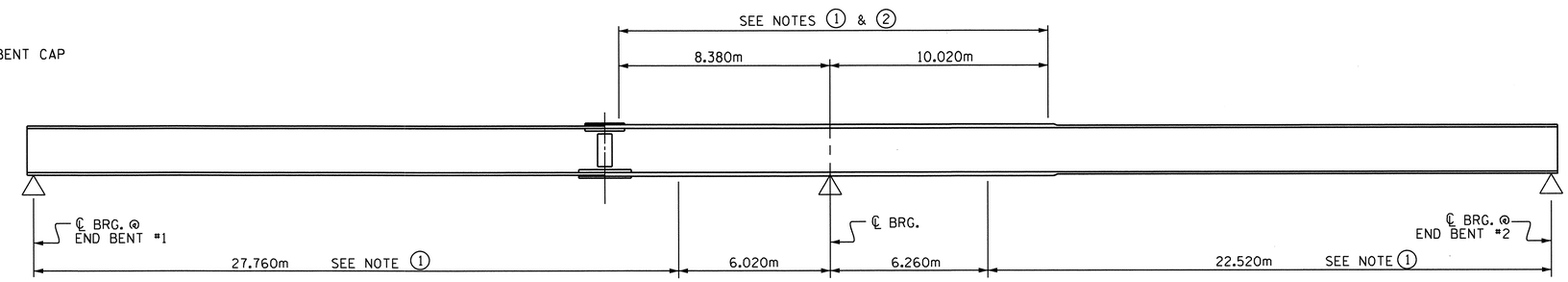


GIRDER MAKE UP

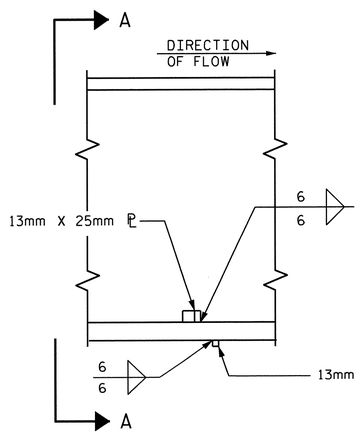


SECTION

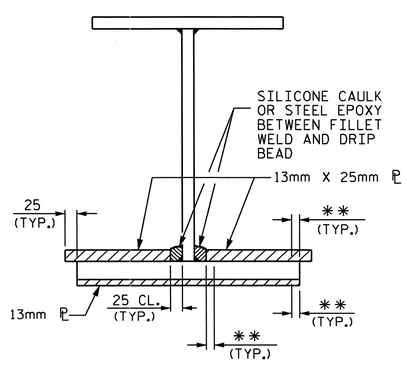


VIEW A-A

**SEE "WELD TERMINATION DETAILS"

## DRIP BEAD DETAILS

NOTE 1: CHARPY V-NOTCH TESTS ARE REQUIRED FOR ALL TOP OR BOTTOM FLANGE PLATES WHICH FALL WITHIN THESE LIMITS, ALL WEB PLATES, AND ALL SPLICE PLATES. IF A PERMITTED SHOP FLANGE SPLICE IS NOT USED, CHARPY V-NOTCH TESTS WILL BE REQUIRED FOR THE ENTIRE FLANGE PLATE. FOR CHARPY V-NOTCH TESTS, SEE ARTICLE 1072-9 OF THE STANDARD SPECIFICATIONS.

NOTE 2: NO WELDING OF FORMS OR FALSEWORK TO THE TOP FLANGE WILL BE PERMITTED IN THIS REGION.

## CHARPY V-NOTCH TESTS FOR CONTINUOUS PLATE GIRDERS

PROJECT NO. R-2413C
GUILFORD-ROCKINGHAM COUNTY
STATION: 45+30.610 -LREV-

SHEET 3 OF 4

STATE OF NORTH CAROLINA
DEPARTMENT OF TRANSPORTATION
RALEIGH

SUPERSTRUCTURE

STRUCTURAL STEEL
DETAILS
LEFT LANE

NORTH CAROLINA PROFESSIONAL SEAL 022516 ENGINEER EMILY E. MURRAY
10/28/11

| REVISIONS | | | | | | SHEET NO. |
|---|---|---|---|---|---|---|
| NO. | BY: | DATE: | NO. | BY: | DATE: | S-156 |
| 1 | | | 3 | | | TOTAL SHEETS |
| 2 | | | 4 | | | 238 |

DRAWN BY : T.L. AVERETTE DATE : 09-01-10
CHECKED BY : PEGGY PARISI DATE : 09-16-10

STR. #5

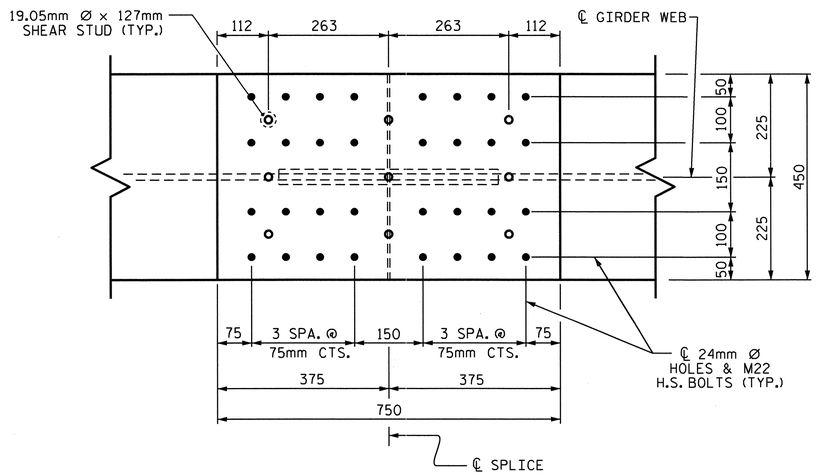


PLAN (TOP OF TOP FLANGE)

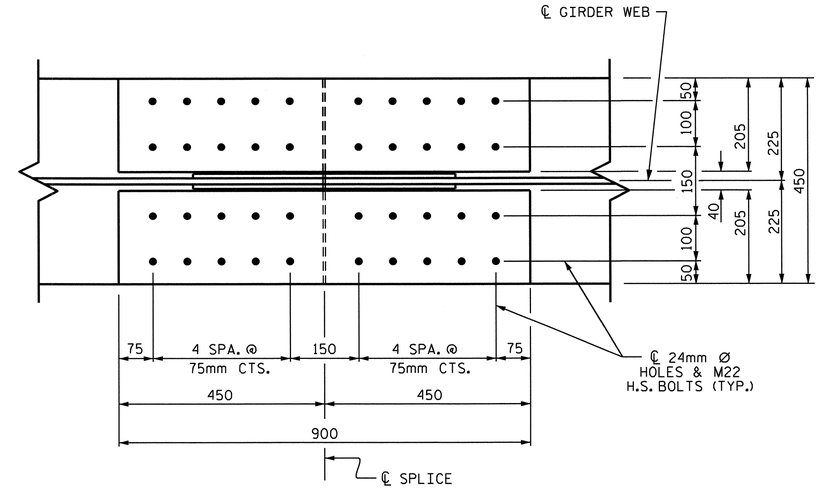


PLAN (TOP OF BOTTOM FLANGE)

## NOTES

ALL STRUCTURAL STEEL SHALL BE AASHTO M270 GRADE 345W AND PAINTED IN ACCORDANCE WITH SYSTEM 4 OF ARTICLE 442-7 OF THE STANDARD SPECIFICATIONS UNLESS OTHERWISE NOTED ON THE PLANS.

ALL DIMENSIONS SHOWN ARE HORIZONTAL OR VERTICAL, UNLESS OTHERWISE NOTED.

ALL FIELD CONNECTIONS TO BE 22.23mm DIA. HIGH STRENGTH BOLTS UNLESS OTHERWISE NOTED. FOR HIGH STRENGTH BOLTS, SEE SPECIAL PROVISIONS.

BEARING STIFFENERS ARE TO BE PLACED NORMAL TO THE WEB OF THE GIRDER AND SHALL BE PLUMB.

PERMITTED FLANGE AND WEB SHOP SPLICES SHALL NOT BE LOCATED WITHIN 4.5 METERS OF MAXIMUM DEAD LOAD DEFLECTION (NOR WITHIN 4.5 METERS OF INTERMEDIATE BEARINGS OF CONTINUOUS UNITS). KEEP 600mm MINIMUM BETWEEN WEB AND FLANGE SHOP SPLICES. KEEP 150mm MINIMUM BETWEEN CONNECTOR PLATE OR TRANSVERSE STIFFENER WELDS AND WEB OR FLANGE SHOP SPLICES.

STUDS ON GIRDERS MAY BE SHIFTED UP TO 25mm IF NECESSARY TO CLEAR FLANGE SPLICE WELD.

TENSION ON THE AASHTO M164 BOLTS SHALL BE CALIBRATED USING DIRECT TENSION INDICATOR WASHERS. FOR DIRECT TENSION INDICATORS, SEE SPECIAL PROVISIONS.

END OF GIRDERS SHALL BE PLUMB.

BEARING STIFFENER MAY REQUIRE COPING IF WIDER THAN BOTTOM FLANGE TO AVOID INTERFERENCE WITH THE ANCHOR BOLT.

FOR SHIPPING STEEL STRUCTURAL MEMBERS, SEE SPECIAL PROVISIONS.

FABRICATORS SHALL DETAIL DIAPHRAGM MEMBERS AND CONNECTIONS FOR FULL DEAD LOAD FIT UP. GIRDERS SHALL BE PLUMB AFTER THE FULL AMOUNT OF DEAD LOAD IS APPLIED.

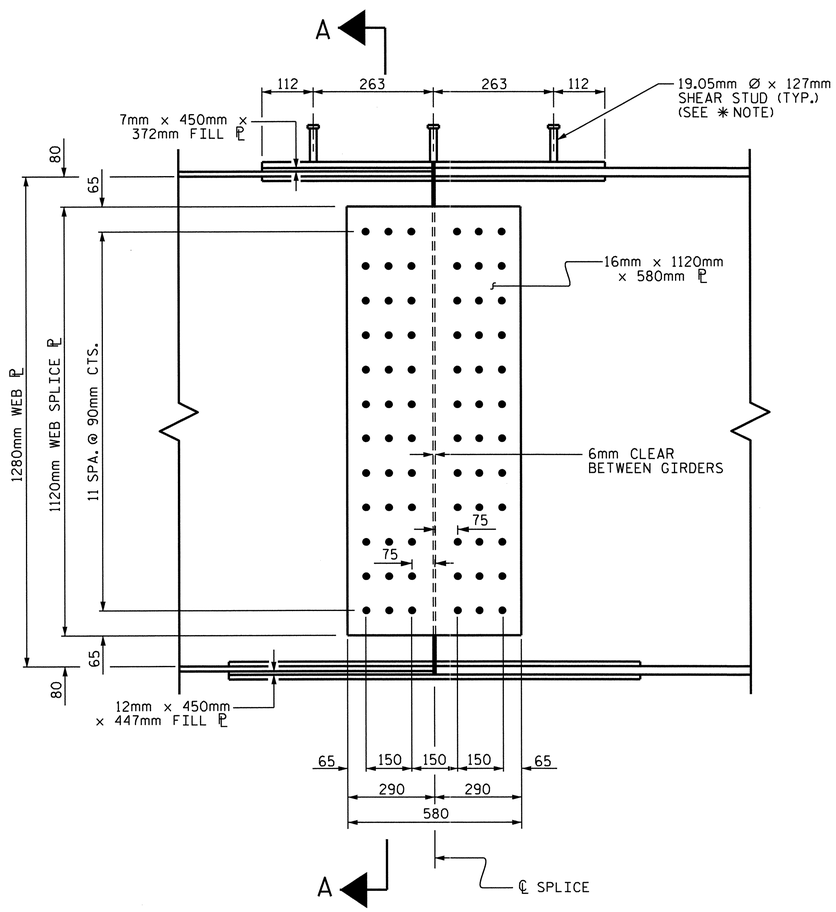


ELEVATION

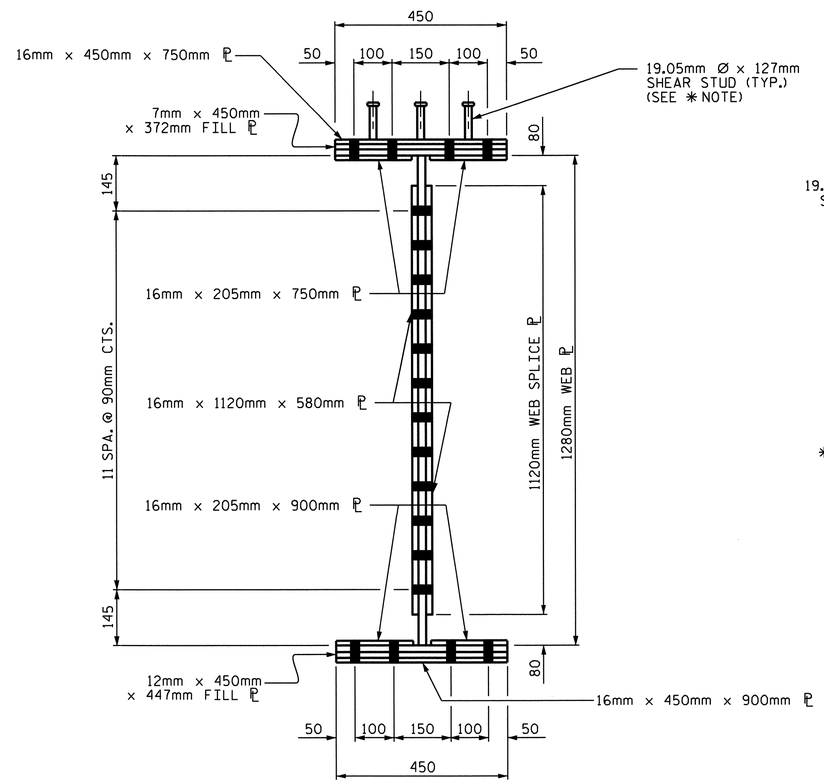


SECTION A-A

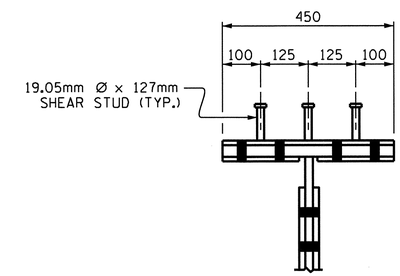


SHEAR STUD DETAIL
FOR TOP FLANGE SPLICE PLATE

✳ NOTE: SHEAR STUDS ARE TO BE SHOP WELDED ON TOP OF PLATE BEFORE FIELD ASSEMBLY

BOLTED FIELD SPLICE DETAILS

PROJECT NO. R-2413C
GUILFORD-ROCKINGHAM COUNTY
STATION: 45+30.610 -LREV-

SHEET 4 OF 4

STATE OF NORTH CAROLINA
DEPARTMENT OF TRANSPORTATION
RALEIGH

SUPERSTRUCTURE

STRUCTURAL STEEL DETAILS
LEFT LANE

NORTH CAROLINA PROFESSIONAL SEAL 022516 ENGINEER EMILY E. MURRAY
10/28/14

| REVISIONS | | | | | | SHEET NO. |
|---|---|---|---|---|---|---|
| NO. | BY: | DATE: | NO. | BY: | DATE: | S-157 |
| 1 | | | 3 | | | TOTAL SHEETS |
| 2 | | | 4 | | | 238 |

DRAWN BY : T.L. AVERETTE DATE : 09-01-10
CHECKED BY : PEGGY PARISI DATE : 09-16-10

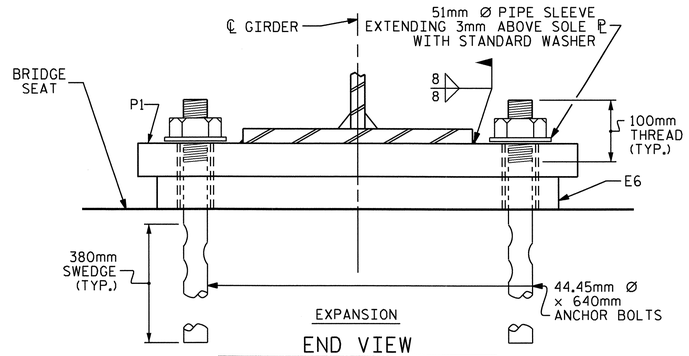


EXPANSION

END VIEW

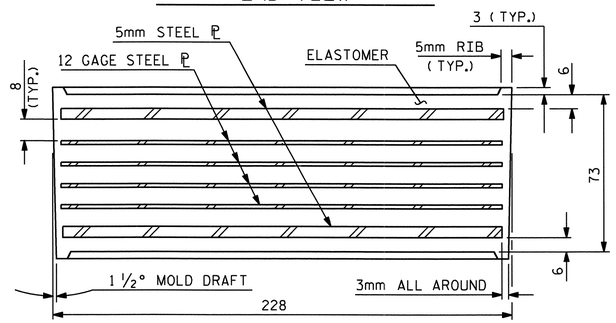


TYPICAL SECTION OF ELASTOMERIC BEARINGS

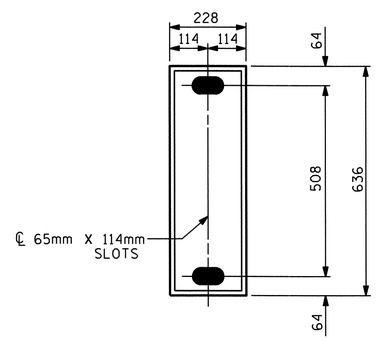


E6 (10 REQ'D)

PLAN VIEW OF ELASTOMERIC BEARING

TYPE III

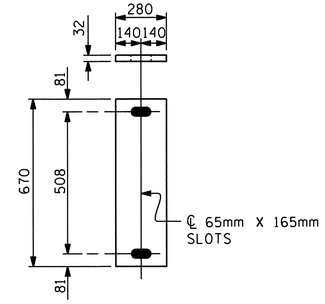


P1

(EXPANSION)

P1 (10 REQ'D)

SOLE PLATE DETAILS (P1)

## NOTES

THE 51mm Ø PIPE SLEEVE SHALL BE CUT FROM SCHEDULE 40 PVC PLASTIC PIPE. THE PVC PLASTIC PIPE SHALL MEET THE REQUIREMENTS OF ASTM D1785.

THE PAYMENT FOR THE PIPE SLEEVES SHALL BE INCLUDED IN THE SEVERAL PAY ITEMS.

FOR AASHTO M270 GRADE 345W STRUCTURAL STEEL, SOLE PLATE SHALL BE AASHTO M270 GRADE 345W AND SHALL NOT BE GALVANIZED. ANCHOR BOLTS AND NUTS SHALL BE GALVANIZED IN ACCORDANCE WITH THE STANDARD SPECIFICATIONS.

ANCHOR BOLTS SHALL MEET THE REQUIREMENTS OF ASTM A449. NUTS SHALL MEET THE REQUIREMENTS OF AASHTO M291M-12 OR AASHTO M292M-2H. WASHERS SHALL MEET THE REQUIREMENTS OF AASHTO M293M. SHOP DRAWINGS ARE NOT REQUIRED FOR ANCHOR BOLTS, NUTS AND WASHERS. SHOP INSPECTION IS REQUIRED.

WHEN FIELD WELDING THE SOLE PLATE TO THE GIRDER FLANGE, USE TEMPERATURE INDICATING WAX PENS, OR OTHER SUITABLE MEANS, TO ENSURE THAT THE TEMPERATURE OF THE SOLE PLATE DOES NOT EXCEED 149°C. TEMPERATURES ABOVE THIS MAY DAMAGE THE ELASTOMER.

ALL SURFACES OF BEARING PLATES SHALL BE SMOOTH AND STRAIGHT.

THE CONTRACTOR'S ATTENTION IS CALLED TO THE FOLLOWING PROCEDURE, WHICH MAY BE REQUIRED BY THE ENGINEER, TO RESET ELASTOMERIC BEARINGS DUE TO GIRDER TRANSLATION AND END ROTATION:

ONCE THE DECK HAS CURED, THE GIRDERS SHALL BE JACKED AND THE ELASTOMERIC BEARING SLOTS CENTERED AS NEARLY AS PRACTICAL ABOUT THE BEARING STIFFENER. THIS OPERATION SHALL BE PERFORMED AT APPROXIMATELY 16° C.

THE CONTRACTOR MAY PROPOSE ALTERNATE METHODS, PROVIDED DETAILS ARE SUBMITTED TO THE ENGINEER FOR REVIEW AND APPROVAL.

| LOAD RATINGS | |
|---|---|
| | MAX.D.L.+ L.L. |
| TYPE III | 674 kN |

PROJECT NO. R-2413C

GUILFORD-ROCKINGHAM COUNTY

STATION: 45+30.610 -LREV-

STATE OF NORTH CAROLINA
DEPARTMENT OF TRANSPORTATION
RALEIGH

# STANDARD ELASTOMERIC BEARING DETAILS

(STEEL SUPERSTRUCTURE)
LEFT LANE

NORTH CAROLINA PROFESSIONAL SEAL 022516 ENGINEER EMILY E. MURRAY
10/25/11

| REVISIONS | | | | | | |
|---|---|---|---|---|---|---|
| NO. | BY: | DATE: | NO. | BY: | DATE: | |
| 1 | | | 3 | | | |
| 2 | | | 4 | | | |

SHEET NO. S-158

TOTAL SHEETS 238

STR. #5

STD. NO. EB1SM

| | | |
|---|---|---|
| ASSEMBLED BY : T.L. AVERETTE | DATE : 09-09-10 | |
| CHECKED BY : PEGGY PARISI | DATE : 09-16-10 | |
| DRAWN BY : JMB 11/87 | REV. 8/16/99 | MAB/LES |
| CHECKED BY : ARB 11/87 | REV. 10/17/00 | RWW/LES |
| | REV. 5/1/06 | TLA/GM |

05-SEP-2011 13:33
Y:\Structures\Final Plans\Str.#5\R2413C_sd_BG_05.dgn
mgudlaugsson

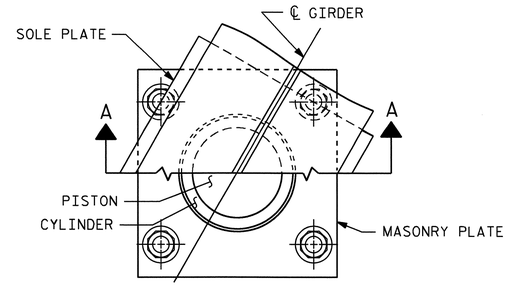


CUT-AWAY PLAN

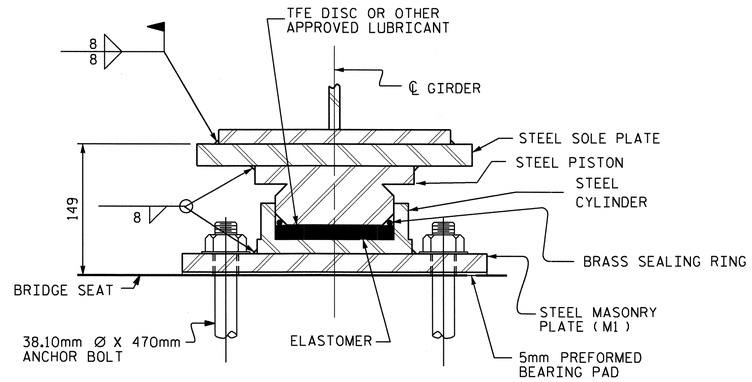


SECTION A-A

PB1, FIXED

( 5 REQ'D. )

## POT BEARING DETAILS

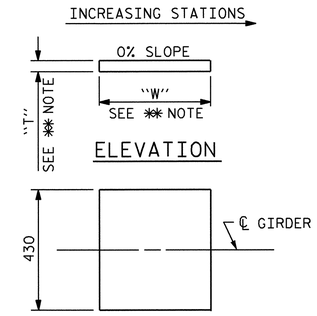


PLAN

✱✱ NOTE:
DIMENSIONS "W" AND "T" ARE TO BE DETERMINED BY THE MANUFACTURER.

## SOLE PLATE DETAILS

## NOTES

FOR POT BEARINGS, SEE SPECIAL PROVISIONS.

AT ALL POINTS OF SUPPORT AT BENT #1, NUTS FOR ANCHOR BOLTS SHALL BE TIGHTENED FINGER TIGHT AND GIVEN AN ADDITIONAL 1/4 TURN. THE THREAD OF THE NUT AND BOLT SHALL THEN BE BURRED WITH A SHARP POINTED TOOL.

WHEN WELDING THE SOLE PLATE TO THE GIRDER, USE TEMPERATURE INDICATING WAX PENS, OR OTHER SUITABLE MEANS, TO ENSURE THAT THE TEMPERATURE OF THE BEARING DOES NOT EXCEED 121°C TEMPERATURES ABOVE THIS MAY DAMAGE THE TFE OR ELASTOMER.

SOLE PLATES SHOULD BE WELDED TO BEAM FLANGES BEFORE FALSEWORK IS PLACED.

ALL SURFACES OF BEARING PLATES SHALL BE SMOOTH AND STRAIGHT.

FOR THERMAL SPRAYED COATINGS (METALLIZATION), SEE SPECIAL PROVISIONS.

THE CONTRACTOR MAY SUBSTITUTE DISC BEARINGS FOR THE POT BEARINGS SHOWN. FOR OPTIONAL DISC BEARINGS, SEE SPECIAL PROVISIONS.

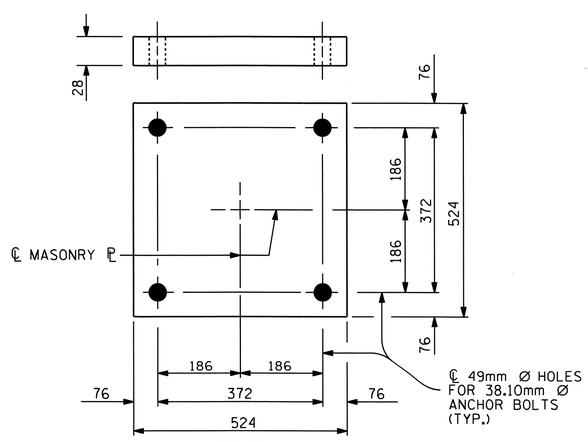


PLAN

M1 ( 5 REQ'D. )

## MASONRY PLATE DETAILS

| TABLE FOR LOADS AND MOVEMENTS | | | | | | |
|---|---|---|---|---|---|---|
| BEARING | LOCATION | VERTICAL LOAD ( kN ) | | | LATERAL LOAD ( kN ) | TOTAL MOVEMENT ( mm ) |
| | | DEAD | LIVE | TOTAL | | |
| PB1 (FIXED) | BENT #1 | 1057 | 410 | 1467 | 212 | 0 |
| | | | | | | |
| | | | | | | |

PROJECT NO. R-2413C

GUILFORD-ROCKINGHAM COUNTY

STATION: 45+30.610 -LREV-

STATE OF NORTH CAROLINA
DEPARTMENT OF TRANSPORTATION
RALEIGH

STANDARD

POT BEARING DETAILS LEFT LANE

NORTH CAROLINA PROFESSIONAL SEAL 022516 ENGINEER EMILY E. MURRAY
10/28/11

| REVISIONS | | | | | | | SHEET NO. |
|---|---|---|---|---|---|---|---|
| NO. | BY: | DATE: | NO. | BY: | DATE: | | S-159 |
| 1 | | | 3 | | | | TOTAL SHEETS |
| 2 | | | 4 | | | | 238 |

ASSEMBLED BY : T.L. AVERETTE DATE : 09-09-10
CHECKED BY : PEGGY PARISI DATE : 09-16-10

DRAWN BY : RWW 8/99
CHECKED BY : LES 8/99

REV. 7/10/01 LES/RWW
REV. 5/7/03 RWW/JTE
REV. 5/1/06R TLA/GM

19-OCT-2011 12:03
R:\TIPProjects-R\R2413c\Structures\Final Plans\Str.#5\R2413C_sd_BG_05.dgn
taverette

STR. #5 PB1SM.STD

## DEAD LOAD DEFLECTION TABLE FOR SPAN A

| | ALL GIRDERS | | | | | | | | | | | | | | | | | | | | |
|---|---|---|---|---|---|---|---|---|---|---|---|---|---|---|---|---|---|---|---|---|---|
| @ TWENTIETH POINTS BETWEEN ℄ BEARINGS | 0 | .05 | .10 | .15 | .20 | .25 | .30 | .35 | .40 | .45 | .50 | .55 | .60 | .65 | .70 | .75 | .80 | .85 | .90 | .95 | 0 |
| DEFLECTION DUE TO WEIGHT OF GIRDER | 0.000 | 0.002 | 0.004 | 0.006 | 0.008 | 0.009 | 0.010 | 0.011 | 0.011 | 0.011 | 0.011 | 0.010 | 0.009 | 0.008 | 0.007 | 0.006 | 0.004 | 0.003 | 0.002 | 0.001 | 0.000 |
| DEFLECTION DUE TO WEIGHT OF SLAB * | 0.000 | 0.009 | 0.017 | 0.025 | 0.032 | 0.038 | 0.043 | 0.046 | 0.047 | 0.047 | 0.046 | 0.044 | 0.040 | 0.035 | 0.030 | 0.024 | 0.018 | 0.012 | 0.007 | 0.003 | 0.000 |
| DEFLECTION DUE TO WEIGHT OF BARRIER RAIL | 0.000 | 0.001 | 0.001 | 0.002 | 0.003 | 0.003 | 0.003 | 0.004 | 0.004 | 0.004 | 0.004 | 0.004 | 0.003 | 0.003 | 0.002 | 0.002 | 0.001 | 0.001 | 0.001 | 0.000 | 0.000 |
| TOTAL DEAD LOAD DEFLECTION | 0.000 | 0.012 | 0.022 | 0.033 | 0.043 | 0.050 | 0.056 | 0.061 | 0.062 | 0.062 | 0.061 | 0.058 | 0.052 | 0.046 | 0.039 | 0.032 | 0.023 | 0.016 | 0.010 | 0.004 | 0.000 |
| VERTICAL CURVE ORDINATE | 0.000 | 0.002 | 0.004 | 0.005 | 0.007 | 0.008 | 0.009 | 0.009 | 0.010 | 0.010 | 0.010 | 0.010 | 0.010 | 0.009 | 0.009 | 0.008 | 0.007 | 0.005 | 0.004 | 0.002 | 0.000 |
| REQUIRED CAMBER | 0 | 14 | 26 | 38 | 50 | 58 | 65 | 70 | 72 | 72 | 71 | 68 | 62 | 55 | 48 | 40 | 30 | 21 | 14 | 6 | 0 |

* INCLUDES SLAB, BUILDUPS & STAY-IN-PLACE FORMS.
ALL VALUES ARE SHOWN IN METERS EXCEPT "REQUIRED CAMBER", WHICH IS GIVEN IN MILLIMETERS.

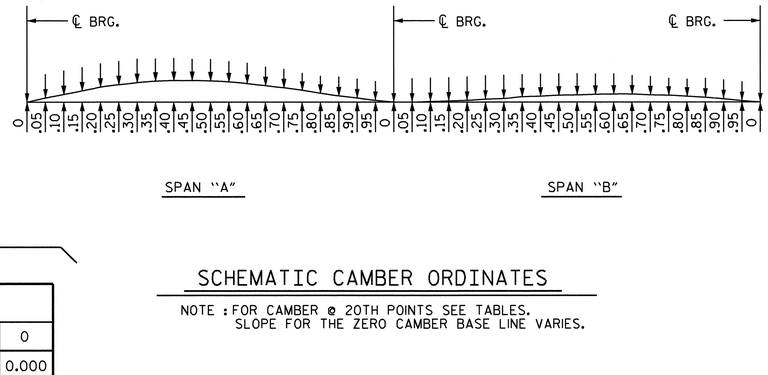


SCHEMATIC CAMBER ORDINATES

NOTE : FOR CAMBER @ 20TH POINTS SEE TABLES.
SLOPE FOR THE ZERO CAMBER BASE LINE VARIES.

## DEAD LOAD DEFLECTION TABLE FOR SPAN B

| | ALL GIRDERS | | | | | | | | | | | | | | | | | | | | |
|---|---|---|---|---|---|---|---|---|---|---|---|---|---|---|---|---|---|---|---|---|---|
| @ TWENTIETH POINTS BETWEEN ℄ BEARINGS | 0 | .05 | .10 | .15 | .20 | .25 | .30 | .35 | .40 | .45 | .50 | .55 | .60 | .65 | .70 | .75 | .80 | .85 | .90 | .95 | 0 |
| DEFLECTION DUE TO WEIGHT OF GIRDER | 0.000 | 0.000 | 0.000 | 0.000 | 0.000 | 0.001 | 0.001 | 0.002 | 0.002 | 0.003 | 0.003 | 0.004 | 0.004 | 0.004 | 0.003 | 0.003 | 0.003 | 0.002 | 0.001 | 0.001 | 0.000 |
| DEFLECTION DUE TO WEIGHT OF SLAB * | 0.000 | -0.001 | -0.001 | 0.000 | 0.001 | 0.003 | 0.005 | 0.008 | 0.010 | 0.012 | 0.013 | 0.014 | 0.015 | 0.015 | 0.014 | 0.013 | 0.011 | 0.009 | 0.006 | 0.003 | 0.000 |
| DEFLECTION DUE TO WEIGHT OF BARRIER RAIL | 0.000 | 0.000 | 0.000 | 0.000 | 0.000 | 0.000 | 0.000 | 0.001 | 0.001 | 0.001 | 0.001 | 0.001 | 0.001 | 0.001 | 0.001 | 0.001 | 0.001 | 0.001 | 0.001 | 0.000 | 0.000 |
| TOTAL DEAD LOAD DEFLECTION | 0.000 | -0.001 | -0.001 | 0.000 | 0.001 | 0.004 | 0.006 | 0.011 | 0.013 | 0.016 | 0.017 | 0.019 | 0.020 | 0.020 | 0.018 | 0.017 | 0.015 | 0.012 | 0.008 | 0.004 | 0.000 |
| VERTICAL CURVE ORDINATE | 0.000 | 0.001 | 0.003 | 0.004 | 0.005 | 0.006 | 0.006 | 0.007 | 0.007 | 0.007 | 0.007 | 0.007 | 0.007 | 0.007 | 0.006 | 0.006 | 0.005 | 0.004 | 0.003 | 0.001 | 0.000 |
| REQUIRED CAMBER | 0 | 0 | 2 | 4 | 6 | 10 | 12 | 18 | 20 | 23 | 24 | 26 | 27 | 27 | 24 | 23 | 20 | 16 | 11 | 5 | 0 |

* INCLUDES SLAB, BUILDUPS & STAY-IN-PLACE FORMS.
ALL VALUES ARE SHOWN IN METERS EXCEPT "REQUIRED CAMBER", WHICH IS GIVEN IN MILLIMETERS.

PROJECT NO. R-2413C
GUILFORD-ROCKINGHAM COUNTY
STATION: 45+30.610 -LREV-

NORTH CAROLINA PROFESSIONAL SEAL 022516 ENGINEER EMILY E. MURRAY
10/28/11

STATE OF NORTH CAROLINA
DEPARTMENT OF TRANSPORTATION
RALEIGH
SUPERSTRUCTURE
DEAD LOAD DEFLECTIONS
LEFT LANE

| REVISIONS | | | | | | SHEET NO. |
|---|---|---|---|---|---|---|
| NO. | BY: | DATE: | NO. | BY: | DATE: | S-160 |
| 1 | | | 3 | | | TOTAL SHEETS |
| 2 | | | 4 | | | 238 |

DRAWN BY : T.L. AVERETTE DATE : 09-01-10
CHECKED BY : PEGGY PARISI DATE : 09-16-10

## NOTES

BARRIER RAIL IN A CONTINUOUS UNIT SHALL NOT BE CAST UNTIL ALL SLAB CONCRETE IN THE UNIT HAS BEEN CAST AND HAS REACHED A MINIMUM COMPRESSIVE STRENGTH OF 20.7 MPa.

ALL REINFORCING STEEL IN BARRIER RAILS SHALL BE EPOXY COATED.

GROOVED CONTRACTION JOINTS, 12mm IN DEPTH, SHALL BE TOOLED IN ALL EXPOSED FACES OF THE BARRIER RAIL AND IN ACCORDANCE WITH ARTICLE 825-10(B) OF THE STANDARD SPECIFICATIONS. THE CONTRACTION JOINT SHALL BE LOCATED AT EACH THIRD POINT BETWEEN BARRIER RAIL EXPANSION JOINTS. ONLY ONE CONTRACTION JOINT IS REQUIRED AT MIDPOINT OF BARRIER RAIL SEGMENTS LESS THAN 6.1m IN LENGTH AND NO CONTRACTION JOINTS ARE REQUIRED FOR THOSE SEGMENTS LESS THAN 3.5m IN LENGTH.

## BAR TYPES

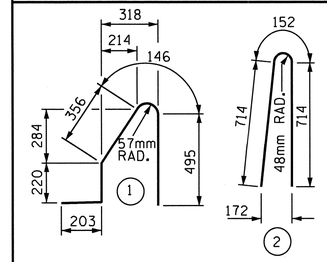


ALL BAR DIMENSIONS ARE OUT TO OUT

## BILL OF MATERIAL

FOR CONCRETE BARRIER RAIL ON BRIDGE DECK ONLY

| BAR | NO. | SIZE | TYPE | LENGTH | WEIGHT |
|---|---|---|---|---|---|
| * S1 | 422 | #16 | 1 | 1420 | 930 |
| * S2 | 422 | #16 | 2 | 1580 | 1035 |
| * B1 | 32 | #16 | STR | 5020 | 249 |
| * B2 | 48 | #16 | STR | 8280 | 617 |
| * B3 | 48 | #16 | STR | 7080 | 527 |
| * B4 | 32 | #16 | STR | 4320 | 215 |

* EPOXY COATED REINFORCING STEEL 3573 kg

CLASS AA CONCRETE 31.8 CU. METER

CONCRETE BARRIER RAIL
SUPERSTRUCTURE 126.590 METERS
● APPROACH SLABS 12.394 METERS
TOTAL 138.984 METERS

● FOR EPOXY COATED REINFORCING STEEL AND CLASS AA CONCRETE IN THE BARRIER RAIL ON THE APPROACH SLABS, SEE "BRIDGE APPROACH SLAB DETAILS" SHEET.

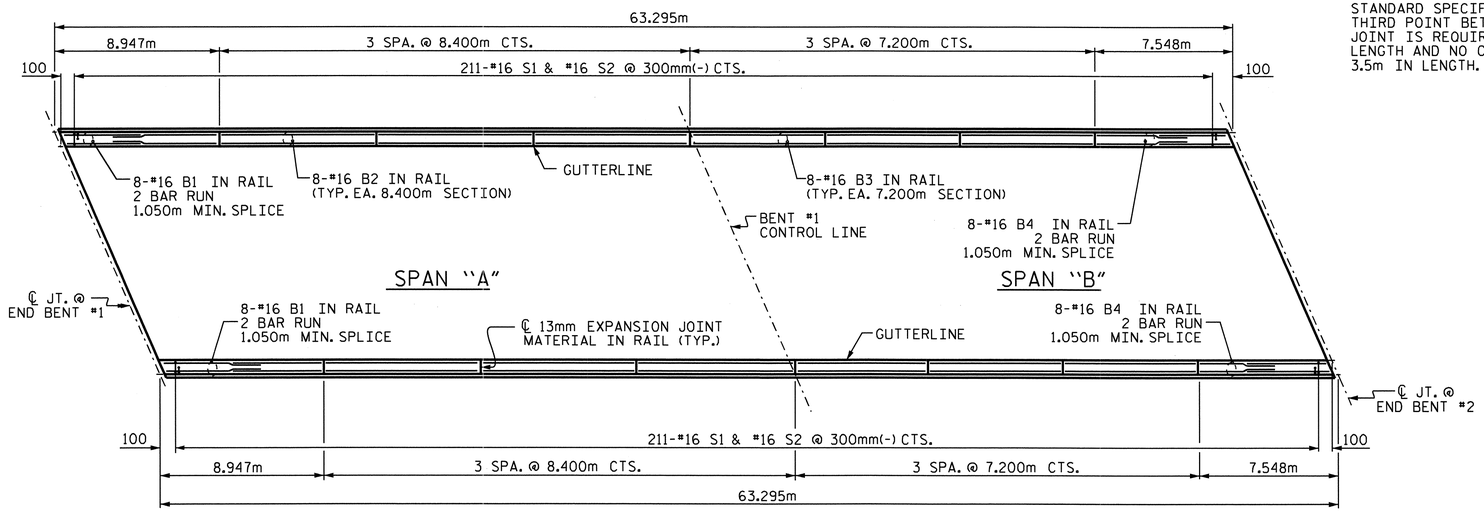


PLAN

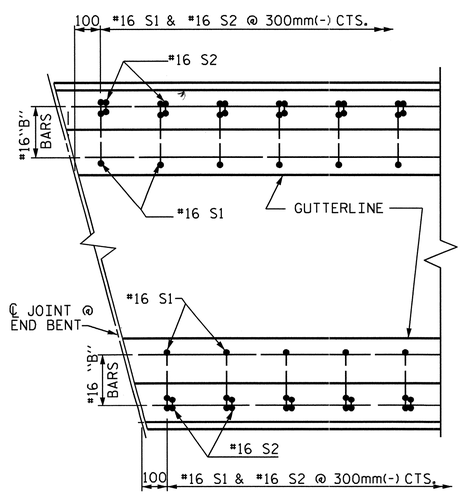


PLAN

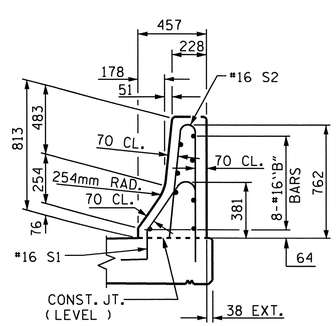


END VIEW

## END OF RAIL DETAILS

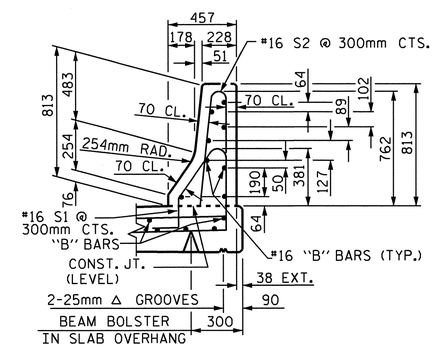


SECTION THRU RAIL

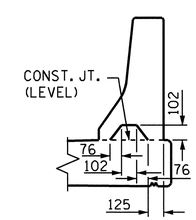


SECTION S-S

AT DAM IN OPEN JOINT
( THIS IS TO BE USED ONLY
WHEN SLIP FORM IS USED )

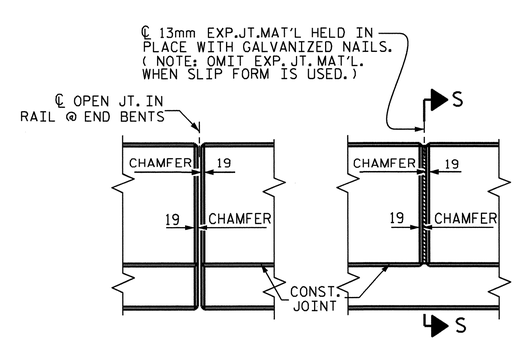


ELEVATION AT EXPANSION JOINTS

## BARRIER RAIL DETAILS

PROJECT NO. R-2413C
GUILFORD-ROCKINGHAM COUNTY
STATION: 45+30.610 -LREV-

STATE OF NORTH CAROLINA
DEPARTMENT OF TRANSPORTATION
RALEIGH

STANDARD
CONCRETE
BARRIER RAIL
LEFT LANE

NORTH CAROLINA PROFESSIONAL SEAL 022516 ENGINEER EMRY ECHARRAY
10/28/10

| REVISIONS | | | | | | SHEET NO. |
|---|---|---|---|---|---|---|
| NO. | BY: | DATE: | NO. | BY: | DATE: | S-161 |
| 1 | | | 3 | | | TOTAL SHEETS |
| 2 | | | 4 | | | 238 |

STR. #5 STD. No. CBR1SM

ASSEMBLED BY : T.L. AVERETTE DATE : 09-13-10
CHECKED BY : PEGGY PARISI DATE : 09-16-10

DRAWN BY : ARB 5/87
CHECKED BY : SJD 9/87

REV. 10/17/00 RWW/LES
REV. 5/7/03R RWW/JTE
REV. 5/1/06 TLA/GM

05-SEP-2011 13:29
Y:\Structures\Final Plans\Str.#5\R2413C_sd_BR_05.dgn
mgudlaugsson

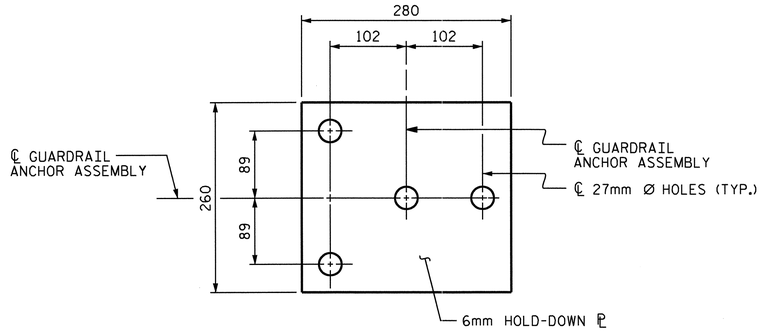


PLAN

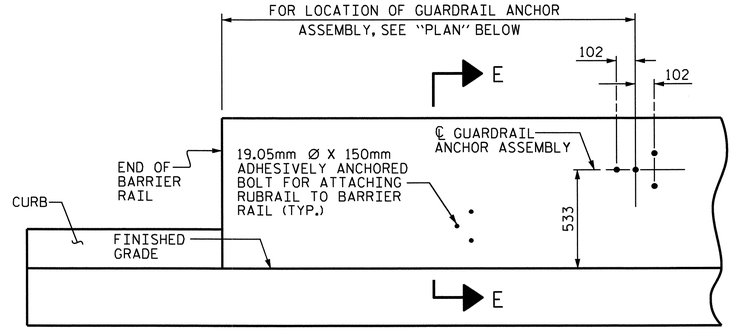


ELEVATION

FOR LOCATION OF RUBRAIL, SEE ROADWAY STD. 862.03

## NOTES

THE GUARDRAIL ANCHOR ASSEMBLY SHALL CONSIST OF A 6mm HOLD DOWN PLATE AND 4 - 22.23mm Ø BOLTS WITH NUTS AND WASHERS, RUBRAIL, AND ADHESIVELY ANCHORED BOLTS.

THE HOLD-DOWN PLATE SHALL CONFORM TO AASHTO M270 GRADE 36. AFTER FABRICATION, THE HOLD-DOWN PLATE SHALL BE HOT-DIP GALVANIZED IN ACCORDANCE WITH AASHTO M111.

BOLTS SHALL CONFORM TO THE REQUIREMENTS OF ASTM A307 AND NUTS SHALL CONFORM TO THE REQUIREMENTS OF AASHTO M291. BOLTS, NUTS AND WASHERS SHALL BE GALVANIZED. (AT THE CONTRACTOR'S OPTION, STAINLESS STEEL BOLTS, NUTS AND WASHERS MAY BE USED AS AN ALTERNATE FOR THE 22.23mm Ø GALVANIZED BOLTS, NUTS AND WASHERS. THEY SHALL CONFORM TO OR EXCEED THE MECHANICAL REQUIREMENTS OF ASTM A307. THE USE OF THIS ALTERNATE SHALL BE APPROVED BY THE ENGINEER.)

THE GUARDRAIL ANCHOR ASSEMBLY IS REQUIRED AT ALL POINTS WHERE APPROACH GUARDRAIL IS TO BE ATTACHED TO THE END OF BARRIER RAIL. FOR POINTS OF ATTACHMENT, SEE SKETCH.

AFTER INSTALLATION, THE EXPOSED THREAD OF THE BOLT SHALL BE BURRED WITH A SHARP POINTED TOOL.

THE COST OF THE GUARDRAIL ANCHOR ASSEMBLY SHALL BE INCLUDED IN THE UNIT CONTRACT PRICE BID FOR CONCRETE BARRIER RAIL.

THE 32mm Ø HOLES SHALL BE FORMED OR DRILLED WITH A CORE BIT. IMPACT TOOLS WILL NOT BE PERMITTED. ANY CONCRETE DAMAGED BY THIS WORK SHALL BE REPAIRED TO THE SATISFACTION OF THE ENGINEER.

THE C150 X 12 RUBRAIL IS TO BE ADHESIVELY ANCHORED TO THE RAIL USING THREE 19.05mm Ø X 150mm BOLTS WITH WASHERS. LEVEL ONE FIELD TESTING IS REQUIRED, AND THE YIELD LOAD OF THE 19.05mm Ø BOLTS IS 53.4kN. FOR ADHESIVELY ANCHORED ANCHOR BOLTS OR DOWELS, SEE SPECIAL PROVISIONS. SEE ROADWAY STANDARD 862.03 FOR DETAILS AND LOCATION OF THE RUBRAIL.

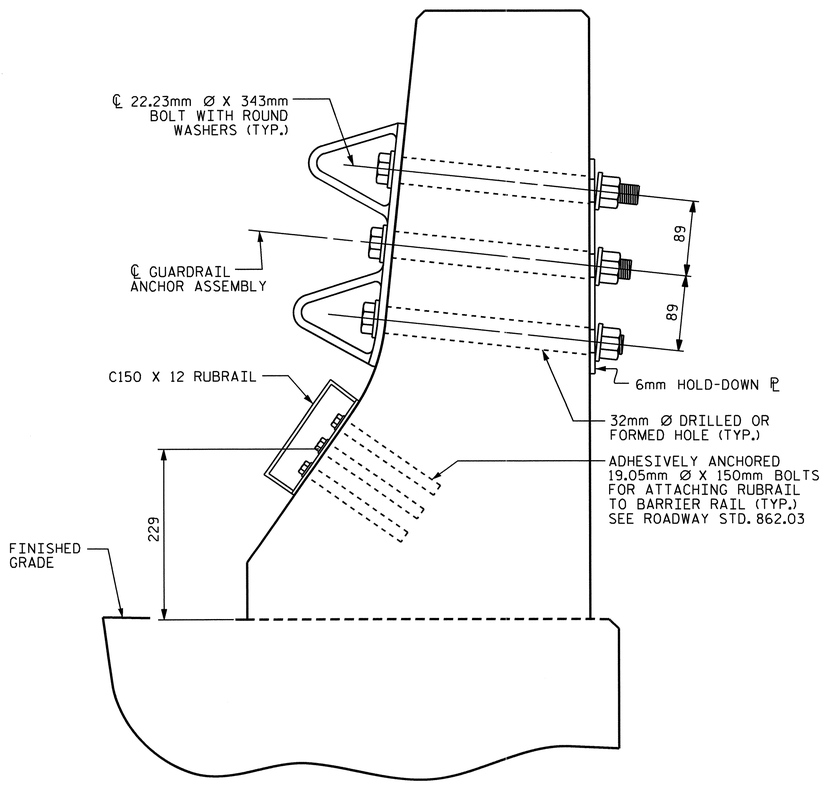


SECTION E-E

GUARDRAIL ANCHOR ASSEMBLY DETAILS

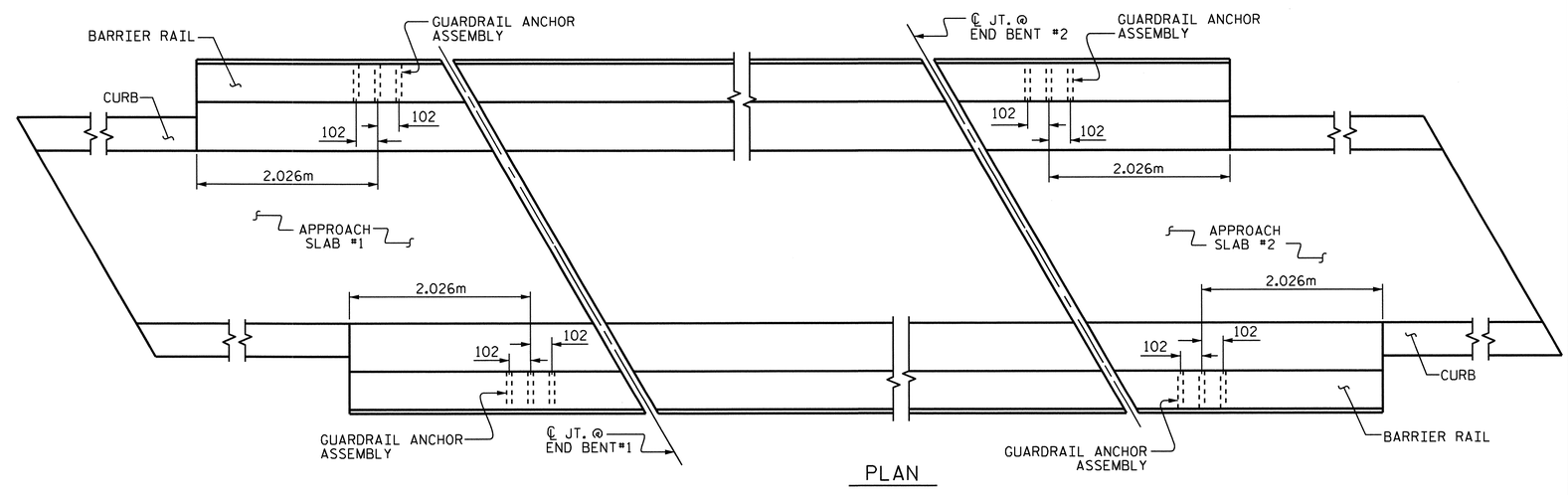


PLAN

LOCATION OF ANCHORS FOR GUARDRAIL

PROJECT NO. R-2413C

GUILFORD-ROCKINGHAM COUNTY

STATION: 45+30.610 -LREV-

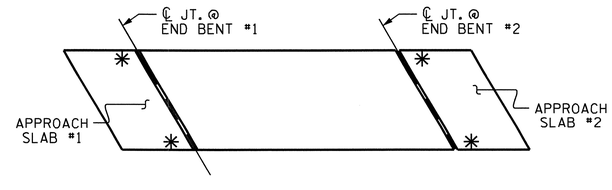


SKETCH SHOWING POINTS OF ATTACHMENTS

✳ DENOTES B-77 GUARDRAIL ANCHOR ASSEMBLY

NORTH CAROLINA PROFESSIONAL SEAL 022516 ENGINEER EMILY E. MURRAY
10/28/11

STATE OF NORTH CAROLINA
DEPARTMENT OF TRANSPORTATION
RALEIGH

STANDARD

GUARDRAIL ANCHORAGE FOR BARRIER RAIL

LEFT LANE

| REVISIONS | | | | | | SHEET NO. |
|---|---|---|---|---|---|---|
| NO. | BY: | DATE: | NO. | BY: | DATE: | S-162 |
| 1 | | | 3 | | | TOTAL SHEETS |
| 2 | | | 4 | | | 238 |

STR. #5 STD. NO. GRA2

| | |
|---|---|
| ASSEMBLED BY : T.L. AVERETTE | DATE : 09-13-10 |
| CHECKED BY : PEGGY PARISI | DATE : 09-16-10 |
| DRAWN BY : TLA 5/06 | ADDED 5/1/06R KMM/GM |
| CHECKED BY : GM 5/06 | |

05-SEP-2011 13:29
Y:\Structures\Final Plans\Str.#5\R2413C_sd_BR_05.dgn
mgudlaugsson

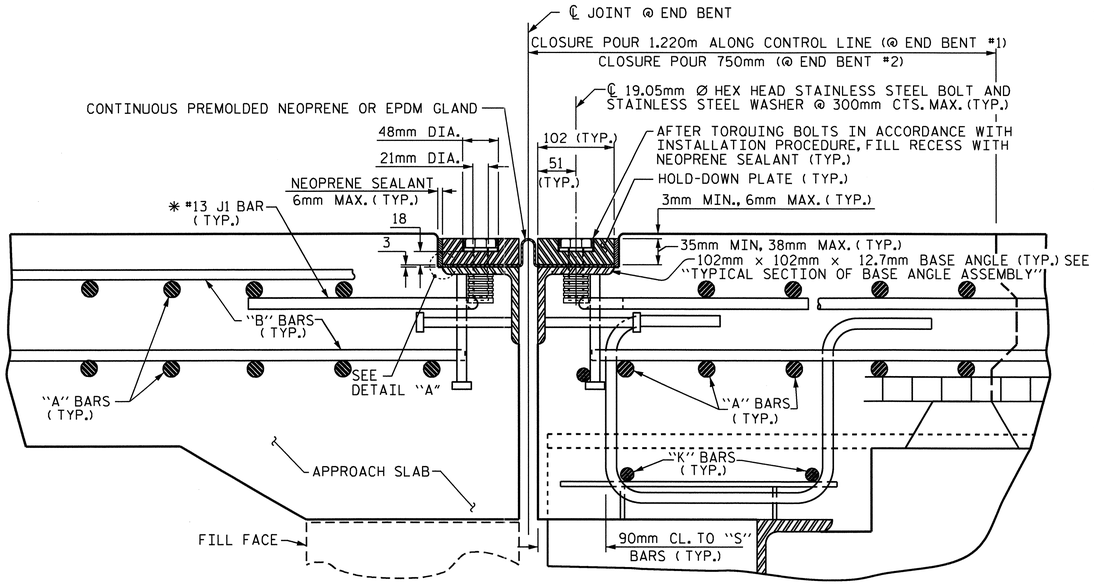


## EXPANSION JOINT DETAILS

SECTION NORMAL TO JOINT -- STEEL SUPERSTRUCTURE

* THE QUANTITY OF #13 J1 BARS ON THE BILL OF MATERIAL IS BASED ON 300mm CENTERS. J1 BARS SHALL BE PLACED AT EACH VERTICAL STUD ANCHOR BOLT. IN THE EVENT THAT THE NUMBER OF VERTICAL STUD ANCHOR BOLTS EXCEEDS THE NUMBER OF J1 BARS SPECIFIED, ADDITIONAL J1 BARS WILL NOT BE REQUIRED.

### INSTALLATION PROCEDURE

1. A TEMPLATE OR OTHER SUITABLE DEVICE SHALL BE USED TO FORM THE TOP OF THE EXPANSION JOINT SEAL BLOCKOUT TO THE PROPER DEPTH AND WIDTH. THE TEMPLATE SHALL BE 105mm TO 108mm WIDE AND OF SUCH THICKNESS AS TO PROVIDE FOR CORRECT FINAL ELEVATION OF TOP OF HOLD-DOWN PLATES. THE TEMPLATE SHALL BE ATTACHED TO THE BASE ANGLE ASSEMBLY WITH THE 19.05mm Ø HEX HEAD BOLTS PROVIDED FOR THE HOLD-DOWN PLATES. A 25mm Ø HOLE SHALL BE PROVIDED IN THE TEMPLATE CENTERED OVER EACH WEEP HOLE IN THE 102mm X 102mm X 12.7mm BASE ANGLE. OTHER METHODS OF INSURING DRAINAGE THROUGH WEEP HOLES MAY BE EMPLOYED SUBJECT TO ENGINEER'S APPROVAL.
2. AFTER THE CONCRETE HAS BEEN CAST ON BOTH SIDES OF THE JOINT, REMOVE THE TEMPLATE. THOROUGHLY CLEAN THE BOLT HOLES AND THE ANGLE PLATE. REMOVE ANY EXCESS CONCRETE THAT COMES OUT OF THE WEEP HOLES. ANY DAMAGED STEEL SHALL BE COATED WITH A MINIMUM THICKNESS OF 0.100mm (DRY) OF ZINC-RICH PAINT IN ACCORDANCE WITH THE STANDARD SPECIFICATIONS.
3. LAY THE GLAND ON THE BASE ANGLE AND FIELD MARK THE GLAND FOR THE BOLT HOLES. HOLES IN THE GLAND SHALL BE PUNCHED 22mm IN DIAMETER WITH A HAND PUNCH.
4. IN ORDER TO CHECK FOR PROPER ALIGNMENT, PLACE THE GLAND AND HOLD-DOWN PLATES ON THE BASE ANGLE. DO NOT APPLY NEOPRENE SEALANT. BOLT THE HOLD-DOWN PLATES TO THE BASE ANGLE BUT DO NOT TIGHTEN. THE ENGINEER SHALL INSPECT THE JOINT SEAL DEVICE FOR PROPER ALIGNMENT.
5. AFTER INSPECTION, REMOVE THE HOLD-DOWN PLATES AND GLAND. APPLY NEOPRENE SEALANT TO THE BASE ANGLE IN ACCORDANCE WITH THE "INSTALLATION SKETCH". PLACE GLAND AND HOLD-DOWN PLATES ON THE BASE ANGLE. BOLT THE HOLD-DOWN PLATES TO THE BASE ANGLE ASSEMBLY AND TORQUE THE BOLTS TO 119.3 N-m WITH A TORQUE WRENCH. THE TORQUE WRENCH SHALL BE CALIBRATED IN ACCORDANCE WITH SECTION 440-10 (D) OF THE STANDARD SPECIFICATIONS. CHECK THE TORQUE AFTER THREE (3) HOURS AND, IF NECESSARY, RETIGHTEN TO 119.3 N-m. A FINAL CHECK SHALL BE MADE AT SEVEN (7) DAYS. TORQUE SHALL NOT BE LESS THAN 108.5 N-m AFTER SEVEN (7) DAYS.
6. AFTER PROPER TORQUING, CLEAN THE BOLT HOLE RECESSES AND THE RECESS BETWEEN THE JOINT SEAL DEVICE AND CONCRETE, COMPLETELY FILL THESE RECESSES WITH NEOPRENE SEALANT.

### GENERAL NOTES

1. FOR EXPANSION JOINT SEALS, SEE SPECIAL PROVISIONS.
2. ALL PLATES AND ANGLES SHALL CONFORM TO AASHTO M270 GRADE 250 STEEL OR APPROVED EQUAL. ALL HOLD-DOWN BOLTS SHALL CONFORM TO ASTM F593 ALLOY 304 STAINLESS STEEL. WASHERS SHALL CONFORM TO ASTM F844 EXCEPT THEY SHALL BE MADE FROM ALLOY 304 STAINLESS STEEL. ALL STUD ANCHORS SHALL CONFORM TO AASHTO M169, GRADES 1010 THRU 1020 OR APPROVED EQUAL. ALL CONCRETE INSERTS SHALL BE CLOSED END AND SHALL CONFORM TO AASHTO M169, GRADE 12L14. TENSILE CAPACITY SHALL BE 13.3 kN MIN.
3. A PREMOLDED CORRUGATED OR NON-CORRUGATED GLAND SHALL BE USED FOR JOINTS SKEWED BETWEEN 50° THRU 130° . FOR JOINTS SKEWED LESS THAN 50° OR MORE THAN 130° , ONLY A CORRUGATED GLAND SHALL BE USED.
4. CLOSED END FERRULES AND STUD ANCHORS SHALL BE SHOP WELDED AND ALL HOLES SHALL BE SHOP DRILLED AS SHOWN ON PLANS. STUD ANCHORS SHALL BE ELECTRIC ARC END WELDED WITH COMPLETE FUSION.
5. SURFACES COMING IN CONTACT WITH NEOPRENE SHALL BE GROUND SMOOTH PRIOR TO METALLIZING.
6. UPON COMPLETION OF SHOP FABRICATION, THE HOLD DOWN PLATE AND BASE ANGLE ASSEMBLY AS SHOWN IN THE "TYPICAL SECTION OF BASE ANGLE ASSEMBLY", SHALL BE METALLIZED. SEE SPECIAL PROVISION FOR THERMAL SPRAYED COATINGS (METALLIZATION).
7. BASE ANGLE ASSEMBLY SHALL BE CONTINUOUS FOR THE LENGTH OF THE JOINT. AT CROWN BREAKS, THE ENDS OF THE BASE ANGLE ASSEMBLY SHALL BE CUT PARALLEL TO THE BRIDGE CENTERLINE FOR SKEWS LESS THAN 80° AND GREATER THAN 100°. FINISHED WELD SHALL BE GROUND SMOOTH AND COATED WITH A MINIMUM THICKNESS OF 0.100mm (DRY) OF ZINC-RICH PAINT IN ACCORDANCE WITH THE STANDARD SPECIFICATIONS.
8. FIELD SPLICES OF HOLD-DOWN PLATES SHALL BE KEPT TO A MINIMUM. CONTRACTOR SHALL FURNISH DETAILED PLANS SHOWING PROPOSED SPLICE LOCATIONS FOR APPROVAL. HOLD-DOWN PLATES SHALL NOT EXCEED 6.1m LENGTHS UNLESS APPROVED BY THE ENGINEER.
9. NO ALTERNATE JOINT DETAILS SHALL BE PERMITTED IN LIEU OF THOSE SHOWN ON THESE PLANS.
10. THE CONTRACTOR MAY, AT HIS OPTION, USE ADHESIVELY ANCHORED ANCHOR BOLTS IN PLACE OF CONCRETE INSERTS FOR COVER PLATES. THE YIELD LOAD OF THE 19.05mm DIA. BOLT IS 44.5 kN. FIELD TESTING OF THE ADHESIVE BONDING SYSTEM IS NOT REQUIRED.

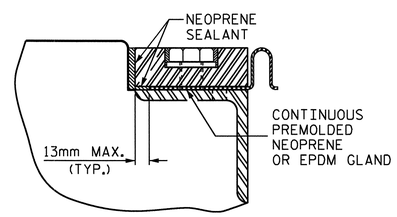


## DETAIL "A"

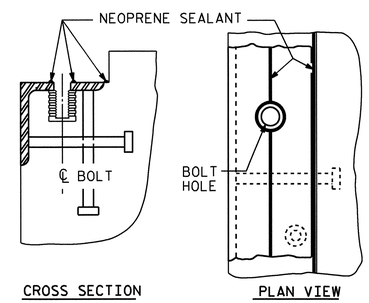


## INSTALLATION SKETCH

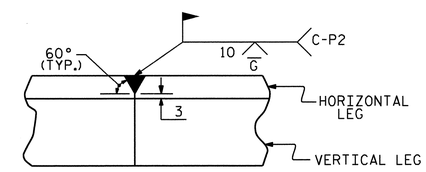


## DETAIL- FIELD WELD SPLICE OF BASE ANGLE

| MOVEMENT AND SETTING AT JOINT | | | | | |
|---|---|---|---|---|---|
| END BENT NO. | SKEW ANGLE | TOTAL MOVEMENT (ALONG ℄ RDWY) | PERPENDICULAR JOINT OPENING AT 7° C | PERPENDICULAR JOINT OPENING AT 16° C | PERPENDICULAR JOINT OPENING AT 32° C |
| 1 | 66°-39'-03" | 28mm | 42mm | 38mm | 30mm |
| 2 | 66°-39'-03" | 24mm | 39mm | 36mm | 29mm |

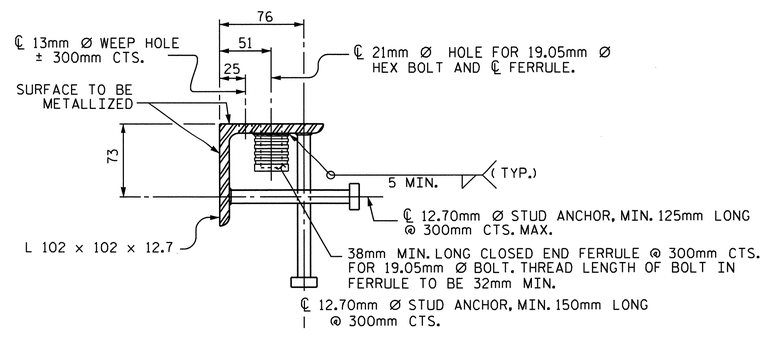


## TYPICAL SECTION OF BASE ANGLE ASSEMBLY

PROJECT NO. R-2413C

GUILFORD-ROCKINGHAM COUNTY

STATION: 45+30.610 -LREV-

SHEET 1 OF 2

STATE OF NORTH CAROLINA
DEPARTMENT OF TRANSPORTATION
RALEIGH

STANDARD

EXPANSION JOINT SEAL DETAILS

LEFT LANE

NORTH CAROLINA PROFESSIONAL SEAL 022516 ENGINEER EMILY E. MURRAY 10/28/11

| REVISIONS | | | | | | | | SHEET NO. |
|---|---|---|---|---|---|---|---|---|
| NO. | BY: | DATE: | NO. | BY: | DATE: | | | S-163 |
| 1 | | | 3 | | | | | TOTAL SHEETS |
| 2 | | | 4 | | | | | 238 |

| | | | |
|---|---|---|---|
| ASSEMBLED BY : T.L. AVERETTE | | DATE : 11-10-10 | |
| CHECKED BY : PEGGY PARISI | | DATE : 07-26-11 | |
| DRAWN BY : REK 9/87 | REV. 10/17/00 | RWW/LES | |
| CHECKED BY : CRK 10/87 | REV. 5/7/03R | RWW/JTE | |
| | REV. 5/1/06 | TLA/GM | |

05-SEP-2011 13:27
Y:\Structures\Final Plans\Str.#5\R2413C_sd_JS_05.dgn
mgudlaugsson

STR. #5

STD. NO. EJS1SM

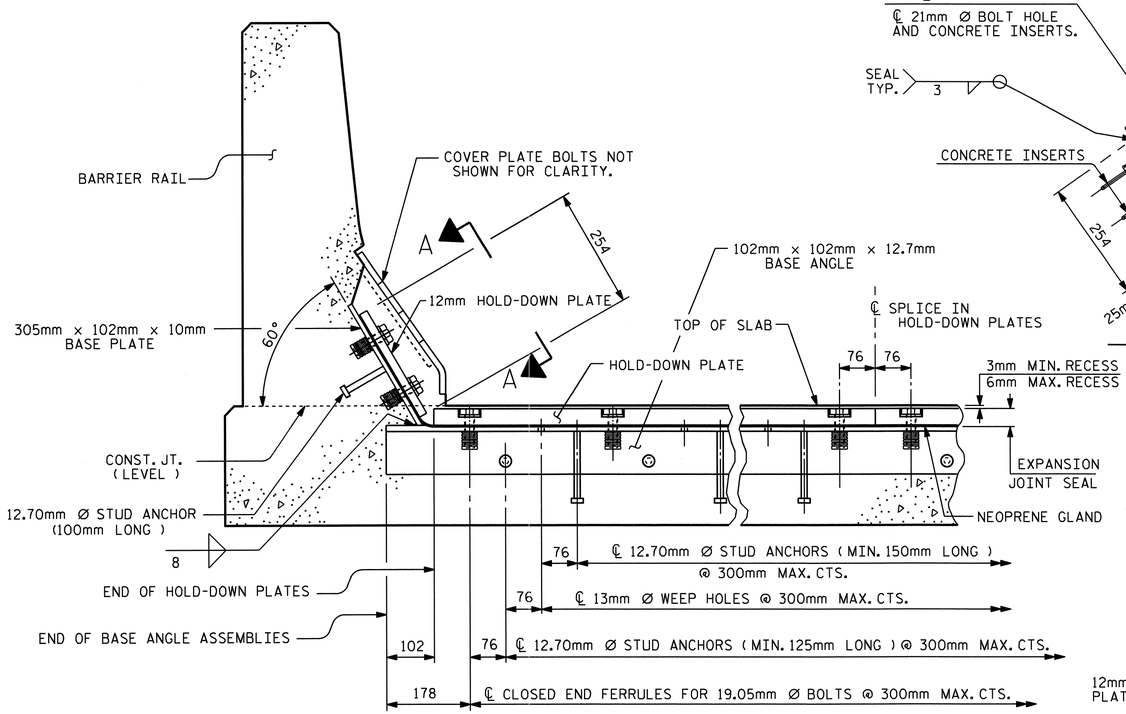


SECTION THRU RAIL NORMAL TO JOINT

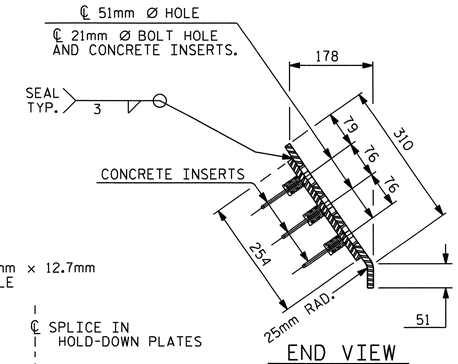


END VIEW

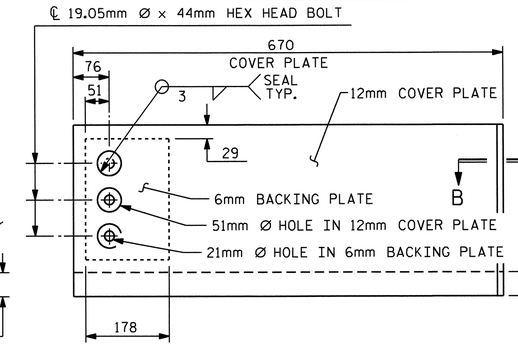


TYPE I - ELEVATION VIEW

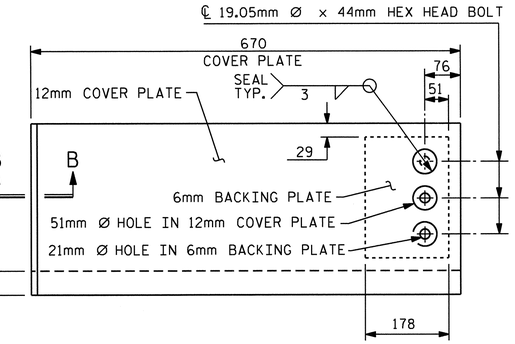


TYPE II - ELEVATION VIEW

COVER PLATE DETAILS

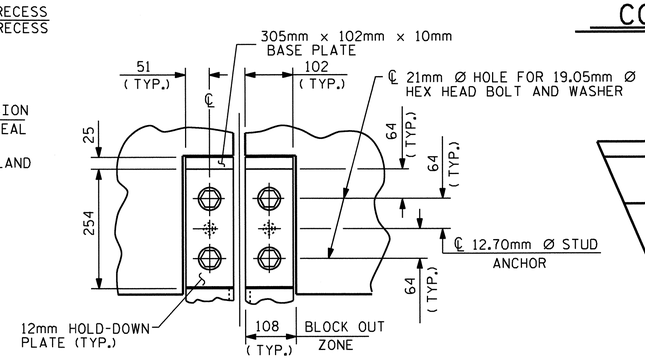


SECTION A - A

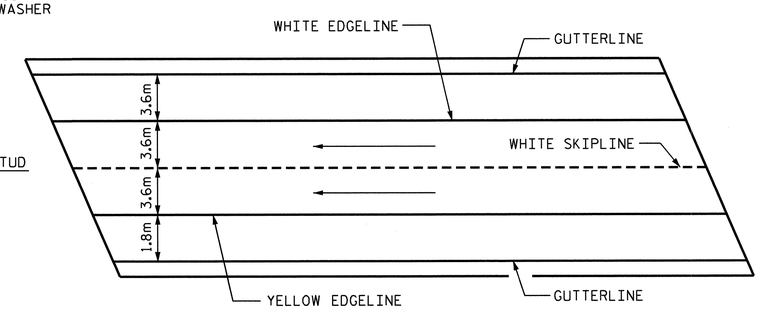


PAVEMENT MARKING ALIGNMENT

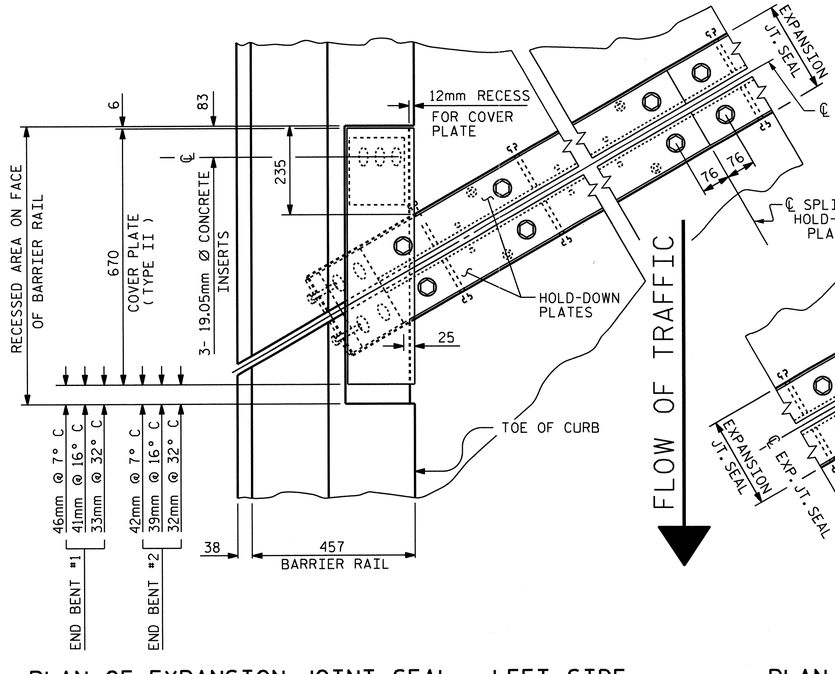


PLAN OF EXPANSION JOINT SEAL - LEFT SIDE

FLOW OF TRAFFIC

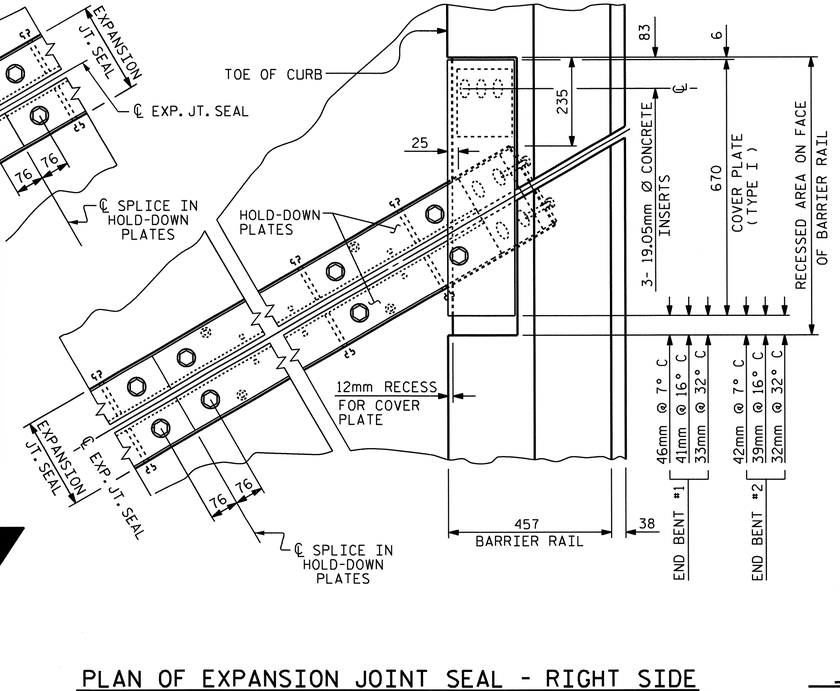


PLAN OF EXPANSION JOINT SEAL - RIGHT SIDE

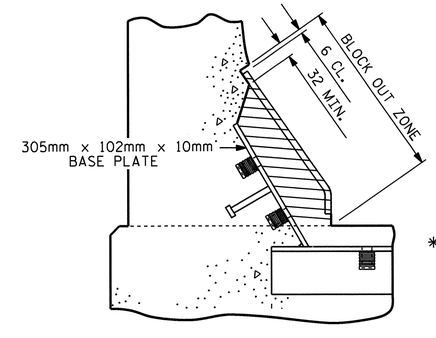


BLOCK OUT DETAIL

SEE "SECTION A - A" FOR OTHER DETAILS.

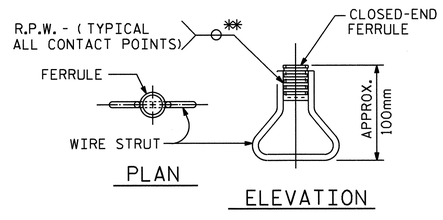


CONCRETE INSERT

** EACH WELDED ATTACHMENT OF WIRE TO FERRULE SHALL DEVELOP THE TENSILE STRENGTH OF THE WIRE.

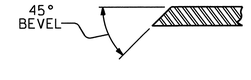


SECTION B - B

PROJECT NO. R-2413C

GUILFORD-ROCKINGHAM COUNTY

STATION: 45+30.610 -LREV-

SHEET 2 OF 2

STATE OF NORTH CAROLINA
DEPARTMENT OF TRANSPORTATION
RALEIGH

STANDARD
EXPANSION JOINT
SEAL DETAILS
FOR BARRIER RAIL
LEFT LANE

NORTH CAROLINA PROFESSIONAL SEAL 022516 ENGINEER EMILY E. MURRAY
10/28/11

| REVISIONS | | | | | | | SHEET NO. |
|---|---|---|---|---|---|---|---|
| NO. | BY: | DATE: | NO. | BY: | DATE: | | S-164 |
| 1 | | | 3 | | | | TOTAL SHEETS |
| 2 | | | 4 | | | | 238 |

| | | | |
|---|---|---|---|
| ASSEMBLED BY : T.L. AVERETTE | | DATE : 11-10-10 | |
| CHECKED BY : PEGGY PARISI | | DATE : 07-25-11 | |
| DRAWN BY : REK 9/87 | REV. 7/17/98 | RWW/LES | |
| CHECKED BY : CRK 10/87 | REV. 10/17/00 | RWW/LES | |
| | REV. 5/1/06 | TLA/GM | |

05-SEP-2011 13:27
Y:\Structures\Final Plans\Str.#5\R2413C_sd_JS_05.dgn
mgudlaugsson

STR. #5

STD. NO. EJS2SM

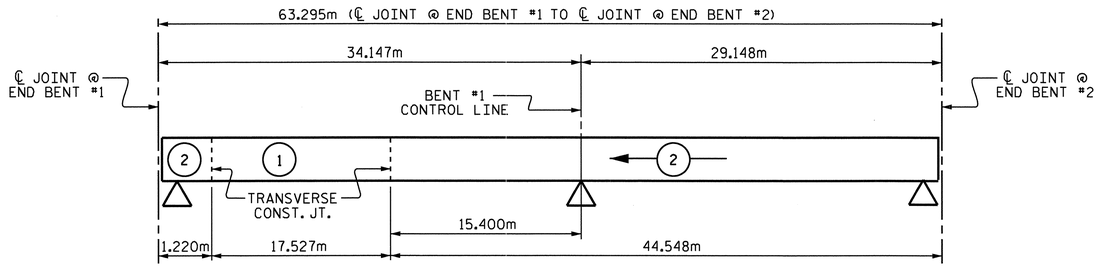


## POURING SEQUENCE

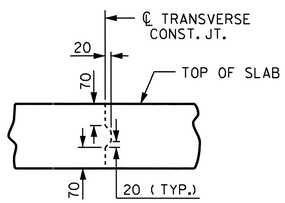


## TRANSVERSE CONSTRUCTION JOINT DETAIL

NOTE: REINFORCING STEEL IN SLAB NOT SHOWN.
LONGITUDINAL REINFORCING STEEL SHALL
BE CONTINUOUS THROUGH JOINT.

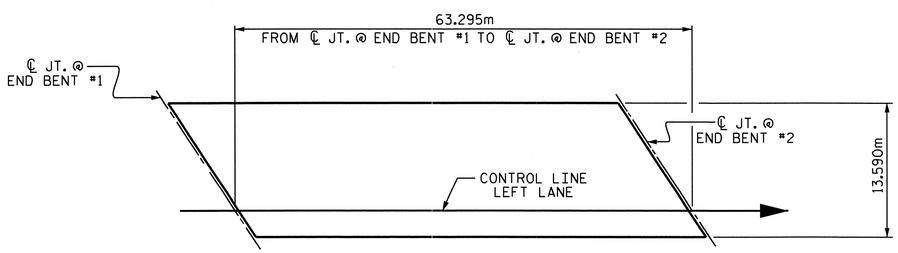


## LAYOUT FOR COMPUTING AREA OF REINFORCED CONCRETE DECK SLAB

( SQ. METER = 860.2 )

## REINFORCING BAR SCHEDULE

### SPANS A & B

| BAR | NUM | SZ | TYP | LENGTH | WEIGHT |
|---|---|---|---|---|---|
| *A1 | 357 | 16 | STR | 13480 | 7469 |
| A2 | 357 | 16 | STR | 13480 | 7469 |
| *A101 | 4 | 16 | STR | 13120 | 81 |
| *A102 | 4 | 16 | STR | 12380 | 77 |
| *A103 | 4 | 16 | STR | 11640 | 72 |
| *A104 | 4 | 16 | STR | 10900 | 68 |
| *A105 | 4 | 16 | STR | 10160 | 63 |
| *A106 | 4 | 16 | STR | 9420 | 58 |
| *A107 | 4 | 16 | STR | 8680 | 54 |
| *A108 | 4 | 16 | STR | 7920 | 49 |
| *A109 | 4 | 16 | STR | 7180 | 45 |
| *A110 | 4 | 16 | STR | 6440 | 40 |
| *A111 | 4 | 16 | STR | 5700 | 35 |
| *A112 | 4 | 16 | STR | 4960 | 31 |
| *A113 | 4 | 16 | STR | 4220 | 26 |
| *A114 | 4 | 16 | STR | 3480 | 22 |
| *A115 | 4 | 16 | STR | 2740 | 17 |
| *A116 | 4 | 16 | STR | 2000 | 12 |
| *A117 | 4 | 16 | STR | 1260 | 8 |
| A201 | 4 | 16 | STR | 13120 | 81 |
| A202 | 4 | 16 | STR | 12380 | 77 |
| A203 | 4 | 16 | STR | 11640 | 72 |
| A204 | 4 | 16 | STR | 10900 | 68 |
| A205 | 4 | 16 | STR | 10160 | 63 |
| A206 | 4 | 16 | STR | 9420 | 58 |
| A207 | 4 | 16 | STR | 8680 | 54 |
| A208 | 4 | 16 | STR | 7920 | 49 |
| A209 | 4 | 16 | STR | 7180 | 45 |
| A210 | 4 | 16 | STR | 6440 | 40 |
| A211 | 4 | 16 | STR | 5700 | 35 |
| A212 | 4 | 16 | STR | 4960 | 31 |
| A213 | 4 | 16 | STR | 4220 | 26 |
| A214 | 4 | 16 | STR | 3480 | 22 |
| A215 | 4 | 16 | STR | 2740 | 17 |
| A216 | 4 | 16 | STR | 2000 | 12 |
| A217 | 4 | 16 | STR | 1260 | 8 |
| *B1 | 96 | 13 | STR | 7380 | 704 |
| *B2 | 90 | 19 | STR | 16160 | 3251 |
| *B3 | 64 | 13 | STR | 6360 | 405 |
| B4 | 192 | 16 | STR | 16300 | 4857 |
| *B5 | 135 | 19 | STR | 12080 | 3645 |
| *G1 | 2 | 16 | STR | 14680 | 46 |
| *J1 | 92 | 13 | 4 | 440 | 40 |
| *K1 | 12 | 16 | 1 | 3360 | 63 |
| *K2 | 18 | 16 | 2 | 4320 | 121 |
| *S1 | 64 | 13 | 3 | 1340 | 85 |

REINFORCING STEEL KG 13084

* EPOXY COATED REINFORCING STEEL KG 16587

## BAR TYPES

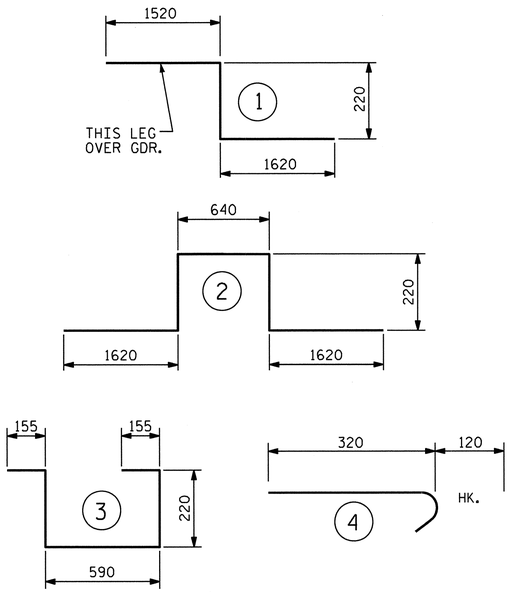


ALL BAR DIMENSIONS ARE OUT TO OUT

## SUPERSTRUCTURE BILL OF MATERIAL

| | CLASS AA CONCRETE | REINFORCING STEEL | EPOXY COATED REINFORCING STEEL |
|---|---|---|---|
| | (CU. METER) | ( kg ) | ( kg ) |
| POUR #1 | 61.0 | | |
| POUR #2 | 161.5 | | |
| | | | |
| TOTALS ** | 222.5 | 13,084 | 16,587 |

** QUANTITIES FOR BARRIER RAIL ARE NOT INCLUDED

## SUPERSTRUCTURE REINFORCING STEEL LENGTHS ARE BASED ON THE FOLLOWING MINIMUM SPLICE LENGTHS

| BAR SIZE | SUPERSTRUCTURE EXCEPT APPROACH SLABS, PARAPET, AND BARRIER RAIL | | APPROACH SLABS | | PARAPET AND BARRIER RAIL |
|---|---|---|---|---|---|
| | EPOXY COATED | UNCOATED | EPOXY COATED | UNCOATED | |
| #13 | 610 | 540 | 610 | 540 | 840 |
| #16 | 770 | 660 | 770 | 660 | 1050 |
| #19 | 920 | 790 | 1190 | 790 | 1330 |
| #22 | 1580 | 1060 | | | |
| #25 | 2080 | 1390 | | | |

## GROOVING BRIDGE FLOORS

| | | |
|---|---|---|
| BRIDGE DECK | 736.2 | SQ. METER |
| APPROACH SLABS | 171.7 | SQ. METER |
| TOTAL | 907.9 | SQ. METER |

PROJECT NO. R-2413C
GUILFORD-ROCKINGHAM COUNTY
STATION: 45+30.610 -LREV-

STATE OF NORTH CAROLINA
DEPARTMENT OF TRANSPORTATION
RALEIGH

SUPERSTRUCTURE

BILL OF MATERIAL
LEFT LANE

NORTH CAROLINA PROFESSIONAL SEAL 022516 ENGINEER LARRY E. MURRAY
10/28/11

| REVISIONS | | | | | | SHEET NO. |
|---|---|---|---|---|---|---|
| NO. | BY: | DATE: | NO. | BY: | DATE: | S-165 |
| 1 | | | 3 | | | TOTAL SHEETS |
| 2 | | | 4 | | | 238 |

DRAWN BY : T.L. AVERETTE DATE : 09-13-10
CHECKED BY : PEGGY PARISI DATE : 09-16-10

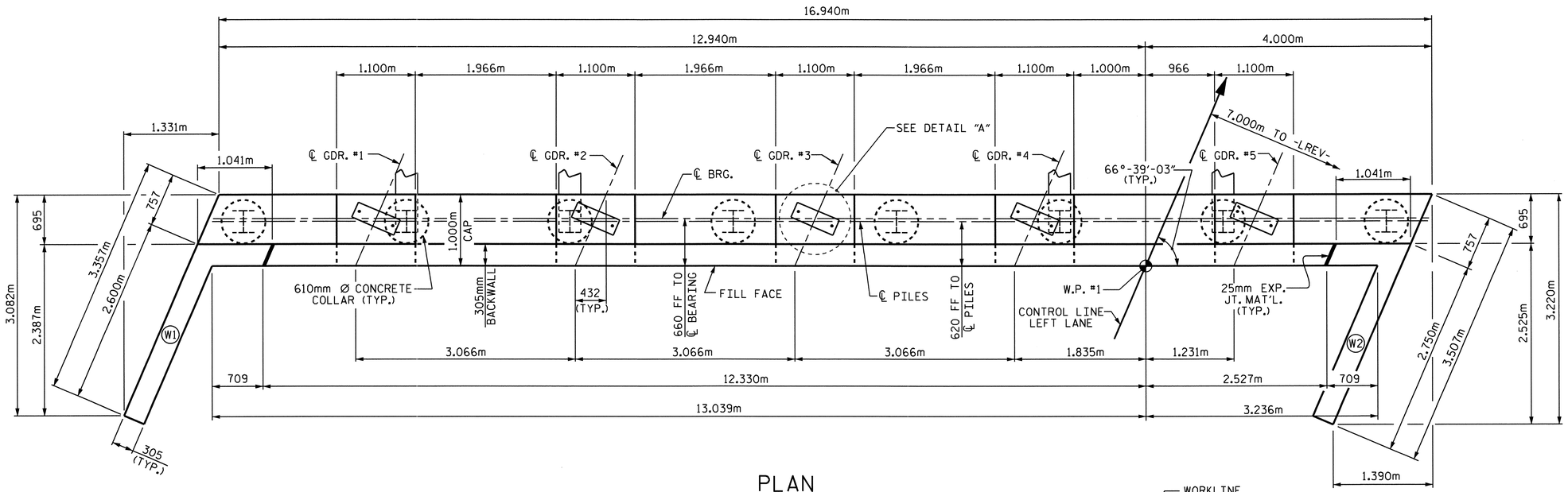


## PLAN

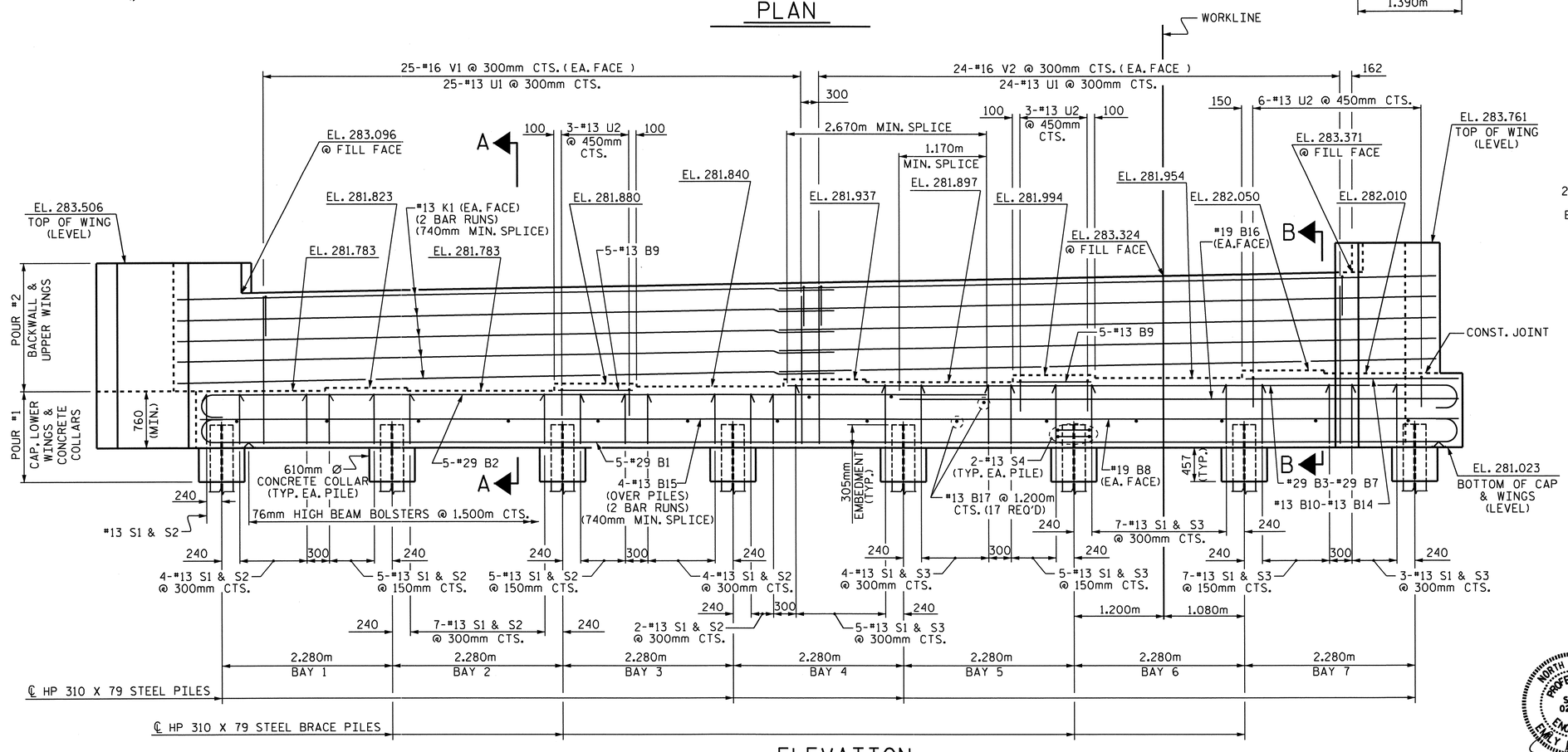


## ELEVATION

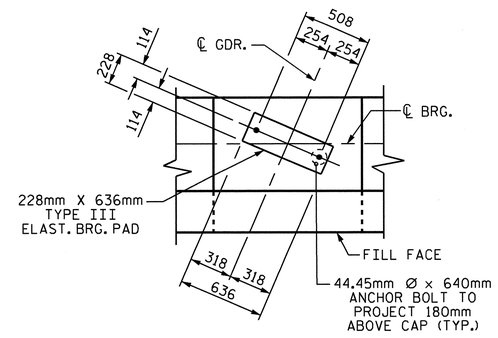


## DETAIL "A"

(TYP. EA. GDR.)

## NOTES

STIRRUPS AND U1 BARS IN CAP MAY BE SHIFTED AS NECESSARY TO CLEAR ANCHOR BOLTS.

BACKWALL SHALL BE PLACED BEFORE APPLYING THE EPOXY PROTECTIVE COATING.

THE TOP SURFACE AREAS OF THE END BENT CAPS SHALL BE CURED IN ACCORDANCE WITH THE STANDARD SPECIFICATIONS EXCEPT THE MEMBRANE CURING COMPOUND METHOD SHALL NOT BE USED.

THE TOP SURFACE OF THE END BENT CAP EXCEPT THE BRIDGE SEAT BUILDUPS SHALL BE SLOPED TRANSVERSELY FROM THE FILL FACE TO THE BACK FACE AT THE RATE OF 2%.

THE CONTRACTOR SHALL PROVIDE FOR INSTALLATION OF THE 102mm DIAMETER DRAIN PIPE THROUGH THE WING WALL AS REQUIRED FOR REINFORCED BRIDGE APPROACH FILLS. SEE THE ROADWAY PLANS. REINFORCING STEEL IN THE WING WALL MAY BE SHIFTED AS NECESSARY TO CLEAR THE DRAIN PIPE.

EPOXY COAT THE END BENT CAP AFTER ADJUSTMENTS ARE MADE TO BEARINGS.

PROJECT NO. R-2413C
GUILFORD-ROCKINGHAM COUNTY
STATION: 45+30.610 -LREV-

SHEET 1 OF 3

STATE OF NORTH CAROLINA
DEPARTMENT OF TRANSPORTATION
RALEIGH

SUBSTRUCTURE

END BENT #1
LEFT LANE

NORTH CAROLINA PROFESSIONAL SEAL 022516 ENGINEER EMILY E. MURRAY
10/28/11

| REVISIONS | | | | | | | SHEET NO. |
|---|---|---|---|---|---|---|---|
| NO. | BY: | DATE: | NO. | BY: | DATE: | | S-166 |
| 1 | | | 3 | | | | TOTAL SHEETS |
| 2 | | | 4 | | | | 238 |

DRAWN BY : T.L. AVERETTE DATE : 1-31-11
CHECKED BY : PEGGY PARISI DATE : 4-05-11

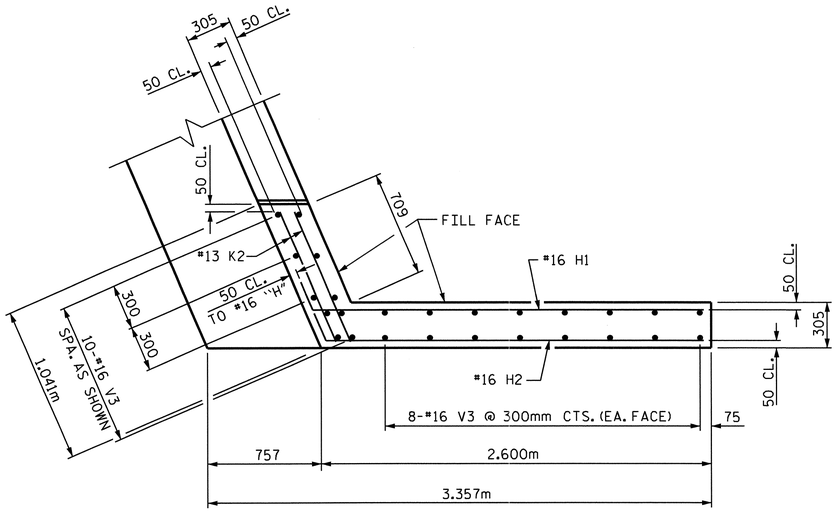


PLAN OF WING W1

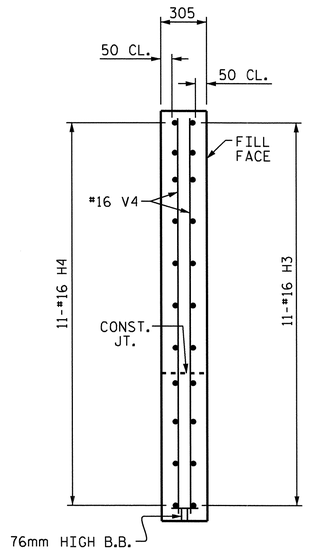


SECTION Y-Y

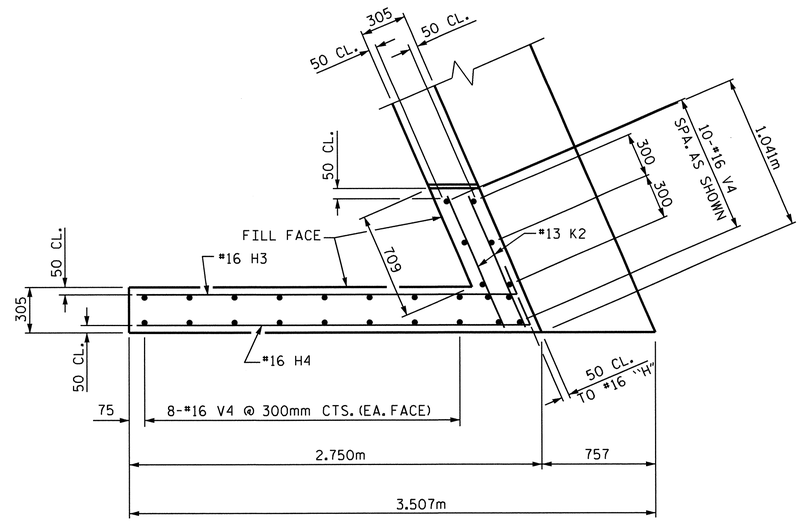


PLAN OF WING W2

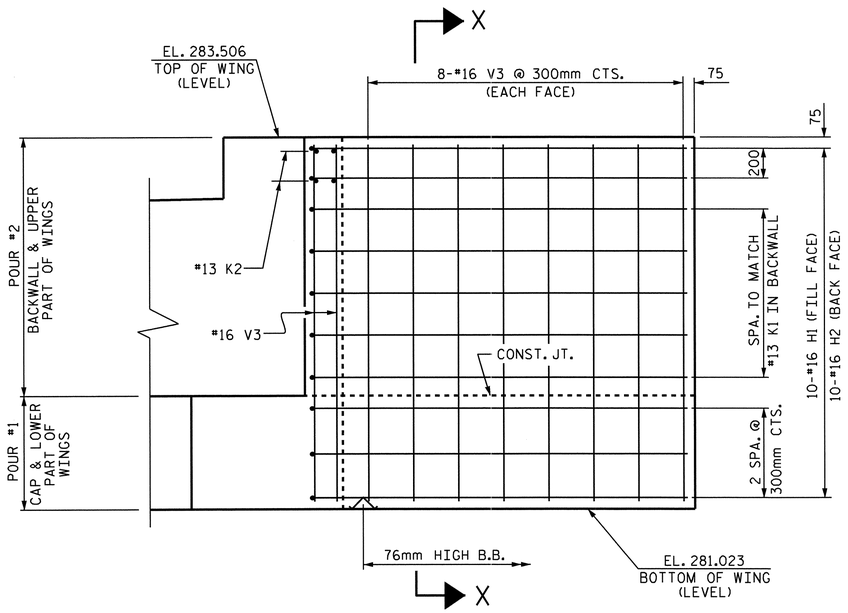


ELEVATION OF WING W1

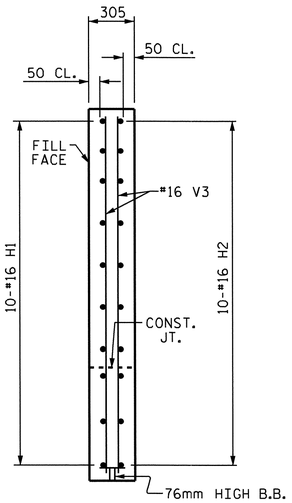


SECTION X-X

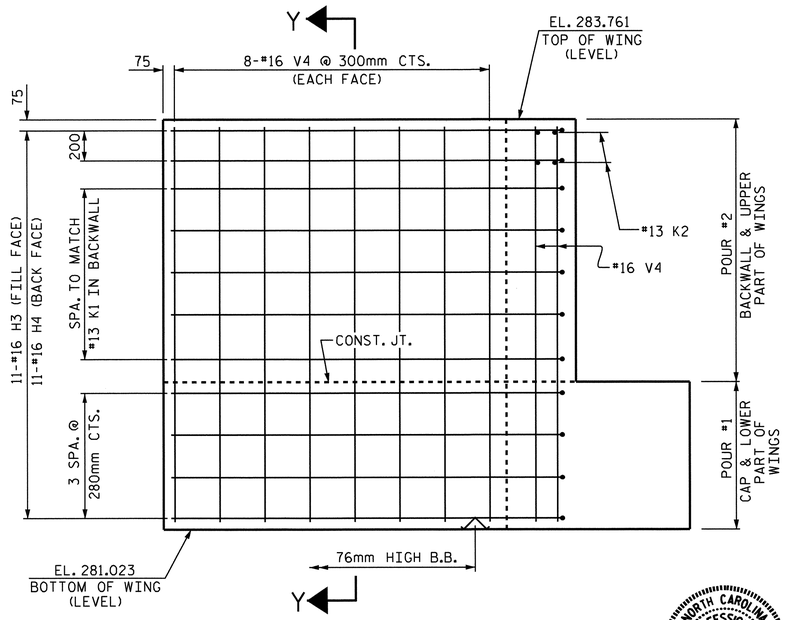


ELEVATION OF WING W2

PROJECT NO. R-2413C
GUILFORD-ROCKINGHAM COUNTY
STATION: 45+30.610 -LREV-

SHEET 2 OF 3

STATE OF NORTH CAROLINA
DEPARTMENT OF TRANSPORTATION
RALEIGH

SUBSTRUCTURE

END BENT #1
LEFT LANE

NORTH CAROLINA PROFESSIONAL SEAL 022516 ENGINEER EMILY E. MURRAY
1/28/11

| REVISIONS | | | | | | SHEET NO. |
|---|---|---|---|---|---|---|
| NO. | BY: | DATE: | NO. | BY: | DATE: | S-167 |
| 1 | | | 3 | | | TOTAL SHEETS |
| 2 | | | 4 | | | 238 |

DRAWN BY : T.L. AVERETTE DATE : 1-31-11
CHECKED BY : PEGGY PARISI DATE : 4-05-11

STR.#5

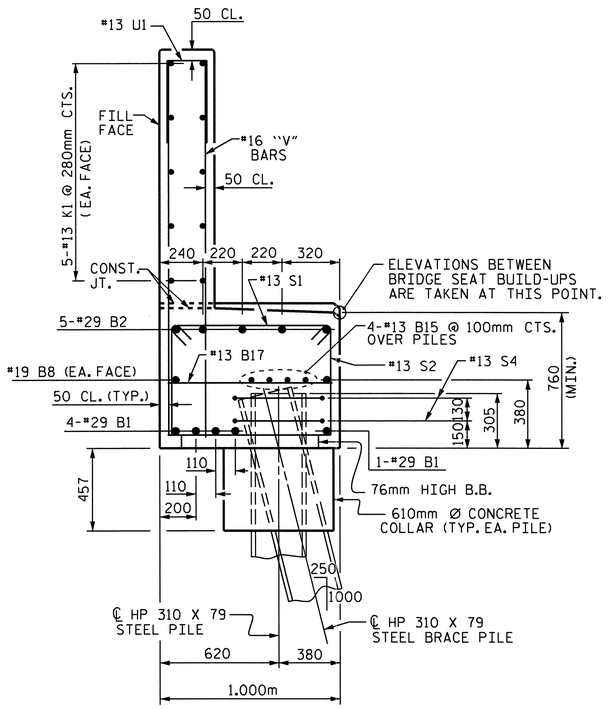


SECTION A-A

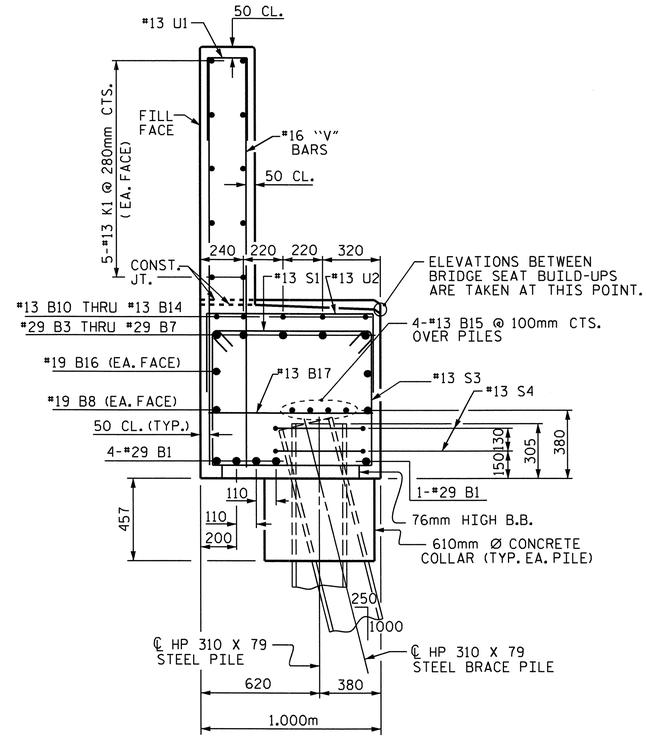


SECTION B-B

## BAR TYPES

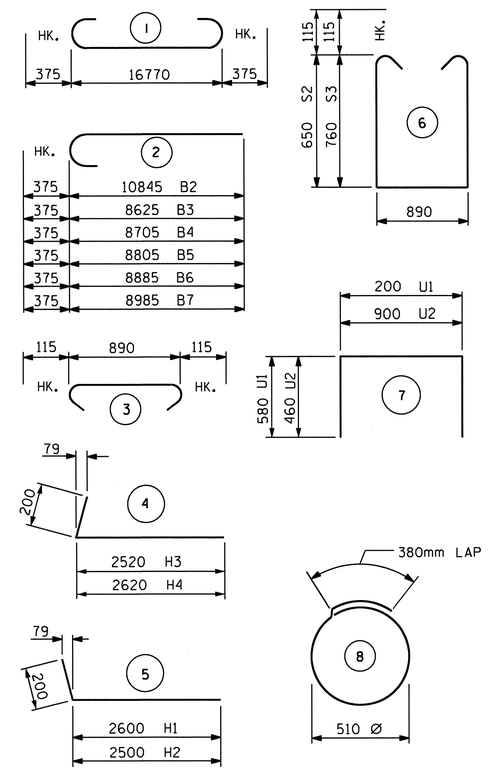


ALL BAR DIMENSIONS ARE OUT TO OUT.

## BILL OF MATERIAL
### END BENT #1

| BAR | NO. | SIZE | TYPE | LENGTH | WEIGHT |
|---|---|---|---|---|---|
| B1 | 5 | #29 | 1 | 17520 | 443 |
| B2 | 5 | #29 | 2 | 11220 | 284 |
| B3 | 1 | #29 | 2 | 9000 | 46 |
| B4 | 1 | #29 | 2 | 9080 | 46 |
| B5 | 1 | #29 | 2 | 9180 | 46 |
| B6 | 1 | #29 | 2 | 9260 | 47 |
| B7 | 1 | #29 | 2 | 9360 | 47 |
| B8 | 2 | #19 | STR | 16820 | 75 |
| B9 | 10 | #13 | STR | 1000 | 10 |
| B10 | 1 | #13 | STR | 2520 | 3 |
| B11 | 1 | #13 | STR | 2600 | 3 |
| B12 | 1 | #13 | STR | 2680 | 3 |
| B13 | 1 | #13 | STR | 2780 | 3 |
| B14 | 1 | #13 | STR | 2880 | 3 |
| B15 | 8 | #13 | STR | 8800 | 70 |
| B16 | 2 | #19 | STR | 7160 | 32 |
| B17 | 17 | #13 | STR | 900 | 15 |
| H1 | 10 | #16 | 5 | 2800 | 43 |
| H2 | 10 | #16 | 5 | 2700 | 42 |
| H3 | 11 | #16 | 4 | 2720 | 46 |
| H4 | 11 | #16 | 4 | 2820 | 48 |
| K1 | 20 | #13 | STR | 8800 | 175 |
| K2 | 8 | #13 | STR | 920 | 7 |
| S1 | 59 | #13 | 3 | 1120 | 66 |
| S2 | 28 | #13 | 6 | 2420 | 67 |
| S3 | 31 | #13 | 6 | 2640 | 81 |
| S4 | 16 | #13 | 8 | 1980 | 31 |
| U1 | 49 | #13 | 7 | 1360 | 66 |
| U2 | 12 | #13 | 7 | 1820 | 22 |
| V1 | 50 | #16 | STR | 1960 | 152 |
| V2 | 48 | #16 | STR | 2100 | 156 |
| V3 | 26 | #16 | STR | 2380 | 96 |
| V4 | 26 | #16 | STR | 2620 | 106 |

TOTAL REINFORCING STEEL = 2,380 kg

CLASS A CONCRETE BREAKDOWN

| | | |
|---|---|---|
| POUR #1 (CAP, LOWER WINGS & CONCRETE COLLARS) | m3 | 17.1 |
| POUR #2 (BACKWALL & UPPER WINGS) | m3 | 9.7 |
| TOTAL CLASS A CONCRETE | m3 | 26.8 |

HP 310 X 79 STEEL PILES
NO. 8 METERS 22.4

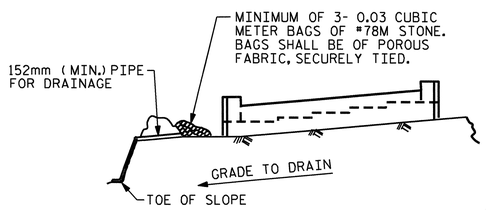


BAGGED STONE AND PIPE SHALL BE PLACED IMMEDIATELY AFTER COMPLETION OF END BENT EXCAVATION. PIPE MAY BE EITHER CONCRETE, CORRUGATED STEEL, CORRUGATED ALUMINUM ALLOY, OR CORRUGATED PLASTIC. PERFORATED PIPE WILL NOT BE ALLOWED.

BAGGED STONE SHALL REMAIN IN PLACE UNTIL THE ENGINEER DIRECTS THAT IT BE REMOVED. THE CONTRACTOR SHALL REMOVE AND DISPOSE OF SILT ACCUMULATIONS AT BAGGED STONE WHEN SO DIRECTED BY THE ENGINEER. BAGS SHALL BE REMOVED AND REPLACED WHENEVER THE ENGINEER DETERMINES THAT THEY HAVE DETERIORATED AND LOST THEIR EFFECTIVENESS.

NO SEPARATE PAYMENT WILL BE MADE FOR THIS WORK AND THE ENTIRE COST OF THIS WORK SHALL BE INCLUDED IN THE UNIT CONTRACT PRICE BID FOR THE SEVERAL PAY ITEMS.

TEMPORARY DRAINAGE AT END BENT

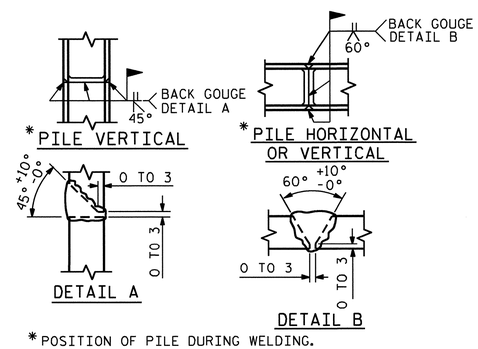


*POSITION OF PILE DURING WELDING.

PILE SPLICE DETAILS

PROJECT NO. R-2413C
GUILFORD-ROCKINGHAM COUNTY
STATION: 45+30.610 -LREV-

SHEET 3 OF 3

STATE OF NORTH CAROLINA
DEPARTMENT OF TRANSPORTATION
RALEIGH

SUBSTRUCTURE
END BENT #1
LEFT LANE

NORTH CAROLINA PROFESSIONAL SEAL 022516 ENGINEER EMILY P. MURRAY
10/28/11

| REVISIONS | | | | | | | | SHEET NO. |
|---|---|---|---|---|---|---|---|---|
| NO. | BY: | DATE: | NO. | BY: | DATE: | | | S-168 |
| 1 | | | 3 | | | | | TOTAL SHEETS |
| 2 | | | 4 | | | | | 238 |

DRAWN BY : T.L. AVERETTE DATE : 1-31-11
CHECKED BY : PEGGY PARISI DATE : 4-05-11

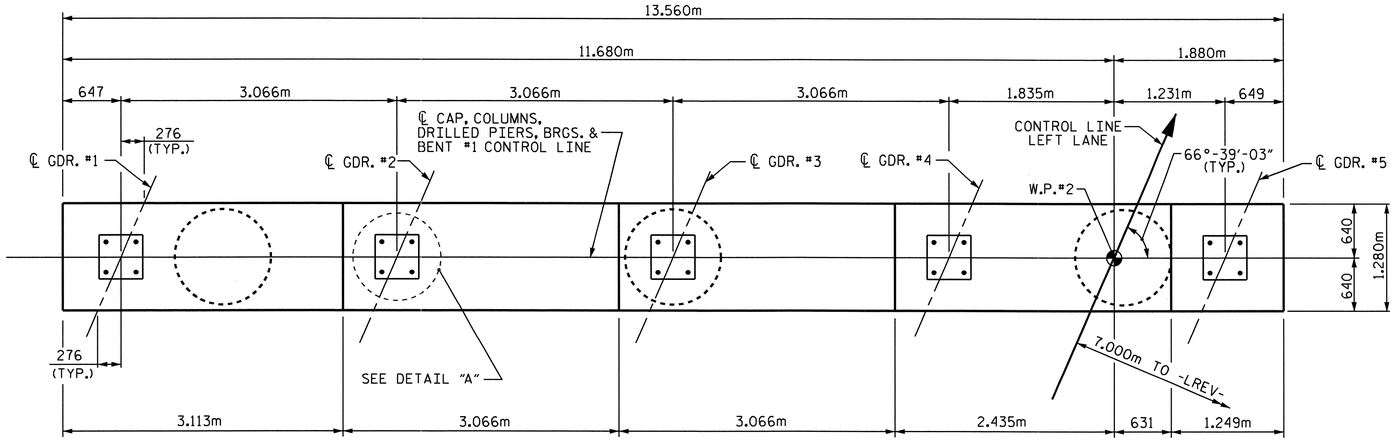


SPAN "B"

SPAN "A"

## PLAN

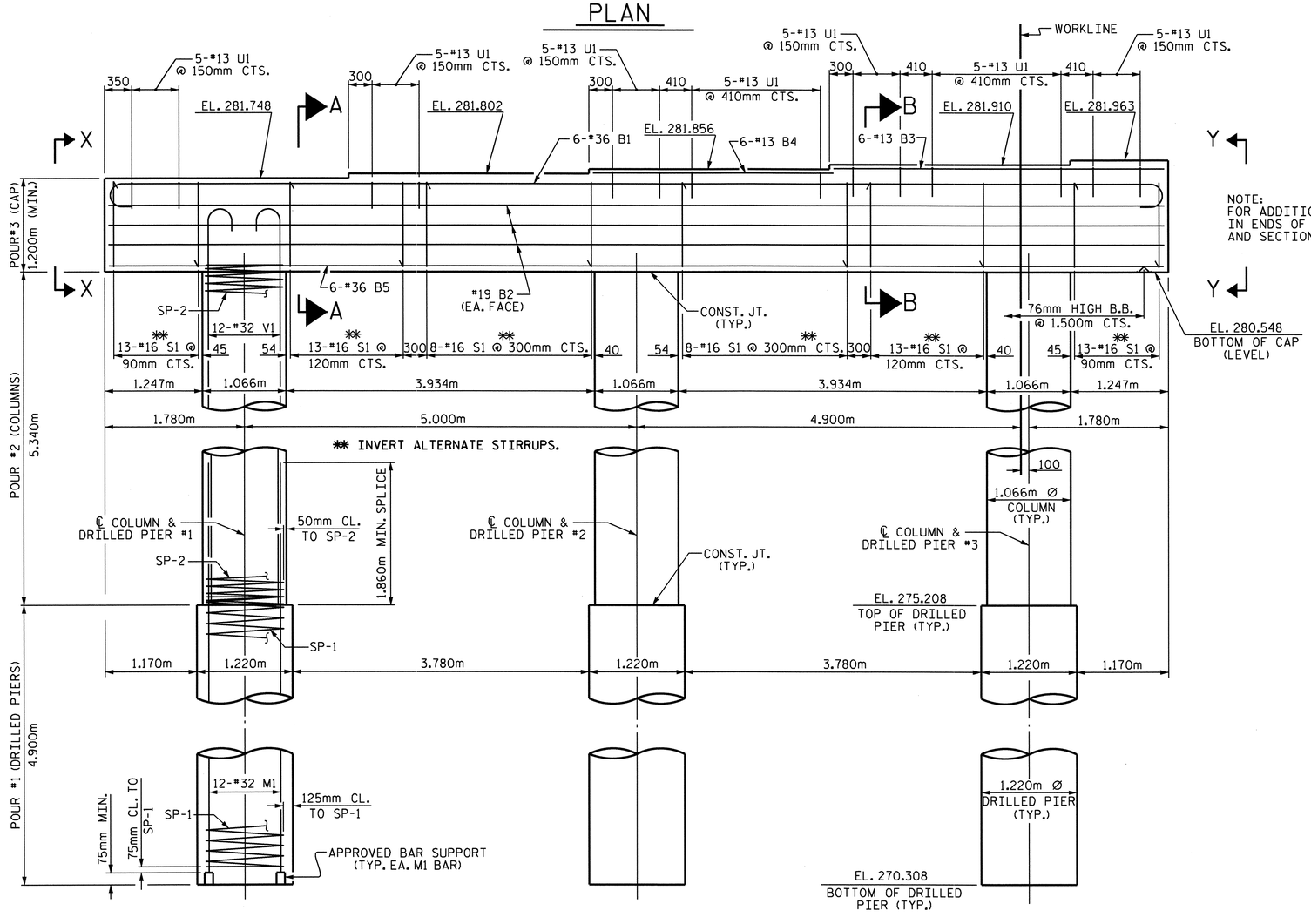


## ELEVATION

( DIMENSIONS AND REINFORCING STEEL ARE TYPICAL FOR EACH COLUMN & DRILLED PIER )

NOTE:
FOR ADDITIONAL REINFORCING STEEL IN ENDS OF CAP, SEE SECTION X-X AND SECTION Y-Y ON SHEET 2 OF 2.

## NOTES

STIRRUPS AND U1 BARS IN CAP MAY BE SHIFTED AS NECESSARY TO CLEAR ANCHOR BOLTS.

HOOKS ON "V" BARS MAY BE TURNED AS NECESSARY FOR PLACING REINFORCING STEEL.

ALL STEEL IN THE DRILLED PIERS IS INCLUDED IN THE PAY ITEMS FOR "REINFORCING STEEL" AND "SPIRAL COLUMN REINFORCING STEEL".

THE CONTRACTOR'S ATTENTION IS CALLED TO THE FACT THAT THE LONGITUDINAL REINFORCEMENT FOR THE DRILLED PIERS IS DETAILED WITH ONE METER OF EXTRA LENGTH.

THE LOCATION OF THE CONSTRUCTION JOINT IN THE DRILLED PIERS IS BASED ON AN APPROXIMATE GROUND LINE ELEVATION. IF THE CONSTRUCTION JOINT IS ABOVE THE ACTUAL GROUND LINE ELEVATION, THE CONTRACTOR SHALL PLACE THE CONSTRUCTION JOINT 300mm BELOW THE GROUND LINE.

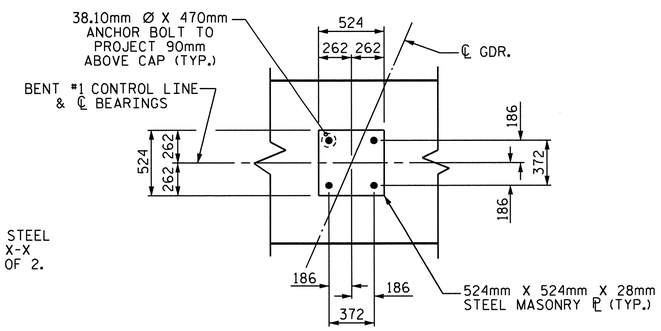


## DETAIL "A"

(TYP. EA. GDR.)

PROJECT NO. R-2413C
GUILFORD-ROCKINGHAM COUNTY
STATION: 45+30.610 -LREV-

SHEET 1 OF 2

STATE OF NORTH CAROLINA
DEPARTMENT OF TRANSPORTATION
RALEIGH

SUBSTRUCTURE
BENT #1
LEFT LANE

NORTH CAROLINA PROFESSIONAL SEAL 022516 ENGINEER EMILY E. MURRAY
10/28/11

| REVISIONS | | | | | | |
|---|---|---|---|---|---|---|
| NO. | BY: | DATE: | NO. | BY: | DATE: | |
| 1 | | | 3 | | | |
| 2 | | | 4 | | | |

SHEET NO. S-169
TOTAL SHEETS 238

DRAWN BY : T.L. AVERETTE DATE : 10-14-10
CHECKED BY : PEGGY PARISI DATE : 04-21-11

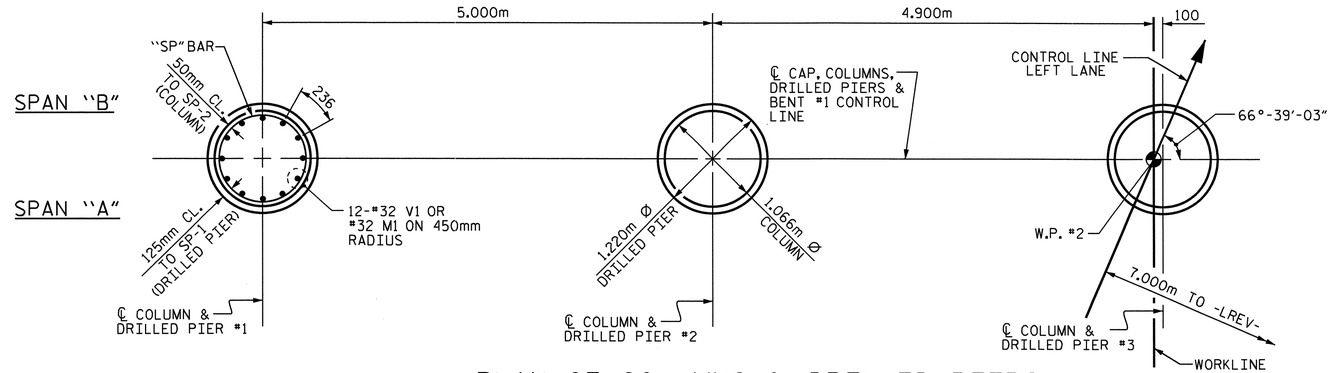


## PLAN OF COLUMNS & DRILLED PIERS

(DIMENSIONS AND REINFORCING STEEL ARE TYPICAL FOR EACH COLUMN & DRILLED PIER)

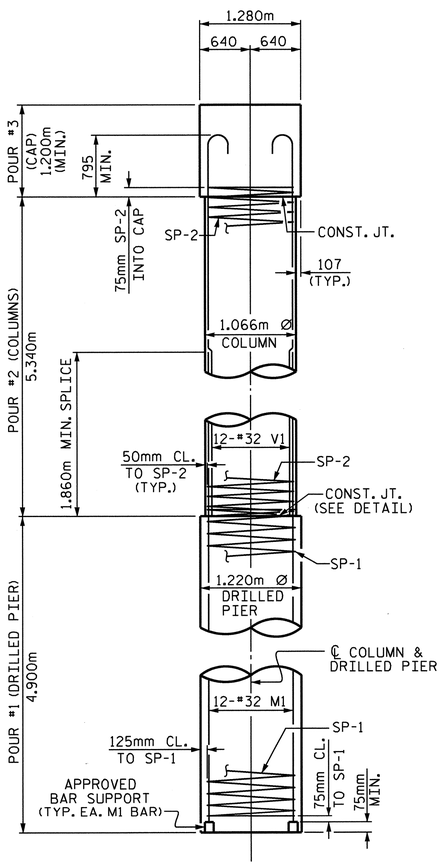


## END ELEVATION

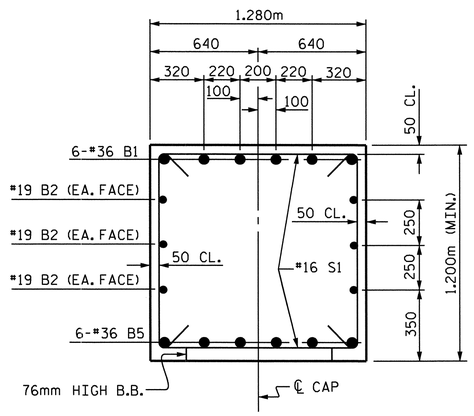


## SECTION A-A

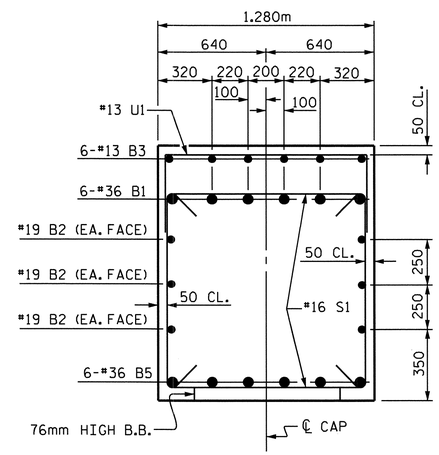


## SECTION B-B

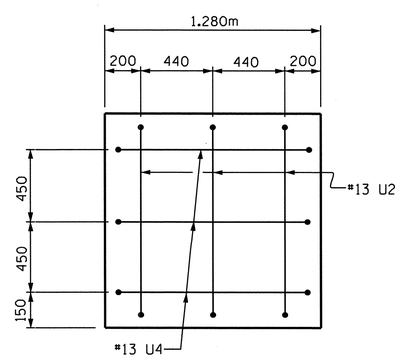


## SECTION X-X

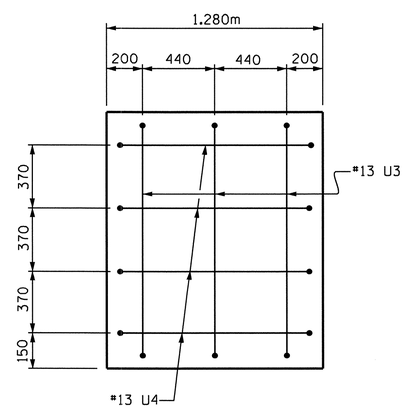


## SECTION Y-Y

## BAR TYPES

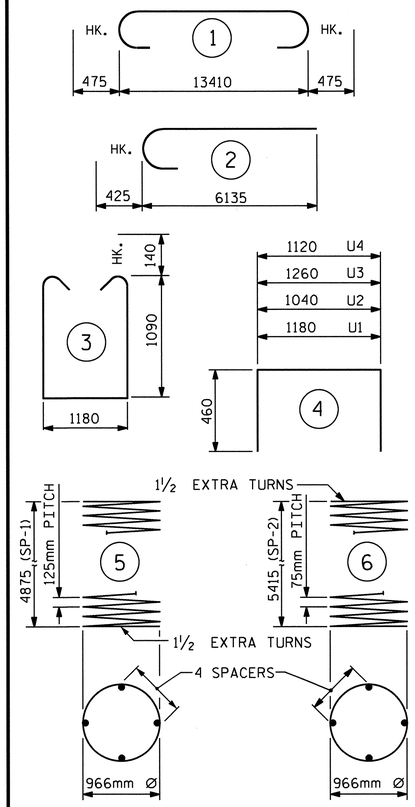


ALL BAR DIMENSIONS ARE OUT TO OUT.

## BILL OF MATERIAL

### BENT #1

| BAR | NO. | SIZE | TYPE | LENGTH | WEIGHT |
|---|---|---|---|---|---|
| B1 | 6 | #36 | 1 | 14360 | 681 |
| B2 | 6 | #19 | STR | 13460 | 180 |
| B3 | 6 | #13 | STR | 4200 | 25 |
| B4 | 6 | #13 | STR | 3060 | 18 |
| B5 | 6 | #36 | STR | 13460 | 639 |
| M1 | 36 | #32 | STR | 7680 | 1771 |
| S1 | 68 | #16 | 3 | 3640 | 384 |
| U1 | 35 | #13 | 4 | 2100 | 73 |
| U2 | 3 | #13 | 4 | 1960 | 6 |
| U3 | 3 | #13 | 4 | 2180 | 7 |
| U4 | 7 | #13 | 4 | 2040 | 14 |
| V1 | 36 | #32 | 2 | 6560 | 1512 |

TOTAL REINFORCING STEEL = 5310 kg

| | | | | | |
|---|---|---|---|---|---|
| SP-1 | 3 | ✱✱ | 5 | 121500 | 566 |
| SP-2 | 3 | ✱✱✱ | 6 | 221640 | 661 |

SPIRAL COLUMN REINFORCING STEEL 1227 kg

DRILLED PIER CONCRETE BREAKDOWN

| | | |
|---|---|---|
| POUR #1 (DRILLED PIERS) | m3 | 17.2 |

CLASS "A" CONCRETE BREAKDOWN

| | | |
|---|---|---|
| POUR #2 (COLUMNS) | m3 | 14.3 |
| POUR #3 (CAP) | m3 | 22.4 |
| TOTAL CLASS "A" CONCRETE | m3 | 36.7 |

| | |
|---|---|
| 1220mm Ø DRILLED PIER NOT IN SOIL | 6.8m |
| 1220mm Ø DRILLED PIER IN SOIL | 7.9m |
| CSL TUBES | 67.8m |

✱✱✱ THE SP-2 SPIRAL REINFORCING STEEL SHALL BE W20 OR D-20 COLD DRAWN WIRE OR #13 PLAIN OR DEFORMED BAR.

✱✱ THE SP-1 SPIRAL REINFORCING STEEL SHALL BE W31 OR D-31 COLD DRAWN WIRE OR #16 PLAIN OR DEFORMED BAR.

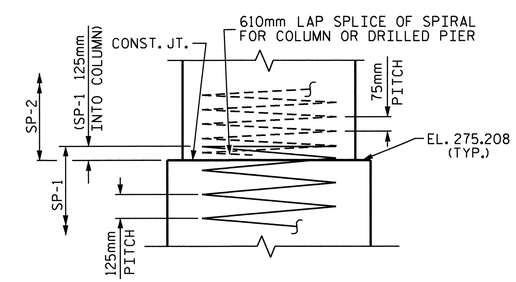


## CONSTRUCTION JOINT DETAIL

PROJECT NO. R-2413C

GUILFORD-ROCKINGHAM COUNTY

STATION: 45+30.610 -LREV-

SHEET 2 OF 2

STATE OF NORTH CAROLINA
DEPARTMENT OF TRANSPORTATION
RALEIGH

SUBSTRUCTURE

BENT #1
LEFT LANE

NORTH CAROLINA PROFESSIONAL SEAL 022516 ENGINEER EMILY E. MURRAY
10/28/11

| REVISIONS | | | | | | SHEET NO. |
|---|---|---|---|---|---|---|
| NO. | BY: | DATE: | NO. | BY: | DATE: | S-170 |
| 1 | | | 3 | | | TOTAL SHEETS |
| 2 | | | 4 | | | 238 |

DRAWN BY : T.L. AVERETTE DATE : 10-14-10
CHECKED BY : PEGGY PARISI DATE : 04-21-11

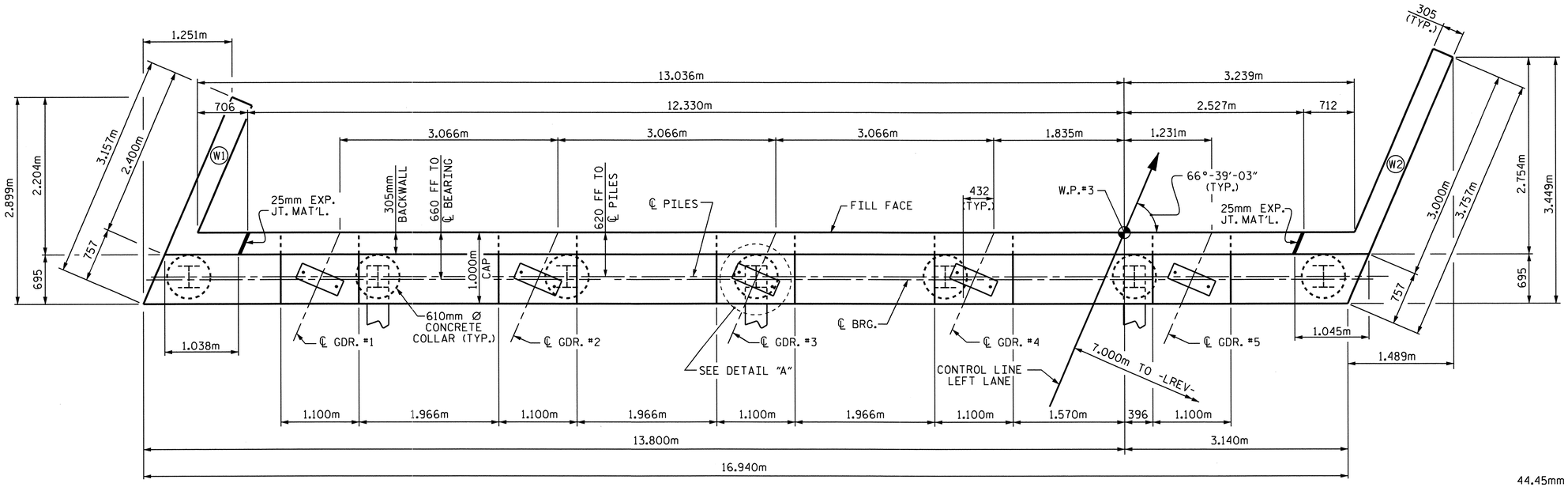


## PLAN

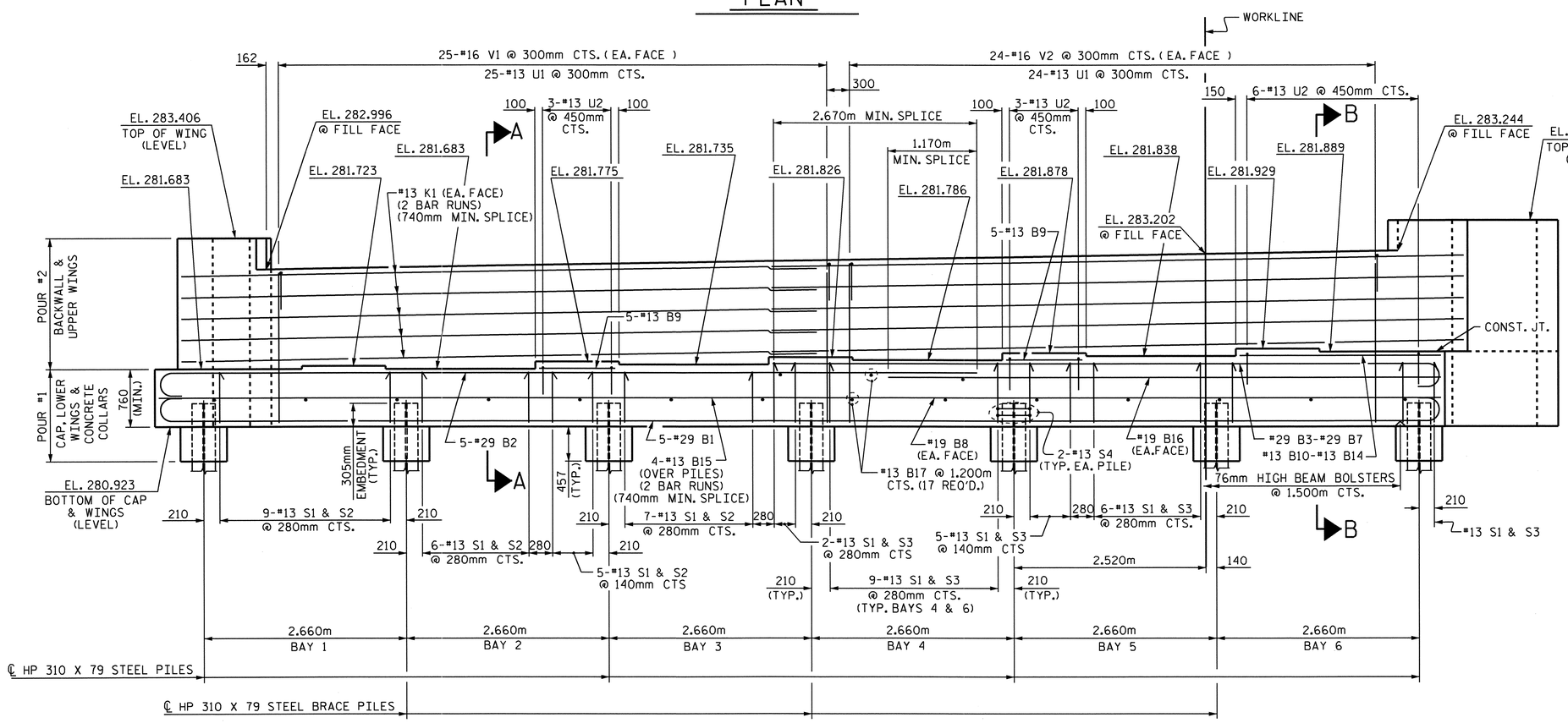


## ELEVATION

## NOTES

STIRRUPS AND U1 BARS IN CAP MAY BE SHIFTED AS NECESSARY TO CLEAR ANCHOR BOLTS.

BACKWALL SHALL BE PLACED BEFORE APPLYING THE EPOXY PROTECTIVE COATING.

THE TOP SURFACE AREAS OF THE END BENT CAPS SHALL BE CURED IN ACCORDANCE WITH THE STANDARD SPECIFICATIONS EXCEPT THE MEMBRANE CURING COMPOUND METHOD SHALL NOT BE USED.

THE TOP SURFACE OF THE END BENT CAP EXCEPT THE BRIDGE SEAT BUILDUPS SHALL BE SLOPED TRANSVERSELY FROM THE FILL FACE TO THE BACK FACE AT THE RATE OF 2%.

THE CONTRACTOR SHALL PROVIDE FOR INSTALLATION OF THE 102mm DIAMETER DRAIN PIPE THROUGH THE WING WALL AS REQUIRED FOR REINFORCED BRIDGE APPROACH FILLS. SEE THE ROADWAY PLANS. REINFORCING STEEL IN THE WING WALL MAY BE SHIFTED AS NECESSARY TO CLEAR THE DRAIN PIPE.

EPOXY COAT THE END BENT CAP AFTER ADJUSTMENTS ARE MADE TO BEARINGS.

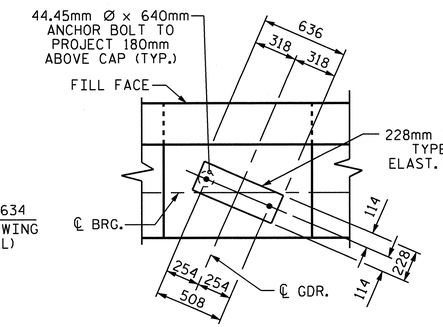


## DETAIL "A"

(TYP. EA. GDR.)

PROJECT NO. R-2413C

GUILFORD-ROCKINGHAM COUNTY

STATION: 45+30.610 -LREV-

SHEET 1 OF 3

STATE OF NORTH CAROLINA
DEPARTMENT OF TRANSPORTATION
RALEIGH

SUBSTRUCTURE

END BENT #2
LEFT LANE

NORTH CAROLINA PROFESSIONAL SEAL 022516 ENGINEER EMILY E. MURRAY
10/28/11

| REVISIONS | | | | | | | | SHEET NO. |
|---|---|---|---|---|---|---|---|---|
| NO. | BY: | DATE: | NO. | BY: | DATE: | | | S-171 |
| 1 | | | 3 | | | | | TOTAL SHEETS |
| 2 | | | 4 | | | | | 238 |

DRAWN BY : T.L. AVERETTE DATE : 9-15-10
CHECKED BY : PEGGY PARISI DATE : 4-05-11

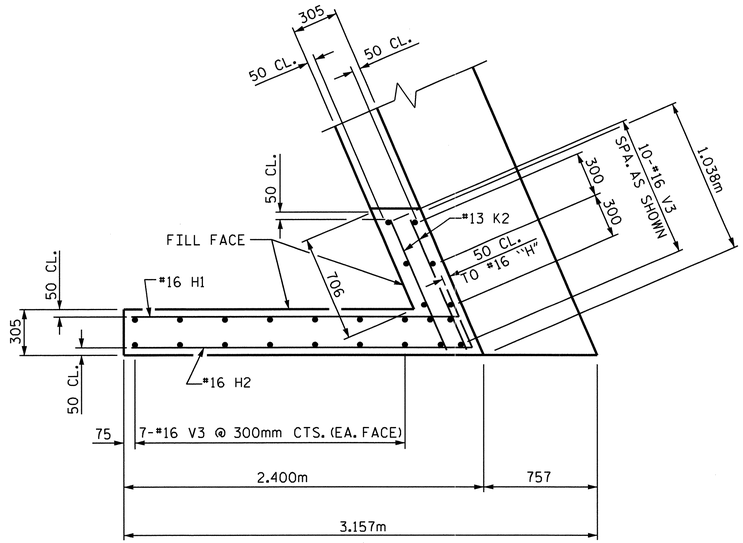


PLAN OF WING W1

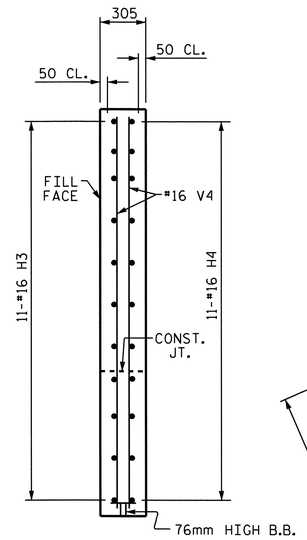


SECTION Y-Y

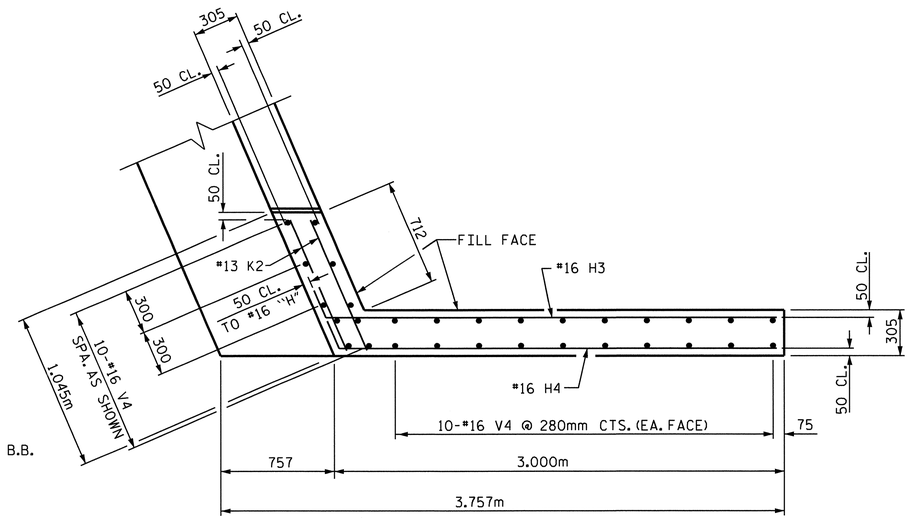


PLAN OF WING W2

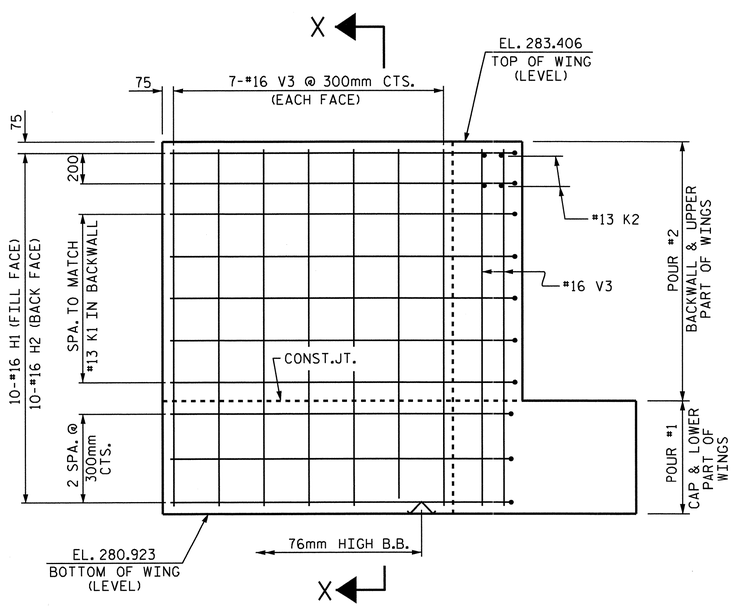


ELEVATION OF WING W1

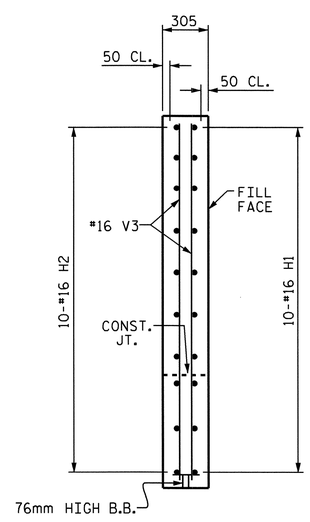


SECTION X-X

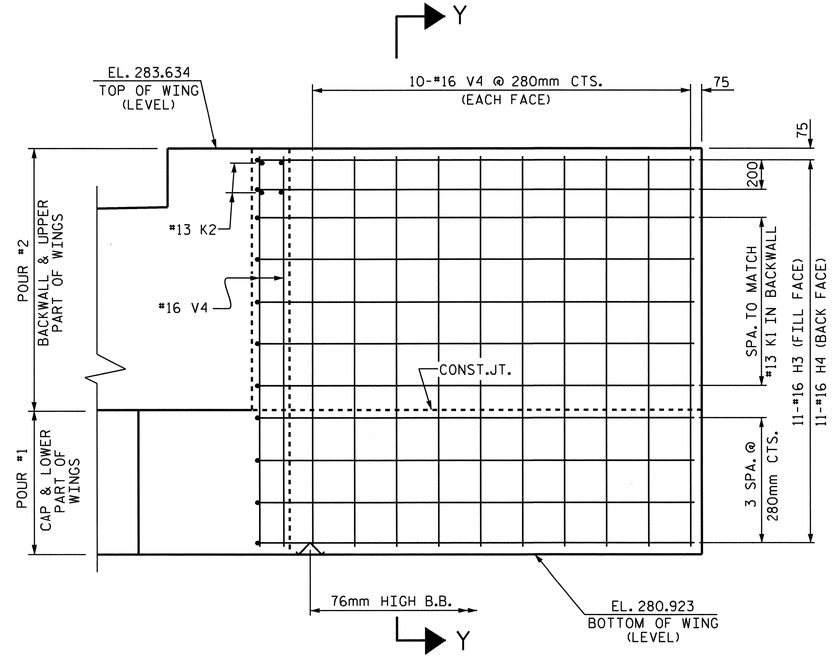


ELEVATION OF WING W2

NORTH CAROLINA PROFESSIONAL SEAL 022516 ENGINEER EMILY E. MURRAY
10/28/11

PROJECT NO. R-2413C
GUILFORD-ROCKINGHAM COUNTY
STATION: 45+30.610 -LREV-

SHEET 2 OF 3

STATE OF NORTH CAROLINA
DEPARTMENT OF TRANSPORTATION
RALEIGH

SUBSTRUCTURE

END BENT #2
LEFT LANE

| REVISIONS | | | | | | SHEET NO. |
|---|---|---|---|---|---|---|
| NO. | BY: | DATE: | NO. | BY: | DATE: | S-172 |
| 1 | | | 3 | | | TOTAL SHEETS |
| 2 | | | 4 | | | 238 |

DRAWN BY : T.L. AVERETTE DATE : 9-15-10
CHECKED BY : PEGGY PARISI DATE : 4-05-11

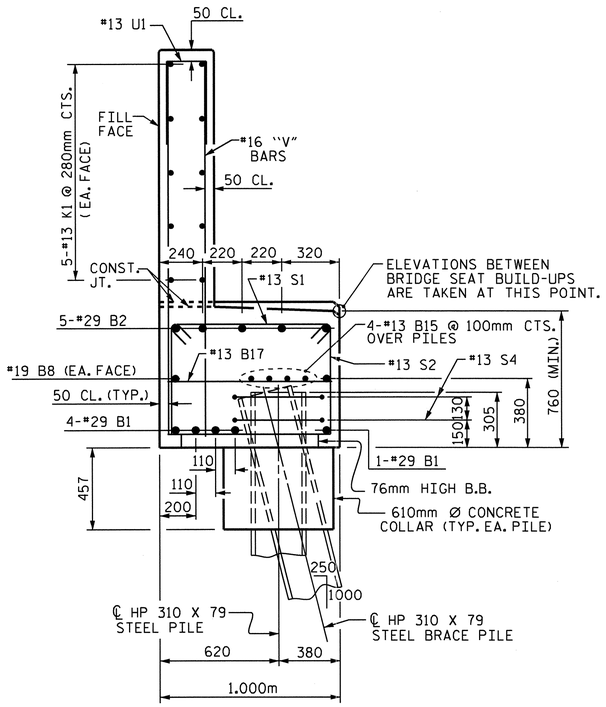


SECTION A-A

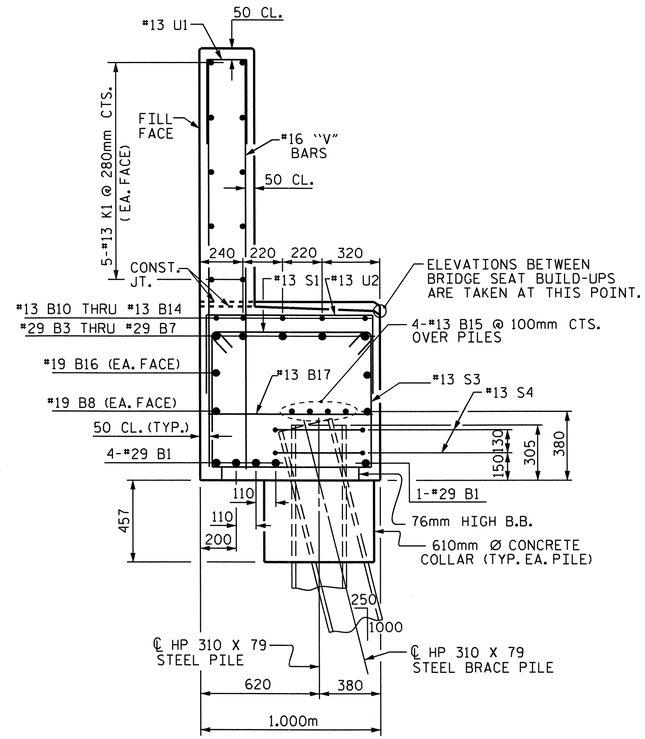


SECTION B-B

## BAR TYPES

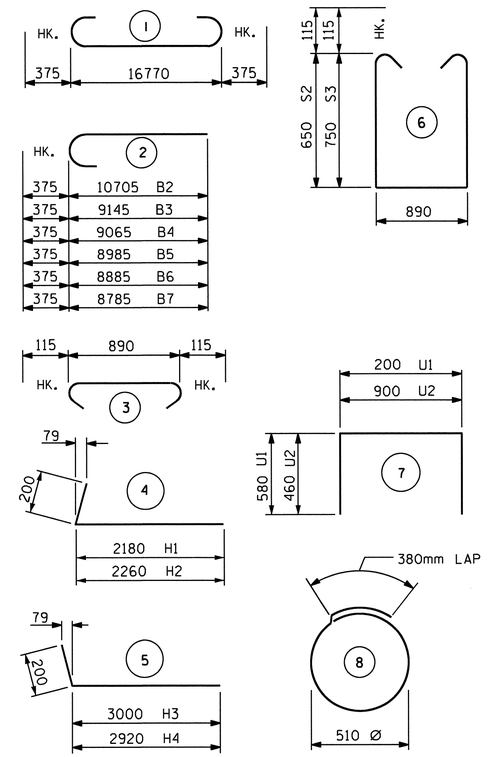


ALL BAR DIMENSIONS ARE OUT TO OUT.

## BILL OF MATERIAL
### END BENT #2

| BAR | NO. | SIZE | TYPE | LENGTH | WEIGHT |
|---|---|---|---|---|---|
| B1 | 5 | #29 | 1 | 17520 | 443 |
| B2 | 5 | #29 | 2 | 11080 | 280 |
| B3 | 1 | #29 | 2 | 9520 | 48 |
| B4 | 1 | #29 | 2 | 9440 | 48 |
| B5 | 1 | #29 | 2 | 9360 | 47 |
| B6 | 1 | #29 | 2 | 9260 | 47 |
| B7 | 1 | #29 | 2 | 9160 | 46 |
| B8 | 2 | #19 | STR | 16820 | 75 |
| B9 | 10 | #13 | STR | 1000 | 10 |
| B10 | 1 | #13 | STR | 3020 | 3 |
| B11 | 1 | #13 | STR | 2960 | 3 |
| B12 | 1 | #13 | STR | 2860 | 3 |
| B13 | 1 | #13 | STR | 2780 | 3 |
| B14 | 1 | #13 | STR | 2660 | 3 |
| B15 | 8 | #13 | STR | 8800 | 70 |
| B16 | 2 | #19 | STR | 7320 | 33 |
| B17 | 17 | #13 | STR | 900 | 15 |
| H1 | 10 | #16 | 4 | 2380 | 37 |
| H2 | 10 | #16 | 4 | 2460 | 38 |
| H3 | 11 | #16 | 5 | 3200 | 55 |
| H4 | 11 | #16 | 5 | 3120 | 53 |
| K1 | 20 | #13 | STR | 8800 | 175 |
| K2 | 8 | #13 | STR | 920 | 7 |
| S1 | 59 | #13 | 3 | 1120 | 66 |
| S2 | 27 | #13 | 6 | 2420 | 65 |
| S3 | 32 | #13 | 6 | 2620 | 83 |
| S4 | 14 | #13 | 8 | 1980 | 28 |
| U1 | 49 | #13 | 7 | 1360 | 66 |
| U2 | 12 | #13 | 7 | 1820 | 22 |
| V1 | 50 | #16 | STR | 1960 | 152 |
| V2 | 48 | #16 | STR | 2100 | 156 |
| V3 | 24 | #16 | STR | 2380 | 89 |
| V4 | 30 | #16 | STR | 2600 | 121 |

TOTAL REINFORCING STEEL = 2,390 kg

CLASS A CONCRETE BREAKDOWN

| | |
|---|---|
| POUR #1 (CAP, LOWER WINGS & CONCRETE COLLARS) | m³ 16.9 |
| POUR #2 (BACKWALL & UPPER WINGS) | m³ 9.6 |
| TOTAL CLASS A CONCRETE | m³ 26.5 |

HP 310 X 79 STEEL PILES
NO. 7 METERS 41.3

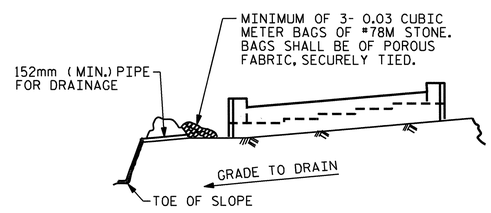


BAGGED STONE AND PIPE SHALL BE PLACED IMMEDIATELY AFTER COMPLETION OF END BENT EXCAVATION. PIPE MAY BE EITHER CONCRETE, CORRUGATED STEEL, CORRUGATED ALUMINUM ALLOY, OR CORRUGATED PLASTIC. PERFORATED PIPE WILL NOT BE ALLOWED.

BAGGED STONE SHALL REMAIN IN PLACE UNTIL THE ENGINEER DIRECTS THAT IT BE REMOVED. THE CONTRACTOR SHALL REMOVE AND DISPOSE OF SILT ACCUMULATIONS AT BAGGED STONE WHEN SO DIRECTED BY THE ENGINEER. BAGS SHALL BE REMOVED AND REPLACED WHENEVER THE ENGINEER DETERMINES THAT THEY HAVE DETERIORATED AND LOST THEIR EFFECTIVENESS.

NO SEPARATE PAYMENT WILL BE MADE FOR THIS WORK AND THE ENTIRE COST OF THIS WORK SHALL BE INCLUDED IN THE UNIT CONTRACT PRICE BID FOR THE SEVERAL PAY ITEMS.

TEMPORARY DRAINAGE AT END BENT

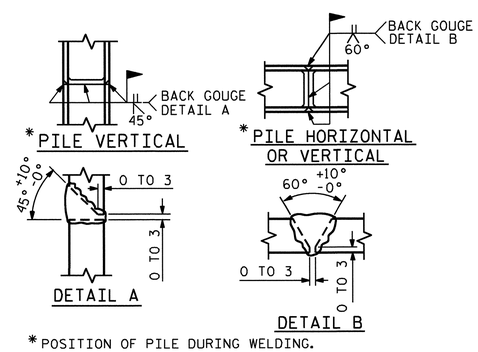


* POSITION OF PILE DURING WELDING.

PILE SPLICE DETAILS

PROJECT NO. R-2413C
GUILFORD-ROCKINGHAM COUNTY
STATION: 45+30.610 -LREV-

SHEET 3 OF 3

STATE OF NORTH CAROLINA
DEPARTMENT OF TRANSPORTATION
RALEIGH

SUBSTRUCTURE
END BENT #2
LEFT LANE

NORTH CAROLINA PROFESSIONAL SEAL 022516 ENGINEER
LINCY E. MURRAY
10/28/11

| REVISIONS | | | | | | | SHEET NO. |
|---|---|---|---|---|---|---|---|
| NO. | BY: | DATE: | NO. | BY: | DATE: | | S-173 |
| 1 | | | 3 | | | | TOTAL SHEETS |
| 2 | | | 4 | | | | 238 |

DRAWN BY : T.L. AVERETTE DATE : 10-04-10
CHECKED BY : PEGGY PARISI DATE : 4-05-11

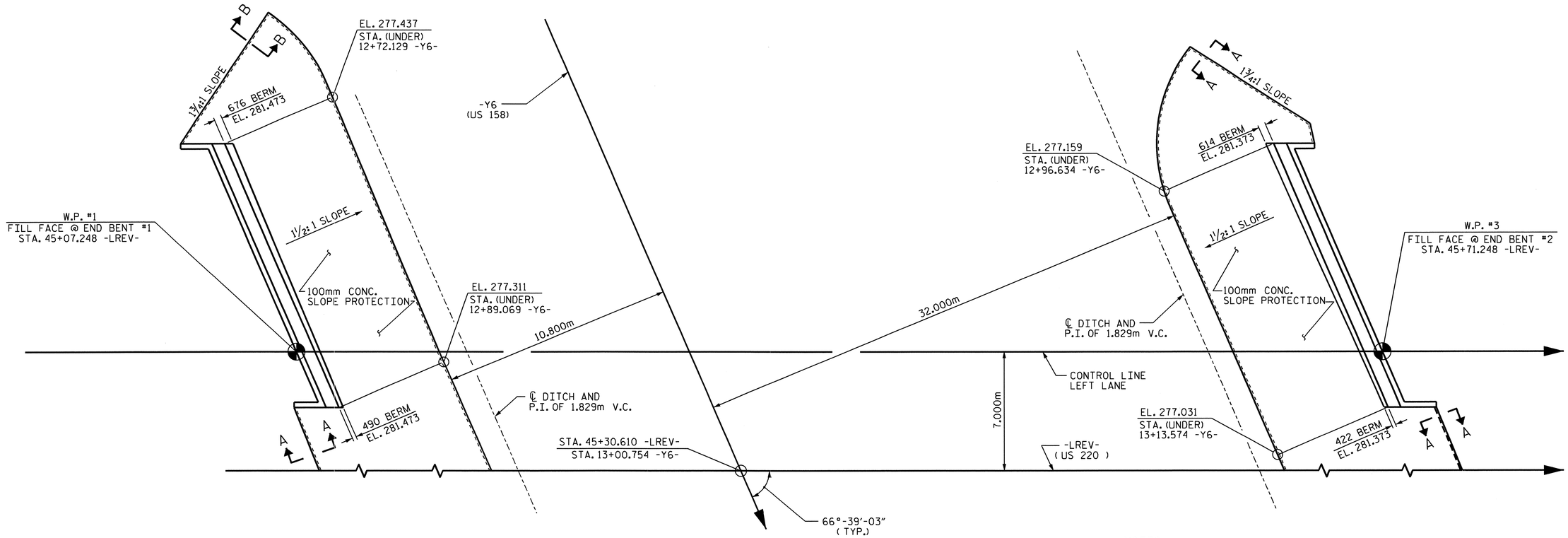


## PLAN

| BRIDGE @ STA. 45+30.610 -LREV- (LEFT LANE) | 100mm SLOPE PROTECTION | * WELDED WIRE FABRIC 1520mm WIDE |
|---|---|---|
| | SQUARE METERS | APPROX. METERS |
| END BENT #1 | 271.7 | 198.1 |
| END BENT #2 | 271.9 | 198.2 |

* QUANTITY SHOWN IS BASED ON 1520mm POURS.

## NOTES

SLOPE PROTECTION SHALL BE PLACED UNDER THE ENDS OF THE BRIDGE AS SHOWN IN THE DETAILS. STRAIGHT EDGING WILL NOT BE REQUIRED UNLESS, IN THE OPINION OF THE ENGINEER, VISUAL INSPECTION INDICATES A NEED FOR IT. MEASUREMENT AND PAYMENT SHALL BE AS PRESCRIBED IN SECTION 462 OF THE STANDARD SPECIFICATIONS.

SLOPE PROTECTION SHALL CONSIST OF 100mm POURED-IN-PLACE CONCRETE PAVING AS SHOWN IN THE DETAILS ON THIS SHEET. CONCRETE SHALL BE CLASS "B". THE CONCRETE SURFACE SHALL BE FLOATED WITH A WOODEN FLOAT AND FINISHED. WELDED WIRE FABRIC REINFORCING SHALL BE 152 X 152 - W9.1 X W9.1, 1520mm WIDE. SLOPE PROTECTION SHALL BE POURED IN 1520mm STRIPS AS SHOWN IN THE "POURING DETAIL" WITH 600mm LONG #13 BARS PLACED ALONG THE SLOPE BETWEEN STRIPS AT 450mm MAXIMUM SPACING. SLOPE PROTECTION MAY BE POURED IN ALTERNATE 1220mm AND 1520mm STRIPS AS SHOWN IN THE "OPTIONAL POURING DETAIL" WITH ADJACENT RUNS OF WELDED WIRE FABRIC LAPPING AT LEAST 152mm. THE COST OF THE WELDED WIRE FABRIC AND #13 BARS, IF USED, SHALL BE INCLUDED IN THE CONTRACT UNIT PRICE BID PER SQUARE METER FOR SLOPE PROTECTION.

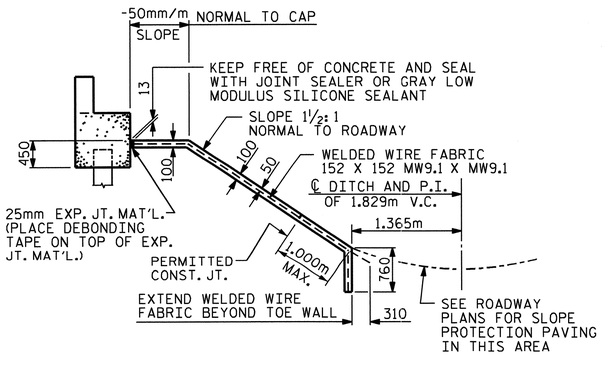


SECTION ALONG ℄ ROADWAY WHEN FILL CATCHES IN DITCH

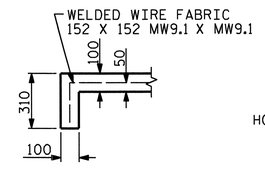


SECTION A-A

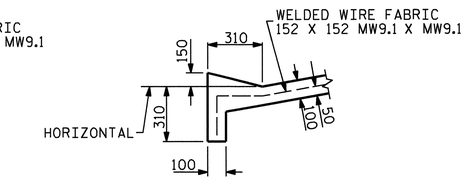


SECTION B-B

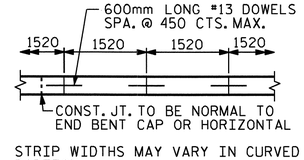


STRIP WIDTHS MAY VARY IN CURVED PORTION.

POURING DETAIL

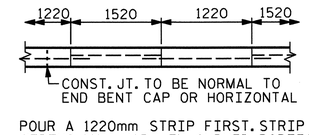


POUR A 1220mm STRIP FIRST. STRIP WIDTHS MAY VARY IN CURVED PORTION.

OPTIONAL POURING DETAIL

PROJECT NO. R-2413C

GUILFORD-ROCKINGHAM COUNTY

STATION: 45+30.610 -LREV-

STATE OF NORTH CAROLINA
DEPARTMENT OF TRANSPORTATION
RALEIGH

# STANDARD SLOPE PROTECTION DETAILS LEFT LANE

NORTH CAROLINA PROFESSIONAL SEAL 022516 ENGINEER EMILY E. MURRAY
10/28/11

| REVISIONS | | | | | | | SHEET NO. |
|---|---|---|---|---|---|---|---|
| NO. | BY: | DATE: | NO. | BY: | DATE: | | S-174 |
| 1 | | | 3 | | | | TOTAL SHEETS |
| 2 | | | 4 | | | | 238 |

STR. #5

STD. NO. SP1SM

| | | | |
|---|---|---|---|
| ASSEMBLED BY : T.L. AVERETTE | | DATE : 01-25-11 | |
| CHECKED BY : M.L. RORIE | | DATE : 07-29-11 | |
| DRAWN BY : ELR 5/92 | REV. 7/10/01 | LES/RDR | |
| CHECKED BY : GRP 6/92 | REV. 5/7/03 | RWW/JTE | |
| | REV. 5/1/06 | TLA/GM | |

13-SEP-2011 11:58
Z:\TIPProjects-R\R2413c\Structures\Final Plans\Str.#5\R2413C_sd_SP_05.dgn
emurray

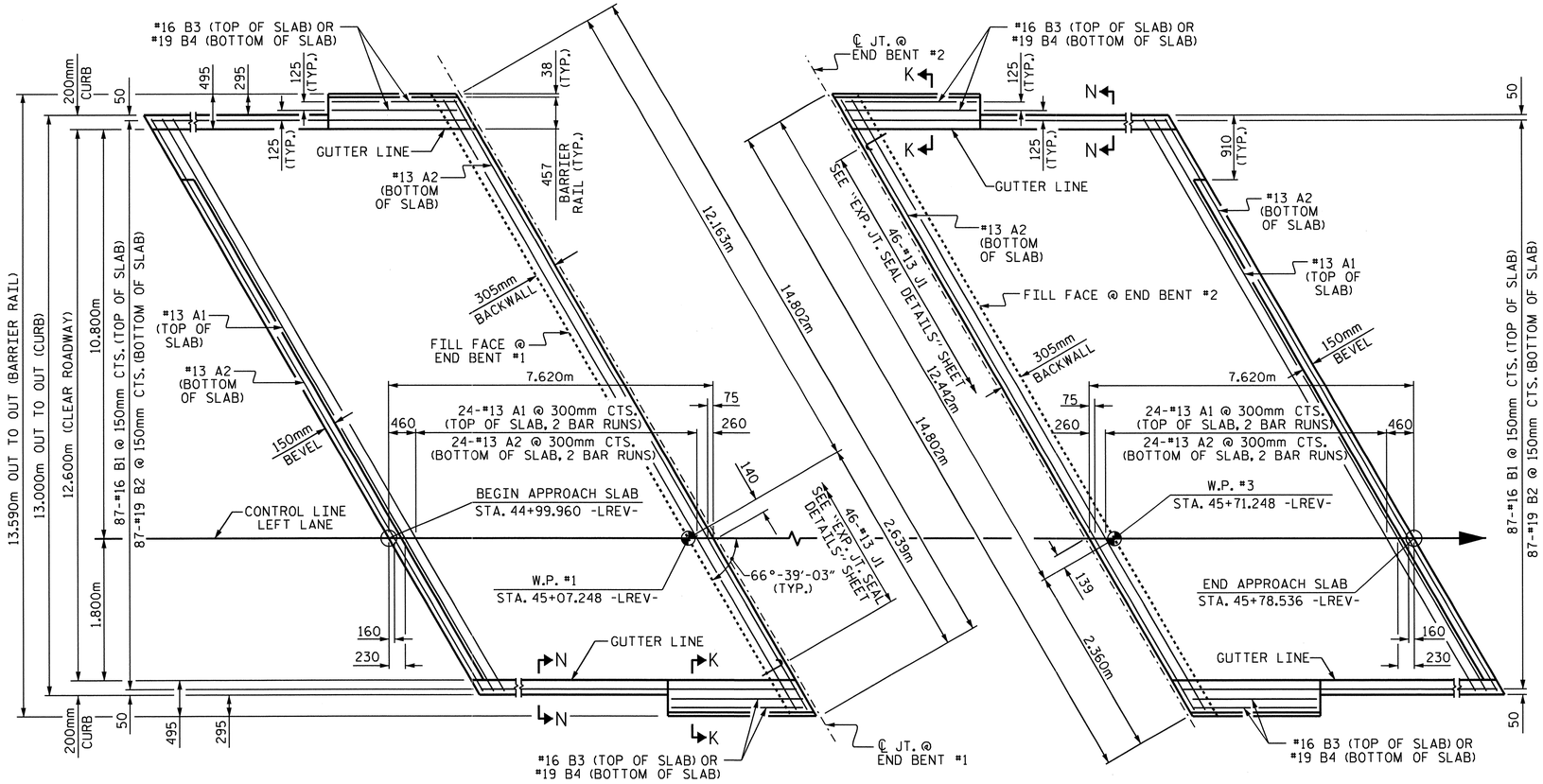


PLAN @ END BENT #1

PLAN @ END BENT #2

DIMENSIONS SHOWN ARE TYPICAL FOR BOTH APPROACH SLABS.
FOR BARRIER RAIL ON THE APPROACH SLAB DETAILS, REINFORCING STEEL AND BILL OF MATERIAL, SEE SHEET 2 OF 2.

## NOTES

THE CONCRETE BARRIER RAIL ON THE APPROACH SLAB IS INCLUDED IN THE CONCRETE BARRIER RAIL QUANTITY FOR THE SUPERSTRUCTURE.

APPROACH SLAB SHALL NOT BE CONSTRUCTED PRIOR TO COMPLETION OF THE BRIDGE DECK.

FOR REINFORCED BRIDGE APPROACH FILL INCLUDING FABRIC, IMPERMEABLE GEOMEMBRANE, 102mm Ø DRAINAGE PIPE, #78M STONE, AND SELECT MATERIAL, SEE ROADWAY PLANS.

AREA BETWEEN THE WINGWALL AND APPROACH SLAB SHALL BE GRADED TO DRAIN THE WATER AWAY FROM THE FILL FACE OF THE BRIDGE AND SHALL BE PAVED. SEE ROADWAY PLANS.

THE 150mm COMP. A.B.C. SHALL BE FLUSH WITH THE ROADWAY END OF THE APPROACH SLAB AND SHALL EXTEND 300mm OUTSIDE OF EACH EDGE OF THE APPROACH SLAB.

THE CONTRACTOR MAY USE 100mm TYPE B-25.0B ASPHALT CONCRETE BASE COURSE IN LIEU OF 150mm COMP. A.B.C. IF THIS OPTION IS USED, THE BASE COURSE SHALL BE FLUSH WITH THE ROADWAY END OF THE APPROACH SLAB, AND THE WIDTH SHALL BE THE SAME AS THAT OF THE APPROACH SLAB.

THE CONTRACTOR MAY USE 125mm CLASS "A" CONCRETE BASE IN LIEU OF 150mm COMP. A.B.C. IF THIS OPTION IS USED, THE CONCRETE BASE SHALL BE FLUSH WITH THE ROADWAY END OF THE APPROACH SLAB, AND THE WIDTH SHALL BE THE SAME AS THAT OF THE APPROACH SLAB. THE CONCRETE SHALL BE FINISHED TO A SMOOTH SURFACE AND A LAYER OF 13.6 kg ROOFING FELT SHALL BE PLACED BETWEEN THE CONCRETE BASE AND THE APPROACH SLAB TO PREVENT BOND. THE APPROACH SLAB SHALL NOT BE CAST UNTIL THE CONCRETE BASE HAS REACHED AN AGE OF THREE CURING DAYS.

FOR EXPANSION JOINT SEALS, SEE SPECIAL PROVISIONS.

THE BARRIER RAIL ON EACH APPROACH SLAB SHALL NOT BE CAST UNTIL ALL APPROACH SLAB CONCRETE HAS BEEN CAST AND HAS REACHED A MINIMUM COMPRESSIVE STRENGTH OF 20.7 MPa.

ALL REINFORCING STEEL IN BARRIER RAILS SHALL BE EPOXY COATED.

## SPLICE CHART

| BAR | SPLICE |
|---|---|
| #13 A1 | 610 |
| #13 A2 | 540 |

## BILL OF MATERIAL

### APPROACH SLAB @ EB #1

| BAR | NO. | SIZE | TYPE | LENGTH | WEIGHT |
|---|---|---|---|---|---|
| * A1 | 50 | #13 | STR | 7660 | 381 |
| A2 | 52 | #13 | STR | 7620 | 394 |
| * B1 | 87 | #16 | STR | 7240 | 978 |
| B2 | 87 | #19 | STR | 7500 | 1458 |
| * B3 | 4 | #16 | STR | 2920 | 18 |
| B4 | 4 | #19 | STR | 2920 | 26 |
| * J1 | 46 | #13 | 3 | 440 | 20 |
| REINFORCING STEEL | | | | kg. | 1878 |
| ● * EPOXY COATED REINFORCING STEEL | | | | kg. | 1397 |
| ● CLASS AA CONCRETE | | | | m3 | 31.3 |

### APPROACH SLAB @ EB #2

| BAR | NO. | SIZE | TYPE | LENGTH | WEIGHT |
|---|---|---|---|---|---|
| * A1 | 50 | #13 | STR | 7660 | 381 |
| A2 | 52 | #13 | STR | 7620 | 394 |
| * B1 | 87 | #16 | STR | 7240 | 978 |
| B2 | 87 | #19 | STR | 7500 | 1458 |
| * B3 | 4 | #16 | STR | 2920 | 18 |
| B4 | 4 | #19 | STR | 2920 | 26 |
| * J1 | 46 | #13 | 3 | 440 | 20 |
| REINFORCING STEEL | | | | kg. | 1878 |
| ● * EPOXY COATED REINFORCING STEEL | | | | kg. | 1397 |
| ● CLASS AA CONCRETE | | | | m3 | 31.3 |

### BAR TYPE

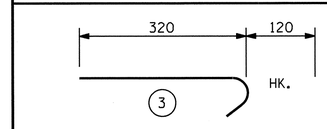


ALL BAR DIMENSIONS ARE OUT TO OUT

● QUANTITIES FOR BARRIER RAIL ON APPROACH SLAB ARE NOT INCLUDED. SEE SHEET 2 OF 2.

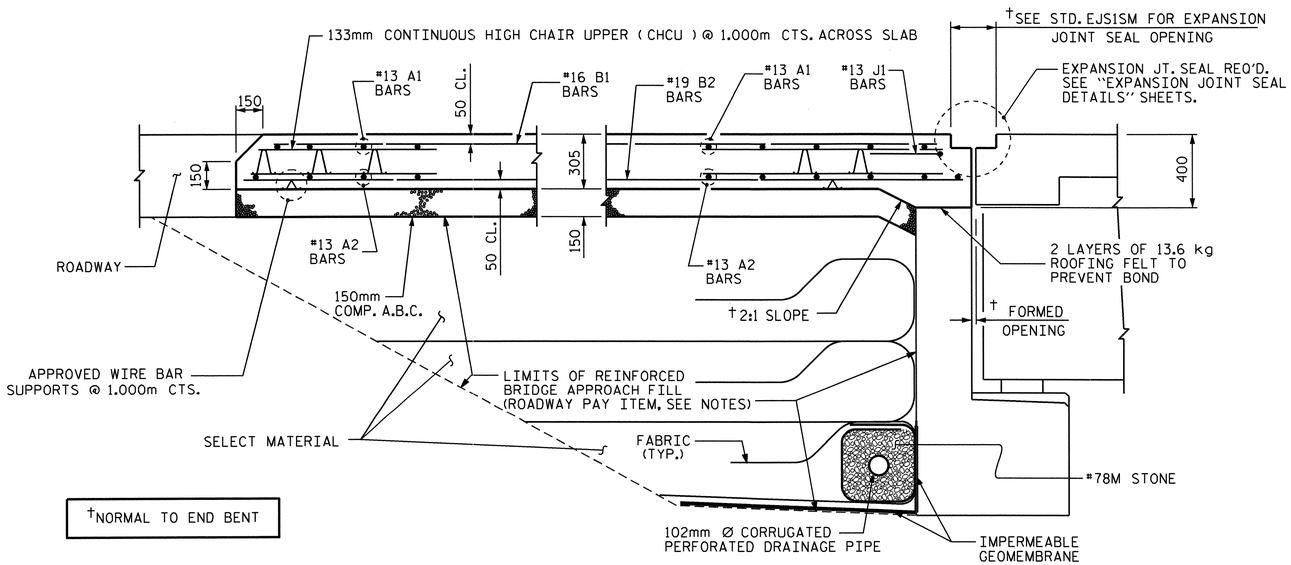


†NORMAL TO END BENT

SECTION THRU SLAB

BARRIER RAIL AND CURB NOT SHOWN

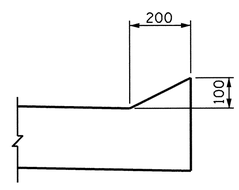


SECTION N-N

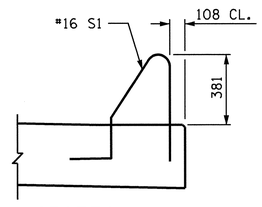


SECTION K-K

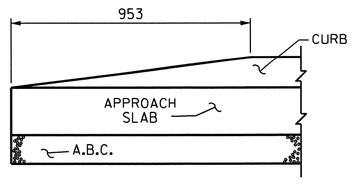


END OF CURB WITHOUT SHOULDER BERM GUTTER

CURB DETAILS

PROJECT NO. R-2413C

GUILFORD-ROCKINGHAM COUNTY

STATION: 45+30.610 -LREV-

SHEET 1 OF 2

STATE OF NORTH CAROLINA
DEPARTMENT OF TRANSPORTATION
RALEIGH

STANDARD

BRIDGE APPROACH SLAB FOR FLEXIBLE PAVEMENT

LEFT LANE

NORTH CAROLINA PROFESSIONAL SEAL 022516 ENGINEER EMILY E. MURRAY
10/28/11

| REVISIONS | | | | | | SHEET NO. |
|---|---|---|---|---|---|---|
| NO. | BY: | DATE: | NO. | BY: | DATE: | S-175 |
| 1 | | | 3 | | | TOTAL SHEETS |
| 2 | | | 4 | | | 238 |

STR #5 STD. NO. BAS4SM

| | | |
|---|---|---|
| ASSEMBLED BY : T.L. AVERETTE | DATE : 11-16-10 | |
| CHECKED BY : PEGGY PARISI | DATE : 11-18-10 | |
| DRAWN BY : FCJ 6/87 | REV. 7/10/01 | RWW/LES |
| CHECKED BY : EGA 6/87 | REV. 5/7/03R | RWW/JTE |
| | REV. 5/1/06R | KMM/GM |

05-SEP-2011 13:20
Y:\Structures\Final Plans\Str.#5\R2413C_sd_AS_05.dgn
mgudlaugsson

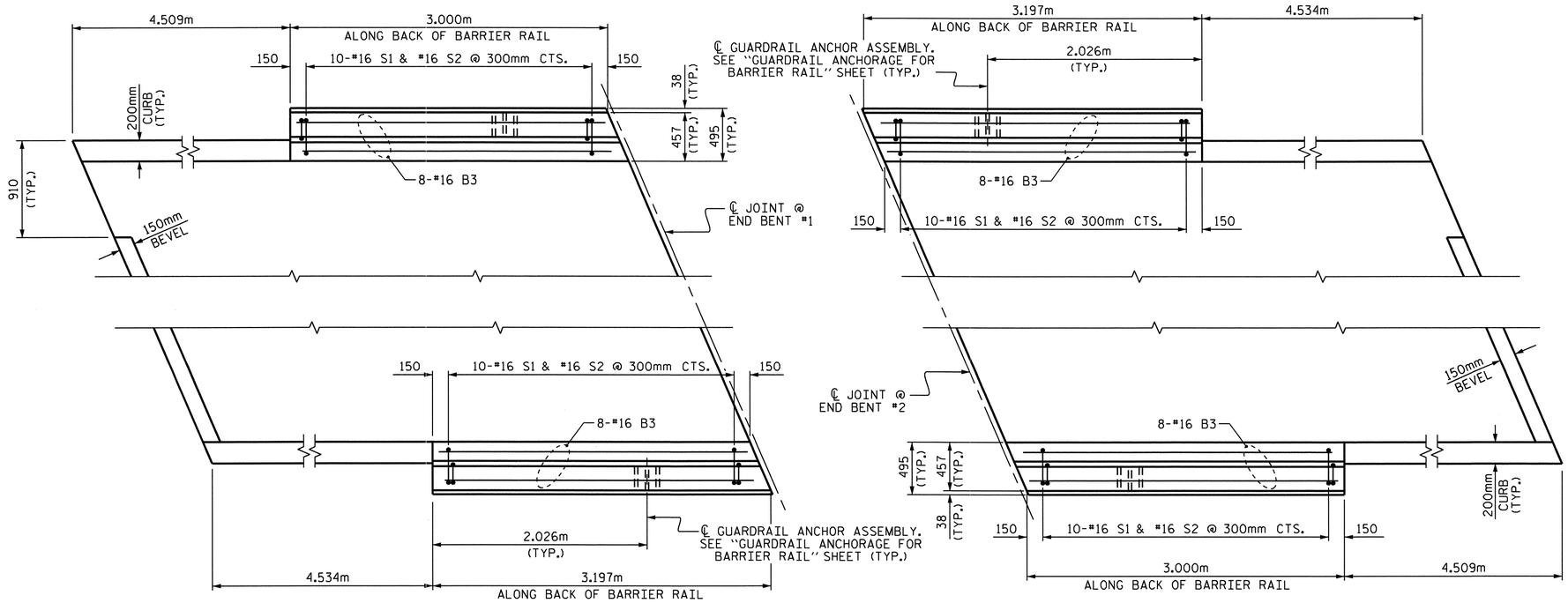


## PLAN OF BARRIER RAIL ON APPROACH SLABS

## BAR TYPES

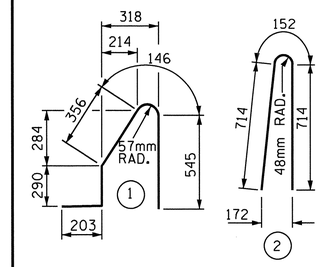


ALL BAR DIMENSIONS ARE OUT TO OUT

## BILL OF MATERIAL

FOR CONCRETE BARRIER RAIL ON BOTH APPROACH SLABS ONLY

| BAR | NO. | SIZE | TYPE | LENGTH | WEIGHT |
|---|---|---|---|---|---|
| * B3 | 32 | #16 | STR | 2920 | 145 |
| | | | | | |
| * S1 | 40 | #16 | 1 | 1540 | 96 |
| * S2 | 40 | #16 | 2 | 1580 | 98 |
| | | | | | |
| * EPOXY COATED REINFORCING STEEL | | | | kg. | 339 |
| CLASS AA CONCRETE | | | | m3 | 3.1 |
| CONCRETE BARRIER RAIL | | | | METERS | 12.394 |

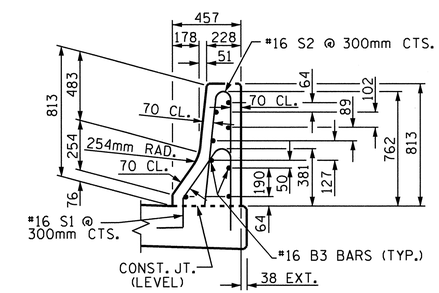


## SECTION THRU RAIL

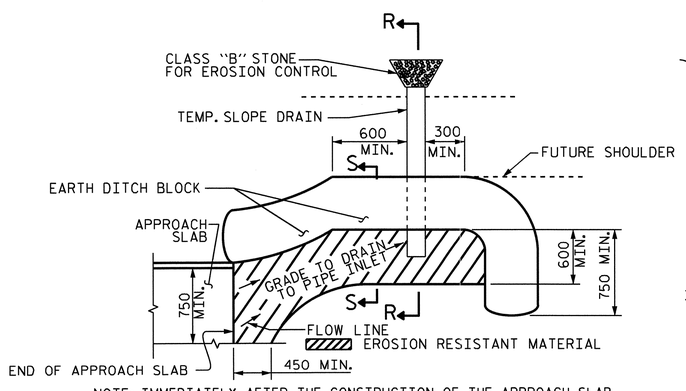


NOTE: IMMEDIATELY AFTER THE CONSTRUCTION OF THE APPROACH SLAB, THE CONTRACTOR SHALL PROVIDE TEMPORARY BERM AND SLOPE DRAIN. CONTRACTOR SHALL GRADE TO PIPE INLET AND PROVIDE EROSION RESISTANT MATERIAL AS SHOWN. THE EROSION RESISTANT MATERIAL SHALL BE EITHER 1) ASPHALT PLANT MIX, TYPE I OR TYPE 2, MIN. 50mm DEPTH, 2) EROSION CONTROL MAT, OR 3) CONCRETE, AS DIRECTED BY THE ENGINEER. THE SLOPE DRAIN SHALL CONSIST OF A NON-PERFORATED TEMPORARY DRAINAGE PIPE, 305mm IN DIAMETER.

PLAN VIEW

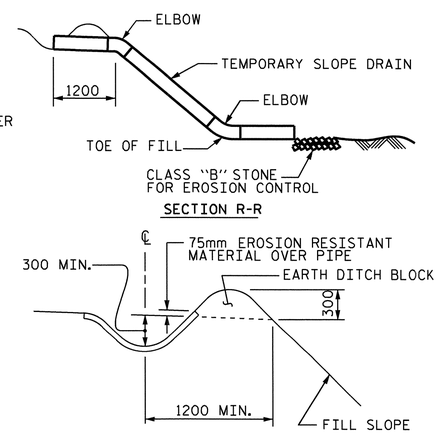


SECTION S-S

## TEMPORARY BERM AND SLOPE DRAIN DETAILS

(TO BE USED WHEN SHOULDER BERM GUTTER IS REQUIRED)

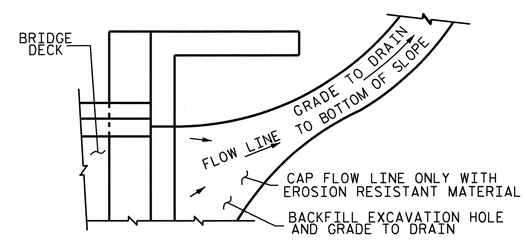


NOTE: IF THE APPROACH SLAB IS NOT CONSTRUCTED IMMEDIATELY AFTER THE BACKFILLING OF THE END BENT EXCAVATION, GRADE TO DRAIN TO THE BOTTOM OF THE SLOPE AND PROVIDE EROSION RESISTANT MATERIAL, SUCH AS FIBERGLASS ROVING OR AS DIRECTED BY THE ENGINEER TO PREVENT SOIL EROSION AND TO PROTECT THE AREA ADJACENT TO THE STRUCTURE. THE CONTRACTOR WILL BE REQUIRED TO REMOVE THESE MATERIALS PRIOR TO CONSTRUCTION OF THE APPROACH SLAB.

## TEMPORARY DRAINAGE DETAIL

PROJECT NO. R-2413C

GUILFORD-ROCKINGHAM COUNTY

STATION: 45+30.610 -LREV-

SHEET 2 OF 2

STATE OF NORTH CAROLINA
DEPARTMENT OF TRANSPORTATION
RALEIGH

STANDARD
BRIDGE APPROACH
SLAB DETAILS

LEFT LANE

NORTH CAROLINA PROFESSIONAL SEAL 022516 ENGINEER EMILY E. MURRAY
12/28/11

| REVISIONS | | | | | | | | SHEET NO. |
|---|---|---|---|---|---|---|---|---|
| NO. | BY: | DATE: | NO. | BY: | DATE: | | | S-176 |
| 1 | | | 3 | | | | | TOTAL SHEETS |
| 2 | | | 4 | | | | | 238 |

ASSEMBLED BY : T.L. AVERETTE DATE : 11-16-10
CHECKED BY : PEGGY PARISI DATE : 11-18-10

DRAWN BY : FCJ 11/88
CHECKED BY : ARB 11/88

REV. 10/17/00 RWW/LES
REV. 5/1/03 RWW/JTE
REV. 5/1/06RR MAA/KMM

05-SEP-2011 13:20
Y:\Structures\Final Plans\Str.#5\R2413C_sd_AS_05.dgn
mgudlaugsson

STR #5

STD. NO. BAS10SM

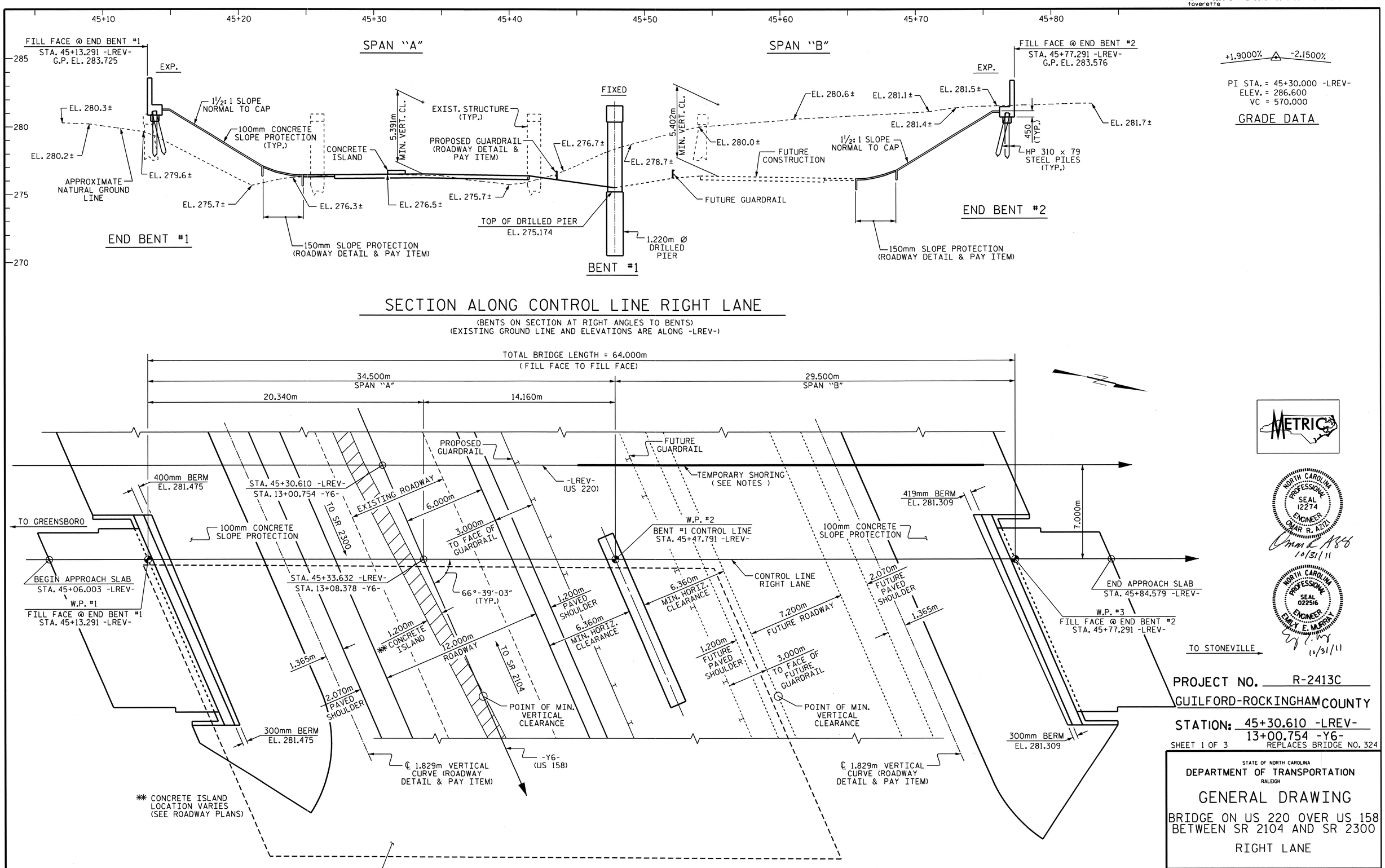


METRIC

NORTH CAROLINA PROFESSIONAL SEAL 12274 ENGINEER OMAR R. AZIZ
10/31/11

NORTH CAROLINA PROFESSIONAL SEAL 022516 ENGINEER EMILY E. MURRAY
10/31/11

PROJECT NO. R-2413C

GUILFORD-ROCKINGHAM COUNTY

STATION: 45+30.610 -LREV-
13+00.754 -Y6-

SHEET 1 OF 3

REPLACES BRIDGE NO. 324

STATE OF NORTH CAROLINA
DEPARTMENT OF TRANSPORTATION
RALEIGH

GENERAL DRAWING

BRIDGE ON US 220 OVER US 158
BETWEEN SR 2104 AND SR 2300

RIGHT LANE

| REVISIONS | | | | | | SHEET NO. |
|---|---|---|---|---|---|---|
| NO. | BY: | DATE: | NO. | BY: | DATE: | S-177 |
| 1 | | | 3 | | | TOTAL SHEETS |
| 2 | | | 4 | | | 238 |

DRAWN BY : T.L. AVERETTE DATE : 02-16-11
CHECKED BY : PEGGY PARISI DATE : 05-04-11

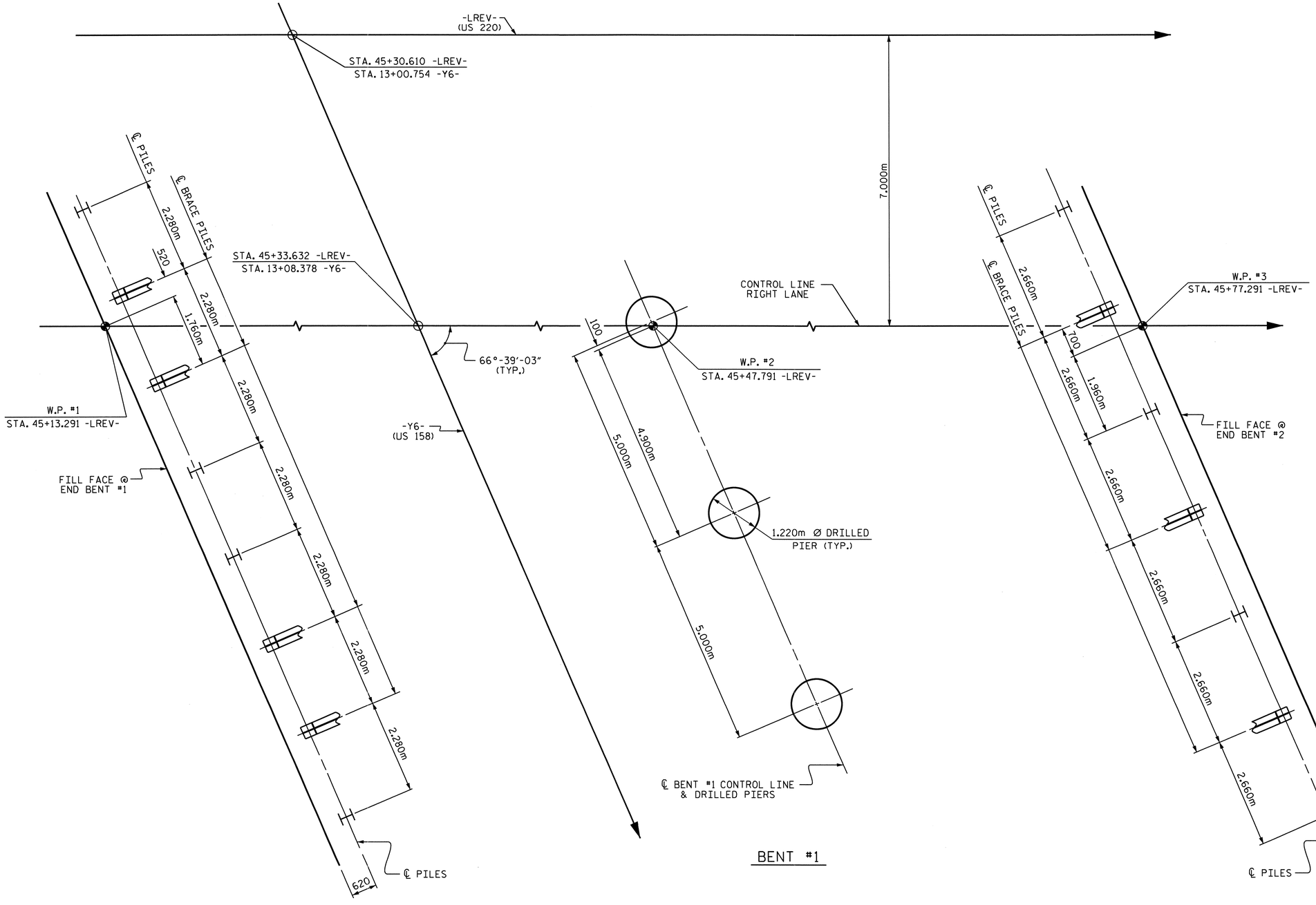


## FOUNDATION LAYOUT

ALL PILES ARE HP 310 x 79 STEEL PILES.
DIMENSIONS LOCATING PILES ARE SHOWN TO THE PILE CENTERLINE.
BRACE PILES AT END BENTS ARE TO BE BATTERED @ 250 :1000

## FOUNDATION NOTES

FOR PILES, SEE SPECIAL PROVISIONS.

DRIVE PILES AT END BENT NO. 1 AND END BENT NO. 2 TO A REQUIRED BEARING CAPACITY OF 1060 KN PER PILE. THE REQUIRED BEARING CAPACITY IS EQUAL TO THE ALLOWABLE BEARING CAPACITY WITH A MINIMUM FACTOR OF SAFETY OF TWO.

THE ALLOWABLE BEARING CAPACITY FOR PILES AT END BENT NO. 1 AND END BENT NO. 2 IS 530 KN PER PILE.

FOR DRILLED PIERS, SEE DRILLED PIERS SPECIAL PROVISION.

DRILLED PIERS AT BENT NO. 1 ARE DESIGNED FOR BOTH SKIN FRICTION AND END BEARING. CHECK FIELD CONDITIONS FOR THE REQUIRED END BEARING CAPACITY OF 2900 KPA.

DRILLED PIERS AT BENT NO. 1 ARE DESIGNED FOR AN APPLIED LOAD OF 2903 KN EACH AT THE TOP OF THE COLUMN.

INSTALL DRILLED PIERS AT BENT NO. 1 THAT EXTEND TO AN ELEVATION NO HIGHER THAN 270.5 m, SATISFY THE REQUIRED END BEARING CAPACITY AND HAVE A MINIMUM PENETRATION OF ONE METER INTO ROCK AS DEFINED BY THE DRILLED PIERS SPECIAL PROVISION.

DO NOT USE SLURRY CONSTRUCTION FOR DRILLED PIERS AT BENT NO. 1.

SID INSPECTIONS MAY BE REQUIRED FOR DRILLED PIERS. THE ENGINEER WILL DETERMINE THE NEED FOR SID INSPECTIONS. FOR SID, SEE DRILLED PIERS SPECIAL PROVISION.

CSL TUBES ARE REQUIRED AND CSL TESTING MAY BE REQUIRED FOR DRILLED PIERS. THE ENGINEER WILL DETERMINE THE NEED FOR CSL TESTING. FOR CROSSHOLE SONIC LOGGING, SEE DRILLED PIERS SPECIAL PROVISION.

PROJECT NO. R-2413C
GUILFORD-ROCKINGHAM COUNTY
STATION: 45+30.610 -LREV-
13+00.754 -Y6-
SHEET 2 OF 3

STATE OF NORTH CAROLINA
DEPARTMENT OF TRANSPORTATION
RALEIGH

GENERAL DRAWING

BRIDGE ON US 220 OVER US 158
BETWEEN SR 2104 AND SR 2300

RIGHT LANE

NORTH CAROLINA PROFESSIONAL SEAL 022516 ENGINEER EMILY E. McMURRAY
10/28/11

| REVISIONS | | | | | | SHEET NO. |
|---|---|---|---|---|---|---|
| NO. | BY: | DATE: | NO. | BY: | DATE: | S-178 |
| 1 | | | 3 | | | TOTAL SHEETS |
| 2 | | | 4 | | | 238 |

DRAWN BY : T.L. AVERETTE DATE : 02-16-11
CHECKED BY : PEGGY PARISI DATE : 05-04-11

B.M. #12 : DISK STAMPED G-170 1965 IN SW WINGWALL OF BRIDGE 11.6m LT. OF -L- STA. 46+67.500 EL. 280.720

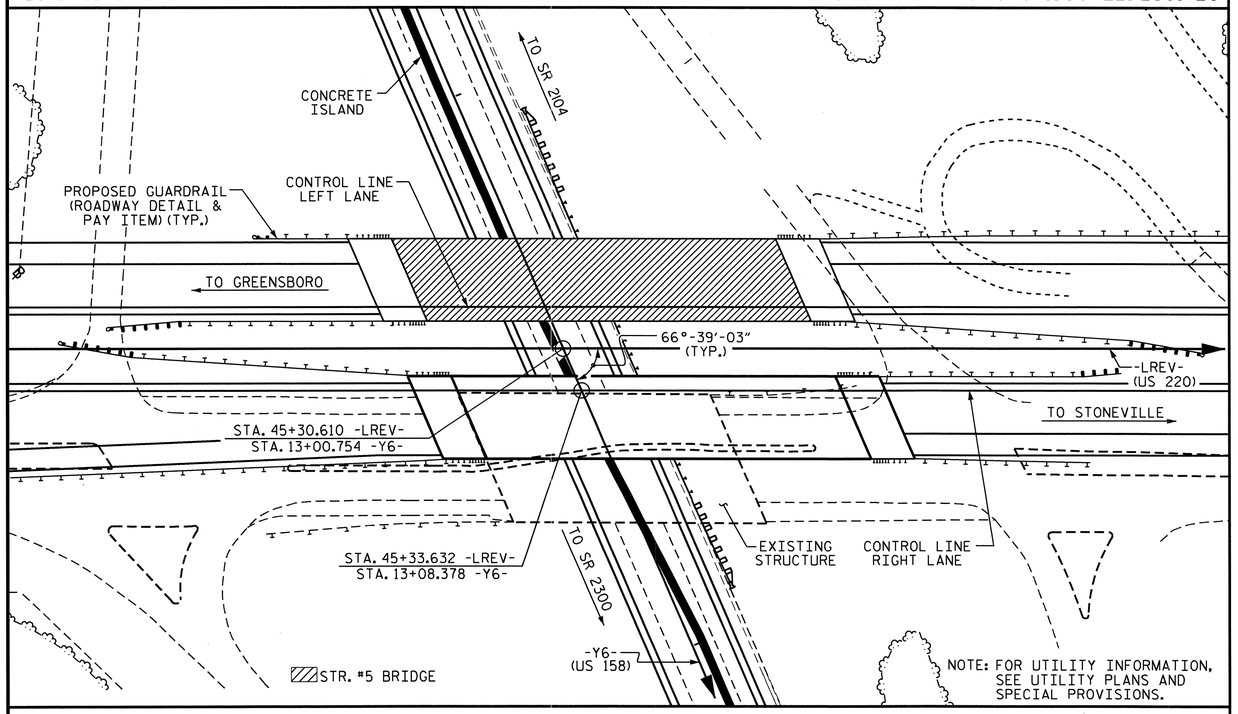


LOCATION SKETCH

## NOTES

ALL DIMENSIONS ARE IN MILLIMETERS UNLESS OTHERWISE NOTED.

ALL ELEVATIONS ARE IN METERS.

ASSUMED LIVE LOAD = MS 18 OR ALTERNATE LOADING, EXCEPT THAT THE GIRDERS HAVE BEEN DESIGNED FOR MS 22.5.

FOR OTHER DESIGN DATA AND GENERAL NOTES, SEE SHEET SNSM.

THIS BRIDGE HAS BEEN DESIGNED BY THE STRENGTH DESIGN METHOD AS SPECIFIED IN AASHTO STANDARD SPECIFICATIONS.

ALL STRUCTURAL STEEL SHALL BE AASHTO M270 GRADE 345W AND PAINTED IN ACCORDANCE WITH SYSTEM 4 OF ARTICLE 442-7 OF THE STANDARD SPECIFICATIONS UNLESS OTHERWISE NOTED ON THE PLANS.

THE LOCATION OF THE CONSTRUCTION JOINT IN THE DRILLED PIERS IS BASED ON AN APPROXIMATE GROUND LINE ELEVATION. IF THE CONSTRUCTION JOINT IS ABOVE THE ACTUAL GROUND ELEVATION, THE CONTRACTOR SHALL PLACE THE CONSTRUCTION JOINT 300mm BELOW THE GROUND LINE.

FOR MAINTENANCE AND PROTECTION OF TRAFFIC BENEATH PROPOSED STRUCTURE, SEE SPECIAL PROVISIONS.

WORK SHALL NOT BE STARTED ON THIS BRIDGE UNTIL ROADWAY SECTION HAS BEEN EXCAVATED.

NEEDLE BEAMS WILL NOT BE ALLOWED UNLESS OTHERWISE CALLED FOR ON THE PLANS OR APPROVED BY THE ENGINEER.

FOR SUBMITTAL OF WORKING DRAWINGS, SEE SPECIAL PROVISIONS.

FOR METRIC STRUCTURAL STEEL, SEE SPECIAL PROVISIONS.

FOR FALSEWORK AND FORMWORK, SEE SPECIAL PROVISIONS.

FOR MAINTENANCE OF TRAFFIC, SEE TRAFFIC CONTROL PLANS.

REMOVABLE FORMS MAY BE USED IN LIEU OF METAL STAY-IN-PLACE FORMS IN ACCORDANCE WITH ARTICLE 420-3 OF THE STANDARD SPECIFICATIONS.

THE CLASS AA CONCRETE IN THE BRIDGE DECK SHALL CONTAIN FLY ASH OR GROUND GRANULATED BLAST FURNACE SLAG AT THE SUBSTITUTION RATE SPECIFIED IN ARTICLE 1024-1 AND IN ACCORDANCE WITH ARTICLES 1024-5 AND 1024-6 OF THE STANDARD SPECIFICATIONS. NO PAYMENT WILL BE MADE FOR THIS SUBSTITUTION AS IT IS CONSIDERED INCIDENTAL TO THE COST OF THE REINFORCED CONCRETE DECK SLAB.

THIS BRIDGE HAS BEEN DESIGNED IN ACCORDANCE WITH THE REQUIREMENTS OF THE AASHTO STANDARD SPECIFICATIONS FOR SEISMIC DESIGN OF HIGHWAY BRIDGES FOR SEISMIC PERFORMANCE CATEGORY A.

FOR CRANE SAFETY, SEE SPECIAL PROVISIONS.

FOR GROUT FOR STRUCTURES, SEE SPECIAL PROVISIONS.

FOR CURING CONCRETE, SEE SPECIAL PROVISIONS.

FOR PLACING LOAD ON STRUCTURE MEMBERS, SEE SPECIAL PROVISIONS.

FOR EROSION CONTROL MEASURES SEE EROSION CONTROL PLANS.

FOR SHIPPING STEEL STRUCTURAL MEMBERS, SEE SPECIAL PROVISIONS.

FOR LIMITS OF TEMPORARY SHORING FOR MAINTENANCE OF TRAFFIC, SEE TRAFFIC CONTROL PLANS. FOR PAY ITEM FOR TEMPORARY SHORING FOR MAINTENANCE OF TRAFFIC, SEE ROADWAY PLANS.

AFTER SERVING AS A TEMPORARY STRUCTURE, THE EXISTING STRUCTURE CONSISTING OF 3 SPANS (1 @ 13.259m, 1 @ 16.002m, AND 1 @ 13.259m) WITH A CLEAR ROADWAY WIDTH OF 20.727m CONSISTING OF A CONCRETE DECK ON STEEL I-BEAMS SUPPORTED BY REINFORCED CONCRETE POSTS AND BEAMS AT INTERIOR BENTS AND REINFORCED CONCRETE SPILL THRUS AT THE END BENTS AND LOCATED AT THE SITE OF THE PROPOSED STRUCTURE, SHALL BE REMOVED. THE EXISTING BRIDGE IS PRESENTLY NOT POSTED FOR LOAD LIMIT. SHOULD THE STRUCTURAL INTEGRITY OF THE BRIDGE FURTHER DETERIORATE, A LOAD LIMITATION MAY BE POSTED AS FOUND NECESSARY DURING THE LIFE OF THE PROJECT.

THE SUBSTRUCTURE OF THE EXISTING BRIDGE INDICATED ON THE PLANS IS FROM THE BEST INFORMATION AVAILABLE. SINCE THIS INFORMATION IS SHOWN FOR THE CONVENIENCE OF THE CONTRACTOR, THE CONTRACTOR SHALL HAVE NO CLAIM WHATSOEVER AGAINST THE DEPARTMENT OF TRANSPORTATION FOR ANY DELAYS OR ADDITIONAL COST INCURRED BASED ON DIFFERENCES BETWEEN THE EXISTING BRIDGE SUBSTRUCTURE SHOWN ON THE PLANS AND THE ACTUAL CONDITIONS AT THE PROJECT SITE.

INASMUCH AS THE PAINT SYSTEM ON THE EXISTING STRUCTURAL STEEL CONTAINS LEAD, THE CONTRACTOR'S ATTENTION IS DIRECTED TO ARTICLE 107-1, OF THE STANDARD SPECIFICATIONS. ANY COSTS RESULTING FROM COMPLIANCE WITH APPLICABLE STATE OR FEDERAL REGULATIONS PERTAINING TO HANDLING OF MATERIALS CONTAINING LEAD BASED PAINT SHALL BE INCLUDED IN THE BID PRICE FOR "REMOVAL OF EXISTING STRUCTURE AT STATION 45+30.610 -LREV-."

## TOTAL BILL OF MATERIAL - METRIC

| RIGHT LANE BRIDGE | REMOVAL OF EXISTING STRUCTURE | 1220mm Ø DRILLED PIERS IN SOIL | 1220mm Ø DRILLED PIERS NOT IN SOIL | SID INSPECTION | CSL TESTING | REINFORCED CONCRETE DECK SLAB | GROOVING BRIDGE FLOORS | CLASS A CONCRETE | BRIDGE APPROACH SLABS | REINFORCING STEEL | SPIRAL COLUMN REINFORCING STEEL | STRUCTURAL STEEL | HP 310 X 79 STEEL PILES | | CONCRETE BARRIER RAIL | 100mm SLOPE PROTECTION | POT BEARINGS | ELASTOMERIC BEARINGS | EXPANSION JOINT SEALS |
|---|---|---|---|---|---|---|---|---|---|---|---|---|---|---|---|---|---|---|---|
| | LUMP SUM | METERS | METERS | EACH | EACH | SQ. METERS | SQ. METERS | CU. METERS | LUMP SUM | kg | kg | APPROX. kg | NO. | METERS | METERS | SQ. METERS | LUMP SUM | LUMP SUM | LUMP SUM |
| SUPERSTRUCTURE | LUMP SUM | | | | | 860.2 | 907.9 | | LUMP SUM | | | 127,800 | | | 138.984 | | LUMP SUM | LUMP SUM | LUMP SUM |
| END BENT #1 | | | | | | | | 26.9 | | 2,391 | | | 8 | 26.4 | | 260.4 | | | |
| BENT #1 | | 6.9 | 7.2 | | | | | 36.9 | | 5,268 | 1,206 | | | | | | | | |
| END BENT #2 | | | | | | | | 26.8 | | 2,382 | | | 7 | 28.0 | | 281.5 | | | |
| TOTAL | LUMP SUM | 6.9 | 7.2 | 1 | 1 | 860.2 | 907.9 | 90.6 | LUMP SUM | 10,041 | 1,206 | 127,800 | 15 | 54.4 | 138.984 | 541.9 | LUMP SUM | LUMP SUM | LUMP SUM |

## TOTAL BILL OF MATERIAL - ENGLISH

| | | | | | | | | | | | | | | | | | | | |
|---|---|---|---|---|---|---|---|---|---|---|---|---|---|---|---|---|---|---|---|
| | LUMP SUM | LIN. FT. | LIN. FT. | EACH | EACH | SQ. FT. | SQ. FT. | CU. YD. | LUMP SUM | LBS. | LBS. | APPROX. LBS. | NO. | LIN. FT. | LIN. FT. | SQ. YD. | LUMP SUM | LUMP SUM | LUMP SUM |
| TOTAL | LUMP SUM | 22.6 | 23.6 | 1 | 1 | 9,259 | 9,773 | 118.5 | LUMP SUM | 22,136 | 2,659 | 281,750 | 15 | 178 | 455.98 | 648 | LUMP SUM | LUMP SUM | LUMP SUM |

PROJECT NO. R-2413C
GUILFORD-ROCKINGHAM COUNTY
STATION: 45+30.610 -LREV-
13+00.754 -Y6-
SHEET 3 OF 3

NORTH CAROLINA PROFESSIONAL SEAL 022516 ENGINEER EMILY E. MURRAY
10/28/11

STATE OF NORTH CAROLINA
DEPARTMENT OF TRANSPORTATION
RALEIGH

GENERAL DRAWING
BRIDGE ON US 220 OVER US 158 BETWEEN SR 2104 AND SR 2300
RIGHT LANE

| REVISIONS | | | | | | SHEET NO. |
|---|---|---|---|---|---|---|
| NO. | BY: | DATE: | NO. | BY: | DATE: | S-179 |
| 1 | | | 3 | | | TOTAL SHEETS |
| 2 | | | 4 | | | 238 |

DRAWN BY : T.L. AVERETTE DATE : 02-16-11
CHECKED BY : PEGGY PARISI DATE : 05-04-11

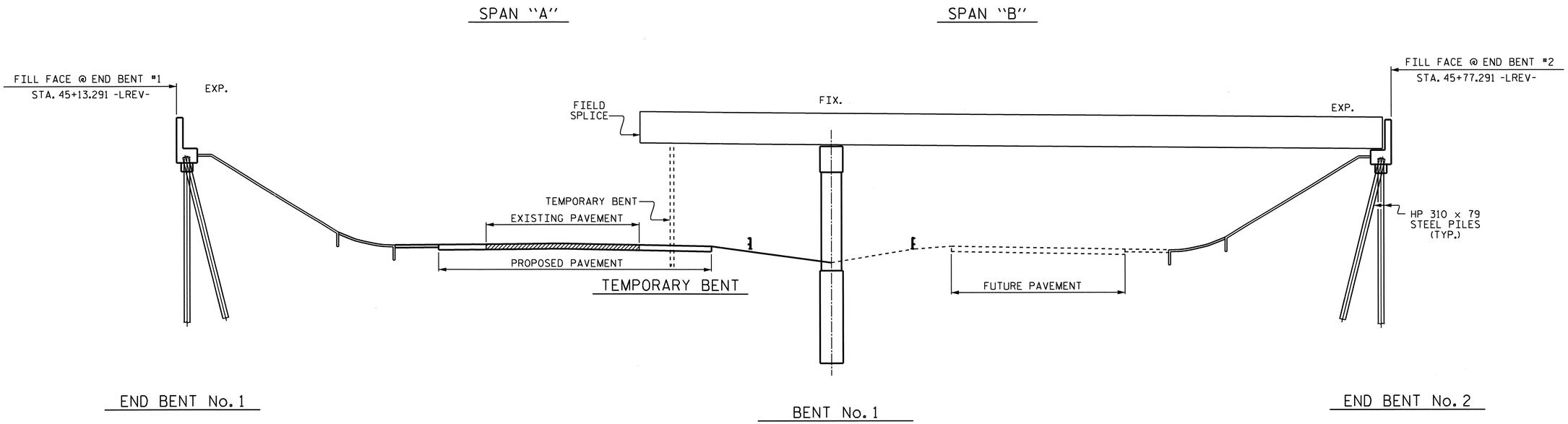


## STAGE I GIRDER ERECTION

( SECTIONS AT BENT & END BENTS ARE AT RIGHT ANGLES )

## ERECTION NOTES

ERECT A MINIMUM OF TWO GIRDERS WITH ALL DIAPHRAGMS/CROSSFRAMES BETWEEN THE GIRDERS IN PLACE AND THE BOLTS TIGHTENED PRIOR TO RELEASING THE GIRDERS.

ERECT EACH SUBSEQUENT GIRDER WITH DIAPHRAGMS/CROSSFRAMES CONNECTING TO THE ADJACENT PREVIOUSLY ERECTED GIRDER AND TIGHTEN ALL BOLTS BEFORE RELEASING THE GIRDER.

THE STRUCTURAL STEEL SHALL BE SUPPORTED DURING ERECTION IN ITS CAMBERED POSITION. A MINIMUM OF ONE TEMPORARY BENT SHALL BE USED IN SPAN "A".

TEMPORARY BENT SHALL SUPPORT ALL GIRDERS IN THE TYPICAL SECTION.

PLACEMENT OF TEMPORARY BENT SHALL BE COORDINATED WITH TRAFFIC PHASING REQUIREMENTS. SEE TRAFFIC CONTROL PLANS.

TEMPORARY BENT SHALL REMAIN IN PLACE UNTIL ALL DIAPHRAGMS/CROSSFRAMES ARE IN PLACE AND ALL HIGH STRENGTH BOLTS ARE TIGHTENED.

TEMPORARY BENT SHALL PROVIDE BEARING AT CONNECTOR PLATE LOCATIONS. WHEN CONNECTOR PLATES ARE USED AS TEMPORARY BEARING STIFFENERS, DIAPHRAGMS MUST BE ATTACHED.

THE CONTRACTOR'S ERECTION PLANS SHALL INCLUDE A METHOD OF TEMPORARY BENT REMOVAL THAT WILL UNIFORMLY TRANSFER THE STRUCTURAL WEIGHT TO THE DIAPHRAGMS/CROSSFRAMES AND THE GIRDERS WILL REMAIN IN THE CAMBERED POSITIONS.

PLANS FOR TEMPORARY BENT ERECTION AND REMOVAL SHALL BE SUBMITTED TO THE ENGINEER FOR REVIEW.

THE CONTRACTOR IS RESPONSIBLE FOR DESIGNING THE TEMPORARY BENT. THE DESIGNS SHALL BE COMPLETED BY A PROFESSIONAL ENGINEER REGISTERED IN THE STATE OF NORTH CAROLINA. THE CONTRACTOR SHALL SUBMIT SIGNED AND SEALED WORKING DRAWINGS AND CALCULATIONS FOR APPROVAL BY THE ENGINEER.

DURING THE GIRDER ERECTION PROCEDURE, THE CONTRACTOR IS RESPONSIBLE FOR PROVIDING TEMPORARY LATERAL BRACING AND OTHER MEANS OF SUPPORT, AS REQUIRED, TO ENSURE STABILITY OF THE GIRDERS, AVOID UPLIFT OF THE GIRDERS AT THE TEMPORARY BENTS AND TO ENSURE PLUMBNESS OF THE GIRDERS IN THE FINAL CONDITION.

NO SEPARATE MEASUREMENT OR PAYMENT WILL BE MADE FOR PROVIDING THE TEMPORARY BENTS. THE COST FOR ALL MATERIALS, EQUIPMENT, TOOLS, LABOR AND ANY INCIDENTALS NECESSARY TO PROVIDE THE TEMPORARY BENTS SHALL BE CONSIDERED INCIDENTAL TO THE LUMP SUM BID PRICE FOR STRUCTURAL STEEL.

THE CONTRACTOR MAY SUBMIT AN ALTERNATE ERECTION METHOD TO THE ENGINEER FOR REVIEW AND APPROVAL.

PROJECT NO. R-2413C
GUILFORD-ROCKINGHAM COUNTY
STATION: 45+30.610 -LREV-

NORTH CAROLINA PROFESSIONAL SEAL 022516 ENGINEER EMILY E. MURRAY
10/28/11

STATE OF NORTH CAROLINA
DEPARTMENT OF TRANSPORTATION
RALEIGH

GIRDER ERECTION DETAILS

| REVISIONS | | | | | | SHEET NO. |
|---|---|---|---|---|---|---|
| NO. | BY: | DATE: | NO. | BY: | DATE: | S-180 |
| 1 | | | 3 | | | TOTAL SHEETS |
| 2 | | | 4 | | | 238 |

DRAWN BY : PEGGY PARISI DATE : 6-1-11
CHECKED BY : T.L. AVERETTE DATE : 7-27-11

05-SEP-2011 14:15
Y:\Structures\Final Plans\Str.#6\R2413C_sd_GD_06.dgn
mgudlaugsson

STR. #6

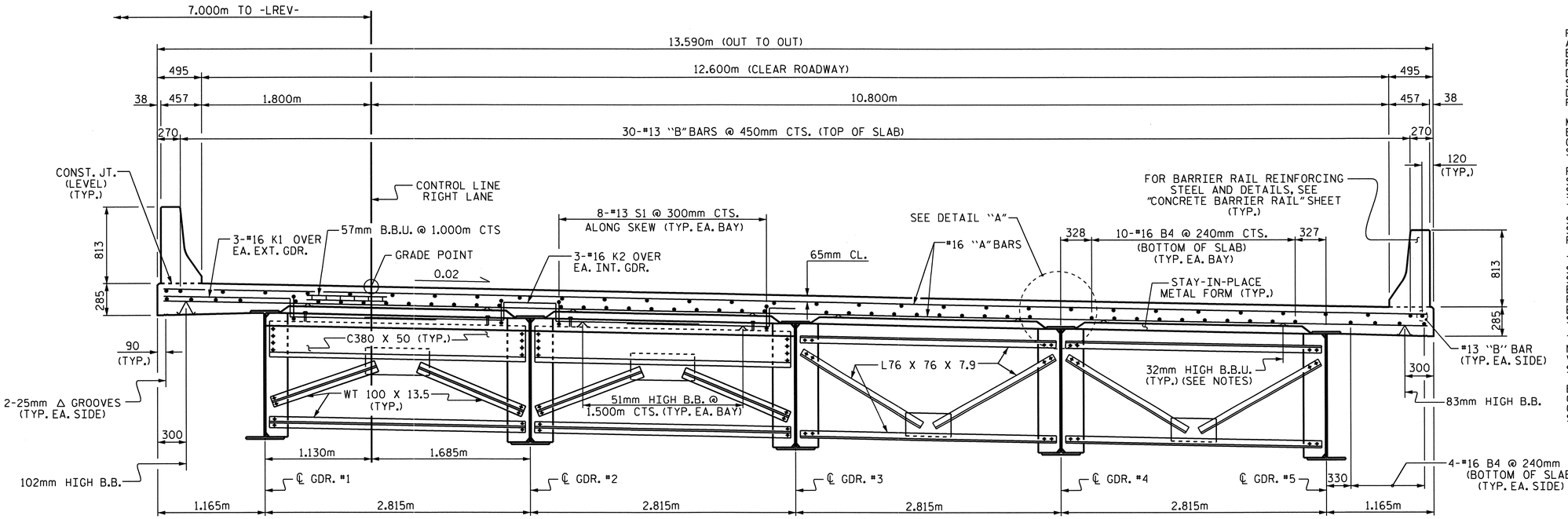


## HALF SECTION @ END BENT DIAPHRAGMS

SHOWING TYPE D1, SEE "FRAMING PLAN"

## HALF SECTION @ INTERMEDIATE DIAPHRAGMS

SHOWING TYPE D3, SEE "FRAMING PLAN"

## NOTES

PROVIDE 32mm HIGH BEAM BOLSTERS UPPER AT 1.2m CTS. ATOP THE METAL STAY-IN-PLACE FORMS TO SUPPORT THE BOTTOM MAT OF 'A' BARS. WHEN USING REMOVABLE FORMS, PROVIDE CONTINUOUS HIGH CHAIRS FOR METAL DECK (C.H.C.M.) @ 1.2m CTS. WITH A HEIGHT TO SUPPORT THE BOTTOM MAT OF 'A' BARS A CLEAR DISTANCE OF 65mm ABOVE THE TOP OF THE REMOVABLE FORM.

METAL STAY-IN-PLACE FORMS SHALL NOT BE WELDED TO BEAM OR GIRDER FLANGES IN THE ZONES REQUIRING CHARPY V-NOTCH TEST. SEE STRUCTURAL STEEL DETAIL SHEETS.

PREVIOUSLY CAST CONCRETE IN A CONTINUOUS UNIT SHALL HAVE ATTAINED A MINIMUM COMPRESSIVE STRENGTH OF 20.7 MPa BEFORE ADDITIONAL CONCRETE IS CAST IN THE UNIT.

STRUCTURAL STEEL ERECTION IN A CONTINUOUS UNIT SHALL BE COMPLETE BEFORE FALSEWORK OR FORMS ARE PLACED ON THE UNIT.

THE CONTRACTOR MAY, WHEN NECESSARY, PROPOSE A SCHEME FOR AVOIDING INTERFERENCE BETWEEN METAL STAY-IN-PLACE FORM SUPPORTS OR FORMS AND BEAM/GIRDER STIFFENERS OR CONNECTOR PLATES. THE PROPOSAL SHALL BE INDICATED, AS APPROPRIATE, ON EITHER THE STEEL WORKING DRAWINGS OR THE METAL STAY-IN-PLACE FORM WORKING DRAWINGS.

THE CONTRACTOR SHALL ADJUST THE GIRDER BUILDUPS AS NECESSARY TO INCORPORATE A MAXIMUM PERMISSIBLE VARIATION IN POT BEARING DEPTH OF 13mm, SEE SPECIAL PROVISION FOR POT BEARINGS.

BARRIER RAIL IN A CONTINUOUS UNIT SHALL NOT BE CAST UNTIL ALL SLAB CONCRETE IN THE UNIT HAS BEEN CAST AND HAS REACHED A MINIMUM COMPRESSIVE STRENGTH OF 20.7 MPa.

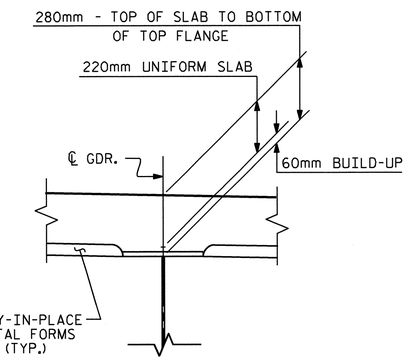


## DETAIL "A"

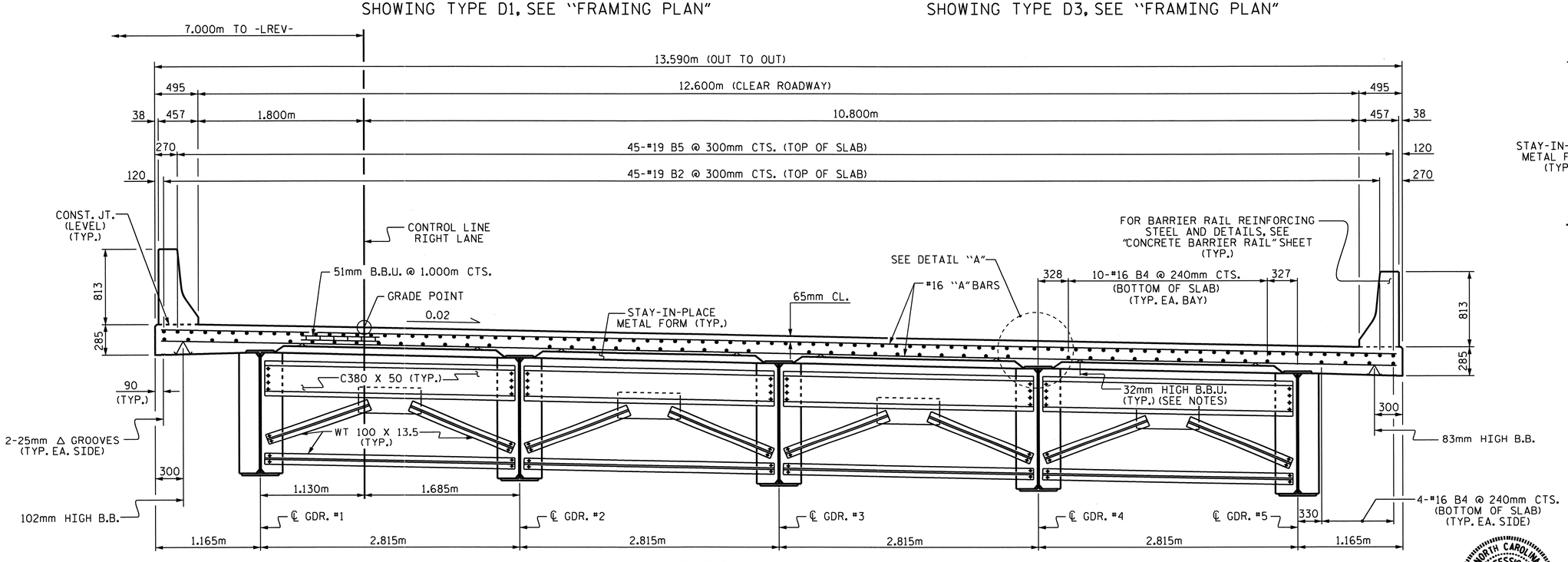


## TYPICAL SECTION @ BENT DIAPHRAGMS

SHOWING TYPE D2, SEE "FRAMING PLAN"

PROJECT NO. R-2413C

GUILFORD-ROCKINGHAM COUNTY

STATION: 45+30.610 -LREV-

SHEET 1 OF 2

STATE OF NORTH CAROLINA
DEPARTMENT OF TRANSPORTATION
RALEIGH

SUPERSTRUCTURE

TYPICAL SECTION AND DETAILS

RIGHT LANE

NORTH CAROLINA PROFESSIONAL SEAL 022516 ENGINEER L.M.Y. E. MURPHY 10/25/10

| REVISIONS | | | | | | | SHEET NO. |
|---|---|---|---|---|---|---|---|
| NO. | BY: | DATE: | NO. | BY: | DATE: | | S-181 |
| 1 | | | 3 | | | | TOTAL SHEETS |
| 2 | | | 4 | | | | 238 |

DRAWN BY : T.L. AVERETTE DATE : 09-29-10
CHECKED BY : PEGGY PARISI DATE : 10-28-10

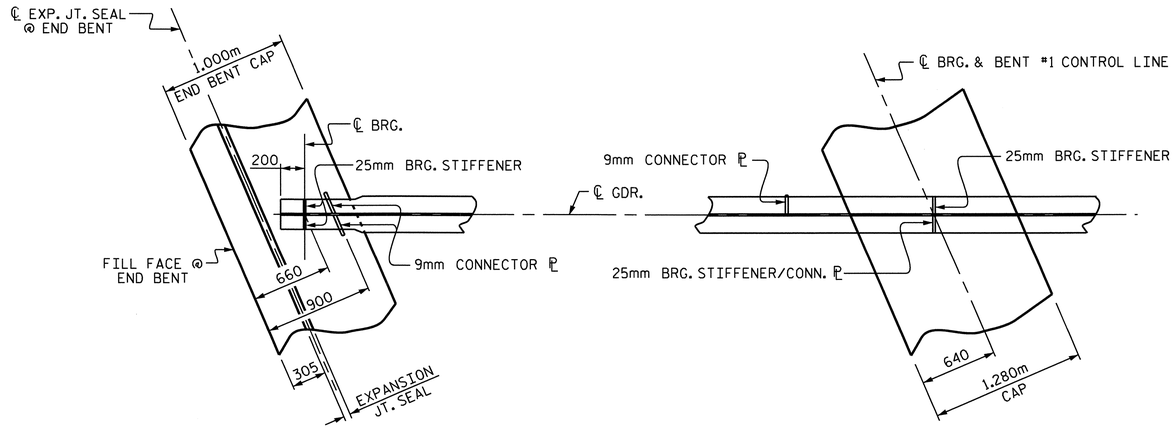


## PLAN OF GIRDER AT END BENT JOINT

( END BENT #1 SHOWN, END BENT #2 SIMILAR )

## PLAN OF GIRDER AT BENT #1

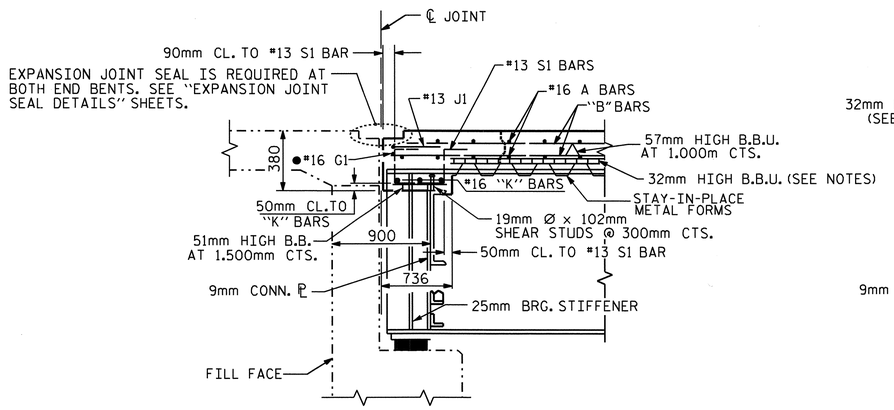


## SECTION THRU END BENT DIAPHRAGM

● #16 G1 BAR MAY BE SHIFTED SLIGHTLY, AS NECESSARY, TO CLEAR DIAPHRAGM AND REINFORCING STEEL.

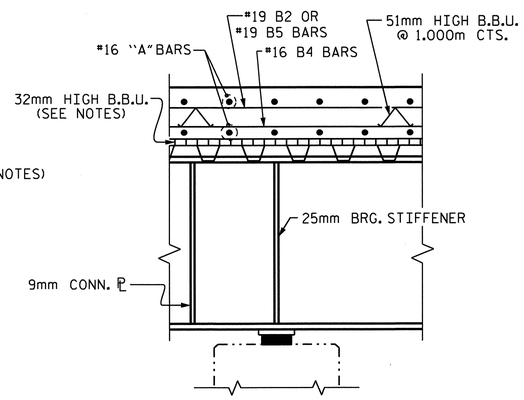


## SECTION AT BENT

(CROSSFRAME NOT SHOWN FOR CLARITY)

PROJECT NO. R-2413C

GUILFORD-ROCKINGHAM COUNTY

STATION: 45+30.610 -LREV-

SHEET 2 OF 2

STATE OF NORTH CAROLINA
DEPARTMENT OF TRANSPORTATION
RALEIGH

SUPERSTRUCTURE

# TYPICAL SECTION AND DETAILS

RIGHT LANE

NORTH CAROLINA PROFESSIONAL SEAL 022516 ENGINEER EMILY F. MURRAY
10/28/10

| REVISIONS | | | | | | SHEET NO. |
|---|---|---|---|---|---|---|
| NO. | BY: | DATE: | NO. | BY: | DATE: | S-182 |
| 1 | | | 3 | | | TOTAL SHEETS |
| 2 | | | 4 | | | 238 |

DRAWN BY : T.L. AVERETTE DATE : 09-29-10
CHECKED BY : PEGGY PARISI DATE : 10-28-10

STR. #6

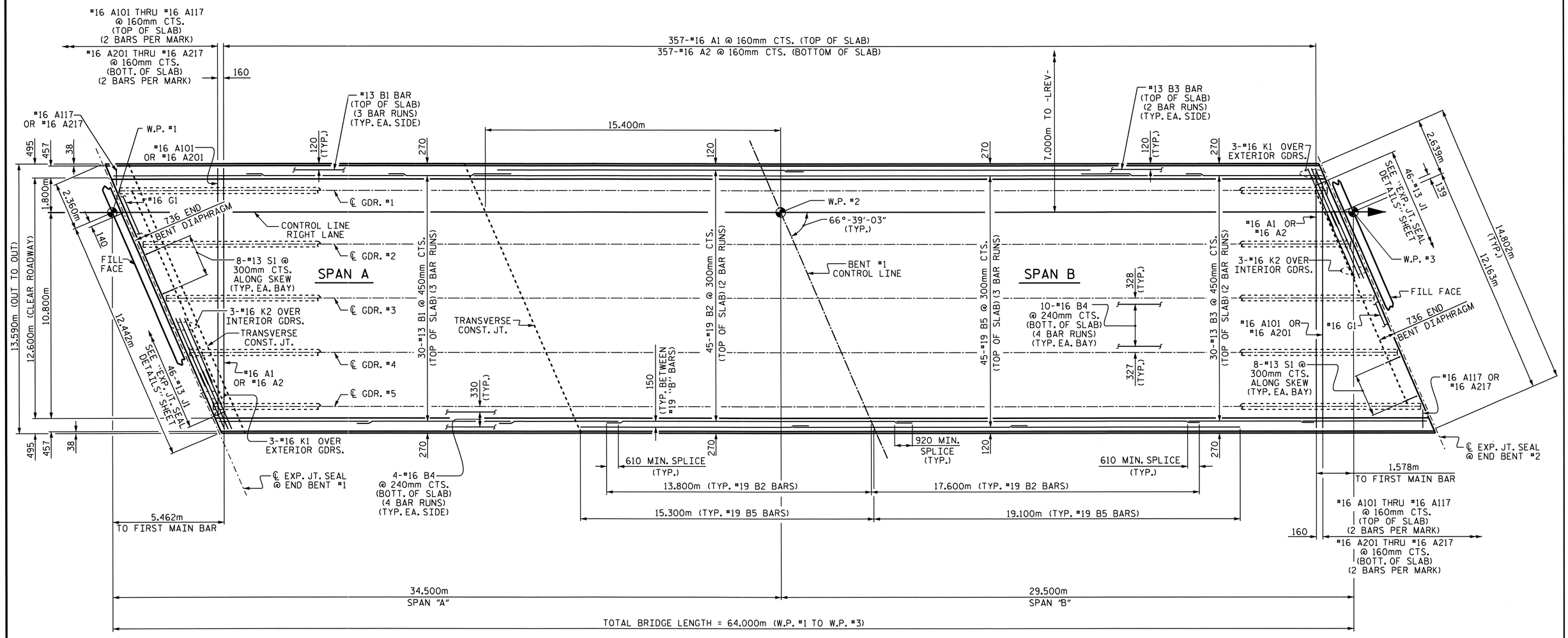


# PLAN OF SPANS

FOR REINFORCING STEEL IN CONCRETE BARRIER RAIL, SEE "CONCRETE BARRIER RAIL" SHEET.

PROJECT NO. R-2413C

GUILFORD-ROCKINGHAM COUNTY

STATION: 45+30.610 -LREV-

NORTH CAROLINA PROFESSIONAL SEAL 022516 ENGINEER EMILY E. KURPAN

10/11/28

STATE OF NORTH CAROLINA
DEPARTMENT OF TRANSPORTATION
RALEIGH

SUPERSTRUCTURE

PLAN OF SPANS
RIGHT LANE

| REVISIONS | | | | | | | | SHEET NO. |
|---|---|---|---|---|---|---|---|---|
| NO. | BY: | DATE: | NO. | BY: | DATE: | | | S-183 |
| 1 | | | 3 | | | | | TOTAL SHEETS |
| 2 | | | 4 | | | | | 238 |

DRAWN BY : T.L. AVERETTE DATE : 9-29-10
CHECKED BY : PEGGY PARISI DATE : 10-28-10

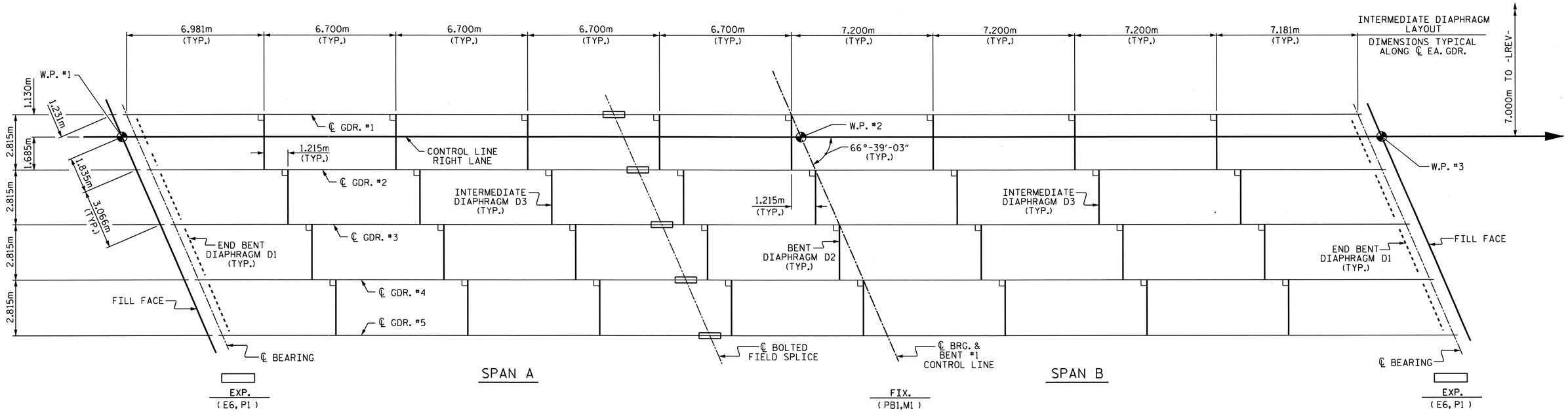


## FRAMING PLAN

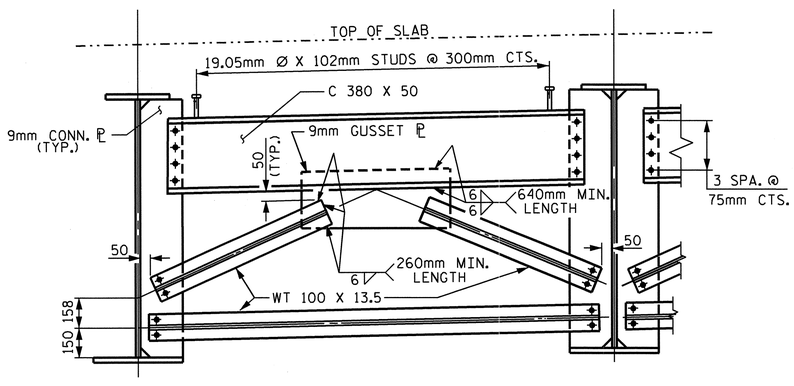


## END BENT DIAPHRAGM-D1

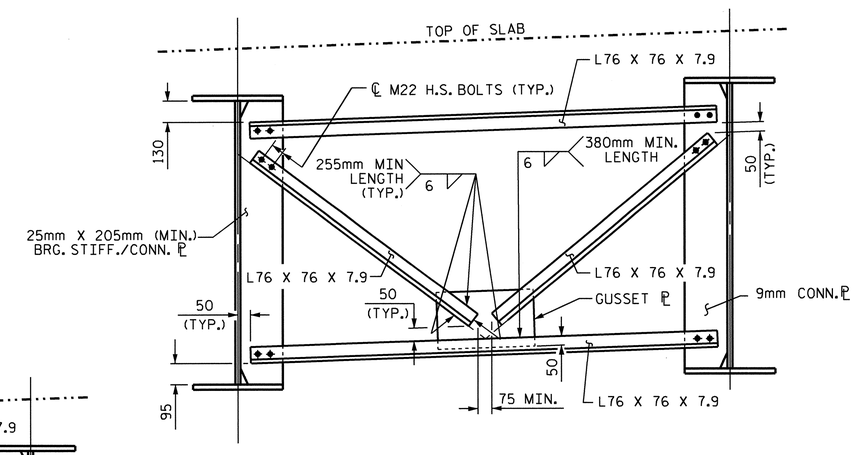


## BENT DIAPHRAGM-D2

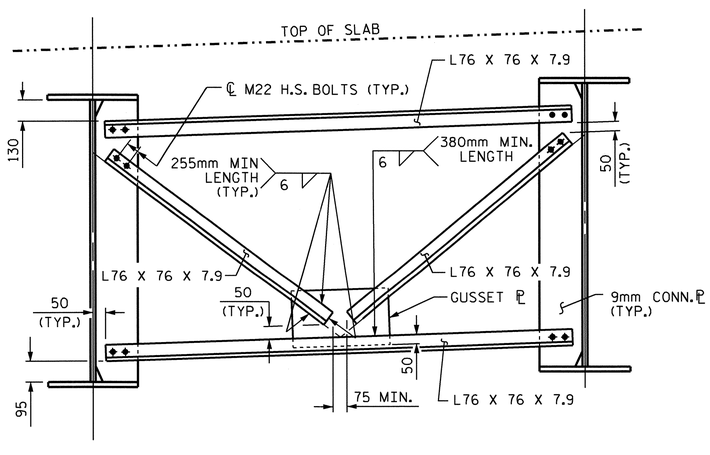


## INTERMEDIATE DIAPHRAGM-D3

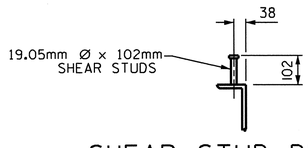


## SHEAR STUD DETAILS

( @ CHANNELS )

PROJECT NO. R-2413C

GUILFORD-ROCKINGHAM COUNTY

STATION: 45+30.610 -LREV-

SHEET 1 OF 4

STATE OF NORTH CAROLINA
DEPARTMENT OF TRANSPORTATION
RALEIGH

SUPERSTRUCTURE
FRAMING PLAN
RIGHT LANE

NORTH CAROLINA PROFESSIONAL SEAL 022516 ENGINEER EMILY E. MURRAY
10/28/11

| REVISIONS | | | | | | SHEET NO. |
|---|---|---|---|---|---|---|
| NO. | BY: | DATE: | NO. | BY: | DATE: | S-184 |
| 1 | | | 3 | | | TOTAL SHEETS |
| 2 | | | 4 | | | 238 |

DRAWN BY : T.L. AVERETTE DATE : 09-29-10
CHECKED BY : PEGGY PARISI DATE : 10-28-10

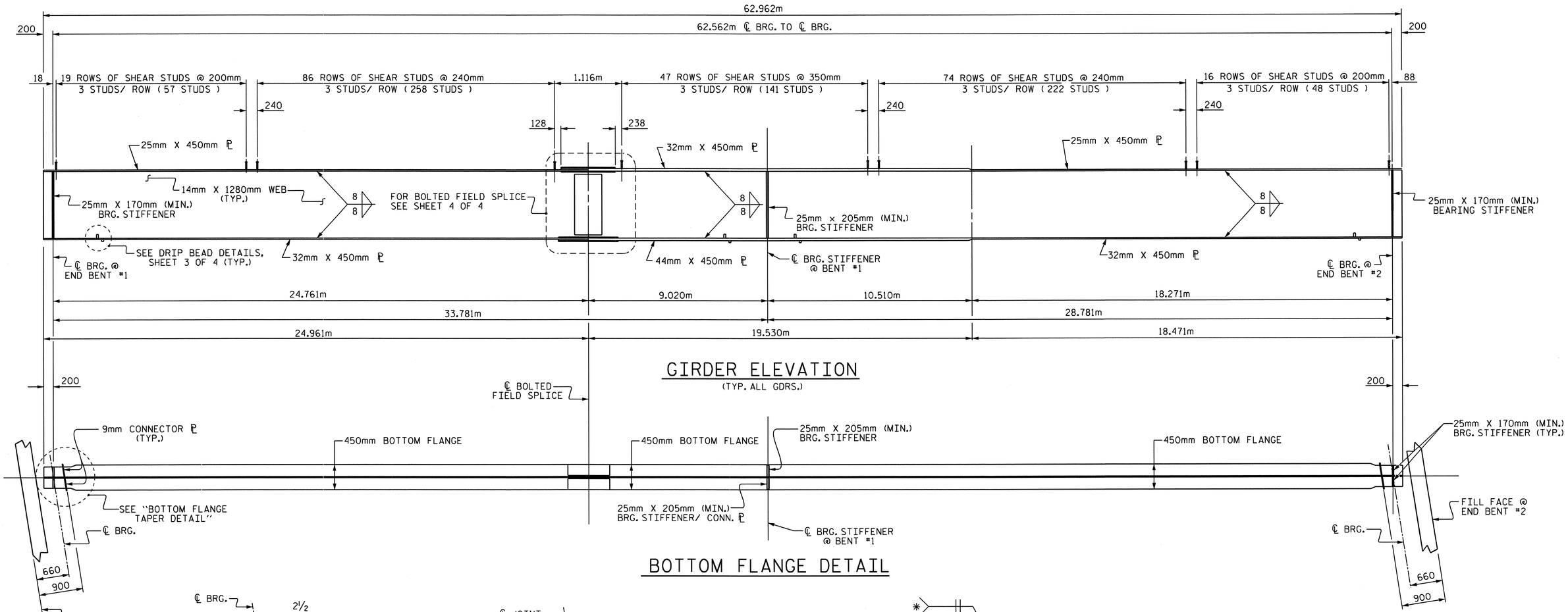


## GIRDER ELEVATION

(TYP. ALL GDRS.)




## BOTTOM FLANGE DETAIL

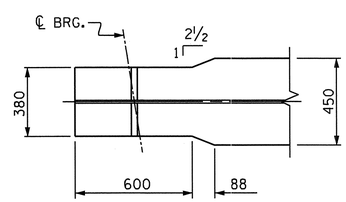


## BOTTOM FLANGE TAPER DETAIL

(TYP. EA. END)

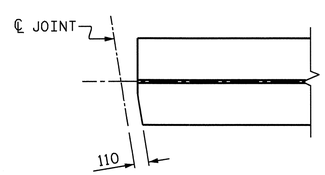


## TOP FLANGE CLIP DETAIL

(TYP. AT BOTH ENDS OF GIRDER)

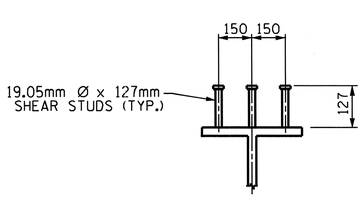


## SHEAR STUD DETAILS

ON GIRDERS

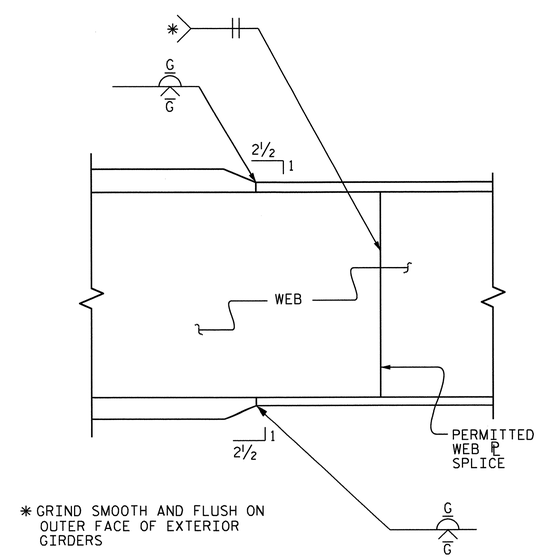


* GRIND SMOOTH AND FLUSH ON OUTER FACE OF EXTERIOR GIRDERS

ELEVATION

## TYPICAL FLANGE AND WEB BUTT JOINT

PROJECT NO. R-2413C

GUILFORD-ROCKINGHAM COUNTY

STATION: 45+30.610 -LREV-

SHEET 2 OF 4

STATE OF NORTH CAROLINA
DEPARTMENT OF TRANSPORTATION
RALEIGH

SUPERSTRUCTURE

STRUCTURAL STEEL DETAILS
RIGHT LANE

NORTH CAROLINA PROFESSIONAL SEAL 022516 ENGINEER EMILY E. MURRAY
10/28/11

| REVISIONS | | | | | | SHEET NO. |
|---|---|---|---|---|---|---|
| NO. | BY: | DATE: | NO. | BY: | DATE: | S-185 |
| 1 | | | 3 | | | TOTAL SHEETS |
| 2 | | | 4 | | | 238 |

DRAWN BY : T.L. AVERETTE DATE : 09-29-10
CHECKED BY : PEGGY PARISI DATE : 10-28-10

STR. #6

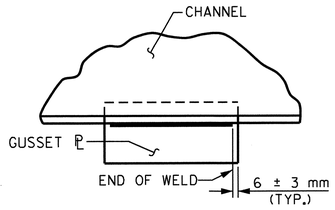


TYPICAL GUSSET PLATE CONNECTION

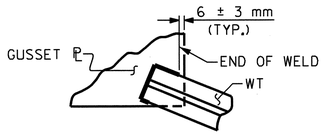


TYPICAL "TEE" TO GUSSET PLATE CONNECTION

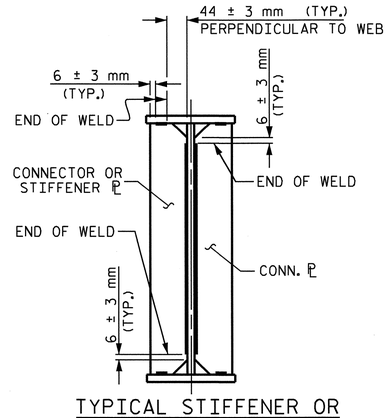


TYPICAL STIFFENER OR
CONNECTOR PLATE CONNECTIONS

## WELD TERMINATION DETAILS

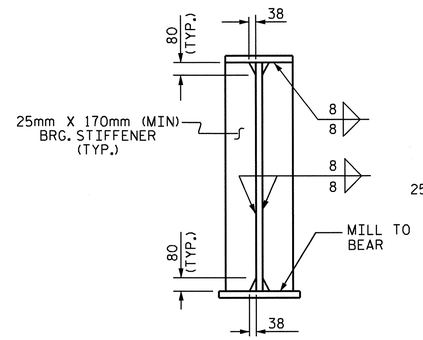


@ END BENTS

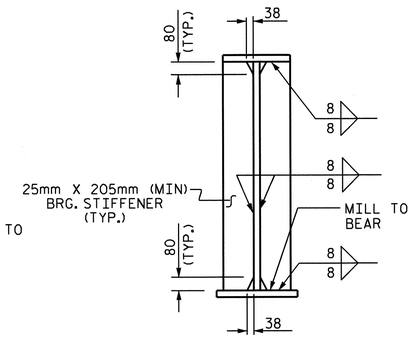


@ BENTS

NOTE:
THE BEARING STIFFENER SHALL BE WELDED TO THE BOTTOM FLANGE ONLY WHEN USED AS A CONNECTOR ℙ.

## BEARING STIFFENER

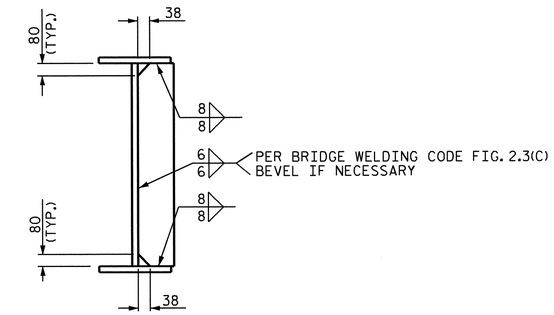


## CONNECTOR PLATE

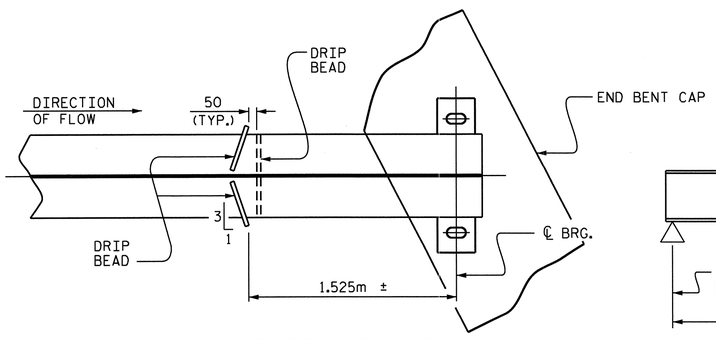


PART PLAN - BOTTOM FLANGE

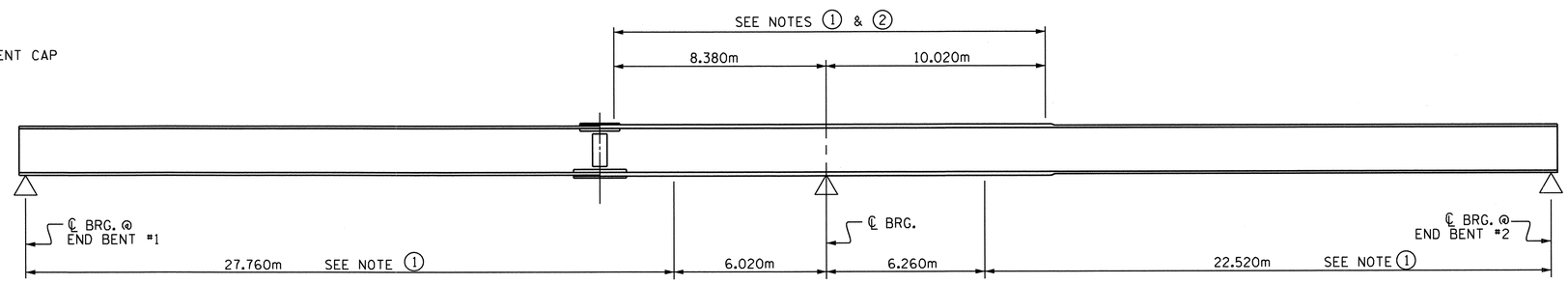


GIRDER MAKE UP

NOTE 1: CHARPY V-NOTCH TESTS ARE REQUIRED FOR ALL TOP OR BOTTOM FLANGE PLATES WHICH FALL WITHIN THESE LIMITS, ALL WEB PLATES, AND ALL SPLICE PLATES. IF A PERMITTED SHOP FLANGE SPLICE IS NOT USED, CHARPY V-NOTCH TESTS WILL BE REQUIRED FOR THE ENTIRE FLANGE PLATE. FOR CHARPY V-NOTCH TESTS, SEE ARTICLE 1072-9 OF THE STANDARD SPECIFICATIONS.

NOTE 2: NO WELDING OF FORMS OR FALSEWORK TO THE TOP FLANGE WILL BE PERMITTED IN THIS REGION.

## CHARPY V-NOTCH TESTS FOR CONTINUOUS PLATE GIRDERS

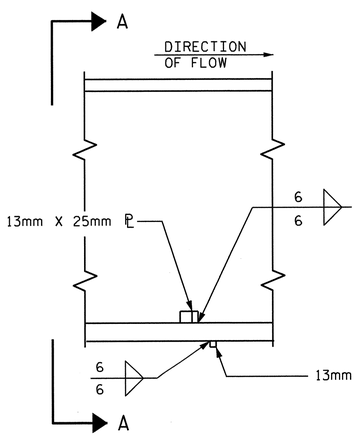


SECTION

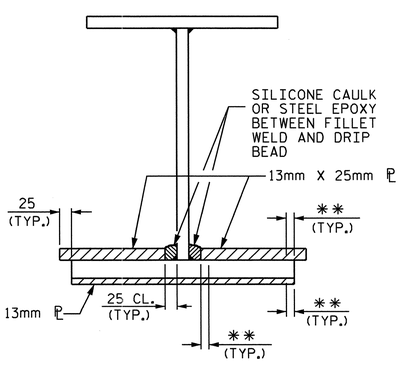


VIEW A-A

**SEE "WELD TERMINATION DETAILS"

## DRIP BEAD DETAILS

PROJECT NO. R-2413C
GUILFORD-ROCKINGHAM COUNTY
STATION: 45+30.610 -LREV-

SHEET 3 OF 4

STATE OF NORTH CAROLINA
DEPARTMENT OF TRANSPORTATION
RALEIGH

SUPERSTRUCTURE

STRUCTURAL STEEL
DETAILS
RIGHT LANE

NORTH CAROLINA PROFESSIONAL SEAL 022516 ENGINEER EMILY E. MURRAY
10/28/11

| REVISIONS | | | | | | SHEET NO. |
|---|---|---|---|---|---|---|
| NO. | BY: | DATE: | NO. | BY: | DATE: | S-186 |
| 1 | | | 3 | | | TOTAL SHEETS |
| 2 | | | 4 | | | 238 |

DRAWN BY : T.L. AVERETTE DATE : 09-29-10
CHECKED BY : PEGGY PARISI DATE : 10-28-10

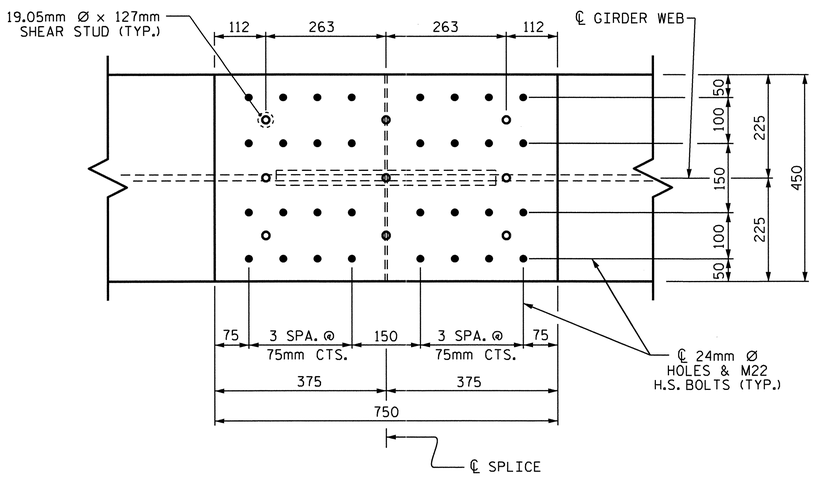


PLAN (TOP OF TOP FLANGE)

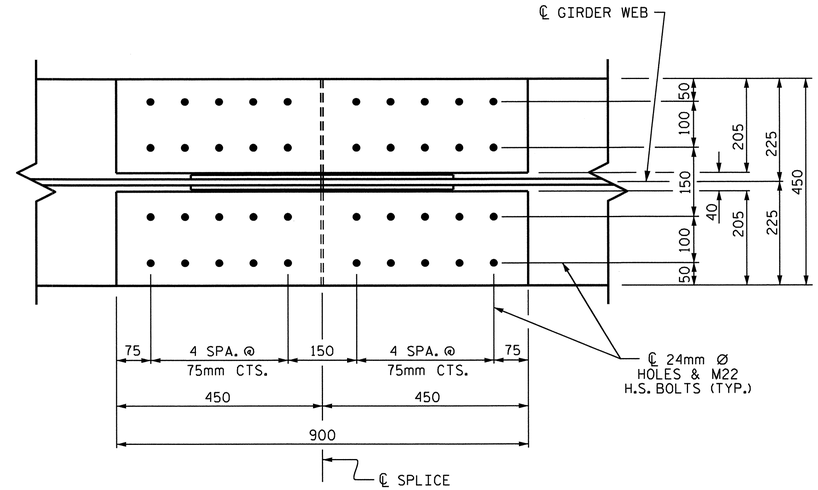


PLAN (TOP OF BOTTOM FLANGE)

## NOTES

ALL STRUCTURAL STEEL SHALL BE AASHTO M270 GRADE 345W AND PAINTED IN ACCORDANCE WITH SYSTEM 4 OF ARTICLE 442-7 OF THE STANDARD SPECIFICATIONS UNLESS OTHERWISE NOTED ON THE PLANS.

ALL DIMENSIONS SHOWN ARE HORIZONTAL OR VERTICAL, UNLESS OTHERWISE NOTED.

ALL FIELD CONNECTIONS TO BE 22.23mm DIA. HIGH STRENGTH BOLTS UNLESS OTHERWISE NOTED. FOR HIGH STRENGTH BOLTS, SEE SPECIAL PROVISIONS.

BEARING STIFFENERS ARE TO BE PLACED NORMAL TO THE WEB OF THE GIRDER AND SHALL BE PLUMB.

PERMITTED FLANGE AND WEB SHOP SPLICES SHALL NOT BE LOCATED WITHIN 4.5 METERS OF MAXIMUM DEAD LOAD DEFLECTION (NOR WITHIN 4.5 METERS OF INTERMEDIATE BEARINGS OF CONTINUOUS UNITS). KEEP 600mm MINIMUM BETWEEN WEB AND FLANGE SHOP SPLICES. KEEP 150mm MINIMUM BETWEEN CONNECTOR PLATE OR TRANSVERSE STIFFENER WELDS AND WEB OR FLANGE SHOP SPLICES.

STUDS ON GIRDERS MAY BE SHIFTED UP TO 25mm IF NECESSARY TO CLEAR FLANGE SPLICE WELD.

TENSION ON THE AASHTO M164 BOLTS SHALL BE CALIBRATED USING DIRECT TENSION INDICATOR WASHERS. FOR DIRECT TENSION INDICATORS, SEE SPECIAL PROVISIONS.

END OF GIRDERS SHALL BE PLUMB.

BEARING STIFFENER MAY REQUIRE COPING IF WIDER THAN BOTTOM FLANGE TO AVOID INTERFERENCE WITH THE ANCHOR BOLT.

FOR SHIPPING STEEL STRUCTURAL MEMBERS, SEE SPECIAL PROVISIONS.

FABRICATORS SHALL DETAIL DIAPHRAGM MEMBERS AND CONNECTIONS FOR FULL DEAD LOAD FIT UP. GIRDERS SHALL BE PLUMB AFTER THE FULL AMOUNT OF DEAD LOAD IS APPLIED.

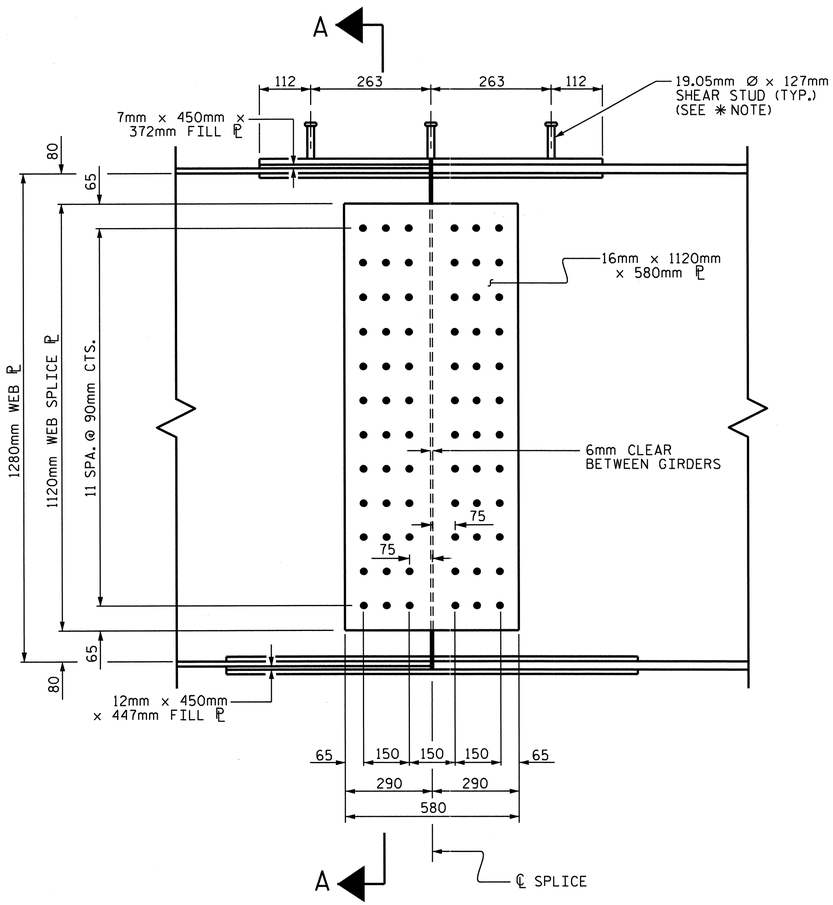


ELEVATION

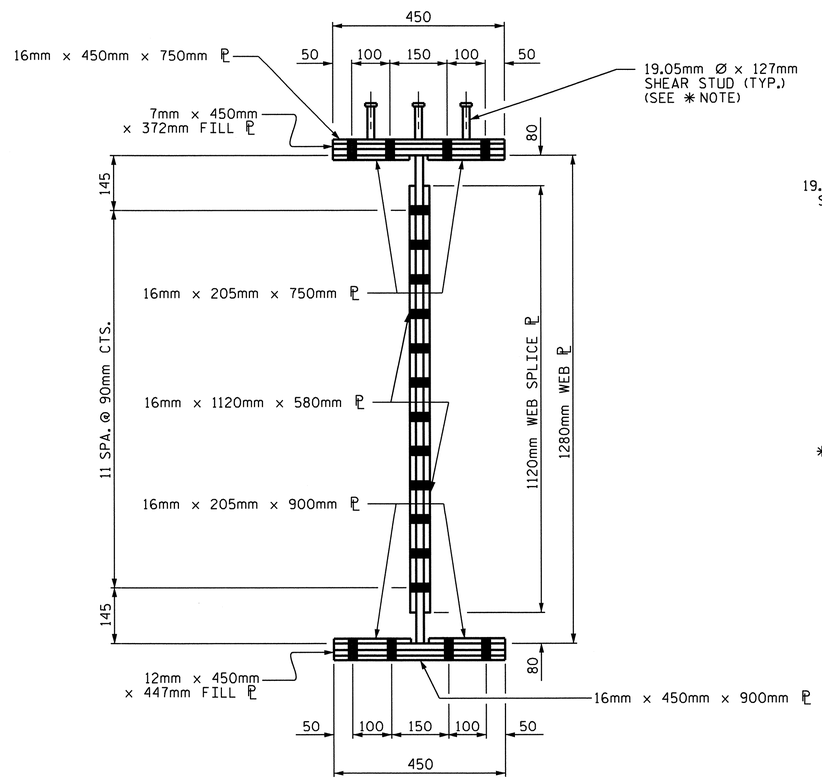


SECTION A-A

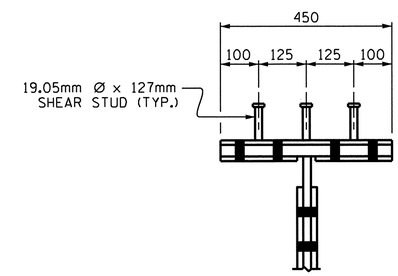


SHEAR STUD DETAIL
FOR TOP FLANGE SPLICE PLATE

✱ NOTE: SHEAR STUDS ARE TO BE SHOP WELDED ON TOP OF PLATE BEFORE FIELD ASSEMBLY

BOLTED FIELD SPLICE DETAILS

PROJECT NO. R-2413C
GUILFORD-ROCKINGHAM COUNTY
STATION: 45+30.610 -LREV-

SHEET 4 OF 4

STATE OF NORTH CAROLINA
DEPARTMENT OF TRANSPORTATION
RALEIGH

SUPERSTRUCTURE

STRUCTURAL STEEL DETAILS
RIGHT LANE

NORTH CAROLINA PROFESSIONAL SEAL 022516 ENGINEER EMILY E. MURRAY
10/28/11

| REVISIONS | | | | | | SHEET NO. |
|---|---|---|---|---|---|---|
| NO. | BY: | DATE: | NO. | BY: | DATE: | S-187 |
| 1 | | | 3 | | | TOTAL SHEETS |
| 2 | | | 4 | | | 238 |

DRAWN BY : T.L. AVERETTE DATE : 09-29-10
CHECKED BY : PEGGY PARISI DATE : 10-28-10

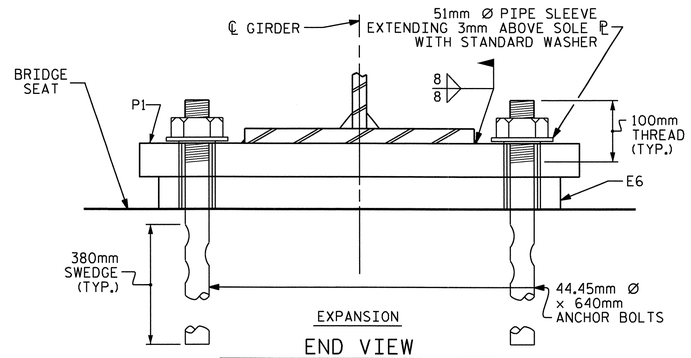


EXPANSION

END VIEW

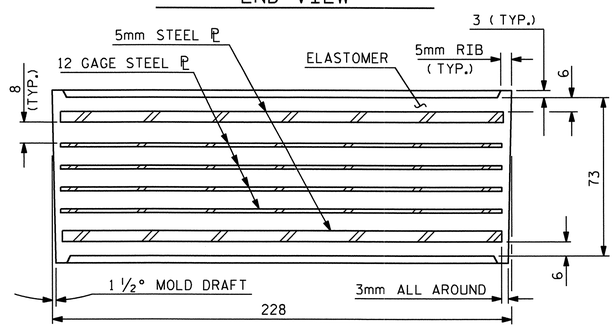


TYPICAL SECTION OF ELASTOMERIC BEARINGS

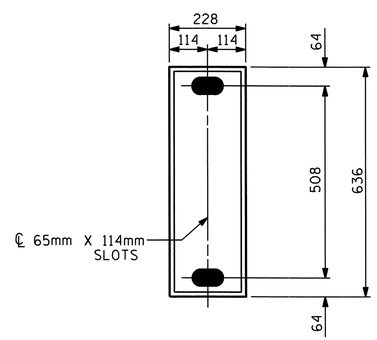


E6 ( 10 REQ'D )

PLAN VIEW OF ELASTOMERIC BEARING

TYPE III

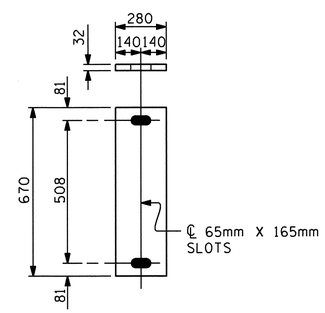


P1

( EXPANSION )

P1 ( 10 REQ'D )

SOLE PLATE DETAILS ( P1 )

## NOTES

THE 51mm Ø PIPE SLEEVE SHALL BE CUT FROM SCHEDULE 40 PVC PLASTIC PIPE. THE PVC PLASTIC PIPE SHALL MEET THE REQUIREMENTS OF ASTM D1785.

THE PAYMENT FOR THE PIPE SLEEVES SHALL BE INCLUDED IN THE SEVERAL PAY ITEMS.

FOR AASHTO M270 GRADE 345W STRUCTURAL STEEL, SOLE PLATE SHALL BE AASHTO M270 GRADE 345W AND SHALL NOT BE GALVANIZED, ANCHOR BOLTS AND NUTS SHALL BE GALVANIZED IN ACCORDANCE WITH THE STANDARD SPECIFICATIONS.

ANCHOR BOLTS SHALL MEET THE REQUIREMENTS OF ASTM A449. NUTS SHALL MEET THE REQUIREMENTS OF AASHTO M291M-12 OR AASHTO M292M-2H. WASHERS SHALL MEET THE REQUIREMENTS OF AASHTO M293M. SHOP DRAWINGS ARE NOT REQUIRED FOR ANCHOR BOLTS, NUTS AND WASHERS. SHOP INSPECTION IS REQUIRED.

WHEN FIELD WELDING THE SOLE PLATE TO THE GIRDER FLANGE, USE TEMPERATURE INDICATING WAX PENS, OR OTHER SUITABLE MEANS, TO ENSURE THAT THE TEMPERATURE OF THE SOLE PLATE DOES NOT EXCEED 149°C. TEMPERATURES ABOVE THIS MAY DAMAGE THE ELASTOMER.

ALL SURFACES OF BEARING PLATES SHALL BE SMOOTH AND STRAIGHT.

THE CONTRACTOR'S ATTENTION IS CALLED TO THE FOLLOWING PROCEDURE, WHICH MAY BE REQUIRED BY THE ENGINEER, TO RESET ELASTOMERIC BEARINGS DUE TO GIRDER TRANSLATION AND END ROTATION:

ONCE THE DECK HAS CURED, THE GIRDERS SHALL BE JACKED AND THE ELASTOMERIC BEARING SLOTS CENTERED AS NEARLY AS PRACTICAL ABOUT THE BEARING STIFFENER. THIS OPERATION SHALL BE PERFORMED AT APPROXIMATELY 16° C.

THE CONTRACTOR MAY PROPOSE ALTERNATE METHODS, PROVIDED DETAILS ARE SUBMITTED TO THE ENGINEER FOR REVIEW AND APPROVAL.

## —LOAD RATINGS—

| | MAX.D.L.+ L.L. |
|---|---|
| TYPE III | 674 kN |

PROJECT NO. R-2413C

GUILFORD-ROCKINGHAM COUNTY

STATION: 45+30.610 -LREV-

STATE OF NORTH CAROLINA
DEPARTMENT OF TRANSPORTATION
RALEIGH

# STANDARD ELASTOMERIC BEARING DETAILS

( STEEL SUPERSTRUCTURE )
RIGHT LANE

NORTH CAROLINA PROFESSIONAL SEAL 022516 ENGINEER EMILY E. McGRAY
10/28/11

| REVISIONS | | | | | | | |
|---|---|---|---|---|---|---|---|
| NO. | BY: | DATE: | NO. | BY: | DATE: | | SHEET NO. S-188 |
| 1 | | | 3 | | | | TOTAL SHEETS 238 |
| 2 | | | 4 | | | | |

ASSEMBLED BY : T.L. AVERETTE DATE : 09-29-10
CHECKED BY : PEGGY PARISI DATE : 10-28-10

DRAWN BY : JMB 11/87
CHECKED BY : ARB 11/87

REV. 8/16/99 MAB/LES
REV. 10/17/00 RWW/LES
REV. 5/1/06 TLA/GM

05-SEP-2011 14:10
Y:\Structures\Final Plans\Str.#6\R2413C_sd_BG_06.dgn
mgudlaugsson

STR. #6

STD. NO. EB1SM

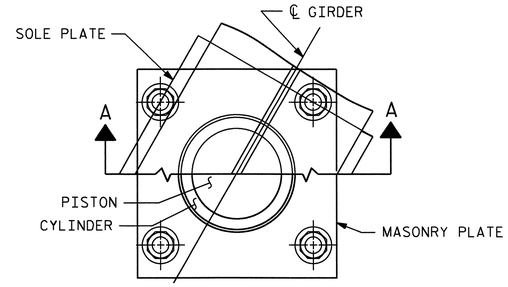


CUT-AWAY PLAN

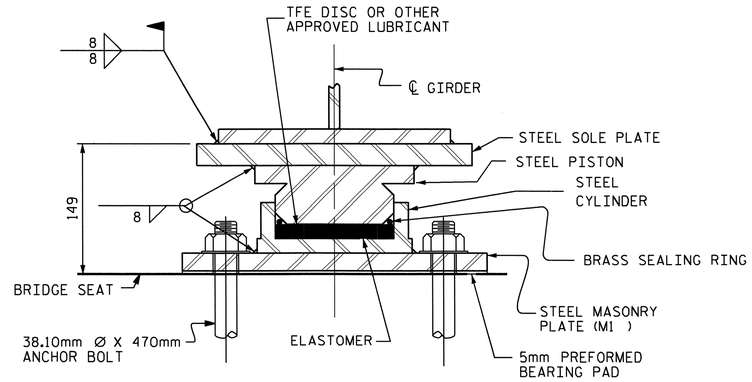


SECTION A-A

PB1, FIXED

( 5 REQ'D. )

## POT BEARING DETAILS

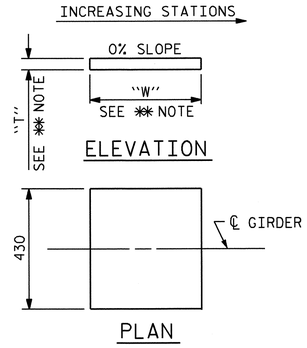


✻✻ NOTE:
DIMENSIONS "W" AND "T" ARE TO BE DETERMINED BY THE MANUFACTURER.

## SOLE PLATE DETAILS

## NOTES

FOR POT BEARINGS, SEE SPECIAL PROVISIONS.

AT ALL POINTS OF SUPPORT AT BENT #1, NUTS FOR ANCHOR BOLTS SHALL BE TIGHTENED FINGER TIGHT AND GIVEN AN ADDITIONAL 1/4 TURN. THE THREAD OF THE NUT AND BOLT SHALL THEN BE BURRED WITH A SHARP POINTED TOOL.

WHEN WELDING THE SOLE PLATE TO THE GIRDER, USE TEMPERATURE INDICATING WAX PENS, OR OTHER SUITABLE MEANS, TO ENSURE THAT THE TEMPERATURE OF THE BEARING DOES NOT EXCEED 121°C TEMPERATURES ABOVE THIS MAY DAMAGE THE TFE OR ELASTOMER.

SOLE PLATES SHOULD BE WELDED TO BEAM FLANGES BEFORE FALSEWORK IS PLACED.

ALL SURFACES OF BEARING PLATES SHALL BE SMOOTH AND STRAIGHT.

FOR THERMAL SPRAYED COATINGS (METALLIZATION), SEE SPECIAL PROVISIONS.

THE CONTRACTOR MAY SUBSTITUTE DISC BEARINGS FOR THE POT BEARINGS SHOWN. FOR OPTIONAL DISC BEARINGS, SEE SPECIAL PROVISIONS.

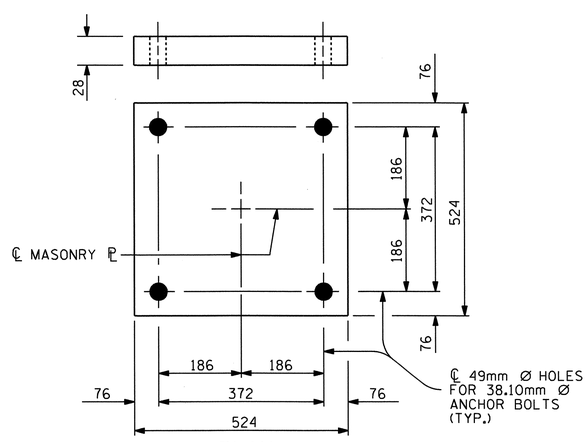


PLAN

M1 ( 5 REQ'D. )

## MASONRY PLATE DETAILS

| TABLE FOR LOADS AND MOVEMENTS | | | | | | |
|---|---|---|---|---|---|---|
| BEARING | LOCATION | VERTICAL LOAD ( kN ) | | | LATERAL LOAD ( kN ) | TOTAL MOVEMENT ( mm ) |
| | | DEAD | LIVE | TOTAL | | |
| PB1 (FIXED) | BENT #1 | 1057 | 410 | 1467 | 212 | 0 |
| | | | | | | |
| | | | | | | |

PROJECT NO. R-2413C

GUILFORD-ROCKINGHAM COUNTY

STATION: 45+30.610 -LREV-

STATE OF NORTH CAROLINA
DEPARTMENT OF TRANSPORTATION
RALEIGH

STANDARD

POT BEARING DETAILS RIGHT LANE

NORTH CAROLINA PROFESSIONAL SEAL 022516 ENGINEER EMILY E. MURRAY
10/28/11

| REVISIONS | | | | | | SHEET NO. |
|---|---|---|---|---|---|---|
| NO. | BY: | DATE: | NO. | BY: | DATE: | S-189 |
| 1 | | | 3 | | | TOTAL SHEETS |
| 2 | | | 4 | | | 238 |

STR. #6 PB1SM.STD

| | | | |
|---|---|---|---|
| ASSEMBLED BY : T.L. AVERETTE | DATE : 09-09-10 | | |
| CHECKED BY : PEGGY PARISI | DATE : 10-28-10 | | |
| DRAWN BY : RWW 8/99 | REV. 7/10/01 | LES/RWW | |
| CHECKED BY : LES 8/99 | REV. 5/7/03 | RWW/JTE | |
| | REV. 5/1/06R | TLA/GM | |

19-OCT-2011 14:54
R:\TIPProjects-R\R2413c\Structures\Final Plans\Str.#6\R2413C_sd_BG_06.dgn
taverette

## DEAD LOAD DEFLECTION TABLE FOR SPAN A

| | ALL GIRDERS | | | | | | | | | | | | | | | | | | | | |
|---|---|---|---|---|---|---|---|---|---|---|---|---|---|---|---|---|---|---|---|---|---|
| @ TWENTIETH POINTS BETWEEN ℄ BEARINGS | 0 | .05 | .10 | .15 | .20 | .25 | .30 | .35 | .40 | .45 | .50 | .55 | .60 | .65 | .70 | .75 | .80 | .85 | .90 | .95 | 0 |
| DEFLECTION DUE TO WEIGHT OF GIRDER | 0.000 | 0.002 | 0.004 | 0.006 | 0.008 | 0.009 | 0.010 | 0.011 | 0.011 | 0.011 | 0.011 | 0.010 | 0.009 | 0.008 | 0.007 | 0.006 | 0.004 | 0.003 | 0.002 | 0.001 | 0.000 |
| DEFLECTION DUE TO WEIGHT OF SLAB * | 0.000 | 0.009 | 0.017 | 0.025 | 0.032 | 0.038 | 0.043 | 0.046 | 0.047 | 0.047 | 0.046 | 0.044 | 0.040 | 0.035 | 0.030 | 0.024 | 0.018 | 0.012 | 0.007 | 0.003 | 0.000 |
| DEFLECTION DUE TO WEIGHT OF BARRIER RAIL | 0.000 | 0.001 | 0.001 | 0.002 | 0.003 | 0.003 | 0.003 | 0.004 | 0.004 | 0.004 | 0.004 | 0.004 | 0.003 | 0.003 | 0.002 | 0.002 | 0.001 | 0.001 | 0.001 | 0.000 | 0.000 |
| TOTAL DEAD LOAD DEFLECTION | 0.000 | 0.012 | 0.022 | 0.033 | 0.043 | 0.050 | 0.056 | 0.061 | 0.062 | 0.062 | 0.061 | 0.058 | 0.052 | 0.046 | 0.039 | 0.032 | 0.023 | 0.016 | 0.010 | 0.004 | 0.000 |
| VERTICAL CURVE ORDINATE | 0.000 | 0.002 | 0.004 | 0.005 | 0.007 | 0.008 | 0.009 | 0.009 | 0.010 | 0.010 | 0.010 | 0.010 | 0.010 | 0.009 | 0.009 | 0.008 | 0.007 | 0.005 | 0.004 | 0.002 | 0.000 |
| REQUIRED CAMBER | 0 | 14 | 26 | 38 | 50 | 58 | 65 | 70 | 72 | 72 | 71 | 68 | 62 | 55 | 48 | 40 | 30 | 21 | 14 | 6 | 0 |

* INCLUDES SLAB, BUILDUPS & STAY-IN-PLACE FORMS.
ALL VALUES ARE SHOWN IN METERS EXCEPT "REQUIRED CAMBER", WHICH IS GIVEN IN MILLIMETERS.

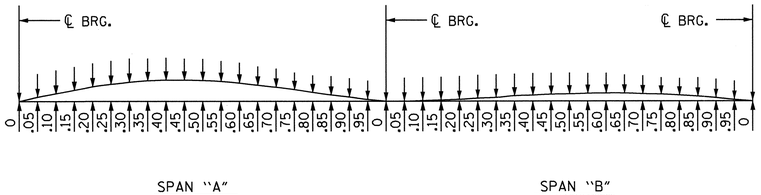


SCHEMATIC CAMBER ORDINATES

NOTE : FOR CAMBER @ 20TH POINTS SEE TABLES.
SLOPE FOR THE ZERO CAMBER BASE LINE VARIES.

## DEAD LOAD DEFLECTION TABLE FOR SPAN B

| | ALL GIRDERS | | | | | | | | | | | | | | | | | | | | |
|---|---|---|---|---|---|---|---|---|---|---|---|---|---|---|---|---|---|---|---|---|---|
| @ TWENTIETH POINTS BETWEEN ℄ BEARINGS | 0 | .05 | .10 | .15 | .20 | .25 | .30 | .35 | .40 | .45 | .50 | .55 | .60 | .65 | .70 | .75 | .80 | .85 | .90 | .95 | 0 |
| DEFLECTION DUE TO WEIGHT OF GIRDER | 0.000 | 0.000 | 0.000 | 0.000 | 0.000 | 0.001 | 0.001 | 0.002 | 0.002 | 0.003 | 0.003 | 0.004 | 0.004 | 0.004 | 0.003 | 0.003 | 0.003 | 0.002 | 0.001 | 0.001 | 0.000 |
| DEFLECTION DUE TO WEIGHT OF SLAB * | 0.000 | -0.001 | -0.001 | 0.000 | 0.001 | 0.003 | 0.005 | 0.008 | 0.010 | 0.012 | 0.013 | 0.014 | 0.015 | 0.015 | 0.014 | 0.013 | 0.011 | 0.009 | 0.006 | 0.003 | 0.000 |
| DEFLECTION DUE TO WEIGHT OF BARRIER RAIL | 0.000 | 0.000 | 0.000 | 0.000 | 0.000 | 0.000 | 0.000 | 0.001 | 0.001 | 0.001 | 0.001 | 0.001 | 0.001 | 0.001 | 0.001 | 0.001 | 0.001 | 0.001 | 0.001 | 0.000 | 0.000 |
| TOTAL DEAD LOAD DEFLECTION | 0.000 | -0.001 | -0.001 | 0.000 | 0.001 | 0.004 | 0.006 | 0.011 | 0.013 | 0.016 | 0.017 | 0.019 | 0.020 | 0.020 | 0.018 | 0.017 | 0.015 | 0.012 | 0.008 | 0.004 | 0.000 |
| VERTICAL CURVE ORDINATE | 0.000 | 0.001 | 0.003 | 0.004 | 0.005 | 0.006 | 0.006 | 0.007 | 0.007 | 0.007 | 0.007 | 0.007 | 0.007 | 0.007 | 0.006 | 0.006 | 0.005 | 0.004 | 0.003 | 0.001 | 0.000 |
| REQUIRED CAMBER | 0 | 0 | 2 | 4 | 6 | 10 | 12 | 18 | 20 | 23 | 24 | 26 | 27 | 27 | 24 | 23 | 20 | 16 | 11 | 5 | 0 |

* INCLUDES SLAB, BUILDUPS & STAY-IN-PLACE FORMS.
ALL VALUES ARE SHOWN IN METERS EXCEPT "REQUIRED CAMBER", WHICH IS GIVEN IN MILLIMETERS.

PROJECT NO. R-2413C
GUILFORD-ROCKINGHAM COUNTY
STATION: 45+30.610 -LREV-

STATE OF NORTH CAROLINA
DEPARTMENT OF TRANSPORTATION
RALEIGH

SUPERSTRUCTURE
DEAD LOAD DEFLECTIONS
RIGHT LANE

NORTH CAROLINA PROFESSIONAL SEAL 022516 ENGINEER EMILY F. MURRAY
10/28/11

| REVISIONS | | | | | | SHEET NO. |
|---|---|---|---|---|---|---|
| NO. | BY: | DATE: | NO. | BY: | DATE: | S-190 |
| 1 | | | 3 | | | TOTAL SHEETS |
| 2 | | | 4 | | | 238 |

DRAWN BY : T.L. AVERETTE DATE : 09-29-10
CHECKED BY : PEGGY ADKINS DATE : 10-28-10

STR. #6

## NOTES

BARRIER RAIL IN A CONTINUOUS UNIT SHALL NOT BE CAST UNTIL ALL SLAB CONCRETE IN THE UNIT HAS BEEN CAST AND HAS REACHED A MINIMUM COMPRESSIVE STRENGTH OF 20.7 MPa.

ALL REINFORCING STEEL IN BARRIER RAILS SHALL BE EPOXY COATED.

GROOVED CONTRACTION JOINTS, 12mm IN DEPTH, SHALL BE TOOLED IN ALL EXPOSED FACES OF THE BARRIER RAIL AND IN ACCORDANCE WITH ARTICLE 825-10(B) OF THE STANDARD SPECIFICATIONS. THE CONTRACTION JOINT SHALL BE LOCATED AT EACH THIRD POINT BETWEEN BARRIER RAIL EXPANSION JOINTS. ONLY ONE CONTRACTION JOINT IS REQUIRED AT MIDPOINT OF BARRIER RAIL SEGMENTS LESS THAN 6.1m IN LENGTH AND NO CONTRACTION JOINTS ARE REQUIRED FOR THOSE SEGMENTS LESS THAN 3.5m IN LENGTH.

## BAR TYPES

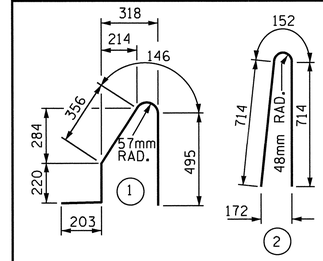


ALL BAR DIMENSIONS ARE OUT TO OUT

## BILL OF MATERIAL

FOR CONCRETE BARRIER RAIL ON BRIDGE DECK ONLY

| BAR | NO. | SIZE | TYPE | LENGTH | WEIGHT |
|---|---|---|---|---|---|
| ✱ S1 | 422 | #16 | 1 | 1420 | 930 |
| ✱ S2 | 422 | #16 | 2 | 1580 | 1035 |
| ✱ B1 | 32 | #16 | STR | 5020 | 249 |
| ✱ B2 | 48 | #16 | STR | 8280 | 617 |
| ✱ B3 | 48 | #16 | STR | 7080 | 527 |
| ✱ B4 | 32 | #16 | STR | 4320 | 215 |

✱ EPOXY COATED REINFORCING STEEL 3573 kg

CLASS AA CONCRETE 31.8 CU. METER

CONCRETE BARRIER RAIL
SUPERSTRUCTURE 126.590 METERS
● APPROACH SLABS 12.394 METERS
TOTAL 138.984 METERS

● FOR EPOXY COATED REINFORCING STEEL AND CLASS AA CONCRETE IN THE BARRIER RAIL ON THE APPROACH SLABS, SEE "BRIDGE APPROACH SLAB DETAILS" SHEET.

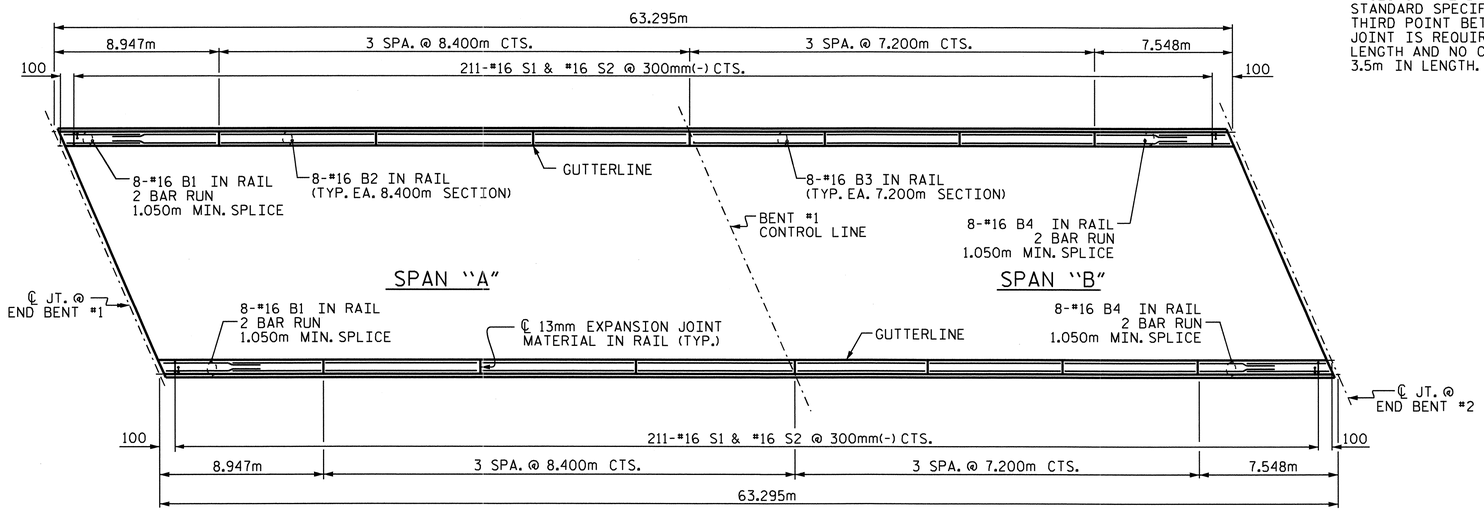


PLAN

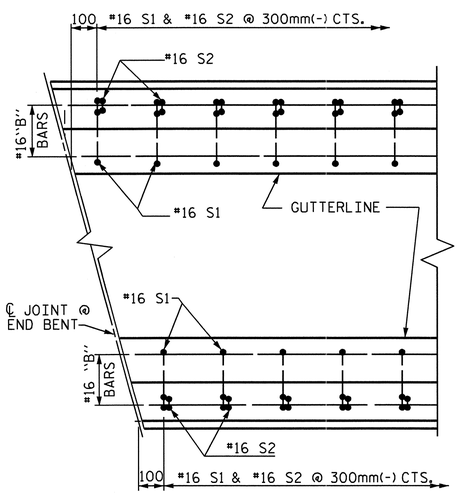


PLAN

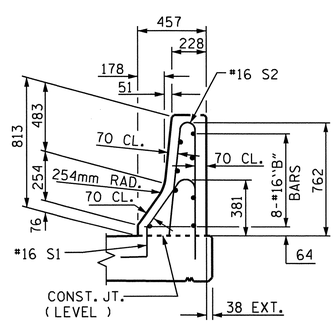


END VIEW

## END OF RAIL DETAILS

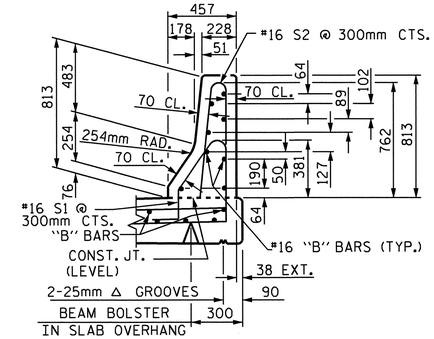


SECTION THRU RAIL

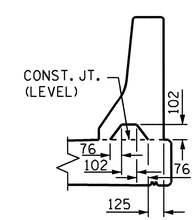


SECTION S-S

AT DAM IN OPEN JOINT
( THIS IS TO BE USED ONLY
WHEN SLIP FORM IS USED )

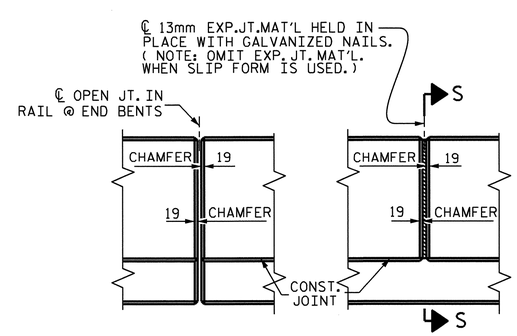


ELEVATION AT EXPANSION JOINTS

## BARRIER RAIL DETAILS

PROJECT NO. R-2413C

GUILFORD-ROCKINGHAM COUNTY

STATION: 45+30.610 -LREV-

STATE OF NORTH CAROLINA
DEPARTMENT OF TRANSPORTATION
RALEIGH

STANDARD
CONCRETE
BARRIER RAIL
RIGHT LANE

NORTH CAROLINA PROFESSIONAL SEAL 022516 ENGINEER EMILY E. MURRAY
10/28/11

| REVISIONS | | | | | | | SHEET NO. |
|---|---|---|---|---|---|---|---|
| NO. | BY: | DATE: | NO. | BY: | DATE: | | S-191 |
| 1 | | | 3 | | | | TOTAL SHEETS |
| 2 | | | 4 | | | | 238 |

STR. #6

STD. No. CBR1SM

ASSEMBLED BY : T.L. AVERETTE DATE : 09-13-10
CHECKED BY : PEGGY PARISI DATE : 09-16-10

DRAWN BY : ARB 5/87
CHECKED BY : SJD 9/87

REV. 10/17/00 RWW/LES
REV. 5/7/03R RWW/JTE
REV. 5/1/06 TLA/GM

05-SEP-2011 14:02
Y:\Structures\Final Plans\Str.#6\R2413C_sd_BR_06.DGN
mgudlaugsson

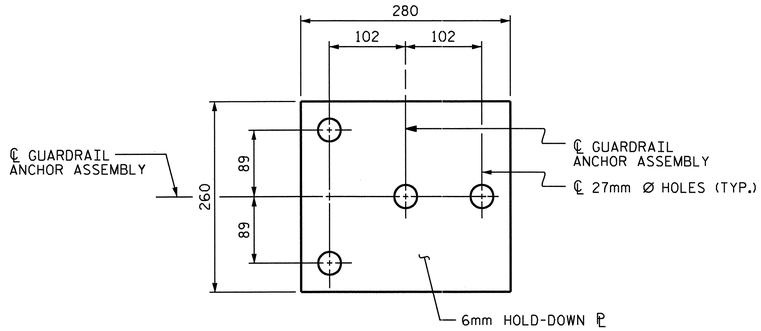


PLAN

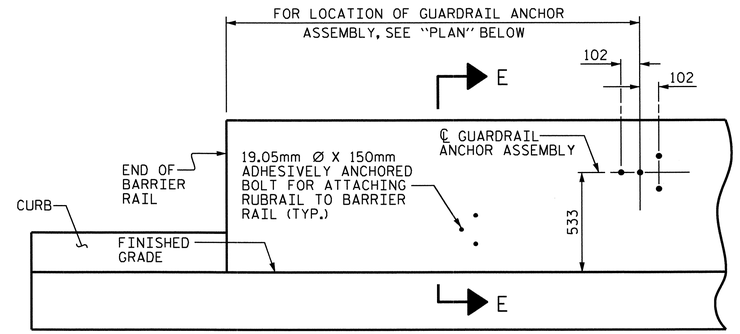


ELEVATION

FOR LOCATION OF RUBRAIL, SEE ROADWAY STD. 862.03

## NOTES

THE GUARDRAIL ANCHOR ASSEMBLY SHALL CONSIST OF A 6mm HOLD DOWN PLATE AND 4 - 22.23mm Ø BOLTS WITH NUTS AND WASHERS, RUBRAIL, AND ADHESIVELY ANCHORED BOLTS.

THE HOLD-DOWN PLATE SHALL CONFORM TO AASHTO M270 GRADE 36. AFTER FABRICATION, THE HOLD-DOWN PLATE SHALL BE HOT-DIP GALVANIZED IN ACCORDANCE WITH AASHTO M111.

BOLTS SHALL CONFORM TO THE REQUIREMENTS OF ASTM A307 AND NUTS SHALL CONFORM TO THE REQUIREMENTS OF AASHTO M291. BOLTS, NUTS AND WASHERS SHALL BE GALVANIZED. (AT THE CONTRACTOR'S OPTION, STAINLESS STEEL BOLTS, NUTS AND WASHERS MAY BE USED AS AN ALTERNATE FOR THE 22.23mm Ø GALVANIZED BOLTS, NUTS AND WASHERS. THEY SHALL CONFORM TO OR EXCEED THE MECHANICAL REQUIREMENTS OF ASTM A307. THE USE OF THIS ALTERNATE SHALL BE APPROVED BY THE ENGINEER.)

THE GUARDRAIL ANCHOR ASSEMBLY IS REQUIRED AT ALL POINTS WHERE APPROACH GUARDRAIL IS TO BE ATTACHED TO THE END OF BARRIER RAIL. FOR POINTS OF ATTACHMENT, SEE SKETCH.

AFTER INSTALLATION, THE EXPOSED THREAD OF THE BOLT SHALL BE BURRED WITH A SHARP POINTED TOOL.

THE COST OF THE GUARDRAIL ANCHOR ASSEMBLY SHALL BE INCLUDED IN THE UNIT CONTRACT PRICE BID FOR CONCRETE BARRIER RAIL.

THE 32mm Ø HOLES SHALL BE FORMED OR DRILLED WITH A CORE BIT. IMPACT TOOLS WILL NOT BE PERMITTED. ANY CONCRETE DAMAGED BY THIS WORK SHALL BE REPAIRED TO THE SATISFACTION OF THE ENGINEER.

THE C150 X 12 RUBRAIL IS TO BE ADHESIVELY ANCHORED TO THE RAIL USING THREE 19.05mm Ø X 150mm BOLTS WITH WASHERS. LEVEL ONE FIELD TESTING IS REQUIRED, AND THE YIELD LOAD OF THE 19.05mm Ø BOLTS IS 53.4kN. FOR ADHESIVELY ANCHORED ANCHOR BOLTS OR DOWELS, SEE SPECIAL PROVISIONS. SEE ROADWAY STANDARD 862.03 FOR DETAILS AND LOCATION OF THE RUBRAIL.

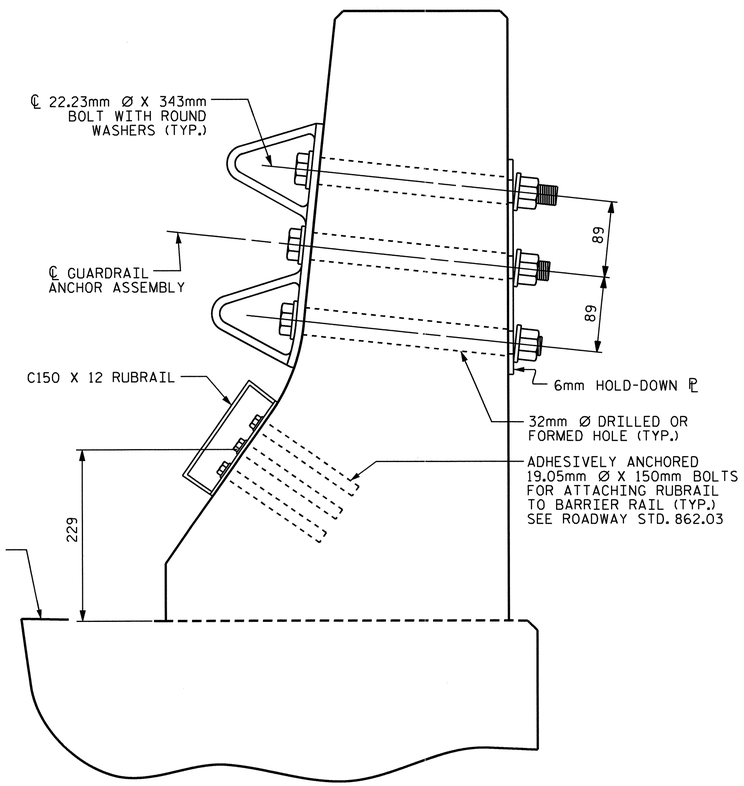


SECTION E-E

GUARDRAIL ANCHOR ASSEMBLY DETAILS

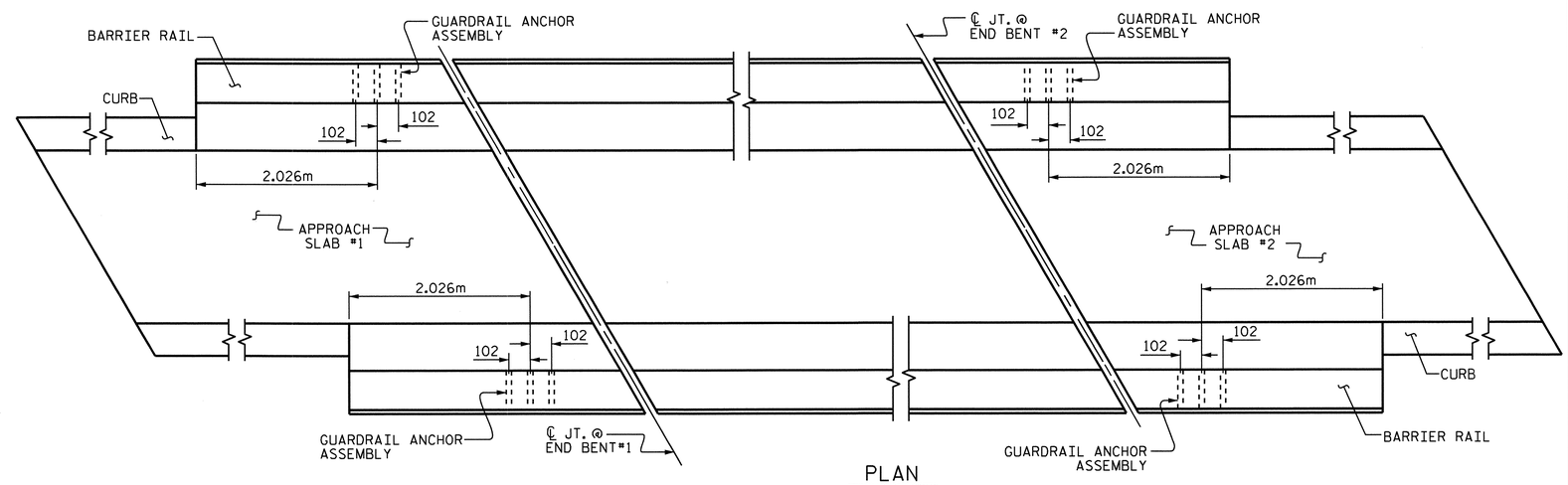


PLAN

LOCATION OF ANCHORS FOR GUARDRAIL

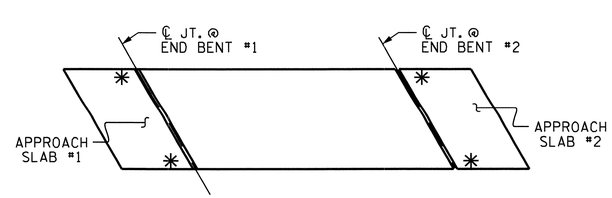


SKETCH SHOWING POINTS OF ATTACHMENTS

✳ DENOTES B-77 GUARDRAIL ANCHOR ASSEMBLY

PROJECT NO. R-2413C

GUILFORD-ROCKINGHAM COUNTY

STATION: 45+30.610 -LREV-

STATE OF NORTH CAROLINA
DEPARTMENT OF TRANSPORTATION
RALEIGH

STANDARD

GUARDRAIL ANCHORAGE FOR BARRIER RAIL RIGHT LANE

NORTH CAROLINA PROFESSIONAL SEAL 022516 ENGINEER EMILY E. MURRAY
10/26/11

| REVISIONS | | | | | | SHEET NO. |
|---|---|---|---|---|---|---|
| NO. | BY: | DATE: | NO. | BY: | DATE: | S-192 |
| 1 | | | 3 | | | TOTAL SHEETS |
| 2 | | | 4 | | | 238 |

STR. #6 STD. NO. GRA2

ASSEMBLED BY : T.L. AVERETTE DATE : 09-13-10
CHECKED BY : PEGGY PARISI DATE : 09-16-10
DRAWN BY : TLA 5/06
CHECKED BY : GM 5/06
ADDED 5/1/06R KMM/GM

05-SEP-2011 14:02
Y:\Structures\Final Plans\Str.#6\R2413C_sd_BR_06.DGN
mgudlaugsson

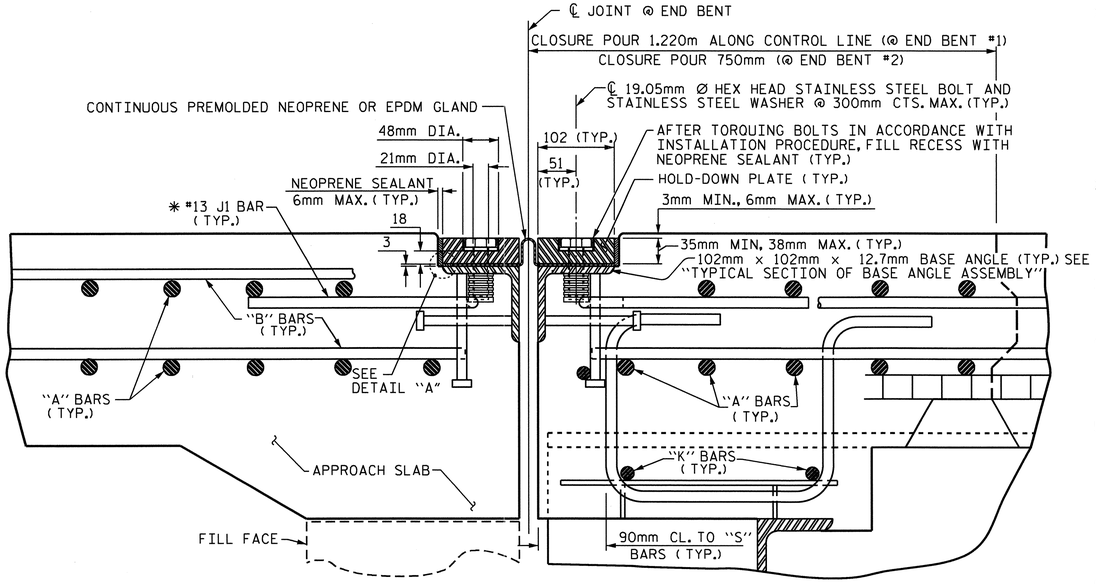


# EXPANSION JOINT DETAILS

SECTION NORMAL TO JOINT -- STEEL SUPERSTRUCTURE

✱ THE QUANTITY OF #13 J1 BARS ON THE BILL OF MATERIAL IS BASED ON 300mm CENTERS. J1 BARS SHALL BE PLACED AT EACH VERTICAL STUD ANCHOR BOLT. IN THE EVENT THAT THE NUMBER OF VERTICAL STUD ANCHOR BOLTS EXCEEDS THE NUMBER OF J1 BARS SPECIFIED, ADDITIONAL J1 BARS WILL NOT BE REQUIRED.

## INSTALLATION PROCEDURE

1. A TEMPLATE OR OTHER SUITABLE DEVICE SHALL BE USED TO FORM THE TOP OF THE EXPANSION JOINT SEAL BLOCKOUT TO THE PROPER DEPTH AND WIDTH. THE TEMPLATE SHALL BE 105mm TO 108mm WIDE AND OF SUCH THICKNESS AS TO PROVIDE FOR CORRECT FINAL ELEVATION OF TOP OF HOLD-DOWN PLATES. THE TEMPLATE SHALL BE ATTACHED TO THE BASE ANGLE ASSEMBLY WITH THE 19.05mm Ø HEX HEAD BOLTS PROVIDED FOR THE HOLD-DOWN PLATES. A 25mm Ø HOLE SHALL BE PROVIDED IN THE TEMPLATE CENTERED OVER EACH WEEP HOLE IN THE 102mm X 102mm X 12.7mm BASE ANGLE. OTHER METHODS OF INSURING DRAINAGE THROUGH WEEP HOLES MAY BE EMPLOYED SUBJECT TO ENGINEER'S APPROVAL.
2. AFTER THE CONCRETE HAS BEEN CAST ON BOTH SIDES OF THE JOINT, REMOVE THE TEMPLATE. THOROUGHLY CLEAN THE BOLT HOLES AND THE ANGLE PLATE. REMOVE ANY EXCESS CONCRETE THAT COMES OUT OF THE WEEP HOLES. ANY DAMAGED STEEL SHALL BE COATED WITH A MINIMUM THICKNESS OF 0.100mm (DRY) OF ZINC-RICH PAINT IN ACCORDANCE WITH THE STANDARD SPECIFICATIONS.
3. LAY THE GLAND ON THE BASE ANGLE AND FIELD MARK THE GLAND FOR THE BOLT HOLES. HOLES IN THE GLAND SHALL BE PUNCHED 22mm IN DIAMETER WITH A HAND PUNCH.
4. IN ORDER TO CHECK FOR PROPER ALIGNMENT, PLACE THE GLAND AND HOLD-DOWN PLATES ON THE BASE ANGLE. DO NOT APPLY NEOPRENE SEALANT. BOLT THE HOLD-DOWN PLATES TO THE BASE ANGLE BUT DO NOT TIGHTEN. THE ENGINEER SHALL INSPECT THE JOINT SEAL DEVICE FOR PROPER ALIGNMENT.
5. AFTER INSPECTION, REMOVE THE HOLD-DOWN PLATES AND GLAND. APPLY NEOPRENE SEALANT TO THE BASE ANGLE IN ACCORDANCE WITH THE "INSTALLATION SKETCH". PLACE GLAND AND HOLD-DOWN PLATES ON THE BASE ANGLE. BOLT THE HOLD-DOWN PLATES TO THE BASE ANGLE ASSEMBLY AND TORQUE THE BOLTS TO 119.3 N-m WITH A TORQUE WRENCH. THE TORQUE WRENCH SHALL BE CALIBRATED IN ACCORDANCE WITH SECTION 440-10 (D) OF THE STANDARD SPECIFICATIONS. CHECK THE TORQUE AFTER THREE (3) HOURS AND, IF NECESSARY, RETIGHTEN TO 119.3 N-m. A FINAL CHECK SHALL BE MADE AT SEVEN (7) DAYS. TORQUE SHALL NOT BE LESS THAN 108.5 N-m AFTER SEVEN (7) DAYS.
6. AFTER PROPER TORQUING, CLEAN THE BOLT HOLE RECESSES AND THE RECESS BETWEEN THE JOINT SEAL DEVICE AND CONCRETE, COMPLETELY FILL THESE RECESSES WITH NEOPRENE SEALANT.

## GENERAL NOTES

1. FOR EXPANSION JOINT SEALS, SEE SPECIAL PROVISIONS.
2. ALL PLATES AND ANGLES SHALL CONFORM TO AASHTO M270 GRADE 250 STEEL OR APPROVED EQUAL. ALL HOLD-DOWN BOLTS SHALL CONFORM TO ASTM F593 ALLOY 304 STAINLESS STEEL. WASHERS SHALL CONFORM TO ASTM F844 EXCEPT THEY SHALL BE MADE FROM ALLOY 304 STAINLESS STEEL. ALL STUD ANCHORS SHALL CONFORM TO AASHTO M169, GRADES 1010 THRU 1020 OR APPROVED EQUAL. ALL CONCRETE INSERTS SHALL BE CLOSED END AND SHALL CONFORM TO AASHTO M169, GRADE 12L14. TENSILE CAPACITY SHALL BE 13.3 kN MIN.
3. A PREMOLDED CORRUGATED OR NON-CORRUGATED GLAND SHALL BE USED FOR JOINTS SKEWED BETWEEN 50° THRU 130° . FOR JOINTS SKEWED LESS THAN 50° OR MORE THAN 130° , ONLY A CORRUGATED GLAND SHALL BE USED.
4. CLOSED END FERRULES AND STUD ANCHORS SHALL BE SHOP WELDED AND ALL HOLES SHALL BE SHOP DRILLED AS SHOWN ON PLANS. STUD ANCHORS SHALL BE ELECTRIC ARC END WELDED WITH COMPLETE FUSION.
5. SURFACES COMING IN CONTACT WITH NEOPRENE SHALL BE GROUND SMOOTH PRIOR TO METALLIZING.
6. UPON COMPLETION OF SHOP FABRICATION, THE HOLD DOWN PLATE AND BASE ANGLE ASSEMBLY AS SHOWN IN THE "TYPICAL SECTION OF BASE ANGLE ASSEMBLY", SHALL BE METALLIZED. SEE SPECIAL PROVISION FOR THERMAL SPRAYED COATINGS (METALLIZATION).
7. BASE ANGLE ASSEMBLY SHALL BE CONTINUOUS FOR THE LENGTH OF THE JOINT. AT CROWN BREAKS, THE ENDS OF THE BASE ANGLE ASSEMBLY SHALL BE CUT PARALLEL TO THE BRIDGE CENTERLINE FOR SKEWS LESS THAN 80° AND GREATER THAN 100°. FINISHED WELD SHALL BE GROUND SMOOTH AND COATED WITH A MINIMUM THICKNESS OF 0.100mm (DRY) OF ZINC-RICH PAINT IN ACCORDANCE WITH THE STANDARD SPECIFICATIONS.
8. FIELD SPLICES OF HOLD-DOWN PLATES SHALL BE KEPT TO A MINIMUM. CONTRACTOR SHALL FURNISH DETAILED PLANS SHOWING PROPOSED SPLICE LOCATIONS FOR APPROVAL. HOLD-DOWN PLATES SHALL NOT EXCEED 6.1m LENGTHS UNLESS APPROVED BY THE ENGINEER.
9. NO ALTERNATE JOINT DETAILS SHALL BE PERMITTED IN LIEU OF THOSE SHOWN ON THESE PLANS.
10. THE CONTRACTOR MAY, AT HIS OPTION, USE ADHESIVELY ANCHORED ANCHOR BOLTS IN PLACE OF CONCRETE INSERTS FOR COVER PLATES. THE YIELD LOAD OF THE 19.05mm DIA. BOLT IS 44.5 kN. FIELD TESTING OF THE ADHESIVE BONDING SYSTEM IS NOT REQUIRED.

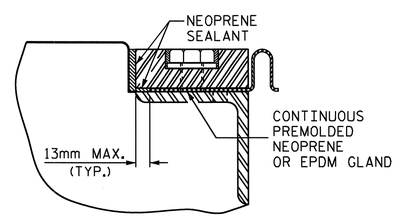


DETAIL "A"

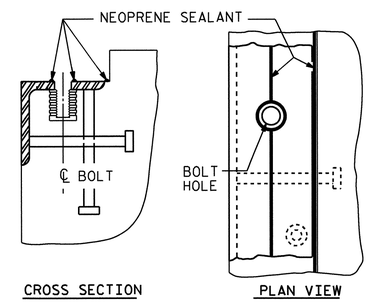


INSTALLATION SKETCH

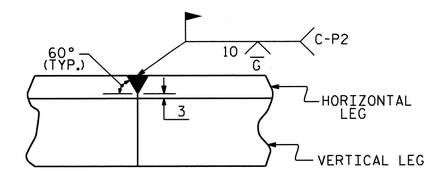


DETAIL- FIELD WELD SPLICE OF BASE ANGLE

| MOVEMENT AND SETTING AT JOINT | | | | | |
|---|---|---|---|---|---|
| END BENT NO. | SKEW ANGLE | TOTAL MOVEMENT (ALONG ℄ RDWY) | PERPENDICULAR JOINT OPENING AT 7° C | PERPENDICULAR JOINT OPENING AT 16° C | PERPENDICULAR JOINT OPENING AT 32° C |
| | | | | | |
| 1 | 66°-39'-03" | 28mm | 42mm | 38mm | 30mm |
| 2 | 66°-39'-03" | 24mm | 39mm | 36mm | 29mm |
| | | | | | |

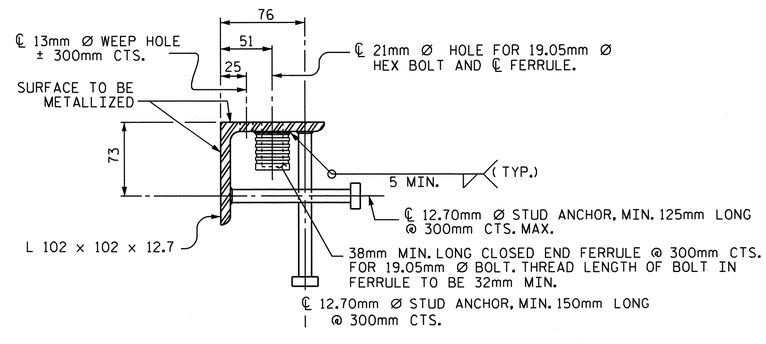


TYPICAL SECTION OF BASE ANGLE ASSEMBLY

PROJECT NO. R-2413C

GUILFORD-ROCKINGHAM COUNTY

STATION: 45+30.610 -LREV-

SHEET 1 OF 2

STATE OF NORTH CAROLINA
DEPARTMENT OF TRANSPORTATION
RALEIGH

STANDARD
EXPANSION JOINT SEAL DETAILS
RIGHT LANE

| REVISIONS | | | | | | SHEET NO. |
|---|---|---|---|---|---|---|
| NO. | BY: | DATE: | NO. | BY: | DATE: | S-193 |
| 1 | | | 3 | | | TOTAL SHEETS |
| 2 | | | 4 | | | 238 |

NORTH CAROLINA PROFESSIONAL SEAL 022516 ENGINEER ELMER E. MURRAY 10/28/11

| | | | |
|---|---|---|---|
| ASSEMBLED BY : T.L. AVERETTE | | DATE : 11-10-10 | |
| CHECKED BY : PEGGY PARISI | | DATE : 07-26-11 | |
| DRAWN BY : REK 9/87 | REV. 10/17/00 | RWW/LES | |
| CHECKED BY : CRK 10/87 | REV. 5/7/03R | RWW/JTE | |
| | REV. 5/1/06 | TLA/GM | |

05-SEP-2011 14:00
Y:\Structures\Final Plans\Str.#6\R2413C_sd_JS_06.dgn
mgudlaugsson

STR. #6

STD. NO. EJS1SM

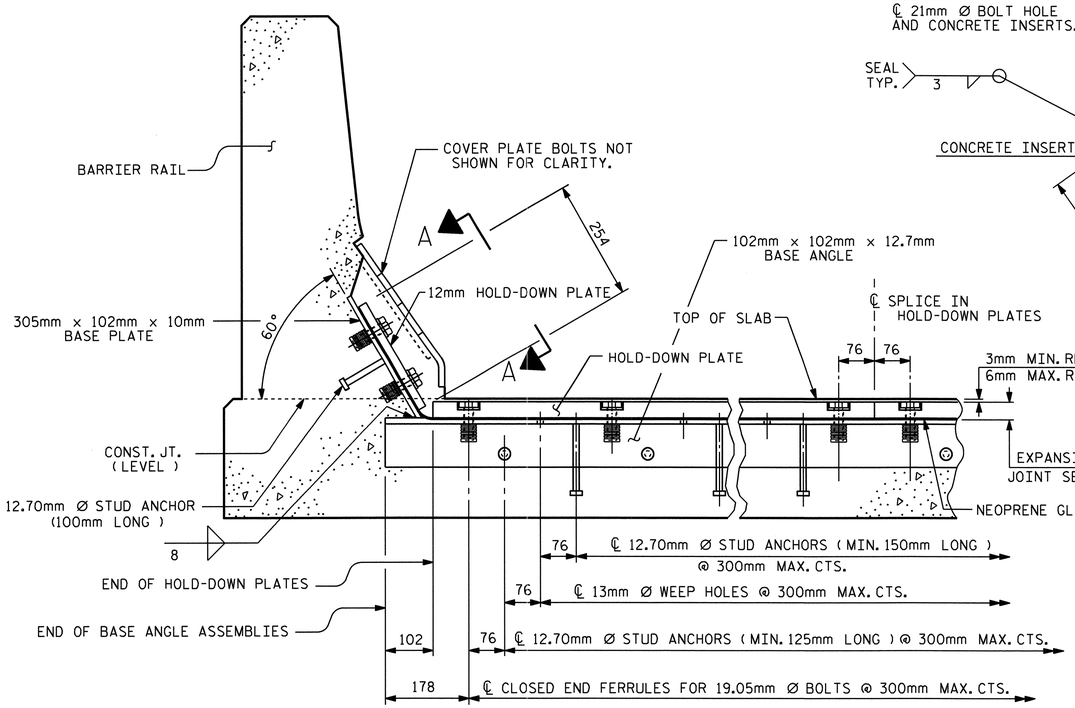


## SECTION THRU RAIL NORMAL TO JOINT

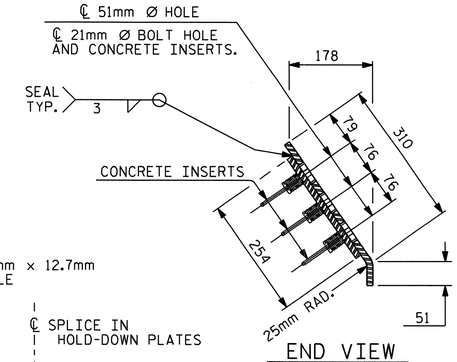


## END VIEW

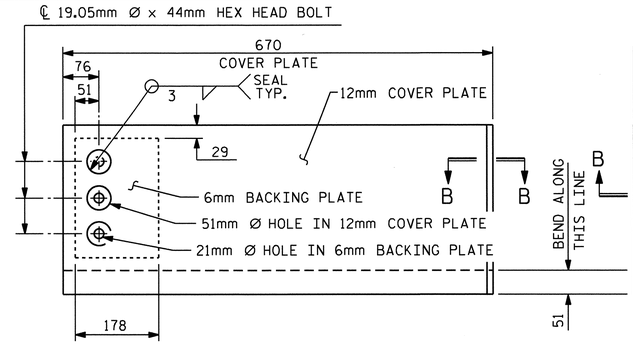


## TYPE I - ELEVATION VIEW

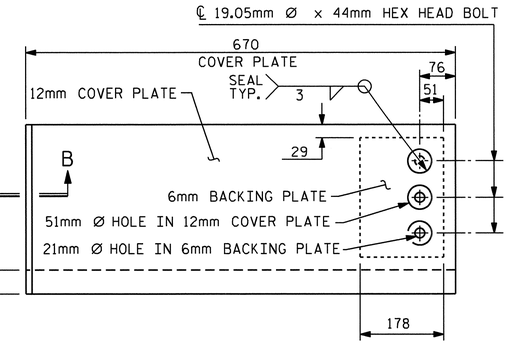


## TYPE II - ELEVATION VIEW

## COVER PLATE DETAILS

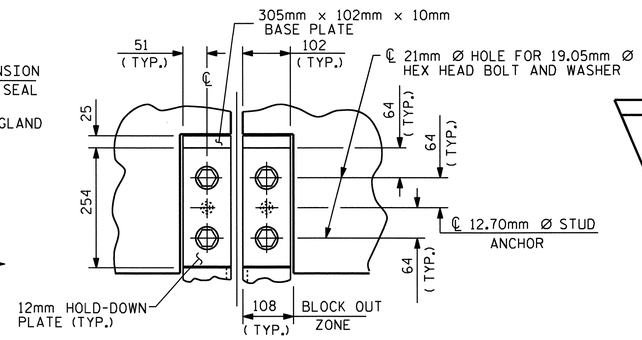


## SECTION A - A

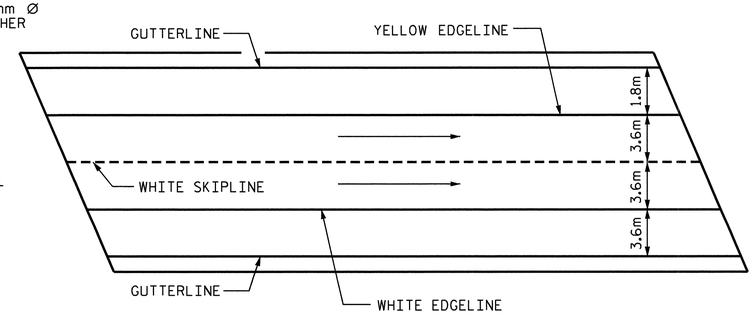


## PAVEMENT MARKING ALIGNMENT

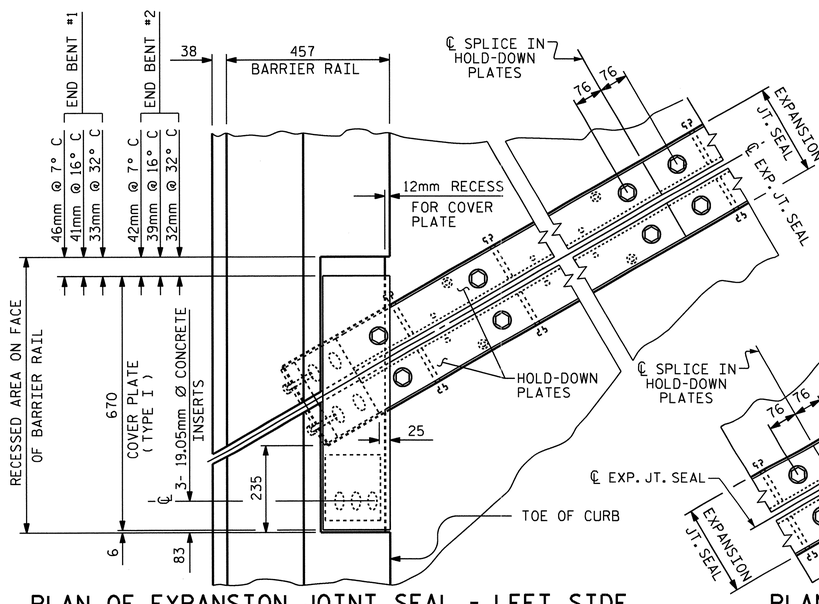


## PLAN OF EXPANSION JOINT SEAL - LEFT SIDE

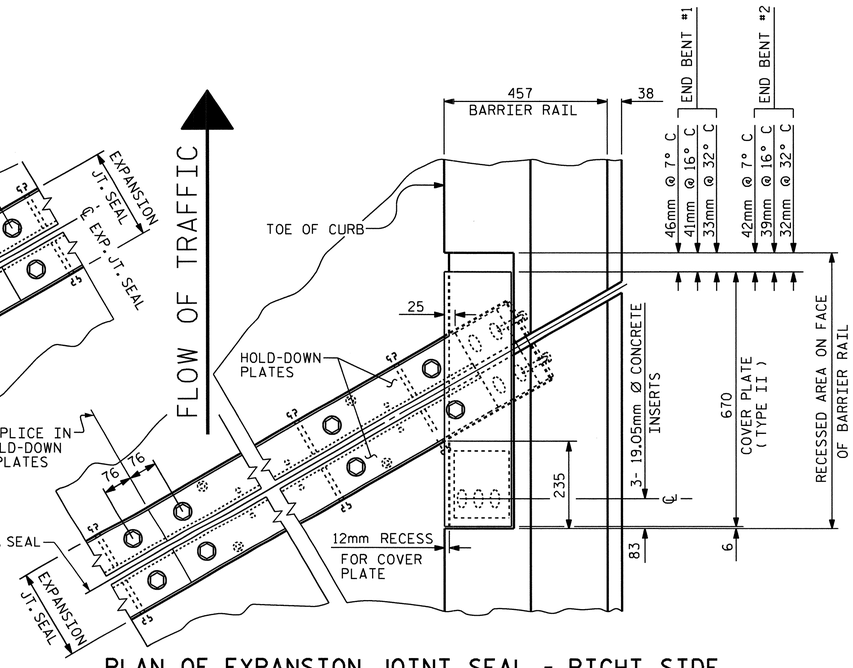


## PLAN OF EXPANSION JOINT SEAL - RIGHT SIDE

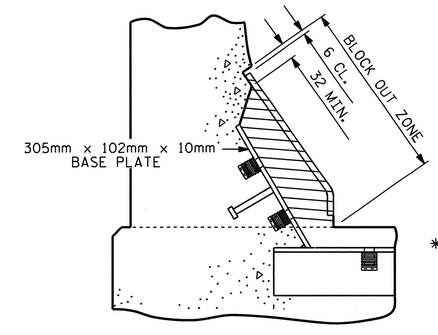


## BLOCK OUT DETAIL

SEE "SECTION A - A" FOR OTHER DETAILS.

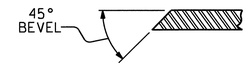


## SECTION B - B

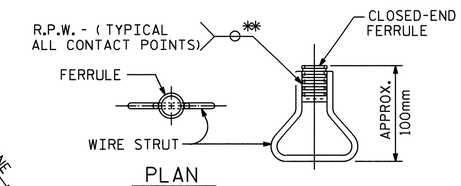


PLAN

ELEVATION

## CONCRETE INSERT

** EACH WELDED ATTACHMENT OF WIRE TO FERRULE SHALL DEVELOP THE TENSILE STRENGTH OF THE WIRE.

PROJECT NO. R-2413C

GUILFORD-ROCKINGHAM COUNTY

STATION: 45+30.610 -LREV-

SHEET 2 OF 2

STATE OF NORTH CAROLINA
DEPARTMENT OF TRANSPORTATION
RALEIGH

# STANDARD EXPANSION JOINT SEAL DETAILS FOR BARRIER RAIL RIGHT LANE

NORTH CAROLINA PROFESSIONAL SEAL 022516 ENGINEER EMILY E. MURRAY
10/28/11

| ASSEMBLED BY : T.L. AVERETTE | DATE : 11-10-10 |
|---|---|
| CHECKED BY : PEGGY PARISI | DATE : 07-26-11 |

| DRAWN BY : REK 9/87 | REV. 7/17/98 RWW/LES |
|---|---|
| CHECKED BY : CRK 10/87 | REV. 10/17/00 RWW/LES |
| | REV. 5/1/06 TLA/GM |

| REVISIONS | | | | | | | | SHEET NO. |
|---|---|---|---|---|---|---|---|---|
| NO. | BY: | DATE: | NO. | BY: | DATE: | | | S-194 |
| 1 | | | 3 | | | | | TOTAL SHEETS |
| 2 | | | 4 | | | | | 238 |

STR. #6

STD. NO. EJS2SM

05-SEP-2011 14:00
Y:\Structures\Final Plans\Str.#6\R2413C_sd_JS_06.dgn
mgudlaugsson

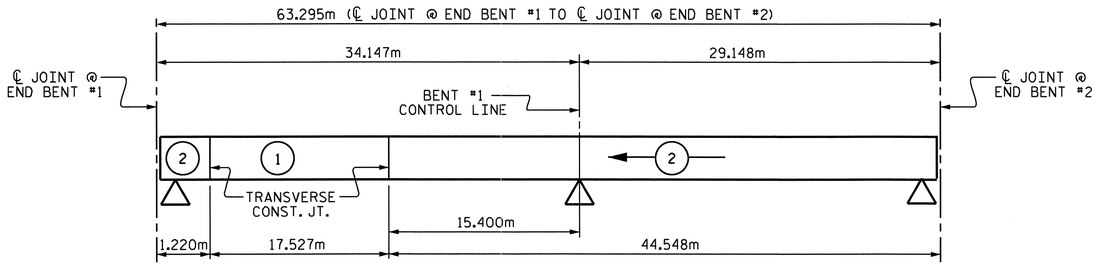


## POURING SEQUENCE

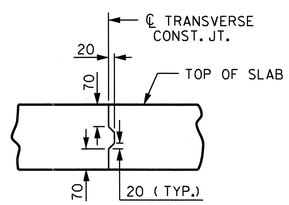


## TRANSVERSE CONSTRUCTION JOINT DETAIL

NOTE: REINFORCING STEEL IN SLAB NOT SHOWN. LONGITUDINAL REINFORCING STEEL SHALL BE CONTINUOUS THROUGH JOINT.

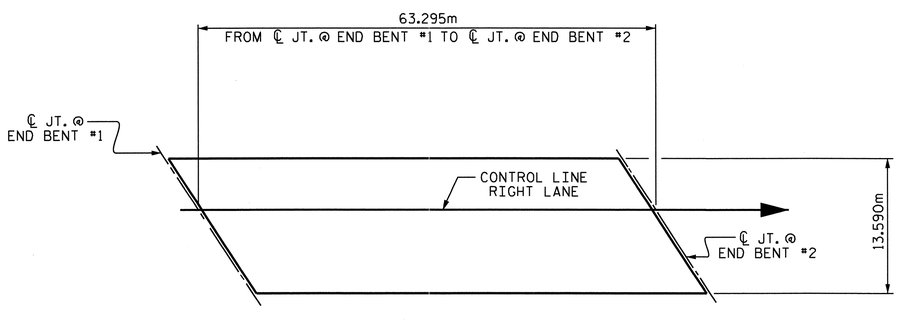


## LAYOUT FOR COMPUTING AREA OF REINFORCED CONCRETE DECK SLAB

( SQ. METER = 860.2 )

## REINFORCING BAR SCHEDULE

### SPANS A & B

| BAR | NUM | SZ | TYP | LENGTH | WEIGHT |
|---|---|---|---|---|---|
| *A1 | 357 | 16 | STR | 13480 | 7469 |
| A2 | 357 | 16 | STR | 13480 | 7469 |
| *A101 | 4 | 16 | STR | 13120 | 81 |
| *A102 | 4 | 16 | STR | 12380 | 77 |
| *A103 | 4 | 16 | STR | 11640 | 72 |
| *A104 | 4 | 16 | STR | 10900 | 68 |
| *A105 | 4 | 16 | STR | 10160 | 63 |
| *A106 | 4 | 16 | STR | 9420 | 58 |
| *A107 | 4 | 16 | STR | 8680 | 54 |
| *A108 | 4 | 16 | STR | 7920 | 49 |
| *A109 | 4 | 16 | STR | 7180 | 45 |
| *A110 | 4 | 16 | STR | 6440 | 40 |
| *A111 | 4 | 16 | STR | 5700 | 35 |
| *A112 | 4 | 16 | STR | 4960 | 31 |
| *A113 | 4 | 16 | STR | 4220 | 26 |
| *A114 | 4 | 16 | STR | 3480 | 22 |
| *A115 | 4 | 16 | STR | 2740 | 17 |
| *A116 | 4 | 16 | STR | 2000 | 12 |
| *A117 | 4 | 16 | STR | 1260 | 8 |
| A201 | 4 | 16 | STR | 13120 | 81 |
| A202 | 4 | 16 | STR | 12380 | 77 |
| A203 | 4 | 16 | STR | 11640 | 72 |
| A204 | 4 | 16 | STR | 10900 | 68 |
| A205 | 4 | 16 | STR | 10160 | 63 |
| A206 | 4 | 16 | STR | 9420 | 58 |
| A207 | 4 | 16 | STR | 8680 | 54 |
| A208 | 4 | 16 | STR | 7920 | 49 |
| A209 | 4 | 16 | STR | 7180 | 45 |
| A210 | 4 | 16 | STR | 6440 | 40 |
| A211 | 4 | 16 | STR | 5700 | 35 |
| A212 | 4 | 16 | STR | 4960 | 31 |
| A213 | 4 | 16 | STR | 4220 | 26 |
| A214 | 4 | 16 | STR | 3480 | 22 |
| A215 | 4 | 16 | STR | 2740 | 17 |
| A216 | 4 | 16 | STR | 2000 | 12 |
| A217 | 4 | 16 | STR | 1260 | 8 |
| *B1 | 96 | 13 | STR | 7380 | 704 |
| *B2 | 90 | 19 | STR | 16160 | 3251 |
| *B3 | 64 | 13 | STR | 6360 | 405 |
| B4 | 192 | 16 | STR | 16300 | 4857 |
| *B5 | 135 | 19 | STR | 12080 | 3645 |
| *G1 | 2 | 16 | STR | 14680 | 46 |
| *J1 | 92 | 13 | 4 | 440 | 40 |
| *K1 | 12 | 16 | 1 | 3360 | 63 |
| *K2 | 18 | 16 | 2 | 4320 | 121 |
| *S1 | 64 | 13 | 3 | 1340 | 85 |

REINFORCING STEEL KG 13084

* EPOXY COATED REINFORCING STEEL KG 16587

## BAR TYPES

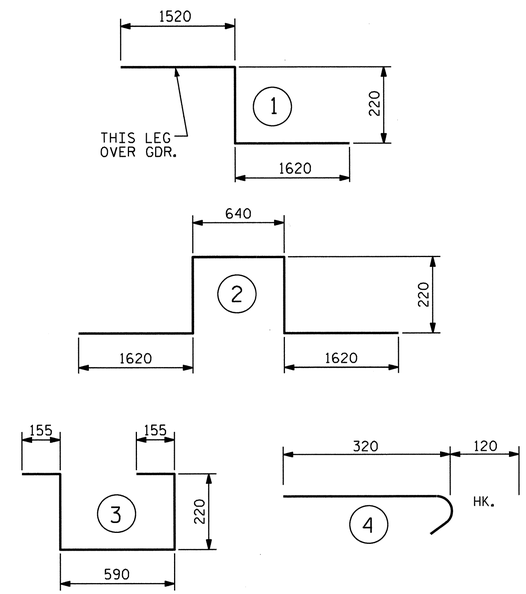


ALL BAR DIMENSIONS ARE OUT TO OUT

## SUPERSTRUCTURE BILL OF MATERIAL

| | CLASS AA CONCRETE | REINFORCING STEEL | EPOXY COATED REINFORCING STEEL |
|---|---|---|---|
| | (CU. METER) | ( kg ) | ( kg ) |
| POUR #1 | 61.0 | | |
| POUR #2 | 161.5 | | |
| | | | |
| TOTALS ** | 222.5 | 13,084 | 16,587 |

** QUANTITIES FOR BARRIER RAIL ARE NOT INCLUDED

## SUPERSTRUCTURE REINFORCING STEEL LENGTHS ARE BASED ON THE FOLLOWING MINIMUM SPLICE LENGTHS

| BAR SIZE | SUPERSTRUCTURE EXCEPT APPROACH SLABS, PARAPET, AND BARRIER RAIL | | APPROACH SLABS | | PARAPET AND BARRIER RAIL |
|---|---|---|---|---|---|
| | EPOXY COATED | UNCOATED | EPOXY COATED | UNCOATED | |
| #13 | 610 | 540 | 610 | 540 | 840 |
| #16 | 770 | 660 | 770 | 660 | 1050 |
| #19 | 920 | 790 | 1190 | 790 | 1330 |
| #22 | 1580 | 1060 | | | |
| #25 | 2080 | 1390 | | | |

## GROOVING BRIDGE FLOORS

| | | |
|---|---|---|
| BRIDGE DECK | 736.2 | SQ. METER |
| APPROACH SLABS | 171.7 | SQ. METER |
| TOTAL | 907.9 | SQ. METER |

PROJECT NO. R-2413C
GUILFORD-ROCKINGHAM COUNTY
STATION: 45+30.610 -LREV-

STATE OF NORTH CAROLINA
DEPARTMENT OF TRANSPORTATION
RALEIGH

SUPERSTRUCTURE
BILL OF MATERIAL
RIGHT LANE

NORTH CAROLINA PROFESSIONAL SEAL 022516 ENGINEER EMILY E. McFRAY
10/28/11

| REVISIONS | | | | | | SHEET NO. |
|---|---|---|---|---|---|---|
| NO. | BY: | DATE: | NO. | BY: | DATE: | S-195 |
| 1 | | | 3 | | | TOTAL SHEETS |
| 2 | | | 4 | | | 238 |

DRAWN BY : T.L. AVERETTE DATE : 09-13-10
CHECKED BY : PEGGY PARISI DATE : 09-16-10

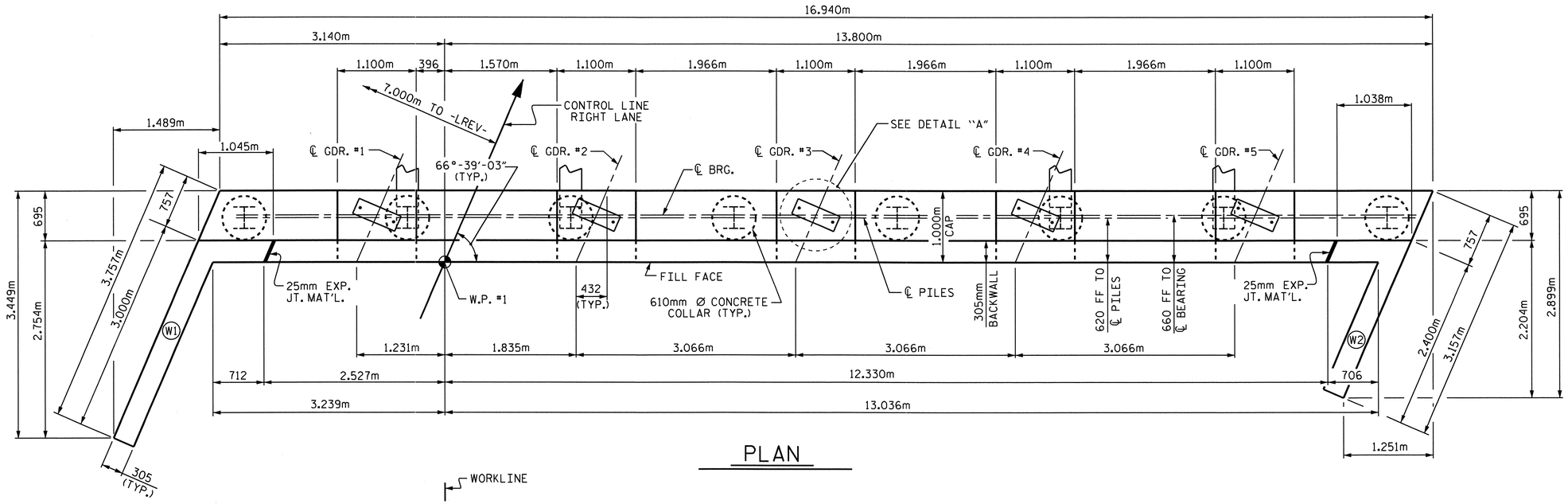


## PLAN

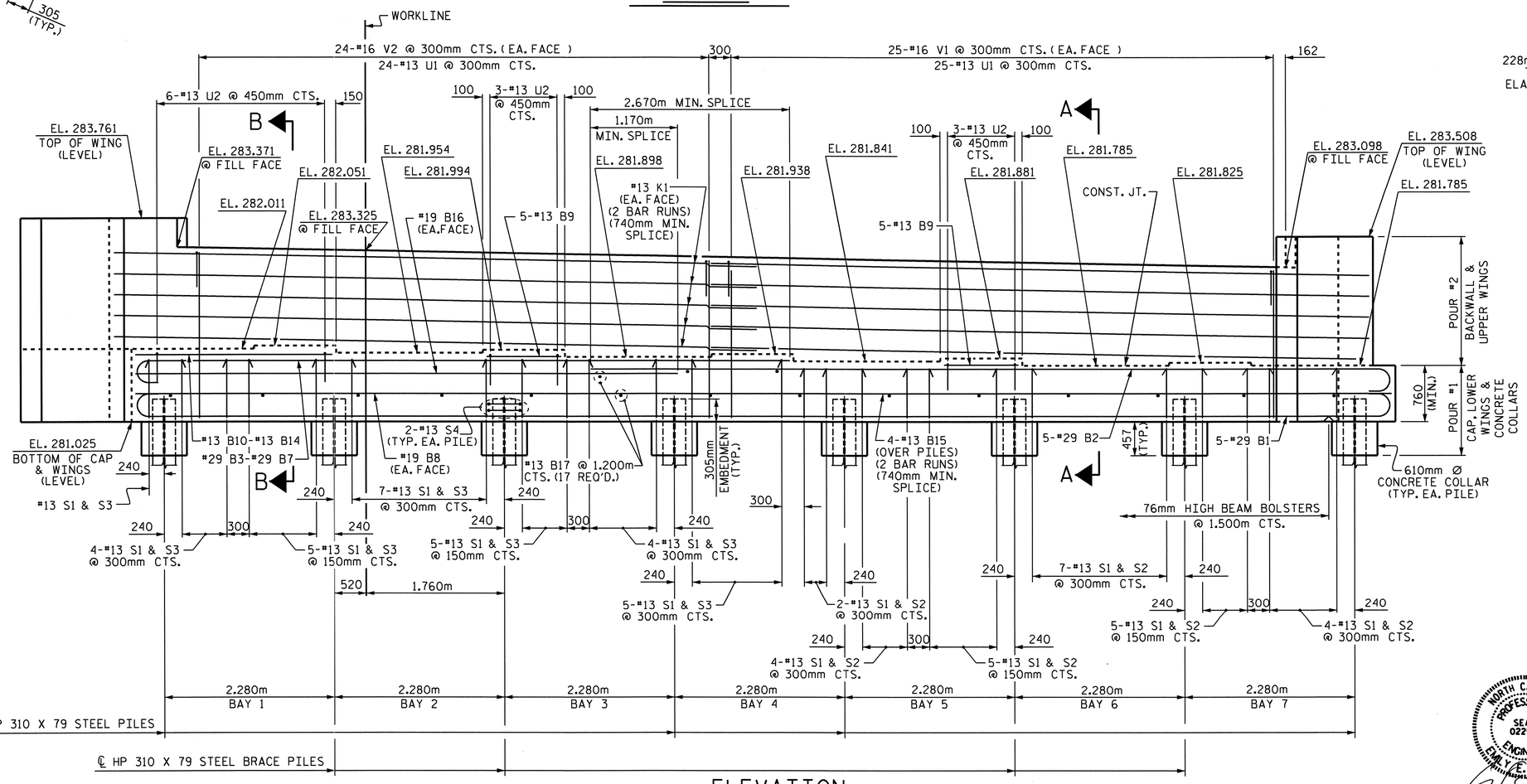


## ELEVATION

## NOTES

STIRRUPS AND U1 BARS IN CAP MAY BE SHIFTED AS NECESSARY TO CLEAR ANCHOR BOLTS.

BACKWALL SHALL BE PLACED BEFORE APPLYING THE EPOXY PROTECTIVE COATING.

THE TOP SURFACE AREAS OF THE END BENT CAPS SHALL BE CURED IN ACCORDANCE WITH THE STANDARD SPECIFICATIONS EXCEPT THE MEMBRANE CURING COMPOUND METHOD SHALL NOT BE USED.

THE TOP SURFACE OF THE END BENT CAP EXCEPT THE BRIDGE SEAT BUILDUPS SHALL BE SLOPED TRANSVERSELY FROM THE FILL FACE TO THE BACK FACE AT THE RATE OF 2%.

THE CONTRACTOR SHALL PROVIDE FOR INSTALLATION OF THE 102mm DIAMETER DRAIN PIPE THROUGH THE WING WALL AS REQUIRED FOR REINFORCED BRIDGE APPROACH FILLS. SEE THE ROADWAY PLANS. REINFORCING STEEL IN THE WING WALL MAY BE SHIFTED AS NECESSARY TO CLEAR THE DRAIN PIPE.

EPOXY COAT THE END BENT CAP AFTER ADJUSTMENTS ARE MADE TO BEARINGS.

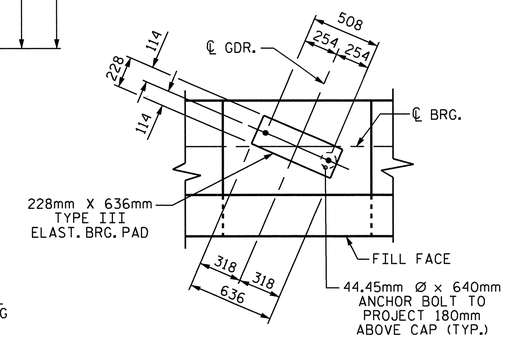


## DETAIL "A"

(TYP. EA. GDR.)

PROJECT NO. R-2413C

GUILFORD-ROCKINGHAM COUNTY

STATION: 45+30.610 -LREV-

SHEET 1 OF 3

STATE OF NORTH CAROLINA
DEPARTMENT OF TRANSPORTATION
RALEIGH

SUBSTRUCTURE

END BENT #1
RIGHT LANE

NORTH CAROLINA PROFESSIONAL SEAL 022516 ENGINEER EMILY E. MURRAY

10/26/11

| REVISIONS | | | | | | | | SHEET NO. |
|---|---|---|---|---|---|---|---|---|
| NO. | BY: | DATE: | NO. | BY: | DATE: | | | S-196 |
| 1 | | | 3 | | | | | TOTAL SHEETS |
| 2 | | | 4 | | | | | 238 |

DRAWN BY : T.L. AVERETTE DATE : 10-04-10
CHECKED BY : PEGGY PARISI DATE : 4-14-11

STR.#6

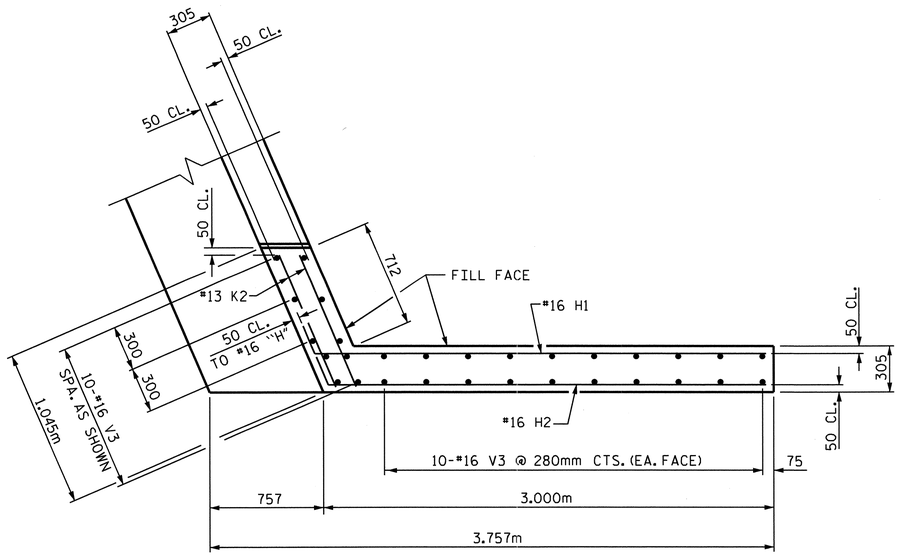


PLAN OF WING W1

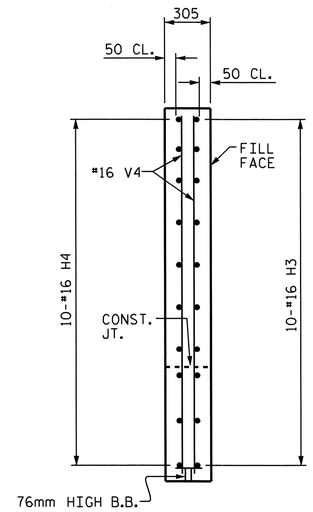


SECTION Y-Y

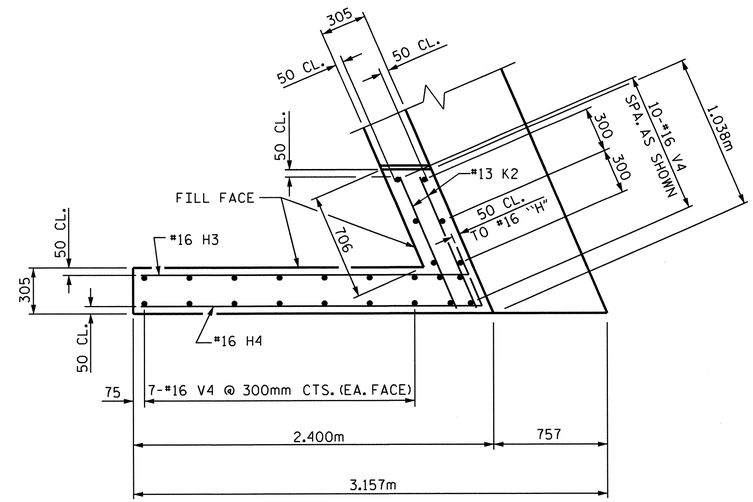


PLAN OF WING W2

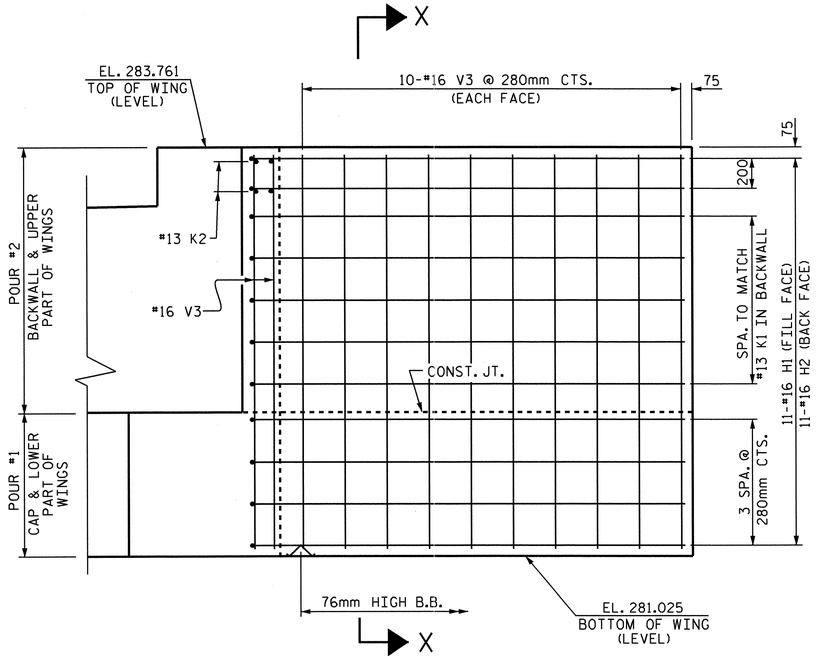


ELEVATION OF WING W1

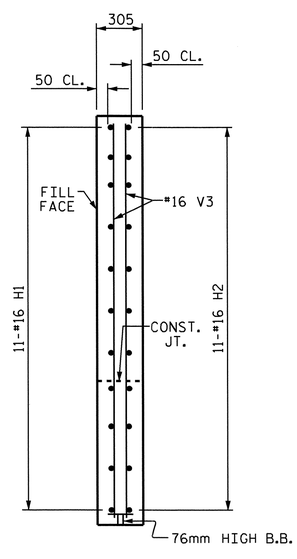


SECTION X-X

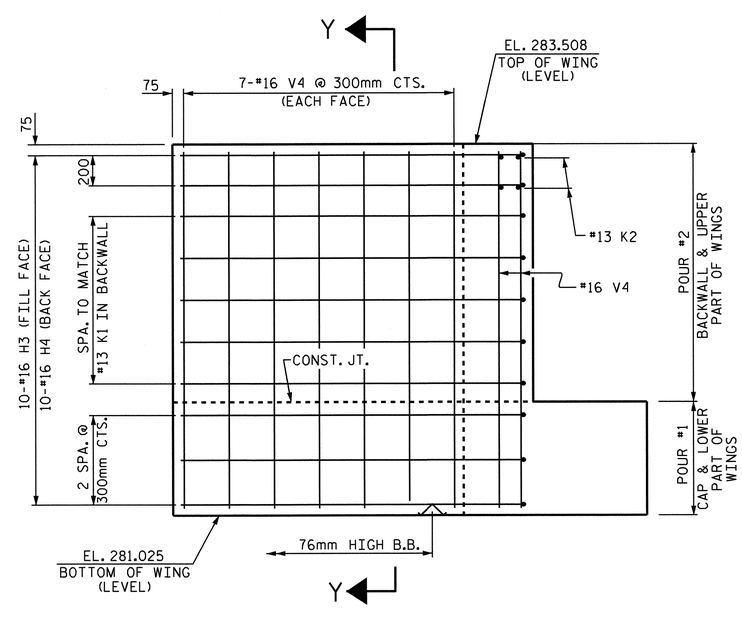


ELEVATION OF WING W2

PROJECT NO. R-2413C

GUILFORD-ROCKINGHAM COUNTY

STATION: 45+30.610 -LREV-

SHEET 2 OF 3

STATE OF NORTH CAROLINA
DEPARTMENT OF TRANSPORTATION
RALEIGH

SUBSTRUCTURE

END BENT #1
RIGHT LANE

| REVISIONS | | | | | | SHEET NO. |
|---|---|---|---|---|---|---|
| NO. | BY: | DATE: | NO. | BY: | DATE: | S-197 |
| 1 | | | 3 | | | TOTAL SHEETS |
| 2 | | | 4 | | | 238 |

DRAWN BY : T.L. AVERETTE DATE : 10-04-10
CHECKED BY : PEGGY PARISI DATE : 4-14-11

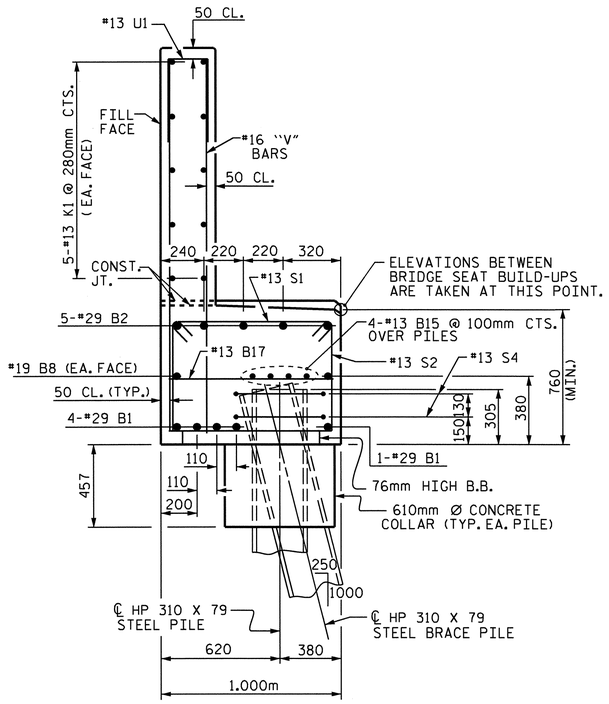


SECTION A-A

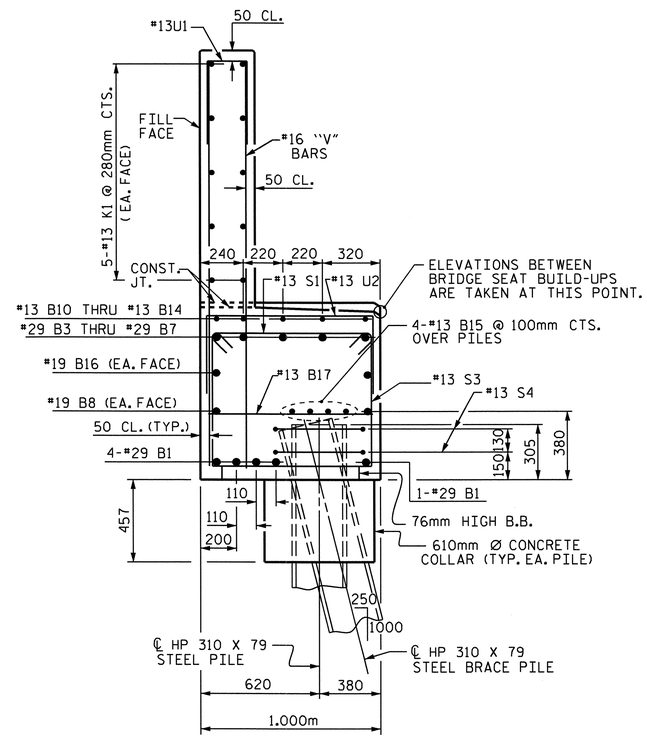


SECTION B-B

## BAR TYPES

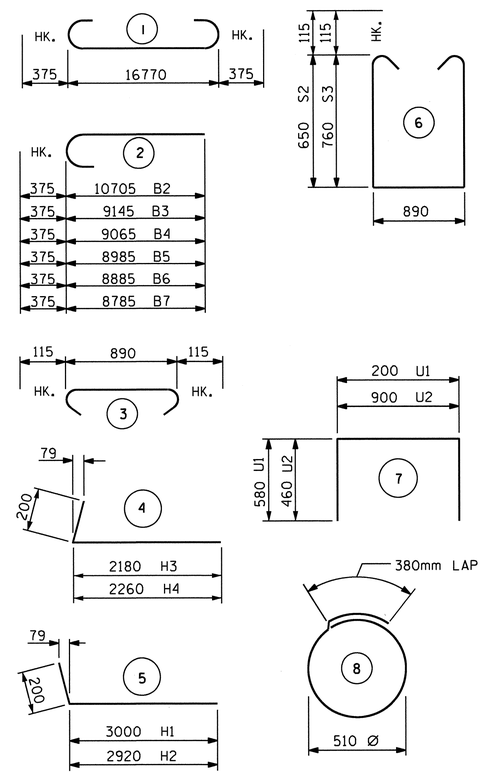


ALL BAR DIMENSIONS ARE OUT TO OUT.

## BILL OF MATERIAL
### END BENT #1

| BAR | NO. | SIZE | TYPE | LENGTH | WEIGHT |
|---|---|---|---|---|---|
| B1 | 5 | #29 | 1 | 17520 | 443 |
| B2 | 5 | #29 | 2 | 11080 | 280 |
| B3 | 1 | #29 | 2 | 9520 | 48 |
| B4 | 1 | #29 | 2 | 9440 | 48 |
| B5 | 1 | #29 | 2 | 9360 | 47 |
| B6 | 1 | #29 | 2 | 9260 | 47 |
| B7 | 1 | #29 | 2 | 9160 | 46 |
| B8 | 2 | #19 | STR | 16820 | 75 |
| B9 | 10 | #13 | STR | 1000 | 10 |
| B10 | 1 | #13 | STR | 3020 | 3 |
| B11 | 1 | #13 | STR | 2960 | 3 |
| B12 | 1 | #13 | STR | 2860 | 3 |
| B13 | 1 | #13 | STR | 2780 | 3 |
| B14 | 1 | #13 | STR | 2660 | 3 |
| B15 | 8 | #13 | STR | 8800 | 70 |
| B16 | 2 | #19 | STR | 7320 | 33 |
| B17 | 17 | #13 | STR | 900 | 15 |
| H1 | 11 | #16 | 5 | 3200 | 55 |
| H2 | 11 | #16 | 5 | 3120 | 53 |
| H3 | 10 | #16 | 4 | 2380 | 37 |
| H4 | 10 | #16 | 4 | 2460 | 38 |
| K1 | 20 | #13 | STR | 8800 | 175 |
| K2 | 8 | #13 | STR | 920 | 7 |
| S1 | 58 | #13 | 3 | 1120 | 65 |
| S2 | 27 | #13 | 6 | 2420 | 65 |
| S3 | 31 | #13 | 6 | 2640 | 81 |
| S4 | 16 | #13 | 8 | 1980 | 31 |
| U1 | 49 | #13 | 7 | 1360 | 66 |
| U2 | 12 | #13 | 7 | 1820 | 22 |
| V1 | 50 | #16 | STR | 1960 | 152 |
| V2 | 48 | #16 | STR | 2100 | 156 |
| V3 | 30 | #16 | STR | 2620 | 122 |
| V4 | 24 | #16 | STR | 2380 | 89 |

TOTAL REINFORCING STEEL = 2,391 kg

CLASS A CONCRETE BREAKDOWN

| | | |
|---|---|---|
| POUR #1 (CAP, LOWER WINGS & CONCRETE COLLARS) | m³ | 17.2 |
| POUR #2 (BACKWALL & UPPER WINGS) | m³ | 9.7 |
| TOTAL CLASS A CONCRETE | m³ | 26.9 |

HP 310 X 79 STEEL PILES
NO. 8 METERS 26.4

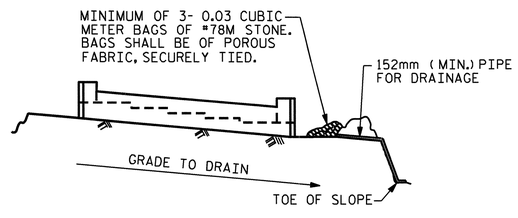


BAGGED STONE AND PIPE SHALL BE PLACED IMMEDIATELY AFTER COMPLETION OF END BENT EXCAVATION. PIPE MAY BE EITHER CONCRETE, CORRUGATED STEEL, CORRUGATED ALUMINUM ALLOY, OR CORRUGATED PLASTIC. PERFORATED PIPE WILL NOT BE ALLOWED.

BAGGED STONE SHALL REMAIN IN PLACE UNTIL THE ENGINEER DIRECTS THAT IT BE REMOVED. THE CONTRACTOR SHALL REMOVE AND DISPOSE OF SILT ACCUMULATIONS AT BAGGED STONE WHEN SO DIRECTED BY THE ENGINEER. BAGS SHALL BE REMOVED AND REPLACED WHENEVER THE ENGINEER DETERMINES THAT THEY HAVE DETERIORATED AND LOST THEIR EFFECTIVENESS.

NO SEPARATE PAYMENT WILL BE MADE FOR THIS WORK AND THE ENTIRE COST OF THIS WORK SHALL BE INCLUDED IN THE UNIT CONTRACT PRICE BID FOR THE SEVERAL PAY ITEMS.

TEMPORARY DRAINAGE AT END BENT

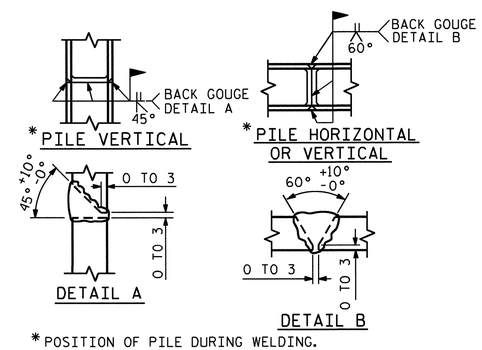


*POSITION OF PILE DURING WELDING.

PILE SPLICE DETAILS

PROJECT NO. R-2413C
GUILFORD-ROCKINGHAM COUNTY
STATION: 45+30.610 -LREV-

SHEET 3 OF 3

STATE OF NORTH CAROLINA
DEPARTMENT OF TRANSPORTATION
RALEIGH

SUBSTRUCTURE

END BENT #1
RIGHT LANE

NORTH CAROLINA PROFESSIONAL SEAL 022516 ENGINEER EMILY E. McFARLAN
4/28/11

| REVISIONS | | | | | | | SHEET NO. |
|---|---|---|---|---|---|---|---|
| NO. | BY: | DATE: | NO. | BY: | DATE: | | S-198 |
| 1 | | | 3 | | | | TOTAL SHEETS |
| 2 | | | 4 | | | | 238 |

DRAWN BY : T.L. AVERETTE DATE : 10-04-10
CHECKED BY : PEGGY PARISI DATE : 4-14-11

STR.#6

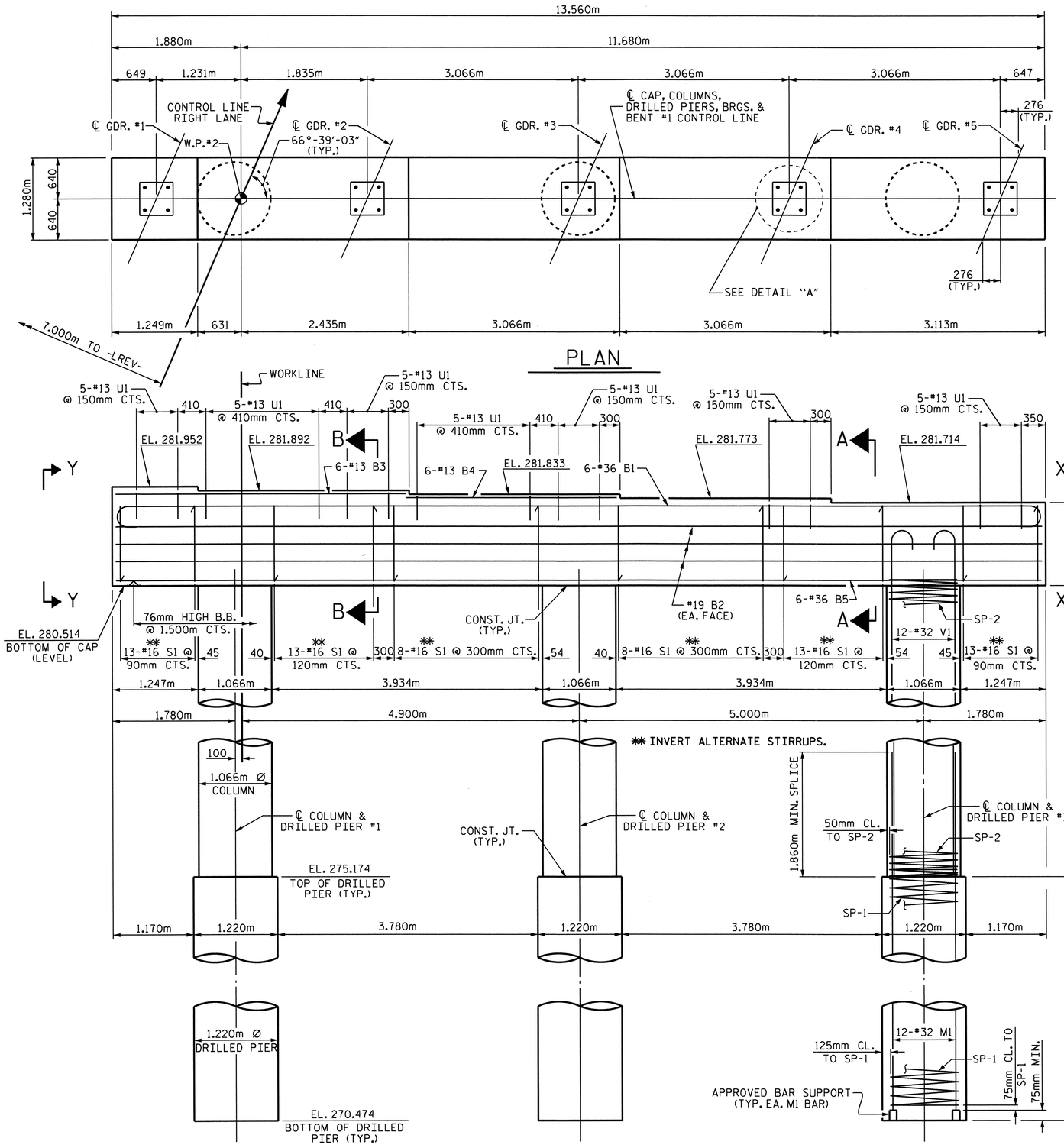


ELEVATION

( DIMENSIONS AND REINFORCING STEEL ARE TYPICAL FOR EACH COLUMN & DRILLED PIER )

## NOTES

STIRRUPS AND U1 BARS IN CAP MAY BE SHIFTED AS NECESSARY TO CLEAR ANCHOR BOLTS.

HOOKS ON "V" BARS MAY BE TURNED AS NECESSARY FOR PLACING REINFORCING STEEL.

ALL STEEL IN THE DRILLED PIERS IS INCLUDED IN THE PAY ITEMS FOR "REINFORCING STEEL" AND "SPIRAL COLUMN REINFORCING STEEL".

THE CONTRACTOR'S ATTENTION IS CALLED TO THE FACT THAT THE LONGITUDINAL REINFORCEMENT FOR THE DRILLED PIERS IS DETAILED WITH ONE METER OF EXTRA LENGTH.

THE LOCATION OF THE CONSTRUCTION JOINT IN THE DRILLED PIERS IS BASED ON AN APPROXIMATE GROUND LINE ELEVATION. IF THE CONSTRUCTION JOINT IS ABOVE THE ACTUAL GROUND LINE ELEVATION, THE CONTRACTOR SHALL PLACE THE CONSTRUCTION JOINT 300mm BELOW THE GROUND LINE.

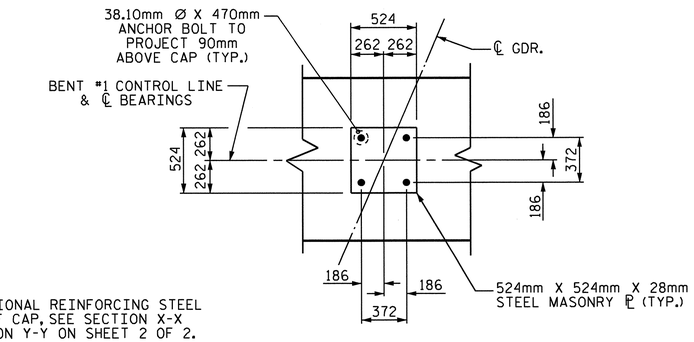


NOTE:
FOR ADDITIONAL REINFORCING STEEL IN ENDS OF CAP, SEE SECTION X-X AND SECTION Y-Y ON SHEET 2 OF 2.

DETAIL "A"

(TYP. EA. GDR.)

PROJECT NO. R-2413C

GUILFORD-ROCKINGHAM COUNTY

STATION: 45+30.610 -LREV-

SHEET 1 OF 2

STATE OF NORTH CAROLINA
DEPARTMENT OF TRANSPORTATION
RALEIGH

SUBSTRUCTURE
BENT #1
RIGHT LANE

NORTH CAROLINA PROFESSIONAL SEAL 022516 ENGINEER EMILY E. MORRAY
10/31/11

| REVISIONS | | | | | | SHEET NO. |
|---|---|---|---|---|---|---|
| NO. | BY: | DATE: | NO. | BY: | DATE: | S-199 |
| 1 | | | 3 | | | TOTAL SHEETS |
| 2 | | | 4 | | | 238 |

DRAWN BY : T.L. AVERETTE DATE : 10-15-10
CHECKED BY : PEGGY PARISI DATE : 04-21-11

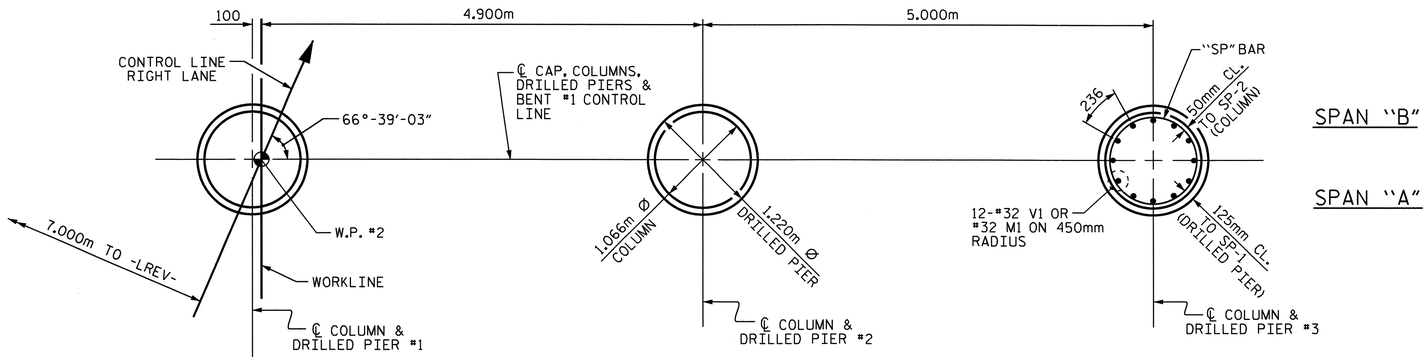


## PLAN OF COLUMNS & DRILLED PIERS

(DIMENSIONS AND REINFORCING STEEL ARE TYPICAL FOR EACH COLUMN & DRILLED PIER)

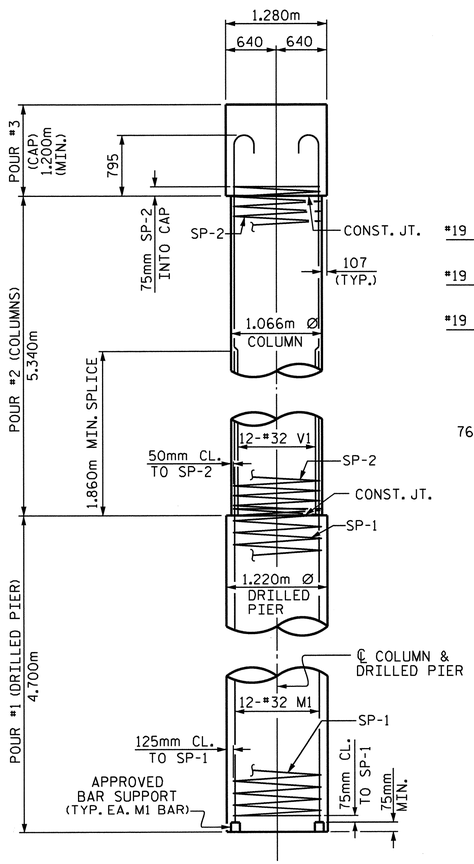


## END ELEVATION

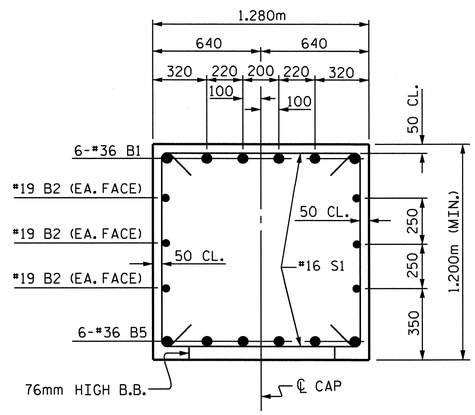


## SECTION A-A

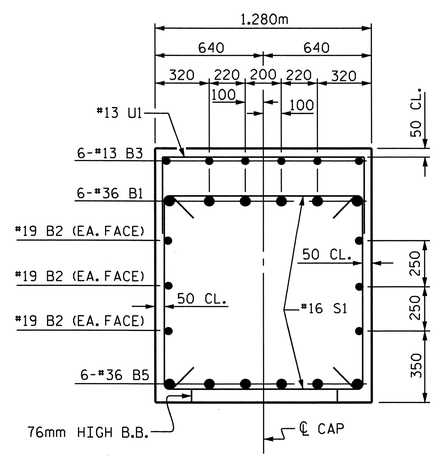


## SECTION B-B

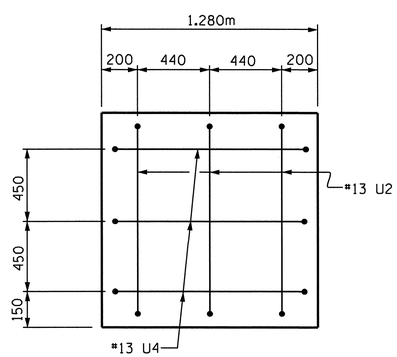


## SECTION X-X

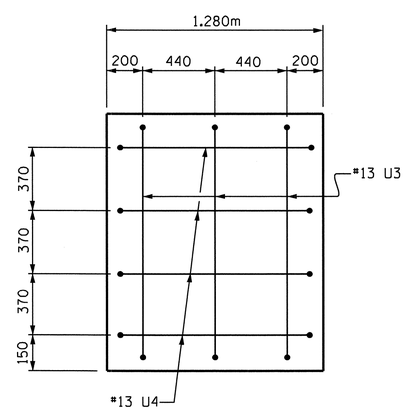


## SECTION Y-Y

## BAR TYPES

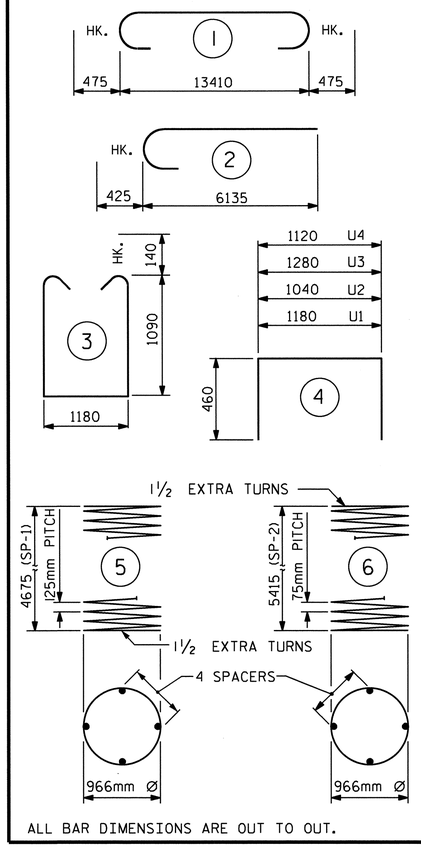


ALL BAR DIMENSIONS ARE OUT TO OUT.

## BILL OF MATERIAL

### BENT #1

| BAR | NO. | SIZE | TYPE | LENGTH | WEIGHT |
|---|---|---|---|---|---|
| B1 | 6 | #36 | 1 | 14360 | 681 |
| B2 | 6 | #19 | STR | 13460 | 180 |
| B3 | 6 | #13 | STR | 4200 | 25 |
| B4 | 6 | #13 | STR | 3060 | 18 |
| B5 | 6 | #36 | STR | 13460 | 639 |
| M1 | 36 | #32 | STR | 7500 | 1729 |
| S1 | 68 | #16 | 3 | 3640 | 384 |
| U1 | 35 | #13 | 4 | 2100 | 73 |
| U2 | 3 | #13 | 4 | 1960 | 6 |
| U3 | 3 | #13 | 4 | 2200 | 7 |
| U4 | 7 | #13 | 4 | 2040 | 14 |
| V1 | 36 | #32 | 2 | 6560 | 1512 |

TOTAL REINFORCING STEEL = 5268 kg

| | | | | | |
|---|---|---|---|---|---|
| SP-1 | 3 | ✱✱ | 5 | 117000 | 545 |
| SP-2 | 3 | ✱✱✱ | 6 | 221640 | 661 |

SPIRAL COLUMN REINFORCING STEEL 1206 kg

DRILLED PIER CONCRETE BREAKDOWN

| | | |
|---|---|---|
| POUR #1 (DRILLED PIERS) | m³ | 16.5 |

CLASS "A" CONCRETE BREAKDOWN

| | | |
|---|---|---|
| POUR #2 (COLUMNS) | m³ | 14.3 |
| POUR #3 (CAP) | m³ | 22.6 |
| TOTAL CLASS "A" CONCRETE | m³ | 36.9 |

| | |
|---|---|
| 1220mm Ø DRILLED PIERS NOT IN SOIL | 7.2m |
| 1220mm Ø DRILLED PIERS IN SOIL | 6.9m |
| CSL TUBES | 65.4m |

✱✱✱ THE SP-2 SPIRAL REINFORCING STEEL SHALL BE W20 OR D-20 COLD DRAWN WIRE OR #13 PLAIN OR DEFORMED BAR.

✱✱ THE SP-1 SPIRAL REINFORCING STEEL SHALL BE W31 OR D-31 COLD DRAWN WIRE OR #16 PLAIN OR DEFORMED BAR.

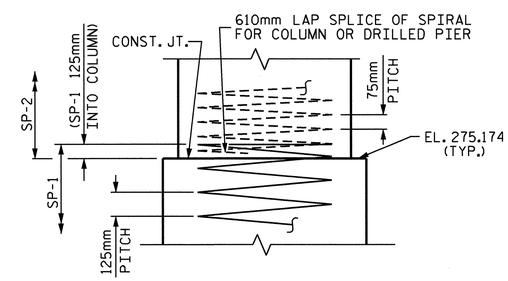


## CONSTRUCTION JOINT DETAIL

PROJECT NO. R-2413C

GUILFORD-ROCKINGHAM COUNTY

STATION: 45+30.610 -LREV-

SHEET 2 OF 2

STATE OF NORTH CAROLINA
DEPARTMENT OF TRANSPORTATION
RALEIGH

SUBSTRUCTURE
BENT #1
RIGHT LANE

NORTH CAROLINA PROFESSIONAL SEAL 022516 ENGINEER EMILY E. MURRAY
10/31/11

| REVISIONS | | | | | | SHEET NO. |
|---|---|---|---|---|---|---|
| NO. | BY: | DATE: | NO. | BY: | DATE: | S-200 |
| 1 | | | 3 | | | TOTAL SHEETS |
| 2 | | | 4 | | | 238 |

DRAWN BY : T.L. AVERETTE DATE : 10-15-10
CHECKED BY : PEGGY PARISI DATE : 04-21-11

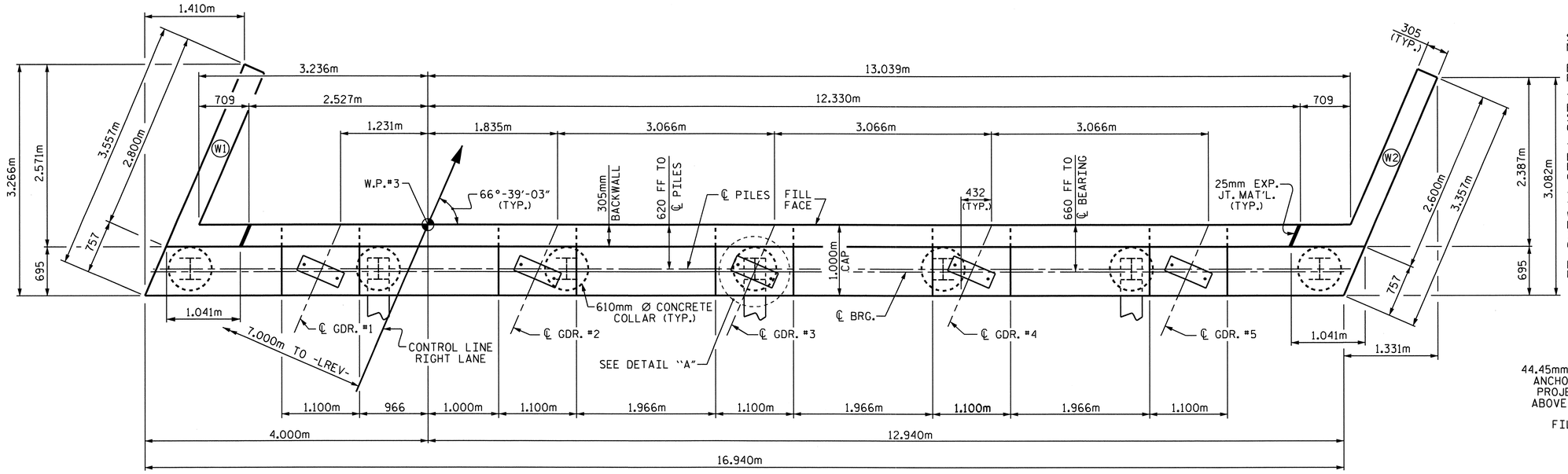


## PLAN

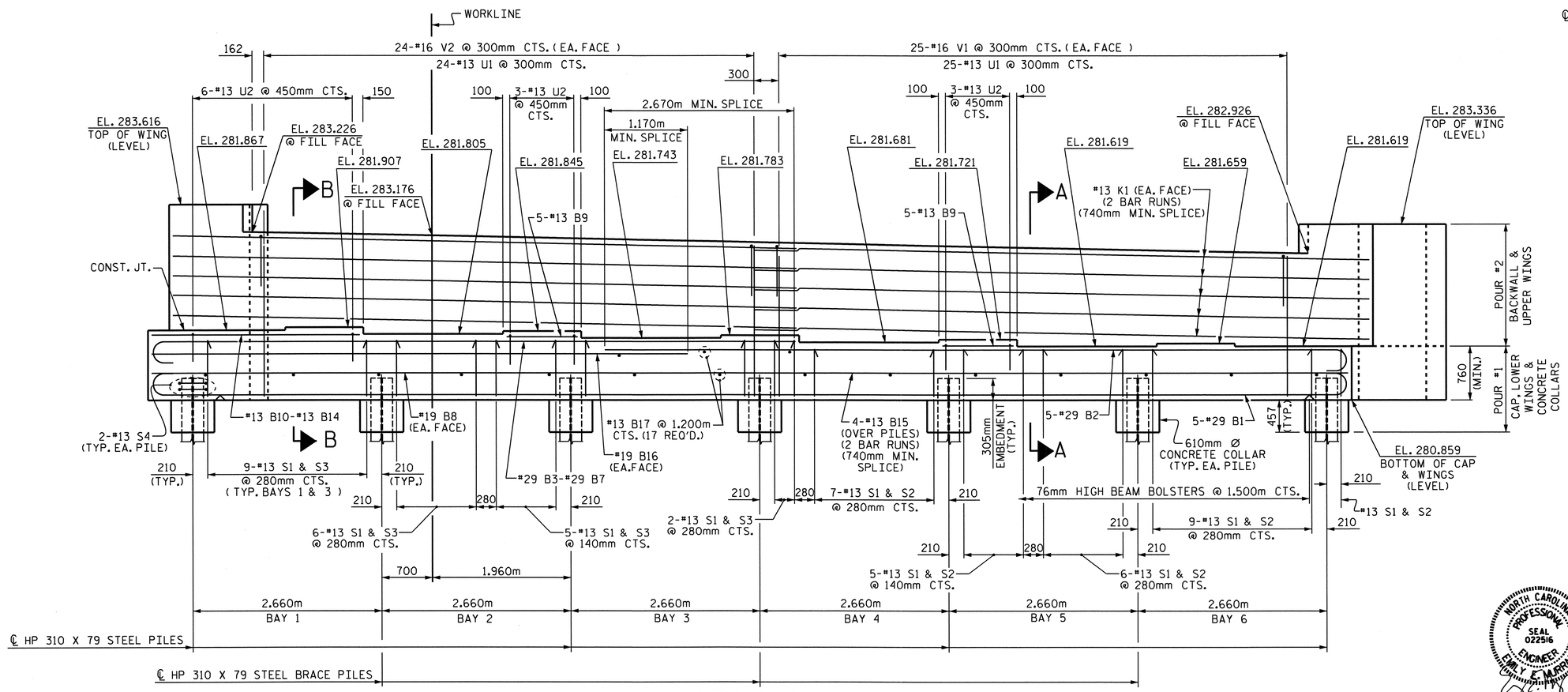


## ELEVATION

## NOTES

STIRRUPS AND U1 BARS IN CAP MAY BE SHIFTED AS NECESSARY TO CLEAR ANCHOR BOLTS.

BACKWALL SHALL BE PLACED BEFORE APPLYING THE EPOXY PROTECTIVE COATING.

THE TOP SURFACE AREAS OF THE END BENT CAPS SHALL BE CURED IN ACCORDANCE WITH THE STANDARD SPECIFICATIONS EXCEPT THE MEMBRANE CURING COMPOUND METHOD SHALL NOT BE USED.

THE TOP SURFACE OF THE END BENT CAP EXCEPT THE BRIDGE SEAT BUILDUPS SHALL BE SLOPED TRANSVERSELY FROM THE FILL FACE TO THE BACK FACE AT THE RATE OF 2%.

THE CONTRACTOR SHALL PROVIDE FOR INSTALLATION OF THE 102mm DIAMETER DRAIN PIPE THROUGH THE WING WALL AS REQUIRED FOR REINFORCED BRIDGE APPROACH FILLS, SEE THE ROADWAY PLANS. REINFORCING STEEL IN THE WING WALL MAY BE SHIFTED AS NECESSARY TO CLEAR THE DRAIN PIPE.

EPOXY COAT THE END BENT CAP AFTER ADJUSTMENTS ARE MADE TO BEARINGS.

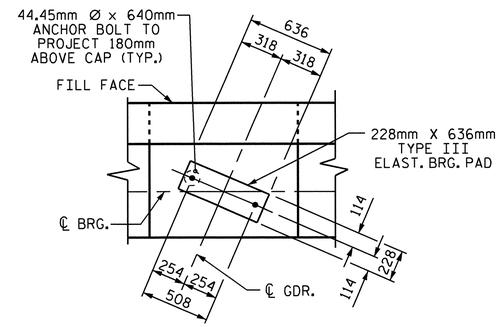


## DETAIL "A"

(TYP. EA. GDR.)

PROJECT NO. R-2413C

GUILFORD-ROCKINGHAM COUNTY

STATION: 45+30.610 -LREV-

SHEET 1 OF 3

STATE OF NORTH CAROLINA
DEPARTMENT OF TRANSPORTATION
RALEIGH

SUBSTRUCTURE

END BENT #2
RIGHT LANE

NORTH CAROLINA PROFESSIONAL SEAL 022516 ENGINEER EMILY E. MURRAY
10/28/11

| REVISIONS | | | | | | | SHEET NO. |
|---|---|---|---|---|---|---|---|
| NO. | BY: | DATE: | NO. | BY: | DATE: | | S-201 |
| 1 | | | 3 | | | | TOTAL SHEETS |
| 2 | | | 4 | | | | 238 |

DRAWN BY : T.L. AVERETTE DATE : 10-05-10
CHECKED BY : PEGGY PARISI DATE : 4-14-11

STR.#6

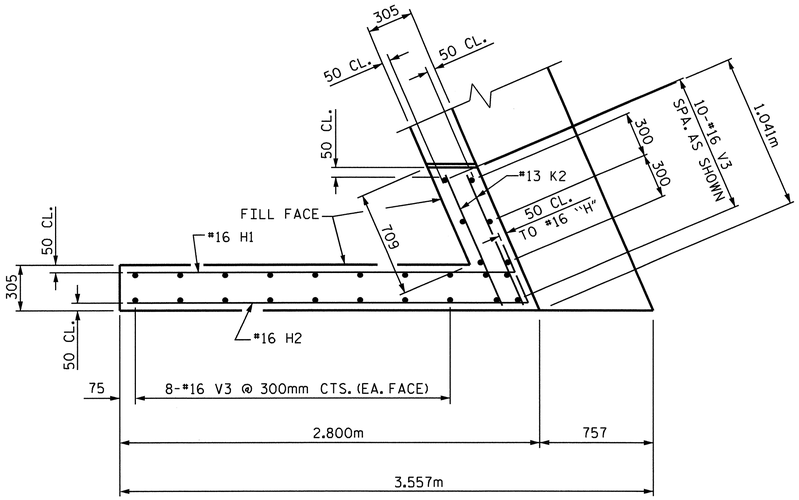


PLAN OF WING W1

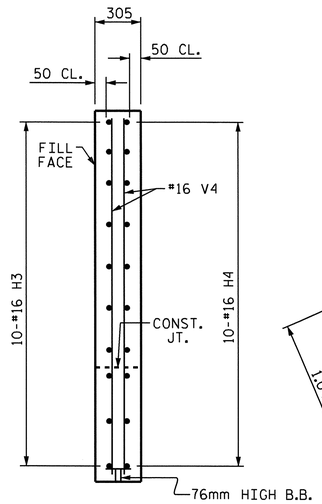


SECTION Y-Y

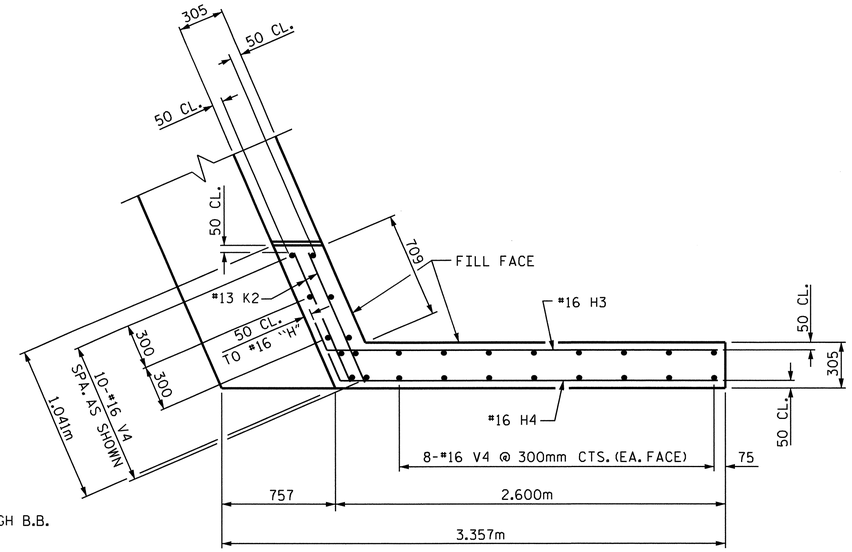


PLAN OF WING W2

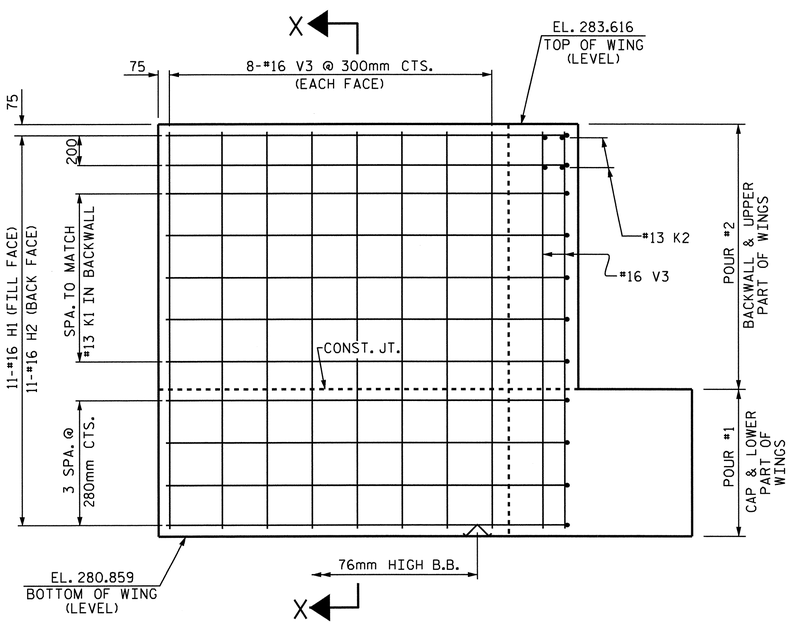


ELEVATION OF WING W1

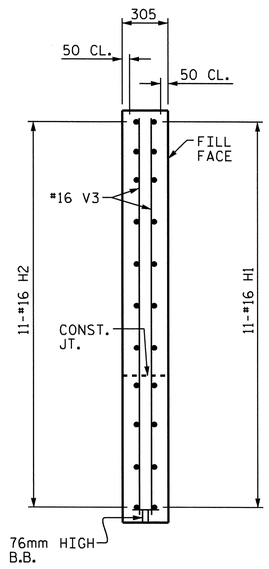


SECTION X-X

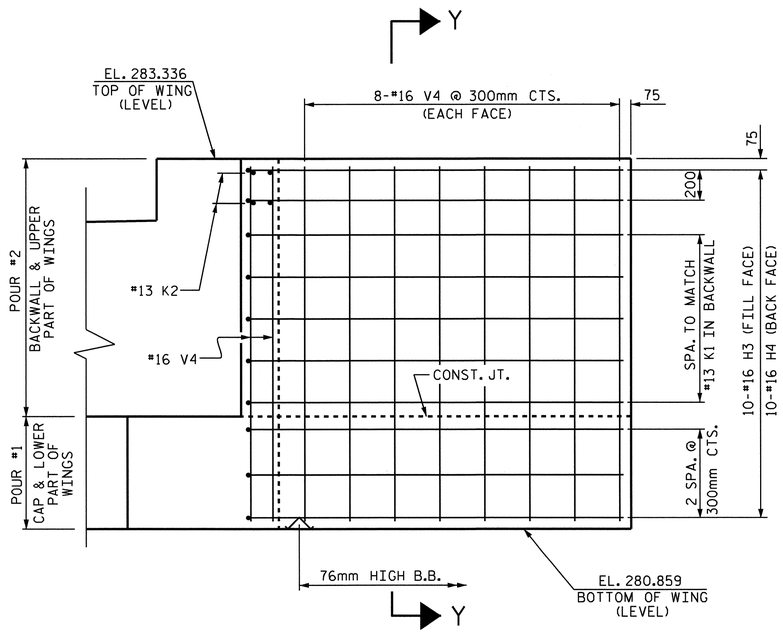


ELEVATION OF WING W2

NORTH CAROLINA PROFESSIONAL SEAL 022516 ENGINEER EMILY E. MURRAY
1/28/11

PROJECT NO. R-2413C
GUILFORD-ROCKINGHAM COUNTY
STATION: 45+30.610 -LREV-

SHEET 2 OF 3

STATE OF NORTH CAROLINA
DEPARTMENT OF TRANSPORTATION
RALEIGH

SUBSTRUCTURE

END BENT #2
RIGHT LANE

| REVISIONS | | | | | | SHEET NO. |
|---|---|---|---|---|---|---|
| NO. | BY: | DATE: | NO. | BY: | DATE: | S-202 |
| 1 | | | 3 | | | TOTAL SHEETS |
| 2 | | | 4 | | | 238 |

DRAWN BY : T.L. AVERETTE DATE : 10-05-10
CHECKED BY : PEGGY PARISI DATE : 4-14-11

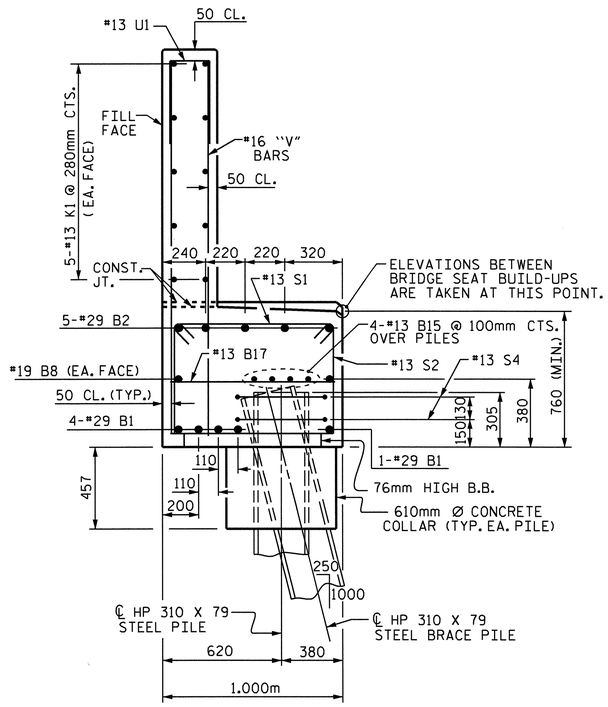


SECTION A-A

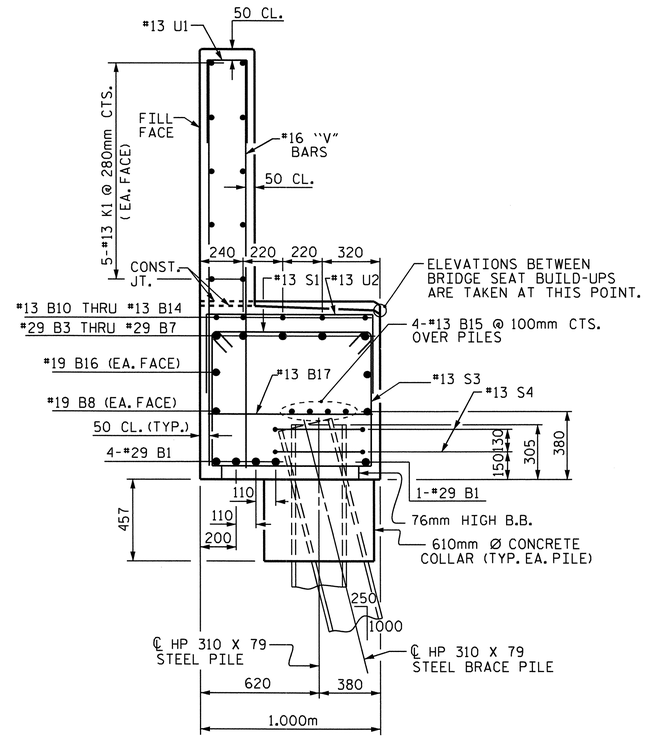


SECTION B-B

## BAR TYPES

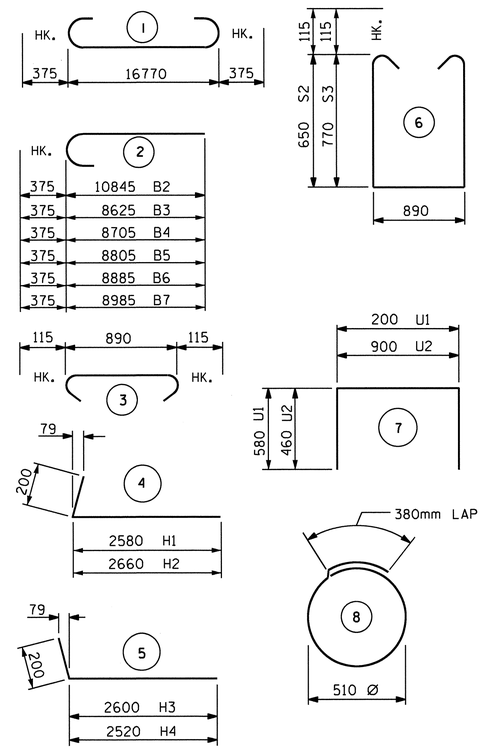


ALL BAR DIMENSIONS ARE OUT TO OUT.

## BILL OF MATERIAL
### END BENT #2

| BAR | NO. | SIZE | TYPE | LENGTH | WEIGHT |
|---|---|---|---|---|---|
| B1 | 5 | #29 | 1 | 17520 | 443 |
| B2 | 5 | #29 | 2 | 11220 | 284 |
| B3 | 1 | #29 | 2 | 9000 | 46 |
| B4 | 1 | #29 | 2 | 9080 | 46 |
| B5 | 1 | #29 | 2 | 9180 | 46 |
| B6 | 1 | #29 | 2 | 9260 | 47 |
| B7 | 1 | #29 | 2 | 9360 | 47 |
| B8 | 2 | #19 | STR | 16820 | 75 |
| B9 | 10 | #13 | STR | 1000 | 10 |
| B10 | 1 | #13 | STR | 2520 | 3 |
| B11 | 1 | #13 | STR | 2600 | 3 |
| B12 | 1 | #13 | STR | 2680 | 3 |
| B13 | 1 | #13 | STR | 2780 | 3 |
| B14 | 1 | #13 | STR | 2880 | 3 |
| B15 | 8 | #13 | STR | 8800 | 70 |
| B16 | 2 | #19 | STR | 7160 | 32 |
| B17 | 17 | #13 | STR | 900 | 15 |
| H1 | 11 | #16 | 4 | 2780 | 47 |
| H2 | 11 | #16 | 4 | 2860 | 49 |
| H3 | 10 | #16 | 5 | 2800 | 43 |
| H4 | 10 | #16 | 5 | 2720 | 42 |
| K1 | 20 | #13 | STR | 8800 | 175 |
| K2 | 8 | #13 | STR | 920 | 7 |
| S1 | 59 | #13 | 3 | 1120 | 66 |
| S2 | 28 | #13 | 6 | 2420 | 67 |
| S3 | 31 | #13 | 6 | 2660 | 82 |
| S4 | 14 | #13 | 8 | 1980 | 28 |
| U1 | 49 | #13 | 7 | 1360 | 66 |
| U2 | 12 | #13 | 7 | 1820 | 22 |
| V1 | 50 | #16 | STR | 1960 | 152 |
| V2 | 48 | #16 | STR | 2120 | 158 |
| V3 | 26 | #16 | STR | 2640 | 107 |
| V4 | 26 | #16 | STR | 2360 | 95 |

TOTAL REINFORCING STEEL = 2,382 kg

CLASS A CONCRETE BREAKDOWN

| | | |
|---|---|---|
| POUR #1 (CAP, LOWER WINGS & CONCRETE COLLARS) | m3 | 17.1 |
| POUR #2 (BACKWALL & UPPER WINGS) | m3 | 9.7 |
| TOTAL CLASS A CONCRETE | m3 | 26.8 |

HP 310 X 79 STEEL PILES
NO. 7 METERS 28.0

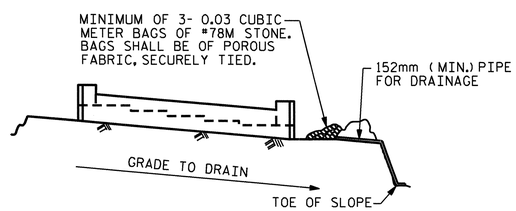


BAGGED STONE AND PIPE SHALL BE PLACED IMMEDIATELY AFTER COMPLETION OF END BENT EXCAVATION. PIPE MAY BE EITHER CONCRETE, CORRUGATED STEEL, CORRUGATED ALUMINUM ALLOY, OR CORRUGATED PLASTIC. PERFORATED PIPE WILL NOT BE ALLOWED.

BAGGED STONE SHALL REMAIN IN PLACE UNTIL THE ENGINEER DIRECTS THAT IT BE REMOVED. THE CONTRACTOR SHALL REMOVE AND DISPOSE OF SILT ACCUMULATIONS AT BAGGED STONE WHEN SO DIRECTED BY THE ENGINEER. BAGS SHALL BE REMOVED AND REPLACED WHENEVER THE ENGINEER DETERMINES THAT THEY HAVE DETERIORATED AND LOST THEIR EFFECTIVENESS.

NO SEPARATE PAYMENT WILL BE MADE FOR THIS WORK AND THE ENTIRE COST OF THIS WORK SHALL BE INCLUDED IN THE UNIT CONTRACT PRICE BID FOR THE SEVERAL PAY ITEMS.

TEMPORARY DRAINAGE AT END BENT

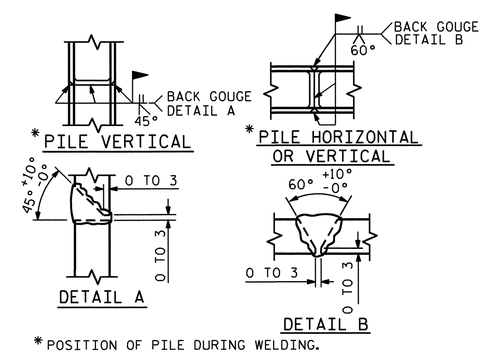


*POSITION OF PILE DURING WELDING.

PILE SPLICE DETAILS

PROJECT NO. R-2413C
GUILFORD-ROCKINGHAM COUNTY
STATION: 45+30.610 -LREV-

SHEET 3 OF 3

STATE OF NORTH CAROLINA
DEPARTMENT OF TRANSPORTATION
RALEIGH

SUBSTRUCTURE
END BENT #2
RIGHT LANE

NORTH CAROLINA PROFESSIONAL SEAL 022516 ENGINEER EMILY E. MURRAY
10/28/11

| REVISIONS | | | | | | SHEET NO. |
|---|---|---|---|---|---|---|
| NO. | BY: | DATE: | NO. | BY: | DATE: | S-203 |
| 1 | | | 3 | | | TOTAL SHEETS |
| 2 | | | 4 | | | 238 |

DRAWN BY : T.L. AVERETTE DATE : 10-05-10
CHECKED BY : PEGGY PARISI DATE : 4-14-11

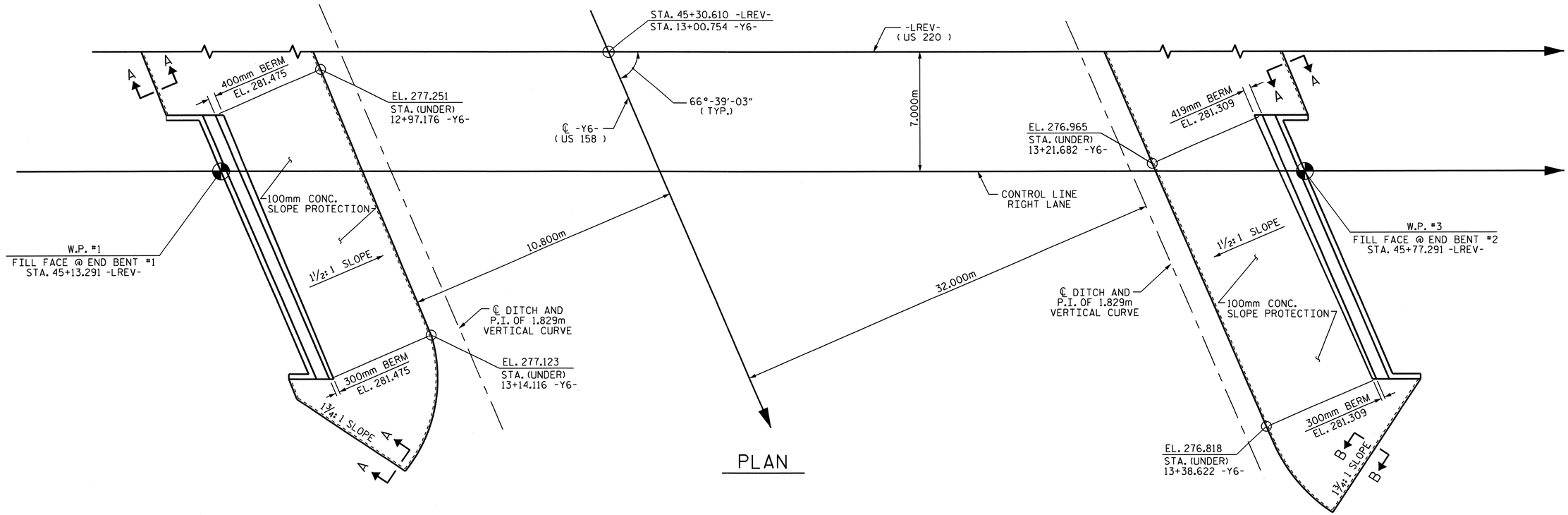


## NOTES

SLOPE PROTECTION SHALL BE PLACED UNDER THE ENDS OF THE BRIDGE AS SHOWN IN THE DETAILS. STRAIGHT EDGING WILL NOT BE REQUIRED UNLESS, IN THE OPINION OF THE ENGINEER, VISUAL INSPECTION INDICATES A NEED FOR IT. MEASUREMENT AND PAYMENT SHALL BE AS PRESCRIBED IN SECTION 462 OF THE STANDARD SPECIFICATIONS.

SLOPE PROTECTION SHALL CONSIST OF 100mm POURED-IN-PLACE CONCRETE PAVING AS SHOWN IN THE DETAILS ON THIS SHEET. CONCRETE SHALL BE CLASS "B". THE CONCRETE SURFACE SHALL BE FLOATED WITH A WOODEN FLOAT AND FINISHED. WELDED WIRE FABRIC REINFORCING SHALL BE 152 X 152 - W9.1 X W9.1, 1520mm WIDE. SLOPE PROTECTION SHALL BE POURED IN 1520mm STRIPS AS SHOWN IN THE "POURING DETAIL" WITH 600mm LONG #13 BARS PLACED ALONG THE SLOPE BETWEEN STRIPS AT 450mm MAXIMUM SPACING. SLOPE PROTECTION MAY BE POURED IN ALTERNATE 1220mm AND 1520mm STRIPS AS SHOWN IN THE "OPTIONAL POURING DETAIL" WITH ADJACENT RUNS OF WELDED WIRE FABRIC LAPPING AT LEAST 152mm. THE COST OF THE WELDED WIRE FABRIC AND #13 BARS, IF USED, SHALL BE INCLUDED IN THE CONTRACT UNIT PRICE BID PER SQUARE METER FOR SLOPE PROTECTION.

| BRIDGE @ STA. 45+30.610 -LREV- (RIGHT LANE) | 100mm SLOPE PROTECTION | * WELDED WIRE FABRIC 1520mm WIDE |
|---|---|---|
| | SQUARE METERS | APPROX. METERS |
| END BENT #1 | 260.4 | 189.9 |
| END BENT #2 | 281.5 | 205.2 |

* QUANTITY SHOWN IS BASED ON 1520mm POURS.

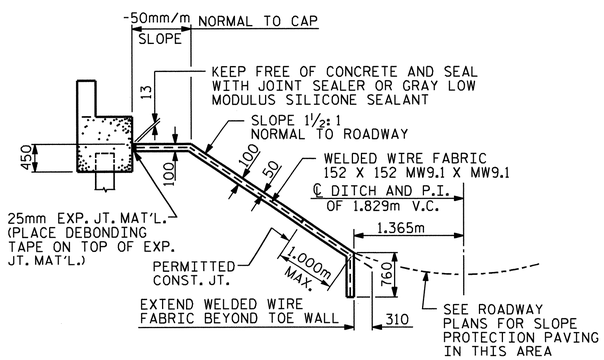


SECTION ALONG ℄ ROADWAY WHEN FILL CATCHES IN DITCH

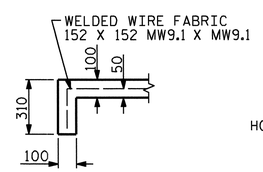


SECTION A-A

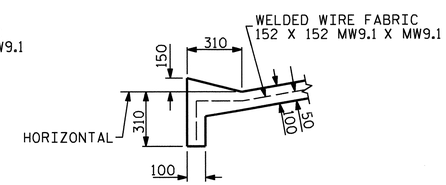


SECTION B-B

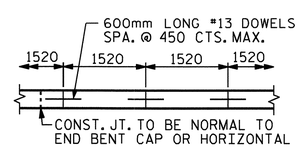


STRIP WIDTHS MAY VARY IN CURVED PORTION.

POURING DETAIL

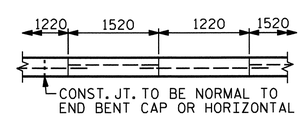


POUR A 1220mm STRIP FIRST. STRIP WIDTHS MAY VARY IN CURVED PORTION.

OPTIONAL POURING DETAIL

PROJECT NO. R-2413C
GUILFORD-ROCKINGHAM COUNTY
STATION: 45+30.610 -LREV-

STATE OF NORTH CAROLINA
DEPARTMENT OF TRANSPORTATION
RALEIGH

# STANDARD SLOPE PROTECTION DETAILS RIGHT LANE

NORTH CAROLINA PROFESSIONAL SEAL 022516 ENGINEER EMILY E. MURRAY
10/28/11

| REVISIONS | | | | | | | SHEET NO. |
|---|---|---|---|---|---|---|---|
| NO. | BY: | DATE: | NO. | BY: | DATE: | | S-204 |
| 1 | | | 3 | | | | TOTAL SHEETS |
| 2 | | | 4 | | | | 238 |

STR. #6

STD. NO. SP1SM

| | | | |
|---|---|---|---|
| ASSEMBLED BY : T.L. AVERETTE | | DATE : 02-16-11 | |
| CHECKED BY : M.L. RORIE | | DATE : 07-29-11 | |
| DRAWN BY : ELR 5/92 | REV. 7/10/01 | LES/RDR | |
| CHECKED BY : GRP 6/92 | REV. 5/7/03 | RWW/JTE | |
| | REV. 5/1/06 | TLA/GM | |

13-SEP-2011 10:12
Z:\TIPProjects-R\R2413c\Structures\Final Plans\Str.#6\R2413C_sd_SP_06.dgn
emurray

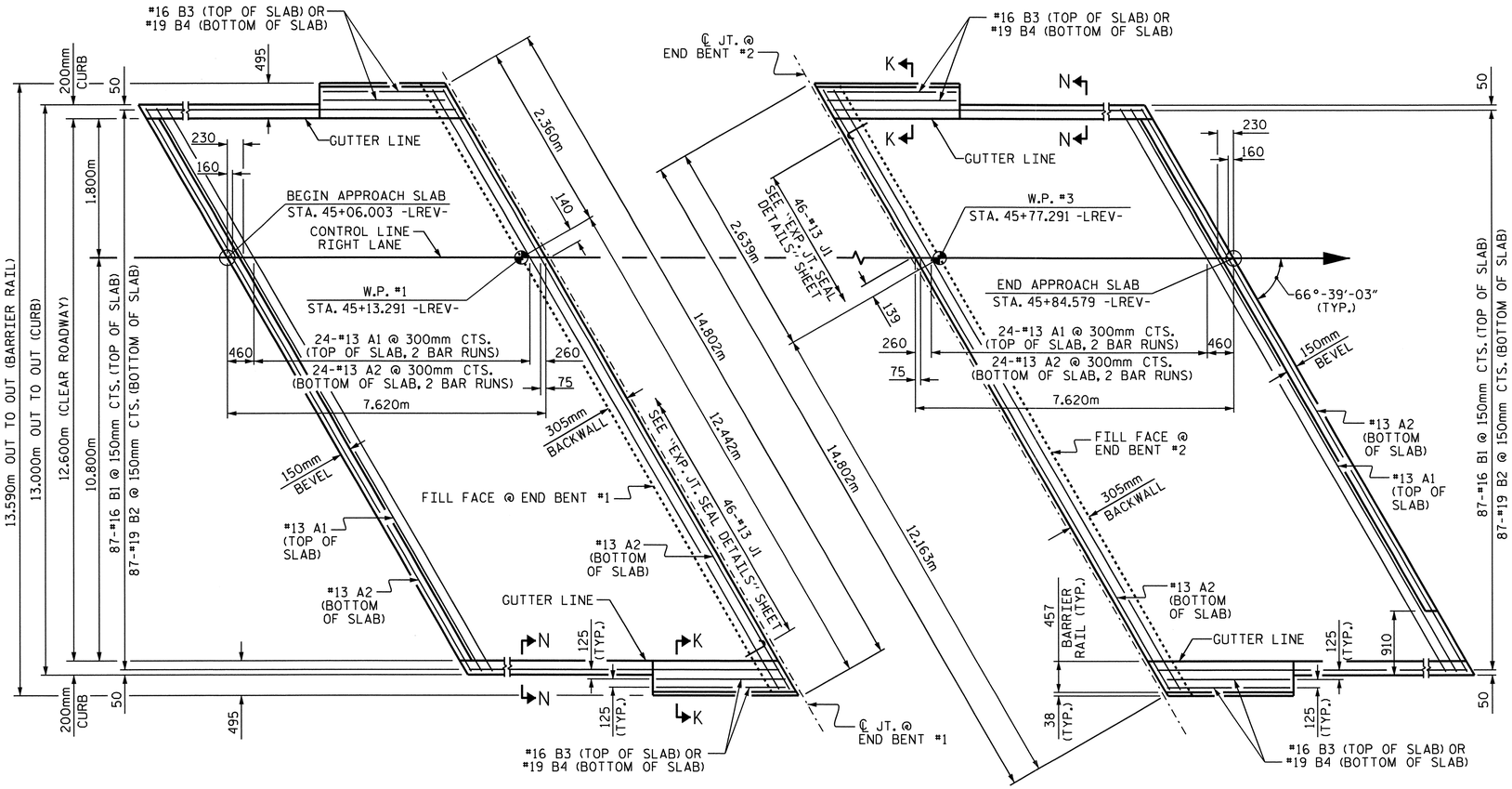


PLAN @ END BENT #1

PLAN @ END BENT #2

DIMENSIONS SHOWN ARE TYPICAL FOR BOTH APPROACH SLABS.
FOR BARRIER RAIL ON THE APPROACH SLAB DETAILS, REINFORCING STEEL AND BILL OF MATERIAL, SEE SHEET 2 OF 2.

## NOTES

THE CONCRETE BARRIER RAIL ON THE APPROACH SLAB IS INCLUDED IN THE CONCRETE BARRIER RAIL QUANTITY FOR THE SUPERSTRUCTURE.

APPROACH SLAB SHALL NOT BE CONSTRUCTED PRIOR TO COMPLETION OF THE BRIDGE DECK.

FOR REINFORCED BRIDGE APPROACH FILL INCLUDING FABRIC, IMPERMEABLE GEOMEMBRANE, 102mm Ø DRAINAGE PIPE, #78M STONE, AND SELECT MATERIAL, SEE ROADWAY PLANS.

AREA BETWEEN THE WINGWALL AND APPROACH SLAB SHALL BE GRADED TO DRAIN THE WATER AWAY FROM THE FILL FACE OF THE BRIDGE AND SHALL BE PAVED. SEE ROADWAY PLANS.

THE 150mm COMP. A.B.C. SHALL BE FLUSH WITH THE ROADWAY END OF THE APPROACH SLAB AND SHALL EXTEND 300mm OUTSIDE OF EACH EDGE OF THE APPROACH SLAB.

THE CONTRACTOR MAY USE 100mm TYPE B-25.0B ASPHALT CONCRETE BASE COURSE IN LIEU OF 150mm COMP. A.B.C. IF THIS OPTION IS USED, THE BASE COURSE SHALL BE FLUSH WITH THE ROADWAY END OF THE APPROACH SLAB, AND THE WIDTH SHALL BE THE SAME AS THAT OF THE APPROACH SLAB.

THE CONTRACTOR MAY USE 125mm CLASS "A" CONCRETE BASE IN LIEU OF 150mm COMP. A.B.C. IF THIS OPTION IS USED, THE CONCRETE BASE SHALL BE FLUSH WITH THE ROADWAY END OF THE APPROACH SLAB, AND THE WIDTH SHALL BE THE SAME AS THAT OF THE APPROACH SLAB. THE CONCRETE SHALL BE FINISHED TO A SMOOTH SURFACE AND A LAYER OF 13.6 kg ROOFING FELT SHALL BE PLACED BETWEEN THE CONCRETE BASE AND THE APPROACH SLAB TO PREVENT BOND. THE APPROACH SLAB SHALL NOT BE CAST UNTIL THE CONCRETE BASE HAS REACHED AN AGE OF THREE CURING DAYS.

FOR EXPANSION JOINT SEALS, SEE SPECIAL PROVISIONS.

THE BARRIER RAIL ON EACH APPROACH SLAB SHALL NOT BE CAST UNTIL ALL APPROACH SLAB CONCRETE HAS BEEN CAST AND HAS REACHED A MINIMUM COMPRESSIVE STRENGTH OF 20.7 MPa.

ALL REINFORCING STEEL IN BARRIER RAILS SHALL BE EPOXY COATED.

## SPLICE CHART

| BAR | SPLICE |
|---|---|
| #13 A1 | 610 |
| #13 A2 | 540 |

## BILL OF MATERIAL

### APPROACH SLAB @ EB #1

| BAR | NO. | SIZE | TYPE | LENGTH | WEIGHT |
|---|---|---|---|---|---|
| * A1 | 50 | #13 | STR | 7660 | 381 |
| A2 | 52 | #13 | STR | 7620 | 394 |
| * B1 | 87 | #16 | STR | 7240 | 978 |
| B2 | 87 | #19 | STR | 7500 | 1458 |
| * B3 | 4 | #16 | STR | 2920 | 18 |
| B4 | 4 | #19 | STR | 2920 | 26 |
| * J1 | 46 | #13 | 3 | 440 | 20 |
| REINFORCING STEEL | | | | kg. | 1878 |
| ● * EPOXY COATED REINFORCING STEEL | | | | kg. | 1397 |
| ● CLASS AA CONCRETE | | | | m³ | 31.3 |

### APPROACH SLAB @ EB #2

| BAR | NO. | SIZE | TYPE | LENGTH | WEIGHT |
|---|---|---|---|---|---|
| * A1 | 50 | #13 | STR | 7660 | 381 |
| A2 | 52 | #13 | STR | 7620 | 394 |
| * B1 | 87 | #16 | STR | 7240 | 978 |
| B2 | 87 | #19 | STR | 7500 | 1458 |
| * B3 | 4 | #16 | STR | 2920 | 18 |
| B4 | 4 | #19 | STR | 2920 | 26 |
| * J1 | 46 | #13 | 3 | 440 | 20 |
| REINFORCING STEEL | | | | kg. | 1878 |
| ● * EPOXY COATED REINFORCING STEEL | | | | kg. | 1397 |
| ● CLASS AA CONCRETE | | | | m³ | 31.3 |

### BAR TYPE

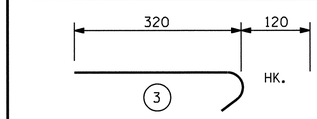


ALL BAR DIMENSIONS ARE OUT TO OUT

● QUANTITIES FOR BARRIER RAIL ON APPROACH SLAB ARE NOT INCLUDED. SEE SHEET 2 OF 2.

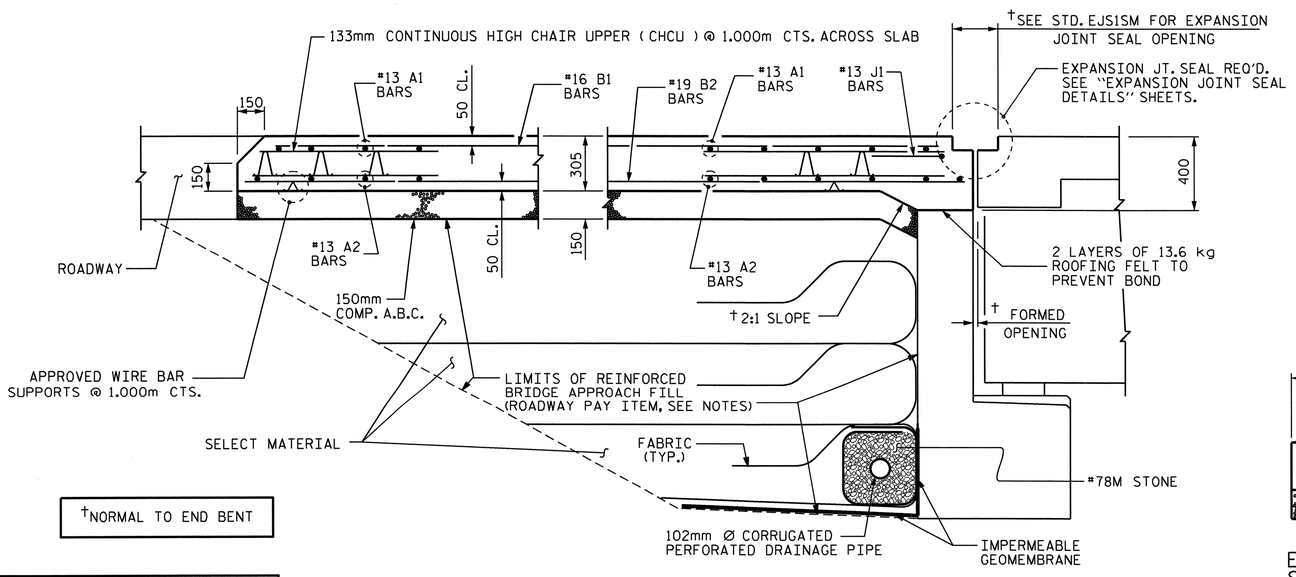


†NORMAL TO END BENT

SECTION THRU SLAB

BARRIER RAIL AND CURB NOT SHOWN

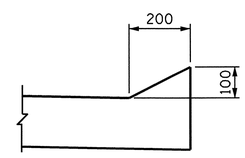


SECTION N-N

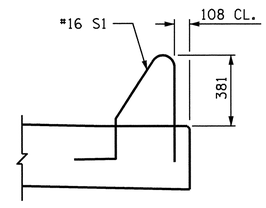


SECTION K-K

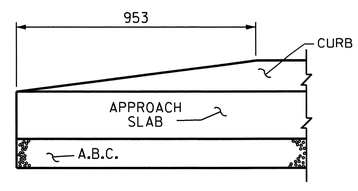


END OF CURB WITHOUT SHOULDER BERM GUTTER

CURB DETAILS

PROJECT NO. R-2413C
GUILFORD-ROCKINGHAM COUNTY
STATION: 45+30.610 -LREV-

SHEET 1 OF 2

STATE OF NORTH CAROLINA
DEPARTMENT OF TRANSPORTATION
RALEIGH

STANDARD

BRIDGE APPROACH SLAB FOR FLEXIBLE PAVEMENT

RIGHT LANE

NORTH CAROLINA PROFESSIONAL SEAL 022516 ENGINEER LEMUY E. MURRAY
6/28/11

| | | | |
|---|---|---|---|
| ASSEMBLED BY : T.L. AVERETTE | DATE : 11-16-10 | | |
| CHECKED BY : PEGGY PARISI | DATE : 11-18-10 | | |
| DRAWN BY : FCJ 6/87 | REV. 7/10/01 | RWW/LES | |
| CHECKED BY : EGA 6/87 | REV. 5/7/03R | RWW/JTE | |
| | REV. 5/1/06R | KMM/GM | |

| REVISIONS | | | | | | | | SHEET NO. |
|---|---|---|---|---|---|---|---|---|
| NO. | BY: | DATE: | NO. | BY: | DATE: | | | S-205 |
| 1 | | | 3 | | | | | TOTAL SHEETS |
| 2 | | | 4 | | | | | 238 |

STR #6 STD. NO. BAS4SM

05-SEP-2011 13:52
Y:\Structures\Final Plans\Str.#6\R2413C_sd_AS_06.dgn
mgudlaugsson

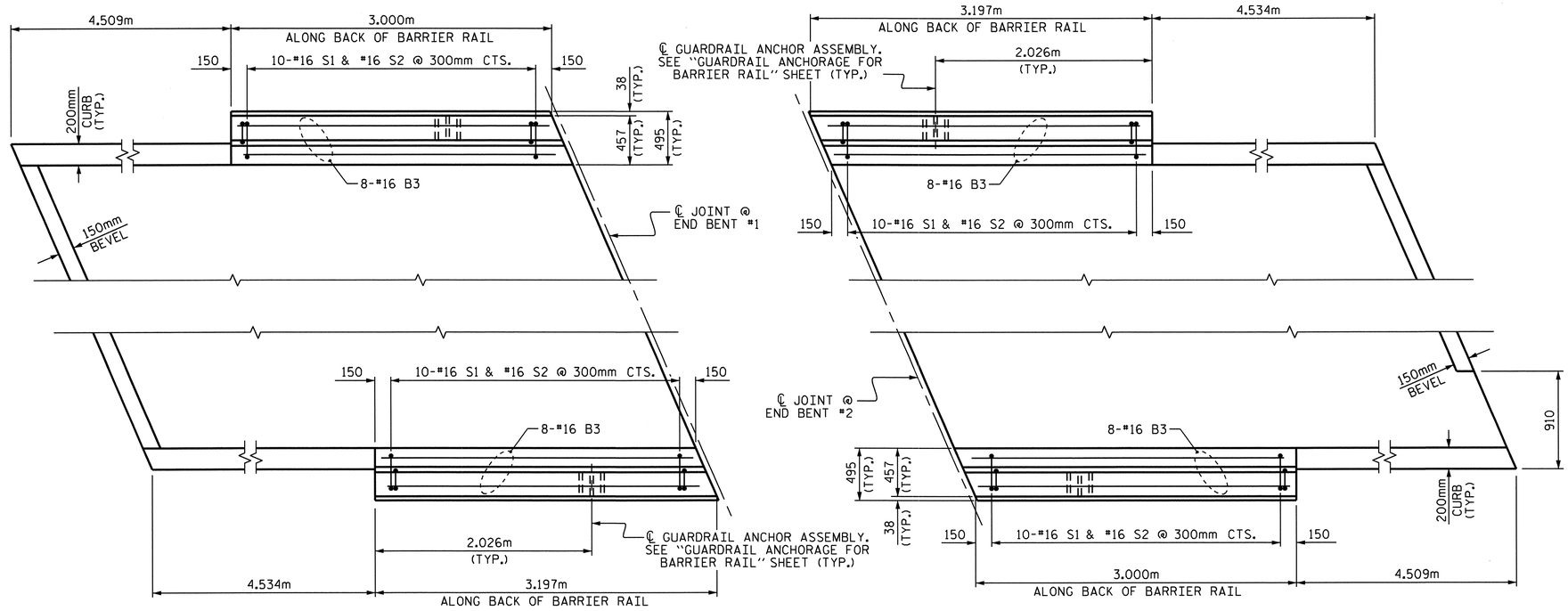


## PLAN OF BARRIER RAIL ON APPROACH SLABS

## BAR TYPES

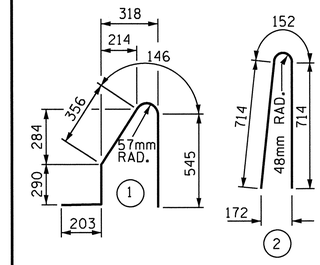


ALL BAR DIMENSIONS ARE OUT TO OUT

## BILL OF MATERIAL

FOR CONCRETE BARRIER RAIL ON BOTH APPROACH SLABS ONLY

| BAR | NO. | SIZE | TYPE | LENGTH | WEIGHT |
|---|---|---|---|---|---|
| * B3 | 32 | #16 | STR | 2920 | 145 |
| | | | | | |
| * S1 | 40 | #16 | 1 | 1540 | 96 |
| * S2 | 40 | #16 | 2 | 1580 | 98 |
| | | | | | |
| * EPOXY COATED REINFORCING STEEL | | | | kg. | 339 |
| CLASS AA CONCRETE | | | | m3 | 3.1 |
| CONCRETE BARRIER RAIL | | | | METERS | 12.394 |

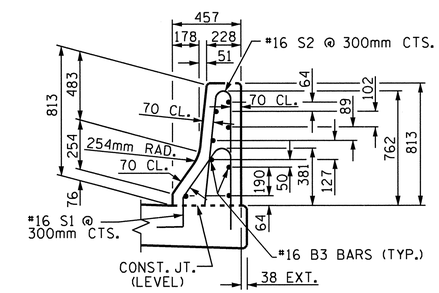


## SECTION THRU RAIL

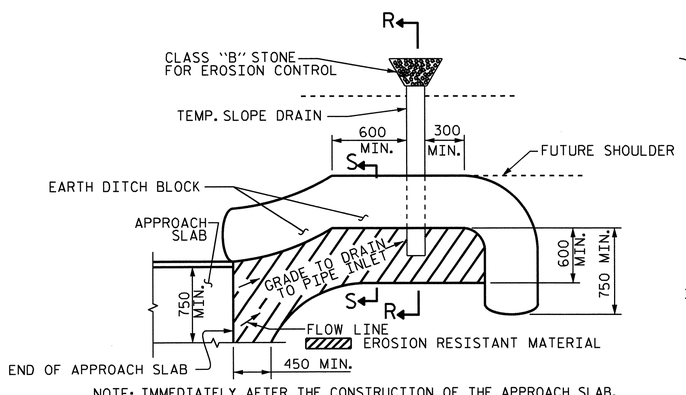


NOTE: IMMEDIATELY AFTER THE CONSTRUCTION OF THE APPROACH SLAB, THE CONTRACTOR SHALL PROVIDE TEMPORARY BERM AND SLOPE DRAIN. CONTRACTOR SHALL GRADE TO PIPE INLET AND PROVIDE EROSION RESISTANT MATERIAL AS SHOWN. THE EROSION RESISTANT MATERIAL SHALL BE EITHER 1) ASPHALT PLANT MIX, TYPE 1 OR TYPE 2, MIN. 50mm DEPTH, 2) EROSION CONTROL MAT, OR 3) CONCRETE, AS DIRECTED BY THE ENGINEER. THE SLOPE DRAIN SHALL CONSIST OF A NON-PERFORATED TEMPORARY DRAINAGE PIPE, 305mm IN DIAMETER.

PLAN VIEW

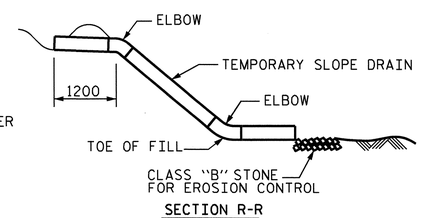


SECTION R-R

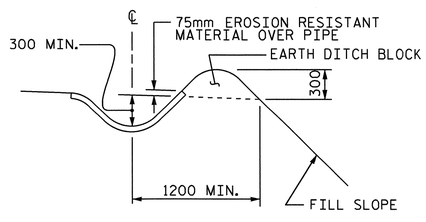


SECTION S-S

## TEMPORARY BERM AND SLOPE DRAIN DETAILS

(TO BE USED WHEN SHOULDER BERM GUTTER IS REQUIRED)

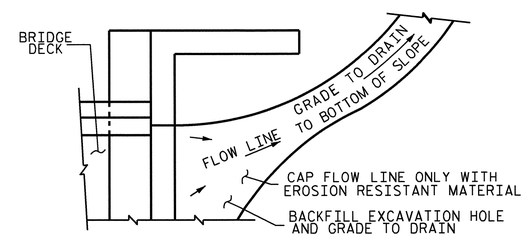


NOTE: IF THE APPROACH SLAB IS NOT CONSTRUCTED IMMEDIATELY AFTER THE BACKFILLING OF THE END BENT EXCAVATION, GRADE TO DRAIN TO THE BOTTOM OF THE SLOPE AND PROVIDE EROSION RESISTANT MATERIAL, SUCH AS FIBERGLASS ROVING OR AS DIRECTED BY THE ENGINEER TO PREVENT SOIL EROSION AND TO PROTECT THE AREA ADJACENT TO THE STRUCTURE. THE CONTRACTOR WILL BE REQUIRED TO REMOVE THESE MATERIALS PRIOR TO CONSTRUCTION OF THE APPROACH SLAB.

## TEMPORARY DRAINAGE DETAIL

PROJECT NO. R-2413C

GUILFORD-ROCKINGHAM COUNTY

STATION: 45+30.610 -LREV-

SHEET 2 OF 2

STATE OF NORTH CAROLINA
DEPARTMENT OF TRANSPORTATION
RALEIGH

STANDARD
BRIDGE APPROACH
SLAB DETAILS

RIGHT LANE

NORTH CAROLINA PROFESSIONAL SEAL 022516 ENGINEER EMILY E. MURRAY
6/28/11

| REVISIONS | | | | | | | | SHEET NO. |
|---|---|---|---|---|---|---|---|---|
| NO. | BY: | DATE: | NO. | BY: | DATE: | | | S-206 |
| 1 | | | 3 | | | | | TOTAL SHEETS |
| 2 | | | 4 | | | | | 238 |

ASSEMBLED BY : T.L. AVERETTE DATE : 11-16-10
CHECKED BY : PEGGY PARISI DATE : 11-18-10

DRAWN BY : FCJ 11/88
CHECKED BY : ARB 11/88

REV. 10/17/00 RWW/LES
REV. 5/7/03 RWW/JTE
REV. 5/1/06RR MAA/KMM

05-SEP-2011 13:52
Y:\Structures\Final Plans\Str.#6\R2413C_sd_AS_06.dgn
mgudlaugsson

STR #6

STD. NO. BAS10SM

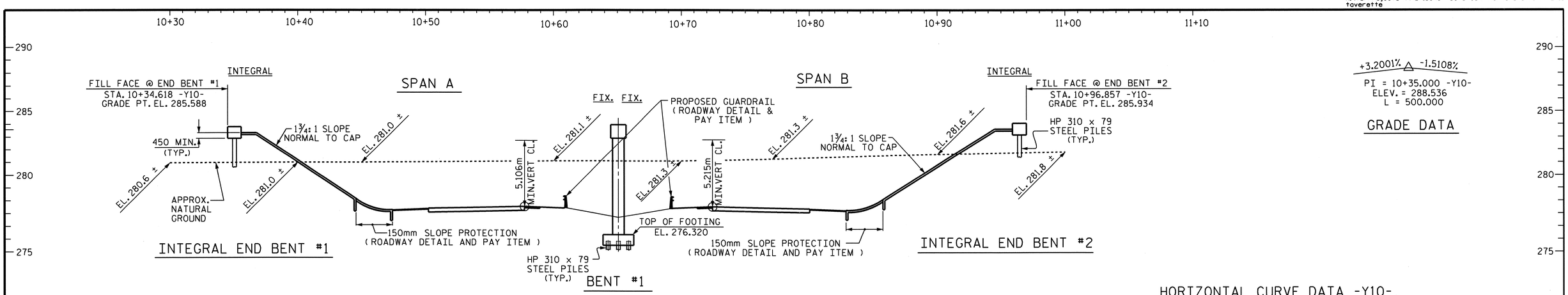


+3.2001% △ -1.5108%
PI = 10+35.000 -Y10-
ELEV. = 288.536
L = 500.000

GRADE DATA

## SECTION ALONG -Y10-

(SECTIONS AT BENTS AND END BENTS ARE TAKEN AT RIGHT ANGLES TO BENTS)

### HORIZONTAL CURVE DATA -Y10-

PIs STA. = 7+17.001 -Y10-
θs = 2°-03′-24.4″
Ls = 56.000
ST = 18.669
LT = 37.336

P.I. STA. = 9+22.675 -Y10-
△ = 26°-57′-54.2″(RT.)
L = 367.091
T = 187.010
R = 780.000
SE = 0.06

PIs STA. = 11+21.425 -Y10-
θs = 2°-03′-24.4″
Ls = 56.000
ST = 18.669
LT = 37.336

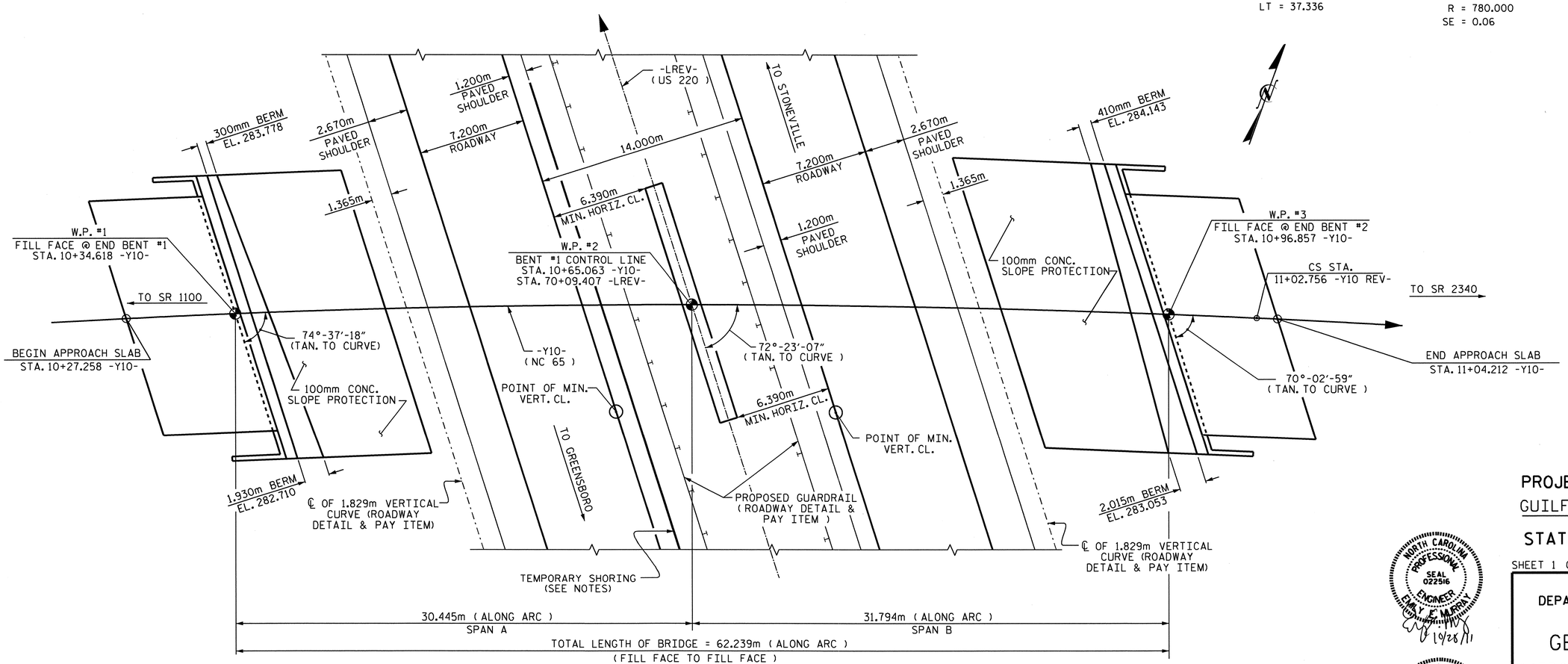


## PLAN

(PILES NOT SHOWN FOR CLARITY)

PROJECT NO. R-2413C
GUILFORD-ROCKINGHAM COUNTY
STATION: 70+09.407 -LREV-
10+65.063 -Y10-
SHEET 1 OF 4 BRIDGE NO. 306

NORTH CAROLINA PROFESSIONAL SEAL 022516 ENGINEER ELMER E. MARRAY
10/28/11

NORTH CAROLINA PROFESSIONAL SEAL 12274 ENGINEER OMAR R. AZIZ
10/28/11

STATE OF NORTH CAROLINA
DEPARTMENT OF TRANSPORTATION
RALEIGH

GENERAL DRAWING

BRIDGE ON NC 65 OVER US 220
BETWEEN SR 1100 AND SR 2340

| REVISIONS | | | | | | SHEET NO. |
|---|---|---|---|---|---|---|
| NO. | BY: | DATE: | NO. | BY: | DATE: | S-207 |
| 1 | | | 3 | | | TOTAL SHEETS |
| 2 | | | 4 | | | 238 |

DRAWN BY : T.L. AVERETTE DATE : 5-18-11
CHECKED BY : PEGGY PARISI DATE : 5-19-11

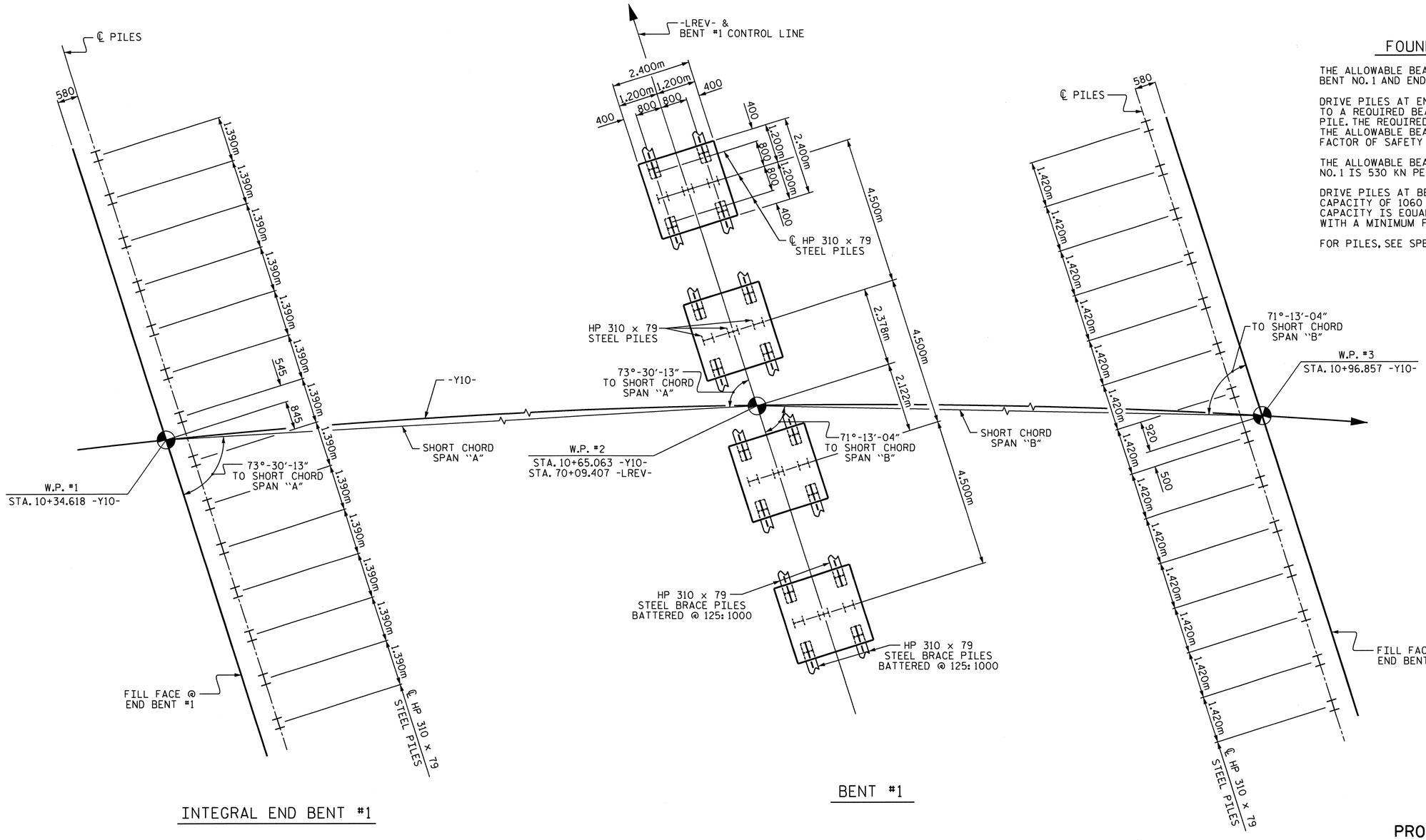


INTEGRAL END BENT #1

BENT #1

INTEGRAL END BENT #2

## FOUNDATION NOTES

THE ALLOWABLE BEARING CAPACITY FOR PILES AT END BENT NO. 1 AND END BENT NO. 2 IS 670 KN PER PILE.

DRIVE PILES AT END BENT NO. 1 AND END BENT NO. 2 TO A REQUIRED BEARING CAPACITY OF 1340 KN PER PILE. THE REQUIRED BEARING CAPACITY IS EQUAL TO THE ALLOWABLE BEARING CAPACITY WITH A MINIMUM FACTOR OF SAFETY OF TWO.

THE ALLOWABLE BEARING CAPACITY FOR PILES AT BENT NO. 1 IS 530 KN PER PILE.

DRIVE PILES AT BENT NO. 1 TO A REQUIRED BEARING CAPACITY OF 1060 KN PER PILE. THE REQUIRED BEARING CAPACITY IS EQUAL TO THE ALLOWABLE BEARING CAPACITY WITH A MINIMUM FACTOR OF SAFETY OF TWO.

FOR PILES, SEE SPECIAL PROVISIONS.

## FOUNDATION LAYOUT

DIMENSIONS LOCATING PILES ARE SHOWN TO THE PILE CENTERLINE.
DIMENSIONS, PILE TYPE, AND LOCATION ARE TYPICAL FOR EACH BENT FOOTING.

PROJECT NO. R-2413C
GUILFORD-ROCKINGHAM COUNTY
STATION: 70+09.407 -LREV-
10+65.063 -Y10-

SHEET 2 OF 4

STATE OF NORTH CAROLINA
DEPARTMENT OF TRANSPORTATION
RALEIGH

GENERAL DRAWING

BRIDGE ON NC 65 OVER US 220
BETWEEN SR 1100 AND SR 2340

NORTH CAROLINA PROFESSIONAL SEAL 022516 ENGINEER EMILY E. MURRAY
8/28/11

| REVISIONS | | | | | | |
|---|---|---|---|---|---|---|
| NO. | BY: | DATE: | NO. | BY: | DATE: | |
| 1 | | | 3 | | | |
| 2 | | | 4 | | | |

SHEET NO. S-208
TOTAL SHEETS 238

DRAWN BY : T.L. AVERETTE DATE : 5-18-11
CHECKED BY : PEGGY PARISI DATE : 5-19-11

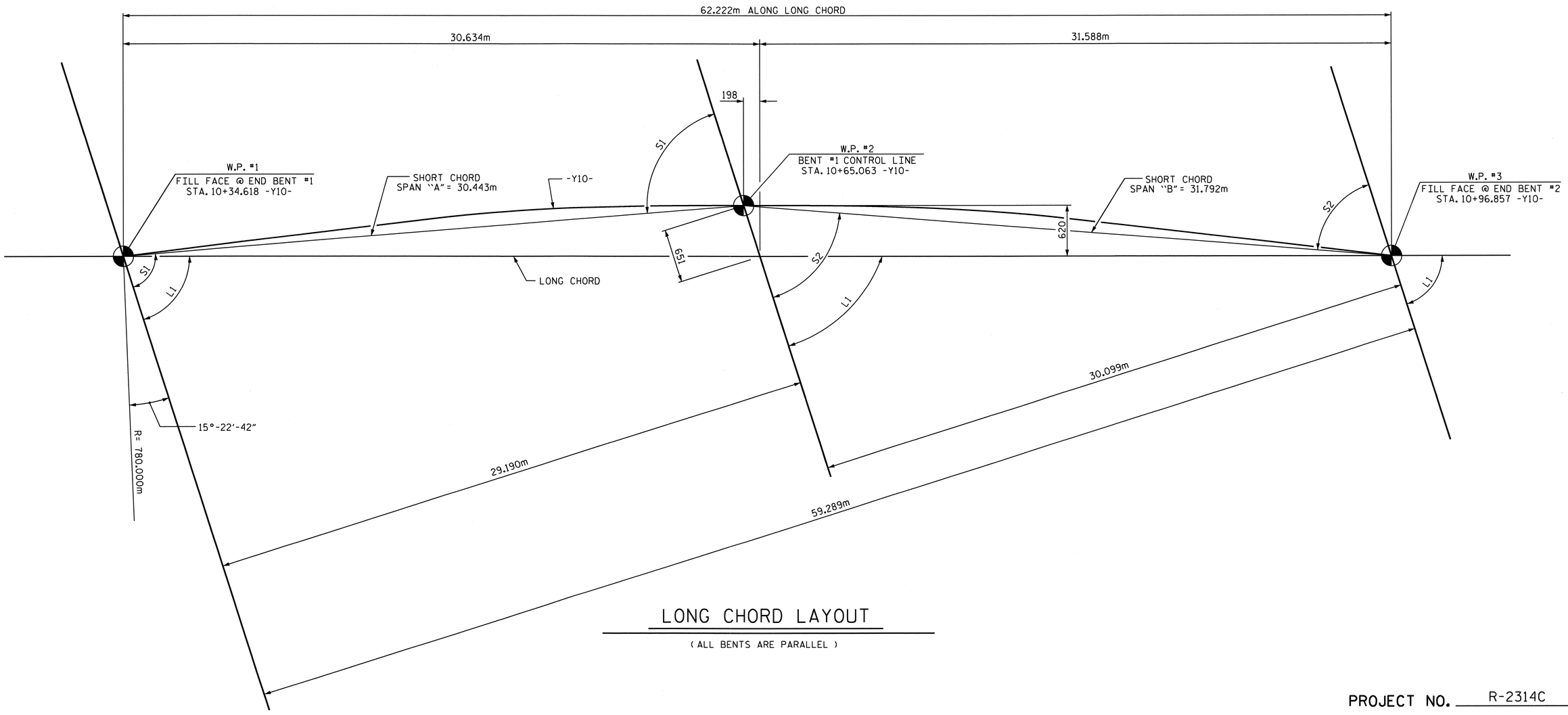


## LONG CHORD LAYOUT

( ALL BENTS ARE PARALLEL )

| ANGLES | | | |
|---|---|---|---|
| LONG CHORD | | SHORT CHORD | |
| L1 | 72°-20'-09" | S1 | 73°-30'-13" |
| | | S2 | 71°-13'-04" |

## HORIZONTAL CURVE DATA -Y10-

P.I. STA. = 9+22.675 -Y10-
△ = 26°-57'-54.2" (RT.)
L = 367.091
T = 187.010
R = 780.000
SE = 0.06

NORTH CAROLINA PROFESSIONAL SEAL 022516 ENGINEER EMILY E. MURRAY
12/28/11

PROJECT NO. R-2314C
GUILFORD-ROCKINGHAM COUNTY
STATION: 70+09.407 -LREV-
10+65.063 -Y10-

SHEET 3 OF 4

STATE OF NORTH CAROLINA
DEPARTMENT OF TRANSPORTATION
RALEIGH

GENERAL DRAWING

BRIDGE ON NC 65 OVER US 220
BETWEEN SR 1100 AND SR 2340

| REVISIONS | | | | | | SHEET NO. |
|---|---|---|---|---|---|---|
| NO. | BY: | DATE: | NO. | BY: | DATE: | S-209 |
| 1 | | | 3 | | | TOTAL SHEETS |
| 2 | | | 4 | | | 238 |

DRAWN BY : T.L. AVERETTE DATE : 5-18-11
CHECKED BY : PEGGY PARISI DATE : 5-19-11

B.M. #18: RR SPIKE IN BASE OF POWER POLE 23.6m RT. OF -L- STA. 71+74.20 EL. 281.180

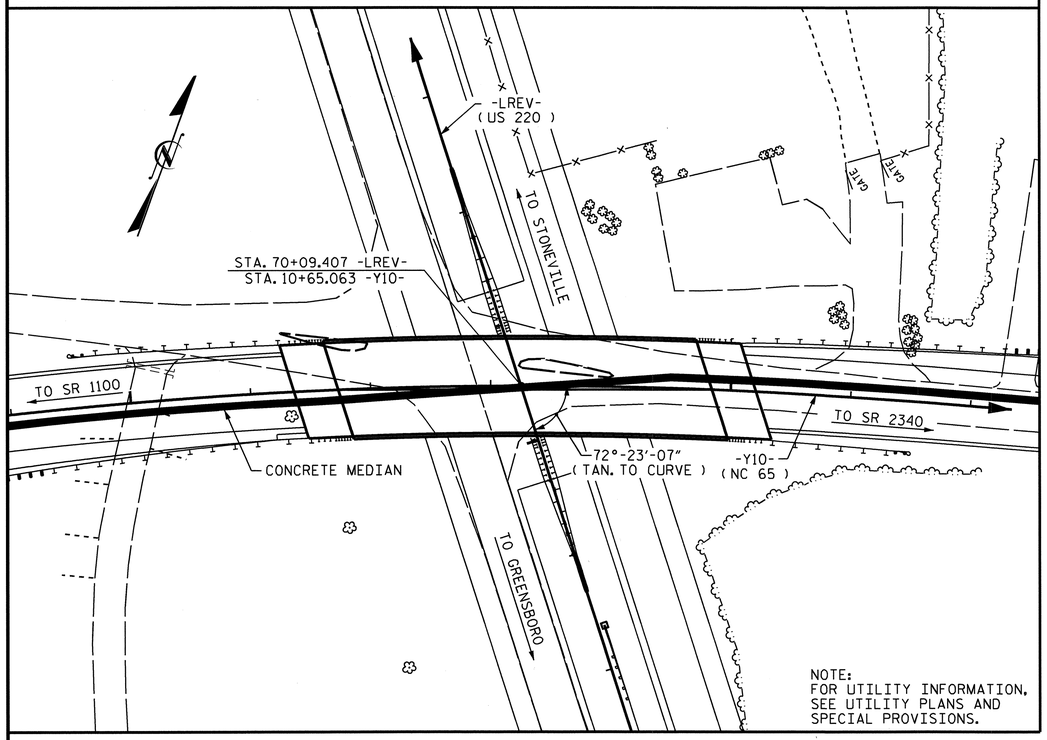


## LOCATION SKETCH

## NOTES

ALL DIMENSIONS ARE IN MILLIMETERS UNLESS OTHERWISE NOTED.

ALL ELEVATIONS ARE IN METERS.

ASSUMED LIVE LOAD = MS 18 OR ALTERNATE LOADING, EXCEPT THAT THE GIRDERS HAVE BEEN DESIGNED FOR MS 22.5.

FOR OTHER DESIGN DATA AND GENERAL NOTES, SEE SHEET SNSM.

THIS BRIDGE HAS BEEN DESIGNED BY THE STRENGTH DESIGN METHOD AS SPECIFIED IN AASHTO STANDARD SPECIFICATIONS.

PRESTRESSED CONCRETE DECK PANELS MAY BE USED IN LIEU OF METAL STAY-IN-PLACE FORMS IN ACCORDANCE WITH ARTICLE 420-3 OF THE STANDARD SPECIFICATIONS.

REMOVABLE FORMS MAY BE USED IN LIEU OF METAL STAY-IN-PLACE FORMS IN ACCORDANCE WITH ARTICLE 420-3 OF THE STANDARD SPECIFICATIONS.

THE CLASS AA CONCRETE IN THE BRIDGE DECK SHALL CONTAIN FLY ASH OR GROUND GRANULATED BLAST FURNACE SLAG AT THE SUBSTITUTION RATE SPECIFIED IN ARTICLE 1024-1 AND IN ACCORDANCE WITH ARTICLES 1024-5 AND 1024-6 OF THE STANDARD SPECIFICATIONS. NO PAYMENT WILL BE MADE FOR THIS SUBSTITUTION AS IT IS CONSIDERED INCIDENTAL TO THE COST OF THE REINFORCED CONCRETE DECK SLAB.

NEEDLE BEAMS WILL NOT BE ALLOWED UNLESS OTHERWISE CALLED FOR ON THE PLANS OR APPROVED BY THE ENGINEER.

FOR SUBMITTAL OF WORKING DRAWINGS, SEE SPECIAL PROVISIONS.

FOR FALSEWORK AND FORMWORK, SEE SPECIAL PROVISIONS.

FOR MAINTENANCE AND PROTECTION OF TRAFFIC BENEATH PROPOSED STRUCTURE, SEE SPECIAL PROVISIONS.

FOR CRANE SAFETY, SEE SPECIAL PROVISIONS.

FOR GROUT FOR STRUCTURES, SEE SPECIAL PROVISIONS.

FOR CURING CONCRETE, SEE SPECIAL PROVISIONS.

FOR PLACING LOAD ON STRUCTURE MEMBERS, SEE SPECIAL PROVISIONS.

FOR MAINTENANCE OF TRAFFIC, SEE TRAFFIC CONTROL PLANS.

WORK SHALL NOT BE STARTED ON THIS BRIDGE UNTIL ROADWAY SECTION HAS BEEN EXCAVATED.

THIS BRIDGE HAS BEEN DESIGNED IN ACCORDANCE WITH THE REQUIREMENTS OF THE STANDARD SPECIFICATIONS FOR SEISMIC DESIGN OF HIGHWAY BRIDGES FOR SEISMIC PERFORMANCE CATEGORY A.

FOR EROSION CONTROL MEASURES, SEE EROSION CONTROL PLANS.

FOR PRESTRESSED CONCRETE MEMBERS, SEE SPECIAL PROVISIONS.

FOR METRIC STRUCTURAL STEEL, SEE SPECIAL PROVISIONS.

FOR LIMITS OF TEMPORARY SHORING FOR MAINTENANCE OF TRAFFIC, SEE TRAFFIC CONTROL PLANS. FOR PAY ITEM FOR TEMPORARY SHORING FOR MAINTENANCE OF TRAFFIC, SEE ROADWAY PLANS.

### TOTAL BILL OF MATERIAL - METRIC

| | FOUNDATION EXCAVATION FOR BENT | REINFORCED CONCRETE DECK SLAB | GROOVING BRIDGE FLOORS | CLASS A CONCRETE | BRIDGE APPROACH SLABS | REINFORCING STEEL | SPIRAL COLUMN REINFORCING STEEL | 1372mm PRESTRESSED CONCRETE GIRDERS | | HP 310 X 79 STEEL PILES | | CONCRETE BARRIER RAIL | 100mm SLOPE PROTECTION | ELASTOMERIC BEARINGS | EVAZOTE JOINT SEALS |
|---|---|---|---|---|---|---|---|---|---|---|---|---|---|---|---|
| | LUMP SUM | SQ. METERS | SQ. METERS | CU. METERS | LUMP SUM | kg | kg | NO. | METERS | NO. | METERS | METERS | SQ. METERS | LUMP SUM | LUMP SUM |
| SUPERSTRUCTURE | | 1032.5 | 1115.8 | | LUMP SUM | | | 14 | 428.384 | | | 123.430 | | LUMP SUM | LUMP SUM |
| END BENT #1 | | | | 25.6 | | 2,354 | | | | 14 | 219.8 | | 223 | | |
| | | | | | | | | | | | | | | | |
| BENT #1 | LUMP SUM | | | 66.4 | | 5,639 | 1082 | | | 28 | 201.6 | | | | |
| | | | | | | | | | | | | | | | |
| END BENT #2 | | | | 26.7 | | 2,401 | | | | 14 | 254.8 | | 252 | | |
| TOTAL | LUMP SUM | 1032.5 | 1115.8 | 118.7 | LUMP SUM | 10,394 | 1082 | 14 | 428.384 | 56 | 676.2 | 123.430 | 475 | LUMP SUM | LUMP SUM |

### TOTAL BILL OF MATERIAL - ENGLISH

| | | | | | | | | | | | | | | | |
|---|---|---|---|---|---|---|---|---|---|---|---|---|---|---|---|
| | LUMP SUM | SQ. FT. | SQ. FT. | CU. YD. | LUMP SUM | LBS. | LBS. | NO. | LIN. FT. | NO. | LIN. FT. | LIN. FT. | SQ. YD. | LUMP SUM | LUMP SUM |
| TOTAL | LUMP SUM | 11,114 | 12,010 | 155.3 | LUMP SUM | 22,915 | 2,385 | 14 | 1405.46 | 56 | 2218 | 404.95 | 568 | LUMP SUM | LUMP SUM |

PROJECT NO. R-2413C
GUILFORD-ROCKINGHAM COUNTY
STATION: 70+09.407 -LREV-
10+65.063 -Y10-

SHEET 4 OF 4

STATE OF NORTH CAROLINA
DEPARTMENT OF TRANSPORTATION
RALEIGH

# GENERAL DRAWING

BRIDGE ON NC 65 OVER US 220
BETWEEN SR 1100 AND SR 2340

NORTH CAROLINA PROFESSIONAL SEAL 022516 ENGINEER EMILY K. MURRAY
10/28/11

| REVISIONS | | | | | | SHEET NO. |
|---|---|---|---|---|---|---|
| NO. | BY: | DATE: | NO. | BY: | DATE: | S-210 |
| 1 | | | 3 | | | TOTAL SHEETS |
| 2 | | | 4 | | | 238 |

DRAWN BY : T.L. AVERETTE DATE : 5-25-11
CHECKED BY : PEGGY PARISI DATE : 5-26-11

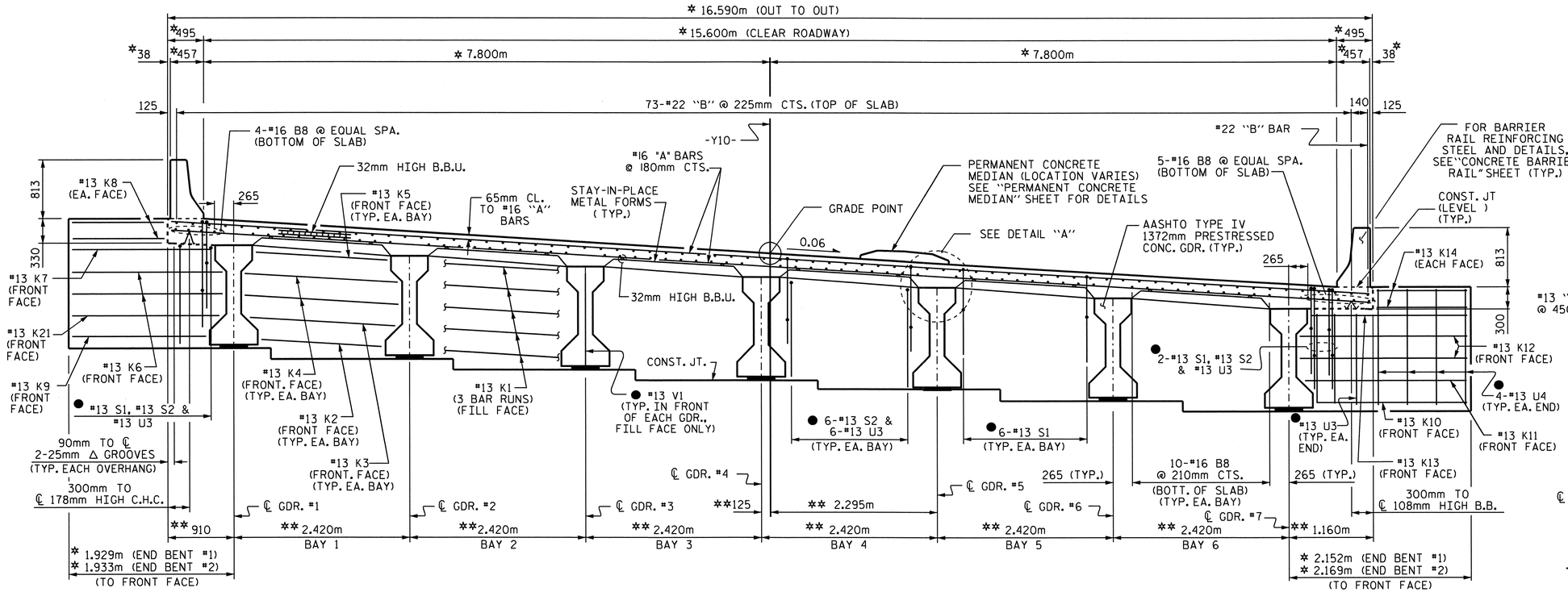


## TYPICAL SECTION @ INTEGRAL END BENT

* RADIAL DIMENSION
** RADIAL DIMENSION THRU WORKPOINT
● #13 U3, #13 U4, #13 S1 #13 S2 & #13 V1 BARS SPACED TO MATCH WITH #13 "V" BARS IN INTEGRAL END BENT CAP

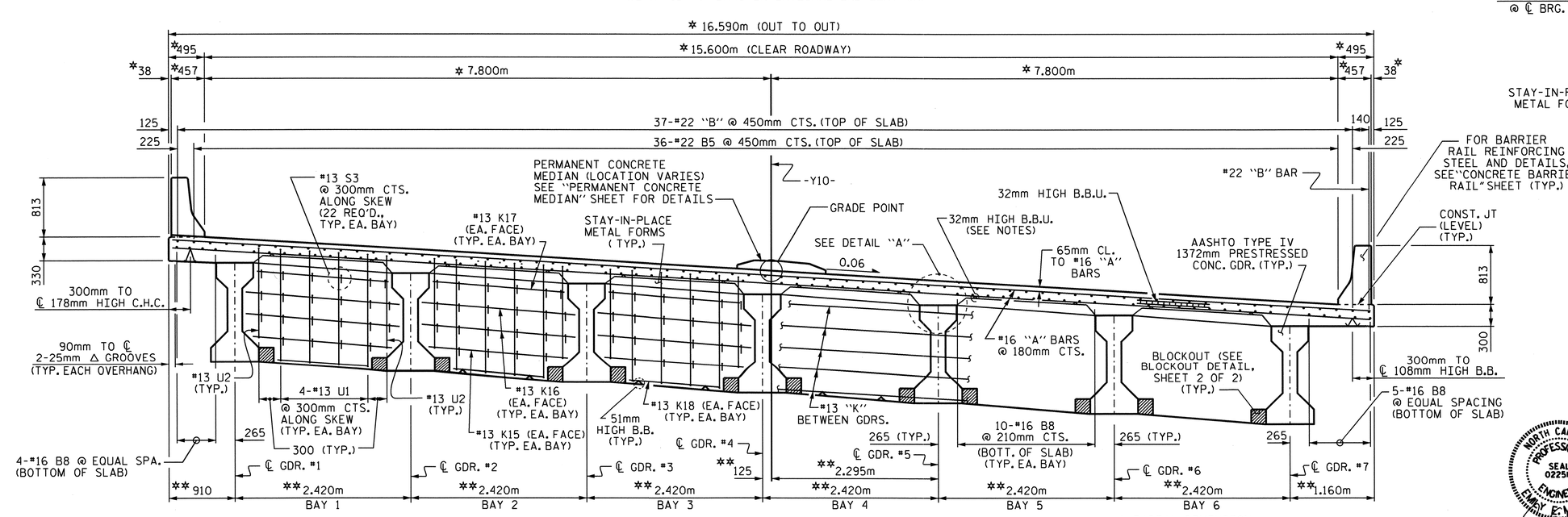


## TYPICAL SECTION @ CONTINUOUS BENT DIAPHGRAM

* RADIAL DIMENSION
** RADIAL DIMENSION THRU WORKPOINT

## NOTES

PROVIDE 32mm HIGH BEAM BOLSTERS UPPER AT 1.2m CTS. ATOP THE METAL STAY-IN-PLACE FORMS TO SUPPORT THE BOTTOM MAT OF 'A' BARS. WHEN USING REMOVABLE FORMS, PROVIDE CONTINUOUS HIGH CHAIRS FOR METAL DECK (C.H.C.M.) @ 1.2m CTS. WITH A HEIGHT TO SUPPORT THE BOTTOM MAT OF 'A' BARS A CLEAR DISTANCE OF 65mm ABOVE THE TOP OF THE REMOVABLE FORM.

LONGITUDINAL STEEL MAY BE SHIFTED SLIGHTLY, AS NECESSARY, TO AVOID INTERFERENCE WITH STIRRUPS IN PRESTRESSED CONCRETE GIRDERS.

PREVIOUSLY CAST CONCRETE IN A CONTINUOUS UNIT SHALL HAVE ATTAINED A MINIMUM COMPRESSIVE STRENGTH OF 20.7 MPa BEFORE ADDITIONAL CONCRETE IS CAST IN THE UNIT.

BARRIER RAIL IN A CONTINUOUS UNIT SHALL NOT BE CAST UNTIL ALL SLAB CONCRETE IN THE UNIT HAS BEEN CAST AND HAS REACHED A MINIMUM COMPRESSIVE STRENGTH OF 20.7 MPa.

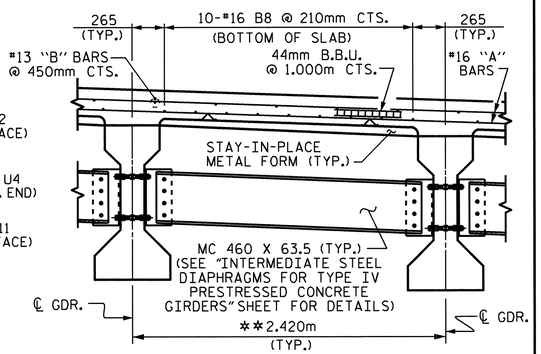


## PARTIAL TYPICAL SECTION

AT INTERMEDIATE DIAPHRAGM

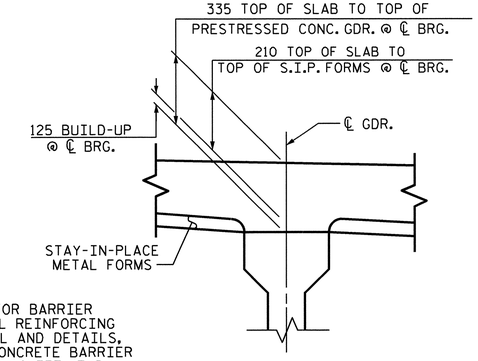


## DETAIL "A"

(TYP. EACH GDR.)

PROJECT NO. R-2413C

GUILFORD-ROCKINGHAM COUNTY

STATION: 70+09.407-LREV-

SHEET 1 OF 2

STATE OF NORTH CAROLINA
DEPARTMENT OF TRANSPORTATION
RALEIGH

SUPERSTRUCTURE

TYPICAL SECTION

NORTH CAROLINA PROFESSIONAL SEAL 022516 ENGINEER EMRY C. MURRAY
10/28/11

| REVISIONS | | | | | | | SHEET NO. |
|---|---|---|---|---|---|---|---|
| NO. | BY: | DATE: | NO. | BY: | DATE: | | S-211 |
| 1 | | | 3 | | | | TOTAL SHEETS |
| 2 | | | 4 | | | | 238 |

STR. #7

DRAWN BY : B.N.BARODAWALA DATE : 11-1-10
CHECKED BY : T.L. AVERETTE DATE : 3-24-11

05-SEP-2011 14:44
Y:\Structures\Final Plans\Str.#7\R-2413C_SD_TS_07.dgn
mgudlaugsson

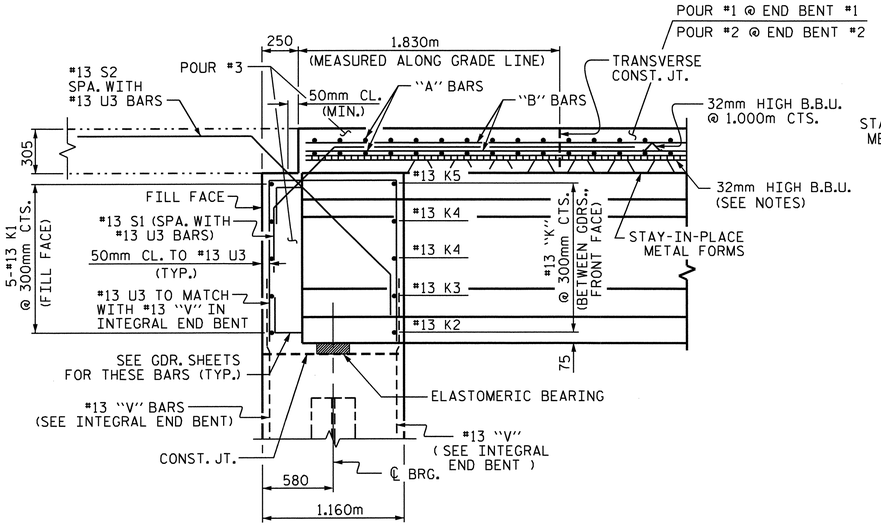


## END OF GIRDER DETAIL AT INTEGRAL END BENT

#13 V1 BAR IN FRONT OF GIRDER NOT SHOWN

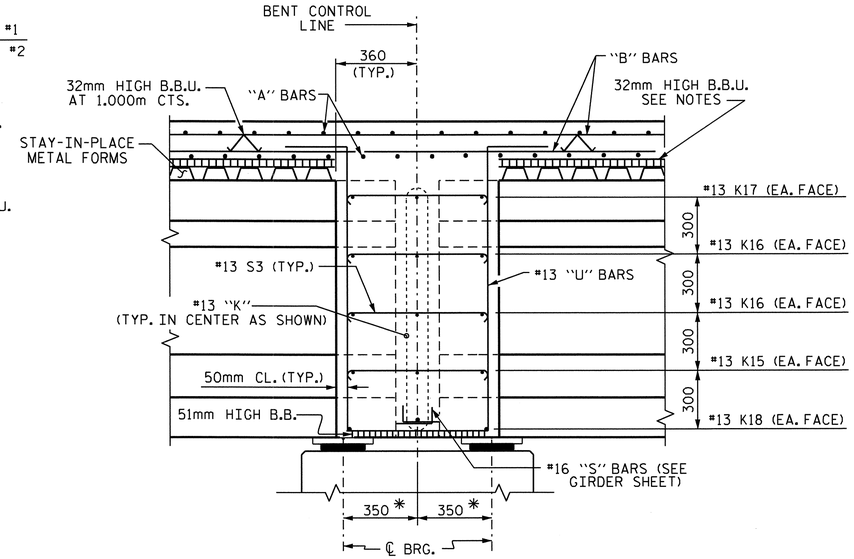


## SECTION THRU BENT DIAPHRAGM

* MEASURED ALONG ℄ GDR.

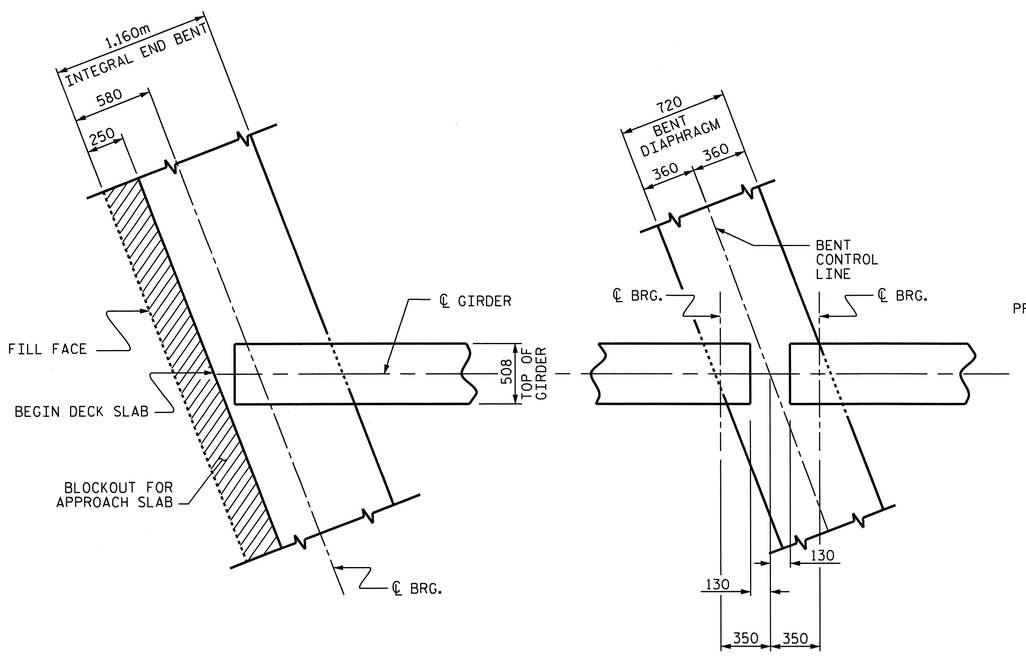


### AT INTEGRAL END BENT

(END BENT #1 SHOWN, END BENT #2 SIMILAR)

### AT BENT DIAPHRAGM

## PLAN OF GIRDER

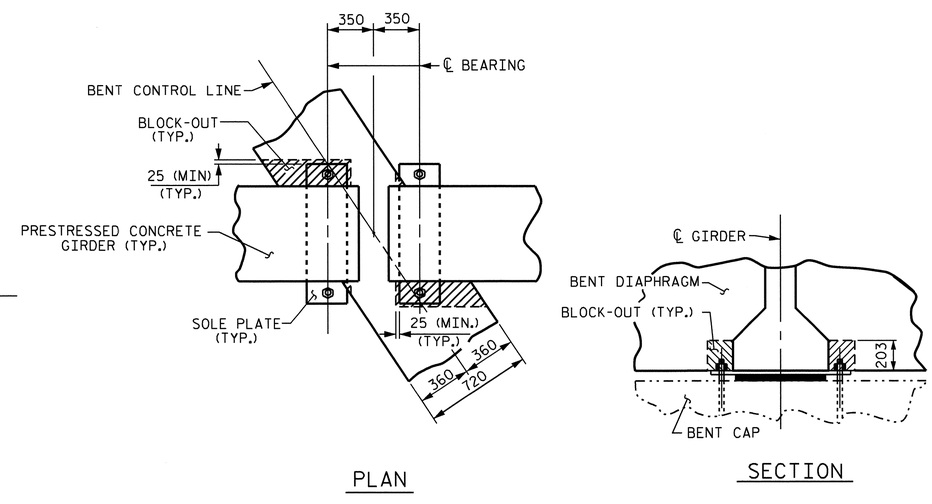


PLAN

SECTION

## BENT DIAPHRAGM BLOCK-OUT DETAIL

PROJECT NO. R-2413C

GUIFORD-ROCKINGHAM COUNTY

STATION: 70+09.407-LREV-

SHEET 2 OF 2

STATE OF NORTH CAROLINA
DEPARTMENT OF TRANSPORTATION
RALEIGH

SUPERSTRUCTURE
TYPICAL SECTION

NORTH CAROLINA PROFESSIONAL SEAL 022516 ENGINEER EMILY E. MURRAY
10/28/11

| REVISIONS | | | | | | | SHEET NO. |
|---|---|---|---|---|---|---|---|
| NO. | BY: | DATE: | NO. | BY: | DATE: | | S-212 |
| 1 | | | 3 | | | | TOTAL SHEETS |
| 2 | | | 4 | | | | 238 |

STR. #7

DRAWN BY : B.N.BARODAWALA DATE : 11-1-10
CHECKED BY : T.L.AVERETTE DATE : 3-24-11

05-SEP-2011 14:44
Y:\Structures\Final Plans\Str.#7\R-2413C_SD_TS_07.dgn
mgudlaugsson

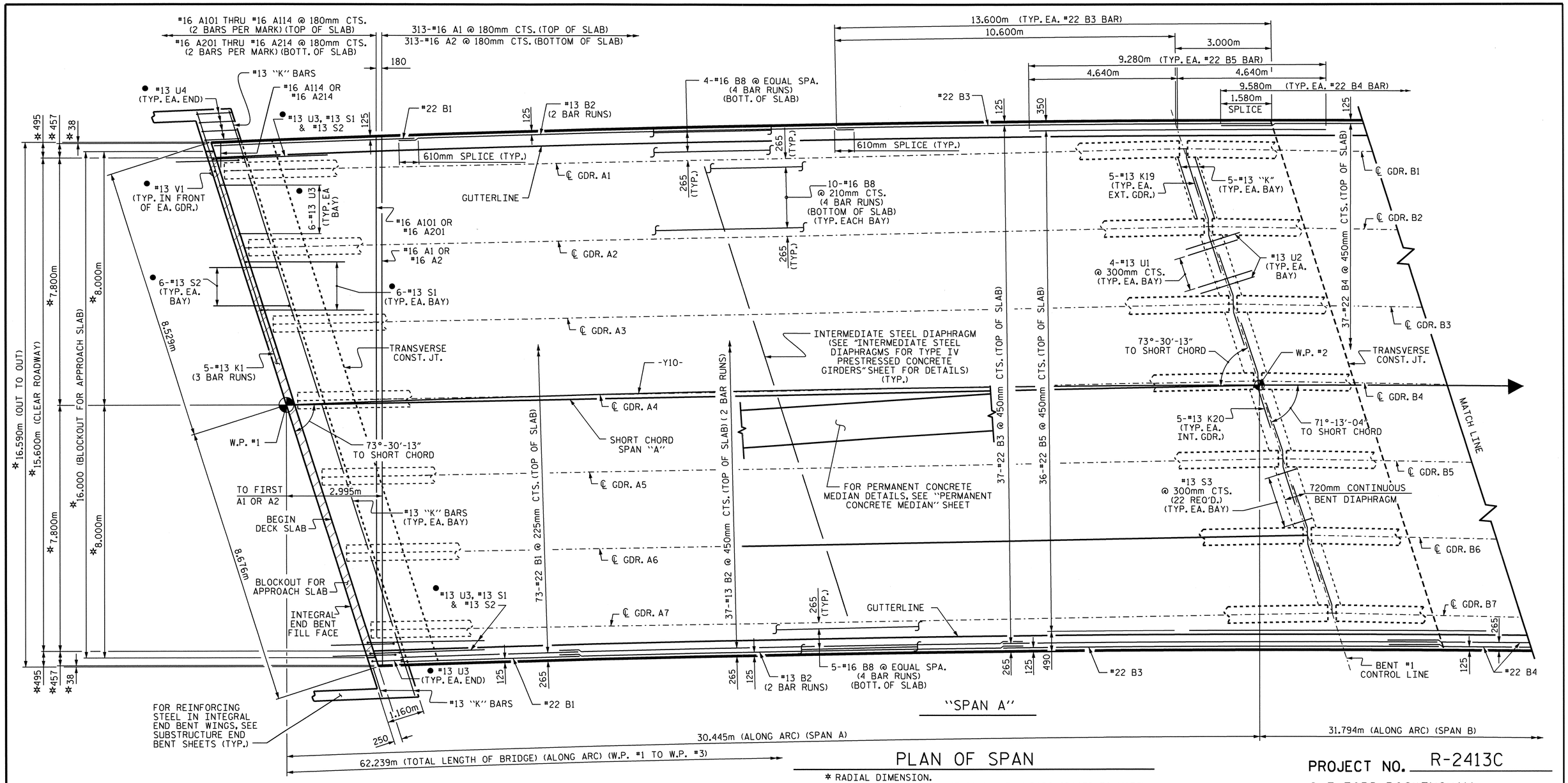


# PLAN OF SPAN

* RADIAL DIMENSION.

● #13 U3, #13 U4, #13 S1, #13 S2 & #13 V1 BARS SPACED TO MATCH WITH #13 "V" BARS IN INTEGRAL END BENT CAP.

#16 "A" BARS ARE SPACED PERPENDICULAR TO THE LONG CHORD.

FOR LOCATION OF INTERMEDIATE DIAPHRAGMS, SEE "PRESTRESSED CONCRETE GIRDER" SHEETS.

FOR LOCATION OF TRANSVERSE CONSTRUCTION JOINTS, SEE "SUPERSTRUCTURE BILL OF MATERIAL" SHEET.

FOR BARRIER RAIL REINFORCING STEEL AND DETAILS, SEE "CONCRETE BARRIER RAIL" SHEET (TYP.)

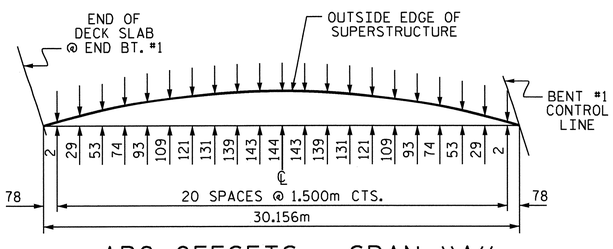


## ARC OFFSETS - SPAN "A"

LEFT SIDE

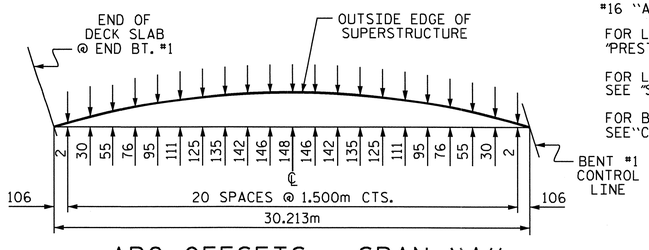


## ARC OFFSETS - SPAN "A"

RIGHT SIDE

PROJECT NO. R-2413C

GUILFORD-ROCKINGHAM COUNTY

STATION: 70+09.407-LREV-

SHEET 1 OF 2

STATE OF NORTH CAROLINA
DEPARTMENT OF TRANSPORTATION
RALEIGH

SUPERSTRUCTURE

PLAN OF SPANS

NORTH CAROLINA PROFESSIONAL SEAL 022516 ENGINEER EMILY S. MURRAY

10/28/11

| REVISIONS | | | | | | SHEET NO. |
|---|---|---|---|---|---|---|
| NO. | BY: | DATE: | NO. | BY: | DATE: | S-213 |
| 1 | | | 3 | | | TOTAL SHEETS |
| 2 | | | 4 | | | 238 |

STR. #7

DRAWN BY : B.N.BARODAWALA DATE : 11-1-10
CHECKED BY : T.L.AVERETTE DATE : 3-24-11

05-SEP-2011 14:43
Y:\Structures\Final Plans\Str.#7\R-2413C_SD_PS_07.dgn
mgudlaugsson

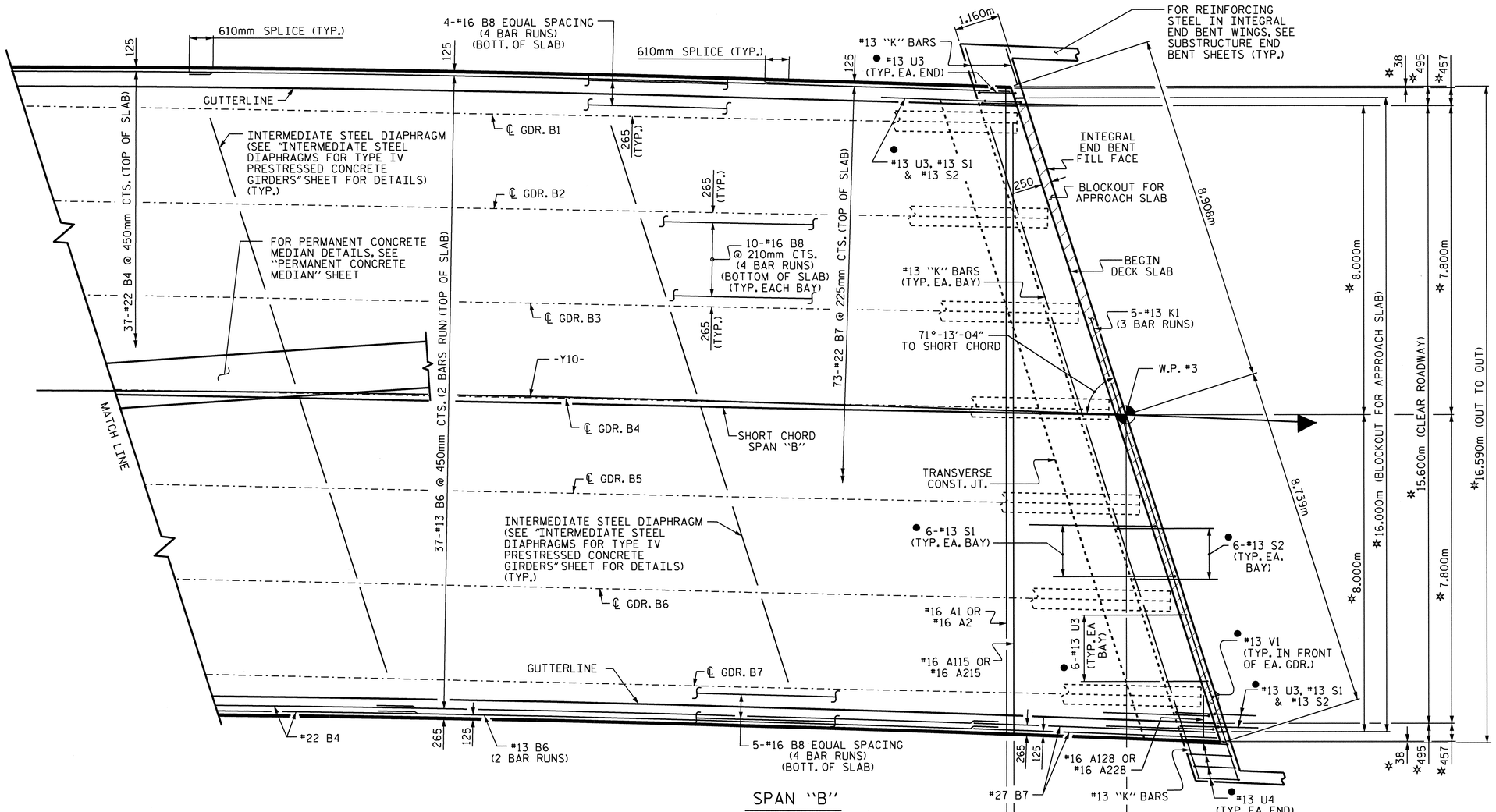


## PLAN OF SPAN

SPAN "B"

3.067m TO FIRST A1 OR A2

31.794m (ALONG ARC) (SPAN B)

62.239m (TOTAL LENGTH OF BRIDGE) (ALONG ARC) (W.P. #1 TO W.P. #3)

180 #16 A115 THRU #16 A128 @ 180mm CTS. (2BARS PER MARK) (TOP OF SLAB)

313-#16 A1 @ 180mm CTS. (TOP OF SLAB)

313-#16 A2 @ 180mm CTS. (BOTTOM OF SLAB)

#16 A215 THRU #16 A228 @ 180mm CTS. (2 BARS PER MARK) (BOTT. OF SLAB)

* RADIAL DIMENSION.

● #13 U3, #13 U4, #13 S1, #13 S2 & #13 V1 BARS SPACED TO MATCH WITH #13 "V" BARS IN INTEGRAL END BENT CAP.

#16 "A" BARS ARE SPACED PERPENDICULAR TO THE LONG CHORD.

FOR LOCATION OF INTERMEDIATE DIAPHRAGMS, SEE "PRESTRESSED CONCRETE GIRDER" SHEETS.

FOR LOCATION OF TRANSVERSE CONSTRUCTION JOINTS, SEE "SUPERSTRUCTURE BILL OF MATERIAL" SHEET.

FOR BARRIER RAIL REINFORCING STEEL AND DETAILS, SEE "CONCRETE BARRIER RAIL" SHEET (TYP.)

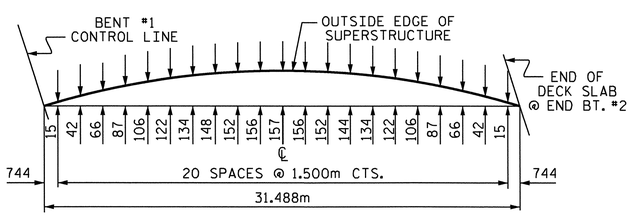


## ARC OFFSETS - SPAN "B"

LEFT SIDE

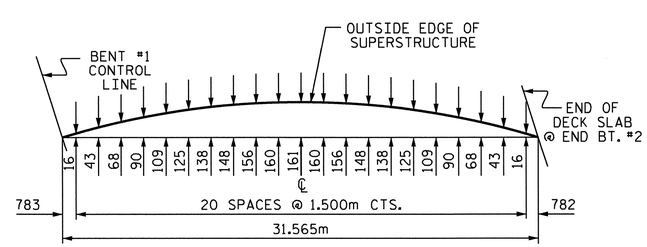


## ARC OFFSETS - SPAN "B"

RIGHT SIDE

PROJECT NO. R-2413C

GUILFORD-ROCKINGHAM COUNTY

STATION: 70+09.407-LREV-

SHEET 2 OF 2

STATE OF NORTH CAROLINA
DEPARTMENT OF TRANSPORTATION
RALEIGH

SUPERSTRUCTURE
PLAN OF SPANS

NORTH CAROLINA PROFESSIONAL SEAL 022516 ENGINEER EMILY E. MURRAY
6/28/11

| REVISIONS | | | | | | SHEET NO. |
|---|---|---|---|---|---|---|
| NO. | BY: | DATE: | NO. | BY: | DATE: | S-214 |
| 1 | | | 3 | | | TOTAL SHEETS |
| 2 | | | 4 | | | 238 |

STR. #7

DRAWN BY : B.N.BARODAWALA DATE : 11-1-10
CHECKED BY : T.L.AVERETTE DATE : 3-24-11

05-SEP-2011 14:43
Y:\Structures\Final Plans\Str.#7\R-2413C_SD_PS_07.dgn
mgudlaugsson

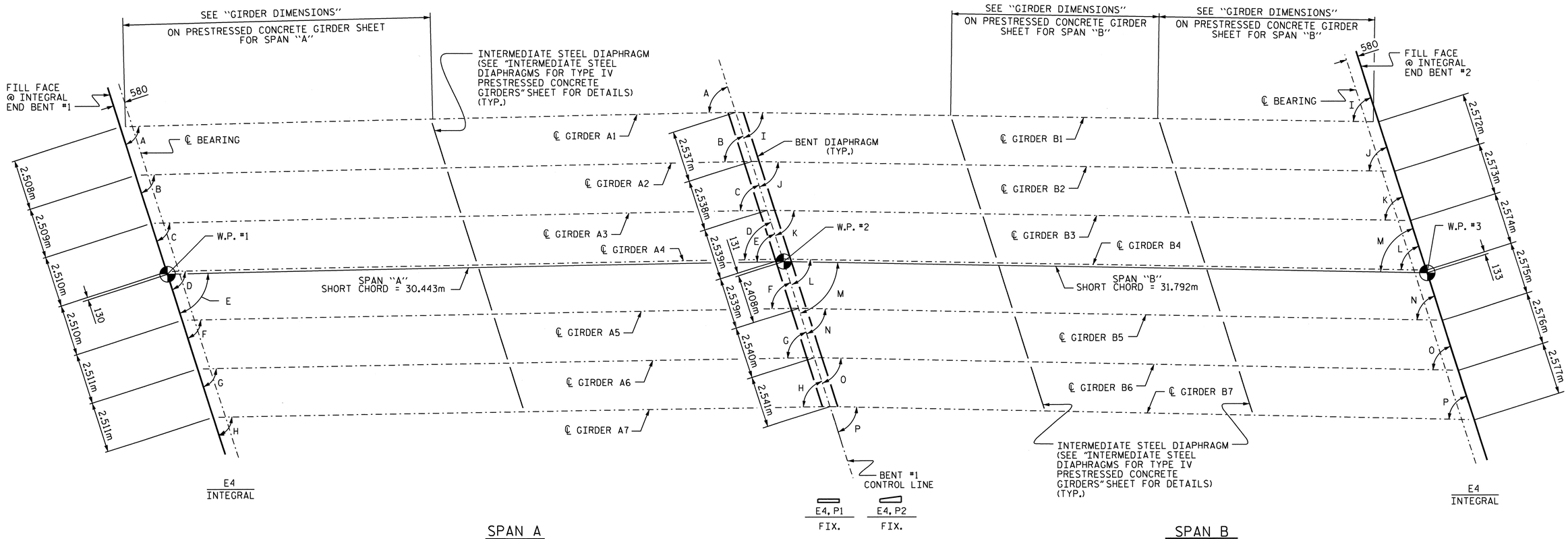


## GIRDER LAYOUT

| ANGLES | | | |
|---|---|---|---|
| A | 73°-39′-46″ | I | 71°-24′-02″ |
| B | 73°-36′-39″ | J | 71°-20′-28″ |
| C | 73°-33′-31″ | K | 71°-16′-52″ |
| D | 73°-30′-22″ | L | 71°-13′-15″ |
| E | 73°-30′-13″ | M | 71°-13′-04″ |
| F | 73°-27′-12″ | N | 71°-09′-37″ |
| G | 73°-24′-01″ | O | 71°-05′-57″ |
| H | 73°-20′-48″ | P | 71°-02′-16″ |

PROJECT NO. R-2413C
GUILFORD-ROCKINGHAM COUNTY
STATION: 70+09.407-LREV-

STATE OF NORTH CAROLINA
DEPARTMENT OF TRANSPORTATION
RALEIGH

SUPERSTRUCTURE
FRAMING PLAN

NORTH CAROLINA PROFESSIONAL SEAL 022516 ENGINEER EMILY E. MURRAY
10/28/11

| REVISIONS | | | | | | SHEET NO. |
|---|---|---|---|---|---|---|
| NO. | BY: | DATE: | NO. | BY: | DATE: | S-215 |
| 1 | | | 3 | | | TOTAL SHEETS |
| 2 | | | 4 | | | 238 |

DRAWN BY : B.N.BARODAWALA DATE : 11-23-10
CHECKED BY : T.L.AVERETTE DATE : 3-24-11

05-SEP-2011 14:42
Y:\Structures\Final Plans\Str.#7\R-2413C_SD_FP_07.dgn
mgudlaugsson

STR. #7

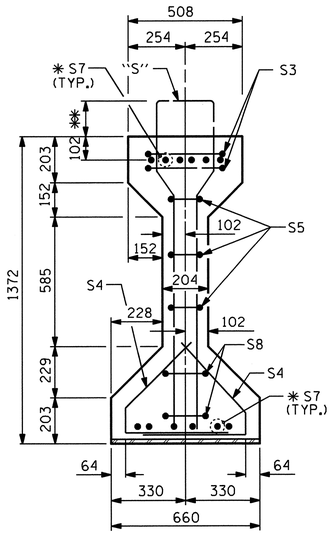


## SECTION A-A

✱ FOR S7 BARS, SEE DETAIL "A" OF PRESTRESSED CONCRETE GIRDER CONTINUOUS FOR LIVE LOAD DETAILS SHEET

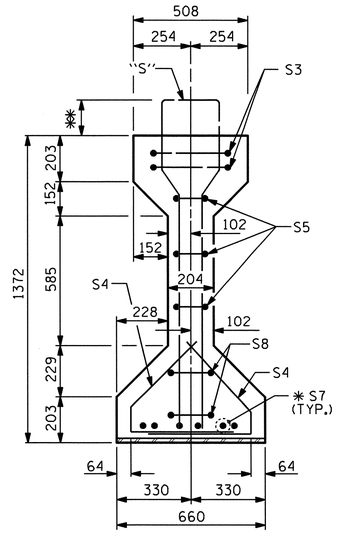


## SECTION B-B

✱✱ THE PROJECTION OF THE S2 & S12 BARS IS 202mm
THE PROJECTION OF THE S13 IS 172mm
THE PROJECTION OF THE S1 BARS IS 152mm

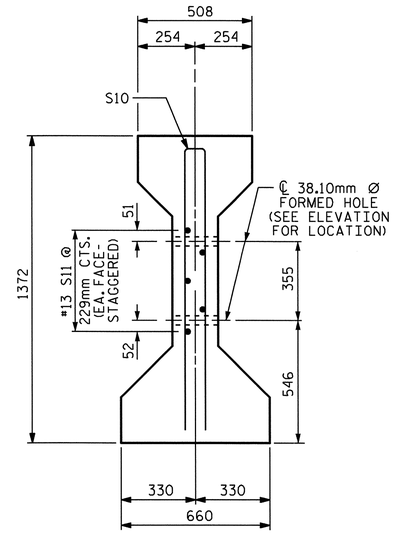


## SECTION C-C

(S1 BARS NOT SHOWN)
NOTE: S11 BARS MAY BE SHIFTED SLIGHTLY VERTICALLY TO AVOID STRANDS

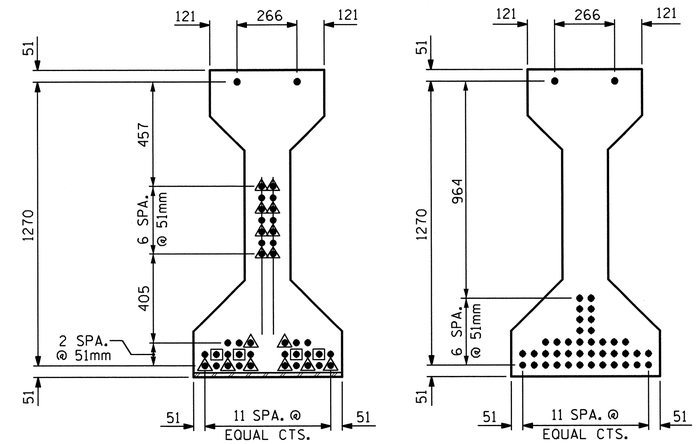


AT END OF GIRDER — AT ℄ OF GIRDER

## 15.24mm Ø LOW RELAXATION STRAND LAYOUT

### DEBONDING LEGEND

- ● FULLY BONDED STRANDS
- STRANDS DEBONDED FOR 610mm FROM END OF GIRDER
- STRANDS DEBONDED FOR 1.220m FROM END OF GIRDER

| GIRDER DIMENSIONS | | | |
|---|---|---|---|
| GIRDER NO. | DIM. "A" (m) | DIM. "B" (m) | DIM. "C" (mm) |
| 1 | 29.906 | 14.953 | 506 |
| 2 | 29.912 | 14.956 | 512 |
| 3 | 29.920 | 14.960 | 520 |
| 4 | 29.928 | 14.964 | 528 |
| 5 | 29.936 | 14.968 | 536 |
| 6 | 29.944 | 14.972 | 544 |
| 7 | 29.954 | 14.977 | 554 |

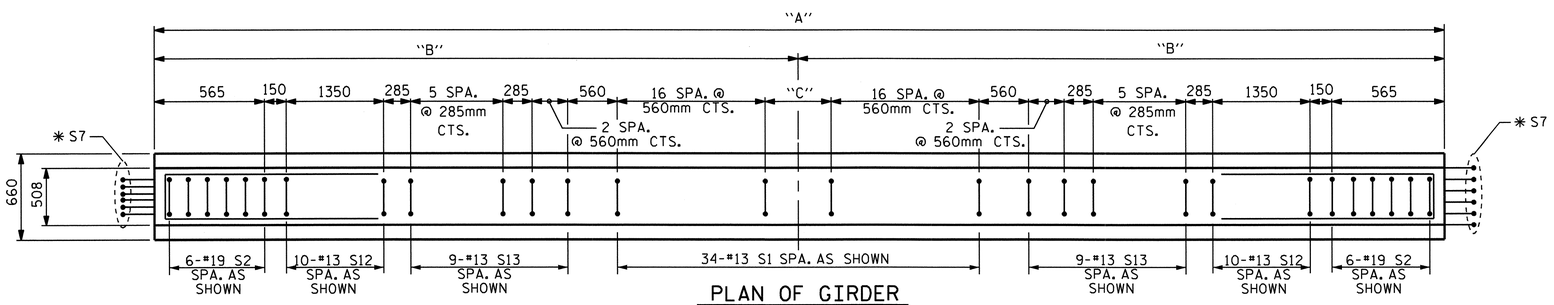


## PLAN OF GIRDER

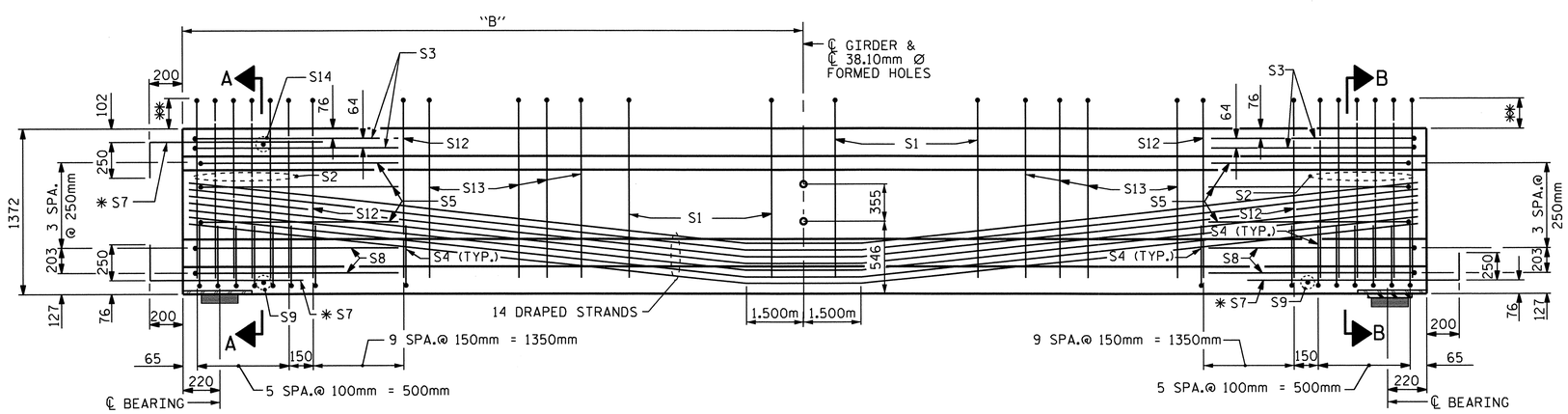


INTEGRAL END BENT — FIX

## ELEVATION OF GIRDER

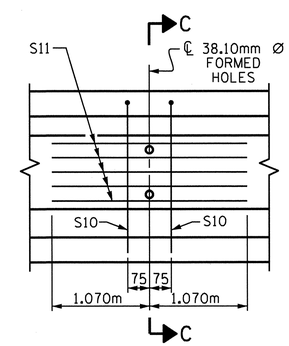


## PARTIAL ELEVATION

SHOWING INTERMEDIATE DIAPHRAGM REINFORCING STEEL FOR ALL GIRDERS

| 15.24mm Ø L. R. GRADE 270 STRANDS | | |
|---|---|---|
| AREA (mm²) | ULTIMATE STRENGTH (KN PER STRAND) | APPLIED PRESTRESS (KN PER STRAND) |
| 140.00 | 260.7 | 195.5 |

### REINFORCING STEEL FOR ONE GIRDER

| BAR | NUMBER | SIZE | TYPE | LENGTH | WEIGHT |
|---|---|---|---|---|---|
| S1 | 34 | #13 | 1 | 3260 | 110 |
| S2 | 12 | #19 | 1 | 3360 | 90 |
| S3 | 4 | #13 | 2 | 2760 | 11 |
| S4 | 64 | #13 | 3 | 1040 | 66 |
| S5 | 6 | #13 | 2 | 2560 | 15 |
| ✱ S7 | 18 | #16 | STR | 1120 | 31 |
| S8 | 4 | #13 | 2 | 2620 | 10 |
| S9 | 2 | #10 | STR | 560 | 1 |
| S10 | 2 | #16 | 2 | 2640 | 8 |
| S11 | 5 | #13 | STR | 2140 | 11 |
| S12 | 20 | #13 | 1 | 3360 | 67 |
| S13 | 18 | #13 | 1 | 3300 | 59 |
| S14 | 1 | #10 | STR | 400 | 1 |

✱ NOTE: S7 BARS SHALL BE BENT BEFORE SHIPMENT. HEAT BENDING SHALL NOT BE ALLOWED.

### BAR TYPES

ALL BAR DIMENSIONS ARE OUT-TO-OUT

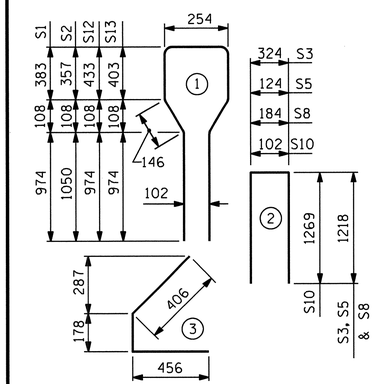


### QUANTITIES FOR ONE GIRDER

| | REINFORCING STEEL | 55.16 MPa CONCRETE | 15.24mm Ø L.R. STRANDS |
|---|---|---|---|
| | kg | m³ | No. |
| | 480 | 15.2 | 42 |
| | | | |

### GIRDERS REQUIRED

| NUMBER | LENGTH | TOTAL LENGTH |
|---|---|---|
| 7 | VARIES | 209.500m |

PROJECT NO. R-2413C
GUILFORD-ROCKINGHAM COUNTY
STATION: 70+09.407-LREV-

SHEET 1 OF 3

STATE OF NORTH CAROLINA
DEPARTMENT OF TRANSPORTATION
RALEIGH

STANDARD

AASHTO TYPE IV
PRESTRESSED CONCRETE GIRDER
CONTINUOUS FOR LIVE LOAD
SPAN A

NORTH CAROLINA PROFESSIONAL SEAL 022516 ENGINEER TIMOTHY E. MURRAY 10/28/11

| REVISIONS | | | | | | | SHEET NO. |
|---|---|---|---|---|---|---|---|
| NO. | BY: | DATE: | NO. | BY: | DATE: | | S-216 |
| 1 | | | 3 | | | | TOTAL SHEETS |
| 2 | | | 4 | | | | 238 |

STR. #7

STD. NO. PCG6SM

| | |
|---|---|
| ASSEMBLED BY : B.N.BARODAWALA | DATE : 12-1-10 |
| CHECKED BY : T.L.AVERETTE | DATE : 3-24-11 |
| DRAWN BY : ELR 8/91 | REV. 7/17/98 RWW/LES |
| CHECKED BY : GRP 8/91 | REV. 10/17/00R RWW/LES |
| | REV. 5/1/06R TLA/GM |

05-SEP-2011 14:41
Y:\Structures\Final Plans\Str.#7\R-2413C_SD_G_07.dgn
mgudlaugsson

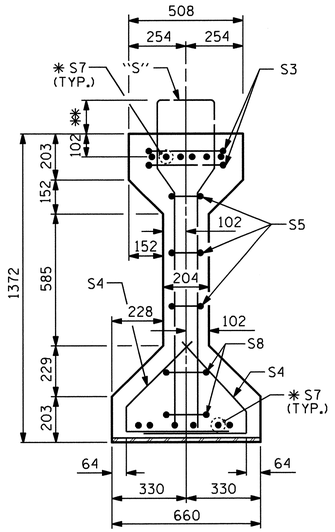


## SECTION A-A

✱ FOR S7 BARS, SEE DETAIL "A" OF PRESTRESSED CONCRETE GIRDER CONTINUOUS FOR LIVE LOAD DETAILS SHEET

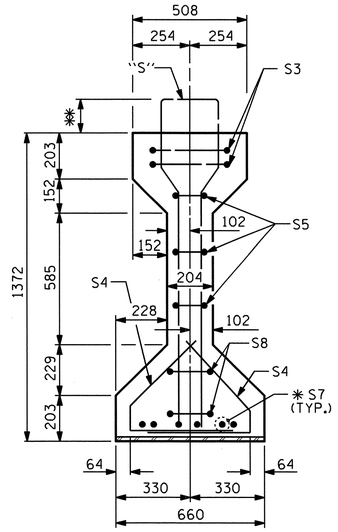


## SECTION B-B

✱✱ THE PROJECTION OF THE S2 & S12 BARS IS 202mm
THE PROJECTION OF THE S13 IS 172mm
THE PROJECTION OF THE S1 BARS IS 152mm

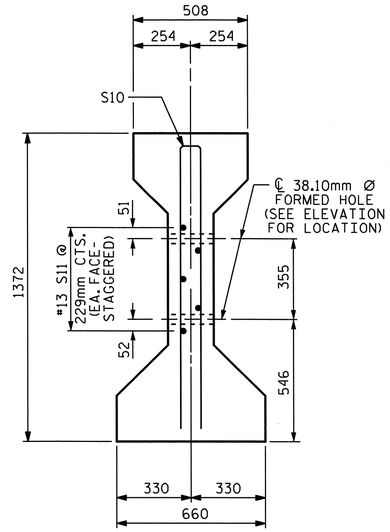


## SECTION C-C

(S1 BARS NOT SHOWN)
NOTE: S11 BARS MAY BE SHIFTED SLIGHTLY VERTICALLY TO AVOID STRANDS

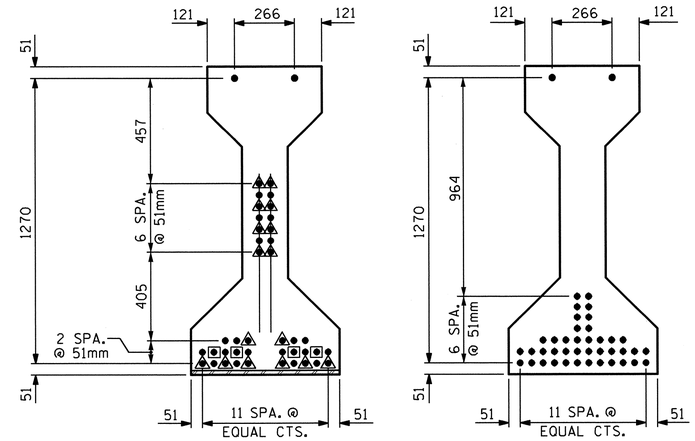


## 15.24mm Ø LOW RELAXATION STRAND LAYOUT

### DEBONDING LEGEND

- ● FULLY BONDED STRANDS
- STRANDS DEBONDED FOR 610mm FROM END OF GIRDER
- STRANDS DEBONDED FOR 1.220m FROM END OF GIRDER

| GIRDER DIMENSIONS | | | | | |
|---|---|---|---|---|---|
| GIRDER NO. | DIM. "A" (m) | DIM. "B" (m) | DIM. "C" (mm) | DIM. "D" (m) | DIM. "E" (m) |
| 1 | 31.236 | 15.618 | 326 | 10.486 | 10.265 |
| 2 | 31.246 | 15.623 | 336 | 10.490 | 10.267 |
| 3 | 31.258 | 15.629 | 348 | 10.493 | 10.271 |
| 4 | 31.268 | 15.634 | 358 | 10.497 | 10.275 |
| 5 | 31.280 | 15.640 | 370 | 10.501 | 10.279 |
| 6 | 31.292 | 15.646 | 382 | 10.504 | 10.284 |
| 7 | 31.304 | 15.652 | 394 | 10.508 | 10.288 |

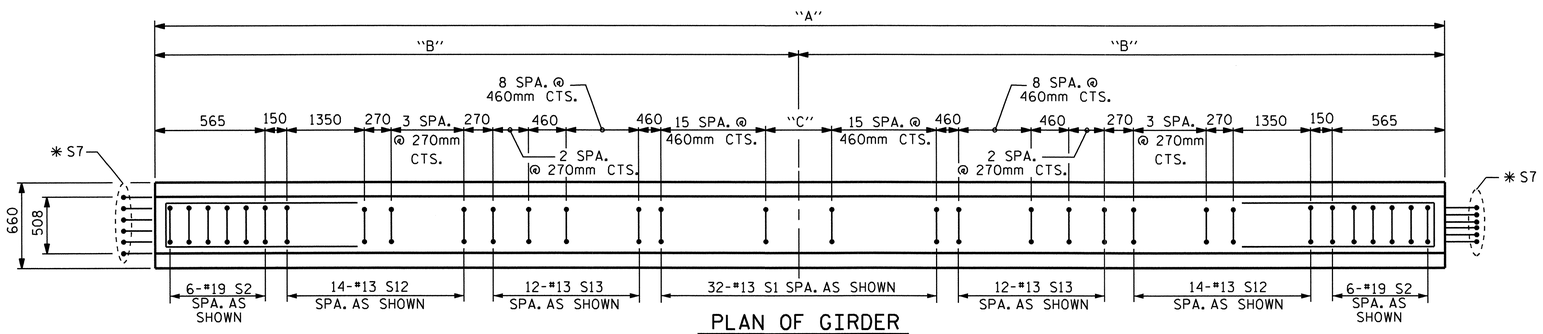


## PLAN OF GIRDER

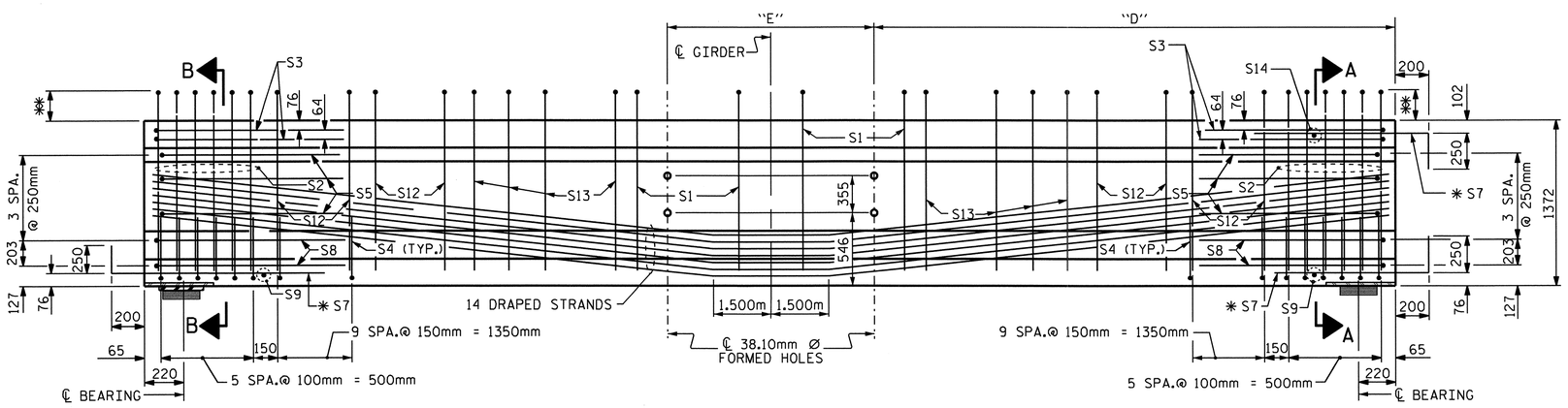


FIX

## ELEVATION OF GIRDER

INTEGRAL END BENT

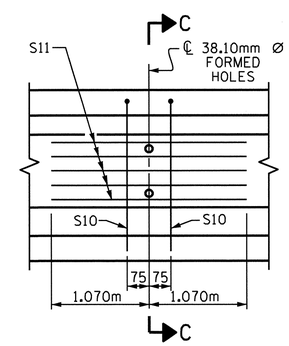


## PARTIAL ELEVATION

SHOWING INTERMEDIATE DIAPHRAGM REINFORCING STEEL FOR ALL GIRDERS

### 15.24mm Ø L. R. GRADE 270 STRANDS

| AREA ($mm^2$) | ULTIMATE STRENGTH (kN PER STRAND) | APPLIED PRESTRESS (kN PER STRAND) |
|---|---|---|
| 140.00 | 260.7 | 195.5 |

### REINFORCING STEEL FOR ONE GIRDER

| BAR | NUMBER | SIZE | TYPE | LENGTH | WEIGHT |
|---|---|---|---|---|---|
| S1 | 32 | #13 | 1 | 3260 | 104 |
| S2 | 12 | #19 | 1 | 3360 | 90 |
| S3 | 4 | #13 | 2 | 2760 | 11 |
| S4 | 64 | #13 | 3 | 1040 | 66 |
| S5 | 6 | #13 | 2 | 2560 | 15 |
| ✱ S7 | 18 | #16 | STR | 1120 | 31 |
| S8 | 4 | #13 | 2 | 2620 | 10 |
| S9 | 2 | #10 | STR | 560 | 1 |
| S10 | 4 | #16 | 2 | 2640 | 16 |
| S11 | 10 | #13 | STR | 2140 | 21 |
| S12 | 28 | #13 | 1 | 3360 | 94 |
| S13 | 24 | #13 | 1 | 3300 | 79 |
| S14 | 1 | #10 | STR | 400 | 1 |

✱ NOTE: S7 BARS SHALL BE BENT BEFORE SHIPMENT. HEAT BENDING SHALL NOT BE ALLOWED.

### BAR TYPES

ALL BAR DIMENSIONS ARE OUT-TO-OUT

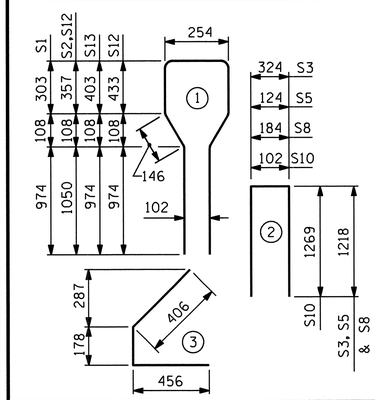


### QUANTITIES FOR ONE GIRDER

| | REINFORCING STEEL | 58.61 MPa CONCRETE | 15.24mm Ø L.R. STRANDS |
|---|---|---|---|
| | kg | $m^3$ | No. |
| | 539 | 15.9 | 42 |
| | | | |

### GIRDERS REQUIRED

| NUMBER | LENGTH | TOTAL LENGTH |
|---|---|---|
| 7 | VARIES | 218.884m |

PROJECT NO. R-2413C
GUILFORD-ROCKINGHAM COUNTY
STATION: 70+09.407-LREV-

SHEET 2 OF 3

STATE OF NORTH CAROLINA
DEPARTMENT OF TRANSPORTATION
RALEIGH

STANDARD

AASHTO TYPE IV
PRESTRESSED CONCRETE GIRDER
CONTINUOUS FOR LIVE LOAD
SPAN B

NORTH CAROLINA PROFESSIONAL SEAL 022516 ENGINEER EMILY E. MURRAY
10/28/11

| REVISIONS | | | | | | | SHEET NO. |
|---|---|---|---|---|---|---|---|
| NO. | BY: | DATE: | NO. | BY: | DATE: | | S-217 |
| 1 | | | 3 | | | | TOTAL SHEETS |
| 2 | | | 4 | | | | 238 |

STR. #7

STD. NO. PCG6SM

| | |
|---|---|
| ASSEMBLED BY : B.N.BARODAWALA | DATE : 12-1-10 |
| CHECKED BY : T.L.AVERETTE | DATE : 3-24-11 |
| DRAWN BY : ELR 8/91 | REV. 7/17/98 RWW/LES |
| CHECKED BY : GRP 8/91 | REV. 10/17/00R RWW/LES |
| | REV. 5/1/06R TLA/GM |

05-SEP-2011 14:40
Y:\Structures\Final Plans\Str.#7\R-2413C_SD_G_07.dgn
mgudlaugsson

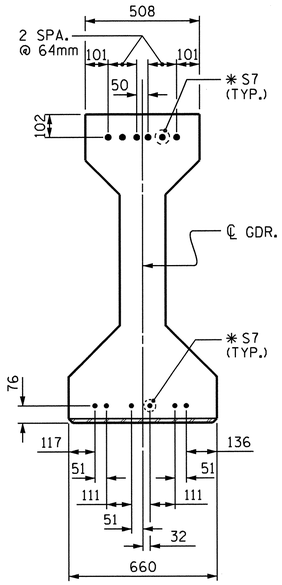


## DETAIL "A"

(FOR AASHTO TYPE IV GIRDERS)

## NOTES

ALL PRESTRESSING STRANDS SHALL BE 7-WIRE LOW-RELAXATION GRADE 270 STRANDS AND SHALL CONFORM TO AASHTO M203M EXCEPT FOR SAMPLING REQUIREMENTS WHICH SHALL BE IN ACCORDANCE WITH THE STANDARD SPECIFICATIONS.

ALL REINFORCING STEEL SHALL BE GRADE 420.

APPLY EPOXY PROTECTIVE COATING TO END OF GIRDER SURFACES INDICATED IN ELEVATION VIEW.

EMBEDDED PLATE "B-1" SHALL BE GALVANIZED IN ACCORDANCE WITH THE SPECIFICATIONS. BEVEL EDGES OF PLATE "B-1" TO GIVE CLOSE FIT BUT NOT TIGHT FIT TO STEEL CASTING FORM.

ANCHOR STUDS SHALL CONFORM TO AASHTO M169 GRADES 1010 THROUGH 1020 OR APPROVED EQUAL, AND SHALL MEET THE TYPE "B" REQUIREMENTS OF SUBSECTION 7.3 OF THE ANSI/AASHTO/AWS D1.5 BRIDGE WELDING CODE.

AT ENDS OF GIRDERS TO BE EMBEDDED IN CONCRETE DIAPHRAGMS OR END WALLS, PRESTRESSING STRANDS MAY EXTEND A MAXIMUM OF 50mm BEYOND THE GIRDER ENDS. OTHERWISE, PRESTRESSING STRANDS SHALL BE CUT FLUSH WITH THE GIRDER ENDS.

THE TRANSFER OF LOAD FROM THE ANCHORAGES TO THE GIRDER SHALL BE DONE WHEN CONCRETE HAS REACHED A COMPRESSIVE STRENGTH OF NOT LESS THAN 44.13 MPa. FOR SPAN A GIRDER AND 46.19 MPa FOR SPAN B GIRDER.

DEPENDING ON THE TYPE OF SYSTEM USED TO SUPPORT THE DECK SLAB FORMS, PRESET ANCHORS MAY BE NECESSARY IN THE PRESTRESSED CONCRETE GIRDER.

THE TOP SURFACE OF THE GIRDER, EXCLUDING THE OUTSIDE 100mm, SHALL BE RAKED TO A DEPTH OF 6mm.

WHEN DRAPED STRANDS ARE DETAILED, THE LONGITUDINAL LOCATION OF THE HOLD DOWN DEVICES SHALL BE WITHIN 150mm OF THE LOCATION SHOWN AND THE CENTER OF GRAVITY OF THE GROUP OF DRAPED STRANDS SHALL BE LOCATED WITHIN 13mm OF THE THEORETICAL LOCATION SHOWN.

FOR PRESTRESSED CONCRETE MEMBERS, SEE SPECIAL PROVISIONS.

THE UPLIFT FORCE DUE TO DRAPED STRANDS IS 103kN FOR SPAN A AND 98 kN FOR SPAN B.

### DEAD LOAD DEFLECTION TABLE FOR SPAN A

| 15.24mm Ø LOW RELAXATION | GIRDERS 1 THRU 7 | | | | | | | | | | |
|---|---|---|---|---|---|---|---|---|---|---|---|
| TENTH POINTS | 0 | .1 | .2 | .3 | .4 | .5 | .6 | .7 | .8 | .9 | 0 |
| CAMBER (GIRDER ALONE IN PLACE) ↑ | 0.000 | 0.041 | 0.078 | 0.107 | 0.126 | 0.132 | 0.126 | 0.107 | 0.078 | 0.041 | 0.000 |
| * DEFLECTION DUE TO SUPERIMPOSED D.L. ↓ | 0.000 | 0.015 | 0.028 | 0.039 | 0.046 | 0.049 | 0.046 | 0.039 | 0.028 | 0.015 | 0.000 |
| FINAL CAMBER ↑ | 0 | 26 | 50 | 68 | 80 | 83 | 80 | 68 | 50 | 26 | 0 |

* INCLUDES FUTURE WEARING SURFACE IN SUPERIMPOSED DEAD LOAD.
ALL VALUES ARE SHOWN IN METERS, EXCEPT "FINAL CAMBER" WHICH IS SHOWN IN MILLIMETERS.

### DEAD LOAD DEFLECTION TABLE FOR SPAN B

| 15.24mm Ø LOW RELAXATION | GIRDERS 1 THRU 7 | | | | | | | | | | |
|---|---|---|---|---|---|---|---|---|---|---|---|
| TENTH POINTS | 0 | .1 | .2 | .3 | .4 | .5 | .6 | .7 | .8 | .9 | 0 |
| CAMBER (GIRDER ALONE IN PLACE) ↑ | 0.000 | 0.042 | 0.079 | 0.109 | 0.127 | 0.134 | 0.127 | 0.109 | 0.079 | 0.042 | 0.000 |
| * DEFLECTION DUE TO SUPERIMPOSED D.L. ↓ | 0.000 | 0.017 | 0.033 | 0.045 | 0.053 | 0.057 | 0.053 | 0.045 | 0.033 | 0.017 | 0.000 |
| FINAL CAMBER ↑ | 0 | 25 | 46 | 64 | 74 | 77 | 74 | 64 | 46 | 25 | 0 |

* INCLUDES FUTURE WEARING SURFACE IN SUPERIMPOSED DEAD LOAD.
ALL VALUES ARE SHOWN IN METERS, EXCEPT "FINAL CAMBER" WHICH IS SHOWN IN MILLIMETERS.

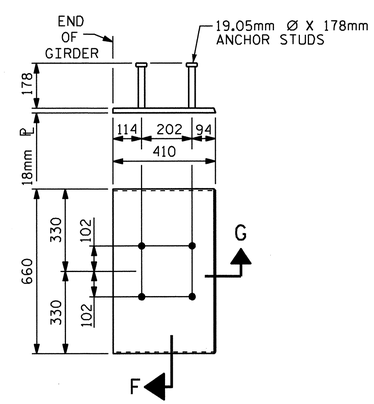


## EMBEDDED PLATE "B-1" DETAILS FOR AASHTO TYPE IV GIRDER

(2 REQ'D PER GIRDER)

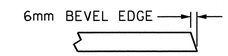


## SECTION "G"

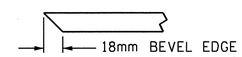


## SECTION "F"

(SEE NOTES)

PROJECT NO. R-2413C

GUILFORD-ROCKINGHAM COUNTY

STATION: 70+09.407-LREV-

SHEET 3 OF 3

STATE OF NORTH CAROLINA
DEPARTMENT OF TRANSPORTATION
RALEIGH

STANDARD
PRESTRESSED CONCRETE GIRDER
CONTINUOUS FOR LIVE LOAD
DETAILS

NORTH CAROLINA PROFESSIONAL SEAL 022516 ENGINEER EMILY E. MURRAY
10/28/11

| REVISIONS | | | | | | SHEET NO. |
|---|---|---|---|---|---|---|
| NO. | BY: | DATE: | NO. | BY: | DATE: | S-218 |
| 1 | | | 3 | | | TOTAL SHEETS |
| 2 | | | 4 | | | 238 |

STR. #7

STD. NO. PCG11SM

ASSEMBLED BY : B.N.BARODAWALA DATE : 12-1-10
CHECKED BY : T.L.AVERETTE DATE : 3-24-11

DRAWN BY : ELR 11/91
CHECKED BY : GRP 11/91

REV. 10/17/00 RWW/LES
REV. 7/10/01RR LES/RDR
REV. 5/1/06 TLA/GM

19-OCT-2011 13:47
R:\TIPProjects-R\R2413c\Structures\FinalPlans\Str.#7\R-2413C_SD_G_07.dgn
taverette

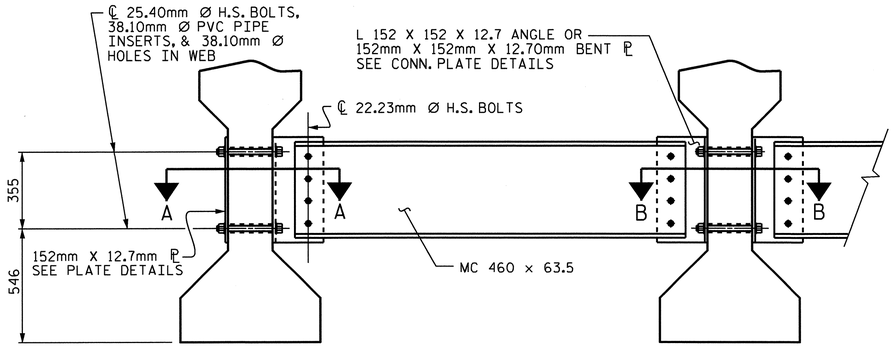


EXTERIOR GIRDER

INTERIOR GIRDER

## PART SECTION AT INTERMEDIATE DIAPHRAGM

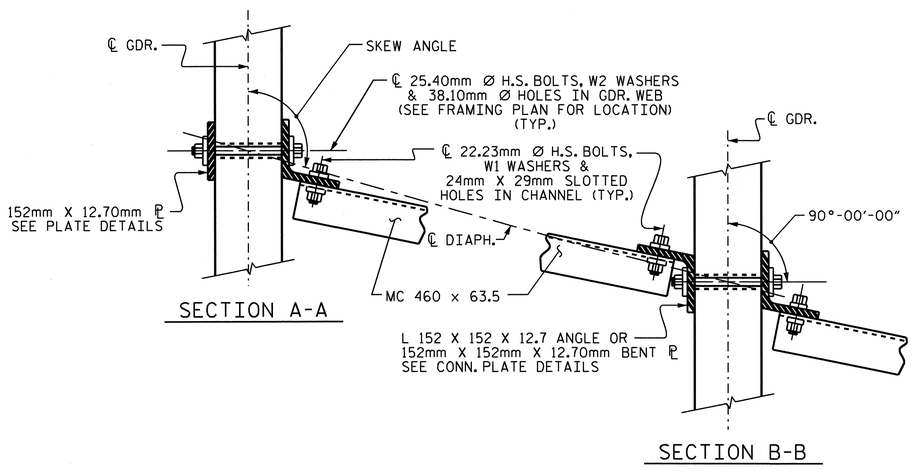


SECTION A-A

SECTION B-B

## CONNECTION DETAILS

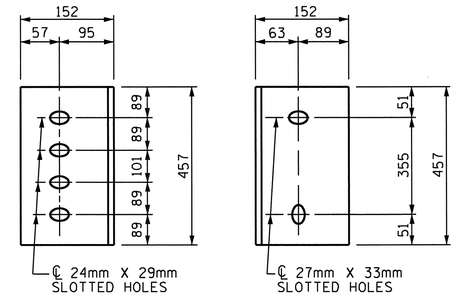


DIAPHRAGM FACE

WEB FACE

## CONNECTOR PLATE DETAILS

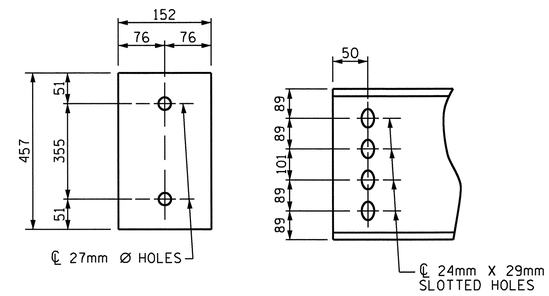


PLATE DETAILS

CHANNEL END

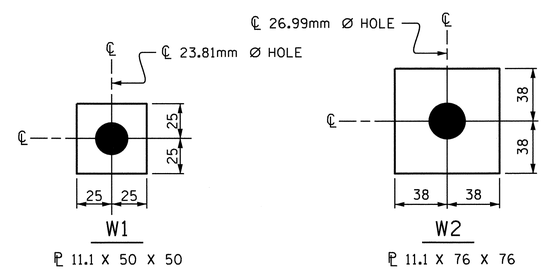


ℙ 11.1 X 50 X 50

USE WITH 22.23mm Ø HVY. HEX NUTS & DIRECT TENSION INDICATOR WASHERS AT DIAPHRAGM CHANNEL TO CONNECTOR PLATE CONNECTIONS

ℙ 11.1 X 76 X 76

USE WITH 25.40mm Ø HVY. HEX NUTS AT CONNECTOR PLATE TO GIRDER CONNECTIONS

## WASHER DETAILS

## STRUCTURAL STEEL NOTES

ALL INTERMEDIATE DIAPHRAGM STEEL, CONNECTOR PLATES AND PLATE WASHERS SHALL BE AASHTO M270 GRADE 345 OR APPROVED EQUAL.

TENSION ON THE AASHTO M164 BOLTS THROUGH THE CHANNEL MEMBER SHALL BE CALIBRATED USING DIRECT TENSION INDICATOR WASHERS IN ACCORDANCE WITH THE STANDARD SPECIFICATIONS. FOR DIRECT TENSION INDICATORS, SEE SPECIAL PROVISIONS.

TENSION ON THE AASHTO M164 BOLTS THROUGH THE GIRDER WEB SHALL BE SNUG TIGHTENED FOLLOWED BY AN ADDITIONAL 1/4 TURN.

THE PLATES, BENT PLATES, CHANNELS, ANGLES, AND PLATE WASHERS SHALL BE GALVANIZED OR METALLIZED IN ACCORDANCE WITH THE STANDARD SPECIFICATIONS. FOR THERMAL SPRAYED COATINGS (METALLIZATION), SEE SPECIAL PROVISIONS.

FOR METALLIZATION, APPLY AN 8 MIL THICK 99.99 PERCENT ZINC (W-Zn-1) THERMAL SPRAYED COATING WITH A 0.5 MIL THICK SEAL COAT TO ALL STEEL DIAPHRAGM SURFACES IN ACCORDANCE WITH THE THERMAL SPRAYED COATINGS SPECIAL PROVISIONS AND SECTION 442 OF THE STANDARD SPECIFICATIONS.

GALVANIZE THE HIGH STRENGTH BOLTS, NUTS, WASHERS AND DIRECT TENSION INDICATORS IN ACCORDANCE WITH THE STANDARD SPECIFICATIONS. FOR HIGH STRENGTH BOLTS, SEE SPECIAL PROVISIONS.

USE A MINIMUM 11mm THICK PLATE WASHER WITH STANDARD HOLES UNDER EACH BOLT HEAD AND NUT. THE PLATE WASHERS SHALL HAVE SUFFICIENT SIZE TO COVER THE HOLES AFTER INSTALLATION. HARDENED WASHERS AND DIRECT TENSION INDICATORS ARE TO BE USED IN CONJUNCTION WITH THE PLATE WASHERS IN THE CHANNEL MEMBER CONNECTION.

FOR BOLTS THROUGH THE GIRDER WEB, PROVIDE SUFFICIENT LENGTH OF ALL BOLTS TO ACCOMMODATE WASHERS AND THE THICKNESS OF CONNECTING MEMBER PLUS AT LEAST 6mm PROJECTION BEYOND THE NUT.

INTERMEDIATE DIAPHRAGM ASSEMBLY SHALL COMPLY WITH SECTION 1072 OF THE STANDARD SPECIFICATIONS.

CONTRACTOR SHALL SUBMIT TWO SETS OF WORKING DRAWINGS FOR THE INTERMEDIATE DIAPHRAGM ASSEMBLY FOR REVIEW, COMMENTS AND ACCEPTANCE. AFTER REVIEW, COMMENTS, AND ACCEPTANCE, SUBMIT SEVEN SETS FOR DISTRIBUTION.

IN THE EXTERIOR BAYS, TEMPORARY STRUTS SHALL BE PLACED BETWEEN PRESTRESSED GIRDERS ADJACENT TO THE STEEL DIAPHRAGMS. STRUTS SHALL REMAIN IN PLACE 3 DAYS AFTER CONCRETE IS PLACED. ALL AASHTO M164 H.S. BOLTS SHALL BE FULLY TIGHTENED AFTER THE STRUTS HAVE BEEN REMOVED.

THE COST OF THE STEEL DIAPHRAGMS AND ASSEMBLIES SHALL BE INCLUDED IN THE UNIT PRICE BID FOR PRESTRESSED CONCRETE GIRDERS.

PROJECT NO. R-2413C

GUILFORD-ROCKINGHAM COUNTY

STATION: 70+09.407-LREV-

STATE OF NORTH CAROLINA
DEPARTMENT OF TRANSPORTATION
RALEIGH

STANDARD

INTERMEDIATE STEEL DIAPHRAGMS FOR TYPE IV PRESTRESSED CONCRETE GIRDERS

NORTH CAROLINA PROFESSIONAL SEAL 022516 ENGINEER ELMEY E. MURRAY 10/28/11

| REVISIONS | | | | | | SHEET NO. |
|---|---|---|---|---|---|---|
| NO. | BY: | DATE: | NO. | BY: | DATE: | S-219 |
| 1 | | | 3 | | | TOTAL SHEETS |
| 2 | | | 4 | | | 238 |

ASSEMBLED BY : B.N.BARODAWALA DATE : 12-1-10
CHECKED BY : T.L.AVERETTE DATE : 3-24-11

DRAWN BY : TLA 6/05
CHECKED BY : VC 6/05

ADDED 10/21/05
REV. 5/1/06RR KMM/GM

05-SEP-2011 14:40
Y:\Structures\Final Plans\Str.#7\R-2413C_SD_Dp_07.dgn
mgudlaugsson

STR. #7

STD.No.PCG12SM

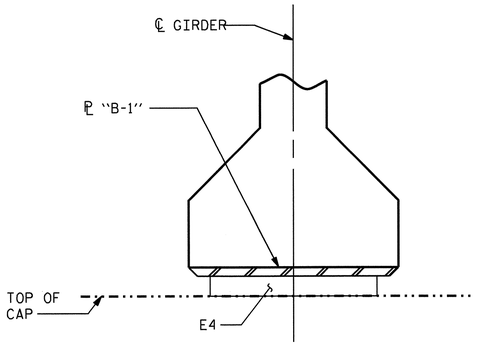


INTEGRAL

SECTION E-E

@ INTEGRAL END BENTS

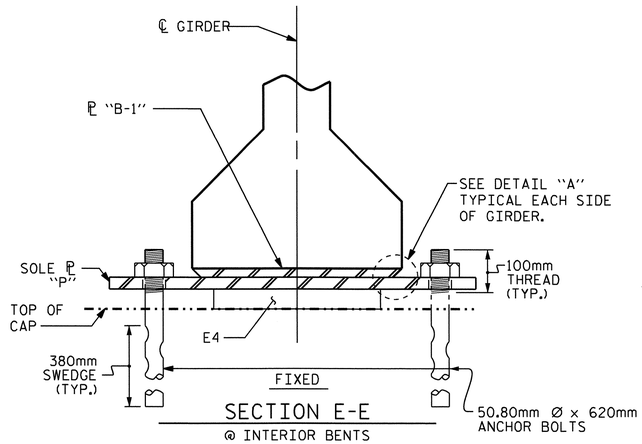


SECTION E-E

@ INTERIOR BENTS

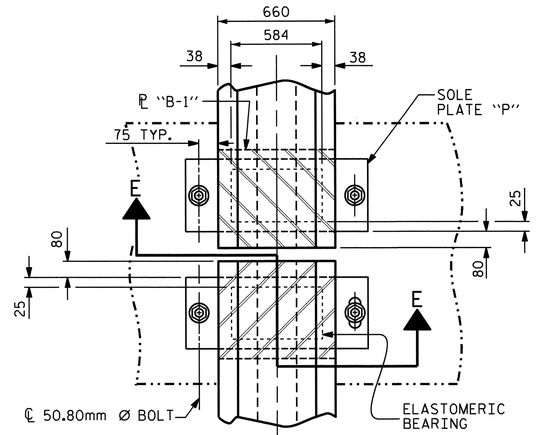


TYPICAL HALF-PLAN

(SHOWING CONTINUOUS BENT)

TYPICAL HALF-PLAN

(SHOWING SIMPLE SPAN BENT)

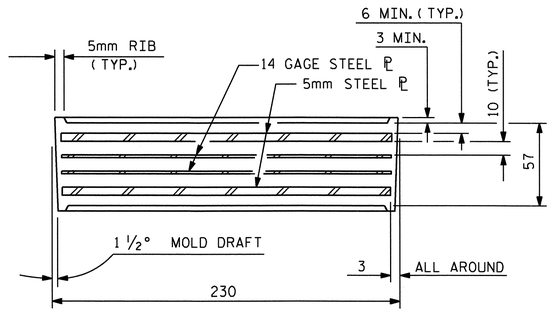


TYPICAL SECTION OF ELASTOMERIC BEARINGS

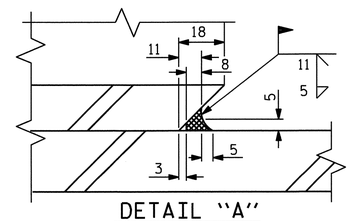


DETAIL "A"

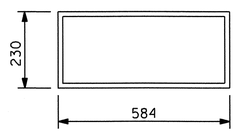


E4 (28 REQ'D)

PLAN VIEW OF ELASTOMERIC BEARING

TYPE V

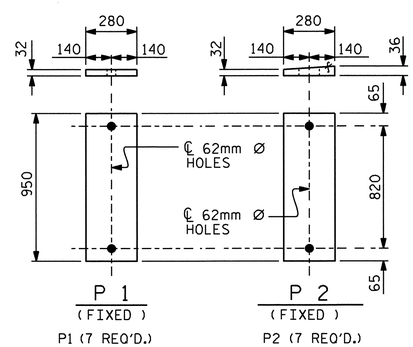


SOLE PLATE DETAILS ("P")

## NOTES

AT ALL FIXED POINTS OF SUPPORT, NUTS FOR ANCHOR BOLTS ARE TO BE TIGHTENED FINGER TIGHT AND THEN BACKED OFF 1/2 TURN. THE THREAD OF THE NUT AND BOLT SHALL THEN BE BURRED WITH A SHARP POINTED TOOL.

STEEL SOLE PLATES, ANCHOR BOLTS, NUTS, AND WASHERS SHALL BE GALVANIZED IN ACCORDANCE WITH THE STANDARD SPECIFICATIONS.

PRIOR TO WELDING, GRIND THE GALVANIZED SURFACE OF THE PORTION OF THE EMBEDDED PLATE AND SOLE PLATE THAT ARE TO BE WELDED. AFTER WELDING, DAMAGED GALVANIZED SURFACES SHALL BE REPAIRED IN ACCORDANCE WITH THE STANDARD SPECIFICATIONS.

WHEN WELDING THE SOLE PLATE TO THE EMBEDDED PLATE IN THE GIRDER, USE TEMPERATURE INDICATING WAX PENS, OR OTHER SUITABLE MEANS, TO ENSURE THAT THE TEMPERATURE OF THE SOLE PLATE DOES NOT EXCEED 149°C. TEMPERATURES ABOVE THIS MAY DAMAGE THE ELASTOMER.

SOLE PLATE "P", BOLTS, NUTS, WASHERS, AND PIPE SLEEVE SHALL BE INCLUDED IN THE PAY ITEM FOR PRESTRESSED CONCRETE GIRDERS.

ANCHOR BOLTS SHALL MEET THE REQUIREMENTS OF ASTM A449. NUTS SHALL MEET THE REQUIREMENTS OF AASHTO M291M-12 OR AASHTO M292M-2H. WASHERS SHALL MEET THE REQUIREMENTS OF AASHTO M293M. SHOP DRAWINGS ARE NOT REQUIRED FOR ANCHOR BOLTS, NUTS AND WASHERS. SHOP INSPECTION IS REQUIRED.

ALL SURFACES OF BEARING PLATES SHALL BE SMOOTH AND STRAIGHT.

ALL BEARING PLATES SHALL BE AASHTO M270 GRADE 250.

ELASTOMER IN ALL BEARINGS SHALL BE 60 DUROMETER HARDNESS.

| —LOAD RATINGS— | |
|---|---|
| | MAX.D.L.+ L.L. |
| TYPE V | 926 kN |

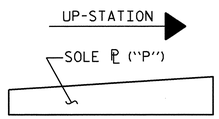


SOLE ℗ PLACEMENT DETAIL

PROJECT NO. R-2413C

GUILFORD-ROCKINGHAM COUNTY

STATION: 70+09.407-LREV-

STATE OF NORTH CAROLINA
DEPARTMENT OF TRANSPORTATION
RALEIGH

STANDARD
ELASTOMERIC BEARING
DETAILS

PRESTRESSED CONCRETE GIRDER
SUPERSTRUCTURE

NORTH CAROLINA PROFESSIONAL SEAL 022516 ENGINEER EMILY E. MURRAY 10/28/11

| REVISIONS | | | | | | SHEET NO. |
|---|---|---|---|---|---|---|
| NO. | BY: | DATE: | NO. | BY: | DATE: | S-220 |
| 1 | | | 3 | | | TOTAL SHEETS |
| 2 | | | 4 | | | 238 |

| | |
|---|---|
| ASSEMBLED BY : B.N.BARODAWALA | DATE : 12-1-10 |
| CHECKED BY : T.L.AVERETTE | DATE : 3-24-11 |
| DRAWN BY : EEM 2/97 | REV. 8/16/99 RWW/LES |
| CHECKED BY : VAP 2/97 | REV. 10/17/00 RWW/LES |
| | REV. 5/1/06 TLA/GM |

05-SEP-2011 14:39
Y:\Structures\Final Plans\Str.#7\R-2413C_SD_BG_07.dgn
mgudlugsson

STR. #7

STD. NO. EB4SM

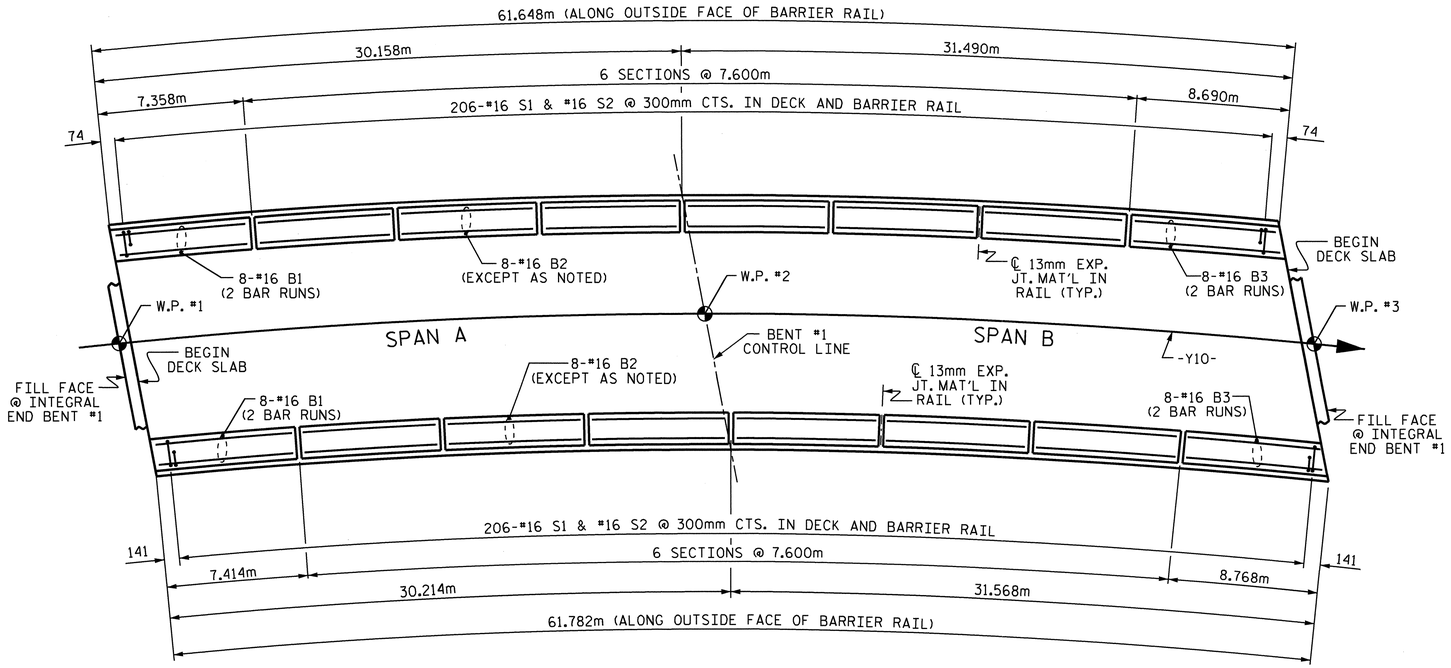


PLAN

## NOTES

THE BARRIER RAIL IN CONTINUOUS UNIT SHALL NOT BE CAST UNTIL ALL SLAB CONCRETE IN THE UNIT HAS BEEN CAST AND HAS REACHED A MINIMUM COMPRESSIVE STRENGTH OF 20.7 MPa.

ALL REINFORCING STEEL IN BARRIER RAILS SHALL BE EPOXY COATED.

GROOVED CONTRACTION JOINTS, 12mm IN DEPTH, SHALL BE TOOLED IN ALL EXPOSED FACES OF THE BARRIER RAIL AND IN ACCORDANCE WITH ARTICLE 825-10(B) OF THE STANDARD SPECIFICATIONS. THE CONTRACTION JOINT SHALL BE LOCATED AT EACH THIRD POINT BETWEEN BARRIER RAIL EXPANSION JOINTS. ONLY ONE CONTRACTION JOINT IS REQUIRED AT MIDPOINT OF BARRIER RAIL SEGMENTS LESS THAN 6.1m IN LENGTH AND NO CONTRACTION JOINTS ARE REQUIRED FOR THOSE SEGMENTS LESS THAN 3.5m IN LENGTH.

## BAR TYPES

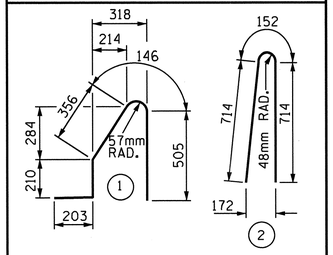


ALL BAR DIMENSIONS ARE OUT TO OUT

## BILL OF MATERIAL

FOR CONCRETE BARRIER RAIL ONLY

| BAR | NO. | SIZE | TYPE | LENGTH | WEIGHT |
|---|---|---|---|---|---|
| * B1 | 32 | #16 | STR | 4200 | 209 |
| * B2 | 96 | #16 | STR | 7480 | 1114 |
| * B3 | 32 | #16 | STR | 4840 | 240 |
| * S1 | 412 | #16 | 1 | 1420 | 908 |
| * S2 | 412 | #16 | 2 | 1580 | 1010 |

* EPOXY COATED REINFORCING STEEL 3481 kg

CLASS AA CONCRETE 31.0 CU. METER

CONCRETE BARRIER RAIL 123.430 METERS

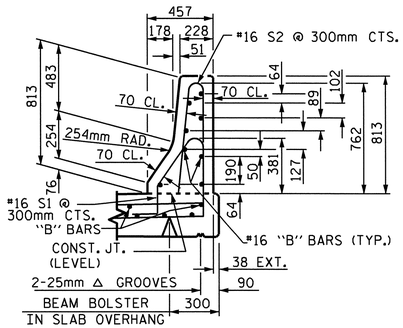


SECTION THRU RAIL

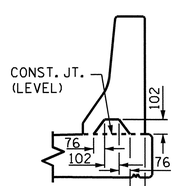


SECTION S-S

AT DAM IN OPEN JOINT
( THIS IS TO BE USED ONLY WHEN SLIP FORM IS USED )

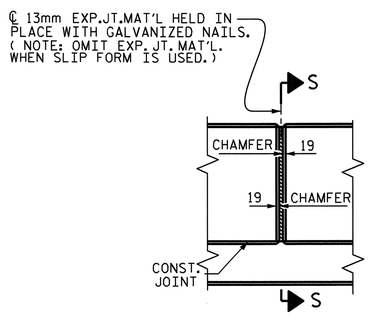


# BARRIER RAIL DETAILS

PROJECT NO. R-2413C

GUILFORD-ROCKINGHAM COUNTY

STATION: 70+09.407-LREV-

STATE OF NORTH CAROLINA
DEPARTMENT OF TRANSPORTATION
RALEIGH

STANDARD

CONCRETE BARRIER RAIL

NORTH CAROLINA PROFESSIONAL SEAL 022516 ENGINEER EMILY E. MURRAY
10/28/11

| REVISIONS | | | | | | | | SHEET NO. |
|---|---|---|---|---|---|---|---|---|
| NO. | BY: | DATE: | NO. | BY: | DATE: | | | S-221 |
| 1 | | | 3 | | | | | TOTAL SHEETS |
| 2 | | | 4 | | | | | 238 |

ASSEMBLED BY : B.N.BARODAWALA DATE : 11-12-10
CHECKED BY : T.L.AVERETTE DATE : 3-24-11

DRAWN BY : ARB 5/87
CHECKED BY : SJD 9/87

REV. 10/17/00 RWW/LES
REV. 5/7/03R RWW/JTE
REV. 5/1/06 TLA/GM

05-SEP-2011 14:34
Y:\Structures\Final Plans\Str.#7\R-2413C_SD_BR_07.dgn
mgudlaugsson

STR. #7

STD. No. CBR1SM

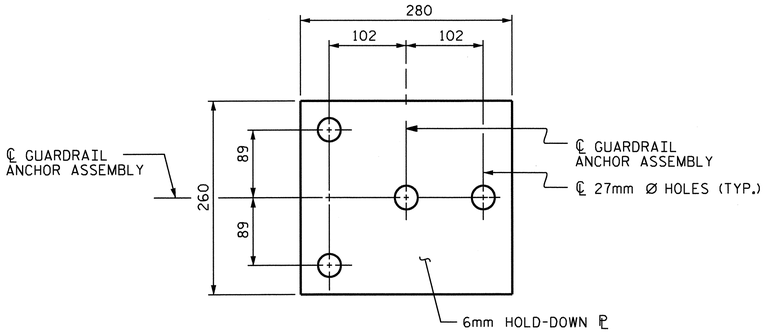


PLAN

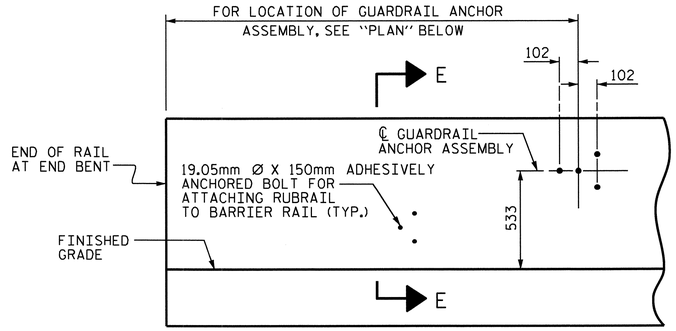


ELEVATION

FOR LOCATION OF RUBRAIL, SEE ROADWAY STD. 862.03

## NOTES

THE GUARDRAIL ANCHOR ASSEMBLY SHALL CONSIST OF A 6mm HOLD DOWN PLATE AND 4 - 22.23mm Ø BOLTS WITH NUTS AND WASHERS, RUBRAIL, AND ADHESIVELY ANCHORED BOLTS.

THE HOLD-DOWN PLATE SHALL CONFORM TO AASHTO M270 GRADE 36. AFTER FABRICATION, THE HOLD-DOWN PLATE SHALL BE HOT-DIP GALVANIZED IN ACCORDANCE WITH AASHTO M111.

BOLTS SHALL CONFORM TO THE REQUIREMENTS OF ASTM A307 AND NUTS SHALL CONFORM TO THE REQUIREMENTS OF AASHTO M291. BOLTS, NUTS AND WASHERS SHALL BE GALVANIZED. (AT THE CONTRACTOR'S OPTION, STAINLESS STEEL BOLTS, NUTS AND WASHERS MAY BE USED AS AN ALTERNATE FOR THE 22.23mm Ø GALVANIZED BOLTS, NUTS AND WASHERS. THEY SHALL CONFORM TO OR EXCEED THE MECHANICAL REQUIREMENTS OF ASTM A307. THE USE OF THIS ALTERNATE SHALL BE APPROVED BY THE ENGINEER.)

THE GUARDRAIL ANCHOR ASSEMBLY IS REQUIRED AT ALL POINTS WHERE APPROACH GUARDRAIL IS TO BE ATTACHED TO THE END OF BARRIER RAIL. FOR POINTS OF ATTACHMENT, SEE SKETCH.

AFTER INSTALLATION, THE EXPOSED THREAD OF THE BOLT SHALL BE BURRED WITH A SHARP POINTED TOOL.

THE COST OF THE GUARDRAIL ANCHOR ASSEMBLY SHALL BE INCLUDED IN THE UNIT CONTRACT PRICE BID FOR CONCRETE BARRIER RAIL.

THE 32mm Ø HOLES SHALL BE FORMED OR DRILLED WITH A CORE BIT. IMPACT TOOLS WILL NOT BE PERMITTED. ANY CONCRETE DAMAGED BY THIS WORK SHALL BE REPAIRED TO THE SATISFACTION OF THE ENGINEER.

THE C150 X 12 RUBRAIL IS TO BE ADHESIVELY ANCHORED TO THE RAIL USING THREE 19.05mm Ø X 150mm BOLTS WITH WASHERS. LEVEL ONE FIELD TESTING IS REQUIRED, AND THE YIELD LOAD OF THE 19.05mm Ø BOLTS IS 53.4kN. FOR ADHESIVELY ANCHORED ANCHOR BOLTS OR DOWELS, SEE SPECIAL PROVISIONS. SEE ROADWAY STANDARD 862.03 FOR DETAILS AND LOCATION OF THE RUBRAIL.

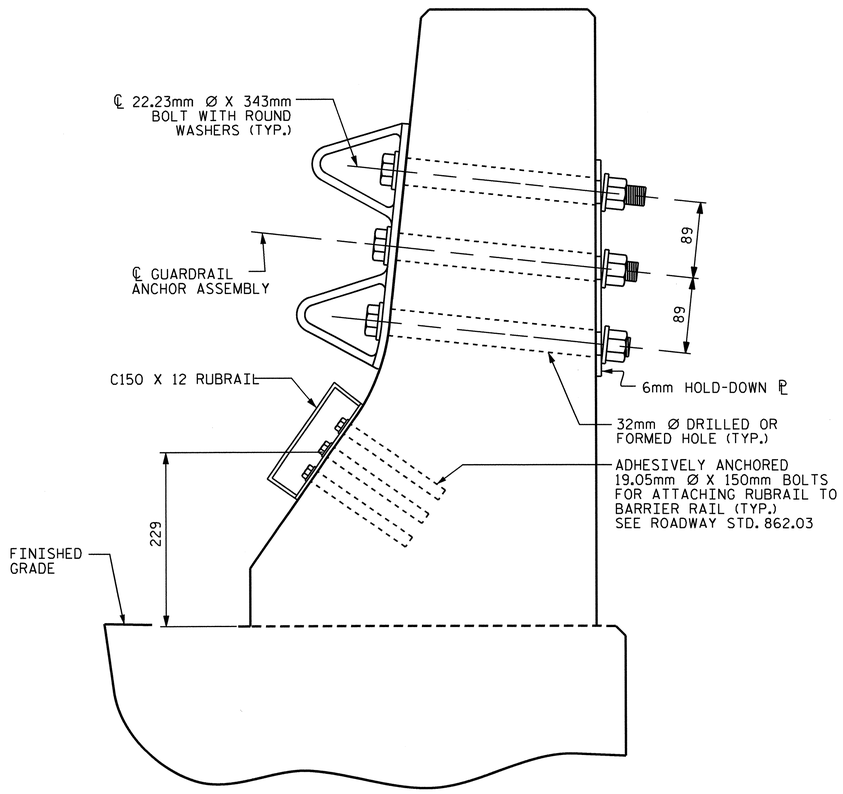


SECTION E-E

## GUARDRAIL ANCHOR ASSEMBLY DETAILS

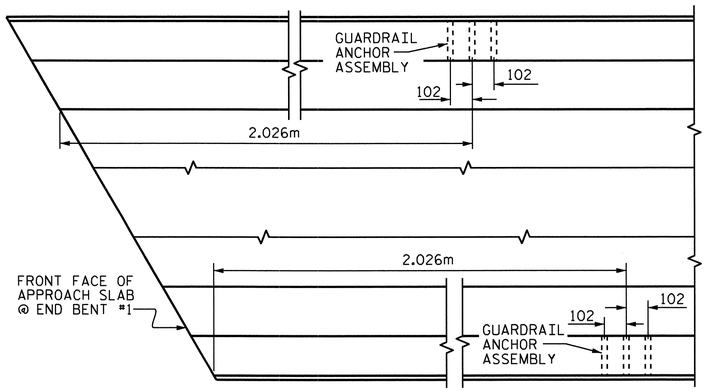


PLAN

## LOCATION OF ANCHORS FOR GUARDRAIL

END BENT #1 SHOWN, END BENT #2 SIMILAR.

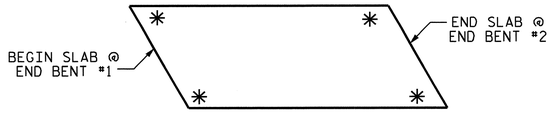


SKETCH SHOWING POINTS OF ATTACHMENTS

✳ DENOTES GUARDRAIL ANCHOR ASSEMBLY

PROJECT NO. R-2413C

GUILFORD-ROCKINGHAM COUNTY

STATION: 70+09.407-LREV-

STATE OF NORTH CAROLINA
DEPARTMENT OF TRANSPORTATION
RALEIGH

STANDARD

GUARDRAIL ANCHORAGE FOR BARRIER RAIL

NORTH CAROLINA PROFESSIONAL SEAL 022516 ENGINEER TIMOTHY E. MURRAY (10/28/11)

| REVISIONS | | | | | | SHEET NO. |
|---|---|---|---|---|---|---|
| NO. | BY: | DATE: | NO. | BY: | DATE: | S-222 |
| 1 | | | 3 | | | TOTAL SHEETS |
| 2 | | | 4 | | | 238 |

STR. #7

(SHT 3) STD. NO. GRA2

| | |
|---|---|
| ASSEMBLED BY : B.N.BARODAWALA | DATE : 11-12-10 |
| CHECKED BY : T.L.AVERETTE | DATE : 3-24-11 |
| DRAWN BY : TLA 5/06 | ADDED 5/1/06R KMM/GM |
| CHECKED BY : GM 5/06 | |

05-SEP-2011 14:34
T:\Structures\Final Plans\Str.#7\R-2413C_SD_BR_07.dgn
mgudlaugsson

## SUPERSTRUCTURE BILL OF MATERIAL

| | CLASS AA CONCRETE | | REINFORCING STEEL | EPOXY COATED REINFORCING STEEL |
|---|---|---|---|---|
| | ( CU. METER ) | | ( kg ) | ( kg ) |
| SPAN A AND B | POUR 1 | 118.8 | 16675 | 17087 |
| | POUR 2 | 152.1 | | |
| | POUR 3 • | 83.7 | | |
| TOTALS ✱✱ | TOTAL | 354.6 | 16675 | 17087 |

✱✱ QUANTITIES FOR BARRIER RAIL ARE NOT INCLUDED

• POUR 3 QUANTITY INCLUDES UPPER POUR OF WINGS & INTEGRAL END BENT

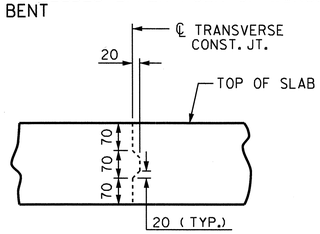


## TRANSVERSE CONSTRUCTION JOINT DETAIL

NOTE: REINFORCING STEEL IN SLAB NOT SHOWN. LONGITUDINAL REINFORCING STEEL SHALL BE CONTINUOUS THRU JOINT.

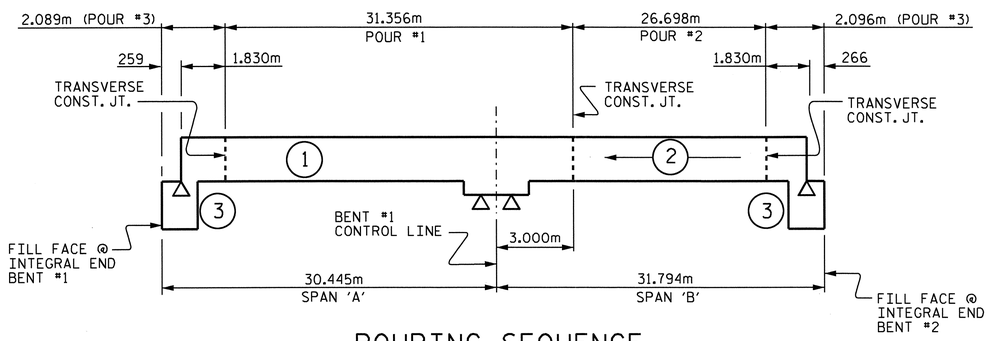


## POURING SEQUENCE

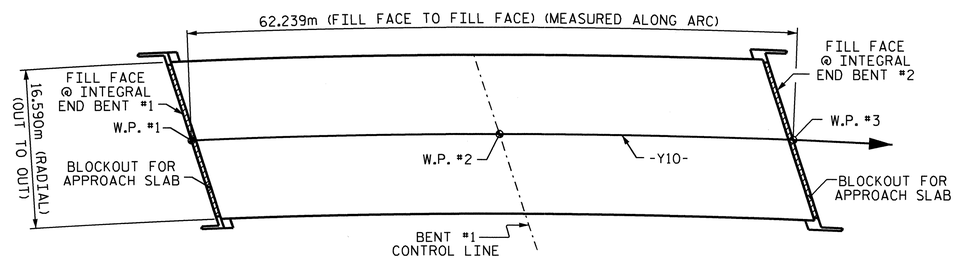


## LAYOUT FOR COMPUTING AREA OF REINFORCED CONCRETE DECK SLAB (1032.5 SQ. METER)

## BILL OF MATERIAL

### SPANS A & B

| BAR | NO. | SIZE | TYPE | LENGTH | WEIGHT | BAR | NO. | SIZE | TYPE | LENGTH | WEIGHT |
|---|---|---|---|---|---|---|---|---|---|---|---|
| ✱A1 | 313 | #16 | STR | 16480 | 8006 | ✱B1 | 74 | #22 | STR | 6100 | 1373 |
| ✱A101 | 2 | #16 | STR | 15640 | 49 | ✱B2 | 76 | #13 | STR | 7660 | 579 |
| ✱A102 | 2 | #16 | STR | 14480 | 45 | ✱B3 | 38 | #22 | STR | 13600 | 1572 |
| ✱A103 | 2 | #16 | STR | 13340 | 41 | ✱B4 | 38 | #22 | STR | 9580 | 1107 |
| ✱A104 | 2 | #16 | STR | 12200 | 38 | ✱B5 | 36 | #22 | STR | 9280 | 1016 |
| ✱A105 | 2 | #16 | STR | 11060 | 34 | ✱B6 | 76 | #13 | STR | 8000 | 604 |
| ✱A106 | 2 | #16 | STR | 9920 | 31 | ✱B7 | 74 | #22 | STR | 6300 | 1418 |
| ✱A107 | 2 | #16 | STR | 8760 | 27 | B8 | 276 | #16 | STR | 16000 | 6854 |
| ✱A108 | 2 | #16 | STR | 7620 | 24 | | | | | | |
| ✱A109 | 2 | #16 | STR | 6480 | 20 | K1 | 30 | #13 | STR | 6940 | 207 |
| ✱A110 | 2 | #16 | STR | 5340 | 17 | K2 | 12 | #13 | STR | 1720 | 21 |
| ✱A111 | 2 | #16 | STR | 4180 | 13 | K3 | 12 | #13 | STR | 2080 | 25 |
| ✱A112 | 2 | #16 | STR | 3040 | 9 | K4 | 24 | #13 | STR | 2200 | 52 |
| ✱A113 | 2 | #16 | STR | 1900 | 6 | K5 | 12 | #13 | STR | 1880 | 22 |
| ✱A114 | 2 | #16 | STR | 760 | 2 | K6 | 4 | #13 | STR | 1800 | 7 |
| ✱A115 | 2 | #16 | STR | 15660 | 49 | K7 | 2 | #13 | STR | 1640 | 3 |
| ✱A116 | 2 | #16 | STR | 14540 | 45 | K8 | 8 | #13 | STR | 940 | 7 |
| ✱A117 | 2 | #16 | STR | 13420 | 42 | K9 | 2 | #13 | STR | 1560 | 3 |
| ✱A118 | 2 | #16 | STR | 12300 | 38 | K10 | 2 | #13 | STR | 1760 | 3 |
| ✱A119 | 2 | #16 | STR | 11180 | 35 | K11 | 2 | #13 | STR | 1920 | 4 |
| ✱A120 | 2 | #16 | STR | 10060 | 31 | K12 | 4 | #13 | STR | 2000 | 8 |
| ✱A121 | 2 | #16 | STR | 8960 | 28 | K13 | 2 | #13 | STR | 1840 | 4 |
| ✱A122 | 2 | #16 | STR | 7840 | 24 | K14 | 8 | #13 | STR | 920 | 7 |
| ✱A123 | 2 | #16 | STR | 6720 | 21 | K15 | 12 | #13 | STR | 2000 | 24 |
| ✱A124 | 2 | #16 | STR | 5600 | 17 | K16 | 24 | #13 | STR | 2200 | 52 |
| ✱A125 | 2 | #16 | STR | 4500 | 14 | K17 | 12 | #13 | STR | 1900 | 23 |
| ✱A126 | 2 | #16 | STR | 3380 | 10 | K18 | 12 | #13 | STR | 1300 | 16 |
| ✱A127 | 2 | #16 | STR | 2260 | 7 | K19 | 10 | #13 | 4 | 1560 | 16 |
| ✱A128 | 2 | #16 | STR | 1140 | 4 | K20 | 25 | #13 | 5 | 3120 | 78 |
| | | | | | | K21 | 2 | #13 | STR | 1720 | 3 |
| A2 | 313 | #16 | STR | 16480 | 8006 | | | | | | |
| A201 | 2 | #16 | STR | 15640 | 49 | ✱S1 | 78 | #13 | 1 | 3560 | 276 |
| A202 | 2 | #16 | STR | 14480 | 45 | ✱S2 | 78 | #13 | 1 | 3320 | 257 |
| A203 | 2 | #16 | STR | 13340 | 41 | S3 | 132 | #13 | 3 | 860 | 113 |
| A204 | 2 | #16 | STR | 12200 | 38 | | | | | | |
| A205 | 2 | #16 | STR | 11060 | 34 | ✱ U1 | 24 | #13 | 6 | 4620 | 110 |
| A206 | 2 | #16 | STR | 9920 | 31 | ✱ U2 | 12 | #13 | 6 | 4020 | 48 |
| A207 | 2 | #16 | STR | 8760 | 27 | U3 | 82 | #13 | 2 | 3780 | 308 |
| A208 | 2 | #16 | STR | 7620 | 24 | U4 | 16 | #13 | 2 | 4340 | 69 |
| A209 | 2 | #16 | STR | 6480 | 20 | | | | | | |
| A210 | 2 | #16 | STR | 5340 | 17 | V1 | 14 | #13 | STR | 1340 | 19 |
| A211 | 2 | #16 | STR | 4180 | 13 | REINFORCING STEEL | | | | = 16675 | kg |
| A212 | 2 | #16 | STR | 3040 | 9 | ✱EPOXY COATED REINFORCING STEEL | | | | = 17087 | kg |
| A213 | 2 | #16 | STR | 1900 | 6 | | | | | | |
| A214 | 2 | #16 | STR | 760 | 2 | | | | | | |
| A215 | 2 | #16 | STR | 15660 | 49 | | | | | | |
| A216 | 2 | #16 | STR | 14540 | 45 | | | | | | |
| A217 | 2 | #16 | STR | 13420 | 42 | | | | | | |
| A218 | 2 | #16 | STR | 12300 | 38 | | | | | | |
| A219 | 2 | #16 | STR | 11180 | 35 | | | | | | |
| A220 | 2 | #16 | STR | 10060 | 31 | | | | | | |
| A221 | 2 | #16 | STR | 8960 | 28 | | | | | | |
| A222 | 2 | #16 | STR | 7840 | 24 | | | | | | |
| A223 | 2 | #16 | STR | 6720 | 21 | | | | | | |
| A224 | 2 | #16 | STR | 5600 | 17 | | | | | | |
| A225 | 2 | #16 | STR | 4500 | 14 | | | | | | |
| A226 | 2 | #16 | STR | 3380 | 10 | | | | | | |
| A227 | 2 | #16 | STR | 2260 | 7 | | | | | | |
| A228 | 2 | #16 | STR | 1140 | 4 | | | | | | |

## BAR TYPES

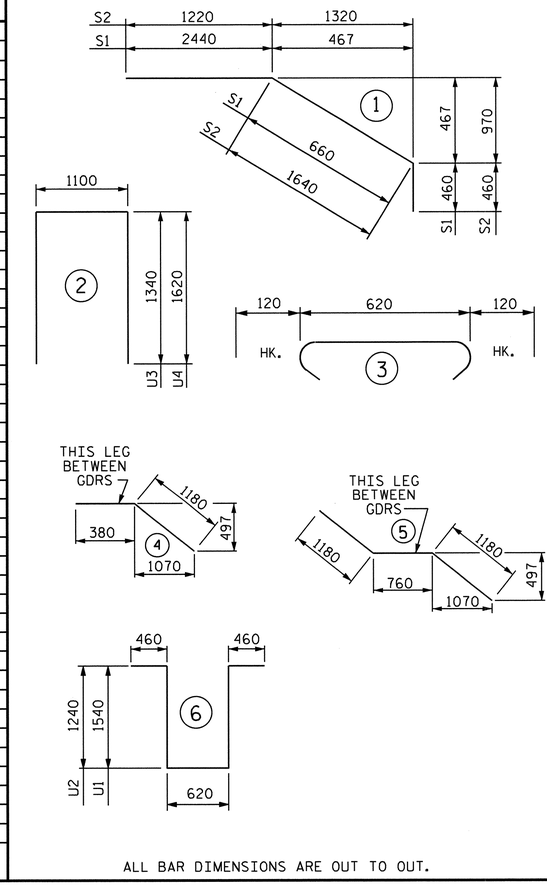


ALL BAR DIMENSIONS ARE OUT TO OUT.

| GROOVING BRIDGE FLOORS | |
|---|---|
| BRIDGE DECK | 906.0 SQ.METER |
| APPROACH SLABS | 209.8 SQ.METER |
| TOTAL | 1115.8 SQ.METER |

| SUPERSTRUCTURE REINFORCING STEEL LENGTHS ARE BASED ON THE FOLLOWING MINIMUM SPLICE LENGTHS | | | | | |
|---|---|---|---|---|---|
| BAR SIZE | SUPERSTRUCTURE EXCEPT APPROACH SLABS, PARAPET, AND BARRIER RAIL | | APPROACH SLABS | | PARAPET AND BARRIER RAIL |
| | EPOXY COATED | UNCOATED | EPOXY COATED | UNCOATED | |
| #13 | 610 | 540 | 610 | 540 | 840 |
| #16 | 770 | 660 | 770 | 660 | 1050 |
| #19 | 920 | 790 | 1190 | 790 | 1330 |
| #22 | 1580 | 1060 | | | |
| #25 | 2080 | 1390 | | | |

PROJECT NO. R-2413C

GUILFORD-ROCKINGHAM COUNTY

STATION: 70+09.407-LREV-

STATE OF NORTH CAROLINA
DEPARTMENT OF TRANSPORTATION
RALEIGH

STANDARD
SUPERSTRUCTURE BILL OF MATERIAL

NORTH CAROLINA PROFESSIONAL SEAL 022516 ENGINEER E.M.L.K. E.M.MURRAY 06/28/10

| REVISIONS | | | | | | SHEET NO. |
|---|---|---|---|---|---|---|
| NO. | BY: | DATE: | NO. | BY: | DATE: | S-223 |
| 1 | | | 3 | | | TOTAL SHEETS |
| 2 | | | 4 | | | 238 |

STR. #7

STD. NO. BOM2SM

| | |
|---|---|
| ASSEMBLED BY : B.N.BARODAWALA | DATE : 12-13-10 |
| CHECKED BY : T.L.AVERETTE | DATE : 3-24-11 |
| DRAWN BY : JMB 5/87 | REV. 5/16/97 EEM/RGW |
| CHECKED BY : SJD 9/87 | REV. 5/1/06 TLA/GM |

25-OCT-2011 11:58
R:\TIPProjects-R\R2413c\Structures\FinalPlans\Str.#7\R-2413C_SD_BM_07.dgn
taverette

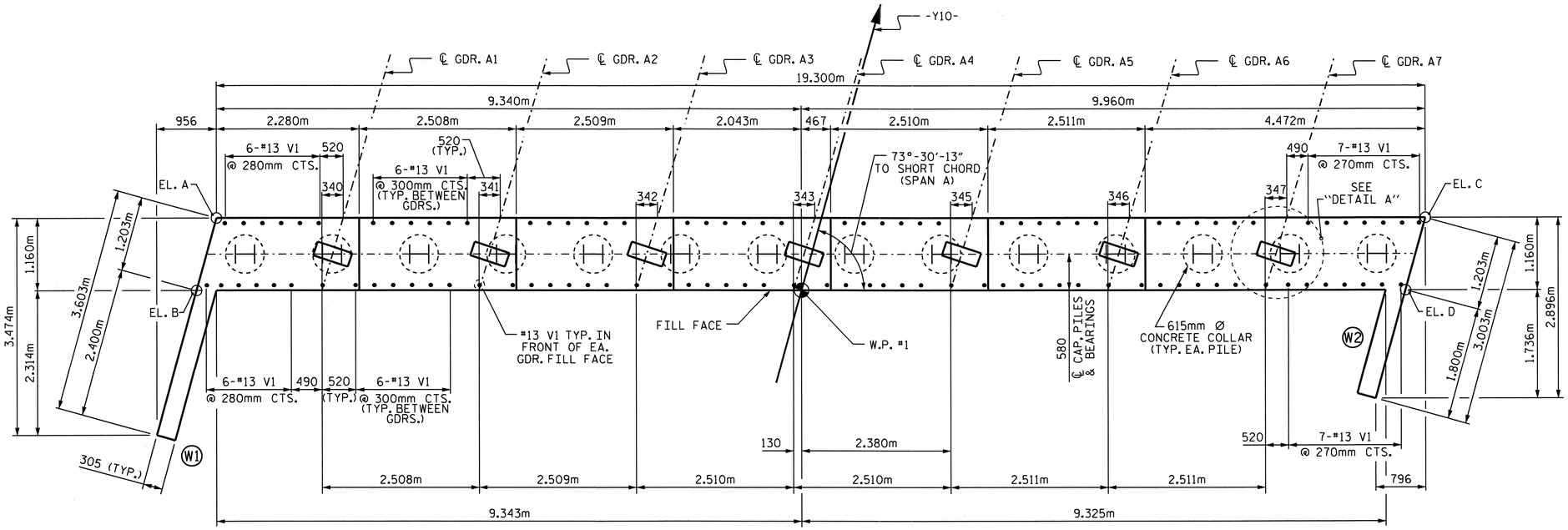


## PLAN

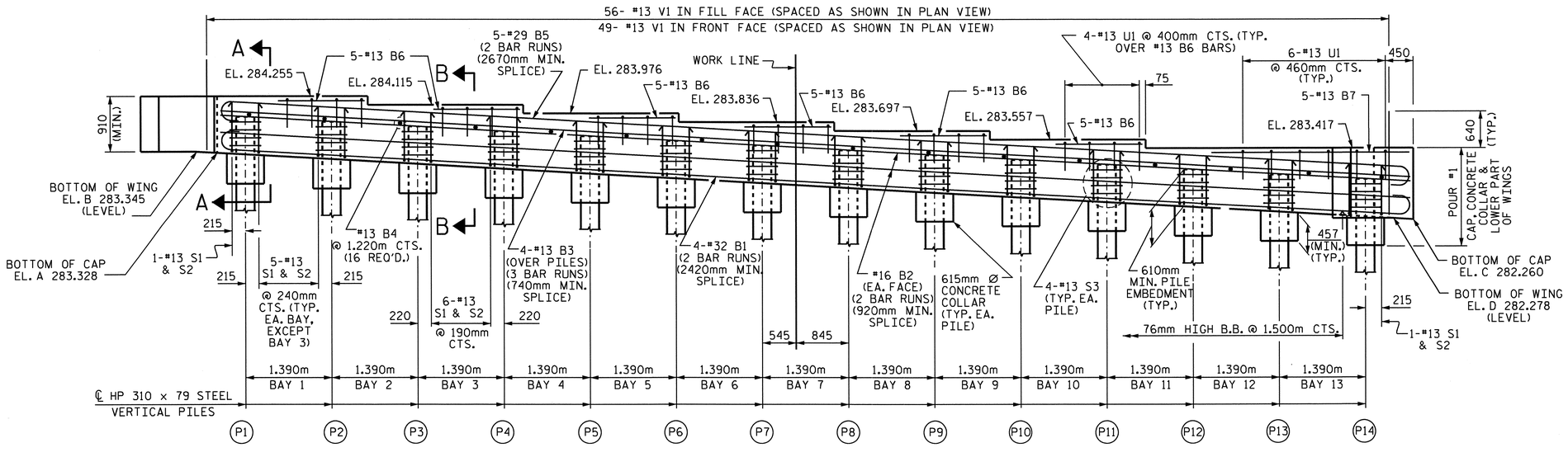


## ELEVATION

## NOTES:

THE CONTRACTOR SHALL PROVIDE FOR INSTALLATION OF THE 102mm DIAMETER DRAIN PIPE THROUGH THE WING WALL AS REQUIRED FOR REINFORCED BRIDGE APPROACH FILLS. SEE THE ROADWAY PLANS. REINFORCING STEEL IN THE WING WALL MAY BE SHIFTED AS NECESSARY TO CLEAR THE DRAIN PIPE.

THE TOP SURFACE OF THE END BENT CAP AND WINGS, EXCLUDING THE OUTSIDE 100mm AND THE BEARING AREA, SHALL BE RAKED TO A DEPTH OF 6mm.

STIRRUPS AND #13 U1 BARS IN CAP MAY BE SHIFTED AS NECESSARY TO CLEAR #13 V1.

THE CONTRACTOR'S ATTENTION IS CALLED TO THE FACT THAT THE UPPER PART OF INTEGRAL END BENT AND WINGS ARE TO BE POURED WITH THE SUPERSTRUCTURE.

SEE SUPERSTRUCTURE SHEET FOR UPPER PART OF INTEGRAL END BENT DETAIL.

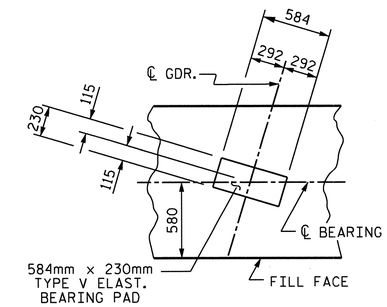


## DETAIL A

(TYP. EA. GDR.)

| TOP OF PILE ELEVATION | |
|---|---|
| P1 283.921 | P8 283.382 |
| P2 283.844 | P9 283.305 |
| P3 283.767 | P10 283.229 |
| P4 283.690 | P11 283.152 |
| P5 283.613 | P12 283.075 |
| P6 283.536 | P13 282.998 |
| P7 283.459 | P14 282.921 |

PROJECT NO. R-2413C

GUILFORD-ROCKINGHAM COUNTY

STATION: 70+09.407-LREV-

SHEET 1 OF 3

STATE OF NORTH CAROLINA
DEPARTMENT OF TRANSPORTATION
RALEIGH

SUBSTRUCTURE
INTEGRAL
END BENT #1

NORTH CAROLINA PROFESSIONAL SEAL 022516 ENGINEER EMILY E. McMURRAY
10/28/11

| REVISIONS | | | | | | SHEET NO. |
|---|---|---|---|---|---|---|
| NO. | BY: | DATE: | NO. | BY: | DATE: | S-224 |
| 1 | | | 3 | | | TOTAL SHEETS |
| 2 | | | 4 | | | 238 |

STR. #7

DRAWN BY : B.N.BARODAWALA DATE : 12-29-10
CHECKED BY : T.L.AVERETTE DATE : 5-13-11

19-OCT-2011 11:33
R:\TIPProjects-R\R2413c\Structures\FinalPlans\Str.#7\R-2413C_SD_EB_07.dgn
taverette

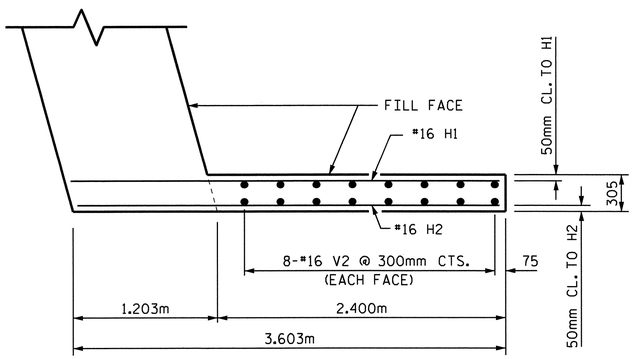


PLAN OF LEFT WING (W1)

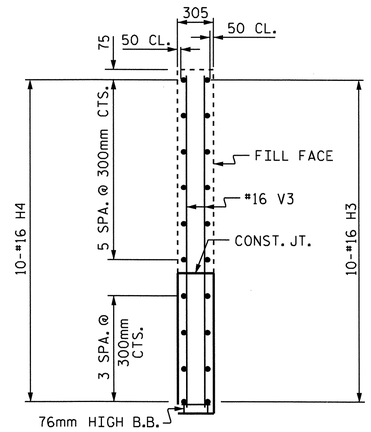


SECTION Y-Y

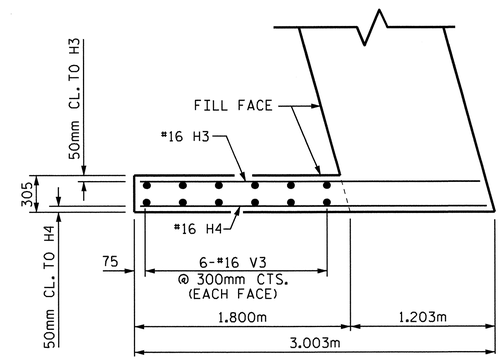


PLAN OF RIGHT WING (W2)

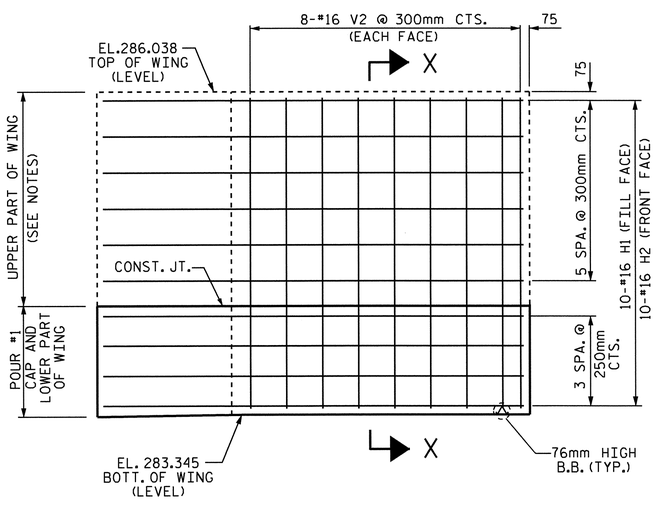


ELEVATION OF LEFT WING (W1)

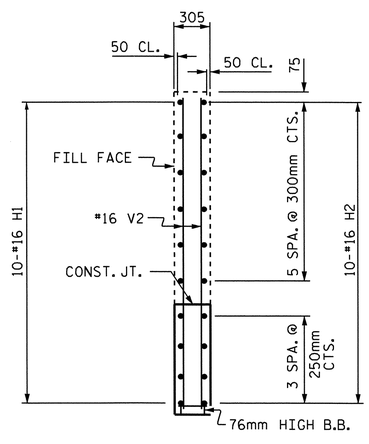


SECTION X-X

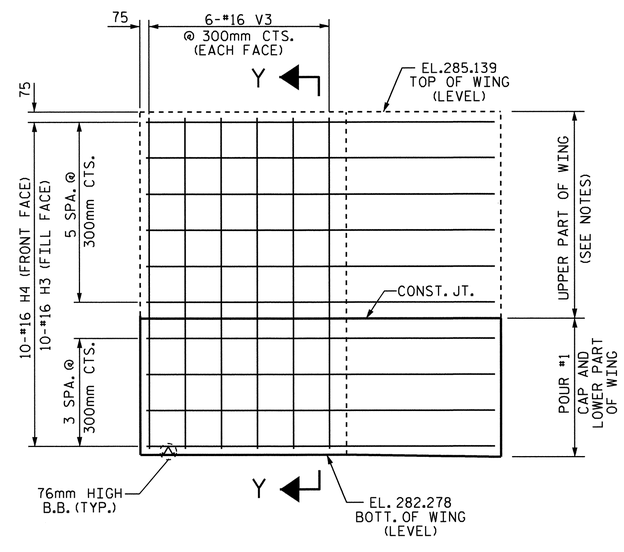


ELEVATION OF RIGHT WING (W2)

PROJECT NO. R-2413C

GUILFORD-ROCKINGHAM COUNTY

STATION: 70+09.407 -LREV-

SHEET 2 OF 3

STATE OF NORTH CAROLINA
DEPARTMENT OF TRANSPORTATION
RALEIGH

SUBSTRUCTURE

INTEGRAL
END BENT #1

NORTH CAROLINA PROFESSIONAL SEAL 022516 ENGINEER EMILY E. MURRAY
10/28/11

| REVISIONS | | | | | | SHEET NO. |
|---|---|---|---|---|---|---|
| NO. | BY: | DATE: | NO. | BY: | DATE: | S-225 |
| 1 | | | 3 | | | TOTAL SHEETS |
| 2 | | | 4 | | | 238 |

STR. #7

DRAWN BY : B.N.BARODAWALA DATE : 12-29-10
CHECKED BY : T.L.AVERETTE DATE : 5-13-11

05-SEP-2011 14:31
Y:\Structures\Final Plans\Str.#7\R-2413C_SD_EB_07.dgn
mgudlaugsson

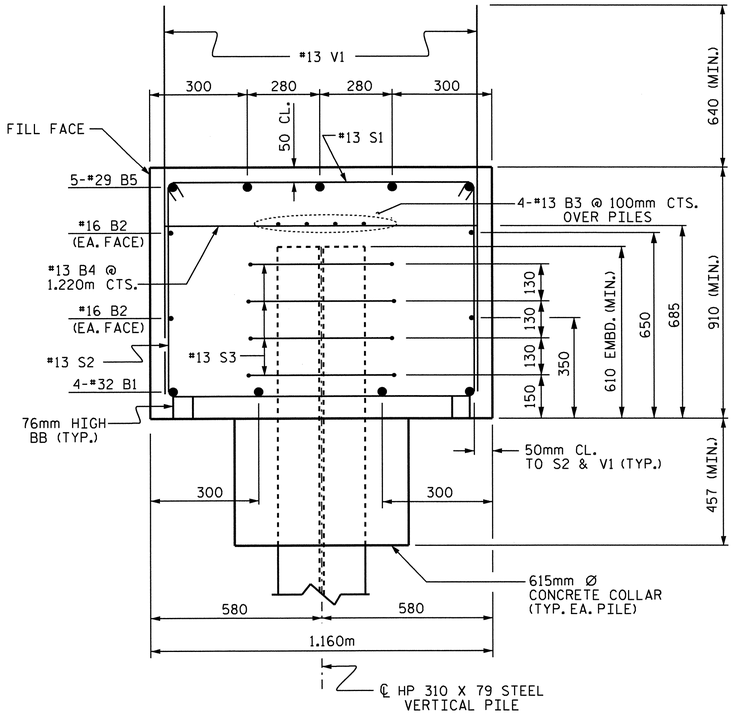


SECTION A-A

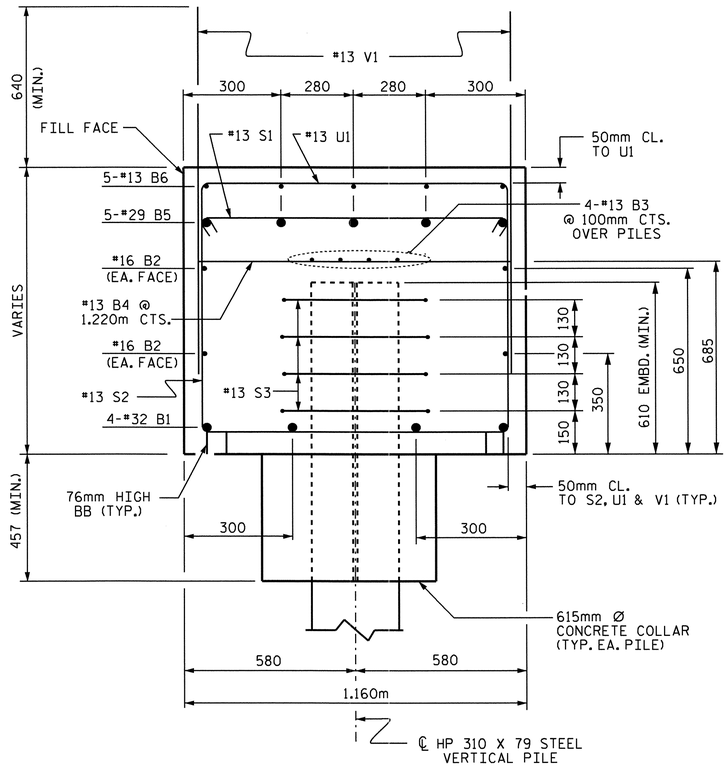


SECTION B-B

## BAR TYPES

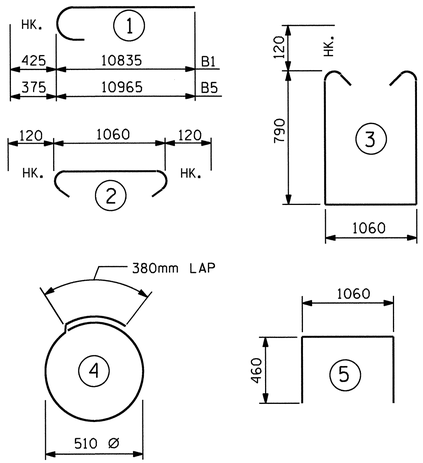


ALL BAR DIMENSIONS ARE OUT TO OUT.

## BILL OF MATERIAL
### END BENT #1

| BAR | NO. | SIZE | TYPE | LENGTH | WEIGHT |
|---|---|---|---|---|---|
| B1 | 8 | #32 | 1 | 11260 | 577 |
| B2 | 8 | #16 | STR | 10080 | 125 |
| B3 | 12 | #13 | STR | 6900 | 82 |
| B4 | 16 | #13 | STR | 1060 | 17 |
| B5 | 10 | #29 | 1 | 11340 | 574 |
| B6 | 30 | #13 | STR | 1400 | 42 |
| B7 | 5 | #13 | STR | 2800 | 14 |
| | | | | | |
| H1 | 10 | #16 | STR | 3560 | 55 |
| H2 | 10 | #16 | STR | 3520 | 55 |
| H3 | 10 | #16 | STR | 2820 | 44 |
| H4 | 10 | #16 | STR | 2880 | 45 |
| | | | | | |
| S1 | 68 | #13 | 2 | 1300 | 88 |
| S2 | 68 | #13 | 3 | 2880 | 195 |
| S3 | 56 | #13 | 4 | 1980 | 110 |
| | | | | | |
| U1 | 30 | #13 | 5 | 1980 | 59 |
| | | | | | |
| V1 | 105 | #13 | STR | 1500 | 157 |
| V2 | 16 | #16 | STR | 2580 | 64 |
| V3 | 12 | #16 | STR | 2760 | 51 |
| | | | | | |
| REINFORCING STEEL | | | | = | 2354 kg |

CLASS A CONCRETE BREAKDOWN

POUR #1: (CAP, CONCRETE COLLARS & LOWER PART OF WINGS 25.6 m3

TOTAL CONCRETE 25.6 m3

HP 310 X 79 STEEL PILES
NO. 14 219.8 METERS

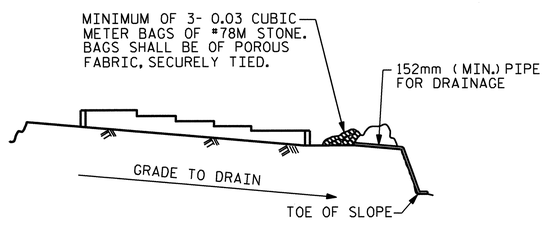


BAGGED STONE AND PIPE SHALL BE PLACED IMMEDIATELY AFTER COMPLETION OF END BENT EXCAVATION. PIPE MAY BE EITHER CONCRETE, CORRUGATED STEEL, CORRUGATED ALUMINUM ALLOY, OR CORRUGATED PLASTIC. PERFORATED PIPE WILL NOT BE ALLOWED.

BAGGED STONE SHALL REMAIN IN PLACE UNTIL THE ENGINEER DIRECTS THAT IT BE REMOVED. THE CONTRACTOR SHALL REMOVE AND DISPOSE OF SILT ACCUMULATIONS AT BAGGED STONE WHEN SO DIRECTED BY THE ENGINEER. BAGS SHALL BE REMOVED AND REPLACED WHENEVER THE ENGINEER DETERMINES THAT THEY HAVE DETERIORATED AND LOST THEIR EFFECTIVENESS.

NO SEPARATE PAYMENT WILL BE MADE FOR THIS WORK AND THE ENTIRE COST OF THIS WORK SHALL BE INCLUDED IN THE UNIT CONTRACT PRICE BID FOR THE SEVERAL PAY ITEMS.

TEMPORARY DRAINAGE AT END BENT

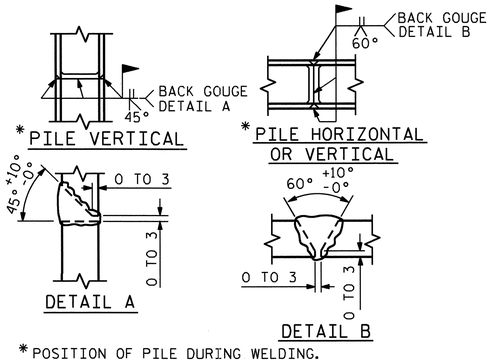


* POSITION OF PILE DURING WELDING.

PILE SPLICE DETAILS

PROJECT NO. R-2413C
GUILFORD-ROCKINGHAM COUNTY
STATION: 70+09.407 -LREV-

SHEET 3 OF 3

STATE OF NORTH CAROLINA
DEPARTMENT OF TRANSPORTATION
RALEIGH

SUBSTRUCTURE
INTEGRAL
END BENT #1

NORTH CAROLINA PROFESSIONAL SEAL 022516 ENGINEER EMILY E. MURRAY
10/28/11

| REVISIONS | | | | | | SHEET NO. |
|---|---|---|---|---|---|---|
| NO. | BY: | DATE: | NO. | BY: | DATE: | S-226 |
| 1 | | | 3 | | | TOTAL SHEETS |
| 2 | | | 4 | | | 238 |

STR. #7

DRAWN BY : B.N.BARODAWALA DATE : 12-29-10
CHECKED BY : T.L.AVERETTE DATE : 5-13-11

05-SEP-2011 14:31
Y:\Structures\Final Plans\Str.#7\R-2413C_SD_EB_07.dgn
mgudlaugsson

# NOTES

STIRRUPS AND U1 BARS IN CAP MAY BE SHIFTED AS NECESSARY TO CLEAR ANCHOR BOLTS.

HOOKS ON "V" BARS MAY BE TURNED AS NECESSARY FOR PLACING REINFORCING STEEL.

FOR PILE SPLICE DETAILS, SEE END BENT #1 OR #2, SHEET 3 OF 3.

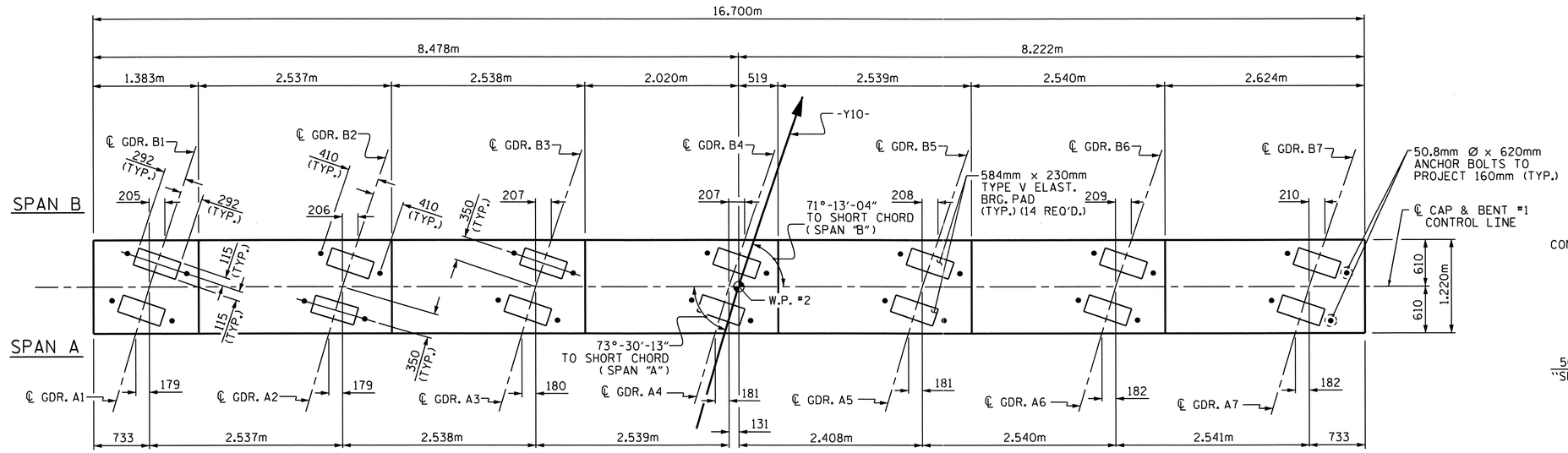


PLAN

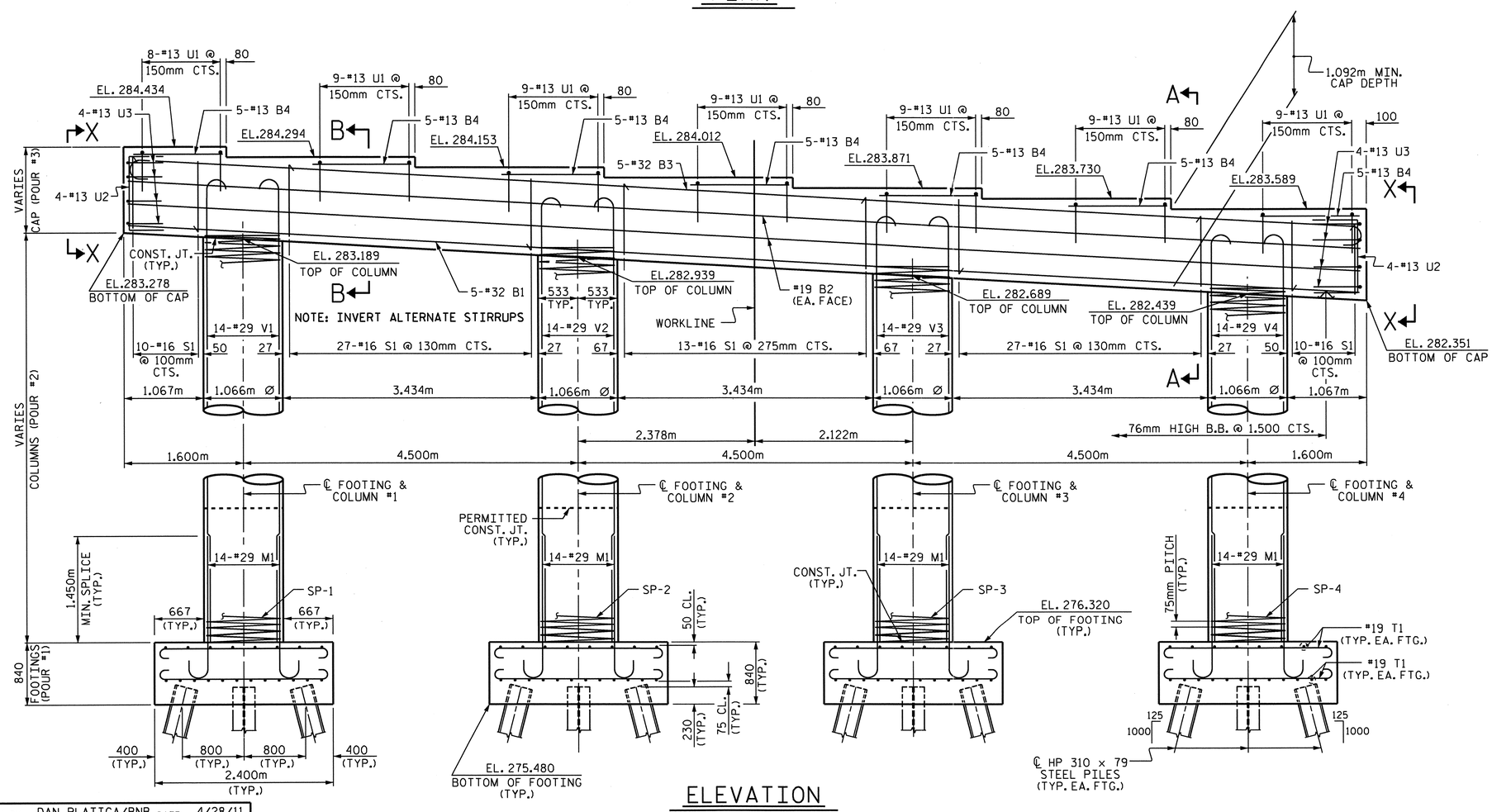


ELEVATION

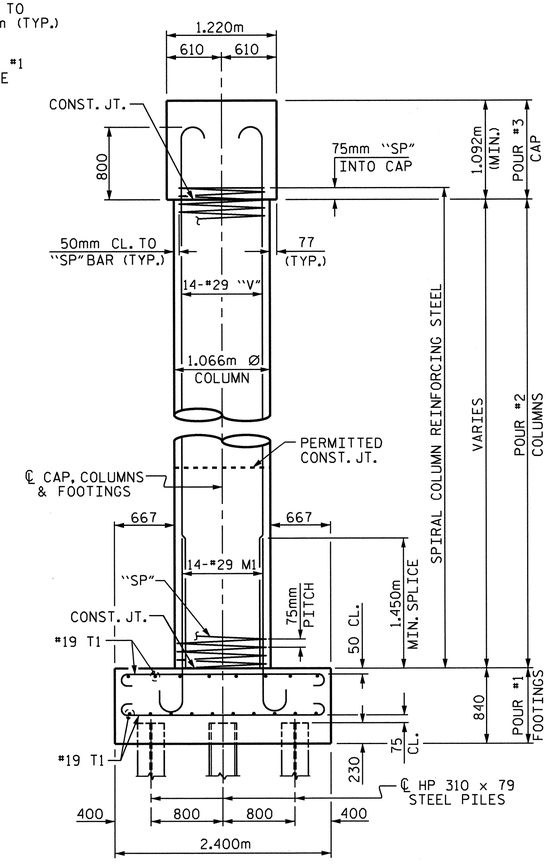


END ELEVATION

PROJECT NO. R-2413C

GUILFORD-ROCKINGHAM COUNTY

STATION: 70+09.407 -LREV-

SHEET 1 OF 2

STATE OF NORTH CAROLINA
DEPARTMENT OF TRANSPORTATION
RALEIGH

SUBSTRUCTURE

BENT #1

NORTH CAROLINA PROFESSIONAL SEAL 022516 ENGINEER EMILY K. MURRAY

| REVISIONS | | | | | | SHEET NO. |
|---|---|---|---|---|---|---|
| NO. | BY: | DATE: | NO. | BY: | DATE: | S-227 |
| 1 | | | 3 | | | TOTAL SHEETS |
| 2 | | | 4 | | | 238 |

DRAWN BY : DAN PLATICA/BNB DATE : 4/28/11
CHECKED BY : T.L. AVERETTE DATE : 5/26/11

19-OCT-2011 11:32
R:\TIPProjects-R\R2413c\Structures\Final Plans\Str.#7\R2413C_sd_B1_07.dgn
taverette

STR. #7

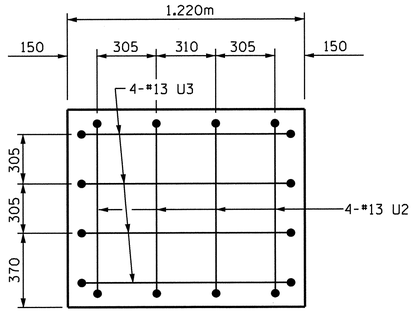


SECTION X-X

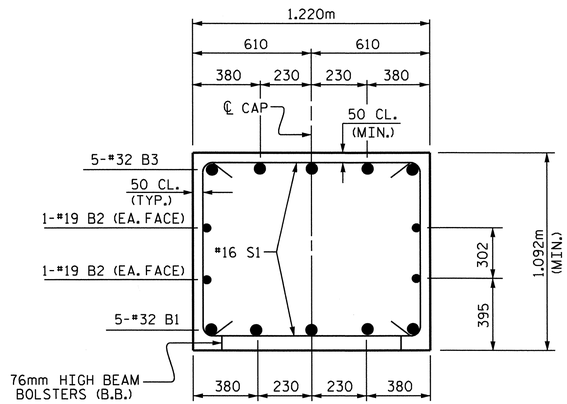


SECTION A-A

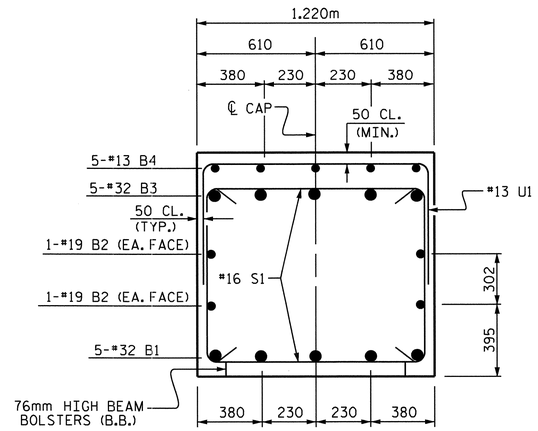


SECTION B-B

## BAR TYPES

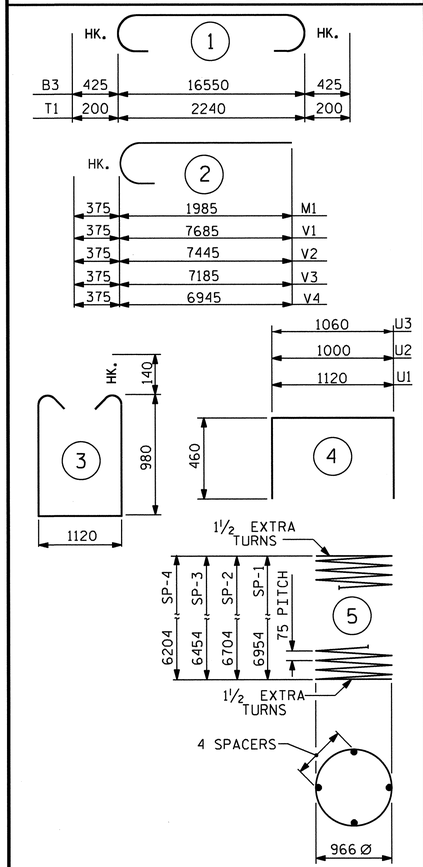


ALL BAR DIMENSIONS ARE OUT TO OUT.

## BILL OF MATERIAL

### BENT #1

| BAR | NO. | SIZE | TYPE | LENGTH | WEIGHT |
|---|---|---|---|---|---|
| B1 | 5 | 32 | STR | 16600 | 532 |
| B2 | 4 | 19 | STR | 16600 | 148 |
| B3 | 5 | 32 | 1 | 17400 | 557 |
| B4 | 35 | 13 | STR | 1280 | 45 |
| M1 | 56 | 29 | 2 | 2360 | 669 |
| S1 | 87 | 16 | 3 | 3360 | 454 |
| T1 | 152 | 19 | 1 | 2640 | 897 |
| U1 | 62 | 13 | 4 | 2040 | 126 |
| U2 | 8 | 13 | 4 | 1920 | 15 |
| U3 | 8 | 13 | 4 | 1980 | 16 |
| V1 | 14 | 29 | 2 | 8060 | 571 |
| V2 | 14 | 29 | 2 | 7820 | 554 |
| V3 | 14 | 29 | 2 | 7560 | 536 |
| V4 | 14 | 29 | 2 | 7320 | 519 |
| SP-1 | 1 | ** | 5 | 287520 | 286 |
| SP-2 | 1 | ** | 5 | 277040 | 275 |
| SP-3 | 1 | ** | 5 | 266560 | 265 |
| SP-4 | 1 | ** | 5 | 257560 | 256 |
| REINFORCING STEEL | | | | kg | 5639 |
| SPIRAL COLUMN REINFORCING STEEL | | | | kg | 1082 |

CLASS A CONCRETE BREAKDOWN

| | | | |
|---|---|---|---|
| POUR #1 | (FOOTINGS) | 19.4 | $m^3$ |
| POUR #2 | (COLUMNS) | 23.2 | $m^3$ |
| POUR #3 | (CAP) | 23.8 | $m^3$ |
| TOTAL | | 66.4 | $m^3$ |

HP 310 x 79 STEEL PILES

| | | |
|---|---|---|
| NO. 28 | METERS | 201.6 |

FOUNDATION EXCAVATION FOR BENT #1 — LUMP SUM

** SP-1 THRU SP-4 SPIRAL REINFORCING STEEL SHALL BE W20 OR D-20 COLD DRAWN WIRE OR #13 PLAIN OR DEFORMED BAR.

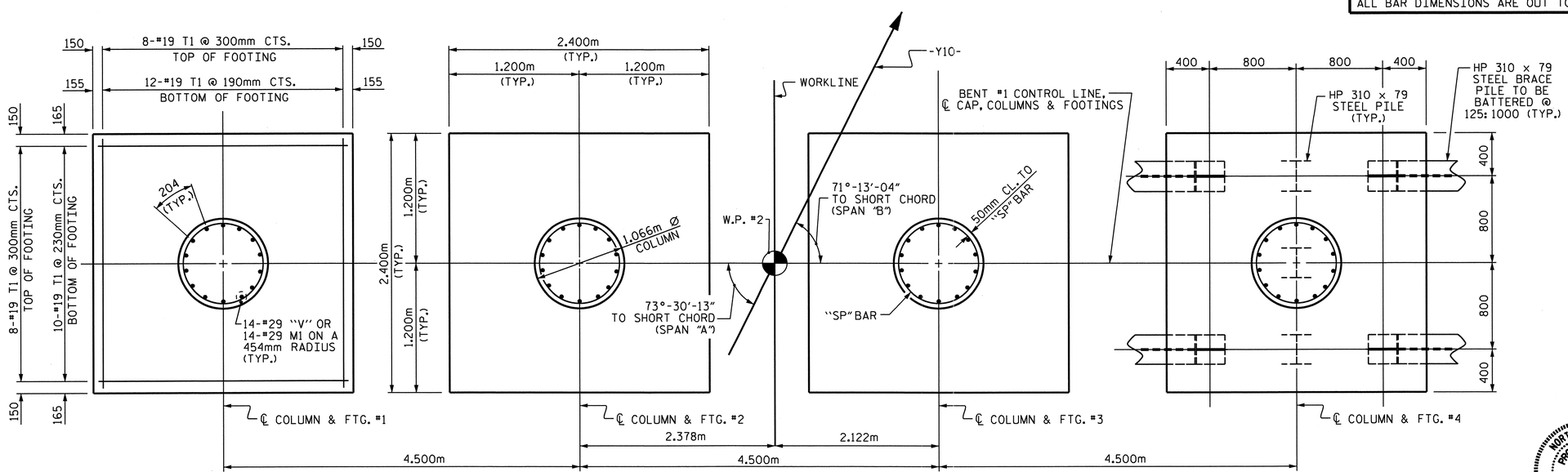


## PLAN OF COLUMNS AND FOOTINGS

(FOOTING DIMENSIONS, REINFORCING STEEL & PILES ARE TYPICAL EACH FOOTING)

PROJECT NO. R-2413C

GUILFORD-ROCKINGHAM COUNTY

STATION: 70+09.407 -LREV-

SHEET 2 OF 2

STATE OF NORTH CAROLINA
DEPARTMENT OF TRANSPORTATION
RALEIGH

SUBSTRUCTURE

BENT #1

NORTH CAROLINA PROFESSIONAL SEAL 022516 ENGINEER L. E. MURRAY

10/28/11

| REVISIONS | | | | | | SHEET NO. |
|---|---|---|---|---|---|---|
| NO. | BY: | DATE: | NO. | BY: | DATE: | S-228 |
| 1 | | | 3 | | | TOTAL SHEETS |
| 2 | | | 4 | | | 238 |

STR. #7

DRAWN BY : DAN PLATICA/BNB DATE : 4/28/11
CHECKED BY : T.L. AVERETTE DATE : 5/26/11

19-OCT-2011 11:30
R:\TIPProjects-R\R2413c\Structures\FinalPlans\Str.#7\R2413C_sd_B1_07.dgn
taverette

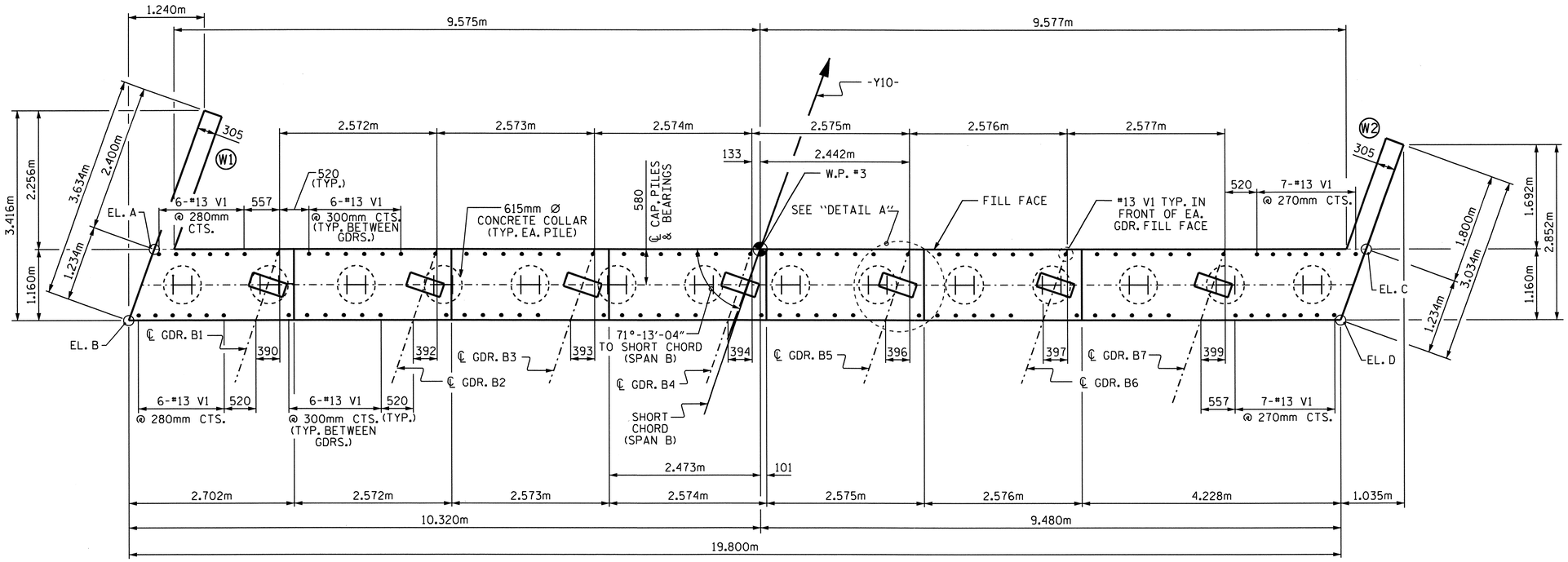


## PLAN

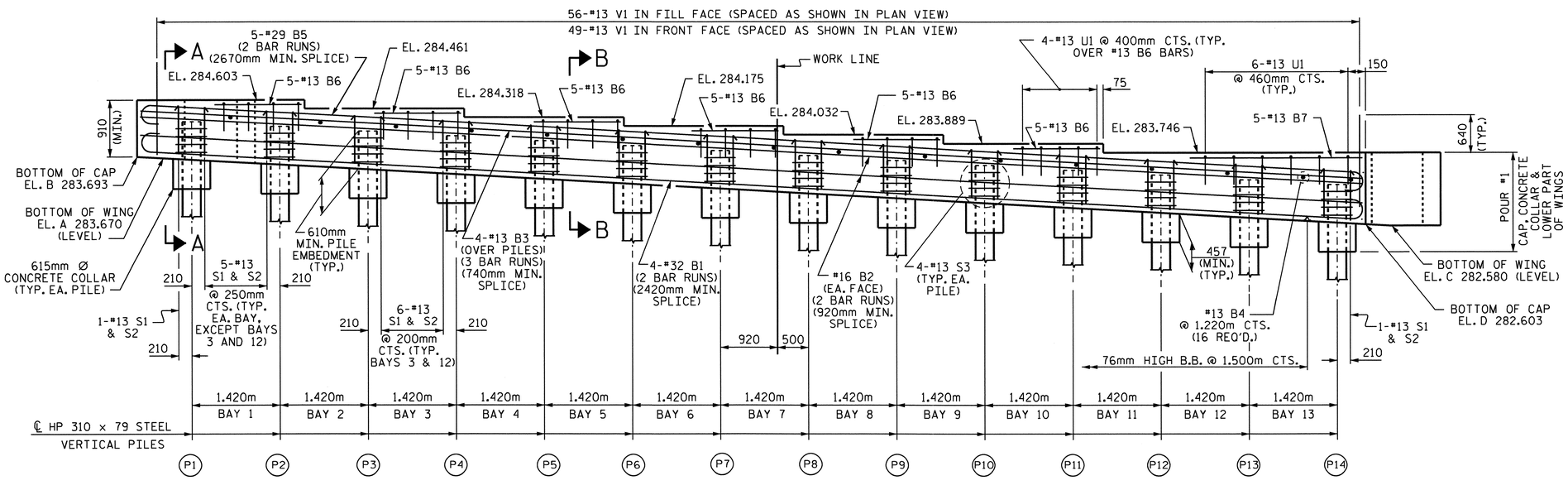


## ELEVATION

## NOTES:

THE CONTRACTOR SHALL PROVIDE FOR INSTALLATION OF THE 102mm DIAMETER DRAIN PIPE THROUGH THE WING WALL AS REQUIRED FOR REINFORCED BRIDGE APPROACH FILLS. SEE THE ROADWAY PLANS. REINFORCING STEEL IN THE WING WALL MAY BE SHIFTED AS NECESSARY TO CLEAR THE DRAIN PIPE.

THE TOP SURFACE OF THE END BENT CAP AND WINGS, EXCLUDING THE OUTSIDE 100mm AND THE BEARING AREA, SHALL BE RAKED TO A DEPTH OF 6mm.

STIRRUPS AND #13 U1 BARS IN CAP MAY BE SHIFTED AS NECESSARY TO CLEAR #13 V1.

THE CONTRACTOR'S ATTENTION IS CALLED TO THE FACT THAT THE UPPER PART OF INTEGRAL END BENT AND WINGS ARE TO BE POURED WITH THE SUPERSTRUCTURE.

SEE SUPERSTRUCTURE SHEET FOR UPPER PART OF INTEGRAL END BENT DETAIL.

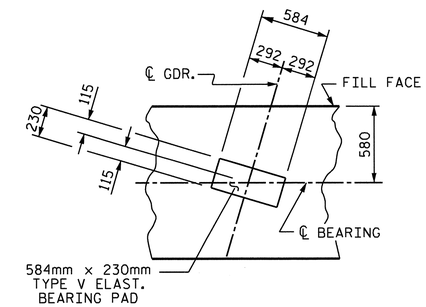


## DETAIL A

(TYP. EA. GDR.)

| TOP OF PILE ELEVATION | |
|---|---|
| P1 284.263 | P8 283.716 |
| P2 284.185 | P9 283.638 |
| P3 284.107 | P10 283.560 |
| P4 284.029 | P11 283.482 |
| P5 283.950 | P12 283.403 |
| P6 283.872 | P13 283.325 |
| P7 283.794 | P14 283.247 |

PROJECT NO. R-2413C

GUILFORD-ROCKINGHAM COUNTY

STATION: 70+09.407 -LREV-

SHEET 1 OF 3

STATE OF NORTH CAROLINA
DEPARTMENT OF TRANSPORTATION
RALEIGH

SUBSTRUCTURE
INTEGRAL END BENT #2

NORTH CAROLINA PROFESSIONAL SEAL 022516 ENGINEER EMILY E. MURRAY
10/28/11

| REVISIONS | | | | | | | | SHEET NO. |
|---|---|---|---|---|---|---|---|---|
| NO. | BY: | DATE: | NO. | BY: | DATE: | | | S-229 |
| 1 | | | 3 | | | | | TOTAL SHEETS |
| 2 | | | 4 | | | | | 238 |

STR. #7

DRAWN BY : B.N.BARODAWALA DATE : 12-29-10
CHECKED BY : T.L.AVERETTE DATE : 5-13-11

05-SEP-2011 14:30
Y:\Structures\Final Plans\Str.#7\R-2413C_SD_EB_07.dgn
mgudlaugsson

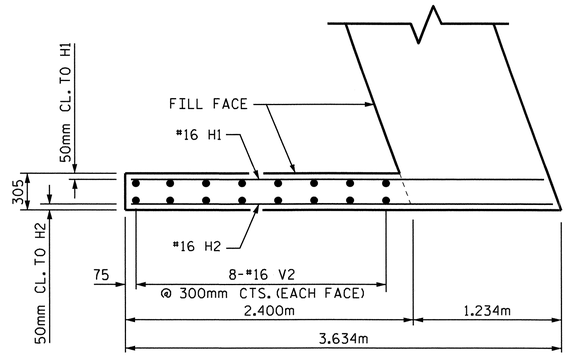


PLAN OF LEFT WING (W1)

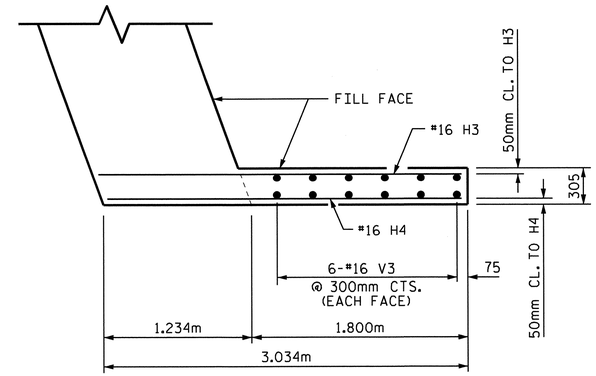


PLAN OF RIGHT WING (W2)

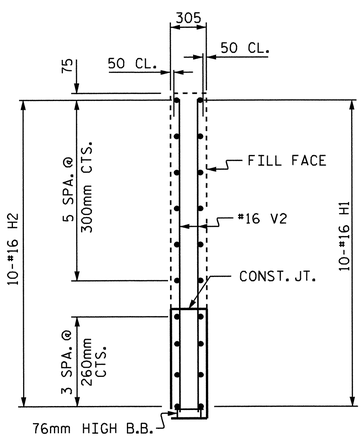


SECTION Y-Y

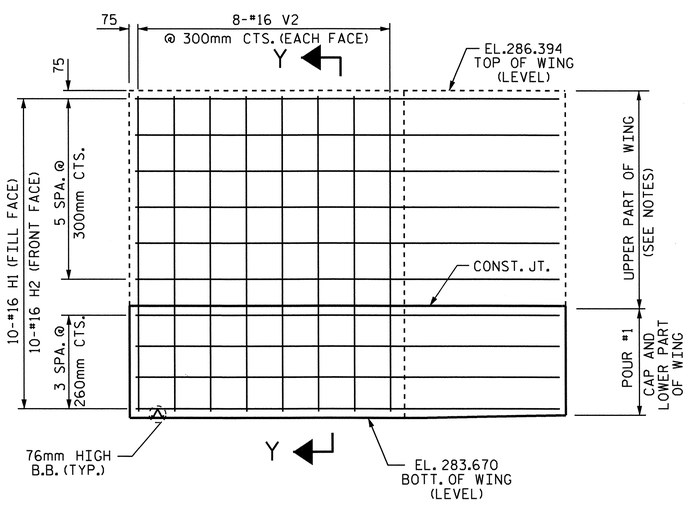


ELEVATION OF LEFT WING (W1)

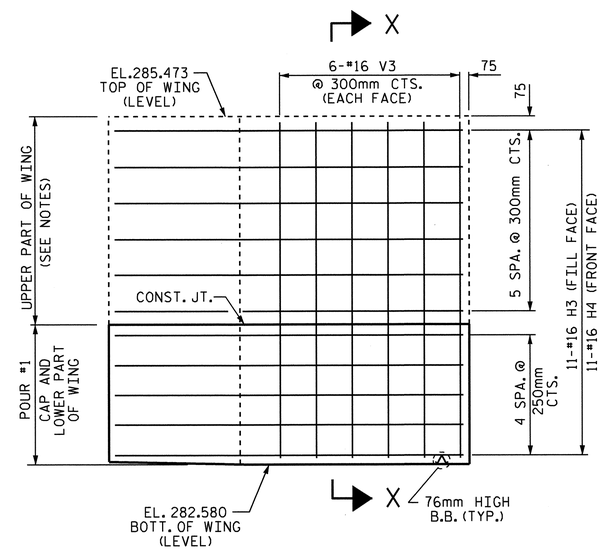


ELEVATION OF RIGHT WING (W2)

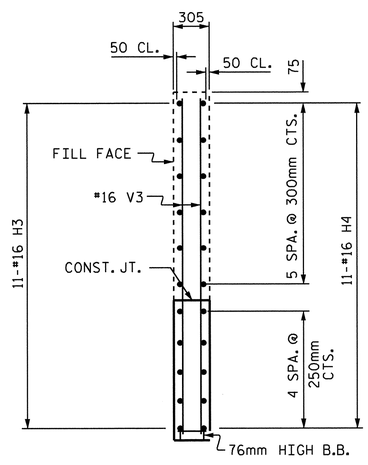


SECTION X-X

PROJECT NO. R-2413C

GUILFORD-ROCKINGHAM COUNTY

STATION: 70+09.407 -LREV-

SHEET 2 OF 3

STATE OF NORTH CAROLINA
DEPARTMENT OF TRANSPORTATION
RALEIGH

SUBSTRUCTURE

INTEGRAL
END BENT #2

NORTH CAROLINA PROFESSIONAL SEAL 022516 ENGINEER EMILY E. MURRAY
10/28/11

| REVISIONS | | | | | | SHEET NO. |
|---|---|---|---|---|---|---|
| NO. | BY: | DATE: | NO. | BY: | DATE: | S-230 |
| 1 | | | 3 | | | TOTAL SHEETS |
| 2 | | | 4 | | | 238 |

STR. #7

DRAWN BY : B.N.BARODAWALA DATE : 12-29-10
CHECKED BY : T.L.AVERETTE DATE : 5-13-11

05-SEP-2011 14:30
Y:\Structures\Final Plans\Str.#7\R-2413C_SD_EB_07.dgn
mgudlaugsson

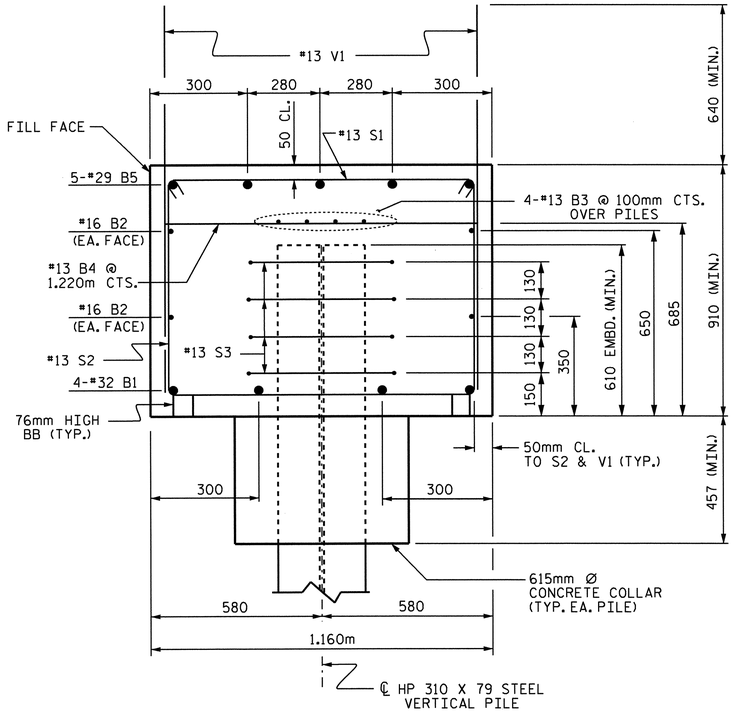


## SECTION A-A

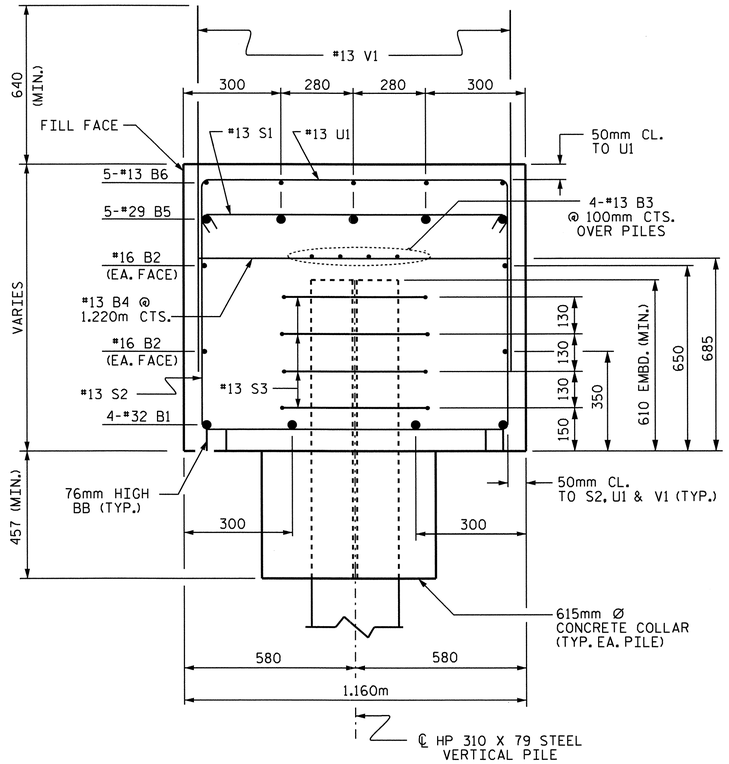


## SECTION B-B

## BAR TYPES

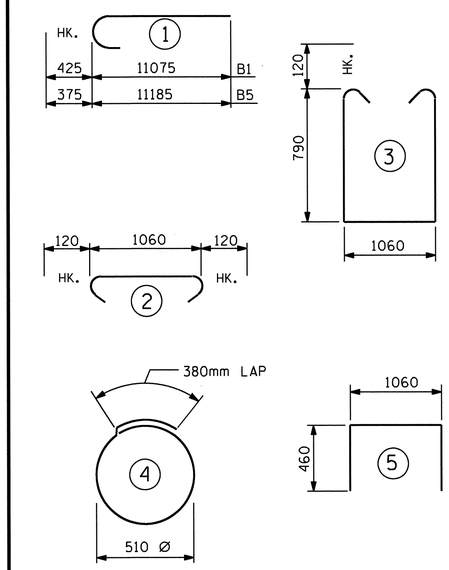


ALL BAR DIMENSIONS ARE OUT TO OUT.

## BILL OF MATERIAL
### END BENT #2

| BAR | NO. | SIZE | TYPE | LENGTH | WEIGHT |
|---|---|---|---|---|---|
| B1 | 8 | #32 | 1 | 11500 | 589 |
| B2 | 8 | #16 | STR | 10380 | 129 |
| B3 | 12 | #13 | STR | 7100 | 85 |
| B4 | 16 | #13 | STR | 1060 | 17 |
| B5 | 10 | #29 | 1 | 11560 | 585 |
| B6 | 30 | #13 | STR | 1400 | 42 |
| B7 | 5 | #13 | STR | 2920 | 15 |
| | | | | | |
| H1 | 10 | #16 | STR | 3440 | 53 |
| H2 | 10 | #16 | STR | 3500 | 54 |
| H3 | 11 | #16 | STR | 3020 | 52 |
| H4 | 11 | #16 | STR | 2940 | 50 |
| | | | | | |
| S1 | 69 | #13 | 2 | 1300 | 89 |
| S2 | 69 | #13 | 3 | 2880 | 198 |
| S3 | 56 | #13 | 4 | 1980 | 110 |
| | | | | | |
| U1 | 30 | #13 | 5 | 1980 | 59 |
| | | | | | |
| V1 | 105 | #13 | STR | 1500 | 157 |
| V2 | 16 | #16 | STR | 2620 | 65 |
| V3 | 12 | #16 | STR | 2780 | 52 |
| | | | | | |

REINFORCING STEEL = 2401 kg

CLASS A CONCRETE BREAKDOWN

POUR #1: (CAP, CONCRETE COLLARs & LOWER PART OF WINGS 26.7 m3

TOTAL CONCRETE 26.7 m3

HP 310 X 79 STEEL PILES
NO. 14 254.8 METERS

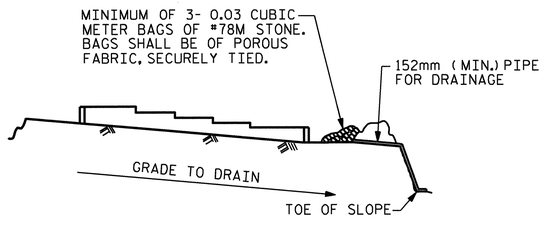


BAGGED STONE AND PIPE SHALL BE PLACED IMMEDIATELY AFTER COMPLETION OF END BENT EXCAVATION. PIPE MAY BE EITHER CONCRETE, CORRUGATED STEEL, CORRUGATED ALUMINUM ALLOY, OR CORRUGATED PLASTIC. PERFORATED PIPE WILL NOT BE ALLOWED.

BAGGED STONE SHALL REMAIN IN PLACE UNTIL THE ENGINEER DIRECTS THAT IT BE REMOVED. THE CONTRACTOR SHALL REMOVE AND DISPOSE OF SILT ACCUMULATIONS AT BAGGED STONE WHEN SO DIRECTED BY THE ENGINEER. BAGS SHALL BE REMOVED AND REPLACED WHENEVER THE ENGINEER DETERMINES THAT THEY HAVE DETERIORATED AND LOST THEIR EFFECTIVENESS.

NO SEPARATE PAYMENT WILL BE MADE FOR THIS WORK AND THE ENTIRE COST OF THIS WORK SHALL BE INCLUDED IN THE UNIT CONTRACT PRICE BID FOR THE SEVERAL PAY ITEMS.

## TEMPORARY DRAINAGE AT END BENT

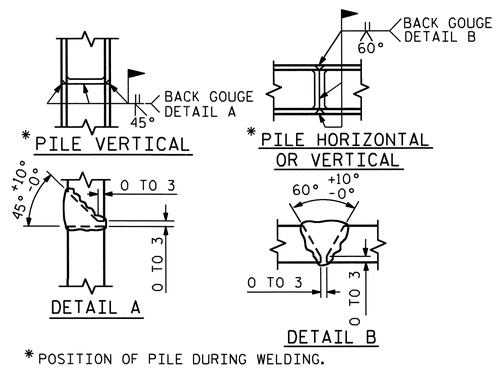


*POSITION OF PILE DURING WELDING.

## PILE SPLICE DETAILS

PROJECT NO. R-2413C
GUILFORD-ROCKINGHAM COUNTY
STATION: 70+09.407 -LREV-

SHEET 3 OF 3

STATE OF NORTH CAROLINA
DEPARTMENT OF TRANSPORTATION
RALEIGH

SUBSTRUCTURE
INTEGRAL
END BENT #2

NORTH CAROLINA PROFESSIONAL SEAL 022516 ENGINEER EMILY E. MURRAY
10/28/11

| REVISIONS | | | | | | | | SHEET NO. |
|---|---|---|---|---|---|---|---|---|
| NO. | BY: | DATE: | NO. | BY: | DATE: | | | S-231 |
| 1 | | | 3 | | | | | TOTAL SHEETS |
| 2 | | | 4 | | | | | 238 |

DRAWN BY : B.N.BARODAWALA DATE : 12-29-10
CHECKED BY : T.L.AVERETTE DATE : 5-13-11

05-SEP-2011 14:30
Y:\Structures\Final Plans\Str.#7\R-2413C_SD_EB_07.dgn
mgudlaugsson

STR. #7

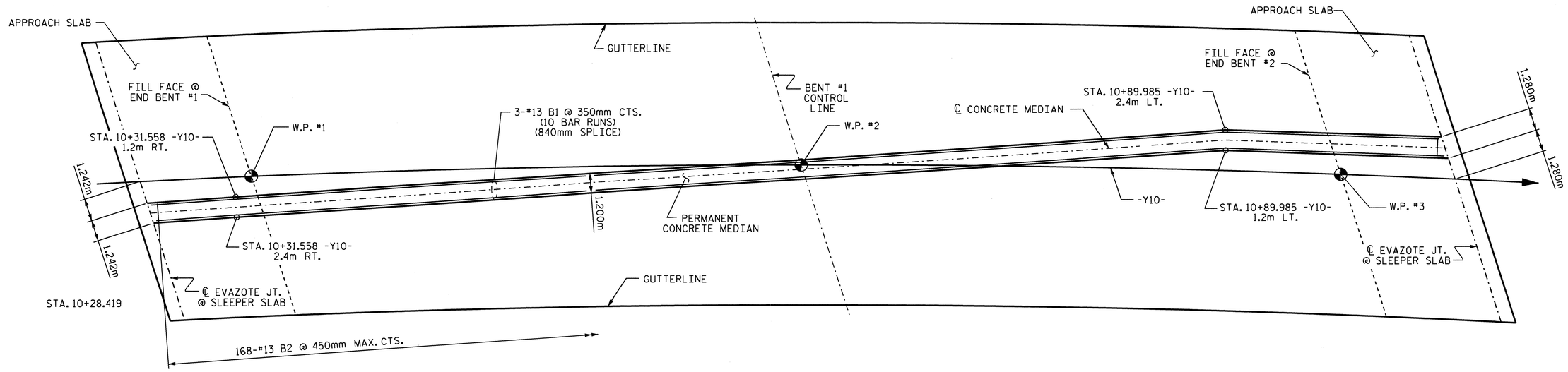


SPAN A

SPAN B

## PLAN

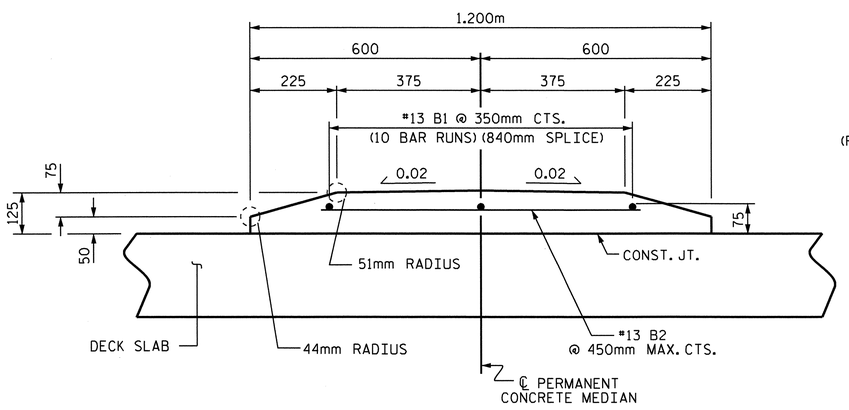


SECTION THRU CONCRETE MEDIAN

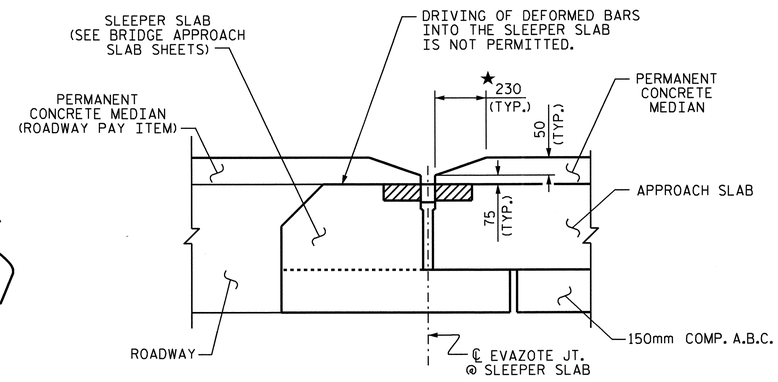


SECTION AT EVAZOTE JOINT

★ NORMAL TO JOINT

| BILL OF MATERIAL | | | | | |
|---|---|---|---|---|---|
| CONCRETE MEDIAN | | | | | |
| BAR | NO. | SIZE | TYPE | LENGTH | WEIGHT |
| * B1 | 30 | 13 | STR | 8240 | 246 |
| * B2 | 168 | 13 | STR | 800 | 134 |
| | | | | | |
| * EPOXY COATED REINFORCING STEEL | | | | | 380 kg |
| CLASS AA CONCRETE | | | | | 10.2 m3 |

PROJECT NO. R-2413C

GUILFORD-ROCKINGHAM COUNTY

STATION: 70+09.407-LREV-

# PERMANENT CONCRETE MEDIAN DETAILS

## NOTES

NO SEPARATE MEASUREMENT OR PAYMENT WILL BE MADE FOR MATERIALS OR LABOR TO CONSTRUCT THE CONCRETE MEDIAN. THE ENTIRE COST OF THIS WORK SHALL BE INCLUDED IN THE SQUARE FOOT CONTRACT PRICE BID FOR THE REINFORCED CONCRETE DECK SLAB.

FOR LOCATION OF CONCRETE MEDIAN, SEE ROADWAY PLANS.

ALL REINFORCING STEEL IN CONCRETE MEDIANS SHALL BE EPOXY COATED.

#13 B1 BARS MAY BE FIELD BENT AS NECESSARY.

NORTH CAROLINA PROFESSIONAL SEAL 022516 ENGINEER EMILY E. MURRAY

10/24/11

STATE OF NORTH CAROLINA
DEPARTMENT OF TRANSPORTATION
RALEIGH

SUPERSTRUCTURE

PERMANENT CONCRETE MEDIAN

| REVISIONS | | | | | | SHEET NO. |
|---|---|---|---|---|---|---|
| NO. | BY: | DATE: | NO. | BY: | DATE: | S-232 |
| 1 | | | 3 | | | TOTAL SHEETS |
| 2 | | | 4 | | | 238 |

DRAWN BY : B.N.BARODAWALA DATE : 4-7-11
CHECKED BY : T.L.AVERETTE DATE : 6-2-11

19-OCT-2011 11:25
R:\TIPProjects-R\R2413c\Structures\FinalPlans\Str.#7\R-2413C_SD_CM_07.dgn
taverette

STR. #7

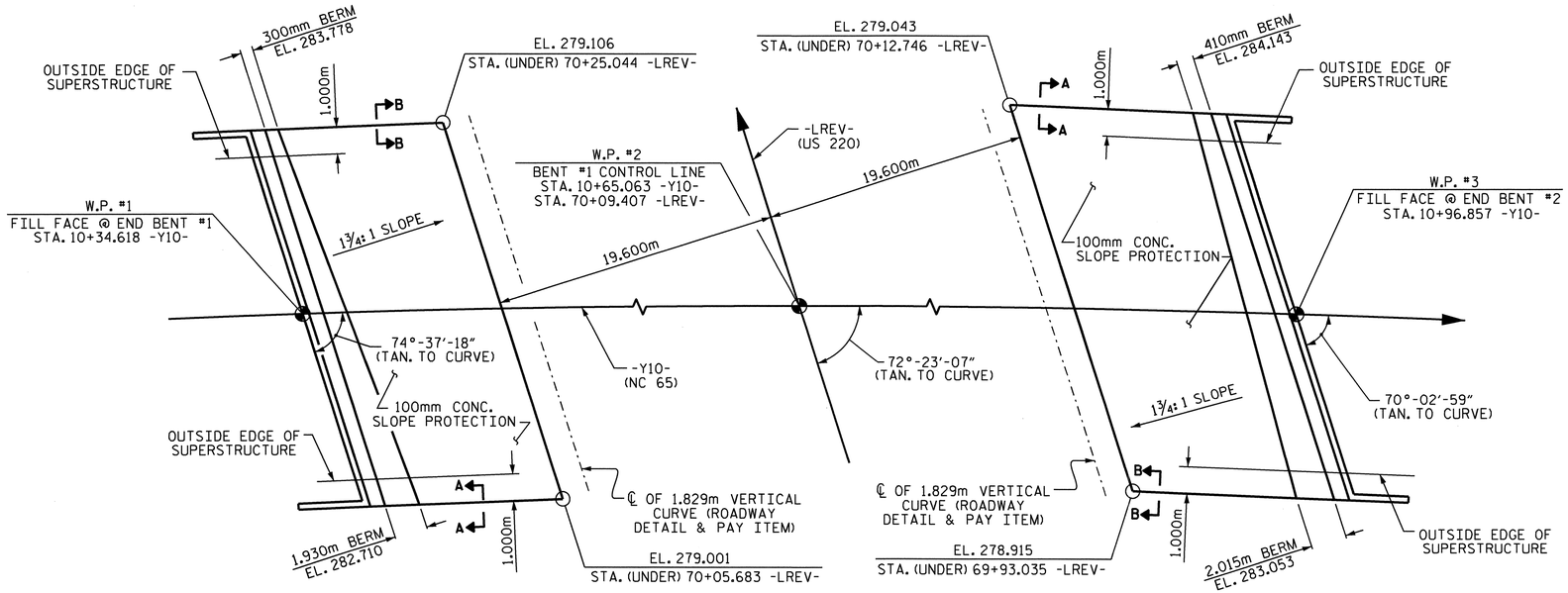


PLAN

## GENERAL NOTES

SLOPE PROTECTION SHALL BE PLACED UNDER THE ENDS OF THE BRIDGE AS SHOWN IN THE DETAILS. STRAIGHT EDGING WILL NOT BE REQUIRED UNLESS, IN THE OPINION OF THE ENGINEER, VISUAL INSPECTION INDICATES A NEED FOR IT. MEASUREMENT AND PAYMENT SHALL BE AS PRESCRIBED IN SECTION 462 OF THE STANDARD SPECIFICATIONS.

SLOPE PROTECTION SHALL CONSIST OF 100mm POURED-IN-PLACE CONCRETE PAVING AS SHOWN IN THE DETAILS ON THIS SHEET. CONCRETE SHALL BE CLASS "B". THE CONCRETE SURFACE SHALL BE FLOATED WITH A WOODEN FLOAT AND FINISHED. WELDED WIRE FABRIC REINFORCING SHALL BE 152 X 152 - W9.1 X W9.1, 1520mm WIDE. SLOPE PROTECTION SHALL BE POURED IN 1520mm STRIPS AS SHOWN IN THE "POURING DETAIL" WITH 600mm LONG #13 BARS PLACED ALONG THE SLOPE BETWEEN STRIPS AT 450mm MAXIMUM SPACING. SLOPE PROTECTION MAY BE POURED IN ALTERNATE 1220mm AND 1520mm STRIPS AS SHOWN IN THE "OPTIONAL POURING DETAIL" WITH ADJACENT RUNS OF WELDED WIRE FABRIC LAPPING AT LEAST 152mm. THE COST OF THE WELDED WIRE FABRIC AND #13 BARS, IF USED, SHALL BE INCLUDED IN THE CONTRACT UNIT PRICE BID PER SQUARE METER FOR SLOPE PROTECTION.

| BRIDGE @ STA. 70+09.407 -LREV- | 100mm SLOPE PROTECTION | * WELDED WIRE FABRIC 1520mm WIDE |
|---|---|---|
| | SQUARE METERS | APPROX. METERS |
| END BENT 1 | 223 | 163 |
| END BENT 2 | 252 | 183 |

* QUANTITY SHOWN IS BASED ON 1520mm POURS.

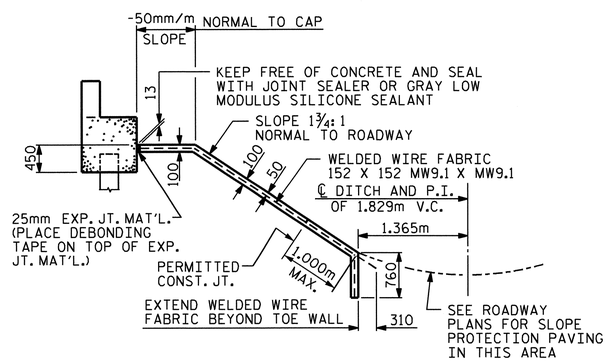


SECTION ALONG ℄ ROADWAY WHEN FILL CATCHES IN DITCH

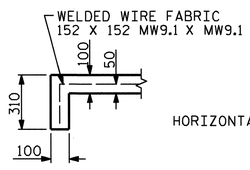


SECTION A-A

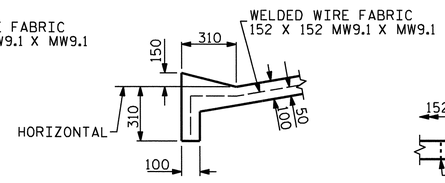


SECTION B-B

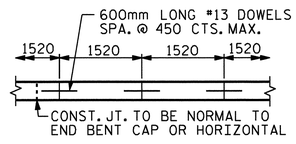


STRIP WIDTHS MAY VARY IN CURVED PORTION.

POURING DETAIL

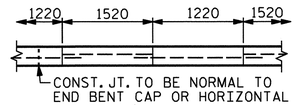


POUR A 1220mm STRIP FIRST. STRIP WIDTHS MAY VARY IN CURVED PORTION.

OPTIONAL POURING DETAIL

PROJECT NO. R-2413C
GUILFORD-ROCKINGHAM COUNTY
STATION: 70+09.407 -LREV-

STATE OF NORTH CAROLINA
DEPARTMENT OF TRANSPORTATION
RALEIGH

# STANDARD SLOPE PROTECTION DETAILS

NORTH CAROLINA PROFESSIONAL SEAL 022516 ENGINEER EMILY E. MURRAY
8/28/11

| ASSEMBLED BY : T.L. AVERETTE | DATE : 5-25-11 |
|---|---|
| CHECKED BY : PEGGY PARISI | DATE : 6-01-11 |

| DRAWN BY : ELR 5/92 | REV. 7/10/01 | LES/RDR |
|---|---|---|
| CHECKED BY : GRP 6/92 | REV. 5/7/03 | RWW/JTE |
| | REV. 5/1/06 | TLA/GM |

| REVISIONS | | | | | | | | SHEET NO. |
|---|---|---|---|---|---|---|---|---|
| NO. | BY: | DATE: | NO. | BY: | DATE: | | | S-233 |
| 1 | | | 3 | | | | | TOTAL SHEETS |
| 2 | | | 4 | | | | | 238 |

13-SEP-2011 10:16
Z:\TIPProjects-R\R2413c\Structures\Final Plans\Str.#7\R2413C_sd_SP_07.dgn
emurray

STR. #7

STD. NO. SP1SM

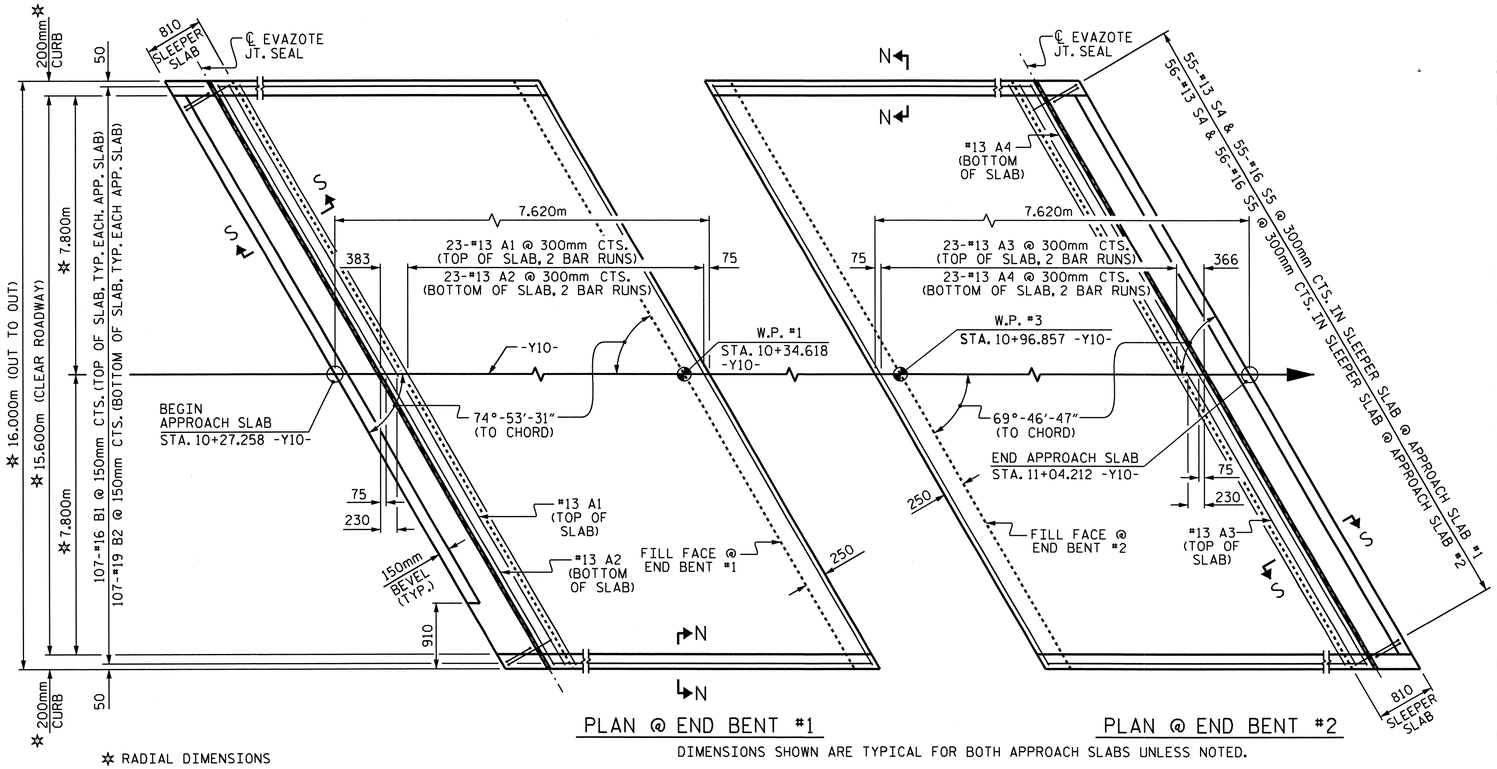


PLAN @ END BENT #1

PLAN @ END BENT #2

✱ RADIAL DIMENSIONS

DIMENSIONS SHOWN ARE TYPICAL FOR BOTH APPROACH SLABS UNLESS NOTED.

#13 "A" BARS IN SLEEPER SLAB NOT SHOWN FOR CLARITY.

PERMANENT CONCRETE MEDIAN NOT SHOWN FOR CLARITY. SEE "PERMANENT CONCRETE MEDIAN" SHEET FOR DETAILS.

## NOTES

APPROACH SLAB SHALL NOT BE CONSTRUCTED PRIOR TO COMPLETION OF THE BRIDGE DECK.

FOR REINFORCED BRIDGE APPROACH FILL INCLUDING FABRIC, IMPERMEABLE GEOMEMBRANE, 102mm Ø DRAINAGE PIPE, #78M STONE, AND SELECT MATERIAL, SEE ROADWAY PLANS.

AREA BETWEEN THE WINGWALL AND APPROACH SLAB SHALL BE GRADED TO DRAIN THE WATER AWAY FROM THE FILL FACE OF THE BRIDGE AND SHALL BE PAVED. SEE ROADWAY PLANS.

THE 150mm COMP. A.B.C. SHALL BE FLUSH WITH THE SLEEPER SLAB AND SHALL EXTEND 300mm OUTSIDE OF EACH EDGE OF THE APPROACH SLAB.

THE CONTRACTOR MAY USE 100mm TYPE B-25.0B ASPHALT CONCRETE BASE COURSE IN LIEU OF 150mm COMP. A.B.C. IF THIS OPTION IS USED, THE BASE COURSE SHALL BE FLUSH WITH THE SLEEPER SLAB, AND THE WIDTH SHALL BE THE SAME AS THAT OF THE APPROACH SLAB.

THE CONTRACTOR MAY USE 125mm CLASS "A" CONCRETE BASE IN LIEU OF 150mm COMP. A.B.C. IF THIS OPTION IS USED, THE CONCRETE BASE SHALL BE FLUSH WITH THE SLEEPER SLAB, AND THE WIDTH SHALL BE THE SAME AS THAT OF THE APPROACH SLAB. THE CONCRETE SHALL BE FINISHED TO A SMOOTH SURFACE AND A LAYER OF 13.6 kg ROOFING FELT SHALL BE PLACED BETWEEN THE CONCRETE BASE AND THE APPROACH SLAB TO PREVENT BOND. THE APPROACH SLAB SHALL NOT BE CAST UNTIL THE CONCRETE BASE HAS REACHED AN AGE OF THREE CURING DAYS.

THE VERTICAL JOINT ON THE RIGHT AND LEFT SIDE OF THE APPROACH SLAB AT THE ENDS OF THE EVAZOTE JOINT SHALL BE FILLED WITH SILICONE OR OTHER APPROVED MATERIAL IN ORDER TO PREVENT BACKFILL FROM ENTERING THE JOINT OPENING.

THE JOINT OPENING AT THE APPROACH SLAB/DECK INTERFACE SHALL BE SAWED NO MORE THAN 12 HOURS AFTER THE APPROACH SLAB IS CAST. THE JOINT SHALL BE CLEANED OF ALL DEBRIS BEFORE THE SEALANT IS APPLIED. THE JOINT SEALER MATERIAL SHALL CONFORM TO THE REQUIREMENTS OF TYPE SL LOW MODULUS SILICONE SEALANT.

WITH EVAZOTE JOINT SEAL

FOR EVAZOTE JOINT SEALS, SEE SPECIAL PROVISIONS.

THE NOMINAL UNCOMPRESSED SEAL WIDTH OF THE EVAZOTE JOINT SEAL SHALL BE 87mm.

FOR ELASTOMERIC CONCRETE, SEE SPECIAL PROVISIONS.

## BILL OF MATERIAL

### FOR APPROACH SLAB #1

| BAR | NO. | SIZE | TYPE | LENGTH | WEIGHT |
|---|---|---|---|---|---|
| ✱ A1 | 62 | #13 | STR | 8560 | 528 |
| A2 | 48 | #13 | STR | 8520 | 407 |
| ✱ B1 | 107 | #16 | STR | 6800 | 1129 |
| B2 | 107 | #19 | STR | 6940 | 1660 |
| ✱ S4 | 55 | #13 | 1 | 1200 | 66 |
| S5 | 55 | #16 | 2 | 880 | 75 |
| REINFORCING STEEL | | | | kg. | 2142 |
| ✱ EPOXY COATED REINFORCING STEEL | | | | kg. | 1723 |
| CLASS AA CONCRETE | | | | | |
| POUR #1 - SLAB & CURB | | | | C.M. | 34.8 |
| POUR #2 - SLEEPER SLAB | | | | C.M. | 4.3 |
| TOTAL | | | | C.M. | 39.1 |

### FOR APPROACH SLAB #2

| BAR | NO. | SIZE | TYPE | LENGTH | WEIGHT |
|---|---|---|---|---|---|
| ✱ A3 | 62 | #13 | STR | 8780 | 541 |
| A4 | 48 | #13 | STR | 8760 | 418 |
| ✱ B1 | 107 | #16 | STR | 6760 | 1123 |
| B2 | 107 | #19 | STR | 6920 | 1655 |
| ✱ S4 | 56 | #13 | 1 | 1200 | 67 |
| S5 | 56 | #16 | 2 | 880 | 76 |
| REINFORCING STEEL | | | | kg. | 2149 |
| ✱ EPOXY COATED REINFORCING STEEL | | | | kg. | 1731 |
| CLASS AA CONCRETE | | | | | |
| POUR #1 - SLAB & CURB | | | | C.M. | 34.8 |
| POUR #2 - SLEEPER SLAB | | | | C.M. | 4.4 |
| TOTAL | | | | C.M. | 39.2 |

## SPLICE CHART

| BAR | SPLICE |
|---|---|
| ✱ #13 A1 & #13 A3 | 610 |
| #13 A2 & #13 A4 | 540 |

## BAR TYPES

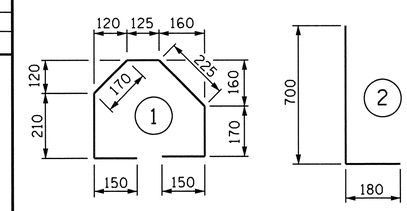


ALL BAR DIMENSIONS ARE OUT TO OUT

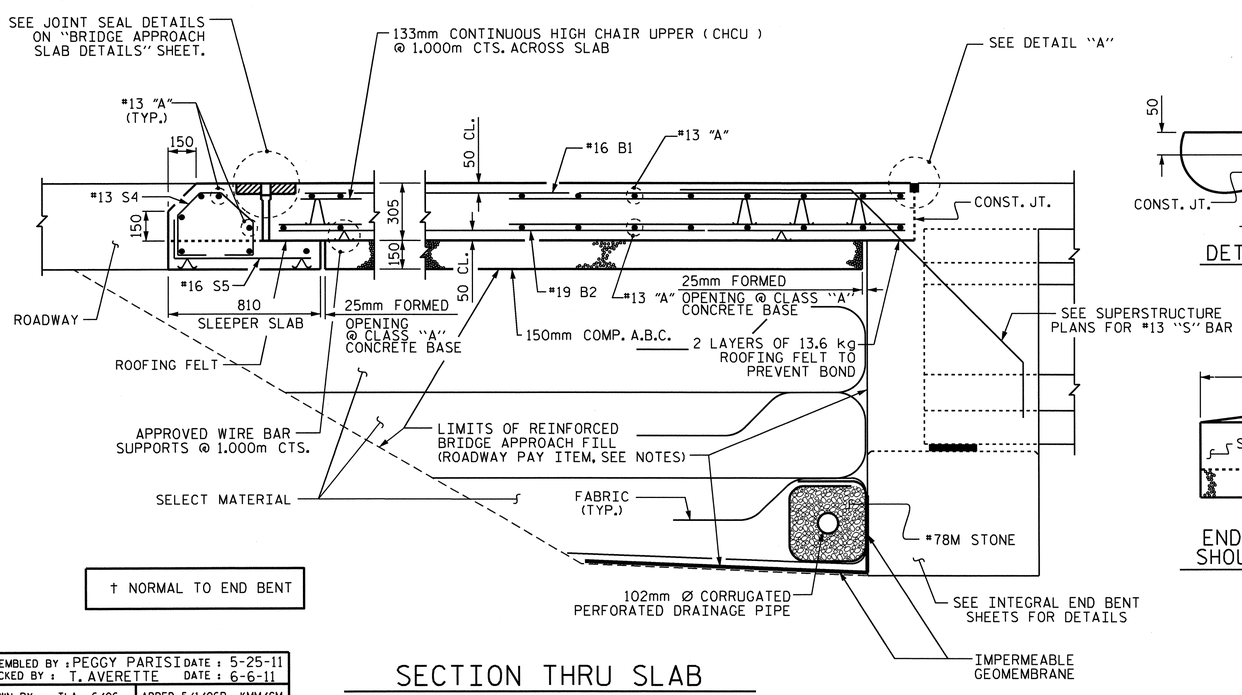


† NORMAL TO END BENT

SECTION THRU SLAB

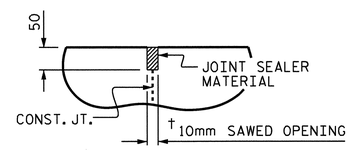


DETAIL "A"

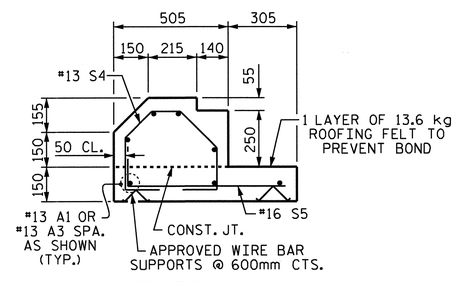


SECTION S-S

SHOWING SLEEPER SLAB

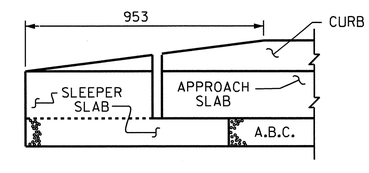


END OF CURB WITHOUT SHOULDER BERM GUTTER

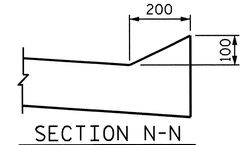


SECTION N-N

NORTH CAROLINA PROFESSIONAL SEAL 022516 ENGINEER EMILY E. MURRAY
10/28/11

PROJECT NO. R-2413C

GUILFORD-ROCKINGHAM COUNTY

STATION: 70+09.407 -LREV-

SHEET 1 OF 2

STATE OF NORTH CAROLINA
DEPARTMENT OF TRANSPORTATION
RALEIGH

STANDARD

BRIDGE APPROACH SLAB FOR INTEGRAL ABUTMENT

| REVISIONS | | | | | | | SHEET NO. |
|---|---|---|---|---|---|---|---|
| NO. | BY: | DATE: | NO. | BY: | DATE: | | S-234 |
| 1 | | | 3 | | | | TOTAL SHEETS |
| 2 | | | 4 | | | | 238 |

ASSEMBLED BY : PEGGY PARISI DATE : 5-25-11
CHECKED BY : T. AVERETTE DATE : 6-6-11
DRAWN BY : TLA 6/06
CHECKED BY : GM 6/06
ADDED 5/1/06R KMM/GM

05-SEP-2011 14:24
Y:\Structures\Final Plans\Str.#7\r2413c_sd_as_07.dgn
mgudlaugsson

STR. #7

STD. NO. BAS11SM

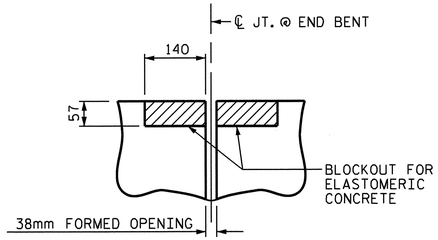


SECTION C-C

EVAZOTE JOINT SEAL (PRE-SAWED ELASTOMERIC CONCRETE DIMENSIONS)

| ELASTOMERIC CONCRETE | |
|---|---|
| END BENT NO. | ELASTOMERIC CONCRETE * (CU. m) |
| 1 | 0.3 |
| 2 | 0.3 |
| TOTAL | 0.6 |

* BASED ON THE MINIMUM BLOCKOUT SHOWN.

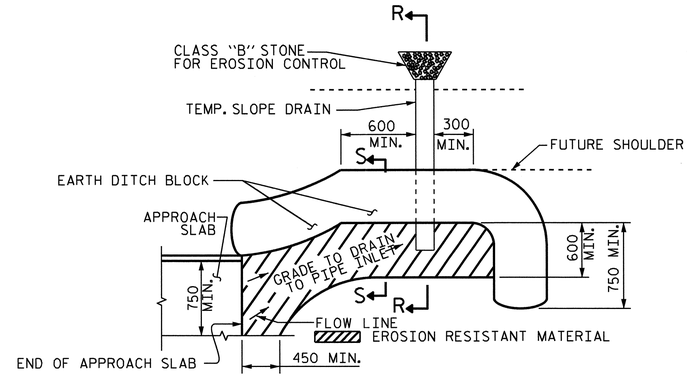


NOTE: IMMEDIATELY AFTER THE CONSTRUCTION OF THE APPROACH SLAB, THE CONTRACTOR SHALL PROVIDE TEMPORARY BERM AND SLOPE DRAIN. CONTRACTOR SHALL GRADE TO PIPE INLET AND PROVIDE EROSION RESISTANT MATERIAL AS SHOWN. THE EROSION RESISTANT MATERIAL SHALL BE EITHER 1) ASPHALT PLANT MIX, TYPE 1 OR TYPE 2, MIN. 50mm DEPTH, 2) EROSION CONTROL MAT, OR 3) CONCRETE, AS DIRECTED BY THE ENGINEER. THE SLOPE DRAIN SHALL CONSIST OF A NON-PERFORATED TEMPORARY DRAINAGE PIPE, 305mm IN DIAMETER.

PLAN VIEW

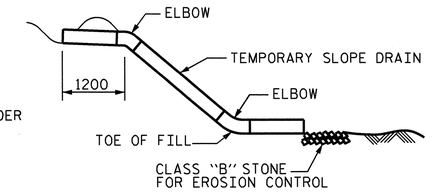


SECTION R-R

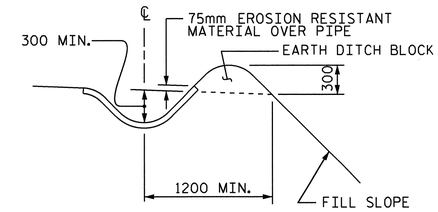


SECTION S-S

# TEMPORARY BERM AND SLOPE DRAIN DETAILS

(TO BE USED WHEN SHOULDER BERM GUTTER IS REQUIRED)

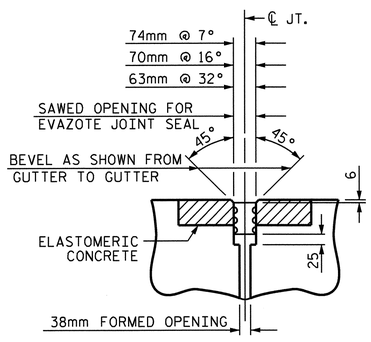


SECTION C-C

EVAZOTE JOINT SEAL

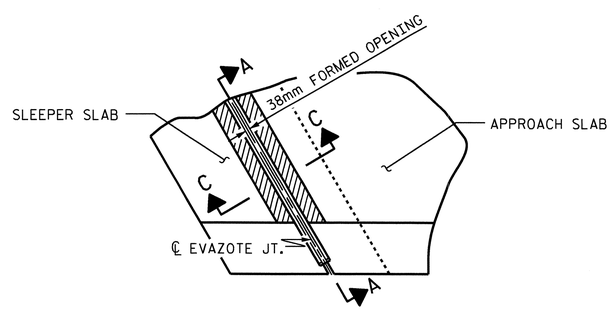


PLAN

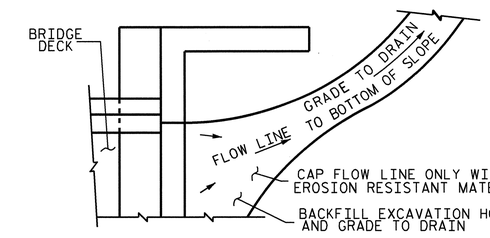


NOTE: IF THE APPROACH SLAB IS NOT CONSTRUCTED IMMEDIATELY AFTER THE BACKFILLING OF THE END BENT EXCAVATION, GRADE TO DRAIN TO THE BOTTOM OF THE SLOPE AND PROVIDE EROSION RESISTANT MATERIAL, SUCH AS FIBERGLASS ROVING OR AS DIRECTED BY THE ENGINEER TO PREVENT SOIL EROSION AND TO PROTECT THE AREA ADJACENT TO THE STRUCTURE. THE CONTRACTOR WILL BE REQUIRED TO REMOVE THESE MATERIALS PRIOR TO CONSTRUCTION OF THE APPROACH SLAB.

TEMPORARY DRAINAGE DETAIL

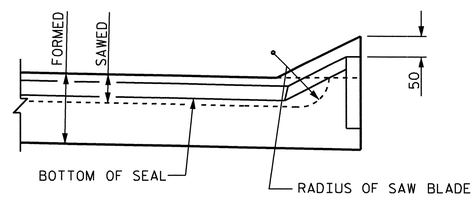


SECTION A-A

# JOINT SEAL DETAILS @ SLEEPER SLAB

PROJECT NO. R-2413C

GUILFORD-ROCKINGHAM COUNTY

STATION: 70+09.407 -LREV-

SHEET 2 OF 2

STATE OF NORTH CAROLINA
DEPARTMENT OF TRANSPORTATION
RALEIGH

STANDARD
BRIDGE APPROACH
SLAB DETAILS

NORTH CAROLINA PROFESSIONAL SEAL 022516 ENGINEER EMILY E. MURRAY 10/28/11

| REVISIONS | | | | | | | SHEET NO. |
|---|---|---|---|---|---|---|---|
| NO. | BY: | DATE: | NO. | BY: | DATE: | | S-235 |
| 1 | | | 3 | | | | TOTAL SHEETS |
| 2 | | | 4 | | | | 238 |

STR. #7

STD. NO. BASIOSM

| | |
|---|---|
| ASSEMBLED BY: PEGGY PARISI | DATE: 5-25-11 |
| CHECKED BY: T. AVERETTE | DATE: 6-6-11 |
| DRAWN BY: FCJ 11/88 | REV. 10/17/00 RWW/LES |
| CHECKED BY: ARB 11/88 | REV. 5/7/03 RWW/JTE |
| | REV. 5/1/06RR MAA/KMM |

05-SEP-2011 14:49
Y:\Structures\Final Plans\Str.#7\r2413c_sd_as_07.dgn
mgudlaugsson

# OVERHANG BRACKET CALCULATION INSTRUCTIONS

## AASHTO SHAPES - TYPES III, IV, V, AND VI

1. RECORD KNOWN INFORMATION ON "BRIDGE OVERHANG BRACKET SUMMARY" ON SHEET 2
2. CALCULATE THE MAXIMUM SCREED LOAD PER BRACKET (SLPB) WITH AN ESTIMATED R = 1.5. SLPB = R X W. ROUND VALUE UP TO NEAREST SLPB VALUE INDICATED ON APPROPRIATE TABLE 1-1, 1-2, 1-3, OR 1-4.
3. WITH THE ESTIMATED SLPB, OVERHANG SLAB THICKNESS, "K" VALUE, AND 45° HANGER SAFE WORKING LOAD (SWL), ENTER THE APPROPRIATE TABLE 1-1, 1-2, 1-3, OR 1-4 (BASED ON OVERHANG DIMENSION) AND DETERMINE THE BRACKET SPACING, S.
4. CALCULATE S/D1 AND S/D2, ROUNDING UP TO NEAREST VALUE IN TABLE 2. ENTER TABLE 2 AND DETERMINE R VALUE.
5. CALCULATE REVISED SLPB. ROUND VALUE UP TO NEAREST SLPB VALUE INDICATED ON APPROPRIATE TABLE 1-1, 1-2, 1-3, OR 1-4.
6. WITH THE REVISED SLPB, OVERHANG SLAB THICKNESS, "K" VALUE AND 45 HANGER SAFE WORKING LOAD (SWL), ENTER THE APPROPRIATE TABLE 1-1, 1-2, 1-3 OR 1-4 (BASED ON OVERHANG DIMENSION) AND DETERMINE REVISED BRACKET SPACING, S.
7. CONTINUE ITERATIONS OF STEPS 4-6 UNTIL THE REVISED BRACKET SPACING, S, IS THE SAME AS THE PREVIOUS S VALUE.
8. CHECK LUMBER JOIST SPACING: WITH BRACKET SPACING VALUE, S, ROUND THIS VALUE UP TO THE NEAREST VALUE OF ALLOWABLE SPAN LENGTH OF JOIST OF TABLE 3. USING THIS VALUE, ALONG WITH THE AVERAGE OVERHANG SLAB THICKNESS AND THE LUMBER JOIST SIZE, DETERMINE JOIST SPACING FROM TABLE 3. IF NECESSARY, ADJUST LUMBER JOIST SIZE AND/OR JOIST SPACING TO MEET ALLOWABLE SPAN LENGTH OF JOIST.
9. CONVERSELY, IF THE DESIRED JOIST SPACING IS KNOWN, USE THIS ALONG WITH THE AVERAGE OVERHANG SLAB THICKNESS AND THE LUMBER JOIST SIZE TO DETERMINE IF ALLOWABLE SPAN LENGTH OF JOIST IS GREATER THAN THE BRACKET SPACING, S. IF NECESSARY, ADJUST LUMBER JOIST SIZE TO MEET REQUIREMENTS OF ALLOWABLE SPAN LENGTH OF JOIST AND JOIST SPACING.
10. RECORD REMAINING INFORMATION ON "BRIDGE OVERHANG BRACKET SUMMARY" FORM.
11. SUBMIT FORM AND CALCULATIONS FOR REVIEW AND APPROVAL.

### TABLE 1-1

(FOR USE ON **UP TO 2'-0" OVERHANG (L)** & 54" HORIZONTAL LEG LENGTH OF THE OVERHANG BRACKET)

| AVG. SLAB THICKNESS (T) (in) | BRACKET (K) DIMENSION (in) | SCREED LOAD PER BRACKET | | | | | | | | | 45° HANGER SWL (lbs) |
|---|---|---|---|---|---|---|---|---|---|---|---|
| | | 2500 lbs. | 2250 lbs. | 2000 lbs. | 1750 lbs. | 1500 lbs. | 1250 lbs. | 1000 lbs. | 750 lbs. | 0 lbs. | |
| | | BRACKET SPACING | | | | | | | | | |
| 10 | 30 | | | | 2'-1" | 2'-7" | 3'-2" | 3'-8" | 4'-2" | 5'-9" | 4000 |
| | | 3'-6" | 4'-0" | 4'-5" | 4'-9" | 5'-1" | 5'-3" | 5'-5" | 5'-7" | 6'-7" | 6000 |
| | 40 | | | | 2'-1" | 2'-7" | 3'-2" | 3'-8" | 4'-2" | 5'-9" | 4000 |
| | | 3'-6" | 4'-0" | 4'-5" | 4'-9" | 5'-1" | 5'-3" | 5'-5" | 5'-7" | 6'-7" | 6000 |
| | 50 | | | | 2'-1" | 2'-7" | 3'-2" | 3'-8" | 4'-2" | 5'-9" | 4000 |
| | | 3'-6" | 4'-0" | 4'-5" | 4'-9" | 5'-1" | 5'-3" | 5'-5" | 5'-7" | 6'-7" | 6000 |
| 12 | 30 | | | | | 2'-4" | 2'-10" | 3'-4" | 3'-9" | 5'-2" | 4000 |
| | | 3'-2" | 3'-7" | 4'-1" | 4'-7" | 5'-0" | 5'-2" | 5'-4" | 5'-7" | 6'-5" | 6000 |
| | 40 | | | | | 2'-4" | 2'-10" | 3'-4" | 3'-9" | 5'-2" | 4000 |
| | | 3'-2" | 3'-7" | 4'-1" | 4'-7" | 5'-0" | 5'-2" | 5'-4" | 5'-7" | 6'-5" | 6000 |
| | 50 | | | | | 2'-4" | 2'-10" | 3'-4" | 3'-9" | 5'-2" | 4000 |
| | | 3'-2" | 3'-7" | 4'-1" | 4'-7" | 5'-0" | 5'-2" | 5'-4" | 5'-7" | 6'-5" | 6000 |
| 14 | 30 | | | | | 2'-2" | 2'-7" | 3'-0" | 3'-5" | 4'-9" | 4000 |
| | | 2'-10" | 3'-4" | 3'-9" | 4'-2" | 4'-7" | 5'-0" | 5'-4" | 5'-7" | 6'-4" | 6000 |
| | 40 | | | | | 2'-2" | 2'-7" | 3'-0" | 3'-5" | 4'-9" | 4000 |
| | | 2'-10" | 3'-4" | 3'-9" | 4'-2" | 4'-7" | 5'-0" | 5'-4" | 5'-7" | 6'-4" | 6000 |
| | 50 | | | | | 2'-2" | 2'-7" | 3'-0" | 3'-5" | 4'-9" | 4000 |
| | | 2'-10" | 3'-4" | 3'-9" | 4'-2" | 4'-7" | 5'-0" | 5'-4" | 5'-7" | 6'-4" | 6000 |
| 16 | 30 | | | | | 2'-0" | 2'-4" | 2'-9" | 3'-2" | 4'-4" | 4000 |
| | | 2'-8" | 3'-0" | 3'-5" | 3'-10" | 4'-3" | 4'-7" | 5'-0" | 5'-5" | 6'-3" | 6000 |
| | 40 | | | | | 2'-0" | 2'-4" | 2'-9" | 3'-2" | 4'-4" | 4000 |
| | | 2'-8" | 3'-0" | 3'-5" | 3'-10" | 4'-3" | 4'-7" | 5'-0" | 5'-5" | 6'-3" | 6000 |
| | 50 | | | | | 2'-0" | 2'-4" | 2'-9" | 3'-2" | 4'-4" | 4000 |
| | | 2'-8" | 3'-0" | 3'-5" | 3'-10" | 4'-3" | 4'-7" | 5'-0" | 5'-5" | 6'-3" | 6000 |

### TABLE 1-2

(FOR USE ON **OVER 2'-0" TO 2'-6" OVERHANG (L)** & 54" HORIZONTAL LEG LENGTH OF THE OVERHANG BRACKET)

| AVG. SLAB THICKNESS (T) (in) | BRACKET (K) DIMENSION (in) | SCREED LOAD PER BRACKET | | | | | | | | | 45° HANGER SWL (lbs) |
|---|---|---|---|---|---|---|---|---|---|---|---|
| | | 2500 lbs. | 2250 lbs. | 2000 lbs. | 1750 lbs. | 1500 lbs. | 1250 lbs. | 1000 lbs. | 750 lbs. | 0 lbs. | |
| | | BRACKET SPACING | | | | | | | | | |
| 10 | 30 | | | | | 2'-4" | 2'-9" | 3'-3" | 3'-8" | 5'-1" | 4000 |
| | | 3'-1" | 3'-6" | 4'-0" | 4'-5" | 4'-11" | 5'-3" | 5'-5" | 5'-7" | 6'-7" | 6000 |
| | 40 | | | | | 2'-4" | 2'-9" | 3'-3" | 3'-8" | 5'-1" | 4000 |
| | | 3'-1" | 3'-6" | 4'-0" | 4'-5" | 4'-11" | 5'-3" | 5'-5" | 5'-7" | 6'-7" | 6000 |
| | 50 | | | | | 2'-4" | 2'-9" | 3'-3" | 3'-8" | 5'-1" | 4000 |
| | | 3'-1" | 3'-6" | 4'-0" | 4'-5" | 4'-11" | 5'-3" | 5'-5" | 5'-7" | 6'-7" | 6000 |
| 12 | 30 | | | | | 2'-1" | 2'-6" | 2'-11" | 3'-4" | 4'-6" | 4000 |
| | | 2'-9" | 3'-2" | 3'-7" | 4'-0" | 4'-5" | 4'-10" | 5'-3" | 5'-7" | 6'-5" | 6000 |
| | 40 | | | | | 2'-1" | 2'-6" | 2'-11" | 3'-4" | 4'-6" | 4000 |
| | | 2'-9" | 3'-2" | 3'-7" | 4'-0" | 4'-5" | 4'-10" | 5'-3" | 5'-7" | 6'-5" | 6000 |
| | 50 | | | | | 2'-1" | 2'-6" | 2'-11" | 3'-4" | 4'-6" | 4000 |
| | | 2'-9" | 3'-2" | 3'-7" | 4'-0" | 4'-5" | 4'-10" | 5'-3" | 5'-7" | 6'-5" | 6000 |
| 14 | 30 | | | | | 2'-3" | 2'-7" | 3'-0" | 4'-1" | 4000 |
| | | 2'-6" | 2'-10" | 3'-3" | 3'-7" | 4'-0" | 4'-4" | 4'-9" | 5'-1" | 6'-3" | 6000 |
| | 40 | | | | | 2'-3" | 2'-7" | 3'-0" | 4'-1" | 4000 |
| | | 2'-6" | 2'-10" | 3'-3" | 3'-7" | 4'-0" | 4'-4" | 4'-9" | 5'-1" | 6'-3" | 6000 |
| | 50 | | | | | 2'-3" | 2'-7" | 3'-0" | 4'-1" | 4000 |
| | | 2'-6" | 2'-10" | 3'-3" | 3'-7" | 4'-0" | 4'-4" | 4'-9" | 5'-1" | 6'-3" | 6000 |
| 16 | 30 | | | | | 2'-1" | 2'-5" | 2'-9" | 3'-9" | 4000 |
| | | 2'-3" | 2'-7" | 2'-11" | 3'-4" | 3'-8" | 4'-0" | 4'-4" | 4'-8" | 5'-8" | 6000 |
| | 40 | | | | | 2'-1" | 2'-5" | 2'-9" | 3'-9" | 4000 |
| | | 2'-3" | 2'-7" | 2'-11" | 3'-4" | 3'-8" | 4'-0" | 4'-4" | 4'-8" | 5'-8" | 6000 |
| | 50 | | | | | 2'-1" | 2'-5" | 2'-9" | 3'-9" | 4000 |
| | | 2'-3" | 2'-7" | 2'-11" | 3'-4" | 3'-8" | 4'-0" | 4'-4" | 4'-8" | 5'-8" | 6000 |

### TABLE 1-3

(FOR USE ON **OVER 2'-6" TO 3'-0" OVERHANG (L)** & 54" HORIZONTAL LEG LENGTH OF THE OVERHANG BRACKET)

| AVG. SLAB THICKNESS (T) (in) | BRACKET (K) DIMENSION (in) | SCREED LOAD PER BRACKET | | | | | | | | | 45° HANGER SWL (lbs) |
|---|---|---|---|---|---|---|---|---|---|---|---|
| | | 2500 lbs. | 2250 lbs. | 2000 lbs. | 1750 lbs. | 1500 lbs. | 1250 lbs. | 1000 lbs. | 750 lbs. | 0 lbs. | |
| | | BRACKET SPACING | | | | | | | | | |
| 10 | 30 | | | | | 2'-1" | 2'-6" | 2'-11" | 3'-4" | 4'-6" | 4000 |
| | | | | | | 4'-5" | 4'-10" | 5'-3" | 5'-7" | 6'-7" | 6000 |
| | 40 | | | | | 2'-1" | 2'-6" | 2'-11" | 3'-4" | 4'-6" | 4000 |
| | | 2'-9" | 3'-2" | 3'-7" | 4'-0" | 4'-5" | 4'-10" | 5'-3" | 5'-7" | 6'-7" | 6000 |
| | 50 | | | | | 2'-1" | 2'-6" | 2'-11" | 3'-4" | 4'-6" | 4000 |
| | | 2'-9" | 3'-2" | 3'-7" | 4'-0" | 4'-5" | 4'-10" | 5'-3" | 5'-7" | 6'-7" | 6000 |
| 12 | 30 | | | | | | 2'-2" | 2'-7" | 2'-11" | 4'-0" | 4000 |
| | | | | | | 3'-11" | 4'-3" | 4'-8" | 5'-0" | 6'-1" | 6000 |
| | 40 | | | | | | 2'-2" | 2'-7" | 2'-11" | 4'-0" | 4000 |
| | | 2'-5" | 2'-10" | 3'-2" | 3'-6" | 3'-11" | 4'-3" | 4'-8" | 5'-0" | 6'-1" | 6000 |
| | 50 | | | | | | 2'-2" | 2'-7" | 2'-11" | 4'-0" | 4000 |
| | | 2'-5" | 2'-10" | 3'-2" | 3'-6" | 3'-11" | 4'-3" | 4'-8" | 5'-0" | 6'-1" | 6000 |
| 14 | 30 | | | | | | 2'-0" | 2'-4" | 2'-8" | 3'-8" | 4000 |
| | | | | | 3'-2" | 3'-6" | 3'-10" | 4'-2" | 4'-6" | 5'-6" | 6000 |
| | 40 | | | | | | 2'-0" | 2'-4" | 2'-8" | 3'-8" | 4000 |
| | | 2'-2" | 2'-6" | 2'-10" | 3'-2" | 3'-6" | 3'-10" | 4'-2" | 4'-6" | 5'-6" | 6000 |
| | 50 | | | | | | 2'-0" | 2'-4" | 2'-8" | 3'-8" | 4000 |
| | | 2'-2" | 2'-6" | 2'-10" | 3'-2" | 3'-6" | 3'-10" | 4'-2" | 4'-6" | 5'-6" | 6000 |
| 16 | 30 | | | | | | | 2'-1" | 2'-5" | 3'-4" | 4000 |
| | | | | | 2'-11" | 3'-2" | 3'-6" | 3'-10" | 4'-1" | 5'-0" | 6000 |
| | 40 | | | | | | | 2'-1" | 2'-5" | 3'-4" | 4000 |
| | | 2'-0" | 2'-4" | 2'-7" | 2'-11" | 3'-2" | 3'-6" | 3'-10" | 4'-1" | 5'-0" | 6000 |
| | 50 | | | | | | | 2'-1" | 2'-5" | 3'-4" | 4000 |
| | | 2'-0" | 2'-4" | 2'-7" | 2'-11" | 3'-2" | 3'-6" | 3'-10" | 4'-1" | 5'-0" | 6000 |

### TABLE 1-4

(FOR USE ON **OVER 3'-0" TO 3'-6" OVERHANG (L)** & 54" HORIZONTAL LEG LENGTH OF THE OVERHANG BRACKET)

| AVG. SLAB THICKNESS (T) (in) | BRACKET (K) DIMENSION (in) | SCREED LOAD PER BRACKET | | | | | | | | | 45° HANGER SWL (lbs) |
|---|---|---|---|---|---|---|---|---|---|---|---|
| | | 2500 lbs. | 2250 lbs. | 2000 lbs. | 1750 lbs. | 1500 lbs. | 1250 lbs. | 1000 lbs. | 750 lbs. | 0 lbs. | |
| | | BRACKET SPACING | | | | | | | | | |
| 10 | 30 | | | | | | 2'-1" | 2'-5" | 2'-9" | 3'-10" | 4000 |
| | | | | | | 2'-3" | 2'-11" | 3'-7" | 4'-3" | 5'-9" | 6000 |
| | 40 | | | | | | 2'-1" | 2'-5" | 2'-9" | 3'-10" | 4000 |
| | | | | 2'-4" | 3'-0" | 3'-7" | 4'-1" | 4'-5" | 4'-9" | 5'-9" | 6000 |
| | 50 | | | | | | 2'-1" | 2'-5" | 2'-9" | 3'-10" | 4000 |
| | | 2'-4" | 2'-8" | 3'-0" | 3'-4" | 3'-8" | 4'-1" | 4'-5" | 4'-9" | 5'-9" | 6000 |
| 12 | 30 | | | | | | | 2'-2" | 2'-6" | 3'-5" | 4000 |
| | | | | | | 2'-1" | 2'-8" | 3'-4" | 3'-11" | 5'-2" | 6000 |
| | 40 | | | | | | | 2'-2" | 2'-6" | 3'-5" | 4000 |
| | | | | 2'-2" | 2'-9" | 3'-4" | 3'-7" | 3'-11" | 4'-3" | 5'-2" | 6000 |
| | 50 | | | | | | | 2'-2" | 2'-6" | 3'-5" | 4000 |
| | | 2'-1" | 2'-4" | 2'-8" | 3'-0" | 3'-4" | 3'-7" | 3'-11" | 4'-3" | 5'-2" | 6000 |
| 14 | 30 | | | | | | | | 2'-3" | 3'-1" | 4000 |
| | | | | | | 2'-0" | 2'-6" | 3'-1" | 3'-8" | 4'-8" | 6000 |
| | 40 | | | | | | | | 2'-3" | 3'-1" | 4000 |
| | | | | 2'-0" | 2'-7" | 3'-0" | 3'-3" | 3'-6" | 3'-10" | 4'-8" | 6000 |
| | 50 | | | | | | | | 2'-3" | 3'-1" | 4000 |
| | | | 2'-2" | 2'-5" | 2'-8" | 3'-0" | 3'-3" | 3'-6" | 3'-10" | 4'-8" | 6000 |
| 16 | 30 | | | | | | | | 2'-0" | 2'-9" | 4000 |
| | | | | | | | 2'-4" | 2'-10" | 3'-5" | 4'-3" | 6000 |
| | 40 | | | | | | | | 2'-0" | 2'-9" | 4000 |
| | | | | | | 2'-5" | 2'-8" | 2'-11" | 3'-3" | 3'-6" | 6000 |
| | 50 | | | | | | | | 2'-0" | 2'-9" | 4000 |
| | | | | 2'-2" | 2'-5" | 2'-8" | 2'-11" | 3'-3" | 3'-6" | 4'-3" | 6000 |

DEFINITIONS

SLPB = SCREED LOAD PER BRACKET (R x W)
R = SCREED LOAD FACTOR, OBTAINED FROM TABLE 2
W = WHEEL LOAD
S = BRACKET SPACING
T = AVERAGE SLAB THICKNESS
SWL = SAFE WORKING LOAD
K = DIMENSION DEFINED ON "BRIDGE OVERHANG BRACKET SUMMARY" ON SHEET 2
L = OVERHANG MEASURED FROM EDGE OF TOP FLANGE TO EDGE OF SUPERSTRUCTURE

PROJECT NO. R-2413C
GUILFORD-ROCKINGHAM COUNTY
STATION: 70+09.407 -LREV-

SHEET 1 OF 3

STATE OF NORTH CAROLINA
DEPARTMENT OF TRANSPORTATION
RALEIGH

STANDARD OVERHANG FALSEWORK

AASHTO TYPES
III, IV, V, AND VI

NORTH CAROLINA PROFESSIONAL SEAL 18788 ENGINEER CHANG-CHUAN VICTOR CHAO

Chang-Chuan V. Chao
8-5-2011

| REVISIONS | | | | | | SHEET NO. |
|---|---|---|---|---|---|---|
| NO. | BY: | DATE: | NO. | BY: | DATE: | S-236 |
| 1 | | | 3 | | | TOTAL SHEETS |
| 2 | | | 4 | | | 238 |

ASSEMBLED BY: DATE:
CHECKED BY: DATE:
DRAWN BY: R. WRIGHT 06/04
CHECKED BY: C. V. CHAO 06/04
REV.

05-AUG-2011 10:48
C:\OLDFILESD\wdir\victor\OverhangFalsework\TIEBAR&STRUT\R-2413C\R-2413CSTR7_TYPE_IV\R2413CSTR7verHangSheets.dgn
vchao

STR. #7

OF1

## BRIDGE OVERHANG BRACKET SUMMARY

TOTAL SCREED WEIGHT = _____ LBS.
NUMBER OF SCREED WHEELS = _____
SCREED WHEEL LOAD (W) = _____LBS.
SCREED LOAD PER BRACKET = _____ LBS.

PROJECT No. : _____
COUNTY : _____
STATION : _____
DESCRIPTION : _____

DATE : _____
DESIGN BY : _____
CHECK BY : _____

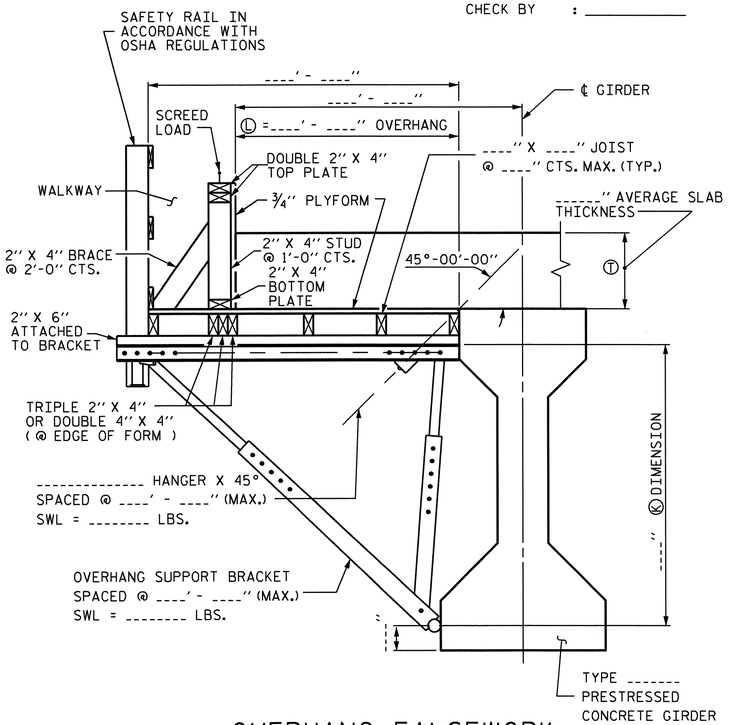


OVERHANG FALSEWORK

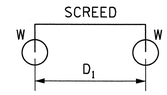


4-WHEEL MACHINE

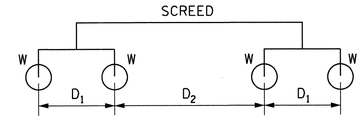


8-WHEEL MACHINE

| 4 WHEEL MACHINE | |
|---|---|
| S/D1 | R |
| <= 1.0 | 1.00 |
| 1.1 | 1.09 |
| 1.2 | 1.17 |
| 1.3 | 1.23 |
| 1.4 | 1.29 |
| 1.5 | 1.33 |
| 1.6 | 1.38 |
| 1.7 | 1.41 |
| 1.8 | 1.44 |
| 1.9 | 1.47 |
| 2.0 | 1.50 |
| 2.2 | 1.55 |
| 2.4 | 1.58 |
| 2.6 | 1.62 |
| 2.8 | 1.64 |
| 3.0 | 1.67 |
| 3.5 | 1.71 |
| 4.0 | 1.75 |

## TABLE 2: SCREED LOAD FACTOR "R"

| | | THE SCREED LOAD FACTOR R (FOR 8 WHEEL MACHINE) | | | | | | | | | | | | | | | | | |
|---|---|---|---|---|---|---|---|---|---|---|---|---|---|---|---|---|---|---|---|
| | | $S/D_2$ | | | | | | | | | | | | | | | | | |
| | | <= 1.0 | 1.1 | 1.2 | 1.3 | 1.4 | 1.5 | 1.6 | 1.7 | 1.8 | 1.9 | 2.0 | 2.2 | 2.4 | 2.6 | 2.8 | 3.0 | 3.5 | 4.0 |
| $S/D_1$ | <= 1.0 | 1.00 | 1.09 | 1.17 | 1.23 | 1.29 | 1.33 | 1.38 | 1.41 | 1.44 | 1.47 | 1.50 | 1.55 | 1.58 | 1.62 | 1.64 | 1.67 | 1.71 | 1.75 |
| | 1.1 | 1.09 | 1.18 | 1.26 | 1.32 | 1.38 | 1.42 | 1.47 | 1.50 | 1.54 | 1.56 | 1.59 | 1.64 | 1.67 | 1.71 | 1.73 | 1.76 | 1.81 | 1.84 |
| | 1.2 | 1.17 | 1.26 | 1.33 | 1.40 | 1.45 | 1.50 | 1.54 | 1.58 | 1.61 | 1.64 | 1.67 | 1.71 | 1.75 | 1.78 | 1.81 | 1.83 | 1.88 | 1.92 |
| | 1.3 | 1.23 | 1.32 | 1.40 | 1.46 | 1.52 | 1.56 | 1.61 | 1.64 | 1.68 | 1.70 | 1.73 | 1.78 | 1.81 | 1.85 | 1.87 | 1.90 | 1.95 | 1.98 |
| | 1.4 | 1.29 | 1.38 | 1.45 | 1.52 | 1.57 | 1.62 | 1.66 | 1.70 | 1.73 | 1.76 | 1.79 | 1.83 | 1.87 | 1.90 | 1.93 | 1.95 | 2.00 | 2.07 |
| | 1.5 | 1.33 | 1.42 | 1.50 | 1.56 | 1.62 | 1.67 | 1.71 | 1.75 | 1.78 | 1.81 | 1.83 | 1.88 | 1.92 | 1.95 | 1.98 | 2.00 | 2.10 | 2.17 |
| | 1.6 | 1.38 | 1.47 | 1.54 | 1.61 | 1.66 | 1.71 | 1.75 | 1.79 | 1.82 | 1.85 | 1.88 | 1.92 | 1.96 | 1.99 | 2.04 | 2.08 | 2.18 | 2.25 |
| | 1.7 | 1.41 | 1.50 | 1.58 | 1.64 | 1.70 | 1.75 | 1.79 | 1.82 | 1.86 | 1.89 | 1.91 | 1.96 | 2.00 | 2.05 | 2.11 | 2.16 | 2.25 | 2.32 |
| | 1.8 | 1.44 | 1.54 | 1.61 | 1.68 | 1.73 | 1.78 | 1.82 | 1.86 | 1.89 | 1.92 | 1.94 | 1.99 | 2.06 | 2.12 | 2.17 | 2.22 | 2.32 | 2.39 |
| | 1.9 | 1.47 | 1.56 | 1.64 | 1.70 | 1.76 | 1.81 | 1.85 | 1.89 | 1.92 | 1.95 | 1.97 | 2.04 | 2.11 | 2.18 | 2.23 | 2.28 | 2.38 | 2.45 |
| | 2.0 | 1.50 | 1.59 | 1.67 | 1.73 | 1.79 | 1.83 | 1.88 | 1.91 | 1.94 | 1.97 | 2.00 | 2.09 | 2.17 | 2.23 | 2.29 | 2.33 | 2.43 | 2.50 |
| | 2.2 | 1.55 | 1.64 | 1.71 | 1.78 | 1.83 | 1.88 | 1.92 | 1.96 | 1.99 | 2.04 | 2.09 | 2.18 | 2.26 | 2.32 | 2.38 | 2.42 | 2.52 | 2.59 |
| | 2.4 | 1.58 | 1.67 | 1.75 | 1.81 | 1.87 | 1.92 | 1.96 | 2.00 | 2.06 | 2.11 | 2.17 | 2.26 | 2.33 | 2.40 | 2.45 | 2.50 | 2.60 | 2.67 |
| | 2.6 | 1.62 | 1.71 | 1.78 | 1.85 | 1.90 | 1.95 | 1.99 | 2.05 | 2.12 | 2.18 | 2.23 | 2.32 | 2.40 | 2.46 | 2.52 | 2.56 | 2.66 | 2.73 |
| | 2.8 | 1.64 | 1.73 | 1.81 | 1.87 | 1.93 | 1.98 | 2.04 | 2.11 | 2.17 | 2.23 | 2.29 | 2.38 | 2.45 | 2.52 | 2.57 | 2.62 | 2.71 | 2.79 |
| | 3.0 | 1.67 | 1.76 | 1.83 | 1.90 | 1.95 | 2.00 | 2.08 | 2.16 | 2.22 | 2.28 | 2.33 | 2.42 | 2.50 | 2.56 | 2.62 | 2.67 | 2.76 | 2.83 |
| | 3.5 | 1.71 | 1.81 | 1.88 | 1.95 | 2.00 | 2.10 | 2.18 | 2.25 | 2.32 | 2.38 | 2.43 | 2.52 | 2.60 | 2.66 | 2.71 | 2.76 | 2.86 | 2.93 |
| | 4.0 | 1.75 | 1.84 | 1.92 | 1.98 | 2.07 | 2.17 | 2.25 | 2.32 | 2.39 | 2.45 | 2.50 | 2.59 | 2.67 | 2.73 | 2.79 | 2.83 | 2.93 | 3.00 |

## NOTES

DESIGN INCLUDES CONSTRUCTION LIVE LOAD 20 PSF ON THE AREA SUPPORTED AND 75 PLF AT THE OUTSIDE DECK OF OVERHANGS.

REQUIRED MINIMUM DIAGONAL LEG CAPACITY: 3600 LB WORKING LOAD

THE CONTRACTOR HAS THE OPTION OF SUBMITTING HIS OWN DESIGN FOR OVERHANG FALSEWORK IN ACCORDANCE WITH THE SPECIAL PROVISIONS.

SUBMITTALS UTILIZING THE INSTRUCTIONS AND PROCEDURES DESCRIBED ON SHEET 1 OF 3 SHALL BE IN ACCORDANCE WITH THE APPLICABLE SECTIONS OF THE SPECIFICATIONS AND SPECIAL PROVISIONS. EXCEPT THAT CALCULATIONS FOR OVERHANG FALSEWORK NEED NOT BE SEALED BY A REGISTERED ENGINEER.

FOR OVERHANG FALSEWORK BRACING DESIGN, SEE SHEET 3 OF 3.

## TABLE 3: ALLOWABLE SPAN LENGTH OF JOISTS AND JOIST SPACINGS

| AVG. SLAB THICKNESS Ⓣ (IN) | LUMBER JOIST SIZE (IN X IN) | JOIST SPACINGS | | | |
|---|---|---|---|---|---|
| | | 15 IN | 12 IN | 10 IN | 8 IN |
| | | THE ALLOWABLE SPAN LENGTH OF JOISTS | | | |
| 10 | 2 X 4 | ——— | 4' - 6" | 4' - 9" | 5' - 0" |
| | 4 X 4 | 5' - 9" | 6' - 3" | 6' - 6" | 6' - 7" |
| 12 | 2 X 4 | ——— | 4' - 3" | 4' - 9" | 5' - 0" |
| | 4 X 4 | 5' - 3" | 6' - 0" | 6' - 3" | 6' - 5" |
| 14 | 2 X 4 | ——— | 4' - 0" | 4' - 6" | 5' - 0" |
| | 4 X 4 | ——— | 5' - 6" | 6' - 0" | 6' - 4" |
| 16 | 2 X 4 | ——— | 4' - 0" | 4' - 3" | 4' - 9" |
| | 4 X 4 | ——— | 5' - 3" | 5' - 9" | 6' - 3" |

PROJECT NO. R-2413C
GUILFORD-ROCKINGHAM COUNTY
STATION: 70+09.407 -LREV-

SHEET 2 OF 3

STATE OF NORTH CAROLINA
DEPARTMENT OF TRANSPORTATION
RALEIGH

STANDARD OVERHANG FALSEWORK

AASHTO TYPES
III, IV, V, AND VI

NORTH CAROLINA PROFESSIONAL SEAL 18788 ENGINEER CHANG-CHUAN VICTOR CHAO
Chang-Chuan V. Chao
8-5-2011

| REVISIONS | | | | | | SHEET NO. |
|---|---|---|---|---|---|---|
| NO. | BY: | DATE: | NO. | BY: | DATE: | 5-237 |
| 1 | | | 3 | | | TOTAL SHEETS |
| 2 | | | 4 | | | 238 |

| | |
|---|---|
| ASSEMBLED BY: | DATE: |
| CHECKED BY: | DATE: |
| DRAWN BY: R. WRIGHT 06/04 | REV. |
| CHECKED BY: C. V. CHAO 06/04 | |

05-AUG-2011 10:48
C:\OLDFILESD\wdlr\victor\OverhangFalsework\TIEBAR&STRUT\R-2413C\R-2413CSTR7_TYPE_IV\R2413CSTR7verHangSheets.dgn
vchao

STR. #7

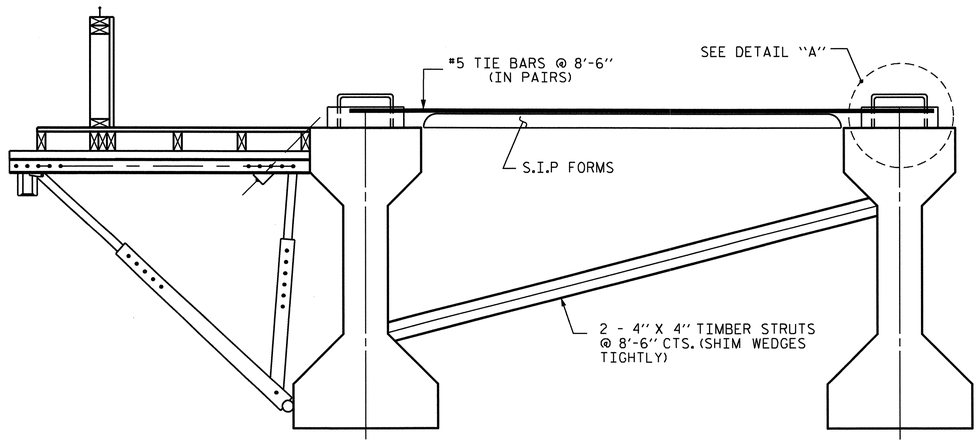


EXTERIOR GIRDER INTERIOR GIRDER

## DETAIL OF REQUIRED OVERHANG FALSEWORK BRACING SYSTEM

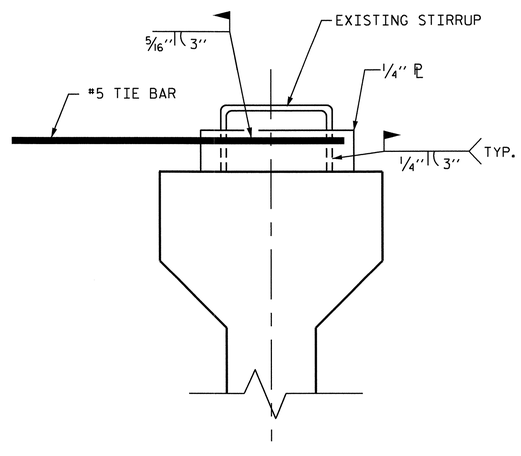


DETAIL "A"

## NOTES:

EACH #5 TIE BAR SHALL BE WELDED TO ONE STIRRUP LOOP AS SHOWN IN DETAIL "A". #5 TIE BARS SHALL BE WELDED TO TWO ADJACENT STIRRUPS OF THE EXTERIOR GIRDER AND THE ADJACENT INTERIOR GIRDER BETWEEN PERMANENT DIAPHRAGMS. WELD STEEL PLATES IN BETWEEN THE TIE BARS AND THE STIRRUP LOOP. WELDING TWO TIE BARS TO THE SAME STIRRUP LOOP SHALL NOT BE PERMITTED.

MAXIMUM SPACING BETWEEN THE BRACING (TIE BARS-TIMBER STRUT) IS 8'-6" CTS. #5 TIE BARS SHALL BE LOCATED OVER A TIMBER STRUT.

INSTALL TIE BARS AND TIMBER STRUTS PRIOR TO PLACEMENT OF CONCRETE OR SCREED WEIGHT ONTO THE OVERHANG FALSEWORK.

PROJECT NO. R-2413C
GUILFORD-ROCKINGHAM COUNTY
STATION: 70+09.407 -LREV-

SHEET 3 OF 3

STATE OF NORTH CAROLINA
DEPARTMENT OF TRANSPORTATION
RALEIGH

STANDARD OVERHANG FALSEWORK

AASHTO TYPES
III, IV, V, AND VI

NORTH CAROLINA PROFESSIONAL SEAL 18788 ENGINEER CHANG-CHUAN VICTOR CHAO

Chang-Chuan V. Chao
8-5-2011

| REVISIONS | | | | | | SHEET NO. |
|---|---|---|---|---|---|---|
| NO. | BY: | DATE: | NO. | BY: | DATE: | S-238 |
| 1 | | | 3 | | | TOTAL SHEETS |
| 2 | | | 4 | | | 238 |

DRAWN BY: R. WRIGHT 06/04 DATE :
CHECKED BY: C. V. CHAO 06/04 DATE :

05-AUG-2011 10:49
C:\OLDFILESD\wdlr\victor\OverhangFalsework\TIEBAR&STRUT\R-2413C\R-2413CSTR7_TYPE_IV\R2413CSTR7verHangSheets.dgn
vchao

STR. #7 OF3

B.M. #15: RR SPIKE IN BASE OF 610mm OAK, 13.0m RT. OF STA. 56+63.60 -L-, EL. 256.945.

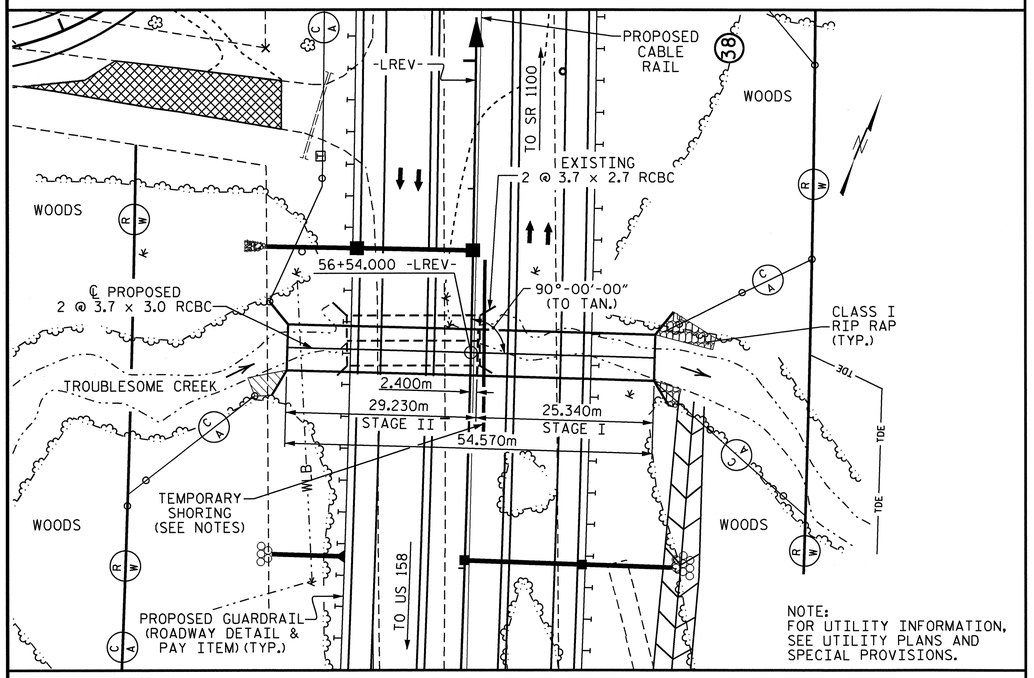


## LOCATION SKETCH

## GRADE DATA

| | |
|---|---|
| GRADE POINT ELEVATION @ STA. 56+54.000 -LREV- | = 255.609 |
| BED ELEVATION @ STA. 56+54.000 -LREV- | = 248.060 |
| ROADWAY SLOPES | = 2 : 1 |

## HYDRAULIC DATA

| | |
|---|---|
| DESIGN DISCHARGE | = 45.3 m3/s |
| FREQUENCY OF DESIGN FLOOD | = 50 YEARS |
| DESIGN HIGH WATER ELEVATION | = 251.66 ⬟ |
| DRAINAGE AREA | = 11.65 Sq. Km. |
| BASE DISCHARGE (Q100) | = 53.8 m3/s |
| BASE HIGH WATER ELEVATION | = 252.00 |

## OVERTOPPING FLOOD DATA

| | |
|---|---|
| OVERTOPPING DISCHARGE | = > 82.1 m3/s |
| FREQUENCY OF OVERTOPPING FLOOD | = 500+ YEARS |
| OVERTOPPING FLOOD ELEVATION | = 255.51 |

⬟ FROM HEC RAS SECTION 107568

## TOTAL STRUCTURE QUANTITIES

| MATERIALS | CLASS A CONCRETE | REINFORCING STEEL | FOUNDATION COND. MAT'L. |
|---|---|---|---|
| (UNITS) | CU. METERS | kg | METRIC TONS |
| STAGE I | 236.0 | 22543 | 138 |
| STAGE II | 270.2 | 25765 | 160 |
| TOTAL | 506.2 | 48308 | 298 |
| CULVERT EXCAVATION ---------- LUMP SUM | | | |
| REMOVAL OF EXISTING STRUCTURE ---------- LUMP SUM | | | |

## TOTAL STRUCTURE QUANTITIES -ENGLISH-

| MATERIALS | CLASS A CONCRETE | REINFORCING STEEL | FOUNDATION COND. MAT'L. |
|---|---|---|---|
| (UNITS) | CU. YD. | LB | TONS |
| STAGE I | 308.7 | 49699 | 152 |
| STAGE II | 353.4 | 56802 | 176 |
| TOTAL | 662.1 | 106501 | 328 |
| CULVERT EXCAVATION ---------- LUMP SUM | | | |
| REMOVAL OF EXISTING STRUCTURE ---------- LUMP SUM | | | |

## NOTES

ASSUMED LIVE LOAD ----------MS18 OR ALTERNATE LOADING.

DESIGN FILL---------- 4.76m

FOR OTHER DESIGN DATA AND NOTES SEE STANDARD NOTE SHEET.

76mm Ø WEEP HOLES INDICATED TO BE IN ACCORDANCE WITH THE SPECIFICATIONS.

CONCRETE IN CULVERT TO BE POURED IN ORDER SHOWN ON SHEET 2 OF 5. (SEE CONSTRUCTION SEQUENCE DETAIL, SHEET 2 OF 5.)

THE RESIDENT ENGINEER SHALL CHECK THE LENGTH OF CULVERT BEFORE STAKING IT OUT TO MAKE CERTAIN THAT IT WILL PROPERLY TAKE CARE OF THE FILL.

DIMENSIONS FOR WING LAYOUT AS WELL AS ADDITIONAL REINFORCING STEEL EMBEDDED IN BARREL ARE SHOWN ON WING SHEET.

TRANSVERSE CONSTRUCTION JOINTS SHALL BE USED IN THE BARREL, SPACED TO LIMIT THE POURS TO A MAXIMUM OF 21.000m. LOCATION OF JOINTS SHALL BE SUBJECT TO APPROVAL OF THE ENGINEER.

AT THE CONTRACTOR'S OPTION, HE MAY SPLICE THE VERTICAL REINFORCING STEEL IN THE INTERIOR FACE OF EXTERIOR WALL AND BOTH FACES OF INTERIOR WALLS ABOVE LOWER WALL CONSTRUCTION JOINT. THE SPLICE LENGTH SHALL BE AS PROVIDED IN THE SPLICE LENGTH CHART SHOWN ON THE PLANS. EXTRA WEIGHT OF STEEL DUE TO THE SPLICES SHALL BE PAID FOR BY THE CONTRACTOR.

ALL DIMENSIONS ARE IN MILLIMETERS UNLESS OTHERWISE NOTED.

ALL ELEVATIONS ARE IN METERS.

FOR CULVERT DIVERSION DETAILS AND PAY ITEM, SEE EROSION CONTROL PLANS.

A 900mm STRIP OF FILTER FABRIC SHALL BE ATTACHED TO THE FILL FACE OF THE WING COVERING THE ENTIRE LENGTH OF THE EXPANSION JOINT.

FOR SUBMITTAL OF WORKING DRAWINGS, SEE SPECIAL PROVISIONS.

FOR FALSEWORK AND FORMWORK, SEE SPECIAL PROVISIONS.

THE EXISTING 2 @ 3.7 x 2.7 REINFORCED CONCRETE BOX CULVERT LOCATED AT THE PROPOSED SITE SHALL BE REMOVED.

NO PRECAST REINFORCED CONCTRETE BOX CULVERT OPTION WILL BE ALLOWED..

FOR CRANE SAFETY, SEE SPECIAL PROVISIONS.

FOR GROUT FOR STRUCTURES, SEE SPECIAL PROVISIONS.

FOR MAINTENANCE OF TRAFFIC, SEE TRAFFIC CONTROL PLANS.

FOR LIMITS OF TEMPORARY SHORING FOR MAINTENANCE OF TRAFFIC, SEE TRAFFIC CONTROL PLANS. FOR PAY ITEM FOR TEMPORARY SHORING FOR MAINTENANCE OF TRAFFIC, SEE ROADWAY PLANS.

## STRUCTURE QUANTITIES (STAGE I)

### (PHASE I)

CLASS A CONCRETE
BARREL @ 3.18 $m^3$/m 80.6 $m^3$
WING ETC. 6.2 $m^3$
TOTAL 86.8 $m^3$

REINFORCING STEEL
BARREL 8783 kg
WING ETC. 270 kg
TOTAL 9053 kg

CULVERT EXCAVATION ---------- LUMP SUM
FOUNDATION COND. MAT'L --------- 76 METRIC TONS

### (PHASE II)

CLASS A CONCRETE
BARREL @ 5.61 $m^3$/m 142.2 $m^3$
WING ETC. 7.0 $m^3$
TOTAL 149.2 $m^3$

REINFORCING STEEL
BARREL 13220 kg
WING ETC. 270 kg
TOTAL 13490 kg

CULVERT EXCAVATION ---------- LUMP SUM
FOUNDATION COND. MAT'L --------- 62 METRIC TONS

## STRUCTURE QUANTITIES (STAGE II)

### (PHASE III)

CLASS A CONCRETE
BARREL @ 3.18 $m^3$/m 93.0 $m^3$
WING ETC. 6.2 $m^3$
TOTAL 99.2 $m^3$

REINFORCING STEEL
BARREL 10069 kg
WING ETC. 270 kg
TOTAL 10339 kg

CULVERT EXCAVATION ---------- LUMP SUM
FOUNDATION COND. MAT'L --------- 88 METRIC TONS

### (PHASE IV)

CLASS A CONCRETE
BARREL @ 5.61 $m^3$/m 164.0 $m^3$
WING ETC. 7.0 $m^3$
TOTAL 171.0 $m^3$

REINFORCING STEEL
BARREL 15156 kg
WING ETC. 270 kg
TOTAL 15426 kg

CULVERT EXCAVATION ---------- LUMP SUM
FOUNDATION COND. MAT'L --------- 72 METRIC TONS

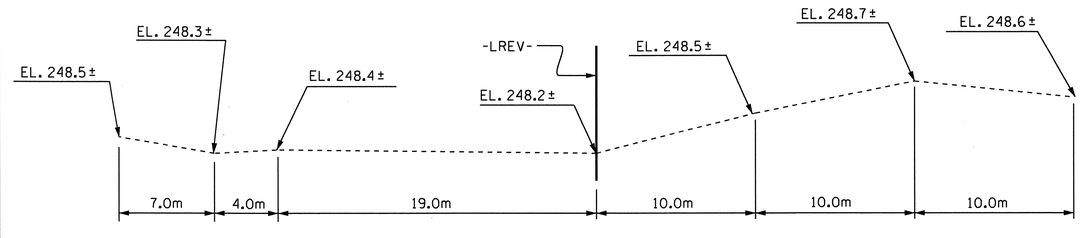


## PROFILE ALONG ℄ CULVERT

METRIC

PROJECT NO. R-2413C
GUILFORD-ROCKINGHAM COUNTY
STATION: 56+54.000 -LREV-

SHEET 1 OF 5 CULVERT #292

STATE OF NORTH CAROLINA
DEPARTMENT OF TRANSPORTATION
RALEIGH

DOUBLE 3.700m X 3.000m
CONCRETE BOX CULVERT
90° SKEW

NORTH CAROLINA PROFESSIONAL SEAL 12274 ENGINEER OMAR R. AZIZ
10/28/14

NORTH CAROLINA PROFESSIONAL SEAL 022516 ENGINEER EMILY E. MURRAY
10/28/14

| REVISIONS | | | | | | | | SHEET NO. |
|---|---|---|---|---|---|---|---|---|
| NO. | BY: | DATE: | NO. | BY: | DATE: | | | C-1 |
| 1 | | | 3 | | | | | TOTAL SHEETS |
| 2 | | | 4 | | | | | 8 |

STR. #8

ASSEMBLED BY : PEGGY PARISI DATE : 6-17-11
CHECKED BY : B.N. BARODAWALA DATE : 8-16-11

DRAWN BY : EEM 6/97
CHECKED BY : ARB 7/97

19-OCT-2011 11:23
R:\TIPProjects-R\R2413c\Structures\FinalPlans\Str.#8\r2413c_SD_CU_08.dgn
taverette

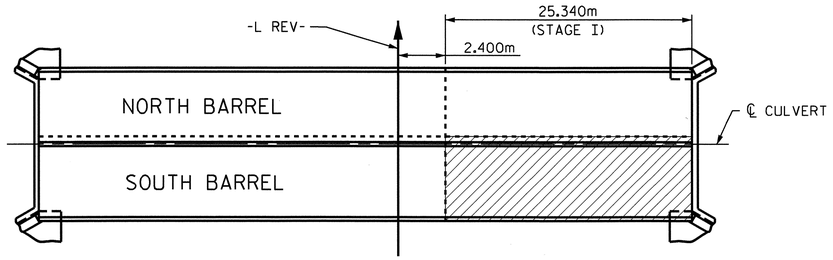


PLAN OF FLOOR SLAB STAGE I (PHASE I)

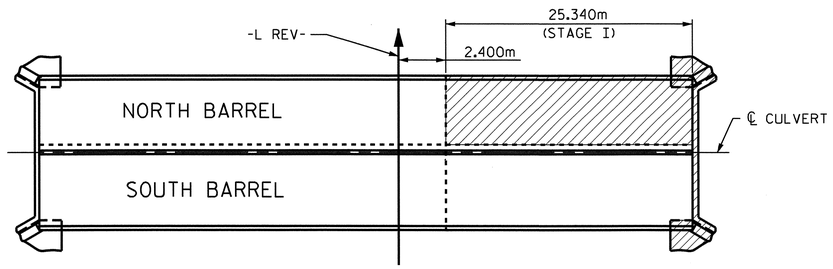


PLAN OF FLOOR SLAB STAGE I (PHASE II)

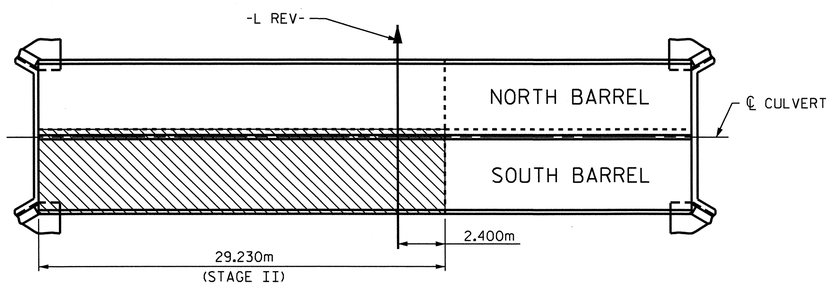


PLAN OF FLOOR SLAB STAGE II (PHASE III)

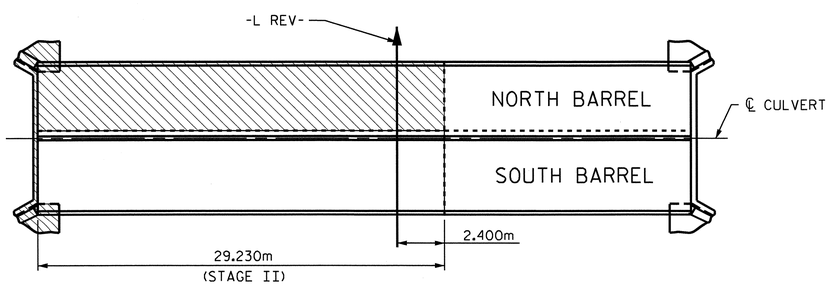


PLAN OF FLOOR SLAB STAGE II (PHASE IV)

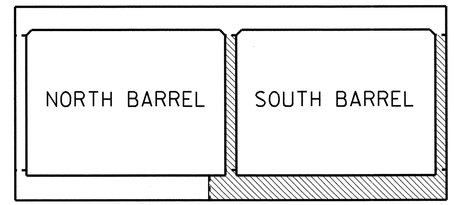


PHASE I & III ELEVATION

(LOOKING DOWNSTREAM )

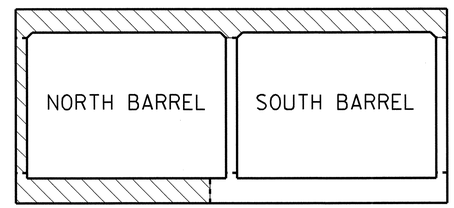


PHASE II & IV ELEVATION

(LOOKING DOWNSTREAM )

## CONSTRUCTION SEQUENCE

CONCRETE IN CULVERT TO BE POURED IN THE FOLLOWING ORDER:

1. **STAGE I (PHASE I)**
   - SOUTH BARREL OUTLET WING FOOTING, SOUTH BARREL FLOOR SLAB, INCLUDING 100mm OF SOUTH BARREL WALLS AND OUTLET WINGWALL
   - REMAINING PORTION OF SOUTH BARREL WALLS AND OUTLET WING FULL HEIGHT
2. **STAGE I (PHASE II)**
   - NORTH BARREL OUTLET WING FOOTING, NORTH BARREL FLOOR SLAB, INCLUDING 100mm OF NORTH BARREL EXTERIOR WALL AND OUTLET WINGWALL
   - REMAINING PORTION OF NORTH BARREL WALL AND OUTLET WING FULL HEIGHT
   - ENTIRE ROOF SLAB FOR STAGE I AND OUTLET HEADWALL
3. **STAGE II (PHASE III)**
   - SOUTH BARREL INLET WING FOOTING, SOUTH BARREL FLOOR SLAB, INCLUDING 100mm OF SOUTH BARREL WALLS AND INLET WINGWALL
   - REMAINING PORTIONS OF SOUTH BARREL WALLS AND INLET WING FULL HEIGHT
4. **STAGE II (PHASE IV)**
   - NORTH BARREL INLET WING FOOTING, NORTH BARREL FLOOR SLAB, INCLUDING 100mm OF NORTH BARREL EXTERIOR WALL AND INLET WINGWALL
   - REMAINING PORTION OF NORTH BARREL WALL AND INLET WING FULL HEIGHT
   - ENTIRE ROOF SLAB FOR STAGE II AND INLET HEADWALL

**PROJECT NO.** R-2413C

GUILFORD-ROCKINGHAM **COUNTY**

**STATION:** 56+54.000 -LREV-

SHEET 2 OF 5

STATE OF NORTH CAROLINA
**DEPARTMENT OF TRANSPORTATION**
RALEIGH

DOUBLE 3.700m X 3.000m
CONCRETE BOX CULVERT

90° SKEW

NORTH CAROLINA PROFESSIONAL SEAL 022516 ENGINEER EMORY P. MURRAY III
10/28/11

| REVISIONS | | | | | | SHEET NO. |
|---|---|---|---|---|---|---|
| NO. | BY: | DATE: | NO. | BY: | DATE: | C-2 |
| 1 | | | 3 | | | TOTAL SHEETS 8 |
| 2 | | | 4 | | | |

DRAWN BY : PEGGY PARISI DATE : 6-27-11
CHECKED BY : B. N. BARODAWALA DATE : 8-16-11

19-OCT-2011 11:22
R:\TIPProjects-R\R2413c\Structures\Final Plans\Str.#8\r2413c_SD_CU_08.dgn
taverette

STR.#8

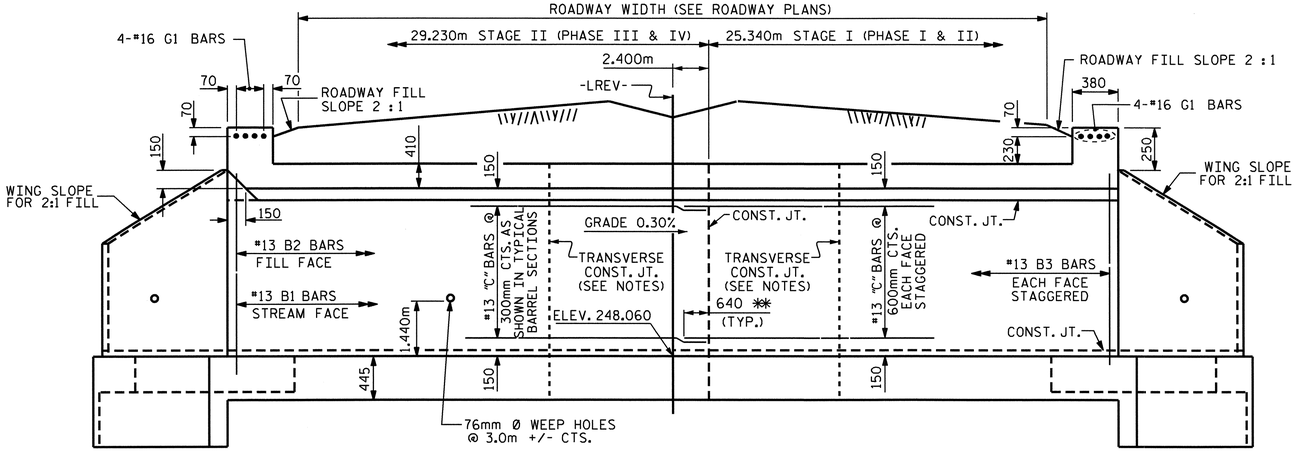


## CULVERT SECTION NORMAL TO ROADWAY

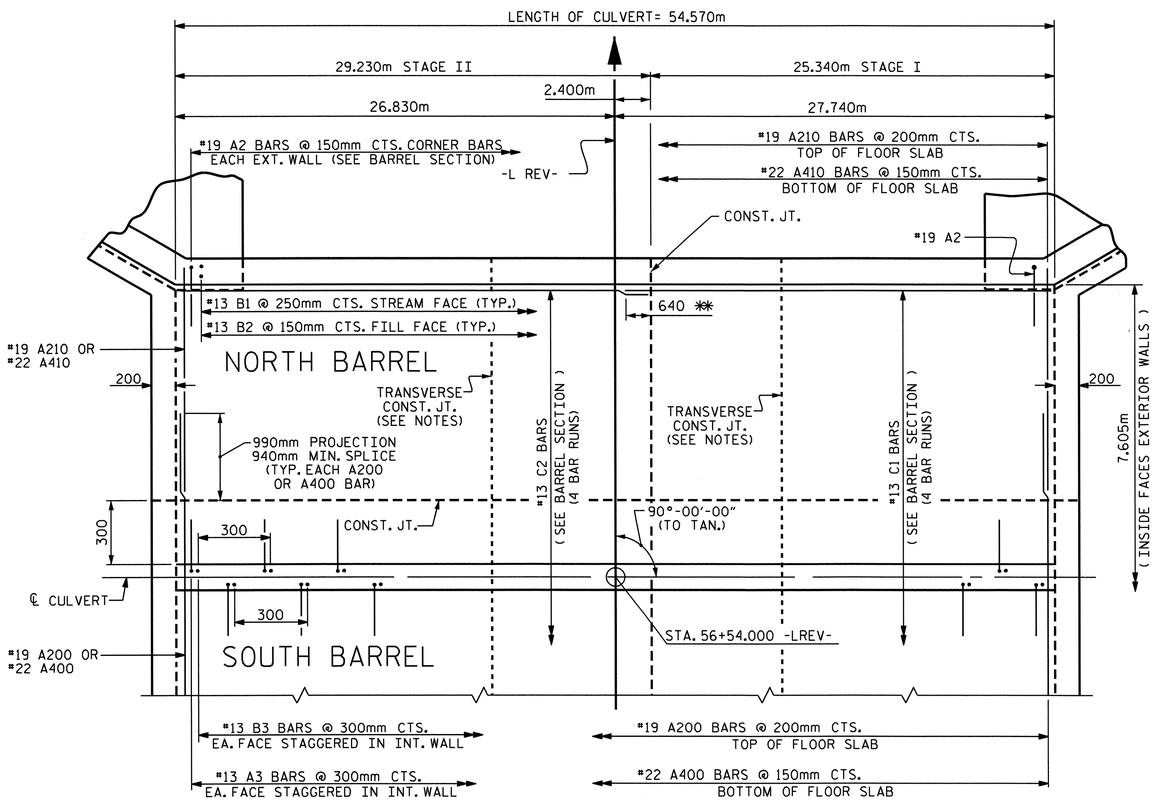


## PART PLAN - FLOOR SLAB

✱✱ 640 MIN. PROJECTION (590 MIN. SPLICE) (TYP. EACH C1 BAR)

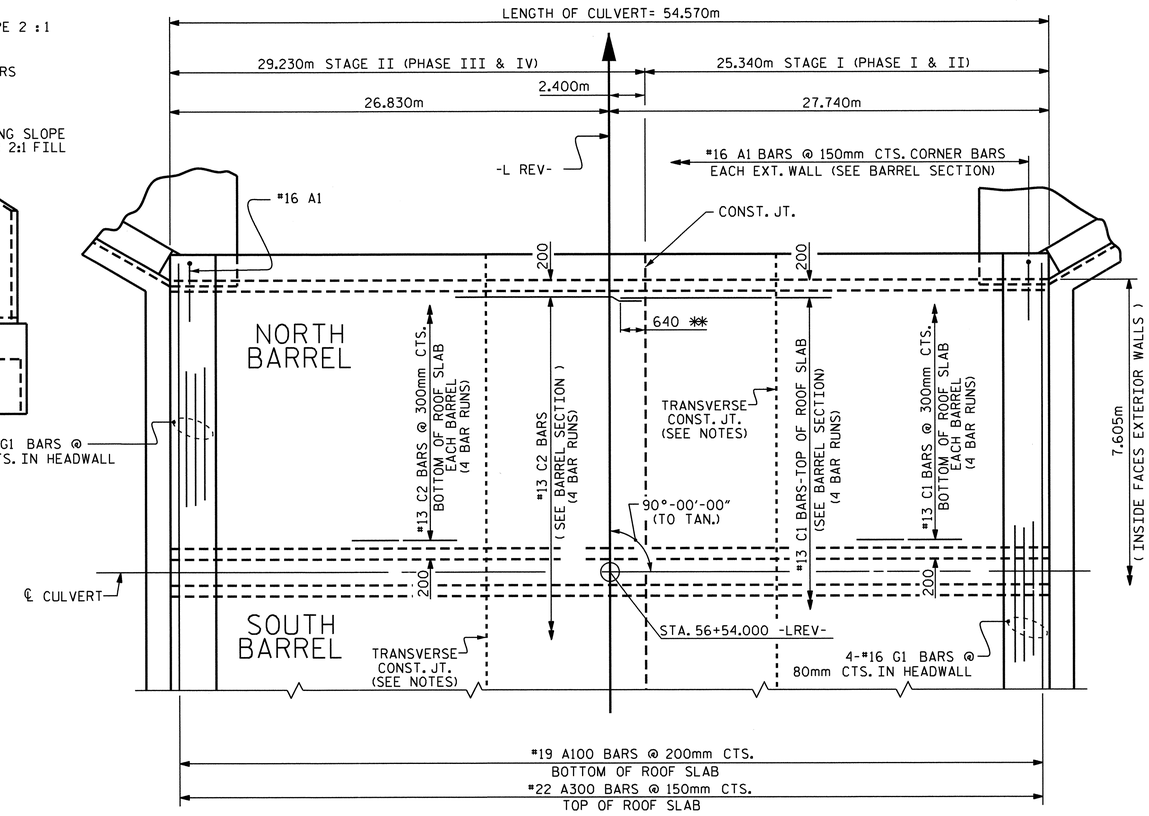


## PART PLAN - ROOF SLAB

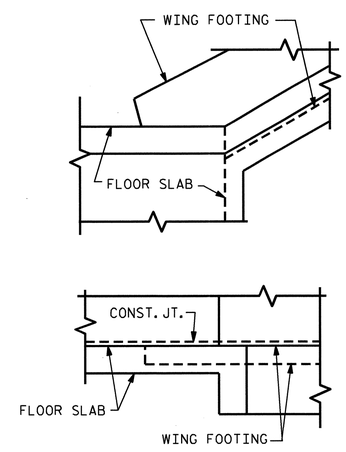


DETAIL

## CONNECTION OF WING FOOTING AND FLOOR SLAB WHEN SLAB IS THICKER THAN FOOTING

PROJECT NO. R-2413C

GUILFORD-ROCKINGHAM COUNTY

STATION: 56+54.000 -LREV-

SHEET 3 OF 5

STATE OF NORTH CAROLINA
DEPARTMENT OF TRANSPORTATION
RALEIGH

# DOUBLE 3.700m X 3.000m CONCRETE BOX CULVERT

## 90° SKEW

NORTH CAROLINA PROFESSIONAL SEAL 022516 ENGINEER EMILY E. MURRAY 10/28/11

| REVISIONS | | | | | | | | SHEET NO. |
|---|---|---|---|---|---|---|---|---|
| NO. | BY: | DATE: | NO. | BY: | DATE: | | | C-3 |
| 1 | | | 3 | | | | | TOTAL SHEETS 8 |
| 2 | | | 4 | | | | | |

ASSEMBLED BY : PEGGY PARISI DATE : 6-27-11
CHECKED BY : B.N. BARODAWALA DATE : 8-16-11

DRAWN BY : EEM 6/97
CHECKED BY : ARB 7/97

13-SEP-2011 10:49
W:\Structures\Final Plans\Str.#8\r2413c_SD_CU_08.dgn
bbarodawala

STR.#8 STD. No. CB290sm

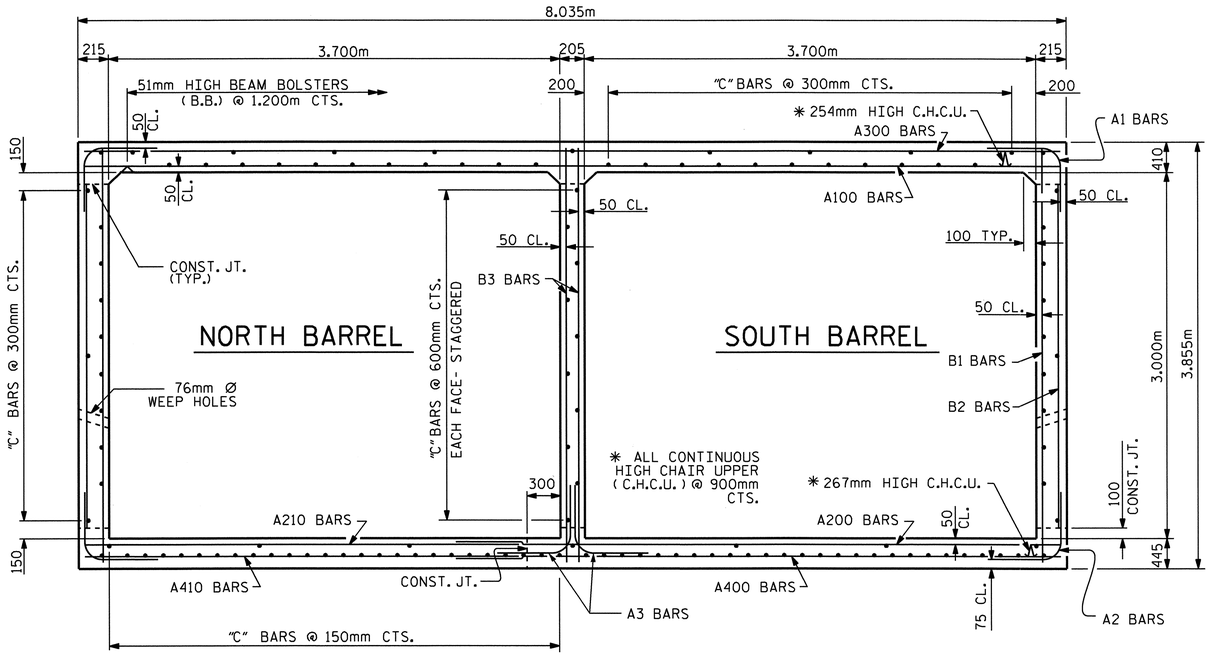


## RIGHT ANGLE SECTION OF BARREL

THERE ARE 124 "C" BARS IN SECTION OF BARREL.
(LOOKING DOWNSTREAM)

## BILL OF MATERIAL STAGE I

### PHASE I

| BAR | NO. | SIZE | TYPE | LENGTH | WEIGHT |
|---|---|---|---|---|---|
| A1 | 169 | #16 | 6 | 2040 | 535 |
| A2 | 169 | #19 | 6 | 1900 | 718 |
| A3 | 169 | #13 | 6 | 1900 | 319 |
| A200 | 127 | #19 | STR | 5360 | 1521 |
| A400 | 169 | #22 | STR | 5360 | 2756 |
| | | | | | |
| B1 | 102 | #13 | STR | 3720 | 377 |
| B2 | 169 | #13 | STR | 2800 | 470 |
| B3 | 169 | #13 | STR | 3720 | 625 |
| | | | | | |
| C1 | 212 | #13 | STR | 6940 | 1462 |
| | | | | | |
| REINFORCING STEEL = | | | | | 8783 kg |

### PHASE II

| BAR | NO. | SIZE | TYPE | LENGTH | WEIGHT |
|---|---|---|---|---|---|
| A1 | 169 | #16 | 6 | 2040 | 535 |
| A2 | 169 | #19 | 6 | 1900 | 718 |
| A100 | 127 | #19 | STR | 7900 | 2242 |
| A210 | 127 | #19 | STR | 3520 | 999 |
| A300 | 169 | #22 | STR | 7900 | 4061 |
| A410 | 169 | #22 | STR | 3520 | 1810 |
| | | | | | |
| B1 | 102 | #13 | STR | 3720 | 377 |
| B2 | 169 | #13 | STR | 2800 | 470 |
| | | | | | |
| C1 | 284 | #13 | STR | 6940 | 1959 |
| | | | | | |
| G1 | 4 | #16 | STR | 7920 | 49 |
| | | | | | |
| REINFORCING STEEL = | | | | | 13220 kg |

## BILL OF MATERIAL STAGE II

### PHASE III

| BAR | NO. | SIZE | TYPE | LENGTH | WEIGHT |
|---|---|---|---|---|---|
| A1 | 195 | #16 | 6 | 2040 | 617 |
| A2 | 195 | #19 | 6 | 1900 | 828 |
| A3 | 195 | #13 | 6 | 1900 | 368 |
| A200 | 146 | #19 | STR | 5360 | 1749 |
| A400 | 195 | #22 | STR | 5360 | 3179 |
| | | | | | |
| B1 | 117 | #13 | STR | 3720 | 433 |
| B2 | 195 | #13 | STR | 2800 | 543 |
| B3 | 195 | #13 | STR | 3720 | 721 |
| | | | | | |
| C2 | 212 | #13 | STR | 7740 | 1631 |
| | | | | | |
| REINFORCING STEEL = | | | | | 10069 kg |

### PHASE IV

| BAR | NO. | SIZE | TYPE | LENGTH | WEIGHT |
|---|---|---|---|---|---|
| A1 | 195 | #16 | 6 | 2040 | 617 |
| A2 | 195 | #19 | 6 | 1900 | 828 |
| A100 | 146 | #19 | STR | 7900 | 2578 |
| A210 | 146 | #19 | STR | 3520 | 1149 |
| A300 | 195 | #22 | STR | 7900 | 4686 |
| A410 | 195 | #22 | STR | 3520 | 2088 |
| | | | | | |
| B1 | 117 | #13 | STR | 3720 | 433 |
| B2 | 195 | #13 | STR | 2800 | 543 |
| | | | | | |
| C2 | 284 | #13 | STR | 7740 | 2185 |
| | | | | | |
| G1 | 4 | #16 | STR | 7920 | 49 |
| | | | | | |
| REINFORCING STEEL = | | | | | 15156 kg |

## SPLICE LENGTHS CHART

| BAR | SIZE | SPLICE LENGTH |
|---|---|---|
| A200 | 19 | 940 |
| A210 | 19 | 940 |
| A400 | 22 | 940 |
| A410 | 22 | 940 |
| B1 | 13 | 540 |
| B3 | 13 | 540 |
| C1 | 13 | 590 |
| C2 | 13 | 590 |

## BAR TYPE

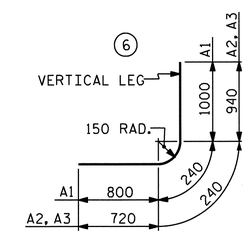


DIMENSIONS ARE OUT TO OUT

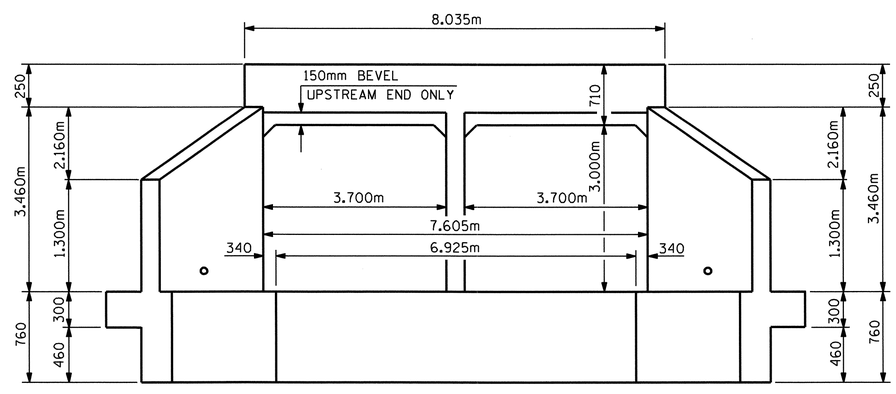


## END ELEVATION NORMAL TO SKEW

PROJECT NO. R-2413C
GUILFORD-ROCKINGHAM COUNTY
STATION: 56+54.000 -LREV-

SHEET 4 OF 5

STATE OF NORTH CAROLINA
DEPARTMENT OF TRANSPORTATION
RALEIGH

# DOUBLE 3.700m X 3.000m CONCRETE BOX CULVERT

## 90° SKEW

NORTH CAROLINA PROFESSIONAL SEAL 022516 ENGINEER EMILY E. MURRAY
10/28/11

| REVISIONS | | | | | | SHEET NO. |
|---|---|---|---|---|---|---|
| NO. | BY: | DATE: | NO. | BY: | DATE: | C-4 |
| 1 | | | 3 | | | TOTAL SHEETS |
| 2 | | | 4 | | | 8 |

STR.#8

DRAWN BY : PEGGY PARISI DATE : 6-27-11
CHECKED BY : B.N. BARODAWALA DATE : 8-16-11

19-OCT-2011 11:21
R:\TIPProjects-R\R2413c\Structures\FinalPlans\Str.#8\r2413c_SD_CU_08.dgn
taverette

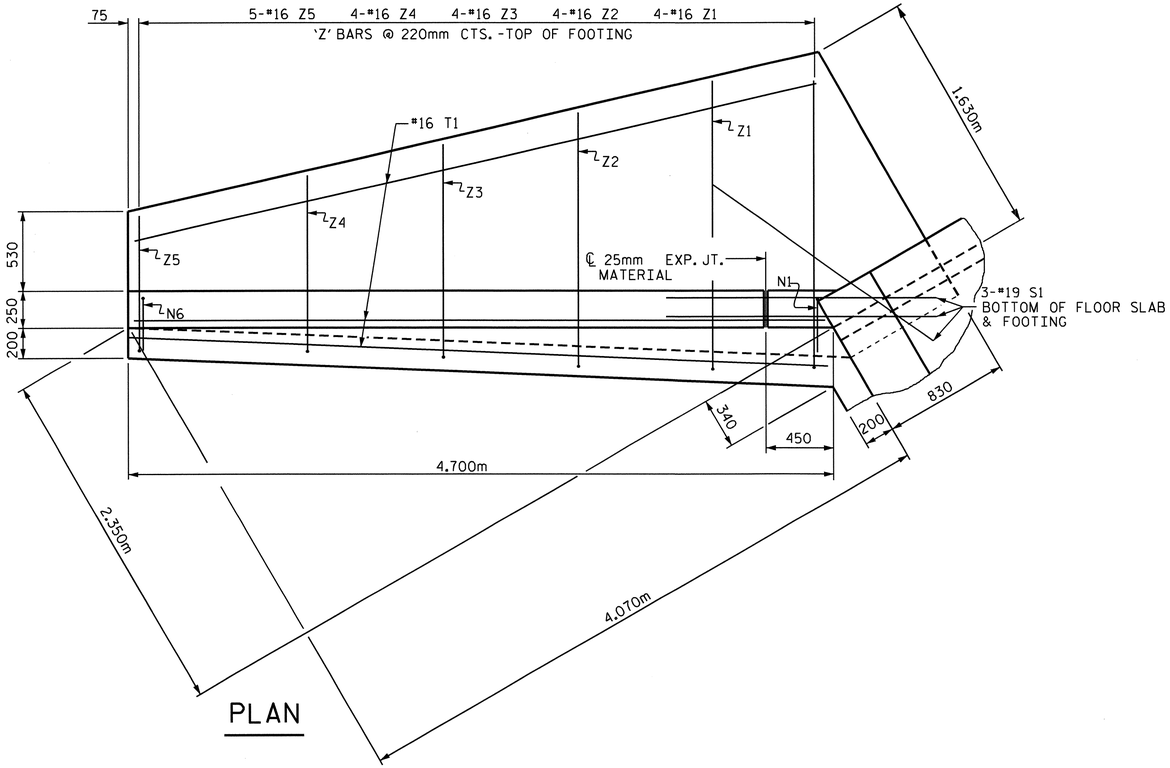


PLAN

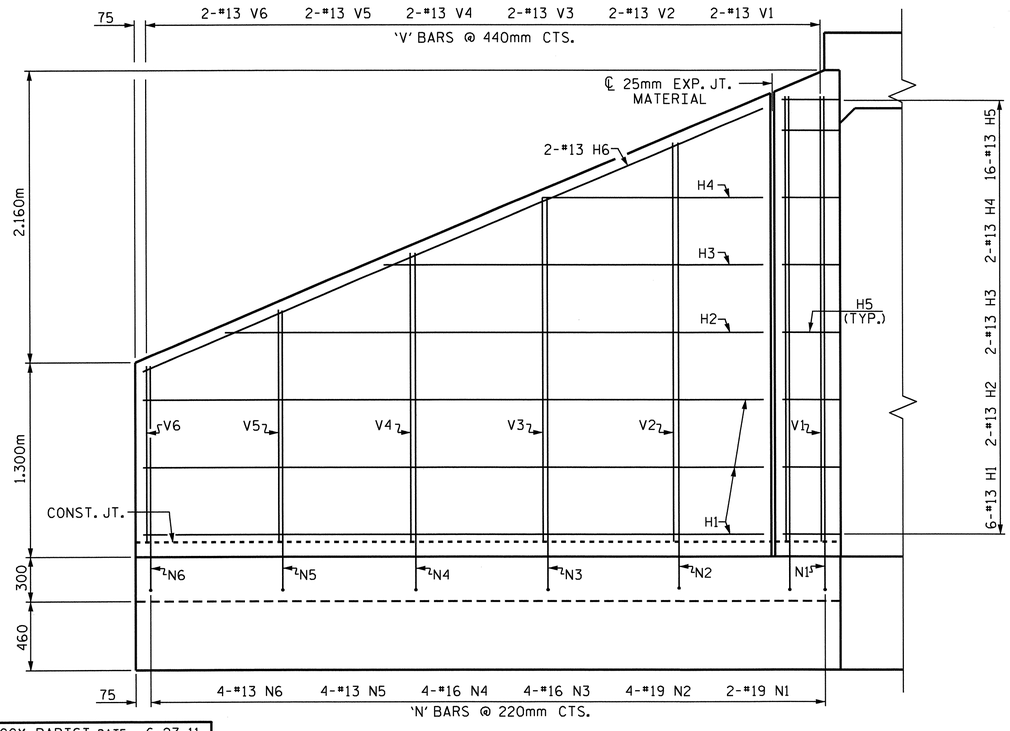


ELEVATION

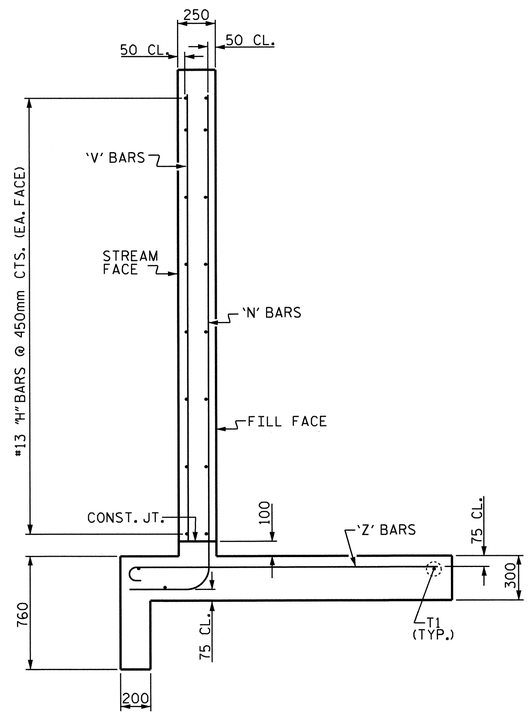


TYPICAL WING SECTION

## BAR TYPES

ALL BAR DIMENSIONS ARE OUT TO OUT.

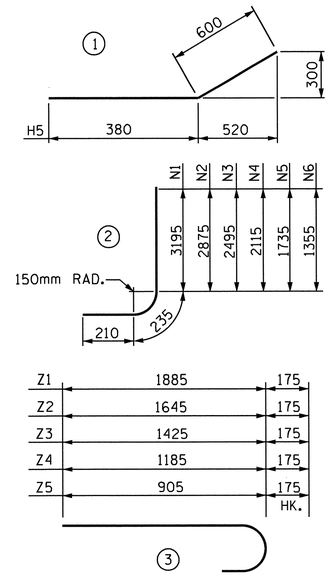


## BILL OF MATERIAL (FOR ONE WING)

| BAR | NO. | SIZE | TYPE | LENGTH | WEIGHT |
|---|---|---|---|---|---|
| H1 | 6 | 13 | STR | 4140 | 25 |
| H2 | 2 | 13 | STR | 3600 | 7 |
| H3 | 2 | 13 | STR | 2560 | 5 |
| H4 | 2 | 13 | STR | 1520 | 3 |
| H5 | 16 | 13 | 1 | 980 | 16 |
| H6 | 2 | 13 | STR | 4500 | 9 |
| N1 | 2 | 19 | 2 | 3640 | 16 |
| N2 | 4 | 19 | 2 | 3320 | 30 |
| N3 | 4 | 16 | 2 | 2940 | 18 |
| N4 | 4 | 16 | 2 | 2560 | 16 |
| N5 | 4 | 13 | 2 | 2180 | 9 |
| N6 | 4 | 13 | 2 | 1800 | 7 |
| S1 | 3 | 19 | STR | 1800 | 12 |
| T1 | 3 | 16 | STR | 4700 | 22 |
| V1 | 2 | 13 | STR | 3020 | 6 |
| V2 | 2 | 13 | STR | 2700 | 5 |
| V3 | 2 | 13 | STR | 2320 | 5 |
| V4 | 2 | 13 | STR | 1940 | 4 |
| V5 | 2 | 13 | STR | 1560 | 3 |
| V6 | 2 | 13 | STR | 1180 | 2 |
| Z1 | 4 | 16 | 3 | 2060 | 13 |
| Z2 | 4 | 16 | 3 | 1820 | 11 |
| Z3 | 4 | 16 | 3 | 1600 | 10 |
| Z4 | 4 | 16 | 3 | 1360 | 8 |
| Z5 | 5 | 16 | 3 | 1080 | 8 |

REINFORCING STEEL FOR 1 WING 270 kg

CLASS A CONCRETE

| | |
|---|---|
| 1 WING (EACH PHASE) | 5.6 m3 |
| END CURTAIN WALL (PHASE I) | 0.6 m3 |
| END CURTAIN WALL (PHASE II) | 0.5 m3 |
| END CURTAIN WALL (PHASE III) | 0.6 m3 |
| END CURTAIN WALL (PHASE IV) | 0.5 m3 |
| 1 HEADWALL (PHASE II) | 0.9 m3 |
| 1 HEADWALL (PHASE IV) | 0.9 m3 |

TOTAL STAGE I (PHASE I & II) 13.2 m3

TOTAL STAGE II (PHASE III & IV) 13.2 m3

PROJECT NO. R-2413C

GUILFORD-ROCKINGHAM COUNTY

STATION: 56+54.000 -LREV-

SHEET 5 OF 5

STATE OF NORTH CAROLINA
DEPARTMENT OF TRANSPORTATION
RALEIGH

# STANDARD WINGS FOR CONCRETE BOX CULVERT

H = 3.000m SLOPE = 2:1
90° SKEW

NORTH CAROLINA PROFESSIONAL SEAL 022516 ENGINEER EMILY E. MURRAY
10/28/11

| REVISIONS | | | | | | |
|---|---|---|---|---|---|---|
| NO. | BY: | DATE: | NO. | BY: | DATE: | |
| 1 | | | 3 | | | |
| 2 | | | 4 | | | |

SHEET NO. C-5
TOTAL SHEETS 8

ASSEMBLED BY : PEGGY PARISI DATE : 6-27-11
CHECKED BY : B.N. BARODAWALA DATE : 8-16-11

DRAWN BY : FPP 06/97
CHECKED BY : VAP 06/97

13-SEP-2011 10:50
W:\Structures\Final Plans\Str.#8\r2413c_SD_CU_08.dgn
bbarodawala

STR. #8

STD. NO. CW9030

B.M. #15: RR SPIKE IN BASE OF 610mm OAK, 13.0m RT. OF -L- STA. 56+63.60, EL. 256.945

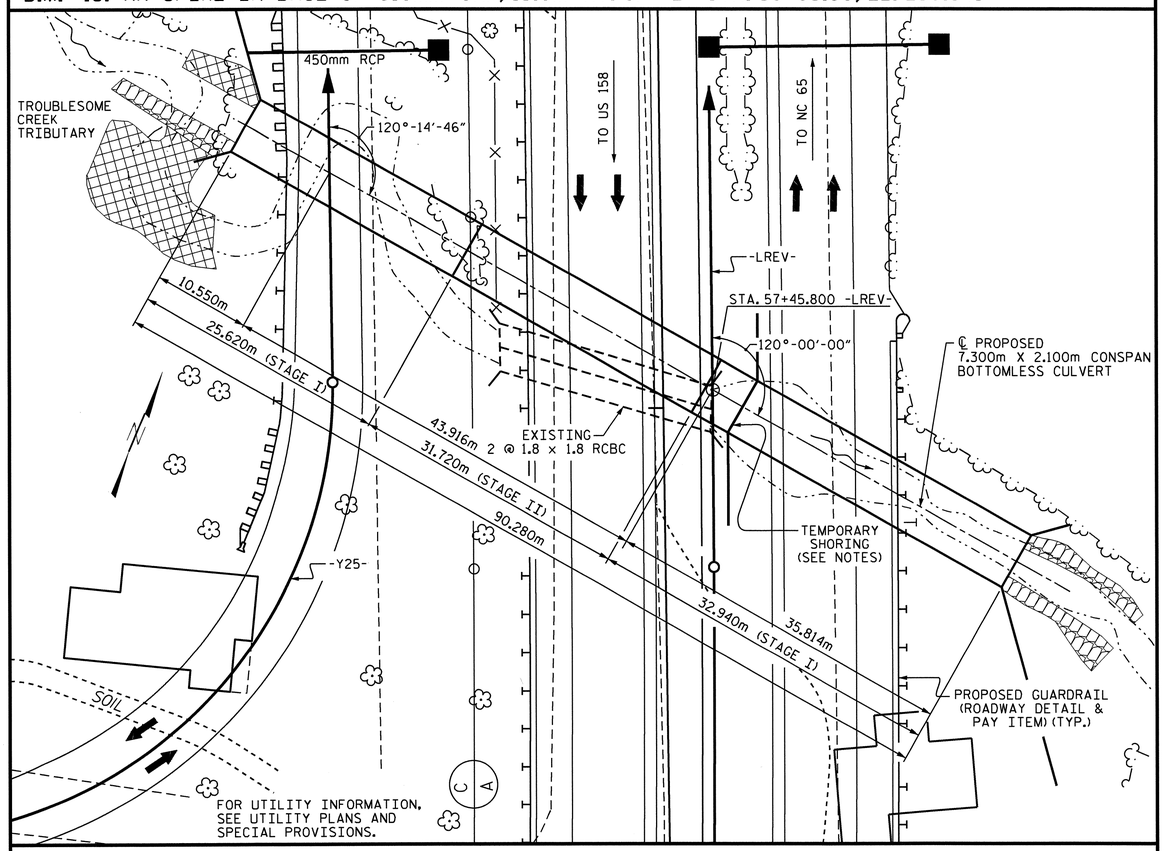


LOCATION SKETCH

## NOTES:

ASSUMED LIVE LOAD ----------MS18 OR ALTERNATE LOADING.

ALL DIMENSIONS ARE IN MILLIMETERS UNLESS OTHERWISE NOTED.

ALL ELEVATIONS ARE IN METERS.

MAXIMUM DESIGN FILL---------- 4.85m

FOR OTHER DESIGN DATA AND NOTES, SEE STANDARD NOTE SHEET.

FOR CULVERT DIVERSION DETAILS AND PAY ITEM, SEE EROSION CONTROL PLANS.

THE RESIDENT ENGINEER SHALL CHECK THE LENGTH OF CULVERT BEFORE STAKING IT OUT TO MAKE CERTAIN THAT IT WILL PROPERLY TAKE CARE OF THE FILL.

A 900mm STRIP OF FILTER FABRIC SHALL BE ATTACHED TO THE FILL FACE OF THE WING COVERING THE ENTIRE LENGTH OF THE EXPANSION JOINT.

THE EXISTING DOUBLE BARRREL 1.8m X 1.8m REINFORCED CONCRETE BOX CULVERT LOCATED AT THE SAME LOCATION AS THE PROPOSED CULVERT SHALL BE REMOVED. (APPROXIMATE LENGTH = 22.0m)

FOR WING FOOTINGS, THE CONTRACTOR HAS THE OPTION TO KEY THE FOOTINGS 305mm INTO ROCK. IF WING FOOTINGS ARE NOT KEYED INTO ROCK, RIP RAP SHALL BE REQUIRED. RIP RAP SHALL NOT BE PLACED ABOVE THE STREAM BED. SEE DETAILS ON SHEET 3 OF 3.

FOR CRANE SAFETY, SEE SPECIAL PROVISIONS.

FOR GROUT FOR STRUCTURES, SEE SPECIAL PROVISIONS.

FOR CURING CONCRETE, SEE SPECIAL PROVISIONS.

FOR LIMITS OF TEMPORARY SHORING FOR MAINTENANCE OF TRAFFIC, SEE TRAFFIC CONTROL PLANS. FOR PAY ITEM FOR TEMPORARY SHORING FOR MAINTENANCE OF TRAFFIC, SEE ROADWAY PLANS.

THE PRECAST CULVERT SECTIONS AND WINGS SHALL BE DESIGNED TO HANDLE FULL DEPTH HYDROSTATIC PRESSURE IF WEEP HOLES ARE NOT UTILIZED. IF PROVIDED, WEEP HOLES SHALL BE LOCATED A MINIMUM HEIGHT OF 150mm ABOVE THE NORMAL FLOW LINE AND HAVE A MAXIMUM SPACING OF 3.000m.

THE ALLOWABLE BEARING CAPACITY FOR CULVERT STRIP FOOTINGS OF BOTTOMLESS CULVERT IS 480 KPA.

KEY BOTTOMLESS CULVERT FOOTINGS AT STATION 57+45.800 -LREV- ± AT LEAST 300mm INTO ROCK WITH A MINIMUM THICKNESS AS SHOWN ON THE PLANS.

TO PROVIDE PROTECTION FROM POSSIBLE SCOUR, THE FOOTINGS SHALL NOT BE CONSTRUCTED AT AN ELEVATION HIGHER THAN SHOWN ON THE PLANS.

SCOUR PROTECTION IS REQUIRED AT THE WINGS. RIP RAP NOT TO BE PLACED ABOVE THE STREAMBED.

THE SCOUR CRITICAL ELEVATION IS THE AS BUILT BOTTOM OF FOOTING ELEVATION. THE SCOUR CRITICAL ELEVATIONS ARE FOR USE BY MAINTENANCE FORCES TO MONITOR POSSIBLE SCOUR PROBLEMS DURING THE LIFE OF THE STRUCTURE.

FOR BLASTING ADJACENT TO HIGHWAY STRUCTURES, SEE STANDARD SPECIFICATIONS ARTICLE 410-11.

THE BOTTOM OF FOOTING ELEVATIONS MAY BE LOWERED IN ORDER TO SATISFY BEARING CAPACITY AND MINIMUM ROCK EMBEDMENT REQUIREMENTS.

THIS STRUCTURE HAS BEEN DESIGNED IN ACCORDANCE WITH HEC 18 "EVALUATING SCOUR AT BRIDGES", MAY 2001

FOR PRECAST REINFORCED CONCRETE THREE-SIDED CULVERT, SEE SPECIAL PROVISIONS.

FOR SUBMITTAL OF WORKING DRAWINGS, SEE SPECIAL PROVISIONS.

FOR FALSEWORK AND FORMWORK, SEE SPECIAL PROVISIONS.

THE 450mm DIA. PIPE THROUGH THE WING OF THE CULVERT SHALL BE LOCATED BY THE ENGINEER. THE REINFORCING STEEL SHALL BE FIELD BENT AS NECESSARY TO CLEAR PIPE.

### TOTAL STRUCTURE QUANTITIES

| | |
|---|---|
| REMOVAL OF EXISTING STRUCTURE | LUMP SUM |
| PRECAST REINFORCED CONCRETE THREE-SIDED CULVERT @ STA. 57+45.800 -LREV- | LUMP SUM |
| CLASS A CONCRETE | 167.4 CU. METERS |
| RIP RAP CLASS I | 36 METRIC TONS |

### TOTAL STRUCTURE QUANTITIES -ENGLISH-

| | |
|---|---|
| REMOVAL OF EXISTING STRUCTURE | LUMP SUM |
| PRECAST REINFORCED CONCRETE THREE-SIDED CULVERT @ STA. 57+45.800 -LREV- | LUMP SUM |
| CLASS A CONCRETE | 219.0 CU. YD. |
| RIP RAP CLASS I | 40 TONS |

### GRADE DATA

| | |
|---|---|
| GRADE POINT ELEVATION @ STA. 57+45.800 -LREV- | = 256.850 |
| BED ELEVATION @ STA. 57+45.800 -LREV- | = 250.310 |
| ROADWAY SLOPES | = 2 :1 |

### HYDRAULIC DATA

| | |
|---|---|
| DESIGN DISCHARGE | = 34.0 m3/s |
| FREQUENCY OF DESIGN FLOOD | = 50 YEARS |
| DESIGN HIGH WATER ELEVATION | = 254.530 |
| DRAINAGE AREA | = 2.09 Sq. Km. |
| BASE DISCHARGE (Q100) | = 36.8 m3/s |
| BASE HIGH WATER ELEVATION | = 254.800 |

### OVERTOPPING FLOOD DATA

| | |
|---|---|
| OVERTOPPING DISCHARGE | = 34.0 m3/s |
| FREQUENCY OF OVERTOPPING FLOOD | = 50 YEARS |
| OVERTOPPING FLOOD ELEVATION | = 254.440 * |

* OVERTOPS -Y25- IN 50 YR AND FLOWS TO TROUBLESOME CREEK

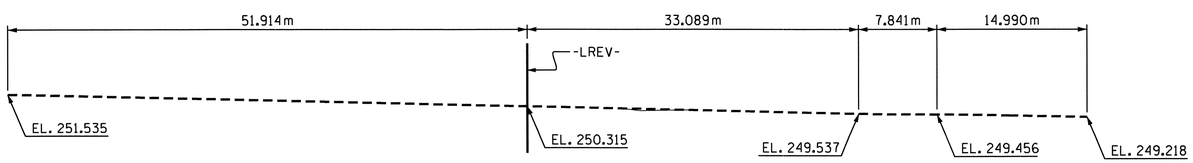


PROFILE ALONG ℄ CULVERT

PROJECT NO. R-2413C

GUILFORD-ROCKINGHAM COUNTY

STATION: 57+45.800 -LREV-

SHEET 1 OF 3

STATE OF NORTH CAROLINA
DEPARTMENT OF TRANSPORTATION
RALEIGH

7.300m X 2.100m PRECAST REINFORCED CONCRETE THREE-SIDED CULVERT ON US 220 AT TROUBLESOME CREEK TRIBUTARY 120° SKEW

| REVISIONS | | | | | | | | SHEET NO. |
|---|---|---|---|---|---|---|---|---|
| NO. | BY: | DATE: | NO. | BY: | DATE: | | | C-6 |
| 1 | | | 3 | | | | | TOTAL SHEETS |
| 2 | | | 4 | | | | | 8 |

NORTH CAROLINA PROFESSIONAL SEAL 12274 ENGINEER OMAR R. AZIZI 10/31/11

NORTH CAROLINA PROFESSIONAL SEAL 022516 ENGINEER EMILY E. MURRAY 10/31/11

DRAWN BY : PEGGY PARISI DATE : 6-2-11
CHECKED BY : B.N. BARODAWALA DATE : 8-29-11

31-OCT-2011 07:42
R:\TIPProjects-R\R2413c\Structures\FinalPlans\Str.#9\R2413C_sd_CU_09.dgn
taverette

STR. #9

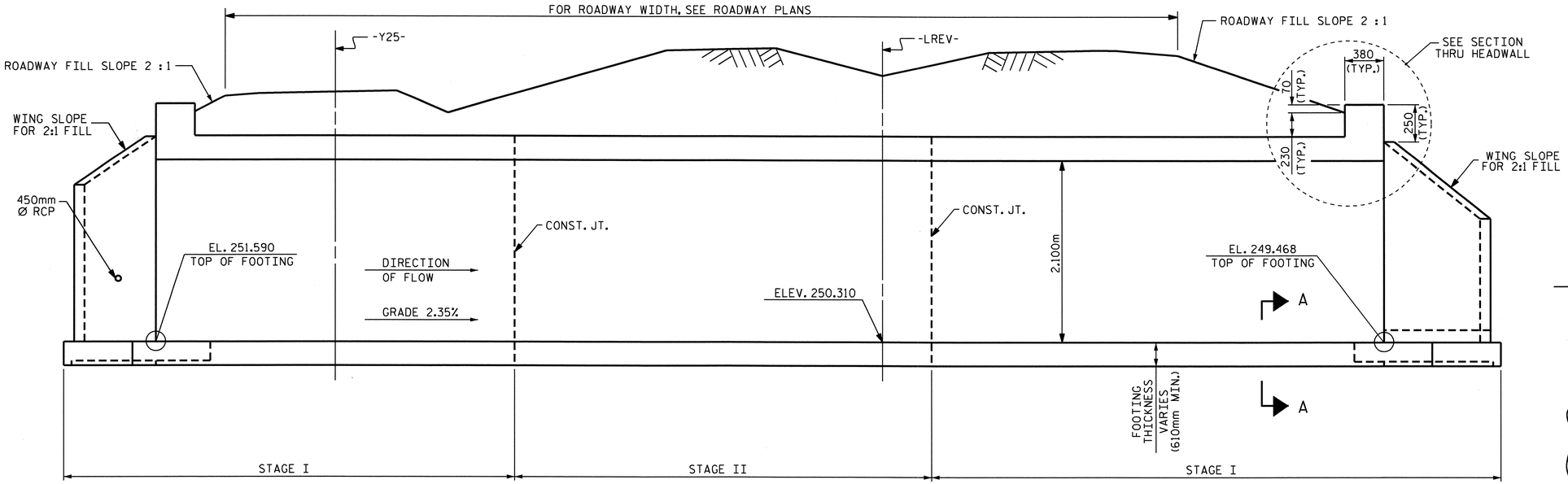


## CULVERT SECTION NORMAL TO ROADWAY

NOTE : SEE SHEET 3 OF 3 FOR SECTION A-A

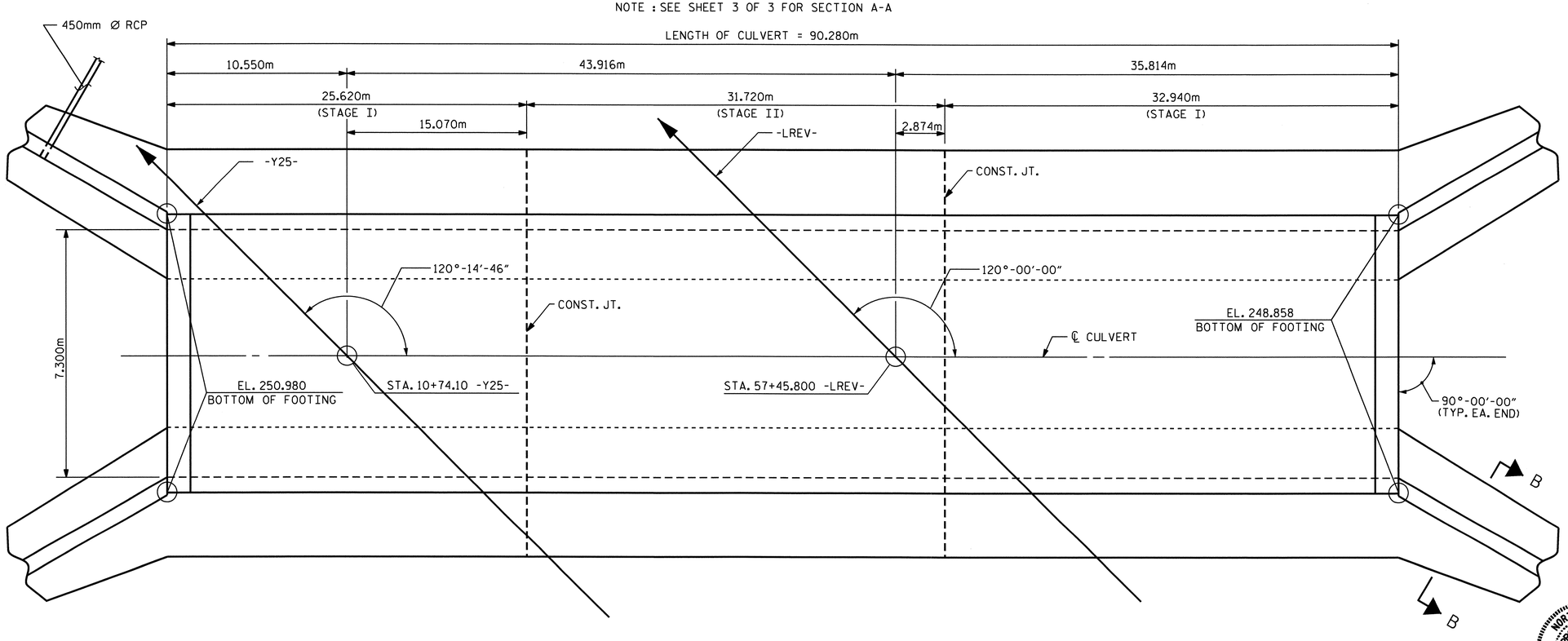


## LENGTH FOR PRECAST THREE-SIDED CULVERT

## BAR TYPE

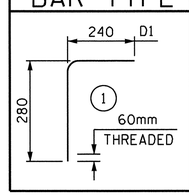


## BAR SCHEDULE

FOR ONE HEADWALL
2 REQUIRED

| BAR | NO. | SIZE | TYPE | LENGTH | WEIGHT |
|---|---|---|---|---|---|
| D1 | 27 | 19 | 1 | 520 | 31 |
| | | | | | |
| G1 | 2 | 16 | STR | 7600 | 24 |
| | | | | | |
| S2 | 3 | 25 | STR | 7600 | 91 |
| | | | | | |
| TOTAL | | | | LBS. | 146 |

## DETAIL A

** APPROVED GALVANIZED CONCRETE INSERTS HAVING A MINIMUM WORKING LOAD TENSION CAPACITY OF 2.5 KIPS.

DIA. =20mm, NO. REQUIRED 54

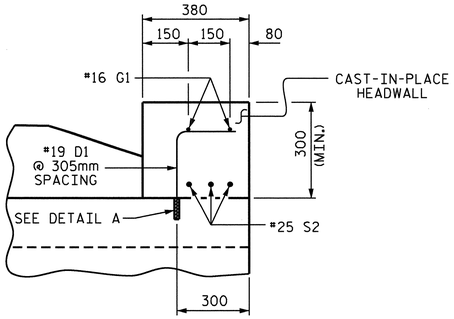


## SECTION THRU HEADWALL

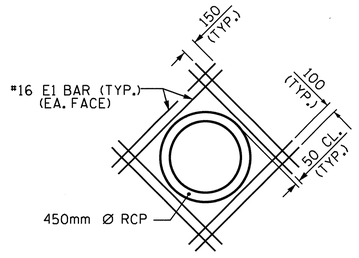


## DETAIL OF REINFORCING AROUND 450mm Ø PIPE IN WING WALL

(16-#16 E1 REINFORCING STEEL L=1.200m)

PROJECT NO. R-2413C

GUILFORD-ROCKINGHAM COUNTY

STATION: 57+45.800 -LREV-

SHEET 2 OF 3

STATE OF NORTH CAROLINA
DEPARTMENT OF TRANSPORTATION
RALEIGH

# PRECAST REINFORCED CONCRETE THREE-SIDED CULVERT

## 120° SKEW

NORTH CAROLINA PROFESSIONAL SEAL 022516 ENGINEER EMILY E. MURRAY
10/28/11

| REVISIONS | | | | | | SHEET NO. |
|---|---|---|---|---|---|---|
| NO. | BY: | DATE: | NO. | BY: | DATE: | C-7 |
| 1 | | | 3 | | | TOTAL SHEETS |
| 2 | | | 4 | | | 8 |

ASSEMBLED BY : PEGGY PARISI DATE : 8-26-11
CHECKED BY : B.N. BARODAWALA DATE : 8-29-11

13-SEP-2011 10:47
W:\Structures\Final Plans\Str.#9\R2413C_sd_CU_09.dgn
bbarodawala

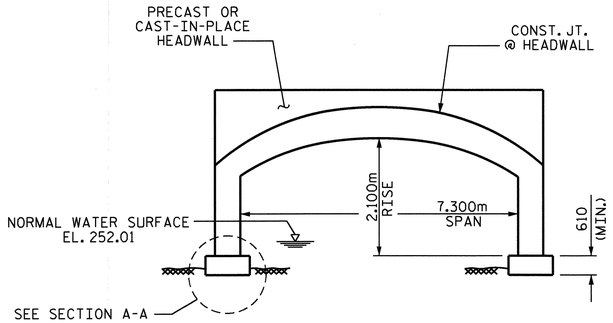


ARCH ALTERNATIVE

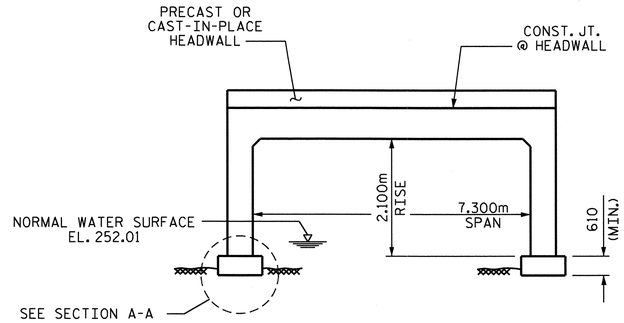


FLAT TOPPED ALTERNATIVE

## RIGHT ANGLE SECTION OF PRECAST CONCRETE THREE-SIDED CULVERT

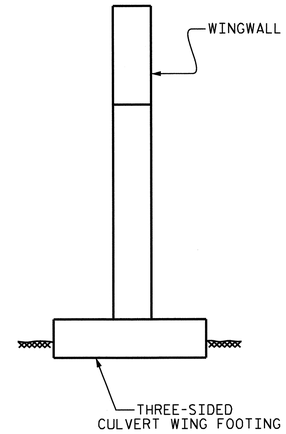


SECTION B-B

CURTAIN WALL NOT REQUIRED WHEN FOOTINGS ARE KEYED INTO ROCK

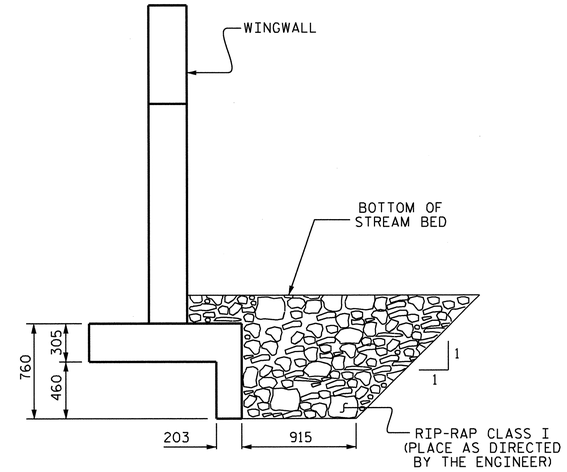


SECTION B-B

WHEN FOOTINGS CANNOT BE KEYED INTO ROCK

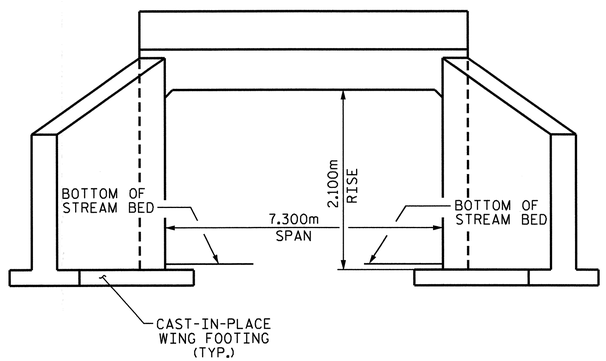


END ELEVATION

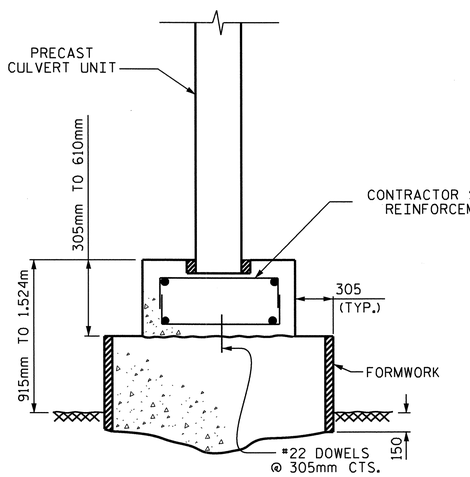


SECTION A-A

OPTION 1
SUB-FTG TO BE USED WHEN FTG. CANNOT BE KEYED INTO ROCK

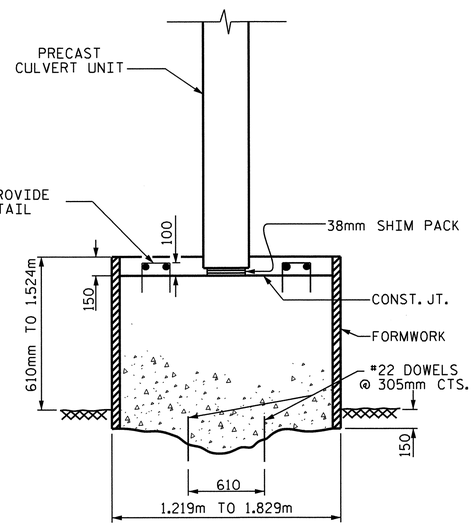


SECTION A-A

OPTION 2
MONOLITHIC SUB-FTG. AND FTG. TO BE USED WHEN FTG. CANNOT BE KEYED INTO ROCK

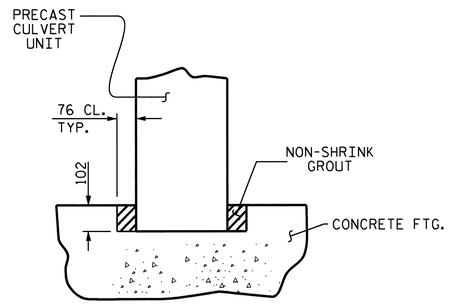


KEYWAY DETAIL

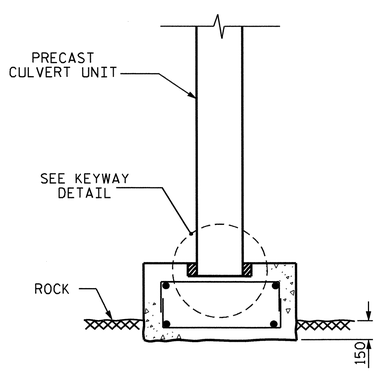


SECTION A-A

FTG. KEYED INTO ROCK

PROJECT NO. R-2413C

GUILFORD-ROCKINGHAM COUNTY

STATION: 57+45.800 -LREV-

SHEET 3 OF 3

STATE OF NORTH CAROLINA
DEPARTMENT OF TRANSPORTATION
RALEIGH

# PRECAST REINFORCED CONCRETE THREE-SIDED CULVERT

## 120° SKEW

NORTH CAROLINA PROFESSIONAL SEAL 022516 ENGINEER EMILY E. MURRAY
6/21/11

| REVISIONS | | | | | | SHEET NO. |
|---|---|---|---|---|---|---|
| NO. | BY: | DATE: | NO. | BY: | DATE: | C-8 |
| 1 | | | 3 | | | TOTAL SHEETS |
| 2 | | | 4 | | | 8 |

ASSEMBLED BY : PEGGY PARISI DATE : 6-22-11
CHECKED BY : B.N. BARODAWALA DATE : 6-29-11

31-OCT-2011 14:28
R:\TIPProjects-R\R2413c\Structures\FinalPlans\Str.#9\R2413C_sd_CU_09.dgn
taverette

STR. #9

| GEOTECHNICAL ENGINEER | ENGINEER |
|---|---|
| NORTH CAROLINA PROFESSIONAL SEAL 038176 ENGINEER SHIHAI ZHANG 9-1-2011 | |
| SIGNATURE DATE | SIGNATURE DATE |

METRIC

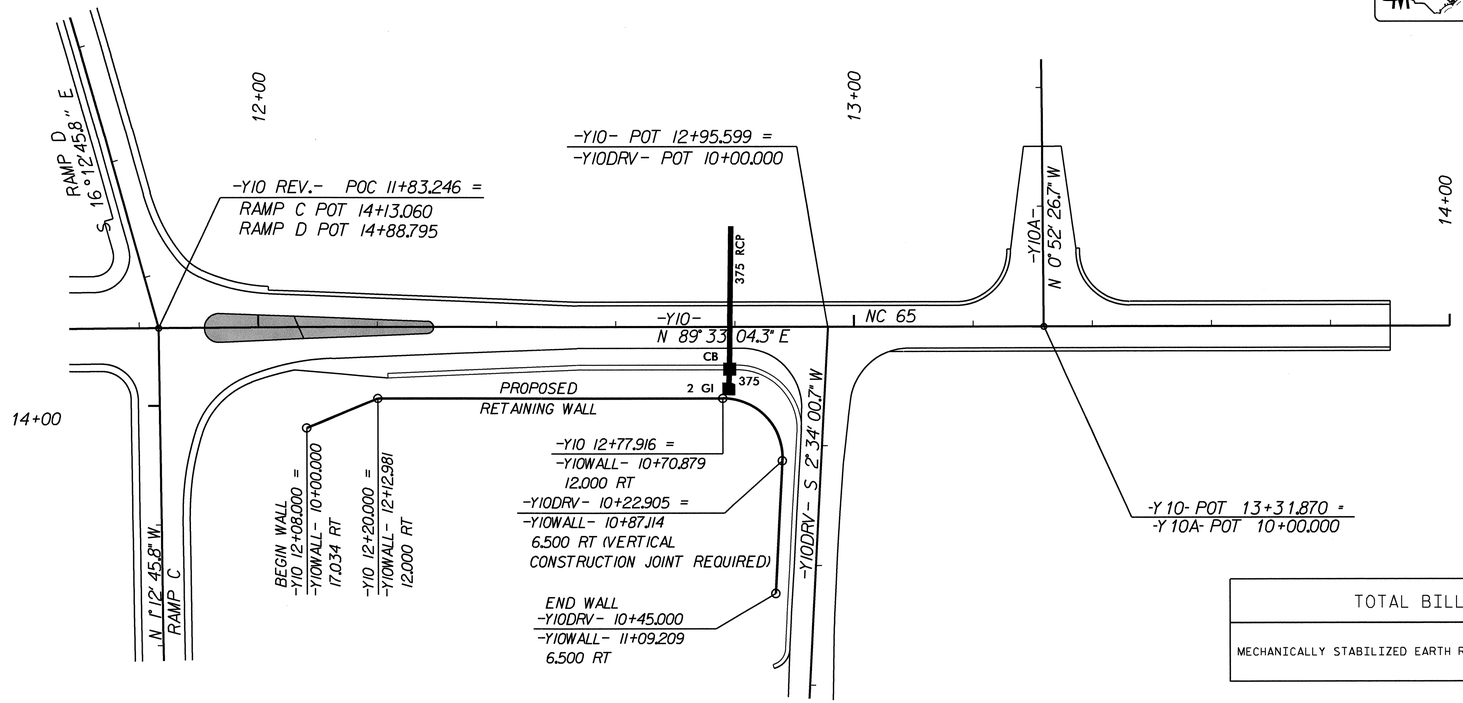


(THE WALL ENVELOPE DOES NOT ACCURATELY DEPICT THE ACTUAL FACE OF THE WALL.)

| TOTAL BILL OF MATERIAL | |
|---|---|
| MECHANICALLY STABILIZED EARTH RETAINING WALLS | 230 SQUARE METERS (2476 SQ. FT) |

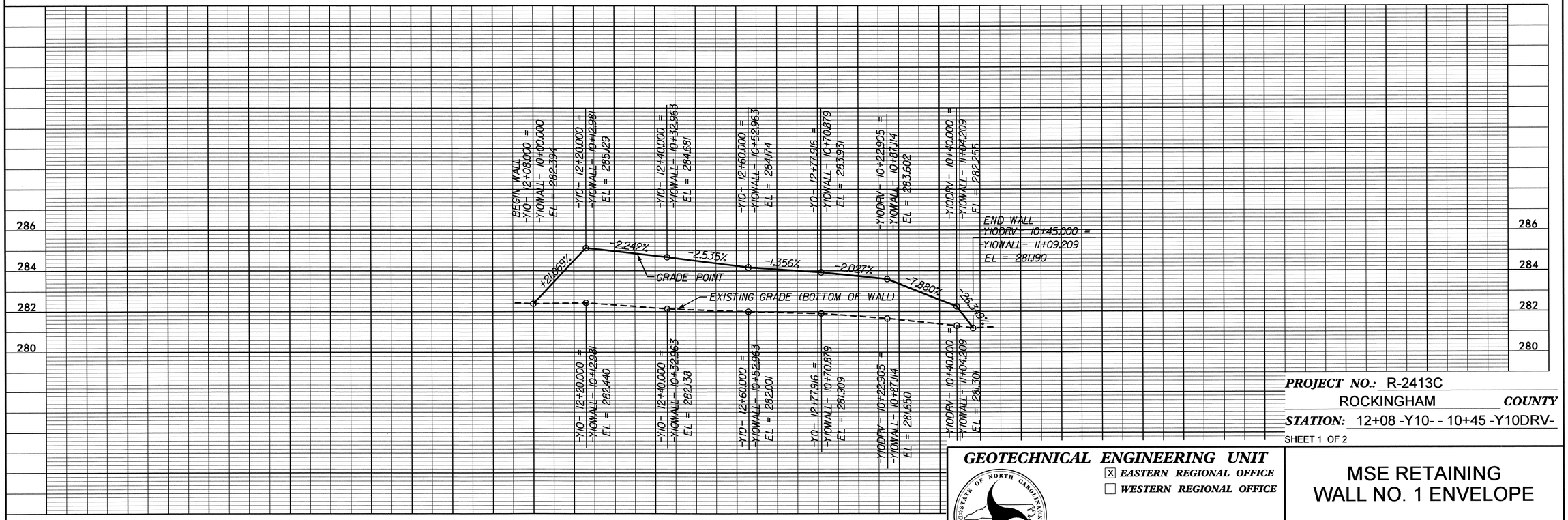


| | |
|---|---|
| PROJECT NO.: | R-2413C |
| | ROCKINGHAM COUNTY |
| STATION: | 12+08 -Y10- - 10+45 -Y10DRV- |

SHEET 1 OF 2

| PREPARED BY: S. ZHANG | DATE: 08/2011 |
|---|---|
| REVIEWED BY: J. BATTS | DATE: 08/2011 |

**GEOTECHNICAL ENGINEERING UNIT**

[X] EASTERN REGIONAL OFFICE
[ ] WESTERN REGIONAL OFFICE

STATE OF NORTH CAROLINA DEPARTMENT OF TRANSPORTATION RALEIGH

# MSE RETAINING WALL NO. 1 ENVELOPE

| REVISIONS | | | | | | | | SHEET NO. |
|---|---|---|---|---|---|---|---|---|
| NO. | BY | DATE | NO. | BY | DATE | | | W-1 |
| 1 | | | 3 | | | | | TOTAL SHEETS |
| 2 | | | 4 | | | | | 2 |

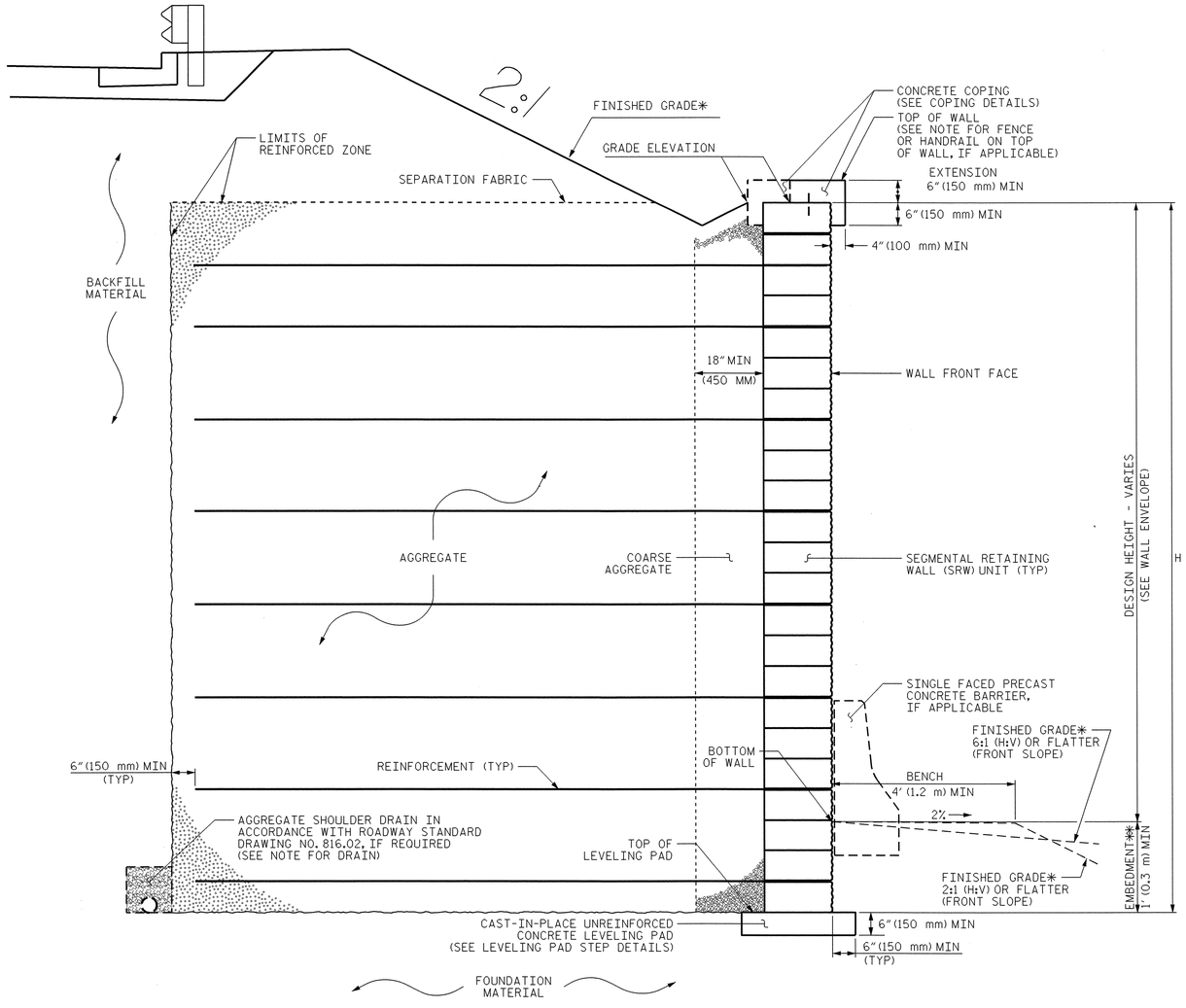


## MSE WALL WITH SRW UNITS - TYPICAL SECTION (NTS)

*SEE ROADWAY PLANS FOR FINISHED GRADE AND DITCH DETAILS.
**SEE MSE RETAINING WALLS PROVISION FOR EMBEDMENT REQUIREMENTS.

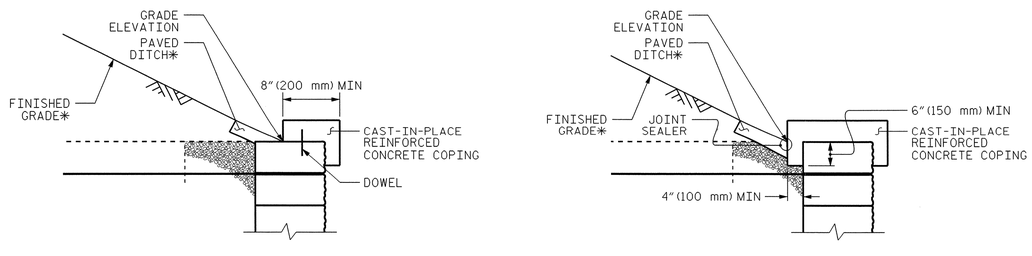


## COPING DETAILS

AT THE CONTRACTOR'S OPTION, CONNECT COPING TO SRW UNITS WITH DOWELS OR EXTEND COPING DOWN BACK OF SRW UNITS.
*SEE ROADWAY PLANS FOR FINISHED GRADE AND DITCH DETAILS.

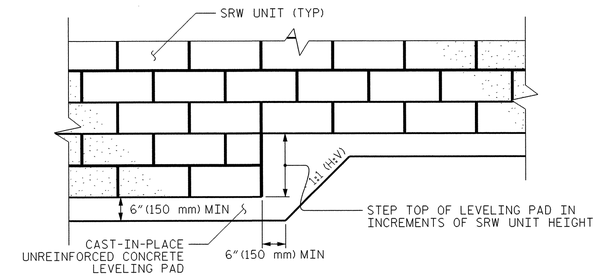


## LEVELING PAD STEP DETAILS

SEGMENTAL RETAINING WALL (SRW) UNITS

## NOTES:

FOR MECHANICALLY STABILIZED EARTH (MSE) RETAINING WALLS, SEE MECHANICALLY STABILIZED EARTH RETAINING WALLS PROVISION.

FOR STEEL BEAM GUARDRAIL, SEE ROADWAY PLANS AND SECTION 862 OF THE STANDARD SPECIFICATIONS.

USE AN MSE WALL SYSTEM WITH SEGMENTAL RETAINING WALL UNITS FOR RETAINING WALL NO. 1.

CAST-IN-PLACE REINFORCED CONCRETE COPING IS REQUIRED FOR RETAINING WALL NO. 1.

A DRAIN IS REQUIRED FOR RETAINING WALL NO. 1.

BEFORE BEGINNING MSE WALL DESIGN FOR RETAINING WALL NO. 1, SURVEY WALL LOCATION AND SUBMIT A REVISED WALL PROFILE VIEW (WALL ENVELOPE) FOR REVIEW. DO NOT START WALL DESIGN OR CONSTRUCTION UNTIL THE REVISED WALL ENVELOPE IS ACCEPTED.

DESIGN RETAINING WALL NO. 1 FOR WALL HEIGHTS EQUAL TO THE DESIGN HEIGHT (DIFFERENCE BETWEEN GRADE ELEVATION AND BOTTOM OF WALL ELEAVATION) PLUS EMBEDMENT (DIFFERENCE BETWEEN BOTTOM OF WALL ELEVATION AND TOP OF LEVELING PAD ELEVATION).

DESIGN RETAINING WALL NO. 1 FOR THE FOLLOWING:
1) MINIMUM DESIGN LIFE = 75 YEARS
2) MINIMUM REINFORCEMENT LENGTH TO HEIGHT (H) RATIO = 0.9 (MINIMUM LENGTH 6 FT [1.8 M])
3) AGGREGATE PARAMETERS:

| STANDARD SIZE NO. (IN ACCORDANCE WITH SECTION 1005 OF THE STANDARD SPECIFICATIONS) | UNIT WEIGHT ($\gamma$) PCF(kN/m³) | FRICTION ANGLE ($\phi$) DEGREES | COHESION (c) PSF(kPa) |
|---|---|---|---|
| 1S, 2S, 2MS AND 4S (FINE AGGREGATE) | 125 (19.6) | 34 | 0 |
| 5, 57, 57M, 6M, 67 AND 78M (COARSE AGGREGATE) | 110 (17.3) | 38 | 0 |

4) IN-SITU ASSUMED MATERIAL PARAMETERS:

| MATERIAL TYPE | UNIT WEIGHT ($\gamma$) PCF(kN/m³) | FRICTION ANGLE ($\phi$) DEGREES | COHESION (c) PSF(kPa) |
|---|---|---|---|
| BACKFILL | 120 (18.8) | 30 | 0 |
| FOUNDATION | 120 (18.8) | 0 | 800 (38) |

DESIGN RETAINING WALL NO. 1 FOR A LIVE LOAD (TRAFFIC) SURCHARGE.

EXISTING OR FUTURE OBSTRUCTIONS SUCH AS FOUNDATIONS, GUARDRAIL, FENCE OR HANDRAIL POSTS, PAVEMENTS, PIPES, INLETS OR UTILITIES WILL INTERFERE WITH REINFORCEMENT FOR RETAINING WALL NO. 1.

DO NOT PLACE LEVELING PAD CONCRETE, AGGREGATE OR REINFORCEMENT FOR RETAINING WALL NO. 1 UNTIL EXCAVATION DIMENSIONS AND FOUNDATION MATERIAL ARE APPROVED.

A VERTICAL CONSTRUCTION JOINT (INCLUDING FACING AND COPING) IS REQUIRED AT -Y10DRV- 10+22.905 (-Y10WALL- 10+70.879). AT THE LOCATION OF R/W LINE, SOIL REINFORCEMENT FOR WALL ON EITHER SIDE OF THIS JOINT SHALL NOT OVERLAP R/W LINE.

| | |
|---|---|
| PREPARED BY: S. ZHANG | DATE: 08/2011 |
| REVIEWED BY: J. BATTS | DATE: 08/2011 |

GEOTECHNICAL ENGINEER: NORTH CAROLINA PROFESSIONAL SEAL 038176 ENGINEER MIHAI IHANC — 9-1-2011 — SIGNATURE — DATE

ENGINEER — SIGNATURE — DATE

***PROJECT NO.:*** R-2413C
ROCKINGHAM ***COUNTY***
***STATION:*** 12+08 -Y10- - 10+45 -Y10DRV-
SHEET 2 OF 2

***GEOTECHNICAL ENGINEERING UNIT***
☒ ***EASTERN REGIONAL OFFICE***
☐ ***WESTERN REGIONAL OFFICE***

***STATE OF NORTH CAROLINA***
***DEPARTMENT OF TRANSPORTATION***
***RALEIGH***

# MSE RETAINING WALL NO. 1 TYPICAL AND NOTES

| REVISIONS | | | | | | SHEET NO. |
|---|---|---|---|---|---|---|
| NO. | BY | DATE | NO. | BY | DATE | W-2 |
| 1 | | | 3 | | | TOTAL SHEETS |
| 2 | | | 4 | | | 2 |

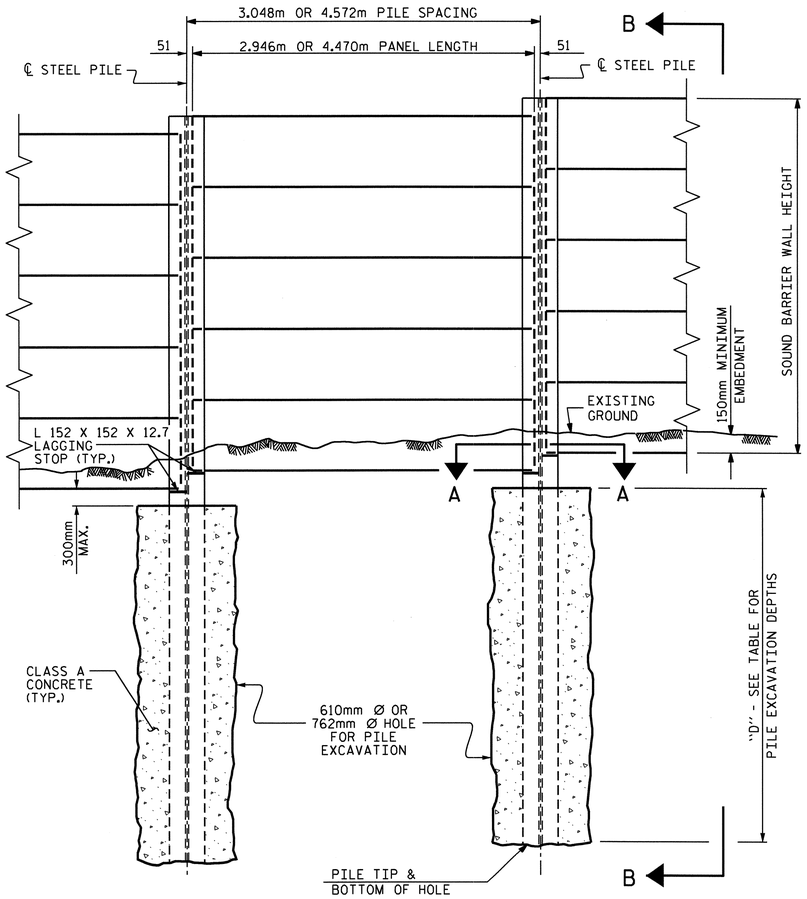


ELEVATION

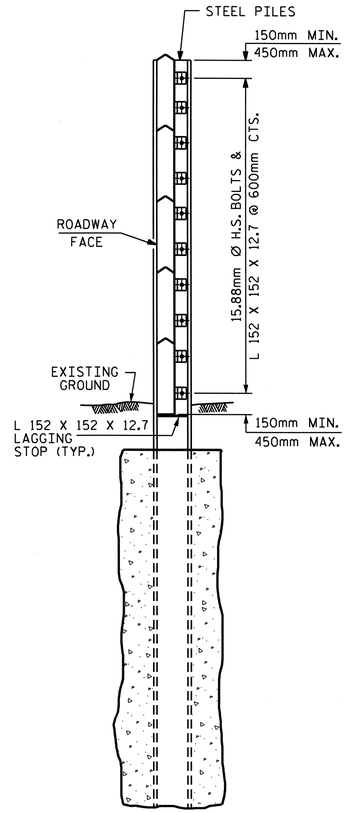


SECTION B-B

## PILE EXCAVATION

| WALL STATIONS | WALL HEIGHT (m) | DEPTH "D" FOR 3.048m PILE SPACING | | DEPTH "D" FOR 4.572m PILE SPACING | | DEPTH "D" FOR 11.000m PILE SPACING |
|---|---|---|---|---|---|---|
| | | 610mm Ø SHAFT | 762mm Ø SHAFT | 610mm Ø SHAFT | 762mm Ø SHAFT | 762mm Ø SHAFT |
| 10+00 TO 10+40 | 2.6 - 3.8 | 6.59 | 6.25 | 7.20 | 6.86 | |
| 10+40 TO 10+60 | 3.4 - 3.8 | 4.67 | 4.49 | 5.06 | 4.85 | |
| 10+60 TO 10+80 | 3.7 - 4.0 | 4.61 | 4.30 | 5.25 | 4.88 | |
| 10+80 TO 11+40 | 4.0 - 4.1 | 6.41 | 6.13 | 7.02 | 6.68 | 7.87 |
| 11+40 TO 11+60 | 3.9 -4.27 | 5.74 | 5.46 | 6.28 | 5.98 | |
| 11+60 TO 12+15 | 4.2 - 4.27 | 4.39 | 4.09 | 5.00 | 4.67 | |
| 12+15 TO 13+20 | 4.3 - 4.7 | 4.61 | 4.30 | 5.25 | 4.88 | |
| 13+20 TO 13+80 | 4.3 - 4.7 | 4.24 | 3.94 | 4.91 | 4.55 | |
| 13+80 TO 15+00 | 4.3 - 4.7 | 4.06 | 3.75 | 4.67 | 4.30 | |
| 15+00 TO 15+55 | 4.3 - 4.6 | 4.12 | 3.82 | 4.76 | 4.39 | |
| 15+55 TO 17+60 | 3.8 - 4.27 | 3.85 | 3.54 | 4.49 | 4.12 | |
| 17+60 TO 18+04.762 | 3.3 - 3.8 | 3.66 | 3.39 | 4.24 | 3.91 | |

## NOTES

FOR SOUND BARRIER WALL, SEE SPECIAL PROVISIONS.

CONSTRUCT SOUND BARRIER WALL TO LINES AND GRADES SHOWN ON THE ROADWAY PLANS.

PROVIDE PANELS WITH A FLAT BOTTOM.

USE STEEL PILES, ANGLES, AND LAGGING STOPS MEETING THE REQUIREMENTS OF AASHTO M270, GRADE 345. GALVANIZE ALL STEEL COMPONENTS INCLUDING PILES, ANGLES, LAGGING STOPS, BOLTS, NUTS, AND WASHERS IN ACCORDANCE WITH SECTION 1076 OF THE STANDARD SPECIFICATIONS. REPAIR ANY DAMAGED GALVANIZATION IN ACCORDANCE WITH ARTICLE 1076-6 OF THE STANDARD SPECIFICATIONS.

VERIFY THE LOCATION OF UNDERGROUND UTILITIES BEFORE DRILLING HOLES TO ENSURE SUFFICIENT CLEARANCE IS AVAILABLE.

AT THE CONTRACTOR'S OPTION, USE AN APPROVED NON-SHRINK NON-METALLIC GROUT BETWEEN THE FLANGES OF THE STEEL PILES TO SUPPORT THE BOTTOM PANEL IN LIEU OF LAGGING STOPS.

ADJUST PILE EXCAVATION ELEVATIONS TO MAINTAIN 150mm MINIMUM EMBEDMENT OF THE BOTTOM PANEL.

USE CLASS AA AND CLASS A CONCRETE FOR PANELS AND PILE EXCAVATION BACKFILL, RESPECTIVELY, IN ACCORDANCE WITH ARTICLE 1000-4 OF THE STANDARD SPECIFICATIONS.

PROVIDE PLATES AND ANGLES TO SECURE PANELS 150mm LONG AS MEASURED ALONG THE STEEL PILE.

AT THE CONTRACTOR'S OPTION, USE EITHER 'W' OR 'HP' PILES THAT SATISFY THE MINIMUM PILE SIZE REQUIRED IN THE "EXPOSURE CATEGORY" TABLE. PILES SMALLER THAN W310 OR HP310 ARE NOT PERMITTED. AT TURNS WITH A 914mm DIAMETER HOLE FOR PILE EXCAVATION, USE ONLY W310 OR HP310 PILES, AS SHOWN.

AT THE CONTRACTOR'S OPTION, USE EITHER 3.048m OR 4.572m PILE SPACINGS, AND EITHER 610mm FOOT OR 762mm DIAMETER HOLES FOR PILE EXCAVATION EXCEPT FOR WALL TURNS AND SPANNING THE CULVERT. THE CONTRACTOR SHALL USE 11.000m PILE SPACING AND 762mm DIA. HOLES FOR PILE EXCAVATION TO SPAN THE CULVERT. SEE SHEET 2 OF 6 FOR DETAILS.

FOR WALL TURNS, PROVIDE HOLES FOR PILE EXCAVATION AS SHOWN ON THE PLANS. A 610mm DIAMETER HOLE FOR PILE EXCAVATION IS NOT AN OPTION. FOR 914mm DIAMETER HOLES AT TURNS, USE DEPTHS DESIGNATED FOR 762mm DIAMETER HOLES. DO NOT SPLICE STEEL PILES.

FOR SOUND BARRIER WALL STATIONS, OFFSETS, AND WALL ENVELOPE, SEE ROADWAY PLANS.

AT THE CONTRACTORS OPTION, CONCRETE PILES MAY BE USED IN LEIU OF STEEL PILES EXCEPT THAT THE TWO PILES ADJACENT TO THE CULVERT SHALL BE STEEL PILES TO SUPPORT THE 10.900m PANELS AS SHOWN ON SHEET 2 OF 6. SEE OPTIONAL SOUND BARRIER WALL DETAILS.

ALTERNATE WALL TYPES SHALL BE PERMITTED FOR THIS SOUND BARRIER WALL.

## EXPOSURE CATEGORY B

DESIGN WIND PRESSURE =
0.958kpa (0m< H≤4.27m); 1.197kpa (4.27m< H≤8.84m)

| PILE SPACING | MAXIMUM WALL HEIGHT ( H ) | MINIMUM W SIZE STEEL PILES | MINIMUM HP SIZE STEEL PILES |
|---|---|---|---|
| 3.048m | H ≤ 8.84m | W 310 X 60<br>W 360 X 72 | HP 310 X 79<br>HP 360 X 108 |
| 4.572m | H ≤ 7.62m | W 310 X 60<br>W 360 X 72 | HP 310 X 79<br>HP 360 X 108 |
| | 7.62m < H ≤ 8.84m | W 310 X 74<br>W 360 X 72 | HP 310 X 79<br>HP 360 X 108 |
| 11.000m | | | HP 360 X 108 |

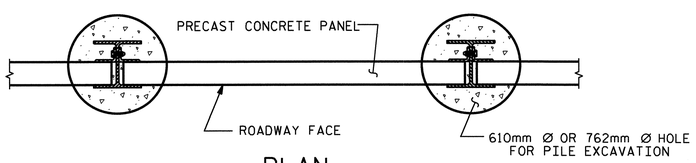


PLAN

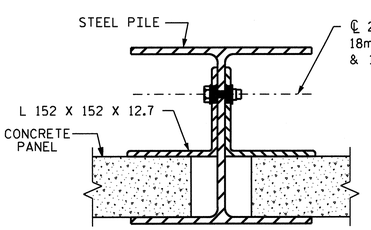


CONNECTION DETAIL

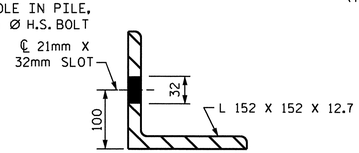


ANGLE DETAIL

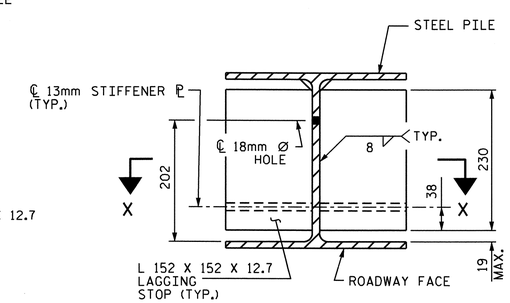


SECTION A-A

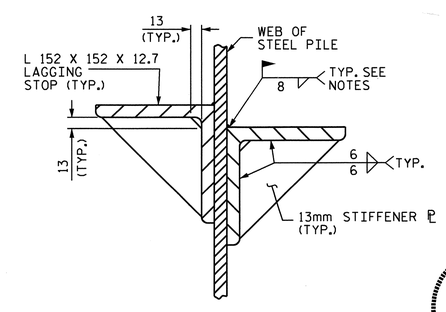


SECTION X-X

PROJECT NO. R-2413C
GUILFORD-ROCKINGHAM COUNTY
STATION: 56+58.570 -LREV-
10+00.000 -NW3-
SHEET 1 OF 6

STATE OF NORTH CAROLINA
DEPARTMENT OF TRANSPORTATION
RALEIGH

SOUND BARRIER WALL

NORTH CAROLINA PROFESSIONAL SEAL 12274 ENGINEER OMAR R. AZIZ
2/10/12

NORTH CAROLINA PROFESSIONAL SEAL 022516 ENGINEER EMILY E. MURRAY
2/10/12

| ASSEMBLED BY : E. E. MURRAY | DATE : 10-25-11 |
|---|---|
| CHECKED BY : T. L. AVERETTE | DATE : 10-28-11 |

| DRAWN BY : JAD 5/01 | REV. 2/4/03 RWW/CVC |
|---|---|
| CHECKED BY : RDR 5/01 | REV. 5/7/03 RWW/JTE |
| | REV. 5/1/06RR KMM/GM |

| REVISIONS | | | | | | | SHEET NO. |
|---|---|---|---|---|---|---|---|
| NO. | BY: | DATE: | NO. | BY: | DATE: | | SW-1 |
| 1 | | | 3 | | | | TOTAL SHEETS |
| 2 | | | 4 | | | | 6 |

10-FEB-2012 11:13
Z:\TIPProjects-R\R2413c\Structures\FinalPlans\Str.#11\R2413C_sd_SBW_11.dgn
emurray

STR. #11

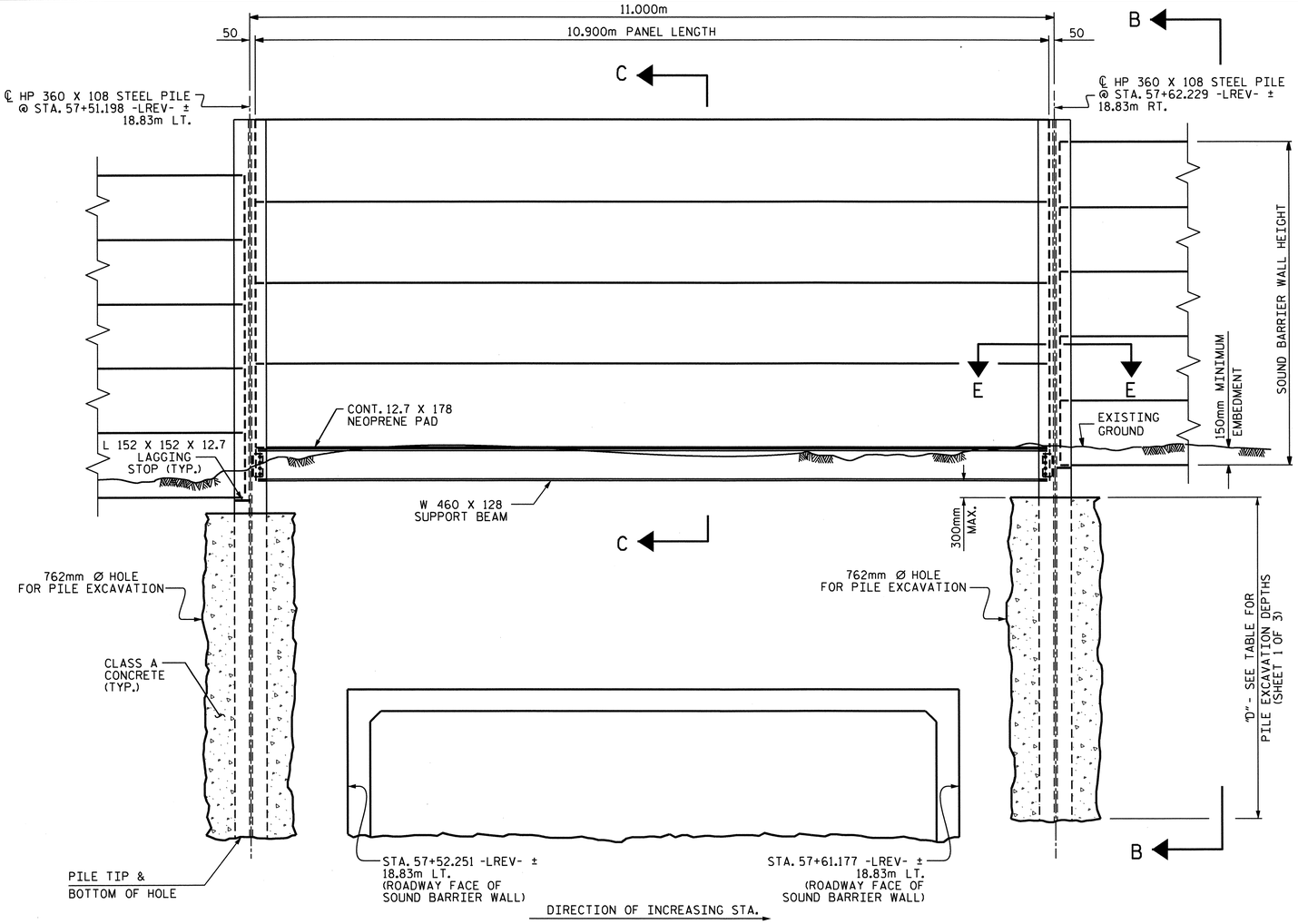


ELEVATION

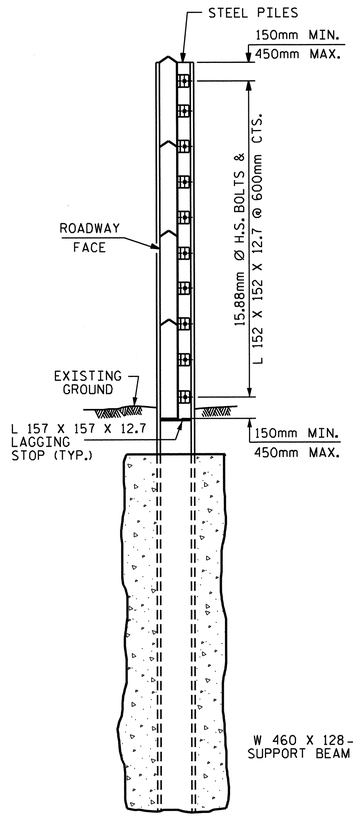


SECTION B-B

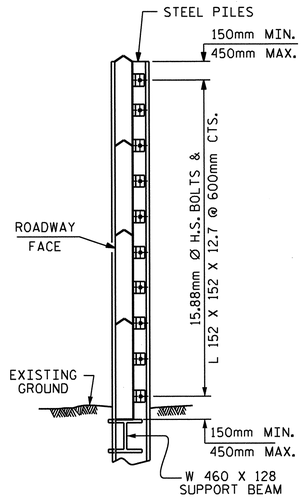


SECTION C-C

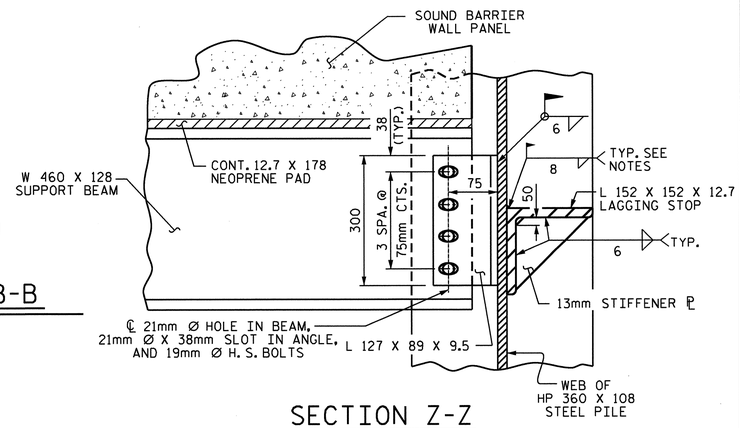


SECTION Z-Z

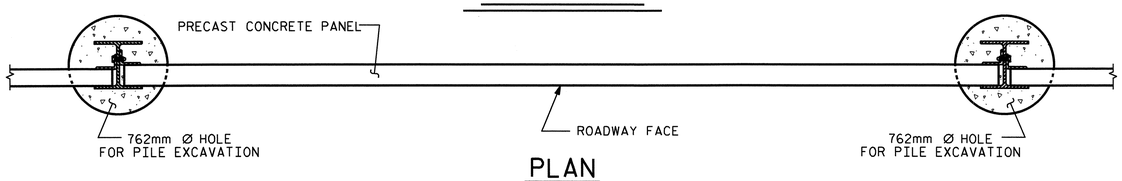


PLAN

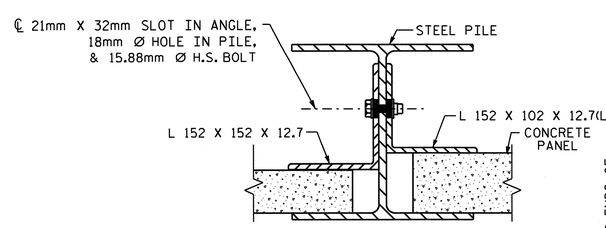


CONNECTION DETAIL

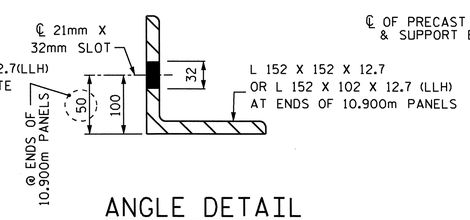


ANGLE DETAIL

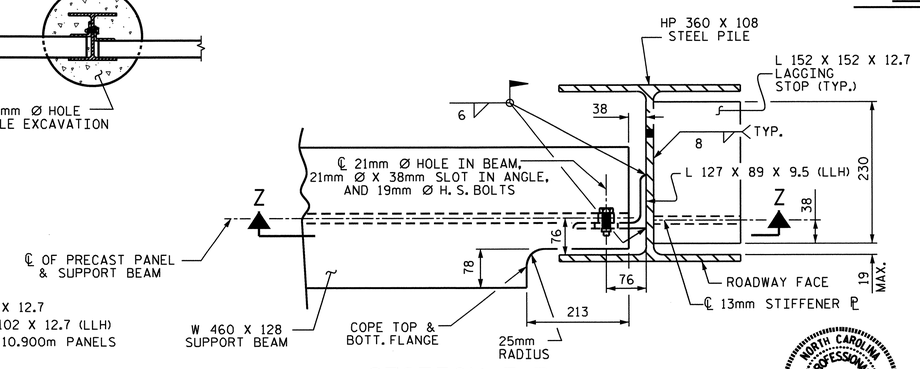


SECTION E-E

NOTE: PRECAST PANELS NOT SHOWN FOR CLARITY.

PROJECT NO. R-2413C

GUILFORD-ROCKINGHAM COUNTY

STATION: 56+58.570 -LREV-
10+00.00 -NW3-

SHEET 2 OF 6

STATE OF NORTH CAROLINA
DEPARTMENT OF TRANSPORTATION
RALEIGH

# SOUND BARRIER WALL

DETAILS FOR 11.000m PILE SPACING
FROM STA. 57+51.198 -LREV- ± TO 57+62.229 -LREV- ±

NORTH CAROLINA PROFESSIONAL SEAL 022516 ENGINEER EMCY E. MURRAY
11/22/11

| REVISIONS | | | | | | SHEET NO. SW-2 |
|---|---|---|---|---|---|---|
| NO. | BY: | DATE: | NO. | BY: | DATE: | TOTAL SHEETS 6 |
| 1 | | | 3 | | | |
| 2 | | | 4 | | | |

DRAWN BY : E. E. MURRAY DATE : 10/26/2011
CHECKED BY : _____ DATE : _____

22-NOV-2011 09:35
Z:\TIPProjects-R\R2413c\Structures\FinalPlans\Str.*11\R2413C_sd_SBW_13.dgn
emurray

STR. #11

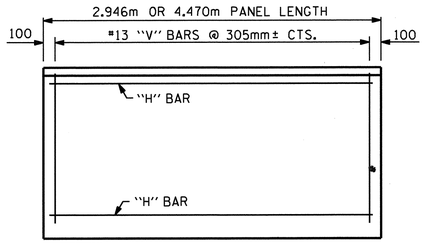


## FRONT ELEVATION OF UPPER PRECAST PANELS

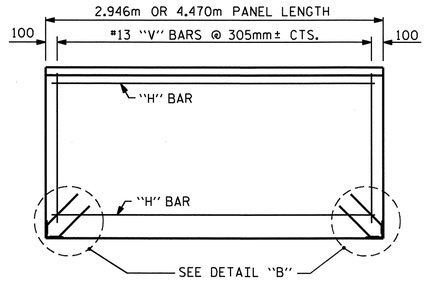


## FRONT ELEVATION OF BOTTOM PRECAST PANEL

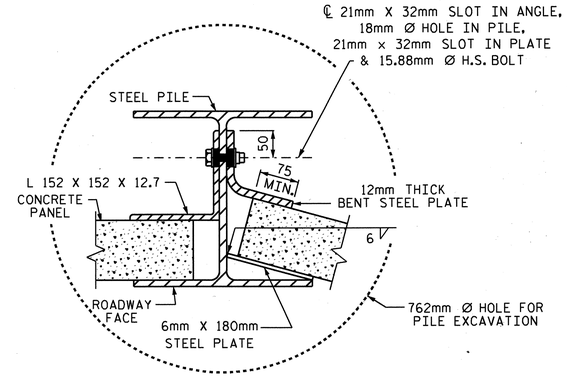


## TYPICAL WALL TURN DETAIL

(USE ONLY FOR TURNS 15° OR LESS, CONCAVE TOWARD ROADWAY)

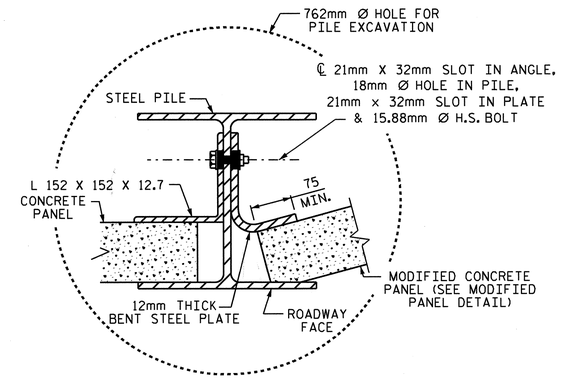


## TYPICAL WALL TURN DETAIL

(USE ONLY FOR TURNS 15° OR LESS, CONVEX TOWARD ROADWAY)

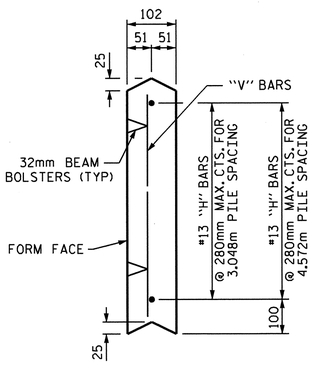


UPPER PANEL

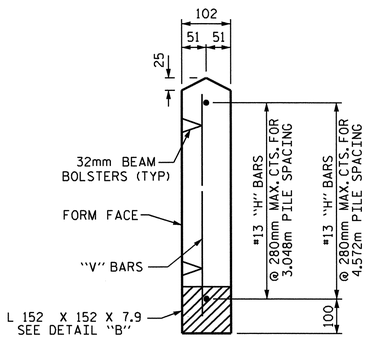


BOTTOM PANEL

## SECTION THROUGH PRECAST PANELS

(FOR 2.946m AND 4.470m PANELS)

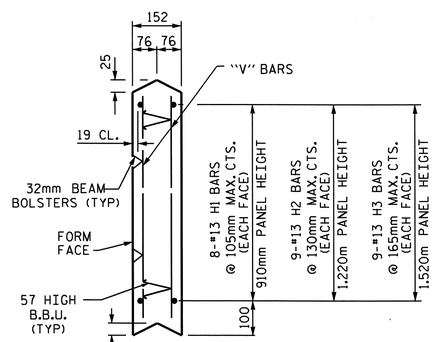


UPPER PANEL

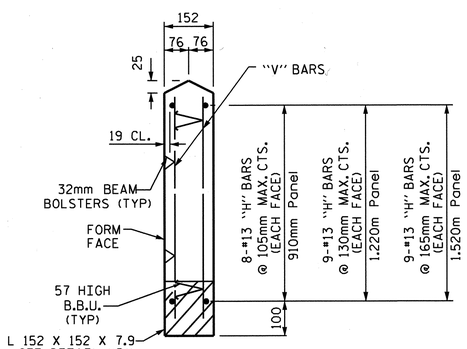


BOTTOM PANEL

## SECTION THROUGH PRECAST PANELS

(FOR 10.900m PANELS)

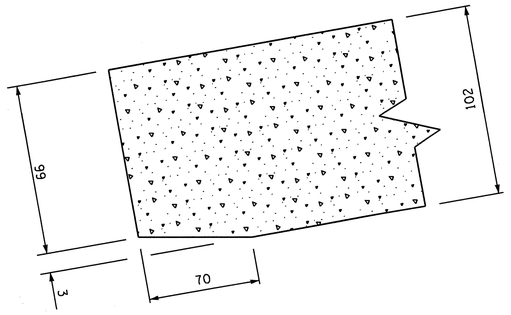


## MODIFIED PANEL DETAIL

(USE ONLY FOR TURNS 15° OR LESS, CONVEX TOWARD ROADWAY)

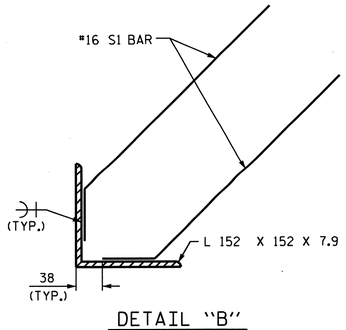


## DETAIL "B"

| ADDITIONAL BARS FOR ONE BOTTOM PANEL | | | | | |
|---|---|---|---|---|---|
| NO. | BAR | SIZE | TYPE | LENGTH | WEIGHT (kg) |
| 4 | S1 | #16 | 1 | 460 | 3 |
| | | | | | |
| | | | | | |

BAR TYPE

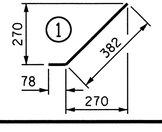


| QUANTITIES FOR ONE PRECAST PANEL (FOR 3.048m PILE SPACING) | | | | | | | | | | | | | |
|---|---|---|---|---|---|---|---|---|---|---|---|---|---|
| PANEL HEIGHT | CLASS AA CONCRETE | BAR TYPES | | | | | | | | | | | |
| | | HORIZONTAL | | | | | | VERTICAL | | | | | |
| | C.M. | NO. | BAR | SIZE | TYPE | LENGTH | WEIGHT (kg) | NO. | BAR | SIZE | TYPE | LENGTH | WEIGHT (kg) |
| 610 | 0.19 | 3 | H1 | #13 | STR | 2840 | 8 | 10 | V1 | #13 | STR | 500 | 5 |
| 910 | 0.28 | 4 | H2 | #13 | STR | 2840 | 11 | 10 | V2 | #13 | STR | 800 | 8 |
| 1220 | 0.37 | 5 | H3 | #13 | STR | 2840 | 14 | 10 | V3 | #13 | STR | 1120 | 11 |

| QUANTITIES FOR ONE PRECAST PANEL (FOR 4.572m PILE SPACING) | | | | | | | | | | | | | |
|---|---|---|---|---|---|---|---|---|---|---|---|---|---|
| PANEL HEIGHT | CLASS AA CONCRETE | BAR TYPES | | | | | | | | | | | |
| | | HORIZONTAL | | | | | | VERTICAL | | | | | |
| | C.M. | NO. | BAR | SIZE | TYPE | LENGTH | WEIGHT (kg) | NO. | BAR | SIZE | TYPE | LENGTH | WEIGHT (kg) |
| 910 | 0.42 | 4 | H1 | #13 | STR | 4360 | 17 | 15 | V1 | #13 | STR | 800 | 12 |
| 1220 | 0.56 | 5 | H2 | #13 | STR | 4360 | 22 | 15 | V2 | #13 | STR | 1120 | 17 |
| 1520 | 0.70 | 6 | H3 | #13 | STR | 4360 | 26 | 15 | V3 | #13 | STR | 1420 | 21 |
| 1830 | 0.84 | 7 | H4 | #13 | STR | 4360 | 30 | 15 | V4 | #13 | STR | 1720 | 26 |

| QUANTITIES FOR ONE PRECAST PANEL (FOR 11.000m PILE SPACING) | | | | | | | | | | | | | |
|---|---|---|---|---|---|---|---|---|---|---|---|---|---|
| PANEL HEIGHT | CLASS AA CONCRETE | BAR TYPES | | | | | | | | | | | |
| | | HORIZONTAL | | | | | | VERTICAL | | | | | |
| | C.M. | NO. | BAR | SIZE | TYPE | LENGTH | WEIGHT (kg) | NO. | BAR | SIZE | TYPE | LENGTH | WEIGHT (kg) |
| 910 | 1.51 | 16 | H1 | #13 | STR | 10800 | 172 | 72 | V1 | #13 | STR | 800 | 57 |
| 1220 | 2.02 | 18 | H2 | #13 | STR | 10800 | 193 | 72 | V2 | #13 | STR | 1120 | 80 |
| 1520 | 2.52 | 18 | H3 | #13 | STR | 10800 | 193 | 72 | V3 | #13 | STR | 1420 | 102 |

| BILL OF MATERIAL | |
|---|---|
| SOUND BARRIER WALL | 3,328.6 SQ. M. |
| | (35,830 SQ FT) |
| QUANTITIES PROVIDED ARE APPROXIMATE AND ARE FOR BID PURPOSES ONLY. | |

PROJECT NO. R-2413C

GUILFORD-ROCKINGHAM COUNTY

STATION: 56+58.570 -LREV-
10+00.000 -NW3-

SHEET 3 OF 6

STATE OF NORTH CAROLINA
DEPARTMENT OF TRANSPORTATION
RALEIGH

# SOUND BARRIER WALL DETAILS

NORTH CAROLINA PROFESSIONAL SEAL 022516 ENGINEER E.M.Y. & MURRAY
11/22/11

ASSEMBLED BY : E.E.MURRAY DATE : 10-25-11
CHECKED BY : T.L. AVERETTE DATE : 10-28-11

DRAWN BY : JAD 5/01
CHECKED BY : RDR 5/01

REV. 7/10/01 RWW/LES
REV. 5/7/03 RWW/JTE
REV. 5/1/06R KMM/GM

| REVISIONS | | | | | | SHEET NO. |
|---|---|---|---|---|---|---|
| NO. | BY: | DATE: | NO. | BY: | DATE: | SW-3 |
| 1 | | | 3 | | | TOTAL SHEETS |
| 2 | | | 4 | | | 6 |

STR. #11

22-NOV-2011 09:35
Z:\TIPProjects-R\R2413c\Structures\Final Plans\Str.#11\R2413C_sd_SBW_13.dgn
emurray

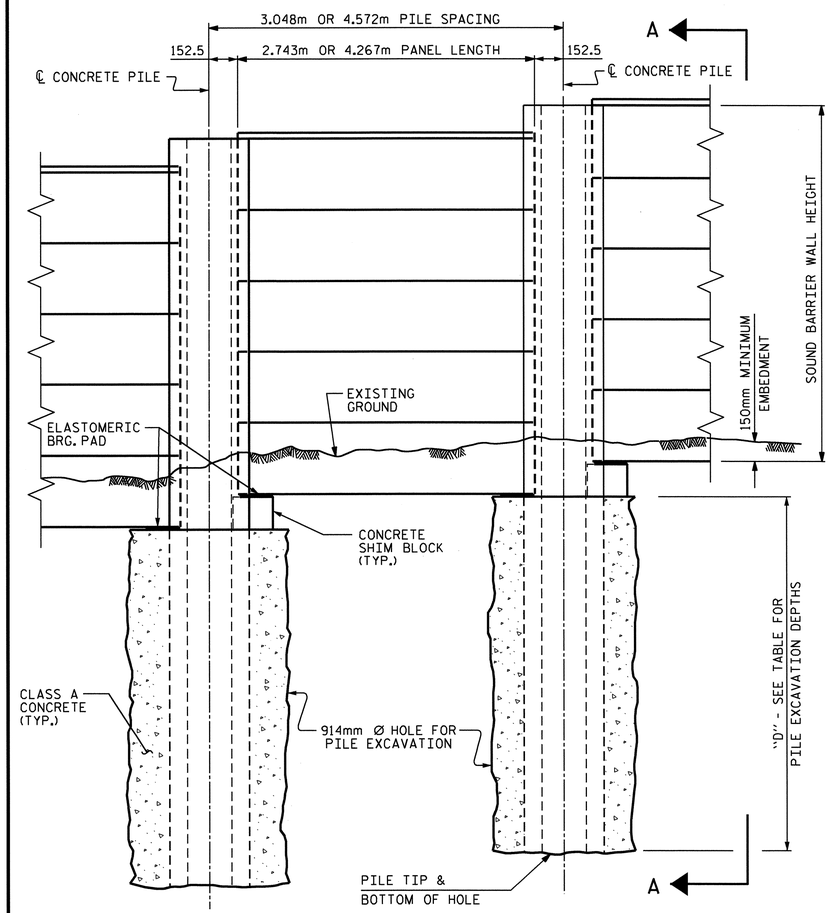


ELEVATION

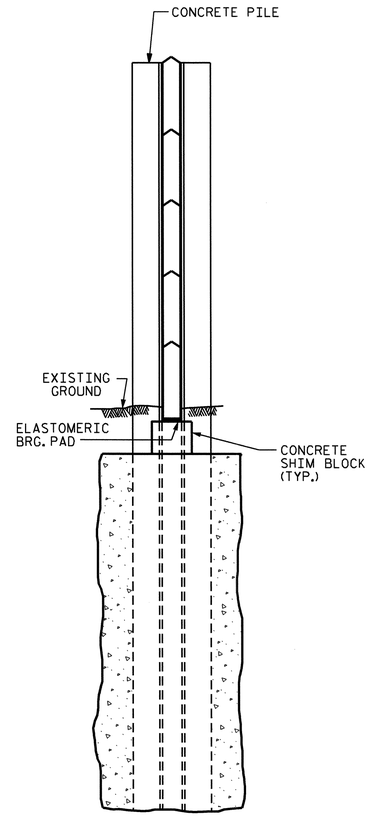


SECTION A-A

## 914mm Ø PILE EXCAVATION

| WALL #3 | WALL STATIONS<br>FROM : STA. 56+58.570 -LREV-, 18.830m LT.<br>TO : STA. 64+63.709 -LREV-, 22.430m LT. |
|---|---|

| WALL HEIGHT | DEPTH "D" FOR 3.048m PILE SPACING | DEPTH "D" FOR 4.572m PILE SPACING |
|---|---|---|
| < 4.57m | 3.96m | 4.57m |
| 4.57m ≤ H ≤ 6.10m | 4.88m | 6.40m |
| 6.10m < H ≤ 7.62m | 5.79m | 6.71m |

* PILES ADJACENT TO CULVERT SHALL BE STEEL AND HAVE A 762mm Ø PILE EXCAVATION HOLE TO A DEPTH OF 7.62m. FOR STEEL PILE AND 10.900m PANEL DETAILS, SEE SHEETS 2 & 3 OF 6.

## NOTES

FOR SOUND BARRIER WALL, SEE SPECIAL PROVISIONS.

CONSTRUCT SOUND BARRIER WALL TO LINES AND GRADES SHOWN ON THE ROADWAY PLANS.

PROVIDE PANELS WITH A FLAT BOTTOM.

VERIFY THE LOCATION OF UNDERGROUND UTILITIES BEFORE DRILLING HOLES TO ENSURE SUFFICIENT CLEARANCE IS AVAILABLE.

ADJUST PILE EXCAVATION ELEVATIONS TO MAINTAIN 150mm MINIMUM EMBEDMENT OF THE BOTTOM PANEL.

USE CLASS AA FOR PANELS AND CLASS A FOR CONCRETE PILE EXCAVATION BACKFILL, IN ACCORDANCE WITH ARTICLE 1000-4 OF THE STANDARD SPECIFICATIONS.

AT THE CONTRACTOR'S OPTION, USE EITHER 3.048m OR 4.572m PILE SPACINGS.

FOR SOUND BARRIER WALL STATIONS, OFFSETS, AND WALL ENVELOPE, SEE ROADWAY PLANS.

PLACE 25mm Ø BACKER RODS FULL HEIGHT ON EACH SIDE OF THE PRECAST PANELS. SET AND SEAL THE BACKER ROD IN PLACE WITH SEALANT THAT CONFORMS WITH ARTICLE 1028-4 OF THE STANDARD SPECIFICATIONS.

FOR SUBMITTAL OF WORKING DRAWINGS, SEE SPECIAL PROVISIONS.

FOR FALSEWORK AND FORMWORK, SEE SPECIAL PROVISIONS.

STEEL PILES SHALL BE USED ADJACENT TO CULVERT TO SUPPORT THE 10.900m PANELS. SEE SHEETS 1 THROUGH 3 OF 6 FOR DETAILS AND APPLICABLE NOTES.

## EXPOSURE CATEGORY B - PILE REINFORCING STEEL

DESIGN WIND PRESSURE =
0.958 kpa ( 0m < H ≤ 4.27m ); 1.197 kpa (4.27m < H ≤ 7.620m )

| PILE TYPE I | | | | PILE TYPE III | | | |
|---|---|---|---|---|---|---|---|
| PILE SPACING | MAXIMUM WALL HEIGHT ( H ) | VERTICAL REINFORCING STEEL | TIES | PILE SPACING | MAXIMUM WALL HEIGHT ( H ) | VERTICAL REINFORCING STEEL | TIES |
| 3.048m | H ≤ 7.62m | 4 - #19 EA. FACE | #10 @ 405mm CTS. | 3.048m | H ≤ 7.62m | 3 - #22 SHORT FACE<br>4 - #22 LONG FACE | #10 @ 405mm CTS. |
| 4.572m | H ≤ 7.62m | 4 - #22 EA. FACE | #10 @ 405mm CTS. | 4.572m | H ≤ 7.62m | 3 - #25 SHORT FACE<br>4 - #25 LONG FACE | #10 @ 405mm CTS. |

| PILE TYPE II | | | | PILE TYPE III ALT. | | | |
|---|---|---|---|---|---|---|---|
| PILE SPACING | MAXIMUM WALL HEIGHT ( H ) | VERTICAL REINFORCING STEEL | TIES | PILE SPACING | MAXIMUM WALL HEIGHT ( H ) | VERTICAL REINFORCING STEEL | TIES |
| 3.048m | H ≤ 7.62m | 4 - #19 EA. FACE | #10 @ 405mm CTS. | 3.048m | H ≤ 7.62m | 3 - #22 SHORT FACE<br>4 - #22 LONG FACE | #10 @ 405mm CTS. |
| 4.572m | H ≤ 7.62m | 4 - #19 EA. FACE | #10 @ 405mm CTS. | 4.572m | H ≤ 7.62m | 3 - #25 SHORT FACE<br>4 - #25 LONG FACE | #10 @ 405mm CTS. |

## BILL OF MATERIAL

| | |
|---|---|
| SOUND BARRIER WALL | 3,328.6 SQ. M.<br>(35,830 SQ. FT.) |

QUANTITIES PROVIDED ARE APPROXIMATE AND ARE FOR BID PURPOSES ONLY.

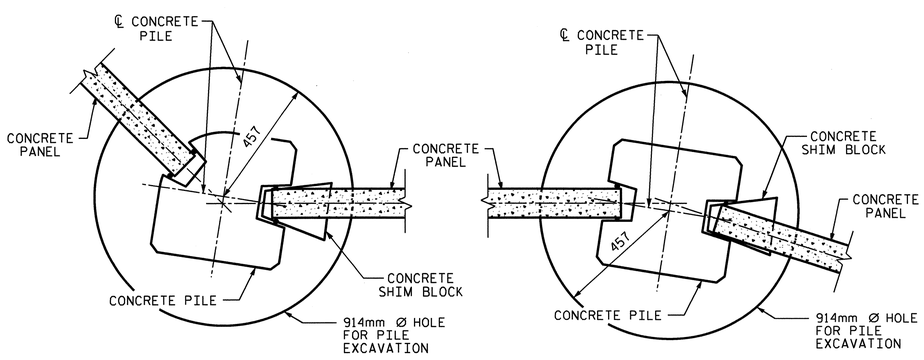


15° TO 45° TURNS
(PILE TYPE III)

0° TO 15° TURNS
(PILE TYPE I)

TYPICAL WALL TURN DETAILS

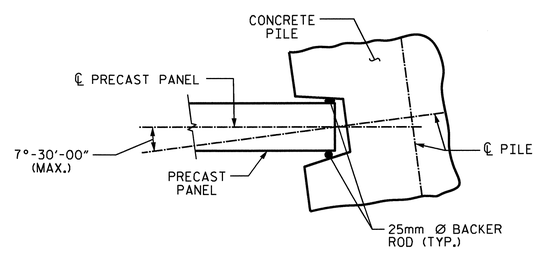


PILE ROTATION LIMIT FOR WALL TURN

(ROTATE THE CONCRETE PILE ±7°-30'-00" TO ACCOMODATE WALL TURN.)

NORTH CAROLINA PROFESSIONAL SEAL 12274 ENGINEER OMAR R. AZIZ
Omar R Aziz
11/22/11

NORTH CAROLINA PROFESSIONAL SEAL 022516 ENGINEER EMILY E. MURRAY
11/22/11

PROJECT NO. R-2413C
GUILFORD-ROCKINGHAM COUNTY
STATION: 56+58.570 -LREV-
10+00.000 -NW3-
SHEET 4 OF 6

STATE OF NORTH CAROLINA
DEPARTMENT OF TRANSPORTATION
RALEIGH

OPTIONAL
SOUND BARRIER WALL

| | |
|---|---|
| ASSEMBLED BY : E. E. MURRAY | DATE : 10-27-11 |
| CHECKED BY : T. L. AVERETTE | DATE : 10-27-11 |
| DRAWN BY : MAA 6/11 | ADDED 10/1/11 |
| CHECKED BY : GM 6/11 | |

| REVISIONS | | | | | | | SHEET NO. |
|---|---|---|---|---|---|---|---|
| NO. | BY: | DATE: | NO. | BY: | DATE: | | SW-4 |
| 1 | | | 3 | | | | TOTAL SHEETS |
| 2 | | | 4 | | | | 6 |

STR. #11

22-NOV-2011 09:35
Z:\TIPProjects-R\R2413c\Structures\FinalPlans\Str.#11\R2413C_sd_SBW_13.dgn
emurray

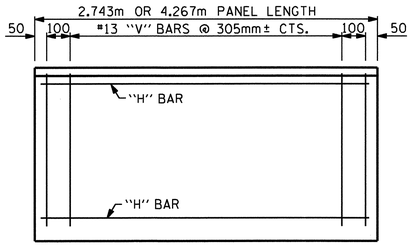


## FRONT ELEVATION OF UPPER PRECAST PANELS

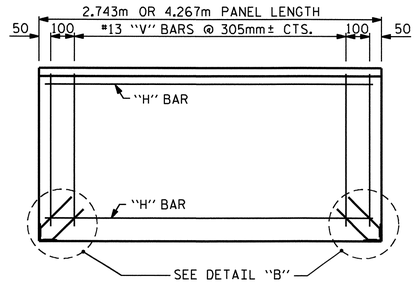


## FRONT ELEVATION OF BOTTOM PRECAST PANEL

| QUANTITIES FOR ONE PRECAST PANEL (FOR 3.048m PILE SPACING) | | | | | | | | | | | | | |
|---|---|---|---|---|---|---|---|---|---|---|---|---|---|
| PANEL HEIGHT | CLASS AA CONCRETE | BAR TYPES | | | | | | | | | | | |
| | | HORIZONTAL | | | | | | VERTICAL | | | | | |
| | C.M. | NO. | BAR | SIZE | TYPE | LENGTH | WEIGHT (kg) | NO. | BAR | SIZE | TYPE | LENGTH | WEIGHT (kg) |
| 610 | 0.17 | 3 | H1 | #13 | STR | 2640 | 8 | 11 | V1 | #13 | STR | 500 | 5 |
| 910 | 0.25 | 4 | H2 | #13 | STR | 2640 | 11 | 11 | V2 | #13 | STR | 800 | 9 |
| 1220 | 0.34 | 5 | H3 | #13 | STR | 2640 | 13 | 11 | V3 | #13 | STR | 1120 | 12 |

| QUANTITIES FOR ONE PRECAST PANEL (FOR 4.572m PILE SPACING) | | | | | | | | | | | | | |
|---|---|---|---|---|---|---|---|---|---|---|---|---|---|
| PANEL HEIGHT | CLASS AA CONCRETE | BAR TYPES | | | | | | | | | | | |
| | | HORIZONTAL | | | | | | VERTICAL | | | | | |
| | C.M. | NO. | BAR | SIZE | TYPE | LENGTH | WEIGHT (kg) | NO. | BAR | SIZE | TYPE | LENGTH | WEIGHT (kg) |
| 910 | 0.40 | 4 | H1 | #13 | STR | 4160 | 17 | 16 | V1 | #13 | STR | 800 | 13 |
| 1220 | 0.53 | 5 | H2 | #13 | STR | 4160 | 21 | 16 | V2 | #13 | STR | 1120 | 18 |
| 1520 | 0.66 | 6 | H3 | #13 | STR | 4160 | 25 | 16 | V3 | #13 | STR | 1420 | 23 |
| 1830 | 0.80 | 7 | H4 | #13 | STR | 4160 | 29 | 16 | V4 | #13 | STR | 1720 | 27 |

| ADDITIONAL BARS FOR ONE BOTTOM PANEL | | | | | |
|---|---|---|---|---|---|
| NO. | BAR | SIZE | TYPE | LENGTH | WEIGHT (kg) |
| 4 | S1 | 16 | 1 | 457 | 3 |
| | | | | | |
| | | | | | |

BAR TYPE

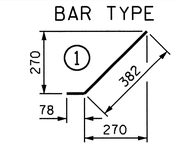


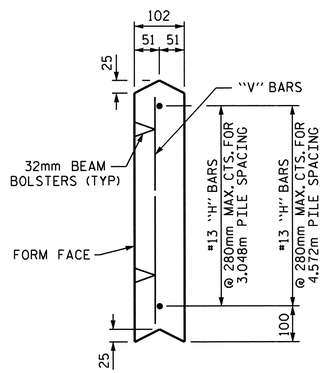


UPPER PANEL

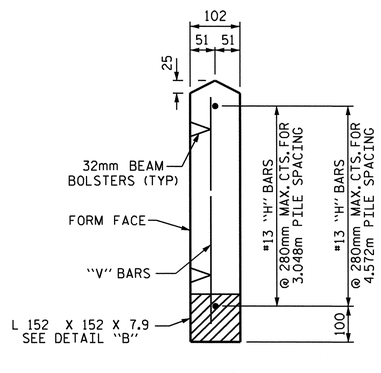


BOTTOM PANEL

## SECTION THROUGH PRECAST PANELS

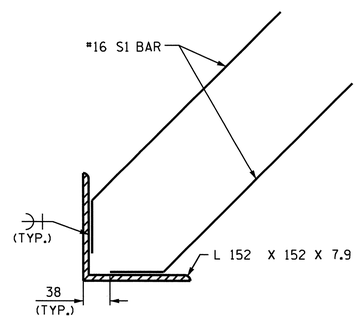


DETAIL "B"

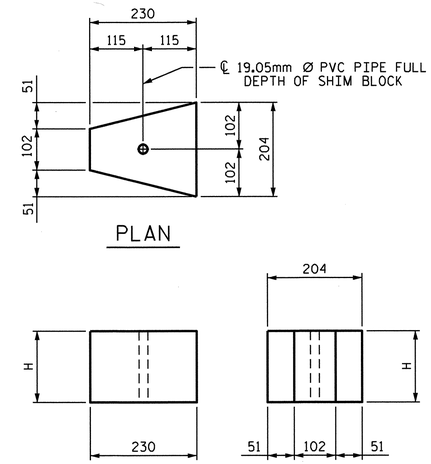


## CONCRETE SHIM BLOCK

H = 75mm, 150mm OR 305mm

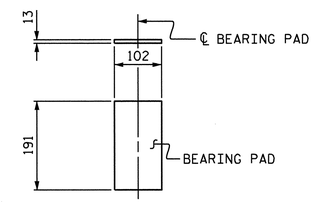


## ELASTOMERIC BEARING DETAILS

ELASTOMER IN BEARINGS SHALL BE 50 DUROMETER HARDNESS.

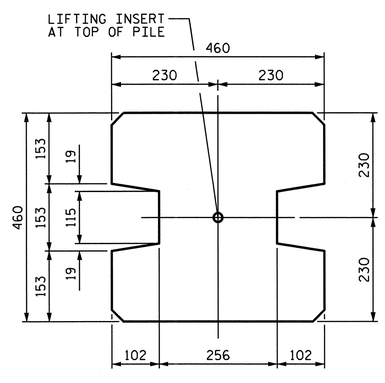


TYPE - I
(AREA = 0.181 SQ. M.)

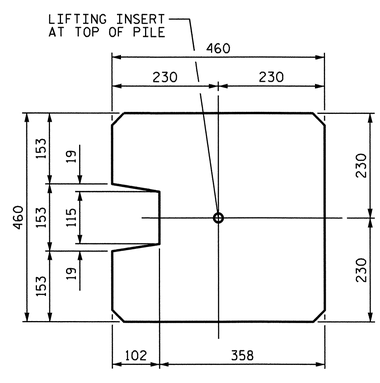


TYPE - II
(AREA = 0.194 SQ. M.)

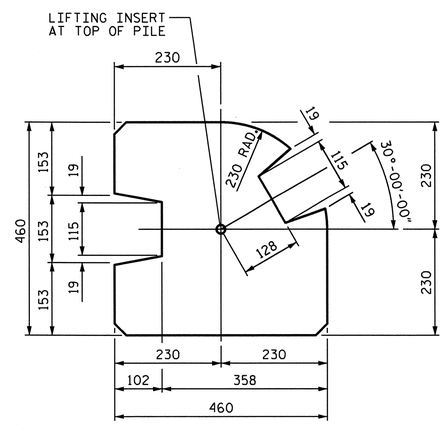


TYPE - III
(AREA = 0.170 SQ. M.)

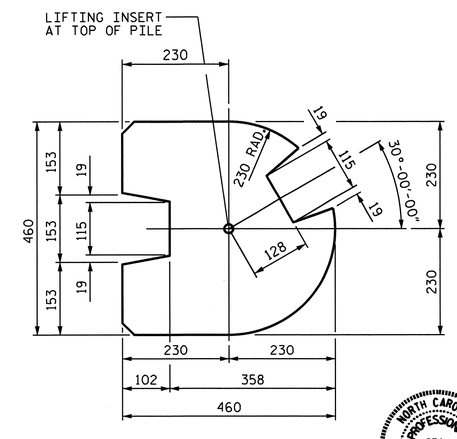


TYPE - III (ALT.)
(AREA = 0.159 SQ. M.)

## PILE DETAIL

(ALL CORNERS TO BE CHAMFERED 25mm)

PROJECT NO. R-2413C
GUILFORD-ROCKINGHAM COUNTY
STATION: 56+58.570 -LREV-
10+00.000 -NW3-

SHEET 5 OF 6

STATE OF NORTH CAROLINA
DEPARTMENT OF TRANSPORTATION
RALEIGH

# OPTIONAL SOUND BARRIER WALL DETAILS

NORTH CAROLINA PROFESSIONAL SEAL 022516 ENGINEER
EMMY E. MURRAY
11/22/11

| ASSEMBLED BY : E. E. MURRAY | DATE : 10-27-11 |
|---|---|
| CHECKED BY : T. L. AVERETTE | DATE : 10-27-11 |
| DRAWN BY : MAA 6/11 | ADDED 8/31/11 |
| CHECKED BY : GM 6/11 | |

| REVISIONS | | | | | | | | SHEET NO. |
|---|---|---|---|---|---|---|---|---|
| NO. | BY: | DATE: | NO. | BY: | DATE: | | | SW-5 |
| 1 | | | 3 | | | | | TOTAL SHEETS |
| 2 | | | 4 | | | | | 6 |

STR. #11

22-NOV-2011 09:35
Z:\TIPProjects-R\R2413c\Structures\FinalPlans\Str.#11\R2413C_sd_SBW_13.dgn
emurray

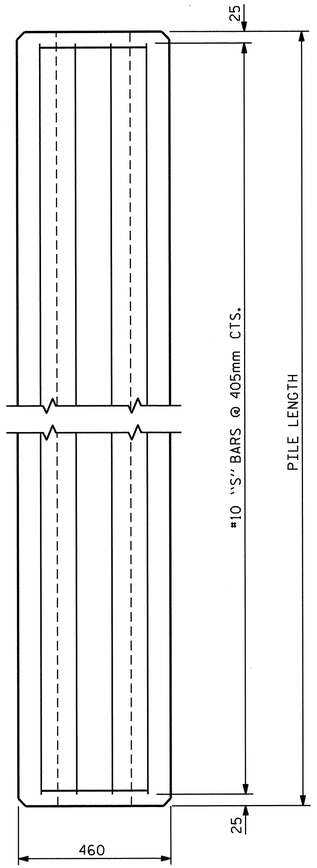


ELEVATION

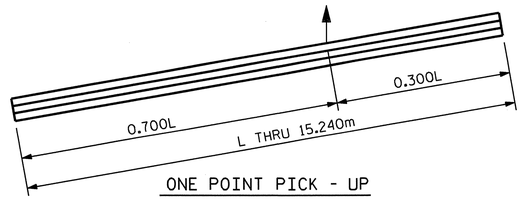


ONE POINT PICK - UP

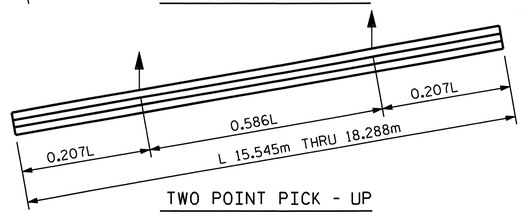


TWO POINT PICK - UP

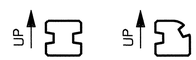


PICK - UP POINTS

## NOTES

CONCRETE DESIGN DATA : f'c = 34.47 MPa

PROPOSED DEVICES FOR LIFTING PILES, RECESS DETAILS, AND PATCHING MATERIAL SHALL BE DETAILED IN SHOP DRAWINGS. AFTER ATTACHMENTS HAVE BEEN REMOVED, OPENINGS SHALL BE REPAIRED SUCH THAT THE APPEARANCE OF THE PILE IS UNIFORM.

WHERE CAST-IN-PLACE LIFTING DEVICES ARE NOT USED, PICK-UP POINTS TO BE INDICATED WITH A BLACK MARK 50mm WIDE.

THE SLIP-FORM METHOD OF CASTING PILES WILL NOT BE PERMITTED.

ALL CORNERS TO BE CHAMFERED 25mm.

## QUANTITIES FOR ONE PRECAST CONCRETE PILE

| LENGTH | APPROX. PILE WT. METRIC TONS | ONE PICK-UP POINT | | TWO PICK-UP POINT | |
|---|---|---|---|---|---|
| | | 0.300L | 0.700L | 0.207L | 0.586L |
| 3.048m | 1.42 | 914mm | 2.134m | | |
| 4.572m | 2.13 | 1.372m | 3.200m | | |
| 6.096m | 2.85 | 1.829m | 4.267m | | |
| 7.620m | 3.57 | 2.286m | 5.334m | | |
| 9.144m | 4.26 | 2.743m | 6.401m | | |
| 10.668m | 4.98 | 3.200m | 7.468m | | |
| 12.192m | 5.70 | 3.658m | 8.534m | | |
| 13.716m | 6.40 | 4.115m | 9.601m | | |
| 15.240m | 7.11 | 4.572m | 10.668m | | |
| 16.764m | 7.83 | | | 3.470m | 9.824m |
| 18.288m | 8.55 | | | 3.786m | 10.717m |

## BAR TYPES

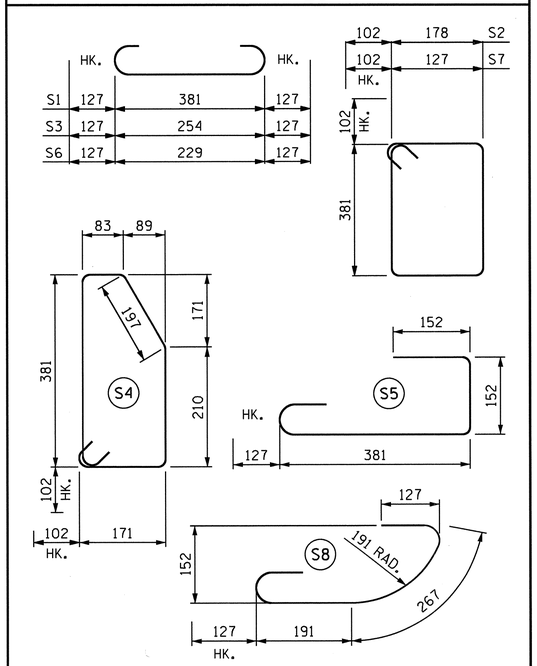


ALL BAR DIMENSIONS ARE OUT TO OUT.

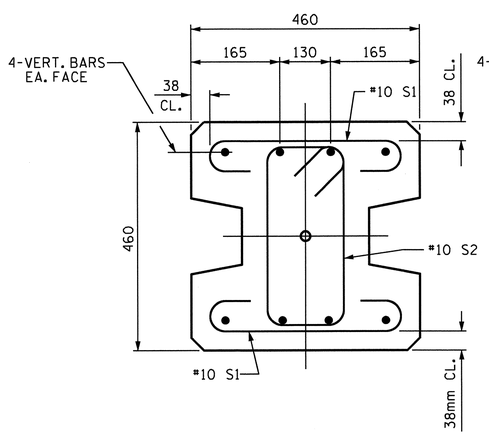


TYPE - I

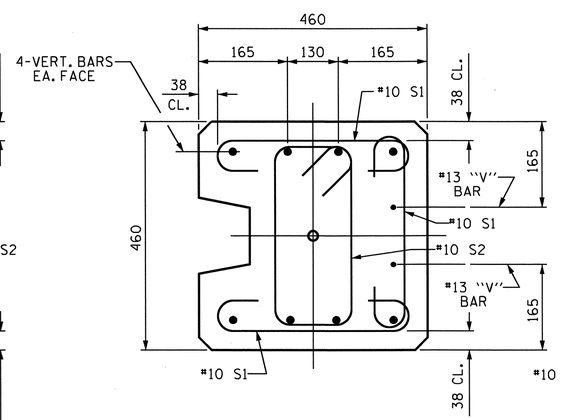


TYPE - II

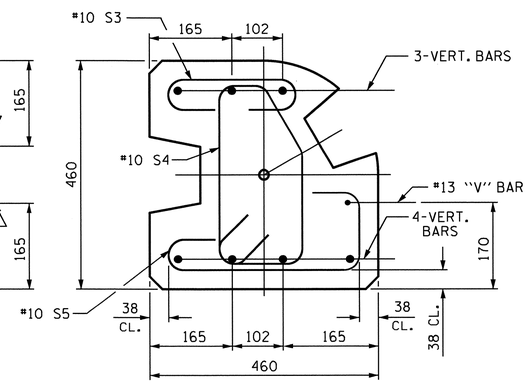


TYPE - III

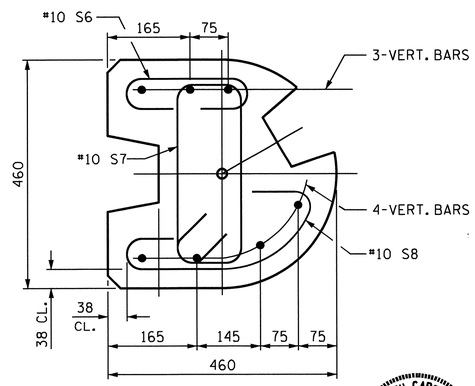


TYPE - III (ALT.)

## PILE DETAIL

SEE EXPOSURE CATEGORY CHART FOR VERT. BAR PILE REINFORCING (SHEET 1 OF 3)

NORTH CAROLINA PROFESSIONAL SEAL 022516 ENGINEER EMILY E. MURRAY

11/22/11

PROJECT NO. R-2413C

GUILFORD-ROCKINGHAM COUNTY

STATION: 56+58.570 -LREV-
10+00.000 -NW3-

SHEET 6 OF 6

STATE OF NORTH CAROLINA
DEPARTMENT OF TRANSPORTATION
RALEIGH

# OPTIONAL SOUND BARRIER WALL DETAILS

| REVISIONS | | | | | | | |
|---|---|---|---|---|---|---|---|
| NO. | BY: | DATE: | NO. | BY: | DATE: | | |
| 1 | | | 3 | | | | |
| 2 | | | 4 | | | | |

SHEET NO. SW-6

TOTAL SHEETS 6

| | | |
|---|---|---|
| ASSEMBLED BY : E. E. MURRAY | | DATE : 10-27-11 |
| CHECKED BY : T. L. AVERETTE | | DATE : 10-27-11 |
| DRAWN BY : MAA 6/11 | ADDED | 8/31/11 |
| CHECKED BY : GM 6/11 | | |

22-NOV-2011 09:35
Z:\TIPProjects-R\R2413c\Structures\FinalPlans\Str.#11\R2413C_sd_SBW_13.dgn
emurray

STR. #11

# STANDARD NOTES

## DESIGN DATA:

| | |
|---|---|
| SPECIFICATIONS | A.A.S.H.T.O. (CURRENT) |
| LIVE LOAD | SEE PLANS |
| IMPACT ALLOWANCE | SEE A.A.S.H.T.O. |
| STRESS IN EXTREME FIBER OF | |
| STRUCTURAL STEEL - AASHTO M270 GRADE 250 | 140 MPa |
| - AASHTO M270 GRADE 345W | 190 MPa |
| - AASHTO M270 GRADE 345 | 190 MPa |
| REINFORCING STEEL IN TENSION | |
| GRADE 420 | 165 MPa |
| CONCRETE IN COMPRESSION | 8.3 MPa |
| CONCRETE IN SHEAR | SEE A.A.S.H.T.O. |
| STRUCTURAL TIMBER - TREATED OR | |
| UNTREATED - EXTREME FIBER STRESS | 12 MPa |
| COMPRESSION PERPENDICULAR TO GRAIN OF TIMBER | 2.6 MPa |
| EQUIVALENT FLUID PRESSURE OF EARTH | 480 $kg/m^3$ (MINIMUM) |

## MATERIAL AND WORKMANSHIP:

EXCEPT AS MAY OTHERWISE BE SPECIFIED ON PLANS OR IN THE SPECIAL PROVISIONS, ALL MATERIAL AND WORKMANSHIP SHALL BE IN ACCORDANCE WITH THE 2006 "STANDARD SPECIFICATIONS FOR ROADS AND STRUCTURES" OF THE N. C. DEPARTMENT OF TRANSPORTATION.

STEEL SHEET PILING FOR PERMANENT OR TEMPORARY APPLICATIONS SHALL BE HOT ROLLED.

## CONCRETE:

UNLESS OTHERWISE REQUIRED ON PLANS, CLASS A CONCRETE SHALL BE USED FOR ALL PORTIONS OF ALL STRUCTURES WITH THE EXCEPTION THAT: CLASS AA CONCRETE SHALL BE USED IN BRIDGE SUPERSTRUCTURES, ABUTMENT BACKWALLS, AND APPROACH SLABS; CLASS B CONCRETE SHALL BE USED FOR SLOPE PROTECTION AND RIP RAP; AND CLASS S SHALL BE USED FOR UNDERWATER FOOTING SEALS.

## CONCRETE CHAMFERS:

UNLESS OTHERWISE NOTED ON THE PLANS, ALL EXPOSED CORNERS ON STRUCTURES SHALL BE CHAMFERED 19mm WITH THE FOLLOWING EXCEPTIONS: TOP CORNERS OF CURBS MAY BE ROUNDED TO 38mm RADIUS WHICH IS BUILT INTO CURB FORMS; CORNERS OF TRANSVERSE FLOOR EXPANSION JOINTS SHALL BE ROUNDED WITH A 6mm FINISHING TOOL UNLESS OTHERWISE REQUIRED ON PLANS; AND CORNERS OF EXPANSION JOINTS IN THE ROADWAY FACES AND TOPS OF CURBS AND SIDEWALKS SHALL BE ROUNDED TO A 6mm RADIUS WITH A FINISHING STONE OR TOOL UNLESS OTHERWISE REQUIRED ON PLANS.

## DOWELS:

DOWELS WHEN INDICATED ON PLANS AS FOR CULVERT EXTENSIONS, SHALL BE EMBEDDED AT LEAST 300mm INTO THE OLD CONCRETE AND GROUTED INTO PLACE WITH 1 :2 CEMENT MORTAR.

## ALLOWANCE FOR DEAD LOAD DEFLECTION, SETTLEMENT, ETC. IN CASTING SUPERSTRUCTURES:

BRIDGES SHALL BE BUILT ON THE GRADE OR VERTICAL CURVE SHOWN ON PLANS. SLABS, CURBS AND PARAPETS SHALL CONFORM TO THE GRADE OR CURVE.

ALL DIMENSIONS WHICH ARE GIVEN IN SECTION AND ARE AFFECTED BY DEAD LOAD DEFLECTIONS ARE DIMENSIONS AT CENTER LINE OF BEARING UNLESS OTHERWISE NOTED ON PLANS. IN SETTING FORMS FOR STEEL BEAM BRIDGES AND PRESTRESSED CONCRETE GIRDER BRIDGES, ADJUSTMENTS SHALL BE MADE DUE TO THE DEAD LOAD DEFLECTIONS FOR THE ELEVATIONS SHOWN. WHERE BLOCKS ARE SHOWN OVER BEAMS FOR BUILDING UP TO THE SLAB, THE VERTICAL DIMENSIONS OF THE BLOCKS SHALL BE ADJUSTED BETWEEN BEARINGS TO COMPENSATE FOR DEAD LOAD DEFLECTIONS, VERTICAL CURVE ORDINATE, AND ACTUAL BEAM CAMBER. WHERE BOTTOM OF SLAB IS IN LINE WITH BOTTOM OF TOP FLANGES, DEPTH OF SLAB BETWEEN BEARINGS SHALL BE ADJUSTED TO COMPENSATE FOR DEAD LOAD DEFLECTION, VERTICAL CURVE ORDINATE, AND ACTUAL BEAM CAMBER.

IN SETTING FALSEWORK AND FORMS FOR REINFORCED CONCRETE SPANS, AN ALLOWANCE SHALL BE MADE FOR DEAD LOAD DEFLECTIONS, SETTLEMENT OF FALSEWORK, AND PERMANENT CAMBER WHICH SHALL BE PROVIDED FOR IN ADDITION TO THE ELEVATIONS SHOWN. AFTER REMOVAL OF THE FALSEWORK, THE FINISHED STRUCTURES SHALL CONFORM TO THE PROFILE AND ELEVATIONS SHOWN ON THE PLANS AND CONSTRUCTION ELEVATIONS FURNISHED BY THE ENGINEER.

DETAILED DRAWINGS FOR FALSEWORK OR FORMS FOR BRIDGE SUPERSTRUCTURE AND ANY STRUCTURE OR PARTS OF A STRUCTURE AS NOTED ON THE PLANS SHALL BE SUBMITTED TO THE ENGINEER FOR APPROVAL BEFORE CONSTRUCTION OF THE FALSEWORK OR FORMS IS STARTED.

## REINFORCING STEEL:

ALL REINFORCING STEEL SHALL BE DEFORMED. DIMENSIONS RELATIVE TO PLACEMENT OF REINFORCING ARE TO CENTERS OF BARS UNLESS OTHERWISE INDICATED IN THE PLANS. DIMENSIONS ON BAR DETAILS ARE TO CENTERS OF BARS OR ARE OUT TO OUT AS INDICATED ON PLANS.

WIRE BAR SUPPORTS SHALL BE PROVIDED FOR REINFORCING STEEL WHERE INDICATED ON THE PLANS. WHEN BAR SUPPORT PIECES ARE PLACED IN CONTINUOUS LINES, THEY SHALL BE SO PLACED THAT THE ENDS OF THE SUPPORTING WIRES SHALL BE LAPPED TO LOCK LEGS ON ADJOINING PIECES.

## STRUCTURAL STEEL:

AT THE CONTRACTOR'S OPTION, HE MAY SUBSTITUTE 22.23mm Ø SHEAR STUDS FOR THE 19.05mm Ø STUDS SPECIFIED ON THE PLANS. THIS SUBSTITUTION SHALL BE MADE AT THE RATE OF 3 -22.23mm Ø STUDS FOR 4 - 19.05mm Ø STUDS, AND STUD SPACING CHANGES SHALL BE MADE AS NECESSARY TO PROVIDE THE SAME EQUIVALENT NUMBER OF 22.23mm Ø STUDS ALONG THE BEAM AS SHOWN FOR 19.05mm Ø STUDS BASED ON THE RATIO OF 3 - 22.23mm Ø STUDS FOR 4 - 19.05mm Ø STUDS. STUDS OF THE LENGTH SPECIFIED ON THE PLANS MUST BE PROVIDED. THE MAXIMUM SPACING SHALL BE 610mm.

EXCEPT AT THE INTERIOR SUPPORTS OF CONTINUOUS BEAMS WHERE THE COVER PLATE IS IN CONTACT WITH BEARING PLATE, THE CONTRACTOR MAY, AT HIS OPTION, SUBSTITUTE FOR THE COVER PLATES DESIGNATED ON THE PLANS COVER PLATES OF THE EQUIVALENT AREA PROVIDED THESE PLATES ARE AT LEAST 8mm IN THICKNESS AND DO NOT EXCEED A WIDTH EQUAL TO THE FLANGE WIDTH LESS 50mm OR A THICKNESS EQUAL TO 2 TIMES THE FLANGE THICKNESS. THE SIZE OF FILLET WELDS SHALL CONFORM TO THE REQUIREMENTS OF THE CURRENT ANSI/AASHTO/AWS "BRIDGE WELDING CODE". ELECTROSLAG WELDING WILL NOT BE PERMITTED.

PLACEMENT OF BEAM OR GIRDER MEMBERS ON TRUCKS FOR HAULING SHALL BE DONE IN COMPLIANCE WITH LIMITS SHOWN ON SKETCHES PROVIDED TO THE MATERIALS AND TEST UNIT APPROVED BY THE STRUCTURE DESIGN UNIT DATED MAY 8, 1991. THESE SKETCHES PRIMARILY LIMIT THE UNSUPPORTED CANTILEVER LENGTH OF MEMBERS. WHEN THE CONTRACTOR WISHES TO PLACE MEMBERS ON TRUCKS NOT IN ACCORDANCE WITH THESE LIMITS, TO SHIP BY RAIL, TO ATTACH SHIPPING RESTRAINTS TO THE MEMBERS OR TO INVERT MEMBERS, HE SHALL SUBMIT A SKETCH FOR APPROVAL PRIOR TO SHIPPING. SEE ALSO ARTICLE 1072-1 1.

WITH THE SOLE EXCEPTION OF EDGES AT SURFACES WHICH BEAR ON OTHER SURFACES, ALL SHARP EDGES AND ENDS OF SHAPES AND PLATES SHALL BE SLIGHTLY ROUNDED BY SUITABLE MEANS TO A RADIUS OF APPROXIMATELY 2mm OR EQUIVALENT FLAT SURFACE AT A SUITABLE ANGLE PRIOR TO PAINTING, GALVANIZING, OR METALLIZING.

## HANDRAILS AND POSTS:

METAL STANDARDS AND FACES OF THE CONCRETE END POSTS FOR THE METAL RAIL SHALL BE SET NORMAL TO THE GRADE OF THE CURB, UNLESS OTHERWISE SHOWN ON PLANS. THE METAL RAIL AND TOPS OF CONCRETE POSTS USED WITH THE ALUMINUM RAIL SHALL BE BUILT PARALLEL TO THE GRADE OF THE CURB.

METAL HANDRAILS SHALL BE IN ACCORDANCE WITH THE PLANS. RAILS SHALL BE AS MANUFACTURED FOR BRIDGE RAILING. CASTINGS SHALL BE OF A UNIFORM APPEARANCE. FINS AND OTHER DEFORMATIONS RESULTING FROM CASTING OR OTHERWISE SHALL BE REMOVED IN A MANNER SO THAT A UNIFORM COLORING OF THE COMPLETED CASTING SHALL BE OBTAINED. CASTINGS WITH DISCOLORATIONS OR OF NON-UNIFORM COLORING WILL NOT BE ACCEPTED. CERTIFIED MILL REPORTS ARE REQUIRED FOR METAL RAILS AND POSTS.

## SPECIAL NOTES:

GENERALLY, IN CASE OF DISCREPANCY, THIS STANDARD SHEET OF NOTES SHALL GOVERN OVER THE SPECIFICATIONS, BUT THE REMAINDER OF THE PLANS SHALL GOVERN OVER NOTES HEREON, AND SPECIAL PROVISIONS SHALL GOVERN OVER ALL. SEE SPECIFICATIONS ARTICLE 105-4.

METRIC

JANUARY, 1990