| STATE | STATE PROJECT REFERENCE NO. | SHEET NO. |
|---|---|---|
| N.C. | R-2309AB/R-2413C | |

| STATE PROJ. NO. | F.A. PROJ. NO. | DESCRIPTION |
|---|---|---|
| 34418.1.4 | STP-220(5) | P.E. (R-2309AB) |
| 34418.2.3 | STPNHS-0220(5) | R/W & UTIL (R-2309AB) |
| 6.499002T | | P.E. & R/W (R-2413C) |
| 34429.3.7 | | UTIL & CONST (R-2413C) |
| 34418.3.5 | STPNHS-0220(25) | CONST. |
| | | |
| | | |
| | | |

STATE OF NORTH CAROLINA
DIVISION OF HIGHWAYS

# GUILFORD–ROCKINGHAM COUNTIES

**LOCATION: US 220 FROM SR 2182 (HORSEPEN CREEK RD.) TO THE INTERSECTION OF US 220 AND EXISTING NC 68**

**TYPE OF WORK: GRADING, DRAINAGE, PAVING, SIGNING, SIGNALS, CULVERTS AND STRUCTURES**

CONTRACT: C200800 & C200800B

TIP PROJECT: R-2309AB & R-2413C

STRUCTURES

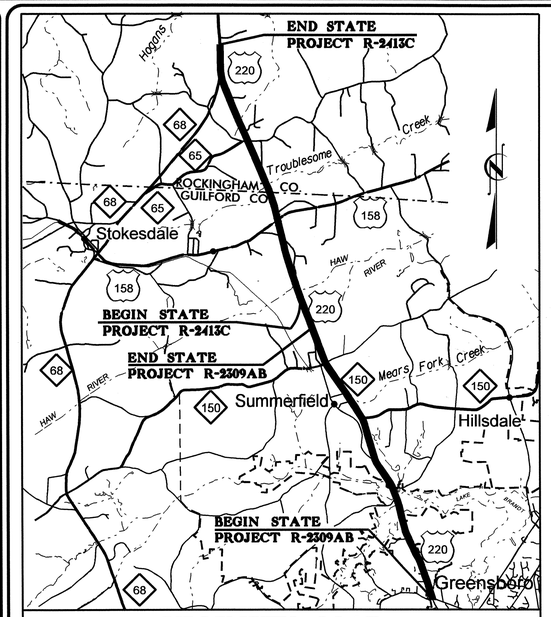


VICINITY MAP

NAD 83

## PART I (R-2309AB) (ENGLISH)

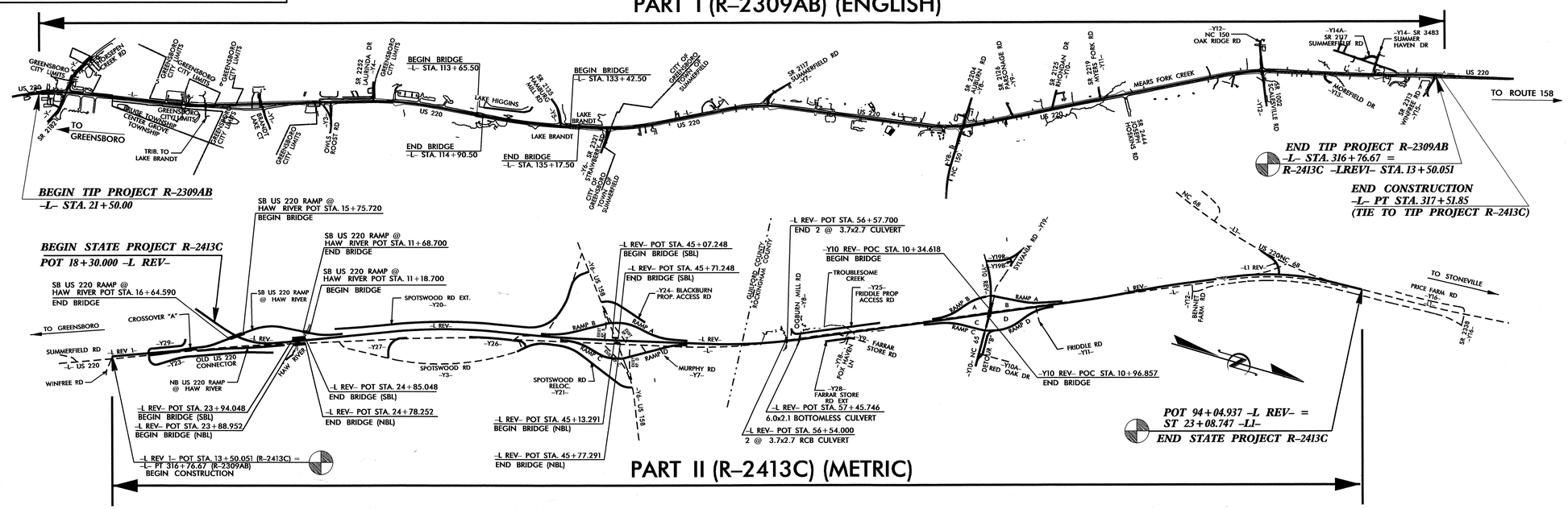


## PART II (R-2413C) (METRIC)

## PROJECT LENGTH

| | | |
|---|---|---|
| LENGTH ROADWAY TIP PROJECT R-2309AB | = | 5.535 MI |
| LENGTH STRUCTURES TIP PROJECT R-2309AB | = | 0.057 MI |
| TOTAL LENGTH OF TIP PROJECT R-2309AB | = | 5.592 MI |
| LENGTH ROADWAY TIP PROJECT R-2413C | = | 4.606 MI (7.413 KM) |
| LENGTH STRUCTURES TIP PROJECT R-2413C | = | 0.101 MI (0.162 KM) |
| TOTAL LENGTH OF TIP PROJECT R-2413C | = | 4.707 MI (7.575 KM) |
| LENGTH ROADWAY TIP PROJECT R-2309AB/R-2413C | = | 10.141 MI |
| LENGTH STRUCTURES TIP PROJECT R-2309AB/R-2413C | = | 0.158 MI |
| TOTAL LENGTH OF TIP PROJECT R-2309AB/R-2413C | = | 10.299 MI |

Prepared in the Office of:

**DIVISION OF HIGHWAYS**

2006 STANDARD SPECIFICATIONS

LETTING DATE:
FEBRUARY 21, 2012


OMAR R. AZIZI, P.E.
PROJECT ENGINEER

TIMOTHY L. COGGINS, P.E.
R-2309AB PROJECT DESIGN ENGINEER

STRUCTURE DESIGN UNIT
1000 Birch Ridge Dr.
Raleigh, N.C. 27610


DIVISION OF HIGHWAYS
STATE OF NORTH CAROLINA

31-OCT-2011 14:48
$$$$$$$$$$$$$$$$DGN$$$$$$$$$$$$$$$$

| STATE | STATE PROJECT REFERENCE NO. | SHEET NO. | TOTAL SHEETS |
|---|---|---|---|
| N.C. | R–2309AB | | |

| STATE PROJ. NO. | F. A. PROJ. NO. | DESCRIPTION |
|---|---|---|
| 34418.1.4 | STP–220(5) | P.E. |
| 34418.2.3 | STPNHS–0220(5) | R/W & UTIL. |
| 34418.3.5 | STPNHS–0220(25) | CONST. |

STATE OF NORTH CAROLINA
DIVISION OF HIGHWAYS

# GUILFORD COUNTY

***LOCATION: US 220 FROM SR 2182 (HORSEPEN CREEK RD.) TO 0.2 MILES NORTH OF SR 2313 (WINFREE RD.) IN GREENSBORO***

***TYPE OF WORK: GRADING, DRAINAGE, PAVING, SIGNALS, CULVERTS AND STRUCTURES***

# PART 1 0F 2

TIP PROJECT: R–2309AB

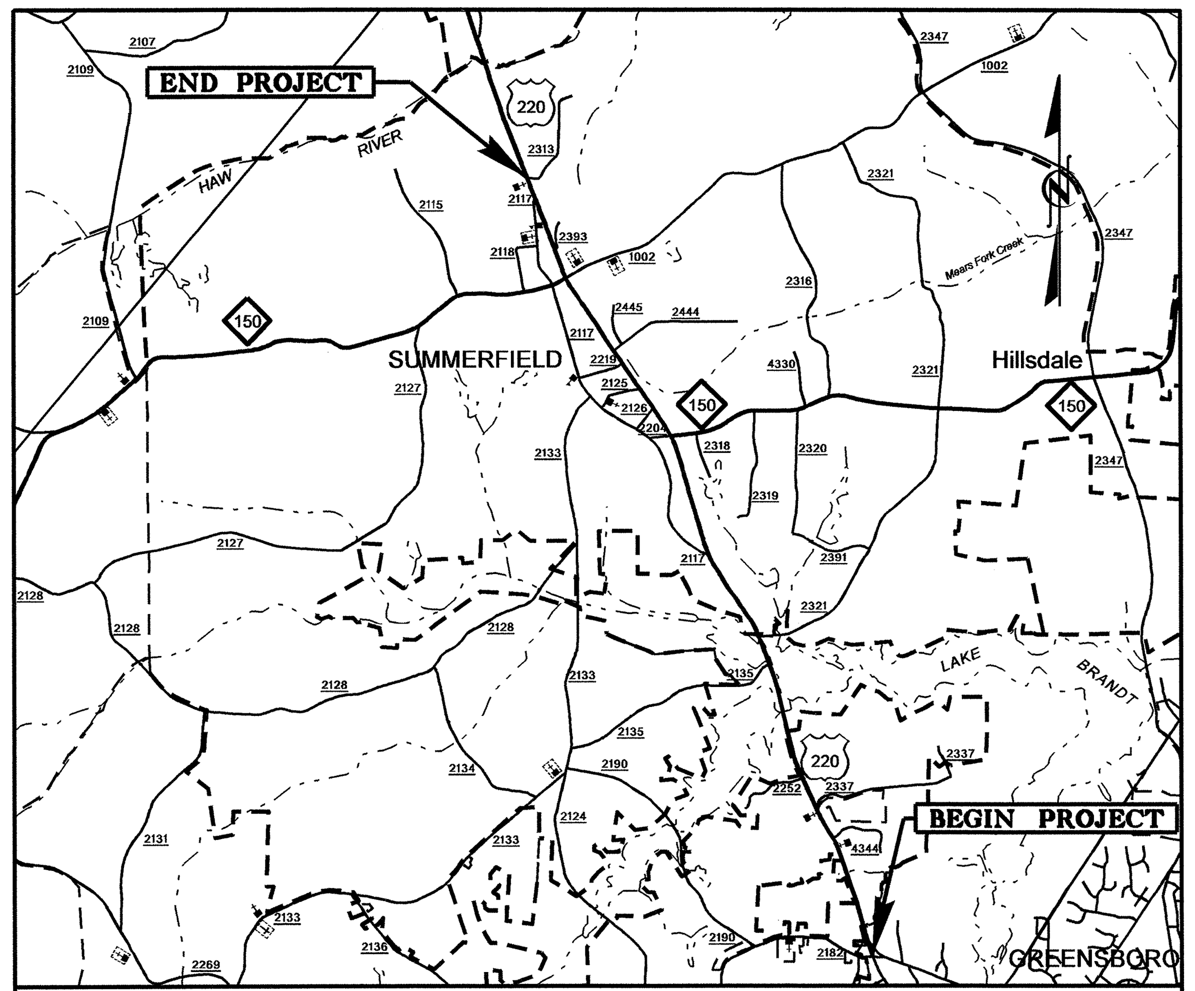


***VICINITY MAP***

NAD 83

***BEGIN TIP PROJECT R–2309AB***
***–L– STA. 21+50.00***

***END CONSTRUCTION***
***–L– PT STA. 317+51.85***
***(TIE TO TIP PROJECT R–2413C)***

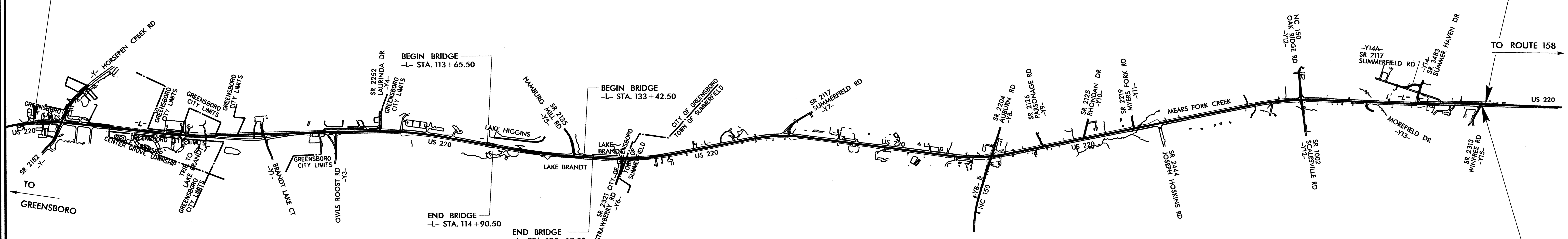


***END TIP PROJECT R–2309AB***
***–L– STA. 316+76.67 =***
***R–2413C –LREV1– STA. 13+50.051***

# STRUCTURES

CONTRACT: C2200800

***DESIGN DATA***

ADT 2012 = 28,882
ADT 2032 = 42,810
DHV = 11 %
D = 65 %
T = 7 % *
V = 60 MPH (SHLDR.)
V = 50 MPH (C&G)
FUNC. CLASS = ARTERIAL
* TTST 4% + DUAL 3%

***PROJECT LENGTH***

LENGTH ROADWAY TIP PROJECT R–2309AB = 5.535 MI.
LENGTH STRUCTURES TIP PROJECT R–2309AB = 0.057 MI.
TOTAL LENGTH OF TIP PROJECT R–2309AB = 5.592 MI.

Prepared In the Office of:

***DIVISION OF HIGHWAYS***

*2006 STANDARD SPECIFICATIONS*

***LETTING DATE:***
FEBRUARY 21, 2012

OMAR R. AZIZI, P.E.
*PROJECT ENGINEER*

TIMOTHY L. COGGINS, P.E.
*PROJECT DESIGN ENGINEER*

***STRUCTURE DESIGN UNIT***
*1000 Birch Ridge Dr.*
*Raleigh, N.C. 27610*

***DIVISION OF HIGHWAYS***
***STATE OF NORTH CAROLINA***

31-OCT-2011 14:48
$$$$$$$$$$$$$$$$DGN$$$$$$$$$$$$$$$$$$
taverette

STATE OF NORTH CAROLINA
DIVISION OF HIGHWAYS

# GUILFORD COUNTY

**PART 1 0F 2**

***END CONSTRUCTION***
***–L– PT STA. 317+51.85***
***(TIE TO TIP PROJECT R–2413C)***

***BEGIN TIP PROJECT R–2309AB***
***–L– STA. 21+50.00***

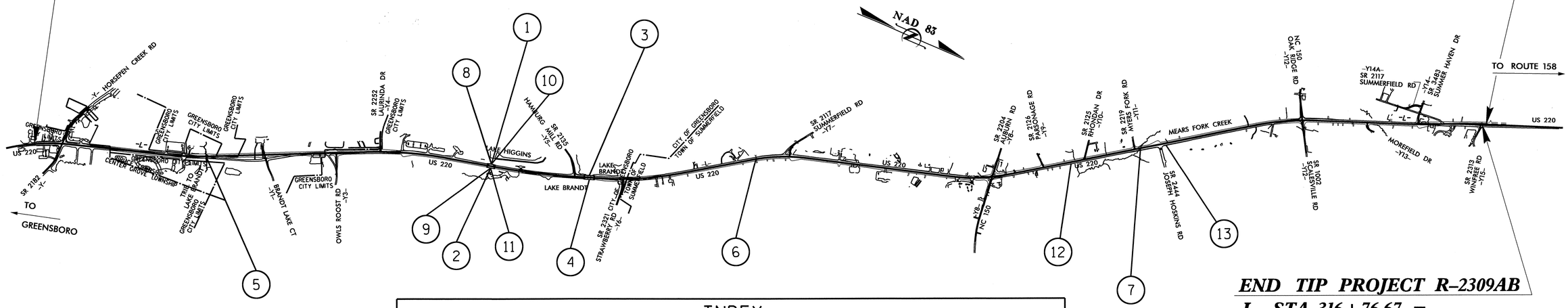


***END TIP PROJECT R–2309AB***
***–L– STA. 316+76.67 =***
***R–2413C –LREV1– STA. 13+50.051***

INDEX

| STR. # | STATION | DESCRIPTION | SHEET # |
|---|---|---|---|
| 1 | 114+28.00 -L- | LEFT LANE BRIDGE OVER LAKE HIGGINS SPILLWAY ON BRUSH CREEK ON US 220 BETWEEN SR 2252 AND SR 2135 | S-1 THRU S-29 |
| 2 | 114+28.00 -L- | RIGHT LANE BRIDGE OVER LAKE HIGGINS SPILLWAY ON BRUSH CREEK ON US 220 BETWEEN SR 2252 AND SR 2135 | S-30 THRU S-56 |
| 3 | 134+30.00 -L- | LEFT LANE BRIDGE OVER LAKE BRANDT ON US 220 BETWEEN SR 2135 AND SR 2321 | S-57 THRU S-97 |
| 4 | 134+30.00 -L- | RIGHT LANE BRIDGE OVER LAKE BRANDT ON US 220 BETWEEN SR 2135 AND SR 2321 | S-98 THRU S-136 |
| 5 | 56+36.00 -L- | SINGLE 10' X 11' RCBC | C-1 THRU C-4 |
| 6 | 168+50.00 -L- | SINGLE 14' X 10' RCBC PEDESTRIAN UNDERPASS | C-5 THRU C-9 |
| 7 | 247+02.00 -L- | SINGLE 8' X 8' RCBC | C-10 THRU C-15 |
| 8 | 113+66.00 -L- | MSE RETAINING WALL #1 @ STR. #1 (END BENT #1) | W-1 THRU W-2 |
| 9 | 113+66.00 -L- | MSE RETAINING WALL #2 @ STR. #1 & #2 (END BENT #1) | W-1 THRU W-2 |
| 10 | 114+90.00 -L- | SOLDIER PILE WALL #3 @ STR. #1 & #2 (END BENT #2) | W-3 |
| 11 | 114+90.00 -L- | SOLDIER PILE WALL #3 @ STR. #2 (END BENT #2) | W-3 |
| 12 | 230+90.00 -L- | SOUND BARRIER WALL | SW-1 THRU SW-6 |
| 13 | 251+69.39 -L- | SOUND BARRIER WALL | SW-7 THRU SW-11 |

PROJECT NO. R-2309AB
GUILFORD COUNTY

STATE OF NORTH CAROLINA
DEPARTMENT OF TRANSPORTATION
RALEIGH

INDEX

| REVISIONS | | | | | |
|---|---|---|---|---|---|
| NO. | BY: | DATE: | NO. | BY: | DATE: |
| 1 | | | 3 | | |
| 2 | | | 4 | | |

DRAWN BY : PEGGY PARISI DATE : 9-2-11
CHECKED BY : T.L. COGGINS DATE : 9-13-11

31-OCT-2011 14:49
R:\TIPProjects-R\R2413c\Structures\Final Plans\R2413C_sd_TSH_01.dgn
taverette

F.A. PROJECT NO.: STPNHS-0220(25)

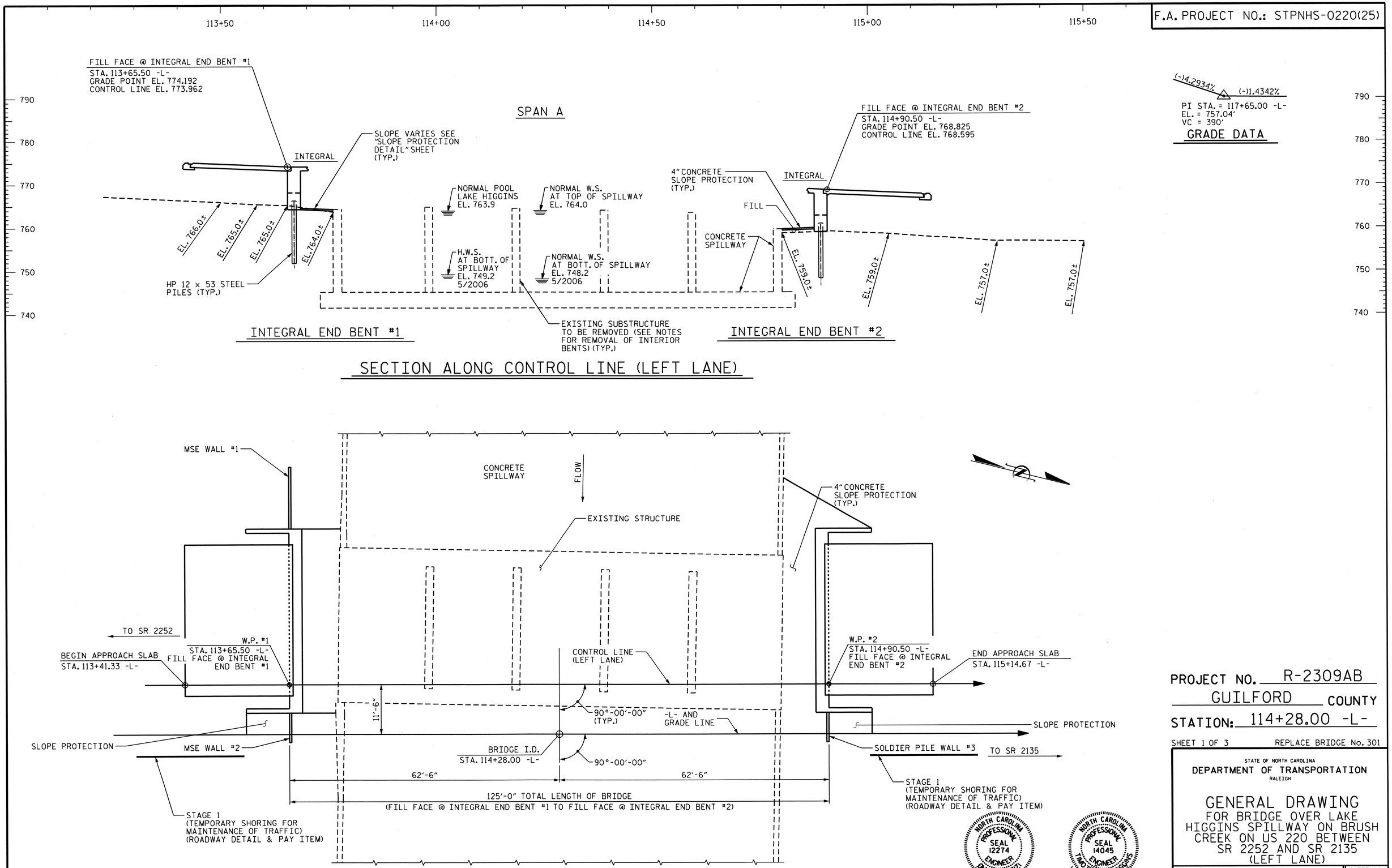


PROJECT NO. R-2309AB

GUILFORD COUNTY

STATION: 114+28.00 -L-

SHEET 1 OF 3 REPLACE BRIDGE No. 301

STATE OF NORTH CAROLINA
DEPARTMENT OF TRANSPORTATION
RALEIGH

# GENERAL DRAWING
FOR BRIDGE OVER LAKE HIGGINS SPILLWAY ON BRUSH CREEK ON US 220 BETWEEN SR 2252 AND SR 2135 (LEFT LANE)

| REVISIONS | | | | | | SHEET NO. |
|---|---|---|---|---|---|---|
| NO. | BY: | DATE: | NO. | BY: | DATE: | S-1 |
| 1 | | | 3 | | | TOTAL SHEETS |
| 2 | | | 4 | | | 136 |

STR. #1

DRAWN BY : Neil M. Ruffin DATE : 8/17/11
CHECKED BY : PEGGY PARISI DATE : 9/2/11

27-OCT-2011 09:19
R:\TIPProjects-R\R2309AB\Structures\R2309ab\FinalPlans\Bridges\Str#1\r2309ab_sd_gd_01.dgn
tcoggins

## ---- FOUNDATION NOTES ----

FOR PILES, SEE SPECIAL PROVISIONS.

PILES AT END BENT NO. 1 ARE DESIGNED FOR A FACTORED RESISTANCE OF 110 TONS PER PILE.

DRIVE PILES AT END BENT NO. 1 TO A REQUIRED DRIVING RESISTANCE OF 185 TONS PER PILE.

PILES AT END BENT NO. 2 ARE DESIGNED FOR A FACTORED RESISTANCE OF 125 TONS PER PILE.

DRIVE PILES AT END BENT NO. 2 TO A REQUIRED DRIVING RESISTANCE OF 210 TONS PER PILE. THIS REQUIRED DRIVING RESISTANCE INCLUDES ADDITIONAL RESISTANCE FOR DOWNDRAG OR SCOUR.

PILE EXCAVATION IS REQUIRED TO INSTALL PILES AT END BENT NOs. 1 AND 2. EXCAVATE HOLES AT PILE LOCATIONS TO ELEVATION 737 FEET AT END BENT NOs. 1 AND 2. FOR PILE EXCAVATION, SEE PILES SPECIAL PROVISION.

SUPPORT AND CENTER PILES IN THE EXCAVATIONS AND DRIVE PILES TO THE REQUIRED RESISTANCE AT BOTH END BENT NOs. 1 AND 2. FILL THE EXCAVATION WITH CONCRETE UP TO A DEPTH OF 10 FEET FROM FINISHED GROUND ELEVATION AND ENSURE CONCRETE FLOWS COMPLETELY AROUND THE PILES. FILL THE REMAINING UPPER TEN FEET PORTION OF THE PILE EXCAVATIONS WITH SELECT MATERIAL CLASS III. FOR PILE EXCAVATION, SEE PILES SPECIAL PROVISION.

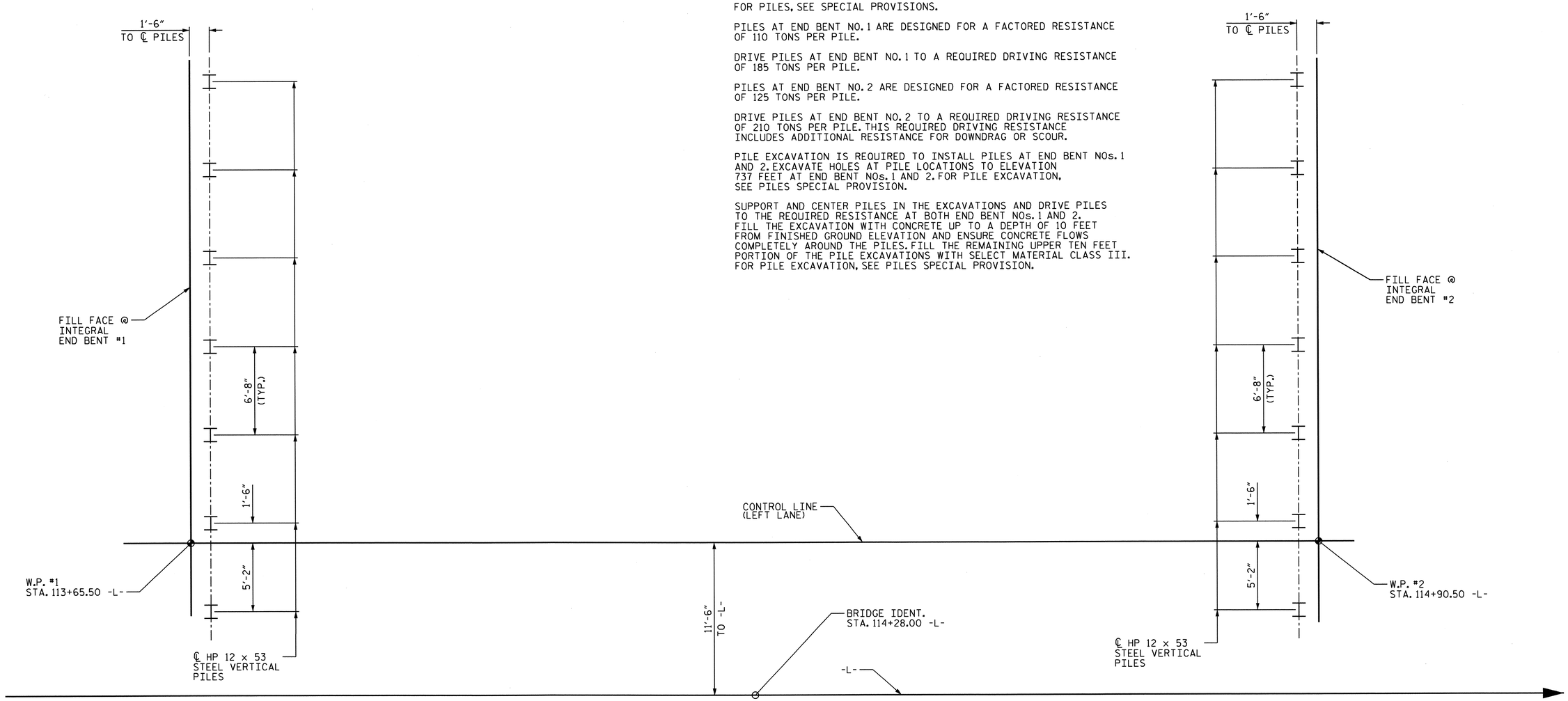


INTEGRAL END BENT #1

INTEGRAL END BENT #2

## FOUNDATION LAYOUT

DIMENSIONS LOCATING PILES ARE SHOWN TO PILE CENTERLINE AT BOTTOM OF CAP. ALL PILES ARE VERTICAL.

PROJECT NO. R-2309AB

GUILFORD COUNTY

STATION: 114+28.00 -L-

SHEET 2 OF 3

STATE OF NORTH CAROLINA
DEPARTMENT OF TRANSPORTATION
RALEIGH

GENERAL DRAWING
FOR BRIDGE OVER LAKE HIGGINS SPILLWAY ON BRUSH CREEK ON US 220 BETWEEN SR 2252 AND SR 2135 (LEFT LANE)

NORTH CAROLINA PROFESSIONAL SEAL 14045 ENGINEER TIMOTHY W. COGGINS

10/27/11

| REVISIONS | | | | | | SHEET NO. |
|---|---|---|---|---|---|---|
| NO. | BY: | DATE: | NO. | BY: | DATE: | S-2 |
| 1 | | | 3 | | | TOTAL SHEETS |
| 2 | | | 4 | | | 136 |

STR. #1

DRAWN BY : Neil M. Ruffin DATE : 8/15/2011
CHECKED BY : PEGGY PARISI DATE : 9/2/11

27-OCT-2011 09:20
R:\TIPProjects-R\R2309AB\Structures\R2309ab\FinalPlans\Bridges\Str#1\r2309ab_sd_fi_01.dgn
tcoggins

BM #6 = RR SPIKE IN BASE OF 18" MAPLE 132.25' RT. OF STA. 114+95.91 -L-, ELEVATION 749.17'

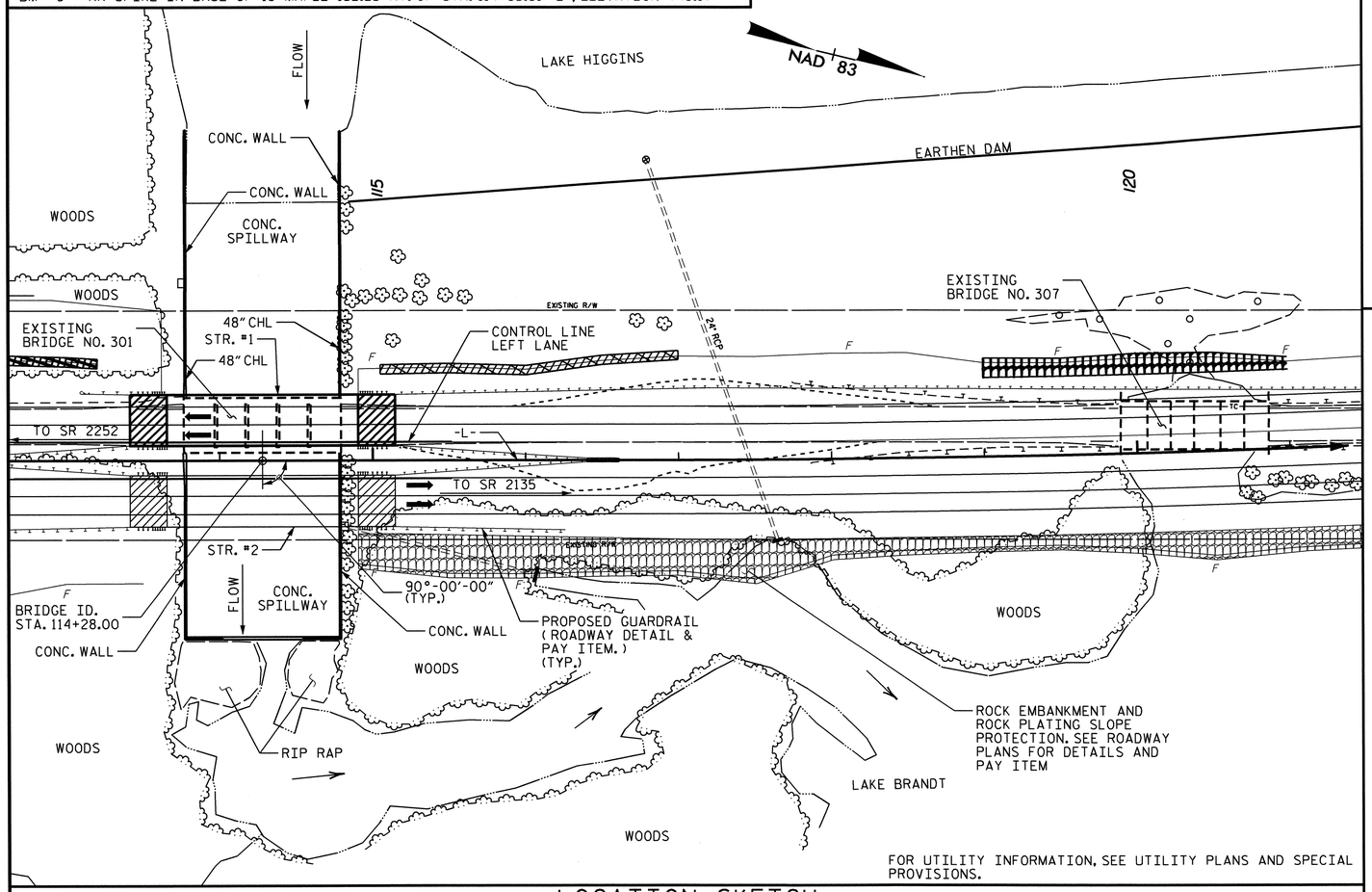


FOR UTILITY INFORMATION, SEE UTILITY PLANS AND SPECIAL PROVISIONS.

## LOCATION SKETCH

## HYDRAULIC DATA

DESIGN DISCHARGE_____4090 CFS.

FREQUENCY OF DESIGN FLOOD_____50 YEARS

DESIGN HIGH WATER ELEVATION_____766.8'

DRAINAGE AREA_____12.6 SQ. MI.

BASE DISCHARGE(Q100)_____5320 CFS.

BASE HIGH WATER ELEVATION_____767.9'

## OVERTOPPING FLOOD DATA

OVERTOPPING DISCHARGE_____N/A CFS.

FREQUENCY OF OVERTOPPING FLOOD__N/A YRS.

OVERTOPPING FLOOD ELEVATION_____N/A

FOR SUBMITTAL OF WORKING DRAWINGS, SEE SPECIAL PROVISIONS.

FOR FALSEWORK AND FORMWORK, SEE SPECIAL PROVISIONS.

FOR CRANE SAFETY, SEE SPECIAL PROVISIONS.

FOR GROUT FOR STRUCTURES, SEE SPECIAL PROVISIONS.

FOR CURING CONCRETE, SEE SPECIAL PROVISIONS.

THE CONTRACTOR'S ATTENTION IS CALLED TO THE FACT THAT EXISTING BRIDGE REMOVAL AND THE CONSTRUCTION OF THE PROPOSED BRIDGE SHALL NOT RESULT IN ANY DAMAGE TO THE EXISTING SPILLWAY AND THE EXISTING SPILLWAY RETAINING WALLS. SHOULD ANY DAMAGE OCCUR, THE CONTRACTOR SHALL BE RESPONSIBLE FOR ANY REPAIRS AT NO ADDITIONAL COST TO THE DEPARTMENT OF TRANSPORTATION.

THE CONTRACTOR SHALL MONITOR THE EXISTING SPILLWAY RETAINING WALLS DURING CONSTRUCTION. THE INITIAL POSITION OF THE WALLS WILL BE ESTABLISHED PRIOR TO CONSTRUCTION, VERIFIED PERIODICALLY DURING CONSTRUCTION AND AT THE COMPLETION OF CONSTRUCTION FOR MOVEMENT AND SETTLEMENT OF THE WALLS. IF MOVEMENT OR SETTLEMENT OCCURS THAT IS NOT SATISFACTORY TO THE ENGINEER OR IF THE WALLS ARE DAMAGED, THE CONTRACTOR SHALL RESTORE THE WALLS TO THEIR INITIAL CONDITION. THE COST OF THE ABOVE WORK SHALL BE INCIDENTAL TO THE VARIOUS PAY ITEMS.

THE CONTRACTOR'S ATTENTION IS CALLED TO THE FACT THAT EXISTING INTERIOR BENTS NEED TO BE SAWED OFF A FEW INCHES ABOVE THE SPILLWAY FLOOR. THIS WILL CREATE DUST AS THE CONCRETE IS BEING SAWED AND COULD RESULT IN SLURRY. SLURRY SHALL BE CONTAINED ON THE SITE AND REMOVED. SLURRY SHALL NOT BE ALLOWED TO FLOW DOWNSTREAM INTO THE LAKE. CONTAINMENT AND REMOVAL SHALL BE INCIDENTAL TO THE COST OF REMOVAL OF EXISTING STRUCTURE AT STATION 114+28.00 -L-.

FOR SHIPPING STEEL STRUCTURAL MEMBERS, SEE SPECIAL PROVISIONS.

FOR FORMS FOR CONCRETE BRIDGE DECKS, SEE SPECIAL PROVISIONS.

THE CONTRACTOR SHALL PROVIDE INDEPENDENT ASSURANCE SAMPLES OF REINFORCING STEEL AS FOLLOWS: FOR PROJECTS REQUIRING UP TO 400 TONS OF REINFORCING STEEL, ONE 30 INCH SAMPLE OF EACH SIZE BAR USED, AND FOR PROJECTS REQUIRING OVER 400 TONS OF REINFORCING STEEL, TWO 30 INCH SAMPLES OF EACH SIZE BAR USED. THE BARS FROM WHICH THE SAMPLES ARE TAKEN MUST THEN BE SPLICED WITH REPLACEMENT BARS OF THE SIZE AND LENGTH OF THE SAMPLE, PLUS A MINIMUM LAP SPLICE OF THIRTY BAR DIAMETERS. PAYMENT FOR THE SAMPLES OF REINFORCING STEEL SHALL BE CONSIDERED INCIDENTAL TO VARIOUS PAY ITEMS.

## NOTES

ASSUMED LIVE LOAD = HL 93 OR ALTERNATE LOADING.

FOR OTHER DESIGN DATA AND GENERAL NOTES, SEE SHEET SN.

FOR EROSION CONTROL MEASURES, SEE EROSION CONTROL PLANS.

THIS BRIDGE HAS BEEN DESIGNED IN ACCORDANCE WITH THE AASHTO LRFD BRIDGE DESIGN SPECIFICATIONS.

ALL STRUCTURAL STEEL SHALL BE AASHTO M270 GRADE 50W.

REMOVABLE FORMS MAY BE USED IN LIEU OF METAL STAY-IN-PLACE FORMS IN ACCORDANCE WITH ARTICLE 420-3 OF THE STANDARD SPECIFICATIONS.

THE EXISTING PAVEMENT WITHIN THE AREA OF THE END BENT PILES SHALL BE REMOVED AND THE ROADBED SCARIFIED TO A MINIMUM DEPTH OF 2'-0".

THE EXISTING STRUCTURE AT STATION 114+28.00 -L- CONSISTING OF 1 @ 21'-4", 3 @ 20'-0", AND 1 @ 21'-4" CONTINUOUS SPANS; CLEAR ROADWAY WIDTH OF 28.1 FEET AND 18" SLAB WITH 5" AWS ON REINFORCED CONCRETE ABUTMENTS AND REINFORCED CONCRETE SOLID PIERS AND LOCATED AT PROPOSED STRUCTURE SHALL BE REMOVED. THE END ABUTMENTS ARE PART OF THE SPILLWAY WALLS AND SHALL REMAIN IN PLACE.

THE EXISTING STRUCTURE AT STATION 120+38.50 -L- CONSISTING OF 1 @ 17'-6", 2 @ 15'-3", 1 @ 17'-3", 1 @ 15'-6" AND 1 @ 17'-3" CONTINUOUS I-BEAM SPANS; CLEAR ROADWAY WIDTH OF 28.0 FEET AND 6.75" REINFORCED CONCRETE WITH 4" AWS ON STEEL CAP AND PILE END BENTS AND STEEL CAP AND PILE INTERIOR BENTS 1, 3, AND 5; REINFORCED CONCRETE POST AND BEAM INTERIOR BENTS 2 AND 4 AND LOCATED UPSTATION OF PROPOSED STRUCTURE AT STATION 114+28.00-L- SHALL BE REMOVED.

REMOVAL OF THE EXISTING BRIDGES SHALL BE PERFORMED SO AS NOT TO ALLOW DEBRIS TO FALL INTO THE WATER. THE CONTRACTOR SHALL REMOVE THE BRIDGE AND SUBMIT PLANS FOR DEMOLITION IN ACCORDANCE WITH ARTICLE 402-2 OF THE STANDARD SPECIFICATIONS.

THE SUBSTRUCTURE OF THE EXISTING BRIDGES INDICATED ON THE PLANS IS FROM THE BEST INFORMATION AVAILABLE. SINCE THIS INFORMATION IS SHOWN FOR THE CONVENIENCE OF THE CONTRACTOR, THE CONTRACTOR SHALL HAVE NO CLAIM WHATSOEVER AGAINST THE DEPARTMENT OF TRANSPORTATION FOR ANY DELAYS OR ADDITIONAL COST INCURRED BASED ON DIFFERENCES BETWEEN THE EXISTING BRIDGE SUBSTRUCTURE SHOWN ON THE PLANS AND THE ACTUAL CONDITIONS AT THE PROJECT SITE.

THE CLASS AA CONCRETE IN THE BRIDGE DECK SHALL CONTAIN FLY ASH OR GROUND GRANULATED BLAST FURNACE SLAG AT THE SUBSTITUTION RATE SPECIFIED IN ARTICLE 1024-1 AND IN ACCORDANCE WITH ARTICLES 1024-5 AND 1024-6 OF THE STANDARD SPECIFICATIONS. NO PAYMENT WILL BE MADE FOR THIS SUBSTITUTION AS IT IS CONSIDERED INCIDENTAL TO THE COST OF THE REINFORCED CONCRETE DECK SLAB.

FOR LIMITS OF TEMPORARY SHORING FOR MAINTENANCE OF TRAFFIC, SEE TRAFFIC CONTROL PLANS. FOR PAY ITEM FOR TEMPORARY SHORING FOR MAINTENANCE OF TRAFFIC, SEE ROADWAY PLANS.

NEEDLE BEAMS WILL NOT BE ALLOWED UNLESS OTHERWISE CALLED FOR ON THE PLANS OR APPROVED BY THE ENGINEER.

FOR PLACING LOAD ON STRUCTURE MEMBERS, SEE SPECIAL PROVISIONS.

INASMUCH AS THE PAINT SYSTEM ON THE EXISTING STRUCTURAL STEEL CONTAINS LEAD, THE CONTRACTOR'S ATTENTION IS DIRECTED TO ARTICLE 107-1 OF THE STANDARD SPECIFICATIONS. ANY COSTS RESULTING FROM COMPLIANCE WITH APPLICABLE STATE OR FEDERAL REGULATIONS PERTAINING TO HANDLING OF MATERIALS CONTAINING LEAD BASED PAINT SHALL BE INCLUDED IN THE BID PRICE FOR "REMOVAL OF EXISTING STRUCTURE AT STATION 114+28.00 -L-."

FOR MAINTENANCE OF TRAFFIC, SEE TRAFFIC CONTROL PLANS.

FOR ELECTRICAL CONDUIT SYSTEM, SEE SPECIAL PROVISIONS.

## TOTAL BILL OF MATERIAL

| | REMOVAL OF EXISTING STRUCTURE STA. 114+28.00 -L- | REMOVAL OF EXISTING STRUCTURE STA. 120+38.50 -L- | PILE EXCAVATION IN SOIL | REINFORCED CONCRETE DECK SLAB | GROOVING BRIDGE FLOORS | CLASS A CONCRETE | BRIDGE APPROACH SLABS | REINFORCING STEEL | STRUCTURAL STEEL | HP 12 X 53 STEEL PILES | | TWO BAR METAL RAIL | CONCRETE BARRIER RAIL | 1'-2" x 2'-6" CONCRETE PARAPET | 4" SLOPE PROTECTION | ELASTOMERIC BEARINGS | EVAZOTE JOINT SEALS | ELECTRICAL CONDUIT SYSTEM |
|---|---|---|---|---|---|---|---|---|---|---|---|---|---|---|---|---|---|---|
| | LUMP SUM | LUMP SUM | LIN. FT. | SQ. FT. | SQ. FT. | CU. YDS. | LUMP SUM | LBS. | APPROX. LBS. | NO. | LIN.FT. | LIN.FT. | LIN.FT. | LIN.FT. | SQ.YDS. | LUMP SUM | LUMP SUM | LUMP SUM |
| SUPERSTRUCTURE | LUMP SUM | LUMP SUM | | 4583 | 5210 | | LUMP SUM | | 159,500 | | | 115.83 | 123.33 | 123.33 | | LUMP SUM | LUMP SUM | LUMP SUM |
| END BENT NO.1 | | | 192 | | | 23.6 | | 4641 | | 7 | 245 | | | | 50 | | | |
| END BENT NO. 2 | | | 155 | | | 23.6 | | 4617 | | 7 | 210 | | | | 84 | | | |
| | | | | | | | | | | | | | | | | | | |
| TOTAL | LUMP SUM | LUMP SUM | 347 | 4583 | 5210 | 47.2 | LUMP SUM | 9258 | 159,500 | 14 | 455 | 115.83 | 123.33 | 123.33 | 134 | LUMP SUM | LUMP SUM | LUMP SUM |

NORTH CAROLINA PROFESSIONAL SEAL 14045 ENGINEER TIMOTHY J. COGGINS

10/31/11

PROJECT NO. R-2309AB

GUILFORD COUNTY

STATION: 114+28.00 -L-

SHEET 3 OF 3

STATE OF NORTH CAROLINA
DEPARTMENT OF TRANSPORTATION
RALEIGH

GENERAL DRAWING
FOR BRIDGE OVER LAKE HIGGINS SPILLWAY ON BRUSH CREEK ON US 220 BETWEEN SR 2252 AND SR 2135 (LEFT LANE)

| REVISIONS | | | | | | SHEET NO. |
|---|---|---|---|---|---|---|
| NO. | BY: | DATE: | NO. | BY: | DATE: | S-3 |
| 1 | | | 3 | | | TOTAL SHEETS |
| 2 | | | 4 | | | 136 |

DRAWN BY : Neil M Ruffin DATE : 8/17/11
CHECKED BY : PEGGY PARISI DATE : 9/2/11

31-OCT-2011 11:57
R:\TIPProjects-R\R2309AB\Structures\R2309ab\Final Plans\Bridges\Str#1\r2309ab_sd_gd_01.dgn
tcoggins

STR. #1

# LOAD AND RESISTANCE FACTOR RATING (LRFR) SUMMARY FOR STEEL GIRDERS

| LEVEL | | VEHICLE | WEIGHT (W) (TONS) | CONTROLLING LOAD RATING (#) | MINIMUM RATING FACTORS (RF) | TONS = W × RF | STRENGTH I LIMIT STATE | | | | | | | | | | | SERVICE II LIMIT STATE | | | | | | COMMENT NUMBER |
|---|---|---|---|---|---|---|---|---|---|---|---|---|---|---|---|---|---|---|---|---|---|---|---|---|
| | | | | | | | LIVE-LOAD FACTORS $\gamma_{(LL)}$ | MOMENT | | | | | SHEAR | | | | | LIVE-LOAD FACTORS $\gamma_{(LL)}$ | MOMENT | | | | | |
| | | | | | | | | DISTRIBUTION FACTORS (DF) | RATING FACTOR | SPAN | GIRDER LOCATION | DISTANCE FROM LEFT END OF SPAN (ft) | DISTRIBUTION FACTORS (DF) | RATING FACTOR | SPAN | GIRDER LOCATION | DISTANCE FROM LEFT END OF SPAN (ft) | | DISTRIBUTION FACTORS (DF) | RATING FACTOR | SPAN | GIRDER LOCATION | DISTANCE FROM LEFT END OF SPAN (ft) | |
| DESIGN LOAD RATING | | HL-93 (INVENTORY) | N/A | 1 | 1.02 | -- | 1.75 | 0.866 | 1.61 | A | EL | 61.000 | 0.946 | 1.02 | A | I | 6.100 | 1.30 | 0.866 | 1.86 | A | EL | 61.000 | |
| | | HL-93 (OPERATING) | N/A | | 1.32 | -- | 1.35 | 0.866 | 2.09 | A | EL | 61.000 | 0.946 | 1.32 | A | I | 6.100 | 1.00 | 0.866 | 2.42 | A | EL | 61.000 | |
| | | HS-20 (INVENTORY) | 36.000 | 2 | 1.45 | 52.116 | 1.75 | 0.866 | 2.37 | A | EL | 61.000 | 0.946 | 1.45 | A | I | 6.100 | 1.30 | 0.866 | 2.73 | A | EL | 61.000 | |
| | | HS-20 (OPERATING) | 36.000 | | 1.88 | 67.558 | 1.35 | 0.866 | 3.07 | A | EL | 61.000 | 0.946 | 1.88 | A | I | 6.100 | 1.00 | 0.866 | 3.55 | A | EL | 61.000 | |
| LEGAL LOAD RATING | SINGLE VEHICLE (SV) | SNSH | 13.500 | | 4.54 | 61.275 | 1.40 | 0.866 | 7.18 | A | EL | 61.000 | 0.946 | 4.54 | A | I | 6.100 | 1.30 | 0.866 | 6.64 | A | EL | 61.000 | |
| | | SNGARBS2 | 20.000 | | 3.15 | 63.038 | 1.40 | 0.866 | 5.13 | A | EL | 61.000 | 0.946 | 3.15 | A | I | 6.100 | 1.30 | 0.866 | 4.74 | A | EL | 61.000 | |
| | | SNAGRIS2 | 22.000 | | 2.90 | 63.764 | 1.40 | 0.866 | 4.77 | A | EL | 61.000 | 0.946 | 2.90 | A | I | 6.100 | 1.30 | 0.866 | 4.41 | A | EL | 61.000 | |
| | | SNCOTTS3 | 27.250 | | 2.26 | 61.538 | 1.40 | 0.866 | 3.57 | A | EL | 61.000 | 0.946 | 2.26 | A | I | 6.100 | 1.30 | 0.866 | 3.30 | A | EL | 61.000 | |
| | | SNAGGRS4 | 34.925 | | 1.82 | 63.634 | 1.40 | 0.866 | 2.89 | A | EL | 61.000 | 0.946 | 1.82 | A | I | 6.100 | 1.30 | 0.866 | 2.68 | A | EL | 61.000 | |
| | | SNS5A | 35.550 | | 1.82 | 64.685 | 1.40 | 0.866 | 2.83 | A | EL | 61.000 | 0.946 | 1.82 | A | I | 6.100 | 1.30 | 0.866 | 2.62 | A | EL | 61.000 | |
| | | SNS6A | 39.950 | | 1.64 | 65.541 | 1.40 | 0.866 | 2.57 | A | EL | 61.000 | 0.946 | 1.64 | A | I | 6.100 | 1.30 | 0.866 | 2.37 | A | EL | 61.000 | |
| | | SNS7B | 42.000 | | 1.59 | 66.659 | 1.40 | 0.866 | 2.44 | A | EL | 61.000 | 0.946 | 1.59 | A | I | 6.100 | 1.30 | 0.866 | 2.26 | A | EL | 61.000 | |
| | TRUCK TRACTOR SEMI-TRAILER (TTST) | TNAGRIT3 | 33.000 | | 1.97 | 64.926 | 1.40 | 0.866 | 3.12 | A | EL | 61.000 | 0.946 | 1.97 | A | I | 6.100 | 1.30 | 0.866 | 2.89 | A | EL | 61.000 | |
| | | TNT4A | 33.075 | | 1.94 | 64.128 | 1.40 | 0.866 | 3.12 | A | EL | 61.000 | 0.946 | 1.94 | A | I | 6.100 | 1.30 | 0.866 | 2.89 | A | EL | 61.000 | |
| | | TNT6A | 41.600 | | 1.65 | 68.455 | 1.40 | 0.866 | 2.52 | A | EL | 61.000 | 0.946 | 1.65 | A | I | 6.100 | 1.30 | 0.866 | 2.33 | A | EL | 61.000 | |
| | | TNT7A | 42.000 | | 1.62 | 68.121 | 1.40 | 0.866 | 2.52 | A | EL | 61.000 | 0.946 | 1.62 | A | I | 6.100 | 1.30 | 0.866 | 2.33 | A | EL | 61.000 | |
| | | TNT7B | 42.000 | | 1.57 | 65.772 | 1.40 | 0.866 | 2.56 | A | EL | 61.000 | 0.946 | 1.57 | A | I | 6.100 | 1.30 | 0.866 | 2.37 | A | EL | 61.000 | |
| | | TNAGRIT4 | 43.000 | | 1.52 | 65.735 | 1.40 | 0.866 | 2.47 | A | EL | 61.000 | 0.946 | 1.52 | A | I | 6.100 | 1.30 | 0.866 | 2.28 | A | EL | 61.000 | |
| | | TNAGT5A | 45.000 | | 1.49 | 66.835 | 1.40 | 0.866 | 2.34 | A | EL | 61.000 | 0.946 | 1.49 | A | I | 6.100 | 1.30 | 0.866 | 2.17 | A | EL | 61.000 | |
| | | TNAGT5B | 45.000 | 3 | 1.45 | 65.325 | 1.40 | 0.866 | 2.33 | A | EL | 61.000 | 0.946 | 1.45 | A | I | 6.100 | 1.30 | 0.866 | 2.15 | A | EL | 61.000 | |
| FATIGUE | | HL-93 (INVENTORY) | $\gamma_{LL}$=0.75 | | | | | | | | | | | | | | | | | | | | | |

## LOAD FACTORS:

| DESIGN LOAD RATING FACTORS | LIMIT STATE | $\gamma_{DC}$ | $\gamma_{DW}$ |
|---|---|---|---|
| | STRENGTH I | 1.25 | 1.50 |
| | SERVICE II | 1.00 | 1.00 |

## NOTES:

MINIMUM RATING FACTORS ARE BASED ON THE STRENGTH I AND SERVICE II LIMIT STATES.

ALLOWABLE STRESS FOR SERVICE II LIMIT STATE ARE AS REQUIRED FOR DESIGN.

## COMMENTS:

1.
2.
3.
4.

**(#) CONTROLLING LOAD RATING**

(1) DESIGN LOAD RATING (HL-93) ✱✱
(2) DESIGN LOAD RATING (HS-20) ✱✱
(3) LEGAL LOAD RATING ✱✱
✱✱ SEE CHART FOR VEHICLE TYPE

**GIRDER LOCATION**

I - INTERIOR GIRDER
EL - EXTERIOR LEFT GIRDER
ER - EXTERIOR RIGHT GIRDER

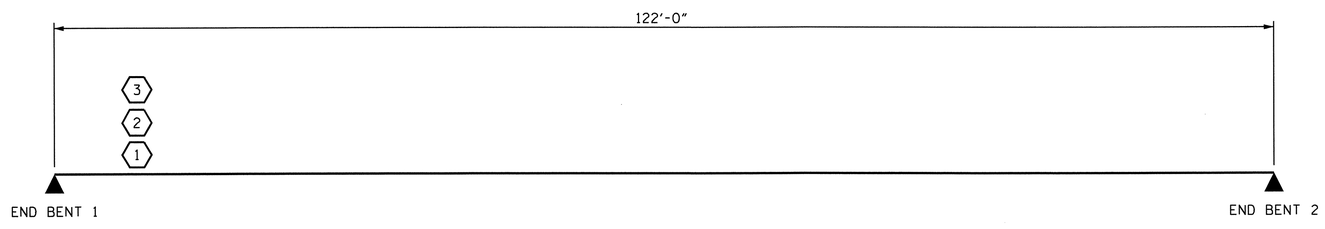


LRFR SUMMARY

PROJECT NO. R-2309AB
GUILFORD COUNTY
STATION: 114+28.00 -L-

STATE OF NORTH CAROLINA
DEPARTMENT OF TRANSPORTATION
RALEIGH

STANDARD

LRFR SUMMARY FOR STEEL GIRDERS
(NON-INTERSTATE TRAFFIC)
(LEFT LANE)

NORTH CAROLINA PROFESSIONAL SEAL 14045 ENGINEER TIMOTHY V. COGGINS
10/27/11

| REVISIONS | | | | | | | | SHEET NO. |
|---|---|---|---|---|---|---|---|---|
| NO. | BY: | DATE: | NO. | BY: | DATE: | | | S-4 |
| 1 | | | 3 | | | | | TOTAL SHEETS |
| 2 | | | 4 | | | | | 136 |

STR. #1 STD. NO. LRFR3

ASSEMBLED BY : PEGGY PARISI DATE : 8-5-11
CHECKED BY : A.M. LEE DATE : 8-10-11
DRAWN BY : MAA 1/08
CHECKED BY : GM/DI 2/08
REV. 11/12/08RR MAA/GM

26-OCT-2011 09:45
R:\TIPProjects-R\R2309AB\Structures\R2309ab\FinalPlans\Bridges\Str#1\r2309ab_sd_lrfr_01.dgn
tcoggins

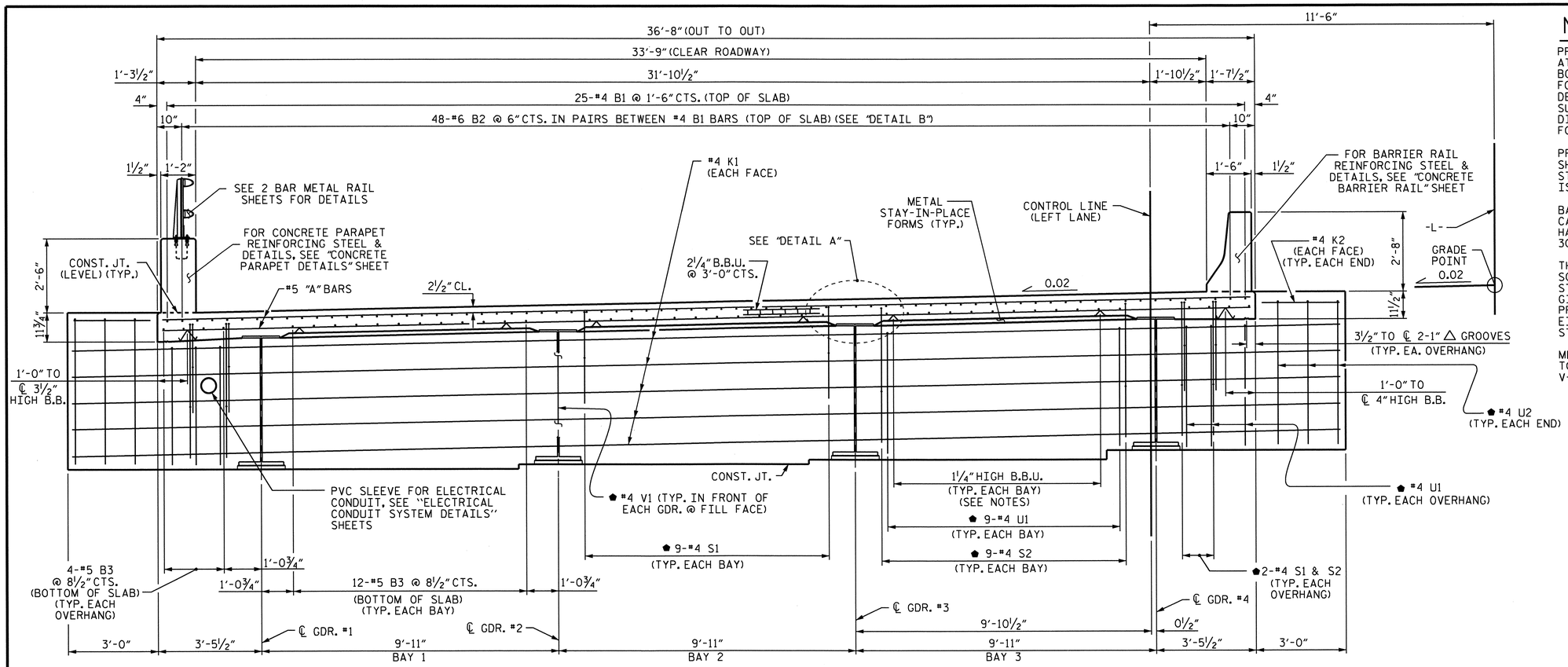


## TYPICAL SECTION @ INTEGRAL END BENT

⬟ #4 U1, #4 U2, #4 V1, #4 S1 & #4 S2
BARS TO MATCH WITH #4 "V" BARS IN INTEGRAL END BENT CAP.

## NOTES

PROVIDE 1¼" HIGH BEAM BOLSTERS UPPER AT 4'-0" CTS. ATOP THE METAL STAY-IN-PLACE FORMS TO SUPPORT THE BOTTOM MAT OF "A" BARS. WHEN USING REMOVABLE FORMS, PROVIDE CONTINUOUS HIGH CHAIRS FOR METAL DECK (C.H.C.M.) @ 4'-0" CTS. WITH A HEIGHT TO SUPPORT THE BOTTOM MAT OF "A" BARS A CLEAR DISTANCE OF 2½" ABOVE THE TOP OF THE REMOVABLE FORM.

PREVIOUSLY CAST CONCRETE IN A SIMPLE SPAN SHALL HAVE ATTAINED A MINIMUM COMPRESSIVE STRENGTH OF 3000 PSI BEFORE ADDITIONAL CONCRETE IS CAST IN THE SPAN.

BARRIER RAIL AND CONCRETE PARAPET SHALL NOT BE CAST UNTIL ALL SLAB CONCRETE HAS BEEN CAST AND HAS REACHED A MINIMUM COMPRESSIVE STRENGTH OF 3000 PSI.

THE CONTRACTOR MAY, WHEN NECESSARY, PROPOSE A SCHEME FOR AVOIDING INTERFERENCE BETWEEN METAL STAY-IN-PLACE FORM SUPPORTS OR FORMS AND GIRDER STIFFENERS OR CONNECTOR PLATES. THE PROPOSAL SHALL BE INDICATED, AS APPROPRIATE, ON EITHER THE STEEL WORKING DRAWINGS OR THE METAL STAY-IN-PLACE FORM WORKING DRAWINGS.

METAL STAY-IN-PLACE FORMS SHALL NOT BE WELDED TO GIRDER FLANGES IN THE ZONES REQUIRING CHARPY V-NOTCH TEST. SEE STRUCTURAL STEEL DETAIL SHEETS.

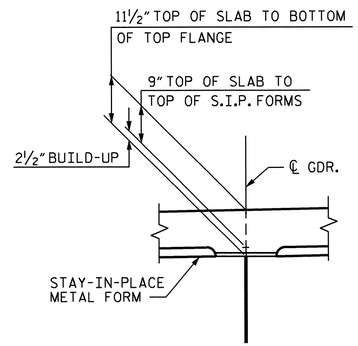


## DETAIL "A"

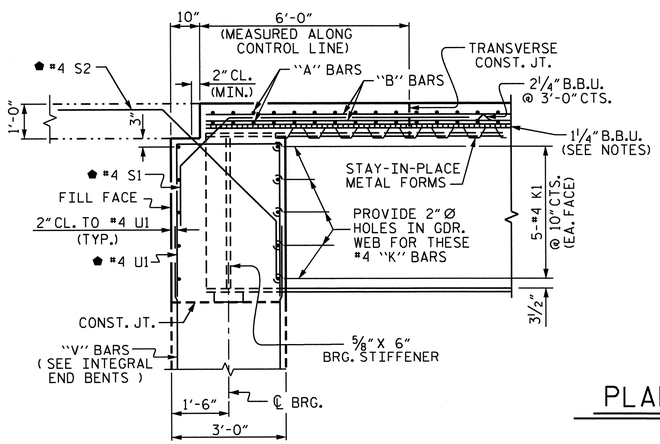


## END OF GIRDER DETAIL AT INTEGRAL END BENT

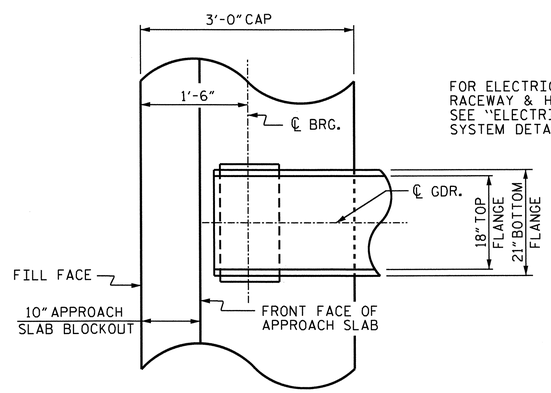


## PLAN OF GIRDER AT INTEGRAL END BENT

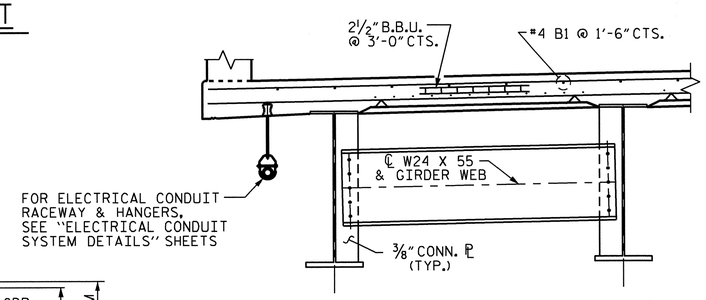


## PARTIAL TYPICAL SECTION @ MIDSPAN SHOWING INTERMEDIATE DIAPHRAGM

TYP. FOR EACH INTERMEDIATE DIAPHRAGM IN EACH BAY.

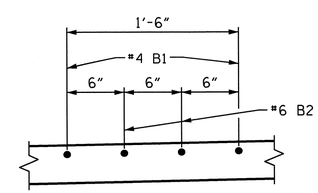


## DETAIL "B"

SHOWING TOP OF SLAB "B" BAR SPACING @ INTEGRAL END BENT

NORTH CAROLINA PROFESSIONAL SEAL 14045 ENGINEER TIMOTHY A. COGGINS
10/27/11

PROJECT NO. R-2309AB
GUILFORD COUNTY
STATION: 114+28.00 -L-

STATE OF NORTH CAROLINA
DEPARTMENT OF TRANSPORTATION
RALEIGH

SUPERSTRUCTURE

TYPICAL SECTION

(LEFT LANE)

| REVISIONS | | | | | | SHEET NO. |
|---|---|---|---|---|---|---|
| NO. | BY: | DATE: | NO. | BY: | DATE: | S-5 |
| 1 | | | 3 | | | TOTAL SHEETS |
| 2 | | | 4 | | | 136 |

DRAWN BY : PEGGY PARISI DATE : 11-30-10
CHECKED BY : J.B. WILSON DATE : 5-25-11

26-OCT-2011 09:45
R:\TIPProjects-R\R2309AB\Structures\R2309ab\FinalPlans\Bridges\Str#1\r2309ab_sd_ts_01.dgn
tcoggins

STR. #1

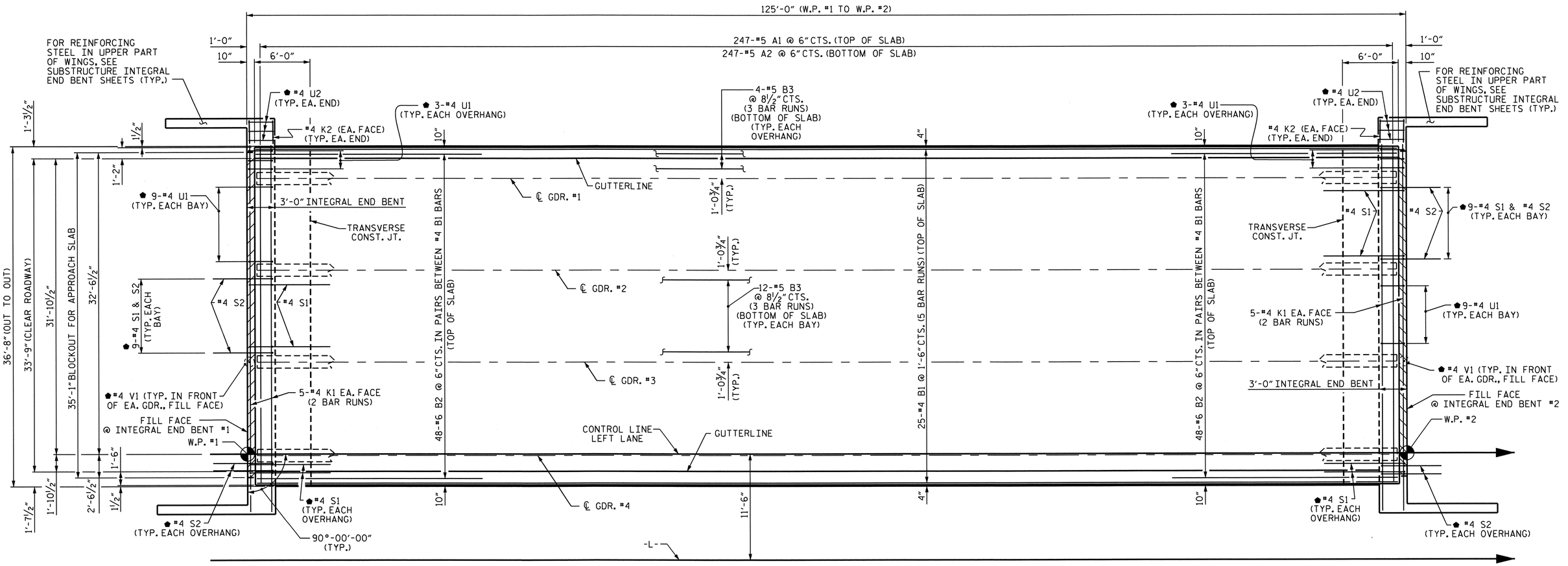


## PLAN OF SPAN

#4 U1, #4 U2, #4 V1, #4 S1 & #4 S2
BARS TO MATCH WITH #4 "V" BARS IN INTEGRAL END BENT CAP.

PROJECT NO. R-2309AB
GUILFORD COUNTY
STATION: 114+28.00 -L-

STATE OF NORTH CAROLINA
DEPARTMENT OF TRANSPORTATION
RALEIGH

SUPERSTRUCTURE

PLAN OF SPAN

(LEFT LANE)

NORTH CAROLINA PROFESSIONAL SEAL 14045 ENGINEER TIMOTHY W. COGGINS
Timothy W. Coggins 10/27/11

| REVISIONS | | | | | | SHEET NO. |
|---|---|---|---|---|---|---|
| NO. | BY: | DATE: | NO. | BY: | DATE: | S-6 |
| 1 | | | 3 | | | TOTAL SHEETS |
| 2 | | | 4 | | | 136 |

DRAWN BY : PEGGY PARISI DATE : 12-6-10
CHECKED BY : J.B. WILSON DATE : 5-25-11

26-OCT-2011 09:44
R:\TIPProjects-R\R2309AB\Structures\R2309ab\FinalPlans\Bridges\Str#1\r2309ab_sd_s1_01.dgn
tcoggins

STR. #1

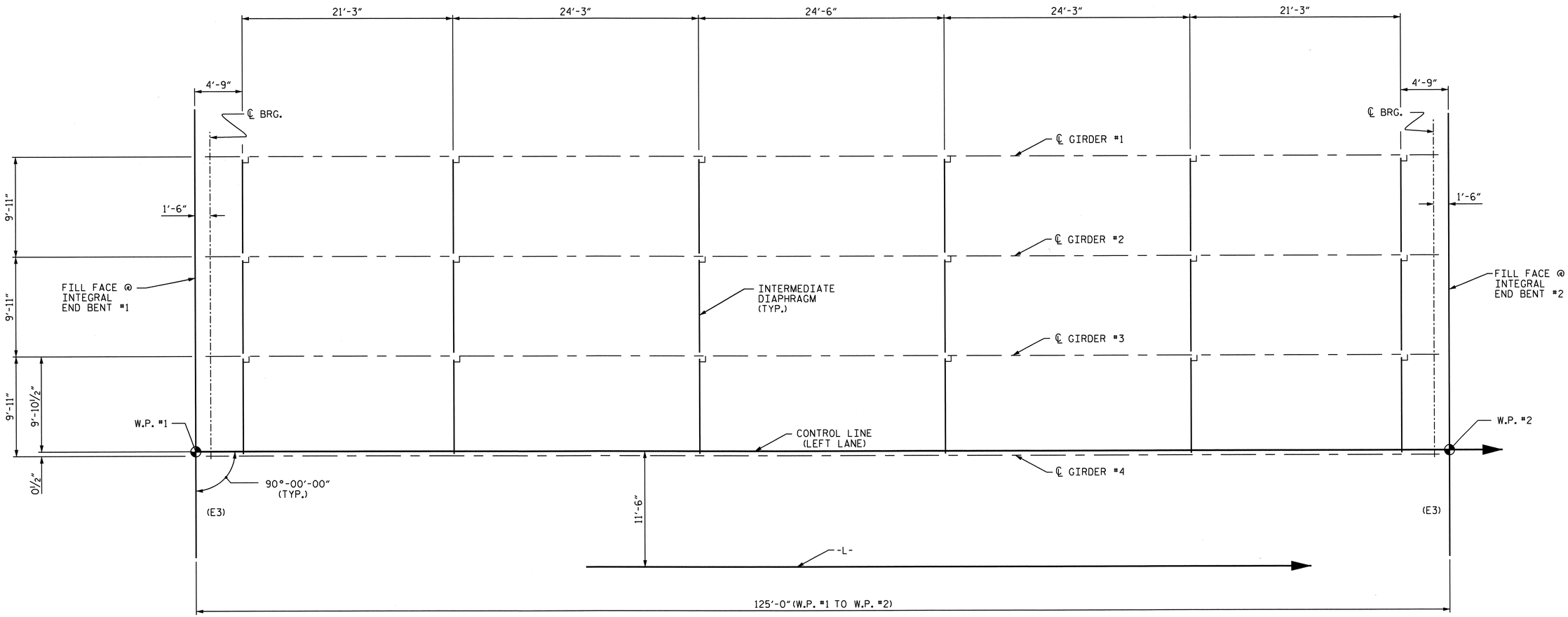


SPAN A

# FRAMING PLAN

PROJECT NO. R-2309AB
GUILFORD COUNTY
STATION: 114+28.00 -L-

STATE OF NORTH CAROLINA
DEPARTMENT OF TRANSPORTATION
RALEIGH

SUPERSTRUCTURE

FRAMING PLAN

(LEFT LANE)

NORTH CAROLINA PROFESSIONAL SEAL 14045 ENGINEER TIMOTHY L. COGGINS
10/27/11

| REVISIONS | | | | | | SHEET NO. |
|---|---|---|---|---|---|---|
| NO. | BY: | DATE: | NO. | BY: | DATE: | S-7 |
| 1 | | | 3 | | | TOTAL SHEETS |
| 2 | | | 4 | | | 136 |

DRAWN BY : PEGGY PARISI DATE : 12-3-10
CHECKED BY : J.B. WILSON DATE : 5-25-11

26-OCT-2011 09:43
R:\TIPProjects-R\R2309AB\Structures\R2309ab\FinalPlans\Bridges\Str#1\r2309ab_sd_fp_01.dgn
tcoggins

STR. #1

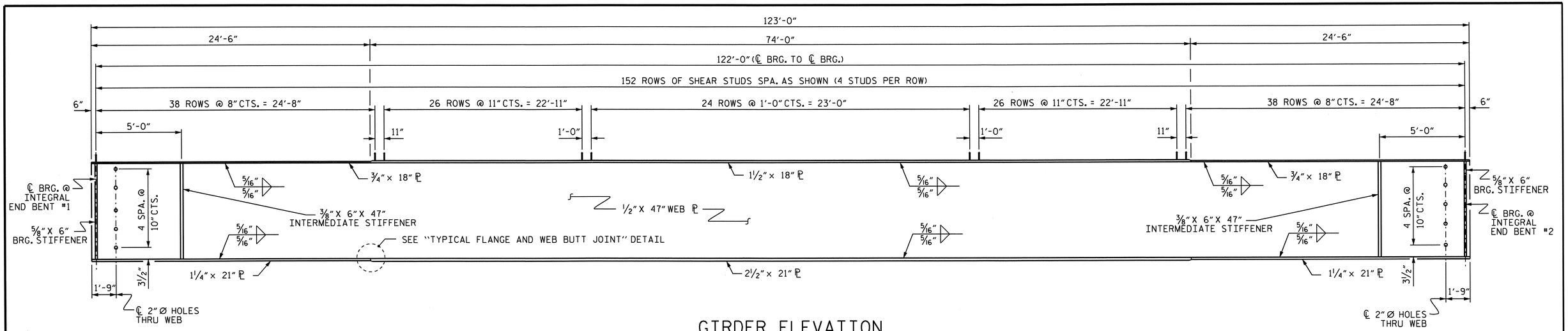


## GIRDER ELEVATION

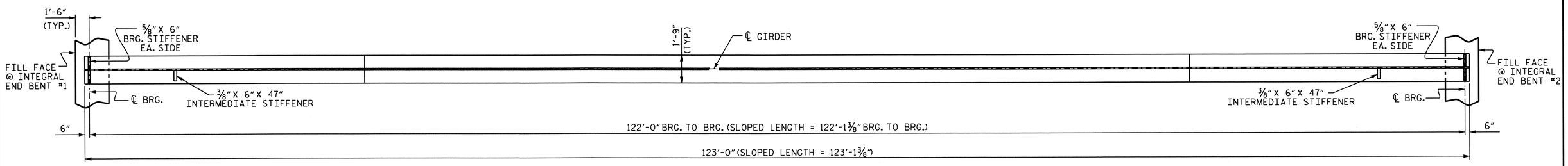


## BOTTOM FLANGE DETAIL

TRANSVERSE STIFFENERS TO BE ON INTERIOR SIDE OF WEB FOR ALL GDRS.

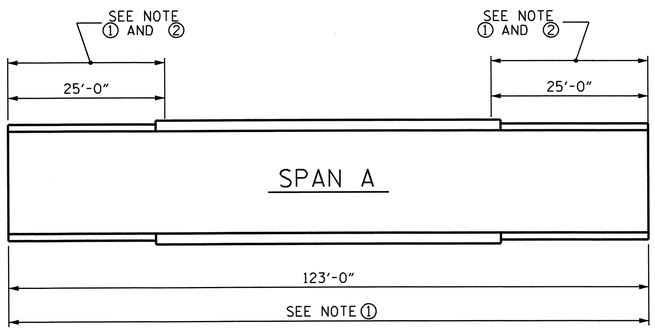


## GIRDER MAKE UP

## FOR CHARPY V-NOTCH TEST

NOTE ①: CHARPY V-NOTCH TESTS ARE REQUIRED FOR ALL TOP OR BOTTOM FLANGE PLATES WHICH FALL WITHIN THESE LIMITS, ALL WEB PLATES, AND ALL SPLICE PLATES. IF A PERMITTED SHOP FLANGE SPLICE IS NOT USED, CHARPY V-NOTCH TESTS WILL BE REQUIRED FOR THE ENTIRE FLANGE PLATE. FOR CHARPY V-NOTCH TESTS, SEE ARTICLE 1072-9 OF THE STANDARD SPECIFICATIONS.

NOTE ②: NO WELDING OF FORMS OR FALSEWORK TO THE TOP FLANGE WILL BE PERMITTED IN THIS REGION.

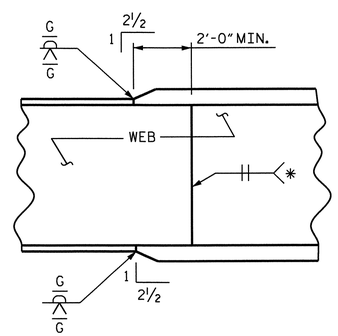


## TYPICAL FLANGE AND WEB BUTT JOINT

* GRIND SMOOTH AND FLUSH ON OUTSIDE OF EXTERIOR GIRDERS

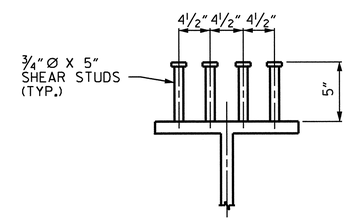


## SHEAR STUD DETAIL

PROJECT NO. R-2309AB
GUILFORD COUNTY
STATION: 114+28.00 -L-

SHEET 1 OF 2

STATE OF NORTH CAROLINA
DEPARTMENT OF TRANSPORTATION
RALEIGH

SUPERSTRUCTURE

# STRUCTURAL STEEL DETAILS

(LEFT LANE)

NORTH CAROLINA PROFESSIONAL SEAL 14045 ENGINEER TIMOTHY L. COGGINS
10/27/11

| REVISIONS | | | | | | | | SHEET NO. |
|---|---|---|---|---|---|---|---|---|
| NO. | BY: | DATE: | NO. | BY: | DATE: | | | S-8 |
| 1 | | | 3 | | | | | TOTAL SHEETS |
| 2 | | | 4 | | | | | 136 |

DRAWN BY : PEGGY PARISI DATE : 12-1-10
CHECKED BY : J.B. WILSON DATE : 5-25-11

26-OCT-2011 09:43
R:\TIPProjects-R\R2309AB\Structures\R2309ab\FinalPlans\Bridges\Str#1\r2309ab_sd_ss_01.dgn
tcoggins

STR. #1

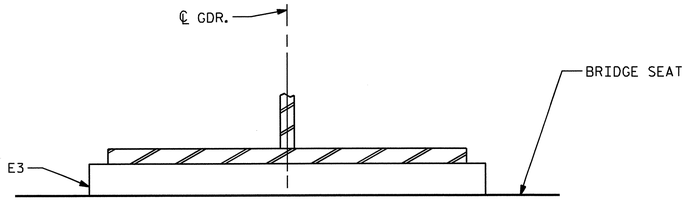


END VIEW

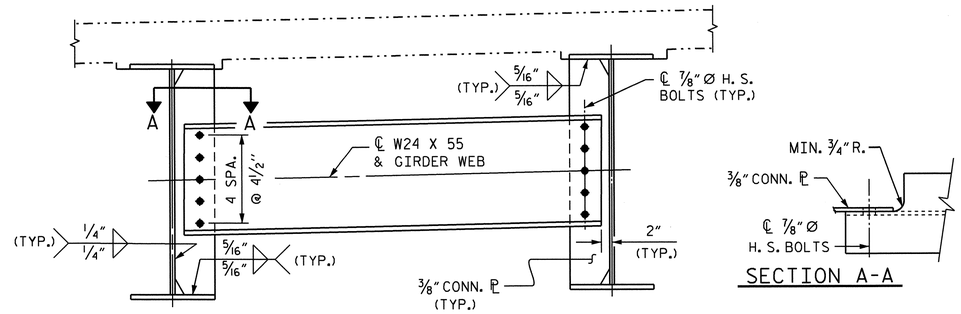


INTERMEDIATE DIAPHRAGM




SECTION A-A

## NOTES:

ALL STRUCTURAL STEEL SHALL BE AASHTO M270 GRADE 50W.

ALL DIMENSIONS SHOWN ARE HORIZONTAL OR VERTICAL, UNLESS OTHERWISE NOTED.

ALL FIELD CONNECTIONS TO BE 7/8" DIA. HIGH STRENGTH BOLTS UNLESS OTHERWISE NOTED. FOR HIGH STRENGTH BOLTS, SEE SPECIAL PROVISIONS.

BEARING STIFFENERS ARE TO BE PLACED NORMAL TO THE WEB OF THE GIRDER AND SHALL BE PLUMB.

PERMITTED FLANGE AND WEB SHOP SPLICES SHALL NOT BE LOCATED WITHIN 15 FEET OF MAXIMUM DEAD LOAD DEFLECTION. KEEP 2 FEET MINIMUM BETWEEN WEB AND FLANGE SHOP SPLICES. KEEP 6" MINIMUM BETWEEN CONNECTOR PLATE AND WEB OR FLANGE SHOP SPLICES.

STUDS ON GIRDERS MAY BE SHIFTED UP TO 1" IF NECESSARY TO CLEAR FLANGE SPLICE WELD.

TENSION ON THE AASHTO M164 BOLTS SHALL BE CALIBRATED USING DIRECT TENSION INDICATOR WASHERS. FOR DIRECT TENSION INDICATORS, SEE SPECIAL PROVISIONS.

END OF GIRDERS SHALL BE PLUMB.

FOR SHIPPING STEEL STRUCTURAL MEMBERS, SEE SPECIAL PROVISIONS.

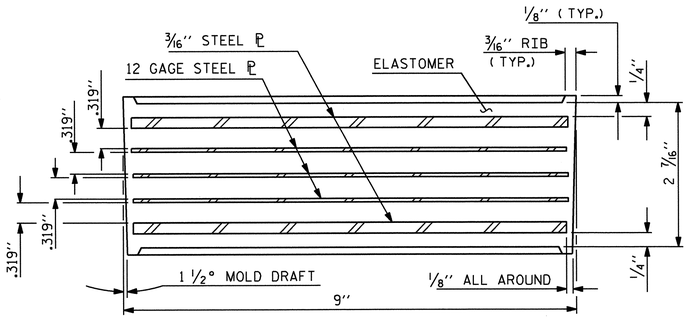


TYPICAL SECTION OF ELASTOMERIC BEARINGS

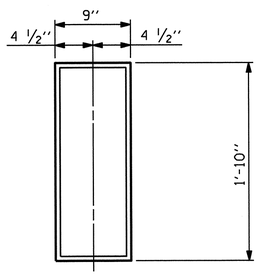


E3 ( 8 REQ'D )

PLAN VIEW OF ELASTOMERIC BEARING

TYPE II

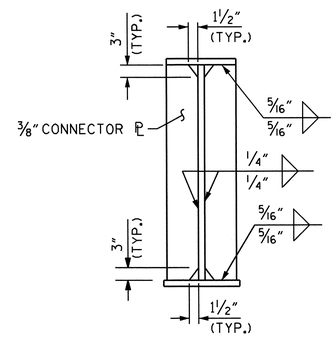


CONNECTOR PLATE DETAILS

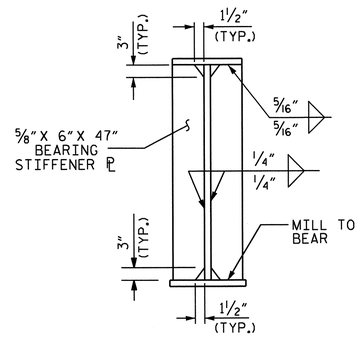


BEARING STIFFENER

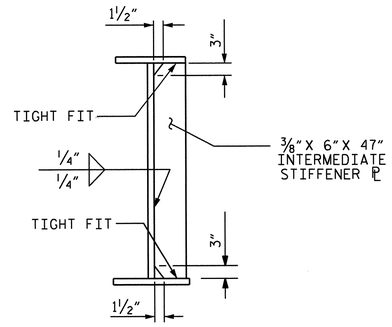


INTERMEDIATE STIFFENER

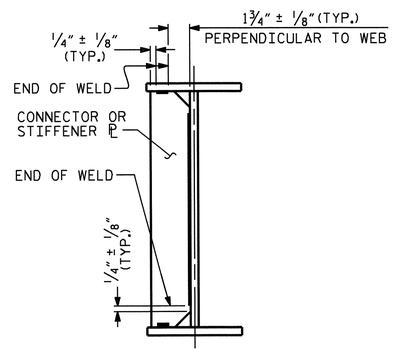


TYPICAL STIFFENER OR CONNECTOR PLATE CONNECTIONS

WELD TERMINATION DETAILS

## LOAD RATINGS

| | MAX.D.L.+L.L. |
|---|---|
| TYPE II | 119 K |

PROJECT NO. R-2309AB

GUILFORD COUNTY

STATION: 114+28.00 -L-

SHEET 2 OF 2

STATE OF NORTH CAROLINA
DEPARTMENT OF TRANSPORTATION
RALEIGH

SUPERSTRUCTURE

STRUCTURAL STEEL & ELASTOMERIC BEARING DETAILS

(LEFT LANE)

NORTH CAROLINA PROFESSIONAL SEAL 14045 ENGINEER TIMOTHY E. COGGINS

10/27/11

| REVISIONS | | | | | | | |
|---|---|---|---|---|---|---|---|
| NO. | BY: | DATE: | NO. | BY: | DATE: | | |
| 1 | | | 3 | | | | |
| 2 | | | 4 | | | | |

SHEET NO. S-9

TOTAL SHEETS 136

DRAWN BY : PEGGY PARISI DATE : 12-1-10
CHECKED BY : J.B. WILSON DATE : 5-25-11

26-OCT-2011 09:43
R:\TIPProjects-R\R2309AB\Structures\R2309ab\FinalPlans\Bridges\Str#1\r2309ab_sd_ss_01.dgn
tcoggins

STR. #1

## DEAD LOAD DEFLECTION TABLE FOR GIRDERS - SPAN A

| | GIRDERS #1 & #4 | | | | | | | | | | | | | | | | | | | | |
|---|---|---|---|---|---|---|---|---|---|---|---|---|---|---|---|---|---|---|---|---|---|
| @ TWENTIETH POINTS BETWEEN ℄ BEARINGS | 0 | .05 | .10 | .15 | .20 | .25 | .30 | .35 | .40 | .45 | .50 | .55 | .60 | .65 | .70 | .75 | .80 | .85 | .90 | .95 | 0 |
| DEFLECTION DUE TO WEIGHT OF GIRDER ↓ | 0.000 | 0.019 | 0.037 | 0.053 | 0.068 | 0.080 | 0.090 | 0.098 | 0.104 | 0.107 | 0.109 | 0.107 | 0.104 | 0.098 | 0.090 | 0.080 | 0.068 | 0.053 | 0.037 | 0.019 | 0.000 |
| DEFLECTION DUE TO WEIGHT OF SLAB * ↓ | 0.000 | 0.043 | 0.114 | 0.178 | 0.232 | 0.279 | 0.319 | 0.350 | 0.374 | 0.388 | 0.392 | 0.388 | 0.374 | 0.350 | 0.319 | 0.279 | 0.232 | 0.178 | 0.114 | 0.043 | 0.000 |
| DEFLECTION DUE TO WEIGHT OF BARRIER RAIL ↓ | 0.000 | 0.006 | 0.012 | 0.018 | 0.023 | 0.027 | 0.031 | 0.034 | 0.036 | 0.037 | 0.038 | 0.037 | 0.036 | 0.034 | 0.031 | 0.027 | 0.023 | 0.018 | 0.012 | 0.006 | 0.000 |
| TOTAL DEAD LOAD DEFLECTION ↓ | 0.000 | 0.068 | 0.163 | 0.249 | 0.323 | 0.386 | 0.440 | 0.482 | 0.514 | 0.532 | 0.539 | 0.532 | 0.514 | 0.482 | 0.440 | 0.386 | 0.323 | 0.249 | 0.163 | 0.068 | 0.000 |
| | | | | | | | | | | | | | | | | | | | | | |
| REQUIRED CAMBER ↑ | 0 | 13/16" | 1 15/16" | 3" | 3 7/8" | 4 5/8" | 5 1/4" | 5 13/16" | 6 3/16" | 6 3/8" | 6 7/16" | 6 3/8" | 6 3/16" | 5 13/16" | 5 1/4" | 4 5/8" | 3 7/8" | 3" | 1 15/16" | 13/16" | 0 |

* INCLUDES SLAB, BUILDUPS & STAY-IN-PLACE FORMS.
ALL VALUES ARE SHOWN IN FEET EXCEPT "REQUIRED CAMBER", WHICH IS GIVEN IN INCHES (FRACTION FORM).

## DEAD LOAD DEFLECTION TABLE FOR GIRDERS - SPAN A

| | GIRDERS #2 & #3 | | | | | | | | | | | | | | | | | | | | |
|---|---|---|---|---|---|---|---|---|---|---|---|---|---|---|---|---|---|---|---|---|---|
| @ TWENTIETH POINTS BETWEEN ℄ BEARINGS | 0 | .05 | .10 | .15 | .20 | .25 | .30 | .35 | .40 | .45 | .50 | .55 | .60 | .65 | .70 | .75 | .80 | .85 | .90 | .95 | 0 |
| DEFLECTION DUE TO WEIGHT OF GIRDER ↓ | 0.000 | 0.019 | 0.037 | 0.053 | 0.068 | 0.080 | 0.090 | 0.098 | 0.104 | 0.107 | 0.109 | 0.107 | 0.104 | 0.098 | 0.090 | 0.080 | 0.068 | 0.053 | 0.037 | 0.019 | 0.000 |
| DEFLECTION DUE TO WEIGHT OF SLAB * ↓ | 0.000 | 0.045 | 0.117 | 0.183 | 0.239 | 0.287 | 0.328 | 0.360 | 0.384 | 0.398 | 0.403 | 0.398 | 0.384 | 0.360 | 0.328 | 0.287 | 0.239 | 0.183 | 0.117 | 0.045 | 0.000 |
| DEFLECTION DUE TO WEIGHT OF BARRIER RAIL ↓ | 0.000 | 0.006 | 0.012 | 0.017 | 0.022 | 0.026 | 0.029 | 0.032 | 0.034 | 0.035 | 0.036 | 0.035 | 0.034 | 0.032 | 0.029 | 0.026 | 0.022 | 0.017 | 0.012 | 0.006 | 0.000 |
| TOTAL DEAD LOAD DEFLECTION ↓ | 0.000 | 0.070 | 0.166 | 0.253 | 0.329 | 0.393 | 0.447 | 0.490 | 0.522 | 0.540 | 0.548 | 0.540 | 0.522 | 0.490 | 0.447 | 0.393 | 0.329 | 0.253 | 0.166 | 0.070 | 0.000 |
| | | | | | | | | | | | | | | | | | | | | | |
| REQUIRED CAMBER ↑ | 0 | 13/16" | 2" | 3 1/16" | 3 15/16" | 4 11/16" | 5 3/8" | 5 7/8" | 6 1/4" | 6 1/2" | 6 9/16" | 6 1/2" | 6 1/4" | 5 7/8" | 5 3/8" | 4 11/16" | 3 15/16" | 3 1/16" | 2" | 13/16" | 0 |

* INCLUDES SLAB, BUILDUPS & STAY-IN-PLACE FORMS.
ALL VALUES ARE SHOWN IN FEET EXCEPT "REQUIRED CAMBER", WHICH IS GIVEN IN INCHES (FRACTION FORM).

PROJECT NO. R-2309AB
GUILFORD COUNTY
STATION: 114+28.00 -L-

STATE OF NORTH CAROLINA
DEPARTMENT OF TRANSPORTATION
RALEIGH

SUPERSTRUCTURE

DEAD LOAD DEFLECTIONS
(LEFT LANE)

NORTH CAROLINA PROFESSIONAL SEAL 14045 ENGINEER TIMOTHY W. COGGINS
10/27/11

| REVISIONS | | | | | | SHEET NO. |
|---|---|---|---|---|---|---|
| NO. | BY: | DATE: | NO. | BY: | DATE: | S-10 |
| 1 | | | 3 | | | TOTAL SHEETS |
| 2 | | | 4 | | | 136 |

DRAWN BY : PEGGY PARISI DATE : 12-14-10
CHECKED BY : J.B. WILSON DATE : 5-25-11

26-OCT-2011 09:41
R:\TIPProjects-R\R2309AB\Structures\R2309ab\FinalPlans\Bridges\Str#1\r2309ab_sd_dl_01.dgn
tcoggins

STR. #1

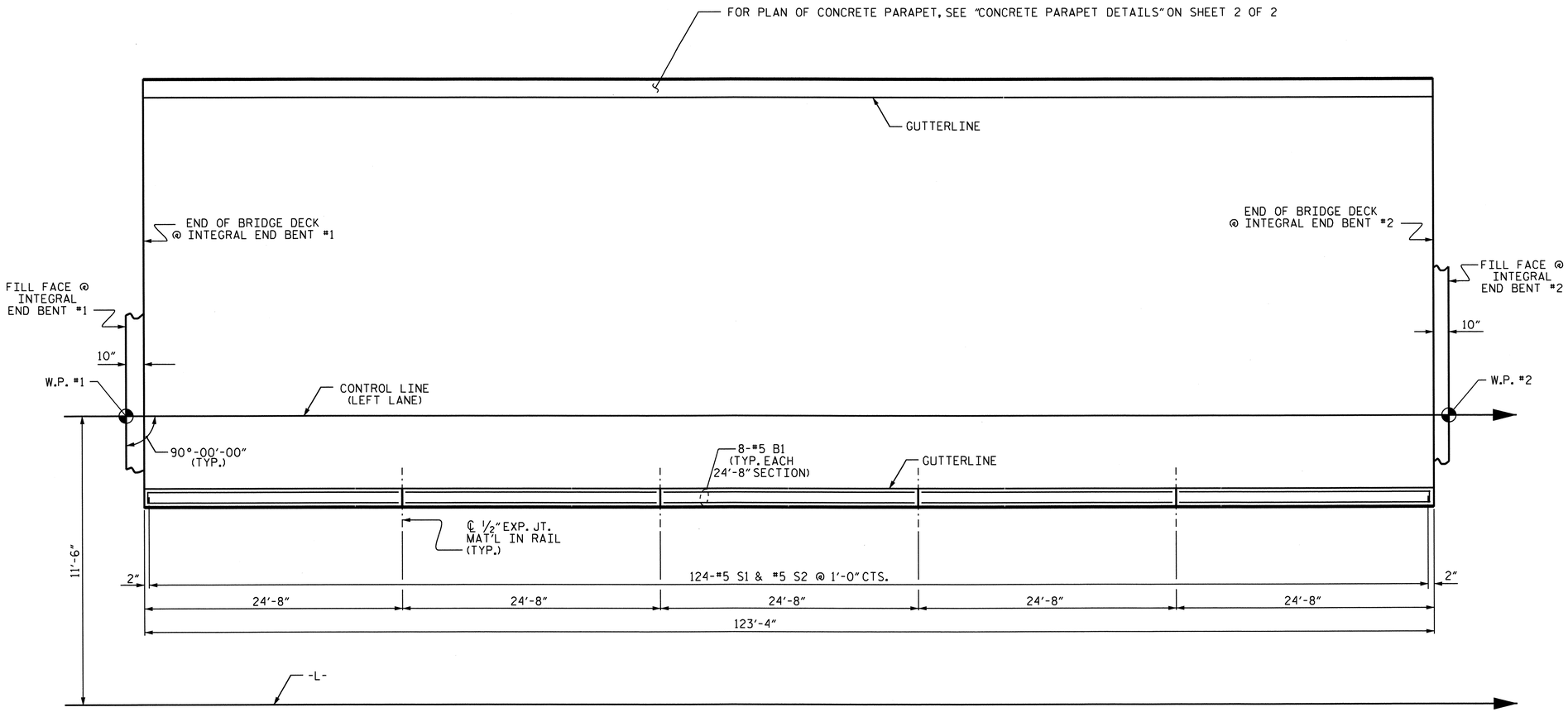


## PLAN OF BARRIER RAIL

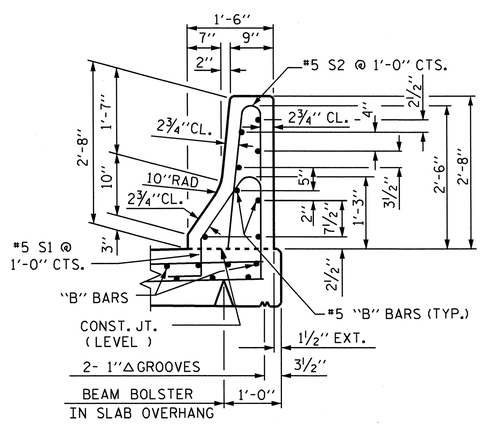


SECTION THRU RAIL

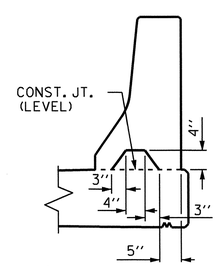


SECTION S-S

AT DAM IN OPEN JOINT (THIS IS TO BE USED ONLY WHEN SLIP FORM IS USED)

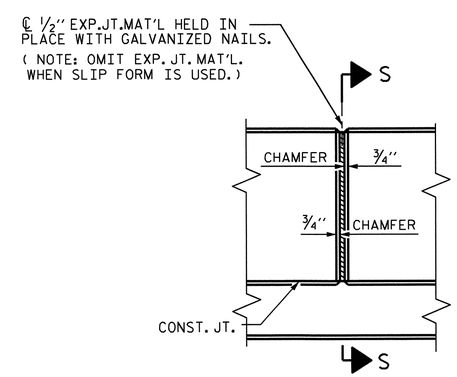


ELEVATION AT EXPANSION JOINTS

## BARRIER RAIL DETAILS

## BAR TYPES

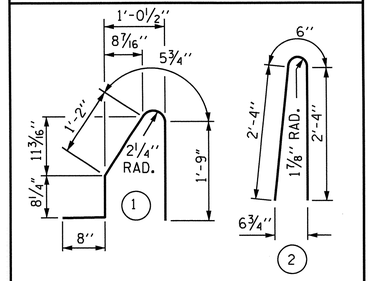


ALL BAR DIMENSIONS ARE OUT TO OUT

## BILL OF MATERIAL

FOR CONCRETE BARRIER RAIL ONLY

| BAR | NO. | SIZE | TYPE | LENGTH | WEIGHT |
|---|---|---|---|---|---|
| * B1 | 40 | #5 | STR | 24'-3" | 1012 |
| | | | | | |
| * S1 | 124 | #5 | 1 | 4'-9" | 614 |
| * S2 | 124 | #5 | 2 | 5'-2" | 668 |

| | |
|---|---|
| * EPOXY COATED REINFORCING STEEL | 2294 LBS. |
| CLASS AA CONCRETE | 12.4 CU. YDS. |
| CONCRETE BARRIER RAIL | 123.33 LIN. FT. |

## NOTES

THE BARRIER RAIL SHALL NOT BE CAST UNTIL ALL SLAB CONCRETE HAS BEEN CAST AND HAS REACHED A MINIMUM COMPRESSIVE STRENGTH OF 3,000 PSI.

ALL REINFORCING STEEL IN BARRIER RAILS SHALL BE EPOXY COATED.

THE #5 S1 AND #5 S2 BARS MAY BE SHIFTED SLIGHTLY IN ORDER TO MAINTAIN A 2" MINIMUM CLEARANCE TO 1/2" EXPANSION JOINT MATERIAL IN THE BARRIER RAIL.

VERTICAL GROOVED CONTRACTION JOINTS, 1/2" IN DEPTH, SHALL BE TOOLED IN ALL EXPOSED FACES OF THE BARRIER RAIL AND IN ACCORDANCE WITH ARTICLE 825-10(B) OF THE STANDARD SPECIFICATIONS. THE CONTRACTION JOINT SHALL BE LOCATED AT EACH THIRD POINT BETWEEN BARRIER RAIL EXPANSION JOINTS. ONLY ONE CONTRACTION JOINT IS REQUIRED AT MIDPOINT OF BARRIER RAIL SEGMENTS LESS THAN 20 FEET IN LENGTH AND NO CONTRACTION JOINTS ARE REQUIRED FOR THOSE SEGMENTS LESS THAN 10 FEET IN LENGTH.

PROJECT NO. R-2309AB
GUILFORD COUNTY
STATION: 114+28.00 -L-

SHEET 1 OF 2

STATE OF NORTH CAROLINA
DEPARTMENT OF TRANSPORTATION
RALEIGH

STANDARD
CONCRETE BARRIER RAIL

(LEFT LANE)

NORTH CAROLINA PROFESSIONAL SEAL 14045 ENGINEER TIMOTHY J. COGGINS
10/27/11

| REVISIONS | | | | | | SHEET NO. |
|---|---|---|---|---|---|---|
| NO. | BY: | DATE: | NO. | BY: | DATE: | S-11 |
| 1 | | | 3 | | | TOTAL SHEETS |
| 2 | | | 4 | | | 136 |

STR. #1 STD. NO. CBR1 (SHT 1)

| | | | |
|---|---|---|---|
| ASSEMBLED BY : PEGGY PARISI | | DATE : 12-9-10 | |
| CHECKED BY : J.B. WILSON | | DATE : 5-25-11 | |
| DRAWN BY : ARB 5/87 | REV. 10/17/00 | RWW/LES | |
| CHECKED BY : SJD 9/87 | REV. 5/7/03R | RWW/JTE | |
| | REV. 5/1/06R | TLA/GM | |

26-OCT-2011 09:41
R:\TIPProjects-R\R2309AB\Structures\R2309ab\FinalPlans\Bridges\Str#1\r2309ab_sd_br_01.dgn
tcoggins

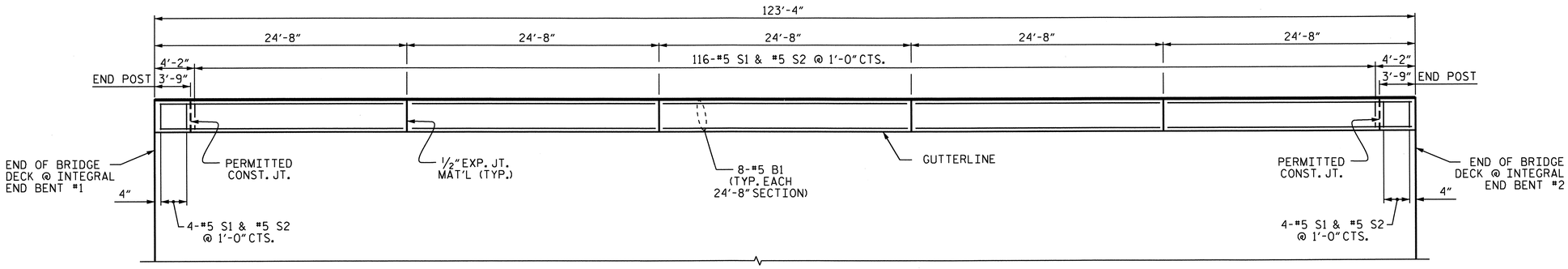


## PLAN OF CONCRETE PARAPET

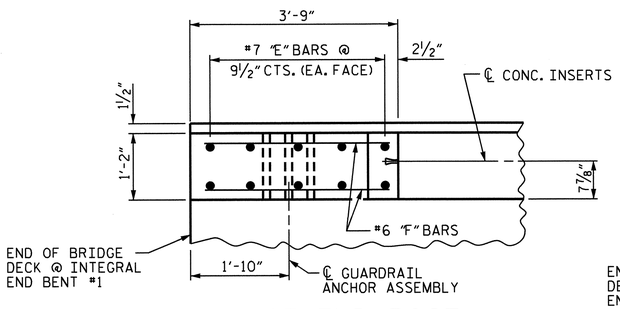


## PLAN OF END POST

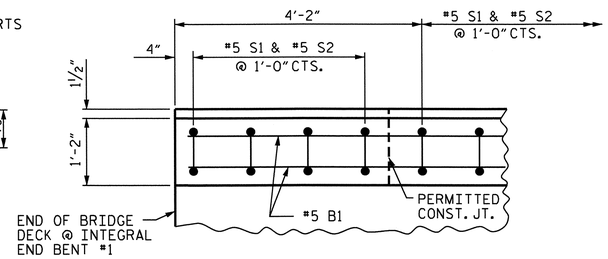


## PLAN OF PARAPET

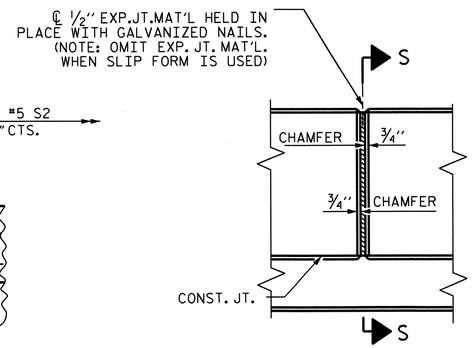


## ELEVATION AT EXPANSION JOINTS

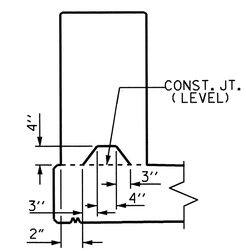


## SECTION S-S

AT DAM IN OPEN JOINT
( THIS IS TO BE USED ONLY WHEN SLIP FORM IS USED )

## BILL OF MATERIAL

PARAPET & TWO END POSTS

| BAR | NO. | SIZE | TYPE | LENGTH | WEIGHT |
|---|---|---|---|---|---|
| * B1 | 40 | 5 | STR | 24'-3" | 1012 |
| * E1 | 4 | 7 | STR | 2'-6" | 20 |
| * E2 | 4 | 7 | STR | 3'-0" | 25 |
| * E3 | 4 | 7 | STR | 3'-6" | 29 |
| * E4 | 4 | 7 | STR | 4'-0" | 33 |
| * E5 | 4 | 7 | STR | 4'-4" | 35 |
| * F1 | 4 | 6 | STR | 1'-10" | 11 |
| * F2 | 4 | 6 | STR | 3'-0" | 18 |
| * F3 | 4 | 6 | STR | 3'-4" | 20 |
| * S1 | 124 | 5 | 1 | 5'-5" | 701 |
| * S2 | 124 | 5 | 2 | 5'-6" | 711 |

| | | |
|---|---|---|
| * EPOXY COATED REINFORCING STEEL | LBS. | 2615 |
| CLASS AA CONCRETE | C.Y. | 13.7 |
| 1'-2" X 2'-6" CONCRETE PARAPET | LIN. FT. | 123.33 |

## BAR TYPE

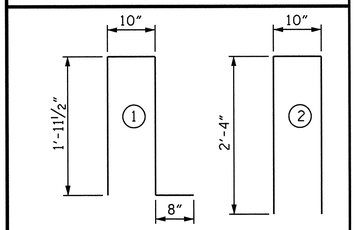


ALL BAR DIMENSIONS ARE OUT TO OUT.

## NOTES

THE CONCRETE PARAPET IN THE SPAN SHALL NOT BE CAST UNTIL ALL SLAB CONCRETE IN THE SPAN HAS BEEN CAST AND HAS REACHED A MINIMUM COMPRESSIVE STRENGTH OF 3,000 PSI.

ALL REINFORCING STEEL IN CONCRETE PARAPETS SHALL BE EPOXY COATED.

SEE "RAIL POST SPACINGS AND END OF RAIL DETAILS" SHEET FOR CONCRETE INSERT DETAILS.

SEE "GUARDRAIL ANCHORAGE DETAILS FOR METAL RAILS" SHEET FOR GUARDRAIL ANCHOR ASSEMBLY.

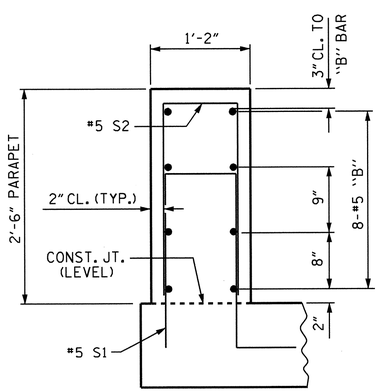


## SECTION THRU PARAPET

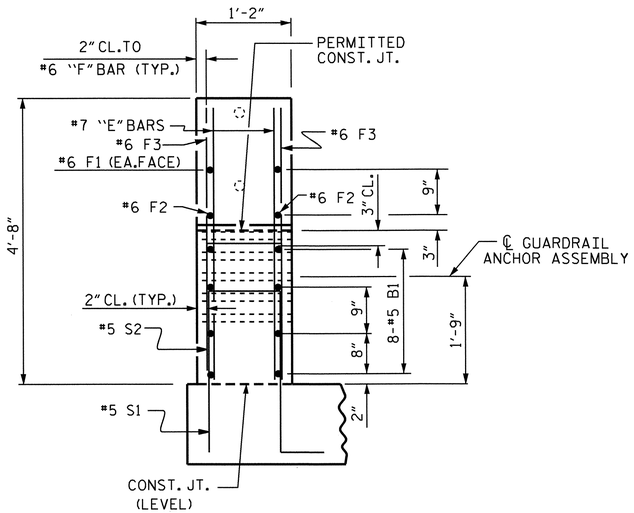


## END VIEW

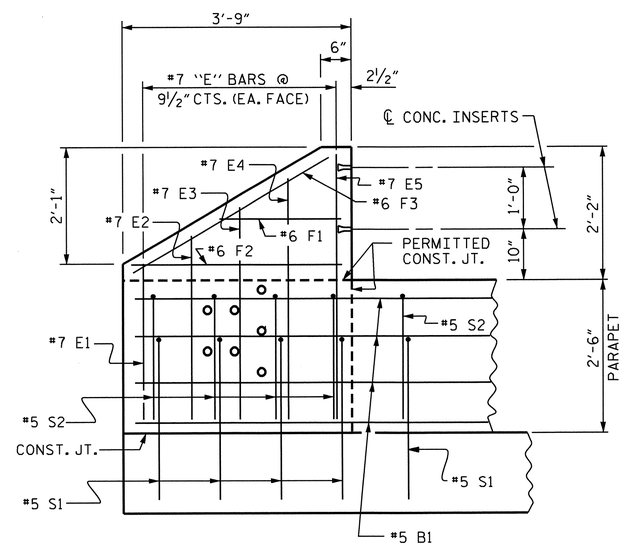


## ELEVATION

## PARAPET AND END POST FOR TWO BAR RAIL

NORTH CAROLINA PROFESSIONAL SEAL 14045 ENGINEER TIMOTHY A. COGGINS
10/27/11

PROJECT NO. R-2309AB
GUILFORD COUNTY
STATION: 114+28.00 -L-

SHEET 2 OF 2

STATE OF NORTH CAROLINA
DEPARTMENT OF TRANSPORTATION
RALEIGH

SUPERSTRUCTURE

CONCRETE PARAPET DETAILS

(LEFT LANE)

| REVISIONS | | | | | | SHEET NO. |
|---|---|---|---|---|---|---|
| NO. | BY: | DATE: | NO. | BY: | DATE: | S-12 |
| 1 | | | 3 | | | TOTAL SHEETS |
| 2 | | | 4 | | | 136 |

STR. #1

ASSEMBLED BY : PEGGY PARISI DATE : 12-9-10
CHECKED BY : J.B. WILSON DATE : 5-25-11

26-OCT-2011 09:40
R:\TIPProjects-R\R2309AB\Structures\R2309ab\FinalPlans\Bridges\Str#1\r2309ab_sd_mr_01.dgn
tcoggins

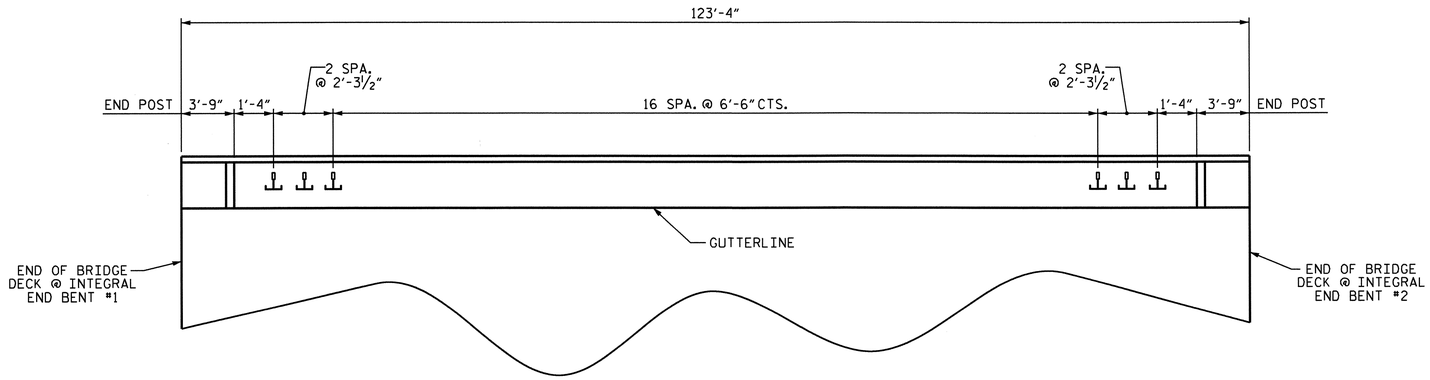


## PLAN OF RAIL POST SPACINGS

## NOTES

STRUCTURAL CONCRETE INSERT

THE STRUCTURAL CONCRETE INSERT ASSEMBLY SHALL CONSIST OF THE FOLLOWING COMPONENTS:

A. FERRULES SHALL BE MADE FROM STEEL MEETING THE REQUIREMENTS OF AASHTO M169, GRADE 12L14 AND SHALL HAVE A MINIMUM LENGTH OF THREADS OF 1½".

B. 1 - ¾" Ø X 1⅝" BOLT WITH WASHER. BOLT SHALL CONFORM TO THE REQUIREMENTS OF ASTM A307. BOLT AND WASHER SHALL BE GALVANIZED. ( AT THE CONTRACTOR'S OPTION, STAINLESS STEEL BOLT AND WASHER MAY BE USED AS AN ALTERNATE FOR THE ¾" Ø X 1⅝" GALVANIZED BOLT AND WASHER. THEY SHALL CONFORM TO OR EXCEED THE MECHANICAL REQUIREMENTS OF ASTM A307. THE USE OF THIS ALTERNATE SHALL BE APPROVED BY THE ENGINEER.)

C. WIRE STRUT SHOWN IN THE CONCRETE INSERT ASSEMBLY DETAIL IS THE MINIMUM ALLOWABLE SIZE AND SHALL HAVE A MINIMUM TENSILE STRENGTH OF 100,000 PSI. AS AN OPTION, A 7/16" Ø WIRE STRUT WITH A MINIMUM TENSILE STRENGTH OF 90,000 PSI IS ACCEPTABLE.

## NOTES

METAL RAIL TO END POST CONNECTION

THE METAL RAIL TO END POST CONNECTION SHALL CONSIST OF THE FOLLOWING COMPONENTS:

A. ½" PLATES SHALL CONFORM TO AASHTO M270 GRADE 36 AND SHALL BE GALVANIZED AFTER FABRICATION.

B. ¾" STRUCTURAL CONCRETE INSERT SHALL HAVE A WORKING LOAD SHEAR CAPACITY OF 4800 LBS. THE FERRULES SHALL ENGAGE A ¾"Ø X 1⅝" BOLT WITH 2" O.D. WASHER IN PLACE. THE ¾"Ø X 1⅝" BOLT SHALL HAVE N. C. THREADS.

C. CAP SCREWS FOR RAIL ATTACHMENT TO ANGLE SHALL CONFORM TO THE REQUIREMENTS OF ASTM F593 ALLOY 305 STAINLESS STEEL. CAP SCREWS TO BE CENTERED IN SLOTS AT 60°F.

D. STANDARD CLAMP BARS ( SEE METAL RAIL SHEET ).

E. ½" Ø PIPE SLEEVES (IF REQUIRED) TO BE GALVANIZED.

THE COST OF THE STANDARD CLAMP BARS AND CAP SCREWS USED IN THE METAL RAIL TO END POST CONNECTION SHALL BE INCLUDED IN THE UNIT CONTRACT PRICE BID FOR LINEAR FEET OF 1 OR 2 BAR METAL RAILS.

THE ¾" STRUCTURAL CONCRETE INSERT WITH BOLT SHALL BE ASSEMBLED IN THE SHOP.

THE COST OF THE ¾" STRUCTURAL CONCRETE INSERT ASSEMBLY, AND THE ½" PLATES COMPLETE IN PLACE SHALL BE INCLUDED IN THE VARIOUS PAY ITEMS.

THE CONTRACTOR, AT HIS OPTION, MAY USE AN ADHESIVE BONDING SYSTEM IN LIEU OF THE STRUCTURAL CONCRETE INSERT EMBEDDED IN THE END POST. IF THE ADHESIVE BONDING SYSTEM IS USED, THE ¾" Ø X 1⅝" BOLT WITH WASHER SHALL BE REPLACED WITH A ¾"Ø X 6½" BOLT AND 2" O.D. WASHER. ALL SPECIFICATIONS THAT APPLY TO THE ¾" Ø X 1⅝" BOLT SHALL APPLY TO THE ¾"Ø X 6 ½" BOLT. FIELD TESTING OF THE ADHESIVE BONDING SYSTEM IS NOT REQUIRED.

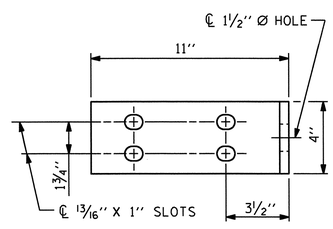


ELEVATION

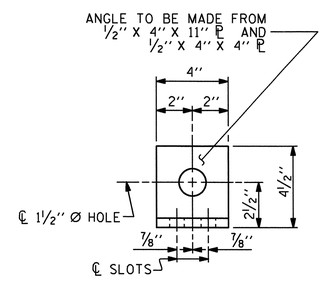


END VIEW

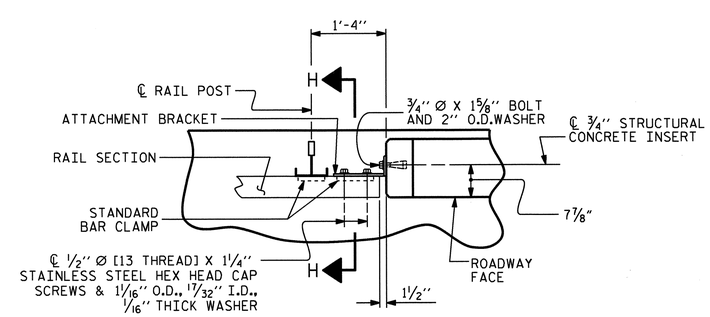


PLAN - RAIL AND END POST

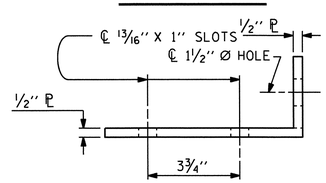


TOP VIEW

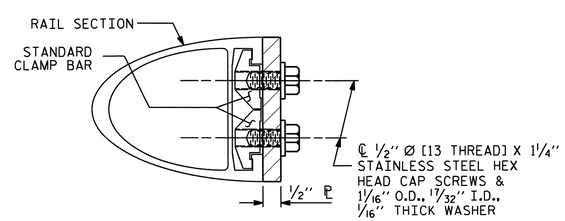


SECTION H-H

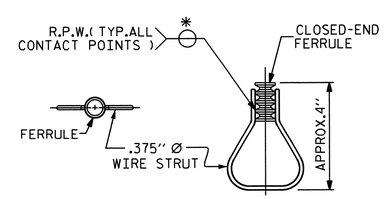


PLAN ELEVATION

STRUCTURAL CONCRETE INSERT

*EACH WELDED ATTACHMENT OF WIRE TO FERRULE SHALL DEVELOP THE TENSILE STRENGTH OF THE WIRE.

FIXED

## DETAILS FOR ATTACHING METAL RAIL TO END POST

PROJECT NO. R-2309AB

GUILFORD COUNTY

STATION: 114+28.00 -L-

SHEET 1 OF 3

STATE OF NORTH CAROLINA
DEPARTMENT OF TRANSPORTATION
RALEIGH

STANDARD
RAIL POST SPACINGS
AND
END OF RAIL DETAILS
TWO BAR METAL RAILS
(LEFT LANE)

NORTH CAROLINA PROFESSIONAL SEAL 14045 ENGINEER TIMOTHY L. COGGINS
Timothy L. Coggins 10/27/11

| REVISIONS | | | | | | | SHEET NO. |
|---|---|---|---|---|---|---|---|
| NO. | BY: | DATE: | NO. | BY: | DATE: | | S-13 |
| 1 | | | 3 | | | | TOTAL SHEETS |
| 2 | | | 4 | | | | 136 |

STR. #1 STD. NO. BMR2

| | | | |
|---|---|---|---|
| ASSEMBLED BY : PEGGY PARISI | | DATE : 12-10-10 | |
| CHECKED BY : J.B. WILSON | | DATE : 5-25-11 | |
| DRAWN BY : FCJ 1/88 | REV. 10/17/00 | LES/RDR | |
| CHECKED BY : CRK 3/89 | REV. 5/7/03 | RWW/JTE | |
| | REV. 5/1/06 | TLA/GM | |

26-OCT-2011 09:40
R:\TIPProjects-R\R2309AB\Structures\R2309ab\FinalPlans\Bridges\Str*1\r2309ab_sd_mr_01.dgn
tcoggins

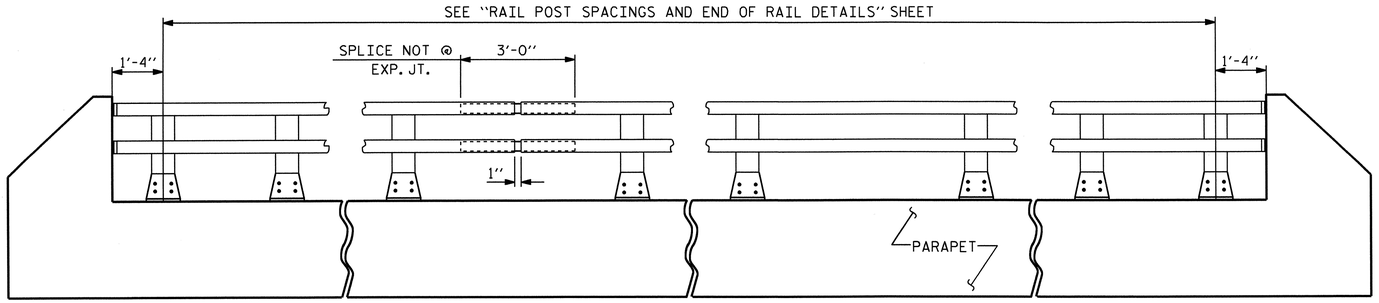


## ELEVATION

NOTE : FOR ATTACHMENT OF METAL RAIL TO END POST, SEE STANDARD NO. BMR2.

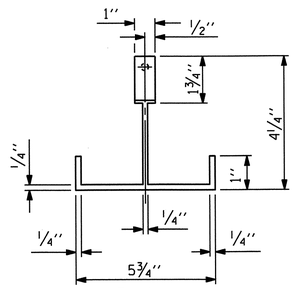


PLAN

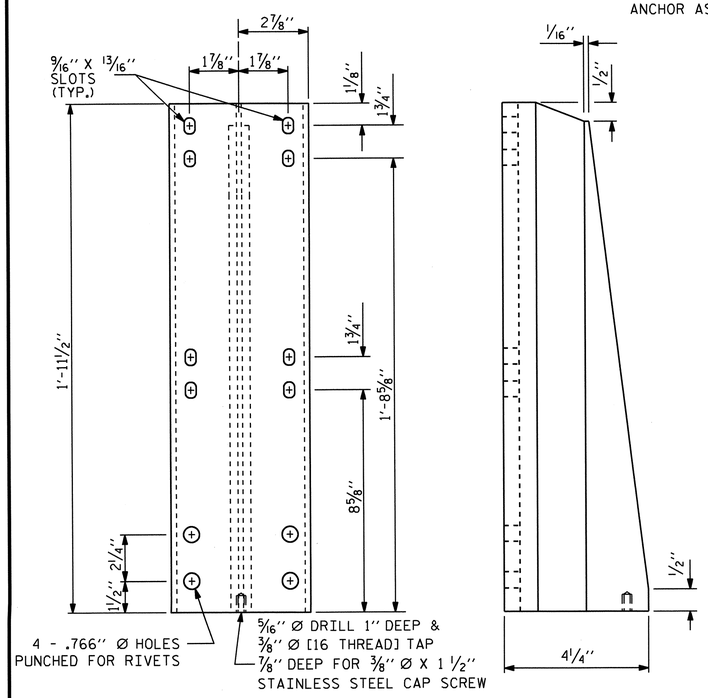


FRONT ELEVATION

SIDE ELEVATION

## DETAILS OF POST

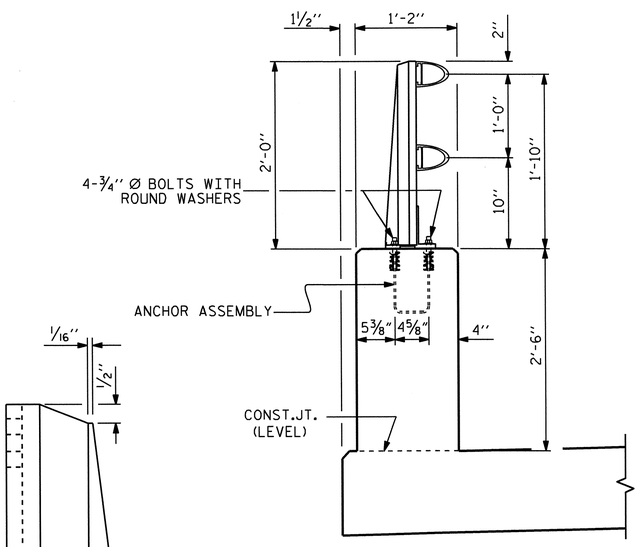


## SECTION THRU PARAPET AND RAIL

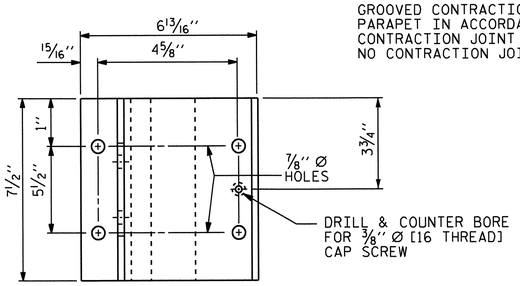


PLAN

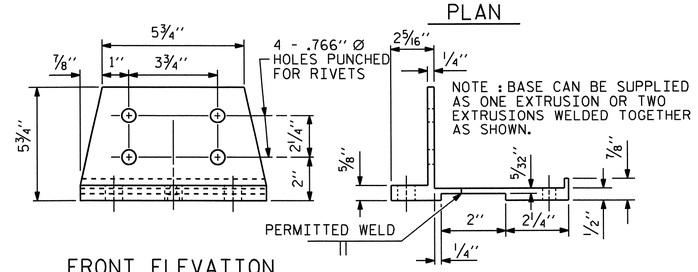


FRONT ELEVATION

SIDE ELEVATION

## POST BASE DETAILS

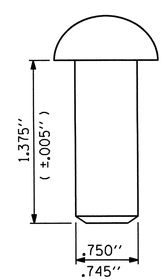


RIVET DETAIL

# NOTES

AT THE CONTRACTOR'S OPTION, METAL RAIL MAY BE EITHER ALUMINUM OR GALVANIZED STEEL IN ACCORDANCE WITH THE REQUIREMENTS OF THE GENERAL NOTES AND THE FOLLOWING SPECIFICATIONS FOR THE ALTERNATE MATERIALS; HOWEVER, THE CONTRACTOR WILL BE REQUIRED TO USE THE SAME RAIL MATERIAL ON ALL STRUCTURES ON THE PROJECT FOR WHICH METAL RAIL IS DESIGNATED.

## ALUMINUM RAILS

MATERIAL FOR POSTS, BASES AND RAILS, EXPANSION BARS AND CLAMP BARS SHALL BE ASTM B-221 ALLOY 6061-T6.

MATERIAL FOR RIVETS SHALL BE ASTM B316 ALLOY 6061-T6. RIVETS SHALL BE STANDARD BUTTON HEAD AND CONE POINT COLD DRIVEN AS PER DRAWING.

THE BASE OF RAIL POSTS, OR ANY OTHER ALUMINUM SURFACE IN CONTACT WITH CONCRETE SHALL BE THOROUGHLY COATED WITH AN ALUMINUM IMPREGNATED CAULKING COMPOUND OF APPROVED QUALITY.

MATERIAL FOR SHIMS TO BE ASTM B209 ALLOY 6061-T6.

## GALVANIZED STEEL RAILS

MATERIAL AND GALVANIZING ARE TO CONFORM TO THE FOLLOWING SPECIFICATIONS:

POST, POST BASES, RAILS, EXPANSION BARS AND CLAMP BARS: AASHTO M270 GRADE 36 STRUCTURAL STEEL - GALVANIZED TO AASHTO M111.

RIVETS: RIVETS SHALL MEET THE REQUIREMENTS OF ASTM A502 FOR GRADE 1 RIVETS.

THE CUT ENDS OF GALVANIZED STEEL RAILING, AFTER GRINDING SMOOTH SHALL BE GIVEN TWO COATS OF ZINC RICH PAINT MEETING THE REQUIREMENTS OF FEDERAL SPECIFICATION MIL-P-26915 USAF TYPE 1, OR OF FEDERAL SPECIFICATIONS TT-P-641.

SHIMS: SHIMS SHALL MEET THE REQUIREMENTS OF ASTM A570 FOR GRADE 33 OR A611 FOR GRADE C AND SHALL BE GALVANIZED IN ACCORDANCE WITH AASHTO M111.

RAIL CAPS: RAIL CAPS SHALL MEET THE REQUIREMENTS OF ASTM A570 FOR GRADE 33 OR A611 FOR GRADE C AND SHALL BE GALVANIZED IN ACCORDANCE WITH AASHTO M111.

## GENERAL NOTES

RAILING SHALL BE CONTINUOUS FROM END POST TO END POST OF BRIDGE. EACH JOINT IN RAIL LENGTH SHALL BE SPLICED AS DETAILED. PANEL LENGTHS OF RAIL SHALL BE ATTACHED TO A MINIMUM OF THREE POSTS.

FOR END OF RAIL TO CLEAR FACE OF CONCRETE END POST DIMENSION, SEE STANDARD NO. BMR2.

CAP SCREWS SHALL BE ASTM F593 ALLOY 305 STAINLESS STEEL. WASHERS SHALL MEET THE REQUIREMENTS OF ASTM F844 EXCEPT THEY SHALL BE MADE FROM ALLOY 304 STAINLESS STEEL.

CERTIFIED MILL REPORTS ARE REQUIRED FOR RAILS AND POSTS. SHOP INSPECTION IS NOT REQUIRED.

METAL RAIL POSTS SHALL BE SET NORMAL TO CURB GRADE.

METHOD OF MEASUREMENT FOR METAL RAILS: FOR LENGTH OF METAL RAILS TO BE PAID FOR, SEE THE STANDARD SPECIFICATIONS.

CURVED RAIL USAGE: WHERE RAILS ARE TO BE USED ON BRIDGES ON HORIZONTAL AND/OR VERTICAL CURVATURE THE CONTRACTOR MAY, AT HIS OPTION, HAVE THE REQUIRED CURVATURE IN THE RAIL FORMED IN THE SHOP OR IN THE FIELD. IN EITHER EVENT, THE RAIL SHALL CONFORM WITHOUT BUCKLING OR KINKING TO THE REQUIRED CURVATURE IN A UNIFORM MANNER ACCEPTABLE TO THE ENGINEER.

TO INSURE FUTURE IDENTIFICATION OF THE FABRICATOR, A PERMANENT IDENTIFYING MARK SHALL BE PLACED ON EACH POST. THE METHOD OF MARKING AND LOCATION SHALL BE SUCH THAT IT DOES NOT DETRACT FROM THE APPEARANCE OF THE POST, BUT REMAINS VISIBLE AFTER RAIL PLACEMENT.

SHIMS SHALL BE USED AS NECESSARY FOR POST ALIGNMENT.

ALLOY 6351-T5 MAY BE SUBSTITUTED FOR ALLOY 6061-T6 WHERE APPLICABLE.

MINOR VARIATIONS IN DETAILS OF METAL RAIL WILL BE CONSIDERED. DETAILS OF SUCH VARIATIONS, IF DESIRED, SHALL BE SUBMITTED FOR APPROVAL.

GROOVED CONTRACTION JOINTS, 1/2" IN DEPTH, SHALL BE TOOLED IN ALL EXPOSED FACES OF THE PARAPET IN ACCORDANCE WITH ARTICLE 825-10(B) OF THE STANDARD SPECIFICATIONS. THE CONTRACTION JOINT SHALL BE LOCATED AT A SPACING OF 8FT. TO 10FT. BETWEEN EXPANSION JOINTS. NO CONTRACTION JOINTS WILL BE REQUIRED FOR SEGMENTS LESS THAN 10 FEET IN LENGTH.

PAY LENGTH = 115.83 LIN. FT.

PROJECT NO. R-2309AB
GUILFORD COUNTY
STATION: 114+28.00 -L-

SHEET 2 OF 3

STATE OF NORTH CAROLINA
DEPARTMENT OF TRANSPORTATION
RALEIGH

STANDARD

2 BAR METAL RAIL

(LEFT LANE)

NORTH CAROLINA PROFESSIONAL SEAL 14045 ENGINEER TIMOTHY W. COGGINS
10/27/11

| ASSEMBLED BY : PEGGY PARISI | DATE : 12-10-10 |
|---|---|
| CHECKED BY : J.B. WILSON | DATE : 5-25-11 |

| | | | |
|---|---|---|---|
| DRAWN BY : EEM | 6/94 | REV. 10/17/00 | LES/RDR |
| CHECKED BY : RGW | 6/94 | REV. 5/7/03R | RWW/JTE |
| | | REV. 5/1/06 | TLA/GM |

| REVISIONS | | | | | | | SHEET NO. |
|---|---|---|---|---|---|---|---|
| NO. | BY: | DATE: | NO. | BY: | DATE: | | S-14 |
| 1 | | | 3 | | | | TOTAL SHEETS |
| 2 | | | 4 | | | | 136 |

STR. #1

STD. NO. BMR3

26-OCT-2011 09:39
R:\TIPProjects-R\R2309AB\Structures\R2309ab\FinalPlans\Bridges\Str*1\r2309ab_sd_mr_01.dgn
tcoggins

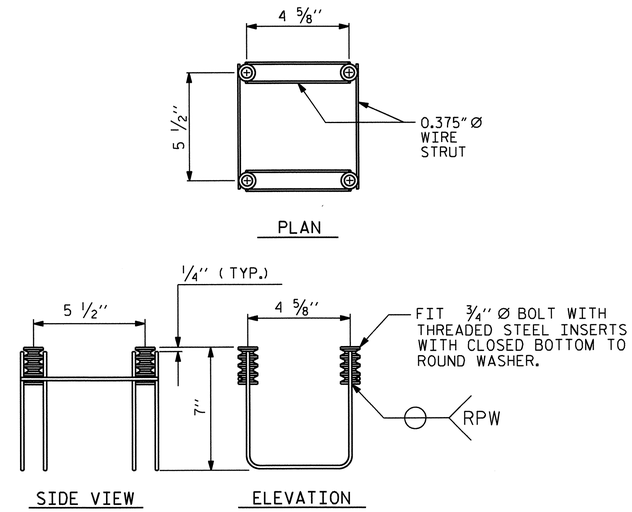


## 4-BOLT METAL RAIL ANCHOR ASSEMBLY

( 21 ASSEMBLIES REQUIRED )

## NOTES

STRUCTURAL CONCRETE ANCHOR ASSEMBLY

THE STRUCTURAL CONCRETE ANCHOR ASSEMBLY SHALL CONSIST OF THE FOLLOWING COMPONENTS :

A. FERRULES SHALL BE MADE FROM STEEL MEETING THE REQUIREMENTS OF AASHTO M169, GRADE 12L14 AND SHALL HAVE A MINIMUM LENGTH OF THREADS OF 2'' FOR 3/4'' FERRULES.

B. 4 - 3/4'' Ø X 2 1/2'' BOLTS WITH WASHERS. BOLTS SHALL CONFORM TO THE REQUIREMENTS OF ASTM A307. BOLTS AND WASHERS SHALL BE GALVANIZED. AT THE CONTRACTOR'S OPTION, STAINLESS STEEL BOLTS AND WASHERS MAY BE USED AS AN ALTERNATE FOR THE 3/4'' Ø X 2 1/2'' GALVANIZED BOLTS AND WASHERS. THEY SHALL CONFORM TO OR EXCEED THE MECHANICAL REQUIREMENTS OF ASTM A307. THE USE OF THIS ALTERNATE SHALL BE APPROVED BY THE ENGINEER.

C. WIRE STRUT SHOWN IN THE CONCRETE ANCHOR ASSEMBLY DETAIL IS THE MINIMUM ALLOWABLE SIZE AND SHALL HAVE A MINIMUM TENSILE STRENGTH OF 100,000 PSI. AS AN OPTION, A 7/16'' Ø WIRE STRUT WITH A MINIMUM TENSILE STRENGTH OF 90,000 PSI IS ACCEPTABLE.

D. THE METAL RAIL ANCHOR ASSEMBLIES TO BE HOT DIPPED GALVANIZED TO CONFORM TO REQUIREMENTS OF AASHTO M111.

E. THE COST OF THE METAL RAIL ANCHOR ASSEMBLY WITH BOLTS AND WASHERS COMPLETE IN PLACE SHALL BE INCLUDED IN THE PRICE BID FOR LINEAR FEET OF METAL RAIL.

F. BOLTS TO BE TIGHTENED ONE-HALF TURN WITH A WRENCH FROM A FINGER-TIGHT POSITION.

THE CONTRACTOR MAY USE ADHESIVELY ANCHORED ANCHOR BOLTS IN PLACE OF THE METAL RAIL ANCHOR ASSEMBLY. LEVEL ONE FIELD TESTING IS REQUIRED, AND THE YIELD LOAD OF THE 3/4''Ø BOLT IS 10 KIPS. FOR ADHESIVELY ANCHORED ANCHOR BOLTS OR DOWELS, SEE SPECIAL PROVISIONS.

WHEN ADHESIVELY ANCHORED ANCHOR BOLTS ARE USED, BOLTS SHALL MEET THE REQUIREMENTS OF ASTM F593 ALLOY 304 STAINLESS STEEL WITH MINIMUM 75,000 PSI ULTIMATE STRENGTH. NUTS SHALL MEET THE REQUIREMENTS OF ASTM F594 ALLOY 304 STAINLESS STEEL AND WASHERS SHALL MEET THE REQUIREMENTS OF ASTM F844 EXCEPT THEY SHALL BE MADE FROM ALLOY 304 STAINLESS STEEL.

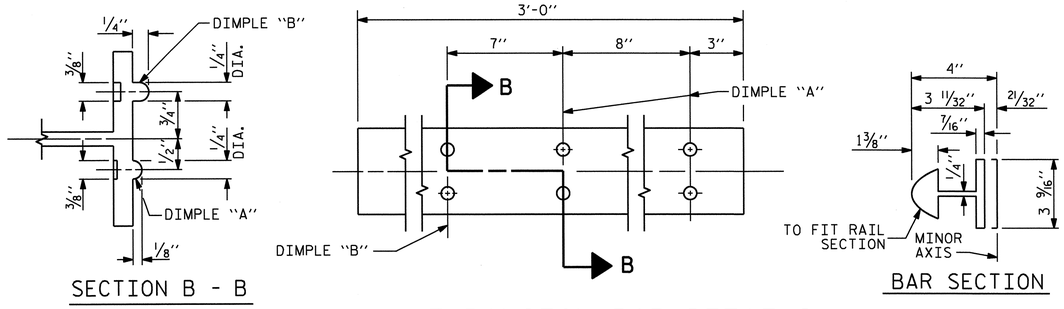


## EXPANSION BAR DETAILS

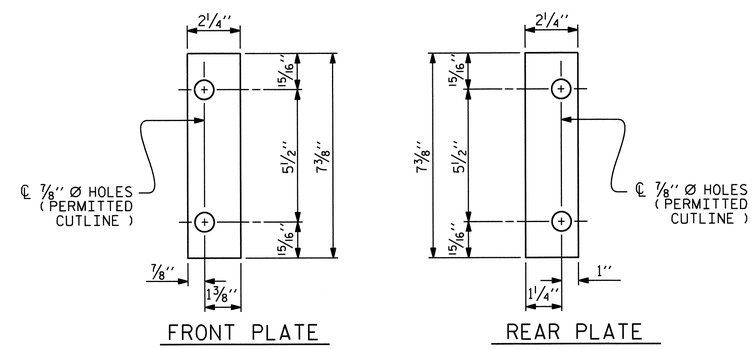


## SHIM DETAILS

NOTE :
SHIMS MAY BE CUT ALONG PERMITTED CUTLINE OR SLOTTED TO EDGE OF PLATE TO FACILITATE PLACEMENT.

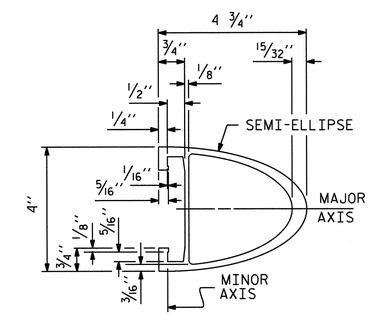


## RAIL SECTION

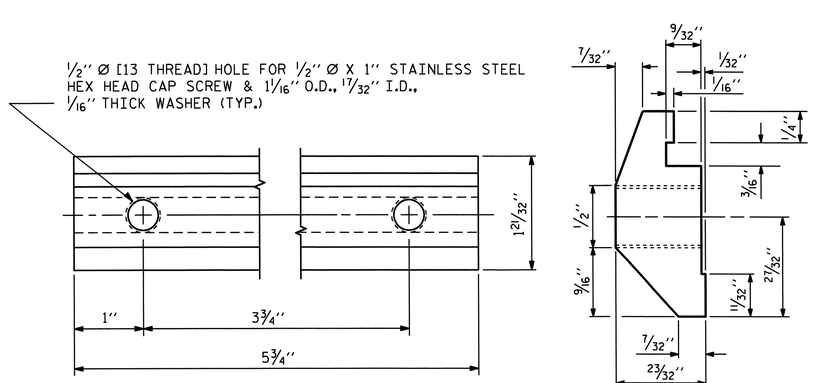


## CLAMP BAR DETAIL

( 4 REQUIRED PER POST )

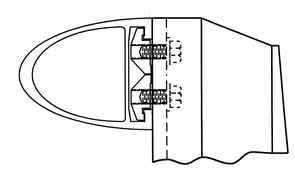

## CLAMP ASSEMBLY

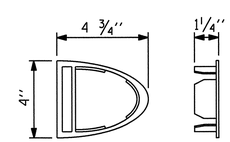


## RAIL CAP

PROJECT NO. R-2309AB
GUILFORD COUNTY
STATION: 114+28.00 -L-

SHEET 3 OF 3

STATE OF NORTH CAROLINA
DEPARTMENT OF TRANSPORTATION
RALEIGH

STANDARD

2 BAR METAL RAIL

(LEFT LANE)

NORTH CAROLINA PROFESSIONAL SEAL 14045 ENGINEER TIMOTHY L. COGGINS
Timothy L. Coggins 10/27/11

| | |
|---|---|
| ASSEMBLED BY : PEGGY PARISI DATE : 12-10-10 | |
| CHECKED BY : J.B. WILSON DATE : 5-25-11 | |
| DRAWN BY : EEM 6/94 | REV. 2/6/97 EEM/RGW |
| CHECKED BY : RGW 6/94 | REV. 8/16/99 MAB/LES |
| | REV. 5/1/06R KMM/GM |

| REVISIONS | | | | | | | | SHEET NO. |
|---|---|---|---|---|---|---|---|---|
| NO. | BY: | DATE: | NO. | BY: | DATE: | | | S-15 |
| 1 | | | 3 | | | | | TOTAL SHEETS |
| 2 | | | 4 | | | | | 136 |

STR. #1 STD. NO. BMR4

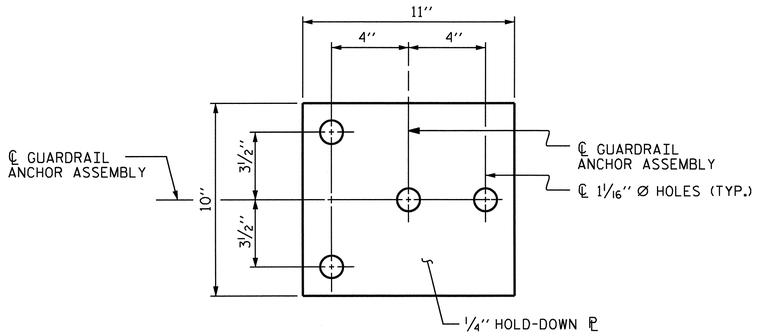


PLAN

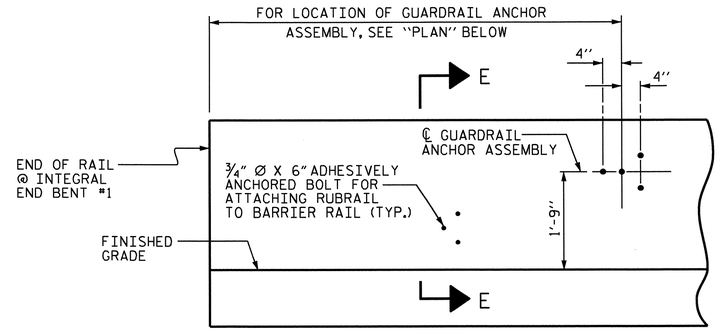


ELEVATION

FOR LOCATION OF RUBRAIL, SEE ROADWAY STD. 862.03

## NOTES

THE GUARDRAIL ANCHOR ASSEMBLY SHALL CONSIST OF A 1/4'' HOLD DOWN PLATE AND 4 - 7/8'' Ø BOLTS WITH NUTS AND WASHERS, RUBRAIL, AND ADHESIVELY ANCHORED BOLTS.

THE HOLD-DOWN PLATE SHALL CONFORM TO AASHTO M270 GRADE 36. AFTER FABRICATION, THE HOLD-DOWN PLATE SHALL BE HOT-DIP GALVANIZED IN ACCORDANCE WITH AASHTO M111.

BOLTS SHALL CONFORM TO THE REQUIREMENTS OF ASTM A307 AND NUTS SHALL CONFORM TO THE REQUIREMENTS OF AASHTO M291. BOLTS, NUTS AND WASHERS SHALL BE GALVANIZED. (AT THE CONTRACTOR'S OPTION, STAINLESS STEEL BOLTS, NUTS AND WASHERS MAY BE USED AS AN ALTERNATE FOR THE 7/8'' Ø GALVANIZED BOLTS, NUTS AND WASHERS. THEY SHALL CONFORM TO OR EXCEED THE MECHANICAL REQUIREMENTS OF ASTM A307. THE USE OF THIS ALTERNATE SHALL BE APPROVED BY THE ENGINEER.)

THE GUARDRAIL ANCHOR ASSEMBLY IS REQUIRED AT ALL POINTS WHERE APPROACH GUARDRAIL IS TO BE ATTACHED TO THE END OF BARRIER RAIL. FOR POINTS OF ATTACHMENT, SEE SKETCH.

AFTER INSTALLATION, THE EXPOSED THREAD OF THE BOLT SHALL BE BURRED WITH A SHARP POINTED TOOL.

THE COST OF THE GUARDRAIL ANCHOR ASSEMBLY SHALL BE INCLUDED IN THE UNIT CONTRACT PRICE BID FOR CONCRETE BARRIER RAIL.

THE 1 1/4'' Ø HOLES SHALL BE FORMED OR DRILLED WITH A CORE BIT. IMPACT TOOLS WILL NOT BE PERMITTED. ANY CONCRETE DAMAGED BY THIS WORK SHALL BE REPAIRED TO THE SATISFACTION OF THE ENGINEER.

THE C6 X 8.2 RUBRAIL IS TO BE ADHESIVELY ANCHORED TO THE RAIL USING THREE 3/4" Ø X 6" BOLTS WITH WASHERS. LEVEL ONE FIELD TESTING IS REQUIRED, AND THE YIELD LOAD OF THE 3/4" Ø BOLT IS 12 KIPS. FOR ADHESIVELY ANCHORED ANCHOR BOLTS OR DOWELS, SEE SPECIAL PROVISIONS. SEE ROADWAY STANDARD 862.03 FOR DETAILS AND LOCATION OF THE RUBRAIL.

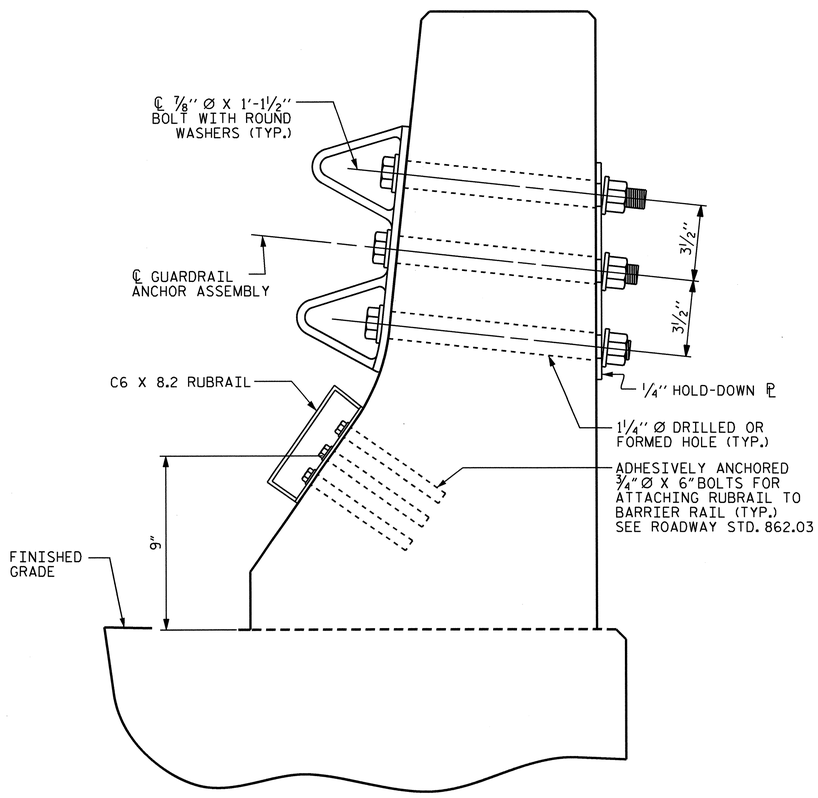


SECTION E-E

## GUARDRAIL ANCHOR ASSEMBLY DETAILS

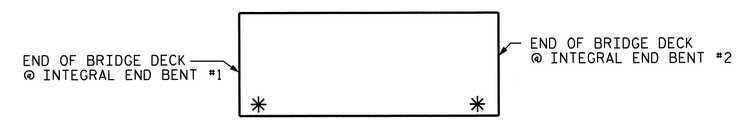


SKETCH SHOWING POINTS OF ATTACHMENTS

✳ DENOTES GUARDRAIL ANCHOR ASSEMBLY FOR BARRIER RAIL

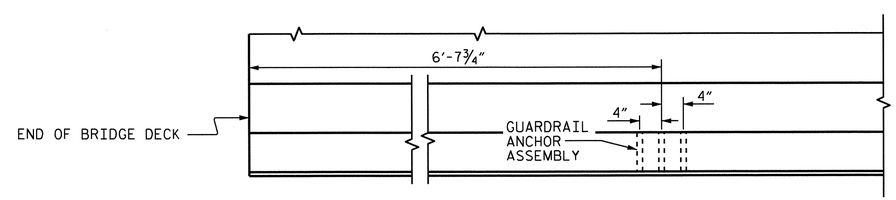


PLAN

## LOCATION OF ANCHORS FOR GUARDRAIL

INTEGRAL END BENT #1 SHOWN, INTEGRAL END BENT #2 SIMILAR.

PROJECT NO. R-2309AB
GUILFORD COUNTY
STATION: 114+28.00 -L-

STATE OF NORTH CAROLINA
DEPARTMENT OF TRANSPORTATION
RALEIGH

STANDARD
GUARDRAIL ANCHORAGE FOR BARRIER RAIL

(LEFT LANE)

NORTH CAROLINA PROFESSIONAL SEAL 14045 ENGINEER TIMOTHY L. COGGINS
10/27/11

| REVISIONS | | | | | | SHEET NO. |
|---|---|---|---|---|---|---|
| NO. | BY: | DATE: | NO. | BY: | DATE: | S-16 |
| 1 | | | 3 | | | TOTAL SHEETS |
| 2 | | | 4 | | | 136 |

| | |
|---|---|
| ASSEMBLED BY : PEGGY PARISI | DATE : 12-9-10 |
| CHECKED BY : J.B. WILSON | DATE : 5-25-11 |
| DRAWN BY : TLA 5/06 | ADDED 5/1/06R KMM/GM |
| CHECKED BY : GM 5/06 | |

26-OCT-2011 09:38
R:\TIPProjects-R\R2309AB\Structures\R2309ab\FinalPlans\Bridges\Str#1\r2309ab_sd_br_01.dgn
tcoggins

STR. #1 (SHT 1) STD. NO. GRA2

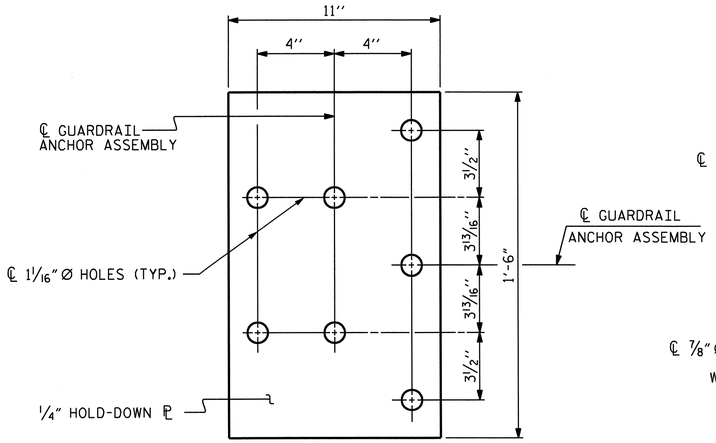


PLAN

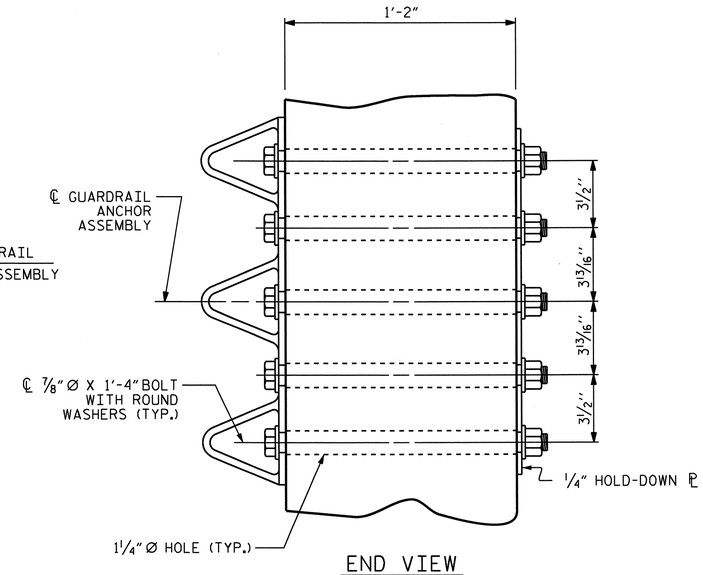


END VIEW

## GUARDRAIL ANCHOR ASSEMBLY DETAILS

## NOTES

THE GUARDRAIL ANCHOR ASSEMBLY SHALL CONSIST OF A 1/4'' HOLD DOWN PLATE AND 7 - 7/8'' Ø BOLTS WITH NUTS AND WASHERS.

THE HOLD-DOWN PLATE SHALL CONFORM TO AASHTO M270 GRADE 36. AFTER FABRICATION, THE HOLD-DOWN PLATE SHALL BE HOT-DIP GALVANIZED IN ACCORDANCE WITH AASHTO M111.

BOLTS SHALL CONFORM TO THE REQUIREMENTS OF ASTM A307 AND NUTS SHALL CONFORM TO THE REQUIREMENTS OF AASHTO M291. BOLTS, NUTS AND WASHERS SHALL BE GALVANIZED. AT THE CONTRACTOR'S OPTION, STAINLESS STEEL BOLTS, NUTS AND WASHERS MAY BE USED AS AN ALTERNATE FOR THE 7/8'' Ø GALVANIZED BOLTS, NUTS AND WASHERS. THEY SHALL CONFORM TO OR EXCEED THE MECHANICAL REQUIREMENTS OF ASTM A307. THE USE OF THIS ALTERNATE SHALL BE APPROVED BY THE ENGINEER.

THE GUARDRAIL ANCHOR ASSEMBLY IS REQUIRED AT ALL POINTS WHERE APPROACH GUARDRAIL IS TO BE ATTACHED TO THE END OF THE PARAPET. FOR POINTS OF ATTACHMENT, SEE SKETCH.

AFTER INSTALLATION, THE EXPOSED THREAD OF THE BOLT SHALL BE BURRED WITH A SHARP POINTED TOOL.

THE COST OF THE GUARDRAIL ANCHOR ASSEMBLIES WITH BOLTS, NUTS AND WASHERS COMPLETE IN PLACE, SHALL BE INCLUDED IN THE VARIOUS PAY ITEMS.

THE VERTICAL REINFORCING BARS MAY BE SHIFTED SLIGHTLY IN THE END POST TO CLEAR ASSEMBLY BOLTS.

THE 1 1/4'' Ø HOLES SHALL BE FORMED OR DRILLED WITH A CORE BIT. IMPACT TOOLS WILL NOT BE PERMITTED. ANY CONCRETE DAMAGED BY THIS WORK SHALL BE REPAIRED TO THE SATISFACTION OF THE ENGINEER.

## SKETCH SHOWING POINTS OF ATTACHMENT

* LOCATION OF GUARDRAIL ATTACHMENT FOR METAL RAIL

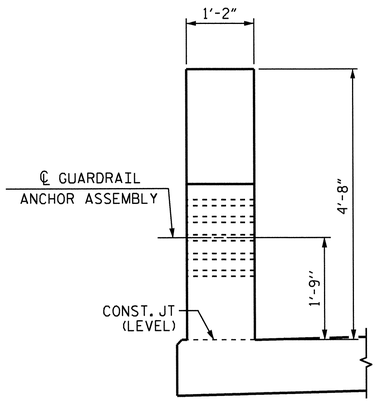


END VIEW

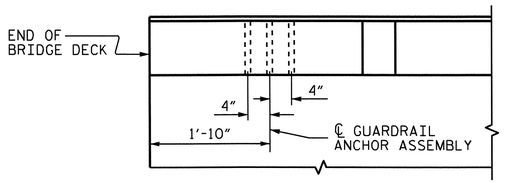


PLAN

INTEGRAL END BENT #1 SHOWN, INTEGRAL END BENT #2 SIMILAR.

## LOCATION OF GUARDRAIL ANCHOR AT END POST

PROJECT NO. R-2309AB

GUILFORD COUNTY

STATION: 114+28.00 -L-

STATE OF NORTH CAROLINA
DEPARTMENT OF TRANSPORTATION
RALEIGH

STANDARD

GUARDRAIL ANCHORAGE DETAILS FOR METAL RAILS

(LEFT LANE)

NORTH CAROLINA PROFESSIONAL SEAL 14045 ENGINEER TIMOTHY L. COGGINS

10/27/11

| REVISIONS | | | | | | SHEET NO. |
|---|---|---|---|---|---|---|
| NO. | BY: | DATE: | NO. | BY: | DATE: | S-17 |
| 1 | | | 3 | | | TOTAL SHEETS |
| 2 | | | 4 | | | 136 |

| | |
|---|---|
| ASSEMBLED BY : PEGGY PARISI | DATE : 12-10-10 |
| CHECKED BY : J.B. WILSON | DATE : 5-25-11 |
| DRAWN BY : MAA 5/10 | ADDED 5/6/10 |
| CHECKED BY : GM 5/10 | |

26-OCT-2011 09:38
R:\TIPProjects-R\R2309AB\Structures\R2309ab\FinalPlans\Bridges\Str#1\r2309ab_sd_mr_01.dgn
tcoggins

STR. #1 (SHT 4) STD. NO. GRA3

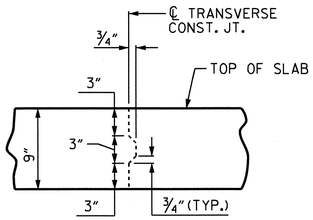


## TRANSVERSE CONSTRUCTION JOINT DETAIL

NOTE:
REINFORCING STEEL IN SLAB NOT SHOWN.
LONGITUDINAL REINFORCING STEEL SHALL BE CONTINUOUS THRU JOINT

| SUPERSTRUCTURE REINFORCING STEEL LENGTHS ARE BASED ON THE FOLLOWING MINIMUM SPLICE LENGTHS | | | | | |
|---|---|---|---|---|---|
| BAR SIZE | SUPERSTRUCTURE EXCEPT APPROACH SLABS, PARAPET, AND BARRIER RAIL | | APPROACH SLABS | | PARAPET AND BARRIER RAIL |
| | EPOXY COATED | UNCOATED | EPOXY COATED | UNCOATED | |
| #4 | 2'-0" | 1'-9" | 2'-0" | 1'-9" | 2'-9" |
| #5 | 2'-6" | 2'-2" | 2'-6" | 2'-2" | 3'-5" |
| #6 | 3'-0" | 2'-7" | 3'-10" | 2'-7" | 4'-4" |
| #7 | 5'-3" | 3'-6" | | | |
| #8 | 6'-10" | 4'-7" | | | |

## BILL OF MATERIAL

| BAR | NO. | SIZE | TYPE | LENGTH | WEIGHT |
|---|---|---|---|---|---|
| * A1 | 247 | #5 | STR | 36'-4" | 9360 |
| A2 | 247 | #5 | STR | 36'-4" | 9360 |
| | | | | | |
| * B1 | 125 | #4 | STR | 26'-3" | 2192 |
| * B2 | 96 | #6 | STR | 24'-6" | 3533 |
| B3 | 132 | #5 | STR | 42'-6" | 5851 |
| | | | | | |
| K1 | 40 | #4 | STR | 22'-1" | 590 |
| K2 | 8 | #4 | STR | 2'-8" | 14 |
| | | | | | |
| * S1 | 62 | #4 | 1 | 11'-8" | 483 |
| * S2 | 62 | #4 | 1 | 9'-7" | 397 |
| | | | | | |
| U1 | 66 | #4 | 2 | 10'-4" | 456 |
| U2 | 12 | #4 | 2 | 12'-2" | 98 |
| | | | | | |
| V1 | 8 | #4 | STR | 3'-10" | 20 |

REINFORCING STEEL 16389 LBS.

* EPOXY COATED REINFORCING STEEL 15965 LBS.

## BAR TYPES

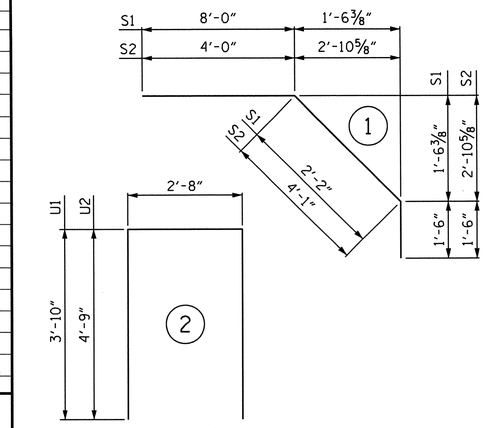


ALL BAR DIMENSIONS ARE OUT TO OUT

## SUPERSTRUCTURE BILL OF MATERIAL

| | CLASS AA CONCRETE | REINFORCING STEEL | EPOXY COATED REINFORCING STEEL |
|---|---|---|---|
| | (CU.YDS.) | (LBS.) | (LBS.) |
| POUR #1 | 131.4 | 16389 | 15965 |
| ◆ POUR #2 | 65.3 | | |
| | | | |
| TOTALS ** | 196.7 | 16389 | 15965 |

** QUANTITIES FOR BARRIER RAIL AND PARAPET ARE NOT INCLUDED.

◆ POUR #2 QUANTITY INCLUDES UPPER POUR OF WINGS AND INTEGRAL END BENT.

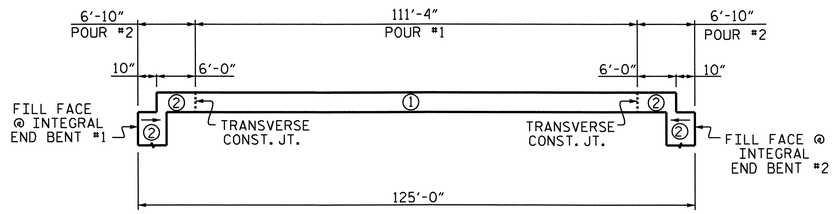


## POURING SEQUENCE

| GROOVING BRIDGE FLOORS | | |
|---|---|---|
| APPROACH SLABS | 1417 | SQ.FT. |
| BRIDGE DECK | 3793 | SQ.FT. |
| TOTAL | 5210 | SQ.FT. |

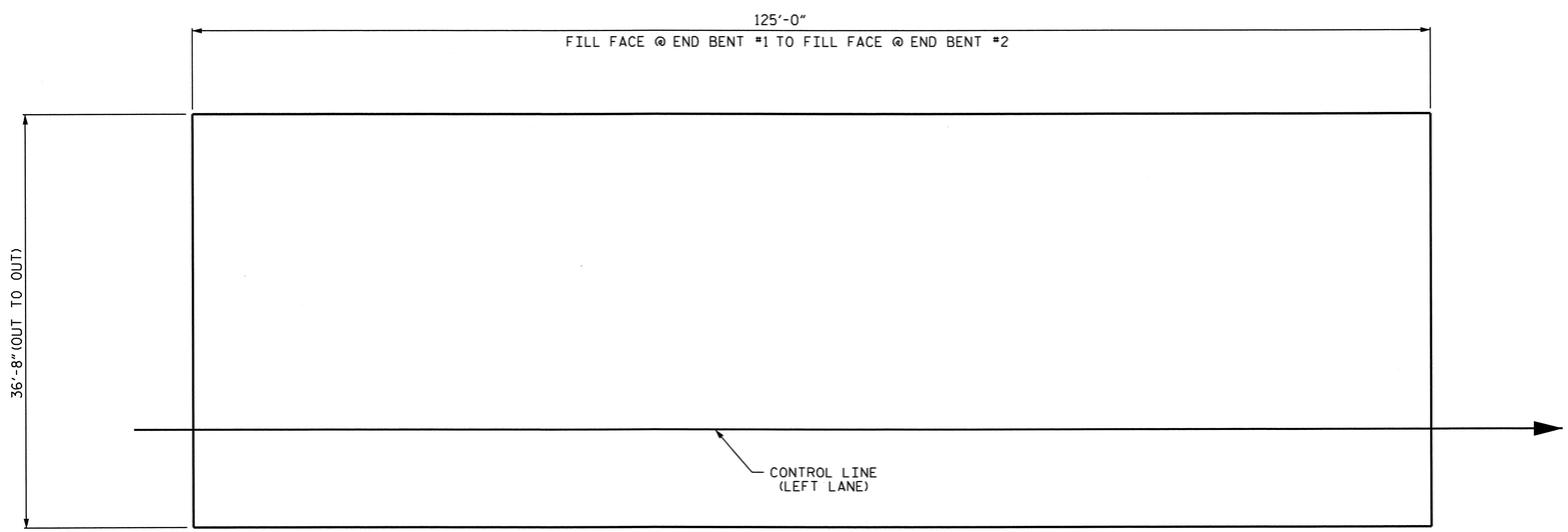


## LAYOUT FOR COMPUTING AREA OF REINFORCED CONCRETE DECK SLAB ( SQ. FT. = 4583 )

PROJECT NO. R-2309AB
GUILFORD COUNTY
STATION: 114+28.00 -L-

STATE OF NORTH CAROLINA
DEPARTMENT OF TRANSPORTATION
RALEIGH

STANDARD
SUPERSTRUCTURE BILL OF MATERIAL
(LEFT LANE)

NORTH CAROLINA PROFESSIONAL SEAL 14045 ENGINEER TIMOTHY LAY COGGINS
10/27/11

| REVISIONS | | | | | | | | SHEET NO. |
|---|---|---|---|---|---|---|---|---|
| NO. | BY: | DATE: | NO. | BY: | DATE: | | | S-18 |
| 1 | | | 3 | | | | | TOTAL SHEETS |
| 2 | | | 4 | | | | | 136 |

STR. #1 STD. NO. BOM1

| | | | |
|---|---|---|---|
| ASSEMBLED BY : PEGGY PARISI | DATE : 12-13-10 | | |
| CHECKED BY : J.B. WILSON | DATE : 5-25-11 | | |
| DRAWN BY : JMB 5/87 | REV. 6/1/94 | EEM/GRP | |
| CHECKED BY : SJD 9/87 | REV. 8/16/99 | RWW/LES | |
| | REV. 5/1/06 | TLA/GM | |

26-OCT-2011 09:37
R:\TIPProjects-R\R2309AB\Structures\R2309ab\FinalPlans\Bridges\Str#1\r2309ab_sd.bm_01.dgn
tcoggins

## NOTES

STIRRUPS IN CAP MAY BE SHIFTED AS NECESSARY TO CLEAR #4 V1 BARS.

THE CONTRACTOR SHALL PROVIDE FOR INSTALLATION OF THE 4" DIAMETER DRAIN PIPE THROUGH THE WING WALL AS REQUIRED FOR REINFORCED BRIDGE APPROACH FILLS, SEE THE ROADWAY PLANS. REINFORCING STEEL IN THE WING WALL MAY BE SHIFTED AS NECESSARY TO CLEAR THE DRAIN PIPE.

SEE SUPERSTRUCTURE SHEETS FOR UPPER PART OF INTEGRAL END BENT DETAIL.

THE CONTRACTOR'S ATTENTION IS CALLED TO THE FACT THAT UPPER PART OF WINGS ARE TO BE POURED WITH THE SUPERSTRUCTURE.

THE TOP SURFACE OF POUR #1 OF THE END BENT CAP AND WINGS, EXCLUDING THE BEARING AREA, SHALL BE RAKED TO A DEPTH OF 1/4".

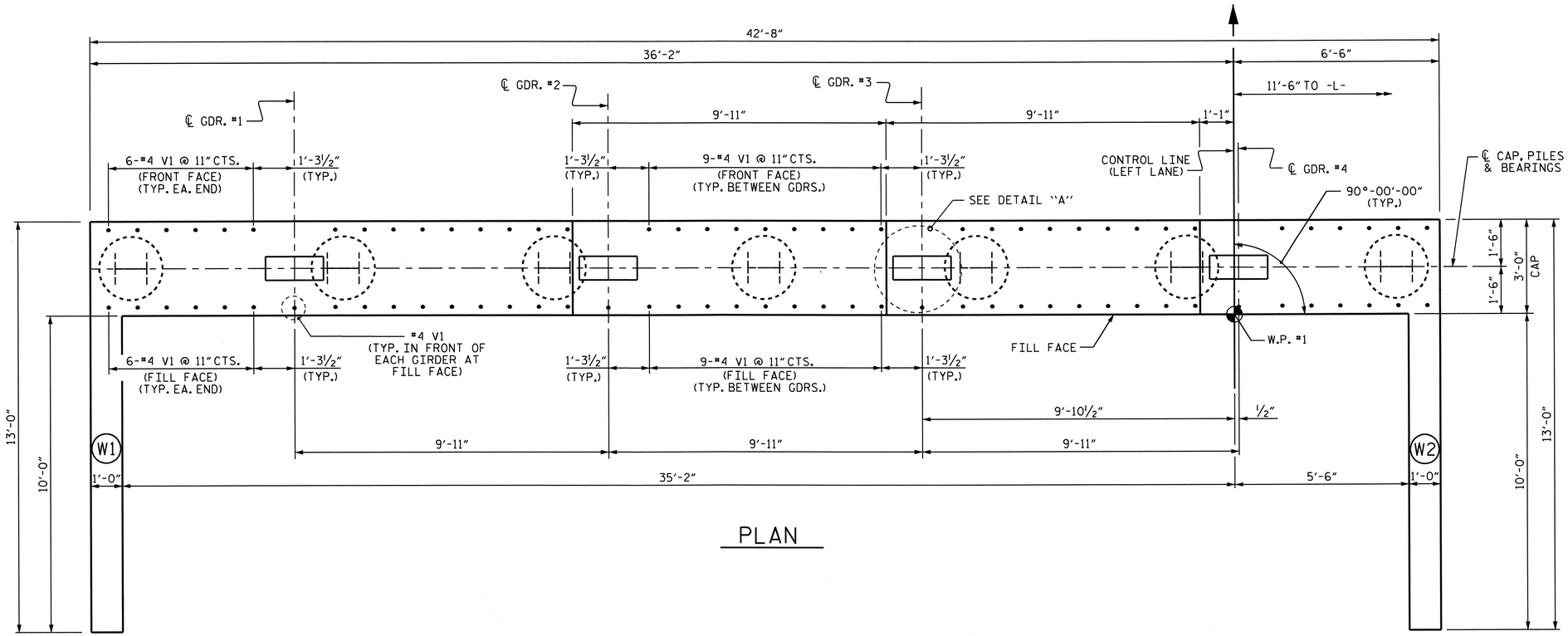


PLAN

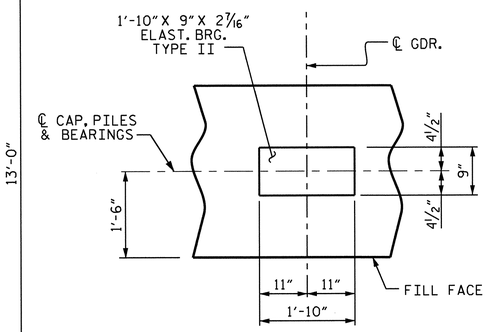


DETAIL A

(TYP. EA. GDR.)

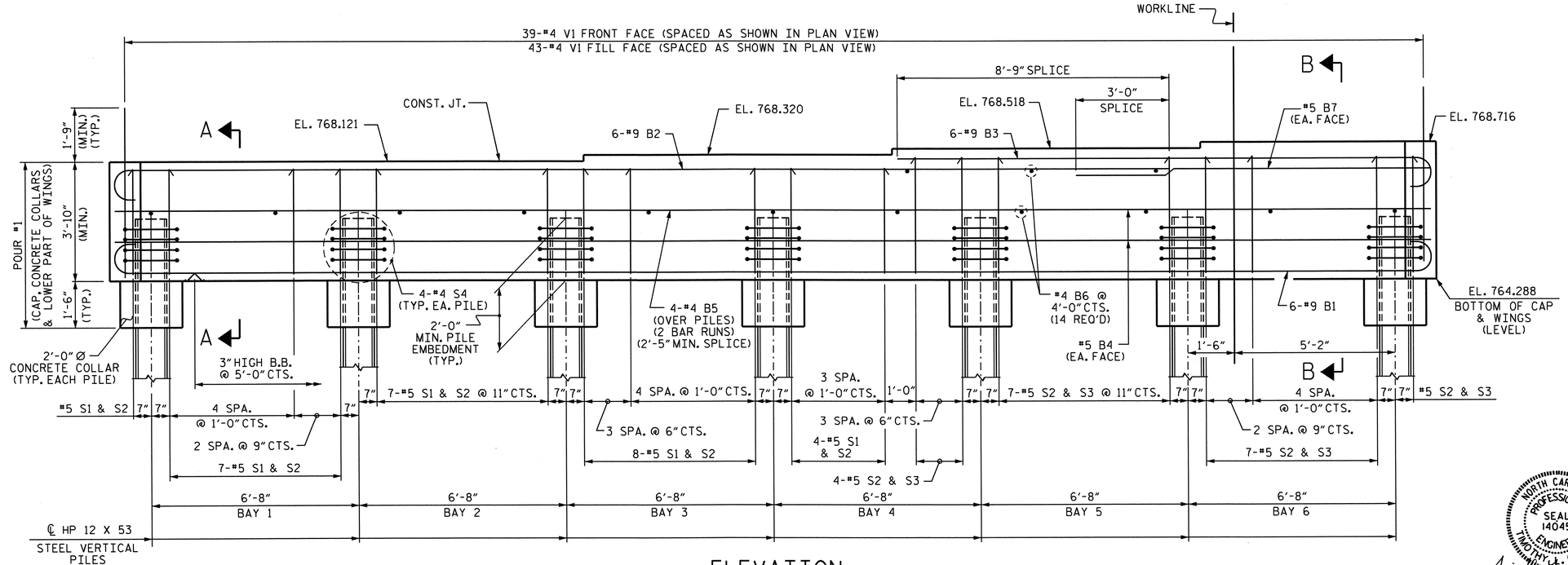


ELEVATION

NORTH CAROLINA PROFESSIONAL SEAL 14045 ENGINEER TIMOTHY J. COGGINS

Timothy J. Coggins 10/27/11

PROJECT NO. R-2309AB

GUILFORD COUNTY

STATION: 114+28.00 -L-

SHEET 1 OF 3

STATE OF NORTH CAROLINA
DEPARTMENT OF TRANSPORTATION
RALEIGH

SUBSTRUCTURE

INTEGRAL END BENT #1

(LEFT LANE)

| REVISIONS | | | | | | SHEET NO. |
|---|---|---|---|---|---|---|
| NO. | BY: | DATE: | NO. | BY: | DATE: | S-19 |
| 1 | | | 3 | | | TOTAL SHEETS |
| 2 | | | 4 | | | 136 |

STR. #1

DRAWN BY : B.N.BARODAWALA DATE : 6-23-11
CHECKED BY : PEGGY PARISI DATE : 7-7-11

26-OCT-2011 09:33
R:\TIPProjects-R\R2309AB\Structures\R2309ab\FinalPlans\Bridges\Str#1\r2309ab_sd_eb_01.dgn
tcoggins

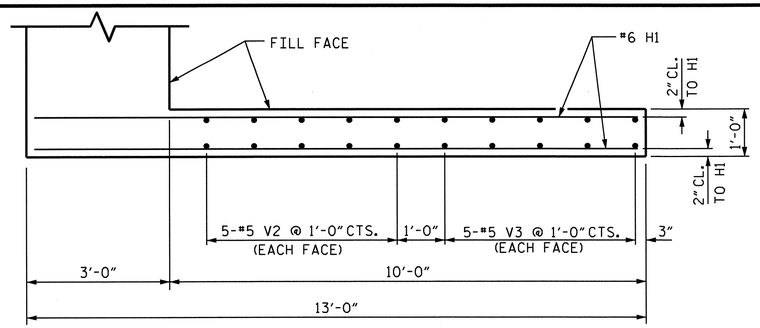


PLAN OF WING W1

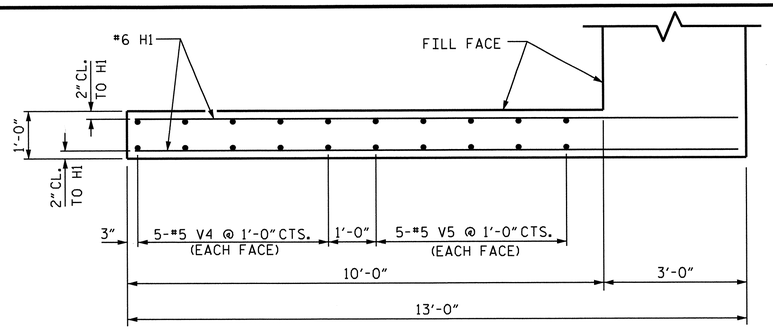


PLAN OF WING W2

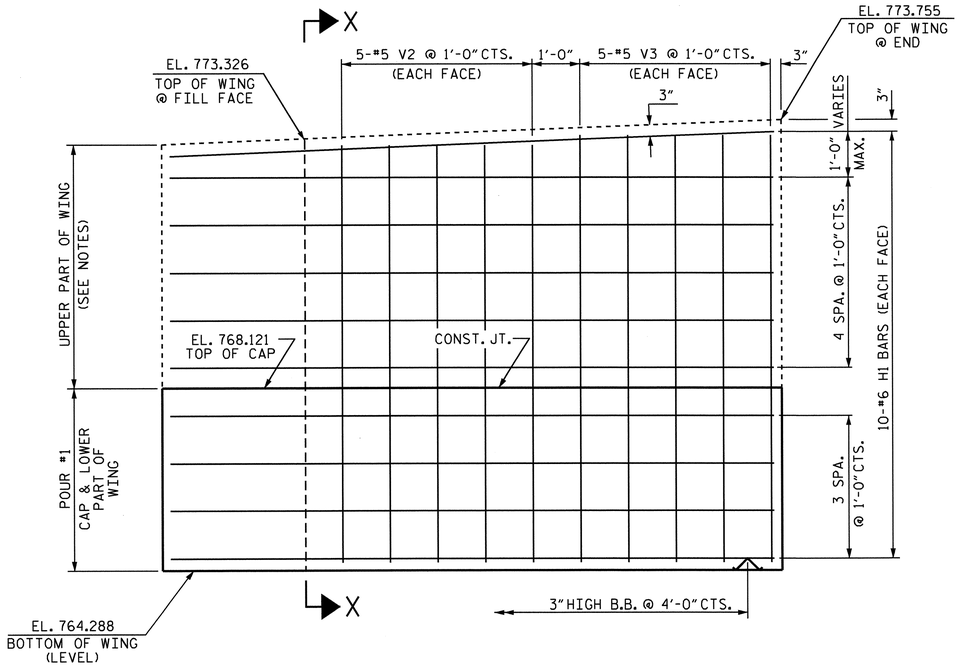


ELEVATION OF WING W1

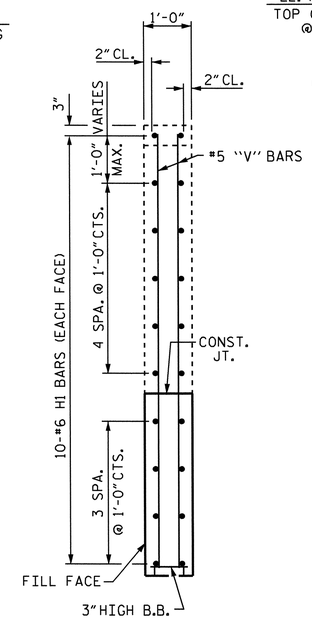


SECTION X-X

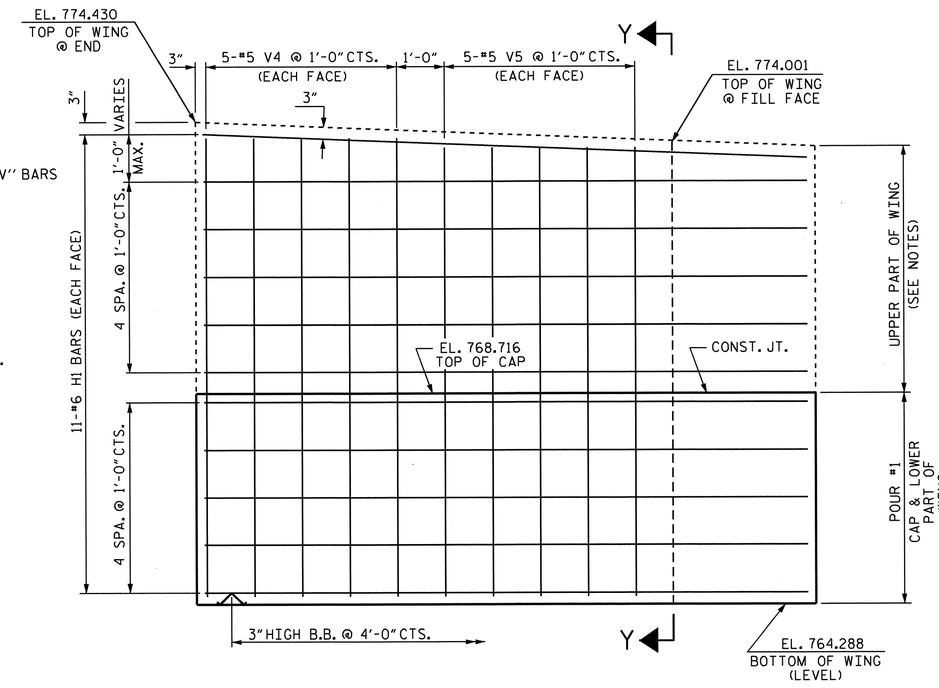


ELEVATION OF WING W2

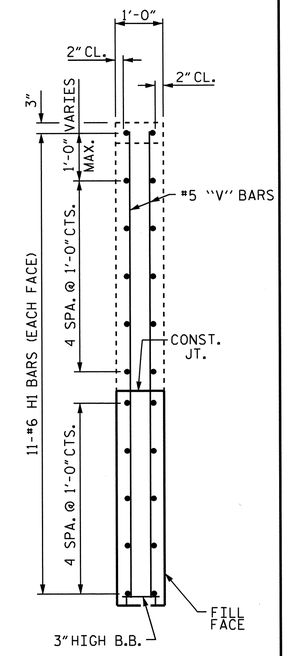


SECTION Y-Y

PROJECT NO. R-2309AB

GUILFORD COUNTY

STATION: 114+28.00 -L-

SHEET 2 OF 3

STATE OF NORTH CAROLINA
DEPARTMENT OF TRANSPORTATION
RALEIGH

SUBSTRUCTURE

INTEGRAL END BENT #1

(LEFT LANE)

NORTH CAROLINA PROFESSIONAL SEAL 14045 ENGINEER TIMOTHY L. COGGINS
10/27/11

| REVISIONS | | | | | | SHEET NO. |
|---|---|---|---|---|---|---|
| NO. | BY: | DATE: | NO. | BY: | DATE: | S-20 |
| 1 | | | 3 | | | TOTAL SHEETS |
| 2 | | | 4 | | | 136 |

STR. #1

DRAWN BY : B.N.BARODAWALA DATE : 6-23-11
CHECKED BY : PEGGY PARISI DATE : 7-7-11

26-OCT-2011 09:32
R:\TIPProjects-R\R2309AB\Structures\R2309ab\FinalPlans\Bridges\Str#1\r2309ab_sd_eb_01.dgn
tcoggins

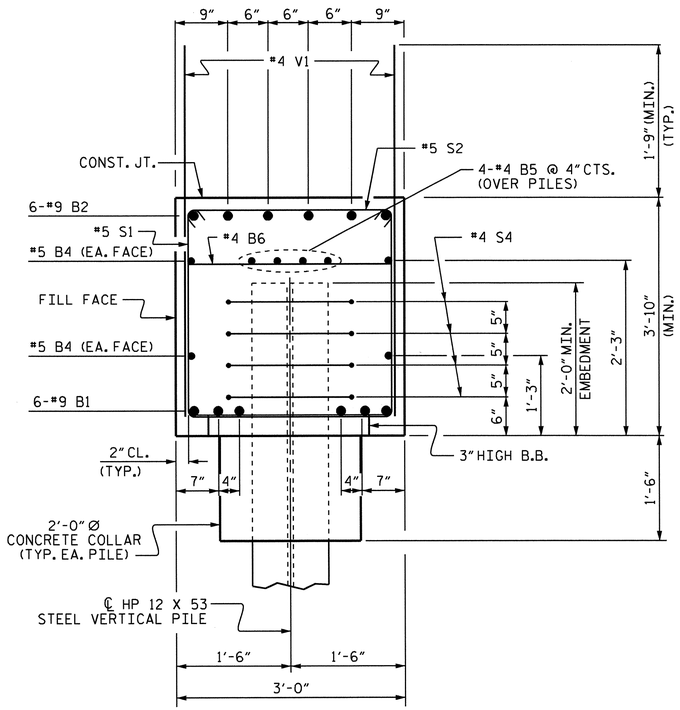


SECTION A-A

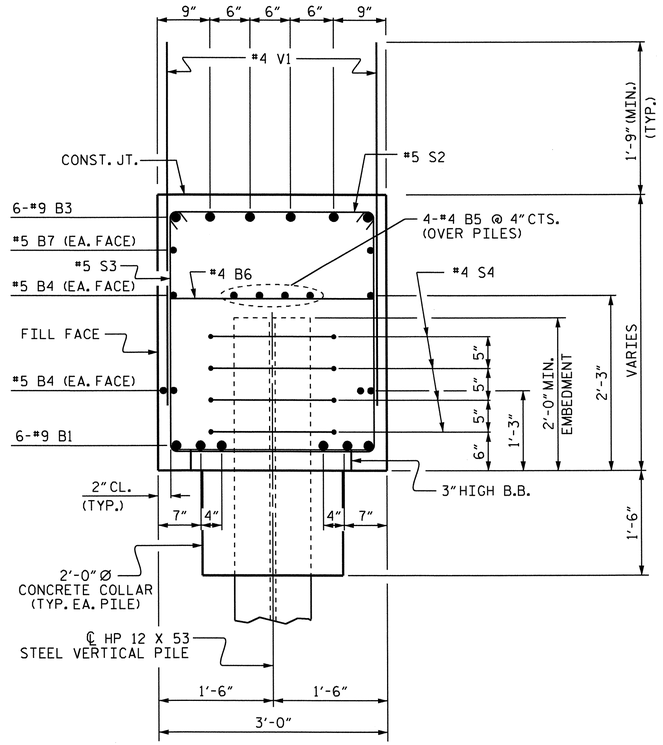


SECTION B-B

## BAR TYPES

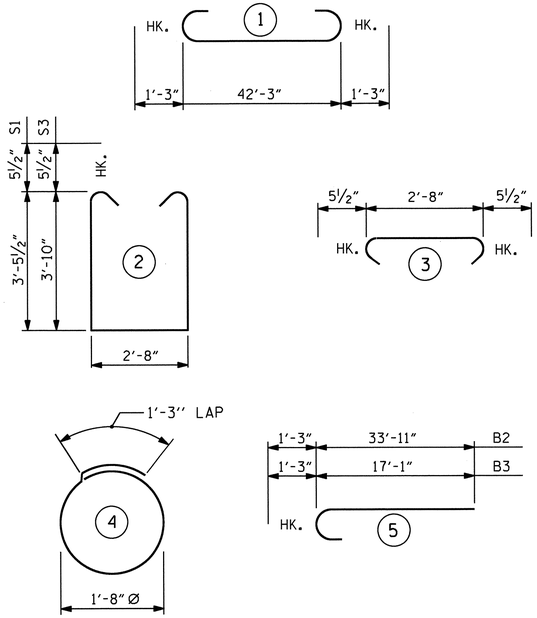


ALL BAR DIMENSIONS ARE OUT TO OUT.

## BILL OF MATERIAL

### INTEGRAL END BENT #1

| BAR | NO. | SIZE | TYPE | LENGTH | WEIGHT |
|---|---|---|---|---|---|
| B1 | 6 | #9 | 1 | 44'-9" | 913 |
| B2 | 6 | #9 | 5 | 35'-2" | 717 |
| B3 | 6 | #9 | 5 | 18'-4" | 374 |
| B4 | 4 | #5 | STR | 42'-4" | 177 |
| B5 | 8 | #4 | STR | 22'-5" | 120 |
| B6 | 14 | #4 | STR | 2'-8" | 25 |
| B7 | 2 | #5 | STR | 11'-5" | 24 |
| | | | | | |
| H1 | 42 | #6 | STR | 12'-8" | 799 |
| | | | | | |
| S1 | 27 | #5 | 2 | 10'-6" | 296 |
| S2 | 46 | #5 | 3 | 3'-7" | 172 |
| S3 | 19 | #5 | 2 | 11'-3" | 223 |
| S4 | 28 | #4 | 4 | 6'-6" | 122 |
| | | | | | |
| V1 | 82 | #4 | STR | 5'-5" | 297 |
| V2 | 10 | #5 | STR | 8'-9" | 91 |
| V3 | 10 | #5 | STR | 8'-11" | 93 |
| V4 | 10 | #5 | STR | 9'-7" | 100 |
| V5 | 10 | #5 | STR | 9'-5" | 98 |

REINFORCING STEEL = 4641 LBS

CLASS A CONCRETE

POUR #1: (CAP, CONCRETE COLLARS & LOWER PART OF WINGS) 23.6 C.Y.

TOTAL CONCRETE 23.6 C.Y.

HP 12 x 53 STEEL PILES No. 7 245 LIN FT.

PILE EXCAVATION (IN SOIL) 192 LIN. FT.

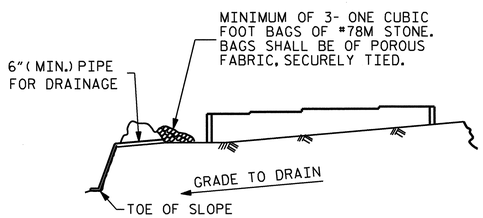


BAGGED STONE AND PIPE SHALL BE PLACED IMMEDIATELY AFTER COMPLETION OF END BENT EXCAVATION. PIPE MAY BE EITHER CONCRETE, CORRUGATED STEEL, CORRUGATED ALUMINUM ALLOY, OR CORRUGATED PLASTIC. PERFORATED PIPE WILL NOT BE ALLOWED.

BAGGED STONE SHALL REMAIN IN PLACE UNTIL THE ENGINEER DIRECTS THAT IT BE REMOVED. THE CONTRACTOR SHALL REMOVE AND DISPOSE OF SILT ACCUMULATIONS AT BAGGED STONE WHEN SO DIRECTED BY THE ENGINEER. BAGS SHALL BE REMOVED AND REPLACED WHENEVER THE ENGINEER DETERMINES THAT THEY HAVE DETERIORATED AND LOST THEIR EFFECTIVENESS.

NO SEPARATE PAYMENT WILL BE MADE FOR THIS WORK AND THE ENTIRE COST OF THIS WORK SHALL BE INCLUDED IN THE UNIT CONTRACT PRICE BID FOR THE SEVERAL PAY ITEMS.

## TEMPORARY DRAINAGE AT END BENT

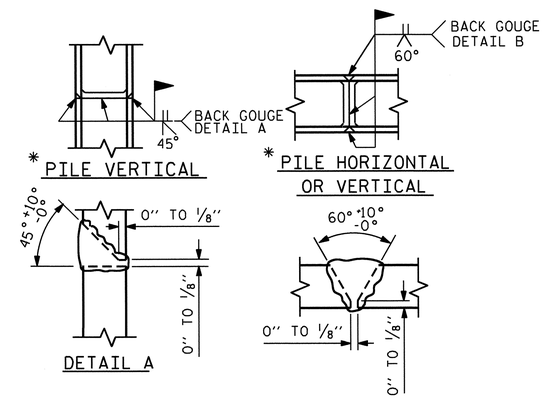


* POSITION OF PILE DURING WELDING.

## PILE SPLICE DETAILS

PROJECT NO. R-2309AB
GUILFORD COUNTY
STATION: 114+28.00 -L-

SHEET 3 OF 3

STATE OF NORTH CAROLINA
DEPARTMENT OF TRANSPORTATION
RALEIGH

SUBSTRUCTURE
INTEGRAL END BENT #1
(LEFT LANE)

NORTH CAROLINA PROFESSIONAL SEAL 14045 ENGINEER TIMOTHY L. COGGINS
10/27/11

| REVISIONS | | | | | | SHEET NO. |
|---|---|---|---|---|---|---|
| NO. | BY: | DATE: | NO. | BY: | DATE: | S-21 |
| 1 | | | 3 | | | TOTAL SHEETS |
| 2 | | | 4 | | | 136 |

STR. #1

DRAWN BY : B.N.BARODAWALA DATE : 6-23-11
CHECKED BY : PEGGY PARISI DATE : 7-7-11

26-OCT-2011 09:32
R:\TIPProjects-R\R2309AB\Structures\R2309ab\FinalPlans\Bridges\Str#1\r2309ab_sd_eb_01.dgn
tcoggins

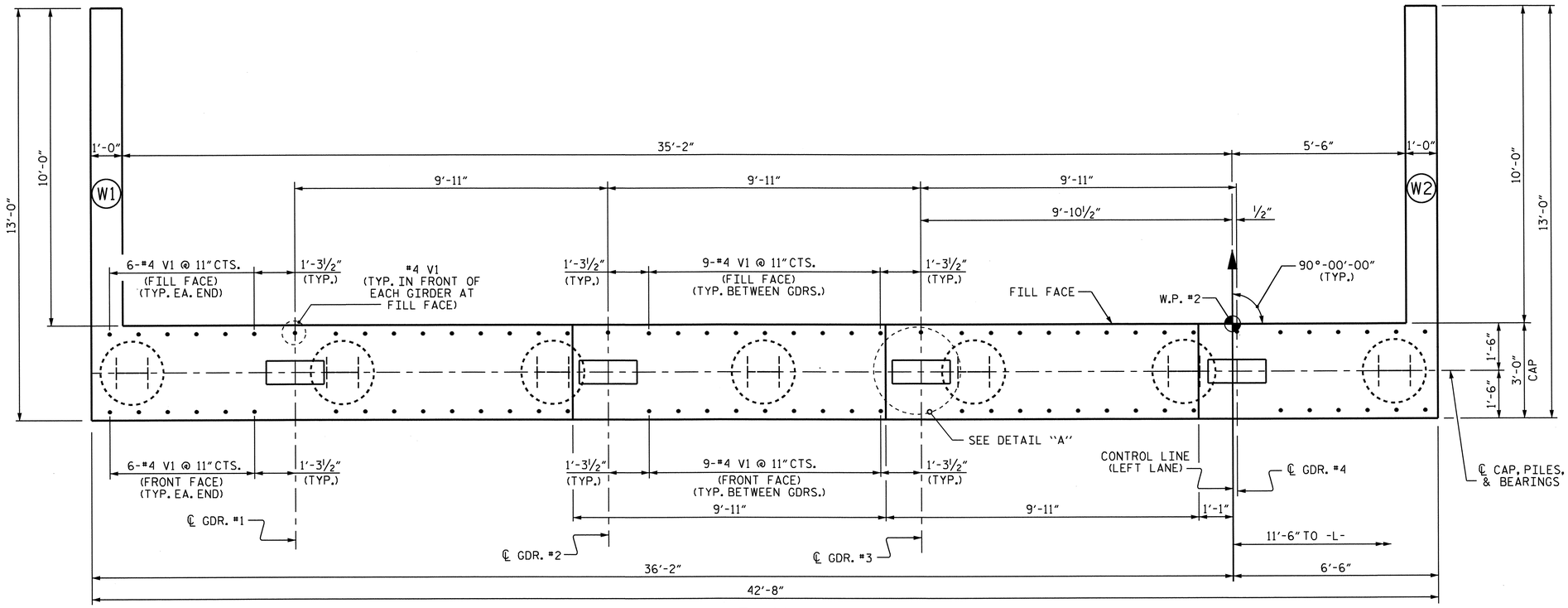


## PLAN

## NOTES

STIRRUPS IN CAP MAY BE SHIFTED AS NECESSARY TO CLEAR #4 V1 BARS.

THE CONTRACTOR SHALL PROVIDE FOR INSTALLATION OF THE 4" DIAMETER DRAIN PIPE THROUGH THE WING WALL AS REQUIRED FOR REINFORCED BRIDGE APPROACH FILLS. SEE THE ROADWAY PLANS. REINFORCING STEEL IN THE WING WALL MAY BE SHIFTED AS NECESSARY TO CLEAR THE DRAIN PIPE.

SEE SUPERSTRUCTURE SHEETS FOR UPPER PART OF INTEGRAL END BENT DETAIL.

THE CONTRACTOR'S ATTENTION IS CALLED TO THE FACT THAT UPPER PART OF WINGS ARE TO BE POURED WITH THE SUPERSTRUCTURE.

THE TOP SURFACE OF POUR #1 OF THE END BENT CAP AND WINGS, EXCLUDING THE BEARING AREA, SHALL BE RAKED TO A DEPTH OF 1/4".

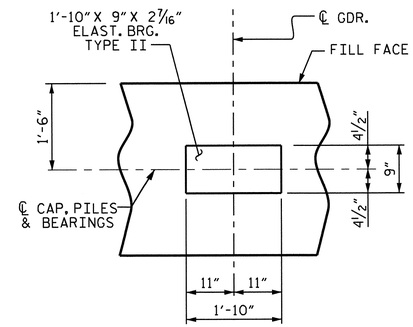


## DETAIL A

(TYP. EA. GDR.)

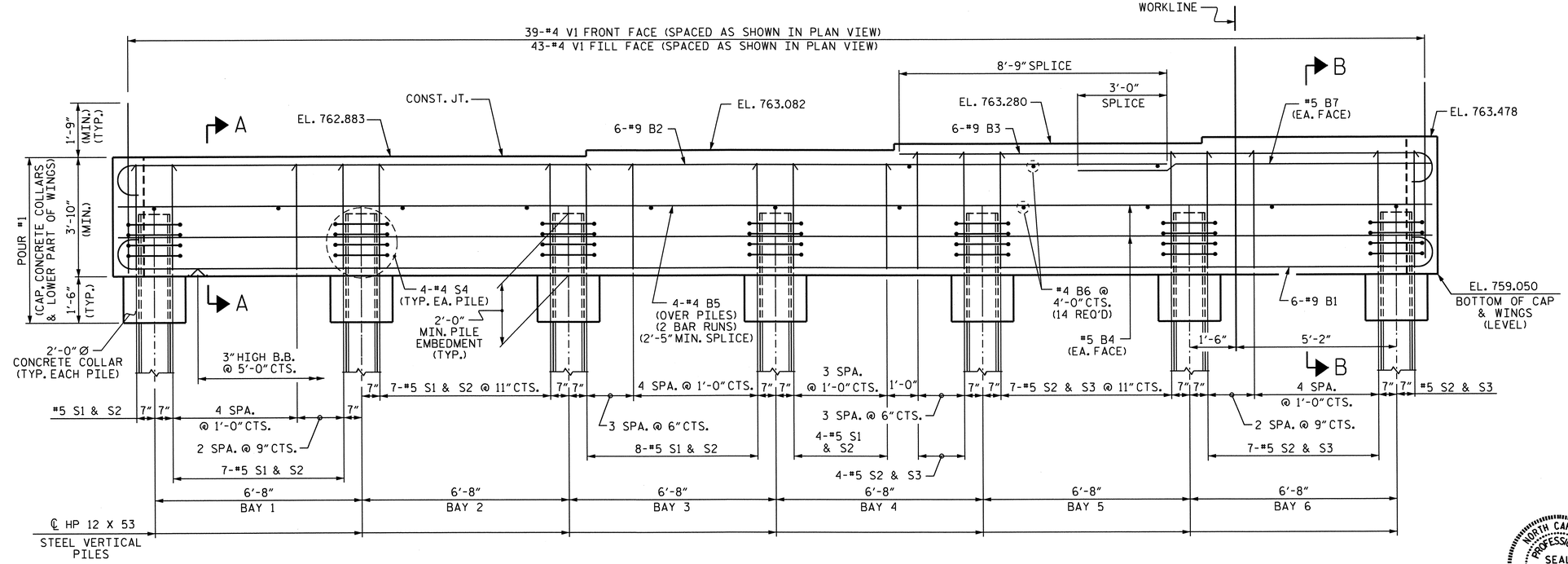


## ELEVATION

PROJECT NO. R-2309AB

GUILFORD COUNTY

STATION: 114+28.00 -L-

SHEET 1 OF 3

STATE OF NORTH CAROLINA
DEPARTMENT OF TRANSPORTATION
RALEIGH

SUBSTRUCTURE

# INTEGRAL END BENT #2

(LEFT LANE)

NORTH CAROLINA PROFESSIONAL SEAL 14045 ENGINEER TIMOTHY J. COGGINS
10/27/11

| REVISIONS | | | | | | | | SHEET NO. |
|---|---|---|---|---|---|---|---|---|
| NO. | BY: | DATE: | NO. | BY: | DATE: | | | S-22 |
| 1 | | | 3 | | | | | TOTAL SHEETS |
| 2 | | | 4 | | | | | 136 |

STR. #1

DRAWN BY : B.N.BARODAWALA DATE : 6-23-11
CHECKED BY : PEGGY PARISI DATE : 7-7-11

26-OCT-2011 09:32
R:\TIPProjects-R\R2309AB\Structures\R2309ab\FinalPlans\Bridges\Str#1\r2309ab_sd_eb_01.dgn
tcoggins

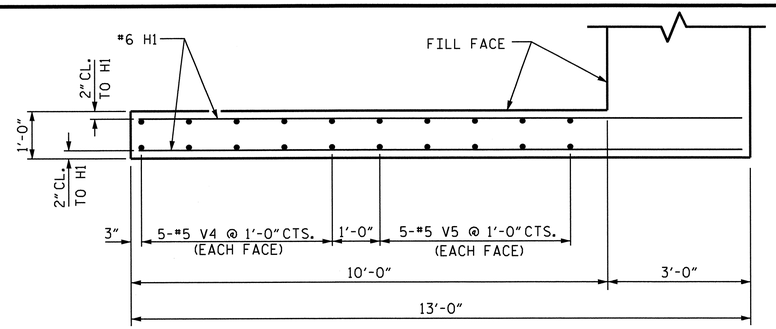


PLAN OF WING W1

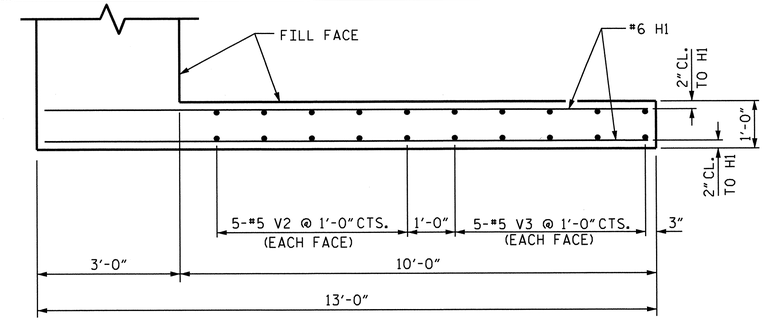


PLAN OF WING W2

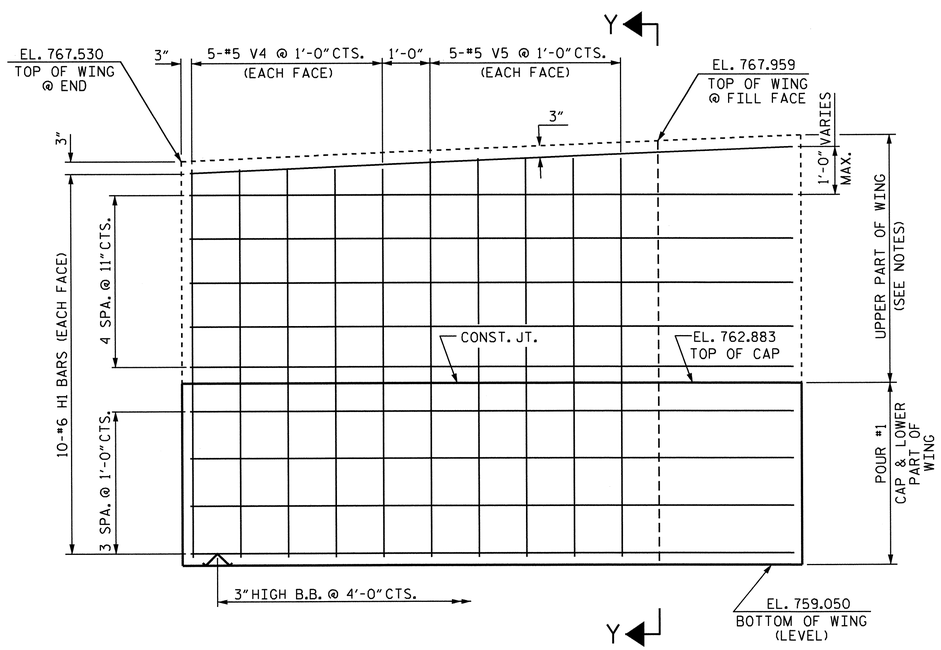


ELEVATION OF WING W1

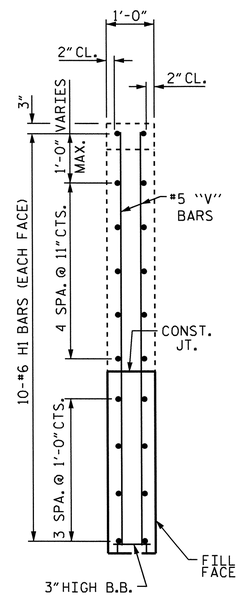


SECTION Y-Y

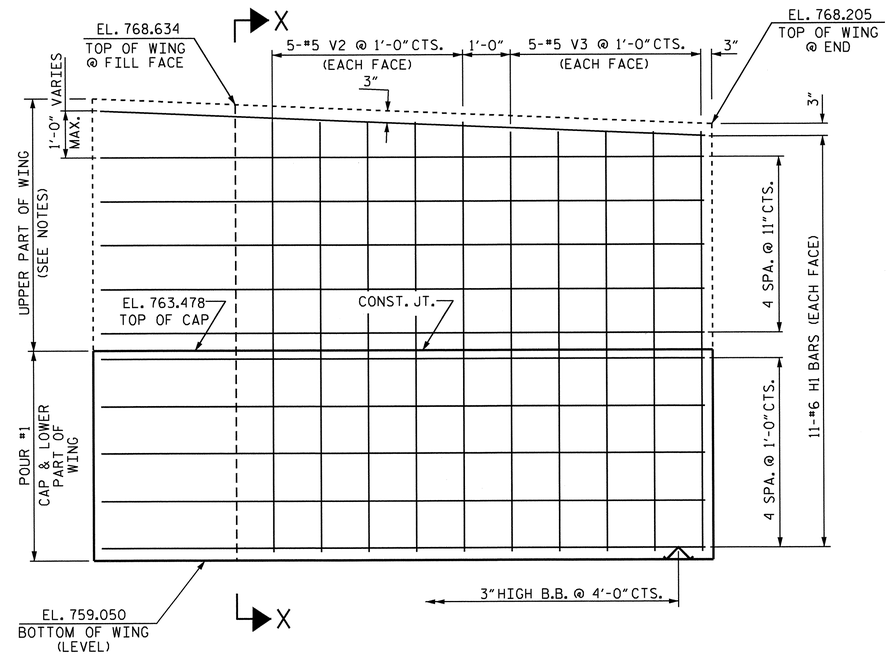


ELEVATION OF WING W2

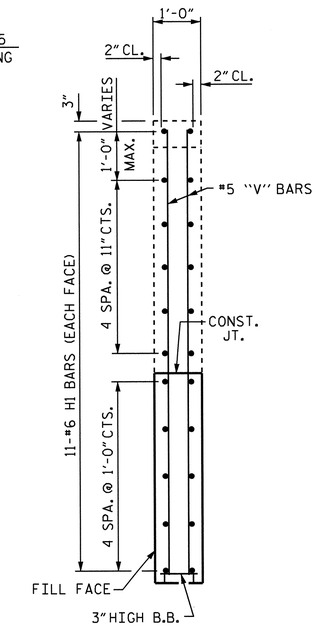


SECTION X-X

PROJECT NO. R-2309AB

GUILFORD COUNTY

STATION: 114+28.00 -L-

SHEET 2 OF 3

STATE OF NORTH CAROLINA
DEPARTMENT OF TRANSPORTATION
RALEIGH

SUBSTRUCTURE

# INTEGRAL END BENT #2

(LEFT LANE)

NORTH CAROLINA PROFESSIONAL SEAL 14045 ENGINEER TIMOTHY M. COGGINS
10/27/11

| REVISIONS | | | | | | SHEET NO. |
|---|---|---|---|---|---|---|
| NO. | BY: | DATE: | NO. | BY: | DATE: | S-23 |
| 1 | | | 3 | | | TOTAL SHEETS |
| 2 | | | 4 | | | 136 |

STR. #1

DRAWN BY : B.N.BARODAWALA DATE : 6-23-11
CHECKED BY : PEGGY PARISI DATE : 7-7-11

26-OCT-2011 09:30
R:\TIPProjects-R\R2309AB\Structures\R2309ab\FinalPlans\Bridges\Str#1\r2309ab_sd_eb_01.dgn
tcoggins

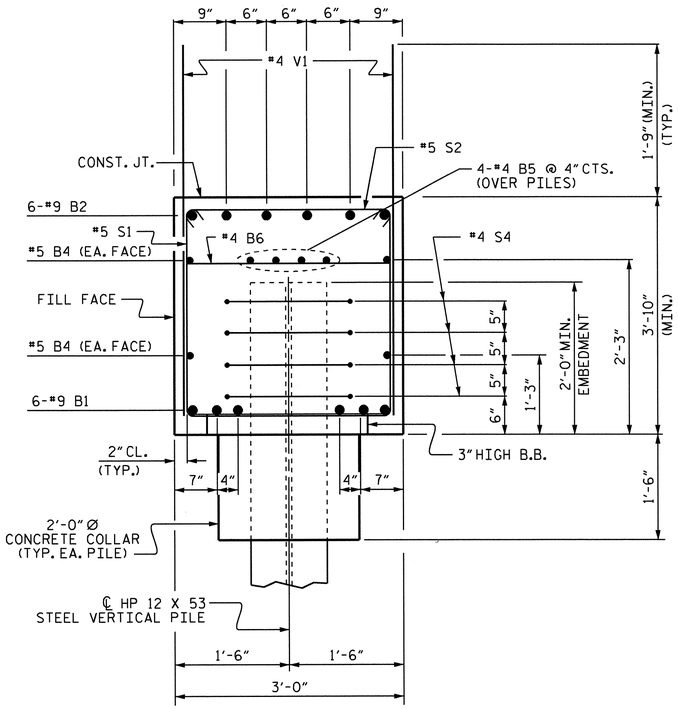


SECTION A-A

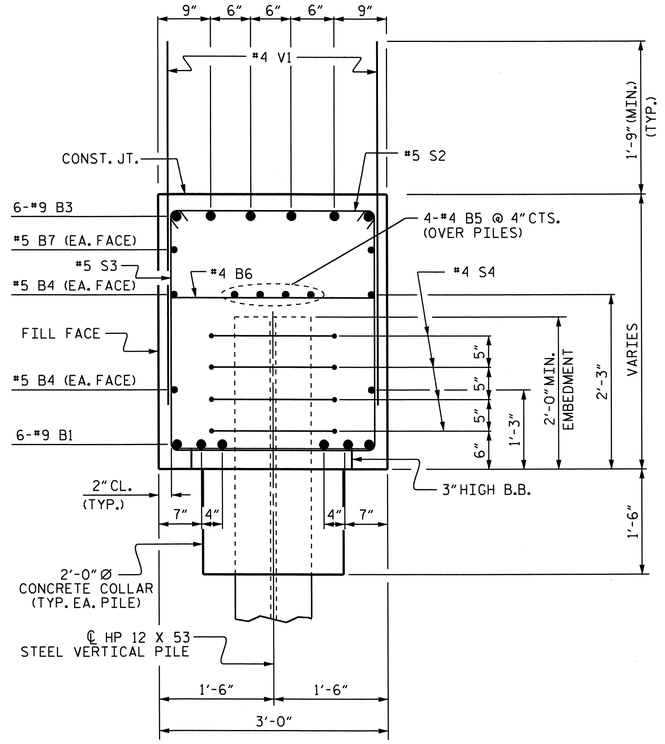


SECTION B-B

## BAR TYPES

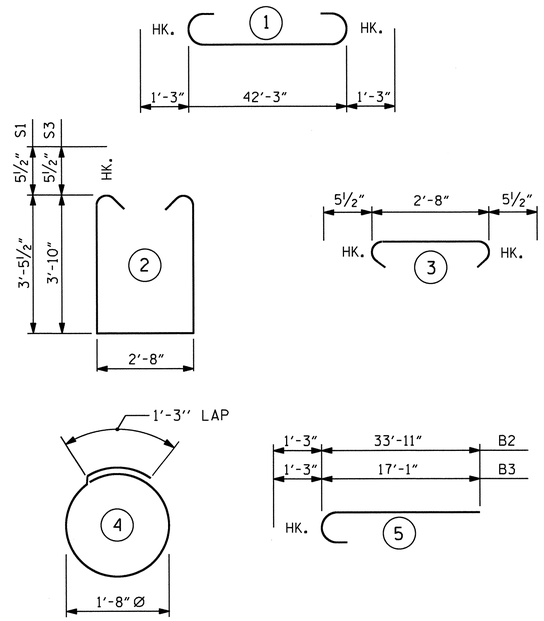


ALL BAR DIMENSIONS ARE OUT TO OUT.

## BILL OF MATERIAL

### INTEGRAL END BENT #2

| BAR | NO. | SIZE | TYPE | LENGTH | WEIGHT |
|---|---|---|---|---|---|
| B1 | 6 | #9 | 1 | 44'-9" | 913 |
| B2 | 6 | #9 | 5 | 35'-2" | 717 |
| B3 | 6 | #9 | 5 | 18'-4" | 374 |
| B4 | 4 | #5 | STR | 42'-4" | 177 |
| B5 | 8 | #4 | STR | 22'-5" | 120 |
| B6 | 14 | #4 | STR | 2'-8" | 25 |
| B7 | 2 | #5 | STR | 11'-5" | 24 |
| | | | | | |
| H1 | 42 | #6 | STR | 12'-8" | 799 |
| | | | | | |
| S1 | 27 | #5 | 2 | 10'-6" | 296 |
| S2 | 46 | #5 | 3 | 3'-7" | 172 |
| S3 | 19 | #5 | 2 | 11'-3" | 223 |
| S4 | 28 | #4 | 4 | 6'-6" | 122 |
| | | | | | |
| V1 | 82 | #4 | STR | 5'-5" | 297 |
| V2 | 10 | #5 | STR | 9'-0' | 94 |
| V3 | 10 | #5 | STR | 8'-10" | 92 |
| V4 | 10 | #5 | STR | 8'-2" | 85 |
| V5 | 10 | #5 | STR | 8'-4" | 87 |

REINFORCING STEEL = 4617 LBS

CLASS A CONCRETE

POUR #1: (CAP, CONCRETE COLLARS & LOWER PART OF WINGS) 23.6 C.Y.

TOTAL CONCRETE 23.6 C.Y.

HP 12 x 53 STEEL PILES
No. 7 210 LIN FT.

PILE EXCAVATION (IN SOIL) 155 LIN. FT.

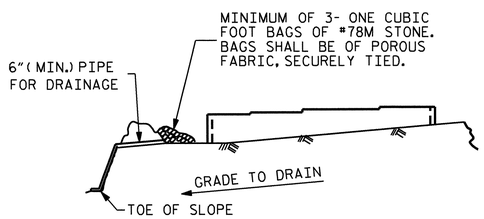


BAGGED STONE AND PIPE SHALL BE PLACED IMMEDIATELY AFTER COMPLETION OF END BENT EXCAVATION. PIPE MAY BE EITHER CONCRETE, CORRUGATED STEEL, CORRUGATED ALUMINUM ALLOY, OR CORRUGATED PLASTIC. PERFORATED PIPE WILL NOT BE ALLOWED.

BAGGED STONE SHALL REMAIN IN PLACE UNTIL THE ENGINEER DIRECTS THAT IT BE REMOVED. THE CONTRACTOR SHALL REMOVE AND DISPOSE OF SILT ACCUMULATIONS AT BAGGED STONE WHEN SO DIRECTED BY THE ENGINEER. BAGS SHALL BE REMOVED AND REPLACED WHENEVER THE ENGINEER DETERMINES THAT THEY HAVE DETERIORATED AND LOST THEIR EFFECTIVENESS.

NO SEPARATE PAYMENT WILL BE MADE FOR THIS WORK AND THE ENTIRE COST OF THIS WORK SHALL BE INCLUDED IN THE UNIT CONTRACT PRICE BID FOR THE SEVERAL PAY ITEMS.

## TEMPORARY DRAINAGE AT END BENT

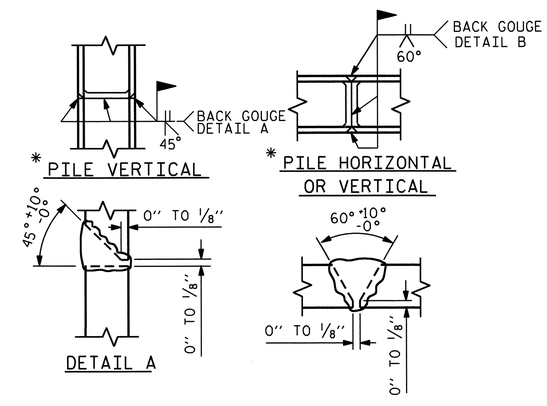


* POSITION OF PILE DURING WELDING.

## PILE SPLICE DETAILS

PROJECT NO. R-2309AB
GUILFORD COUNTY
STATION: 114+28.00 -L-

SHEET 3 OF 3

STATE OF NORTH CAROLINA
DEPARTMENT OF TRANSPORTATION
RALEIGH

SUBSTRUCTURE
INTEGRAL END BENT #2
(LEFT LANE)

NORTH CAROLINA PROFESSIONAL SEAL 14045 ENGINEER TIMOTHY L. COGGINS
10/27/11

| REVISIONS | | | | | | SHEET NO. |
|---|---|---|---|---|---|---|
| NO. | BY: | DATE: | NO. | BY: | DATE: | S-24 |
| 1 | | | 3 | | | TOTAL SHEETS |
| 2 | | | 4 | | | 136 |

STR. #1

DRAWN BY : B.N.BARODAWALA DATE : 6-23-11
CHECKED BY : PEGGY PARISI DATE : 7-7-11

26-OCT-2011 09:30
R:\TIPProjects-R\R2309AB\Structures\R2309ab\FinalPlans\Bridges\Str#1\r2309ab_sd_eb_01.dgn
tcoggins

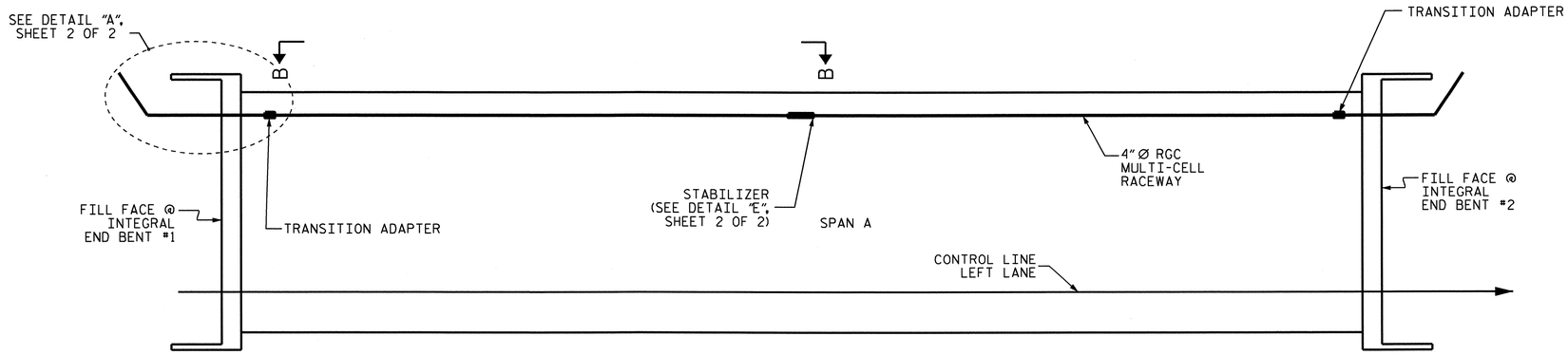


## ELECTRICAL CONDUIT LAYOUT

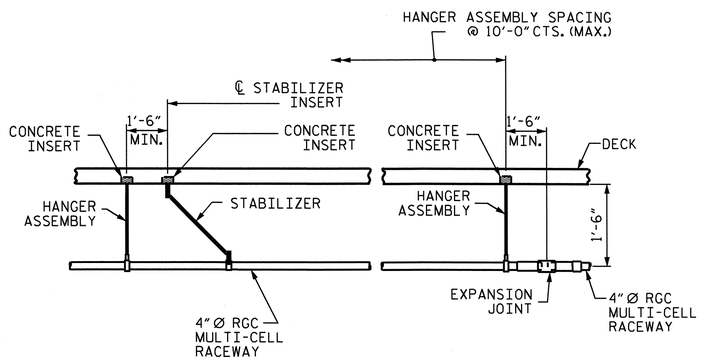


## VIEW B-B

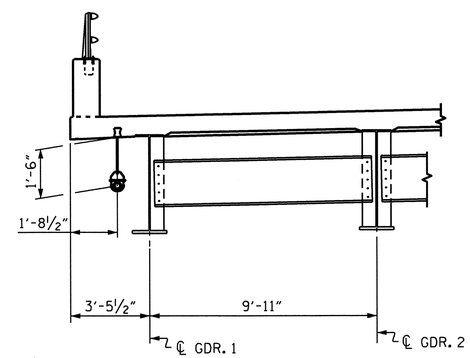


## CONDUIT LOCATION

PROJECT NO. R-2309AB
GUILFORD COUNTY
STATION: 114+28.00 -L-

SHEET 1 OF 2

STATE OF NORTH CAROLINA
DEPARTMENT OF TRANSPORTATION
RALEIGH

# ELECTRICAL CONDUIT SYSTEM DETAILS
(LEFT LANE)

NORTH CAROLINA PROFESSIONAL SEAL 14045 ENGINEER TIMOTHY L. COGGINS
10/27/11

| REVISIONS | | | | | | | SHEET NO. |
|---|---|---|---|---|---|---|---|
| NO. | BY: | DATE: | NO. | BY: | DATE: | | S-25 |
| 1 | | | 3 | | | | TOTAL SHEETS |
| 2 | | | 4 | | | | 136 |

DRAWN BY : T.L. AVERETTE DATE : 10-04-11
CHECKED BY : T.L. COGGINS DATE : 10-18-11

26-OCT-2011 09:11
R:\TIPProjects-R\R2309AB\Structures\R2309ab\FinalPlans\Bridges\Str#1\r2309ab_sd_ecs_01.dgn
tcoggins

STR. #1

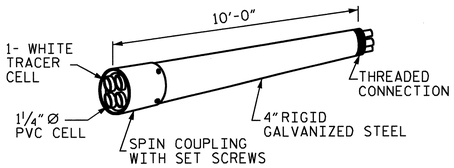


RIGID GALVANIZED (RGC) MULTI-CELL RACEWAY

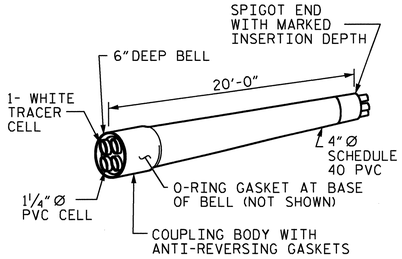


SCHEDULE 40 PVC MULTI-CELL RACEWAY

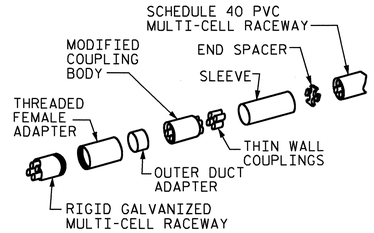


TRANSITION ADAPTER

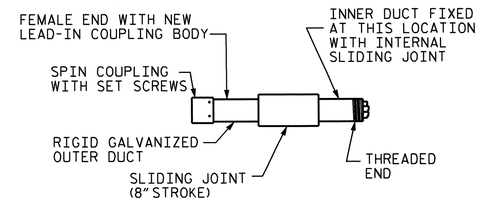


EXPANSION JOINT FITTING

## DETAIL "D"

4" MULTI-CELL COMPONENTS

## NOTES

THE CONTRACTOR SHALL BE RESPONSIBLE FOR DETERMINING THE TOTAL QUANTITY OF CONDUIT NEEDED TO COMPLETE THE WORK AND THAT THE CONDUIT(S) ARE PLACED AT THE NOTED DIMENSION AND ABOVE THE BOTTOM OF THE GIRDER.

THE INSTALLATION OF THE CONDUIT SYSTEM SHALL BE PAID FOR AS LUMP SUM. THE PRICE SHALL INCLUDE ALL CONDUIT, HANGERS, STABILIZERS, EXPANSION JOINTS, CONCRETE INSERTS, PVC SLEEVES AND ALL NECESSARY HARDWARE TO COMPLETE THE WORK.

THE CONTRACTOR SHALL FIELD VERIFY THAT THE CONDUIT SYSTEM IS NOT IN CONFLICT WITH THE GUARDRAIL POSTS.

SEE DETAIL "C" FOR HANGER ASSEMBLY INSTALLATION.

INSTALL SLEEVES PARALLEL TO GIRDERS. SEE DETAIL "B" FOR SLEEVE INSTALLATION.

PROVIDE TRANSITION ADAPTOR AND EXPANSION JOINT FOR CONDUIT AT END BENT 1 AND END BENT 2.

INSTALL STABILIZERS MIDWAY BETWEEN DECK EXPANSION JOINTS. STABILIZER CAN NOT BE USED INSTEAD OF A HANGER ASSEMBLY.

THE CONCRETE SCREW INSERT SHALL HAVE A ROD SIZE OF 5/8" AND A PULL FORCE OF 1260 lbs.

FOR ELECTRICAL CONDUIT SYSTEM, SEE SPECIAL PROVISIONS.

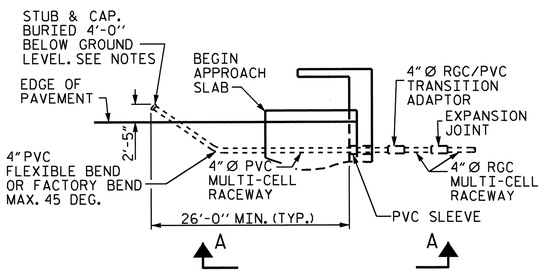


## DETAIL "A"

TERMINATION OF CONDUIT AT WING WALL (END BENT #1 SHOWN, END BENT #2 SIMILAR)

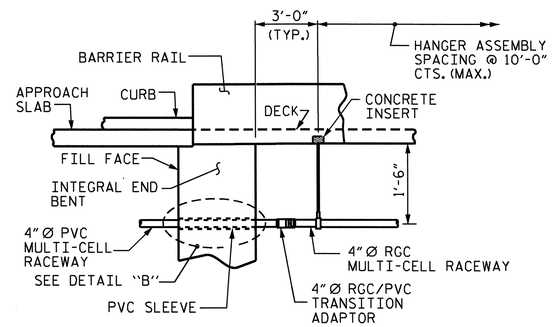


## VIEW A-A

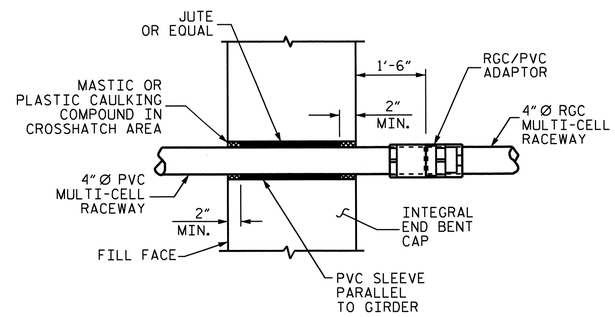


## DETAIL "B"

PVC SLEEVE INSTALLATION & RGC/PVC ADAPTOR AT INTEGRAL END BENT.

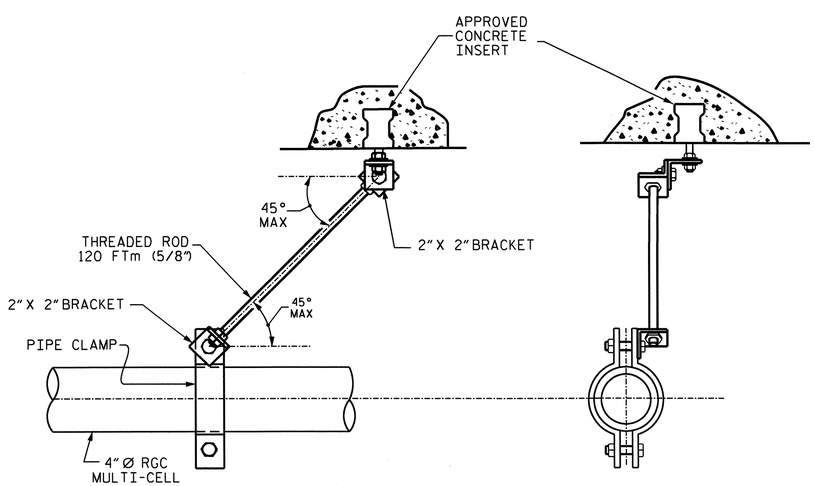


## DETAIL "E"

STABILIZER

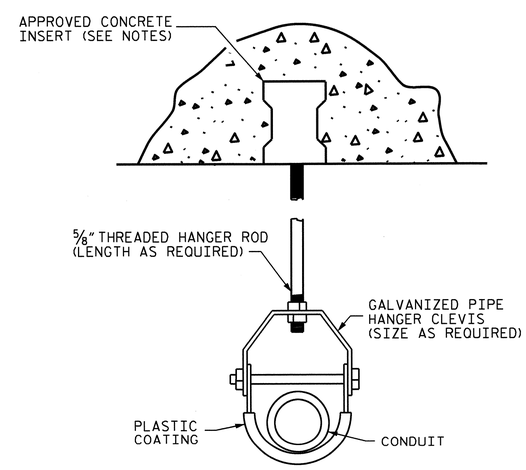


## DETAIL "C"

HANGER ASSEMBLY

# ELECTRIC CONDUIT DETAILS

NORTH CAROLINA PROFESSIONAL SEAL 14045 ENGINEER TIMOTHY L. COGGINS

10/27/11

PROJECT NO. R-2309AB

GUILFORD COUNTY

STATION: 114+28.00 -L-

SHEET 2 OF 2

STATE OF NORTH CAROLINA
DEPARTMENT OF TRANSPORTATION
RALEIGH

STANDARD

ELECTRICAL CONDUIT SYSTEM DETAILS
(LEFT LANE)

| REVISIONS | | | | | | SHEET NO. |
|---|---|---|---|---|---|---|
| NO. | BY: | DATE: | NO. | BY: | DATE: | S-26 |
| 1 | | | 3 | | | TOTAL SHEETS |
| 2 | | | 4 | | | 136 |

STR. #1

STD. NO. ECS1

| | | |
|---|---|---|
| ASSEMBLED BY : T.L. AVERETTE | DATE : 10-04-11 | |
| CHECKED BY : T.L. COGGINS | DATE : 10-18-11 | |
| DRAWN BY : RWW 2-4-03 | REV. 5/1/06 | TLA/GM |
| CHECKED BY : DBM 2-4-03 | | |

26-OCT-2011 09:10
R:\TIPProjects-R\R2309AB\Structures\R2309ab\FinalPlans\Bridges\Str#1\r2309ab_sd_ecs_01.dgn
tcoggins

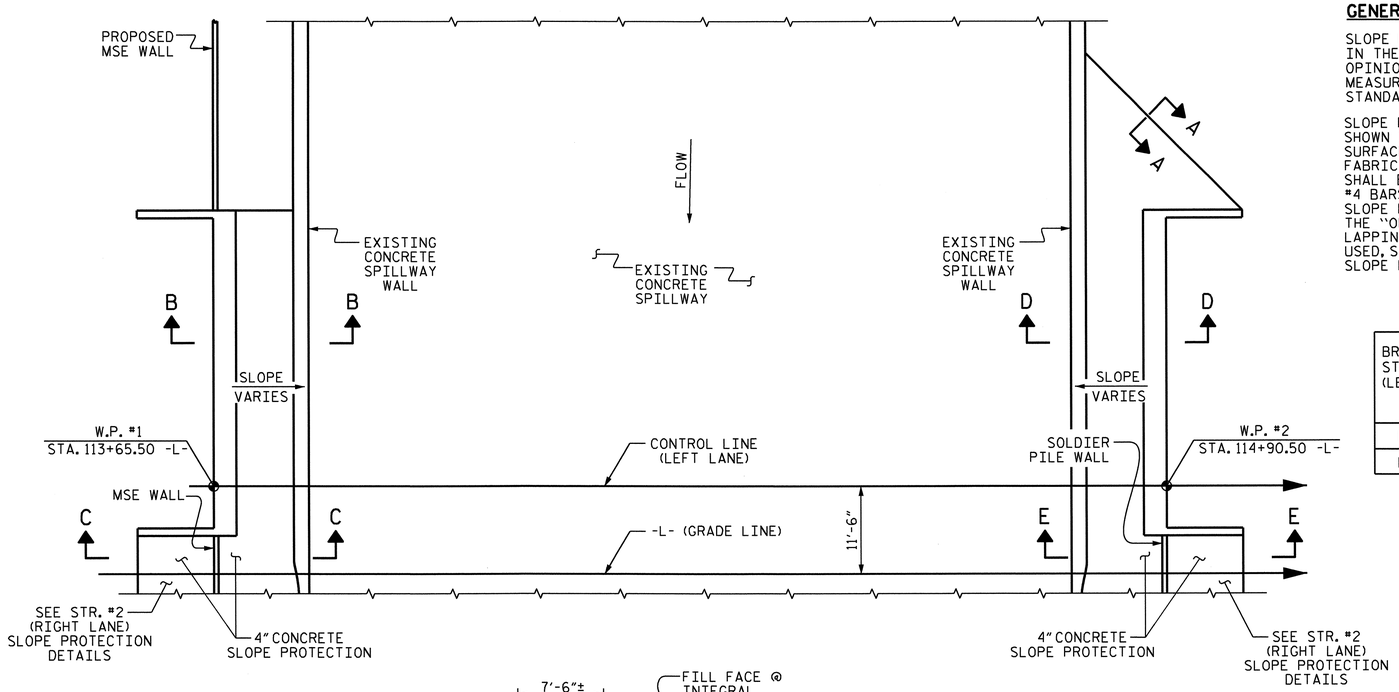


## GENERAL NOTES

SLOPE PROTECTION SHALL BE PLACED UNDER THE ENDS OF THE BRIDGE AS SHOWN IN THE DETAILS. STRAIGHT EDGING WILL NOT BE REQUIRED UNLESS, IN THE OPINION OF THE ENGINEER, VISUAL INSPECTION INDICATES A NEED FOR IT. MEASUREMENT AND PAYMENT SHALL BE AS PRESCRIBED IN SECTION 462 OF THE STANDARD SPECIFICATIONS.

SLOPE PROTECTION SHALL CONSIST OF 4" POURED-IN-PLACE CONCRETE PAVING AS SHOWN IN THE DETAILS ON THIS SHEET. CONCRETE SHALL BE CLASS "B". THE CONCRETE SURFACE SHALL BE FLOATED WITH A WOODEN FLOAT AND FINISHED. WELDED WIRE FABRIC REINFORCING SHALL BE 6 X 6 - W1.4 X W1.4, 60" WIDE. SLOPE PROTECTION SHALL BE POURED IN 5' STRIPS AS SHOWN IN THE "POURING DETAIL" WITH 2'-0" LONG #4 BARS PLACED ALONG THE SLOPE BETWEEN STRIPS AT 1'-6" MAXIMUM SPACING. SLOPE PROTECTION MAY BE POURED IN ALTERNATE 4' AND 5' STRIPS AS SHOWN IN THE "OPTIONAL POURING DETAIL" WITH ADJACENT RUNS OF WELDED WIRE FABRIC LAPPING AT LEAST 6". THE COST OF THE WELDED WIRE FABRIC AND #4 BARS, IF USED, SHALL BE INCLUDED IN THE CONTRACT UNIT PRICE BID PER SQUARE YARD FOR SLOPE PROTECTION.

| BRIDGE @ STA. 114+28.00 -L- (LEFT LANE) | 4 INCH SLOPE PROTECTION | * WELDED WIRE FABRIC 60 INCHES WIDE |
|---|---|---|
| | SQUARE YARDS | APPROX. L.F. |
| END BENT 1 | 50 | 100 |
| END BENT 2 | 84 | 168 |

* QUANTITY SHOWN IS BASED ON 5' POURS.

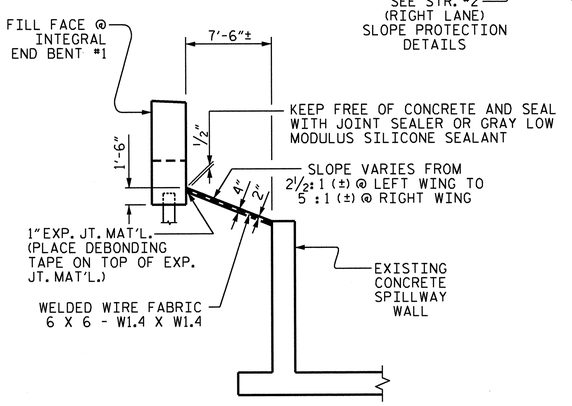


SECTION B-B

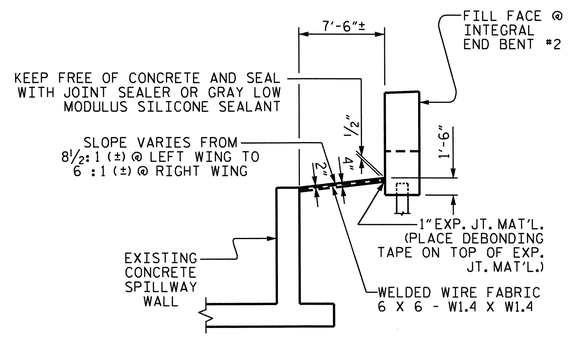


SECTION D-D

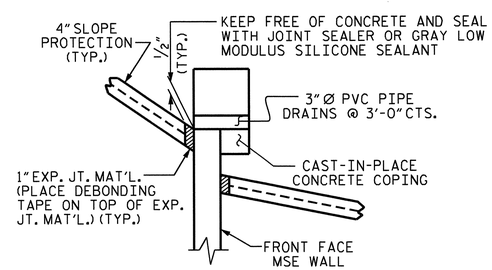


DETAIL "B"

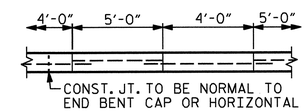


POUR A 4'-0" STRIP FIRST. STRIP WIDTHS MAY VARY IN CURVED PORTION.

OPTIONAL POURING DETAIL

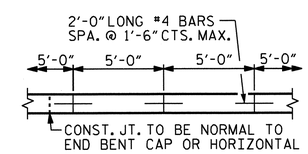


STRIP WIDTHS MAY VARY IN CURVED PORTION.

POURING DETAIL

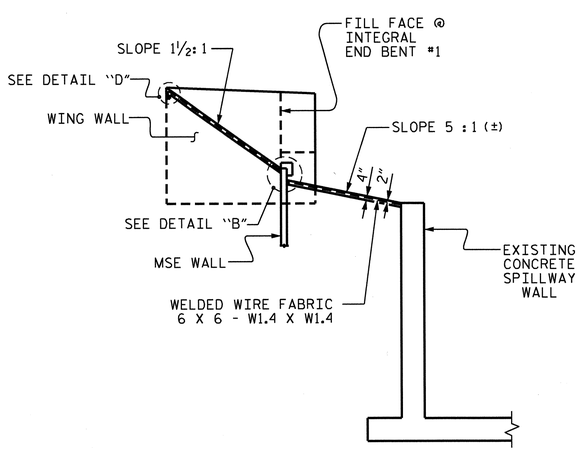


SECTION C-C

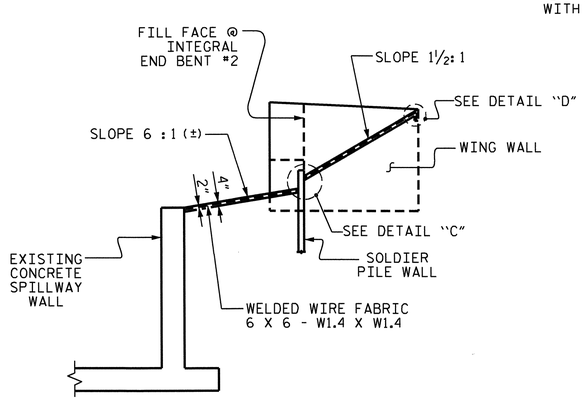


SECTION E-E

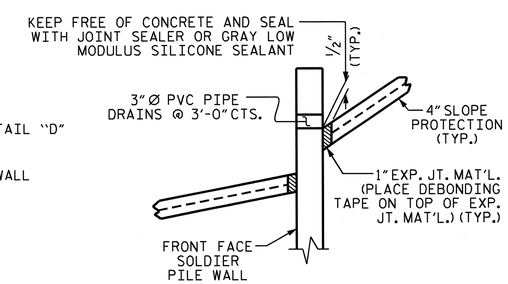


DETAIL "C"

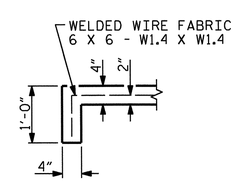


SECTION A-A

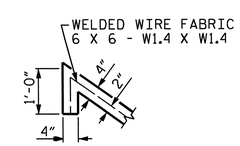


DETAIL "D"

NORTH CAROLINA PROFESSIONAL SEAL 14045 ENGINEER TIMOTHY L. COGGINS
10/27/11

PROJECT NO. R-2309AB
GUILFORD COUNTY
STATION: 114+28.00 -L-

STATE OF NORTH CAROLINA
DEPARTMENT OF TRANSPORTATION
RALEIGH

# SLOPE PROTECTION DETAILS
(LEFT LANE)

| REVISIONS | | | | | | SHEET NO. |
|---|---|---|---|---|---|---|
| NO. | BY: | DATE: | NO. | BY: | DATE: | S-27 |
| 1 | | | 3 | | | TOTAL SHEETS |
| 2 | | | 4 | | | 136 |

DRAWN BY : T.L. AVERETTE DATE : 08-15-11
CHECKED BY : PEGGY PARISI DATE : 08-23-11

26-OCT-2011 09:05
R:\TIPProjects-R\R2309AB\Structures\R2309ab\FinalPlans\Bridges\Str#1\r2309ab_sd_sp_01.dgn
tcoggins

STR. #1 NCDDS

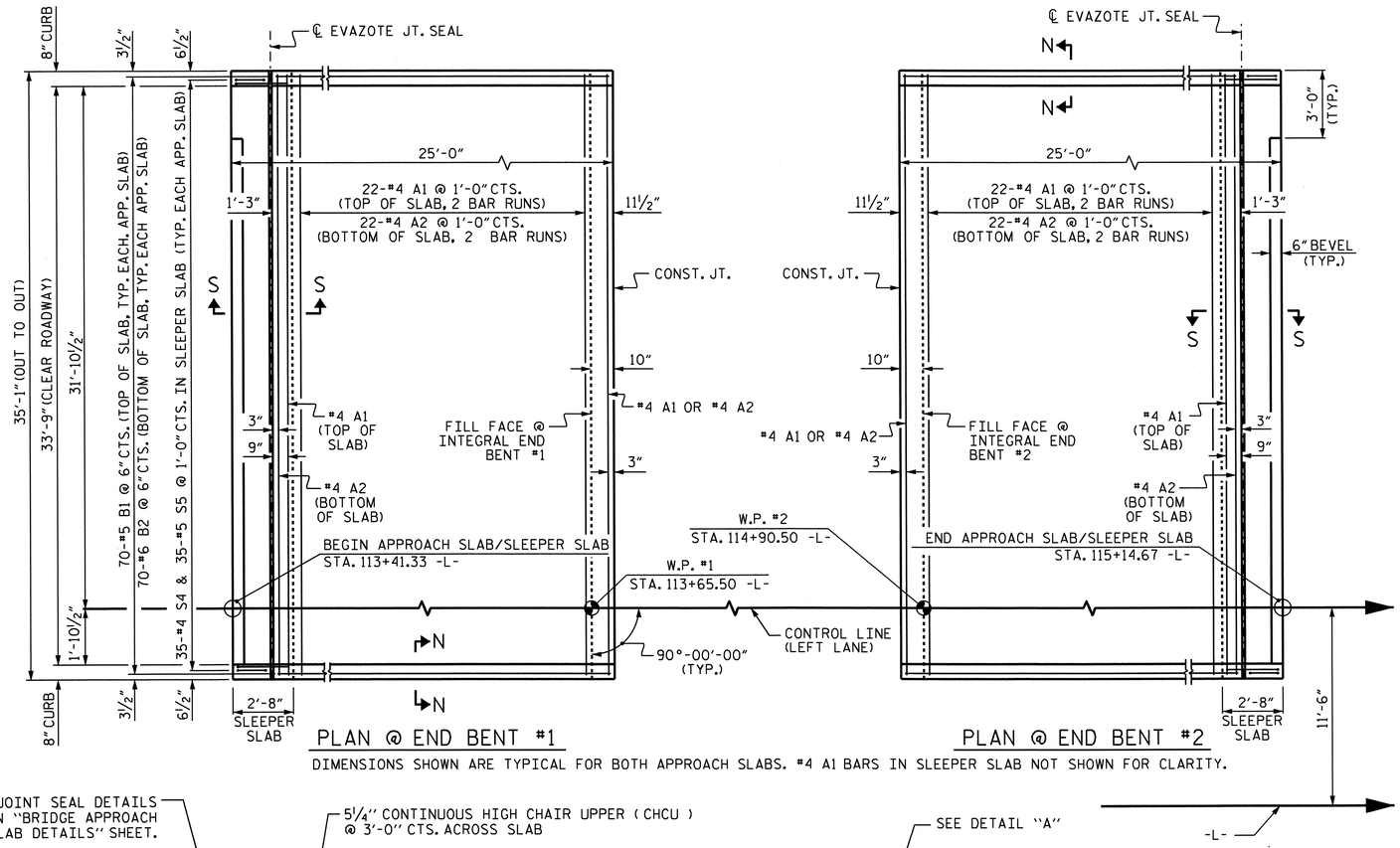


PLAN @ END BENT #1

PLAN @ END BENT #2

DIMENSIONS SHOWN ARE TYPICAL FOR BOTH APPROACH SLABS. #4 A1 BARS IN SLEEPER SLAB NOT SHOWN FOR CLARITY.

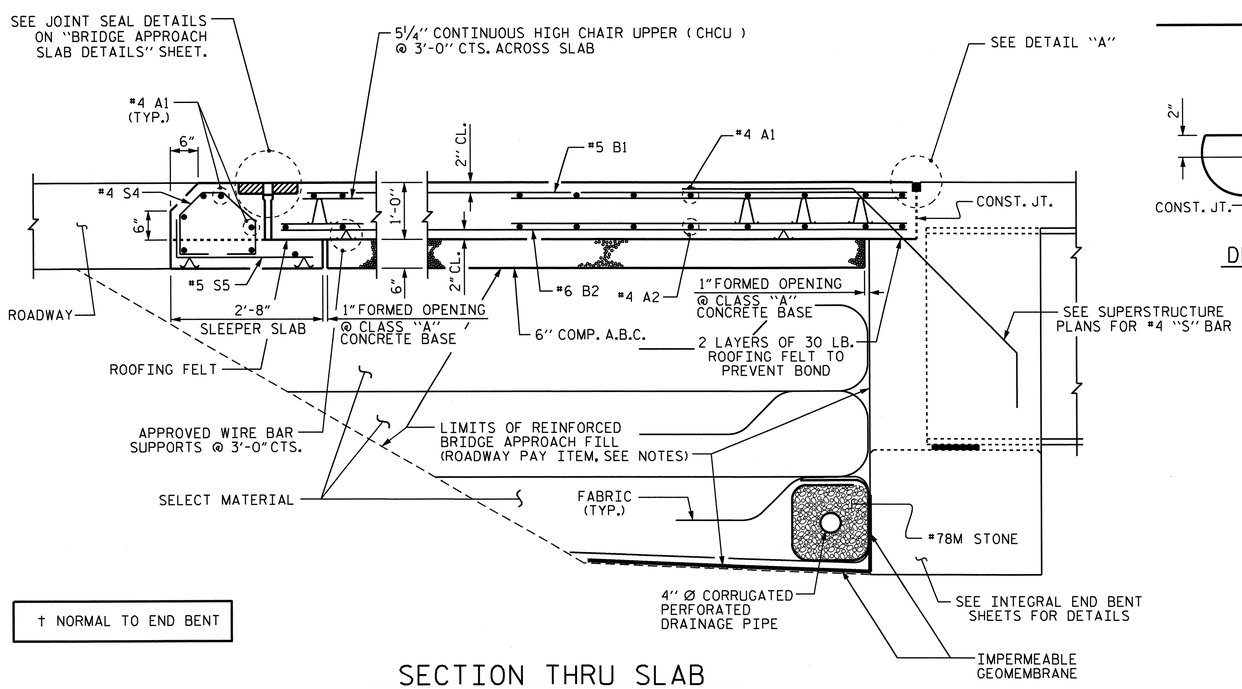


† NORMAL TO END BENT

SECTION THRU SLAB

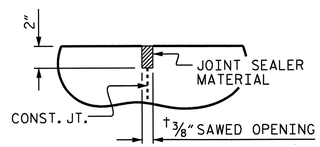


DETAIL "A"

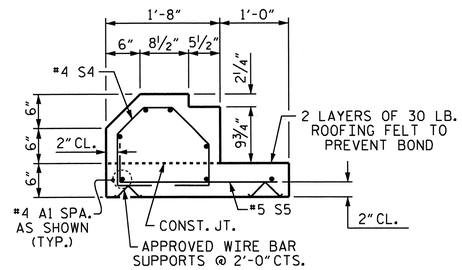


SECTION S-S

SHOWING SLEEPER SLAB

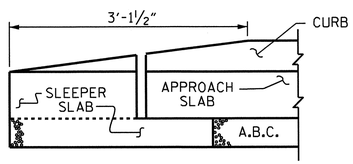


END OF CURB WITHOUT SHOULDER BERM GUTTER

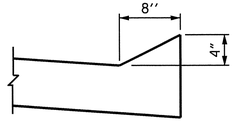


SECTION N-N

## NOTES

APPROACH SLAB SHALL NOT BE CONSTRUCTED PRIOR TO COMPLETION OF THE BRIDGE DECK.

FOR REINFORCED BRIDGE APPROACH FILL INCLUDING FABRIC, IMPERMEABLE GEOMEMBRANE, 4" Ø DRAINAGE PIPE, #78M STONE, AND SELECT MATERIAL, SEE ROADWAY PLANS.

AREA BETWEEN THE WINGWALL AND APPROACH SLAB SHALL BE GRADED TO DRAIN THE WATER AWAY FROM THE FILL FACE OF THE BRIDGE AND SHALL BE PAVED. SEE ROADWAY PLANS.

THE 6" COMP. A.B.C. SHALL BE FLUSH WITH THE SLEEPER SLAB AND SHALL EXTEND 1'-0" OUTSIDE OF EACH EDGE OF THE APPROACH SLAB.

THE CONTRACTOR MAY USE 4" TYPE B-25.0B ASPHALT CONCRETE BASE COURSE IN LIEU OF 6" COMP. A.B.C. IF THIS OPTION IS USED, THE BASE COURSE SHALL BE FLUSH WITH THE SLEEPER SLAB, AND THE WIDTH SHALL BE THE SAME AS THAT OF THE APPROACH SLAB.

THE CONTRACTOR MAY USE 5" CLASS "A" CONCRETE BASE IN LIEU OF 6" COMP. A.B.C. IF THIS OPTION IS USED, THE CONCRETE BASE SHALL BE FLUSH WITH THE SLEEPER SLAB, AND THE WIDTH SHALL BE THE SAME AS THAT OF THE APPROACH SLAB. THE CONCRETE SHALL BE FINISHED TO A SMOOTH SURFACE AND A LAYER OF 30 LB ROOFING FELT SHALL BE PLACED BETWEEN THE CONCRETE BASE AND THE APPROACH SLAB TO PREVENT BOND. THE APPROACH SLAB SHALL NOT BE CAST UNTIL THE CONCRETE BASE HAS REACHED AN AGE OF THREE CURING DAYS.

THE VERTICAL JOINT ON THE RIGHT AND LEFT SIDE OF THE APPROACH SLAB AT THE ENDS OF THE EVAZOTE JOINT SHALL BE FILLED WITH SILICONE OR OTHER APPROVED MATERIAL IN ORDER TO PREVENT BACKFILL FROM ENTERING THE JOINT OPENING.

THE JOINT OPENING AT THE APPROACH SLAB/DECK INTERFACE SHALL BE SAWED NO MORE THAN 12 HOURS AFTER THE APPROACH SLAB IS CAST. THE JOINT SHALL BE CLEANED OF ALL DEBRIS BEFORE THE SEALANT IS APPLIED. THE JOINT SEALER MATERIAL SHALL CONFORM TO THE REQUIREMENTS OF TYPE SL LOW MODULUS SILICONE SEALANT.

WITH EVAZOTE JOINT SEAL

FOR EVAZOTE JOINT SEALS, SEE SPECIAL PROVISIONS.

THE NOMINAL UNCOMPRESSED SEAL WIDTH OF THE EVAZOTE JOINT SEAL SHALL BE 3/16".

FOR ELASTOMERIC CONCRETE, SEE SPECIAL PROVISIONS.

## BILL OF MATERIAL

FOR ONE APPROACH SLAB (2 REQ'D)

| BAR | NO. | SIZE | TYPE | LENGTH | WEIGHT |
|---|---|---|---|---|---|
| * A1 | 62 | #4 | STR | 18'-5" | 763 |
| A2 | 48 | #4 | STR | 18'-3" | 585 |
| * B1 | 70 | #5 | STR | 22'-5" | 1637 |
| B2 | 70 | #6 | STR | 22'-10" | 2401 |
| * S4 | 35 | #4 | 1 | 3'-11" | 92 |
| S5 | 35 | #5 | 2 | 2'-11" | 106 |

| | | |
|---|---|---|
| REINFORCING STEEL | LBS. | 3092 |
| * EPOXY COATED REINFORCING STEEL | LBS. | 2492 |
| CLASS AA CONCRETE | | |
| POUR #1 - SLAB & CURB | C.Y. | 30.3 |
| POUR #2 - SLEEPER SLAB | C.Y. | 3.6 |
| TOTAL | C.Y. | 33.9 |

## BAR TYPES

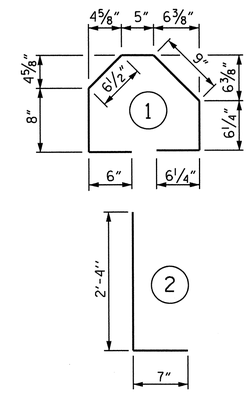


ALL BAR DIMENSIONS ARE OUT TO OUT

## SPLICE LENGTH CHART

| BAR | SPLICE LENGTH |
|---|---|
| #4 A1 | 2'-0" |
| #4 A2 | 1'-9" |

PROJECT NO. R-2309AB

GUILFORD COUNTY

STATION: 114+28.00 -L-

SHEET 1 OF 2

STATE OF NORTH CAROLINA
DEPARTMENT OF TRANSPORTATION
RALEIGH

STANDARD

BRIDGE APPROACH SLAB FOR INTEGRAL ABUTMENT (LEFT LANE)

NORTH CAROLINA PROFESSIONAL SEAL 14045 ENGINEER TIMOTHY W. COGGINS
10/27/11

| REVISIONS | | | | | | | SHEET NO. |
|---|---|---|---|---|---|---|---|
| NO. | BY: | DATE: | NO. | BY: | DATE: | | S-28 |
| 1 | | | 3 | | | | TOTAL SHEETS |
| 2 | | | 4 | | | | 136 |

ASSEMBLED BY : JASON WILSON DATE : 01/27/11
CHECKED BY : B.N.BARODAWALA DATE : 04/06/11

DRAWN BY : TLA 10/05
CHECKED BY : GM 5/06
ADDED 5/1/06R KMM/GM

26-OCT-2011 09:04
R:\TIPProjects-R\R2309AB\Structures\R2309ab\FinalPlans\Bridges\Str#1\r2309ab_sd_as_01.dgn
tcoggins

STR. #1

STD. NO. BAS11 (SHT 10)

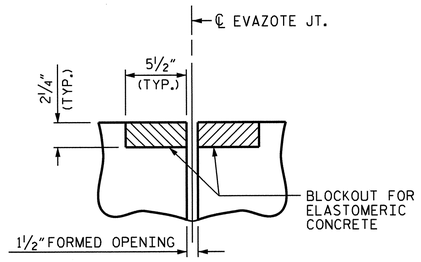


SECTION C-C
EVAZOTE JOINT SEAL
(PRE-SAWED ELASTOMERIC
CONCRETE DIMENSIONS)

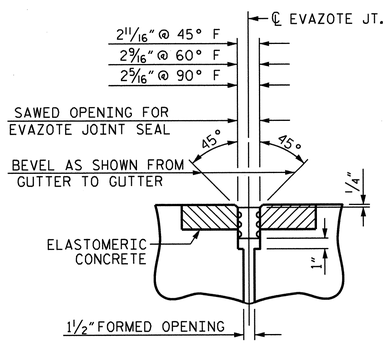


SECTION C-C
EVAZOTE JOINT SEAL
( EXPANSION )

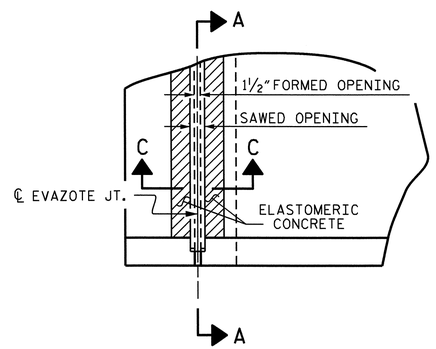


PLAN

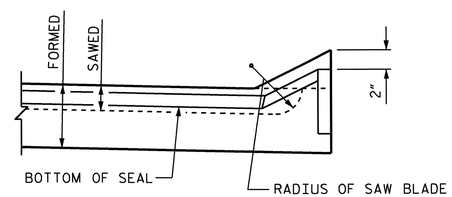


SECTION A-A

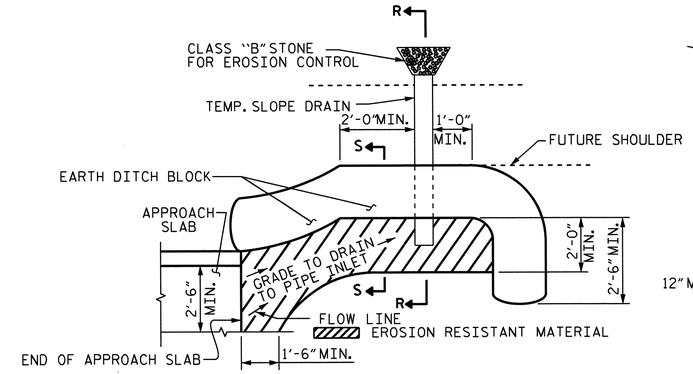


NOTE: IMMEDIATELY AFTER THE CONSTRUCTION OF THE APPROACH SLAB, THE CONTRACTOR SHALL PROVIDE TEMPORARY BERM AND SLOPE DRAIN. CONTRACTOR SHALL GRADE TO PIPE INLET AND PROVIDE EROSION RESISTANT MATERIAL AS SHOWN. THE EROSION RESISTANT MATERIAL SHALL BE EITHER 1) ASPHALT PLANT MIX, TYPE 1 OR TYPE 2, MIN. 2" DEPTH, 2) EROSION CONTROL MAT, OR 3) CONCRETE, AS DIRECTED BY THE ENGINEER. THE SLOPE DRAIN SHALL CONSIST OF A NON-PERFORATED TEMPORARY DRAINAGE PIPE, 12 INCHES IN DIAMETER.

PLAN VIEW

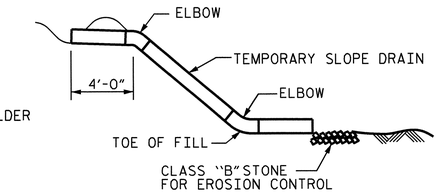


SECTION R-R

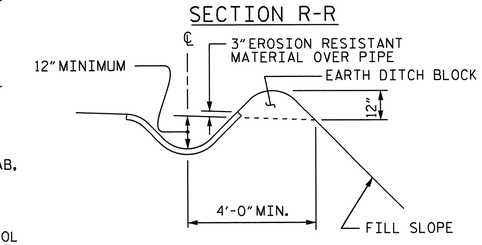


SECTION S-S

# TEMPORARY BERM AND SLOPE DRAIN DETAILS

(TO BE USED WHEN SHOULDER BERM GUTTER IS REQUIRED)

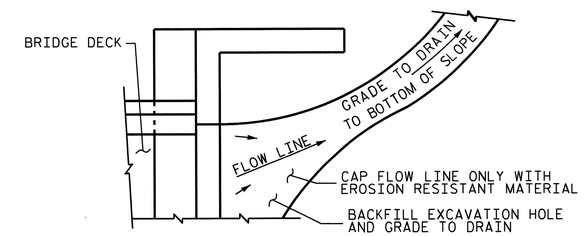


NOTE: IF THE APPROACH SLAB IS NOT CONSTRUCTED IMMEDIATELY AFTER THE BACKFILLING OF THE END BENT EXCAVATION, GRADE TO DRAIN TO THE BOTTOM OF THE SLOPE AND PROVIDE EROSION RESISTANT MATERIAL, SUCH AS FIBERGLASS ROVING OR AS DIRECTED BY THE ENGINEER TO PREVENT SOIL EROSION AND TO PROTECT THE AREA ADJACENT TO THE STRUCTURE. THE CONTRACTOR WILL BE REQUIRED TO REMOVE THESE MATERIALS PRIOR TO CONSTRUCTION OF THE APPROACH SLAB.

TEMPORARY DRAINAGE DETAIL

| ELASTOMERIC CONCRETE | |
|---|---|
| END BENT NO. | ELASTOMERIC CONCRETE * (CU. FT.) |
| 1 | 5.8 |
| 2 | 5.8 |
| TOTAL | 11.6 |

* BASED ON THE MINIMUM BLOCKOUT SHOWN.

PROJECT NO. R-2309AB
GUILFORD COUNTY
STATION: 114+28.00 -L-

SHEET 2 OF 2

STATE OF NORTH CAROLINA
DEPARTMENT OF TRANSPORTATION
RALEIGH

STANDARD

BRIDGE APPROACH
SLAB DETAILS
(LEFT LANE)

NORTH CAROLINA PROFESSIONAL SEAL 14045 ENGINEER TIMOTHY J. COGGINS
10/27/11

| REVISIONS | | | | | | SHEET NO. |
|---|---|---|---|---|---|---|
| NO. | BY: | DATE: | NO. | BY: | DATE: | S-29 |
| 1 | | | 3 | | | TOTAL SHEETS |
| 2 | | | 4 | | | 136 |

ASSEMBLED BY : JASON WILSON DATE : 01/27/11
CHECKED BY : B.N.BARODAWALA DATE : 04/06/11

DRAWN BY : FCJ 11/88
CHECKED BY : ARB 11/88

REV. 10/17/00 RWW/LES
REV. 5/7/03 RWW/JTE
REV. 5/1/06RR MAA/KWM

26-OCT-2011 09:03
R:\TIPProjects-R\R2309AB\Structures\R2309ab\Final Plans\Bridges\Str#1\r2309ab_sd_as_01.dgn
tcoggins

STR. #1 STD. NO. BAS10 (SHT 9)

F.A. PROJECT NO.: STPNHS-0220(25)

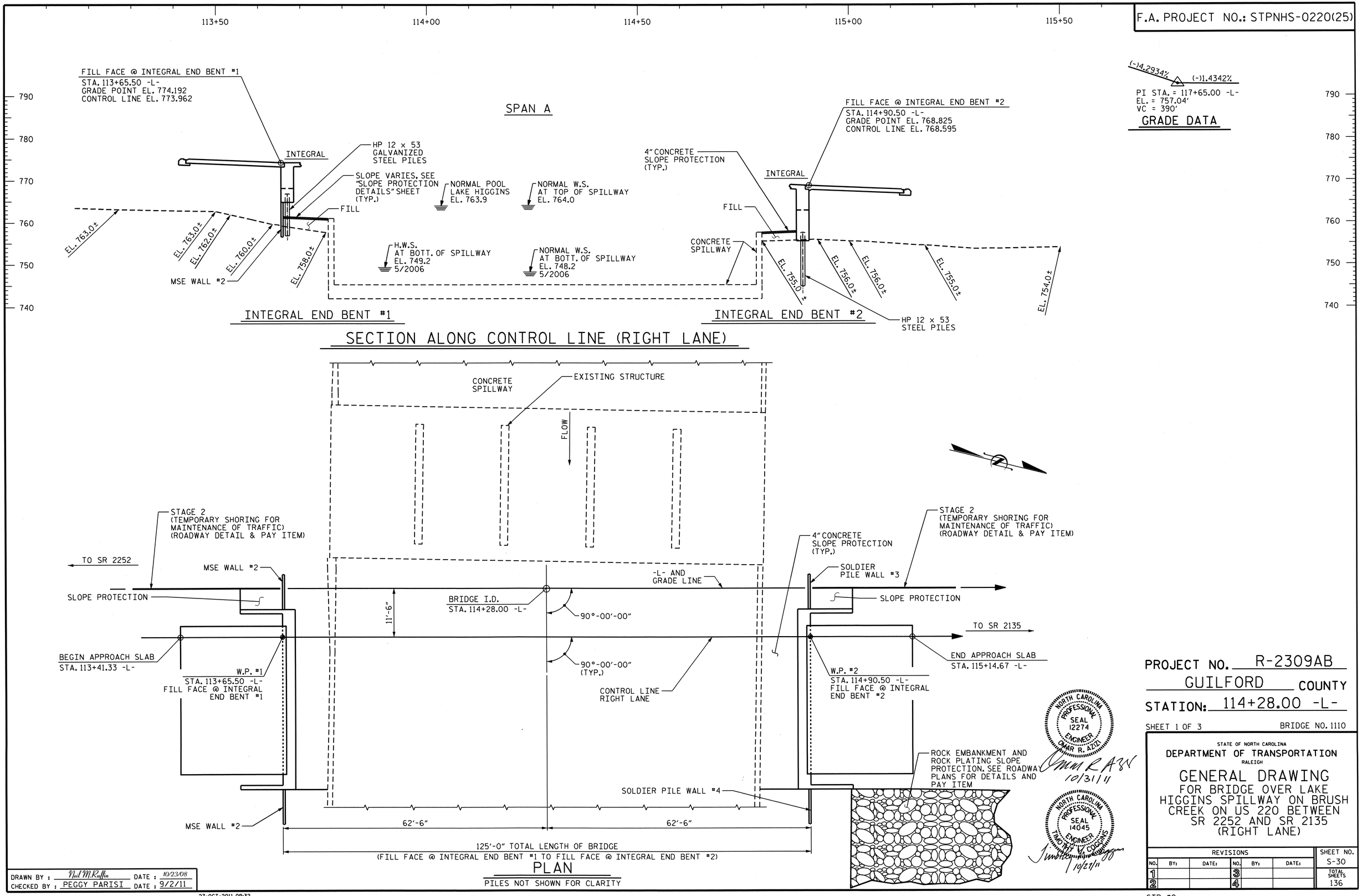


PROJECT NO. R-2309AB

GUILFORD COUNTY

STATION: 114+28.00 -L-

SHEET 1 OF 3

BRIDGE NO. 1110

STATE OF NORTH CAROLINA
DEPARTMENT OF TRANSPORTATION
RALEIGH

GENERAL DRAWING
FOR BRIDGE OVER LAKE HIGGINS SPILLWAY ON BRUSH CREEK ON US 220 BETWEEN SR 2252 AND SR 2135 (RIGHT LANE)

NORTH CAROLINA PROFESSIONAL SEAL 12274 ENGINEER OMAR R. AZIZI
10/31/11

NORTH CAROLINA PROFESSIONAL SEAL 14045 ENGINEER TIMOTHY L. COGGINS
10/21/11

| REVISIONS | | | | | | SHEET NO. |
|---|---|---|---|---|---|---|
| NO. | BY: | DATE: | NO. | BY: | DATE: | S-30 |
| 1 | | | 3 | | | TOTAL SHEETS |
| 2 | | | 4 | | | 136 |

DRAWN BY : Neil M. Ruffin DATE : 10/23/08
CHECKED BY : PEGGY PARISI DATE : 9/2/11

27-OCT-2011 09:32
R:\TIPProjects-R\R2309AB\Structures\R2309ab\FinalPlans\Bridges\Str#2\r2309ab_sd_gd_02.dgn
tcoggins

STR. #2

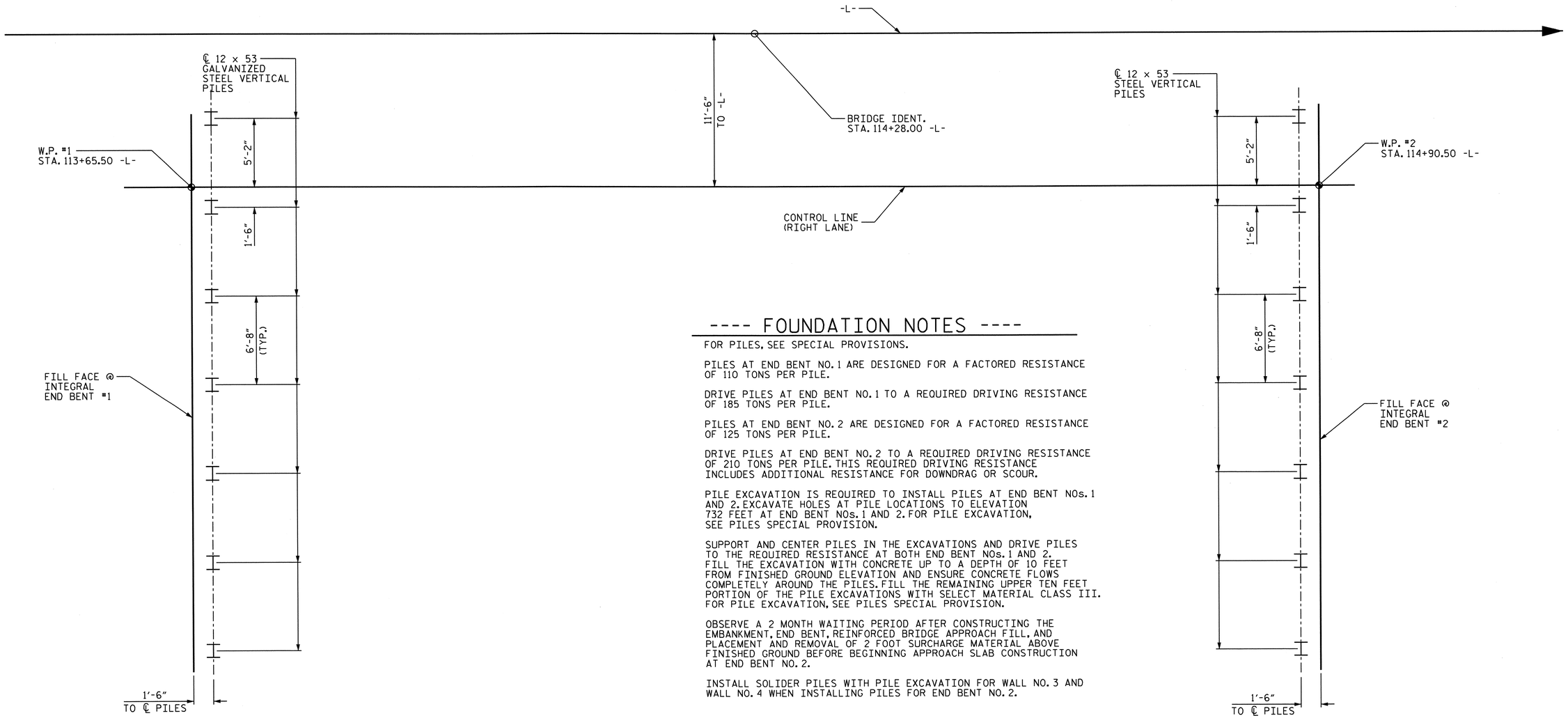


## ---- FOUNDATION NOTES ----

FOR PILES, SEE SPECIAL PROVISIONS.

PILES AT END BENT NO. 1 ARE DESIGNED FOR A FACTORED RESISTANCE OF 110 TONS PER PILE.

DRIVE PILES AT END BENT NO. 1 TO A REQUIRED DRIVING RESISTANCE OF 185 TONS PER PILE.

PILES AT END BENT NO. 2 ARE DESIGNED FOR A FACTORED RESISTANCE OF 125 TONS PER PILE.

DRIVE PILES AT END BENT NO. 2 TO A REQUIRED DRIVING RESISTANCE OF 210 TONS PER PILE. THIS REQUIRED DRIVING RESISTANCE INCLUDES ADDITIONAL RESISTANCE FOR DOWNDRAG OR SCOUR.

PILE EXCAVATION IS REQUIRED TO INSTALL PILES AT END BENT NOs. 1 AND 2. EXCAVATE HOLES AT PILE LOCATIONS TO ELEVATION 732 FEET AT END BENT NOs. 1 AND 2. FOR PILE EXCAVATION, SEE PILES SPECIAL PROVISION.

SUPPORT AND CENTER PILES IN THE EXCAVATIONS AND DRIVE PILES TO THE REQUIRED RESISTANCE AT BOTH END BENT NOs. 1 AND 2. FILL THE EXCAVATION WITH CONCRETE UP TO A DEPTH OF 10 FEET FROM FINISHED GROUND ELEVATION AND ENSURE CONCRETE FLOWS COMPLETELY AROUND THE PILES. FILL THE REMAINING UPPER TEN FEET PORTION OF THE PILE EXCAVATIONS WITH SELECT MATERIAL CLASS III. FOR PILE EXCAVATION, SEE PILES SPECIAL PROVISION.

OBSERVE A 2 MONTH WAITING PERIOD AFTER CONSTRUCTING THE EMBANKMENT, END BENT, REINFORCED BRIDGE APPROACH FILL, AND PLACEMENT AND REMOVAL OF 2 FOOT SURCHARGE MATERIAL ABOVE FINISHED GROUND BEFORE BEGINNING APPROACH SLAB CONSTRUCTION AT END BENT NO. 2.

INSTALL SOLIDER PILES WITH PILE EXCAVATION FOR WALL NO. 3 AND WALL NO. 4 WHEN INSTALLING PILES FOR END BENT NO. 2.

## FOUNDATION LAYOUT

DIMENSIONS LOCATING PILES ARE SHOWN TO PILE CENTERLINE AT BOTTOM OF CAP. ALL PILES ARE VERTICAL.

PROJECT NO. R-2309AB
GUILFORD COUNTY
STATION: 114+28.00 -L-

SHEET 2 OF 3

STATE OF NORTH CAROLINA
DEPARTMENT OF TRANSPORTATION
RALEIGH

# GENERAL DRAWING

FOR BRIDGE OVER LAKE HIGGINS SPILLWAY ON BRUSH CREEK ON US 220 BETWEEN SR 2252 AND SR 2135 (RIGHT LANE)

NORTH CAROLINA PROFESSIONAL SEAL 14045 ENGINEER TIMOTHY W. COGGINS
10/27/11

| REVISIONS | | | | | | | | SHEET NO. |
|---|---|---|---|---|---|---|---|---|
| NO. | BY: | DATE: | NO. | BY: | DATE: | | | S-31 |
| 1 | | | 3 | | | | | TOTAL SHEETS |
| 2 | | | 4 | | | | | 136 |

STR. #2

DRAWN BY : Neil M. Ruffin DATE : 8/15/2011
CHECKED BY : PEGGY PARISI DATE : 9/2/11

27-OCT-2011 09:32
R:\TIPProjects-R\R2309AB\Structures\R2309ab\FinalPlans\Bridges\Str#2\r2309ab_sd_fl_02.dgn
tcoggins

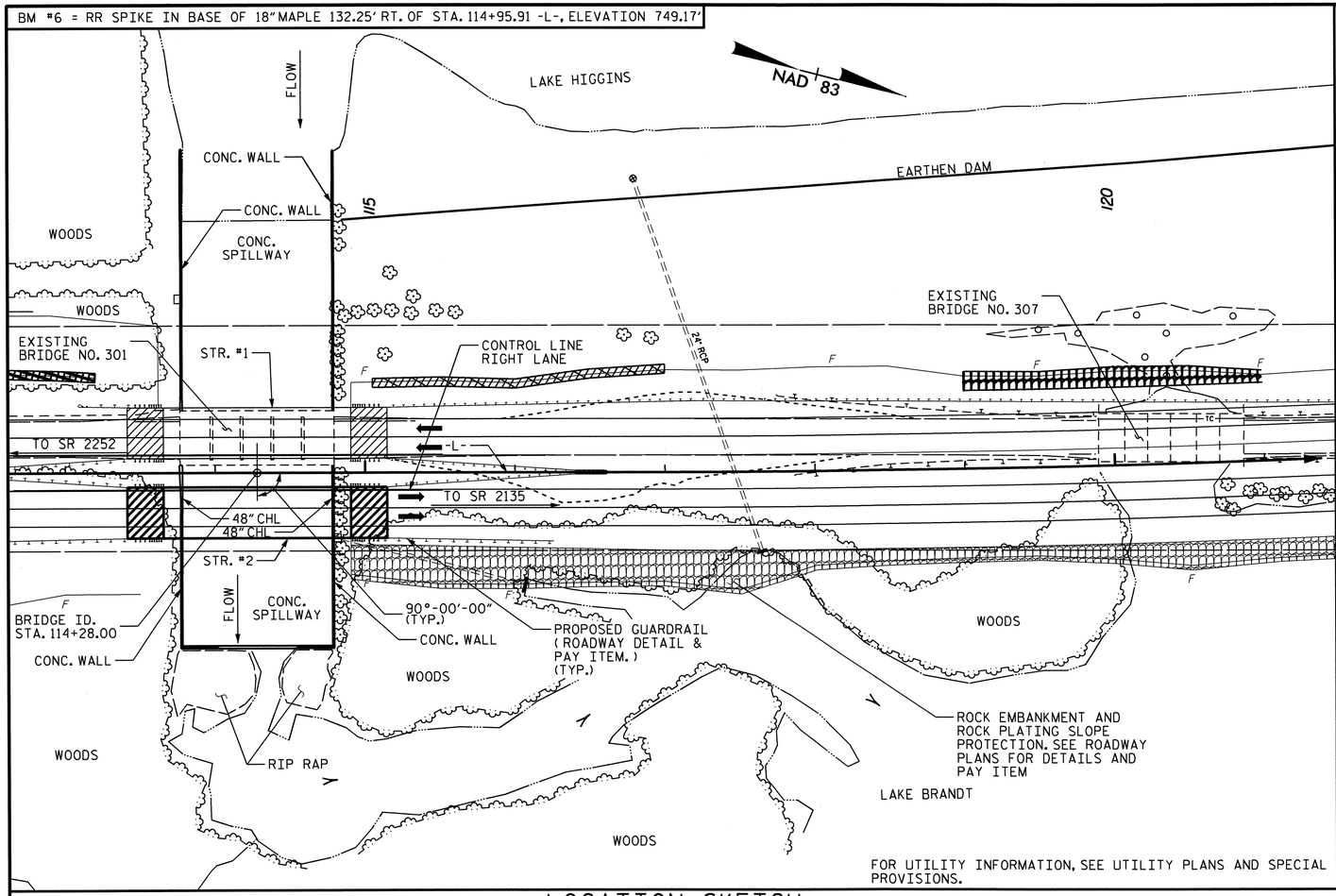


FOR UTILITY INFORMATION, SEE UTILITY PLANS AND SPECIAL PROVISIONS.

LOCATION SKETCH

## HYDRAULIC DATA

DESIGN DISCHARGE_____4090 CFS.

FREQUENCY OF DESIGN FLOOD_____50 YEARS

DESIGN HIGH WATER ELEVATION_____766.8'

DRAINAGE AREA_____12.6 SQ. MI.

BASE DISCHARGE(Q100)_____5320 CFS.

BASE HIGH WATER ELEVATION_____767.9'

## OVERTOPPING FLOOD DATA

OVERTOPPING DISCHARGE_____N/A CFS.

FREQUENCY OF OVERTOPPING FLOOD__N/A YRS.

OVERTOPPING FLOOD ELEVATION_____N/A

FOR SHIPPING STEEL STRUCTURAL MEMBERS, SEE SPECIAL PROVISIONS.

FOR FORMS FOR CONCRETE BRIDGE DECKS, SEE SPECIAL PROVISIONS.

FOR PLACING LOAD ON STRUCTURE MEMBERS, SEE SPECIAL PROVISIONS.

FOR MASS CONCRETE, SEE SPECIAL PROVISIONS.

THE CONTRACTOR SHALL PROVIDE INDEPENDENT ASSURANCE SAMPLES OF REINFORCING STEEL AS FOLLOWS: FOR PROJECTS REQUIRING UP TO 400 TONS OF REINFORCING STEEL, ONE 30 INCH SAMPLE OF EACH SIZE BAR USED, AND FOR PROJECTS REQUIRING OVER 400 TONS OF REINFORCING STEEL, TWO 30 INCH SAMPLES OF EACH SIZE BAR USED. THE BARS FROM WHICH THE SAMPLES ARE TAKEN MUST THEN BE SPLICED WITH REPLACEMENT BARS OF THE SIZE AND LENGTH OF THE SAMPLE, PLUS A MINIMUM LAP SPLICE OF THIRTY BAR DIAMETERS. PAYMENT FOR THE SAMPLES OF REINFORCING STEEL SHALL BE CONSIDERED INCIDENTAL TO VARIOUS PAY ITEMS.

FOR MAINTENANCE OF TRAFFIC, SEE TRAFFIC CONTROL PLANS.

## NOTES

ASSUMED LIVE LOAD = HL 93 OR ALTERNATE LOADING.

FOR OTHER DESIGN DATA AND GENERAL NOTES, SEE SHEET SN.

FOR EROSION CONTROL MEASURES, SEE EROSION CONTROL PLANS.

THIS BRIDGE HAS BEEN DESIGNED IN ACCORDANCE WITH THE AASHTO LRFD BRIDGE DESIGN SPECIFICATIONS.

ALL STRUCTURAL STEEL SHALL BE AASHTO M270 GRADE 50W.

REMOVABLE FORMS MAY BE USED IN LIEU OF METAL STAY-IN-PLACE FORMS IN ACCORDANCE WITH ARTICLE 420-3 OF THE STANDARD SPECIFICATIONS.

THE CLASS AA CONCRETE IN THE BRIDGE DECK SHALL CONTAIN FLY ASH OR GROUND GRANULATED BLAST FURNACE SLAG AT THE SUBSTITUTION RATE SPECIFIED IN ARTICLE 1024-1 AND IN ACCORDANCE WITH ARTICLES 1024-5 AND 1024-6 OF THE STANDARD SPECIFICATIONS. NO PAYMENT WILL BE MADE FOR THIS SUBSTITUTION AS IT IS CONSIDERED INCIDENTAL TO THE COST OF THE REINFORCED CONCRETE DECK SLAB.

FOR LIMITS OF TEMPORARY SHORING FOR MAINTENANCE OF TRAFFIC, SEE TRAFFIC CONTROL PLANS. FOR PAY ITEM FOR TEMPORARY SHORING FOR MAINTENANCE OF TRAFFIC, SEE ROADWAY PLANS.

NEEDLE BEAMS WILL NOT BE ALLOWED UNLESS OTHERWISE CALLED FOR ON THE PLANS OR APPROVED BY THE ENGINEER.

FOR SUBMITTAL OF WORKING DRAWINGS, SEE SPECIAL PROVISIONS.

FOR FALSEWORK AND FORMWORK, SEE SPECIAL PROVISIONS.

FOR CRANE SAFETY, SEE SPECIAL PROVISIONS.

FOR GROUT FOR STRUCTURES, SEE SPECIAL PROVISIONS.

FOR CURING CONCRETE, SEE SPECIAL PROVISIONS.

THE CONTRACTOR'S ATTENTION IS CALLED TO THE FACT THAT THE CONSTRUCTION OF THE PROPOSED BRIDGE SHALL NOT RESULT IN ANY DAMAGE TO THE EXISTING SPILLWAY AND THE EXISTING SPILLWAY RETAINING WALLS. SHOULD ANY DAMAGE OCCUR, THE CONTRACTOR SHALL BE RESPONSIBLE FOR ANY REPAIRS AT NO ADDITIONAL COST TO THE DEPARTMENT OF TRANSPORTATION.

THE CONTRACTOR SHALL MONITOR THE EXISTING SPILLWAY RETAINING WALLS DURING CONSTRUCTION. THE INITIAL POSITION OF THE WALLS WILL BE ESTABLISHED PRIOR TO CONSTRUCTION, VERIFIED PERIODICALLY DURING CONSTRUCTION AND AT THE COMPLETION OF CONSTRUCTION FOR MOVEMENT AND SETTLEMENT OF THE WALLS. IF MOVEMENT OR SETTLEMENT OCCURS THAT IS NOT SATISFACTORY TO THE ENGINEER OR IF THE WALLS ARE DAMAGED, THE CONTRACTOR SHALL RESTORE THE WALLS TO THEIR INITIAL CONDITION.

SEQUENCE TO FOLLOW IN PLACING THE MSE WALL AND STEEL PILES AT END BENT #1 ONLY:

1. DRIVE PILE TO ONE FOOT ABOVE GROUNDLINE.
2. CONSTRUCT MSE WALL.
3. SPLICE REMAINDER OF PILE TWO FOOT ABOVE THE BOTTOM OF CAP.

## TOTAL BILL OF MATERIAL

| | PILE EXCAVATION IN SOIL | REINFORCED CONCRETE DECK SLAB | GROOVING BRIDGE FLOORS | CLASS A CONCRETE | BRIDGE APPROACH SLABS | REINFORCING STEEL | STRUCTURAL STEEL | HP 12 X 53 STEEL PILES | | HP 12 X 53 GALVANIZED STEEL PILES | | TWO BAR METAL RAIL | CONCRETE BARRIER RAIL | 1'-2" x 2'-6" CONCRETE PARAPET | 4" SLOPE PROTECTION | ELASTOMERIC BEARINGS | EVAZOTE JOINT SEALS |
|---|---|---|---|---|---|---|---|---|---|---|---|---|---|---|---|---|---|
| | LIN. FT. | SQ. FT. | SQ. FT. | CU. YDS. | LUMP SUM | LBS. | APPROX. LBS. | NO. | LIN.FT. | NO. | LIN.FT. | LIN.FT. | LIN.FT. | LIN.FT. | SQ.YDS. | LUMP SUM | LUMP SUM |
| SUPERSTRUCTURE | | 4583 | 5210 | | LUMP SUM | | 159,500 | | | | | 115.83 | 123.33 | 123.33 | | LUMP SUM | LUMP SUM |
| END BENT NO.1 | 175 | | | 19.6 | | 4572 | | | | 7 | 280 | | | | 66 | | |
| END BENT NO. 2 | 165 | | | 42.8 | | 6622 | | 7 | 245 | | | | | | 53 | | |
| | | | | | | | | | | | | | | | | | |
| TOTAL | 340 | 4583 | 5210 | 62.4 | LUMP SUM | 11,194 | 159,500 | 7 | 245 | 7 | 280 | 115.83 | 123.33 | 123.33 | 119 | LUMP SUM | LUMP SUM |

NORTH CAROLINA PROFESSIONAL SEAL 14045 ENGINEER TIMOTHY W. COGGINS
10/21/11

PROJECT NO. R-2309AB

GUILFORD COUNTY

STATION: 114+28.00 -L-

SHEET 3 OF 3

STATE OF NORTH CAROLINA
DEPARTMENT OF TRANSPORTATION
RALEIGH

GENERAL DRAWING
FOR BRIDGE OVER LAKE HIGGINS SPILLWAY ON BRUSH CREEK ON US 220 BETWEEN SR 2252 AND SR 2135 (RIGHT LANE)

| REVISIONS | | | | | | SHEET NO. |
|---|---|---|---|---|---|---|
| NO. | BY: | DATE: | NO. | BY: | DATE: | S-32 |
| 1 | | | 3 | | | TOTAL SHEETS |
| 2 | | | 4 | | | 136 |

DRAWN BY : Neil M Raffin DATE : 10/23/08
CHECKED BY : PEGGY PARISI DATE : 9/2/11

27-OCT-2011 10:45
R:\TIPProjects-R\R2309AB\Structures\R2309ab\FinalPlans\Bridges\Str#2\r2309ab_sd_gd_02.dgn
tcoggins

STR. #2

# LOAD AND RESISTANCE FACTOR RATING (LRFR) SUMMARY FOR STEEL GIRDERS

| LEVEL | | VEHICLE | WEIGHT (W) (TONS) | CONTROLLING LOAD RATING (#) | MINIMUM RATING FACTORS (RF) | TONS = W × RF | STRENGTH I LIMIT STATE | | | | | | | | | | | SERVICE II LIMIT STATE | | | | | | COMMENT NUMBER |
|---|---|---|---|---|---|---|---|---|---|---|---|---|---|---|---|---|---|---|---|---|---|---|---|---|
| | | | | | | | LIVE-LOAD FACTORS $\gamma_{LL}$ | MOMENT | | | | | SHEAR | | | | | LIVE-LOAD FACTORS $\gamma_{LL}$ | MOMENT | | | | | |
| | | | | | | | | DISTRIBUTION FACTORS (DF) | RATING FACTOR | SPAN | GIRDER LOCATION | DISTANCE FROM LEFT END OF SPAN (ft) | DISTRIBUTION FACTORS (DF) | RATING FACTOR | SPAN | GIRDER LOCATION | DISTANCE FROM LEFT END OF SPAN (ft) | | DISTRIBUTION FACTORS (DF) | RATING FACTOR | SPAN | GIRDER LOCATION | DISTANCE FROM LEFT END OF SPAN (ft) | |
| DESIGN LOAD RATING | | HL-93 (INVENTORY) | N/A | 1 | 1.02 | -- | 1.75 | 0.866 | 1.61 | A | ER | 61.000 | 0.946 | 1.02 | A | I | 6.100 | 1.30 | 0.866 | 1.86 | A | ER | 61.000 | |
| | | HL-93 (OPERATING) | N/A | | 1.32 | -- | 1.35 | 0.866 | 2.09 | A | ER | 61.000 | 0.946 | 1.32 | A | I | 6.100 | 1.00 | 0.866 | 2.42 | A | ER | 61.000 | |
| | | HS-20 (INVENTORY) | 36.000 | 2 | 1.45 | 52.116 | 1.75 | 0.866 | 2.37 | A | ER | 61.000 | 0.946 | 1.45 | A | I | 6.100 | 1.30 | 0.866 | 2.73 | A | ER | 61.000 | |
| | | HS-20 (OPERATING) | 36.000 | | 1.88 | 67.558 | 1.35 | 0.866 | 3.07 | A | ER | 61.000 | 0.946 | 1.88 | A | I | 6.100 | 1.00 | 0.866 | 3.55 | A | ER | 61.000 | |
| LEGAL LOAD RATING | SINGLE VEHICLE (SV) | SNSH | 13.500 | | 4.54 | 61.275 | 1.40 | 0.866 | 7.18 | A | ER | 61.000 | 0.946 | 4.54 | A | I | 6.100 | 1.30 | 0.866 | 6.64 | A | ER | 61.000 | |
| | | SNGARBS2 | 20.000 | | 3.15 | 63.038 | 1.40 | 0.866 | 5.13 | A | ER | 61.000 | 0.946 | 3.15 | A | I | 6.100 | 1.30 | 0.866 | 4.74 | A | ER | 61.000 | |
| | | SNAGRIS2 | 22.000 | | 2.90 | 63.764 | 1.40 | 0.866 | 4.77 | A | ER | 61.000 | 0.946 | 2.90 | A | I | 6.100 | 1.30 | 0.866 | 4.41 | A | ER | 61.000 | |
| | | SNCOTTS3 | 27.250 | | 2.26 | 61.538 | 1.40 | 0.866 | 3.57 | A | ER | 61.000 | 0.946 | 2.26 | A | I | 6.100 | 1.30 | 0.866 | 3.30 | A | ER | 61.000 | |
| | | SNAGGRS4 | 34.925 | | 1.82 | 63.634 | 1.40 | 0.866 | 2.89 | A | ER | 61.000 | 0.946 | 1.82 | A | I | 6.100 | 1.30 | 0.866 | 2.68 | A | ER | 61.000 | |
| | | SNS5A | 35.550 | | 1.82 | 64.685 | 1.40 | 0.866 | 2.83 | A | ER | 61.000 | 0.946 | 1.82 | A | I | 6.100 | 1.30 | 0.866 | 2.62 | A | ER | 61.000 | |
| | | SNS6A | 39.950 | | 1.64 | 65.541 | 1.40 | 0.866 | 2.57 | A | ER | 61.000 | 0.946 | 1.64 | A | I | 6.100 | 1.30 | 0.866 | 2.37 | A | ER | 61.000 | |
| | | SNS7B | 42.000 | | 1.59 | 66.659 | 1.40 | 0.866 | 2.44 | A | ER | 61.000 | 0.946 | 1.59 | A | I | 6.100 | 1.30 | 0.866 | 2.26 | A | ER | 61.000 | |
| | TRUCK TRACTOR SEMI-TRAILER (TTST) | TNAGRIT3 | 33.000 | | 1.97 | 64.926 | 1.40 | 0.866 | 3.12 | A | ER | 61.000 | 0.946 | 1.97 | A | I | 6.100 | 1.30 | 0.866 | 2.89 | A | ER | 61.000 | |
| | | TNT4A | 33.075 | | 1.94 | 64.128 | 1.40 | 0.866 | 3.12 | A | ER | 61.000 | 0.946 | 1.94 | A | I | 6.100 | 1.30 | 0.866 | 2.89 | A | ER | 61.000 | |
| | | TNT6A | 41.600 | | 1.65 | 68.455 | 1.40 | 0.866 | 2.52 | A | ER | 61.000 | 0.946 | 1.65 | A | I | 6.100 | 1.30 | 0.866 | 2.33 | A | ER | 61.000 | |
| | | TNT7A | 42.000 | | 1.62 | 68.121 | 1.40 | 0.866 | 2.52 | A | ER | 61.000 | 0.946 | 1.62 | A | I | 6.100 | 1.30 | 0.866 | 2.33 | A | ER | 61.000 | |
| | | TNT7B | 42.000 | | 1.57 | 65.772 | 1.40 | 0.866 | 2.56 | A | ER | 61.000 | 0.946 | 1.57 | A | I | 6.100 | 1.30 | 0.866 | 2.37 | A | ER | 61.000 | |
| | | TNAGRIT4 | 43.000 | | 1.52 | 65.735 | 1.40 | 0.866 | 2.47 | A | ER | 61.000 | 0.946 | 1.52 | A | I | 6.100 | 1.30 | 0.866 | 2.28 | A | ER | 61.000 | |
| | | TNAGT5A | 45.000 | | 1.49 | 66.835 | 1.40 | 0.866 | 2.34 | A | ER | 61.000 | 0.946 | 1.49 | A | I | 6.100 | 1.30 | 0.866 | 2.17 | A | ER | 61.000 | |
| | | TNAGT5B | 45.000 | 3 | 1.45 | 65.325 | 1.40 | 0.866 | 2.33 | A | ER | 61.000 | 0.946 | 1.45 | A | I | 6.100 | 1.30 | 0.866 | 2.15 | A | ER | 61.000 | |
| FATIGUE | | HL-93 (INVENTORY) | $\gamma_{LL}$=0.75 | | | | | | | | | | | | | | | | | | | | | |

## LOAD FACTORS:

| DESIGN LOAD RATING FACTORS | LIMIT STATE | $\gamma_{DC}$ | $\gamma_{DW}$ |
|---|---|---|---|
| | STRENGTH I | 1.25 | 1.50 |
| | SERVICE II | 1.00 | 1.00 |

## NOTES:

MINIMUM RATING FACTORS ARE BASED ON THE STRENGTH I AND SERVICE II LIMIT STATES.

ALLOWABLE STRESS FOR SERVICE II LIMIT STATE ARE AS REQUIRED FOR DESIGN.

## COMMENTS:

1.
2.
3.
4.

| (#) CONTROLLING LOAD RATING |
|---|
| (1) DESIGN LOAD RATING (HL-93) ** |
| (2) DESIGN LOAD RATING (HS-20) ** |
| (3) LEGAL LOAD RATING ** |
| ** SEE CHART FOR VEHICLE TYPE |
| **GIRDER LOCATION** |
| I - INTERIOR GIRDER |
| EL - EXTERIOR LEFT GIRDER |
| ER - EXTERIOR RIGHT GIRDER |

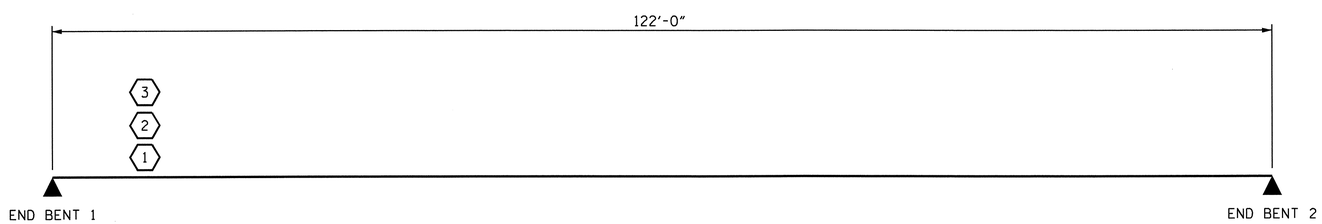


LRFR SUMMARY

PROJECT NO. R-2309AB
GUILFORD COUNTY
STATION: 114+28.00 -L-

STATE OF NORTH CAROLINA
DEPARTMENT OF TRANSPORTATION
RALEIGH

STANDARD

LRFR SUMMARY FOR STEEL GIRDERS
(NON-INTERSTATE TRAFFIC)
(RIGHT LANE)

NORTH CAROLINA PROFESSIONAL SEAL 14045 ENGINEER TIMOTHY W. COGGINS
10/27/11

| REVISIONS | | | | | | SHEET NO. |
|---|---|---|---|---|---|---|
| NO. | BY: | DATE: | NO. | BY: | DATE: | S-33 |
| 1 | | | 3 | | | TOTAL SHEETS |
| 2 | | | 4 | | | 136 |

STR. #2 STD. NO. LRFR3

ASSEMBLED BY : PEGGY PARISI DATE : 8-5-11
CHECKED BY : A.M. LEE DATE : 8-10-11
DRAWN BY : MAA 1/08
CHECKED BY : GM/DI 2/08
REV. 11/12/08RR MAA/GM

27-OCT-2011 09:31
R:\TIPProjects-R\R2309AB\Structures\R2309ab\FinalPlans\Bridges\Str#2\r2309ab_sd_lrfr_02.dgn
tcoggins

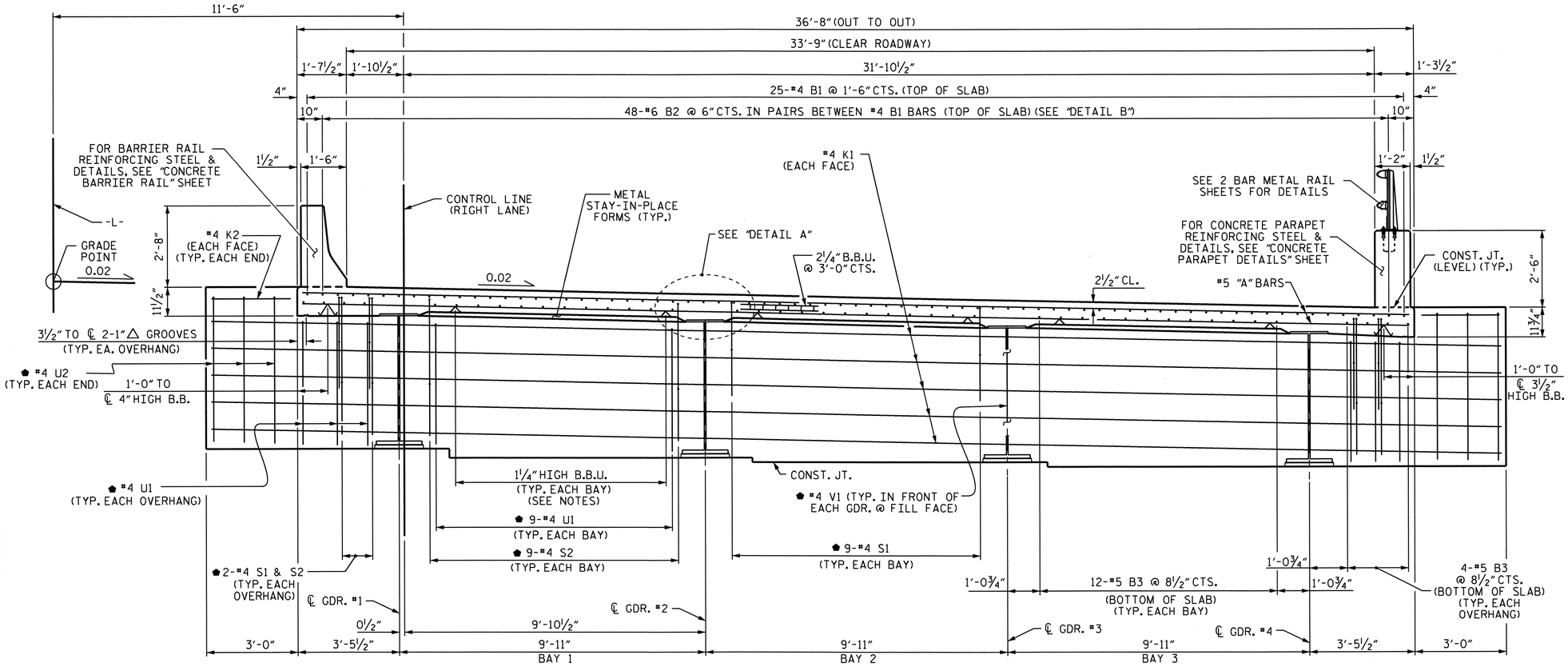


## TYPICAL SECTION @ INTEGRAL END BENT

⬟ #4 U1, #4 U2, #4 V1, #4 S1 & #4 S2
BARS TO MATCH WITH #4 "V" BARS IN INTEGRAL END BENT CAP.

## NOTES

PROVIDE 1¼" HIGH BEAM BOLSTERS UPPER AT 4'-0" CTS. ATOP THE METAL STAY-IN-PLACE FORMS TO SUPPORT THE BOTTOM MAT OF "A" BARS. WHEN USING REMOVABLE FORMS, PROVIDE CONTINUOUS HIGH CHAIRS FOR METAL DECK (C.H.C.M.) @ 4'-0" CTS. WITH A HEIGHT TO SUPPORT THE BOTTOM MAT OF "A" BARS A CLEAR DISTANCE OF 2½" ABOVE THE TOP OF THE REMOVABLE FORM.

PREVIOUSLY CAST CONCRETE IN A SIMPLE SPAN SHALL HAVE ATTAINED A MINIMUM COMPRESSIVE STRENGTH OF 3000 PSI BEFORE ADDITIONAL CONCRETE IS CAST IN THE SPAN.

BARRIER RAIL AND CONCRETE PARAPET SHALL NOT BE CAST UNTIL ALL SLAB CONCRETE HAS BEEN CAST AND HAS REACHED A MINIMUM COMPRESSIVE STRENGTH OF 3000 PSI.

THE CONTRACTOR MAY, WHEN NECESSARY, PROPOSE A SCHEME FOR AVOIDING INTERFERENCE BETWEEN METAL STAY-IN-PLACE FORM SUPPORTS OR FORMS AND GIRDER STIFFENERS OR CONNECTOR PLATES. THE PROPOSAL SHALL BE INDICATED, AS APPROPRIATE, ON EITHER THE STEEL WORKING DRAWINGS OR THE METAL STAY-IN-PLACE FORM WORKING DRAWINGS.

METAL STAY-IN-PLACE FORMS SHALL NOT BE WELDED TO GIRDER FLANGES IN THE ZONES REQUIRING CHARPY V-NOTCH TEST. SEE STRUCTURAL STEEL DETAIL SHEETS.

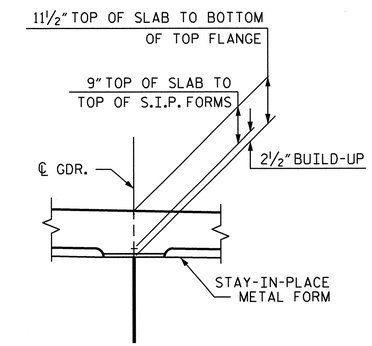


## DETAIL "A"

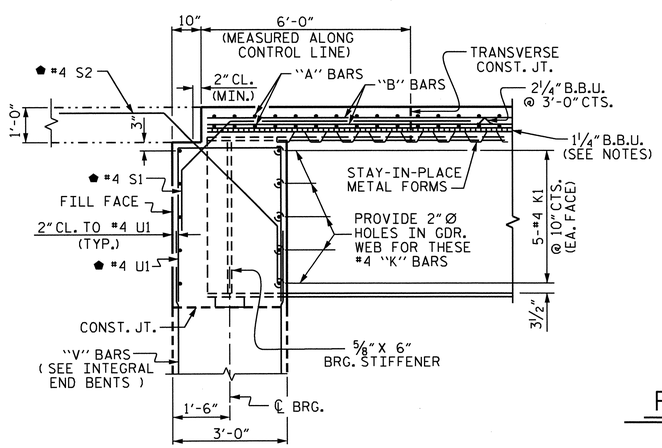


## END OF GIRDER DETAIL AT INTEGRAL END BENT

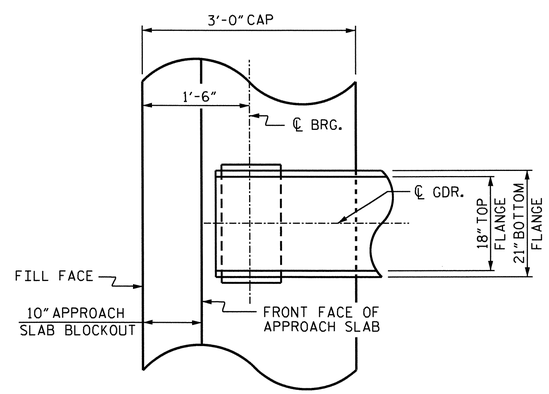


## PLAN OF GIRDER AT INTEGRAL END BENT

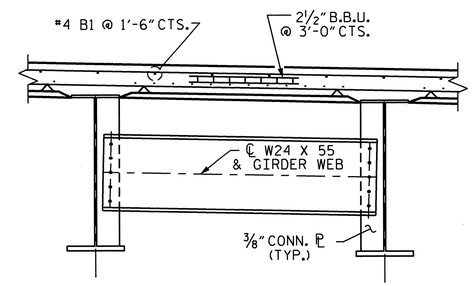


## PARTIAL TYPICAL SECTION @ MIDSPAN SHOWING INTERMEDIATE DIAPHRAGM

TYP. FOR EACH INTERMEDIATE DIAPHRAGM IN EACH BAY.

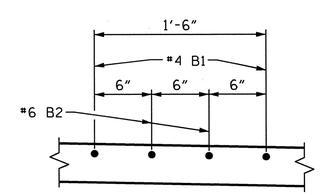


## DETAIL "B"

SHOWING TOP OF SLAB "B" BAR SPACING @ INTEGRAL END BENT

NORTH CAROLINA PROFESSIONAL SEAL 14045 ENGINEER TIMOTHY W. COGGINS
10/27/11

PROJECT NO. R-2309AB
GUILFORD COUNTY
STATION: 114+28.00 -L-

STATE OF NORTH CAROLINA
DEPARTMENT OF TRANSPORTATION
RALEIGH

SUPERSTRUCTURE

TYPICAL SECTION

(RIGHT LANE)

| REVISIONS | | | | | | | SHEET NO. |
|---|---|---|---|---|---|---|---|
| NO. | BY: | DATE: | NO. | BY: | DATE: | | S-34 |
| 1 | | | 3 | | | | TOTAL SHEETS |
| 2 | | | 4 | | | | 136 |

DRAWN BY : PEGGY PARISI DATE : 11-30-10
CHECKED BY : J.B. WILSON DATE : 5-25-11

27-OCT-2011 09:30
R:\TIPProjects-R\R2309AB\Structures\R2309ab\FinalPlans\Bridges\Str#2\r2309ab_sd_ts_02.dgn
tcoggins

STR. #2

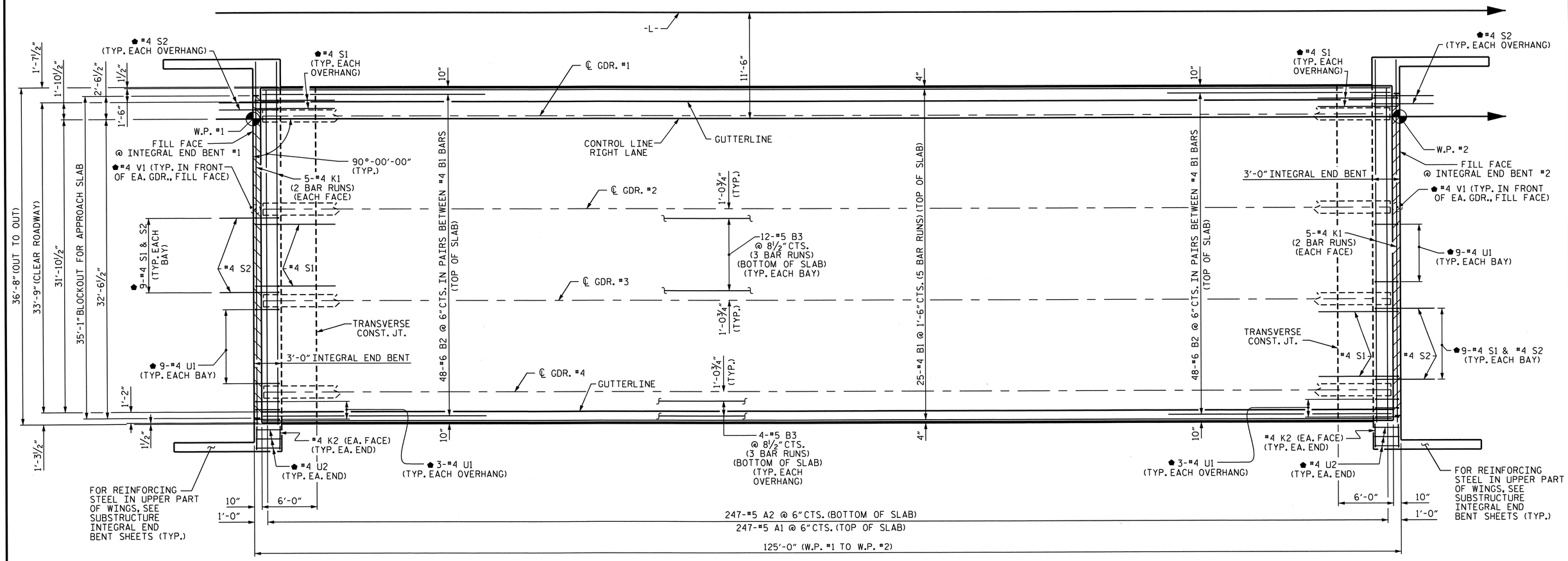


## PLAN OF SPAN

⬟ #4 U1, #4 U2, #4 V1, #4 S1 & #4 S2
BARS TO MATCH WITH #4 "V" BARS IN INTEGRAL END BENT CAP.

PROJECT NO. R-2309AB
GUILFORD COUNTY
STATION: 114+28.00 -L-

STATE OF NORTH CAROLINA
DEPARTMENT OF TRANSPORTATION
RALEIGH

SUPERSTRUCTURE
PLAN OF SPAN
(RIGHT LANE)

NORTH CAROLINA PROFESSIONAL SEAL 14045 ENGINEER TIMOTHY W. COGGINS
10/27/11

| REVISIONS | | | | | | SHEET NO. |
|---|---|---|---|---|---|---|
| NO. | BY: | DATE: | NO. | BY: | DATE: | S-35 |
| 1 | | | 3 | | | TOTAL SHEETS |
| 2 | | | 4 | | | 136 |

DRAWN BY : PEGGY PARISI DATE : 12-6-10
CHECKED BY : J.B. WILSON DATE : 5-25-11

27-OCT-2011 09:30
R:\TIPProjects-R\R2309AB\Structures\R2309ab\FinalPlans\Bridges\Str#2\r2309ab_sd_s1_02.dgn
tcoggins

STR. #2

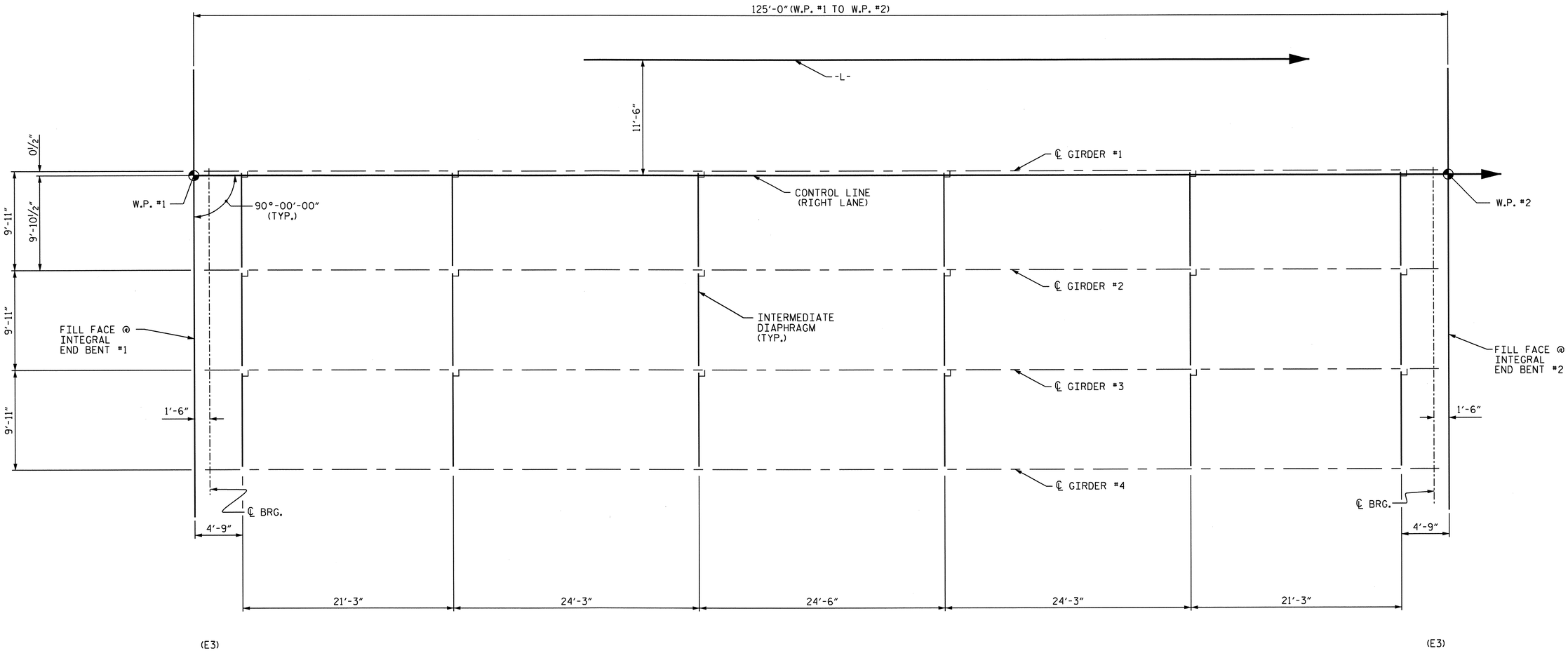


SPAN A

# FRAMING PLAN

PROJECT NO. R-2309AB
GUILFORD COUNTY
STATION: 114+28.00 -L-

STATE OF NORTH CAROLINA
DEPARTMENT OF TRANSPORTATION
RALEIGH

SUPERSTRUCTURE

FRAMING PLAN

(RIGHT LANE)

NORTH CAROLINA PROFESSIONAL SEAL 14045 ENGINEER TIMOTHY L. COUGHLIN
10/31/11

| REVISIONS | | | | | | SHEET NO. |
|---|---|---|---|---|---|---|
| NO. | BY: | DATE: | NO. | BY: | DATE: | S-36 |
| 1 | | | 3 | | | TOTAL SHEETS |
| 2 | | | 4 | | | 136 |

DRAWN BY : PEGGY PARISI DATE : 12-3-10
CHECKED BY : J.B. WILSON DATE : 5-25-11

31-OCT-2011 15:57
R:\TIPProjects-R\R2309AB\Structures\R2309ab\FinalPlans\Bridges\Str#2\r2309ab_sd_fp_02.dgn
taverette

STR. #2

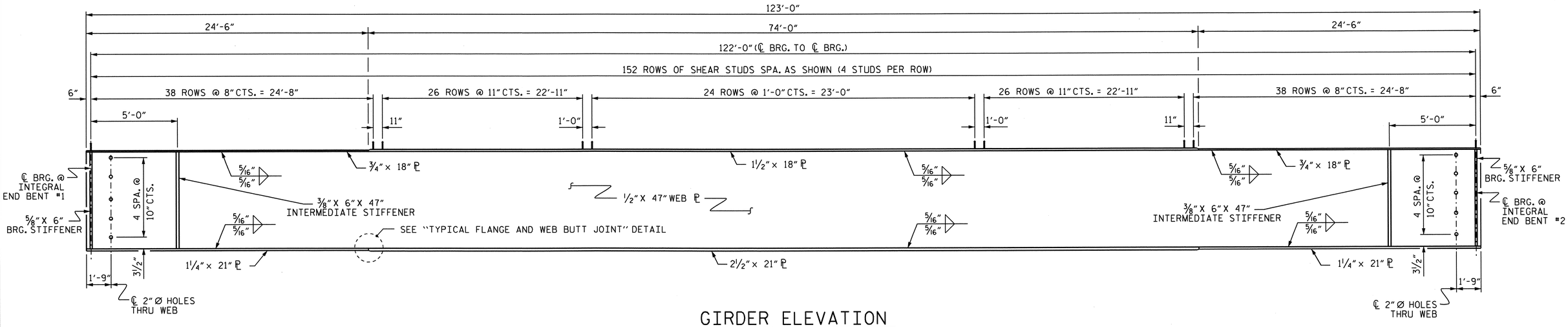


## GIRDER ELEVATION

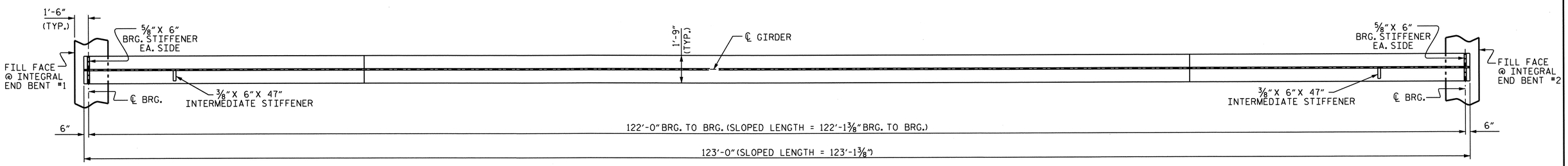


## BOTTOM FLANGE DETAIL

TRANSVERSE STIFFENERS TO BE ON INTERIOR SIDE OF WEB FOR ALL GDRS.

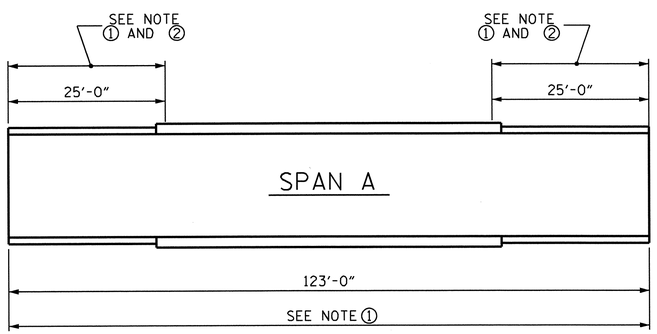


## GIRDER MAKE UP

## FOR CHARPY V-NOTCH TEST

NOTE ①: CHARPY V-NOTCH TESTS ARE REQUIRED FOR ALL TOP OR BOTTOM FLANGE PLATES WHICH FALL WITHIN THESE LIMITS, ALL WEB PLATES, AND ALL SPLICE PLATES. IF A PERMITTED SHOP FLANGE SPLICE IS NOT USED, CHARPY V-NOTCH TESTS WILL BE REQUIRED FOR THE ENTIRE FLANGE PLATE. FOR CHARPY V-NOTCH TESTS, SEE ARTICLE 1072-9 OF THE STANDARD SPECIFICATIONS.

NOTE ②: NO WELDING OF FORMS OR FALSEWORK TO THE TOP FLANGE WILL BE PERMITTED IN THIS REGION.

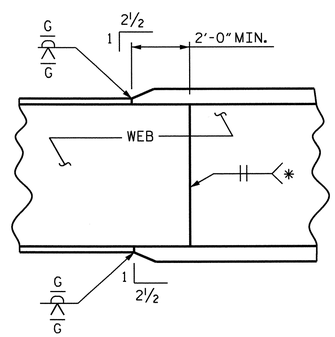


## TYPICAL FLANGE AND WEB BUTT JOINT

* GRIND SMOOTH AND FLUSH ON OUTSIDE OF EXTERIOR GIRDERS

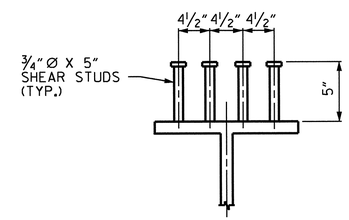


## SHEAR STUD DETAIL

PROJECT NO. R-2309AB
GUILFORD COUNTY
STATION: 114+28.00 -L-

SHEET 1 OF 2

STATE OF NORTH CAROLINA
DEPARTMENT OF TRANSPORTATION
RALEIGH

SUPERSTRUCTURE

STRUCTURAL STEEL DETAILS

(RIGHT LANE)

NORTH CAROLINA PROFESSIONAL SEAL 14045 ENGINEER TIMOTHY L. COGGINS
10/27/11

| REVISIONS | | | | | | SHEET NO. |
|---|---|---|---|---|---|---|
| NO. | BY: | DATE: | NO. | BY: | DATE: | S-37 |
| 1 | | | 3 | | | TOTAL SHEETS |
| 2 | | | 4 | | | 136 |

DRAWN BY : PEGGY PARISI DATE : 12-1-10
CHECKED BY : J.B. WILSON DATE : 5-25-11

27-OCT-2011 09:29
R:\TIPProjects-R\R2309AB\Structures\R2309ab\FinalPlans\Bridges\Str#2\r2309ab_sd_ss_02.dgn
tcoggins

STR. #2

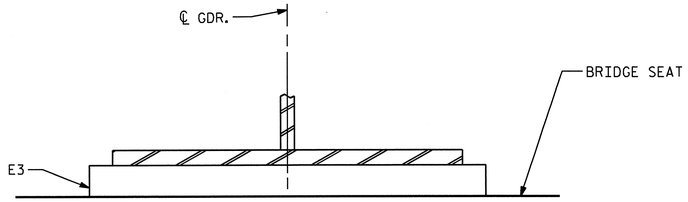


END VIEW

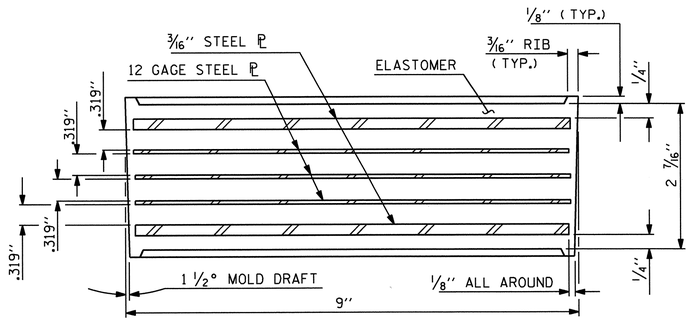


TYPICAL SECTION OF ELASTOMERIC BEARINGS

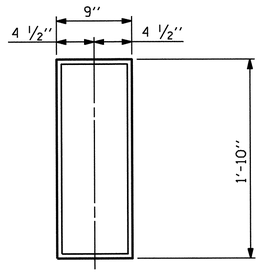


E3 ( 8 REQ'D )

PLAN VIEW OF ELASTOMERIC BEARING

TYPE II

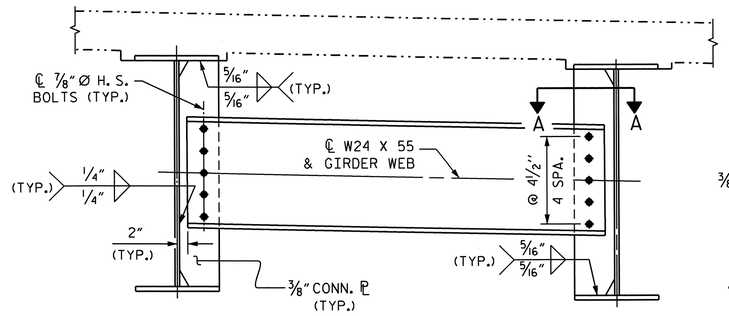


INTERMEDIATE DIAPHRAGM

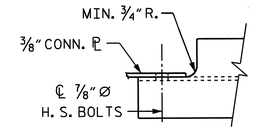


SECTION A-A

## NOTES:

ALL STRUCTURAL STEEL SHALL BE AASHTO M270 GRADE 50W.

ALL DIMENSIONS SHOWN ARE HORIZONTAL OR VERTICAL, UNLESS OTHERWISE NOTED.

ALL FIELD CONNECTIONS TO BE 7/8" DIA. HIGH STRENGTH BOLTS UNLESS OTHERWISE NOTED. FOR HIGH STRENGTH BOLTS, SEE SPECIAL PROVISIONS.

BEARING STIFFENERS ARE TO BE PLACED NORMAL TO THE WEB OF THE GIRDER AND SHALL BE PLUMB.

PERMITTED FLANGE AND WEB SHOP SPLICES SHALL NOT BE LOCATED WITHIN 15 FEET OF MAXIMUM DEAD LOAD DEFLECTION. KEEP 2 FEET MINIMUM BETWEEN WEB AND FLANGE SHOP SPLICES. KEEP 6" MINIMUM BETWEEN CONNECTOR PLATE AND WEB OR FLANGE SHOP SPLICES.

STUDS ON GIRDERS MAY BE SHIFTED UP TO 1" IF NECESSARY TO CLEAR FLANGE SPLICE WELD.

TENSION ON THE AASHTO M164 BOLTS SHALL BE CALIBRATED USING DIRECT TENSION INDICATOR WASHERS. FOR DIRECT TENSION INDICATORS, SEE SPECIAL PROVISIONS.

END OF GIRDERS SHALL BE PLUMB.

FOR SHIPPING STEEL STRUCTURAL MEMBERS, SEE SPECIAL PROVISIONS.

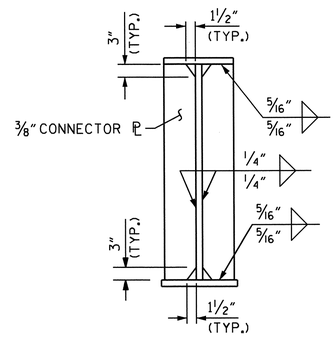


CONNECTOR PLATE DETAILS

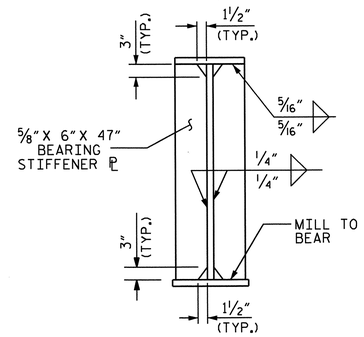


BEARING STIFFENER

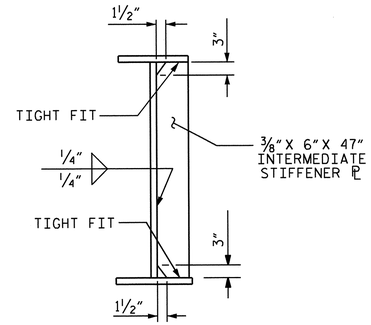


INTERMEDIATE STIFFENER

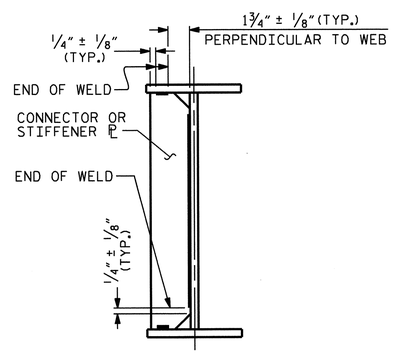


TYPICAL STIFFENER OR CONNECTOR PLATE CONNECTIONS

WELD TERMINATION DETAILS

| —LOAD RATINGS— | |
|---|---|
| | MAX.D.L.+L.L. |
| TYPE II | 119 K |

PROJECT NO. R-2309AB

GUILFORD COUNTY

STATION: 114+28.00 -L-

SHEET 2 OF 2

STATE OF NORTH CAROLINA
DEPARTMENT OF TRANSPORTATION
RALEIGH

SUPERSTRUCTURE

STRUCTURAL STEEL & ELASTOMERIC BEARING DETAILS

(RIGHT LANE)

NORTH CAROLINA PROFESSIONAL SEAL 14045 ENGINEER TIMOTHY A. COGGINS

10/27/11

| REVISIONS | | | | | | SHEET NO. |
|---|---|---|---|---|---|---|
| NO. | BY: | DATE: | NO. | BY: | DATE: | S-38 |
| 1 | | | 3 | | | TOTAL SHEETS |
| 2 | | | 4 | | | 136 |

STR. #2

DRAWN BY : PEGGY PARISI DATE : 12-1-10
CHECKED BY : J.B. WILSON DATE : 5-25-11

27-OCT-2011 09:29
R:\TIPProjects-R\R2309AB\Structures\R2309ab\FinalPlans\Bridges\Str#2\r2309ab_sd_ss_02.dgn
tcoggins

## DEAD LOAD DEFLECTION TABLE FOR GIRDERS - SPAN A

| | GIRDERS #1 & #4 | | | | | | | | | | | | | | | | | | | | |
|---|---|---|---|---|---|---|---|---|---|---|---|---|---|---|---|---|---|---|---|---|---|
| @ TWENTIETH POINTS BETWEEN ℄ BEARINGS | 0 | .05 | .10 | .15 | .20 | .25 | .30 | .35 | .40 | .45 | .50 | .55 | .60 | .65 | .70 | .75 | .80 | .85 | .90 | .95 | 0 |
| DEFLECTION DUE TO WEIGHT OF GIRDER ↓ | 0.000 | 0.019 | 0.037 | 0.053 | 0.068 | 0.080 | 0.090 | 0.098 | 0.104 | 0.107 | 0.109 | 0.107 | 0.104 | 0.098 | 0.090 | 0.080 | 0.068 | 0.053 | 0.037 | 0.019 | 0.000 |
| DEFLECTION DUE TO WEIGHT OF SLAB * ↓ | 0.000 | 0.043 | 0.114 | 0.178 | 0.232 | 0.279 | 0.319 | 0.350 | 0.374 | 0.388 | 0.392 | 0.388 | 0.374 | 0.350 | 0.319 | 0.279 | 0.232 | 0.178 | 0.114 | 0.043 | 0.000 |
| DEFLECTION DUE TO WEIGHT OF BARRIER RAIL ↓ | 0.000 | 0.006 | 0.012 | 0.018 | 0.023 | 0.027 | 0.031 | 0.034 | 0.036 | 0.037 | 0.038 | 0.037 | 0.036 | 0.034 | 0.031 | 0.027 | 0.023 | 0.018 | 0.012 | 0.006 | 0.000 |
| TOTAL DEAD LOAD DEFLECTION ↓ | 0.000 | 0.068 | 0.163 | 0.249 | 0.323 | 0.386 | 0.440 | 0.482 | 0.514 | 0.532 | 0.539 | 0.532 | 0.514 | 0.482 | 0.440 | 0.386 | 0.323 | 0.249 | 0.163 | 0.068 | 0.000 |
| | | | | | | | | | | | | | | | | | | | | | |
| REQUIRED CAMBER ↑ | 0 | 13/16" | 1 15/16" | 3" | 3 7/8" | 4 5/8" | 5 1/4" | 5 13/16" | 6 3/16" | 6 3/8" | 6 7/16" | 6 3/8" | 6 3/16" | 5 13/16" | 5 1/4" | 4 5/8" | 3 7/8" | 3" | 1 15/16" | 13/16" | 0 |

* INCLUDES SLAB, BUILDUPS & STAY-IN-PLACE FORMS.
ALL VALUES ARE SHOWN IN FEET EXCEPT "REQUIRED CAMBER", WHICH IS GIVEN IN INCHES (FRACTION FORM).

## DEAD LOAD DEFLECTION TABLE FOR GIRDERS - SPAN A

| | GIRDERS #2 & #3 | | | | | | | | | | | | | | | | | | | | |
|---|---|---|---|---|---|---|---|---|---|---|---|---|---|---|---|---|---|---|---|---|---|
| @ TWENTIETH POINTS BETWEEN ℄ BEARINGS | 0 | .05 | .10 | .15 | .20 | .25 | .30 | .35 | .40 | .45 | .50 | .55 | .60 | .65 | .70 | .75 | .80 | .85 | .90 | .95 | 0 |
| DEFLECTION DUE TO WEIGHT OF GIRDER ↓ | 0.000 | 0.019 | 0.037 | 0.053 | 0.068 | 0.080 | 0.090 | 0.098 | 0.104 | 0.107 | 0.109 | 0.107 | 0.104 | 0.098 | 0.090 | 0.080 | 0.068 | 0.053 | 0.037 | 0.019 | 0.000 |
| DEFLECTION DUE TO WEIGHT OF SLAB * ↓ | 0.000 | 0.045 | 0.117 | 0.183 | 0.239 | 0.287 | 0.328 | 0.360 | 0.384 | 0.398 | 0.403 | 0.398 | 0.384 | 0.360 | 0.328 | 0.287 | 0.239 | 0.183 | 0.117 | 0.045 | 0.000 |
| DEFLECTION DUE TO WEIGHT OF BARRIER RAIL ↓ | 0.000 | 0.006 | 0.012 | 0.017 | 0.022 | 0.026 | 0.029 | 0.032 | 0.034 | 0.035 | 0.036 | 0.035 | 0.034 | 0.032 | 0.029 | 0.026 | 0.022 | 0.017 | 0.012 | 0.006 | 0.000 |
| TOTAL DEAD LOAD DEFLECTION ↓ | 0.000 | 0.070 | 0.166 | 0.253 | 0.329 | 0.393 | 0.447 | 0.490 | 0.522 | 0.540 | 0.548 | 0.540 | 0.522 | 0.490 | 0.447 | 0.393 | 0.329 | 0.253 | 0.166 | 0.070 | 0.000 |
| | | | | | | | | | | | | | | | | | | | | | |
| REQUIRED CAMBER ↑ | 0 | 13/16" | 2" | 3/16" | 3 15/16" | 4 11/16" | 5 3/8" | 5 7/8" | 6 1/4" | 6 1/2" | 6 9/16" | 6 1/2" | 6 1/4" | 5 7/8" | 5 3/8" | 4 11/16" | 3 15/16" | 3/16" | 2" | 13/16" | 0 |

* INCLUDES SLAB, BUILDUPS & STAY-IN-PLACE FORMS.
ALL VALUES ARE SHOWN IN FEET EXCEPT "REQUIRED CAMBER", WHICH IS GIVEN IN INCHES (FRACTION FORM).

PROJECT NO. R-2309AB
GUILFORD COUNTY
STATION: 114+28.00 -L-

STATE OF NORTH CAROLINA
DEPARTMENT OF TRANSPORTATION
RALEIGH

SUPERSTRUCTURE

DEAD LOAD DEFLECTIONS
(RIGHT LANE)

NORTH CAROLINA PROFESSIONAL SEAL 14045 ENGINEER TIMOTHY W. COGGINS
Timothy W. Coggins 10/27/11

| REVISIONS | | | | | | | | SHEET NO. |
|---|---|---|---|---|---|---|---|---|
| NO. | BY: | DATE: | NO. | BY: | DATE: | | | S-39 |
| 1 | | | 3 | | | | | TOTAL SHEETS |
| 2 | | | 4 | | | | | 136 |

DRAWN BY : PEGGY PARISI DATE : 12-14-10
CHECKED BY : J.B. WILSON DATE : 5-25-11

27-OCT-2011 09:26
R:\TIPProjects-R\R2309AB\Structures\R2309ab\FinalPlans\Bridges\Str#2\r2309ab_sd_dl_02.dgn
tcoggins

STR. #2

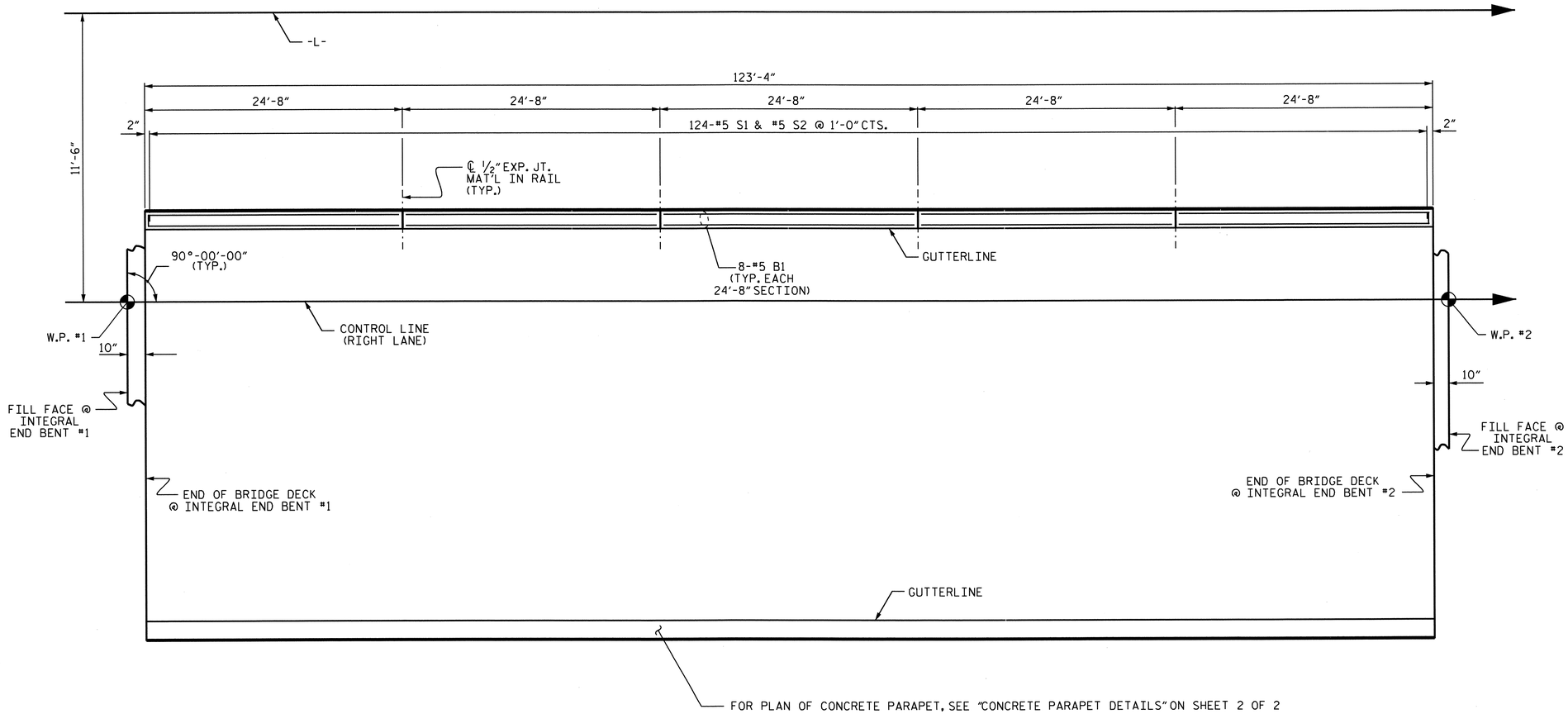


## PLAN OF BARRIER RAIL

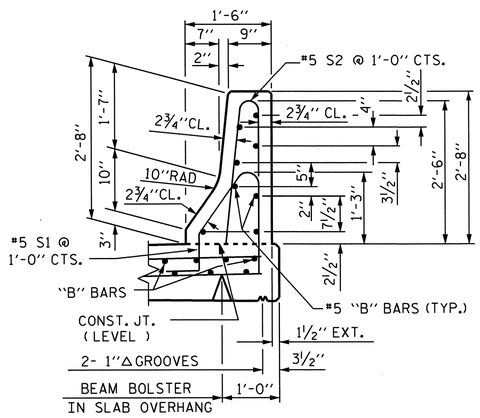


## SECTION THRU RAIL

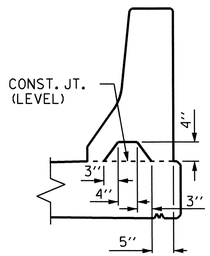


## SECTION S-S

AT DAM IN OPEN JOINT
(THIS IS TO BE USED ONLY WHEN SLIP FORM IS USED)

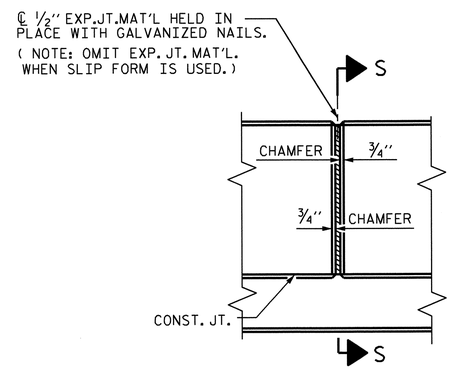


## ELEVATION AT EXPANSION JOINTS

## BARRIER RAIL DETAILS

## BAR TYPES

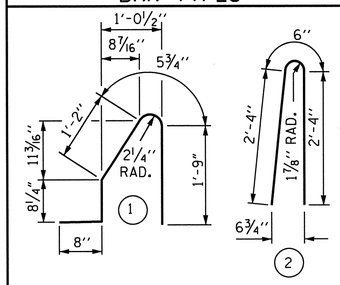


ALL BAR DIMENSIONS ARE OUT TO OUT

## BILL OF MATERIAL

FOR CONCRETE BARRIER RAIL ONLY

| BAR | NO. | SIZE | TYPE | LENGTH | WEIGHT |
|---|---|---|---|---|---|
| * B1 | 40 | #5 | STR | 24'-3" | 1012 |
| | | | | | |
| * S1 | 124 | #5 | 1 | 4'-9" | 614 |
| * S2 | 124 | #5 | 2 | 5'-2" | 668 |
| | | | | | |
| * EPOXY COATED REINFORCING STEEL | | | | | 2294 LBS. |
| CLASS AA CONCRETE | | | | | 12.4 CU. YDS. |
| CONCRETE BARRIER RAIL | | | | | 123.33 LIN. FT. |

## NOTES

THE BARRIER RAIL SHALL NOT BE CAST UNTIL ALL SLAB CONCRETE HAS BEEN CAST AND HAS REACHED A MINIMUM COMPRESSIVE STRENGTH OF 3,000 PSI.

ALL REINFORCING STEEL IN BARRIER RAILS SHALL BE EPOXY COATED.

THE #5 S1 AND #5 S2 BARS MAY BE SHIFTED SLIGHTLY IN ORDER TO MAINTAIN A 2" MINIMUM CLEARANCE TO 1/2" EXPANSION JOINT MATERIAL IN THE BARRIER RAIL.

VERTICAL GROOVED CONTRACTION JOINTS, 1/2" IN DEPTH, SHALL BE TOOLED IN ALL EXPOSED FACES OF THE BARRIER RAIL AND IN ACCORDANCE WITH ARTICLE 825-10(B) OF THE STANDARD SPECIFICATIONS. THE CONTRACTION JOINT SHALL BE LOCATED AT EACH THIRD POINT BETWEEN BARRIER RAIL EXPANSION JOINTS. ONLY ONE CONTRACTION JOINT IS REQUIRED AT MIDPOINT OF BARRIER RAIL SEGMENTS LESS THAN 20 FEET IN LENGTH AND NO CONTRACTION JOINTS ARE REQUIRED FOR THOSE SEGMENTS LESS THAN 10 FEET IN LENGTH.

PROJECT NO. R-2309AB
GUILFORD COUNTY
STATION: 114+28.00 -L-

SHEET 1 OF 2

STATE OF NORTH CAROLINA
DEPARTMENT OF TRANSPORTATION
RALEIGH

STANDARD
CONCRETE BARRIER RAIL

(RIGHT LANE)

NORTH CAROLINA PROFESSIONAL SEAL 14045 ENGINEER TIMOTHY W. COGGINS
10/27/11

| REVISIONS | | | | | | SHEET NO. |
|---|---|---|---|---|---|---|
| NO. | BY: | DATE: | NO. | BY: | DATE: | S-40 |
| 1 | | | 3 | | | TOTAL SHEETS |
| 2 | | | 4 | | | 136 |

STR. #2 STD. NO. CBR1 (SHT 1)

| | | | |
|---|---|---|---|
| ASSEMBLED BY : PEGGY PARISI | | DATE : 12-9-10 | |
| CHECKED BY : J.B. WILSON | | DATE : 5-25-11 | |
| DRAWN BY : ARB 5/87 | REV. 10/17/00 | RWW/LES | |
| CHECKED BY : SJD 9/87 | REV. 5/7/03R | RWW/JTE | |
| | REV. 5/1/06R | TLA/GM | |

27-OCT-2011 09:25
R:\TIPProjects-R\R2309AB\Structures\R2309ab\FinalPlans\Bridges\Str#2\r2309ab_sd_br_02.dgn
tcoggins

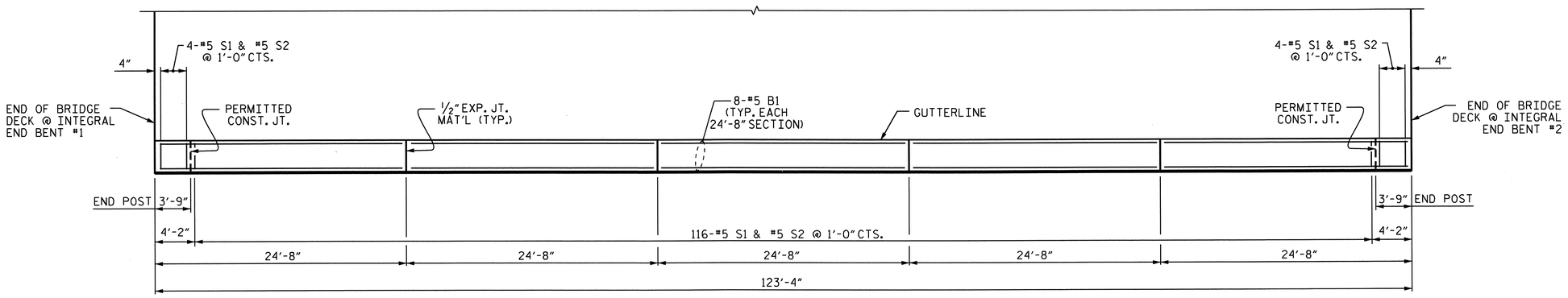


## PLAN OF CONCRETE PARAPET

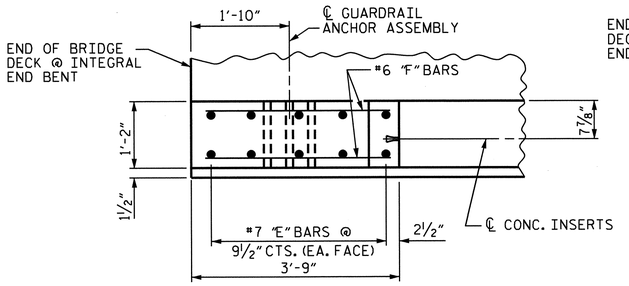


## PLAN OF END POST

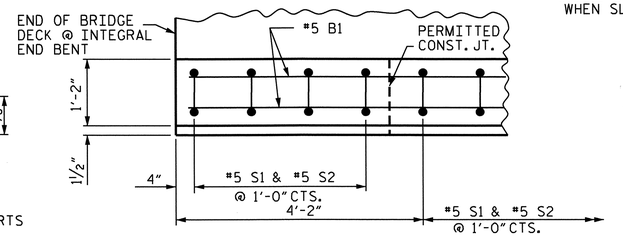


## PLAN OF PARAPET

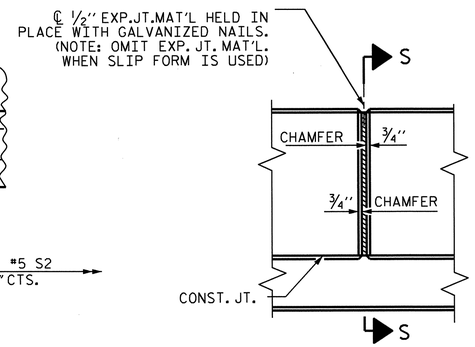


## ELEVATION AT EXPANSION JOINTS

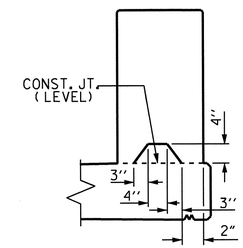


## SECTION S-S

AT DAM IN OPEN JOINT
( THIS IS TO BE USED ONLY
WHEN SLIP FORM IS USED )

## BILL OF MATERIAL

### PARAPET & TWO END POSTS

| BAR | NO. | SIZE | TYPE | LENGTH | WEIGHT |
|---|---|---|---|---|---|
| * B1 | 40 | 5 | STR | 24'-3" | 1012 |
| | | | | | |
| * E1 | 4 | 7 | STR | 2'-6" | 20 |
| * E2 | 4 | 7 | STR | 3'-0" | 25 |
| * E3 | 4 | 7 | STR | 3'-6" | 29 |
| * E4 | 4 | 7 | STR | 4'-0" | 33 |
| * E5 | 4 | 7 | STR | 4'-4" | 35 |
| | | | | | |
| * F1 | 4 | 6 | STR | 1'-10" | 11 |
| * F2 | 4 | 6 | STR | 3'-0" | 18 |
| * F3 | 4 | 6 | STR | 3'-4" | 20 |
| | | | | | |
| * S1 | 124 | 5 | 1 | 5'-5" | 701 |
| * S2 | 124 | 5 | 2 | 5'-6" | 711 |

| | | |
|---|---|---|
| * EPOXY COATED REINFORCING STEEL | LBS. | 2615 |
| CLASS AA CONCRETE | C.Y. | 13.7 |
| 1'-2" X 2'-6" CONCRETE PARAPET | LIN. FT. | 123.33 |

### BAR TYPE

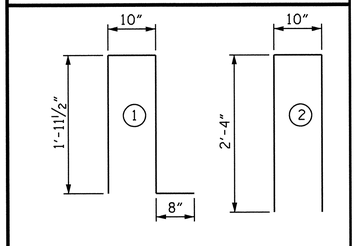


ALL BAR DIMENSIONS ARE OUT TO OUT.

## NOTES

THE CONCRETE PARAPET IN THE SPAN SHALL NOT BE CAST UNTIL ALL SLAB CONCRETE IN THE SPAN HAS BEEN CAST AND HAS REACHED A MINIMUM COMPRESSIVE STRENGTH OF 3,000 PSI.

ALL REINFORCING STEEL IN CONCRETE PARAPETS SHALL BE EPOXY COATED.

SEE "RAIL POST SPACINGS AND END OF RAIL DETAILS" SHEET FOR CONCRETE INSERT DETAILS.

SEE "GUARDRAIL ANCHORAGE DETAILS FOR METAL RAILS" SHEET FOR GUARDRAIL ANCHOR ASSEMBLY.

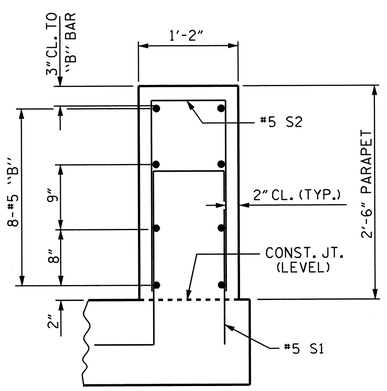


## SECTION THRU PARAPET

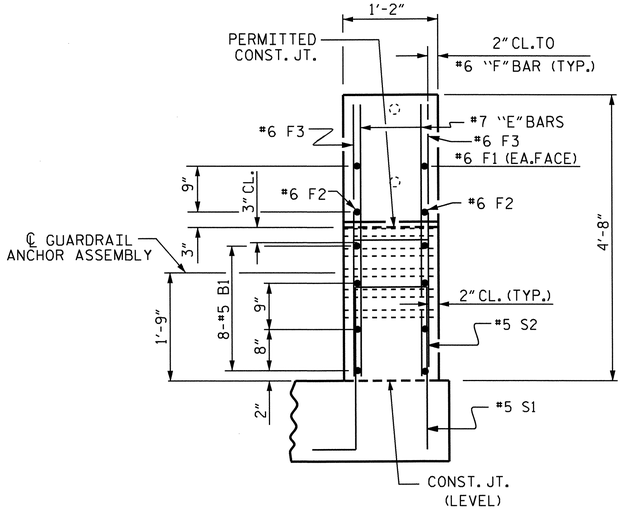


## END VIEW

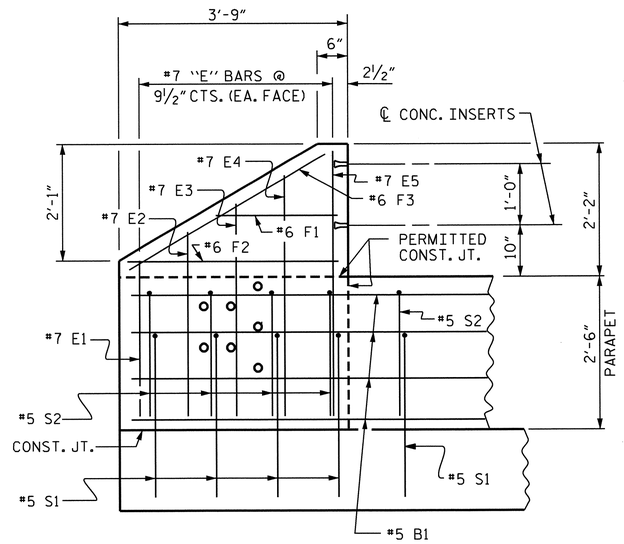


## ELEVATION

## PARAPET AND END POST FOR TWO BAR RAIL

PROJECT NO. R-2309AB
GUILFORD COUNTY
STATION: 114+28.00 -L-

SHEET 2 OF 2

STATE OF NORTH CAROLINA
DEPARTMENT OF TRANSPORTATION
RALEIGH

SUPERSTRUCTURE

CONCRETE
PARAPET DETAILS

(RIGHT LANE)

NORTH CAROLINA PROFESSIONAL SEAL 14045 ENGINEER TIMOTHY J. COGGINS
10/27/11

| REVISIONS | | | | | | SHEET NO. |
|---|---|---|---|---|---|---|
| NO. | BY: | DATE: | NO. | BY: | DATE: | S-41 |
| 1 | | | 3 | | | TOTAL SHEETS |
| 2 | | | 4 | | | 136 |

STR. #2

ASSEMBLED BY : PEGGY PARISI DATE : 12-9-10
CHECKED BY : J.B. WILSON DATE : 5-25-11

27-OCT-2011 09:28
R:\TIPProjects-R\R2309AB\Structures\R2309ab\FinalPlans\Bridges\Str#2\r2309ab_sd_mr_02.dgn
tcoggins

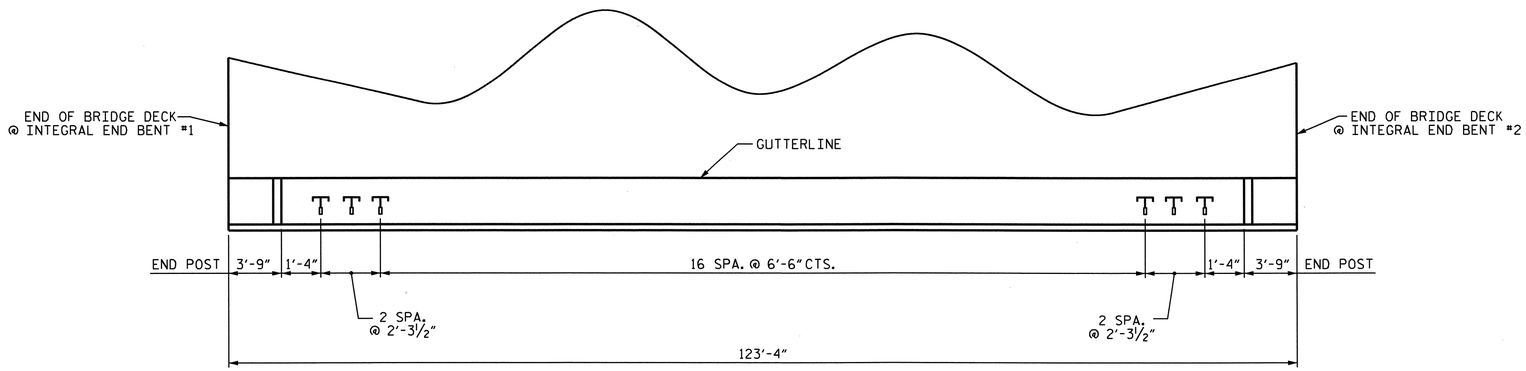


## PLAN OF RAIL POST SPACINGS

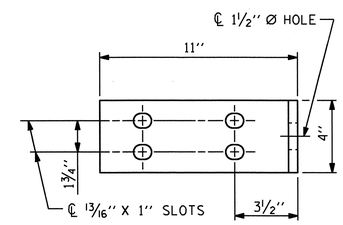


ELEVATION

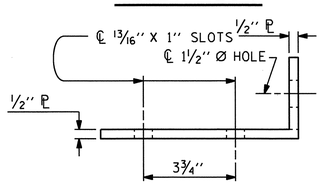


TOP VIEW

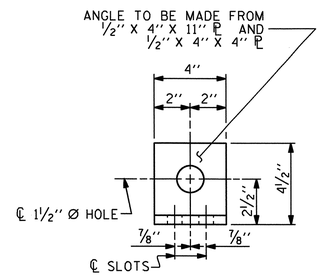


END VIEW

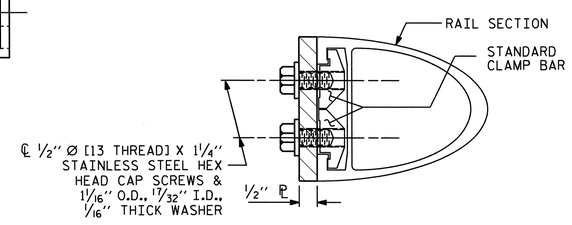


SECTION H-H

FIXED

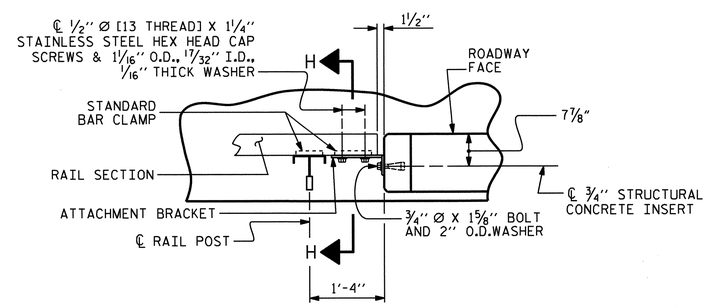


PLAN - RAIL AND END POST

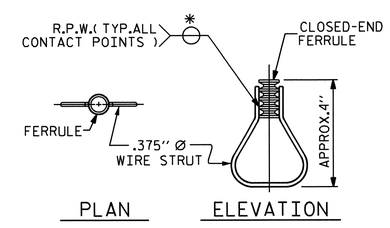


STRUCTURAL CONCRETE INSERT

* EACH WELDED ATTACHMENT OF WIRE TO FERRULE SHALL DEVELOP THE TENSILE STRENGTH OF THE WIRE.

## DETAILS FOR ATTACHING METAL RAIL TO END POST

## NOTES

STRUCTURAL CONCRETE INSERT

THE STRUCTURAL CONCRETE INSERT ASSEMBLY SHALL CONSIST OF THE FOLLOWING COMPONENTS:

A. FERRULES SHALL BE MADE FROM STEEL MEETING THE REQUIREMENTS OF AASHTO M169, GRADE 12L14 AND SHALL HAVE A MINIMUM LENGTH OF THREADS OF 1½".

B. 1 - ¾" Ø X 1⅝" BOLT WITH WASHER. BOLT SHALL CONFORM TO THE REQUIREMENTS OF ASTM A307. BOLT AND WASHER SHALL BE GALVANIZED. ( AT THE CONTRACTOR'S OPTION, STAINLESS STEEL BOLT AND WASHER MAY BE USED AS AN ALTERNATE FOR THE ¾" Ø X 1⅝" GALVANIZED BOLT AND WASHER. THEY SHALL CONFORM TO OR EXCEED THE MECHANICAL REQUIREMENTS OF ASTM A307. THE USE OF THIS ALTERNATE SHALL BE APPROVED BY THE ENGINEER.)

C. WIRE STRUT SHOWN IN THE CONCRETE INSERT ASSEMBLY DETAIL IS THE MINIMUM ALLOWABLE SIZE AND SHALL HAVE A MINIMUM TENSILE STRENGTH OF 100,000 PSI. AS AN OPTION, A 7/16" Ø WIRE STRUT WITH A MINIMUM TENSILE STRENGTH OF 90,000 PSI IS ACCEPTABLE.

## NOTES

METAL RAIL TO END POST CONNECTION

THE METAL RAIL TO END POST CONNECTION SHALL CONSIST OF THE FOLLOWING COMPONENTS:

A. ½" PLATES SHALL CONFORM TO AASHTO M270 GRADE 36 AND SHALL BE GALVANIZED AFTER FABRICATION.

B. ¾" STRUCTURAL CONCRETE INSERT SHALL HAVE A WORKING LOAD SHEAR CAPACITY OF 4800 LBS. THE FERRULES SHALL ENGAGE A ¾"Ø X 1⅝" BOLT WITH 2" O.D. WASHER IN PLACE. THE ¾"Ø X 1⅝" BOLT SHALL HAVE N. C. THREADS.

C. CAP SCREWS FOR RAIL ATTACHMENT TO ANGLE SHALL CONFORM TO THE REQUIREMENTS OF ASTM F593 ALLOY 305 STAINLESS STEEL. CAP SCREWS TO BE CENTERED IN SLOTS AT 60°F.

D. STANDARD CLAMP BARS ( SEE METAL RAIL SHEET ).

E. ½" Ø PIPE SLEEVES (IF REQUIRED) TO BE GALVANIZED.

THE COST OF THE STANDARD CLAMP BARS AND CAP SCREWS USED IN THE METAL RAIL TO END POST CONNECTION SHALL BE INCLUDED IN THE UNIT CONTRACT PRICE BID FOR LINEAR FEET OF 1 OR 2 BAR METAL RAILS.

THE ¾" STRUCTURAL CONCRETE INSERT WITH BOLT SHALL BE ASSEMBLED IN THE SHOP.

THE COST OF THE ¾" STRUCTURAL CONCRETE INSERT ASSEMBLY, AND THE ½" PLATES COMPLETE IN PLACE SHALL BE INCLUDED IN THE VARIOUS PAY ITEMS.

THE CONTRACTOR, AT HIS OPTION, MAY USE AN ADHESIVE BONDING SYSTEM IN LIEU OF THE STRUCTURAL CONCRETE INSERT EMBEDDED IN THE END POST. IF THE ADHESIVE BONDING SYSTEM IS USED, THE ¾" Ø X 1⅝" BOLT WITH WASHER SHALL BE REPLACED WITH A ¾"Ø X 6½" BOLT AND 2" O.D. WASHER. ALL SPECIFICATIONS THAT APPLY TO THE ¾" Ø X 1⅝" BOLT SHALL APPLY TO THE ¾"Ø X 6 ½" BOLT. FIELD TESTING OF THE ADHESIVE BONDING SYSTEM IS NOT REQUIRED.

PROJECT NO. R-2309AB
GUILFORD COUNTY
STATION: 114+28.00 -L-

SHEET 1 OF 3

STATE OF NORTH CAROLINA
DEPARTMENT OF TRANSPORTATION
RALEIGH

STANDARD
RAIL POST SPACINGS
AND
END OF RAIL DETAILS
TWO BAR METAL RAILS
(RIGHT LANE)

NORTH CAROLINA PROFESSIONAL SEAL 14045 ENGINEER TIMOTHY A. COGGINS
10/27/11

| REVISIONS | | | | | | SHEET NO. |
|---|---|---|---|---|---|---|
| NO. | BY: | DATE: | NO. | BY: | DATE: | S-42 |
| 1 | | | 3 | | | TOTAL SHEETS |
| 2 | | | 4 | | | 136 |

STR. #2

STD. NO. BMR2

| | | | |
|---|---|---|---|
| ASSEMBLED BY : PEGGY PARISI | | DATE : 12-10-10 | |
| CHECKED BY : J.B. WILSON | | DATE : 5-25-11 | |
| DRAWN BY : FCJ 1/88 | REV. 10/17/00 | LES/RDR | |
| CHECKED BY : CRK 3/89 | REV. 5/7/03 | RWW/JTE | |
| | REV. 5/1/06 | TLA/GM | |

27-OCT-2011 09:28
R:\TIPProjects-R\R2309AB\Structures\R2309ab\Final Plans\Bridges\Str#2\r2309ab_sd_mr_02.dgn
tcoggins

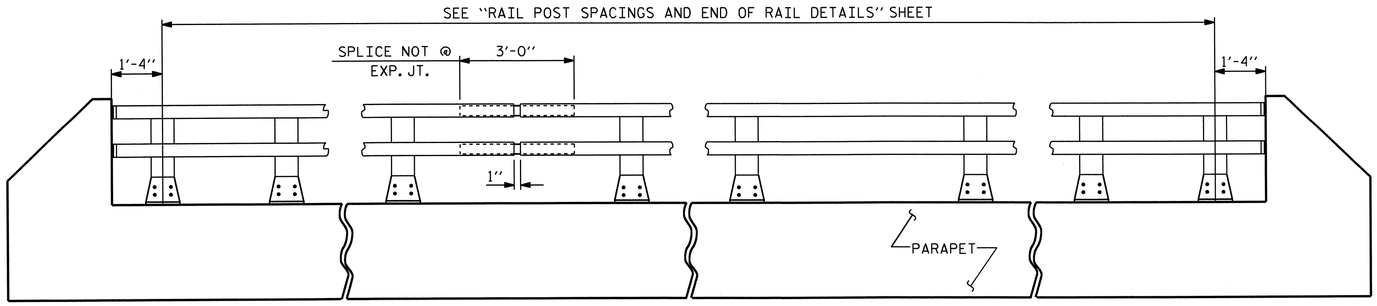


## ELEVATION

NOTE : FOR ATTACHMENT OF METAL RAIL TO END POST, SEE STANDARD NO. BMR2.

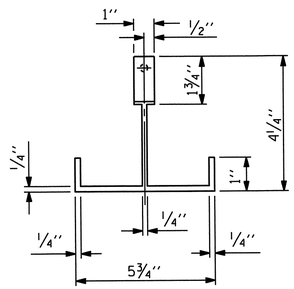


PLAN

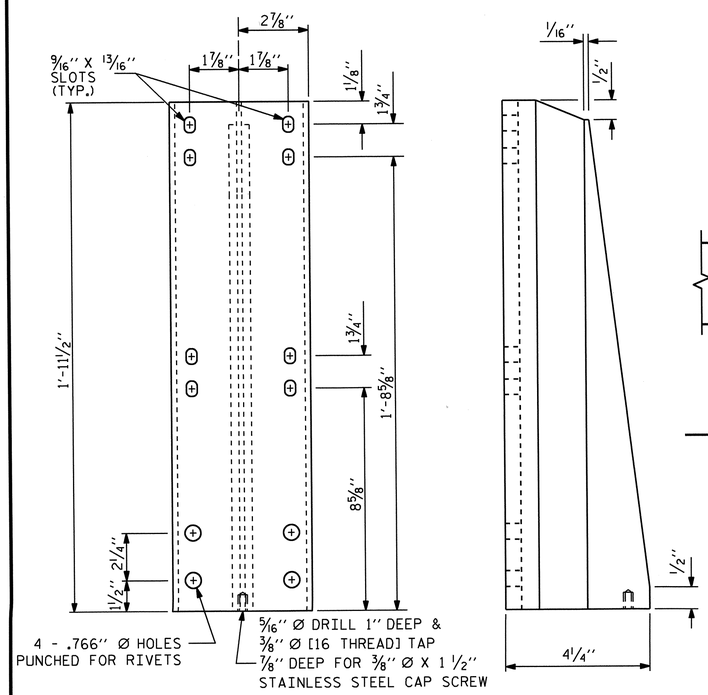


FRONT ELEVATION

SIDE ELEVATION

## DETAILS OF POST

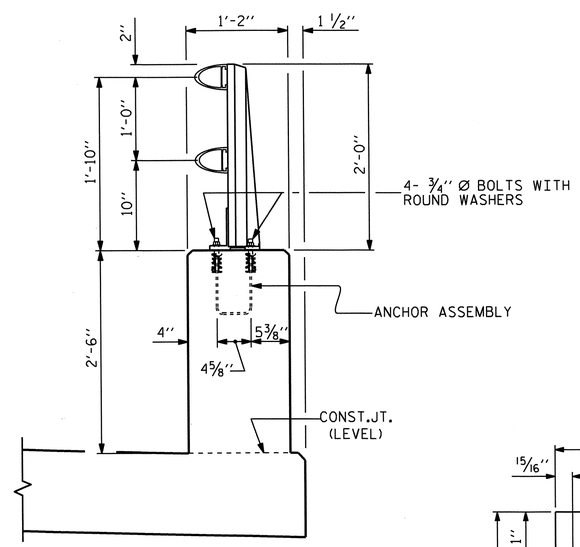


## SECTION THRU PARAPET AND RAIL

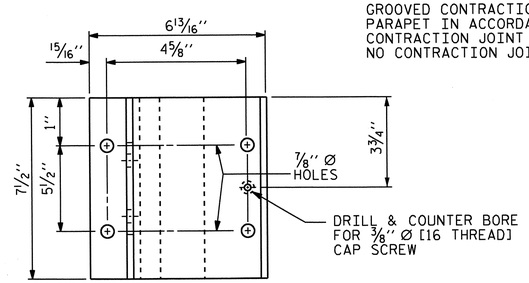


PLAN

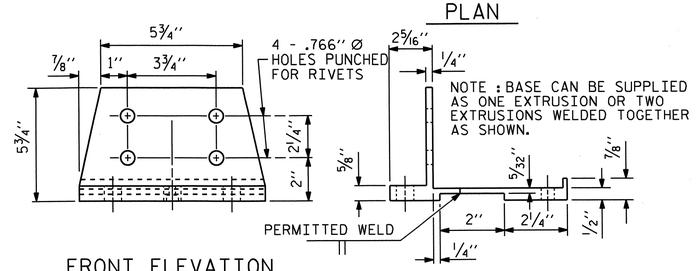


FRONT ELEVATION

SIDE ELEVATION

## POST BASE DETAILS

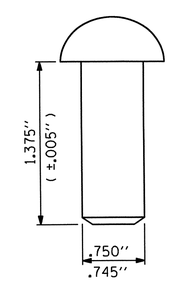


RIVET DETAIL

## NOTES

AT THE CONTRACTOR'S OPTION, METAL RAIL MAY BE EITHER ALUMINUM OR GALVANIZED STEEL IN ACCORDANCE WITH THE REQUIREMENTS OF THE GENERAL NOTES AND THE FOLLOWING SPECIFICATIONS FOR THE ALTERNATE MATERIALS; HOWEVER, THE CONTRACTOR WILL BE REQUIRED TO USE THE SAME RAIL MATERIAL ON ALL STRUCTURES ON THE PROJECT FOR WHICH METAL RAIL IS DESIGNATED.

### ALUMINUM RAILS

MATERIAL FOR POSTS, BASES AND RAILS, EXPANSION BARS AND CLAMP BARS SHALL BE ASTM B-221 ALLOY 6061-T6.

MATERIAL FOR RIVETS SHALL BE ASTM B316 ALLOY 6061-T6. RIVETS SHALL BE STANDARD BUTTON HEAD AND CONE POINT COLD DRIVEN AS PER DRAWING.

THE BASE OF RAIL POSTS, OR ANY OTHER ALUMINUM SURFACE IN CONTACT WITH CONCRETE SHALL BE THOROUGHLY COATED WITH AN ALUMINUM IMPREGNATED CAULKING COMPOUND OF APPROVED QUALITY.

MATERIAL FOR SHIMS TO BE ASTM B209 ALLOY 6061-T6.

### GALVANIZED STEEL RAILS

MATERIAL AND GALVANIZING ARE TO CONFORM TO THE FOLLOWING SPECIFICATIONS:

POST, POST BASES, RAILS, EXPANSION BARS AND CLAMP BARS: AASHTO M270 GRADE 36 STRUCTURAL STEEL - GALVANIZED TO AASHTO M111.

RIVETS: RIVETS SHALL MEET THE REQUIREMENTS OF ASTM A502 FOR GRADE 1 RIVETS.

THE CUT ENDS OF GALVANIZED STEEL RAILING, AFTER GRINDING SMOOTH SHALL BE GIVEN TWO COATS OF ZINC RICH PAINT MEETING THE REQUIREMENTS OF FEDERAL SPECIFICATION MIL-P-26915 USAF TYPE 1, OR OF FEDERAL SPECIFICATIONS TT-P-641.

SHIMS: SHIMS SHALL MEET THE REQUIREMENTS OF ASTM A570 FOR GRADE 33 OR A611 FOR GRADE C AND SHALL BE GALVANIZED IN ACCORDANCE WITH AASHTO M111.

RAIL CAPS: RAIL CAPS SHALL MEET THE REQUIREMENTS OF ASTM A570 FOR GRADE 33 OR A611 FOR GRADE C AND SHALL BE GALVANIZED IN ACCORDANCE WITH AASHTO M111.

### GENERAL NOTES

RAILING SHALL BE CONTINUOUS FROM END POST TO END POST OF BRIDGE. EACH JOINT IN RAIL LENGTH SHALL BE SPLICED AS DETAILED. PANEL LENGTHS OF RAIL SHALL BE ATTACHED TO A MINIMUM OF THREE POSTS.

FOR END OF RAIL TO CLEAR FACE OF CONCRETE END POST DIMENSION, SEE STANDARD NO. BMR2.

CAP SCREWS SHALL BE ASTM F593 ALLOY 305 STAINLESS STEEL. WASHERS SHALL MEET THE REQUIREMENTS OF ASTM F844 EXCEPT THEY SHALL BE MADE FROM ALLOY 304 STAINLESS STEEL.

CERTIFIED MILL REPORTS ARE REQUIRED FOR RAILS AND POSTS. SHOP INSPECTION IS NOT REQUIRED.

METAL RAIL POSTS SHALL BE SET NORMAL TO CURB GRADE.

METHOD OF MEASUREMENT FOR METAL RAILS: FOR LENGTH OF METAL RAILS TO BE PAID FOR, SEE THE STANDARD SPECIFICATIONS.

CURVED RAIL USAGE: WHERE RAILS ARE TO BE USED ON BRIDGES ON HORIZONTAL AND/OR VERTICAL CURVATURE THE CONTRACTOR MAY, AT HIS OPTION, HAVE THE REQUIRED CURVATURE IN THE RAIL FORMED IN THE SHOP OR IN THE FIELD. IN EITHER EVENT, THE RAIL SHALL CONFORM WITHOUT BUCKLING OR KINKING TO THE REQUIRED CURVATURE IN A UNIFORM MANNER ACCEPTABLE TO THE ENGINEER.

TO INSURE FUTURE IDENTIFICATION OF THE FABRICATOR, A PERMANENT IDENTIFYING MARK SHALL BE PLACED ON EACH POST. THE METHOD OF MARKING AND LOCATION SHALL BE SUCH THAT IT DOES NOT DETRACT FROM THE APPEARANCE OF THE POST, BUT REMAINS VISIBLE AFTER RAIL PLACEMENT.

SHIMS SHALL BE USED AS NECESSARY FOR POST ALIGNMENT.

ALLOY 6351-T5 MAY BE SUBSTITUTED FOR ALLOY 6061-T6 WHERE APPLICABLE.

MINOR VARIATIONS IN DETAILS OF METAL RAIL WILL BE CONSIDERED. DETAILS OF SUCH VARIATIONS, IF DESIRED, SHALL BE SUBMITTED FOR APPROVAL.

GROOVED CONTRACTION JOINTS, 1/2" IN DEPTH, SHALL BE TOOLED IN ALL EXPOSED FACES OF THE PARAPET IN ACCORDANCE WITH ARTICLE 825-10(B) OF THE STANDARD SPECIFICATIONS. THE CONTRACTION JOINT SHALL BE LOCATED AT A SPACING OF 8FT. TO 10FT. BETWEEN EXPANSION JOINTS. NO CONTRACTION JOINTS WILL BE REQUIRED FOR SEGMENTS LESS THAN 10 FEET IN LENGTH.

PAY LENGTH = 115.83 LIN. FT.

PROJECT NO. R-2309AB
GUILFORD COUNTY
STATION: 114+28.00 -L-

SHEET 2 OF 3

STATE OF NORTH CAROLINA
DEPARTMENT OF TRANSPORTATION
RALEIGH

STANDARD

2 BAR METAL RAIL

(RIGHT LANE)

NORTH CAROLINA PROFESSIONAL SEAL 14045 ENGINEER TIMOTHY G. COGGINS
Timothy G. Coggins 10/27/11

| ASSEMBLED BY : PEGGY PARISI | DATE : 12-10-10 | | |
|---|---|---|---|
| CHECKED BY : J.B. WILSON | DATE : 5-25-11 | | |
| DRAWN BY : EEM 6/94 | REV. 10/17/00 | LES/RDR | |
| CHECKED BY : RGW 6/94 | REV. 5/7/03R | RWW/JTE | |
| | REV. 5/1/06 | TLA/GM | |

| REVISIONS | | | | | | | SHEET NO. |
|---|---|---|---|---|---|---|---|
| NO. | BY: | DATE: | NO. | BY: | DATE: | | S-43 |
| 1 | | | 3 | | | | TOTAL SHEETS |
| 2 | | | 4 | | | | 136 |

STR. #2

STD. NO. BMR3

27-OCT-2011 09:27
R:\TIPProjects-R\R2309AB\Structures\R2309ab\FinalPlans\Bridges\Str#2\r2309ab_sd_mr_02.dgn
tcoggins

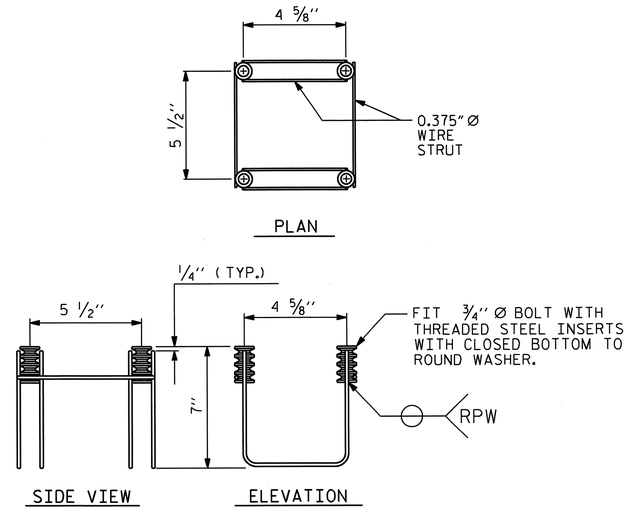


## 4-BOLT METAL RAIL ANCHOR ASSEMBLY

( 21 ASSEMBLIES REQUIRED )

## NOTES

STRUCTURAL CONCRETE ANCHOR ASSEMBLY

THE STRUCTURAL CONCRETE ANCHOR ASSEMBLY SHALL CONSIST OF THE FOLLOWING COMPONENTS :

A. FERRULES SHALL BE MADE FROM STEEL MEETING THE REQUIREMENTS OF AASHTO M169, GRADE 12L14 AND SHALL HAVE A MINIMUM LENGTH OF THREADS OF 2'' FOR 3/4'' FERRULES.

B. 4 - 3/4'' Ø X 2 1/2'' BOLTS WITH WASHERS. BOLTS SHALL CONFORM TO THE REQUIREMENTS OF ASTM A307. BOLTS AND WASHERS SHALL BE GALVANIZED. AT THE CONTRACTOR'S OPTION, STAINLESS STEEL BOLTS AND WASHERS MAY BE USED AS AN ALTERNATE FOR THE 3/4'' Ø X 2 1/2'' GALVANIZED BOLTS AND WASHERS. THEY SHALL CONFORM TO OR EXCEED THE MECHANICAL REQUIREMENTS OF ASTM A307. THE USE OF THIS ALTERNATE SHALL BE APPROVED BY THE ENGINEER.

C. WIRE STRUT SHOWN IN THE CONCRETE ANCHOR ASSEMBLY DETAIL IS THE MINIMUM ALLOWABLE SIZE AND SHALL HAVE A MINIMUM TENSILE STRENGTH OF 100,000 PSI. AS AN OPTION, A 7/16'' Ø WIRE STRUT WITH A MINIMUM TENSILE STRENGTH OF 90,000 PSI IS ACCEPTABLE.

D. THE METAL RAIL ANCHOR ASSEMBLIES TO BE HOT DIPPED GALVANIZED TO CONFORM TO REQUIREMENTS OF AASHTO M111.

E. THE COST OF THE METAL RAIL ANCHOR ASSEMBLY WITH BOLTS AND WASHERS COMPLETE IN PLACE SHALL BE INCLUDED IN THE PRICE BID FOR LINEAR FEET OF METAL RAIL.

F. BOLTS TO BE TIGHTENED ONE-HALF TURN WITH A WRENCH FROM A FINGER-TIGHT POSITION.

THE CONTRACTOR MAY USE ADHESIVELY ANCHORED ANCHOR BOLTS IN PLACE OF THE METAL RAIL ANCHOR ASSEMBLY. LEVEL ONE FIELD TESTING IS REQUIRED, AND THE YIELD LOAD OF THE 3/4''Ø BOLT IS 10 KIPS. FOR ADHESIVELY ANCHORED ANCHOR BOLTS OR DOWELS, SEE SPECIAL PROVISIONS.

WHEN ADHESIVELY ANCHORED ANCHOR BOLTS ARE USED, BOLTS SHALL MEET THE REQUIREMENTS OF ASTM F593 ALLOY 304 STAINLESS STEEL WITH MINIMUM 75,000 PSI ULTIMATE STRENGTH. NUTS SHALL MEET THE REQUIREMENTS OF ASTM F594 ALLOY 304 STAINLESS STEEL AND WASHERS SHALL MEET THE REQUIREMENTS OF ASTM F844 EXCEPT THEY SHALL BE MADE FROM ALLOY 304 STAINLESS STEEL.

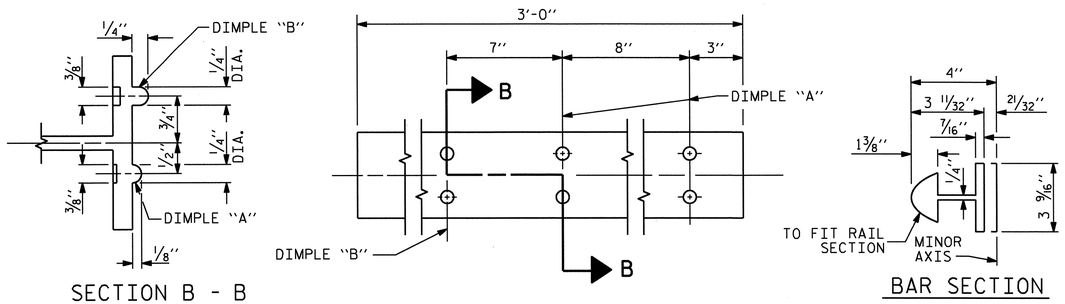


## EXPANSION BAR DETAILS

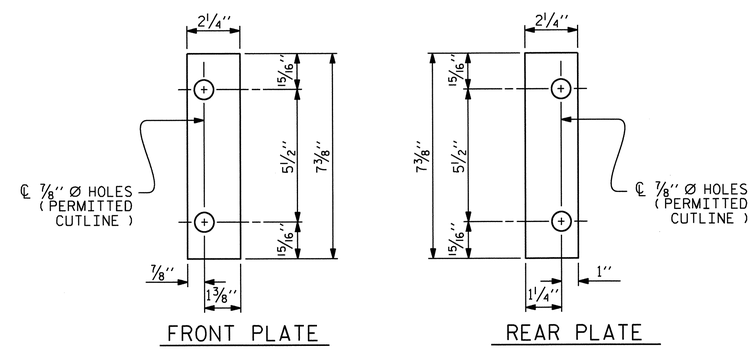


## SHIM DETAILS

NOTE :
SHIMS MAY BE CUT ALONG PERMITTED CUTLINE OR SLOTTED TO EDGE OF PLATE TO FACILITATE PLACEMENT.

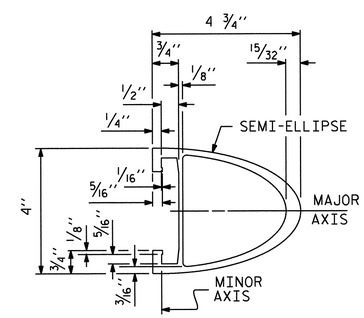


## RAIL SECTION

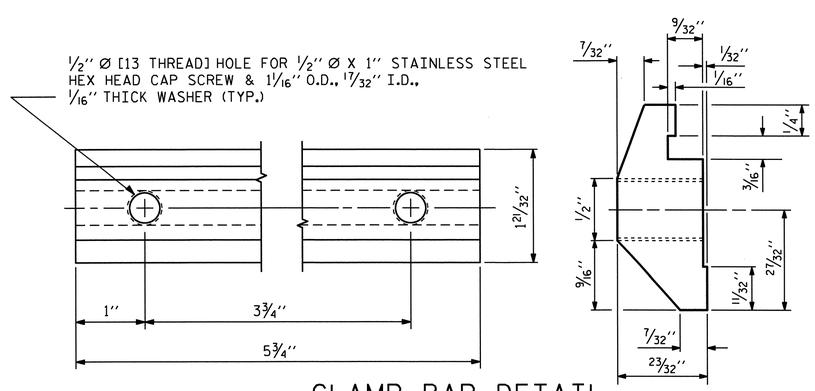


## CLAMP BAR DETAIL

( 4 REQUIRED PER POST )

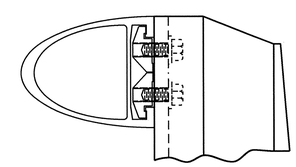

## CLAMP ASSEMBLY

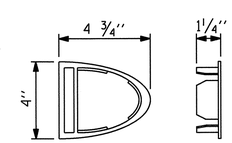


## RAIL CAP

PROJECT NO. R-2309AB
GUILFORD COUNTY
STATION: 114+28.00 -L-

SHEET 3 OF 3

STATE OF NORTH CAROLINA
DEPARTMENT OF TRANSPORTATION
RALEIGH

STANDARD

2 BAR METAL RAIL

(RIGHT LANE)

NORTH CAROLINA PROFESSIONAL SEAL 14045 ENGINEER TIMOTHY Le COGGINS
10/27/11

| | | | |
|---|---|---|---|
| ASSEMBLED BY : PEGGY PARISI | DATE : 12-10-10 | | |
| CHECKED BY : J.B. WILSON | DATE : 5-25-11 | | |
| DRAWN BY : EEM 6/94 | REV. 2/6/97 | EEM/RGW | |
| CHECKED BY : RGW 6/94 | REV. 8/16/99 | MAB/LES | |
| | REV. 5/1/06R | KMM/GM | |

| REVISIONS | | | | | | | | SHEET NO. |
|---|---|---|---|---|---|---|---|---|
| NO. | BY: | DATE: | NO. | BY: | DATE: | | | S-44 |
| 1 | | | 3 | | | | | TOTAL SHEETS |
| 2 | | | 4 | | | | | 136 |

STR. #2

STD. NO. BMR4

27-OCT-2011 09:27
R:\TIPProjects-R\R2309AB\Structures\R2309ab\Final Plans\Bridges\Str#2\r2309ab_sd_mr_02.dgn
tcoggins

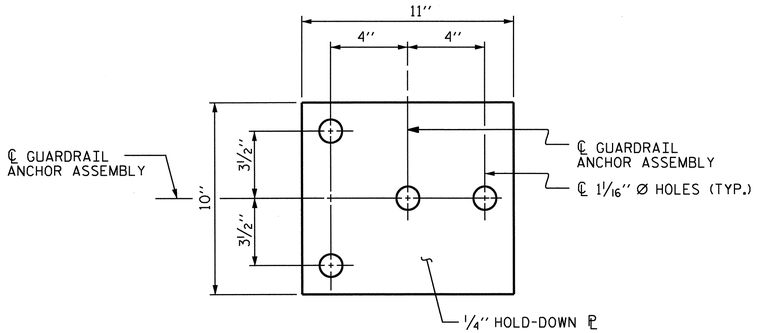


PLAN

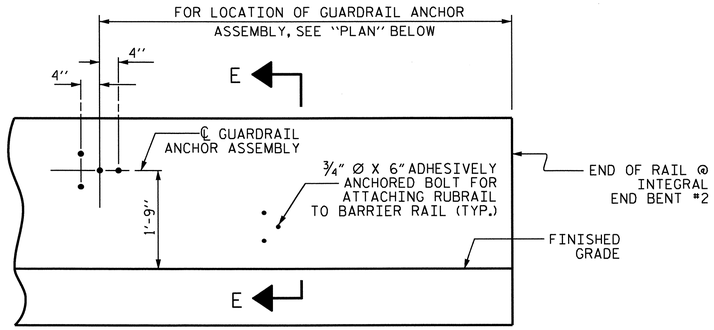


ELEVATION

FOR LOCATION OF RUBRAIL, SEE ROADWAY STD. 862.03

## NOTES

THE GUARDRAIL ANCHOR ASSEMBLY SHALL CONSIST OF A 1/4'' HOLD DOWN PLATE AND 4 - 7/8'' Ø BOLTS WITH NUTS AND WASHERS, RUBRAIL, AND ADHESIVELY ANCHORED BOLTS.

THE HOLD-DOWN PLATE SHALL CONFORM TO AASHTO M270 GRADE 36. AFTER FABRICATION, THE HOLD-DOWN PLATE SHALL BE HOT-DIP GALVANIZED IN ACCORDANCE WITH AASHTO M111.

BOLTS SHALL CONFORM TO THE REQUIREMENTS OF ASTM A307 AND NUTS SHALL CONFORM TO THE REQUIREMENTS OF AASHTO M291. BOLTS, NUTS AND WASHERS SHALL BE GALVANIZED. (AT THE CONTRACTOR'S OPTION, STAINLESS STEEL BOLTS, NUTS AND WASHERS MAY BE USED AS AN ALTERNATE FOR THE 7/8'' Ø GALVANIZED BOLTS, NUTS AND WASHERS. THEY SHALL CONFORM TO OR EXCEED THE MECHANICAL REQUIREMENTS OF ASTM A307. THE USE OF THIS ALTERNATE SHALL BE APPROVED BY THE ENGINEER.)

THE GUARDRAIL ANCHOR ASSEMBLY IS REQUIRED AT ALL POINTS WHERE APPROACH GUARDRAIL IS TO BE ATTACHED TO THE END OF BARRIER RAIL. FOR POINTS OF ATTACHMENT, SEE SKETCH.

AFTER INSTALLATION, THE EXPOSED THREAD OF THE BOLT SHALL BE BURRED WITH A SHARP POINTED TOOL.

THE COST OF THE GUARDRAIL ANCHOR ASSEMBLY SHALL BE INCLUDED IN THE UNIT CONTRACT PRICE BID FOR CONCRETE BARRIER RAIL.

THE 1 1/4'' Ø HOLES SHALL BE FORMED OR DRILLED WITH A CORE BIT. IMPACT TOOLS WILL NOT BE PERMITTED. ANY CONCRETE DAMAGED BY THIS WORK SHALL BE REPAIRED TO THE SATISFACTION OF THE ENGINEER.

THE C6 X 8.2 RUBRAIL IS TO BE ADHESIVELY ANCHORED TO THE RAIL USING THREE 3/4'' Ø X 6'' BOLTS WITH WASHERS. LEVEL ONE FIELD TESTING IS REQUIRED, AND THE YIELD LOAD OF THE 3/4'' Ø BOLT IS 12 KIPS. FOR ADHESIVELY ANCHORED ANCHOR BOLTS OR DOWELS, SEE SPECIAL PROVISIONS. SEE ROADWAY STANDARD 862.03 FOR DETAILS AND LOCATION OF THE RUBRAIL.

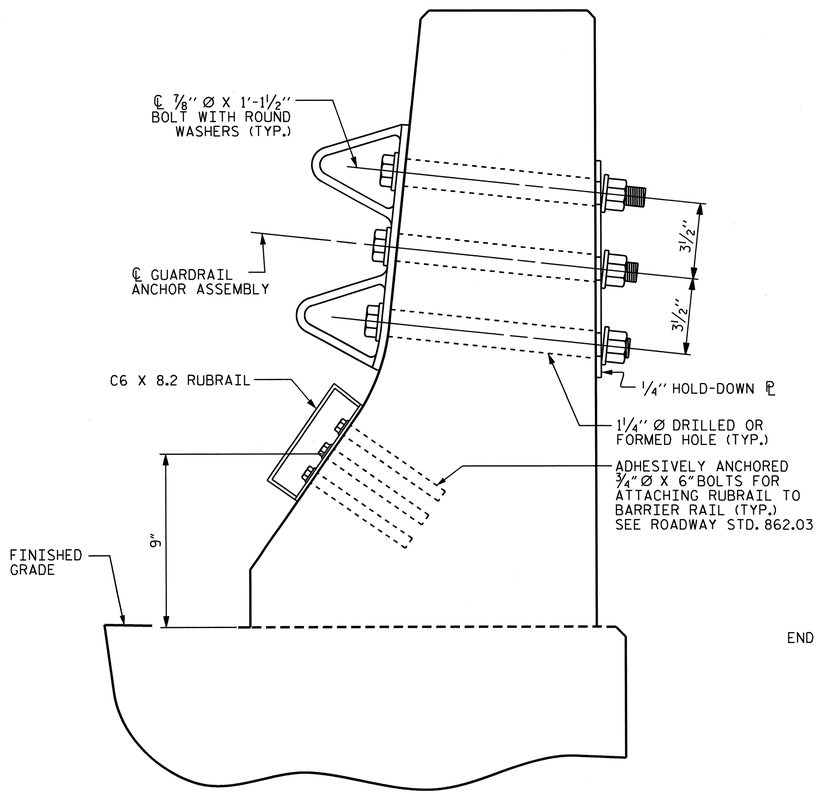


SECTION E-E

## GUARDRAIL ANCHOR ASSEMBLY DETAILS

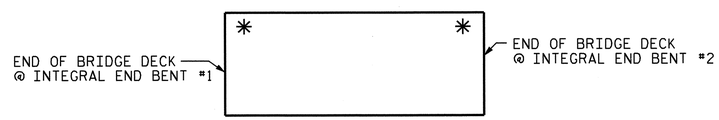


SKETCH SHOWING POINTS OF ATTACHMENTS

✳ DENOTES GUARDRAIL ANCHOR ASSEMBLY FOR BARRIER RAIL

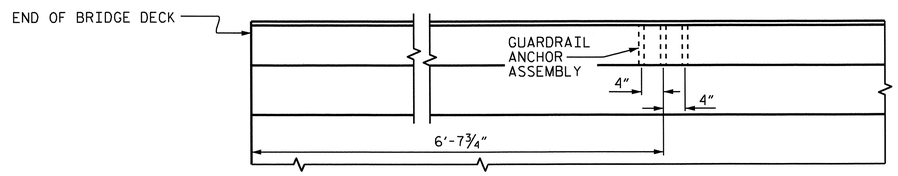


PLAN

## LOCATION OF ANCHORS FOR GUARDRAIL

INTEGRAL END BENT #1 SHOWN, INTEGRAL END BENT #2 SIMILAR.

PROJECT NO. R-2309AB
GUILFORD COUNTY
STATION: 114+28.00 -L-

STATE OF NORTH CAROLINA
DEPARTMENT OF TRANSPORTATION
RALEIGH

STANDARD

GUARDRAIL ANCHORAGE FOR BARRIER RAIL

(RIGHT LANE)

NORTH CAROLINA PROFESSIONAL SEAL 14045 ENGINEER TIMOTHY J. COGGINS
10/27/11

| REVISIONS | | | | | | SHEET NO. |
|---|---|---|---|---|---|---|
| NO. | BY: | DATE: | NO. | BY: | DATE: | S-45 |
| 1 | | | 3 | | | TOTAL SHEETS |
| 2 | | | 4 | | | 136 |

| | |
|---|---|
| ASSEMBLED BY : PEGGY PARISI DATE : 12-9-10 | |
| CHECKED BY : J.B. WILSON DATE : 5-25-11 | |
| DRAWN BY : TLA 5/06 | ADDED 5/1/06R KMM/GM |
| CHECKED BY : GM 5/06 | |

27-OCT-2011 09:25
R:\TIPProjects-R\R2309AB\Structures\R2309ab\FinalPlans\Bridges\Str#2\r2309ab_sd_br_02.dgn
tcoggins

STR. #2 (SHT 1) STD. NO. GRA2

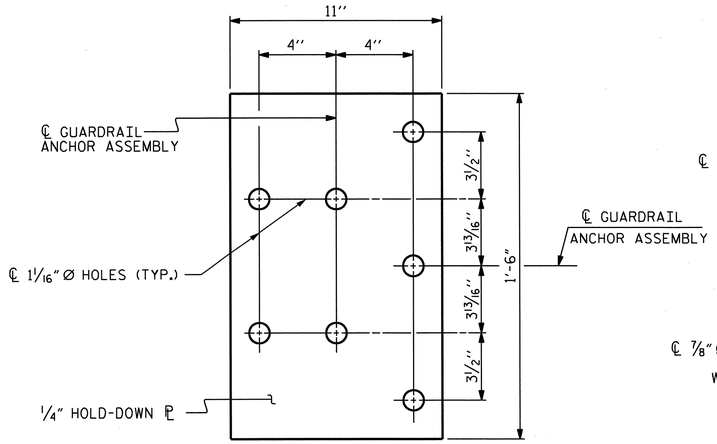


PLAN

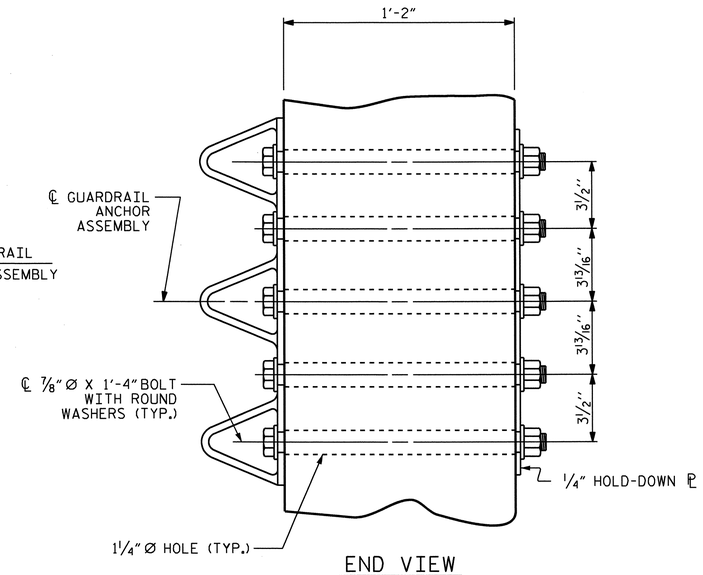


END VIEW

## GUARDRAIL ANCHOR ASSEMBLY DETAILS

## NOTES

THE GUARDRAIL ANCHOR ASSEMBLY SHALL CONSIST OF A 1/4'' HOLD DOWN PLATE AND 7 - 7/8'' Ø BOLTS WITH NUTS AND WASHERS.

THE HOLD-DOWN PLATE SHALL CONFORM TO AASHTO M270 GRADE 36. AFTER FABRICATION, THE HOLD-DOWN PLATE SHALL BE HOT-DIP GALVANIZED IN ACCORDANCE WITH AASHTO M111.

BOLTS SHALL CONFORM TO THE REQUIREMENTS OF ASTM A307 AND NUTS SHALL CONFORM TO THE REQUIREMENTS OF AASHTO M291. BOLTS, NUTS AND WASHERS SHALL BE GALVANIZED. AT THE CONTRACTOR'S OPTION, STAINLESS STEEL BOLTS, NUTS AND WASHERS MAY BE USED AS AN ALTERNATE FOR THE 7/8'' Ø GALVANIZED BOLTS, NUTS AND WASHERS. THEY SHALL CONFORM TO OR EXCEED THE MECHANICAL REQUIREMENTS OF ASTM A307. THE USE OF THIS ALTERNATE SHALL BE APPROVED BY THE ENGINEER.

THE GUARDRAIL ANCHOR ASSEMBLY IS REQUIRED AT ALL POINTS WHERE APPROACH GUARDRAIL IS TO BE ATTACHED TO THE END OF THE PARAPET. FOR POINTS OF ATTACHMENT, SEE SKETCH.

AFTER INSTALLATION, THE EXPOSED THREAD OF THE BOLT SHALL BE BURRED WITH A SHARP POINTED TOOL.

THE COST OF THE GUARDRAIL ANCHOR ASSEMBLIES WITH BOLTS, NUTS AND WASHERS COMPLETE IN PLACE, SHALL BE INCLUDED IN THE VARIOUS PAY ITEMS.

THE VERTICAL REINFORCING BARS MAY BE SHIFTED SLIGHTLY IN THE END POST TO CLEAR ASSEMBLY BOLTS.

THE 1 1/4'' Ø HOLES SHALL BE FORMED OR DRILLED WITH A CORE BIT. IMPACT TOOLS WILL NOT BE PERMITTED. ANY CONCRETE DAMAGED BY THIS WORK SHALL BE REPAIRED TO THE SATISFACTION OF THE ENGINEER.

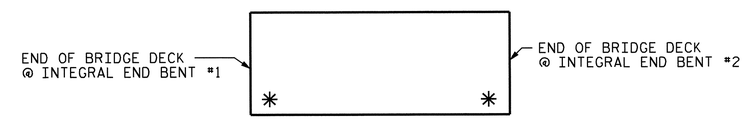


## SKETCH SHOWING POINTS OF ATTACHMENT

* LOCATION OF GUARDRAIL ATTACHMENT FOR METAL RAIL

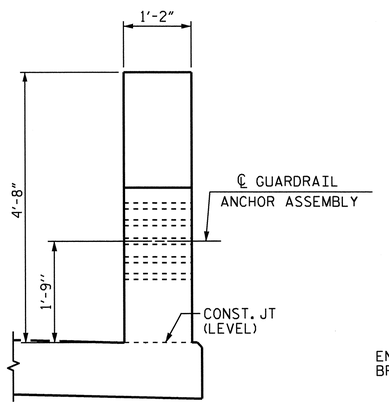


END VIEW

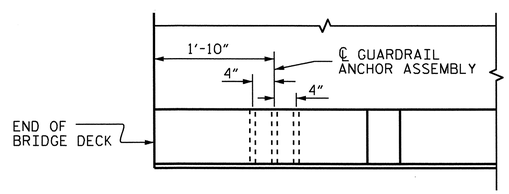


PLAN

INTEGRAL END BENT #1 SHOWN, INTEGRAL END BENT #2 SIMILAR.

## LOCATION OF GUARDRAIL ANCHOR AT END POST

PROJECT NO. R-2309AB
GUILFORD COUNTY
STATION: 114+28.00 -L-

STATE OF NORTH CAROLINA
DEPARTMENT OF TRANSPORTATION
RALEIGH

STANDARD
GUARDRAIL ANCHORAGE DETAILS FOR METAL RAILS
(RIGHT LANE)

NORTH CAROLINA PROFESSIONAL SEAL 14045 ENGINEER TIMOTHY W. COGGINS
10/27/11

| REVISIONS | | | | | | SHEET NO. |
|---|---|---|---|---|---|---|
| NO. | BY: | DATE: | NO. | BY: | DATE: | S-46 |
| 1 | | | 3 | | | TOTAL SHEETS |
| 2 | | | 4 | | | 136 |

ASSEMBLED BY : PEGGY PARISI DATE : 12-10-10
CHECKED BY : J.B. WILSON DATE : 5-25-11

DRAWN BY : MAA 5/10
CHECKED BY : GM 5/10
ADDED 5/6/10

27-OCT-2011 09:27
R:\TIPProjects-R\R2309AB\Structures\R2309ab\FinalPlans\Bridges\Str#2\r2309ab_sd_mr_02.dgn
tcoggins

STR. #2 (SHT 4) STD. NO. GRA3

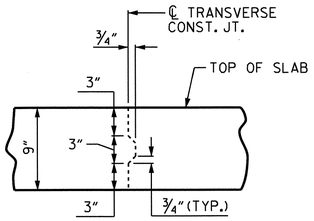


## TRANSVERSE CONSTRUCTION JOINT DETAIL

NOTE:
REINFORCING STEEL IN SLAB NOT SHOWN.
LONGITUDINAL REINFORCING STEEL SHALL BE CONTINUOUS THRU JOINT

### SUPERSTRUCTURE REINFORCING STEEL LENGTHS ARE BASED ON THE FOLLOWING MINIMUM SPLICE LENGTHS

| BAR SIZE | SUPERSTRUCTURE EXCEPT APPROACH SLABS, PARAPET, AND BARRIER RAIL | | APPROACH SLABS | | PARAPET AND BARRIER RAIL |
|---|---|---|---|---|---|
| | EPOXY COATED | UNCOATED | EPOXY COATED | UNCOATED | |
| #4 | 2'-0" | 1'-9" | 2'-0" | 1'-9" | 2'-9" |
| #5 | 2'-6" | 2'-2" | 2'-6" | 2'-2" | 3'-5" |
| #6 | 3'-0" | 2'-7" | 3'-10" | 2'-7" | 4'-4" |
| #7 | 5'-3" | 3'-6" | | | |
| #8 | 6'-10" | 4'-7" | | | |

### BILL OF MATERIAL

| BAR | NO. | SIZE | TYPE | LENGTH | WEIGHT |
|---|---|---|---|---|---|
| * A1 | 247 | #5 | STR | 36'-4" | 9360 |
| A2 | 247 | #5 | STR | 36'-4" | 9360 |
| | | | | | |
| * B1 | 125 | #4 | STR | 26'-3" | 2192 |
| * B2 | 96 | #6 | STR | 24'-6" | 3533 |
| B3 | 132 | #5 | STR | 42'-6" | 5851 |
| | | | | | |
| K1 | 40 | #4 | STR | 22'-1" | 590 |
| K2 | 8 | #4 | STR | 2'-8" | 14 |
| | | | | | |
| * S1 | 62 | #4 | 1 | 11'-8" | 483 |
| * S2 | 62 | #4 | 1 | 9'-7" | 397 |
| | | | | | |
| U1 | 66 | #4 | 2 | 10'-4" | 456 |
| U2 | 12 | #4 | 2 | 12'-2" | 98 |
| | | | | | |
| V1 | 8 | #4 | STR | 3'-10" | 20 |

REINFORCING STEEL 16389 LBS.

* EPOXY COATED REINFORCING STEEL 15965 LBS.

### BAR TYPES

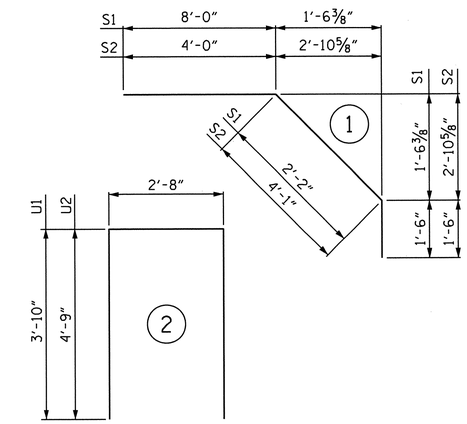


ALL BAR DIMENSIONS ARE OUT TO OUT

### SUPERSTRUCTURE BILL OF MATERIAL

| | CLASS AA CONCRETE | REINFORCING STEEL | EPOXY COATED REINFORCING STEEL |
|---|---|---|---|
| | (CU.YDS.) | (LBS.) | (LBS.) |
| POUR #1 | 131.4 | 16389 | 15965 |
| ◆ POUR #2 | 65.3 | | |
| | | | |
| TOTALS ** | 196.7 | 16389 | 15965 |

** QUANTITIES FOR BARRIER RAIL AND PARAPET ARE NOT INCLUDED.

◆ POUR #2 QUANTITY INCLUDES UPPER POUR OF WINGS AND INTEGRAL END BENT.

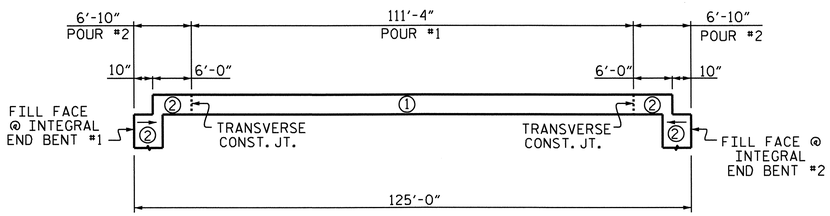


## POURING SEQUENCE

### GROOVING BRIDGE FLOORS

| | | |
|---|---|---|
| APPROACH SLABS | 1417 | SQ.FT. |
| BRIDGE DECK | 3793 | SQ.FT. |
| TOTAL | 5210 | SQ.FT. |

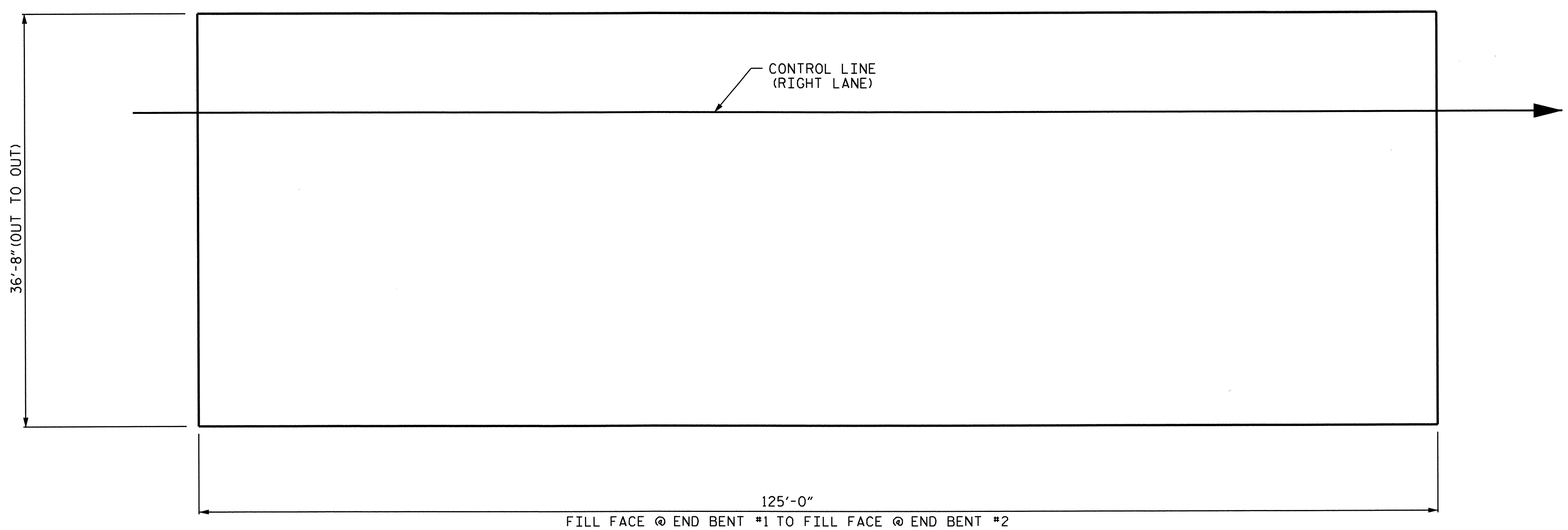


## LAYOUT FOR COMPUTING AREA OF REINFORCED CONCRETE DECK SLAB ( SQ. FT. = 4583 )

PROJECT NO. R-2309AB
GUILFORD COUNTY
STATION: 114+28.00 -L-

STATE OF NORTH CAROLINA
DEPARTMENT OF TRANSPORTATION
RALEIGH

STANDARD
SUPERSTRUCTURE BILL OF MATERIAL
(RIGHT LANE)

NORTH CAROLINA PROFESSIONAL SEAL 14045 ENGINEER TIMOTHY L. COGGINS
10/27/11

| REVISIONS | | | | | | SHEET NO. |
|---|---|---|---|---|---|---|
| NO. | BY: | DATE: | NO. | BY: | DATE: | S-47 |
| 1 | | | 3 | | | TOTAL SHEETS |
| 2 | | | 4 | | | 136 |

STR. #2 STD. NO. BOM1

ASSEMBLED BY : PEGGY PARISI DATE : 12-13-10
CHECKED BY : J.B. WILSON DATE : 5-25-11

DRAWN BY : JMB 5/87
CHECKED BY : SJD 9/87

REV. 6/1/94 EEM/GRP
REV. 8/16/99 RWW/LES
REV. 5/1/06 TLA/GM

27-OCT-2011 09:24
R:\TIPProjects-R\R2309AB\Structures\R2309ab\FinalPlans\Bridges\Str#2\r2309ab_sd_bm_02.dgn
tcoggins

## NOTES

STIRRUPS IN CAP MAY BE SHIFTED AS NECESSARY TO CLEAR #4 V1 BARS.

SEE SUPERSTRUCTURE SHEETS FOR UPPER PART OF INTEGRAL END BENT DETAIL.

THE CONTRACTOR'S ATTENTION IS CALLED TO THE FACT THAT UPPER PART OF WINGS ARE TO BE POURED WITH THE SUPERSTRUCTURE.

THE TOP SURFACE OF POUR #1 OF THE END BENT CAP AND WINGS, EXCLUDING THE BEARING AREA, SHALL BE RAKED TO A DEPTH OF 1/4".

GALVANIZE THE FULL LENGTH OF EACH END BENT PILE IN ACCORDANCE WITH SECTION 1076 OF THE STANDARD SPECIFICATIONS.

FOR MSE WALL UNDER THE END BENT CAP, SEE MSE WALL PLANS.

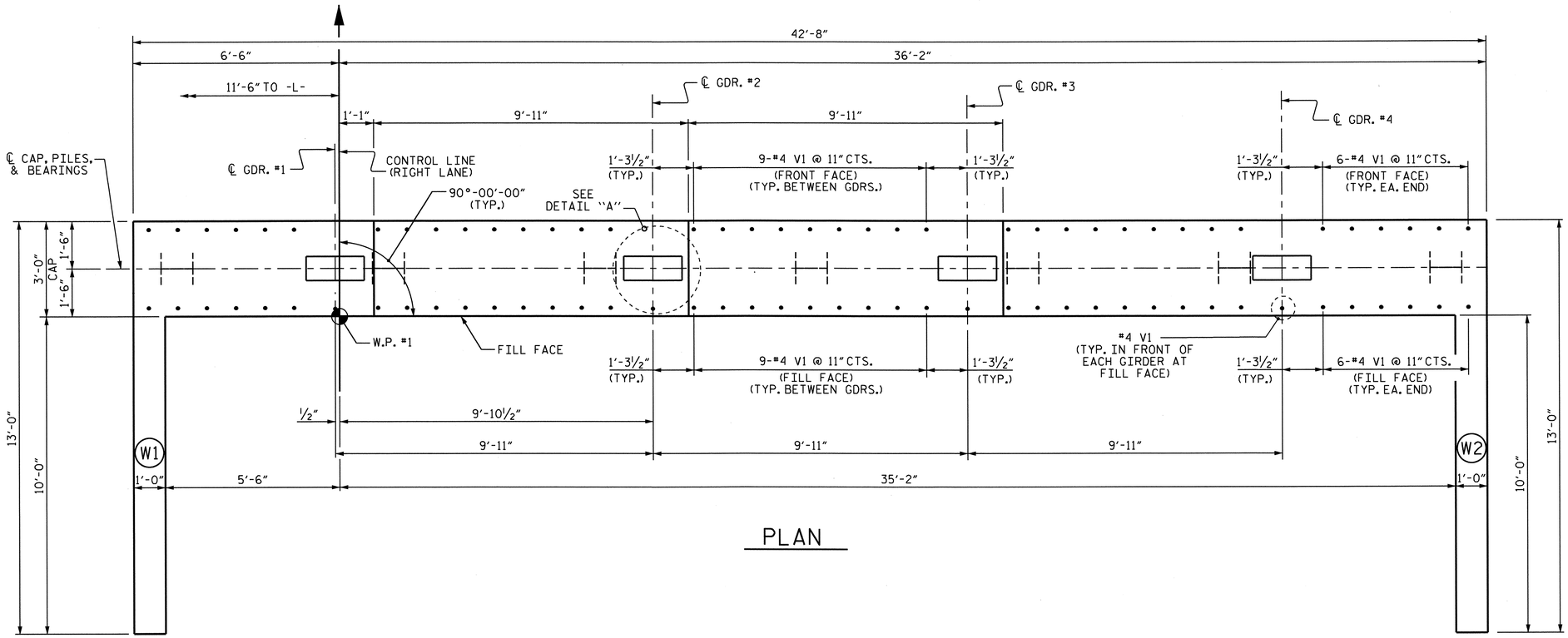


PLAN

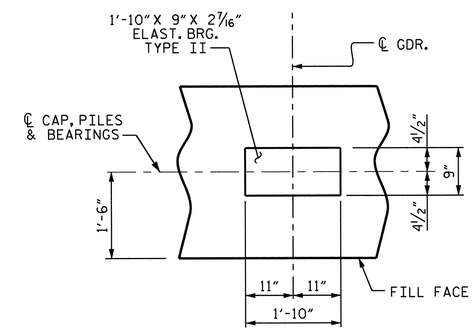


DETAIL A

(TYP. EA. GDR.)

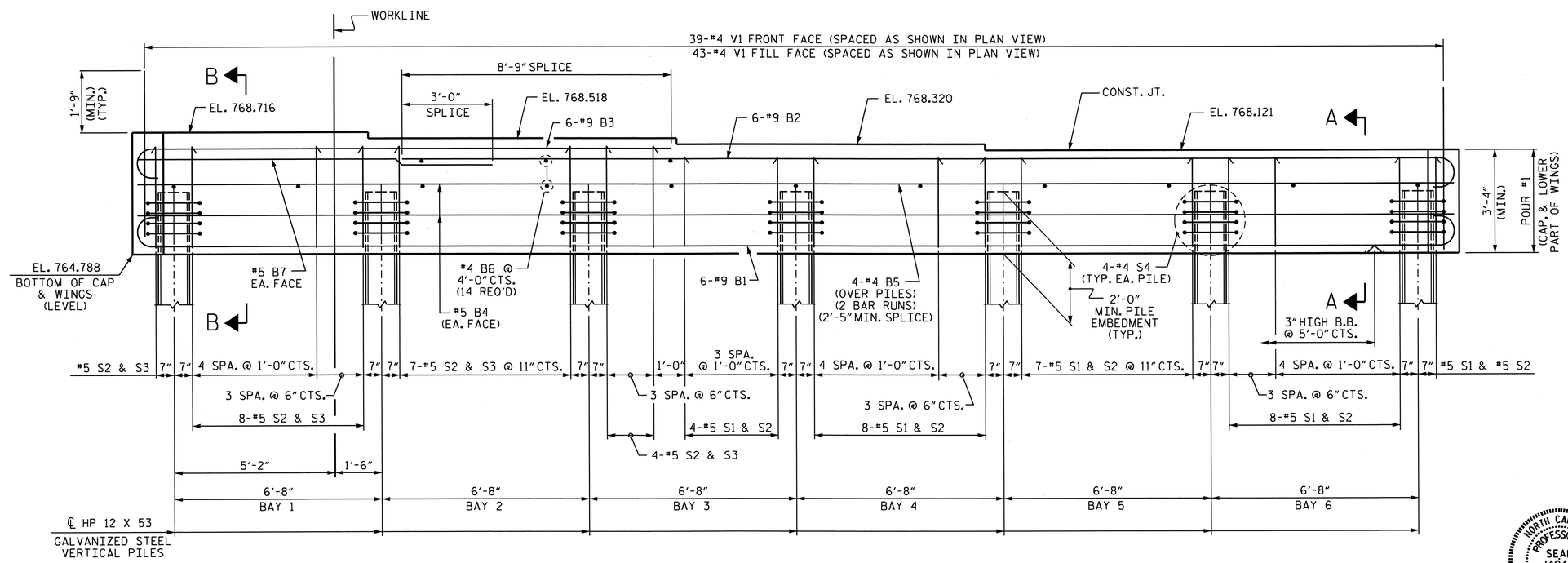


ELEVATION

PROJECT NO. R-2309AB

GUILFORD COUNTY

STATION: 114+28.00 -L-

SHEET 1 OF 3

STATE OF NORTH CAROLINA
DEPARTMENT OF TRANSPORTATION
RALEIGH

SUBSTRUCTURE

INTEGRAL END BENT #1

(RIGHT LANE)

NORTH CAROLINA PROFESSIONAL SEAL 14045 ENGINEER TIMOTHY R. COGGINS

10/27/11

| REVISIONS | | | | | | SHEET NO. |
|---|---|---|---|---|---|---|
| NO. | BY: | DATE: | NO. | BY: | DATE: | S-48 |
| 1 | | | 3 | | | TOTAL SHEETS |
| 2 | | | 4 | | | 136 |

STR. #2

DRAWN BY : B.N.BARODAWALA DATE : 6-23-11
CHECKED BY : PEGGY PARISI DATE : 7-7-11

27-OCT-2011 09:24
R:\TIPProjects-R\R2309AB\Structures\R2309ab\FinalPlans\Bridges\Str#2\r2309ab_sd_eb_02.dgn
tcoggins

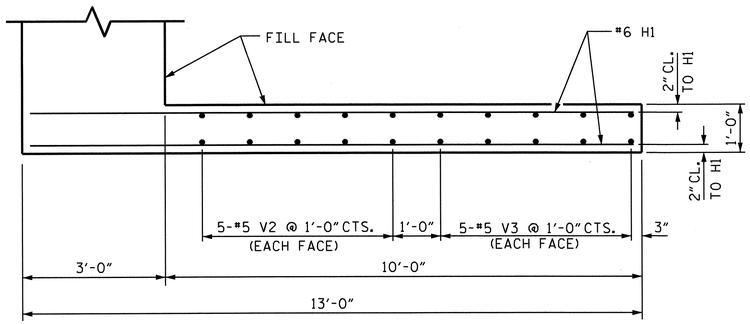


## PLAN OF WING W1

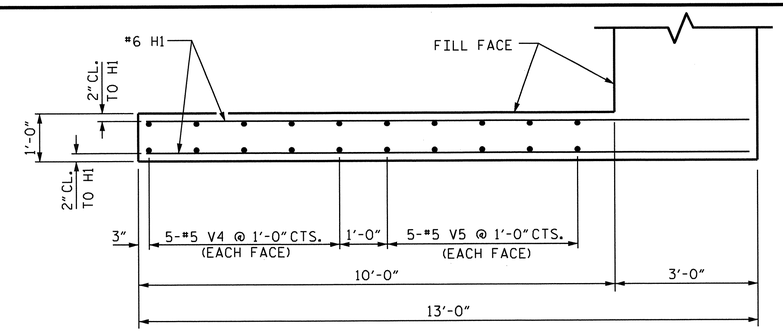


## PLAN OF WING W2

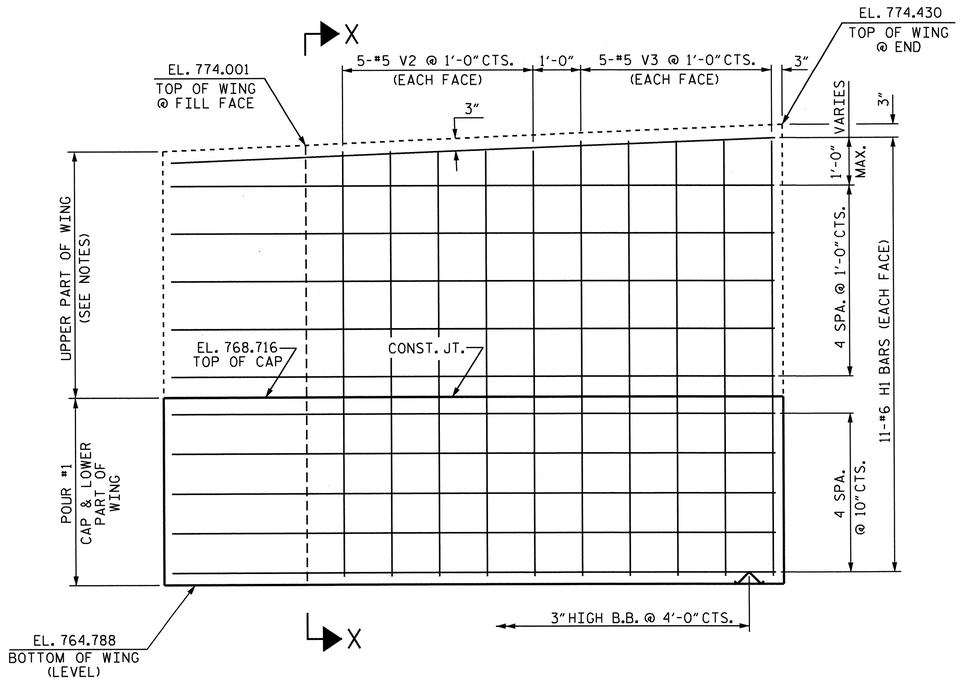


## ELEVATION OF WING W1

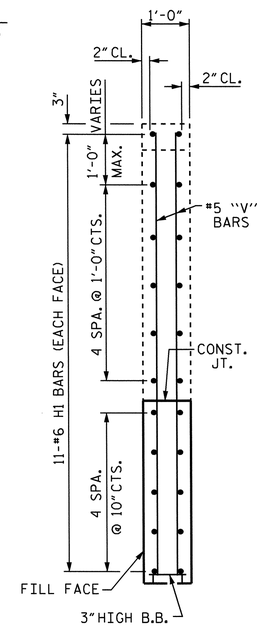


## SECTION X-X

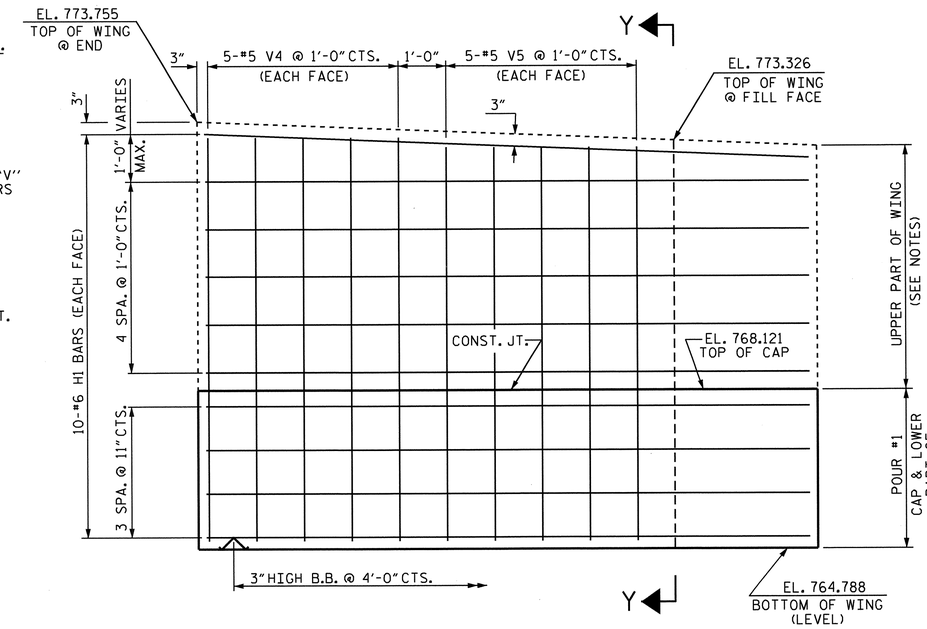


## ELEVATION OF WING W2

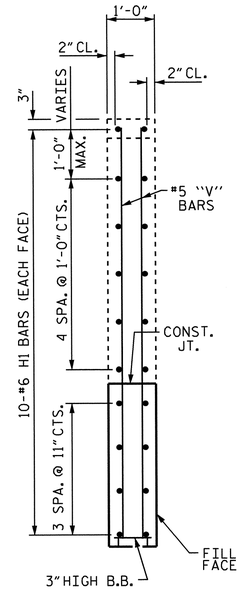


## SECTION Y-Y

PROJECT NO. R-2309AB

GUILFORD COUNTY

STATION: 114+28.00 -L-

SHEET 2 OF 3

STATE OF NORTH CAROLINA
DEPARTMENT OF TRANSPORTATION
RALEIGH

SUBSTRUCTURE

INTEGRAL END BENT #1

(RIGHT LANE)

NORTH CAROLINA PROFESSIONAL SEAL 14045 ENGINEER TIMOTHY W. COGGINS
10/27/11

| REVISIONS | | | | | | SHEET NO. |
|---|---|---|---|---|---|---|
| NO. | BY: | DATE: | NO. | BY: | DATE: | S-49 |
| 1 | | | 3 | | | TOTAL SHEETS |
| 2 | | | 4 | | | 136 |

STR. #2

DRAWN BY : B.N.BARODAWALA DATE : 6-23-11
CHECKED BY : PEGGY PARISI DATE : 7-7-11

27-OCT-2011 09:23
R:\TIPProjects-R\R2309AB\Structures\R2309ab\FinalPlans\Bridges\Str#2\r2309ab_sd_eb_02.dgn
tcoggins

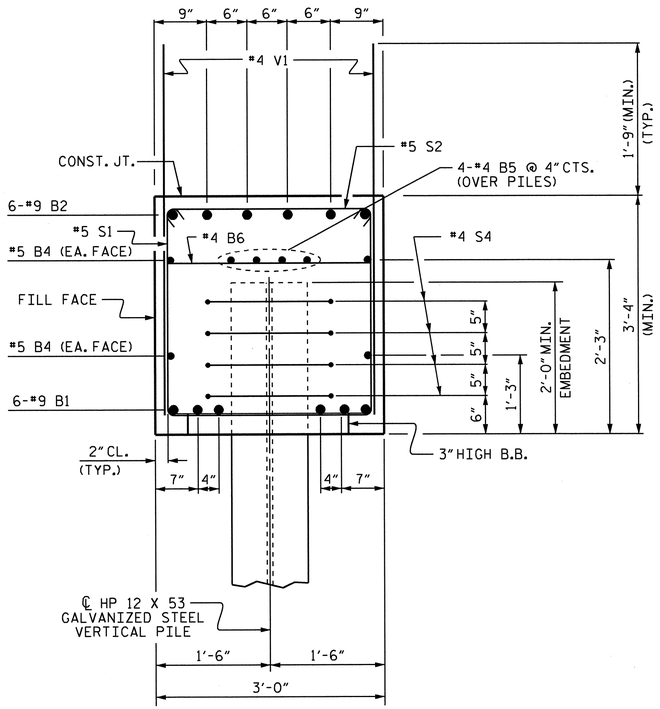


SECTION A-A

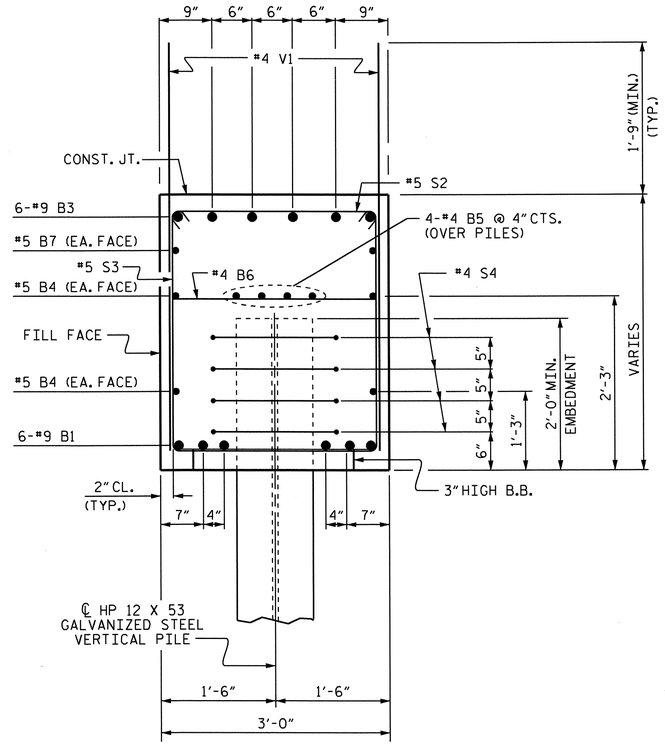


SECTION B-B

## BAR TYPES

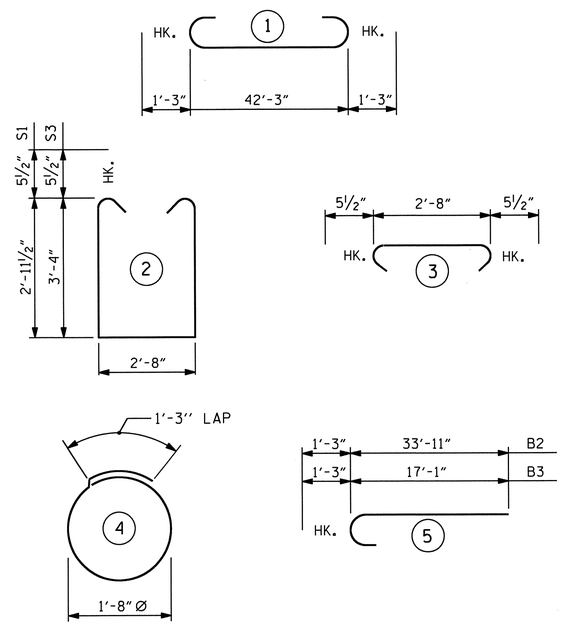


ALL BAR DIMENSIONS ARE OUT TO OUT.

## BILL OF MATERIAL

### INTEGRAL END BENT #1

| BAR | NO. | SIZE | TYPE | LENGTH | WEIGHT |
|---|---|---|---|---|---|
| B1 | 6 | #9 | 1 | 44'-9" | 913 |
| B2 | 6 | #9 | 5 | 35'-2" | 717 |
| B3 | 6 | #9 | 5 | 18'-4" | 374 |
| B4 | 4 | #5 | STR | 42'-4" | 177 |
| B5 | 8 | #4 | STR | 22'-5" | 120 |
| B6 | 14 | #4 | STR | 2'-8" | 25 |
| B7 | 2 | #5 | STR | 11'-5" | 24 |
| | | | | | |
| H1 | 42 | #6 | STR | 12'-8" | 799 |
| | | | | | |
| S1 | 28 | #5 | 2 | 9'-6" | 277 |
| S2 | 48 | #5 | 3 | 3'-7" | 179 |
| S3 | 20 | #5 | 2 | 10'-3" | 214 |
| S4 | 28 | #4 | 4 | 6'-6" | 122 |
| | | | | | |
| V1 | 82 | #4 | STR | 4'-11" | 269 |
| V2 | 10 | #5 | STR | 8'-11" | 93 |
| V3 | 10 | #5 | STR | 9'-1" | 95 |
| V4 | 10 | #5 | STR | 8'-5" | 88 |
| V5 | 10 | #5 | STR | 8'-3" | 86 |

REINFORCING STEEL = 4572 LBS

CLASS A CONCRETE

POUR #1: (CAP & LOWER PART OF WINGS) 19.6 C.Y.

TOTAL CONCRETE 19.6 C.Y.

HP 12 x 53 GALVANIZED STEEL PILES No. 7 280 LIN FT.

PILE EXCAVATION (IN SOIL) 175 LIN. FT.

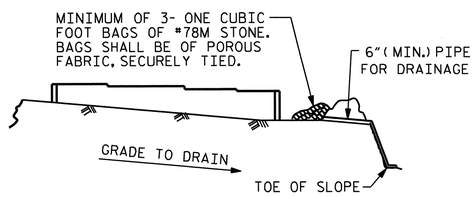


BAGGED STONE AND PIPE SHALL BE PLACED IMMEDIATELY AFTER COMPLETION OF END BENT EXCAVATION. PIPE MAY BE EITHER CONCRETE, CORRUGATED STEEL, CORRUGATED ALUMINUM ALLOY, OR CORRUGATED PLASTIC. PERFORATED PIPE WILL NOT BE ALLOWED.

BAGGED STONE SHALL REMAIN IN PLACE UNTIL THE ENGINEER DIRECTS THAT IT BE REMOVED. THE CONTRACTOR SHALL REMOVE AND DISPOSE OF SILT ACCUMULATIONS AT BAGGED STONE WHEN SO DIRECTED BY THE ENGINEER. BAGS SHALL BE REMOVED AND REPLACED WHENEVER THE ENGINEER DETERMINES THAT THEY HAVE DETERIORATED AND LOST THEIR EFFECTIVENESS.

NO SEPARATE PAYMENT WILL BE MADE FOR THIS WORK AND THE ENTIRE COST OF THIS WORK SHALL BE INCLUDED IN THE UNIT CONTRACT PRICE BID FOR THE SEVERAL PAY ITEMS.

## TEMPORARY DRAINAGE AT END BENT

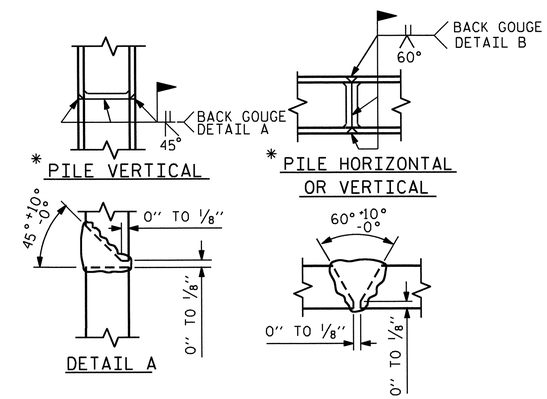


* POSITION OF PILE DURING WELDING.

## PILE SPLICE DETAILS

PROJECT NO. R-2309AB

GUILFORD COUNTY

STATION: 114+28.00 -L-

SHEET 3 OF 3

STATE OF NORTH CAROLINA
DEPARTMENT OF TRANSPORTATION
RALEIGH

SUBSTRUCTURE

INTEGRAL END BENT #1

(RIGHT LANE)

NORTH CAROLINA PROFESSIONAL SEAL 14045 ENGINEER TIMOTHY L. COGGINS
10/27/11

| REVISIONS | | | | | | SHEET NO. |
|---|---|---|---|---|---|---|
| NO. | BY: | DATE: | NO. | BY: | DATE: | S-50 |
| 1 | | | 3 | | | TOTAL SHEETS |
| 2 | | | 4 | | | 136 |

STR. #2

DRAWN BY : B.N.BARODAWALA DATE : 6-23-11
CHECKED BY : PEGGY PARISI DATE : 7-7-11

27-OCT-2011 09:23
R:\TIPProjects-R\R2309AB\Structures\R2309ab\FinalPlans\Bridges\Str#2\r2309ab_sd_eb_02.dgn
tcoggins

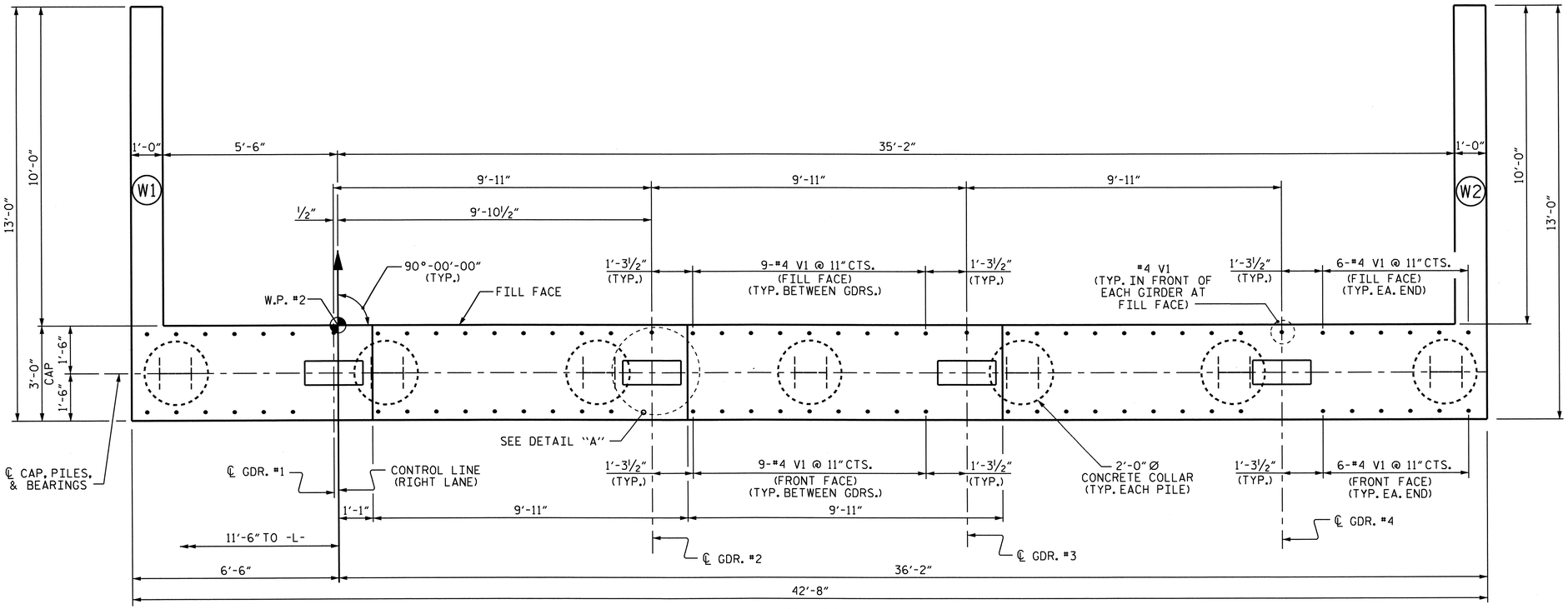


## PLAN

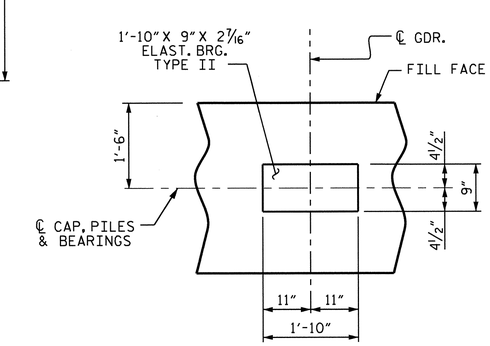


## DETAIL A

(TYP. EA. GDR.)

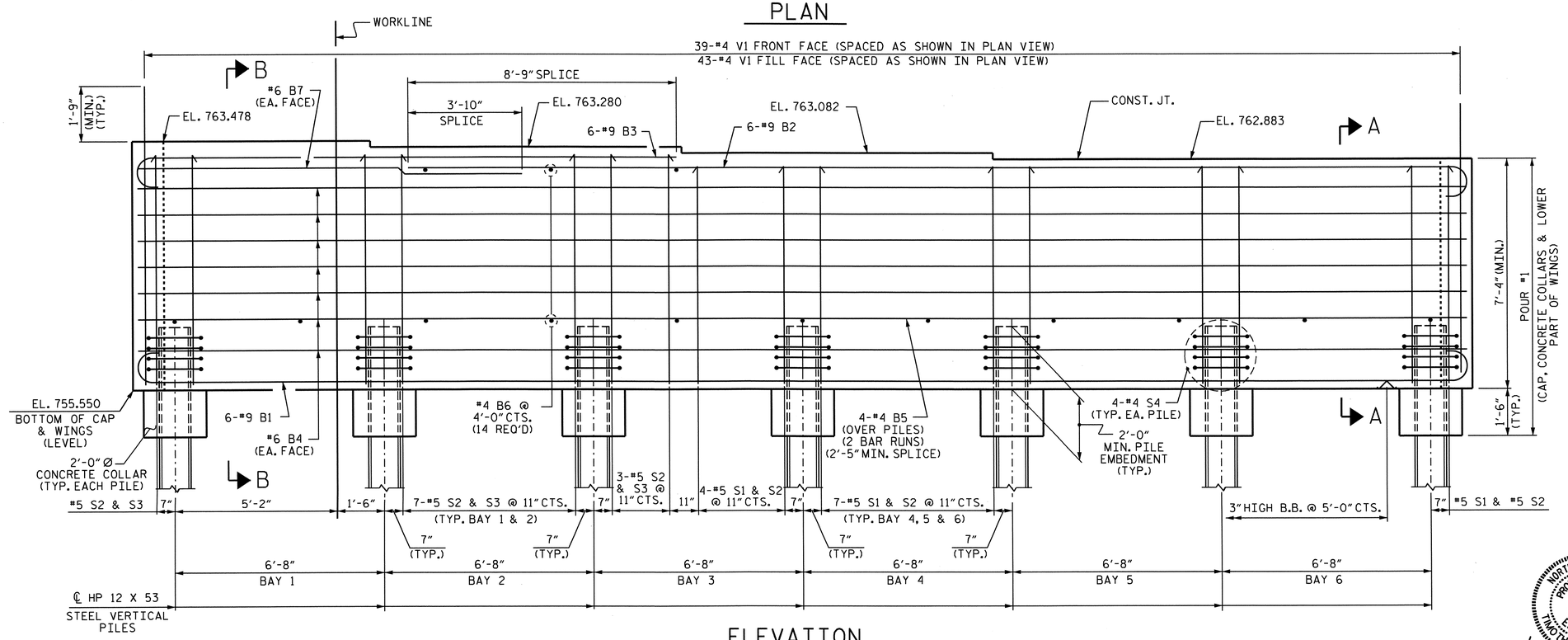


## ELEVATION

## NOTES

STIRRUPS IN CAP MAY BE SHIFTED AS NECESSARY TO CLEAR #4 V1 BARS.

THE CONTRACTOR SHALL PROVIDE FOR INSTALLATION OF THE 4" DIAMETER DRAIN PIPE THROUGH THE WING WALL AS REQUIRED FOR REINFORCED BRIDGE APPROACH FILLS. SEE THE ROADWAY PLANS. REINFORCING STEEL IN THE WING WALL MAY BE SHIFTED AS NECESSARY TO CLEAR THE DRAIN PIPE.

SEE SUPERSTRUCTURE SHEETS FOR UPPER PART OF INTEGRAL END BENT DETAIL.

THE CONTRACTOR'S ATTENTION IS CALLED TO THE FACT THAT UPPER PART OF WINGS ARE TO BE POURED WITH THE SUPERSTRUCTURE.

THE TOP SURFACE OF POUR #1 OF THE END BENT CAP AND WINGS, EXCLUDING THE BEARING AREA, SHALL BE RAKED TO A DEPTH OF 1/4".

FOR MASS CONCRETE, SEE SPECIAL PROVISIONS.

PROJECT NO. R-2309AB
GUILFORD COUNTY
STATION: 114+28.00 -L-

SHEET 1 OF 3

STATE OF NORTH CAROLINA
DEPARTMENT OF TRANSPORTATION
RALEIGH

SUBSTRUCTURE

# INTEGRAL END BENT #2

(RIGHT LANE)

NORTH CAROLINA PROFESSIONAL SEAL 14045 ENGINEER TIMOTHY W. COGGINS
10/27/11

| REVISIONS | | | | | | | | SHEET NO. |
|---|---|---|---|---|---|---|---|---|
| NO. | BY: | DATE: | NO. | BY: | DATE: | | | S-51 |
| 1 | | | 3 | | | | | TOTAL SHEETS |
| 2 | | | 4 | | | | | 136 |

STR. #2

DRAWN BY : B.N.BARODAWALA DATE : 6-23-11
CHECKED BY : PEGGY PARISI DATE : 7-7-11

27-OCT-2011 09:23
R:\TIPProjects-R\R2309AB\Structures\R2309ab\FinalPlans\Bridges\Str#2\r2309ab_sd_eb_02.dgn
tcoggins

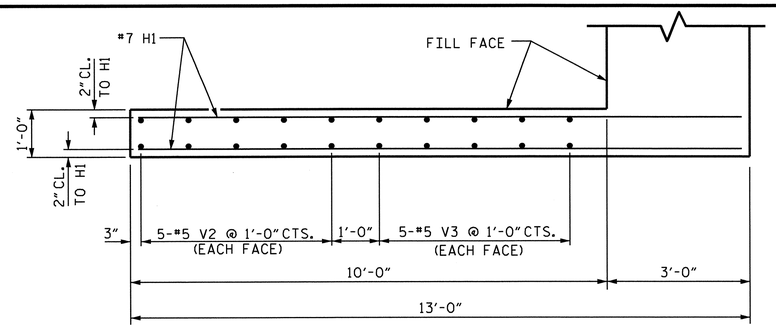


PLAN OF WING W1

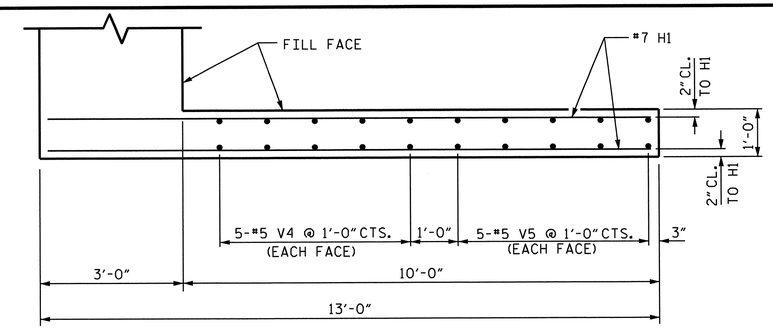


PLAN OF WING W2

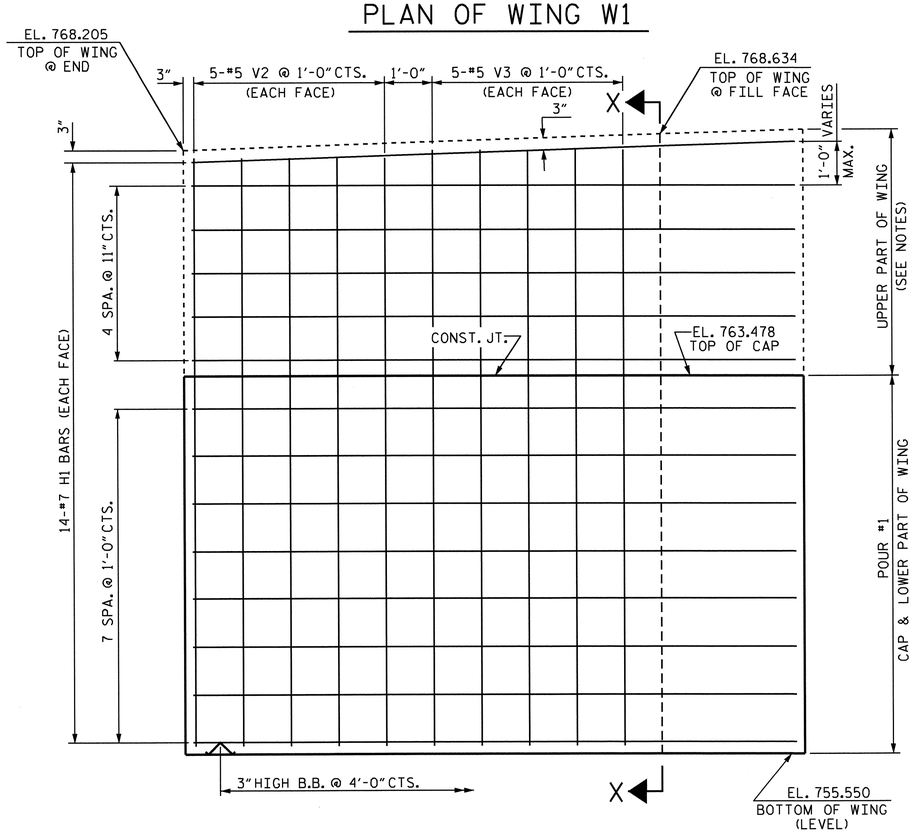


ELEVATION OF WING W1

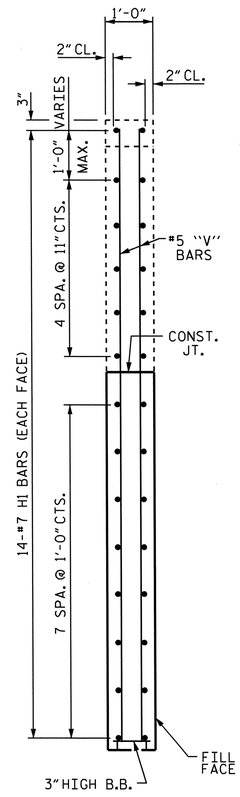


SECTION X-X

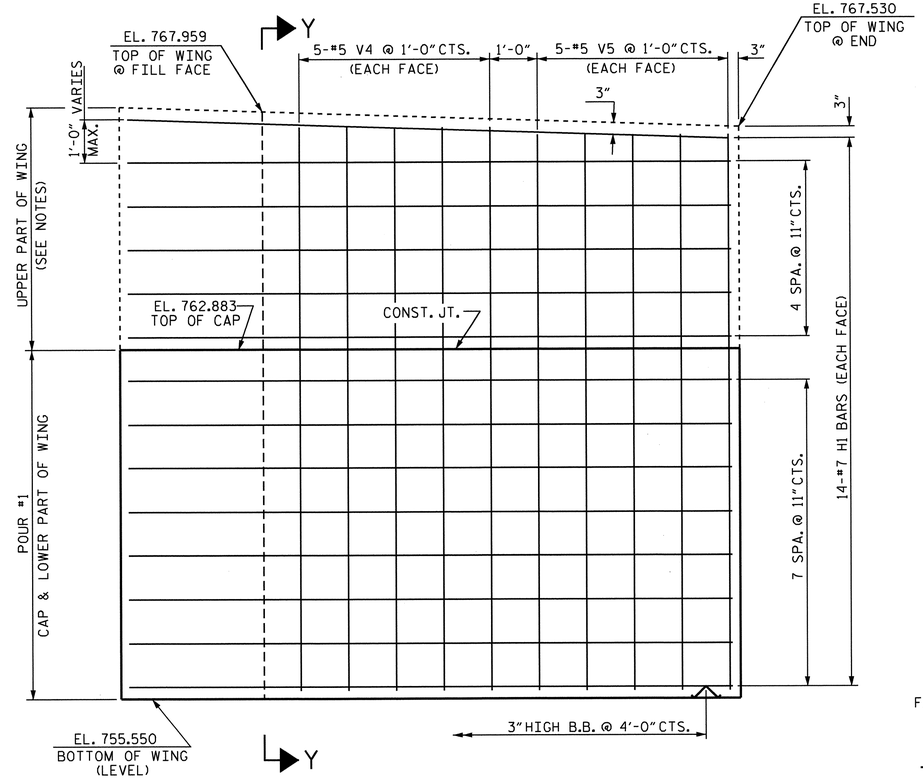


ELEVATION OF WING W2

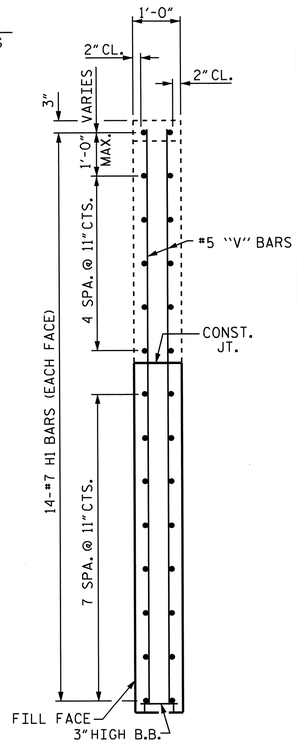


SECTION Y-Y

PROJECT NO. R-2309AB

GUILFORD COUNTY

STATION: 114+28.00 -L-

SHEET 2 OF 3

STATE OF NORTH CAROLINA
DEPARTMENT OF TRANSPORTATION
RALEIGH

SUBSTRUCTURE

INTEGRAL END BENT #2

(RIGHT LANE)

NORTH CAROLINA PROFESSIONAL SEAL 14045 ENGINEER TIMOTHY W. COGGINS
10/21/11

| REVISIONS | | | | | | SHEET NO. |
|---|---|---|---|---|---|---|
| NO. | BY: | DATE: | NO. | BY: | DATE: | S-52 |
| 1 | | | 3 | | | TOTAL SHEETS |
| 2 | | | 4 | | | 136 |

STR. #2

DRAWN BY : B.N.BARODAWALA DATE : 6-23-11
CHECKED BY : PEGGY PARISI DATE : 7-7-11

27-OCT-2011 09:22
R:\TIPProjects-R\R2309AB\Structures\R2309ab\FinalPlans\Bridges\Str#2\r2309ab_sd_eb_02.dgn
tcoggins

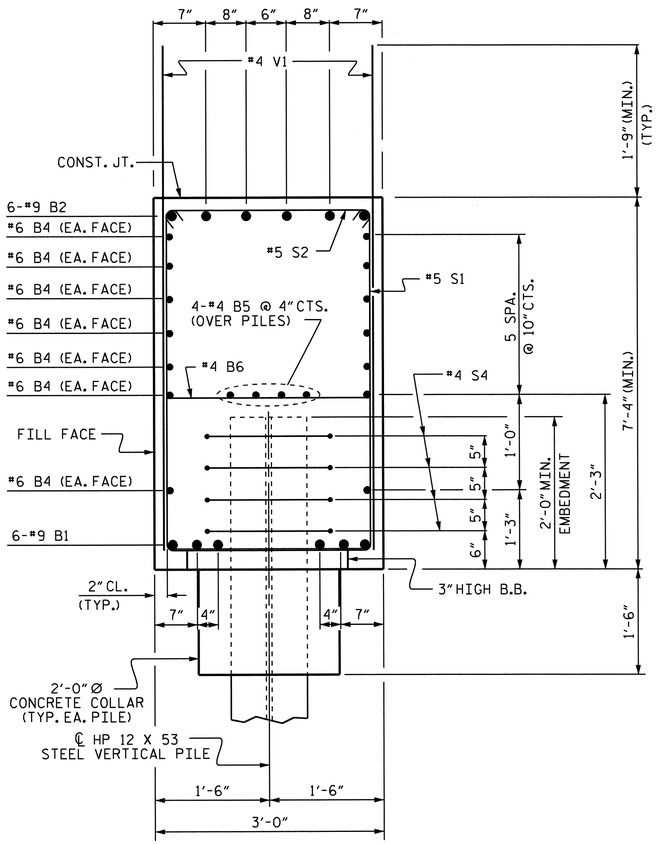


SECTION A-A

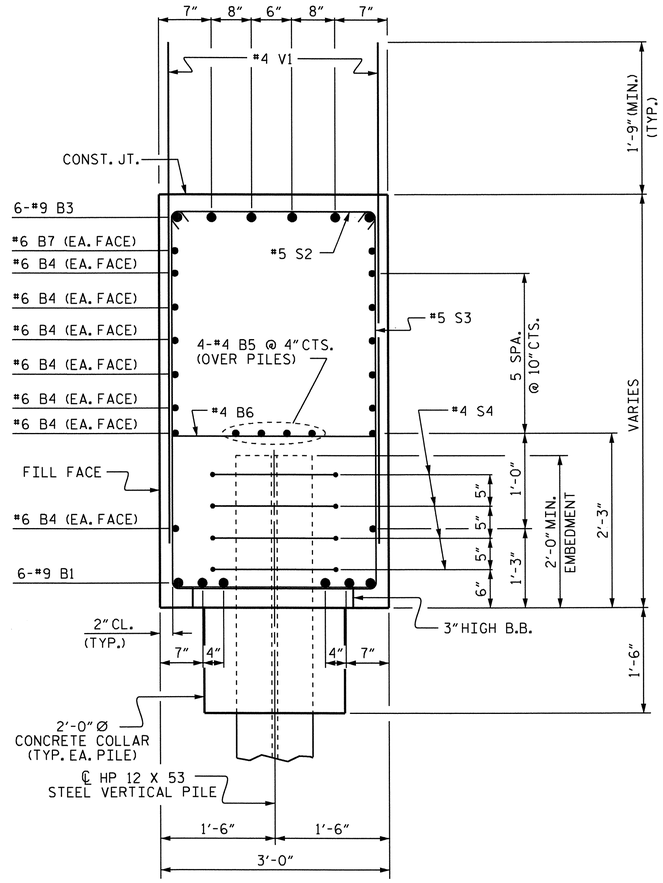


SECTION B-B

## BAR TYPES

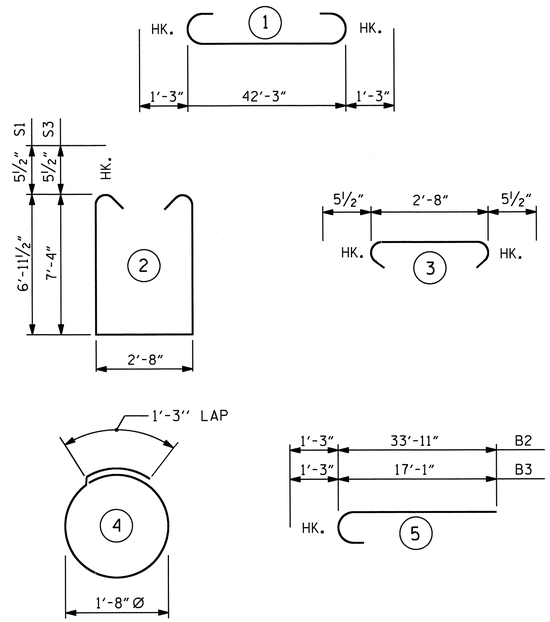


ALL BAR DIMENSIONS ARE OUT TO OUT.

## BILL OF MATERIAL

### INTEGRAL END BENT #2

| BAR | NO. | SIZE | TYPE | LENGTH | WEIGHT |
|---|---|---|---|---|---|
| B1 | 6 | #9 | 1 | 44'-9" | 913 |
| B2 | 6 | #9 | 5 | 35'-2" | 717 |
| B3 | 6 | #9 | 5 | 18'-4" | 374 |
| B4 | 14 | #6 | STR | 42'-4" | 890 |
| B5 | 8 | #4 | STR | 22'-5" | 120 |
| B6 | 14 | #4 | STR | 2'-8" | 25 |
| B7 | 2 | #6 | STR | 12'-3" | 37 |
| | | | | | |
| H1 | 56 | #7 | STR | 12'-8" | 1450 |
| | | | | | |
| S1 | 26 | #5 | 2 | 17'-6" | 475 |
| S2 | 44 | #5 | 3 | 3'-7" | 164 |
| S3 | 18 | #5 | 2 | 18'-3" | 343 |
| S4 | 28 | #4 | 4 | 6'-6" | 122 |
| | | | | | |
| V1 | 82 | #4 | STR | 8'-11" | 488 |
| V2 | 10 | #5 | STR | 12'-4" | 129 |
| V3 | 10 | #5 | STR | 12'-6" | 130 |
| V4 | 10 | #5 | STR | 11'-10" | 123 |
| V5 | 10 | #5 | STR | 11'-8" | 122 |

REINFORCING STEEL = 6622 LBS

CLASS A CONCRETE

POUR #1: (CAP, CONCRETE COLLARS & LOWER PART OF WINGS) 42.8 C.Y.

TOTAL CONCRETE 42.8 C.Y.

HP 12 x 53 STEEL PILES
No. 7 245 LIN FT.

PILE EXCAVATION (IN SOIL) 165 LIN. FT.

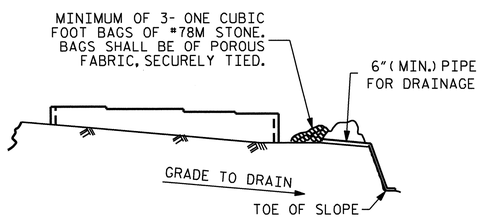


BAGGED STONE AND PIPE SHALL BE PLACED IMMEDIATELY AFTER COMPLETION OF END BENT EXCAVATION. PIPE MAY BE EITHER CONCRETE, CORRUGATED STEEL, CORRUGATED ALUMINUM ALLOY, OR CORRUGATED PLASTIC. PERFORATED PIPE WILL NOT BE ALLOWED.

BAGGED STONE SHALL REMAIN IN PLACE UNTIL THE ENGINEER DIRECTS THAT IT BE REMOVED. THE CONTRACTOR SHALL REMOVE AND DISPOSE OF SILT ACCUMULATIONS AT BAGGED STONE WHEN SO DIRECTED BY THE ENGINEER. BAGS SHALL BE REMOVED AND REPLACED WHENEVER THE ENGINEER DETERMINES THAT THEY HAVE DETERIORATED AND LOST THEIR EFFECTIVENESS.

NO SEPARATE PAYMENT WILL BE MADE FOR THIS WORK AND THE ENTIRE COST OF THIS WORK SHALL BE INCLUDED IN THE UNIT CONTRACT PRICE BID FOR THE SEVERAL PAY ITEMS.

## TEMPORARY DRAINAGE AT END BENT

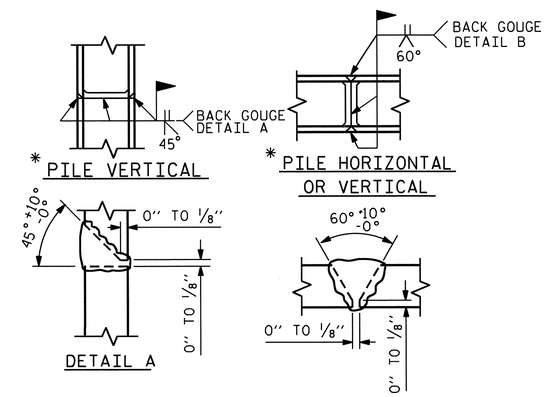


* POSITION OF PILE DURING WELDING.

## PILE SPLICE DETAILS

PROJECT NO. R-2309AB
GUILFORD COUNTY
STATION: 114+28.00 -L-

SHEET 3 OF 3

STATE OF NORTH CAROLINA
DEPARTMENT OF TRANSPORTATION
RALEIGH

SUBSTRUCTURE
INTEGRAL END BENT #2
(RIGHT LANE)

NORTH CAROLINA PROFESSIONAL SEAL 14045 ENGINEER TIMOTHY W. COGGINS
10/31/11

| REVISIONS | | | | | | SHEET NO. |
|---|---|---|---|---|---|---|
| NO. | BY: | DATE: | NO. | BY: | DATE: | S-53 |
| 1 | | | 3 | | | TOTAL SHEETS |
| 2 | | | 4 | | | 136 |

STR. #2

DRAWN BY : B.N.BARODAWALA DATE : 6-23-11
CHECKED BY : PEGGY PARISI DATE : 7-7-11

31-OCT-2011 09:51
R:\TIPProjects-R\R2309AB\Structures\R2309ab\FinalPlans\Bridges\Str#2\r2309ab_sd_eb_02.dgn
tcoggins

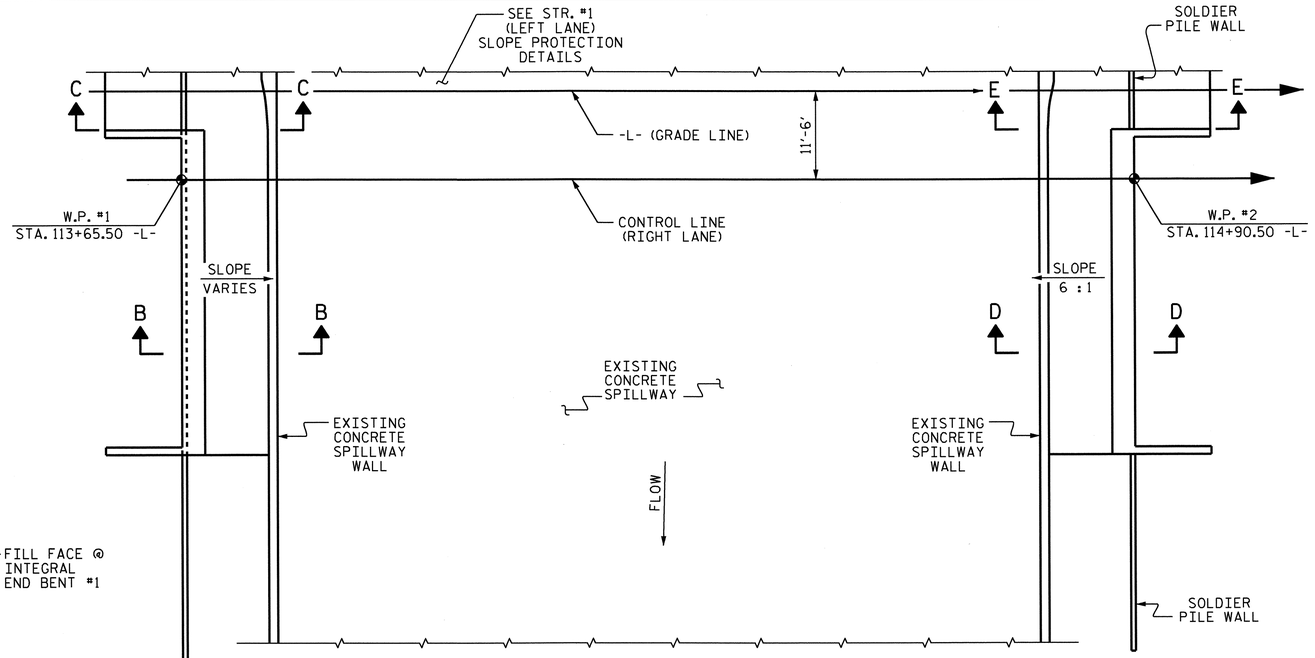


## GENERAL NOTES

SLOPE PROTECTION SHALL BE PLACED UNDER THE ENDS OF THE BRIDGE AS SHOWN IN THE DETAILS. STRAIGHT EDGING WILL NOT BE REQUIRED UNLESS, IN THE OPINION OF THE ENGINEER, VISUAL INSPECTION INDICATES A NEED FOR IT. MEASUREMENT AND PAYMENT SHALL BE AS PRESCRIBED IN SECTION 462 OF THE STANDARD SPECIFICATIONS.

SLOPE PROTECTION SHALL CONSIST OF 4'' POURED-IN-PLACE CONCRETE PAVING AS SHOWN IN THE DETAILS ON THIS SHEET. CONCRETE SHALL BE CLASS "B". THE CONCRETE SURFACE SHALL BE FLOATED WITH A WOODEN FLOAT AND FINISHED. WELDED WIRE FABRIC REINFORCING SHALL BE 6 X 6 - W1.4 X W1.4, 60'' WIDE. SLOPE PROTECTION SHALL BE POURED IN 5' STRIPS AS SHOWN IN THE "POURING DETAIL" WITH 2'-0" LONG #4 BARS PLACED ALONG THE SLOPE BETWEEN STRIPS AT 1'-6" MAXIMUM SPACING. SLOPE PROTECTION MAY BE POURED IN ALTERNATE 4' AND 5' STRIPS AS SHOWN IN THE "OPTIONAL POURING DETAIL" WITH ADJACENT RUNS OF WELDED WIRE FABRIC LAPPING AT LEAST 6''. THE COST OF THE WELDED WIRE FABRIC AND #4 BARS, IF USED, SHALL BE INCLUDED IN THE CONTRACT UNIT PRICE BID PER SQUARE YARD FOR SLOPE PROTECTION.

| BRIDGE @ STA. 114+28.00 -L- (RIGHT LANE) | 4 INCH SLOPE PROTECTION | * WELDED WIRE FABRIC 60 INCHES WIDE |
|---|---|---|
| | SQUARE YARDS | APPROX. L.F. |
| END BENT 1 | 66 | 132 |
| END BENT 2 | 53 | 106 |

* QUANTITY SHOWN IS BASED ON 5' POURS.

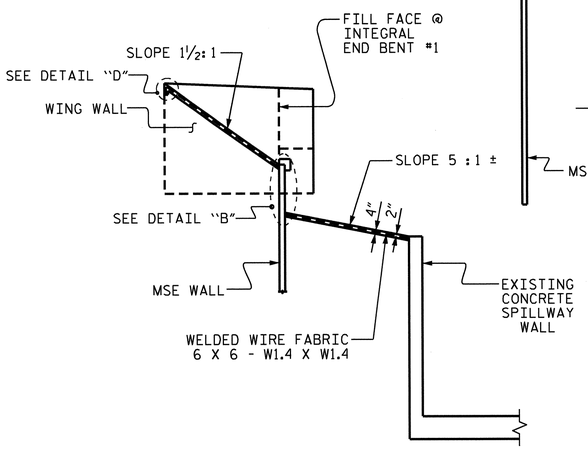


SECTION C-C

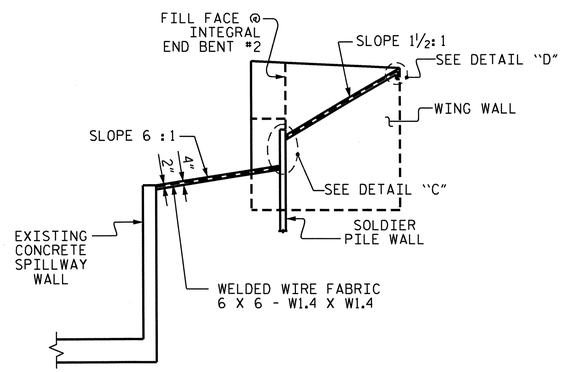


SECTION E-E

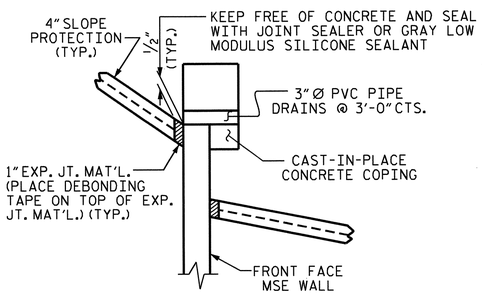


DETAIL "B"

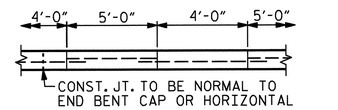


POUR A 4'-0'' STRIP FIRST. STRIP WIDTHS MAY VARY IN CURVED PORTION.

OPTIONAL POURING DETAIL

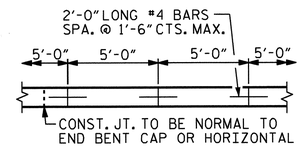


STRIP WIDTHS MAY VARY IN CURVED PORTION.

POURING DETAIL

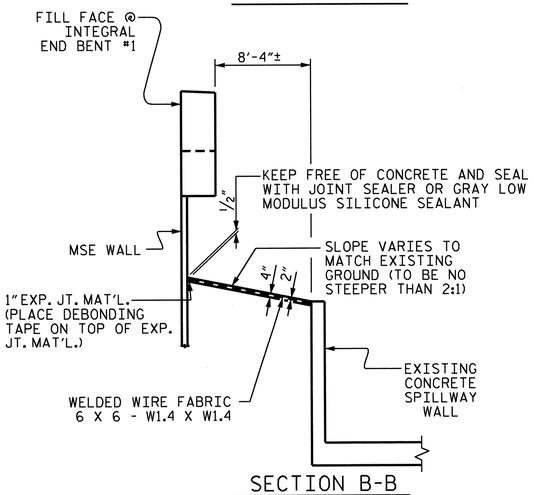


SECTION B-B

NOTE: PILES NOT SHOWN FOR CLARITY. 1" EXP. JT. MAT'L. SHALL BE PLACED BETWEEN AND AROUND VERTICAL ABUTMENT PILES & SLOPE PROTECTION.

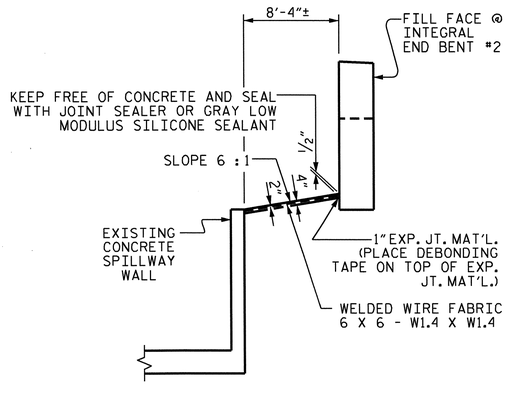


SECTION D-D

NOTE: PILES NOT SHOWN FOR CLARITY.

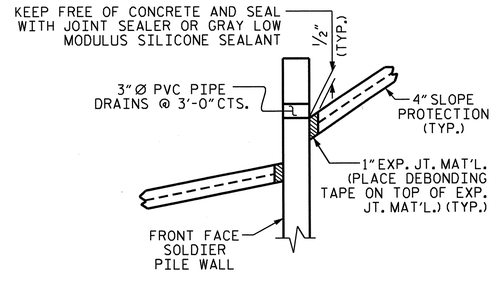


DETAIL "C"

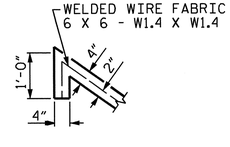


DETAIL "D"

NORTH CAROLINA PROFESSIONAL SEAL 14045 ENGINEER TIMOTHY L. COGGINS

Timothy L. Coggins 10/3/11

PROJECT NO. R-2309AB
GUILFORD COUNTY
STATION: 114+28.00 -L-

STATE OF NORTH CAROLINA
DEPARTMENT OF TRANSPORTATION
RALEIGH

SLOPE PROTECTION DETAILS
(RIGHT LANE)

| REVISIONS | | | | | | SHEET NO. |
|---|---|---|---|---|---|---|
| NO. | BY: | DATE: | NO. | BY: | DATE: | S-54 |
| 1 | | | 3 | | | TOTAL SHEETS |
| 2 | | | 4 | | | 136 |

DRAWN BY : T.L. AVERETTE DATE : 08-15-11
CHECKED BY : PEGGY PARISI DATE : 08-23-11

27-OCT-2011 09:21
R:\TIPProjects-R\R2309AB\Structures\R2309ab\FinalPlans\Bridges\Str#2\r2309ab_sd_sp_02.dgn
tcoggins

STR. #2 NC005

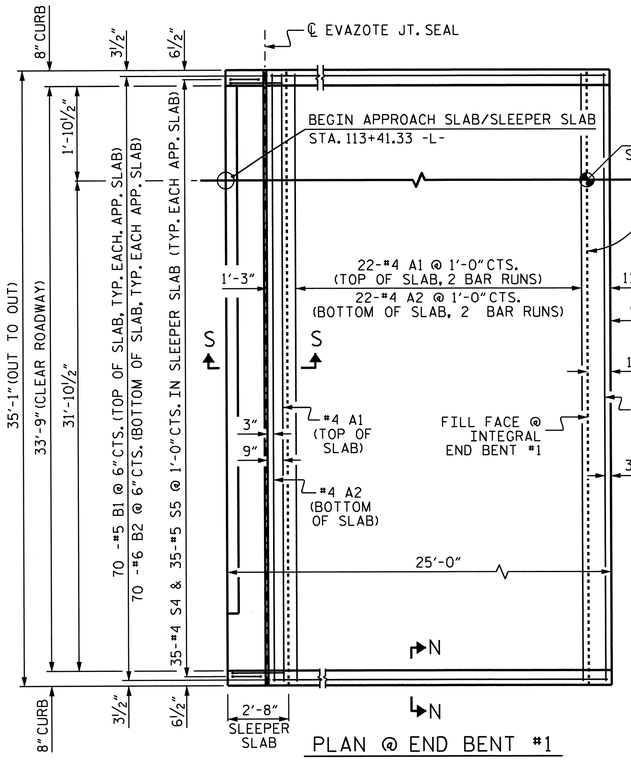


PLAN @ END BENT #1

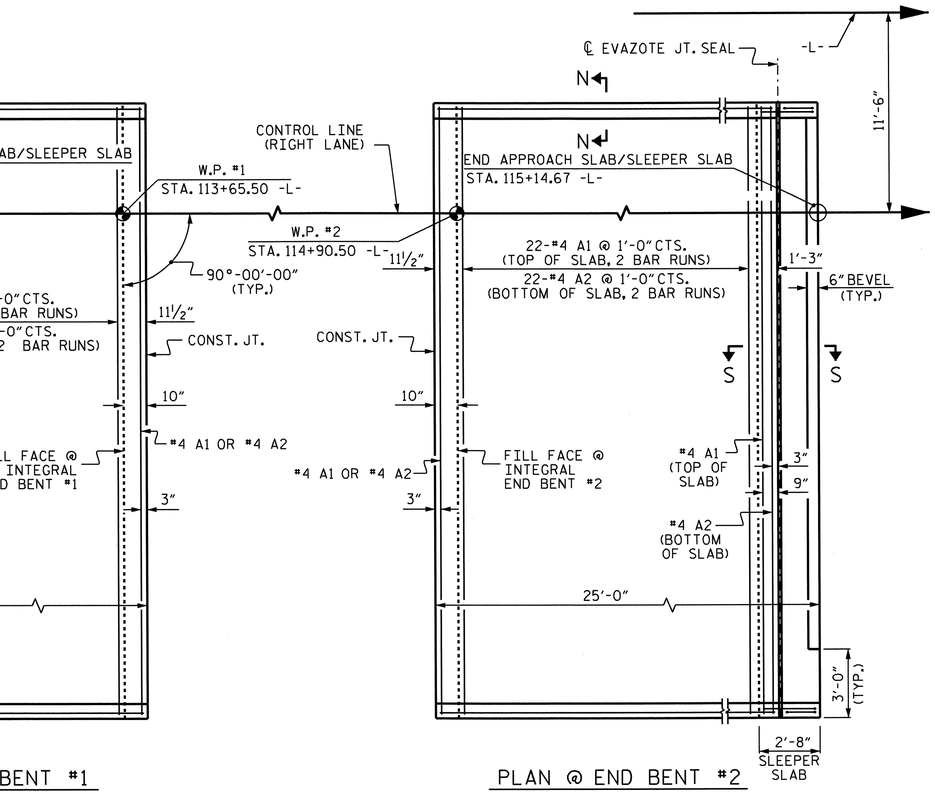


PLAN @ END BENT #2

DIMENSIONS SHOWN ARE TYPICAL FOR BOTH APPROACH SLABS. #4 A1 BARS IN SLEEPER SLAB NOT SHOWN FOR CLARITY.

## NOTES

APPROACH SLAB SHALL NOT BE CONSTRUCTED PRIOR TO COMPLETION OF THE BRIDGE DECK.

FOR REINFORCED BRIDGE APPROACH FILL INCLUDING FABRIC, IMPERMEABLE GEOMEMBRANE, 4" Ø DRAINAGE PIPE, #78M STONE, AND SELECT MATERIAL, SEE ROADWAY PLANS.

AREA BETWEEN THE WINGWALL AND APPROACH SLAB SHALL BE GRADED TO DRAIN THE WATER AWAY FROM THE FILL FACE OF THE BRIDGE AND SHALL BE PAVED. SEE ROADWAY PLANS.

THE 6" COMP. A.B.C. SHALL BE FLUSH WITH THE SLEEPER SLAB AND SHALL EXTEND 1'-0" OUTSIDE OF EACH EDGE OF THE APPROACH SLAB.

THE CONTRACTOR MAY USE 4" TYPE B-25.0B ASPHALT CONCRETE BASE COURSE IN LIEU OF 6" COMP. A.B.C. IF THIS OPTION IS USED, THE BASE COURSE SHALL BE FLUSH WITH THE SLEEPER SLAB, AND THE WIDTH SHALL BE THE SAME AS THAT OF THE APPROACH SLAB.

THE CONTRACTOR MAY USE 5" CLASS "A" CONCRETE BASE IN LIEU OF 6" COMP. A.B.C. IF THIS OPTION IS USED, THE CONCRETE BASE SHALL BE FLUSH WITH THE SLEEPER SLAB, AND THE WIDTH SHALL BE THE SAME AS THAT OF THE APPROACH SLAB. THE CONCRETE SHALL BE FINISHED TO A SMOOTH SURFACE AND A LAYER OF 30 LB ROOFING FELT SHALL BE PLACED BETWEEN THE CONCRETE BASE AND THE APPROACH SLAB TO PREVENT BOND. THE APPROACH SLAB SHALL NOT BE CAST UNTIL THE CONCRETE BASE HAS REACHED AN AGE OF THREE CURING DAYS.

THE VERTICAL JOINT ON THE RIGHT AND LEFT SIDE OF THE APPROACH SLAB AT THE ENDS OF THE EVAZOTE JOINT SHALL BE FILLED WITH SILICONE OR OTHER APPROVED MATERIAL IN ORDER TO PREVENT BACKFILL FROM ENTERING THE JOINT OPENING.

THE JOINT OPENING AT THE APPROACH SLAB/DECK INTERFACE SHALL BE SAWED NO MORE THAN 12 HOURS AFTER THE APPROACH SLAB IS CAST. THE JOINT SHALL BE CLEANED OF ALL DEBRIS BEFORE THE SEALANT IS APPLIED. THE JOINT SEALER MATERIAL SHALL CONFORM TO THE REQUIREMENTS OF TYPE SL LOW MODULUS SILICONE SEALANT.

WITH EVAZOTE JOINT SEAL

FOR EVAZOTE JOINT SEALS, SEE SPECIAL PROVISIONS.

THE NOMINAL UNCOMPRESSED SEAL WIDTH OF THE EVAZOTE JOINT SEAL SHALL BE 3 7/16".

FOR ELASTOMERIC CONCRETE, SEE SPECIAL PROVISIONS.

## BILL OF MATERIAL

### FOR ONE APPROACH SLAB (2 REQ'D)

| BAR | NO. | SIZE | TYPE | LENGTH | WEIGHT |
|---|---|---|---|---|---|
| * A1 | 62 | #4 | STR | 18'-5" | 763 |
| A2 | 48 | #4 | STR | 18'-3" | 585 |
| * B1 | 70 | #5 | STR | 22'-5" | 1637 |
| B2 | 70 | #6 | STR | 22'-10" | 2401 |
| * S4 | 35 | #4 | 1 | 3'-11" | 92 |
| S5 | 35 | #5 | 2 | 2'-11" | 106 |

| | | |
|---|---|---|
| REINFORCING STEEL | LBS. | 3092 |
| * EPOXY COATED REINFORCING STEEL | LBS. | 2492 |
| CLASS AA CONCRETE | | |
| POUR #1 - SLAB & CURB | C.Y. | 30.3 |
| POUR #2 - SLEEPER SLAB | C.Y. | 3.6 |
| TOTAL | C.Y. | 33.9 |

## BAR TYPES

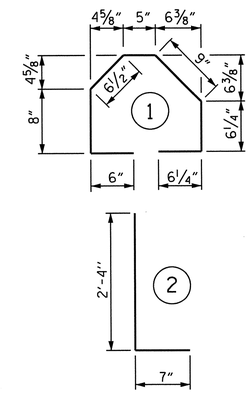


ALL BAR DIMENSIONS ARE OUT TO OUT

## SPLICE LENGTH CHART

| BAR | SPLICE LENGTH |
|---|---|
| #4 A1 | 2'-0" |
| #4 A2 | 1'-9" |

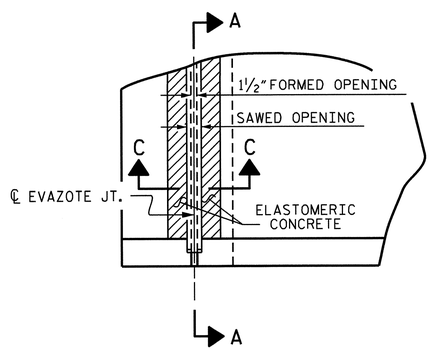


PLAN

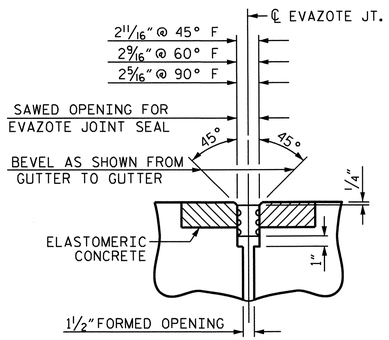


SECTION C-C
EVAZOTE JOINT SEAL
(EXPANSION)

| ELASTOMERIC CONCRETE | |
|---|---|
| END BENT NO. | ELASTOMERIC CONCRETE * (CU. FT.) |
| 1 | 5.8 |
| 2 | 5.8 |
| TOTAL | 11.6 |

* BASED ON THE MINIMUM BLOCKOUT SHOWN.

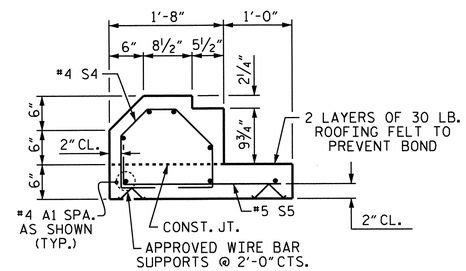


SECTION S-S
SHOWING SLEEPER SLAB

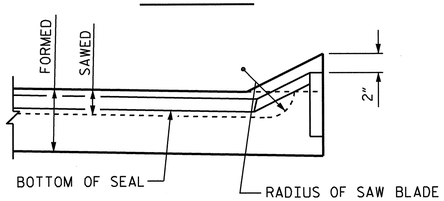


SECTION A-A

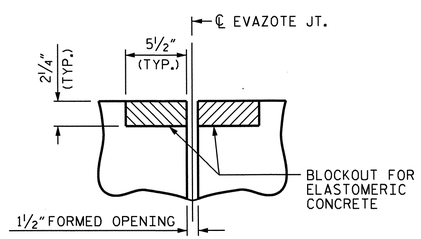


SECTION C-C
EVAZOTE JOINT SEAL
(PRE-SAWED ELASTOMERIC CONCRETE DIMENSIONS)

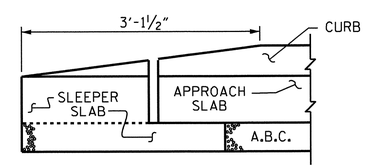


END OF CURB WITHOUT SHOULDER BERM GUTTER

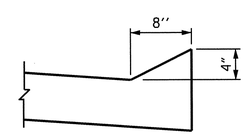


SECTION N-N

NORTH CAROLINA PROFESSIONAL SEAL 14045 ENGINEER TIMOTHY J. COGGINS

10/27/11

PROJECT NO. R-2309AB
GUILFORD COUNTY
STATION: 114+28.00 -L-

SHEET 1 OF 2

STATE OF NORTH CAROLINA
DEPARTMENT OF TRANSPORTATION
RALEIGH

STANDARD

BRIDGE APPROACH SLAB FOR INTEGRAL ABUTMENT (RIGHT LANE)

| REVISIONS | | | | | | SHEET NO. |
|---|---|---|---|---|---|---|
| NO. | BY: | DATE: | NO. | BY: | DATE: | S-55 |
| 1 | | | 3 | | | TOTAL SHEETS |
| 2 | | | 4 | | | 136 |

ASSEMBLED BY : JASON WILSON DATE : 01/28/11
CHECKED BY : B.N.BARODAWAL DATE : 04/06/11
DRAWN BY : TLA 10/05
CHECKED BY : GM 5/06
ADDED 5/1/06R KMM/GM

27-OCT-2011 09:21
R:\TIPProjects-R\R2309AB\Structures\R2309ab\FinalPlans\Bridges\Str#2\r2309ab_sd_as_02.dgn
tcoggins

STR. #2

STD. NO. BAS11 (SHT 10)

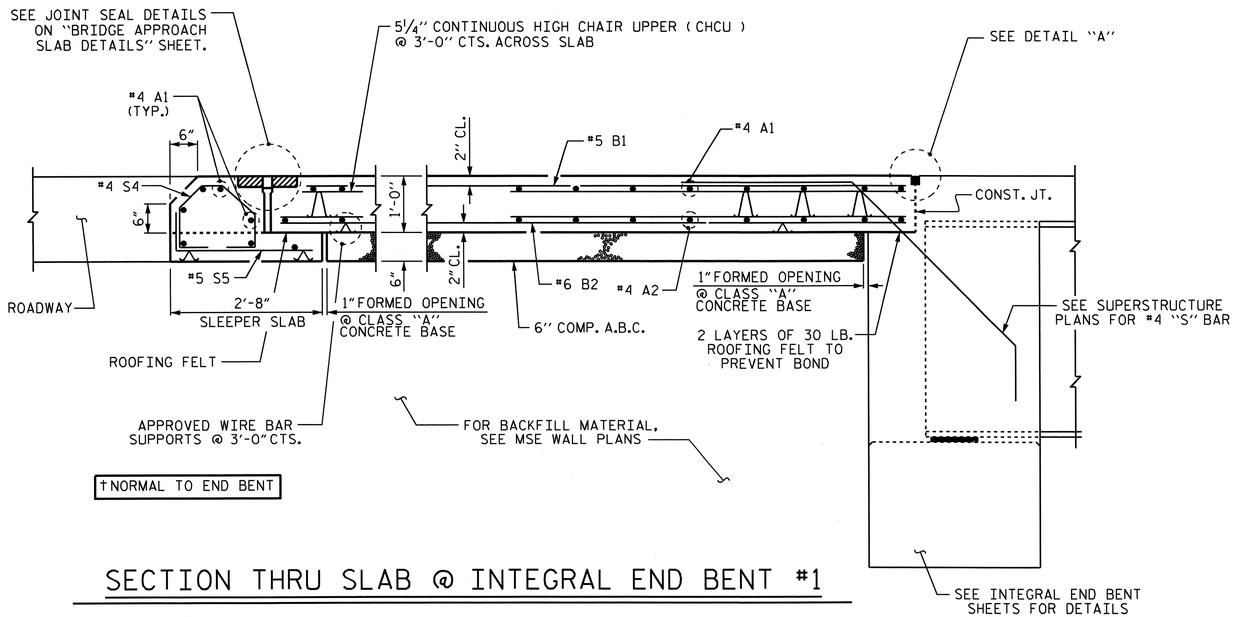


## SECTION THRU SLAB @ INTEGRAL END BENT #1

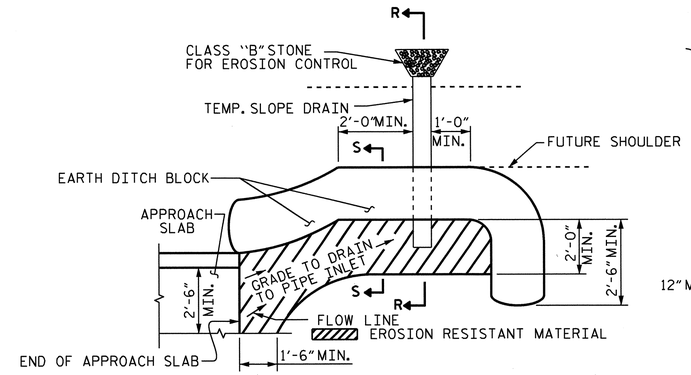


NOTE: IMMEDIATELY AFTER THE CONSTRUCTION OF THE APPROACH SLAB, THE CONTRACTOR SHALL PROVIDE TEMPORARY BERM AND SLOPE DRAIN. CONTRACTOR SHALL GRADE TO PIPE INLET AND PROVIDE EROSION RESISTANT MATERIAL AS SHOWN. THE EROSION RESISTANT MATERIAL SHALL BE EITHER 1) ASPHALT PLANT MIX, TYPE 1 OR TYPE 2, MIN. 2" DEPTH, 2) EROSION CONTROL MAT, OR 3) CONCRETE, AS DIRECTED BY THE ENGINEER. THE SLOPE DRAIN SHALL CONSIST OF A NON-PERFORATED TEMPORARY DRAINAGE PIPE, 12 INCHES IN DIAMETER.

PLAN VIEW

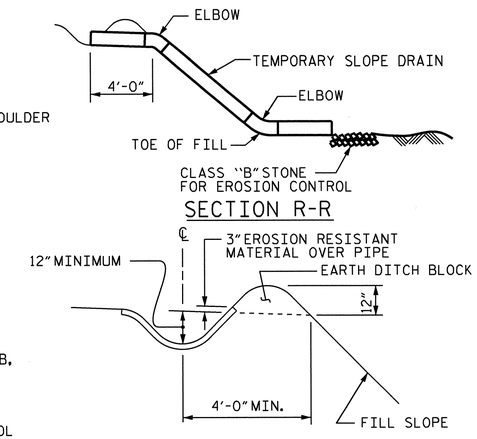


## TEMPORARY BERM AND SLOPE DRAIN DETAILS

(TO BE USED WHEN SHOULDER BERM GUTTER IS REQUIRED)

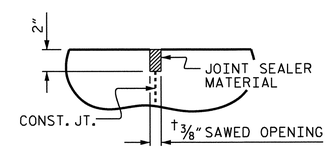


DETAIL "A"

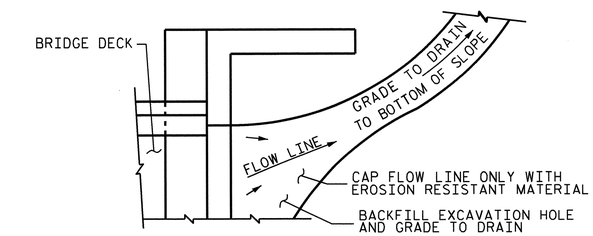


NOTE: IF THE APPROACH SLAB IS NOT CONSTRUCTED IMMEDIATELY AFTER THE BACKFILLING OF THE END BENT EXCAVATION, GRADE TO DRAIN TO THE BOTTOM OF THE SLOPE AND PROVIDE EROSION RESISTANT MATERIAL, SUCH AS FIBERGLASS ROVING OR AS DIRECTED BY THE ENGINEER TO PREVENT SOIL EROSION AND TO PROTECT THE AREA ADJACENT TO THE STRUCTURE. THE CONTRACTOR WILL BE REQUIRED TO REMOVE THESE MATERIALS PRIOR TO CONSTRUCTION OF THE APPROACH SLAB.

TEMPORARY DRAINAGE DETAIL

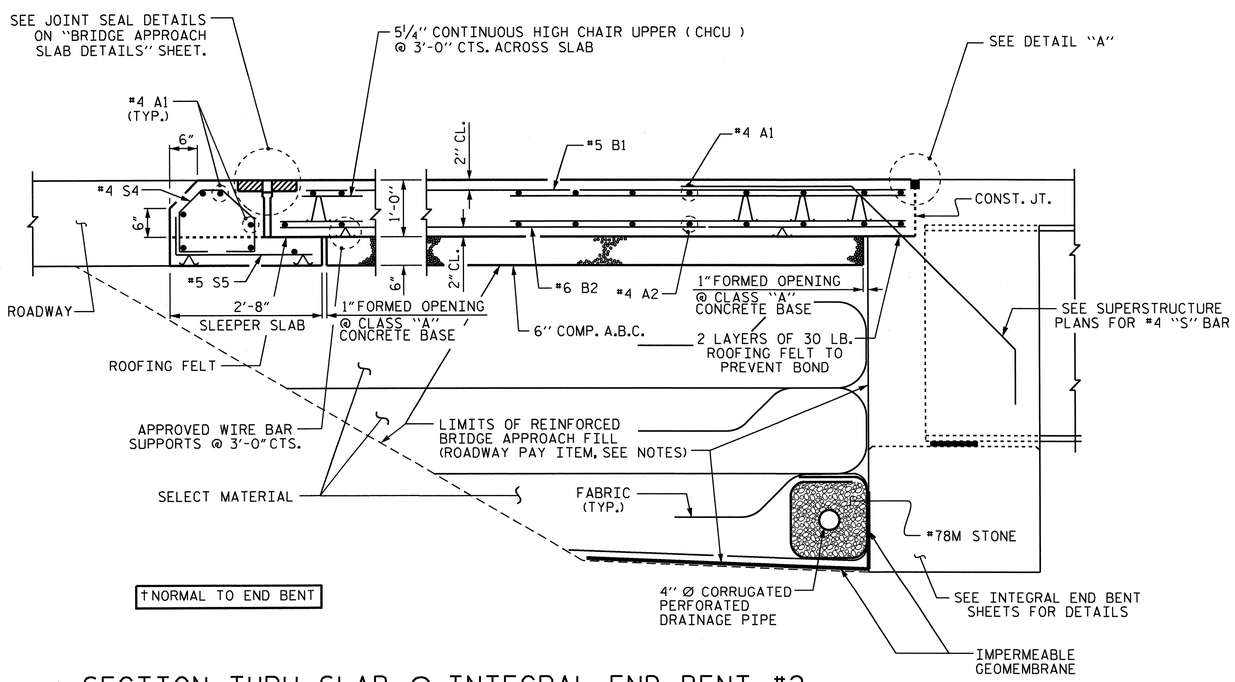


## SECTION THRU SLAB @ INTEGRAL END BENT #2

PROJECT NO. R-2309AB

GUILFORD COUNTY

STATION: 114+28.00 -L-

SHEET 2 OF 2

STATE OF NORTH CAROLINA
DEPARTMENT OF TRANSPORTATION
RALEIGH

STANDARD

BRIDGE APPROACH SLAB DETAILS (RIGHT LANE)

NORTH CAROLINA PROFESSIONAL SEAL 14045 ENGINEER TIMOTHY W. COGGINS

Timothy W. Coggins 10/27/11

| REVISIONS | | | | | | | | SHEET NO. |
|---|---|---|---|---|---|---|---|---|
| NO. | BY: | DATE: | NO. | BY: | DATE: | | | S-56 |
| 1 | | | 3 | | | | | TOTAL SHEETS |
| 2 | | | 4 | | | | | 136 |

| | | | |
|---|---|---|---|
| ASSEMBLED BY : JASON WILSON | | DATE : 01/27/11 | |
| CHECKED BY : B.N.BARODAWALA | | DATE : 04/06/11 | |
| DRAWN BY : FCJ | 11/88 | REV. 10/17/00 | RWW/LES |
| | | REV. 5/7/03 | RWW/JTE |
| CHECKED BY : ARB | 11/88 | REV. 5/1/06RR | MAA/KMM |

27-OCT-2011 09:20
R:\TIPProjects-R\R2309AB\Structures\R2309ab\Final Plans\Bridges\Str#2\r2309ab_sd_as_02.dgn
tcoggins

STR. #2 STD. NO. BAS10 (SHT 9)

F.A. PROJECT NO. STPNHS-0220(25)

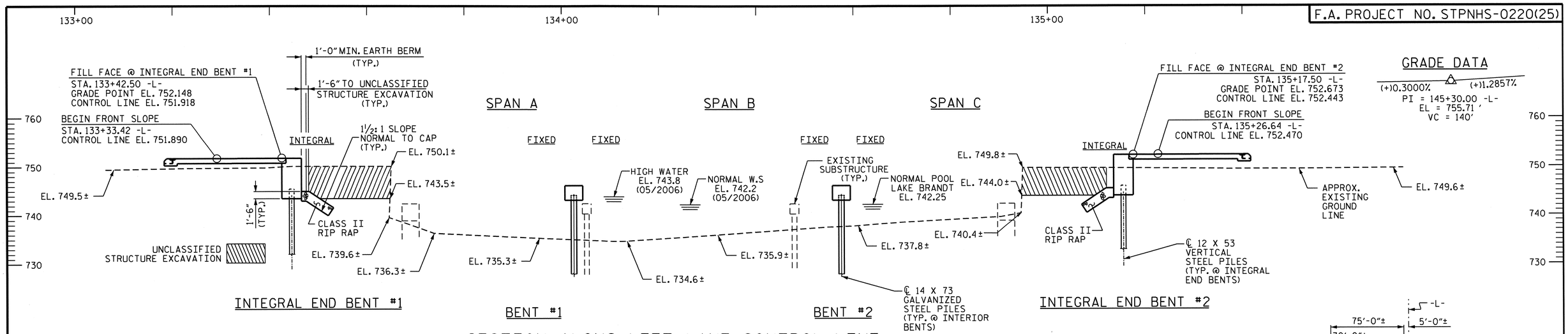


SECTION ALONG LEFT LANE CONTROL LINE

GRADE DATA

(+)0.3000% (+)1.2857%

PI = 145+30.00 -L-
EL = 755.71'
VC = 140'

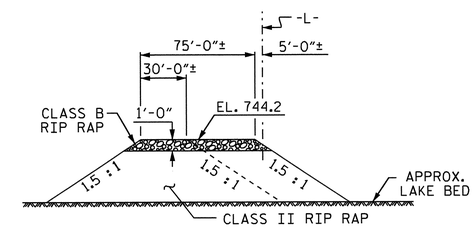


SECTION THRU TEMPORARY CAUSEWAY

LOOKING UPSTATION

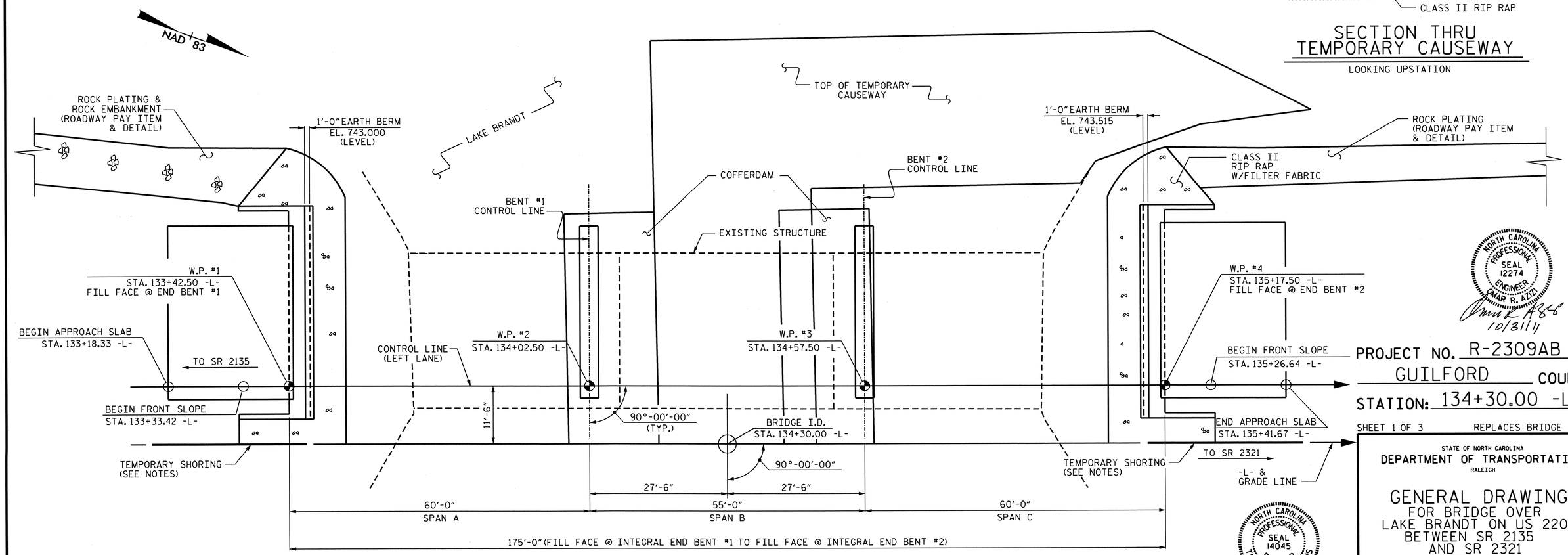


PLAN

(PILES NOT SHOWN FOR CLARITY)

NORTH CAROLINA PROFESSIONAL SEAL 12274 ENGINEER OMAR R. AZIZ
10/31/11

NORTH CAROLINA PROFESSIONAL SEAL 14045 ENGINEER TIMOTHY U. COGGINS
10/27/11

PROJECT NO. R-2309AB

GUILFORD COUNTY

STATION: 134+30.00 -L-

SHEET 1 OF 3 REPLACES BRIDGE NO. 313

STATE OF NORTH CAROLINA
DEPARTMENT OF TRANSPORTATION
RALEIGH

GENERAL DRAWING
FOR BRIDGE OVER
LAKE BRANDT ON US 220
BETWEEN SR 2135
AND SR 2321
(LEFT LANE)

| REVISIONS | | | | | | SHEET NO. |
|---|---|---|---|---|---|---|
| NO. | BY: | DATE: | NO. | BY: | DATE: | S-57 |
| 1 | | | 3 | | | TOTAL SHEETS |
| 2 | | | 4 | | | 136 |

DRAWN BY : J.B. WILSON DATE : 11/06/08
CHECKED BY : PEGGY PARISI DATE : 6-17-11

26-OCT-2011 15:15
R:\TIPProjects-R\R2309AB\Structures\R2309ab\FinalPlans\Bridges\Str#3\r2309ab_sd_gd_03.dgn
tcoggins

STR. #3

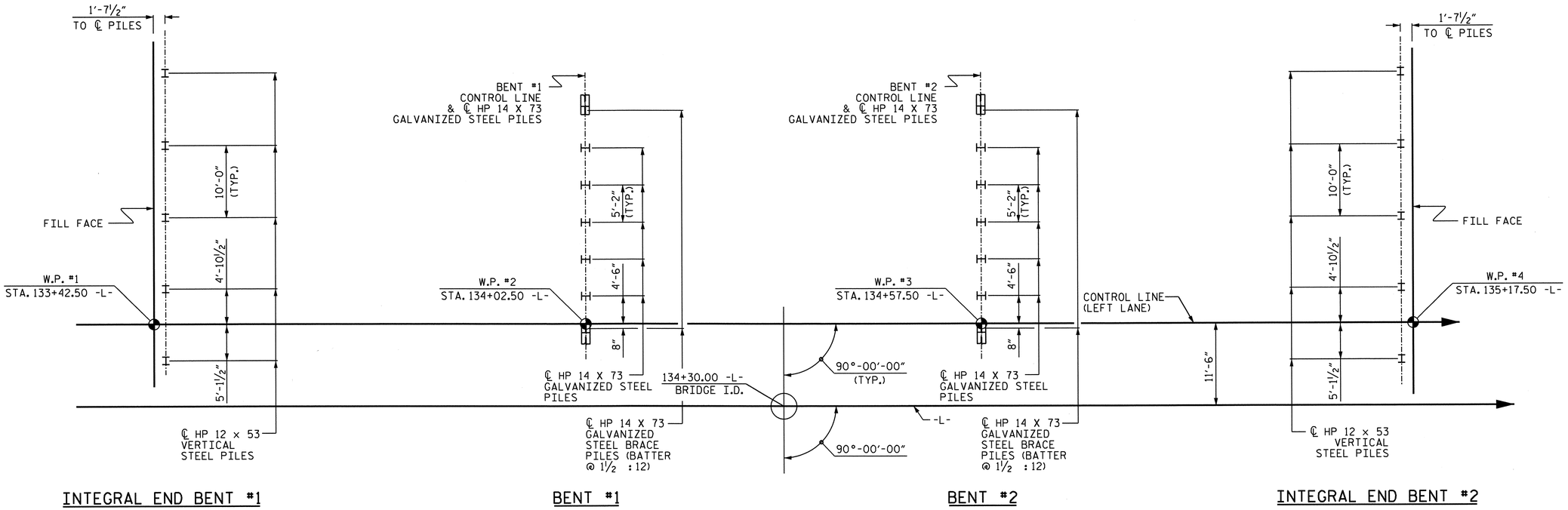


## FOUNDATION LAYOUT

DIMENSIONS LOCATING PILES ARE SHOWN TO THE PILE CENTERLINE.

## FOUNDATION NOTES

FOR PILES, SEE SPECIAL PROVISIONS.

PILES AT END BENT NO. 1 AND END BENT NO.2 ARE DESIGNED FOR A FACTORED RESISTANCE OF 115 TONS PER PILE.

PILES AT BENT NO. 1 AND NO. 2 ARE DESIGNED FOR A FACTORED RESISTANCE OF 150 TONS PER PILE.

DRIVE PILES AT END BENT NO. 1 AND END BENT NO. 2 TO A REQUIRED DRIVING RESISTANCE OF 195 TONS PER PILE.

DRIVE PILES AT BENT NO. 1 AND BENT NO. 2 TO A REQUIRED DRIVING RESISTANCE OF 250 TONS PER PILE.

INSTALL PILES AT BENT NO. 1 AND BENT NO. 2 TO A TIP ELEVATION NO HIGHER THAN 717.0 FT. AND 715.0 FT., RESPECTIVELY.

THE SCOUR CRITICAL ELEVATION FOR BENT NO. 1 AND BENT NO. 2 IS ELEVATION 732.0 FT. SCOUR CRITICAL ELEVATIONS ARE USED TO MONITOR POSSIBLE SCOUR PROBLEMS DURING THE LIFE OF THE STRUCTURE.

PROJECT NO. R-2309AB
GUILFORD COUNTY
STATION: 134+30.00 -L-

SHEET 2 OF 3

STATE OF NORTH CAROLINA
DEPARTMENT OF TRANSPORTATION
RALEIGH

GENERAL DRAWING
FOR BRIDGE OVER
LAKE BRANDT ON US 220
BETWEEN SR 2135
AND SR 2321
(LEFT LANE)

NORTH CAROLINA PROFESSIONAL SEAL 14045 ENGINEER TIMOTHY L. COGGINS
10/27/11

| REVISIONS | | | | | | SHEET NO. |
|---|---|---|---|---|---|---|
| NO. | BY: | DATE: | NO. | BY: | DATE: | S-58 |
| 1 | | | 3 | | | TOTAL SHEETS |
| 2 | | | 4 | | | 136 |

DRAWN BY : JASON B. WILSON DATE : 6/1/2011
CHECKED BY : PEGGY PARISI DATE : 6-17-11

26-OCT-2011 15:15
R:\TIPProjects-R\R2309AB\Structures\R2309ab\FinalPlans\Bridges\Str#3\r2309ab_sd_gd_03.dgn
tcoggins

STR. #3

BM #7 RR SPIKE IN ROOT OF 24"ELM 193.24' LT. OF STA. 132+06.01 -L-, ELEV. 744.74'.

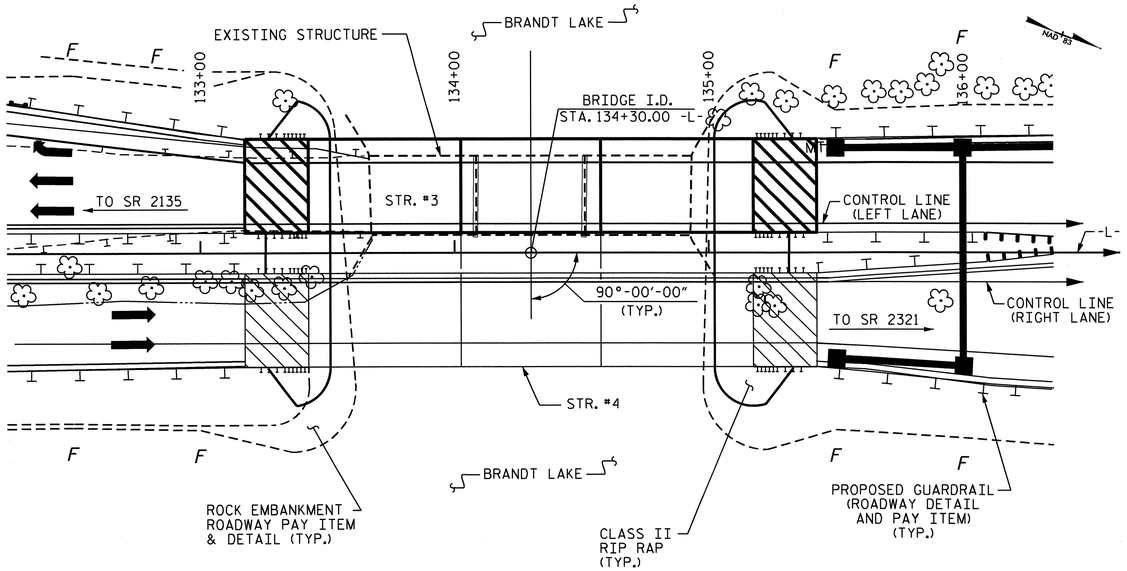


FOR UTILITY INFORMATION, SEE UTILITY PLANS AND SPECIAL PROVISIONS.

## LOCATION SKETCH

### HYDRAULIC DATA

| | |
|---|---|
| DESIGN DISCHARGE | 5,850 CFS |
| FREQUENCY OF DESIGN FLOOD | 50 YRS |
| DESIGN HIGH WATER ELEVATION | 745.4' |
| DRAINAGE AREA | 33.5 SQ. MI. |
| BASE DISCHARGE (Q100) | 7,750 CFS |
| BASE HIGH WATER ELEVATION | 746.8' |

### OVERTOPPING FLOOD DATA

| | |
|---|---|
| OVERTOPPING DISCHARGE | N/A |
| FREQUENCY OF OVERTOPPING FLOOD | N/A |
| OVERTOPPING FLOOD ELEVATION | N/A |

## NOTES

ASSUMED LIVE LOAD = HL-93 OR ALTERNATE LOADING.

FOR OTHER DESIGN DATA AND GENERAL NOTES, SEE SHEET SN.

FOR EROSION CONTROL MEASURES, SEE EROSION CONTROL PLANS.

THIS BRIDGE HAS BEEN DESIGNED IN ACCORDANCE WITH THE AASHTO LRFD BRIDGE DESIGN SPECIFICATIONS.

REMOVABLE FORMS MAY BE USED IN LIEU OF METAL-STAY-PLACE FORMS IN ACCORDANCE WITH ARTICLE 420-3 OF THE STANDARD SPECIFICATIONS.

THE EXISTING STRUCTURE CONSISTING OF 3 SPANS, (1 @ 42'-3", 1 @ 42'-6" AND 1 @ 42'-3") WITH A CLEAR ROADWAY WIDTH OF 28'-0" AND A CONCRETE DECK GIRDER SUPERSTRUCTURE SUPPORTED BY REINFORCED CONCRETE ABUTMENTS AND A COMBINATION OF REINFORCED CONCRETE ROUND NOSE PIERS AND WALLS SUPPORTED ON FOOTINGS AND REINFORCED CONCRETE CAPS SUPPORTED ON PILES AND LOCATED AT THE SITE OF THE PROPOSED STRUCTURE, SHALL BE REMOVED. SHOULD THE STRUCTURAL INTEGRITY OF THE BRIDGE DETERIORATE, A LOAD LIMIT MAY BE POSTED AND MAY BE REDUCED AS FOUND NECESSARY DURING THE LIFE OF THE PROJECT.

COFFERDAMS MAY BE REQUIRED FOR REMOVAL OF EXISTING INTERIOR BENT #1 AND BENT #2. REMOVAL SHALL BE TO THE LAKE BED AT THE APPROVAL OF THE ENGINEER. THE PAYMENT FOR THE TOTAL COST ASSOCIATED WITH THE COFFERDAMS IS INCIDENTAL TO THE REMOVAL OF THE EXISTING STRUCTURE.

THE SUBSTRUCTURE OF THE EXISTING BRIDGE INDICATED ON THE PLANS IS FROM THE BEST INFORMATION AVAILABLE. SINCE THIS INFORMATION IS SHOWN FOR THE CONVENIENCE OF THE CONTRACTOR, THE CONTRACTOR SHALL HAVE NO CLAIM WHATSOEVER AGAINST THE DEPARTMENT OF TRANSPORTATION FOR ANY DELAYS OR ADDITIONAL COST INCURRED BASED ON DIFFERENCES BETWEEN THE EXISTING BRIDGE SUBSTRUCTURE SHOWN ON THE PLANS AND THE ACTUAL CONDITIONS AT THE PROJECT SITE.

AT THE CONTRACTOR'S OPTION, AND UPON REMOVAL OF THE CAUSEWAY, THE CLASS II RIP RAP USED IN THE CAUSEWAY MAY BE PLACED AS RIP RAP SLOPE PROTECTION. SEE SPECIAL PROVISIONS FOR CONSTRUCTION, MAINTENANCE AND REMOVAL OF TEMPORARY ACCESS AT STATION 134+30.00 -L-.

REMOVAL OF THE EXISTING BRIDGE SHALL BE PERFORMED SO AS NOT TO ALLOW DEBRIS TO FALL INTO THE WATER. THE CONTRACTOR SHALL REMOVE THE BRIDGE AND SUBMIT PLANS FOR DEMOLITION IN ACCORDANCE WITH ARTICLE 402-2 OF THE STANDARD SPECIFICATIONS.

THE MATERIAL SHOWN IN THE CROSS-HATCHED AREA SHALL BE EXCAVATED FOR A DISTANCE OF 11.5 FT. RIGHT AND 37.0 FT. LEFT OF CENTERLINE ROADWAY AS DIRECTED BY THE ENGINEER. THIS WORK WILL BE PAID FOR AT THE CONTRACT LUMP SUM PRICE FOR UNCLASSIFIED STRUCTURE EXCAVATION. SEE SECTION 412 OF THE STANDARD SPECIFICATIONS.

THIS STRUCTURE HAS BEEN DESIGNED IN ACCORDANCE WITH HEC 18, "EVALUATING SCOUR AT BRIDGES", MAY, 2001.

THE CONTRACTOR SHALL PROVIDE INDEPENDENT ASSURANCE SAMPLES OF REINFORCING STEEL AS FOLLOWS: FOR PROJECTS REQUIRING UP TO 400 TONS OF REINFORCING STEEL, ONE 30 INCH SAMPLE OF EACH SIZE BAR USED, AND FOR PROJECTS REQUIRING OVER 400 TONS OF REINFORCING STEEL, TWO 30 INCH SAMPLES OF EACH SIZE BAR USED. THE BARS FROM WHICH THE SAMPLES ARE TAKEN MUST THEN BE SPLICED WITH REPLACEMENT BARS OF THE SIZE AND LENGTH OF THE SAMPLE, PLUS A MINIMUM LAP SPLICE OF THIRTY BAR DIAMETERS. PAYMENT FOR THE SAMPLES OF REINFORCING STEEL SHALL BE CONSIDERED INCIDENTAL TO VARIOUS PAY ITEMS.

NEEDLE BEAMS WILL NOT BE ALLOWED UNLESS OTHERWISE CALLED FOR ON THE PLANS OR APPROVED BY THE ENGINEER.

FOR SUBMITTAL OF WORKING DRAWINGS, SEE SPECIAL PROVISIONS.

FOR FALSEWORK AND FORMWORK, SEE SPECIAL PROVISIONS.

FOR CRANE SAFETY, SEE SPECIAL PROVISIONS.

FOR PRESTRESSED CONCRETE MEMBERS, SEE SPECIAL PROVISIONS.

FOR CURING CONCRETE, SEE SPECIAL PROVISIONS.

FOR MAINTENANCE OF TRAFFIC, SEE TRAFFIC CONTROL PLANS.

FOR GROUT FOR STRUCTURES, SEE SPECIAL PROVISIONS.

FOR FORMS FOR CONCRETE BRIDGE DECKS, SEE SPECIAL PROVISIONS.

FOR LIMITS OF TEMPORARY SHORING FOR MAINTENANCE OF TRAFFIC, SEE TRAFFIC CONTROL PLANS.
FOR PAY ITEM FOR TEMPORARY SHORING FOR MAINTENANCE OF TRAFFIC, SEE ROADWAY PLANS.

FOR PLACING LOAD ON STRUCTURE MEMBERS, SEE SPECIAL PROVISIONS.

THE CLASS AA CONCRETE IN THE BRIDGE DECK SHALL CONTAIN FLY ASH OR GROUND GRANULATED BLAST FURNACE SLAG AT THE SUBSTITUTION RATE SPECIFIED IN ARTICLE 1024-1 AND IN ACCORDANCE WITH ARTICLES 1024-5 AND 1024-6 OF THE STANDARD SPECIFICATIONS. NO PAYMENT WILL BE MADE FOR THIS SUBSTITUTION AS IT IS CONSIDERED INCIDENTAL TO THE COST OF THE REINFORCED CONCRETE DECK SLAB.

FOR ROCK PLATING AND ROCK EMBANKMENT IN AREAS OF END BENTS, SEE ROADWAY PLANS.

FOR ELECTRICAL CONDUIT SYSTEM, SEE SPECIAL PROVISIONS.

NORTH CAROLINA PROFESSIONAL SEAL 14045 ENGINEER TIMOTHY L. COGGINS
10/27/11

## TOTAL BILL OF MATERIAL

| | CONSTRUCTION, MAINTENANCE, & REMOVAL OF TEMPORARY ACCESS | REMOVAL OF EXISTING STRUCTURE | UNCLASSIFIED STRUCTURE EXCAVATION | REINFORCED CONCRETE DECK SLAB | GROOVING BRIDGE FLOORS | CLASS A CONCRETE | BRIDGE APPROACH SLABS | REINFORCING STEEL | 45" PRESTRESSED CONCRETE GIRDERS | | HP 12 X 53 STEEL PILES | | HP 14 X 73 GALVANIZED STEEL PILES | | 2 BAR METAL RAIL | CONCRETE BARRIER RAIL | 1'-2" X 2'-6" CONCRETE PARAPET | RIP RAP CLASS II (2'-0" THICK) | FILTER FABRIC FOR DRAINAGE | ELASTOMERIC BEARINGS | EVAZOTE JOINT SEALS | ELECTRICAL CONDUIT SYSTEM |
|---|---|---|---|---|---|---|---|---|---|---|---|---|---|---|---|---|---|---|---|---|---|---|
| | LUMP SUM | LUMP SUM | LUMP SUM | SQ. FT. | SQ. FT. | CU. YDS. | LUMP SUM | LBS. | NO. | LIN.FT. | NO. | LIN.FT. | NO. | LIN.FT. | LIN.FT. | LIN.FT. | LIN.FT. | TONS | SQ.YDS. | LUMP SUM | LUMP SUM | LUMP SUM |
| SUPERSTRUCTURE | | | | 6417 | 6747 | | LUMP SUM | | 12 | 685.67 | | | | | 165.83 | 173.33 | 173.33 | | | LUMP SUM | LUMP SUM | |
| END BENT NO. 1 | | | | | | 19.9 | | 3752 | | | 5 | 150 | | | | | | 57 | 63 | | | |
| BENT NO. 1 | | | | | | 11.5 | | 2126 | | | | | 7 | 280 | | | | | | | | |
| BENT NO. 2 | | | | | | 11.5 | | 2126 | | | | | 7 | 280 | | | | | | | | |
| END BENT NO. 2 | | | | | | 19.9 | | 3752 | | | 5 | 175 | | | | | | 61 | 68 | | | |
| TOTAL | LUMP SUM | LUMP SUM | LUMP SUM | 6417 | 6747 | 62.8 | LUMP SUM | 11756 | 12 | 685.67 | 10 | 325 | 14 | 560 | 165.83 | 173.33 | 173.33 | 118 | 131 | LUMP SUM | LUMP SUM | LUMP SUM |

DRAWN BY : J.B. WILSON DATE : 6/1/11
CHECKED BY : PEGGY PARISI DATE : 6-17-11

27-OCT-2011 10:41
R:\TIPProjects-R\R2309AB\Structures\R2309ab\FinalPlans\Bridges\Str#3\r2309ab_sd_gd_03.dgn
tcoggins

PROJECT NO. R-2309AB
GUILFORD COUNTY
STATION: 134+30.00 -L-

SHEET 3 OF 3

STATE OF NORTH CAROLINA
DEPARTMENT OF TRANSPORTATION
RALEIGH

GENERAL DRAWING
FOR BRIDGE OVER
LAKE BRANDT ON US 220
BETWEEN SR 2135
AND SR 2321
(LEFT LANE)

| REVISIONS | | | | | | SHEET NO. |
|---|---|---|---|---|---|---|
| NO. | BY: | DATE: | NO. | BY: | DATE: | S-59 |
| 1 | | | 3 | | | TOTAL SHEETS |
| 2 | | | 4 | | | 136 |

# LOAD AND RESISTANCE FACTOR RATING (LRFD) SUMMARY FOR PRESTRESSED CONCRETE GIRDERS

| LEVEL | | VEHICLE | WEIGHT (W) (TONS) | CONTROLLING LOAD RATING (#) | MINIMUM RATING FACTORS (RF) | TONS = W X RF | STRENGTH I LIMIT STATE | | | | | | | | | | | SERVICE III LIMIT STATE | | | | | | COMMENT NUMBER |
|---|---|---|---|---|---|---|---|---|---|---|---|---|---|---|---|---|---|---|---|---|---|---|---|---|
| | | | | | | | | MOMENT | | | | | SHEAR | | | | | | MOMENT | | | | | |
| | | | | | | | LIVELOAD FACTORS | DISTRIBUTION FACTORS (DF) | RATING FACTOR | SPAN | GIRDER LOCATION | DISTANCE FROM LEFT END OF SPAN (ft) | DISTRIBUTION FACTORS (DF) | RATING FACTOR | SPAN | GIRDER LOCATION | DISTANCE FROM LEFT END OF SPAN (ft) | LIVELOAD FACTORS | DISTRIBUTION FACTORS (DF) | RATING FACTOR | SPAN | GIRDER LOCATION | DISTANCE FROM LEFT END OF SPAN (ft) | |
| DESIGN LOAD RATING | | HL-93(Inv) | N/A | 1 | 1.06 | -- | 1.75 | 0.866 | 1.32 | A | EL | 28.646 | 0.946 | 1.42 | B | I | 21.133 | 0.80 | 0.946 | 1.06 | A | I | 28.646 | |
| | | HL-93(Opr) | N/A | -- | 1.71 | -- | 1.35 | 0.866 | 1.71 | A | EL | 28.646 | 0.946 | 1.84 | B | I | 21.133 | N/A | -- | -- | -- | -- | -- | |
| | | HS-20(Inv) | 36.000 | 2 | 1.34 | 48.328 | 1.75 | 0.866 | 1.66 | A | EL | 28.646 | 0.946 | 1.61 | B | I | 21.133 | 0.80 | 0.837 | 1.34 | A | I | 28.646 | |
| | | HS-20(Opr) | 36.000 | -- | 2.09 | 75.113 | 1.35 | 0.866 | 2.16 | A | EL | 28.646 | 0.946 | 2.09 | B | I | 21.133 | N/A | -- | -- | -- | -- | -- | |
| LEGAL LOAD RATING | SV | SNSH | 13.500 | -- | 2.87 | 38.710 | 1.40 | 0.866 | 4.44 | A | EL | 28.646 | 0.946 | 4.12 | B | I | 21.133 | 0.80 | 0.837 | 2.87 | A | I | 28.646 | |
| | | SNGARBS2 | 20.000 | -- | 2.20 | 44.096 | 1.40 | 0.866 | 3.42 | A | EL | 28.646 | 0.946 | 3.12 | B | I | 21.133 | 0.80 | 0.837 | 2.20 | A | I | 28.646 | |
| | | SNAGRIS2 | 22.000 | -- | 2.12 | 46.591 | 1.40 | 0.866 | 3.28 | A | EL | 28.646 | 0.946 | 2.98 | B | I | 21.133 | 0.80 | 0.837 | 2.12 | A | I | 28.646 | |
| | | SNCOTTS3 | 27.250 | -- | 1.43 | 38.935 | 1.40 | 0.866 | 2.21 | A | EL | 28.646 | 0.946 | 2.08 | B | I | 21.133 | 0.80 | 0.837 | 1.43 | A | I | 28.646 | |
| | | SNAGGRS4 | 34.925 | -- | 1.22 | 42.603 | 1.40 | 0.866 | 1.89 | A | EL | 28.646 | 0.946 | 1.86 | B | I | 21.133 | 0.80 | 0.837 | 1.22 | A | I | 28.646 | |
| | | SNS5A | 35.550 | -- | 1.19 | 42.343 | 1.40 | 0.866 | 1.85 | A | EL | 28.646 | 0.946 | 1.97 | B | I | 21.133 | 0.80 | 0.837 | 1.19 | A | I | 28.646 | |
| | | SNS6A | 39.950 | -- | 1.10 | 44.103 | 1.40 | 0.866 | 1.71 | A | EL | 28.646 | 0.946 | 1.86 | B | I | 21.133 | 0.80 | 0.837 | 1.10 | A | I | 28.646 | |
| | | SNS7B | 42.000 | -- | 1.05 | 44.172 | 1.40 | 0.866 | 1.63 | A | EL | 28.646 | 0.946 | 1.93 | B | I | 21.133 | 0.80 | 0.837 | 1.05 | A | I | 28.646 | |
| | TTST | TNAGRIT3 | 33.000 | -- | 1.35 | 44.534 | 1.40 | 0.866 | 2.09 | A | EL | 28.646 | 0.946 | 2.16 | B | I | 21.133 | 0.80 | 0.837 | 1.35 | A | I | 28.646 | |
| | | TNT4A | 33.075 | -- | 1.36 | 44.934 | 1.40 | 0.866 | 2.11 | A | EL | 28.646 | 0.946 | 2.04 | B | I | 21.133 | 0.80 | 0.837 | 1.36 | A | I | 28.646 | |
| | | TNT6A | 41.600 | -- | 1.12 | 46.664 | 1.40 | 0.866 | 1.74 | A | EL | 28.646 | 0.946 | 2.22 | B | I | 21.133 | 0.80 | 0.837 | 1.12 | A | I | 28.646 | |
| | | TNT7A | 42.000 | -- | 1.13 | 47.597 | 1.40 | 0.866 | 1.76 | A | EL | 28.646 | 0.946 | 1.97 | B | I | 21.133 | 0.80 | 0.837 | 1.13 | A | I | 28.646 | |
| | | TNT7B | 42.000 | -- | 1.18 | 49.703 | 1.40 | 0.866 | 1.83 | A | EL | 28.646 | 0.946 | 1.80 | B | I | 21.133 | 0.80 | 0.837 | 1.18 | A | I | 28.646 | |
| | | TNAGRIT4 | 43.000 | -- | 1.12 | 48.090 | 1.40 | 0.866 | 1.73 | A | EL | 28.646 | 0.946 | 1.73 | B | I | 21.133 | 0.80 | 0.837 | 1.12 | A | I | 28.646 | |
| | | TNAGT5A | 45.000 | -- | 1.05 | 47.222 | 1.40 | 0.866 | 1.63 | A | EL | 28.646 | 0.946 | 1.83 | B | I | 21.133 | 0.80 | 0.837 | 1.05 | A | I | 28.646 | |
| | | TNAGT5B | 45.000 | 3 | 1.03 | 46.448 | 1.40 | 0.866 | 1.60 | A | EL | 28.646 | 0.946 | 1.63 | B | I | 21.133 | 0.80 | 0.837 | 1.03 | A | I | 28.646 | |

## LOAD FACTORS:

| DESIGN LOAD RATING FACTORS | LIMIT STATE | $\gamma_{DC}$ | $\gamma_{DW}$ |
|---|---|---|---|
| | STRENGTH I | 1.25 | 1.50 |
| | SERVICE III | 1.00 | 1.00 |

## NOTES:

MINIMUM RATING FACTORS ARE BASED ON THE STRENGTH I AND SERVICE III LIMIT STATES.

ALLOWABLE STRESSES FOR SERVICE III LIMIT STATE ARE AS REQUIRED FOR DESIGN.

## COMMENTS:

1. SPAN C EQUALS SPAN A
2.
3.
4.

## (#) CONTROLLING LOAD RATING

(1) DESIGN LOAD RATING (HL-93)

(2) DESIGN LOAD RATING (HS-20)

(3) LEGAL LOAD RATING **

** SEE CHART FOR VEHICLE TYPE

## GIRDER LOCATION

I - INTERIOR GIRDER
EL - EXTERIOR LEFT GIRDER
ER - EXTERIOR RIGHT GIRDER

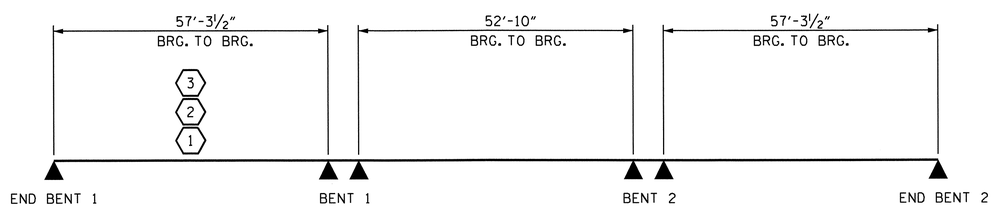


LRFR SUMMARY

PROJECT NO. R-2309AB
GUILFORD COUNTY
STATION: 134+30.00 -L-

STATE OF NORTH CAROLINA
DEPARTMENT OF TRANSPORTATION
RALEIGH

STANDARD
LRFR SUMMARY FOR PRESTRESSED CONCRETE GIRDERS
(NON-INTERSTATE TRAFFIC)
(LEFT LANE)

NORTH CAROLINA PROFESSIONAL SEAL 14045 ENGINEER TIMOTHY W. COGGINS
10/27/11

| REVISIONS | | | | | | SHEET NO. |
|---|---|---|---|---|---|---|
| NO. | BY: | DATE: | NO. | BY: | DATE: | S-60 |
| 1 | | | 3 | | | TOTAL SHEETS |
| 2 | | | 4 | | | 136 |

STR. #3 STD. NO. LRFR1

ASSEMBLED BY: N.BARODAWALA DATE: 9-7-11
CHECKED BY: PEGGY PARISI DATE: 9-7-11
DRAWN BY: MAA 1/08
CHECKED BY: GM/DI 2/08
REV. 11/12/08R MAA/GM

26-OCT-2011 15:14
R:\TIPProjects-R\R2309AB\Structures\R2309ab\FinalPlans\Bridges\Str#3\r2309ab_sd_lrfr_03.dgn
tcoggins

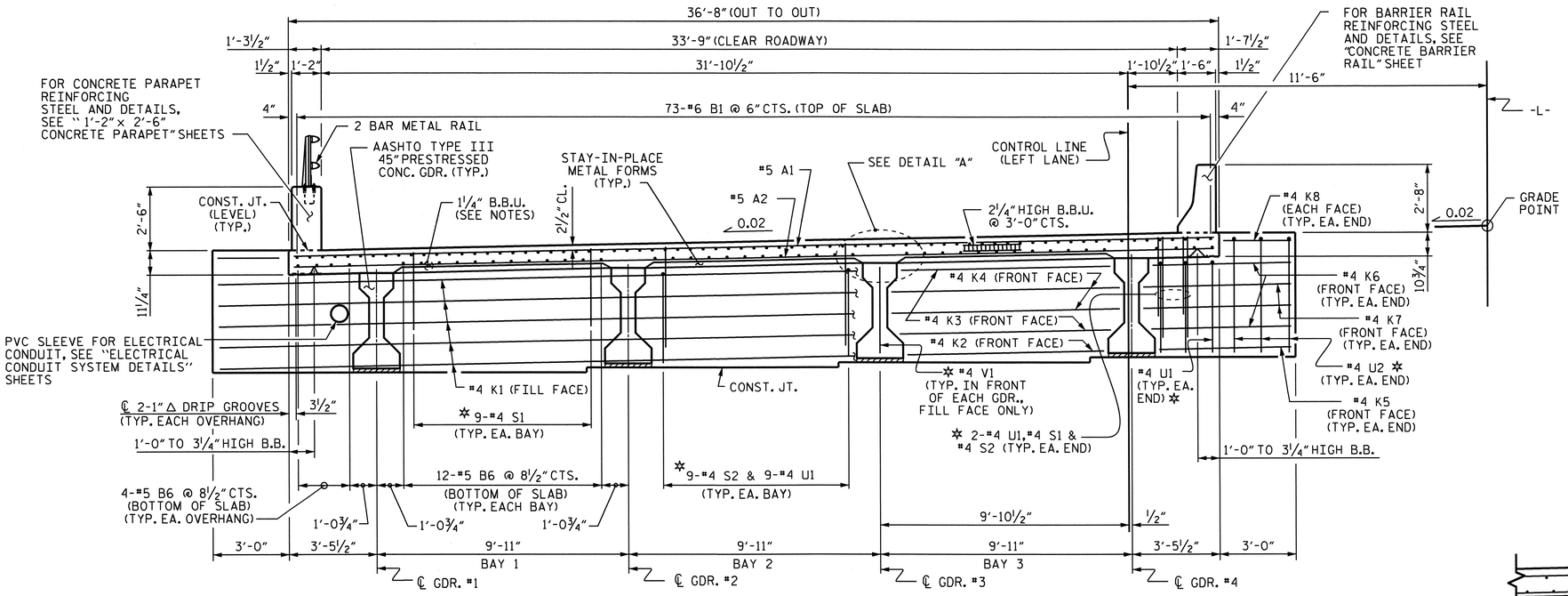


## TYPICAL SECTION @ INTEGRAL END BENT

✲ #4 U1, #4 U2, #4 V1, #4 S1 & #4 S2 BARS TO MATCH WITH #4 "V" BARS IN INTEGRAL END BENT CAP

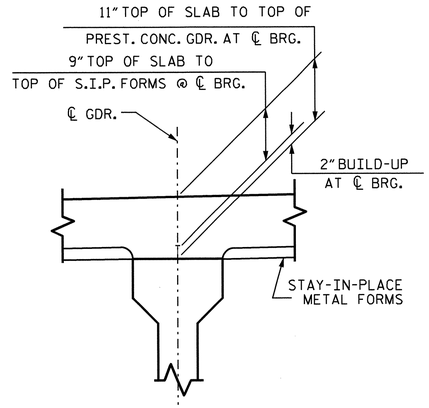


## DETAIL "A"

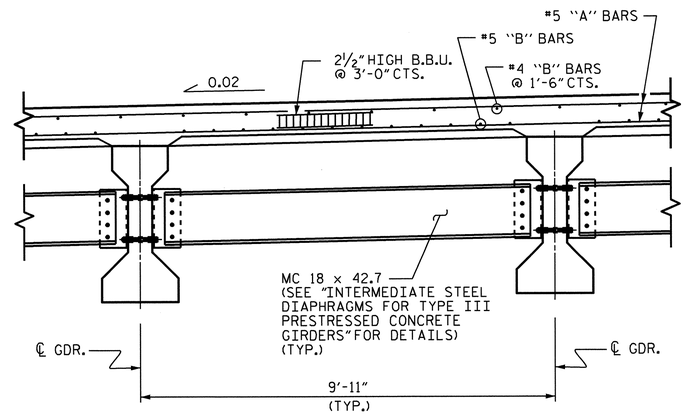


## PARTIAL TYPICAL SECTION

AT INTERMEDIATE DIAPHRAGM

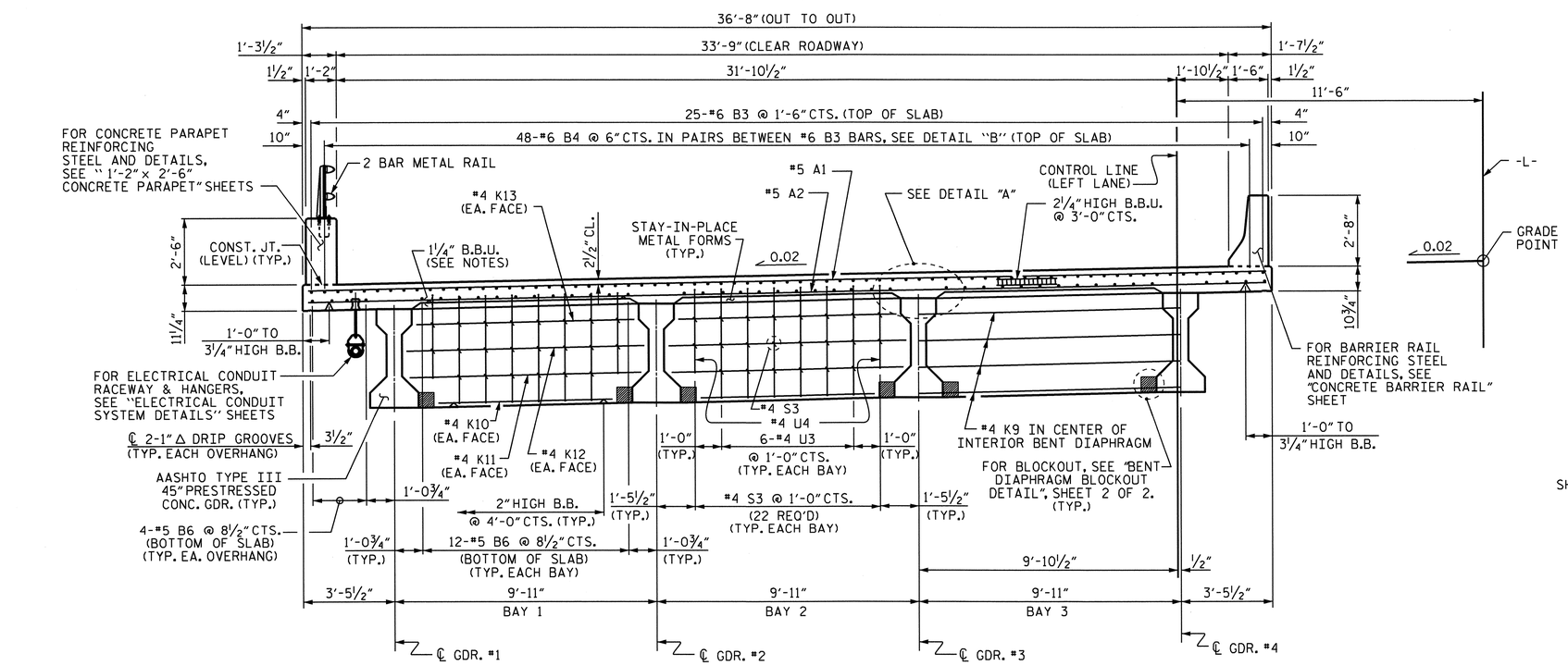


## TYPICAL SECTION @ CONTINUOUS BENT DIAPHRAGM

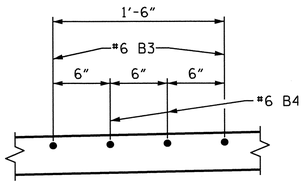


## DETAIL "B"

SHOWING TOP OF SLAB "B" BAR SPACING @ CONTINUOUS BENT DIAPHGRAM

PROJECT NO. R-2309AB

GUILFORD COUNTY

STATION: 134+30.00 -L-

SHEET 1 OF 2

STATE OF NORTH CAROLINA
DEPARTMENT OF TRANSPORTATION
RALEIGH

SUPERSTRUCTURE

TYPICAL SECTION

(LEFT LANE)

NORTH CAROLINA PROFESSIONAL SEAL 14045 ENGINEER TIMOTHY W. COGGINS

10/27/11

| REVISIONS | | | | | | SHEET NO. |
|---|---|---|---|---|---|---|
| NO. | BY: | DATE: | NO. | BY: | DATE: | S-61 |
| 1 | | | 3 | | | TOTAL SHEETS |
| 2 | | | 4 | | | 136 |

STR. #3

DRAWN BY : B.N.BARODAWALA DATE : 8-24-10
CHECKED BY : PEGGY PARISI DATE : 8-31-10

26-OCT-2011 15:14
R:\TIPProjects-R\R2309AB\Structures\R2309ab\FinalPlans\Bridges\Str#3\r2309ab_sd_ts_03.dgn
tcoggins

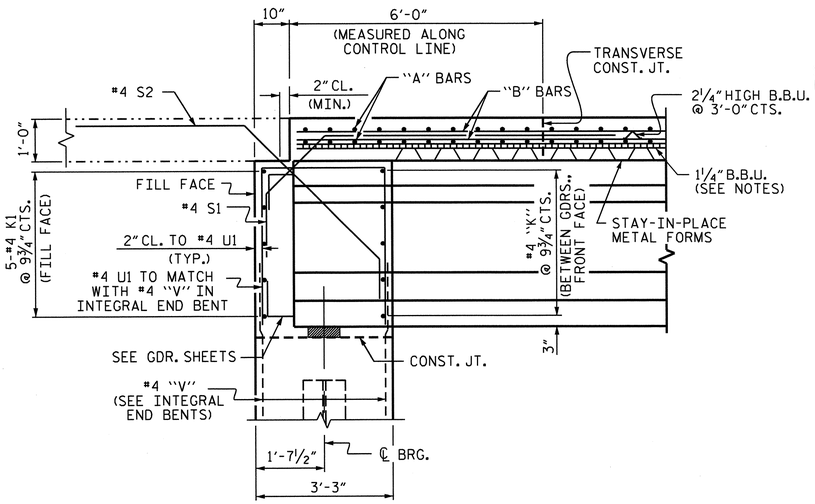


## END OF GIRDER DETAIL AT INTEGRAL END BENT

#4 V1 BARS IN FRONT OF GIRDER NOT SHOWN

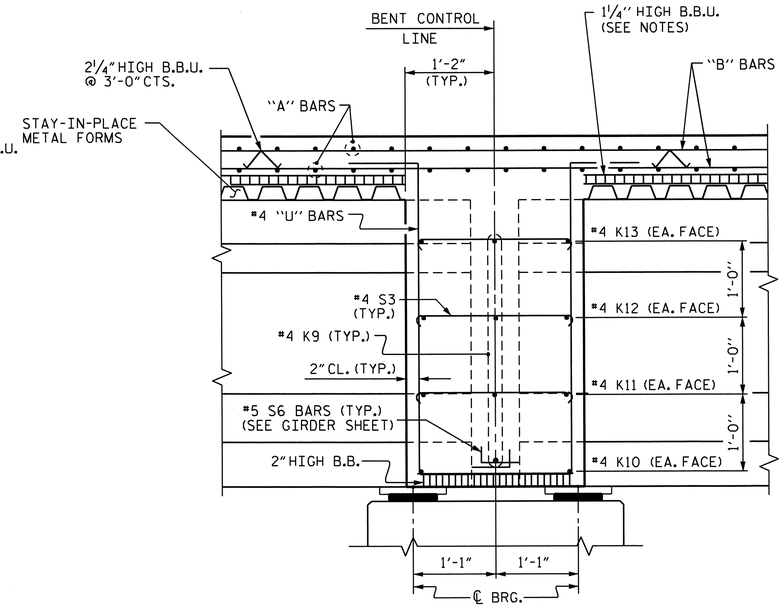


## SECTION THRU BENT DIAPHRAGM

## NOTES:

LONGITUDINAL STEEL MAY BE SHIFTED SLIGHTLY, AS NECESSARY, TO AVOID INTERFERENCE WITH STIRRUPS IN PRESTRESSED CONCRETE GIRDERS.

PREVIOUSLY CAST CONCRETE IN A CONTINUOUS UNIT SHALL HAVE ATTAINED A MINIMUM COMPRESSIVE STRENGTH OF 3,000 PSI BEFORE ADDITIONAL CONCRETE IS CAST IN THE UNIT.

CONCRETE PARAPET AND BARRIER RAIL IN A CONTINUOUS UNIT SHALL NOT BE CAST UNTIL ALL SLAB CONCRETE IN THE UNIT HAS BEEN CAST AND HAS REACHED A MINIMUM COMPRESSIVE STRENGTH OF 3,000 PSI.

PROVIDE 1¼" HIGH BEAM BOLSTERS UPPER AT 4'-0" CTS. ATOP THE METAL STAY-IN-PLACE FORMS TO SUPPORT THE BOTTOM MAT OF 'A' BARS. WHEN USING REMOVABLE FORMS, PROVIDE CONTINUOUS HIGH CHAIRS FOR METAL DECK (C.H.C.M.) @ 4'-0" CTS. WITH A HEIGHT TO SUPPORT THE BOTTOM MAT OF 'A' BARS A CLEAR DISTANCE OF 2½" ABOVE THE TOP OF THE REMOVABLE FORM.

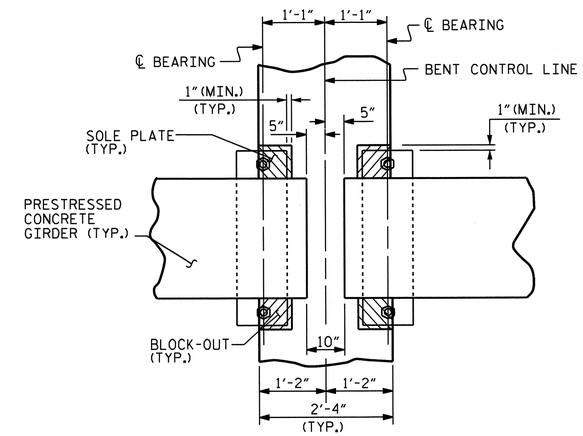


PLAN

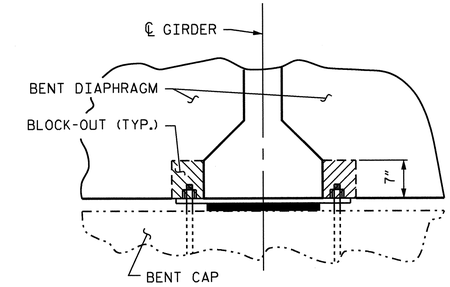


SECTION

## BENT DIAPHRAGM BLOCKOUT DETAIL

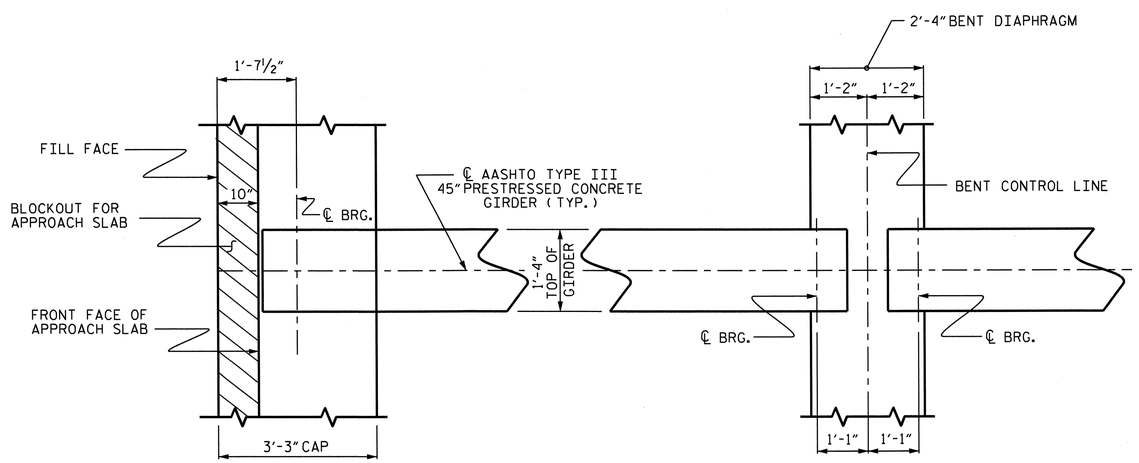


@ INTEGRAL END BENT

@ BENT DIAPHRAGM

## PLAN OF GIRDER

PROJECT NO. R-2309AB

GUILFORD COUNTY

STATION: 134+30.00 -L-

SHEET 2 OF 2

STATE OF NORTH CAROLINA
DEPARTMENT OF TRANSPORTATION
RALEIGH

SUPERSTRUCTURE
TYPICAL SECTION DETAILS
(LEFT LANE)

NORTH CAROLINA PROFESSIONAL SEAL 14045 ENGINEER TIMOTHY W. COGGINS
10/27/11

| REVISIONS | | | | | | SHEET NO. |
|---|---|---|---|---|---|---|
| NO. | BY: | DATE: | NO. | BY: | DATE: | S-62 |
| 1 | | | 3 | | | TOTAL SHEETS |
| 2 | | | 4 | | | 136 |

STR. #3

DRAWN BY : B.N.BARODAWALA DATE : 8-24-10
CHECKED BY : PEGGY PARISI DATE : 8-31-10

26-OCT-2011 15:14
R:\TIPProjects-R\R2309AB\Structures\R2309ab\FinalPlans\Bridges\Str#3\r2309ab_sd_ts_03.dgn
tcoggins

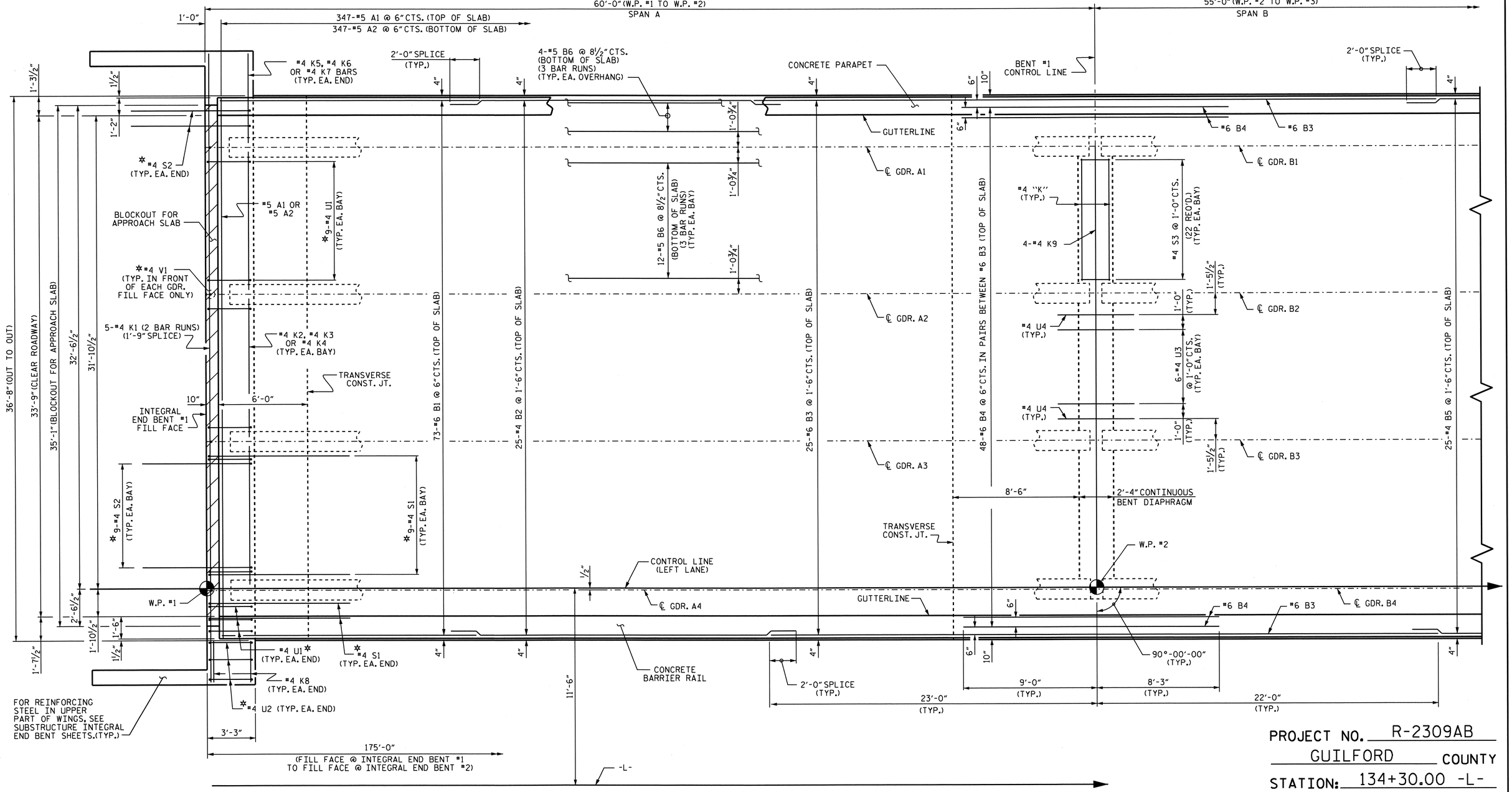


PROJECT NO. R-2309AB

GUILFORD COUNTY

STATION: 134+30.00 -L-

SHEET 1 OF 2

## PLAN OF SPAN

FOR LOCATION OF INTERMEDIATE DIAPHRAGMS, SEE "GIRDER LAYOUT."

* #4 U1, #4 U2, #4 V1, #4 S1 & #4 S2 BARS TO MATCH WITH #4 "V" BARS IN INTEGRAL END BENT CAP.

NORTH CAROLINA PROFESSIONAL SEAL 14045 ENGINEER TIMOTHY A. COGGINS

10/27/11

STATE OF NORTH CAROLINA
DEPARTMENT OF TRANSPORTATION
RALEIGH

SUPERSTRUCTURE

PLAN OF SPAN
(LEFT LANE)

| REVISIONS | | | | | | SHEET NO. |
|---|---|---|---|---|---|---|
| NO. | BY: | DATE: | NO. | BY: | DATE: | S-63 |
| 1 | | | 3 | | | TOTAL SHEETS |
| 2 | | | 4 | | | 136 |

STR. #3

DRAWN BY : B.N.BARODAWALA DATE : 8-24-10
CHECKED BY : PEGGY PARISI DATE : 8-31-10

26-OCT-2011 15:13
R:\TIPProjects-R\R2309AB\Structures\R2309ab\FinalPlans\Bridges\Str#3\r2309ab_sd_ps_03.dgn
tcoggins

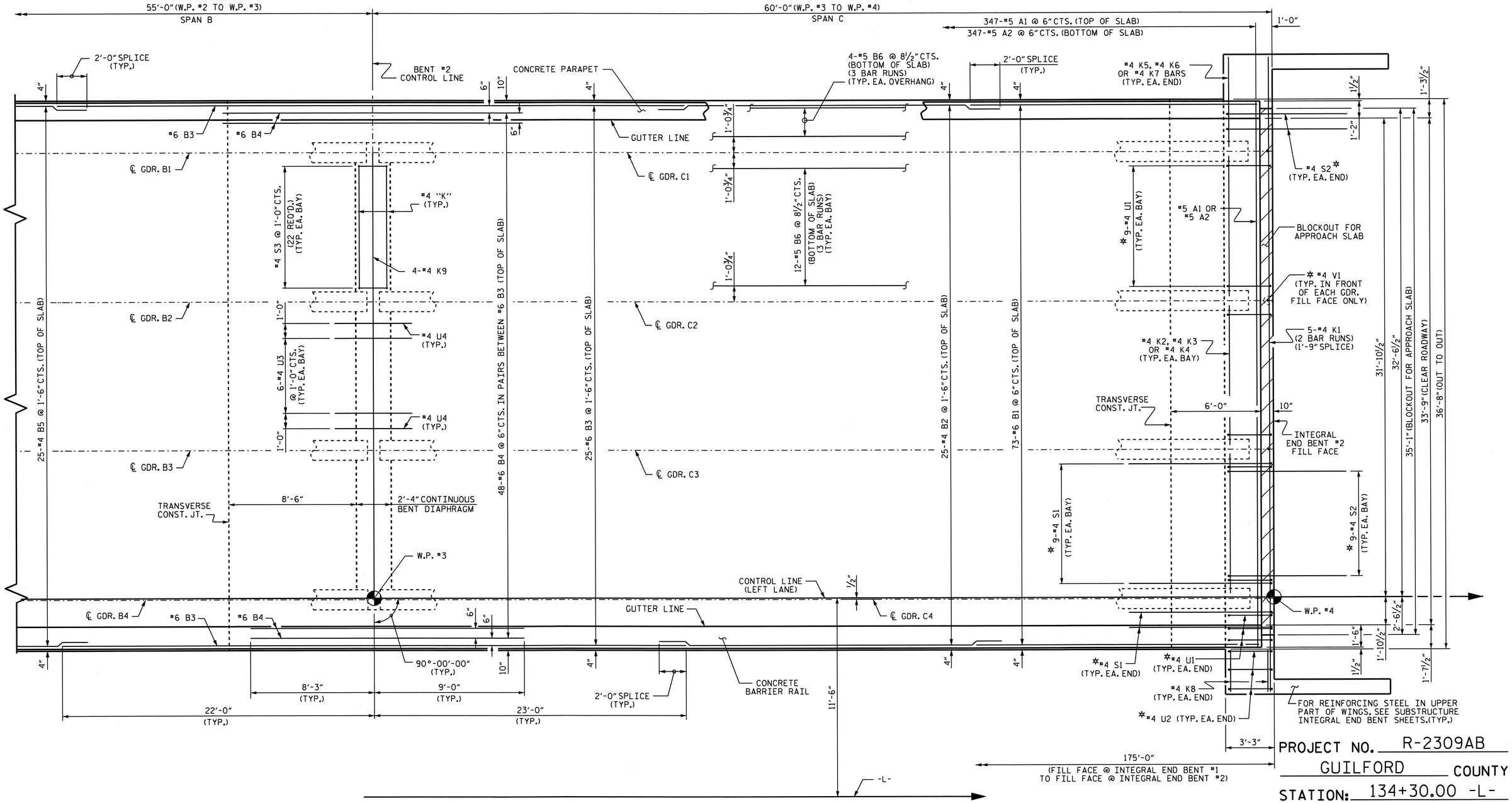


# PLAN OF SPAN

FOR LOCATION OF INTERMEDIATE DIAPHRAGMS, SEE "GIRDER LAYOUT."
* #4 U1, #4 U2, #4 V1, #4 S1 & #4 S2 BARS TO MATCH WITH #4 "V" BARS IN INTEGRAL END BENT CAP.

PROJECT NO. R-2309AB
GUILFORD COUNTY
STATION: 134+30.00 -L-

SHEET 2 OF 2

STATE OF NORTH CAROLINA
DEPARTMENT OF TRANSPORTATION
RALEIGH

SUPERSTRUCTURE
PLAN OF SPAN
(LEFT LANE)

NORTH CAROLINA PROFESSIONAL SEAL 14045 ENGINEER TIMOTHY J. COGGINS
10/27/11

| REVISIONS | | | | | | SHEET NO. |
|---|---|---|---|---|---|---|
| NO. | BY: | DATE: | NO. | BY: | DATE: | S-64 |
| 1 | | | 3 | | | TOTAL SHEETS |
| 2 | | | 4 | | | 136 |

STR. #3

DRAWN BY : B.N.BARODAWALA DATE : 8-24-10
CHECKED BY : PEGGY PARISI DATE : 8-31-10

26-OCT-2011 15:13
R:\TIPProjects-R\R2309AB\Structures\R2309ab\FinalPlans\Bridges\Str#3\r2309ab_sd_ps_03.dgn
tcoggins

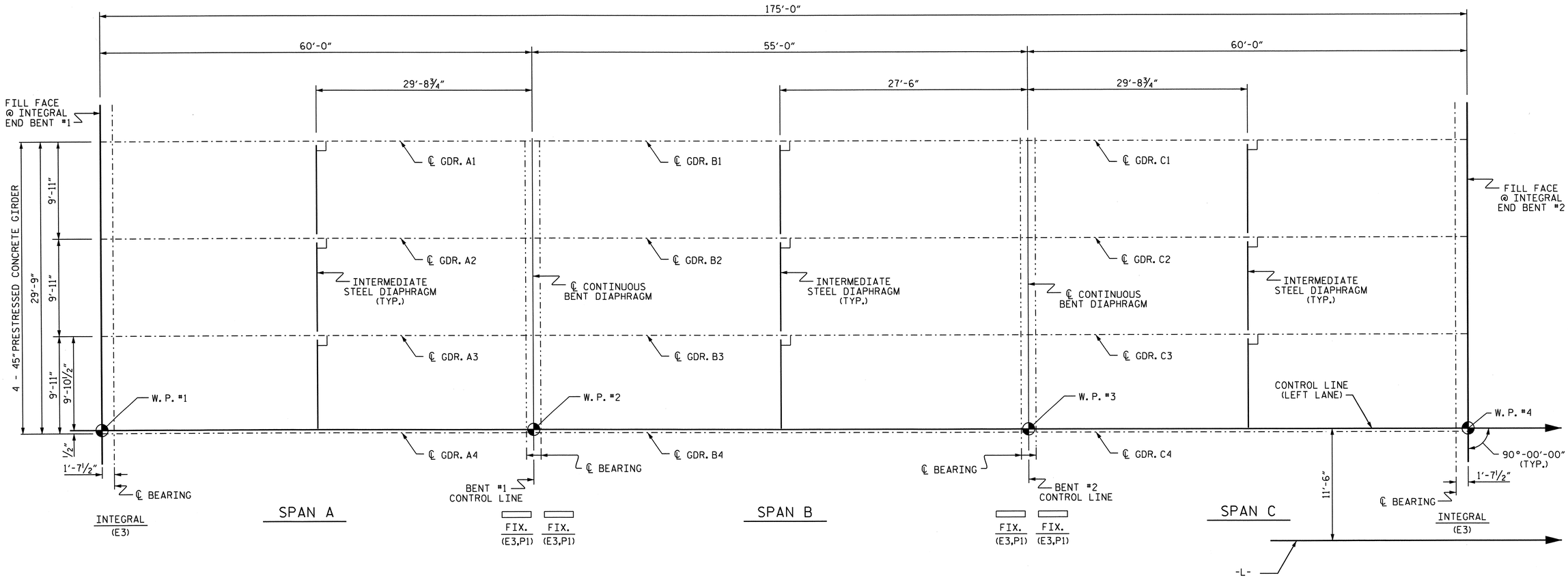


# GIRDER LAYOUT

PROJECT NO. R-2309AB
GUILFORD COUNTY
STATION: 134+30.00 -L-

STATE OF NORTH CAROLINA
DEPARTMENT OF TRANSPORTATION
RALEIGH

SUPERSTRUCTURE

GIRDER LAYOUT

(LEFT LANE)

NORTH CAROLINA PROFESSIONAL SEAL 14045 ENGINEER TIMOTHY L. COGGINS
10/27/11

| REVISIONS | | | | | | SHEET NO. |
|---|---|---|---|---|---|---|
| NO. | BY: | DATE: | NO. | BY: | DATE: | S-65 |
| 1 | | | 3 | | | TOTAL SHEETS |
| 2 | | | 4 | | | 136 |

STR. #3

DRAWN BY : B.N.BARODAWALA DATE : 8-26-10
CHECKED BY : PEGGY PARISI DATE : 8-31-10

26-OCT-2011 15:13
R:\TIPProjects-R\R2309AB\Structures\R2309ab\FinalPlans\Bridges\Str#3\r2309ab_sd_fp_03.dgn
tcoggins

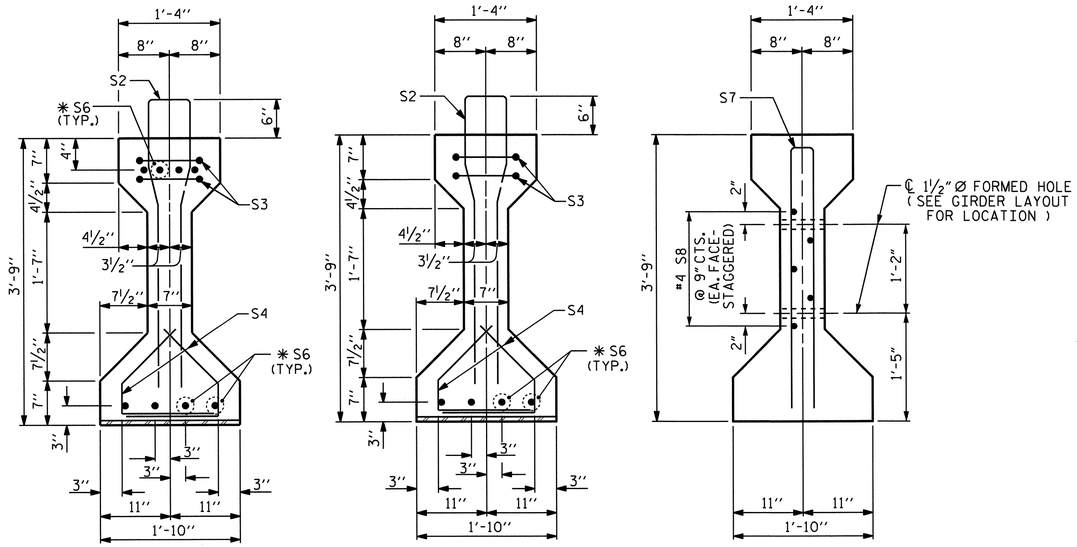


(S1 BARS NOT SHOWN)

ADJUST #4 S8 TO AVOID INTERFERENCE WITH STRAND PATTERN IN WEB OF GIRDER.

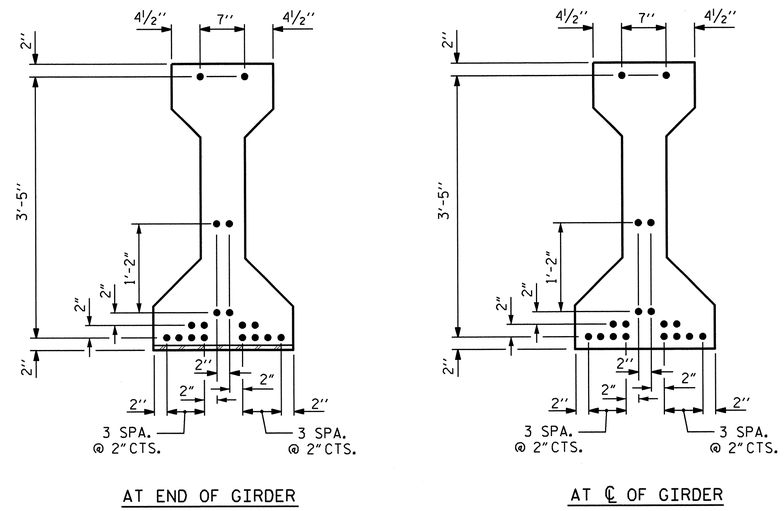


0.6" Ø LOW RELAXATION STRAND LAYOUT

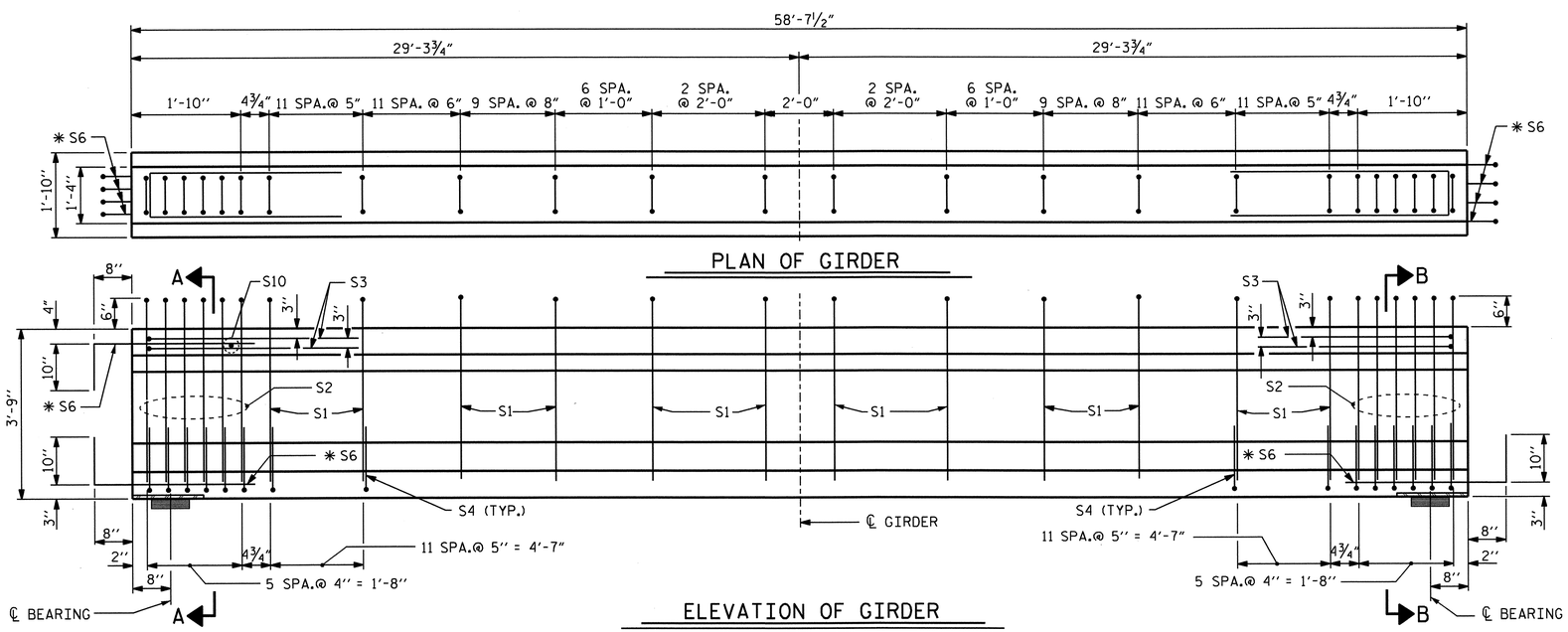


(SEE PARTIAL ELEVATION FOR ADDITIONAL "S" BARS)

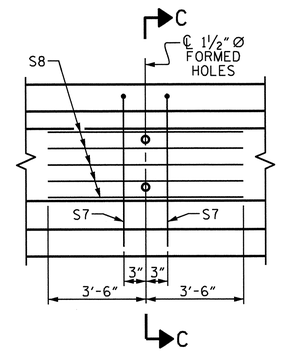


PARTIAL ELEVATION

SHOWING INTERMEDIATE DIAPHRAGM REINFORCING STEEL FOR ALL GIRDERS

## 0.6" Ø L. R. GRADE 270 STRANDS

| AREA (SQUARE INCHES) | ULTIMATE STRENGTH (LBS. PER STRAND) | APPLIED PRESTRESS (LBS. PER STRAND) |
|---|---|---|
| 0.217 | 58,600 | 43,950 |

## REINFORCING STEEL FOR ONE GIRDER

| BAR | NUMBER | SIZE | TYPE | LENGTH | WEIGHT |
|---|---|---|---|---|---|
| S1 | 80 | #4 | 1 | 8'-6" | 454 |
| S2 | 12 | #6 | 1 | 8'-6" | 153 |
| S3 | 4 | #4 | 3 | 8'-8" | 23 |
| S4 | 72 | #4 | 2 | 2'-9" | 132 |
| ✱S6 | 12 | #5 | STR | 3'-8" | 46 |
| S7 | 2 | #5 | 3 | 7'-2" | 15 |
| S8 | 5 | #4 | STR | 7'-0" | 23 |
| S10 | 1 | #3 | STR | 1'-0" | 1 |

✱NOTE: S6 BARS SHALL BE BENT BEFORE SHIPMENT. HEAT BENDING SHALL NOT BE ALLOWED.

## BAR TYPES

ALL BAR DIMENSIONS ARE OUT-TO-OUT

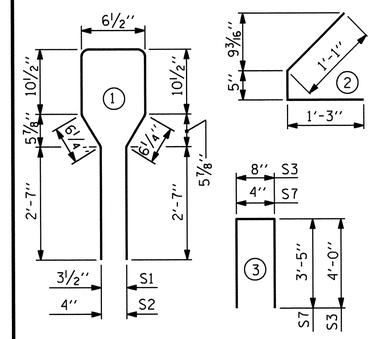


## QUANTITIES FOR ONE GIRDER

| | REINFORCING STEEL | 5500 PSI CONCRETE | 0.6" Ø L. R. STRANDS |
|---|---|---|---|
| | LB. | C.Y. | No. |
| | 847 | 8.4 | 18 |

## GIRDERS REQUIRED

| NUMBER | LENGTH | TOTAL LENGTH |
|---|---|---|
| 8 | 58'-7½" | 469'-0" |

PROJECT NO. R-2309AB

GUILFORD COUNTY

STATION: 134+30.00 -L-

SHEET 1 OF 4

STATE OF NORTH CAROLINA
DEPARTMENT OF TRANSPORTATION
RALEIGH

STANDARD

AASHTO TYPE III
PRESTRESSED CONCRETE GIRDER
CONTINUOUS FOR LIVE LOAD
SPAN A & C (LEFT LANE)

NORTH CAROLINA PROFESSIONAL SEAL 14045 ENGINEER TIMOTHY L. COGGINS

10/27/11

| REVISIONS | | | | | | | | SHEET NO. |
|---|---|---|---|---|---|---|---|---|
| NO. | BY: | DATE: | NO. | BY: | DATE: | | | S-66 |
| 1 | | | 3 | | | | | TOTAL SHEETS |
| 2 | | | 4 | | | | | 136 |

ASSEMBLED BY : B.N.BARODAWALA DATE : 8-25-10
CHECKED BY : PEGGY PARISI DATE : 8-31-10

DRAWN BY : ELR 8/91
CHECKED BY : GRP 8/91

REV. 7/17/98 RWW/LES
REV. 10/17/00R RWW/LES
REV. 5/1/06R TLA/GM

26-OCT-2011 15:12
R:\TIPProjects-R\R2309AB\Structures\R2309ab\Final Plans\Bridges\Str#3\r2309ab_sd_g_03.dgn
tcoggins

STR. #3

STD. NO. PCG5 (Sht. 2)

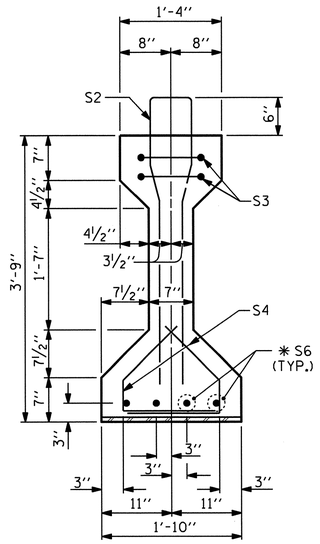


SECTION B-B

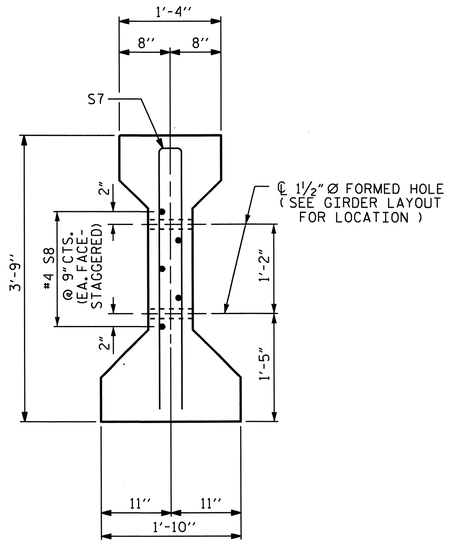


SECTION C-C

(S1 BARS NOT SHOWN)

ADJUST #4 S8 TO AVOID INTERFERENCE WITH STRAND PATTERN IN WEB OF GIRDER.

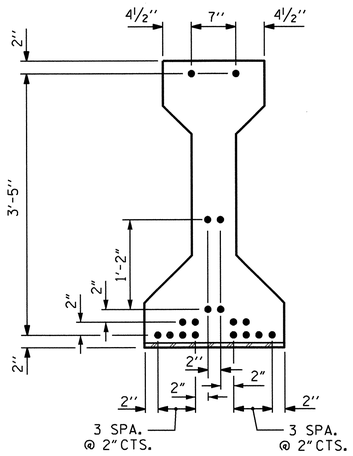


AT END OF GIRDER

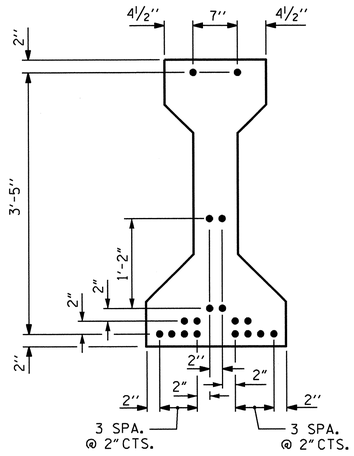


AT ℄ OF GIRDER

0.6" Ø LOW RELAXATION STRAND LAYOUT

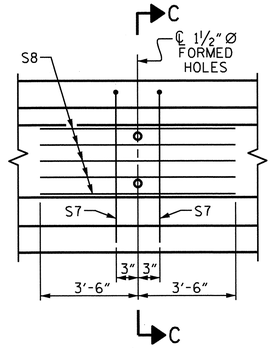


PARTIAL ELEVATION

SHOWING INTERMEDIATE DIAPHRAGM REINFORCING STEEL FOR ALL GIRDERS

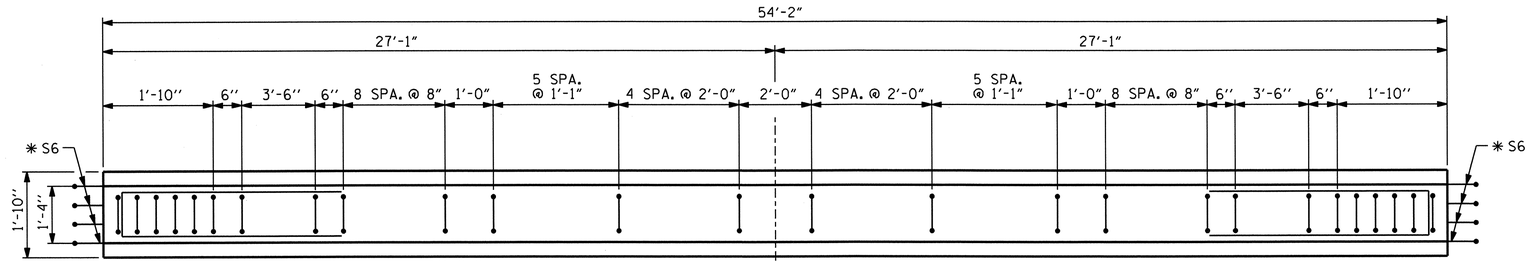


PLAN OF GIRDER

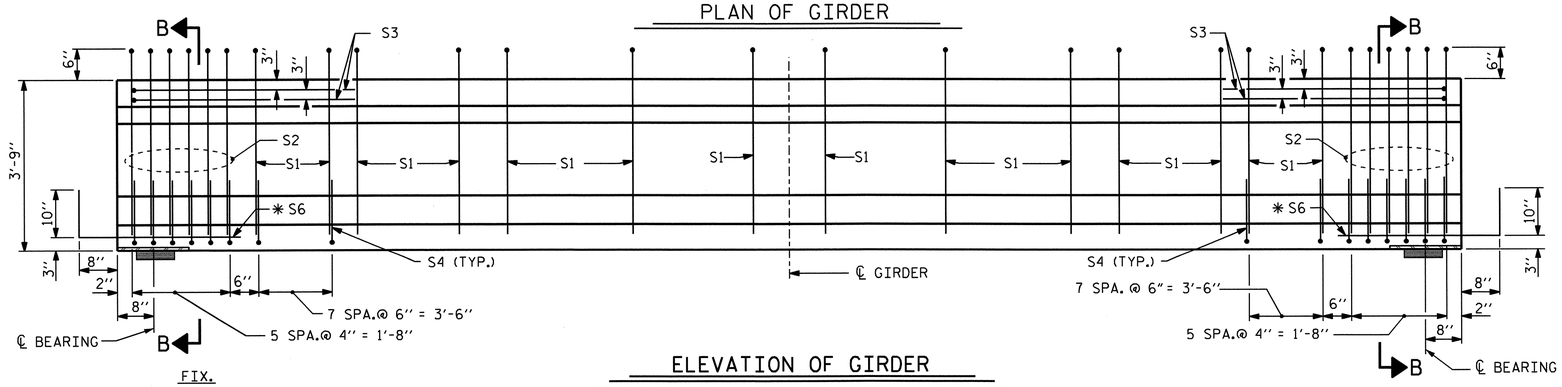


ELEVATION OF GIRDER

(SEE PARTIAL ELEVATION FOR ADDITIONAL "S" BARS)

## 0.6" Ø L. R. GRADE 270 STRANDS

| AREA (SQUARE INCHES) | ULTIMATE STRENGTH (LBS. PER STRAND) | APPLIED PRESTRESS (LBS. PER STRAND) |
|---|---|---|
| 0.217 | 58,600 | 43,950 |

## REINFORCING STEEL FOR ONE GIRDER

| BAR | NUMBER | SIZE | TYPE | LENGTH | WEIGHT |
|---|---|---|---|---|---|
| S1 | 54 | #4 | 1 | 8'-6" | 307 |
| S2 | 12 | #6 | 1 | 8'-6" | 153 |
| S3 | 4 | #4 | 3 | 8'-8" | 23 |
| S4 | 56 | #4 | 2 | 2'-9" | 103 |
| ✱ S6 | 8 | #5 | STR | 3'-8" | 31 |
| S7 | 2 | #5 | 3 | 7'-2" | 15 |
| S8 | 5 | #4 | STR | 7'-0" | 23 |
| | | | | | |
| | | | | | |

✱ NOTE: S6 BARS SHALL BE BENT BEFORE SHIPMENT. HEAT BENDING SHALL NOT BE ALLOWED.

## BAR TYPES

ALL BAR DIMENSIONS ARE OUT-TO-OUT

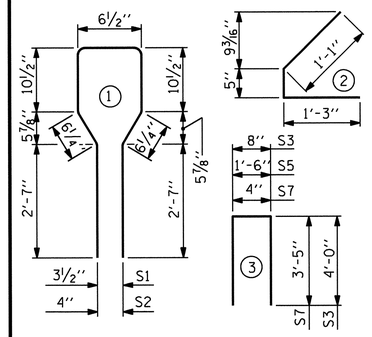


## QUANTITIES FOR ONE GIRDER

| | REINFORCING STEEL | 5500 PSI CONCRETE | 0.6" Ø L. R. STRANDS |
|---|---|---|---|
| | LB. | C.Y. | No. |
| | 655 | 7.8 | 18 |

## GIRDERS REQUIRED

| NUMBER | LENGTH | TOTAL LENGTH |
|---|---|---|
| 4 | 54'-2" | 216'-8" |

PROJECT NO. R-2309AB

GUILFORD COUNTY

STATION: 134+30.00 -L-

SHEET 2 OF 4

STATE OF NORTH CAROLINA
DEPARTMENT OF TRANSPORTATION
RALEIGH

STANDARD

AASHTO TYPE III
PRESTRESSED CONCRETE GIRDER
CONTINUOUS FOR LIVE LOAD
SPAN B (LEFT LANE)

NORTH CAROLINA PROFESSIONAL SEAL 14045 ENGINEER TIMOTHY L. COGGINS
10/27/11

| REVISIONS | | | | | | SHEET NO. |
|---|---|---|---|---|---|---|
| NO. | BY: | DATE: | NO. | BY: | DATE: | S-67 |
| 1 | | | 3 | | | TOTAL SHEETS |
| 2 | | | 4 | | | 136 |

STR. #3

STD. NO. PCG5

| | |
|---|---|
| ASSEMBLED BY : B.N.BARODAWALA DATE : 8-25-10 | |
| CHECKED BY : PEGGY PARISI DATE : 8-31-10 | |
| DRAWN BY : ELR 8/91 | REV. 7/17/98 RWW/LES |
| CHECKED BY : GRP 8/91 | REV. 10/17/00R RWW/LES |
| | REV. 5/1/06R TLA/GM |

26-OCT-2011 15:12
R:\TIPProjects-R\R2309AB\Structures\R2309ab\Final Plans\Bridges\Str#3\r2309ab_sd_g_03.dgn
tcoggins

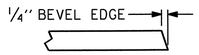


SECTION "G"

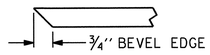


SECTION "F"

(SEE NOTES)

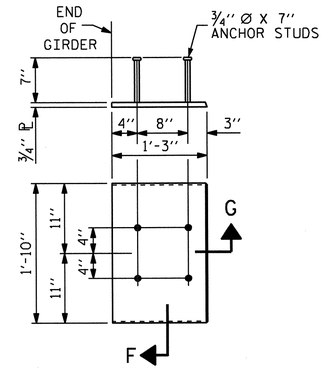


## EMBEDDED PLATE "B-1" DETAILS FOR AASHTO TYPE III GIRDER

(2 REQ'D PER GIRDER)

## NOTES

ALL PRESTRESSING STRANDS SHALL BE 7-WIRE LOW-RELAXATION GRADE 270 STRANDS AND SHALL CONFORM TO AASHTO M203 EXCEPT FOR SAMPLING REQUIREMENTS WHICH SHALL BE IN ACCORDANCE WITH THE STANDARD SPECIFICATIONS.

ALL REINFORCING STEEL SHALL BE GRADE 60.

EMBEDDED PLATE "B-1" SHALL BE GALVANIZED IN ACCORDANCE WITH THE STANDARD SPECIFICATIONS. BEVEL EDGES OF PLATE "B-1" TO GIVE CLOSE FIT BUT NOT TIGHT FIT TO STEEL CASTING FORM.

ANCHOR STUDS SHALL CONFORM TO AASHTO M169 GRADES 1010 THROUGH 1020 OR APPROVED EQUAL, AND SHALL MEET THE TYPE "B" REQUIREMENTS OF SUBSECTION 7.3 OF THE ANSI/AASHTO/AWS D1.5 BRIDGE WELDING CODE.

AT ENDS OF GIRDERS TO BE EMBEDDED IN CONCRETE DIAPHRAGMS OR END WALLS, PRESTRESSING STRANDS MAY EXTEND A MAXIMUM OF 2" BEYOND THE GIRDER ENDS. OTHERWISE, PRESTRESSING STRANDS SHALL BE CUT FLUSH WITH THE GIRDER ENDS.

THE TRANSFER OF LOAD FROM THE ANCHORAGES TO THE GIRDER SHALL BE DONE WHEN CONCRETE HAS REACHED A COMPRESSIVE STRENGTH OF NOT LESS THAN 4200 PSI.

DEPENDING ON THE TYPE OF SYSTEM USED TO SUPPORT THE DECK SLAB FORMS, PRESET ANCHORS MAY BE NECESSARY IN THE PRESTRESSED CONCRETE GIRDER.

THE TOP SURFACE OF THE GIRDER, EXCLUDING THE OUTSIDE 4", SHALL BE RAKED TO A DEPTH OF 1/4".

FOR PRESTRESSED CONCRETE MEMBERS, SEE SPECIAL PROVISIONS.

### DEAD LOAD DEFLECTION TABLE FOR SPANS A AND C

| 0.6" Ø LOW RELAXATION | GIRDERS 1 AND 4 | | | | | | | | | | | GIRDERS 2 AND 3 | | | | | | | | | | |
|---|---|---|---|---|---|---|---|---|---|---|---|---|---|---|---|---|---|---|---|---|---|---|
| TENTH POINTS | 0 | .1 | .2 | .3 | .4 | .5 | .6 | .7 | .8 | .9 | 0 | 0 | .1 | .2 | .3 | .4 | .5 | .6 | .7 | .8 | .9 | 0 |
| CAMBER (GIRDER ALONE IN PLACE) ↑ | 0 | 0.035 | 0.067 | 0.092 | 0.107 | 0.113 | 0.107 | 0.092 | 0.067 | 0.035 | 0 | 0 | 0.035 | 0.067 | 0.092 | 0.107 | 0.113 | 0.107 | 0.092 | 0.067 | 0.035 | 0 |
| * DEFLECTION DUE TO SUPERIMPOSED D.L. ↓ | 0 | 0.015 | 0.028 | 0.038 | 0.044 | 0.046 | 0.044 | 0.038 | 0.028 | 0.015 | 0 | 0 | 0.017 | 0.031 | 0.043 | 0.050 | 0.053 | 0.050 | 0.043 | 0.031 | 0.017 | 0 |
| FINAL CAMBER ↑ | 0 | 1/4" | 1/2" | 5/8" | 3/4" | 13/16" | 3/4" | 5/8" | 1/2" | 1/4" | 0 | 0 | 1/4" | 7/16" | 9/16" | 11/16" | 3/4" | 11/16" | 9/16" | 7/16" | 1/4" | 0 |

* INCLUDES FUTURE WEARING SURFACE IN SUPERIMPOSED DEAD LOAD.
ALL VALUES ARE SHOWN IN FEET (DECIMAL FORM), EXCEPT "FINAL CAMBER", WHICH IS GIVEN IN INCHES (FRACTION FORM).

### DEAD LOAD DEFLECTION TABLE FOR SPAN B

| 0.6" Ø LOW RELAXATION | GIRDERS 1 AND 4 | | | | | | | | | | | GIRDERS 2 AND 3 | | | | | | | | | | |
|---|---|---|---|---|---|---|---|---|---|---|---|---|---|---|---|---|---|---|---|---|---|---|
| TENTH POINTS | 0 | .1 | .2 | .3 | .4 | .5 | .6 | .7 | .8 | .9 | 0 | 0 | .1 | .2 | .3 | .4 | .5 | .6 | .7 | .8 | .9 | 0 |
| CAMBER (GIRDER ALONE IN PLACE) ↑ | 0 | 0.032 | 0.060 | 0.083 | 0.097 | 0.102 | 0.097 | 0.083 | 0.060 | 0.032 | 0 | 0 | 0.032 | 0.060 | 0.083 | 0.097 | 0.102 | 0.097 | 0.083 | 0.060 | 0.032 | 0 |
| * DEFLECTION DUE TO SUPERIMPOSED D.L. ↓ | 0 | 0.011 | 0.020 | 0.027 | 0.032 | 0.034 | 0.032 | 0.027 | 0.020 | 0.011 | 0 | 0 | 0.012 | 0.023 | 0.031 | 0.037 | 0.038 | 0.037 | 0.031 | 0.023 | 0.012 | 0 |
| FINAL CAMBER ↑ | 0 | 1/4" | 1/2" | 11/16" | 3/4" | 13/16" | 3/4" | 11/16" | 1/2" | 1/4" | 0 | 0 | 1/4" | 7/16" | 5/8" | 3/4" | 3/4" | 3/4" | 5/8" | 7/16" | 1/4" | 0 |

* INCLUDES FUTURE WEARING SURFACE IN SUPERIMPOSED DEAD LOAD.
ALL VALUES ARE SHOWN IN FEET (DECIMAL FORM), EXCEPT "FINAL CAMBER", WHICH IS GIVEN IN INCHES (FRACTION FORM).

PROJECT NO. R-2309AB
GUILFORD COUNTY
STATION: 134+30.00 -L-

SHEET 3 OF 4

STATE OF NORTH CAROLINA
DEPARTMENT OF TRANSPORTATION
RALEIGH

STANDARD

PRESTRESSED CONCRETE GIRDER CONTINUOUS FOR LIVE LOAD DETAILS (LEFT LANE)

NORTH CAROLINA PROFESSIONAL SEAL 14045 ENGINEER TIMOTHY L. COGGINS
10/27/11

| REVISIONS | | | | | | SHEET NO. |
|---|---|---|---|---|---|---|
| NO. | BY: | DATE: | NO. | BY: | DATE: | S-68 |
| 1 | | | 3 | | | TOTAL SHEETS |
| 2 | | | 4 | | | 136 |

ASSEMBLED BY : B.N. BARODAWALA DATE : 8-25-10
CHECKED BY : PEGGY PARISI DATE : 8-31-10

DRAWN BY : ELR 11/91
CHECKED BY : GRP 11/91

REV. 10/17/00 RWW/LES
REV. 7/10/01 RR LES/RDR
REV. 5/1/06 TLA/GM

26-OCT-2011 15:12
R:\TIPProjects-R\R2309AB\Structures\R2309ab\Final Plans\Bridges\Str#3\r2309ab_sd_g_03.dgn
tcoggins

STR. #3 STD. NO. PCG11 (SHT. 2)

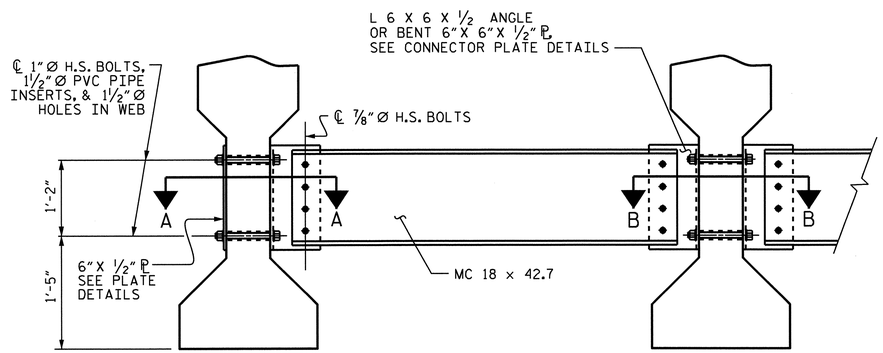


EXTERIOR GIRDER

INTERIOR GIRDER

## PART SECTION AT INTERMEDIATE DIAPHRAGM

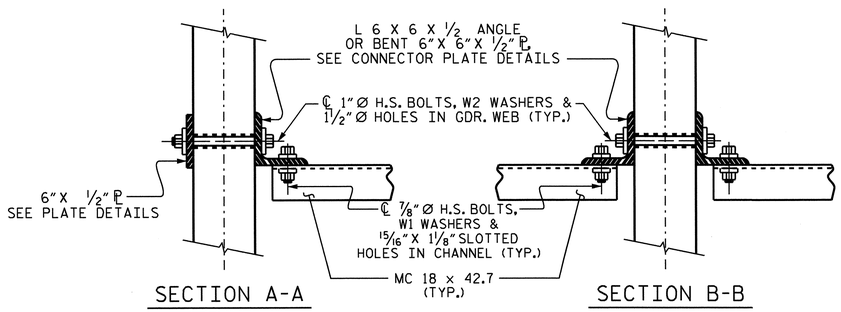


SECTION A-A

SECTION B-B

## CONNECTION DETAILS

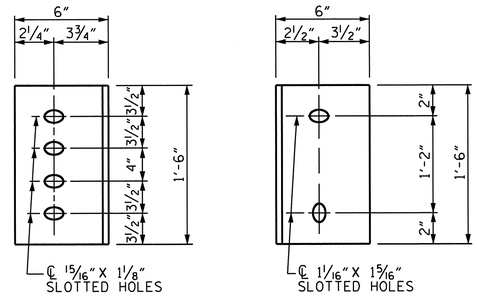


DIAPHRAGM FACE

WEB FACE

## CONNECTOR PLATE DETAILS

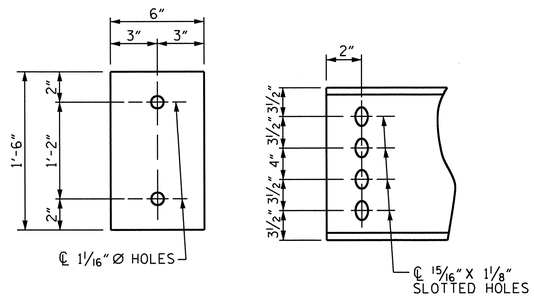


PLATE DETAILS

CHANNEL END

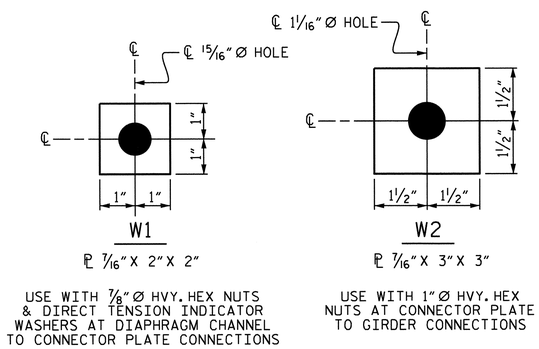


## WASHER DETAILS

## STRUCTURAL STEEL NOTES

ALL INTERMEDIATE DIAPHRAGM STEEL, CONNECTOR PLATES AND PLATE WASHERS SHALL BE AASHTO M270 GRADE 50 OR APPROVED EQUAL.

TENSION ON THE AASHTO M164 BOLTS THROUGH THE CHANNEL MEMBER SHALL BE CALIBRATED USING DIRECT TENSION INDICATOR WASHERS IN ACCORDANCE WITH THE STANDARD SPECIFICATIONS. FOR DIRECT TENSION INDICATORS, SEE SPECIAL PROVISIONS.

TENSION ON THE AASHTO M164 BOLTS THROUGH THE GIRDER WEB SHALL BE SNUG TIGHTENED FOLLOWED BY AN ADDITIONAL 1/4 TURN.

THE PLATES, BENT PLATES, CHANNELS, ANGLES, AND PLATE WASHERS SHALL BE GALVANIZED OR METALLIZED IN ACCORDANCE WITH THE STANDARD SPECIFICATIONS. FOR THERMAL SPRAYED COATINGS (METALLIZATION), SEE SPECIAL PROVISIONS.

FOR METALLIZATION, APPLY AN 8 MIL THICK 99.99 PERCENT ZINC (W-Zn-1) THERMAL SPRAYED COATING WITH A 0.5 MIL THICK SEAL COAT TO ALL STEEL DIAPHRAGM SURFACES IN ACCORDANCE WITH THE THERMAL SPRAYED COATINGS SPECIAL PROVISIONS AND SECTION 442 OF THE STANDARD SPECIFICATIONS.

GALVANIZE THE HIGH STRENGTH BOLTS, NUTS, WASHERS AND DIRECT TENSION INDICATORS IN ACCORDANCE WITH THE STANDARD SPECIFICATIONS. FOR HIGH STRENGTH BOLTS, SEE SPECIAL PROVISIONS.

USE A MINIMUM 7/16" THICK PLATE WASHER WITH STANDARD HOLES UNDER EACH BOLT HEAD AND NUT. THE PLATE WASHERS SHALL HAVE SUFFICIENT SIZE TO COVER THE HOLES AFTER INSTALLATION. HARDENED WASHERS AND DIRECT TENSION INDICATORS ARE TO BE USED IN CONJUNCTION WITH THE PLATE WASHERS IN THE CHANNEL MEMBER CONNECTION.

FOR BOLTS THROUGH THE GIRDER WEB, PROVIDE SUFFICIENT LENGTH OF ALL BOLTS TO ACCOMMODATE WASHERS AND THE THICKNESS OF CONNECTING MEMBER PLUS AT LEAST 1/4" PROJECTION BEYOND THE NUT.

INTERMEDIATE DIAPHRAGM ASSEMBLY SHALL COMPLY WITH SECTION 1072 OF THE STANDARD SPECIFICATIONS.

CONTRACTOR SHALL SUBMIT TWO SETS OF WORKING DRAWINGS FOR THE INTERMEDIATE DIAPHRAGM ASSEMBLY FOR REVIEW, COMMENTS AND ACCEPTANCE. AFTER REVIEW, COMMENTS, AND ACCEPTANCE, SUBMIT SEVEN SETS FOR DISTRIBUTION.

IN THE EXTERIOR BAYS, TEMPORARY STRUTS SHALL BE PLACED BETWEEN PRESTRESSED GIRDERS ADJACENT TO THE STEEL DIAPHRAGMS. STRUTS SHALL REMAIN IN PLACE 3 DAYS AFTER CONCRETE IS PLACED. ALL AASHTO M164 H.S. BOLTS SHALL BE FULLY TIGHTENED AFTER THE STRUTS HAVE BEEN REMOVED.

THE COST OF THE STEEL DIAPHRAGMS AND ASSEMBLIES SHALL BE INCLUDED IN THE UNIT PRICE BID FOR PRESTRESSED CONCRETE GIRDERS.

PROJECT NO. R-2309AB
GUILFORD COUNTY
STATION: 134+30.00 -L-

SHEET 4 OF 4

STATE OF NORTH CAROLINA
DEPARTMENT OF TRANSPORTATION
RALEIGH

STANDARD
INTERMEDIATE
STEEL DIAPHRAGMS
FOR TYPE III PRESTRESSED
CONCRETE GIRDERS
(LEFT LANE)

NORTH CAROLINA PROFESSIONAL SEAL 14045 ENGINEER TIMOTHY A. COGGINS
10/27/11

| REVISIONS | | | | | | SHEET NO. |
|---|---|---|---|---|---|---|
| NO. | BY: | DATE: | NO. | BY: | DATE: | S-69 |
| 1 | | | 3 | | | TOTAL SHEETS |
| 2 | | | 4 | | | 136 |

STR. #3 STD. NO. PCG12

ASSEMBLED BY : B.N.BARODAWALA DATE : 8-25-10
CHECKED BY : PEGGY PARISI DATE : 8-31-10
DRAWN BY : TLA 6/05
CHECKED BY : VC 6/05
ADDED 10/21/05
REV. 5/1/06RR KMM/GM

26-OCT-2011 15:11
R:\TIPProjects-R\R2309AB\Structures\R2309ab\FinalPlans\Bridges\Str#3\r2309ab_sd_g_03.dgn
tcoggins

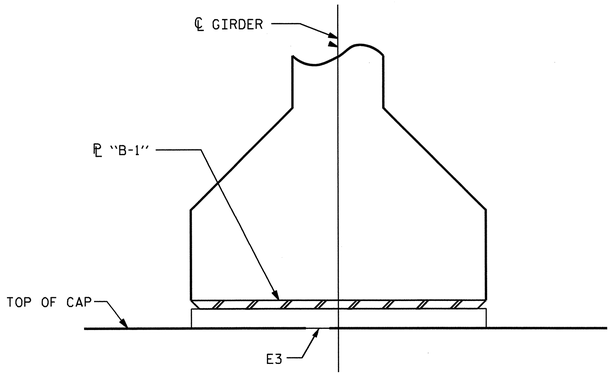


INTEGRAL

## SECTION F-F
AT END BENTS

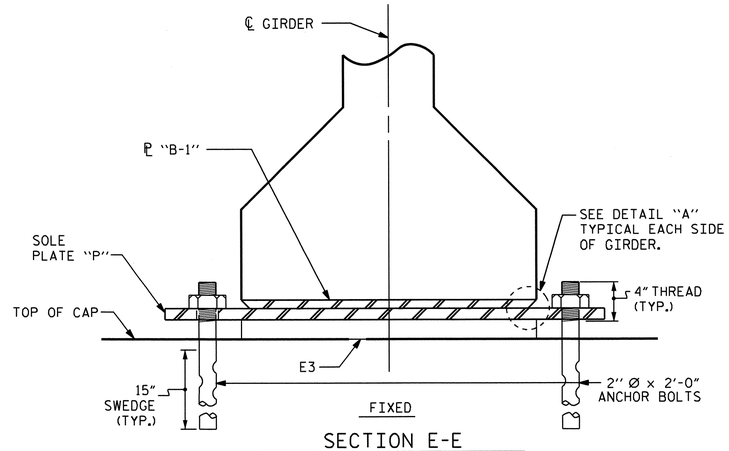


FIXED

## SECTION E-E
AT BENTS

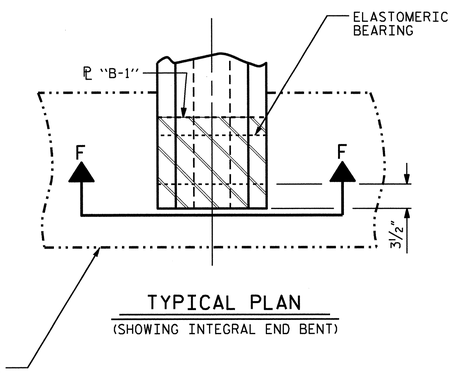


## TYPICAL PLAN
(SHOWING INTEGRAL END BENT)

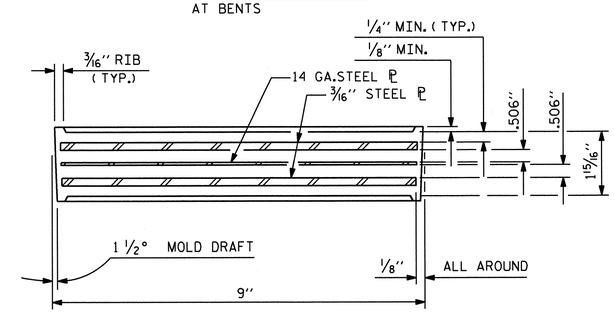


## TYPICAL SECTION OF ELASTOMERIC BEARINGS

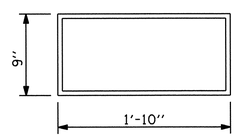


E3 (24 REQ'D)

PLAN VIEW OF ELASTOMERIC BEARING

## TYPE IV

## NOTES

AT ALL FIXED POINTS OF SUPPORT, NUTS FOR ANCHOR BOLTS ARE TO BE TIGHTENED FINGER TIGHT AND THEN BACKED OFF 1/2 TURN. THE THREAD OF THE NUT AND BOLT SHALL THEN BE BURRED WITH A SHARP POINTED TOOL.

STEEL SOLE PLATES, ANCHOR BOLTS, NUTS, AND WASHERS SHALL BE GALVANIZED IN ACCORDANCE WITH THE STANDARD SPECIFICATIONS.

PRIOR TO WELDING, GRIND THE GALVANIZED SURFACE OF THE PORTION OF THE EMBEDDED PLATE AND SOLE PLATE THAT ARE TO BE WELDED. AFTER WELDING, DAMAGED GALVANIZED SURFACES SHALL BE REPAIRED IN ACCORDANCE WITH THE STANDARD SPECIFICATIONS.

WHEN WELDING THE SOLE PLATE TO THE EMBEDDED PLATE IN THE GIRDER, USE TEMPERATURE INDICATING WAX PENS, OR OTHER SUITABLE MEANS, TO ENSURE THAT THE TEMPERATURE OF THE SOLE PLATE DOES NOT EXCEED 300°F. TEMPERATURES ABOVE THIS MAY DAMAGE THE ELASTOMER.

SOLE PLATE "P", BOLTS, NUTS, AND WASHERS SHALL BE INCLUDED IN THE PAY ITEM FOR PRESTRESSED CONCRETE GIRDERS.

ANCHOR BOLTS SHALL MEET THE REQUIREMENTS OF ASTM A449. NUTS SHALL MEET THE REQUIREMENTS OF AASHTO M291-DH OR AASHTO M292-2H. WASHERS SHALL MEET THE REQUIREMENTS OF AASHTO M293. SHOP DRAWINGS ARE NOT REQUIRED FOR ANCHOR BOLT, NUTS AND WASHERS. SHOP INSPECTION IS REQUIRED.

ALL SURFACES OF BEARING PLATES SHALL BE SMOOTH AND STRAIGHT.

ALL BEARING PLATES SHALL BE AASHTO M270 GRADE 36.

ELASTOMER IN ALL BEARINGS SHALL BE 60 DUROMETER HARDNESS.

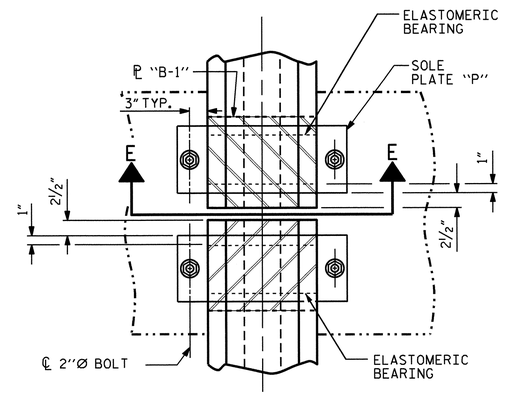


## TYPICAL PLAN
(SHOWING CONTINUOUS BENT)

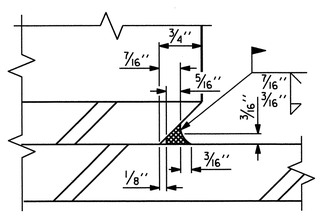


## DETAIL "A"

| — LOAD RATINGS — | |
|---|---|
| | MAX.D.L.+L.L. |
| TYPE IV (60 DUROMETER) | 198 K |
| | |

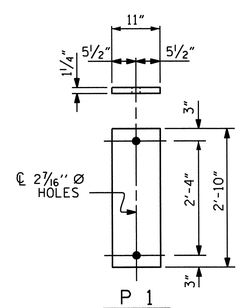


P 1
(FIXED)

P1 (16 REQ'D)

## SOLE PLATE DETAILS ("P")
(AT BENTS ONLY)

PROJECT NO. R-2309AB
GUILFORD COUNTY
STATION: 134+30.00 -L-

STATE OF NORTH CAROLINA
DEPARTMENT OF TRANSPORTATION
RALEIGH

STANDARD
# ELASTOMERIC BEARING DETAILS
PRESTRESSED CONCRETE GIRDER SUPERSTRUCTURE
(LEFT LANE)

NORTH CAROLINA PROFESSIONAL SEAL 14045 ENGINEER TIMOTHY W. COGGINS
10/27/11

| REVISIONS | | | | | | | | SHEET NO. S-70 |
|---|---|---|---|---|---|---|---|---|
| NO. | BY: | DATE: | NO. | BY: | DATE: | | | TOTAL SHEETS 136 |
| 1 | | | 3 | | | | | |
| 2 | | | 4 | | | | | |

STR. #3

STD. NO. EB3

| | | |
|---|---|---|
| ASSEMBLED BY : B.N.BARODAWALA DATE : 8-26-10 | | |
| CHECKED BY : PEGGY PARISI DATE : 8-31-10 | | |
| DRAWN BY : WJH 8/89 | REV. 10/17/00 | RWW/LES |
| CHECKED BY : CRK 8/89 | REV. 7/10/01 | RWW/LES |
| | REV. 5/1/06 | TLA/GM |

26-OCT-2011 15:10
R:\TIPProjects-R\R2309AB\Structures\R2309ab\FinalPlans\Bridges\Str#3\r2309ab_sd_bg_03.dgn
tcoggins

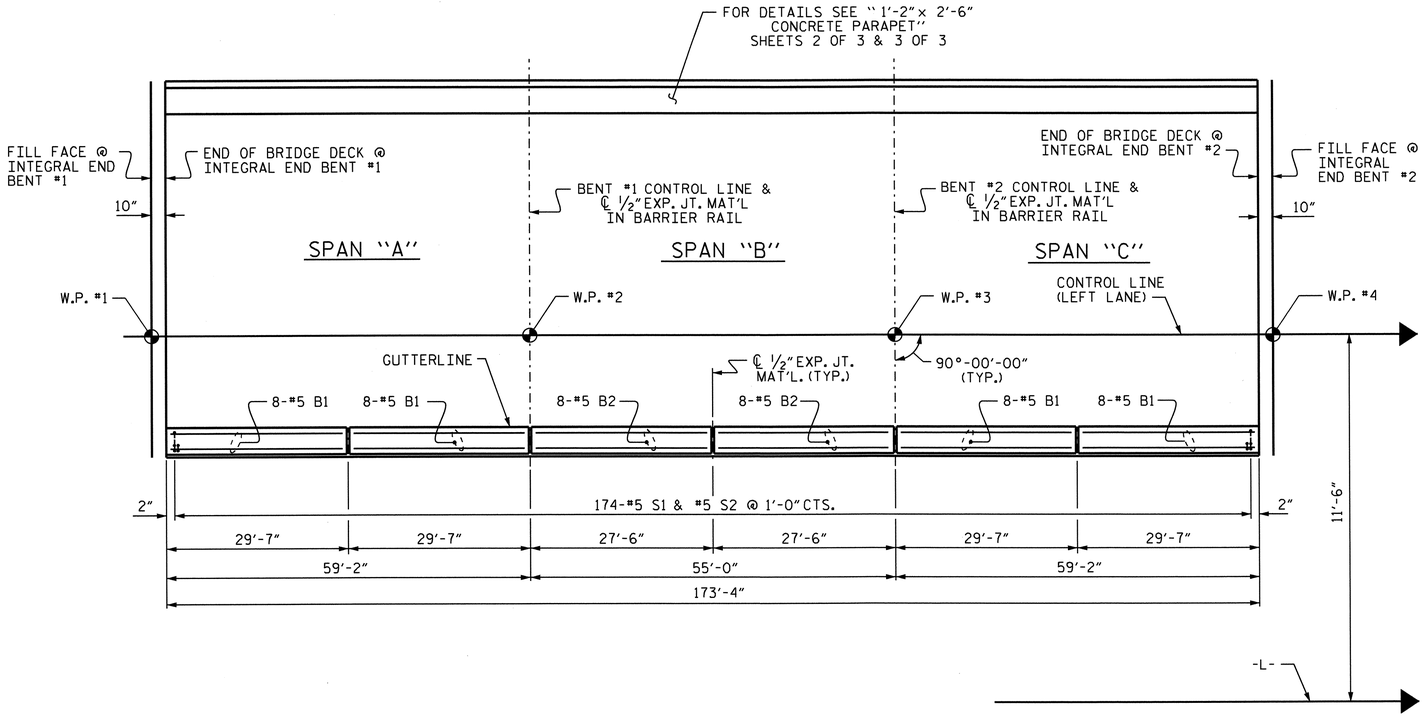


## PLAN OF BARRIER RAIL

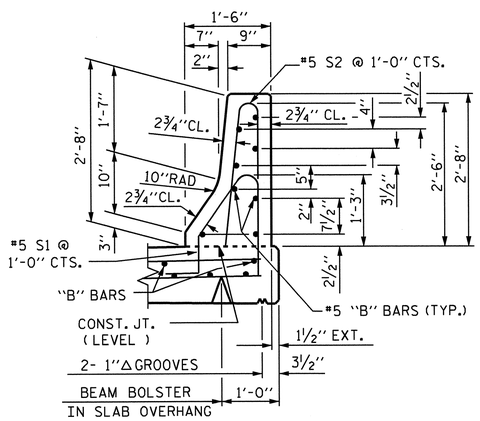


## SECTION THRU RAIL

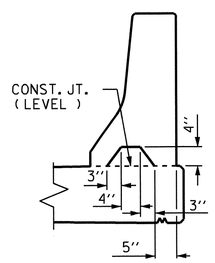


## SECTION S-S

AT DAM IN OPEN JOINT
( THIS IS TO BE USED ONLY WHEN SLIP FORM IS USED )

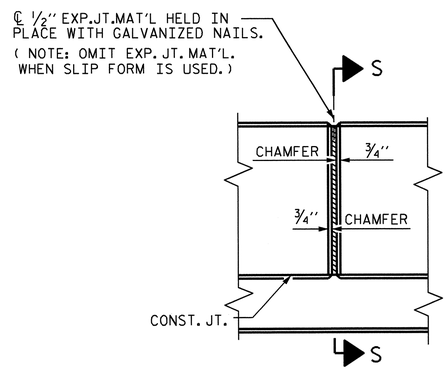


## ELEVATION AT EXPANSION JOINTS

# BARRIER RAIL DETAILS

## NOTES

BARRIER RAIL IN A CONTINUOUS UNIT SHALL NOT BE CAST UNTIL ALL SLAB CONCRETE IN THE UNIT HAS BEEN CAST AND HAS REACHED A MINIMUM COMPRESSIVE STRENGTH OF 3,000 PSI.

ALL REINFORCING STEEL IN BARRIER RAILS SHALL BE EPOXY COATED.

GROOVED CONTRACTION JOINTS, 1/2" IN DEPTH, SHALL BE TOOLED IN ALL EXPOSED FACES OF THE BARRIER RAIL AND IN ACCORDANCE WITH ARTICLE 825-10(B) OF THE STANDARD SPECIFICATIONS. THE CONTRACTION JOINT SHALL BE LOCATED AT EACH THIRD POINT BETWEEN BARRIER RAIL EXPANSION JOINTS. ONLY ONE CONTRACTION JOINT IS REQUIRED AT MIDPOINT OF BARRIER RAIL SEGMENTS LESS THAN 20 FEET IN LENGTH AND NO CONTRACTION JOINTS ARE REQUIRED FOR THOSE SEGMENTS LESS THAN 10 FEET IN LENGTH.

THE #5 S1 AND #5 S2 BARS MAY BE SHIFTED SLIGHTLY IN ORDER TO MAINTAIN A 2" MINIMUM CLEARANCE TO 1/2" EXPANSION JOINT MATERIAL IN THE BARRIER RAIL.

## BAR TYPES

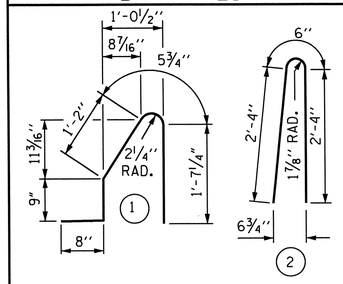


ALL BAR DIMENSIONS ARE OUT TO OUT

## BILL OF MATERIAL

FOR CONCRETE BARRIER RAIL ONLY

| BAR | NO. | SIZE | TYPE | LENGTH | WEIGHT |
|---|---|---|---|---|---|
| * B1 | 32 | #5 | STR | 29'-2" | 973 |
| * B2 | 16 | #5 | STR | 27'-1" | 452 |
| | | | | | |
| * S1 | 174 | #5 | 1 | 4'-8" | 847 |
| * S2 | 174 | #5 | 2 | 5'-2" | 938 |
| | | | | | |
| * EPOXY COATED REINFORCING STEEL | | | | | 3210 LBS. |
| CLASS AA CONCRETE | | | | | 17.4 CU. YDS. |
| CONCRETE BARRIER RAIL | | | | | 173.33 LIN. FT. |

PROJECT NO. R-2309AB
GUILFORD COUNTY
STATION: 134+30.00 -L-

SHEET 1 OF 3

STATE OF NORTH CAROLINA
DEPARTMENT OF TRANSPORTATION
RALEIGH

STANDARD
CONCRETE BARRIER RAIL
(LEFT LANE)

NORTH CAROLINA PROFESSIONAL SEAL 14045 ENGINEER TIMOTHY L. COGGINS
10/27/11

| REVISIONS | | | | | | SHEET NO. |
|---|---|---|---|---|---|---|
| NO. | BY: | DATE: | NO. | BY: | DATE: | S-71 |
| 1 | | | 3 | | | TOTAL SHEETS |
| 2 | | | 4 | | | 136 |

STR. #3 STD. NO. CBR1 (SHT 1)

| | | | |
|---|---|---|---|
| ASSEMBLED BY : B.N.BARODAWALA | DATE : 9-15-09 | | |
| CHECKED BY : PEGGY PARISI | DATE : 8-31-10 | | |
| DRAWN BY : ARB 5/87 | REV. 10/17/00 | RWW/LES | |
| CHECKED BY : SJD 9/87 | REV. 5/7/03R | RWW/JTE | |
| | REV. 5/1/06 | TLA/GM | |

26-OCT-2011 15:10
R:\TIPProjects-R\R2309AB\Structures\R2309ab\FinalPlans\Bridges\Str#3\r2309ab_sd_br_03.dgn
tcoggins

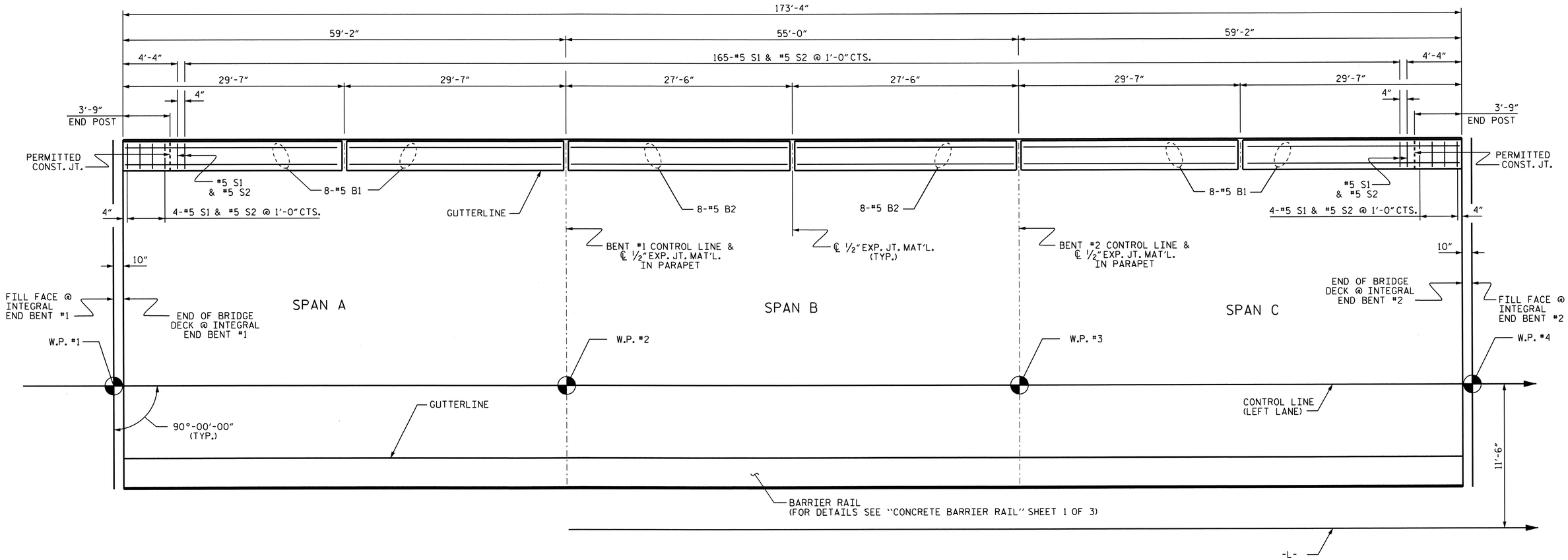


## PLAN OF PARAPET

FOR DETAILS OF PARAPET, ENDPOSTS, AND ADDITIONAL REINFORCEMENT, SEE SHEET 3 OF 3.

PROJECT NO. R-2309AB
GUILFORD COUNTY
STATION: 134+30.00 -L-

SHEET 2 OF 3

STATE OF NORTH CAROLINA
DEPARTMENT OF TRANSPORTATION
RALEIGH

SUPERSTRUCTURE

1'-2" x 2'-6"
CONCRETE PARAPET
(LEFT LANE)

NORTH CAROLINA PROFESSIONAL SEAL 14045 ENGINEER TIMOTHY L. COGGINS
10/27/11

| REVISIONS | | | | | | SHEET NO. |
|---|---|---|---|---|---|---|
| NO. | BY: | DATE: | NO. | BY: | DATE: | S-72 |
| 1 | | | 3 | | | TOTAL SHEETS |
| 2 | | | 4 | | | 136 |

STR. #3

DRAWN BY : B.N.BARODAWALA DATE : 9/21/09
CHECKED BY : PEGGY PARISI DATE : 8/31/10

26-OCT-2011 15:09
R:\TIPProjects-R\R2309AB\Structures\R2309ab\FinalPlans\Bridges\Str#3\r2309ab_sd_br_03.dgn
tcoggins

## NOTES

THE CONCRETE PARAPET IN A CONTINUOUS UNIT SHALL NOT BE CAST UNTIL ALL SLAB CONCRETE IN THE UNIT HAS BEEN CAST AND HAS REACHED A MINIMUM COMPRESSIVE STRENGTH OF 3,000 PSI.

ALL REINFORCING STEEL IN CONCRETE PARAPETS SHALL BE EPOXY COATED.

SEE "RAIL POST SPACINGS AND END OF RAIL DETAILS" SHEET FOR CONCRETE INSERT DETAILS.

SEE "GUARDRAIL ANCHORAGE DETAILS FOR METAL RAILS" SHEET FOR GUARDRAIL ANCHOR ASSEMBLY.

## BAR TYPE

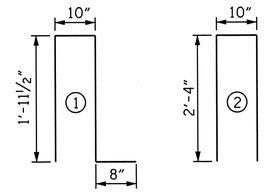


ALL BAR DIMENSIONS ARE OUT TO OUT.

## BILL OF MATERIAL

PARAPET & TWO END POSTS

| BAR | NO. | SIZE | TYPE | LENGTH | WEIGHT |
|---|---|---|---|---|---|
| ✳B1 | 32 | #5 | STR | 29'-2" | 973 |
| ✳B2 | 16 | #5 | STR | 27'-1" | 452 |
| | | | | | |
| ✳E1 | 4 | #7 | STR | 2'-6" | 20 |
| ✳E2 | 4 | #7 | STR | 3'-0" | 25 |
| ✳E3 | 4 | #7 | STR | 3'-6" | 29 |
| ✳E4 | 4 | #7 | STR | 4'-0" | 33 |
| ✳E5 | 4 | #7 | STR | 4'-4" | 35 |
| | | | | | |
| ✳F1 | 4 | #6 | STR | 1'-10" | 11 |
| ✳F2 | 4 | #6 | STR | 3'-0" | 18 |
| ✳F3 | 4 | #6 | STR | 3'-4" | 20 |
| | | | | | |
| ✳S1 | 175 | #5 | 1 | 5'-5" | 989 |
| ✳S2 | 175 | #5 | 2 | 5'-6" | 1004 |
| ✳EPOXY COATED REINFORCING STEEL | | | | LBS. | 3609 |
| CLASS AA CONCRETE | | | | CU. YDS. | 19.1 |
| 1'-2" x 2'-6" CONCRETE PARAPET | | | | LIN. FT. | 173.33 |

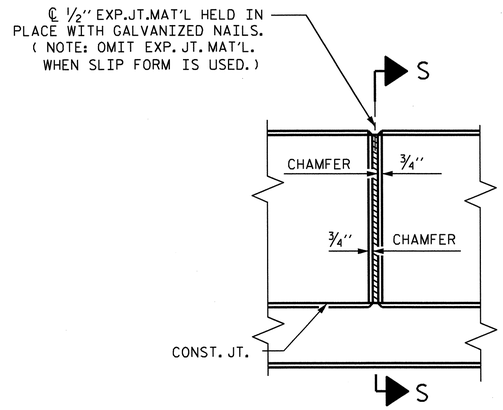


ELEVATION AT EXPANSION JOINTS

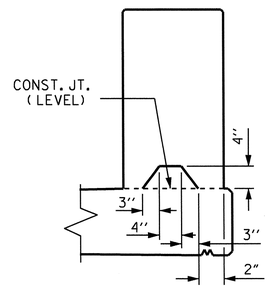


SECTION S-S

AT DAM IN OPEN JOINT
( THIS IS TO BE USED ONLY WHEN SLIP FORM IS USED )

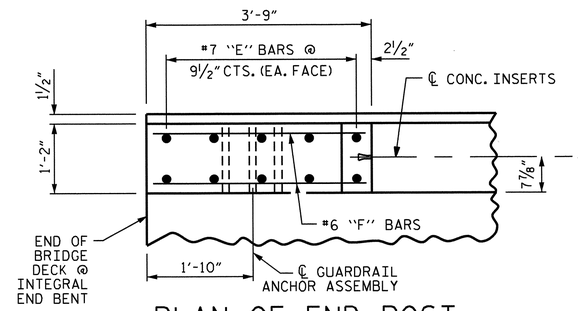


PLAN OF END POST

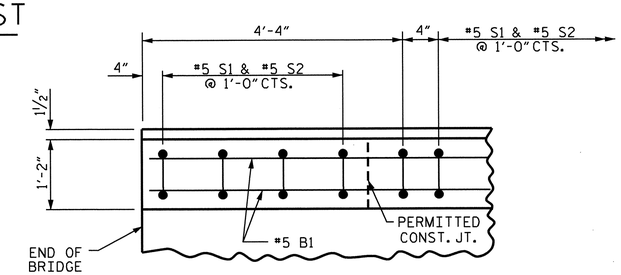


PLAN OF PARAPET

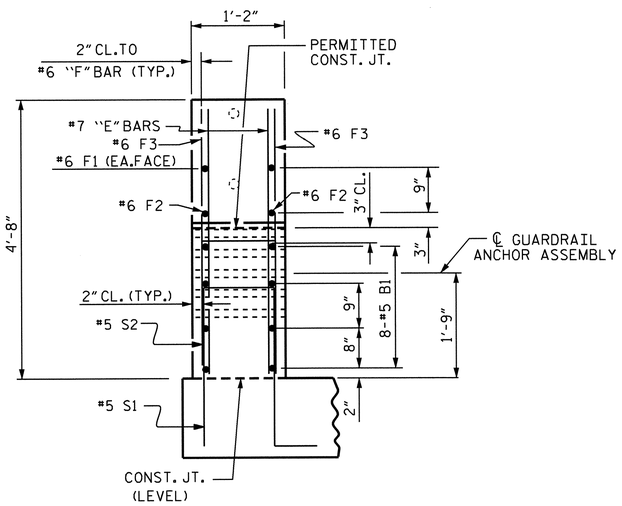


END VIEW

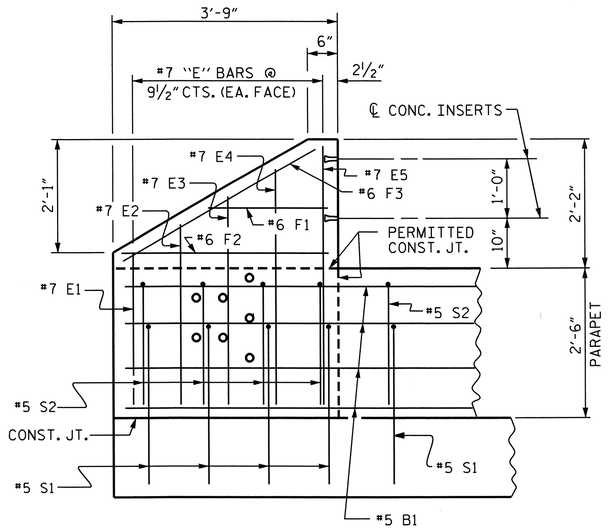


ELEVATION

PARAPET AND END POST FOR TWO BAR RAIL

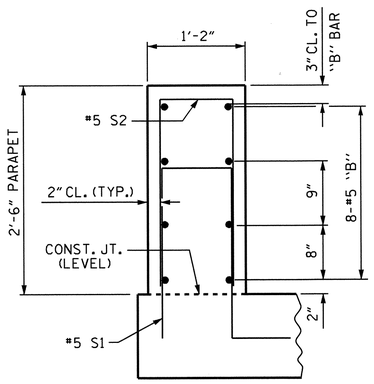


SECTION THRU PARAPET

PROJECT NO. R-2309AB

GUILFORD COUNTY

STATION: 134+30.00 -L-

SHEET 3 OF 3

STATE OF NORTH CAROLINA
DEPARTMENT OF TRANSPORTATION
RALEIGH

SUPERSTRUCTURE
1'-2" x 2'-6"
CONCRETE PARAPET
(LEFT LANE)

NORTH CAROLINA PROFESSIONAL SEAL 14045 ENGINEER TIMOTHY L. COGGINS
Timothy L. Coggins 10/27/11

| REVISIONS | | | | | | SHEET NO. S-73 |
|---|---|---|---|---|---|---|
| NO. | BY: | DATE: | NO. | BY: | DATE: | TOTAL SHEETS 136 |
| 1 | | | 3 | | | |
| 2 | | | 4 | | | |

DRAWN BY : B.N.BARODAWALA DATE : 9/21/09
CHECKED BY : PEGGY PARISI DATE : 8/31/10

26-OCT-2011 15:09
R:\TIPProjects-R\R2309AB\Structures\R2309ab\FinalPlans\Bridges\Str#3\r2309ab_sd_br_03.dgn
tcoggins

STR. #3

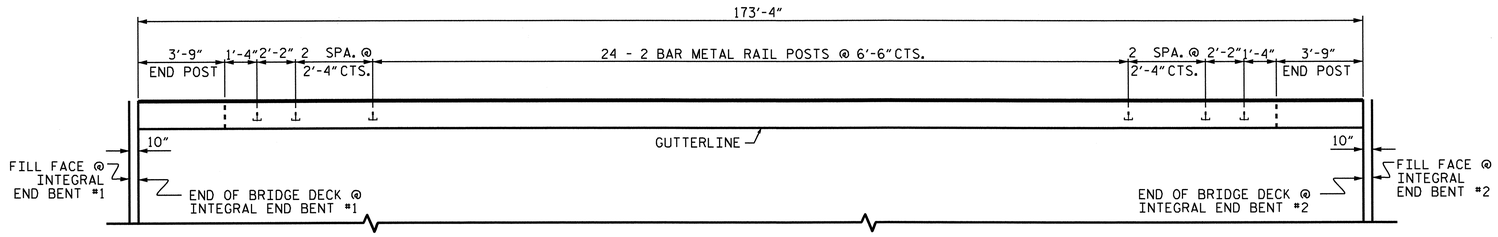


## PLAN OF RAIL POST SPACING

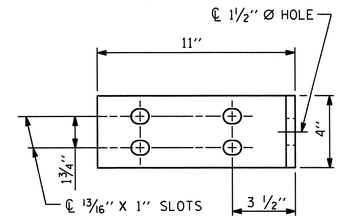


ELEVATION

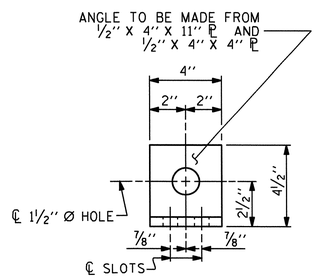


END VIEW

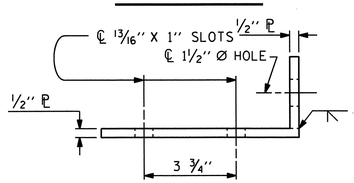


TOP VIEW

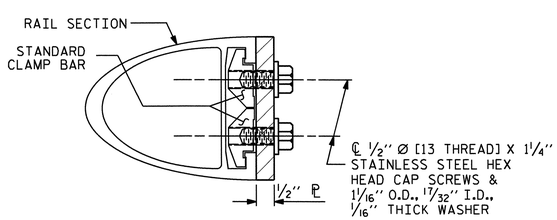


SECTION H-H

FIXED

## DETAILS FOR ATTACHING METAL RAIL TO END POST

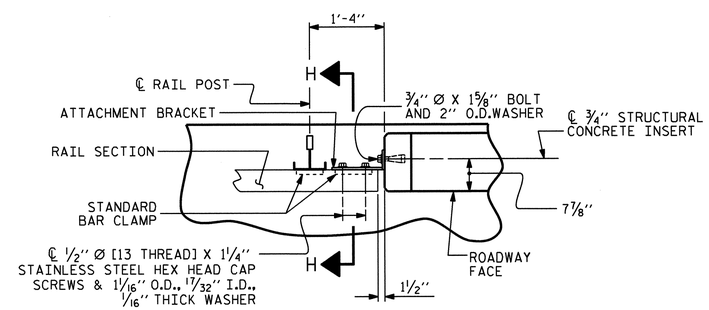


PLAN - RAIL AND END POST

## NOTES

STRUCTURAL CONCRETE INSERT

THE STRUCTURAL CONCRETE INSERT ASSEMBLY SHALL CONSIST OF THE FOLLOWING COMPONENTS:

A. FERRULES SHALL BE MADE FROM STEEL MEETING THE REQUIREMENTS OF AASHTO M169, GRADE 12L14 AND SHALL HAVE A MINIMUM LENGTH OF THREADS OF 1½".

B. 1 - ¾" Ø X 1⅝" BOLT WITH WASHER. BOLT SHALL CONFORM TO THE REQUIREMENTS OF ASTM A307. BOLT AND WASHER SHALL BE GALVANIZED. ( AT THE CONTRACTOR'S OPTION, STAINLESS STEEL BOLT AND WASHER MAY BE USED AS AN ALTERNATE FOR THE ¾" Ø X 1⅝" GALVANIZED BOLT AND WASHER. THEY SHALL CONFORM TO OR EXCEED THE MECHANICAL REQUIREMENTS OF ASTM A307. THE USE OF THIS ALTERNATE SHALL BE APPROVED BY THE ENGINEER.)

C. WIRE STRUT SHOWN IN THE CONCRETE INSERT ASSEMBLY DETAIL IS THE MINIMUM ALLOWABLE SIZE AND SHALL HAVE A MINIMUM TENSILE STRENGTH OF 100,000 PSI. AS AN OPTION, A 7/16" Ø WIRE STRUT WITH A MINIMUM TENSILE STRENGTH OF 90,000 PSI IS ACCEPTABLE.

## NOTES

METAL RAIL TO END POST CONNECTION

THE METAL RAIL TO END POST CONNECTION SHALL CONSIST OF THE FOLLOWING COMPONENTS:

A. ½" PLATES SHALL CONFORM TO AASHTO M270 GRADE 36 AND SHALL BE GALVANIZED AFTER FABRICATION.

B. ¾" STRUCTURAL CONCRETE INSERT SHALL HAVE A WORKING LOAD SHEAR CAPACITY OF 4800 LBS. THE FERRULES SHALL ENGAGE A ¾"Ø X 1⅝" BOLT WITH 2" O.D. WASHER IN PLACE. THE ¾"Ø X 1⅝" BOLT SHALL HAVE N. C. THREADS.

C. CAP SCREWS FOR RAIL ATTACHMENT TO ANGLE SHALL CONFORM TO THE REQUIREMENTS OF ASTM F593 ALLOY 305 STAINLESS STEEL. CAP SCREWS TO BE CENTERED IN SLOTS AT 60°F.

D. STANDARD CLAMP BARS ( SEE METAL RAIL SHEET ).

THE COST OF THE STANDARD CLAMP BARS AND CAP SCREWS USED IN THE METAL RAIL TO END POST CONNECTION SHALL BE INCLUDED IN THE UNIT CONTRACT PRICE BID FOR LINEAR FEET OF 2 BAR METAL RAILS.

THE ¾" STRUCTURAL CONCRETE INSERT WITH BOLT SHALL BE ASSEMBLED IN THE SHOP.

THE COST OF THE ¾" STRUCTURAL CONCRETE INSERT ASSEMBLY, AND THE ½" PLATES COMPLETE IN PLACE SHALL BE INCLUDED IN THE VARIOUS PAY ITEMS.

THE CONTRACTOR, AT HIS OPTION, MAY USE AN ADHESIVE BONDING SYSTEM IN LIEU OF THE STRUCTURAL CONCRETE INSERT EMBEDDED IN THE END POST. IF THE ADHESIVE BONDING SYSTEM IS USED, THE ¾" Ø X 1⅝" BOLT WITH WASHER SHALL BE REPLACED WITH A ¾"Ø X 6½" BOLT AND 2" O.D. WASHER. ALL SPECIFICATIONS THAT APPLY TO THE ¾" Ø X 1⅝" BOLT SHALL APPLY TO THE ¾"Ø X 6 ½" BOLT. FIELD TESTING OF THE ADHESIVE BONDING SYSTEM IS NOT REQUIRED.

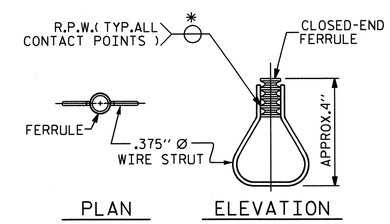


STRUCTURAL CONCRETE INSERT

* EACH WELDED ATTACHMENT OF WIRE TO FERRULE SHALL DEVELOP THE TENSILE STRENGTH OF THE WIRE.

PROJECT NO. R-2309AB

GUILFORD COUNTY

STATION: 134+30.00 -L-

SHEET 1 OF 3

STATE OF NORTH CAROLINA
DEPARTMENT OF TRANSPORTATION
RALEIGH

STANDARD
RAIL POST SPACINGS
AND
END OF RAIL DETAILS
FOR TWO BAR METAL RAILS
(LEFT LANE)

NORTH CAROLINA PROFESSIONAL SEAL 14045 ENGINEER TIMOTHY W. COGGINS

Timothy W. Coggins 10/27/11

| REVISIONS | | | | | | SHEET NO. |
|---|---|---|---|---|---|---|
| NO. | BY: | DATE: | NO. | BY: | DATE: | S-74 |
| 1 | | | 3 | | | TOTAL SHEETS |
| 2 | | | 4 | | | 136 |

STR. #3 STD. NO. BMR2

| | | | |
|---|---|---|---|
| ASSEMBLED BY : B.N.BARODAWALA | | DATE : 9-21-09 | |
| CHECKED BY : PEGGY PARISI | | DATE : 8-31-10 | |
| DRAWN BY : FCJ 1/88 | REV. 10/17/00 | LES/RDR | |
| CHECKED BY : CRK 3/89 | REV. 5/7/03 | RWW/JTE | |
| | REV. 5/1/06 | TLA/GM | |

26-OCT-2011 15:08
R:\TIPProjects-R\R2309AB\Structures\R2309ab\Final Plans\Bridges\Str#3\r2309ab_sd_2mr_03.dgn
tcoggins

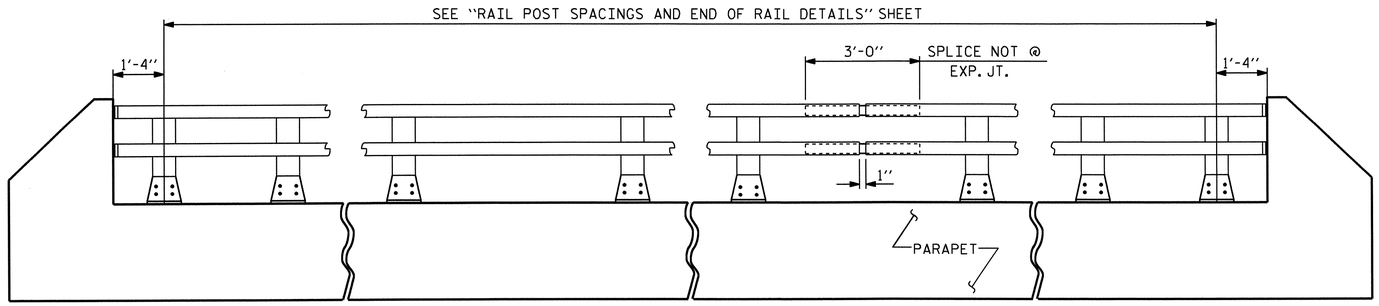


## ELEVATION

NOTE : FOR ATTACHMENT OF METAL RAIL TO END POST, SEE STANDARD NO. BMR2.

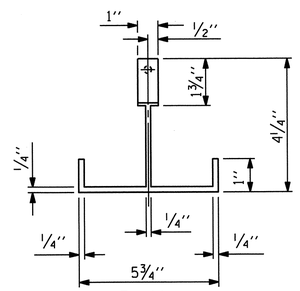


## PLAN

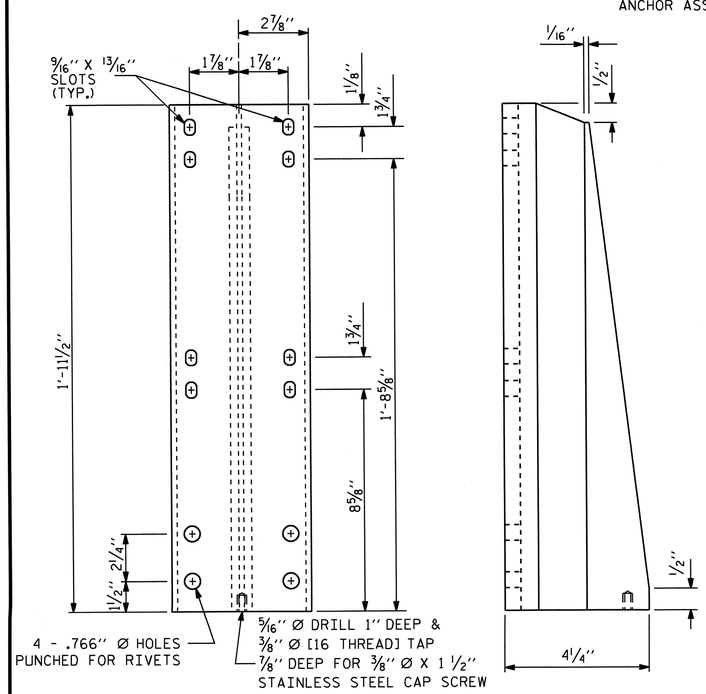


FRONT ELEVATION

SIDE ELEVATION

## DETAILS OF POST

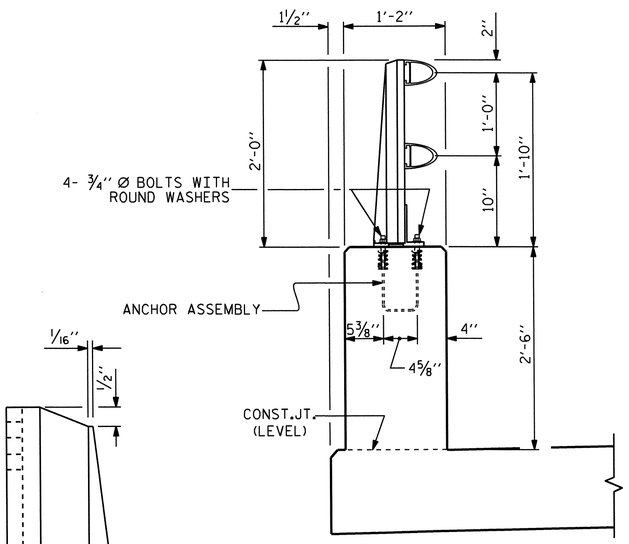


## SECTION THRU PARAPET AND RAIL

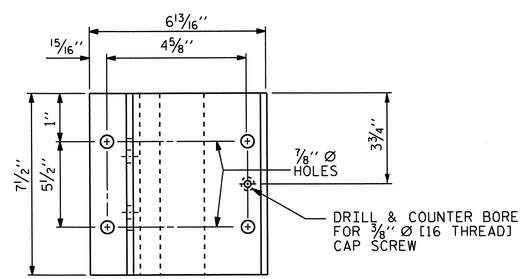


PLAN

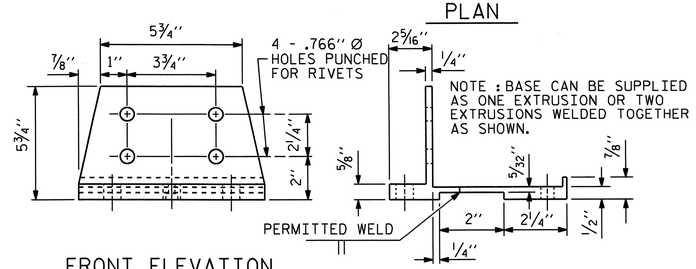


FRONT ELEVATION

SIDE ELEVATION

## POST BASE DETAILS

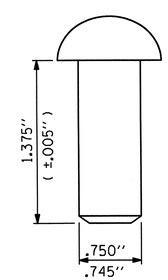


RIVET DETAIL

## NOTES

AT THE CONTRACTOR'S OPTION, METAL RAIL MAY BE EITHER ALUMINUM OR GALVANIZED STEEL IN ACCORDANCE WITH THE REQUIREMENTS OF THE GENERAL NOTES AND THE FOLLOWING SPECIFICATIONS FOR THE ALTERNATE MATERIALS; HOWEVER, THE CONTRACTOR WILL BE REQUIRED TO USE THE SAME RAIL MATERIAL ON ALL STRUCTURES ON THE PROJECT FOR WHICH METAL RAIL IS DESIGNATED.

### ALUMINUM RAILS

MATERIAL FOR POSTS, BASES AND RAILS, EXPANSION BARS AND CLAMP BARS SHALL BE ASTM B-221 ALLOY 6061-T6.

MATERIAL FOR RIVETS SHALL BE ASTM B316 ALLOY 6061-T6. RIVETS SHALL BE STANDARD BUTTON HEAD AND CONE POINT COLD DRIVEN AS PER DRAWING.

THE BASE OF RAIL POSTS, OR ANY OTHER ALUMINUM SURFACE IN CONTACT WITH CONCRETE SHALL BE THOROUGHLY COATED WITH AN ALUMINUM IMPREGNATED CAULKING COMPOUND OF APPROVED QUALITY.

MATERIAL FOR SHIMS TO BE ASTM B209 ALLOY 6061-T6.

### GALVANIZED STEEL RAILS

MATERIAL AND GALVANIZING ARE TO CONFORM TO THE FOLLOWING SPECIFICATIONS:

POST, POST BASES, RAILS, EXPANSION BARS AND CLAMP BARS: AASHTO M270 GRADE 36 STRUCTURAL STEEL - GALVANIZED TO AASHTO M111.

RIVETS: RIVETS SHALL MEET THE REQUIREMENTS OF ASTM A502 FOR GRADE 1 RIVETS.

THE CUT ENDS OF GALVANIZED STEEL RAILING, AFTER GRINDING SMOOTH SHALL BE GIVEN TWO COATS OF ZINC RICH PAINT MEETING THE REQUIREMENTS OF FEDERAL SPECIFICATION MIL-P-26915 USAF TYPE 1, OR OF FEDERAL SPECIFICATIONS TT-P-641.

SHIMS: SHIMS SHALL MEET THE REQUIREMENTS OF ASTM A570 FOR GRADE 33 OR A611 FOR GRADE C AND SHALL BE GALVANIZED IN ACCORDANCE WITH AASHTO M111.

RAIL CAPS: RAIL CAPS SHALL MEET THE REQUIREMENTS OF ASTM A570 FOR GRADE 33 OR A611 FOR GRADE C AND SHALL BE GALVANIZED IN ACCORDANCE WITH AASHTO M111.

### GENERAL NOTES

RAILING SHALL BE CONTINUOUS FROM END POST TO END POST OF BRIDGE. EACH JOINT IN RAIL LENGTH SHALL BE SPLICED AS DETAILED. PANEL LENGTHS OF RAIL SHALL BE ATTACHED TO A MINIMUM OF THREE POSTS.

FOR END OF RAIL TO CLEAR FACE OF CONCRETE END POST DIMENSION, SEE STANDARD NO. BMR2.

CAP SCREWS SHALL BE ASTM F593 ALLOY 305 STAINLESS STEEL. WASHERS SHALL MEET THE REQUIREMENTS OF ASTM F844 EXCEPT THEY SHALL BE MADE FROM ALLOY 304 STAINLESS STEEL.

CERTIFIED MILL REPORTS ARE REQUIRED FOR RAILS AND POSTS. SHOP INSPECTION IS NOT REQUIRED.

METAL RAIL POSTS SHALL BE SET NORMAL TO CURB GRADE.

METHOD OF MEASUREMENT FOR METAL RAILS: FOR LENGTH OF METAL RAILS TO BE PAID FOR, SEE THE STANDARD SPECIFICATIONS.

TO INSURE FUTURE IDENTIFICATION OF THE FABRICATOR, A PERMANENT IDENTIFYING MARK SHALL BE PLACED ON EACH POST. THE METHOD OF MARKING AND LOCATION SHALL BE SUCH THAT IT DOES NOT DETRACT FROM THE APPEARANCE OF THE POST, BUT REMAINS VISIBLE AFTER RAIL PLACEMENT.

SHIMS SHALL BE USED AS NECESSARY FOR POST ALIGNMENT.

ALLOY 6351-T5 MAY BE SUBSTITUTED FOR ALLOY 6061-T6 WHERE APPLICABLE.

MINOR VARIATIONS IN DETAILS OF METAL RAIL WILL BE CONSIDERED. DETAILS OF SUCH VARIATIONS, IF DESIRED, SHALL BE SUBMITTED FOR APPROVAL.

GROOVED CONTRACTION JOINTS, 1/2" IN DEPTH, SHALL BE TOOLED IN ALL EXPOSED FACES OF THE PARAPET IN ACCORDANCE WITH ARTICLE 825-10(B) OF THE STANDARD SPECIFICATIONS. THE CONTRACTION JOINT SHALL BE LOCATED AT A SPACING OF 8FT. TO 10FT. BETWEEN EXPANSION JOINTS. NO CONTRACTION JOINTS WILL BE REQUIRED FOR SEGMENTS LESS THAN 10 FEET IN LENGTH.

PAY LENGTH = 165.83 LIN. FT.

PROJECT NO. R-2309AB
GUILFORD COUNTY
STATION: 134+30.00 -L-

SHEET 2 OF 3

STATE OF NORTH CAROLINA
DEPARTMENT OF TRANSPORTATION
RALEIGH

STANDARD

2 BAR METAL RAIL

(LEFT LANE)

NORTH CAROLINA PROFESSIONAL SEAL 14045 ENGINEER TIMOTHY LL COGGINS
10/27/11

| ASSEMBLED BY : B.N.BARODAWALA | DATE : 9/21/09 |
|---|---|
| CHECKED BY : PEGGY PARISI | DATE : 8/31/10 |

| | | | |
|---|---|---|---|
| DRAWN BY : EEM 6/94 | REV. 10/17/00 | LES/RDR |
| CHECKED BY : RGW 6/94 | REV. 5/7/03R | RWW/JTE |
| | REV. 5/1/06 | TLA/GM |

| REVISIONS | | | | | | | |
|---|---|---|---|---|---|---|---|
| NO. | BY: | DATE: | NO. | BY: | DATE: | SHEET NO. S-75 |
| 1 | | | 3 | | | TOTAL SHEETS 136 |
| 2 | | | 4 | | | |

STR. #3

STD. NO. BMR3

26-OCT-2011 15:08
R:\TIPProjects-R\R2309AB\Structures\R2309ab\Final Plans\Bridges\Str#3\r2309ab_sd_2mr_03.dgn
tcoggins

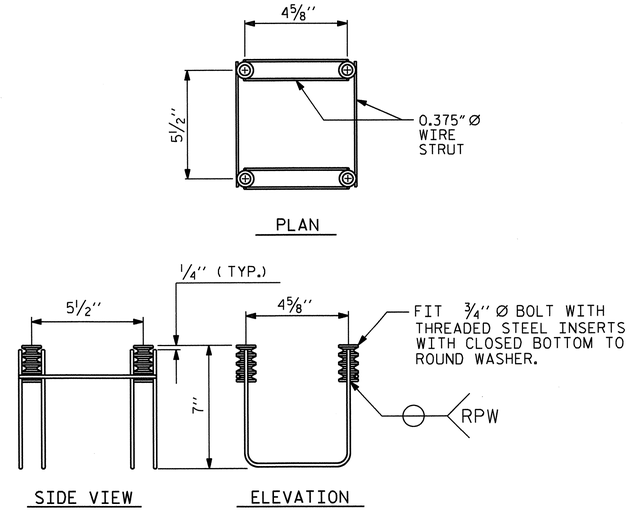


## 4-BOLT METAL RAIL ANCHOR ASSEMBLY

(30 ASSEMBLIES REQUIRED)

## NOTES

STRUCTURAL CONCRETE ANCHOR ASSEMBLY

THE STRUCTURAL CONCRETE ANCHOR ASSEMBLY SHALL CONSIST OF THE FOLLOWING COMPONENTS :

A. FERRULES SHALL BE MADE FROM STEEL MEETING THE REQUIREMENTS OF AASHTO M169, GRADE 12L14 AND SHALL HAVE A MINIMUM LENGTH OF THREADS OF 2'' FOR 3/4'' FERRULES.

B. 4 - 3/4'' Ø X 2 1/2'' BOLTS WITH WASHERS. BOLTS SHALL CONFORM TO THE REQUIREMENTS OF ASTM A307. BOLTS AND WASHERS SHALL BE GALVANIZED. AT THE CONTRACTOR'S OPTION, STAINLESS STEEL BOLTS AND WASHERS MAY BE USED AS AN ALTERNATE FOR THE 3/4'' Ø X 2 1/2'' GALVANIZED BOLTS AND WASHERS. THEY SHALL CONFORM TO OR EXCEED THE MECHANICAL REQUIREMENTS OF ASTM A307. THE USE OF THIS ALTERNATE SHALL BE APPROVED BY THE ENGINEER.

C. WIRE STRUT SHOWN IN THE CONCRETE ANCHOR ASSEMBLY DETAIL IS THE MINIMUM ALLOWABLE SIZE AND SHALL HAVE A MINIMUM TENSILE STRENGTH OF 100,000 PSI. AS AN OPTION, A 7/16'' Ø WIRE STRUT WITH A MINIMUM TENSILE STRENGTH OF 90,000 PSI IS ACCEPTABLE.

D. THE METAL RAIL ANCHOR ASSEMBLIES TO BE HOT DIPPED GALVANIZED TO CONFORM TO REQUIREMENTS OF AASHTO M111.

E. THE COST OF THE METAL RAIL ANCHOR ASSEMBLY WITH BOLTS AND WASHERS COMPLETE IN PLACE SHALL BE INCLUDED IN THE PRICE BID FOR LINEAR FEET OF METAL RAIL.

F. BOLTS TO BE TIGHTENED ONE-HALF TURN WITH A WRENCH FROM A FINGER-TIGHT POSITION.

THE CONTRACTOR MAY USE ADHESIVELY ANCHORED ANCHOR BOLTS IN PLACE OF THE METAL RAIL ANCHOR ASSEMBLY. LEVEL ONE FIELD TESTING IS REQUIRED, AND THE YIELD LOAD OF THE 3/4" Ø BOLT IS 10 KIPS. FOR ADHESIVELY ANCHORED ANCHOR BOLTS OR DOWELS, SEE SPECIAL PROVISIONS.

WHEN ADHESIVELY ANCHORED ANCHOR BOLTS ARE USED, BOLTS SHALL MEET THE REQUIREMENTS OF ASTM F593 ALLOY 304 STAINLESS STEEL WITH MINIMUM 75,000 PSI ULTIMATE STRENGTH. NUTS SHALL MEET THE REQUIREMENTS OF ASTM F594 ALLOY 304 STAINLESS STEEL AND WASHERS SHALL MEET THE REQUIREMENTS OF ASTM F844 EXCEPT THEY SHALL BE MADE FROM ALLOY 304 STAINLESS STEEL.

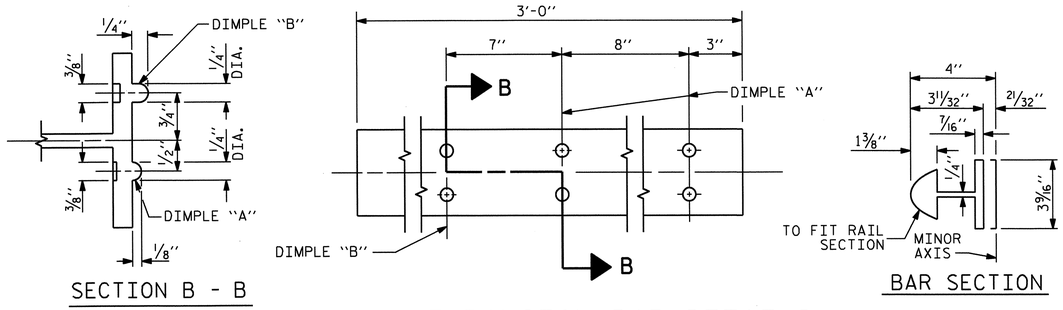


## EXPANSION BAR DETAILS

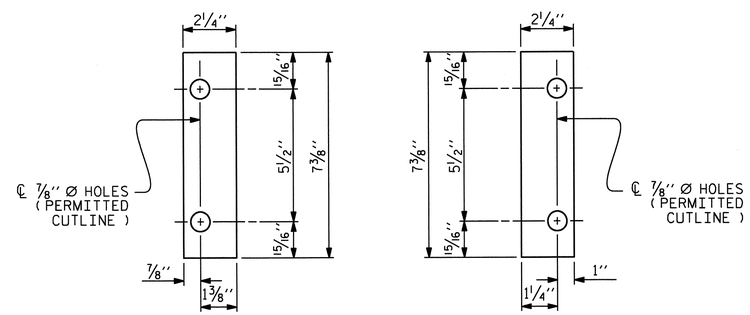


## SHIM DETAILS

NOTE :
SHIMS MAY BE CUT ALONG PERMITTED CUTLINE OR SLOTTED TO EDGE OF PLATE TO FACILITATE PLACEMENT.

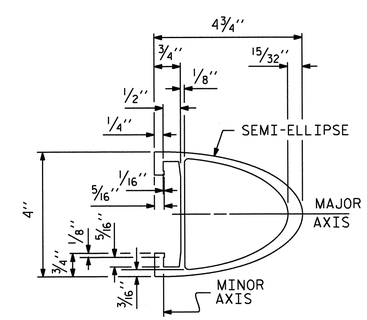


## RAIL SECTION

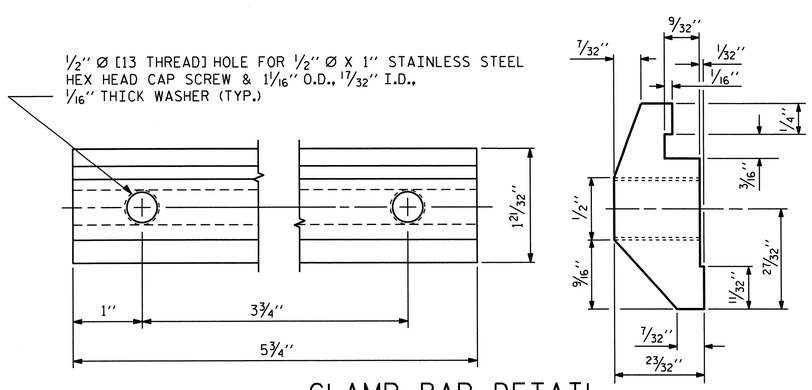


## CLAMP BAR DETAIL

( 4 REQUIRED PER POST )

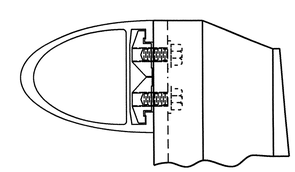

## CLAMP ASSEMBLY

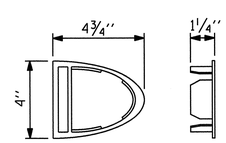


## RAIL CAP

PROJECT NO. R-2309AB
GUILFORD COUNTY
STATION: 134+30.00 -L-

SHEET 3 OF 3

STATE OF NORTH CAROLINA
DEPARTMENT OF TRANSPORTATION
RALEIGH

STANDARD

2 BAR METAL RAIL

(LEFT LANE)

NORTH CAROLINA PROFESSIONAL SEAL 14045 ENGINEER TIMOTHY W. COGGINS
10/27/11

| REVISIONS | | | | | | | | SHEET NO. |
|---|---|---|---|---|---|---|---|---|
| NO. | BY: | DATE: | NO. | BY: | DATE: | | | S-76 |
| 1 | | | 3 | | | | | TOTAL SHEETS |
| 2 | | | 4 | | | | | 136 |

| | | | |
|---|---|---|---|
| ASSEMBLED BY : B.N.BARODAWALA | | DATE : 9/21/09 | |
| CHECKED BY : PEGGY PARISI | | DATE : 8/31/10 | |
| DRAWN BY : EEM 6/94 | REV. 2/6/97 | EEM/RGW | |
| CHECKED BY : RGW 6/94 | REV. 8/16/99 | MAB/LES | |
| | REV. 5/1/06R | KMM/GM | |

26-OCT-2011 15:09
R:\TIPProjects-R\R2309AB\Structures\R2309ab\FinalPlans\Bridges\Str#3\r2309ab_sd_2mr_03.dgn
tcoggins

STR. #3

STD. NO. BMR4

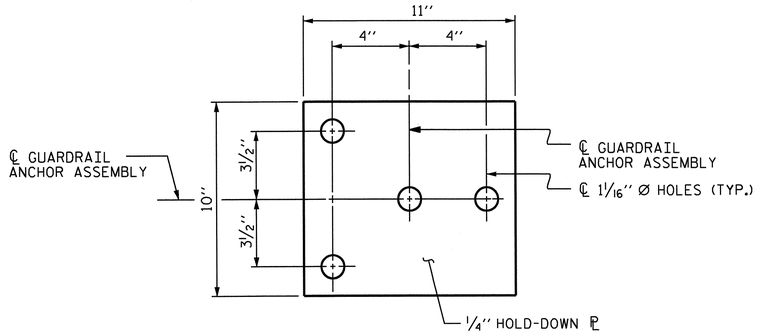


PLAN

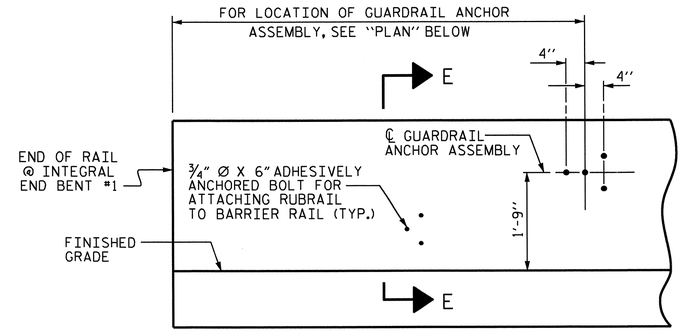


ELEVATION

FOR LOCATION OF RUBRAIL, SEE ROADWAY STD. 862.03

## NOTES

THE GUARDRAIL ANCHOR ASSEMBLY SHALL CONSIST OF A 1/4'' HOLD DOWN PLATE AND 4 - 7/8'' Ø BOLTS WITH NUTS AND WASHERS, RUBRAIL, AND ADHESIVELY ANCHORED BOLTS.

THE HOLD-DOWN PLATE SHALL CONFORM TO AASHTO M270 GRADE 36. AFTER FABRICATION, THE HOLD-DOWN PLATE SHALL BE HOT-DIP GALVANIZED IN ACCORDANCE WITH AASHTO M111.

BOLTS SHALL CONFORM TO THE REQUIREMENTS OF ASTM A307 AND NUTS SHALL CONFORM TO THE REQUIREMENTS OF AASHTO M291. BOLTS, NUTS AND WASHERS SHALL BE GALVANIZED. (AT THE CONTRACTOR'S OPTION, STAINLESS STEEL BOLTS, NUTS AND WASHERS MAY BE USED AS AN ALTERNATE FOR THE 7/8'' Ø GALVANIZED BOLTS, NUTS AND WASHERS. THEY SHALL CONFORM TO OR EXCEED THE MECHANICAL REQUIREMENTS OF ASTM A307. THE USE OF THIS ALTERNATE SHALL BE APPROVED BY THE ENGINEER.)

THE GUARDRAIL ANCHOR ASSEMBLY IS REQUIRED AT ALL POINTS WHERE APPROACH GUARDRAIL IS TO BE ATTACHED TO THE END OF BARRIER RAIL. FOR POINTS OF ATTACHMENT, SEE SKETCH.

AFTER INSTALLATION, THE EXPOSED THREAD OF THE BOLT SHALL BE BURRED WITH A SHARP POINTED TOOL.

THE COST OF THE GUARDRAIL ANCHOR ASSEMBLY SHALL BE INCLUDED IN THE UNIT CONTRACT PRICE BID FOR CONCRETE BARRIER RAIL.

THE 1 1/4'' Ø HOLES SHALL BE FORMED OR DRILLED WITH A CORE BIT. IMPACT TOOLS WILL NOT BE PERMITTED. ANY CONCRETE DAMAGED BY THIS WORK SHALL BE REPAIRED TO THE SATISFACTION OF THE ENGINEER.

THE C6 X 8.2 RUBRAIL IS TO BE ADHESIVELY ANCHORED TO THE RAIL USING THREE 3/4" Ø X 6" BOLTS WITH WASHERS. LEVEL ONE FIELD TESTING IS REQUIRED, AND THE YIELD LOAD OF THE 3/4" Ø BOLT IS 12 KIPS. FOR ADHESIVELY ANCHORED ANCHOR BOLTS OR DOWELS, SEE SPECIAL PROVISIONS. SEE ROADWAY STANDARD 862.03 FOR DETAILS AND LOCATION OF THE RUBRAIL.

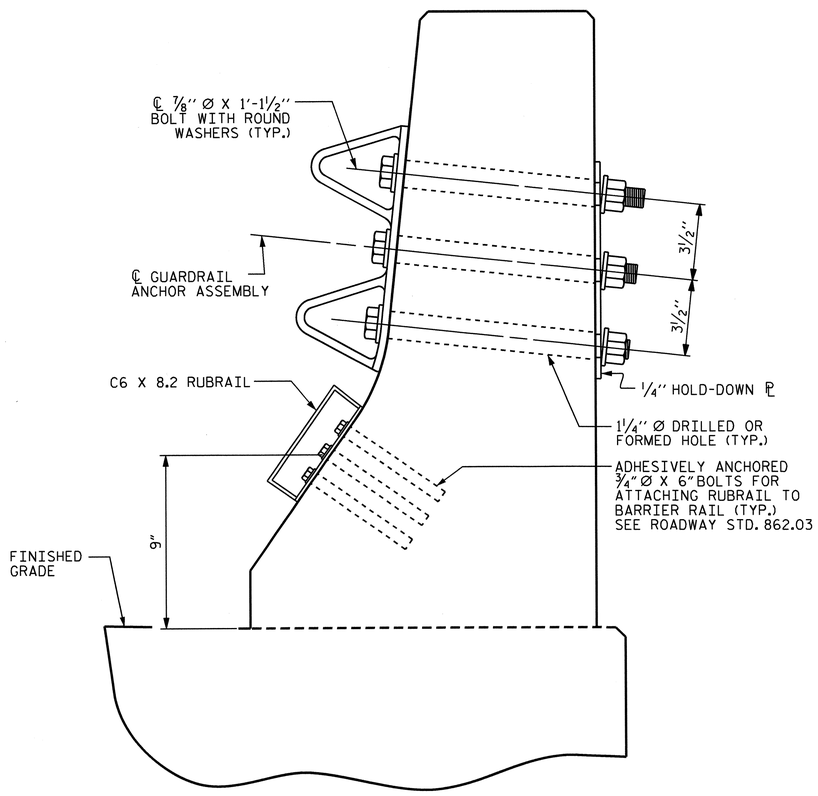


SECTION E-E

## GUARDRAIL ANCHOR ASSEMBLY DETAILS

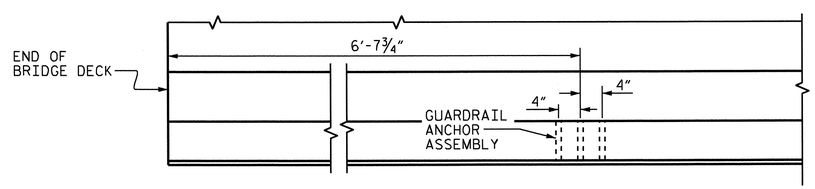


PLAN

## LOCATION OF ANCHORS FOR GUARDRAIL

INTEGRAL END BENT #1 SHOWN, INTEGRAL END BENT #2 SIMILAR.

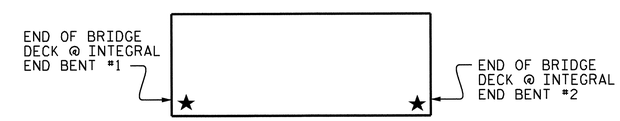


SKETCH SHOWING POINTS OF ATTACHMENTS

★ DENOTES GUARDRAIL ANCHOR ASSEMBLY FOR BARRIER RAIL

PROJECT NO. R-2309AB
GUILFORD COUNTY
STATION: 134+30.00 -L-

STATE OF NORTH CAROLINA
DEPARTMENT OF TRANSPORTATION
RALEIGH

STANDARD
GUARDRAIL ANCHORAGE FOR BARRIER RAIL
(LEFT LANE)

NORTH CAROLINA PROFESSIONAL SEAL 14045 ENGINEER TIMOTHY K. COGGINS
10/27/11

| REVISIONS | | | | | | SHEET NO. S-77 |
|---|---|---|---|---|---|---|
| NO. | BY: | DATE: | NO. | BY: | DATE: | TOTAL SHEETS 136 |
| 1 | | | 3 | | | |
| 2 | | | 4 | | | |

STR. #3 STD. NO. GRA2

ASSEMBLED BY : B.N.BARODAWALA DATE : 9-15-09
CHECKED BY : PEGGY PARISI DATE : 8-31-10
DRAWN BY : TLA 5/06
CHECKED BY : GM 5/06
ADDED 5/1/06R KMM/GM

26-OCT-2011 15:08
R:\TIPProjects-R\R2309AB\Structures\R2309ab\FinalPlans\Bridges\Str#3\r2309ab_sd_br_03.dgn
tcoggins

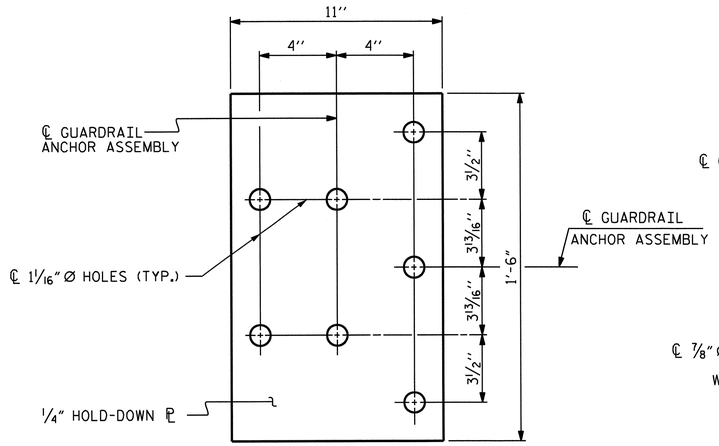


PLAN

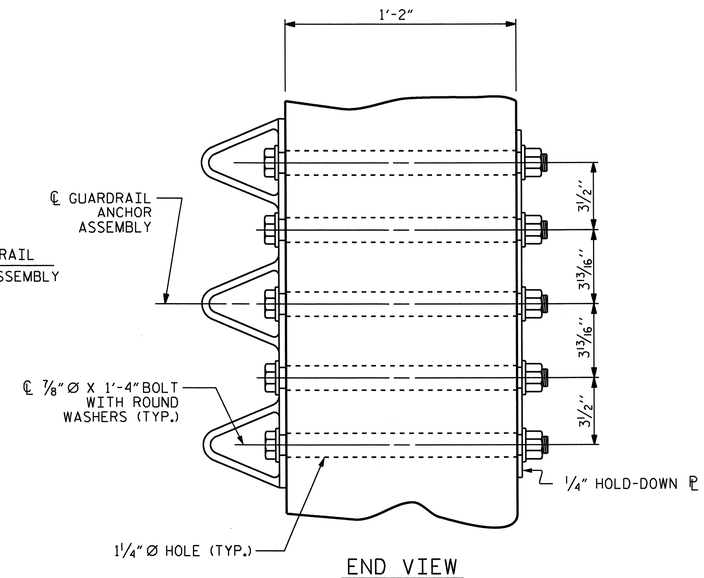


END VIEW

## GUARDRAIL ANCHOR ASSEMBLY DETAILS

## NOTES

THE GUARDRAIL ANCHOR ASSEMBLY SHALL CONSIST OF A 1/4" HOLD DOWN PLATE AND 7 - 7/8" Ø BOLTS WITH NUTS AND WASHERS.

THE HOLD-DOWN PLATE SHALL CONFORM TO AASHTO M270 GRADE 36. AFTER FABRICATION, THE HOLD-DOWN PLATE SHALL BE HOT-DIP GALVANIZED IN ACCORDANCE WITH AASHTO M111.

BOLTS SHALL CONFORM TO THE REQUIREMENTS OF ASTM A307 AND NUTS SHALL CONFORM TO THE REQUIREMENTS OF AASHTO M291. BOLTS, NUTS AND WASHERS SHALL BE GALVANIZED. AT THE CONTRACTOR'S OPTION, STAINLESS STEEL BOLTS, NUTS AND WASHERS MAY BE USED AS AN ALTERNATE FOR THE 7/8" Ø GALVANIZED BOLTS, NUTS AND WASHERS. THEY SHALL CONFORM TO OR EXCEED THE MECHANICAL REQUIREMENTS OF ASTM A307. THE USE OF THIS ALTERNATE SHALL BE APPROVED BY THE ENGINEER.

THE GUARDRAIL ANCHOR ASSEMBLY IS REQUIRED AT ALL POINTS WHERE APPROACH GUARDRAIL IS TO BE ATTACHED TO THE END OF THE PARAPET. FOR POINTS OF ATTACHMENT, SEE SKETCH.

AFTER INSTALLATION, THE EXPOSED THREAD OF THE BOLT SHALL BE BURRED WITH A SHARP POINTED TOOL.

THE COST OF THE GUARDRAIL ANCHOR ASSEMBLIES WITH BOLTS, NUTS AND WASHERS COMPLETE IN PLACE, SHALL BE INCLUDED IN THE VARIOUS PAY ITEMS.

THE VERTICAL REINFORCING BARS MAY BE SHIFTED SLIGHTLY IN THE END POST TO CLEAR ASSEMBLY BOLTS.

THE 1 1/4" Ø HOLES SHALL BE FORMED OR DRILLED WITH A CORE BIT. IMPACT TOOLS WILL NOT BE PERMITTED. ANY CONCRETE DAMAGED BY THIS WORK SHALL BE REPAIRED TO THE SATISFACTION OF THE ENGINEER.

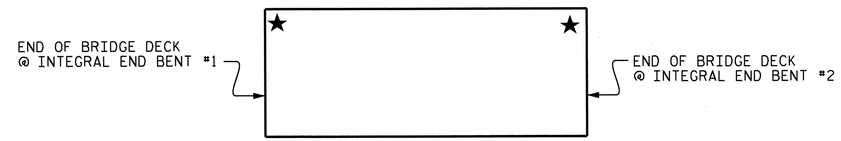


## SKETCH SHOWING POINTS OF ATTACHMENT

★ LOCATION OF GUARDRAIL ATTACHMENT FOR METAL RAIL

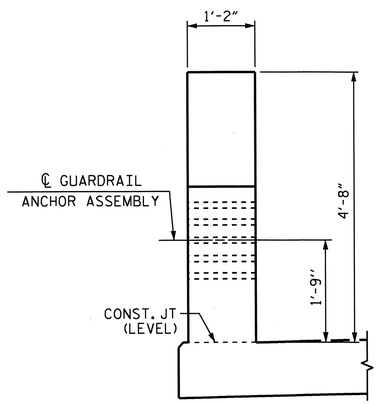


END VIEW

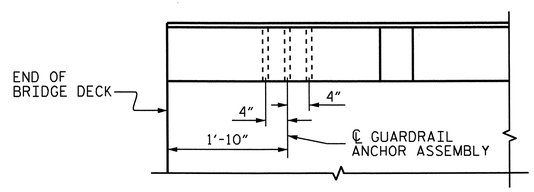


PLAN

INTEGRAL END BENT #1 SHOWN, INTEGRAL END BENT #2 SIMILAR.

## LOCATION OF GUARDRAIL ANCHOR AT END POST

PROJECT NO. R-2309AB

GUILFORD COUNTY

STATION: 134+30.00 -L-

STATE OF NORTH CAROLINA
DEPARTMENT OF TRANSPORTATION
RALEIGH

STANDARD

GUARDRAIL ANCHORAGE DETAILS FOR METAL RAILS

(LEFT LANE)

NORTH CAROLINA PROFESSIONAL SEAL 14045 ENGINEER TIMOTHY W. COGGINS

Timothy W. Coggins 10/27/11

| REVISIONS | | | | | | | |
|---|---|---|---|---|---|---|---|
| NO. | BY: | DATE: | NO. | BY: | DATE: | | SHEET NO. S-78 |
| 1 | | | 3 | | | | TOTAL SHEETS 136 |
| 2 | | | 4 | | | | |

STR. #3

STD. NO. GRA3

ASSEMBLED BY : B.N.BARODAWALA DATE : 9/21/09
CHECKED BY : PEGGY PARISI DATE : 8/31/10

DRAWN BY : MAA 5/10
CHECKED BY : GM 5/10

ADDED 5/6/10

26-OCT-2011 15:07
R:\TIPProjects-R\R2309AB\Structures\R2309ab\FinalPlans\Bridges\Str#3\r2309ab_sd_2mr_03.dgn
tcoggins

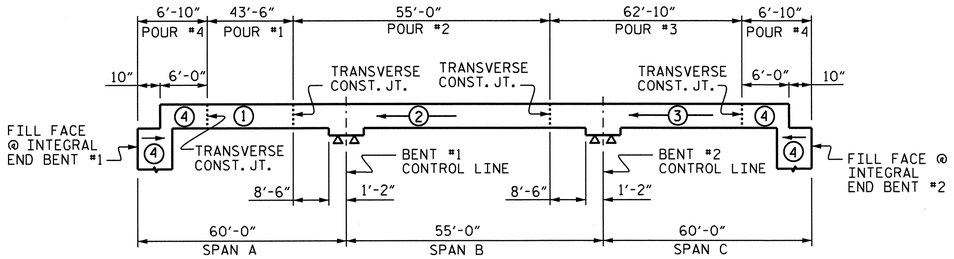


## POURING SEQUENCE

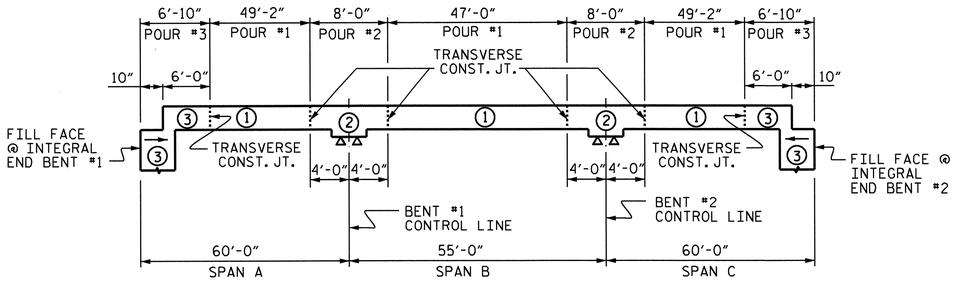


## OPTIONAL POURING SEQUENCE

POUR #2 CAN NOT BE STARTED UNTIL BOTH ADJACENT POURS #1 REACH A MINIMUM OF 3000 PSI.

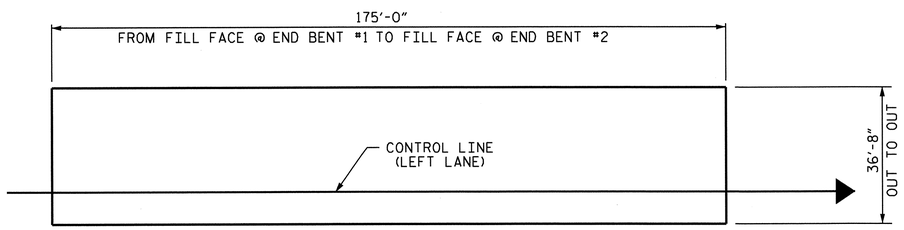


## LAYOUT FOR COMPUTING AREA OF REINFORCED CONCRETE DECK SLAB (6417 SQ. FT.)

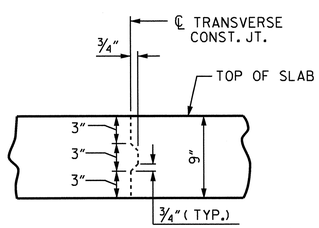


## TRANSVERSE CONSTRUCTION JOINT DETAIL

NOTE: REINFORCING STEEL IN SLAB NOT SHOWN. LONGITUDINAL REINFORCING STEEL SHALL BE CONTINUOUS THRU JOINT.

## SUPERSTRUCTURE REINFORCING STEEL LENGTHS ARE BASED ON THE FOLLOWING MINIMUM SPLICE LENGTHS

| BAR SIZE | SUPERSTRUCTURE EXCEPT APPROACH SLABS, PARAPET, AND BARRIER RAIL | | APPROACH SLABS | | PARAPET AND BARRIER RAIL |
|---|---|---|---|---|---|
| | EPOXY COATED | UNCOATED | EPOXY COATED | UNCOATED | |
| #4 | 2'-0" | 1'-9" | 2'-0" | 1'-9" | 2'-9" |
| #5 | 2'-6" | 2'-2" | 2'-6" | 2'-2" | 3'-5" |
| #6 | 3'-0" | 2'-7" | 3'-10" | 2'-7" | 4'-4" |
| #7 | 5'-3" | 3'-6" | | | |
| #8 | 6'-10" | 4'-7" | | | |

## GROOVING BRIDGE FLOORS

| | | |
|---|---|---|
| APPROACH SLABS | 1417 | SQ.FT. |
| BRIDGE DECK | 5330 | SQ.FT. |
| TOTAL | 6747 | SQ.FT. |

## BILL OF MATERIAL

### SPANS A, B & C

| BAR | NO. | SIZE | TYPE | LENGTH | WEIGHT |
|---|---|---|---|---|---|
| * A1 | 347 | #5 | STR | 36'-4" | 13150 |
| A2 | 347 | #5 | STR | 36'-4" | 13150 |
| | | | | | |
| * B1 | 146 | #6 | STR | 12'-0" | 2632 |
| * B2 | 50 | #4 | STR | 28'-0" | 935 |
| * B3 | 50 | #6 | STR | 45'-0" | 3380 |
| * B4 | 96 | #6 | STR | 17'-3" | 2487 |
| * B5 | 25 | #4 | STR | 15'-0" | 251 |
| B6 | 132 | #5 | STR | 59'-2" | 8146 |
| | | | | | |
| K1 | 20 | #4 | STR | 22'-2" | 296 |
| K2 | 6 | #4 | STR | 7'-9" | 31 |
| K3 | 12 | #4 | STR | 8'-3" | 66 |
| K4 | 12 | #4 | STR | 9'-0" | 72 |
| K5 | 4 | #4 | STR | 5'-2" | 14 |
| K6 | 8 | #4 | STR | 5'-5" | 29 |
| K7 | 8 | #4 | STR | 5'-10" | 31 |
| K8 | 8 | #4 | STR | 2'-8" | 14 |
| K9 | 8 | #4 | STR | 29'-9" | 159 |
| K10 | 12 | #4 | STR | 6'-7" | 53 |
| K11 | 12 | #4 | STR | 8'-9" | 70 |
| K12 | 12 | #4 | STR | 9'-0" | 72 |
| K13 | 12 | #4 | STR | 8'-3" | 66 |
| | | | | | |
| * S1 | 62 | #4 | 1 | 11'-8" | 483 |
| * S2 | 62 | #4 | 1 | 9'-9" | 404 |
| S3 | 132 | #4 | 3 | 2'-9" | 242 |
| | | | | | |
| U1 | 66 | #4 | 2 | 9'-11" | 437 |
| U2 | 12 | #4 | 2 | 11'-9" | 94 |
| * U3 | 36 | #4 | 4 | 13'-4" | 321 |
| * U4 | 12 | #4 | 4 | 11'-4" | 91 |
| | | | | | |
| V1 | 8 | #4 | STR | 3'-4" | 18 |

REINFORCING STEEL = 23060 LBS.
*EPOXY COATED REINFORCING STEEL = 24134 LBS.

## BAR TYPES

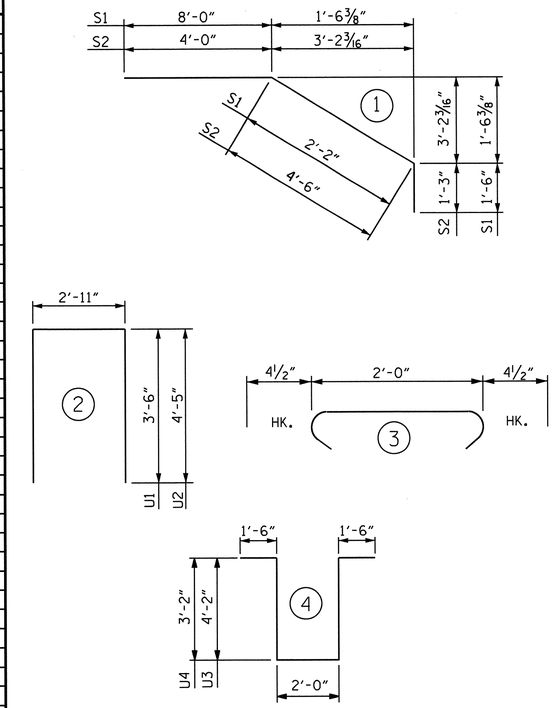


ALL BAR DIMENSIONS ARE OUT TO OUT.

## SUPERSTRUCTURE BILL OF MATERIAL

| | | CLASS AA CONCRETE | REINFORCING STEEL | EPOXY COATED REINFORCING STEEL |
|---|---|---|---|---|
| | | (CU. YDS.) | (LBS.) | (LBS.) |
| SPAN A, B AND C | POUR 1 | 51.1 | 23060 | 24134 |
| | POUR 2 | 73.4 | | |
| | POUR 3 | 82.6 | | |
| | POUR 4✲ | 59.8 | | |
| TOTALS** | | 266.9 | 23060 | 24134 |

** QUANTITIES FOR BARRIER RAIL AND PARAPET ARE NOT INCLUDED
✲ POUR 4 QUANTITY INCLUDES UPPER POUR OF WINGS & INTEGRAL END BENT

PROJECT NO. R-2309AB
GUILFORD COUNTY
STATION: 134+30.00 -L-

STATE OF NORTH CAROLINA
DEPARTMENT OF TRANSPORTATION
RALEIGH

STANDARD
SUPERSTRUCTURE BILL OF MATERIAL
(LEFT LANE)

NORTH CAROLINA PROFESSIONAL SEAL 14045 ENGINEER TIMOTHY L. COGGINS
10/27/11

| | |
|---|---|
| ASSEMBLED BY : B.N.BARODAWALA | DATE : 8-26-10 |
| CHECKED BY : PEGGY PARISI | DATE : 8-31-10 |
| DRAWN BY : JMB 5/87 | REV. 6/1/94 EEM/GRP |
| CHECKED BY : SJD 9/87 | REV. 8/16/99 RWW/LES |
| | REV. 5/1/06 TLA/GM |

| REVISIONS | | | | | | | SHEET NO. |
|---|---|---|---|---|---|---|---|
| NO. | BY: | DATE: | NO. | BY: | DATE: | | S-79 |
| 1 | | | 3 | | | | TOTAL SHEETS |
| 2 | | | 4 | | | | 136 |

STR. #3 STD. NO. BOM2

26-OCT-2011 15:06
R:\TIPProjects-R\R2309AB\Structures\R2309ab\Final Plans\Bridges\Str#3\r2309ab_sd_bm_03.dgn
tcoggins

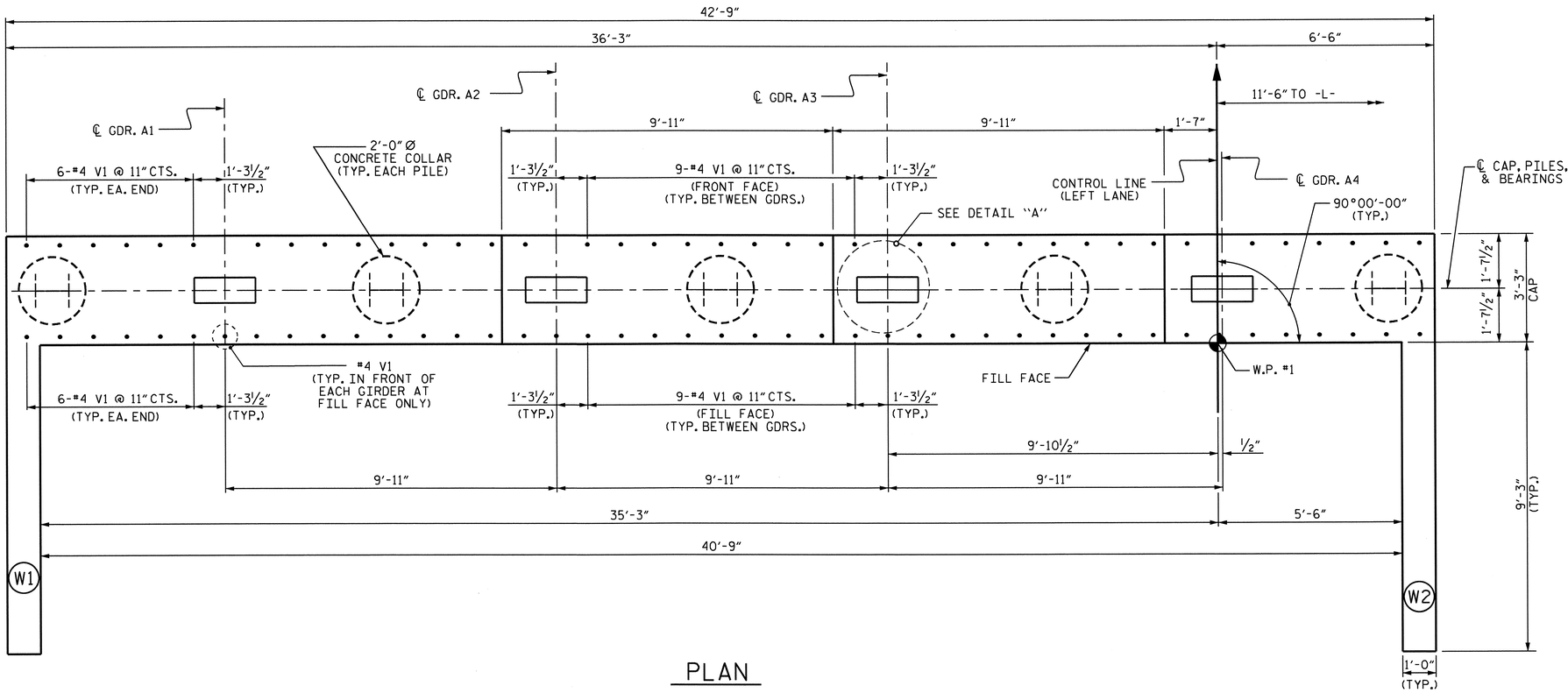


PLAN

## NOTES

STIRRUPS IN CAP MAY BE SHIFTED AS NECESSARY TO CLEAR #4 V1 BARS.

THE CONTRACTOR SHALL PROVIDE FOR INSTALLATION OF THE 4" DIAMETER DRAIN PIPE THROUGH THE WING WALL AS REQUIRED FOR REINFORCED BRIDGE APPROACH FILLS. SEE THE ROADWAY PLANS. REINFORCING STEEL IN THE WING WALL MAY BE SHIFTED AS NECESSARY TO CLEAR THE DRAIN PIPE.

SEE SUPERSTRUCTURE SHEETS FOR UPPER PART OF INTEGRAL END BENT DETAIL.

THE CONTRACTOR'S ATTENTION IS CALLED TO THE FACT THAT UPPER PART OF WINGS ARE TO BE POURED WITH THE SUPERSTRUCTURE.

THE TOP SURFACE OF POUR #1 OF THE END BENT CAP AND WINGS, EXCLUDING THE BEARING AREA, SHALL BE RAKED TO A DEPTH OF ¼".

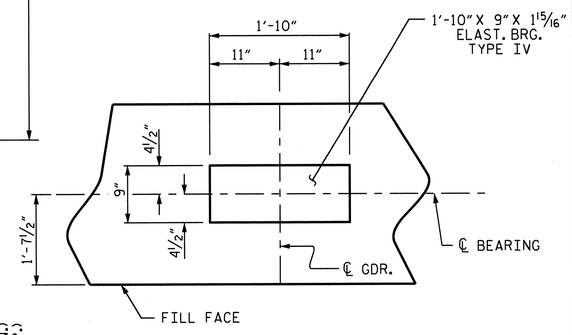


DETAIL "A"
(TYP. EA. GDR.)

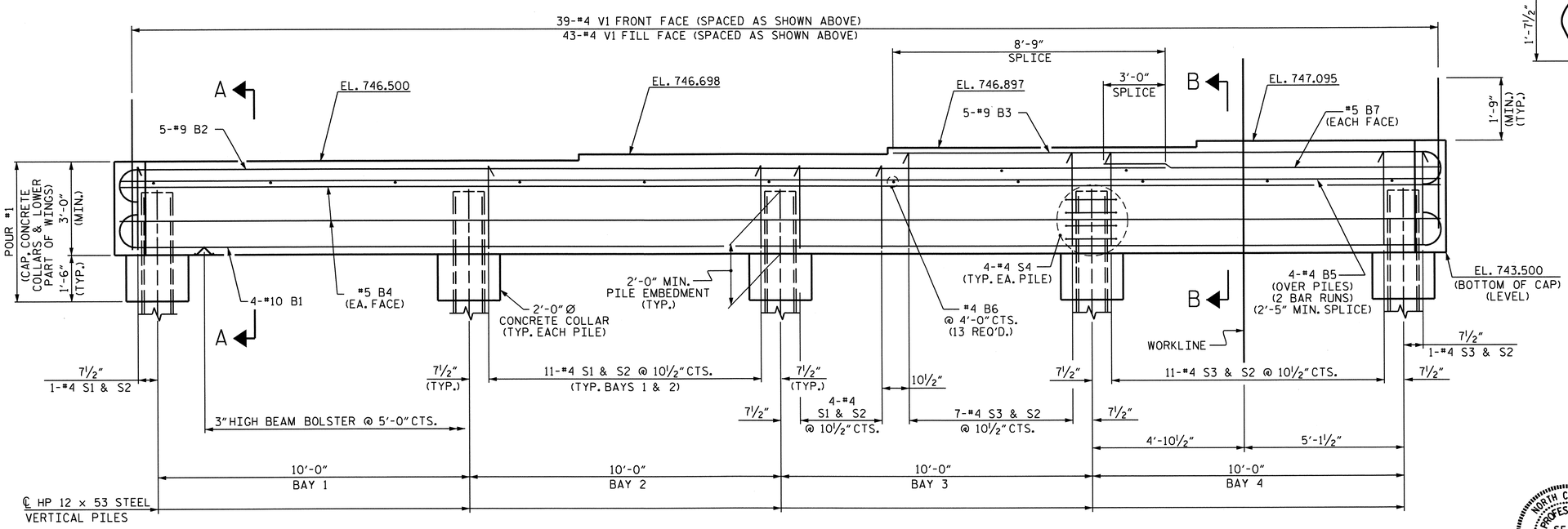


ELEVATION

PROJECT NO. R-2309AB
GUILFORD COUNTY
STATION: 134+30.00 -L-

SHEET 1 OF 3

STATE OF NORTH CAROLINA
DEPARTMENT OF TRANSPORTATION
RALEIGH

SUBSTRUCTURE
INTEGRAL
END BENT #1

(LEFT LANE)

NORTH CAROLINA PROFESSIONAL SEAL 14045 ENGINEER TIMOTHY A. COGGINS
10/27/11

| REVISIONS | | | | | | SHEET NO. |
|---|---|---|---|---|---|---|
| NO. | BY: | DATE: | NO. | BY: | DATE: | S-80 |
| 1 | | | 3 | | | TOTAL SHEETS |
| 2 | | | 4 | | | 136 |

DRAWN BY : PEGGY PARISI DATE : 10-19-10
CHECKED BY : JASON WILSON DATE : 1-28-11

26-OCT-2011 15:02
R:\TIPProjects-R\R2309AB\Structures\R2309ab\FinalPlans\Bridges\Str#3\r2309ab_sd_eb_03.dgn
tcoggins

STR. #3

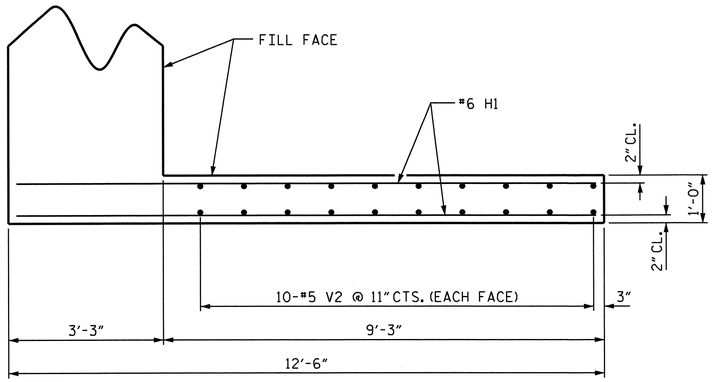


PLAN OF WING W1

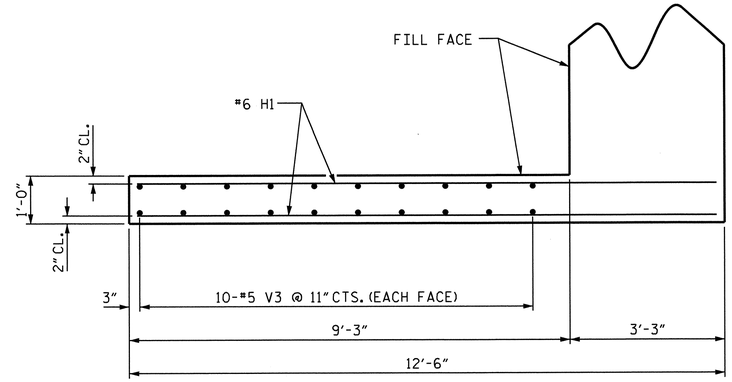


PLAN OF WING W2

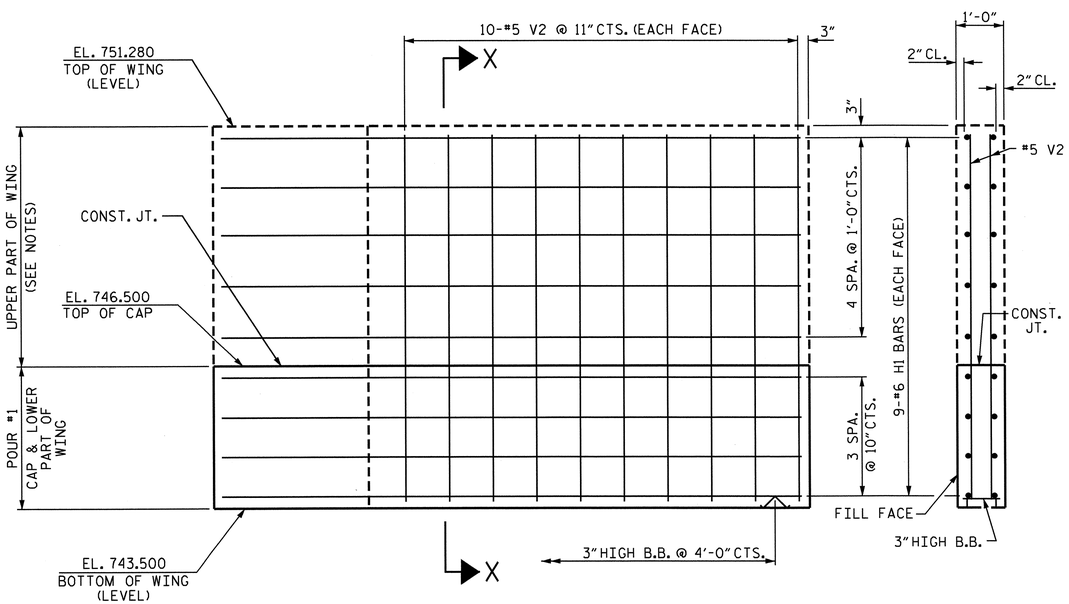


ELEVATION OF WING W1




SECTION X-X

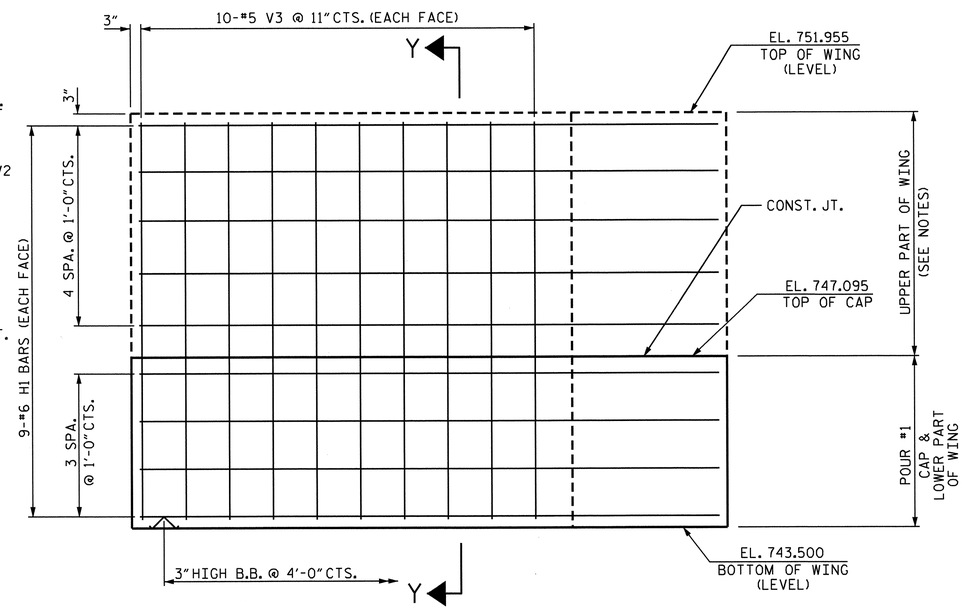


ELEVATION OF WING W2

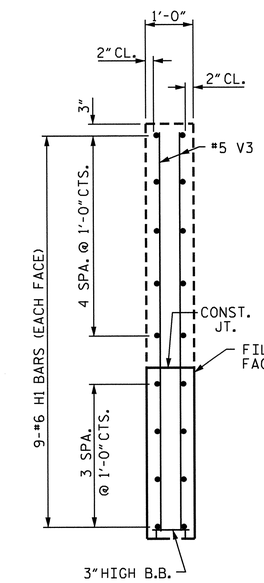


SECTION Y-Y

PROJECT NO. R-2309AB

GUILFORD COUNTY

STATION: 134+30.00 -L-

SHEET 2 OF 3

STATE OF NORTH CAROLINA
DEPARTMENT OF TRANSPORTATION
RALEIGH

SUBSTRUCTURE

# INTEGRAL END BENT #1

(LEFT LANE)

NORTH CAROLINA PROFESSIONAL SEAL 14045 ENGINEER TIMOTHY W. COGGINS

10/27/11

| REVISIONS | | | | | | | SHEET NO. |
|---|---|---|---|---|---|---|---|
| NO. | BY: | DATE: | NO. | BY: | DATE: | | S-81 |
| 1 | | | 3 | | | | TOTAL SHEETS |
| 2 | | | 4 | | | | 136 |

DRAWN BY : PEGGY PARISI DATE : 10-20-10
CHECKED BY : JASON WILSON DATE : 1-28-11

26-OCT-2011 15:02
R:\TIPProjects-R\R2309AB\Structures\R2309ab\FinalPlans\Bridges\Str#3\r2309ab_sd_eb_03.dgn
tcoggins

STR. #3

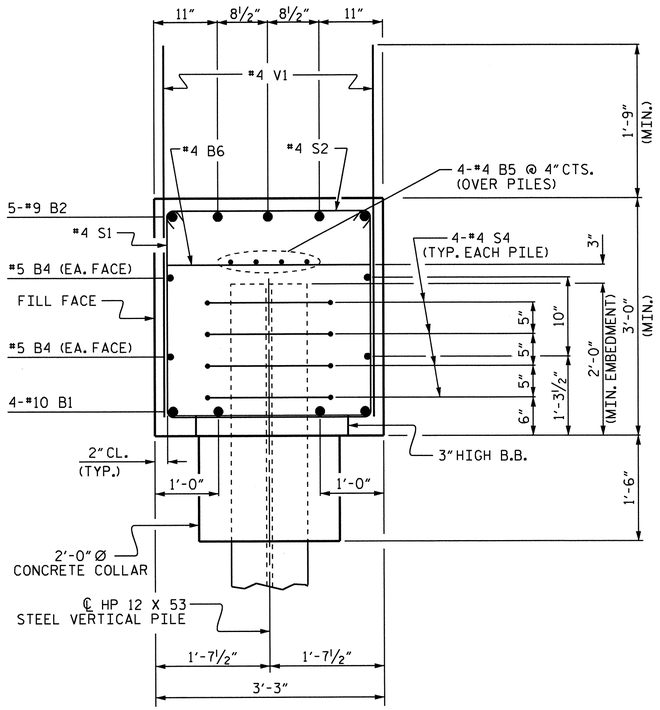


SECTION A-A

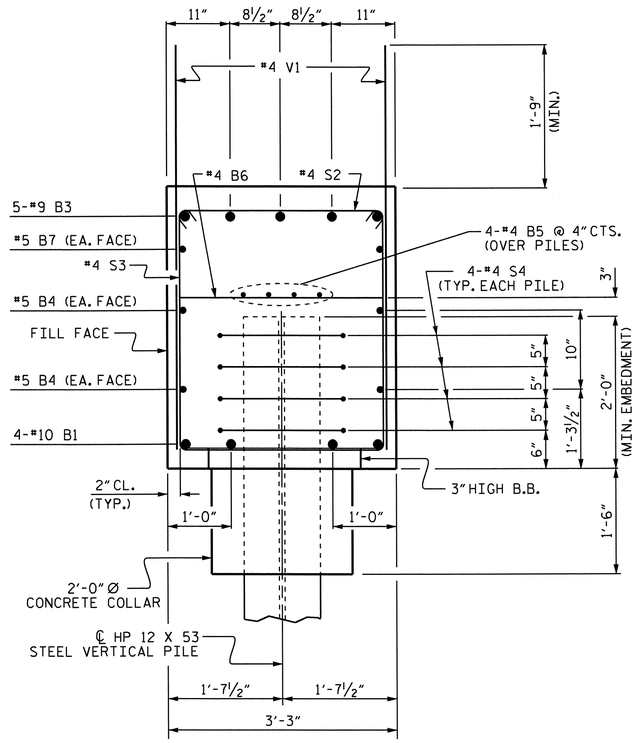


SECTION B-B

## BAR TYPES

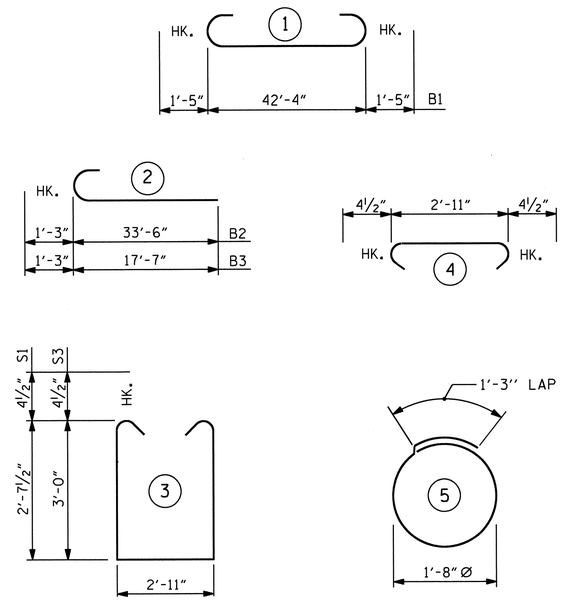


ALL BAR DIMENSIONS ARE OUT TO OUT.

## BILL OF MATERIAL

### INTEGRAL END BENT #1

| BAR | NO. | SIZE | TYPE | LENGTH | WEIGHT |
|---|---|---|---|---|---|
| B1 | 4 | #10 | 1 | 45'-2" | 777 |
| B2 | 5 | #9 | 2 | 34'-9" | 591 |
| B3 | 5 | #9 | 2 | 18'-10" | 320 |
| B4 | 4 | #5 | STR | 42'-5" | 177 |
| B5 | 8 | #4 | STR | 22'-5" | 120 |
| B6 | 13 | #4 | STR | 2'-11" | 25 |
| B7 | 2 | #5 | STR | 11'-11" | 25 |
| | | | | | |
| H1 | 36 | #6 | STR | 12'-2" | 658 |
| | | | | | |
| S1 | 27 | #4 | 3 | 8'-11" | 161 |
| S2 | 46 | #4 | 4 | 3'-8" | 113 |
| S3 | 19 | #4 | 3 | 9'-8" | 123 |
| S4 | 20 | #4 | 5 | 6'-6" | 87 |
| | | | | | |
| V1 | 82 | #4 | STR | 4'-7" | 251 |
| V2 | 20 | #5 | STR | 7'-5" | 155 |
| V3 | 20 | #5 | STR | 8'-1" | 169 |
| | | | | | |
| | | | | | |
| REINFORCING STEEL | | | | = | 3752 LBS |

CLASS A CONCRETE

POUR #1 (CAP, CONCRETE COLLARS & LOWER PART OF WINGS) 19.9 C.Y.

TOTAL 19.9 C.Y.

HP 12 x 53 STEEL PILES
No. 5 150 LIN FT.

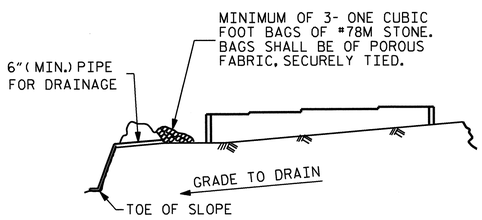


BAGGED STONE AND PIPE SHALL BE PLACED IMMEDIATELY AFTER COMPLETION OF END BENT EXCAVATION. PIPE MAY BE EITHER CONCRETE, CORRUGATED STEEL, CORRUGATED ALUMINUM ALLOY, OR CORRUGATED PLASTIC. PERFORATED PIPE WILL NOT BE ALLOWED.

BAGGED STONE SHALL REMAIN IN PLACE UNTIL THE ENGINEER DIRECTS THAT IT BE REMOVED. THE CONTRACTOR SHALL REMOVE AND DISPOSE OF SILT ACCUMULATIONS AT BAGGED STONE WHEN SO DIRECTED BY THE ENGINEER. BAGS SHALL BE REMOVED AND REPLACED WHENEVER THE ENGINEER DETERMINES THAT THEY HAVE DETERIORATED AND LOST THEIR EFFECTIVENESS.

NO SEPARATE PAYMENT WILL BE MADE FOR THIS WORK AND THE ENTIRE COST OF THIS WORK SHALL BE INCLUDED IN THE UNIT CONTRACT PRICE BID FOR THE SEVERAL PAY ITEMS.

## TEMPORARY DRAINAGE AT END BENT

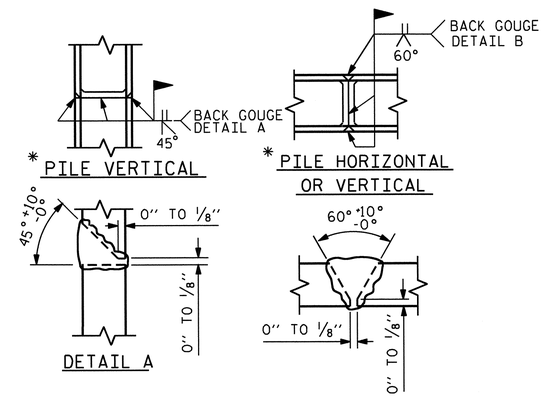


* POSITION OF PILE DURING WELDING.

## PILE SPLICE DETAILS

PROJECT NO. R-2309AB
GUILFORD COUNTY
STATION: 134+30.00 -L-

SHEET 3 OF 3

STATE OF NORTH CAROLINA
DEPARTMENT OF TRANSPORTATION
RALEIGH

SUBSTRUCTURE
INTEGRAL END BENT #1
(LEFT LANE)

NORTH CAROLINA PROFESSIONAL SEAL 14045 ENGINEER TIMOTHY L. COGGINS
Timothy L. Coggins 10/27/11

| REVISIONS | | | | | | | | SHEET NO. |
|---|---|---|---|---|---|---|---|---|
| NO. | BY: | DATE: | NO. | BY: | DATE: | | | S-82 |
| 1 | | | 3 | | | | | TOTAL SHEETS |
| 2 | | | 4 | | | | | 136 |

DRAWN BY : PEGGY PARISI DATE : 10-21-10
CHECKED BY : JASON WILSON DATE : 1-28-11

26-OCT-2011 15:02
R:\TIPProjects-R\R2309AB\Structures\R2309ab\FinalPlans\Bridges\Str#3\r2309ab_sd_eb_03.dgn
tcoggins

STR. #3

## NOTES:

STIRRUPS AND U1 BARS IN CAP MAY BE SHIFTED AS NECESSARY TO CLEAR ANCHOR BOLTS.

GALVANIZE THE FULL LENGTH OF EACH INTERIOR BENT PILE IN ACCORDANCE WITH SECTION 1076 OF THE STANDARD SPECIFICATIONS.

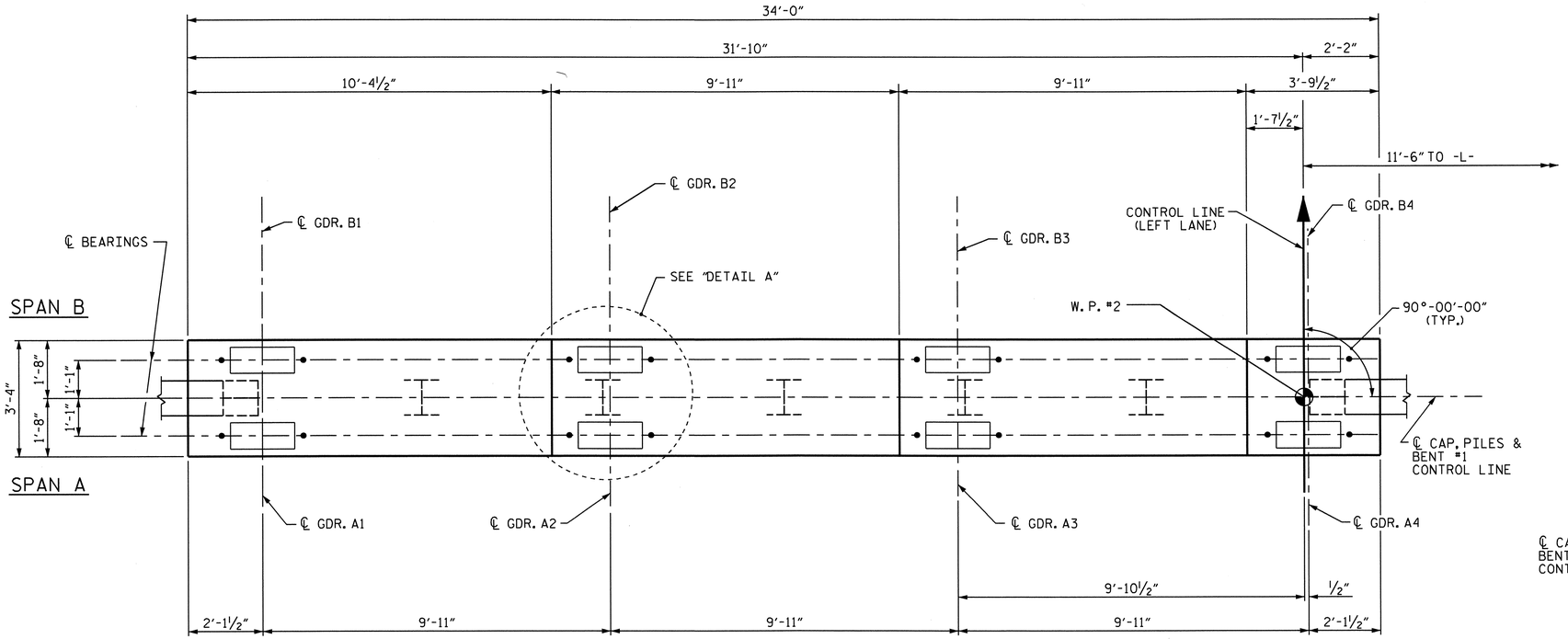


PLAN

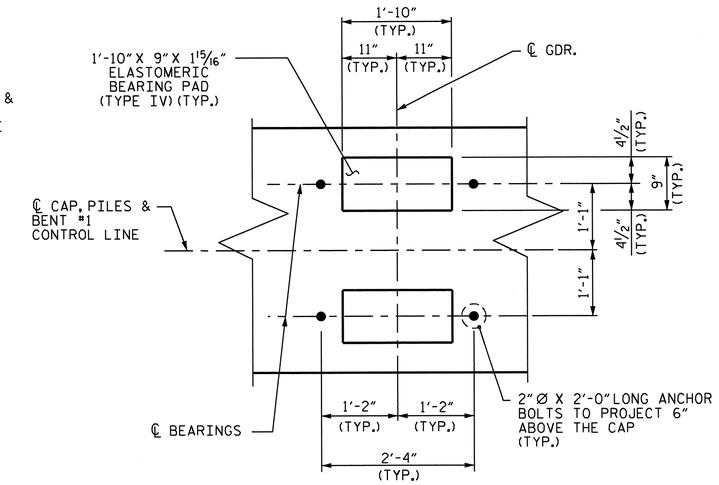


DETAIL "A"

(TYP. EA. GDR.)

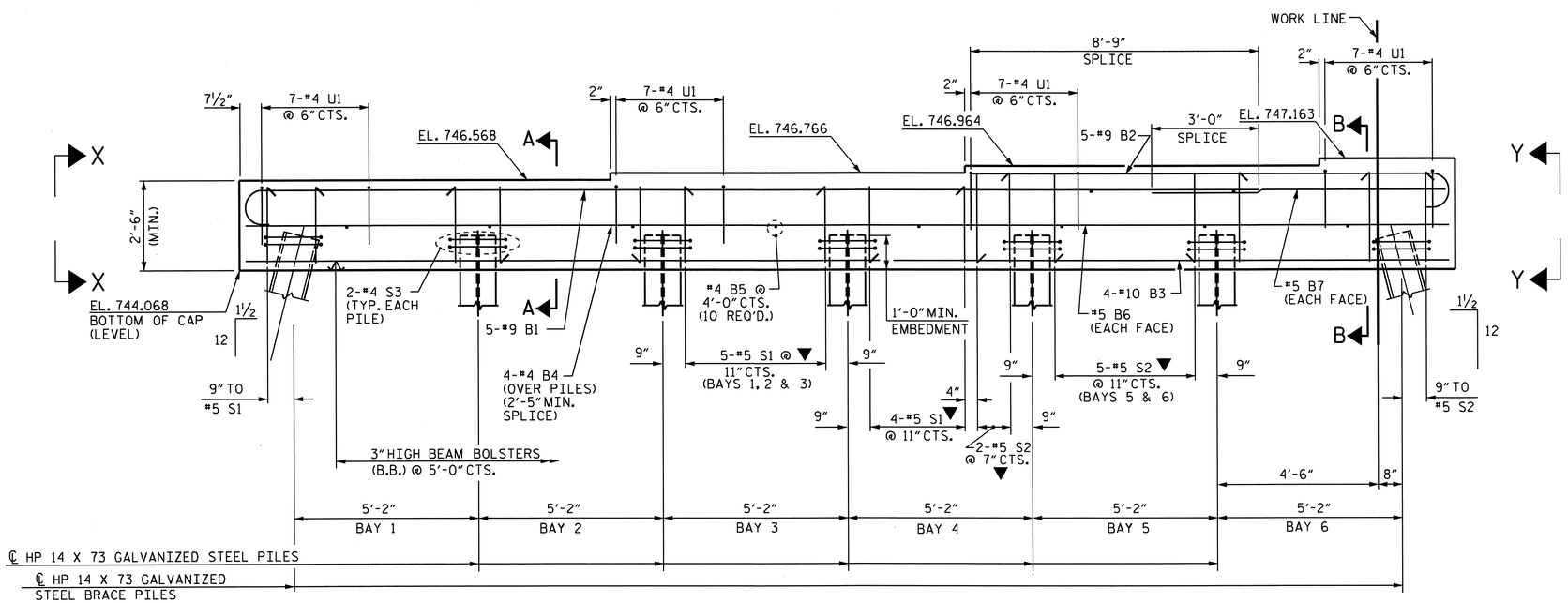


FOR ADDITIONAL REINFORCING STEEL IN ENDS OF CAP, SEE SECTION X-X AND SECTION Y-Y ON SHEET 2 OF 2.

ELEVATION

▼ INVERT ALTERNATE STIRRUPS

PROJECT NO. R-2309AB

GUILFORD COUNTY

STATION: 134+30.00 -L-

SHEET 1 OF 2

STATE OF NORTH CAROLINA
DEPARTMENT OF TRANSPORTATION
RALEIGH

SUBSTRUCTURE

BENT #1

(LEFT LANE)

NORTH CAROLINA PROFESSIONAL SEAL 14045 ENGINEER TIMOTHY L. COGGINS

10/27/11

| REVISIONS | | | | | | SHEET NO. |
|---|---|---|---|---|---|---|
| NO. | BY: | DATE: | NO. | BY: | DATE: | S-83 |
| 1 | | | 3 | | | TOTAL SHEETS |
| 2 | | | 4 | | | 136 |

STR. #3

DRAWN BY : PEGGY PARISI DATE : 3-10-11
CHECKED BY : J.B. WILSON DATE : 6-2-11

26-OCT-2011 15:02
R:\TIPProjects-R\R2309AB\Structures\R2309ab\FinalPlans\Bridges\Str#3\r2309ab_sd_b1_03.dgn
tcoggins

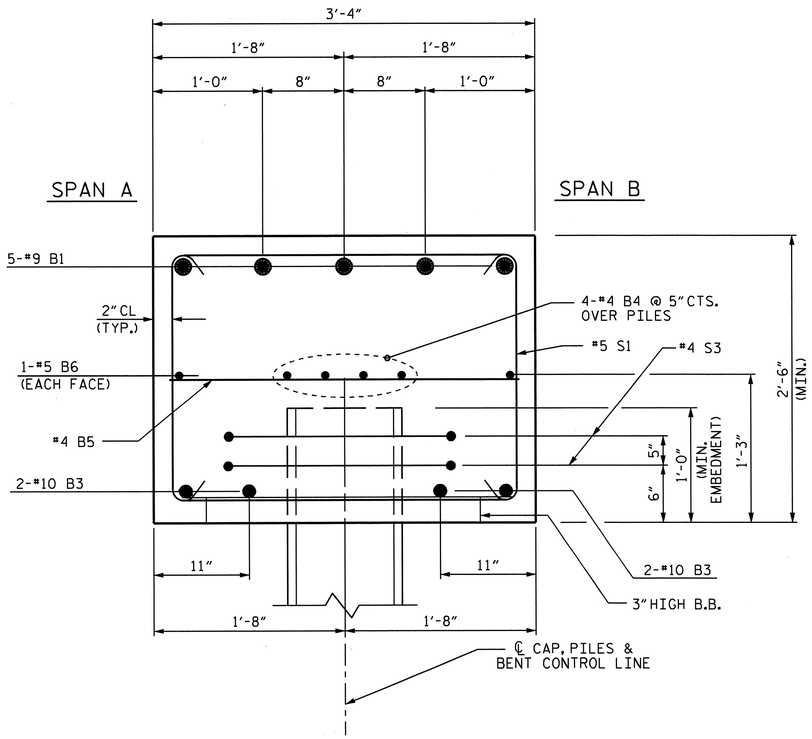


SECTION A-A

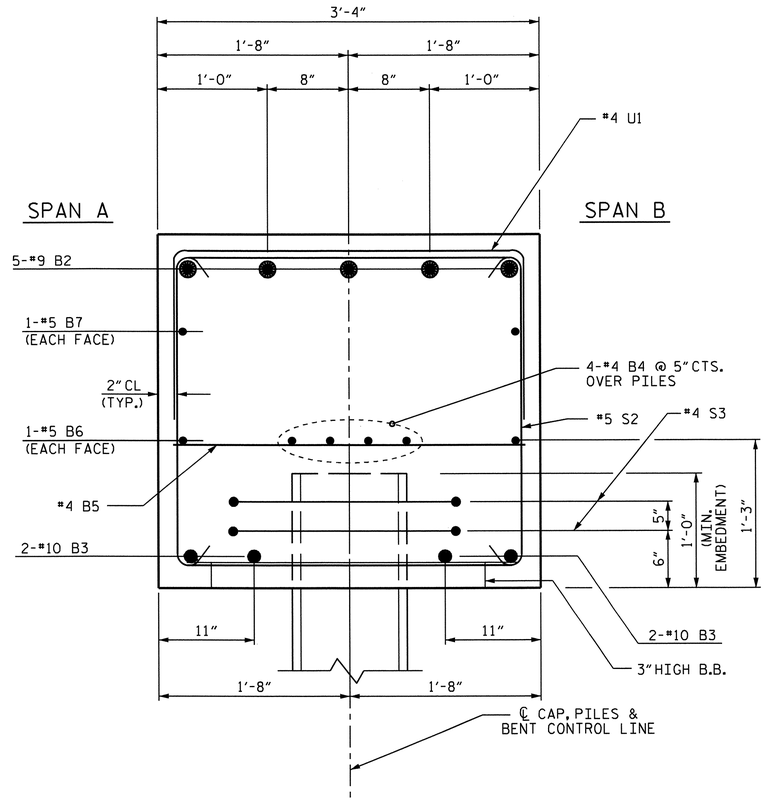


SECTION B-B

## BAR TYPES

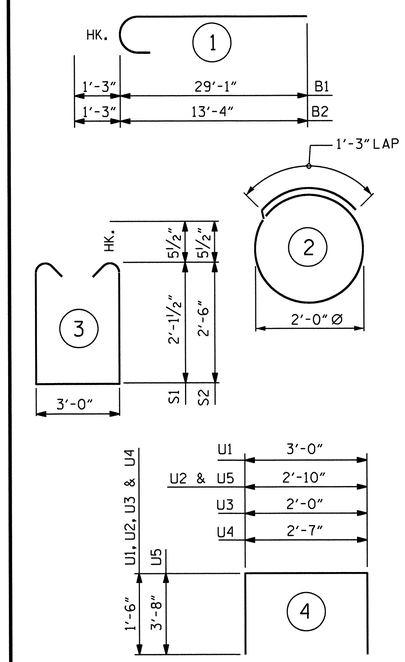


ALL BAR DIMENSIONS ARE OUT TO OUT.

## BILL OF MATERIAL

### BENT #1

| BAR | NO. | SIZE | TYPE | LENGTH | WEIGHT |
|---|---|---|---|---|---|
| B1 | 5 | #9 | 1 | 30'-4" | 516 |
| B2 | 5 | #9 | 1 | 14'-7" | 248 |
| B3 | 4 | #10 | STR | 33'-8" | 579 |
| B4 | 8 | #4 | STR | 18'-1" | 97 |
| B5 | 10 | #4 | STR | 3'-0" | 20 |
| B6 | 2 | #5 | STR | 33'-8" | 70 |
| B7 | 2 | #5 | STR | 7'-8" | 16 |
| | | | | | |
| S1 | 20 | #5 | 3 | 8'-2" | 170 |
| S2 | 13 | #5 | 3 | 8'-11" | 121 |
| S3 | 14 | #4 | 2 | 7'-7" | 71 |
| | | | | | |
| U1 | 28 | #4 | 4 | 6'-0" | 112 |
| U2 | 4 | #4 | 4 | 5'-10" | 16 |
| U3 | 3 | #4 | 4 | 5'-0" | 10 |
| U4 | 3 | #4 | 4 | 5'-7" | 11 |
| U5 | 2 | #9 | 4 | 10'-2" | 69 |
| TOTAL REINFORCING STEEL | | | | | 2126 |

CLASS "A" CONCRETE
POUR #1 CAP 11.5 C.Y.

TOTAL CLASS "A" CONCRETE 11.5 C.Y.

HP 14 X 73 GALVANIZED STEEL PILES
NO. 7 280 LIN. FT.

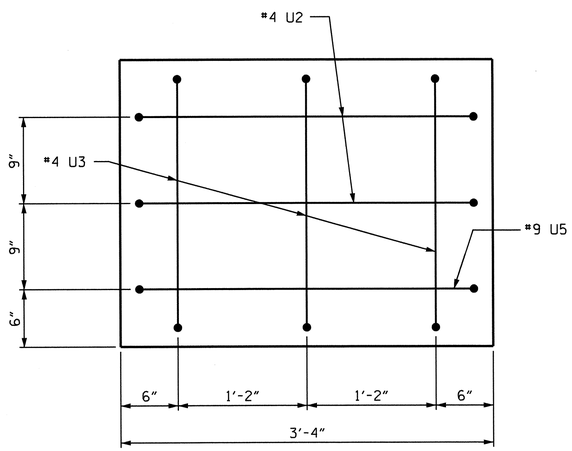


SECTION X-X

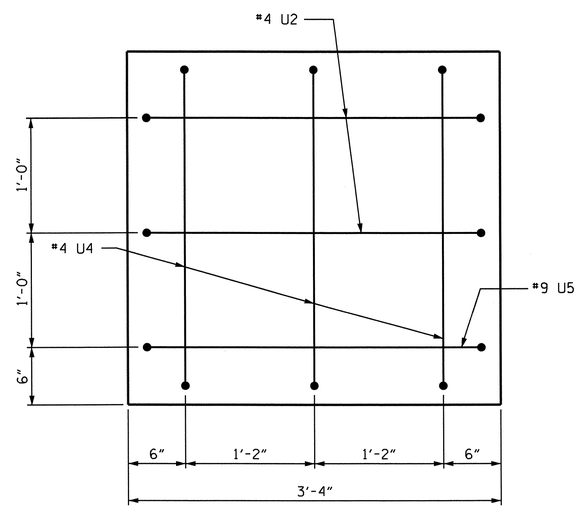


SECTION Y-Y

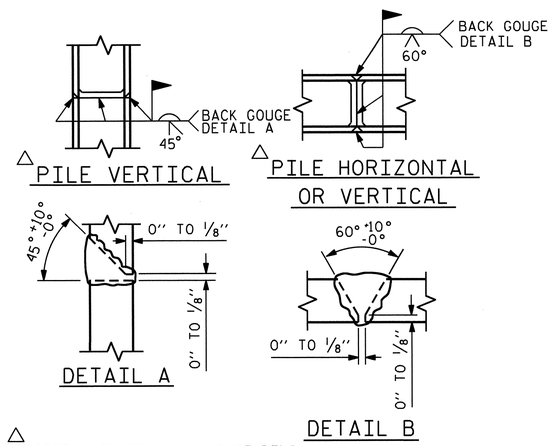


△ POSITION OF PILE DURING WELDING.

PILE SPLICE DETAILS

PROJECT NO. R-2309AB
GUILFORD COUNTY
STATION: 134+30.00 -L-

SHEET 2 OF 2

STATE OF NORTH CAROLINA
DEPARTMENT OF TRANSPORTATION
RALEIGH

SUBSTRUCTURE

BENT #1

(LEFT LANE)

NORTH CAROLINA PROFESSIONAL SEAL 14045 ENGINEER TIMOTHY L. COGGINS
10/27/11

| REVISIONS | | | | | | SHEET NO. |
|---|---|---|---|---|---|---|
| NO. | BY: | DATE: | NO. | BY: | DATE: | S-84 |
| 1 | | | 3 | | | TOTAL SHEETS |
| 2 | | | 4 | | | 136 |

DRAWN BY : PEGGY PARISI DATE : 3-10-11
CHECKED BY : J.B. WILSON DATE : 6-2-11

26-OCT-2011 15:01
R:\TIPProjects-R\R2309AB\Structures\R2309ab\FinalPlans\Bridges\Str#3\r2309ab_sd_bl_03.dgn
tcoggins

STR. #3

## NOTES:

STIRRUPS AND U1 BARS IN CAP MAY BE SHIFTED AS NECESSARY TO CLEAR ANCHOR BOLTS.

GALVANIZE THE FULL LENGTH OF EACH INTERIOR BENT PILE IN ACCORDANCE WITH SECTION 1076 OF THE STANDARD SPECIFICATIONS.

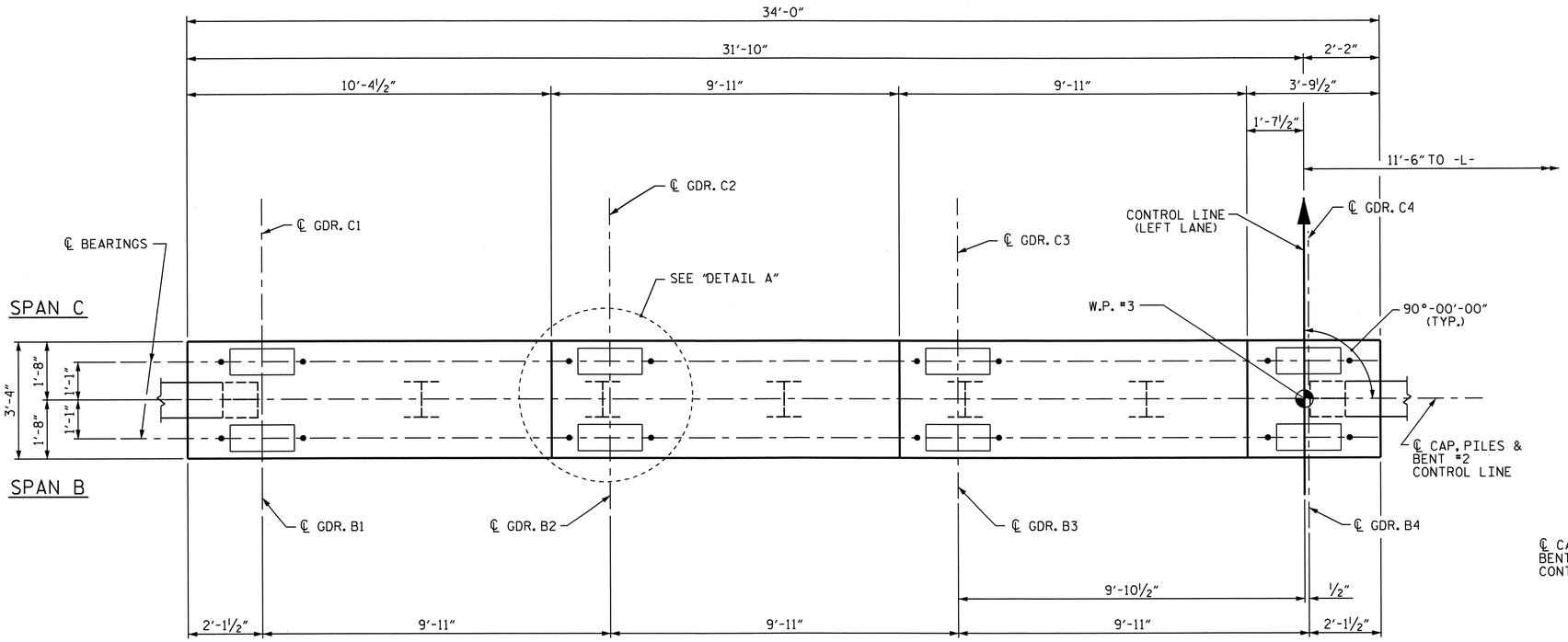


PLAN

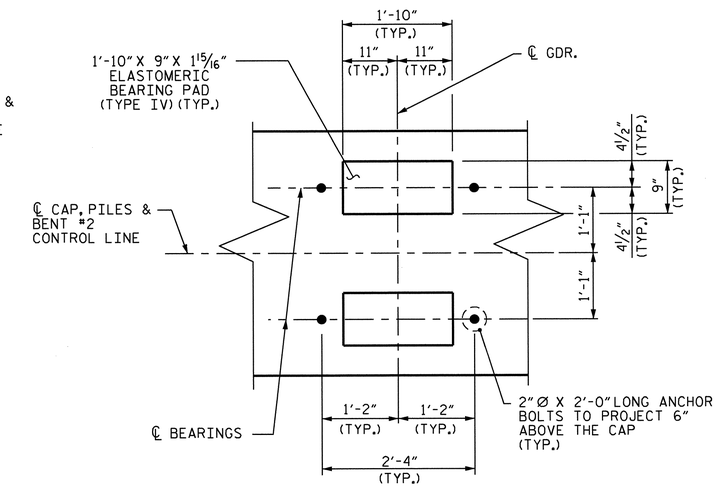


DETAIL "A"

(TYP. EA. GDR.)

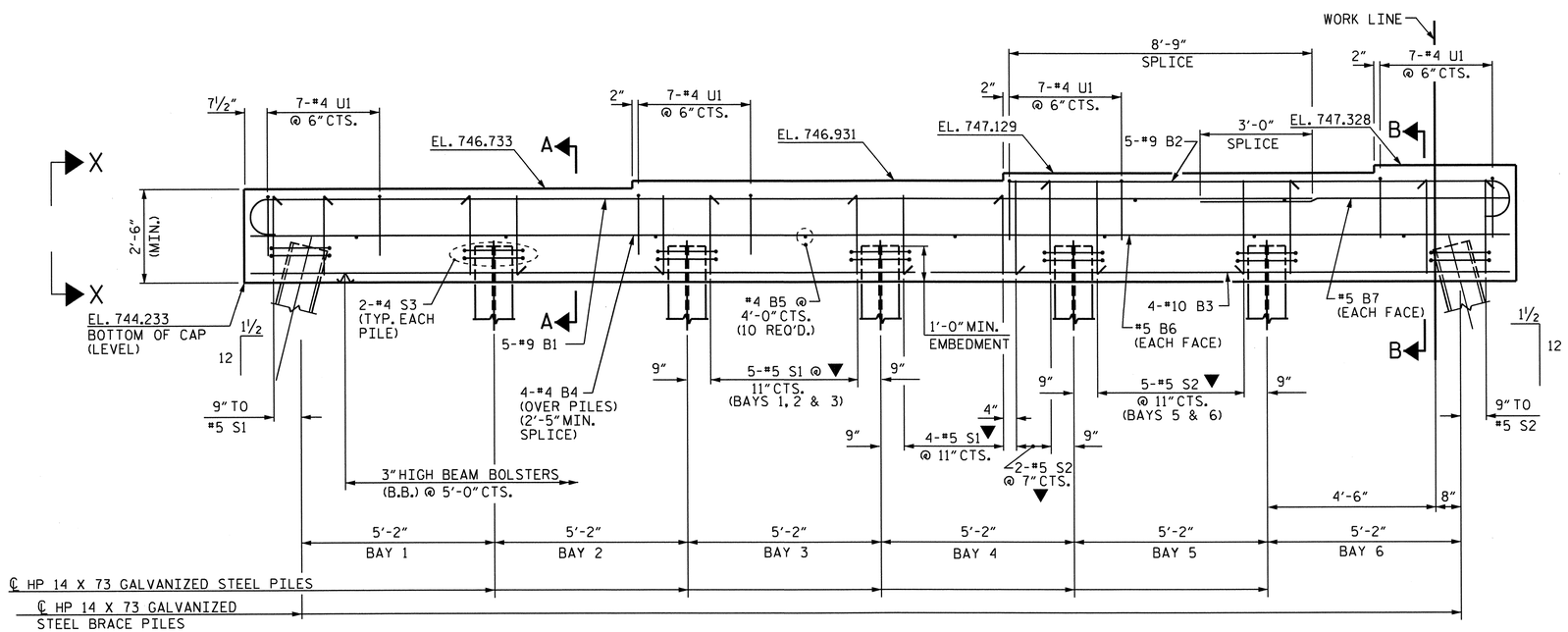


ELEVATION

▼ INVERT ALTERNATE STIRRUPS

FOR ADDITIONAL REINFORCING STEEL IN ENDS OF CAP, SEE SECTION X-X AND SECTION Y-Y ON SHEET 2 OF 2.

PROJECT NO. R-2309AB

GUILFORD COUNTY

STATION: 134+30.00 -L-

SHEET 1 OF 2

STATE OF NORTH CAROLINA
DEPARTMENT OF TRANSPORTATION
RALEIGH

SUBSTRUCTURE

BENT #2

(LEFT LANE)

NORTH CAROLINA PROFESSIONAL SEAL 14045 ENGINEER TIMOTHY L. COGGINS

10/27/11

| REVISIONS | | | | | | SHEET NO. |
|---|---|---|---|---|---|---|
| NO. | BY: | DATE: | NO. | BY: | DATE: | S-85 |
| 1 | | | 3 | | | TOTAL SHEETS |
| 2 | | | 4 | | | 136 |

STR. #3

DRAWN BY : PEGGY PARISI DATE : 3-10-11
CHECKED BY : J.B. WILSON DATE : 6-2-11

26-OCT-2011 15:25
R:\TIPProjects-R\R2309AB\Structures\R2309ab\FinalPlans\Bridges\Str#3\r2309ab_sd_b1_03.dgn
tcoggins

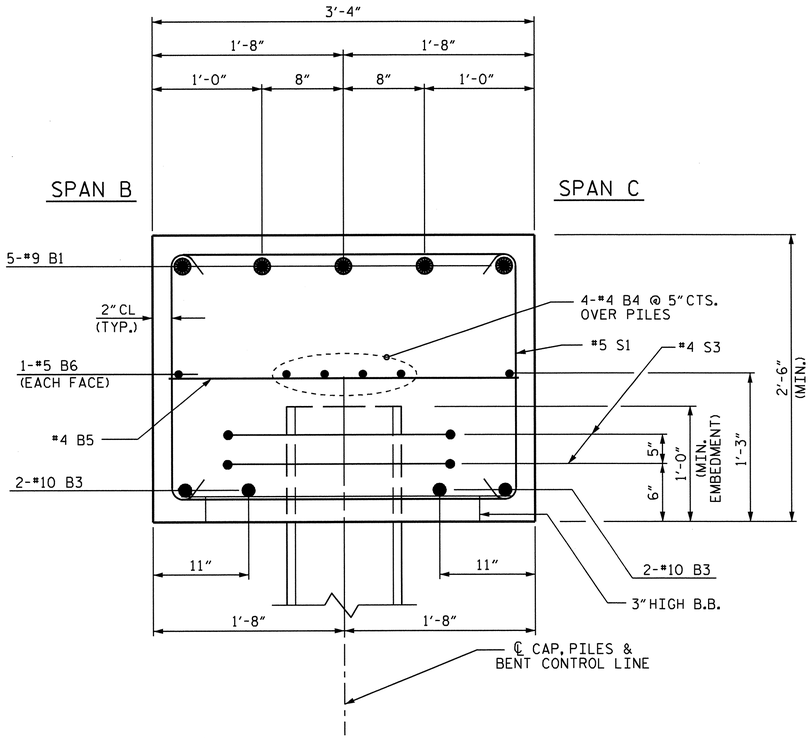


SECTION A-A

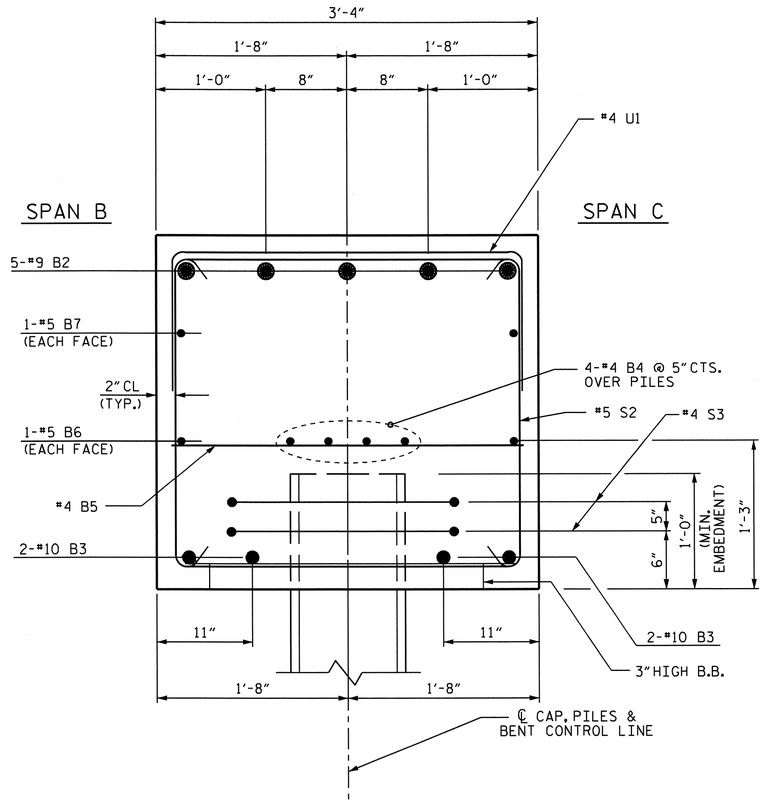


SECTION B-B

## BAR TYPES

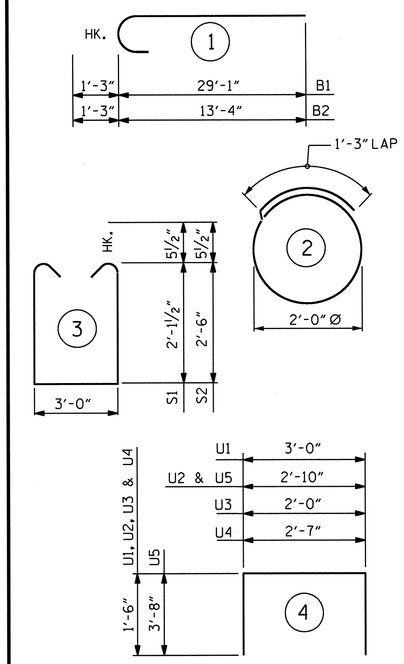


ALL BAR DIMENSIONS ARE OUT TO OUT.

## BILL OF MATERIAL

### BENT #2

| BAR | NO. | SIZE | TYPE | LENGTH | WEIGHT |
|---|---|---|---|---|---|
| B1 | 5 | #9 | 1 | 30'-4" | 516 |
| B2 | 5 | #9 | 1 | 14'-7" | 248 |
| B3 | 4 | #10 | STR | 33'-8" | 579 |
| B4 | 8 | #4 | STR | 18'-1" | 97 |
| B5 | 10 | #4 | STR | 3'-0" | 20 |
| B6 | 2 | #5 | STR | 33'-8" | 70 |
| B7 | 2 | #5 | STR | 7'-8" | 16 |
| | | | | | |
| S1 | 20 | #5 | 3 | 8'-2" | 170 |
| S2 | 13 | #5 | 3 | 8'-11" | 121 |
| S3 | 14 | #4 | 2 | 7'-7" | 71 |
| | | | | | |
| U1 | 28 | #4 | 4 | 6'-0" | 112 |
| U2 | 4 | #4 | 4 | 5'-10" | 16 |
| U3 | 3 | #4 | 4 | 5'-0" | 10 |
| U4 | 3 | #4 | 4 | 5'-7" | 11 |
| U5 | 2 | #9 | 4 | 10'-2" | 69 |

TOTAL REINFORCING STEEL 2126 LBS.

CLASS "A" CONCRETE
POUR #1 CAP 11.5 C.Y.

TOTAL CLASS "A" CONCRETE 11.5 C.Y.

HP 14 X 73 GALVANIZED STEEL PILES
NO. 7 280 LIN. FT.

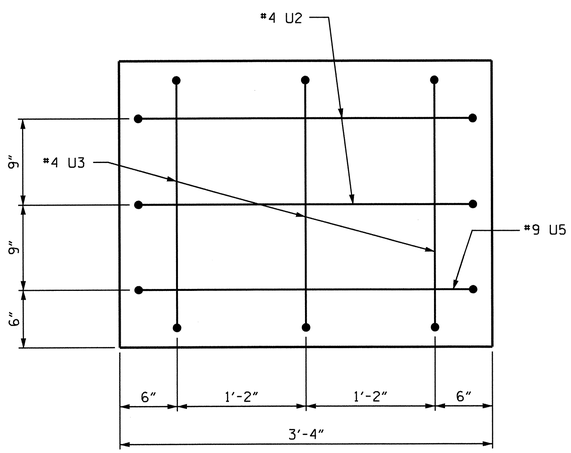


SECTION X-X

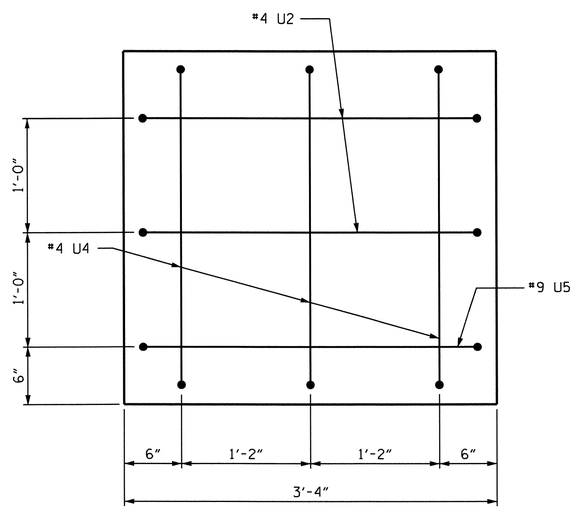


SECTION Y-Y

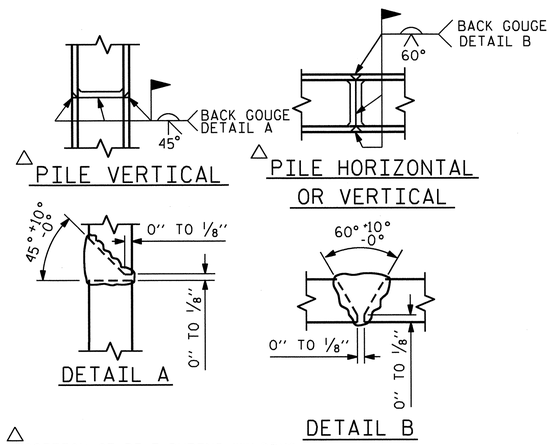


△ PILE VERTICAL

△ PILE HORIZONTAL OR VERTICAL

DETAIL A

DETAIL B

△ POSITION OF PILE DURING WELDING.

## PILE SPLICE DETAILS

PROJECT NO. R-2309AB
GUILFORD COUNTY
STATION: 134+30.00 -L-

SHEET 2 OF 2

STATE OF NORTH CAROLINA
DEPARTMENT OF TRANSPORTATION
RALEIGH

SUBSTRUCTURE

BENT #2

(LEFT LANE)

NORTH CAROLINA PROFESSIONAL SEAL 14045 ENGINEER TIMOTHY W. COGGINS
10/27/11

| REVISIONS | | | | | | | | SHEET NO. |
|---|---|---|---|---|---|---|---|---|
| NO. | BY: | DATE: | NO. | BY: | DATE: | | | S-86 |
| 1 | | | 3 | | | | | TOTAL SHEETS |
| 2 | | | 4 | | | | | 136 |

STR. #3

DRAWN BY : PEGGY PARISI DATE : 3-10-11
CHECKED BY : J.B. WILSON DATE : 6-2-11

26-OCT-2011 15:01
R:\TIPProjects-R\R2309AB\Structures\R2309ab\FinalPlans\Bridges\Str#3\r2309ab_sd_b1_03.dgn
tcoggins

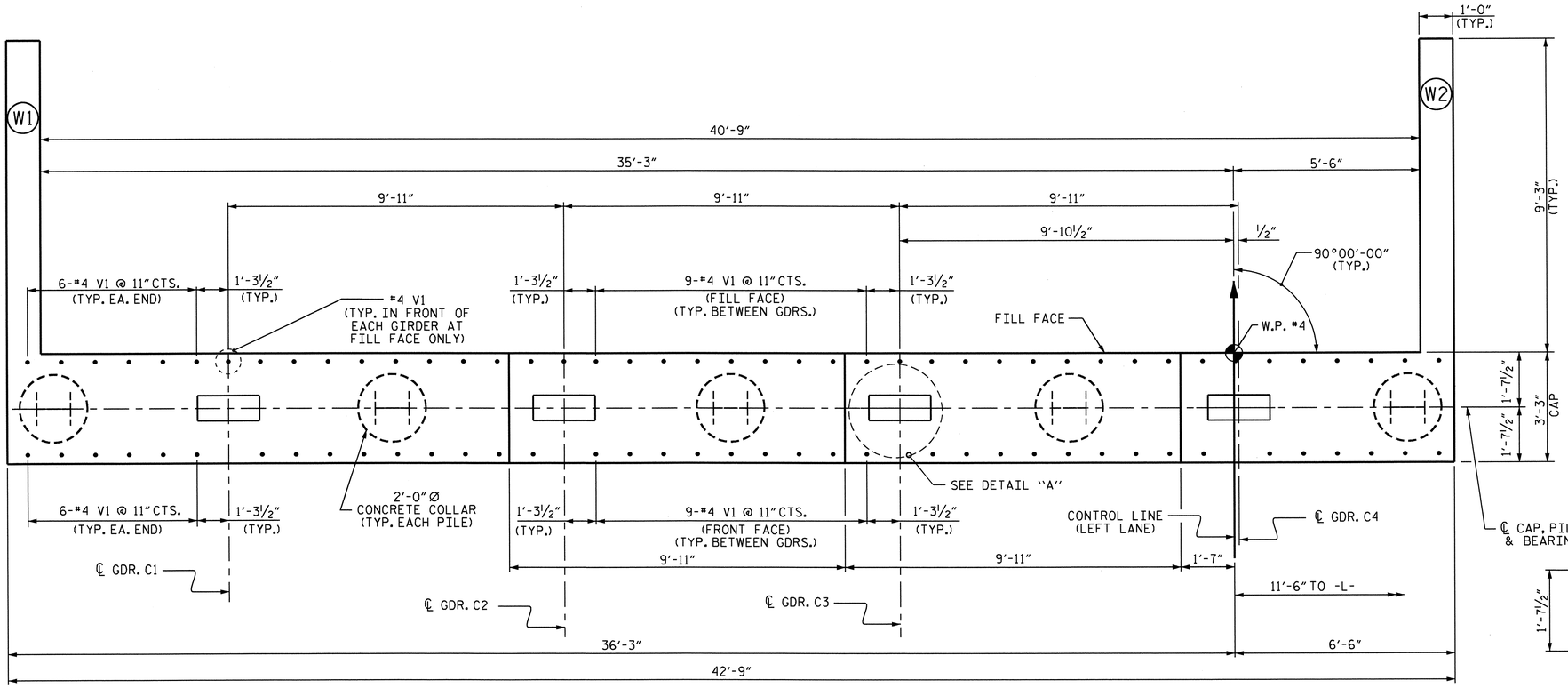


PLAN

## NOTES

STIRRUPS IN CAP MAY BE SHIFTED AS NECESSARY TO CLEAR #4 V1 BARS.

THE CONTRACTOR SHALL PROVIDE FOR INSTALLATION OF THE 4" DIAMETER DRAIN PIPE THROUGH THE WING WALL AS REQUIRED FOR REINFORCED BRIDGE APPROACH FILLS, SEE THE ROADWAY PLANS. REINFORCING STEEL IN THE WING WALL MAY BE SHIFTED AS NECESSARY TO CLEAR THE DRAIN PIPE.

SEE SUPERSTRUCTURE SHEETS FOR UPPER PART OF INTEGRAL END BENT DETAIL.

THE CONTRACTOR'S ATTENTION IS CALLED TO THE FACT THAT UPPER PART OF WINGS ARE TO BE POURED WITH THE SUPERSTRUCTURE.

THE TOP SURFACE OF POUR #1 OF THE END BENT CAP AND WINGS, EXCLUDING THE BEARING AREA, SHALL BE RAKED TO A DEPTH OF ¼".

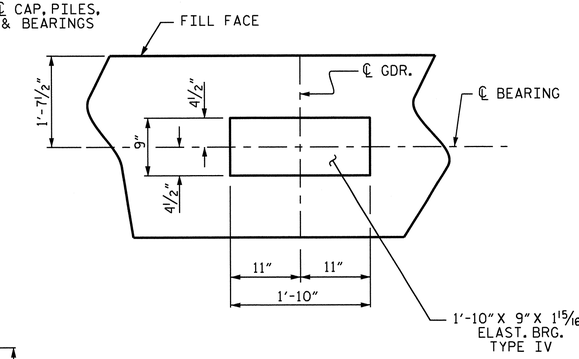


DETAIL "A"
(TYP. EA. GDR.)

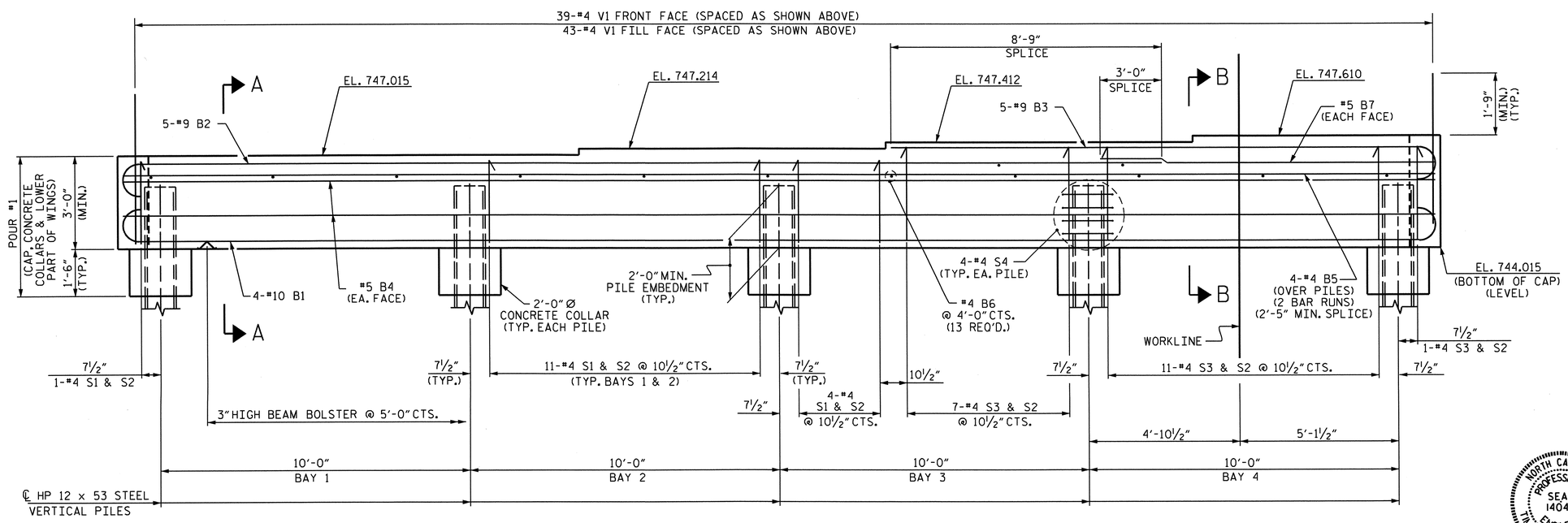


ELEVATION

PROJECT NO. R-2309AB
GUILFORD COUNTY
STATION: 134+30.00 -L-

SHEET 1 OF 3

STATE OF NORTH CAROLINA
DEPARTMENT OF TRANSPORTATION
RALEIGH

SUBSTRUCTURE

# INTEGRAL END BENT #2
(LEFT LANE)

NORTH CAROLINA PROFESSIONAL SEAL 14045 ENGINEER TIMOTHY L. COGGINS
Timothy L. Coggins 10/27/11

| REVISIONS | | | | | | SHEET NO. |
|---|---|---|---|---|---|---|
| NO. | BY: | DATE: | NO. | BY: | DATE: | S-87 |
| 1 | | | 3 | | | TOTAL SHEETS |
| 2 | | | 4 | | | 136 |

STR. #3

DRAWN BY : PEGGY PARISI DATE : 10-19-10
CHECKED BY : JASON WILSON DATE : 1-28-11

26-OCT-2011 15:01
R:\TIPProjects-R\R2309AB\Structures\R2309ab\FinalPlans\Bridges\Str#3\r2309ab_sd_eb_03.dgn
tcoggins

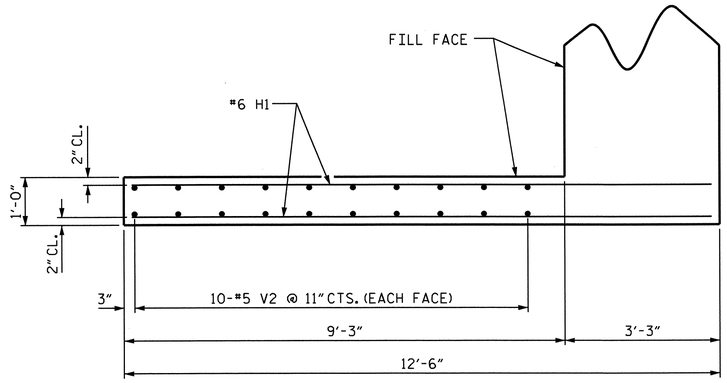


PLAN OF WING W1

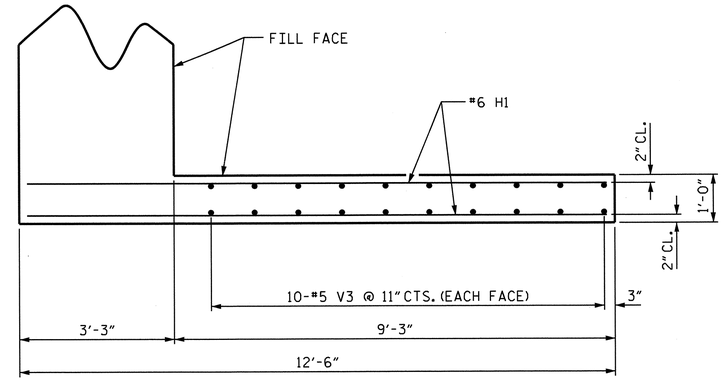


PLAN OF WING W2

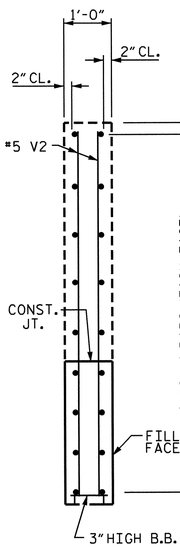


SECTION X-X

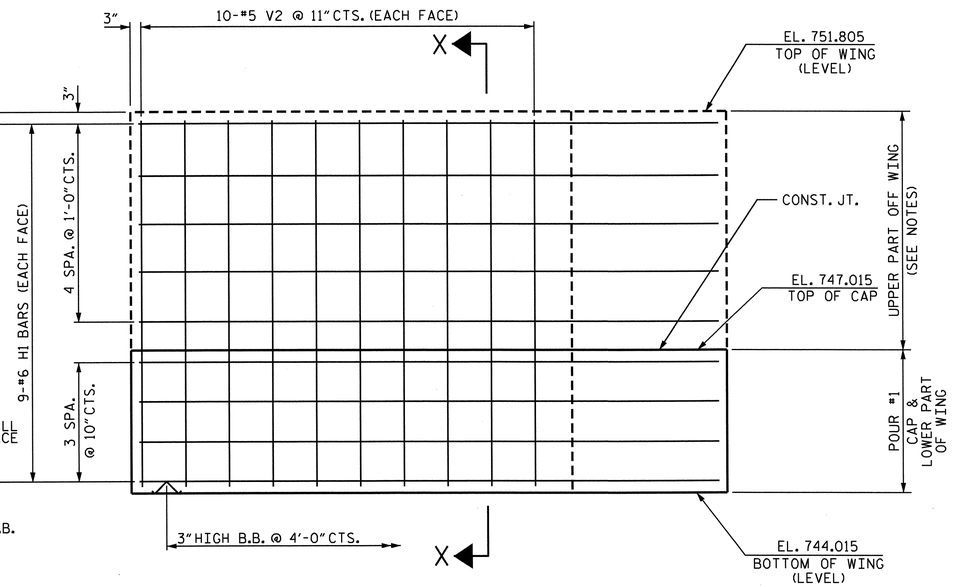


ELEVATION OF WING W1

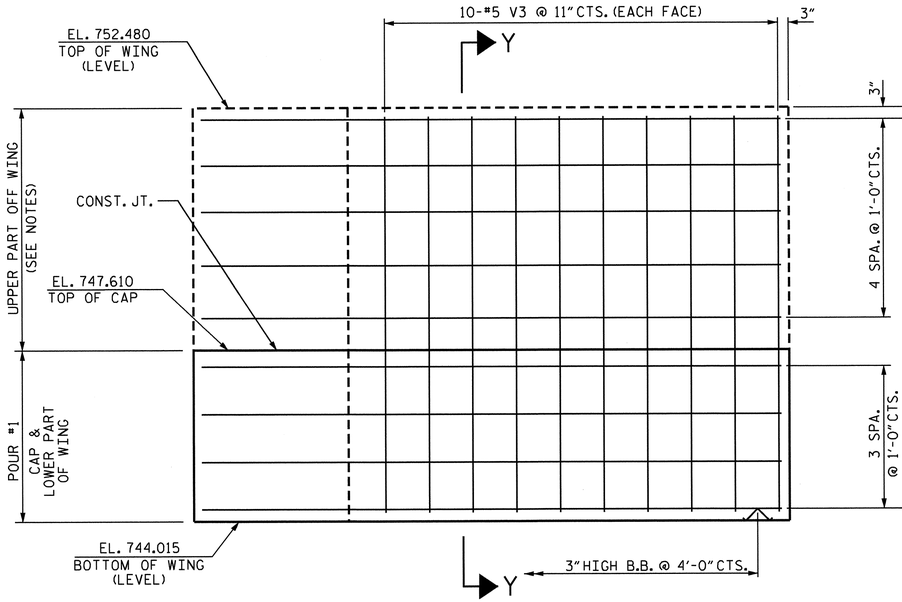


ELEVATION OF WING W2

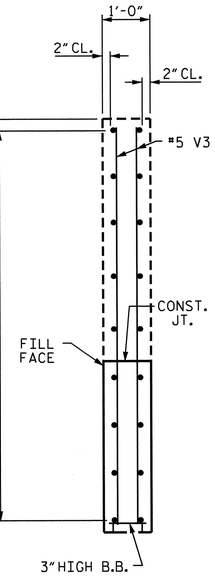


SECTION Y-Y

PROJECT NO. R-2309AB

GUILFORD COUNTY

STATION: 134+30.00 -L-

SHEET 2 OF 3

STATE OF NORTH CAROLINA
DEPARTMENT OF TRANSPORTATION
RALEIGH

SUBSTRUCTURE

INTEGRAL
END BENT #2
(LEFT LANE)

NORTH CAROLINA PROFESSIONAL SEAL 14045 ENGINEER TIMOTHY W. COGGINS
10/27/11

| REVISIONS | | | | | | SHEET NO. |
|---|---|---|---|---|---|---|
| NO. | BY: | DATE: | NO. | BY: | DATE: | S-88 |
| 1 | | | 3 | | | TOTAL SHEETS |
| 2 | | | 4 | | | 136 |

DRAWN BY : PEGGY PARISI DATE : 10-20-10
CHECKED BY : JASON WILSON DATE : 1-28-11

26-OCT-2011 15:00
R:\TIPProjects-R\R2309AB\Structures\R2309ab\FinalPlans\Bridges\Str#3\r2309ab_sd_eb_03.dgn
tcoggins

STR. #3

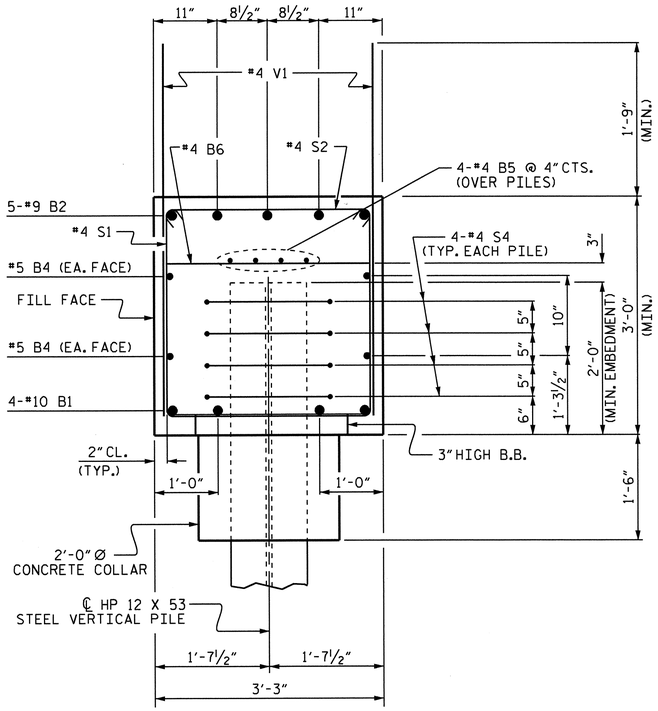


SECTION A-A

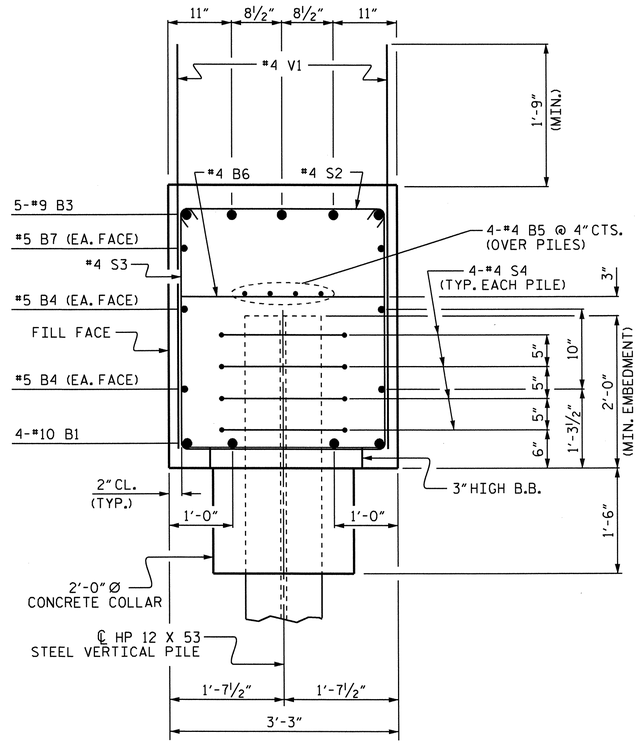


SECTION B-B

## BAR TYPES

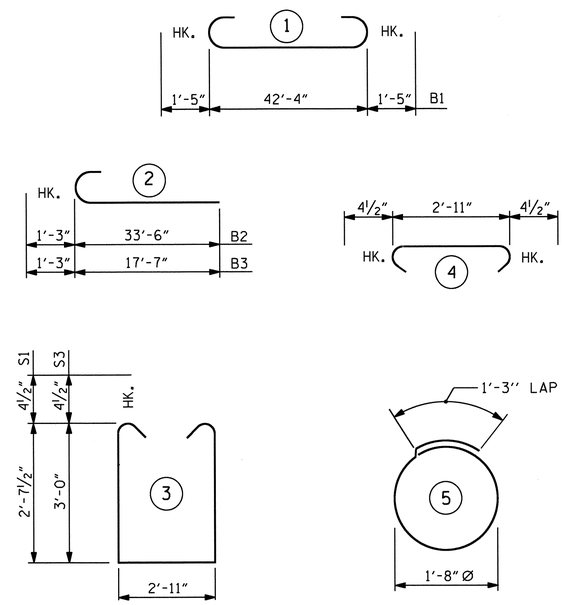


ALL BAR DIMENSIONS ARE OUT TO OUT.

## BILL OF MATERIAL

### INTEGRAL END BENT #2

| BAR | NO. | SIZE | TYPE | LENGTH | WEIGHT |
|---|---|---|---|---|---|
| B1 | 4 | #10 | 1 | 45'-2" | 777 |
| B2 | 5 | #9 | 2 | 34'-9" | 591 |
| B3 | 5 | #9 | 2 | 18'-10" | 320 |
| B4 | 4 | #5 | STR | 42'-5" | 177 |
| B5 | 8 | #4 | STR | 22'-5" | 120 |
| B6 | 13 | #4 | STR | 2'-11" | 25 |
| B7 | 2 | #5 | STR | 11'-11" | 25 |
| | | | | | |
| H1 | 36 | #6 | STR | 12'-2" | 658 |
| | | | | | |
| S1 | 27 | #4 | 3 | 8'-11" | 161 |
| S2 | 46 | #4 | 4 | 3'-8" | 113 |
| S3 | 19 | #4 | 3 | 9'-8" | 123 |
| S4 | 20 | #4 | 5 | 6'-6" | 87 |
| | | | | | |
| V1 | 82 | #4 | STR | 4'-7" | 251 |
| V2 | 20 | #5 | STR | 7'-5" | 155 |
| V3 | 20 | #5 | STR | 8'-1" | 169 |
| | | | | | |
| | | | | | |
| REINFORCING STEEL | | | | = | 3752 LBS |

CLASS A CONCRETE

POUR #1 (CAP, CONCRETE COLLARS & LOWER PART OF WINGS) 19.9 C.Y.

TOTAL 19.9 C.Y.

HP 12 x 53 STEEL PILES
No. 5 175 LIN FT.

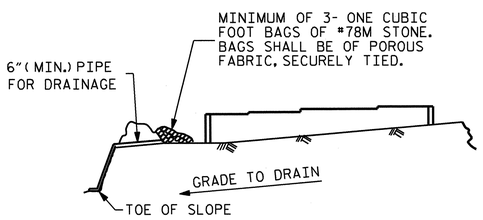


BAGGED STONE AND PIPE SHALL BE PLACED IMMEDIATELY AFTER COMPLETION OF END BENT EXCAVATION. PIPE MAY BE EITHER CONCRETE, CORRUGATED STEEL, CORRUGATED ALUMINUM ALLOY, OR CORRUGATED PLASTIC. PERFORATED PIPE WILL NOT BE ALLOWED.

BAGGED STONE SHALL REMAIN IN PLACE UNTIL THE ENGINEER DIRECTS THAT IT BE REMOVED. THE CONTRACTOR SHALL REMOVE AND DISPOSE OF SILT ACCUMULATIONS AT BAGGED STONE WHEN SO DIRECTED BY THE ENGINEER. BAGS SHALL BE REMOVED AND REPLACED WHENEVER THE ENGINEER DETERMINES THAT THEY HAVE DETERIORATED AND LOST THEIR EFFECTIVENESS.

NO SEPARATE PAYMENT WILL BE MADE FOR THIS WORK AND THE ENTIRE COST OF THIS WORK SHALL BE INCLUDED IN THE UNIT CONTRACT PRICE BID FOR THE SEVERAL PAY ITEMS.

## TEMPORARY DRAINAGE AT END BENT

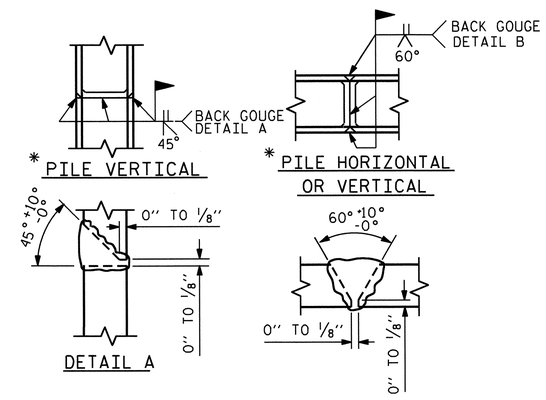


* POSITION OF PILE DURING WELDING.

## PILE SPLICE DETAILS

PROJECT NO. R-2309AB
GUILFORD COUNTY
STATION: 134+30.00 -L-

SHEET 3 OF 3

STATE OF NORTH CAROLINA
DEPARTMENT OF TRANSPORTATION
RALEIGH

SUBSTRUCTURE
INTEGRAL END BENT #2
(LEFT LANE)

NORTH CAROLINA PROFESSIONAL SEAL 14045 ENGINEER TIMOTHY W. COGGINS
Timothy W. Coggins 10/27/11

| REVISIONS | | | | | | | | SHEET NO. |
|---|---|---|---|---|---|---|---|---|
| NO. | BY: | DATE: | NO. | BY: | DATE: | | | S-89 |
| 1 | | | 3 | | | | | TOTAL SHEETS |
| 2 | | | 4 | | | | | 136 |

DRAWN BY : PEGGY PARISI DATE : 10-21-10
CHECKED BY : JASON WILSON DATE : 1-28-11

26-OCT-2011 15:00
R:\TIPProjects-R\R2309AB\Structures\R2309ab\FinalPlans\Bridges\Str#3\r2309ab_sd_eb_03.dgn
tcoggins

STR. #3

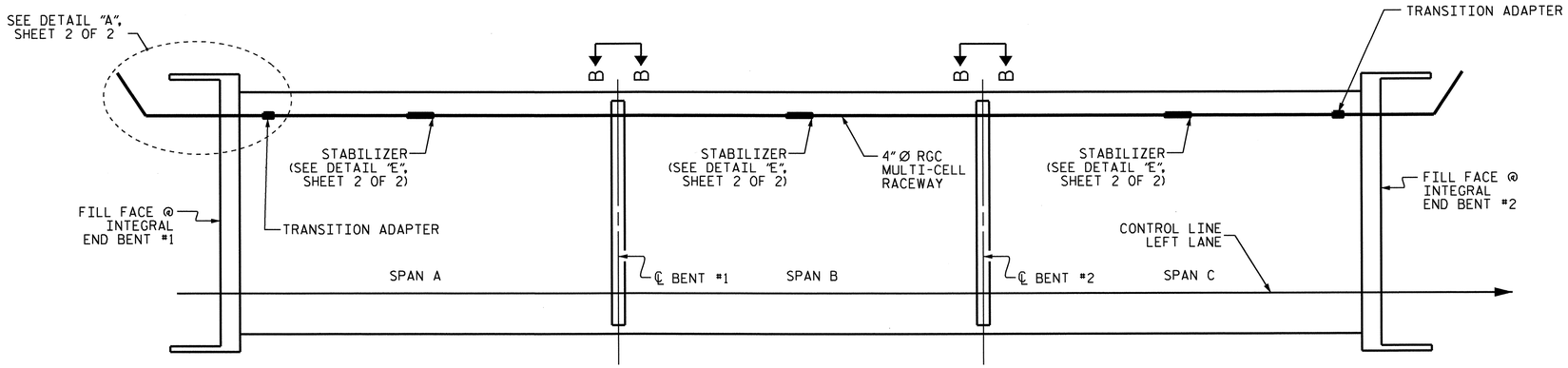


## ELECTRICAL CONDUIT LAYOUT

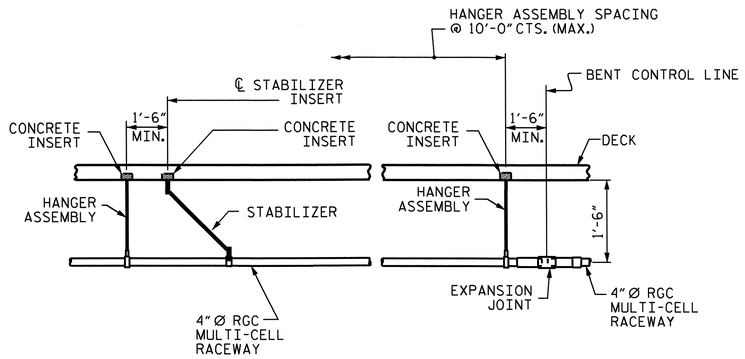


## VIEW B-B

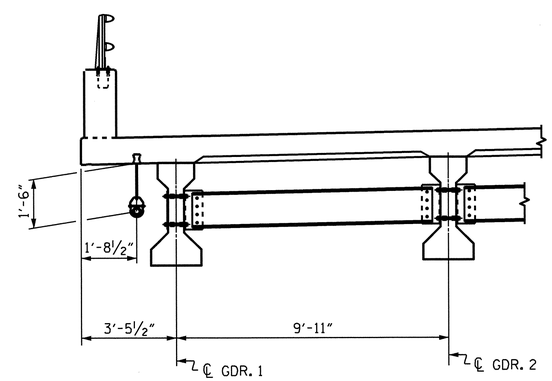


## CONDUIT LOCATION

PROJECT NO. R-2309AB

GUILFORD COUNTY

STATION: 134+30.00 -L-

SHEET 1 OF 2

STATE OF NORTH CAROLINA
DEPARTMENT OF TRANSPORTATION
RALEIGH

# ELECTRICAL CONDUIT SYSTEM DETAILS
(LEFT LANE)

NORTH CAROLINA PROFESSIONAL SEAL 14045 ENGINEER TIMOTHY L. COGGINS
Timothy L. Coggins 10/27/11

| REVISIONS | | | | | | | SHEET NO. |
|---|---|---|---|---|---|---|---|
| NO. | BY: | DATE: | NO. | BY: | DATE: | | S-90 |
| 1 | | | 3 | | | | TOTAL SHEETS |
| 2 | | | 4 | | | | 136 |

STR. #3

DRAWN BY : T.L. AVERETTE DATE : 10-04-11
CHECKED BY : T.L. COGGINS DATE : 10-18-11

26-OCT-2011 15:06
R:\TIPProjects-R\R2309AB\Structures\R2309ab\FinalPlans\Bridges\Str#3\r2309ab_sd_ecs_03.dgn
tcoggins

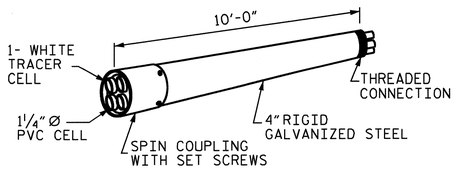


RIGID GALVANIZED (RGC) MULTI-CELL RACEWAY

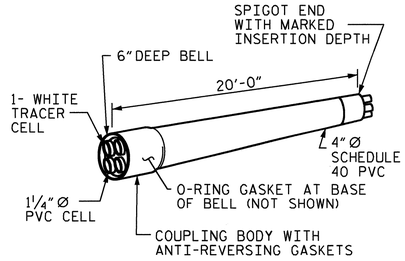


SCHEDULE 40 PVC MULTI-CELL RACEWAY

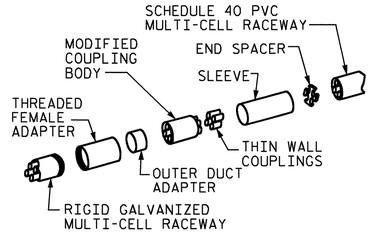


TRANSITION ADAPTER

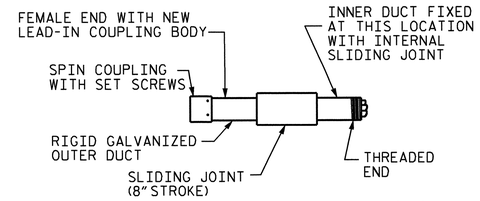


EXPANSION JOINT FITTING

DETAIL "D"

4" MULTI-CELL COMPONENTS

## NOTES

THE CONTRACTOR SHALL BE RESPONSIBLE FOR DETERMINING THE TOTAL QUANTITY OF CONDUIT NEEDED TO COMPLETE THE WORK AND THAT THE CONDUIT(S) ARE PLACED AT THE NOTED DIMENSION AND ABOVE THE BOTTOM OF THE GIRDER.

THE INSTALLATION OF THE CONDUIT SYSTEM SHALL BE PAID FOR AS LUMP SUM. THE PRICE SHALL INCLUDE ALL CONDUIT, HANGERS, STABILIZERS, EXPANSION JOINTS, CONCRETE INSERTS, PVC SLEEVES AND ALL NECESSARY HARDWARE TO COMPLETE THE WORK.

THE CONTRACTOR SHALL FIELD VERIFY THAT THE CONDUIT SYSTEM IS NOT IN CONFLICT WITH THE GUARDRAIL POSTS.

SEE DETAIL "C" FOR HANGER ASSEMBLY INSTALLATION.

INSTALL SLEEVES PARALLEL TO GIRDERS. SEE DETAIL "B" FOR SLEEVE INSTALLATION.

PROVIDE TRANSITION ADAPTOR AND EXPANSION JOINT FOR CONDUIT AT END BENT 1 AND END BENT 2.

INSTALL STABILIZERS MIDWAY BETWEEN DECK EXPANSION JOINTS. STABILIZER CAN NOT BE USED INSTEAD OF A HANGER ASSEMBLY.

INSTALL EXPANSION JOINTS AT BENT #1 AND BENT #2.

THE CONCRETE SCREW INSERT SHALL HAVE A ROD SIZE OF 5/8" AND A PULL FORCE OF 1260 lbs.

FOR ELECTRICAL CONDUIT SYSTEM, SEE SPECIAL PROVISIONS.

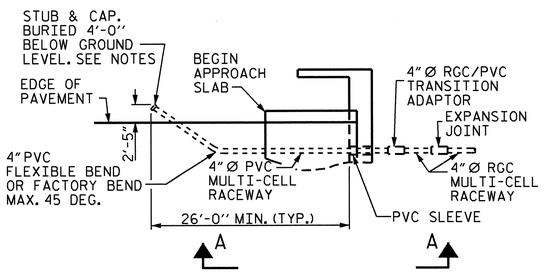


DETAIL "A"

TERMINATION OF CONDUIT AT WING WALL (END BENT #1 SHOWN, END BENT #2 SIMILAR)

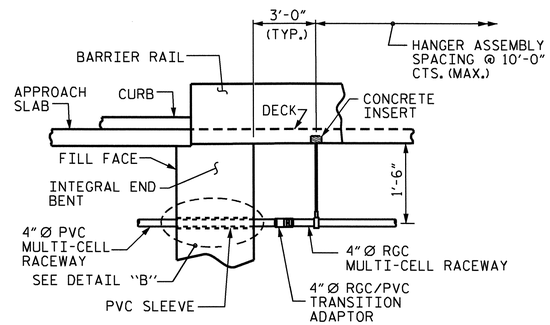


VIEW A-A

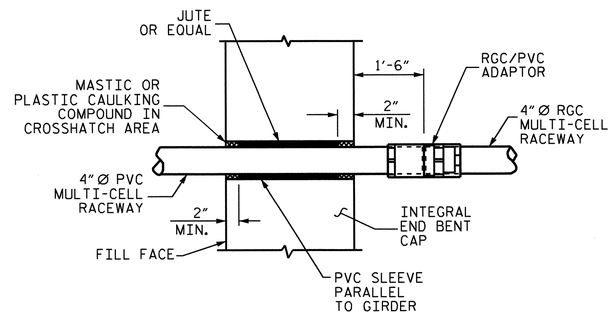


DETAIL "B"

PVC SLEEVE INSTALLATION & RGC/PVC ADAPTOR AT INTEGRAL END BENT.

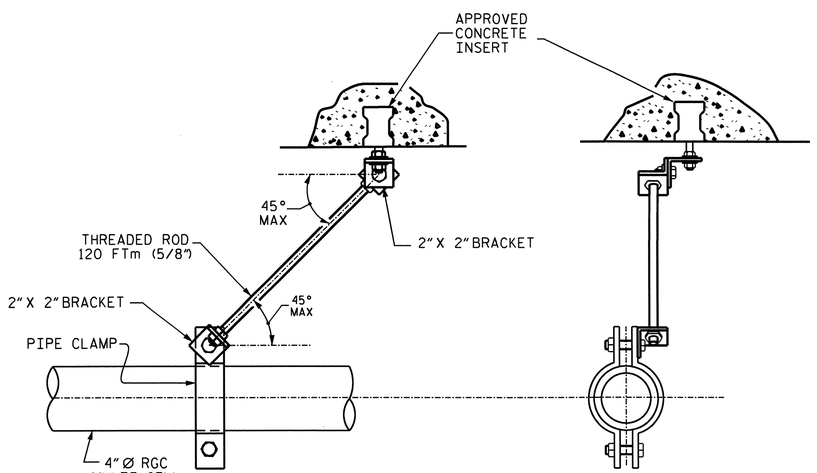


DETAIL "E"

STABILIZER

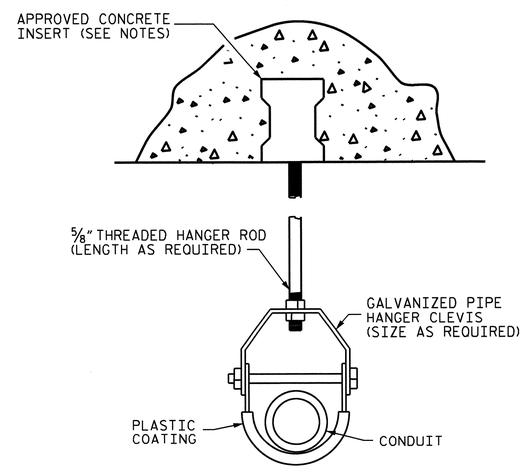


DETAIL "C"

HANGER ASSEMBLY

# ELECTRIC CONDUIT DETAILS

PROJECT NO. R-2309AB

GUILFORD COUNTY

STATION: 134+30.00 -L-

SHEET 2 OF 2

STATE OF NORTH CAROLINA
DEPARTMENT OF TRANSPORTATION
RALEIGH

STANDARD

ELECTRICAL CONDUIT SYSTEM DETAILS
(LEFT LANE)

NORTH CAROLINA PROFESSIONAL SEAL 14045 ENGINEER TIMOTHY L. COGGINS
10/27/11

| REVISIONS | | | | | | | SHEET NO. |
|---|---|---|---|---|---|---|---|
| NO. | BY: | DATE: | NO. | BY: | DATE: | | S-91 |
| 1 | | | 3 | | | | TOTAL SHEETS |
| 2 | | | 4 | | | | 136 |

STR. #3 STD. NO. ECS1

| | | |
|---|---|---|
| ASSEMBLED BY : T.L. AVERETTE | DATE : 10-04-11 | |
| CHECKED BY : T.L. COGGINS | DATE : 10-18-11 | |
| DRAWN BY : RWW 2-4-03 | REV. 5/1/06 TLA/GM | |
| CHECKED BY : DBM 2-4-03 | | |

26-OCT-2011 15:05
R:\TIPProjects-R\R2309AB\Structures\R2309ab\FinalPlans\Bridges\Str#3\r2309ab_sd_ecs_03.dgn
tcoggins

NOTES :

FOR BERM WIDTH DIMENSIONS, SEE GENERAL DRAWING.

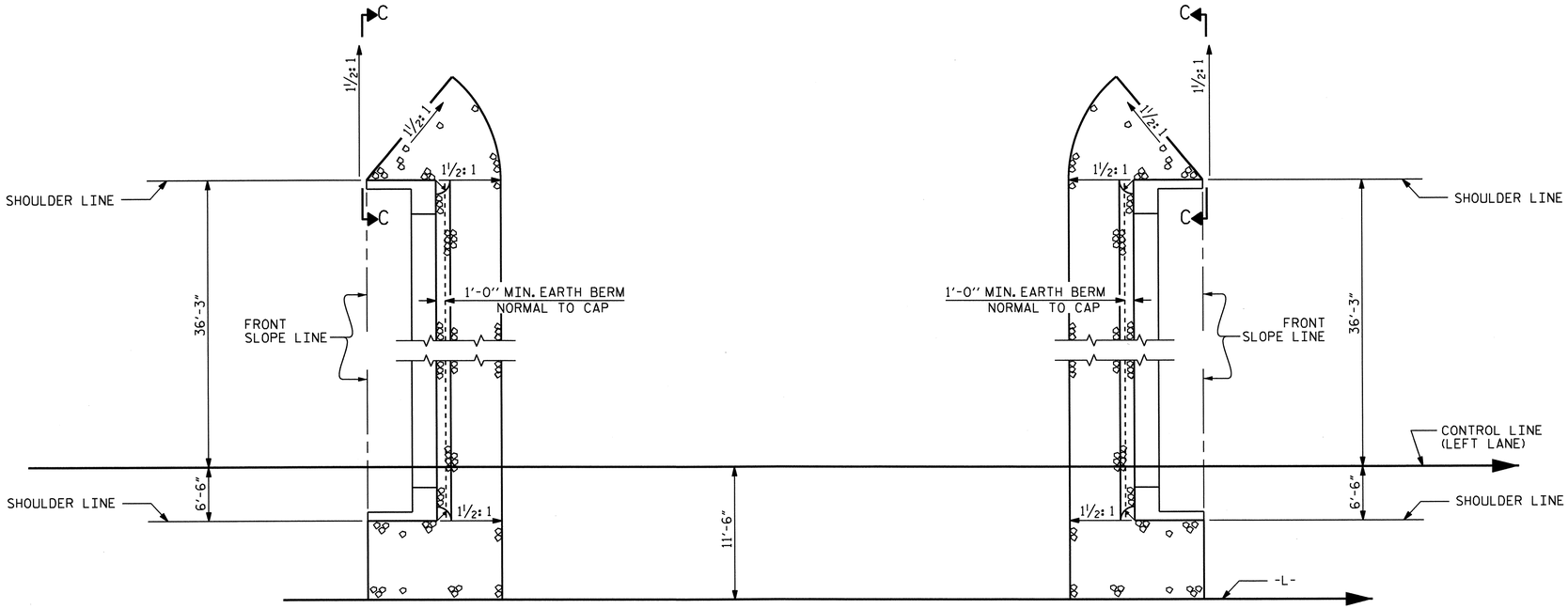


| ESTIMATED QUANTITIES | | |
|---|---|---|
| BRIDGE @ STA. 134+30.00 -L- (LEFT LANE) | RIP RAP CLASS II (2'-0" THICK) | FILTER FABRIC FOR DRAINAGE |
| | TONS | SQUARE YARDS |
| END BENT 1 | 57 | 63 |
| END BENT 2 | 61 | 68 |

## BERM RIP RAPPED

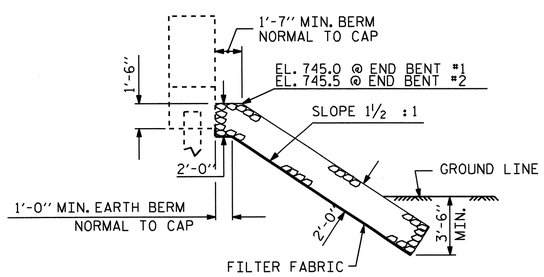


℄ SECTION

BERM RIP RAPPED

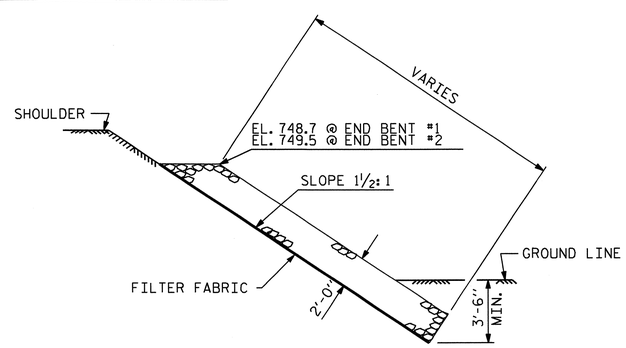


SECTION C-C

PROJECT NO. R-2309AB

GUILFORD COUNTY

STATION: 134+30.00 -L-

STATE OF NORTH CAROLINA
DEPARTMENT OF TRANSPORTATION
RALEIGH

STANDARD

RIP RAP DETAILS

(LEFT LANE)

NORTH CAROLINA PROFESSIONAL SEAL 14045 ENGINEER TIMOTHY L. COGGINS
10/27/11

| REVISIONS | | | | | | |
|---|---|---|---|---|---|---|
| NO. | BY: | DATE: | NO. | BY: | DATE: | |
| 1 | | | 3 | | | |
| 2 | | | 4 | | | |

SHEET NO. S-92

TOTAL SHEETS 136

| | |
|---|---|
| ASSEMBLED BY : PEGGY PARISI | DATE : 9-30-10 |
| CHECKED BY : J.B. WILSON | DATE : 10/22/10 |
| DRAWN BY : FCJ 2/88 | REV. 8/16/99 RWW/LES |
| CHECKED BY : ARB 8/88 | REV. 10/17/00 RWW/LES |
| | REV. 5/1/06R TLA/GM |

26-OCT-2011 14:59
R:\TIPProjects-R\R2309AB\Structures\R2309ab\FinalPlans\Bridges\Str#3\r2309ab_sd_rr_03.dgn
tcoggins

STR. #3 SKEW 90° STD. NO. RR2

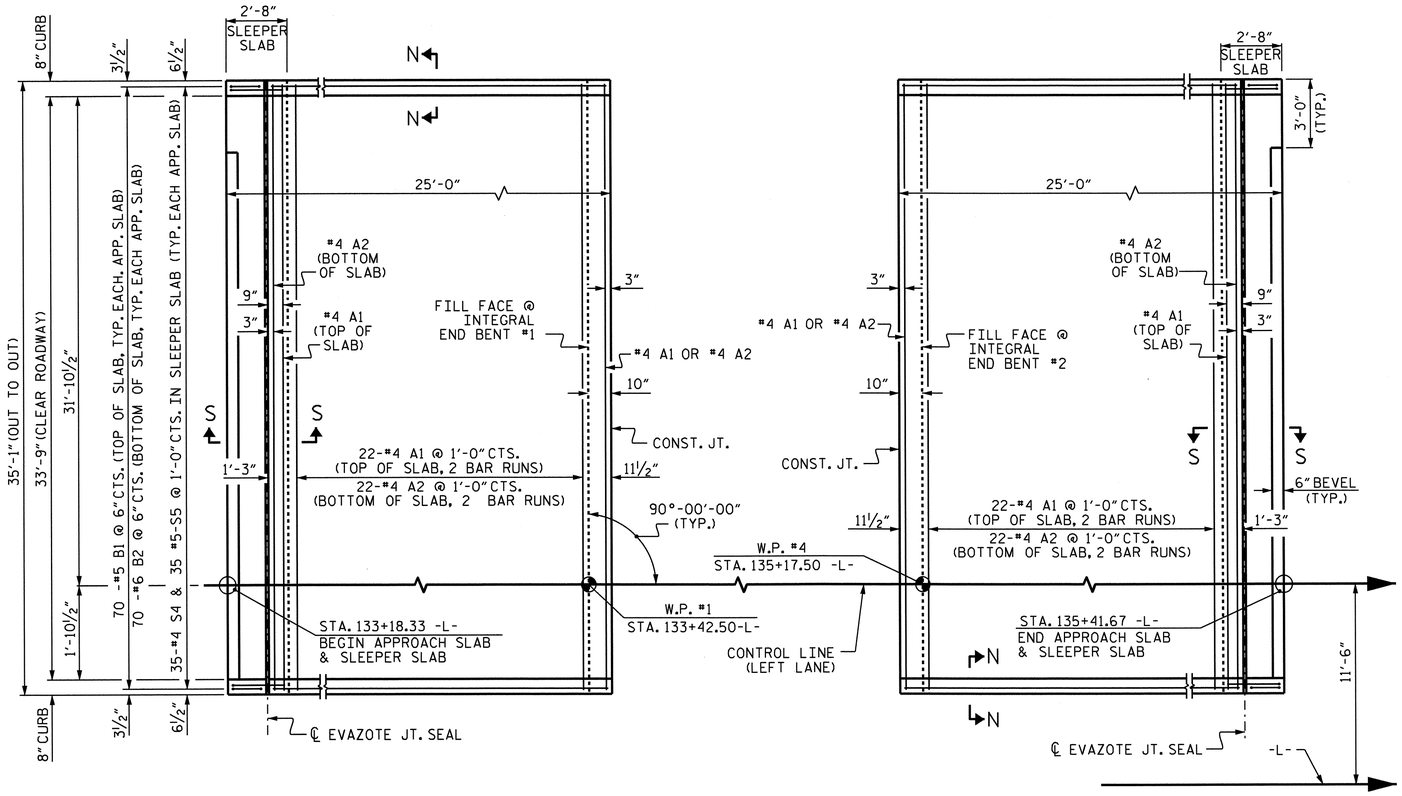


PLAN @ END BENT #1

PLAN @ END BENT #2

DIMENSIONS SHOWN ARE TYPICAL FOR BOTH APPROACH SLABS. #4 A1 BARS IN SLEEPER SLAB NOT SHOWN FOR CLARITY.

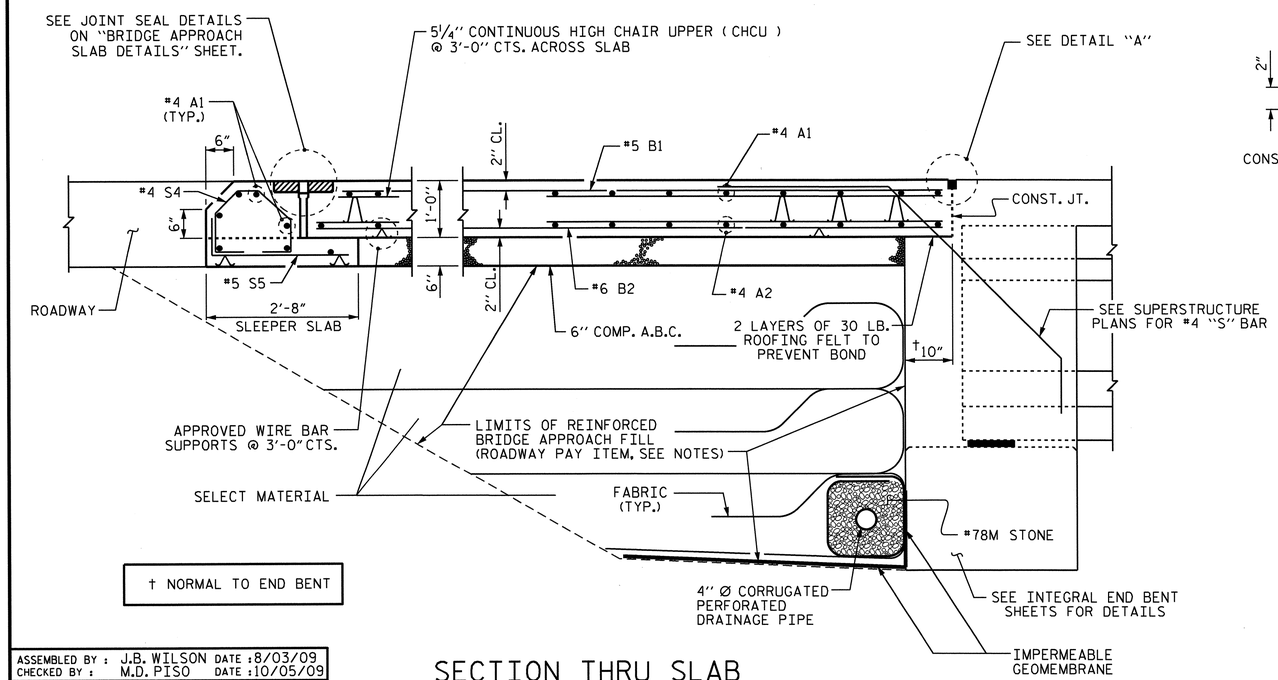


† NORMAL TO END BENT

SECTION THRU SLAB

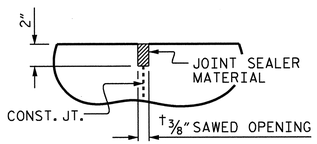


DETAIL "A"

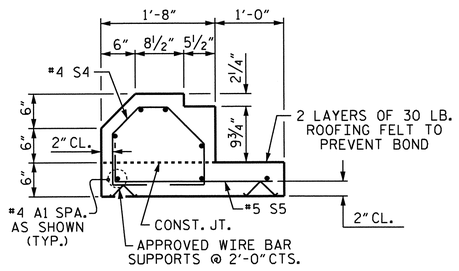


SECTION S-S

SHOWING SLEEPER SLAB

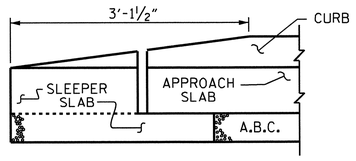


END OF CURB WITHOUT SHOULDER BERM GUTTER

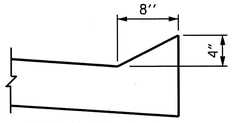


SECTION N-N

## NOTES

APPROACH SLAB SHALL NOT BE CONSTRUCTED PRIOR TO COMPLETION OF THE BRIDGE DECK.

FOR REINFORCED BRIDGE APPROACH FILL INCLUDING FABRIC, IMPERMEABLE GEOMEMBRANE, 4" Ø DRAINAGE PIPE, #78M STONE, AND SELECT MATERIAL, SEE ROADWAY PLANS.

AREA BETWEEN THE WINGWALL AND APPROACH SLAB SHALL BE GRADED TO DRAIN THE WATER AWAY FROM THE FILL FACE OF THE BRIDGE AND SHALL BE PAVED. SEE ROADWAY PLANS.

THE 6" COMP. A.B.C. SHALL BE FLUSH WITH THE SLEEPER SLAB AND SHALL EXTEND 1'-0" OUTSIDE OF EACH EDGE OF THE APPROACH SLAB.

THE CONTRACTOR MAY USE 4" TYPE B-25.0B ASPHALT CONCRETE BASE COURSE IN LIEU OF 6" COMP. A.B.C. IF THIS OPTION IS USED, THE BASE COURSE SHALL BE FLUSH WITH THE SLEEPER SLAB, AND THE WIDTH SHALL BE THE SAME AS THAT OF THE APPROACH SLAB.

THE CONTRACTOR MAY USE 5" CLASS "A" CONCRETE BASE IN LIEU OF 6" COMP. A.B.C. IF THIS OPTION IS USED, THE CONCRETE BASE SHALL BE FLUSH WITH THE SLEEPER SLAB, AND THE WIDTH SHALL BE THE SAME AS THAT OF THE APPROACH SLAB. THE CONCRETE SHALL BE FINISHED TO A SMOOTH SURFACE AND A LAYER OF 30 LB ROOFING FELT SHALL BE PLACED BETWEEN THE CONCRETE BASE AND THE APPROACH SLAB TO PREVENT BOND. THE APPROACH SLAB SHALL NOT BE CAST UNTIL THE CONCRETE BASE HAS REACHED AN AGE OF THREE CURING DAYS.

THE VERTICAL JOINT ON THE RIGHT AND LEFT SIDE OF THE APPROACH SLAB AT THE ENDS OF THE EVAZOTE JOINT SHALL BE FILLED WITH SILICONE OR OTHER APPROVED MATERIAL IN ORDER TO PREVENT BACKFILL FROM ENTERING THE JOINT OPENING.

THE JOINT OPENING AT THE APPROACH SLAB/DECK INTERFACE SHALL BE SAWED NO MORE THAN 12 HOURS AFTER THE APPROACH SLAB IS CAST. THE JOINT SHALL BE CLEANED OF ALL DEBRIS BEFORE THE SEALANT IS APPLIED. THE JOINT SEALER MATERIAL SHALL CONFORM TO THE REQUIREMENTS OF TYPE SL LOW MODULUS SILICONE SEALANT.

WITH EVAZOTE JOINT SEAL

FOR EVAZOTE JOINT SEALS, SEE SPECIAL PROVISIONS.

THE NOMINAL UNCOMPRESSED SEAL WIDTH OF THE EVAZOTE JOINT SEAL SHALL BE 3/16".

FOR ELASTOMERIC CONCRETE, SEE SPECIAL PROVISIONS.

## BILL OF MATERIAL

FOR ONE APPROACH SLAB (2 REQ'D)

| BAR | NO. | SIZE | TYPE | LENGTH | WEIGHT |
|---|---|---|---|---|---|
| * A1 | 62 | #4 | STR | 18'-5" | 763 |
| A2 | 48 | #4 | STR | 18'-3" | 585 |
| * B1 | 70 | #5 | STR | 22'-5" | 1637 |
| B2 | 70 | #6 | STR | 22'-10" | 2401 |
| * S4 | 35 | #4 | 1 | 3'-11" | 92 |
| S5 | 35 | #5 | 2 | 2'-11" | 106 |
| REINFORCING STEEL | | | | LBS. | 3092 |
| * EPOXY COATED REINFORCING STEEL | | | | LBS. | 2492 |
| CLASS AA CONCRETE | | | | | |
| POUR #1 - SLAB & CURB | | | | C.Y. | 30.3 |
| POUR #2 - SLEEPER SLAB | | | | C.Y. | 3.6 |
| TOTAL | | | | C.Y. | 33.9 |

## BAR TYPES

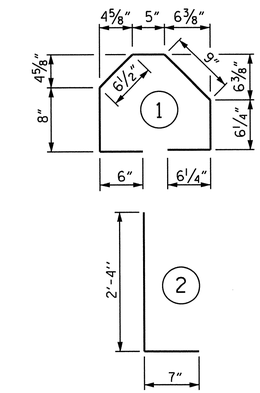


ALL BAR DIMENSIONS ARE OUT TO OUT

## SPLICE CHART

| BAR | SPLICE LENGTH |
|---|---|
| #4 A1 | 2'-0" |
| #4 A2 | 1'-9" |

PROJECT NO. R-2309AB

GUILFORD COUNTY

STATION: 134+30.00 -L-

SHEET 1 OF 2

STATE OF NORTH CAROLINA
DEPARTMENT OF TRANSPORTATION
RALEIGH

STANDARD

BRIDGE APPROACH SLAB FOR INTEGRAL ABUTMENT (LEFT LANE)

NORTH CAROLINA PROFESSIONAL SEAL 14045 ENGINEER TIMOTHY W. COGGINS
10/27/11

| REVISIONS | | | | | | SHEET NO. |
|---|---|---|---|---|---|---|
| NO. | BY: | DATE: | NO. | BY: | DATE: | S-93 |
| 1 | | | 3 | | | TOTAL SHEETS 136 |
| 2 | | | 4 | | | |

STR. #3

STD. NO. BAS11

| | | | |
|---|---|---|---|
| ASSEMBLED BY : J.B. WILSON | DATE : 8/03/09 | | |
| CHECKED BY : M.D. PISO | DATE : 10/05/09 | | |
| DRAWN BY : TLA 10/05 | ADDED 5/1/06R KMM/GM | | |
| CHECKED BY : GM 5/06 | | | |

26-OCT-2011 14:58
R:\TIPProjects-R\R2309AB\Structures\R2309ab\Final Plans\Bridges\Str#3\r2309ab_sd_as_03.dgn
tcoggins

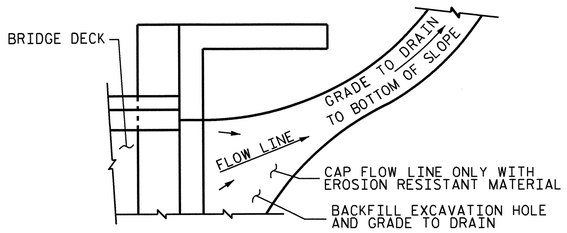


NOTE: IF THE APPROACH SLAB IS NOT CONSTRUCTED IMMEDIATELY AFTER THE BACKFILLING OF THE END BENT EXCAVATION, GRADE TO DRAIN TO THE BOTTOM OF THE SLOPE AND PROVIDE EROSION RESISTANT MATERIAL, SUCH AS FIBERGLASS ROVING OR AS DIRECTED BY THE ENGINEER TO PREVENT SOIL EROSION AND TO PROTECT THE AREA ADJACENT TO THE STRUCTURE. THE CONTRACTOR WILL BE REQUIRED TO REMOVE THESE MATERIALS PRIOR TO CONSTRUCTION OF THE APPROACH SLAB.

## TEMPORARY DRAINAGE DETAIL

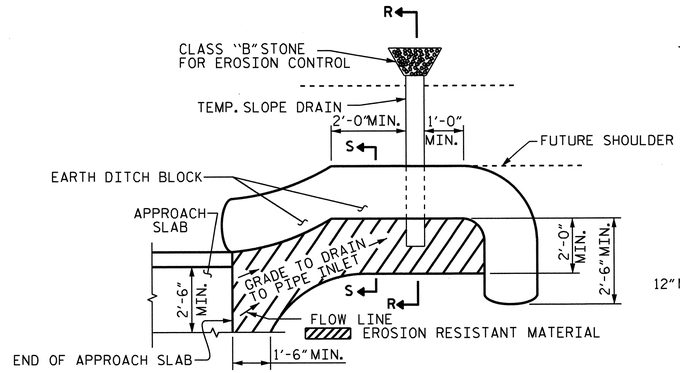


NOTE: IMMEDIATELY AFTER THE CONSTRUCTION OF THE APPROACH SLAB, THE CONTRACTOR SHALL PROVIDE TEMPORARY BERM AND SLOPE DRAIN. CONTRACTOR SHALL GRADE TO PIPE INLET AND PROVIDE EROSION RESISTANT MATERIAL AS SHOWN. THE EROSION RESISTANT MATERIAL SHALL BE EITHER 1) ASPHALT PLANT MIX, TYPE 1 OR TYPE 2, MIN. 2" DEPTH, 2) EROSION CONTROL MAT, OR 3) CONCRETE, AS DIRECTED BY THE ENGINEER. THE SLOPE DRAIN SHALL CONSIST OF A NON-PERFORATED TEMPORARY DRAINAGE PIPE, 12 INCHES IN DIAMETER.

PLAN VIEW

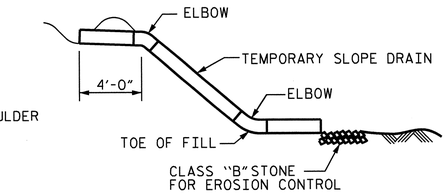


SECTION R-R

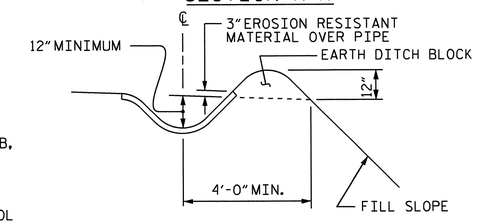


SECTION S-S

## TEMPORARY BERM AND SLOPE DRAIN DETAILS

(TO BE USED WHEN SHOULDER BERM GUTTER IS REQUIRED)

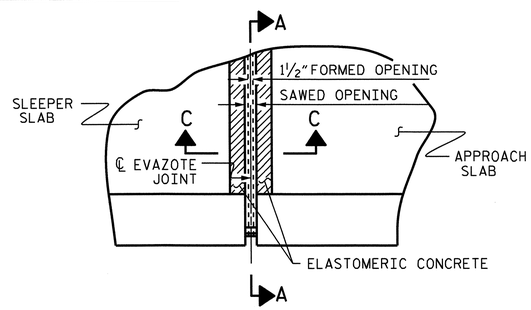


PLAN

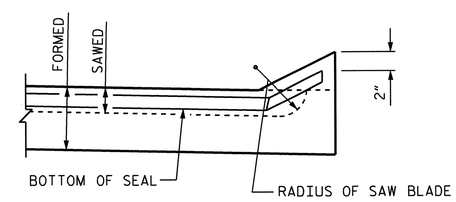


SECTION A-A

| ELASTOMERIC CONCRETE | |
|---|---|
| END BENT NO. | ELASTOMERIC CONCRETE * (CU. FT.) |
| 1 | 5.8 |
| 2 | 5.8 |
| TOTAL | 11.6 |

* BASED ON THE MINIMUM BLOCKOUT SHOWN.

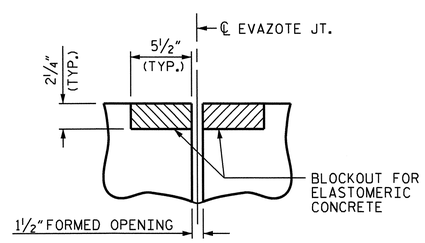


SECTION C-C
EVAZOTE JOINT SEAL
(PRE-SAWED ELASTOMERIC CONCRETE DIMENSIONS)

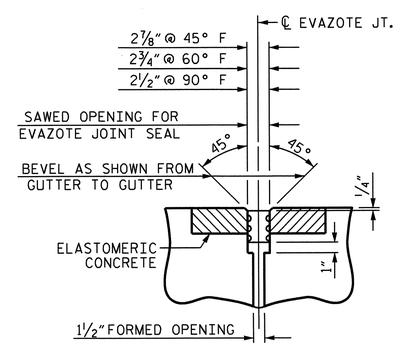


SECTION C-C
EVAZOTE JOINT SEAL

## JOINT SEAL DETAILS @ SLEEPER SLAB

PROJECT NO. R-2309AB
GUILFORD COUNTY
STATION: 134+30.00 -L-

SHEET 2 OF 2

STATE OF NORTH CAROLINA
DEPARTMENT OF TRANSPORTATION
RALEIGH

STANDARD

BRIDGE APPROACH SLAB FOR INTEGRAL ABUTMENT (LEFT LANE)

NORTH CAROLINA PROFESSIONAL SEAL 14045 ENGINEER TIMOTHY L. COGGINS
10/27/11

| REVISIONS | | | | | | | | SHEET NO. |
|---|---|---|---|---|---|---|---|---|
| NO. | BY: | DATE: | NO. | BY: | DATE: | | | S-94 |
| 1 | | | 3 | | | | | TOTAL SHEETS |
| 2 | | | 4 | | | | | 136 |

STR. #3 STD. NO. BAS10

| | | | |
|---|---|---|---|
| ASSEMBLED BY : J.B. WILSON | | DATE : 8/03/09 | |
| CHECKED BY : M.D. PISO | | DATE : 10/05/09 | |
| DRAWN BY : FCJ | 11/88 | REV. 10/17/00 | RWW/LES |
| CHECKED BY : ARB | 11/88 | REV. 5/7/03 | RWW/JTE |
| | | REV. 5/1/06RR | TLA/GM |

26-OCT-2011 14:58
R:\TIPProjects-R\R2309AB\Structures\R2309ab\FinalPlans\Bridges\Str#3\r2309ab_sd_as_03.dgn
tcoggins

# OVERHANG BRACKET CALCULATION INSTRUCTIONS

## AASHTO SHAPES - TYPES III, IV, V, AND VI

1. RECORD KNOWN INFORMATION ON "BRIDGE OVERHANG BRACKET SUMMARY" ON SHEET 2
2. CALCULATE THE MAXIMUM SCREED LOAD PER BRACKET (SLPB) WITH AN ESTIMATED R = 1.5. SLPB = R X W. ROUND VALUE UP TO NEAREST SLPB VALUE INDICATED ON APPROPRIATE TABLE 1-1, 1-2, 1-3, OR 1-4.
3. WITH THE ESTIMATED SLPB, OVERHANG SLAB THICKNESS, "K" VALUE, AND 45° HANGER SAFE WORKING LOAD (SWL), ENTER THE APPROPRIATE TABLE 1-1, 1-2, 1-3, OR 1-4 (BASED ON OVERHANG DIMENSION) AND DETERMINE THE BRACKET SPACING, S.
4. CALCULATE S/D1 AND S/D2, ROUNDING UP TO NEAREST VALUE IN TABLE 2. ENTER TABLE 2 AND DETERMINE R VALUE.
5. CALCULATE REVISED SLPB. ROUND VALUE UP TO NEAREST SLPB VALUE INDICATED ON APPROPRIATE TABLE 1-1, 1-2, 1-3, OR 1-4.
6. WITH THE REVISED SLPB, OVERHANG SLAB THICKNESS, "K" VALUE AND 45 HANGER SAFE WORKING LOAD (SWL), ENTER THE APPROPRIATE TABLE 1-1, 1-2, 1-3 OR 1-4 (BASED ON OVERHANG DIMENSION) AND DETERMINE REVISED BRACKET SPACING, S.
7. CONTINUE ITERATIONS OF STEPS 4-6 UNTIL THE REVISED BRACKET SPACING, S, IS THE SAME AS THE PREVIOUS S VALUE.
8. CHECK LUMBER JOIST SPACING: WITH BRACKET SPACING VALUE, S, ROUND THIS VALUE UP TO THE NEAREST VALUE OF ALLOWABLE SPAN LENGTH OF JOIST OF TABLE 3. USING THIS VALUE, ALONG WITH THE AVERAGE OVERHANG SLAB THICKNESS AND THE LUMBER JOIST SIZE, DETERMINE JOIST SPACING FROM TABLE 3. IF NECESSARY, ADJUST LUMBER JOIST SIZE AND/OR JOIST SPACING TO MEET ALLOWABLE SPAN LENGTH OF JOIST.
9. CONVERSELY, IF THE DESIRED JOIST SPACING IS KNOWN, USE THIS ALONG WITH THE AVERAGE OVERHANG SLAB THICKNESS AND THE LUMBER JOIST SIZE TO DETERMINE IF ALLOWABLE SPAN LENGTH OF JOIST IS GREATER THAN THE BRACKET SPACING, S. IF NECESSARY, ADJUST LUMBER JOIST SIZE TO MEET REQUIREMENTS OF ALLOWABLE SPAN LENGTH OF JOIST AND JOIST SPACING.
10. RECORD REMAINING INFORMATION ON "BRIDGE OVERHANG BRACKET SUMMARY" FORM.
11. SUBMIT FORM AND CALCULATIONS FOR REVIEW AND APPROVAL.

### TABLE 1-1

(FOR USE ON **UP TO 2'-0" OVERHANG Ⓛ** & 54" HORIZONTAL LEG LENGTH OF THE OVERHANG BRACKET)

| AVG. SLAB THICKNESS Ⓣ (in) | BRACKET Ⓚ DIMENSION (in) | SCREED LOAD PER BRACKET | | | | | | | | | 45° HANGER SWL (lbs) |
|---|---|---|---|---|---|---|---|---|---|---|---|
| | | 2500 lbs. | 2250 lbs. | 2000 lbs. | 1750 lbs. | 1500 lbs. | 1250 lbs. | 1000 lbs. | 750 lbs. | 0 lbs. | |
| | | BRACKET SPACING | | | | | | | | | |
| 10 | 30 | | | | 2'-1" | 2'-7" | 3'-2" | 3'-8" | 4'-2" | 5'-9" | 4000 |
| | | 3'-6" | 4'-0" | 4'-5" | 4'-9" | 5'-1" | 5'-3" | 5'-5" | 5'-7" | 6'-7" | 6000 |
| | 40 | | | | 2'-1" | 2'-7" | 3'-2" | 3'-8" | 4'-2" | 5'-9" | 4000 |
| | | 3'-6" | 4'-0" | 4'-5" | 4'-9" | 5'-1" | 5'-3" | 5'-5" | 5'-7" | 6'-7" | 6000 |
| | 50 | | | | 2'-1" | 2'-7" | 3'-2" | 3'-8" | 4'-2" | 5'-9" | 4000 |
| | | 3'-6" | 4'-0" | 4'-5" | 4'-9" | 5'-1" | 5'-3" | 5'-5" | 5'-7" | 6'-7" | 6000 |
| 12 | 30 | | | | | 2'-4" | 2'-10" | 3'-4" | 3'-9" | 5'-2" | 4000 |
| | | 3'-2" | 3'-7" | 4'-1" | 4'-7" | 5'-0" | 5'-2" | 5'-4" | 5'-7" | 6'-5" | 6000 |
| | 40 | | | | | 2'-4" | 2'-10" | 3'-4" | 3'-9" | 5'-2" | 4000 |
| | | 3'-2" | 3'-7" | 4'-1" | 4'-7" | 5'-0" | 5'-2" | 5'-4" | 5'-7" | 6'-5" | 6000 |
| | 50 | | | | | 2'-4" | 2'-10" | 3'-4" | 3'-9" | 5'-2" | 4000 |
| | | 3'-2" | 3'-7" | 4'-1" | 4'-7" | 5'-0" | 5'-2" | 5'-4" | 5'-7" | 6'-5" | 6000 |
| 14 | 30 | | | | | 2'-2" | 2'-7" | 3'-0" | 3'-5" | 4'-9" | 4000 |
| | | 2'-10" | 3'-4" | 3'-9" | 4'-2" | 4'-7" | 5'-0" | 5'-4" | 5'-7" | 6'-4" | 6000 |
| | 40 | | | | | 2'-2" | 2'-7" | 3'-0" | 3'-5" | 4'-9" | 4000 |
| | | 2'-10" | 3'-4" | 3'-9" | 4'-2" | 4'-7" | 5'-0" | 5'-4" | 5'-7" | 6'-4" | 6000 |
| | 50 | | | | | 2'-2" | 2'-7" | 3'-0" | 3'-5" | 4'-9" | 4000 |
| | | 2'-10" | 3'-4" | 3'-9" | 4'-2" | 4'-7" | 5'-0" | 5'-4" | 5'-7" | 6'-4" | 6000 |
| 16 | 30 | | | | | 2'-0" | 2'-4" | 2'-9" | 3'-2" | 4'-4" | 4000 |
| | | 2'-8" | 3'-0" | 3'-5" | 3'-10" | 4'-3" | 4'-7" | 5'-0" | 5'-5" | 6'-3" | 6000 |
| | 40 | | | | | 2'-0" | 2'-4" | 2'-9" | 3'-2" | 4'-4" | 4000 |
| | | 2'-8" | 3'-0" | 3'-5" | 3'-10" | 4'-3" | 4'-7" | 5'-0" | 5'-5" | 6'-3" | 6000 |
| | 50 | | | | | 2'-0" | 2'-4" | 2'-9" | 3'-2" | 4'-4" | 4000 |
| | | 2'-8" | 3'-0" | 3'-5" | 3'-10" | 4'-3" | 4'-7" | 5'-0" | 5'-5" | 6'-3" | 6000 |

### TABLE 1-2

(FOR USE ON **OVER 2'-0" TO 2'-6" OVERHANG Ⓛ** & 54" HORIZONTAL LEG LENGTH OF THE OVERHANG BRACKET)

| AVG. SLAB THICKNESS Ⓣ (in) | BRACKET Ⓚ DIMENSION (in) | SCREED LOAD PER BRACKET | | | | | | | | | 45° HANGER SWL (lbs) |
|---|---|---|---|---|---|---|---|---|---|---|---|
| | | 2500 lbs. | 2250 lbs. | 2000 lbs. | 1750 lbs. | 1500 lbs. | 1250 lbs. | 1000 lbs. | 750 lbs. | 0 lbs. | |
| | | BRACKET SPACING | | | | | | | | | |
| 10 | 30 | | | | | 2'-4" | 2'-9" | 3'-3" | 3'-8" | 5'-1" | 4000 |
| | | 3'-1" | 3'-6" | 4'-0" | 4'-5" | 4'-11" | 5'-3" | 5'-5" | 5'-7" | 6'-7" | 6000 |
| | 40 | | | | | 2'-4" | 2'-9" | 3'-3" | 3'-8" | 5'-1" | 4000 |
| | | 3'-1" | 3'-6" | 4'-0" | 4'-5" | 4'-11" | 5'-3" | 5'-5" | 5'-7" | 6'-7" | 6000 |
| | 50 | | | | | 2'-4" | 2'-9" | 3'-3" | 3'-8" | 5'-1" | 4000 |
| | | 3'-1" | 3'-6" | 4'-0" | 4'-5" | 4'-11" | 5'-3" | 5'-5" | 5'-7" | 6'-7" | 6000 |
| 12 | 30 | | | | | 2'-1" | 2'-6" | 2'-11" | 3'-4" | 4'-6" | 4000 |
| | | 2'-9" | 3'-2" | 3'-7" | 4'-0" | 4'-5" | 4'-10" | 5'-3" | 5'-7" | 6'-5" | 6000 |
| | 40 | | | | | 2'-1" | 2'-6" | 2'-11" | 3'-4" | 4'-6" | 4000 |
| | | 2'-9" | 3'-2" | 3'-7" | 4'-0" | 4'-5" | 4'-10" | 5'-3" | 5'-7" | 6'-5" | 6000 |
| | 50 | | | | | 2'-1" | 2'-6" | 2'-11" | 3'-4" | 4'-6" | 4000 |
| | | 2'-9" | 3'-2" | 3'-7" | 4'-0" | 4'-5" | 4'-10" | 5'-3" | 5'-7" | 6'-5" | 6000 |
| 14 | 30 | | | | | 2'-3" | 2'-7" | 3'-0" | 4'-1" | 4000 |
| | | 2'-6" | 2'-10" | 3'-3" | 3'-7" | 4'-0" | 4'-4" | 4'-9" | 5'-1" | 6'-3" | 6000 |
| | 40 | | | | | 2'-3" | 2'-7" | 3'-0" | 4'-1" | 4000 |
| | | 2'-6" | 2'-10" | 3'-3" | 3'-7" | 4'-0" | 4'-4" | 4'-9" | 5'-1" | 6'-3" | 6000 |
| | 50 | | | | | 2'-3" | 2'-7" | 3'-0" | 4'-1" | 4000 |
| | | 2'-6" | 2'-10" | 3'-3" | 3'-7" | 4'-0" | 4'-4" | 4'-9" | 5'-1" | 6'-3" | 6000 |
| 16 | 30 | | | | | 2'-1" | 2'-5" | 2'-9" | 3'-9" | 4000 |
| | | 2'-3" | 2'-7" | 2'-11" | 3'-4" | 3'-8" | 4'-0" | 4'-4" | 4'-8" | 5'-8" | 6000 |
| | 40 | | | | | 2'-1" | 2'-5" | 2'-9" | 3'-9" | 4000 |
| | | 2'-3" | 2'-7" | 2'-11" | 3'-4" | 3'-8" | 4'-0" | 4'-4" | 4'-8" | 5'-8" | 6000 |
| | 50 | | | | | 2'-1" | 2'-5" | 2'-9" | 3'-9" | 4000 |
| | | 2'-3" | 2'-7" | 2'-11" | 3'-4" | 3'-8" | 4'-0" | 4'-4" | 4'-8" | 5'-8" | 6000 |

### TABLE 1-3

(FOR USE ON **OVER 2'-6" TO 3'-0" OVERHANG Ⓛ** & 54" HORIZONTAL LEG LENGTH OF THE OVERHANG BRACKET)

| AVG. SLAB THICKNESS Ⓣ (in) | BRACKET Ⓚ DIMENSION (in) | SCREED LOAD PER BRACKET | | | | | | | | | 45° HANGER SWL (lbs) |
|---|---|---|---|---|---|---|---|---|---|---|---|
| | | 2500 lbs. | 2250 lbs. | 2000 lbs. | 1750 lbs. | 1500 lbs. | 1250 lbs. | 1000 lbs. | 750 lbs. | 0 lbs. | |
| | | BRACKET SPACING | | | | | | | | | |
| 10 | 30 | | | | | 2'-1" | 2'-6" | 2'-11" | 3'-4" | 4'-6" | 4000 |
| | | | | | | 4'-5" | 4'-10" | 5'-3" | 5'-7" | 6'-7" | 6000 |
| | 40 | | | | | 2'-1" | 2'-6" | 2'-11" | 3'-4" | 4'-6" | 4000 |
| | | 2'-9" | 3'-2" | 3'-7" | 4'-0" | 4'-5" | 4'-10" | 5'-3" | 5'-7" | 6'-7" | 6000 |
| | 50 | | | | | 2'-1" | 2'-6" | 2'-11" | 3'-4" | 4'-6" | 4000 |
| | | 2'-9" | 3'-2" | 3'-7" | 4'-0" | 4'-5" | 4'-10" | 5'-3" | 5'-7" | 6'-7" | 6000 |
| 12 | 30 | | | | | | 2'-2" | 2'-7" | 2'-11" | 4'-0" | 4000 |
| | | | | | | 3'-11" | 4'-3" | 4'-8" | 5'-0" | 6'-1" | 6000 |
| | 40 | | | | | | 2'-2" | 2'-7" | 2'-11" | 4'-0" | 4000 |
| | | 2'-5" | 2'-10" | 3'-2" | 3'-6" | 3'-11" | 4'-3" | 4'-8" | 5'-0" | 6'-1" | 6000 |
| | 50 | | | | | | 2'-2" | 2'-7" | 2'-11" | 4'-0" | 4000 |
| | | 2'-5" | 2'-10" | 3'-2" | 3'-6" | 3'-11" | 4'-3" | 4'-8" | 5'-0" | 6'-1" | 6000 |
| 14 | 30 | | | | | | 2'-0" | 2'-4" | 2'-8" | 3'-8" | 4000 |
| | | | | | 3'-2" | 3'-6" | 3'-10" | 4'-2" | 4'-6" | 5'-6" | 6000 |
| | 40 | | | | | | 2'-0" | 2'-4" | 2'-8" | 3'-8" | 4000 |
| | | 2'-2" | 2'-6" | 2'-10" | 3'-2" | 3'-6" | 3'-10" | 4'-2" | 4'-6" | 5'-6" | 6000 |
| | 50 | | | | | | 2'-0" | 2'-4" | 2'-8" | 3'-8" | 4000 |
| | | 2'-2" | 2'-6" | 2'-10" | 3'-2" | 3'-6" | 3'-10" | 4'-2" | 4'-6" | 5'-6" | 6000 |
| 16 | 30 | | | | | | | 2'-1" | 2'-5" | 3'-4" | 4000 |
| | | | | | 2'-11" | 3'-2" | 3'-6" | 3'-10" | 4'-1" | 5'-0" | 6000 |
| | 40 | | | | | | | 2'-1" | 2'-5" | 3'-4" | 4000 |
| | | 2'-0" | 2'-4" | 2'-7" | 2'-11" | 3'-2" | 3'-6" | 3'-10" | 4'-1" | 5'-0" | 6000 |
| | 50 | | | | | | | 2'-1" | 2'-5" | 3'-4" | 4000 |
| | | 2'-0" | 2'-4" | 2'-7" | 2'-11" | 3'-2" | 3'-6" | 3'-10" | 4'-1" | 5'-0" | 6000 |

### TABLE 1-4

(FOR USE ON **OVER 3'-0" TO 3'-6" OVERHANG Ⓛ** & 54" HORIZONTAL LEG LENGTH OF THE OVERHANG BRACKET)

| AVG. SLAB THICKNESS Ⓣ (in) | BRACKET Ⓚ DIMENSION (in) | SCREED LOAD PER BRACKET | | | | | | | | | 45° HANGER SWL (lbs) |
|---|---|---|---|---|---|---|---|---|---|---|---|
| | | 2500 lbs. | 2250 lbs. | 2000 lbs. | 1750 lbs. | 1500 lbs. | 1250 lbs. | 1000 lbs. | 750 lbs. | 0 lbs. | |
| | | BRACKET SPACING | | | | | | | | | |
| 10 | 30 | | | | | | 2'-1" | 2'-5" | 2'-9" | 3'-10" | 4000 |
| | | | | | | 2'-3" | 2'-11" | 3'-7" | 4'-3" | 5'-9" | 6000 |
| | 40 | | | | | | 2'-1" | 2'-5" | 2'-9" | 3'-10" | 4000 |
| | | | | 2'-4" | 3'-0" | 3'-7" | 4'-1" | 4'-5" | 4'-9" | 5'-9" | 6000 |
| | 50 | | | | | | 2'-1" | 2'-5" | 2'-9" | 3'-10" | 4000 |
| | | 2'-4" | 2'-8" | 3'-0" | 3'-4" | 3'-8" | 4'-1" | 4'-5" | 4'-9" | 5'-9" | 6000 |
| 12 | 30 | | | | | | | 2'-2" | 2'-6" | 3'-5" | 4000 |
| | | | | | | 2'-1" | 2'-8" | 3'-4" | 3'-11" | 5'-2" | 6000 |
| | 40 | | | | | | | 2'-2" | 2'-6" | 3'-5" | 4000 |
| | | | | 2'-2" | 2'-9" | 3'-4" | 3'-7" | 3'-11" | 4'-3" | 5'-2" | 6000 |
| | 50 | | | | | | | 2'-2" | 2'-6" | 3'-5" | 4000 |
| | | 2'-1" | 2'-4" | 2'-8" | 3'-0" | 3'-4" | 3'-7" | 3'-11" | 4'-3" | 5'-2" | 6000 |
| 14 | 30 | | | | | | | | 2'-3" | 3'-1" | 4000 |
| | | | | | | 2'-0" | 2'-6" | 3'-1" | 3'-8" | 4'-8" | 6000 |
| | 40 | | | | | | | | 2'-3" | 3'-1" | 4000 |
| | | | | 2'-0" | 2'-7" | 3'-0" | 3'-3" | 3'-6" | 3'-10" | 4'-8" | 6000 |
| | 50 | | | | | | | | 2'-3" | 3'-1" | 4000 |
| | | | 2'-2" | 2'-5" | 2'-8" | 3'-0" | 3'-3" | 3'-6" | 3'-10" | 4'-8" | 6000 |
| 16 | 30 | | | | | | | | 2'-0" | 2'-9" | 4000 |
| | | | | | | | 2'-4" | 2'-10" | 3'-5" | 4'-3" | 6000 |
| | 40 | | | | | | | | 2'-0" | 2'-9" | 4000 |
| | | | | | 2'-5" | 2'-8" | 2'-11" | 3'-3" | 3'-6" | 4'-3" | 6000 |
| | 50 | | | | | | | | 2'-0" | 2'-9" | 4000 |
| | | | | 2'-2" | 2'-5" | 2'-8" | 2'-11" | 3'-3" | 3'-6" | 4'-3" | 6000 |

DEFINITIONS

SLPB = SCREED LOAD PER BRACKET (R x W)
R = SCREED LOAD FACTOR, OBTAINED FROM TABLE 2
W = WHEEL LOAD
S = BRACKET SPACING
T = AVERAGE SLAB THICKNESS
SWL = SAFE WORKING LOAD
K = DIMENSION DEFINED ON "BRIDGE OVERHANG BRACKET SUMMARY" ON SHEET 2
L = OVERHANG MEASURED FROM EDGE OF TOP FLANGE TO EDGE OF SUPERSTRUCTURE

PROJECT NO. R-2309AB
GUILFORD COUNTY
STATION: 134+30.00 -L-

SHEET 1 OF 3

STATE OF NORTH CAROLINA
DEPARTMENT OF TRANSPORTATION
RALEIGH

STANDARD OVERHANG FALSEWORK AASHTO TYPES III, IV, V, AND VI (LEFT LANE)

NORTH CAROLINA PROFESSIONAL SEAL 18788 ENGINEER CHANG-CHUAN VICTOR CHAO

Chang-Chuan Victor Chao
8-23-2011

| REVISIONS | | | | | | SHEET NO. |
|---|---|---|---|---|---|---|
| NO. | BY: | DATE: | NO. | BY: | DATE: | S-95 |
| 1 | | | 3 | | | TOTAL SHEETS 136 |
| 2 | | | 4 | | | |

| | |
|---|---|
| ASSEMBLED BY: | DATE: |
| CHECKED BY: | DATE: |
| DRAWN BY: R. WRIGHT 06/04 | REV. |
| CHECKED BY: C. V. CHAO 06/04 | |

23-AUG-2011 11:29
C:\OLDFILESD\wdlr\victor\OverhangFalsework\TIEBAR&STRUT\R-2309AB_TYPE_III\R2309ABSTR30verHangSheets.dgn
vchao

STR. #3

OF1

## BRIDGE OVERHANG BRACKET SUMMARY

TOTAL SCREED WEIGHT = _____ LBS.
NUMBER OF SCREED WHEELS = _____
SCREED WHEEL LOAD (W) = _____ LBS.
SCREED LOAD PER BRACKET = _____ LBS.

PROJECT No. : _____
COUNTY : _____
STATION : _____
DESCRIPTION : _____

DATE : _____
DESIGN BY : _____
CHECK BY : _____

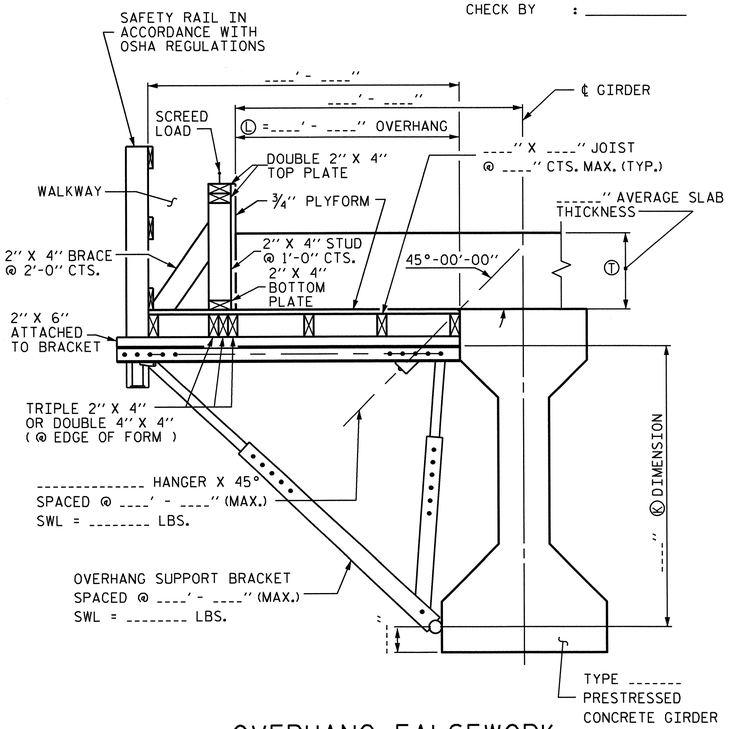


OVERHANG FALSEWORK

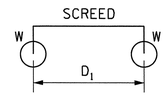


4-WHEEL MACHINE

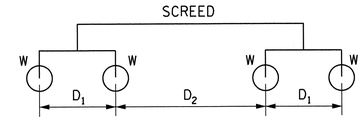


8-WHEEL MACHINE

| 4 WHEEL MACHINE | |
|---|---|
| S/D1 | R |
| <= 1.0 | 1.00 |
| 1.1 | 1.09 |
| 1.2 | 1.17 |
| 1.3 | 1.23 |
| 1.4 | 1.29 |
| 1.5 | 1.33 |
| 1.6 | 1.38 |
| 1.7 | 1.41 |
| 1.8 | 1.44 |
| 1.9 | 1.47 |
| 2.0 | 1.50 |
| 2.2 | 1.55 |
| 2.4 | 1.58 |
| 2.6 | 1.62 |
| 2.8 | 1.64 |
| 3.0 | 1.67 |
| 3.5 | 1.71 |
| 4.0 | 1.75 |

### TABLE 2: SCREED LOAD FACTOR "R"

| | | THE SCREED LOAD FACTOR R (FOR 8 WHEEL MACHINE) | | | | | | | | | | | | | | | | | |
|---|---|---|---|---|---|---|---|---|---|---|---|---|---|---|---|---|---|---|---|
| | | $S/D_2$ | | | | | | | | | | | | | | | | | |
| | | <= 1.0 | 1.1 | 1.2 | 1.3 | 1.4 | 1.5 | 1.6 | 1.7 | 1.8 | 1.9 | 2.0 | 2.2 | 2.4 | 2.6 | 2.8 | 3.0 | 3.5 | 4.0 |
| $S/D_1$ | <= 1.0 | 1.00 | 1.09 | 1.17 | 1.23 | 1.29 | 1.33 | 1.38 | 1.41 | 1.44 | 1.47 | 1.50 | 1.55 | 1.58 | 1.62 | 1.64 | 1.67 | 1.71 | 1.75 |
| | 1.1 | 1.09 | 1.18 | 1.26 | 1.32 | 1.38 | 1.42 | 1.47 | 1.50 | 1.54 | 1.56 | 1.59 | 1.64 | 1.67 | 1.71 | 1.73 | 1.76 | 1.81 | 1.84 |
| | 1.2 | 1.17 | 1.26 | 1.33 | 1.40 | 1.45 | 1.50 | 1.54 | 1.58 | 1.61 | 1.64 | 1.67 | 1.71 | 1.75 | 1.78 | 1.81 | 1.83 | 1.88 | 1.92 |
| | 1.3 | 1.23 | 1.32 | 1.40 | 1.46 | 1.52 | 1.56 | 1.61 | 1.64 | 1.68 | 1.70 | 1.73 | 1.78 | 1.81 | 1.85 | 1.87 | 1.90 | 1.95 | 1.98 |
| | 1.4 | 1.29 | 1.38 | 1.45 | 1.52 | 1.57 | 1.62 | 1.66 | 1.70 | 1.73 | 1.76 | 1.79 | 1.83 | 1.87 | 1.90 | 1.93 | 1.95 | 2.00 | 2.07 |
| | 1.5 | 1.33 | 1.42 | 1.50 | 1.56 | 1.62 | 1.67 | 1.71 | 1.75 | 1.78 | 1.81 | 1.83 | 1.88 | 1.92 | 1.95 | 1.98 | 2.00 | 2.10 | 2.17 |
| | 1.6 | 1.38 | 1.47 | 1.54 | 1.61 | 1.66 | 1.71 | 1.75 | 1.79 | 1.82 | 1.85 | 1.88 | 1.92 | 1.96 | 1.99 | 2.04 | 2.08 | 2.18 | 2.25 |
| | 1.7 | 1.41 | 1.50 | 1.58 | 1.64 | 1.70 | 1.75 | 1.79 | 1.82 | 1.86 | 1.89 | 1.91 | 1.96 | 2.00 | 2.05 | 2.11 | 2.16 | 2.25 | 2.32 |
| | 1.8 | 1.44 | 1.54 | 1.61 | 1.68 | 1.73 | 1.78 | 1.82 | 1.86 | 1.89 | 1.92 | 1.94 | 1.99 | 2.06 | 2.12 | 2.17 | 2.22 | 2.32 | 2.39 |
| | 1.9 | 1.47 | 1.56 | 1.64 | 1.70 | 1.76 | 1.81 | 1.85 | 1.89 | 1.92 | 1.95 | 1.97 | 2.04 | 2.11 | 2.18 | 2.23 | 2.28 | 2.38 | 2.45 |
| | 2.0 | 1.50 | 1.59 | 1.67 | 1.73 | 1.79 | 1.83 | 1.88 | 1.91 | 1.94 | 1.97 | 2.00 | 2.09 | 2.17 | 2.23 | 2.29 | 2.33 | 2.43 | 2.50 |
| | 2.2 | 1.55 | 1.64 | 1.71 | 1.78 | 1.83 | 1.88 | 1.92 | 1.96 | 1.99 | 2.04 | 2.09 | 2.18 | 2.26 | 2.32 | 2.38 | 2.42 | 2.52 | 2.59 |
| | 2.4 | 1.58 | 1.67 | 1.75 | 1.81 | 1.87 | 1.92 | 1.96 | 2.00 | 2.06 | 2.11 | 2.17 | 2.26 | 2.33 | 2.40 | 2.45 | 2.50 | 2.60 | 2.67 |
| | 2.6 | 1.62 | 1.71 | 1.78 | 1.85 | 1.90 | 1.95 | 1.99 | 2.05 | 2.12 | 2.18 | 2.23 | 2.32 | 2.40 | 2.46 | 2.52 | 2.56 | 2.66 | 2.73 |
| | 2.8 | 1.64 | 1.73 | 1.81 | 1.87 | 1.93 | 1.98 | 2.04 | 2.11 | 2.17 | 2.23 | 2.29 | 2.38 | 2.45 | 2.52 | 2.57 | 2.62 | 2.71 | 2.79 |
| | 3.0 | 1.67 | 1.76 | 1.83 | 1.90 | 1.95 | 2.00 | 2.08 | 2.16 | 2.22 | 2.28 | 2.33 | 2.42 | 2.50 | 2.56 | 2.62 | 2.67 | 2.76 | 2.83 |
| | 3.5 | 1.71 | 1.81 | 1.88 | 1.95 | 2.00 | 2.10 | 2.18 | 2.25 | 2.32 | 2.38 | 2.43 | 2.52 | 2.60 | 2.66 | 2.71 | 2.76 | 2.86 | 2.93 |
| | 4.0 | 1.75 | 1.84 | 1.92 | 1.98 | 2.07 | 2.17 | 2.25 | 2.32 | 2.39 | 2.45 | 2.50 | 2.59 | 2.67 | 2.73 | 2.79 | 2.83 | 2.93 | 3.00 |

### TABLE 3: ALLOWABLE SPAN LENGTH OF JOISTS AND JOIST SPACINGS

| AVG. SLAB THICKNESS Ⓣ (IN) | LUMBER JOIST SIZE (IN X IN) | JOIST SPACINGS | | | |
|---|---|---|---|---|---|
| | | 15 IN | 12 IN | 10 IN | 8 IN |
| | | THE ALLOWABLE SPAN LENGTH OF JOISTS | | | |
| 10 | 2 X 4 | ——— | 4' - 6" | 4' - 9" | 5' - 0" |
| | 4 X 4 | 5' - 9" | 6' - 3" | 6' - 6" | 6' - 7" |
| 12 | 2 X 4 | ——— | 4' - 3" | 4' - 9" | 5' - 0" |
| | 4 X 4 | 5' - 3" | 6' - 0" | 6' - 3" | 6' - 5" |
| 14 | 2 X 4 | ——— | 4' - 0" | 4' - 6" | 5' - 0" |
| | 4 X 4 | ——— | 5' - 6" | 6' - 0" | 6' - 4" |
| 16 | 2 X 4 | ——— | 4' - 0" | 4' - 3" | 4' - 9" |
| | 4 X 4 | ——— | 5' - 3" | 5' - 9" | 6' - 3" |

### NOTES

DESIGN INCLUDES CONSTRUCTION LIVE LOAD 20 PSF ON THE AREA SUPPORTED AND 75 PLF AT THE OUTSIDE DECK OF OVERHANGS.

REQUIRED MINIMUM DIAGONAL LEG CAPACITY: 3600 LB WORKING LOAD

THE CONTRACTOR HAS THE OPTION OF SUBMITTING HIS OWN DESIGN FOR OVERHANG FALSEWORK IN ACCORDANCE WITH THE SPECIAL PROVISIONS.

SUBMITTALS UTILIZING THE INSTRUCTIONS AND PROCEDURES DESCRIBED ON SHEET 1 OF 3 SHALL BE IN ACCORDANCE WITH THE APPLICABLE SECTIONS OF THE SPECIFICATIONS AND SPECIAL PROVISIONS, EXCEPT THAT CALCULATIONS FOR OVERHANG FALSEWORK NEED NOT BE SEALED BY A REGISTERED ENGINEER.

FOR OVERHANG FALSEWORK BRACING DESIGN, SEE SHEET 3 OF 3.

PROJECT NO. R-2309AB
GUILFORD COUNTY
STATION: 134+30.00 -L-

SHEET 2 OF 3

STATE OF NORTH CAROLINA
DEPARTMENT OF TRANSPORTATION
RALEIGH

STANDARD OVERHANG FALSEWORK AASHTO TYPES III, IV, V, AND VI (LEFT LANE)

NORTH CAROLINA PROFESSIONAL SEAL 18788 ENGINEER CHANG-CHUAN VICTOR CHAO

Chang-Chuan Victor Chao
8-23-2011

| ASSEMBLED BY: | DATE: |
|---|---|
| CHECKED BY: | DATE: |
| DRAWN BY: R. WRIGHT 06/04 | REV. |
| CHECKED BY: C. V. CHAO 06/04 | |

| REVISIONS | | | | | | SHEET NO. |
|---|---|---|---|---|---|---|
| NO. | BY: | DATE: | NO. | BY: | DATE: | 5-96 |
| 1 | | | 3 | | | TOTAL SHEETS |
| 2 | | | 4 | | | 136 |

23-AUG-2011 11:30
C:\OLDFILESD\wdlr\victor\OverhangFalsework\TIEBAR&STRUT\R-2309AB_TYPE_III\R2309ABSTR3OverHangSheets.dgn
vchao

## NOTES:

EACH #5 TIE BAR SHALL BE WELDED TO ONE STIRRUP LOOP AS SHOWN IN DETAIL "A". #5 TIE BARS SHALL BE WELDED TO TWO ADJACENT STIRRUPS OF THE EXTERIOR GIRDER AND THE ADJACENT INTERIOR GIRDER BETWEEN PERMANENT DIAPHRAGMS. WELD STEEL PLATES IN BETWEEN THE TIE BARS AND THE STIRRUP LOOP. WELDING TWO TIE BARS TO THE SAME STIRRUP LOOP SHALL NOT BE PERMITTED.

MAXIMUM SPACING BETWEEN THE BRACING (TIE BARS-TIMBER STRUT) IS 8'-6" CTS. #5 TIE BARS SHALL BE LOCATED OVER A TIMBER STRUT.

INSTALL TIE BARS AND TIMBER STRUTS PRIOR TO PLACEMENT OF CONCRETE OR SCREED WEIGHT ONTO THE OVERHANG FALSEWORK.

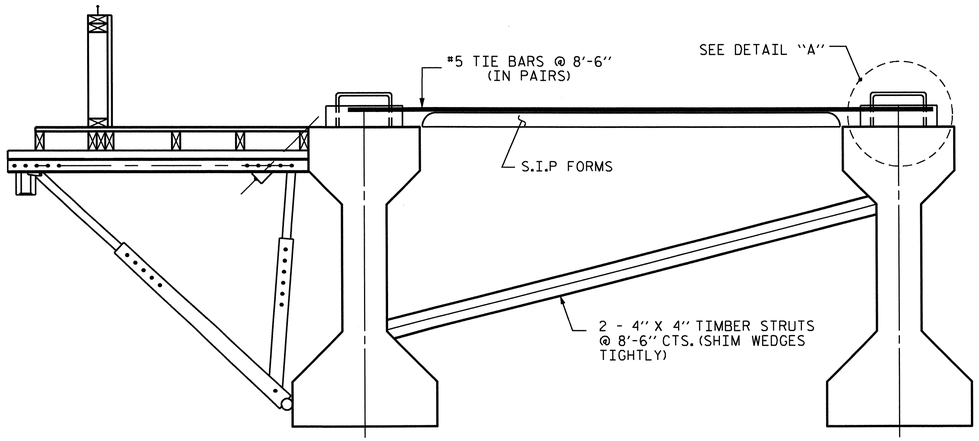


EXTERIOR GIRDER INTERIOR GIRDER

## DETAIL OF REQUIRED OVERHANG FALSEWORK BRACING SYSTEM

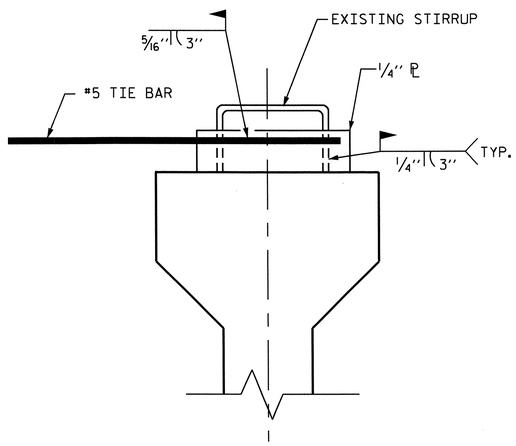


DETAIL "A"

PROJECT NO. R-2309AB

GUILFORD COUNTY

STATION: 134+30.00 -L-

SHEET 3 OF 3

STATE OF NORTH CAROLINA
DEPARTMENT OF TRANSPORTATION
RALEIGH

# STANDARD OVERHANG FALSEWORK AASHTO TYPES III, IV, V, AND VI (LEFT LANE)

NORTH CAROLINA PROFESSIONAL SEAL 18788 ENGINEER CHANG-CHUAN VICTOR CHAO

Chang-Chuan Victor Chao
8-23-2011

| REVISIONS | | | | | | SHEET NO. |
|---|---|---|---|---|---|---|
| NO. | BY: | DATE: | NO. | BY: | DATE: | S-97 |
| 1 | | | 3 | | | TOTAL SHEETS |
| 2 | | | 4 | | | 136 |

DRAWN BY: R. WRIGHT 06/04 DATE :
CHECKED BY: C. V. CHAO 06/04 DATE :

23-AUG-2011 11:31
C:\OLDFILES\D\wdlr\victor\OverhangFalsework\TIEBAR&STRUT\R-2309AB_TYPE_III\R2309ABSTR3OverHangSheets.dgn
vchao

STR. #3 OF3

F.A. PROJECT NO. STPNHS-0220(25)

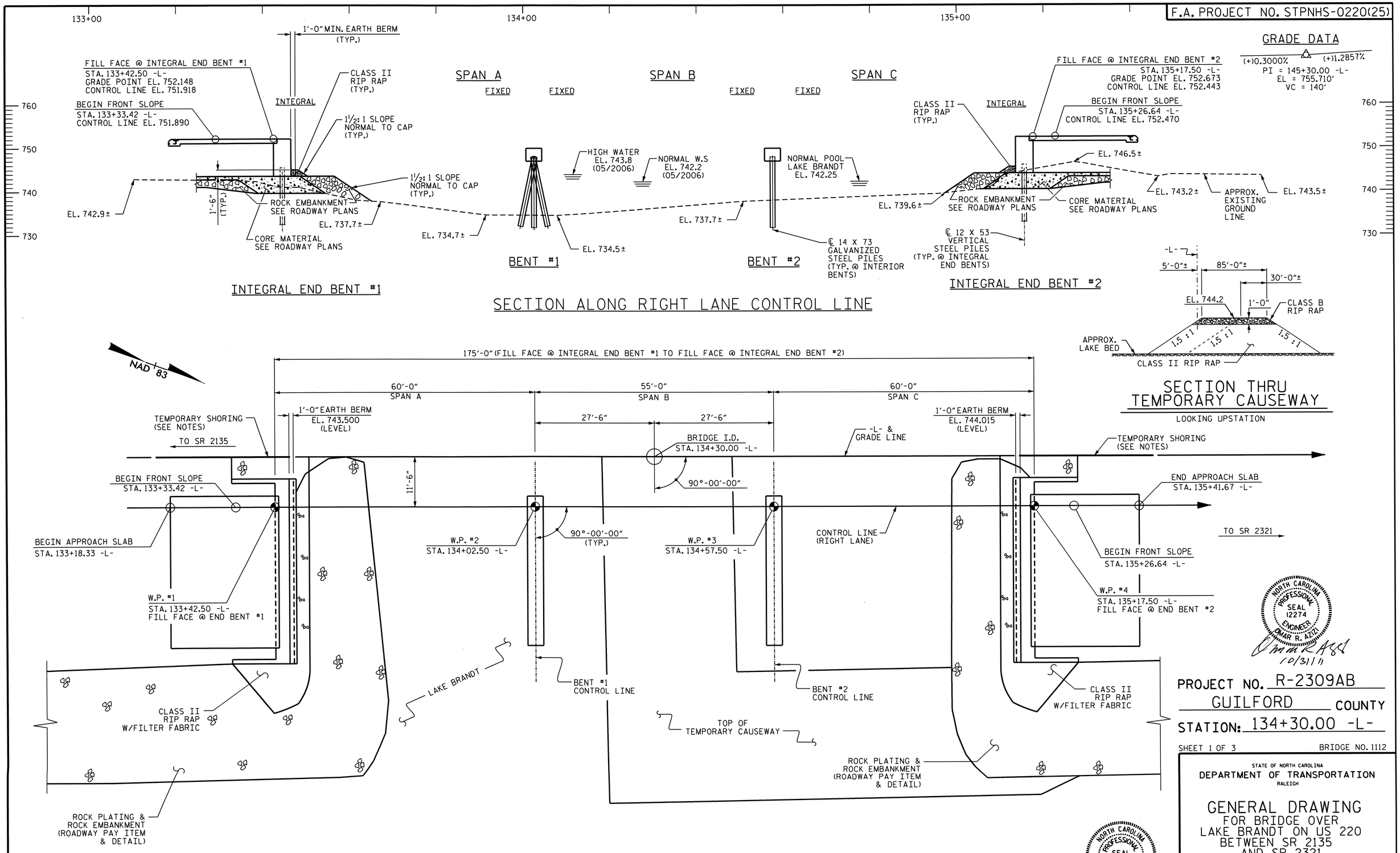


NORTH CAROLINA PROFESSIONAL SEAL 12274 ENGINEER OMAR R. AZIZ
10/31/11

NORTH CAROLINA PROFESSIONAL SEAL 14045 ENGINEER TIMOTHY E. COGGINS
10/27/11

PROJECT NO. R-2309AB

GUILFORD COUNTY

STATION: 134+30.00 -L-

SHEET 1 OF 3

BRIDGE NO. 1112

STATE OF NORTH CAROLINA
DEPARTMENT OF TRANSPORTATION
RALEIGH

# GENERAL DRAWING
FOR BRIDGE OVER
LAKE BRANDT ON US 220
BETWEEN SR 2135
AND SR 2321
(RIGHT LANE)

| REVISIONS | | | | | | |
|---|---|---|---|---|---|---|
| NO. | BY: | DATE: | NO. | BY: | DATE: | |
| 1 | | | 3 | | | |
| 2 | | | 4 | | | |

SHEET NO. S-98

TOTAL SHEETS 136

DRAWN BY : J.B. WILSON DATE : 11/05/08
CHECKED BY : PEGGY PARISI DATE : 6/17/09

27-OCT-2011 11:45
R:\TIPProjects-R\R2309AB\Structures\R2309ab\FinalPlans\Bridges\Str#4\r2309ab_sd_gd_04.dgn
tcoggins

STR. #4

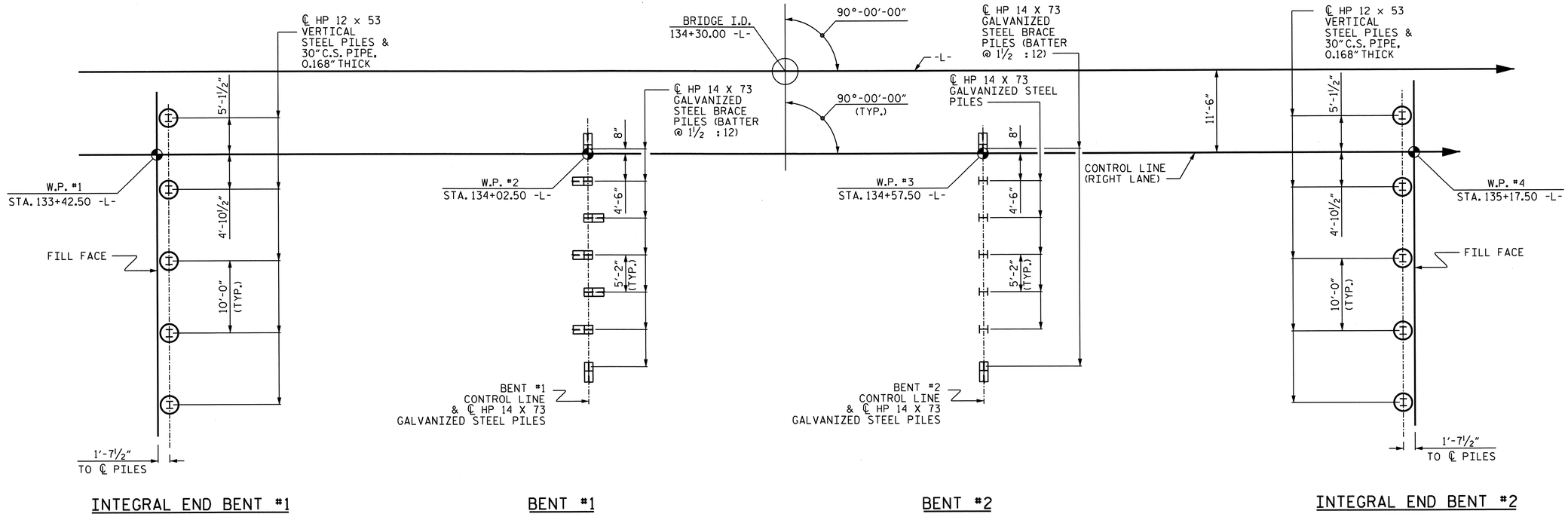


## FOUNDATION LAYOUT

DIMENSIONS LOCATING PILES ARE SHOWN TO THE PILE CENTERLINE.

## FOUNDATION NOTES

FOR PILES, SEE SPECIAL PROVISIONS.

PILES AT END BENT NO. 1 AND END BENT NO.2 ARE DESIGNED FOR A FACTORED RESISTANCE OF 115 TONS PER PILE.

PILES AT BENT NO. 1 AND NO. 2 ARE DESIGNED FOR A FACTORED RESISTANCE OF 150 TONS PER PILE.

DRIVE PILES AT END BENT NO. 1 AND END BENT NO. 2 TO A REQUIRED DRIVING RESISTANCE OF 195 TONS PER PILE.

DRIVE PILES AT BENT NO. 1 AND BENT NO. 2 TO A REQUIRED DRIVING RESISTANCE OF 250 TONS PER PILE.

INSTALL PILES AT BENT NO. 2 TO A TIP ELEVATION NO HIGHER THAN 715.0 FT.

THE SCOUR CRITICAL ELEVATIONS FOR BENT NO. 1 AND BENT NO. 2 ARE 733.0 FT. AND 736.0 FT., RESPECTIVELY. SCOUR CRITICAL ELEVATIONS ARE USED TO MONITOR POSSIBLE SCOUR PROBLEMS DURING THE LIFE OF THE STRUCTURE.

STEEL PILE POINTS ARE REQUIRED FOR STEEL PILES AT BENT NO. 1.

PILES AT END BENT NO. 1 AND END BENT NO. 2 SHALL BE INSTALLED INSIDE CORRUGATED STEEL PIPE. FOR 30 INCH CORRUGATED STEEL PIPE, SEE SPECIAL PROVISIONS.

PROJECT NO. R-2309AB
GUILFORD COUNTY
STATION: 134+30.00 -L-

SHEET 2 OF 3

STATE OF NORTH CAROLINA
DEPARTMENT OF TRANSPORTATION
RALEIGH

GENERAL DRAWING
FOR BRIDGE OVER
LAKE BRANDT ON US 220
BETWEEN SR 2135
AND SR 2321
(RIGHT LANE)

NORTH CAROLINA PROFESSIONAL SEAL 14045 ENGINEER TIMOTHY E. COGGINS
10/27/11

| REVISIONS | | | | | | SHEET NO. |
|---|---|---|---|---|---|---|
| NO. | BY: | DATE: | NO. | BY: | DATE: | S-99 |
| 1 | | | 3 | | | TOTAL SHEETS |
| 2 | | | 4 | | | 136 |

DRAWN BY : JASON B. WILSON DATE : 6/1/2011
CHECKED BY : PEGGY PARISI DATE : 6-17-11

27-OCT-2011 11:44
R:\TIPProjects-R\R2309AB\Structures\R2309ab\FinalPlans\Bridges\Str#4\r2309ab_sd_gd_04.dgn
tcoggins

STR. #4

BM #7 RR SPIKE IN ROOT OF 24"ELM 193.24' LT. OF STA. 132+06.01 -L-, ELEV. 744.74'.

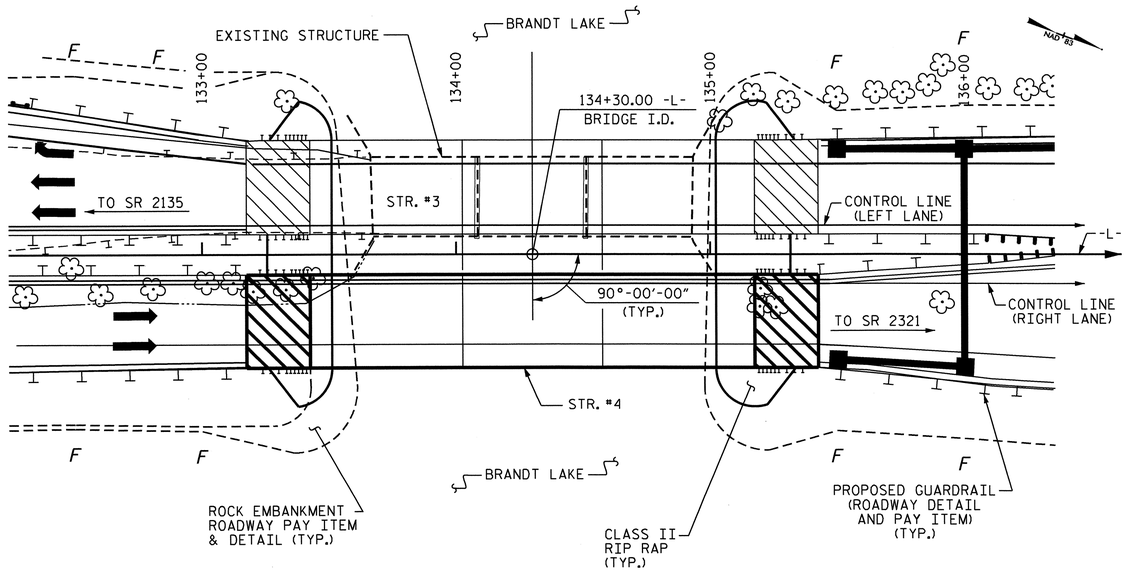


FOR UTILITY INFORMATION, SEE UTILITY PLANS AND SPECIAL PROVISIONS.

## LOCATION SKETCH

## HYDRAULIC DATA

| | |
|---|---|
| DESIGN DISCHARGE | 5,850 CFS |
| FREQUENCY OF DESIGN FLOOD | 50 YRS |
| DESIGN HIGH WATER ELEVATION | 745.4' |
| DRAINAGE AREA | 33.5 SQ. MI. |
| BASE DISCHARGE (Q100) | 7,750 CFS |
| BASE HIGH WATER ELEVATION | 746.8' |

## OVERTOPPING FLOOD DATA

| | |
|---|---|
| OVERTOPPING DISCHARGE | N/A |
| FREQUENCY OF OVERTOPPING FLOOD | N/A |
| OVERTOPPING FLOOD ELEVATION | N/A |

## NOTES

ASSUMED LIVE LOAD = HL-93 OR ALTERNATE LOADING.

FOR OTHER DESIGN DATA AND GENERAL NOTES, SEE SHEET SN.

FOR EROSION CONTROL MEASURES, SEE EROSION CONTROL PLANS.

THIS BRIDGE HAS BEEN DESIGNED IN ACCORDANCE WITH THE AASHTO LRFD BRIDGE DESIGN SPECIFICATIONS.

REMOVABLE FORMS MAY BE USED IN LIEU OF METAL-STAY-PLACE FORMS IN ACCORDANCE WITH ARTICLE 420-3 OF THE STANDARD SPECIFICATIONS.

FOR ROCK EMBANKMENT AND CORE MATERIAL IN AREAS OF THE END BENTS, SEE ROADWAY PLANS.

WORK ON END BENTS SHALL NOT BE STARTED UNTIL APPROACH ROCK EMBANKMENT AND CORE MATERIAL IN THE AREA OF END BENT PILES HAVE BEEN PLACED.

AT THE CONTRACTOR'S OPTION, AND UPON REMOVAL OF THE CAUSEWAY, THE CLASS II RIP RAP USED IN THE CAUSEWAY MAY BE PLACED AS RIP RAP SLOPE PROTECTION. SEE SPECIAL PROVISIONS FOR CONSTRUCTION, MAINTENANCE AND REMOVAL OF TEMPORARY ACCESS AT STATION 134+30.00 -L-.

THIS STRUCTURE HAS BEEN DESIGNED IN ACCORDANCE WITH HEC 18, "EVALUATING SCOUR AT BRIDGES", MAY, 2001.

THE CONTRACTOR SHALL PROVIDE INDEPENDENT ASSURANCE SAMPLES OF REINFORCING STEEL AS FOLLOWS: FOR PROJECTS REQUIRING UP TO 400 TONS OF REINFORCING STEEL, ONE 30 INCH SAMPLE OF EACH SIZE BAR USED, AND FOR PROJECTS REQUIRING OVER 400 TONS OF REINFORCING STEEL, TWO 30 INCH SAMPLES OF EACH SIZE BAR USED. THE BARS FROM WHICH THE SAMPLES ARE TAKEN MUST THEN BE SPLICED WITH REPLACEMENT BARS OF THE SIZE AND LENGTH OF THE SAMPLE, PLUS A MINIMUM LAP SPLICE OF THIRTY BAR DIAMETERS. PAYMENT FOR THE SAMPLES OF REINFORCING STEEL SHALL BE CONSIDERED INCIDENTAL TO VARIOUS PAY ITEMS.

NEEDLE BEAMS WILL NOT BE ALLOWED UNLESS OTHERWISE CALLED FOR ON THE PLANS OR APPROVED BY THE ENGINEER.

FOR SUBMITTAL OF WORKING DRAWINGS, SEE SPECIAL PROVISIONS.

FOR FALSEWORK AND FORMWORK, SEE SPECIAL PROVISIONS.

FOR CRANE SAFETY, SEE SPECIAL PROVISIONS.

FOR PRESTRESSED CONCRETE MEMBERS, SEE SPECIAL PROVISIONS.

FOR CURING CONCRETE, SEE SPECIAL PROVISIONS.

FOR MAINTENANCE OF TRAFFIC, SEE TRAFFIC CONTROL PLANS.

FOR GROUT FOR STRUCTURES, SEE SPECIAL PROVISIONS.

FOR FORMS FOR CONCRETE BRIDGE DECKS, SEE SPECIAL PROVISIONS.

FOR LIMITS OF TEMPORARY SHORING FOR MAINTENANCE OF TRAFFIC, SEE TRAFFIC CONTROL PLANS. FOR PAY ITEM FOR TEMPORARY SHORING FOR MAINTENANCE OF TRAFFIC, SEE ROADWAY PLANS.

FOR PLACING LOAD ON STRUCTURE MEMBERS, SEE SPECIAL PROVISIONS.

THE CLASS AA CONCRETE IN THE BRIDGE DECK SHALL CONTAIN FLY ASH OR GROUND GRANULATED BLAST FURNACE SLAG AT THE SUBSTITUTION RATE SPECIFIED IN ARTICLE 1024-1 AND IN ACCORDANCE WITH ARTICLES 1024-5 AND 1024-6 OF THE STANDARD SPECIFICATIONS. NO PAYMENT WILL BE MADE FOR THIS SUBSTITUTION AS IT IS CONSIDERED INCIDENTAL TO THE COST OF THE REINFORCED CONCRETE DECK SLAB.

THE CONTRACTOR'S ATTENTION IS CALLED TO THE FACT THAT THE 30 INCH CS PIPES SHALL BE INSTALLED AT EACH PILE LOCATION DURING PLACEMENT OF THE ROCK EMBANKMENT/CORE MATERIAL TO THE BOTTOM OF END BENT CAP ELEVATION. SEE SPECIAL PROVISIONS FOR 30 INCH CORRUGATED STEEL PIPE.

## TOTAL BILL OF MATERIAL

| | CONSTRUCTION, MAINTENANCE, & REMOVAL OF TEMPORARY ACCESS | REINFORCED CONCRETE DECK SLAB | GROOVING BRIDGE FLOORS | CLASS A CONCRETE | BRIDGE APPROACH SLABS | REINFORCING STEEL | 45" PRESTRESSED CONCRETE GIRDERS | | HP 12 X 53 STEEL PILES | | HP 14 X 73 GALVANIZED STEEL PILES | | STEEL PILE POINTS | 2 BAR METAL RAIL | CONCRETE BARRIER RAIL | 1'-2" X 2'-6" CONCRETE PARAPET | RIP RAP CLASS II (2'-0" THICK) | FILTER FABRIC FOR DRAINAGE | ELASTOMERIC BEARINGS | EVAZOTE JOINT SEALS | 30" C.S. PIPE, 0.168" THICK |
|---|---|---|---|---|---|---|---|---|---|---|---|---|---|---|---|---|---|---|---|---|---|
| | LUMP SUM | SQ. FT. | SQ. FT. | CU. YDS. | LUMP SUM | LBS. | NO. | LIN.FT. | NO. | LIN.FT. | NO. | LIN.FT. | EACH | LIN.FT. | LIN.FT. | LIN.FT. | TONS | SQ.YDS. | LUMP SUM | LUMP SUM | LIN.FT. |
| SUPERSTRUCTURE | | 6417 | 6747 | | LUMP SUM | | 12 | 685.67 | | | | | | 165.83 | 173.33 | 173.33 | | | LUMP SUM | LUMP SUM | |
| END BENT NO. 1 | | | | 19.9 | | 3752 | | | 5 | 150 | | | | | | | 29 | 32 | | | 24 |
| BENT NO. 1 | | | | 11.5 | | 2126 | | | | | 7 | 210 | 7 | | | | | | | | |
| BENT NO. 2 | | | | 11.5 | | 2126 | | | | | 7 | 245 | | | | | | | | | |
| END BENT NO. 2 | | | | 19.9 | | 3752 | | | 5 | 200 | | | | | | | 30 | 33 | | | 19 |
| TOTAL | LUMP SUM | 6417 | 6747 | 62.8 | LUMP SUM | 11756 | 12 | 685.67 | 10 | 350 | 14 | 455 | 7 | 165.83 | 173.33 | 173.33 | 59 | 65 | LUMP SUM | LUMP SUM | 43 |

PROJECT NO. R-2309AB

GUILFORD COUNTY

STATION: 134+30.00 -L-

SHEET 3 OF 3

STATE OF NORTH CAROLINA
DEPARTMENT OF TRANSPORTATION
RALEIGH

GENERAL DRAWING
FOR BRIDGE OVER
LAKE BRANDT ON US 220
BETWEEN SR 2135
AND SR 2321
(RIGHT LANE)

NORTH CAROLINA PROFESSIONAL SEAL 14045 ENGINEER TIMOTHY L. COGGINS

10/27/11

| REVISIONS | | | | | | | SHEET NO. |
|---|---|---|---|---|---|---|---|
| NO. | BY: | DATE: | NO. | BY: | DATE: | | S-100 |
| 1 | | | 3 | | | | TOTAL SHEETS |
| 2 | | | 4 | | | | 136 |

DRAWN BY : J.B. WILSON DATE : 6/1/11
CHECKED BY : PEGGY PARISI DATE : 6-17-11

27-OCT-2011 11:44
R:\TIPProjects-R\R2309AB\Structures\R2309ab\FinalPlans\Bridges\Str#4\r2309ab_sd_gd_04.dgn
tcoggins

# LOAD AND RESISTANCE FACTOR RATING (LRFD) SUMMARY FOR PRESTRESSED CONCRETE GIRDERS

| LEVEL | | VEHICLE | WEIGHT (W) (TONS) | CONTROLLING LOAD RATING (#) | MINIMUM RATING FACTORS (RF) | TONS = W X RF | STRENGTH I LIMIT STATE | | | | | | | | | | | SERVICE III LIMIT STATE | | | | | | COMMENT NUMBER |
|---|---|---|---|---|---|---|---|---|---|---|---|---|---|---|---|---|---|---|---|---|---|---|---|---|
| | | | | | | | | MOMENT | | | | | SHEAR | | | | | | MOMENT | | | | | |
| | | | | | | | LIVELOAD FACTORS | DISTRIBUTION FACTORS (DF) | RATING FACTOR | SPAN | GIRDER LOCATION | DISTANCE FROM LEFT END OF SPAN (ft) | DISTRIBUTION FACTORS (DF) | RATING FACTOR | SPAN | GIRDER LOCATION | DISTANCE FROM LEFT END OF SPAN (ft) | LIVELOAD FACTORS | DISTRIBUTION FACTORS (DF) | RATING FACTOR | SPAN | GIRDER LOCATION | DISTANCE FROM LEFT END OF SPAN (ft) | |
| DESIGN LOAD RATING | | HL-93(Inv) | N/A | 1 | 1.06 | -- | 1.75 | 0.866 | 1.32 | A | ER | 28.646 | 0.946 | 1.42 | B | I | 21.133 | 0.80 | 0.946 | 1.06 | A | I | 28.646 | |
| | | HL-93(Opr) | N/A | -- | 1.71 | -- | 1.35 | 0.866 | 1.71 | A | ER | 28.646 | 0.946 | 1.84 | B | I | 21.133 | N/A | -- | -- | -- | -- | -- | |
| | | HS-20(Inv) | 36.000 | 2 | 1.34 | 48.328 | 1.75 | 0.866 | 1.66 | A | ER | 28.646 | 0.946 | 1.61 | B | I | 21.133 | 0.80 | 0.837 | 1.34 | A | I | 28.646 | |
| | | HS-20(Opr) | 36.000 | -- | 2.09 | 75.113 | 1.35 | 0.866 | 2.16 | A | ER | 28.646 | 0.946 | 2.09 | B | I | 21.133 | N/A | -- | -- | -- | -- | -- | |
| LEGAL LOAD RATING | SV | SNSH | 13.500 | -- | 2.87 | 38.710 | 1.40 | 0.866 | 4.44 | A | ER | 28.646 | 0.946 | 4.12 | B | I | 21.133 | 0.80 | 0.837 | 2.87 | A | I | 28.646 | |
| | | SNGARBS2 | 20.000 | -- | 2.20 | 44.096 | 1.40 | 0.866 | 3.42 | A | ER | 28.646 | 0.946 | 3.12 | B | I | 21.133 | 0.80 | 0.837 | 2.20 | A | I | 28.646 | |
| | | SNAGRIS2 | 22.000 | -- | 2.12 | 46.591 | 1.40 | 0.866 | 3.28 | A | ER | 28.646 | 0.946 | 2.98 | B | I | 21.133 | 0.80 | 0.837 | 2.12 | A | I | 28.646 | |
| | | SNCOTTS3 | 27.250 | -- | 1.43 | 38.935 | 1.40 | 0.866 | 2.21 | A | ER | 28.646 | 0.946 | 2.08 | B | I | 21.133 | 0.80 | 0.837 | 1.43 | A | I | 28.646 | |
| | | SNAGGRS4 | 34.925 | -- | 1.22 | 42.603 | 1.40 | 0.866 | 1.89 | A | ER | 28.646 | 0.946 | 1.86 | B | I | 21.133 | 0.80 | 0.837 | 1.22 | A | I | 28.646 | |
| | | SNS5A | 35.550 | -- | 1.19 | 42.343 | 1.40 | 0.866 | 1.85 | A | ER | 28.646 | 0.946 | 1.97 | B | I | 21.133 | 0.80 | 0.837 | 1.19 | A | I | 28.646 | |
| | | SNS6A | 39.950 | -- | 1.10 | 44.103 | 1.40 | 0.866 | 1.71 | A | ER | 28.646 | 0.946 | 1.86 | B | I | 21.133 | 0.80 | 0.837 | 1.10 | A | I | 28.646 | |
| | | SNS7B | 42.000 | -- | 1.05 | 44.172 | 1.40 | 0.866 | 1.63 | A | ER | 28.646 | 0.946 | 1.93 | B | I | 21.133 | 0.80 | 0.837 | 1.05 | A | I | 28.646 | |
| | TTST | TNAGRIT3 | 33.000 | -- | 1.35 | 44.534 | 1.40 | 0.866 | 2.09 | A | ER | 28.646 | 0.946 | 2.16 | B | I | 21.133 | 0.80 | 0.837 | 1.35 | A | I | 28.646 | |
| | | TNT4A | 33.075 | -- | 1.36 | 44.934 | 1.40 | 0.866 | 2.11 | A | ER | 28.646 | 0.946 | 2.04 | B | I | 21.133 | 0.80 | 0.837 | 1.36 | A | I | 28.646 | |
| | | TNT6A | 41.600 | -- | 1.12 | 46.664 | 1.40 | 0.866 | 1.74 | A | ER | 28.646 | 0.946 | 2.22 | B | I | 21.133 | 0.80 | 0.837 | 1.12 | A | I | 28.646 | |
| | | TNT7A | 42.000 | -- | 1.13 | 47.597 | 1.40 | 0.866 | 1.76 | A | ER | 28.646 | 0.946 | 1.97 | B | I | 21.133 | 0.80 | 0.837 | 1.13 | A | I | 28.646 | |
| | | TNT7B | 42.000 | -- | 1.18 | 49.703 | 1.40 | 0.866 | 1.83 | A | ER | 28.646 | 0.946 | 1.80 | B | I | 21.133 | 0.80 | 0.837 | 1.18 | A | I | 28.646 | |
| | | TNAGRIT4 | 43.000 | -- | 1.12 | 48.090 | 1.40 | 0.866 | 1.73 | A | ER | 28.646 | 0.946 | 1.73 | B | I | 21.133 | 0.80 | 0.837 | 1.12 | A | I | 28.646 | |
| | | TNAGT5A | 45.000 | -- | 1.05 | 47.222 | 1.40 | 0.866 | 1.63 | A | ER | 28.646 | 0.946 | 1.83 | B | I | 21.133 | 0.80 | 0.837 | 1.05 | A | I | 28.646 | |
| | | TNAGT5B | 45.000 | 3 | 1.03 | 46.448 | 1.40 | 0.866 | 1.60 | A | ER | 28.646 | 0.946 | 1.63 | B | I | 21.133 | 0.80 | 0.837 | 1.03 | A | I | 28.646 | |

## LOAD FACTORS:

| DESIGN LOAD RATING FACTORS | LIMIT STATE | $\gamma_{DC}$ | $\gamma_{DW}$ |
|---|---|---|---|
| | STRENGTH I | 1.25 | 1.50 |
| | SERVICE III | 1.00 | 1.00 |

## NOTES:

MINIMUM RATING FACTORS ARE BASED ON THE STRENGTH I AND SERVICE III LIMIT STATES.

ALLOWABLE STRESSES FOR SERVICE III LIMIT STATE ARE AS REQUIRED FOR DESIGN.

## COMMENTS:

1. SPAN C EQUALS SPAN A
2.
3.
4.

## (#) CONTROLLING LOAD RATING

(1) DESIGN LOAD RATING (HL-93)

(2) DESIGN LOAD RATING (HS-20)

(3) LEGAL LOAD RATING **

** SEE CHART FOR VEHICLE TYPE

## GIRDER LOCATION

I - INTERIOR GIRDER
EL - EXTERIOR LEFT GIRDER
ER - EXTERIOR RIGHT GIRDER

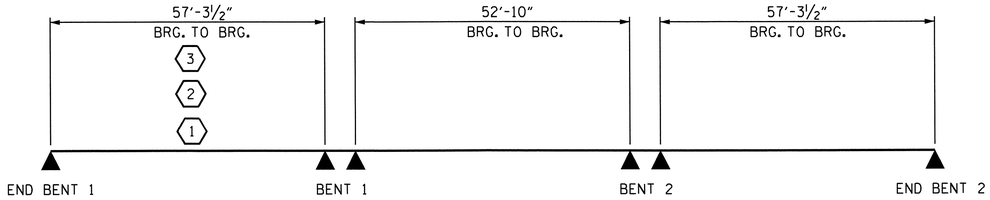


LRFR SUMMARY

PROJECT NO. R-2309AB
GUILFORD COUNTY
STATION: 134+30.00 -L-

STATE OF NORTH CAROLINA
DEPARTMENT OF TRANSPORTATION
RALEIGH

STANDARD
LRFR SUMMARY FOR PRESTRESSED CONCRETE GIRDERS
(NON-INTERSTATE TRAFFIC)
(RIGHT LANE)

NORTH CAROLINA PROFESSIONAL SEAL 14045 ENGINEER TIMOTHY L. COGGINS
10/27/11

| REVISIONS | | | | | | SHEET NO. |
|---|---|---|---|---|---|---|
| NO. | BY: | DATE: | NO. | BY: | DATE: | S-101 |
| 1 | | | 3 | | | TOTAL SHEETS |
| 2 | | | 4 | | | 136 |

STR. #4 STD. NO. LRFR1

ASSEMBLED BY: B.N.BARODAWALA DATE: 9-7-11
CHECKED BY: PEGGY PARISI DATE: 9-7-11
DRAWN BY: MAA 1/08
CHECKED BY: GM/DI 2/08
REV. 11/12/08R MAA/GM

27-OCT-2011 11:44
R:\TIPProjects-R\R2309AB\Structures\R2309ab\FinalPlans\Bridges\Str#4\r2309ab_sd_lrfr_04.dgn
tcoggins

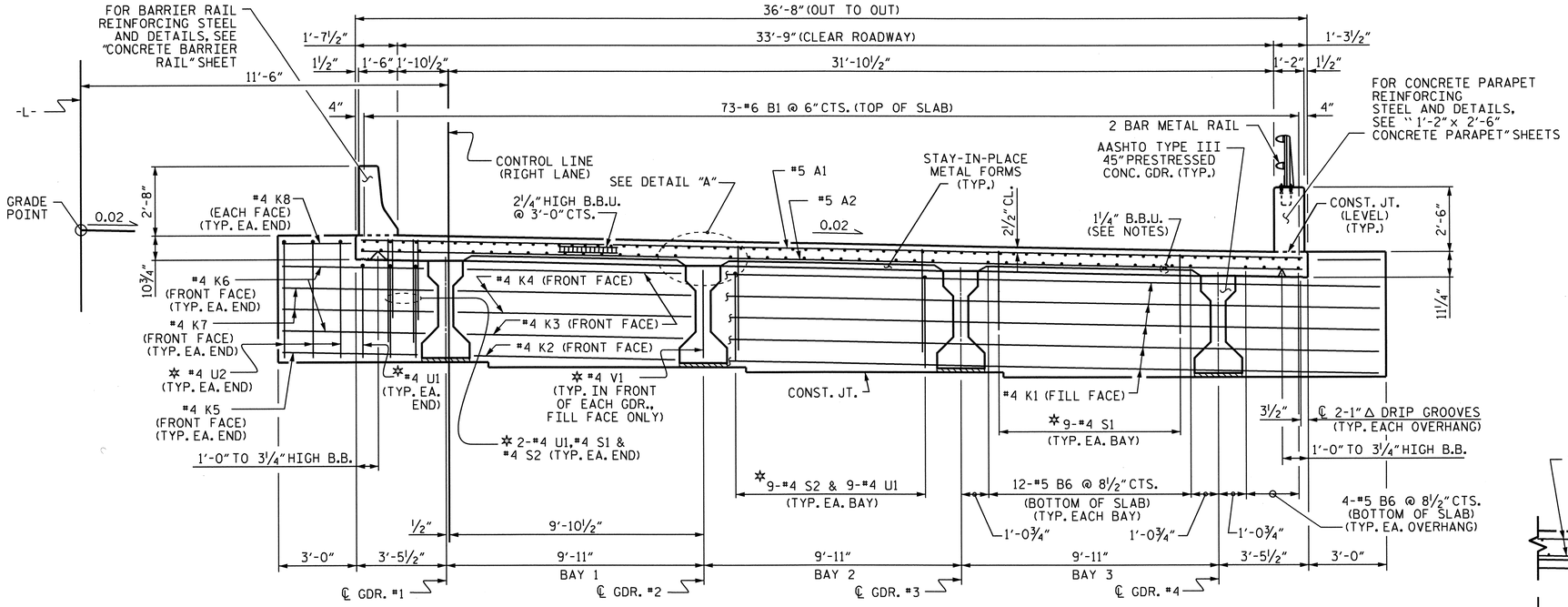


## TYPICAL SECTION @ INTEGRAL END BENT

✲ #4 U1, #4 U2, #4 V1, #4 S1 & #4 S2 BARS TO MATCH WITH #4 "V" BARS IN INTEGRAL END BENT CAP

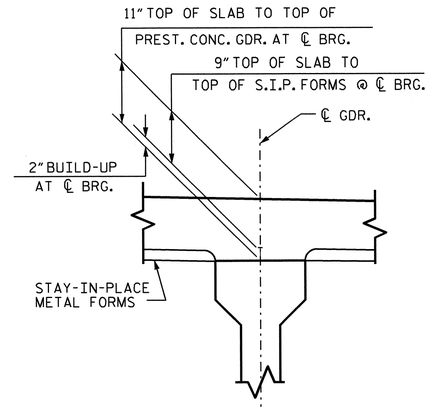


## DETAIL "A"

(TYP. EACH GDR.)

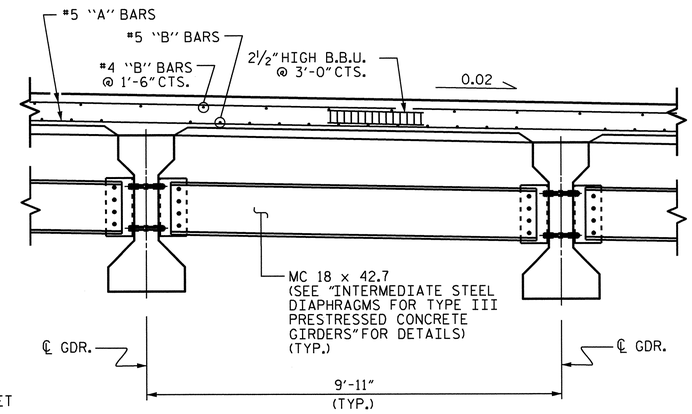


## PARTIAL TYPICAL SECTION

AT INTERMEDIATE DIAPHRAGM

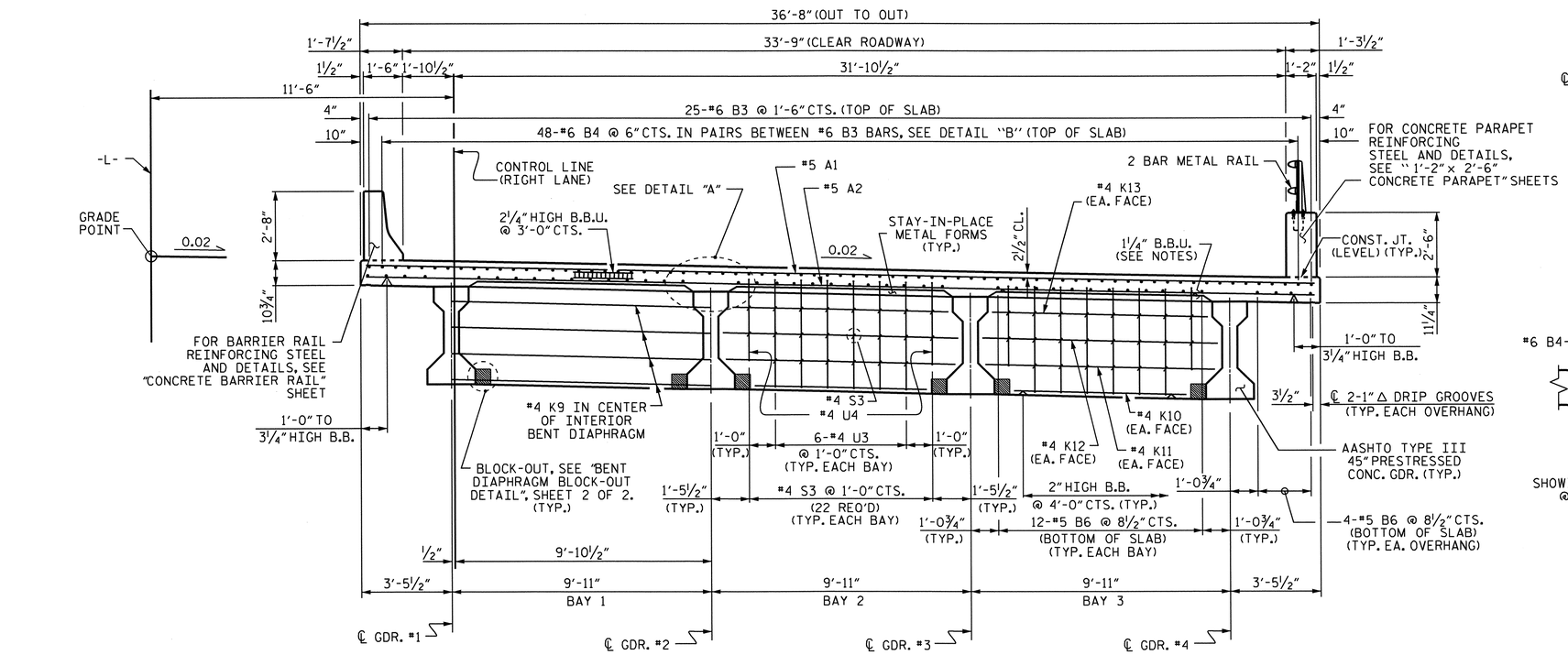


## TYPICAL SECTION @ CONTINUOUS BENT DIAPHRAGM

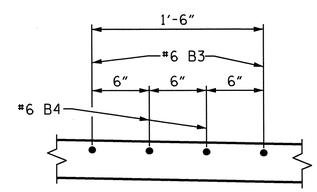


## DETAIL "B"

SHOWING TOP OF SLAB "B" BAR SPACING @ CONTINUOUS BENT DIAPHRAGM

PROJECT NO. R-2309AB
GUILFORD COUNTY
STATION: 134+30.00 -L-

SHEET 1 OF 2

STATE OF NORTH CAROLINA
DEPARTMENT OF TRANSPORTATION
RALEIGH

SUPERSTRUCTURE

TYPICAL SECTION

(RIGHT LANE)

NORTH CAROLINA PROFESSIONAL SEAL 14045 ENGINEER TIMOTHY W. COGGINS
10/27/11

| REVISIONS | | | | | | | SHEET NO. |
|---|---|---|---|---|---|---|---|
| NO. | BY: | DATE: | NO. | BY: | DATE: | | S-102 |
| 1 | | | 3 | | | | TOTAL SHEETS |
| 2 | | | 4 | | | | 136 |

DRAWN BY : B.N.BARODAWALA DATE : 8-27-10
CHECKED BY : PEGGY PARISI DATE : 9-22-10

27-OCT-2011 11:43
R:\TIPProjects-R\R2309AB\Structures\R2309ab\FinalPlans\Bridges\Str#4\r2309ab_sd_ts_04.dgn
tcoggins

STR. #4

## NOTES:

LONGITUDINAL STEEL MAY BE SHIFTED SLIGHTLY, AS NECESSARY, TO AVOID INTERFERENCE WITH STIRRUPS IN PRESTRESSED CONCRETE GIRDERS.

PREVIOUSLY CAST CONCRETE IN A CONTINUOUS UNIT SHALL HAVE ATTAINED A MINIMUM COMPRESSIVE STRENGTH OF 3,000 PSI BEFORE ADDITIONAL CONCRETE IS CAST IN THE UNIT.

CONCRETE PARAPET AND BARRIER RAIL IN A CONTINUOUS UNIT SHALL NOT BE CAST UNTIL ALL SLAB CONCRETE IN THE UNIT HAS BEEN CAST AND HAS REACHED A MINIMUM COMPRESSIVE STRENGTH OF 3,000 PSI.

PROVIDE 1¼" HIGH BEAM BOLSTERS UPPER AT 4'-0" CTS. ATOP THE METAL STAY-IN-PLACE FORMS TO SUPPORT THE BOTTOM MAT OF 'A' BARS. WHEN USING REMOVABLE FORMS, PROVIDE CONTINUOUS HIGH CHAIRS FOR METAL DECK (C.H.C.M.) @ 4'-0" CTS. WITH A HEIGHT TO SUPPORT THE BOTTOM MAT OF 'A' BARS A CLEAR DISTANCE OF 2½" ABOVE THE TOP OF THE REMOVABLE FORM.

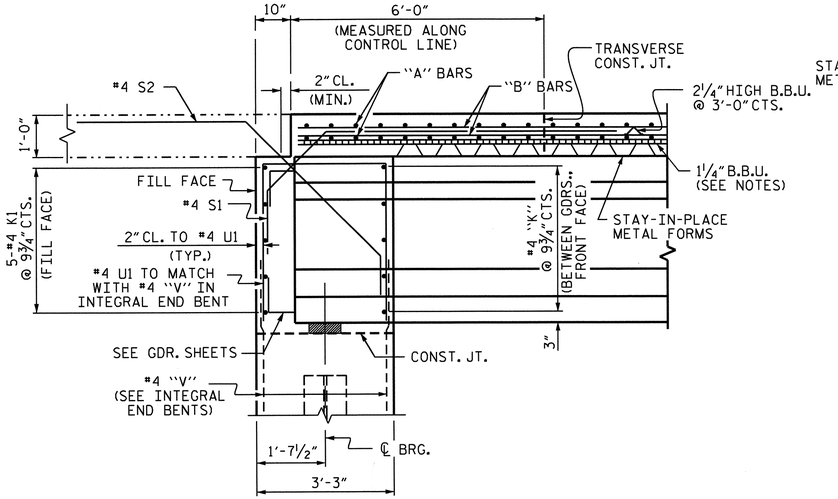


## END OF GIRDER DETAIL AT INTEGRAL END BENT

#4 V1 BARS IN FRONT OF GIRDER NOT SHOWN

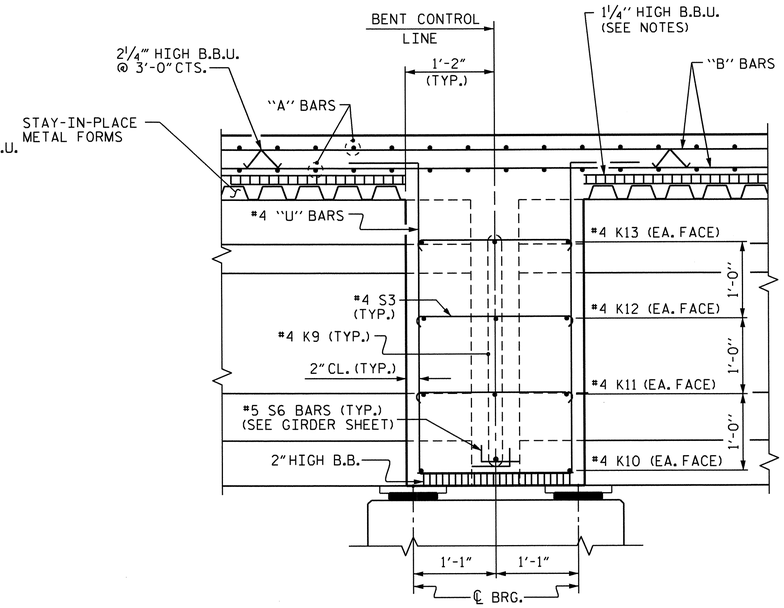


## SECTION THRU BENT DIAPHRAGM

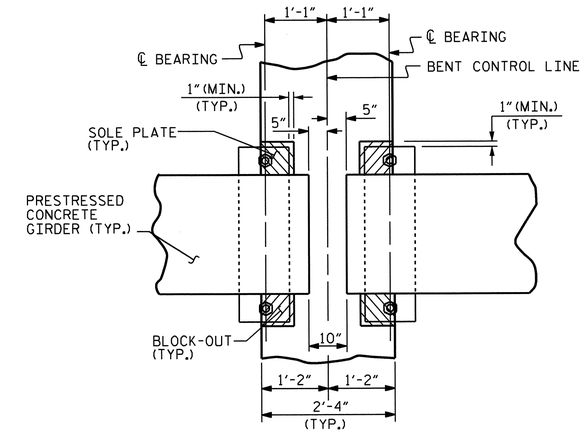


PLAN

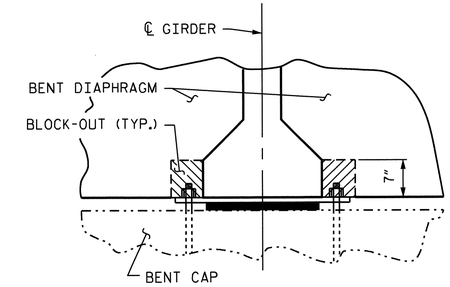


SECTION

## BENT DIAPHRAGM BLOCKOUT DETAIL

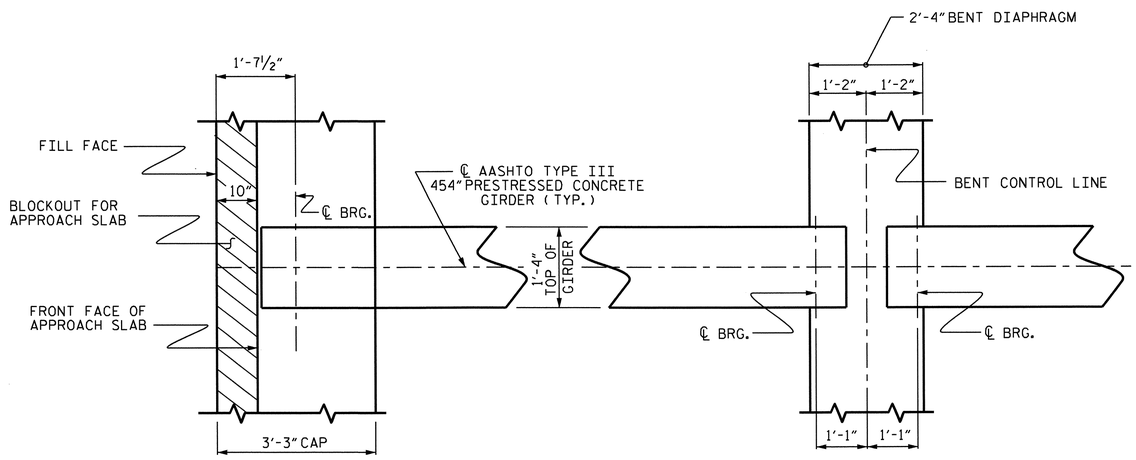


@ INTEGRAL END BENT

@ BENT DIAPHRAGM

## PLAN OF GIRDER

PROJECT NO. R-2309AB

GUILFORD COUNTY

STATION: 134+30.00 -L-

SHEET 2 OF 2

STATE OF NORTH CAROLINA
DEPARTMENT OF TRANSPORTATION
RALEIGH

SUPERSTRUCTURE

TYPICAL SECTION DETAILS
(RIGHT LANE)

NORTH CAROLINA PROFESSIONAL SEAL 14045 ENGINEER TIMOTHY A. COGGINS
10/27/11

| REVISIONS | | | | | | SHEET NO. |
|---|---|---|---|---|---|---|
| NO. | BY: | DATE: | NO. | BY: | DATE: | S-103 |
| 1 | | | 3 | | | TOTAL SHEETS |
| 2 | | | 4 | | | 136 |

STR. #4

DRAWN BY : B.N.BARODAWALA DATE : 8-29-10
CHECKED BY : PEGGY PARISI DATE : 9-22-10

27-OCT-2011 11:43
R:\TIPProjects-R\R2309AB\Structures\R2309ab\FinalPlans\Bridges\Str#4\r2309ab_sd_ts_04.dgn
tcoggins

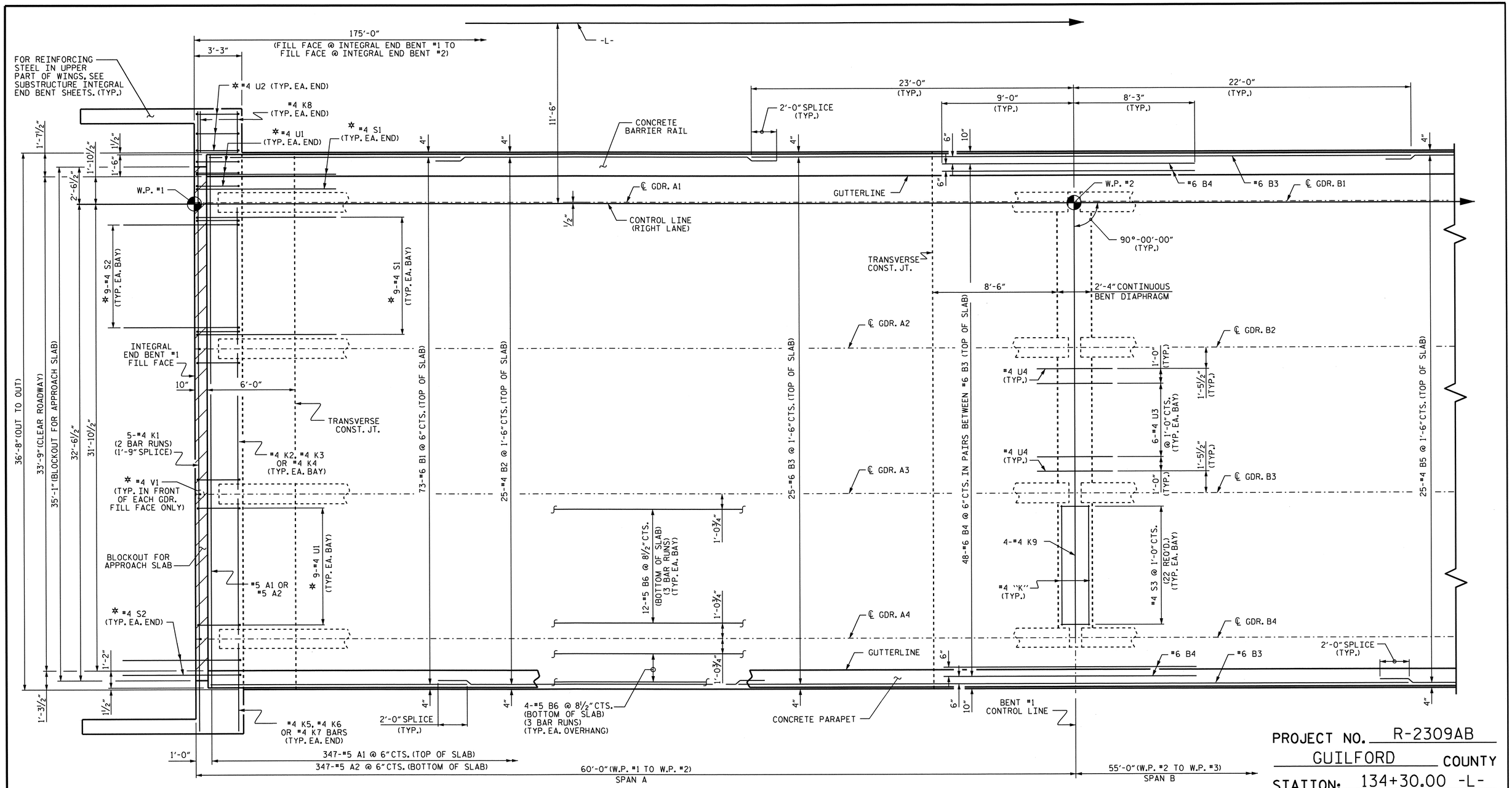


PROJECT NO. R-2309AB

GUILFORD COUNTY

STATION: 134+30.00 -L-

SHEET 1 OF 2

# PLAN OF SPAN

FOR LOCATION OF INTERMEDIATE DIAPHRAGMS, SEE "GIRDER LAYOUT."
* #4 U1, #4 U2, #4 V1, #4 S1 & #4 S2 BARS TO MATCH WITH #4 "V" BARS IN INTEGRAL END BENT CAP.

NORTH CAROLINA PROFESSIONAL SEAL 14045 ENGINEER TIMOTHY L. COGGINS

10/27/11

STATE OF NORTH CAROLINA
DEPARTMENT OF TRANSPORTATION
RALEIGH

SUPERSTRUCTURE

PLAN OF SPAN

(RIGHT LANE)

| REVISIONS | | | | | | SHEET NO. |
|---|---|---|---|---|---|---|
| NO. | BY: | DATE: | NO. | BY: | DATE: | S-104 |
| 1 | | | 3 | | | TOTAL SHEETS |
| 2 | | | 4 | | | 136 |

STR. #4

DRAWN BY : B.N.BARODAWALA DATE : 8-30-10
CHECKED BY : PEGGY PARISI DATE : 9-22-10

27-OCT-2011 11:42
R:\TIPProjects-R\R2309AB\Structures\R2309ab\FinalPlans\Bridges\Str#4\r2309ab_sd_ps_04.dgn
tcoggins

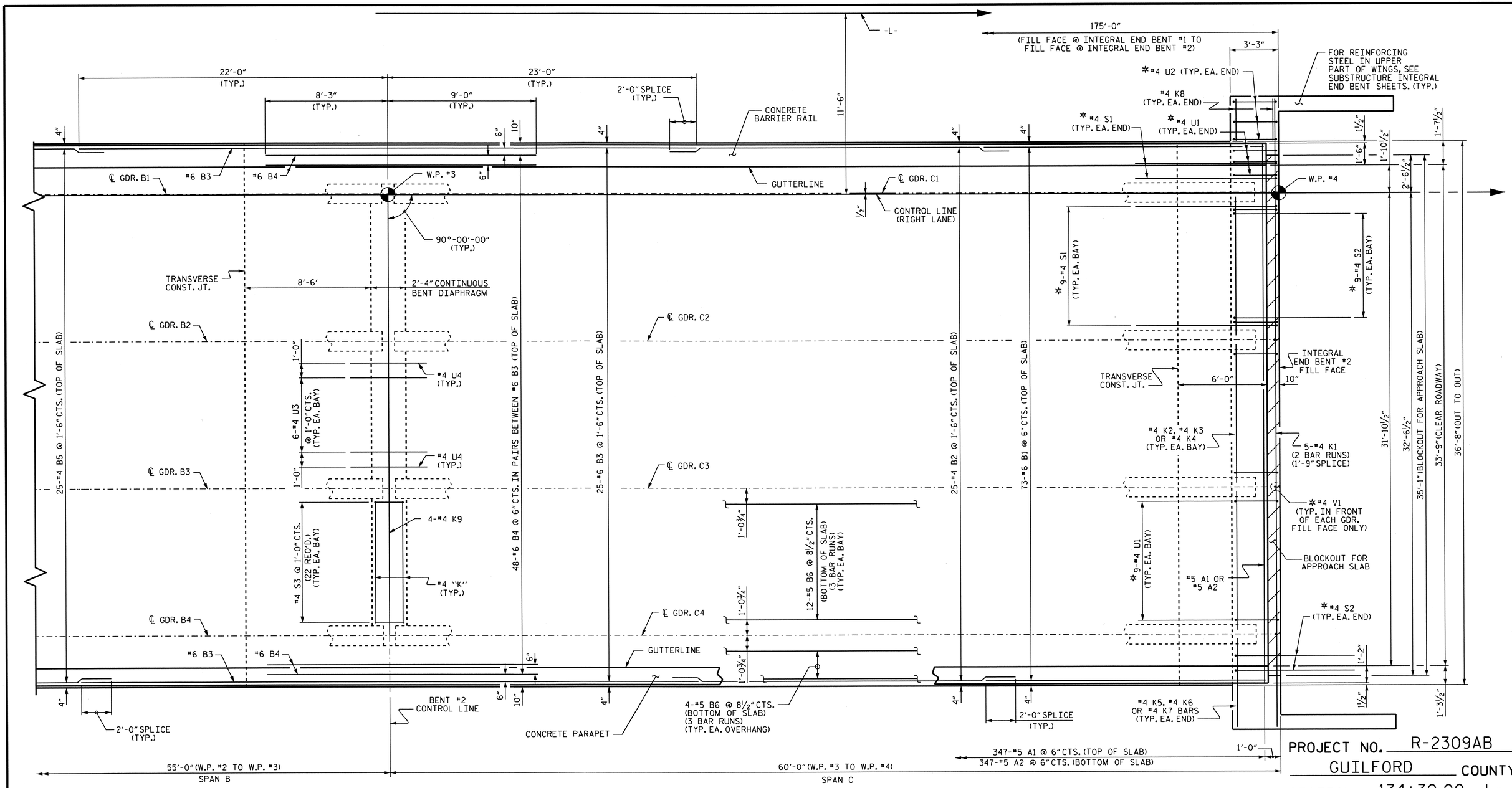


PROJECT NO. R-2309AB

GUILFORD COUNTY

STATION: 134+30.00 -L-

SHEET 2 OF 2

## PLAN OF SPAN

FOR LOCATION OF INTERMEDIATE DIAPHRAGMS, SEE "GIRDER LAYOUT."
✲ #4 U1, #4 U2, #4 V1, #4 S1 & #4 S2 BARS TO MATCH WITH #4 "V" BARS IN INTEGRAL END BENT CAP.

NORTH CAROLINA PROFESSIONAL SEAL 14045 ENGINEER TIMOTHY L. COGGINS

10/27/11

STATE OF NORTH CAROLINA
DEPARTMENT OF TRANSPORTATION
RALEIGH

SUPERSTRUCTURE

PLAN OF SPAN

(RIGHT LANE)

| REVISIONS | | | | | | | | SHEET NO. |
|---|---|---|---|---|---|---|---|---|
| NO. | BY: | DATE: | NO. | BY: | DATE: | | | S-105 |
| 1 | | | 3 | | | | | TOTAL SHEETS |
| 2 | | | 4 | | | | | 136 |

STR. #4

DRAWN BY : B.N.BARODAWALA DATE : 8-30-10
CHECKED BY : PEGGY PARISI DATE : 9-22-10

27-OCT-2011 11:42
R:\TIPProjects-R\R2309AB\Structures\R2309ab\FinalPlans\Bridges\Str#4\r2309ab_sd_ps_04.dgn
tcoggins

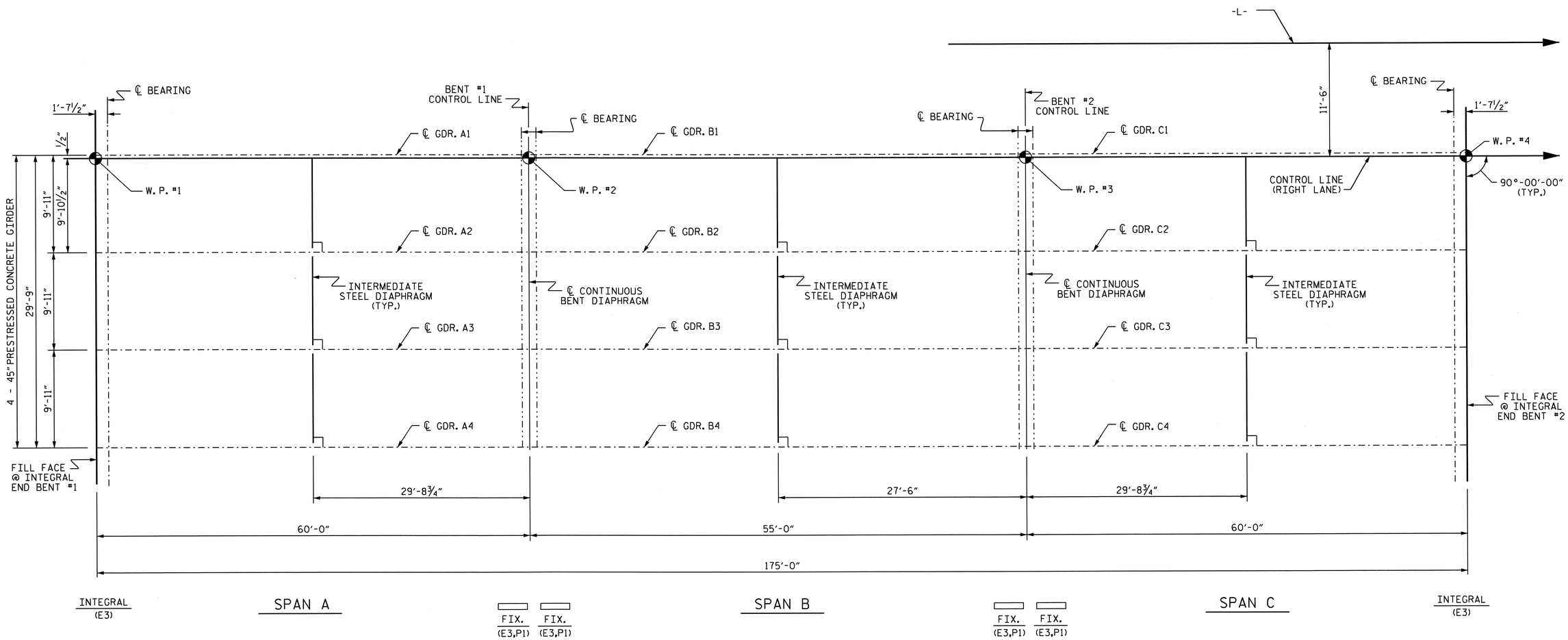


# GIRDER LAYOUT

PROJECT NO. R-2309AB
GUILFORD COUNTY
STATION: 134+30.00 -L-

STATE OF NORTH CAROLINA
DEPARTMENT OF TRANSPORTATION
RALEIGH

SUPERSTRUCTURE

GIRDER LAYOUT
(RIGHT LANE)

NORTH CAROLINA PROFESSIONAL SEAL 14045 ENGINEER TIMOTHY R. COGGINS
10/27/11

| REVISIONS | | | | | | SHEET NO. |
|---|---|---|---|---|---|---|
| NO. | BY: | DATE: | NO. | BY: | DATE: | S-106 |
| 1 | | | 3 | | | TOTAL SHEETS |
| 2 | | | 4 | | | 136 |

STR. #4

DRAWN BY : B.N.BARODAWALA DATE : 8-31-10
CHECKED BY : PEGGY PARISI DATE : 9-22-10

27-OCT-2011 11:42
R:\TIPProjects-R\R2309AB\Structures\R2309ab\FinalPlans\Bridges\Str#4\r2309ab_sd_fp_04.dgn
tcoggins

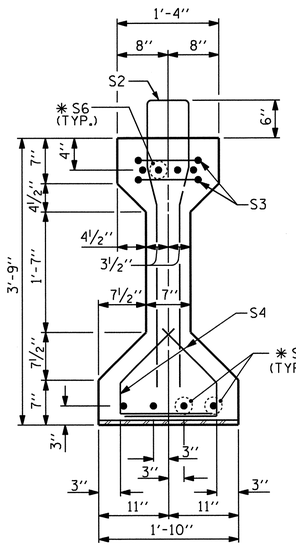


SECTION A-A

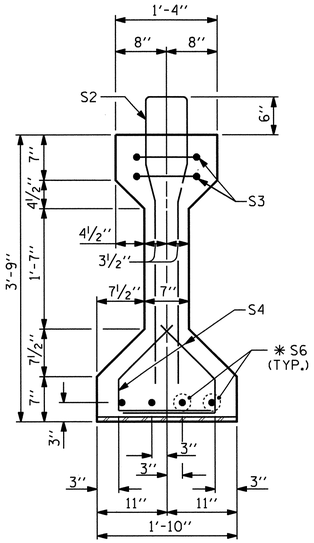


SECTION B-B

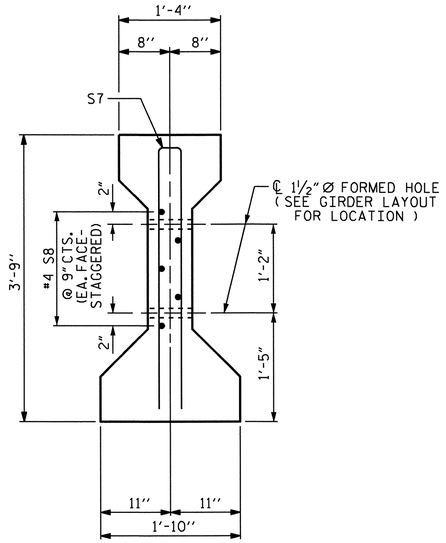


SECTION C-C

(S1 BARS NOT SHOWN)

ADJUST #4 S8 TO AVOID INTERFERENCE WITH STRAND PATTERN IN WEB OF GIRDER.

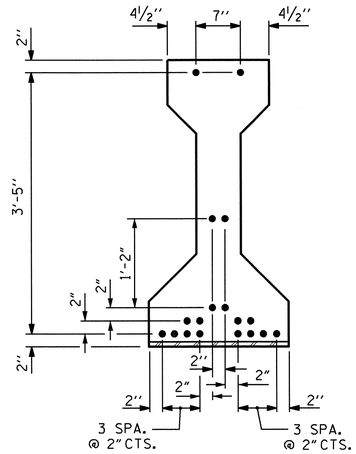


AT END OF GIRDER

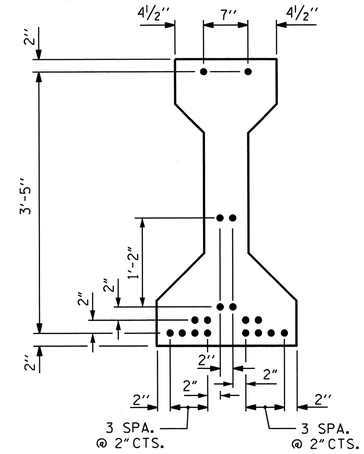


AT ℄ OF GIRDER

0.6" Ø LOW RELAXATION STRAND LAYOUT

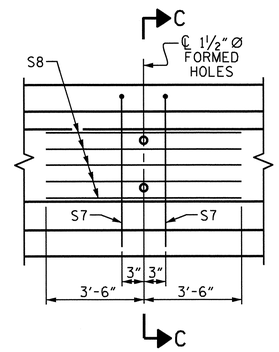


PARTIAL ELEVATION

SHOWING INTERMEDIATE DIAPHRAGM REINFORCING STEEL FOR ALL GIRDERS

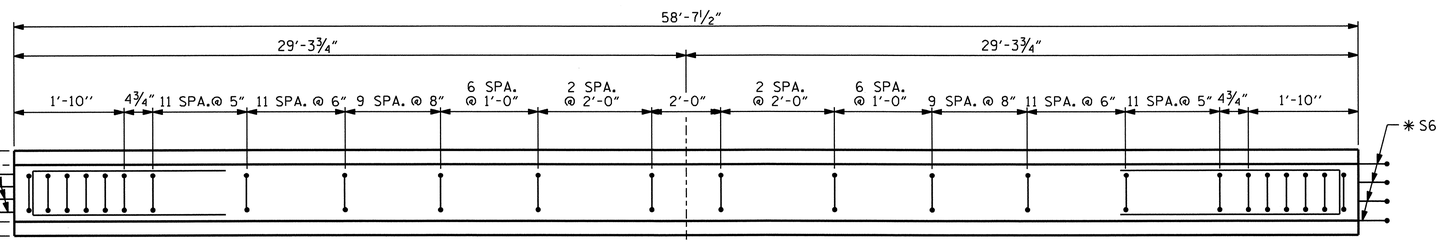


PLAN OF GIRDER

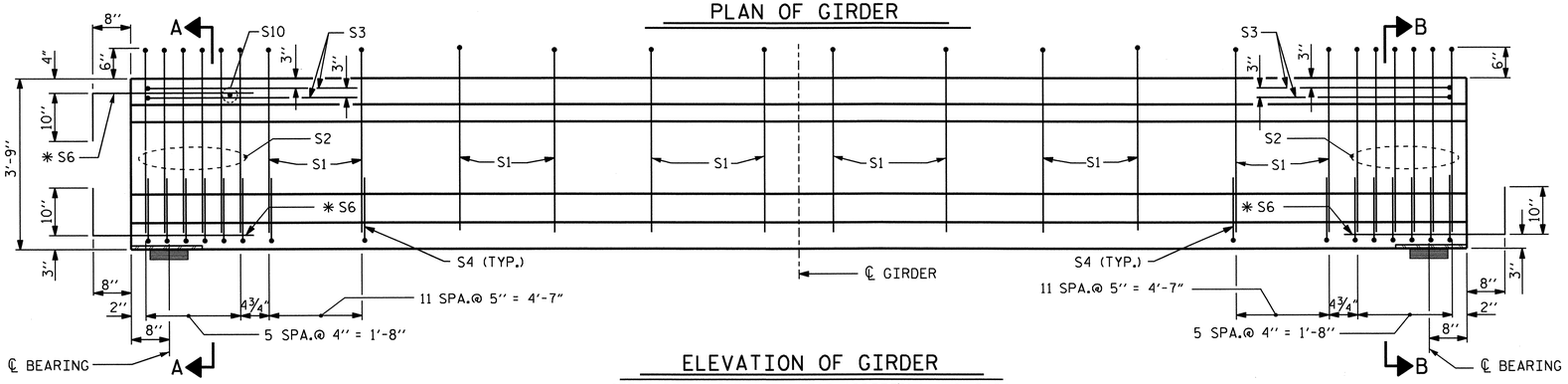


INTEGRAL END BENT

ELEVATION OF GIRDER

(SEE PARTIAL ELEVATION FOR ADDITIONAL "S" BARS)

FIX

## 0.6" Ø L. R. GRADE 270 STRANDS

| AREA (SQUARE INCHES) | ULTIMATE STRENGTH (LBS. PER STRAND) | APPLIED PRESTRESS (LBS. PER STRAND) |
|---|---|---|
| 0.217 | 58,600 | 43,950 |

## REINFORCING STEEL FOR ONE GIRDER

| BAR | NUMBER | SIZE | TYPE | LENGTH | WEIGHT |
|---|---|---|---|---|---|
| S1 | 80 | #4 | 1 | 8'-6" | 454 |
| S2 | 12 | #6 | 1 | 8'-6" | 153 |
| S3 | 4 | #4 | 3 | 8'-8" | 23 |
| S4 | 72 | #4 | 2 | 2'-9" | 132 |
| ✱ S6 | 12 | #5 | STR | 3'-8" | 46 |
| S7 | 2 | #5 | 3 | 7'-2" | 15 |
| S8 | 5 | #4 | STR | 7'-0" | 23 |
| S10 | 1 | #3 | STR | 1'-0" | 1 |
| | | | | | |
| | | | | | |
| | | | | | |

✱ NOTE: S6 BARS SHALL BE BENT BEFORE SHIPMENT. HEAT BENDING SHALL NOT BE ALLOWED.

## BAR TYPES

ALL BAR DIMENSIONS ARE OUT-TO-OUT

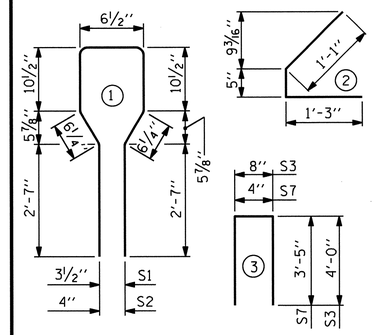


## QUANTITIES FOR ONE GIRDER

| | REINFORCING STEEL | 5500 PSI CONCRETE | 0.6" Ø L. R. STRANDS |
|---|---|---|---|
| | LB. | C.Y. | No. |
| | 847 | 8.4 | 18 |

## GIRDERS REQUIRED

| NUMBER | LENGTH | TOTAL LENGTH |
|---|---|---|
| 8 | 58'-7½" | 469'-0" |

PROJECT NO. R-2309AB

GUILFORD COUNTY

STATION: 134+30.00 -L-

SHEET 1 OF 4

STATE OF NORTH CAROLINA
DEPARTMENT OF TRANSPORTATION
RALEIGH

STANDARD

AASHTO TYPE III
PRESTRESSED CONCRETE GIRDER
CONTINUOUS FOR LIVE LOAD
SPAN A & C (RIGHT LANE)

NORTH CAROLINA PROFESSIONAL SEAL 14045 ENGINEER TIMOTHY K. COGGINS

10/27/11

| REVISIONS | | | | | | | SHEET NO. |
|---|---|---|---|---|---|---|---|
| NO. | BY: | DATE: | NO. | BY: | DATE: | | S-107 |
| 1 | | | 3 | | | | TOTAL SHEETS |
| 2 | | | 4 | | | | 136 |

ASSEMBLED BY : B.N.BARODAWALA DATE : 8-25-10
CHECKED BY : PEGGY PARISI DATE : 9-22-10

DRAWN BY : ELR 8/91
CHECKED BY : GRP 8/91

REV. 7/17/98 RWW/LES
REV. 10/17/00R RWW/LES
REV. 5/1/06R TLA/GM

27-OCT-2011 11:41
R:\TIPProjects-R\R2309AB\Structures\R2309ab\FinalPlans\Bridges\Str#4\r2309ab_sd_g_04.dgn
tcoggins

STR. #4

STD. NO. PCG5 (Sht. 2)

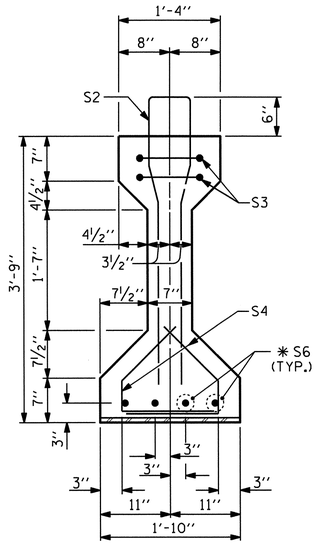


SECTION B-B

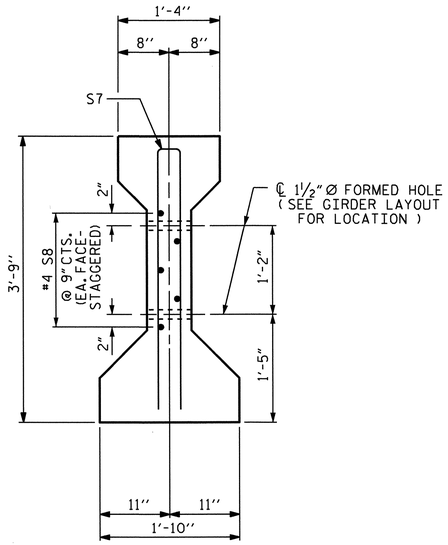


SECTION C-C

(S1 BARS NOT SHOWN)

ADJUST #4 S8 TO AVOID INTERFERENCE WITH STRAND PATTERN IN WEB OF GIRDER.

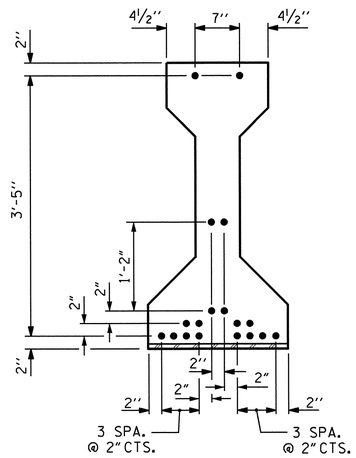


AT END OF GIRDER

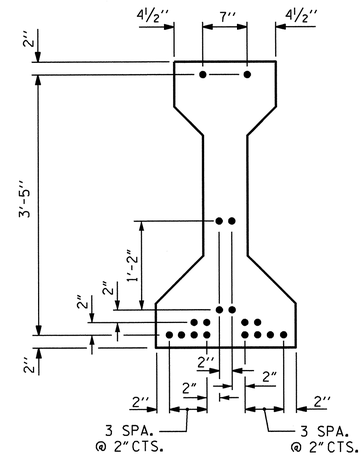


AT ℄ OF GIRDER

0.6" Ø LOW RELAXATION STRAND LAYOUT

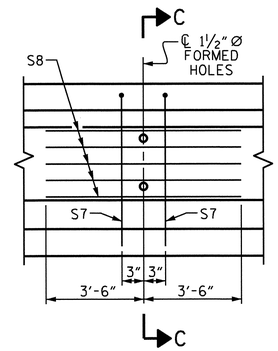


PARTIAL ELEVATION

SHOWING INTERMEDIATE DIAPHRAGM REINFORCING STEEL FOR ALL GIRDERS

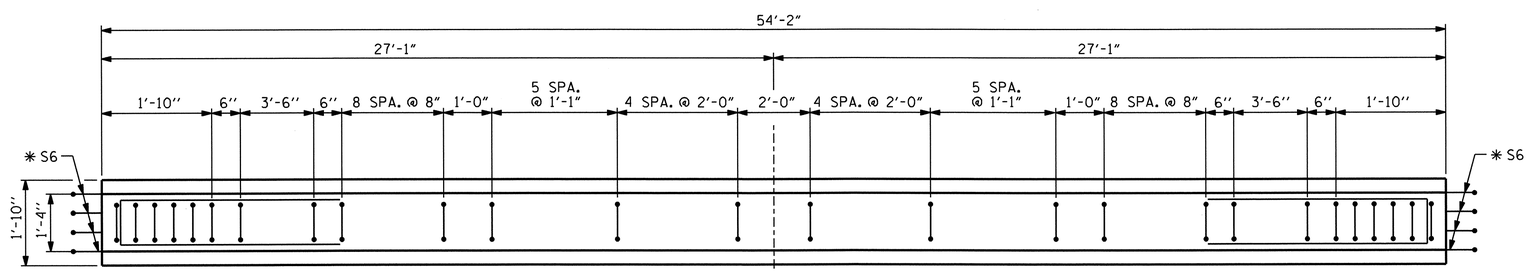


PLAN OF GIRDER

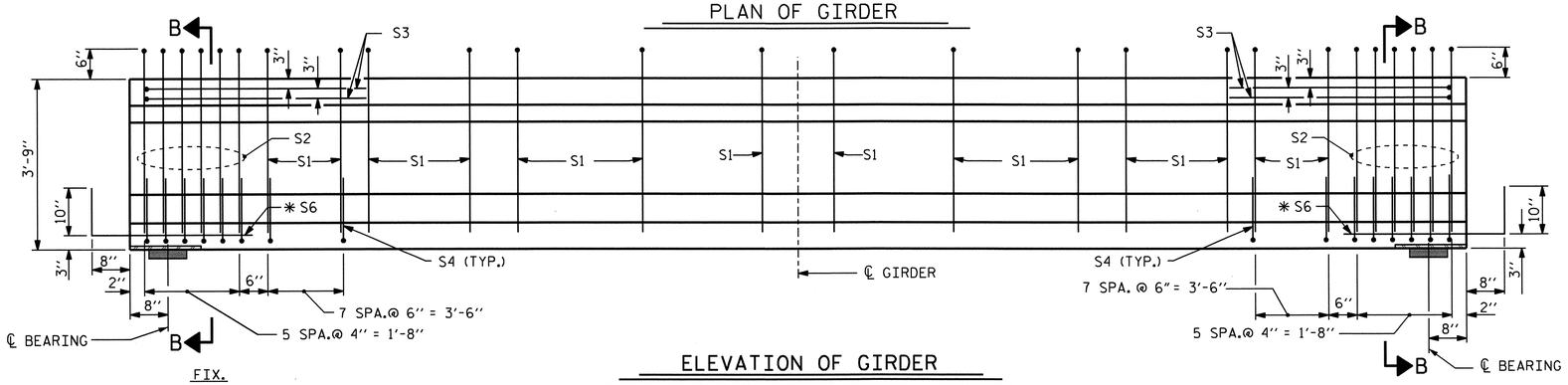


ELEVATION OF GIRDER

(SEE PARTIAL ELEVATION FOR ADDITIONAL "S" BARS)

## 0.6" Ø L. R. GRADE 270 STRANDS

| AREA (SQUARE INCHES) | ULTIMATE STRENGTH (LBS. PER STRAND) | APPLIED PRESTRESS (LBS. PER STRAND) |
|---|---|---|
| 0.217 | 58,600 | 43,950 |

## REINFORCING STEEL FOR ONE GIRDER

| BAR | NUMBER | SIZE | TYPE | LENGTH | WEIGHT |
|---|---|---|---|---|---|
| S1 | 54 | #4 | 1 | 8'-6" | 307 |
| S2 | 12 | #6 | 1 | 8'-6" | 153 |
| S3 | 4 | #4 | 3 | 8'-8" | 23 |
| S4 | 56 | #4 | 2 | 2'-9" | 103 |
| ✱ S6 | 8 | #5 | STR | 3'-8" | 31 |
| S7 | 2 | #5 | 3 | 7'-2" | 15 |
| S8 | 5 | #4 | STR | 7'-0" | 23 |
| | | | | | |

✱ NOTE: S6 BARS SHALL BE BENT BEFORE SHIPMENT. HEAT BENDING SHALL NOT BE ALLOWED.

## BAR TYPES

ALL BAR DIMENSIONS ARE OUT-TO-OUT

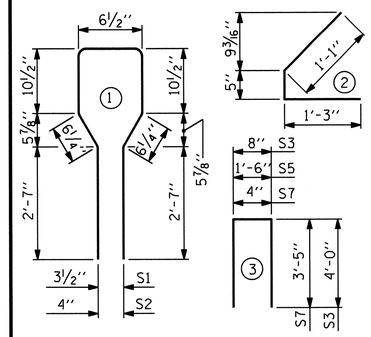


## QUANTITIES FOR ONE GIRDER

| | REINFORCING STEEL | 5500 PSI CONCRETE | 0.6" Ø L. R. STRANDS |
|---|---|---|---|
| | LB. | C.Y. | No. |
| | 655 | 7.8 | 18 |

## GIRDERS REQUIRED

| NUMBER | LENGTH | TOTAL LENGTH |
|---|---|---|
| 4 | 54'-2" | 216'-8" |

PROJECT NO. R-2309AB

GUILFORD COUNTY

STATION: 134+30.00 -L-

SHEET 2 OF 4

STATE OF NORTH CAROLINA
DEPARTMENT OF TRANSPORTATION
RALEIGH

STANDARD

AASHTO TYPE III
PRESTRESSED CONCRETE GIRDER
CONTINUOUS FOR LIVE LOAD
SPAN B (RIGHT LANE)

NORTH CAROLINA PROFESSIONAL SEAL 14045 ENGINEER TIMOTHY L. COGGINS

10/27/11

| REVISIONS | | | | | | | | SHEET NO. |
|---|---|---|---|---|---|---|---|---|
| NO. | BY: | DATE: | NO. | BY: | DATE: | | | S-108 |
| 1 | | | 3 | | | | | TOTAL SHEETS |
| 2 | | | 4 | | | | | 136 |

STR. #4

STD. NO. PCG5

| | |
|---|---|
| ASSEMBLED BY : B.N.BARODAWALA DATE : 8-25-10 | |
| CHECKED BY : PEGGY PARISI DATE : 9-22-10 | |
| DRAWN BY : ELR 8/91 | REV. 7/17/98 RWW/LES |
| CHECKED BY : GRP 8/91 | REV. 10/17/00R RWW/LES |
| | REV. 5/1/06R TLA/GM |

27-OCT-2011 11:41
R:\TIPProjects-R\R2309AB\Structures\R2309ab\Final Plans\Bridges\Str#4\r2309ab_sd_g_04.dgn
tcoggins

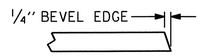


SECTION "G"

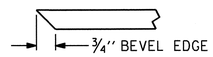


SECTION "F"

(SEE NOTES)

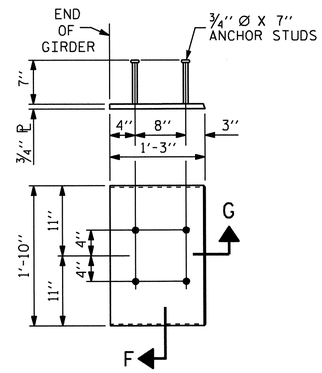


## EMBEDDED PLATE "B-1" DETAILS FOR AASHTO TYPE III GIRDER

(2 REQ'D PER GIRDER)

## NOTES

ALL PRESTRESSING STRANDS SHALL BE 7-WIRE LOW-RELAXATION GRADE 270 STRANDS AND SHALL CONFORM TO AASHTO M203 EXCEPT FOR SAMPLING REQUIREMENTS WHICH SHALL BE IN ACCORDANCE WITH THE STANDARD SPECIFICATIONS.

ALL REINFORCING STEEL SHALL BE GRADE 60.

EMBEDDED PLATE "B-1" SHALL BE GALVANIZED IN ACCORDANCE WITH THE STANDARD SPECIFICATIONS. BEVEL EDGES OF PLATE "B-1" TO GIVE CLOSE FIT BUT NOT TIGHT FIT TO STEEL CASTING FORM.

ANCHOR STUDS SHALL CONFORM TO AASHTO M169 GRADES 1010 THROUGH 1020 OR APPROVED EQUAL, AND SHALL MEET THE TYPE "B" REQUIREMENTS OF SUBSECTION 7.3 OF THE ANSI/AASHTO/AWS D1.5 BRIDGE WELDING CODE.

AT ENDS OF GIRDERS TO BE EMBEDDED IN CONCRETE DIAPHRAGMS OR END WALLS, PRESTRESSING STRANDS MAY EXTEND A MAXIMUM OF 2" BEYOND THE GIRDER ENDS. OTHERWISE, PRESTRESSING STRANDS SHALL BE CUT FLUSH WITH THE GIRDER ENDS.

THE TRANSFER OF LOAD FROM THE ANCHORAGES TO THE GIRDER SHALL BE DONE WHEN CONCRETE HAS REACHED A COMPRESSIVE STRENGTH OF NOT LESS THAN 4200 PSI.

DEPENDING ON THE TYPE OF SYSTEM USED TO SUPPORT THE DECK SLAB FORMS, PRESET ANCHORS MAY BE NECESSARY IN THE PRESTRESSED CONCRETE GIRDER.

THE TOP SURFACE OF THE GIRDER, EXCLUDING THE OUTSIDE 4", SHALL BE RAKED TO A DEPTH OF 1/4".

FOR PRESTRESSED CONCRETE MEMBERS, SEE SPECIAL PROVISIONS.

### DEAD LOAD DEFLECTION TABLE FOR SPANS A AND C

| 0.6" Ø LOW RELAXATION | GIRDERS 1 AND 4 | | | | | | | | | | | GIRDERS 2 AND 3 | | | | | | | | | | |
|---|---|---|---|---|---|---|---|---|---|---|---|---|---|---|---|---|---|---|---|---|---|---|
| TENTH POINTS | 0 | .1 | .2 | .3 | .4 | .5 | .6 | .7 | .8 | .9 | 0 | 0 | .1 | .2 | .3 | .4 | .5 | .6 | .7 | .8 | .9 | 0 |
| CAMBER (GIRDER ALONE IN PLACE) ↑ | 0 | 0.035 | 0.067 | 0.092 | 0.107 | 0.113 | 0.107 | 0.092 | 0.067 | 0.035 | 0 | 0 | 0.035 | 0.067 | 0.092 | 0.107 | 0.113 | 0.107 | 0.092 | 0.067 | 0.035 | 0 |
| ✱ DEFLECTION DUE TO SUPERIMPOSED D.L. ↓ | 0 | 0.015 | 0.028 | 0.038 | 0.044 | 0.046 | 0.044 | 0.038 | 0.028 | 0.015 | 0 | 0 | 0.017 | 0.031 | 0.043 | 0.050 | 0.053 | 0.050 | 0.043 | 0.031 | 0.017 | 0 |
| FINAL CAMBER ↑ | 0 | 1/4" | 1/2" | 5/8" | 3/4" | 13/16" | 3/4" | 5/8" | 1/2" | 1/4" | 0 | 0 | 1/4" | 7/16" | 9/16" | 11/16" | 3/4" | 11/16" | 9/16" | 7/16" | 1/4" | 0 |

✱ INCLUDES FUTURE WEARING SURFACE IN SUPERIMPOSED DEAD LOAD.
ALL VALUES ARE SHOWN IN FEET (DECIMAL FORM), EXCEPT "FINAL CAMBER", WHICH IS GIVEN IN INCHES (FRACTION FORM).

### DEAD LOAD DEFLECTION TABLE FOR SPAN B

| 0.6" Ø LOW RELAXATION | GIRDERS 1 AND 4 | | | | | | | | | | | GIRDERS 2 AND 3 | | | | | | | | | | |
|---|---|---|---|---|---|---|---|---|---|---|---|---|---|---|---|---|---|---|---|---|---|---|
| TENTH POINTS | 0 | .1 | .2 | .3 | .4 | .5 | .6 | .7 | .8 | .9 | 0 | 0 | .1 | .2 | .3 | .4 | .5 | .6 | .7 | .8 | .9 | 0 |
| CAMBER (GIRDER ALONE IN PLACE) ↑ | 0 | 0.032 | 0.060 | 0.083 | 0.097 | 0.102 | 0.097 | 0.083 | 0.060 | 0.032 | 0 | 0 | 0.032 | 0.060 | 0.083 | 0.097 | 0.102 | 0.097 | 0.083 | 0.060 | 0.032 | 0 |
| ✱ DEFLECTION DUE TO SUPERIMPOSED D.L. ↓ | 0 | 0.011 | 0.020 | 0.027 | 0.032 | 0.034 | 0.032 | 0.027 | 0.020 | 0.011 | 0 | 0 | 0.012 | 0.023 | 0.031 | 0.037 | 0.038 | 0.037 | 0.031 | 0.023 | 0.012 | 0 |
| FINAL CAMBER ↑ | 0 | 1/4" | 1/2" | 11/16" | 3/4" | 13/16" | 3/4" | 11/16" | 1/2" | 1/4" | 0 | 0 | 1/4" | 7/16" | 5/8" | 3/4" | 3/4" | 3/4" | 5/8" | 7/16" | 1/4" | 0 |

✱ INCLUDES FUTURE WEARING SURFACE IN SUPERIMPOSED DEAD LOAD.
ALL VALUES ARE SHOWN IN FEET (DECIMAL FORM), EXCEPT "FINAL CAMBER", WHICH IS GIVEN IN INCHES (FRACTION FORM).

PROJECT NO. R-2309AB
GUILFORD COUNTY
STATION: 134+30.00 -L-

SHEET 3 OF 4

STATE OF NORTH CAROLINA
DEPARTMENT OF TRANSPORTATION
RALEIGH

STANDARD

PRESTRESSED CONCRETE GIRDER CONTINUOUS FOR LIVE LOAD DETAILS (RIGHT LANE)

NORTH CAROLINA PROFESSIONAL SEAL 14045 ENGINEER TIMOTHY L. COGGINS
10/27/11

| REVISIONS | | | | | | SHEET NO. |
|---|---|---|---|---|---|---|
| NO. | BY: | DATE: | NO. | BY: | DATE: | S-109 |
| 1 | | | 3 | | | TOTAL SHEETS |
| 2 | | | 4 | | | 136 |

ASSEMBLED BY : B.N.BARODAWALA DATE : 8-25-10
CHECKED BY : PEGGY PARISI DATE : 9-22-10

DRAWN BY : ELR 11/91
CHECKED BY : GRP 11/91

REV. 10/17/00 RWW/LES
REV. 7/10/01RR LES/RDR
REV. 5/1/06 TLA/GM

27-OCT-2011 11:41
R:\TIPProjects-R\R2309AB\Structures\R2309ab\FinalPlans\Bridges\Str#4\r2309ab_sd_g_04.dgn
tcoggins

STR. #4 STD. NO. PCG11 (SHT. 2)

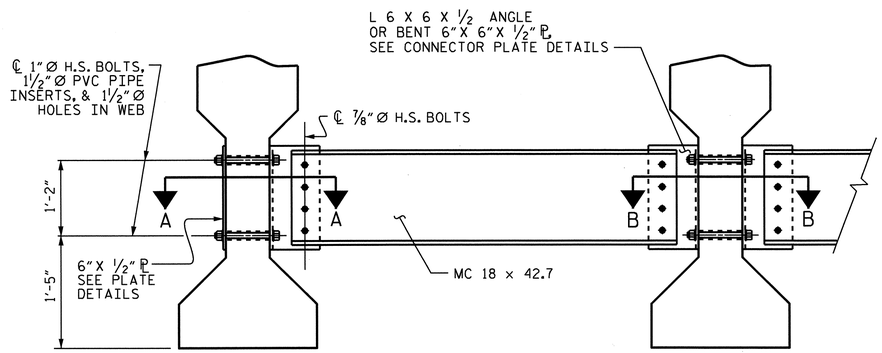


## PART SECTION AT INTERMEDIATE DIAPHRAGM

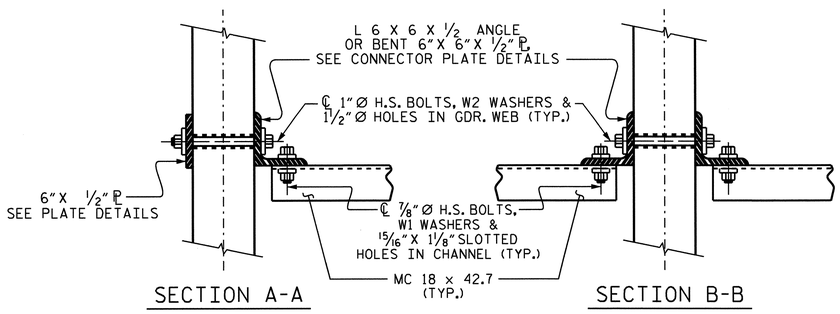


## CONNECTION DETAILS

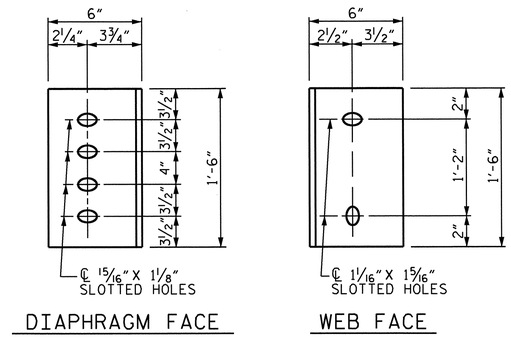


## CONNECTOR PLATE DETAILS

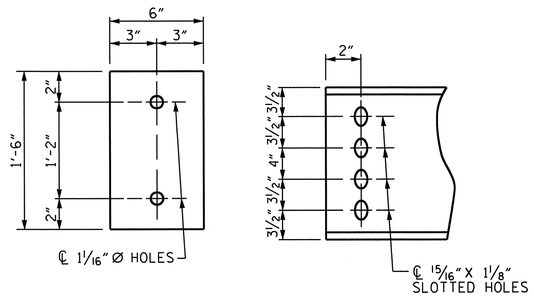


## PLATE DETAILS CHANNEL END

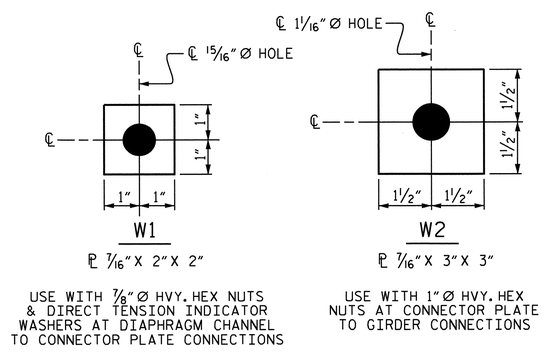


## WASHER DETAILS

## STRUCTURAL STEEL NOTES

ALL INTERMEDIATE DIAPHRAGM STEEL, CONNECTOR PLATES AND PLATE WASHERS SHALL BE AASHTO M270 GRADE 50 OR APPROVED EQUAL.

TENSION ON THE AASHTO M164 BOLTS THROUGH THE CHANNEL MEMBER SHALL BE CALIBRATED USING DIRECT TENSION INDICATOR WASHERS IN ACCORDANCE WITH THE STANDARD SPECIFICATIONS. FOR DIRECT TENSION INDICATORS, SEE SPECIAL PROVISIONS.

TENSION ON THE AASHTO M164 BOLTS THROUGH THE GIRDER WEB SHALL BE SNUG TIGHTENED FOLLOWED BY AN ADDITIONAL 1/4 TURN.

THE PLATES, BENT PLATES, CHANNELS, ANGLES, AND PLATE WASHERS SHALL BE GALVANIZED OR METALLIZED IN ACCORDANCE WITH THE STANDARD SPECIFICATIONS. FOR THERMAL SPRAYED COATINGS (METALLIZATION), SEE SPECIAL PROVISIONS.

FOR METALLIZATION, APPLY AN 8 MIL THICK 99.99 PERCENT ZINC (W-Zn-1) THERMAL SPRAYED COATING WITH A 0.5 MIL THICK SEAL COAT TO ALL STEEL DIAPHRAGM SURFACES IN ACCORDANCE WITH THE THERMAL SPRAYED COATINGS SPECIAL PROVISIONS AND SECTION 442 OF THE STANDARD SPECIFICATIONS.

GALVANIZE THE HIGH STRENGTH BOLTS, NUTS, WASHERS AND DIRECT TENSION INDICATORS IN ACCORDANCE WITH THE STANDARD SPECIFICATIONS. FOR HIGH STRENGTH BOLTS, SEE SPECIAL PROVISIONS.

USE A MINIMUM 7/16" THICK PLATE WASHER WITH STANDARD HOLES UNDER EACH BOLT HEAD AND NUT. THE PLATE WASHERS SHALL HAVE SUFFICIENT SIZE TO COVER THE HOLES AFTER INSTALLATION. HARDENED WASHERS AND DIRECT TENSION INDICATORS ARE TO BE USED IN CONJUNCTION WITH THE PLATE WASHERS IN THE CHANNEL MEMBER CONNECTION.

FOR BOLTS THROUGH THE GIRDER WEB, PROVIDE SUFFICIENT LENGTH OF ALL BOLTS TO ACCOMMODATE WASHERS AND THE THICKNESS OF CONNECTING MEMBER PLUS AT LEAST 1/4" PROJECTION BEYOND THE NUT.

INTERMEDIATE DIAPHRAGM ASSEMBLY SHALL COMPLY WITH SECTION 1072 OF THE STANDARD SPECIFICATIONS.

CONTRACTOR SHALL SUBMIT TWO SETS OF WORKING DRAWINGS FOR THE INTERMEDIATE DIAPHRAGM ASSEMBLY FOR REVIEW, COMMENTS AND ACCEPTANCE. AFTER REVIEW, COMMENTS, AND ACCEPTANCE, SUBMIT SEVEN SETS FOR DISTRIBUTION.

IN THE EXTERIOR BAYS, TEMPORARY STRUTS SHALL BE PLACED BETWEEN PRESTRESSED GIRDERS ADJACENT TO THE STEEL DIAPHRAGMS. STRUTS SHALL REMAIN IN PLACE 3 DAYS AFTER CONCRETE IS PLACED. ALL AASHTO M164 H.S. BOLTS SHALL BE FULLY TIGHTENED AFTER THE STRUTS HAVE BEEN REMOVED.

THE COST OF THE STEEL DIAPHRAGMS AND ASSEMBLIES SHALL BE INCLUDED IN THE UNIT PRICE BID FOR PRESTRESSED CONCRETE GIRDERS.

PROJECT NO. R-2309AB
GUILFORD COUNTY
STATION: 134+30.00 -L-

SHEET 4 OF 4

STATE OF NORTH CAROLINA
DEPARTMENT OF TRANSPORTATION
RALEIGH

STANDARD
INTERMEDIATE
STEEL DIAPHRAGMS
FOR TYPE III PRESTRESSED
CONCRETE GIRDERS
(RIGHT LANE)

NORTH CAROLINA PROFESSIONAL SEAL 14045 ENGINEER TIMOTHY L. COGGINS
10/27/11

| REVISIONS | | | | | | SHEET NO. |
|---|---|---|---|---|---|---|
| NO. | BY: | DATE: | NO. | BY: | DATE: | S-110 |
| 1 | | | 3 | | | TOTAL SHEETS |
| 2 | | | 4 | | | 136 |

STR. #4 STD. NO. PCG12

| | |
|---|---|
| ASSEMBLED BY : B.N.BARODAWALA | DATE : 8-25-10 |
| CHECKED BY : PEGGY PARISI | DATE : 9-22-10 |
| DRAWN BY : TLA 6/05 | ADDED 10/21/05 |
| CHECKED BY : VC 6/05 | REV. 5/1/06RR KMM/GM |

27-OCT-2011 11:40
R:\TIPProjects-R\R2309AB\Structures\R2309ab\FinalPlans\Bridges\Str#4\r2309ab_sd_g_04.dgn
tcoggins

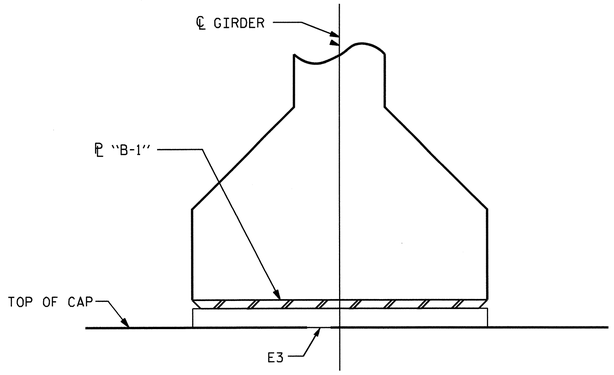


INTEGRAL

## SECTION F-F
AT END BENTS

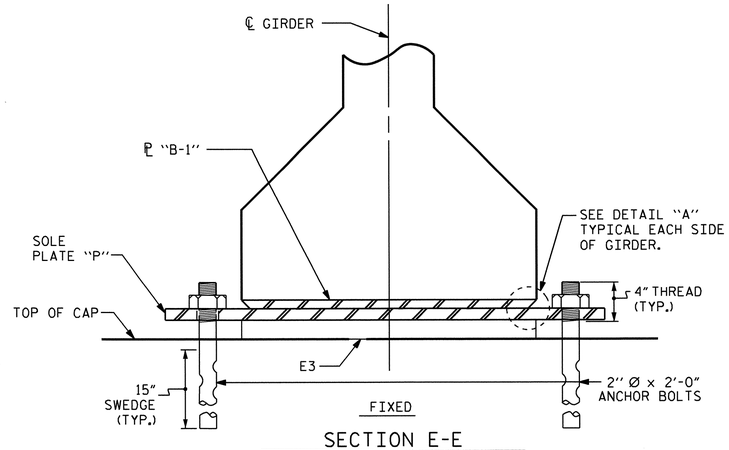


FIXED

## SECTION E-E
AT BENTS

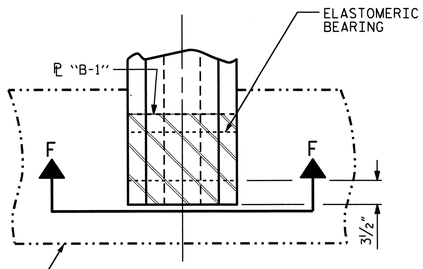


## TYPICAL PLAN
(SHOWING INTEGRAL END BENT)

FILL FACE

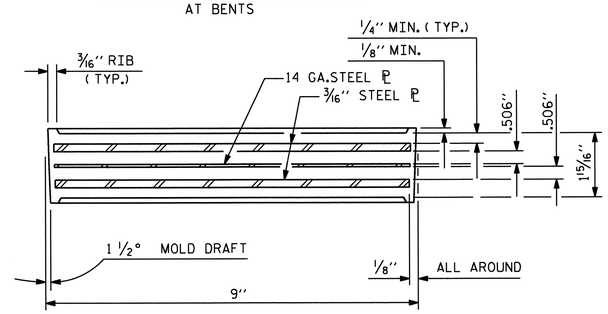


## TYPICAL SECTION OF ELASTOMERIC BEARINGS

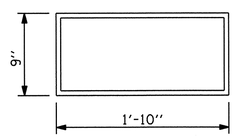


E3 (24 REQ'D)

PLAN VIEW OF ELASTOMERIC BEARING

## TYPE IV

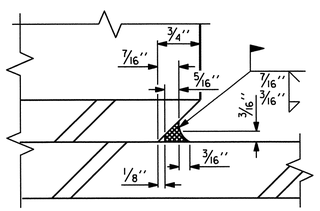


## DETAIL "A"

| — LOAD RATINGS — | |
|---|---|
| | MAX.D.L.+L.L. |
| TYPE IV (60 DUROMETER) | 198 K |
| | |

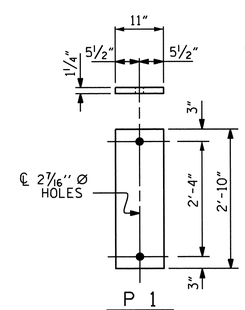


P 1
(FIXED)

P1 (16 REQ'D)

## SOLE PLATE DETAILS ("P")
(AT BENTS ONLY)

## NOTES

AT ALL FIXED POINTS OF SUPPORT, NUTS FOR ANCHOR BOLTS ARE TO BE TIGHTENED FINGER TIGHT AND THEN BACKED OFF ½ TURN. THE THREAD OF THE NUT AND BOLT SHALL THEN BE BURRED WITH A SHARP POINTED TOOL.

STEEL SOLE PLATES, ANCHOR BOLTS, NUTS, AND WASHERS SHALL BE GALVANIZED IN ACCORDANCE WITH THE STANDARD SPECIFICATIONS.

PRIOR TO WELDING, GRIND THE GALVANIZED SURFACE OF THE PORTION OF THE EMBEDDED PLATE AND SOLE PLATE THAT ARE TO BE WELDED. AFTER WELDING, DAMAGED GALVANIZED SURFACES SHALL BE REPAIRED IN ACCORDANCE WITH THE STANDARD SPECIFICATIONS.

WHEN WELDING THE SOLE PLATE TO THE EMBEDDED PLATE IN THE GIRDER, USE TEMPERATURE INDICATING WAX PENS, OR OTHER SUITABLE MEANS, TO ENSURE THAT THE TEMPERATURE OF THE SOLE PLATE DOES NOT EXCEED 300°F. TEMPERATURES ABOVE THIS MAY DAMAGE THE ELASTOMER.

SOLE PLATE "P", BOLTS, NUTS, AND WASHERS SHALL BE INCLUDED IN THE PAY ITEM FOR PRESTRESSED CONCRETE GIRDERS.

ANCHOR BOLTS SHALL MEET THE REQUIREMENTS OF ASTM A449. NUTS SHALL MEET THE REQUIREMENTS OF AASHTO M291-DH OR AASHTO M292-2H. WASHERS SHALL MEET THE REQUIREMENTS OF AASHTO M293. SHOP DRAWINGS ARE NOT REQUIRED FOR ANCHOR BOLT, NUTS AND WASHERS. SHOP INSPECTION IS REQUIRED.

ALL SURFACES OF BEARING PLATES SHALL BE SMOOTH AND STRAIGHT.

ALL BEARING PLATES SHALL BE AASHTO M270 GRADE 36.

ELASTOMER IN ALL BEARINGS SHALL BE 60 DUROMETER HARDNESS.

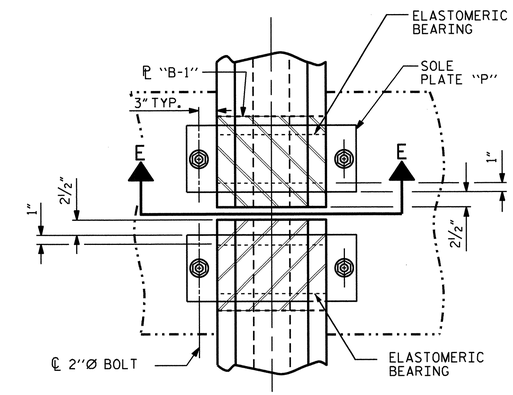


## TYPICAL PLAN
(SHOWING CONTINUOUS BENT)

PROJECT NO. R-2309AB
GUILFORD COUNTY
STATION: 134+30.00 -L-

STATE OF NORTH CAROLINA
DEPARTMENT OF TRANSPORTATION
RALEIGH

STANDARD
# ELASTOMERIC BEARING DETAILS
PRESTRESSED CONCRETE GIRDER SUPERSTRUCTURE
(RIGHT LANE)

NORTH CAROLINA PROFESSIONAL SEAL 14045 ENGINEER TIMOTHY L. COGGINS

10/27/11

| REVISIONS | | | | | | | | SHEET NO. |
|---|---|---|---|---|---|---|---|---|
| NO. | BY: | DATE: | NO. | BY: | DATE: | | | S-111 |
| 1 | | | 3 | | | | | TOTAL SHEETS |
| 2 | | | 4 | | | | | 136 |

STR. #4

STD. NO. EB3

| | | | |
|---|---|---|---|
| ASSEMBLED BY : B.N.BARODAWALA | DATE : 8-26-10 | | |
| CHECKED BY : PEGGY PARISI | DATE : 9-22-10 | | |
| DRAWN BY : WJH 8/89 | REV. 10/17/00 | RWW/LES | |
| CHECKED BY : CRK 8/89 | REV. 7/10/01 | RWW/LES | |
| | REV. 5/1/06 | TLA/GM | |

27-OCT-2011 11:40
R:\TIPProjects-R\R2309AB\Structures\R2309ab\FinalPlans\Bridges\Str#4\r2309ab_sd_bg_04.dgn
tcoggins

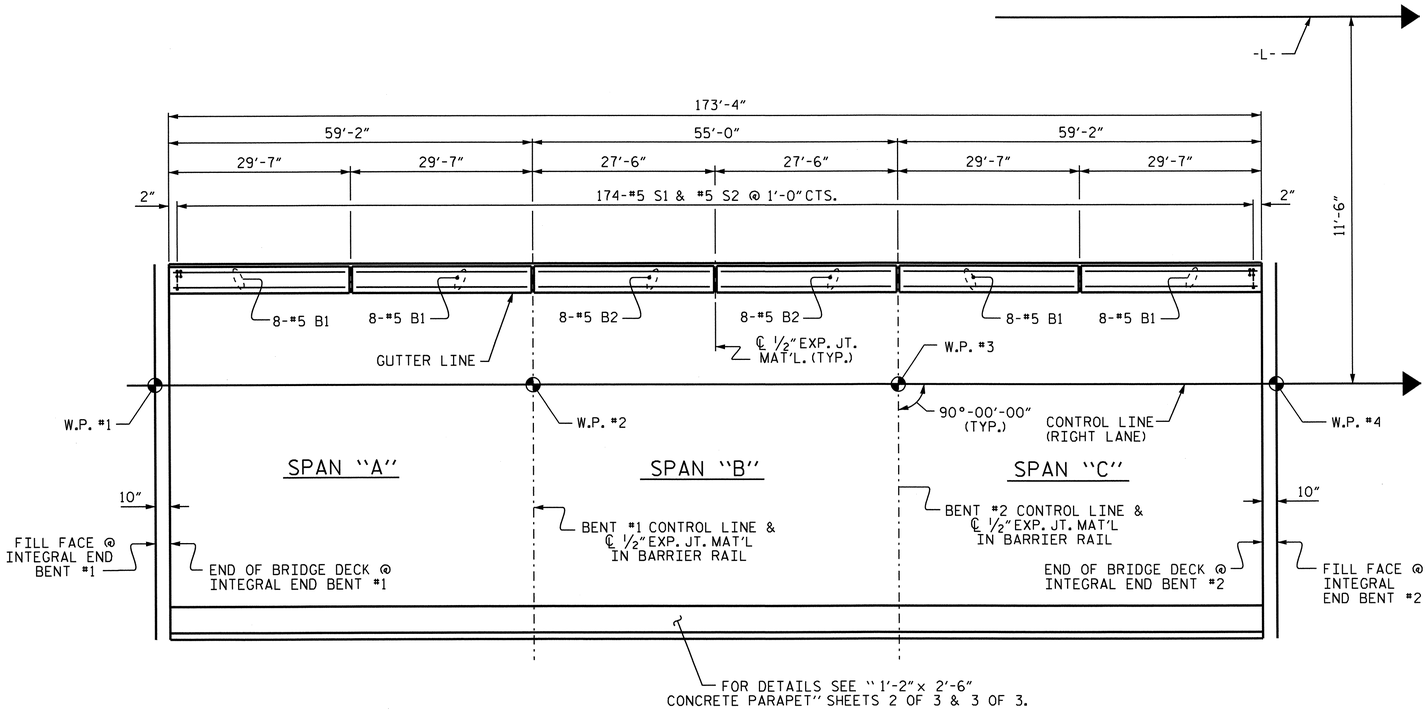


## PLAN OF BARRIER RAIL

## NOTES

BARRIER RAIL IN A CONTINUOUS UNIT SHALL NOT BE CAST UNTIL ALL SLAB CONCRETE IN THE UNIT HAS BEEN CAST AND HAS REACHED A MINIMUM COMPRESSIVE STRENGTH OF 3,000 PSI.

ALL REINFORCING STEEL IN BARRIER RAILS SHALL BE EPOXY COATED.

GROOVED CONTRACTION JOINTS, 1/2" IN DEPTH, SHALL BE TOOLED IN ALL EXPOSED FACES OF THE BARRIER RAIL AND IN ACCORDANCE WITH ARTICLE 825-10(B) OF THE STANDARD SPECIFICATIONS. THE CONTRACTION JOINT SHALL BE LOCATED AT EACH THIRD POINT BETWEEN BARRIER RAIL EXPANSION JOINTS. ONLY ONE CONTRACTION JOINT IS REQUIRED AT MIDPOINT OF BARRIER RAIL SEGMENTS LESS THAN 20 FEET IN LENGTH AND NO CONTRACTION JOINTS ARE REQUIRED FOR THOSE SEGMENTS LESS THAN 10 FEET IN LENGTH.

THE #5 S1 AND #5 S2 BARS MAY BE SHIFTED SLIGHTLY IN ORDER TO MAINTAIN A 2" MINIMUM CLEARANCE TO 1/2" EXPANSION JOINT MATERIAL IN THE BARRIER RAIL.

## BAR TYPES

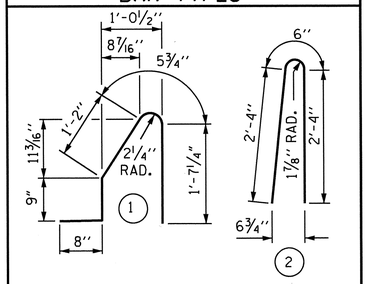


ALL BAR DIMENSIONS ARE OUT TO OUT

## BILL OF MATERIAL

FOR CONCRETE BARRIER RAIL ONLY

| BAR | NO. | SIZE | TYPE | LENGTH | WEIGHT |
|---|---|---|---|---|---|
| * B1 | 32 | #5 | STR | 29'-2" | 973 |
| * B2 | 16 | #5 | STR | 27'-1" | 452 |
| | | | | | |
| * S1 | 174 | #5 | 1 | 4'-8" | 847 |
| * S2 | 174 | #5 | 2 | 5'-2" | 938 |
| | | | | | |
| * EPOXY COATED REINFORCING STEEL | | | | | 3210 LBS. |
| CLASS AA CONCRETE | | | | | 17.4 CU. YDS. |
| CONCRETE BARRIER RAIL | | | | | 173.33 LIN. FT. |

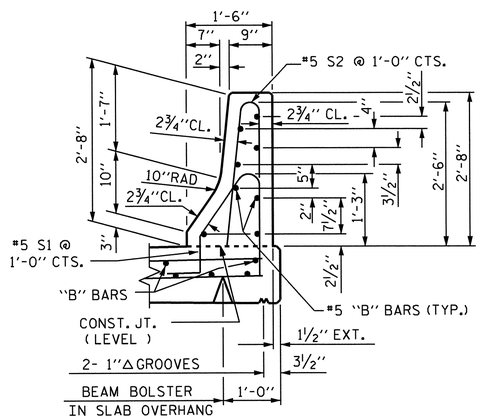


SECTION THRU RAIL

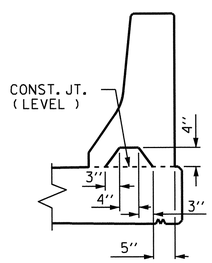


SECTION S-S

AT DAM IN OPEN JOINT
( THIS IS TO BE USED ONLY WHEN SLIP FORM IS USED )

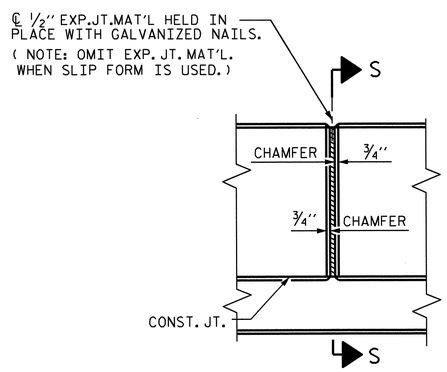


ELEVATION AT EXPANSION JOINTS

## BARRIER RAIL DETAILS

PROJECT NO. R-2309AB
GUILFORD COUNTY
STATION: 134+30.00 -L-

SHEET 1 OF 3

STATE OF NORTH CAROLINA
DEPARTMENT OF TRANSPORTATION
RALEIGH

STANDARD
CONCRETE BARRIER RAIL
(RIGHT LANE)

NORTH CAROLINA PROFESSIONAL SEAL 14045 ENGINEER TIMOTHY W. COGGINS
10/27/11

| REVISIONS | | | | | | | | SHEET NO. |
|---|---|---|---|---|---|---|---|---|
| NO. | BY: | DATE: | NO. | BY: | DATE: | | | S-112 |
| 1 | | | 3 | | | | | TOTAL SHEETS |
| 2 | | | 4 | | | | | 136 |

STR. #4 STD. NO. CBR1 (SHT 1)

| | | | |
|---|---|---|---|
| ASSEMBLED BY : B.N.BARODAWALA | DATE : 9-29-09 | | |
| CHECKED BY : PEGGY PARISI | DATE : 9-22-10 | | |
| DRAWN BY : ARB 5/87 | REV. 10/17/00 | RWW/LES | |
| CHECKED BY : SJD 9/87 | REV. 5/7/03R | RWW/JTE | |
| | REV. 5/1/06R | TLA/GM | |

27-OCT-2011 11:39
R:\TIPProjects-R\R2309AB\Structures\R2309ab\FinalPlans\Bridges\Str#4\r2309ab_sd_br_04.dgn
tcoggins

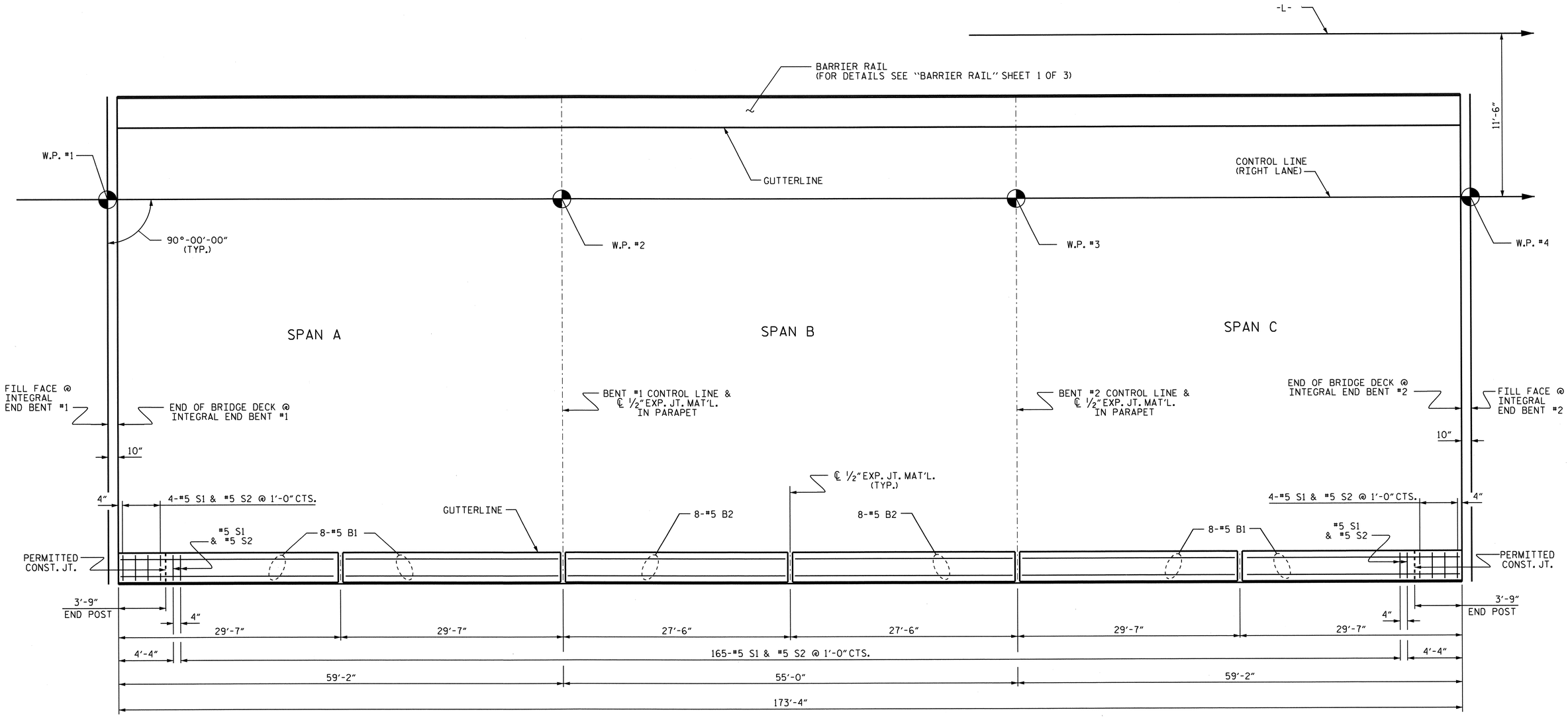


PROJECT NO. R-2309AB
GUILFORD COUNTY
STATION: 134+30.00 -L-

SHEET 2 OF 3

## PLAN OF PARAPET

FOR DETAILS OF PARAPET, ENDPOSTS,
AND ADDITIONAL REINFORCEMENT, SEE SHEET 3 OF 3.

NORTH CAROLINA PROFESSIONAL SEAL 14045 ENGINEER TIMOTHY A. COGGINS

Timothy A. Coggins 10/27/11

STATE OF NORTH CAROLINA
DEPARTMENT OF TRANSPORTATION
RALEIGH

SUPERSTRUCTURE

1'-2" x 2'-6"
CONCRETE PARAPET
(RIGHT LANE)

| REVISIONS | | | | | | SHEET NO. |
|---|---|---|---|---|---|---|
| NO. | BY: | DATE: | NO. | BY: | DATE: | S-113 |
| 1 | | | 3 | | | TOTAL SHEETS |
| 2 | | | 4 | | | 136 |

STR. #4

DRAWN BY : B.N.BARODAWALA DATE : 9/29/09
CHECKED BY : PEGGY PARISI DATE : 8-22-10

27-OCT-2011 11:39
R:\TIPProjects-R\R2309AB\Structures\R2309ab\FinalPlans\Bridges\Str#4\r2309ab_sd_br_04.dgn
tcoggins

## NOTES

THE CONCRETE PARAPET IN A CONTINUOUS UNIT SHALL NOT BE CAST UNTIL ALL SLAB CONCRETE IN THE UNIT HAS BEEN CAST AND HAS REACHED A MINIMUM COMPRESSIVE STRENGTH OF 3,000 PSI.

ALL REINFORCING STEEL IN CONCRETE PARAPETS SHALL BE EPOXY COATED.

SEE "RAIL POST SPACINGS AND END OF RAIL DETAILS" SHEET FOR CONCRETE INSERT DETAILS.

SEE "GUARDRAIL ANCHORAGE DETAILS FOR METAL RAILS" SHEET FOR GUARDRAIL ANCHOR ASSEMBLY.

## BAR TYPE

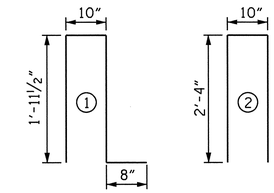


ALL BAR DIMENSIONS ARE OUT TO OUT.

## BILL OF MATERIAL

### PARAPET & TWO END POSTS

| BAR | NO. | SIZE | TYPE | LENGTH | WEIGHT |
|---|---|---|---|---|---|
| ✳B1 | 32 | #5 | STR | 29'-2" | 973 |
| ✳B2 | 16 | #5 | STR | 27'-1" | 452 |
| | | | | | |
| ✳E1 | 4 | #7 | STR | 2'-6" | 20 |
| ✳E2 | 4 | #7 | STR | 3'-0" | 25 |
| ✳E3 | 4 | #7 | STR | 3'-6" | 29 |
| ✳E4 | 4 | #7 | STR | 4'-0" | 33 |
| ✳E5 | 4 | #7 | STR | 4'-4" | 35 |
| | | | | | |
| ✳F1 | 4 | #6 | STR | 1'-10" | 11 |
| ✳F2 | 4 | #6 | STR | 3'-0" | 18 |
| ✳F3 | 4 | #6 | STR | 3'-4" | 20 |
| | | | | | |
| ✳S1 | 175 | #5 | 1 | 5'-5" | 989 |
| ✳S2 | 175 | #5 | 2 | 5'-6" | 1004 |
| ✳EPOXY COATED REINFORCING STEEL | | | | LBS. | 3609 |
| CLASS AA CONCRETE | | | | CU. YDS. | 19.1 |
| 1'-2" x 2'-6" CONCRETE PARAPET | | | | LIN. FT. | 173.33 |

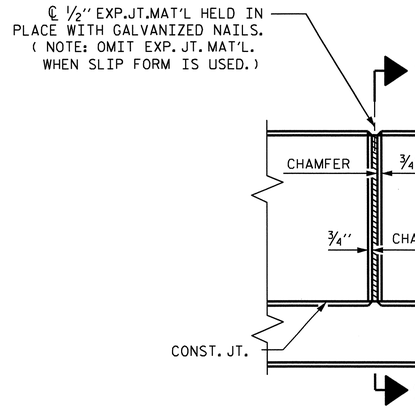


ELEVATION AT EXPANSION JOINTS

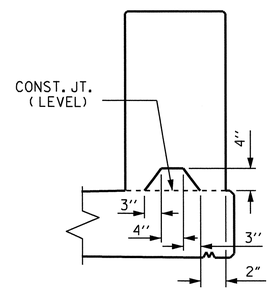


SECTION S-S

AT DAM IN OPEN JOINT
( THIS IS TO BE USED ONLY WHEN SLIP FORM IS USED )

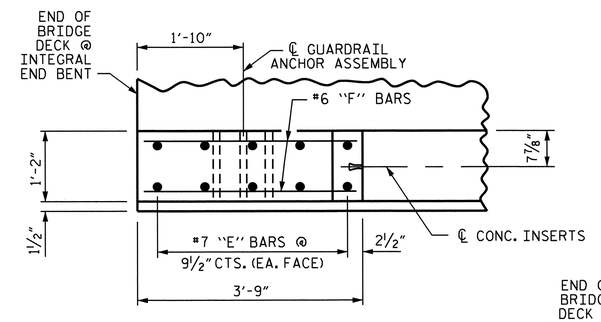


PLAN OF END POST

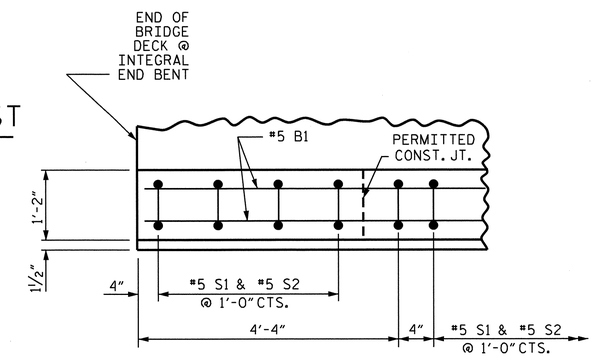


PLAN OF PARAPET

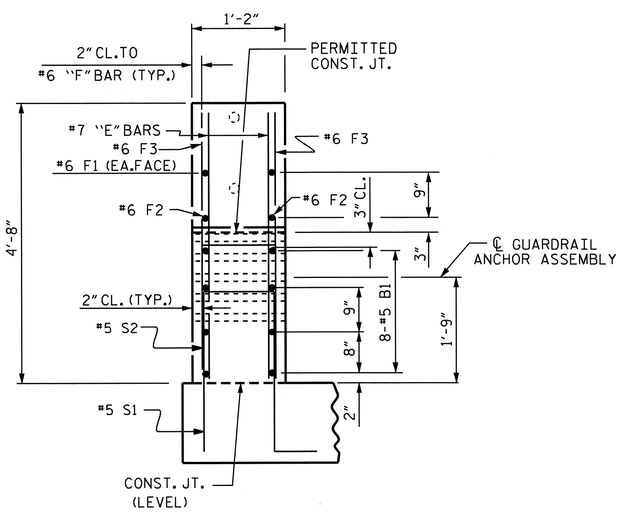


END VIEW

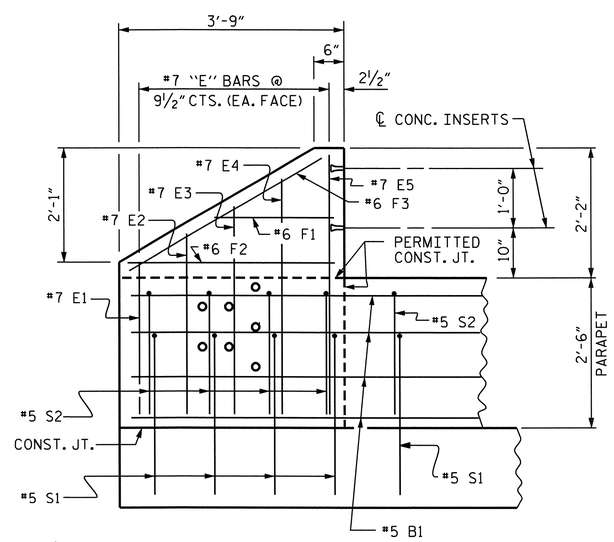


ELEVATION

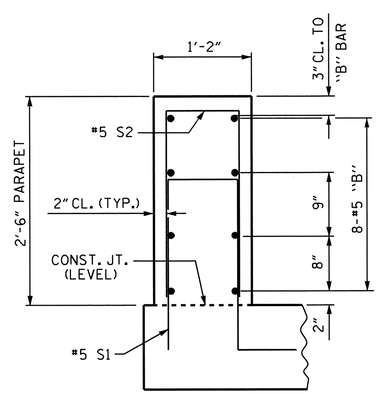


SECTION THRU PARAPET

PARAPET AND END POST FOR TWO BAR RAIL

PROJECT NO. R-2309AB
GUILFORD COUNTY
STATION: 134+30.00 -L-

SHEET 3 OF 3

STATE OF NORTH CAROLINA
DEPARTMENT OF TRANSPORTATION
RALEIGH

SUPERSTRUCTURE
1'-2" x 2'-6"
CONCRETE PARAPET
(RIGHT LANE)

NORTH CAROLINA PROFESSIONAL SEAL 14045 ENGINEER TIMOTHY L. COGGINS
Timothy L. Coggins 10/27/11

| REVISIONS | | | | | | SHEET NO. |
|---|---|---|---|---|---|---|
| NO. | BY: | DATE: | NO. | BY: | DATE: | S-114 |
| 1 | | | 3 | | | TOTAL SHEETS |
| 2 | | | 4 | | | 136 |

STR. #4

DRAWN BY : B.N.BARODAWALA DATE : 9/21/09
CHECKED BY : PEGGY PARISI DATE : 9-22-10

27-OCT-2011 11:38
R:\TIPProjects-R\R2309AB\Structures\R2309ab\FinalPlans\Bridges\Str#4\r2309ab_sd_br_04.dgn
tcoggins

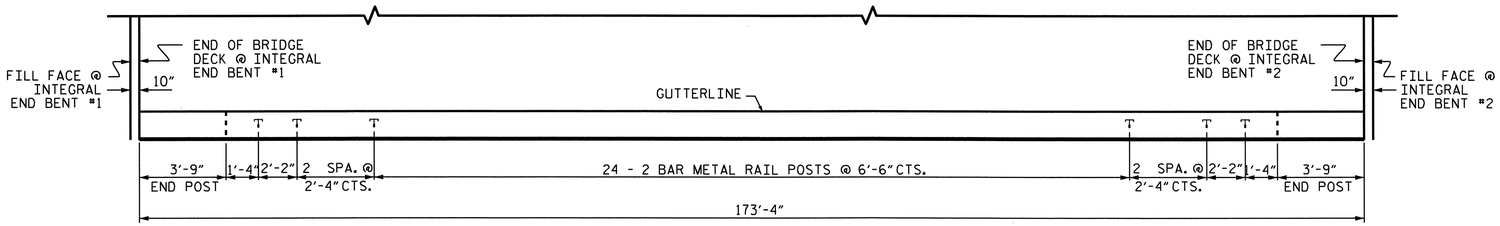


## PLAN OF RAIL POST SPACING

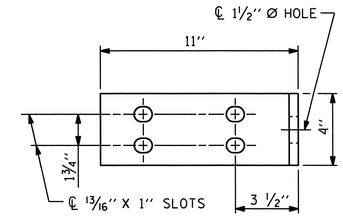


ELEVATION

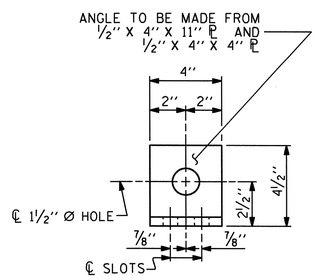


END VIEW

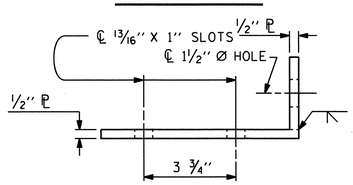


TOP VIEW

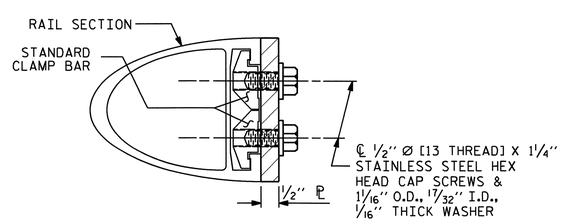


SECTION H-H

FIXED

## DETAILS FOR ATTACHING METAL RAIL TO END POST

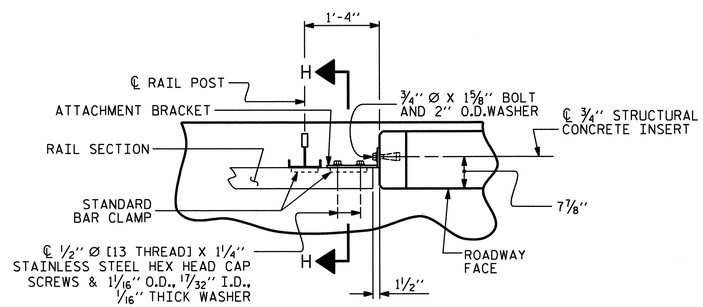


PLAN - RAIL AND END POST

## NOTES

STRUCTURAL CONCRETE INSERT

THE STRUCTURAL CONCRETE INSERT ASSEMBLY SHALL CONSIST OF THE FOLLOWING COMPONENTS:

A. FERRULES SHALL BE MADE FROM STEEL MEETING THE REQUIREMENTS OF AASHTO M169, GRADE 12L14 AND SHALL HAVE A MINIMUM LENGTH OF THREADS OF 1½".

B. 1 - ¾" Ø X 1⅝" BOLT WITH WASHER. BOLT SHALL CONFORM TO THE REQUIREMENTS OF ASTM A307. BOLT AND WASHER SHALL BE GALVANIZED. ( AT THE CONTRACTOR'S OPTION, STAINLESS STEEL BOLT AND WASHER MAY BE USED AS AN ALTERNATE FOR THE ¾" Ø X 1⅝" GALVANIZED BOLT AND WASHER. THEY SHALL CONFORM TO OR EXCEED THE MECHANICAL REQUIREMENTS OF ASTM A307. THE USE OF THIS ALTERNATE SHALL BE APPROVED BY THE ENGINEER.)

C. WIRE STRUT SHOWN IN THE CONCRETE INSERT ASSEMBLY DETAIL IS THE MINIMUM ALLOWABLE SIZE AND SHALL HAVE A MINIMUM TENSILE STRENGTH OF 100,000 PSI. AS AN OPTION, A ⁷⁄₁₆" Ø WIRE STRUT WITH A MINIMUM TENSILE STRENGTH OF 90,000 PSI IS ACCEPTABLE.

## NOTES

METAL RAIL TO END POST CONNECTION

THE METAL RAIL TO END POST CONNECTION SHALL CONSIST OF THE FOLLOWING COMPONENTS:

A. ½" PLATES SHALL CONFORM TO AASHTO M270 GRADE 36 AND SHALL BE GALVANIZED AFTER FABRICATION.

B. ¾" STRUCTURAL CONCRETE INSERT SHALL HAVE A WORKING LOAD SHEAR CAPACITY OF 4800 LBS. THE FERRULES SHALL ENGAGE A ¾"Ø X 1⅝" BOLT WITH 2" O.D. WASHER IN PLACE. THE ¾"Ø X 1⅝" BOLT SHALL HAVE N. C. THREADS.

C. CAP SCREWS FOR RAIL ATTACHMENT TO ANGLE SHALL CONFORM TO THE REQUIREMENTS OF ASTM F593 ALLOY 305 STAINLESS STEEL. CAP SCREWS TO BE CENTERED IN SLOTS AT 60°F.

D. STANDARD CLAMP BARS ( SEE METAL RAIL SHEET ).

THE COST OF THE STANDARD CLAMP BARS AND CAP SCREWS USED IN THE METAL RAIL TO END POST CONNECTION SHALL BE INCLUDED IN THE UNIT CONTRACT PRICE BID FOR LINEAR FEET OF 2 BAR METAL RAILS.

THE ¾" STRUCTURAL CONCRETE INSERT WITH BOLT SHALL BE ASSEMBLED IN THE SHOP.

THE COST OF THE ¾" STRUCTURAL CONCRETE INSERT ASSEMBLY, AND THE ½" PLATES COMPLETE IN PLACE SHALL BE INCLUDED IN THE VARIOUS PAY ITEMS.

THE CONTRACTOR, AT HIS OPTION, MAY USE AN ADHESIVE BONDING SYSTEM IN LIEU OF THE STRUCTURAL CONCRETE INSERT EMBEDDED IN THE END POST. IF THE ADHESIVE BONDING SYSTEM IS USED, THE ¾" Ø X 1⅝" BOLT WITH WASHER SHALL BE REPLACED WITH A ¾"Ø X 6½" BOLT AND 2" O.D. WASHER. ALL SPECIFICATIONS THAT APPLY TO THE ¾" Ø X 1⅝" BOLT SHALL APPLY TO THE ¾"Ø X 6 ½" BOLT. FIELD TESTING OF THE ADHESIVE BONDING SYSTEM IS NOT REQUIRED.

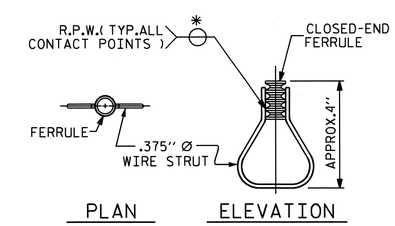


STRUCTURAL CONCRETE INSERT

* EACH WELDED ATTACHMENT OF WIRE TO FERRULE SHALL DEVELOP THE TENSILE STRENGTH OF THE WIRE.

PROJECT NO. R-2309AB

GUILFORD COUNTY

STATION: 134+30.00 -L-

SHEET 1 OF 3

STATE OF NORTH CAROLINA
DEPARTMENT OF TRANSPORTATION
RALEIGH

STANDARD
RAIL POST SPACINGS
AND
END OF RAIL DETAILS
FOR TWO BAR METAL RAILS
(RIGHT LANE)

NORTH CAROLINA PROFESSIONAL SEAL 14045 ENGINEER TIMOTHY W. COGGINS
Timothy W. Coggins 10/27/11

| REVISIONS | | | | | | | SHEET NO. |
|---|---|---|---|---|---|---|---|
| NO. | BY: | DATE: | NO. | BY: | DATE: | | S-115 |
| 1 | | | 3 | | | | TOTAL SHEETS |
| 2 | | | 4 | | | | 136 |

STR. #4 STD. NO. BMR2

| | | | |
|---|---|---|---|
| ASSEMBLED BY : B.N.BARODAWALA | DATE : 9-21-09 | | |
| CHECKED BY : PEGGY PARISI | DATE : 9-22-10 | | |
| DRAWN BY : FCJ 1/88 | REV. 10/17/00 | LES/RDR | |
| CHECKED BY : CRK 3/89 | REV. 5/7/03 | RWW/JTE | |
| | REV. 5/1/06 | TLA/GM | |

27-OCT-2011 11:38
R:\TIPProjects-R\R2309AB\Structures\R2309ab\Final Plans\Bridges\Str#4\r2309ab_sd_2mr_04.dgn
tcoggins

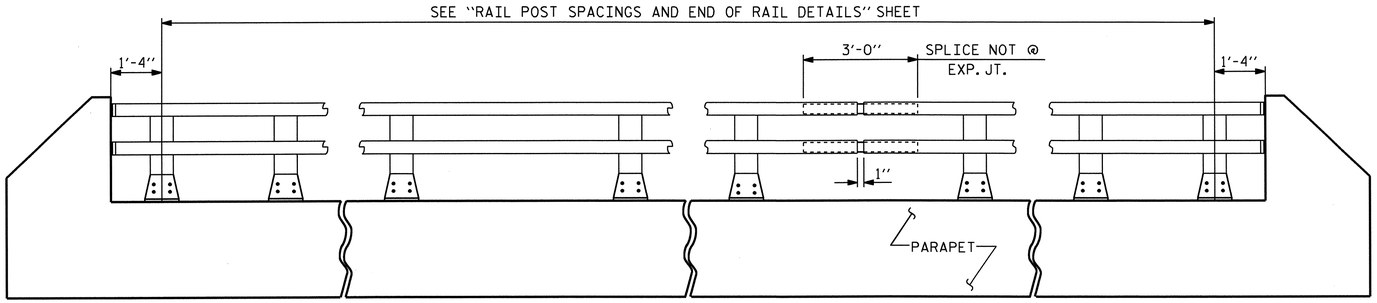


## ELEVATION

NOTE : FOR ATTACHMENT OF METAL RAIL TO END POST, SEE STANDARD NO. BMR2.

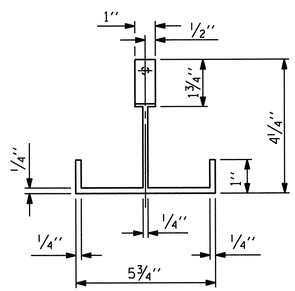


## PLAN

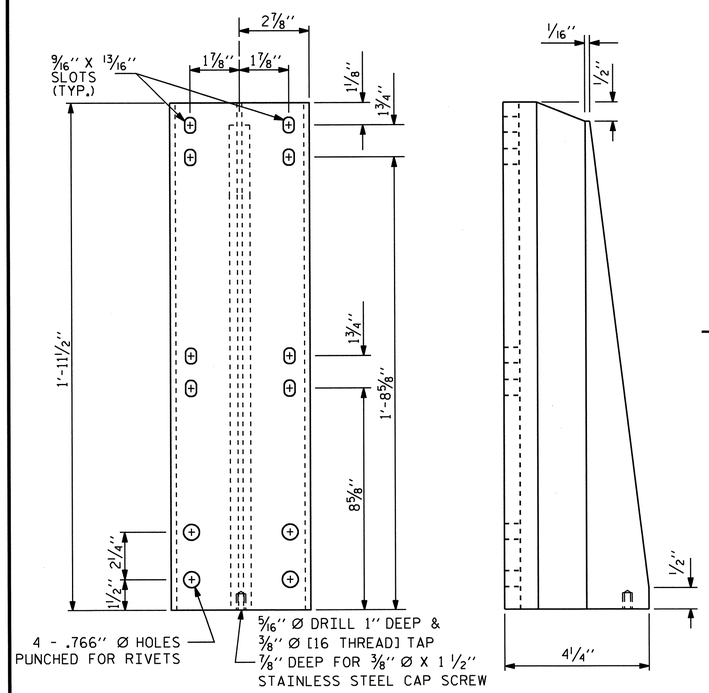


FRONT ELEVATION

SIDE ELEVATION

## DETAILS OF POST

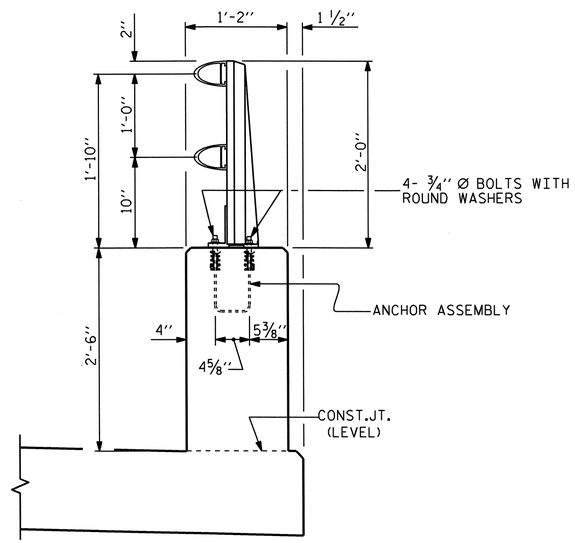


## SECTION THRU PARAPET AND RAIL

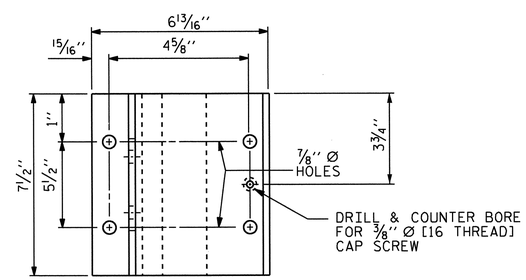


PLAN

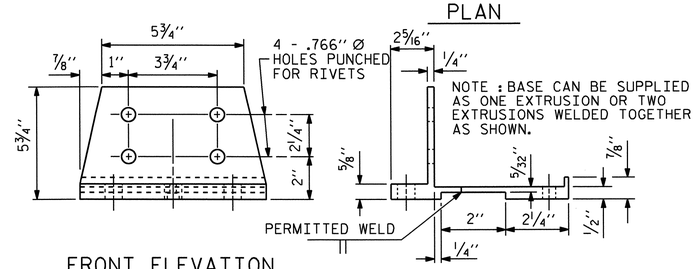


FRONT ELEVATION

SIDE ELEVATION

## POST BASE DETAILS

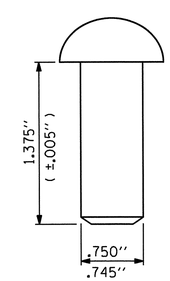


## RIVET DETAIL

# NOTES

AT THE CONTRACTOR'S OPTION, METAL RAIL MAY BE EITHER ALUMINUM OR GALVANIZED STEEL IN ACCORDANCE WITH THE REQUIREMENTS OF THE GENERAL NOTES AND THE FOLLOWING SPECIFICATIONS FOR THE ALTERNATE MATERIALS; HOWEVER, THE CONTRACTOR WILL BE REQUIRED TO USE THE SAME RAIL MATERIAL ON ALL STRUCTURES ON THE PROJECT FOR WHICH METAL RAIL IS DESIGNATED.

## ALUMINUM RAILS

MATERIAL FOR POSTS, BASES AND RAILS, EXPANSION BARS AND CLAMP BARS SHALL BE ASTM B-221 ALLOY 6061-T6.

MATERIAL FOR RIVETS SHALL BE ASTM B316 ALLOY 6061-T6. RIVETS SHALL BE STANDARD BUTTON HEAD AND CONE POINT COLD DRIVEN AS PER DRAWING.

THE BASE OF RAIL POSTS, OR ANY OTHER ALUMINUM SURFACE IN CONTACT WITH CONCRETE SHALL BE THOROUGHLY COATED WITH AN ALUMINUM IMPREGNATED CAULKING COMPOUND OF APPROVED QUALITY.

MATERIAL FOR SHIMS TO BE ASTM B209 ALLOY 6061-T6.

## GALVANIZED STEEL RAILS

MATERIAL AND GALVANIZING ARE TO CONFORM TO THE FOLLOWING SPECIFICATIONS:

POST, POST BASES, RAILS, EXPANSION BARS AND CLAMP BARS: AASHTO M270 GRADE 36 STRUCTURAL STEEL - GALVANIZED TO AASHTO M111.

RIVETS: RIVETS SHALL MEET THE REQUIREMENTS OF ASTM A502 FOR GRADE 1 RIVETS.

THE CUT ENDS OF GALVANIZED STEEL RAILING, AFTER GRINDING SMOOTH SHALL BE GIVEN TWO COATS OF ZINC RICH PAINT MEETING THE REQUIREMENTS OF FEDERAL SPECIFICATION MIL-P-26915 USAF TYPE 1, OR OF FEDERAL SPECIFICATIONS TT-P-641.

SHIMS: SHIMS SHALL MEET THE REQUIREMENTS OF ASTM A570 FOR GRADE 33 OR A611 FOR GRADE C AND SHALL BE GALVANIZED IN ACCORDANCE WITH AASHTO M111.

RAIL CAPS: RAIL CAPS SHALL MEET THE REQUIREMENTS OF ASTM A570 FOR GRADE 33 OR A611 FOR GRADE C AND SHALL BE GALVANIZED IN ACCORDANCE WITH AASHTO M111.

## GENERAL NOTES

RAILING SHALL BE CONTINUOUS FROM END POST TO END POST OF BRIDGE. EACH JOINT IN RAIL LENGTH SHALL BE SPLICED AS DETAILED. PANEL LENGTHS OF RAIL SHALL BE ATTACHED TO A MINIMUM OF THREE POSTS.

FOR END OF RAIL TO CLEAR FACE OF CONCRETE END POST DIMENSION, SEE STANDARD NO. BMR2.

CAP SCREWS SHALL BE ASTM F593 ALLOY 305 STAINLESS STEEL. WASHERS SHALL MEET THE REQUIREMENTS OF ASTM F844 EXCEPT THEY SHALL BE MADE FROM ALLOY 304 STAINLESS STEEL.

CERTIFIED MILL REPORTS ARE REQUIRED FOR RAILS AND POSTS. SHOP INSPECTION IS NOT REQUIRED.

METAL RAIL POSTS SHALL BE SET NORMAL TO CURB GRADE.

METHOD OF MEASUREMENT FOR METAL RAILS: FOR LENGTH OF METAL RAILS TO BE PAID FOR, SEE THE STANDARD SPECIFICATIONS.

TO INSURE FUTURE IDENTIFICATION OF THE FABRICATOR, A PERMANENT IDENTIFYING MARK SHALL BE PLACED ON EACH POST. THE METHOD OF MARKING AND LOCATION SHALL BE SUCH THAT IT DOES NOT DETRACT FROM THE APPEARANCE OF THE POST, BUT REMAINS VISIBLE AFTER RAIL PLACEMENT.

SHIMS SHALL BE USED AS NECESSARY FOR POST ALIGNMENT.

ALLOY 6351-T5 MAY BE SUBSTITUTED FOR ALLOY 6061-T6 WHERE APPLICABLE.

MINOR VARIATIONS IN DETAILS OF METAL RAIL WILL BE CONSIDERED. DETAILS OF SUCH VARIATIONS, IF DESIRED, SHALL BE SUBMITTED FOR APPROVAL.

GROOVED CONTRACTION JOINTS, 1/2" IN DEPTH, SHALL BE TOOLED IN ALL EXPOSED FACES OF THE PARAPET IN ACCORDANCE WITH ARTICLE 825-10(B) OF THE STANDARD SPECIFICATIONS. THE CONTRACTION JOINT SHALL BE LOCATED AT A SPACING OF 8FT. TO 10FT. BETWEEN EXPANSION JOINTS. NO CONTRACTION JOINTS WILL BE REQUIRED FOR SEGMENTS LESS THAN 10 FEET IN LENGTH.

PAY LENGTH = 165.83 LIN. FT.

PROJECT NO. R-2309AB

GUILFORD COUNTY

STATION: 134+30.00 -L-

SHEET 2 OF 3

STATE OF NORTH CAROLINA
DEPARTMENT OF TRANSPORTATION
RALEIGH

STANDARD

2 BAR METAL RAIL

(RIGHT LANE)

NORTH CAROLINA PROFESSIONAL SEAL 14045 ENGINEER TIMOTHY A. COGGINS

Timothy A. Coggins 10/27/11

| ASSEMBLED BY : B.N.BARODAWALA | DATE : 9/21/09 |
|---|---|
| CHECKED BY : PEGGY PARISI | DATE : 9-22-10 |

| | | | |
|---|---|---|---|
| DRAWN BY : EEM | 6/94 | REV. 10/17/00 | LES/RDR |
| CHECKED BY : RGW | 6/94 | REV. 5/7/03R | RWW/JTE |
| | | REV. 5/1/06 | TLA/GM |

| REVISIONS | | | | | | | | SHEET NO. |
|---|---|---|---|---|---|---|---|---|
| NO. | BY: | DATE: | NO. | BY: | DATE: | | | S-116 |
| 1 | | | 3 | | | | | TOTAL SHEETS |
| 2 | | | 4 | | | | | 136 |

STR. #4

STD. NO. BMR3

27-OCT-2011 11:38
R:\TIPProjects-R\R2309AB\Structures\R2309ab\FinalPlans\Bridges\Str#4\r2309ab_sd_2mr_04.dgn
tcoggins

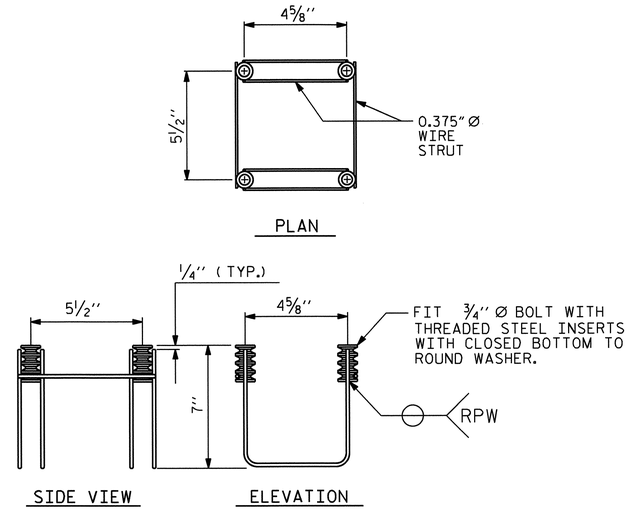


## 4-BOLT METAL RAIL ANCHOR ASSEMBLY

(30 ASSEMBLIES REQUIRED)

## NOTES

STRUCTURAL CONCRETE ANCHOR ASSEMBLY

THE STRUCTURAL CONCRETE ANCHOR ASSEMBLY SHALL CONSIST OF THE FOLLOWING COMPONENTS :

A. FERRULES SHALL BE MADE FROM STEEL MEETING THE REQUIREMENTS OF AASHTO M169, GRADE 12L14 AND SHALL HAVE A MINIMUM LENGTH OF THREADS OF 2'' FOR 3/4'' FERRULES.

B. 4 - 3/4'' Ø X 2 1/2'' BOLTS WITH WASHERS. BOLTS SHALL CONFORM TO THE REQUIREMENTS OF ASTM A307. BOLTS AND WASHERS SHALL BE GALVANIZED. AT THE CONTRACTOR'S OPTION, STAINLESS STEEL BOLTS AND WASHERS MAY BE USED AS AN ALTERNATE FOR THE 3/4'' Ø X 2 1/2'' GALVANIZED BOLTS AND WASHERS. THEY SHALL CONFORM TO OR EXCEED THE MECHANICAL REQUIREMENTS OF ASTM A307. THE USE OF THIS ALTERNATE SHALL BE APPROVED BY THE ENGINEER.

C. WIRE STRUT SHOWN IN THE CONCRETE ANCHOR ASSEMBLY DETAIL IS THE MINIMUM ALLOWABLE SIZE AND SHALL HAVE A MINIMUM TENSILE STRENGTH OF 100,000 PSI. AS AN OPTION, A 7/16'' Ø WIRE STRUT WITH A MINIMUM TENSILE STRENGTH OF 90,000 PSI IS ACCEPTABLE.

D. THE METAL RAIL ANCHOR ASSEMBLIES TO BE HOT DIPPED GALVANIZED TO CONFORM TO REQUIREMENTS OF AASHTO M111.

E. THE COST OF THE METAL RAIL ANCHOR ASSEMBLY WITH BOLTS AND WASHERS COMPLETE IN PLACE SHALL BE INCLUDED IN THE PRICE BID FOR LINEAR FEET OF METAL RAIL.

F. BOLTS TO BE TIGHTENED ONE-HALF TURN WITH A WRENCH FROM A FINGER-TIGHT POSITION.

THE CONTRACTOR MAY USE ADHESIVELY ANCHORED ANCHOR BOLTS IN PLACE OF THE METAL RAIL ANCHOR ASSEMBLY. LEVEL ONE FIELD TESTING IS REQUIRED, AND THE YIELD LOAD OF THE 3/4''Ø BOLT IS 10 KIPS. FOR ADHESIVELY ANCHORED ANCHOR BOLTS OR DOWELS, SEE SPECIAL PROVISIONS.

WHEN ADHESIVELY ANCHORED ANCHOR BOLTS ARE USED, BOLTS SHALL MEET THE REQUIREMENTS OF ASTM F593 ALLOY 304 STAINLESS STEEL WITH MINIMUM 75,000 PSI ULTIMATE STRENGTH. NUTS SHALL MEET THE REQUIREMENTS OF ASTM F594 ALLOY 304 STAINLESS STEEL AND WASHERS SHALL MEET THE REQUIREMENTS OF ASTM F844 EXCEPT THEY SHALL BE MADE FROM ALLOY 304 STAINLESS STEEL.

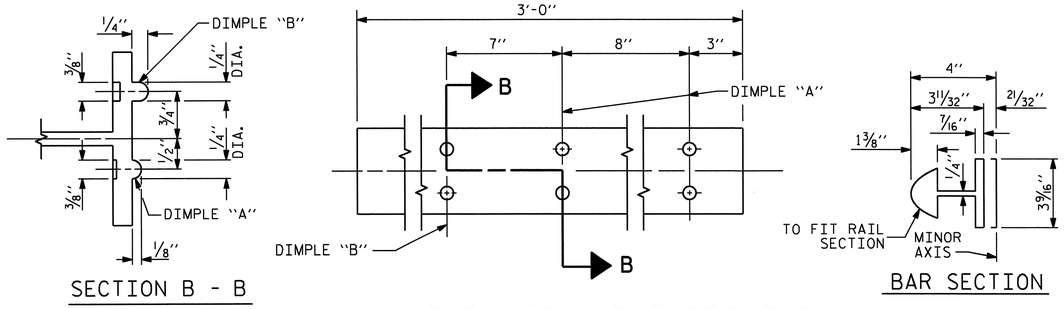


## EXPANSION BAR DETAILS

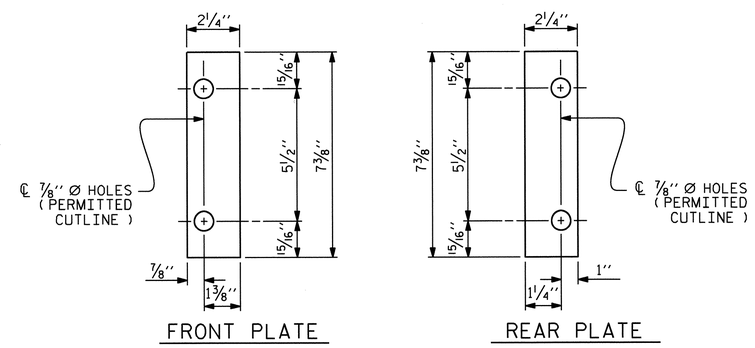


## SHIM DETAILS

NOTE :
SHIMS MAY BE CUT ALONG PERMITTED CUTLINE OR SLOTTED TO EDGE OF PLATE TO FACILITATE PLACEMENT.

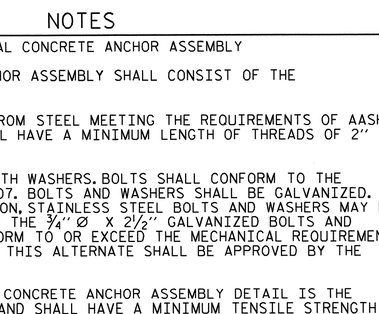


## RAIL SECTION

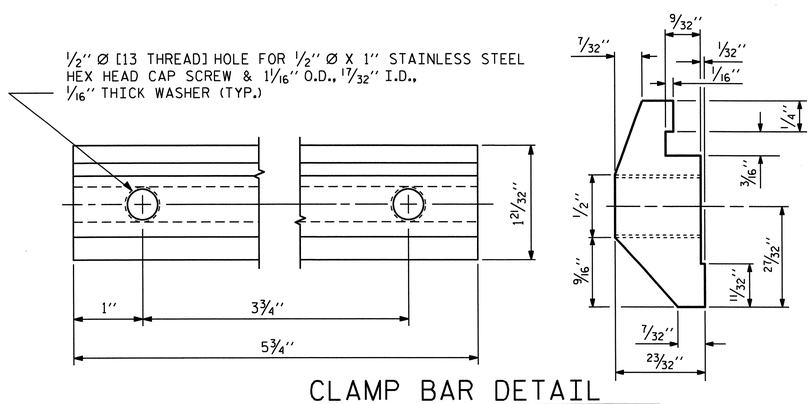


## CLAMP BAR DETAIL

( 4 REQUIRED PER POST )

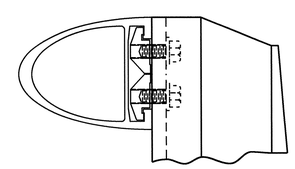

## CLAMP ASSEMBLY

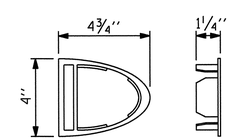


## RAIL CAP

PROJECT NO. R-2309AB
GUILFORD COUNTY
STATION: 134+30.00 -L-

SHEET 3 OF 3

STATE OF NORTH CAROLINA
DEPARTMENT OF TRANSPORTATION
RALEIGH

STANDARD

2 BAR METAL RAIL

(RIGHT LANE)

NORTH CAROLINA PROFESSIONAL SEAL 14045 ENGINEER TIMOTHY W. COGGINS
10/27/11

| REVISIONS | | | | | | SHEET NO. |
|---|---|---|---|---|---|---|
| NO. | BY: | DATE: | NO. | BY: | DATE: | S-117 |
| 1 | | | 3 | | | TOTAL SHEETS |
| 2 | | | 4 | | | 136 |

ASSEMBLED BY : B.N.BARODAWALA DATE : 9/21/09
CHECKED BY : PEGGY PARISI DATE : 9-22-10

DRAWN BY : EEM 6/94
CHECKED BY : RGW 6/94

REV. 2/6/97 EEM/RGW
REV. 8/16/99 MAB/LES
REV. 5/1/06R KMM/GM

27-OCT-2011 11:36
R:\TIPProjects-R\R2309AB\Structures\R2309ab\FinalPlans\Bridges\Str#4\r2309ab_sd_2mr_04.dgn
tcoggins

STR. #4

STD. NO. BMR4

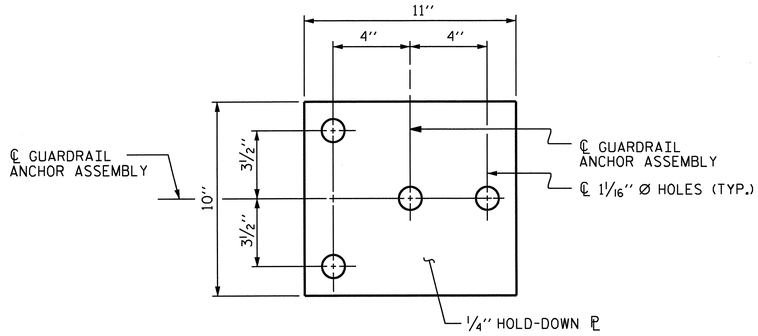


PLAN

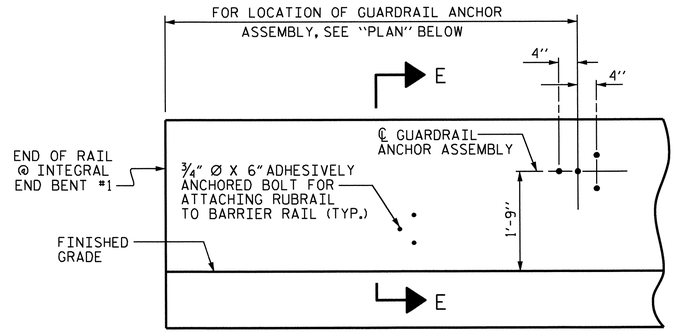


ELEVATION

FOR LOCATION OF RUBRAIL, SEE ROADWAY STD. 862.03

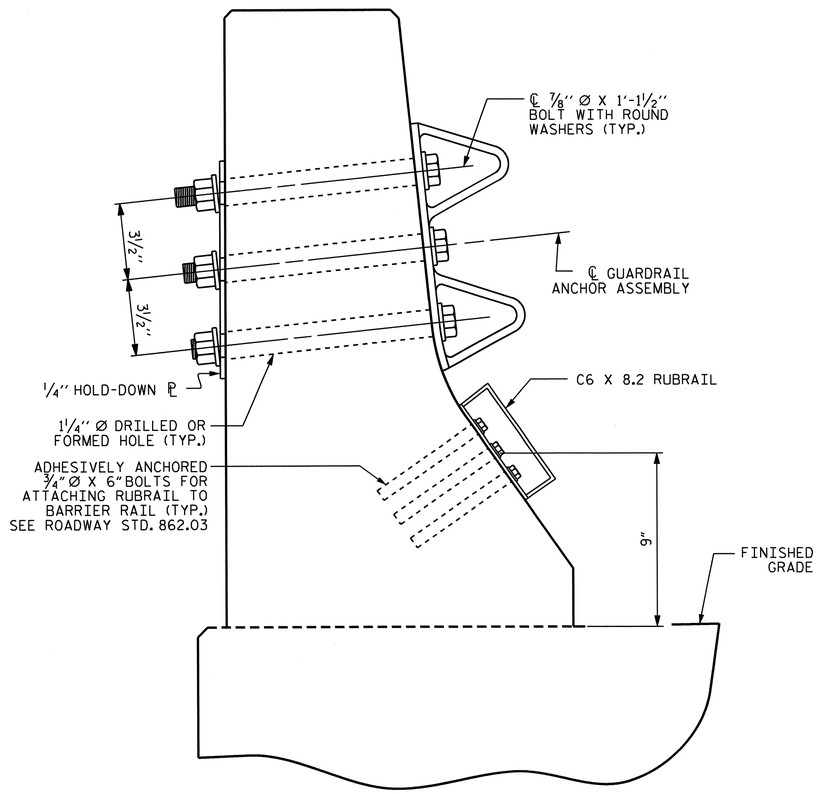


SECTION E-E

## GUARDRAIL ANCHOR ASSEMBLY DETAILS

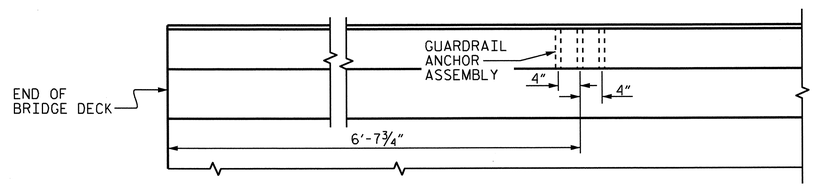


PLAN

## LOCATION OF ANCHORS FOR GUARDRAIL

INTEGRAL END BENT #1 SHOWN, INTEGRAL END BENT #2 SIMILAR.

## NOTES

THE GUARDRAIL ANCHOR ASSEMBLY SHALL CONSIST OF A 1/4'' HOLD DOWN PLATE AND 4 - 7/8'' Ø BOLTS WITH NUTS AND WASHERS, RUBRAIL, AND ADHESIVELY ANCHORED BOLTS.

THE HOLD-DOWN PLATE SHALL CONFORM TO AASHTO M270 GRADE 36. AFTER FABRICATION, THE HOLD-DOWN PLATE SHALL BE HOT-DIP GALVANIZED IN ACCORDANCE WITH AASHTO M111.

BOLTS SHALL CONFORM TO THE REQUIREMENTS OF ASTM A307 AND NUTS SHALL CONFORM TO THE REQUIREMENTS OF AASHTO M291. BOLTS, NUTS AND WASHERS SHALL BE GALVANIZED. (AT THE CONTRACTOR'S OPTION, STAINLESS STEEL BOLTS, NUTS AND WASHERS MAY BE USED AS AN ALTERNATE FOR THE 7/8'' Ø GALVANIZED BOLTS, NUTS AND WASHERS. THEY SHALL CONFORM TO OR EXCEED THE MECHANICAL REQUIREMENTS OF ASTM A307. THE USE OF THIS ALTERNATE SHALL BE APPROVED BY THE ENGINEER.)

THE GUARDRAIL ANCHOR ASSEMBLY IS REQUIRED AT ALL POINTS WHERE APPROACH GUARDRAIL IS TO BE ATTACHED TO THE END OF BARRIER RAIL. FOR POINTS OF ATTACHMENT, SEE SKETCH.

AFTER INSTALLATION, THE EXPOSED THREAD OF THE BOLT SHALL BE BURRED WITH A SHARP POINTED TOOL.

THE COST OF THE GUARDRAIL ANCHOR ASSEMBLY SHALL BE INCLUDED IN THE UNIT CONTRACT PRICE BID FOR CONCRETE BARRIER RAIL.

THE 1 1/4'' Ø HOLES SHALL BE FORMED OR DRILLED WITH A CORE BIT. IMPACT TOOLS WILL NOT BE PERMITTED. ANY CONCRETE DAMAGED BY THIS WORK SHALL BE REPAIRED TO THE SATISFACTION OF THE ENGINEER.

THE C6 X 8.2 RUBRAIL IS TO BE ADHESIVELY ANCHORED TO THE RAIL USING THREE 3/4" Ø X 6" BOLTS WITH WASHERS. LEVEL ONE FIELD TESTING IS REQUIRED, AND THE YIELD LOAD OF THE 3/4" Ø BOLT IS 12 KIPS. FOR ADHESIVELY ANCHORED ANCHOR BOLTS OR DOWELS, SEE SPECIAL PROVISIONS. SEE ROADWAY STANDARD 862.03 FOR DETAILS AND LOCATION OF THE RUBRAIL.

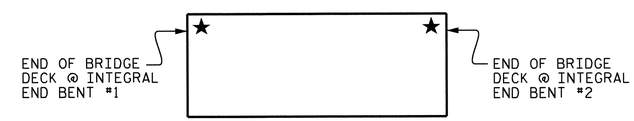


SKETCH SHOWING POINTS OF ATTACHMENTS

★ DENOTES GUARDRAIL ANCHOR ASSEMBLY FOR BARRIER RAIL

PROJECT NO. R-2309AB
GUILFORD COUNTY
STATION: 134+30.00 -L-

STATE OF NORTH CAROLINA
DEPARTMENT OF TRANSPORTATION
RALEIGH

STANDARD

GUARDRAIL ANCHORAGE FOR BARRIER RAIL
(RIGHT LANE)

NORTH CAROLINA PROFESSIONAL SEAL 14045 ENGINEER TIMOTHY A. COGGINS
10/27/11

| REVISIONS | | | | | | SHEET NO. |
|---|---|---|---|---|---|---|
| NO. | BY: | DATE: | NO. | BY: | DATE: | S-118 |
| 1 | | | 3 | | | TOTAL SHEETS |
| 2 | | | 4 | | | 136 |

STR. #4 STD. NO. GRA2

ASSEMBLED BY : B.N.BARODAWALA DATE : 9-29-09
CHECKED BY : PEGGY PARISI DATE : 9-22-10
DRAWN BY : TLA 5/06
CHECKED BY : GM 5/06
ADDED 5/1/06R KMM/GM

27-OCT-2011 11:36
R:\TIPProjects-R\R2309AB\Structures\R2309ab\FinalPlans\Bridges\Str#4\r2309ab_sd_br_04.dgn
tcoggins

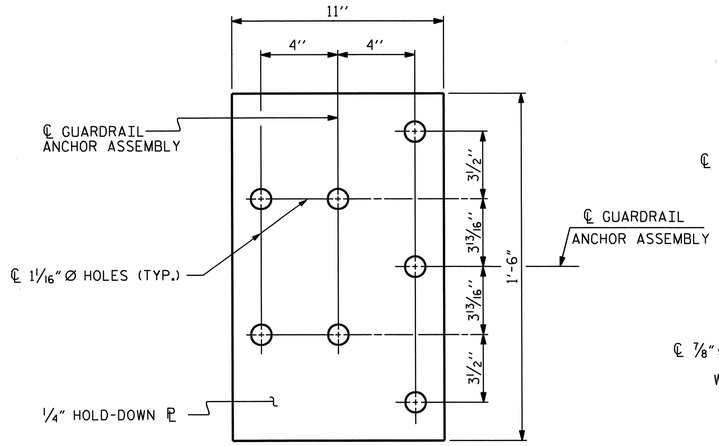


PLAN

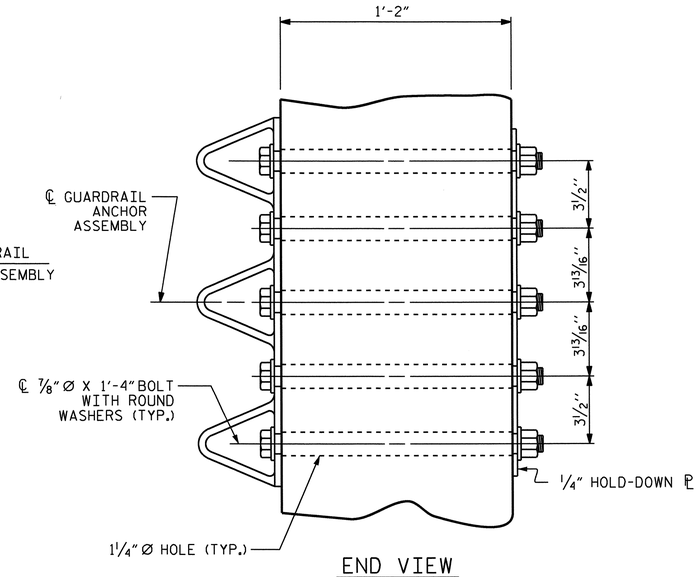


END VIEW

## GUARDRAIL ANCHOR ASSEMBLY DETAILS

## NOTES

THE GUARDRAIL ANCHOR ASSEMBLY SHALL CONSIST OF A 1/4" HOLD DOWN PLATE AND 7 - 7/8" Ø BOLTS WITH NUTS AND WASHERS.

THE HOLD-DOWN PLATE SHALL CONFORM TO AASHTO M270 GRADE 36. AFTER FABRICATION, THE HOLD-DOWN PLATE SHALL BE HOT-DIP GALVANIZED IN ACCORDANCE WITH AASHTO M111.

BOLTS SHALL CONFORM TO THE REQUIREMENTS OF ASTM A307 AND NUTS SHALL CONFORM TO THE REQUIREMENTS OF AASHTO M291. BOLTS, NUTS AND WASHERS SHALL BE GALVANIZED. AT THE CONTRACTOR'S OPTION, STAINLESS STEEL BOLTS, NUTS AND WASHERS MAY BE USED AS AN ALTERNATE FOR THE 7/8" Ø GALVANIZED BOLTS, NUTS AND WASHERS. THEY SHALL CONFORM TO OR EXCEED THE MECHANICAL REQUIREMENTS OF ASTM A307. THE USE OF THIS ALTERNATE SHALL BE APPROVED BY THE ENGINEER.

THE GUARDRAIL ANCHOR ASSEMBLY IS REQUIRED AT ALL POINTS WHERE APPROACH GUARDRAIL IS TO BE ATTACHED TO THE END OF THE PARAPET. FOR POINTS OF ATTACHMENT, SEE SKETCH.

AFTER INSTALLATION, THE EXPOSED THREAD OF THE BOLT SHALL BE BURRED WITH A SHARP POINTED TOOL.

THE COST OF THE GUARDRAIL ANCHOR ASSEMBLIES WITH BOLTS, NUTS AND WASHERS COMPLETE IN PLACE, SHALL BE INCLUDED IN THE VARIOUS PAY ITEMS.

THE VERTICAL REINFORCING BARS MAY BE SHIFTED SLIGHTLY IN THE END POST TO CLEAR ASSEMBLY BOLTS.

THE 1 1/4" Ø HOLES SHALL BE FORMED OR DRILLED WITH A CORE BIT. IMPACT TOOLS WILL NOT BE PERMITTED. ANY CONCRETE DAMAGED BY THIS WORK SHALL BE REPAIRED TO THE SATISFACTION OF THE ENGINEER.

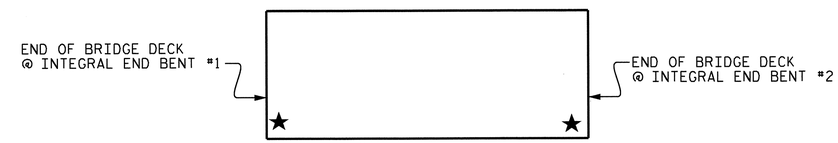


## SKETCH SHOWING POINTS OF ATTACHMENT

★ LOCATION OF GUARDRAIL ATTACHMENT FOR METAL RAIL

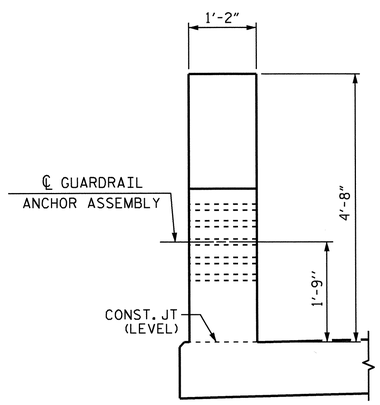


END VIEW

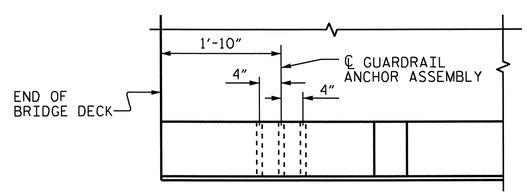


PLAN

INTEGRAL END BENT #1 SHOWN, INTEGRAL END BENT #2 SIMILAR.

## LOCATION OF GUARDRAIL ANCHOR AT END POST

PROJECT NO. R-2309AB
GUILFORD COUNTY
STATION: 134+30.00 -L-

STATE OF NORTH CAROLINA
DEPARTMENT OF TRANSPORTATION
RALEIGH

STANDARD
GUARDRAIL ANCHORAGE DETAILS FOR METAL RAILS
(RIGHT LANE)

NORTH CAROLINA PROFESSIONAL SEAL 14045 ENGINEER TIMOTHY W. COGGINS
10/27/11

| REVISIONS | | | | | | SHEET NO. |
|---|---|---|---|---|---|---|
| NO. | BY: | DATE: | NO. | BY: | DATE: | S-119 |
| 1 | | | 3 | | | TOTAL SHEETS |
| 2 | | | 4 | | | 136 |

ASSEMBLED BY B.N.BARODAWALA DATE : 9/21/09
CHECKED BY : PEGGY PARISI DATE : 9-22-10
DRAWN BY : MAA 5/10
CHECKED BY : GM 5/10
ADDED 5/6/10

STR. #4 STD. NO. GRA3 (SHT. 4)

27-OCT-2011 11:35
R:\TIPProjects-R\R2309AB\Structures\R2309ab\FinalPlans\Bridges\Str#4\r2309ab_sd_2mr_04.dgn
tcoggins

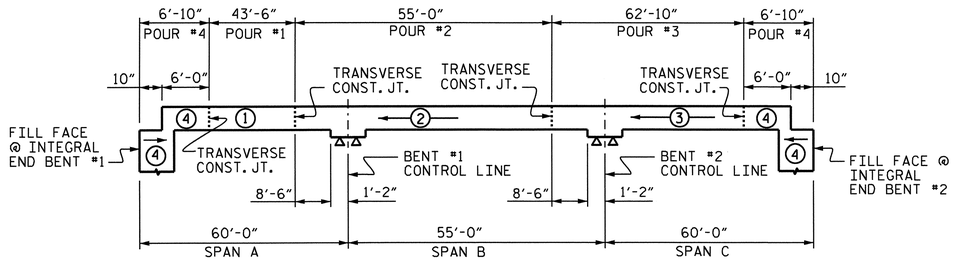


## POURING SEQUENCE

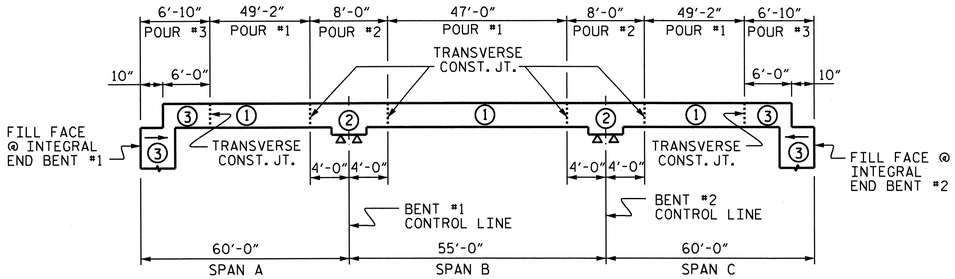


## OPTIONAL POURING SEQUENCE

POUR #2 CAN NOT BE STARTED UNTIL BOTH ADJACENT POURS #1 REACH A MINIMUM OF 3000 PSI.

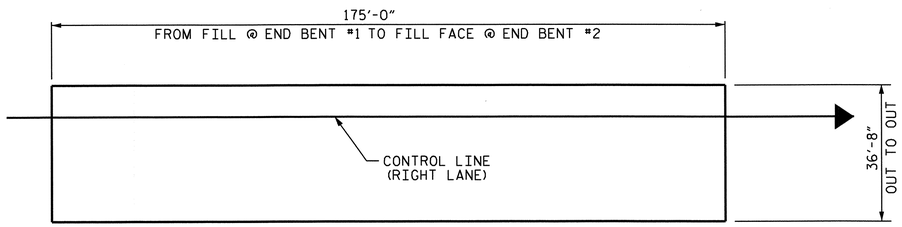


## LAYOUT FOR COMPUTING AREA OF REINFORCED CONCRETE DECK SLAB (6417 SQ. FT.)

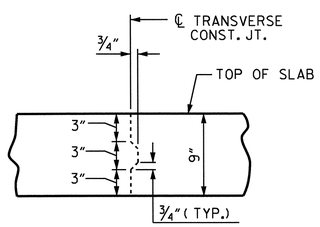


## TRANSVERSE CONSTRUCTION JOINT DETAIL

NOTE: REINFORCING STEEL IN SLAB NOT SHOWN. LONGITUDINAL REINFORCING STEEL SHALL BE CONTINUOUS THRU JOINT.

## SUPERSTRUCTURE REINFORCING STEEL LENGTHS ARE BASED ON THE FOLLOWING MINIMUM SPLICE LENGTHS

| BAR SIZE | SUPERSTRUCTURE EXCEPT APPROACH SLABS, PARAPET, AND BARRIER RAIL | | APPROACH SLABS | | PARAPET AND BARRIER RAIL |
|---|---|---|---|---|---|
| | EPOXY COATED | UNCOATED | EPOXY COATED | UNCOATED | |
| #4 | 2'-0" | 1'-9" | 2'-0" | 1'-9" | 2'-9" |
| #5 | 2'-6" | 2'-2" | 2'-6" | 2'-2" | 3'-5" |
| #6 | 3'-0" | 2'-7" | 3'-10" | 2'-7" | 4'-4" |
| #7 | 5'-3" | 3'-6" | | | |
| #8 | 6'-10" | 4'-7" | | | |

## GROOVING BRIDGE FLOORS

| | | |
|---|---|---|
| APPROACH SLABS | 1417 | SQ.FT. |
| BRIDGE DECK | 5330 | SQ.FT. |
| TOTAL | 6747 | SQ.FT. |

## BILL OF MATERIAL

### SPANS A, B & C

| BAR | NO. | SIZE | TYPE | LENGTH | WEIGHT |
|---|---|---|---|---|---|
| * A1 | 347 | #5 | STR | 36'-4" | 13150 |
| A2 | 347 | #5 | STR | 36'-4" | 13150 |
| | | | | | |
| * B1 | 146 | #6 | STR | 12'-0" | 2632 |
| * B2 | 50 | #4 | STR | 28'-0" | 935 |
| * B3 | 50 | #6 | STR | 45'-0" | 3380 |
| * B4 | 96 | #6 | STR | 17'-3" | 2487 |
| * B5 | 25 | #4 | STR | 15'-0" | 251 |
| B6 | 132 | #5 | STR | 59'-2" | 8146 |
| | | | | | |
| K1 | 20 | #4 | STR | 22'-2" | 296 |
| K2 | 6 | #4 | STR | 7'-9" | 31 |
| K3 | 12 | #4 | STR | 8'-3" | 66 |
| K4 | 12 | #4 | STR | 9'-0" | 72 |
| K5 | 4 | #4 | STR | 5'-2" | 14 |
| K6 | 8 | #4 | STR | 5'-5" | 29 |
| K7 | 8 | #4 | STR | 5'-10" | 31 |
| K8 | 8 | #4 | STR | 2'-8" | 14 |
| K9 | 8 | #4 | STR | 29'-9" | 159 |
| K10 | 12 | #4 | STR | 6'-7" | 53 |
| K11 | 12 | #4 | STR | 8'-9" | 70 |
| K12 | 12 | #4 | STR | 9'-0" | 72 |
| K13 | 12 | #4 | STR | 8'-3" | 66 |
| | | | | | |
| * S1 | 62 | #4 | 1 | 11'-8" | 483 |
| * S2 | 62 | #4 | 1 | 9'-9" | 404 |
| S3 | 132 | #4 | 3 | 2'-9" | 242 |
| | | | | | |
| U1 | 66 | #4 | 2 | 9'-11" | 437 |
| U2 | 12 | #4 | 2 | 11'-9" | 94 |
| * U3 | 36 | #4 | 4 | 13'-4" | 321 |
| * U4 | 12 | #4 | 4 | 11'-4" | 91 |
| | | | | | |
| V1 | 8 | #4 | STR | 3'-4" | 18 |
| | | | | | |
| REINFORCING STEEL | | | | = 23060 LBS. | |
| *EPOXY COATED REINFORCING STEEL | | | | = 24134 LBS. | |

## BAR TYPES

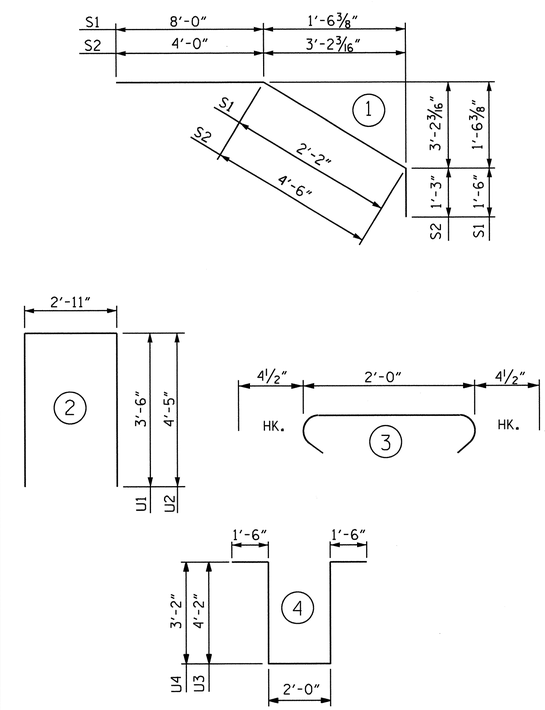


ALL BAR DIMENSIONS ARE OUT TO OUT.

## SUPERSTRUCTURE BILL OF MATERIAL

| | | CLASS AA CONCRETE | REINFORCING STEEL | EPOXY COATED REINFORCING STEEL |
|---|---|---|---|---|
| | | (CU. YDS.) | (LBS.) | (LBS.) |
| SPAN A, B AND C | POUR 1 | 51.1 | 23060 | 24134 |
| | POUR 2 | 73.4 | | |
| | POUR 3 | 82.6 | | |
| | POUR 4✲ | 59.8 | | |
| TOTALS** | | 266.9 | 23060 | 24134 |

** QUANTITIES FOR BARRIER RAIL AND PARAPET ARE NOT INCLUDED

✲ POUR 4 QUANTITY INCLUDES UPPER POUR OF WINGS & INTEGRAL END BENT

PROJECT NO. R-2309AB

GUILFORD COUNTY

STATION: 134+30.00 -L-

STATE OF NORTH CAROLINA
DEPARTMENT OF TRANSPORTATION
RALEIGH

STANDARD

SUPERSTRUCTURE BILL OF MATERIAL (RIGHT LANE)

NORTH CAROLINA PROFESSIONAL SEAL 14045 ENGINEER TIMOTHY L. COGGINS

10/27/11

| REVISIONS | | | | | | |
|---|---|---|---|---|---|---|
| NO. | BY: | DATE: | NO. | BY: | DATE: | |
| 1 | | | 3 | | | |
| 2 | | | 4 | | | |

SHEET NO. S-120

TOTAL SHEETS 136

STR. #4

STD. NO. BOM2

| | | | |
|---|---|---|---|
| ASSEMBLED BY : B.N.BARODAWALA | | DATE : 8-26-10 | |
| CHECKED BY : PEGGY PARISI | | DATE : 9-22-10 | |
| DRAWN BY : JMB 5/87 | REV. 6/1/94 | EEM/GRP | |
| CHECKED BY : SJD 9/87 | REV. 8/16/99 | RWW/LES | |
| | REV. 5/1/06 | TLA/GM | |

27-OCT-2011 11:35
R:\TIPProjects-R\R2309AB\Structures\R2309ab\FinalPlans\Bridges\Str#4\r2309ab_sd_bm_04.dgn
tcoggins

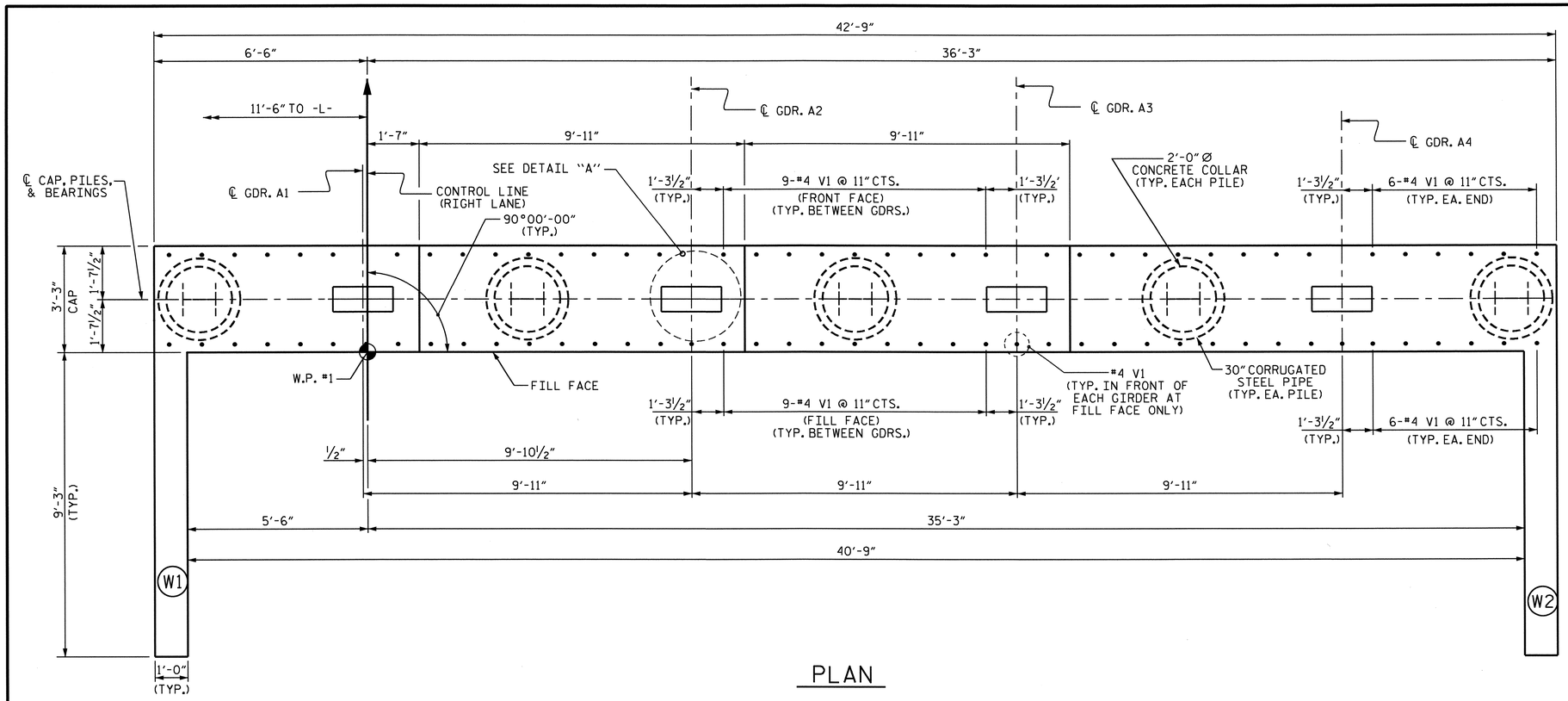


## PLAN

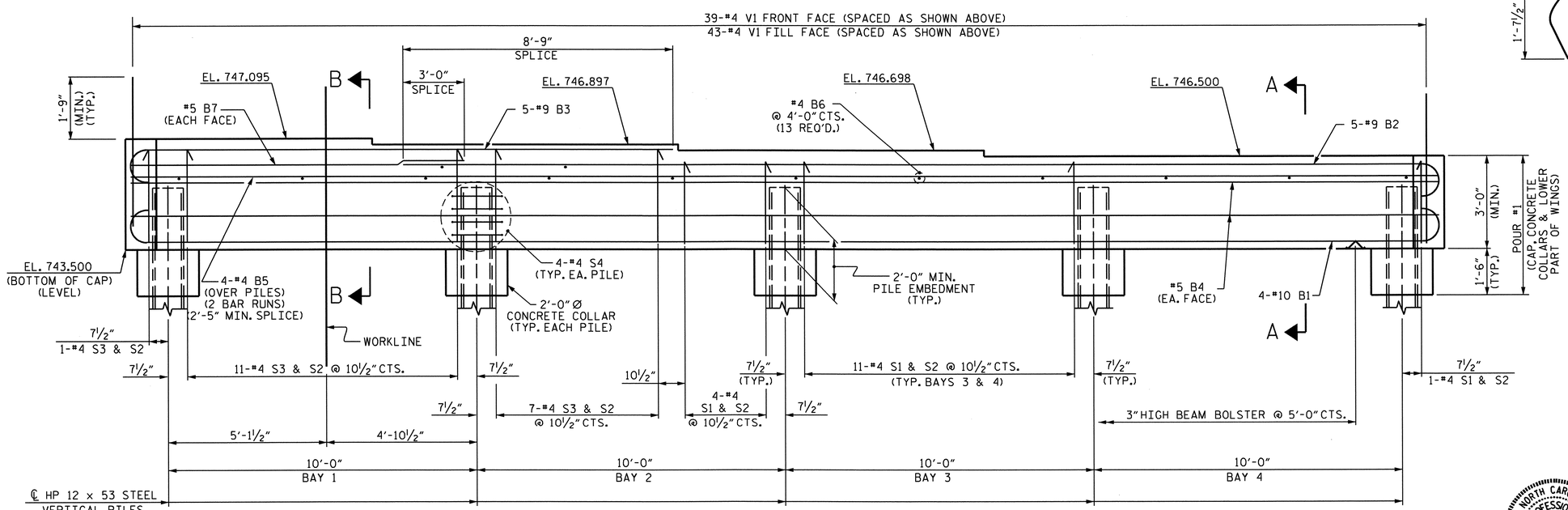


## ELEVATION

## NOTES

STIRRUPS IN CAP MAY BE SHIFTED AS NECESSARY TO CLEAR #4 V1 BARS.

THE CONTRACTOR SHALL PROVIDE FOR INSTALLATION OF THE 4" DIAMETER DRAIN PIPE THROUGH THE WING WALL AS REQUIRED FOR REINFORCED BRIDGE APPROACH FILLS. SEE THE ROADWAY PLANS. REINFORCING STEEL IN THE WING WALL MAY BE SHIFTED AS NECESSARY TO CLEAR THE DRAIN PIPE.

SEE SUPERSTRUCTURE SHEETS FOR UPPER PART OF INTEGRAL END BENT DETAIL.

THE CONTRACTOR'S ATTENTION IS CALLED TO THE FACT THAT UPPER PART OF WINGS ARE TO BE POURED WITH THE SUPERSTRUCTURE.

THE TOP SURFACE OF POUR #1 OF THE END BENT CAP AND WINGS, EXCLUDINGTHE BEARING AREA, SHALL BE RAKED TO A DEPTH OF ¼".

FOR 30" CORRUGATED STEEL PIPE, SEE SPECIAL PROVISIONS.

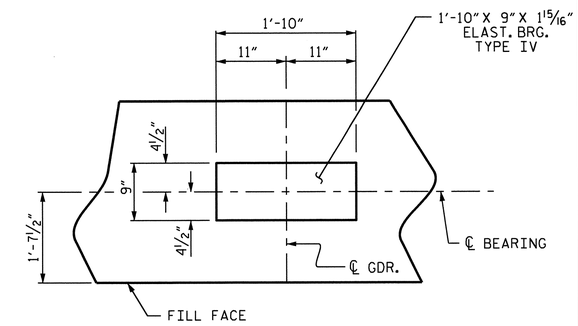


## DETAIL "A"

(TYP. EA. GDR.)

PROJECT NO. R-2309AB

GUILFORD COUNTY

STATION: 134+30.00 -L-

SHEET 1 OF 3

STATE OF NORTH CAROLINA
DEPARTMENT OF TRANSPORTATION
RALEIGH

SUBSTRUCTURE

INTEGRAL END BENT #1

(RIGHT LANE)

NORTH CAROLINA PROFESSIONAL SEAL 14045 ENGINEER TIMOTHY V. COGGINS

10/27/11

| REVISIONS | | | | | | SHEET NO. |
|---|---|---|---|---|---|---|
| NO. | BY: | DATE: | NO. | BY: | DATE: | S-121 |
| 1 | | | 3 | | | TOTAL SHEETS |
| 2 | | | 4 | | | 136 |

DRAWN BY : PEGGY PARISI DATE : 10-19-10
CHECKED BY : JASON WILSON DATE : 1-28-11

27-OCT-2011 11:34
R:\TIPProjects-R\R2309AB\Structures\R2309ab\FinalPlans\Bridges\Str#4\r2309ab_sd_eb_04.dgn
tcoggins

STR. #4

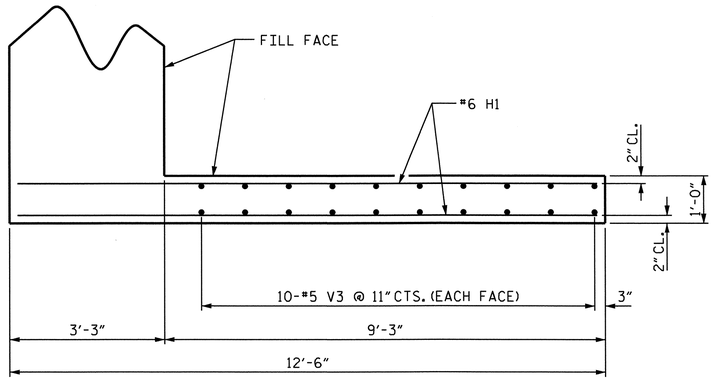


PLAN OF WING W1

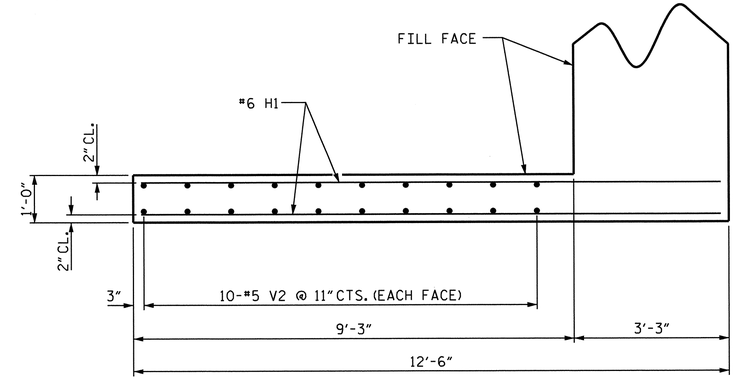


PLAN OF WING W2

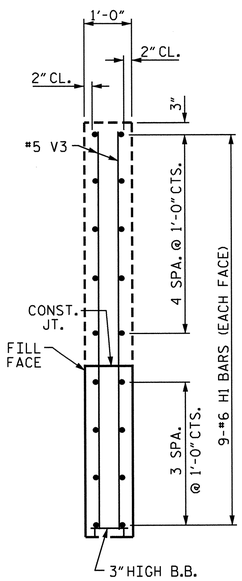


SECTION Y-Y

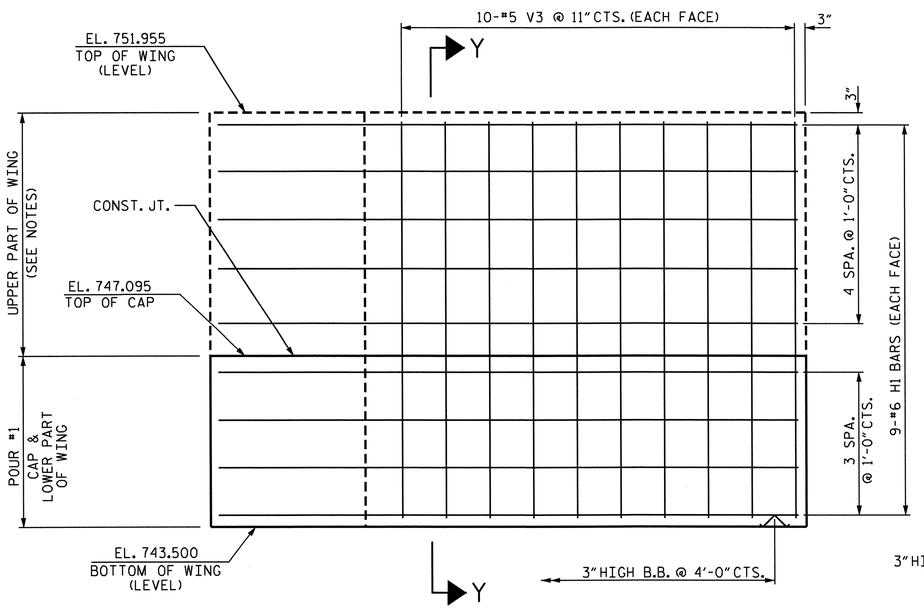


ELEVATION OF WING W1

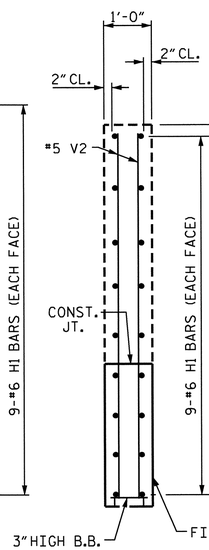


SECTION X-X

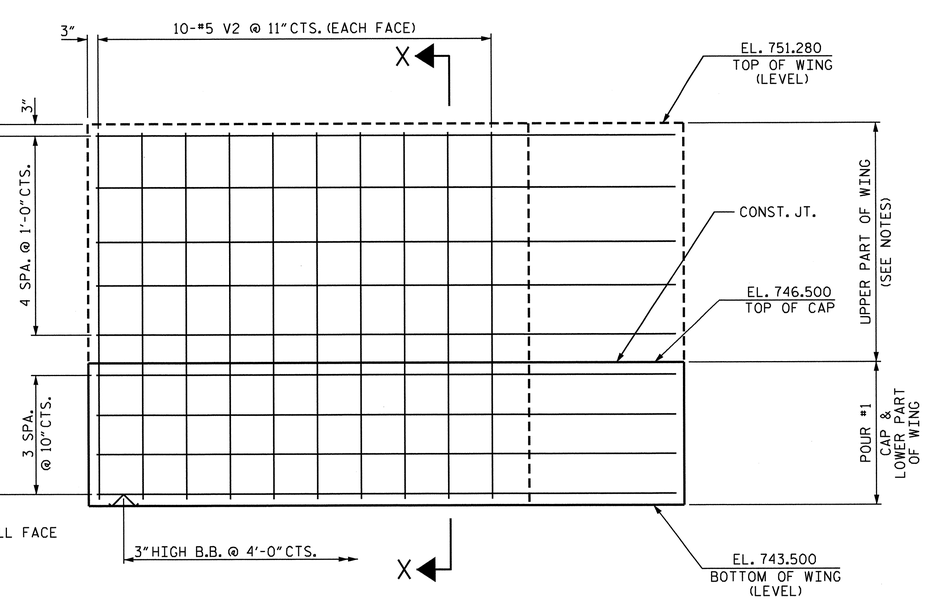


ELEVATION OF WING W2

PROJECT NO. R-2309AB

GUILFORD COUNTY

STATION: 134+30.00 -L-

SHEET 2 OF 3

STATE OF NORTH CAROLINA
DEPARTMENT OF TRANSPORTATION
RALEIGH

SUBSTRUCTURE

INTEGRAL
END BENT #1
(RIGHT LANE)

NORTH CAROLINA PROFESSIONAL SEAL 14045 ENGINEER TIMOTHY L. COGGINS

10/27/11

| REVISIONS | | | | | | SHEET NO. |
|---|---|---|---|---|---|---|
| NO. | BY: | DATE: | NO. | BY: | DATE: | S-122 |
| 1 | | | 3 | | | TOTAL SHEETS |
| 2 | | | 4 | | | 136 |

DRAWN BY : PEGGY PARISI DATE : 10-20-10
CHECKED BY : JASON WILSON DATE : 1-28-11

27-OCT-2011 11:34
R:\TIPProjects-R\R2309AB\Structures\R2309ab\FinalPlans\Bridges\Str#4\r2309ab_sd_eb_04.dgn
tcoggins

STR. #4

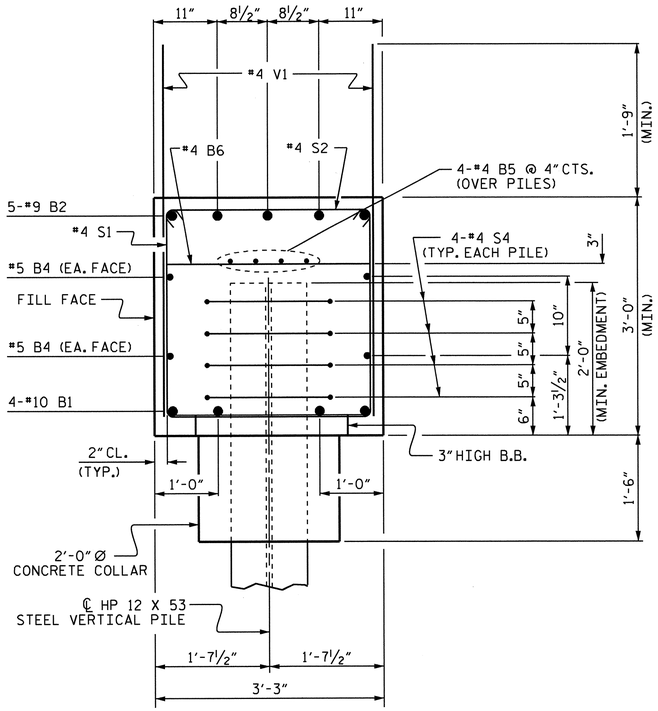


SECTION A-A

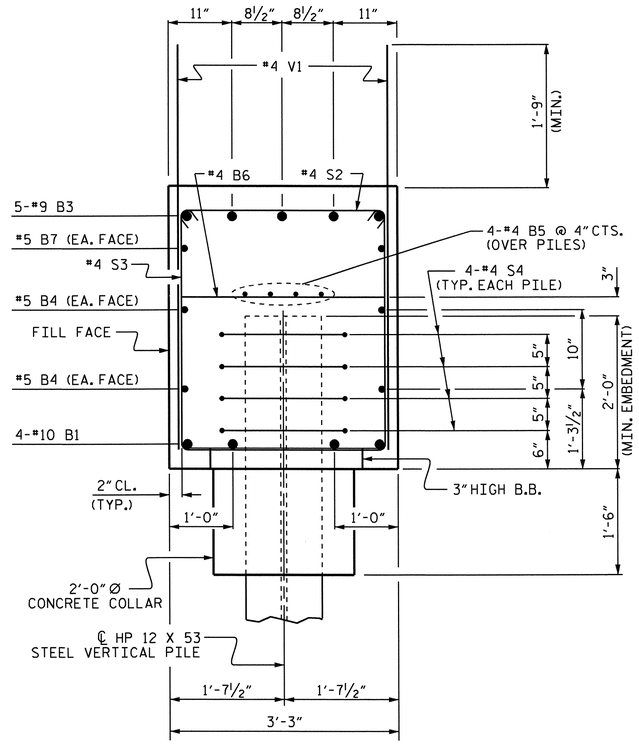


SECTION B-B

## BAR TYPES

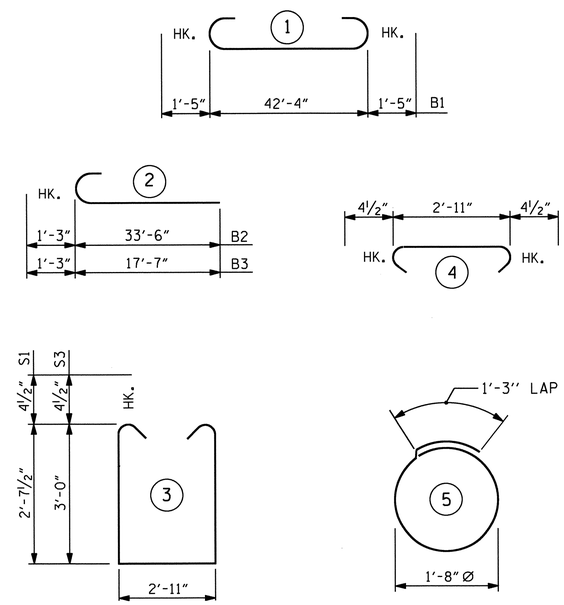


ALL BAR DIMENSIONS ARE OUT TO OUT.

## BILL OF MATERIAL

### INTEGRAL END BENT #1

| BAR | NO. | SIZE | TYPE | LENGTH | WEIGHT |
|---|---|---|---|---|---|
| B1 | 4 | #10 | 1 | 45'-2" | 777 |
| B2 | 5 | #9 | 2 | 34'-9" | 591 |
| B3 | 5 | #9 | 2 | 18'-10" | 320 |
| B4 | 4 | #5 | STR | 42'-5" | 177 |
| B5 | 8 | #4 | STR | 22'-5" | 120 |
| B6 | 13 | #4 | STR | 2'-11" | 25 |
| B7 | 2 | #5 | STR | 11'-11" | 25 |
| H1 | 36 | #6 | STR | 12'-2" | 658 |
| S1 | 27 | #4 | 3 | 8'-11" | 161 |
| S2 | 46 | #4 | 4 | 3'-8" | 113 |
| S3 | 19 | #4 | 3 | 9'-8" | 123 |
| S4 | 20 | #4 | 5 | 6'-6" | 87 |
| V1 | 82 | #4 | STR | 4'-7" | 251 |
| V2 | 20 | #5 | STR | 7'-5" | 155 |
| V3 | 20 | #5 | STR | 8'-1" | 169 |

REINFORCING STEEL = 3752 LBS

CLASS A CONCRETE

POUR #1 (CAP, CONCRETE COLLARS & LOWER PART OF WINGS) 19.9 C.Y.

TOTAL 19.9 C.Y.

HP 12 x 53 STEEL PILES
No. 5 150 LIN FT.

30" C.S. PIPE, 0.168" THICK 24 LIN FT.

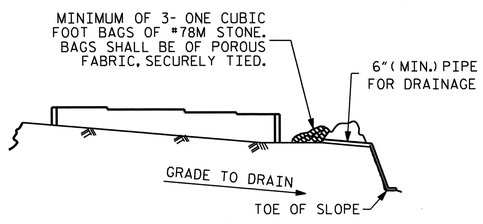


BAGGED STONE AND PIPE SHALL BE PLACED IMMEDIATELY AFTER COMPLETION OF END BENT EXCAVATION. PIPE MAY BE EITHER CONCRETE, CORRUGATED STEEL, CORRUGATED ALUMINUM ALLOY, OR CORRUGATED PLASTIC. PERFORATED PIPE WILL NOT BE ALLOWED.

BAGGED STONE SHALL REMAIN IN PLACE UNTIL THE ENGINEER DIRECTS THAT IT BE REMOVED. THE CONTRACTOR SHALL REMOVE AND DISPOSE OF SILT ACCUMULATIONS AT BAGGED STONE WHEN SO DIRECTED BY THE ENGINEER. BAGS SHALL BE REMOVED AND REPLACED WHENEVER THE ENGINEER DETERMINES THAT THEY HAVE DETERIORATED AND LOST THEIR EFFECTIVENESS.

NO SEPARATE PAYMENT WILL BE MADE FOR THIS WORK AND THE ENTIRE COST OF THIS WORK SHALL BE INCLUDED IN THE UNIT CONTRACT PRICE BID FOR THE SEVERAL PAY ITEMS.

## TEMPORARY DRAINAGE AT END BENT

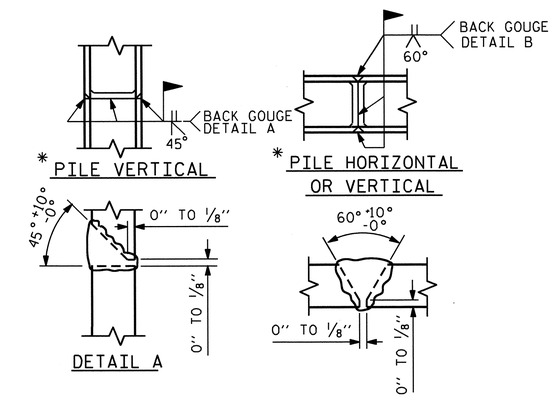


* POSITION OF PILE DURING WELDING.

## PILE SPLICE DETAILS

PROJECT NO. R-2309AB
GUILFORD COUNTY
STATION: 134+30.00 -L-

SHEET 3 OF 3

STATE OF NORTH CAROLINA
DEPARTMENT OF TRANSPORTATION
RALEIGH

SUBSTRUCTURE
INTEGRAL END BENT #1
(RIGHT LANE)

NORTH CAROLINA PROFESSIONAL SEAL 14045 ENGINEER TIMOTHY L. COGGINS
10/27/11

| REVISIONS | | | | | | SHEET NO. |
|---|---|---|---|---|---|---|
| NO. | BY: | DATE: | NO. | BY: | DATE: | S-123 |
| 1 | | | 3 | | | TOTAL SHEETS |
| 2 | | | 4 | | | 136 |

DRAWN BY : PEGGY PARISI DATE : 10-21-10
CHECKED BY : JASON WILSON DATE : 1-28-11

27-OCT-2011 11:34
R:\TIPProjects-R\R2309AB\Structures\R2309ab\FinalPlans\Bridges\Str#4\r2309ab_sd_eb_04.dgn
tcoggins

STR. #4

## NOTES:

STIRRUPS AND U1 BARS IN CAP MAY BE SHIFTED AS NECESSARY TO CLEAR ANCHOR BOLTS.

GALVANIZE THE FULL LENGTH OF EACH INTERIOR BENT PILE IN ACCORDANCE WITH SECTION 1076 OF THE STANDARD SPECIFICATIONS.

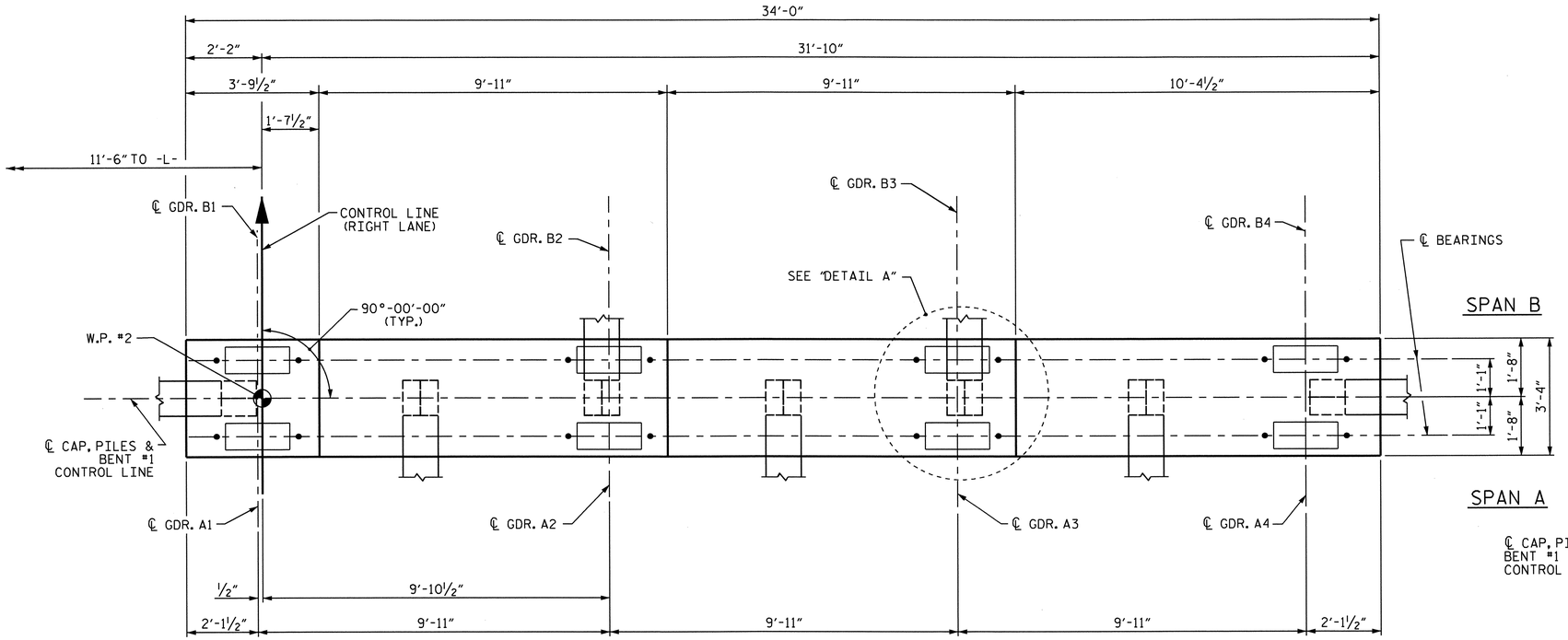


PLAN

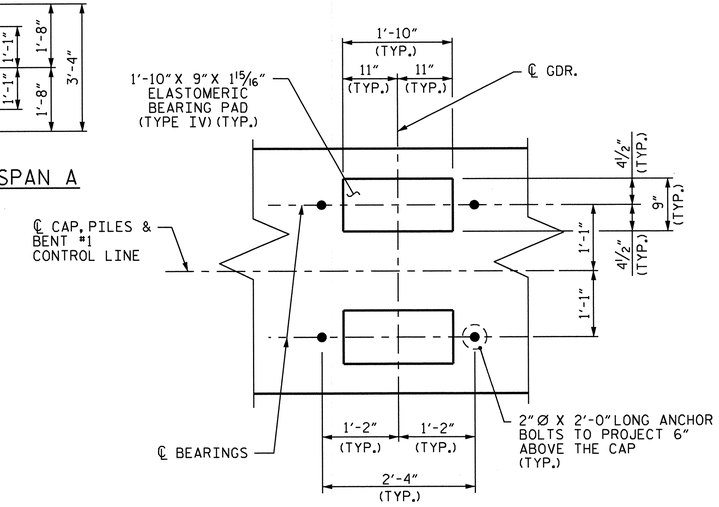


DETAIL "A"

(TYP. EA. GDR.)

FOR ADDITIONAL REINFORCING STEEL IN ENDS OF CAP, SEE SECTION X-X AND SECTION Y-Y ON SHEET 2 OF 2.

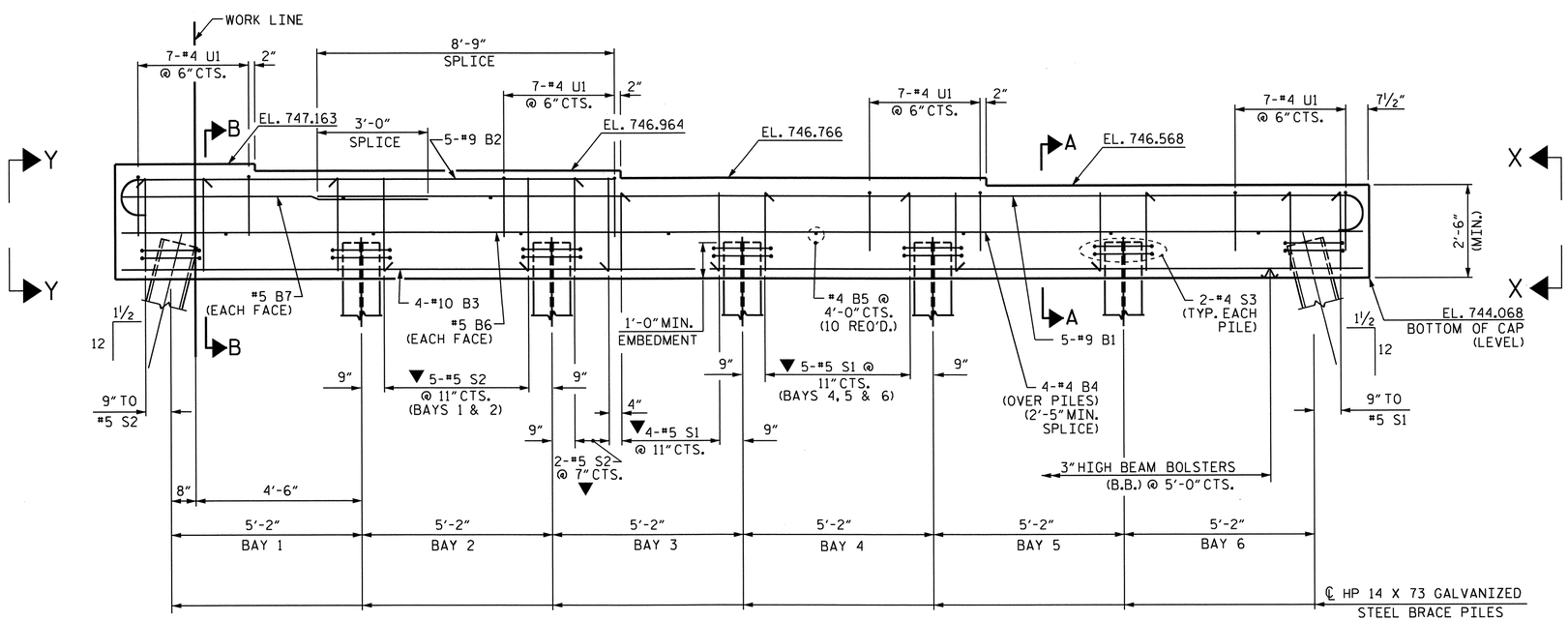


▼ INVERT ALTERNATE STIRRUPS

ELEVATION

PROJECT NO. R-2309AB

GUILFORD COUNTY

STATION: 134+30.00 -L-

SHEET 1 OF 2

STATE OF NORTH CAROLINA
DEPARTMENT OF TRANSPORTATION
RALEIGH

SUBSTRUCTURE

BENT #1

(RIGHT LANE)

NORTH CAROLINA PROFESSIONAL SEAL 14045 ENGINEER TIMOTHY LYLE COGGINS

Timothy L. Coggins 10/27/11

| REVISIONS | | | | | | SHEET NO. |
|---|---|---|---|---|---|---|
| NO. | BY: | DATE: | NO. | BY: | DATE: | S-124 |
| 1 | | | 3 | | | TOTAL SHEETS |
| 2 | | | 4 | | | 136 |

STR. #4

DRAWN BY : PEGGY PARISI DATE : 3-10-11
CHECKED BY : J.B. WILSON DATE : 6-2-11

27-OCT-2011 11:33
R:\TIPProjects-R\R2309AB\Structures\R2309ab\FinalPlans\Bridges\Str#4\r2309ab_sd_b1_04.dgn
tcoggins

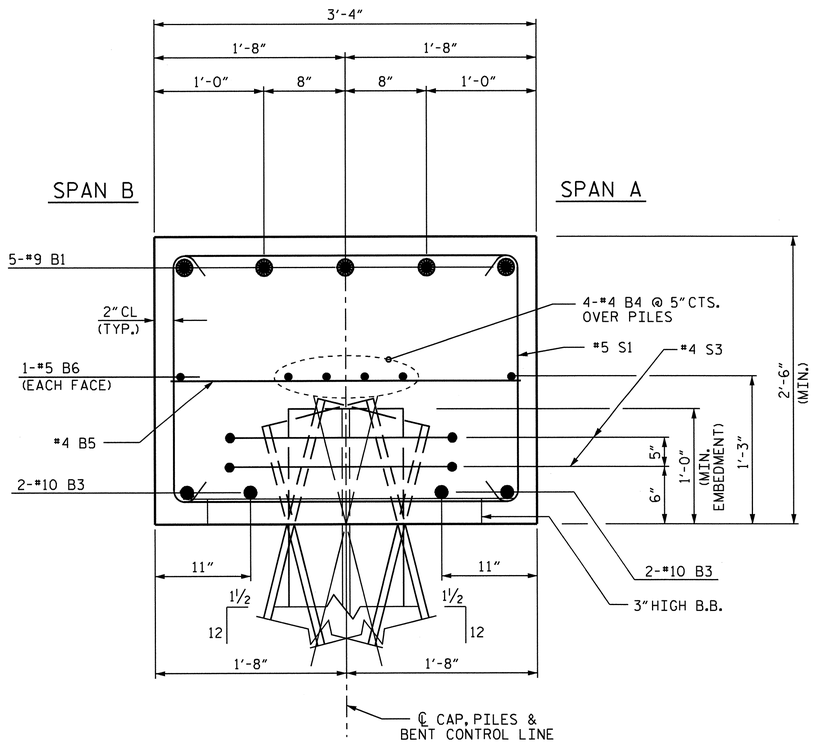


SECTION A-A

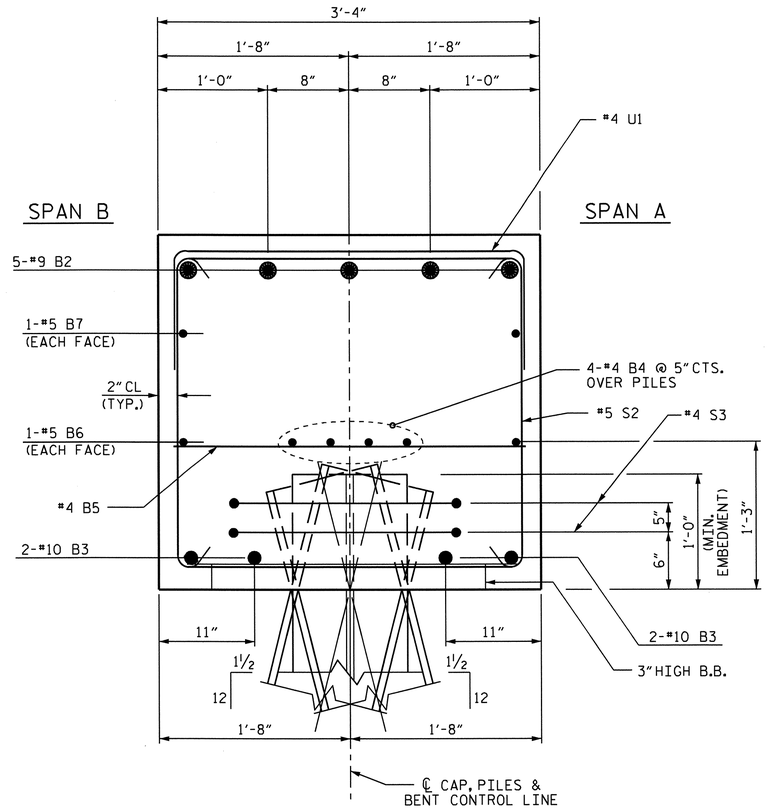


SECTION B-B

## BAR TYPES

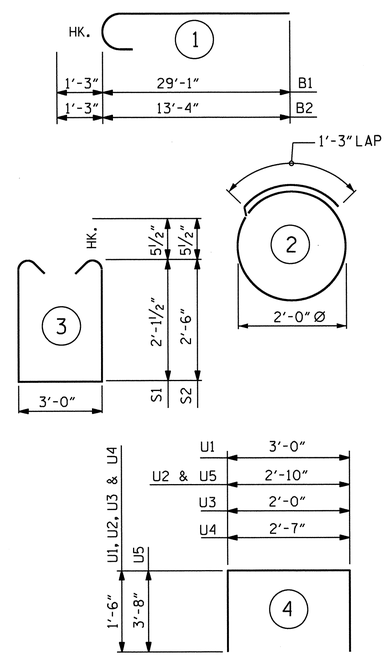


ALL BAR DIMENSIONS ARE OUT TO OUT.

## BILL OF MATERIAL

### BENT #1

| BAR | NO. | SIZE | TYPE | LENGTH | WEIGHT |
|---|---|---|---|---|---|
| B1 | 5 | #9 | 1 | 30'-4" | 516 |
| B2 | 5 | #9 | 1 | 14'-7" | 248 |
| B3 | 4 | #10 | STR | 33'-8" | 579 |
| B4 | 8 | #4 | STR | 18'-1" | 97 |
| B5 | 10 | #4 | STR | 3'-0" | 20 |
| B6 | 2 | #5 | STR | 33'-8" | 70 |
| B7 | 2 | #5 | STR | 7'-8" | 16 |
| | | | | | |
| S1 | 20 | #5 | 3 | 8'-2" | 170 |
| S2 | 13 | #5 | 3 | 8'-11" | 121 |
| S3 | 14 | #4 | 2 | 7'-7" | 71 |
| | | | | | |
| U1 | 28 | #4 | 4 | 6'-0" | 112 |
| U2 | 4 | #4 | 4 | 5'-10" | 16 |
| U3 | 3 | #4 | 4 | 5'-0" | 10 |
| U4 | 3 | #4 | 4 | 5'-7" | 11 |
| U5 | 2 | #9 | 4 | 10'-2" | 69 |

TOTAL REINFORCING STEEL 2126 LBS.

CLASS "A" CONCRETE
POUR #1 CAP 11.5 C.Y.

TOTAL CLASS "A" CONCRETE 11.5 C.Y.

HP 14 X 73 GALVANIZED STEEL PILES
NO. 7 210 LIN. FT.

STEEL PILE POINTS EACH 7

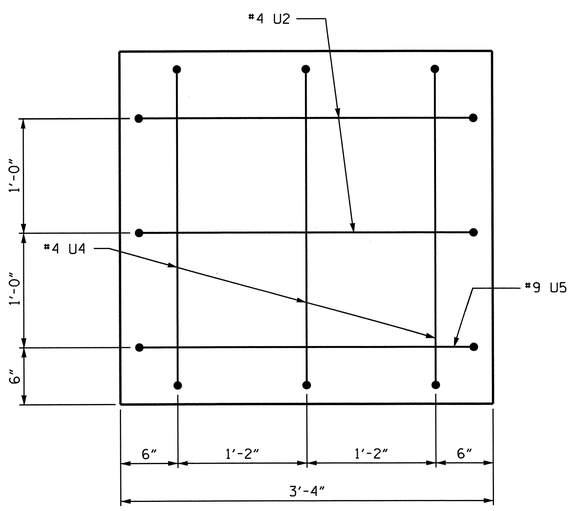


SECTION Y-Y

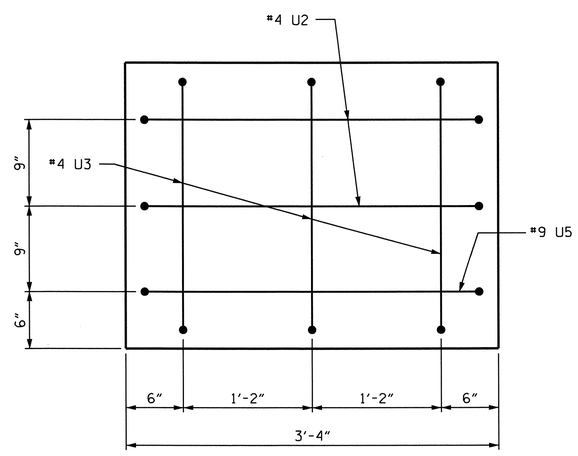


SECTION X-X

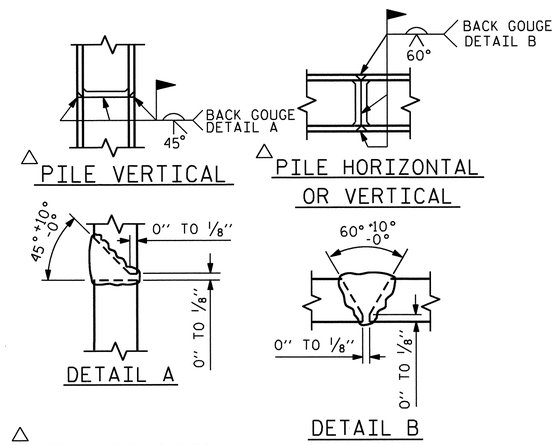


△ POSITION OF PILE DURING WELDING.

PILE SPLICE DETAILS

PROJECT NO. R-2309AB
GUILFORD COUNTY
STATION: 134+30.00 -L-

SHEET 2 OF 2

STATE OF NORTH CAROLINA
DEPARTMENT OF TRANSPORTATION
RALEIGH

SUBSTRUCTURE

BENT #1

(RIGHT LANE)

NORTH CAROLINA PROFESSIONAL SEAL 14045 ENGINEER TIMOTHY K. COGGINS
10/27/11

| REVISIONS | | | | | | SHEET NO. |
|---|---|---|---|---|---|---|
| NO. | BY: | DATE: | NO. | BY: | DATE: | S-125 |
| 1 | | | 3 | | | TOTAL SHEETS |
| 2 | | | 4 | | | 136 |

STR. #4

DRAWN BY : PEGGY PARISI DATE : 3-10-11
CHECKED BY : J.B. WILSON DATE : 6-2-11

27-OCT-2011 11:33
R:\TIPProjects-R\R2309AB\Structures\R2309ab\FinalPlans\Bridges\Str#4\r2309ab_sd_b1_04.dgn
tcoggins

## NOTES:

STIRRUPS AND U1 BARS IN CAP MAY BE SHIFTED AS NECESSARY TO CLEAR ANCHOR BOLTS.

GALVANIZE THE FULL LENGTH OF EACH INTERIOR BENT PILE IN ACCORDANCE WITH SECTION 1076 OF THE STANDARD SPECIFICATIONS.

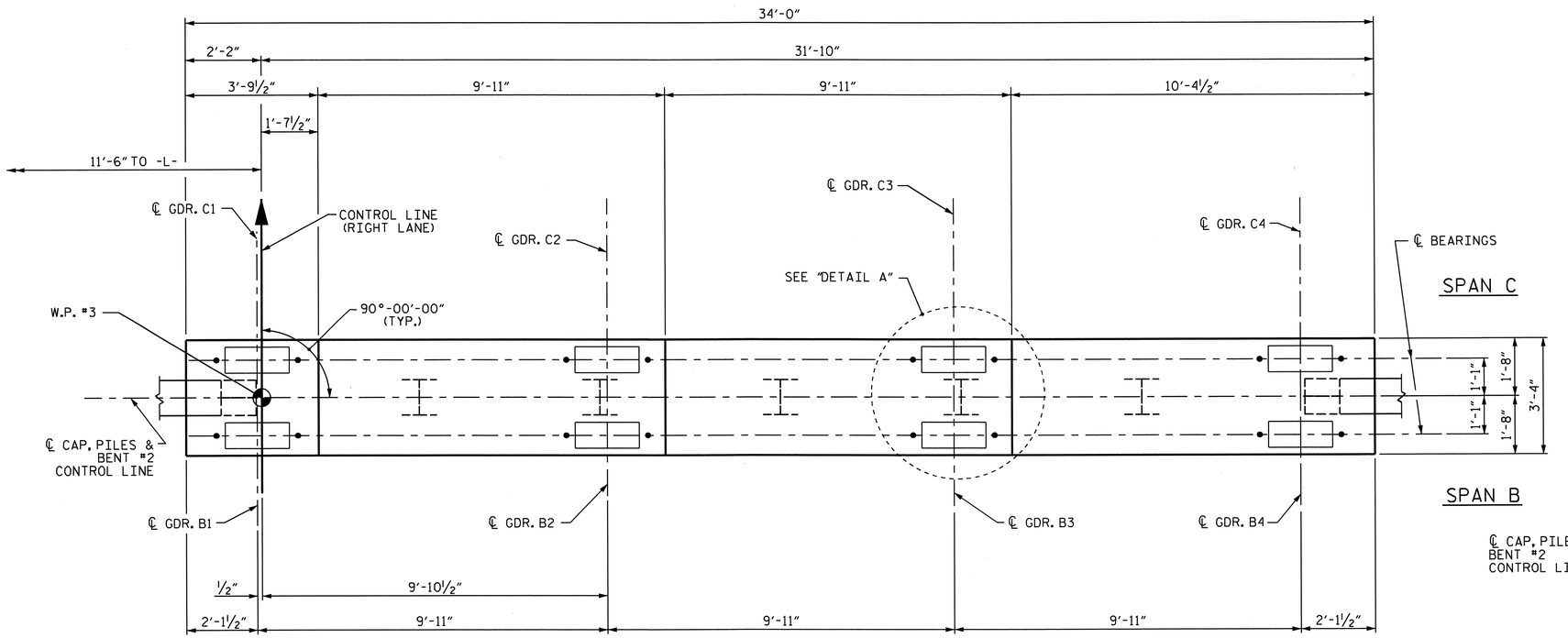


PLAN

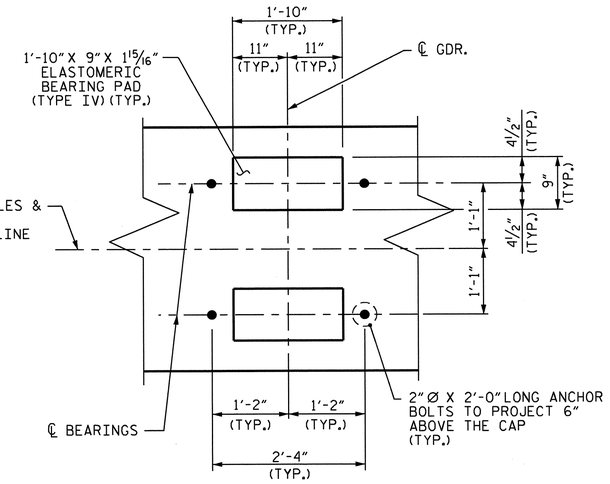


DETAIL "A"

(TYP. EA. GDR.)

FOR ADDITIONAL REINFORCING STEEL IN ENDS OF CAP, SEE SECTION X-X AND SECTION Y-Y ON SHEET 2 OF 2.

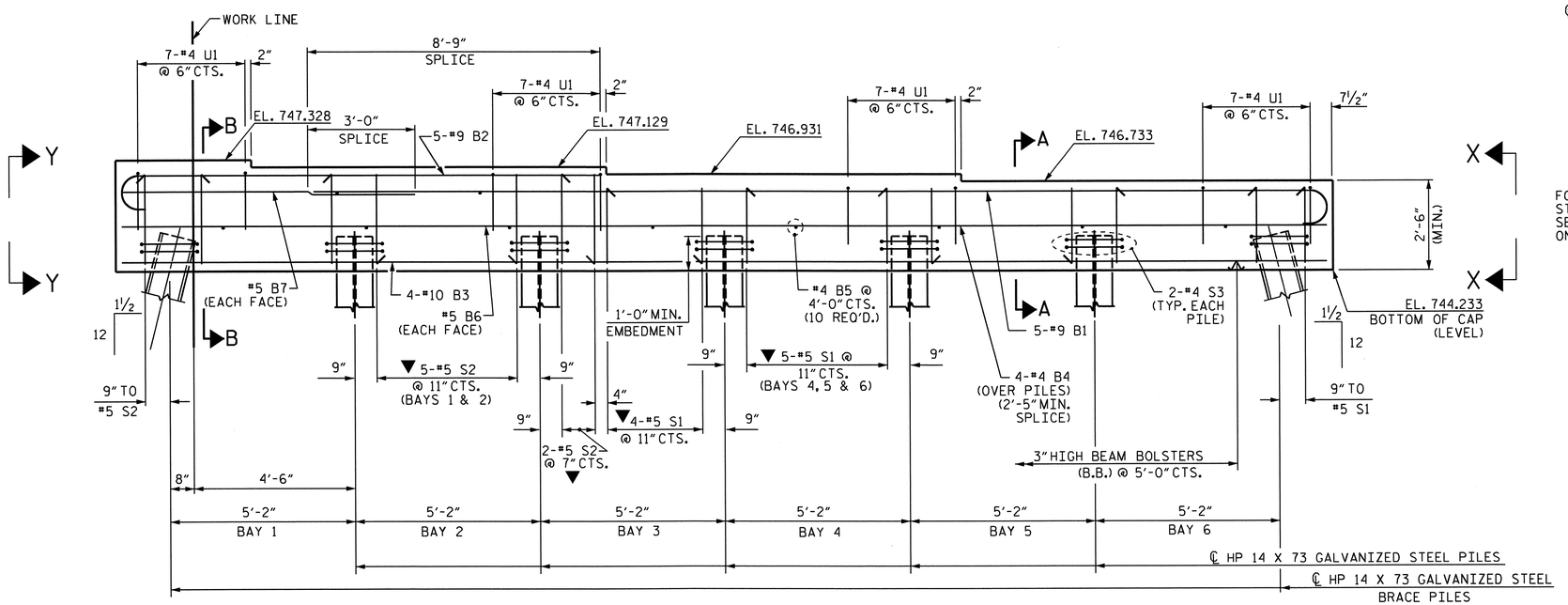


▼ INVERT ALTERNATE STIRRUPS

ELEVATION

PROJECT NO. R-2309AB

GUILFORD COUNTY

STATION: 134+30.00 -L-

SHEET 1 OF 2

STATE OF NORTH CAROLINA
DEPARTMENT OF TRANSPORTATION
RALEIGH

SUBSTRUCTURE

BENT #2

(RIGHT LANE)

NORTH CAROLINA PROFESSIONAL SEAL 14045 ENGINEER TIMOTHY W. COGGINS

10/21/11

| REVISIONS | | | | | | SHEET NO. |
|---|---|---|---|---|---|---|
| NO. | BY: | DATE: | NO. | BY: | DATE: | S-126 |
| 1 | | | 3 | | | TOTAL SHEETS |
| 2 | | | 4 | | | 136 |

STR. #4

DRAWN BY : PEGGY PARISI DATE : 3-10-11
CHECKED BY : J.B. WILSON DATE : 6-2-11

27-OCT-2011 11:33
R:\TIPProjects-R\R2309AB\Structures\R2309ab\FinalPlans\Bridges\Str#4\r2309ab_sd_b1_04.dgn
tcoggins

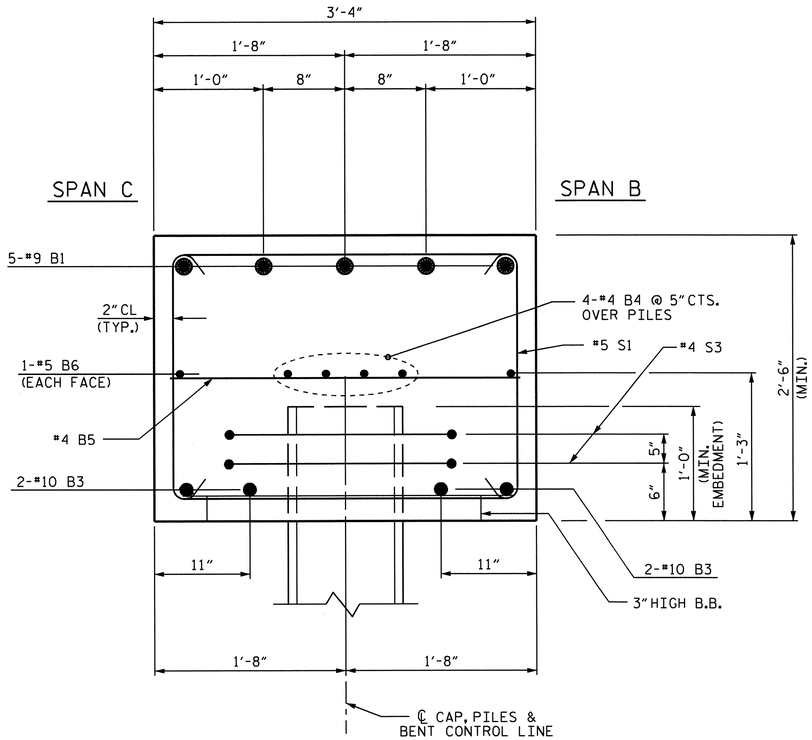


SECTION A-A

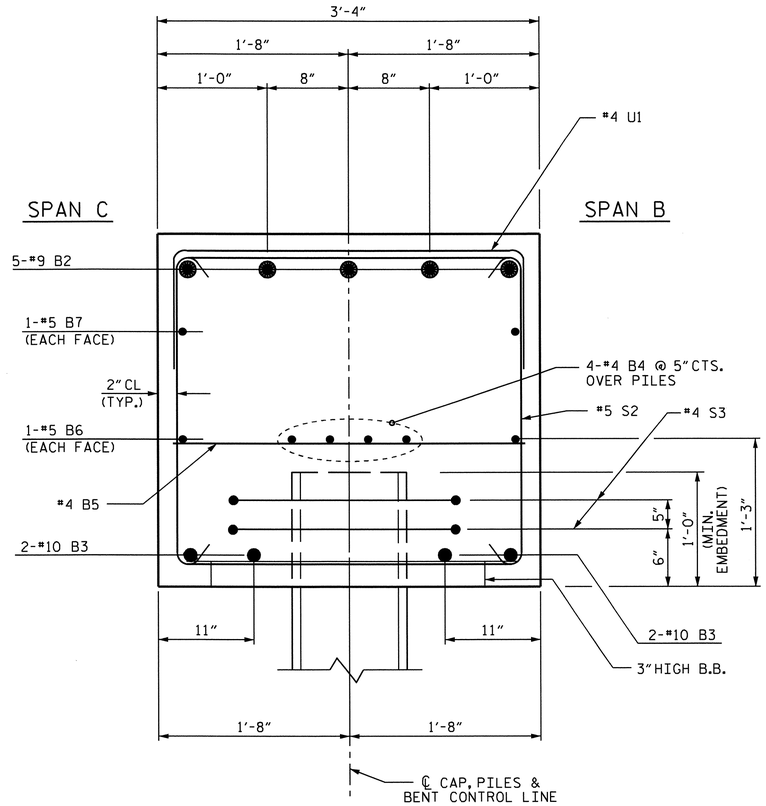


SECTION B-B

## BAR TYPES

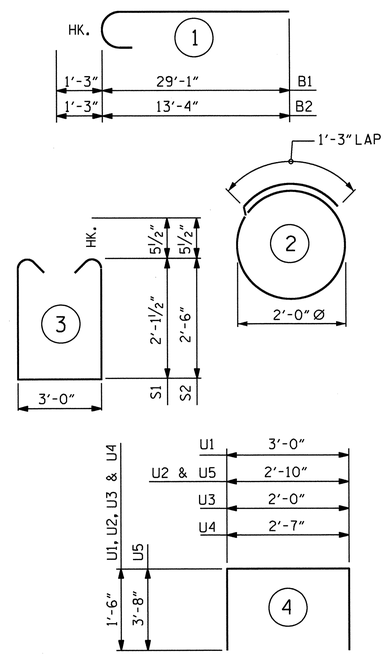


ALL BAR DIMENSIONS ARE OUT TO OUT.

## BILL OF MATERIAL

### BENT #2

| BAR | NO. | SIZE | TYPE | LENGTH | WEIGHT |
|---|---|---|---|---|---|
| B1 | 5 | #9 | 1 | 30'-4" | 516 |
| B2 | 5 | #9 | 1 | 14'-7" | 248 |
| B3 | 4 | #10 | STR | 33'-8" | 579 |
| B4 | 8 | #4 | STR | 18'-1" | 97 |
| B5 | 10 | #4 | STR | 3'-0" | 20 |
| B6 | 2 | #5 | STR | 33'-8" | 70 |
| B7 | 2 | #5 | STR | 7'-8" | 16 |
| | | | | | |
| S1 | 20 | #5 | 3 | 8'-2" | 170 |
| S2 | 13 | #5 | 3 | 8'-11" | 121 |
| S3 | 14 | #4 | 2 | 7'-7" | 71 |
| | | | | | |
| U1 | 28 | #4 | 4 | 6'-0" | 112 |
| U2 | 4 | #4 | 4 | 5'-10" | 16 |
| U3 | 3 | #4 | 4 | 5'-0" | 10 |
| U4 | 3 | #4 | 4 | 5'-7" | 11 |
| U5 | 2 | #9 | 4 | 10'-2" | 69 |

TOTAL REINFORCING STEEL 2126 LBS.

CLASS "A" CONCRETE
POUR #1 CAP 11.5 C.Y.

TOTAL CLASS "A" CONCRETE 11.5 C.Y.

HP 14 X 73 GALVANIZED STEEL PILES
NO. 7 245 LIN. FT.

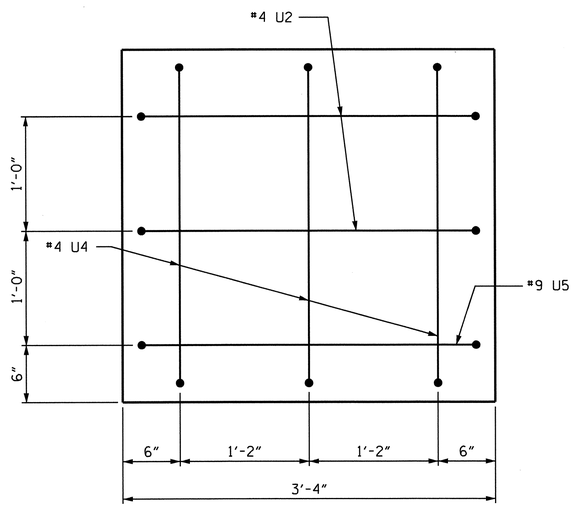


SECTION Y-Y

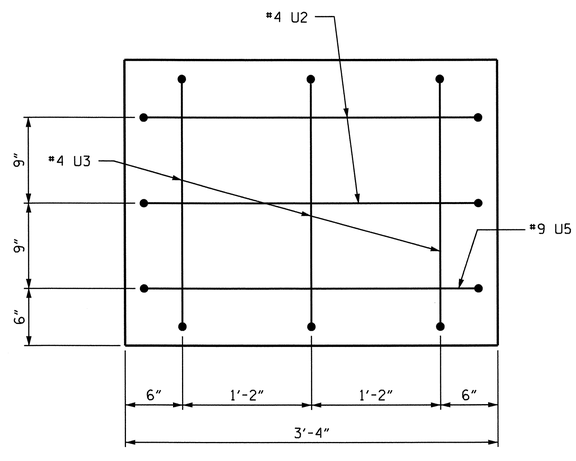


SECTION X-X

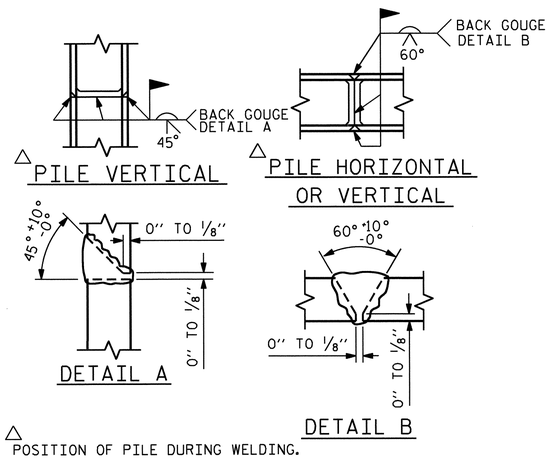


△ POSITION OF PILE DURING WELDING.

PILE SPLICE DETAILS

PROJECT NO. R-2309AB
GUILFORD COUNTY
STATION: 134+30.00 -L-

SHEET 2 OF 2

STATE OF NORTH CAROLINA
DEPARTMENT OF TRANSPORTATION
RALEIGH

SUBSTRUCTURE

BENT #2

(RIGHT LANE)

NORTH CAROLINA PROFESSIONAL SEAL 14045 ENGINEER TIMOTHY M. COGGINS
10/27/11

| REVISIONS | | | | | | SHEET NO. |
|---|---|---|---|---|---|---|
| NO. | BY: | DATE: | NO. | BY: | DATE: | S-127 |
| 1 | | | 3 | | | TOTAL SHEETS |
| 2 | | | 4 | | | 136 |

STR. #4

DRAWN BY : PEGGY PARISI DATE : 3-10-11
CHECKED BY : J.B. WILSON DATE : 6-2-11

27-OCT-2011 11:32
R:\TIPProjects-R\R2309AB\Structures\R2309ab\FinalPlans\Bridges\Str#4\r2309ab_sd_b1_04.dgn
tcoggins

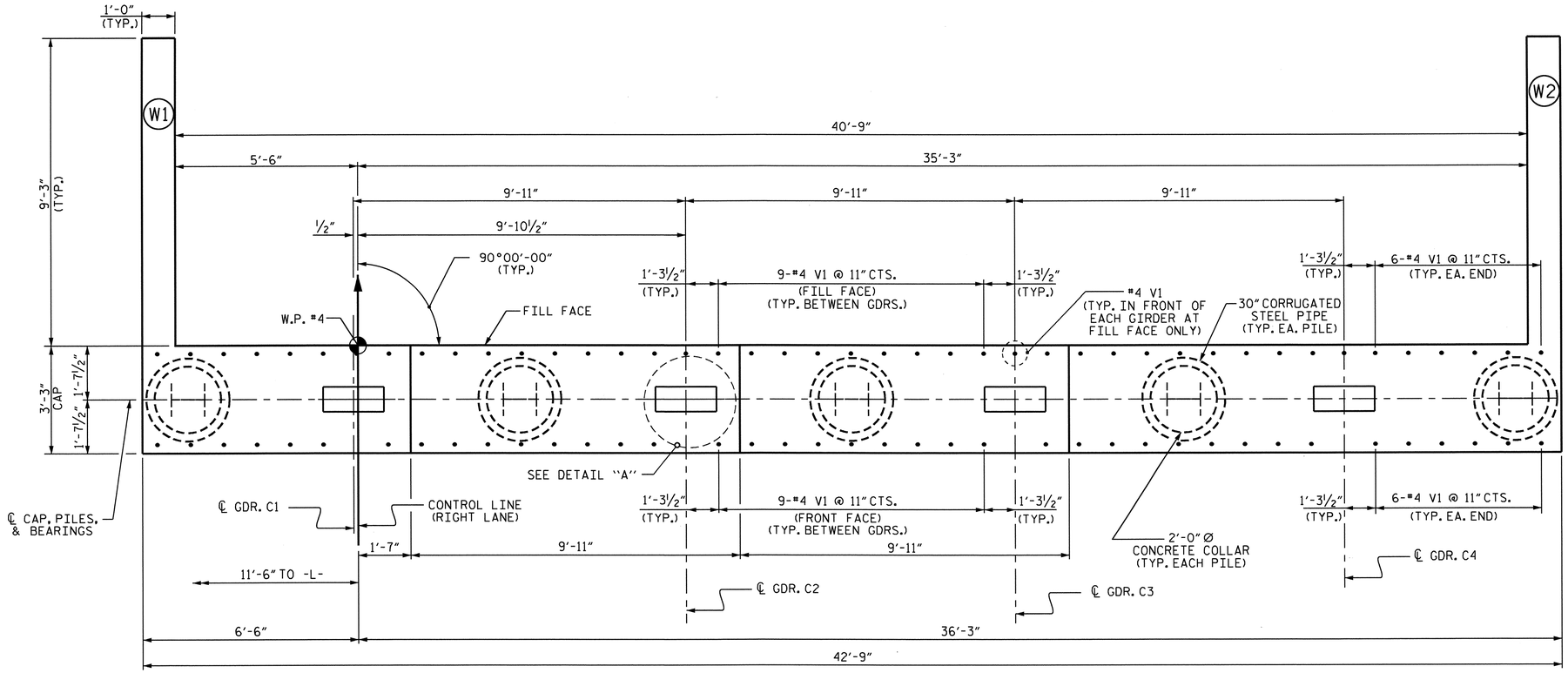


PLAN

## NOTES

STIRRUPS IN CAP MAY BE SHIFTED AS NECESSARY TO CLEAR #4 V1 BARS.

THE CONTRACTOR SHALL PROVIDE FOR INSTALLATION OF THE 4" DIAMETER DRAIN PIPE THROUGH THE WING WALL AS REQUIRED FOR REINFORCED BRIDGE APPROACH FILLS. SEE THE ROADWAY PLANS. REINFORCING STEEL IN THE WING WALL MAY BE SHIFTED AS NECESSARY TO CLEAR THE DRAIN PIPE.

SEE SUPERSTRUCTURE SHEETS FOR UPPER PART OF INTEGRAL END BENT DETAIL.

THE CONTRACTOR'S ATTENTION IS CALLED TO THE FACT THAT UPPER PART OF WINGS ARE TO BE POURED WITH THE SUPERSTRUCTURE.

THE TOP SURFACE OF POUR #1 OF THE END BENT CAP AND WINGS, EXCLUDINGTHE BEARING AREA, SHALL BE RAKED TO A DEPTH OF 1/4".

FOR 30" CORRUGATED STEEL PIPE, SEE SPECIAL PROVISIONS.

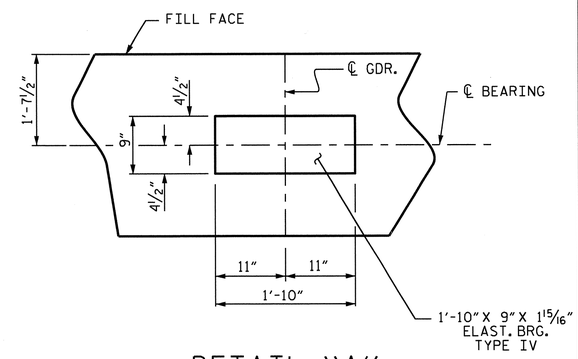


DETAIL "A"
(TYP. EA. GDR.)

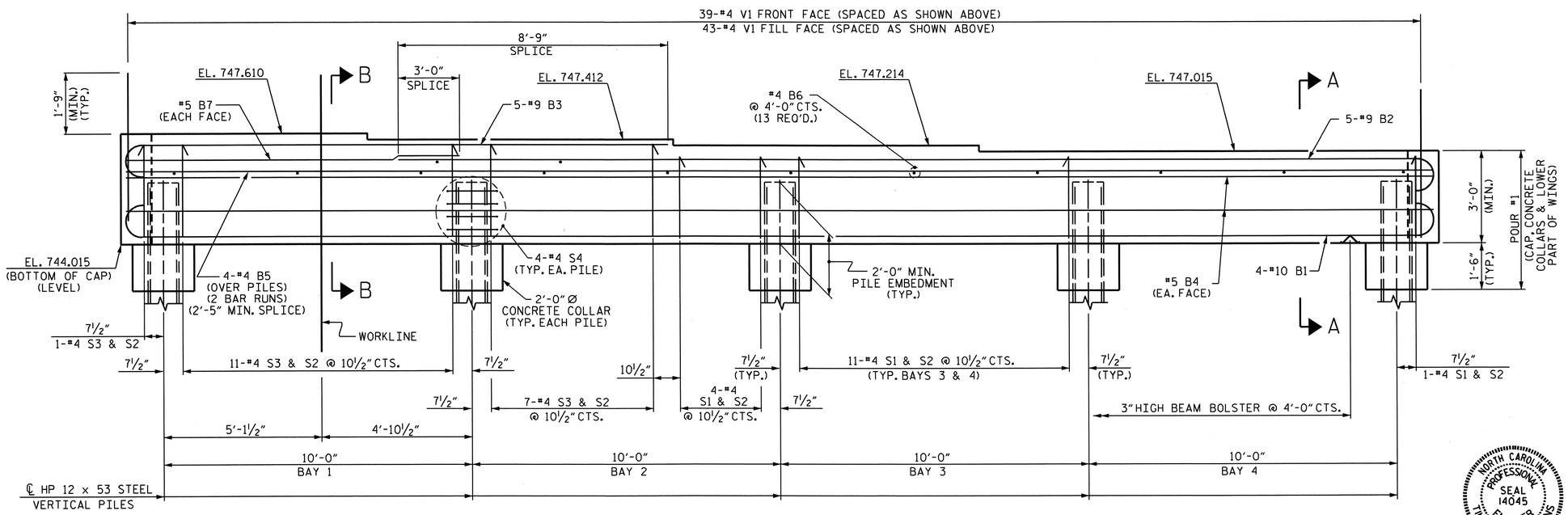


ELEVATION

PROJECT NO. R-2309AB
GUILFORD COUNTY
STATION: 134+30.00 -L-

SHEET 1 OF 3

STATE OF NORTH CAROLINA
DEPARTMENT OF TRANSPORTATION
RALEIGH

SUBSTRUCTURE
INTEGRAL
END BENT #2
(RIGHT LANE)

NORTH CAROLINA PROFESSIONAL SEAL 14045 ENGINEER TIMOTHY J. COGGINS
Timothy J. Coggins 10/27/11

| REVISIONS | | | | | | SHEET NO. |
|---|---|---|---|---|---|---|
| NO. | BY: | DATE: | NO. | BY: | DATE: | S-128 |
| 1 | | | 3 | | | TOTAL SHEETS |
| 2 | | | 4 | | | 136 |

DRAWN BY : PEGGY PARISI DATE : 10-19-10
CHECKED BY : JASON WILSON DATE : 1-28-11

27-OCT-2011 11:32
R:\TIPProjects-R\R2309AB\Structures\R2309ab\FinalPlans\Bridges\Str#4\r2309ab_sd_eb_04.dgn
tcoggins

STR. #4

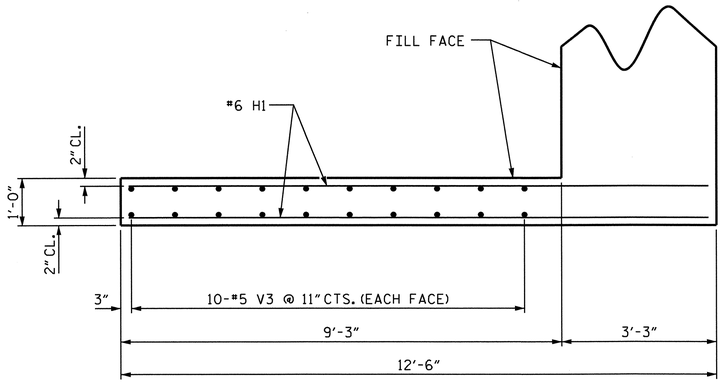


PLAN OF WING W1

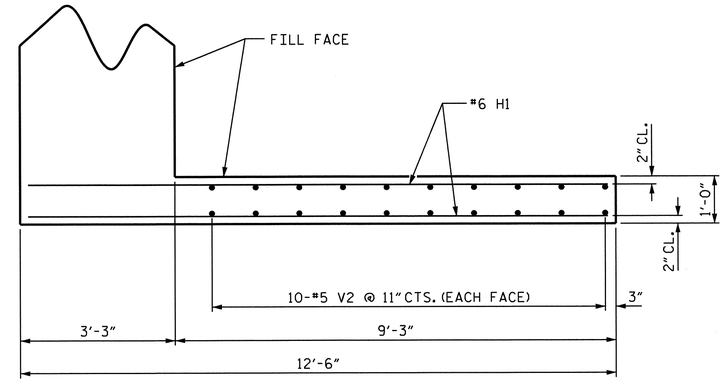


PLAN OF WING W2

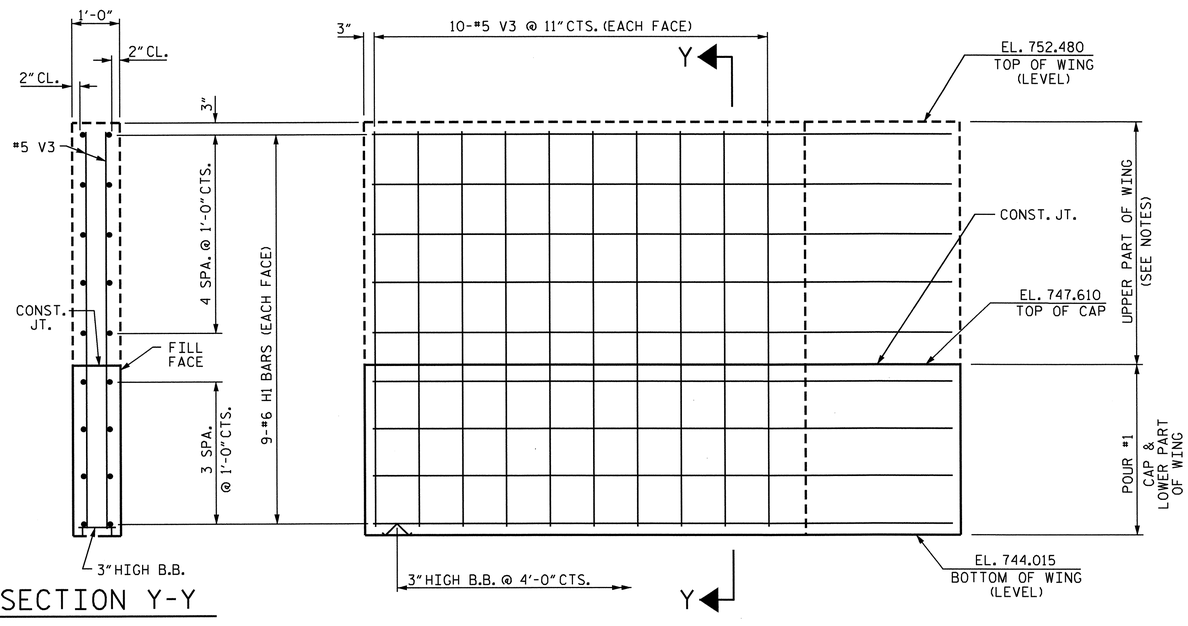


SECTION Y-Y

ELEVATION OF WING W1

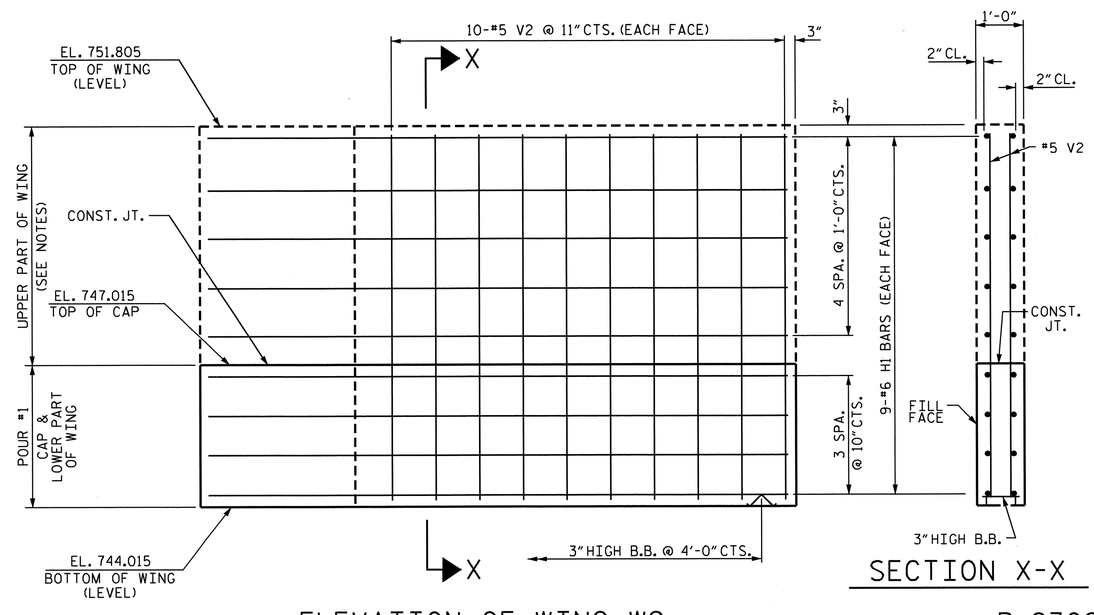


ELEVATION OF WING W2

SECTION X-X

PROJECT NO. R-2309AB

GUILFORD COUNTY

STATION: 134+30.00 -L-

SHEET 2 OF 3

STATE OF NORTH CAROLINA
DEPARTMENT OF TRANSPORTATION
RALEIGH

SUBSTRUCTURE

INTEGRAL
END BENT #2
(RIGHT LANE)

NORTH CAROLINA PROFESSIONAL SEAL 14045 ENGINEER TIMOTHY W. COGGINS
10/27/11

| REVISIONS | | | | | | SHEET NO. |
|---|---|---|---|---|---|---|
| NO. | BY: | DATE: | NO. | BY: | DATE: | S-129 |
| 1 | | | 3 | | | TOTAL SHEETS |
| 2 | | | 4 | | | 136 |

DRAWN BY : PEGGY PARISI DATE : 10-20-10
CHECKED BY : JASON WILSON DATE : 1-28-11

27-OCT-2011 11:32
R:\TIPProjects-R\R2309AB\Structures\R2309ab\FinalPlans\Bridges\Str#4\r2309ab_sd_eb_04.dgn
tcoggins

STR. #4

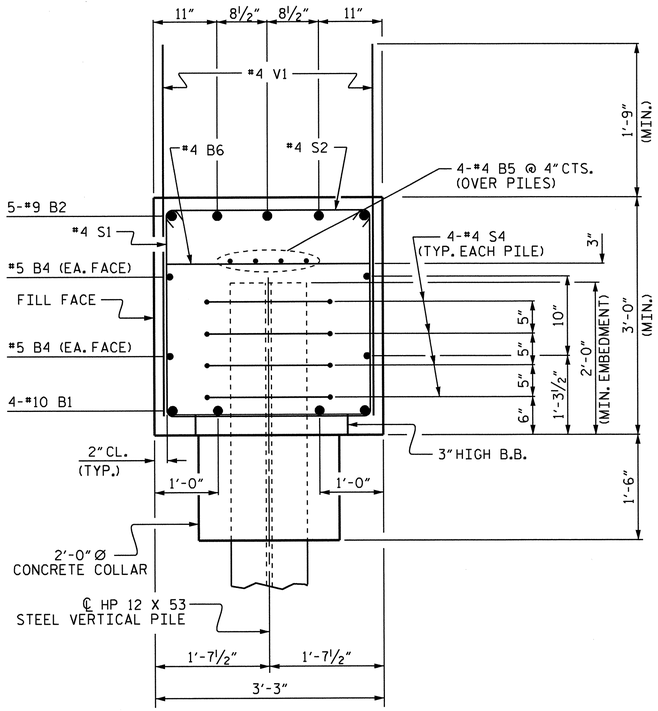


SECTION A-A

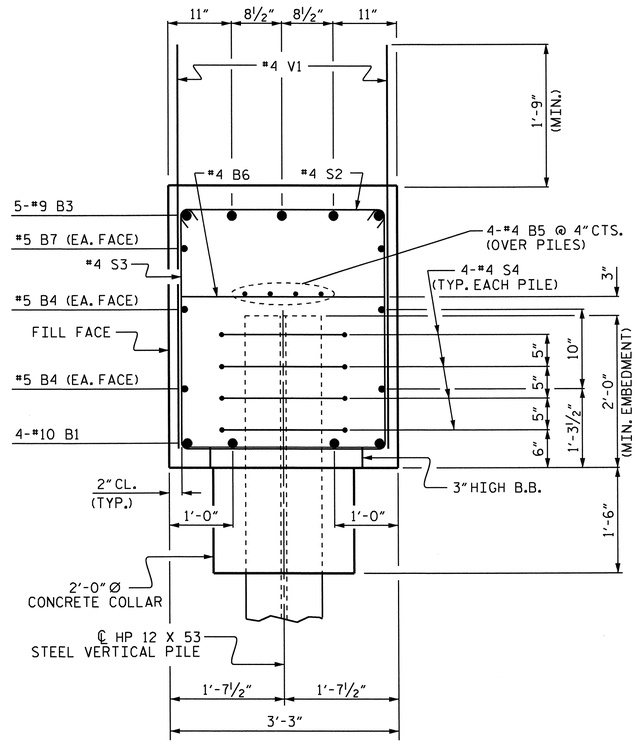


SECTION B-B

## BAR TYPES

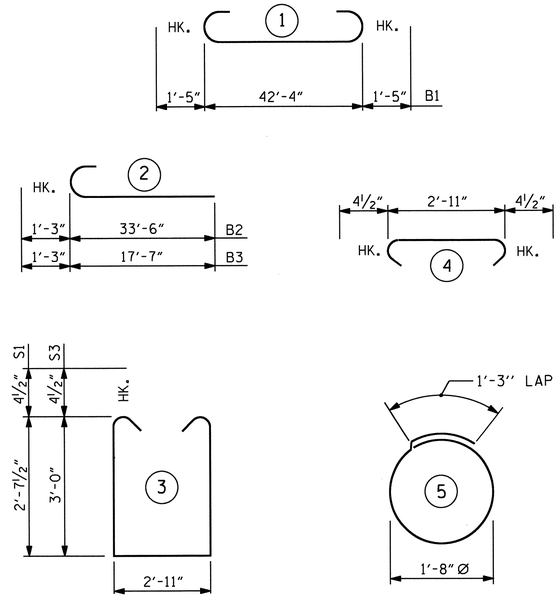


ALL BAR DIMENSIONS ARE OUT TO OUT.

## BILL OF MATERIAL

### INTEGRAL END BENT #2

| BAR | NO. | SIZE | TYPE | LENGTH | WEIGHT |
|---|---|---|---|---|---|
| B1 | 4 | #10 | 1 | 45'-2" | 777 |
| B2 | 5 | #9 | 2 | 34'-9" | 591 |
| B3 | 5 | #9 | 2 | 18'-10" | 320 |
| B4 | 4 | #5 | STR | 42'-5" | 177 |
| B5 | 8 | #4 | STR | 22'-5" | 120 |
| B6 | 13 | #4 | STR | 2'-11" | 25 |
| B7 | 2 | #5 | STR | 11'-11" | 25 |
| H1 | 36 | #6 | STR | 12'-2" | 658 |
| S1 | 27 | #4 | 3 | 8'-11" | 161 |
| S2 | 46 | #4 | 4 | 3'-8" | 113 |
| S3 | 19 | #4 | 3 | 9'-8" | 123 |
| S4 | 20 | #4 | 5 | 6'-6" | 87 |
| V1 | 82 | #4 | STR | 4'-7" | 251 |
| V2 | 20 | #5 | STR | 7'-5" | 155 |
| V3 | 20 | #5 | STR | 8'-1" | 169 |
| REINFORCING STEEL | | | | = | 3752 LBS |

CLASS A CONCRETE

POUR #1 (CAP, CONCRETE COLLARS & LOWER PART OF WINGS) 19.9 C.Y.

TOTAL 19.9 C.Y.

HP 12 x 53 STEEL PILES
No. 5 200 LIN FT.

30" C.S. PIPE, 0.168" THICK 19 LIN FT.

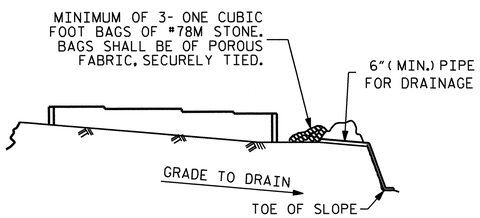


BAGGED STONE AND PIPE SHALL BE PLACED IMMEDIATELY AFTER COMPLETION OF END BENT EXCAVATION. PIPE MAY BE EITHER CONCRETE, CORRUGATED STEEL, CORRUGATED ALUMINUM ALLOY, OR CORRUGATED PLASTIC. PERFORATED PIPE WILL NOT BE ALLOWED.

BAGGED STONE SHALL REMAIN IN PLACE UNTIL THE ENGINEER DIRECTS THAT IT BE REMOVED. THE CONTRACTOR SHALL REMOVE AND DISPOSE OF SILT ACCUMULATIONS AT BAGGED STONE WHEN SO DIRECTED BY THE ENGINEER. BAGS SHALL BE REMOVED AND REPLACED WHENEVER THE ENGINEER DETERMINES THAT THEY HAVE DETERIORATED AND LOST THEIR EFFECTIVENESS.

NO SEPARATE PAYMENT WILL BE MADE FOR THIS WORK AND THE ENTIRE COST OF THIS WORK SHALL BE INCLUDED IN THE UNIT CONTRACT PRICE BID FOR THE SEVERAL PAY ITEMS.

## TEMPORARY DRAINAGE AT END BENT

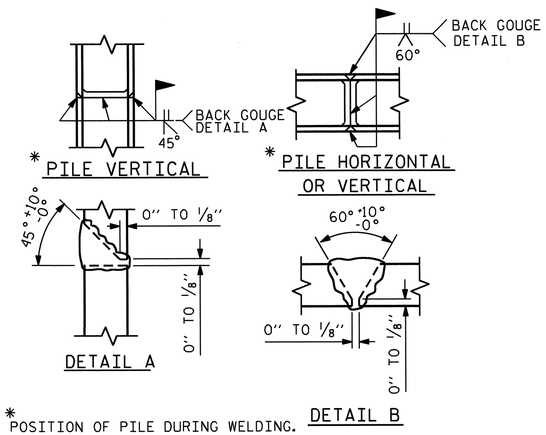


* POSITION OF PILE DURING WELDING.

## PILE SPLICE DETAILS

PROJECT NO. R-2309AB
GUILFORD COUNTY
STATION: 134+30.00 -L-

SHEET 3 OF 3

STATE OF NORTH CAROLINA
DEPARTMENT OF TRANSPORTATION
RALEIGH

SUBSTRUCTURE

INTEGRAL END BENT #2

(RIGHT LANE)

NORTH CAROLINA PROFESSIONAL SEAL 14045 ENGINEER TIMOTHY J. COGGINS
10/27/11

| REVISIONS | | | | | | SHEET NO. |
|---|---|---|---|---|---|---|
| NO. | BY: | DATE: | NO. | BY: | DATE: | S-130 |
| 1 | | | 3 | | | TOTAL SHEETS |
| 2 | | | 4 | | | 136 |

DRAWN BY : PEGGY PARISI DATE : 10-21-10
CHECKED BY : JASON WILSON DATE : 1-28-11

27-OCT-2011 11:31
R:\TIPProjects-R\R2309AB\Structures\R2309ab\FinalPlans\Bridges\Str#4\r2309ab_sd_eb_04.dgn
tcoggins

STR. #4

NOTES :

FOR BERM WIDTH DIMENSIONS, SEE GENERAL DRAWING.

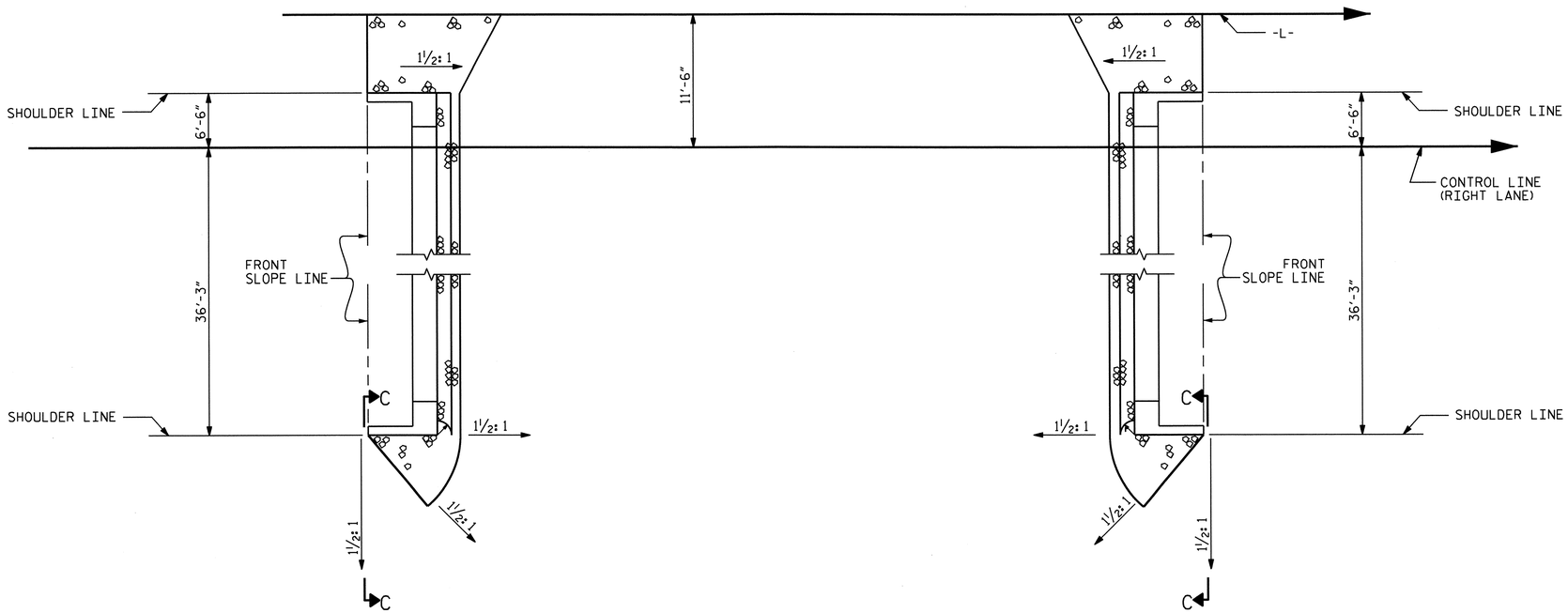


BERM RIP RAPPED

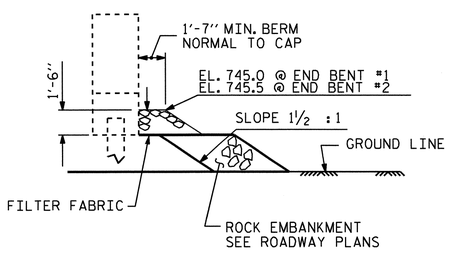


℄ SECTION

BERM RIP RAPPED

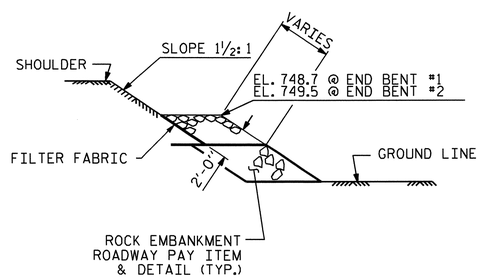


SECTION C-C

| ESTIMATED QUANTITIES | | |
|---|---|---|
| BRIDGE @ STA. 134+30.00 -L- (RIGHT LANE) | RIP RAP CLASS II (2'-0" THICK) | FILTER FABRIC FOR DRAINAGE |
| | TONS | SQUARE YARDS |
| END BENT 1 | 29 | 32 |
| END BENT 2 | 28 | 33 |

PROJECT NO. R-2309AB

GUILFORD COUNTY

STATION: 134+30.00 -L-

STATE OF NORTH CAROLINA
DEPARTMENT OF TRANSPORTATION
RALEIGH

STANDARD

RIP RAP DETAILS

(RIGHT LANE)

NORTH CAROLINA PROFESSIONAL SEAL 14045 ENGINEER TIMOTHY L. COGGINS

10/27/11

| REVISIONS | | | | | | SHEET NO. |
|---|---|---|---|---|---|---|
| NO. | BY: | DATE: | NO. | BY: | DATE: | S-131 |
| 1 | | | 3 | | | TOTAL SHEETS |
| 2 | | | 4 | | | 136 |

ASSEMBLED BY : PEGGY PARISI DATE : 9-30-10
CHECKED BY : J.B. WILSON DATE : 10/22/10

DRAWN BY : FCJ 2/88
CHECKED BY : ARB 8/88

REV. 8/16/99 RWW/LES
REV. 10/17/00 RWW/LES
REV. 5/1/06R TLA/GM

27-OCT-2011 11:59
R:\TIPProjects-R\R2309AB\Structures\R2309ab\FinalPlans\Bridges\Str#4\r2309ab_sd_rr_04.dgn
tcoggins

STR. #4 SKEW 90° STD. NO. RR2

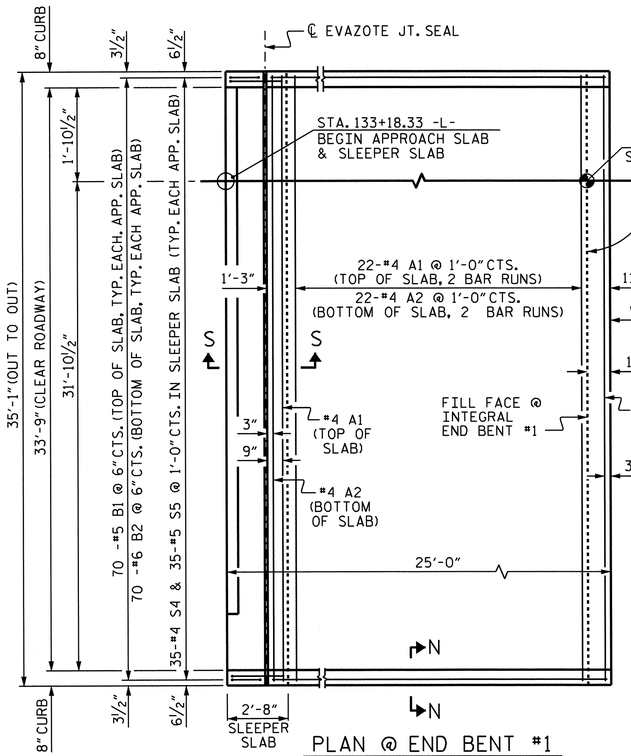


PLAN @ END BENT #1

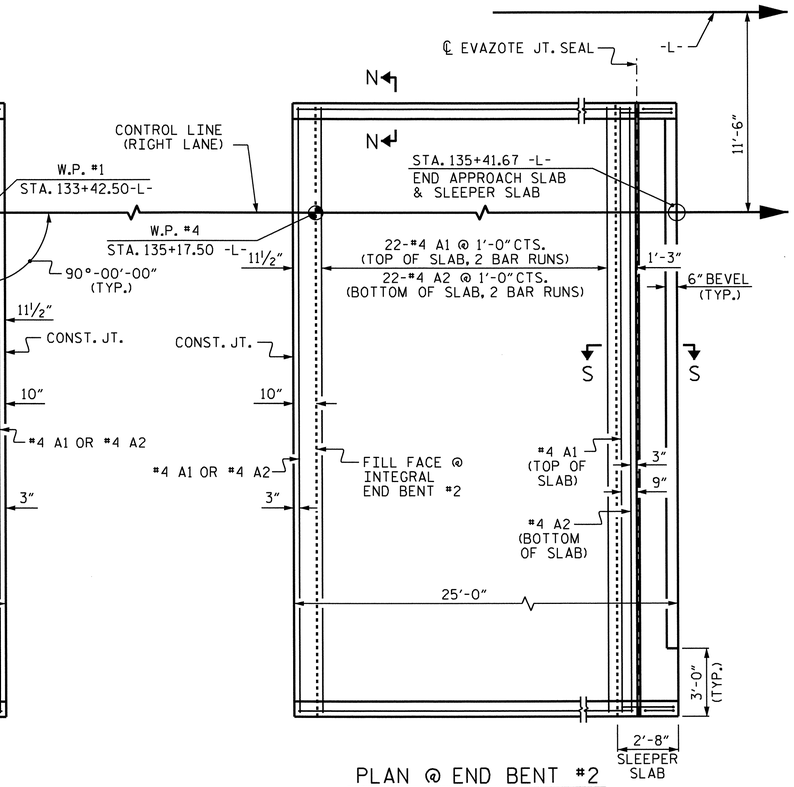


PLAN @ END BENT #2

DIMENSIONS SHOWN ARE TYPICAL FOR BOTH APPROACH SLABS. #4 A1 BARS IN SLEEPER SLAB NOT SHOWN FOR CLARITY.

## NOTES

APPROACH SLAB SHALL NOT BE CONSTRUCTED PRIOR TO COMPLETION OF THE BRIDGE DECK.

FOR REINFORCED BRIDGE APPROACH FILL INCLUDING FABRIC, IMPERMEABLE GEOMEMBRANE, 4" Ø DRAINAGE PIPE, #78M STONE, AND SELECT MATERIAL, SEE ROADWAY PLANS.

AREA BETWEEN THE WINGWALL AND APPROACH SLAB SHALL BE GRADED TO DRAIN THE WATER AWAY FROM THE FILL FACE OF THE BRIDGE AND SHALL BE PAVED. SEE ROADWAY PLANS.

THE 6" COMP. A.B.C. SHALL BE FLUSH WITH THE SLEEPER SLAB AND SHALL EXTEND 1'-0" OUTSIDE OF EACH EDGE OF THE APPROACH SLAB.

THE CONTRACTOR MAY USE 4" TYPE B-25.0B ASPHALT CONCRETE BASE COURSE IN LIEU OF 6" COMP. A.B.C. IF THIS OPTION IS USED, THE BASE COURSE SHALL BE FLUSH WITH THE SLEEPER SLAB, AND THE WIDTH SHALL BE THE SAME AS THAT OF THE APPROACH SLAB.

THE CONTRACTOR MAY USE 5" CLASS "A" CONCRETE BASE IN LIEU OF 6" COMP. A.B.C. IF THIS OPTION IS USED, THE CONCRETE BASE SHALL BE FLUSH WITH THE SLEEPER SLAB, AND THE WIDTH SHALL BE THE SAME AS THAT OF THE APPROACH SLAB. THE CONCRETE SHALL BE FINISHED TO A SMOOTH SURFACE AND A LAYER OF 30 LB ROOFING FELT SHALL BE PLACED BETWEEN THE CONCRETE BASE AND THE APPROACH SLAB TO PREVENT BOND. THE APPROACH SLAB SHALL NOT BE CAST UNTIL THE CONCRETE BASE HAS REACHED AN AGE OF THREE CURING DAYS.

THE VERTICAL JOINT ON THE RIGHT AND LEFT SIDE OF THE APPROACH SLAB AT THE ENDS OF THE EVAZOTE JOINT SHALL BE FILLED WITH SILICONE OR OTHER APPROVED MATERIAL IN ORDER TO PREVENT BACKFILL FROM ENTERING THE JOINT OPENING.

THE JOINT OPENING AT THE APPROACH SLAB/DECK INTERFACE SHALL BE SAWED NO MORE THAN 12 HOURS AFTER THE APPROACH SLAB IS CAST. THE JOINT SHALL BE CLEANED OF ALL DEBRIS BEFORE THE SEALANT IS APPLIED. THE JOINT SEALER MATERIAL SHALL CONFORM TO THE REQUIREMENTS OF TYPE SL LOW MODULUS SILICONE SEALANT.

WITH EVAZOTE JOINT SEAL

FOR EVAZOTE JOINT SEALS, SEE SPECIAL PROVISIONS.

THE NOMINAL UNCOMPRESSED SEAL WIDTH OF THE EVAZOTE JOINT SEAL SHALL BE 3 7/16".

FOR ELASTOMERIC CONCRETE, SEE SPECIAL PROVISIONS.

## BILL OF MATERIAL

FOR ONE APPROACH SLAB (2 REQ'D)

| BAR | NO. | SIZE | TYPE | LENGTH | WEIGHT |
|---|---|---|---|---|---|
| * A1 | 62 | #4 | STR | 18'-5" | 763 |
| A2 | 48 | #4 | STR | 18'-3" | 585 |
| * B1 | 70 | #5 | STR | 22'-5" | 1637 |
| B2 | 70 | #6 | STR | 22'-10" | 2401 |
| * S4 | 35 | #4 | 1 | 3'-11" | 92 |
| S5 | 35 | #5 | 2 | 2'-11" | 106 |
| REINFORCING STEEL | | | | LBS. | 3092 |
| * EPOXY COATED REINFORCING STEEL | | | | LBS. | 2492 |
| CLASS AA CONCRETE | | | | | |
| POUR #1 - SLAB & CURB | | | | C. Y. | 30.3 |
| POUR #2 - SLEEPER SLAB | | | | C. Y. | 3.6 |
| TOTAL | | | | C. Y. | 33.9 |

## BAR TYPES

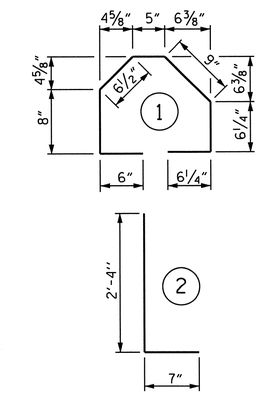


ALL BAR DIMENSIONS ARE OUT TO OUT

## SPLICE CHART

| BAR | SPLICE LENGTH |
|---|---|
| #4 A1 | 2'-0" |
| #4 A2 | 1'-9" |

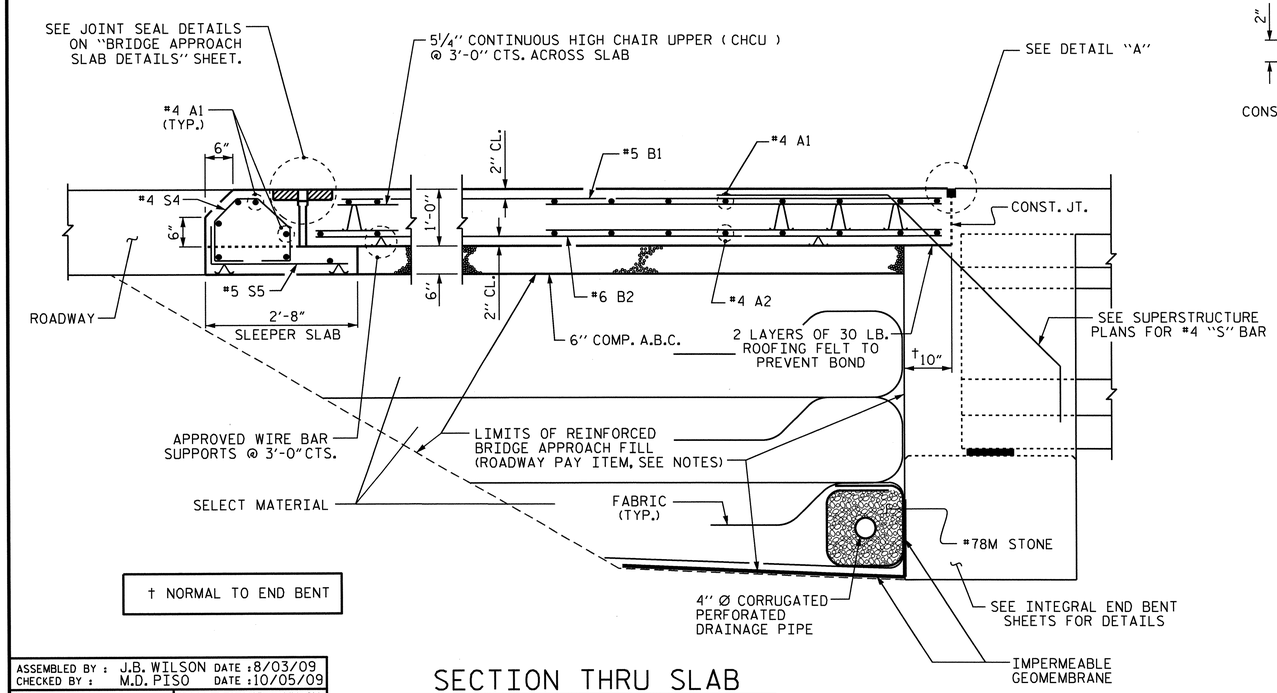


† NORMAL TO END BENT

SECTION THRU SLAB

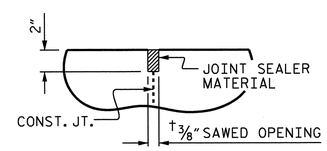


DETAIL "A"

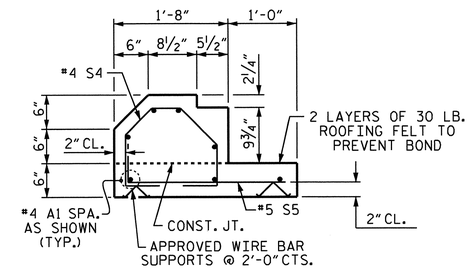


SECTION S-S

SHOWING SLEEPER SLAB

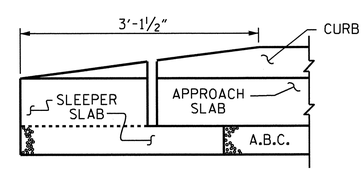


END OF CURB WITHOUT SHOULDER BERM GUTTER

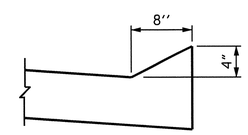


SECTION N-N

PROJECT NO. R-2309AB

GUILFORD COUNTY

STATION: 134+30.00 -L-

SHEET 1 OF 2

STATE OF NORTH CAROLINA
DEPARTMENT OF TRANSPORTATION
RALEIGH

STANDARD

BRIDGE APPROACH SLAB
FOR INTEGRAL ABUTMENT
(RIGHT LANE)

NORTH CAROLINA PROFESSIONAL SEAL 14045 ENGINEER TIMOTHY L. COGGINS

10/27/11

| REVISIONS | | | | | | | SHEET NO. |
|---|---|---|---|---|---|---|---|
| NO. | BY: | DATE: | NO. | BY: | DATE: | | S-132 |
| 1 | | | 3 | | | | TOTAL SHEETS |
| 2 | | | 4 | | | | 136 |

STR. #4 STD. NO. BAS11

ASSEMBLED BY : J.B. WILSON DATE : 8/03/09
CHECKED BY : M.D. PISO DATE : 10/05/09
DRAWN BY : TLA 10/05
CHECKED BY : GM 5/06
ADDED 5/1/06R KMM/GM

27-OCT-2011 11:58
R:\TIPProjects-R\R2309AB\Structures\R2309ab\FinalPlans\Bridges\Str#4\r2309ab_sd_as_04.dgn
tcoggins

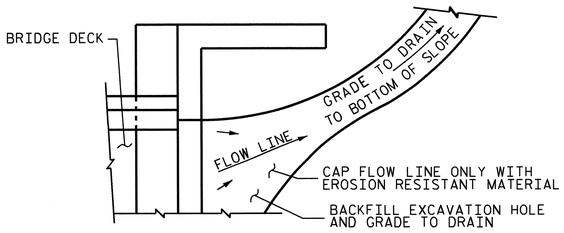


NOTE: IF THE APPROACH SLAB IS NOT CONSTRUCTED IMMEDIATELY AFTER THE BACKFILLING OF THE END BENT EXCAVATION, GRADE TO DRAIN TO THE BOTTOM OF THE SLOPE AND PROVIDE EROSION RESISTANT MATERIAL, SUCH AS FIBERGLASS ROVING OR AS DIRECTED BY THE ENGINEER TO PREVENT SOIL EROSION AND TO PROTECT THE AREA ADJACENT TO THE STRUCTURE. THE CONTRACTOR WILL BE REQUIRED TO REMOVE THESE MATERIALS PRIOR TO CONSTRUCTION OF THE APPROACH SLAB.

## TEMPORARY DRAINAGE DETAIL

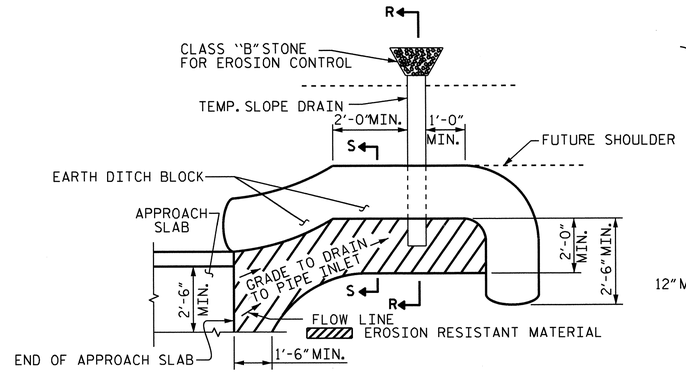


NOTE: IMMEDIATELY AFTER THE CONSTRUCTION OF THE APPROACH SLAB, THE CONTRACTOR SHALL PROVIDE TEMPORARY BERM AND SLOPE DRAIN. CONTRACTOR SHALL GRADE TO PIPE INLET AND PROVIDE EROSION RESISTANT MATERIAL AS SHOWN. THE EROSION RESISTANT MATERIAL SHALL BE EITHER 1) ASPHALT PLANT MIX, TYPE 1 OR TYPE 2, MIN. 2" DEPTH, 2) EROSION CONTROL MAT, OR 3) CONCRETE, AS DIRECTED BY THE ENGINEER. THE SLOPE DRAIN SHALL CONSIST OF A NON-PERFORATED TEMPORARY DRAINAGE PIPE, 12 INCHES IN DIAMETER.

PLAN VIEW

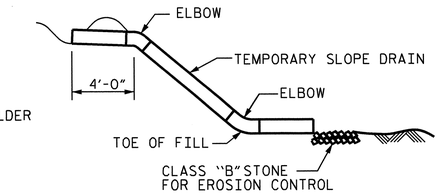


SECTION R-R

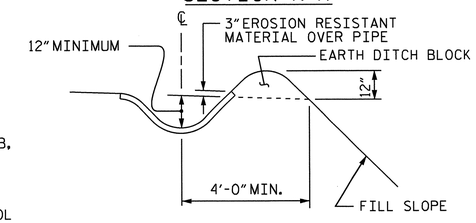


SECTION S-S

## TEMPORARY BERM AND SLOPE DRAIN DETAILS

(TO BE USED WHEN SHOULDER BERM GUTTER IS REQUIRED)

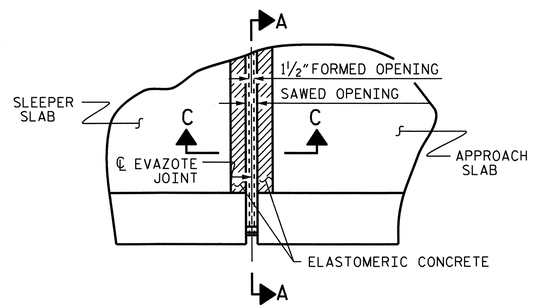


PLAN

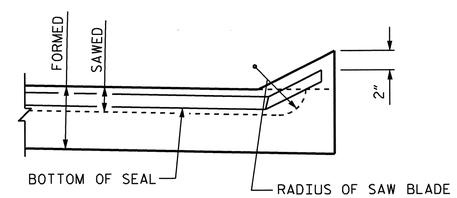


SECTION A-A

| ELASTOMERIC CONCRETE | |
|---|---|
| END BENT NO. | ELASTOMERIC CONCRETE * (CU. FT.) |
| 1 | 5.8 |
| 2 | 5.8 |
| TOTAL | 11.6 |

* BASED ON THE MINIMUM BLOCKOUT SHOWN.

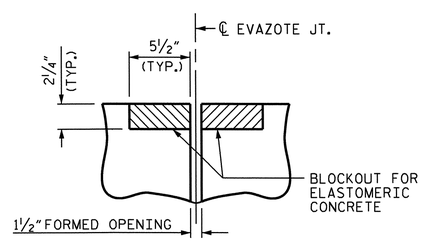


SECTION C-C
EVAZOTE JOINT SEAL
(PRE-SAWED ELASTOMERIC CONCRETE DIMENSIONS)

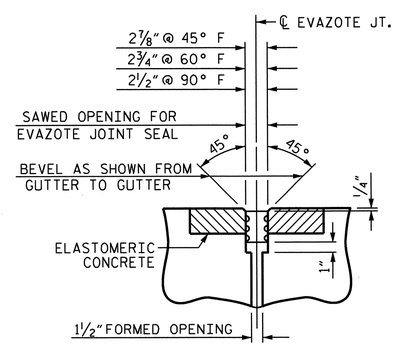


SECTION C-C
EVAZOTE JOINT SEAL

## JOINT SEAL DETAILS @ SLEEPER SLAB

PROJECT NO. R-2309AB
GUILFORD COUNTY
STATION: 134+30.00 -L-

SHEET 2 OF 2

STATE OF NORTH CAROLINA
DEPARTMENT OF TRANSPORTATION
RALEIGH

STANDARD

BRIDGE APPROACH SLAB FOR INTEGRAL ABUTMENT (RIGHT LANE)

NORTH CAROLINA PROFESSIONAL SEAL 14045 ENGINEER TIMOTHY W. COGGINS
10/27/11

| REVISIONS | | | | | | SHEET NO. |
|---|---|---|---|---|---|---|
| NO. | BY: | DATE: | NO. | BY: | DATE: | S-133 |
| 1 | | | 3 | | | TOTAL SHEETS |
| 2 | | | 4 | | | 136 |

| | | | |
|---|---|---|---|
| ASSEMBLED BY : J.B. WILSON | | DATE : 8/03/09 | |
| CHECKED BY : M.D. PISO | | DATE : 10/05/09 | |
| DRAWN BY : FCJ | 11/88 | REV. 10/17/00 | RWW/LES |
| CHECKED BY : ARB | 11/88 | REV. 5/7/03 | RWW/JTE |
| | | REV. 5/1/06 | RR TLA/GM |

STR. #4 STD. NO. BAS10

27-OCT-2011 11:57
R:\TIPProjects-R\R2309AB\Structures\R2309ab\FinalPlans\Bridges\Str#4\r2309ab_sd_as_04.dgn
tcoggins

# OVERHANG BRACKET CALCULATION INSTRUCTIONS

## AASHTO SHAPES - TYPES III, IV, V, AND VI

1. RECORD KNOWN INFORMATION ON "BRIDGE OVERHANG BRACKET SUMMARY" ON SHEET 2
2. CALCULATE THE MAXIMUM SCREED LOAD PER BRACKET (SLPB) WITH AN ESTIMATED R = 1.5. SLPB = R X W. ROUND VALUE UP TO NEAREST SLPB VALUE INDICATED ON APPROPRIATE TABLE 1-1, 1-2, 1-3, OR 1-4.
3. WITH THE ESTIMATED SLPB, OVERHANG SLAB THICKNESS, "K" VALUE, AND 45° HANGER SAFE WORKING LOAD (SWL), ENTER THE APPROPRIATE TABLE 1-1, 1-2, 1-3, OR 1-4 (BASED ON OVERHANG DIMENSION) AND DETERMINE THE BRACKET SPACING, S.
4. CALCULATE S/D1 AND S/D2, ROUNDING UP TO NEAREST VALUE IN TABLE 2. ENTER TABLE 2 AND DETERMINE R VALUE.
5. CALCULATE REVISED SLPB. ROUND VALUE UP TO NEAREST SLPB VALUE INDICATED ON APPROPRIATE TABLE 1-1, 1-2, 1-3, OR 1-4.
6. WITH THE REVISED SLPB, OVERHANG SLAB THICKNESS, "K" VALUE AND 45 HANGER SAFE WORKING LOAD (SWL), ENTER THE APPROPRIATE TABLE 1-1, 1-2, 1-3 OR 1-4 (BASED ON OVERHANG DIMENSION) AND DETERMINE REVISED BRACKET SPACING, S.
7. CONTINUE ITERATIONS OF STEPS 4-6 UNTIL THE REVISED BRACKET SPACING, S, IS THE SAME AS THE PREVIOUS S VALUE.
8. CHECK LUMBER JOIST SPACING: WITH BRACKET SPACING VALUE, S, ROUND THIS VALUE UP TO THE NEAREST VALUE OF ALLOWABLE SPAN LENGTH OF JOIST OF TABLE 3. USING THIS VALUE, ALONG WITH THE AVERAGE OVERHANG SLAB THICKNESS AND THE LUMBER JOIST SIZE, DETERMINE JOIST SPACING FROM TABLE 3. IF NECESSARY, ADJUST LUMBER JOIST SIZE AND/OR JOIST SPACING TO MEET ALLOWABLE SPAN LENGTH OF JOIST.
9. CONVERSELY, IF THE DESIRED JOIST SPACING IS KNOWN, USE THIS ALONG WITH THE AVERAGE OVERHANG SLAB THICKNESS AND THE LUMBER JOIST SIZE TO DETERMINE IF ALLOWABLE SPAN LENGTH OF JOIST IS GREATER THAN THE BRACKET SPACING, S. IF NECESSARY, ADJUST LUMBER JOIST SIZE TO MEET REQUIREMENTS OF ALLOWABLE SPAN LENGTH OF JOIST AND JOIST SPACING.
10. RECORD REMAINING INFORMATION ON "BRIDGE OVERHANG BRACKET SUMMARY" FORM.
11. SUBMIT FORM AND CALCULATIONS FOR REVIEW AND APPROVAL.

### TABLE 1-1

(FOR USE ON **UP TO 2'-0" OVERHANG (L)** & 54" HORIZONTAL LEG LENGTH OF THE OVERHANG BRACKET)

| AVG. SLAB THICKNESS (T) (in) | BRACKET (K) DIMENSION (in) | SCREED LOAD PER BRACKET 2500 lbs. | 2250 lbs. | 2000 lbs. | 1750 lbs. | 1500 lbs. | 1250 lbs. | 1000 lbs. | 750 lbs. | 0 lbs. | 45° HANGER SWL (lbs) |
|---|---|---|---|---|---|---|---|---|---|---|---|
| | | BRACKET SPACING | | | | | | | | | |
| 10 | 30 | | | | 2'-1" | 2'-7" | 3'-2" | 3'-8" | 4'-2" | 5'-9" | 4000 |
| | | 3'-6" | 4'-0" | 4'-5" | 4'-9" | 5'-1" | 5'-3" | 5'-5" | 5'-7" | 6'-7" | 6000 |
| | 40 | | | | 2'-1" | 2'-7" | 3'-2" | 3'-8" | 4'-2" | 5'-9" | 4000 |
| | | 3'-6" | 4'-0" | 4'-5" | 4'-9" | 5'-1" | 5'-3" | 5'-5" | 5'-7" | 6'-7" | 6000 |
| | 50 | | | | 2'-1" | 2'-7" | 3'-2" | 3'-8" | 4'-2" | 5'-9" | 4000 |
| | | 3'-6" | 4'-0" | 4'-5" | 4'-9" | 5'-1" | 5'-3" | 5'-5" | 5'-7" | 6'-7" | 6000 |
| 12 | 30 | | | | | 2'-4" | 2'-10" | 3'-4" | 3'-9" | 5'-2" | 4000 |
| | | 3'-2" | 3'-7" | 4'-1" | 4'-7" | 5'-0" | 5'-2" | 5'-4" | 5'-7" | 6'-5" | 6000 |
| | 40 | | | | | 2'-4" | 2'-10" | 3'-4" | 3'-9" | 5'-2" | 4000 |
| | | 3'-2" | 3'-7" | 4'-1" | 4'-7" | 5'-0" | 5'-2" | 5'-4" | 5'-7" | 6'-5" | 6000 |
| | 50 | | | | | 2'-4" | 2'-10" | 3'-4" | 3'-9" | 5'-2" | 4000 |
| | | 3'-2" | 3'-7" | 4'-1" | 4'-7" | 5'-0" | 5'-2" | 5'-4" | 5'-7" | 6'-5" | 6000 |
| 14 | 30 | | | | | 2'-2" | 2'-7" | 3'-0" | 3'-5" | 4'-9" | 4000 |
| | | 2'-10" | 3'-4" | 3'-9" | 4'-2" | 4'-7" | 5'-0" | 5'-4" | 5'-7" | 6'-4" | 6000 |
| | 40 | | | | | 2'-2" | 2'-7" | 3'-0" | 3'-5" | 4'-9" | 4000 |
| | | 2'-10" | 3'-4" | 3'-9" | 4'-2" | 4'-7" | 5'-0" | 5'-4" | 5'-7" | 6'-4" | 6000 |
| | 50 | | | | | 2'-2" | 2'-7" | 3'-0" | 3'-5" | 4'-9" | 4000 |
| | | 2'-10" | 3'-4" | 3'-9" | 4'-2" | 4'-7" | 5'-0" | 5'-4" | 5'-7" | 6'-4" | 6000 |
| 16 | 30 | | | | | 2'-0" | 2'-4" | 2'-9" | 3'-2" | 4'-4" | 4000 |
| | | 2'-8" | 3'-0" | 3'-5" | 3'-10" | 4'-3" | 4'-7" | 5'-0" | 5'-5" | 6'-3" | 6000 |
| | 40 | | | | | 2'-0" | 2'-4" | 2'-9" | 3'-2" | 4'-4" | 4000 |
| | | 2'-8" | 3'-0" | 3'-5" | 3'-10" | 4'-3" | 4'-7" | 5'-0" | 5'-5" | 6'-3" | 6000 |
| | 50 | | | | | 2'-0" | 2'-4" | 2'-9" | 3'-2" | 4'-4" | 4000 |
| | | 2'-8" | 3'-0" | 3'-5" | 3'-10" | 4'-3" | 4'-7" | 5'-0" | 5'-5" | 6'-3" | 6000 |

### TABLE 1-2

(FOR USE ON **OVER 2'-0" TO 2'-6" OVERHANG (L)** & 54" HORIZONTAL LEG LENGTH OF THE OVERHANG BRACKET)

| AVG. SLAB THICKNESS (T) (in) | BRACKET (K) DIMENSION (in) | SCREED LOAD PER BRACKET 2500 lbs. | 2250 lbs. | 2000 lbs. | 1750 lbs. | 1500 lbs. | 1250 lbs. | 1000 lbs. | 750 lbs. | 0 lbs. | 45° HANGER SWL (lbs) |
|---|---|---|---|---|---|---|---|---|---|---|---|
| | | BRACKET SPACING | | | | | | | | | |
| 10 | 30 | | | | | 2'-4" | 2'-9" | 3'-3" | 3'-8" | 5'-1" | 4000 |
| | | 3'-1" | 3'-6" | 4'-0" | 4'-5" | 4'-11" | 5'-3" | 5'-5" | 5'-7" | 6'-7" | 6000 |
| | 40 | | | | | 2'-4" | 2'-9" | 3'-3" | 3'-8" | 5'-1" | 4000 |
| | | 3'-1" | 3'-6" | 4'-0" | 4'-5" | 4'-11" | 5'-3" | 5'-5" | 5'-7" | 6'-7" | 6000 |
| | 50 | | | | | 2'-4" | 2'-9" | 3'-3" | 3'-8" | 5'-1" | 4000 |
| | | 3'-1" | 3'-6" | 4'-0" | 4'-5" | 4'-11" | 5'-3" | 5'-5" | 5'-7" | 6'-7" | 6000 |
| 12 | 30 | | | | | 2'-1" | 2'-6" | 2'-11" | 3'-4" | 4'-6" | 4000 |
| | | 2'-9" | 3'-2" | 3'-7" | 4'-0" | 4'-5" | 4'-10" | 5'-3" | 5'-7" | 6'-5" | 6000 |
| | 40 | | | | | 2'-1" | 2'-6" | 2'-11" | 3'-4" | 4'-6" | 4000 |
| | | 2'-9" | 3'-2" | 3'-7" | 4'-0" | 4'-5" | 4'-10" | 5'-3" | 5'-7" | 6'-5" | 6000 |
| | 50 | | | | | 2'-1" | 2'-6" | 2'-11" | 3'-4" | 4'-6" | 4000 |
| | | 2'-9" | 3'-2" | 3'-7" | 4'-0" | 4'-5" | 4'-10" | 5'-3" | 5'-7" | 6'-5" | 6000 |
| 14 | 30 | | | | | 2'-3" | 2'-7" | 3'-0" | 4'-1" | 5'-0" | 4000 |
| | | 2'-6" | 2'-10" | 3'-3" | 3'-7" | 4'-0" | 4'-4" | 4'-9" | 5'-1" | 6'-3" | 6000 |
| | 40 | | | | | 2'-3" | 2'-7" | 3'-0" | 4'-1" | 5'-0" | 4000 |
| | | 2'-6" | 2'-10" | 3'-3" | 3'-7" | 4'-0" | 4'-4" | 4'-9" | 5'-1" | 6'-3" | 6000 |
| | 50 | | | | | 2'-3" | 2'-7" | 3'-0" | 4'-1" | 5'-0" | 4000 |
| | | 2'-6" | 2'-10" | 3'-3" | 3'-7" | 4'-0" | 4'-4" | 4'-9" | 5'-1" | 6'-3" | 6000 |
| 16 | 30 | | | | | 2'-1" | 2'-5" | 2'-9" | 3'-9" | 4000 |
| | | 2'-3" | 2'-7" | 2'-11" | 3'-4" | 3'-8" | 4'-0" | 4'-4" | 4'-8" | 5'-8" | 6000 |
| | 40 | | | | | 2'-1" | 2'-5" | 2'-9" | 3'-9" | 4000 |
| | | 2'-3" | 2'-7" | 2'-11" | 3'-4" | 3'-8" | 4'-0" | 4'-4" | 4'-8" | 5'-8" | 6000 |
| | 50 | | | | | 2'-1" | 2'-5" | 2'-9" | 3'-9" | 4000 |
| | | 2'-3" | 2'-7" | 2'-11" | 3'-4" | 3'-8" | 4'-0" | 4'-4" | 4'-8" | 5'-8" | 6000 |

### TABLE 1-3

(FOR USE ON **OVER 2'-6" TO 3'-0" OVERHANG (L)** & 54" HORIZONTAL LEG LENGTH OF THE OVERHANG BRACKET)

| AVG. SLAB THICKNESS (T) (in) | BRACKET (K) DIMENSION (in) | SCREED LOAD PER BRACKET 2500 lbs. | 2250 lbs. | 2000 lbs. | 1750 lbs. | 1500 lbs. | 1250 lbs. | 1000 lbs. | 750 lbs. | 0 lbs. | 45° HANGER SWL (lbs) |
|---|---|---|---|---|---|---|---|---|---|---|---|
| | | BRACKET SPACING | | | | | | | | | |
| 10 | 30 | | | | | 2'-1" | 2'-6" | 2'-11" | 3'-4" | 4'-6" | 4000 |
| | | | | | | 4'-5" | 4'-10" | 5'-3" | 5'-7" | 6'-7" | 6000 |
| | 40 | | | | | 2'-1" | 2'-6" | 2'-11" | 3'-4" | 4'-6" | 4000 |
| | | 2'-9" | 3'-2" | 3'-7" | 4'-0" | 4'-5" | 4'-10" | 5'-3" | 5'-7" | 6'-7" | 6000 |
| | 50 | | | | | 2'-1" | 2'-6" | 2'-11" | 3'-4" | 4'-6" | 4000 |
| | | 2'-9" | 3'-2" | 3'-7" | 4'-0" | 4'-5" | 4'-10" | 5'-3" | 5'-7" | 6'-7" | 6000 |
| 12 | 30 | | | | | | 2'-2" | 2'-7" | 2'-11" | 4'-0" | 4000 |
| | | | | | | 3'-11" | 4'-3" | 4'-8" | 5'-0" | 6'-1" | 6000 |
| | 40 | | | | | | 2'-2" | 2'-7" | 2'-11" | 4'-0" | 4000 |
| | | 2'-5" | 2'-10" | 3'-2" | 3'-6" | 3'-11" | 4'-3" | 4'-8" | 5'-0" | 6'-1" | 6000 |
| | 50 | | | | | | 2'-2" | 2'-7" | 2'-11" | 4'-0" | 4000 |
| | | 2'-5" | 2'-10" | 3'-2" | 3'-6" | 3'-11" | 4'-3" | 4'-8" | 5'-0" | 6'-1" | 6000 |
| 14 | 30 | | | | | | 2'-0" | 2'-4" | 2'-8" | 3'-8" | 4000 |
| | | | | | 3'-2" | 3'-6" | 3'-10" | 4'-2" | 4'-6" | 5'-6" | 6000 |
| | 40 | | | | | | 2'-0" | 2'-4" | 2'-8" | 3'-8" | 4000 |
| | | 2'-2" | 2'-6" | 2'-10" | 3'-2" | 3'-6" | 3'-10" | 4'-2" | 4'-6" | 5'-6" | 6000 |
| | 50 | | | | | | 2'-0" | 2'-4" | 2'-8" | 3'-8" | 4000 |
| | | 2'-2" | 2'-6" | 2'-10" | 3'-2" | 3'-6" | 3'-10" | 4'-2" | 4'-6" | 5'-6" | 6000 |
| 16 | 30 | | | | | | | 2'-1" | 2'-5" | 3'-4" | 4000 |
| | | | | | 2'-11" | 3'-2" | 3'-6" | 3'-10" | 4'-1" | 5'-0" | 6000 |
| | 40 | | | | | | | 2'-1" | 2'-5" | 3'-4" | 4000 |
| | | 2'-0" | 2'-4" | 2'-7" | 2'-11" | 3'-2" | 3'-6" | 3'-10" | 4'-1" | 5'-0" | 6000 |
| | 50 | | | | | | | 2'-1" | 2'-5" | 3'-4" | 4000 |
| | | 2'-0" | 2'-4" | 2'-7" | 2'-11" | 3'-2" | 3'-6" | 3'-10" | 4'-1" | 5'-0" | 6000 |

### TABLE 1-4

(FOR USE ON **OVER 3'-0" TO 3'-6" OVERHANG (L)** & 54" HORIZONTAL LEG LENGTH OF THE OVERHANG BRACKET)

| AVG. SLAB THICKNESS (T) (in) | BRACKET (K) DIMENSION (in) | SCREED LOAD PER BRACKET 2500 lbs. | 2250 lbs. | 2000 lbs. | 1750 lbs. | 1500 lbs. | 1250 lbs. | 1000 lbs. | 750 lbs. | 0 lbs. | 45° HANGER SWL (lbs) |
|---|---|---|---|---|---|---|---|---|---|---|---|
| | | BRACKET SPACING | | | | | | | | | |
| 10 | 30 | | | | | | 2'-1" | 2'-5" | 2'-9" | 3'-10" | 4000 |
| | | | | | | 2'-3" | 2'-11" | 3'-7" | 4'-3" | 5'-9" | 6000 |
| | 40 | | | | | | 2'-1" | 2'-5" | 2'-9" | 3'-10" | 4000 |
| | | | | 2'-4" | 3'-0" | 3'-7" | 4'-1" | 4'-5" | 4'-9" | 5'-9" | 6000 |
| | 50 | | | | | | 2'-1" | 2'-5" | 2'-9" | 3'-10" | 4000 |
| | | 2'-4" | 2'-8" | 3'-0" | 3'-4" | 3'-8" | 4'-1" | 4'-5" | 4'-9" | 5'-9" | 6000 |
| 12 | 30 | | | | | | | 2'-2" | 2'-6" | 3'-5" | 4000 |
| | | | | | | 2'-1" | 2'-8" | 3'-4" | 3'-11" | 5'-2" | 6000 |
| | 40 | | | | | | | 2'-2" | 2'-6" | 3'-5" | 4000 |
| | | | | 2'-2" | 2'-9" | 3'-4" | 3'-7" | 3'-11" | 4'-3" | 5'-2" | 6000 |
| | 50 | | | | | | | 2'-2" | 2'-6" | 3'-5" | 4000 |
| | | 2'-1" | 2'-4" | 2'-8" | 3'-0" | 3'-4" | 3'-7" | 3'-11" | 4'-3" | 5'-2" | 6000 |
| 14 | 30 | | | | | | | | 2'-3" | 3'-1" | 4000 |
| | | | | | | 2'-0" | 2'-6" | 3'-1" | 3'-8" | 4'-8" | 6000 |
| | 40 | | | | | | | | 2'-3" | 3'-1" | 4000 |
| | | | | 2'-0" | 2'-7" | 3'-0" | 3'-3" | 3'-6" | 3'-10" | 4'-8" | 6000 |
| | 50 | | | | | | | | 2'-3" | 3'-1" | 4000 |
| | | | 2'-2" | 2'-5" | 2'-8" | 3'-0" | 3'-3" | 3'-6" | 3'-10" | 4'-8" | 6000 |
| 16 | 30 | | | | | | | | 2'-0" | 2'-9" | 4000 |
| | | | | | | | 2'-4" | 2'-10" | 3'-5" | 4'-3" | 6000 |
| | 40 | | | | | | | | 2'-0" | 2'-9" | 4000 |
| | | | | | 2'-5" | 2'-8" | 2'-11" | 3'-3" | 3'-6" | 4'-3" | 6000 |
| | 50 | | | | | | | | 2'-0" | 2'-9" | 4000 |
| | | | | 2'-2" | 2'-5" | 2'-8" | 2'-11" | 3'-3" | 3'-6" | 4'-3" | 6000 |

DEFINITIONS

SLPB = SCREED LOAD PER BRACKET (R x W)
R = SCREED LOAD FACTOR, OBTAINED FROM TABLE 2
W = WHEEL LOAD
S = BRACKET SPACING
T = AVERAGE SLAB THICKNESS
SWL = SAFE WORKING LOAD
K = DIMENSION DEFINED ON "BRIDGE OVERHANG BRACKET SUMMARY" ON SHEET 2
L = OVERHANG MEASURED FROM EDGE OF TOP FLANGE TO EDGE OF SUPERSTRUCTURE

PROJECT NO. R-2309AB
GUILFORD COUNTY
STATION: 134+30.00 -L-

SHEET 1 OF 3

STATE OF NORTH CAROLINA
DEPARTMENT OF TRANSPORTATION
RALEIGH

STANDARD OVERHANG FALSEWORK AASHTO TYPES III, IV, V, AND VI (RIGHT LANE)

NORTH CAROLINA PROFESSIONAL SEAL 18788 ENGINEER CHARNG-CHUAN VICTOR CHAO

Charng-Chuan Victor Chao
8-23-2011

| REVISIONS | | | | | | SHEET NO. |
|---|---|---|---|---|---|---|
| NO. | BY: | DATE: | NO. | BY: | DATE: | S-134 |
| 1 | | | 3 | | | TOTAL SHEETS |
| 2 | | | 4 | | | 136 |

| | |
|---|---|
| ASSEMBLED BY: | DATE: |
| CHECKED BY: | DATE: |
| DRAWN BY: R. WRIGHT 06/04 | REV. |
| CHECKED BY: C. V. CHAO 06/04 | |

23-AUG-2011 11:32
C:\OLDFILES0\wdir\victor\OverhangFalsework\TIEBAR&STRUT\R-2309AB_TYPE_III\R2309ABSTR4OverHangSheets.dgn
vchao

STR. #4

OF1

## BRIDGE OVERHANG BRACKET SUMMARY

TOTAL SCREED WEIGHT = _____ LBS.
NUMBER OF SCREED WHEELS = _____
SCREED WHEEL LOAD (W) = _____ LBS.
SCREED LOAD PER BRACKET = _____ LBS.

PROJECT No. : _____
COUNTY : _____
STATION : _____
DESCRIPTION : _____

DATE : _____
DESIGN BY : _____
CHECK BY : _____

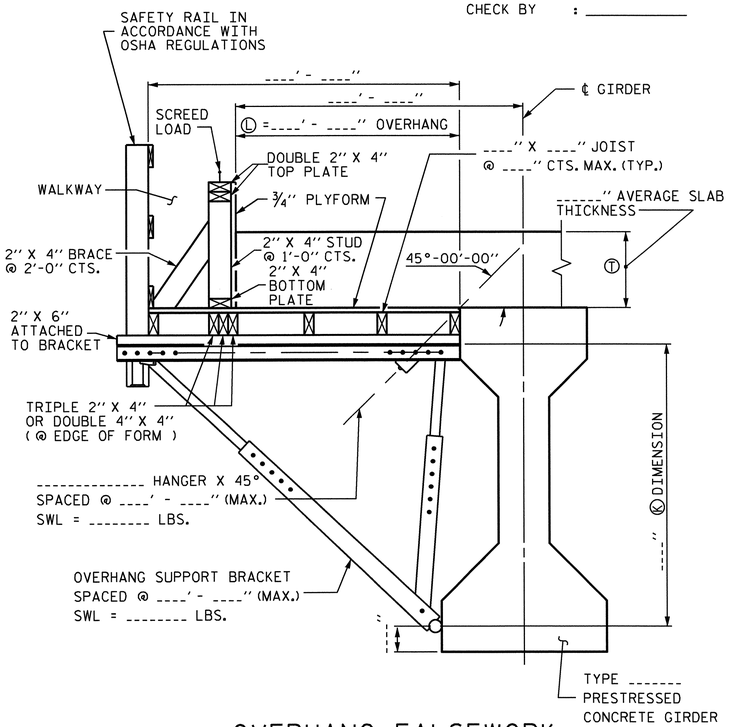


OVERHANG FALSEWORK

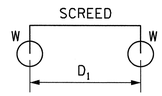


4-WHEEL MACHINE

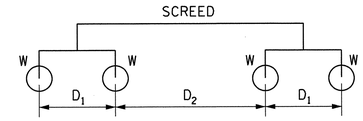


8-WHEEL MACHINE

| 4 WHEEL MACHINE | |
|---|---|
| S/D1 | R |
| <= 1.0 | 1.00 |
| 1.1 | 1.09 |
| 1.2 | 1.17 |
| 1.3 | 1.23 |
| 1.4 | 1.29 |
| 1.5 | 1.33 |
| 1.6 | 1.38 |
| 1.7 | 1.41 |
| 1.8 | 1.44 |
| 1.9 | 1.47 |
| 2.0 | 1.50 |
| 2.2 | 1.55 |
| 2.4 | 1.58 |
| 2.6 | 1.62 |
| 2.8 | 1.64 |
| 3.0 | 1.67 |
| 3.5 | 1.71 |
| 4.0 | 1.75 |

### TABLE 2: SCREED LOAD FACTOR "R"

| | | THE SCREED LOAD FACTOR R (FOR 8 WHEEL MACHINE) | | | | | | | | | | | | | | | | | |
|---|---|---|---|---|---|---|---|---|---|---|---|---|---|---|---|---|---|---|---|
| | | $S/D_2$ | | | | | | | | | | | | | | | | | |
| | | <= 1.0 | 1.1 | 1.2 | 1.3 | 1.4 | 1.5 | 1.6 | 1.7 | 1.8 | 1.9 | 2.0 | 2.2 | 2.4 | 2.6 | 2.8 | 3.0 | 3.5 | 4.0 |
| $S/D_1$ | <= 1.0 | 1.00 | 1.09 | 1.17 | 1.23 | 1.29 | 1.33 | 1.38 | 1.41 | 1.44 | 1.47 | 1.50 | 1.55 | 1.58 | 1.62 | 1.64 | 1.67 | 1.71 | 1.75 |
| | 1.1 | 1.09 | 1.18 | 1.26 | 1.32 | 1.38 | 1.42 | 1.47 | 1.50 | 1.54 | 1.56 | 1.59 | 1.64 | 1.67 | 1.71 | 1.73 | 1.76 | 1.81 | 1.84 |
| | 1.2 | 1.17 | 1.26 | 1.33 | 1.40 | 1.45 | 1.50 | 1.54 | 1.58 | 1.61 | 1.64 | 1.67 | 1.71 | 1.75 | 1.78 | 1.81 | 1.83 | 1.88 | 1.92 |
| | 1.3 | 1.23 | 1.32 | 1.40 | 1.46 | 1.52 | 1.56 | 1.61 | 1.64 | 1.68 | 1.70 | 1.73 | 1.78 | 1.81 | 1.85 | 1.87 | 1.90 | 1.95 | 1.98 |
| | 1.4 | 1.29 | 1.38 | 1.45 | 1.52 | 1.57 | 1.62 | 1.66 | 1.70 | 1.73 | 1.76 | 1.79 | 1.83 | 1.87 | 1.90 | 1.93 | 1.95 | 2.00 | 2.07 |
| | 1.5 | 1.33 | 1.42 | 1.50 | 1.56 | 1.62 | 1.67 | 1.71 | 1.75 | 1.78 | 1.81 | 1.83 | 1.88 | 1.92 | 1.95 | 1.98 | 2.00 | 2.10 | 2.17 |
| | 1.6 | 1.38 | 1.47 | 1.54 | 1.61 | 1.66 | 1.71 | 1.75 | 1.79 | 1.82 | 1.85 | 1.88 | 1.92 | 1.96 | 1.99 | 2.04 | 2.08 | 2.18 | 2.25 |
| | 1.7 | 1.41 | 1.50 | 1.58 | 1.64 | 1.70 | 1.75 | 1.79 | 1.82 | 1.86 | 1.89 | 1.91 | 1.96 | 2.00 | 2.05 | 2.11 | 2.16 | 2.25 | 2.32 |
| | 1.8 | 1.44 | 1.54 | 1.61 | 1.68 | 1.73 | 1.78 | 1.82 | 1.86 | 1.89 | 1.92 | 1.94 | 1.99 | 2.06 | 2.12 | 2.17 | 2.22 | 2.32 | 2.39 |
| | 1.9 | 1.47 | 1.56 | 1.64 | 1.70 | 1.76 | 1.81 | 1.85 | 1.89 | 1.92 | 1.95 | 1.97 | 2.04 | 2.11 | 2.18 | 2.23 | 2.28 | 2.38 | 2.45 |
| | 2.0 | 1.50 | 1.59 | 1.67 | 1.73 | 1.79 | 1.83 | 1.88 | 1.91 | 1.94 | 1.97 | 2.00 | 2.09 | 2.17 | 2.23 | 2.29 | 2.33 | 2.43 | 2.50 |
| | 2.2 | 1.55 | 1.64 | 1.71 | 1.78 | 1.83 | 1.88 | 1.92 | 1.96 | 1.99 | 2.04 | 2.09 | 2.18 | 2.26 | 2.32 | 2.38 | 2.42 | 2.52 | 2.59 |
| | 2.4 | 1.58 | 1.67 | 1.75 | 1.81 | 1.87 | 1.92 | 1.96 | 2.00 | 2.06 | 2.11 | 2.17 | 2.26 | 2.33 | 2.40 | 2.45 | 2.50 | 2.60 | 2.67 |
| | 2.6 | 1.62 | 1.71 | 1.78 | 1.85 | 1.90 | 1.95 | 1.99 | 2.05 | 2.12 | 2.18 | 2.23 | 2.32 | 2.40 | 2.46 | 2.52 | 2.56 | 2.66 | 2.73 |
| | 2.8 | 1.64 | 1.73 | 1.81 | 1.87 | 1.93 | 1.98 | 2.04 | 2.11 | 2.17 | 2.23 | 2.29 | 2.38 | 2.45 | 2.52 | 2.57 | 2.62 | 2.71 | 2.79 |
| | 3.0 | 1.67 | 1.76 | 1.83 | 1.90 | 1.95 | 2.00 | 2.08 | 2.16 | 2.22 | 2.28 | 2.33 | 2.42 | 2.50 | 2.56 | 2.62 | 2.67 | 2.76 | 2.83 |
| | 3.5 | 1.71 | 1.81 | 1.88 | 1.95 | 2.00 | 2.10 | 2.18 | 2.25 | 2.32 | 2.38 | 2.43 | 2.52 | 2.60 | 2.66 | 2.71 | 2.76 | 2.86 | 2.93 |
| | 4.0 | 1.75 | 1.84 | 1.92 | 1.98 | 2.07 | 2.17 | 2.25 | 2.32 | 2.39 | 2.45 | 2.50 | 2.59 | 2.67 | 2.73 | 2.79 | 2.83 | 2.93 | 3.00 |

### TABLE 3: ALLOWABLE SPAN LENGTH OF JOISTS AND JOIST SPACINGS

| AVG. SLAB THICKNESS Ⓣ (IN) | LUMBER JOIST SIZE (IN X IN) | JOIST SPACINGS | | | |
|---|---|---|---|---|---|
| | | 15 IN | 12 IN | 10 IN | 8 IN |
| | | THE ALLOWABLE SPAN LENGTH OF JOISTS | | | |
| 10 | 2 X 4 | ——— | 4' - 6" | 4' - 9" | 5' - 0" |
| | 4 X 4 | 5' - 9" | 6' - 3" | 6' - 6" | 6' - 7" |
| 12 | 2 X 4 | ——— | 4' - 3" | 4' - 9" | 5' - 0" |
| | 4 X 4 | 5' - 3" | 6' - 0" | 6' - 3" | 6' - 5" |
| 14 | 2 X 4 | ——— | 4' - 0" | 4' - 6" | 5' - 0" |
| | 4 X 4 | ——— | 5' - 6" | 6' - 0" | 6' - 4" |
| 16 | 2 X 4 | ——— | 4' - 0" | 4' - 3" | 4' - 9" |
| | 4 X 4 | ——— | 5' - 3" | 5' - 9" | 6' - 3" |

### NOTES

DESIGN INCLUDES CONSTRUCTION LIVE LOAD 20 PSF ON THE AREA SUPPORTED AND 75 PLF AT THE OUTSIDE DECK OF OVERHANGS.

REQUIRED MINIMUM DIAGONAL LEG CAPACITY: 3600 LB WORKING LOAD

THE CONTRACTOR HAS THE OPTION OF SUBMITTING HIS OWN DESIGN FOR OVERHANG FALSEWORK IN ACCORDANCE WITH THE SPECIAL PROVISIONS.

SUBMITTALS UTILIZING THE INSTRUCTIONS AND PROCEDURES DESCRIBED ON SHEET 1 OF 3 SHALL BE IN ACCORDANCE WITH THE APPLICABLE SECTIONS OF THE SPECIFICATIONS AND SPECIAL PROVISIONS. EXCEPT THAT CALCULATIONS FOR OVERHANG FALSEWORK NEED NOT BE SEALED BY A REGISTERED ENGINEER.

FOR OVERHANG FALSEWORK BRACING DESIGN, SEE SHEET 3 OF 3.

PROJECT NO. R-2309AB
GUILFORD COUNTY
STATION: 134+30.00 -L-

SHEET 2 OF 3

STATE OF NORTH CAROLINA
DEPARTMENT OF TRANSPORTATION
RALEIGH

STANDARD OVERHANG FALSEWORK AASHTO TYPES III, IV, V, AND VI (RIGHT LANE)

NORTH CAROLINA PROFESSIONAL SEAL 18788 ENGINEER CHANG-CHUAN VICTOR CHAO

Chang-Chuan Victor Chao
8-23-2011

| REVISIONS | | | | | | SHEET NO. |
|---|---|---|---|---|---|---|
| NO. | BY: | DATE: | NO. | BY: | DATE: | S-135 |
| 1 | | | 3 | | | TOTAL SHEETS |
| 2 | | | 4 | | | 136 |

| | |
|---|---|
| ASSEMBLED BY: | DATE: |
| CHECKED BY: | DATE: |
| DRAWN BY: R. WRIGHT 06/04 | REV. |
| CHECKED BY: C. V. CHAO 06/04 | |

23-AUG-2011 11:32
C:\OLDFILESD\wdir\victor\OverhangFalsework\TIEBAR&STRUT\R-2309AB_TYPE_III\R2309ABSTR4OverHangSheets.dgn
vchao

STR. #4

OF2

## NOTES:

EACH #5 TIE BAR SHALL BE WELDED TO ONE STIRRUP LOOP AS SHOWN IN DETAIL "A". #5 TIE BARS SHALL BE WELDED TO TWO ADJACENT STIRRUPS OF THE EXTERIOR GIRDER AND THE ADJACENT INTERIOR GIRDER BETWEEN PERMANENT DIAPHRAGMS. WELD STEEL PLATES IN BETWEEN THE TIE BARS AND THE STIRRUP LOOP. WELDING TWO TIE BARS TO THE SAME STIRRUP LOOP SHALL NOT BE PERMITTED.

MAXIMUM SPACING BETWEEN THE BRACING (TIE BARS-TIMBER STRUT) IS 8'-6" CTS. #5 TIE BARS SHALL BE LOCATED OVER A TIMBER STRUT.

INSTALL TIE BARS AND TIMBER STRUTS PRIOR TO PLACEMENT OF CONCRETE OR SCREED WEIGHT ONTO THE OVERHANG FALSEWORK.

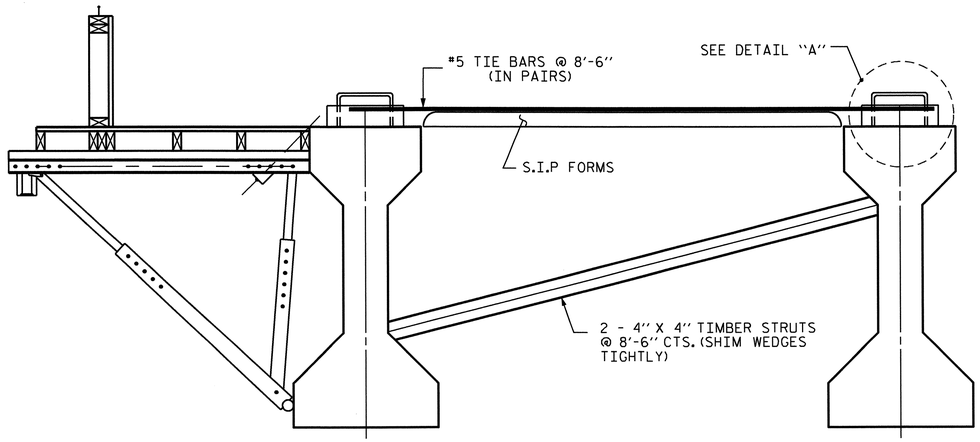


EXTERIOR GIRDER INTERIOR GIRDER

## DETAIL OF REQUIRED OVERHANG FALSEWORK BRACING SYSTEM

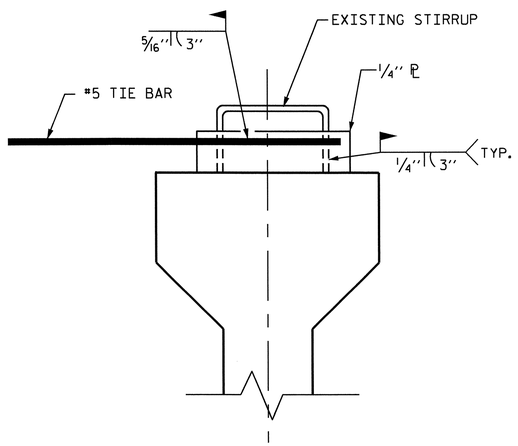


DETAIL "A"

PROJECT NO. R-2309AB

GUILFORD COUNTY

STATION: 134+30.00 -L-

SHEET 3 OF 3

STATE OF NORTH CAROLINA
DEPARTMENT OF TRANSPORTATION
RALEIGH

# STANDARD OVERHANG FALSEWORK AASHTO TYPES III, IV, V, AND VI (RIGHT LANE)

NORTH CAROLINA PROFESSIONAL SEAL 18788 ENGINEER CHANG-CHUAN VICTOR CHAO

Chang-Chuan Victor Chao
8-23-2011

| REVISIONS | | | | | | SHEET NO. |
|---|---|---|---|---|---|---|
| NO. | BY: | DATE: | NO. | BY: | DATE: | S-136 |
| 1 | | | 3 | | | TOTAL SHEETS |
| 2 | | | 4 | | | 136 |

DRAWN BY: R. WRIGHT 06/04 DATE :
CHECKED BY: C. V. CHAO 06/04 DATE :

23-AUG-2011 11:33
C:\OLDFILESD\wdir\victor\OverhangFalsework\TIEBAR&STRUT\R-2309AB_TYPE_III\R2309ABSTR4OverHangSheets.dgn
vchao

STR. #4 OF3

F.A. PROJECT NO.: STPNHS-0220(25)

BM #3 RR SPIKE IN BASE OF 24" POPLAR 32.66' LEFT OF STA. 68+58.90 -L-, EL. 830.09

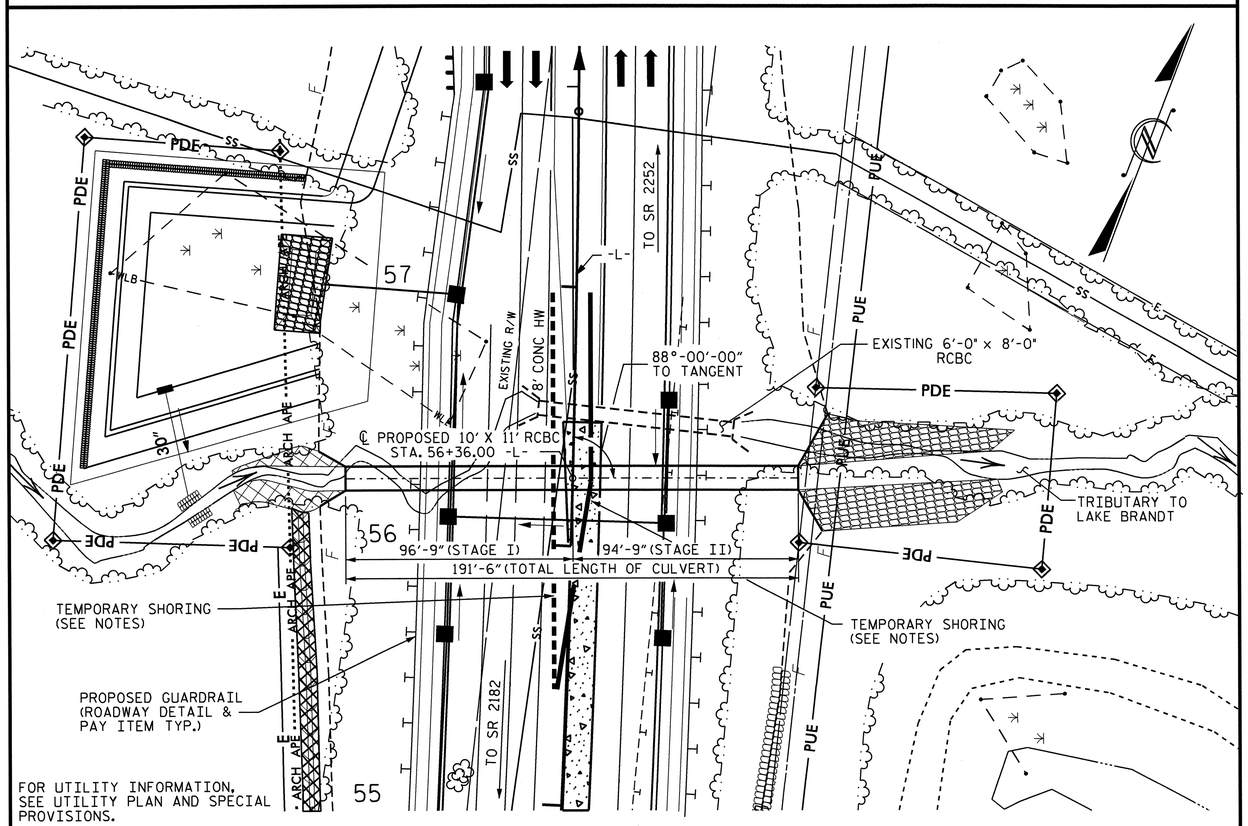


LOCATION SKETCH

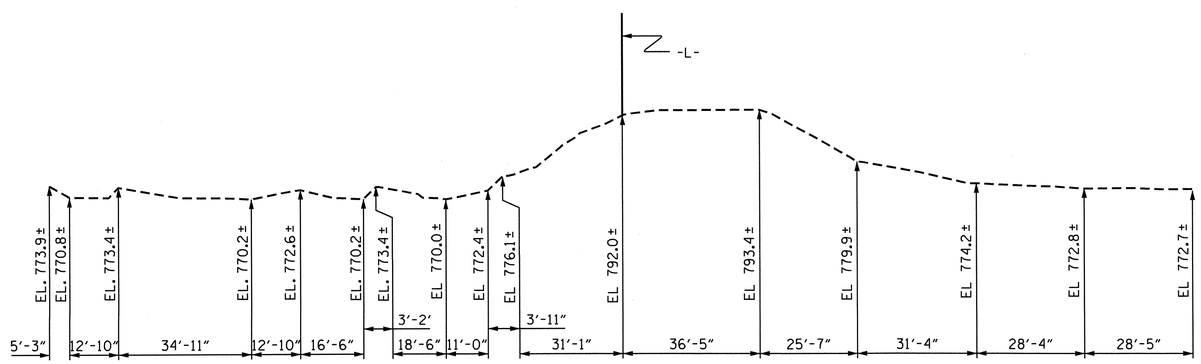


PROFILE ALONG ℄ CULVERT

## NOTES

ASSUMED LIVE LOAD ----------HS20 OR ALTERNATE LOADING.

DESIGN FILL 20.0'.

FOR OTHER DESIGN DATA AND NOTES SEE STANDARD NOTE SHEET.

3"Ø WEEP HOLES INDICATED TO BE IN ACCORDANCE WITH THE SPECIFICATIONS.

CONCRETE IN CULVERTS IN EACH STAGE TO BE POURED IN THE FOLLOWING ORDER:

1. WING FOOTINGS AND FLOOR SLAB INCLUDING 4" OF ALL VERTICAL WALLS.
2. THE REMAINING PORTIONS OF THE STAGE WALLS AND WINGS FULL HEIGHT FOLLOWED BY ROOF SLAB AND HEADWALLS.

THE RESIDENT ENGINEER SHALL CHECK THE LENGTH OF CULVERT BEFORE STAKING IT OUT TO MAKE CERTAIN THAT IT WILL PROPERLY TAKE CARE OF THE FILL.

DIMENSIONS FOR WING LAYOUT AS WELL AS ADDITIONAL REINFORCING STEEL EMBEDDED IN BARREL ARE SHOWN ON WING SHEET.

TRANSVERSE CONSTRUCTION JOINTS SHALL BE USED IN THE BARREL, SPACED TO LIMIT THE POURS TO A MAXIMUM OF 70 FT. LOCATION OF JOINTS SHALL BE SUBJECT TO APPROVAL OF THE ENGINEER.

AT THE CONTRACTORS OPTION, HE MAY SPLICE THE VERTICAL REINFORCING STEEL IN THE INTERIOR FACE OF EXTERIOR WALL ABOVE LOWER WALL CONSTRUCTION JOINT. THE SPLICE LENGTH SHALL BE AS PROVIDED IN THE SPLICE LENGTH CHART SHOWN ON THE PLANS. EXTRA WEIGHT OF STEEL DUE TO THE SPLICES SHALL BE PAID FOR BY THE CONTRACTOR.

FOR MAINTENANCE OF TRAFFIC, SEE TRAFFIC CONTROL PLANS.

FOR LIMITS OF TEMPORARY SHORING FOR MAINTENANCE OF TRAFFIC, SEE TRAFFIC CONTROL PLANS. FOR PAY ITEM FOR TEMPORARY SHORING FOR MAINTENANCE OF TRAFFIC, SEE ROADWAY PLANS.

FOR CULVERT DIVERSION DETAILS AND PAY ITEM, SEE EROSION CONTROL PLANS.

A 3 FOOT STRIP OF FILTER FABRIC SHALL BE ATTACHED TO THE FILL FACE OF THE WING COVERING THE ENTIRE LENGTH OF THE EXPANSION JOINT.

FOR SUBMITTAL OF WORKING DRAWINGS, SEE SPECIAL PROVISIONS.

FOR FALSEWORK AND FORMWORK, SEE SPECIAL PROVISIONS.

NO PRECAST REINFORCED BOX CULVERT OPTION WILL BE ALLOWED.

FOR GROUT FOR STRUCTURES, SEE SPECIAL PROVISIONS.

FOR CRANE SAFETY, SEE SPECIAL PROVISIONS.

THE CONTRACTOR SHALL PROVIDE INDEPENDENT ASSURANCE SAMPLES OF REINFORCING STEEL AS FOLLOWS: FOR PROJECTS REQUIRING UP TO 400 TONS OF REINFORCING STEEL, ONE 30 INCH SAMPLE OF EACH SIZE BAR USED, AND FOR PROJECTS REQUIRING OVER 400 TONS OF REINFORCING STEEL, TWO 30 INCH SAMPLES OF EACH SIZE BAR USED. THE BARS FROM WHICH THE SAMPLES ARE TAKEN MUST THEN BE SPLICED WITH REPLACEMENT BARS OF THE SIZE AND LENGTH OF THE SAMPLE, PLUS A MINIMUM LAP SPLICE OF THIRTY BAR DIAMETERS. PAYMENT FOR THE SAMPLES OF REINFORCING STEEL SHALL BE CONSIDERED INCIDENTAL TO VARIOUS PAY ITEMS.

THE TOP SLAB OF THE EXISTING 6'X8' RCBC SHALL BE REMOVED. THE REMOVAL AND BACKFILLING SHALL BE DONE AT THE DIRECTION AND TO THE SATISFACTION OF THE ENGINEER.

## TOTAL STRUCTURE QUANTITIES

| | | |
|---|---|---|
| CLASS A CONCRETE (STAGE I) | | |
| BARREL @ 1.369 CY/FT | 132.5 | C.Y. |
| WINGS, ETC. | 22.2 | C.Y. |
| SILLS | 5.6 | C.Y. |
| TOTAL | 160.3 | C.Y. |
| CLASS A CONCRETE (STAGE II) | | |
| BARREL @ 1.369 CY/FT | 129.7 | C.Y. |
| WINGS, ETC. | 22.2 | C.Y. |
| SILLS | 4.1 | C.Y. |
| TOTAL | 156.0 | C.Y. |
| TOTAL CLASS A CONCRETE (STAGE I & II) | 316.3 | C.Y. |
| REINFORCING STEEL (STAGE I) | | |
| BARREL | 25709 | LBS. |
| WINGS, ETC. | 1507 | LBS. |
| TOTAL | 27216 | LBS. |
| REINFORCING STEEL (STAGE II) | | |
| BARREL | 25068 | LBS. |
| WINGS, ETC. | 1507 | LBS. |
| TOTAL | 26575 | LBS. |
| TOTAL REINFORCING STEEL (STAGE I & II) | 53791 | LBS. |
| CULVERT EXCAVATION (STAGE I & II) | LUMP SUM | |
| FOUNDATION COND. MAT'L (STAGE I) | 77 | TONS |
| FOUNDATION COND. MAT'L (STAGE II) | 76 | TONS |
| TOTAL FOUNDATION COND. MAT'L | 153 | TONS |
| REMOVAL OF EXISTING STRUCTURE | LUMP SUM | |

## HYDRAULIC DATA

| | |
|---|---|
| DESIGN DISCHARGE | = 700 CFS. |
| FREQUENCY OF DESIGN FLOOD | = 50 YRS. |
| DESIGN HIGH WATER ELEVATION | = 778.1 |
| DRAINAGE AREA | = 292 AC. |
| BASE DISCHARGE (Q100) | = 800 CFS. |
| BASE HIGH WATER ELEVATION | = 778.8 |

## OVERTOPPING FLOOD DATA

| | |
|---|---|
| OVERTOPPING DISCHARGE | = 2000 CFS. |
| FREQUENCY OF OVERTOPPING FLOOD | = 500 YR.+ |
| OVERTOPPING FLOOD ELEVATION | = 794.9 |

## GRADE DATA

| | |
|---|---|
| GRADE POINT ELEVATION @ STA. 56+36.00 -L- | 794.933' |
| BED ELEVATION @ STA. 56+36.00 -L- | 764.600' |
| ROADWAY SLOPE | 2 : 1 |

NORTH CAROLINA PROFESSIONAL SEAL 12274 ENGINEER OMAR R. AZIZI
10/31/11

NORTH CAROLINA PROFESSIONAL SEAL 14045 ENGINEER TIMOTHY G. COGGINS
10/26/11

PROJECT NO. R-2309AB
GUILFORD COUNTY
STATION: 56+36.00 -L-

SHEET 1 OF 4

STATE OF NORTH CAROLINA
DEPARTMENT OF TRANSPORTATION
RALEIGH

SINGLE 10 FT. X 11 FT.
CONCRETE BOX CULVERT
88° SKEW

| REVISIONS | | | | | | | | SHEET NO. |
|---|---|---|---|---|---|---|---|---|
| NO. | BY: | DATE: | NO. | BY: | DATE: | | | C-1 |
| 1 | | | 3 | | | | | TOTAL SHEETS |
| 2 | | | 4 | | | | | 15 |

STR. #5

| | | | |
|---|---|---|---|
| ASSEMBLED BY : B.N.BARODAWALA | DATE : 7-29-11 | SPECIAL | |
| CHECKED BY : J.B.WILSON | DATE : 8-17-11 | | |
| DRAWN BY : R.W.WRIGHT | DATE : AUG. 1989 | STANDARD | |
| CHECKED BY : A.R.BISSETTE | DATE : AUG. 1989 | | |

REVISED 11-13-91 BY E.L.R. CHECKED BY G.R.P.
ADDED 8-22-89

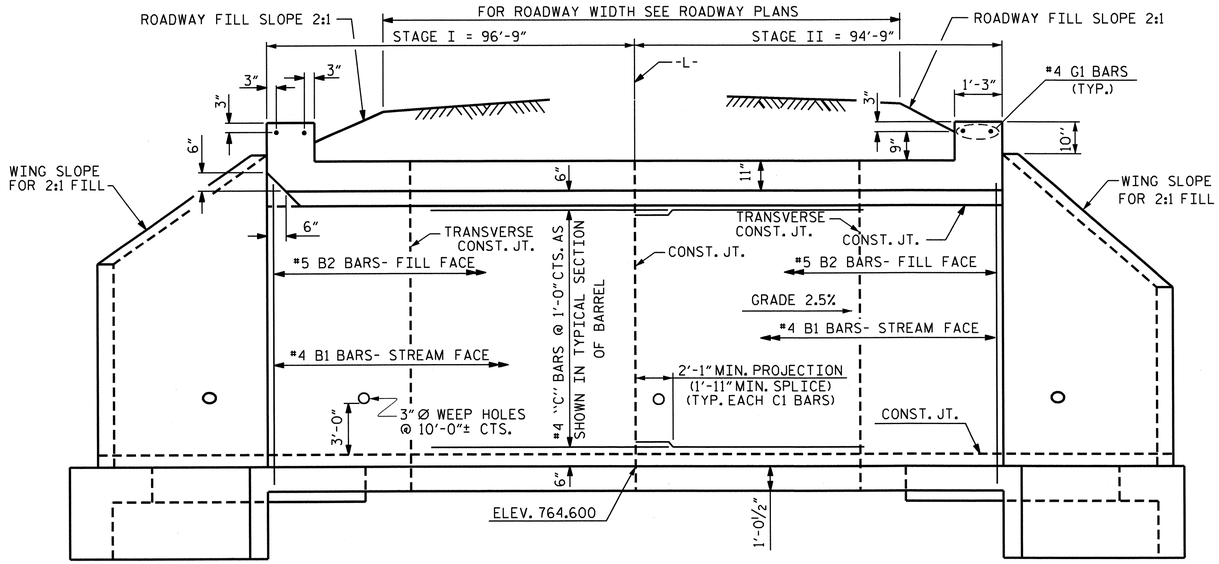


## CULVERT SECTION NORMAL TO ROADWAY

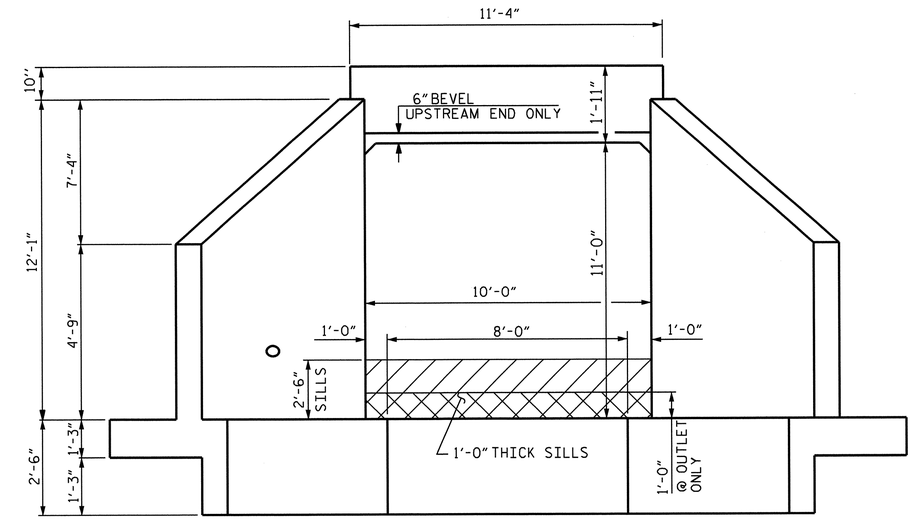


## END ELEVATION

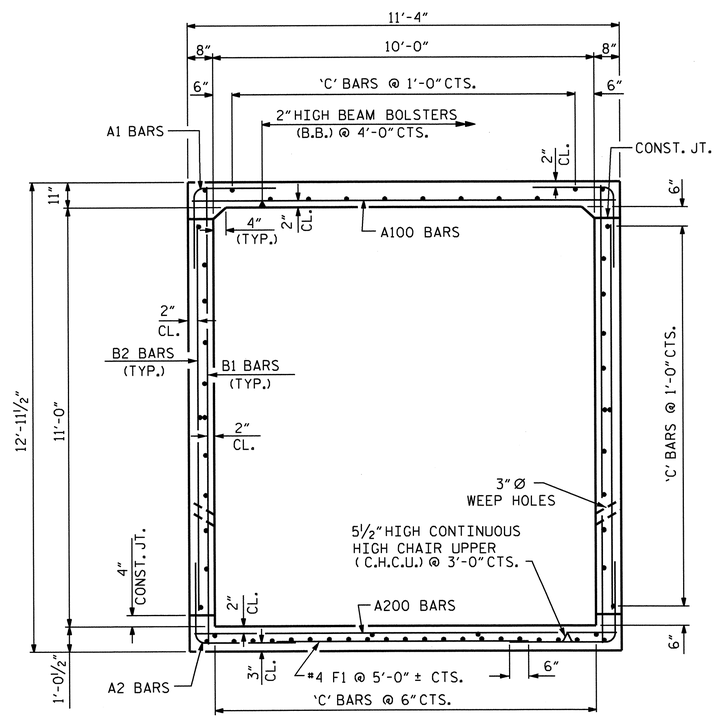


## RIGHT ANGLE SECTION OF BARREL

THERE ARE 61 "C" BARS IN SECTION OF BARREL

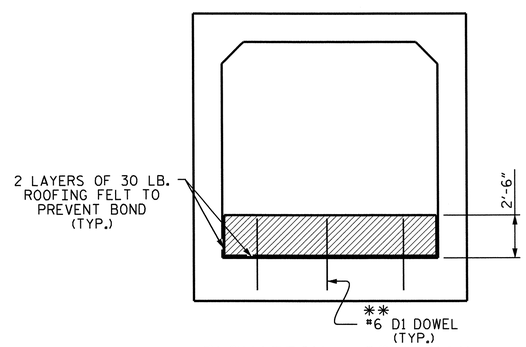


## ELEVATION - SILL "A"

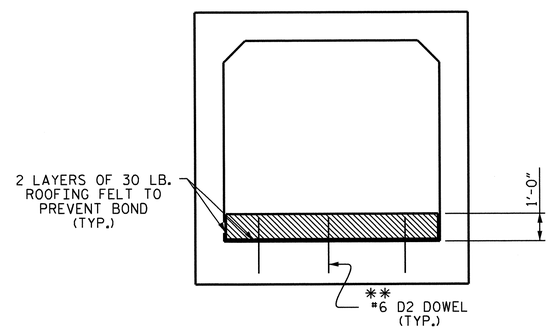


## ELEVATION - SILL "B"

(AT OUTLET ONLY)

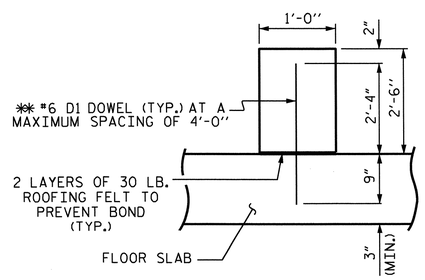


## SECTION THROUGH SILL "A"

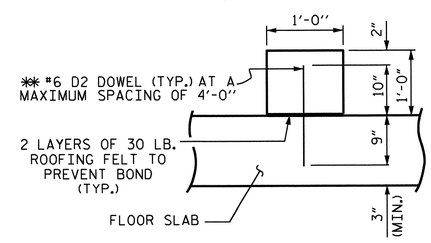


## SECTION THROUGH SILL "B"

(AT OUTLET ONLY)

## SILL DETAILS

FOR PLAN VIEW SHOWING SILL LOCATIONS, SEE SHEET 3 OF 4.

** DOWELS MAY BE PUSHED INTO GREEN CONCRETE AFTER SLAB HAS BEEN FLOAT FINISHED.

PROJECT NO. R-2309AB
GUILFORD COUNTY
STATION: 56+36.00 -L-

SHEET 2 OF 4

STATE OF NORTH CAROLINA
DEPARTMENT OF TRANSPORTATION
RALEIGH

SINGLE 10 FT. X 11 FT.
CONCRETE BOX CULVERT
88° SKEW

NORTH CAROLINA PROFESSIONAL SEAL 14045 ENGINEER TIMOTHY L. COGGINS
10/26/11

| REVISIONS | | | | | | | | SHEET NO. |
|---|---|---|---|---|---|---|---|---|
| NO. | BY: | DATE: | NO. | BY: | DATE: | | | C-2 |
| 1 | | | 3 | | | | | TOTAL SHEETS |
| 2 | | | 4 | | | | | 15 |

STR. #5

| | | | |
|---|---|---|---|
| ASSEMBLED BY : B.N.BARODAWALA | DATE : 7-29-11 | SPECIAL | |
| CHECKED BY : J.B.WILSON | DATE : 8-17-11 | | |
| DRAWN BY : S. A. TEDDER | DATE : AUG. 1989 | STANDARD | |
| CHECKED BY : A.R. BISSETTE | DATE : AUG. 1989 | | |

REVISED 8-28-92 BY E.L.R. CHECKED BY C.R.P.
REVISED 8-22-89 BY A.R.B. CHECKED BY C.R.K.
REDRAWN 8-22-89
REVISED 11-19-99 BY M.M. CHECKED BY R.W.W.

26-OCT-2011 10:00
R:\TIPProjects-R\R2309AB\Structures\R2309ab\FinalPlans\Culverts\Str#5\r2309ab_sd_cu_05.dgn
tcoggins

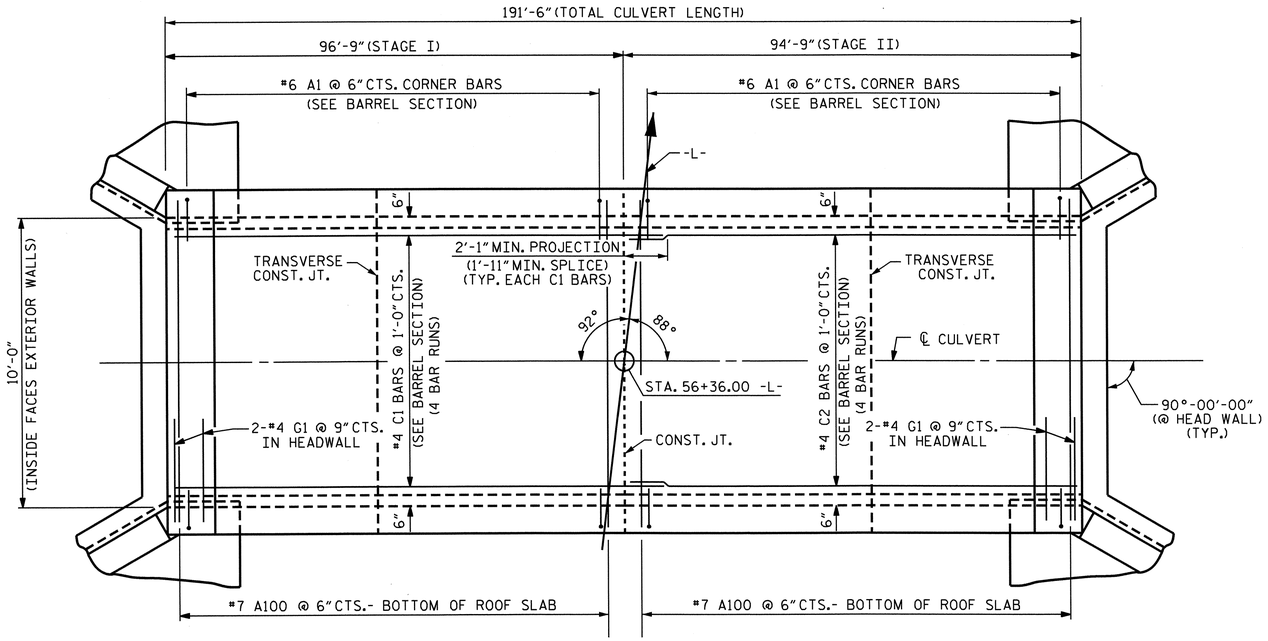


## PLAN - ROOF SLAB

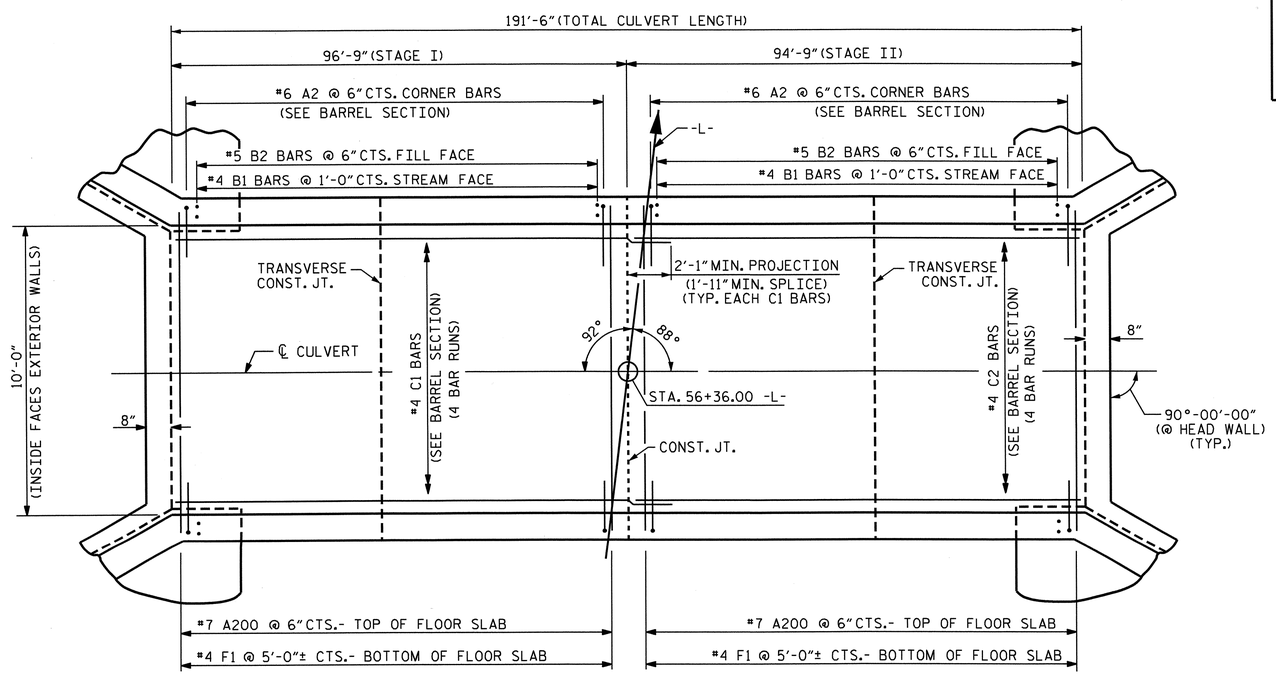


## PLAN - FLOOR SLAB

## BAR TYPE

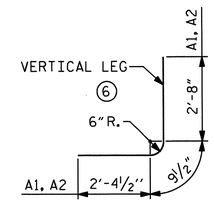


BAR DIMENSIONS ARE OUT TO OUT

## SPLICE LENGTH CHART

| BAR | SIZE | SPLICE LENGTH |
|---|---|---|
| B1 | 4 | 1'-9" |
| C1 | 4 | 1'-11" |
| C2 | 4 | 1'-11" |

## REINFORCING STEEL BAR SCHEDULE

### STAGE I

| BAR | NO. | SIZE | TYPE | LENGTH | WEIGHT |
|---|---|---|---|---|---|
| A1 | 388 | 6 | 6 | 5'-10" | 3400 |
| A2 | 388 | 6 | 6 | 5'-10" | 3400 |
| A100 | 194 | 7 | STR | 10'-11" | 4329 |
| A200 | 194 | 7 | STR | 10'-11" | 4329 |
| B1 | 194 | 4 | STR | 12'-5" | 1609 |
| B2 | 388 | 5 | STR | 10'-4" | 4182 |
| C1 | 244 | 4 | STR | 26'-2" | 4265 |
| D1 | 18 | 6 | STR | 3'-1" | 83 |
| F1 | 20 | 4 | STR | 7'-3" | 97 |
| G1 | 2 | 4 | STR | 11'-0" | 15 |

STAGE I REINFORCING STEEL 25709 LBS.

### STAGE II

| BAR | NO. | SIZE | TYPE | LENGTH | WEIGHT |
|---|---|---|---|---|---|
| A1 | 380 | 6 | 6 | 5'-10" | 3329 |
| A2 | 380 | 6 | 6 | 5'-10" | 3329 |
| A100 | 190 | 7 | STR | 10'-11" | 4240 |
| A200 | 190 | 7 | STR | 10'-11" | 4240 |
| B1 | 190 | 4 | STR | 12'-5" | 1576 |
| B2 | 380 | 5 | STR | 10'-4" | 4096 |
| C2 | 244 | 4 | STR | 25'-1" | 4088 |
| D1 | 12 | 6 | STR | 3'-1" | 56 |
| D2 | 3 | 6 | STR | 1'-7" | 7 |
| F1 | 19 | 4 | STR | 7'-3" | 92 |
| G1 | 2 | 4 | STR | 11'-0" | 15 |

STAGE II REINFORCING STEEL 25068 LBS.

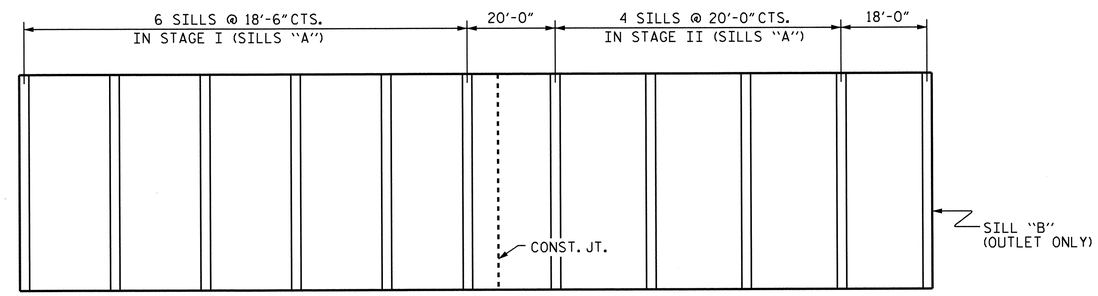


## PLAN - LOCATION OF SILLS IN FLOOR SLAB

PROJECT NO. R-2309AB
GUILFORD COUNTY
STATION: 56+36.00 -L-

SHEET 3 OF 4

STATE OF NORTH CAROLINA
DEPARTMENT OF TRANSPORTATION
RALEIGH

SINGLE 10 FT. X 11 FT.
CONCRETE BOX CULVERT
88° SKEW

NORTH CAROLINA PROFESSIONAL SEAL 14045 ENGINEER TIMOTHY E. COGGINS
10/26/11

| REVISIONS | | | | | | SHEET NO. |
|---|---|---|---|---|---|---|
| NO. | BY: | DATE: | NO. | BY: | DATE: | C-3 |
| 1 | | | 3 | | | TOTAL SHEETS 15 |
| 2 | | | 4 | | | |

STR. #5

DRAWN BY : B.N.BARODAWALA DATE : 7-29-11
CHECKED BY : J.B.WILSON DATE : 8-17-11

26-OCT-2011 09:59
R:\TIPProjects-R\R2309AB\Structures\R2309ab\FinalPlans\Culverts\Str#5\r2309ab_sd_cu_05.dgn
tcoggins

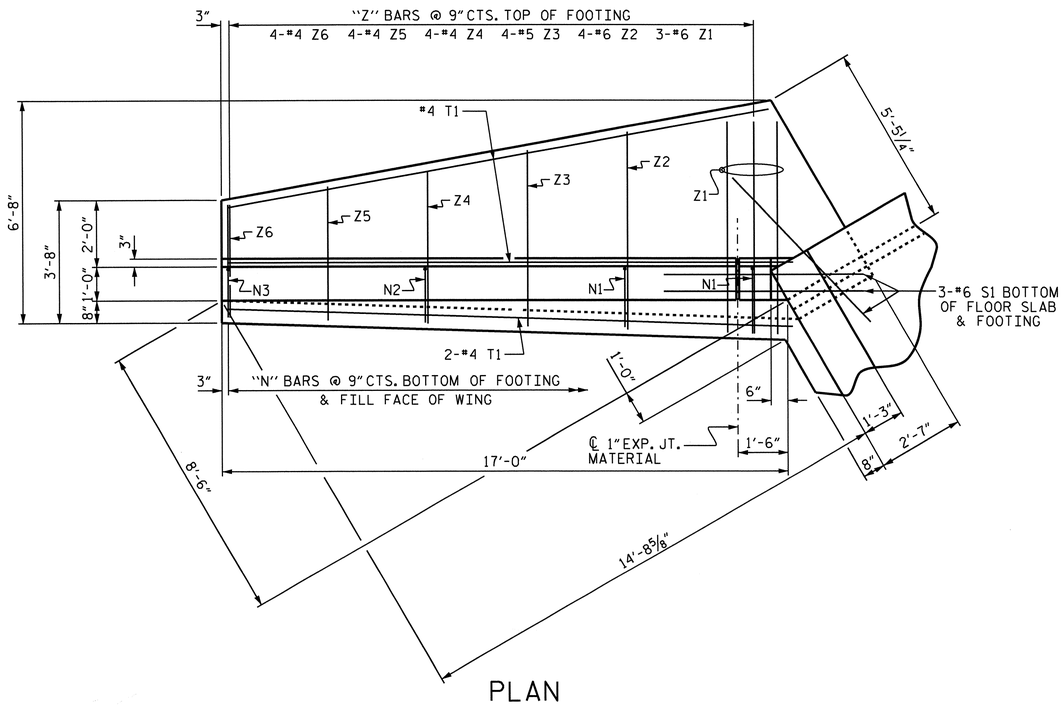


## PLAN

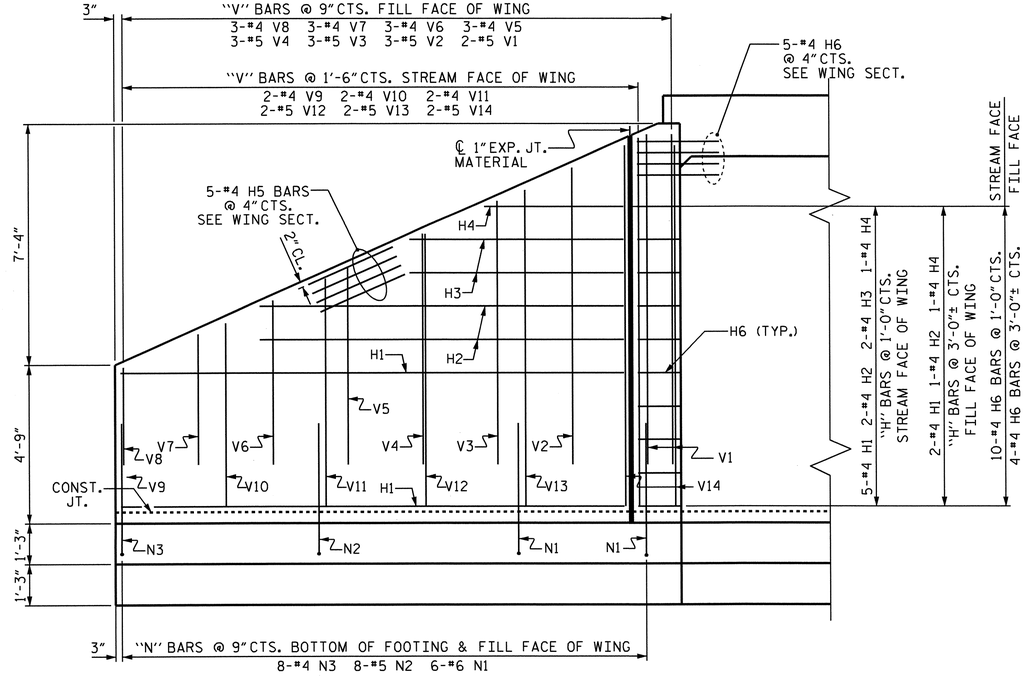


## ELEVATION

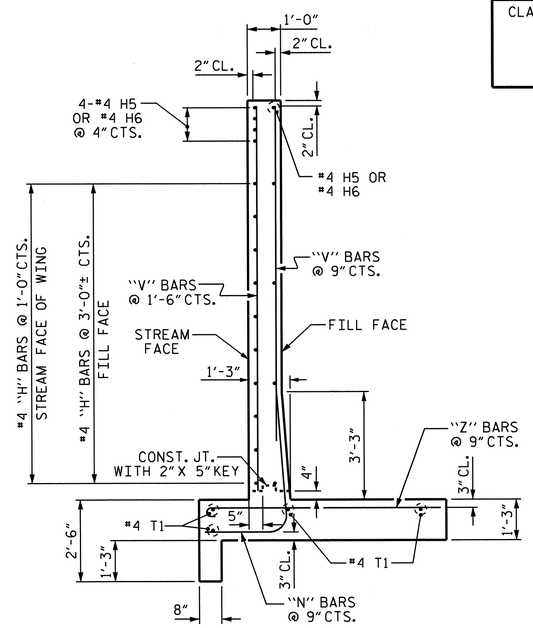


## TYPICAL WING SECTION

## BAR TYPES

ALL BAR DIMENSIONS ARE OUT TO OUT.

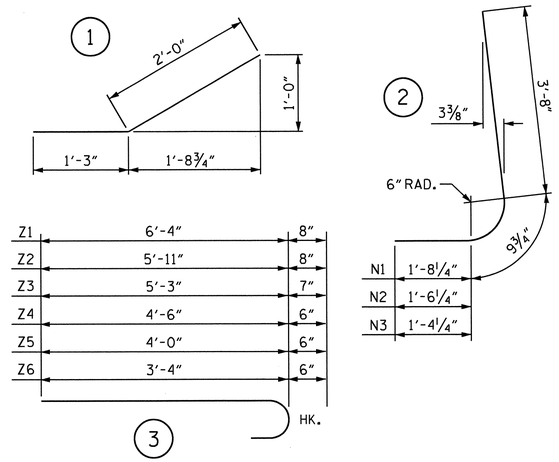


## BILL OF MATERIAL

### PHASE I

| BAR | NO. | SIZE | TYPE | LENGTH | WEIGHT |
|---|---|---|---|---|---|
| H1 | 14 | #4 | STR | 15'- 1" | 141 |
| H2 | 6 | #4 | STR | 10'-11" | 44 |
| H3 | 4 | #4 | STR | 6'-5" | 17 |
| H4 | 4 | #4 | STR | 4'-2" | 11 |
| H5 | 10 | #4 | STR | 16'-6" | 110 |
| H6 | 38 | #4 | 1 | 3'- 3" | 82 |
| N1 | 12 | #6 | 2 | 6'-2" | 111 |
| N2 | 16 | #5 | 2 | 6'-0" | 100 |
| N3 | 16 | #4 | 2 | 5'-10" | 62 |
| S1 | 6 | #6 | STR | 6'- 0" | 54 |
| T1 | 8 | #4 | STR | 16'-6" | 88 |
| V1 | 4 | #5 | STR | 9'-11 | 41 |
| V2 | 6 | #5 | STR | 8'-11" | 56 |
| V3 | 6 | #5 | STR | 7'-11" | 50 |
| V4 | 6 | #5 | STR | 6'-11" | 43 |
| V5 | 6 | #4 | STR | 5'-11" | 24 |
| V6 | 6 | #4 | STR | 4'-11" | 20 |
| V7 | 6 | #4 | STR | 3'-11" | 16 |
| V8 | 6 | #4 | STR | 2'-11" | 12 |
| V9 | 4 | #4 | STR | 4'-2" | 11 |
| V10 | 4 | #4 | STR | 5'-6" | 15 |
| V11 | 4 | #4 | STR | 6'-10" | 18 |
| V12 | 4 | #5 | STR | 8'-2" | 34 |
| V13 | 4 | #5 | STR | 9'-6" | 40 |
| V14 | 4 | #5 | STR | 10'-10" | 45 |
| Z1 | 6 | #6 | 3 | 7'-0" | 63 |
| Z2 | 8 | #6 | 3 | 6'-7" | 79 |
| Z3 | 8 | #5 | 3 | 5'-10" | 49 |
| Z4 | 8 | #4 | 3 | 5'-0" | 27 |
| Z5 | 8 | #4 | 3 | 4'-6" | 24 |
| Z6 | 8 | #4 | 3 | 3'-10" | 20 |

REINFORCING STEEL FOR 2 WINGS 1507 LBS

| CLASS A CONCRETE | | |
|---|---|---|
| 2 WINGS | 21.2 | CY |
| 1 HEADWALLS | 0.5 | CY |
| 1 END CURTAIN WALLS | 0.5 | CY |
| TOTAL | 22.2 | CY |

## BILL OF MATERIAL

### PHASE II

| BAR | NO. | SIZE | TYPE | LENGTH | WEIGHT |
|---|---|---|---|---|---|
| H1 | 14 | #4 | STR | 15'- 1" | 141 |
| H2 | 6 | #4 | STR | 10'-11" | 44 |
| H3 | 4 | #4 | STR | 6'-5" | 17 |
| H4 | 4 | #4 | STR | 4'-2" | 11 |
| H5 | 10 | #4 | STR | 16'-6" | 110 |
| H6 | 38 | #4 | 1 | 3'- 3" | 82 |
| N1 | 12 | #6 | 2 | 6'-2" | 111 |
| N2 | 16 | #5 | 2 | 6'-0" | 100 |
| N3 | 16 | #4 | 2 | 5'-10" | 62 |
| S1 | 6 | #6 | STR | 6'- 0" | 54 |
| T1 | 8 | #4 | STR | 16'-6" | 88 |
| V1 | 4 | #5 | STR | 9'-11 | 41 |
| V2 | 6 | #5 | STR | 8'-11" | 56 |
| V3 | 6 | #5 | STR | 7'-11" | 50 |
| V4 | 6 | #5 | STR | 6'-11" | 43 |
| V5 | 6 | #4 | STR | 5'-11" | 24 |
| V6 | 6 | #4 | STR | 4'-11" | 20 |
| V7 | 6 | #4 | STR | 3'-11" | 16 |
| V8 | 6 | #4 | STR | 2'-11" | 12 |
| V9 | 4 | #4 | STR | 4'-2" | 11 |
| V10 | 4 | #4 | STR | 5'-6" | 15 |
| V11 | 4 | #4 | STR | 6'-10" | 18 |
| V12 | 4 | #5 | STR | 8'-2" | 34 |
| V13 | 4 | #5 | STR | 9'-6" | 40 |
| V14 | 4 | #5 | STR | 10'-10" | 45 |
| Z1 | 6 | #6 | 3 | 7'-0" | 63 |
| Z2 | 8 | #6 | 3 | 6'-7" | 79 |
| Z3 | 8 | #5 | 3 | 5'-10" | 49 |
| Z4 | 8 | #4 | 3 | 5'-0" | 27 |
| Z5 | 8 | #4 | 3 | 4'-6" | 24 |
| Z6 | 8 | #4 | 3 | 3'-10" | 20 |

REINFORCING STEEL FOR 2 WINGS 1507 LBS

| CLASS A CONCRETE | | |
|---|---|---|
| 2 WINGS | 21.2 | CY |
| 1 HEADWALLS | 0.5 | CY |
| 1 END CURTAIN WALLS | 0.5 | CY |
| TOTAL | 22.2 | CY |

PROJECT NO. R-2309AB
GUILFORD COUNTY
STATION: 56+36.00 -L-

SHEET 4 OF 4

STATE OF NORTH CAROLINA
DEPARTMENT OF TRANSPORTATION
RALEIGH

# STANDARD WINGS FOR CONCRETE BOX CULVERT

H = 11'-0" SLOPE = 2:1
90° SKEW

NORTH CAROLINA PROFESSIONAL SEAL 14045 ENGINEER TIMOTHY J. COGGINS
10/26/11

| REVISIONS | | | | | | SHEET NO. |
|---|---|---|---|---|---|---|
| NO. | BY: | DATE: | NO. | BY: | DATE: | C-4 |
| 1 | | | 3 | | | TOTAL SHEETS |
| 2 | | | 4 | | | 15 |

STR. #5

| | | | |
|---|---|---|---|
| ASSEMBLED BY : | | DATE : | |
| CHECKED BY : | | DATE : | |
| DRAWN BY : | A.M. LEE | DATE : | 10/2011 |
| CHECKED BY : | P.A. PARISI | DATE : | 10/2011 |

26-OCT-2011 13:38
R:\TIPProjects-R\R2309AB\Structures\R2309ab\FinalPlans\Culverts\Str#5\r2309ab_sd_cu_05.dgn
tcoggins

BM #9 RR SPIKE IN BASE OF MAPLE 217.55' LT OF STA. 164+66.28 -L-, ELEV. 792.77'

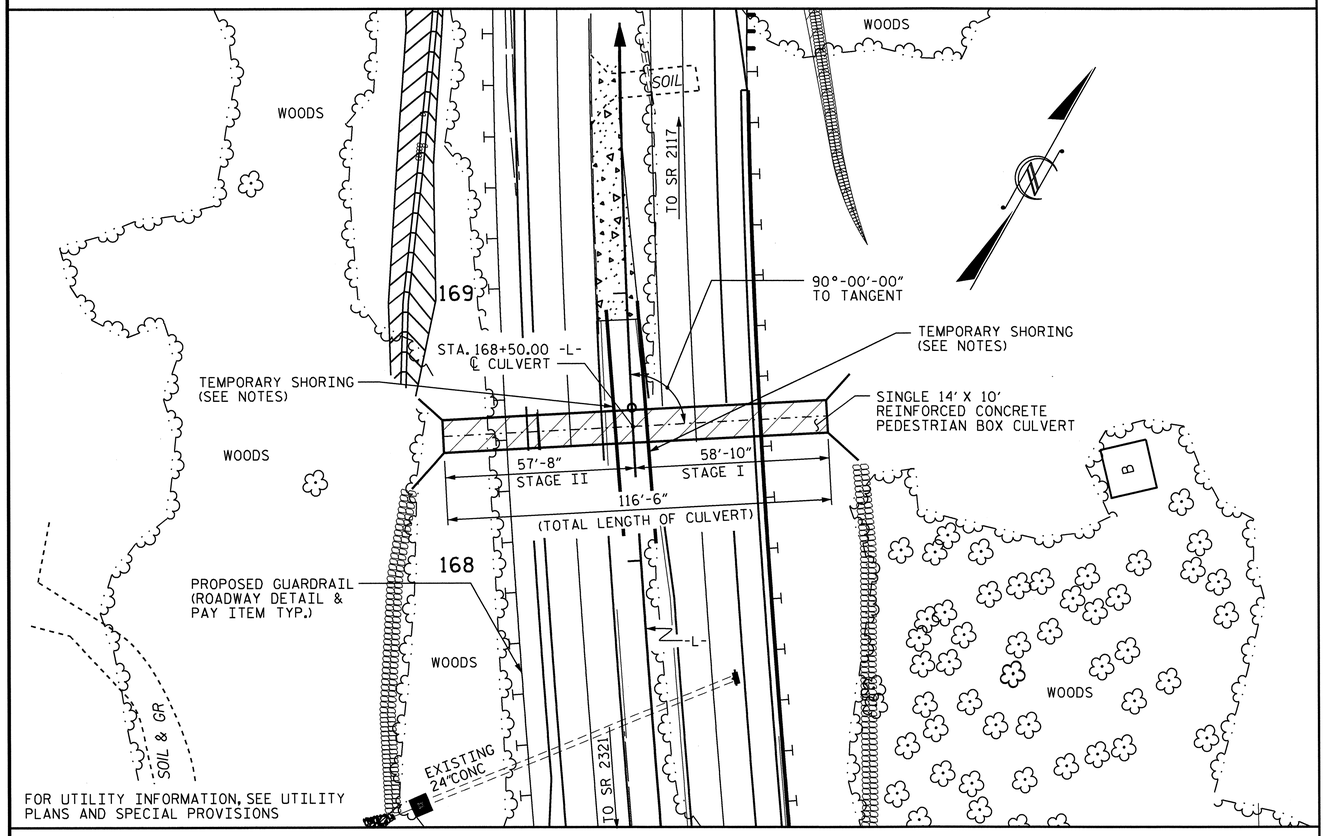


FOR UTILITY INFORMATION, SEE UTILITY PLANS AND SPECIAL PROVISIONS

LOCATION SKETCH

## NOTES

ASSUMED LIVE LOAD ----------HS20 OR ALTERNATE LOADING.

DESIGN FILL 6.2'.

FOR OTHER DESIGN DATA AND NOTES SEE STANDARD NOTE SHEET.

CONCRETE IN CULVERTS IN EACH STAGE TO BE POURED IN THE FOLLOWING ORDER:

1. WING FOOTINGS AND FLOOR SLAB INCLUDING 4" OF ALL VERTICAL WALLS.
2. THE REMAINING PORTIONS OF THE STAGE WALLS AND WINGS FULL HEIGHT FOLLOWED BY ROOF SLAB AND HEADWALLS.

THE RESIDENT ENGINEER SHALL CHECK THE LENGTH OF CULVERT BEFORE STAKING IT OUT TO MAKE CERTAIN THAT IT WILL PROPERLY TAKE CARE OF THE FILL.

DIMENSIONS FOR WING LAYOUT AS WELL AS ADDITIONAL REINFORCING STEEL EMBEDDED IN BARREL ARE SHOWN ON WING SHEET.

AT THE CONTRACTORS OPTION, HE MAY SPLICE THE VERTICAL REINFORCING STEEL IN THE INTERIOR FACE OF EXTERIOR WALL ABOVE LOWER WALL CONSTRUCTION JOINT. THE SPLICE LENGTH SHALL BE AS PROVIDED IN THE SPLICE LENGTH CHART SHOWN ON THE PLANS. EXTRA WEIGHT OF STEEL DUE TO THE SPLICES SHALL BE PAID FOR BY THE CONTRACTOR.

FOR MAINTENANCE OF TRAFFIC, SEE TRAFFIC CONTROL PLANS.

FOR LIMITS OF TEMPORARY SHORING FOR MAINTENANCE OF TRAFFIC, SEE TRAFFIC CONTROL PLANS. FOR PAY ITEM FOR TEMPORARY SHORING FOR MAINTENANCE OF TRAFFIC, SEE ROADWAY PLANS.

A 3 FOOT STRIP OF FILTER FABRIC SHALL BE ATTACHED TO THE FILL FACE OF THE WING COVERING THE ENTIRE LENGTH OF THE EXPANSION JOINT.

FOR SUBMITTAL OF WORKING DRAWINGS, SEE SPECIAL PROVISIONS.

FOR FALSEWORK AND FORMWORK, SEE SPECIAL PROVISIONS.

NO PRECAST REINFORCED BOX CULVERT OPTION WILL BE ALLOWED.

FOR GROUT FOR STRUCTURES, SEE SPECIAL PROVISIONS.

FOR CRANE SAFETY, SEE SPECIAL PROVISIONS.

FOR PEDESTRIAN CULVERT CONDUIT SYSTEM, SEE SPECIAL PROVISIONS.

THE CONTRACTOR SHALL PROVIDE INDEPENDENT ASSURANCE SAMPLES OF REINFORCING STEEL AS FOLLOWS: FOR PROJECTS REQUIRING UP TO 400 TONS OF REINFORCING STEEL, ONE 30 INCH SAMPLE OF EACH SIZE BAR USED, AND FOR PROJECTS REQUIRING OVER 400 TONS OF REINFORCING STEEL, TWO 30 INCH SAMPLES OF EACH SIZE BAR USED. THE BARS FROM WHICH THE SAMPLES ARE TAKEN MUST THEN BE SPLICED WITH REPLACEMENT BARS OF THE SIZE AND LENGTH OF THE SAMPLE, PLUS A MINIMUM LAP SPLICE OF THIRTY BAR DIAMETERS. PAYMENT FOR THE SAMPLES OF REINFORCING STEEL SHALL BE CONSIDERED INCIDENTAL TO VARIOUS PAY ITEMS.

F.A. PROJECT NO.: STPNHS-0220(25)

## TOTAL STRUCTURE QUANTITIES

| | | |
|---|---|---|
| CLASS A CONCRETE (STAGE I) | | |
| BARREL @ 1.468 CY/FT | 86.4 | C.Y. |
| WINGS, ETC. | 17.0 | C.Y. |
| TOTAL | 103.4 | C.Y. |
| CLASS A CONCRETE (STAGE II) | | |
| BARREL @ 1.468 CY/FT | 84.7 | C.Y. |
| WINGS, ETC. | 17.0 | C.Y. |
| TOTAL | 101.7 | C.Y. |
| TOTAL CLASS A CONCRETE (STAGE I & II) | 205.1 | C.Y. |
| REINFORCING STEEL (STAGE I) | | |
| BARREL | 18098 | LBS. |
| WINGS, ETC. | 1215 | LBS. |
| TOTAL | 19313 | LBS. |
| REINFORCING STEEL (STAGE II) | | |
| BARREL | 17554 | LBS. |
| WINGS, ETC. | 1215 | LBS. |
| TOTAL | 18769 | LBS. |
| TOTAL REINFORCING STEEL (STAGE I & II) | 38082 | LBS. |
| CULVERT EXCAVATION (STAGE I & II) | LUMP SUM | |
| FOUNDATION COND. MAT'L (STAGE I) | 64 | TONS |
| FOUNDATION COND. MAT'L (STAGE II) | 62 | TONS |
| TOTAL FOUNDATION COND. MAT'L | 126 | TONS |
| PEDESTRIAN CULVERT CONDUIT SYSTEM | LUMP SUM | |

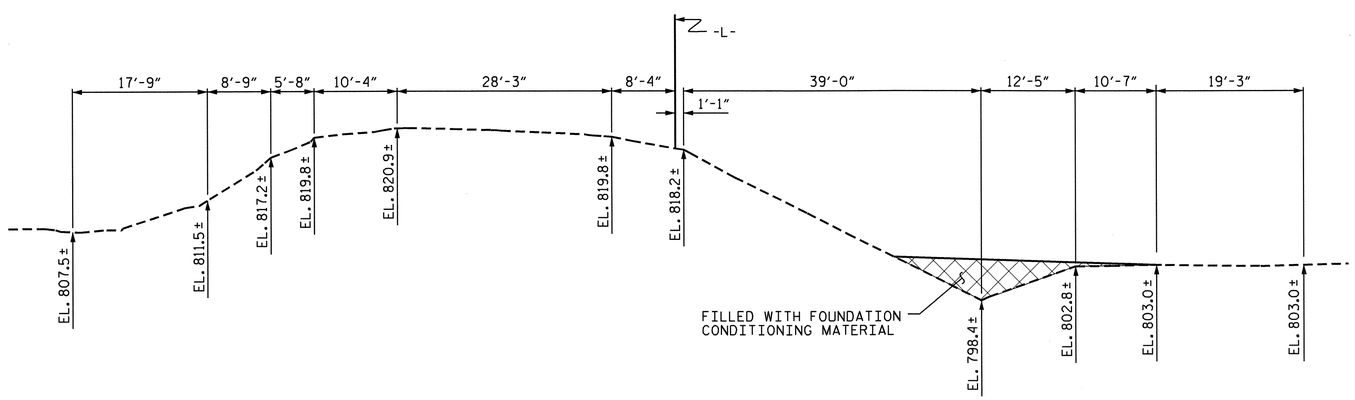


PROFILE ALONG ℄ CULVERT

PROJECT NO. R-2309AB
GUILFORD COUNTY
STATION: 168+50.00 -L-

SHEET 1 OF 5

STATE OF NORTH CAROLINA
DEPARTMENT OF TRANSPORTATION
RALEIGH

SINGLE 14 FT. X 10 FT.
CONCRETE BOX CULVERT
90° SKEW
PEDESTRIAN UNDERPASS

NORTH CAROLINA PROFESSIONAL SEAL 12274 ENGINEER OMAR R. AZIZ
10/31/11

NORTH CAROLINA PROFESSIONAL SEAL 14045 ENGINEER TIMOTHY L. COGGINS
10/26/11

| REVISIONS | | | | | | | SHEET NO. |
|---|---|---|---|---|---|---|---|
| NO. | BY: | DATE: | NO. | BY: | DATE: | | C-5 |
| 1 | | | 3 | | | | TOTAL SHEETS |
| 2 | | | 4 | | | | 15 |

STR. #6 STD. NO. CB11A

REVISED 11-13-91 BY E.L.R. CHECKED BY G.R.P.
ADDED 8-22-89

| | | | |
|---|---|---|---|
| ASSEMBLED BY : B.N.BARODAWALA | DATE : 7-27-11 | SPECIAL | |
| CHECKED BY : J.B.WILSON | DATE : 8-17-11 | | |
| DRAWN BY : R.W. WRIGHT | DATE : AUG. 1989 | STANDARD | |
| CHECKED BY : A.R. BISSETTE | DATE : AUG. 1989 | | |

26-OCT-2011 09:57
R:\TIPProjects-R\R2309AB\Structures\R2309ab\FinalPlans\Culverts\Str#6\r2309ab_sd_cu_06.dgn
tcoggins

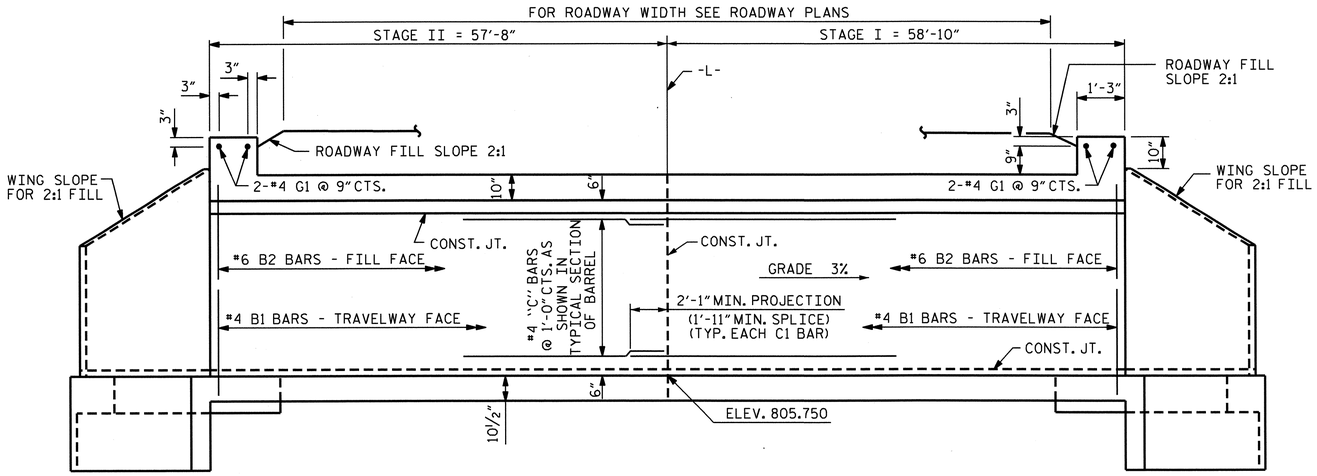


## CULVERT SECTION NORMAL TO ROADWAY

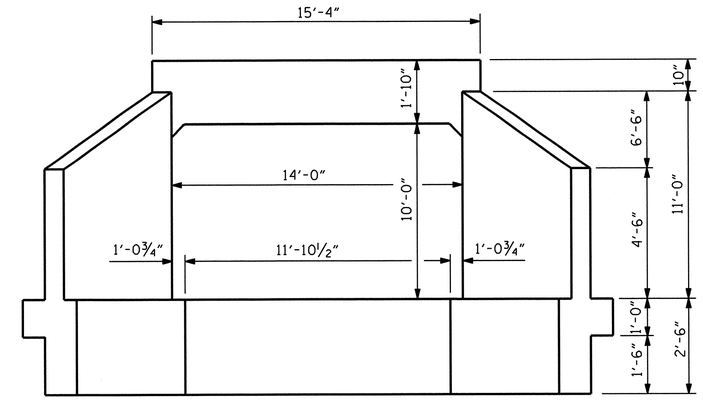


## END ELEVATION

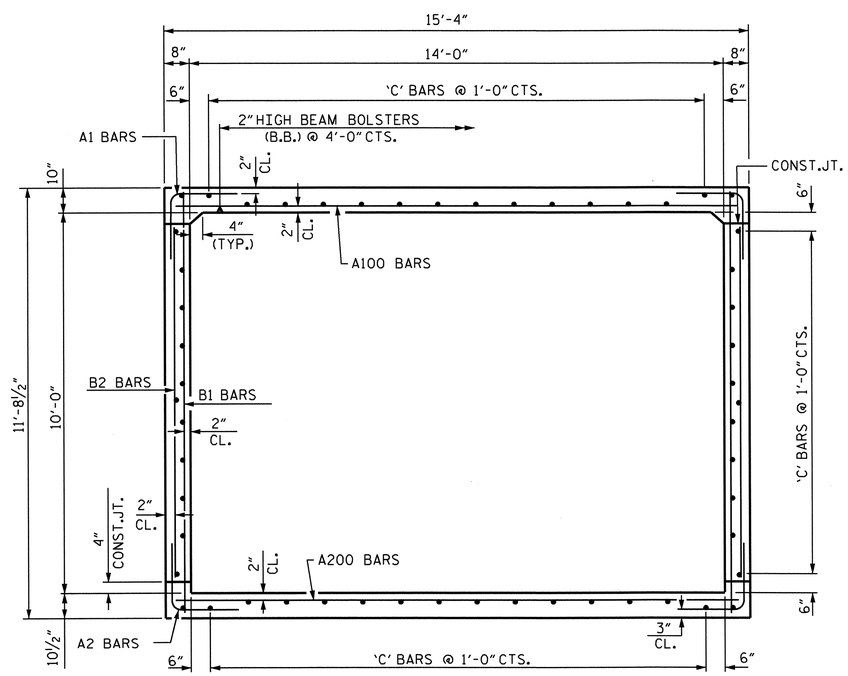


## RIGHT ANGLE SECTION OF BARREL

THERE ARE 54 "C" BARS IN SECTION OF BARREL

PROJECT NO. R-2309AB
GUILFORD COUNTY
STATION: 168+50.00 -L-

SHEET 2 OF 5

STATE OF NORTH CAROLINA
DEPARTMENT OF TRANSPORTATION
RALEIGH

SINGLE 14 FT. X 10 FT.
CONCRETE BOX CULVERT
90° SKEW
PEDESTRIAN UNDERPASS

NORTH CAROLINA PROFESSIONAL SEAL 14045 ENGINEER TIMOTHY K. COGGINS
10/26/11

| REVISIONS | | | | | | SHEET NO. |
|---|---|---|---|---|---|---|
| NO. | BY: | DATE: | NO. | BY: | DATE: | C-6 |
| 1 | | | 3 | | | TOTAL SHEETS |
| 2 | | | 4 | | | 15 |

STR. #6 STD. NO. CB11

| | | | |
|---|---|---|---|
| ASSEMBLED BY : B.N.BARODAWALA | DATE : 7-27-11 | SPECIAL | |
| CHECKED BY : J.B.WILSON | DATE : 8-17-11 | | |
| DRAWN BY : R. WRIGHT | DATE : AUG. 1989 | STANDARD | |
| CHECKED BY : A.R. BISSETTE | DATE : AUG. 1989 | | |

REVISED 8-28-92 BY E.L.R. CHECKED BY G.R.P.
REVISED 8-22-89 BY A.R.B. CHECKED BY C.R.K.
REDRAWN 8-22-1989

REVISED 11-19-99 BY M.M. CHECKED BY R.W.W.

26-OCT-2011 09:56
R:\TIPProjects-R\R2309AB\Structures\R2309ab\FinalPlans\Culverts\Str#6\r2309ab_sd_cu_06.dgn
tcoggins

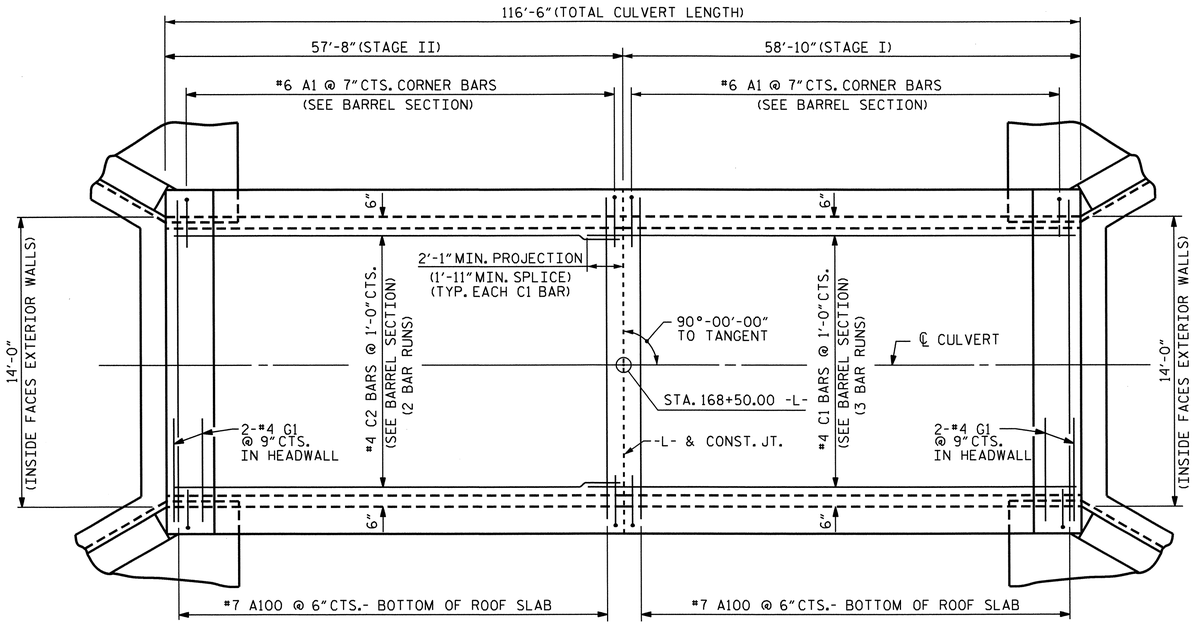


## PLAN - ROOF SLAB

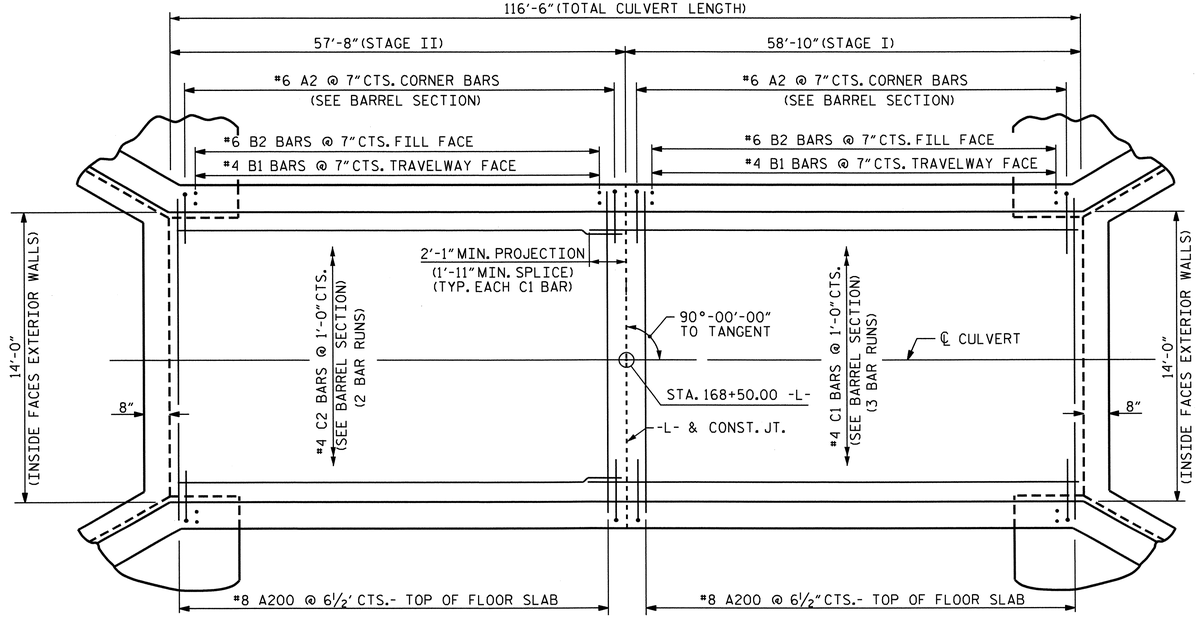


## PLAN - FLOOR SLAB

## BAR TYPE

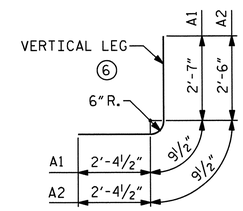


BAR DIMENSIONS ARE OUT TO OUT

## SPLICE LENGTH CHART

| BAR | SIZE | SPLICE LENGTH |
|---|---|---|
| B1 | 4 | 1'-9" |
| C1 | 4 | 1'-11" |
| C2 | 4 | 1'-11" |

## REINFORCING STEEL BAR SCHEDULE

### STAGE I

| BAR | NO. | SIZE | TYPE | LENGTH | WEIGHT |
|---|---|---|---|---|---|
| A1 | 202 | 6 | 6 | 5'-9" | 1745 |
| A2 | 202 | 6 | 6 | 5'-8" | 1719 |
| A100 | 118 | 7 | STR | 14'-11" | 3598 |
| A200 | 109 | 8 | STR | 14'-11" | 4341 |
| B1 | 202 | 4 | STR | 11'-2" | 1507 |
| B2 | 202 | 6 | STR | 9'-4" | 2832 |
| C1 | 162 | 4 | STR | 21'-7" | 2336 |
| G1 | 2 | 4 | STR | 15'-0" | 20 |

STAGE I REINFORCING STEEL 18098 LBS.

### STAGE II

| BAR | NO. | SIZE | TYPE | LENGTH | WEIGHT |
|---|---|---|---|---|---|
| A1 | 198 | 6 | 6 | 5'-9" | 1710 |
| A2 | 198 | 6 | 6 | 5'-8" | 1685 |
| A100 | 115 | 7 | STR | 14'-11" | 3506 |
| A200 | 106 | 8 | STR | 14'-11" | 4222 |
| B1 | 198 | 4 | STR | 11'-2" | 1477 |
| B2 | 198 | 6 | STR | 9'-4" | 2776 |
| C2 | 108 | 4 | STR | 29'-9" | 2158 |
| G1 | 2 | 4 | STR | 15'-0" | 20 |

STAGE II REINFORCING STEEL 17554 LBS.

PROJECT NO. R-2309AB
GUILFORD COUNTY
STATION: 168+50.00 -L-

SHEET 3 OF 5

STATE OF NORTH CAROLINA
DEPARTMENT OF TRANSPORTATION
RALEIGH

SINGLE 14 FT. X 10 FT.
CONCRETE BOX CULVERT
90° SKEW
PEDESTRIAN UNDERPASS

NORTH CAROLINA PROFESSIONAL SEAL 14045 ENGINEER TIMOTHY L. COGGINS
10/26/11

| REVISIONS | | | | | | | SHEET NO. |
|---|---|---|---|---|---|---|---|
| NO. | BY: | DATE: | NO. | BY: | DATE: | | C-7 |
| 1 | | | 3 | | | | TOTAL SHEETS |
| 2 | | | 4 | | | | 15 |

DRAWN BY : B.N.BARODAWALA DATE : 7-27-11
CHECKED BY : J.B.WILSON DATE : 8-17-11

26-OCT-2011 09:56
R:\TIPProjects-R\R2309AB\Structures\R2309ab\FinalPlans\Culverts\Str#6\r2309ab_sd_cu_06.dgn
tcoggins

STR. #6

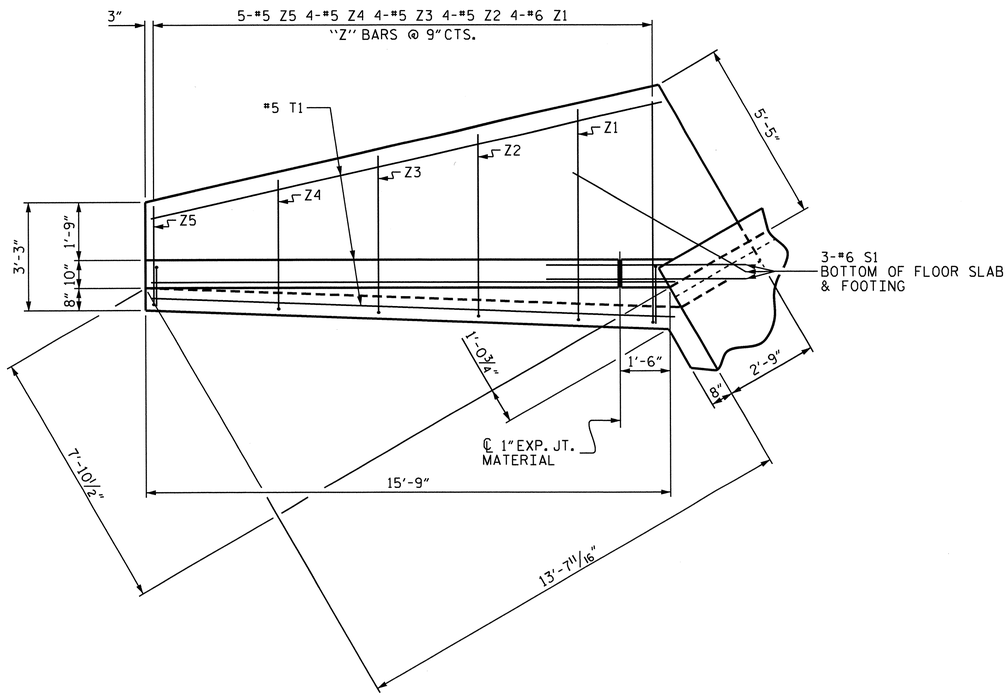


PLAN

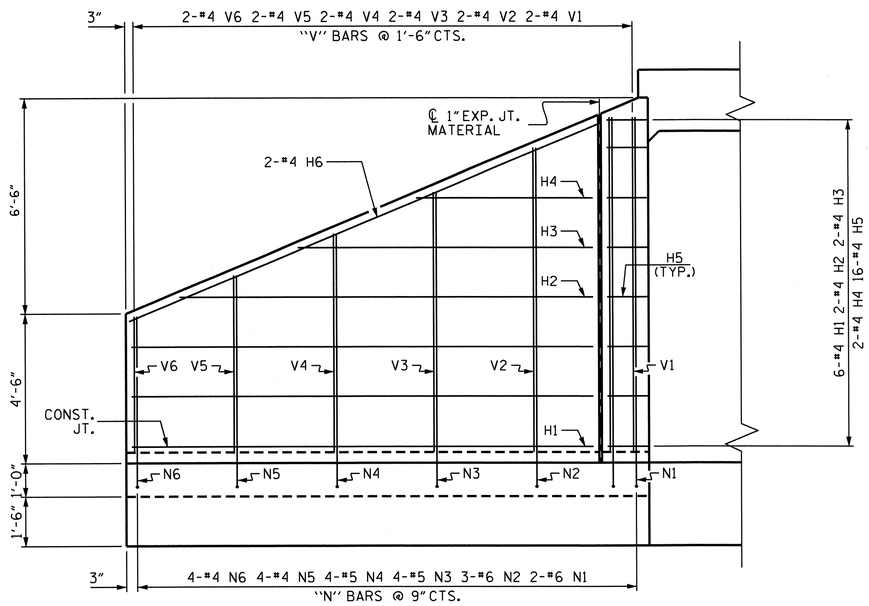


ELEVATION

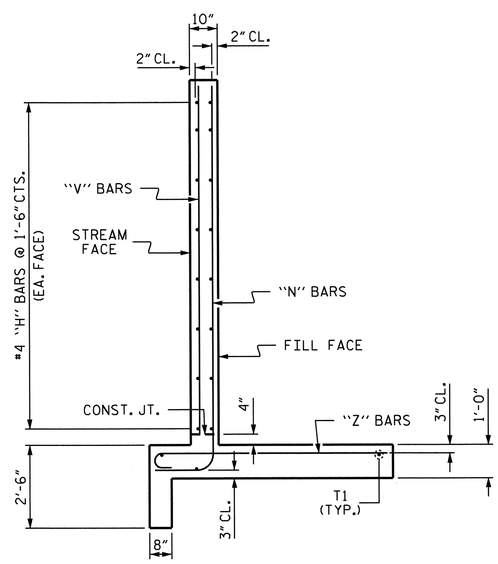


TYPICAL WING SECTION

## BAR TYPES

ALL BAR DIMENSIONS ARE OUT TO OUT.

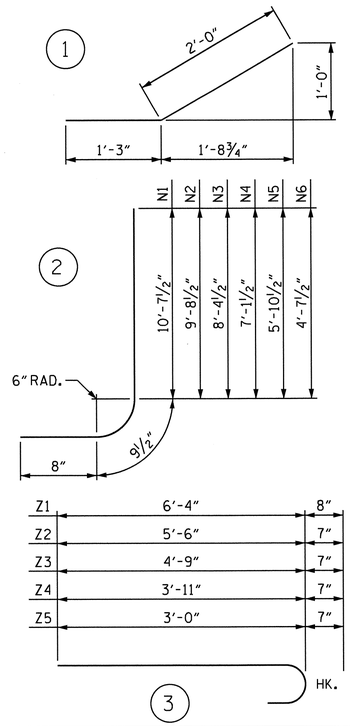


## BILL OF MATERIAL — STAGE I

| BAR | NO. | SIZE | TYPE | LENGTH | WEIGHT |
|---|---|---|---|---|---|
| H1 | 12 | #4 | STR | 13'-10" | 111 |
| H2 | 4 | #4 | STR | 12'-5" | 33 |
| H3 | 4 | #4 | STR | 8'-10" | 24 |
| H4 | 4 | #4 | STR | 5'-4" | 14 |
| H5 | 32 | #4 | 1 | 3'-3" | 69 |
| H6 | 4 | #4 | STR | 15'-5" | 41 |
| N1 | 4 | #6 | 2 | 12'-1" | 73 |
| N2 | 6 | #6 | 2 | 11'-2" | 101 |
| N3 | 8 | #5 | 2 | 9'-10" | 82 |
| N4 | 8 | #5 | 2 | 8'-7" | 72 |
| N5 | 8 | #4 | 2 | 7'-4" | 39 |
| N6 | 8 | #4 | 2 | 6'-1" | 33 |
| S1 | 6 | #6 | STR | 6'-0" | 54 |
| T1 | 6 | #5 | STR | 15'-9" | 99 |
| V1 | 4 | #4 | STR | 10'-1" | 27 |
| V2 | 4 | #4 | STR | 9'-2" | 24 |
| V3 | 4 | #4 | STR | 7'-10" | 21 |
| V4 | 4 | #4 | STR | 6'-7" | 18 |
| V5 | 4 | #4 | STR | 5'-4" | 14 |
| V6 | 4 | #4 | STR | 4'-1" | 11 |
| Z1 | 8 | #6 | 3 | 7'-0" | 84 |
| Z2 | 8 | #5 | 3 | 6'-1" | 51 |
| Z3 | 8 | #5 | 3 | 5'-4" | 45 |
| Z4 | 8 | #5 | 3 | 4'-6" | 38 |
| Z5 | 10 | #5 | 3 | 3'-7" | 37 |

REINFORCING STEEL FOR 2 WINGS 1215 LBS

CLASS A CONCRETE
2 WINGS 15.6 CY
1 HEADWALL 0.7 CY
1 END CURTAIN WALL 0.7 CY
TOTAL 17.0 CY

## BILL OF MATERIAL — STAGE II

| BAR | NO. | SIZE | TYPE | LENGTH | WEIGHT |
|---|---|---|---|---|---|
| H1 | 12 | #4 | STR | 13'-10" | 111 |
| H2 | 4 | #4 | STR | 12'-5" | 33 |
| H3 | 4 | #4 | STR | 8'-10" | 24 |
| H4 | 4 | #4 | STR | 5'-4" | 14 |
| H5 | 32 | #4 | 1 | 3'-3" | 69 |
| H6 | 4 | #4 | STR | 15'-5" | 41 |
| N1 | 4 | #6 | 2 | 12'-1" | 73 |
| N2 | 6 | #6 | 2 | 11'-2" | 101 |
| N3 | 8 | #5 | 2 | 9'-10" | 82 |
| N4 | 8 | #5 | 2 | 8'-7" | 72 |
| N5 | 8 | #4 | 2 | 7'-4" | 39 |
| N6 | 8 | #4 | 2 | 6'-1" | 33 |
| S1 | 6 | #6 | STR | 6'-0" | 54 |
| T1 | 6 | #5 | STR | 15'-9" | 99 |
| V1 | 4 | #4 | STR | 10'-1" | 27 |
| V2 | 4 | #4 | STR | 9'-2" | 24 |
| V3 | 4 | #4 | STR | 7'-10" | 21 |
| V4 | 4 | #4 | STR | 6'-7" | 18 |
| V5 | 4 | #4 | STR | 5'-4" | 14 |
| V6 | 4 | #4 | STR | 4'-1" | 11 |
| Z1 | 8 | #6 | 3 | 7'-0" | 84 |
| Z2 | 8 | #5 | 3 | 6'-1" | 51 |
| Z3 | 8 | #5 | 3 | 5'-4" | 45 |
| Z4 | 8 | #5 | 3 | 4'-6" | 38 |
| Z5 | 10 | #5 | 3 | 3'-7" | 37 |

REINFORCING STEEL FOR 2 WINGS 1215 LBS

CLASS A CONCRETE
2 WINGS 15.6 CY
1 HEADWALL 0.7 CY
1 END CURTAIN WALL 0.7 CY
TOTAL 17.0 CY

PROJECT NO. R-2309AB
GUILFORD COUNTY
STATION: 168+50.00 -L-

SHEET 4 OF 5

STATE OF NORTH CAROLINA
DEPARTMENT OF TRANSPORTATION
RALEIGH

# STANDARD WINGS FOR CONCRETE BOX CULVERT

H = 10'-0" SLOPE = 2:1
90° SKEW

NORTH CAROLINA PROFESSIONAL SEAL 14045 ENGINEER TIMOTHY W. COGGINS
10/26/11

| REVISIONS | | | | | | | | SHEET NO. |
|---|---|---|---|---|---|---|---|---|
| NO. | BY: | DATE: | NO. | BY: | DATE: | | | C-8 |
| 1 | | | 3 | | | | | TOTAL SHEETS |
| 2 | | | 4 | | | | | 15 |

STR. #6 STD. NO. CW9010

ASSEMBLED BY : B.N.BARODAWALA DATE : 7-27-11
CHECKED BY : J.B.WILSON DATE : 8-17-11
DRAWN BY : CCJ 10/99
CHECKED BY : RWW 03/00

26-OCT-2011 09:55
R:\TIPProjects-R\R2309AB\Structures\R2309ab\FinalPlans\Culverts\Str#6\r2309ab_sd_cu_06.dgn
tcoggins

| PROJECT REFERENCE NO. | SHEET NO. |
|---|---|
| R-2309AB | ECS-1 |

BM #9 RR SPIKE IN BASE OF MAPLE 217' LT OF STA. 164+66.28 -L-, ELEV. 792.77'

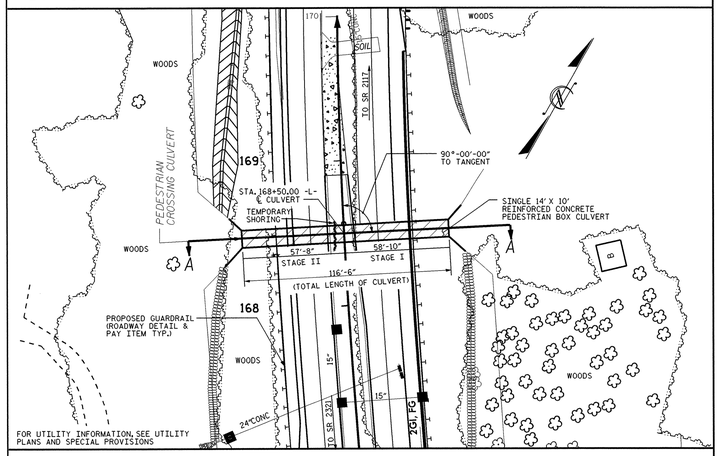


LOCATION SKETCH SHEET NO. 15

## LOCATION SKETCH

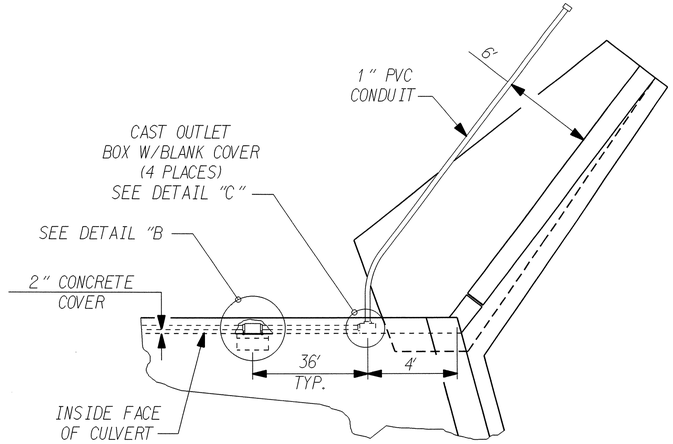


## DETAIL "A"

| ESTIMATED MATERIALS | | |
|---|---|---|
| QTY | UNIT | DESCRIPTION |
| 4 | EA | CAST OUTLET BOX W/ BLANK COVER & GASKET |
| 110 | FT | 3/4" POLYVINYL CHLORIDE (PVC) CONDUIT |
| 50 | FT | 1" POLYVINYL CHLORIDE (PVC) CONDUIT |
| 2 | EA | 1" PVC END CAPS |
| 1 | LOT | ZINC RICH PAINT |
| 200 | FT | POLYETHYLENE PULL LINE |

NOTES

1. SEE SPECIAL PROVISIONS FOR INSTALLATION IN PRE-CAST CULVERT
2. INSTALL TRACER WIRE IN STUBBED CONDUIT FOR FUTURE USE.
3. PEDESTRIAN CULVERT LUMINAIRES AND LIGHTING CIRCUITRY ARE PROVIDED AND INSTALLED BY OTHERS.

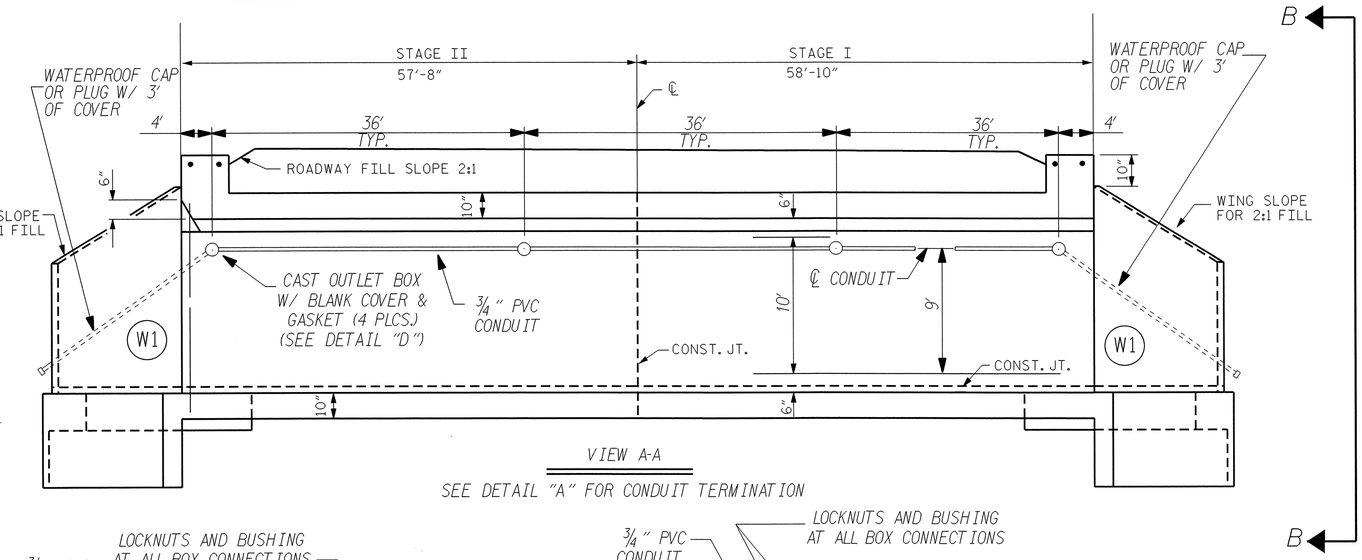


VIEW A-A

SEE DETAIL "A" FOR CONDUIT TERMINATION

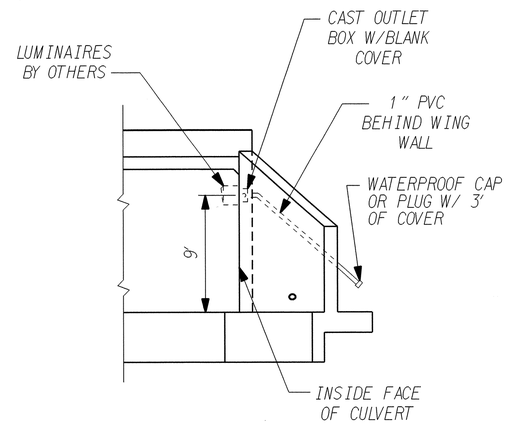


## VIEW B-B

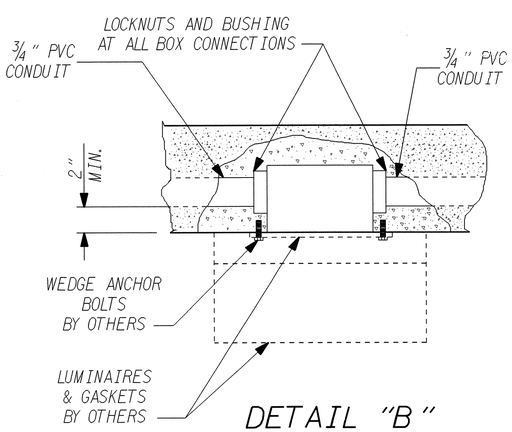


## DETAIL "B"

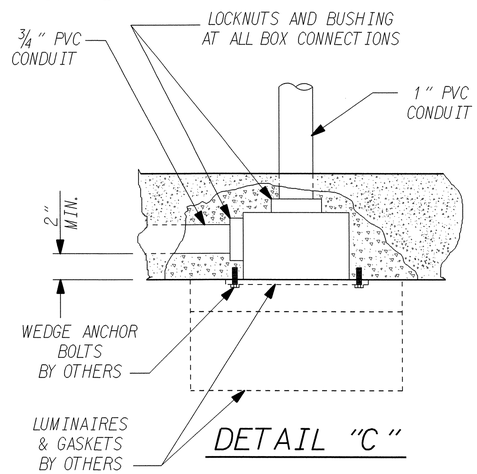


## DETAIL "C"

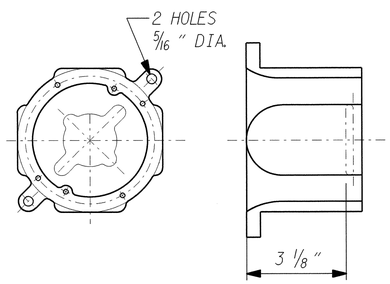


## DETAIL "D"

PROJECT NO. R-2309AB

GUILFORD COUNTY

STATION: 168+50.000 -L-

SHEET 5 OF 5

STATE OF NORTH CAROLINA
DEPARTMENT OF TRANSPORTATION
RALEIGH
ROADWAY DESIGN LIGHTING & ELECTRICAL

# ELECTRICAL CONDUIT SYSTEM

## CAST-IN-PLACE CULVERT

NORTH CAROLINA PROFESSIONAL SEAL 022582 ENGINEER PAUL KI-BUN CHAN 8-12-11

SEE PROJECT SPECIAL PROVISIONS TITLED "PEDESTRIAN CULVERT CONDUIT SYSTEM" FOR MATERIALS CONSTRUCTION METHODS AND PAYMENT.

| REVISIONS | | | | | | | SHEET NO. |
|---|---|---|---|---|---|---|---|
| NO. | BY: | DATE: | NO. | BY: | DATE: | | C-9 |
| 1 | | | 3 | | | | TOTAL SHEETS |
| 2 | | | 4 | | | | 15 |

DRAWN BY : A.BROWN DATE : 06/15/11
CHECKED BY : P. Chan DATE : 8-12-11

R:\Lighting\Electrical\Lighting Design\R-2309ab_L&E_ECS1.dgn
12-AUG-2011 09:52
$$$$USERNAME$$$$

BM #14 RAILROAD SPIKE IN ROOT OF 24"POPLAR, STA. 250+66.58 -L-; 578.31' RIGHT; EL. 837.95

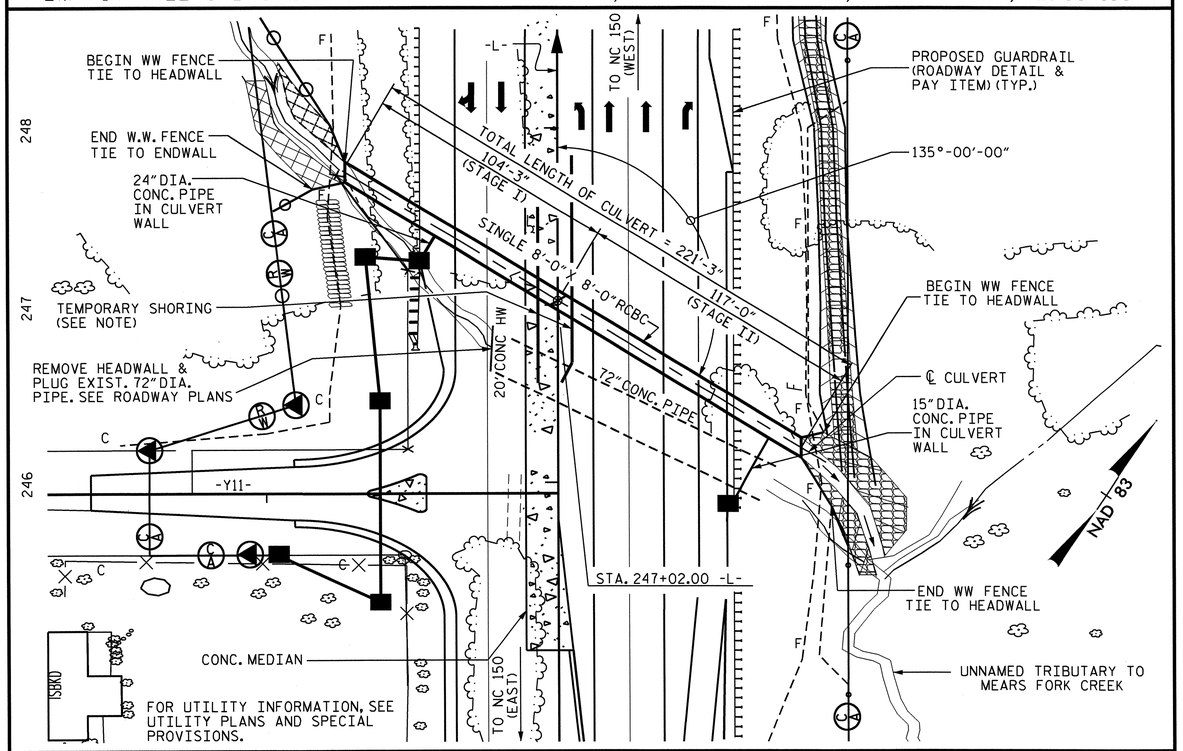


LOCATION SKETCH

## HYDRAULIC DATA

| | |
|---|---|
| DESIGN DISCHARGE | = 420 CF/S |
| FREQUENCY OF DESIGN FLOOD | = 50 YRS. |
| DESIGN HIGH WATER ELEVATION | = 829.8 |
| DRAINAGE AREA | = 138 AC. |
| BASE DISCHARGE (Q100) | = 480 CF/S |
| BASE HIGH WATER ELEVATION | = 830.5 |

## OVERTOPPING FLOOD DATA

| | |
|---|---|
| OVERTOPPING DISCHARGE | = 1037 CF/S |
| FREQUENCY OF OVERTOPPING FLOOD | = >500 YRS. |
| OVERTOPPING FLOOD ELEVATION | = 838.4 CF/S |

## GRADE DATA

| | |
|---|---|
| GRADE POINT ELEVATION @ STA. 247+02.00 -L- | = 840.951 |
| BED ELEVATION @ STA. 247+02.00 -L- | = 820.500 |
| ROADWAY SLOPE | = 2 : 1 |

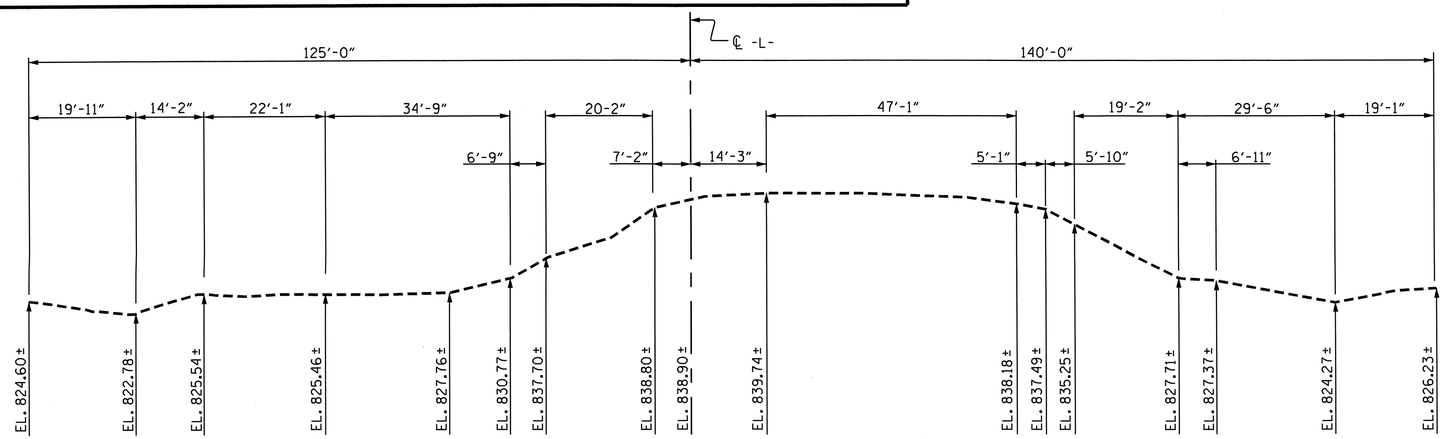


PROFILE ALONG ℄ CULVERT

DRAWN BY : M.D.PISO DATE : 6-6-11
CHECKED BY : B.N.BARODAWALA DATE : 8-18-11

26-OCT-2011 09:54
R:\TIPProjects-R\R2309AB\Structures\R2309ab\FinalPlans\Culverts\Str#7\r2309ab_sd_cu_07.dgn
tcoggins

## NOTES:

ASSUMED LIVE LOAD ----------HS20 OR ALTERNATE LOADING.

DESIGN FILL----------12.5'

FOR OTHER DESIGN DATA AND NOTES SEE STANDARD NOTE SHEET.

3"Ø WEEP HOLES INDICATED TO BE IN ACCORDANCE WITH THE SPECIFICATIONS.

CONCRETE IN CULVERTS, IN EACH STAGE, TO BE POURED IN THE FOLLOWING ORDER:

1. WING FOOTINGS AND FLOOR SLAB INCLUDING 4" OF ALL VERTICAL WALLS.
2. THE REMAINING PORTIONS OF THE STAGE WALLS AND WINGS FULL HEIGHT FOLLOWED BY ROOF SLAB AND HEADWALLS.

THE RESIDENT ENGINEER SHALL CHECK THE LENGTH OF CULVERT BEFORE STAKING IT OUT TO MAKE CERTAIN THAT IT WILL PROPERLY TAKE CARE OF THE FILL.

DIMENSIONS FOR WING LAYOUT AS WELL AS ADDITIONAL REINFORCING STEEL EMBEDDED IN BARREL ARE SHOWN ON WING SHEET.

TRANSVERSE CONSTRUCTION JOINTS SHALL BE USED IN THE BARREL, SPACED TO LIMIT THE POURS TO A MAXIMUM OF 70 FT. LOCATION OF JOINTS SHALL BE SUBJECT TO APPROVAL OF THE ENGINEER.

AT THE CONTRACTOR'S OPTION, HE MAY SPLICE THE VERTICAL REINFORCING STEEL IN THE INTERIOR FACE OF EXTERIOR WALL ABOVE LOWER WALL CONSTRUCTION JOINT. THE SPLICE LENGTH SHALL BE AS PROVIDED IN THE SPLICE LENGTH CHART SHOWN ON THE PLANS. EXTRA WEIGHT OF STEEL DUE TO THE SPLICES SHALL BE PAID FOR BY THE CONTRACTOR.

THE 15"DIA. PIPE AND THE 24"DIA. PIPE THROUGH THE SIDEWALL OF THE CULVERT SHALL BE LOCATED BY THE ENGINEER. THE REINFORCING STEEL SHALL BE FIELD BENT AS NECESSARY TO CLEAR PIPE.

FOR CULVERT DIVERSION DETAILS AND PAY ITEM, SEE EROSION CONTROL PLANS.

A 3 FOOT STRIP OF FILTER FABRIC SHALL BE ATTACHED TO THE FILL FACE OF THE WING COVERING THE ENTIRE LENGTH OF THE EXPANSION JOINT.

FOR SUBMITTAL OF WORKING DRAWINGS, SEE SPECIAL PROVISIONS.

FOR FALSEWORK AND FORMWORK, SEE SPECIAL PROVISIONS.

NO PRECAST REINFORCED BOX CULVERT OPTION WILL BE ALLOWED.

FOR GROUT FOR STRUCTURES, SEE SPECIAL PROVISIONS.

FOR CRANE SAFETY, SEE SPECIAL PROVISIONS.

FOR MAINTENANCE OF TRAFFIC, SEE TRAFFIC CONTROL PLANS.

FOR LIMITS OF TEMPORARY SHORING FOR MAINTENANCE OF TRAFFIC, SEE TRAFFIC CONTROL PLANS. FOR PAY ITEM FOR TEMPORARY SHORING FOR MAINTENANCE OF TRAFFIC, SEE ROADWAY PLANS.

THE CONTRACTOR SHALL PROVIDE INDEPENDENT ASSURANCE SAMPLES OF REINFORCING STEEL AS FOLLOWS: FOR PROJECTS REQUIRING UP TO 400 TONS OF REINFORCING STEEL, ONE 30 INCH SAMPLE OF EACH SIZE BAR USED, AND FOR PROJECTS REQUIRING OVER 400 TONS OF REINFORCING STEEL, TWO 30 INCH SAMPLES OF EACH SIZE BAR USED. THE BARS FROM WHICH THE SAMPLES ARE TAKEN MUST THEN BE SPLICED WITH REPLACEMENT BARS OF THE SIZE AND LENGTH OF THE SAMPLE, PLUS A MINIMUM LAP SPLICE OF THIRTY BAR DIAMETERS. PAYMENT FOR THE SAMPLES OF REINFORCING STEEL SHALL BE CONSIDERED INCIDENTAL TO VARIOUS PAY ITEMS.

NORTH CAROLINA PROFESSIONAL SEAL 12274 ENGINEER OMAR R. AZIZ
Omar R Aziz 10/21/11

NORTH CAROLINA PROFESSIONAL SEAL 14045 ENGINEER TIMOTHY J. COGGINS
Timothy J. Coggins 10/26/11

F.A. PROJECT NO.: STPNHS-0220(25)

## STRUCTURE QUANTITIES (STAGE I)

| | |
|---|---|
| CLASS A CONCRETE | |
| BARREL @ 0.874 CY/FT | 91.1 CY |
| 2 WINGS | 14.6 CY |
| 1 HEADWALL | 0.6 CY |
| 1 END CURTAIN WALL | 0.6 CY |
| 2 EDGE BEAMS | 1.0 CY |
| TOTAL | 107.9 CY |
| REINFORCING STEEL | |
| BARREL | 15,226 LBS. |
| WINGS, ETC. | 941 LBS. |
| TOTAL | 16,167 LBS. |
| CULVERT EXCAVATION | LUMP SUM |
| FOUNDATION COND. MAT'L | 69 TONS |

## STRUCTURE QUANTITIES (STAGE II)

| | |
|---|---|
| CLASS A CONCRETE | |
| BARREL @ 0.874 CY/FT | 102.3 CY |
| 2 WINGS | 14.6 CY |
| 1 HEADWALL | 0.6 CY |
| 1 END CURTAIN WALL | 0.6 CY |
| 2 EDGE BEAMS | 1.0 CY |
| TOTAL | 119.1 CY |
| REINFORCING STEEL | |
| BARREL | 17,003 LBS. |
| WINGS, ETC. | 941 LBS. |
| TOTAL | 17,944 LBS. |
| CULVERT EXCAVATION | LUMP SUM |
| FOUNDATION COND. MAT'L | 77 TONS |

## TOTAL STRUCTURE QUANTITIES (STAGE I & STAGE II)

| | |
|---|---|
| CLASS A CONCRETE | |
| BARREL @ 0.874 CY/FT | 193.4 CY |
| WINGS ETC. | 33.6 CY |
| TOTAL | 227.0 CY |
| REINFORCING STEEL | |
| BARREL | 32,229 LBS. |
| WINGS, ETC. | 1882 LBS. |
| TOTAL | 34,111 LBS. |
| CULVERT EXCAVATION | LUMP SUM |
| FOUNDATION COND. MAT'L | 146 TONS |

PROJECT NO. R-2309AB
GUILFORD COUNTY
STATION: 247+02.00 -L-

SHEET 1 OF 6

STATE OF NORTH CAROLINA
DEPARTMENT OF TRANSPORTATION
RALEIGH

SINGLE 8 FT. X 8 FT. CONCRETE BOX CULVERT 135° SKEW

| REVISIONS | | | | | | SHEET NO. |
|---|---|---|---|---|---|---|
| NO. | BY: | DATE: | NO. | BY: | DATE: | C-10 |
| 1 | | | 3 | | | TOTAL SHEETS |
| 2 | | | 4 | | | 15 |

STR. #7

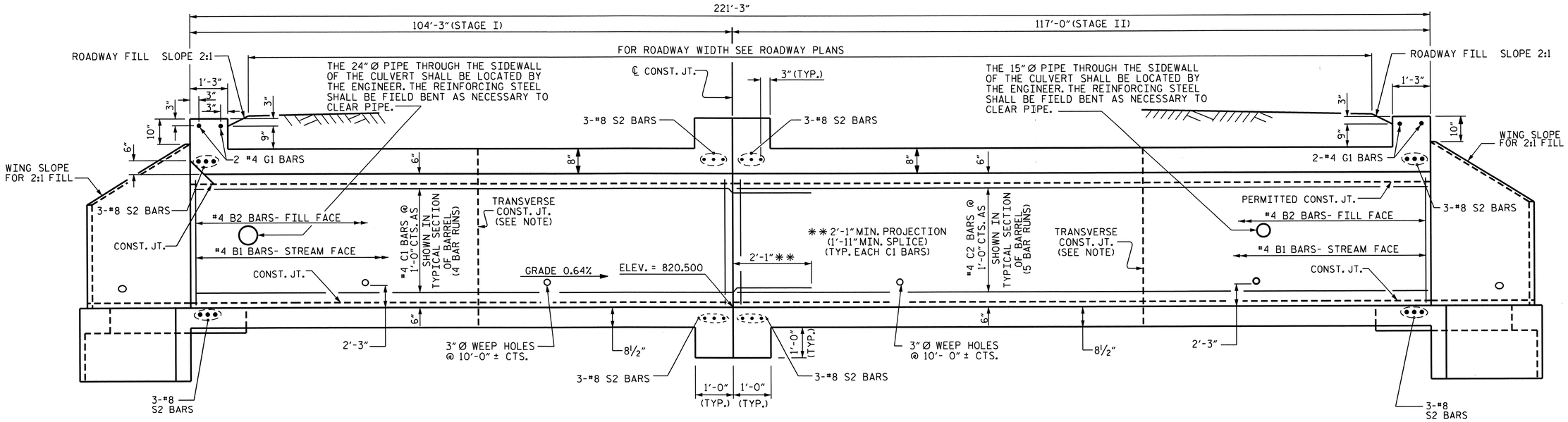


CULVERT SECTION NORMAL TO ROADWAY

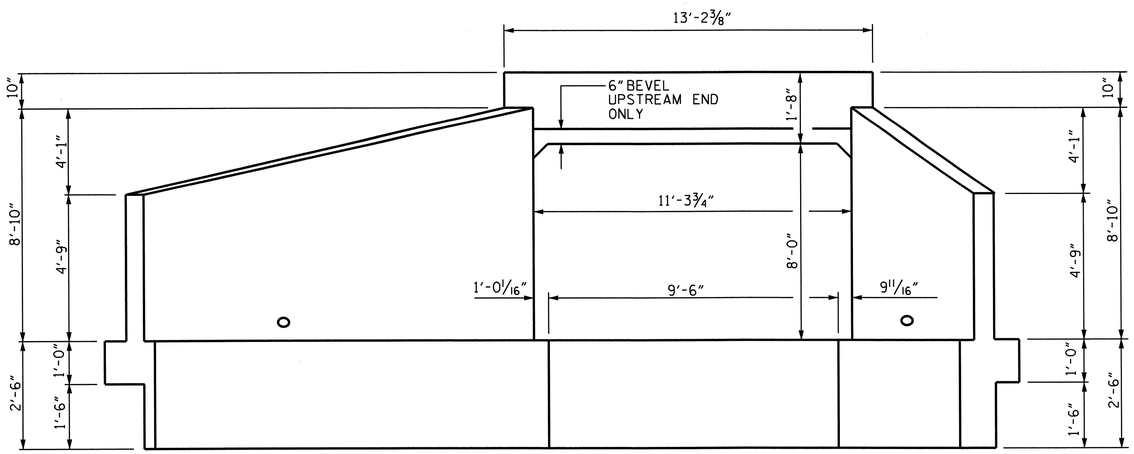


END ELEVATION NORMAL TO SKEW

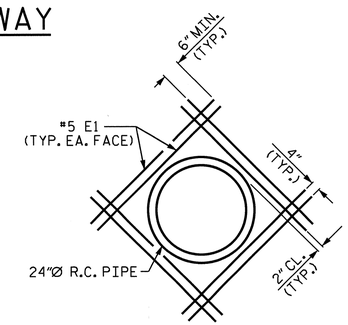


DETAIL OF REINFORCING AROUND 24" Ø R.C. PIPE
(STAGE I)

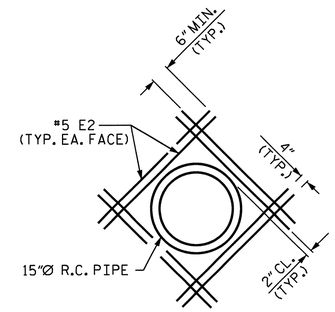


DETAIL OF REINFORCING AROUND 15" Ø R.C. PIPE
(STAGE II)

PROJECT NO. R-2309AB
GUILFORD COUNTY
STATION: 247+02.00 -L-

SHEET 2 OF 6

STATE OF NORTH CAROLINA
DEPARTMENT OF TRANSPORTATION
RALEIGH

SINGLE 8 FT. X 8 FT. CONCRETE BOX CULVERT 135° SKEW

NORTH CAROLINA PROFESSIONAL SEAL 14045 ENGINEER TIMOTHY L. COGGINS
10/24/11

| REVISIONS | | | | | | SHEET NO. |
|---|---|---|---|---|---|---|
| NO. | BY: | DATE: | NO. | BY: | DATE: | C-11 |
| 1 | | | 3 | | | TOTAL SHEETS |
| 2 | | | 4 | | | 15 |

DRAWN BY : M.D.PISO DATE : 6-6-11
CHECKED BY : B.N.BARODAWALA DATE : 8-18-11

26-OCT-2011 09:54
R:\TIPProjects-R\R2309AB\Structures\R2309ab\FinalPlans\Culverts\Str*7\r2309ab_sd_cu_07.dgn
tcoggins

STR. #7

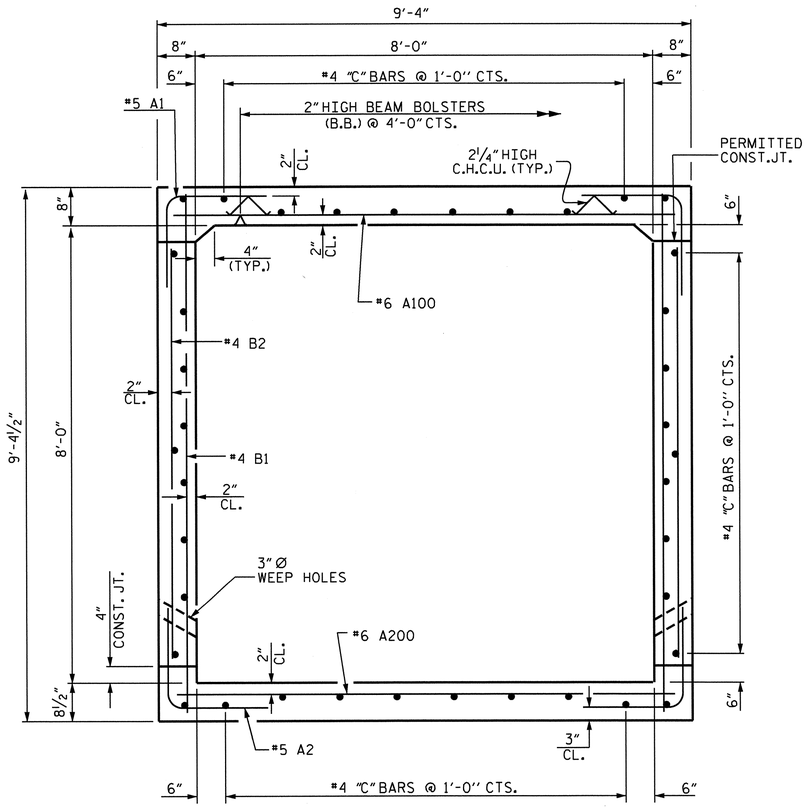


## RIGHT ANGLE SECTION OF BARREL

THERE ARE 38 "C" BARS IN SECTION OF BARREL

## BAR TYPE

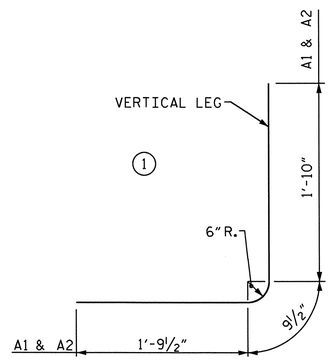


BAR DIMENSIONS ARE OUT TO OUT

## SPLICE CHART

| BAR | LENGTH |
|---|---|
| #4 "C" | 1'-11" |
| #4 B1 | 1'-9" |

## BILL OF MATERIAL STAGE I

| BAR | NO. | SIZE | TYPE | LENGTH | WEIGHT |
|---|---|---|---|---|---|
| A1 | 358 | #5 | 1 | 4'-5" | 1649 |
| A2 | 358 | #5 | 1 | 4'-5" | 1649 |
| A100 | 163 | #6 | STR. | 9'-0" | 2203 |
| A101 | 4 | #6 | STR. | 7'-10" | 47 |
| A102 | 4 | #6 | STR. | 6'-8" | 40 |
| A103 | 4 | #6 | STR. | 5'-6" | 33 |
| A104 | 4 | #6 | STR. | 4'-4" | 26 |
| A105 | 4 | #6 | STR. | 3'-2" | 19 |
| A106 | 4 | #6 | STR. | 2'-0" | 12 |
| A200 | 163 | #6 | STR. | 9'-0" | 2203 |
| A201 | 4 | #6 | STR. | 7'-10" | 47 |
| A202 | 4 | #6 | STR. | 6'-8" | 40 |
| A203 | 4 | #6 | STR. | 5'-6" | 33 |
| A204 | 4 | #6 | STR. | 4'-4" | 26 |
| A205 | 4 | #6 | STR. | 3'-2" | 19 |
| A206 | 4 | #6 | STR. | 2'-0" | 12 |
| B1 | 358 | #4 | STR. | 9'-0" | 2152 |
| B2 | 358 | #4 | STR. | 7'-0" | 1674 |
| C1 | 152 | #4 | STR. | 28'-0" | 2843 |
| E1 | 16 | #5 | STR. | 4'-7" | 76 |
| G1 | 2 | #4 | STR. | 12'-8" | 17 |
| S2 | 12 | #8 | STR. | 12'-8" | 406 |
| TOTAL REINFORCING STEEL | | | | | 15,226 LBS. |

## BILL OF MATERIAL STAGE II

| BAR | NO. | SIZE | TYPE | LENGTH | WEIGHT |
|---|---|---|---|---|---|
| A1 | 402 | #5 | 1 | 4'-5" | 1852 |
| A2 | 402 | #5 | 1 | 4'-5" | 1852 |
| A100 | 185 | #6 | STR. | 9'-0" | 2501 |
| A101 | 4 | #6 | STR. | 7'-10" | 47 |
| A102 | 4 | #6 | STR. | 6'-8" | 40 |
| A103 | 4 | #6 | STR. | 5'-6" | 33 |
| A104 | 4 | #6 | STR. | 4'-4" | 26 |
| A105 | 4 | #6 | STR. | 3'-2" | 19 |
| A106 | 4 | #6 | STR. | 2'-0" | 12 |
| A200 | 185 | #6 | STR. | 9'-0" | 2501 |
| A201 | 4 | #6 | STR. | 7'-10" | 47 |
| A202 | 4 | #6 | STR. | 6'-8" | 40 |
| A203 | 4 | #6 | STR. | 5'-6" | 33 |
| A204 | 4 | #6 | STR. | 4'-4" | 26 |
| A205 | 4 | #6 | STR. | 3'-2" | 19 |
| A206 | 4 | #6 | STR. | 2'-0" | 12 |
| B1 | 402 | #4 | STR. | 9'-0" | 2417 |
| B2 | 402 | #4 | STR. | 7'-0" | 1880 |
| C2 | 190 | #4 | STR. | 24'-11" | 3162 |
| E2 | 16 | #5 | STR. | 3'-8" | 61 |
| G1 | 2 | #4 | STR. | 12'-8" | 17 |
| S2 | 12 | #8 | STR. | 12'-8" | 406 |
| TOTAL REINFORCING STEEL | | | | | 17,003 LBS. |

PROJECT NO. R-2309AB

GUILFORD COUNTY

STATION: 247+02.00 -L-

SHEET 3 OF 6

STATE OF NORTH CAROLINA
DEPARTMENT OF TRANSPORTATION
RALEIGH

SINGLE 8 FT. X 8 FT.
CONCRETE BOX CULVERT
135° SKEW

BILL OF MATERIAL &
DETAILS

NORTH CAROLINA PROFESSIONAL SEAL 14045 ENGINEER TIMOTHY L. COGGINS
10/24/11

| REVISIONS | | | | | | SHEET NO. |
|---|---|---|---|---|---|---|
| NO. | BY: | DATE: | NO. | BY: | DATE: | C-12 |
| 1 | | | 3 | | | TOTAL SHEETS |
| 2 | | | 4 | | | 15 |

DRAWN BY : M.D.PISO DATE : 6-6-11
CHECKED BY : B.N.BARODAWALA DATE : 8-18-11

26-OCT-2011 09:54
R:\TIPProjects-R\R2309AB\Structures\R2309ab\FinalPlans\Culverts\Str*7\r2309ab_sd_cu_07.dgn
tcoggins

STR. #7

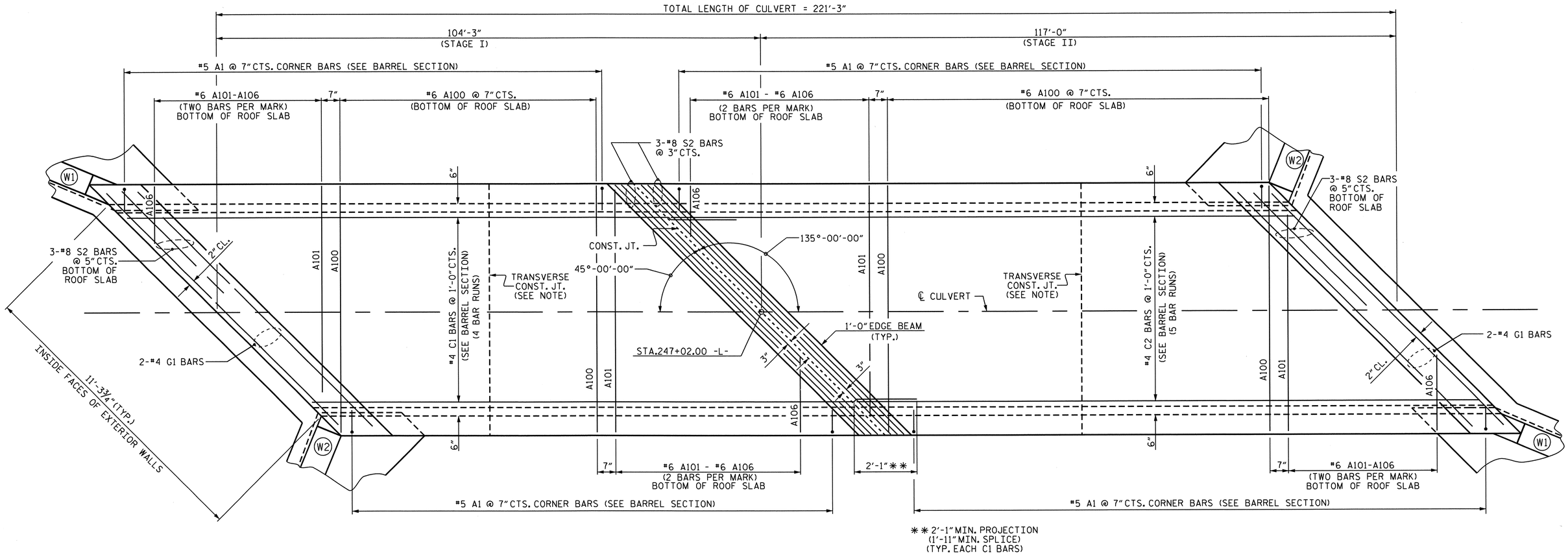


## ROOF SLAB

PROJECT NO. R-2309AB

GUILFORD COUNTY

STATION: 247+02.00 -L-

SHEET 4 OF 6

STATE OF NORTH CAROLINA
DEPARTMENT OF TRANSPORTATION
RALEIGH

# SINGLE 8 FT. X 8 FT. CONCRETE BOX CULVERT 135° SKEW

NORTH CAROLINA PROFESSIONAL SEAL 14045 ENGINEER TIMOTHY L. COGGINS
10/26/11

| REVISIONS | | | | | | SHEET NO. |
|---|---|---|---|---|---|---|
| NO. | BY: | DATE: | NO. | BY: | DATE: | C-13 |
| 1 | | | 3 | | | TOTAL SHEETS |
| 2 | | | 4 | | | 15 |

DRAWN BY : M.D.PISO DATE : 6-6-11
CHECKED BY : B.N.BARODAWALA DATE : 8-18-11

26-OCT-2011 09:53
R:\TIPProjects-R\R2309AB\Structures\R2309ab\FinalPlans\Culverts\Str#7\r2309ab_sd_cu_07.dgn
tcoggins

STR. #7

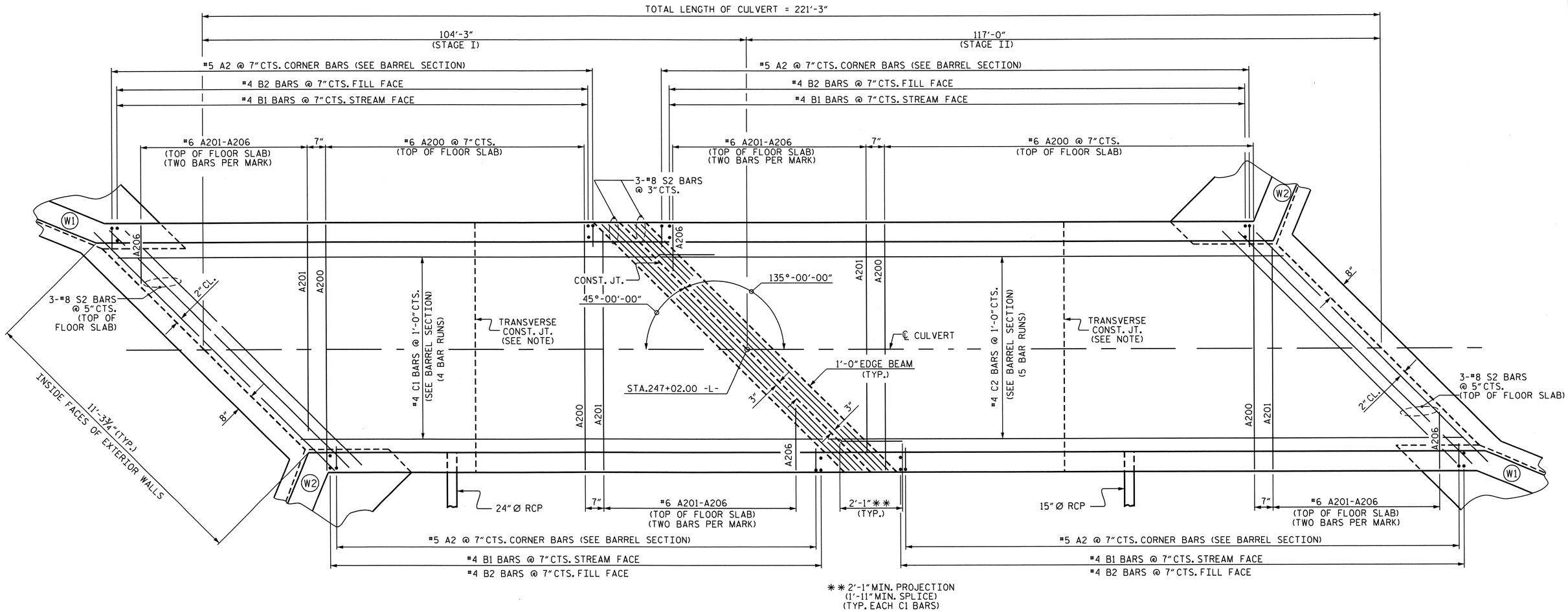


STAGE I

STAGE II

## FLOOR SLAB

PROJECT NO. R-2309AB

GUILFORD COUNTY

STATION: 247+02.00 -L-

SHEET 5 OF 6

STATE OF NORTH CAROLINA
DEPARTMENT OF TRANSPORTATION
RALEIGH

# SINGLE 8 FT. X 8 FT. CONCRETE BOX CULVERT 135° SKEW

NORTH CAROLINA PROFESSIONAL SEAL 14045 ENGINEER TIMOTHY L. COGGINS

Timothy L. Coggins 10/26/11

| REVISIONS | | | | | | SHEET NO. |
|---|---|---|---|---|---|---|
| NO. | BY: | DATE: | NO. | BY: | DATE: | C-14 |
| 1 | | | 3 | | | TOTAL SHEETS |
| 2 | | | 4 | | | 15 |

STR. #7

DRAWN BY : M.D.PISO DATE : 6-6-11
CHECKED BY : B.N.BARODAWALA DATE : 8-18-11

26-OCT-2011 09:53
R:\TIPProjects-R\R2309AB\Structures\R2309ab\FinalPlans\Culverts\Str#7\r2309ab_sd_cu_07.dgn
tcoggins

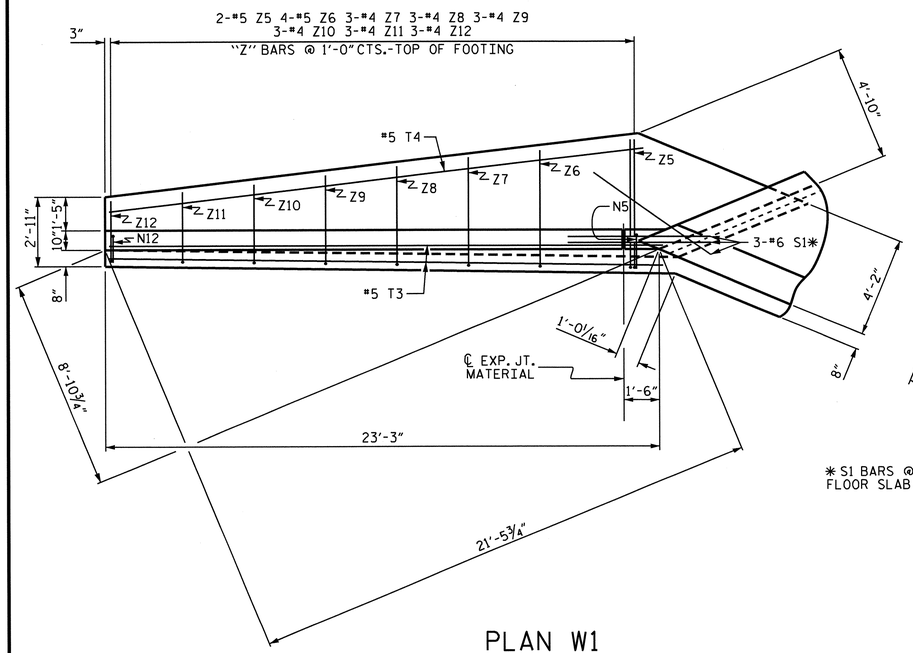


PLAN W1

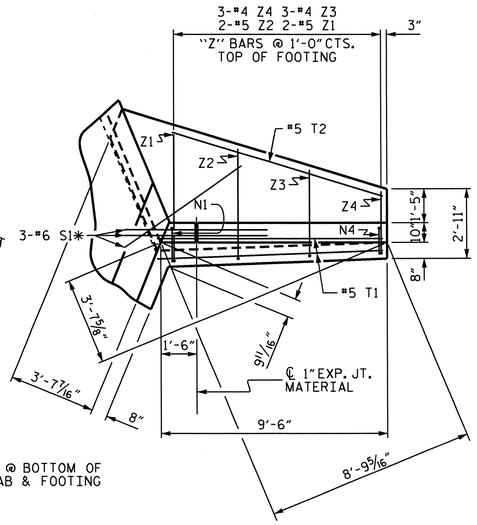


* S1 BARS @ BOTTOM OF FLOOR SLAB & FOOTING

PLAN W2

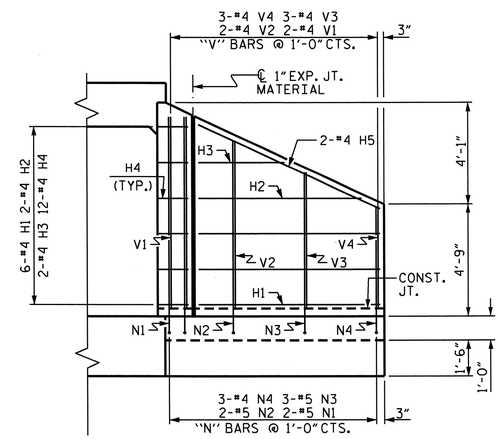


ELEVATION W2

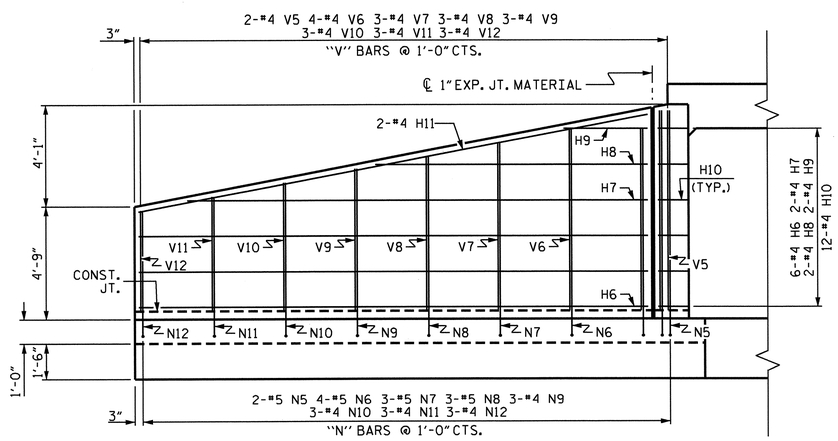


ELEVATION W1

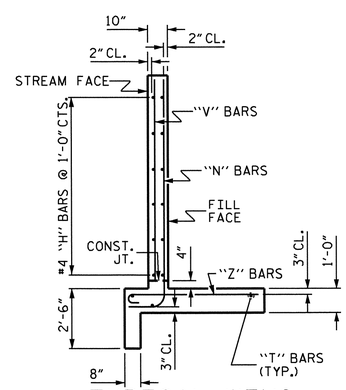


TYPICAL WING SECTION

## BAR TYPES

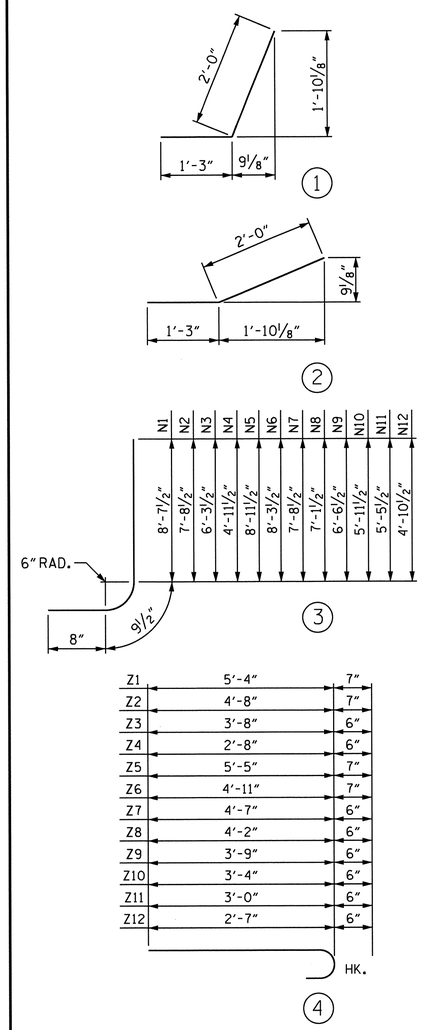


ALL BAR DIMENSIONS ARE OUT TO OUT.

## BILL OF MATERIAL STAGE I

| BAR | NO. | SIZE | TYPE | LENGTH | WEIGHT |
|---|---|---|---|---|---|
| H1 | 6 | #4 | STR | 7'-7" | 30 |
| H2 | 2 | #4 | STR | 6'-10" | 9 |
| H3 | 2 | #4 | STR | 3'-7" | 5 |
| H4 | 12 | #4 | 1 | 3'-3" | 26 |
| H5 | 2 | #4 | STR | 8'-5" | 11 |
| H6 | 6 | #4 | STR | 21'-4" | 86 |
| H7 | 2 | #4 | STR | 19'-4" | 26 |
| H8 | 2 | #4 | STR | 11'-5" | 15 |
| H9 | 2 | #4 | STR | 3'-6" | 5 |
| H10 | 12 | #4 | 2 | 3'-3" | 26 |
| H11 | 2 | #4 | STR | 21'-9" | 29 |
| | | | | | |
| N1 | 2 | #5 | 3 | 10'-1" | 21 |
| N2 | 2 | #5 | 3 | 9'-2" | 19 |
| N3 | 3 | #5 | 3 | 7'-9" | 24 |
| N4 | 3 | #4 | 3 | 6'-5" | 13 |
| N5 | 2 | #5 | 3 | 10'-5" | 22 |
| N6 | 4 | #5 | 3 | 9'-9" | 41 |
| N7 | 3 | #5 | 3 | 9'-2" | 29 |
| N8 | 3 | #5 | 3 | 8'-7" | 27 |
| N9 | 3 | #4 | 3 | 8'-0" | 16 |
| N10 | 3 | #4 | 3 | 7'-5" | 15 |
| N11 | 3 | #4 | 3 | 6'-11" | 14 |
| N12 | 3 | #4 | 3 | 6'-4" | 13 |
| | | | | | |
| S1 | 6 | #6 | STR | 6'-0" | 54 |
| | | | | | |
| T1 | 2 | #5 | STR | 9'-6" | 20 |
| T2 | 1 | #5 | STR | 9'-3" | 10 |
| T3 | 2 | #5 | STR | 23'-3" | 48 |
| T4 | 1 | #5 | STR | 22'-7" | 24 |
| | | | | | |
| V1 | 2 | #4 | STR | 8'-1" | 11 |
| V2 | 2 | #4 | STR | 7'-1" | 9 |
| V3 | 3 | #4 | STR | 5'-9" | 12 |
| V4 | 3 | #4 | STR | 4'-4" | 9 |
| V5 | 2 | #4 | STR | 8'-5" | 11 |
| V6 | 4 | #4 | STR | 7'-8" | 20 |
| V7 | 3 | #4 | STR | 7'-1" | 14 |
| V8 | 3 | #4 | STR | 6'-6" | 13 |
| V9 | 3 | #4 | STR | 6'-0" | 12 |
| V10 | 3 | #4 | STR | 5'-5" | 11 |
| V11 | 3 | #4 | STR | 4'-10" | 10 |
| V12 | 3 | #4 | STR | 4'-3" | 9 |
| | | | | | |
| Z1 | 2 | #5 | 4 | 5'-11" | 12 |
| Z2 | 2 | #5 | 4 | 5'-3" | 11 |
| Z3 | 3 | #4 | 4 | 4'-2" | 8 |
| Z4 | 3 | #4 | 4 | 3'-2" | 6 |
| Z5 | 2 | #5 | 4 | 6'-0" | 13 |
| Z6 | 4 | #5 | 4 | 5'-6" | 23 |
| Z7 | 3 | #4 | 4 | 5'-1" | 10 |
| Z8 | 3 | #4 | 4 | 4'-8" | 9 |
| Z9 | 3 | #4 | 4 | 4'-3" | 9 |
| Z10 | 3 | #4 | 4 | 3'-10" | 8 |
| Z11 | 3 | #4 | 4 | 3'-6" | 7 |
| Z12 | 3 | #4 | 4 | 3'-1" | 6 |

REINFORCING STEEL FOR 2 WINGS 941 LBS

| CLASS A CONCRETE | | |
|---|---|---|
| 2 WINGS | 14.6 | CY |
| 1 HEADWALL | 0.6 | CY |
| 1 END CURTAIN WALL | 0.6 | CY |
| 2 EDGE BEAMS | 1.0 | CY |
| TOTAL | 16.8 | CY |

## BILL OF MATERIAL STAGE II

| BAR | NO. | SIZE | TYPE | LENGTH | WEIGHT |
|---|---|---|---|---|---|
| H1 | 6 | #4 | STR | 7'-7" | 30 |
| H2 | 2 | #4 | STR | 6'-10" | 9 |
| H3 | 2 | #4 | STR | 3'-7" | 5 |
| H4 | 12 | #4 | 1 | 3'-3" | 26 |
| H5 | 2 | #4 | STR | 8'-5" | 11 |
| H6 | 6 | #4 | STR | 21'-4" | 86 |
| H7 | 2 | #4 | STR | 19'-4" | 26 |
| H8 | 2 | #4 | STR | 11'-5" | 15 |
| H9 | 2 | #4 | STR | 3'-6" | 5 |
| H10 | 12 | #4 | 2 | 3'-3" | 26 |
| H11 | 2 | #4 | STR | 21'-9" | 29 |
| | | | | | |
| N1 | 2 | #5 | 3 | 10'-1" | 21 |
| N2 | 2 | #5 | 3 | 9'-2" | 19 |
| N3 | 3 | #5 | 3 | 7'-9" | 24 |
| N4 | 3 | #4 | 3 | 6'-5" | 13 |
| N5 | 2 | #5 | 3 | 10'-5" | 22 |
| N6 | 4 | #5 | 3 | 9'-9" | 41 |
| N7 | 3 | #5 | 3 | 9'-2" | 29 |
| N8 | 3 | #5 | 3 | 8'-7" | 27 |
| N9 | 3 | #4 | 3 | 8'-0" | 16 |
| N10 | 3 | #4 | 3 | 7'-5" | 15 |
| N11 | 3 | #4 | 3 | 6'-11" | 14 |
| N12 | 3 | #4 | 3 | 6'-4" | 13 |
| | | | | | |
| S1 | 6 | #6 | STR | 6'-0" | 54 |
| | | | | | |
| T1 | 2 | #5 | STR | 9'-6" | 20 |
| T2 | 1 | #5 | STR | 9'-3" | 10 |
| T3 | 2 | #5 | STR | 23'-3" | 48 |
| T4 | 1 | #5 | STR | 22'-7" | 24 |
| | | | | | |
| V1 | 2 | #4 | STR | 8'-1" | 11 |
| V2 | 2 | #4 | STR | 7'-1" | 9 |
| V3 | 3 | #4 | STR | 5'-9" | 12 |
| V4 | 3 | #4 | STR | 4'-4" | 9 |
| V5 | 2 | #4 | STR | 8'-5" | 11 |
| V6 | 4 | #4 | STR | 7'-8" | 20 |
| V7 | 3 | #4 | STR | 7'-1" | 14 |
| V8 | 3 | #4 | STR | 6'-6" | 13 |
| V9 | 3 | #4 | STR | 6'-0" | 12 |
| V10 | 3 | #4 | STR | 5'-5" | 11 |
| V11 | 3 | #4 | STR | 4'-10" | 10 |
| V12 | 3 | #4 | STR | 4'-3" | 9 |
| | | | | | |
| Z1 | 2 | #5 | 4 | 5'-11" | 12 |
| Z2 | 2 | #5 | 4 | 5'-3" | 11 |
| Z3 | 3 | #4 | 4 | 4'-2" | 8 |
| Z4 | 3 | #4 | 4 | 3'-2" | 6 |
| Z5 | 2 | #5 | 4 | 6'-0" | 13 |
| Z6 | 4 | #5 | 4 | 5'-6" | 23 |
| Z7 | 3 | #4 | 4 | 5'-1" | 10 |
| Z8 | 3 | #4 | 4 | 4'-8" | 9 |
| Z9 | 3 | #4 | 4 | 4'-3" | 9 |
| Z10 | 3 | #4 | 4 | 3'-10" | 8 |
| Z11 | 3 | #4 | 4 | 3'-6" | 7 |
| Z12 | 3 | #4 | 4 | 3'-1" | 6 |

REINFORCING STEEL FOR 2 WINGS 941 LBS

| CLASS A CONCRETE | | |
|---|---|---|
| 2 WINGS | 14.6 | CY |
| 1 HEADWALL | 0.6 | CY |
| 1 END CURTAIN WALL | 0.6 | CY |
| 2 EDGE BEAMS | 1.0 | CY |
| TOTAL | 16.8 | CY |

PROJECT NO. R-2309AB

GUILFORD COUNTY

STATION: 247+02.00 -L-

SHEET 6 OF 6

STATE OF NORTH CAROLINA
DEPARTMENT OF TRANSPORTATION
RALEIGH

# STANDARD WINGS FOR CONCRETE BOX CULVERT

H = 8'-0" SLOPE = 2:1

135° SKEW

NORTH CAROLINA PROFESSIONAL SEAL 14045 ENGINEER TIMOTHY L. COGGINS

Timothy L. Coggins 10/24/11

| REVISIONS | | | | | | |
|---|---|---|---|---|---|---|
| NO. | BY: | DATE: | NO. | BY: | DATE: | |
| 1 | | | 3 | | | |
| 2 | | | 4 | | | |

SHEET NO. C-15

TOTAL SHEETS 15

| | |
|---|---|
| ASSEMBLED BY : M.D.PISO | DATE : 6-6-11 |
| CHECKED BY : B.N.BARODAWALA | DATE : 8-18-11 |
| DRAWN BY : CCJ 01/00 | |
| CHECKED BY : RWW 03/00 | |

STR. #7

STD. NO. CW4508

| GEOTECHNICAL ENGINEER | ENGINEER |
|---|---|
| NORTH CAROLINA PROFESSIONAL SEAL 036278 ENGINEER MAJID KHAZAEI — 10-26-11 | |
| SIGNATURE DATE | SIGNATURE DATE |

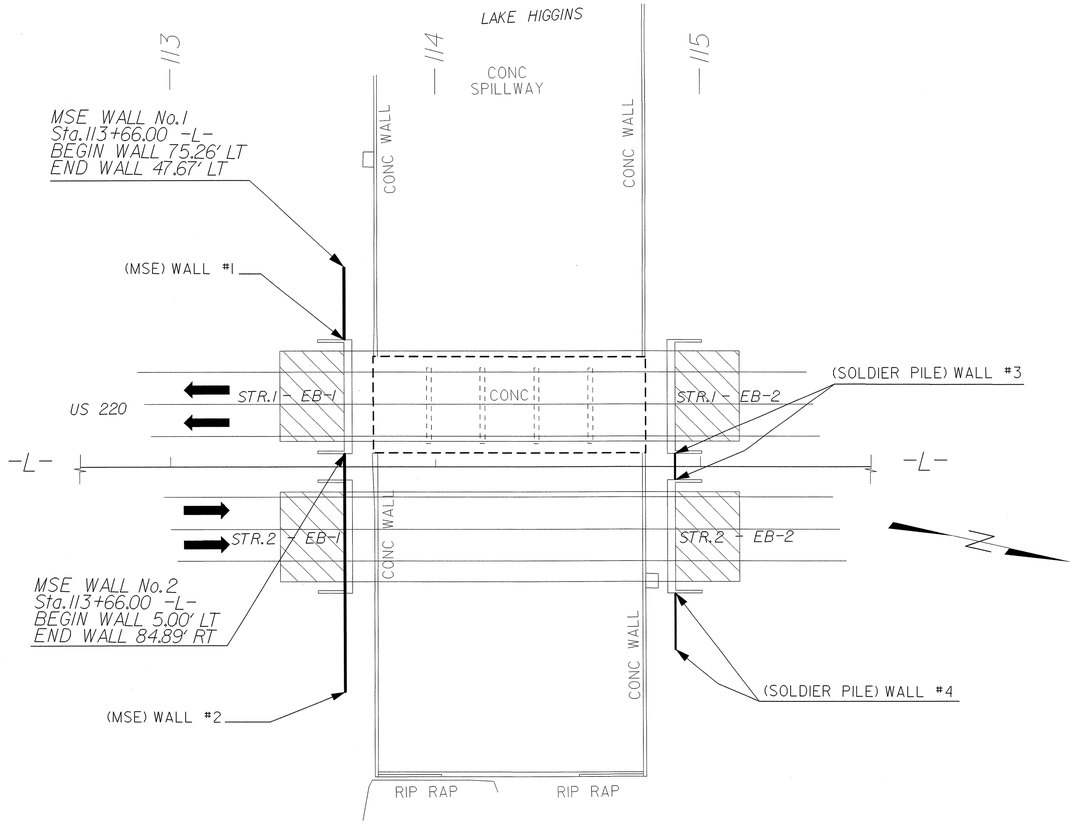


PLAN
N.T.S.

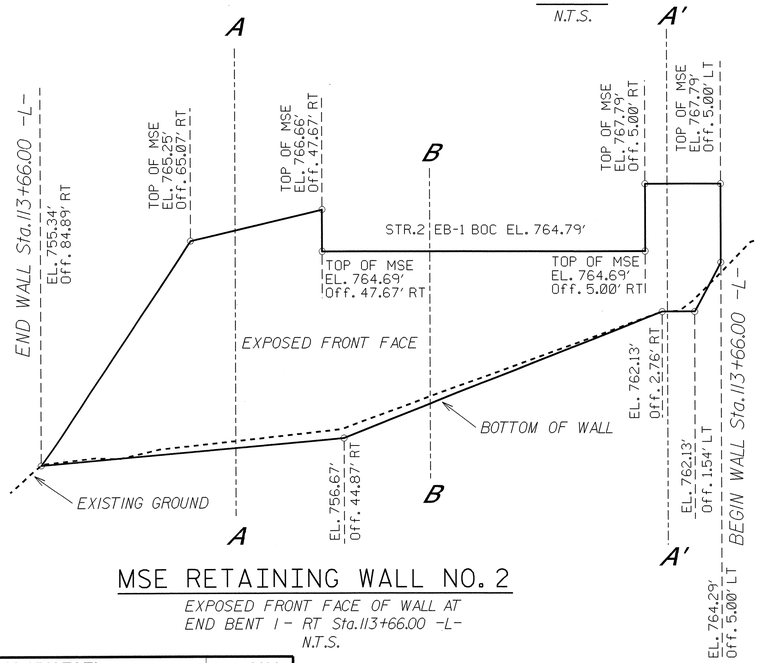


MSE RETAINING WALL NO. 2
EXPOSED FRONT FACE OF WALL AT
END BENT 1 - RT Sta.113+66.00 -L-
N.T.S.

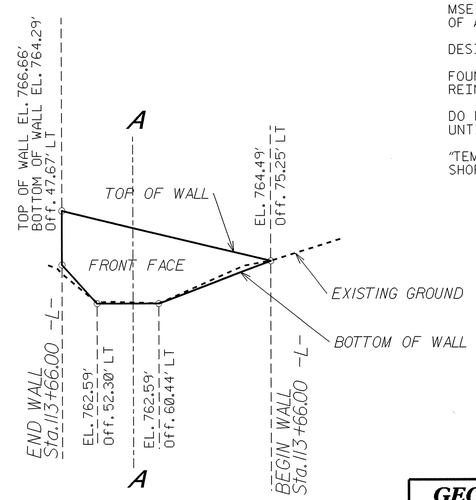


MSE RETAINING WALL NO. 1
EXPOSED FRONT FACE OF WALL AT
END BENT 1 - LT Sta.113+66.00 -L-
N.T.S.

## NOTES:

FOR MECHANICALLY STABILIZED EARTH (MSE) RETAINING WALLS, SEE MECHANICALLY STABILIZED EARTH RETAINING WALLS PROVISION.

USE COARSE AGGREGATE IN THE REINFORCED ZONE FOR RETAINING WALLS NO. 1 AND 2.

USE AN MSE WALL SYSTEM WITH PRECAST CONCRETE PANELS FOR RETAINING WALLS NO. 1 AND 2.

CAST-IN-PLACE REINFORCED CONCRETE COPING IS REQUIRED FOR RETAINING WALL NO. 1.

CAST-IN-PLACE REINFORCED CONCRETE COPING IS REQUIRED FOR RETAINING WALL NO. 2 EXCEPT FOR WALL SECTION LOCATED DIRECTLY BELOW BOTTOM OF END BENT CAP. INSTALL FILTER FABRIC AND EXPANSION JOINT MATERIAL AT JUNCTION.

WEEPHOLES FOR DRAINAGE ARE REQUIRED THROUGH CAST-IN-PLACE REINFORCED CONCRETE COPING FOR RETAINING WALL NO. 2 SECTION BETWEEN BRIDGES.

BEFORE BEGINNING MSE WALL DESIGN FOR RETAINING WALLS NO. 1 AND 2, SURVEY WALL LOCATION AND SUBMIT A REVISED WALL PROFILE VIEW (WALL ENVELOPE) FOR REVIEW. DO NOT START WALL DESIGN OR CONSTRUCTION UNTIL THE REVISED WALL ENVELOPE IS ACCEPTED.
ABOVE RETAINING WALLS NO. 2
DESIGN RETAINING WALLS NO. 1 AND 2 FOR WALL HEIGHTS EQUAL TO THE DESIGN HEIGHT (DIFFERENCE BETWEEN GRADE ELEVATION AND BOTTOM OF WALL ELEAVATION) PLUS EMBEDMENT (DIFFERENCE BETWEEN BOTTOM OF WALL ELEVATION AND TOP OF LEVELING PAD ELEVATION).

DESIGN RETAINING WALLS NO. 1 AND 2 FOR THE FOLLOWING:
1) MINIMUM DESIGN LIFE = 100 YEARS
2) MAXIMUM FACTORED RESISTANCE = 3000 PSF
3) AGGREGATE PARAMETERS:

| STANDARD SIZE NO. (IN ACCORDANCE WITH SECTION 1005 OF THE STANDARD SPECIFICATIONS) | UNIT WEIGHT ($\gamma$) PCF | FRICTION ANGLE ($\phi$) DEGREES | COHESION (c) PSF |
|---|---|---|---|
| 5, 57, 57M, 6M, 67 AND 78M (COARSE AGGREGATE) | 110 | 38 | 0 |

4) IN-SITU ASSUMED MATERIAL PARAMETERS:

| MATERIAL TYPE | UNIT WEIGHT ($\gamma$) PCF | FRICTION ANGLE ($\phi$) DEGREES | COHESION (c) PSF |
|---|---|---|---|
| BACKFILL | 120 | 30 | 0 |
| FOUNDATION | 120 | 30 | 0 |

MSE RETAINING WALL NO. 2 INCLUDES THE BACKFILL BEHIND THE END BENT CAP UP TO THE BOTTOM OF APPROACH SLAB WITH THE SAME COARSE AGGREGATE MATERIAL USED IN THE MSE WALL REINFORCED ZONE.

DESIGN RETAINING WALLS NO. 1 AND 2 FOR A LIVE LOAD (TRAFFIC) SURCHARGE.

FOUNDATIONS FOR END BENT NO. 1 LOCATED AT STATION 113+65.50 -L- WILL INTERFERE WITH REINFORCEMENT FOR RETAINING WALL NO. 2. SEE "FOUNDATION LAYOUT" SHEET FOR FOUNDATION LOCATIONS.

DO NOT PLACE LEVELING PAD CONCRETE, AGGREGATE OR REINFORCEMENT FOR RETAINING WALLS NO. 1 AND 2 UNTIL EXCAVATION DIMENSIONS AND FOUNDATION MATERIAL ARE APPROVED.

"TEMPORARY SHORING" IS REQUIRED FOR RETAINING WALL NO. 2 IN ACCORDANCE WITH THE TEMPORARY SHORING PROVISION. SEE ROADWAY PLANS.

**ESTIMATED QUANTITY FOR MSE RETAINING WALLS .....630 SQ. FT.**

***PROJECT NO.:*** R-2309AB (34418.1.4)
GUILFORD ***COUNTY***
***STATION:*** 113+66.00 -L-
SHEET 1 OF 2 OFF. 75.26' LT TO OFF. 84.89' RT

| PREPARED BY: M. KHAZAEI | DATE: 8/11 |
|---|---|
| REVIEWED BY: J. BATTS | DATE: 8/11 |

***GEOTECHNICAL ENGINEERING UNIT***
☒ ***EASTERN REGIONAL OFFICE***
☐ ***WESTERN REGIONAL OFFICE***
☐ ***CONTRACT OFFICE***
***STATE OF NORTH CAROLINA***
***DEPARTMENT OF TRANSPORTATION***
***RALEIGH***

# MSE WALL 1 AND 2 - PLAN VIEW, WALL ENVELOPES, NOTES

| REVISIONS | | | | | | | SHEET NO. |
|---|---|---|---|---|---|---|---|
| NO. | BY | DATE | NO. | BY | DATE | | W-1 |
| 1 | | | 3 | | | | TOTAL SHEETS |
| 2 | | | 4 | | | | 3 |

| GEOTECHNICAL ENGINEER | ENGINEER |
|---|---|
| NORTH CAROLINA PROFESSIONAL SEAL 036278 ENGINEER MAJID KHAZAEI | |
| SIGNATURE / DATE 10-26-11 | SIGNATURE / DATE |

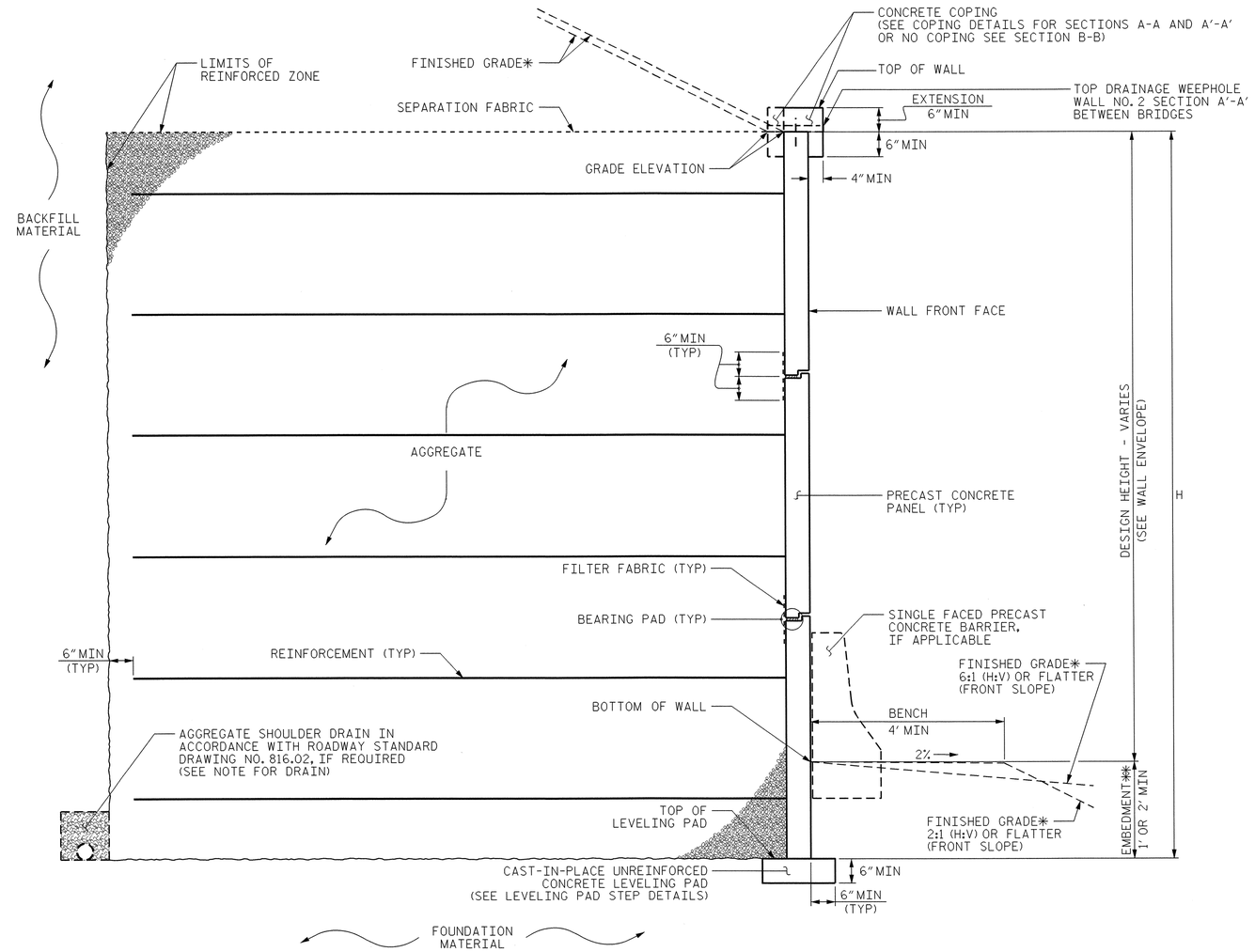


## MSE WALL WITH PRECAST PANELS - TYPICAL SECTION

* SEE ROADWAY PLANS AND/OR STRUCTURE PLANS FOR FINISHED GRADE AND DITCH DETAILS.
** SEE MSE RETAINING WALLS PROVISION FOR EMBEDMENT REQUIREMENTS.

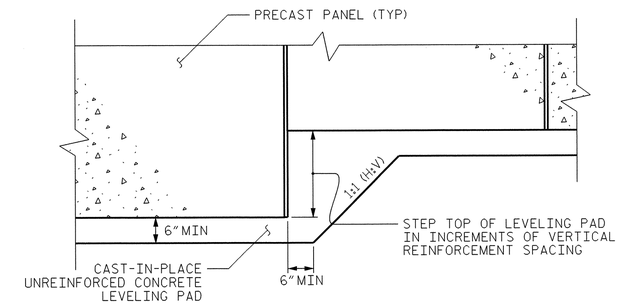


## PRECAST CONCRETE PANELS

## LEVELING PAD STEP DETAILS

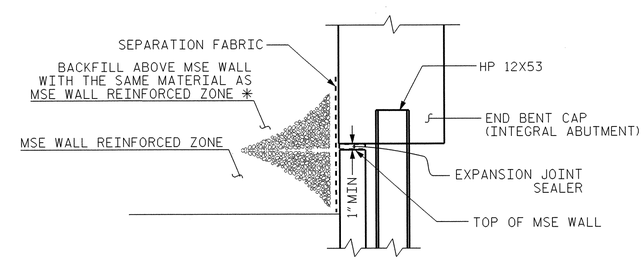


## TOP OF WALL DETAILS (SECTION B-B)

* SEE STRUCTURE PLANS FOR DETAILS.
N.T.S.

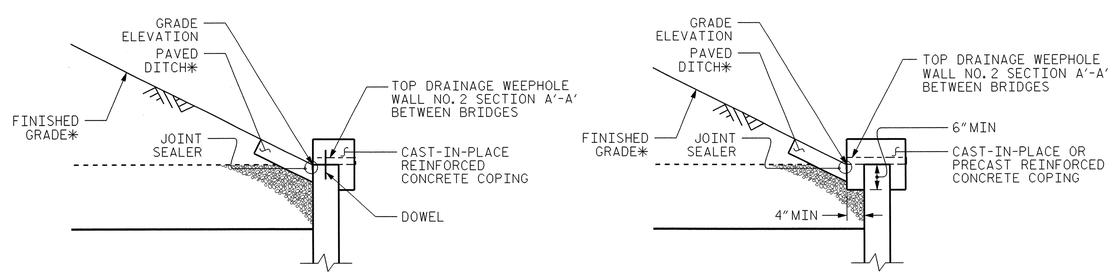


## COPING DETAILS (SECTIONS A-A AND A'-A')

AT THE CONTRACTOR'S OPTION, CONNECT COPING TO PANELS
WITH DOWELS OR EXTEND COPING DOWN BACK OF PANELS.
* SEE ROADWAY PLANS AND/OR STRUCTURE PLANS FOR FINISHED GRADE AND DITCH DETAILS.
N.T.S.

| | | | |
|---|---|---|---|
| PREPARED BY: | M. KHAZAEI | DATE: | 8/11 |
| REVIEWED BY: | J. BATTS | DATE: | 8/11 |

**PROJECT NO.:** R-2309AB (34418.1.4)
GUILFORD **COUNTY**
**STATION:** 113+66.00 -L-
SHEET 2 OF 2 OFF. 75.26' LT TO OFF. 84.89' RT

***GEOTECHNICAL ENGINEERING UNIT***

☒ *EASTERN REGIONAL OFFICE*
☐ *WESTERN REGIONAL OFFICE*
☐ *CONTRACT OFFICE*

***STATE OF NORTH CAROLINA***
***DEPARTMENT OF TRANSPORTATION***
***RALEIGH***

# MSE WALL 1 AND 2 TYPICAL SECTIONS, DETAILES

| REVISIONS | | | | | | | SHEET NO. |
|---|---|---|---|---|---|---|---|
| NO. | BY | DATE | NO. | BY | DATE | | W-2 |
| 1 | | | 3 | | | | TOTAL SHEETS |
| 2 | | | 4 | | | | 3 |

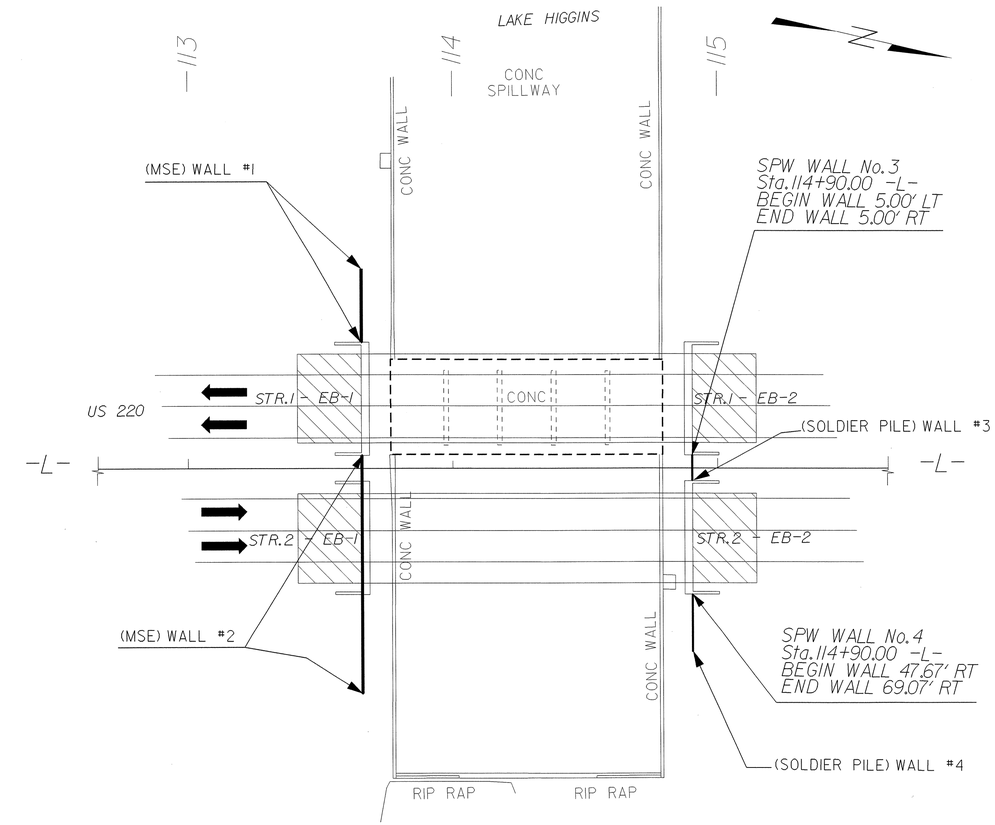


PLAN

N.T.S.

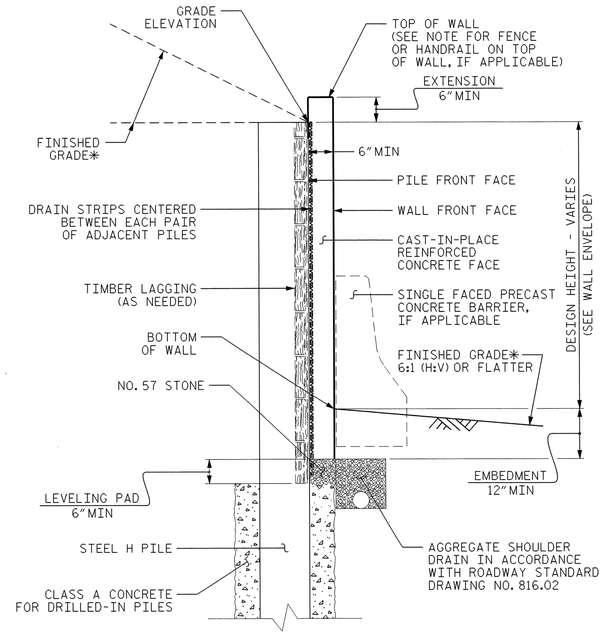


SOLDIER PILE WALL WITH CAST-IN-PLACE FACE - TYPICAL SECTION

*SEE ROADWAY PLANS FOR FINISHED GRADE AND DITCH DETAILS.
N.T.S.

| GEOTECHNICAL ENGINEER | ENGINEER |
|---|---|
| NORTH CAROLINA PROFESSIONAL SEAL 036278 ENGINEER MAJID KHAZAEI — 10-26-11 | |
| SIGNATURE DATE | SIGNATURE DATE |

## NOTES:

FOR SOLDIER PILE RETAINING WALLS, SEE SOLDIER PILE RETAINING WALLS PROVISION.

DRILLED-IN PILES ARE REQUIRED FOR RETAINING WALLS NO. 3 AND 4.

INSTALL SOLDIER PILES WITH PILE EXCAVATION FOR WALL NO. 3 AND WALL NO. 4 WHEN INSTALLING END BENT NO. 2 PILES FOR RL BRIDGE (STR. 2).

USE A SOLDIER PILE RETAINING WALL WITH A CAST-IN-PLACE REINFORCED CONCRETE FACE FOR RETAINING WALLS NO. 3 AND 4.

BEFORE BEGINNING SOLDIER PILE WALL DESIGN FOR RETAINING WALLS NO. 3 AND 4, SURVEY WALL LOCATION AND SUBMIT A REVISED WALL PROFILE VIEW (WALL ENVELOPE) FOR REVIEW. DO NOT START WALL DESIGN OR CONSTRUCTION UNTIL THE REVISED WALL ENVELOPE IS ACCEPTED.

DESIGN RETAINING WALLS NO. 3 AND 4 FOR WALL HEIGHTS EQUAL TO THE DESIGN HEIGHT (DIFFERENCE BETWEEN GRADE ELEVATION AND BOTTOM OF WALL ELEVATION) PLUS EMBEDMENT (DIFFERENCE BETWEEN BOTTOM OF WALL ELEVATION AND TOP OF LEVELING PAD ELEVATION).

DESIGN RETAINING WALLS NO. 3 AND 4 FOR THE FOLLOWING:
1) MINIMUM DESIGN LIFE = 100 YEARS
2) IN-SITU ASSUMED MATERIAL PARAMETERS:
   UNIT WEIGHT, $\gamma$ = 120 PCF
   FRICTION ANGLE, $\phi$ = 30 DEGREES
   COHESION, c = 0 PSF
3) IN-SITU ASSUMED MATERIAL PARAMETERS BELOW ELEVATION 753 FT:
   UNIT WEIGHT, $\gamma$ = 110 PCF
   FRICTION ANGLE, $\phi$ = 0 DEGREES
   COHESION, c = 500 PSF

DESIGN RETAINING WALLS NO. 3 AND 4 FOR A LIVE LOAD (TRAFFIC) SURCHARGE.

"TEMPORARY SHORING" IS REQUIRED FOR RETAINING WALL NO. 3 IN ACCORDANCE WITH THE TEMPORARY SHORING PROVISION. SEE ROADWAY PLANS.

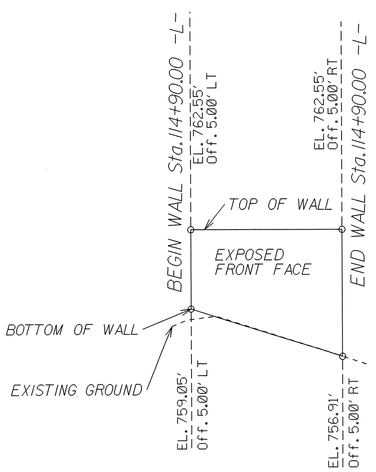


SPW RETAINING WALL NO. 3

EXPOSED FRONT FACE OF WALL AT END BENT 2 - MID Sta. 114+90.00 -L-
N.T.S.

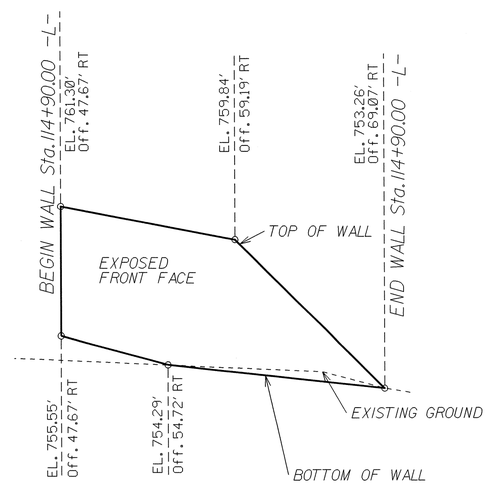


SPW RETAINING WALL NO. 4

EXPOSED FRONT FACE OF WALL AT END BENT 2 - RT Sta. 114+90.00 -L-
N.T.S.

ESTIMATED QUANTITY FOR SOLDIER PILE RETAINING WALLS ..... 150 SQ. FT.

| | | |
|---|---|---|
| PROJECT NO.: | R-2309AB (34418.1.4) | |
| | GUILFORD | COUNTY |
| STATION: | 114+90.00 -L- | |
| SHEET 1 OF 1 | OFF. 5.00' LT TO OFF. 96.07' RT | |

| | | | |
|---|---|---|---|
| PREPARED BY: M. KHAZAEI | DATE: 8/11 | | |
| REVIEWED BY: J. BATTS | DATE: 8/11 | | |

GEOTECHNICAL ENGINEERING UNIT

☒ EASTERN REGIONAL OFFICE
☐ WESTERN REGIONAL OFFICE
☐ CONTRACT OFFICE

STATE OF NORTH CAROLINA
DEPARTMENT OF TRANSPORTATION
RALEIGH

SOLDIER PILE WALL 3 AND 4
PLAN VIEW, WALL ENVELOPES, NOTES

| REVISIONS | | | | | | SHEET NO. |
|---|---|---|---|---|---|---|
| NO. | BY | DATE | NO. | BY | DATE | W-3 |
| 1 | | | 3 | | | TOTAL SHEETS |
| 2 | | | 4 | | | 3 |

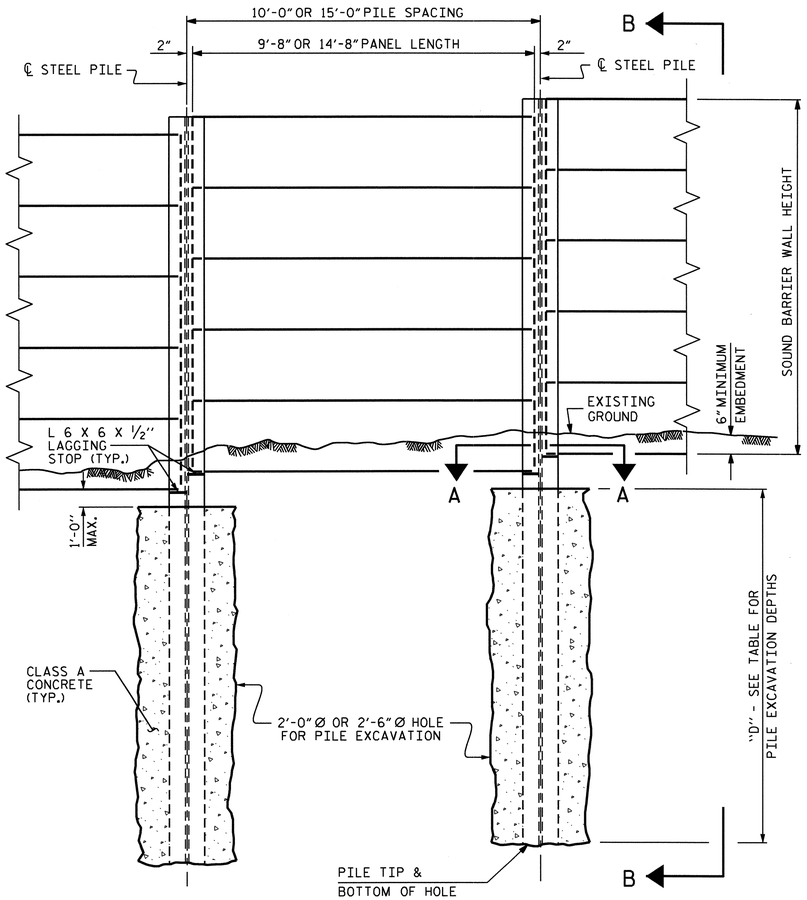


ELEVATION

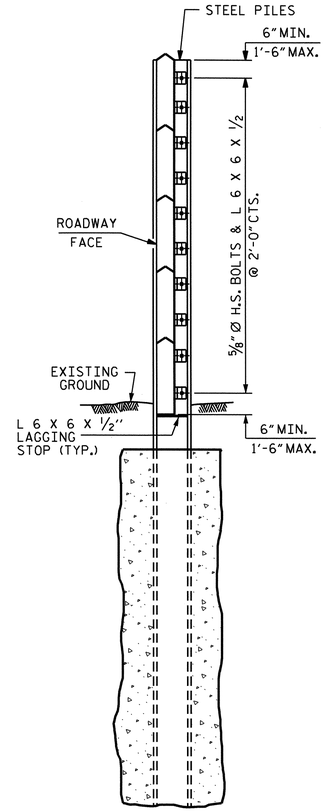


SECTION B-B

## PILE EXCAVATION - NW1

| WALL STATIONS | WALL HEIGHT (FT.) | "D" (FT.) FOR 10 FT. SPACING | | "D" (FT.) FOR 15 FT. SPACING | | "D" (FT.) FOR 20 FT. SPACING |
|---|---|---|---|---|---|---|
| | | 2'-0" Ø SHAFT | 2'-6" Ø SHAFT | 2'-0" Ø SHAFT | 2'-6" Ø SHAFT | 2'-6" Ø SHAFT |
| 10+00 TO 10+75 | 11.5-14.0 | 18.0 | 17.5 | 20.0 | 19.0 | |
| 10+75 TO 12+00 | 14.1 - 16.0 | 24.0 | 22.5 | 26.0 | 25.0 | |
| 12+00 TO 13+50 | 15.5 - 16.0 | 25.5 | 23.0 | 29.0 | 27.5 | |
| 13+50 TO 14+50 | 15.0 - 16.0 | 20.5 | 19.5 | 22.5 | 21.5 | |
| 14+50 TO 18+40 | 14.1 - 15.0 | 13.5 | 12.5 | 15.5 | 14.0 | |
| 18+40 TO 20+20 | 13.5 - 14.0 | 23.5 | 21.5 | 27.5 | 25.5 | |
| 20+20 TO 22+50 | 15.0 - 16.5 | 26.0 | 24.0 | 28.5 | 27.0 | |
| 22+50 TO 23+00 | 16.5 - 17.0 | 19.5 | 18.0 | 23.0 | 21.0 | |
| 23+00 TO 26+00 | 16.0 - 17.0 | 23.0 | 22.0 | 25.5 | 24.0 | 25.5 |
| 26+00 TO 27+10 | 14.1 - 16.0 | 20.5 | 19.5 | 22.5 | 21.5 | |
| 27+10 TO 28+00 | 11.5 - 14.0 | 19.0 | 18.0 | 21.0 | 20.0 | |

## NOTES

FOR SOUND BARRIER WALL, SEE SPECIAL PROVISIONS.

CONSTRUCT SOUND BARRIER WALL TO LINES AND GRADES SHOWN ON THE ROADWAY PLANS.

PROVIDE PANELS WITH A FLAT BOTTOM.

USE STEEL PILES, ANGLES, AND LAGGING STOPS MEETING THE REQUIREMENTS OF AASHTO M270, GRADE 50. GALVANIZE ALL STEEL COMPONENTS INCLUDING PILES, ANGLES, LAGGING STOPS, BOLTS, NUTS, AND WASHERS IN ACCORDANCE WITH SECTION 1076 OF THE STANDARD SPECIFICATIONS. REPAIR ANY DAMAGED GALVANIZATION IN ACCORDANCE WITH ARTICLE 1076-6 OF THE STANDARD SPECIFICATIONS.

VERIFY THE LOCATION OF UNDERGROUND UTILITIES BEFORE DRILLING HOLES TO ENSURE SUFFICIENT CLEARANCE IS AVAILABLE.

AT THE CONTRACTOR'S OPTION, USE AN APPROVED NON-SHRINK NON-METALLIC GROUT BETWEEN THE FLANGES OF THE STEEL PILES TO SUPPORT THE BOTTOM PANEL IN LIEU OF LAGGING STOPS.

ADJUST PILE EXCAVATION ELEVATIONS TO MAINTAIN 6" MINIMUM EMBEDMENT OF THE BOTTOM PANEL.

USE CLASS AA AND CLASS A CONCRETE FOR PANELS AND PILE EXCAVATION BACKFILL, RESPECTIVELY, IN ACCORDANCE WITH ARTICLE 1000-4 OF THE STANDARD SPECIFICATIONS.

PROVIDE PLATES AND ANGLES TO SECURE PANELS 6" LONG AS MEASURED ALONG THE STEEL PILE.

AT THE CONTRACTOR'S OPTION, USE EITHER 'W' OR 'HP' PILES THAT SATISFY THE MINIMUM PILE SIZE REQUIRED IN THE "EXPOSURE CATEGORY" TABLE. PILES SMALLER THAN W12 OR HP12 ARE NOT PERMITTED.

AT THE CONTRACTOR'S OPTION, USE EITHER 10 FOOT OR 15 FOOT PILE SPACINGS, EXCEPT FOR WALL TURNS AND SPANNING THE CULVERT. THE CONTRACTOR SHALL USE 20 FOOT PILE SPACING AND 2'-6" DIAMETER HOLES FOR PILE EXCAVATION TO SPAN THE CULVERT. SEE SHEET 2 OF 6 FOR DETAILS.

FOR WALL TURNS, PROVIDE HOLES FOR PILE EXCAVATION AS SHOWN ON THE PLANS. A 2 FOOT DIAMETER HOLE FOR PILE EXCAVATION IS NOT AN OPTION FOR WALL TURNS.

DO NOT SPLICE STEEL PILES.

FOR SOUND BARRIER WALL STATIONS, OFFSETS, AND WALL ENVELOPE, SEE ROADWAY PLANS.

AT THE CONTRACTOR'S OPTION, CONCRETE PILES MAY BE USED IN LIEU OF STEEL PILES, EXCEPT THAT THE TWO PILES ADJACENT TO THE CULVERT SHALL BE STEEL PILES TO SUPPORT THE 19'-8" PANELS AS SHOWN ON SHEET 2 OF 6. SEE OPITIONAL SOUND BARRIER WALL DETAILS.

ALTERNATE WALL TYPES SHALL BE PERMITTED FOR THIS SOUND BARRIER WALL.

## EXPOSURE CATEGORY B

DESIGN WIND PRESSURE = 20 PSF ( 0' < H ≤ 14' ); 25 PSF (14' < H ≤ 29' )

| PILE SPACING | MAXIMUM WALL HEIGHT ( H ) | MIN. W SIZE STEEL PILES | MIN. HP SIZE STEEL PILES |
|---|---|---|---|
| 10'-0" | H ≤ 29' | W 12 X 40<br>W 14 X 48 | HP 12 X 53<br>HP 14 X 73 |
| 15'-0" | H ≤ 25' | W 12 X 40<br>W 14 X 48 | HP 12 X 53<br>HP 14 X 73 |
| | 25' < H ≤ 29' | W 12 X 50<br>W 14 X 48 | HP 12 X 53<br>HP 14 X 73 |

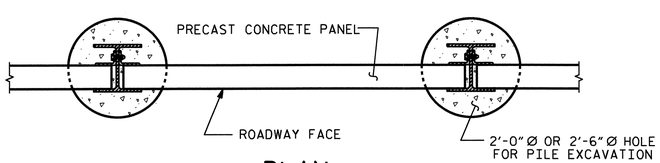


PLAN

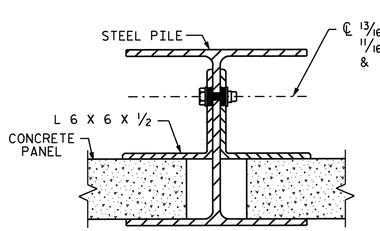


CONNECTION DETAIL

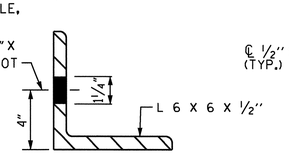


ANGLE DETAIL

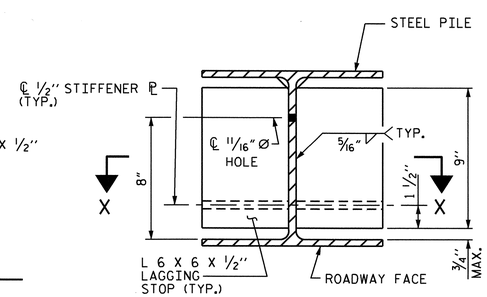


SECTION A-A

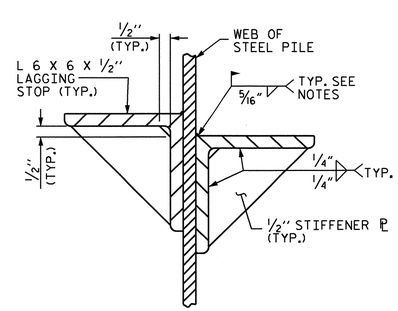


SECTION X-X

PROJECT NO. R-2309AB

GUILFORD COUNTY

STATION: 230+90.00 -L-
10+00.00 -NW1-

SHEET 1 OF 6

STATE OF NORTH CAROLINA
DEPARTMENT OF TRANSPORTATION
RALEIGH

STANDARD

SOUND BARRIER WALL

| ASSEMBLED BY : T. L. COGGINS | DATE : 10/19/2011 |
|---|---|
| CHECKED BY : T. L. AVERETTE | DATE : 10/27/2011 |

| DRAWN BY : JAD 5/01 | REV. 2/4/03 RWW/CVC |
|---|---|
| CHECKED BY : RDR 5/01 | REV. 5/7/03 RWW/JTE |
| | REV. 5/1/06RR KMM/GM |

NORTH CAROLINA PROFESSIONAL SEAL 12274 ENGINEER OMAR R. AZIZI
2/10/12

NORTH CAROLINA PROFESSIONAL SEAL 14045 ENGINEER TIMOTHY L. COGGINS
02/10/12

| REVISIONS | | | | | | | | SHEET NO. |
|---|---|---|---|---|---|---|---|---|
| NO. | BY: | DATE: | NO. | BY: | DATE: | | | SW-1 |
| 1 | | | 3 | | | | | TOTAL SHEETS |
| 2 | | | 4 | | | | | 11 |

STR. #12

STD. NO. SBW1

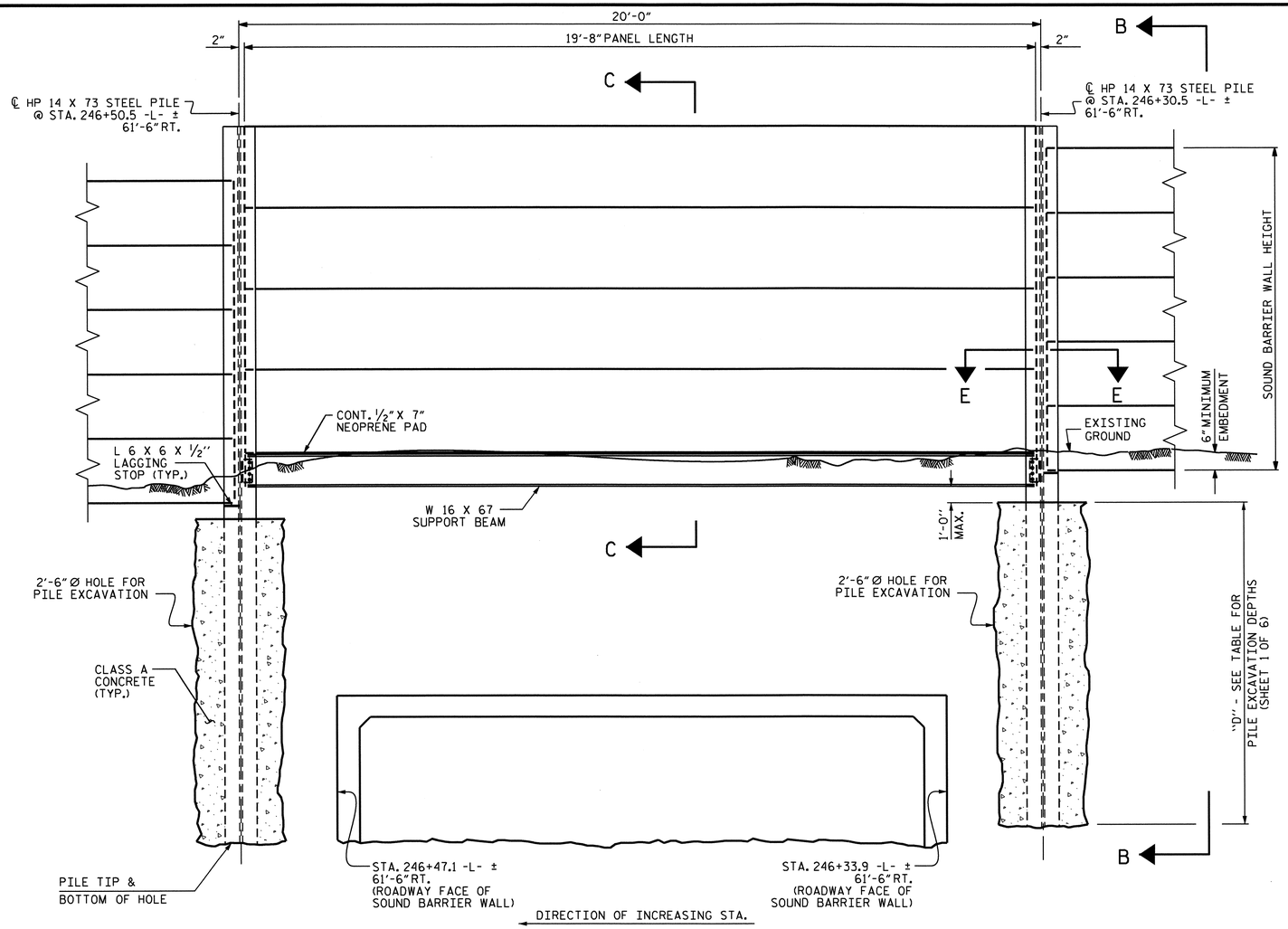


## ELEVATION

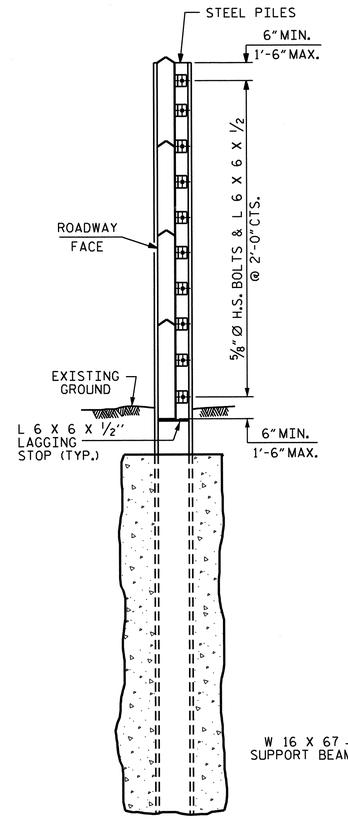


## SECTION B-B

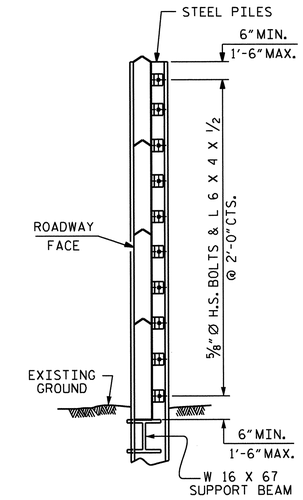


## SECTION C-C

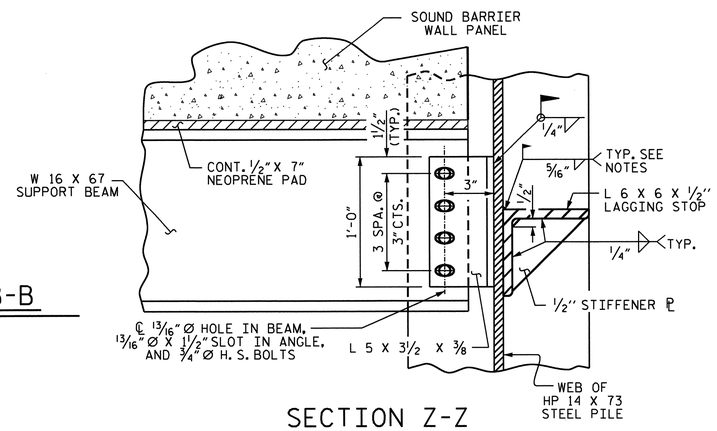


## SECTION Z-Z

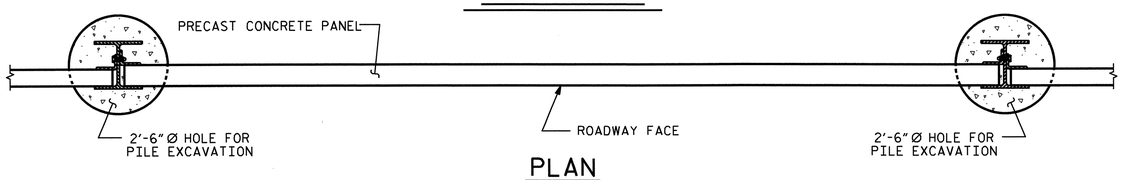


## PLAN

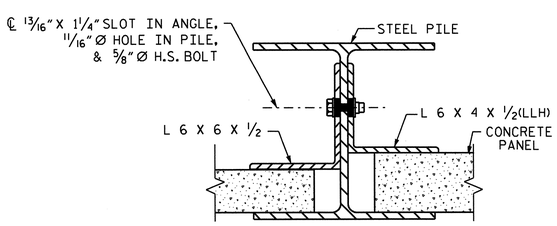


## CONNECTION DETAIL

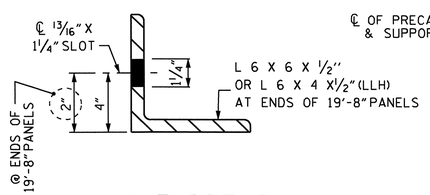


## ANGLE DETAIL

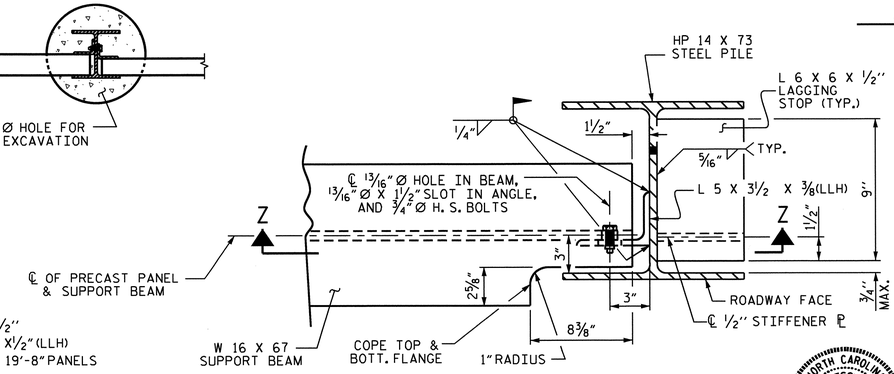


## SECTION E-E

NOTE: PRECAST PANELS NOT SHOWN FOR CLARITY.

PROJECT NO. R-2309AB
GUILFORD COUNTY
STATION: 230+90.00 -L-
10+00.00 -NW1-

SHEET 2 OF 6

STATE OF NORTH CAROLINA
DEPARTMENT OF TRANSPORTATION
RALEIGH

# SOUND BARRIER WALL

DETAILS FOR 20'-0" PILE SPACING FROM STA. 246+30.50 -L- ± TO 246+50.50 -L- ±

NORTH CAROLINA PROFESSIONAL SEAL 14045 ENGINEER TIMOTHY L. COGGINS
10/31/11

| REVISIONS | | | | | | SHEET NO. |
|---|---|---|---|---|---|---|
| NO. | BY: | DATE: | NO. | BY: | DATE: | SW-2 |
| 1 | | | 3 | | | TOTAL SHEETS |
| 2 | | | 4 | | | 11 |

DRAWN BY : T. L. COGGINS DATE : 10/19/2011
CHECKED BY : T. L. AVERETTE DATE : 10/27/2011

31-OCT-2011 12:19
R:\TIPProjects-R\R2309AB\Structures\R2309ab\FinalPlans\Walls\Str#12\r2309ab_sd_sbw1_12.dgn
tcoggins

STR. #12

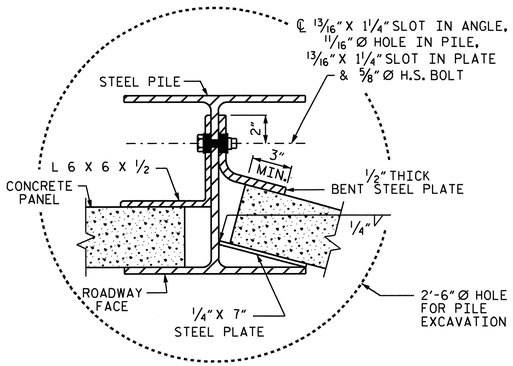


## TYPICAL WALL TURN DETAIL

(USE ONLY FOR TURNS 15° OR LESS, CONCAVE TOWARD ROADWAY)

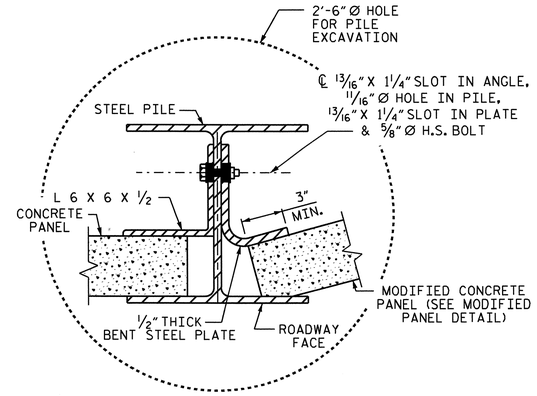


## TYPICAL WALL TURN DETAIL

(USE ONLY FOR TURNS 15° OR LESS, CONVEX TOWARD ROADWAY)

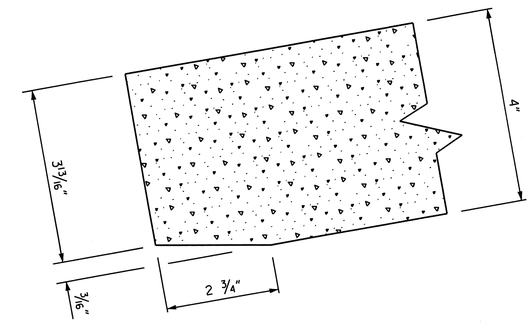


## MODIFIED PANEL DETAIL

(USE ONLY FOR TURNS 15° OR LESS, CONVEX TOWARD ROADWAY)

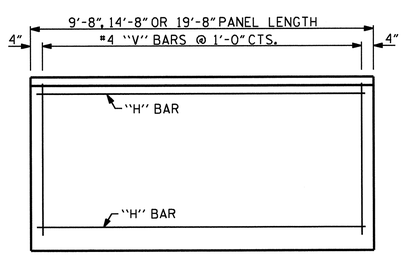


## FRONT ELEVATION OF UPPER PRECAST PANELS

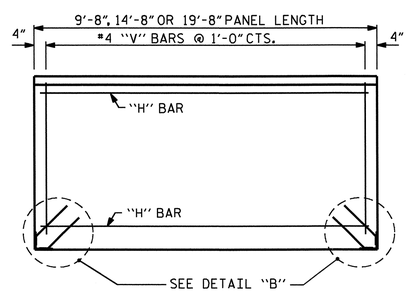


## FRONT ELEVATION OF BOTTOM PRECAST PANEL

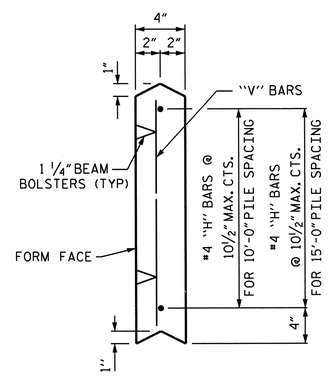


UPPER PANEL

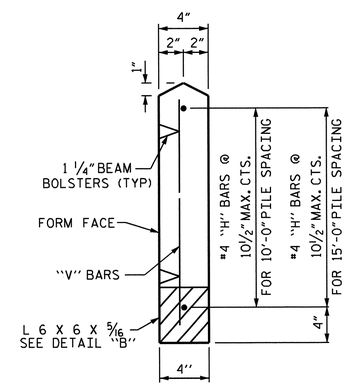


BOTTOM PANEL

## SECTION THROUGH PRECAST PANELS

(FOR 9'-8" AND 14'-8" PANEL)

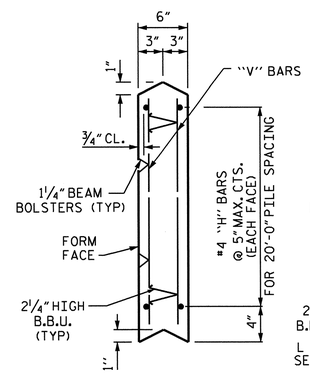


UPPER PANEL

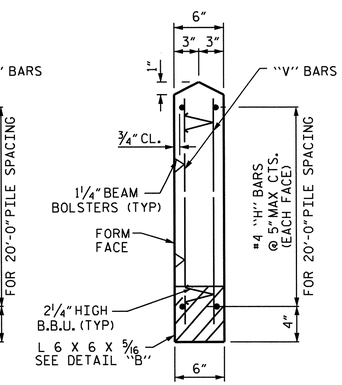


BOTTOM PANEL

## SECTION THROUGH PRECAST PANELS

(FOR 19'-8" PANEL)

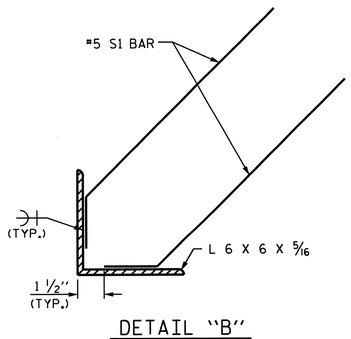


DETAIL "B"

### QUANTITIES FOR ONE PRECAST PANEL (FOR 10'-0" PILE SPACING)

| PANEL HEIGHT | CLASS AA CONCRETE | BAR TYPES | | | | | | | | | | | |
|---|---|---|---|---|---|---|---|---|---|---|---|---|---|
| | | HORIZONTAL | | | | | | VERTICAL | | | | | |
| | C.Y. | NO. | BAR | SIZE | TYPE | LENGTH | WEIGHT (lb) | NO. | BAR | SIZE | TYPE | LENGTH | WEIGHT (lb) |
| 2'-0" | 0.24 | 3 | H1 | #4 | STR | 9'-4" | 19 | 10 | V1 | #4 | STR | 1'-8" | 11 |
| 3'-0" | 0.36 | 4 | H2 | #4 | STR | 9'-4" | 25 | 10 | V2 | #4 | STR | 2'-8" | 18 |
| 4'-0" | 0.48 | 5 | H3 | #4 | STR | 9'-4" | 31 | 10 | V3 | #4 | STR | 3'-8" | 24 |

### QUANTITIES FOR ONE PRECAST PANEL (FOR 15'-0" PILE SPACING)

| PANEL HEIGHT | CLASS AA CONCRETE | BAR TYPES | | | | | | | | | | | |
|---|---|---|---|---|---|---|---|---|---|---|---|---|---|
| | | HORIZONTAL | | | | | | VERTICAL | | | | | |
| | C.Y. | NO. | BAR | SIZE | TYPE | LENGTH | WEIGHT (lb) | NO. | BAR | SIZE | TYPE | LENGTH | WEIGHT (lb) |
| 3'-0" | 0.54 | 4 | H1 | #4 | STR | 14'-4" | 38 | 15 | V1 | #4 | STR | 2'-8" | 27 |
| 4'-0" | 0.72 | 5 | H2 | #4 | STR | 14'-4" | 48 | 15 | V2 | #4 | STR | 3'-8" | 37 |
| 5'-0" | 0.91 | 6 | H3 | #4 | STR | 14'-4" | 57 | 15 | V3 | #4 | STR | 4'-8" | 47 |
| 6'-0" | 1.09 | 7 | H4 | #4 | STR | 14'-4" | 67 | 15 | V4 | #4 | STR | 5'-8" | 57 |

### QUANTITIES FOR ONE PRECAST PANEL (FOR 20'-0" PILE SPACING)

| PANEL HEIGHT | CLASS AA CONCRETE | BAR TYPES | | | | | | | | | | | |
|---|---|---|---|---|---|---|---|---|---|---|---|---|---|
| | | HORIZONTAL | | | | | | VERTICAL | | | | | |
| | C.Y. | NO. | BAR | SIZE | TYPE | LENGTH | WEIGHT (lb) | NO. | BAR | SIZE | TYPE | LENGTH | WEIGHT (lb) |
| 3'-0" | 1.09 | 14 | H1 | #4 | STR | 19'-4" | 181 | 40 | V1 | #4 | STR | 2'-8" | 71 |
| 4'-0" | 1.46 | 18 | H2 | #4 | STR | 19'-4" | 232 | 40 | V2 | #4 | STR | 3'-8" | 98 |
| 5'-0" | 1.82 | 24 | H3 | #4 | STR | 19'-4" | 310 | 40 | V3 | #4 | STR | 4'-8" | 125 |

### BILL OF MATERIAL

| | |
|---|---|
| SOUND BARRIER WALL #1 | 27,067 S.F. |

QUANTITIES PROVIDED ARE APPROXIMATE AND ARE FOR BID PURPOSES ONLY.

### ADDITIONAL BARS FOR ONE BOTTOM PANEL

| NO. | BAR | SIZE | TYPE | LENGTH | WEIGHT (lb) |
|---|---|---|---|---|---|
| 4 | S1 | #5 | 1 | 1'-6" | 6 |
| | | | | | |
| | | | | | |

BAR TYPE

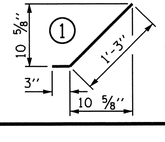


NORTH CAROLINA PROFESSIONAL SEAL 14045 ENGINEER TIMOTHY L. COGGINS

10/21/11

PROJECT NO. R-2309AB

GUILFORD COUNTY

STATION: 230+90.00 -L-
10+00.00 -NW1-

SHEET 3 OF 6

STATE OF NORTH CAROLINA
DEPARTMENT OF TRANSPORTATION
RALEIGH

STANDARD

# SOUND BARRIER WALL DETAILS

| REVISIONS | | | | | | SHEET NO. |
|---|---|---|---|---|---|---|
| NO. | BY: | DATE: | NO. | BY: | DATE: | SW-3 |
| 1 | | | 3 | | | TOTAL SHEETS |
| 2 | | | 4 | | | 11 |

ASSEMBLED BY : T. L. COGGINS DATE : 10/19/2011
CHECKED BY : T. L. AVERETTE DATE : 10/20/2011

DRAWN BY : JAD 5/01 REV. 7/10/01 RWW/LES
CHECKED BY : RDR 5/01 REV. 5/7/03 RWW/JTE
REV. 5/1/06R KMM/GM

STR. #12

STD. NO. SBW2

31-OCT-2011 11:39
R:\TIPProjects-R\R2309AB\Structures\R2309ab\FinalPlans\Walls\Str#12\r2309ab_sd_sbw2_12.dgn
tcoggins

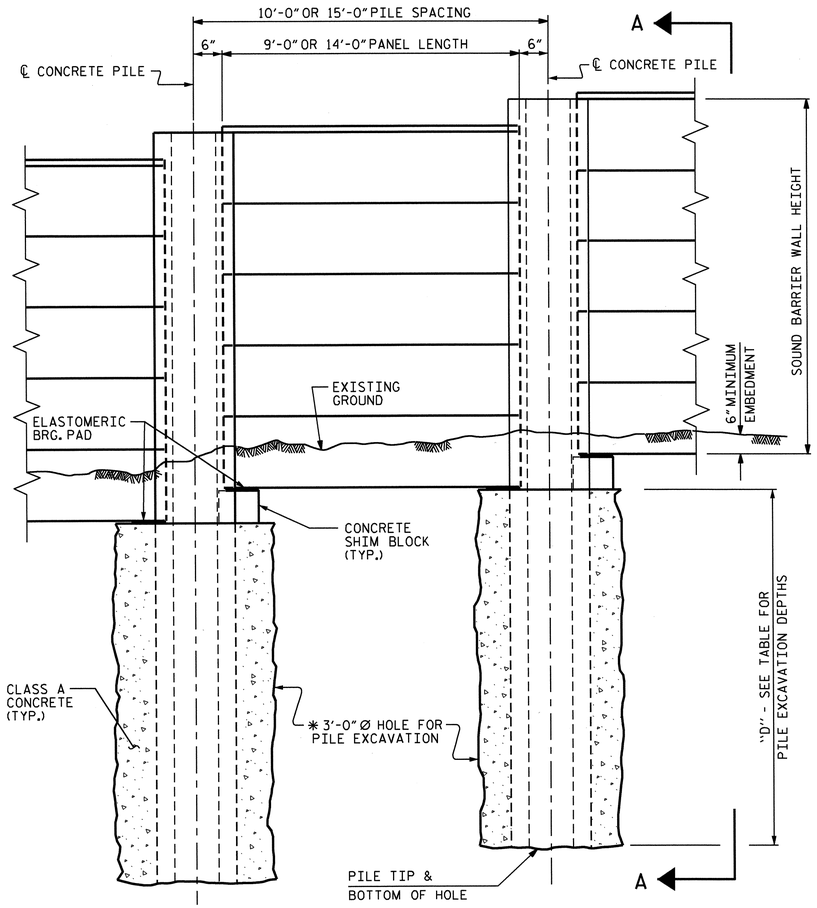


ELEVATION

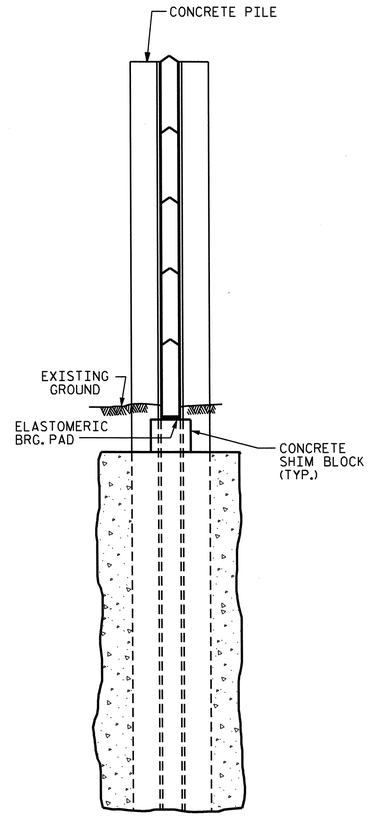


SECTION A-A

## ✱ 3'-0" Ø PILE EXCAVATION

| | WALL STATIONS |
|---|---|
| WALL #1 | FROM : STA. 230+90.00 -L-, 49.5' RT.<br>TO : STA. 248+89.60 -L-, 61.5' RT. |

| WALL HEIGHT | DEPTH "D" FOR 10'-0" PILE SPACING | DEPTH "D" FOR 15'-0" PILE SPACING |
|---|---|---|
| < 15'-0" | 13 FT. | 15 FT. |
| 15'-0" ≤ H ≤ 20'-0" | 16 FT. | 21 FT. |
| 20'-0" ≤ H ≤ 25'-0" | 19 FT. | 22 FT. |

✱ PILES ADJACENT TO CULVERT SHALL BE STEEL AND HAVE A 2'-6" Ø PILE EXCAVATION HOLE TO A DEPTH SHOWN ON TABLE, SHEET 1 OF 6. FOR STEEL PILE AND 19'-8" PANEL DETAILS, SEE SHEETS 2 & 3 OF 6.

## NOTES

FOR SOUND BARRIER WALL, SEE SPECIAL PROVISIONS.

CONSTRUCT SOUND BARRIER WALL TO LINES AND GRADES SHOWN ON THE ROADWAY PLANS.

PROVIDE PANELS WITH A FLAT BOTTOM.

VERIFY THE LOCATION OF UNDERGROUND UTILITIES BEFORE DRILLING HOLES TO ENSURE SUFFICIENT CLEARANCE IS AVAILABLE.

ADJUST PILE EXCAVATION ELEVATIONS TO MAINTAIN 6" MINIMUM EMBEDMENT OF THE BOTTOM PANEL.

USE CLASS AA FOR PANELS AND PILES AND CLASS A CONCRETE PILE EXCAVATION BACKFILL, IN ACCORDANCE WITH ARTICLE 1000-4 OF THE STANDARD SPECIFICATIONS.

AT THE CONTRACTOR'S OPTION, USE EITHER 10 FOOT OR 15 FOOT PILE SPACINGS.

FOR SOUND BARRIER WALL STATIONS, OFFSETS, AND WALL ENVELOPE, SEE ROADWAY PLANS.

PLACE 1" Ø BACKER RODS FULL HEIGHT ON EACH SIDE OF THE PRECAST PANELS. SET AND SEAL THE BACKER ROD IN PLACE WITH SEALANT THAT CONFORMS WITH ARTICLE 1028-3 OF THE STANDARD SPECIFICATIONS.

FOR SUBMITTAL OF WORKING DRAWINGS, SEE SPECIAL PROVISIONS.

FOR FALSEWORK AND FORMWORK, SEE SPECIAL PROVISIONS.

## EXPOSURE CATEGORY B - PILE REINFORCING STEEL

DESIGN WIND PRESSURE =
20 PSF ( 0' < H ≤ 14' ); 25 PSF (14' < H ≤ 25' )

| PILE TYPE I | | | | PILE TYPE III | | | |
|---|---|---|---|---|---|---|---|
| PILE SPACING | MAXIMUM WALL HEIGHT ( H ) | VERTICAL REINFORCING STEEL | TIES | PILE SPACING | MAXIMUM WALL HEIGHT ( H ) | VERTICAL REINFORCING STEEL | TIES |
| 10'-0" | H ≤ 25' | 4 - #6 EA. FACE | #3 @ 1'-4" CTS. | 10'-0" | H ≤ 25' | 3 - #7 SHORT FACE<br>4 - #7 LONG FACE | #3 @ 1'-4" CTS. |
| 15'-0" | H ≤ 25' | 4 - #7 EA. FACE | #3 @ 1'-4" CTS. | 15'-0" | H ≤ 25' | 3 - #8 SHORT FACE<br>4 - #8 LONG FACE | #3 @ 1'-4" CTS. |

| PILE TYPE II | | | | PILE TYPE III ALT. | | | |
|---|---|---|---|---|---|---|---|
| PILE SPACING | MAXIMUM WALL HEIGHT ( H ) | VERTICAL REINFORCING STEEL | TIES | PILE SPACING | MAXIMUM WALL HEIGHT ( H ) | VERTICAL REINFORCING STEEL | TIES |
| 10'-0" | H ≤ 25' | 4 - #6 EA. FACE | #3 @ 1'-4" CTS. | 10'-0" | H ≤ 25' | 3 - #7 SHORT FACE<br>4 - #7 LONG FACE | #3 @ 1'-4" CTS. |
| 15'-0" | H ≤ 25' | 4 - #6 EA. FACE | #3 @ 1'-4" CTS. | 15'-0" | H ≤ 25' | 3 - #8 SHORT FACE<br>4 - #8 LONG FACE | #3 @ 1'-4" CTS. |

## BILL OF MATERIAL

| | |
|---|---|
| SOUND BARRIER WALL | 27,067 S.F. |

QUANTITIES PROVIDED ARE APPROXIMATE AND ARE FOR BID PURPOSES ONLY.

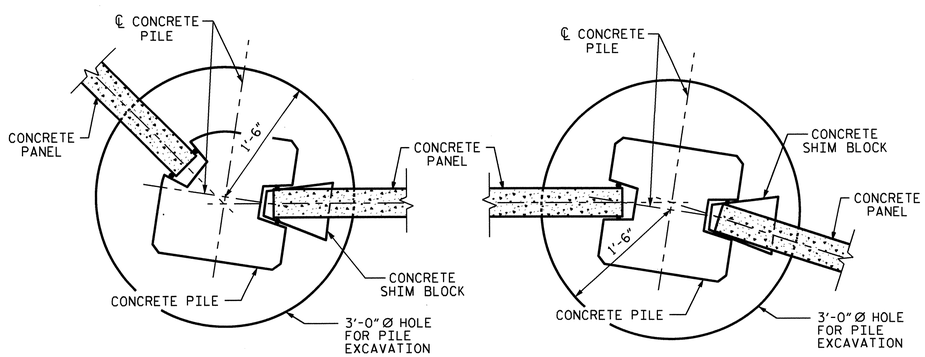


15° TO 45° TURNS
(PILE TYPE III)

0° TO 15° TURNS
(PILE TYPE I)

TYPICAL WALL TURN DETAILS

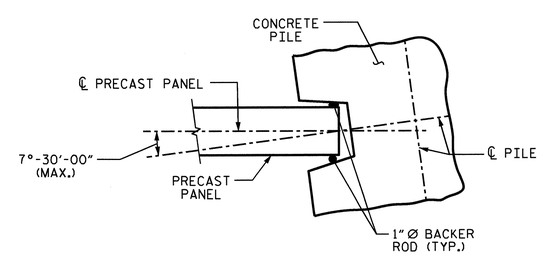


PILE ROTATION LIMIT FOR WALL TURN

(ROTATE THE CONCRETE PILE ±7°-30'-00" TO ACCOMODATE WALL TURN.)

PROJECT NO. R-2309AB
GUILFORD COUNTY
STATION: 230+90.00 -L-
10+00.00 -NW1-
SHEET 4 OF 6

STATE OF NORTH CAROLINA
DEPARTMENT OF TRANSPORTATION
RALEIGH

OPTIONAL
SOUND BARRIER WALL

| REVISIONS | | | | | | | SHEET NO. |
|---|---|---|---|---|---|---|---|
| NO. | BY: | DATE: | NO. | BY: | DATE: | | SW-4 |
| 1 | | | 3 | | | | TOTAL SHEETS |
| 2 | | | 4 | | | | 11 |

| | |
|---|---|
| ASSEMBLED BY : T.L. AVERETTE | DATE : 10-27-11 |
| CHECKED BY : | DATE : |
| DRAWN BY : MAA 6/11 | ADDED 10/1/11 |
| CHECKED BY : GM 6/11 | |

31-OCT-2011 15:56
R:\TIPProjects-R\R2309AB\Structures\R2309ab\FinalPlans\Walls\Str#12\r2309ab_sd_sbw1_12.dgn
taverette

STR. #12

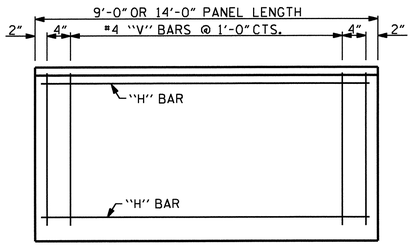


## FRONT ELEVATION OF UPPER PRECAST PANELS

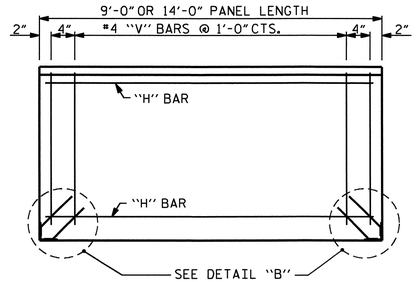


## FRONT ELEVATION OF BOTTOM PRECAST PANEL

| QUANTITIES FOR ONE PRECAST PANEL (FOR 10'-0" PILE SPACING) | | | | | | | | | | | | | |
|---|---|---|---|---|---|---|---|---|---|---|---|---|---|
| PANEL HEIGHT | CLASS AA CONCRETE | BAR TYPES | | | | | | | | | | | |
| | | HORIZONTAL | | | | | | VERTICAL | | | | | |
| | C.Y. | NO. | BAR | SIZE | TYPE | LENGTH | WEIGHT (lb) | NO. | BAR | SIZE | TYPE | LENGTH | WEIGHT (lb) |
| 2'-0" | 0.22 | 3 | H1 | #4 | STR | 8'-8" | 17 | 11 | V1 | #4 | STR | 1'-8" | 12 |
| 3'-0" | 0.33 | 4 | H2 | #4 | STR | 8'-8" | 23 | 11 | V2 | #4 | STR | 2'-8" | 20 |
| 4'-0" | 0.44 | 5 | H3 | #4 | STR | 8'-8" | 29 | 11 | V3 | #4 | STR | 3'-8" | 27 |

| QUANTITIES FOR ONE PRECAST PANEL (FOR 15'-0" PILE SPACING) | | | | | | | | | | | | | |
|---|---|---|---|---|---|---|---|---|---|---|---|---|---|
| PANEL HEIGHT | CLASS AA CONCRETE | BAR TYPES | | | | | | | | | | | |
| | | HORIZONTAL | | | | | | VERTICAL | | | | | |
| | C.Y. | NO. | BAR | SIZE | TYPE | LENGTH | WEIGHT (lb) | NO. | BAR | SIZE | TYPE | LENGTH | WEIGHT (lb) |
| 3'-0" | 0.52 | 4 | H1 | #4 | STR | 13'-8" | 37 | 16 | V1 | #4 | STR | 2'-8" | 29 |
| 4'-0" | 0.69 | 5 | H2 | #4 | STR | 13'-8" | 46 | 16 | V2 | #4 | STR | 3'-8" | 39 |
| 5'-0" | 0.86 | 6 | H3 | #4 | STR | 13'-8" | 55 | 16 | V3 | #4 | STR | 4'-8" | 50 |
| 6'-0" | 1.04 | 7 | H4 | #4 | STR | 13'-8" | 64 | 16 | V4 | #4 | STR | 5'-8" | 61 |

| ADDITIONAL BARS FOR ONE BOTTOM PANEL | | | | | |
|---|---|---|---|---|---|
| NO. | BAR | SIZE | TYPE | LENGTH | WEIGHT (lb) |
| 4 | S1 | #5 | 1 | 1'-6" | 6 |
| | | | | | |
| | | | | | |

BAR TYPE

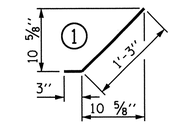


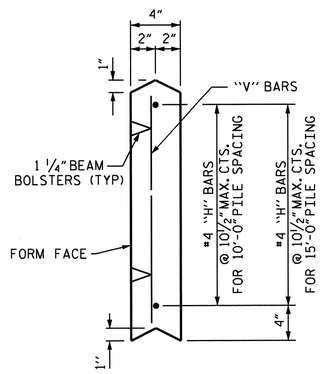


UPPER PANEL

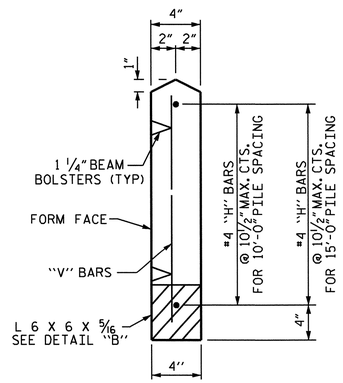


BOTTOM PANEL

## SECTION THROUGH PRECAST PANELS

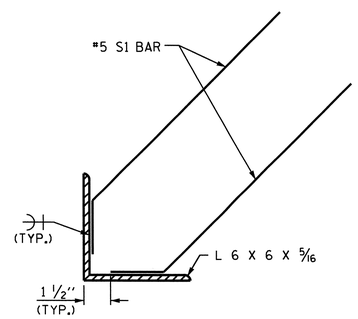


DETAIL "B"

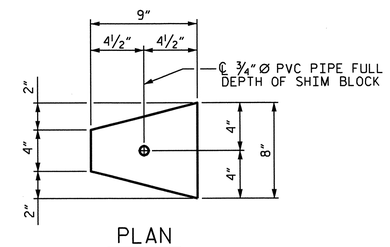


PLAN

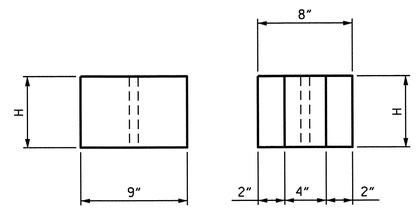


ELEVATION END

## CONCRETE SHIM BLOCK

H = 3", 6" or 1'-0"

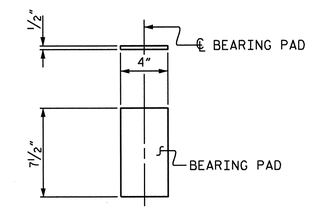


## ELASTOMERIC BEARING DETAILS

ELASTOMER IN BEARINGS SHALL BE 50 DUROMETER HARDNESS.

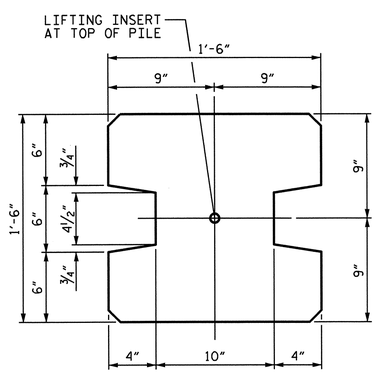


TYPE - I
(AREA = 1.9444 SQ. FT.)

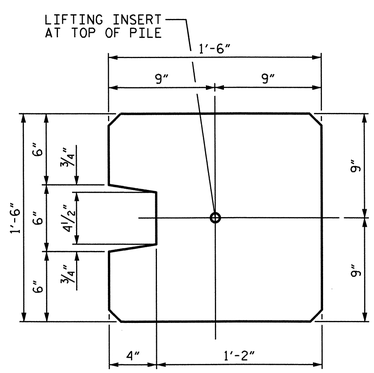


TYPE - II
(AREA = 2.0903 SQ. FT.)

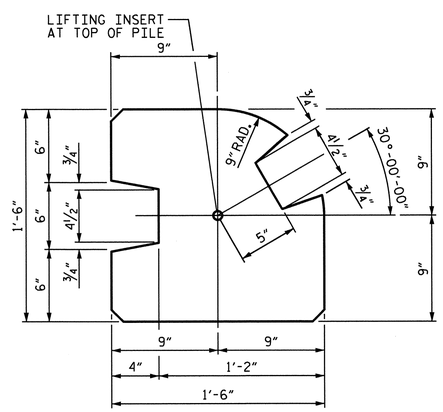


TYPE - III
(AREA = 1.8336 SQ. FT.)

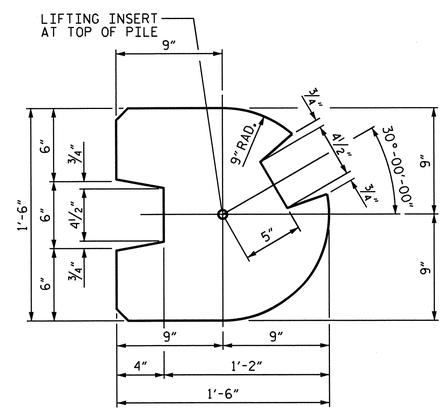


TYPE - III (ALT.)
(AREA = 1.7163 SQ. FT.)

## PILE DETAIL

(ALL CORNERS TO BE CHAMFERED 1")

PROJECT NO. R-2309AB
GUILFORD COUNTY
STATION: 230+90.00 -L-
10+00.00 -NW1-

SHEET 5 OF 6

STATE OF NORTH CAROLINA
DEPARTMENT OF TRANSPORTATION
RALEIGH

STANDARD

OPTIONAL SOUND BARRIER WALL DETAILS

| ASSEMBLED BY : | | DATE : |
|---|---|---|
| CHECKED BY : | | DATE : |
| DRAWN BY : MAA 6/11 | ADDED 8/31/11 | |
| CHECKED BY : GM 6/11 | | |

| REVISIONS | | | | | | SHEET NO. |
|---|---|---|---|---|---|---|
| NO. | BY: | DATE: | NO. | BY: | DATE: | SW-5 |
| 1 | | | 3 | | | TOTAL SHEETS |
| 2 | | | 4 | | | 11 |

STR. #12 STD. NO. SBW2

31-OCT-2011 11:37
R:\TIPProjects-R\R2309AB\Structures\R2309ab\FinalPlans\Walls\Str*12\r2309ab_sd_sbw1_12.dgn
tcoggins

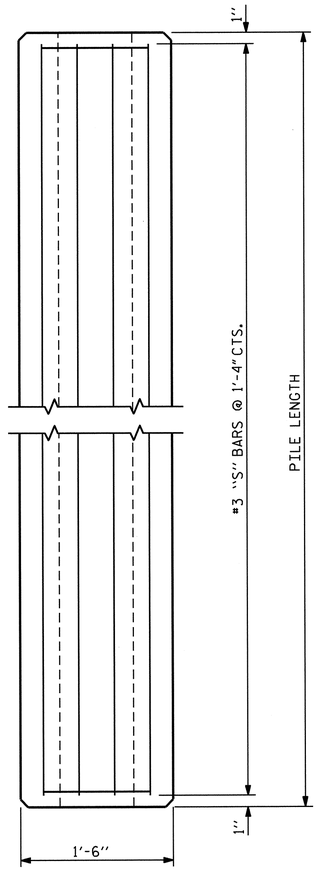


ELEVATION

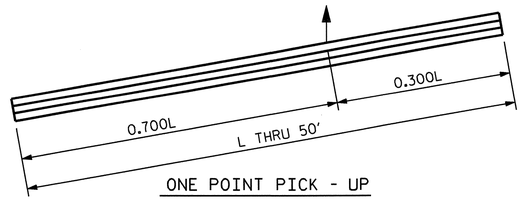


ONE POINT PICK - UP

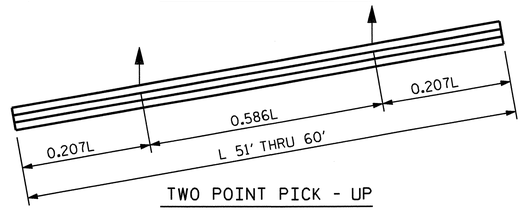


TWO POINT PICK - UP

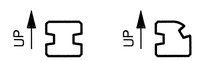


PICK - UP POINTS

## NOTES

CONCRETE DESIGN DATA : f'c = 5,000 PSI

PROPOSED DEVICES FOR LIFTING PILES, RECESS DETAILS, AND PATCHING MATERIAL SHALL BE DETAILED IN SHOP DRAWINGS. AFTER ATTACHMENTS HAVE BEEN REMOVED, OPENINGS SHALL BE REPAIRED SUCH THAT THE APPEARANCE OF THE PILE IS UNIFORM.

WHERE CAST-IN-PLACE LIFTING DEVICES ARE NOT USED, PICK-UP POINTS TO BE INDICATED WITH A BLACK MARK 2" WIDE.

THE SLIP-FORM METHOD OF CASTING PILES WILL NOT BE PERMITTED.

ALL CORNERS TO BE CHAMFERED 1".

## QUANTITIES FOR ONE PRECAST CONCRETE PILE

| LENGTH | APPROX. PILE WT. TONS | ONE PICK-UP POINT | | TWO PICK-UP POINT | |
|---|---|---|---|---|---|
| | | 0.300L | 0.700L | 0.207L | 0.586L |
| 10'-8" | 1.56 | 3'-0" | 7'-0" | | |
| 15'-0" | 2.35 | 4'-6" | 10'-6" | | |
| 20'-0" | 3.14 | 6'-0" | 14'-0" | | |
| 25'-0" | 3.93 | 7'-6" | 17'-6" | | |
| 30'-0" | 4.70 | 9'-0" | 21'-0" | | |
| 35'-0" | 5.49 | 10'-6" | 24'-6" | | |
| 40'-0" | 6.28 | 12'-0" | 28'-0" | | |
| 45'-0" | 7.05 | 13'-6" | 31'-6" | | |
| 50'-0" | 7.84 | 15'-0" | 35'-0" | | |
| 55'-0" | 8.63 | | | 11'-4½" | 32'-3" |
| 60'-0" | 9.42 | | | 12'-5" | 35'-2" |

## BAR TYPES

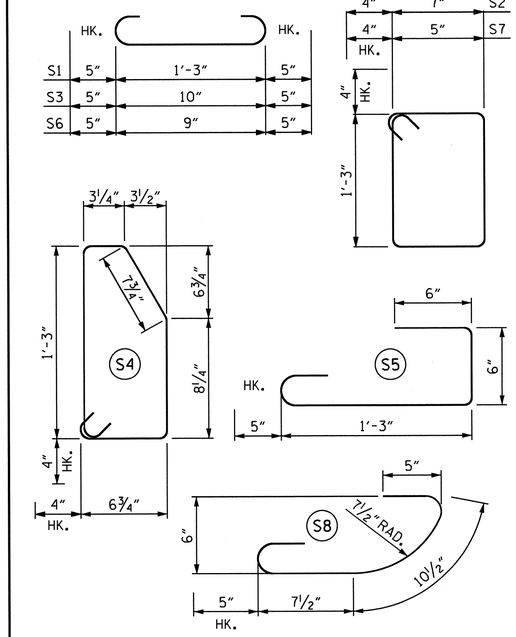


ALL BAR DIMENSIONS ARE OUT TO OUT.

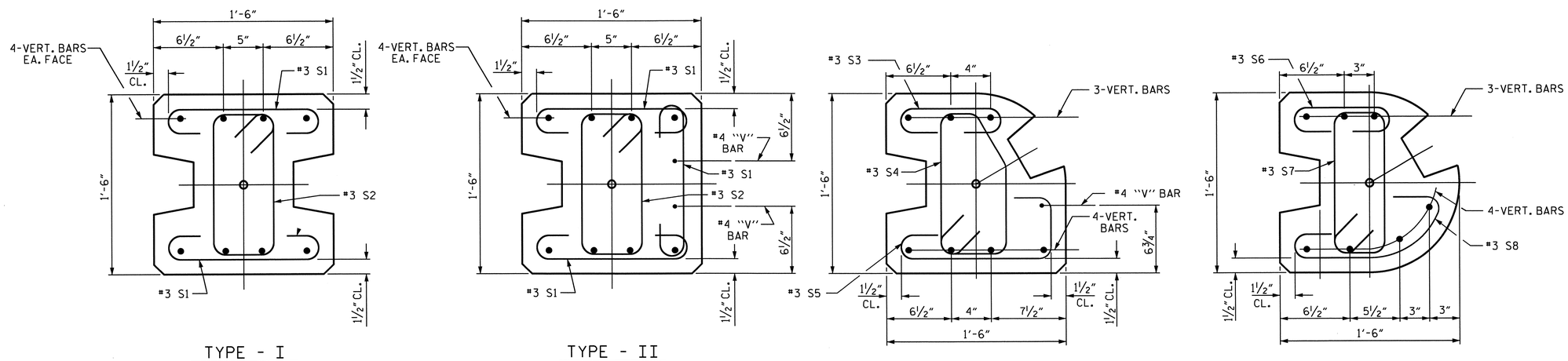


## PILE DETAIL

SEE EXPOSURE CATEGORY CHART FOR VERT. BAR PILE REINFORCING (SHEET 4 OF 6)

PROJECT NO. R-2309AB
GUILFORD COUNTY
STATION: 230+90.00 -L-
10+00.00 -NW1-
SHEET 6 OF 6

STATE OF NORTH CAROLINA
DEPARTMENT OF TRANSPORTATION
RALEIGH

STANDARD
OPTIONAL
SOUND BARRIER WALL
DETAILS

| | |
|---|---|
| ASSEMBLED BY : T.L. AVERETTE | DATE : 10-27-11 |
| CHECKED BY : | DATE : |
| DRAWN BY : MAA 6/11 | ADDED 8/31/11 |
| CHECKED BY : GM 6/11 | |

| REVISIONS | | | | | | SHEET NO. |
|---|---|---|---|---|---|---|
| NO. | BY: | DATE: | NO. | BY: | DATE: | SW-6 |
| 1 | | | 3 | | | TOTAL SHEETS |
| 2 | | | 4 | | | 11 |

31-OCT-2011 11:37
R:\TIPProjects-R\R2309AB\Structures\R2309ab\FinalPlans\Walls\Str#12\r2309ab_sd_sbw1_12.dgn
tcoggins

STR. #12 STD. NO. SBW3

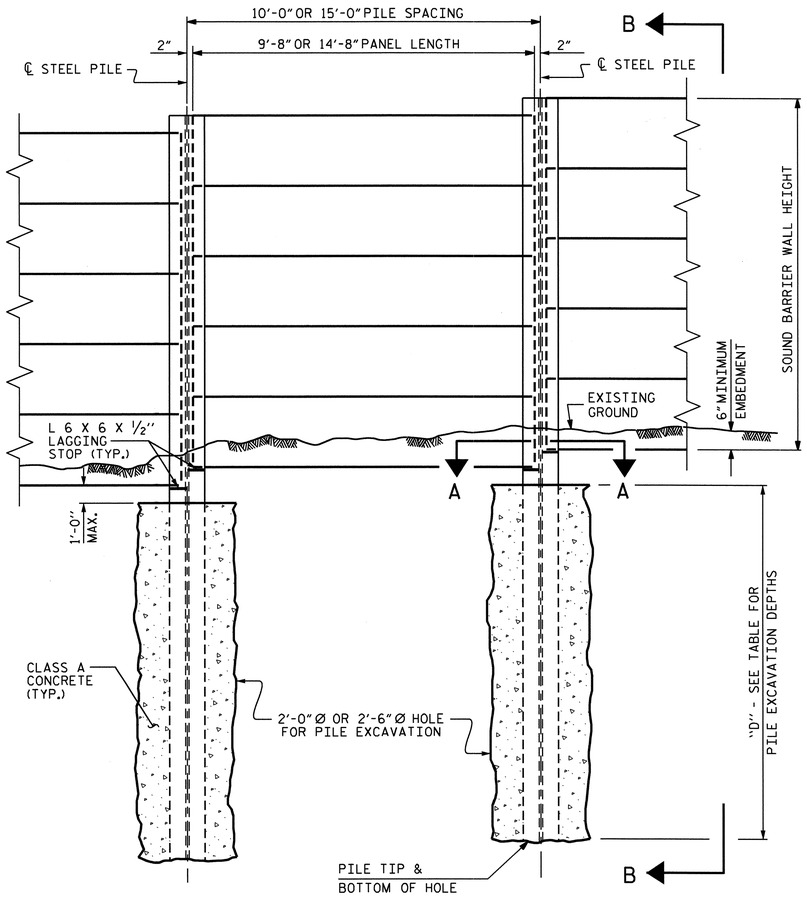


ELEVATION

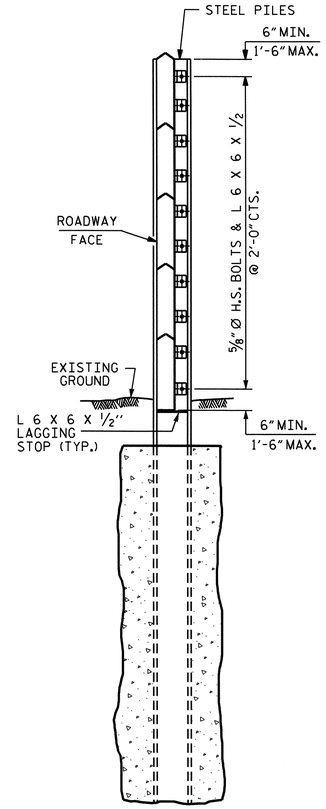


SECTION B-B

| PILE EXCAVATION - NW2 | | | | | |
|---|---|---|---|---|---|
| WALL STATIONS | WALL HEIGHT (FT.) | "D" (FT.) FOR 10 FT. SPACING | | "D" (FT.) FOR 15 FT. SPACING | |
| | | 2'-0" Ø SHAFT | 2'-6" Ø SHAFT | 2'-0" Ø SHAFT | 2'-6" Ø SHAFT |
| 10+00 TO 10+30 | 11.0 - 14.0 | 14.0 | 13.0 | 15.5 | 14.5 |
| 10+30 TO 12+75 | 16.0 - 20.0 | 17.0 | 16.0 | 19.0 | 18.0 |
| 12+75 TO 14+70 | 14.1 - 16.0 | 16.0 | 15.0 | 17.5 | 16.5 |
| 14+70 TO 16+40 | 13.0 - 14.0 | 16.0 | 15.5 | 18.0 | 17.0 |
| 16+40 TO 16+75 | 15.0 - 18.0 | 17.5 | 16.5 | 19.5 | 18.5 |
| 16+75 TO 18+25 | 18.0 - 21.0 | 17.0 | 15.5 | 19.5 | 18.0 |
| 18+25 TO 19+75 | 17.0 - 18.0 | 17.5 | 16.5 | 19.5 | 18.5 |
| 19+75 TO 22+25 | 17.0 - 18.0 | 16.5 | 15.0 | 18.5 | 17.5 |
| 22+25 TO 23+25 | 18.0 - 20.0 | 16.0 | 14.5 | 18.5 | 17.0 |
| 23+25 TO 24+40 | 15.0 - 20.0 | 17.5 | 16.5 | 19.5 | 18.5 |
| 24+40 TO 25+10 | 14.0 | 15.5 | 15.0 | 17.5 | 16.5 |
| 25+10 TO 26+05 | 15.0 | 16.5 | 16.0 | 18.5 | 17.5 |
| 26+05 TO 27+25 | 14.0 | 17.0 | 16.0 | 18.5 | 17.5 |
| 27+25 TO 27+70 | 15.0 - 16.0 | 18.0 | 17.0 | 19.5 | 18.5 |

## NOTES

FOR SOUND BARRIER WALL, SEE SPECIAL PROVISIONS.

CONSTRUCT SOUND BARRIER WALL TO LINES AND GRADES SHOWN ON THE ROADWAY PLANS.

PROVIDE PANELS WITH A FLAT BOTTOM.

USE STEEL PILES, ANGLES, AND LAGGING STOPS MEETING THE REQUIREMENTS OF AASHTO M270, GRADE 50. GALVANIZE ALL STEEL COMPONENTS INCLUDING PILES, ANGLES, LAGGING STOPS, BOLTS, NUTS, AND WASHERS IN ACCORDANCE WITH SECTION 1076 OF THE STANDARD SPECIFICATIONS. REPAIR ANY DAMAGED GALVANIZATION IN ACCORDANCE WITH ARTICLE 1076-6 OF THE STANDARD SPECIFICATIONS.

VERIFY THE LOCATION OF UNDERGROUND UTILITIES BEFORE DRILLING HOLES TO ENSURE SUFFICIENT CLEARANCE IS AVAILABLE.

AT THE CONTRACTOR'S OPTION, USE AN APPROVED NON-SHRINK NON-METALLIC GROUT BETWEEN THE FLANGES OF THE STEEL PILES TO SUPPORT THE BOTTOM PANEL IN LIEU OF LAGGING STOPS.

ADJUST PILE EXCAVATION ELEVATIONS TO MAINTAIN 6" MINIMUM EMBEDMENT OF THE BOTTOM PANEL.

USE CLASS AA AND CLASS A CONCRETE FOR PANELS AND PILE EXCAVATION BACKFILL, RESPECTIVELY, IN ACCORDANCE WITH ARTICLE 1000-4 OF THE STANDARD SPECIFICATIONS.

PROVIDE PLATES AND ANGLES TO SECURE PANELS 6" LONG AS MEASURED ALONG THE STEEL PILE.

AT THE CONTRACTOR'S OPTION, USE EITHER 'W' OR 'HP' PILES THAT SATISFY THE MINIMUM PILE SIZE REQUIRED IN THE "EXPOSURE CATEGORY" TABLE. PILES SMALLER THAN W12 OR HP12 ARE NOT PERMITTED. AT TURNS WITH A 3 FOOT DIAMETER HOLE FOR PILE EXCAVATION, USE ONLY W12 OR HP12 PILES, AS SHOWN.

AT THE CONTRACTOR'S OPTION, USE EITHER 10 FOOT OR 15 FOOT PILE SPACINGS, AND EITHER 2 FOOT OR 2½ FOOT DIAMETER HOLES FOR PILE EXCAVATION, EXCEPT FOR WALL TURNS.

FOR WALL TURNS, PROVIDE HOLES FOR PILE EXCAVATION AS SHOWN ON THE PLANS. A 2 FOOT DIAMETER HOLE FOR PILE EXCAVATION IS NOT AN OPTION. FOR 3 FOOT DIAMETER HOLES AT TURNS, USE DEPTHS DESIGNATED FOR THE 2½ FOOT DIAMETER HOLES.

DO NOT SPLICE STEEL PILES.

FOR SOUND BARRIER WALL STATIONS, OFFSETS, AND WALL ENVELOPE, SEE ROADWAY PLANS.

AT THE CONTRACTOR'S OPTION, CONCRETE PILES MAY BE USED IN LIEU OF STEEL PILES. SEE OPTIONAL SOUND BARRIER WALL DETAILS.

ALTERNATE WALL TYPES SHALL BE PERMITTED FOR THIS SOUND BARRIER WALL.

## EXPOSURE CATEGORY B

DESIGN WIND PRESSURE = 20 PSF ( 0'< H ≤ 14' ); 25 PSF (14'< H≤ 29' )

| PILE SPACING | MAXIMUM WALL HEIGHT ( H ) | MINIMUM W SIZE STEEL PILES | MINIMUM HP SIZE STEEL PILES |
|---|---|---|---|
| 10'-0" | H ≤ 29' | W 12 X 40<br>W 14 X 48 | HP 12 X 53<br>HP 14 X 73 |
| 15'-0" | H ≤ 25' | W 12 X 40<br>W 14 X 48 | HP 12 X 53<br>HP 14 X 73 |
| | 25'< H ≤ 29' | W 12 X 50<br>W 14 X 48 | HP 12 X 53<br>HP 14 X 73 |

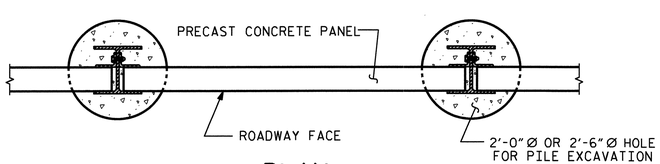


PLAN

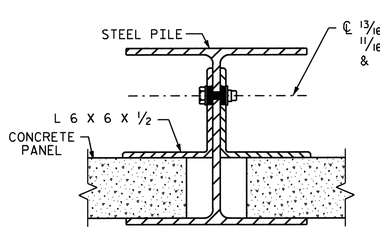


CONNECTION DETAIL

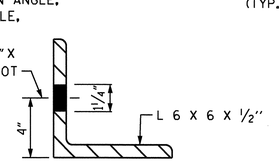


ANGLE DETAIL

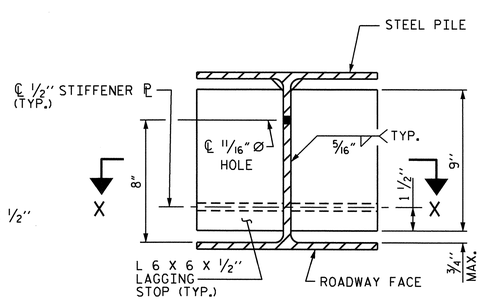


SECTION A-A

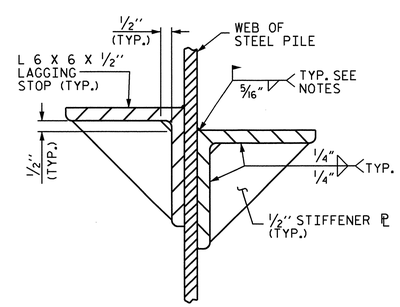


SECTION X-X

PROJECT NO. R-2309AB

GUILFORD COUNTY

STATION: 251+69.39 -L-
10+00.00 -NW2-

SHEET 1 OF 5

STATE OF NORTH CAROLINA
DEPARTMENT OF TRANSPORTATION
RALEIGH

STANDARD

SOUND BARRIER WALL

NORTH CAROLINA PROFESSIONAL SEAL 12274 ENGINEER OMAR R. AZIZI
2/10/12

NORTH CAROLINA PROFESSIONAL SEAL 14045 ENGINEER TIMOTHY L. COGGINS
02/10/12

| ASSEMBLED BY : T. L. COGGINS | DATE : 10/19/2011 |
|---|---|
| CHECKED BY : T. L. AVERETTE | DATE : 10/27/2011 |

| DRAWN BY : JAD 5/01 | REV. 2/4/03 RWW/CVC |
|---|---|
| CHECKED BY : RDR 5/01 | REV. 5/7/03 RWW/JTE |
| | REV. 5/1/06RR KMM/GM |

| REVISIONS | | | | | | SHEET NO. |
|---|---|---|---|---|---|---|
| NO. | BY: | DATE: | NO. | BY: | DATE: | SW-7 |
| 1 | | | 3 | | | TOTAL SHEETS |
| 2 | | | 4 | | | 11 |

STR. #13

STD. NO. SBW1

10-FEB-2012 11:11
Z:\TIPProjects-R\R2309AB\Structures\R2309ab\Final Plans\Walls\Str#13\r2309ab_sd_sbw1_13.dgn
emurray

| BILL OF MATERIAL | |
|---|---|
| SOUND BARRIER WALL #2 | 28,509 S.F. |
| QUANTITIES PROVIDED ARE APPROXIMATE AND ARE FOR BID PURPOSES ONLY. | |

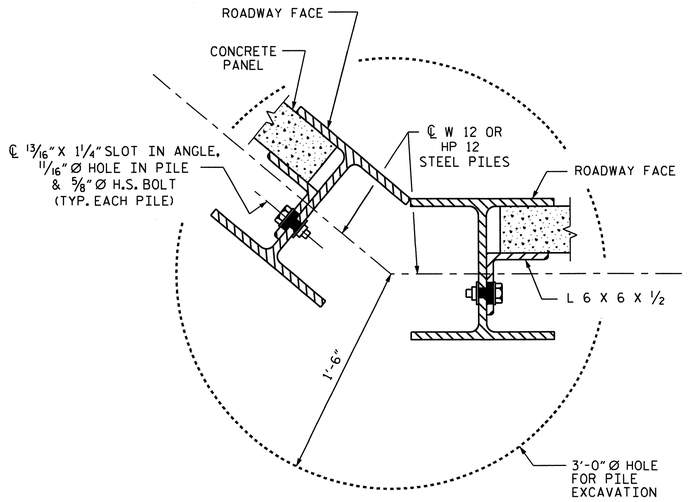


## TYPICAL WALL TURN DETAIL

(FOR GREATER THAN 15° TURNS, CONCAVE TOWARD ROADWAY)

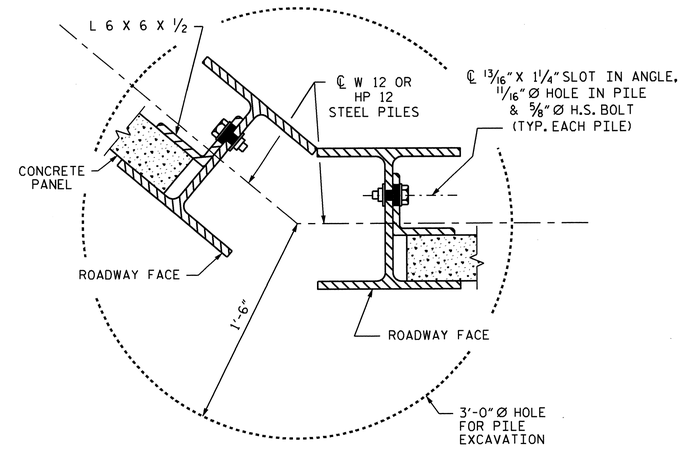


## TYPICAL WALL TURN DETAIL

(FOR GREATER THAN 15° TURNS, CONVEX TOWARD ROADWAY)

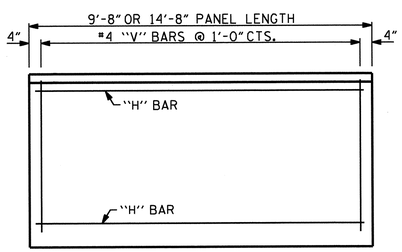


## FRONT ELEVATION OF UPPER PRECAST PANELS

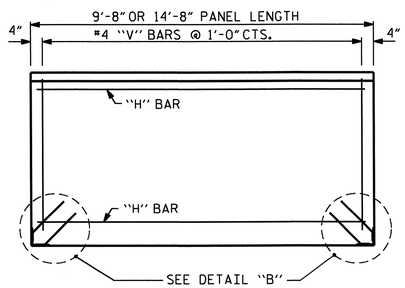


## FRONT ELEVATION OF BOTTOM PRECAST PANEL

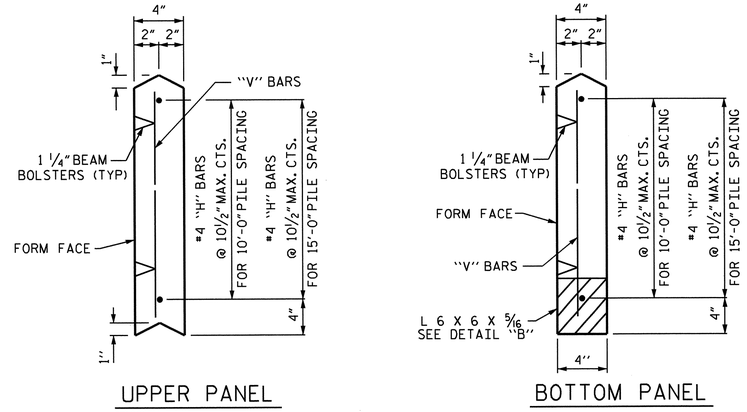


## SECTION THROUGH PRECAST PANELS

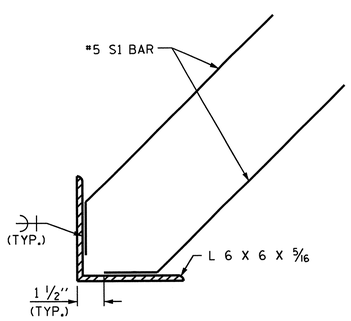


## DETAIL "B"

| ADDITIONAL BARS FOR ONE BOTTOM PANEL | | | | | |
|---|---|---|---|---|---|
| NO. | BAR | SIZE | TYPE | LENGTH | WEIGHT (lb) |
| 4 | S1 | #5 | 1 | 1'-6" | 6 |
| | | | | | |
| | | | | | |

BAR TYPE

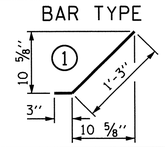


| QUANTITIES FOR ONE PRECAST PANEL (FOR 10'-0" PILE SPACING) | | | | | | | | | | | | | |
|---|---|---|---|---|---|---|---|---|---|---|---|---|---|
| PANEL HEIGHT | CLASS AA CONCRETE | BAR TYPES | | | | | | | | | | | |
| | | HORIZONTAL | | | | | | VERTICAL | | | | | |
| | C.Y. | NO. | BAR | SIZE | TYPE | LENGTH | WEIGHT (lb) | NO. | BAR | SIZE | TYPE | LENGTH | WEIGHT (lb) |
| 2'-0" | 0.24 | 3 | H1 | #4 | STR | 9'-4" | 19 | 10 | V1 | #4 | STR | 1'-8" | 11 |
| 3'-0" | 0.36 | 4 | H2 | #4 | STR | 9'-4" | 25 | 10 | V2 | #4 | STR | 2'-8" | 18 |
| 4'-0" | 0.48 | 5 | H3 | #4 | STR | 9'-4" | 31 | 10 | V3 | #4 | STR | 3'-8" | 24 |

| QUANTITIES FOR ONE PRECAST PANEL (FOR 15'-0" PILE SPACING) | | | | | | | | | | | | | |
|---|---|---|---|---|---|---|---|---|---|---|---|---|---|
| PANEL HEIGHT | CLASS AA CONCRETE | BAR TYPES | | | | | | | | | | | |
| | | HORIZONTAL | | | | | | VERTICAL | | | | | |
| | C.Y. | NO. | BAR | SIZE | TYPE | LENGTH | WEIGHT (lb) | NO. | BAR | SIZE | TYPE | LENGTH | WEIGHT (lb) |
| 3'-0" | 0.54 | 4 | H1 | #4 | STR | 14'-4" | 38 | 15 | V1 | #4 | STR | 2'-8" | 27 |
| 4'-0" | 0.72 | 5 | H2 | #4 | STR | 14'-4" | 48 | 15 | V2 | #4 | STR | 3'-8" | 37 |
| 5'-0" | 0.91 | 6 | H3 | #4 | STR | 14'-4" | 57 | 15 | V3 | #4 | STR | 4'-8" | 47 |
| 6'-0" | 1.09 | 7 | H4 | #4 | STR | 14'-4" | 67 | 15 | V4 | #4 | STR | 5'-8" | 57 |

ASSEMBLED BY : T. L. COGGINS DATE :10/19/2011
CHECKED BY : T. L. AVERETTE DATE :10/27/2011

| | | | |
|---|---|---|---|
| DRAWN BY : JAD 5/01 | REV. 7/10/01 | RWW/LES | |
| CHECKED BY : RDR 5/01 | REV. 5/7/03 | RWW/JTE | |
| | REV. 5/1/06R | KMM/GM | |

31-OCT-2011 11:27
R:\TIPProjects-R\R2309AB\Structures\R2309ab\FinalPlans\Walls\Str#13\r2309ab_sd_sbw2_13.dgn
tcoggins

PROJECT NO. R-2309AB
GUILFORD COUNTY
STATION: 251+69.39 -L-
10+00.00 -NW2-

SHEET 2 OF 5

STATE OF NORTH CAROLINA
DEPARTMENT OF TRANSPORTATION
RALEIGH

STANDARD

SOUND BARRIER WALL DETAILS

NORTH CAROLINA PROFESSIONAL SEAL 14045 ENGINEER TIMOTHY L. COGGINS
1/31/11

| REVISIONS | | | | | | SHEET NO. |
|---|---|---|---|---|---|---|
| NO. | BY: | DATE: | NO. | BY: | DATE: | SW-8 |
| 1 | | | 3 | | | TOTAL SHEETS |
| 2 | | | 4 | | | 11 |

STR. #13 STD. NO. SBW2

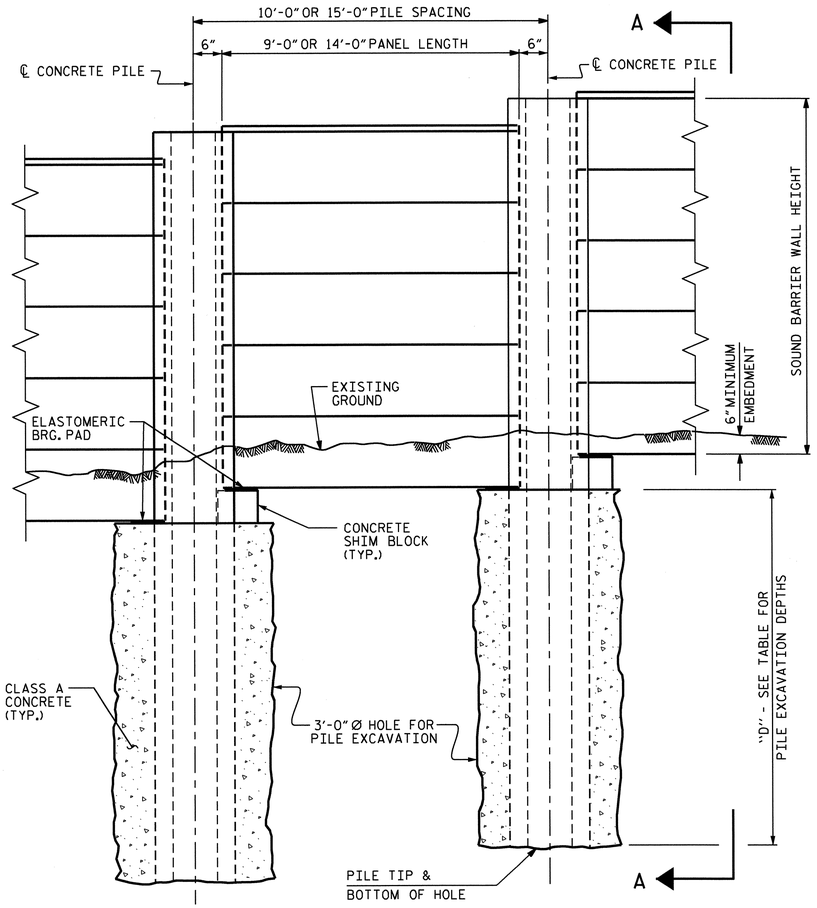


ELEVATION

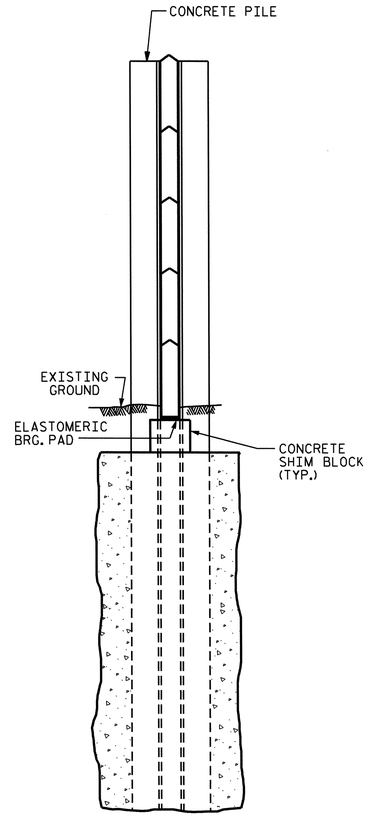


SECTION A-A

## 3'-0" Ø PILE EXCAVATION

| | WALL STATIONS |
|---|---|
| WALL #2 | FROM : STA. 251+69.39 -L-, 158.66' RT.<br>TO : STA. 268+51.32 -L-, 84.55' RT. |

| WALL HEIGHT | DEPTH "D" FOR 10'-0" PILE SPACING | DEPTH "D" FOR 15'-0" PILE SPACING |
|---|---|---|
| < 15'-0" | 13 FT. | 15 FT. |
| 15'-0" ≤ H ≤ 20'-0" | 16 FT. | 21 FT. |
| 20'-0" ≤ H ≤ 25'-0" | 19 FT. | 22 FT. |

## NOTES

FOR SOUND BARRIER WALL, SEE SPECIAL PROVISIONS.

CONSTRUCT SOUND BARRIER WALL TO LINES AND GRADES SHOWN ON THE ROADWAY PLANS.

PROVIDE PANELS WITH A FLAT BOTTOM.

VERIFY THE LOCATION OF UNDERGROUND UTILITIES BEFORE DRILLING HOLES TO ENSURE SUFFICIENT CLEARANCE IS AVAILABLE.

ADJUST PILE EXCAVATION ELEVATIONS TO MAINTAIN 6" MINIMUM EMBEDMENT OF THE BOTTOM PANEL.

USE CLASS AA FOR PANELS AND PILES AND CLASS A CONCRETE PILE EXCAVATION BACKFILL, IN ACCORDANCE WITH ARTICLE 1000-4 OF THE STANDARD SPECIFICATIONS.

AT THE CONTRACTOR'S OPTION, USE EITHER 10 FOOT OR 15 FOOT PILE SPACINGS.

FOR SOUND BARRIER WALL STATIONS, OFFSETS, AND WALL ENVELOPE, SEE ROADWAY PLANS.

PLACE 1" Ø BACKER RODS FULL HEIGHT ON EACH SIDE OF THE PRECAST PANELS. SET AND SEAL THE BACKER ROD IN PLACE WITH SEALANT THAT CONFORMS WITH ARTICLE 1028-3 OF THE STANDARD SPECIFICATIONS.

FOR SUBMITTAL OF WORKING DRAWINGS, SEE SPECIAL PROVISIONS.

FOR FALSEWORK AND FORMWORK, SEE SPECIAL PROVISIONS.

## EXPOSURE CATEGORY B - PILE REINFORCING STEEL

DESIGN WIND PRESSURE =
20 PSF ( 0' < H ≤ 14' ); 25 PSF (14' < H ≤ 25' )

| PILE TYPE I | | | | PILE TYPE III | | | |
|---|---|---|---|---|---|---|---|
| PILE SPACING | MAXIMUM WALL HEIGHT ( H ) | VERTICAL REINFORCING STEEL | TIES | PILE SPACING | MAXIMUM WALL HEIGHT ( H ) | VERTICAL REINFORCING STEEL | TIES |
| 10'-0" | H ≤ 25' | 4 - #6 EA. FACE | #3 @ 1'-4" CTS. | 10'-0" | H ≤ 25' | 3 - #7 SHORT FACE<br>4 - #7 LONG FACE | #3 @ 1'-4" CTS. |
| 15'-0" | H ≤ 25' | 4 - #7 EA. FACE | #3 @ 1'-4" CTS. | 15'-0" | H ≤ 25' | 3 - #8 SHORT FACE<br>4 - #8 LONG FACE | #3 @ 1'-4" CTS. |

| PILE TYPE II | | | | PILE TYPE III ALT. | | | |
|---|---|---|---|---|---|---|---|
| PILE SPACING | MAXIMUM WALL HEIGHT ( H ) | VERTICAL REINFORCING STEEL | TIES | PILE SPACING | MAXIMUM WALL HEIGHT ( H ) | VERTICAL REINFORCING STEEL | TIES |
| 10'-0" | H ≤ 25' | 4 - #6 EA. FACE | #3 @ 1'-4" CTS. | 10'-0" | H ≤ 25' | 3 - #7 SHORT FACE<br>4 - #7 LONG FACE | #3 @ 1'-4" CTS. |
| 15'-0" | H ≤ 25' | 4 - #6 EA. FACE | #3 @ 1'-4" CTS. | 15'-0" | H ≤ 25' | 3 - #8 SHORT FACE<br>4 - #8 LONG FACE | #3 @ 1'-4" CTS. |

## BILL OF MATERIAL

| | |
|---|---|
| SOUND BARRIER WALL | 28,509 S.F. |

QUANTITIES PROVIDED ARE APPROXIMATE AND ARE FOR BID PURPOSES ONLY.

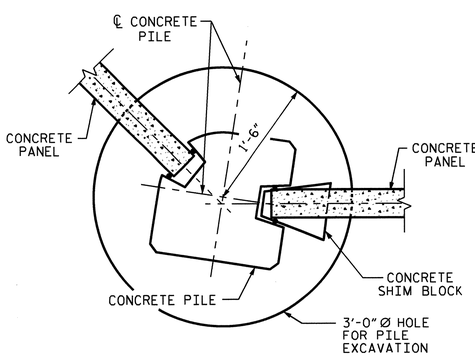


15° TO 45° TURNS
(PILE TYPE III)

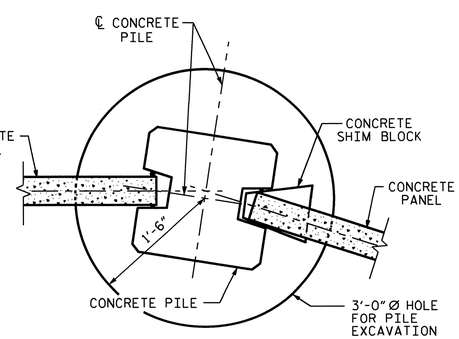


0° TO 15° TURNS
(PILE TYPE I)

TYPICAL WALL TURN DETAILS

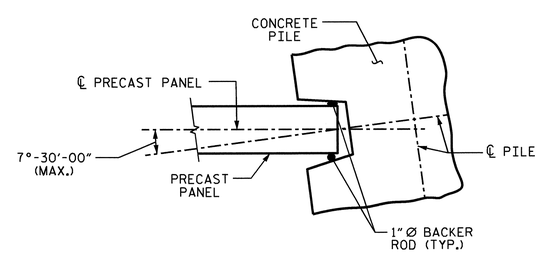


PILE ROTATION LIMIT FOR WALL TURN

(ROTATE THE CONCRETE PILE ±7°-30'-00" TO ACCOMODATE WALL TURN.)

PROJECT NO. R-2309AB
GUILFORD COUNTY
STATION: 251+69.39 -L-
10+00.00 -NW2-
SHEET 3 OF 5

STATE OF NORTH CAROLINA
DEPARTMENT OF TRANSPORTATION
RALEIGH

OPTIONAL
SOUND BARRIER WALL

| | |
|---|---|
| ASSEMBLED BY : T.L. AVERETTE | DATE : 10-27-11 |
| CHECKED BY : | DATE : |
| DRAWN BY : MAA 6/11 | ADDED 10/1/11 |
| CHECKED BY : GM 6/11 | |

| REVISIONS | | | | | | SHEET NO. |
|---|---|---|---|---|---|---|
| NO. | BY: | DATE: | NO. | BY: | DATE: | SW-9 |
| 1 | | | 3 | | | TOTAL SHEETS |
| 2 | | | 4 | | | 11 |

STR. #13

31-OCT-2011 11:33
R:\TIPProjects-R\R2309AB\Structures\R2309ab\FinalPlans\Walls\Str#13\r2309ab_sd_sbw1_13.dgn
tcoggins

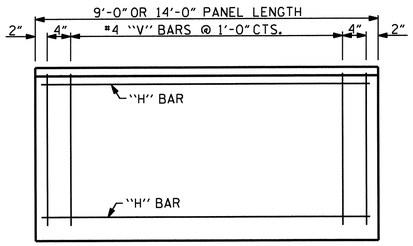


## FRONT ELEVATION OF UPPER PRECAST PANELS

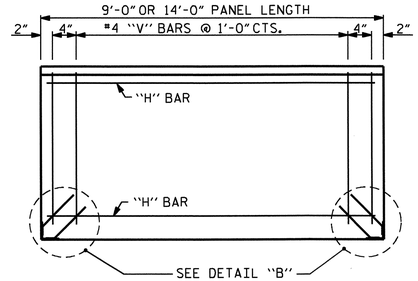


## FRONT ELEVATION OF BOTTOM PRECAST PANEL

| QUANTITIES FOR ONE PRECAST PANEL (FOR 10'-0" PILE SPACING) | | | | | | | | | | | | | |
|---|---|---|---|---|---|---|---|---|---|---|---|---|---|
| PANEL HEIGHT | CLASS AA CONCRETE | BAR TYPES | | | | | | | | | | | |
| | | HORIZONTAL | | | | | | VERTICAL | | | | | |
| | C.Y. | NO. | BAR | SIZE | TYPE | LENGTH | WEIGHT (lb) | NO. | BAR | SIZE | TYPE | LENGTH | WEIGHT (lb) |
| 2'-0" | 0.22 | 3 | H1 | #4 | STR | 8'-8" | 17 | 11 | V1 | #4 | STR | 1'-8" | 12 |
| 3'-0" | 0.33 | 4 | H2 | #4 | STR | 8'-8" | 23 | 11 | V2 | #4 | STR | 2'-8" | 20 |
| 4'-0" | 0.44 | 5 | H3 | #4 | STR | 8'-8" | 29 | 11 | V3 | #4 | STR | 3'-8" | 27 |

| QUANTITIES FOR ONE PRECAST PANEL (FOR 15'-0" PILE SPACING) | | | | | | | | | | | | | |
|---|---|---|---|---|---|---|---|---|---|---|---|---|---|
| PANEL HEIGHT | CLASS AA CONCRETE | BAR TYPES | | | | | | | | | | | |
| | | HORIZONTAL | | | | | | VERTICAL | | | | | |
| | C.Y. | NO. | BAR | SIZE | TYPE | LENGTH | WEIGHT (lb) | NO. | BAR | SIZE | TYPE | LENGTH | WEIGHT (lb) |
| 3'-0" | 0.52 | 4 | H1 | #4 | STR | 13'-8" | 37 | 16 | V1 | #4 | STR | 2'-8" | 29 |
| 4'-0" | 0.69 | 5 | H2 | #4 | STR | 13'-8" | 46 | 16 | V2 | #4 | STR | 3'-8" | 39 |
| 5'-0" | 0.86 | 6 | H3 | #4 | STR | 13'-8" | 55 | 16 | V3 | #4 | STR | 4'-8" | 50 |
| 6'-0" | 1.04 | 7 | H4 | #4 | STR | 13'-8" | 64 | 16 | V4 | #4 | STR | 5'-8" | 61 |

| ADDITIONAL BARS FOR ONE BOTTOM PANEL | | | | | |
|---|---|---|---|---|---|
| NO. | BAR | SIZE | TYPE | LENGTH | WEIGHT (lb) |
| 4 | S1 | #5 | 1 | 1'-6" | 6 |
| | | | | | |
| | | | | | |

BAR TYPE

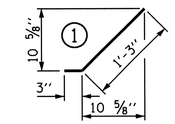


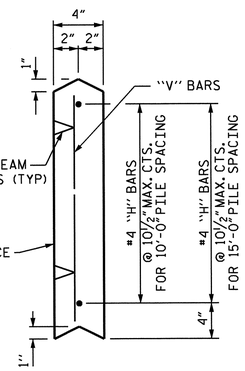


UPPER PANEL

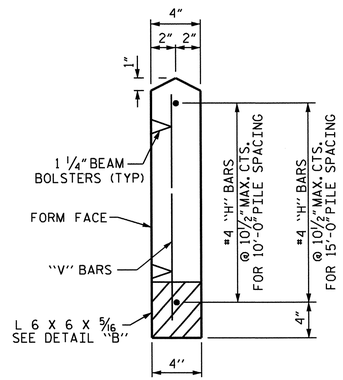


BOTTOM PANEL

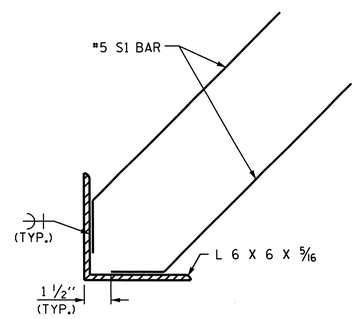


DETAIL "B"

## SECTION THROUGH PRECAST PANELS

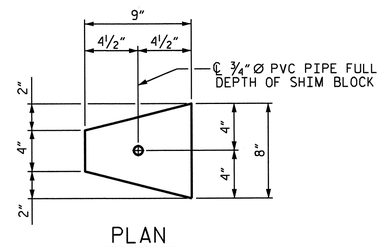


PLAN

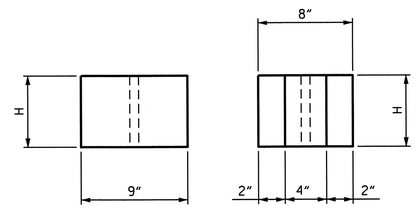


ELEVATION END

## CONCRETE SHIM BLOCK

H = 3", 6" or 1'-0"

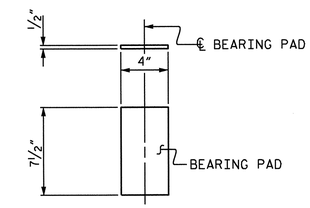


## ELASTOMERIC BEARING DETAILS

ELASTOMER IN BEARINGS SHALL BE 50 DUROMETER HARDNESS.

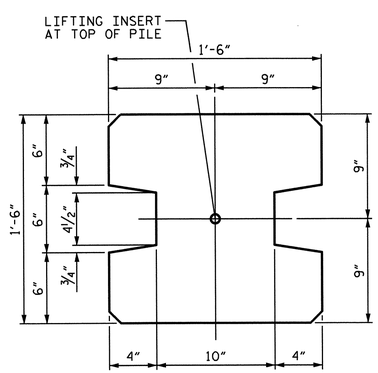


TYPE - I
(AREA = 1.9444 SQ. FT.)

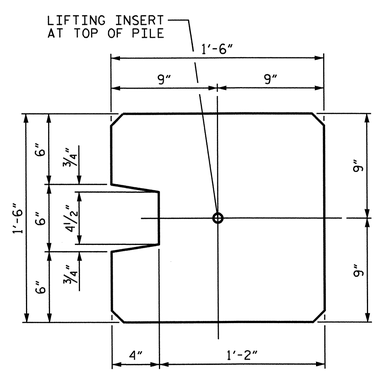


TYPE - II
(AREA = 2.0903 SQ. FT.)

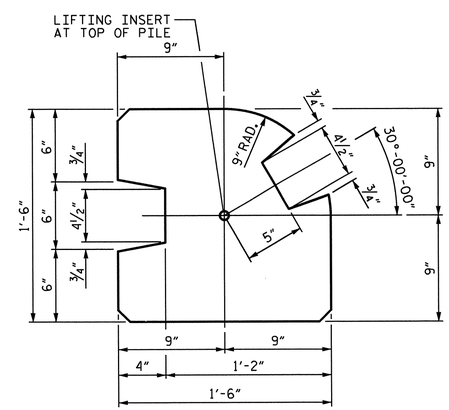


TYPE - III
(AREA = 1.8336 SQ. FT.)

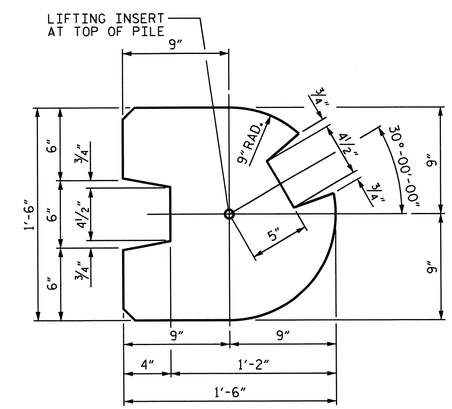


TYPE - III (ALT.)
(AREA = 1.7163 SQ. FT.)

## PILE DETAIL

(ALL CORNERS TO BE CHAMFERED 1")

PROJECT NO. R-2309AB
GUILFORD COUNTY
STATION: 251+69.39 -L-
10+00.00 -NW2-

SHEET 4 OF 5

STATE OF NORTH CAROLINA
DEPARTMENT OF TRANSPORTATION
RALEIGH

STANDARD

OPTIONAL SOUND BARRIER WALL DETAILS

| REVISIONS | | | | | | SHEET NO. |
|---|---|---|---|---|---|---|
| NO. | BY: | DATE: | NO. | BY: | DATE: | SW-10 |
| 1 | | | 3 | | | TOTAL SHEETS |
| 2 | | | 4 | | | 11 |

| | | |
|---|---|---|
| ASSEMBLED BY : T.L. AVERETTE | DATE : 10/27/11 | |
| CHECKED BY : | DATE : | |
| DRAWN BY : MAA 6/11 | ADDED 8/31/11 | |
| CHECKED BY : GM 6/11 | | |

31-OCT-2011 11:34
R:\TIPProjects-R\R2309AB\Structures\R2309ab\FInalPlans\Walls\Str#13\r2309ab_sd_sbw1_13.dgn
tcoggins

STR. #13

STD. NO. SBW2

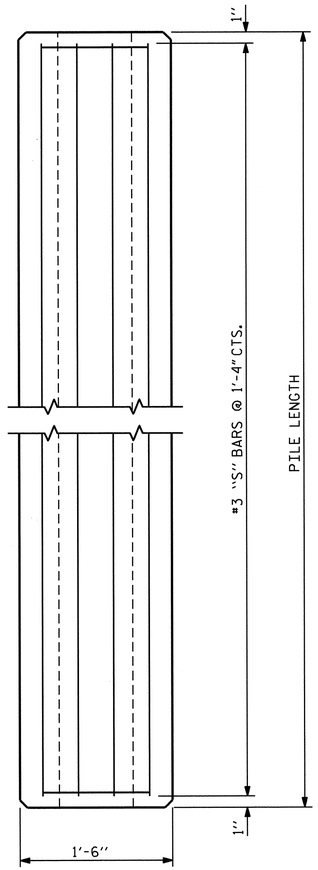


ELEVATION

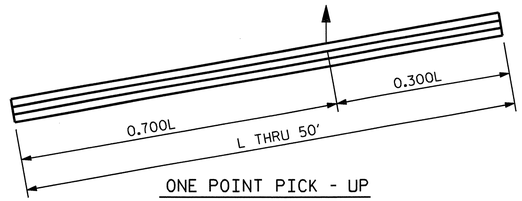


ONE POINT PICK - UP

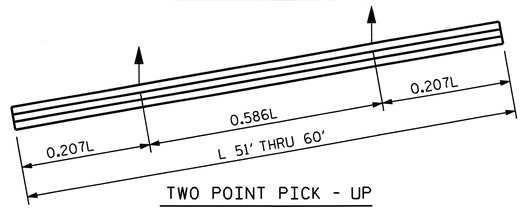


TWO POINT PICK - UP

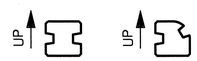


PICK - UP POINTS

## NOTES

CONCRETE DESIGN DATA : f'c = 5,000 PSI

PROPOSED DEVICES FOR LIFTING PILES, RECESS DETAILS, AND PATCHING MATERIAL SHALL BE DETAILED IN SHOP DRAWINGS. AFTER ATTACHMENTS HAVE BEEN REMOVED, OPENINGS SHALL BE REPAIRED SUCH THAT THE APPEARANCE OF THE PILE IS UNIFORM.

WHERE CAST-IN-PLACE LIFTING DEVICES ARE NOT USED, PICK-UP POINTS TO BE INDICATED WITH A BLACK MARK 2" WIDE.

THE SLIP-FORM METHOD OF CASTING PILES WILL NOT BE PERMITTED.

ALL CORNERS TO BE CHAMFERED 1".

## QUANTITIES FOR ONE PRECAST CONCRETE PILE

| LENGTH | APPROX. PILE WT. TONS | ONE PICK-UP POINT | | TWO PICK-UP POINT | |
|---|---|---|---|---|---|
| | | 0.300L | 0.700L | 0.207L | 0.586L |
| 10'-0" | 1.56 | 3'-0" | 7'-0" | | |
| 15'-0" | 2.35 | 4'-6" | 10'-6" | | |
| 20'-0" | 3.14 | 6'-0" | 14'-0" | | |
| 25'-0" | 3.93 | 7'-6" | 17'-6" | | |
| 30'-0" | 4.70 | 9'-0" | 21'-0" | | |
| 35'-0" | 5.49 | 10'-6" | 24'-6" | | |
| 40'-0" | 6.28 | 12'-0" | 28'-0" | | |
| 45'-0" | 7.05 | 13'-6" | 31'-6" | | |
| 50'-0" | 7.84 | 15'-0" | 35'-0" | | |
| 55'-0" | 8.63 | | | 11'-4½" | 32'-3" |
| 60'-0" | 9.42 | | | 12'-5" | 35'-2" |

## BAR TYPES

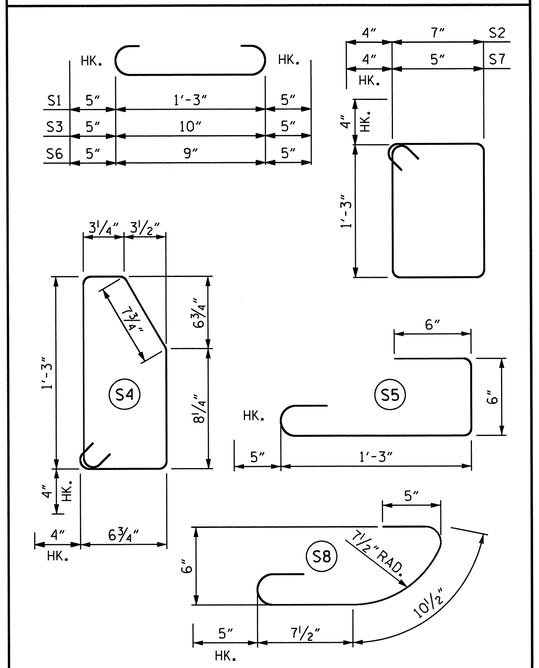


ALL BAR DIMENSIONS ARE OUT TO OUT.

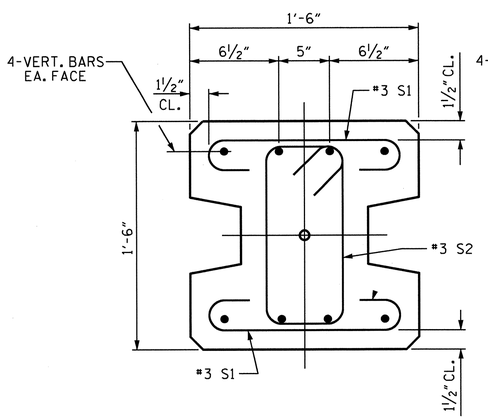


TYPE - I

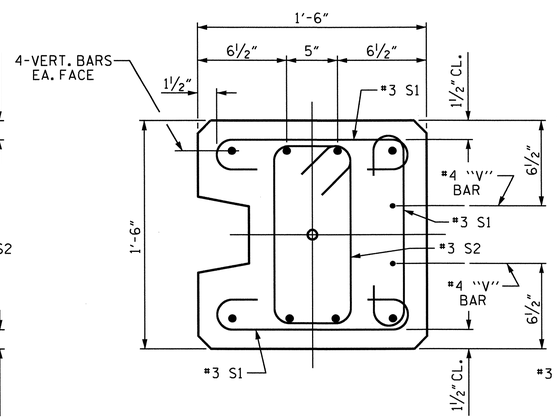


TYPE - II

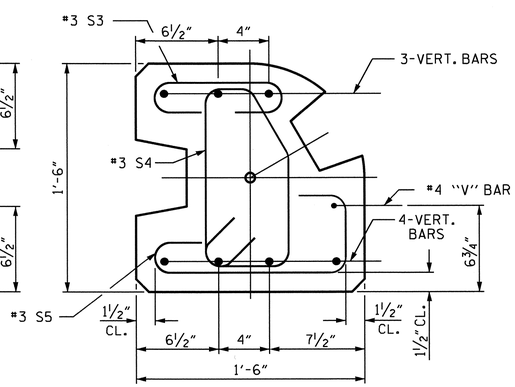


TYPE - III

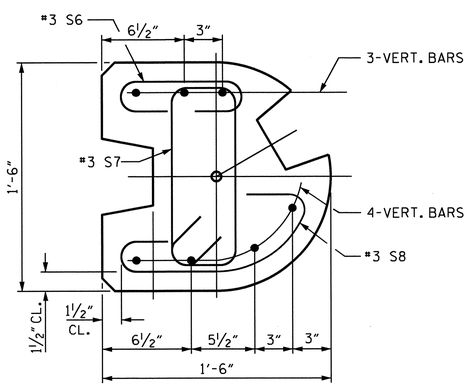


TYPE - III (ALT.)

## PILE DETAIL

SEE EXPOSURE CATEGORY CHART FOR VERT. BAR PILE REINFORCING (SHEET 3 OF 5)

PROJECT NO. R-2309AB
GUILFORD COUNTY
STATION: 251+69.39 -L-
10+00.00 -NW2-
SHEET 5 OF 5

STATE OF NORTH CAROLINA
DEPARTMENT OF TRANSPORTATION
RALEIGH

STANDARD
OPTIONAL
SOUND BARRIER WALL
DETAILS

| | |
|---|---|
| ASSEMBLED BY : T.L. AVERETTE | DATE : 10-27-11 |
| CHECKED BY : | DATE : |
| DRAWN BY : MAA 6/11 | ADDED 8/31/11 |
| CHECKED BY : GM 6/11 | |

| REVISIONS | | | | | | SHEET NO. |
|---|---|---|---|---|---|---|
| NO. | BY: | DATE: | NO. | BY: | DATE: | SW-11 |
| 1 | | | 3 | | | TOTAL SHEETS |
| 2 | | | 4 | | | 11 |

31-OCT-2011 11:34
R:\TIPProjects-R\R2309AB\Structures\R2309ab\FinalPlans\Walls\Str#13\r2309ab_sd_sbw1_13.dgn
tcoggins

STR. #13 STD. NO. SBW3