TIP PROJECT: R-2413C

STATE	STATE PROJECT REFERENCE NO.	SHEET NO.	TOTAL SHEETS
N.C.	R-2413C	EC-1	

STATE PROJ. NO.	F.A. PROJ. NO.	DESCRIPTION

METRIC

ALL DIMENSIONS IN THESE PLANS ARE IN METERS UNLESS OTHERWISE SHOWN

STATE OF NORTH CAROLINA

DIVISION OF HIGHWAYS

PLAN FOR PROPOSED

HIGHWAY EROSION CONTROL

GUILFORD–ROCKINGHAM COUNTIES

LOCATION: US 220 FROM SOUTH OF HAW RIVER TO THE INTERSECTION OF US 220 AND EXISTING NC 68

TYPE OF WORK: GRADING, DRAINAGE, STRUCTURES, CULVERTS, PAVING, SIGNING, ITS & SIGNALS

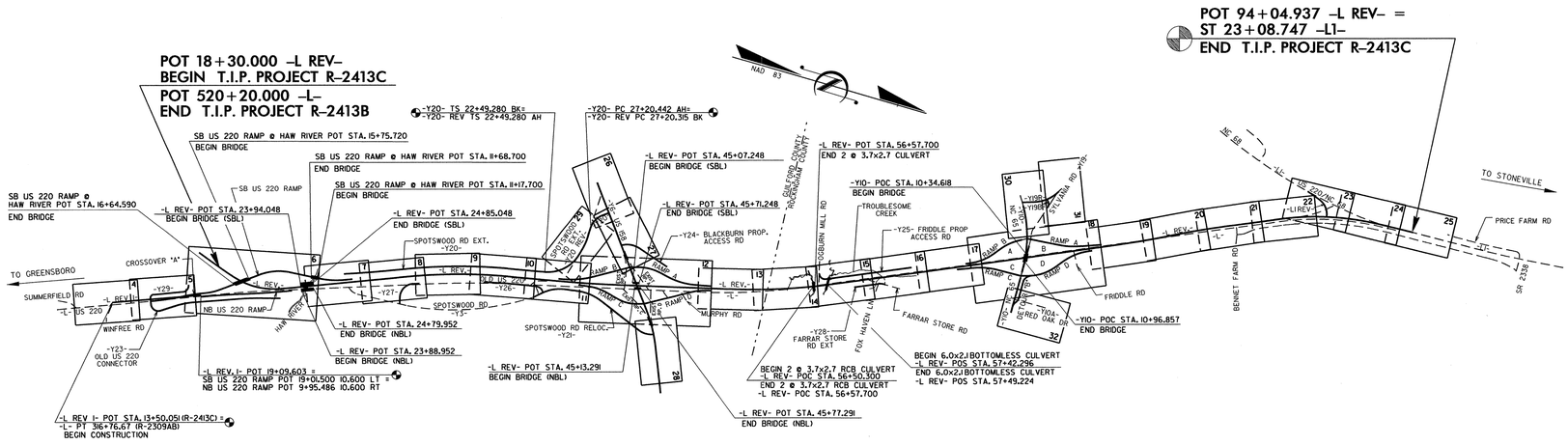

EROSION AND SEDIMENT CONTROL MEASURES

Std. #	Description	Symbol
1630.03	Temporary Silt Ditch	TSD
1630.05	Temporary Diversion	TD
	Temporary Silt Fence	
	Special Sediment Control Fence	
1622.01	Temporary Berms and Slope Drains	
	Silt Basin Type B	
1633.01	Temporary Rock Silt Check Type-A	
	Temporary Rock Silt Check Type-A with Matting and Polyacrylamide (PAM)	
1633.02	Temporary Rock Silt Check Type-B	
	Wattle / Coir Fiber Wattle	
	Wattle / Coir Fiber Wattle with Polyacrylamide (PAM)	
1634.01	Temporary Rock Sediment Dam Type-A	
1634.02	Temporary Rock Sediment Dam Type-B	
1635.01	Rock Pipe Inlet Sediment Trap Type-A	
1635.02	Rock Pipe Inlet Sediment Trap Type-B	
	Stilling Basin	
	Rock Inlet Sediment Trap:	
1632.01	Type A	A
1632.02	Type B	B
	Type C	C
	Skimmer Basin	
	Tiered Skimmer Basin	
	Infiltration Basin	

THIS PROJECT CONTAINS EROSION CONTROL PLANS FOR CLEARING AND GRUBBING PHASE OF CONSTRUCTION.

GRAPHIC SCALE

0

PLANS

0

PROFILE (HORIZONTAL)

0

PROFILE (VERTICAL)

ROADSIDE ENVIRONMENTAL UNIT
DIVISION OF HIGHWAYS
STATE OF NORTH CAROLINA

THESE EROSION AND SEDIMENT CONTROL PLANS COMPLY WITH THE REGULATIONS SET FORTH BY THE NCG–010000 GENERAL CONSTRUCTION PERMIT EFFECTIVE AUGUST 3, 2011 ISSUED BY THE NORTH CAROLINA DEPARTMENT OF ENVIRONMENT AND NATURAL RESOURCES DIVISION OF WATER QUALITY.

Prepared in the Office of:

ROADSIDE ENVIRONMENTAL UNIT

1 South Wilmington St.
Raleigh, NC 27611

2006 STANDARD SPECIFICATIONS

Roadway Standard Drawings

The following roadway metric standards as appear in "Roadway Standard Drawings"– Roadway Design Unit – N. C. Department of Transportation – Raleigh, N. C., dated July 2006 and the latest revison thereto are applicable to this project and by reference hereby are considered a part of these plans.

1605.01	Temporary Silt Fence	1632.01	Rock Inlet Sediment Trap Type A
1606.01	Special Sediment Control Fence	1632.02	Rock Inlet Sediment Trap Type B
1622.01	Temporary Berms and Slope Drains	1632.03	Rock Inlet Sediment Trap Type C
1630.01	Riser Basin	1633.01	Temporary Rock Silt Check Type A
1630.02	Silt Basin Type B	1633.02	Temporary Rock Silt Check Type B
1630.03	Temporary Silt Ditch	1634.01	Temporary Rock Sediment Dam Type A
1630.04	Stilling Basin	1634.02	Temporary Rock Sediment Dam Type B
1630.05	Temporary Diversion	1635.01	Rock Pipe Inlet Sediment Trap Type A
		1635.02	Rock Pipe Inlet Sediment Trap Type B
		1636.01	Rock Silt Screen

PW:\29-DEC-2011\6.5\
Jenny\Farrar\pw\pw0001\R2413C_EC_tsh.dgn

PROJECT REFERENCE NO.	SHEET NO.
R-2413C	EC-2
R /W SHEET NO.	
ROADWAY DESIGN ENGINEER	HYDRAULICS ENGINEER

TEMPORARY GRAVEL CONSTRUCTION ENTRANCE

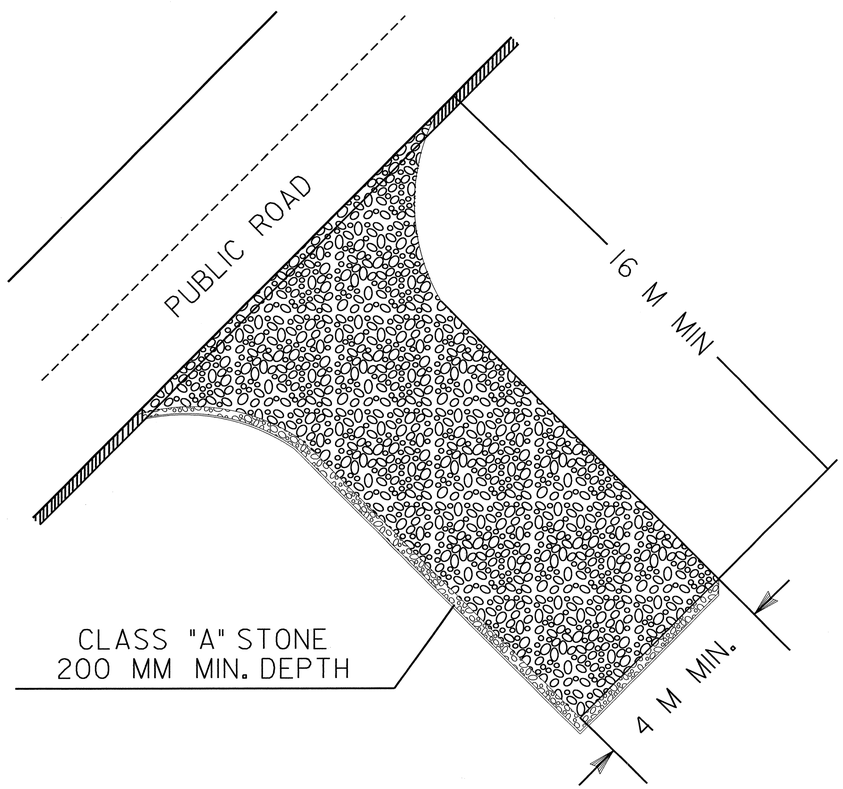

NOTES:

1. TURNING RADIUS SUFFICIENT TO ACCOMODATE LARGE TRUCKS SHALL BE PROVIDED.
2. ENTRANCE(S) SHOULD BE LOCATED TO PROVIDE FOR UTILIZATION BY ALL CONSTRUCTION VEHICLES.
3. MUST BE MAINTAINED IN A CONDITION WHICH WILL PREVENT TRACKING OR DIRECT FLOW OF MUD ONTO STREETS. PERIODIC TOPDRESSING WITH STONE WILL BE NECESSARY.
4. ANY MATERIAL TRACKED ONTO THE ROADWAY MUST BE CLEANED UP IMMEDIATELY.
5. GRAVEL CONSTRUCTION ENTRANCE SHALL BE LOCATED AT ALL POINTS OF INGRESS AND EGRESS UNTIL SITE IS STABILIZED. FREQUENT CHECKS OF THE DEVICE AND TIMELY MAINTENANCE MUST BE PROVIDED.
6. NUMBER AND LOCATION OF CONSTRUCTION ENTRANCES TO BE DETERMINED BY THE ENGINEER

NOTE: FILTER FABRIC TO BE PLACED BENEATH STONE

PROJECT REFERENCE NO.	SHEET NO.
R-2413C	EC-2A
R /W SHEET NO.	
ROADWAY DESIGN ENGINEER	HYDRAULICS ENGINEER

COIR FIBER BAFFLE DETAIL

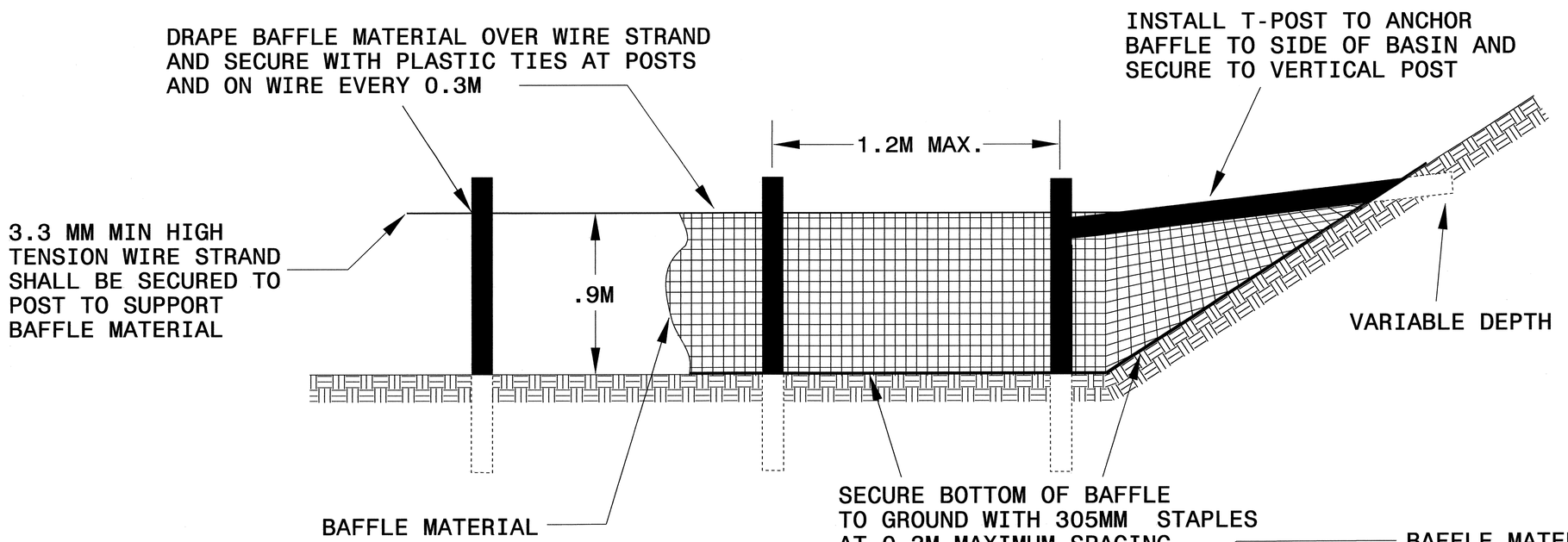

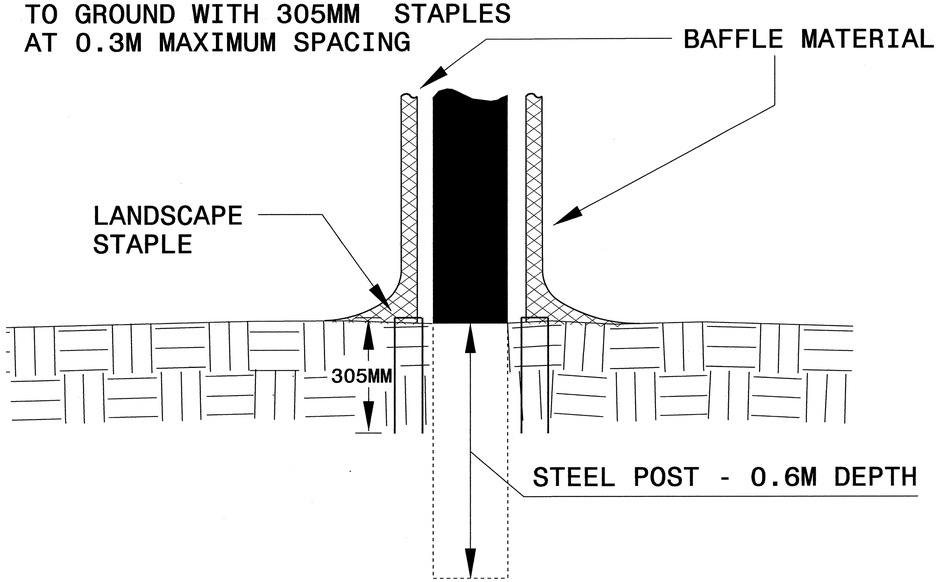

BAFFLE MATERIAL SHALL BE SECURED TO THE BOTTOM AND SIDES OF BASIN USING 305MM LANDSCAPE STAPLES

1. INSTALL THREE(3) COIR FIBER BAFFLES IN SILT BASINS AND SEDIMENT DAMS AT DRAINAGE OUTLETS WITH A SPACING OF ¼ THE BASIN LENGTH.

2. TWO(2) COIR FIBER BAFFLES CAN BE INSTALLED IN SILT BASINS AND DAMS LESS THAN 6 M IN LENGTH WITH A SPACING OF 1/3 THE BASIN LENGTH.

3. TOP HEIGHT OF COIR FIBER BAFFLES SHALL NOT BE BELOW BASE OF EMERGENCY SPILLWAY ELEVATION.

PROJECT REFERENCE NO.	SHEET NO.
R-2413C	EC-2B
R /W SHEET NO.	
ROADWAY DESIGN ENGINEER	HYDRAULICS ENGINEER

SKIMMER BASIN WITH BAFFLES DETAIL

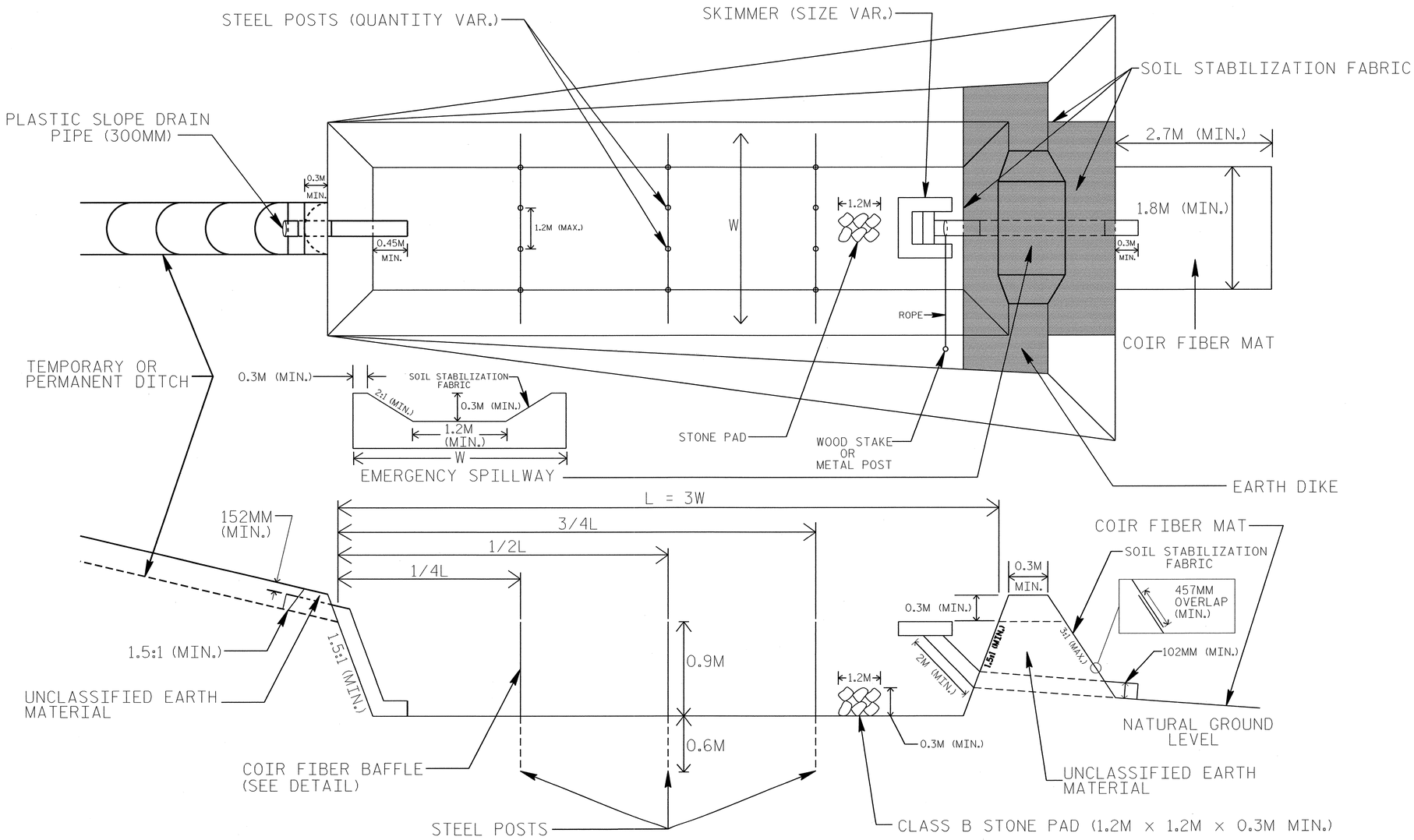

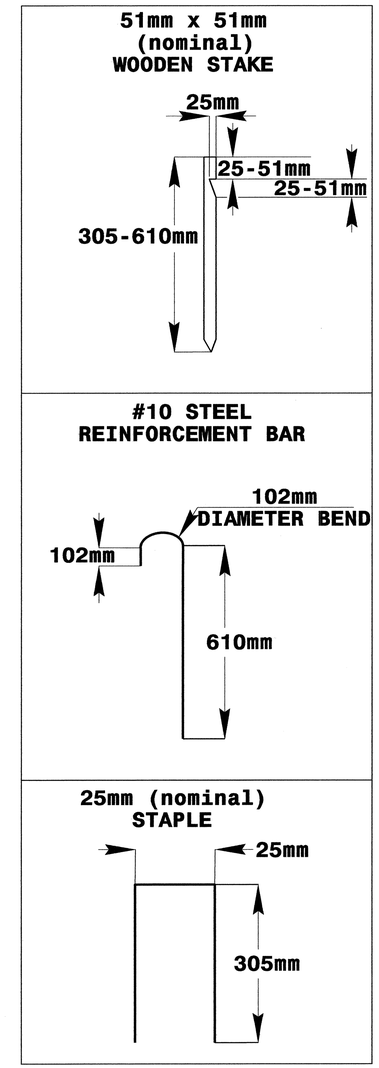

COIR FIBER MAT ANCHOR OPTIONS

NOTES

1. SEED AND PLACE MATTING FOR EROSION CONTROL ON INTERIOR AND EXTERIOR SIDESLOPES.
2. LIMIT EARTH DIKE HEIGHT TO 1.5M.
3. FOR BASIN DEPTH OF 1M, MINIMUM BASIN WIDTH SHALL BE 3M.
4. DETERMINE EMERGENCY SPILLWAY LENGTH (M) USING Q/0.074, WHERE Q IS FLOW RATE (CMS) INTO BASIN.
5. PLASTIC SLOPE DRAIN PIPE AT INLET OF BASIN MAY BE REPLACED BY FILTER FABRIC AS DIRECTED.
6. SOIL STABILIZATION FABRIC FOR EMERGENCY SPILLWAY SHALL BE ONE CONTINUOUS PIECE OF MATERIAL OR OVERLAPPED 457MM (MIN.).

NOT TO SCALE

PROJECT REFERENCE NO.	SHEET NO.
R-2413C	EC-2C
R /W SHEET NO.	
ROADWAY DESIGN ENGINEER	HYDRAULICS ENGINEER

TIERED SKIMMER BASIN DETAIL

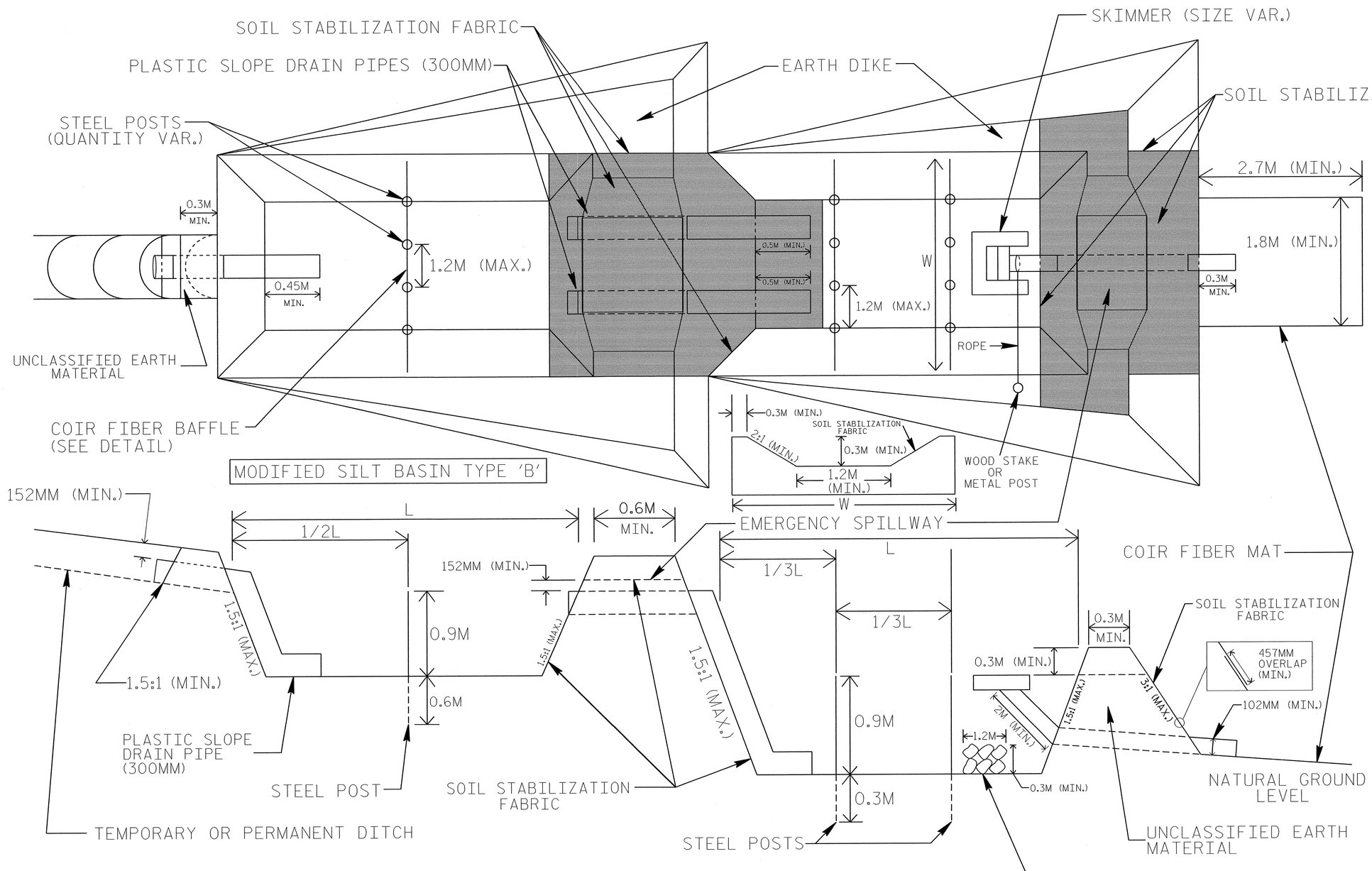

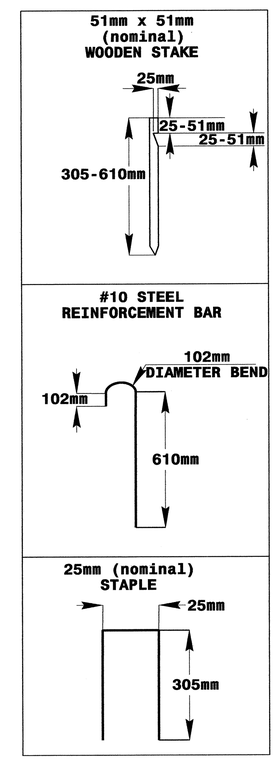

COIR FIBER MAT ANCHOR OPTIONS

NOTES

1. SEED AND PLACE MATTING FOR EROSION CONTROL ON INTERIOR AND EXTERIOR SIDESLOPES OF BASINS.
2. LIMIT HEIGHT OF EARTH DIKES TO 1.5M.
3. ADDITIONAL MODIFIED SILT BASINS TYPE 'B' MAY BE NEEDED DEPENDING ON SLOPE.
4. FOR BASIN DEPTHS OF 1M, THE MINIMUM BASIN WIDTHS SHALL BE 3M.
5. DETERMINE EMERGENCY SPILLWAY LENGTHS (M) USING Q/0.074, WHERE Q IS FLOW RATE (CMS) INTO UPPER BASIN.
6. SOIL STABILIZATION FABRIC FOR EMERGENCY SPILLWAYS SHALL BE ONE CONTINUOUS PIECE OF MATERIAL OR OVERLAPPED 457MM (MIN.).

NOT TO SCALE

PROJECT REFERENCE NO.	SHEET NO.
R-2314C	EC-2D
R /W SHEET NO.	
ROADWAY DESIGN ENGINEER	HYDRAULICS ENGINEER

SILT BASIN 'B' DETAIL

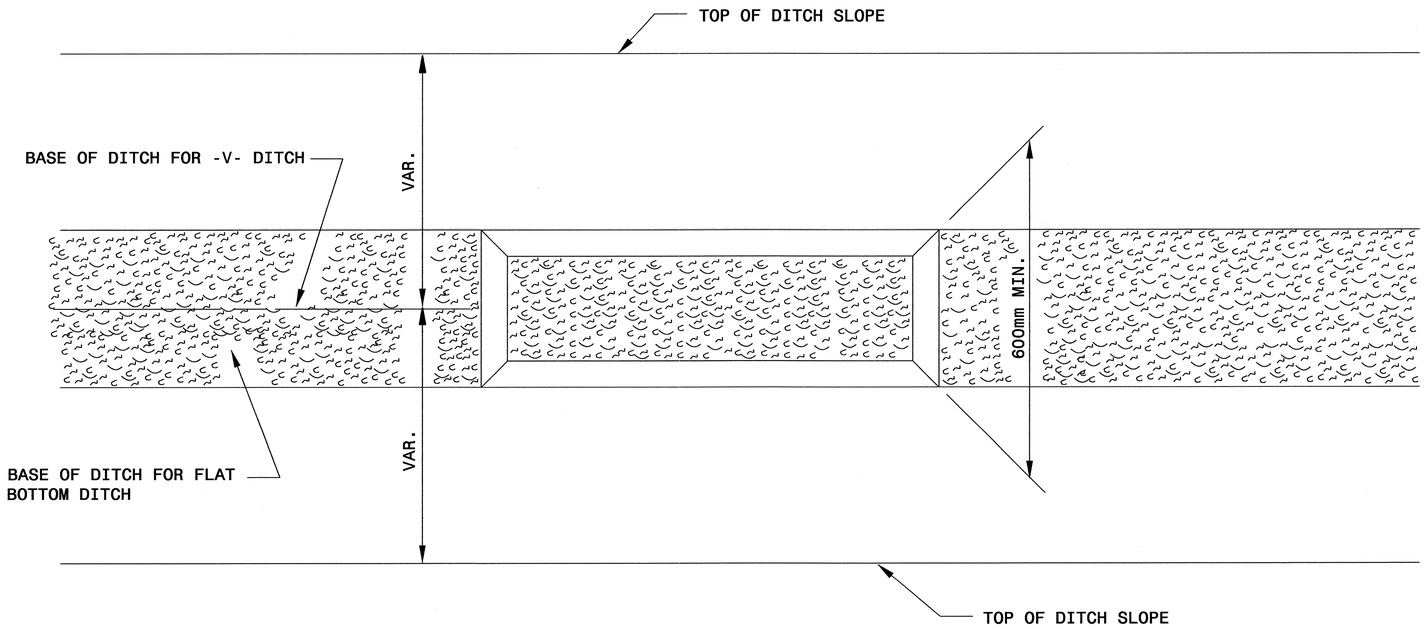

PLAN

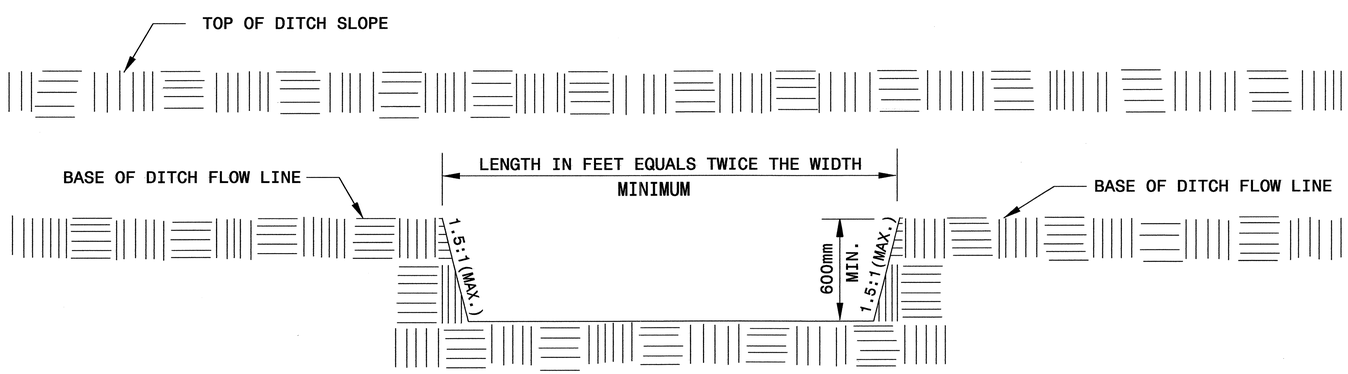

ELEVATION

PROJECT REFERENCE NO.	SHEET NO.
R-2413C	EC-2E
R /W SHEET NO.	
ROADWAY DESIGN ENGINEER	HYDRAULICS ENGINEER

TEMPORARY ROCK SILT CHECK TYPE 'A' WITH EXCELSIOR MATTING AND POLYACRYLAMIDE (PAM)

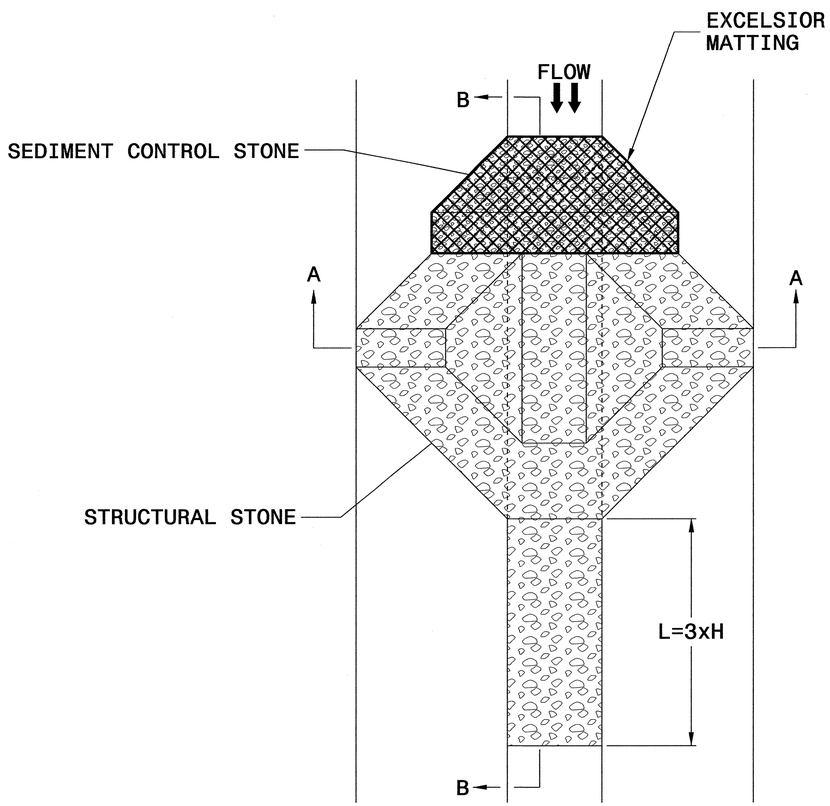

PLAN

NOTES

USE EXCELSIOR FOR MATTING MATERIAL AND ANCHOR MATTING SECTION AT TOP AND BOTTOM WITH CLASS B STONE.

PRIOR TO POLYACRYLAMIDE (PAM) APPLICATION, OBTAIN A SOIL SAMPLE FROM PROJECT LOCATION, AND FROM OFFSITE MATERIAL, AND ANALYZE FOR APPROPRIATE PAM FLOCCULANT TO BE APPLIED TO EACH ROCK SILT CHECK.

INITIALLY APPLY 100 GRAMS OF POLYACRYLAMIDE (PAM) TO TOP OF MATTING SECTION AND AFTER EVERY RAINFALL EVENT THAT EQUALS OR EXCEEDS 12 MM.

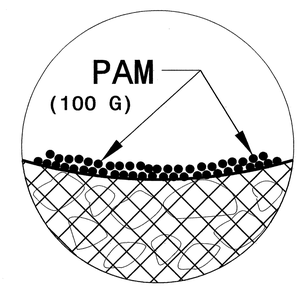

INSET A

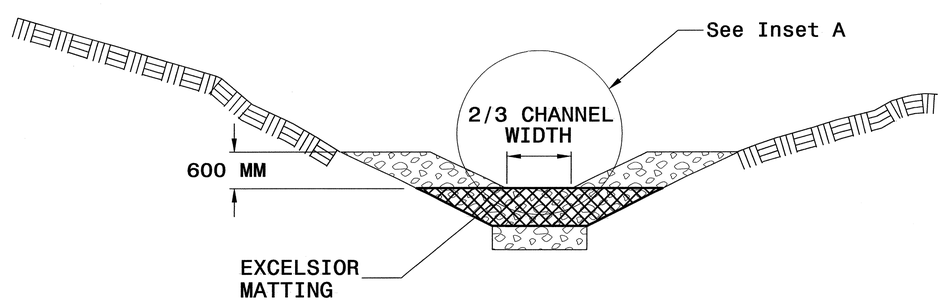

SECTION A-A

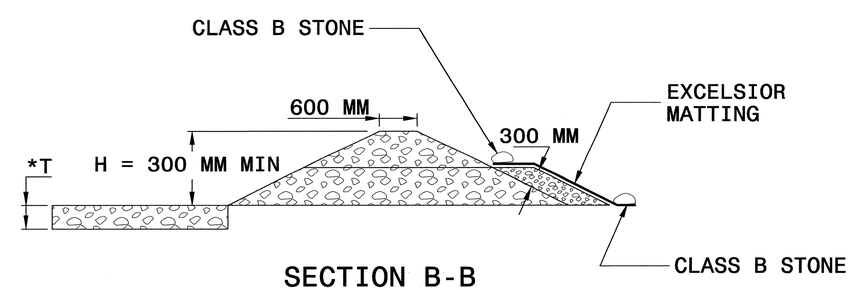

SECTION B-B

*T = 300 MM MIN., 450 MM MAX.

NOT TO SCALE

PROJECT REFERENCE NO.	SHEET NO.
R-2413C	EC-2F
R /W SHEET NO.	
ROADWAY DESIGN ENGINEER	HYDRAULICS ENGINEER

COIR FIBER WATTLE WITH POLYACRYLAMIDE (PAM) DETAIL

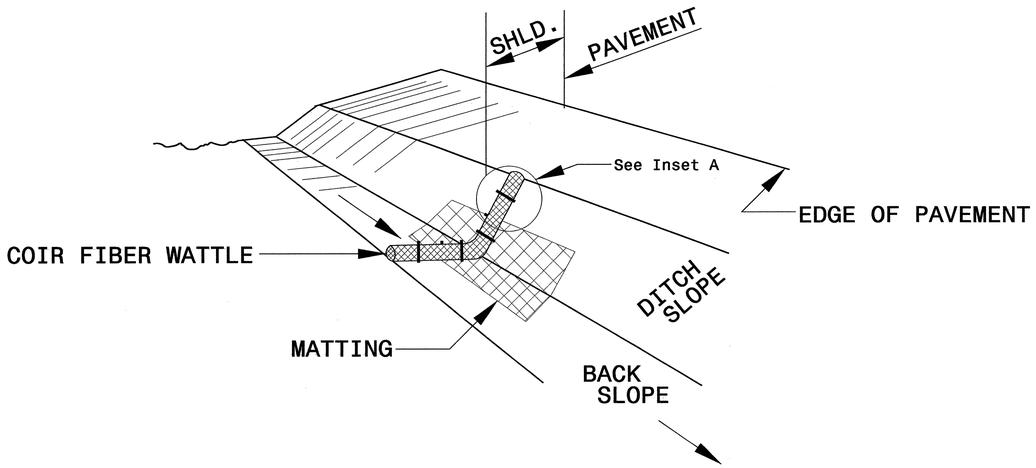

ISOMETRIC VIEW

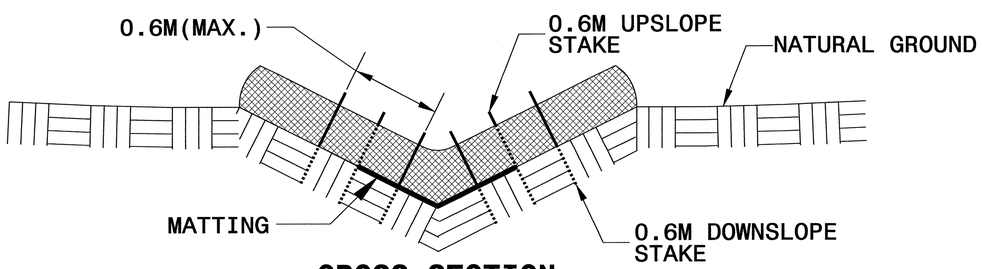

CROSS SECTION VEE DITCH

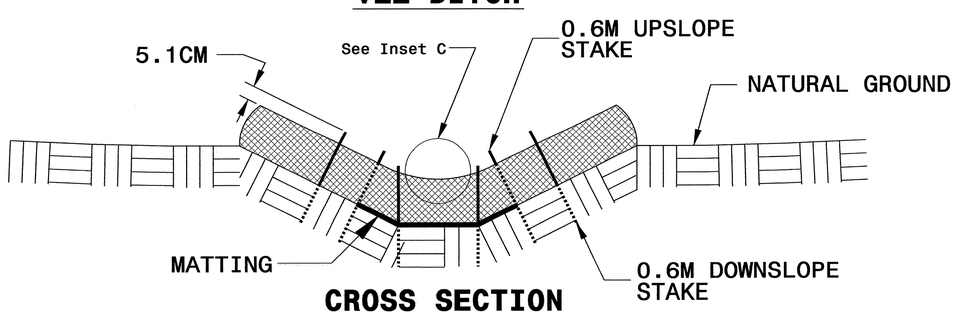

CROSS SECTION TRAPEZOIDAL DITCH

NOTES:

USE MINIMUM 305 MM DIAMETER COIR FIBER (COCONUT FIBER) WATTLE.

USE 0.6 M WOODEN STAKES WITH A 5.1 CM BY 5.1 CM NOMINAL CROSS SECTION.

ONLY INSTALL WATTLE(S) TO A HEIGHT IN DITCH SO FLOW WILL NOT WASH AROUND WATTLE AND SCOUR DITCH SLOPES AND AS DIRECTED.

INSTALL A MINIMUM OF 2 UPSLOPE STAKES AND 4 DOWNSLOPE STAKES AT AN ANGLE TO WEDGE WATTLE TO BOTTOM OF DITCH.

PROVIDE STAPLES MADE OF 3 MM DIAMETER STEEL WIRE FORMED INTO A U SHAPE NOT LESS THAN 305 MM IN LENGTH.

INSTALL STAPLES APPROXIMATELY EVERY 0.3 LINEAR METER ON BOTH SIDES OF WATTLE AND AT EACH END TO SECURE IT TO THE SOIL.

INSTALL MATTING IN ACCORDANCE WITH SECTION 1631 OF THE STANDARD SPECIFICATIONS.

PRIOR TO POLYACRYLAMIDE (PAM) APPLICATION, OBTAIN A SOIL SAMPLE FROM PROJECT LOCATION, AND FROM OFFSITE MATERIAL, AND ANALYZE FOR APPROPRIATE PAM FLOCCULANT TO BE APPLIED TO EACH WATTLE.

INITIALLY APPLY 50 GRAMS OF ANIONIC OR NEUTRALLY CHARGED PAM OVER WATTLE WHERE WATER WILL FLOW AND 25 GRAMS ON MATTING ON EACH SIDE OF WATTLE. REAPPLY PAM AFTER EVERY RAINFALL EVENT THAT IS EQUAL TO OR EXCEEDS 12 MM.

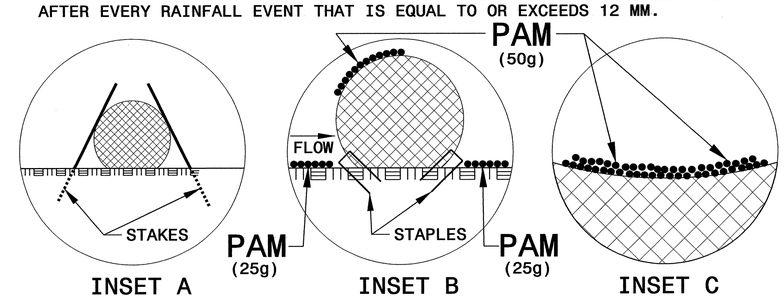

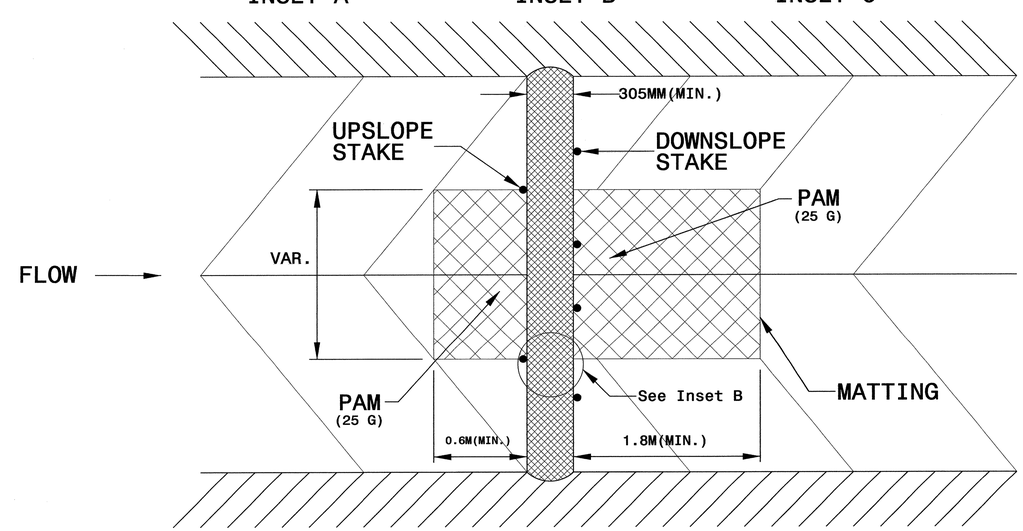

TOP VIEW

PROJECT REFERENCE NO.	SHEET NO.
R-2413C	EC-2G
R /W SHEET NO.	
ROADWAY DESIGN ENGINEER	HYDRAULICS ENGINEER

TEMPORARY SILT FENCE DETAIL

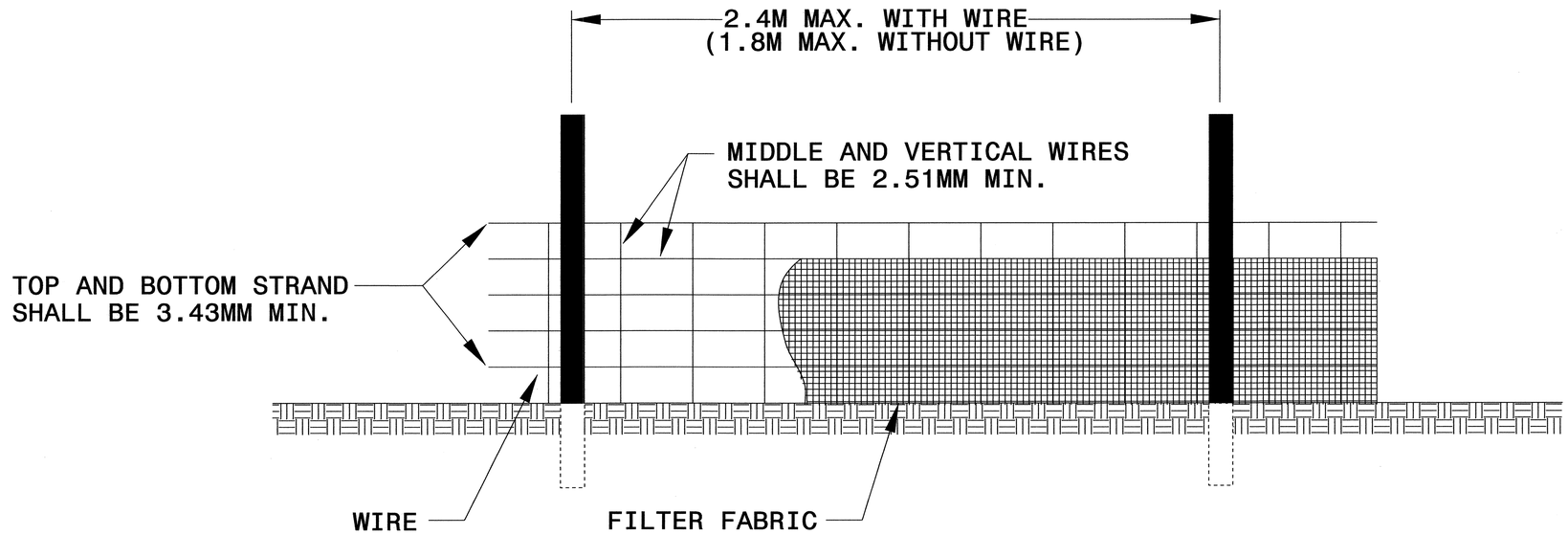

NOTES

USE WIRE A MINIMUM OF 800MM IN WIDTH AND WITH A MINIMUM OF 6 LINE WIRES WITH 300MM STAY SPACING.

USE FILTER FABRIC A MINIMUM OF 900MM IN WIDTH AND FASTEN ADEQUATELY TO THE WIRE AS DIRECTED BY THE ENGINEER.

PROVIDE 1.5M STEEL POST OF THE SELF-FASTENER ANGLE STEEL TYPE. ANGLE STEEL TYPE.

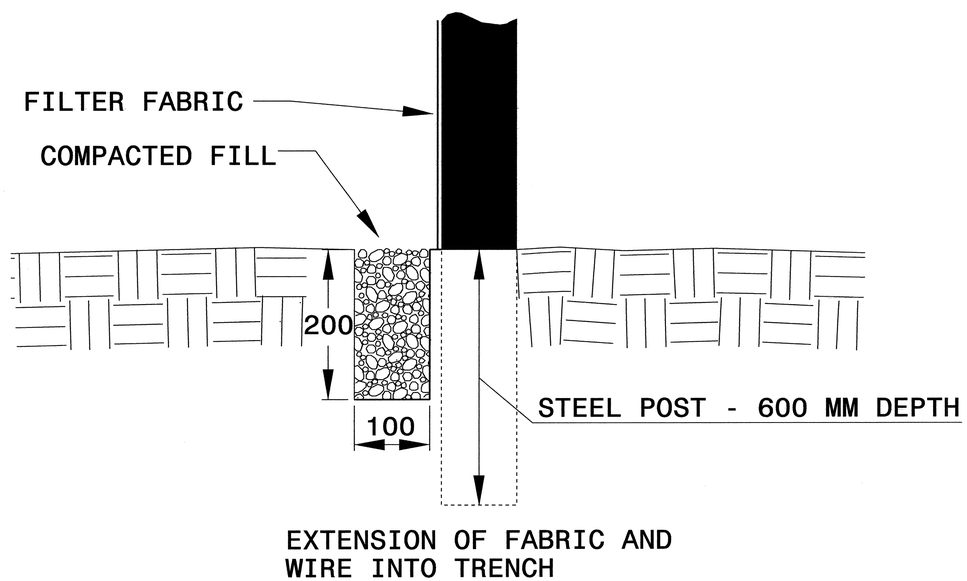

PROJECT REFERENCE NO.	SHEET NO.
R-2413C	EC-2H
R /W SHEET NO.	
ROADWAY DESIGN ENGINEER	HYDRAULICS ENGINEER

SPECIAL SEDIMENT CONTROL FENCE DETAIL

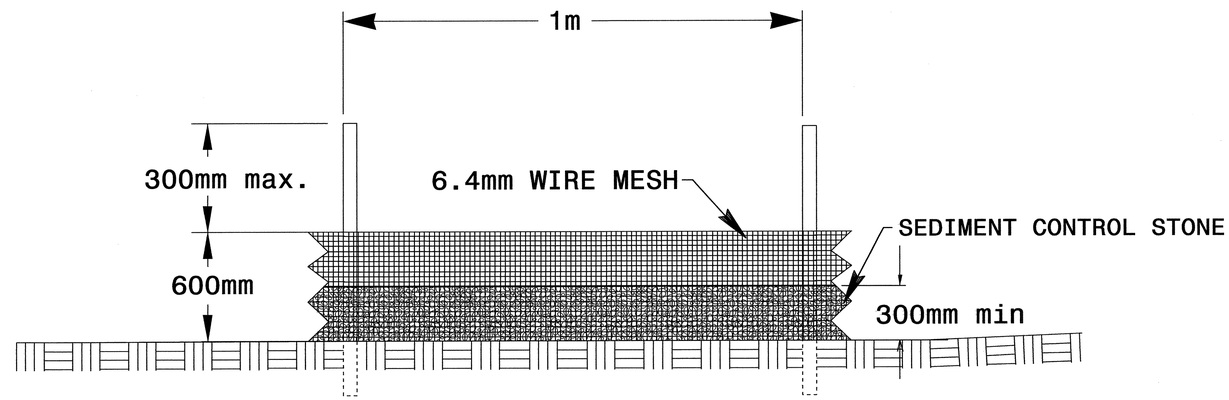

GENERAL NOTES:

USE NO. 5 OR NO. 57 STONE FOR SEDIMENT CONTROL.

USE 0.65mm HARDWARE CLOTH WIRE MESH WITH 6.4 mm MESH OPENINGS.

INSTALL 1.5m SELF FASTENER ANGLE STEEL POST 600mm DEEP MINIMUM.

SPACE POST A MAXIMUM OF 1m.

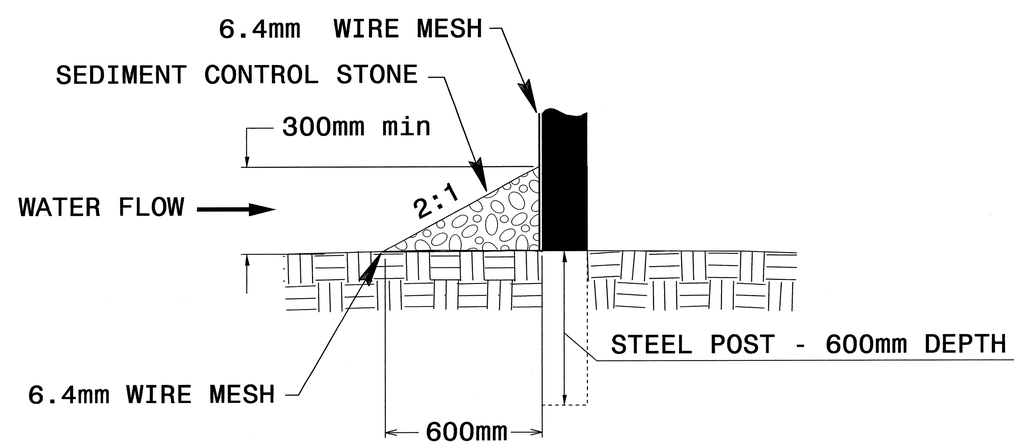

PROJECT REFERENCE NO.	SHEET NO.
R-2413C	EC-21
R /W SHEET NO.	
ROADWAY DESIGN ENGINEER	HYDRAULICS ENGINEER

STILLING BASIN

GENERAL NOTES:
CONSTRUCT THE COIR FIBER BAFFLES WITH A MATERIAL THAT MEETS THE SPECIFICATIONS OF THE COIR FIBER MAT SPECIAL PROVISION PROVIDED IN THE CONTRACT.

PROVIDE 1.5M STEEL POSTS OF THE SELF-FASTENER ANGLE STEEL TYPE. INSTALL STEEL POSTS WITH NO MORE THAN 0.9M OF THE POST APPEARING ABOVE THE GROUND.

ATTACH THE COIR FIBER MAT TO THE STEEL POSTS WITH WIRE OR OTHER ACCEPTABLE MEANS AND STAPLED INTO THE BOTTOM AND SIDE SLOPES OF THE STILLING BASIN WITH 12″ STAPLES.

INSTALL THE TOP OF THE COIR FIBER BAFFLE A MINIMUM OF 300MM LOWER THAN THE TOP OF THE STILLING BASIN BERMS.

USE THE TYPICAL SECTION SHOWN FOR THE STILLING BASIN AS A GUIDE. THE BASIN MAY HAVE ANY TYPE CONFIGURATION AS LONG AS SUFFICIENT VOLUME IS PROVIDED AND PROVISIONS ARE MADE FOR A PERMEABLE STONE DRAIN.

DO NOT EXCEED 1.5M IN HEIGHT FOR THE EARTH DIKES REQUIRED FOR STILLING BASINS. ADDITIONAL DEPTHS MAY BE ATTAINED BY EXCAVATING BELOW THE NATURAL GROUND LEVEL.

THE STILLING BASIN SIZE IS VARIABLE AND DEPENDENT ON SPECIFIC SITE REQUIREMENTS AS WELL AS PROPOSED CONSTRUCTION OPERATIONS.

SUBMIT THE SIZE, LOCATION AND PERMEABLE STONE DRAIN MATERIAL FOR APPROVAL PRIOR TO CONSTRUCTION.

PUMP THE EFFLUENT INTO THE STILLING BASIN TO A MAXIMUM DEPTH OF 0.9 METERS.

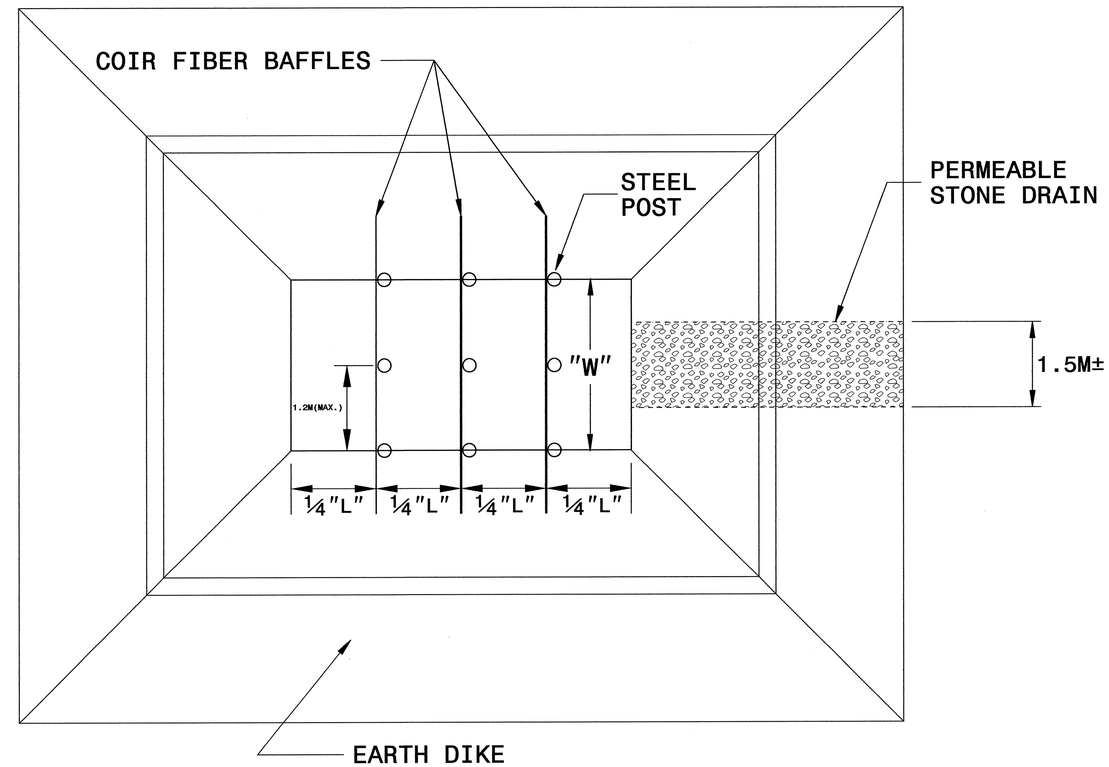

PLAN

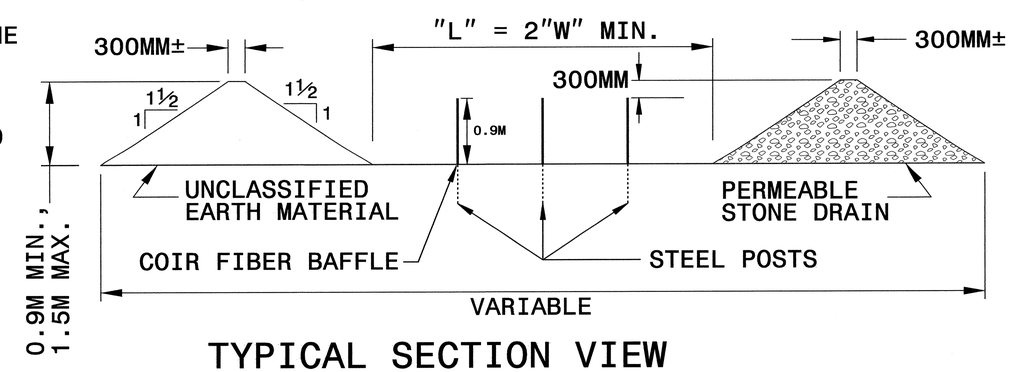

TYPICAL SECTION VIEW

PROJECT REFERENCE NO.	SHEET NO.
R-2413C	EC-2J
R /W SHEET NO.	
ROADWAY DESIGN ENGINEER	HYDRAULICS ENGINEER

ROCK INLET SEDIMENT TRAP TYPE 'C' DETAIL

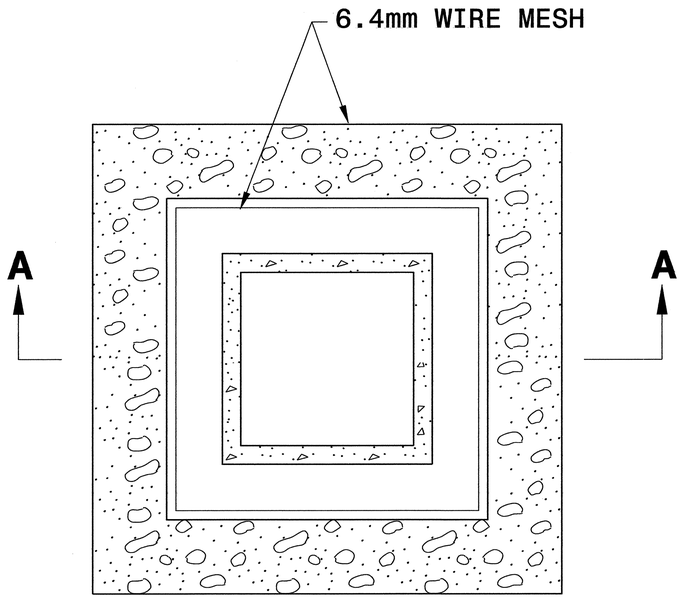

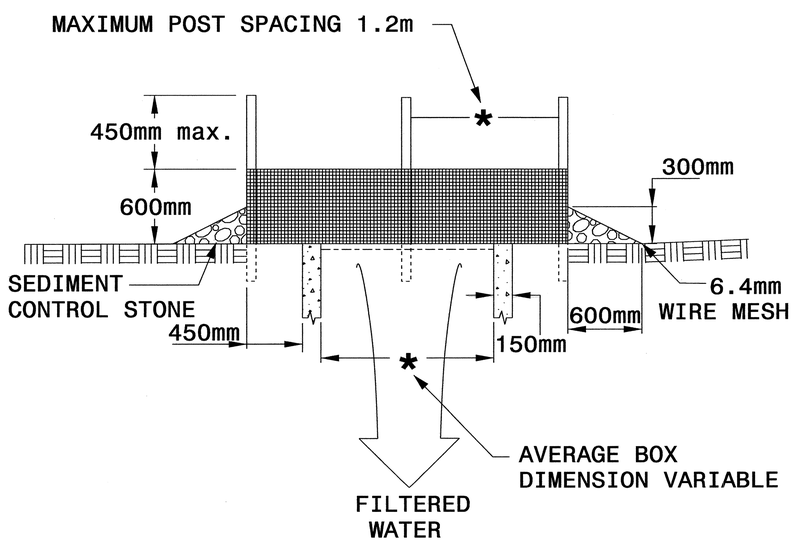

SECTION A-A

MULTI-DIRECTIONAL FLOW

NOTE

USE NO. 5 OR NO. 57 STONE FOR SEDIMENT CONTROL.

USE HARDWARE CLOTH 0.65mm WIRE MESH WITH 6.4mm MESH OPENINGS.

PLACE TOP OF WIRE MESH A MINIMUM OF 300mm BELOW THE SHOULDER OR ANY DIVERSION POINT.

INSTALL WIRE MESH UNDER SEDIMENT CONTROL STONE.

USE 1.5m STEEL POST, INSTALLED 450mm DEEP MINIMUM, AND OF THE SELF-FASTENER ANGLE STEEL TYPE.

SPACE POST A MAXIMUM OF 1.2m.

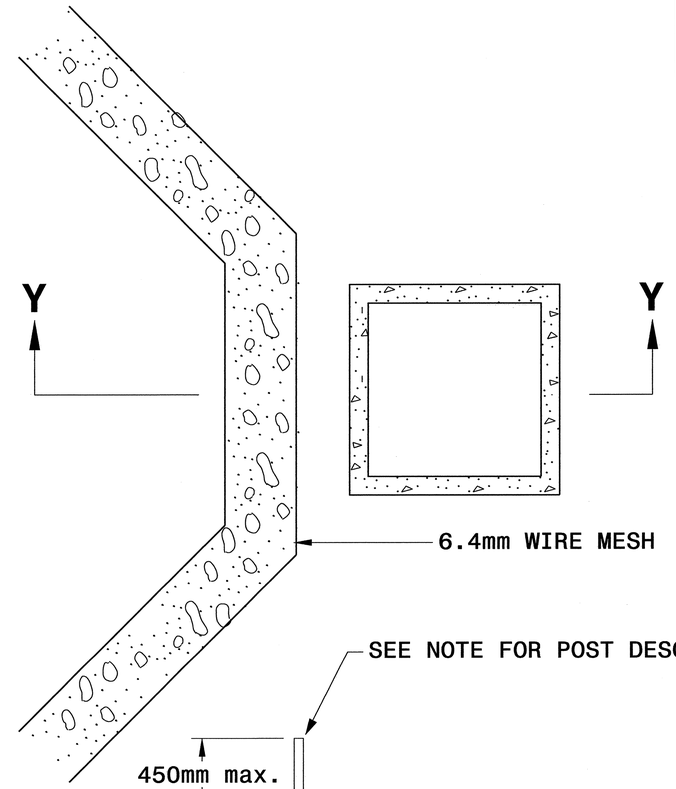

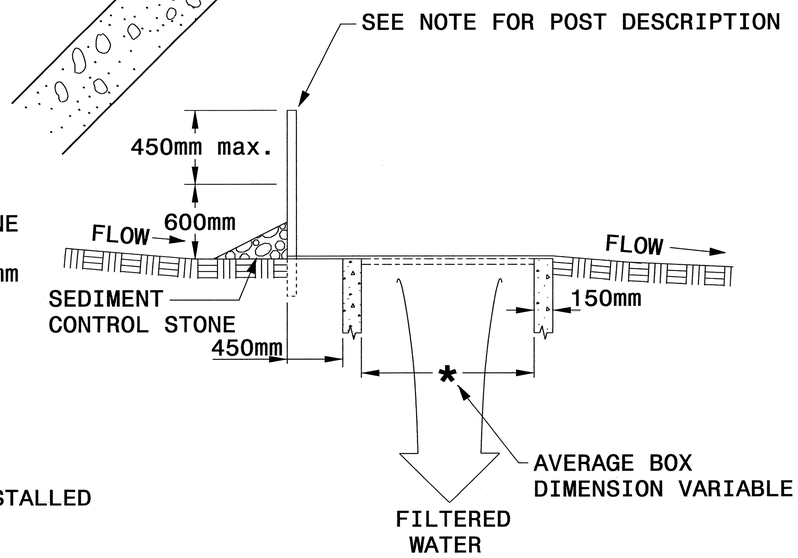

SECTION Y-Y

SINGLE-DIRECTIONAL FLOW

PROJECT REFERENCE NO.	SHEET NO.
R-2413C	EC-2K
R /W SHEET NO.	
ROADWAY DESIGN ENGINEER	HYDRAULICS ENGINEER

MATTING INSTALLATION DETAIL

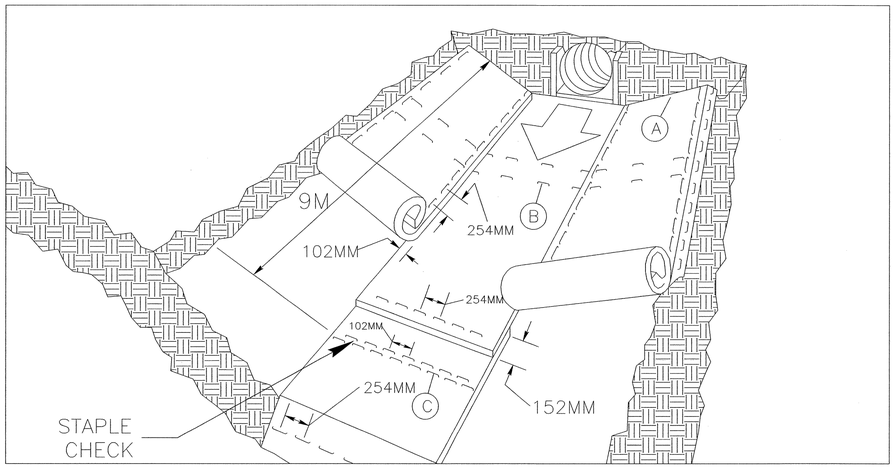

MATTING IN DITCHES

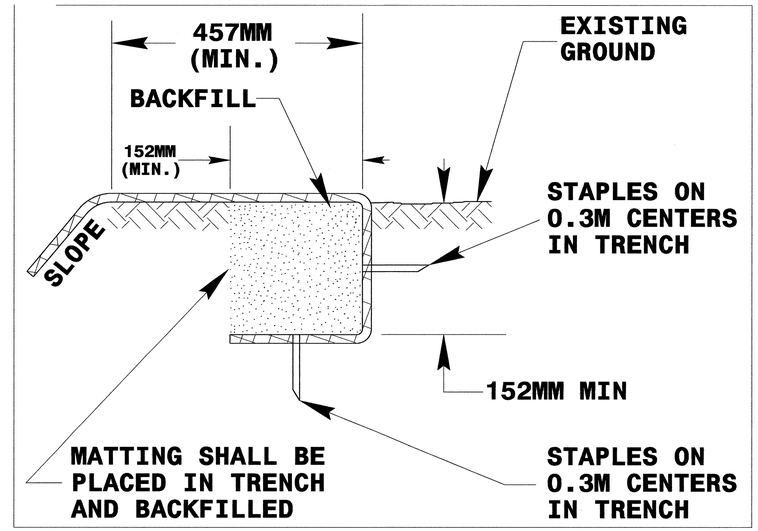

DIAGRAM (A)

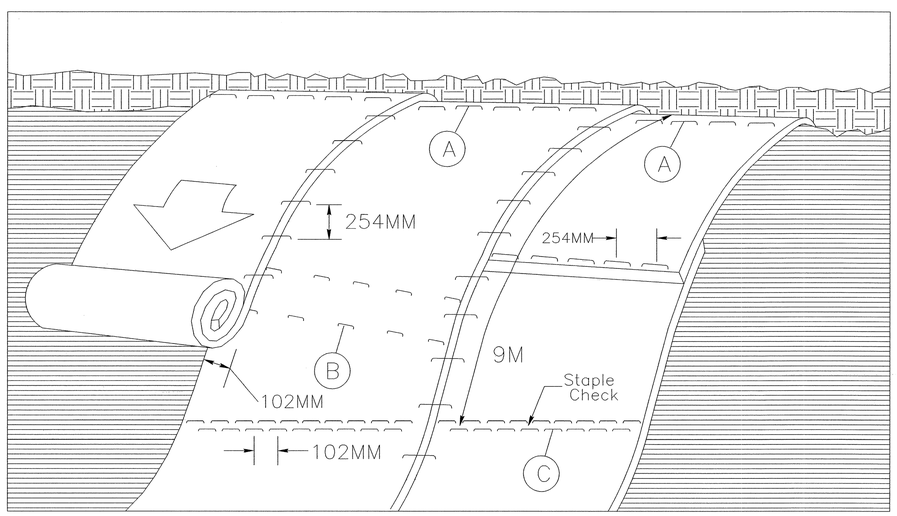

MATTING ON SLOPES

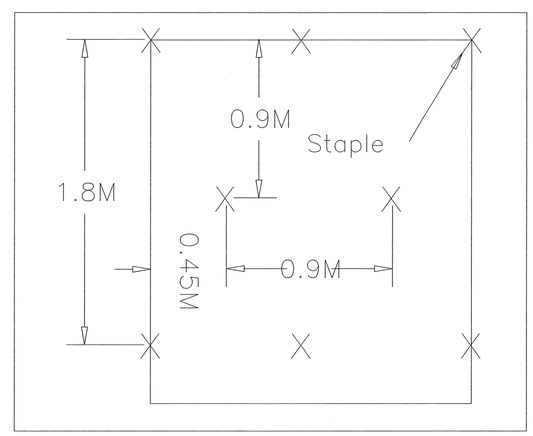

DIAGRAM (B)

Staple Check Pattern

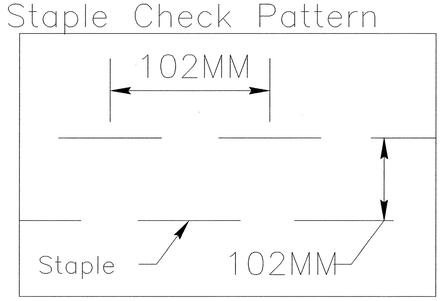

DIAGRAM (C)

NOTES:

THIS DETAIL APPLIES TO STRAW, EXCELSIOR, AND PERMANENT SOIL REINFORCEMENT MAT (PSRM) INSTALLATION.

STAPLES SHALL BE NO. 11 GAUGE STEEL WIRE FORMED INTO A "U" SHAPE WITH A MINIMUM THROAT WIDTH OF 25MM AND NOT LESS THAN 152MM IN LENGTH.

NOT TO SCALE

PROJECT REFERENCE NO.	SHEET NO.
R-2413C	EC-3
R/W SHEET NO.	
ROADWAY DESIGN ENGINEER	HYDRAULICS ENGINEER

STATE OF NORTH CAROLINA

SOIL STABILIZATION SUMMARY SHEET

MATTING FOR EROSION CONTROL

CONST SHEET NO.	LINE	FROM STATION	TO STATION	SIDE	ESTIMATE (SM)
4	LREV1	13+50	14+00	RT	205
4	LREV1	13+50	15+80	LT	805
4	LREV1	13+50	15+80	MEDIAN	775
5	LREV1	16+20	19+09	LT	1165
5	LREV1	16+20	19+09	MEDIAN	1165
5	Y23	9+40	10+40	LT	210
5	Y23	10+80	16+84	LT	1645
6	NBUS220	10+00	12+20	LT	885
6	SBUS220	14+55	15+65	RT	375
6	SBUS220	14+35	14+94	LT	240
6	LREV	18+30	19+60	RT	360
6	LREV	18+30	70+80	MEDIAN	21085
6	LREV	18+60	20+20	LT	645
6	LREV	21+20	21+60	LT	165
7	SBUS220	10+46	11+06	LT	245
7	LREV	26+20	28+40	RT	715
8	LREV	28+20	33+00	LT	1310
8	LREV	29+80	39+80	RT	4015
8	Y20	13+90	15+92	LT	425
9	Y20	17+14	19+17	RT	555
9	Y20	17+14	18+56	LT	300
10	LREV	37+60	41+00	LT	935
10	Y20	20+99	26+80	LT	1220
10	Y26	12+01	13+21	RT	210
11	Y20	22+39	24+80	RT	510
11	Y21	11+54	12+73	RT	250
11	Y21	11+18	12+93	LT	530
11	RPB@Y6	11+29	11+87	LT	90
11	RPB@Y6	11+48	14+40	RT	1090
12	RPC@Y6	11+40	13+00	LT	340

MATTING FOR EROSION CONTROL

CONST SHEET NO.	LINE	FROM STATION	TO STATION	SIDE	ESTIMATE (SM)
12	Y21	16+40	18+40	LT	420
12	Y21	16+60	18+00	RT	295
13	RPA@Y6	10+00	13+20	LT	1190
13	RPD@Y6	10+00	14+15	LT	1335
13	RPD@Y6	10+00	10+60	LT BERM	130
13	RPD@Y6	11+80	14+15	RT	795
13	RPA@Y6	10+00	10+40	RT BERM	75
13	LREV	50+00	50+80	LT BERM	170
13	LREV	50+20	54+80	LT	1045
13	LREV	50+00	53+60	RT	1450
13	LREV	50+00	50+80	RT BERM	145
15	LREV	57+60	65+40	LT	2125
15	LREV	57+80	65+60	RT	2965
15	Y25	9+80	10+31	LT	110
15	Y25	11+46	11+66	LT	45
15	Y25	12+66	12+86	LT	45
16	Y25	13+66	15+86	LT	465
17	RPC@Y10	10+10	10+50	RT	135
18	LREV	67+40	69+80	LT	965
18	LREV	67+80	69+60	RT	725
18	LREV	69+20	69+80	LT BERM	110
18	LREV	70+40	70+60	LT	70
18	LREV	72+00	72+60	RT	245
18	LREV	72+00	77+20	MEDIAN	2090
18	LREV	72+00	73+60	LT	540
18	RPD@Y10	10+15	14+40	RT	1465
18	RPA@Y10	11+40	14+20	RT	875
18	RPB@Y10	11+68	13+00	RT	530
18	RPB@Y10	11+29	14+00	LT	1090
18	RPD@Y10	10+00	14+00	LT	1350

PROJECT REFERENCE NO.	SHEET NO.
R-2413C	EC-3A
R /W SHEET NO.	
ROADWAY DESIGN ENGINEER	HYDRAULICS ENGINEER

STATE OF NORTH CAROLINA

SOIL STABILIZATION SUMMARY SHEET

MATTING FOR EROSION CONTROL

CONST SHEET NO.	LINE	FROM STATION	TO STATION	SIDE	ESTIMATE (SM)
18	Y10	12+00	12+80	LT	120
18	Y10	11+00	11+40	LT	85
19	LREV	74+40	75+40	RT	405
19	LREV	74+80	75+40	LT	245
19	LREV	77+80	78+80	RT	405
19	LREV	77+60	78+80	LT	485
20	LREV	79+20	81+00	RT	490
21	LREV	83+20	83+80	RT	245
22	LREV	85+60	88+00	RT	965
22	LREV	85+40	88+60	LT	1285
22	LREV	85+60	87+00	LT BERM	210
23	LREV	89+80	94+00	MEDIAN	1600
23	LREV	89+80	91+20	LT	645
23	LIREV	16+44	18+60	MEDIAN	775
24	LREV	92+60	93+40	LT	220
27	Y24	10+20	11+00	RT	170
27	Y24	11+60	13+00	RT	295
27	Y24	11+80	13+40	LT	340
28	Y6	16+00	16+20	RT	45
28	Y6	16+60	16+80	LT	45
29	Y20	26+20	27+60	RT	295
29	Y20	27+60	28+60	LT	210
30	Y10	7+00	9+20	RT	465
30	Y10	6+80	7+00	LT	45
30	Y10	7+40	8+40	LT	210
30	Y19R	10+20	12+00	RT	380
30	Y19R	10+20	10+80	LT	130

MATTING FOR EROSION CONTROL

CONST SHEET NO.	LINE	FROM STATION	TO STATION	SIDE	ESTIMATE (SM)
31	Y19R	11+60	12+00	LT	85
31	Y190	10+20	10+40	RT	45
31	Y190	10+20	10+40	LT	45
				SUBTOTAL	76445
MISCELLANEOUS MATTING TO BE INSTALLED AS DIRECTED BY THE ENGINEER					123050
				TOTAL	199495
				SAY	200000

PROJECT REFERENCE NO.	SHEET NO.
R-2413C	EC-3B
R/W SHEET NO.	
ROADWAY DESIGN ENGINEER	HYDRAULICS ENGINEER

STATE OF NORTH CAROLINA

SOIL STABILIZATION SUMMARY SHEET

PERMANENT SOIL REINFORCEMENT MAT

CONST SHEET NO.	LINE	FROM STATION	TO STATION	SIDE	ESTIMATE (SM)
5	Y23	10+40	10+80	LT	85
6	Y23	14+24	15+59	RT	285
6	SØUS220	12+86	13+07	RT	75
6	LREV	18+30	19+00	RT BERM	150
7	SØUS220	9+76	11+10	LT	285
8	Y27	10+60	11+14	LT	115
8	Y27	11+40	11+60	LT	30
18	RPA@Y10	12+38	13+40	LT	380
			SUBTOTAL		1405
		ADDITIONAL PSRM TO BE INSTALLED			3020
			TOTAL		4425
			SAY		4450

PERMANENT SOIL REINFORCEMENT MAT

CONST SHEET NO.	LINE	FROM STATION	TO STATION	SIDE	ESTIMATE (SM)

PROJECT REFERENCE NO.	SHEET NO.
R-2413C	EC-3C
ROADWAY DESIGN ENGINEER	HYDRAULICS ENGINEER

DIVISION OF HIGHWAYS
STATE OF NORTH CAROLINA

SOIL STABILIZATION TIMEFRAMES

SITE DESCRIPTION	STABILIZATION TIME	TIMEFRAME EXCEPTIONS
PERIMETER DIKES, SWALES, DITCHES AND SLOPES	7 DAYS	NONE
HIGH QUALITY WATER (HQW) ZONES	7 DAYS	NONE
SLOPES STEEPER THAN 3:1	7 DAYS	IF SLOPES ARE 3 M OR LESS IN LENGTH AND ARE NOT STEEPER THAN 2:1, 14 DAYS ARE ALLOWED.
SLOPES 3:1 OR FLATTER	14 DAYS	7 DAYS FOR SLOPES GREATER THAN 15 M IN LENGTH.
ALL OTHER AREAS WITH SLOPES FLATTER THAN 4:1	14 DAYS	NONE, EXCEPT FOR PERIMETERS AND HQW ZONES.

PROJECT REFERENCE NO.	SHEET NO.
R-2413C	EC-4/CONST.4
R/W SHEET NO.	
ROADWAY DESIGN ENGINEER	HYDRAULICS ENGINEER

METRIC 5m 0 10m

CONST.REV.

R/W REV.

CLEARING AND GRUBBING EROSION CONTROL FOR CONSTRUCTION SHEET 4

NOTE: PLACE TEMPORARY ROCK SEDIMENT DAMS TYPE- B AND TEMPORARY ROCK SILT CHECKS TYPE-A AT DRAINAGE OUTLETS.

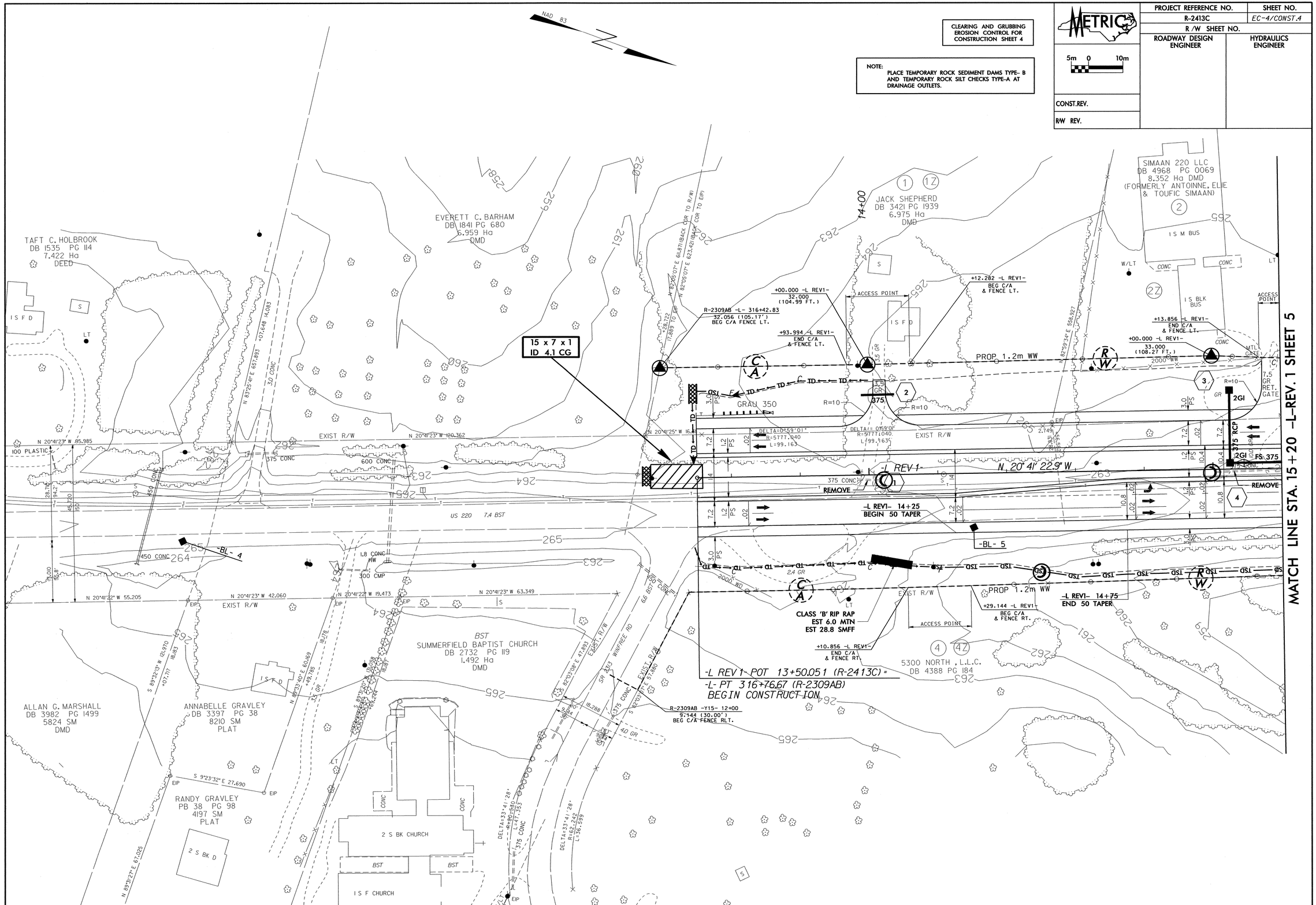

12/1609 – PARCELS 4 & 6 REVISED CONTROL OF ACCESS & FENCE

PROJECT REFERENCE NO.	SHEET NO.
R-2413C	EC-5/CONST.5
R /W SHEET NO.	
ROADWAY DESIGN ENGINEER	HYDRAULICS ENGINEER
CONST.REV.	
R/W REV.	

METRIC 5m 0 10m

CLEARING AND GRUBBING
EROSION CONTROL FOR
CONSTRUCTION SHEET 4

NOTE:
PLACE TEMPORARY ROCK SEDIMENT DAMS TYPE- B AND TEMPORARY ROCK SILT CHECKS TYPE-A AT DRAINAGE OUTLETS.

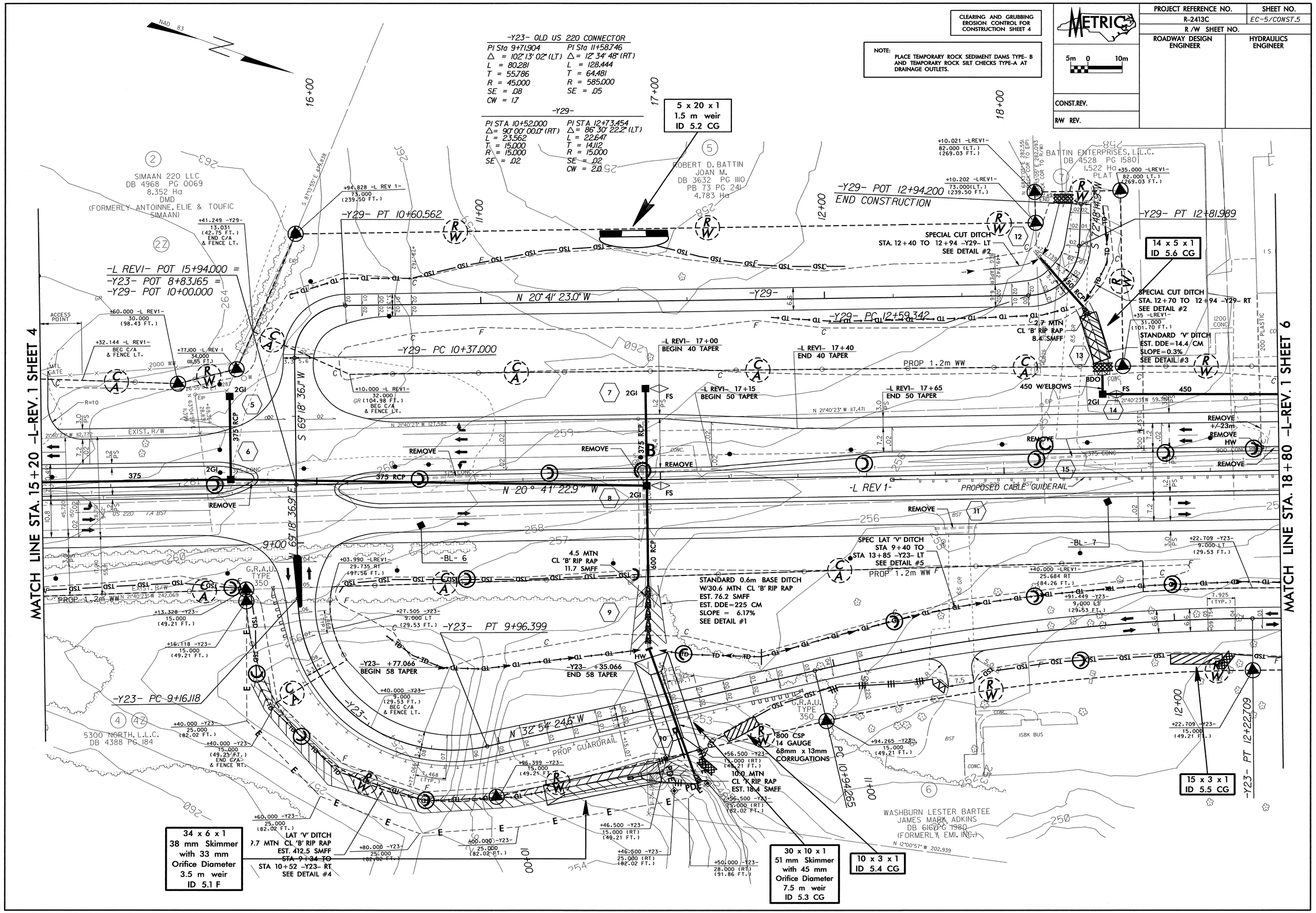

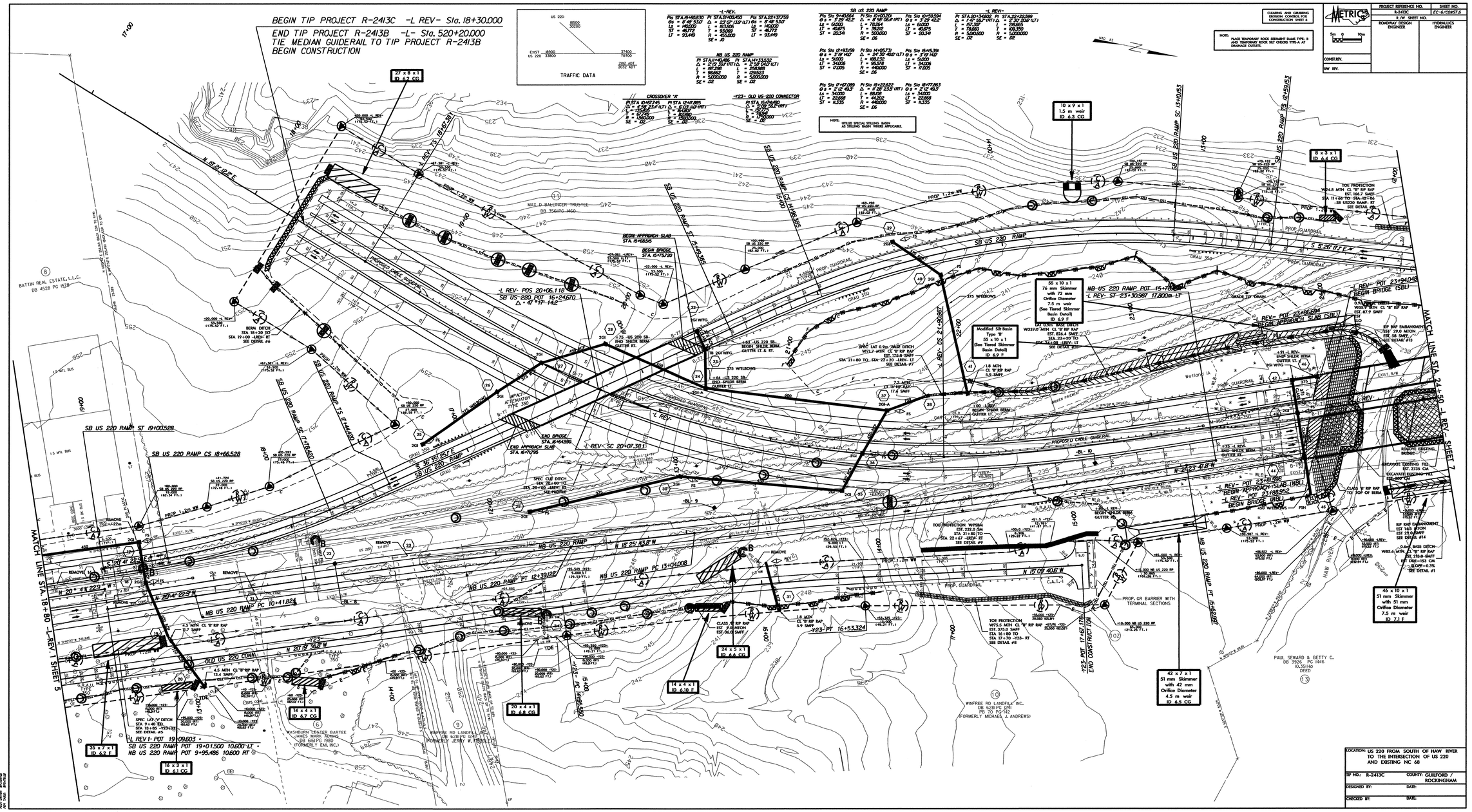
BEGIN TIP PROJECT R-2413C -L REV- Sta. 18+30.000
END TIP PROJECT R-2413B -L- Sta. 520+20.000
TIE MEDIAN GUIDERAIL TO TIP PROJECT R-2413B
BEGIN CONSTRUCTION
TRAFFIC DATA
SB US 220 RAMP
NB US 220 RAMP
CROSSOVER "A"
-123- OLD US 220 CONNECTOR
-L REV- POS 20+06.118
SB US 220 POT 16+24.670
△ = 47° 17' 14.2"
-L REV- POT 23+94.046
BEGIN BRIDGE (SBL)
-L REV- POT 23+68.894
BEGIN APPROACH SLAB (SBL)
NB US 220 RAMP POT 15+78.000
-L REV- ST 23+30.987 17.800m LT
-L REV- POT 23+18.399
BEGIN APPROACH SLAB (NBL)
-L REV- POT 23+88.952
BEGIN BRIDGE (NBL)
-L REV- POT 23+62.769
END BRIDGE
-L REV- POT 23+17.167
END CONSTRUCTION
-L REV- SC 20+07.381
SB US 220 RAMP ST 19+00.528
SB US 220 RAMP CS 18+66.528
NB US 220 RAMP PC 10+41.824
NB US 220 RAMP PT 12+39.122
NB US 220 RAMP PC 13+04.008
-L REV- POT 19+09.603
SB US 220 RAMP POT 19+01.500 10.600 LT
NB US 220 RAMP POT 9+95.486 10.600 RT
-Y23- PT 16+53.324
MATCH LINE STA. 18+80 -L- REV. 1 SHEET 5
MATCH LINE STA. 24+50 -L- REV. SHEET 7
BATTIN REAL ESTATE, L.L.C.
DB 4528 PG 1578
MAX D. BALLINGER TRUSTEE
DB 1561 PG 1460
WASHBURN LESLIER BARTEE
JAMES MARK ADKINS
DB 686 PG 1980
(FORMERLY EMIL INC.)
WINFREE RD. LANDFILL INC.
DB 6281 PG 1240
(FORMERLY JERRY R. FOGLE)
WINFREE RD. LANDFILL INC.
DB 6281 PG 1241
PB 70 PG 142
(FORMERLY MICHAEL J. ANDREWS)
PAUL SEWARD & BETTY C.
DB 3926 PG 1446
10.35HA
DEED
HAW RIVER
Wetland A
Wetland B
PROP. GUARDRAIL
PROPOSED CABLE GUARDRAIL
PROP. GR BARRIER WITH TERMINAL SECTIONS
55 x 10 x 1
76 mm Skimmer
with 72 mm
Orifice Diameter
7.5 m weir
(See Tiered Skimmer
Basin Detail)
ID 6.9 F
Modified Silt Basin
Type "B"
55 x 10 x 1
(See Tiered Skimmer
Basin Detail)
ID 6.9 F
10 x 9 x 1
1.5 m weir
ID 6.3 CG
8 x 3 x 1
ID 6.4 CG
27 x 8 x 1
ID 6.7 CG
35 x 7 x 1
ID 6.2 F
16 x 3 x 1
ID 6.1 CG
14 x 4 x 1
ID 6.7 CG
20 x 4 x 1
ID 6.8 CG
24 x 5 x 1
ID 6.6 CG
14 x 4 x 1
ID 6.10 F
42 x 7 x 1
51 mm Skimmer
with 42 mm
Orifice Diameter
4.5 m weir
ID 6.5 CG
46 x 10 x 1
51 mm Skimmer
with 51 mm
Orifice Diameter
7.5 m weir
ID 7.1 F
METRIC
PROJECT REFERENCE NO.
R-2413C
SHEET NO.
EC-6/CONST.6
R/W SHEET NO.
ROADWAY DESIGN ENGINEER
HYDRAULICS ENGINEER
CONST. REV.
MW REV.
LOCATION: US 220 FROM SOUTH OF HAW RIVER TO THE INTERSECTION OF US 220 AND EXISTING NC 68
TIP NO.: R-2413C
COUNTY: GUILFORD / ROCKINGHAM
DESIGNED BY:
DATE:
CHECKED BY:
DATE:

PROJECT REFERENCE NO.	SHEET NO.
R-2413C	EC-7/CONST.7
R /W SHEET NO.	
ROADWAY DESIGN ENGINEER	HYDRAULICS ENGINEER
CONST.REV.	
R/W REV.	

METRIC 5m 0 10m

CLEARING AND GRUBBING EROSION CONTROL FOR CONSTRUCTION SHEET 7

NOTE: PLACE TEMPORARY ROCK SEDIMENT DAMS TYPE- B AND TEMPORARY ROCK SILT CHECKS TYPE-A AT DRAINAGE OUTLETS.

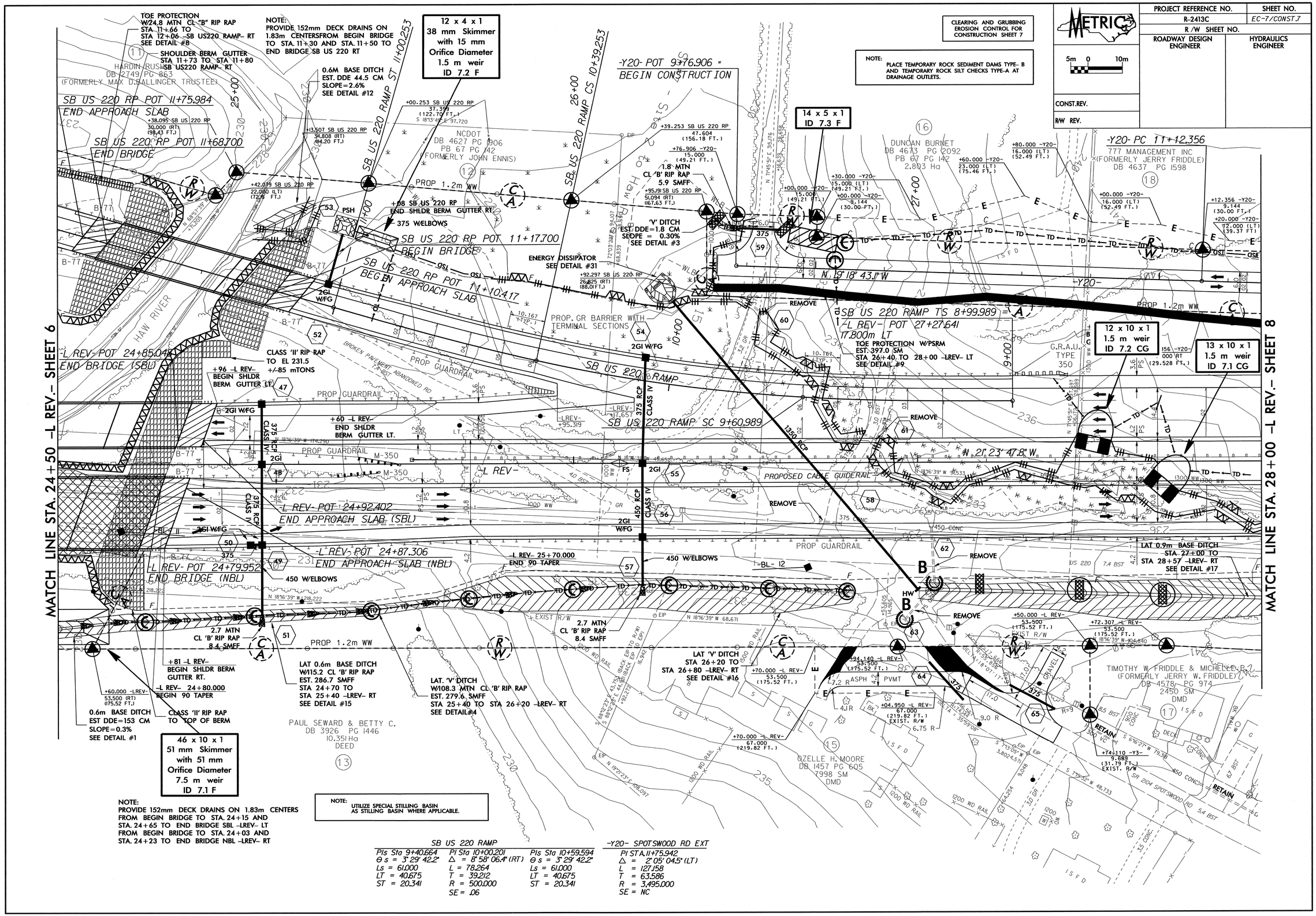

SB US 220 RAMP		
PIs Sta 9+40.664	PI Sta 10+00.201	PIs Sta 10+59.594
Θs = 3° 29' 42.2"	Δ = 8° 58' 06.4" (RT)	Θs = 3° 29' 42.2"
Ls = 61.000	L = 78.264	Ls = 61.000
LT = 40.675	T = 39.212	LT = 40.675
ST = 20.341	R = 500.000	ST = 20.341
	SE = .06	

-Y20- SPOTSWOOD RD EXT
PI STA.11+75.942
Δ = 2° 05' 04.5" (LT)
L = 127.158
T = 63.586
R = 3,495.000
SE = NC

CLEARING AND GRUBBING
EROSION CONTROL FOR
CONSTRUCTION SHEET 8

PROJECT REFERENCE NO.	SHEET NO.
R-2413C	EC-8/CONST.8
R /W SHEET NO.	
ROADWAY DESIGN ENGINEER	HYDRAULICS ENGINEER

METRIC

5m 0 10m

CONST.REV.

R/W REV.

NOTE:
PLACE TEMPORARY ROCK SEDIMENT DAMS TYPE- B AND TEMPORARY ROCK SILT CHECKS TYPE-A AT DRAINAGE OUTLETS.

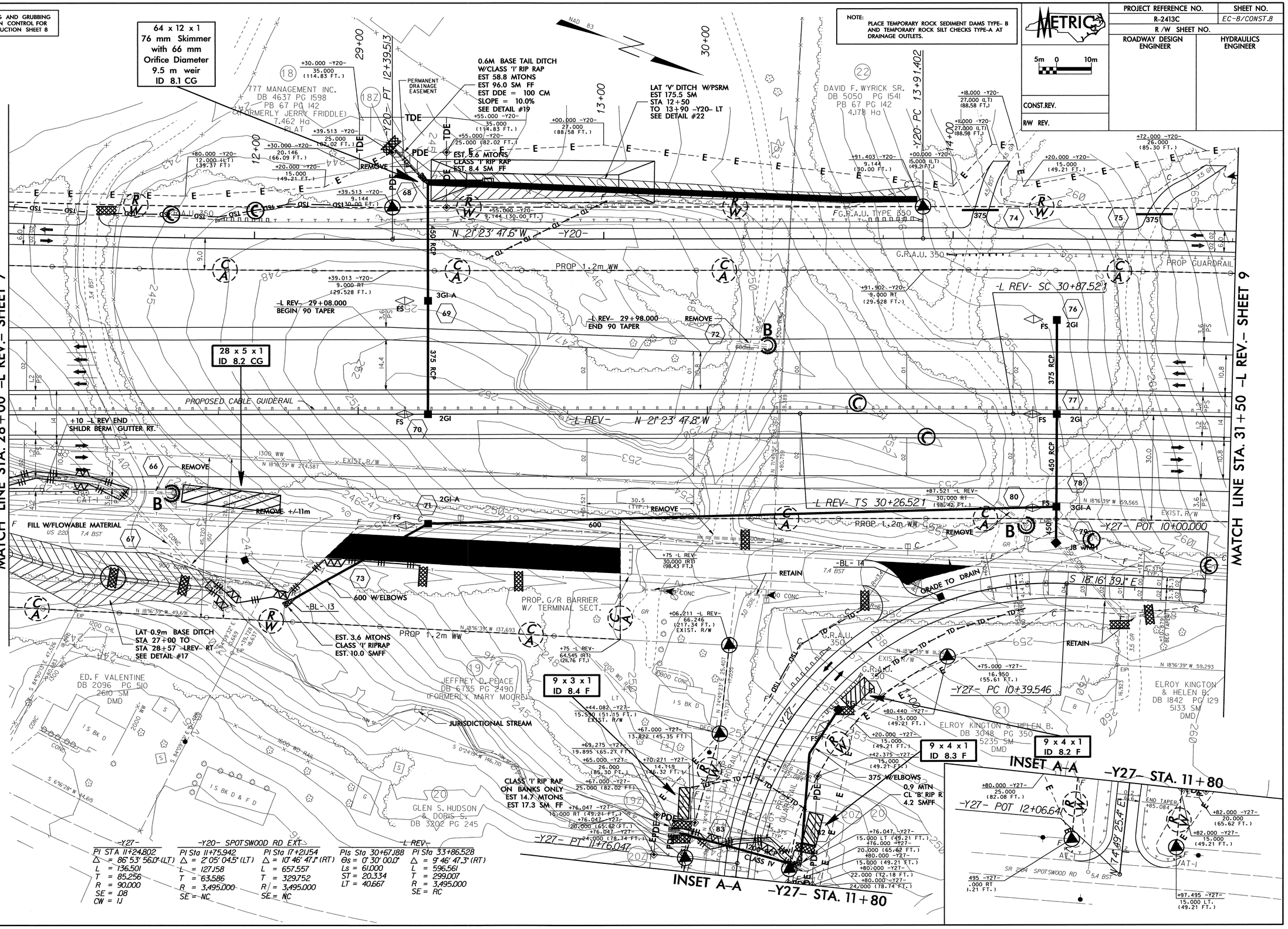

-Y27-	-Y20- SPOTSWOOD RD EXT		-L REV-	
PI STA 11+24.802	PI Sta 11+75.942	PI Sta 17+21.54	PIs Sta 30+67.88	PI Sta 33+86.528
Δ = 86° 53' 56.0" (LT)	Δ = 2° 05' 04.5" (LT)	Δ = 10° 46' 47.1" (RT)	θs = 0° 30' 00.0"	Δ = 9° 46' 47.3" (RT)
L = 136.501	L = 127.158	L = 657.557	Ls = 61.000	L = 596.561
T = 85.256	T = 63.586	T = 329.752	ST = 20.334	T = 299.007
R = 90.000	R = 3,495.000	R = 3,495.000	LT = 40.667	R = 3,495.000
SE = .08	SE = NC	SE = NC		SE = RC
CW = 11				

PROJECT REFERENCE NO.	SHEET NO.
R-2413C	EC-9/CONST.9
R /W SHEET NO.	
ROADWAY DESIGN ENGINEER	HYDRAULICS ENGINEER

METRIC 5m 0 10m

CONST.REV.

R/W REV.

CLEARING AND GRUBBING EROSION CONTROL FOR CONSTRUCTION SHEET 9

NOTE: PLACE TEMPORARY ROCK SEDIMENT DAMS TYPE- B AND TEMPORARY ROCK SILT CHECKS TYPE-A AT DRAINAGE OUTLETS.

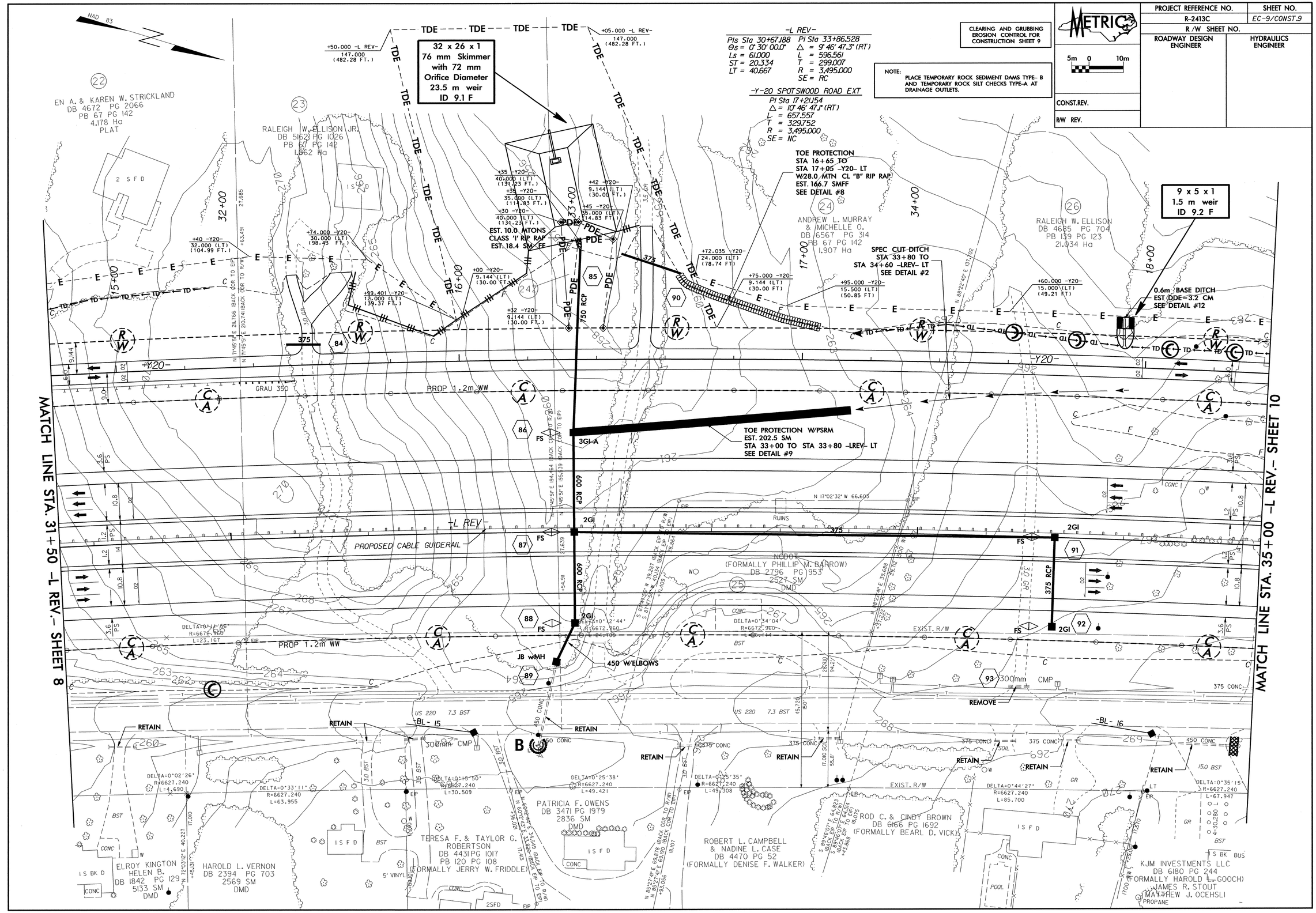

PROJECT REFERENCE NO.	SHEET NO.
R-2413C	EC-10/CONST.10
R/W SHEET NO.	
ROADWAY DESIGN ENGINEER	HYDRAULICS ENGINEER

CONST.REV.

R/W REV.

METRIC 5m 0 10m

CLEARING AND GRUBBING EROSION CONTROL FOR CONSTRUCTION SHEET 10

NOTE: PLACE TEMPORARY ROCK SEDIMENT DAMS TYPE- B AND TEMPORARY ROCK SILT CHECKS TYPE-A AT DRAINAGE OUTLETS.

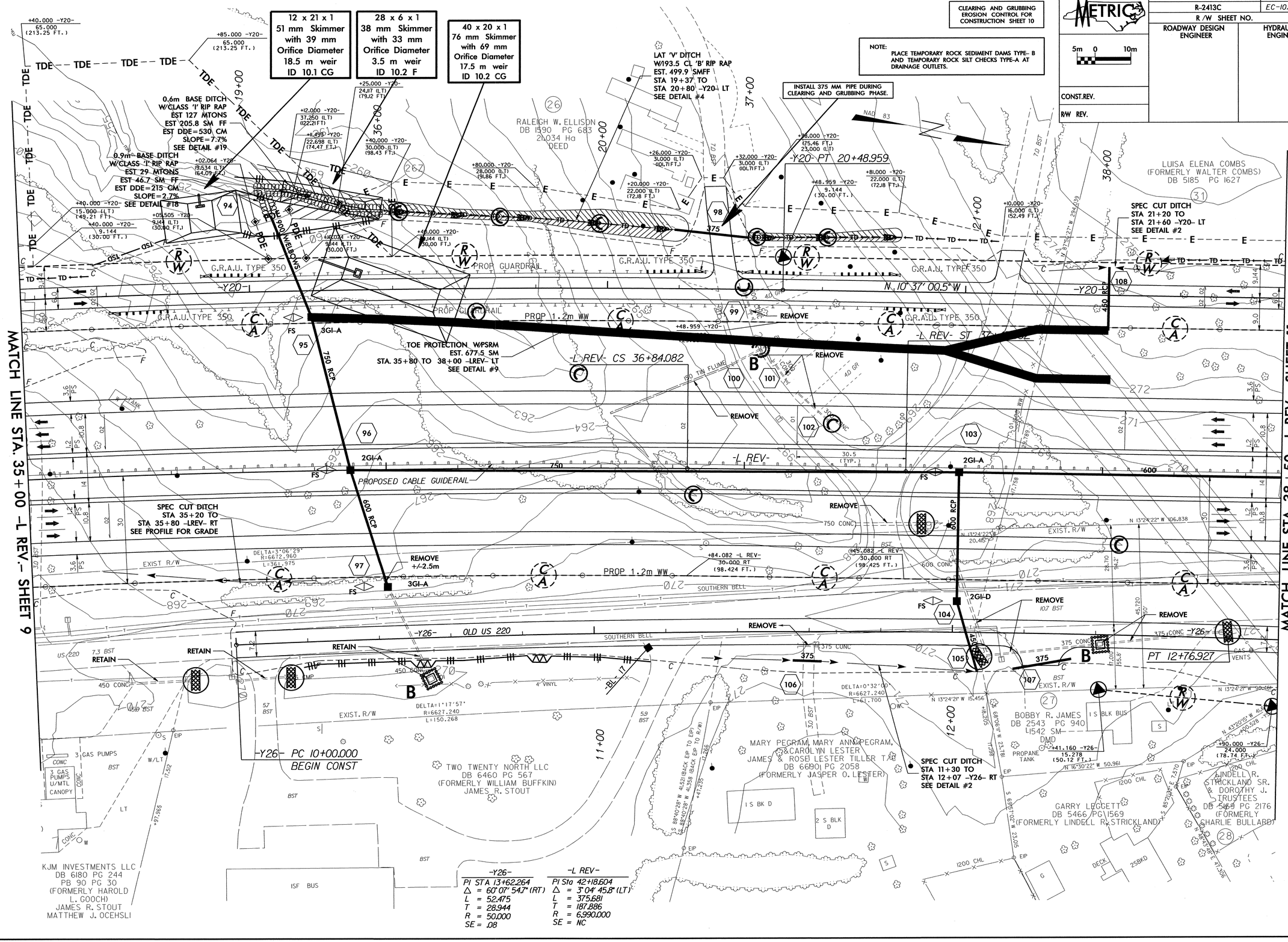

-Y26-	-L REV-
PI STA 13+62.264	PI Sta 42+18.604
Δ = 60° 07' 54.7" (RT)	Δ = 3° 04' 45.8" (LT)
L = 52.475	L = 375.681
T = 28.944	T = 187.886
R = 50.000	R = 6,990.000
SE = .08	SE = NC

PROJECT REFERENCE NO.	SHEET NO.
R-2413C	EC-11/CONST.11
R/W SHEET NO.	
ROADWAY DESIGN ENGINEER	HYDRAULICS ENGINEER
CONST.REV.	
R/W REV.	

METRIC

5m 0 10m

NOTE:
PLACE TEMPORARY ROCK SEDIMENT DAMS TYPE- B AND TEMPORARY ROCK SILT CHECKS TYPE-A AT DRAINAGE OUTLETS.

CLEARING AND GRUBBING EROSION CONTROL FOR CONSTRUCTION SHEET 11

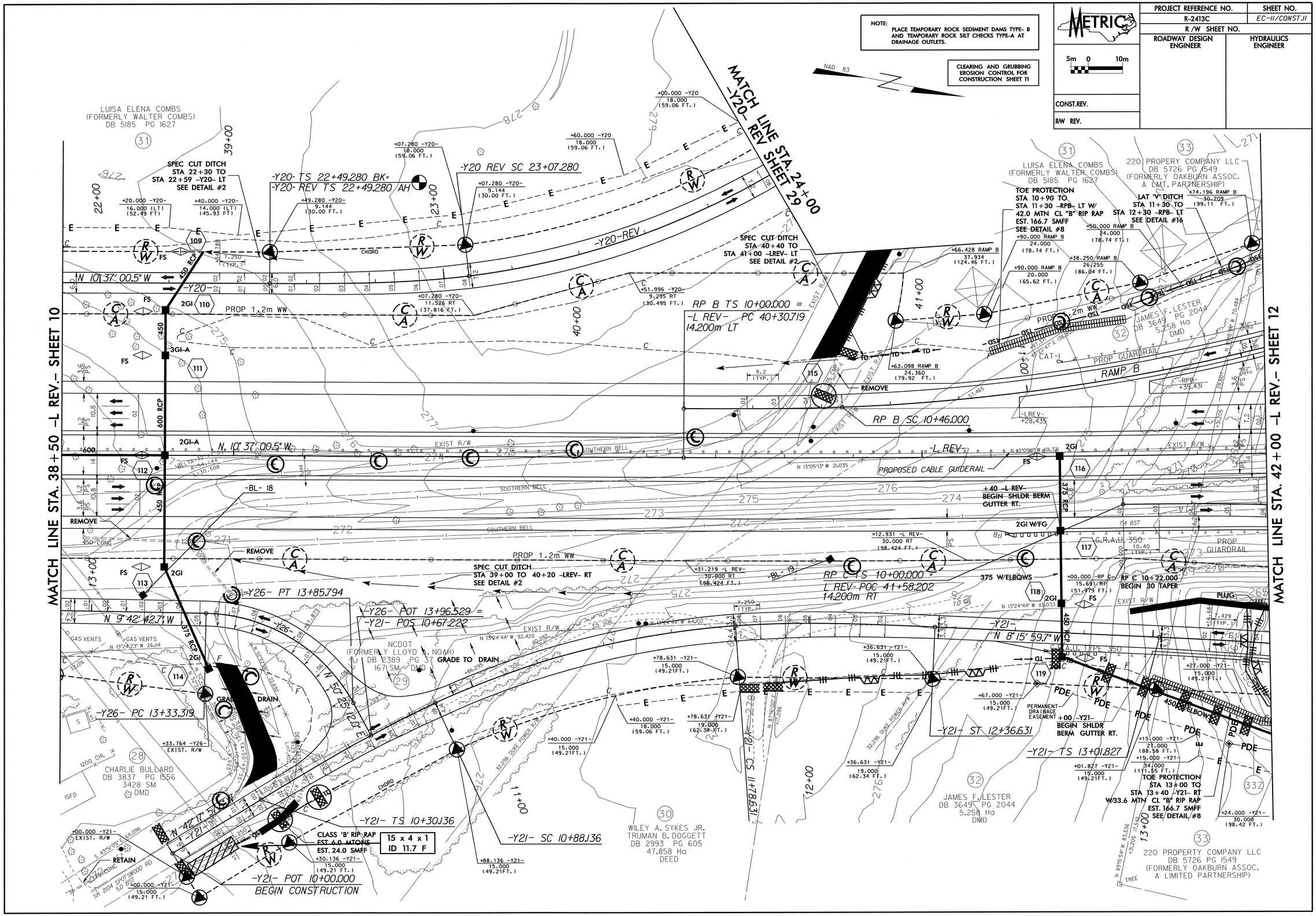

PROJECT REFERENCE NO.	SHEET NO.
R-2413C	EC-12/CONST.12
R/W SHEET NO.	
ROADWAY DESIGN ENGINEER	HYDRAULICS ENGINEER

CLEARING AND GRUBBING DESIGN POINTS FOR CONSTRUCTION SHEET 12

NOTE: PLACE TEMPORARY ROCK SEDIMENT DAMS TYPE: B AND TEMPORARY ROCK SILT CHECKS TYPE-A AT DRAINAGE OUTLETS.

CONST.REV.

R/W REV.

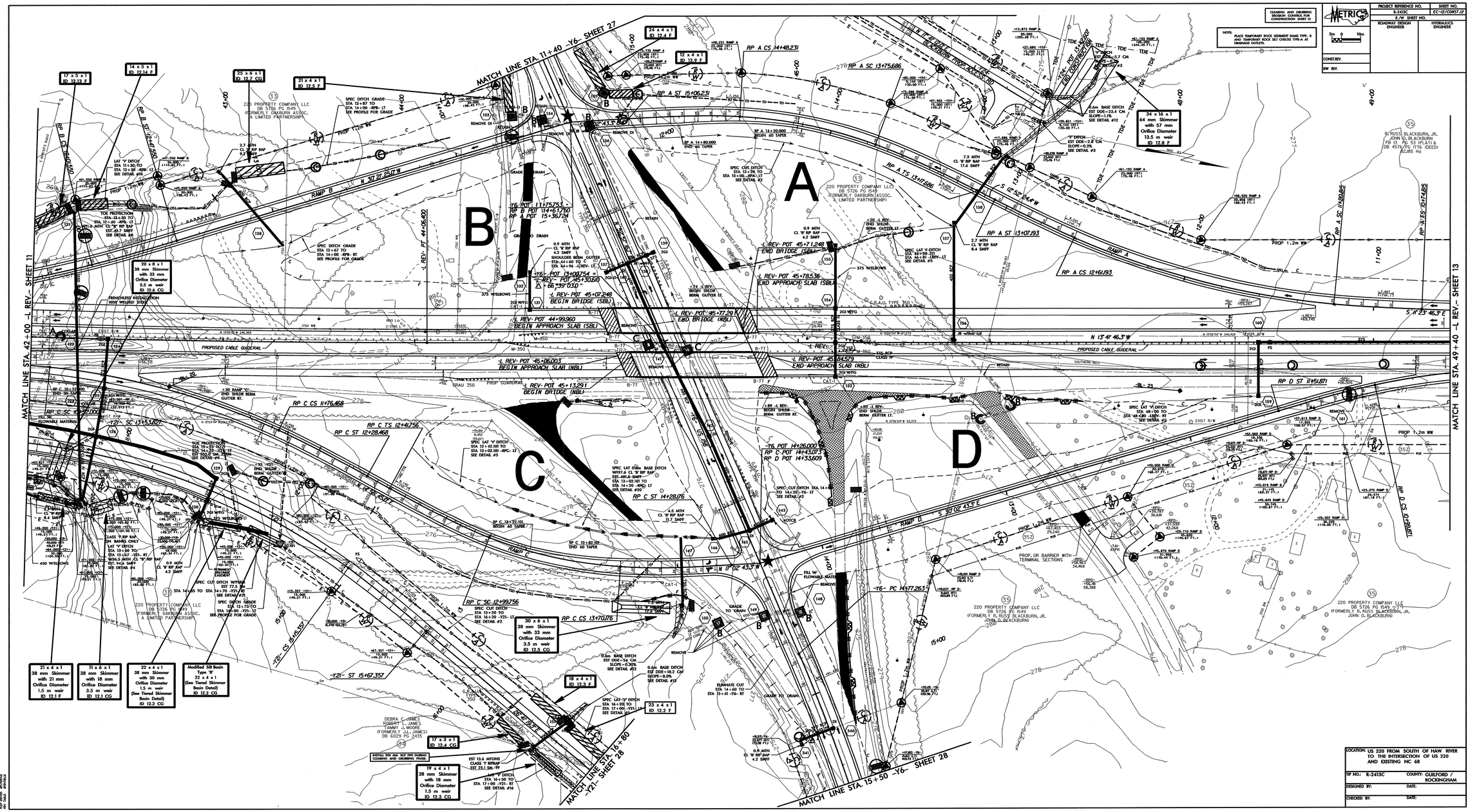

LOCATION:	US 220 FROM SOUTH OF HAW RIVER TO THE INTERSECTION OF US 220 AND EXISTING NC 68
TIP NO.: R-2413C	COUNTY: GUILFORD / ROCKINGHAM
DESIGNED BY:	DATE:
CHECKED BY:	DATE:

PROJECT REFERENCE NO.	SHEET NO.
R-2413C	EC-13/CONST.13
R/W SHEET NO.	
ROADWAY DESIGN ENGINEER	HYDRAULICS ENGINEER

CONST.REV.

R/W REV.

CLEARING AND GRUBBING EROSION CONTROL FOR CONSTRUCTION SHEET 13

NOTE: PLACE TEMPORARY ROCK SEDIMENT DAMS TYPE- B AND TEMPORARY ROCK SILT CHECKS TYPE-A AT DRAINAGE OUTLETS.

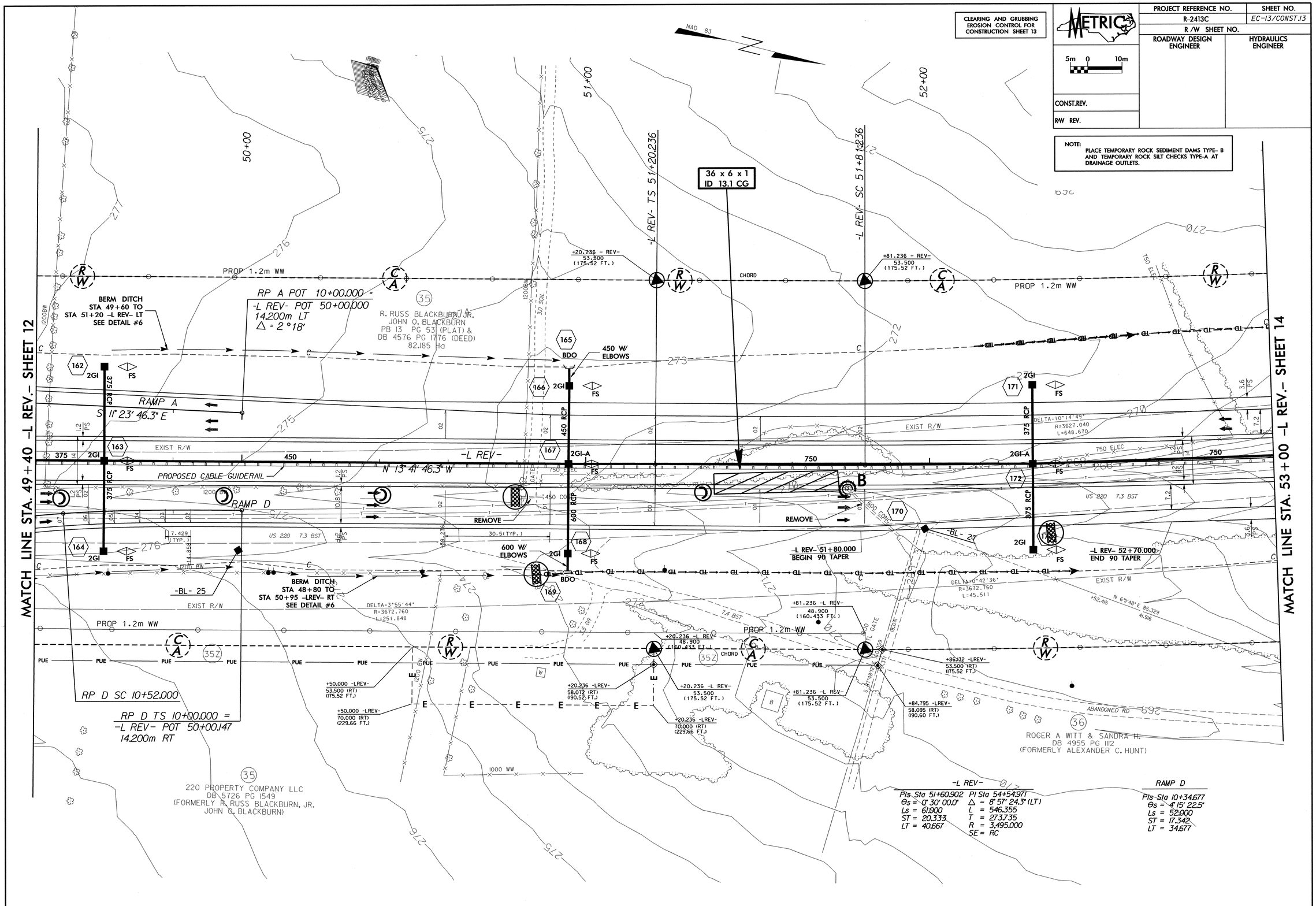

PROJECT REFERENCE NO.	SHEET NO.
R-2413C	EC-14/CONST.14
R /W SHEET NO.	
ROADWAY DESIGN ENGINEER	HYDRAULICS ENGINEER

CLEARING AND GRUBBING
EROSION CONTROL FOR
CONSTRUCTION SHEET 14

NOTE:
PLACE TEMPORARY ROCK SEDIMENT DAMS TYPE- B AND TEMPORARY ROCK SILT CHECKS TYPE-A AT DRAINAGE OUTLETS.

METRIC
5m 0 10m

CONST.REV.

R/W REV.

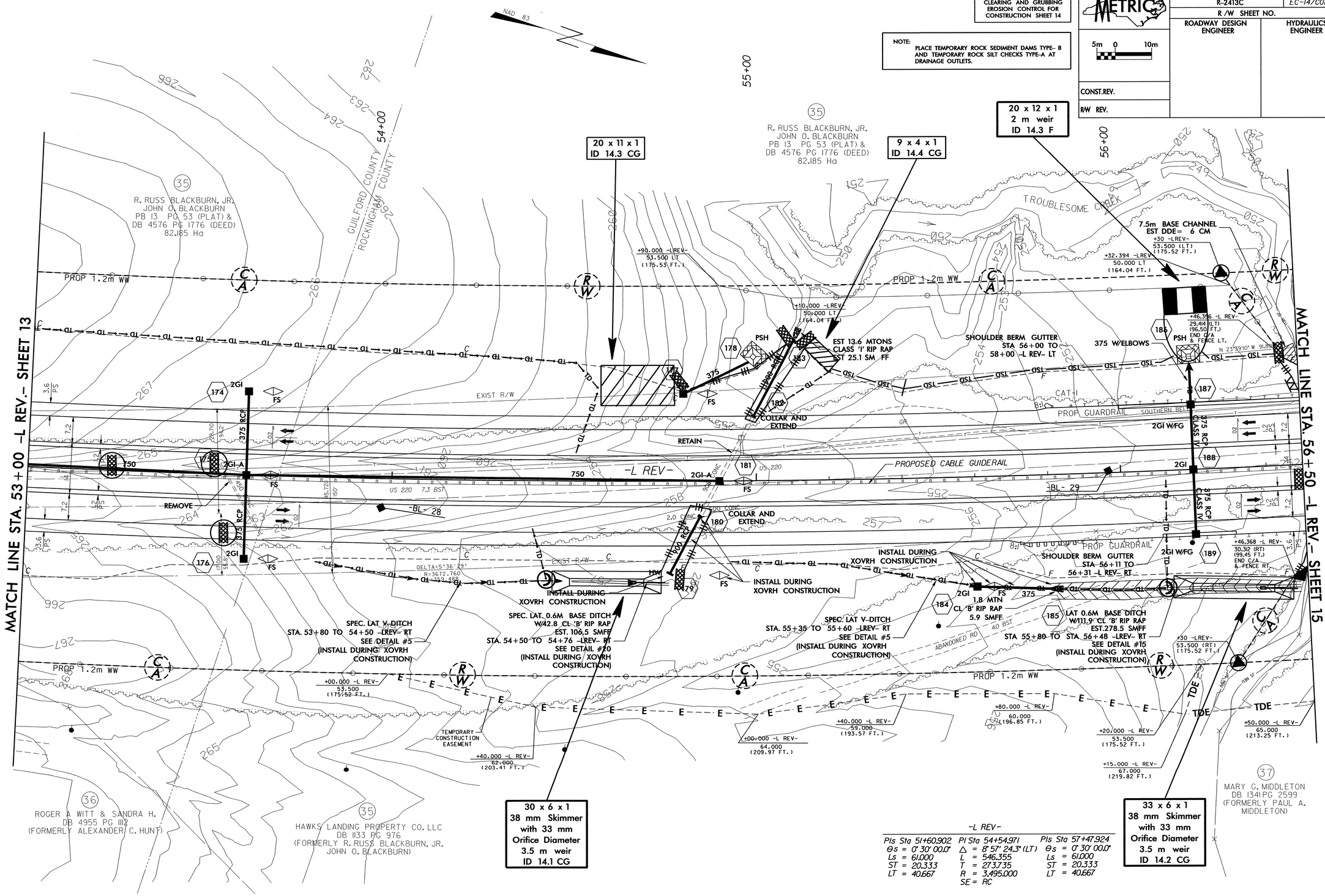

-L REV-

PIs Sta 51+60.902	PI Sta 54+54.971	PIs Sta 57+47.924
Θs = 0° 30' 00.0"	Δ = 8° 57' 24.3" (LT)	Θs = 0° 30' 00.0"
Ls = 61.000	L = 546.355	Ls = 61.000
ST = 20.333	T = 273.735	ST = 20.333
LT = 40.667	R = 3,495.000	LT = 40.667
	SE = RC	

PROJECT REFERENCE NO.	SHEET NO.
R-2413C	EC-15/CONST.15
R/W SHEET NO.	
ROADWAY DESIGN ENGINEER	HYDRAULICS ENGINEER

CONST.REV.

RW REV.

NOTE: PLACE TEMPORARY ROCK SEDIMENT DAMS TYPE- B AND TEMPORARY ROCK SILT CHECKS TYPE-A AT DRAINAGE OUTLETS.

CLEARING AND GRUBBING EROSION CONTROL FOR CONSTRUCTION SHEET 15

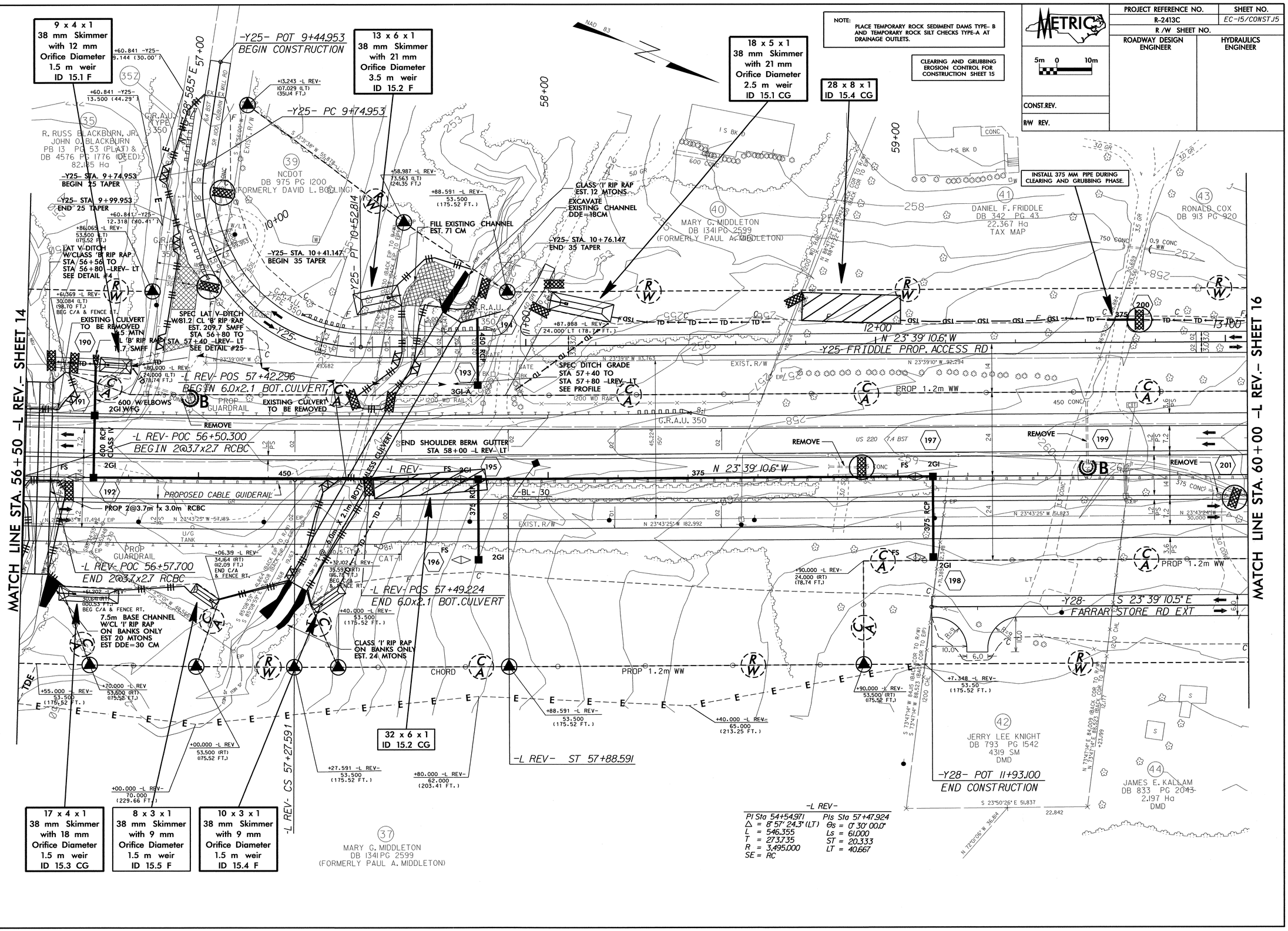

2/15/10 – PARCEL 35Z ADDED TEMPORARY CONSTRUCTION EASEMENT
2/15/10 – PARCEL 40Z ADDED TEMPORARY CONSTRUCTION EASEMENT
2/15/11 – ELIMINATED PARCEL 40Z, TEMPORARY CONSTRUCTION EASEMENT

PROJECT REFERENCE NO.	SHEET NO.
R-2413C	EC-16/CONST.J5
R /W SHEET NO.	
ROADWAY DESIGN ENGINEER	HYDRAULICS ENGINEER

CULVERT CONSTRUCTION SEQUENCE STA. 56 + 54 –LREV– (SHEET 1 OF 2)

PHASE I

1. CONSTRUCT STILLING BASIN 1 (90 M3).
2. CONSTRUCT IMPERVIOUS DIKE A, DIVERTING FLOW.
3. CONSTRUCT APPROXIMATELY 25 METERS OF DOWNSTREAM SECTION OF BARREL 1 OF PROPOSED CULVERT, AND PORTION OF OUTLET CHANNEL IMPROVEMENTS.
4. REMOVE IMPERVIOUS DIKE A.

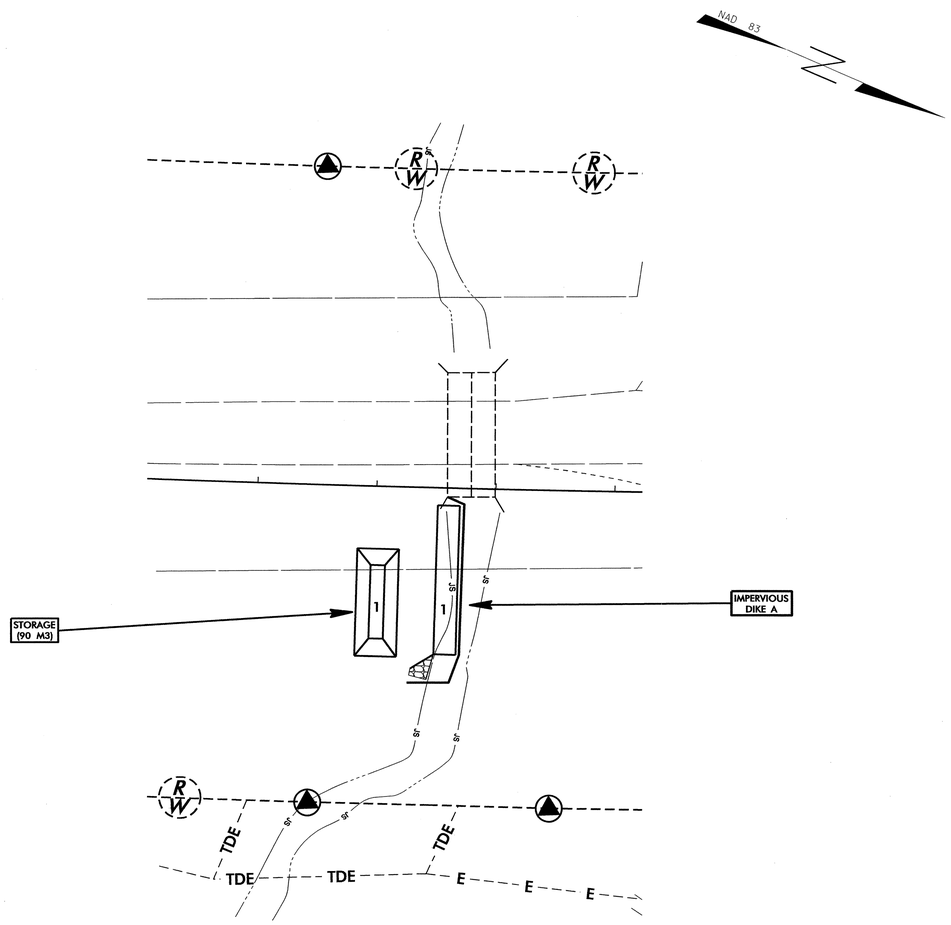

PHASE II

5. CONSTRUCT IMPERVIOUS DIKES B DIVERTING FLOW THROUGH COMPLETED SECTION OF BARREL 1.
6. CONSTRUCT APPROXIMATELY 25 METERS OF DOWNSTREAM SECTION OF BARREL 2 OF PROPOSED CULVERT, AND REMAINDER OF OUTLET CHANNEL IMPROVEMENTS.
7. REMOVE IMPERVIOUS DIKES B AND STILLING BASIN 1.
8. CONSTRUCT ROADWAY OVER COMPLETED SECTION OF PROPOSED CULVERT, AND SHIFT TRAFFIC.

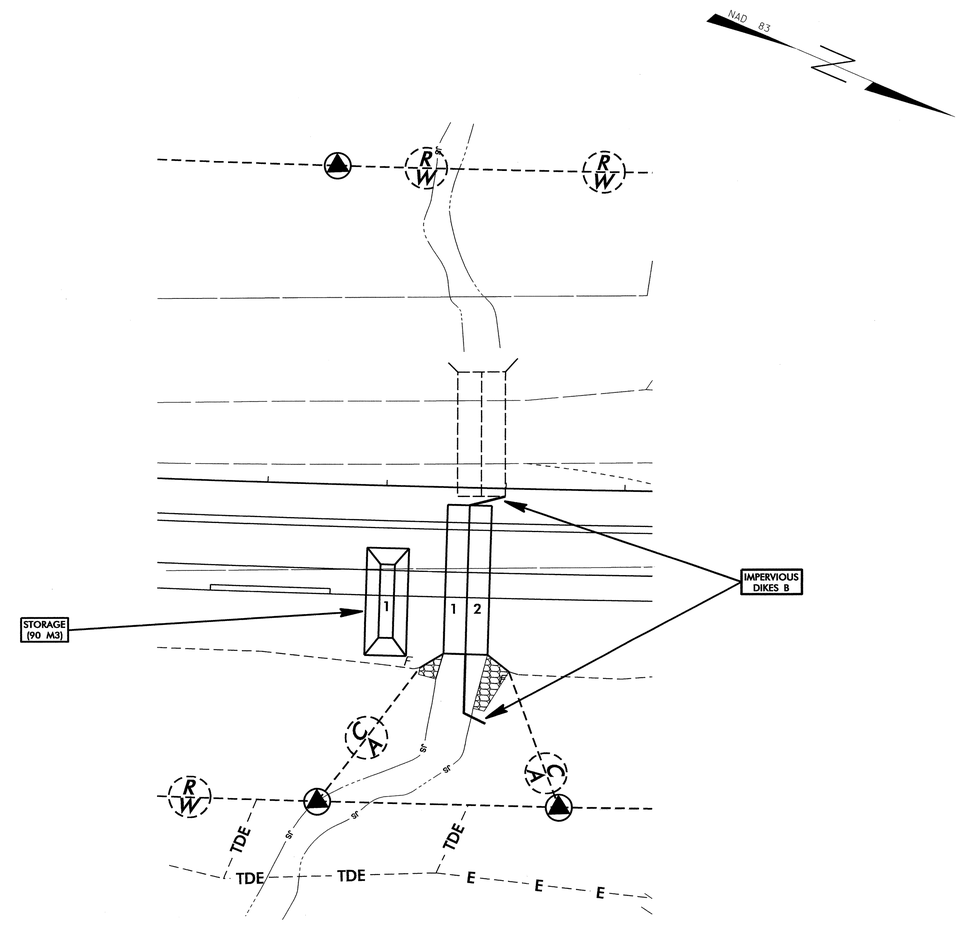

PROJECT REFERENCE NO.	SHEET NO.
R-2413C	EC-17/CONST.J5
R/W SHEET NO.	
ROADWAY DESIGN ENGINEER	HYDRAULICS ENGINEER

CULVERT CONSTRUCTION SEQUENCE STA. 56+54 –LREV– (SHEET 2 OF 2)

PHASE III

9. CONSTRUCT STILLING BASIN 2 (125 M3).
10. REMOVE EXISTING CULVERT.
11. CONSTRUCT IMPERVIOUS DIKES C AND TEMPORARY CHANNEL CHANGE WITH LINER (1.5M BASE, 1M DEEP, 2:1 SIDE SLOPES), DIVERTING FLOW THROUGH COMPLETED SECTION OF BARREL 2 OF PROPOSED CULVERT.
12. CONSTRUCT REMAINDER OF BARREL 1 OF PROPOSED CULVERT, INCLUDING PORTION OF INLET CHANNEL IMPROVEMENTS.
13. REMOVE IMPERVIOUS DIKES C AND TEMPORARY CHANNEL CHANGE WITH LINER.

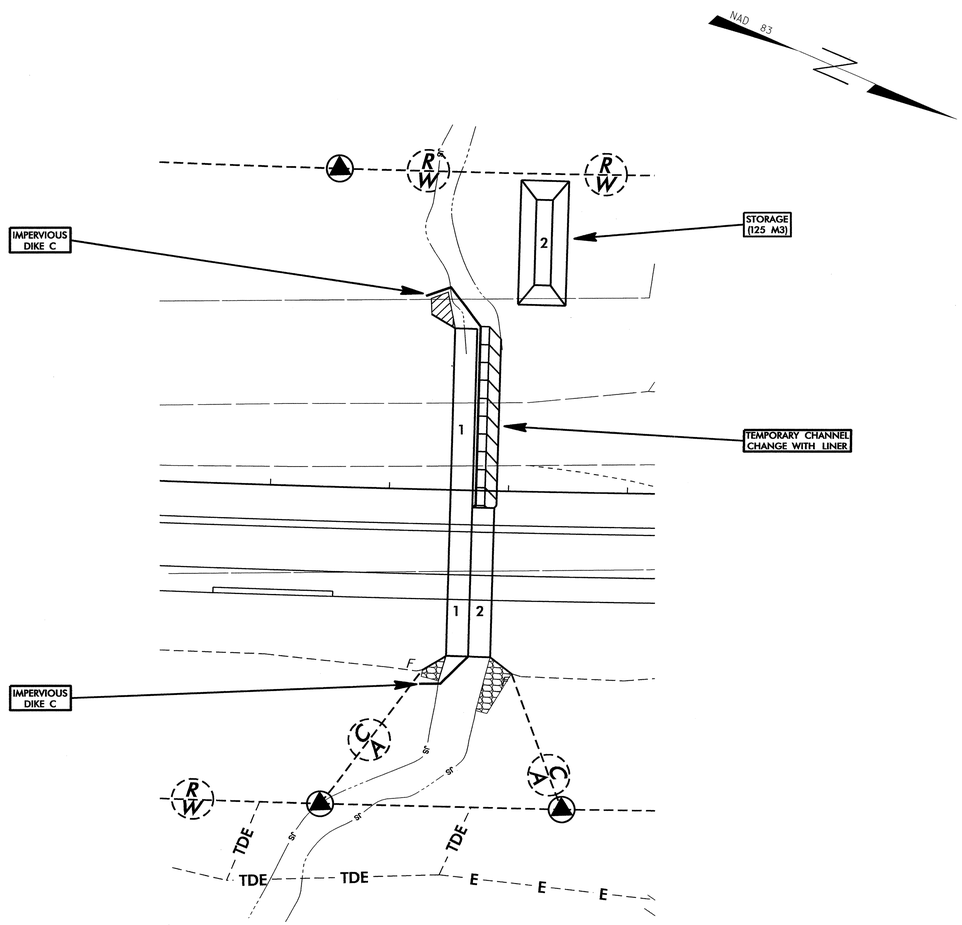

PHASE IV

14. CONSTRUCT IMPERVIOUS DIKES D, DIVERTING FLOW THROUGH COMPLETED BARREL 1 OF PROPOSED CULVERT.
15. CONSTRUCT REMAINDER OF BARREL 2 OF PROPOSED CULVERT, INCLUDING REMAINDER OF INLET CHANNEL IMPROVEMENTS.
16. REMOVE IMPERVIOUS DIKES D AND STILLING BASIN 2.
17. COMPLETE ROADWAY.

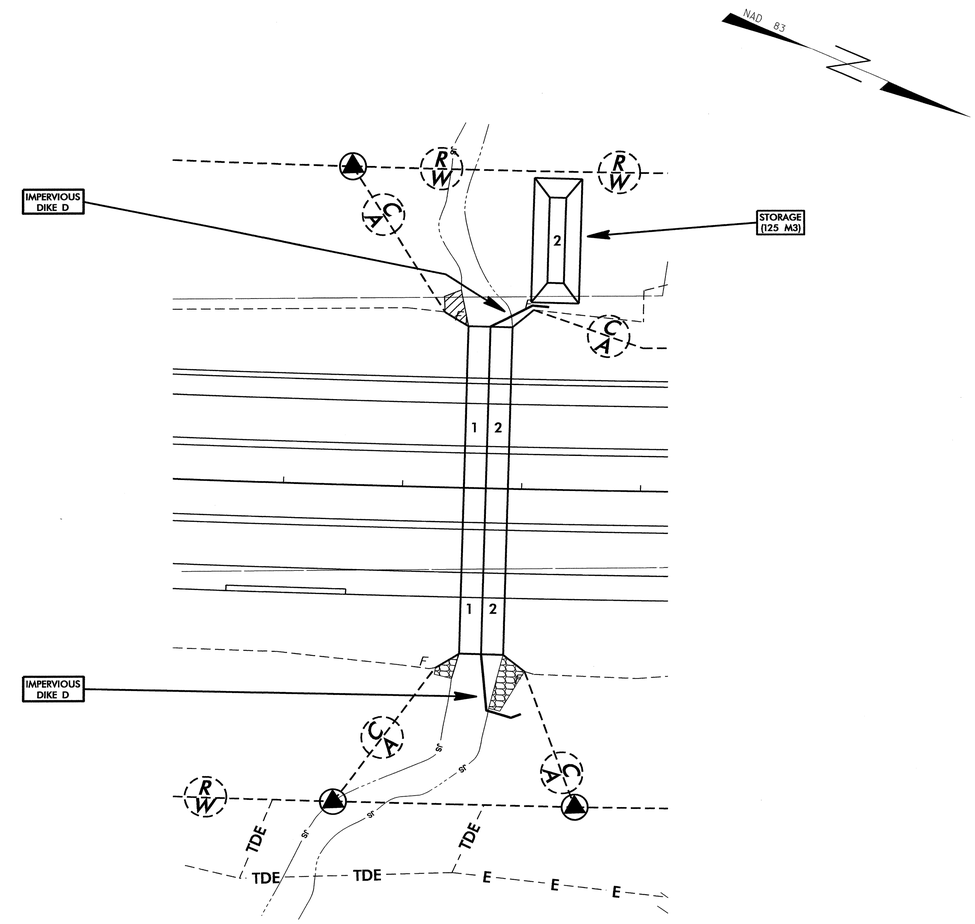

PROJECT REFERENCE NO.	SHEET NO.
R-2413C	EC-18/CONST.15
R/W SHEET NO.	
ROADWAY DESIGN ENGINEER	HYDRAULICS ENGINEER

CULVERT CONSTRUCTION SEQUENCE STA. 57+45.8 -LREV-

PHASE I

1. CONSTRUCT STILLING BASIN 1 (50 M3) AND STILLING BASIN 2 (60 M3).
2. CONSTRUCT IMPERVIOUS DIKES A, DIVERTING FLOW.
3. CONSTRUCT UPSTREAM AND DOWNSTREAM PORTIONS OF PROPOSED CULVERT, INCLUDING PORTION OF INLET/OUTLET CHANNEL IMPROVEMENTS..
4. CONSTRUCT ROADWAY OVER COMPLETED PORTIONS OF PROPOSED CULVERT AND SHIFT TRAFFIC.
5. REMOVE IMPERVIOUS DIKES A AND STILLING BASIN 1.

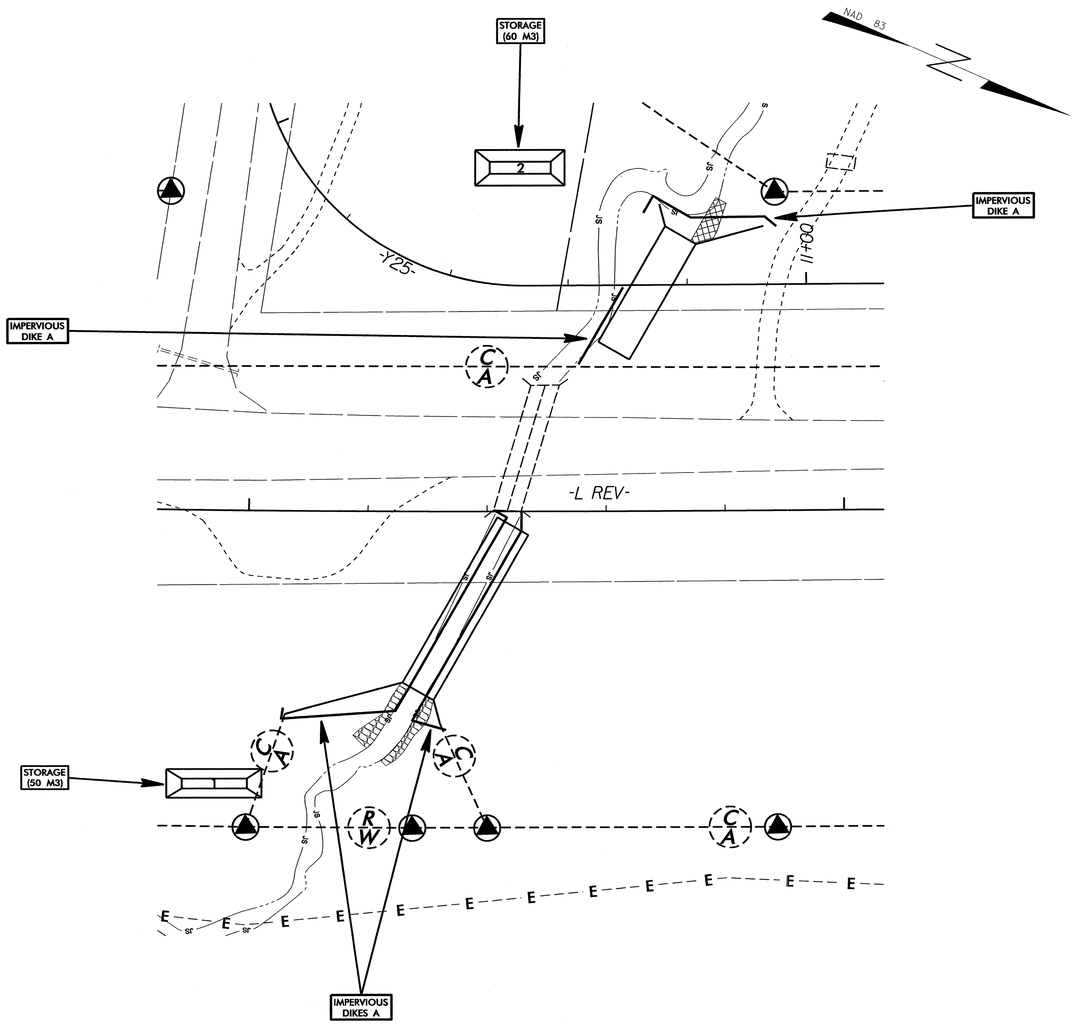

PHASE II

6. REMOVE EXISTING CULVERT.
7. CONSTRUCT IMPERVIOUS DIKES B AND FILL PORTION OF EXISTING CHANNEL, DIVERTING FLOW BETWEEN COMPLETED PORTIONS OF PROPOSED CULVERT.
8. CONSTRUCT REMAINDER OF PROPOSED CULVERT, INCLUDING REMAINDER OF INLET/OUTLET CHANNEL IMPROVEMENTS.
9. REMOVE IMPERVIOUS DIKES B AND STILLING BASIN 2.
10. COMPLETE ROADWAY.

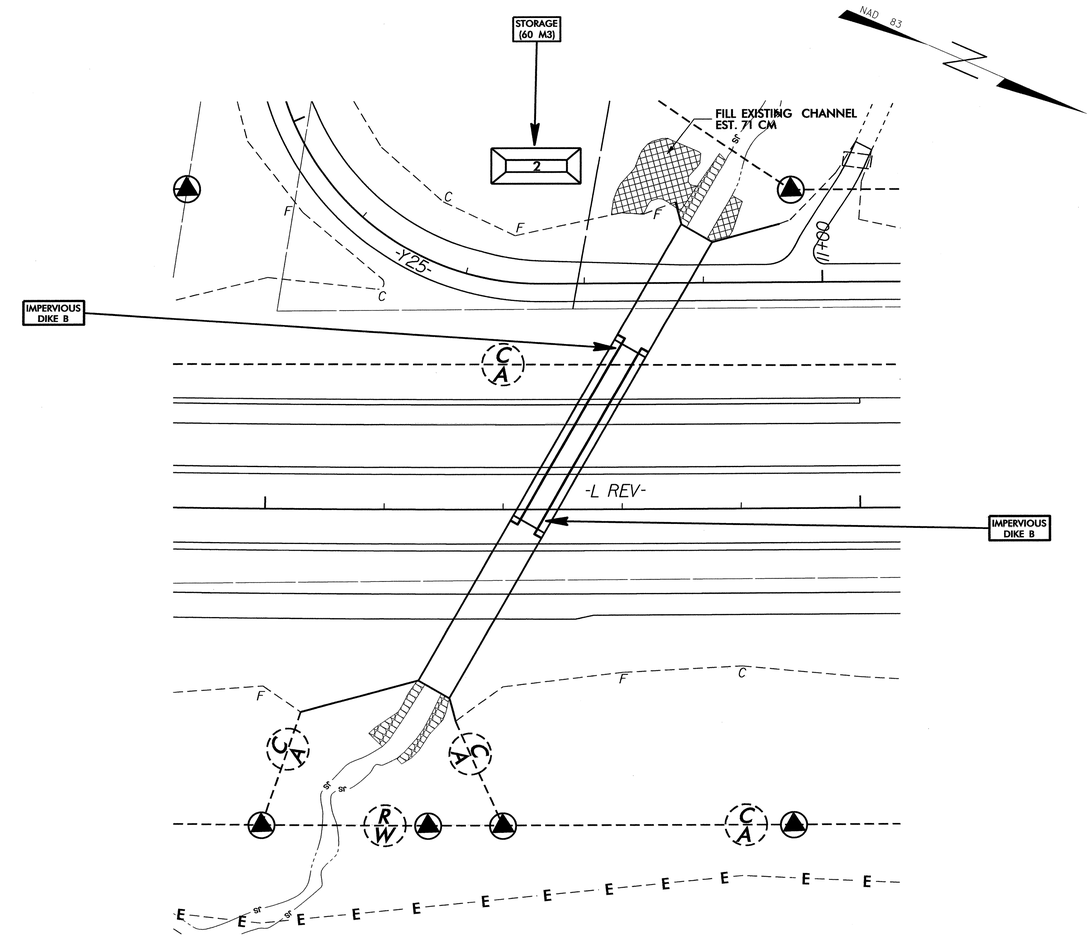

PROJECT REFERENCE NO.	SHEET NO.
R-2413C	EC-19/CONST.J6
R /W SHEET NO.	
ROADWAY DESIGN ENGINEER	HYDRAULICS ENGINEER

METRIC

5m 0 10m

CONST.REV.

R/W REV.

CLEARING AND GRUBBING
EROSION CONTROL FOR
CONSTRUCTION SHEET 16

NOTE:
PLACE TEMPORARY ROCK SEDIMENT DAMS TYPE- B AND TEMPORARY ROCK SILT CHECKS TYPE-A AT DRAINAGE OUTLETS.

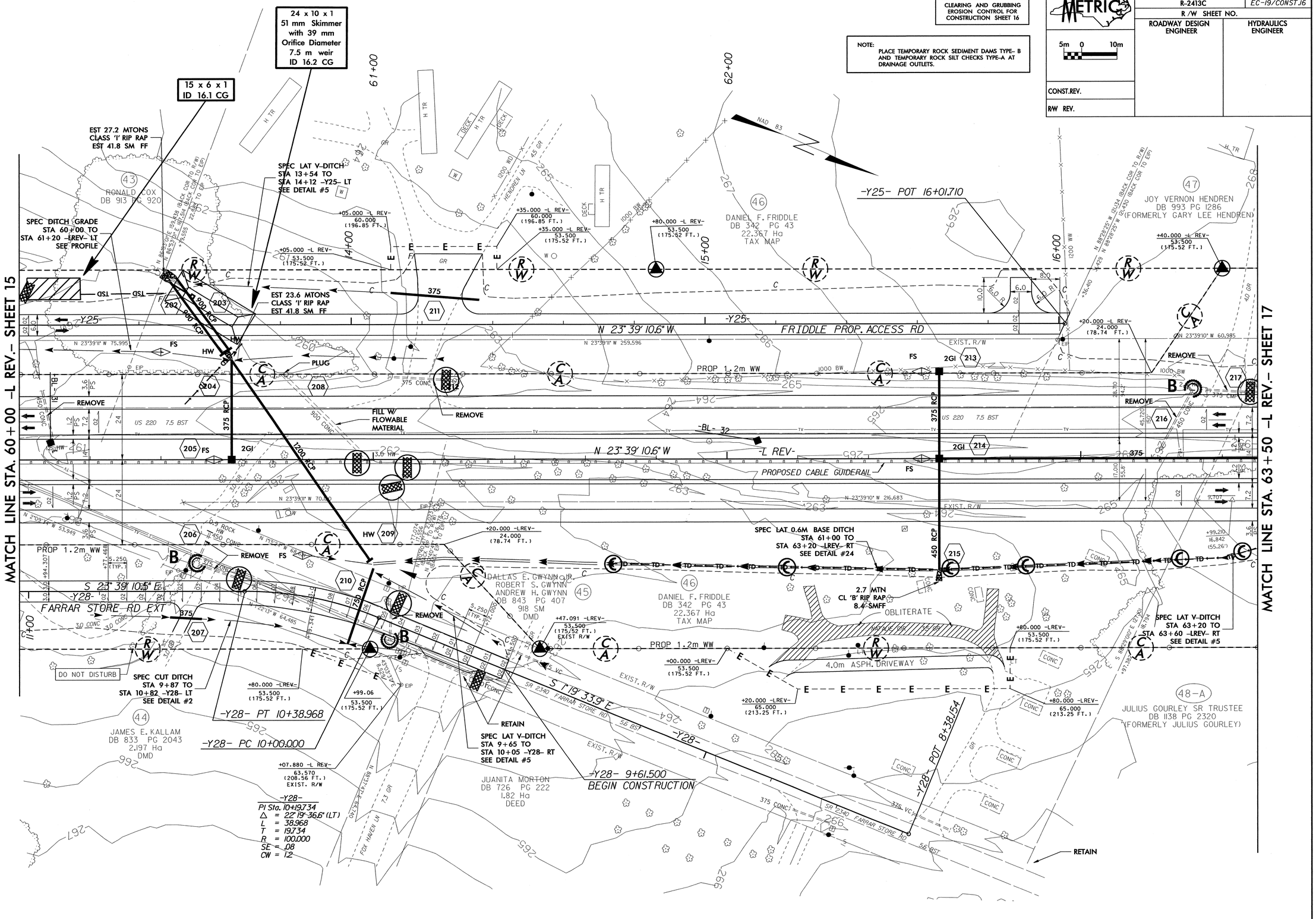

PROJECT REFERENCE NO.	SHEET NO.
R-2413C	EC-20/CONST.17
R /W SHEET NO.	
ROADWAY DESIGN ENGINEER	HYDRAULICS ENGINEER

METRIC 5m 0 10m

CONST.REV.

R/W REV.

NOTE:
PLACE TEMPORARY ROCK SEDIMENT DAMS TYPE- B AND TEMPORARY ROCK SILT CHECKS TYPE-A AT DRAINAGE OUTLETS.

CLEARING AND GRUBBING EROSION CONTROL FOR CONSTRUCTION SHEET 17

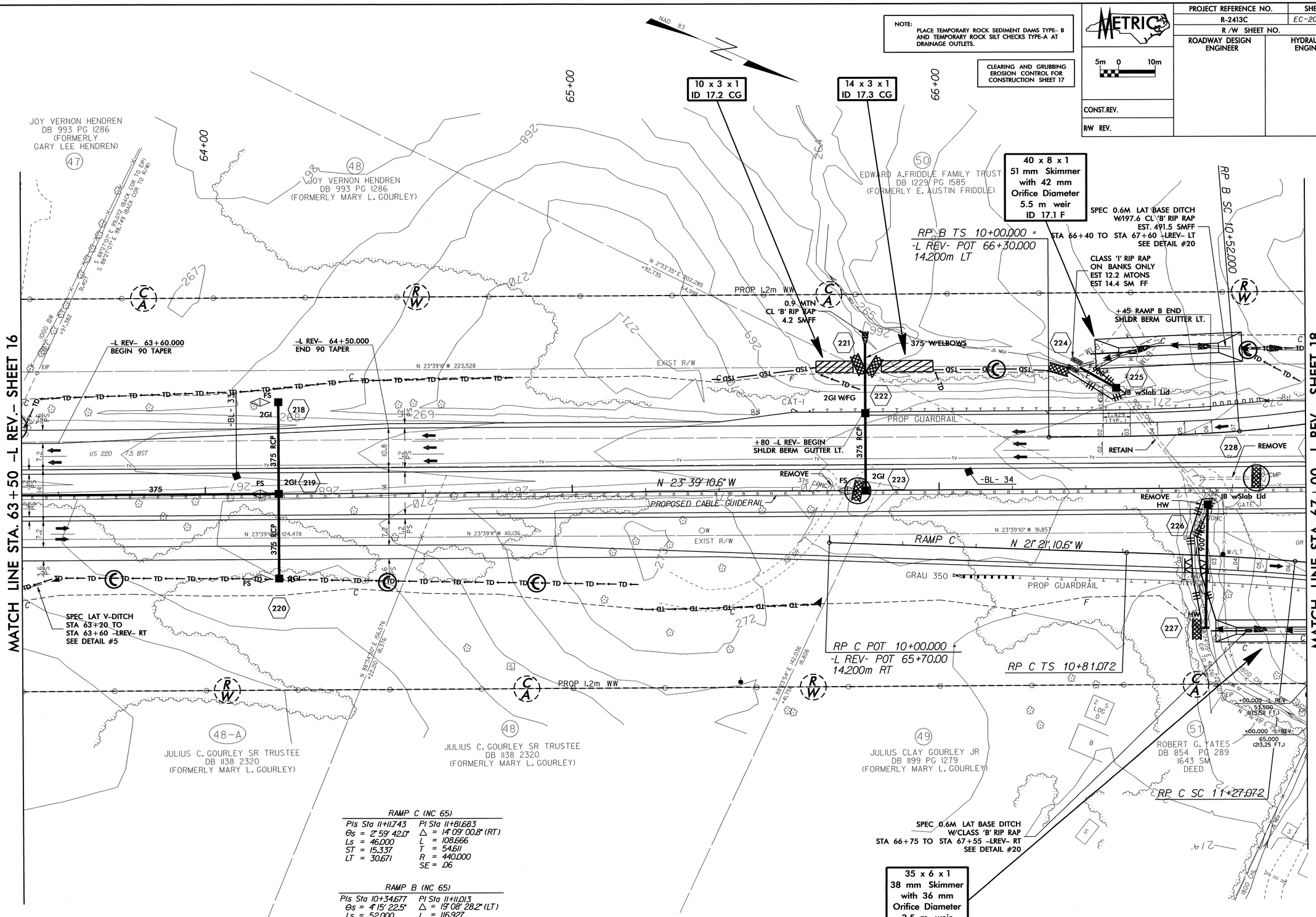

RAMP C (NC 65)

PIs Sta 11+11.743	PI Sta 11+81.683
Θs = 2° 59' 42.0"	Δ = 14° 09' 00.8" (RT)
Ls = 46.000	L = 108.666
ST = 15.337	T = 54.611
LT = 30.671	R = 440.000
	SE = .06

RAMP B (NC 65)

PIs Sta 10+34.677	PI Sta 11+11.013
Θs = 4° 15' 22.5"	Δ = 19° 08' 28.2" (LT)
Ls = 52.000	L = 116.927
ST = 17.342	T = 59.013
LT = 34.677	R = 350.000
	SE = .07

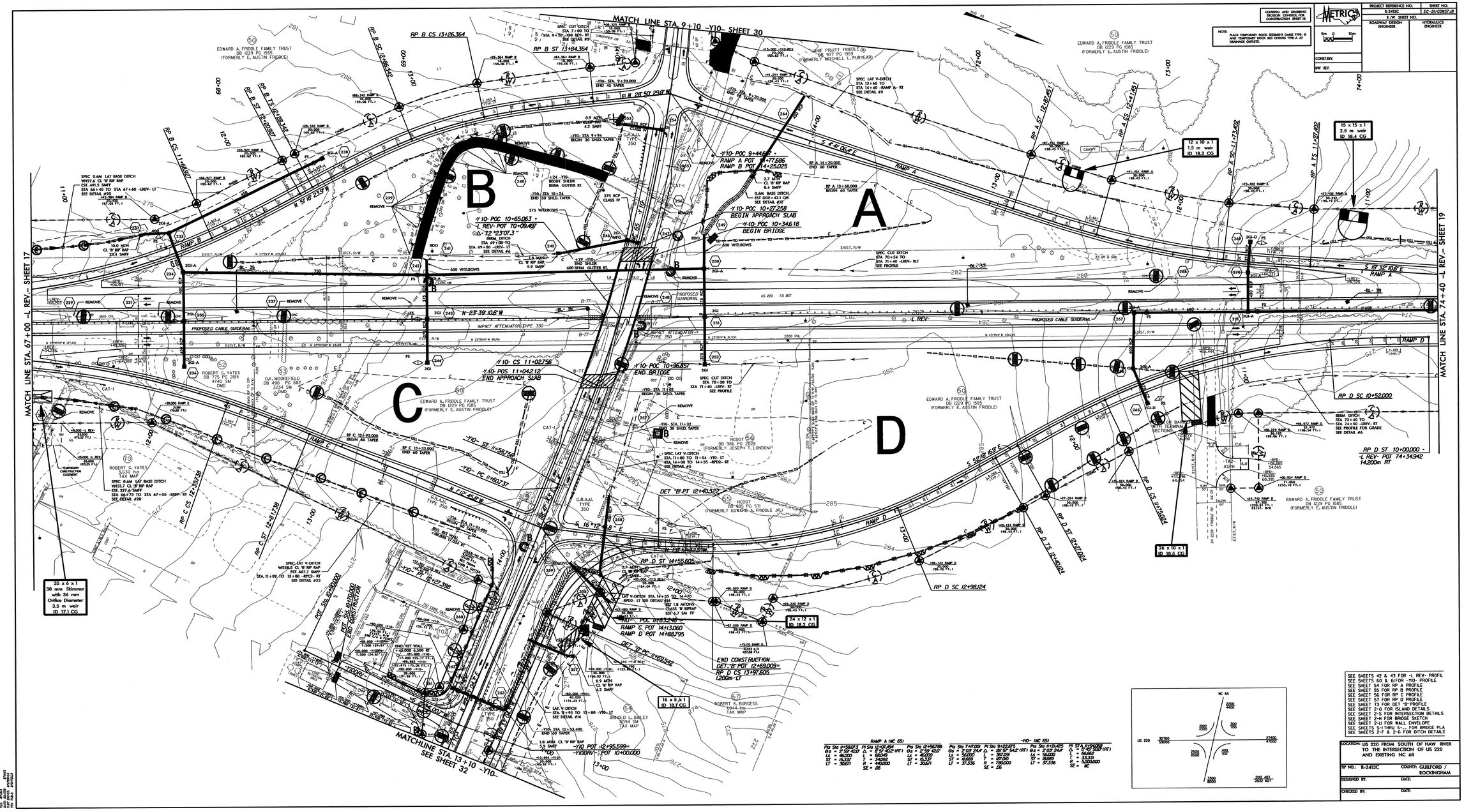

RAMP A (HC 65)		
Pls Sta 9+58.073	Pi Sta 12+10.494	Pts Sta 12+56.788
θs = 2°59'42.0	Δ = 8°54'45.0 (RT)	θs = 2°59'42.0
Ls = 46.000	L = 68.149	Ls = 46.000
ST = 25.337	T = 34.082	ST = 25.337
LT = 30.671	R = 440.000	LT = 30.671
	SE = .06	

-Y10- (HC 65)		
Pts Sta 7+17.003	Pi Sta 9+22.875	Pts Sta 9+28.425
θs = 2°07'24.4	Δ = 25°57'54.2 (RT)	θs = 2°07'24.4
Ls = 56.000	L = 367.09	Ls = 56.000
ST = 55.665	T = 187.00	ST = 55.665
LT = 37.336	R = 780.000	LT = 37.336
	SE = .06	

Pt ST 9+34.942
Δ = 0°45'20.0 (RT)
L = 66.852
T = 33.426
R = 5,000.000
SE = NC

SEE SHEETS 42 & 43 FOR -L REV- PROFIL
SEE SHEETS 60 & 61FOR -Y10- PROFILE
SEE SHEET 54 FOR RP A PROFILE
SEE SHEET 55 FOR RP B PROFILE
SEE SHEET 56 FOR RP C PROFILE
SEE SHEET 57 FOR RP D PROFILE
SEE SHEET 73 FOR DET "B" PROFILE
SEE SHEET 2-O FOR ISLAND DETAILS
SEE SHEET 2-S FOR INTERSECTION DETAILS
SEE SHEET 2-H FOR BRIDGE SKETCH
SEE SHEET 2-U FOR WALL ENVELOPE
SEE SHEETS S-1 THRU S-__ FOR BRIDGE PLA
SEE SHEETS 2-F & 2-G FOR DITCH DETAILS

LOCATION: US 220 FROM SOUTH OF HAW RIVER TO THE INTERSECTION OF US 220 AND EXISTING NC 68

TIP NO.: R-2413C
COUNTY: GUILFORD / ROCKINGHAM

DESIGNED BY: DATE:
CHECKED BY: DATE:

PROJECT REFERENCE NO.	SHEET NO.
R-2413C	EC-22/CONST.J9
R /W SHEET NO.	
ROADWAY DESIGN ENGINEER	HYDRAULICS ENGINEER
CONST.REV.	
R/W REV.	

METRIC 5m 0 10m

NOTE: PLACE TEMPORARY ROCK SEDIMENT DAMS TYPE- B AND TEMPORARY ROCK SILT CHECKS TYPE-A AT DRAINAGE OUTLETS.

CLEARING AND GRUBBING EROSION CONTROL FOR CONSTRUCTION SHEET 19

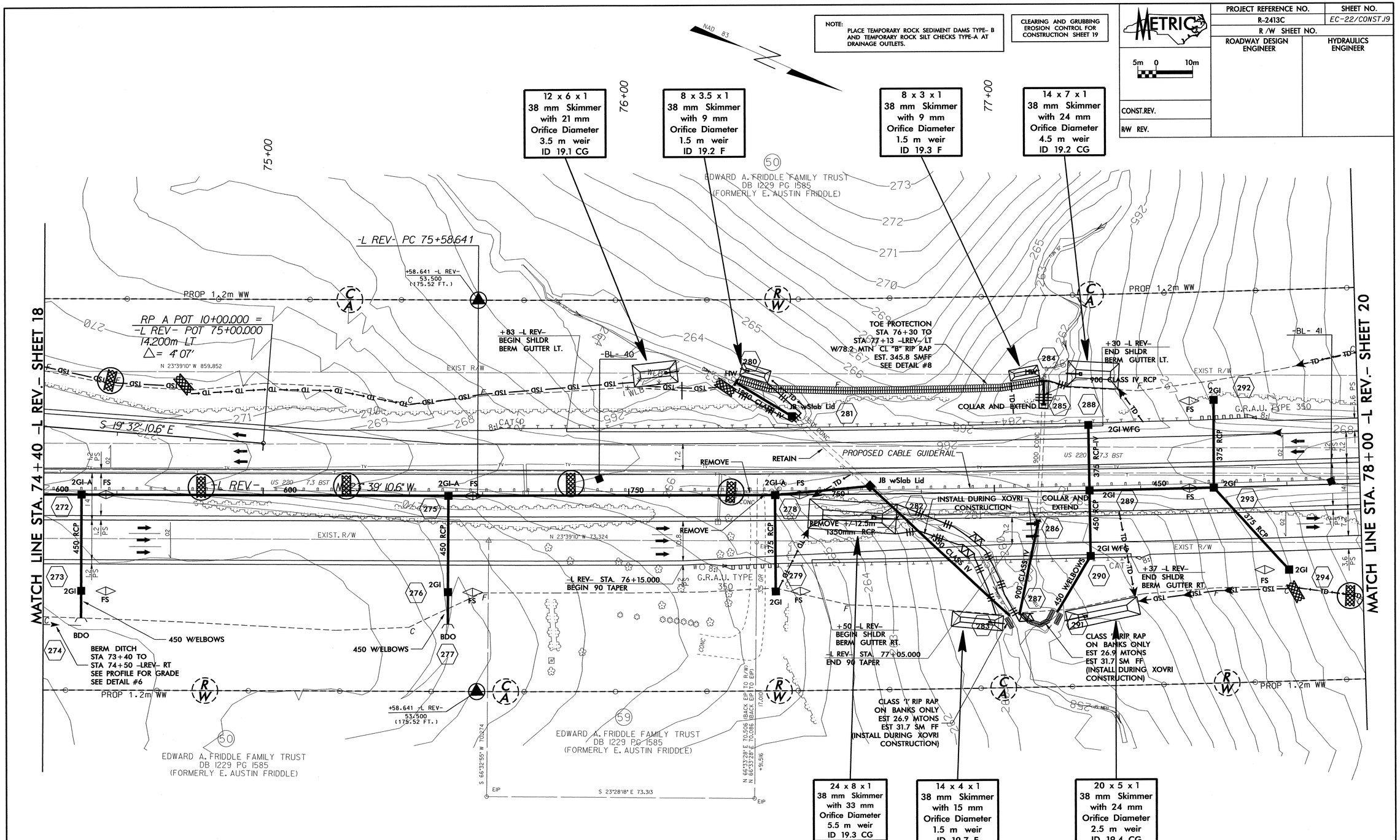

-L REV-	DET "C"	
PI Sta 77+51.91	PI Sta 10+56.714	PI Sta 11+75.573
Δ = 3° 09' 20.9 (LT)	Δ = 12° 56' 33.1" (RT)	Δ = 14° 16' 44.4" (LT)
L = 385.004	L = 112.945	L = 124.608
T = 192.550	T = 56.714	T = 62.628
R = 6,990.000	R = 500.000	R = 500.000
SE = NC	SE = .06	SE = .06

PROJECT REFERENCE NO.	SHEET NO.
R-2413C	EC-23/CONST.20
R /W SHEET NO.	
ROADWAY DESIGN ENGINEER	HYDRAULICS ENGINEER

CONST.REV.

R/W REV.

CLEARING AND GRUBBING EROSION CONTROL FOR CONSTRUCTION SHEET 20

NOTE: PLACE TEMPORARY ROCK SEDIMENT DAMS TYPE- B AND TEMPORARY ROCK SILT CHECKS TYPE-A AT DRAINAGE OUTLETS.

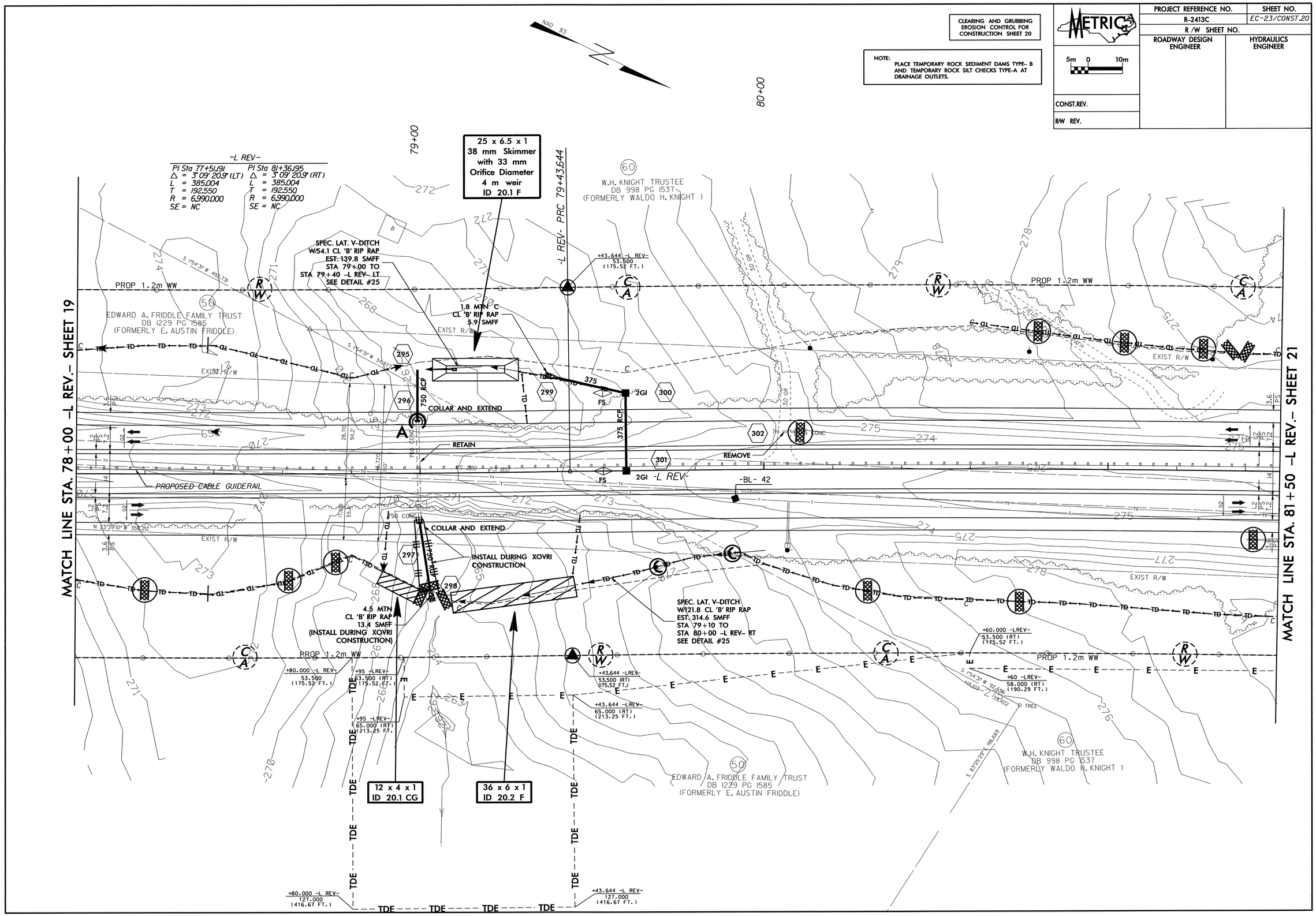

NOTE:
PLACE TEMPORARY ROCK SEDIMENT DAMS TYPE- B AND TEMPORARY ROCK SILT CHECKS TYPE-A AT DRAINAGE OUTLETS.

CLEARING AND GRUBBING EROSION CONTROL FOR CONSTRUCTION SHEET 21

PROJECT REFERENCE NO.	SHEET NO.
R-2413C	EC-24/CONST.21
R /W SHEET NO.	
ROADWAY DESIGN ENGINEER	HYDRAULICS ENGINEER
CONST.REV.	
R/W REV.	

METRIC 5m 0 10m

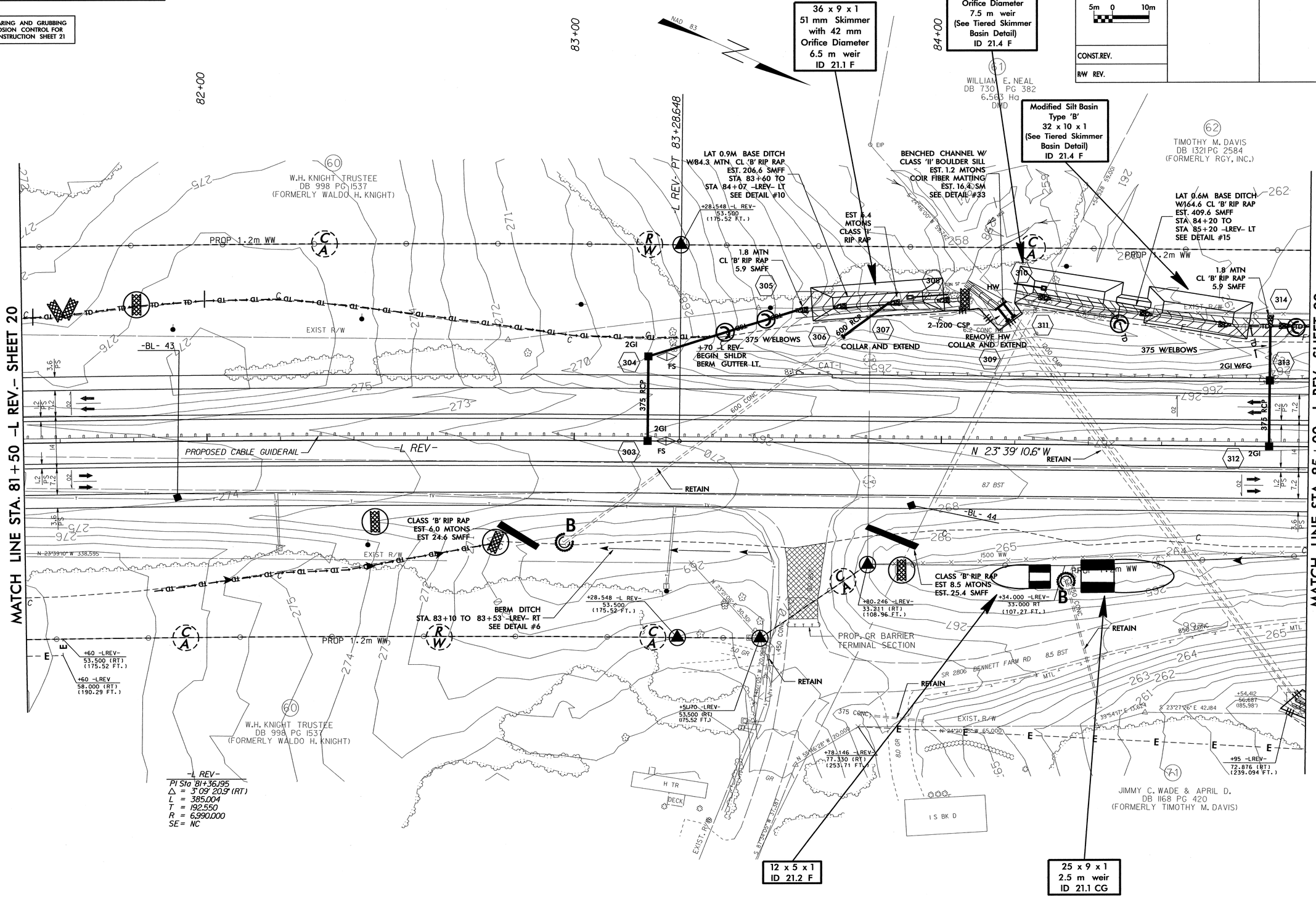

PROJECT REFERENCE NO.	SHEET NO.
R-2413C	EC-25/CONST.22
R /W SHEET NO.	
ROADWAY DESIGN ENGINEER	HYDRAULICS ENGINEER

METRIC

5m 0 10m

CONST.REV.

R/W REV.

CLEARING AND GRUBBING EROSION CONTROL FOR CONSTRUCTION SHEET 22

NOTE:
PLACE TEMPORARY ROCK SEDIMENT DAMS TYPE- B AND TEMPORARY ROCK SILT CHECKS TYPE-A AT DRAINAGE OUTLETS.

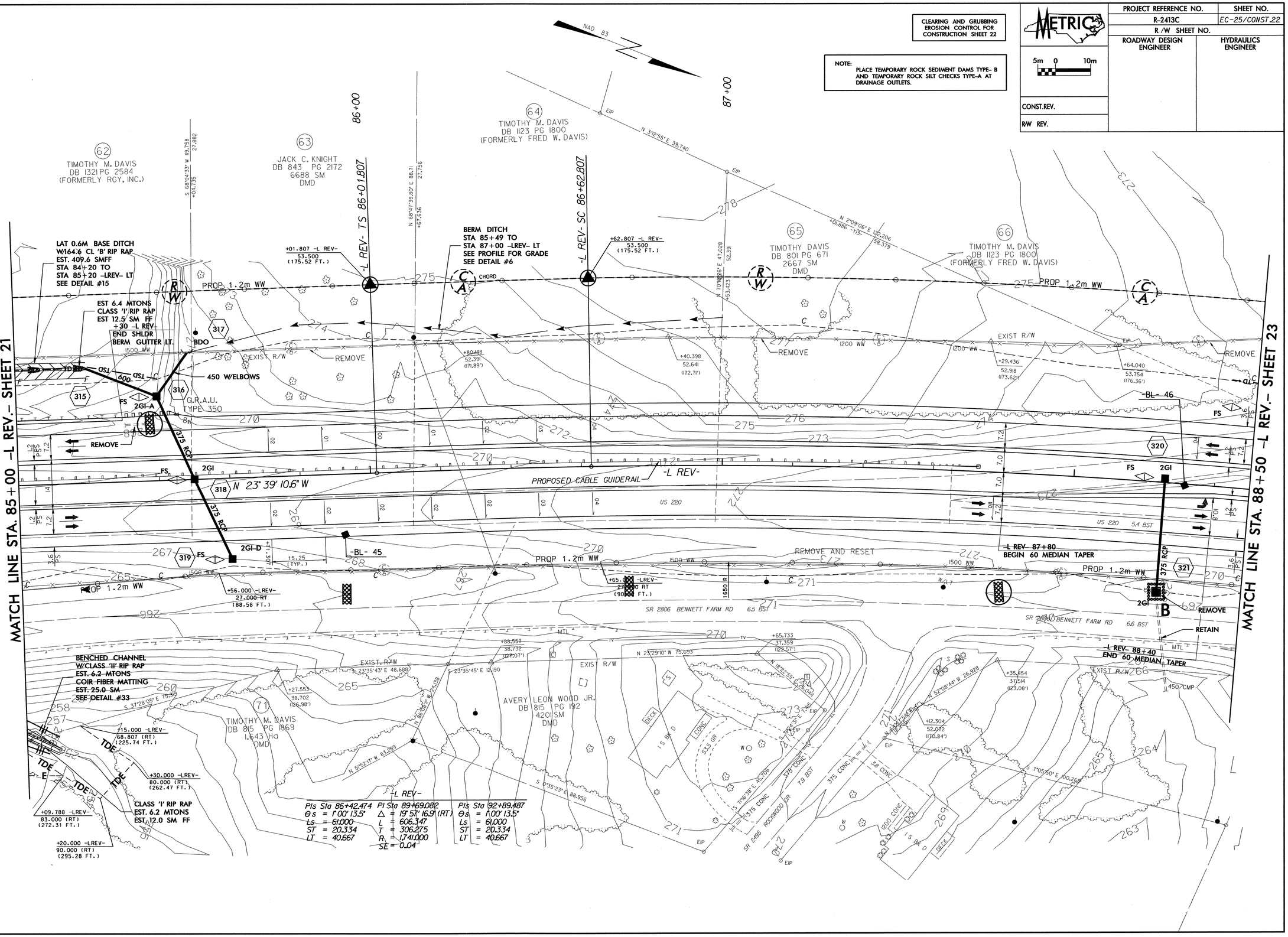

PROJECT REFERENCE NO.	SHEET NO.
R-2413C	EC-26/CONST.23
R /W SHEET NO.	
ROADWAY DESIGN ENGINEER	HYDRAULICS ENGINEER
CONST.REV.	
R/W REV.	

METRIC

5m 0 10m

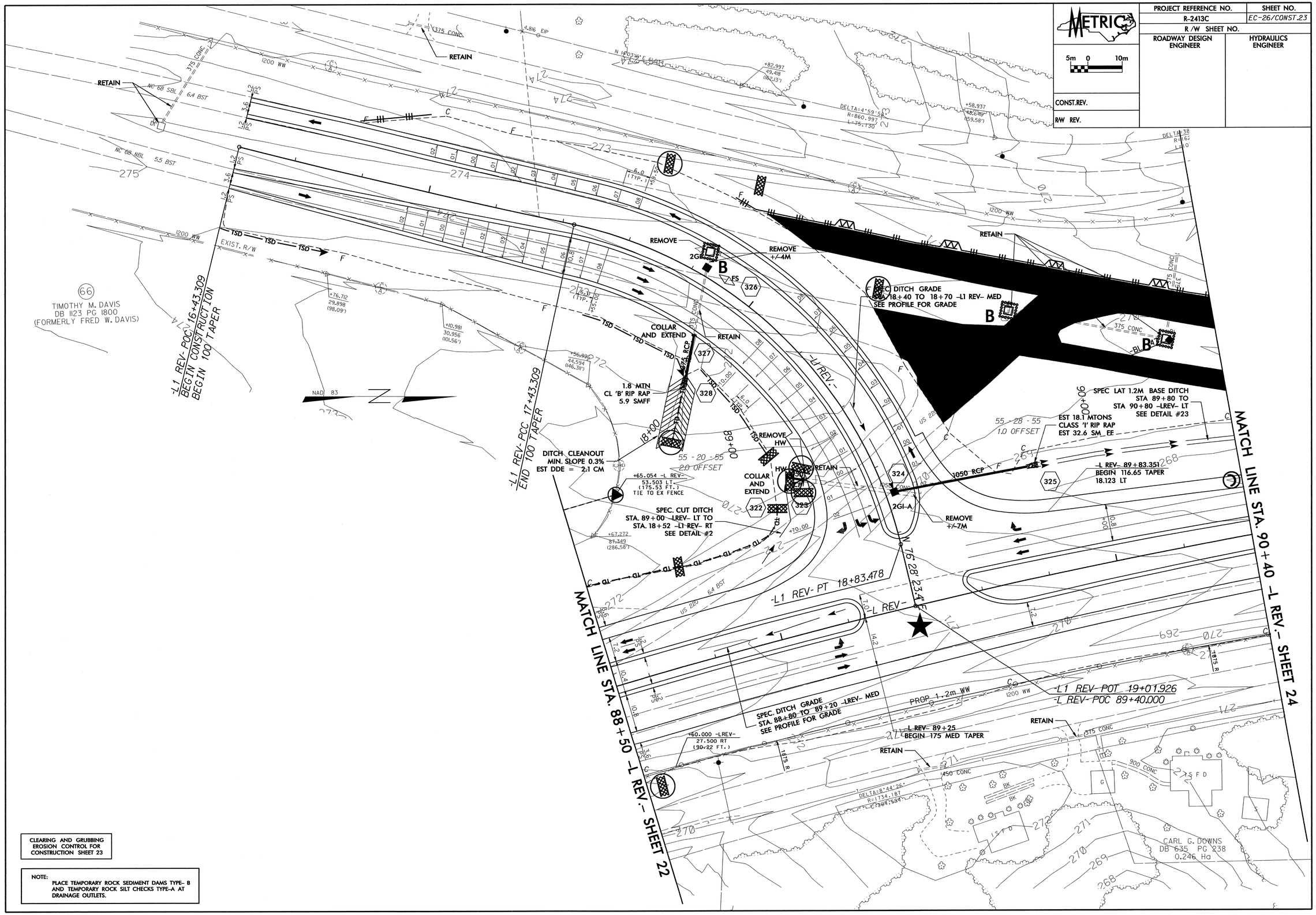

CLEARING AND GRUBBING
EROSION CONTROL FOR
CONSTRUCTION SHEET 23

NOTE:
PLACE TEMPORARY ROCK SEDIMENT DAMS TYPE- B AND TEMPORARY ROCK SILT CHECKS TYPE-A AT DRAINAGE OUTLETS.

PROJECT REFERENCE NO.	SHEET NO.
R-2413C	EC-27/CONST.24
R/W SHEET NO.	
ROADWAY DESIGN ENGINEER	HYDRAULICS ENGINEER

CONST.REV.

R/W REV.

CLEARING AND GRUBBING EROSION CONTROL FOR CONSTRUCTION SHEET 24

NOTE:
PLACE TEMPORARY ROCK SEDIMENT DAMS TYPE- B AND TEMPORARY ROCK SILT CHECKS TYPE-A AT DRAINAGE OUTLETS.

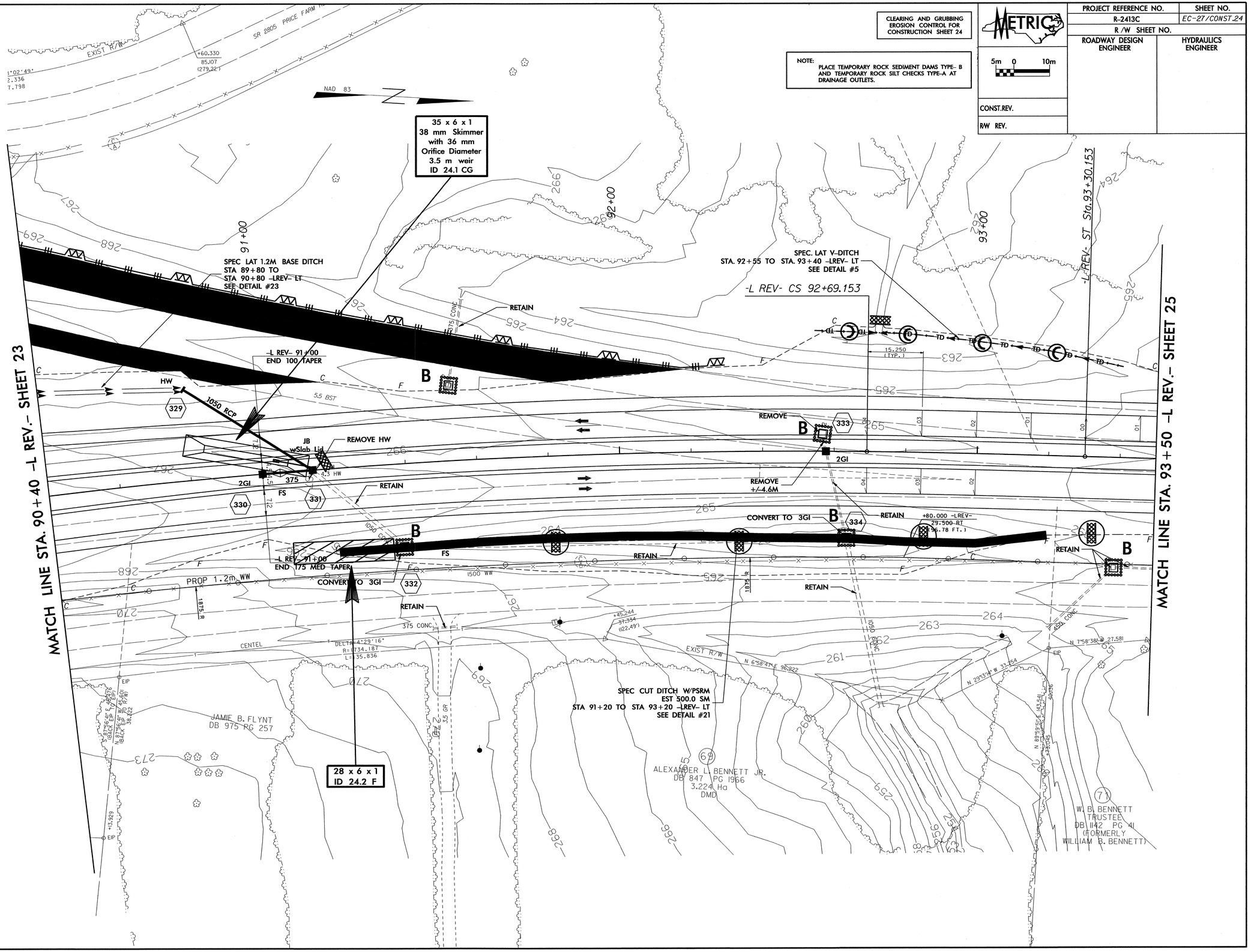

CLEARING AND GRUBBING EROSION CONTROL FOR CONSTRUCTION SHEET 25

NOTE:
PLACE TEMPORARY ROCK SEDIMENT DAMS TYPE- B AND TEMPORARY ROCK SILT CHECKS TYPE-A AT DRAINAGE OUTLETS.

METRIC	PROJECT REFERENCE NO.	SHEET NO.
5m 0 10m	R-2413C	EC-28/CONST.25
	R /W SHEET NO.	
	ROADWAY DESIGN ENGINEER	HYDRAULICS ENGINEER
CONST.REV.		
R/W REV.		

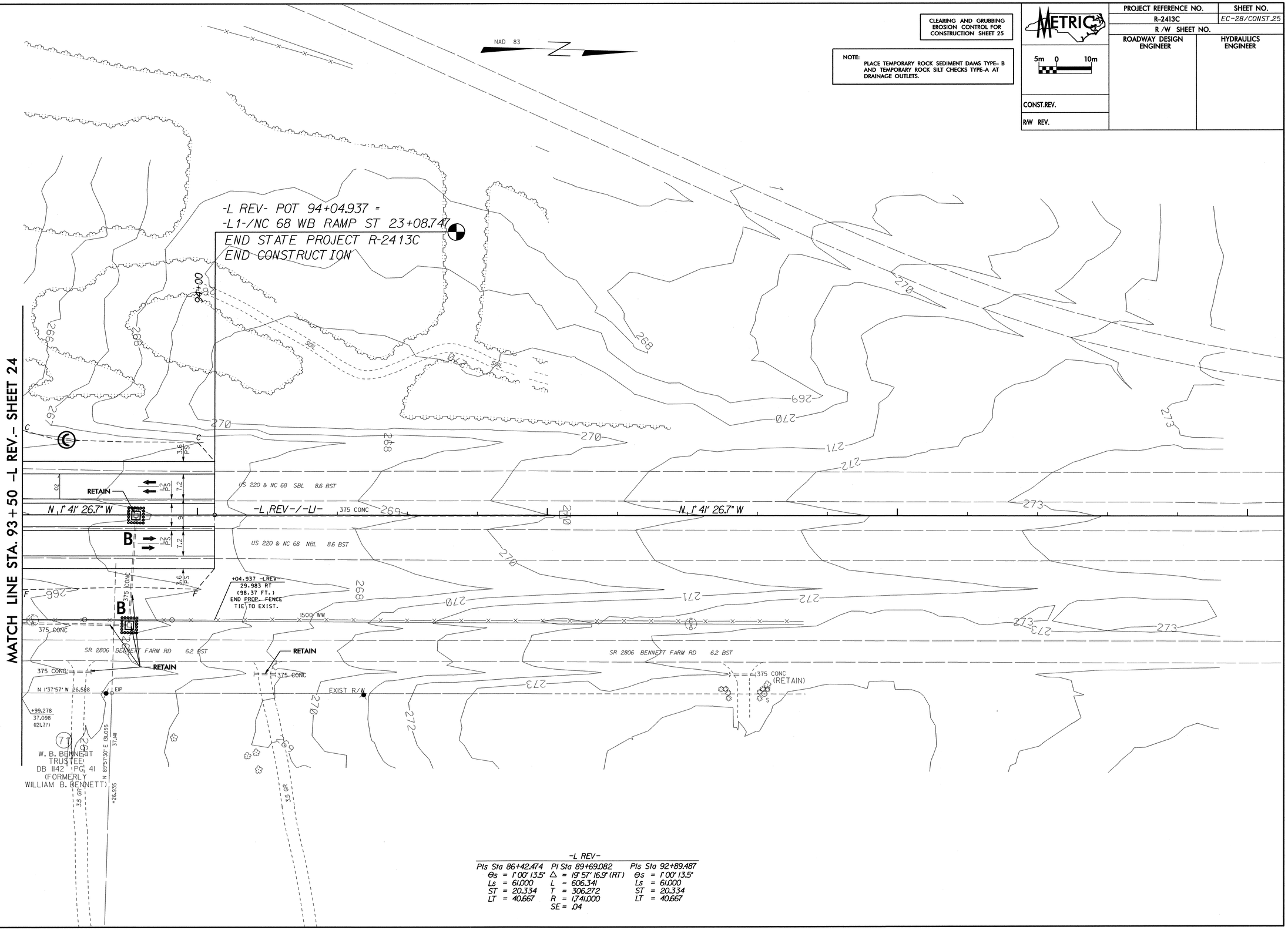

-L REV-

PIs Sta 86+42.474	PI Sta 89+69.082	PIs Sta 92+89.487
Θs = 1° 00' 13.5"	Δ = 19° 57' 16.9" (RT)	Θs = 1° 00' 13.5"
Ls = 61.000	L = 606.341	Ls = 61.000
ST = 20.334	T = 306.272	ST = 20.334
LT = 40.667	R = 1,741.000	LT = 40.667
	SE = .04	

PROJECT REFERENCE NO.	SHEET NO.
R-2413C	EC-29/CONST.26
R /W SHEET NO.	
ROADWAY DESIGN ENGINEER	HYDRAULICS ENGINEER

METRIC

5m 0 10m

CONST.REV.

R/W REV.

CLEARING AND GRUBBING EROSION CONTROL FOR CONSTRUCTION SHEET 26

NOTE:
PLACE TEMPORARY ROCK SEDIMENT DAMS TYPE- B AND TEMPORARY ROCK SILT CHECKS TYPE-A AT DRAINAGE OUTLETS.

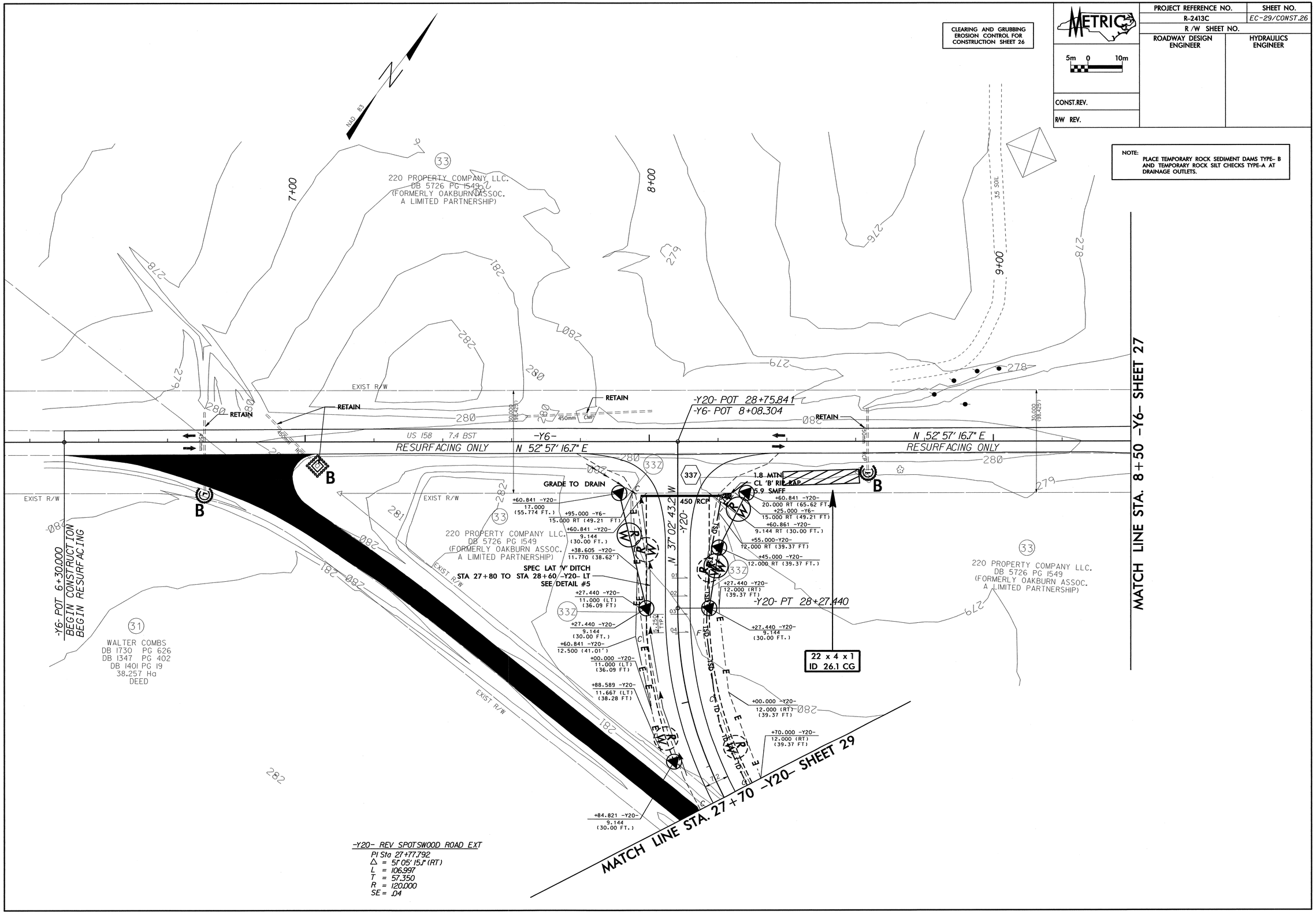

-Y20- REV SPOTSWOOD ROAD EXT
PI Sta 27+77.792
Δ = 51° 05' 15.1" (RT)
L = 106.997
T = 57.350
R = 120.000
SE = .04

2/15/10 – PARCEL 33Z ADDED PROPOSED RIGHT OF WAY
REVISED TEMPORARY CONSTRUCTION EASEMENT

PROJECT REFERENCE NO.	SHEET NO.
R-2413C	EC-30/CONST.27
R /W SHEET NO.	
ROADWAY DESIGN ENGINEER	HYDRAULICS ENGINEER

CONST.REV.

R/W REV.

CLEARING AND GRUBBING EROSION CONTROL FOR CONSTRUCTION SHEET 27

NOTE:
PLACE TEMPORARY ROCK SEDIMENT DAMS TYPE- B AND TEMPORARY ROCK SILT CHECKS TYPE-A AT DRAINAGE OUTLETS.

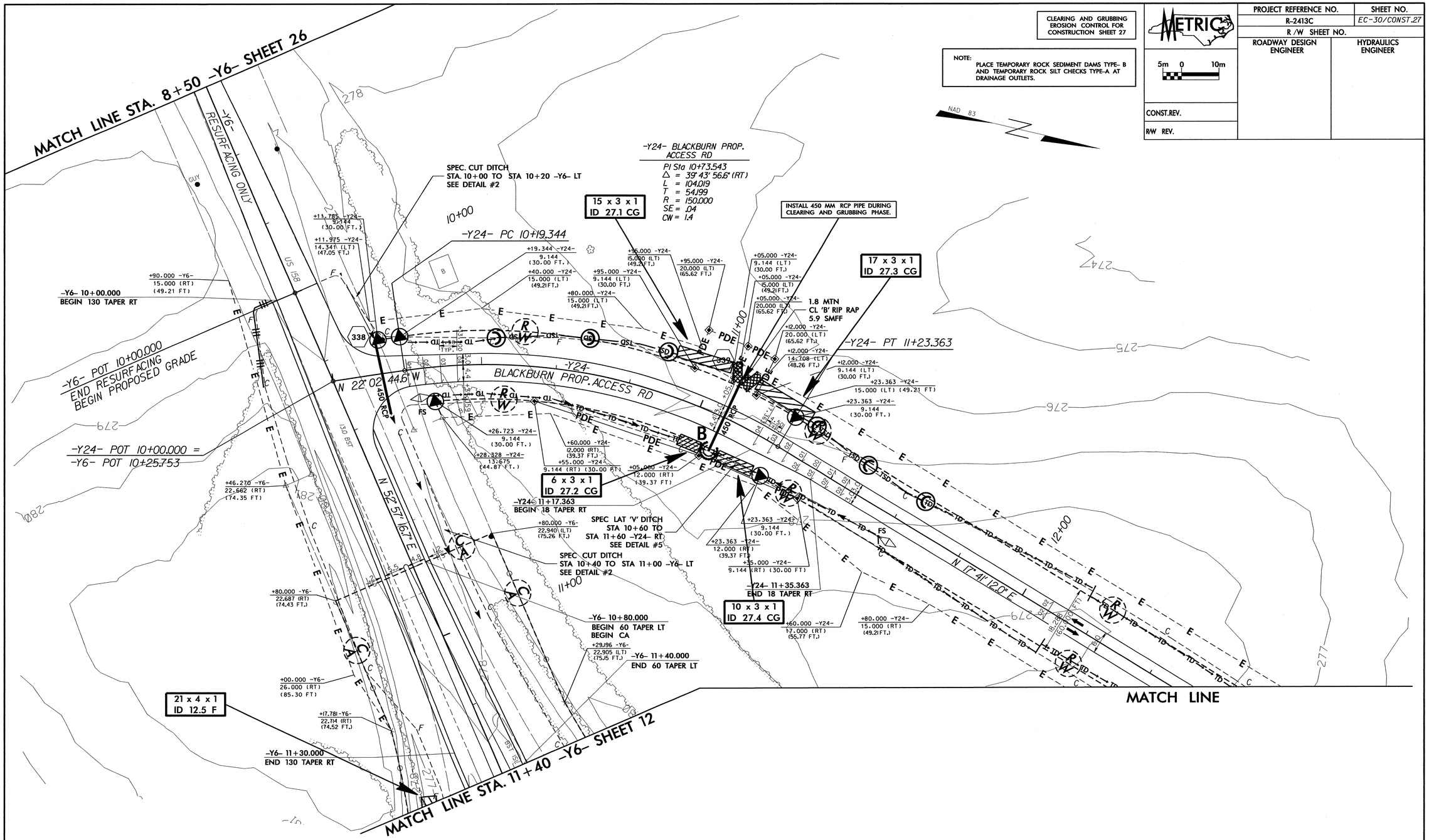

PROJECT REFERENCE NO.	SHEET NO.
R-2413C	EC-31/CONST.28
R /W SHEET NO.	
ROADWAY DESIGN ENGINEER	HYDRAULICS ENGINEER

CONST.REV.

R/W REV.

NOTE: PLACE TEMPORARY ROCK SEDIMENT DAMS TYPE- B AND TEMPORARY ROCK SILT CHECKS TYPE-A AT DRAINAGE OUTLETS.

CLEARING AND GRUBBING EROSION CONTROL FOR CONSTRUCTION SHEET 28

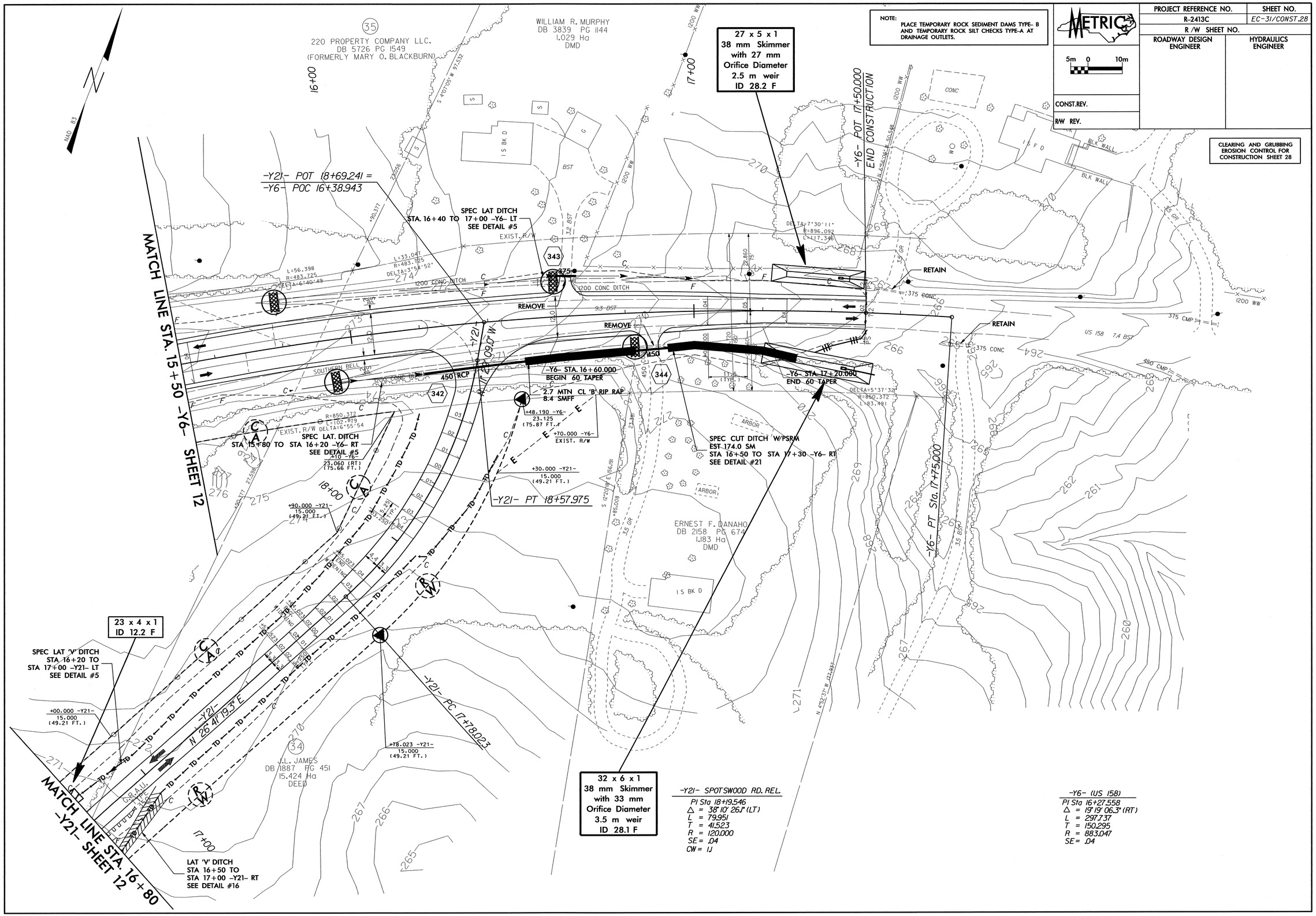

PROJECT REFERENCE NO.	SHEET NO.
R-2413C	EC-32/CONST.29
R /W SHEET NO.	
ROADWAY DESIGN ENGINEER	HYDRAULICS ENGINEER

METRIC

5m 0 10m

CONST.REV.

R/W REV.

CLEARING AND GRUBBING EROSION CONTROL FOR CONSTRUCTION SHEET 29

NOTE: PLACE TEMPORARY ROCK SEDIMENT DAMS TYPE- B AND TEMPORARY ROCK SILT CHECKS TYPE-A AT DRAINAGE OUTLETS.

-Y-20 REV SPOTSWOOD ROAD EXT

PIs Sta 22+87.978
Θs = 7°13' 27.3"
Ls = 58.000
ST = 19.363
LT = 38.699

PI Sta 24+12.310
Δ = 49°05' 16.8" (LT)
L = 197.052
T = 105.030
R = 230.000
SE = .08
CW = 1.1m

PIs Sta 25+17.493
Θs = 5°27' 20.0"
Ls = 30.000
ST = 13.162
LT = 16.861

PI Sta 26+03.482
Δ = 15°44' 53.8" (LT)
L = 137.430
T = 69.151
R = 500.000
SE = .06

PI Sta 27+77.792
Δ = 51°05' 15.1" (RT)
L = 106.998
T = 57.350
R = 120.000
SE = .04

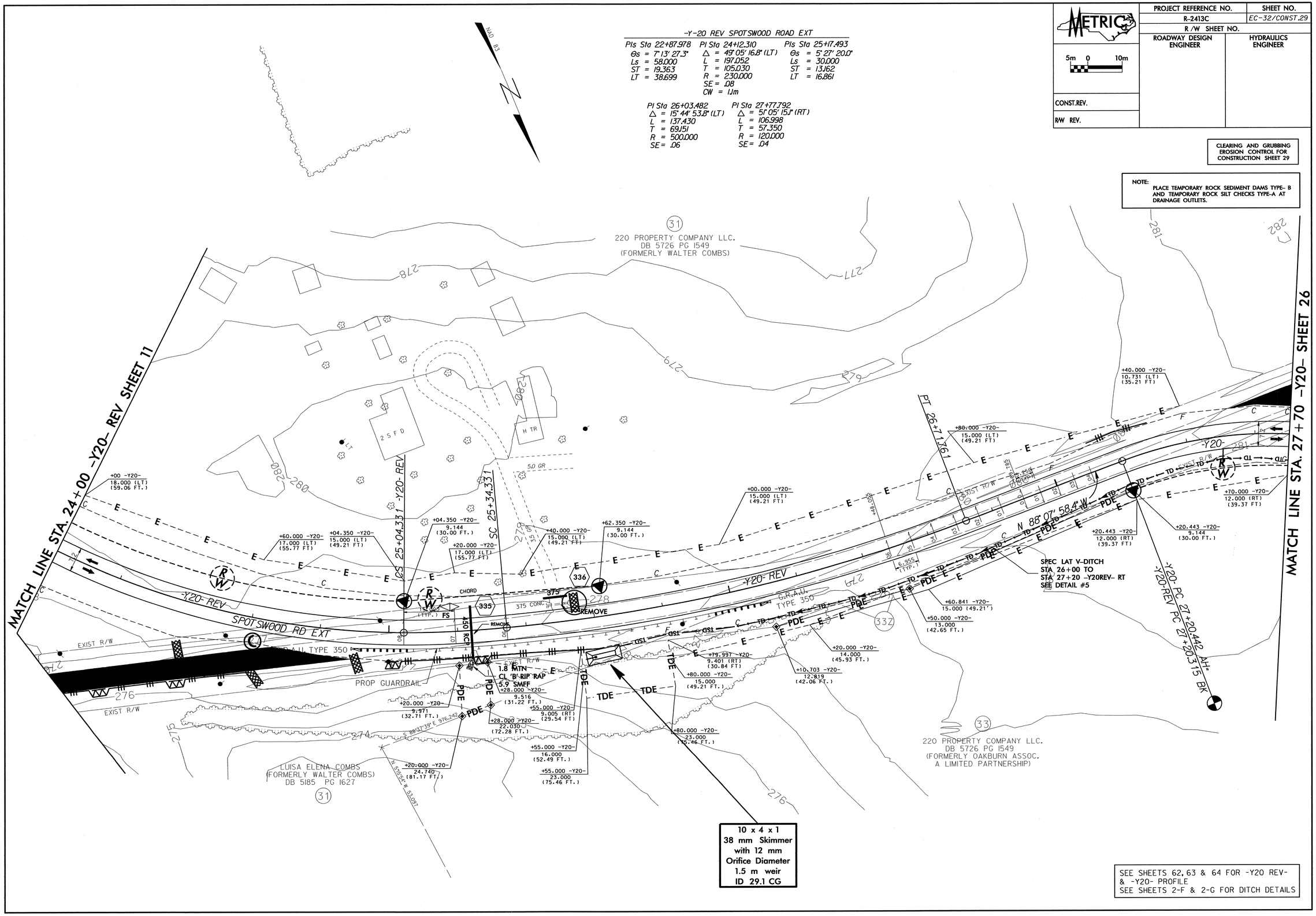

SEE SHEETS 62, 63 & 64 FOR -Y20 REV- & -Y20- PROFILE
SEE SHEETS 2-F & 2-G FOR DITCH DETAILS

PROJECT REFERENCE NO.	SHEET NO.
R-2413C	EC-33/CONST.30
R /W SHEET NO.	
ROADWAY DESIGN ENGINEER	HYDRAULICS ENGINEER

METRIC 5m 0 10m

CONST.REV.

R/W REV.

CLEARING AND GRUBBING EROSION CONTROL FOR CONSTRUCTION SHEET 30

NOTE: PLACE TEMPORARY ROCK SEDIMENT DAMS TYPE- B AND TEMPORARY ROCK SILT CHECKS TYPE-A AT DRAINAGE OUTLETS.

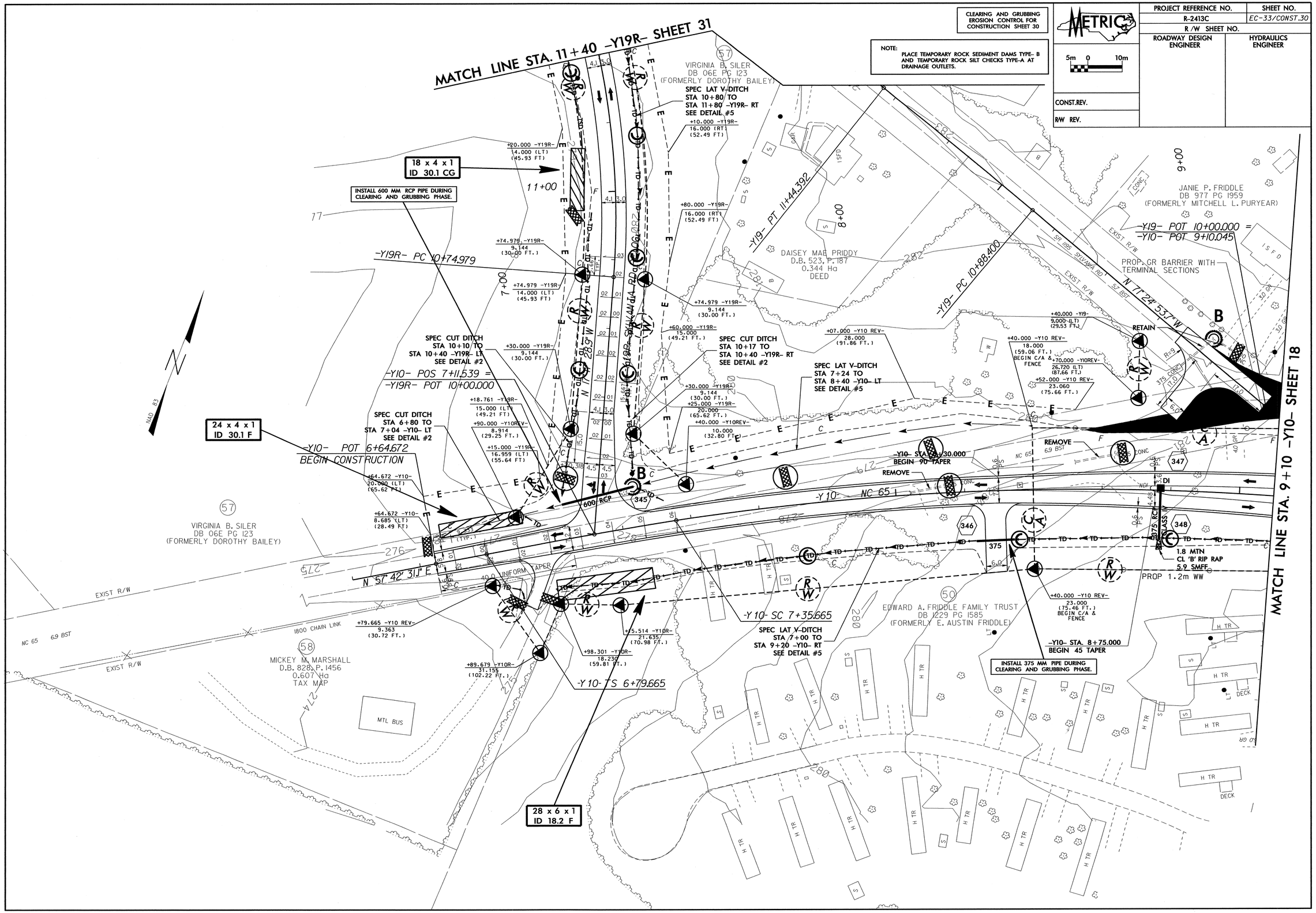

PROJECT REFERENCE NO.	SHEET NO.
R-2413C	EC-34/CONST.31
R /W SHEET NO.	
ROADWAY DESIGN ENGINEER	HYDRAULICS ENGINEER

CONST.REV.

R/W REV.

CLEARING AND GRUBBING EROSION CONTROL FOR CONSTRUCTION SHEET 31

NOTE:
PLACE TEMPORARY ROCK SEDIMENT DAMS TYPE- B AND TEMPORARY ROCK SILT CHECKS TYPE-A AT DRAINAGE OUTLETS.

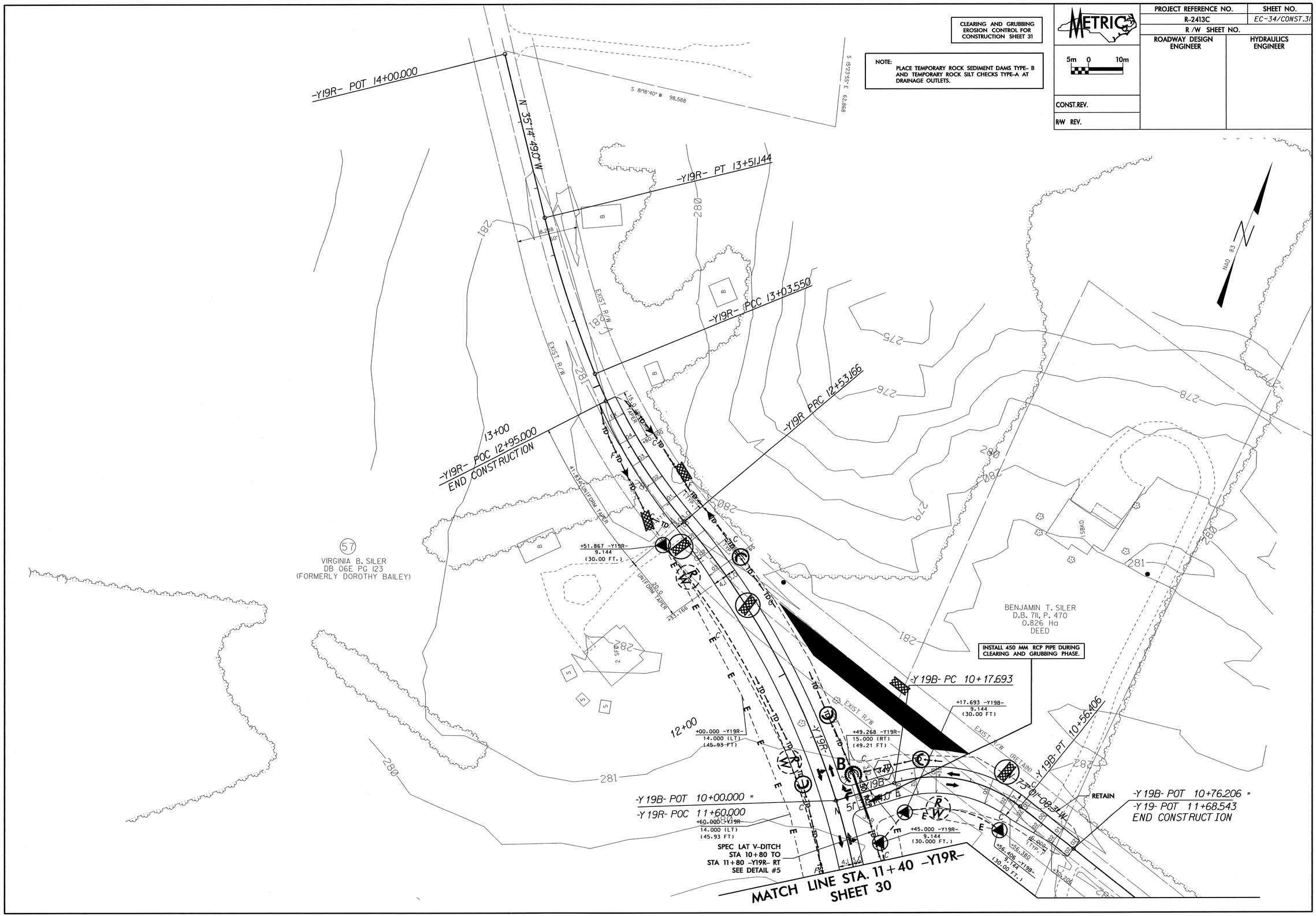

PROJECT REFERENCE NO.	SHEET NO.
R-2413C	EC-35/CONST.32
R /W SHEET NO.	
ROADWAY DESIGN ENGINEER	HYDRAULICS ENGINEER

CONST.REV.

R/W REV.

CLEARING AND GRUBBING EROSION CONTROL FOR CONSTRUCTION SHEET 32

NOTE: PLACE TEMPORARY ROCK SEDIMENT DAMS TYPE- B AND TEMPORARY ROCK SILT CHECKS TYPE-A AT DRAINAGE OUTLETS.

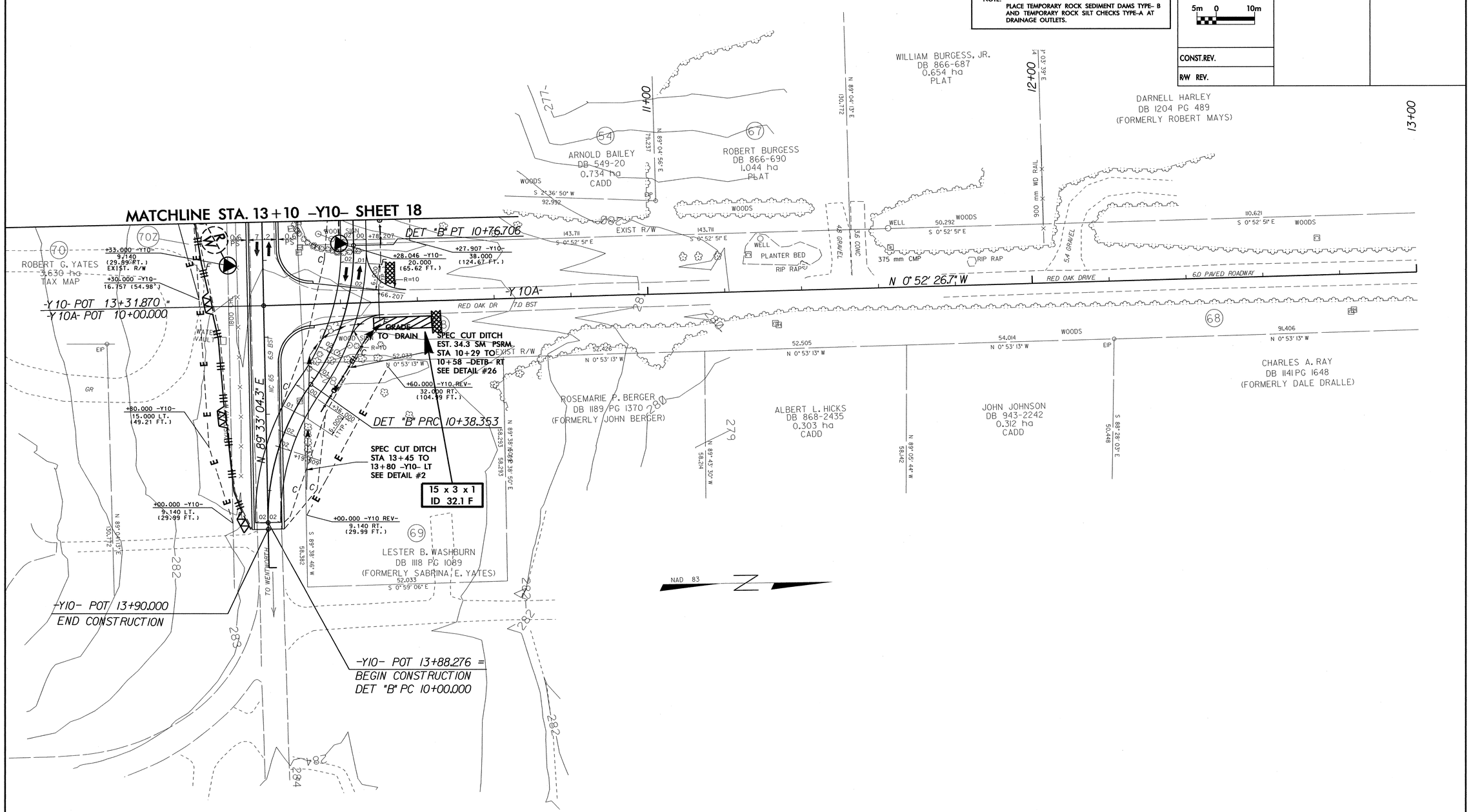

METRIC	PROJECT REFERENCE NO.	SHEET NO.
5m 0 10m	R-2413C	EC-36/CONST.4
	R /W SHEET NO.	
	ROADWAY DESIGN ENGINEER	HYDRAULICS ENGINEER
CONST.REV.		
R/W REV.		

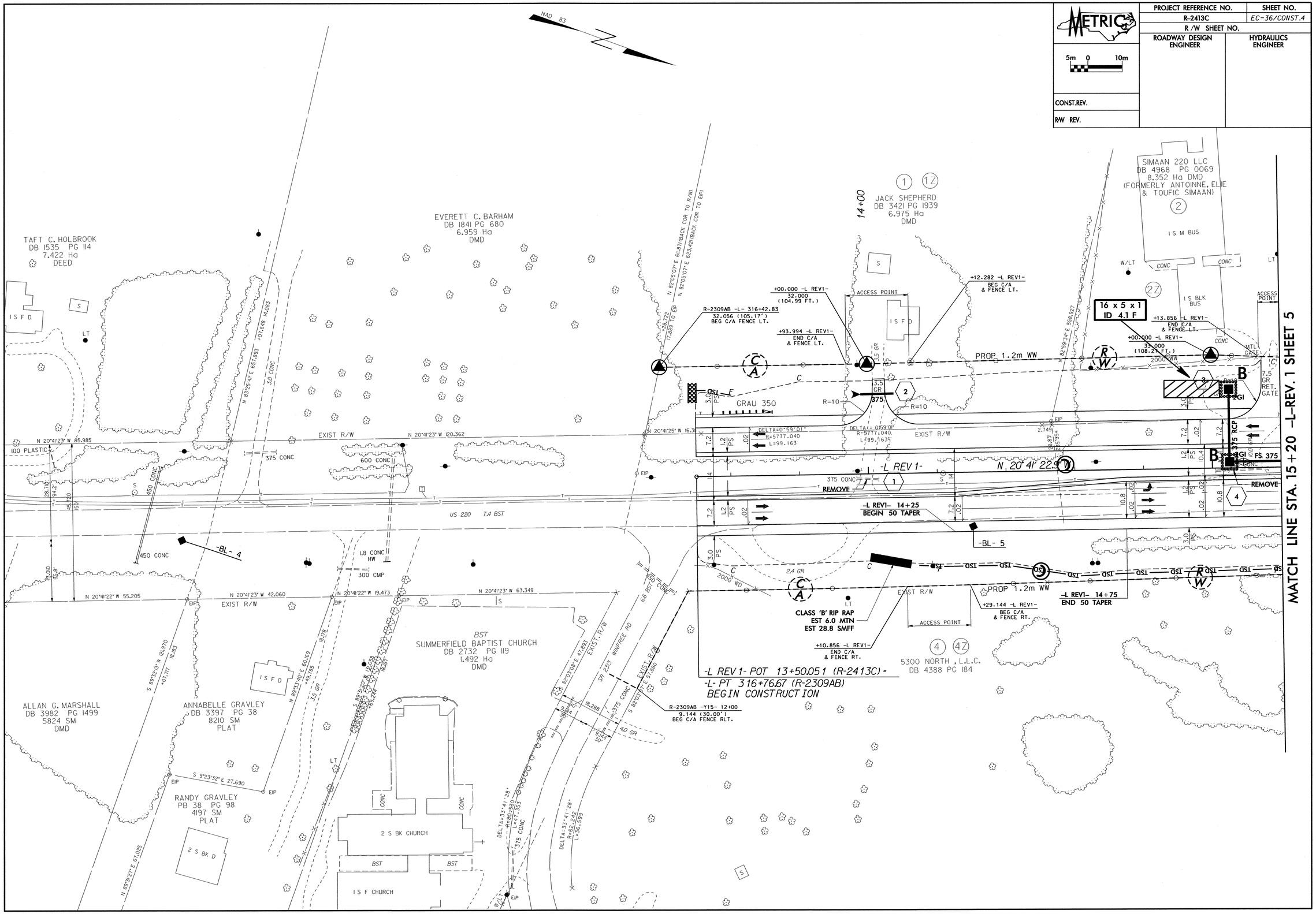

PROJECT REFERENCE NO.	SHEET NO.
R-2413C	EC-37/CONST.5
R /W SHEET NO.	
ROADWAY DESIGN ENGINEER	HYDRAULICS ENGINEER

METRIC

5m 0 10m

CONST.REV.

R/W REV.

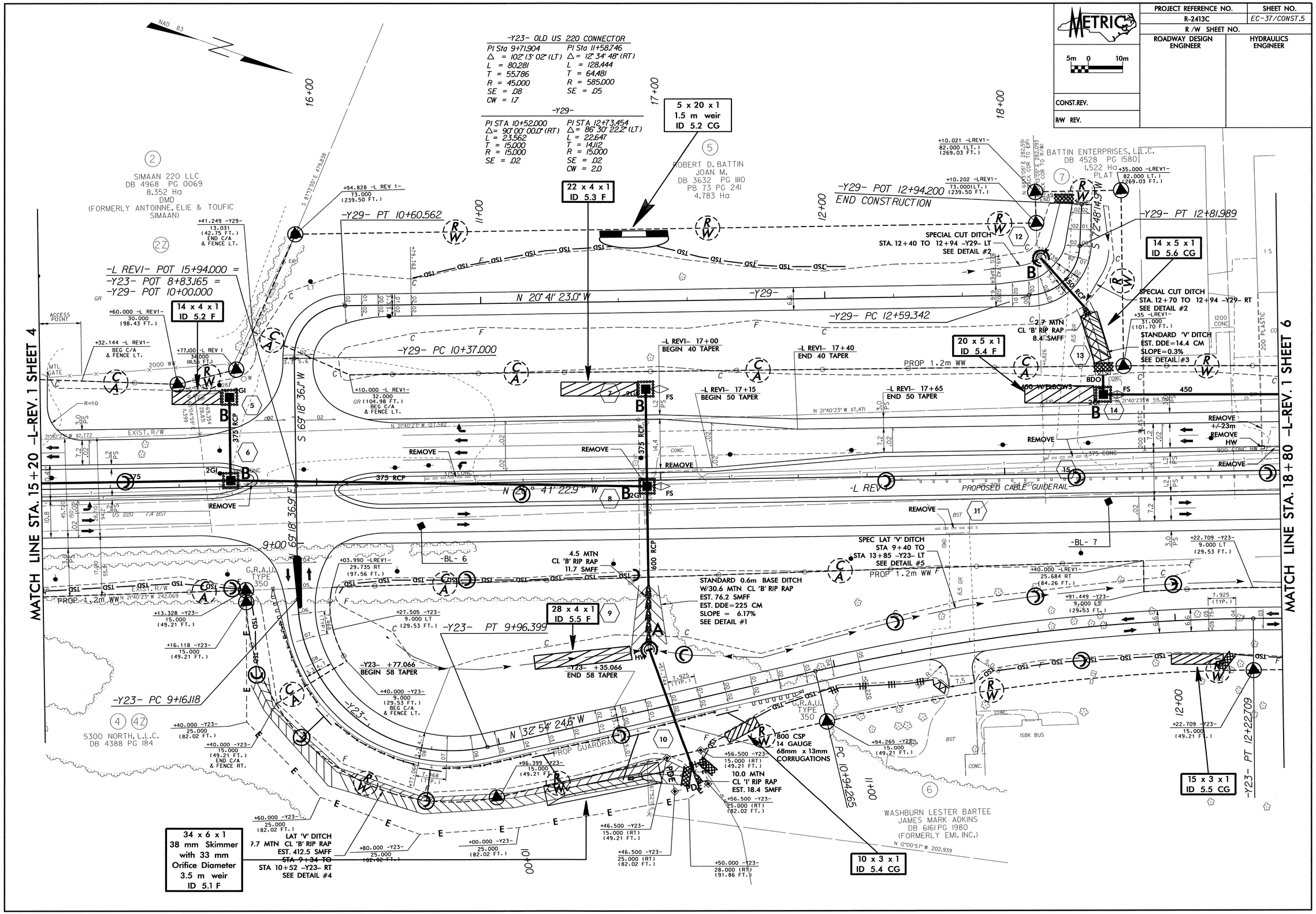

12/1609 - PARCELS 4 & 6 REVISED CONTROL OF ACCESS & FENCE

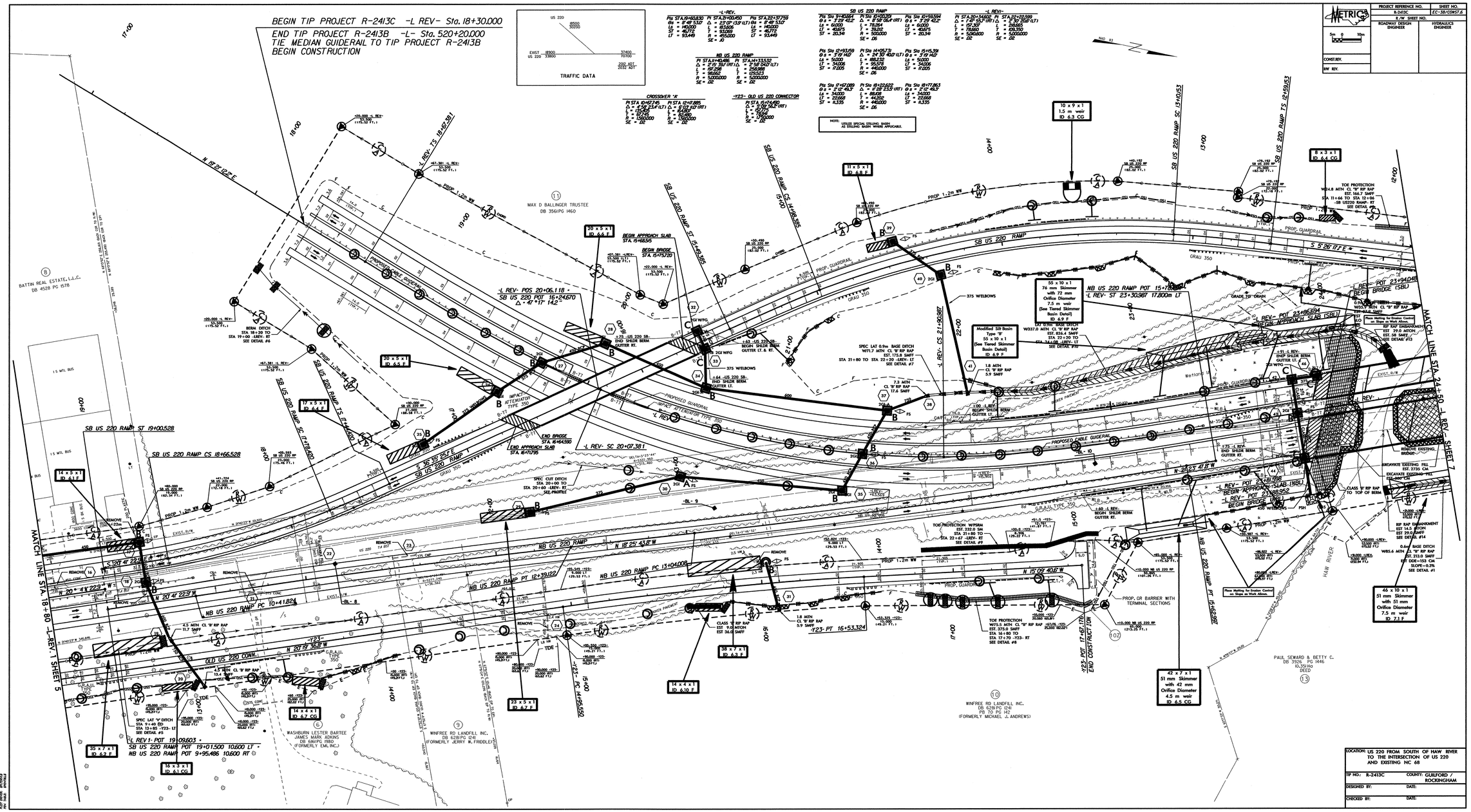
BEGIN TIP PROJECT R-2413C -L REV- Sta. 18+30.000
END TIP PROJECT R-2413B -L- Sta. 520+20.000
TIE MEDIAN GUIDERAIL TO TIP PROJECT R-2413B
BEGIN CONSTRUCTION
TRAFFIC DATA
SB US 220 RAMP
NB US 220 RAMP
CROSSOVER 'X'
-Y23- OLD US 220 CONNECTOR
-L REV- POS 20+06.118 =
SB US 220 POT 16+24570
△ = 41° 11' 14.2"
-L REV- POT 23+94046
BEGIN BRIDGE (SBL)
-L REV- POT 23+95694
BEGIN APPROACH SLAB (SBL)
-L REV- POT 23+81598
BEGIN APPROACH SLAB (NBL)
-L REV- POT 23+88952
BEGIN BRIDGE (NBL)
-L REV- ST 23+30987 17.800m LT
NB US 220 RAMP POT 15+78.094
-Y23- PT 16+53.324
-Y23- POT 17+67.176
END CONSTRUCTION
-L REV1- POT 19+09.603 =
SB US 220 RAMP POT 19+01.500 10.600 LT =
NB US 220 RAMP POT 9+95.486 10.600 RT
MATCH LINE STA. 18+80 -L REV. 1 SHEET 5
MATCH LINE STA. 24+50 -L REV- SHEET 7
BATTIN REAL ESTATE, L.L.C.
DB 4528 PG 1578
MAX D BALLINGER TRUSTEE
DB 3561PG 1460
WASHBURN LESTER BARTEE
JAMES MARK ADKINS
DB 6161PG 1980
(FORMERLY EMIL INC.)
WINFREE RD LANDFILL INC.
DB 6281PG 1241
(FORMERLY JERRY W. FRIDDLE)
WINFREE RD LANDFILL INC.
DB 6281 PG 1241
PB 70 PG 142
(FORMERLY MICHAEL J. ANDREWS)
PAUL SEWARD & BETTY C.
DB 3926 PG 1446
10.39Ha
DEED
HAW RIVER
LOCATION: US 220 FROM SOUTH OF HAW RIVER TO THE INTERSECTION OF US 220 AND EXISTING NC 68
TIP NO.: R-2413C
COUNTY: GUILFORD / ROCKINGHAM
DESIGNED BY:
DATE:
CHECKED BY:
DATE:
PROJECT REFERENCE NO.
R-2413C
SHEET NO.
EC-38/CONST.6
R/W SHEET NO.
ROADWAY DESIGN ENGINEER
HYDRAULICS ENGINEER
CONST.REV.
R/W REV.

PROJECT REFERENCE NO.	SHEET NO.
R-2413C	EC-39/CONST.7
R /W SHEET NO.	
ROADWAY DESIGN ENGINEER	HYDRAULICS ENGINEER

METRIC 5m 0 10m

CONST.REV.

R/W REV.

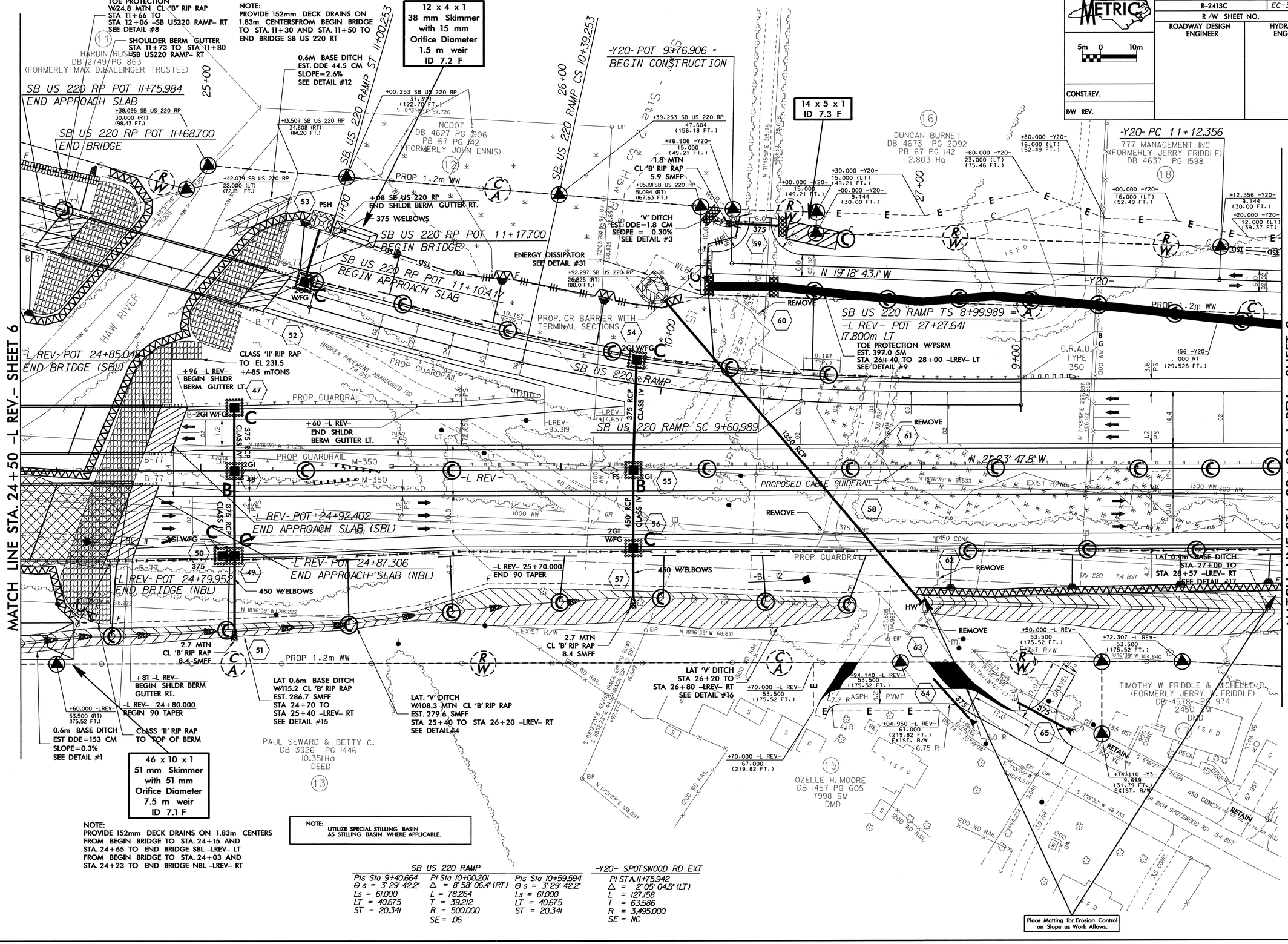

NOTE: PROVIDE 152mm DECK DRAINS ON 1.83m CENTERS FROM BEGIN BRIDGE TO STA. 24+15 AND STA. 24+65 TO END BRIDGE SBL -LREV- LT FROM BEGIN BRIDGE TO STA. 24+03 AND STA. 24+23 TO END BRIDGE NBL -LREV- RT

NOTE: UTILIZE SPECIAL STILLING BASIN AS STILLING BASIN WHERE APPLICABLE.

SB US 220 RAMP

PIs Sta 9+40.664	PI Sta 10+00.201	PIs Sta 10+59.594
Θs = 3° 29' 42.2"	Δ = 8° 58' 06.4" (RT)	Θs = 3° 29' 42.2"
Ls = 61.000	L = 78.264	Ls = 61.000
LT = 40.675	T = 39.212	LT = 40.675
ST = 20.341	R = 500.000	ST = 20.341
	SE = .06	

-Y20- SPOTSWOOD RD EXT

PI STA. 11+75.942
Δ = 2° 05' 04.5" (LT)
L = 127.158
T = 63.586
R = 3,495.000
SE = NC

PROJECT REFERENCE NO.	SHEET NO.
R-2413C	EC-40/CONST.8
R /W SHEET NO.	
ROADWAY DESIGN ENGINEER	HYDRAULICS ENGINEER

METRIC 5m 0 10m

CONST.REV.

R/W REV.

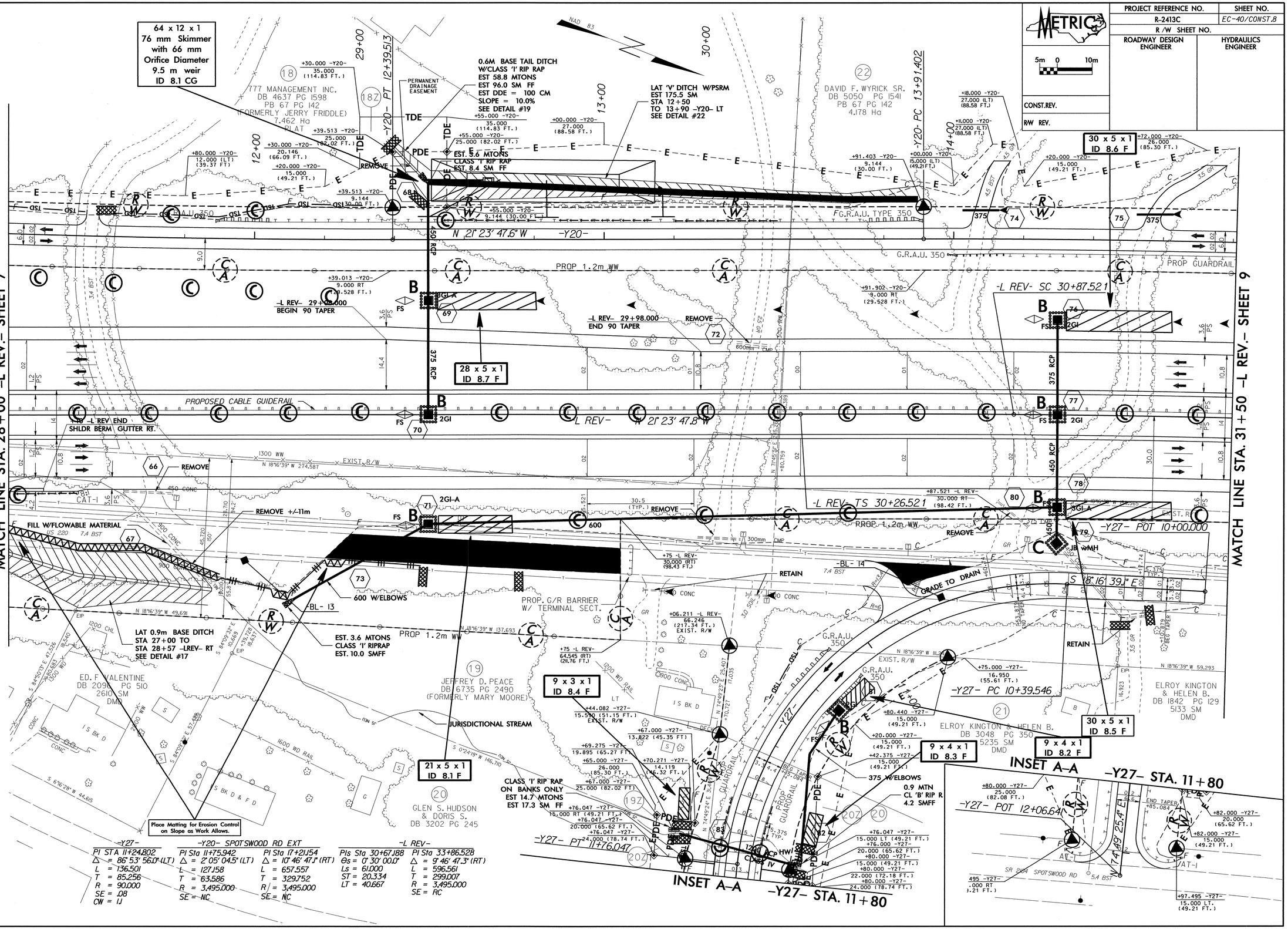

PROJECT REFERENCE NO.	SHEET NO.
R-2413C	EC-41/CONST.9
R/W SHEET NO.	
ROADWAY DESIGN ENGINEER	HYDRAULICS ENGINEER
CONST.REV.	
R/W REV.	

METRIC

5m 0 10m

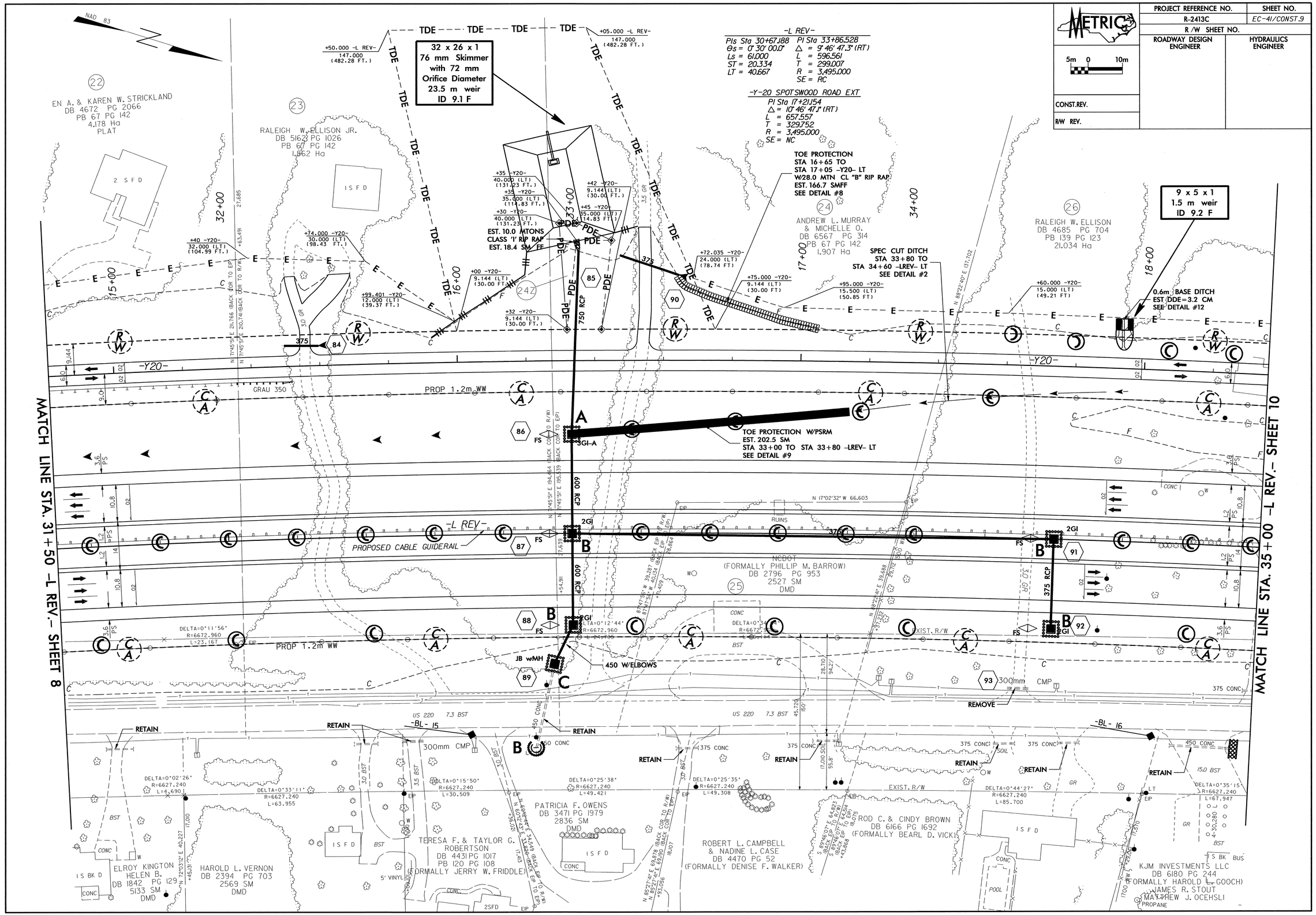

PROJECT REFERENCE NO.	SHEET NO.
R-2413C	EC-42/CONST.JO
R /W SHEET NO.	
ROADWAY DESIGN ENGINEER	HYDRAULICS ENGINEER

METRIC 5m 0 10m

CONST.REV.

RW REV.

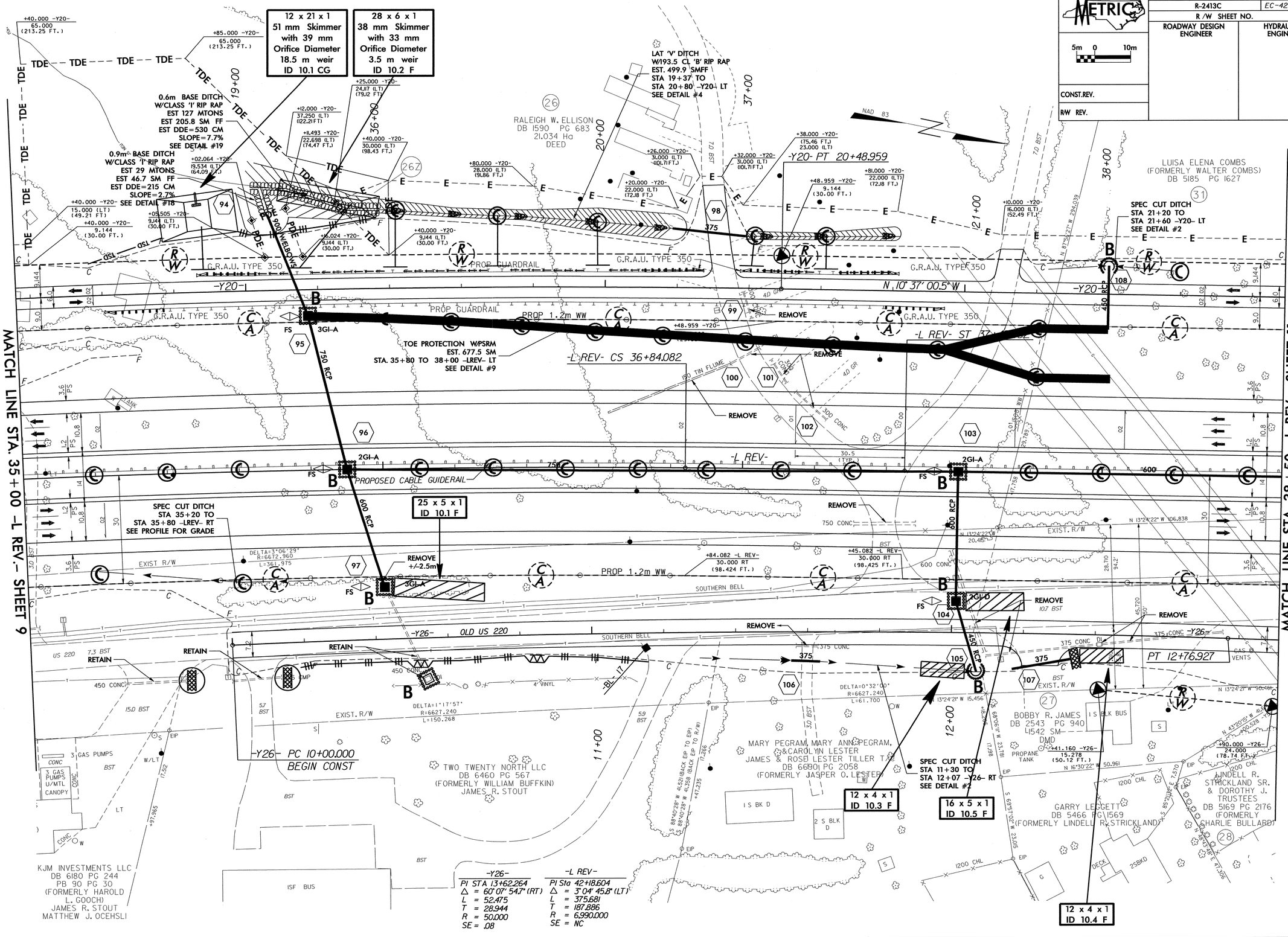

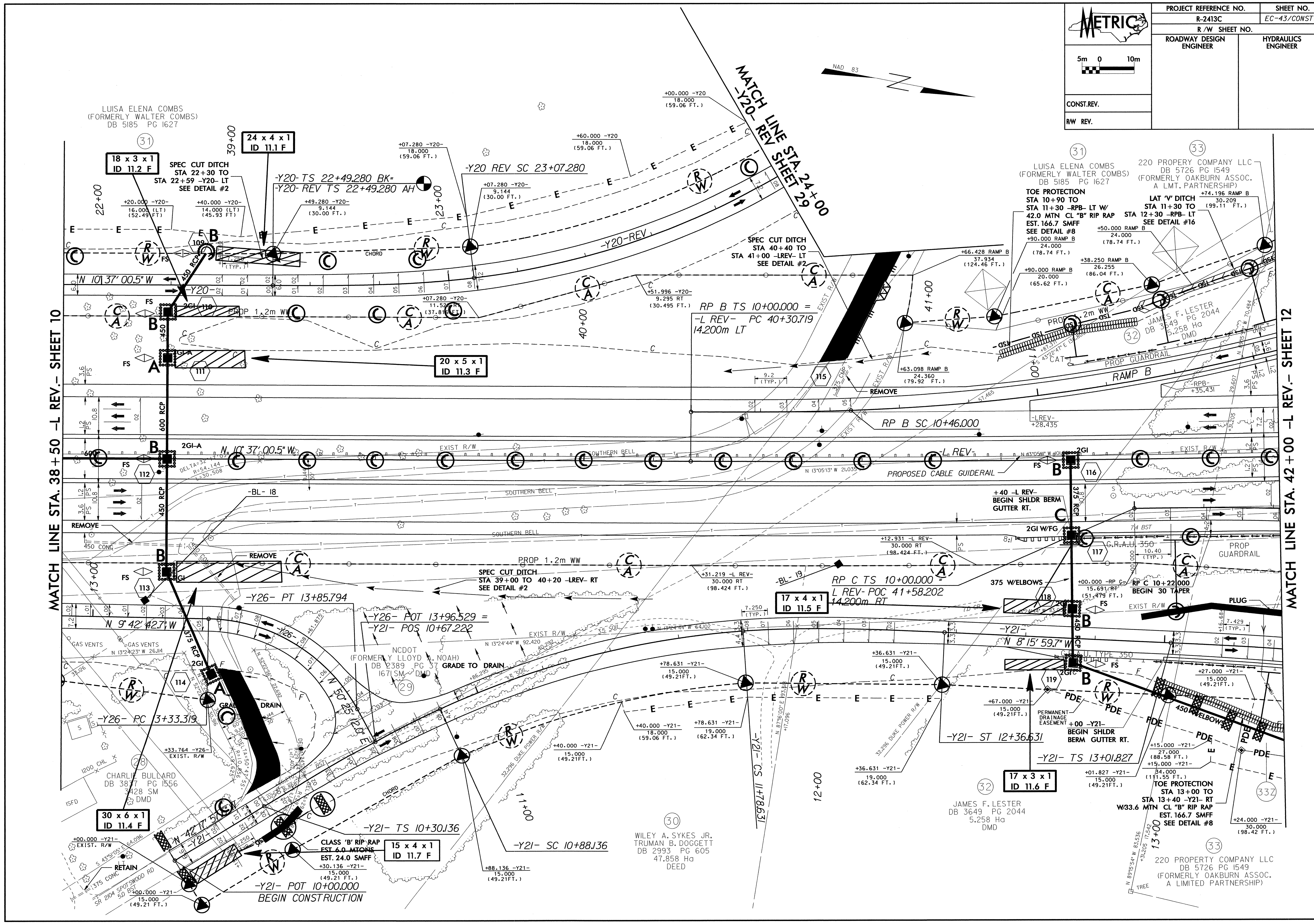
METRIC
PROJECT REFERENCE NO.
R-2413C
SHEET NO.
EC-43/CONST.II
R/W SHEET NO.
ROADWAY DESIGN ENGINEER
HYDRAULICS ENGINEER
5m 0 10m
CONST.REV.
RW REV.
NAD 83
MATCH LINE STA. 38+50 -L REV.- SHEET 10
MATCH LINE STA. 42+00 -L REV.- SHEET 12
MATCH LINE STA. 24+00 -Y20- REV SHEET 29
LUISA ELENA COMBS (FORMERLY WALTER COMBS) DB 5185 PG 1627
18 x 3 x 1 ID 11.2 F
24 x 4 x 1 ID 11.1 F
20 x 5 x 1 ID 11.3 F
30 x 6 x 1 ID 11.4 F
15 x 4 x 1 ID 11.7 F
17 x 4 x 1 ID 11.5 F
17 x 3 x 1 ID 11.6 F
SPEC CUT DITCH STA 22+30 TO STA 22+59 -Y20- LT SEE DETAIL #2
-Y20- TS 22+49.280 BK= -Y20- REV TS 22+49.280 AH
-Y20 REV SC 23+07.280
-Y20-REV
N 10°37' 00.5" W
SPEC CUT DITCH STA 40+40 TO STA 41+00 -LREV- LT SEE DETAIL #2
RP B TS 10+00.000 = -L REV- PC 40+30.719 14.200m LT
RP B SC 10+46.000
TOE PROTECTION STA 10+90 TO STA 11+30 -RPB- LT W/ 42.0 MTN CL "B" RIP RAP EST. 166.7 SMFF SEE DETAIL #8
LAT 'V' DITCH STA 11+30 TO STA 12+30 -RPB- LT SEE DETAIL #16
220 PROPERY COMPANY LLC DB 5726 PG 1549 (FORMERLY OAKBURN ASSOC. A LMT. PARTNERSHIP)
JAMES F. LESTER DB 3649 PG 2044 5.258 Ha DMD
PROP 1.2m WW
PROP GUARDRAIL
RAMP B
-L REV-
PROPOSED CABLE GUIDERAIL
SOUTHERN BELL
EXIST R/W
REMOVE
450 CONC
-BL- 18
-BL- 19
SPEC CUT DITCH STA 39+00 TO 40+20 -LREV- RT SEE DETAIL #2
RP C TS 10+00.000 = L REV- POC 41+58.202 14.200m RT
+40 -L REV- BEGIN SHLDR BERM GUTTER RT.
375 W/ELBOWS
RP C 10+22.000 BEGIN 30 TAPER
PLUG
G.R.A.U. 350
-Y26- PT 13+85.794
-Y26- POT 13+96.529 = -Y21- POS 10+67.222
-Y26- PC 3+33.319
NCDOT (FORMERLY LLOYD A. NOAH) DB 2389 PG 37 1671 SM DMD
GRADE TO DRAIN
CHARLIE BULLARD DB 3837 PG 1556 3428 SM DMD
CLASS 'B' RIP RAP EST 6.0 MTONS EST. 24.0 SMFF
-Y21- TS 10+30.136
-Y21- SC 10+88.136
-Y21- POT 10+00.000 BEGIN CONSTRUCTION
RETAIN
SR 2104 SPOTSWOOD RD 5.0 BST
-Y21- CS 11+78.631
WILEY A. SYKES JR. TRUMAN B. DOGGETT DB 2993 PG 605 47.858 Ha DEED
-Y21- ST 12+36.631
-Y21- TS 13+01.827
N 8° 15' 59.7" W
PERMANENT DRAINAGE EASEMENT
+00 -Y21- BEGIN SHLDR BERM GUTTER RT.
450 W/ELBOWS
TOE PROTECTION STA 13+00 TO STA 13+40 -Y21- RT W/33.6 MTN CL "B" RIP RAP EST. 166.7 SMFF SEE DETAIL #8
220 PROPERTY COMPANY LLC DB 5726 PG 1549 (FORMERLY OAKBURN ASSOC. A LIMITED PARTNERSHIP)

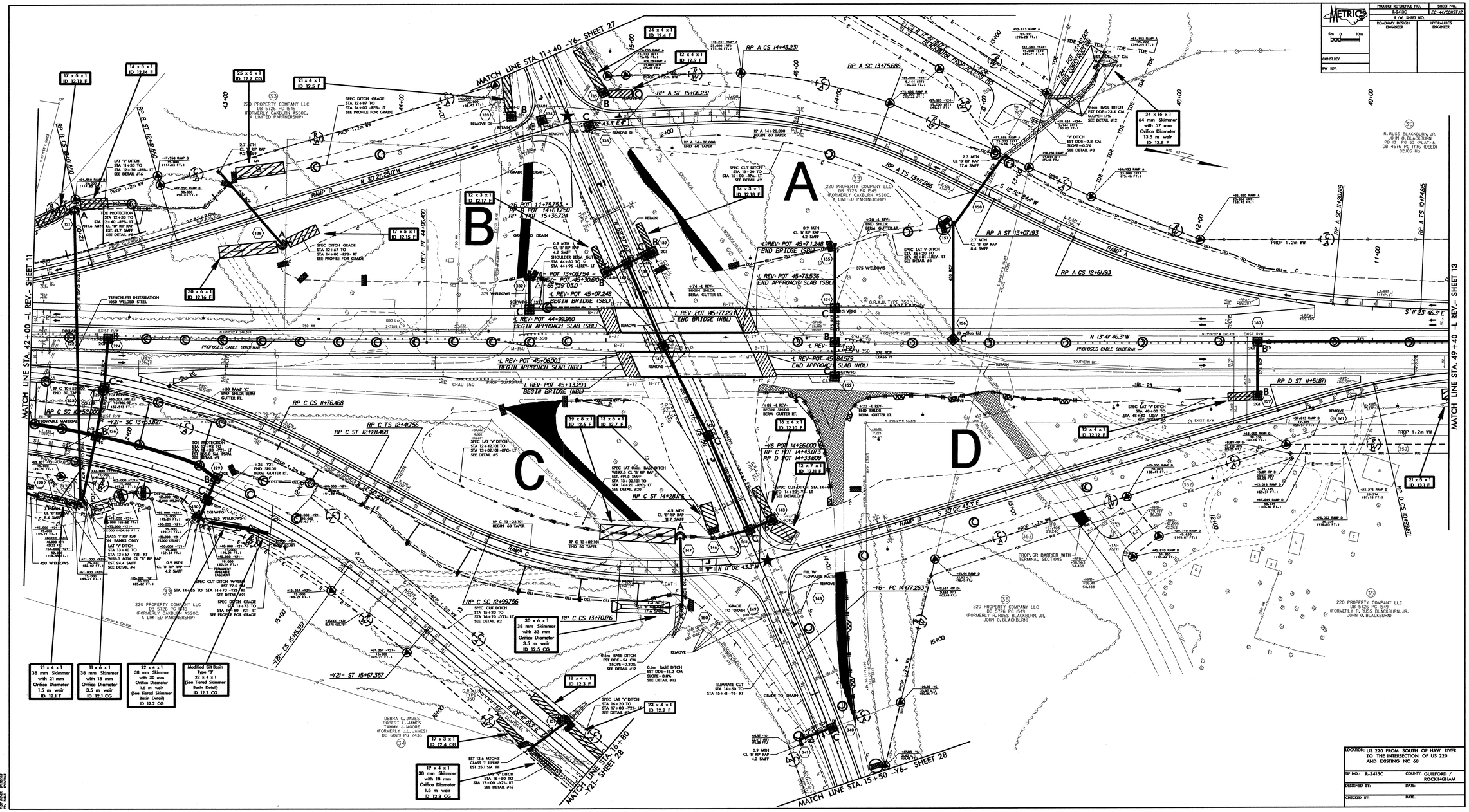

PROJECT REFERENCE NO.	SHEET NO.
R-2413C	EC-44/CONST.12
R/W SHEET NO.	
ROADWAY DESIGN ENGINEER	HYDRAULICS ENGINEER
CONST.REV.	
RW REV.	

LOCATION: US 220 FROM SOUTH OF HAW RIVER TO THE INTERSECTION OF US 220 AND EXISTING NC 68

TIP NO.: R-2413C COUNTY: GUILFORD / ROCKINGHAM

DESIGNED BY: DATE:

CHECKED BY: DATE:

METRIC 5m 0 10m	PROJECT REFERENCE NO.	SHEET NO.
	R-2413C	EC-45/CONST.13
	R/W SHEET NO.	
	ROADWAY DESIGN ENGINEER	HYDRAULICS ENGINEER
CONST.REV.		
R/W REV.		

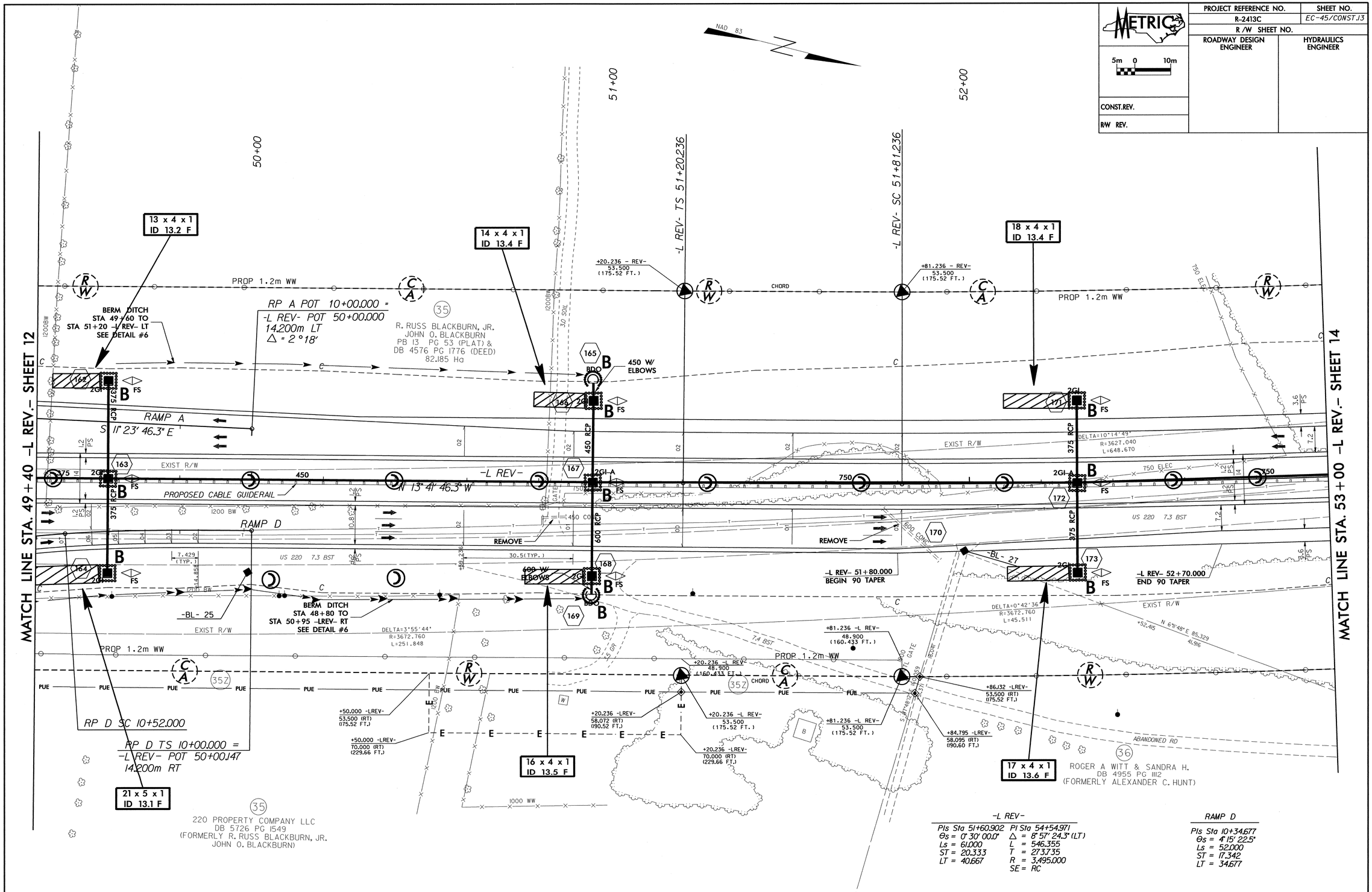

-L REV-

PIs Sta 51+60.902	PI Sta 54+54.971
Θs = 0° 30' 00.0"	Δ = 8° 57' 24.3" (LT)
Ls = 61.000	L = 546.355
ST = 20.333	T = 273.735
LT = 40.667	R = 3,495.000
	SE = RC

RAMP D

PIs Sta 10+34.677
Θs = 4° 15' 22.5"
Ls = 52.000
ST = 17.342
LT = 34.677

PROJECT REFERENCE NO.	SHEET NO.
R-2413C	EC-46/CONST.J4
R/W SHEET NO.	
ROADWAY DESIGN ENGINEER	HYDRAULICS ENGINEER

METRIC

5m 0 10m

CONST.REV.

R/W REV.

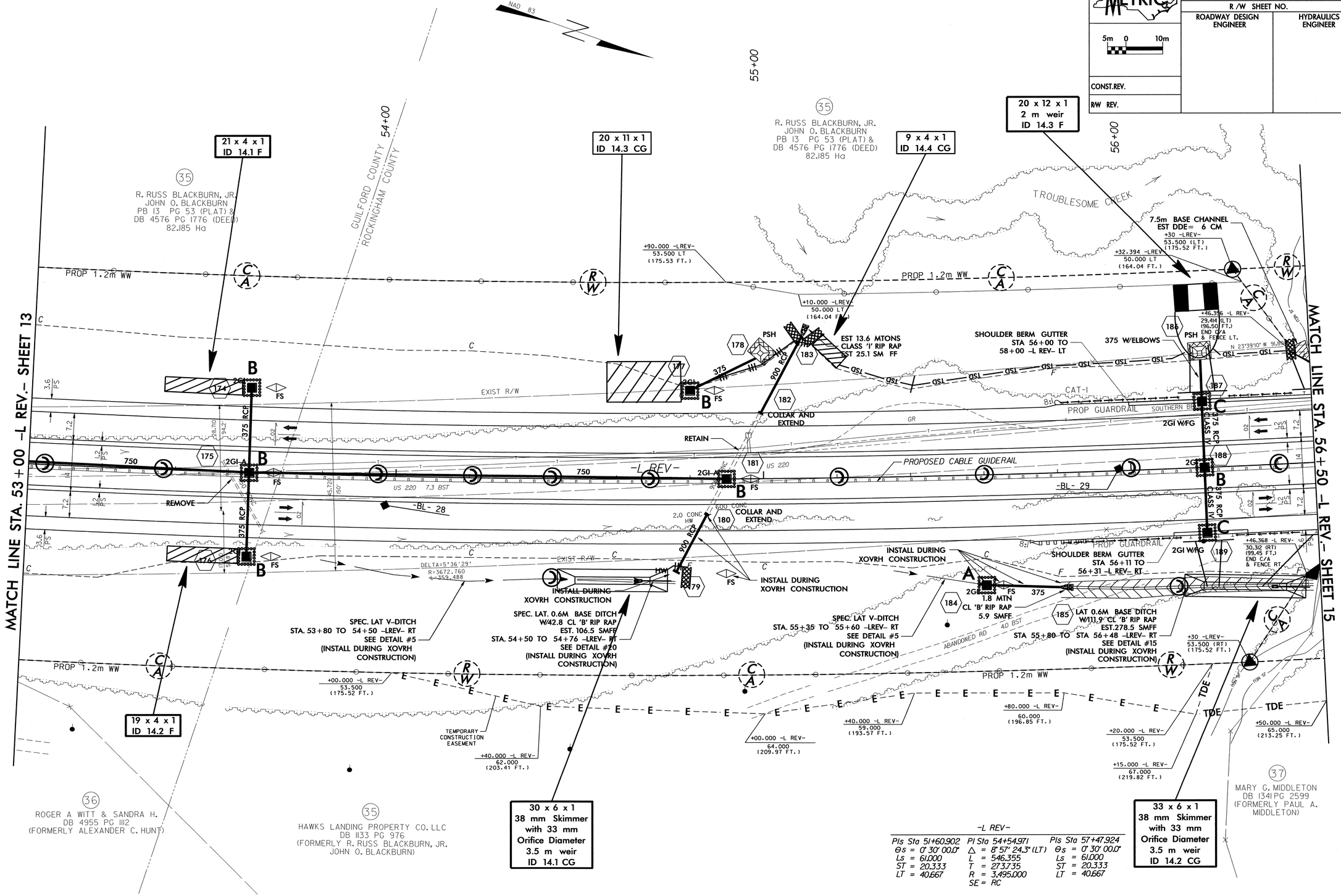

-L REV-

Pls Sta 51+60.902	Pl Sta 54+54.971	Pls Sta 57+47.924
Θs = 0° 30' 00.0"	Δ = 8° 57' 24.3" (LT)	Θs = 0° 30' 00.0"
Ls = 61.000	L = 546.355	Ls = 61.000
ST = 20.333	T = 273.735	ST = 20.333
LT = 40.667	R = 3,495.000	LT = 40.667
	SE = RC	

PROJECT REFERENCE NO.	SHEET NO.
R-2413C	EC-47/CONST.15
R/W SHEET NO.	
ROADWAY DESIGN ENGINEER	HYDRAULICS ENGINEER

METRIC 5m 0 10m

CONST.REV.

R/W REV.

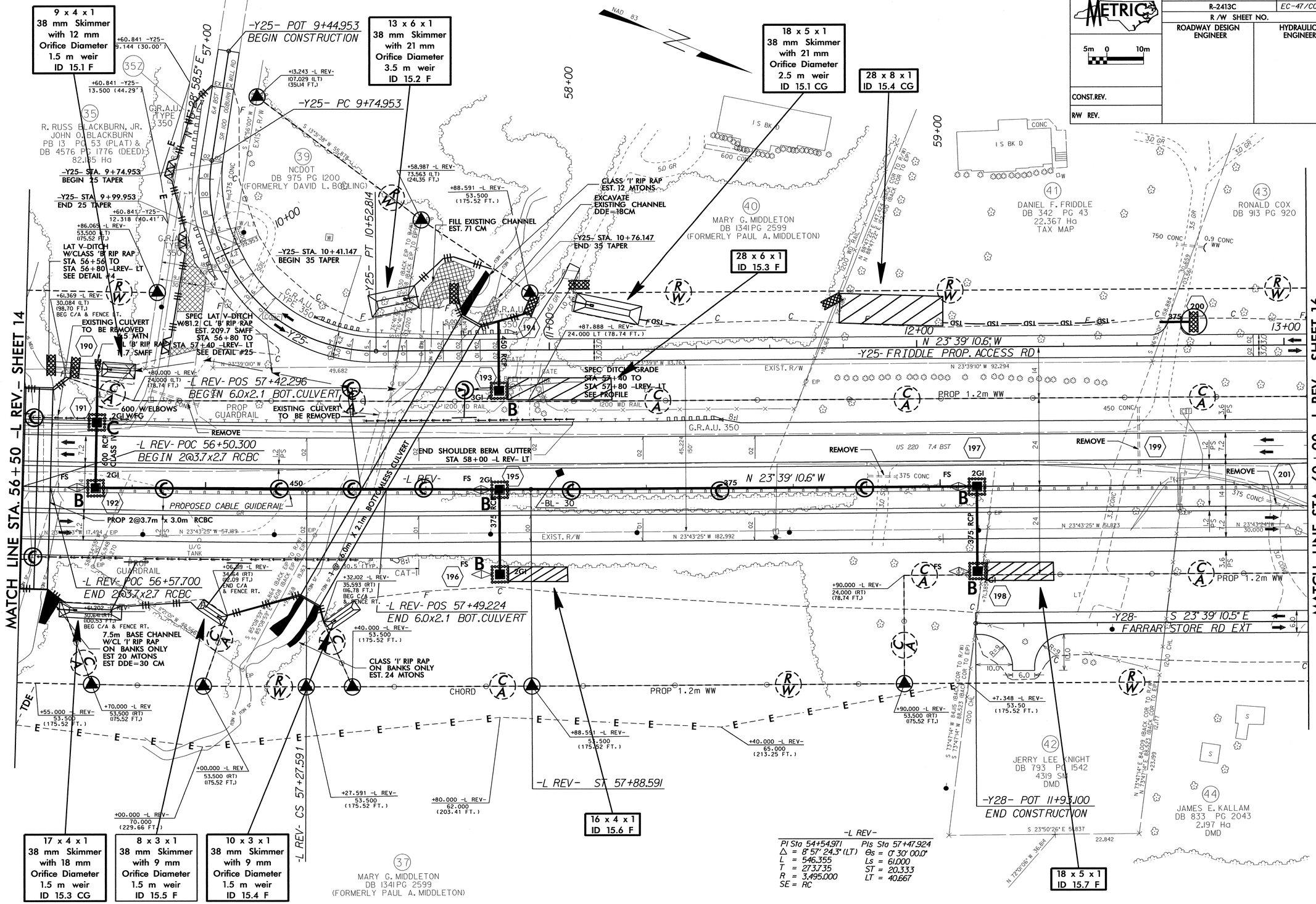

2/15/10 – PARCEL 35Z ADDED TEMPORARY CONSTRUCTION EASEMENT

2/15/10 – PARCEL 40Z ADDED TEMPORARY CONSTRUCTION EASEMENT

2/15/11 – ELIMINATED PARCEL 40Z, TEMPORARY CONSTRUCTION EASEMENT

PROJECT REFERENCE NO.	SHEET NO.
R-2413C	EC-48/CONST.J6
R /W SHEET NO.	
ROADWAY DESIGN ENGINEER	HYDRAULICS ENGINEER

METRIC

5m 0 10m

CONST.REV.

R/W REV.

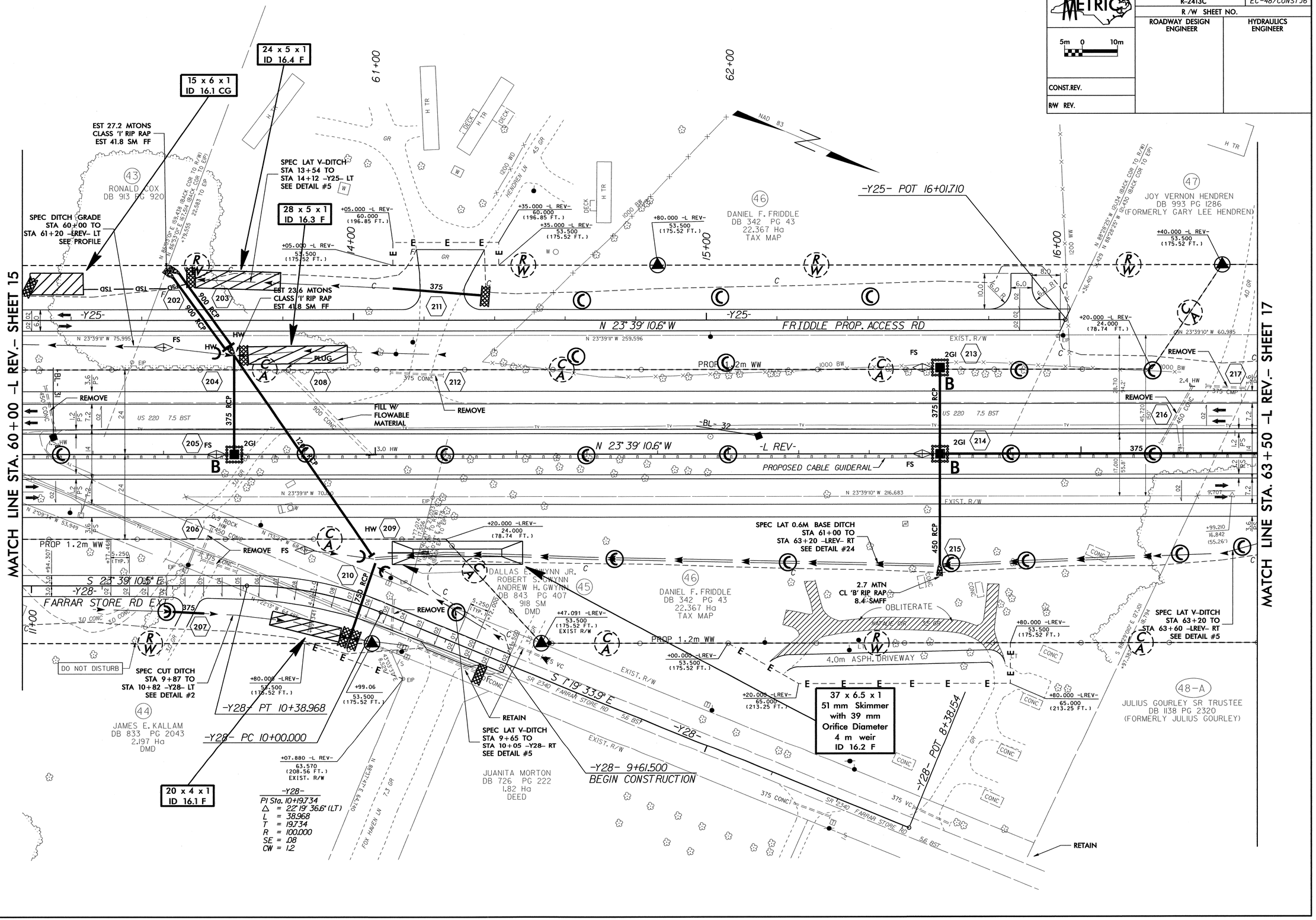

METRIC	PROJECT REFERENCE NO.	SHEET NO.
5m 0 10m	R-2413C	EC-49/CONST.J7
	R /W SHEET NO.	
	ROADWAY DESIGN ENGINEER	HYDRAULICS ENGINEER
CONST.REV.		
R/W REV.		

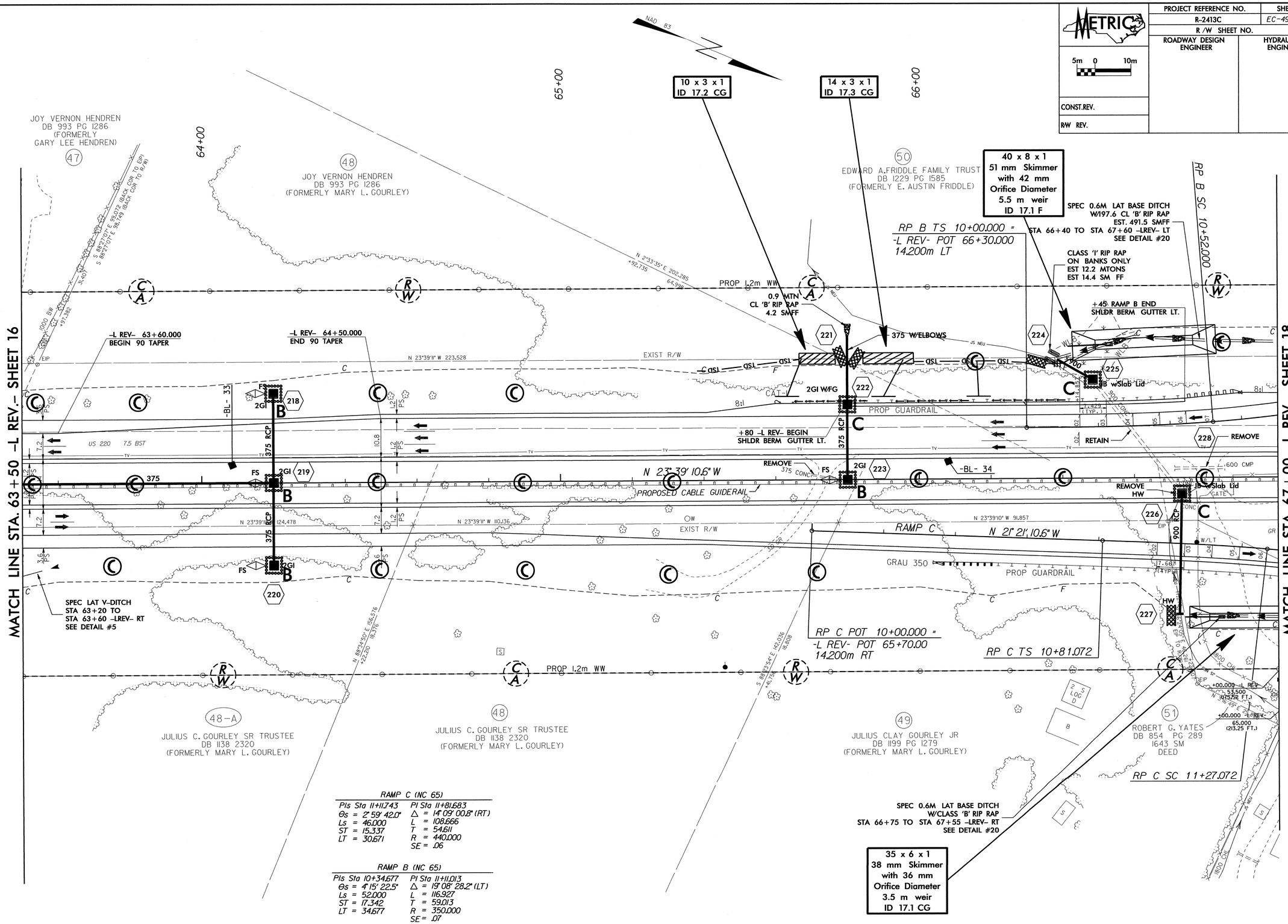

RAMP C (NC 65)

PIs Sta 11+11.743	PI Sta 11+81.683
Θs = 2° 59' 42.0"	Δ = 14° 09' 00.8" (RT)
Ls = 46.000	L = 108.666
ST = 15.337	T = 54.611
LT = 30.671	R = 440.000
	SE = .06

RAMP B (NC 65)

PIs Sta 10+34.677	PI Sta 11+11.013
Θs = 4° 15' 22.5"	Δ = 19° 08' 28.2" (LT)
Ls = 52.000	L = 116.927
ST = 17.342	T = 59.013
LT = 34.677	R = 350.000
	SE = .07

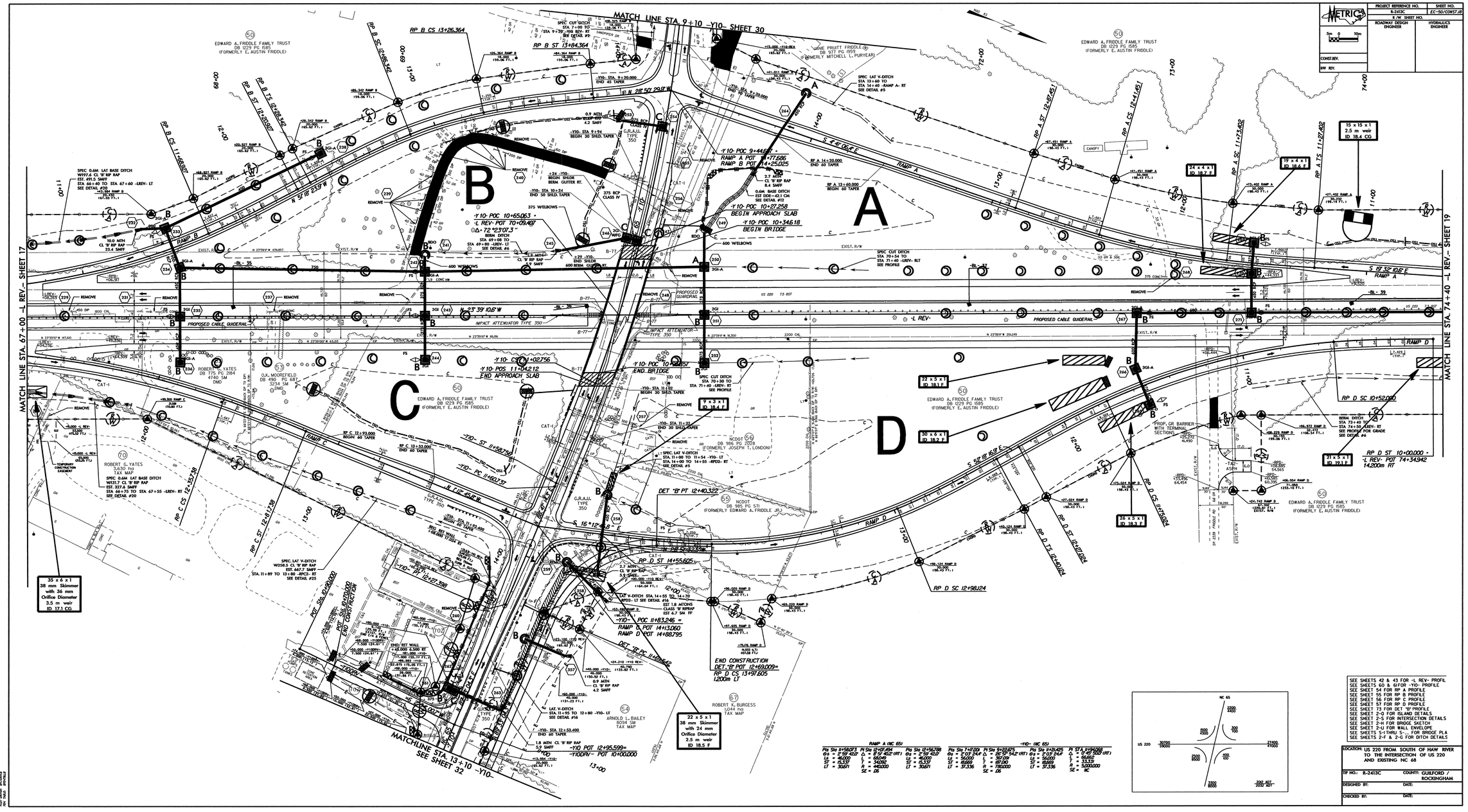
MATCH LINE STA. 9+10 -Y10- SHEET 30
MATCH LINE STA. 67+00 -L REV.- SHEET 17
MATCH LINE STA. 74+40 -L REV.- SHEET 19
MATCHLINE STA. 13+10 -Y10-
SEE SHEET 32
A
B
C
D
RAMP A
RAMP B
RAMP C
RAMP D
-L REV-
PROPOSED CABLE GUIDERAL
IMPACT ATTENUATOR TYPE 350
BEGIN APPROACH SLAB
BEGIN BRIDGE
END BRIDGE
END APPROACH SLAB
EDWARD A. FRIDDLE FAMILY TRUST
DB 1229 PG 1585
(FORMERLY E. AUSTIN FRIDDLE)
ROBERT G. YATES
TAX MAP
NCDOT
DB 986 PG 2028
(FORMERLY JOSEPH T. LONDON)
NCDOT
DB 985 PG 571
(FORMERLY EDWARD A. FRIDDLE JR.)
ROBERT K. BURGESS
TAX MAP
ARNOLD L. BAILEY
TAX MAP
35 x 6 x 1
38 mm Skimmer
with 36 mm
Orifice Diameter
3.5 m weir
ID 17.1 CG
22 x 5 x 1
38 mm Skimmer
with 24 mm
Orifice Diameter
2.5 m weir
ID 18.5 F
15 x 15 x 1
2.5 m weir
ID 18.4 CG
19 x 4 x 1
ID 18.6 F
24 x 4 x 1
ID 18.7 F
22 x 5 x 1
ID 18.1 F
9 x 3 x 1
ID 18.4 F
30 x 6 x 1
ID 18.2 F
26 x 3 x 1
ID 18.3 F
21 x 5 x 1
ID 19.1 F
RP D ST 10+00.000 -
-L REV- POT 74+34.942
1+20.0m RT
RP D SC 10+52.000
RP D SC 12+98.124
RP D ST 14+55.605
DET "B" PT 12+40.322
END CONSTRUCTION
DET."B" POT 12+69.009=
RP D CS 13+97.505
1.200m LT
RAMP D POT 14+13.060
RAMP D POT 14+88.795
-Y10- POC 11+83.246 =
-Y10- POS 11+04.212
-Y10- POC 10+34.618
-Y10- POC 10+27.258
-Y10- POC 10+65.063 =
-L REV- POT 70+09.407
Δ= 72°23'07.3"
-Y10- POC 9+44.607 =
RAMP A POT 14+77.686
RAMP B POT 14+25.025
-Y10- POT 12+97.398
POT STA. 0+30.000
END CONSTRUCTION
-Y10- POT 10+00.000
-Y10- POT 12+95.599=
-Y10- ST 11+58.758
-Y10- PC 11+60.737
-Y10- CS 11+02.756
-Y10- POT 11+83.857
-Y10- POT 12+40.322
-Y10- POT 12+97.398
-Y10- POT 12+95.599=
-Y10- POT 10+00.000
-Y10- STA. 9+20.000
-Y10- STA. 9+30.000
-Y10- STA. 9+94
BEGIN 30 SHLD. TAPER
-Y10- STA. 10+24
END 50 SHLD. TAPER
-Y10- STA. 11+92
BEGIN 30 SHLD. TAPER
-Y10- STA. 11+22
END 30 SHLD. TAPER
-Y10- STA. 12+53.400
END 60 TAPER
RP B CS 13+26.364
RP B ST 13+84.364
RP B SC 12+85.342
RP B CS 11+85.967
RP B ST 12+85.967
RP B SC 12+28.342
RP A ST 12+87.651
RP A CS 12+41.651
RP A SC 11+73.402
RP A TS 11+27.402
RP C CS 12+35.739
RP C ST 12+81.739
RP C SC 12+93.000
RP C SC 12+53.000
RP D TS 12+40.124
RP D ST 12+78.124
S 4°41'06.4" E
S 19°32'10.6" E
S 52°18'16.9" E
S 16°12'48.8" E
N 23°39'10.6" W
N 5°16'23.9" W
N 28°50'29.8" W
N 12°46'48.8" W
SPEC. LAT V-DITCH
STA. 11+00 TO 11+54 -Y10- LT
STA. 14+00 TO 14+55 -RPD2- RT
SEE DETAIL #5
SPEC. LAT V-DITCH
STA. 13+60 TO
STA. 14+40 -RAMP A- RT
SEE DETAIL #5
SPEC. CUT DITCH
STA. 70+30 TO
STA. 71+40 -LREV- RT
SEE PROFILE
SPEC. 0.6M LAT BASE DITCH
W337.2 CL "B" RIP RAP
EST. 327.6 SMFF
STA. 66+75 TO STA. 67+55 -LREV- RT
SEE DETAIL #20
SPEC. 0.6M LAT BASE DITCH
W337.7 CL "B" RIP RAP
EST. 327.6 SMFF
STA. 66+40 TO STA. 67+60 -LREV- LT
SEE DETAIL #20
SPEC. LAT V-DITCH
W338.5 CL "B" RIP RAP
EST. 667.7 SMFF
STA. 11+89 TO 13+60 -RPC2- RT
SEE DETAIL #25
BERM DITCH
STA. 73+40 TO
STA. 74+50 -LREV- RT
SEE PROFILE FOR GRADE
SEE DETAIL #6
PROP. GR. BARRIER
WITH TERMINAL
SECTIONS
TEMPORARY
CONSTRUCTION
EASEMENT
CANOPY
REMOVE
375 WELBOWS
600 WELBOWS
375 CONC.
PROPOSED GUARDRAIL
US 220
NC 65
2200
4400
2000
4000
300
700
2000
2000
400
800
2000
2000
2000
4000
2000
2000
2000
4000
2000
2000
2000
4000

PROJECT REFERENCE NO.	SHEET NO.
R-2413C	EC-51/CONST.J9
R/W SHEET NO.	
ROADWAY DESIGN ENGINEER	HYDRAULICS ENGINEER

METRIC 5m 0 10m

CONST.REV.

R/W REV.

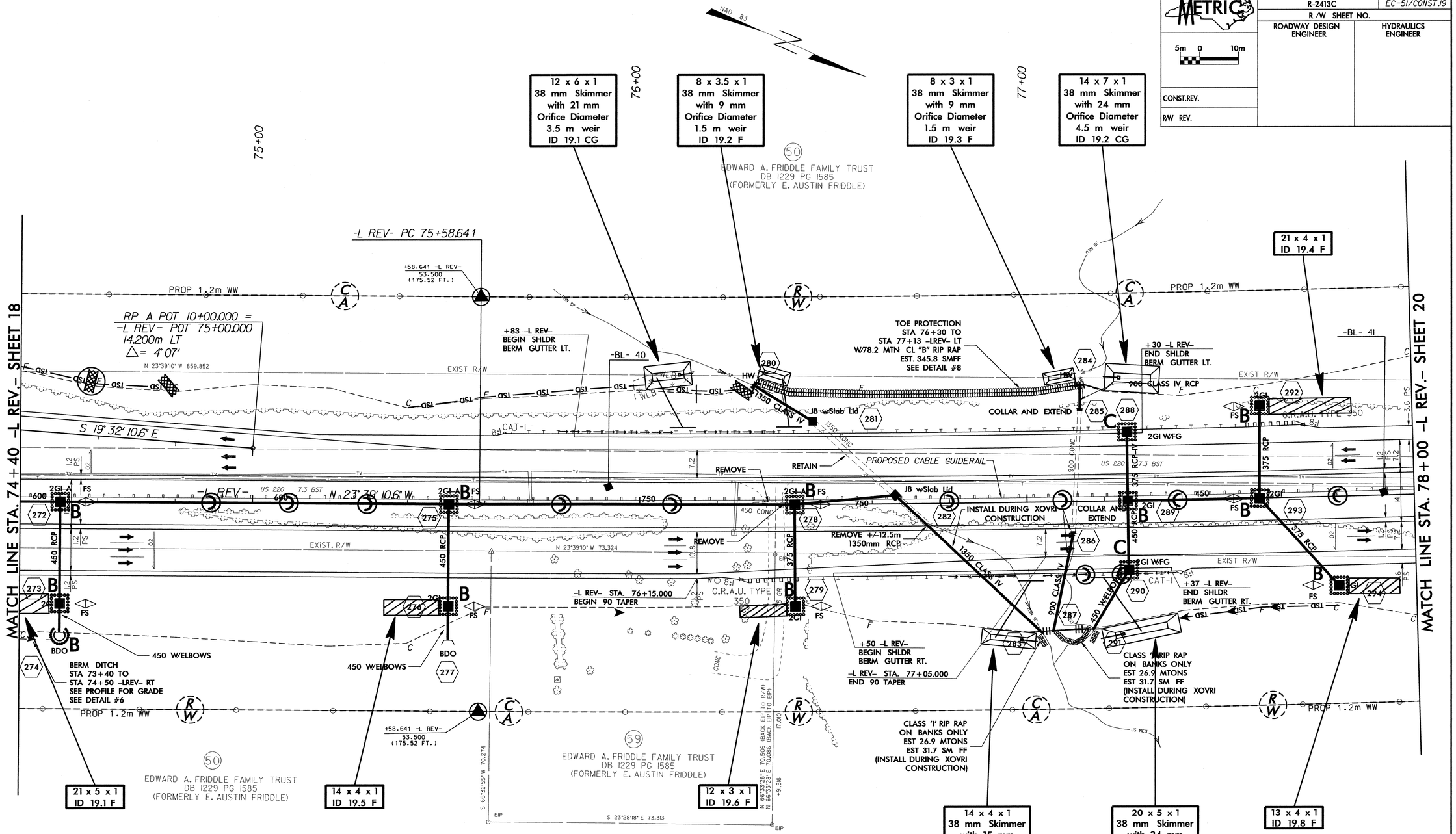

-L REV-
PI Sta 77+51.191
△ = 3°09' 20.9 (LT)
L = 385.004
T = 192.550
R = 6,990.000
SE = NC

DET "C"	
PI Sta 10+56.714	PI Sta 11+75.573
△ = 12°56' 33.1" (RT)	△ = 14°16' 44.4" (LT)
L = 112.945	L = 124.608
T = 56.714	T = 62.628
R = 500.000	R = 500.000
SE = .06	SE = .06

METRIC 5m 0 10m	PROJECT REFERENCE NO.	SHEET NO.
	R-2413C	EC-52/CONST.20
	R /W SHEET NO.	
	ROADWAY DESIGN ENGINEER	HYDRAULICS ENGINEER
CONST.REV.		
R/W REV.		

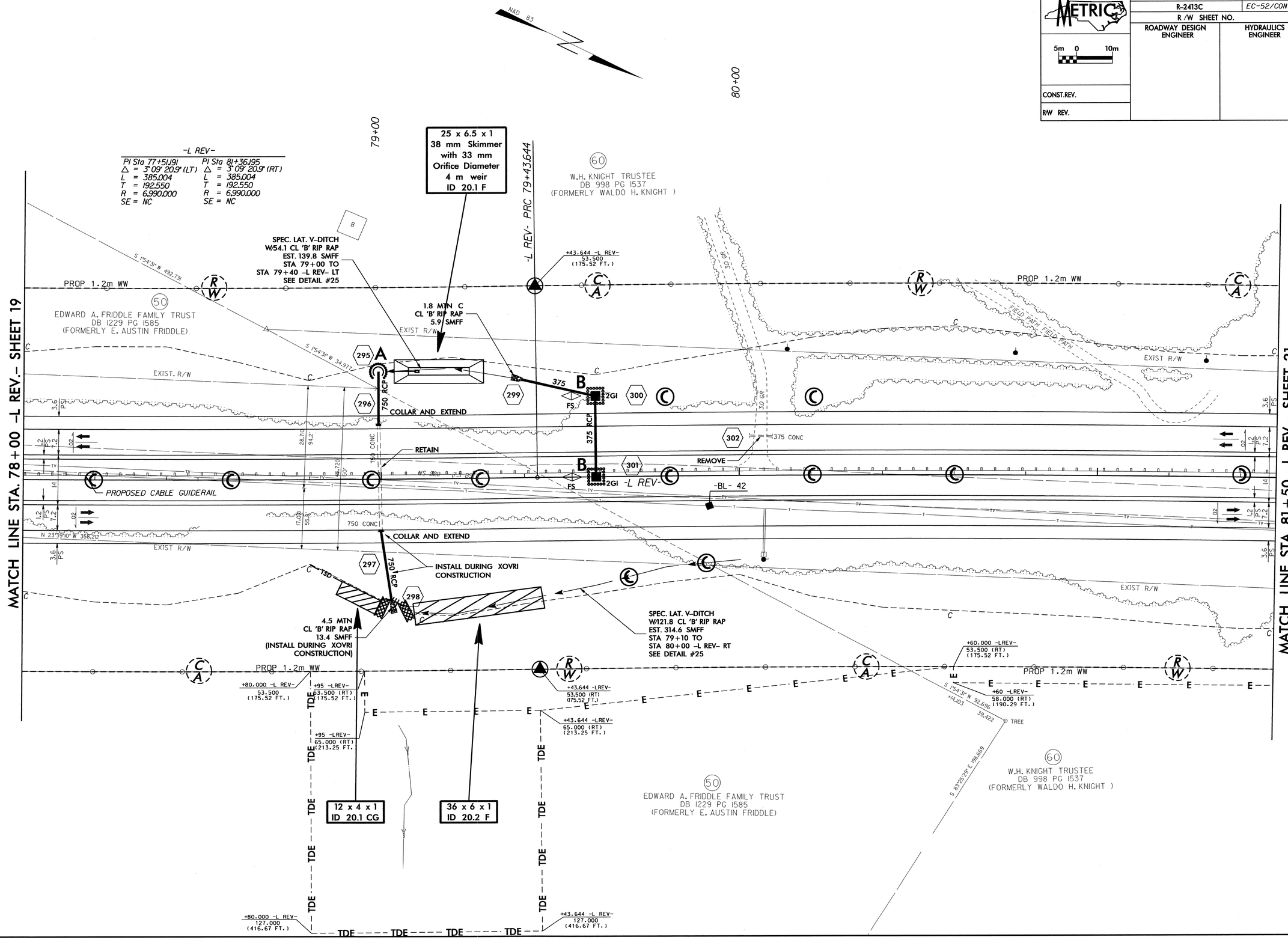

PROJECT REFERENCE NO.	SHEET NO.
R-2413C	EC-53/CONST.21
R /W SHEET NO.	
ROADWAY DESIGN ENGINEER	HYDRAULICS ENGINEER

METRIC 5m 0 10m

CONST.REV.

R/W REV.

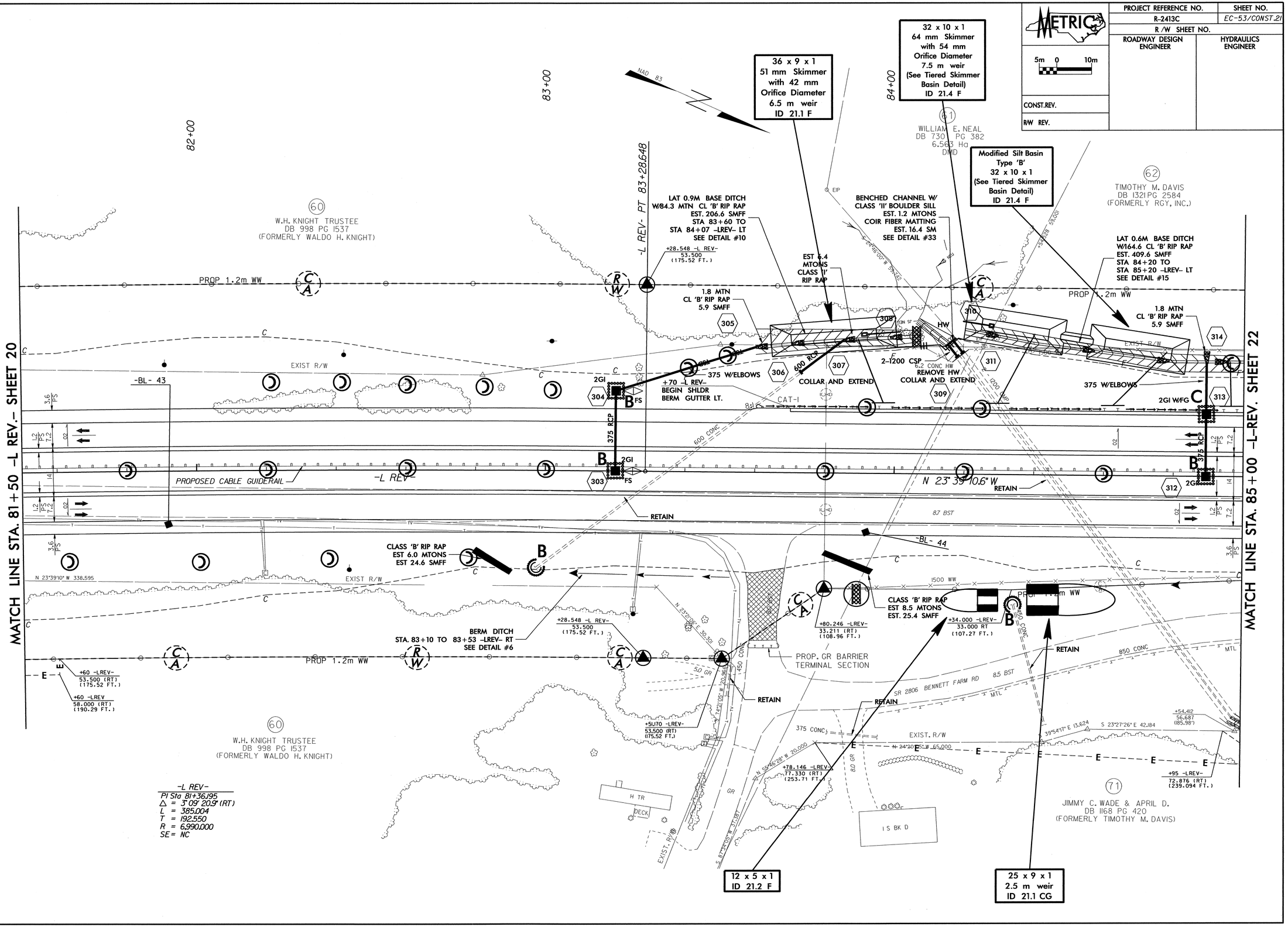

-L REV-
PI Sta 81+36.195
Δ = 3° 09' 20.9" (RT)
L = 385.004
T = 192.550
R = 6,990.000
SE = NC

PROJECT REFERENCE NO.	SHEET NO.
R-2413C	EC-54/CONST.22
R /W SHEET NO.	
ROADWAY DESIGN ENGINEER	HYDRAULICS ENGINEER

METRIC

5m 0 10m

CONST.REV.

R/W REV.

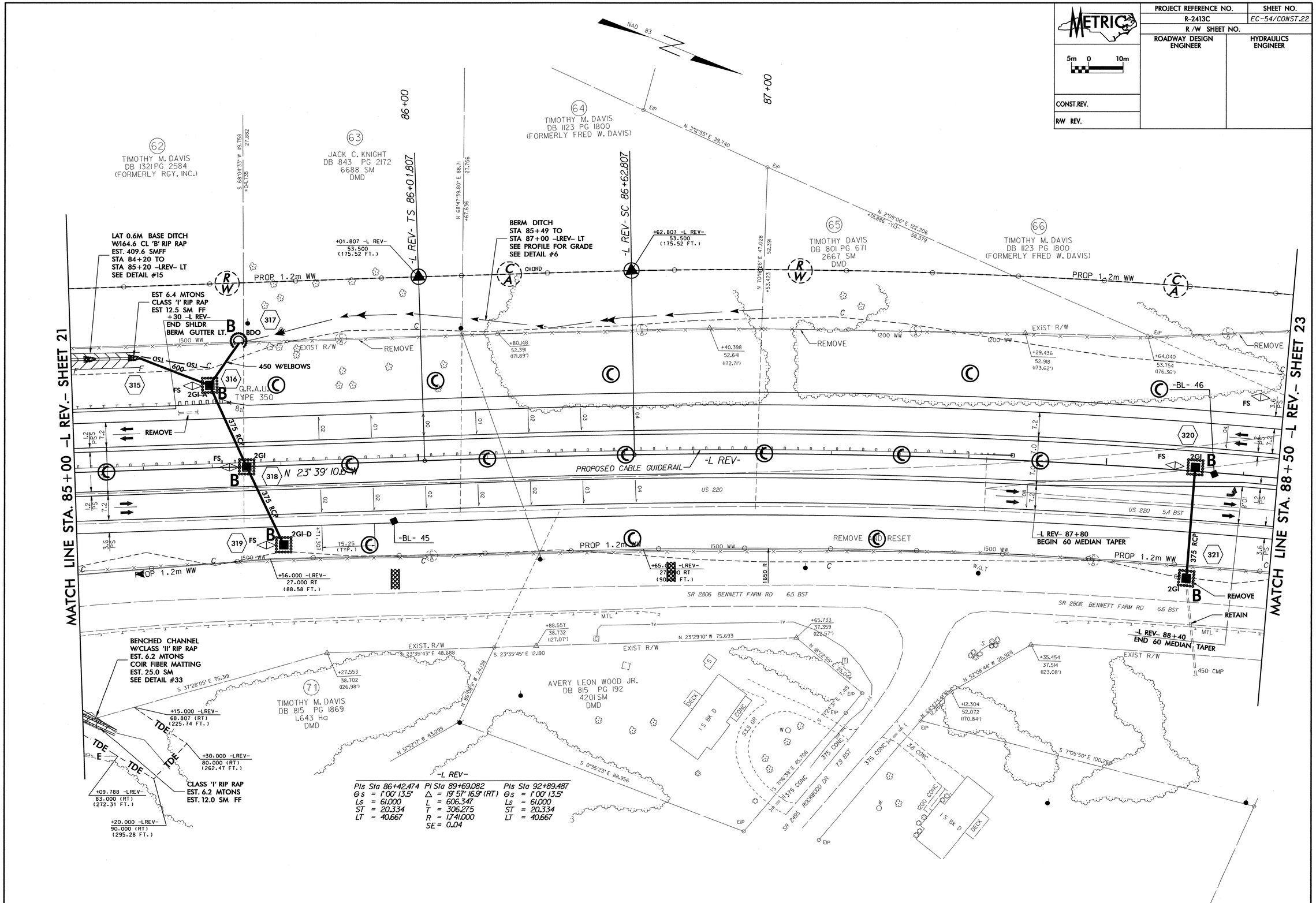

PROJECT REFERENCE NO.	SHEET NO.
R-2413C	EC-55/CONST.23
R /W SHEET NO.	
ROADWAY DESIGN ENGINEER	HYDRAULICS ENGINEER

METRIC

5m 0 10m

CONST.REV.

R/W REV.

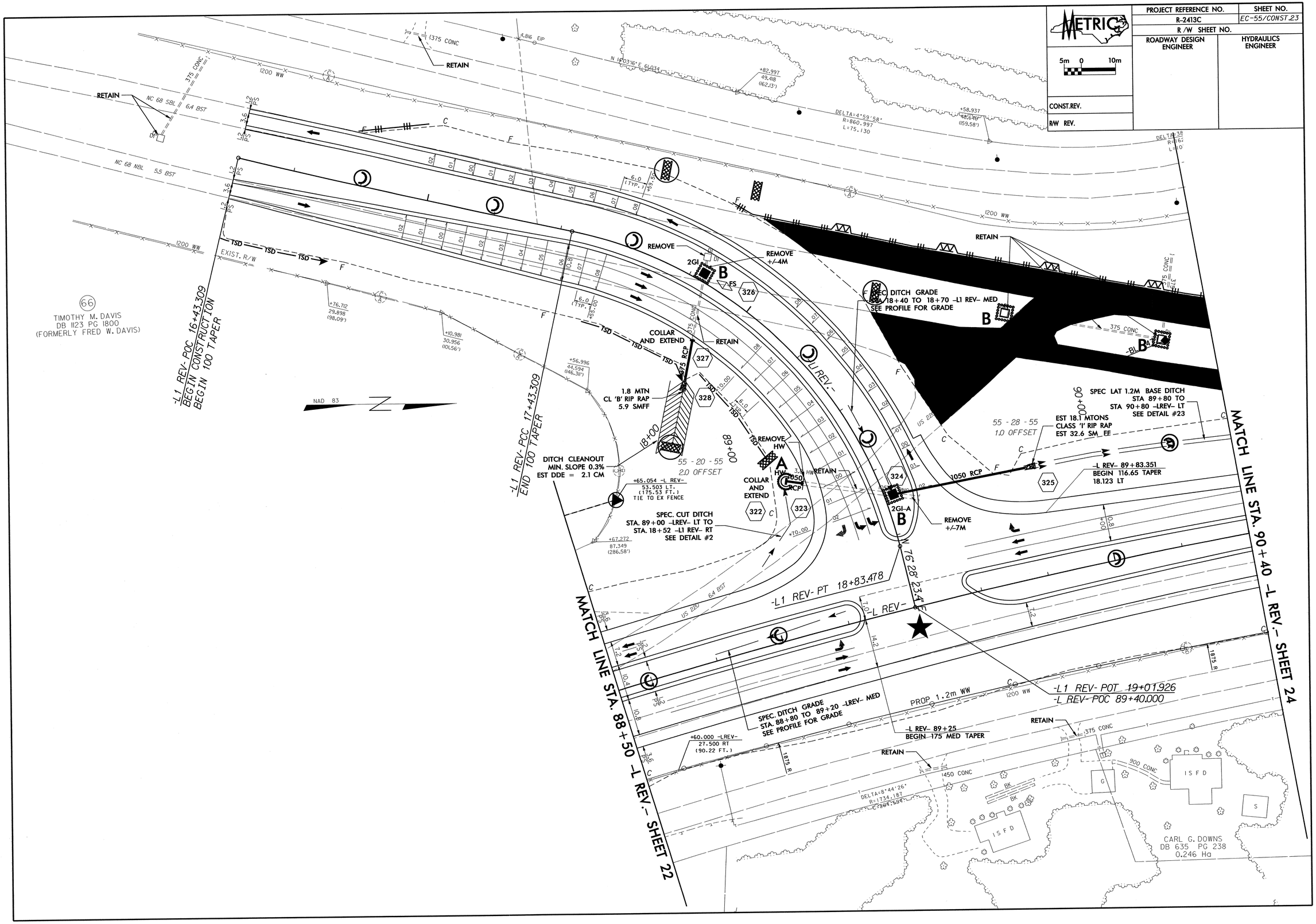

PROJECT REFERENCE NO.	SHEET NO.
R-2413C	EC-56/CONST.24
R /W SHEET NO.	
ROADWAY DESIGN ENGINEER	HYDRAULICS ENGINEER

METRIC

5m 0 10m

CONST.REV.

R/W REV.

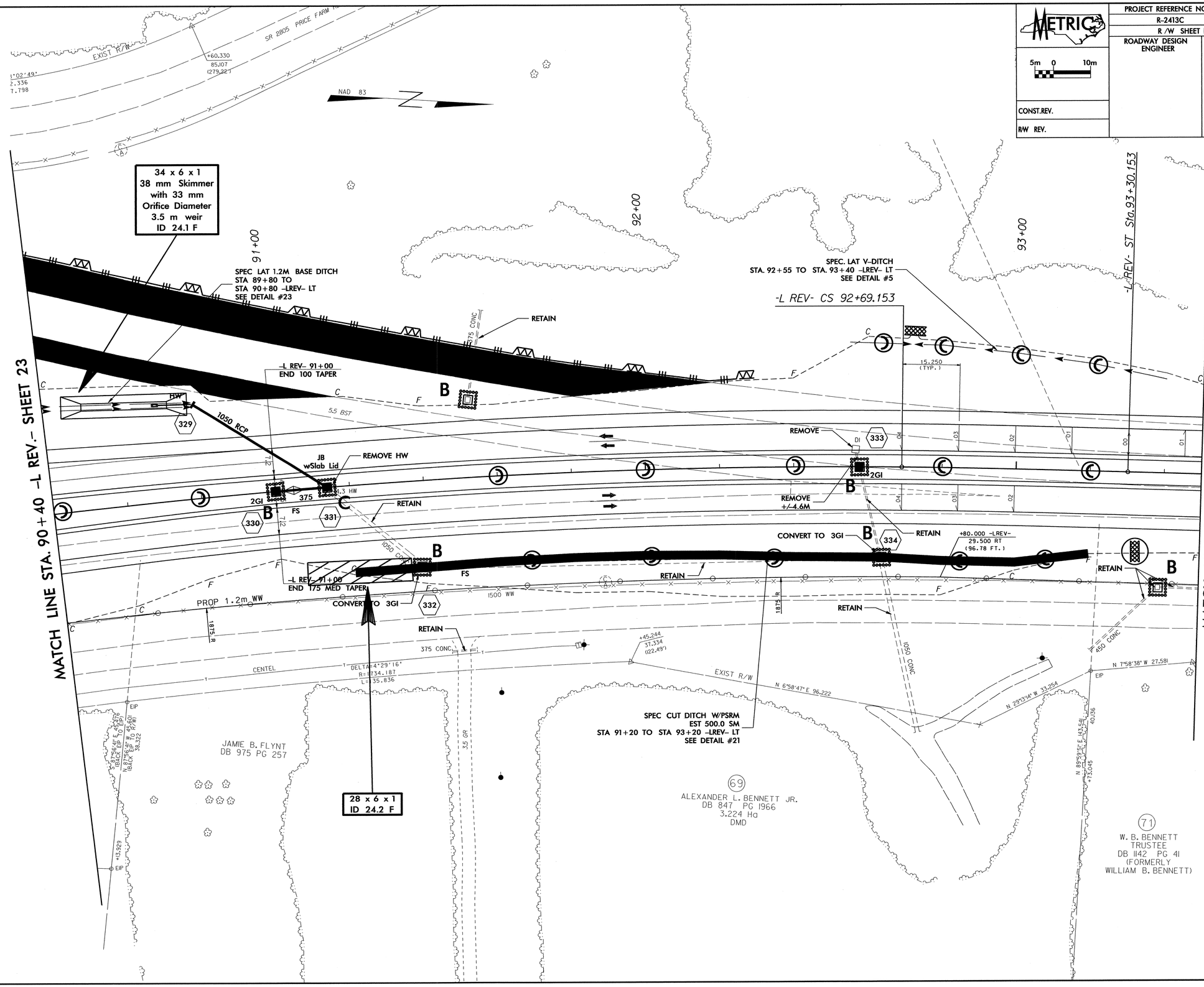

METRIC	PROJECT REFERENCE NO.	SHEET NO.
	R-2413C	EC-57/CONST.25
	R /W SHEET NO.	
5m 0 10m	ROADWAY DESIGN ENGINEER	HYDRAULICS ENGINEER
CONST.REV.		
R/W REV.		

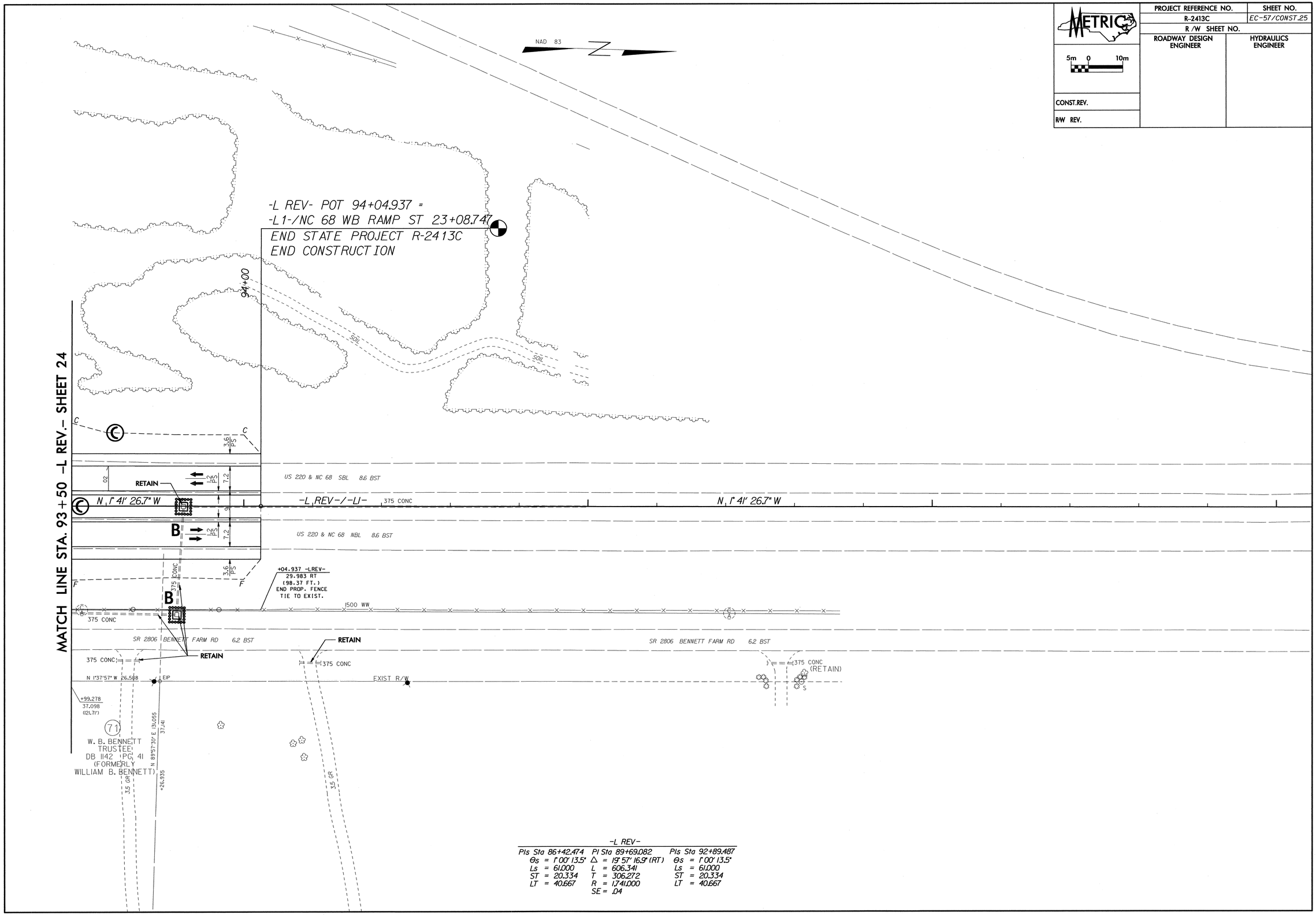

-L REV-

PIs Sta 86+42.474	PI Sta 89+69.082	PIs Sta 92+89.487
Θs = 1° 00' 13.5"	Δ = 19° 57' 16.9" (RT)	Θs = 1° 00' 13.5"
Ls = 61.000	L = 606.341	Ls = 61.000
ST = 20.334	T = 306.272	ST = 20.334
LT = 40.667	R = 1,741.000	LT = 40.667
	SE = .04	

PROJECT REFERENCE NO.	SHEET NO.
R-2413C	EC-58/CONST.26
R /W SHEET NO.	
ROADWAY DESIGN ENGINEER	HYDRAULICS ENGINEER

METRIC

5m 0 10m

CONST.REV.

R/W REV.

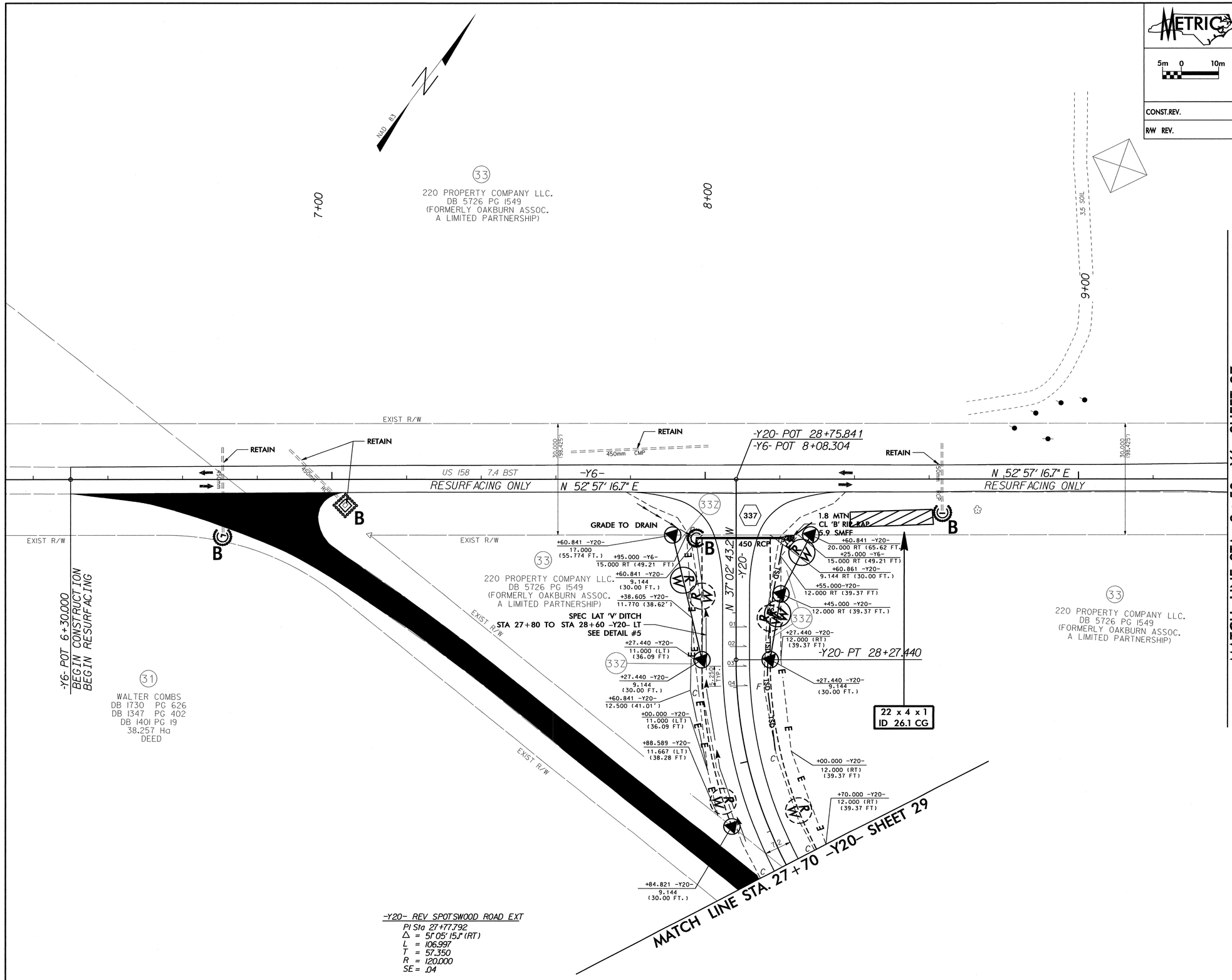

2/15/10 - PARCEL 33Z ADDED PROPOSED RIGHT OF WAY
REVISED TEMPORARY CONSTRUCTION EASEMENT

PROJECT REFERENCE NO.	SHEET NO.
R-2413C	EC-59/CONST.27
R /W SHEET NO.	
ROADWAY DESIGN ENGINEER	HYDRAULICS ENGINEER
CONST.REV.	
R/W REV.	

METRIC

5m 0 10m

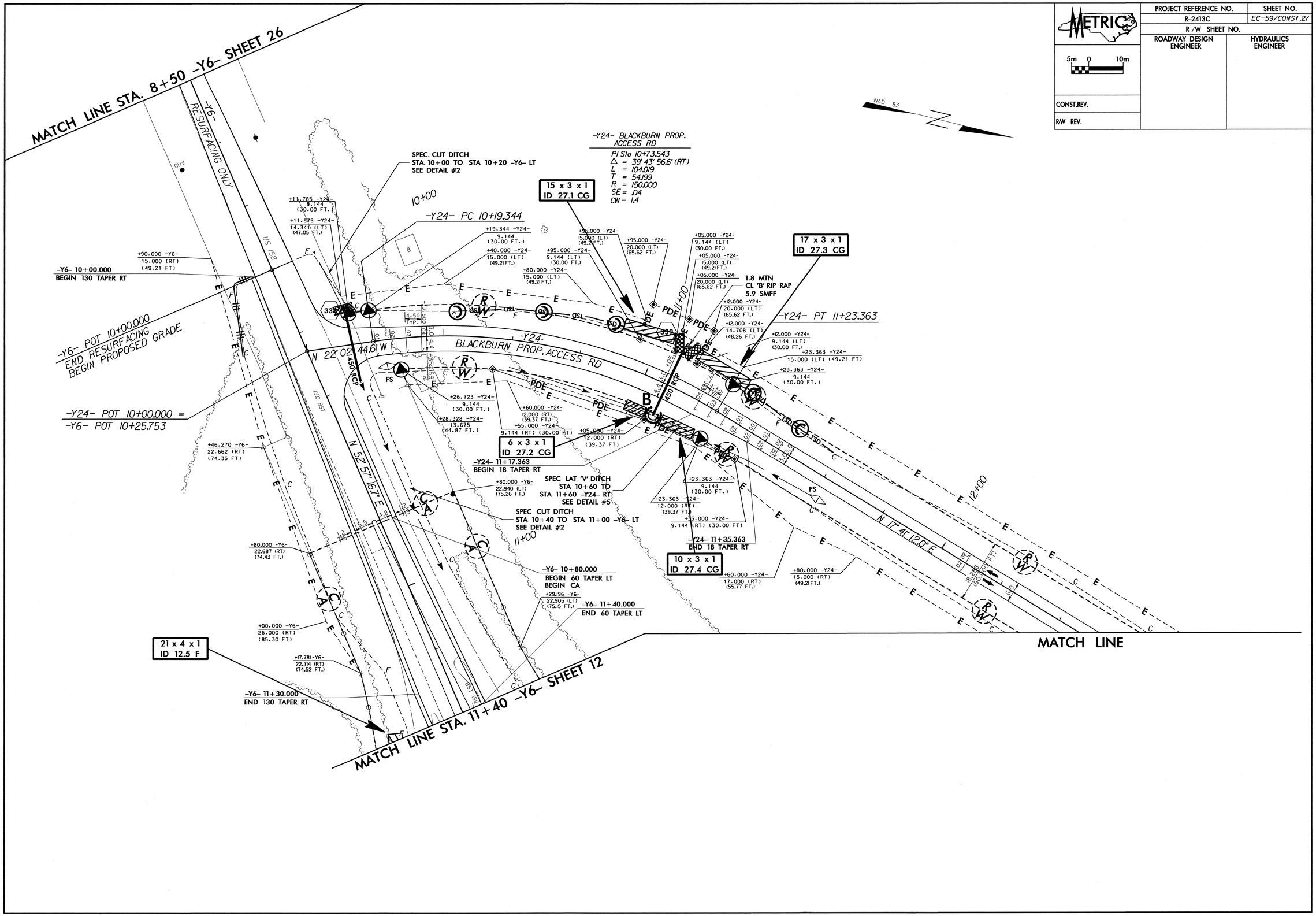

PROJECT REFERENCE NO.	SHEET NO.
R-2413C	EC-60/CONST.28
R/W SHEET NO.	
ROADWAY DESIGN ENGINEER	HYDRAULICS ENGINEER
CONST.REV.	
R/W REV.	

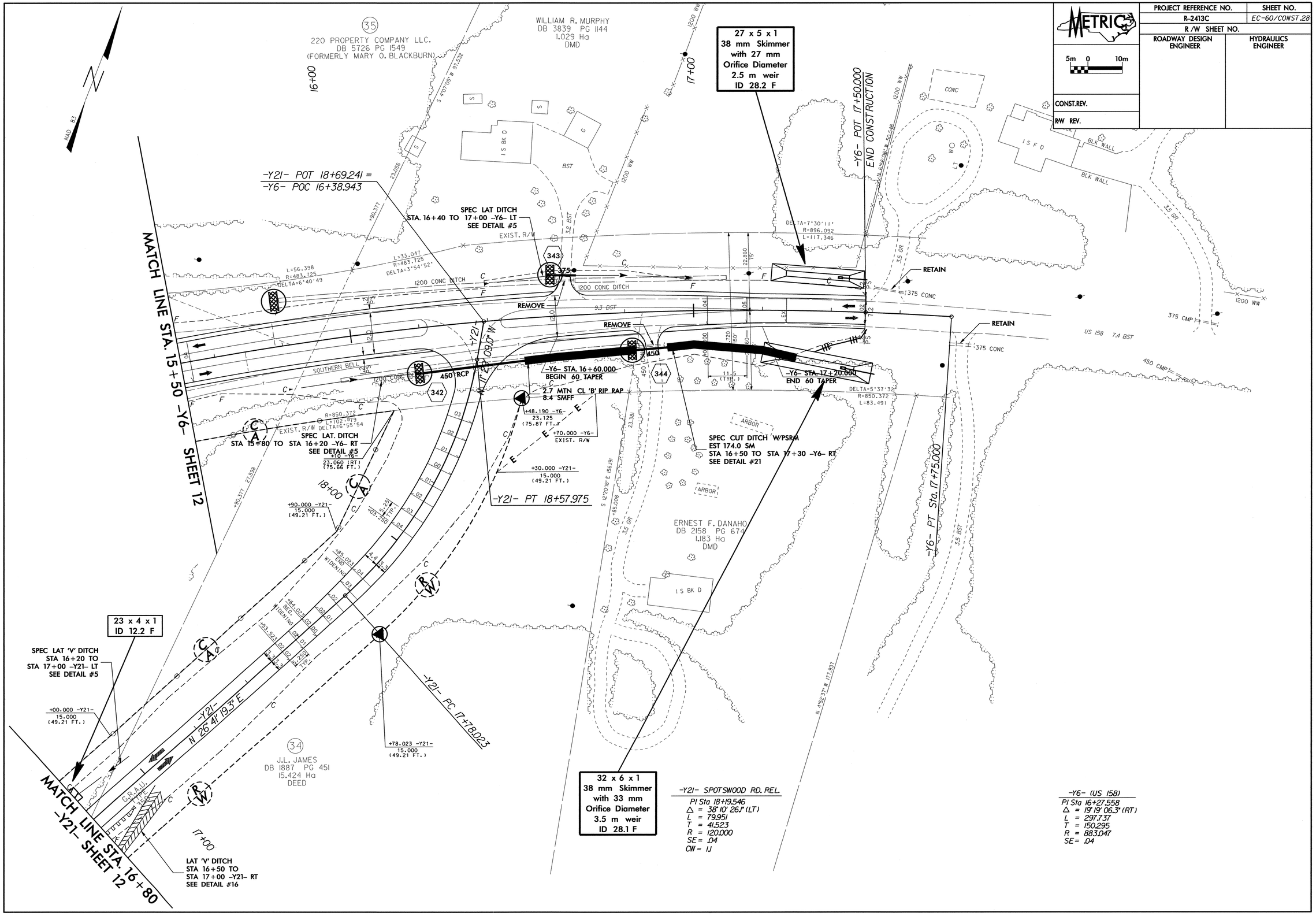

PROJECT REFERENCE NO.	SHEET NO.
R-2413C	EC-61/CONST.29
R /W SHEET NO.	
ROADWAY DESIGN ENGINEER	HYDRAULICS ENGINEER

METRIC

5m 0 10m

CONST.REV.

R/W REV.

-Y-20 REV SPOTSWOOD ROAD EXT

PIs Sta 22+87.978	PI Sta 24+12.310	PIs Sta 25+17.493
θs = 7° 13' 27.3"	Δ = 49° 05' 16.8" (LT)	θs = 5° 27' 20.0"
Ls = 58.000	L = 197.052	Ls = 30.000
ST = 19.363	T = 105.030	ST = 13.162
LT = 38.699	R = 230.000	LT = 16.861
	SE = .08	
	CW = 1.1m	

PI Sta 26+03.482	PI Sta 27+77.792
Δ = 15° 44' 53.8" (LT)	Δ = 51° 05' 15.1" (RT)
L = 137.430	L = 106.998
T = 69.151	T = 57.350
R = 500.000	R = 120.000
SE = .06	SE = .04

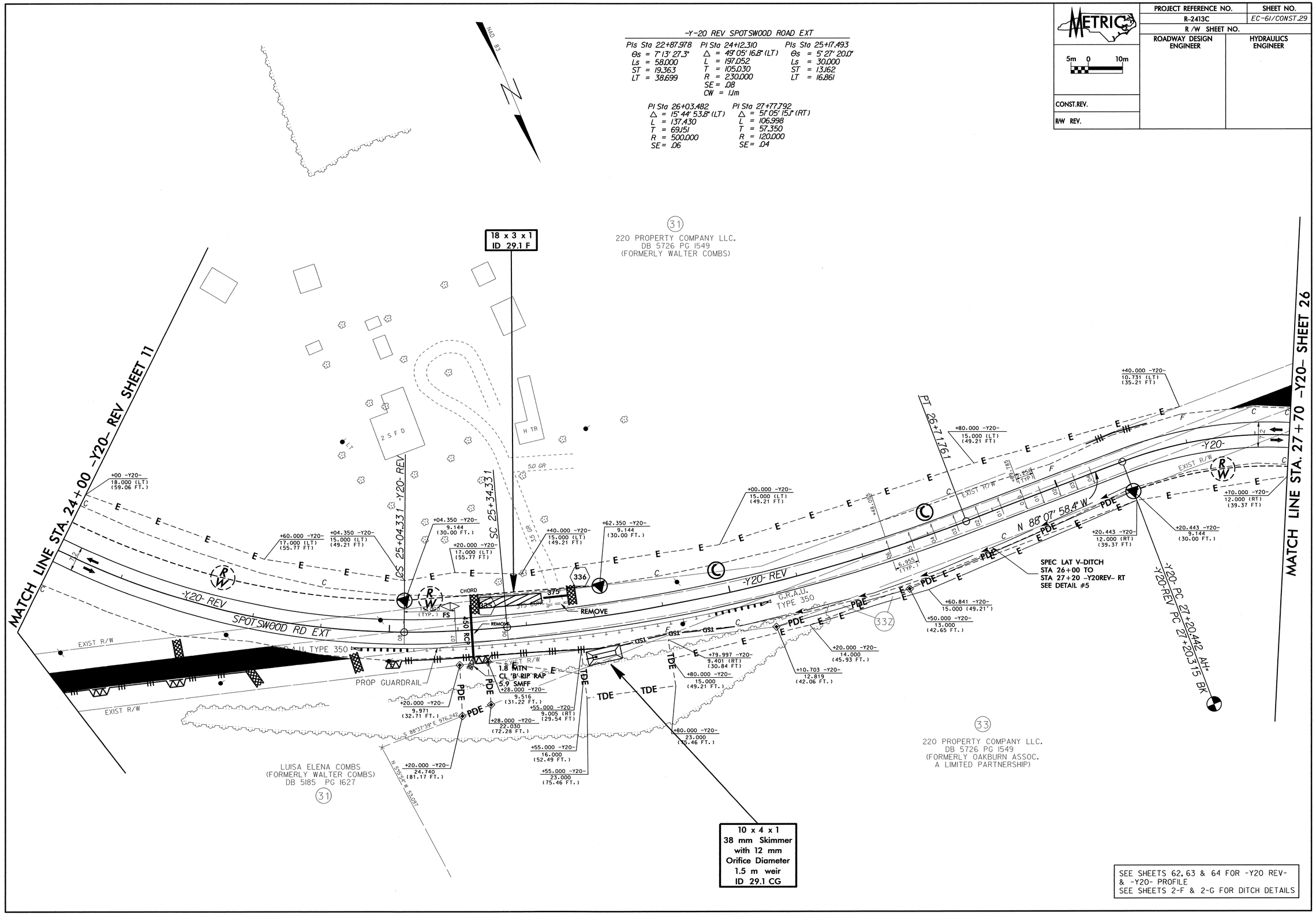

SEE SHEETS 62, 63 & 64 FOR -Y20 REV- & -Y20- PROFILE
SEE SHEETS 2-F & 2-G FOR DITCH DETAILS

PROJECT REFERENCE NO.	SHEET NO.
R-2413C	EC-62/CONST.30
R /W SHEET NO.	
ROADWAY DESIGN ENGINEER	HYDRAULICS ENGINEER

METRIC

5m 0 10m

CONST.REV.

R/W REV.

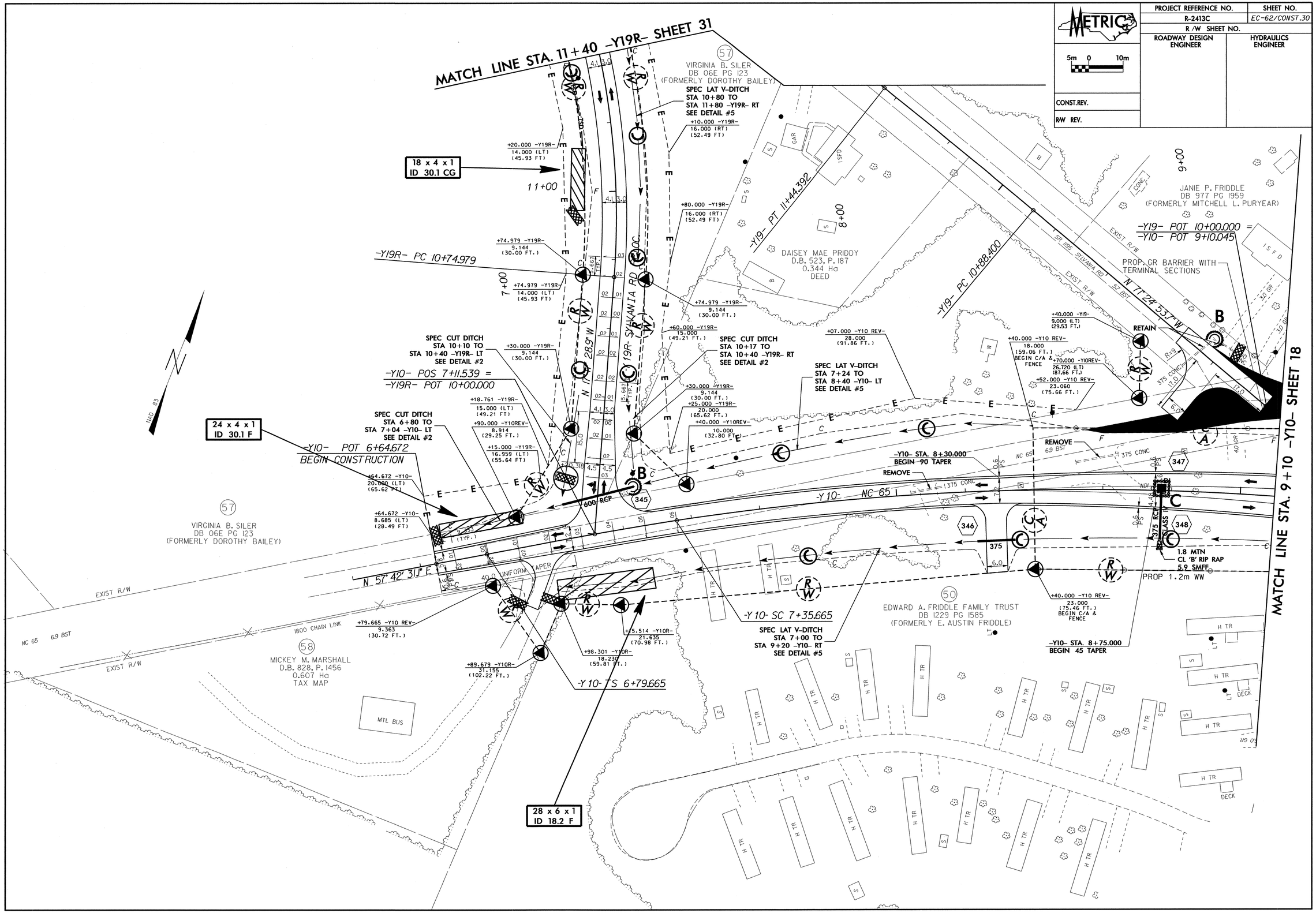

METRIC	PROJECT REFERENCE NO.	SHEET NO.
5m 0 10m	R-2413C	EC-63/CONST.31
	R /W SHEET NO.	
CONST.REV.	ROADWAY DESIGN ENGINEER	HYDRAULICS ENGINEER
R/W REV.		

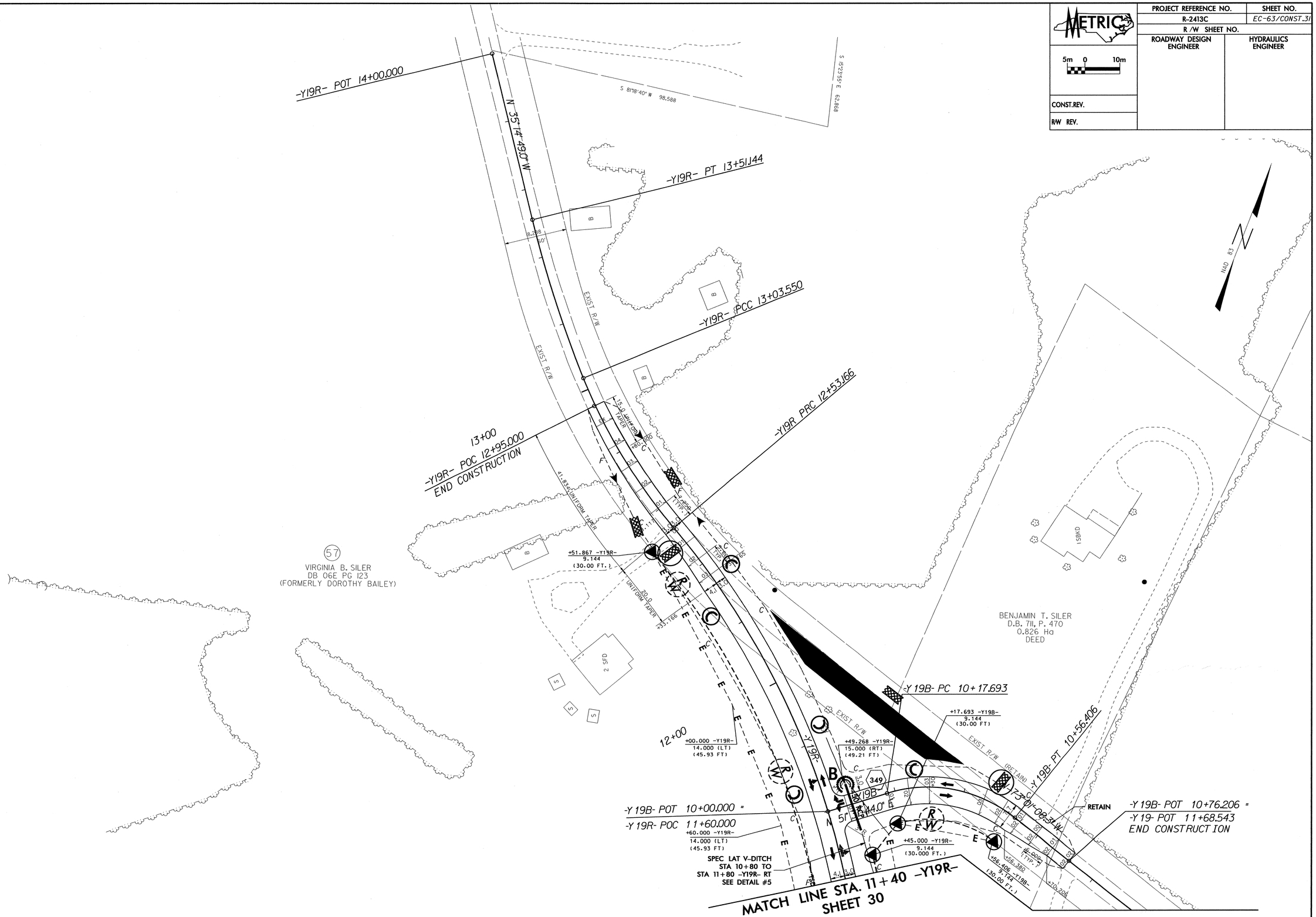

PROJECT REFERENCE NO.	SHEET NO.
R-2413C	EC-64/CONST.32
R /W SHEET NO.	
ROADWAY DESIGN ENGINEER	HYDRAULICS ENGINEER

METRIC

5m 0 10m

CONST.REV.
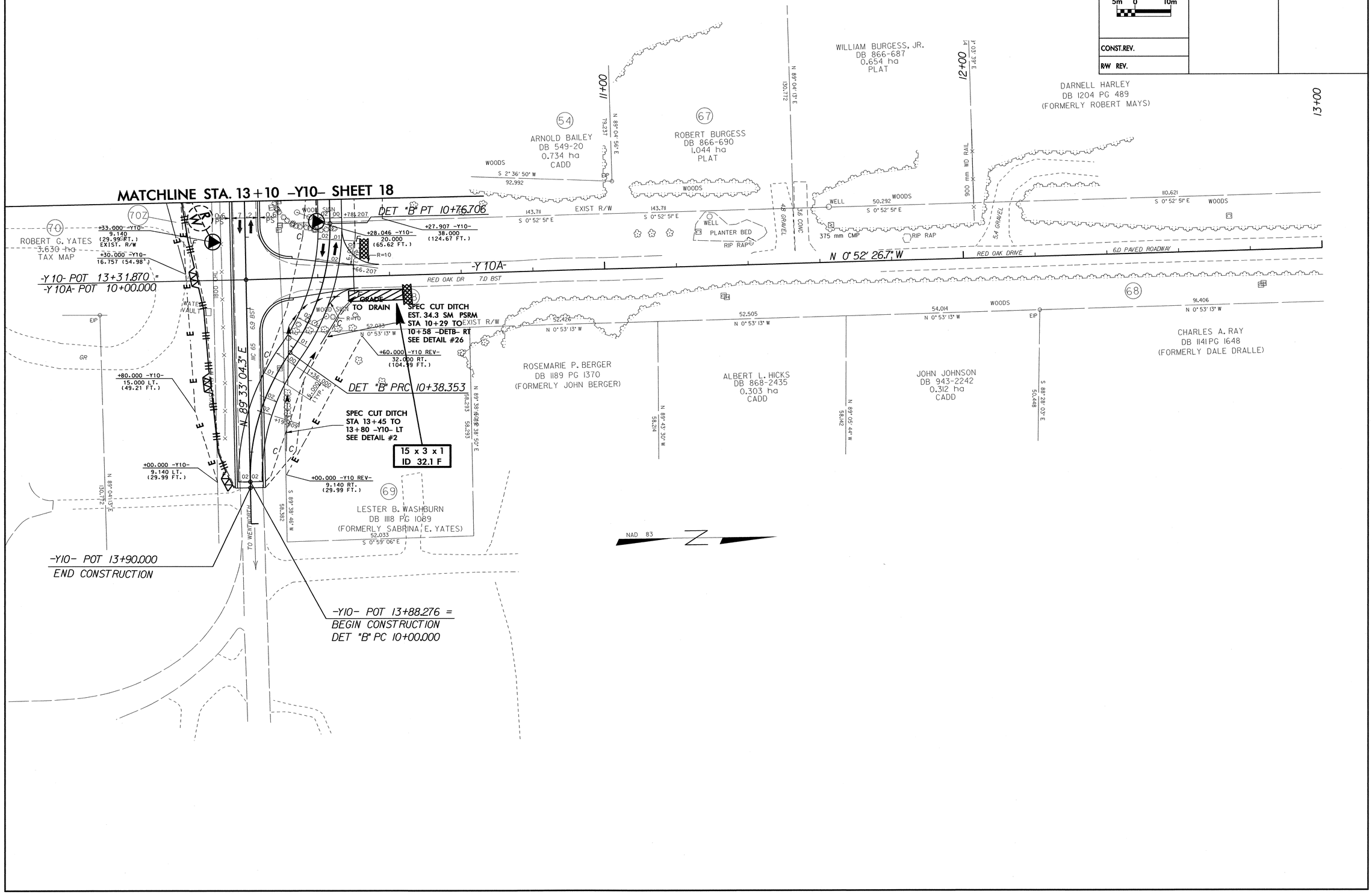
R/W REV.