CONTRACT: C200800 TIP PROJECT: R-2309AB & R-2413C

STATE OF NORTH CAROLINA
DIVISION OF HIGHWAYS

STATE	STATE PROJECT REFERENCE NO.	SHEET NO.
N.C.	R-2309AB/R-2413C	1

STATE PROJ. NO.	F.A. PROJ. NO.	DESCRIPTION
34418.1.4	STP-220(5)	P.E. (R-2309AB)
34418.2.3	STPNHS-0220(5)	R/W & UTIL (R-2309AB)
34418.3.5	STPNHS-0220(25)	CONST (R-2309AB)
34429.1.3		P.E. (R-2413C)
34429.2.4		R/W & UTIL (R-2413C)
34429.3.7		CONST (R-2413C)

GUILFORD–ROCKINGHAM COUNTIES

LOCATION: US 220 FROM SR 2182 (HORSEPEN CREEK RD.) TO THE INTERSECTION OF US 220 AND EXISTING NC 68

TYPE OF WORK: GRADING, DRAINAGE, PAVING, SIGNING, SIGNALS, CULVERTS, WALLS, ITS AND STRUCTURES

Part 1 0f 5

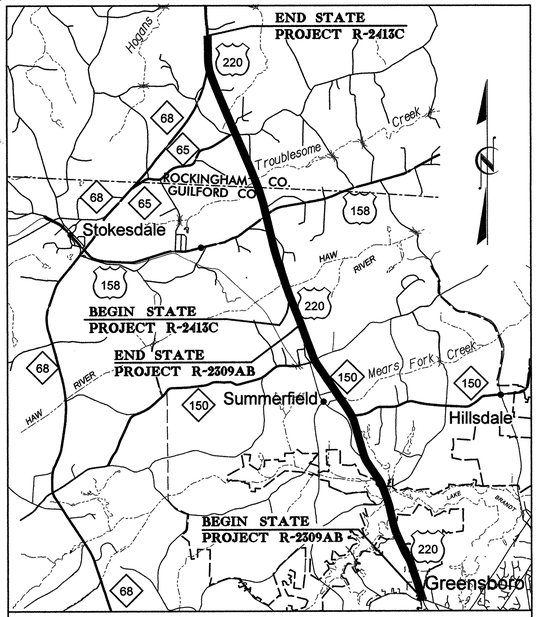

VICINITY MAP

NAD 83

PART I (R-2309AB)

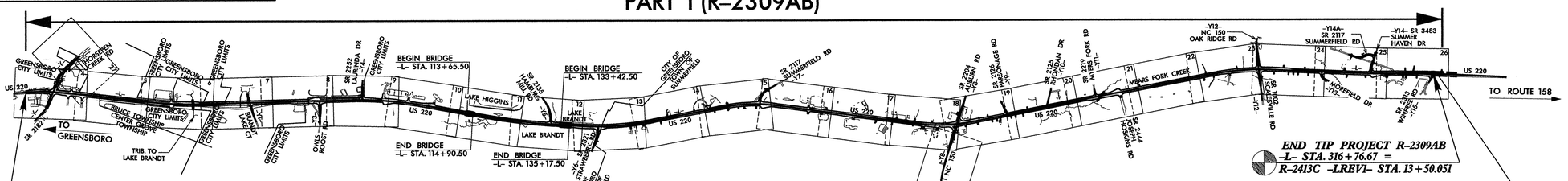

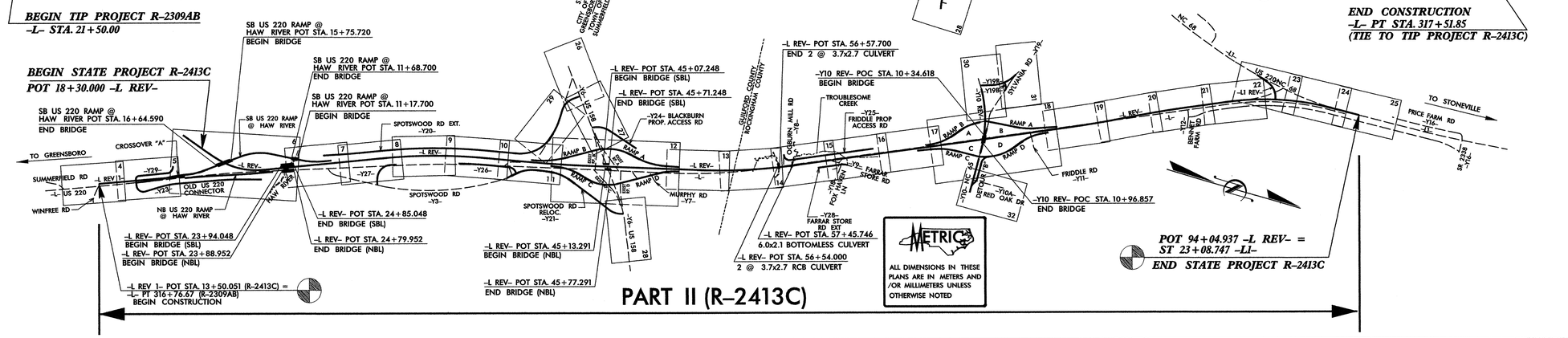

PART II (R-2413C)

NCDOT CONTACT: BRENDA MOORE, P.E.,
PROJECT ENGINEER – ROADWAY DESIGN

PROJECT LENGTH

LENGTH ROADWAY TIP PROJECT R-2309AB	=	5.535 MI
LENGTH STRUCTURES TIP PROJECT R-2309AB	=	0.057 MI
TOTAL LENGTH OF TIP PROJECT R-2309AB	=	5.592 MI
LENGTH ROADWAY TIP PROJECT R-2413C	=	4.602 MI (7.406 KM)
LENGTH STRUCTURES TIP PROJECT R-2413C	=	0.105 MI (0.169 KM)
TOTAL LENGTH OF TIP PROJECT R-2413C	=	4.707 MI (7.575 KM)
LENGTH ROADWAY TIP PROJECT R-2309AB/R-2413C	=	10.137 MI
LENGTH STRUCTURES TIP PROJECT R-2309AB/R-2413C	=	0.162 MI
TOTAL LENGTH OF TIP PROJECT R-2309AB/R-2413C	=	10.299 MI

Prepared In the Office of:
Florence & Hutcheson
CONSULTING ENGINEERS
5121 Kingsborn Way, Suite 100 Raleigh, NC 27607
NC License No: F-0258
for the
DIVISION OF HIGHWAYS
2006 STANDARD SPECIFICATIONS

R-2309AB	R-2413C
RIGHT OF WAY DATE: OCTOBER 17, 2008	RIGHT OF WAY DATE: JULY 16, 1997
LETTING DATE: FEBRUARY 21, 2012	LETTING DATE: FEBRUARY 21, 2012

DIVISION OF HIGHWAYS
STATE OF NORTH CAROLINA

P.E.
STATE HIGHWAY DESIGN ENGINEER

11/28/2011
H:\Roadway\Proj\r-2309ab_r-2413c_rdy_combined_tsh.dgn
FLORENCE\mcpherson

8/17/99

PROJECT REFERENCE NO.	SHEET NO.
R-2309AB/R-2413C	1-A

ROADWAY DESIGN ENGINEER

NORTH CAROLINA PROFESSIONAL SEAL 16689 ENGINEER BRIAN ALLEN WILES 12/2/11

STATE OF NORTH CAROLINA
DIVISION OF HIGHWAYS

R-2309AB/R-2413C - INDEX OF SHEETS

SHEET NUMBER	SHEET
1 TITLE SHEET	
1-A	INDEX OF SHEETS, GENERAL NOTES & LIST OF STANDARDS
1-B	CONVENTIONAL PLAN SHEET SYMBOLS
3	SUMMARY OF QUANTITIES

R-2309AB - INDEX OF SHEETS

SHEET NUMBER	SHEET
1	TITLE SHEET (Part 1 of 2)
1-C THRU 1-D	SURVEY CONTROL SHEETS
2	PAVEMENT SCHEDULE
2-A THRU 2-K	TYPICAL SECTIONS
2-L	WEDGING DETAILS
2-M THRU 2-P	TEMPORARY PAVEMENT AND WIDENING DETAILS
2-Q AND 2-R	DITCH DETAILS
2-S	HAZARDOUS SPILL RETENTION BASIN
2-T THRU 2-Y	INTERSECTION DETAILS
2-Z AND 2-AA	ROCK EMBANKMENT AND ROCK PLATING DETAILS
2-AB AND 2-AC	METHOD OF PIPE INSTALLATION DETAILS
2-AD	DETAIL FOR ANCHORAGE FOR FRAMES
2-AE AND 2-AF	CURB RAMP DETAILS
2-AG AND 2-AR	TEMPORARY SHORING DETAILS
2-AS THRU 2-BC	SPECIAL DETAILS
2-BD THRU 2-BG	NOISE WALL ENVELOPES
3-A THRU 3-S	DRAINAGE SUMMARY
3-T AND 3-U	GUARDRAIL SUMMARY AND TEMPORARY GUARDRAIL SUMMARY
3-V AND 3-W	EARTHWORK SUMMARY
3-X	PAVEMENT REMOVAL SUMMARY, PAVEMENT BREAKING SUMMARY & CHAIN LINK FENCE SUMMARY
3-Y	WOVEN WIRE FENCE SUMMARY
3-Z AND 3-AA	PARCEL INDEX
4 THRU 28	PLAN SHEETS
29 THRU 45	PROFILE SHEETS
TMP-1 THRU TMP-175	TRAFFIC CONTROL PLANS
PMP-1 THRU PMP-19	PAVEMENT MARKING PLANS
EC-1 THRU EC-55	EROSION CONTROL PLANS
RF-1	REFORESTATION PLAN
SIGN-1 THRU SIGN-14	SIGNING PLANS
SIG-1 THRU SIG-90	SIGNAL PLANS
UC-1 THRU UC-10	UTILITY CONSTRUCTION PLANS
UO-1 THRU UO-26	UTILITY CONFLICT PLANS
XSUM-1 THRU XSUM-7	CROSS SECTION SUMMARY
X-1 THRU X-209	CROSS SECTIONS

R-2413C - INDEX OF SHEETS

SHEET NUMBER	SHEET
1	TITLE SHEET (Part 2 of 2)
1-C THRU 1-D	SURVEY CONTROL SHEETS
1-E	CENTERLINE COORDINATE LIST
2 THRU 2-E	TYPICAL SECTIONS, UNSUITABLE EXCAVATION & UNDERCUT DETAILS
2-F THRU 2-G	DITCH DETAILS
2-H	SUMMARY OF SHOULDER DRAINS
2-I THRU 2-O	SHEAR POINT LAYOUT
2-P THRU 2-Q	CONCRETE ISLAND DETAILS
2-R THRU 2-T	INTERSECTION DETAILS
2-U	WALL ENVELOPE
2-V THRU 2-AM	TEMPORARY ALIGNMENTS
2-AN AND 2-AO	METHOD OF PIPE INSTALLATION DETAILS
2-AP	DETAIL FOR ANCHORAGE FOR FRAMES
2-AQ AND 2-BB	TEMPORARY SHORING DETAILS
2-BC	BRIDGE SKETCHES
2-BD THRU 2-BF	NOISE WALL ENVELOPES
2-BG	FABRIC FOR EMBANKMENT STABILIZATION
2-BH AND 2-BI	CONCRETE PAVEMENT JOINTS AND DOWEL ASSEMBLY
3-A THRU 3-L	DRAINAGE SUMMARY
3-M THRU 3-N	GUARDRAIL SUMMARY & CABLE GUIDERAIL SUMMARY
3-O	PAVEMENT REMOVAL SUMMARY & FENCE SUMMARY
3-P	EARTHWORK SUMMARY
3-Q	PARCEL INDEX
4 THRU 32	PLAN SHEETS
33 THRU 73	PROFILE SHEETS
PMP-1 THRU PMP-24	PAVEMENT MARKING PLANS
EC-1 THRU EC-64	EROSION CONTROL PLANS
RF-1	REFORESTATION PLAN
SIGN-1 THRU SIGN-21	SIGNING PLANS
SIG-1 THRU SIG-52	SIGNAL PLANS
ITS-1 THRU ITS-16	INTELLIGENT SYSTEM PLANS
UO-1 THRU UO-27	UTILITY CONFLICT PLANS
X-1 THRU X-325	CROSS SECTIONS

R-2309AB/R-2413C - STRUCTURE INDEX OF SHEETS

R-2309AB	
S-1 THRU S-136	STRUCTURE PLANS
C-1 THRU C-15	CULVERT PLANS
W-1 THRU W-3	MSE WALLS
SW-1 THRU SW-	NOISE WALLS
R-2413C	
S-1 THRU S-238	STRUCTURE PLANS
C-1 THRU C-8	CULVERT PLANS

EFF. 07-18-06
REV. 01-02-07

2006 ROADWAY ENGLISH STANDARD DRAWINGS

The following Roadway Standards as appear in "Roadway Standard Drawings" Highway Design Branch - N. C. Department of Transportation - Raleigh, N. C., Dated July 18, 2006 are applicable to this project and by reference hereby are considered a part of these plans:

STD.NO.	TITLE
DIVISION 2 - EARTHWORK	
200.03	Method of Clearing - Method III
225.01	Guide for Grading Subgrade - Interstate and Freeway
225.02	Guide for Grading Subgrade - Secondary and Local
225.03	Deceleration and Acceleration Lanes
225.04	Method of Obtaining Superelevation - Two Lane Pavement
225.05	Method of Obtaining Superelevation - Divided Highways
225.06	Method of Grading Sight Distance at Intersections
225.09	Guide for Shoulder and Ditch Transition at Grade Separations
240.01	Guide for Berm Ditch Construction
DIVISION 3 - PIPE CULVERTS	
310.03	Cross Pipe End Section - Precast Concrete Section for 18" to 30" Pipe
310.05	Cross Pipe End Section - Prefabricated Steel Section for 18" to 30" Pipe
310.10	Driveway Pipe Construction
DIVISION 4 - MAJOR STRUCTURES	
422.10	Reinforced Bridge Approach Fills
DIVISION 5 - SUBGRADE, BASES AND SHOULDERS	
560.01	Method of Shoulder Construction - High Side of Superelevated Curve - Method I
560.02	Method of Shoulder Construction - High Side of Superelevated Curve - Method II
DIVISION 6 - ASPHALT BASES AND PAVEMENTS	
610.01	Guide for Paving Shoulders Under Bridges - Method I
610.02	Guide for Paving Shoulders Under Bridges - Method II
610.03	Guide for Paving Shoulders Under Bridges - Method III
654.01	Pavement Repairs
665.01	Milled Rumble Strips - Asphalt Pavements
DIVISION 7 - CONCRETE PAVEMENT AND SHOULDERS	
700.02	Expansion Joint Layout - for Rigid Doweled Pavement at Bridges
700.04	Concrete Pavement Header Board
700.05	Tying Proposed Pavement to Existing
710.01	Concrete Pavement - Station Marking
720.01	Concrete Shoulders
DIVISION 8 - INCIDENTALS	
806.01	Concrete Right-of-Way Marker
806.02	Granite Right-of-Way Marker
815.03	Pipe Underdrain and Blind Drain
816.01	Concrete Pads - for Shoulder Drain Installation
816.02	Aggregate Shoulder Drain
816.04	Markers for Drainage Structure and Concrete Pad
838.01	Concrete Endwall for Single and Double Pipe Culverts - 15" thru 48" Pipe 90 Skew
838.02	Concrete Endwall and Sluice Gate - 15" thru 36" Pipe 90 Skew
838.11	Brick Endwall for Single and Double Pipe Culverts - 15" thru 48" Pipe 90 Skew
838.21	Reinforced Concrete Endwall - for Single 54" Pipe 90 Skew
838.22	Reinforced Concrete Endwall - for Double and Triple 54" Pipes 90 Skew
838.33	Reinforced Concrete Endwall - for Single 66" Pipe 90 Skew
838.45	Notes for Reinforced Concrete Endwall - Std. Dwg 838.21 thru 838.40
838.51	Reinforced Brick Endwall - for Single 54" Pipe 90 Skew
838.52	Reinforced Brick Endwall - for Double and Triple 54" Pipes 90 Skew
838.63	Reinforced Brick Endwall - for Single 66" Pipe 90 Skew
838.75	Notes for Reinforced Brick Endwall - Std. Dwg 838.51 thru 838.70
838.80	Precast Endwalls - 12" thru 72" Pipe 90 Skew
840.00	Concrete Base Pad for Drainage Structures
840.01	Brick Catch Basin - 12" thru 54" Pipe
840.02	Concrete Catch Basin - 12" thru 54" Pipe
840.03	Frame, Grates and Hood - for Use on Standard Catch Basin
840.04	Concrete Open Throat Catch Basin - 12" thru 48" Pipe
840.05	Brick Open Throat Catch Basin - 12" thru 48" Pipe
840.14	Concrete Drop Inlet - 12" thru 30" Pipe
840.15	Brick Drop Inlet - 12" thru 30" Pipe
840.16	Drop Inlet Frame and Grates - for use with Std. Dwg 840.14 and 840.15
840.17	Concrete Grated Drop Inlet Type 'A' - 12" thru 72" Pipe
840.18	Concrete Grated Drop Inlet Type 'B' - 12" thru 36" Pipe
840.19	Concrete Grated Drop Inlet Type 'D' - 12" thru 36" Pipe
840.20	Frames and Wide Slot Flat Grates
840.22	Frames and Wide Slot Sag Grates
840.24	Frames and Narrow Slot Sag Grates
840.26	Brick Grated Drop Inlet Type 'A' - 12" thru 72" Pipe
840.27	Brick Grated Drop Inlet Type 'B' - 12" thru 36" Pipe
840.28	Brick Grated Drop Inlet Type 'D' - 12" thru 36" Pipe
840.29	Frames and Narrow Slot Flat Grates
840.31	Concrete Junction Box - 12" thru 66" Pipe
840.32	Brick Junction Box - 12" thru 66" Pipe
840.34	Traffic Bearing Junction Box - for Use with Pipes 42" and Under
840.35	Traffic Bearing Grated Drop Inlet - for Cast Iron Double Frame and Grates
840.45	Precast Drainage Structure
840.46	Traffic Bearing Precast Drainage Structure
840.54	Manhole Frame and Cover
840.66	Drainage Structure Steps
840.71	Concrete and Brick Pipe Plug
840.72	Pipe Collar
846.01	Concrete Curb, Gutter and Curb & Gutter
846.02	Drop Inlet Installation in Expressway Gutter
846.04	Drop Inlet Installation in Shoulder Berm Gutter
848.01	Concrete Sidewalk
848.03	Driveway Turnout - Drop Curb Type
848.04	Street Turnout
850.01	Concrete Paved Ditches
850.10	Guide for Berm Drainage Outlet - 15" and 18" Pipe
850.11	Guide for Berm Drainage Outlet - 24" and 30" Pipe
852.01	Concrete Islands
852.04	Method for Placement of Drop Inlets in Grassed Median - Using 1'-6" Curb and Gutter
852.05	Median Curb for Catch Basin - for Use with 1'-6" Curb and Gutter
852.06	Method for Placement of Drop Inlets in Concrete Islands
852.10	Median Construction - with Curb and Gutter
857.01	Precast Reinforced Concrete Barrier - 41" Single Faced
862.01	Guardrail Placement
862.02	Guardrail Installation
862.03	Structure Anchor Units
862.04	Anchoring End of Guardrail - B-77 and B-83 Anchor Units
865.01	Cable Guiderail
866.01	Chain Link Fence - 4', 5' and 6' High Fence
866.02	Woven Wire Fence - with Wood Post
876.01	Rip Rap in Channels
876.02	Guide for Rip Rap at Pipe Outlets
876.04	Drainage Ditches with Class 'B' Rip Rap

GENERAL NOTES:

2006 SPECIFICATIONS
EFFECTIVE: 07-18-06
REVISED: 07-30-08

GRADING AND SURFACING OR RESURFACING AND WIDENING:

THE GRADE LINES SHOWN DENOTE THE FINISHED ELEVATION OF THE PROPOSED SURFACING AT GRADE POINTS SHOWN ON THE TYPICAL SECTIONS. WHERE NO GRADE LINES ARE SHOWN, THE PROFILES SHOWN DENOTE THE TOP ELEVATION OF THE EXISTING PAVEMENT ALONG THE CENTER LINE OF SURVEY ON WHICH THE PROPOSED RESURFACING WILL BE PLACED. GRADE LINES MAY BE ADJUSTED BY THE ENGINEER IN ORDER TO SECURE A PROPER TIE-IN.

CLEARING:

CLEARING ON THIS PROJECT SHALL BE PERFORMED TO THE LIMITS ESTABLISHED BY METHOD III.

SUPERELEVATION:

ALL CURVES ON THIS PROJECT SHALL BE SUPERELEVATED IN ACCORDANCE WITH STD. NO. 225.04 AND STD. NO. 225.05 USING THE RATE OF SUPERELEVATION AND RUNOFF SHOWN ON THE PLANS. SUPERELEVATION IS TO BE REVOLVED ABOUT THE GRADE POINTS SHOWN ON THE TYPICAL SECTIONS.

SHOULDER CONSTRUCTION:

ASPHALT, EARTH, AND CONCRETE SHOULDER CONSTRUCTION ON THE HIGH SIDE OF SUPERELEVATED CURVES SHALL BE IN ACCORDANCE WITH STD. NO. 560.01 AND STD. NO. 560.02.

SIDE ROADS:

THE CONTRACTOR WILL BE REQUIRED TO DO ALL NECESSARY WORK TO PROVIDE SUITABLE CONNECTIONS WITH ALL ROADS, STREETS, AND DRIVES ENTERING THIS PROJECT. THIS WORK WILL BE PAID FOR AT THE CONTRACT UNIT PRICE FOR THE PARTICULAR ITEMS INVOLVED.

BERM DITCHES:

BERM DITCHES SHALL BE CONSTRUCTED IN ACCORDANCE WITH STD. NO. 240.01 AT LOCATIONS SHOWN ON THE PLANS OR AS DIRECTED BY THE ENGINEER.

UNDERDRAINS:

UNDERDRAINS SHALL BE CONSTRUCTED IN ACCORDANCE WITH STD. NO. 815.03 AT LOCATIONS DIRECTED BY THE ENGINEER.

SHOULDER DRAINS:

SHOULDER DRAINS SHALL BE CONSTRUCTED IN ACCORDANCE WITH STD. NO. 816.03 AND DETAILS IN PLANS AT LOCATIONS DIRECTED BY THE ENGINEER.

DRIVEWAYS:

DRIVEWAYS SHALL BE CONSTRUCTED IN ACCORDANCE WITH STD. 848.03 AT LOCATIONS SHOWN ON PLANS OR AS DIRECTED BY THE ENGINEER.

STREET TURNOUT:

STREET RETURNS SHALL BE CONSTRUCTED IN ACCORDANCE WITH STD. NO. 848.04 USING THE RADII NOTED ON PLANS.

GUARDRAIL:

THE GUARDRAIL LOCATIONS SHOWN ON THE PLANS MAY BE ADJUSTED DURING CONSTRUCTION AS DIRECTED BY THE ENGINEER. THE CONTRACTOR SHOULD CONSULT WITH THE ENGINEER PRIOR TO ORDERING GUARDRAIL MATERIAL.

TEMPORARY SHORING:

SHORING REQUIRED FOR THE MAINTENANCE OF TRAFFIC NOT SHOWN ON THE PLANS WILL BE PAID FOR AT THE CONTRACT PRICE FOR "TEMPORARY SHORING".

END BENTS:

THE ENGINEER SHALL CHECK THE STRUCTURE END BENT PLANS, DETAILS, AND CROSS-SECTION PRIOR TO SETTING OF THE SLOPE STAKES FOR THE EMBANKMENT OR EXCAVATION APPROACHING A BRIDGE.

UTILITIES:

UTILITY OWNERS ON THIS PROJECT ARE Duke Energy, AT&T,

Time Warner, Piedmont Natural Gas, City of Greensboro Public Utilities,

Williams Pipeline, CenturyLink and Level3 Communication.

ANY RELOCATION OF EXISTING UTILITIES WILL BE ACCOMPLISHED BY OTHERS, EXCEPT AS SHOWN ON THE PLANS.

RIGHT-OF-WAY MARKERS:

ALL RIGHT-OF-WAY MARKERS ON THIS PROJECT SHALL BE PLACED BY CONTRACT.

Curb Ramps:

CURB RAMPS ARE SHOWN ON THE PLANS AT APPROXIMATE LOCATIONS. THE CONSTRUCTION OF ALL CURB RAMPS SHALL BE IN ACCORDANCE WITH THE DETAILS IN THE PLANS.

12/2/2011
R:\Roadway\Proj\r2309ab_rdy_tsh_1a.dgn
Florence & Hutcheson Inc.

04/16/11

PROJECT REFERENCE NO.	SHEET NO.
R-2309AB/R-2413C	1-B

Note: Not to Scale

****S.U.E. = Subsurface Utility Engineering***

STATE OF NORTH CAROLINA
DIVISION OF HIGHWAYS

CONVENTIONAL PLAN SHEET SYMBOLS

BOUNDARIES AND PROPERTY:

- State Line
- County Line
- Township Line
- City Line
- Reservation Line
- Property Line
- Existing Iron Pin — EIP
- Property Corner
- Property Monument — ECM
- Parcel/Sequence Number — 123
- Existing Fence Line
- Proposed Woven Wire Fence
- Proposed Chain Link Fence
- Proposed Barbed Wire Fence
- Existing Wetland Boundary — WLB
- Proposed Wetland Boundary — WLB
- Existing Endangered Animal Boundary — EAB
- Existing Endangered Plant Boundary — EPB
- Known Soil Contamination: Area or Site
- Potential Soil Contamination: Area or Site

BUILDINGS AND OTHER CULTURE:

- Gas Pump Vent or U/G Tank Cap
- Sign — S
- Well — W
- Small Mine
- Foundation
- Area Outline
- Cemetery
- Building
- School
- Church
- Dam

HYDROLOGY:

- Stream or Body of Water
- Hydro, Pool or Reservoir
- Jurisdictional Stream — JS
- Buffer Zone 1 — BZ 1
- Buffer Zone 2 — BZ 2
- Flow Arrow
- Disappearing Stream
- Spring
- Wetland
- Proposed Lateral, Tail, Head Ditch — FLOW
- False Sump

RAILROADS:

- Standard Gauge — CSX TRANSPORTATION
- RR Signal Milepost — MILEPOST 35
- Switch — SWITCH
- RR Abandoned
- RR Dismantled

RIGHT OF WAY:

- Baseline Control Point
- Existing Right of Way Marker
- Existing Right of Way Line
- Proposed Right of Way Line — RW
- Proposed Right of Way Line with Iron Pin and Cap Marker — RW
- Proposed Right of Way Line with Concrete or Granite Marker — RW
- Existing Control of Access — CA
- Proposed Control of Access — CA
- Existing Easement Line — E
- Proposed Temporary Construction Easement — E
- Proposed Temporary Drainage Easement — TDE
- Proposed Permanent Drainage Easement — PDE
- Proposed Permanent Drainage / Utility Easement — DUE
- Proposed Permanent Utility Easement — PUE
- Proposed Temporary Utility Easement — TUE
- Proposed Aerial Utility Easement — AUE
- Proposed Permanent Easement with Iron Pin and Cap Marker

ROADS AND RELATED FEATURES:

- Existing Edge of Pavement
- Existing Curb
- Proposed Slope Stakes Cut — C
- Proposed Slope Stakes Fill — F
- Proposed Curb Ramp — CR
- Existing Metal Guardrail
- Proposed Guardrail
- Existing Cable Guiderail
- Proposed Cable Guiderail
- Equality Symbol
- Pavement Removal

VEGETATION:

- Single Tree
- Single Shrub
- Hedge
- Woods Line
- Orchard
- Vineyard — Vineyard

EXISTING STRUCTURES:

MAJOR:

- Bridge, Tunnel or Box Culvert — CONC
- Bridge Wing Wall, Head Wall and End Wall — CONC WW

MINOR:

- Head and End Wall — CONC HW
- Pipe Culvert
- Footbridge
- Drainage Box: Catch Basin, DI or JB — CB
- Paved Ditch Gutter
- Storm Sewer Manhole — S
- Storm Sewer — S

UTILITIES:

POWER:

- Existing Power Pole
- Proposed Power Pole
- Existing Joint Use Pole
- Proposed Joint Use Pole
- Power Manhole — P
- Power Line Tower
- Power Transformer
- U/G Power Cable Hand Hole
- H-Frame Pole
- Recorded U/G Power Line — P
- Designated U/G Power Line (S.U.E.*) — P

TELEPHONE:

- Existing Telephone Pole
- Proposed Telephone Pole
- Telephone Manhole — T
- Telephone Booth
- Telephone Pedestal — T
- Telephone Cell Tower
- U/G Telephone Cable Hand Hole — HH
- Recorded U/G Telephone Cable — T
- Designated U/G Telephone Cable (S.U.E.*) — T
- Recorded U/G Telephone Conduit — TC
- Designated U/G Telephone Conduit (S.U.E.*) — TC
- Recorded U/G Fiber Optics Cable — T FO
- Designated U/G Fiber Optics Cable (S.U.E.*) — T FO

WATER:

- Water Manhole — W
- Water Meter
- Water Valve
- Water Hydrant
- Recorded U/G Water Line — W
- Designated U/G Water Line (S.U.E.*) — W
- Above Ground Water Line — A/G Water

TV:

- TV Satellite Dish
- TV Pedestal — C
- TV Tower
- U/G TV Cable Hand Hole — HH
- Recorded U/G TV Cable — TV
- Designated U/G TV Cable (S.U.E.*) — TV
- Recorded U/G Fiber Optic Cable — TV FO
- Designated U/G Fiber Optic Cable (S.U.E.*) — TV FO

GAS:

- Gas Valve
- Gas Meter
- Recorded U/G Gas Line — G
- Designated U/G Gas Line (S.U.E.*) — G
- Above Ground Gas Line — A/G Gas

SANITARY SEWER:

- Sanitary Sewer Manhole
- Sanitary Sewer Cleanout
- U/G Sanitary Sewer Line — SS
- Above Ground Sanitary Sewer — A/G Sanitary Sewer
- Recorded SS Forced Main Line — FSS
- Designated SS Forced Main Line (S.U.E.*) — FSS

MISCELLANEOUS:

- Utility Pole
- Utility Pole with Base
- Utility Located Object
- Utility Traffic Signal Box — S
- Utility Unknown U/G Line — TUTL
- U/G Tank; Water, Gas, Oil
- Underground Storage Tank, Approx. Loc. — UST
- A/G Tank; Water, Gas, Oil
- Geoenvironmental Boring
- U/G Test Hole (S.U.E.*)
- Abandoned According to Utility Records — AATUR
- End of Information — E.O.I.

6/4/99

PROJECT REFERENCE NO.	SHEET NO.
R-2309AB/R-2413C	3(1 of 3)

STATE OF NORTH CAROLINA
DIVISION OF HIGHWAYS
ROADWAY SUMMARY OF QUANTITIES FOR CONTRACT - C200800

SUMMARY OF QUANTITIES

ItemNumber	Sec #	Quantity	Unit	Description
0000100000-N	800	Lump Sum		MOBILIZATION
0000400000-N	801	Lump Sum		CONSTRUCTION SURVEYING
0001000000-E	200	Lump Sum		CLEARING & GRUBBING .. ACRE(S)
0008000000-E	200	7	ACR	SUPPLEMENTARY CLEARING & GRUB-BING
0015000000-N	205	9	EA	SEALING ABANDONED WELLS
0029000000-N	SP	Lump Sum		REINFORCED BRIDGE APPROACH FILL, STATION ************ (10+65.063 -Y10-)
0029000000-N	SP	Lump Sum		REINFORCED BRIDGE APPROACH FILL, STATION ************ (11+43.200 US 220 SB RAMP)
0029000000-N	SP	Lump Sum		REINFORCED BRIDGE APPROACH FILL, STATION ************ (114+28.00-L-NB)
0029000000-N	SP	Lump Sum		REINFORCED BRIDGE APPROACH FILL, STATION ************ (114+28.00-L-SB)
0029000000-N	SP	Lump Sum		REINFORCED BRIDGE APPROACH FILL, STATION ************ (134+30.00-L-NB)
0029000000-N	SP	Lump Sum		REINFORCED BRIDGE APPROACH FILL, STATION ************ (134+30.00-L-SB)
0029000000-N	SP	Lump Sum		REINFORCED BRIDGE APPROACH FILL, STATION ************ (16+24.670 US 220 SB RAMP)
0029000000-N	SP	Lump Sum		REINFORCED BRIDGE APPROACH FILL, STATION ************ (24+37.000 -L REV- NBL)
0029000000-N	SP	Lump Sum		REINFORCED BRIDGE APPROACH FILL, STATION ************ (24+37.000 -L REV- SBL)
0029000000-N	SP	Lump Sum		REINFORCED BRIDGE APPROACH FILL, STATION ************ (45+30.610 -L REV- NBL)
0029000000-N	SP	Lump Sum		REINFORCED BRIDGE APPROACH FILL, STATION ************ (45+30.610 -L REV- SBL)
0036000000-E	225	33,860	CY	UNDERCUT EXCAVATION
0038000000-E	SP	8,300	CY	SHALLOW UNDERCUT
0080000000-E	SP	16,550	TON	CLASS IV SUBGRADE STABILIZA-TION
0134000000-E	240	18,200	CY	DRAINAGE DITCH EXCAVATION
0141000000-E	240	4,255	LF	BERM DITCH CONSTRUCTION
0156000000-E	250	104,515	SY	REMOVAL OF EXISTING ASPHALT PAVEMENT
0177000000-E	250	40,940	SY	BREAKING OF EXISTING ASPHALT PAVEMENT
0192000000-N	260	120	HR	PROOF ROLLING
0195000000-E	SP	29,320	CY	SELECT GRANULAR MATERIAL
0196000000-E	270	68,920	SY	FABRIC FOR SOIL STABILIZATION
0199000000-E	SP	18,509	SF	TEMPORARY SHORING
0220000000-E	SP	24,020	TON	ROCK EMBANKMENTS
0223000000-E	SP	5,400	SY	ROCK PLATING
0234000000-E	SP	100	CY	GENERIC GRADING ITEM EXCAVATION AND STOCKPILING CONTAMINATED SOIL
0241000000-E	SP	1,675	SY	GENERIC GRADING ITEM FABRIC FOR EMBANKMENT STABILIZATION
0241000000-E	SP	11,650	SY	GENERIC GRADING ITEM FILTER FABRIC FOR ROCK EMBANK-MENT
0248000000-N	SP	Lump Sum		GENERIC GRADING ITEM SUBGRADE IMPROVEMENT FIELD TEST
0318000000-E	SP	6,140	TON	FOUNDATION CONDITIONING MATE-RIAL, MINOR STRS
0320000000-E	SP	19,210	SY	FOUNDATION CONDITIONING FABRIC
0342000000-E	SP	3,100	LF	**" SIDE DRAIN PIPE (30")
0342000000-E	SP	180	LF	**" SIDE DRAIN PIPE (36")
0343000000-E	SP	11,576	LF	15" SIDE DRAIN PIPE
0344000000-E	SP	6,924	LF	18" SIDE DRAIN PIPE
0345000000-E	SP	4,088	LF	24" SIDE DRAIN PIPE
0348000000-E	SP	35	EA	**" SIDE DRAIN PIPE ELBOWS (15")
0348000000-E	SP	22	EA	**" SIDE DRAIN PIPE ELBOWS (18")
0348000000-E	SP	10	EA	**" SIDE DRAIN PIPE ELBOWS (24")
0348000000-E	SP	2	EA	**" SIDE DRAIN PIPE ELBOWS (36")
0360000000-E	SP	16	LF	12" RC PIPE CULVERTS, CLASS III
0366000000-E	SP	4,264	LF	15" RC PIPE CULVERTS, CLASS III
0372000000-E	SP	5,000	LF	18" RC PIPE CULVERTS, CLASS III
0378000000-E	SP	2,748	LF	24" RC PIPE CULVERTS, CLASS III
0384000000-E	SP	1,424	LF	30" RC PIPE CULVERTS, CLASS III
0390000000-E	SP	668	LF	36" RC PIPE CULVERTS, CLASS III
0396000000-E	SP	368	LF	42" RC PIPE CULVERTS, CLASS III
0402000000-E	SP	292	LF	48" RC PIPE CULVERTS, CLASS III
0408000000-E	SP	1,052	LF	54" RC PIPE CULVERTS, CLASS III
0420000000-E	SP	240	LF	66" RC PIPE CULVERTS, CLASS III
0448000000-E	SP	112	LF	****" RC PIPE CULVERTS, CLASS IV (48")
0448200000-E	SP	8,420	LF	15" RC PIPE CULVERTS, CLASS IV
0448300000-E	SP	1,196	LF	18" RC PIPE CULVERTS, CLASS IV
0448400000-E	SP	804	LF	24" RC PIPE CULVERTS, CLASS IV
0448500000-E	SP	452	LF	30" RC PIPE CULVERTS, CLASS IV
0448600000-E	SP	344	LF	36" RC PIPE CULVERTS, CLASS IV
0448700000-E	SP	380	LF	42" RC PIPE CULVERTS, CLASS IV
0453000000-E	SP	2	EA	**" PIPE END SECTION (15")
0546000000-E	SP	176	LF	**" CAA PIPE CULVERTS, *****" THICK (18", 0.064")
0546000000-E	SP	136	LF	**" CAA PIPE CULVERTS, *****" THICK (72", 0.168")
0576000000-E	SP	120	LF	**" CS PIPE CULVERTS, *****" THICK (36", 0.079")
0576000000-E	SP	32	LF	**" CS PIPE CULVERTS, *****" THICK (48", 0.109")
0576000000-E	SP	160	LF	**" CS PIPE CULVERTS, *****" THICK (72", 0.168")
0582000000-E	SP	1,852	LF	15" CS PIPE CULVERTS, 0.064" THICK
0588000000-E	SP	160	LF	18" CS PIPE CULVERTS, 0.064" THICK
0600000000-E	SP	240	LF	30" CS PIPE CULVERTS, 0.079" THICK
0636000000-E	SP	31	EA	**" CS PIPE ELBOWS, *****" THICK (15", 0.064")
0636000000-E	SP	7	EA	**" CS PIPE ELBOWS, *****" THICK (18", 0.064")
0636000000-E	SP	4	EA	**" CS PIPE ELBOWS, *****" THICK (30", 0.079")
0636000000-E	SP	2	EA	**" CS PIPE ELBOWS, *****" THICK (36", 0.079")
0973100000-E	SP	96	LF	**" WELDED STEEL PIPE, ****" THICK, GRADE ** IN SOIL (18", 0.5", B)
0973100000-E	SP	260	LF	**" WELDED STEEL PIPE, ****" THICK, GRADE ** IN SOIL (24", 0.5", B)
0973100000-E	SP	340	LF	**" WELDED STEEL PIPE, ****" THICK, GRADE ** IN SOIL (36", 0.5", B)
0973100000-E	SP	172	LF	**" WELDED STEEL PIPE, ****" THICK, GRADE ** IN SOIL (42", 0.625", B)
0973100000-E	SP	108	LF	**" WELDED STEEL PIPE, ****" THICK, GRADE ** IN SOIL (54", 0.75", B)
0973300000-E	SP	50	LF	**" WELDED STEEL PIPE, ****" THICK, GRADE ** NOT IN SOIL (42", 0.625", B)
0986000000-E	SP	88	LF	GENERIC PIPE ITEM 15" CS SLOTTED DRAIN, 0.064" THICK
0992000000-E	SP	1	EA	GENERIC PIPE ITEM 15" FLAP GATE
0995000000-E	340	11,545	LF	PIPE REMOVAL
0996000000-N	350	12	EA	PIPE CLEAN-OUT
1000000000-E	462	510	SY	6" SLOPE PROTECTION
1011000000-N	500	Lump Sum		FINE GRADING
1077000000-E	SP	10,050	TON	#57 STONE
1110000000-E	510	500	TON	STABILIZER AGGREGATE
1121000000-E	520	46,700	TON	AGGREGATE BASE COURSE
1220000000-E	545	6,310	TON	INCIDENTAL STONE BASE
1275000000-E	600	15,000	GAL	PRIME COAT
1489000000-E	610	11,080	TON	ASPHALT CONC BASE COURSE, TYPE B25.0B
1498000000-E	610	7,280	TON	ASPHALT CONC INTERMEDIATE COURSE, TYPE I19.0B
1519000000-E	610	25,690	TON	ASPHALT CONC SURFACE COURSE, TYPE S9.5B
1693000000-E	654	640	TON	ASPHALT PLANT MIX, PAVEMENT REPAIR
2000000000-N	806	390	EA	RIGHT OF WAY MARKERS
2022000000-E	SP	4,915	CY	SUBDRAIN EXCAVATION
2033000000-E	SP	2,460	CY	SUBDRAIN FINE AGGREGATE
2044000000-E	SP	14,830	LF	6" PERFORATED SUBDRAIN PIPE
2070000000-N	SP	31	EA	SUBDRAIN PIPE OUTLETS
2077000000-E	SP	204	LF	6" OUTLET PIPE (SUBDRAINS)
2143000000-E	818	55	TON	BLOTTING SAND
2209000000-E	838	83.8	CY	ENDWALLS
2220000000-E	838	42.5	CY	REINFORCED ENDWALLS
2253000000-E	840	41.67	CY	PIPE COLLARS
2264000000-E	840	8.14	CY	PIPE PLUGS
2275000000-E	SP	686	CY	FLOWABLE FILL
2286000000-N	840	475	EA	MASONRY DRAINAGE STRUCTURES
2297000000-E	840	52.18	CY	MASONRY DRAINAGE STRUCTURES
2308000000-E	840	197.2	LF	MASONRY DRAINAGE STRUCTURES
2354000000-N	840	14	EA	FRAME WITH GRATE, STD 840.22
2364000000-N	840	51	EA	FRAME WITH TWO GRATES, STD 840.16
2364200000-N	840	29	EA	FRAME WITH TWO GRATES, STD 840.20
2365000000-N	840	206	EA	FRAME WITH TWO GRATES, STD 840.22
2366000000-N	840	18	EA	FRAME WITH TWO GRATES, STD 840.24
2367000000-N	840	75	EA	FRAME WITH TWO GRATES, STD 840.29
2374000000-N	840	7	EA	FRAME WITH GRATE & HOOD, STD 840.03, TYPE ** (E)
2374000000-N	840	32	EA	FRAME WITH GRATE & HOOD, STD 840.03, TYPE ** (F)
2374000000-N	840	33	EA	FRAME WITH GRATE & HOOD, STD 840.03, TYPE ** (G)
2396000000-N	840	31	EA	FRAME WITH COVER, STD 840.54
2440000000-N	852	5	EA	CONCRETE TRANSITIONAL SECTION FOR CATCH BASIN
2451000000-N	852	51	EA	CONCRETE TRANSITIONAL SECTION FOR DROP INLETS
2462000000-E	SP	2	EA	**" SLUICE GATE (25")
2462000000-E	SP	3	EA	**" SLUICE GATE (38-3/4")
2472000000-N	840	5	EA	GENERIC DRAINAGE ITEM TEMPORARY CONCRETE LIDS
2535000000-E	846	2,280	LF	**"X **" CONCRETE CURB (8" X 18")
2542000000-E	846	21,740	LF	1'-6" CONCRETE CURB & GUTTER
2549000000-E	846	14,060	LF	2'-6" CONCRETE CURB & GUTTER
2556000000-E	846	14,100	LF	SHOULDER BERM GUTTER
2577000000-E	846	2,040	LF	CONCRETE EXPRESSWAY GUTTER
2580000000-E	846	370	LF	CONCRETE VALLEY GUTTER
2591000000-E	848	6,860	SY	4" CONCRETE SIDEWALK
2612000000-E	848	840	SY	6" CONCRETE DRIVEWAY
2619000000-E	850	250	SY	4" CONCRETE PAVED DITCH
2627000000-E	852	85	SY	4" CONCRETE ISLAND COVERS
2655000000-E	852	20,890	SY	5" MONOLITHIC CONCRETE ISLANDS (KEYED IN)
2724000000-E	857	5,159	LF	PRECAST REINFORCED CONCRETE BARRIER, SINGLE FACED
2760000000-N	848	44	EA	GENERIC PAVING ITEM CONCRETE CURB RAMPS
2800000000-N	858	3	EA	ADJUSTMENT OF CATCH BASINS
2830000000-N	858	4	EA	ADJUSTMENT OF MANHOLES
3000000000-N	SP	11	EA	IMPACT ATTENUATOR UNIT, TYPE 350
3030000000-E	862	34,962.5	LF	STEEL BM GUARDRAIL
3045000000-E	862	862.5	LF	STEEL BM GUARDRAIL, SHOP CURVED
3105000000-N	862	16	EA	STEEL BM GUARDRAIL TERMINAL SECTIONS
3150000000-N	862	20	EA	ADDITIONAL GUARDRAIL POSTS
3195000000-N	862	11	EA	GUARDRAIL ANCHOR UNITS, TYPE AT-1
3210000000-N	862	30	EA	GUARDRAIL ANCHOR UNITS, TYPE CAT-1
3215000000-N	862	8	EA	GUARDRAIL ANCHOR UNITS, TYPE III
3270000000-N	SP	89	EA	GUARDRAIL ANCHOR UNITS, TYPE 350
3285000000-N	SP	8	EA	GUARDRAIL ANCHOR UNITS, TYPE M-350
3317000000-N	862	49	EA	GUARDRAIL ANCHOR UNITS, TYPE B-77
3360000000-E	863	6,366	LF	REMOVE EXISTING GUARDRAIL
3380000000-E	862	3,750	LF	TEMPORARY STEEL BM GUARDRAIL
3387000000-N	862	1	EA	GUARDRAIL ANCHOR UNITS, TYPE ********** TEMPORARY (W-BEAM)
3389100000-N	SP	6	EA	GUARDRAIL ANCHOR UNITS, TYPE 350 TEMPORARY
3389400000-E	865	21,400	LF	DOUBLE FACED CABLE GUIDERAIL
3389500000-N	SP	10	EA	ADDITIONAL GUIDERAIL POSTS
3389600000-N	865	131	EA	CABLE GUIDERAIL ANCHOR UNITS
3503000000-E	866	95,220	LF	WOVEN WIRE FENCE, 47" FABRIC
3509000000-E	866	5,800	EA	4" TIMBER FENCE POSTS, 7'-6" LONG
3515000000-E	866	1,870	EA	5" TIMBER FENCE POSTS, 8'-0" LONG
3536000000-E	866	1,310	LF	CHAIN LINK FENCE, 48" FABRIC
3542000000-E	866	112	EA	METAL LINE POSTS FOR 48" CHAIN LINK FENCE
3548000000-E	866	10	EA	METAL TERMINAL POSTS FOR 48" CHAIN LINK FENCE
3551000000-E	866	6	EA	METAL GATE POSTS FOR **" CHAIN LINK FENCE, SINGLE GATE (48")
3564000000-E	866	6	EA	SINGLE GATES, **" HIGH, **' WIDE, **' OPENING (48", 16', 16')
3575000000-E	SP	115	LF	GENERIC FENCING ITEM PEDESTRIAN SAFETY RAIL
3628000000-E	876	2,530	TON	RIP RAP, CLASS I
3635000000-E	876	110	TON	RIP RAP, CLASS II
3649000000-E	876	5,690	TON	RIP RAP, CLASS B
3656000000-E	876	43,320	SY	FILTER FABRIC FOR DRAINAGE
3659000000-N	SP	4	EA	PREFORMED SCOUR HOLES WITH LEVEL SPREADER APRON
3691000000-N	SP	1	EA	GENERIC EROSION CONTROL ITEM RIP RAP ENERGY DISSIPATOR
4048000000-E	902	8	CY	REINFORCED CONCRETE SIGN FOUN-DATIONS
4054000000-E	902	2	CY	PLAIN CONCRETE SIGN FOUNDA-TIONS

7/31/2011
R:\Roadway\Proj\R2309AB_rdy_sum_pave_rem_sheet3.dgn
Florence & Hutcheson, Inc.

STATE OF NORTH CAROLINA
SUMMARY OF QUANTITIES

PROJECT REFERENCE No.	SHEET No.
R-2309AB / R-2413C	3 (2 of 3)

ItemNumber	Sec #	Quantity	Unit	Description
4057000000-E	SP	84	CY	OVERHEAD FOOTING
4060000000-E	903	5,793	LB	SUPPORTS, BREAKAWAY STEEL BEAM
4066000000-E	903	2,440	LB	SUPPORTS, SIMPLE STEEL BEAM
4072000000-E	903	6,928	LF	SUPPORTS, 3-LB STEEL U-CHANNEL
4082100000-N	SP	Lump Sum		SUPPORTS, OVERHEAD SIGN STRUCTURE AT STA ****** (26+40 -L REV-)
4082100000-N	SP	Lump Sum		SUPPORTS, OVERHEAD SIGN STRUCTURE AT STA ****** (27+40 -L REV-)
4082100000-N	SP	Lump Sum		SUPPORTS, OVERHEAD SIGN STRUCTURE AT STA ****** (33+60 -L REV-)
4082100000-N	SP	Lump Sum		SUPPORTS, OVERHEAD SIGN STRUCTURE AT STA ****** (35+40 -L REV-)
4082100000-N	SP	Lump Sum		SUPPORTS, OVERHEAD SIGN STRUCTURE AT STA ****** (41+60 -L REV-)
4082100000-N	SP	Lump Sum		SUPPORTS, OVERHEAD SIGN STRUCTURE AT STA ****** (50+00 -L REV-)
4082100000-N	SP	Lump Sum		SUPPORTS, OVERHEAD SIGN STRUCTURE AT STA ****** (75+00 -L REV-)
4096000000-N	904	26	EA	SIGN ERECTION, TYPE D
4102000000-N	904	412	EA	SIGN ERECTION, TYPE E
4108000000-N	904	90	EA	SIGN ERECTION, TYPE F
4110000000-N	904	10	EA	SIGN ERECTION, TYPE *** (GROUND MOUNTED) (A)
4110000000-N	904	3	EA	SIGN ERECTION, TYPE *** (GROUND MOUNTED) (B)
4116100000-N	904	23	EA	SIGN ERECTION, RELOCATE, TYPE **** (GROUND MOUNTED) (D)
4116100000-N	904	4	EA	SIGN ERECTION, RELOCATE, TYPE **** (GROUND MOUNTED) (E)
4152000000-N	907	2	EA	DISPOSAL OF SIGN SYSTEM, STEEL BEAM
4155000000-N	907	307	EA	DISPOSAL OF SIGN SYSTEM, U-CHANNEL
4158000000-N	907	3	EA	DISPOSAL OF SIGN SYSTEM, WOOD
4192000000-N	907	27	EA	DISPOSAL OF SUPPORT, U-CHANNEL
4400000000-E	1110	793	SF	WORK ZONE SIGNS (STATIONARY)
4405000000-E	1110	1,124	SF	WORK ZONE SIGNS (PORTABLE)
4410000000-E	1110	2,705	SF	WORK ZONE SIGNS (BARRICADE MOUNTED)
4415000000-N	1115	2	EA	FLASHING ARROW PANELS, TYPE C
4422000000-N	1120	1,680	DAY	CHANGEABLE MESSAGE SIGN (SHORT TERM)
4430000000-N	1130	1,010	EA	DRUMS
4435000000-N	1135	200	EA	CONES
4445000000-E	1145	2,940	LF	BARRICADES (TYPE III)
4455000000-N	1150	2,880	MD	FLAGGER
4465000000-N	1160	20	EA	TEMPORARY CRASH CUSHIONS
4470000000-N	1160	6	EA	RESET TEMPORARY CRASH CUSHIONS
4480000000-N	1165	4	EA	TMIA
4485000000-E	1170	6,140	LF	PORTABLE CONCRETE BARRIER
4495000000-E	1170	1,960	LF	PORTABLE CONCRETE BARRIER (DRAINAGE)
4500000000-E	1170	1,040	LF	RESET PORTABLE CONCRETE BARRIER
4506000000-E	1170	360	LF	RESET PORTABLE CONCRETE BARRIER (DRAINAGE)
4650000000-N	1251	2,665	EA	TEMPORARY RAISED PAVEMENT MARKERS
4695000000-E	1205	9,689	LF	THERMOPLASTIC PAVEMENT MARKING LINES (8", 90 MILS)
4697000000-E	1205	1,976	LF	THERMOPLASTIC PAVEMENT MARKING LINES (8", 120 MILS)
4710000000-E	1205	3,922	LF	THERMOPLASTIC PAVEMENT MARKING LINES (24", 120 MILS)
4721000000-E	1205	70	EA	THERMOPLASTIC PAVEMENT MARKING CHARACTER (120 MILS)

ItemNumber	Sec #	Quantity	Unit	Description
4725000000-E	1205	432	EA	THERMOPLASTIC PAVEMENT MARKING SYMBOL (90 MILS)
4770000000-E	1205	5,560	LF	COLD APPLIED PLASTIC PAVEMENT MARKING LINES, TYPE ** (4") (IV)
4810000000-E	1205	1,070,768	LF	PAINT PAVEMENT MARKING LINES (4")
4820000000-E	1205	11,368	LF	PAINT PAVEMENT MARKING LINES (8")
4835000000-E	1205	6,480	LF	PAINT PAVEMENT MARKING LINES (24")
4840000000-N	1205	4	EA	PAINT PAVEMENT MARKING CHARACTER
4845000000-N	1205	370	EA	PAINT PAVEMENT MARKING SYMBOL
4850000000-E	1205	28,000	LF	REMOVAL OF PAVEMENT MARKING LINES (4")
4900000000-N	1251	28	EA	PERMANENT RAISED PAVEMENT MARKERS
4905000000-N	1253	3,953	EA	SNOWPLOWABLE PAVEMENT MARKERS
4935000000-N	1267	142	EA	FLEXIBLE DELINEATORS (CRYSTAL)
4940000000-N	1267	48	EA	FLEXIBLE DELINEATORS (YELLOW)
4945000000-N	1267	20	EA	FLEXIBLE DELINEATORS (CRYSTAL & RED)
4950000000-N	1267	20	EA	FLEXIBLE DELINEATORS (YELLOW & RED)
5255000000-N	1413	Lump Sum		PORTABLE LIGHTING
5325600000-E	1510	214	LF	6" WATER LINE
5325800000-E	1510	361	LF	8" WATER LINE
5326200000-E	1510	99	LF	12" WATER LINE
5546000000-E	1515	2	EA	8" VALVE
5606000000-E	1515	2	EA	2" BLOW OFF
5648000000-N	1515	1	EA	RELOCATE WATER METER
5666000000-E	1515	2	EA	FIRE HYDRANT
5672000000-N	1515	10	EA	RELOCATE FIRE HYDRANT
5689000000-E	1515	8	EA	GENERIC UTILITY ITEM ADJUSTMENT OF SEWER MANHOLES
5804000000-E	1530	120	LF	ABANDON 12" UTILITY PIPE
5890000000-N	1510	6	EA	GENERIC UTILITY ITEM ADJUSTMENT OF VALVE BOX
5890000000-N	1510	1	EA	GENERIC UTILITY ITEM TEMPORARY SEWER LINE SUPPORT
5890000000-N	1510	1	EA	GENERIC UTILITY ITEM TEMPORARY WATER LINE SUPPORT
6000000000-E	1605	82,800	LF	TEMPORARY SILT FENCE
6006000000-E	1610	32,450	TON	STONE FOR EROSION CONTROL, CLASS A
6009000000-E	1610	20,825	TON	STONE FOR EROSION CONTROL, CLASS B
6012000000-E	1610	20,650	TON	SEDIMENT CONTROL STONE
6015000000-E	1615	380	ACR	TEMPORARY MULCHING
6018000000-E	1620	11,900	LB	SEED FOR TEMPORARY SEEDING
6021000000-E	1620	52	TON	FERTILIZER FOR TEMPORARY SEEDING
6024000000-E	1622	36,875	LF	TEMPORARY SLOPE DRAINS
6027000000-N	1622	260	EA	INLET PROTECTION AT TEMPORARY SLOPE DRAINS
6029000000-E	SP	3,000	LF	SAFETY FENCE
6030000000-E	1630	141,300	CY	SILT EXCAVATION
6036000000-E	1631	352,200	SY	MATTING FOR EROSION CONTROL
6037000000-E	SP	17,970	SY	COIR FIBER MAT
6038000000-E	SP	21,675	SY	PERMANENT SOIL REINFORCEMENT MAT
6042000000-E	1632	29,500	LF	1/4" HARDWARE CLOTH
6045000000-E	SP	170	LF	**" TEMPORARY PIPE (72")
6048000000-E	SP	7,800	SY	FLOATING TURBIDITY CURTAIN
6069000000-E	1638	1,130	CY	STILLING BASINS
6070000000-N	SP	40	EA	SPECIAL STILLING BASINS
6071012000-E	SP	15,320	LF	COIR FIBER WATTLE
6071020000-E	SP	16,700	LB	POLYACRYLAMIDE (PAM)

ItemNumber	Sec #	Quantity	Unit	Description
6071030000-E	SP	38,750	LF	COIR FIBER BAFFLE
6071050000-E	SP	60	EA	**" SKIMMER (1-1/2")
6071050000-E	SP	8	EA	**" SKIMMER (2")
6071050000-E	SP	5	EA	**" SKIMMER (2-1/2")
6071050000-E	SP	4	EA	**" SKIMMER (3")
6084000000-E	1660	315	ACR	SEEDING & MULCHING
6087000000-E	1660	380	ACR	MOWING
6090000000-E	1661	7,520	LB	SEED FOR REPAIR SEEDING
6093000000-E	1661	16	TON	FERTILIZER FOR REPAIR SEEDING
6096000000-E	1662	7,530	LB	SEED FOR SUPPLEMENTAL SEEDING
6108000000-E	1665	225	TON	FERTILIZER TOPDRESSING
6111000000-E	SP	1,300	LF	IMPERVIOUS DIKE
6114500000-N	SP	500	MHR	SPECIALIZED HAND MOWING
6117000000-N	SP	300	EA	RESPONSE FOR EROSION CONTROL
6120000000-E	SP	450	CY	CULVERT DIVERSION CHANNEL
6123000000-E	1670	40	ACR	REFORESTATION
7000000000-E	1705	32	EA	PEDESTRIAN SIGNAL HEAD (**", ** SECTION) (16", 1 SECTION W/ COUNTDOWN)
7060000000-E	1705	30,330	LF	SIGNAL CABLE
7120000000-E	1705	187	EA	VEHICLE SIGNAL HEAD (12", 3 SECTION)
7132000000-E	1705	13	EA	VEHICLE SIGNAL HEAD (12", 4 SECTION)
7144000000-E	1705	13	EA	VEHICLE SIGNAL HEAD (12", 5 SECTION)
7252000000-E	1710	6,596	LF	MESSENGER CABLE (1/4")
7264000000-E	1710	12,270	LF	MESSENGER CABLE (3/8")
7279000000-E	1715	23,685	LF	TRACER WIRE
7300000000-E	1715	13,810	LF	UNPAVED TRENCHING (**********) (1, 2")
7300000000-E	1715	22,578	LF	UNPAVED TRENCHING (**********) (2, 2")
7301000000-E	1715	510	LF	DIRECTIONAL DRILL (**********) (1, 2")
7301000000-E	1715	1,067	LF	DIRECTIONAL DRILL (**********) (2, 2")
7324000000-N	1716	53	EA	JUNCTION BOX (STANDARD SIZE)
7348000000-N	1716	45	EA	JUNCTION BOX (OVER-SIZED, HEAVY DUTY)
7360000000-N	1720	61	EA	WOOD POLE
7372000000-N	1721	143	EA	GUY ASSEMBLY
7384000000-E	1722	2	EA	***" RISER WITH ********** (1-1/4", WEATHERHEAD)
7396000000-E	1722	4	EA	1/2" RISER WITH WEATHERHEAD
7408000000-E	1722	13	EA	1" RISER WITH WEATHERHEAD
7420000000-E	1722	56	EA	2" RISER WITH WEATHERHEAD
7432000000-E	1722	4	EA	2" RISER WITH HEAT SHRINK TUBING
7444000000-E	1725	35,850	LF	INDUCTIVE LOOP SAWCUT
7456000000-E	1726	85,650	LF	LEAD-IN CABLE (**********) (14-2)
7516000000-E	1730	7,000	LF	COMMUNICATIONS CABLE (**FIBER) (24)
7516000000-E	1730	24,816	LF	COMMUNICATIONS CABLE (**FIBER) (72)
7528000000-E	1730	2,621	LF	DROP CABLE
7540000000-N	1731	6	EA	SPLICE ENCLOSURE
7552000000-N	1731	6	EA	INTERCONNECT CENTER
7566000000-N	1733	29	EA	DELINEATOR MARKER
7575142000-N	SP	2	EA	900MHZ WIRELESS RADIO SYSTEM
7575160000-E	1734	6,000	LF	REMOVE EXISTING COMMUNICATIONS CABLE
7576000000-N	SP	36	EA	METAL STRAIN SIGNAL POLE
7613000000-N	SP	36	EA	SOIL TEST
7614100000-E	SP	306	CY	DRILLED PIER FOUNDATION

STATE OF NORTH CAROLINA
SUMMARY OF QUANTITIES

PROJECT REFERENCE No.	SHEET No.
R-2309AB/R-2413C	3 (3 of 3)

ItemNumber	Sec #	Quantity	Unit	Description
7624000000-N	1743	7	EA	SIGNAL PEDESTAL WITH FOUNDATION
7636000000-N	1745	39	EA	SIGN FOR SIGNALS
7684000000-N	1750	9	EA	SIGNAL CABINET FOUNDATION
7756000000-N	1751	9	EA	CONTROLLER WITH CABINET (TYPE 2070L, BASE MOUNTED)
7768000000-N	1751	7	EA	CONTROLLER WITH CABINET (TYPE 2070L, POLE MOUNTED)
7780000000-N	1751	92	EA	DETECTOR CARD (TYPE 2070L)
7901000000-N	1753	9	EA	CABINET BASE EXTENDER
7912000000-N	1755	2	EA	BEACON CONTROLLER ASSEMBLY & CABINET (********) (F3)
7948000000-N	SP	7	EA	TRAFFIC SIGNAL REMOVAL
7980000000-N	SP	5	EA	GENERIC SIGNAL ITEM 30' WOOD POLE
7980000000-N	SP	28	EA	GENERIC SIGNAL ITEM 5/8" X 10' GROUNDING ELECTRODE
7980000000-N	SP	4	EA	GENERIC SIGNAL ITEM 60' WOOD POLE
7980000000-N	SP	2	EA	GENERIC SIGNAL ITEM 900 MHZ WIRELESS ETHERNET RADIO
7980000000-N	SP	4	EA	GENERIC SIGNAL ITEM CCTV ASSEMBLY
7980000000-N	SP	1	EA	GENERIC SIGNAL ITEM CENTRAL ETHERNET SWITCH
7980000000-N	SP	4	EA	GENERIC SIGNAL ITEM DIGITAL VIDEO DECODER
7980000000-N	SP	4	EA	GENERIC SIGNAL ITEM DIGITAL VIDEO ENCODER
7980000000-N	SP	4	EA	GENERIC SIGNAL ITEM EQUIPMENT CABINET DISCONNECT
7980000000-N	SP	4	EA	GENERIC SIGNAL ITEM FIELD EQUIPMENT CABINET
7980000000-N	SP	4	EA	GENERIC SIGNAL ITEM FIELD ETHERNET SWITCH
7980000000-N	SP	3	EA	GENERIC SIGNAL ITEM FUNISH WIRELESS LIGHTNING ARRESTOR
7980000000-N	SP	2	EA	GENERIC SIGNAL ITEM FURNISH WIRELESS RADIO MODEM
7980000000-N	SP	4	EA	GENERIC SIGNAL ITEM LOCAL TRAFFIC SIGNAL SOFTWARE
7980000000-N	SP	4	EA	GENERIC SIGNAL ITEM METER BASE/DISCONNECT COMBINATION PANEL
7980000000-N	SP	2	EA	GENERIC SIGNAL ITEM MODIFY SPLICE ENCLOSURE
7980000000-N	SP	3	EA	GENERIC SIGNAL ITEM RELOCATE SOLAR POWERED FLASHER BEACON
7980000000-N	SP	4	EA	GENERIC SIGNAL ITEM RELOCATE SOLAR POWERED SCHOOL FLASHER
7980000000-N	SP	6	EA	GENERIC SIGNAL ITEM SOLAR POWERED FLASHER BEACON
7980000000-N	SP	2	EA	GENERIC SIGNAL ITEM SOLAR POWERED, 900 MHZ WIRELESS ETHERNET REPEATER RADIO
7990000000-E	SP	280	LF	GENERIC SIGNAL ITEM #4 SOLID BARE COPPER GROUNDING CONDUCTOR
7990000000-E	SP	358	LF	GENERIC SIGNAL ITEM 3-WIRE #12 COPPER FEEDER CONDUCTORS
7990000000-E	SP	66	LF	GENERIC SIGNAL ITEM 3-WIRE #3 COPPER SERVICE ENTRANCE CONDUCTORS

******* BEGIN SCHEDULE AA *******
******* (2 ALTERNATES) *******

ItemNumber	Sec #	Quantity	Unit	Description
0022000000-E AA1	225	1,656,635	CY	UNCLASSIFIED EXCAVATION
0106000000-E AA1	230	659,050	CY	BORROW EXCAVATION
1044000000-E AA1	501	136,010	SY	LIME TREATED SOIL (SLURRY METHOD)
1066000000-E AA1	501	1,380	TON	LIME FOR LIME TREATED SOIL
1154000000-E AA1	540	130,100	TON	AGGREGATE FOR CEMENT TREATED BASE COURSE
1165000000-E AA1	540	5,210	TON	PORTLAND CEMENT FOR CEMENT TREATED BASE COURSE
1176000000-E AA1	542	229,960	SY	SOIL CEMENT BASE
1187000000-E AA1	542	6,360	TON	PORTLAND CEMENT FOR SOIL CEMENT BASE
1198000000-E AA1	SP	2,540	TON	AGGREGATE FOR SOIL CEMENT BASE
1209000000-E AA1	543	96,620	GAL	ASPHALT CURING SEAL
1491000000-E AA1	610	185,400	TON	ASPHALT CONC BASE COURSE, TYPE B25.0C
1503000000-E AA1	610	116,680	TON	ASPHALT CONC INTERMEDIATE COURSE, TYPE I19.0C
1523000000-E AA1	610	102,500	TON	ASPHALT CONC SURFACE COURSE, TYPE S9.5C
1575000000-E AA1	SP	22,230	TON	ASPHALT BINDER FOR PLANT MIX
1840000000-E AA1	665	96,810	LF	MILLED RUMBLE STRIPS (ASPHALT CEMENT CONCRETE)
2099000000-E AA1	816	10,360	LF	SHOULDER DRAIN
2110000000-E AA1	816	10,360	LF	4" SHOULDER DRAIN PIPE
2121000000-E AA1	816	670	LF	4" OUTLET PIPE FOR SHOULDER DRAINS
2132000000-N AA1	816	15	EA	CONCRETE PAD FOR SHOULDER DRAIN PIPE OUTLET
4685000000-E AA1	1205	174,271	LF	THERMOPLASTIC PAVEMENT MARKING LINES (4", 90 MILS)
4686000000-E AA1	1205	103,293	LF	THERMOPLASTIC PAVEMENT MARKING LINES (4", 120 MILS)
4688000000-E AA1	1205	76,731	LF	THERMOPLASTIC PAVEMENT MARKING LINES (6", 90 MILS)
4690000000-E AA1	1205	12,228	LF	THERMOPLASTIC PAVEMENT MARKING LINES (6", 120 MILS)
4700000000-E AA1	1205	6,519	LF	THERMOPLASTIC PAVEMENT MARKING LINES (12", 90 MILS)
4770000000-E AA1	1205	1,112	LF	COLD APPLIED PLASTIC PAVEMENT MARKING LINES, TYPE ** (4") (II)
4775000000-E AA1	1205	1,965	LF	COLD APPLIED PLASTIC PAVEMENT MARKING LINES, TYPE ** (6") (II)
4880000000-E AA1	1205	3,077	LF	CURING COMPOUND REMOVAL, LINES
4885000000-N AA1	1205	5	EA	CURING COMPOUND REMOVAL, SYMBOLS & CHARACTERS

*** OR ***

ItemNumber	Sec #	Quantity	Unit	Description
0022000000-E AA2	225	1,537,084	CY	UNCLASSIFIED EXCAVATION
0106000000-E AA2	230	717,390	CY	BORROW EXCAVATION
1044000000-E AA2	501	118,310	SY	LIME TREATED SOIL (SLURRY METHOD)
1066000000-E AA2	501	1,200	TON	LIME FOR LIME TREATED SOIL
1154000000-E AA2	540	19,000	TON	AGGREGATE FOR CEMENT TREATED BASE COURSE
1165000000-E AA2	540	760	TON	PORTLAND CEMENT FOR CEMENT TREATED BASE COURSE
1176000000-E AA2	542	188,680	SY	SOIL CEMENT BASE
1187000000-E AA2	542	5,220	TON	PORTLAND CEMENT FOR SOIL CEMENT BASE
1198000000-E AA2	SP	2,030	TON	AGGREGATE FOR SOIL CEMENT BASE
1209000000-E AA2	543	83,520	GAL	ASPHALT CURING SEAL
1491000000-E AA2	610	133,200	TON	ASPHALT CONC BASE COURSE, TYPE B25.0C
1503000000-E AA2	610	74,860	TON	ASPHALT CONC INTERMEDIATE COURSE, TYPE I19.0C
1523000000-E AA2	610	62,650	TON	ASPHALT CONC SURFACE COURSE, TYPE S9.5C
1525000000-E AA2	610	9,120	TON	ASPHALT CONC SURFACE COURSE, TYPE SF9.5A
1575000000-E AA2	SP	16,630	TON	ASPHALT BINDER FOR PLANT MIX
1682000000-E AA2	652	16,690	TON	PERMEABLE ASPHALT DRAINAGE COURSE, TYPE P-57
1840000000-E AA2	665	6,770	LF	MILLED RUMBLE STRIPS (ASPHALT CEMENT CONCRETE)
1847000000-E AA2	710	182,150	SY	***** PORT CEM CONC PAVEMENT, THROUGH LANES (WITH DOWELS) (11-1/2")
1869000000-E AA2	710	52,160	SY	***** PORT CEM CONC PAVEMENT, MISCELLANEOUS (WITHOUT DOWELS) (11-1/2")
1869000000-E AA2	710	62,020	SY	***** PORT CEM CONC PAVEMENT, MISCELLANEOUS (WITHOUT DOWELS) (8-1/2")
1881000000-E AA2	SP	90,050	LF	GENERIC PAVING ITEM MILLED RUMBLE STRIPS (CONCRETE SHOULDER)
1902000000-N AA2	710	Lump Sum		SURFACE TESTING CONCRETE PAVEMENT
1924000000-N AA2	725	Lump Sum		FIELD LABORATORY RENTAL, PORT CEM CONC PAVEMENT
2099000000-E AA2	816	47,610	LF	SHOULDER DRAIN
2110000000-E AA2	816	47,610	LF	4" SHOULDER DRAIN PIPE
2121000000-E AA2	816	2,540	LF	4" OUTLET PIPE FOR SHOULDER DRAINS
2132000000-N AA2	816	50	EA	CONCRETE PAD FOR SHOULDER DRAIN PIPE OUTLET
4685000000-E AA2	1205	160,029	LF	THERMOPLASTIC PAVEMENT MARKING LINES (4", 90 MILS)
4686000000-E AA2	1205	101,453	LF	THERMOPLASTIC PAVEMENT MARKING LINES (4", 120 MILS)
4688000000-E AA2	1205	1,391	LF	THERMOPLASTIC PAVEMENT MARKING LINES (6", 90 MILS)
4690000000-E AA2	1205	390	LF	THERMOPLASTIC PAVEMENT MARKING LINES (6", 120 MILS)
4700000000-E AA2	1205	945	LF	THERMOPLASTIC PAVEMENT MARKING LINES (12", 90 MILS)
4847000000-E AA2	1205	17,182	LF	POLYUREA PAVEMENT MARKING LINES (4", **********) (HIGHLY REFLECTIVE ELEMENTS)
4847100000-E AA2	1205	87,725	LF	POLYUREA PAVEMENT MARKING LINES (6", **********) (HIGHLY REFLECTIVE ELEMENTS)
4847120000-E AA2	1205	6,037	LF	POLYUREA PAVEMENT MARKING LINES (12", **********) (HIGHLY REFLECTIVE ELEMENTS)
4880000000-E AA2	1205	111,239	LF	CURING COMPOUND REMOVAL, LINES
4885000000-N AA2	1205	51	EA	CURING COMPOUND REMOVAL, SYMBOLS & CHARACTERS

******* END SCHEDULE AA *******

TIP PROJECT: R-2309AB

CONTRACT: C200800

See Sheet 1-A For Index of Sheets
See Sheet 1-B For Conventional Symbols

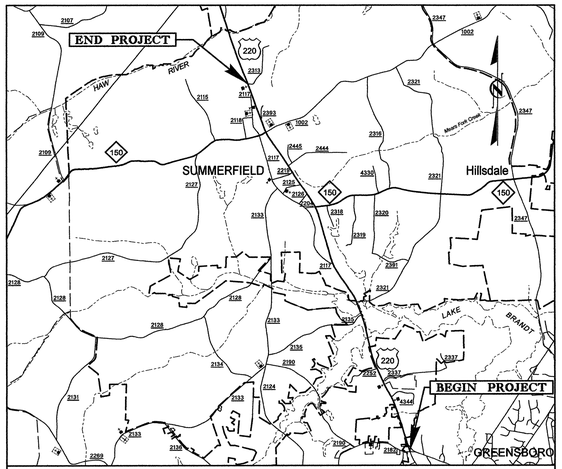

VICINITY MAP

STATE OF NORTH CAROLINA
DIVISION OF HIGHWAYS

GUILFORD COUNTY

STATE	STATE PROJECT REFERENCE NO.	SHEET NO.	TOTAL SHEETS
N.C.	R-2309AB	1	

STATE PROJ. NO.	F. A. PROJ. NO.	DESCRIPTION
34418.1.4	STP-220(5)	P.E.
34418.2.3	STPNHS-0220(5)	R/W & UTIL.
34418.3.5	STPNHS-0220(25)	CONST.

LOCATION: US 220 FROM SR 2182 (HORSEPEN CREEK RD.) TO 0.2 MILES NORTH OF SR 2313 (WINFREE RD.) IN GREENSBORO

PART 1 OF 2

TYPE OF WORK: GRADING, DRAINAGE, PAVING, SIGNALS, CULVERTS AND STRUCTURES

NAD 83

END CONSTRUCTION
-L- PT STA. 317+51.85
(TIE TO TIP PROJECT R-2413C)

BEGIN TIP PROJECT R-2309AB
-L- STA. 21+50.00

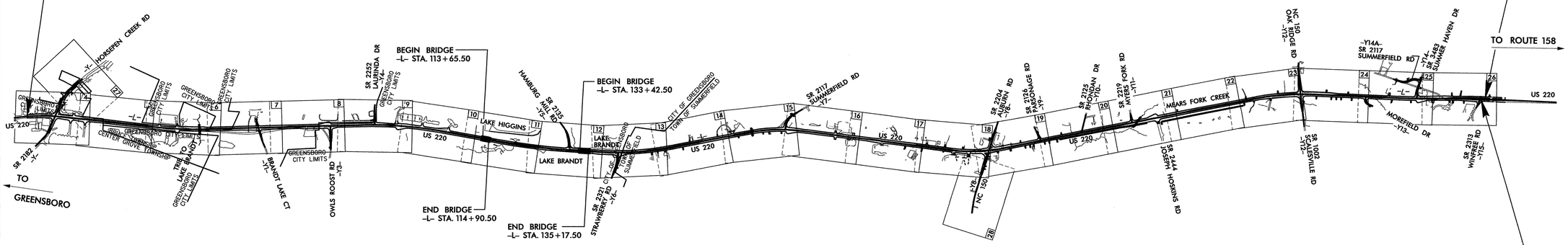

END TIP PROJECT R-2309AB
-L- STA. 316+76.67 =
R-2413C -LREV1- STA. 13+50.051

THIS IS A PARTIAL CONTROLLED-ACCESS PROJECT WITH ACCESS LIMITED TO POINTS AS SHOWN ON THE PLANS.
NCDOT CONTACT: BRENDA MOORE, P.E., PROJECT ENGINEER – ROADWAY DESIGN

GRAPHIC SCALES

50 25 0 50 100
PLANS

50 25 0 50 100
PROFILE (HORIZONTAL)

10 5 0 10 20
PROFILE (VERTICAL)

DESIGN DATA

ADT 2012 = 28,882
ADT 2032 = 42,810
DHV = 11 %
D = 65 %
T = 7 % *
V = 60 MPH (SHLDR.)
V = 50 MPH (C&G)
FUNC. CLASS = ARTERIAL
* TTST 4% + DUAL 3%
STATEWIDE TIER

PROJECT LENGTH

LENGTH ROADWAY TIP PROJECT R-2309AB = 5.535 MI.
LENGTH STRUCTURES TIP PROJECT R-2309AB = 0.057 MI.
TOTAL LENGTH OF TIP PROJECT R-2309AB = 5.592 MI.

Prepared In the Office of:
Florence & Hutcheson
CONSULTING ENGINEERS
5121 Kingdom Way, Suite 100 Raleigh, NC 27607
NC License No: F-0258
for the
DIVISION OF HIGHWAYS

2006 STANDARD SPECIFICATIONS

RIGHT OF WAY DATE:
OCTOBER 17, 2008

LETTING DATE:
JANUARY 17, 2012

BRIAN A. WILES, P.E.
PROJECT ENGINEER

HYDRAULICS ENGINEER
-L- 21+50 to 176+00
10-10-2011
SIGNATURE:
NORTH CAROLINA PROFESSIONAL SEAL 19732 ENGINEER SHIH-CHEN FU

ROADWAY DESIGN ENGINEER
10/10/11
SIGNATURE:
NORTH CAROLINA PROFESSIONAL SEAL 16689 ENGINEER BRIAN ALLEN WILES

DIVISION OF HIGHWAYS
STATE OF NORTH CAROLINA

Art McMillan P.E.
STATE HIGHWAY DESIGN ENGINEER

10/10/2011
R:\Roadway\Proj\R-2309ab_rdy_tsh.dgn

See Sheet 1-A For Index of Sheets
See Sheet 1-B For Conventional Symbols

STATE OF NORTH CAROLINA
DIVISION OF HIGHWAYS

GUILFORD COUNTY

STATE	STATE PROJECT REFERENCE NO.	SHEET NO.	TOTAL SHEETS
N.C.	R-2309AB	1	

STATE PROJ. NO.	F.A. PROJ. NO.	DESCRIPTION
34418.1.4	STP-220(5)	P.E.
34418.2.3	STPNHS-0220(5)	R/W & UTIL.
34418.3.5	STPNHS-0220(25)	CONST.

LOCATION: US 220 FROM SR 2182 (HORSEPEN CREEK RD.) TO 0.2 MILES NORTH OF SR 2313 (WINFREE RD.) IN GREENSBORO

PART 1 OF 2

TYPE OF WORK: GRADING, DRAINAGE, PAVING, SIGNALS, CULVERTS AND STRUCTURES

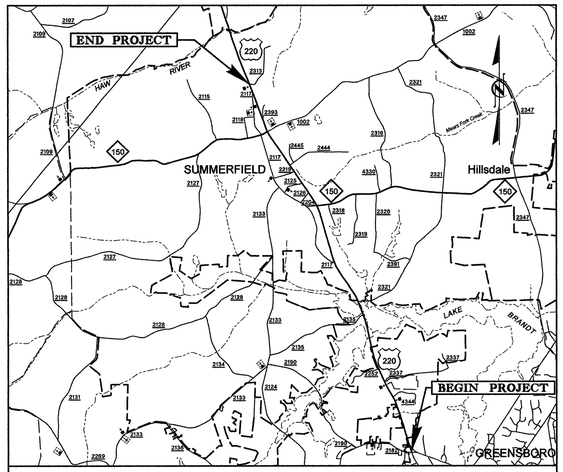

VICINITY MAP

NAD 83

BEGIN TIP PROJECT R-2309AB
-L- STA. 21+50.00

END CONSTRUCTION
-L- PT STA. 317+51.85
(TIE TO TIP PROJECT R-2413C)

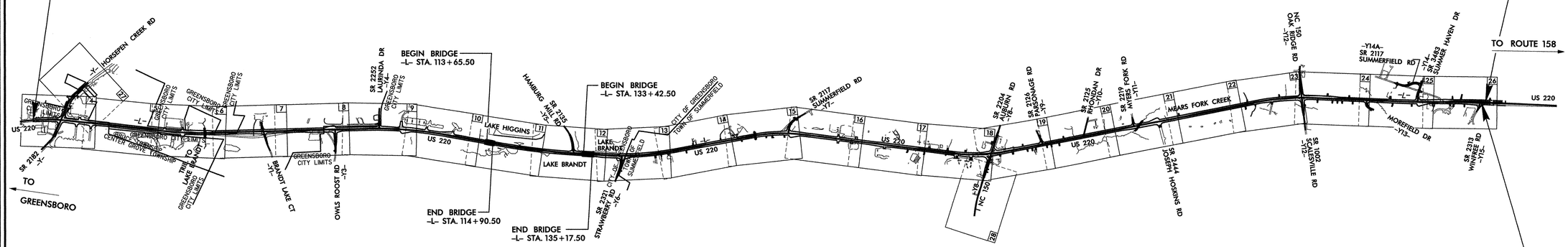

END TIP PROJECT R-2309AB
-L- STA. 316+76.67 =
R-2413C -LREV1- STA. 13+50.051

THIS IS A PARTIAL CONTROLLED-ACCESS PROJECT WITH ACCESS LIMITED TO POINTS AS SHOWN ON THE PLANS.
NCDOT CONTACT: BRENDA MOORE, P.E., PROJECT ENGINEER - ROADWAY DESIGN

TIP PROJECT: R-2309AB

CONTRACT: C200800

GRAPHIC SCALES

50 25 0 50 100
PLANS

50 25 0 50 100
PROFILE (HORIZONTAL)

10 5 0 10 20
PROFILE (VERTICAL)

DESIGN DATA

ADT 2012 = 28,882
ADT 2032 = 42,810
DHV = 11 %
D = 65 %
T = 7 % *
V = 60 MPH (SHLDR.)
V = 50 MPH (C&G)
FUNC. CLASS = ARTERIAL
* TTST 4% + DUAL 3%
STATEWIDE TIER

PROJECT LENGTH

LENGTH ROADWAY TIP PROJECT R-2309AB = 5.535 MI.
LENGTH STRUCTURES TIP PROJECT R-2309AB = 0.057 MI.
TOTAL LENGTH OF TIP PROJECT R-2309AB = 5.592 MI.

Prepared In the Office of:
Florence & Hutcheson
CONSULTING ENGINEERS
5121 Kingdom Way, Suite 100 Raleigh, NC 27607
NC License No: F-0258
for the
DIVISION OF HIGHWAYS

2006 STANDARD SPECIFICATIONS

RIGHT OF WAY DATE:
OCTOBER 17, 2008

LETTING DATE:
FEBRUARY 21, 2012

BRIAN A. WILES, P.E.
PROJECT ENGINEER

HYDRAULICS ENGINEER
-L- 21+50 to 176+00
SIGNATURE: 11-28-2011
NORTH CAROLINA PROFESSIONAL SEAL 19732 ENGINEER SHIHCHEN PUH

ROADWAY DESIGN ENGINEER
SIGNATURE: 11/28/11
NORTH CAROLINA PROFESSIONAL SEAL 16689 ENGINEER BRIAN ALLEN WILES

DIVISION OF HIGHWAYS
STATE OF NORTH CAROLINA

P.E.
STATE HIGHWAY DESIGN ENGINEER

11/28/2011
R:\Roadway\Proj\r2309ab_rdy_tsh.dgn
Florence & Hutcheson, Inc.

PROJECT REFERENCE NO.	SHEET NO.
R-2309AB	1C
Location and Surveys	

R-2309AB SURVEY CONTROL SHEET

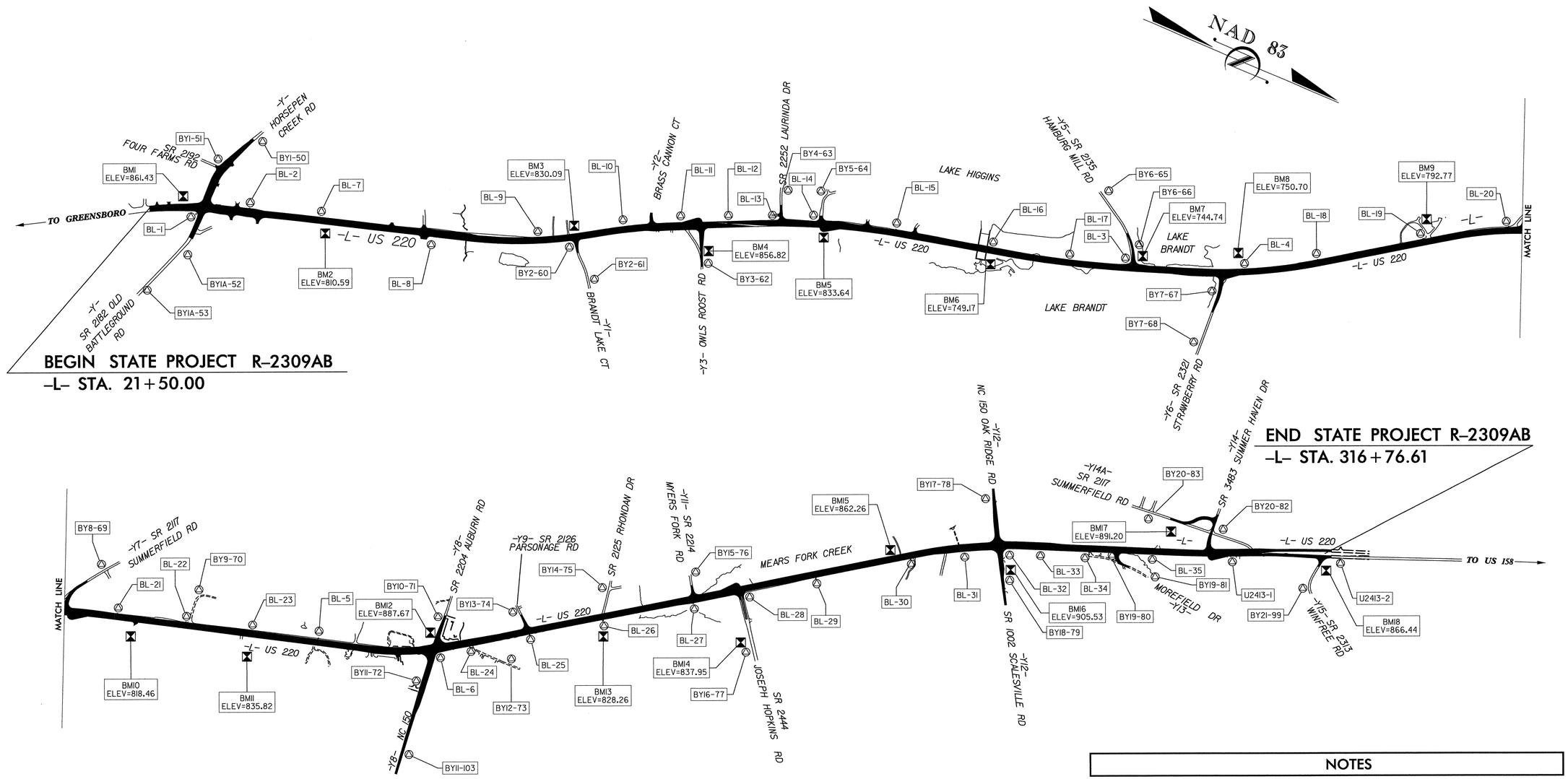

DATUM DESCRIPTION

THE LOCALIZED COORDINATE SYSTEM DEVELOPED FOR THIS PROJECT IS BASED ON THE STATE PLANE COORDINATES ESTABLISHED BY NCGS FOR MONUMENT "LITTLE"
WITH NAD 83 STATE PLANE GRID COORDINATES OF NORTHING: 909872.8161(ft) EASTING: 1728513.8264(ft)
THE AVERAGE COMBINED GRID FACTOR USED ON THIS PROJECT (GROUND TO GRID) IS: 0.999989076
THE N.C. LAMBERT GRID BEARING AND LOCALIZED HORIZONTAL GROUND DISTANCE FROM "LITTLE" TO -L- STATION 21+50.00 IS
S 22° 11' 49" E 40,114.29 ft
ALL LINEAR DIMENSIONS ARE LOCALIZED HORIZONTAL DISTANCES
VERTICAL DATUM USED IS NGVD 29

NOTES

1. THE CONTROL DATA FOR THIS PROJECT CAN BE FOUND ELECTRONICALLY BY SELECTING PROJECT CONTROL DATA AT:

HTTP://WWW.NCDOT.ORG/DOH/PRECONSTRUCT/HIGHWAY/LOCATION/PROJECT/

THE FILES TO BE FOUND ARE AS FOLLOWS:

R2309AB_LS_CONTROL_080730.TXT

SITE CALIBRATION INFORMATION HAS NOT BEEN PROVIDED FOR THIS PROJECT. IF FURTHER INFORMATION IS NEEDED, PLEASE CONTACT THE LOCATION AND SURVEYS UNIT.

⊘ INDICATES GEODETIC CONTROL MONUMENTS USED OR SET FOR HORIZONTAL PROJECT CONTROL BY THE NCDOT LOCATION AND SURVEYS UNIT.

PROJECT CONTROL ESTABLISHED USING GLOBAL POSITIONING SYSTEM FROM EXISTING NCGS MONUMENTATION.

NOTE: DRAWING NOT TO SCALE

12/01/2005

7/31/2011
R:\Roadway\Proj\r2309ab_ls_1c_080730.dgn
Florence & Hutcheson, Inc.

12/01/2005

PROJECT REFERENCE NO.	SHEET NO.
R-2309AB	1D
Location and Surveys	

R-2309AB SURVEY CONTROL SHEET

BASELINE DATA

BL

POINT	DESC.	NORTH	EAST	ELEVATION	L STATION	OFFSET
100	BL-100	872684.8177	1743740.7735	845.96	20+74.55	41.70 RT
1	BL-1	873201.6525	1743528.1616	852.30	26+41.04	63.04 RT
2	BL-2	873724.2797	1743239.7593	835.60	32+29.30	51.20 LT
7	BL-7	874496.8930	1743033.4230	810.94	40+28.01	23.27 LT
8	BL-8	875672.6050	1742715.1640	797.23	52+44.21	27.69 RT
9	BL-9	876804.1840	1742276.1300	819.75	64+54.21	83.81 RT
10	BL-10	877645.3573	1741795.1580	851.37	74+19.46	1.83 LT
11	BL-11	878240.6748	1741499.8625	854.45	80+83.72	20.12 LT
12	BL-12	878693.9653	1741298.5993	861.52	85+79.63	13.23 LT
13	BL-13	879204.5765	1741065.4630	848.59	91+40.50	15.42 LT
14	BL-14	879606.9750	1740885.7160	840.96	95+79.35	36.44 LT
15	BL-15	880437.8285	1740528.9803	810.90	104+44.99	44.13 LT
16	BL-16	881466.0498	1740398.8013	758.48	114+98.13	38.75 LT
17	BL-17	882347.3903	1740186.7813	746.75	124+06.64	26.65 LT
3	R2309-3	882991.0390	1739954.6335	749.62	130+92.77	48.32 LT
4	R2309-4	884179.2290	1739518.7783	751.59	143+61.98	23.46 LT
18	BL-18	884890.6125	1739089.5110	761.60	151+97.98	42.13 LT
19	BL-19	885881.3025	1738418.6145	804.81	163+94.62	43.15 LT
20	BL-20	886704.6735	1737917.1975	830.21	173+52.12	49.08 LT
21	BL-21	887409.2705	1737686.5010	826.34	180+87.58	39.52 LT
22	BL-22	888149.2050	1737474.7182	820.87	188+57.22	41.51 LT
23	BL-23	888863.0695	1737274.2163	834.59	195+98.71	39.77 LT
5	R2309-5	889577.7255	1737061.4800	851.24	203+44.29	49.57 LT
6	R2309-6	890849.2518	1736698.3935	885.56	216+63.10	48.29 RT
24	BL-24	891178.7975	1736492.7067	886.77	220+47.53	50.94 RT
25	BL-25	891728.6658	1736106.0705	864.77	227+19.65	41.42 RT
26	BL-26	892417.7418	1735635.5218	838.88	235+54.06	41.02 RT
27	BL-27	893265.5655	1735060.6827	837.30	245+78.38	43.94 RT
28	BL-28	893742.6227	1734743.4685	851.18	251+51.23	50.73 RT
29	BL-29	894414.5825	1734276.0063	865.85	259+69.77	43.24 RT
30	BL-30	895301.8025	1733669.6045	864.86	270+44.42	42.29 RT
31	BL-31	895812.8465	1733339.2600	886.83	276+56.85	28.19 RT
32	BL-32	896191.8283	1733145.3617	900.53	280+84.50	17.45 RT
33	BL-33	896578.4695	1732974.3840	904.38	285+07.48	0.92 LT
34	BL-34	897048.4630	1732796.1280	893.60	290+10.11	1.17 LT
35	BL-35	897745.9720	1732528.4710	878.03	297+57.20	4.57 LT
101	U2413-1	898573.2915	1732226.1615	874.83	306+37.11	21.85 RT
102	U2413-2	899703.6173	1731794.6960	866.01	318+49.19	59.11 RT

BY1

POINT	DESC.	NORTH	EAST	ELEVATION	Y STATION	OFFSET
50	BY1-50	873514.7862	1742465.8531	861.15	OUTSIDE PROJECT LIMITS	
51	BY1-51	873244.5406	1742937.0986	859.65	4+98.46	26.56 RT
1	BL-1	873201.6525	1743528.1616	852.30	10+83.73	47.90 RT

BY1A

POINT	DESC.	NORTH	EAST	ELEVATION	Y STATION	OFFSET
1	BL-1	873201.6525	1743528.1616	852.30	10+83.73	47.90 RT
52	BY1A-52	873251.7748	1743966.4989	848.04	15+11.25	48.37 LT
53	BY1A-53	872977.3364	1744494.1000	820.75	OUTSIDE PROJECT LIMITS	

BY2

POINT	DESC.	NORTH	EAST	ELEVATION	Y1 STATION	OFFSET
40	BL-9	876804.1840	1742276.1300	819.75	OUTSIDE PROJECT LIMITS	
60	BY2-60	877178.6700	1742154.5400	837.05	10+34.91	29.30 RT
61	BY2-61	877518.7010	1742496.5550	815.83	OUTSIDE PROJECT LIMITS	

BY3

POINT	DESC.	NORTH	EAST	ELEVATION	Y3 STATION	OFFSET
41	BL-11	878240.6748	1741499.8625	854.45	OUTSIDE PROJECT LIMITS	
62	BY3-62	878611.6760	1741806.5370	854.45	14+13.40	21.37 LT

BY4

POINT	DESC.	NORTH	EAST	ELEVATION	Y4 STATION	OFFSET
63	BY4-63	879105.4120	1740710.2910	819.07	OUTSIDE PROJECT LIMITS	
42	BL-13	879204.5765	1741065.4630	848.59	10+15.86	28.18 LT

BY5

POINT	DESC.	NORTH	EAST	ELEVATION	L STATION	OFFSET
64	BY5-64	879577.6220	1740568.4290	820.79	96+55.73	345.34 LT
43	BL-14	879606.9750	1740885.7160	840.96	95+79.35	36.44 LT

BY6

POINT	DESC.	NORTH	EAST	ELEVATION	Y5 STATION	OFFSET
65	BY6-65	882410.3920	1739372.1310	771.45	OUTSIDE PROJECT LIMITS	
66	BY6-66	882955.0470	1739769.2370	744.81	12+32.86	20.85 RT
44	R2309-3	882991.0390	1739954.6335	749.62	10+55.06	41.14 LT

BY7

POINT	DESC.	NORTH	EAST	ELEVATION	Y6 STATION	OFFSET
45	R2309-4	884179.2290	1739518.7783	751.59	OUTSIDE PROJECT LIMITS	
67	BY7-67	884010.4320	1739865.1200	748.56	12+28.44	13.39 RT
68	BY7-68	884054.5180	1740478.5450	751.71	OUTSIDE PROJECT LIMITS	

BY8

POINT	DESC.	NORTH	EAST	ELEVATION	Y7 STATION	OFFSET
69	BY8-69	887084.3410	1737285.2300	840.76	OUTSIDE PROJECT LIMITS	
46	BL-20	886704.6735	1737917.1975	830.21	10+44.69	175.47 LT

BY9

POINT	DESC.	NORTH	EAST	ELEVATION	L STATION	OFFSET
70	BY9-70	888175.2390	1737129.2320	841.66	189+76.47	366.81 LT
47	BL-22	888149.2050	1737474.7182	820.87	188+57.22	41.51 LT

BY10

POINT	DESC.	NORTH	EAST	ELEVATION	Y8 STATION	OFFSET
71	BY10-71	890760.9050	1736334.4060	883.23	6+69.44	23.97 RT
48	R2309-6	890849.2518	1736698.3935	885.56	10+40.34	28.21 LT

BY11

POINT	DESC.	NORTH	EAST	ELEVATION	Y8 STATION	OFFSET
49	R2309-6	890849.2518	1736698.3935	885.56	10+40.34	28.21 LT
72	BY11-72	890831.1990	1737087.7760	880.05	14+26.07	28.00 RT
103	BY11-103	890954.5020	1737867.1920	875.18	22+13.83	18.17 LT

BY12

POINT	DESC.	NORTH	EAST	ELEVATION	L STATION	OFFSET
84	BL-24	891178.7975	1736492.7067	886.77	220+47.53	50.94 RT
73	BY12-73	891644.0910	1736495.0840	880.52	224+30.55	315.11 RT

BY13

POINT	DESC.	NORTH	EAST	ELEVATION	Y9 STATION	OFFSET
74	BY13-74	891491.9950	1735904.4220	871.53	OUTSIDE PROJECT LIMITS	
85	BL-25	891728.6658	1736106.0705	864.77	OUTSIDE PROJECT LIMITS	

BY14

POINT	DESC.	NORTH	EAST	ELEVATION	Y10 STATION	OFFSET
75	BY14-75	892322.4950	1735299.5530	856.16	13+10.53	20.27 LT
86	BL-26	892417.7418	1735635.5218	838.88	OUTSIDE PROJECT LIMITS	

BY15

POINT	DESC.	NORTH	EAST	ELEVATION	Y11 STATION	OFFSET
76	BY15-76	893115.9860	1734765.1930	854.45	OUTSIDE PROJECT LIMITS	
87	BL-27	893265.5655	1735060.6827	837.30	OUTSIDE PROJECT LIMITS	

BY16

POINT	DESC.	NORTH	EAST	ELEVATION	L STATION	OFFSET
88	BL-28	893742.6227	1734743.4685	851.18	251+51.23	50.73 RT
77	BY16-77	894058.4650	1735275.6210	842.99	251+12.26	668.33 RT

BY17

POINT	DESC.	NORTH	EAST	ELEVATION	Y12 STATION	OFFSET
78	BY17-78	895866.0180	1732698.1380	921.25	4+72.74	29.26 RT
89	BL-32	896191.8283	1733145.3617	900.53	10+22.28	42.16 LT

BY18

POINT	DESC.	NORTH	EAST	ELEVATION	Y12 STATION	OFFSET
90	BL-32	896191.8283	1733145.3617	900.53	10+22.28	42.16 LT
79	BY18-79	896356.5210	1733479.8470	902.58	13+94.37	18.51 LT

BY19

POINT	DESC.	NORTH	EAST	ELEVATION	Y13 STATION	OFFSET
91	BL-34	897048.4630	1732796.1280	893.60	OUTSIDE PROJECT LIMITS	
80	BY19-80	897368.1500	1732789.4450	889.08	10+88.71	54.80 RT
81	BY19-81	897854.1380	1732826.0970	847.97	OUTSIDE PROJECT LIMITS	

BY20

POINT	DESC.	NORTH	EAST	ELEVATION	L STATION	OFFSET
83	BY20-83	897550.7150	1732158.4900	893.73	297+05.57	419.72 LT
82	BY20-82	898376.6619	1732064.8471	876.78	305+19.97	204.36 LT
92	U2413-1	898573.2910	1732226.1600	874.83	306+37.11	21.85 RT

BY21

POINT	DESC.	NORTH	EAST	ELEVATION	Y15 STATION	OFFSET
102	U2413-2	899703.6173	1731794.6960	866.01	10+57.26	201.53 LT
99	BY21-99	899494.8070	1732227.0620	877.17	OUTSIDE PROJECT LIMITS	

BENCHMARK DATA

BM1 ELEVATION = 861.43
N 872993 E 1743414
L STATION 24+90 120 LEFT
RR SPIKE IN ROOT OF 24 INCH MAPLE

BM2 ELEVATION = 810.59
N 874608 E 1743166
L STATION 40+97 135 RIGHT
RR SPIKE IN BASE OF 18 INCH POPLAR

BM3 ELEVATION = 830.09
N 877123 E 1742001
L STATION 68+83 125 LEFT
RR SPIKE IN BASE OF 24 INCH POPLAR

BM4 ELEVATION = 856.82
N 878607 E 1741673
L STATION 83+44 290 RIGHT
RR SPIKE IN BASE OF 12 INCH PINE

BM5 ELEVATION = 833.64
N 879727 E 1741007
L STATION 96+52 118 RIGHT
RR SPIKE IN BASE OF 24 INCH POPLAR

BM6 ELEVATION = 749.17
N 881502 E 1740566
L STATION 114+96 132 RIGHT
RR SPIKE IN BASE OF 18 INCH MAPLE

BM7 ELEVATION = 744.74
N 883048 E 1739780
L STATION 132+06 193 LEFT
RR SPIKE IN ROOT OF 24 INCH ELM

BM8 ELEVATION = 750.78
N 884094 E 1739404
L STATION 143+34 164 LEFT
RR SPIKE IN BASE OF 13 INCH PINE

BM9 ELEVATION = 792.77
N 885843 E 1738234
L STATION 164+66 218 LEFT
RR SPIKE IN BASE OF 26 INCH MAPLE

BM10 ELEVATION = 818.46
N 887646 E 1737864
L STATION 182+67 196 RIGHT
RR SPIKE IN BASE OF 26 INCH WHITE OAK

BM11 ELEVATION = 835.82
N 888924 E 1737565
L STATION 195+78 257 RIGHT
RR SPIKE IN BASE OF 8 INCH SPRUCE PINE

BM12 ELEVATION = 887.67
N 890731 E 1736504
L STATION 216+55 179 LEFT
RR SPIKE IN ROOT OF 42 INCH WILLOW OAK

BM13 ELEVATION = 828.26
N 892473 E 1735756
L STATION 235+32 172 RIGHT
RR SPIKE IN ROOT OF 36 INCH WHITE OAK

BM14 ELEVATION = 837.95
N 893970 E 1735227
L STATION 250+67 578 RIGHT
RR SPIKE IN ROOT OF 24 INCH POPLAR

BM15 ELEVATION = 862.26
N 895059 E 1733664
L STATION 268+47 99 LEFT
RR SPIKE IN BASE OF 30 INCH POPLAR

BM16 ELEVATION = 905.53
N 896333 E 1733357
L STATION 281+33 267 RIGHT
RR SPIKE IN ROOT OF 34 INCH OAK

BM17 ELEVATION = 891.20
N 897853 E 1732251
L STATION 299+56 226 LEFT
RR SPIKE IN ROOT OF 33 INCH OAK

BM18 ELEVATION = 866.44
N 899561 E 1731939
L STATION 316+65 144 RIGHT
RR SPIKE IN ROOT OF 40 INCH WILLOW OAK

DATUM DESCRIPTION

THE LOCALIZED COORDINATE SYSTEM DEVELOPED FOR THIS PROJECT
IS BASED ON THE STATE PLANE COORDINATES ESTABLISHED BY
NCGS FOR MONUMENT "LITTLE"
WITH NAD 83 STATE PLANE GRID COORDINATES OF
NORTHING: 909872.8161(ft) EASTING: 1728513.8264(ft)
THE AVERAGE COMBINED GRID FACTOR USED ON THIS PROJECT
(GROUND TO GRID) IS: 0.999989076
THE N.C. LAMBERT GRID BEARING AND
LOCALIZED HORIZONTAL GROUND DISTANCE FROM
"LITTLE" TO -L- STATION 21+50.00 IS
S 22° 11' 49" E 40,114.29 ft
ALL LINEAR DIMENSIONS ARE LOCALIZED HORIZONTAL DISTANCES
VERTICAL DATUM USED IS NGVD 29

NOTES

1. THE CONTROL DATA FOR THIS PROJECT CAN BE FOUND ELECTRONICALLY BY SELECTING PROJECT CONTROL DATA AT:

HTTP://WWW.NCDOT.ORG/DOH/PRECONSTRUCT/HIGHWAY/LOCATION/PROJECT/

THE FILES TO BE FOUND ARE AS FOLLOWS:

R2309AB_LS_CONTROL_080730.TXT

SITE CALIBRATION INFORMATION HAS NOT BEEN PROVIDED FOR THIS PROJECT. IF FURTHER INFORMATION IS NEEDED, PLEASE CONTACT THE LOCATION AND SURVEYS UNIT.

PROJECT CONTROL ESTABLISHED USING GLOBAL POSITIONING SYSTEM FROM EXISTING NCGS MONUMENTATION.

7/31/2011
R:\Roadway\Proj\r2309ab_ls_id_080730.dgn
Florence & Hutchison, Inc.

Florence & Hutcheson
CONSULTING ENGINEERS
5121 Kingdom Way, Suite 100 Raleigh, NC 27607
NC License No: F-0258

PROJECT REFERENCE NO.	SHEET NO.
R-2309AB	2

ROADWAY DESIGN ENGINEER
NORTH CAROLINA PROFESSIONAL SEAL 16689 ENGINEER ALLEN WILES
9/20/11

PAVEMENT DESIGN ENGINEER
NORTH CAROLINA PROFESSIONAL SEAL 031484 ENGINEER VLADIMIR G. MITCHEV
10/06/11

PAVEMENT SCHEDULE

C1	PROP. APPROX. 1½" ASPHALT CONCRETE SURFACE COURSE, TYPE S9.5B, AT AN AVERAGE RATE OF 168 LBS. PER SQ. YD.	K1	BASE TO BE TREATED WITH LIME (METHOD-SLURRY) TO A DEPTH OF 8", AT A RATE OF 20 LBS. PER. SQ. YD. AS DIRECTED BY THE ENGINEER. OR BASE TO BE TREATED WITH CEMENT TO A DEPTH OF 7", AT A RATE OF 55 LBS. PER. SQ. YD. AS DIRECTED BY THE ENGINEER.
C2	PROP. APPROX. 3" ASPHALT CONCRETE SURFACE COURSE, TYPE S9.5B, AT AN AVERAGE RATE OF 168 LBS. PER SQ. YD. IN EACH OF TWO LAYERS.		
C3	PROP. APPROX. 3" ASPHALT CONCRETE SURFACE COURSE, TYPE S9.5C, AT AN AVERAGE RATE OF 168 LBS. PER SQ. YD. IN EACH OF TWO LAYERS.	L1	CLASS IV SUBGRADE STABILIZATION
C4	PROP. VAR. DEPTH ASPHALT CONCRETE SURFACE COURSE, TYPE S9.5B, AT AN AVERAGE RATE OF 112 LBS. PER SQ. YD. PER 1" DEPTH. TO BE PLACED IN LAYERS NOT TO EXCEED 2" IN DEPTH.	N1	FABRIC STABILIZATION
C5	PROP. VAR. DEPTH ASPHALT CONCRETE SURFACE COURSE, TYPE S9.5C, AT AN AVERAGE RATE OF 112 LBS. PER SQ. YD. PER 1" DEPTH. TO BE PLACED IN LAYERS NOT TO EXCEED 2" IN DEPTH.	R1	2'-6" CONCRETE CURB AND GUTTER.
D1	PROP. APPROX. 2½" ASPHALT CONCRETE INTERMEDIATE COURSE, TYPE I19.0B, AT AN AVERAGE RATE OF 285 LBS. PER SQ. YD.	R2	1'-6" CONCRETE CURB AND GUTTER.
D2	PROP. APPROX. 4" ASPHALT CONCRETE INTERMEDIATE COURSE, TYPE I19.0B, AT AN AVERAGE RATE OF 456 LBS. PER SQ. YD.	R3	8"x18" CONCRETE CURB.
D3	PROP. APPROX. 4" ASPHALT CONCRETE INTERMEDIATE COURSE, TYPE I19.0C, AT AN AVERAGE RATE OF 456 LBS. PER SQ. YD.	R4	EXPRESSWAY GUTTER.
D4	PROP. VAR. DEPTH ASPHALT CONCRETE INTERMEDIATE COURSE, TYPE I19.0B, AT AN AVERAGE RATE OF 114 LBS. PER SQ. YD. PER 1" DEPTH, TO BE PLACED IN LAYERS NOT LESS THAN 2½" IN DEPTH OR GREATER THAN 4" IN DEPTH.	R5	SHOULDER BERM GUTTER.
D5	PROP. VAR. DEPTH ASPHALT CONCRETE INTERMEDIATE COURSE, TYPE I19.0C, AT AN AVERAGE RATE OF 114 LBS. PER SQ. YD. PER 1" DEPTH, TO BE PLACED IN LAYERS NOT LESS THAN 2½" IN DEPTH OR GREATER THAN 4" IN DEPTH.	R6	5" MONOLITHIC CONCRETE ISLAND (KEYED IN).
E1	PROP. APPROX. 4" ASPHALT CONCRETE BASE COURSE, TYPE B25.0B, AT AN AVERAGE RATE OF 456 LBS. PER SQ. YD.	R7	VALLEY GUTTER.
E2	PROP. APPROX. 5" ASPHALT CONCRETE BASE COURSE, TYPE B25.0B, AT AN AVERAGE RATE OF 570 LBS. PER SQ. YD.	S	4" CONCRETE SIDEWALK.
E3	PROP. APPROX. 5½" ASPHALT CONCRETE BASE COURSE, TYPE B25.0B, AT AN AVERAGE RATE OF 627 LBS. PER SQ. YD.	T	EARTH MATERIAL.
E4	PROP. APPROX. 5" ASPHALT CONCRETE BASE COURSE, TYPE B25.0C, AT AN AVERAGE RATE OF 570 LBS. PER SQ. YD.	U	EXISTING PAVEMENT.
E5	PROP. APPROX. 8½" ASPHALT CONCRETE BASE COURSE, TYPE B25.0C, AT AN AVERAGE RATE OF 484.5 LBS. PER SQ. YD. IN EACH OF TWO LAYERS.	V	MILLING.
E6	PROP. VAR. DEPTH ASPHALT CONCRETE BASE COURSE, TYPE B25.0B, AT AN AVERAGE RATE OF 114 LBS. PER SQ. YD. PER 1" DEPTH. TO BE PLACED IN LAYERS NOT LESS THAN 3" IN DEPTH OR GREATER THAN 5½" IN DEPTH.	W	VARIABLE DEPTH ASPHALT PAVEMENT (SEE STANDARD WEDING DETAILS SHEET NO. 2-L
E7	PROP. VAR. DEPTH ASPHALT CONCRETE BASE COURSE, TYPE B25.0C, AT AN AVERAGE RATE OF 114 LBS. PER SQ. YD. PER 1" DEPTH. TO BE PLACED IN LAYERS NOT LESS THAN 3" IN DEPTH OR GREATER THAN 5½" IN DEPTH.		

NOTE: PAVEMENT EDGE SLOPESARE 1:1 UNLESS SHOWN OTHERWISE.

USE
AGGREGATE SUBGRADE DETAIL

-L- STA. 217+10 TO 219+20
-L- STA. 256+40 TO 260+25

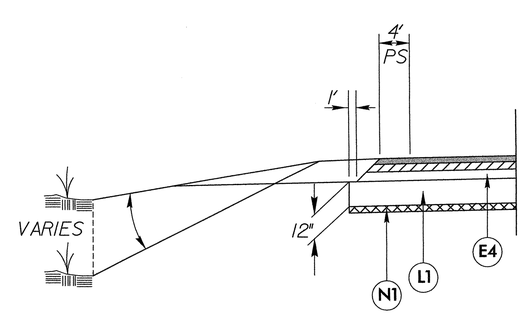

6/12/99
9/26/2011
R:\Roadway\Proj\r2309ab_rdy_typ.dgn
Florence & Hutcheson, Inc.

*NOTE: When Island width is <16', use Monolithic Concrete Island
**NOTE: Location of Existing Pavement Varies from Lt. to Rt.

Florence & Hutcheson
CONSULTING ENGINEERS
5121 Kingdom Way, Suite 100 Raleigh, NC 27607
NC License No: P-0258

PROJECT REFERENCE NO.	SHEET NO.
R-2309AB	2-A

ROADWAY DESIGN ENGINEER
NORTH CAROLINA PROFESSIONAL SEAL 016689 ENGINEER BRIAN VILLES ALLEN
9/28/11

PAVEMENT DESIGN ENGINEER
NORTH CAROLINA PROFESSIONAL SEAL 031464 ENGINEER VLADIMIR G. MITCHEV
10/06/11

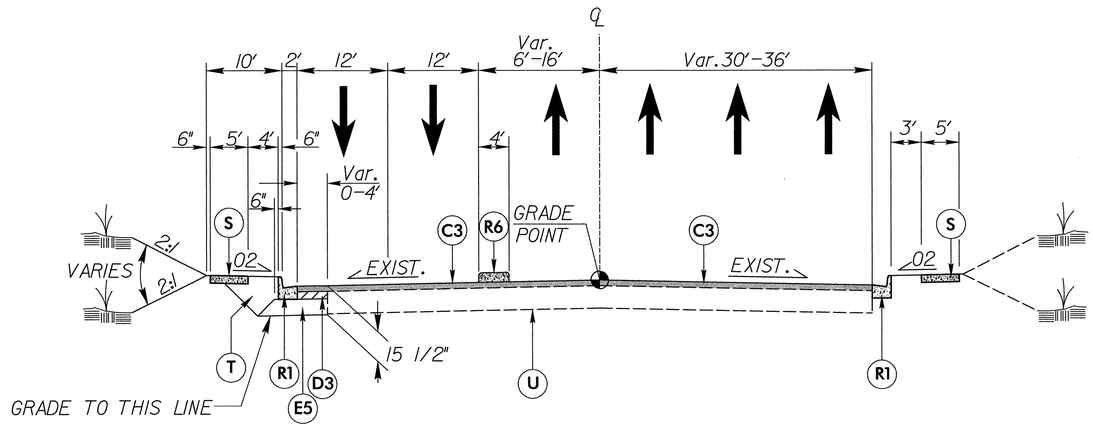

TYPICAL SECTION NO. 1

-L-

USE TYPICAL SECTION NO. 1

-L- STA. 21+50.00 TO 26+60.00

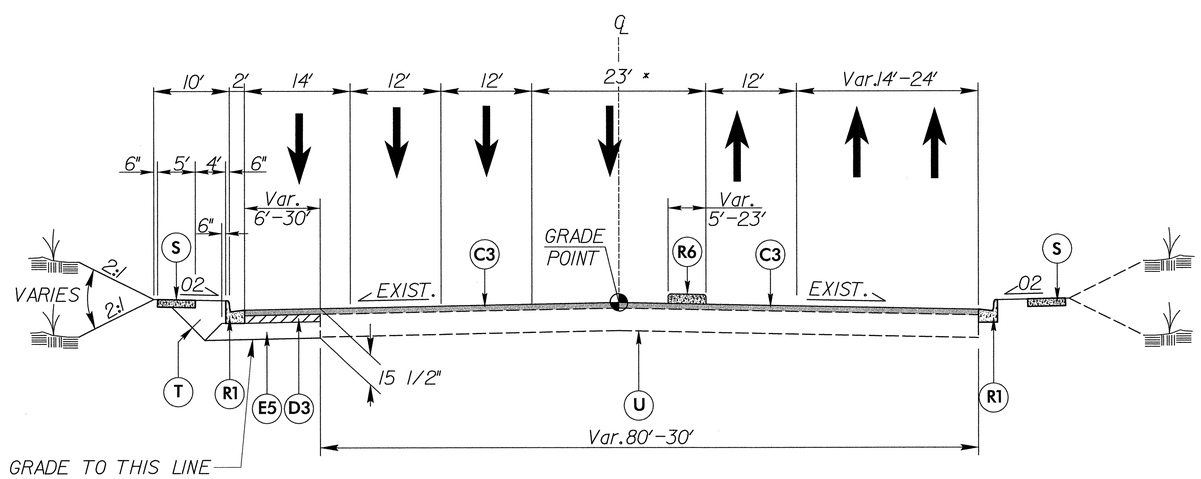

TYPICAL SECTION NO. 2

-L-

TRANSITION FROM TS NO. 1 TO TS NO. 2:

-L- STA. 26+60.00 TO -L- STA. 27+87.00

USE TYPICAL SECTION NO. 2

-L- STA. 27+87.00 TO -L- STA. 33+18.00

C1	1½" S9.5B
C2	3" S9.5B
C3	3" S9.5C
C4	VAR. S9.5B
C5	VAR. S9.5C
D1	2½" I19.0B
D2	4" I19.0B
D3	4" I19.0C
D4	VAR. I19.0B
D5	VAR. I19.0C
E1	4" B25.0B
E2	5" B25.0B
E3	5½" B25.0B
E4	5" B25.0C
E5	8½" B25.0C
E6	VAR. B25.0B
E7	VAR. B25.0C
K1	LIME STAB. OR CEMENT STAB.
R1	2'-6" C & G
R2	1'-6" C & G
R3	8"x18" CONC CURB
R4	EXP GUTTER
R5	SBG
R6	5" MCI
R7	VALLEY GUTTER
S	4" SIDEWALK
T	EARTH MATERIAL
U	EX PAVEMENT
V	MILLING PAVM'T
W	WEDGING

NOTE: PAVEMENT EDGE SLOPES ARE 1:1 UNLESS SHOWN OTHERWISE.

6/2/99
7/31/2011
R:\Roadway\Proj\r2309ab_rdy_typ.dgn
Florence & Hutcheson, Inc.

*NOTE: When Island width is <16', use Monolithic Concrete Island
**NOTE: Location of Existing Pavement Varies from Lt. to Rt.

Florence & Hutcheson
CONSULTING ENGINEERS
5121 Kingdom Way, Suite 100 Raleigh, NC 27607
NC License No: F-0258

PROJECT REFERENCE NO.	SHEET NO.
R-2309AB	2-B

ROADWAY DESIGN ENGINEER — NORTH CAROLINA PROFESSIONAL SEAL 19669 ENGINEER FRANKLIN ALLEN WILES — 9/28/11

PAVEMENT DESIGN ENGINEER — NORTH CAROLINA PROFESSIONAL SEAL 031484 ENGINEER VENKATESWARA KUMAR G. MITCHELA — 10/06/11

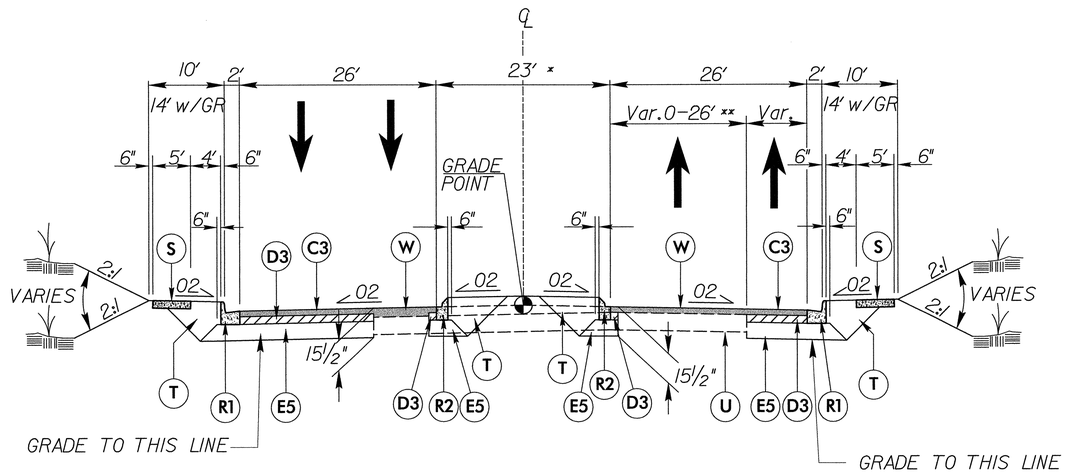

TYPICAL SECTION NO. 3

-L-

USE TYPICAL SECTION NO. 3

-L- STA. 33+18.00 TO -L- STA. 39+50.00
-L- STA. 47+00.00 TO -L- STA. 55+00.00
-L- STA. 77+50.00 TO -L- STA. 82+98.00

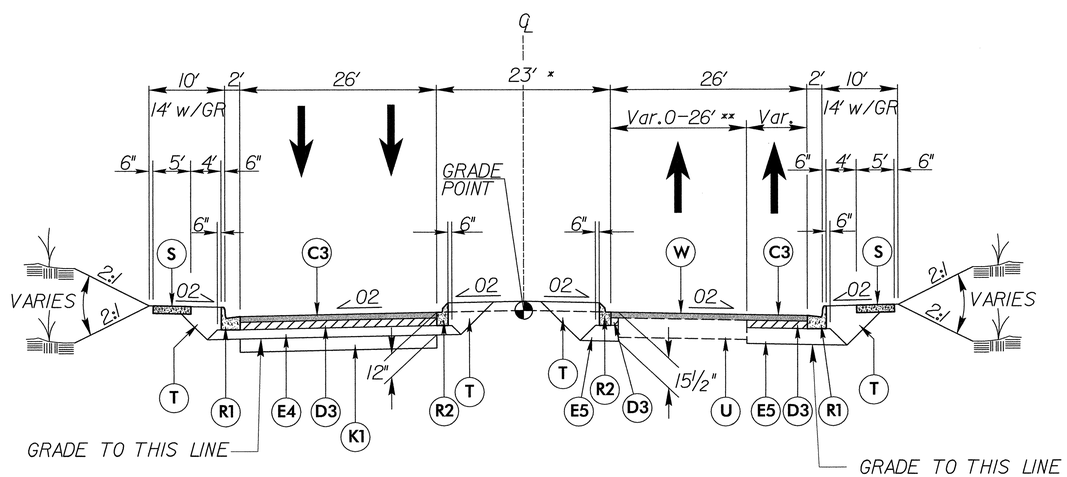

TYPICAL SECTION NO. 4

-L-

USE TYPICAL SECTION NO. 4

-L- STA. 42+00.00 TO -L- STA. 47+00.00
-L- STA. 55+00.00 TO -L- STA. 58+00.00
-L- STA. 73+50.00 TO -L- STA. 77+50.00

C1	1½" S9.5B
C2	3" S9.5B
C3	3" S9.5C
C4	VAR. S9.5B
C5	VAR. S9.5C
D1	2½" I19.0B
D2	4" I19.0B
D3	4" I19.0C
D4	VAR. I19.0B
D5	VAR. I19.0C
E1	4" B25.0B
E2	5" B25.0B
E3	5½" B25.0B
E4	5" B25.0C
E5	8½" B25.0C
E6	VAR. B25.0B
E7	VAR. B25.0C
K1	LIME STAB. OR CEMENT STAB.
R1	2'-6" C & G
R2	1'-6" C & G
R3	8"x18" CONC CURB
R4	EXP GUTTER
R5	SBG
R6	5" MCI(KEYED IN)
R7	VALLEY GUTTER
S	4" SIDEWALK
T	EARTH MATERIAL
U	EX PAVEMENT
V	MILLING PAVM'T
W	WEDGING

NOTE: PAVEMENT EDGE SLOPES ARE 1:1 UNLESS SHOWN OTHERWISE.

6/2/99

7/31/2011
R:\Roadway\Proj\r2309ab_rdy_typ.dgn
Florence & Hutcheson, Inc.

*NOTE: When Island width is <16', use Monolithic Concrete Island
**NOTE: Location of Existing Pavement Varies from Lt. to Rt.

Florence & Hutcheson
CONSULTING ENGINEERS
5121 Kingdom Way, Suite 100 Raleigh, NC 27607
NC License No: F-0258

PROJECT REFERENCE NO.	SHEET NO.
R-2309AB	2-C

ROADWAY DESIGN ENGINEER: NORTH CAROLINA PROFESSIONAL SEAL 16689 ENGINEER BRIAN ALLEN WILES 9/28/11

PAVEMENT DESIGN ENGINEER: NORTH CAROLINA PROFESSIONAL SEAL 031484 ENGINEER VLADIMIR G. MITCHEV 10/06/11

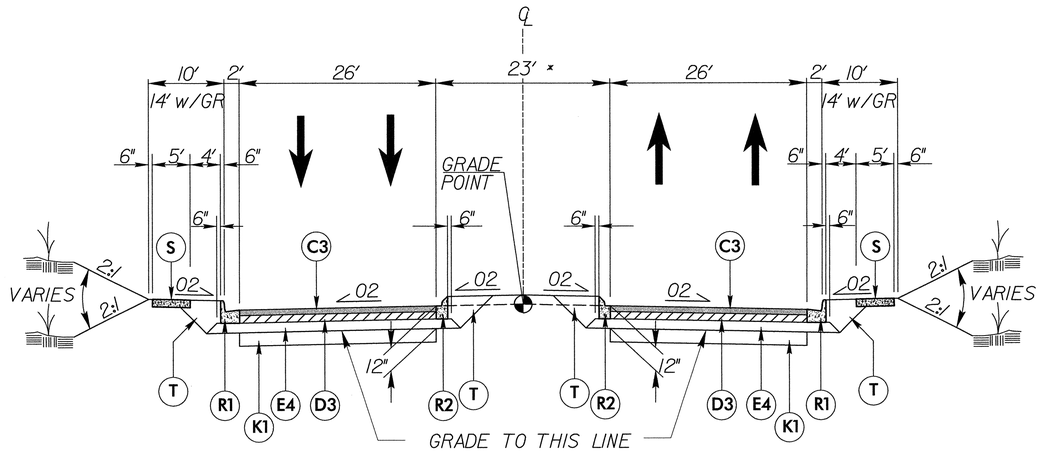

TYPICAL SECTION NO.5

-L-

USE TYPICAL SECTION NO. 5

-L- STA. 39+50.00 TO -L- STA. 42+00.00
-L- STA. 58+00.00 TO -L- STA. 73+50.00

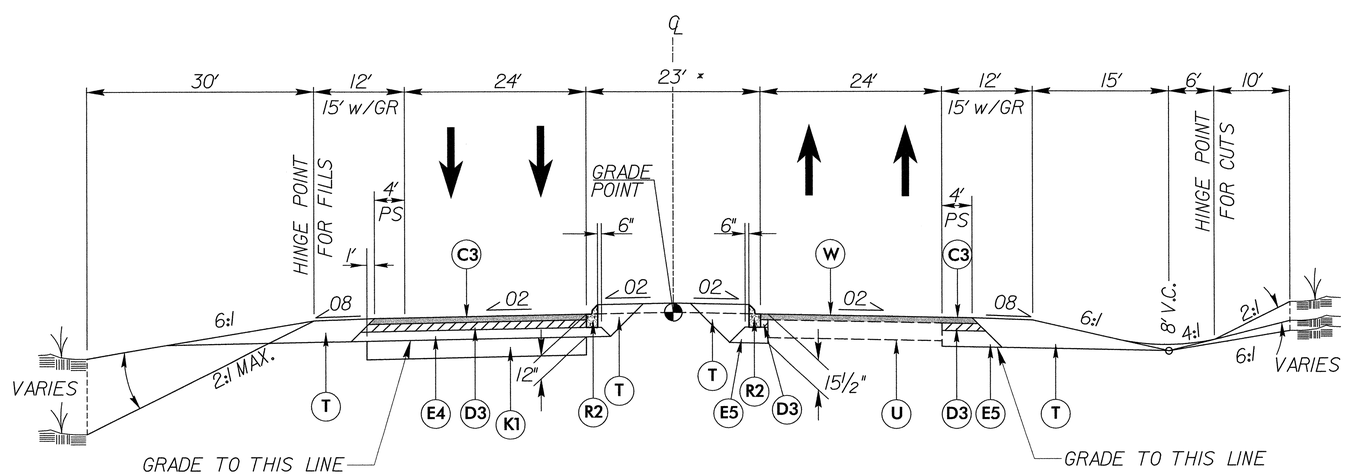

TYPICAL SECTION NO.6

-L-

USE TYPICAL SECTION NO. 6

-L- STA. 82+98.00 TO -L- STA. 107+00.00
-L- STA. 123+00.00 TO -L- STA. 132+50.00
-L- STA. 136+00.00 TO -L- STA. 308+40.13

C1	1½" S9.5B
C2	3" S9.5B
C3	3" S9.5C
C4	VAR. S9.5B
C5	VAR. S9.5C
D1	2½" I19.0B
D2	4" I19.0B
D3	4" I19.0C
D4	VAR. I19.0B
D5	VAR. I19.0C
E1	4" B25.0B
E2	5" B25.0B
E3	5½" B25.0B
E4	5" B25.0C
E5	8½" B25.0C
E6	VAR. B25.0B
E7	VAR. B25.0C
K1	LIME STAB. OR CEMENT STAB.
R1	2'-6" C & G
R2	1'-6" C & G
R3	8"x18" CONC CURB
R4	EXP GUTTER
R5	SBG
R6	5" MCI(KEYED IN)
R7	VALLEY GUTTER
S	4" SIDEWALK
T	EARTH MATERIAL
U	EX PAVEMENT
V	MILLING PAVM'T
W	WEDGING

NOTE: PAVEMENT EDGE SLOPES ARE 1:1 UNLESS SHOWN OTHERWISE.

6/2/99

7/31/2011
R:\Roadway\Proj\r2309ab_rdy_typ.dgn
Florence & Hutcheson, Inc.

Florence & Hutcheson
CONSULTING ENGINEERS
5121 Kingdom Way, Suite 100 Raleigh, NC 27607
NC License No: F-0258

PROJECT REFERENCE NO.	SHEET NO.
R-2309AB	2-D

ROADWAY DESIGN ENGINEER
NORTH CAROLINA PROFESSIONAL SEAL 16689 ENGINEER BRIAN ALLEN WILES
9/20/11

PAVEMENT DESIGN ENGINEER
NORTH CAROLINA PROFESSIONAL SEAL 031484 ENGINEER VLADIMIR G. MITCHEV
Vladimir Mitchev 10/06/11

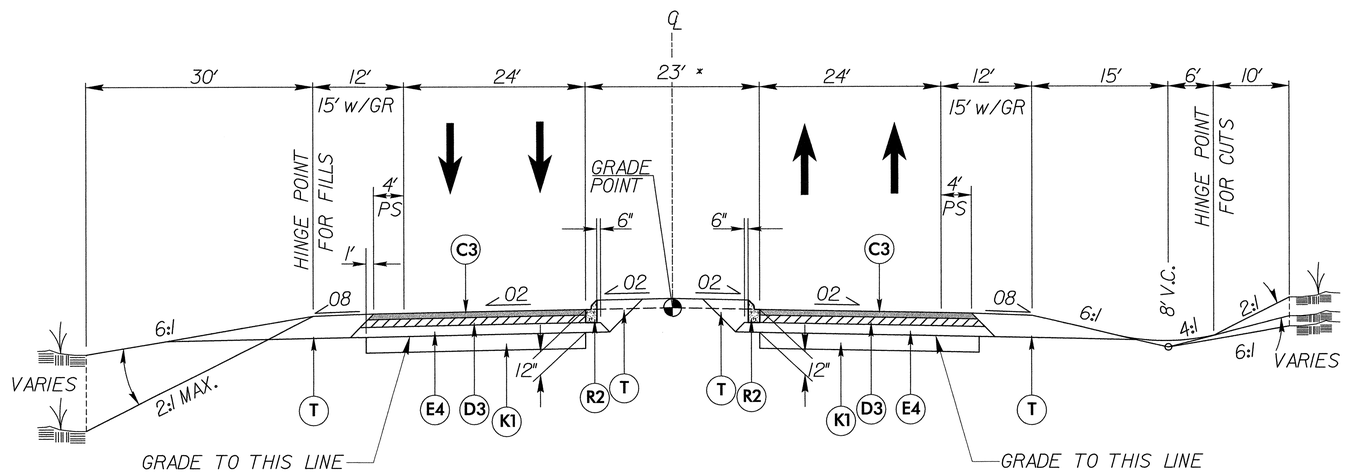

TYPICAL SECTION NO.7

-L-

USE TYPICAL SECTION NO. 7

-L- STA. 107+00.00 TO -L- STA. 113+65.50 (BEG. BRIDGE)
-L- STA. 114+90.50 (END BRIDGE) TO -L- STA. 123+00.00
-L- STA. 132+50.00 TO -L- STA. 133+42.50 (BEG. BRIDGE)
-L- STA. 135+17.50 (END BRIDGE) TO -L- STA. 136+00.00

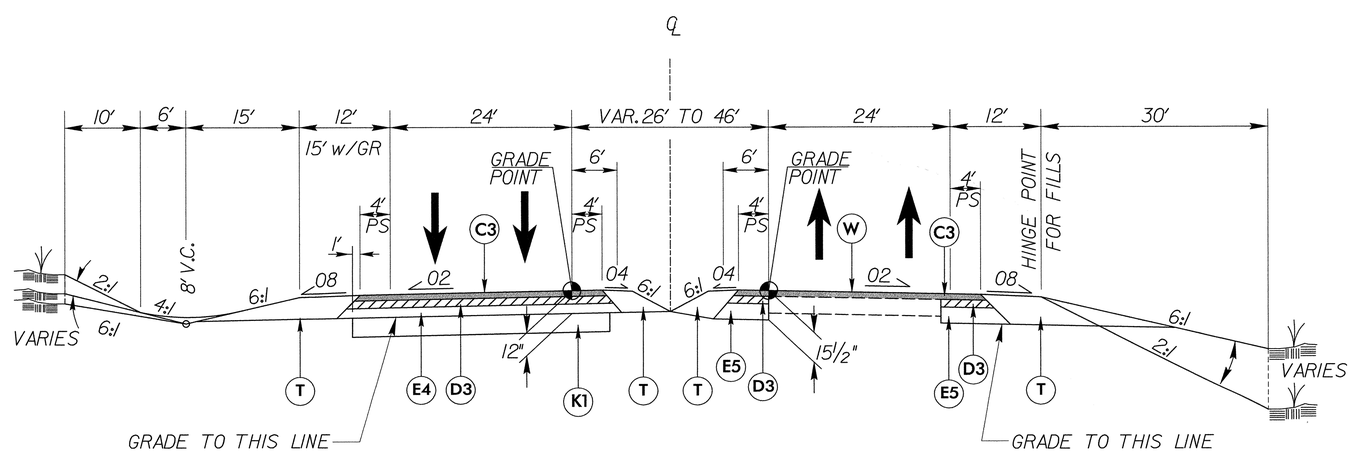

TYPICAL SECTION NO.8

-L-

USE TYPICAL SECTION NO. 8

-L- STA. 308+40.13 TO -L- STA. 316+76.67

C1	1½" S9.5B
C2	3" S9.5B
C3	3" S9.5C
C4	VAR. S9.5B
C5	VAR. S9.5C
D1	2½" I19.0B
D2	4" I19.0B
D3	4" I19.0C
D4	VAR. I19.0B
D5	VAR. I19.0C
E1	4" B25.0B
E2	5" B25.0B
E3	5½" B25.0B
E4	5" B25.0C
E5	8½" B25.0C
E6	VAR. B25.0B
E7	VAR. B25.0C
K1	LIME STAB. OR CEMENT STAB.
R1	2'-6" C & G
R2	1'-6" C & G
R3	8"x18" CONC CURB
R4	EXP GUTTER
R5	SBG
R6	5" MCI(KEYED IN)
R7	VALLEY GUTTER
S	4" SIDEWALK
T	EARTH MATERIAL
U	EX PAVEMENT
V	MILLING PAVM'T
W	WEDGING

NOTE: PAVEMENT EDGE SLOPES ARE 1:1 UNLESS SHOWN OTHERWISE.

6/2/99

7/31/2011
R:\Roadway\Proj\r2309ab_rdy_typ.dgn
Florence & Hutcheson Inc.

Florence & Hutcheson
CONSULTING ENGINEERS
5121 Kingdom Way, Suite 100 Raleigh, NC 27607
NC License No: F-0258

PROJECT REFERENCE NO.	SHEET NO.
R-2309AB	2-E

ROADWAY DESIGN ENGINEER
NORTH CAROLINA PROFESSIONAL SEAL 16669 ENGINEER ALLEN WILES
12/7/11

PAVEMENT DESIGN ENGINEER
NORTH CAROLINA PROFESSIONAL SEAL 13368 ENGINEER DONG-CHI CHEN
12/13/11

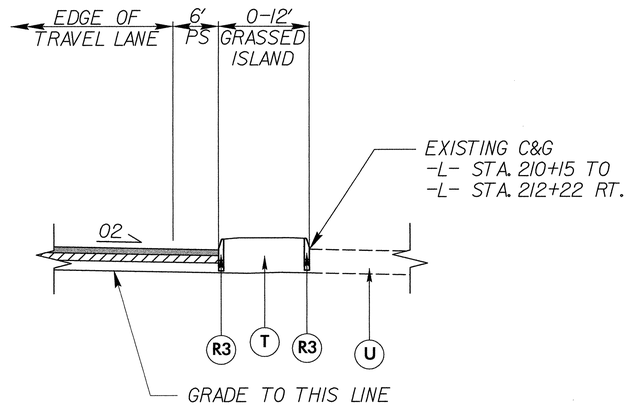

INSET A

USE INSET A

-L- STA. 183+40.00 TO -L- STA. 190+12.00 RT. (12' ISLAND)
-L- STA. 207+46.80 TO -L- STA. 212+05.3500 RT. (NO ISLAND)
-Y8- STA. 6+55.75 TO -L- STA. 219+16.02 LT. (NO ISLAND)

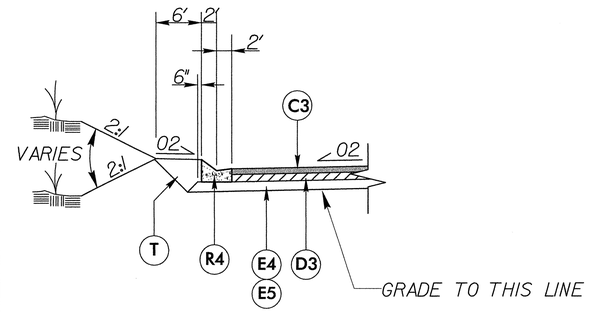

INSET B

USE INSET B

-Y4- STA. 10+90.40 TO -L- STA. 108+45.00 LT.
-L- STA. 269+56.00 TO -L- STA. 272+10.00 LT.

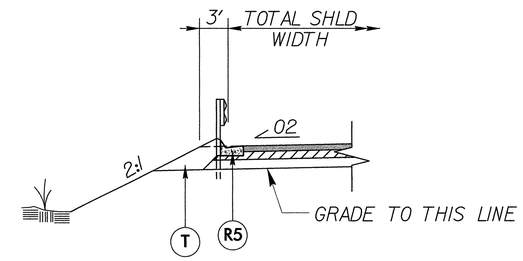

INSET C

USE INSET C

-L- STA. 100+55.00 TO -L- STA. 113+41.33 RT.
-L- STA. 113+15.00 TO -L- STA. 113+41.33 LT.
-L- STA. 115+14.67 TO -L- STA. 115+41.00 LT.
-L- STA. 115+14.67 TO -L- STA. 133+18.33 RT.
-L- STA. 118+95.00 TO -L- STA. 121+75.00 LT.
-Y5- STA. 11+02 RT. TO -L- STA. 133+18.33 LT.
-L- STA. 135+41.67 TO -L- STA. 142+30.00 LT.
-L- STA. 135+41.67 TO -L- STA. 137+15.00 RT.
-L- STA. 165+45.00 TO -L- STA. 166+57.00 LT.
-L- STA. 166+45.00 TO -L- STA. 169+75.00 RT.
-L- STA. 176+52.00 TO -L- STA. 182+25.00 RT.
-L- STA. 179+71.00 TO -L- STA. 183+01.00 LT.
-L- STA. 200+75.00 TO -L- STA. 202+25.00 LT.
-L- STA. 200+75.00 TO -L- STA. 202+25.00 RT.
-L- STA. 232+20.00 TO -L- STA. 234+00.00 LT.
-L- STA. 247+25.00 TO -L- STA. 250+12.00 LT.
-L- STA. 260+75.00 TO -L- STA. 268+80.00 LT.
-L- STA. 292+75.00 TO -L- STA. 296+75.00 LT.
-L- STA. 294+23.00 TO -L- STA. 298+21.00 RT.
-L- STA. 311+25.00 TO -L- STA. 312+41.00 LT.
-L- STA. 312+90.00 TO -L- STA. 315+75.00 LT.

C1	1½" S9.5B
C2	3" S9.5B
C3	3" S9.5C
C4	VAR. S9.5B
C5	VAR. S9.5C
D1	2½" I19.0B
D2	4" I19.0B
D3	4" I19.0C
D4	VAR. I19.0B
D5	VAR. I19.0C
E1	4" B25.0B
E2	5" B25.0B
E3	5½" B25.0B
E4	5" B25.0C
E5	8½" B25.0C
E6	VAR. B25.0B
E7	VAR. B25.0C
K1	LIME STAB. OR CEMENT STAB.
R1	2'-6" C & G
R2	1'-6" C & G
R3	8"x18" CONC CURB
R4	EXP GUTTER
R5	SBG
R6	5" MCI(KEYED IN)
R7	VALLEY GUTTER
S	4" SIDEWALK
T	EARTH MATERIAL
U	EX PAVEMENT
V	MILLING PAVM'T
W	WEDGING

NOTE: PAVEMENT EDGE SLOPES ARE 1:1 UNLESS SHOWN OTHERWISE.

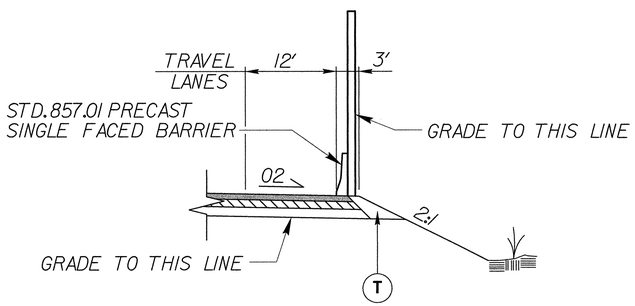

INSET D

USE INSET D

-L- STA. 230+90.00 TO -L- STA. 248+89.60 RT.
-L- STA. 258+51.52 TO -L- STA. 263+46.52 RT.

SUMMARY OF SHOULDER DRAINS

LINE	STATION TO STATION	SIDE	SHOULDER DRAIN PIPE	SHOULDER DRAINS	OUTLET PIPES	OUTLET LOCATION	
						PAD	2GI
	TOTAL R-2309AB		0	0	0	0	
	TOTAL R-2413C (ALTERNATE 1)		10360	10360	670	15	
	SAY (ALTERNATE 1)		10360	10360	670	15	
	TOTAL R-2309AB		0	0	0	0	
	TOTAL R-2413C (ALTERNATE 2)		47610	47610	2540	50	
	SAY (ALTERNATE 2)		47610	47610	2540	50	

6/2/99
12/7/2011
R:\Roadway\Proj\r2309ab_rdy_typ.dgn
Florence & Hutcheson, Inc.

Florence & Hutcheson
CONSULTING ENGINEERS
5121 Kingdom Way, Suite 100 Raleigh, NC 27607
NC License No: F-0258

PROJECT REFERENCE NO.	SHEET NO.
R-2309AB	2-F

ROADWAY DESIGN ENGINEER
NORTH CAROLINA PROFESSIONAL SEAL 19889 ENGINEER BRYAN ALLEN WILES
8/28/11

PAVEMENT DESIGN ENGINEER
NORTH CAROLINA PROFESSIONAL SEAL 031484 ENGINEER VLADIMIR G. MITCHEV
Vladimir Mitchev 10/06/11

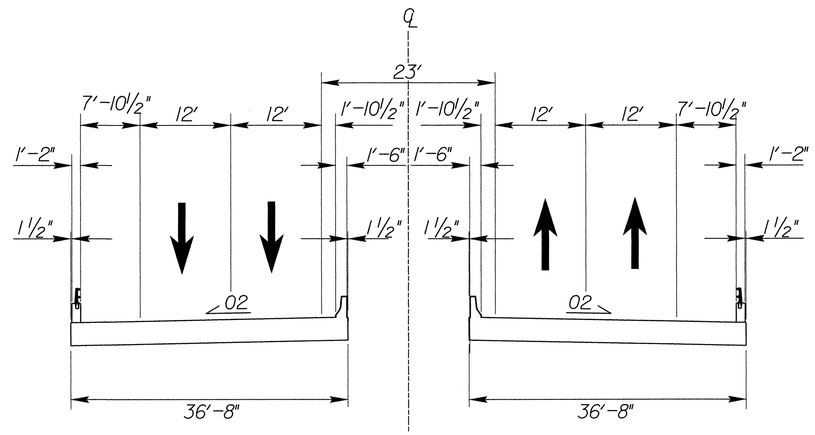

TYPICAL SECTION NO. 9

BRIDGE NO. 301 OVER LAKE HIGGINS
BRIDGE NO. 313 OVER LAKE BRANDT

USE TYPICAL SECTION NO. 9

-L- STA. 113+65.50 TO -L- STA. 114+90.50
-L- STA. 133+42.50 TO -L- STA. 135+17.50

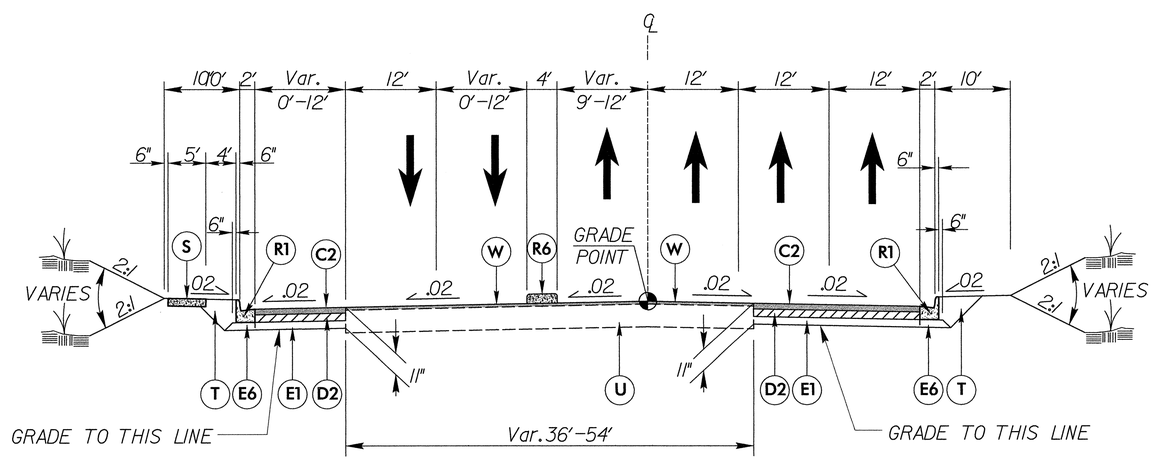

TYPICAL SECTION NO. 10

-Y-

USE TYPICAL SECTION NO. 10

-Y- STA. 1+50.00 TO -Y- STA. 9+49.49

C1	1½" S9.5B
C2	3" S9.5B
C3	3" S9.5C
C4	VAR. S9.5B
C5	VAR. S9.5C
D1	2½" I19.0B
D2	4" I19.0B
D3	4" I19.0C
D4	VAR. I19.0B
D5	VAR. I19.0C
E1	4" B25.0B
E2	5" B25.0B
E3	5½" B25.0B
E4	5" B25.0C
E5	8½" B25.0C
E6	VAR. B25.0B
E7	VAR. B25.0C
K1	LIME STAB. OR CEMENT STAB.
R1	2'-6" C & G
R2	1'-6" C & G
R3	8"x18" CONC CURB
R4	EXP GUTTER
R5	SBG
R6	5" MCI(KEYED IN)
R7	VALLEY GUTTER
S	4" SIDEWALK
T	EARTH MATERIAL
U	EX PAVEMENT
V	MILLING PAVM'T
W	WEDGING

NOTE: PAVEMENT EDGE SLOPES ARE 1:1 UNLESS SHOWN OTHERWISE.

6/2/99

8/22/2011
R:\Roadway\Proj\r2309ab_rdy_typ.dgn
Florence & Hutcheson Inc.

Florence & Hutcheson
CONSULTING ENGINEERS
5121 Kingdom Way, Suite 100 Raleigh, NC 27607
NC License No: F-0258

PROJECT REFERENCE NO.	SHEET NO.
R-2309AB	2-G

ROADWAY DESIGN ENGINEER — NORTH CAROLINA PROFESSIONAL SEAL 16689 ENGINEER FABRIAN ALLEN WILES — 1/20/11

PAVEMENT DESIGN ENGINEER — NORTH CAROLINA PROFESSIONAL SEAL 031484 ENGINEER VLADIMIR G. MITCHEV — Vladimir Mitchev 10/06/11

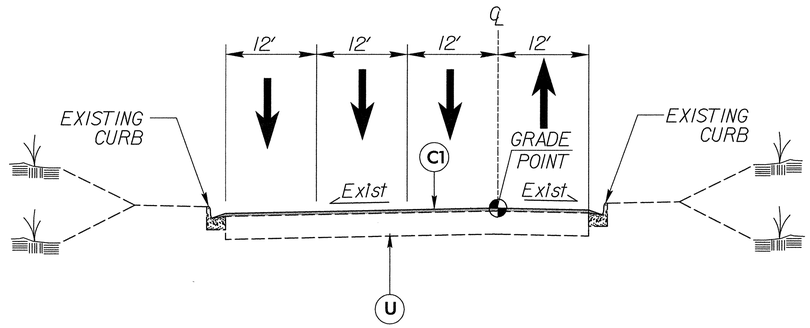

TYPICAL SECTION NO. 11

-Y-

USE TYPICAL SECTION NO. 11

-Y- STA. 10+42.30 TO -Y- STA. 13+40.00

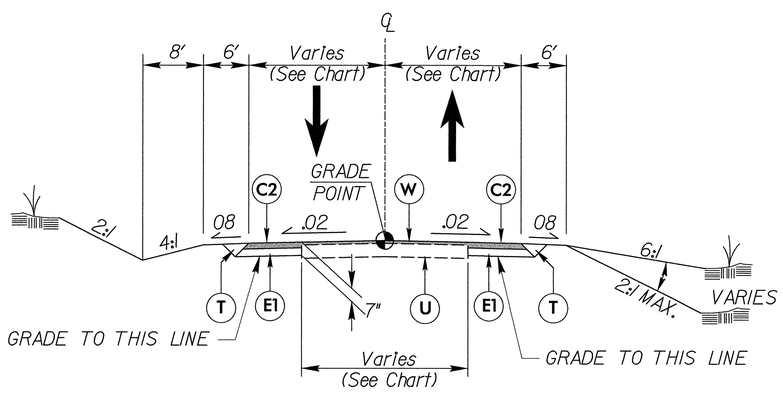

TYPICAL SECTION NO. 12

-Y1-, -Y15-

USE TYPICAL SECTION NO. 12

LINE	STATION	TO	STATION	PROP. WIDTH - LT	PROP. WIDTH - RT.	EXIST. PAV'T. WIDTH
-Y1-	11+50.00		12+67.88	10'-15'	10'-15'	20'
-Y15-	10+58.57		11+75.00	11'	12'	20'

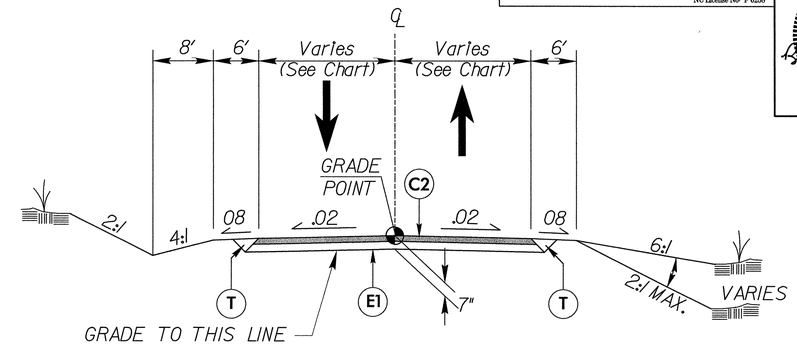

TYPICAL SECTION NO. 13

-Y1-, -Y9-, -Y11- & -Y13-

USE TYPICAL SECTION NO. 13

LINE	STATION	TO	STATION	PROP. WIDTH - LT	PROP. WIDTH - RT.
-Y1-	8+05.00		9+54.63	10'-15'	10'-15'
-Y1-	10+32.15		11+50.00	10'-15'	10'-15'
-Y9-	10+36.77		12+04.00	16'	16'
-Y11-	10+35.50		11+60.00	15'	15'
-Y13-	10+35.50		12+66.00	20'	24'

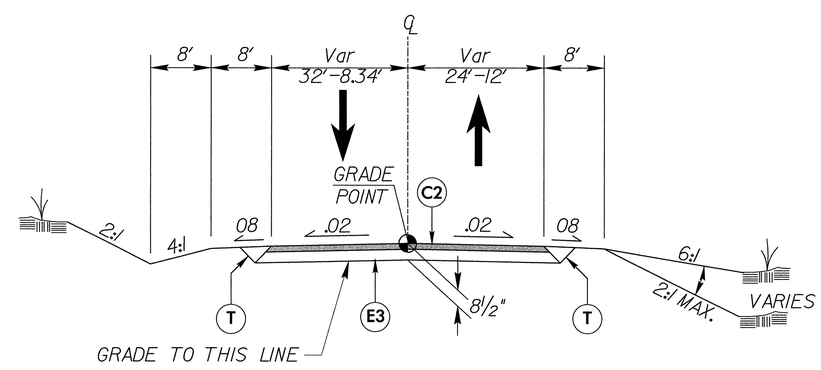

TYPICAL SECTION NO. 14

-Y3-

USE TYPICAL SECTION NO. 14

-Y3- STA. 10+47.51 TO -Y3- STA. 13+50.00

C1	1½" S9.5B
C2	3" S9.5B
C3	3" S9.5C
C4	VAR. S9.5B
C5	VAR. S9.5C
D1	2½" I19.0B
D2	4" I19.0B
D3	4" I19.0C
D4	VAR. I19.0B
D5	VAR. I19.0C
E1	4" B25.0B
E2	5" B25.0B
E3	5½" B25.0B
E4	5" B25.0C
E5	8½" B25.0C
E6	VAR. B25.0B
E7	VAR. B25.0C
K1	LIME STAB. OR CEMENT STAB.
R1	2'-6" C & G
R2	1'-6" C & G
R3	8"x18" CONC CURB
R4	EXP GUTTER
R5	SBG
R6	5" MCI(KEYED IN)
R7	VALLEY GUTTER
S	4" SIDEWALK
T	EARTH MATERIAL
U	EX PAVEMENT
V	MILLING PAVM'T
W	WEDGING

NOTE: PAVEMENT EDGE SLOPES ARE 1:1 UNLESS SHOWN OTHERWISE.

6/2/99

Florence & Hutcheson
CONSULTING ENGINEERS
5121 Kingdom Way, Suite 100 Raleigh, NC 27607
NC License No: F-0258

PROJECT REFERENCE NO.	SHEET NO.
R-2309AB	2-H

ROADWAY DESIGN ENGINEER
NORTH CAROLINA PROFESSIONAL SEAL 16689 ENGINEER BRIAN ALLEN WILES
9/20/11

PAVEMENT DESIGN ENGINEER
NORTH CAROLINA PROFESSIONAL SEAL 031484 ENGINEER VLADIMIR G. MITCHEV
10/05/11

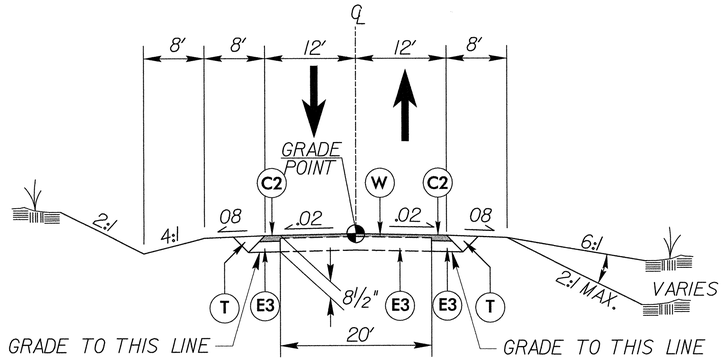

TYPICAL SECTION NO.15

-Y3-

USE TYPICAL SECTION NO. 15

-Y3- STA. 13+50.00 TO -Y3- STA. 14+58.00

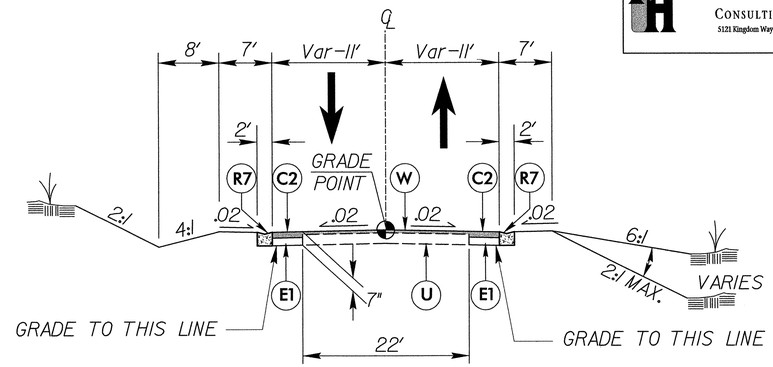

TYPICAL SECTION NO.17

-Y4-

USE TYPICAL SECTION NO. 17

-Y4- STA. 12+00.00 TO -Y4- STA. 12+75.00

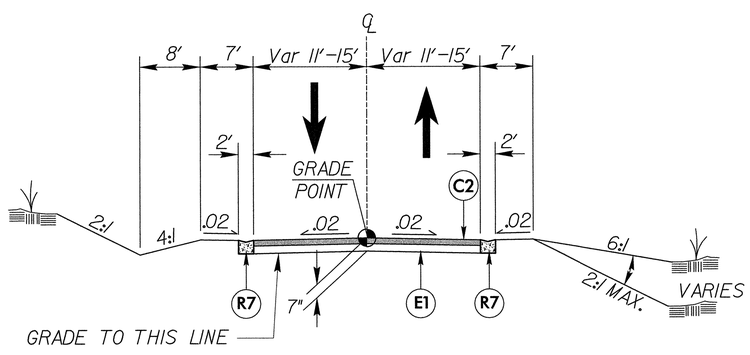

TYPICAL SECTION NO.16

-Y4-

USE TYPICAL SECTION NO. 16

-Y4- STA. 10+35.51 TO -Y4- STA. 12+00.00

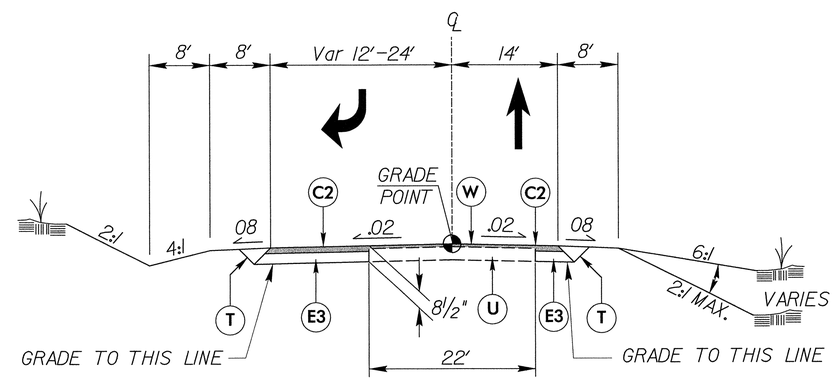

TYPICAL SECTION NO.18

-Y5-

USE TYPICAL SECTION NO. 18

-Y5- STA. 10+48.02 TO -Y5- STA. 14+00.00

C1	1½″ S9.5B
C2	3″ S9.5B
C3	3″ S9.5C
C4	VAR. S9.5B
C5	VAR. S9.5C
D1	2½″ I19.0B
D2	4″ I19.0B
D3	4″ I19.0C
D4	VAR. I19.0B
D5	VAR. I19.0C
E1	4″ B25.0B
E2	5″ B25.0B
E3	5½″ B25.0B
E4	5″ B25.0C
E5	8½″ B25.0C
E6	VAR. B25.0B
E7	VAR. B25.0C
K1	LIME STAB. OR CEMENT STAB.
R1	2′-6″ C & G
R2	1′-6″ C & G
R3	8″x18″ CONC CURB
R4	EXP GUTTER
R5	SBG
R6	5″ MCI(KEYED IN)
R7	VALLEY GUTTER
S	4″ SIDEWALK
T	EARTH MATERIAL
U	EX PAVEMENT
V	MILLING PAVM'T
W	WEDGING

NOTE: PAVEMENT EDGE SLOPES ARE 1:1 UNLESS SHOWN OTHERWISE.

7/31/2011
R:\Roadway\Proj\r2309ab_rdy_typ.dgn
Florence & Hutcheson, Inc.

6/2/99

Florence & Hutcheson
CONSULTING ENGINEERS
5121 Kingdom Way, Suite 100 Raleigh, NC 27607
NC License No: F-0258

PROJECT REFERENCE NO.	SHEET NO.
R-2309AB	2-1

ROADWAY DESIGN ENGINEER
NORTH CAROLINA PROFESSIONAL SEAL 16689 ENGINEER BRIAN WILES ALLEN
4/28/11

PAVEMENT DESIGN ENGINEER
NORTH CAROLINA PROFESSIONAL SEAL 031484 ENGINEER VLADIMIR G. MITCHEV
10/06/11

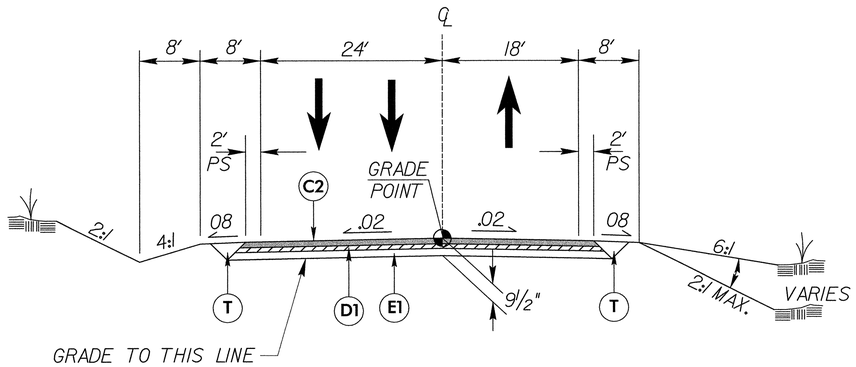

TYPICAL SECTION NO. 19

-Y6-

USE TYPICAL SECTION NO. 19

-Y6- STA. 10+47.51 TO -Y6- STA. 12+50.00

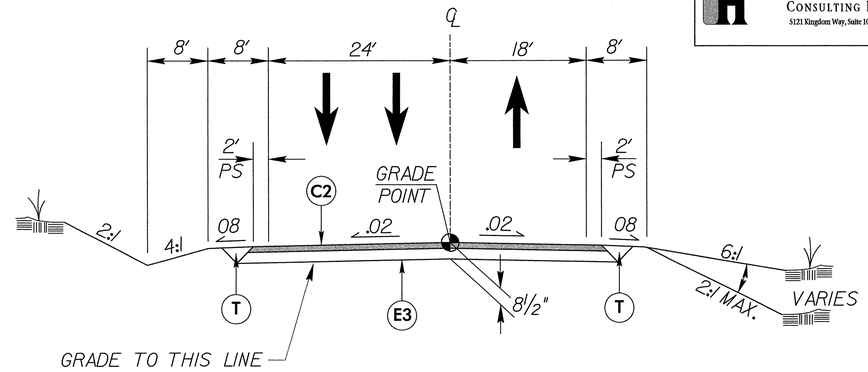

TYPICAL SECTION NO. 21

-Y7-

USE TYPICAL SECTION NO. 21

-Y7- STA. 10+47.50 TO -Y7- STA. 12+50.00

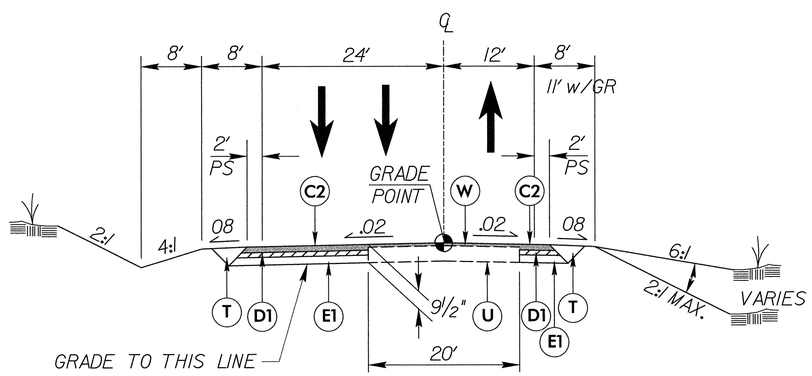

TYPICAL SECTION NO. 20

-Y6-

USE TYPICAL SECTION NO. 20

-Y6- STA. 12+50.00 TO -Y6- STA. 14+60.00

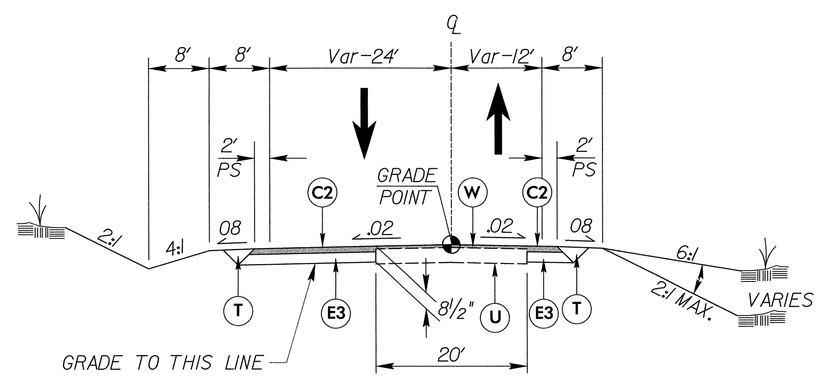

TYPICAL SECTION NO. 22

-Y7-

USE TYPICAL SECTION NO. 22

-Y7- STA. 12+50.00 TO -Y7- STA. 14+40.00

C1	1½" S9.5B
C2	3" S9.5B
C3	3" S9.5C
C4	VAR. S9.5B
C5	VAR. S9.5C
D1	2½" I19.0B
D2	4" I19.0B
D3	4" I19.0C
D4	VAR. I19.0B
D5	VAR. I19.0C
E1	4" B25.0B
E2	5" B25.0B
E3	5½" B25.0B
E4	5" B25.0C
E5	8½" B25.0C
E6	VAR. B25.0B
E7	VAR. B25.0C
K1	LIME STAB. OR CEMENT STAB.
R1	2'-6" C & G
R2	1'-6" C & G
R3	8"x18" CONC CURB
R4	EXP GUTTER
R5	SBG
R6	5" MCI(KEYED IN)
R7	VALLEY GUTTER
S	4" SIDEWALK
T	EARTH MATERIAL
U	EX PAVEMENT
V	MILLING PAVM'T
W	WEDGING

NOTE: PAVEMENT EDGE SLOPES ARE 1:1 UNLESS SHOWN OTHERWISE.

7/31/2011
R:\Roadway\Proj\r-2309ab_rdy_typ.dgn
Florence & Hutcheson, Inc.

Florence & Hutcheson
CONSULTING ENGINEERS
5121 Kingdom Way, Suite 100 Raleigh, NC 27607
NC License No: F-0258

PROJECT REFERENCE NO.	SHEET NO.
R-2309AB	2-J

ROADWAY DESIGN ENGINEER: NORTH CAROLINA PROFESSIONAL SEAL 16689 ENGINEER BRIAN ALLEN WILES 9/20/11

PAVEMENT DESIGN ENGINEER: NORTH CAROLINA PROFESSIONAL SEAL 031484 ENGINEER VLADIMIR G. MITCHEV 10/06/11

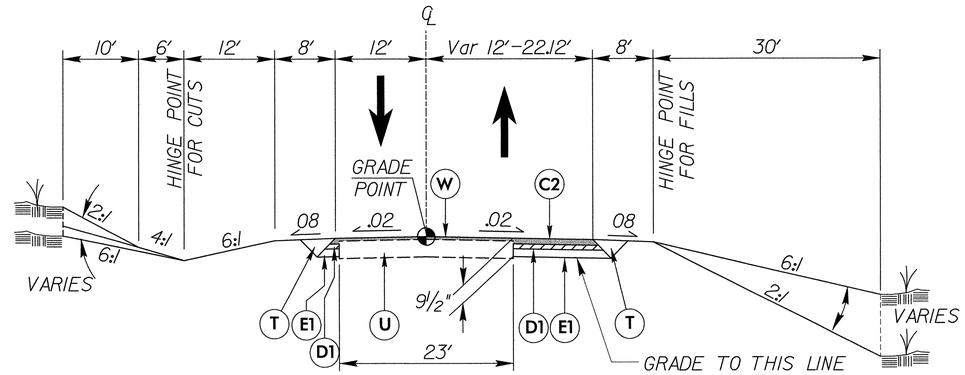

TYPICAL SECTION NO. 23
-Y8-

USE TYPICAL SECTION NO. 23
-Y8- STA. 5+20.00 TO -Y8- STA. 6+00.00

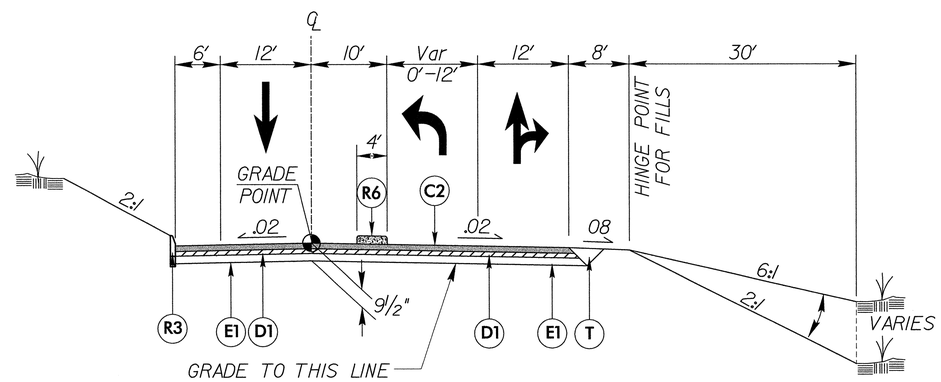

TYPICAL SECTION NO. 24
-Y8-

USE TYPICAL SECTION NO. 24
-Y8- STA. 6+00.00 TO -Y8- STA. 9+48.07

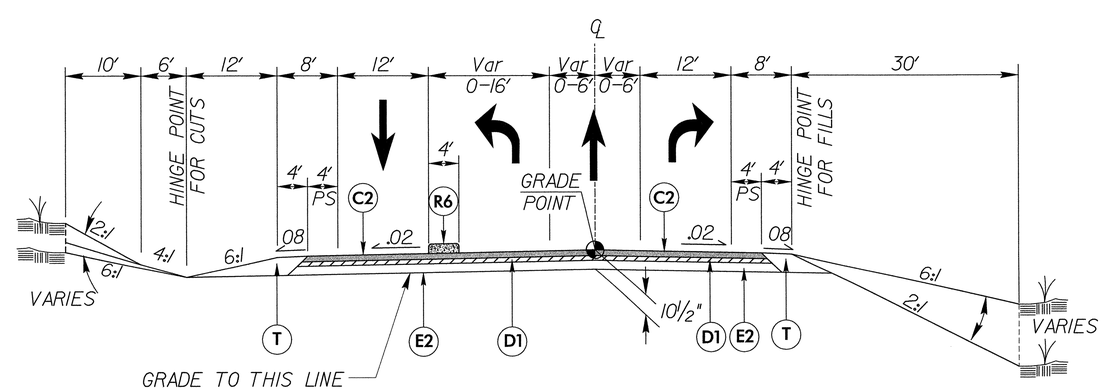

TYPICAL SECTION NO. 25
-Y8-

USE TYPICAL SECTION NO. 25
-Y8- STA. 10+51.80 TO -Y8- STA. 13+00.00

C1	1½" S9.5B
C2	3" S9.5B
C3	3" S9.5C
C4	VAR. S9.5B
C5	VAR. S9.5C
D1	2½" I19.0B
D2	4" I19.0B
D3	4" I19.0C
D4	VAR. I19.0B
D5	VAR. I19.0C
E1	4" B25.0B
E2	5" B25.0B
E3	5½" B25.0B
E4	5" B25.0C
E5	8½" B25.0C
E6	VAR. B25.0B
E7	VAR. B25.0C
K1	LIME STAB. OR CEMENT STAB.
R1	2'-6" C & G
R2	1'-6" C & G
R3	8"x18" CONC CURB
R4	EXP GUTTER
R5	SBG
R6	5" MCI(KEYED IN)
R7	VALLEY GUTTER
S	4" SIDEWALK
T	EARTH MATERIAL
U	EX PAVEMENT
V	MILLING PAVM'T
W	WEDGING

NOTE: PAVEMENT EDGE SLOPES ARE 1:1 UNLESS SHOWN OTHERWISE.

6/2/99

7/31/2011
R:\Roadway\Proj\r2309ab_rdy_typ.dgn
Florence & Hutcheson, Inc.

6/2/99

Florence & Hutcheson
CONSULTING ENGINEERS
5121 Kingsdom Way, Suite 100 Raleigh, NC 27607
NC License No. F-0258

PROJECT REFERENCE NO.	SHEET NO.
R-2309AB	2-K

ROADWAY DESIGN ENGINEER
NORTH CAROLINA PROFESSIONAL SEAL 16689 ENGINEER BRIAN ALLEN WILES
Brian Wiles 9/28/11

PAVEMENT DESIGN ENGINEER
NORTH CAROLINA PROFESSIONAL SEAL 031484 ENGINEER VLADIMIR G. MITCHEV
Vladimir Mitchev 10/06/11

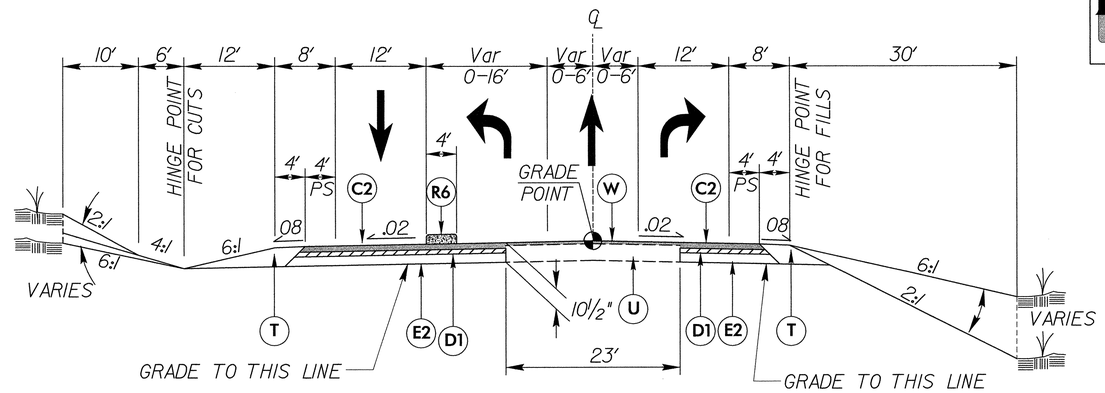

TYPICAL SECTION NO. 26

-Y8-

USE TYPICAL SECTION NO. 26

-Y8- STA. 13+00.00 TO -Y8- STA. 15+00.00

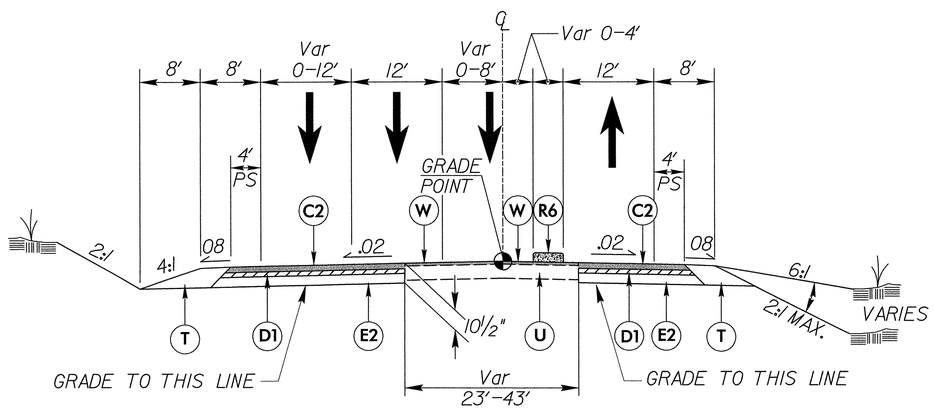

TYPICAL SECTION NO. 27

-Y12-

USE TYPICAL SECTION NO. 27

-Y12- STA. 6+25.00 TO -Y12- STA. 9+52.33
-Y12- STA. 10+47.78 TO -Y12- STA. 13+50.00

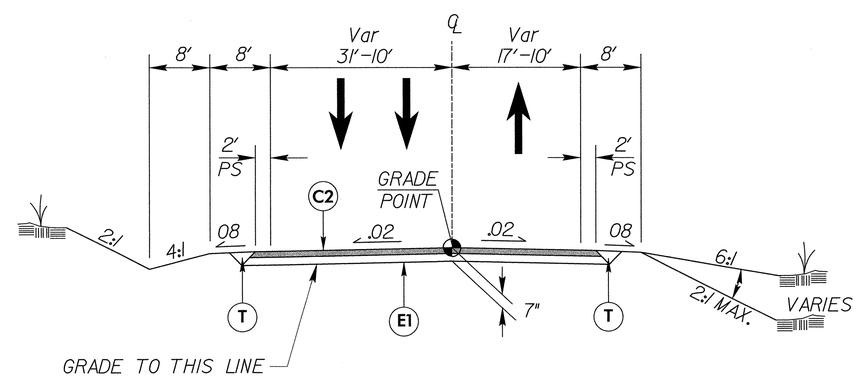

TYPICAL SECTION NO. 28

-Y14-,-Y14A-

USE TYPICAL SECTION NO. 28

-Y14- STA. 10+47.50 TO -Y14- STA. 13+75.00
-Y14A- STA. 10+12.00 TO -Y14A- STA. 13+75.00

C1	1½″ S9.5B
C2	3″ S9.5B
C3	3″ S9.5C
C4	VAR. S9.5B
C5	VAR. S9.5C
D1	2½″ I19.0B
D2	4″ I19.0B
D3	4″ I19.0C
D4	VAR. I19.0B
D5	VAR. I19.0C
E1	4″ B25.0B
E2	5″ B25.0B
E3	5½″ B25.0B
E4	5″ B25.0C
E5	8½″ B25.0C
E6	VAR. B25.0B
E7	VAR. B25.0C
K1	LIME STAB. OR CEMENT STAB.
R1	2′-6″ C & G
R2	1′-6″ C & G
R3	8″x18″ CONC CURB
R4	EXP GUTTER
R5	SBG
R6	5″ MCI(KEYED IN)
R7	VALLEY GUTTER
S	4″ SIDEWALK
T	EARTH MATERIAL
U	EX PAVEMENT
V	MILLING PAVM'T
W	WEDGING

NOTE: PAVEMENT EDGE SLOPES ARE 1:1 UNLESS SHOWN OTHERWISE.

7/31/2011
R:\Roadway\Proj\r2309ab_rdy_typ.dgn
Florence & Hutcheson, Inc.

Florence & Hutcheson
CONSULTING ENGINEERS
5121 Kingdom Way, Suite 100 Raleigh, NC 27607
NC License No: P-0258

PROJECT REFERENCE NO.	SHEET NO.
R-2309AB	2-L

ROADWAY DESIGN ENGINEER
NORTH CAROLINA PROFESSIONAL SEAL 16689 ENGINEER BRIAN ALLEN WILES
9/28/11

PAVEMENT DESIGN ENGINEER
NORTH CAROLINA PROFESSIONAL SEAL 031484 ENGINEER VLADIMIR G. MITCHEV
Vladimir Mitchev 10/06/11

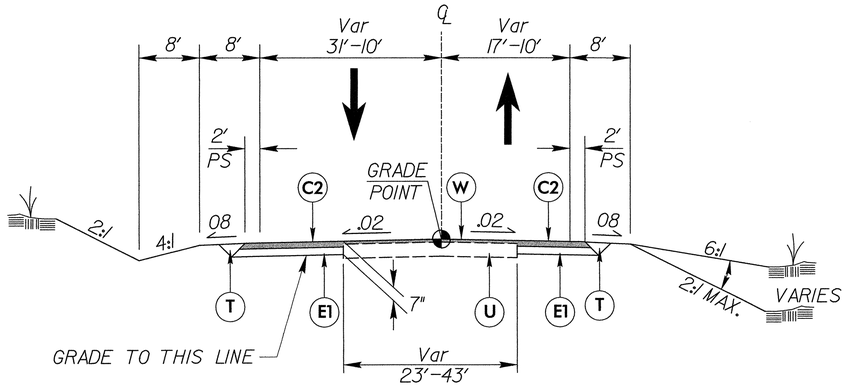

TYPICAL SECTION NO. 29

-Y14-,-Y14A-

USE TYPICAL SECTION NO. 29

-Y14- STA. 13+75.00 TO -Y14- STA. 14+39.00
-Y14A- STA. 13+75.00 TO -Y14A- STA. 15+40.00

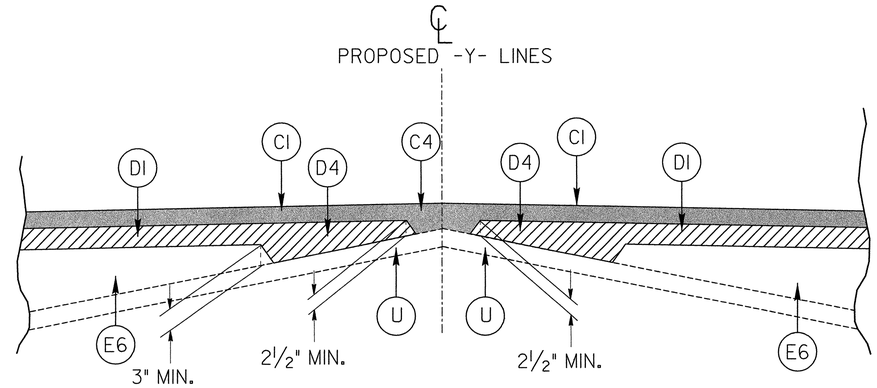

DETAIL SHOWING METHOD OF WEDGING NO. 2

USE TYPICAL WEDGING SECTION NO. 2 FOR:
TYPICAL SECTIONS 10, 11, 12, 20, 23, 26 AND 27

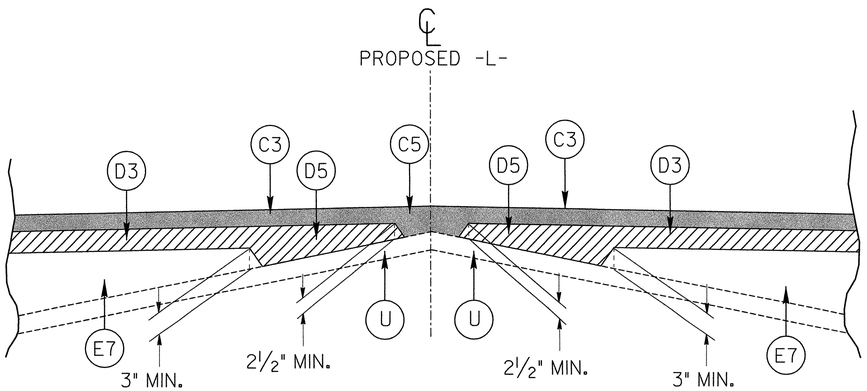

DETAIL SHOWING METHOD OF WEDGING NO. 1

USE TYPICAL WEDGING SECTION NO. 1 FOR:
TYPICAL SECTIONS 1, 2, 3, 4, 6 AND 8

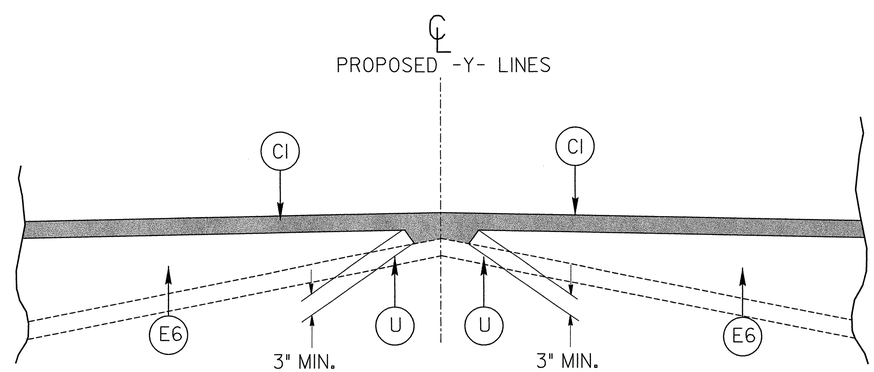

DETAIL SHOWING METHOD OF WEDGING NO. 3

USE TYPICAL WEDGING SECTION NO. 3 FOR:
TYPICAL SECTIONS 15, 17, 18, 22 AND 29

C1	1½" S9.5B
C2	3" S9.5B
C3	3" S9.5C
C4	VAR. S9.5B
C5	VAR. S9.5C
D1	2½" I19.0B
D2	4" I19.0B
D3	4" I19.0C
D4	VAR. I19.0B
D5	VAR. I19.0C
E1	4" B25.0B
E2	5" B25.0B
E3	5½" B25.0B
E4	5" B25.0C
E5	8½" B25.0C
E6	VAR. B25.0B
E7	VAR. B25.0C
K1	LIME STAB. OR CEMENT STAB.
R1	2'-6" C & G
R2	1'-6" C & G
R3	8"x18" CONC CURB
R4	EXP GUTTER
R5	SBG
R6	5" MCI(KEYED IN)
R7	VALLEY GUTTER
S	4" SIDEWALK
T	EARTH MATERIAL
U	EX PAVEMENT
V	MILLING PAVM'T
W	WEDGING

NOTE: PAVEMENT EDGE SLOPES ARE 1:1 UNLESS SHOWN OTHERWISE.

6/2/99
9/22/2011
R:\Roadway\Proj\r2309ab_rdy_typ.dgn
Florence & Hutcheson Inc.

PROJECT REFERENCE NO.	SHEET NO.
R-2309AB	2-M
R/W SHEET NO.	

Florence & Hutcheson
CONSULTING ENGINEERS
5121 Kingdom Way, Suite 100 Raleigh, NC 27607
NC License No: F-0258

ROADWAY DESIGN ENGINEER
NORTH CAROLINA PROFESSIONAL SEAL 16689 ENGINEER BRIAN ALLEN WILLIS
8/26/11

NORTH CAROLINA PROFESSIONAL SEAL 031484 ENGINEER VLADIMIR G. MITCHEV
Vladimir Mitchev 10/10/11

REVISIONS

8/17/99

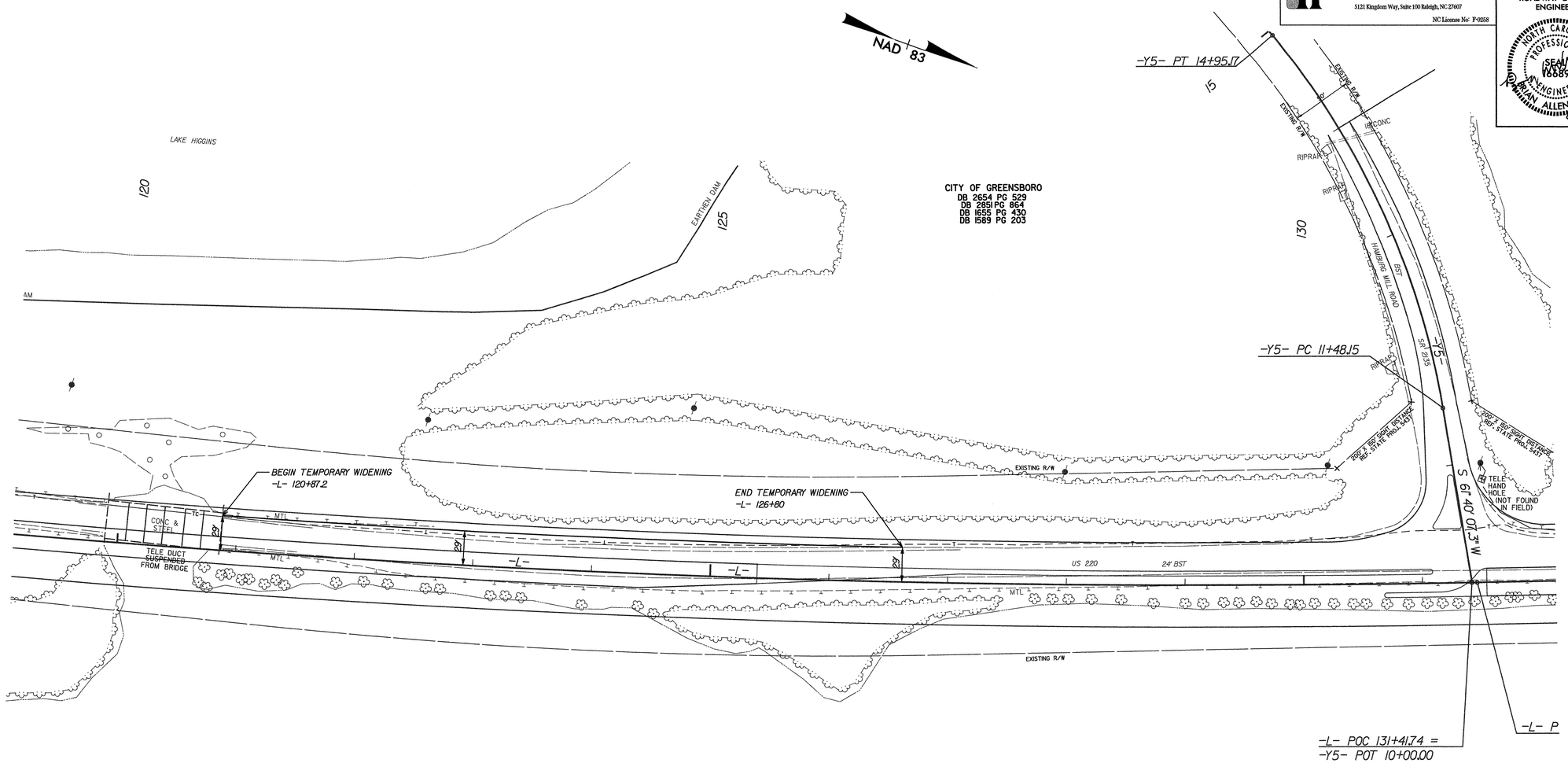

PAVEMENT DESIGN ENGINEER

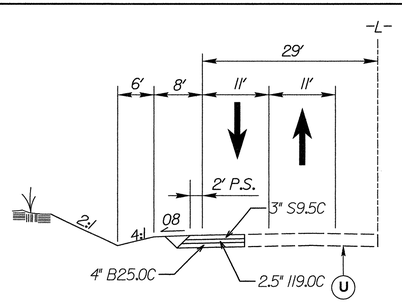

TYPICAL SECTION

-L- 120+87.2 to 126+80

CITY OF GREENSBORO
DB 2654 PG 529
DB 2851 PG 864
DB 1655 PG 430

-L- CURVE DATA

PI Sta 124+10.48
Δ = 7° 02' 04.3" (LT)
D = 0° 28' 38.9"
L = 1,473.31'
T = 737.58'
R = 12,000.00'
SE = NORMAL CROWN
V = 60 MPH

9/22/2011
R:\Roadway\Proj\r2309ab_rdy_temp_pvmt_sht1.dgn
Florence & Hutcheson, Inc.

8/17/99

REVISIONS

Florence & Hutcheson
CONSULTING ENGINEERS
5121 Kingdom Way, Suite 100 Raleigh, NC 27607
NC License No: P-0258

PROJECT REFERENCE NO.	SHEET NO.
R-2309AB	2-N
R/W SHEET NO.	

ROADWAY DESIGN ENGINEER
NORTH CAROLINA PROFESSIONAL SEAL 16889 ENGINEER FRANKLIN ALLEN WILES
9/28/11

NORTH CAROLINA PROFESSIONAL SEAL 031484 ENGINEER VLADIMIR G. MITCHEV
10/10/11

PAVEMENT DESIGN ENGINEER

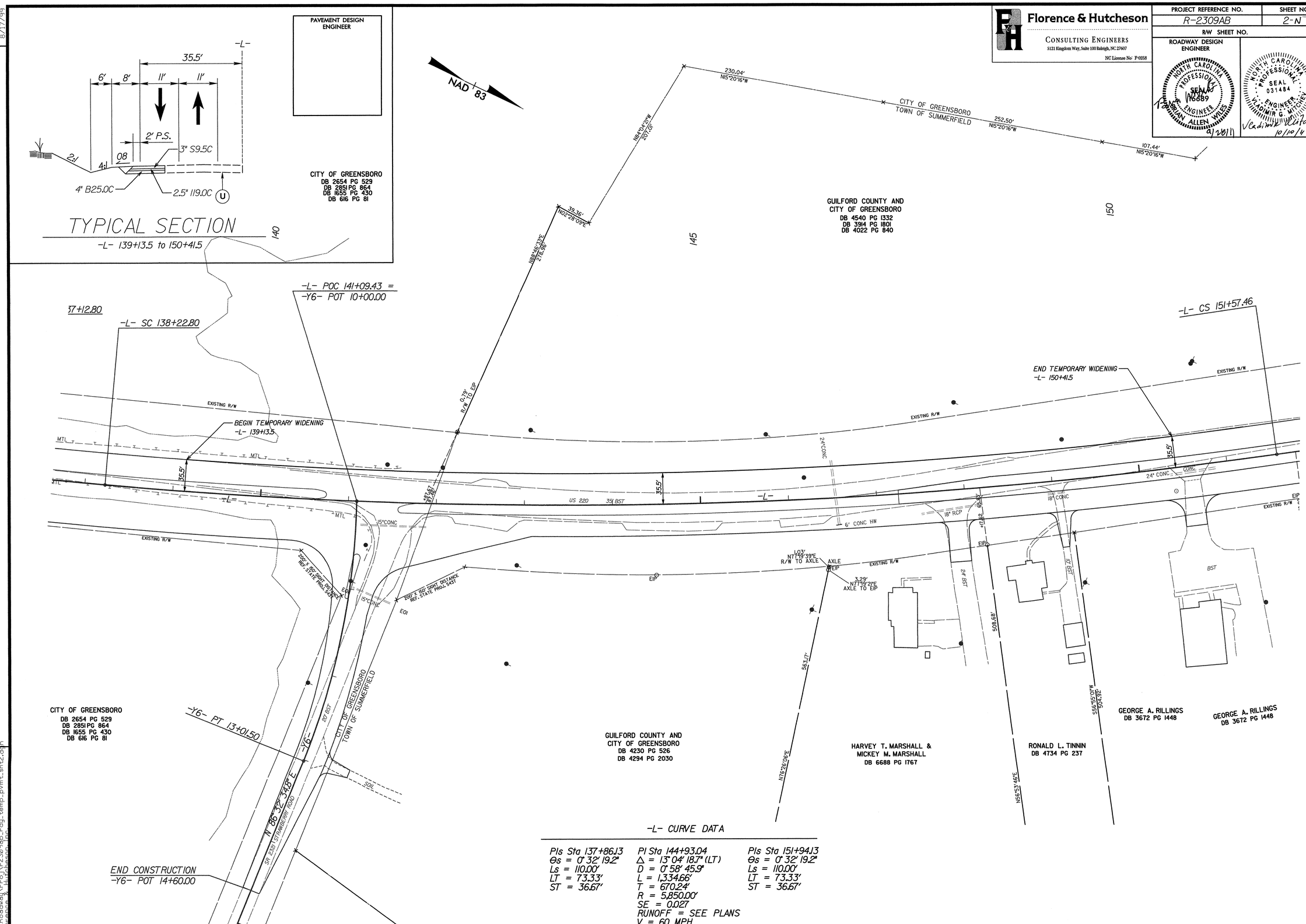

-L- CURVE DATA

Pls Sta 137+86.13	PI Sta 144+93.04	Pls Sta 151+94.13
Θs = 0° 32' 19.2"	Δ = 13° 04' 18.7" (LT)	Θs = 0° 32' 19.2"
Ls = 110.00'	D = 0° 58' 45.9"	Ls = 110.00'
LT = 73.33'	L = 1,334.66'	LT = 73.33'
ST = 36.67'	T = 670.24'	ST = 36.67'
	R = 5,850.00'	
	SE = 0.027	
	RUNOFF = SEE PLANS	
	V = 60 MPH	

9/22/2011
R:\RoadwayProj\r2309ab_rdy_temp_pvmt_sht2.dgn
Florence & Hutcheson, Inc.

8/17/99

REVISIONS

Florence & Hutcheson
CONSULTING ENGINEERS
5121 Kingsdown Way, Suite 100 Raleigh, NC 27607
NC License No: F-0258

PROJECT REFERENCE NO.	SHEET NO.
R-2309AB	2-O
R/W SHEET NO.	
ROADWAY DESIGN ENGINEER	

NORTH CAROLINA PROFESSIONAL SEAL 16689 ENGINEER BRIAN ALLEN WILES
10/10/11

NORTH CAROLINA PROFESSIONAL SEAL 031484 ENGINEER VLADIMIR G. MITCHEV
10/10/11

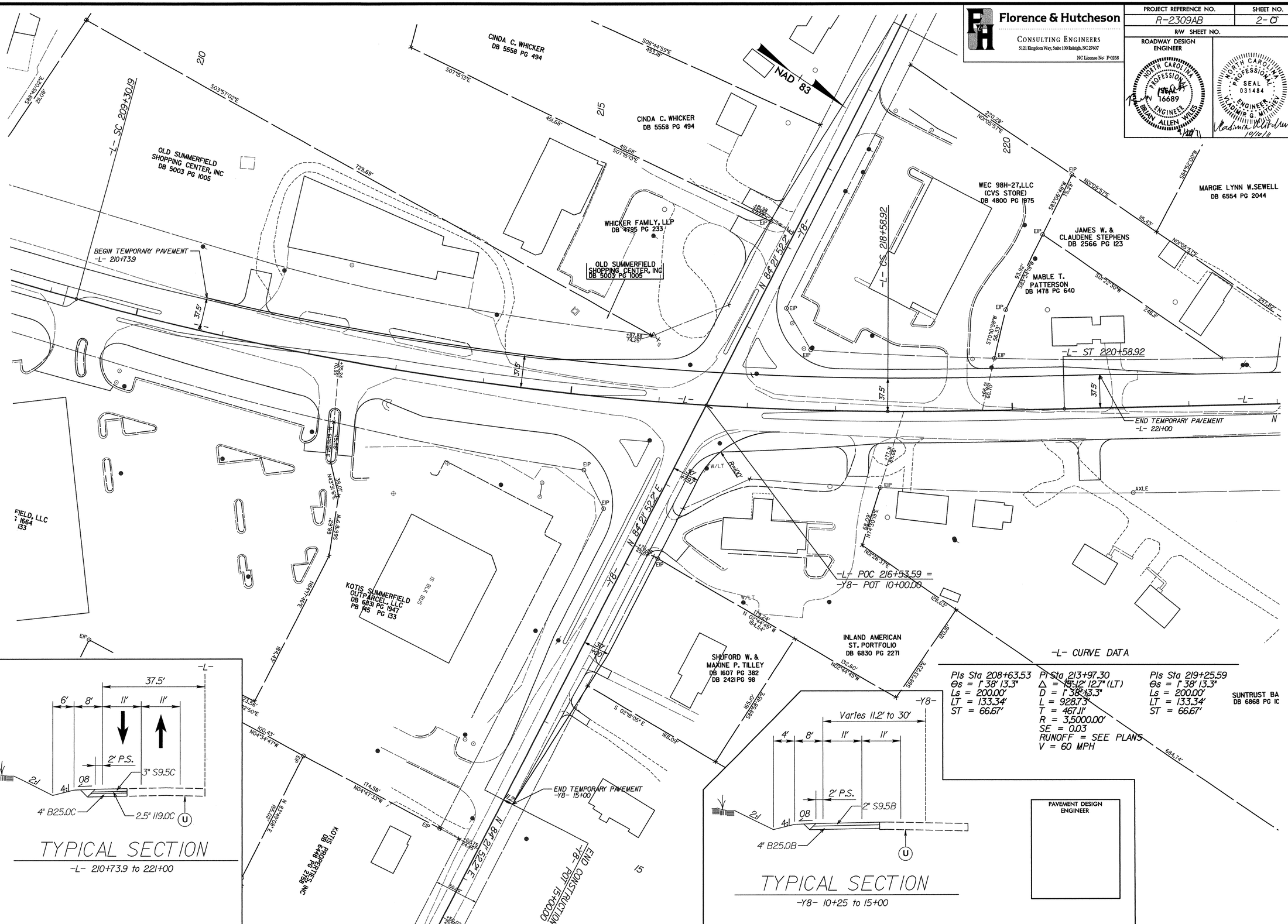

9/22/2011
R:\Hydraulics\Proj\r-2309ab_rdy_temp_pvmt_sht3.dgn
Florence & Hutcheson, Inc.

PROJECT REFERENCE NO.	SHEET NO.
R-2309AB	2-P
R/W SHEET NO.	

Florence & Hutcheson
CONSULTING ENGINEERS
5121 Kingdom Way, Suite 100 Raleigh, NC 27607
NC License No: F-0258

ROADWAY DESIGN ENGINEER
NORTH CAROLINA PROFESSIONAL SEAL 18689 ENGINEER BRIAN ALLEN WILLIS
9/20/11

NORTH CAROLINA PROFESSIONAL SEAL 031484 ENGINEER VLADIMIR G. MITCHEV
10/10/11

REVISIONS

8/17/99

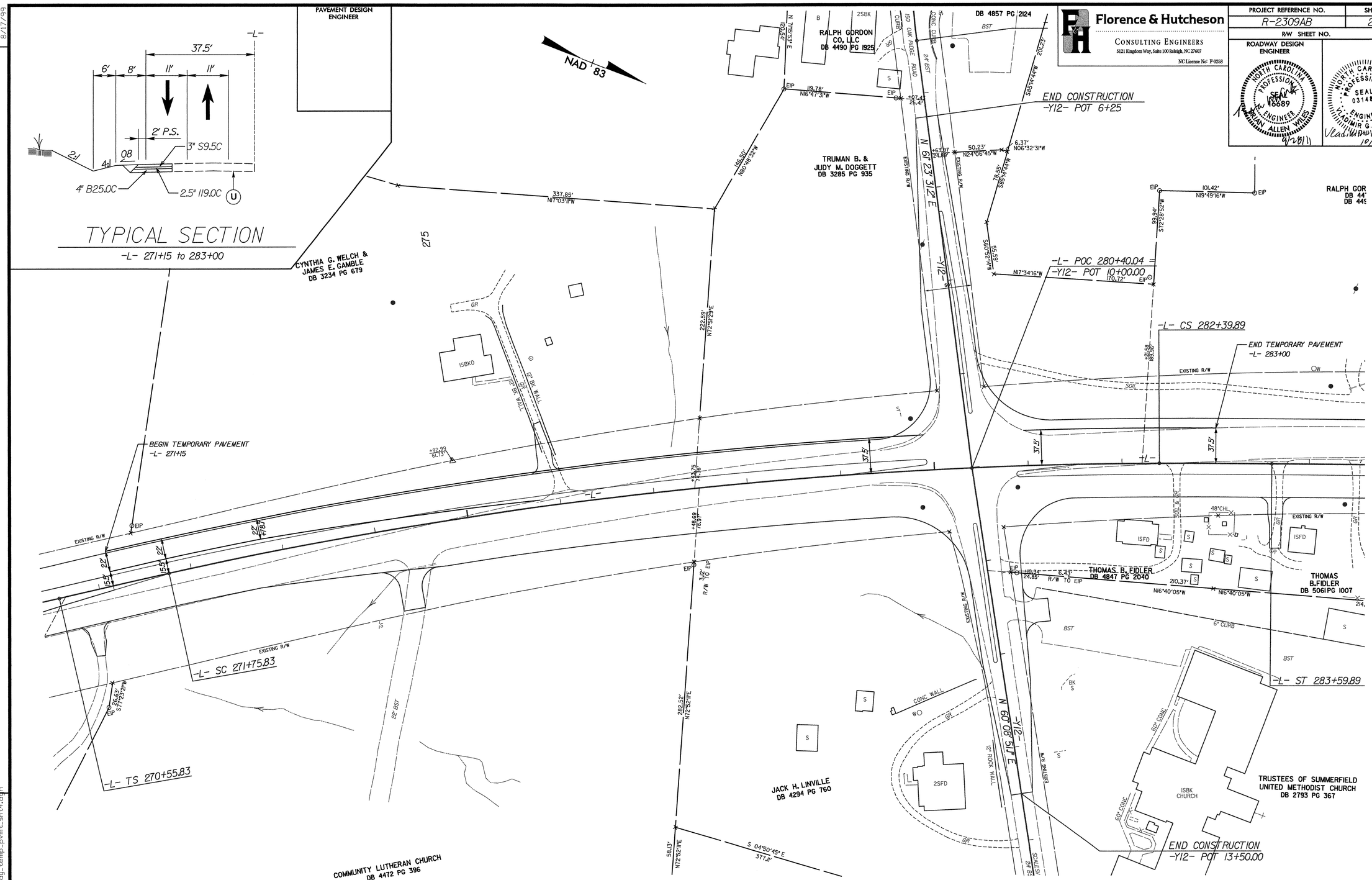

-Y12- CURVE DATA

PI Sta 4+73.37
Δ = 13° 34' 13.6" (LT)
D = 9° 32' 57.5"
L = 142.11'
T = 71.39'
R = 600.00'

-L- CURVE DATA

PIs Sta 271+35.83
Θs = 0° 41' 15.2"
Ls = 120.00'
LT = 80.00'
ST = 40.00'

PI Sta 277+09.88
Δ = 12° 11' 35.5" (RT)
D = 1° 08' 45.3"
L = 1064.06'
T = 534.05'
R = 5,000.00'
SE = 0.03
RUNOFF = SEE PLANS
V = 60 MPH

PIs Sta 282+79.89
Θs = 0° 41' 15.2"
Ls = 120.00'
LT = 80.00'
ST = 40.00'

8/23/2011
H:\Roadway\Proj\r2309ab_rdy_temp_pvmt_sht4.dgn

8/17/99

Florence & Hutcheson
CONSULTING ENGINEERS
5121 Kingsdom Way, Suite 100 Raleigh, NC 27607
NC License No: F-0258

PROJECT REFERENCE NO.	SHEET NO.
R-2309AB	2-Q
R/W SHEET NO.	

ROADWAY DESIGN ENGINEER: NORTH CAROLINA PROFESSIONAL SEAL 10589 ENGINEER BRIAN ALLEN WILES 10/24/11

HYDRAULICS ENGINEER: NORTH CAROLINA PROFESSIONAL SEAL 19732 ENGINEER STEPHEN E. FLEI 10-24-2011

DETAIL A
LATERAL 'V' DITCH
(Not to Scale)

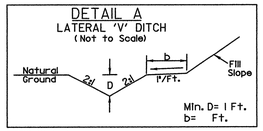

SHEET	RDWY	STATION - STATION	B	SIDE
27	-Y-	5+70 - 6+00	2'	RT.

DETAIL B
LATERAL 'V' DITCH
(Not to Scale)

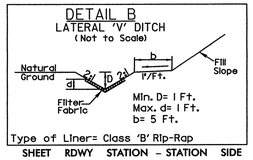

Type of Liner= Class 'B' Rip-Rap

SHEET	RDWY	STATION - STATION	SIDE
15	-L-	169+15 - 170+30	RT.

DETAIL C
SPECIAL CUT DITCH
(Not to Scale)

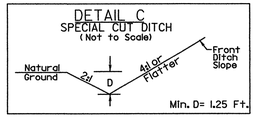

SHEET	RDWY	STATION - STATION	SIDE
8,9	-L-	83+50 - 88+00	LT.
8	-Y3-	11+75 - 12+94	LT.
16	-L-	184+00 - 185+00	LT.
22	-L-	258+50 - 260+00	RT.
22	-L-	261+50 - 262+00	RT.
25,26	-L-	304+50 - 307+00	LT.
25	-Y14-	11+00 - 11+85	RT.
25	-Y14-	11+00 - 13+00	LT.
25	-Y14A-	10+38 - 13+00	LT.
26	-Y15-	11+50 - 12+00	LT.
27	-Y-	0+50 - 3+10	RT.

DETAIL D
TOE PROTECTION
(Not to Scale)

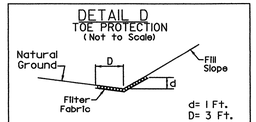

Type of Liner= Class 'B' Rip Rap

SHEET	RDWY	STATION - STATION	SIDE
6	-L-	52+50 - 55+60	RT.
6	-L-	56+30 - 57+65	LT.
10	-L-	101+00 - 101+75	RT.
11	-L-	121+30 - 121+65	LT.
15	-L-	165+75 - 168+30	RT.
16	-L-	179+73 - 182+50	RT.
17	-L-	200+05 - 201+90	LT.
17	-L-	200+50 - 201+03	RT.
20	-L-	229+50 - 230+50	LT.
20	-L-	231+25 - 231+70	RT.
20	-L-	234+00 - 235+00	RT.
21	-L-	247+00 - 247+70	LT.
22	-L-	266+39 - 267+00	LT.
23	-L-	267+00 - 269+30	LT.
23	-L-	269+06 - 269+65	RT.
23	-L-	276+50 - 277+30	LT.
24	-L-	286+50 - 287+20	LT.
25	-L-	294+35 - 297+50	LT.
25	-L-	294+10 - 296+15	RT.

DETAIL E
BERM DITCH
(Not to Scale)

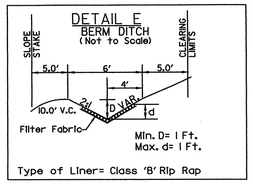

Type of Liner= Class 'B' Rip Rap

SHEET	RDWY	STATION - STATION	SIDE
5,6	-L-	38+80 - 47+60	LT.
14,15	-L-	158+05 - 163+30	RT.

DETAIL F
PREFORMED SCOUR HOLE
W/ LEVEL SPREADER
(Not to Scale)

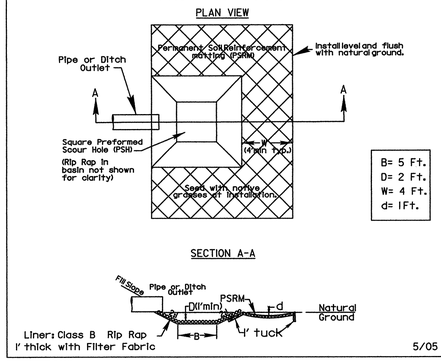

B= 5 Ft.
D= 2 Ft.
W= 4 Ft.
d= 1Ft.

SHEET	RDWY	STATION - STATION	SIDE
14	-L-	154+05	LT.
18	-L-	209+43	LT.
21	-L-	242+92	RT.
21	-L-	248+88	LT.

DETAIL G
TOE PROTECTION
(Not to Scale)

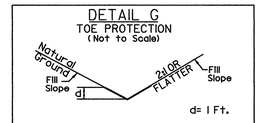

Type of Liner= PSRM

SHEET	RDWY	STATION - STATION	SIDE
4	-Y-	6+00 - 7+05	RT.
4	-L-	29+65 - 30+08	LT.
5	-L-	35+00 - 37+20	LT.
6	-L-	48+50 - 51+65	LT.
7	-L-	68+90 - 69+50	RT.
7,8	-Y1- &-L-	8+50 - 72+70	LT.
8	-L-	76+00 - 78+20	LT.
8	-Y3-&-L-	11+05 - 84+00	RT.
10	-L-	98+50 - 100+90	LT.
10	-L-	102+00 - 104+65	LT.
10	-L-	106+75 - 108+50	LT.
11	-L-	115+05 - 117+00	LT.
27	-Y-	2+80 - 4+20	RT.

DETAIL H
BERM DITCH
(Not to Scale)

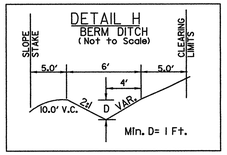

SHEET	RDWY	STATION - STATION	SIDE
5	-L-	37+60 - 38+80	LT.

DETAIL J
PIPE OUTLET CHANNEL
(Not to Scale)

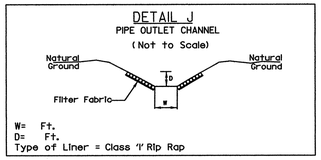

W= Ft.
D= Ft.
Type of Liner = Class 'I' Rip Rap

SHEET	RDWY	STATION - STATION	SIDE	W	D
6	-L-	56+20	LT.	6'	5'
23	-L-	276+80	RT.	7'	5'

DETAIL K
STANDARD BASE DITCH
(Not to Scale)

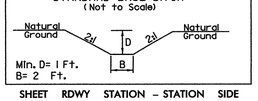

SHEET	RDWY	STATION - STATION	SIDE
8	-Y3-	11+75 - 11+90	RT.

DETAIL L
STANDARD BASE DITCH
(Not to Scale)

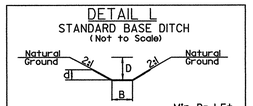

Type of Liner= PSRM

SHEET	RDWY	STATION - STATION	SIDE
8	-L-	75+70 - 76+80	RT.

DETAIL N
LATERAL 'V' DITCH
(Not to Scale)

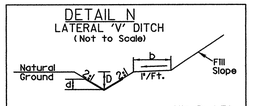

Type of Liner= PSRM

SHEET	RDWY	STATION - STATION	SIDE
9	-L-	88+00 - 89+20	LT.

DETAIL O
STANDARD 'V' DITCH
(Not to Scale)

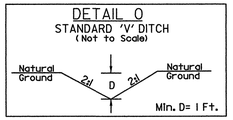

SHEET	RDWY	STATION - STATION	SIDE
7	-L-	64+30 - 65+10	RT.
7	-L-	67+65 - 67+85	RT.
9	-L-	95+60	LT.

DETAIL P
SPECIAL CUT BASE DITCH
(Not to Scale)

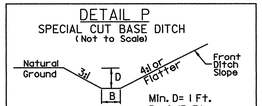

SHEET	RDWY	STATION - STATION	SIDE
11	-L-	122+00 - 122+50	LT.

DETAIL Q
SPECIAL CUT DITCH
(Not to Scale)

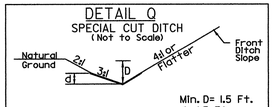

Type of Liner= PSRM

SHEET	RDWY	STATION - STATION	SIDE
10	-L-	108+50 - 110+50	LT.
25	-Y14A-	12+00 - 15+00	RT.

DETAIL R
SPECIAL CUT DITCH W/HINGE
(Not to Scale)

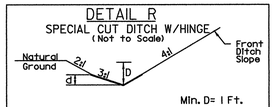

Type of Liner= PSRM

SHEET	RDWY	STATION - STATION	SIDE
10,11	-L-	110+50 - 113+20	LT.

DETAIL S
SPECIAL CUT DITCH w/HINGE
(Not to Scale)

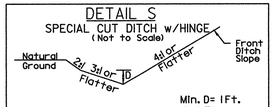

SHEET	RDWY	STATION - STATION	SIDE
11,12	-L-	122+50 - 130+76	LT.
12	-Y5-	13+00 - 13+95	LT.
20	-L-	234+57 - 235+67	LT.
20,21	-L-	240+00 - 242+35	LT.
21	-L-	242+35 - 245+55	LT.
22	-L-	256+50 - 258+50	RT.
22	-L-	262+00 - 265+50	RT.
22,23	-L-	265+50 - 268+65	RT.
24	-L-	282+50 - 285+34	LT.
25	-L-	298+45 - 300+32	LT.
25	-L-	303+50 - 306+75	RT.
26	-L-	307+35 - 310+10	RT.
19	-Y8-	8+27 - 9+46	RT.
19	-Y8-	5+70 - 6+50	RT.
28	-Y8-	14+00 - 14+98	LT.

DETAIL T
SPECIAL CUT DITCH
(Not to Scale)

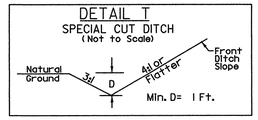

SHEET	RDWY	STATION - STATION	SIDE
13	-L-	143+00 - 145+00	RT.
13	-Y6-	13+15 - 14+00	LT.

DETAIL U
LATERAL 'V' DITCH
(Not to Scale)

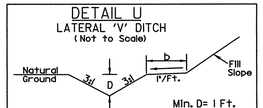

SHEET	RDWY	STATION - STATION	SIDE
13	-L-	141+65 - 143+00	RT.
13	-Y6-	11+11 - 12+80	LT.

DETAIL V
TOE PROTECTION
(Not to Scale)

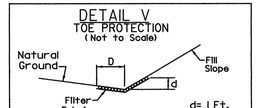

Type of Liner= Class 'I' Rip Rap

SHEET	RDWY	STATION - STATION	SIDE
15	-L-	167+10 - 168+30	LT.

DETAIL W
LATERAL BASE DITCH
(Not to Scale)

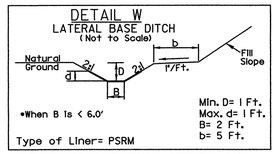

Type of Liner= PSRM

SHEET	RDWY	STATION - STATION	SIDE
6	-L-	53+30 - 56+20	LT.

DETAIL X
STANDARD BASE DITCH
(Not to Scale)

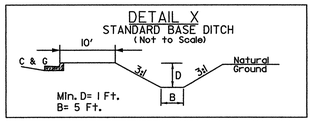

SHEET	RDWY	STATION - STATION	SIDE
7	-L-	59+50 - 64+50	RT.

DETAIL B-2
LATERAL BASE DITCH
(Not to Scale)

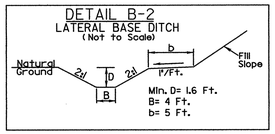

SHEET	RDWY	STATION - STATION	SIDE
26	-L-	307+50 - 311+80	LT. (B=2')
26	-L-	311+80 - 313+93	LT.
26	-L-	313+78 - 315+50	RT. (D=1')

DETAIL C-2
LATERAL BASE DITCH
(Not to Scale)

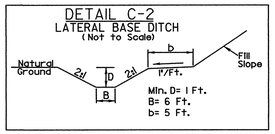

SHEET	RDWY	STATION - STATION	SIDE
22	-L-	260+00 - 261+50	RT.

DETAIL D-2
LATERAL BASE DITCH
(Not to Scale)

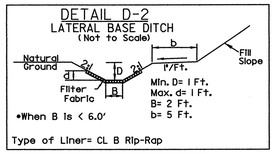

Type of Liner= CL B Rip-Rap

SHEET	RDWY	STATION - STATION	SIDE
15	-L-	168+60 - 170+00	LT.
18	-L-	209+50 - 210+60	LT.
20	-L-	233+62 - 233+95	LT.
26	-L-	315+50 - 315+90	RT.

DETAIL E-2
LATERAL BASE DITCH
(Not to Scale)

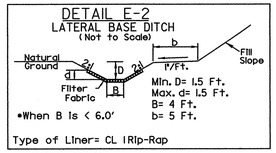

Type of Liner= CL 1Rip-Rap

SHEET	RDWY	STATION - STATION	SIDE
16	-L-	176+85 - 178+93	LT.
16	-L-	178+84 - 179+60	RT. (D=2')
20	-L-	231+80 - 233+80	RT.
21	-L-	245+85 - 249+80	RT.

DETAIL I
FALSE SUMP
(Not to Scale)

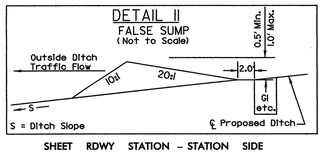

SHEET	RDWY	STATION - STATION	SIDE
7	-L-	64+75	RT.
10	-L-	98+50	RT.
10	-L-	100+60	RT.
12	-L-	130+85	LT.
27	-Y-	3+34	RT.
18	-L-	210+87	LT.
18	-L-	213+65	LT.
19	-L-	216+10	LT.
20	-L-	239+10	RT.
21	-L-	253+50	LT.
21	-Y11-	10+84	RT.
22	-L-	266+78	RT.
23	-L-	278+33	LT.
24	-L-	279+52	LT.
26	-L-	307+12	LT.

DETAIL III
FALSE SUMP
(Not to Scale)

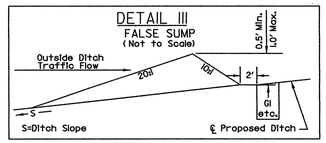

SHEET	RDWY	STATION - STATION	SIDE
10	-L-	105+30	LT.
11	-L-	113+25	LT.
13	-L-	146+60	RT.
14	-L-	157+95	RT.
16	-L-	176+50	LT.
16	-L-	183+77	LT.
16	-L-	188+25	LT.
17	-L-	190+35	RT.
17	-L-	191+09	RT.
19	-L-	227+60	LT.
20	-L-	229+36	LT.
20	-Y10-	11+07	RT.
21	-L-	246+55	LT.
21	-L-	250+38	RT.
21	-L-	252+85	RT.
23	-L-	273+33	LT.
24	-Y12-	9+09	LT.
24	-Y12-	10+86	LT.
24	-L-	282+60	RT.
24	-L-	291+93	LT.

DETAIL F-2
SPECIAL FALSE CUT
(Not to Scale)

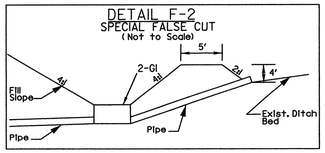

SHEET	RDWY	STATION - STATION	SIDE
20	-L-	239+50 - 240+50	LT.

DETAIL G-2
STANDARD BASE DITCH
(Not to Scale)

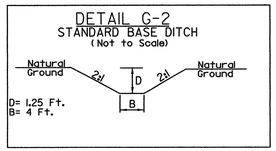

SHEET	RDWY	STATION - STATION	SIDE
22	-L-	260+90	LT.

DETAIL H-2
SP. BERM 'V' DITCH
(Not to Scale)

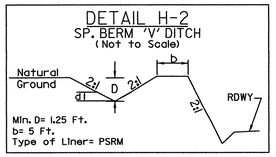

SHEET	RDWY	STATION - STATION	SIDE
23	-L-	269+60 - 272+00	LT.

DETAIL I-2
DITCH CLEANOUT
(Not to Scale)

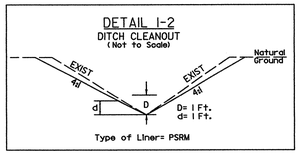

SHEET	RDWY	STATION - STATION	SIDE
18	-L-	202+50 - 203+60	LT.
18	-L-	204+20 - 206+05	LT.

DETAIL J-2
STANDARD BASE DITCH
(Not to Scale)

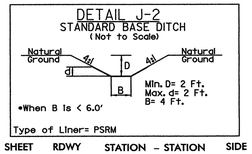

Type of Liner= PSRM

SHEET	RDWY	STATION - STATION	SIDE
26	-L-	313+93	LT.

DETAIL M
'V' DITCH BEHIND NOISE WALL
(Not to Scale)

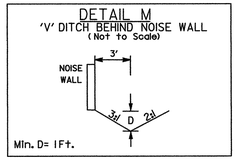

SHEET	RDWY	STATION - STATION	SIDE
21, 22	-L-	251+75 TO 255+50	RT.
22	-L-	256+00 TO 257+40	RT.
22	-L-	265+00 TO 267+00	RT.
23	-L-	267+25 TO 268+60	RT.

DETAIL Y
TYP. BACK OF CURB 'V' CUT DITCH
(NOT TO SCALE)

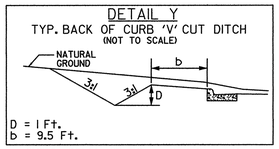

SHEET	RDWY	STATION - STATION	SIDE
27	-Y-	1+50 - 2+50	RT.
27	-Y-	4+20 - 5+15	RT.

DETAIL Z
CUT DITCH
(Not to Scale)

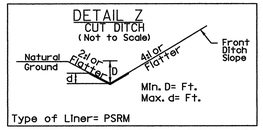

SHEET	RDWY	STATION - STATION	SIDE
7	-Y1-	11+00 - 12+70	LT.

10/21/2011
H:\Roadway\Proj\2309ab_rdy_typ_ditches.dgn
Florence & Hutcheson, Inc.

8/17/99

NOTE: RIP RAP SHALL NOT BE PLACED IN STREAM BED

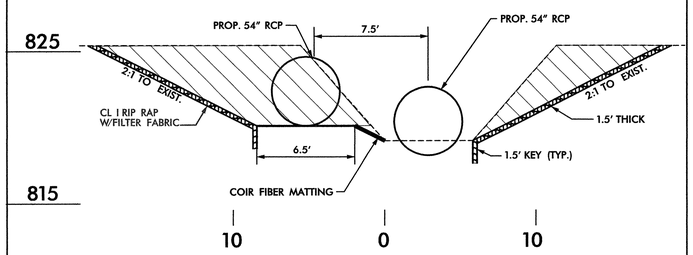

DETAIL AA-2
INLET CHANNEL IMPROVEMENT

SHT. 20 STA. 233+45 -L- LT.

EST. 85 TONS CL I RIPRAP
EST. 130 CY DDE
EST. 45 SY COIR FIBER MATTING
EST. 120 SY FF

NOTE: RIP RAP SHALL NOT BE PLACED IN STREAM BED

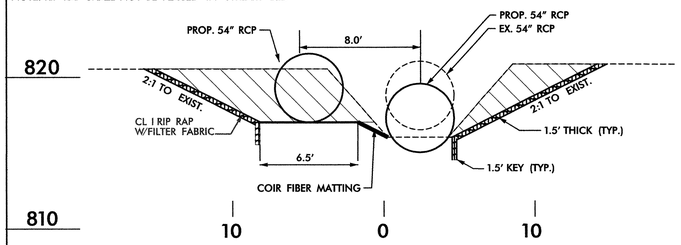

DETAIL BB-2
OUTLET CHANNEL IMPROVEMENT

SHT. 20 STA. 233+85 -L- RT.

EST. 60 TONS CL I RIPRAP
EST. 80 SY FF
EST. 80 CY DDE
EST. 45 SY COIR FIBER MATTING

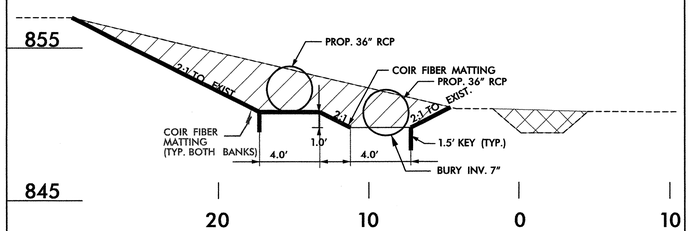

NOTE: RIP RAP SHALL NOT BE PLACED IN STREAM BED

DETAIL CC-2
INLET CHANNEL IMPROVEMENT

SHT. 25 STA. 294+22 -L- LT.

EST. 85 CY DDE
EST. 130 SY COIR FIBER MATTING
EST. 15 CY FILL

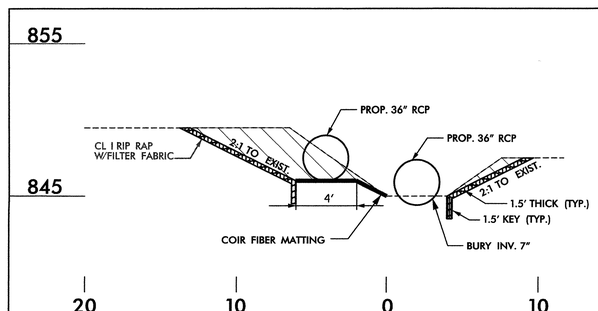

NOTE: RIP RAP SHALL NOT BE PLACED IN STREAM BED

DETAIL DD-2
OUTLET CHANNEL IMPROVEMENT

SHT. 25 STA. 296+55 -L- RT.

EST. 25 TONS CL I RIPRAP
EST. 35 SY FF
EST. 30 CY DDE
EST. 25 SY COIR FIBER MATTING

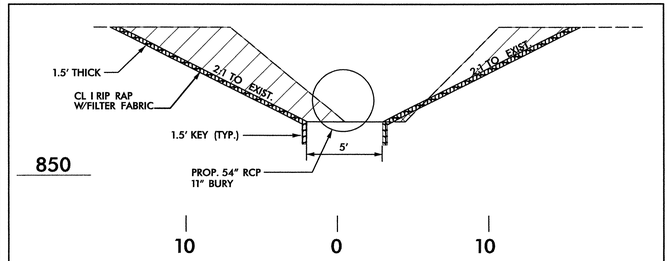

DETAIL EE-2
INLET CHANNEL IMPROVEMENT

SHT. 22 STA. 266+20 -L- LT.

EST. 55 TONS CL I RIPRAP
EST. 75 SY FF
EST. 40 CY DDE

NOTE: RIP RAP SHALL NOT BE PLACED IN STREAM BED

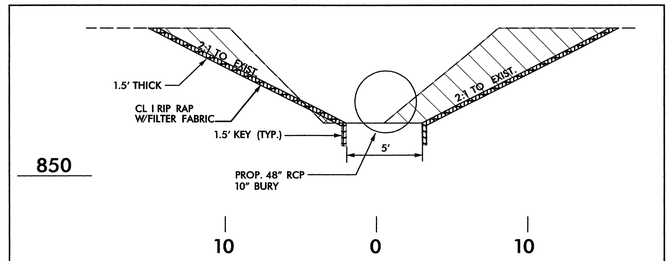

DETAIL FF-2
INLET CHANNEL IMPROVEMENT

SHT. 23 STA. 269+90 -L- RT.

EST. 75 TONS CL I RIPRAP
EST. 105 SY FF
EST. 55 CY DDE

NOTE: RIP RAP SHALL NOT BE PLACED IN STREAM BED

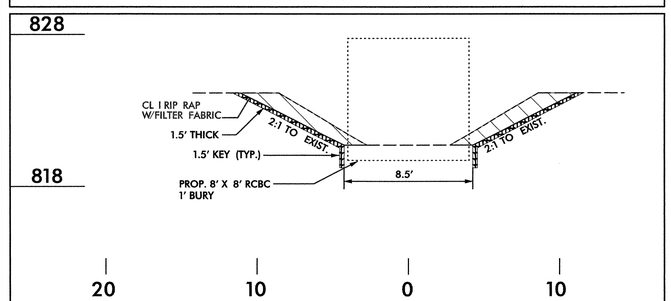

NOTE: RIP RAP SHALL NOT BE PLACED IN STREAM BED

DETAIL GG-2
OUTLET CHANNEL IMPROVEMENT

SHT. 21 STA. 246+15 -L- RT.

EST. 50 TNS CL I RIPRAP
EST. 65 SY FF
EST. 25 CY DDE

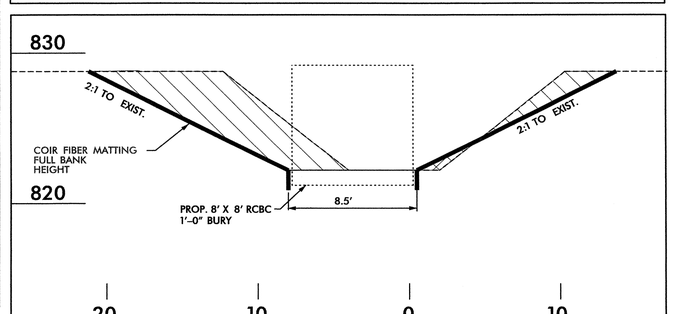

NOTE: RIP RAP SHALL NOT BE PLACED IN STREAM BED

DETAIL HH-2
INLET CHANNEL IMPROVEMENT

SHT. 21 STA. 247+80 -L- LT.

EST. 180 SY COIR FIBER MATTING
EST. 135 CY DDE
EST. 10 CY FILL

LEGEND

EXCAVATION

FILL

Florence & Hutcheson
CONSULTING ENGINEERS
5121 Kingdom Way, Suite 100 Raleigh, NC 27607
NC License No: F-0258

PROJECT REFERENCE NO.	SHEET NO.
R-2309AB	2-R
R/W SHEET NO.	

ROADWAY DESIGN ENGINEER: NORTH CAROLINA PROFESSIONAL SEAL 16689 ENGINEER BRIAN ALLEN WILES 9/28/11

HYDRAULICS ENGINEER: NORTH CAROLINA PROFESSIONAL SEAL 19732 ENGINEER KITCHEN FLH 9-28-2011

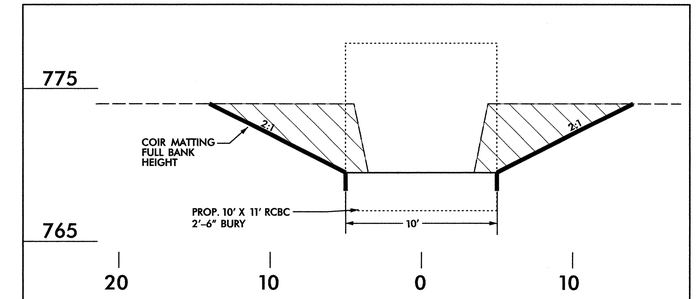

DETAIL AA
INLET CHANNEL IMPROVEMENT

SHT. 6 STA. 56+34 -L- LT.

EST. 95 SY COIR FIBER MATTING
EST. 90 CY DDE

NOTE: RIP RAP SHALL NOT BE PLACED IN STREAM BED

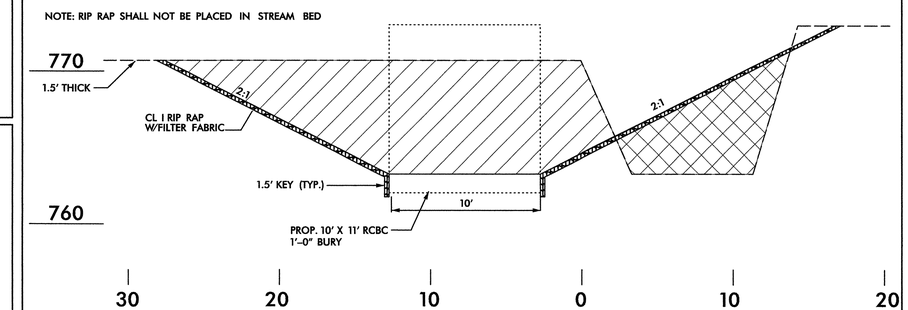

DETAIL BB
OUTLET CHANNEL IMPROVEMENT

SHT. 6 STA. 56+40 -L- RT.

EST. 185 TONS CL I RIPRAP
EST. 115 CY FILL
EST. 260 SY FF
EST. 385 CY DDE

825

EST. 25 TONS CL I RIPRAP
EST. 40 SY FF
EST. 10 CY DDE

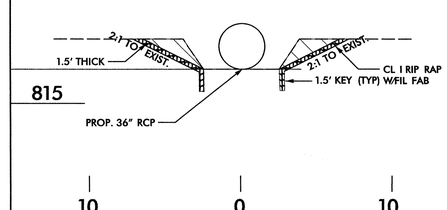

DETAIL JJ-2
OUTLET CHANNEL IMPROVEMENT

SHT. 20 STA. 239+60 -L- RT.

NOTE: RIP RAP SHALL NOT BE PLACED IN STREAM BED

7/31/2011
R:\Roadway\Proj\r2309ab_rdy_tup_ditches.dgn
Florence & Hutcheson, Inc.

GENERAL NOTES:
1- REINFORCING STEEL SHALL BE CONSIDERED INCIDENTAL TO THE HEADWALL AND SHALL BE PAID FOR ON YD^3 BASIS.
2- CONCRETE SHALL BE CLASS "B" THROUGHOUT STRUCTURE.
3- DELETE REINFORCING STEEL WHEN BRICK ALTERNATE IS USED.

BASIN #		1	2	3	4	5
SLUICE GATE DIMENSIONS						
PIPE DIAMETER	A	30"	30"	18"	30"	18"
GATE DIAMETER	B	38¾"	38¾"	25"	38¾"	25"
HEADWALL HT.	C	6'3"	6'3"	3'9"	6'3"	3'9"
FRAME HEIGHT	D	60"	60"	36"	60"	36"
INVERT HEIGHT	E	10"	10"	10"	10"	10"
HEADWALL WIDTH	F	9'2"	9'2"	6'4"	9'2"	6'4"
HEADWALL DIMENSIONS						
PIPE DIAMETER	A	30"	30"	18"	30"	18"
HEADWALL HT.	G	7'1"	7'1"	4'7"	7'1"	4'7"
FOOTING DEPTH	H	2'6"	2'6"	18"	2'6"	18"
HEADWALL DEP.	I	5'6"	5'6"	4'6"	5'6"	4'6"

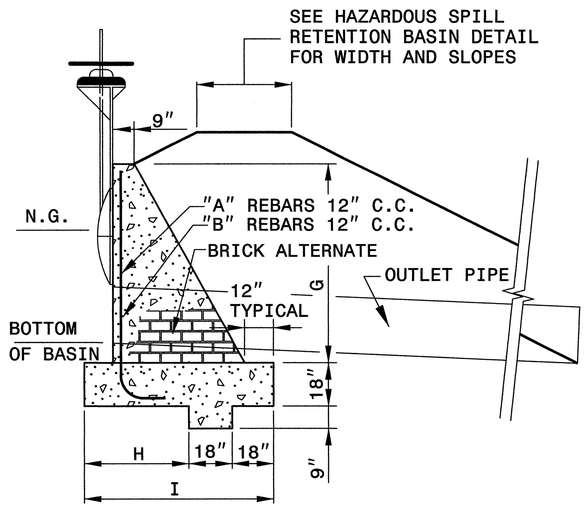

SECTION VIEW

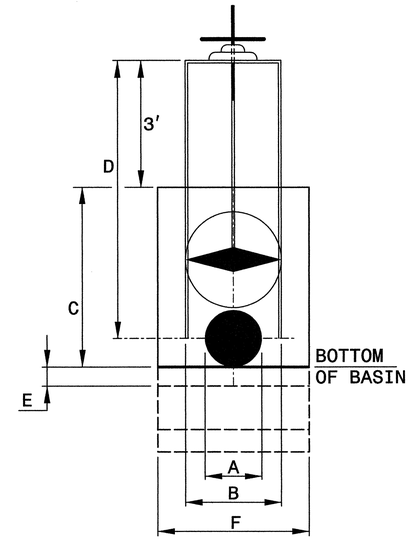

ELEVATION VIEW

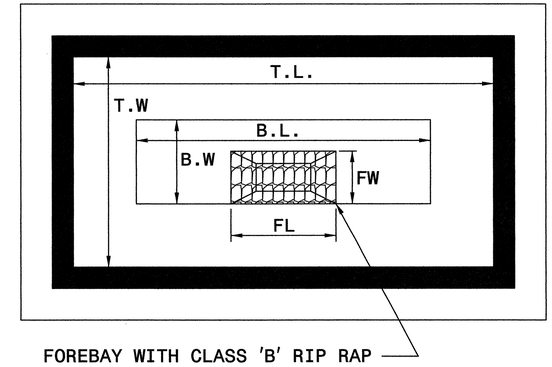

PLAN VIEW OF BASIN

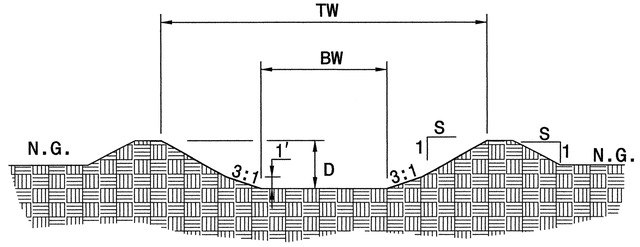

CROSS SECTION VIEW OF BASIN

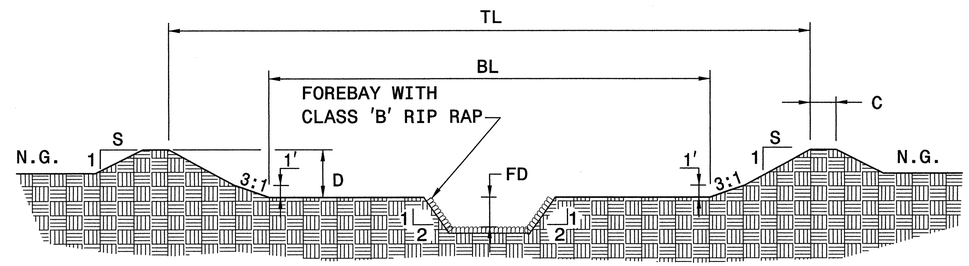

CROSS SECTION VIEW OF BASIN

HAZARDOUS SPILL RETENTION BASIN														FOREBAY DIMENSION		
BASIN #	PIPE SIZE	TOP ELEV.	BOTTOM ELEV	T.W. (ft)	B.W. (ft)	D (ft)	T.L. (ft)	B.L. (ft)	S	C (ft)	*G (CY)	CAPACITY (cu. ft.)	STATION	FL (ft)	FW (ft)	FD (ft)
1	30"	779	774	97	75	5	72-97	50-75	2	2	100	30800	-L- 57+13 LT.	40	20	3
2	30"	760	753.5	58	30	6.5	78	50	2	5	110	17600	-L- 112+60 RT.	30	15	3
3	18"	746.5	N/A	N/A	N/A	N/A	N/A	N/A	2	2	0	6500	-L- 118+50 LT.	N/A	N/A	N/A
4	30"	748	744	33	15	4	58	48	2	2	180	16000	-L- 121+70 LT.	N/A	N/A	N/A
5	18"	750.8	745.8	42	20	5	62	40	2	2	160	7500	-L- 142+25 LT.	20	12	3

*G DENOTES EXCAVATION AMOUNT.

NOTE: SEE PLAN SHEET FOR LOCATION OF OUTLET PIPE WITH SLUICE GATE.

** Provided at new and/or improved roadway sections to aid in containment and clean up of accidental spills by truck traffic. Basins are provided in particular locations including areas in proximity to sensitive waters and water supplies.

NORTH CAROLINA PROFESSIONAL SEAL 019732 ENGINEER SHIHCHEN FUH

10-21-2011

DESIGN SERVICES UNIT
STANDARDS AND SPECIAL DESIGN
Office 919-250-4128 FAX 919-250-4119

HAZARDOUS SPILL RETENTION BASIN

ORIGINAL BY: DATE:
MODIFIED BY: DATE:
CHECKED BY: DATE:
FILE SPEC.:

5/14/99
10/19/2011
R:\Roadway\Proj\hazsple.dgn
Florence & Hutchison, Inc.

PROJECT REFERENCE NO.	SHEET NO.
R-2309AB	2-F
R/W SHEET NO.	
ROADWAY DESIGN ENGINEER	

Florence & Hutcheson
CONSULTING ENGINEERS
5121 Kingdom Way, Suite 100 Raleigh, NC 27607
NC License No: F-0258

NORTH CAROLINA PROFESSIONAL SEAL 16889 ENGINEER BRIAN ALLEN WILES
10/3/11

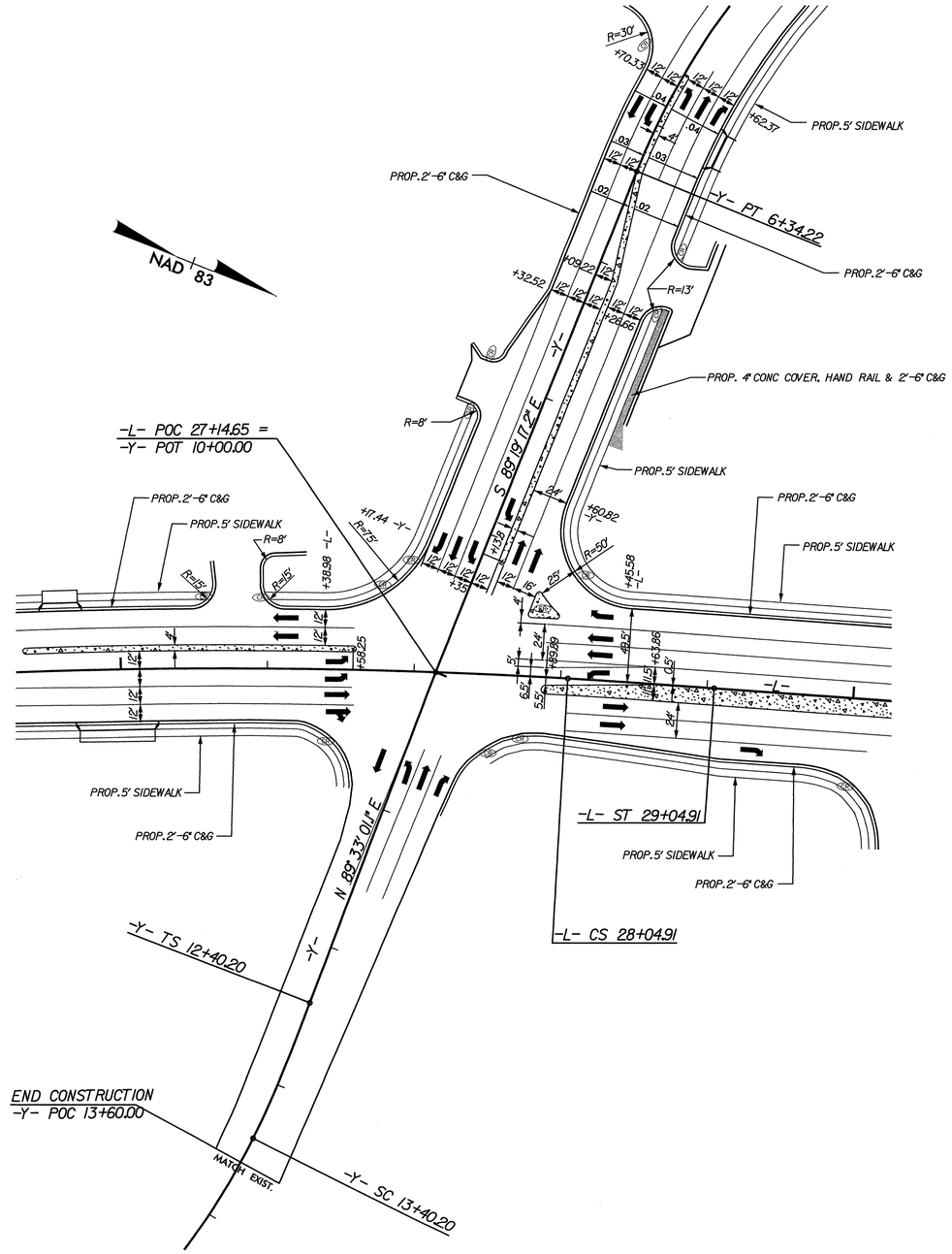

US 220 (-L-)/HORSEPEN CREEK ROAD (-Y-)
INTERSECTION DETAIL
INTERSECTION DETAIL SHOWN FROM PLAN SHEET 4

NOTES:
1. ALL PROPOSED COMMERCIAL DRIVEWAY RADII 20 FT UNLESS OTHERWISE SHOWN. ALL RESIDENTIAL DRIVEWAY RADII 10 FT UNLESS OTHERWISE SHOWN.
2. ALL ISLAND RADII 2 FT UNLESS OTHERWISE SHOWN.
3. PROPOSED DRIVEWAY WIDTHS AT END OF RADII 16 FT UNLESS OTHERWISE SHOWN. TAPER DRIVEWAY TO EXISTING DRIVEWAY WIDTH.

LEGEND
PAVED SHOULDER
PROPOSED MONOLITHIC ISLAND

REVISIONS

8/17/99

10/1/2011
R:\Roadway\Proj\r2309ab_rdy_details.dgn
Florence & Hutcheson, Inc.

8/17/99

REVISIONS

Florence & Hutcheson CONSULTING ENGINEERS 5121 Kingdom Way, Suite 100 Raleigh, NC 27607 NC License No: F-0258	PROJECT REFERENCE NO.	SHEET NO.
	R-2309AB	2-U
	R/W SHEET NO.	
	ROADWAY DESIGN ENGINEER NORTH CAROLINA PROFESSIONAL SEAL 016689 ENGINEER BRIAN ALLEN WILES 9/28/11	

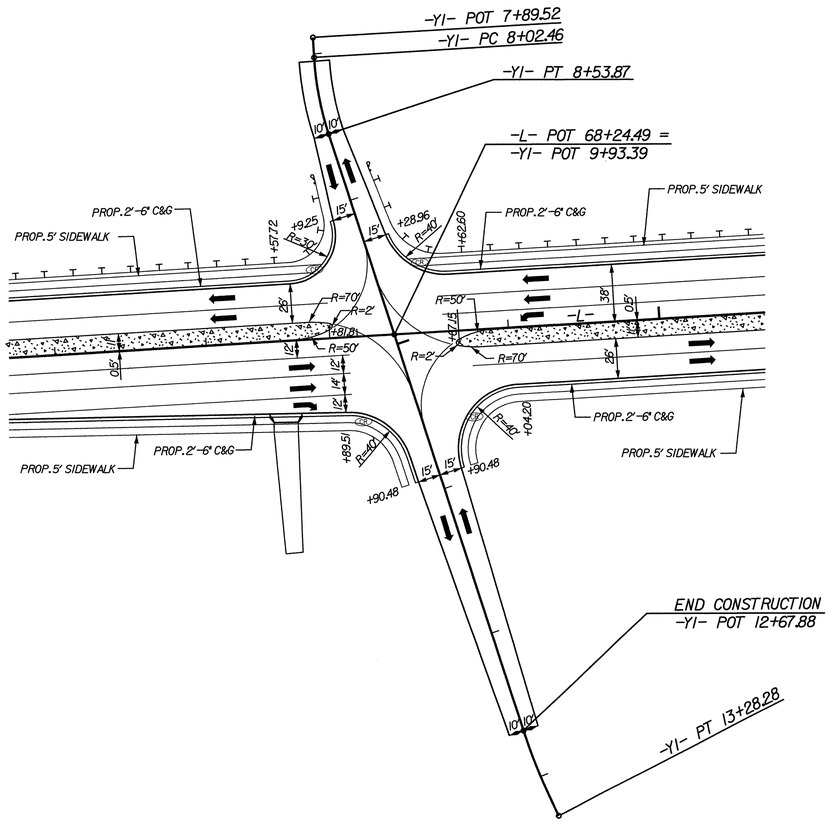

US 220 (-L-)/BRANDT LAKE CT (-Y1-)
INTERSECTION DETAIL
INTERSECTION DETAIL SHOWN FROM PLAN SHEET 7

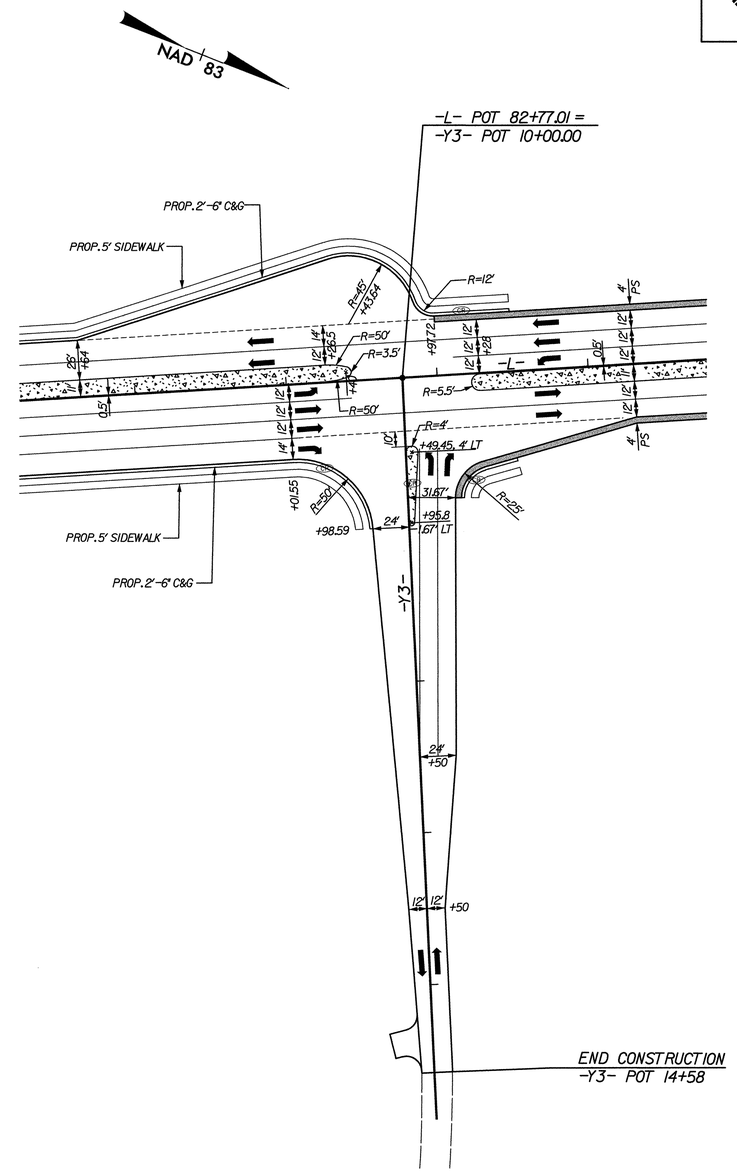

US 220 (-L-)/OWLS ROOST ROAD (-Y3-)
INTERSECTION DETAIL
INTERSECTION DETAIL SHOWN FROM PLAN SHEET 8

NOTES:
1. ALL PROPOSED COMMERCIAL DRIVEWAY RADII 20 FT UNLESS OTHERWISE SHOWN. ALL RESIDENTIAL DRIVEWAY RADII 10 FT UNLESS OTHERWISE SHOWN.

2. ALL ISLAND RADII 2 FT UNLESS OTHERWISE SHOWN.

3. PROPOSED DRIVEWAY WIDTHS AT END OF RADII 16 FT UNLESS OTHERWISE SHOWN. TAPER DRIVEWAY TO EXISTING DRIVEWAY WIDTH.

LEGEND
PAVED SHOULDER
PROPOSED MONOLITHIC ISLAND

9/8/2011
R:\Roadway\Proj\r2309ab_rdy_details.dgn
Florence & Hutcheson, Inc.

PROJECT REFERENCE NO.	SHEET NO.
R-2309AB	2-V
R/W SHEET NO.	

Florence & Hutcheson
CONSULTING ENGINEERS
5121 Kingdom Way, Suite 100 Raleigh, NC 27607
NC License No: F-0258

ROADWAY DESIGN ENGINEER

NORTH CAROLINA PROFESSIONAL ENGINEER SEAL 16689 BRIAN ALLEN WILES

1/28/11

REVISIONS

8/17/99

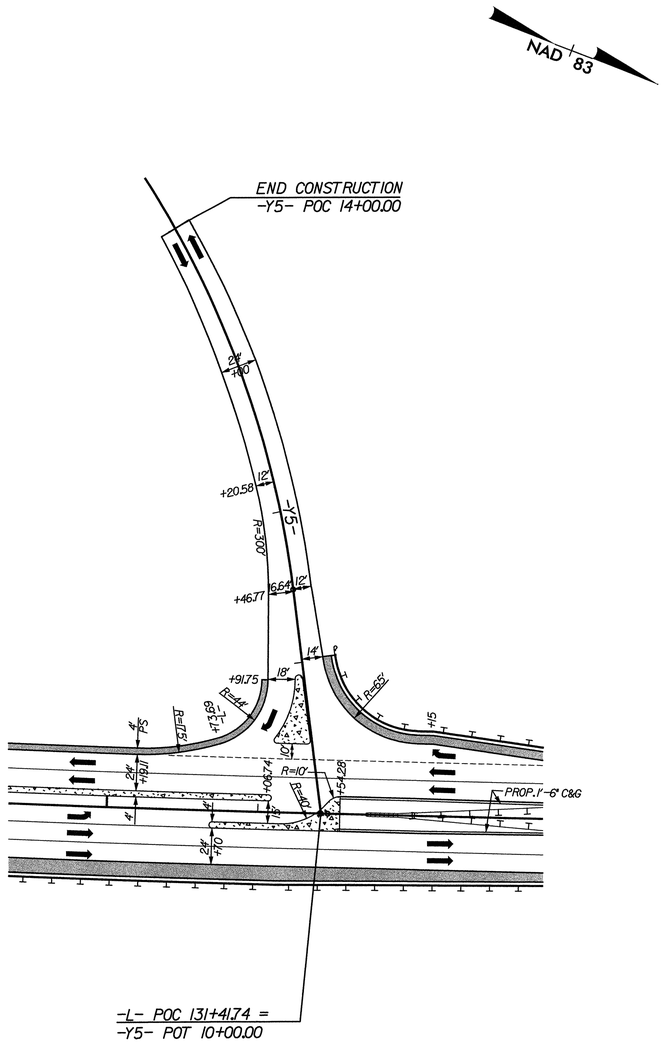

US 220 (-L-)/HAMBURG MILL ROAD (-Y5-)
INTERSECTION DETAIL
INTERSECTION DETAIL SHOWN FROM PLAN SHEET 12

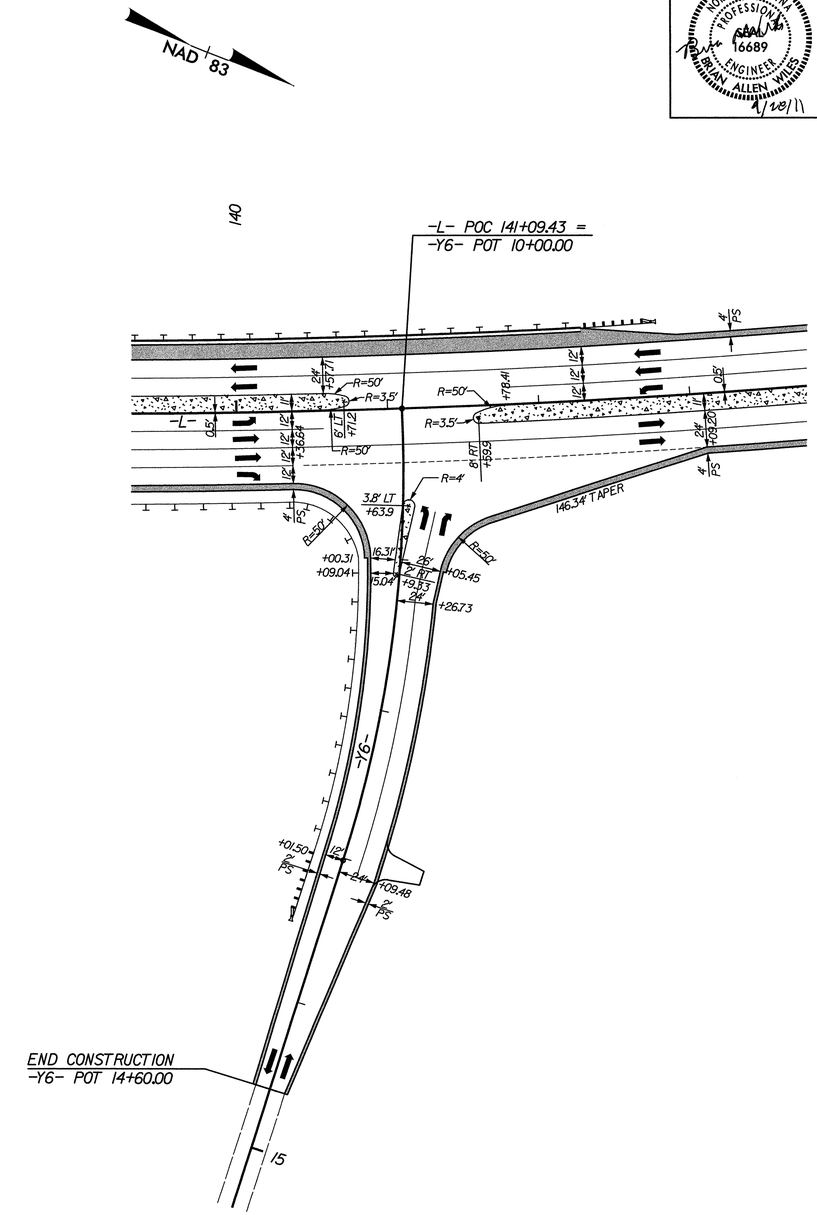

US 220 (-L-)/STRAWBERRY ROAD (-Y6-)
INTERSECTION DETAIL
INTERSECTION DETAIL SHOWN FROM PLAN SHEET 13

NOTES:
1. ALL PROPOSED COMMERCIAL DRIVEWAY RADII 20 FT UNLESS OTHERWISE SHOWN. ALL RESIDENTIAL DRIVEWAY RADII 10 FT UNLESS OTHERWISE SHOWN.

2. ALL ISLAND RADII 2 FT UNLESS OTHERWISE SHOWN.

3. PROPOSED DRIVEWAY WIDTHS AT END OF RADII 16 FT UNLESS OTHERWISE SHOWN. TAPER DRIVEWAY TO EXISTING DRIVEWAY WIDTH.

LEGEND
PAVED SHOULDER
PROPOSED MONOLITHIC ISLAND

9/8/2011
H:\Roadway\Proj\r-2309ab_rdy_details.dgn
florence & hutcheson, inc.

PROJECT REFERENCE NO.	SHEET NO.
R-2309AB	2-W
R/W SHEET NO.	

ROADWAY DESIGN ENGINEER

NORTH CAROLINA PROFESSIONAL SEAL 16689 ENGINEER BRIAN ALLEN WILES

9/28/11

Florence & Hutcheson

CONSULTING ENGINEERS

5121 Kingdom Way, Suite 100 Raleigh, NC 27607

NC License No: F-0258

REVISIONS

8/17/99

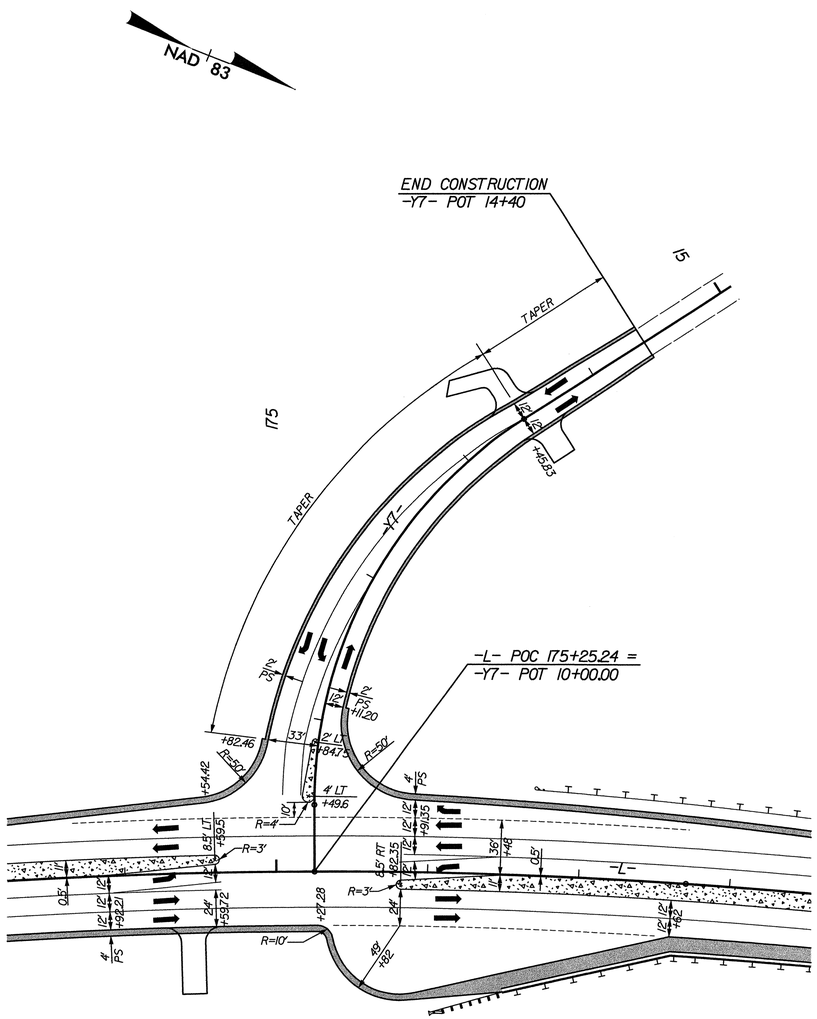

US 220 (-L-)/SUMMERFIELD ROAD (-Y7-)
INTERSECTION DETAIL
INTERSECTION DETAIL SHOWN FROM PLAN SHEETS 15 & 16

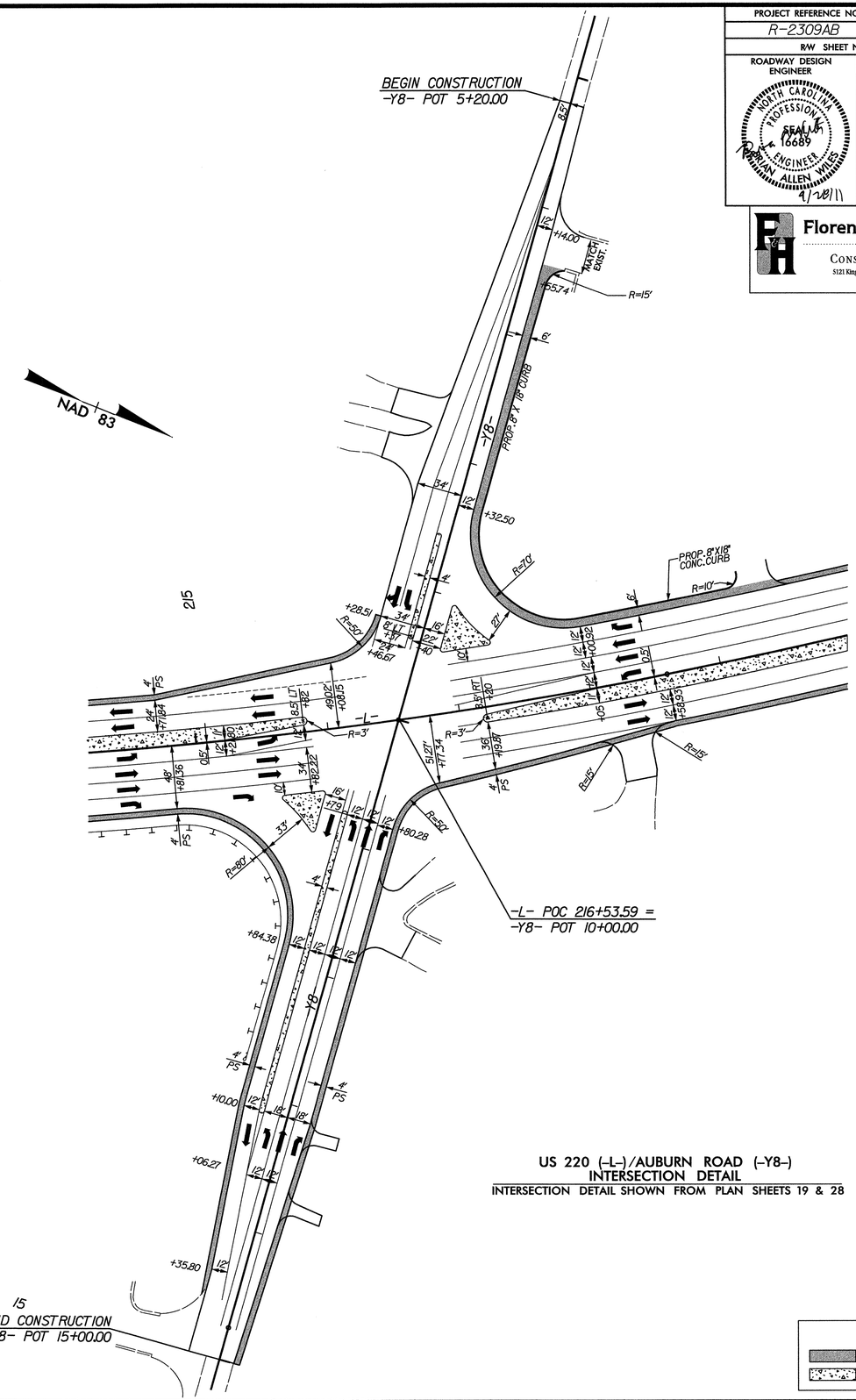

US 220 (-L-)/AUBURN ROAD (-Y8-)
INTERSECTION DETAIL
INTERSECTION DETAIL SHOWN FROM PLAN SHEETS 19 & 28

NOTES:

1. ALL PROPOSED COMMERCIAL DRIVEWAY RADII 20 FT UNLESS OTHERWISE SHOWN. ALL RESIDENTIAL DRIVEWAY RADII 10 FT UNLESS OTHERWISE SHOWN.
2. ALL ISLAND RADII 2 FT UNLESS OTHERWISE SHOWN.
3. PROPOSED DRIVEWAY WIDTHS AT END OF RADII 16 FT UNLESS OTHERWISE SHOWN. TAPER DRIVEWAY TO EXISTING DRIVEWAY WIDTH.

LEGEND

PAVED SHOULDER

PROPOSED MONOLITHIC ISLAND

9/8/2011
R:\Roadway\Proj\r2309ab_rdy_details.dgn
Florence & Hutcheson, Inc.

8/17/99

REVISIONS

PROJECT REFERENCE NO.	SHEET NO.
R-2309AB	2-X
R/W SHEET NO.	

Florence & Hutcheson
CONSULTING ENGINEERS
5121 Kingdom Way, Suite 100 Raleigh, NC 27607
NC License No: F-0258

ROADWAY DESIGN ENGINEER
NORTH CAROLINA PROFESSIONAL SEAL 16689 ENGINEER BRIAN ALLEN WILES
11/28/11

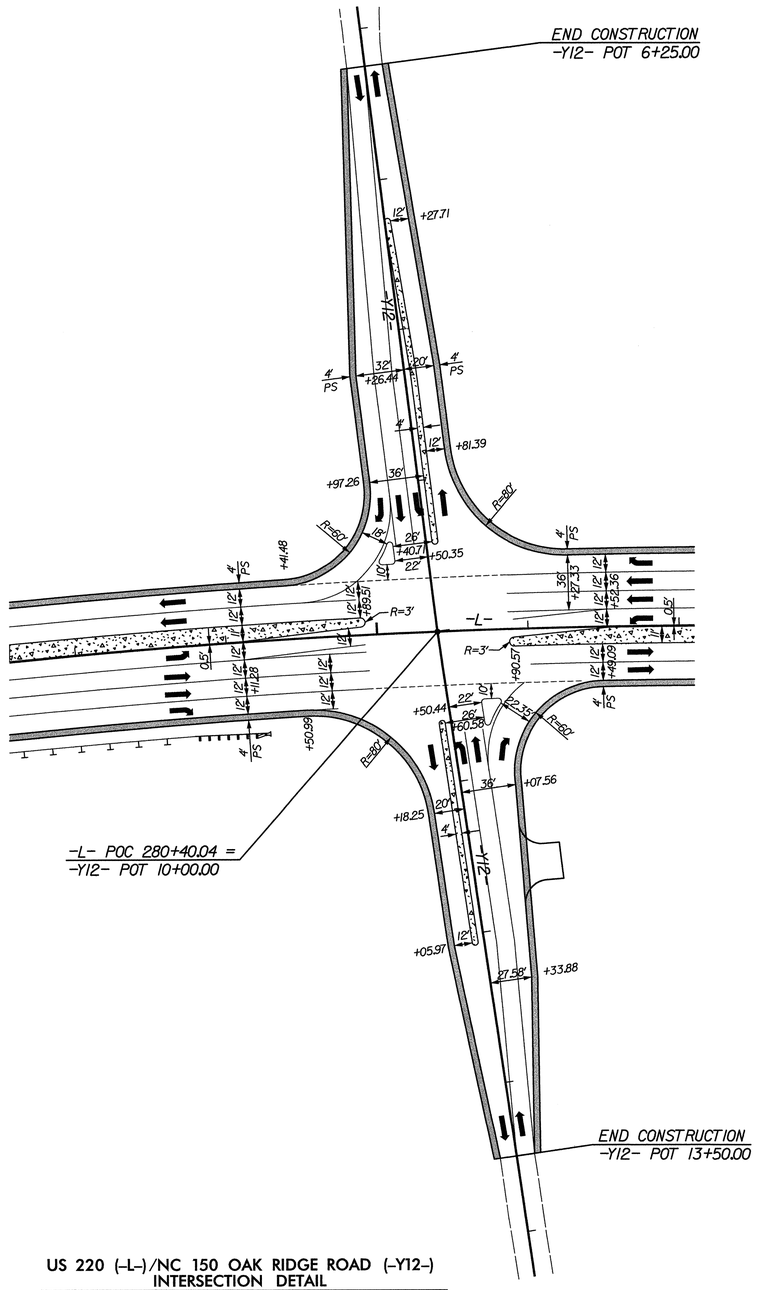

US 220 (-L-)/NC 150 OAK RIDGE ROAD (-Y12-)
INTERSECTION DETAIL
INTERSECTION DETAIL SHOWN FROM PLAN SHEETS 23 & 24

NOTES:
1. ALL PROPOSED COMMERCIAL DRIVEWAY RADII 20 FT UNLESS OTHERWISE SHOWN. ALL RESIDENTIAL DRIVEWAY RADII 10 FT UNLESS OTHERWISE SHOWN.

2. ALL ISLAND RADII 2 FT UNLESS OTHERWISE SHOWN.

3. PROPOSED DRIVEWAY WIDTHS AT END OF RADII 16 FT UNLESS OTHERWISE SHOWN. TAPER DRIVEWAY TO EXISTING DRIVEWAY WIDTH.

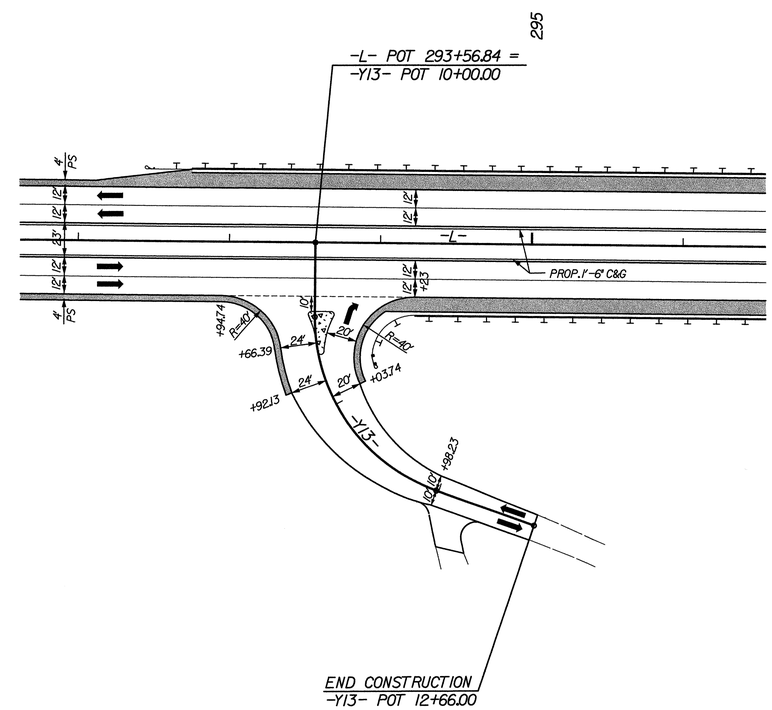

US 220 (-L-)/MOREFIELD DRIVE (-Y13-)
INTERSECTION DETAIL
INTERSECTION DETAIL SHOWN FROM PLAN SHEET 25

LEGEND
PAVED SHOULDER
PROPOSED MONOLITHIC ISLAND

9/8/2011
R:\Roadway\Proj\r-2309ab_rdy_details.dgn
Florence & Hutcheson, Inc.

Florence & Hutcheson CONSULTING ENGINEERS 5121 Kingdom Way, Suite 100 Raleigh, NC 27607 NC License No: F-0258	PROJECT REFERENCE NO.	SHEET NO.
	R-2309AB	2-Y
	R/W SHEET NO.	
	ROADWAY DESIGN ENGINEER NORTH CAROLINA PROFESSIONAL SEAL 16889 ENGINEER BRIAN ALLEN WILES 9/28/11	

REVISIONS

8/17/99

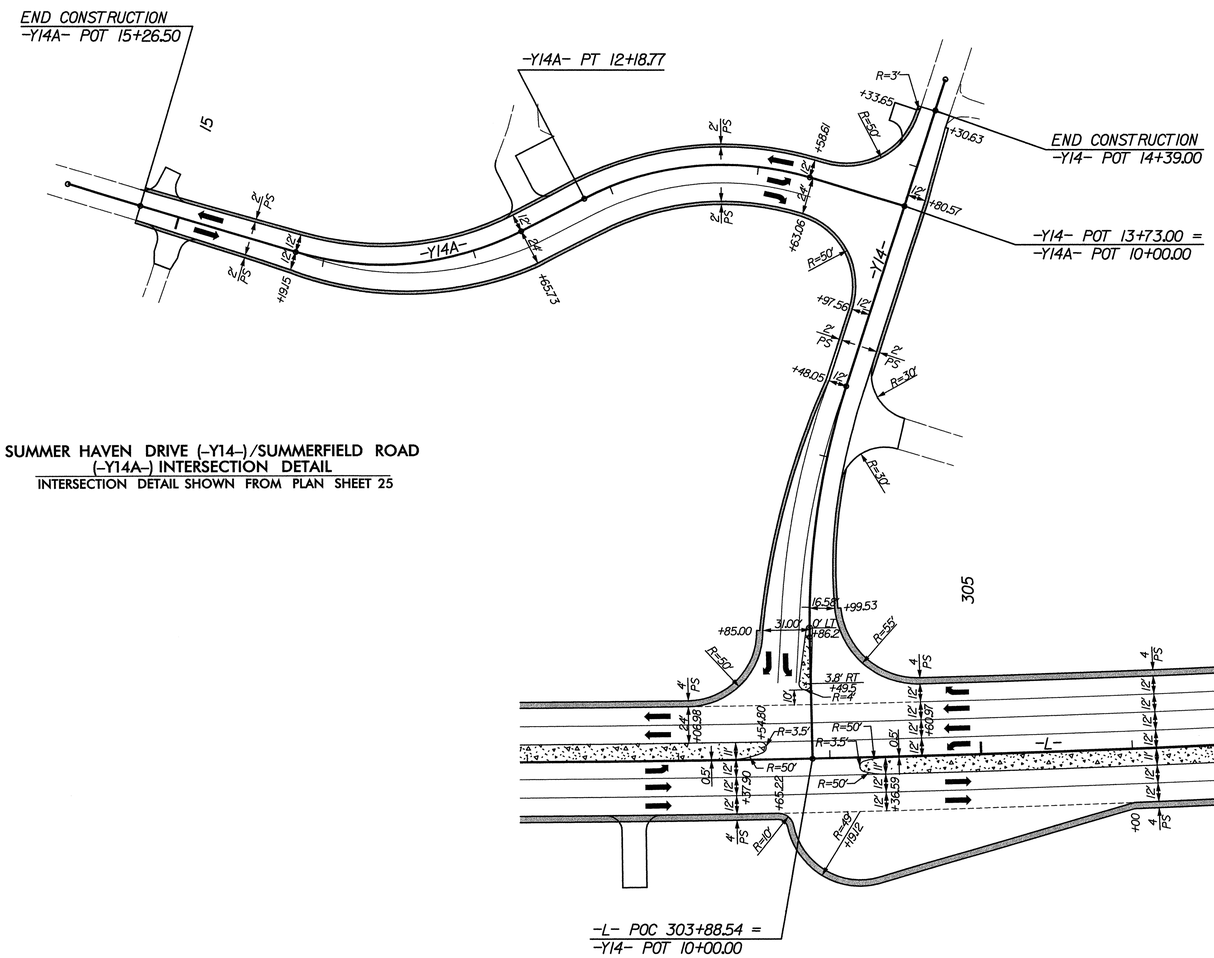

SUMMER HAVEN DRIVE (-Y14-)/SUMMERFIELD ROAD (-Y14A-) INTERSECTION DETAIL

INTERSECTION DETAIL SHOWN FROM PLAN SHEET 25

US 220 (-L-)/SUMMER HAVEN DRIVE (-Y14-) INTERSECTION DETAIL

INTERSECTION DETAIL SHOWN FROM PLAN SHEET 25

NOTES:

1. ALL PROPOSED COMMERCIAL DRIVEWAY RADII 20 FT UNLESS OTHERWISE SHOWN. ALL RESIDENTIAL DRIVEWAY RADII 10 FT UNLESS OTHERWISE SHOWN.

2. ALL ISLAND RADII 2 FT UNLESS OTHERWISE SHOWN.

3. PROPOSED DRIVEWAY WIDTHS AT END OF RADII 16 FT UNLESS OTHERWISE SHOWN. TAPER DRIVEWAY TO EXISTING DRIVEWAY WIDTH.

LEGEND

PAVED SHOULDER

PROPOSED MONOLITHIC ISLAND

9/8/2011
R:\Roadway\Proj\r2309ab_rdy_details.dgn
Florence & Hutcheson Inc

PROJECT REFERENCE NO.	SHEET
R-2309AB	2-Z

GEOTECHNICAL ENGINEER

ENGINEER

NORTH CAROLINA PROFESSIONAL SEAL 32171 ENGINEER JINYOUNG PARK

SIGNATURE DATE SIGNATURE DATE

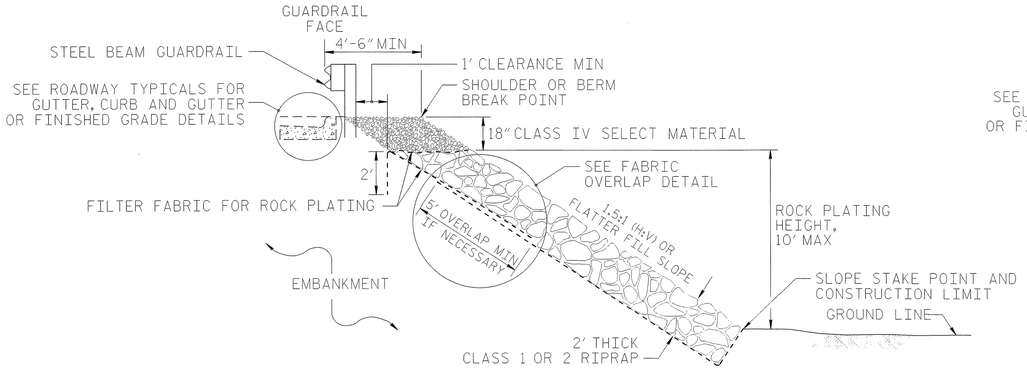

ROCK PLATING DETAIL NO. 1 - TYPICAL SECTION

NOT TO SCALE, USE ROCK PLATING DETAIL NO. 1 WHEN THE ROCK PLATING HEIGHT IS BELOW 10 FT.

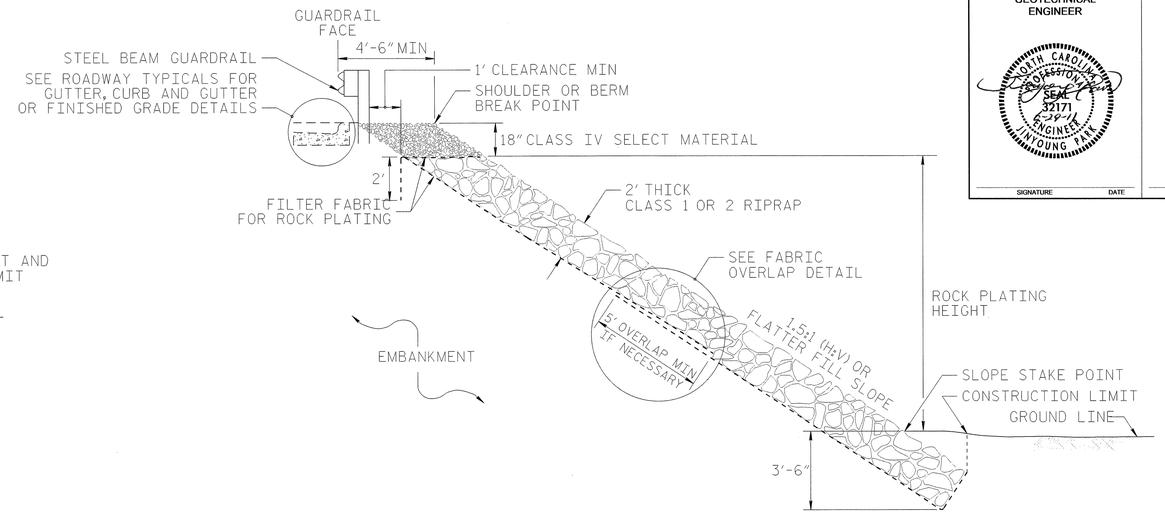

ROCK PLATING DETAIL NO. 2 - TYPICAL SECTION

NOT TO SCALE, USE ROCK PLATING DETAIL NO. 2 WHEN THE ROCK PLATING HEIGHT IS OVER 10 FT.

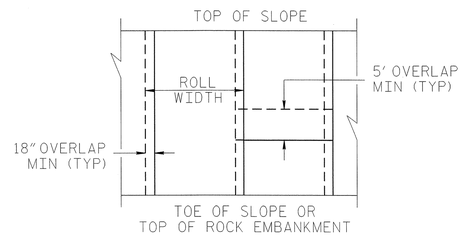

FABRIC OVERLAP DETAIL

(PLAN VIEW)

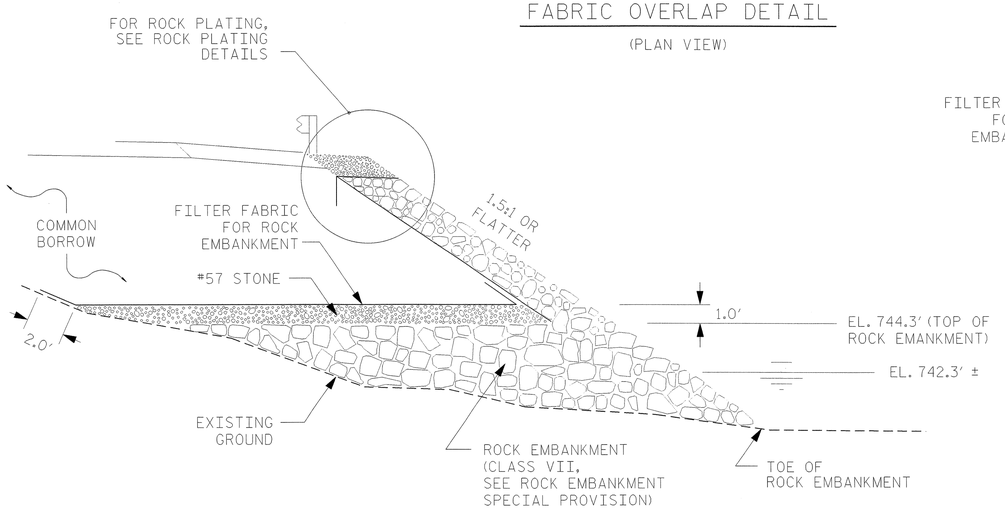

ROCK EMBANKMENT TYPICAL SECTION A-A

NOT TO SCALE

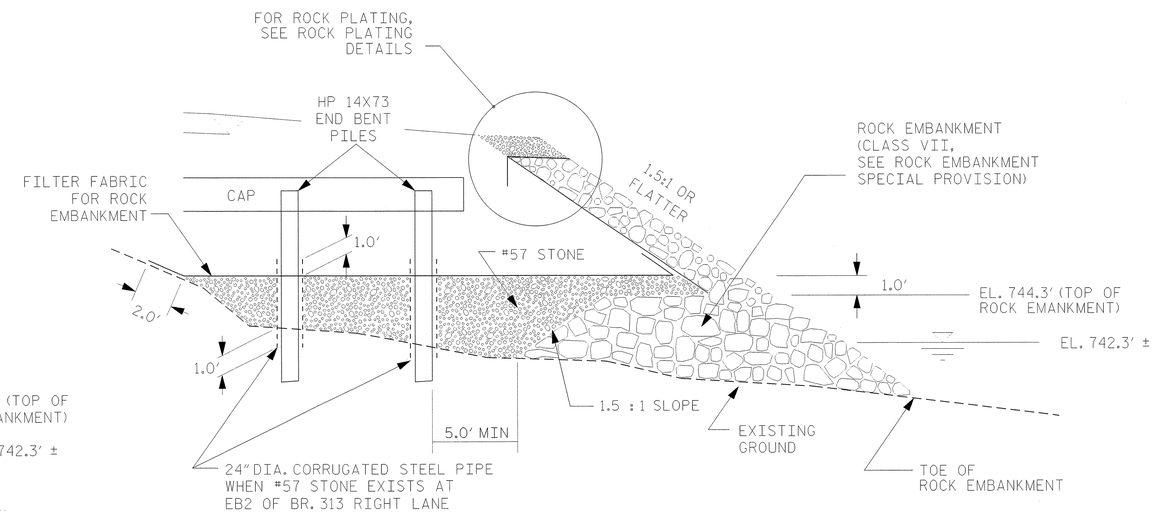

ROCK EMBANKMENT TYPICAL SECTION B-B

NOT TO SCALE

PREPARED BY:	J. PARK	DATE:	06 / 2011
REVIEWED BY:	J. BATTS.	DATE:	06 / 2011

GEOTECHNICAL ENGINEERING UNIT

STATE OF NORTH CAROLINA DEPARTMENT OF TRANSPORTATION

- [X] EASTERN REGIONAL OFFICE
- [ ] WESTERN REGIONAL OFFICE
- [ ] CONTRACT OFFICE

STATE OF NORTH CAROLINA
DEPARTMENT OF TRANSPORTATION
RALEIGH

ROCK EMBANKMENT & ROCK PLATING DETAILS

REVISIONS

NO.	BY	DATE	NO.	BY	DATE
1	-	-	3	-	-
2	-	-	4	-	-

PROJECT REFERENCE NO.	SHEET
R-2309AB	2-AA

GEOTECHNICAL ENGINEER

ENGINEER

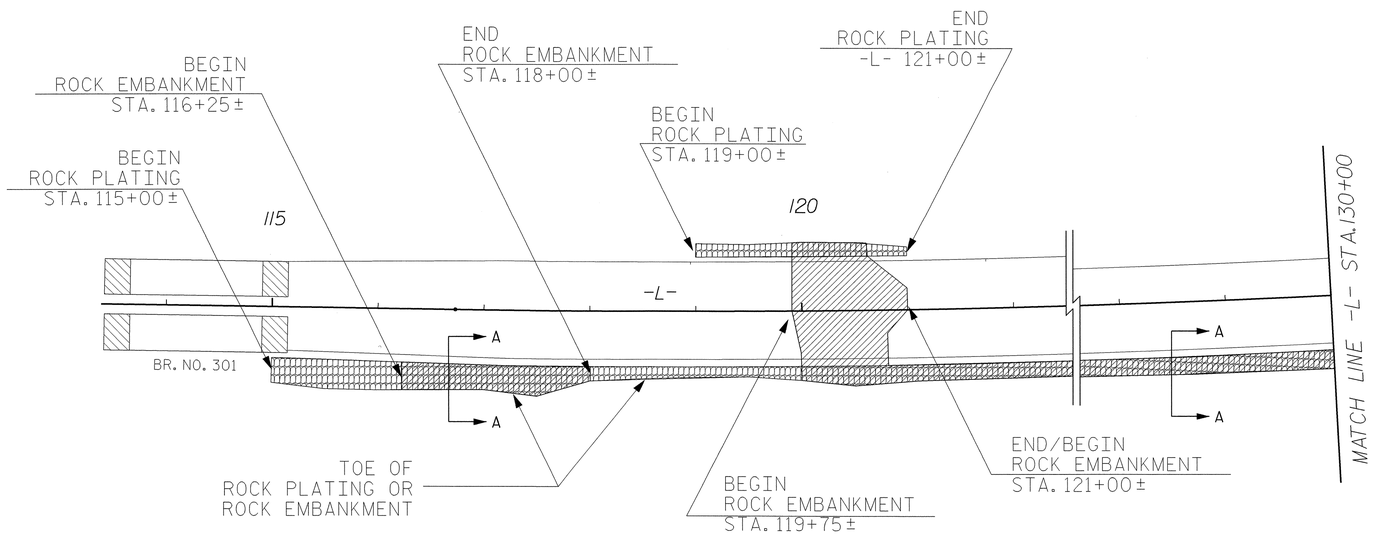

ROCK EMBANKMENT / ROCK PLATING		
BEGIN	END	LOCATION
-L- 116+25±	-L- 118+00±	RIGHT
-L- 119+75±	-L- 121+00±	LEFT TO RIGHT
-L- 121+00±	-L- 133+50±	RIGHT
-L- 132+00±	-L- 133+50±	LEFT
-L- 135+00±	-L- 140+75±	RIGHT

ROCK PLATING		
BEGIN	END	LOCATION
-L- 115+00±	-L- 133+50±	RIGHT
-L- 119+00±	-L- 121+00±	LEFT
-L- 132+00±	-L- 141+50±	LEFT
-L- 135+00±	-Y6- 13+50±	RIGHT

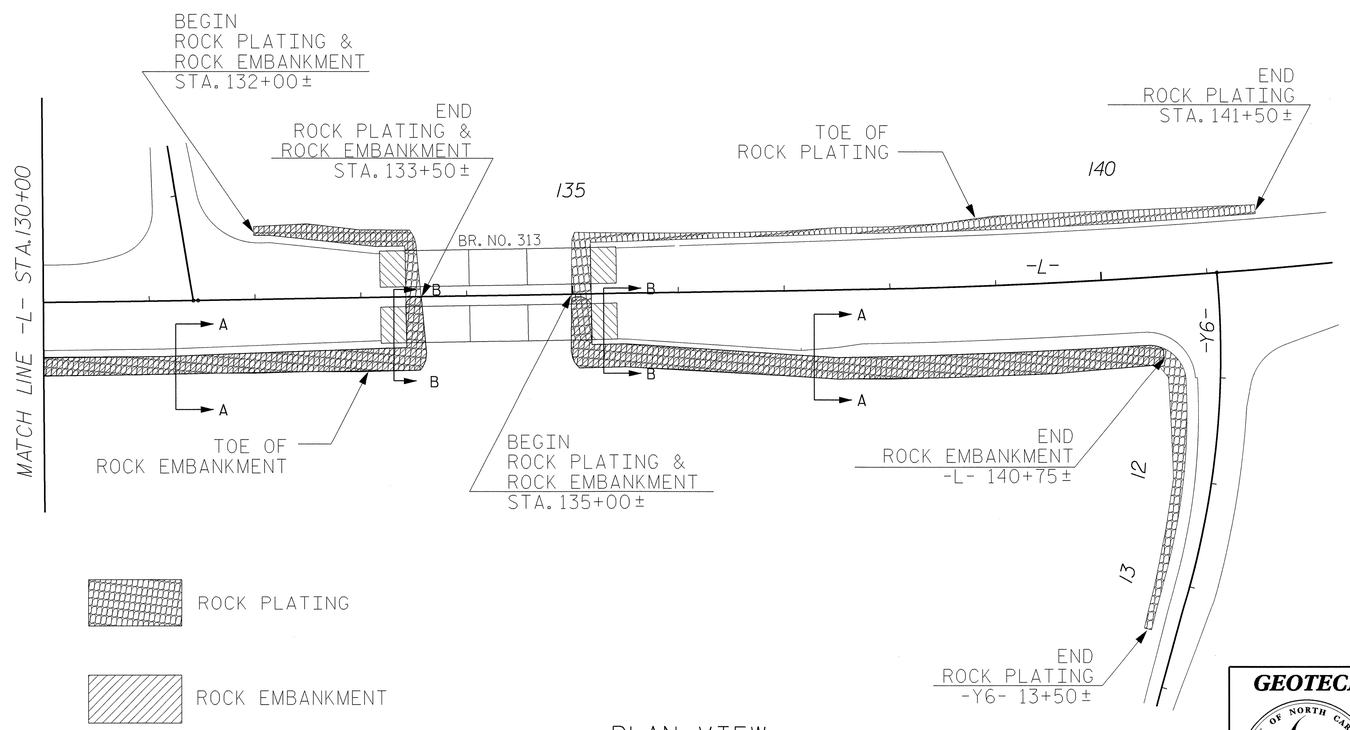

PLAN VIEW

NOT TO SCALE

ESTIMATED QUANTITIES	
ROCK EMBANKMENTS	24,020 TONS
#57 STONE	10,050 TONS
FILTER FABRIC FOR ROCK EMBANKMENTS	11,650 SY
ROCK PLATING	5400 SY

FOR ROCK EMBANKMENT, SEE ROCK EMBANKMENT SPECIAL PROVISIONS.

FOR ROCK PLATING, SEE ROCK PLATING PROVISIONS.

FOR ROCK EMBANKMENT AND ROCK PLATING SLOPES, SEE ROADWAY CROSS SECTIONS.

PREPARED BY:	J. PARK	DATE:	06 / 2011
REVIEWED BY:	J. BATTS.	DATE:	06 / 2011

GEOTECHNICAL ENGINEERING UNIT

- [X] EASTERN REGIONAL OFFICE
- [ ] WESTERN REGIONAL OFFICE
- [ ] CONTRACT OFFICE

STATE OF NORTH CAROLINA
DEPARTMENT OF TRANSPORTATION
RALEIGH

ROCK EMBANKMENT & ROCK PLATING PLANS

REVISIONS

NO.	BY	DATE	NO.	BY	DATE
1			3		
2			4		

PROJECT REFERENCE NO.	SHEET NO.
R-2309AB	2-AB

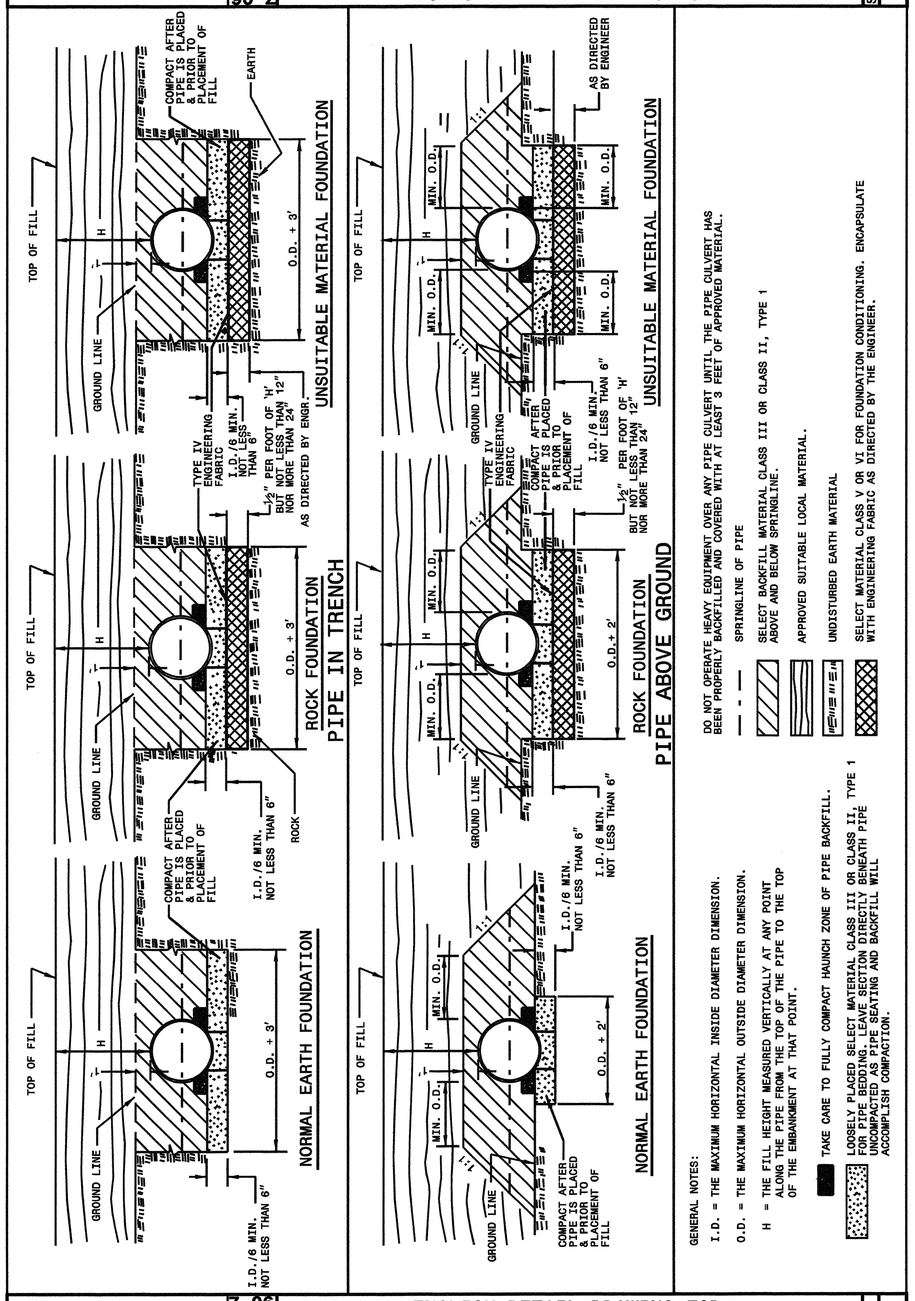

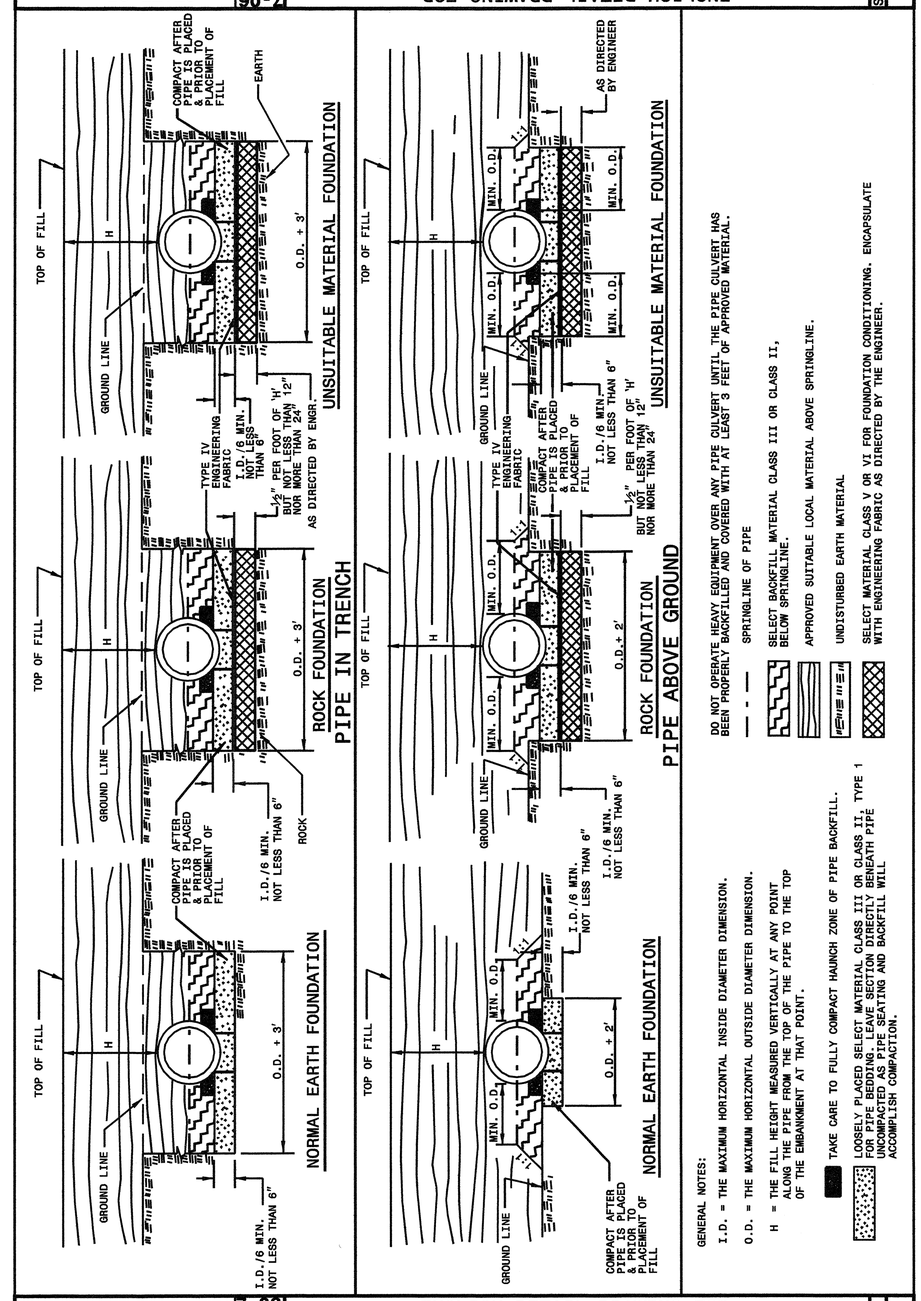

STATE OF NORTH CAROLINA DEPT. OF TRANSPORTATION DIVISION OF HIGHWAYS RALEIGH, N.C.

7-06

ENGLISH DETAIL DRAWING FOR
METHOD OF PIPE INSTALLATION
FLEXIBLE PIPE

SHEET 1 OF 3 — 300D01

STATE OF NORTH CAROLINA DEPT. OF TRANSPORTATION DIVISION OF HIGHWAYS RALEIGH, N.C.

7-06

ENGLISH DETAIL DRAWING FOR
METHOD OF PIPE INSTALLATION
RIGID PIPE

SHEET 2 OF 3 — 300D01

NORTH CAROLINA PROFESSIONAL SEAL 022966 ENGINEER
JOHNS HOPKINS HOUGHTON
10/8/11

PROJECT SERVICES UNIT
STANDARDS AND SPECIAL DESIGN
Office 919-250-4128 FAX 919-250-4119

SEE PLATE FOR TITLE

ORIGINAL BY: KKempf DATE: 5-15-09
MODIFIED BY: DATE:
CHECKED BY: DATE:
FILE SPEC: C:/cricward/stds/stdstodetails/30001/0300d01.dgn

05-NOV-2009 11:35
s:\contracts contracts\special details\cricward\stds\06' stds to special details\30001\0300d01.dgn
jhowerton AT PS297501

5/14/99

STATE OF NORTH CAROLINA
DEPT. OF TRANSPORTATION
DIVISION OF HIGHWAYS
RALEIGH, N.C.

7-06

ENGLISH DETAIL DRAWING FOR
METHOD OF PIPE INSTALLATION
FILL HEIGHT TABLES

SHEET 3 OF 3
300D01

FLEXIBLE PIPE

Round Corrugated Steel Pipe
2 2/3 x ½ corrugation **

Diameter (inches)	Minimum cover (inches)	Maximum Height of Cover (feet) (Ga) 16	14	12	10	8
12	12	204	256			
15	12	162	204			
18	12	135	169	239		
21	12	115	145	204		
24	12	100	126	178		
30	12	79	100	142		
36	12	65	83	117	152	
42	12	55	70	100	130	160
48	12	48	61	87	113	139
54	12		54	77	100	123
60	12			69	90	111
66	12				81	100
72	12				74	91
78	12					81
84	12					69

Round Corrugated Aluminum Pipe
2 2/3 x ½ corrugation **

Diameter (inches)	Minimum cover (inches)	Maximum Height of Cover (feet) (Ga) 16	14	12	10	8
12	12	123	155	218	281	344
15	12	98	123	174	224	275
18	12	81	102	144	187	228
21	12	69	87	123	160	195
24	12	60	76	108	139	171
27	12		67	95	123	151
30	12		60	85	111	136
36	12		50	71	92	113
42	12			60	78	96
48	12			52	68	84
54	12			46	50	74
60	12				50	62
66	12					51
72	12					41

** FOR DIFFERENT CORRUGATIONS AND ARCH PIPES REFER TO ROADWAY DESIGN MANUAL OR MANUFACTURERS SPECIFICATION.

HDPE - * (Minimum fill) 2′ for pipe diameters ≥ 12″ and ≤ 60″
* (Maximum fill) 20′ for pipe diameters ≤ 24″
17′ for pipe diameters ≥ 30″ and ≤ 60″

PVC - * (Minimum fill) 2′ for pipe diameters ≥ 12″ and ≤ 36″
* (Maximum fill) 30′ for pipe diameters ≥ 12″ and ≤ 36″

* FILL HEIGHT IS MEASURED FROM THE TOP OF THE PIPE TO THE BOTTOM OF THE PAVEMENT STRUCTURE

REFER TO THE FOLLOWING FOR PIPE SPECIFICATIONS

CSP - AASHTO M36
CAAP - AASHTO M196
HDPE - AASHTO M294
PVC - ASTM F949 or AASHTO M304

NOTES: FILL HEIGHTS SHOWN WERE CALCULATED USING AASHTO LRFD BRIDGE DESIGN SPECIFICATIONS

1′ MINIMUM COVER FOR ALL SIDE DRAIN PIPE IN ACCORDANCE WITH THE STANDARD SPECIFICATIONS

RIGID PIPE

RCP - * (Minimum fill) 1′ for Class IV & CLASS V
2′ for Class III & Class II

* (Maximum fill) 10′ - Class II pipe
20′ - Class III pipe
30′ - Class IV pipe
40′ - Class V pipe

(For fills > 40′ & < 80′ use LRFD Direct Design Method)

* FILL HEIGHT IS MEASURED FROM THE TOP OF THE PIPE TO THE BOTTOM OF THE PAVEMENT STRUCTURE

REFER TO THE FOLLOWING FOR PIPE SPECIFICATIONS

RCP - AASHTO M170

NOTES: FILL HEIGHTS SHOWN WERE CALCULATED USING AASHTO LRFD BRIDGE DESIGN SPECIFICATIONS

1′ MINIMUM COVER FOR ALL SIDE DRAIN PIPE IN ACCORDANCE WITH THE STANDARD SPECIFICATIONS

STATE OF NORTH CAROLINA
DEPT. OF TRANSPORTATION
DIVISION OF HIGHWAYS
RALEIGH, N.C.

7-06

ENGLISH DETAIL DRAWING FOR
METHOD OF PIPE INSTALLATION
FILL HEIGHT TABLES

SHEET 3 OF 3
300D01

PROJECT SERVICES UNIT
STANDARDS AND SPECIAL DESIGN
Office 919-250-4128 FAX 919-250-4119

SEE PLATE FOR TITLE

ORIGINAL BY: KKempf DATE: 5-15-09
MODIFIED BY: DATE:
CHECKED BY: DATE:
FILE SPEC/rpowell/stds/details/30001/0300d01.dgn

NORTH CAROLINA PROFESSIONAL SEAL 02966 ENGINEER

PROJECT REFERENCE NO. R-2501 AB
SHEET NO. 2AC

PROJECT REFERENCE NO.	SHEET NO.
R-2309AB	2-AD

STATE OF
NORTH CAROLINA
DEPT. OF TRANSPORTATION
DIVISION OF HIGHWAYS
RALEIGH, N.C.

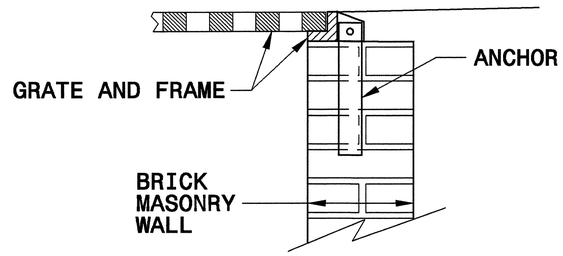

BRICK MASONRY CONSTRUCTION

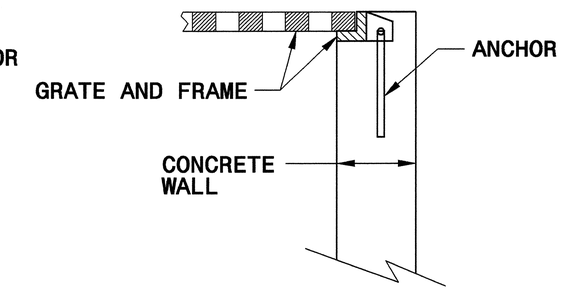

CONCRETE CONSTRUCTION

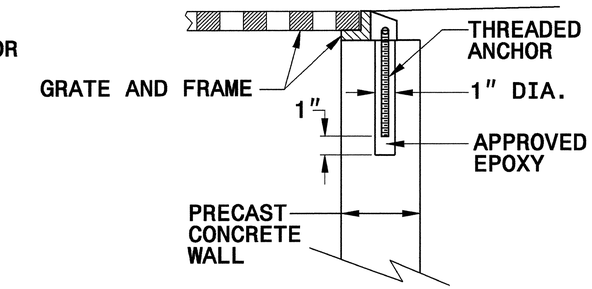

PRECAST CONCRETE CONSTRUCTION

DETAIL SHOWING ANCHORAGE OF FRAME FOR GRATED DROP INLET

NOTE:
CONSTRUCT GRATED DROP INLET TO COINCIDE WITH NORMAL OR SUPERELEVATED SHOULDER OR PAVEMENT SLOPE.

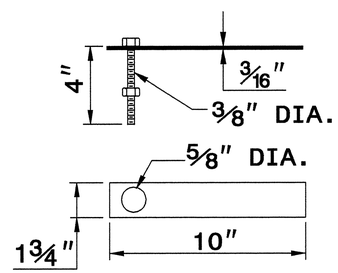

MASONRY ANCHOR
3/8" DIA. BOLT WITH PLATE

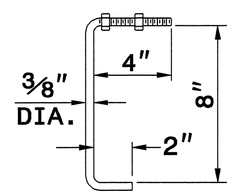

CONCRETE ANCHOR
3/8" DIA. BENT BAR

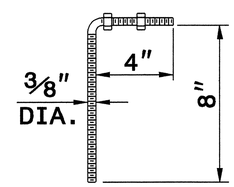

PRECAST CONCRETE ANCHOR
3/8" DIA. BENT BAR

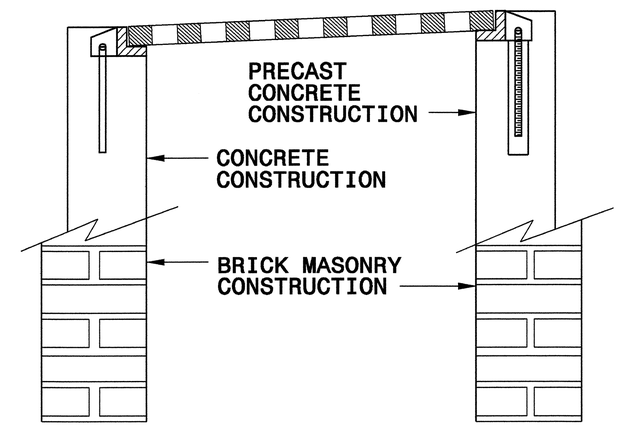

FRAME AND GRATE INSTALLATION FOR NORMAL CROWN AND SUPERELEVATED SECTIONS

ENGLISH DETAIL DRAWING FOR
ANCHORAGE FOR FRAMES
BRICK/CONCRETE/PRECAST CONCRETE

SHEET 1 OF 1
840D25

STATE OF
NORTH CAROLINA
DEPT. OF TRANSPORTATION
DIVISION OF HIGHWAYS
RALEIGH, N.C.

ENGLISH DETAIL DRAWING FOR
ANCHORAGE FOR FRAMES
BRICK/CONCRETE/PRECAST CONCRETE

SHEET 1 OF 1
840D25

NORTH CAROLINA PROFESSIONAL SEAL 022966 ENGINEER
10/10/11

PROJECT SERVICES UNIT
STANDARDS AND SPECIAL DESIGN
Office 919-250-4128 FAX 919-250-4119

SEE PLATE FOR TITLE

ORIGINAL BY:	2006 STD 840.25	DATE:	07/18/06
MODIFIED BY:	E.E. WARD	DATE:	9/25/06
CHECKED BY:		DATE:	
FILE SPEC.:			

27-SEP-2006 08:59
S:\Contracts\Contracts\Special Details\ericward\stds\06' Stds to Special Details\84025 Anchorage for Frames\0840d25.dgn
ericward AT PS222293

$$$$$$SYSTIME$$$$$
$$$$$$$$$$$$$$$$DGN$$$$$$$$$$$$$$$$
$$$$USERNAME$$$$

STATE OF NORTH CAROLINA
DEPT. OF TRANSPORTATION
DIVISION OF HIGHWAYS
RALEIGH, N.C.

ENGLISH DETAIL DRAWING FOR

CURB RAMP

PROPOSED CURB AND GUTTER

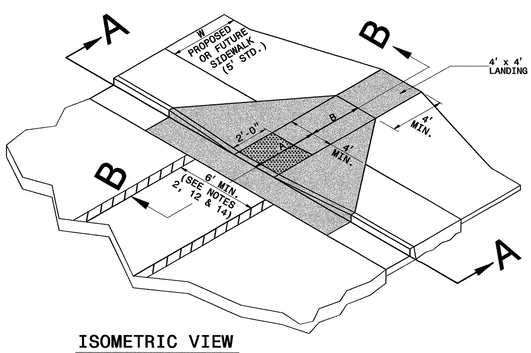

ISOMETRIC VIEW

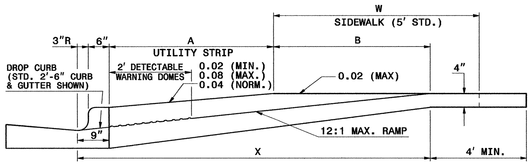

SECTION B-B

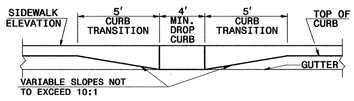

SECTION A-A

PAY LIMITS FOR CURB RAMP

NOTES:
1. DETECTABLE WARNING DOMES WILL COVER 2'-0" LENGTH AND FULL WIDTH OF THE RAMP FLOOR AS SHOWN ON THE DETAILS.
2. DETECTABLE WARNING DOMES WILL CONTRAST VISIBILITY WITH ADJOINING SURFACE, EITHER LIGHT-ON-DARK, OR DARK-ON-LIGHT SEQUENCE COVERING THE ENTIRE RAMP.

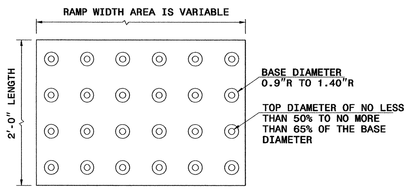

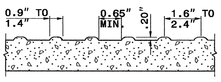

DETECTABLE WARNING DOMES

W	A	W+A+9"	X	B
5'	0.0'	5.8'	5.8'	5.0'*
6'	0.0'	6.8'	6.8'	6.0'**
7'	0.0'	7.8'	7.3'	6.5'**
8'	0.0'	8.8'	7.3'	6.5'**
5'	2.0'	7.8'	7.8'	5.0'
5'	2.5'	8.3'	8.1'	4.8'
5'	3.0'	8.8'	8.3'	4.4'
5'	3.5'	9.3'	8.4'	4.1'
5'	4.0'	9.8'	8.6'	3.8'
5'	4.5'	10.3'	8.7'	3.4'
5'	5.0'	10.8'	8.9'	3.1'

B = X-(A+9")
B = DISTANCE FROM FRONT EDGE OF SIDEWALK TO BACK POINT OF 12:1 (8.33%) SLOPE.
* BACK OF SIDEWALK DROP REQUIRED FOR ALL SIDEWALK SLOPES.
** BACK OF SIDEWALK DROP REQUIRED FOR SIDEWALK SLOPES 0.04.

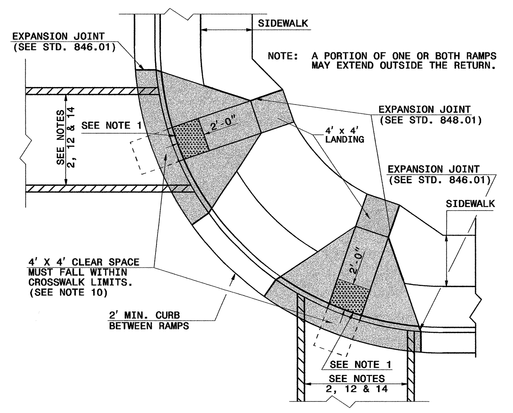

PLAN VIEW

DUAL RAMPS
ANY RADII
(4' MIN. FLOOR WIDTH)

SHEET 1 OF 3
848D05

STATE OF NORTH CAROLINA
DEPT. OF TRANSPORTATION
DIVISION OF HIGHWAYS
RALEIGH, N.C.

ENGLISH DETAIL DRAWING FOR

CURB RAMP

PROPOSED CURB AND GUTTER

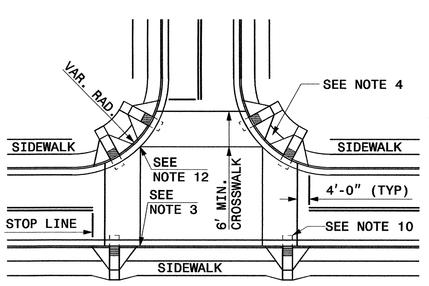

DETAIL SHOWING TYPICAL LOCATION OF CURB RAMPS, PEDESTRIAN CROSSWALKS AND STOP LINES FOR TEE INTERSECTIONS

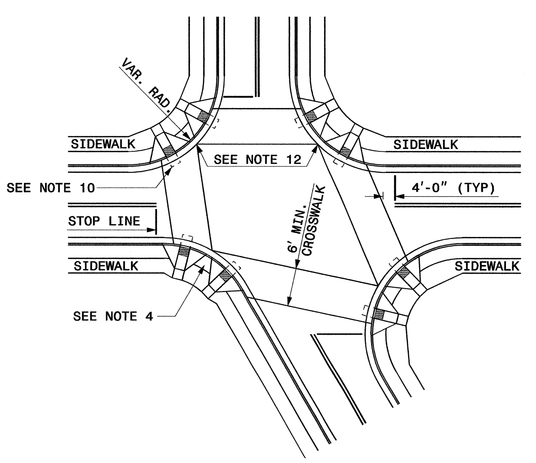

DETAIL SHOWING TYPICAL LOCATION OF CURB RAMPS, PEDESTRIAN CROSSWALKS AND STOP LINES

ROADWAY PLAN SYMBOL
CR
FOR PROPOSED CURB RAMP

PROPOSED CURB RAMP W/ LANDING
PROPOSED OR FUTURE SIDEWALK

ALLOWABLE LOCATIONS

DUAL RAMP RADII.....ANY

SHEET 2 OF 3
848D05

STATE OF NORTH CAROLINA
DEPT. OF TRANSPORTATION
DIVISION OF HIGHWAYS
RALEIGH, N.C.

ENGLISH DETAIL DRAWING FOR

CURB RAMP

PROPOSED CURB AND GUTTER

CONTRACT STANDARDS AND DEVELOPMENT UNIT
Office 919-250-4128 FAX 919-250-4119

SEE PLATE FOR TITLE

ORIGINAL BY: STD.NO.848.05 DATE: 4-22-10
MODIFIED BY: DATE:
CHECKED BY: DATE:
FILE SPEC.: SpecialDetails\EnGWarn\STD\848D05.dgn

NORTH CAROLINA PROFESSIONAL SEAL 02396 ENGINEER
6/14/11

PROJECT REFERENCE NO. R-2309AB
SHEET NO. 2-1E

$$$$$$SYSTIME$$$$$
$$$$$$$$$$$$$$$$DGN$$$$$$$$$$$$$$$$$
$$$$USERNAME$$$$

STATE OF
NORTH CAROLINA
DEPT. OF TRANSPORTATION
DIVISION OF HIGHWAYS
RALEIGH, N.C.

ENGLISH DETAILS DRAWING FOR

CURB RAMPS

NOTES

SHEET 3 OF 3

848D05

NOTES:

1. CONSTRUCT THE RAMP SURFACE TO BE STABLE, FIRM, AND SLIP RESISTANT. CONSTRUCT THE CURB RAMP TYPE AS SHOWN IN THE PAVEMENT MARKING PLANS OR AS DIRECTED BY THE ENGINEER.
2. LOCATE CURB RAMPS AND PLACE PEDESTRIAN CROSSWALK MARKINGS AS SHOWN IN THE PAVEMENT MARKING PLANS. WHEN FIELD ADJUSTMENTS REQUIRE MOVING CURB RAMPS OR MARKINGS AS SHOWN, CONTACT THE SIGNING AND DELINEATION UNIT OR LOCATE AS DIRECTED BY THE ENGINEER.
3. COORDINATE THE CURB RAMP AND THE PEDESTRIAN CROSSWALK MARKINGS SO A 4'x4' CLEAR SPACE AT THE BASE OF THE CURB RAMP WILL FALL WITHIN THE PEDESTRIAN CROSSWALK LINES.
4. SET BACK DISTANCE FROM INSIDE CROSSWALK MARKING TO NEAREST EDGE OF TRAVEL LANE IS 4' MINIMUM.
5. REFER TO THE PAVEMENT MARKING PLANS FOR STOP BAR LOCATIONS AT SIGNALIZED INTERSECTIONS. IF A PAVEMENT MARKING PLAN IS NOT PROVIDED, CONTACT THE SIGNAL DESIGN SECTION FOR THE STOP BAR LOCATIONS OR LOCATE AS DIRECTED BY THE ENGINEER.
6. TERMINATE PARKING A MINIMUM OF 20' BACK OF A PEDESTRIAN CROSSWALK.
7. CONSTRUCT CURB RAMPS A MINIMUM OF 4' WIDE.
8. CONSTRUCT THE RUNNING SLOPE OF THE RAMP 8.33% MAXIMUM.
9. ALLOWABLE CROSS SLOPE ON SIDEWALKS AND CURB RAMPS WILL BE 2% MAXIMUM.
10. CONSTRUCT THE SIDE FLARE SLOPE A MAXIMUM OF 10% MEASURED ALONG THE CURB LINE.
11. CONSTRUCT THE COUNTER SLOPE OF THE GUTTER OR STREET AT THE BASE OF THE CURB RAMP A MAXIMUM OF 5% AND MAINTAIN A SMOOTH TRANSITION.
12. CONSTRUCT LANDINGS FOR SIDEWALK A MINIMUM OF 4'x4' WITH A MAXIMUM SLOPE OF 2% IN ANY DIRECTION. CONSTRUCT LANDINGS FOR MEDIAN ISLANDS A MINIMUM OF 5'x5' WITH A MAXIMUM SLOPE OF 2% IN ANY DIRECTION.
13. TO USE A MEDIAN ISLAND AS A PEDESTRIAN REFUGE AREA, MEDIAN ISLANDS WILL BE A MINIMUM OF 6' WIDE. CONSTRUCT MEDIAN ISLANDS TO PROVIDE PASSAGE OVER OR THROUGHT THE ISLAND.
14. SMALL CHANNELIZATION ISLANDS THAT CAN NOT PROVIDE A 5'X5' LANDING AT THE TOP OF A RAMPS, WILL BE CUT THROUGH LEVEL WITH THE SURFACE STREET.
15. CURB RAMPS WITH RETURNED CURBS MAY BE USED ONLY WHERE PEDESTRIANS WOULD NOT NORMALLY WALK ACROSS THE RAMP. THE ADJACENT SURFACE IS PLANTING OR OTHER NON-WALKING SURFACE OR THE SIDE APPROACH IS SUBSTANTIALLY OBSTRUCTED.
16. PLACE A ½" EXPANSION JOINT WHERE THE CONCRETE CURB RAMP JOINS THE CURB AS SHOWN IN ROADWAY STANDARD DRAWING 848.01
17. PLACE ALL PEDESTRIAN PUSH BUTTON ACTUATORS AND CROSSING SIGNALS AS SHOWN IN THE PLANS OR AS SHOWN IN THE MUTCD.
18. CURB RAMPS THROUGH MEDIAN ISLANDS, SINGLE RAMPS AT DUAL CROSSWALKS OR LIMITED R/W SITUATIONS, WILL BE HANDLED BY SPECIAL DETAILS. CONTACT THE CONTRACT STANDARDS AND DEVELOPMENT UNIT FOR THE DETAILS OR FOR A SPECIAL DESIGN.

STATE OF
NORTH CAROLINA
DEPT. OF TRANSPORTATION
DIVISION OF HIGHWAYS
RALEIGH, N.C.

ENGLISH DETAIL DRAWING FOR

CURB RAMPS

NOTES

SHEET 3 OF 3

848D05

CONTRACT STANDARDS AND DEVELOPMENT UNIT
Office 919-250-4128 FAX 919-250-4119

SEE PLATE FOR TITLE

ORIGINAL BY: STD.NO.848_05 DATE: 4-22-10
MODIFIED BY: DATE:
CHECKED BY: DATE:
FILE SPEC.: Specialbetails/Ecl.dWnrd/STD5/848d05.dgn

NORTH CAROLINA PROFESSIONAL SEAL 022986 PROFESSIONAL ENGINEER

PROJECT REFERENCE NO. R-2304AS
SHEET NO. 2-AF

PROJECT REFERENCE NO.	SHEET
R-2309AB	2-AG

GEOTECHNICAL ENGINEER

NORTH CAROLINA PROFESSIONAL SEAL 022246 ENGINEER SCOTT A. HIDDEN

Scott A. Hidden 3/29/07

SIGNATURE DATE

ENGINEER

SIGNATURE DATE

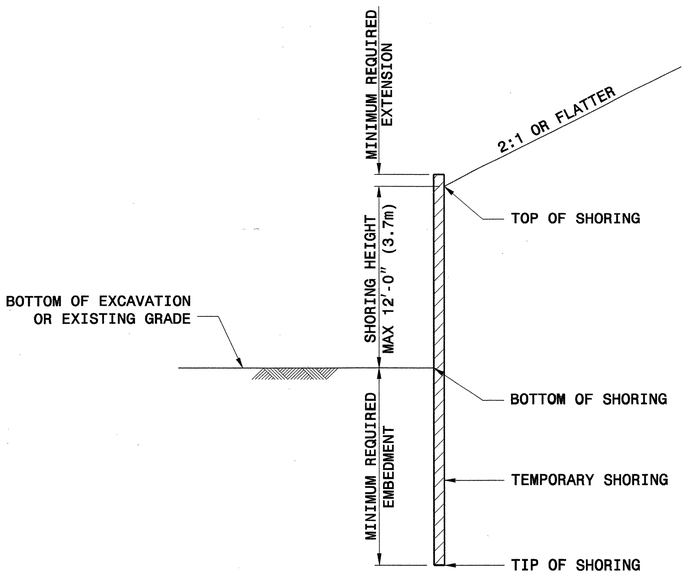

SLOPE CASE

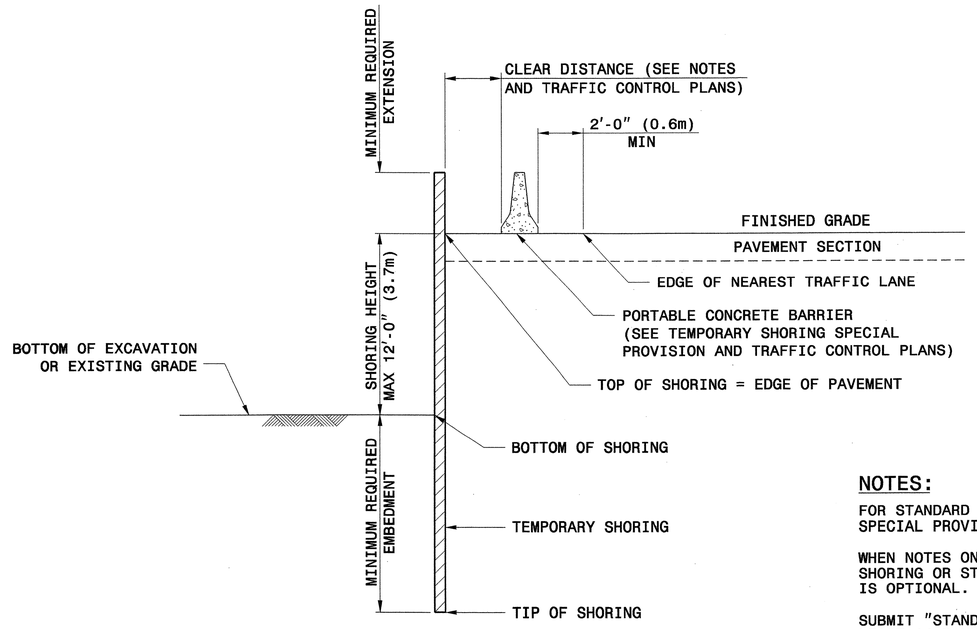

SURCHARGE CASE

		SLOPE OR SURCHARGE CASE WITH NO TRAFFIC IMPACT					SURCHARGE CASE WITH TRAFFIC IMPACT				
		SHEET PILES		H PILES WITH TIMBER LAGGING			SHEET PILES		H PILES WITH TIMBER LAGGING		
				MINIMUM REQUIRED EMBEDMENT FT (m)					MINIMUM REQUIRED EMBEDMENT FT (m)		
GROUNDWATER CONDITION	SHORING HEIGHT FT (m)	MINIMUM REQUIRED EMBEDMENT FT (m)	MINIMUM REQUIRED SECTION MODULUS IN^3/FT (cm^3/m)	HP 10x42 (HP 250x62)	HP 12x53 (HP 310x79)	HP 14x73 (HP 360x108)	MINIMUM REQUIRED EMBEDMENT FT (m)	MINIMUM REQUIRED SECTION MODULUS IN^3/FT (cm^3/m)	HP 10x42 (HP 250x62)	HP 12x53 (HP 310x79)	HP 14x73 (HP 360x108)
GROUNDWATER ELEVATION BELOW TIP OF SHORING	< 6 (1.8)	7.5 (2.3)	3.0 (161)	8.0 (2.4)	8.0 (2.4)	8.0 (2.4)	11.0 (3.4)	10.0 (538)	9.5 (2.9)	9.5 (2.9)	9.5 (2.9)
	7 (2.1)	8.5 (2.6)	4.5 (242)	9.5 (2.9)	9.5 (2.9)	9.5 (2.9)	12.0 (3.7)	12.0 (645)	10.5 (3.2)	10.5 (3.2)	10.5 (3.2)
	8 (2.4)	10.0 (3.0)	6.5 (349)	10.5 (3.2)	10.5 (3.2)	10.5 (3.2)	12.5 (3.8)	14.0 (753)	11.5 (3.5)	11.5 (3.5)	11.5 (3.5)
	9 (2.7)	11.0 (3.4)	9.5 (511)	--	12.0 (3.7)	12.0 (3.7)	13.5 (4.1)	16.5 (887)	--	12.5 (3.8)	12.5 (3.8)
	10 (3.0)	12.5 (3.8)	13.0 (699)	--	--	13.5 (4.1)	14.0 (4.3)	19.5 (1048)	--	13.5 (4.1)	13.5 (4.1)
	11 (3.4)	13.5 (4.1)	17.0 (914)	--	--	14.5 (4.4)	15.0 (4.6)	22.5 (1210)	--	--	14.5 (4.4)
	12 (3.7)	15.0 (4.6)	21.5 (1156)	--	--	16.0 (4.9)	16.0 (4.9)	25.5 (1371)	--	--	15.5 (4.7)
GROUNDWATER ELEVATION BEWTEEN BOTTOM OF SHORING AND TIP OF SHORING	< 6 (1.8)	11.5 (3.5)	4.5 (242)	11.5 (3.5)	11.5 (3.5)	11.5 (3.5)	16.0 (4.9)	12.0 (645)	13.0 (4.0)	13.0 (4.0)	13.0 (4.0)
	7 (2.1)	13.0 (4.0)	7.0 (376)	13.0 (4.0)	13.0 (4.0)	13.0 (4.0)	17.0 (5.2)	14.5 (780)	14.5 (4.4)	14.5 (4.4)	14.5 (4.4)
	8 (2.4)	15.0 (4.6)	10.0 (538)	--	15.0 (4.6)	15.0 (4.6)	18.0 (5.5)	17.0 (914)	--	15.5 (4.7)	15.5 (4.7)
	9 (2.7)	17.0 (5.2)	14.0 (753)	--	17.0 (5.2)	17.0 (5.2)	19.0 (5.8)	20.0 (1075)	--	17.0 (5.2)	17.0 (5.2)
	10 (3.0)	18.5 (5.6)	19.5 (1048)	--	--	18.5 (5.6)	20.0 (6.1)	23.5 (1263)	--	--	18.5 (5.6)
	11 (3.4)	20.5 (6.3)	26.0 (1398)	--	--	--	21.0 (6.4)	28.0 (1505)	--	--	20.0 (6.1)
	12 (3.7)	22.5 (6.9)	33.0 (1774)	--	--	--	22.0 (6.7)	33.0 (1774)	--	--	21.5 (6.6)

NOTE: MINIMUM REQUIRED EXTENSION IS 6" (150mm) FOR "SLOPE OR SURCHARGE CASE WITH NO TRAFFIC IMPACT" AND 32" (800 mm) FOR "SURCHARGE CASE WITH TRAFFFIC IMPACT".

NOTES:

FOR STANDARD TEMPORARY SHORING, SEE TEMPORARY SHORING SPECIAL PROVISION.

WHEN NOTES ON PLANS DO NOT PROHIBIT STANDARD TEMPORARY SHORING OR STANDARD SHORING, STANDARD TEMPORARY SHORING IS OPTIONAL.

SUBMIT "STANDARD TEMPORARY SHORING SELECTION FORM" AT LEAST 14 DAYS BEFORE BEGINNING SHORING CONSTRUCTION. UP TO THREE LOCATIONS MAY BE INCLUDED ON EACH SELECTION FORM.

STANDARD TEMPORARY SHORING IS BASED ON THE FOLLOWING CONDITIONS:
1) MAXIMUM SHORING HEIGHT IS 12'-0" (3.7m).
2) TRAFFIC SURCHARGE IS 240 PSF (11.5 KPA) MAXIMUM OR BACKSLOPE IS 2:1 (H:V) OR FLATTER.
3) BOTTOM OF EXCAVATION OR EXISTING GRADE IN FRONT OF SHORING IS 6:1 (H:V) SLOPE OR FLATTER.
4) H PILE SPACING IS 6'-0" (1.8m).
5) H PILE EMBEDMENT DEPTHS ARE FOR DRIVEN PILES.
6) TIMBER LAGGING IS A MINIMUM OF 3" (75mm) THICK.

STANDARD TEMPORARY SHORING IS BASED ON THE FOLLOWING IN-SITU ASSUMED SOIL PARAMETERS:
TOTAL UNIT WEIGHT = 120 PCF (18.8 KN/M^3)
FRICTION ANGLE = 30 DEGREES
COHESION = 0 PSF (0 KPA)
GROUNDWATER IS ASSUMED TO BE BELOW BOTTOM OF SHORING.

DO NOT USE STANDARD TEMPORARY SHORING WHEN THE ASSUMED SOIL PARAMETERS ARE NOT APPLICABLE OR GROUNDWATER IS ABOVE THE BOTTOM OF SHORING.

DO NOT USE STANDARD TEMPORARY SHORING WHEN VERY LOOSE OR SOFT SOIL OR MUCK IS PRESENT WITHIN THE EMBEDMENT DEPTH.

VERIFY GROUNDWATER ELEVATION BEFORE BEGINNING SHORING CONSTRUCTION.

IF THE CLEAR DISTANCE AVAILABLE IS LESS THAN THE MINIMUM REQUIRED IN ACCORDANCE WITH THE TRAFFIC CONTROL PLANS, SET THE BARRIER AGAINST THE TRAFFIC SIDE OF THE SHORING AND USE THE "SURCHARGE CASE WITH TRAFFIC IMPACT".

AT THE CONTRACTOR'S OPTION, H PILE EMBEDMENT DEPTHS FOR PILES SET IN DRILLED HOLES MAY BE REDUCED BY 25%. FOR PILE EXCAVATION, SEE TEMPORARY SHORING SPECIAL PROVISION.

CONTROL DRAINAGE DURING CONSTRUCTION IN THE VICINITY OF THE SHORING. COLLECT AND DIRECT RUNOFF AWAY FROM SHORING.

CONTACT THE ENGINEER IF MINIMUM REQUIRED EMBEDMENT IS NOT ACHIEVED.

STATE OF NORTH CAROLINA DEPARTMENT OF TRANSPORTATION

GEOTECHNICAL ENGINEERING UNIT

STATE OF NORTH CAROLINA DEPARTMENT OF TRANSPORTATION RALEIGH

STANDARD DRAWING NO. 1801.01

STANDARD TEMPORARY SHORING

DATE: 2-20-07

PROJECT REFERENCE NO.	SHEET
R-2309AB	2-A11

GEOTECHNICAL ENGINEER

NORTH CAROLINA PROFESSIONAL SEAL 022246 ENGINEER SCOTT A. HIDDEN

Scott A. Hidden 3/29/07

SIGNATURE DATE

ENGINEER

SIGNATURE DATE

STANDARD TEMPORARY MSE WALL OPTIONS

TEMPORARY MSE WALL OPTION	VENDOR	CONTACT INFORMATION	REINFORCEMENT TYPE	SHEETS
TEMPORARY FABRIC WALL	N/A	N/A	POLYESTER OR POLYPROPYLENE FABRIC	3
HILFIKER TEMPORARY WALL	HILFIKER RETAINING WALLS	1902 HILFIKER LANE, EUREKA, CA 95503-5711 707-443-5093 WWW.HILFIKER.COM	WELDED WIRE MAT	4
SIERRASCAPE TEMPORARY WALL	TENSAR EARTH TECHNOLOGIES, INC	5883 GLENRIDGE DRIVE, SUITE 200 ATLANTA, GA 30328-5363 404-250-1290 WWW.TENSARCORP.COM	GEOGRID	5
RETAINED EARTH TEMPORARY WALL	THE REINFORCED EARTH COMPANY	8614 WESTWOOD CENTER DRIVE, SUITE 1100 VIENNA, VA 22182-2233 703-749-4325 WWW.REINFORCEDEARTH.COM	WELDED WIRE MESH	6-8
TERRATREL TEMPORARY WALL	THE REINFORCED EARTH COMPANY	8614 WESTWOOD CENTER DRIVE, SUITE 1100 VIENNA, VA 22182-2233 703-749-4325 WWW.REINFORCEDEARTH.COM	RIBBED STEEL STRIPS	9-11

FOR STANDARD TEMPORARY MSE WALLS, SEE TEMPORARY SHORING SPECIAL PROVISION.

WHEN NOTES ON PLANS DO NOT PROHIBIT TEMPORARY MSE WALLS OR STANDARD SHORING, STANDARD TEMPORARY MSE WALLS ARE OPTIONAL.

WHEN NOTES ON PLANS REQUIRE TEMPORARY MSE WALLS, USE STANDARD TEMPORARY MSE WALLS OR CONTRACTOR DESIGNED TEMPORARY MSE WALLS.

WHEN THE ALIGNMENT OF STANDARD TEMPORARY MSE WALLS RESULTS IN AN INTERIOR ANGLE LESS THAN 90 DEGREES, SUBMIT AN ACUTE CORNER DETAIL FOR THE SPECIFIC SITUATION IN ACCORDANCE WITH THE WALL VENDOR RECOMMENDATIONS. ALSO, SUBMIT A "STANDARD TEMPORARY MSE WALL SELECTION FORM" FOR EACH TEMPORARY MSE WALL LOCATION. SUBMIT THESE ITEMS AT LEAST 14 DAYS BEFORE BEGINNING WALL CONSTRUCTION.

STANDARD TEMPORARY MSE WALLS ARE BASED ON THE FOLLOWING CONDITIONS:
1) MAXIMUM WALL HEIGHT IS 28'-0" (8.5m).
2) TRAFFIC SURCHARGE IS 240 PSF (11.5 KPA) MAXIMUM OR BACKSLOPE IS 2:1 (H:V) OR FLATTER.
3) EXISTING OR FINISHED GRADE IN FRONT OF WALL IS 6:1 (H:V) SLOPE OR FLATTER.
4) THE GRADE OF THE TOP OF WALL IS LESS THAN 4% FOR RETAINED EARTH AND TERRATREL TEMPORARY WALLS.
5) DESIGN SERVICE LIFE IS 3 YEARS.
6) MATERIAL IN REINFORCED ZONE IS SHORING BACKFILL.
7) MAXIMUM APPLIED BEARING PRESSURE IS 1 TSF (100 KPA) FOR WALL HEIGHTS UP TO 8'-0" (2.4m), 2 TSF (195 KPA) FOR WALL HEIGHTS BETWEEN 8'-0" AND 18'-0" (2.4m AND 5.5m) AND 3 TSF (290 KPA) FOR WALL HEIGHTS OVER 18'-0" (5.5m).

STANDARD TEMPORARY MSE WALLS ARE BASED ON THE FOLLOWING IN-SITU ASSUMMED SOIL PARAMETERS:
TOTAL UNIT WEIGHT = 120 PCF (18.8 KN/M^3)
FRICTION ANGLE = 30 DEGREES
COHESION = 0 PSF (0 KPA)
GROUNDWATER IS ASSUMED TO BE BELOW BOTTOM OF REINFORCED ZONE.

DO NOT USE STANDARD TEMPORARY MSE WALLS WHEN THE ASSUMED SOIL PARAMETERS ARE NOT APPLICABLE OR VERY LOOSE OR SOFT SOIL OR MUCK IS PRESENT BELOW THE BOTTOM OF REINFORCED ZONE.

CONTROL DRAINAGE DURING CONSTRUCTION IN THE VICINITY OF STANDARD TEMPORARY MSE WALLS. COLLECT AND DIRECT RUNOFF AWAY FROM WALLS AND SHORING BACKFILL.

EXCAVATE AS NECESSARY FOR STANDARD TEMPORARY MSE WALLS IN ACCORDANCE WITH THE FOLLOWING FOR THE WALL OPTION CHOSEN:
1) MINIMUM EMBEDMENT OF 18" (450mm) UNLESS WALL BEARS ON ROCK, CONCRETE OR PAVEMENT AS DETERMINED BY THE ENGINEER
2) VERTICAL STEPS IN INCREMENTS EQUAL TO THE VERTICAL REINFORCEMENT SPACING
3) WITH THE EXCEPTION OF EITHER THE FIRST OR LAST SECTION OF WALL, HORIZONTAL SECTION LENGTHS IN INCREMENTS EQUAL TO THE FOLLOWING:

STANDARD TEMPORARY MSE WALL OPTION	INCREMENT
TEMPORARY FABRIC WALL	9'-0" (2.7m) MIN (VARIES)
HILFIKER TEMPORARY WALL	10'-0" (3.0m) MIN (VARIES)
SIERRASCAPE TEMPORARY WALL	18'-7¼" (5.7m)
RETAINED EARTH TEMPORARY WALL	24'-0" (7.3m)
TERRATREL TEMPORARY WALL	19'-8" (6.0m)

DO NOT PLACE SHORING BACKFILL OR FIRST REINFORCEMENT LAYER UNTIL OBTAINING APPROVAL OF THE EXCAVATION DEPTH AND FOUNDATION MATERIAL.

IF APPLICABLE, INSTALL FOUNDATIONS LOCATED WITHIN THE REINFORCED ZONE BEFORE BEGINNING WALL CONSTRUCTION UNLESS DIRECTED OTHERWISE BY THE ENGINEER.

ERECT AND MAINTAIN FACINGS AND FORMS AS SHOWN ON THE STANDARD TEMPORARY MSE WALL DETAILS. STAGGER VERTICAL JOINTS OF FACINGS AND FORMS TO CREATE A RUNNING BOND WHEN POSSIBLE UNLESS SHOWN OTHERWISE ON THESE DETAILS.

PLACE FACINGS AND FORMS AS NEAR TO VERTICAL AS POSSIBLE WITH NO NEGATIVE BATTER. CONSTRUCT STANDARD TEMPORARY MSE WALLS WITH A VERTICAL AND HORIZONTAL TOLERANCE OF 3" (75mm) WHEN MEASURED WITH A 10'-0" (3m) STRAIGHT EDGE AND AN OVERALL VERTICAL PLUMBNESS (BATTER) AND HORIZONTAL ALIGNMENT OF LESS THAN 6" (150mm).

PLACE REINFORCEMENT AT LOCATIONS AND ELEVATIONS SHOWN ON THE STANDARD TEMPORARY MSE WALL DETAILS AND IN SLIGHT TENSION FREE OF KINKS, FOLDS, WRINKLES OR CREASES.

DO NOT SPLICE REINFORCEMENT IN THE REINFORCEMENT DIRECTION (RD), i.e., PARALLEL TO THE WALL FACE. SEAMS ARE ALLOWED IN THE CROSS-REINFORCEMENT DIRECTION (CRD).

CONTACT THE ENGINEER WHEN EXISTING OR FUTURE STRUCTURES SUCH AS FOUNDATIONS, PAVEMENTS, PIPES, INLETS OR UTILITIES WILL INTERFERE WITH REINFORCEMENT. TO AVOID STRUCTURES, DELFECT, SKEW AND MODIFY REINFORCEMENT.

PLACE SHORING BACKFILL IN 8" TO 10" (200mm to 250mm) THICK LIFTS AND COMPACT IN ACCORDANCE WITH SUBARTICLE 235-4(C) OF THE STANDARD SPECIFICATIONS. USE ONLY HAND OPERATED COMPACTION EQUIPMENT WITHIN 3'-0" (1m) OF THE WALL FACE.

DO NOT DAMAGE REINFORCEMENT WHEN PLACING AND COMPACTING SHORING BACKFILL. DO NOT OPERATE HEAVY EQUIPMENT ON REINFORCEMENT UNTIL IT IS COVERED WITH AT LEAST 10" (250mm) OF SHORING BACKFILL. DO NOT USE SHEEPSFOOT, GRID ROLLERS OR OTHER TYPES OF COMPACTION EQUIPMENT WITH FEET.

COVER REINFORCING AND RETENTION FABRIC WITH AT LEAST 3" (75mm) OF SHORING BACKFILL. PLACE TOP REINFORCEMENT LAYER BETWEEN 4" AND 24" (100mm and 600mm) BELOW TOP OF WALL DEPENDING ON WALL OPTION.

BENCH STANDARD TEMPORARY MSE WALLS INTO THE SIDES OF EXCAVATIONS WHERE APPLICABLE.

IF THE TOP OF WALL IS WITHIN 5'-0" (1.5m) OF FINISHED GRADE, REMOVE TOP FORM OR FACING AND INCORPORATE THE TOP REINFORCEMENT LAYER INTO THE FILL WHEN PLACING FILL IN FRONT OF THE WALL. STANDARD TEMPORARY MSE WALLS REMAIN IN PLACE PERMANENTLY UNLESS REQUIRED OTHERWISE.

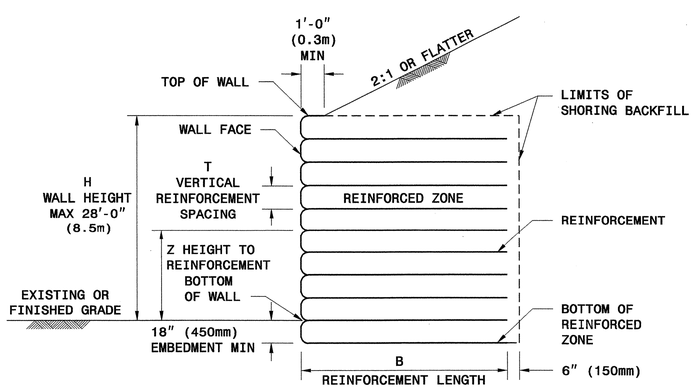

SLOPE CASE

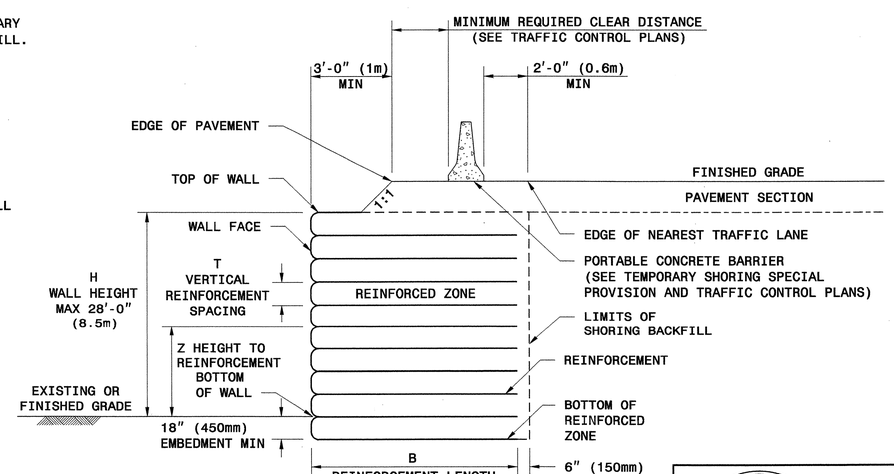

SURCHARGE CASE

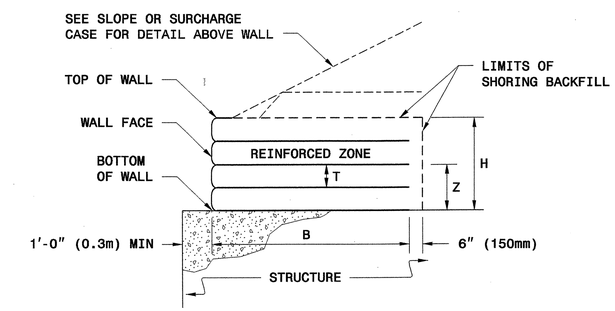

TEMPORARY MSE WALL ON STRUCTURE

STATE OF NORTH CAROLINA DEPARTMENT OF TRANSPORTATION

GEOTECHNICAL ENGINEERING UNIT

STATE OF NORTH CAROLINA DEPARTMENT OF TRANSPORTATION RALEIGH

STANDARD DRAWING NO. 1801.02

STANDARD TEMPORARY MECHANICALLY STABILIZED EARTH (MSE) WALLS

SHEET 1 OF 11 DATE: 2-20-07

PROJECT REFERENCE NO.	SHEET
R-2309AB	2-AE

GEOTECHNICAL ENGINEER

NORTH CAROLINA PROFESSIONAL SEAL 022246 ENGINEER SCOTT A. HIDDEN

Scott A. Hidden 3/29/07

SIGNATURE DATE

ENGINEER

SIGNATURE DATE

HOW TO USE THIS SHEET:

- FOR ALL WALL OPTIONS, DETERMINE MINIMUM REQUIRED REINFORCEMENT LENGTH (B) FROM TABLE AT RIGHT BASED ON WALL HEIGHT (H) AND SLOPE OR SURCHARGE CASE
- FOR STANDARD TEMPORARY FABRIC WALL, SEE SHEET 3 FOR FABRIC STRENGTH REQUIREMENTS BASED ON WALL HEIGHT (H)
- FOR ALL OTHER WALL OPTIONS, DETERMINE REINFORCEMENT TYPE FROM TABLES BELOW FOR EACH HEIGHT TO REINFORCEMENT (Z) BASED ON WALL HEIGHT (H) AND SLOPE OR SURCHARGE CASE

MINIMUM REQUIRED REINFORCEMENT LENGTH B (FT)

(FOR ALL WALL OPTIONS)

WALL HEIGHT H (FT)	<8	8 TO 10	10 TO 12	12 TO 14	14 TO 16	16 TO 18	18 TO 20	20 TO 22	22 TO 24	24 TO 26	26 TO 28
SLOPE CASE	8	11	13	14	16	18	20	22	24	25	27
SURCHARGE CASE	8	9	11	12	14	15	16	18	19	21	22

TERRATREL TEMPORARY WALL (STRIPS PER LEVEL PER PANEL)

H (FT)

<4	4 TO 6	6 TO 8	8 TO 10	10 TO 12	12 TO 14	14 TO 16	16 TO 18	18 TO 20	20 TO 22	22 TO 24	24 TO 26	26 TO 28	Z (FT-INCHES)
												3	27 - 8
											3	3	26 -10
											3	3	25 - 2
										3	3	3	23 - 6
									3	3	3	3	21 -10
								3	3	3	3	3	20 - 2
							3	3	3	3	3	3	18 - 6
						3	3	3	3	3	3	3	16 -10
						3	3	3	3	3	3	3	15 - 2
					4	3	3	3	3	3	3	3	13 - 6
				4	4	3	3	3	3	3	3	3	11 -10
			5	4	4	3	3	3	3	3	3	3	10 - 2
		5	5	4	4	3	3	3	3	3	3	3	8 - 6
	5	5	5	4	4	3	3	3	3	3	3	3	6 -10
	5	5	5	4	4	3	3	3	3	3	3	3	5 - 2
5	5	5	5	4	4	3	3	3	3	3	3	3	3 - 6
5	5	5	5	4	4	3	3	3	3	3	3	3	1 -10
5	5	5	5	4	4	3	3	3	3	3	3	3	0 - 2
5	5	5	5	4	4	3	3	3	3	3	3	3	-0 - 8

SLOPE AND SURCHARGE CASES

SIERRASCAPE TEMPORARY WALL (GEOGRID TYPE)

11 = UX1100MSE
14 = UX1400MSE
15 = UX1500MSE
16 = UX1600MSE
17 = UX1700MSE

H (FT)

<4	4 TO 6	6 TO 8	8 TO 10	10 TO 12	12 TO 14	14 TO 16	16 TO 18	18 TO 20	20 TO 22	22 TO 24	24 TO 26	26 TO 28	Z (FT)
												11	26.5
											11	11	25.5
											11	11	24
										11	11	11	22.5
									11	11	11	15	21
								11	11	11	14	15	19.5
								11	11	11	14	15	18
							11	11	11	14	15	15	16.5
						11	11	11	11	14	15	15	15
					11	11	11	11	15	15	15	15	13.5
					11	11	11	15	15	15	15	15	12
				11	11	11	11	15	15	15	15	16	10.5
			11	11	11	11	15	15	15	15	15	16	9
		11	11	11	11	14	15	15	15	15	16	16	7.5
		11	11	11	11	14	15	15	15	16	16	16	6
	11	11	11	11	15	15	15	15	15	16	16	17	4.5
11	11	11	11	14	15	15	15	15	16	16	16	17	3
11	11	11	11	14	15	15	15	16	16	16	17	17	1.5
11	11	11	14	15	15	15	15	16	16	17	17	17	0
11	11	11	14	15	15	15	15	16	16	17	17	17	-1.5

SLOPE CASE

H (FT)

<4	4 TO 6	6 TO 8	8 TO 10	10 TO 12	12 TO 14	14 TO 16	16 TO 18	18 TO 20	20 TO 22	22 TO 24	24 TO 26	26 TO 28	Z (FT)
												11	26.5
												11	25.5
											11	11	24
										11	11	11	22.5
									11	11	11	15	21
								11	11	11	14	15	19.5
								11	11	11	14	15	18
							11	11	11	14	15	15	16.5
						11	11	11	11	14	15	15	15
					11	11	11	11	15	15	15	15	13.5
					11	11	11	15	15	15	15	15	12
				11	11	11	11	15	15	15	15	16	10.5
			11	11	11	11	15	15	15	15	15	16	9
		11	11	11	11	14	15	15	15	15	16	16	7.5
		11	11	11	11	14	15	15	15	16	16	16	6
	11	11	11	11	15	15	15	15	15	16	16	17	4.5
11	11	11	11	14	15	15	15	15	16	16	16	17	3
11	11	11	11	14	15	15	15	16	16	16	17	17	1.5
11	11	11	14	15	15	15	15	16	16	17	17	17	0
11	11	11	14	15	15	15	15	16	16	17	17	17	-1.5

SURCHARGE CASE

HILFIKER TEMPORARY WALL (WELDED WIRE MAT TYPE)

4.5 = W4.5 x W3.5
7.0 = W7.0 x W3.5
9.5 = W9.5 x W4.0

H (FT)

<4	4 TO 6	6 TO 8	8 TO 10	10 TO 12	12 TO 14	14 TO 16	16 TO 18	18 TO 20	20 TO 22	22 TO 24	24 TO 26	26 TO 28	Z (FT)
												4.5	26
											4.5	7.0	24
										4.5	7.0	7.0	22
									4.5	7.0	7.0	7.0	20
								4.5	7.0	7.0	7.0	7.0	18
							4.5	7.0	7.0	7.0	7.0	7.0	16
						4.5	7.0	7.0	7.0	7.0	7.0	9.5	14
					4.5	7.0	7.0	7.0	7.0	7.0	9.5	9.5	12
				4.5	7.0	7.0	7.0	7.0	9.5	9.5	9.5	9.5	10
			4.5	7.0	7.0	7.0	7.0	7.0	9.5	9.5	9.5	9.5	8
		4.5	7.0	7.0	7.0	7.0	7.0	9.5	9.5	9.5	9.5	9.5	6
	4.5	7.0	7.0	7.0	7.0	7.0	9.5	9.5	9.5	9.5	9.5	9.5	4
	N/A	N/A	N/A	N/A	N/A	N/A	N/A	N/A	N/A	N/A	N/A	N/A	3
4.5	7.0	7.0	7.0	7.0	7.0	9.5	9.5	9.5	9.5	9.5	9.5	7.0	2
N/A	N/A	N/A	N/A	N/A	N/A	N/A	N/A	N/A	N/A	N/A	7.0	7.0	1
7.0	7.0	7.0	7.0	7.0	9.5	9.5	9.5	9.5	9.5	9.5	7.0	7.0	0
7.0	7.0	7.0	7.0	7.0	9.5	9.5	9.5	9.5	9.5	9.5	9.5	9.5	-1.5

SLOPE CASE

H (FT)

<4	4 TO 6	6 TO 8	8 TO 10	10 TO 12	12 TO 14	14 TO 16	16 TO 18	18 TO 20	20 TO 22	22 TO 24	24 TO 26	26 TO 28	Z (FT)
												4.5	26
											4.5	7.0	24
										4.5	7.0	7.0	22
									4.5	7.0	7.0	7.0	20
								4.5	7.0	7.0	7.0	7.0	18
							4.5	7.0	7.0	7.0	7.0	7.0	16
						4.5	7.0	7.0	7.0	7.0	7.0	7.0	14
					4.5	7.0	7.0	7.0	7.0	7.0	7.0	9.5	12
				4.5	7.0	7.0	7.0	7.0	7.0	7.0	9.5	9.5	10
			4.5	7.0	7.0	7.0	7.0	7.0	7.0	9.5	9.5	9.5	8
		4.5	7.0	7.0	7.0	7.0	7.0	7.0	9.5	9.5	9.5	9.5	6
	4.5	7.0	7.0	7.0	7.0	7.0	7.0	9.5	9.5	9.5	9.5	9.5	4
4.5	7.0	7.0	7.0	7.0	7.0	7.0	9.5	9.5	9.5	9.5	9.5	9.5	2
N/A	N/A	N/A	N/A	N/A	N/A	N/A	N/A	N/A	N/A	N/A	N/A	N/A	1
7.0	7.0	7.0	7.0	7.0	7.0	9.5	9.5	9.5	9.5	9.5	9.5	7.0	0
7.0	7.0	7.0	7.0	7.0	7.0	9.5	9.5	9.5	9.5	9.5	9.5	9.5	-1.5

SURCHARGE CASE

RETAINED EARTH TEMPORARY WALL (WELDED WIRE MESH TYPE)

3X1 = 3W8 x W8 x 1.0′
3X2 = 3W8 x W8 x 2.0′

H (FT)

<4	4 TO 6	6 TO 8	8 TO 10	10 TO 12	12 TO 14	14 TO 16	16 TO 18	18 TO 20	20 TO 22	22 TO 24	24 TO 26	26 TO 28	Z (FT-INCHES)
												3X1	27 - 6
												3X1	26 -10
											3X1	3X2	25 - 2
										3X1	3X1	3X2	23 - 6
									3X1	3X1	3X2	3X2	21 -10
								3X1	3X1	3X2	3X2	3X2	20 - 2
							3X1	3X1	3X2	3X2	3X2	3X2	18 - 6
							3X1	3X2	3X2	3X2	3X2	3X2	16 -10
						3X1	3X2	3X2	3X2	3X2	3X2	3X2	15 - 2
					3X1	3X1	3X2	3X2	3X2	3X2	3X2	3X2	13 - 6
				3X1	3X1	3X2	3X2	3X2	3X2	3X2	3X2	3X2	11 -10
			3X1	3X1	3X2	3X2	3X2	3X2	3X2	3X2	3X2	3X2	10 - 2
		3X1	3X1	3X2	3X2	3X2	3X2	3X2	3X2	3X2	3X2	3X2	8 - 6
		3X1	3X2	3X2	3X2	3X2	3X2	3X2	3X2	3X2	3X2	3X2	6 -10
	3X1	3X2	3X2	3X2	3X2	3X2	3X2	3X2	3X2	3X2	3X2	3X2	5 - 2
3X1	3X1	3X2	3X2	3X2	3X2	3X2	3X2	3X2	3X2	3X2	3X2	3X2	3 - 6
3X1	3X2	3X2	3X2	3X2	3X2	3X2	3X2	3X2	3X2	3X2	3X2	3X2	1 -10
3X2	3X2	3X2	3X2	3X2	3X2	3X2	3X2	3X2	3X2	3X2	3X2	3X2	0 - 2
3X2	3X2	3X2	3X2	3X2	3X2	3X2	3X2	3X2	3X2	3X2	3X2	3X2	-1 - 6

SLOPE AND SURCHARGE CASES

NOTES FOR HILFIKER TEMPORARY WALL

1) CAP MAT AT TOP OF WALL IS NOT INCLUDED IN TABLES.

2) REINFORCEMENT IS NOT REQUIRED AT 1′ LEVEL FOR SLOPE CASE UNTIL WALL HEIGHT (H) IS GREATER THAN 24′.

3) REINFORCEMENT IS NOT REQUIRED AT 3′ LEVEL FOR SLOPE CASE UNTIL WALL HEIGHT (H) IS GREATER THAN 26′.

4) REINFORCEMENT IS NOT REQUIRED AT 1′ LEVEL FOR SURCHARGE CASE UNTIL WALL HEIGHT (H) IS GREATER THAN 26′.

STATE OF NORTH CAROLINA DEPARTMENT OF TRANSPORTATION

GEOTECHNICAL ENGINEERING UNIT

STATE OF NORTH CAROLINA DEPARTMENT OF TRANSPORTATION RALEIGH

STANDARD DRAWING NO. 1801.02

STANDARD TEMPORARY MSE WALL REINFORCEMENT TABLES - ENGLISH UNITS

SHEET 2 OF 11 DATE: 2-20-07

PROJECT REFERENCE NO.	SHEET
R-2309AB	2-AJ

GEOTECHNICAL ENGINEER

NORTH CAROLINA PROFESSIONAL SEAL 022246 ENGINEER SCOTT A. HIDDEN

Scott A. Hidden 3/29/07

SIGNATURE DATE

ENGINEER

SIGNATURE DATE

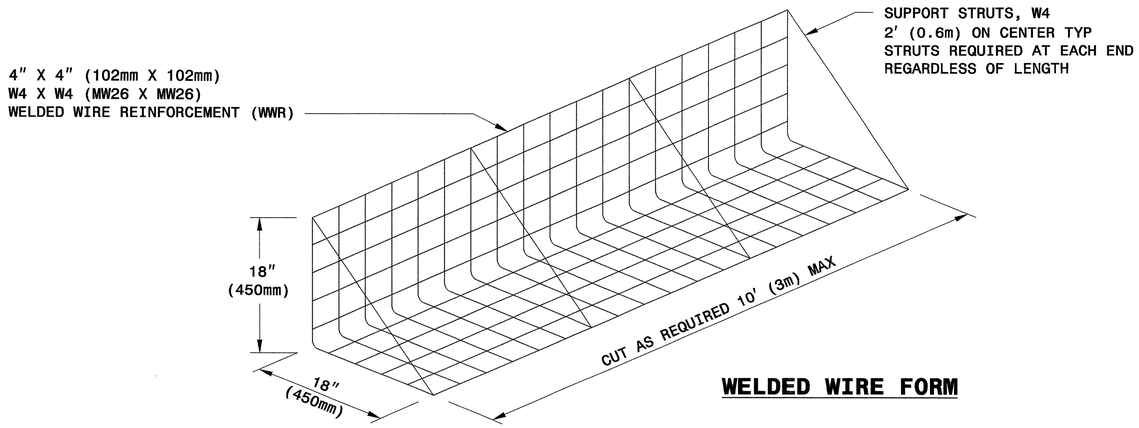

WELDED WIRE FORM

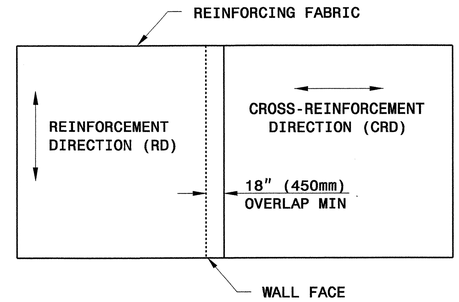

PLAN VIEW OF FABRIC OVERLAP

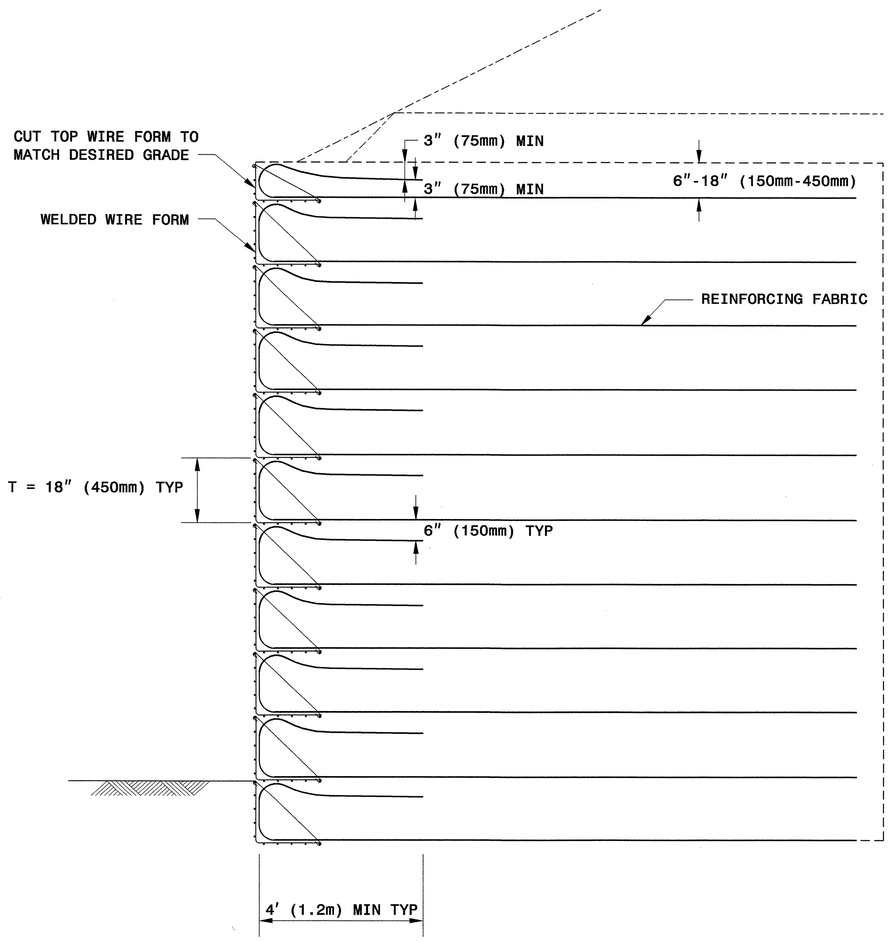

TYPICAL SECTION

MINIMUM REQUIRED REINFORCING FABRIC STRENGTH FOR RD*
(SLOPE AND SURCHARGE CASES)

WALL HEIGHT H FEET (M)	POLYESTER WIDE WIDTH TENSILE STRENGTH @ ULTIMATE LB/INCH (KN/M)	POLYPROPYLENE WIDE WIDTH TENSILE STRENGTH @ ULTIMATE LB/INCH (KN/M)
4 (1.2)	200 (35)	200 (35)
6 (1.8)	200 (35)	200 (35)
8 (2.4)	200 (35)	200 (35)
10 (3.0)	200 (35)	230 (40)
12 (3.7)	220 (39)	264 (46)
14 (4.3)	248 (43)	297 (52)
16 (4.9)	276 (48)	330 (58)
18 (5.5)	304 (53)	364 (64)
20 (6.1)	332 (58)	397 (70)
22 (6.7)	359 (63)	431 (76)
24 (7.3)	387 (68)	464 (81)
26 (7.9)	415 (73)	497 (87)
28 (8.5)	443 (78)	531 (93)

*RD = REINFORCEMENT DIRECTION

STATE OF NORTH CAROLINA DEPARTMENT OF TRANSPORTATION

GEOTECHNICAL ENGINEERING UNIT

STATE OF NORTH CAROLINA
DEPARTMENT OF TRANSPORTATION
RALEIGH

STANDARD DRAWING NO. 1801.02

TEMPORARY
FABRIC WALL

SHEET 3 OF 11 DATE: 12-19-06

PROJECT REFERENCE NO.	SHEET
R-2309AB	2-AK

GEOTECHNICAL ENGINEER

NORTH CAROLINA PROFESSIONAL SEAL 022246 ENGINEER SCOTT A. HIDDEN

Scott A. Hidden 3/29/07
SIGNATURE DATE

ENGINEER

SIGNATURE DATE

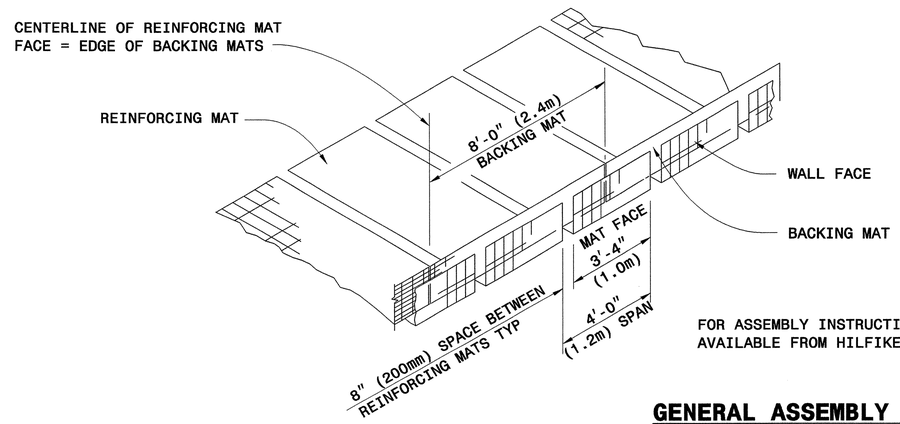

FOR ASSEMBLY INSTRUCTIONS, SEE WELDED WIRE WALL CONSTRUCTION GUIDE AVAILABLE FROM HILFIKER WEBSITE AT WWW.HILFIKER.COM/WWW

GENERAL ASSEMBLY DETAIL

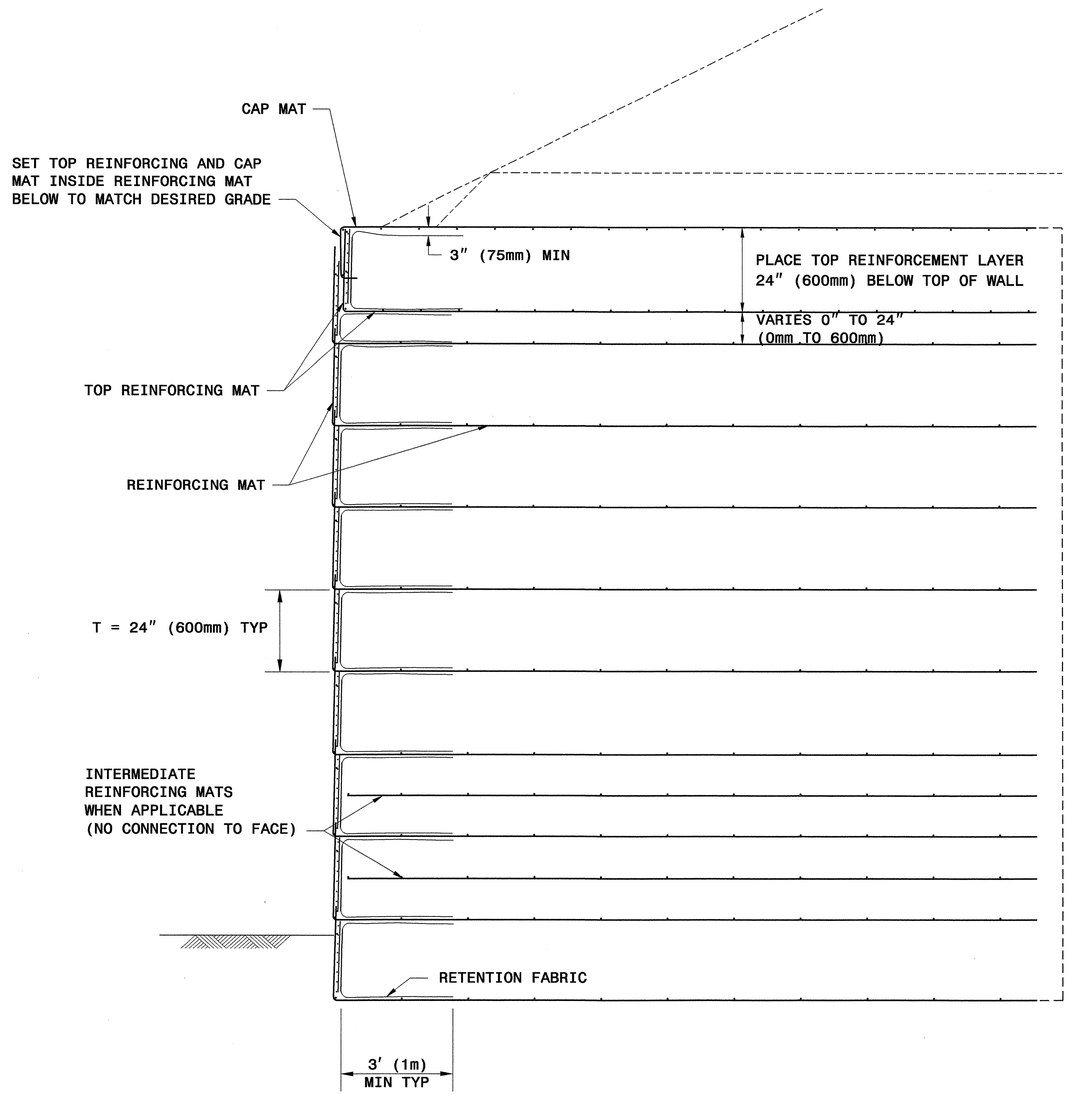

TYPICAL SECTION

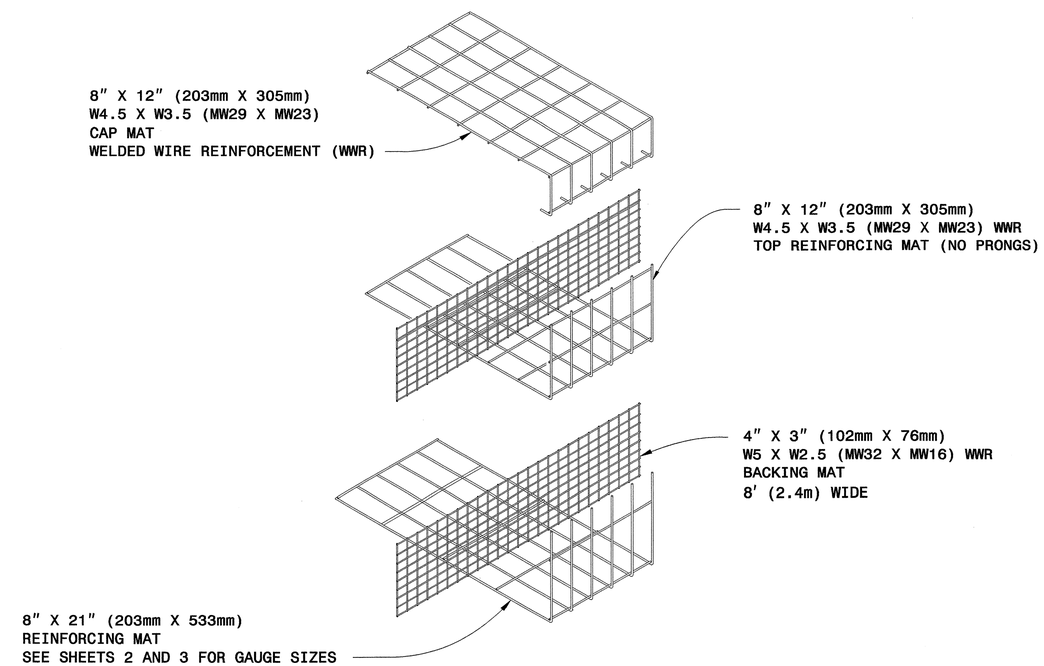

WALL COMPONENTS

HILFIKER RETAINING WALLS

STATE OF NORTH CAROLINA DEPARTMENT OF TRANSPORTATION

GEOTECHNICAL ENGINEERING UNIT

STATE OF NORTH CAROLINA
DEPARTMENT OF TRANSPORTATION
RALEIGH

STANDARD DRAWING NO. 1801.02

HILFIKER
TEMPORARY WALL

SHEET 4 OF 11 DATE: 12-19-06

PROJECT REFERENCE NO.	SHEET
R-2309AB	2-AL

GEOTECHNICAL ENGINEER

NORTH CAROLINA PROFESSIONAL SEAL 022246 ENGINEER SCOTT A. HIDDEN

Scott A. Hidden 3/29/07
SIGNATURE DATE

ENGINEER

SIGNATURE DATE

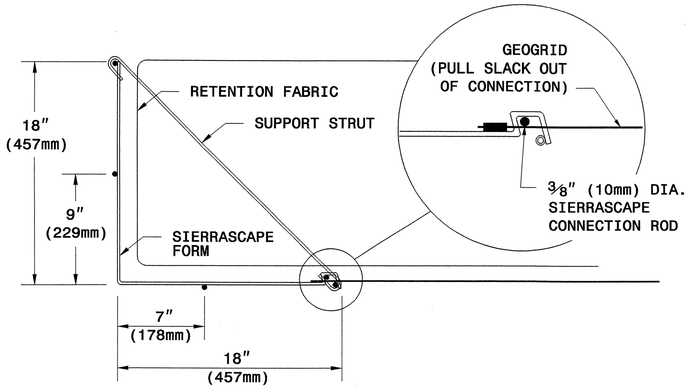

WALL FACE DETAIL

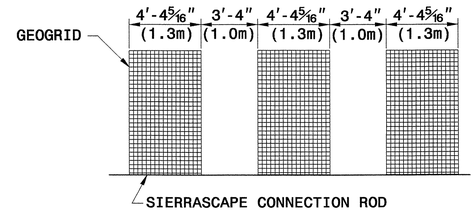

PLACE ALTERNATE LAYERS OF GEOGRID IN STAGGERED PATTERN
SUCH THAT THE LAYER ABOVE IS CENTERED OVER SPACE BELOW

TYPICAL GEOGRID COVERAGE

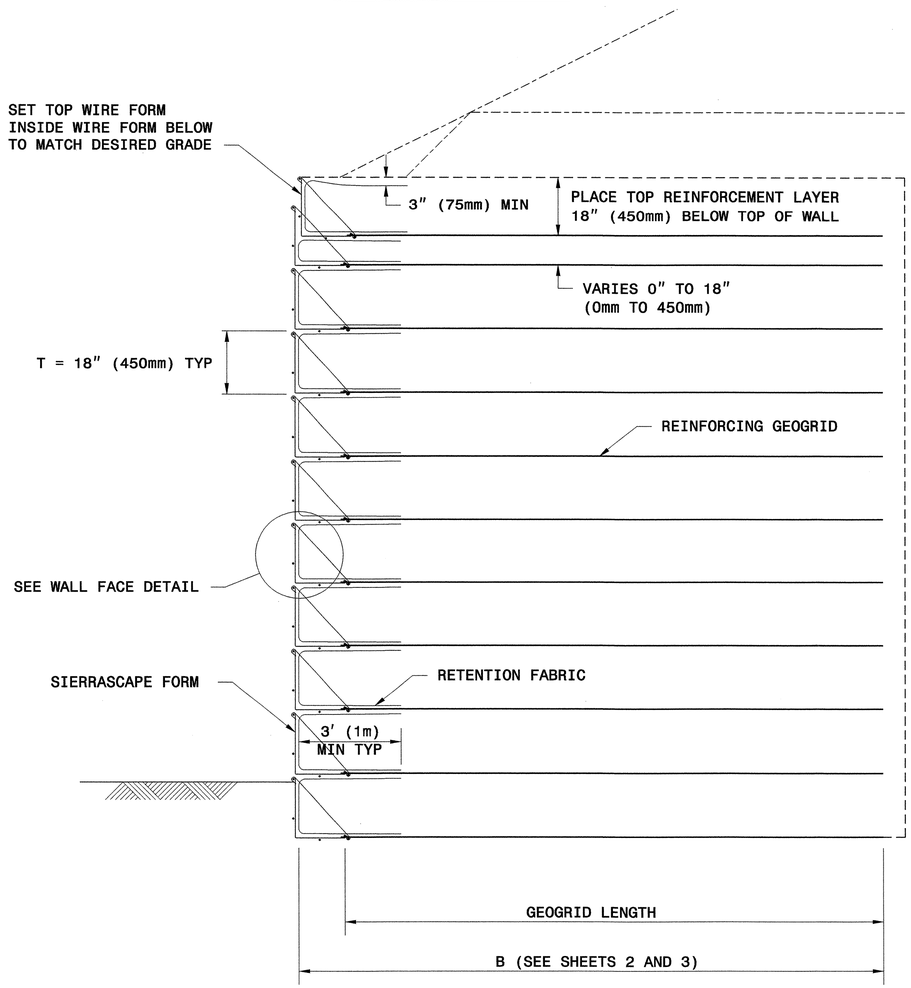

TYPICAL SECTION

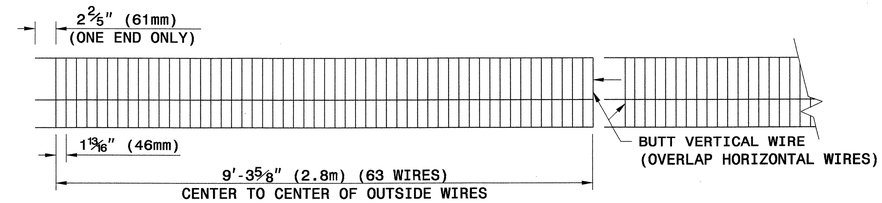

ELEVATION VIEW

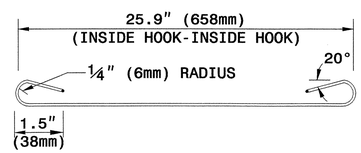

SUPPORT STRUT

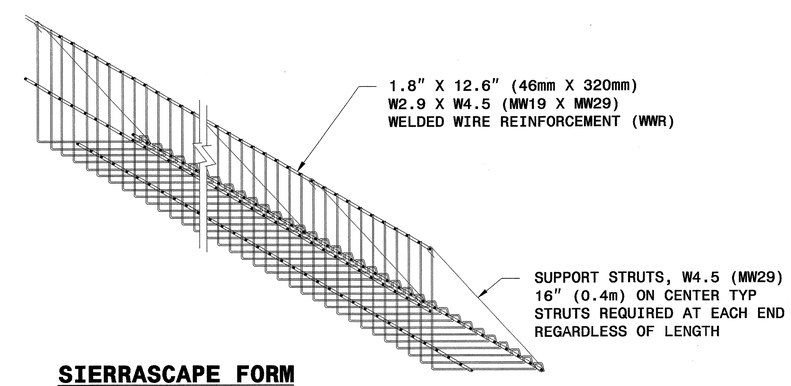

SIERRASCAPE FORM

WALL COMPONENTS

TENSAR®
TENSAR EARTH TECHNOLOGIES, INC.

STATE OF NORTH CAROLINA DEPARTMENT OF TRANSPORTATION

GEOTECHNICAL ENGINEERING UNIT

STATE OF NORTH CAROLINA
DEPARTMENT OF TRANSPORTATION
RALEIGH

STANDARD DRAWING NO. 1801.02

SIERRASCAPE
TEMPORARY WALL

SHEET 5 OF 11 DATE: 12-19-06

PROJECT REFERENCE NO.	SHEET
R-2309AB	2-AM

GEOTECHNICAL ENGINEER

NORTH CAROLINA PROFESSIONAL SEAL 022246 ENGINEER SCOTT A. HIDDEN

Scott A. Hidden 3/29/07
SIGNATURE DATE

ENGINEER

SIGNATURE DATE

PANEL LAYOUTS

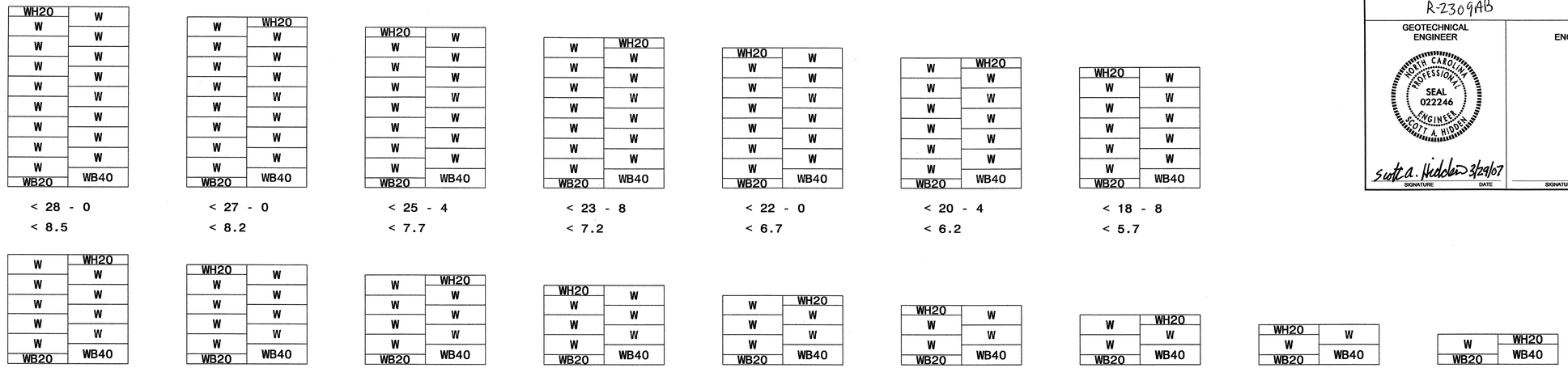

H - WALL HEIGHT																	
(FEET-INCHES)	< 28 - 0	< 27 - 0	< 25 - 4	< 23 - 8	< 22 - 0	< 20 - 4	< 18 - 8	< 17 - 0	< 15 - 4	< 13 - 8	< 12 - 0	< 10 - 4	< 8 - 8	< 7 - 0	< 5 - 4	< 3 - 8
(METER)	< 8.5	< 8.2	< 7.7	< 7.2	< 6.7	< 6.2	< 5.7	< 5.2	< 4.7	< 4.2	< 3.7	< 3.2	< 2.6	< 2.1	< 1.6	< 1.1

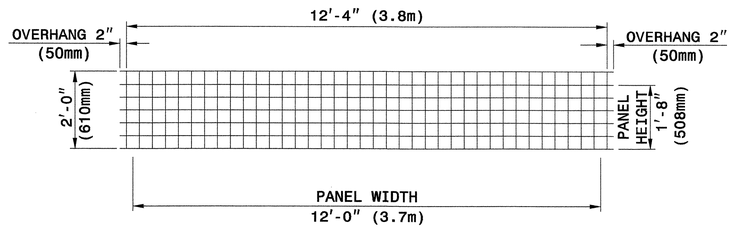

TYPE WH20

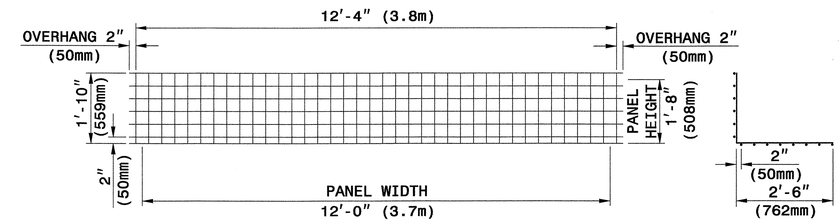

TYPE WB20 **SECTION**

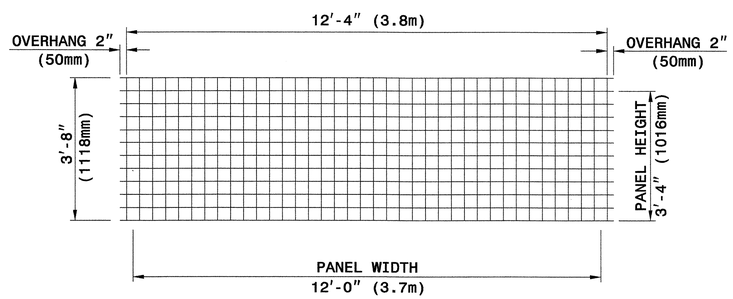

TYPE W

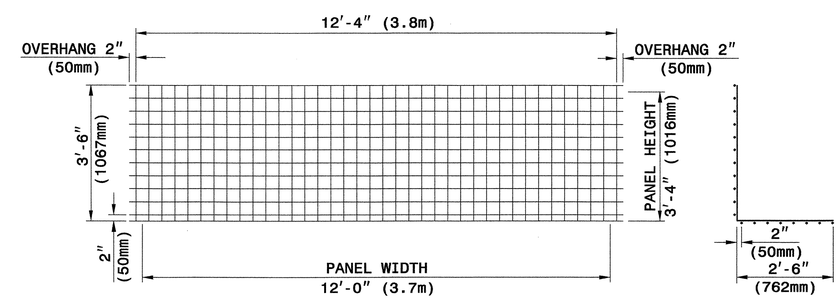

TYPE WB40 **SECTION**

WELDED WIRE FACINGS **WELDED WIRE FORMS**

PANEL TYPES (WELDED WIRE FACINGS AND FORMS)

4" X 4" (100mm X 100mm), W8 X W8 (MW52 X MW52) WELDED WIRE REINFORCEMENT (WWR)

The Reinforced Earth Company

STATE OF NORTH CAROLINA DEPARTMENT OF TRANSPORTATION

GEOTECHNICAL ENGINEERING UNIT

STATE OF NORTH CAROLINA DEPARTMENT OF TRANSPORTATION RALEIGH

STANDARD DRAWING NO. 1801.02

RETAINED EARTH TEMPORARY WALL

SHEET 6 OF 11 DATE: 12-19-06

PROJECT REFERENCE NO.	SHEET
R-2309AB	2-AN

GEOTECHNICAL ENGINEER

NORTH CAROLINA PROFESSIONAL SEAL 022246 ENGINEER SCOTT A. HIDDEN

Scott A. Hidden 3/29/07
SIGNATURE DATE

ENGINEER

SIGNATURE DATE

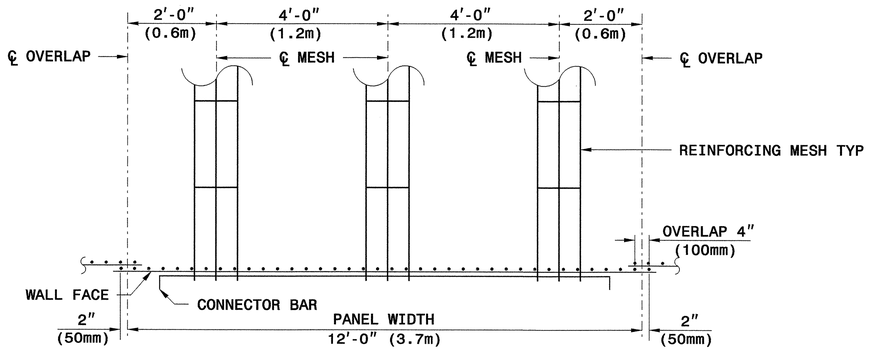

REINFORCING MESH PLACEMENT DETAIL
(PLAN VIEW)

½" (13mm) DIA. BAR

CONNECTOR BAR

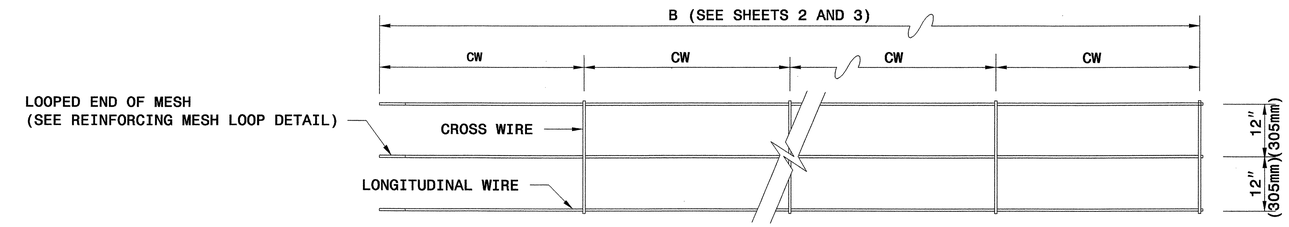

IF REINFORCEMENT LENGTH IS NOT AN INCREMENT OF 2'-0" (610mm) MAKE CW EQUAL TO 12" (305mm) AT THE END OF THE REINFORCING MESH OPPOSITE THE LOOPED END

3W8 X W8 x 2.0' (3MW52 X MW52 X 610mm)

NO. OF LONGITUDINAL WIRES
GAUGE OF LONGITUDINAL WIRES
GAUGE OF CROSS WIRES
SPACING OF CROSS WIRES IN FT (mm), CW

REINFORCING MESH DESIGNATION

REINFORCING MESH

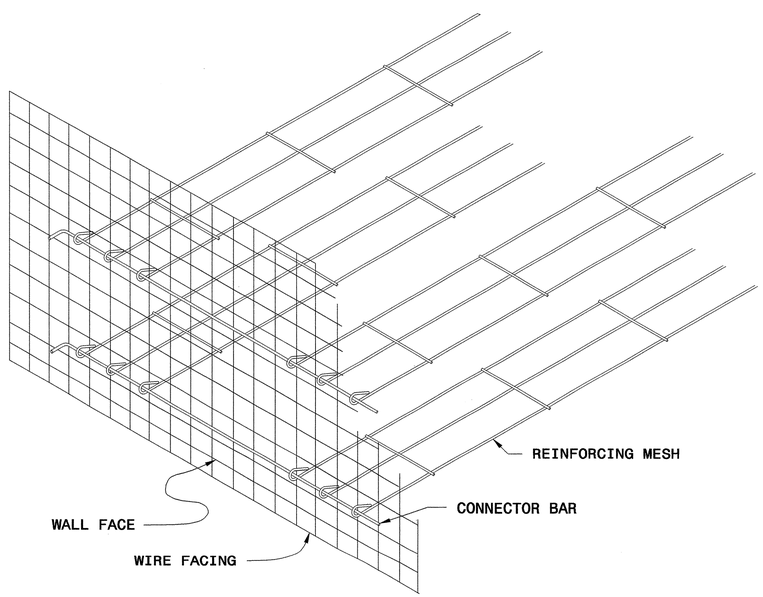

GENERAL ASSEMBLY DETAIL

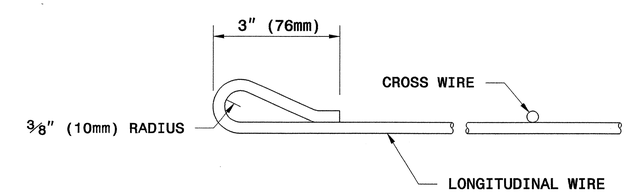

REINFORCING MESH LOOP DETAIL

The Reinforced Earth Company

STATE OF NORTH CAROLINA DEPARTMENT OF TRANSPORTATION

GEOTECHNICAL ENGINEERING UNIT

STATE OF NORTH CAROLINA DEPARTMENT OF TRANSPORTATION RALEIGH

STANDARD DRAWING NO. 1801.02

RETAINED EARTH TEMPORARY WALL

SHEET 7 OF 11 DATE: 12-19-06

PROJECT REFERENCE NO.	SHEET
R-2309AB	2-A0

GEOTECHNICAL ENGINEER

NORTH CAROLINA PROFESSIONAL SEAL 022246 ENGINEER SCOTT A. HIDDEN

Scott A. Hidden 3/29/07

SIGNATURE DATE

ENGINEER

SIGNATURE DATE

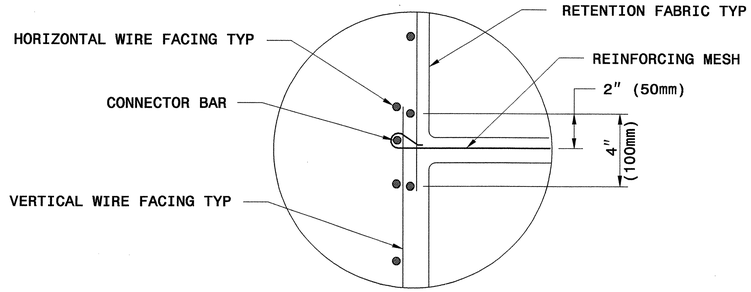

OVERLAP DETAIL

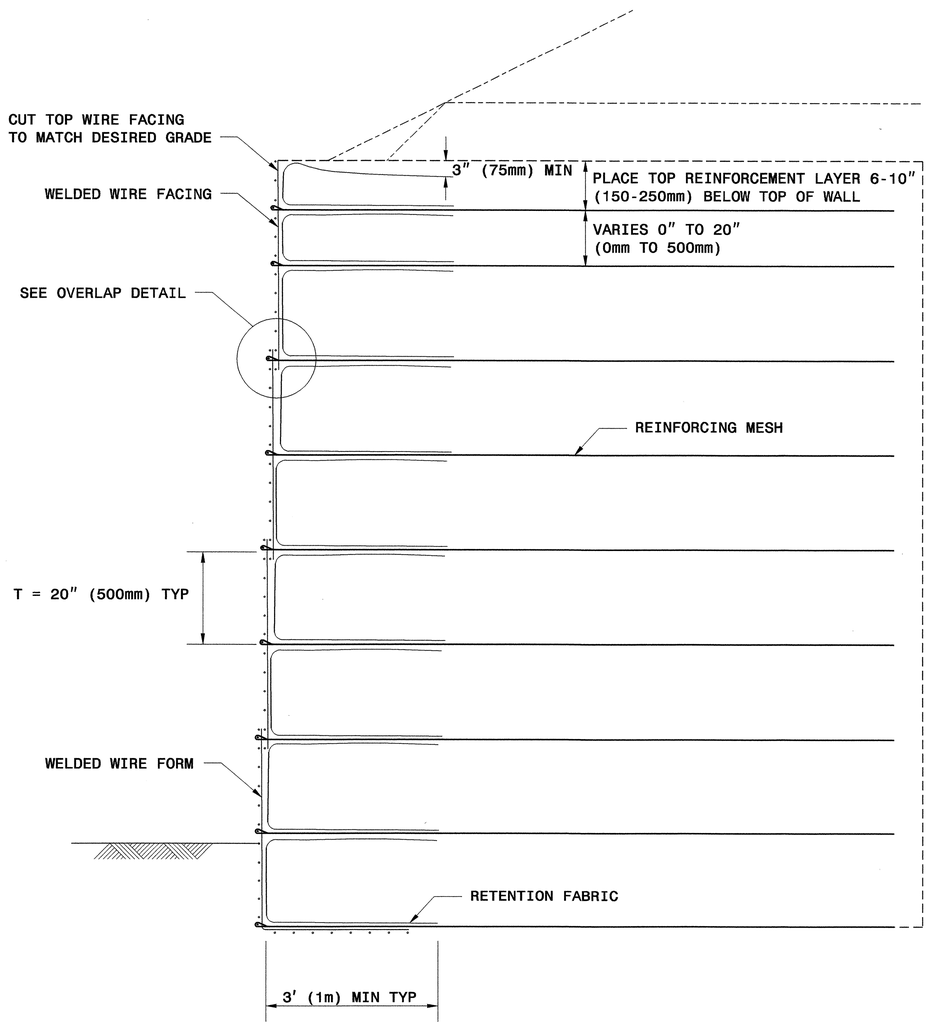

TYPICAL SECTION

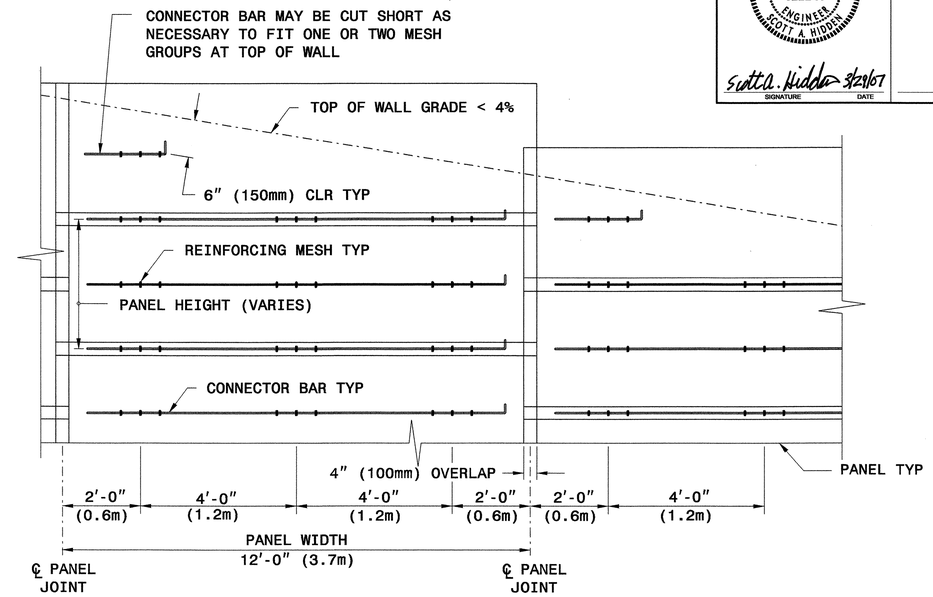

TYPICAL ELEVATION @ TOP OF WALL
(WIRES NOT SHOWN FOR CLARITY)

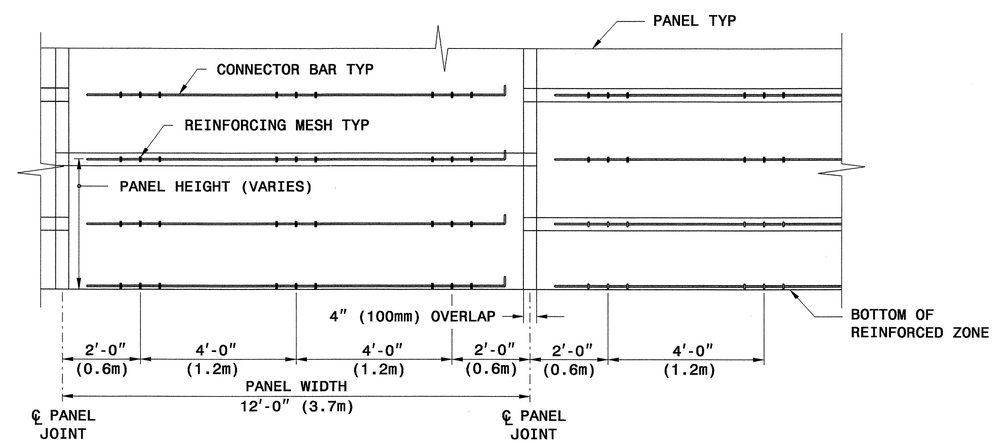

TYPICAL ELEVATION @ BOTTOM OF WALL
(WIRES NOT SHOWN FOR CLARITY)

The Reinforced Earth Company

STATE OF NORTH CAROLINA DEPARTMENT OF TRANSPORTATION

GEOTECHNICAL ENGINEERING UNIT

STATE OF NORTH CAROLINA
DEPARTMENT OF TRANSPORTATION
RALEIGH

STANDARD DRAWING NO. 1801.02

RETAINED EARTH
TEMPORARY WALL

SHEET 8 OF 11

DATE: 12-19-06

PROJECT REFERENCE NO.	SHEET
R-2309AB	2-AP

GEOTECHNICAL ENGINEER

NORTH CAROLINA PROFESSIONAL SEAL 022246 ENGINEER SCOTT A. HIDDEN

Scott A. Hidden 3/29/07

SIGNATURE DATE

ENGINEER

SIGNATURE DATE

PANEL LAYOUTS

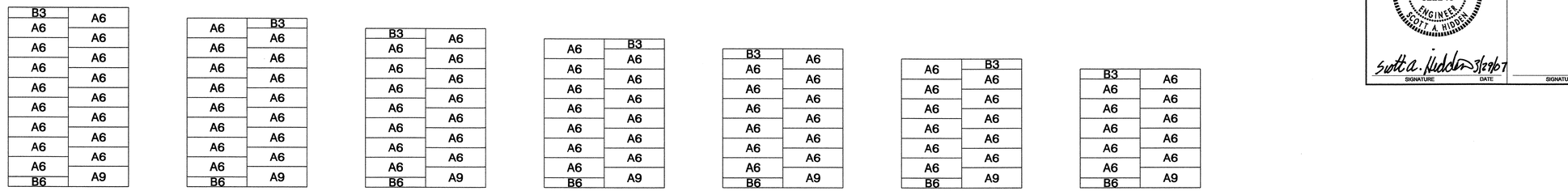

H - WALL HEIGHT							
(FEET-INCHES)	< 28 - 0	< 27 - 8	< 26 - 0	< 24 - 4	< 22 - 8	< 21 - 0	< 19 - 4
(METER)	< 8.5	< 8.4	< 7.9	< 7.4	< 6.9	< 6.4	< 5.9

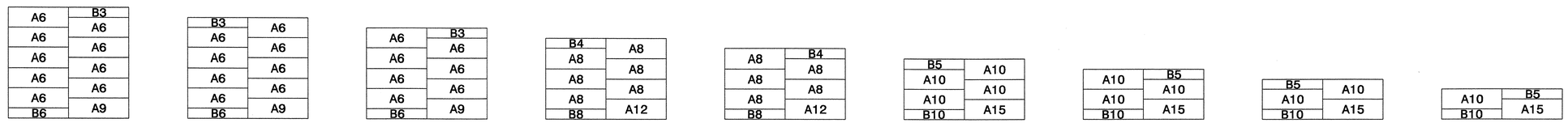

(FEET-INCHES)	< 17 - 8	< 16 - 0	< 14 - 4	< 12 - 8	< 11 - 0	< 9 - 4	< 7 - 8	< 6 - 0	< 4 - 4
(METER)	< 5.4	< 4.9	< 4.4	< 3.9	< 3.4	< 2.8	< 2.3	< 1.8	< 1.3

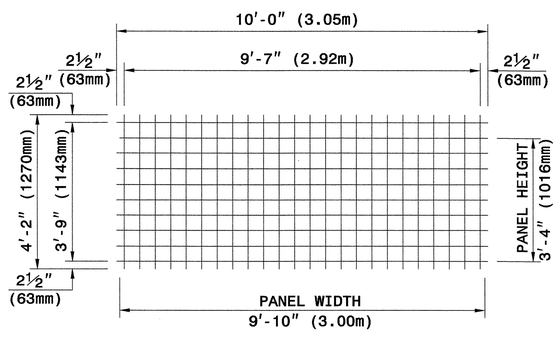

TYPE A

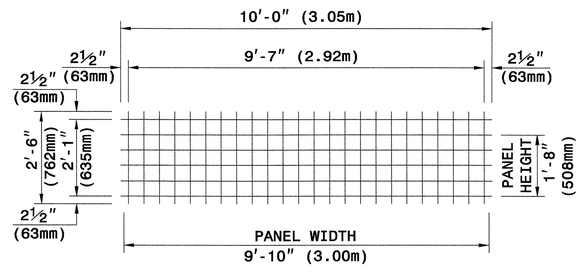

TYPE B

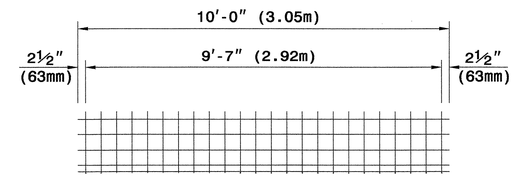

WELDED WIRE FORM

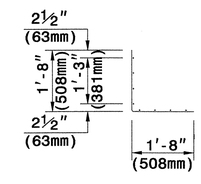

SECTION

WELDED WIRE FACINGS

PANEL TYPES (WELDED WIRE FACINGS AND FORM

5" X 5" (125mm X 125mm), W5 X W5 (MW32 X MW32) WELDED WIRE REINFORCEMENT (WWR)

The Reinforced Earth Company

STATE OF NORTH CAROLINA DEPARTMENT OF TRANSPORTATION

GEOTECHNICAL ENGINEERING UNIT

STATE OF NORTH CAROLINA
DEPARTMENT OF TRANSPORTATION
RALEIGH

STANDARD DRAWING NO. 1801.02

TERRATREL
TEMPORARY WALL

SHEET 9 OF 11 DATE: 12-19-06

PROJECT REFERENCE NO.	SHEET
R-2309AB	2-AQ

GEOTECHNICAL ENGINEER

NORTH CAROLINA PROFESSIONAL SEAL 022246 ENGINEER SCOTT A. HIDDEN

Scott A. Hidden 3/29/07

SIGNATURE DATE

ENGINEER

SIGNATURE DATE

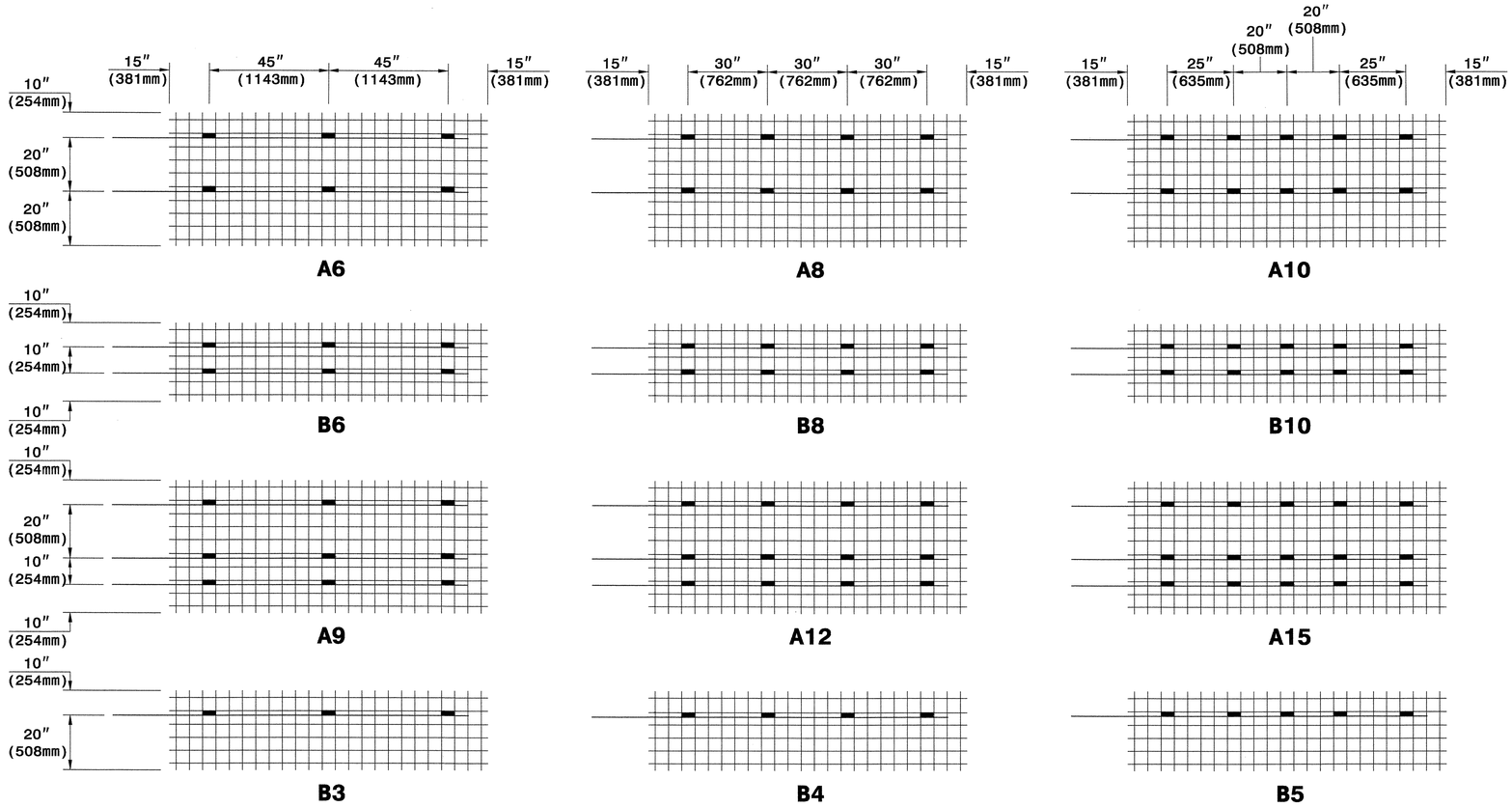

KEY: A8

NUMBER OF REINFORCING STRIPS

PANEL TYPE

CONNECTOR ROD AND REINFORCING STRIP PLACEMENT DIAGRAMS

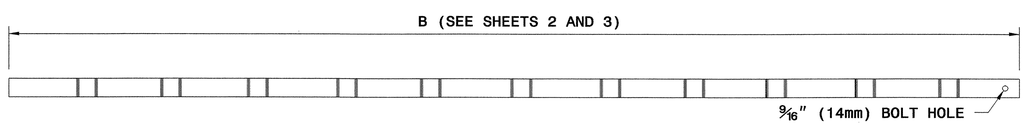

REINFORCING STRIP - 2" X 5/32" (50mm X 4mm)

1/2" (13mm) DIA. ROD

CONNECTOR ROD

1/2" (13mm) BOLT WITH NUT AND WASHER

BOLT SET

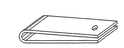

HAIRPIN CONNECTOR

WALL COMPONENTS

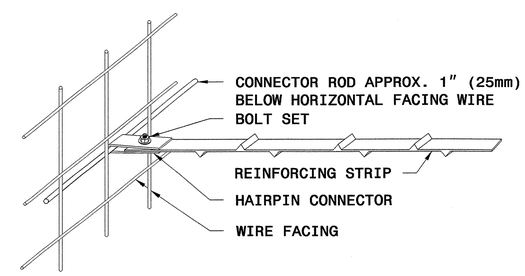

STRIP TO FACING CONNECTION

The Reinforced Earth Company

GEOTECHNICAL ENGINEERING UNIT

STATE OF NORTH CAROLINA DEPARTMENT OF TRANSPORTATION RALEIGH

STANDARD DRAWING NO. 1801.02

TERRATREL TEMPORARY WALL

SHEET 10 OF 11 DATE: 12-19-06

PROJECT REFERENCE NO.	SHEET
R-2309AB	2-AR

GEOTECHNICAL ENGINEER

NORTH CAROLINA PROFESSIONAL SEAL 022246 ENGINEER SCOTT A. HIDDEN

Scott A. Hidden 3/29/07

SIGNATURE DATE

ENGINEER

SIGNATURE DATE

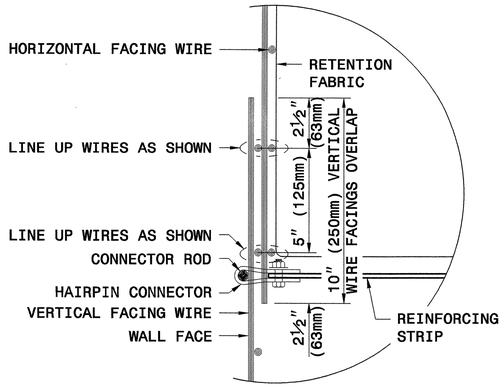

OVERLAP FACINGS VERTICALLY ONE FULL 5" (125mm) WIRE SQUARE DISREGARDING HALF SQUARES AT EDGES

VERTICAL OVERLAP DETAIL

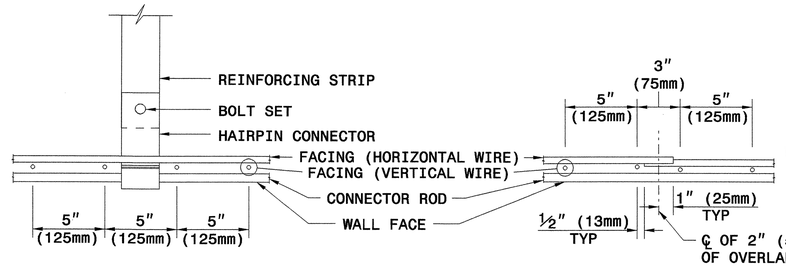

PLAN DETAIL 'A'

STRIP CONNECTION

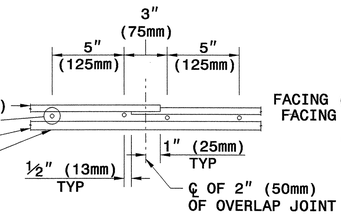

PLAN DETAIL 'B'

HORIZONTAL OVERLAP DETAIL

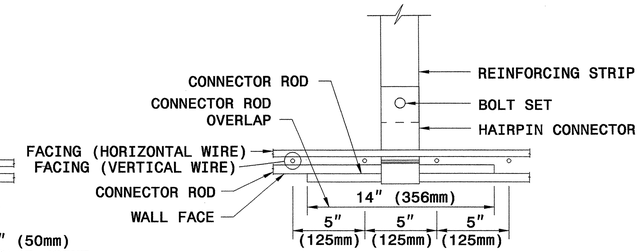

PLAN DETAIL 'C'

STRIP CONNECTION WITH HORIZONTAL OVERLAP DETAIL

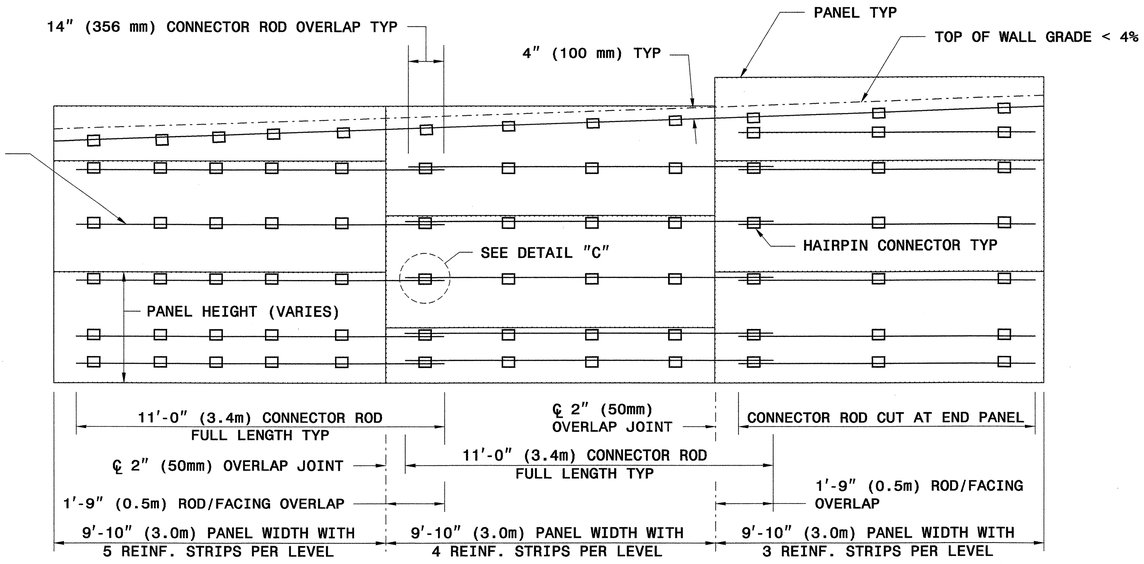

TYPICAL ELEVATION

(WIRES NOT SHOWN FOR CLARITY)

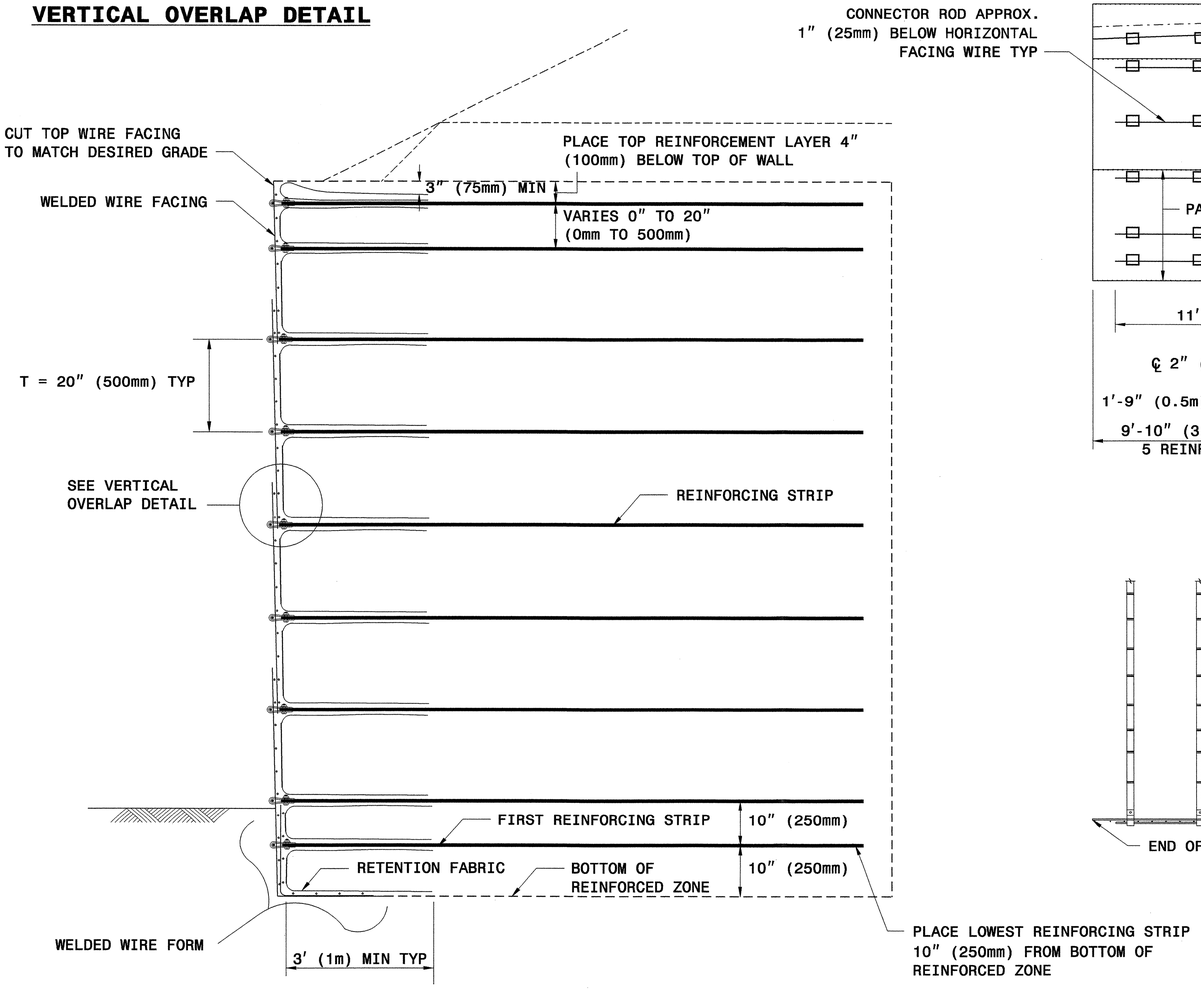

TYPICAL SECTION

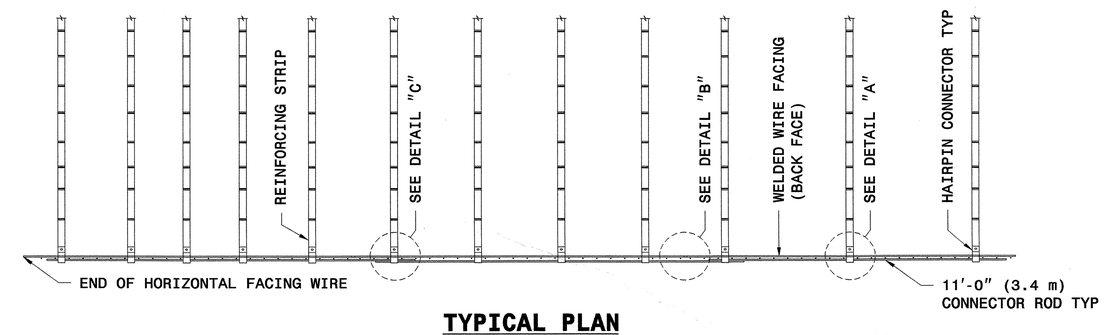

TYPICAL PLAN

The Reinforced Earth Company

STATE OF NORTH CAROLINA DEPARTMENT OF TRANSPORTATION

GEOTECHNICAL ENGINEERING UNIT

STATE OF NORTH CAROLINA DEPARTMENT OF TRANSPORTATION RALEIGH

STANDARD DRAWING NO. 1801.02

TERRATREL TEMPORARY WALL

SHEET 11 OF 11 DATE: 12-19-06

PROJECT REFERENCE NO.	SHEET NO.
R-2309AB	2-A5

PAY LIMITS FOR 1 CURB RAMP

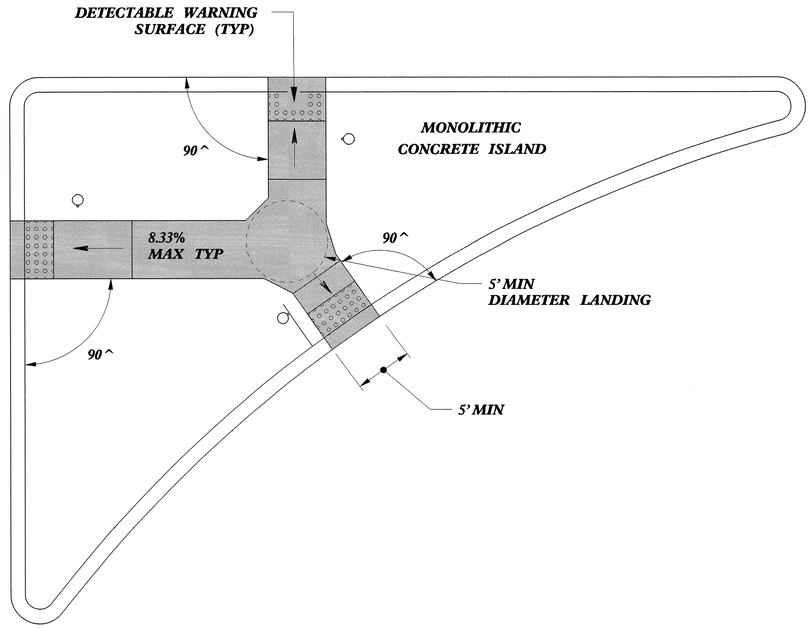

LARGE ISLAND CURB RAMPS

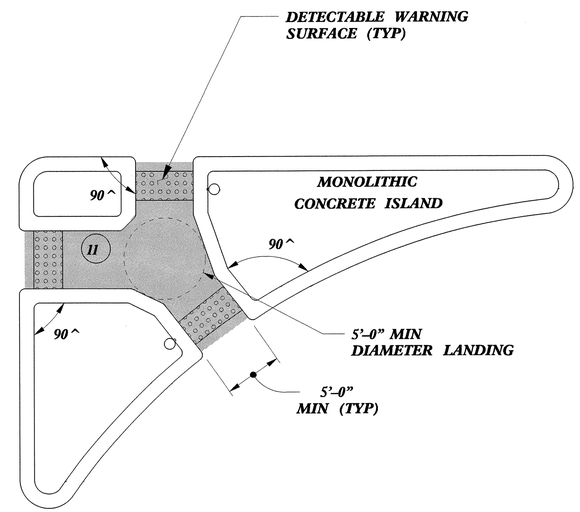

SMALL ISLAND WITH CUT THROUGH

NORTH CAROLINA PROFESSIONAL SEAL 022966 ENGINEER JOEL S. HOWERTON
10/14/11

-SEE ROADWAY DETAIL DRAWING 848D05 FOR DETECTABLE WARNING SURFACE AND FOR RAMP NOTES.

-SEE ROADWAY STANDARD DRAWING 852.01 FOR CONCRETE ISLAND DIMENSIONS.

CONTRACT STANDARDS AND DEVELOPMENT UNIT
Office 919-707-6950 FAX 919-250-4119

CURB RAMPS

Median or Turn Lane Islands

ORIGINAL BY: J.S. HOWERTON DATE: 7/7/11
MODIFIED BY: DATE:
CHECKED BY: DATE: 9/30/11
FILE SPEC.: sds/2012CurbRamp/CurbRampDetails.dgn

5/14/99
30-SEP-2011 10:40
S:\Contracts\Special Details\jhowerton\Standard Drawings\2012 Standard Drawings\2012 Curb Ramp Special Details\Curb Ramp Details.dgn
jhowerton AT CSD237501

PROJECT REFERENCE NO.	SHEET NO.
R-2309AB	2-AT

GATE DIMENSIONS IN INCHES

SIZE DIA.	B	C	D	F	G	H	J	K	L°	M	N
4	2 1/4	6 5/16	8 1/2	3/8	4 1/8	2 1/4	5 1/8	5 5/8	5	1/2	1 3/8
6	2 13/16	8 1/16	10	3/8	4 1/8	2 1/4	7 1/8	7 9/16	5	1/2	1 3/8
8	3 1/2	10	12	3/8	4 1/4	2 3/16	9 1/8	9 5/8	5	1/2	1 3/8
10	4 3/4	12 1/4	14 1/2	3/8	4 1/2	2 1/4	11 3/16	11 5/8	5	1/2	1 3/8
12	5 1/8	15	17 1/8	3/8	4 1/2	2 1/8	13 1/8	13 5/8	5	1/2	1 3/8
14	5 15/16	16 7/8	19 5/8	3/8	4 3/4	2 1/8	15 1/16	15 5/8	5	1/2	1 3/8
15	6 1/4	18 1/8	20	3/8	5	2 1/4	16	16 3/4	5	1/2	1 3/8
16	6 5/8	18 11/16	21 5/8	7/16	5	2 3/8	17	17 3/4	5	1/2	1 3/8
18	7 7/16	21	24 3/8	7/16	5 3/8	2 1/8	19	19 3/4	5	1/2	1 3/8
20	8 1/4	23 9/16	26 1/2	1/2	6	2 1/4	21 1/8	21 3/4	5	5/8	1 5/8
21	8 9/16	24 1/8	27 1/2	1/2	7	2 1/4	22	22 3/4	5	5/8	1 5/8
24	9 11/16	27 1/2	32	1/2	7 5/8	2 1/4	25	26 1/2	5	5/8	1 5/8
30	12	34	39 5/8	3/4	6 1/2	2 3/16	31	32	2 1/2	3/4	2
36	14 3/8	40 5/8	46	3/4	8	2 1/8	37	38	2 1/2	3/4	2
42	16 11/16	47 3/8	55 3/4	3/4	8	2 1/2	43 1/8	44 1/8	2 1/2	3/4	2
48	19 5/16	54 1/2	63 3/8	3/4	9 1/8	3	49 7/8	51	2 1/2	3/4	2
54	22 1/8	60 1/4	71	7/8	9 3/4	3	55 1/4	57	2 1/2	1	2 3/4
60	24 13/16	72	80 5/8	1	10 3/4	3	61 1/4	62 3/4	2 1/2	1	2 3/4
72	29	83	95 1/2	1 1/8	11 1/2	3 1/8	74 3/4	76 1/2	2 1/2	1	2 3/4

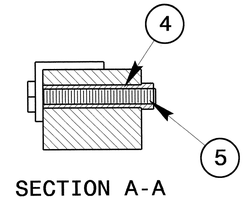

SECTION A-A

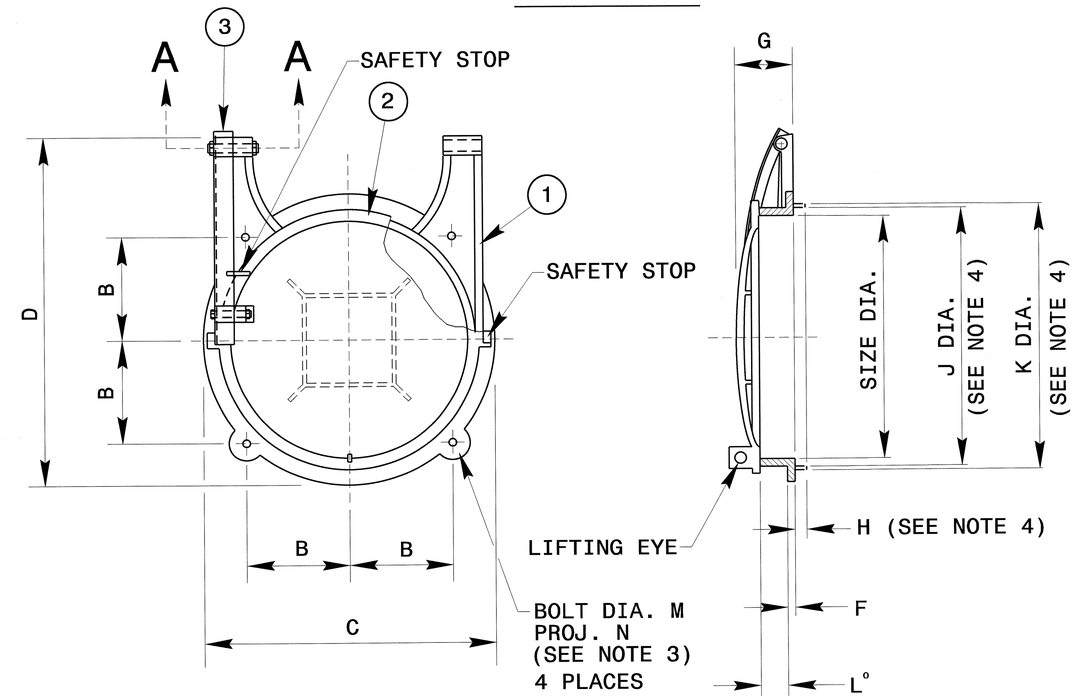

NOTES:

1. FOR USE WITH SEATING HEADS TO 10 FEET.
2. NOT RECOMMENDED FOR PUMP DISCHARGE USE.
3. ADD GROUT PAD THICKNESS TO ANCHOR BOLT PROJECTION.
4. APPLIES TO SPIGOT BACK GATE ONLY. SPIGOT, SHOWN IN PHANTOM, IS OPTIONAL.
5. ATTACH FLAP GATE TO CONCRETE PIPE OR ENDWALL PER MANUFACTURER'S RECOMMENDATIONS.

1 FRAME
2 COVER
3 HINGE LINK
4 HINGE BUSHING
5 HINGE BOLT & NUT

NORTH CAROLINA PROFESSIONAL SEAL 022966 ENGINEER
10/14/11

CONTRACT STANDARDS & DEVELOPMENT UNIT
STANDARDS AND SPECIAL DESIGN
Office 919-707-6950 FAX 919-250-4119

FLAP GATE DETAIL

ORIGINAL BY: _____ DATE: _____
MODIFIED BY: nbritt DATE: 3-30-07
CHECKED BY: [signature] DATE: 10/4/11
FILE SPEC.: details/nbritt/english/hydro/flapgate.dgn

5/14/99
03-OCT-2011 5:34
$$$$USERNAME$$$$ c:\pwworking\d0392\d0392\contracts\Special Details\nbritt\english\hydro\flap gate.dgn

PROJECT REFERENCE NO.	SHEET NO.
R-2309AB	2-AU

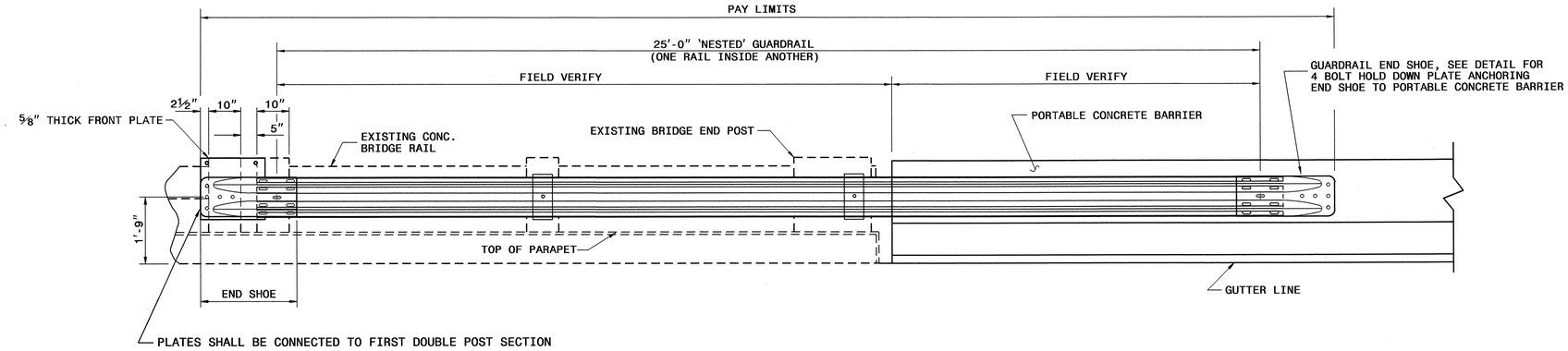

ELEVATION VIEW

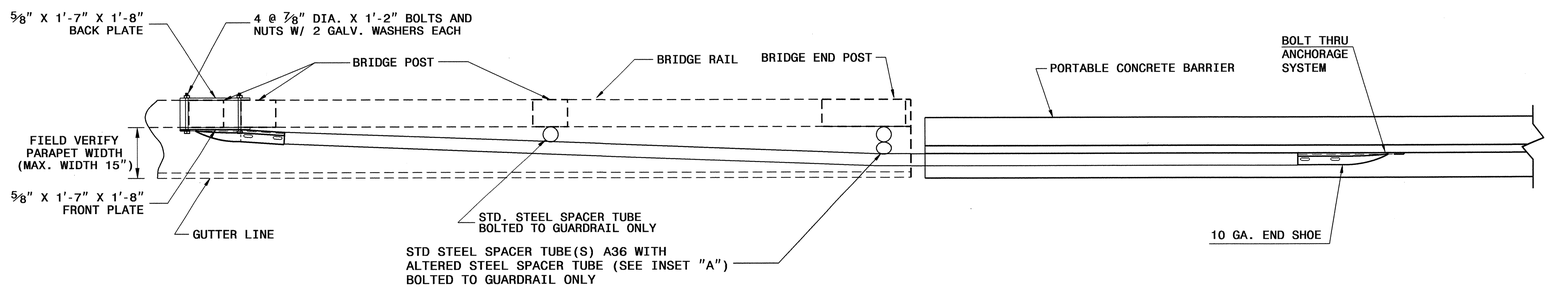

PLAN VIEW

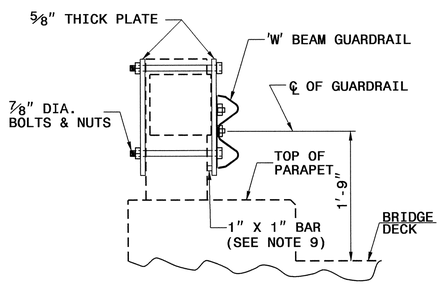

SECTION VIEW

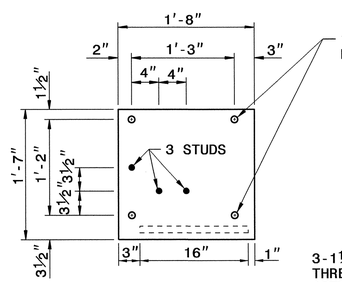

FRONT VIEW

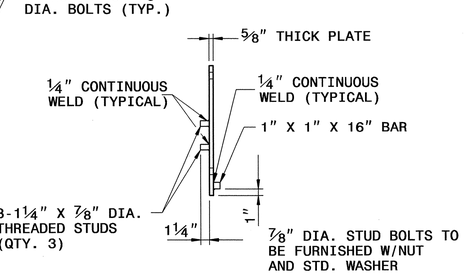

SIDE VIEW

STUDS MAY BE ADJUSTED TO MEET FIELD CONDITIONS

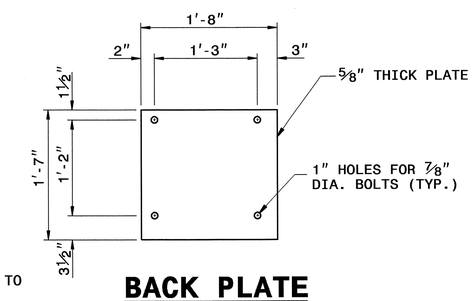

BACK PLATE

FRONT PLATE

NOTES FOR 4 BOLT HOLD DOWN PLATE

THE GUARDRAIL ANCHOR ASSEMBLY SHALL CONSIST OF A ¼" HOLD DOWN PLATE AND 4 - 7/8" DIA. BOLTS WITH NUTS AND WASHERS.

THE HOLD-DOWN PLATE SHALL CONFORM TO AASHTO M270 GRADE 36. AFTER FABRICATION, THE HOLD-DOWN PLATE SHALL BE HOT-DIP GALVANIZED IN ACCORDANCE WITH AASHTO M111.

AFTER INSTALLATION, THE EXPOSED THREAD OF THE BOLT SHALL BE BURRED WITH A SHARP POINTED TOOL. THE 1¼" DIA. HOLES SHALL BE FORMED OR DRILLED WITH A CORE BIT. IMPACT TOOLS WILL NOT BE PERMITTED. ANY CONCRETE DAMAGED BY THIS WORK SHALL BE REPAIRED TO THE SATISFACTION OF THE ENGINEER.

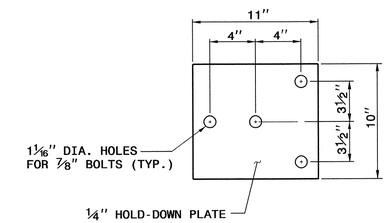

4 BOLT HOLD DOWN PLATE

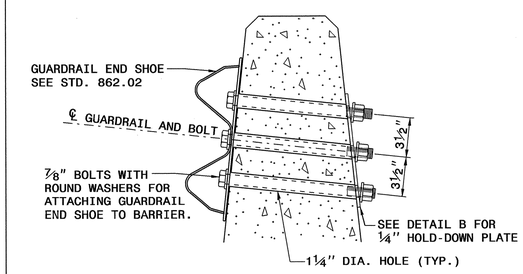

PART SECTION OF BARRIER OR RAIL

THRU END SHOE SECTION AND 4 BOLT HOLD DOWN PLATE

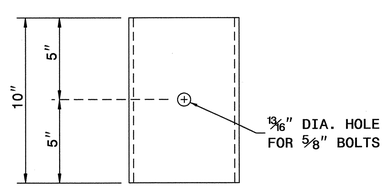

FRONT VIEW

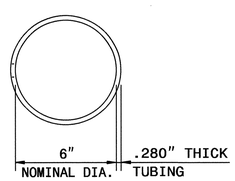

PLAN VIEW

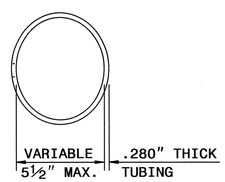

PLAN VIEW INSET "A"

STEEL SPACER TUBE

GENERAL NOTES:

1. USE NUTS, BOLTS, AND WASHERS CONFORMING TO THE REQUIREMENTS OF A.S.T.M. A-307 AND GALVANIZED IN ACCORDANCE WITH SECTION 1076 OF STAND. SPECS.
2. TAP NUTS FOR THE 7/8" DIA. STUDS AND BOLTS AFTER GALVANIZING SEE A.S.T.M. A-563.
3. USE PLATES AND TUBES CONFORMING TO THE REQUIREMENTS OF A.S.T.M. A-36 AND GALVANIZED AFTER FABRICATION IN ACCORDANCE WITH SECTION 1076 OF STAND. SPECS.
4. ADDITIONAL FIELD HOLES MAY BE DRILLED IN STEEL RAIL AS DIRECTED BY THE ENGINEER.
5. INSTALL FACE OF GUARDRAIL AS NEAR AS POSSIBLE TO PLUMB WITH THE PARAPET FACE AT BRIDGE END POST SPACER TUBE LOCATION BY USING STANDARD OR ALTERED SPACER TUBES OR A COMBINATION THEREOF OR AS DIRECTED BY THE ENGINEER. FOR VERY SMALL PARAPET WIDTHS, GUARDRAIL MAY BE INSTALLED AGAINST BRIDGE RAIL WITHOUT SPACER TUBES.
6. DO NOT DRILL BRIDGE RAIL IN ORDER TO INSTALL GUARDRAIL ANCHOR UNIT.
7. KEEP TOE OF PORTABLE CONCRETE BARRIER FLUSH WITH FACE OF PARAPET.
8. ATTACH 1" X 1" BAR AND THREADED STUDS TO PLATE WITH ¼" WELDS ALL AROUND.
9. 1" X 1" BAR MAY NOT BE NEEDED ON BRIDGE RAILS WHERE FACE OF RAIL DOES NOT PROJECT BEYOND FACE OF POST.

CONTRACT STANDARDS AND DEVELOPMENT UNIT
Office 919-707-6950 FAX 919-250-4119

TEMPORARY ANCHOR UNIT TYPE W-BEAM

ORIGINAL BY:	E.E. WARD	DATE:	4-03
MODIFIED BY:	E.E. WARD	DATE:	6-04
CHECKED BY:	[signature]	DATE:	7/29/11
FILE SPEC.:	\usr\details\stand\862stds\anc.dgn		

28-SEP-2011 09:25
S:\Contracts\Contracts\Special Details\ericward\usr\details\stand\862stds\anc.dgn
$$$$USERNAME$$$$

PROJECT REFERENCE NO.	SHEET NO.
R-2309AB	2-AV

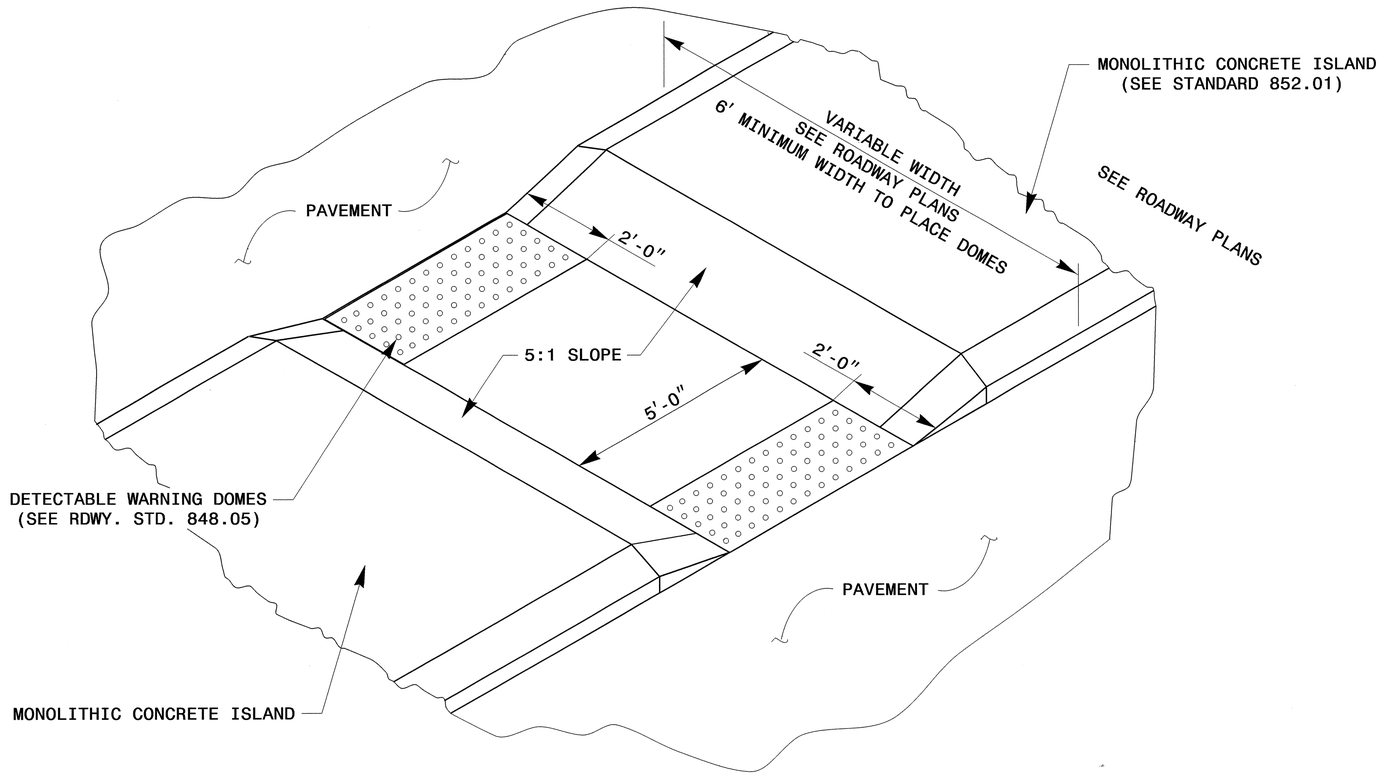

ISOMETRIC VIEW

GENERAL NOTES:

REFER TO RDWY. STD. DWG. 848.05. TRUNCATED DOMES WILL NOT BE PAID FOR SEPARATELY, BUT WILL BE CONSIDERED A CURB RAMP.

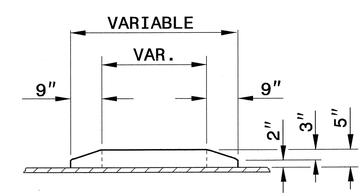

MONOLITHIC CONCRETE ISLAND REFER TO STD.852.01

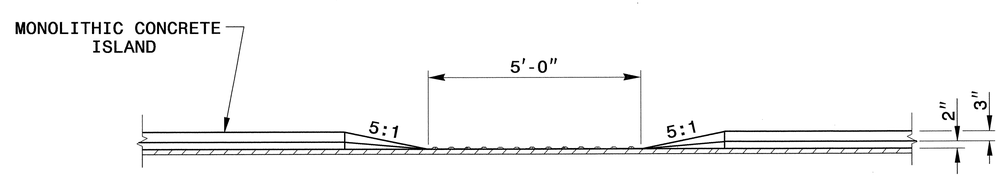

ELEVATION

NORTH CAROLINA PROFESSIONAL SEAL 022966 ENGINEER JOHN S. HOWERTON 10/14/11

CONTRACT STANDARDS AND DEVELOPMENT UNIT
Office 919-707-6950 FAX 919-250-4119

CROSSWALK THRU MONOLITHIC ISLAND

ORIGINAL BY: DATE: 2-5-02
MODIFIED BY: DATE:
CHECKED BY: DATE: 9/29/11
FILE SPEC.: s:details\stand\Curb Ramp Thru Island.dgn

29-SEP-2011:55
S:\Contracts\Contracts\Special Details\jhowerton\Curb Ramps\Curb Ramp Thru Island.dgn
$$$$USERNAME$$$$

PROJECT REFERENCE NO.	SHEET NO.
R-2309AB	2-AW

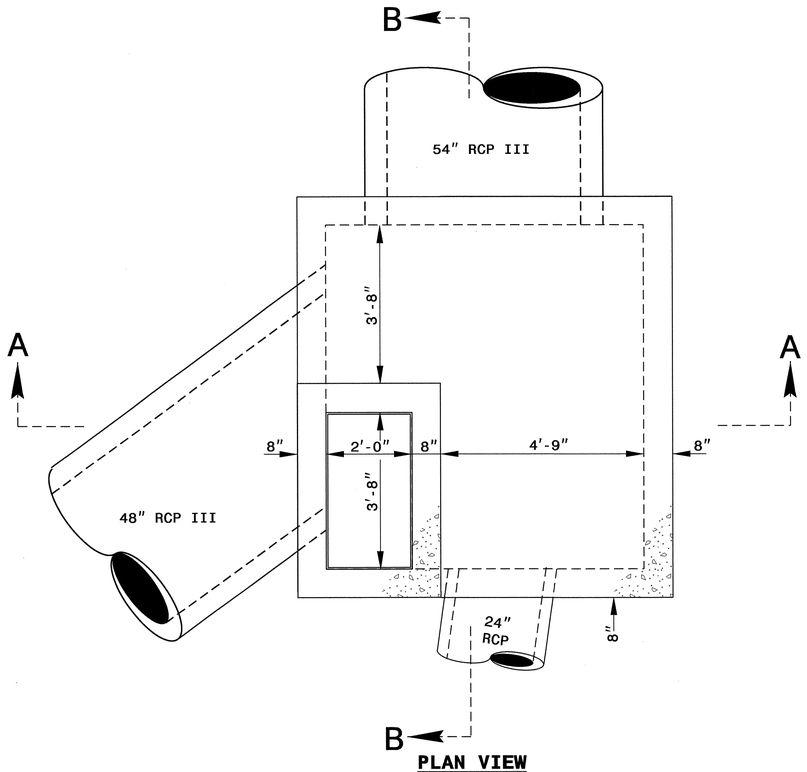

PLAN VIEW

GENERAL NOTES:

USE CLASS "B" CONCRETE THROUGHOUT.

PROVIDE ALL CATCH BASINS OVER 3'-6" IN DEPTH WITH STEPS 12" ON CENTER. USE STEPS WHICH COMPLY WITH STD. DRAWING 840.66.

OPTIONAL CONSTRUCTION - MONOLITHIC POUR, 2" KEYWAY, OR #4 BAR DOWELS AT 12" CENTERS AS DIRECTED BY THE ENGINEER.

USE FORMS FOR THE CONSTRUCTION OF THE BOTTOM SLAB.

IF REINFORCED CONCRETE PIPE IS SET IN BOTTOM SLAB OF BOX, ADD TO SLAB AS SHOWN ON STD. NO. 840.00.

NO DEDUCTIONS HAVE BEEN MADE FOR PIPES.

CHAMFER ALL EXPOSED CORNERS 1".

DRAWING NOT TO SCALE.

BILL OF MATERIAL

REINFORCING STEEL

BAR	SIZE	LENGTH	NO.	WEIGHT
A	#5	8'-5"	28	245
C	#5	9'-0"	26	244
D	#5	7'-1"	54	398
E	#4	9'-0"	28	168
F	#4	8'-5"	28	157
G	#4	4'-8"	18	56
H	#4	3'-0"	18	36
I	#4	9'-4"	32	200
J	#4	14'-9"	16	157
REINFORCING STEEL - LBS.				1661
CLASS "B" CONCRETE - CU. YDS.				13.4

* NO DEDUCTIONS HAVE MADE FOR PIPES.

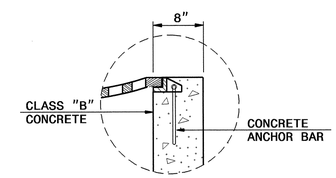

DETAIL
(APRON SUPPORT NOTCH)

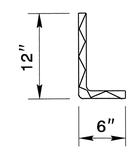

DOWEL

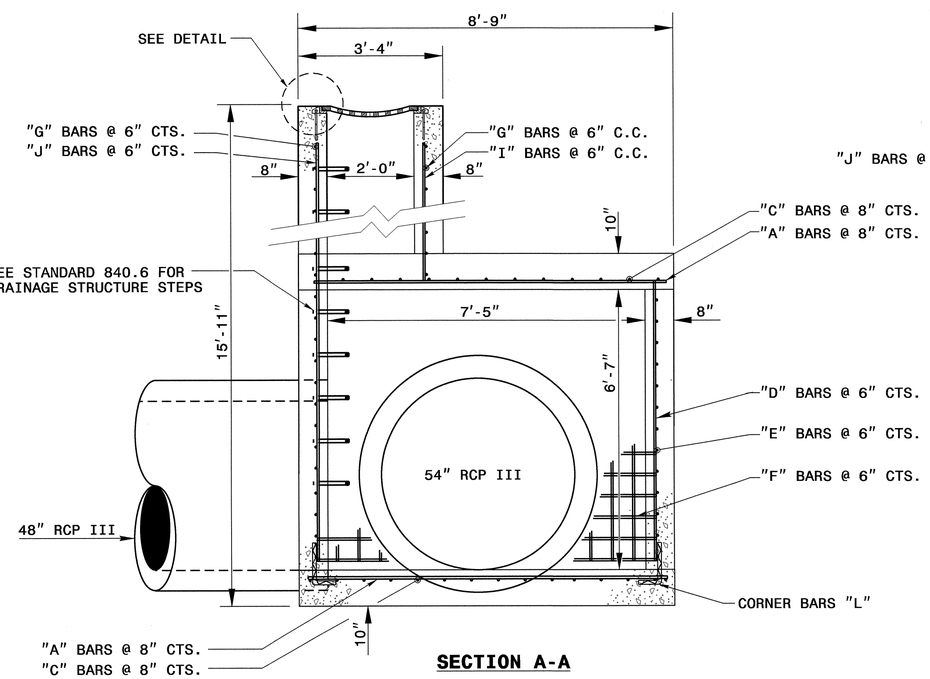

SECTION A-A

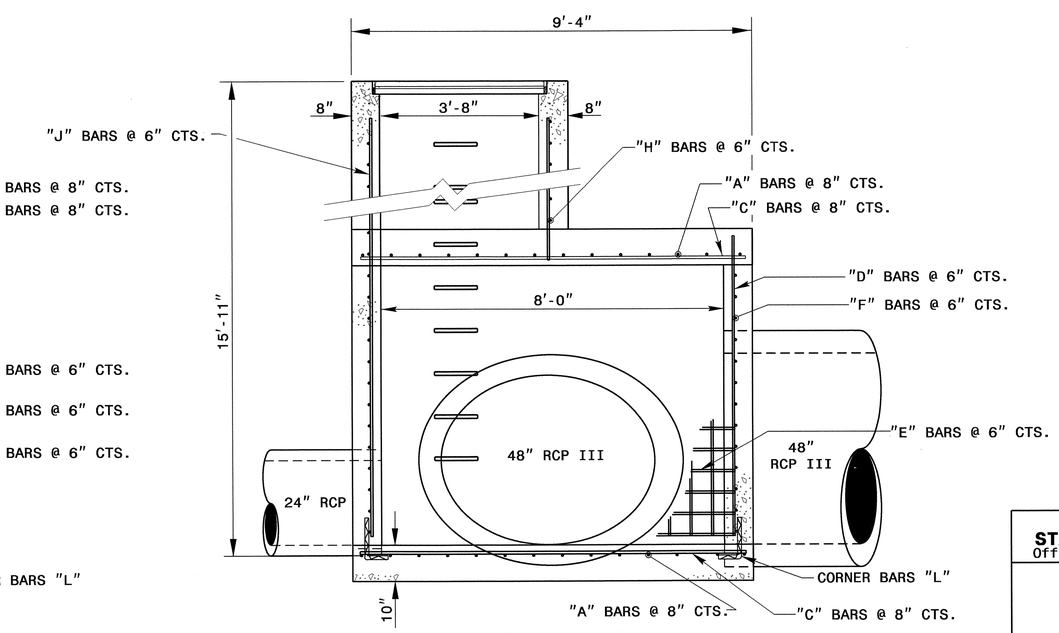

SECTION B-B

NORTH CAROLINA PROFESSIONAL SEAL 022966 ENGINEER JOEL S. HOWARD
10/14/11

STR.NO.2302

PROJECT SERVICES UNIT
STANDARDS AND SPECIAL DESIGN
Office 919-250-4128 FAX 919-250-4119

EXTRA DEPTH 2GI

ORIGINAL BY: K. KEMPF DATE: 5-14-10
MODIFIED BY: T. Spell DATE: 9-23-11
CHECKED BY: [signature] DATE: 9/29/11
FILE SPEC.: s:\tspell\std\r2309ab_24dbl_2gi_jb15'deep.dgn

29-SEP-2011 13:31
S:\Contracts\Contracts\Special Details\tspell\details\stand\R2309ab_24dbl_jb15'deep.dgn
$$$$USERNAME$$$$

PROJECT REFERENCE NO.	SHEET NO.
R-2309AB	2-AX

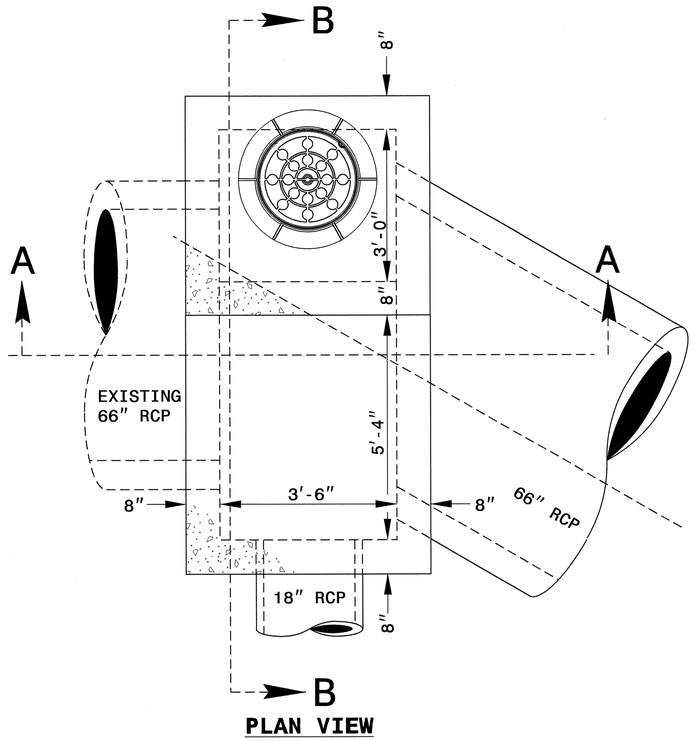

PLAN VIEW

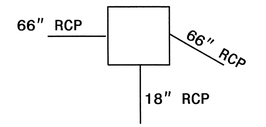

STR.#1612

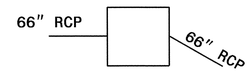

STR.#2203

BILL OF MATERIAL FOR CATCH BASIN				
REINF. STEEL			1 PIPE	
BAR	SIZE	LENGTH	NO.	WEIGHT
A	#5	4'-6"	28	131
B	#5	4'-0"	7	29
C	#5	6'-6"	7	40
D	#5	9'-2"	7	67
E	#4	3'-10"	110	281
F	#4	7'-6"	9	63
G	#4	7'-4"	23	101
H	#4	14'-10"	31	411
I	#4	3'-4"	82	183
J	#4	9'-8"	28	159
REINF. STEEL LBS.				1465
CLASS "B" CONCRETE			CU. YDS.	8.0

* RISER HAS 0.321 CUBIC YARDS OF BRICK MASONRY PER FOOT HEIGHT

GENERAL NOTES:

USE CLASS "B" CONCRETE THROUGHOUT.

PROVIDE ALL CATCH BASINS OVER 3'-6" IN DEPTH WITH STEPS 12" ON CENTER. USE STEPS WHICH COMPLY WITH STD. DRAWING 840.66.

OPTIONAL CONSTRUCTION - MONOLITHIC POUR, 2" KEYWAY, OR #4 BAR DOWELS AT 12" CENTERS AS DIRECTED BY THE ENGINEER.

USE FORMS FOR THE CONSTRUCTION OF THE BOTTOM SLAB.

IF REINFORCED CONCRETE PIPE IS SET IN BOTTOM SLAB OF BOX, ADD TO SLAB AS SHOWN ON STD. NO. 840.00.

NO DEDUCTIONS HAVE BEEN MADE FOR PIPES.

CHAMFER ALL EXPOSED CORNERS 1".

DRAWING NOT TO SCALE.

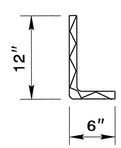

DOWEL

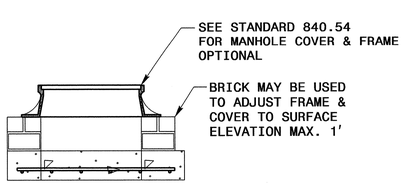

BRICK RISER

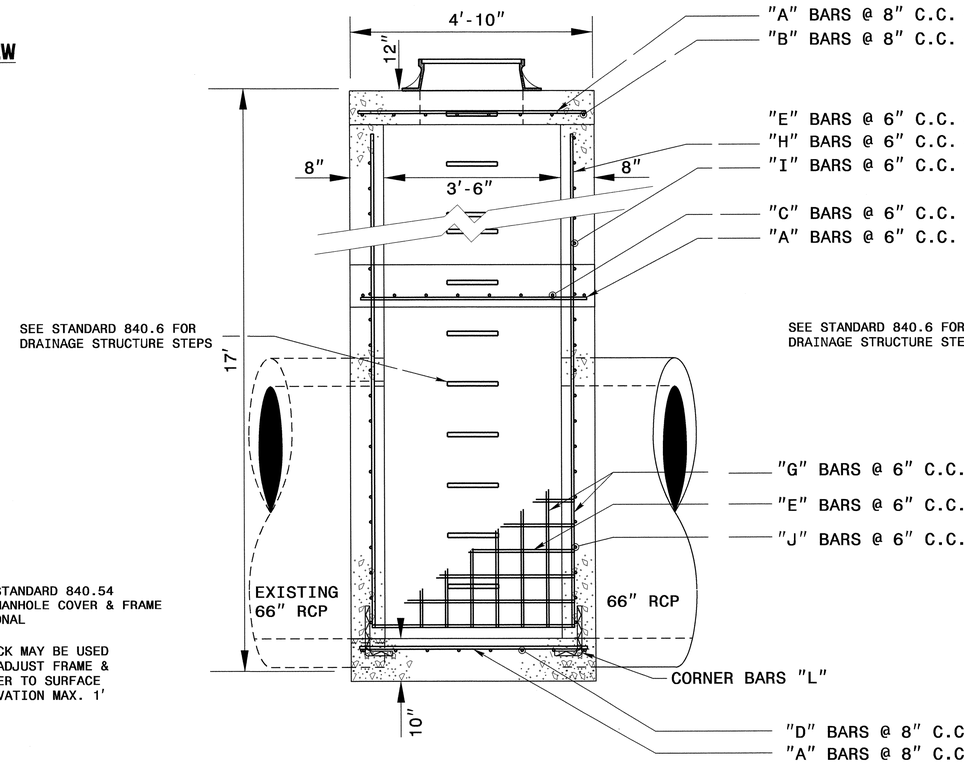

SECTION A-A

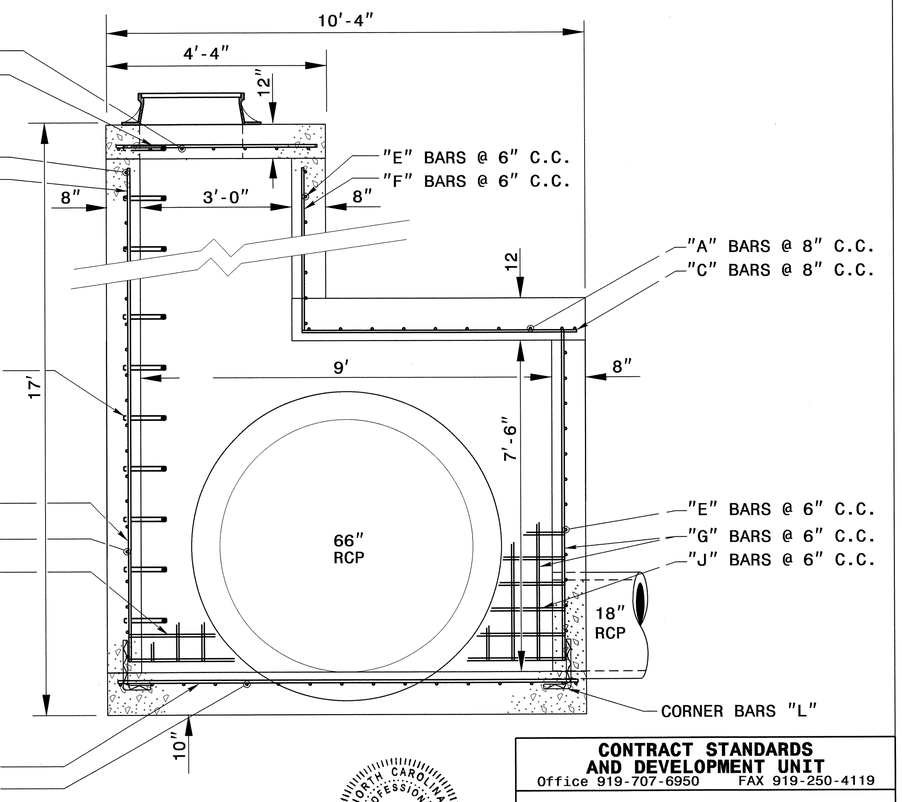

SECTION B-B

CONTRACT STANDARDS AND DEVELOPMENT UNIT
Office 919-707-6950 FAX 919-250-4119

EXTRA DEPTH TBJB W/ MANHOLE

ORIGINAL BY: T. Spell DATE:
MODIFIED BY: DATE:
CHECKED BY: DATE: 9/29/11
FILE SPEC.: tspell\details\stand\r2309 66'tbjb mh.dgn

29-SEP-2011 11:28
S:\Contracts\Contracts\Special Details\tspell\details\stand\R2309AB 66-TBJb-mh.dgn
$$$$USERNAME$$$$

PROJECT REFERENCE NO.	SHEET NO.
R-2309AB	2-A4

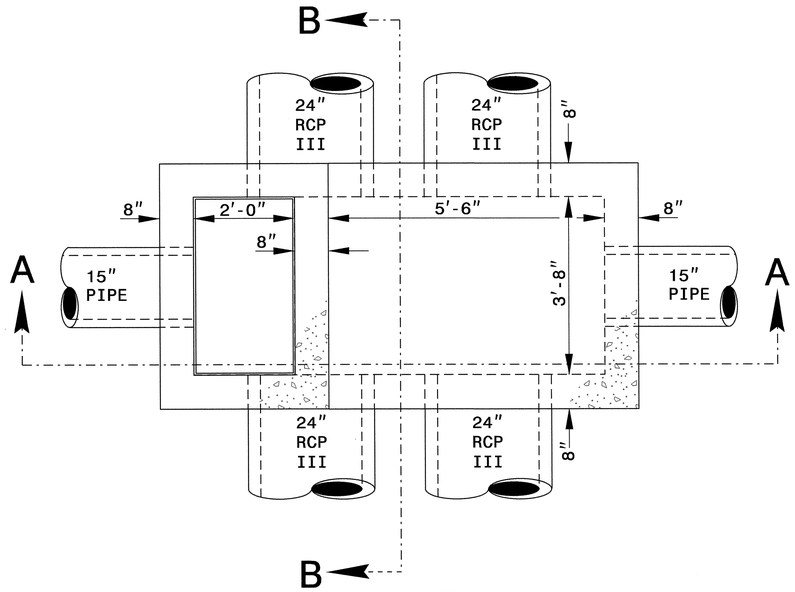

PLAN VIEW

GENERAL NOTES:

USE CLASS "B" CONCRETE THROUGHOUT.

PROVIDE ALL CATCH BASINS OVER 3'-6" IN DEPTH WITH STEPS 12" ON CENTER. USE STEPS WHICH COMPLY WITH STD. DRAWING 840.66.

OPTIONAL CONSTRUCTION - MONOLITHIC POUR, 2" KEYWAY, OR #4 BAR DOWELS AT 12" CENTERS AS DIRECTED BY THE ENGINEER.

USE FORMS FOR THE CONSTRUCTION OF THE BOTTOM SLAB.

IF REINFORCED CONCRETE PIPE IS SET IN BOTTOM SLAB OF BOX, ADD TO SLAB AS SHOWN ON STD. NO. 840.00.

NO DEDUCTIONS HAVE BEEN MADE FOR PIPES.

CHAMFER ALL EXPOSED CORNERS 1".

DRAWING NOT TO SCALE.

BILL OF MATERIAL

REINFORCING STEEL

BAR	SIZE	LENGTH	NO.	WEIGHT
A	#5	4'-8"	21	102
C	#5	6'-6"	8	54
D	#5	9'-2"	8	76
E	#4	4'-0"	82	219
F	#4	8'-6"	10	57
G	#4	6'-7"	23	101
H	#4	9'-11"	31	205
I	#4	3'-4"	82	183
J	#4	8'-6"	28	159
REINFORCING STEEL - LBS.				1156
CLASS "B" CONCRETE - CU. YDS.				8.4

* NO DEDUCTIONS HAVE MADE FOR PIPES.

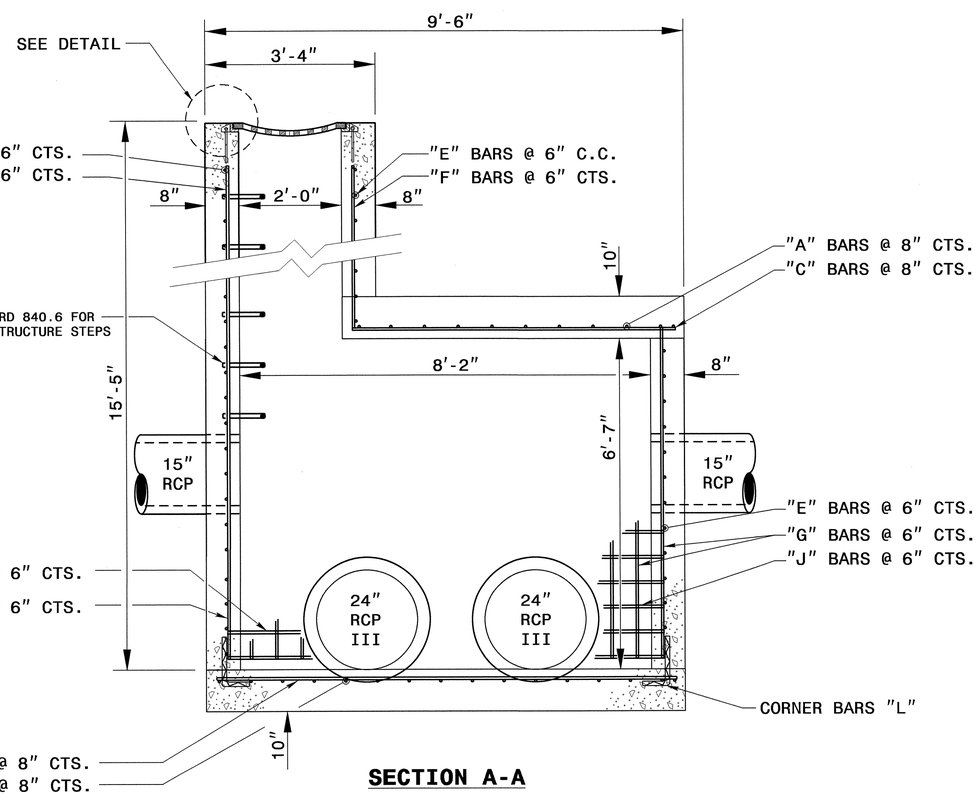

SECTION A-A

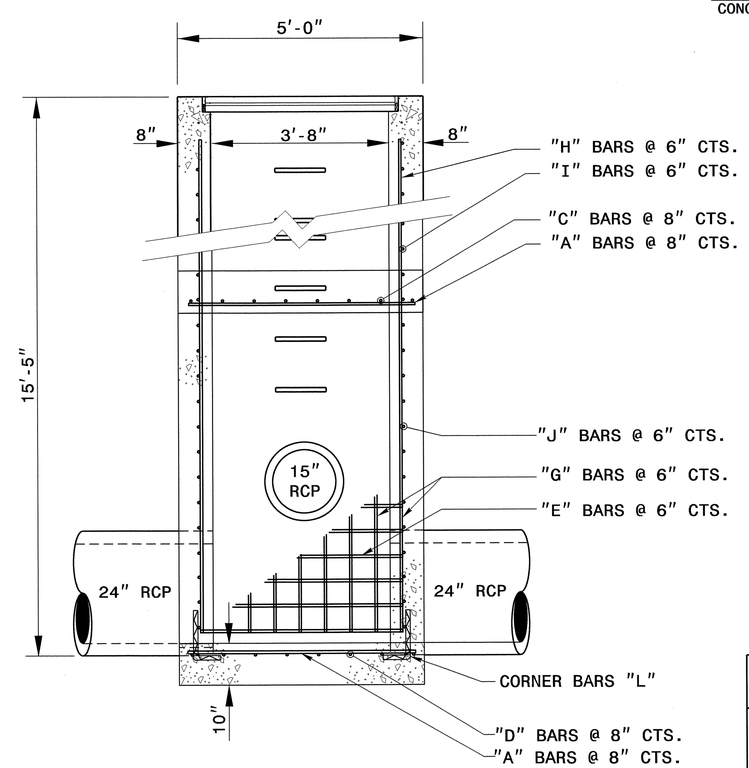

SECTION B-B

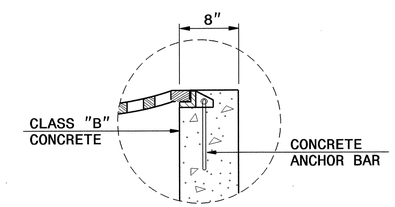

DETAIL

(APRON SUPPORT NOTCH)

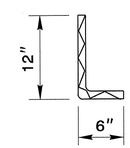

DOWEL

NORTH CAROLINA PROFESSIONAL SEAL 022966 ENGINEER JOHN S. HOMAN 10/14/11

STR.NO.2623

PROJECT SERVICES UNIT
STANDARDS AND SPECIAL DESIGN
Office 919-250-4128 FAX 919-250-4119

EXTRA DEPTH 2GI

ORIGINAL BY:	K. KEMPF	DATE:	5-14-10
MODIFIED BY:	T. Spell	DATE:	9-23-11
CHECKED BY:	[signature]	DATE:	9/29/11
FILE SPEC.:	s:\tspell\std\r2309ab.24dbl.2gi.jb15'deep.dgn		

29-SEP-2011 11:26
S:\Contracts\Contracts\Special Details\tspell\details\stand\R2309ab.24dbl.jb15'deep.dgn
$$$$USERNAME$$$$

PROJECT REFERENCE NO.	SHEET NO.
R-2309AB	2-A7

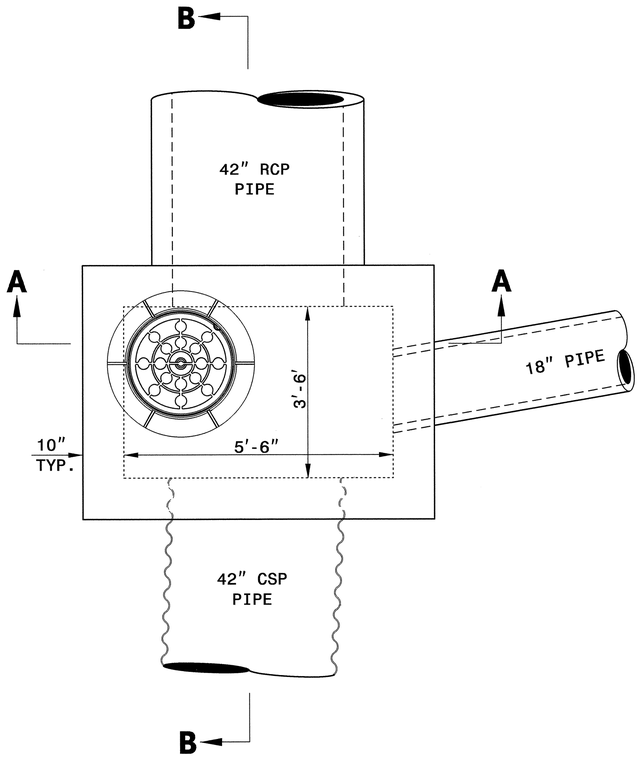

PLAN

GENERAL NOTES:
- CONSTRUCT THE BASE SLAB BY FORMING.
- SEE STD. DWG. 840.00 FOR CONSTRUCTION OF BASE SLAB IF PIPE IS SET INTO BASE SLAB.
- USE CLASS 'B' CONCRETE THROUGHOUT.
- CONSTRUCTION OPTIONS: MONOLITHIC POUR; CONSTRUCTION JOINTS AT UNION OF WALLS WITH FLOOR AND/OR TOP SLAB.
- CUT, BEND OR RELOCATE REINFORCING STEEL TO POSITION PIPE AS DIRECTED BY THE ENGINEER.
- CHAMFER ALL EXPOSED CORNERS 1".
- SEE STD. DRAWING 840.54 MANHOLE.
- PLACE STEPS IN JUNCTION BOXES OVER 3'-6" IN DEPTH WITH MANHOLES. REFERENCE STD. NO. 840.66.

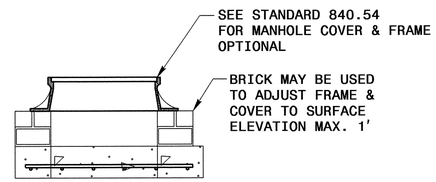

BRICK RISER

BILL OF MATERIAL

BAR	NO.	SIZE	LENGTH	WEIGHT
A	60	#5	6'-10"	427.6
B	66	#5	4'-10"	332.7
C	38	#5	15'-2"	601.1
TOTAL REINF. STEEL (lbs.)				1361.4
CLASS "B" CONC. (cu. yds.)				11.2

NO DEDUCTIONS HAVE BEEN MADE TO ACCOMMODATE PIPES

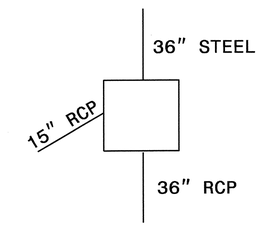

STR.#2030

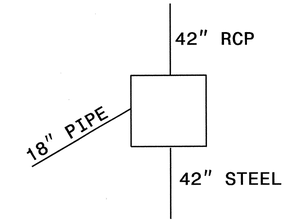

STR.#2321

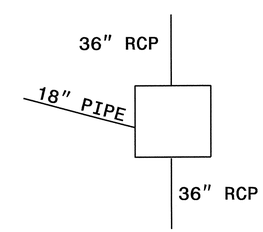

STR.#2505

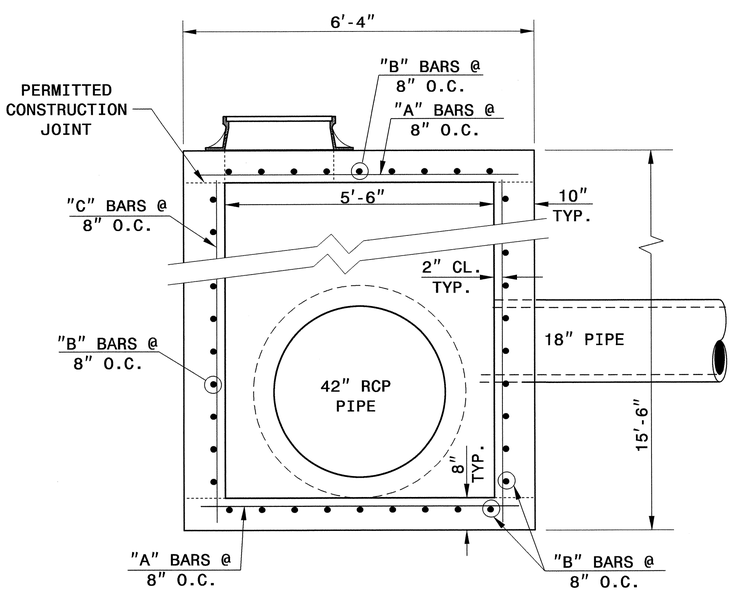

SECTION A-A

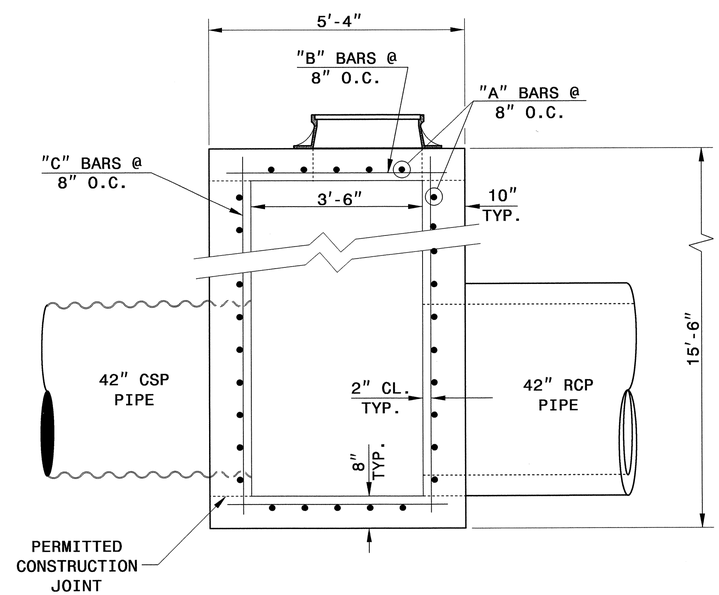

SECTION B-B

NORTH CAROLINA PROFESSIONAL SEAL 022966 ENGINEER JOHN S. LAMPE 10/4/11

CONTRACT STANDARDS AND DEVELOPMENT UNIT
Office 919-707-6950 FAX 919-250-4119

DETAIL OF JUNCTION BOX W/MANHOLE

ORIGINAL BY: E.E. WARD DATE: 1-99
MODIFIED BY: T.S. Spell DATE: 9-11
CHECKED BY: [signature] DATE: 9/29/11
FILE SPEC.: $$spell\stand\jbw_mh42in24ft_r2309ab.dgn

29-SEP-2011 10:11
S:\Contracts\Contracts\Special Details\tspell\details\stand\jbw_mh42in15ft_r2309ab.dgn
$$$$USERNAME$$$$

PROJECT REFERENCE NO.	SHEET NO.
R-2309	2-BA

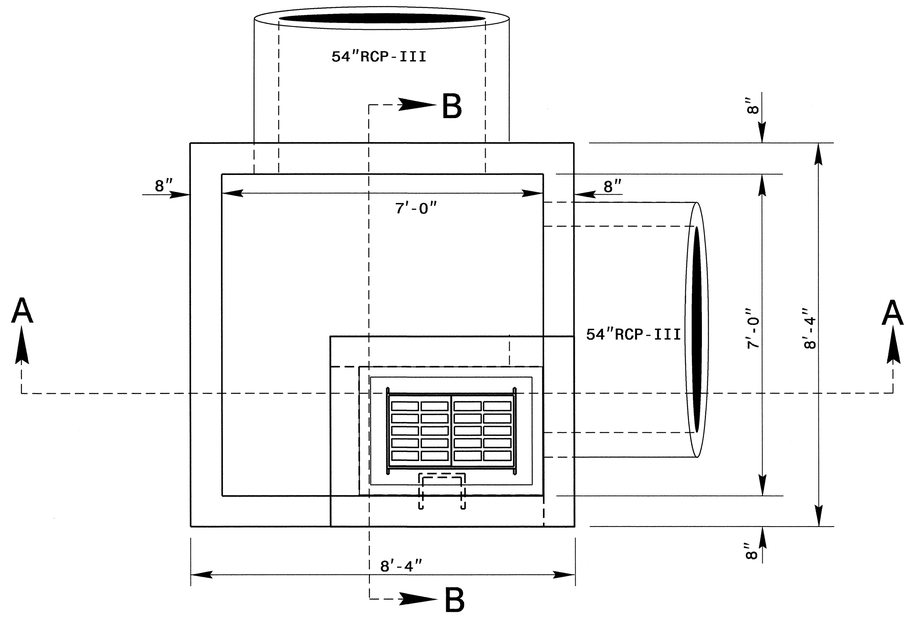

PLAN VIEW

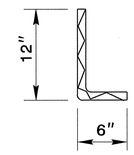

DOWEL

GENERAL NOTES:

USE CLASS "B" CONCRETE THROUGHOUT.

PROVIDE ALL CATCH BASINS OVER 3'-6" IN DEPTH WITH STEPS 12" ON CENTER. USE STEPS WHICH COMPLY WITH STD. DRAWING 840.66.

OPTIONAL CONSTRUCTION - MONOLITHIC POUR, 2" KEYWAY, OR #4 BAR DOWELS AT 12" CENTERS AS DIRECTED BY THE ENGINEER.

USE FORMS FOR THE CONSTRUCTION OF THE BOTTOM SLAB.

IF REINFORCED CONCRETE PIPE IS SET IN BOTTOM SLAB OF BOX, ADD TO SLAB AS SHOWN ON STD. NO. 840.00.

CHAMFER ALL EXPOSED CORNERS 1".

MAINTAIN 2" CLEARANCE ON ALL REINFORCING STEEL.

ADJUST STEEL AND CONCRETE AS DIRECTED BY THE ENGINEER.

DRAWING NOT TO SCALE.

BILL OF MATERIAL

REINFORCING STEEL

BAR	SIZE	LENGTH	NO.	WEIGHT
H	#4	8'-0"	100	534
V	#4	15'-10"	52	549
K	#4	4'-0"	8	21
REINF. STEEL LBS.				1228
CLASS "B" CONCRETE			CU. YDS.	12.8
2-42"RCP-IV PIPE DEDUCTION			CU. YDS.	-1.2
CLASS "B" CONCRETE			CU. YDS.	11.6

* RISER HAS 0.321 CUBIC YARDS OF BRICK MASONRY PER FOOT HEIGHT.

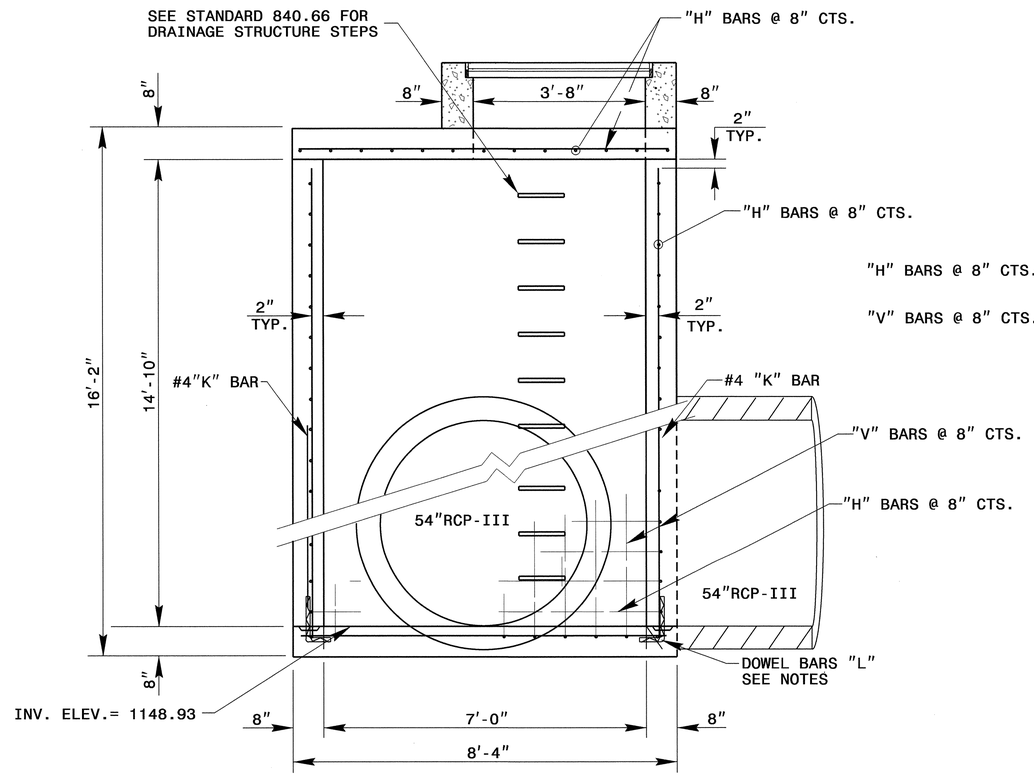

SECTION A-A

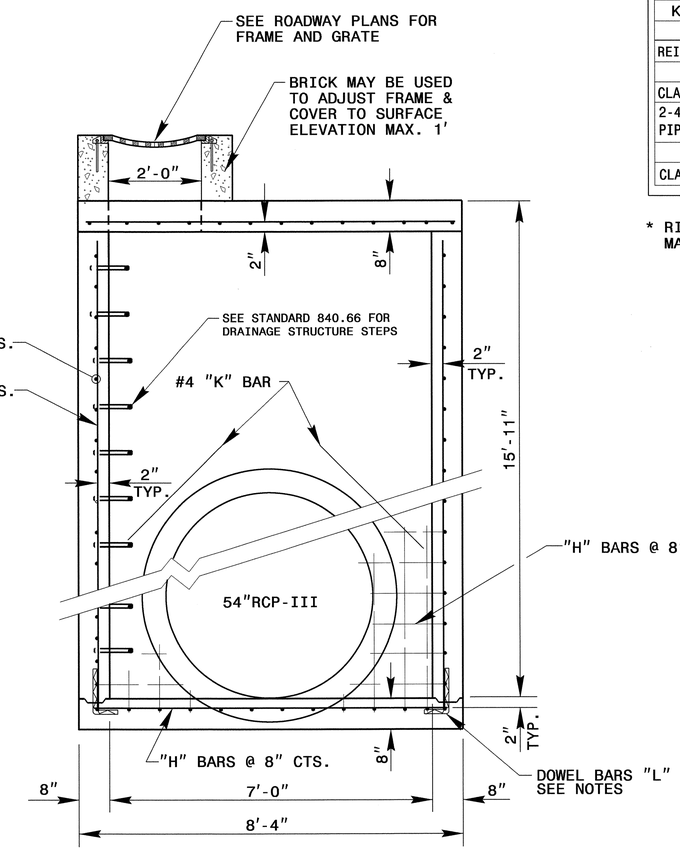

SECTION B-B

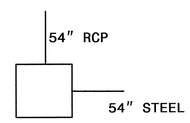

STR.#2207

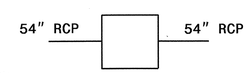

STR.#2301

NORTH CAROLINA PROFESSIONAL SEAL 022966 ENGINEER
10/14/11

CONTRACT STANDARDS AND DEVELOPMENT UNIT
Office 919-707-6950 FAX 919-250-4119

EXTRA DEPTH 2-GI

ORIGINAL BY: K. KEMPF DATE: 1-8-08
MODIFIED BY: t.spell DATE: 9-29-11
CHECKED BY: DATE: 9/29/11
FILE SPEC.: g:\tspell\english\r2309ab_2gi1b.dgn

29-SEP-2011 10:01
S:\Contracts\Contracts\Special Details\tspell\details\stand\r2309ab_2gi di.dgn
$$$$USERNAME$$$$

PROJECT REFERENCE NO.	SHEET NO.
R-2309AB	2-BB

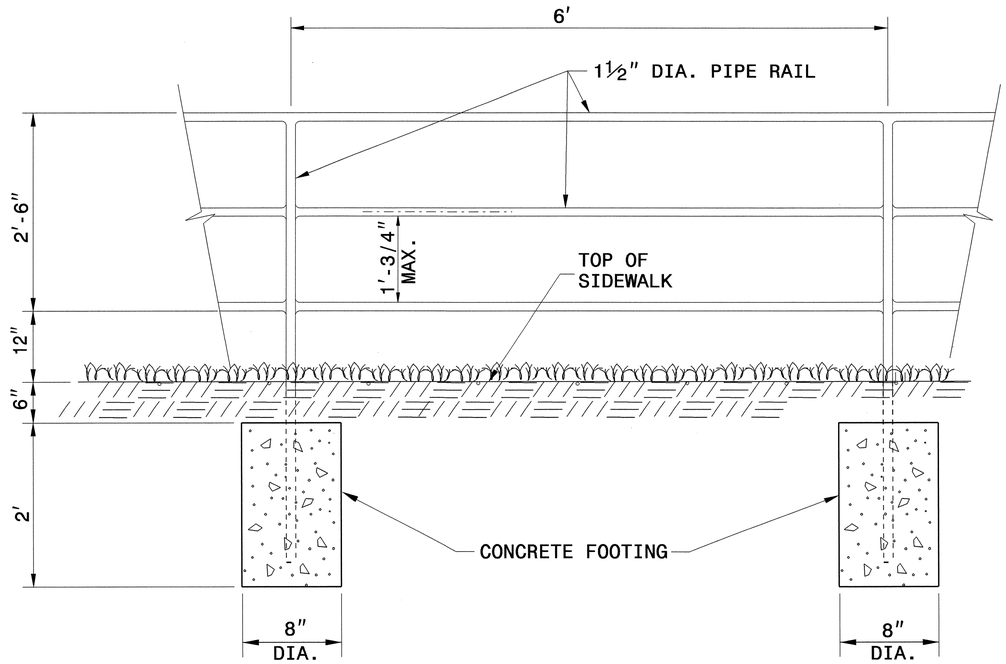

ELEVATION OF PROPOSED PEDESTRIAN HANDRAIL

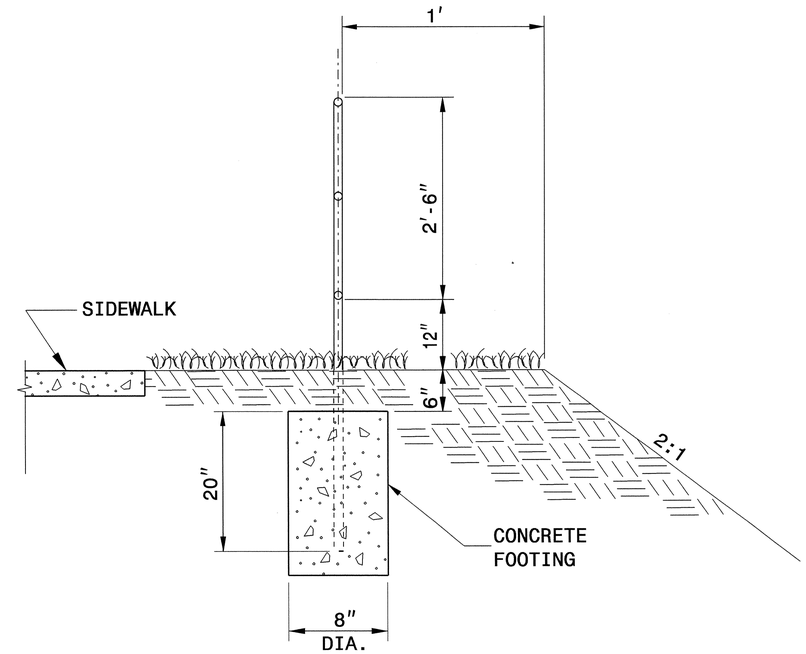

SECTION VIEW

NOTES:

CONSTRUCT PROPOSED STEEL PIPE RAIL OF 1½" DIAMETER SCHEDULE 40 PLAIN END GALVANIZED STEEL PIPE MEETING THE REQUIREMENTS OF ASTM A53.

REPAIR GALVANIZING IN ACCORDANCE WITH SECTION 1076 OF THE NCDOT STANDARD SPECIFICATIONS.

PAINT, IF REQUIRED BY THE ENGINEER, IN ACCORDANCE WITH SECTION 1080 OF THE STANDARD SPECIFICATIONS.

WELD IN ACCORDANCE WITH ARTICLE 1072-20 OF THE STANDARD SPECIFICATIONS.

USE CLASS 'B' CONCRETE FOR HANDRAIL FOOTINGS.

PLACEMENT OF HANDRAIL IN RELATION TO SHOULDER BREAK POINT AND SIDEWALK MAY BE MODIFIED AS DIRECTED BY THE ENGINEER.

NORTH CAROLINA PROFESSIONAL SEAL 022966 ENGINEER
10/14/11

CONTRACT STANDARDS AND DEVELOPMENT UNIT
Office 919-707-6950 FAX 919-250-4119

PROPOSED PEDESTRIAN SAFETY RAIL

ORIGINAL BY:	E.E.WARD	DATE:	12-99
MODIFIED BY:	T.S.Snell	DATE:	1-4-05
CHECKED BY:	[signature]	DATE:	9/23/11
FILE SPEC.:	w/details/stand/metric/retainwall_handrails.dgn		

23-SEP-2011 5:06
S:\Contracts\Contracts\Special Details\jhowerton\handrail.dgn
$$$$USERNAME$$$$

PROJECT REFERENCE NO.	SHEET NO.
R-2309AB	2-BC

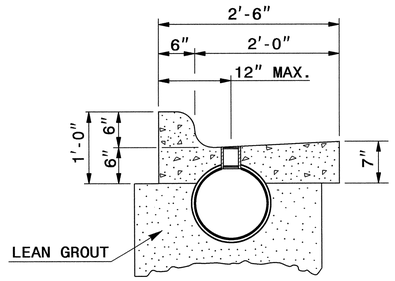

ALTERNATE NO.1

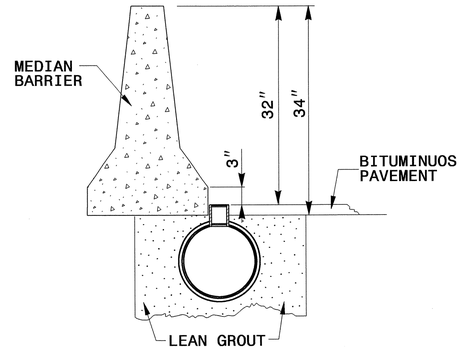

ALTERNATE NO.2

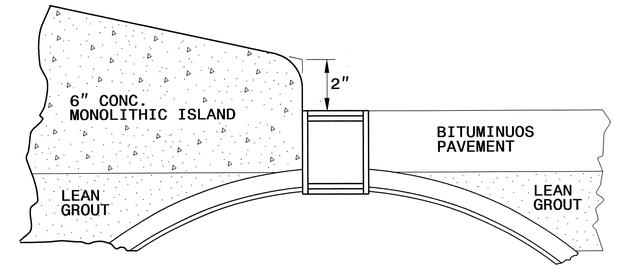

ALTERNATE NO.3

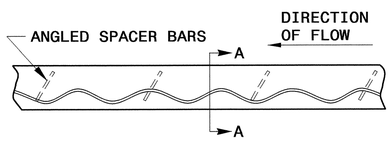

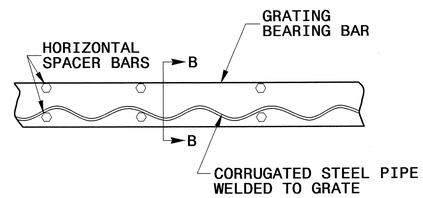

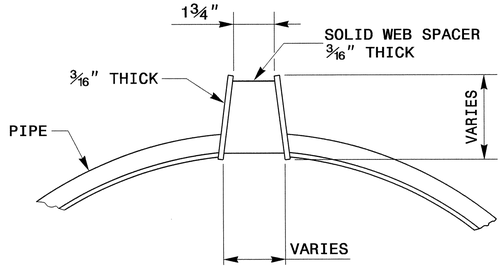

SECTION A-A

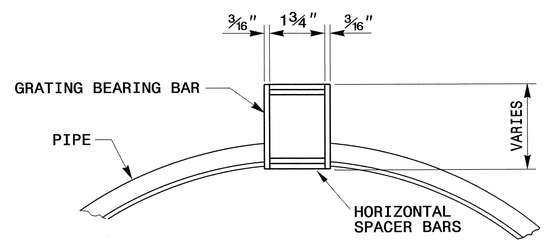

SECTION B-B

NOTES:

USE GRATE ASSEMBLIES FABRICATED FROM STRUCTURAL STEEL MEETING THE REQUIREMENTS OF ASTM A 570, GRADE 36 OR ASTM A 36.

HOT-DIP GALVANIZE GRATES AFTER FABRICATION TO MEET ASTM A123.

USE SLOTTED DRAIN PIPE THAT IS ADEQUATE FOR AASHTO H20 LOADING WHEN INSTALLED AS SHOWN.

USE SLOTTED DRAIN PIPE FABRICATED FROM ALUMINIZED CORRUGATED STEEL PIPE MEETING THE REQUIREMENTS OF AASHTO M274 TYPE 2.

NCDOT ALLOWS THE USE OF SIMILAR GRATE CONFIGURATIONS MEETING THE REQUIREMENTS OF THIS DETAIL, THE REQUIREMENTS OF THE SPECIAL PROVISIONS, AND THE APPROVAL OF THE ENGINEER.

TYPICAL GRATE DETAILS

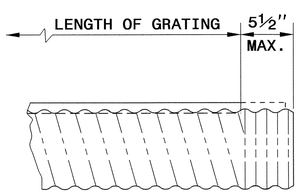

DETAIL AT END OF PIPE

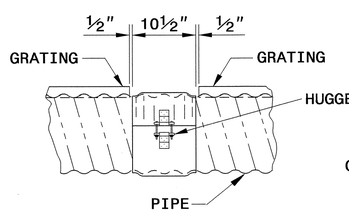

TYPICAL COUPLING BAND

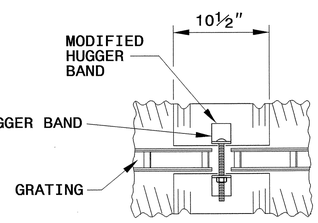

MODIFIED COUPLING BAND

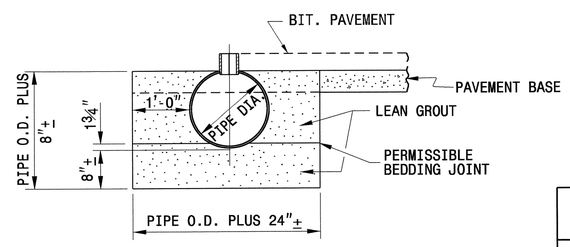

SLOTTED DRAIN PIPE INSTALLATION

NORTH CAROLINA PROFESSIONAL SEAL 022966 ENGINEER
10/21/11

CONTRACT STANDARDS AND DEVELOPMENT UNIT
Office 919-707-6950 FAX 919-250-4119

DETAILS OF SLOTTED DRAIN 12" THRU 36" DIAMETER PIPE

ORIGINAL BY: T.Spell DATE: 2-28-99
MODIFIED BY: DATE:
CHECKED BY: DATE:
FILE SPEC.: w:details\stand\slottdrain.dgn

21-OCT-2011 14:20
R:\Contracts\Special Details\tspell\metric\slottdrain.dgn
$$$$USERNAME$$$$

Florence & Hutcheson
CONSULTING ENGINEERS
5121 Kingdom Way, Suite 100 Raleigh, NC 27607
NC License No: F-0258

PROJECT REFERENCE NO.	SHEET NO.
R-2309AB	2-BD
R/W SHEET NO.	

ROADWAY DESIGN ENGINEER

NORTH CAROLINA PROFESSIONAL SEAL 116689 ENGINEER BRIAN ALLEN WILES
10/24/11

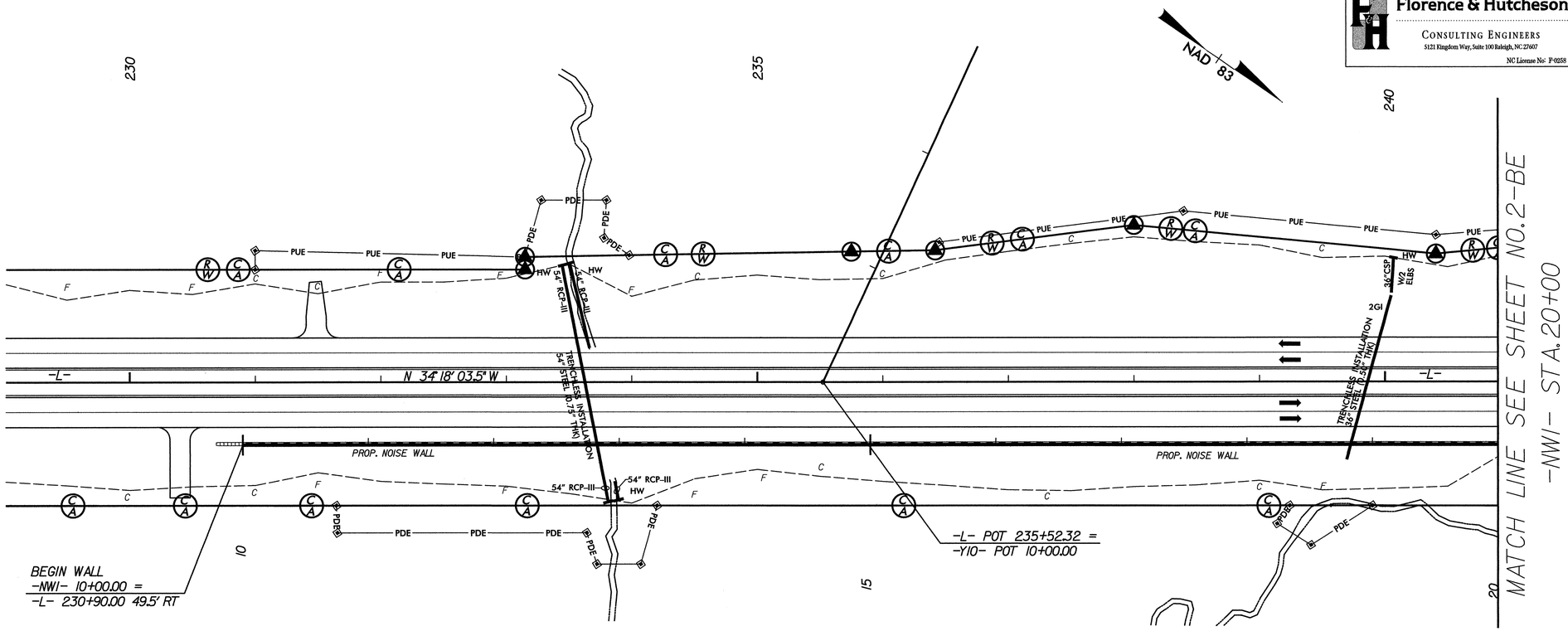

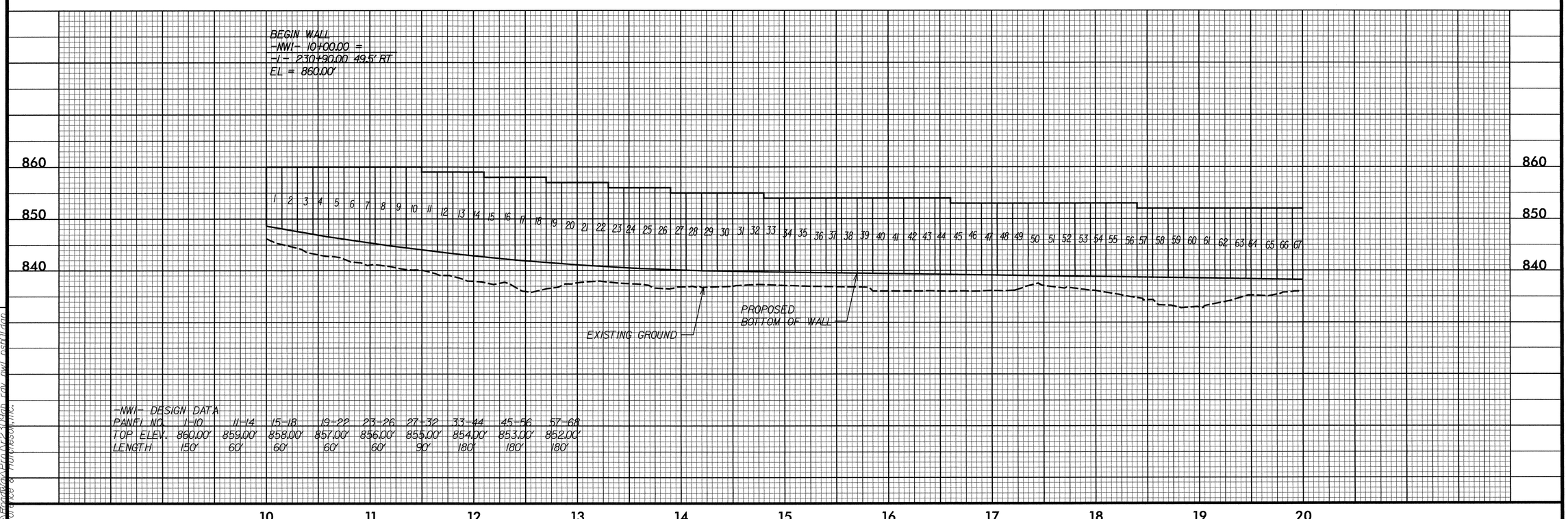

-NW1- DESIGN DATA

PANEL NO.	1-10	11-14	15-18	19-22	23-26	27-32	33-44	45-56	57-68
TOP ELEV.	860.00'	859.00'	858.00'	857.00'	856.00'	855.00'	854.00'	853.00'	852.00'
LENGTH	150'	60'	60'	60'	60'	90'	180'	180'	180'

REVISIONS

REVISIONS

10/24/2011
R:\Roadway\Proj\r2309ab_rdy_bwl_psh01.dgn
Florence & Hutcheson, Inc.

PROJECT REFERENCE NO.	SHEET NO.
R-2309AB	2-BE
R/W SHEET NO.	

ROADWAY DESIGN ENGINEER

NORTH CAROLINA PROFESSIONAL SEAL 16889 ENGINEER BRIAN ALLEN WILES

10/24/11

Florence & Hutcheson

CONSULTING ENGINEERS

5121 Kingdom Way, Suite 100 Raleigh, NC 27607

NC License No: F-0258

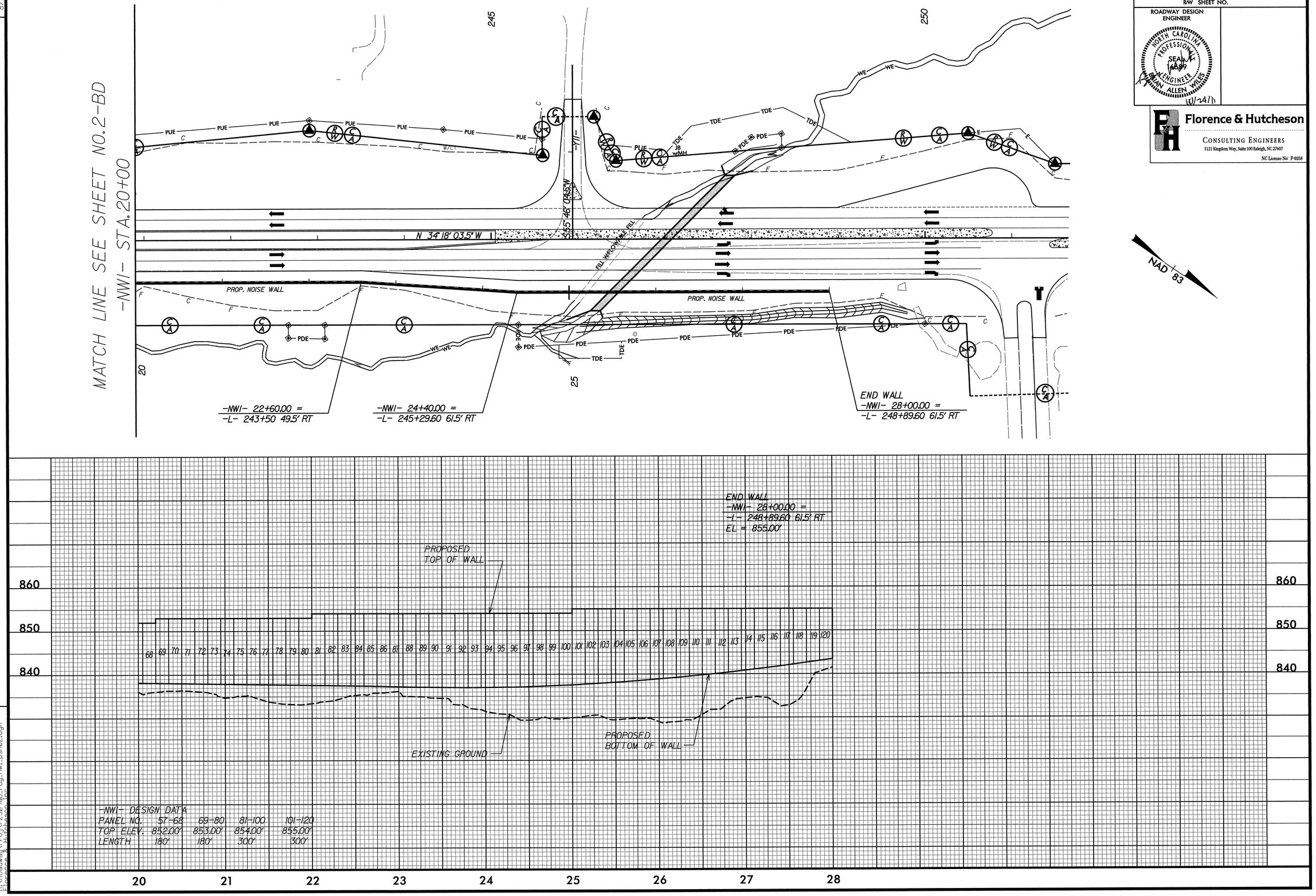

REVISIONS

8/17/99

10/24/2011
R:\Roadway\Proj\r2309ab_rdy_nw1_psh02.dgn
Florence & Hutcheson, Inc.

PROJECT REFERENCE NO.	SHEET NO.
R-2309AB	2-BF
R/W SHEET NO.	

ROADWAY DESIGN ENGINEER

NORTH CAROLINA PROFESSIONAL SEAL 15069 ENGINEER BRIAN ALLEN WILLIS

10/24/11

Florence & Hutcheson

CONSULTING ENGINEERS

5121 Kingdom Way, Suite 100 Raleigh, NC 27607

NC License No: F-0258

8/17/99

REVISIONS

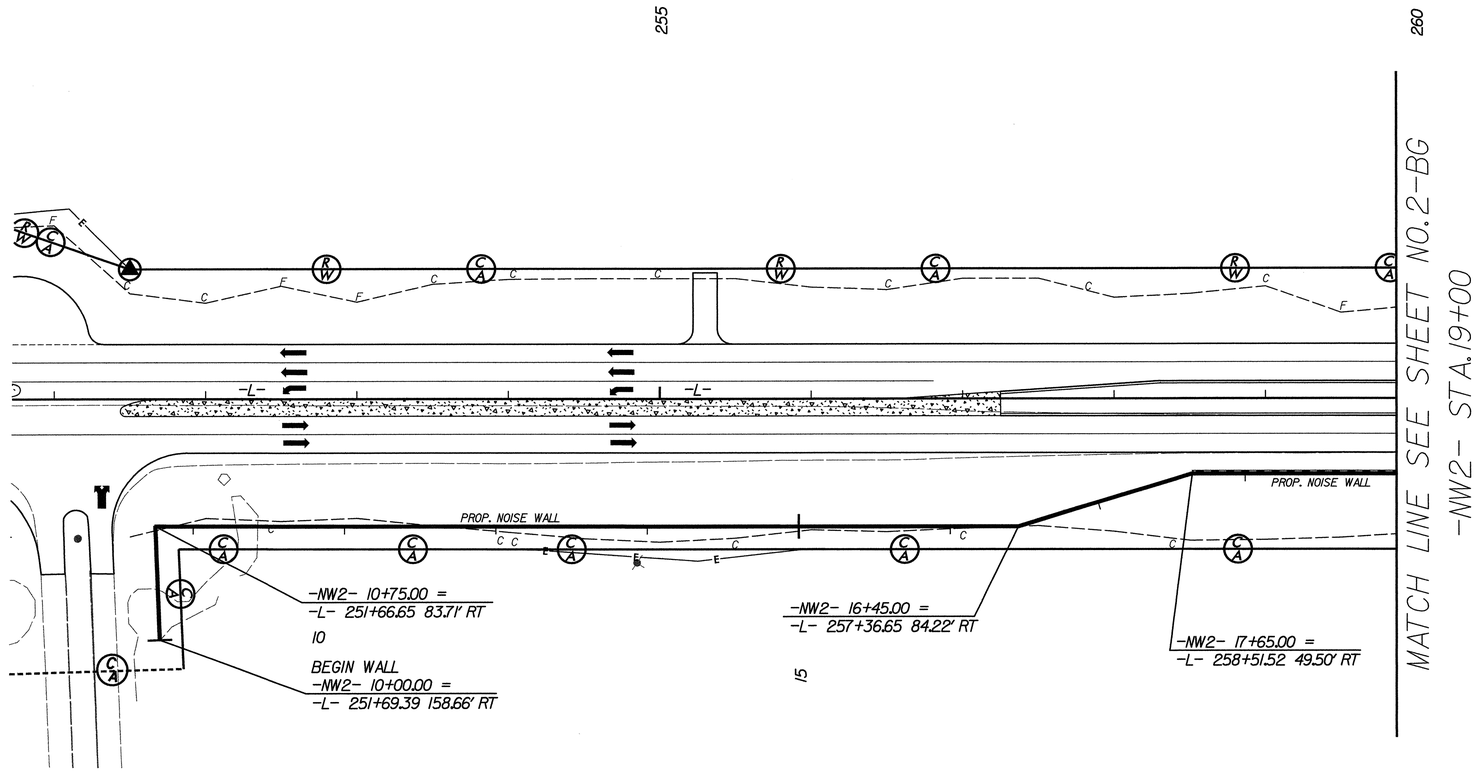

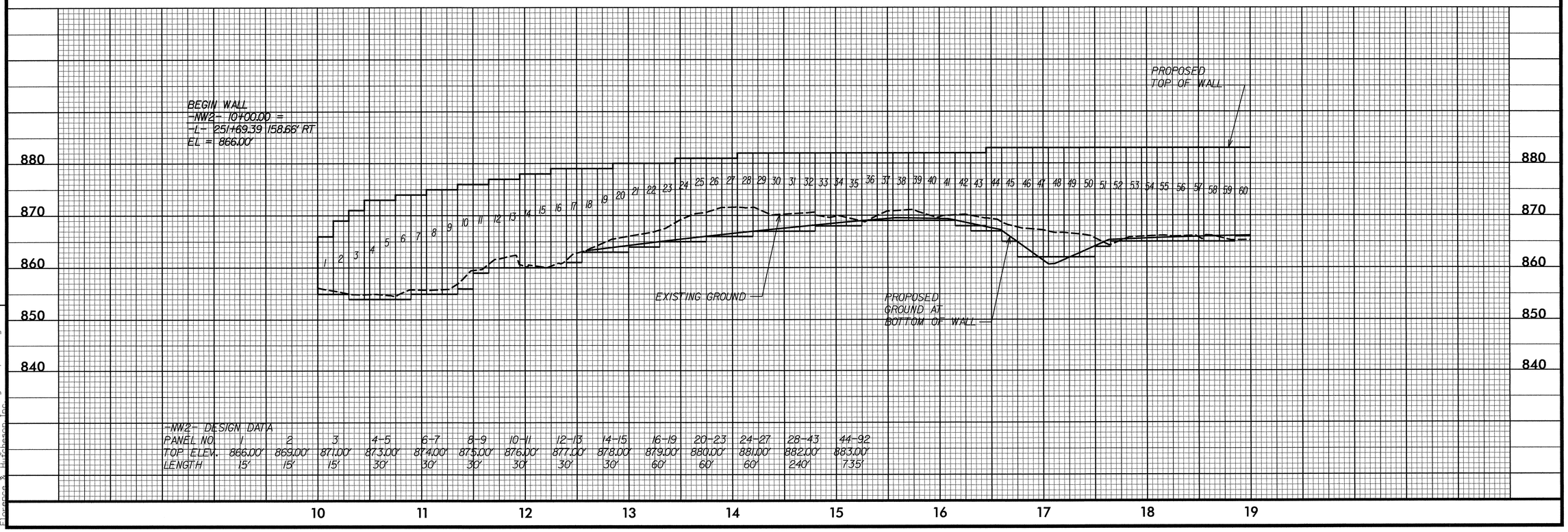

-NW2- DESIGN DATA

PANEL NO.	1	2	3	4-5	6-7	8-9	10-11	12-13	14-15	16-19	20-23	24-27	28-43	44-92
TOP ELEV.	866.00'	869.00'	871.00'	873.00'	874.00'	875.00'	876.00'	877.00'	878.00'	879.00'	880.00'	881.00'	882.00'	883.00'
LENGTH	15'	15'	15'	30'	30'	30'	30'	30'	30'	60'	60'	60'	240'	735'

10/24/2011
R:\Roadway\Proj\r2309ab_rdy_nw2_psh01.dgn
Florence & Hutcheson, Inc.

PROJECT REFERENCE NO.	SHEET NO.
R-2309AB	2-BG
R/W SHEET NO.	

ROADWAY DESIGN ENGINEER

NORTH CAROLINA PROFESSIONAL SEAL 16689 ENGINEER BRIAN ALLEN WILES

10/24/11

Florence & Hutcheson

CONSULTING ENGINEERS

5121 Kingsdown Way, Suite 100 Raleigh, NC 27607

NC License No: F-0258

8/17/99

REVISIONS

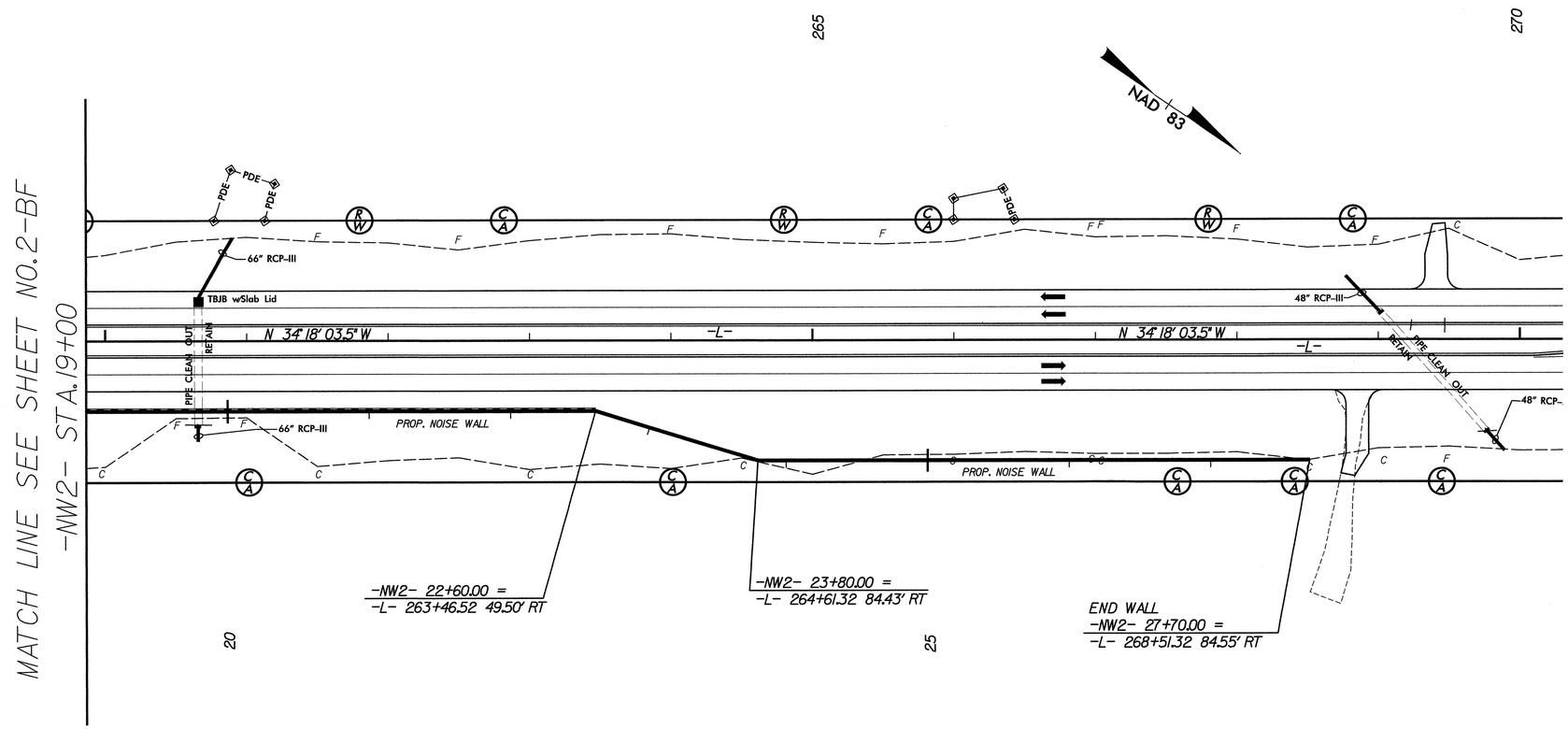

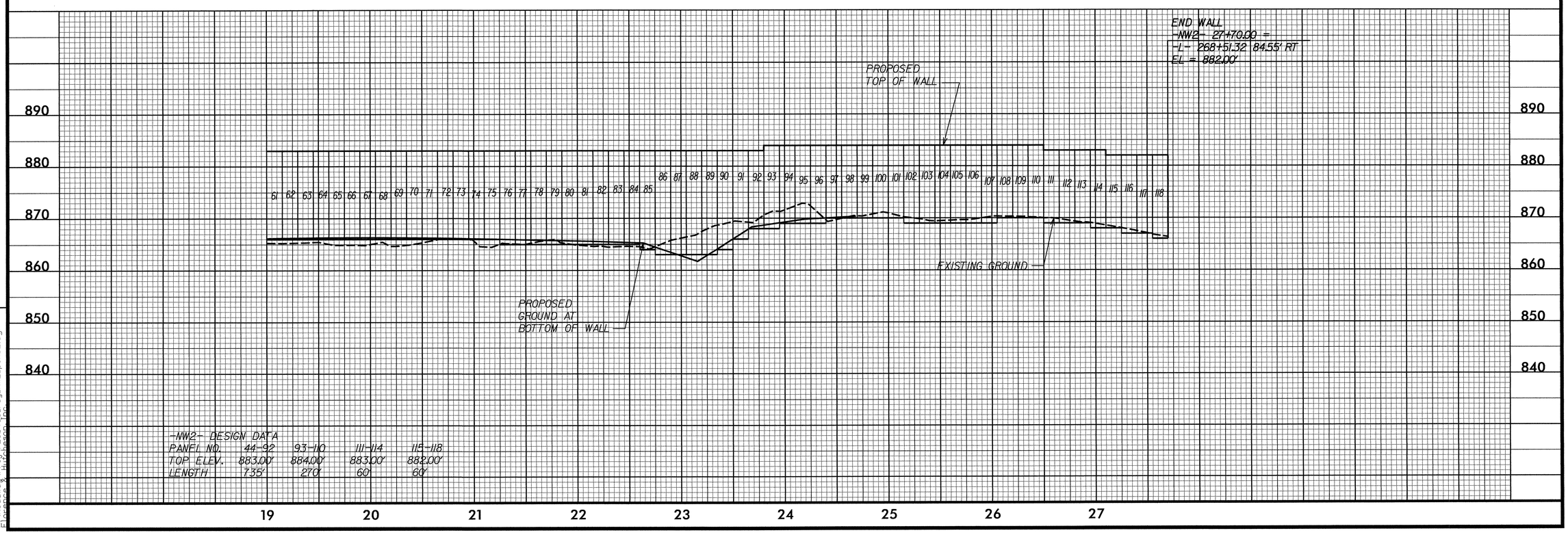

-NW2- DESIGN DATA

PANEL NO.	44-92	93-110	111-114	115-118
TOP ELEV.	883.00'	884.00'	883.00'	882.00'
LENGTH	735'	270'	60'	60'

10/24/2011
R:\Roadway\Proj\r-2309ab_rdy_nw2_psh02.dgn
FLorence & Hutcheson, Inc.

COMPUTED BY: ______________________ DATE: __________

CHECKED BY: ______________________ DATE: __________

NC10440

NORTH CAROLINA DEPARTMENT OF TRANSPORTATION
DIVISION OF HIGHWAYS

PROJECT NO.	SHEET NO.
R-2309AB	3-A

Note: Invert Elevations indicated are for Bid Purposes only and shall not be used for project construction stakeout.

LIST OF PIPES, ENDWALLS, ETC. (FOR PIPES 48 INCHES & UNDER)

STATION	LOCATION (LT, RT, OR CL')	STRUCTURE NO. FROM	STRUCTURE NO. TO	TOP ELEVATION	INVERT ELEVATION	INVERT ELEVATION	SLOPE CRITICAL	SIDE DRAIN PIPE (RCP, CSP, CAAP, HDPE, or PVC) 12"	15"	18"	24"	30"	36"	42"	48"	DO NOT USE RCP	DO NOT USE CSP	DO NOT USE CAAP	DO NOT USE HDPE
6+70 -Y-	LT	0400		852.9	849.9														
		0400	0409		849.9	844.7													
8+05 -Y-	RT	0401		—	—														
25+80 -L-	LT	0402		—	—														
8+53 -Y-	RT	0403		853.7	847.6														
7+73 -Y-	RT	0404		853.3	847.3														
7+73 -Y-	RT	0405		851.5	847.3														
7+42 -Y-	RT	0406	0407		852.4	847.2			16										
7+35 -Y-	RT	0407		852.6	847.2														
7+33 -Y-	LT	0408		852.0	846.2														
7+32 -Y-	LT	0409		851.2	844.7														
24+60 -L-	LT	0410		—	—														
8+11 -Y-	LT	0411		851.5	848.3														
		0411	0432		848.3	845.8													
21-89 -L-	LT	0412		851.7	847.9														
		0412	0436		847.9	847.8			16										
23+15 -L-	LT	0413		853.4	849.3														
		0413	0415		849.3	848.7													
22+69 -L-	LT	0414		852.0	848.8														
		0414	0415		848.8	848.7			24										
22+80 -L-	LT	0415		852.9	849.9														
		0415	0416		849.9	847.6													
22+12 -L-	LT	0416		851.4	847.6														
NOT USED		0417		—	—														
26+51 -L-	LT	0418		852.9	849.7														
		0418	0419		849.7	847.7													
26+15 -L-	RT	0419		852.0	847.7														
NOT USED		0420		—	—														
29+30 -L-	RT	0421		845.1	841.9														
		0421	0422		841.9	841.3													
29+30 -L-	RT	0422			841.3														
29+31 -L-	RT	0423		844.2															
30+12 -L-	LT	0424		841.0	834.5														
		0424	0425		834.5	834.0					36								
30+40 -L-	LT	0425		839.5	834.0														
		0425	0428		834.0	831.8													
31+26 -L-	LT	0426		838.9	835.7														
		0426	0427		835.7	832.0			28										
31+37 -L-	LT	0427		835.0	832.0														
SHEET TOTALS									84		36								

STATION	FROM	TO	C.S. PIPE 12" (.064)	15" (.064)	18" (.064)	24" (.064)	30" (.079)	36" (.079)	42" (.109)	48" (.109)	R.C. PIPE CLASS III 12"	15"	18"	24"	30"	36"	42"	48"	R.C. PIPE CLASS IV 12"	15"	18"	24"	30"	36"	42"	48"	18" WELDED STEEL PIPE, GRADE B (TRENCHLESS INSTALLATION)	24" WELDED STEEL PIPE (TRENCHLESS INSTALLATION)	36" WELDED STEEL PIPE, GRADE B (TRENCHLESS INSTALLATION)	42" WELDED STEEL PIPE, GRADE B (TRENCHLESS INSTALLATION)	ENDWALLS STD. 838.01 OR STD. 838.11 (UNLESS NOTED OTHERWISE) CU. YARDS R.C.P.	C.S.P.
6+70 -Y-	0400																															
	0400	0409																		64												
8+05 -Y-	0401			12																												
25+80 -L-	0402			20																												
8+53 -Y-	0403																															
7+73 -Y-	0404																															
7+73 -Y-	0405																															
7+42 -Y-	0406	0407																														
7+35 -Y-	0407																															
7+33 -Y-	0408																															
7+32 -Y-	0409																															
24+60 -L-	0410			20																												
8+11 -Y-	0411																															
	0411	0432																		28												
21-89 -L-	0412																															
	0412	0436																														
23+15 -L-	0413																															
	0413	0415																														
22+69 -L-	0414																															
	0414	0415																														
22+80 -L-	0415																															
	0415	0416																														
22+12 -L-	0416																															
NOT USED	0417																															
26+51 -L-	0418																															
	0418	0419																		64												
26+15 -L-	0419																															
NOT USED	0420																															
29+30 -L-	0421																															
	0421	0422																		8												
29+30 -L-	0422																															
29+31 -L-	0423																															
30+12 -L-	0424																															
	0424	0425																														
30+40 -L-	0425																															
	0425	0428												16																		
31+26 -L-	0426																															
	0426	0427																														
31+37 -L-	0427																															
SHEET TOTALS				52										16						164												

STATION	FROM	TO	QUANTITIES FOR DRAINAGE STRUCTURES PER EACH (0' THRU 5.0')	A 5.0' THRU 10.0'	B 10.0' AND ABOVE	C.B. STD. 840.01 OR STD. 840.02	FRAME, GRATES, AND HOOD STANDARD 840.03 TYPE OF GRATE E	F	G	CONCRETE TRANSITIONAL SECTION DROP INLET	CATCH BASIN	D.I. STD. 840.14 OR STD. 840.15	D.I. FRAME AND GRATES STD. 840.16	G.D.I. TYPE "A" STD. 840.17 OR 840.26	G.D.I. TYPE "B" STD. 840.18 OR 840.27	G.D.I. TYPE "D" STD. 840.19 OR 840.28	G.D.I. FRAME WITH TWO GRATES STD. 840.22	G.D.I. (N.S.) FRAME WITH TWO GRATES STD. 840.24	G.D.I. (N.S.) FRAME WITH TWO GRATES STD. 840.29	J.B. STD. 840.31 OR 840.32	MANHOLE FRAME AND COVER STD. 840.54	SLOTTED DRAIN (LF)	ADJUST MANHOLE	T.B.J.B. STD. 840.34	ADJUST CB	CROSS PIPE END SECTION STD. 310.03	C. S. PIPE ELBOWS NO. & SIZE	CONC. & BRICK PIPE PLUG, C.Y. STD. 840.71	CONC. COLLARS CL. "B" C.Y. STD. 840.72	PIPE REMOVAL LIN. FT.	REMARKS
6+70 -Y-	0400		1			1			1																						
	0400	0409																												96	
8+05 -Y-	0401																					30					1 @ 15"				
25+80 -L-	0402																					30					1 @ 15"				
8+53 -Y-	0403																				1		1								
7+73 -Y-	0404																				1		1								
7+73 -Y-	0405		1																		1			1							
7+42 -Y-	0406	0407																													
7+35 -Y-	0407		1	0.38		1		1																							
7+33 -Y-	0408		1	0.85						1		1	1																		
7+32 -Y-	0409		1	1.52		1			1																						
24+60 -L-	0410																					28					1 @ 15"				
8+11 -Y-	0411		1							1		1	1																		
	0411	0432																													
21-89 -L-	0412		1																	1	1										
	0412	0436																													
23+15 -L-	0413		1																		1			1							
	0413	0415																													
22+69 -L-	0414		1							1		1	1																		
	0414	0415																													
22+80 -L-	0415		1			1		1																							
	0415	0416																													
22+12 -L-	0416		1																		1			1							
NOT USED	0417																														
26+51 -L-	0418		1							1		1	1																		
	0418	0419																													
26+15 -L-	0419		1			1		1																							
NOT USED	0420																														
29+30 -L-	0421		1							1		1	1																		
	0421	0422																													
29+30 -L-	0422																												0.399		
29+31 -L-	0423							1																	1						
30+12 -L-	0424		1	1.46											1			1													
	0424	0425																													
30+40 -L-	0425		1	0.5		1			1																						
	0425	0428																													
31+26 -L-	0426		1												1			1													
	0426	0427																													
31+37 -L-	0427		1			1			1																						
SHEET TOTALS			18	4.71		7		4	4	5		5	5		2			2		1	6	88	2	3	1		3 @ 15"		0.399	96	

*TOTAL L.F. FOR PAY QUANTITY SHALL BE COL. 'A' + (1.3 X COL.'B')

ABBREVIATIONS

C.B.	CATCH BASIN
N.D.I.	NARROW DROP INLET
D.I.	DROP INLET
G.D.I.	GRATED DROP INLET
G.D.I.(N.S.)	(NARROW SLOT)
J.B.	JUNCTION BOX
M.H.	MANHOLE
T.B.D.I.	TRAFFIC BEARING DROP INLET
T.B.J.B.	TRAFFIC BEARING JUNCTION BOX

COMPUTED BY: ____________ DATE: ________

CHECKED BY: ____________ DATE: ________

NC10440

NORTH CAROLINA DEPARTMENT OF TRANSPORTATION
DIVISION OF HIGHWAYS

PROJECT NO.	SHEET NO.
R-2309AB	3-B

Note: Invert Elevations indicated are for Bid Purposes only and shall not be used for project construction stakeout.

LIST OF PIPES, ENDWALLS, ETC. (FOR PIPES 48 INCHES & UNDER)

Station	Location (LT, RT, or CL)	Structure No. From	Structure No. To	Top Elevation	Invert Elevation	Invert Elevation	Slope Critical	Side Drain Pipe (RCP, CSP, CAAP, HDPE, or PVC) 12"	15"	18"	24"	30"	36"	42"	48"	Do Not Use RCP	Do Not Use CSP	Do Not Use CAAP	Do Not Use HDPE
30+56 -L-	LT	0428		839.0	831.8														
		0428	0440		831.8	831.8													
30+60 -L-	LT	0440			831.8														
NOT USED		0429		—	—														
32+62 -L-	RT	0430		829.9	820.1														
NOT USED		0431		—	—														
8+12 -Y-	RT	0432		850.6	845.8														
6+03 -Y-	RT	0433			853.6														
		0433	0434	853.6	848.8		X			8									
NOT USED		0435																	
NOT USED		0437		—	—														
8+15 -Y-	LT	0440		851.2															
7+02 -Y-	RT	0438		852.6	849.9														
		0438	0439		849.9	847.9													
7+00 -Y-	RT	0439		854.0	847.9														
33+45 -L-	RT	0526																	
35+83 -L-	RT	0500		817.4	810.4														
		0501	0502		814.6	812.9						24							
31+37 -L-	LT	0427	0527		832.0	821.6													
33+90 -L-	LT	0527		824.6	821.6														
33+90 -L-	LT	0527	0502		821.6	812.9													
35+90 -L-	LT	0502		817.1	812.9														
		0502	0504		812.9	811.9													
36+30 -L-	RT	0503		817.1	813.9														
		0503	0504		813.9	811.9													
36+30 -L-	LT	0504		816.2	811.9														
		0504	0505		811.9	810.4													
37+10 -L-	LT	0505		814.7	810.4														
		0505	0506		810.4	805.9													
37+16 -L-	RT	0506		814.5	805.9														
NOT USED		0507		—	—														
NOT USED		0508		—	—														
		0509	0510		815.7	809.7													
38+80 -L-	LT	0510		812.7	809.7														
		0510	0511		809.7	808.1	X												
40+05 -L-	LT	0511		811.3	808.1														
		0511	0512		808.1	805.8													
40+50 -L-	RT	0512		811.3	805.8														
44+00 -L-	RT	0513		806.9	803.9														
		0513	0514		803.9	803.5	X												
44+00 -L-	LT	0514		806.9	803.5														
		0514	0604		803.5	800.1	X												
NOT USED		0600		—	—														
SHEET TOTALS										8		24							

Station	Structure No. From	C.S. Pipe 12" (.064)	15" (.064)	18" (.064)	24" (.064)	30" (.079)	36" (.079)	42" (.109)	48" (.109)	R.C. Pipe Class III 12"	15"	18"	24"	30"	36"	42"	48"	R.C. Pipe Class IV 12"	15"	18"	24"	30"	36"	42"	48"
30+56 -L-	0428																								
	0428												16												
30+60 -L-	0440																								
NOT USED	0429																								
32+62 -L-	0430																								
NOT USED	0431																								
8+12 -Y-	0432																								
6+03 -Y-	0433																								
	0433																								
NOT USED	0435																								
NOT USED	0437																								
8+15 -Y-	0440																								
7+02 -Y-	0438																								
	0438																		12						
7+00 -Y-	0439																								
33+45 -L-	0526																								
35+83 -L-	0500																								
	0501																								
31+37 -L-	0427																		252						
33+90 -L-	0527																								
33+90 -L-	0527																		200						
35+90 -L-	0502																								
	0502																					40			
36+30 -L-	0503																								
	0503																		48						
36+30 -L-	0504																								
	0504																					80			
37+10 -L-	0505																								
	0505																					80			
37+16 -L-	0506																								
NOT USED	0507																								
NOT USED	0508																								
	0509		16																						
38+80 -L-	0510																								
	0510																		128						
40+05 -L-	0511																								
	0511																			80					
40+50 -L-	0512																								
44+00 -L-	0513																								
	0513																		80						
44+00 -L-	0514																								
	0514																		300						
NOT USED	0600																								
SHEET TOTALS			16										16						1020	80		200			

Station	Structure No. From	18" Welded Steel Pipe, Grade B (Trenchless Installation)	24" Welded Steel Pipe, Grade B (Trenchless Installation)	36" Welded Steel Pipe, Grade B (Trenchless Installation)	42" Welded Steel Pipe, Grade B (Trenchless Installation)	Endwalls Std. 838.01 or Std. 838.11 (Unless Noted Otherwise) Cu. Yards R.C.P.	C.S.P.	Quantities for Drainage Structures: Per Each (0' thru 5.0')	Lin. Ft. A: 5.0' thru 10.0'	B: 10.0' and above	C.B. Std. 840.01 or Std. 840.02	Frame, Grates, and Hood Standard 840.03 Type of Grate E	F	G	Concrete Transitional Section: Drop Inlet	Catch Basin	D.I. Std. 840.14 or Std. 840.15	D.I. Frame and Grates Std. 840.16	G.D.I. Type "A" Std. 840.17 or 840.26	G.D.I. Type "B" Std. 840.18 or 840.27	G.D.I. Type "D" Std. 840.19 or 840.28	G.D.I. Frame with Two Grates Std. 840.22	G.D.I. (N.S.) Frame with Two Grates Std. 840.24	G.D.I. (N.S.) Frame with Two Grates Std. 840.29	J.B. Std. 840.31 or 840.32	Manhole Frame and Cover Std. 840.54	Slotted Drain (LF)	Adjust Manhole	T.B.J.B. Std. 840.34	Adjust CB	Cross Pipe End Section Std. 310.03	C. S. Pipe Elbows No. & Size	Conc. & Brick Pipe Plug, C.Y. Std. 840.71	Conc. Collars Cl. "B" C.Y. Std. 840.72	Pipe Removal Lin. Ft.	Remarks
30+56 -L-	0428							1	2.21																	1			1							
	0428																																			
30+60 -L-	0440																																	0.5526		
NOT USED	0429																																			
32+62 -L-	0430												1																	1						
NOT USED	0431																																			
8+12 -Y-	0432							1			1	1																								
6+03 -Y-	0433							1																	1	1										
	0433																																			
NOT USED	0435																																			
NOT USED	0437																																			
8+15 -Y-	0440								2.5																	1		1								
7+02 -Y-	0438							1												1			1													
	0438																																			
7+00 -Y-	0439							1	1.1																1	1										
33+45 -L-	0526												1																	1						
35+83 -L-	0500							1	2.04		1		1																							
	0501																																			
31+37 -L-	0427																																			
33+90 -L-	0527							1			1			1																						
33+90 -L-	0527																																			
35+90 -L-	0502							1			1			1																					36	
	0502																																			
36+30 -L-	0503							1							1		1	1																		
	0503																																			
36+30 -L-	0504							1			1			1																						
	0504																																			
37+10 -L-	0505							1			1			1																						
	0505																																		112	
37+16 -L-	0506							1	3.67		1		1																							
NOT USED	0507																																			
NOT USED	0508																																			
	0509																															1 @ 15"				
38+80 -L-	0510							1			1			1																						
	0510																																			
40+05 -L-	0511							1			1			1																						
	0511																																			
40+50 -L-	0512							1	0.49		1		1																							
44+00 -L-	0513							1			1		1																							
	0513																																			
44+00 -L-	0514							1			1			1																						
	0514																																			
NOT USED	0600																																			
SHEET TOTALS								17	12.01		12	1	6	7	1		1	1		1			1		2	4		1	1	2		1 @ 15"		0.5526	148	

*TOTAL L.F. FOR PAY QUANTITY SHALL BE COL. 'A' + (1.3 X COL.'B')

ABBREVIATIONS

- C.B. — CATCH BASIN
- N.D.I. — NARROW DROP INLET
- D.I. — DROP INLET
- G.D.I. — GRATED DROP INLET
- G.D.I.(N.S.) — (NARROW SLOT)
- J.B. — JUNCTION BOX
- M.H. — MANHOLE
- T.B.D.I. — TRAFFIC BEARING DROP INLET
- T.B.J.B. — TRAFFIC BEARING JUNCTION BOX

COMPUTED BY:	DATE:
CHECKED BY:	DATE:

PROJECT NO.	SHEET NO.
R-2309AB	3-C

NORTH CAROLINA DEPARTMENT OF TRANSPORTATION
DIVISION OF HIGHWAYS

NC10440

Note: Invert Elevations indicated are for Bid Purposes only and shall not be used for project construction stakeout.

LIST OF PIPES, ENDWALLS, ETC. (FOR PIPES 48 INCHES & UNDER)

STATION / SIZE	LOCATION (LT, RT, OR CL)'	STRUCTURE NO. FROM	STRUCTURE NO. TO	TOP ELEVATION	INVERT ELEVATION	INVERT ELEVATION	SLOPE CRITICAL	SIDE DRAIN PIPE (RCP, CSP, CAAP, HDPE, or PVC) 12"	15"	18"	24"	30"	36"	42"	48"	DO NOT USE RCP	DO NOT USE CSP	DO NOT USE CAAP	DO NOT USE HDPE	C.S. PIPE 12"	15"	18"	24"	30"	36"	42"	48"	R.C. PIPE CLASS III 12"	15"	18"	24"	30"	36"	42"	48"	R.C. PIPE CLASS IV 12"	15"	18"	24"	30"	36"	42"	48"	18" WELDED STEEL PIPE, GRADE B (TRENCHLESS INSTALLATION)	24" WELDED STEEL PIPE, GRADE B (TRENCHLESS INSTALLATION)	36" WELDED STEEL PIPE, GRADE B (TRENCHLESS INSTALLATION)	42" WELDED STEEL PIPE, GRADE B (TRENCHLESS INSTALLATION)		ENDWALLS STD. 838.01 OR STD. 838.11 (UNLESS NOTED OTHERWISE) CU. YARDS R.C.P.	C.S.P.	QUANTITIES FOR DRAINAGE STRUCTURES PER EACH (0' THRU 5.0')	*TOTAL L.F. FOR PAY QUANTITY SHALL BE COL. 'A' + (1.3 X COL.'B') LIN. FT. A 5.0' THRU 10.0'	B 10.0' AND ABOVE	C.B. STD. 840.01 OR STD. 840.02	FRAME, GRATES, AND HOOD STANDARD 840.03 TYPE OF GRATE E	F	G	CONCRETE TRANSITIONAL SECTION DROP INLET	CATCH BASIN	D.I. STD. 840.14 OR STD. 840.15	D.I. FRAME AND GRATES STD. 840.16	G.D.I. TYPE "A" STD. 840.17 OR 840.26	G.D.I. TYPE "B" STD. 840.18 OR 840.27	G.D.I. TYPE "D" STD. 840.19 OR 840.28	G.D.I. FRAME WITH TWO GRATES STD. 840.22	G.D.I. (N.S.) FRAME WITH TWO GRATES STD. 840.24	G.D.I. (N.S.) FRAME WITH TWO GRATES STD. 840.29	J.B. STD. 840.31 OR 840.32	MANHOLE FRAME AND COVER STD. 840.54	SLOTTED DRAIN (LF)	ADJUST MANHOLE	T.B.J.B. STD. 840.34	ADJUST CB	CROSS PIPE END SECTION STD. 310.03	C. S. PIPE ELBOWS NO. & SIZE	CONC. & BRICK PIPE PLUG, C.Y. STD. 840.71	CONC. COLLARS CL. "B" C.Y. STD. 840.72	PIPE REMOVAL LIN. FT.	REMARKS
THICKNESS OR GAUGE																				.064	.064	.064	.064	.079	.079	.109	.109																																																				
47+64 -L-	LT	0601		803.0	800.9																																														1												1			1													
		0601	0602		800.9	797.1	X																							360																																																	
51+23 -L-	LT	0602		799.2	797.1																																														1												1			1													
		0602	0623		797.1	786.2																								208																																																186	
47+00 -L-	RT	0603		803.5	800.5																																														1			1		1																							
		0603	0604		800.5	800.1	X																														76																																										
47+00 -L-	LT	0604		803.5	800.1																																														1			1			1																						
		0604	0605		800.1	799.4	X																														80																																										
47+76 -L-	LT	0605		802.7	799.4																																														1			1			1																						
		0605	0607		799.4	797.9	X																															124																																								64	
49+00 -L-	RT	0606		801.3	798.3																																														1			1		1																							
		0606	0607		798.3	797.9	X																														80																																										
49+00 -L-	LT	0607		801.3	797.9																																														1			1			1																						
		0607	0609		797.9	795.1	X																															224																																									
51+22 -L-	RT	0608		798.8	795.8																																														1			1		1																							
		0608	0609		795.8	795.1	X																														88																																									94	
51+22 -L-	LT	0609		798.8	795.1																																														1			1			1																						
		0609	0610		795.1	793.4																																128																																									
52+50 -L-	LT	0610		797.2	793.4																																														1			1			1																						
		0610	0612		793.4	791.7																																	152																																								
54+00 -L-	RT	0611		795.7	792.7																																														1			1		1																							
		0611	0612		792.7	791.7	X																														88																																										
54+00 -L-	LT	0612		795.5	791.7																																														1			1			1																						
		0612	0613		791.7	789.5																																	168																																								
55+70 -L-	LT	0613		793.7	789.5																																														1			1			1																						
		0613	0617		789.5	789.2	X																																	52																																							
55+70 -L-	RT	0614		794.0	791.0																																														1			1		1																							
		0614	0616		791.0	790.7	X																														52																																										
56+71 -L-	RT	0615		794.0	791.0																																														1			1			1																						
		0615	0616		791.0	790.7	X																														52																																										
56+19 -L-	RT	0616		793.9	790.7																																														1			1	1																								
		0616	0617		790.7	789.2																															88																																										
56+19 -L-	LT	0617		793.6	789.2																																														1			1	1																								
		0617	0622		789.2	788.8	X																																	92																																							
NOT USED		0618																																																																													
NOT USED		0619																																																																													
NOT USED		0620																																																																													
58+01 -L-		0621		795.5	792.3																																														1			1		1																							
		0621	0622		792.3	788.8																																92																																									
57+12 -L-		0622		794.1	788.8																																														1	0.29		1		1																							
		0622	0625		788.8	774.0																		56																																																			2 @ 30"				ROD & LUG CONNECTORS
56+50 -L-	LT	0625										48																																					2.3																														END WALL W/SLUICE GATE
		0621	0721		792.3	795.9																																148																																									
59+50 -L-	LT	0721		799.5	795.9																																														1			1		1																							
		0721	0722		795.9	796.2	X																															76																																									
59+50 -L-	RT	0722		799.5	796.2																																														1			1			1																						
		0722	0723		796.2	798.2			16																																																																					
SHEET TOTALS									16			48												56						568							604	792	320	144									2.3		21	0.29		19	2	8	9						2			2									2 @ 30"		344	

ABBREVIATIONS

C.B.	CATCH BASIN
N.D.I.	NARROW DROP INLET
D.I.	DROP INLET
G.D.I.	GRATED DROP INLET
G.D.I.(N.S.)	(NARROW SLOT)
J.B.	JUNCTION BOX
M.H.	MANHOLE
T.B.D.I.	TRAFFIC BEARING DROP INLET
T.B.J.B.	TRAFFIC BEARING JUNCTION BOX

NC10440

COMPUTED BY:		DATE:	
CHECKED BY:		DATE:	

NORTH CAROLINA DEPARTMENT OF TRANSPORTATION
DIVISION OF HIGHWAYS

PROJECT NO.	SHEET NO.
R-2309AB	3-D

Note: Invert Elevations indicated are for Bid Purposes only and shall not be used for project construction stakeout.

LIST OF PIPES, ENDWALLS, ETC. (FOR PIPES 48 INCHES & UNDER)

STATION / SIZE / THICKNESS OR GAUGE	LOCATION (LT, RT, OR CL)	STRUCTURE NO. FROM	STRUCTURE NO. TO	TOP ELEVATION	INVERT ELEVATION	INVERT ELEVATION	SLOPE CRITICAL	SIDE DRAIN PIPE (RCP, CSP, CAAP, HDPE, or PVC) 12"	15"	18"	24"	30"	36"	42"	48"	DO NOT USE RCP	DO NOT USE CSP	DO NOT USE CAAP	DO NOT USE HDPE	C.S. PIPE 12" .064	15" .064	18" .064	24" .064	30" .079	36" .079	42" .109	48" .109	R.C. PIPE CLASS III 12"	15"	18"	24"	30"	36"	42"	48"	R.C. PIPE CLASS IV 12"	15"	18"	24"	30"	36"	42"	48"
NOT USED		0700																																									
NOT USED		0701																																									
NOT USED		0702																																									
69+55 -L-	RT	0703		841.6	838.6																																						
		0703	0705		838.6	836.5																															52						
69+03 -L-	RT	0705		839.5	836.5																																						
		0705	0706		836.5	835.4			60																																		
68+65 -L-	LT	0704		837.6	834.6																																						
		0704	0709		834.6	824.5			76																																		
8+90 -Y1-	LT	0709		827.5	824.5																																						
		0709	0720		824.5	822.6																										64													
8+82 -Y1-	RT	0720		824.4	822.6																																						
10+54 -Y1-		0707		835.5	832.5																																						
		0707	0708		832.5	832.3	X		32																																		
64+50 -L-	LT	0710		820.3	817.3																																						
		0710	0711		817.3	816.9	X																														76						
64+50 -L-	RT	0711		820.3	816.9																																						
		0711	0725		816.9	816.8	X		24																																		
62+00 -L-	LT	0712		809.7	806.7																																						
		0712	0713		806.7	806.4	X																														76						
62+00 -L-	RT	0713		809.7	806.4																																						
		0713	0724		806.4	806.2	X		24																																		
NOT USED		0714																																									
NOT USED		0715																																									
NOT USED		0716																																									
71+60 -L-	LT	0717		845.0	842.3																																						
		0717	0718		842.3	842.2	X		24																																		
71+60 -L-	LT	0718		848.2	842.2																																						
		0718	0719		842.2	836.7																															244						
69+15 -L-	LT	0719		839.7	836.7																																						
		0719	0704		836.7	834.6																															52						
65+67 -L-	RT	0726			823.7	822.0			28																																		
67+50 -L-	RT	0727			831.8	829.9			32																																		
		0718	0819		842.2	844.4																															72						
72+30 -L-	LT	0818		847.2	844.5																																						
		0818	0819		844.5	844.4			16																																		
72+30 -L-	LT	0819		849.6	844.4																																						
SHEET TOTALS									316																					64							572						

STATION	18" WELDED STEEL PIPE, GRADE B (TRENCHLESS INSTALLATION)	24" WELDED STEEL PIPE, GRADE B (TRENCHLESS INSTALLATION)	36" WELDED STEEL PIPE, GRADE B (TRENCHLESS INSTALLATION)	42" WELDED STEEL PIPE, GRADE B (TRENCHLESS INSTALLATION)		ENDWALLS STD. 838.01 OR STD. 838.11 (UNLESS NOTED OTHERWISE) CU. YARDS R.C.P.	C.S.P.	QUANTITIES FOR DRAINAGE STRUCTURES PER EACH (0' THRU 5.0')	*TOTAL L.F. FOR PAY QUANTITY SHALL BE COL. 'A' + (1.3 X COL.'B') LIN. FT. A 5.0' THRU 10.0'	B 10.0' AND ABOVE	C.B. STD. 840.01 OR STD. 840.02	FRAME, GRATES, AND HOOD STANDARD 840.03 TYPE OF GRATE E	F	G	CONCRETE TRANSITIONAL SECTION DROP INLET	CATCH BASIN	D.I. STD. 840.14 OR STD. 840.15	D.I. FRAME AND GRATES STD. 840.16	G.D.I. TYPE "A" STD. 840.17 OR 840.26	G.D.I. TYPE "B" STD. 840.18 OR 840.27	G.D.I. TYPE "D" STD. 840.19 OR 840.28	G.D.I. FRAME WITH TWO GRATES STD. 840.22	G.D.I. (N.S.) FRAME WITH TWO GRATES STD. 840.24	G.D.I. (N.S.) FRAME WITH TWO GRATES STD. 840.29	J.B. STD. 840.31 OR 840.32	MANHOLE FRAME AND COVER STD. 840.54	SLOTTED DRAIN (LF)	ADJUST MANHOLE	T.B.J.B. STD. 840.34	ADJUST CB	CROSS PIPE END SECTION STD. 310.03	C. S. PIPE ELBOWS NO. & SIZE	CONC. & BRICK PIPE PLUG, C.Y. STD. 840.71	CONC. COLLARS CL. "B" C.Y. STD. 840.72	PIPE REMOVAL LIN. FT.	REMARKS
NOT USED																																				
NOT USED																																				
NOT USED																																				
69+55 -L-								1			1			1																						
69+03 -L-								1			1			1																						
68+65 -L-								1			1		1																							
8+90 -Y1-								1												1			1													
																																			24	
8+82 -Y1-								1													1		1													
10+54 -Y1-								1			1	1																								
64+50 -L-								1			1		1																							
64+50 -L-								1			1			1																						
62+00 -L-								1			1		1																						20	
																																			16	
62+00 -L-								1			1			1																					16	
																																			18	
NOT USED																																				
NOT USED																																				
NOT USED																																				
71+60 -L-								1												1			1													
71+60 -L-								1	1.03		1		1																							
69+15 -L-								1			1		1																							
65+67 -L-																																			32	
67+50 -L-																																				
																																			20	
72+30 -L-								1												1			1													
72+30 -L-								1	0.25		1		1																							
SHEET TOTALS								15	1.28		11	1	6	4						3	1		4												146	

ABBREVIATIONS

C.B.	CATCH BASIN
N.D.I.	NARROW DROP INLET
D.I.	DROP INLET
G.D.I.	GRATED DROP INLET
G.D.I.(N.S.)	(NARROW SLOT)
J.B.	JUNCTION BOX
M.H.	MANHOLE
T.B.D.I.	TRAFFIC BEARING DROP INLET
T.B.J.B.	TRAFFIC BEARING JUNCTION BOX

COMPUTED BY: ______________________ DATE: __________

CHECKED BY: ______________________ DATE: __________

PROJECT NO.	SHEET NO.
R-2309AB	3-E

NORTH CAROLINA DEPARTMENT OF TRANSPORTATION
DIVISION OF HIGHWAYS

NC10440

Note: Invert Elevations indicated are for Bid Purposes only and shall not be used for project construction stakeout.

LIST OF PIPES, ENDWALLS, ETC. (FOR PIPES 48 INCHES & UNDER)

STATION	LOCATION (LT, RT, OR CL)	STRUCTURE NO. FROM	STRUCTURE NO. TO	TOP ELEVATION	INVERT ELEVATION	INVERT ELEVATION	SLOPE CRITICAL
82+00 -L-	LT	0800		858.0	855.0		
		0800	0801		855.0	852.6	
80+61 -L-	LT	0801		855.6	852.6		
		0801	0802		852.6	849.1	
79+00 -L-	LT	0802		852.1	849.1		
		0802	0803		849.1	847.4	X
77+92 -L-	LT	0803		850.4	847.4		
		0803	0811		847.4	846.5	
NOT USED		0804					
NOT USED		0805					
NOT USED		0806					
NOT USED		0807					
NOT USED		0808					
NOT USED		0809					
76+00 -L-	LT	0810		850.5	847.5		
		0810	0811		847.5	846.5	
77+00 -L-	LT	0811		850.1	846.5		
		0811	0815		846.5	844.5	
78+34 -L-	RT	0812		850.7	847.7		
		0812	0813		847.7	846.9	X
77+25 -L-	RT	0813		849.9	846.9		
		0813	0815		846.9	844.5	
76+48 -L-	RT	0814		850.2	847.2		
		0814	0815		847.2	844.5	
76+90 -L-	RT	0815		849.9	844.5		
		0815	0816		844.5	837.5	
76+90 -L-	RT	0816		841.4	837.5		
		0816	0820		837.5	837.1	
79+90 -L-	RT	0817		853.8	850.8		
		0817	0821		850.8	850.5	X
11+76 -Y3-	CL	0822			850.0	849.6	
77+00 -L-	LT	0823	0811		848.0	846.5	
90+85 -L-	LT	0900		854.1	850.9		
		0900	0905		850.9	840.1	
90+85 -L-	LT	0905		842.5	840.1		
93+50 -L-	LT	0901		847.6	844.4		
		0901	0906		844.4	840.3	
95+15 -L-	LT	0902		843.4	840.2		
		0902	0903		840.2	838.9	
95+65 -L-	LT	0903		842.1	838.9		
		0903	0907		838.9	838.7	X
11+50 -Y4-	CL	0904			843.0	836.0	
SHEET TOTALS							

FROM	TO	SIDE DRAIN PIPE (RCP, CSP, CAAP, HDPE, or PVC) 12"	15"	18"	24"	30"	36"	42"	48"	DO NOT USE RCP	DO NOT USE CSP	DO NOT USE CAAP	DO NOT USE HDPE	C.S. PIPE 12" (.064)	15" (.064)	18" (.064)	24" (.064)	30" (.079)	36" (.079)	42" (.109)	48" (.109)
0800																					
0800	0801																				
0801																					
0801	0802																				
0802																					
0802	0803																				
0803																					
0803	0811																				
0804																					
0805																					
0806																					
0807																					
0808																					
0809																					
0810																					
0810	0811																				
0811																					
0811	0815																				
0812																					
0812	0813																				
0813																					
0813	0815																				
0814																					
0814	0815																				
0815																					
0815	0816				32					X											
0816																					
0816	0820				36																
0817																					
0817	0821		24																		
0822																					
0823	0811				24					X											
0900																					
0900	0905																				
0905																					
0901																					
0901	0906																				
0902																					
0902	0903																				
0903																					
0903	0907																				
0904																					
SHEET TOTALS			24		92																

FROM	TO	R.C. PIPE CLASS III 12"	15"	18"	24"	30"	36"	42"	48"	R.C. PIPE CLASS IV 12"	15"	18"	24"	30"	36"	42"	48"	18" WELDED STEEL PIPE, GRADE B (TRENCHLESS INSTALLATION)	24" WELDED STEEL PIPE, GRADE B (TRENCHLESS INSTALLATION)	36" WELDED STEEL PIPE, GRADE B (TRENCHLESS INSTALLATION)	42" WELDED STEEL PIPE, GRADE B (TRENCHLESS INSTALLATION)
0800																					
0800	0801										144										
0801																					
0801	0802										164										
0802																					
0802	0803										112										
0803																					
0803	0811										92										
0804																					
0805																					
0806																					
0807																					
0808																					
0809																					
0810																					
0810	0811										100										
0811																					
0811	0815												88								
0812																					
0812	0813										112										
0813																					
0813	0815										36										
0814																					
0814	0815										44										
0815																					
0815	0816																				
0816																					
0816	0820																				
0817																					
0817	0821																				
0822					84																
0823	0811																				
0900																					
0900	0905										64										
0905																					
0901																					
0901	0906										68										
0902																					
0902	0903										52										
0903																					
0903	0907										52										
0904																					
SHEET TOTALS					84						1040		88								

FROM	TO	ENDWALLS STD. 838.01 OR STD. 838.11 (UNLESS NOTED OTHERWISE) CU. YARDS R.C.P.	C.S.P.	QUANTITIES FOR DRAINAGE STRUCTURES PER EACH (0' THRU 5.0')	*TOTAL L.F. FOR PAY QUANTITY SHALL BE COL. 'A' + (1.3 X COL.'B') LIN. FT. A 5.0' THRU 10.0'	B 10.0' AND ABOVE	C.B. STD. 840.01 OR STD. 840.02	FRAME, GRATES, AND HOOD STANDARD 840.03 TYPE OF GRATE E	F	G	CONCRETE TRANSITIONAL SECTION DROP INLET	CATCH BASIN
0800				1			1		1			
0800	0801											
0801				1			1		1			
0801	0802											
0802				1			1		1			
0802	0803											
0803				1			1		1			
0803	0811											
0804												
0805												
0806												
0807												
0808												
0809												
0810				1			1			1		
0810	0811											
0811				1			1	1				
0811	0815											
0812				1			1			1		
0812	0813											
0813				1			1	1				
0813	0815											
0814				1			1		1			
0814	0815											
0815				1	0.45		1	1				
0815	0816											
0816				1								
0816	0820											
0817				1			1			1		
0817	0821											
0822												
0823	0811											
0900				1							1	
0900	0905											
0905				1								
0901				1							1	
0901	0906											
0902				1							1	
0902	0903											
0903				1							1	
0903	0907											
0904												
SHEET TOTALS				17	0.45		11	3	5	3	4	

FROM	TO	D.I. STD. 840.14 OR STD. 840.15	D.I. FRAME AND GRATES STD. 840.16	G.D.I. TYPE "A" STD. 840.17 OR 840.26	G.D.I. TYPE "B" STD. 840.18 OR 840.27	G.D.I. TYPE "D" STD. 840.19 OR 840.28	G.D.I. FRAME WITH TWO GRATES STD. 840.22	G.D.I. (N.S.) FRAME WITH TWO GRATES STD. 840.24	G.D.I. (N.S.) FRAME WITH TWO GRATES STD. 840.29	J.B. STD. 840.31 OR 840.32	MANHOLE FRAME AND COVER STD. 840.54	SLOTTED DRAIN (LF)	ADJUST MANHOLE	T.B.J.B. STD. 840.34	ADJUST CB	CROSS PIPE END SECTION STD. 310.03	C. S. PIPE ELBOWS NO. & SIZE	CONC. & BRICK PIPE PLUG, C.Y. STD. 840.71	CONC. COLLARS CL. "B" C.Y. STD. 840.72	PIPE REMOVAL LIN. FT.	REMARKS
0800																					
0800	0801																				
0801																					
0801	0802																				
0802																					
0802	0803																				
0803																					
0803	0811																				
0804																					
0805																				22	STA 73+30
0806																				22	STA 74+90
0807																					
0808																					
0809																					
0810																					
0810	0811																				
0811																					
0811	0815																			62	
0812																					
0812	0813																				
0813																					
0813	0815																				
0814																					
0814	0815																				
0815																					
0815	0816																			46	
0816					1			1													
0816	0820																				
0817																					
0817	0821																				
0822																				32	
0823	0811																				
0900		1	1																		
0900	0905																				
0905					1			1													
0901		1	1																		
0901	0906																				
0902		1	1																		
0902	0903																				
0903		1	1																		
0903	0907																				
0904											1		1								
SHEET TOTALS		4	4		2			2			1		1							184	

ABBREVIATIONS

C.B.	CATCH BASIN
N.D.I.	NARROW DROP INLET
D.I.	DROP INLET
G.D.I.	GRATED DROP INLET
G.D.I.(N.S.)	(NARROW SLOT)
J.B.	JUNCTION BOX
M.H.	MANHOLE
T.B.D.I.	TRAFFIC BEARING DROP INLET
T.B.J.B.	TRAFFIC BEARING JUNCTION BOX

NC10440

COMPUTED BY: ______________________ DATE: __________

CHECKED BY: ______________________ DATE: __________

NORTH CAROLINA DEPARTMENT OF TRANSPORTATION
DIVISION OF HIGHWAYS

PROJECT NO.	SHEET NO.
R-2309AB	3-F

Note: Invert Elevations indicated are for Bid Purposes only and shall not be used for project construction stakeout.

LIST OF PIPES, ENDWALLS, ETC. (FOR PIPES 48 INCHES & UNDER)

STATION / SIZE / THICKNESS OR GAUGE	LOCATION (LT, RT, OR CL)	STRUCTURE NO. FROM	STRUCTURE NO. TO	TOP ELEVATION	INVERT ELEVATION	INVERT ELEVATION	SLOPE CRITICAL	SIDE DRAIN PIPE (RCP, CSP, CAAP, HDPE, or PVC) 12"	15"	18"	24"	30"	36"	42"	48"	DO NOT USE RCP	DO NOT USE CSP	DO NOT USE CAAP	DO NOT USE HDPE	C.S. PIPE 12" .064	15" .064	18" .064	24" .064	30" .079	36" .079	42" .109	48" .109	R.C. PIPE CLASS III 12"	15"	18"	24"	30"	36"	42"	48"	R.C. PIPE CLASS IV 12"	15"	18"	24"	30"	36"	42"	48"	18" WELDED STEEL PIPE, GRADE B (TRENCHLESS INSTALLATION)	24" WELDED STEEL PIPE, GRADE B (TRENCHLESS INSTALLATION)	36" WELDED STEEL PIPE, GRADE B (TRENCHLESS INSTALLATION)	42" WELDED STEEL PIPE, GRADE B (TRENCHLESS INSTALLATION)		ENDWALLS STD. 838.01 OR STD. 838.11 (UNLESS NOTED OTHERWISE) CU. YARDS R.C.P.	C.S.P.	QUANTITIES FOR DRAINAGE STRUCTURES PER EACH (0' THRU 5.0')	*TOTAL L.F. FOR PAY QUANTITY SHALL BE COL. 'A' + (1.3 X COL.'B') LIN. FT. A 5.0' THRU 10.0'	B 10.0' AND ABOVE	C.B. STD. 840.01 OR STD. 840.02	FRAME, GRATES, AND HOOD STANDARD 840.03 TYPE OF GRATE E	F	G	CONCRETE TRANSITIONAL SECTION DROP INLET	CATCH BASIN	D.I. STD. 840.14 OR STD. 840.15	D.I. FRAME AND GRATES STD. 840.16	G.D.I. TYPE "A" STD. 840.17 OR 840.26	G.D.I. TYPE "B" STD. 840.18 OR 840.27	G.D.I. TYPE "D" STD. 840.19 OR 840.28	G.D.I. FRAME WITH TWO GRATES STD. 840.22	G.D.I. (N.S.) FRAME WITH TWO GRATES STD. 840.24	G.D.I. (N.S.) FRAME WITH TWO GRATES STD. 840.29	J.B. STD. 840.31 OR 840.32	MANHOLE FRAME AND COVER STD. 840.54	SLOTTED DRAIN (LF)	ADJUST MANHOLE	T.B.J.B. STD. 840.34	ADJUST CB	CROSS PIPE END SECTION STD. 310.03	C. S. PIPE ELBOWS NO. & SIZE	CONC. & BRICK PIPE PLUG, C.Y. STD. 840.71	CONC. COLLARS CL. "B" C.Y. STD. 840.72	PIPE REMOVAL LIN. FT.	REMARKS
98+50 -L-	CL	1000		833.6	830.4																																													1							1		1	1																		
		1000	1001		830.4	826.9																															64																																										
98+50 -L-	RT	1001		829.7	826.9																																													1												1		1															
		1001	1002		826.9	819.9			208																																																																						
100+60 -L-	RT	1002		822.9	819.9																																													1												1		1															
		1002	1004		819.9	819.9	X			20																																																																				
100+60 -L-	CL	1003		826.9	823.7																																													1							1		1	1																		
		1003	1004		823.7	819.9																															48																																									
100+60 -L-	RT	1004		825.9	819.9																																													1	1.00											1				1													
		1004	1006		819.9	814.5				240																																																																					
103+00 -L-	LT	1005		818.7	815.5																																													1							1		1	1																		
		1005	1006		815.5	814.5																															60																																									
103+00 -L-	RT	1006		817.5	814.5																																													1												1				1													
		1006	1009		814.5	806.1				220																																																																					
104+70 -L-	LT	1007		812.3	809.1																																													1							1		1	1																		
		1007	1008		809.1	807.1																															52																																									
105+20 -L-	LT	1008		810.3	807.1																																													1							1		1	1																		
		1008	1009		807.1	806.1																															60																																									
105+20 -L-	RT	1009		809.1	806.1																																													1												1				1													
		1009	1010		806.1	792.3				320																																																																					
108+40 -L-	RT	1010		795.8	792.3																																													1												1				1													
		1010	1012		792.3	791.9	X																																88																																							
107+98 -L-	LT	1011		797.7	795.0																																													1												1				1													
		1011	1012		795.0	791.9																															44																																									
104+40 -L-	LT	1012		796.0	791.9		X																																											1												1				1													
		1012	1018		791.9	791.7					28																																																																				
104+50 -L-	LT	1017		812.4	809.4																																													1												1		1															
		1017	1013		809.4	803.8				112																																																																					
105+60 -L-	LT	1013		808.6	803.8																																													1												1				1													
		1013	1016		803.8	789.0																										160																																																	
101+82 -L-	LT																																																																											0.130			FLOWABLE FILL
101+20 -L-	CL	1014																				176 CAP (16 GA)																																																											60	REMOVE CB
NOT USED		1100																																																																																
	LT	1101	1124		774.4	767.4																										24																																																	
112+25 -L-	LT	1124		778.8	774.4																																													1																	1	1										
		1120	1121	770.4	770.4																																			108																																						
113+20 -L-	RT	1121		775.2	770.4		X																																											1												1				1													
		1121	1122		769.8	764.0						64																																																																				
112+60 -L-	RT	1122		777.6	764.0																																													1	5.00	3.6										1				1													
		1122	1102		764.0	750.0																				56																																																			2 @ 30"				ROD & LUG CONNECTORS
112+60 -L-	RT	1123		753.5	753.5							40																																					2.3																																END WALL W/SLUICE GATE
115+36 -L-	LT	1130		765.9	763.1																																													1												1				1													
		1130	1103		763.1	760.5	X														20																																																										2 @ 15"				ROD & LUG CONNECTORS
																						176 CAP (16 GA)																																																												
SHEET TOTALS									208	912	28	104									20			56						184							328		88	108									2.3		19	6.00	3.6					5		5	5		13		3		10	1	1						2 @ 15" 2 @ 30"	0.130		60	

ABBREVIATIONS

C.B.	CATCH BASIN
N.D.I.	NARROW DROP INLET
D.I.	DROP INLET
G.D.I.	GRATED DROP INLET
G.D.I.(N.S.)	(NARROW SLOT)
J.B.	JUNCTION BOX
M.H.	MANHOLE
T.B.D.I.	TRAFFIC BEARING DROP INLET
T.B.J.B.	TRAFFIC BEARING JUNCTION BOX

COMPUTED BY:		DATE:	
CHECKED BY:		DATE:	

NORTH CAROLINA DEPARTMENT OF TRANSPORTATION
DIVISION OF HIGHWAYS

PROJECT NO.	SHEET NO.
R-2309AB	3-G

NC10440

Note: Invert Elevations indicated are for Bid Purposes only and shall not be used for project construction stakeout.

LIST OF PIPES, ENDWALLS, ETC. (FOR PIPES 48 INCHES & UNDER)

STATION	LOCATION (LT, RT, OR CL)'	STRUCTURE NO.		TOP ELEVATION	INVERT ELEVATION	INVERT ELEVATION	SLOPE CRITICAL	SIDE DRAIN PIPE (RCP, CSP, CAAP, HDPE, or PVC)								DO NOT USE RCP	DO NOT USE CSP	DO NOT USE CAAP	DO NOT USE HDPE	C.S. PIPE								R.C. PIPE CLASS III								R.C. PIPE CLASS IV							
SIZE								12"	15"	18"	24"	30"	36"	42"	48"					12"	15"	18"	24"	30"	36"	42"	48"	12"	15"	18"	24"	30"	36"	42"	48"	12"	15"	18"	24"	30"	36"	42"	48"
THICKNESS OR GAUGE		FROM	TO																	.064	.064	.064	.064	.079	.079	.109	.109																
116+06 -L-	RT	1104			739.7																																						
		1104	1105		739.7	739.6																							24														
116+29 -L-	RT	1105			739.6																																						
117+64 -L-	RT	1106			739.7																																						
		1106	1107		739.7	735.1																									28												
117+72 -L-	RT	1107			735.1																																						
		1108	1150		746.4	750.9																							116														
118+00 -L-	RT	1150		756.5	750.4																																						
		1150	1140		750.4	750.8	X		144																																		
119+42 -L-	RT	1140		753.6	750.8																																						
119+00 -L-	LT	1135		742.3	742.3					28																																	
121+40 -L-	LT	1165		744.0	744.0							36																															
121+70 -L-	LT	1160		750.2	747.5																																						
		1160	1110		747.5	744.0	X														16																						
123+50 -L-	RT	1170		748.5	745.7																																						
		1170	1190		745.7	745.5	X		52																																		
124+00 -L-	RT	1190		748.4	745.5																																						
		1190	1191		745.5	745.2	X																														104						
124+00 -L-	RT	1191			745.2																																						
124+50 -L-	RT	1210		748.5	745.7																																						
		1210	1190		745.7	745.5	X		52																																		
127+00 -L-	RT	1200		749.2	746.5																																						
		1200	1201		746.5	746.3	X																														56						
127+00 -L-	LT	1201		750.1	746.3																																						
		1201	1211		746.3	746.1	X																														56						
127+00 -L-	LT	1211			746.1																																						
132+00 -L-	RT	1202		750.7	748.0																																						
		1202	1203		748.0	747.7	X																														100						
132+00 -L-	LT	1203		750.5	747.7																																						
		1203	1204		747.7	746.5	X		68																																		
10+95 -Y5-	RT	1204		749.2	746.5																																						
		1204	1205		746.5	746.2	X																														76						
13+90 -Y5-	CL	1212			743.6	743.4																																48					
135+50 -L-	RT	1206		751.8	749.0																																						
		1206	1207		749.0	748.8	X		52																																		
136+00 -L-	RT	1207		751.9	748.8																																						
		1207	1209		748.8	748.6	X																														88						
135+50 -L-	LT	1208		751.8	749.0																																						
		1208	1209		749.0	748.6	X		52																																		
136+00 -L-	LT	1209		751.9	748.6																																						
SHEET TOTALS									420	28		36									16								140		28						480	48					

STATION	STRUCTURE NO. FROM	TO	18" WELDED STEEL PIPE, GRADE B (TRENCHLESS INSTALLATION)	24" WELDED STEEL PIPE, GRADE B (TRENCHLESS INSTALLATION)	36" WELDED STEEL PIPE, GRADE B (TRENCHLESS INSTALLATION)	42" WELDED STEEL PIPE, GRADE B (TRENCHLESS INSTALLATION)		ENDWALLS STD. 838.01 OR STD. 838.11 (UNLESS NOTED OTHERWISE) CU. YARDS R.C.P.	C.S.P.	QUANTITIES FOR DRAINAGE STRUCTURES PER EACH (0' THRU 5.0')	*TOTAL L.F. FOR PAY QUANTITY SHALL BE COL. 'A' + (1.3 X COL.'B') LIN. FT. A 5.0' THRU 10.0'	B 10.0' AND ABOVE	C.B. STD. 840.01 OR STD. 840.02	FRAME, GRATES, AND HOOD STANDARD 840.03 TYPE OF GRATE E	F	G	CONCRETE TRANSITIONAL SECTION DROP INLET	CATCH BASIN	D.I. STD. 840.14 OR STD. 840.15	D.I. FRAME AND GRATES STD. 840.16	G.D.I. TYPE "A" STD. 840.17 OR 840.26	G.D.I. TYPE "B" STD. 840.18 OR 840.27	G.D.I. TYPE "D" STD. 840.19 OR 840.28	G.D.I. FRAME WITH TWO GRATES STD. 840.22	G.D.I. (N.S.) FRAME WITH TWO GRATES STD. 840.24	G.D.I. (N.S.) FRAME WITH TWO GRATES STD. 840.29	J.B. STD. 840.31 OR 840.32	MANHOLE FRAME AND COVER STD. 840.54	SLOTTED DRAIN (LF)	ADJUST MANHOLE	T.B.J.B. STD. 840.34	ADJUST CB	CROSS PIPE END SECTION STD. 310.03 OR 310.05	C. S. PIPE ELBOWS NO. & SIZE	CONC. & BRICK PIPE PLUG, C.Y. STD. 840.71	CONC. COLLARS CL. "B" C.Y. STD. 840.72	PIPE REMOVAL LIN. FT.	REMARKS
116+06 -L-	1104																																			0.399		REMOVE HEADWALL
	1104	1105																																				
116+29 -L-	1105							0.7																														HEADWALL W/FLAP GATE
117+64 -L-	1106																																			0.5526		
	1106	1107																																				
117+72 -L-	1107							1.5																														
	1108	1150																																				
118+00 -L-	1150									1	1.08											1				1												
	1150	1140																																				
119+42 -L-	1140									1												1				1												
119+00 -L-	1135							1																														ENDWALL W/SLUICE GATE
121+40 -L-	1165							2.3																														ENDWALL W/SLUICE GATE
121+70 -L-	1160									1												1				1												
	1160	1110																																2 @ 15"				ROD & LUG CONNECTORS
123+50 -L-	1170									1												1				1												
	1170	1190																																				
124+00 -L-	1190									1												1				1												
	1190	1191																																				
124+00 -L-	1191																																1					
124+50 -L-	1210									1												1				1												
	1210	1190																																				
127+00 -L-	1200									1												1				1												
	1200	1201																																				
127+00 -L-	1201									1							1		1	1																		
	1201	1211																																				
127+00 -L-	1211																																1					
132+00 -L-	1202									1												1				1												
	1202	1203																																				
132+00 -L-	1203									1												1				1												
	1203	1204																																				
10+95 -Y5-	1204									1												1				1												
	1204	1205																																				
13+90 -Y5-	1212																																					
135+50 -L-	1206									1												1				1												
	1206	1207																																				
136+00 -L-	1207									1												1				1												
	1207	1209																																				
135+50 -L-	1208									1												1				1												
	1208	1209																																				
136+00 -L-	1209									1												1				1												
SHEET TOTALS								5.5		15	1.08						1		1	1		14				14							2	2 @ 15"		0.9516		

ABBREVIATIONS

C.B.	CATCH BASIN
N.D.I.	NARROW DROP INLET
D.I.	DROP INLET
G.D.I.	GRATED DROP INLET
G.D.I.(N.S.)	(NARROW SLOT)
J.B.	JUNCTION BOX
M.H.	MANHOLE
T.B.D.I.	TRAFFIC BEARING DROP INLET
T.B.J.B.	TRAFFIC BEARING JUNCTION BOX

COMPUTED BY: ______________________ DATE: __________

CHECKED BY: ______________________ DATE: __________

PROJECT NO.	SHEET NO.
R-2309AB	3-H

NC10440

NORTH CAROLINA DEPARTMENT OF TRANSPORTATION
DIVISION OF HIGHWAYS

Note: Invert Elevations indicated are for Bid Purposes only and shall not be used for project construction stakeout.

LIST OF PIPES, ENDWALLS, ETC. (FOR PIPES 48 INCHES & UNDER)

ABBREVIATIONS

- C.B. – CATCH BASIN
- N.D.I. – NARROW DROP INLET
- D.I. – DROP INLET
- G.D.I. – GRATED DROP INLET
- G.D.I.(N.S.) – (NARROW SLOT)
- J.B. – JUNCTION BOX
- M.H. – MANHOLE
- T.B.D.I. – TRAFFIC BEARING DROP INLET
- T.B.J.B. – TRAFFIC BEARING JUNCTION BOX

STATION (SIZE / THICKNESS OR GAUGE)	LOCATION (LT, RT, OR CL)	STRUCTURE NO. FROM	STRUCTURE NO. TO	TOP ELEVATION	INVERT ELEVATION	INVERT ELEVATION	SLOPE CRITICAL	SIDE DRAIN PIPE (RCP, CSP, CAAP, HDPE, or PVC) 12"	15"	18"	24"	30"	36"	42"	48"	DO NOT USE RCP	DO NOT USE CSP	DO NOT USE CAAP	DO NOT USE HDPE
		1209	1333		748.6	748.0	X		176										
137+75 -L-	LT	1333		752.4	748.0														
138+26 -L-	CL	1330		753.6	750.4														
		1330	1331		750.4	750.3	X												
138+00 -L-	CL	1331		753.5	750.3														
		1331	1332		750.3	750.2	X												
137+75 -L-	CL	1332		753.4	750.2														
		1332	1333		750.2	748.0													
		1333	1335		748.0	747.4	X		164										
139+40 -L-	CL	1334		753.9	750.8														
		1334	1335		750.8	747.4													
139+40 -L-	LT	1335		752.6	747.4														
		1335	1336		747.4	746.7	X			132									
140+70 -L-	LT	1336		753.0	746.7														
		1336	1340		746.7	746.0	X			156									
141+70 -L-	RT	1338		754.9	751.8														
		1338	1339		751.8	751.5	X												
142+25 -L-	RT	1339		755.2	751.5														
		1339	1340		751.5	746.0													
144+00 -L-	RT	1337		755.6	752.5														
		1337	1339		752.5	751.5	X												
142+25 -L-	LT	1340		753.5	746.0														
		1340	1342		746.0	745.8	X			20									
141+90 -L-	LT	1341		745.8	745.8					32									
11+05 -Y6-	CL	1343			745.1	743.6													
12+98 -Y6-	LT	1344							36										
149+30 -L-	RT	1301		758.6	755.1														
		1301	1303		755.1	752.7					152								
148+15 -L-	RT	1302		759.5	756.5														
		1302	1303		756.5	753.1													
148+15 -L-	RT	1303		757.1	753.1														
		1303	1304		753.1	751.1	X					120							
146+60 -L-	RT	1304		755.1	751.1														
		1304	1305		751.1	750.9	X												
146+55 -L-	RT	1305		757.8	750.9														
		1305	1306		750.9	748.9													
155+90 -L-	RT	1400		761.0	758.0														
		1400	1301		758.0	755.1				164									
154+51 -L-	RT	1408		766.0	763.0														
		1408	1401		763.0	761.1													
SHEET TOTALS									376	504	152	120							

STATION	FROM	TO	C.S. PIPE 12" .064	15" .064	18" .064	24" .064	30" .079	36" .079	42" .109	48" .109	R.C. PIPE CLASS III 12"	15"	18"	24"	30"	36"	42"	48"	R.C. PIPE CLASS IV 12"	15"	18"	24"	30"	36"	42"	48"
	1330	1331																		28						
	1331	1332																		24						
	1332	1333																		44						
	1334	1335																		44						
	1338	1339																		56						
	1339	1340																		56						
	1337	1339																		176						
11+05 -Y6-	1343													108												
	1302	1303																		52						
	1304	1305													56											
	1305	1306													88											
	1408	1401											148													
SHEET TOTALS													148	108	144					480						

STATION	FROM	TO	18" WELDED STEEL PIPE, GRADE B (TRENCHLESS INSTALLATION)	24" WELDED STEEL PIPE, GRADE B (TRENCHLESS INSTALLATION)	36" WELDED STEEL PIPE, GRADE B (TRENCHLESS INSTALLATION)	42" WELDED STEEL PIPE, GRADE B (TRENCHLESS INSTALLATION)		ENDWALLS STD. 838.01 OR STD. 838.11 (UNLESS NOTED OTHERWISE) CU. YARDS R.C.P.	C.S.P.	QUANTITIES FOR DRAINAGE STRUCTURES PER EACH (0' THRU 5.0')	*TOTAL L.F. FOR PAY QUANTITY SHALL BE COL. 'A' + (1.3 X COL.'B') LIN. FT. A 5.0' THRU 10.0'	B 10.0' AND ABOVE	C.B. STD. 840.01 OR STD. 840.02	FRAME, GRATES, AND HOOD STANDARD 840.03 TYPE OF GRATE E	F	G	CONCRETE TRANSITIONAL SECTION DROP INLET	CATCH BASIN
137+75 -L-	1333									1								
138+26 -L-	1330									1							1	
138+00 -L-	1331									1							1	
137+75 -L-	1332									1							1	
139+40 -L-	1334									1							1	
139+40 -L-	1335									1	0.2067							
140+70 -L-	1336									1	1.2567							
141+70 -L-	1338									1							1	
142+25 -L-	1339									1							1	
144+00 -L-	1337									1							1	
142+25 -L-	1340									1	2.5467							
141+90 -L-	1341							1										
149+30 -L-	1301									1								
148+15 -L-	1302									1			1		1			1
148+15 -L-	1303									1								
146+60 -L-	1304									1								
146+55 -L-	1305									1	1.9						1	
155+90 -L-	1400									1								
154+51 -L-	1408									1								
SHEET TOTALS								1		18	5.91		1		1		8	1

STATION	FROM	TO	D.I. STD. 840.14 OR STD. 840.15	D.I. FRAME AND GRATES STD. 840.16	G.D.I. TYPE "A" STD. 840.17 OR 840.26	G.D.I. TYPE "B" STD. 840.18 OR 840.27	G.D.I. TYPE "D" STD. 840.19 OR 840.28	G.D.I. FRAME WITH TWO GRATES STD. 840.22	G.D.I. (N.S.) FRAME WITH TWO GRATES STD. 840.24	G.D.I. (N.S.) FRAME WITH TWO GRATES STD. 840.29	J.B. STD. 840.31 OR 840.32	MANHOLE FRAME AND COVER STD. 840.54	SLOTTED DRAIN (LF)	ADJUST MANHOLE	T.B.J.B. STD. 840.34	ADJUST CB	CROSS PIPE END SECTION STD. 310.03	C. S. PIPE ELBOWS NO. & SIZE	CONC. & BRICK PIPE PLUG, C.Y. STD. 840.71	CONC. COLLARS CL. "B" C.Y. STD. 840.72	PIPE REMOVAL LIN. FT.	REMARKS
137+75 -L-	1333					1				1												
138+26 -L-	1330		1	1																		
138+00 -L-	1331		1	1																		
137+75 -L-	1332		1	1																		
139+40 -L-	1334		1	1																		
139+40 -L-	1335					1				1												
140+70 -L-	1336					1				1												
141+70 -L-	1338		1	1																		
	1338	1339																			76	
142+25 -L-	1339		1	1																		
144+00 -L-	1337		1	1																		
142+25 -L-	1340					1				1												
141+90 -L-	1341																					ENDWALL W/SLUICE GATE
11+05 -Y6-	1343																				48	
149+30 -L-	1301					1		1														
	1301	1303																			22	
148+15 -L-	1303					1		1														
	1303	1304																			22	
146+60 -L-	1304					1		1														
	1304	1305																				REMOVE CONCRETE HEADWALL
146+55 -L-	1305		1	1																		
155+90 -L-	1400					1		1														
	1400	1301																			52	
154+51 -L-	1408					1		1														
	1408	1401																			60	REMOVE CONCRETE HEADWALL
SHEET TOTALS			8	8		9		5		4											280	

NC10440

COMPUTED BY: ____________________ DATE: __________

CHECKED BY: ____________________ DATE: __________

NORTH CAROLINA DEPARTMENT OF TRANSPORTATION
DIVISION OF HIGHWAYS

PROJECT NO.	SHEET NO.
R-2309AB	3-I

Note: Invert Elevations indicated are for Bid Purposes only and shall not be used for project construction stakeout.

LIST OF PIPES, ENDWALLS, ETC. (FOR PIPES 48 INCHES & UNDER)

STATION	LOCATION (LT, RT, OR CL)'	STRUCTURE NO. FROM	STRUCTURE NO. TO	TOP ELEVATION	INVERT ELEVATION	INVERT ELEVATION	SLOPE CRITICAL	SIDE DRAIN PIPE (RCP, CSP, CAAP, HDPE, or PVC)								DO NOT USE RCP	DO NOT USE CSP	DO NOT USE CAAP	DO NOT USE HDPE	C.S. PIPE								R.C. PIPE CLASS III								R.C. PIPE CLASS IV							
SIZE								12"	15"	18"	24"	30"	36"	42"	48"					12"	15"	18"	24"	30"	36"	42"	48"	12"	15"	18"	24"	30"	36"	42"	48"	12"	15"	18"	24"	30"	36"	42"	48"
THICKNESS OR GAUGE																				.064	.064	.064	.064	.079	.079	.109	.109																
		1404	1405		785.0	777.5															20																						
158+05 -L-	RT	1405		781.0	777.5																																						
		1405	1407		777.5	777.2	X																								56												
159+99 -L-	CL	1406		792.8	789.6																																						
		1406	1407		789.6	777.2																															196						
158+05 -L-	CL	1407		784.8	777.2																																						
		1407	1402		777.2	776.0																									84												
161+70 -L-	LT	1409		795.4	792.7																																						
		1409	1403		792.7	791.0			48																																		
165+50 -L-	LT	1507		810.4	807.6																																						
		1507	1508		807.6	796.6	X														32																						
167+84 -L-	LT	1501		819.9	816.9																																						
		1501	1502		816.9	815.2																															52						
167+33 -L-	LT	1502		818.2	815.2																																						
		1502	1503		815.2	814.5	X																														56						
167+33 -L-	RT	1503		817.3	814.5																																						
		1503	1504		814.5	811.8			88																																		
166+50 -L-	RT	1504		814.5	811.8																																						
		1504	1514		811.8	803.7	X														24																						
		1511	1510		789.4	797.4																																					
167+48 -L-	RT	1510			797.4																																						
		1510	1509		797.4	800.6																									52												
		1515	1505		789.4	789.4																									12												
167+15 -L-	LT	1505		798.0	789.4																																						
167+53 -L-	RT	1513			796.7																																						
		1513	1512		796.7	800.6																									52												
168+50 -L-	LT	1519							36																																		
169+80 -L-	RT																																										
170+50 -L-	LT																																										
172+20 -L-	RT	1518		824.9	822.1																																						
		1518	1517		822.1	820.1			128																																		
170+90 -L-	RT	1517		822.8	820.1																																						
		1517	1516		820.1	816.6			64																																		
174+52 -L-	CL																																										
174+83 -L-	CL																																										
176+35 -L-	LT	1601		831.1	828.4																																						
		1601	1602		828.4	827.5			52																																		
177+00 -L-	CL	1605		831.6	828.4																																						
		1605	1606		828.4	827.7	X																														100						
178+00 -L-	CL	1606		830.8	827.7																																						
		1606	1607		827.7	826.8	X																														100						
179+00 -L-	CL	1607		830.0	826.8																																						
		1607	1608		826.8	826.5	X																															44					
178+97 -L-	RT	1608		829.3	826.5																																						
		1608	1609		826.5	810.3																68																					
SHEET TOTALS									416												76	68									256						504	44					

STATION	STRUCTURE NO. FROM	STRUCTURE NO. TO	18" WELDED STEEL PIPE, GRADE B (TRENCHLESS INSTALLATION)	24" WELDED STEEL PIPE, GRADE B (TRENCHLESS INSTALLATION)	36" WELDED STEEL PIPE, GRADE B (TRENCHLESS INSTALLATION)	42" WELDED STEEL PIPE, GRADE B (TRENCHLESS INSTALLATION)		ENDWALLS STD. 838.01 OR STD. 838.11 (UNLESS NOTED OTHERWISE) CU. YARDS R.C.P.	ENDWALLS CU. YARDS C.S.P.	QUANTITIES FOR DRAINAGE STRUCTURES PER EACH (0' THRU 5.0')	*TOTAL L.F. FOR PAY QUANTITY SHALL BE COL. 'A' + (1.3 X COL.'B') LIN. FT. A 5.0' THRU 10.0'	LIN. FT. B 10.0' AND ABOVE	C.B. STD. 840.01 OR STD. 840.02	FRAME, GRATES, AND HOOD STANDARD 840.03 TYPE OF GRATE E	F	G	CONCRETE TRANSITIONAL SECTION DROP INLET	CONCRETE TRANSITIONAL SECTION CATCH BASIN	D.I. STD. 840.14 OR STD. 840.15	D.I. FRAME AND GRATES STD. 840.16	G.D.I. TYPE "A" STD. 840.17 OR 840.26	G.D.I. TYPE "B" STD. 840.18 OR 840.27	G.D.I. TYPE "D" STD. 840.19 OR 840.28	G.D.I. FRAME WITH TWO GRATES STD. 840.22	G.D.I. (N.S.) FRAME WITH TWO GRATES STD. 840.24	G.D.I. (N.S.) FRAME WITH TWO GRATES STD. 840.29	J.B. STD. 840.31 OR 840.32	MANHOLE FRAME AND COVER STD. 840.54	SLOTTED DRAIN (LF)	ADJUST MANHOLE	T.B.J.B. STD. 840.34	ADJUST CB	CROSS PIPE END SECTION STD. 310.03	C. S. PIPE ELBOWS NO. & SIZE	CONC. & BRICK PIPE PLUG, C.Y. STD. 840.71	CONC. COLLARS CL. "B" C.Y. STD. 840.72	PIPE REMOVAL LIN. FT.	REMARKS
	1404	1405																																1 @ 15"				
158+05 -L-	1405									1												1		1														
	1405	1407																																				
159+99 -L-	1406									1							1		1	1																		
	1406	1407																																				
158+05 -L-	1407									1	2.52		1		1			1																				
	1407	1402																																				
161+70 -L-	1409									1												1		1														
	1409	1403																																			22	
165+50 -L-	1507									1												1				1												
	1507	1508																																2 @ 15"				ROD & LUG CONNECTORS
167+84 -L-	1501									1			1			1		1																				
	1501	1502																																				
167+33 -L-	1502									1			1			1		1																				
	1502	1503																																				
167+33 -L-	1503									1												1				1												
	1503	1504																																				
166+50 -L-	1504									1												1				1												
	1504	1514																																2 @ 15"				ROD & LUG CONNECTORS
	1511	1510		144																																		
167+48 -L-	1510																																			0.5526		
	1510	1509																																				
	1515	1505																																				
167+15 -L-	1505									1	3.6																1	1										
167+53 -L-	1513																																			0.5526		
	1513	1512																																				
168+50 -L-	1519																																					
169+80 -L-																																					28	
170+50 -L-																																					22	
172+20 -L-	1518									1												1		1														
	1518	1517																																			22	
170+90 -L-	1517									1												1		1														
	1517	1516																																			22	
174+52 -L-																																			0.13			FLOWABLE FILL
174+83 -L-																																			0.13			FLOWABLE FILL
176+35 -L-	1601									1												1		1														
	1601	1602																																				
177+00 -L-	1605									1							1		1	1																		
	1605	1606																																				
178+00 -L-	1606									1							1		1	1																		
	1606	1607																																				
179+00 -L-	1607									1							1		1	1																		
	1607	1608																																				
178+97 -L-	1608									1												1				1												
	1608	1609																																2 @ 18"				ROD & LUG CONNECTORS
SHEET TOTALS				144						17	6.12		3		1	2	4	3	4	4		9		5		4	1	1						5 @ 15" 2 @ 18"	0.26	1.1052	116	

ABBREVIATIONS

C.B.	CATCH BASIN
N.D.I.	NARROW DROP INLET
D.I.	DROP INLET
G.D.I.	GRATED DROP INLET
G.D.I.(N.S.)	(NARROW SLOT)
J.B.	JUNCTION BOX
M.H.	MANHOLE
T.B.D.I.	TRAFFIC BEARING DROP INLET
T.B.J.B.	TRAFFIC BEARING JUNCTION BOX

COMPUTED BY: ______________________ DATE: ________

CHECKED BY: ______________________ DATE: ________

NC10440

NORTH CAROLINA DEPARTMENT OF TRANSPORTATION
DIVISION OF HIGHWAYS

PROJECT NO.	SHEET NO.
R-2309AB	3-J

Note: Invert Elevations indicated are for Bid Purposes only and shall not be used for project construction stakeout.

LIST OF PIPES, ENDWALLS, ETC. (FOR PIPES 48 INCHES & UNDER)

STATION	LOCATION (LT, RT, OR CL)	STRUCTURE NO. FROM	STRUCTURE NO. TO	TOP ELEVATION	INVERT ELEVATION	INVERT ELEVATION	SLOPE CRITICAL	SIDE DRAIN PIPE (RCP, CSP, CAAP, HDPE, or PVC) 12"	15"	18"	24"	30"	36"	42"	48"	DO NOT USE RCP	DO NOT USE CSP	DO NOT USE CAAP	DO NOT USE HDPE
		1603	1604		809.0	808.0	X												
179+08 -L-	LT	1604			808.0														
179+64 -L-	RT	1610			802.1														
		1610	1613		802.1	802.1	X												
181+06 -L-	RT	1611		826.4	821.4														
		1611	1612		821.4	803.1													
		1612		821.7	819.2														
181+10 -L-	LT	1617		808.9	805.7														
		1617	1619		805.7	804.6						44							
182+20 -L-	RT	1615		824.1	821.3														
		1615	1616		821.3	816.3													
183+88 -L-	LT	1620		815.9	813.2														
		1620	1622		813.2	806.9			92										
182+96 -L-	LT	1621		824.5	821.8														
		1621	1622		821.8	806.9													
182+96 -L-	LT	1622		810.1	806.9														
		1622	1619		806.9	805.5	X			152									
184+86 -L-	LT	1633		821.8	818.6														
		1633	1623		818.6	818.0	X												
184+90 -L-	RT	1623		820.8	818.0														
		1623	1624		818.0	809.2													
186+63 -L-	RT	1624		820.0	809.6														
		1624	1631		809.2	801.4													
186+63 -L-	RT	1632		820.8	809.4														
		1632	1624		809.4	809.2	X												
186+63 -L-	LT	1627		814.5	809.8														
		1627	1632		809.8	809.4	X												
188+47 -L-	RT	1628		820.8	818.0														
		1628	1629		818.0	818.0	X		16										
188+44 -L-	RT	1629		821.1	818.0														
		1629	1630		818.0	817.5	X												
187+50 -L-	RT	1630		820.3	817.5														
		1630	1624		817.5	809.2													
188+43 -L-	LT	1625			821.6														
		1625	1626		821.6	813.6													
188+35 -L-	LT	1626		818.4	813.6														
		1626	1627		813.6	809.8					176								
189+38 -L-	LT	1701		819.2	816.2														
		1701	1626		816.2	813.6	X												
SHEET TOTALS									108	152	176	44							

STATION	FROM	TO	C.S. PIPE 12" (.064)	15" (.064)	18" (.064)	24" (.064)	30" (.079)	36" (.079)	42" (.109)	48" (.109)	R.C. PIPE CLASS III 12"	15"	18"	24"	30"	36"	42"	48"	R.C. PIPE CLASS IV 12"	15"	18"	24"	30"	36"	42"	48"
	1603	1604												32												
179+08 -L-	1604																									
179+64 -L-	1610																									
	1610	1613																				56				
181+06 -L-	1611																									
	1611	1612										24														
	1612																									
181+10 -L-	1617																									
	1617	1619																								
182+20 -L-	1615																									
	1615	1616		28																						
183+88 -L-	1620																									
	1620	1622																								
182+96 -L-	1621																									
	1621	1622		28																						
182+96 -L-	1622																									
	1622	1619																								
184+86 -L-	1633																									
	1633	1623																		48						
184+90 -L-	1623																									
	1623	1624																		172						
186+63 -L-	1624																									
	1624	1631													84											
186+63 -L-	1632																									
	1632	1624													32											
186+63 -L-	1627																									
	1627	1632													72											
188+47 -L-	1628																									
	1628	1629																								
188+44 -L-	1629																									
	1629	1630																		96						
187+50 -L-	1630																									
	1630	1624																		88						
188+43 -L-	1625																									
	1625	1626									16															
188+35 -L-	1626																									
	1626	1627																								
189+38 -L-	1701																									
	1701	1626											104													
SHEET TOTALS				56							16	24	104	32	188					404		56				

STATION	FROM	TO	18" WELDED STEEL PIPE, GRADE B (TRENCHLESS INSTALLATION)	24" WELDED STEEL PIPE, GRADE B (TRENCHLESS INSTALLATION)	36" WELDED STEEL PIPE, GRADE B (TRENCHLESS INSTALLATION)	42" WELDED STEEL PIPE, GRADE B (TRENCHLESS INSTALLATION)		ENDWALLS STD. 838.01 OR STD. 838.11 (UNLESS NOTED OTHERWISE) CU. YARDS R.C.P.	C.S.P.	QUANTITIES FOR DRAINAGE STRUCTURES PER EACH (0' THRU 5.0')	*TOTAL L.F. FOR PAY QUANTITY SHALL BE COL. 'A' + (1.3 X COL.'B') LIN. FT. A 5.0' THRU 10.0'	B 10.0' AND ABOVE	C.B. STD. 840.01 OR STD. 840.02	FRAME, GRATES, AND HOOD STANDARD 840.03 TYPE OF GRATE E	F	G
	1603	1604														
179+08 -L-	1604															
179+64 -L-	1610															
	1610	1613														
181+06 -L-	1611									1						
	1611	1612														
	1612															
181+10 -L-	1617									1						
	1617	1619														
182+20 -L-	1615									1						
	1615	1616														
183+88 -L-	1620									1						
	1620	1622														
182+96 -L-	1621									1						
	1621	1622														
182+96 -L-	1622									1						
	1622	1619														
184+86 -L-	1633									1						
	1633	1623														
184+90 -L-	1623									1						
	1623	1624														
186+63 -L-	1624									1	5	0.43				
	1624	1631														
186+63 -L-	1632									1	5	1.42				
	1632	1624														
186+63 -L-	1627									1						
	1627	1632														
188+47 -L-	1628									1						
	1628	1629														
188+44 -L-	1629									1						
	1629	1630														
187+50 -L-	1630									1						
	1630	1624														
188+43 -L-	1625															
	1625	1626														
188+35 -L-	1626									1						
	1626	1627														
189+38 -L-	1701									1						
	1701	1626														
SHEET TOTALS										16	10	1.85				

STATION	FROM	TO	CONCRETE TRANSITIONAL SECTION DROP INLET	CATCH BASIN	D.I. STD. 840.14 OR STD. 840.15	D.I. FRAME AND GRATES STD. 840.16	G.D.I. TYPE "A" STD. 840.17 OR 840.26	G.D.I. TYPE "B" STD. 840.18 OR 840.27	G.D.I. TYPE "D" STD. 840.19 OR 840.28	G.D.I. FRAME WITH TWO GRATES STD. 840.22	G.D.I. (N.S.) FRAME WITH TWO GRATES STD. 840.24	G.D.I. (N.S.) FRAME WITH TWO GRATES STD. 840.29	J.B. STD. 840.31 OR 840.32	MANHOLE FRAME AND COVER STD. 840.54	SLOTTED DRAIN (LF)	ADJUST MANHOLE	T.B.J.B. STD. 840.34	ADJUST CB	CROSS PIPE END SECTION STD. 310.03	C. S. PIPE ELBOWS NO. & SIZE	CONC. & BRICK PIPE PLUG, C.Y. STD. 840.71	CONC. COLLARS CL. "B" C.Y. STD. 840.72	PIPE REMOVAL LIN. FT.	REMARKS
	1603	1604																						
179+08 -L-	1604																					0.5526		
179+64 -L-	1610																					0.5526		
	1610	1613																						
181+06 -L-	1611							1				1												
	1611	1612																						
	1612																							
181+10 -L-	1617							1		1														
	1617	1619																						
182+20 -L-	1615							1				1												
	1615	1616																		2 @ 15"				ROD & LUG CONNECTORS
183+88 -L-	1620							1		1														
	1620	1622																						
182+96 -L-	1621							1				1												
	1621	1622																		2 @ 15"				
182+96 -L-	1622							1		1														
	1622	1619																						
184+86 -L-	1633		1		1	1																		
	1633	1623																						
184+90 -L-	1623							1				1												
	1623	1624																					84	
186+63 -L-	1624							1				1												
	1624	1631																					102	
186+63 -L-	1632		1		1	1																		
	1632	1624																					84	
186+63 -L-	1627						1			1													68	
	1627	1632																					84	
188+47 -L-	1628							1				1												
	1628	1629																						
188+44 -L-	1629							1				1												
	1629	1630																					108	
187+50 -L-	1630							1				1												
	1630	1624																					72	
188+43 -L-	1625																					0.3528		
	1625	1626																						
188+35 -L-	1626						1			1														
	1626	1627																					76	
189+38 -L-	1701							1		1														
	1701	1626																					48	
SHEET TOTALS			2		2	2	2	12		6		8								4 @ 15"		1.458	726	

ABBREVIATIONS

C.B.	CATCH BASIN
N.D.I.	NARROW DROP INLET
D.I.	DROP INLET
G.D.I.	GRATED DROP INLET
G.D.I.(N.S.)	(NARROW SLOT)
J.B.	JUNCTION BOX
M.H.	MANHOLE
T.B.D.I.	TRAFFIC BEARING DROP INLET
T.B.J.B.	TRAFFIC BEARING JUNCTION BOX

COMPUTED BY:	DATE:
CHECKED BY:	DATE:

NC10440

NORTH CAROLINA DEPARTMENT OF TRANSPORTATION
DIVISION OF HIGHWAYS

PROJECT NO.	SHEET NO.
R-2309AB	3-K

Note: Invert Elevations indicated are for Bid Purposes only and shall not be used for project construction stakeout.

LIST OF PIPES, ENDWALLS, ETC. (FOR PIPES 48 INCHES & UNDER)

STATION	LOCATION (LT, RT, OR CL)'	STRUCTURE NO. FROM	STRUCTURE NO. TO	TOP ELEVATION	INVERT ELEVATION	INVERT ELEVATION	SLOPE CRITICAL
		1703	1704		838.4	825.0	
193+05 -L-	LT	1704		827.2	825.0		
		1704	1705		825.0	822.8	
		1702	1705		824.4	822.8	
192+31 -L-	LT	1705		827.7	822.8		
191+79 -L-	RT	1706			820.5		
		1706	1708		820.5	817.7	
NOT USED		1707					
191+24 -L-	RT	1708		822.5	817.7		
		1708	1709		817.7	817.2	
190+48 -L-	RT	1709		822.0	817.2		
		1709	1710		817.2	815.2	
189+84 -L-	RT	1710		818.4	815.2		
200+80 -L-	RT	1711		844.9	842.2		
		1711	1712		842.2	841.7	X
200+80 -L-	LT	1712		844.9	841.7		
		1712	1713		841.7	831.9	
201+66 -L-	LT	1715			825.0		
		1715	1714		825.0	823.3	
201+58 -L-	LT	1714			823.3		
201+24 -L-	RT	1716			820.3		
		1716	1717		820.3	819.9	X
201+19 -L-	RT	1717			819.9		
203+18 -L-	RT						
205+84 -L-	LT						
206+95 -L-	RT						
208+28 -L-	RT	1803		867.3	864.3		
		1803	1805		864.3	859.0	
209+86 -L-	RT	1804		872.0	868.9		
		1804	1805		868.9	859.0	
209+53 -L-	LT	1805		870.7	859.0		
214+82 -L-	CL	1806		885.1	882.0		
		1806	1807		882.0	874.1	
211+86 -L-	CL	1807		877.3	874.1		
		1807	1809		874.1	871.4	
213+74 -L-	LT	1808		880.8	875.4		
		1808	1809		875.4	871.4	
211+86 -L-	LT	1809		874.1	871.4		
		1809	1810		871.4	867.7	
211+00 -L-	LT	1810		870.7	867.7		
		1810	1811		867.7	865.1	
SHEET TOTALS							

SIDE DRAIN PIPE (RCP, CSP, CAAP, HDPE, or PVC)

STATION	FROM	TO	12"	15"	18"	24"	30"	36"	42"	48"	DO NOT USE RCP	DO NOT USE CSP	DO NOT USE CAAP	DO NOT USE HDPE
	1704	1705			76									
	1808	1809		184										
	1810	1811			40									
SHEET TOTALS				184	116									

C.S. PIPE

STATION	FROM	TO	12" (.064)	15" (.064)	18" (.064)	24" (.064)	30" (.079)	36" (.079)	42" (.109)	48" (.109)
	1703	1704			32					
	1712	1713		28						
SHEET TOTALS				28	32					

R.C. PIPE CLASS III

STATION	FROM	TO	12"	15"	18"	24"	30"	36"	42"	48"
	1702	1705					24			
	1706	1708					80			
	1708	1709					76			
	1709	1710					68			
	1715	1714						12		
	1716	1717						28		
	1809	1810		88						
SHEET TOTALS				88			248	40		

R.C. PIPE CLASS IV

STATION	FROM	TO	12"	15"	18"	24"	30"	36"	42"	48"
	1711	1712		92						
	1803	1805		124						
	1804	1805		40						
	1806	1807		296						
	1807	1809		64						
SHEET TOTALS				616						

STATION	18" WELDED STEEL PIPE, GRADE B (TRENCHLESS INSTALLATION)	24" WELDED STEEL PIPE, GRADE B (TRENCHLESS INSTALLATION)	36" WELDED STEEL PIPE, GRADE B (TRENCHLESS INSTALLATION)	42" WELDED STEEL PIPE, GRADE B (TRENCHLESS INSTALLATION)
SHEET TOTALS				

ENDWALLS STD. 838.01 OR STD. 838.11 (UNLESS NOTED OTHERWISE) CU. YARDS; QUANTITIES FOR DRAINAGE STRUCTURES; *TOTAL L.F. FOR PAY QUANTITY SHALL BE COL. 'A' + (1.3 X COL.'B'); FRAME, GRATES, AND HOOD STANDARD 840.03 TYPE OF GRATE; CONCRETE TRANSITIONAL SECTION

STATION	FROM	TO	R.C.P.	C.S.P.	PER EACH (0' THRU 5.0')	A 5.0' THRU 10.0' LIN. FT.	B 10.0' AND ABOVE LIN. FT.	C.B. STD. 840.01 OR STD. 840.02	E	F	G	DROP INLET	CATCH BASIN
193+05 -L-	1704				1								
192+31 -L-	1705				1								
191+24 -L-	1708				1								
190+48 -L-	1709				1								
189+84 -L-	1710				1								
200+80 -L-	1711				1								
200+80 -L-	1712				1								
201+66 -L-	1715		3.4										
208+28 -L-	1803				1			1			1		1
209+86 -L-	1804				1							1	
209+53 -L-	1805				1	5	1.68					1	
214+82 -L-	1806				1							1	
211+86 -L-	1807				1							1	
213+74 -L-	1808				1	0.4							
211+86 -L-	1809				1								
211+00 -L-	1810				1								
SHEET TOTALS			3.4		15	5.4	1.68	1			1	4	1

STATION	FROM	D.I. STD. 840.14 OR STD. 840.15	D.I. FRAME AND GRATES STD. 840.16	G.D.I. TYPE "A" STD. 840.17 OR 840.26	G.D.I. TYPE "B" STD. 840.18 OR 840.27	G.D.I. TYPE "D" STD. 840.19 OR 840.28	G.D.I. FRAME WITH TWO GRATES STD. 840.22	G.D.I. (N.S.) FRAME WITH TWO GRATES STD. 840.24	G.D.I. (N.S.) FRAME WITH TWO GRATES STD. 840.29	J.B. STD. 840.31 OR 840.32	MANHOLE FRAME AND COVER STD. 840.54	SLOTTED DRAIN (LF)	ADJUST MANHOLE	T.B.J.B. STD. 840.34	ADJUST CB	CROSS PIPE END SECTION STD. 310.03
193+05 -L-	1704					1	1									
192+31 -L-	1705									1	1					
191+24 -L-	1708			1			1									
190+48 -L-	1709			1			1									
189+84 -L-	1710									1	1					
200+80 -L-	1711				1				1							
200+80 -L-	1712				1				1							
209+86 -L-	1804	1	1													
209+53 -L-	1805	1	1													
214+82 -L-	1806	1	1													
211+86 -L-	1807	1	1													
213+74 -L-	1808				1		1									
211+86 -L-	1809				1		1									
211+00 -L-	1810				1		1									
SHEET TOTALS		4	4	2	5	1	6		2	2	2					

STATION	FROM	TO	C. S. PIPE ELBOWS NO. & SIZE	CONC. & BRICK PIPE PLUG, C.Y. STD. 840.71	CONC. COLLARS CL. "B" C.Y. STD. 840.72	PIPE REMOVAL LIN. FT.	REMARKS
	1703	1704	2 @ 18"				
192+31 -L-	1705						REMOVE EXISTING HEADWALL
191+79 -L-	1706				0.656		REMOVE DI
	1706	1708				62	
	1709	1710				56	
	1712	1713	2 @ 15"				ROD & LUG CONNECTORS
201+58 -L-	1714				0.764		
201+24 -L-	1716				0.764		
201+19 -L-	1717				0.764		
203+18 -L-						50	
205+84 -L-						44	
206+95 -L-						27	
	1804	1805				66	
	1806	1807				88	
	1808	1809				150	
SHEET TOTALS			2 @ 15" 2 @ 18"		2.948	543	

ABBREVIATIONS

C.B.	CATCH BASIN
N.D.I.	NARROW DROP INLET
D.I.	DROP INLET
G.D.I.	GRATED DROP INLET
G.D.I.(N.S.)	INLET (NARROW SLOT)
J.B.	JUNCTION BOX
M.H.	MANHOLE
T.B.D.I.	TRAFFIC BEARING DROP INLET
T.B.J.B.	TRAFFIC BEARING JUNCTION BOX

COMPUTED BY: ______________________ DATE: __________

CHECKED BY: ______________________ DATE: __________

PROJECT NO.	SHEET NO.
R-2309AB	3-L

NORTH CAROLINA DEPARTMENT OF TRANSPORTATION
DIVISION OF HIGHWAYS

NC10440

Note: Invert Elevations indicated are for Bid Purposes only and shall not be used for project construction stakeout.

LIST OF PIPES, ENDWALLS, ETC. (FOR PIPES 48 INCHES & UNDER)

STATION	LOCATION (LT, RT, OR CL)	STRUCTURE NO. FROM	STRUCTURE NO. TO	TOP ELEVATION	INVERT ELEVATION	INVERT ELEVATION	SLOPE CRITICAL	SIDE DRAIN PIPE (RCP, CSP, CAAP, HDPE, or PVC) 12"	15"	18"	24"	30"	36"	42"	48"	DO NOT USE RCP	DO NOT USE CSP	DO NOT USE CAAP	DO NOT USE HDPE
216+20 -L-	LT	1901		879.6	876.8														
		1901	1808		876.8	875.4	X		244										
8+25 -Y8-	LT	1902		883.4	880.6														
		1902	1903		880.6	880.3	X		76										
217+47 -L-	LT	1903		885.5	880.3														
		1903	1905		880.3	880.1	X												
217+17 -L-	LT	1905		887.2	880.1														
		1905	1901		880.1	876.8	X												
217+24 -L-	RT	1904		889.5	886.8														
		1904	1905		886.8	880.1													
6+56 -Y8-	LT	1914		883.5	880.8														
222+92 -L-	LT	1910		879.3	876.6														
		1910	1911		876.6	862.8			360										
226+48 -L-	LT	1911		865.6	862.8														
		1911	1912		862.8	858.6													
227+43 -L-	LT	1912		861.6	858.6														
		1912	2001		858.6	850.5				184									
219+58 -L-	RT	1913		888.4	885.6														
		1913	1906		885.6	882.8													
220+45 -L-	RT	1906		885.5	882.8														
		1906	1915		882.8	874.7			320										
223+62 -L-	RT	1915		877.5	874.7														
		1915	1907		874.7	871.5			92										
224+55 -L-	RT	1907		874.2	871.5														
		1907	1908		871.5	867.8			80										
225+36 -L-	RT	1908		870.6	867.8														
		1908	1909		867.8	858.2			212										
227+47 -L-	RT	1909		861.2	858.2														
		1909	2005		858.2	852.5				104									
229+25 -L-	LT	2001		853.5	850.5														
		2001	2003		850.5	840.5				136									
		2002	2003		842.9	840.5													
230+60 -L-	LT	2003		844.9	840.5														
		2003	2004		840.5	837.7													
		2004			837.7														
228+48 -L-	RT	2005		855.5	852.5														
		2005	2006		852.5	844.2				176									
230+20 -L-	RT	2006		847.2	842.9														
		2006	2007		842.9	842.5	X				120								
231+41 -L-	RT	2007		844.0	842.5														
		2007	2008		842.5	830.1													
SHEET TOTALS									1384	600	120								

STATION	FROM	TO	C.S. PIPE 12" .064	15" .064	18" .064	24" .064	30" .079	36" .079	42" .109	48" .109	R.C. PIPE CLASS III 12"	15"	18"	24"	30"	36"	42"	48"	R.C. PIPE CLASS IV 12"	15"	18"	24"	30"	36"	42"	48"
216+20 -L-	1901																									
	1901	1808																								
8+25 -Y8-	1902																									
	1902	1903																								
217+47 -L-	1903																									
	1903	1905																		40						
217+17 -L-	1905																									
	1905	1901																		100						
217+24 -L-	1904																									
	1904	1905																		68						
6+56 -Y8-	1914																									
222+92 -L-	1910																									
	1910	1911																								
226+48 -L-	1911																									
	1911	1912										96														
227+43 -L-	1912																									
	1912	2001																								
219+58 -L-	1913																									
	1913	1906																		104						
220+45 -L-	1906																									
	1906	1915																								
223+62 -L-	1915																									
	1915	1907																								
224+55 -L-	1907																									
	1907	1908																								
225+36 -L-	1908																									
	1908	1909																								
227+47 -L-	1909																									
	1909	2005																								
229+25 -L-	2001																									
	2001	2003																								
	2002	2003												20												
230+60 -L-	2003																									
	2003	2004												56												
	2004																									
228+48 -L-	2005																									
	2005	2006																								
230+20 -L-	2006																									
	2006	2007																								
231+41 -L-	2007																									
	2007	2008														48										
SHEET TOTALS												96		76		48				312						

STATION	FROM	TO	18" WELDED STEEL PIPE, GRADE B (TRENCHLESS INSTALLATION)	24" WELDED STEEL PIPE, GRADE B (TRENCHLESS INSTALLATION)	36" WELDED STEEL PIPE, GRADE B (TRENCHLESS INSTALLATION)	42" WELDED STEEL PIPE, GRADE B (TRENCHLESS INSTALLATION)		ENDWALLS STD. 838.01 OR STD. 838.11 (UNLESS NOTED OTHERWISE) CU. YARDS R.C.P.	C.S.P.	QUANTITIES FOR DRAINAGE STRUCTURES PER EACH (0' THRU 5.0')	*TOTAL L.F. FOR PAY QUANTITY SHALL BE COL. 'A' + (1.3 X COL.'B') LIN. FT. A 5.0' THRU 10.0'	B 10.0' AND ABOVE	C.B. STD. 840.01 OR STD. 840.02	FRAME, GRATES, AND HOOD STANDARD 840.03 TYPE OF GRATE E	F	G	CONCRETE TRANSITIONAL SECTION DROP INLET	CATCH BASIN
216+20 -L-	1901									1								
	1901	1808																
8+25 -Y8-	1902									1								
	1902	1903																
217+47 -L-	1903									1	0.29							
	1903	1905																
217+17 -L-	1905									1	2.11							
	1905	1901																
217+24 -L-	1904									1							1	
	1904	1905																
6+56 -Y8-	1914									1								
222+92 -L-	1910									1								
	1910	1911																
226+48 -L-	1911									1								
	1911	1912																
227+43 -L-	1912									1								
	1912	2001																
219+58 -L-	1913									1							1	
	1913	1906																
220+45 -L-	1906									1								
	1906	1915																
223+62 -L-	1915									1								
	1915	1907																
224+55 -L-	1907									1								
	1907	1908																
225+36 -L-	1908									1								
	1908	1909																
227+47 -L-	1909									1								
	1909	2005																
229+25 -L-	2001									1								
	2001	2003																
	2002	2003																
230+60 -L-	2003									1								
	2003	2004																
	2004																	
228+48 -L-	2005									1								
	2005	2006																
230+20 -L-	2006									1								
	2006	2007																
231+41 -L-	2007									1								
	2007	2008																
SHEET TOTALS										20	2.4						2	

STATION	FROM	TO	D.I. STD. 840.14 OR STD. 840.15	D.I. FRAME AND GRATES STD. 840.16	G.D.I. TYPE "A" STD. 840.17 OR 840.26	G.D.I. TYPE "B" STD. 840.18 OR 840.27	G.D.I. TYPE "D" STD. 840.19 OR 840.28	G.D.I. FRAME WITH TWO GRATES STD. 840.22	G.D.I. (N.S.) FRAME WITH TWO GRATES STD. 840.24	G.D.I. (N.S.) FRAME WITH TWO GRATES STD. 840.29	J.B. STD. 840.31 OR 840.32	MANHOLE FRAME AND COVER STD. 840.54	SLOTTED DRAIN (LF)	ADJUST MANHOLE	T.B.J.B. STD. 840.34	T.B.D.I. STD. 840.35	ADJUST CB	CROSS PIPE END SECTION STD. 310.03	C. S. PIPE ELBOWS NO. & SIZE	CONC. & BRICK PIPE PLUG, C.Y. STD. 840.71	CONC. COLLARS CL. "B" C.Y. STD. 840.72	PIPE REMOVAL LIN. FT.	REMARKS
216+20 -L-	1901					1		1															
	1901	1808																					
8+25 -Y8-	1902									1						1							
	1902	1903																					
217+47 -L-	1903									1						1							
	1903	1905																					
217+17 -L-	1905										1	1											
	1905	1901																				64	
217+24 -L-	1904		1	1																			
	1904	1905																					
6+56 -Y8-	1914									1						1							
222+92 -L-	1910					1		1															
	1910	1911																				42	
226+48 -L-	1911					1		1															
	1911	1912																				145	
227+43 -L-	1912					1		1															
	1912	2001																					
219+58 -L-	1913		1	1																			
	1913	1906																					
220+45 -L-	1906					1		1															
	1906	1915																				40	
223+62 -L-	1915					1		1															
	1915	1907																				26	
224+55 -L-	1907					1		1															
	1907	1908																				26	
225+36 -L-	1908					1		1															
	1908	1909																				28	
227+47 -L-	1909					1		1															
	1909	2005																				28	
229+25 -L-	2001					1		1															
	2001	2003																					
	2002	2003																					
230+60 -L-	2003										1	1											
	2003	2004																					
	2004																				0.5526		REMOVE EXISTING HEADWALL
228+48 -L-	2005					1		1															
	2005	2006																				80	
230+20 -L-	2006				1			1															
	2006	2007																				32	
231+41 -L-	2007										1	1											
	2007	2008																					
SHEET TOTALS			2	2	1	11		12		3	3	3				3					0.5526	511	

ABBREVIATIONS

C.B.	CATCH BASIN
N.D.I.	NARROW DROP INLET
D.I.	DROP INLET
G.D.I.	GRATED DROP INLET
G.D.I.(N.S.)	(NARROW SLOT)
J.B.	JUNCTION BOX
M.H.	MANHOLE
T.B.D.I.	TRAFFIC BEARING DROP INLET
T.B.J.B.	TRAFFIC BEARING JUNCTION BOX

NC10440

COMPUTED BY: ______________________ DATE: ________

CHECKED BY: ______________________ DATE: ________

NORTH CAROLINA DEPARTMENT OF TRANSPORTATION
DIVISION OF HIGHWAYS

PROJECT NO.	SHEET NO.
R-2309AB	3-M

Note: Invert Elevations indicated are for Bid Purposes only and shall not be used for project construction stakeout.

LIST OF PIPES, ENDWALLS, ETC. (FOR PIPES 48 INCHES & UNDER)

STATION / SIZE / THICKNESS OR GAUGE	LOCATION (LT, RT, OR CL')	STRUCTURE NO. FROM	STRUCTURE NO. TO	TOP ELEVATION	INVERT ELEVATION	INVERT ELEVATION	SLOPE CRITICAL	SIDE DRAIN PIPE (RCP, CSP, CAAP, HDPE, or PVC) 12"	15"	18"	24"	30"	36"	42"	48"	DO NOT USE RCP	DO NOT USE CSP	DO NOT USE CAAP	DO NOT USE HDPE
233+25 -L-	RT	2013		842.9	840.1														
		2013	2014		840.1	821.4													
234+70 -L-	RT	2025		840.6	837.9														
		2025	2026		837.9	828.8													
		2019	2020		847.0	841.5				48									
235+71 -L-	LT	2020		844.5	841.5														
		2020	2021		841.5	834.5				120									
234+57 -L-	LT	2021		837.1	834.5														
		2021	2024		834.5	824.0				68									
233+94 -L-	LT	2022		841.7	838.9														
		2022	2023		838.9	827.0													
240+06 -L-	LT	2027			844.6														
		2027	2028		844.6	829.6													
204+06 -L-	LT	2028		834.2	829.6														
		2028	2030		829.6	817.5													
239+70 -L-	RT	2030		833.0	817.5														
		2030	2031		817.5	817.3	X												
238+96 -L-	RT	2029		836.5	833.7														
		2029	2030		833.7	817.5			72										
238+50 -L-	RT	2032		839.1	836.4														
		2032	2033		836.4	833.8			48										
238+96 -L-	RT	2033		839.0	833.8														
		2033	2029		833.8	833.7			16										
242+92 -L-	RT	2101		838.3	835.6														
		2101	2102		835.6	822.1													
10+96 -Y11-	LT	2103		843.0	840.0														
		2103	2104		840.0	829.4				40									
245+42 -L-	LT	2104		834.1	829.4														
		2104	2105		829.4	829.0	X												
246+41 -L-	LT	2105		835.7	829.0														
		2105	2106		829.0	828.2	X				88								
247+28 -L-	LT	2107		839.4	837.1														
		2107	2106		837.1	828.2													
247+28 -L-	LT	2106		833.6	828.2														
		2106	2108		828.2	825.7													
244+54 -L-	RT	2109		837.6	834.9														
		2109	2110		834.9	827.0	X		144										
245+96 -L-	RT	2110		838.0	827.0														
		2110	2111		827.0	824.4													
248+88 -L-	LT	2113		843.8	841.1														
		2113	2112		841.1	829.9													
248+84 -L-	RT																		
SHEET TOTALS									280	276	88								

STATION	STRUCTURE NO. FROM	STRUCTURE NO. TO	C.S. PIPE 12" .064	15" .064	18" .064	24" .064	30" .079	36" .079	42" .109	48" .109	R.C. PIPE CLASS III 12"	15"	18"	24"	30"	36"	42"	48"	R.C. PIPE CLASS IV 12"	15"	18"	24"	30"	36"	42"	48"	18" WELDED STEEL PIPE, GRADE B (TRENCHLESS INSTALLATION)	24" WELDED STEEL PIPE, GRADE B (TRENCHLESS INSTALLATION)	36" WELDED STEEL PIPE, GRADE B (TRENCHLESS INSTALLATION)	42" WELDED STEEL PIPE, GRADE B (TRENCHLESS INSTALLATION)	
	2013	2014		52																											
	2025	2026		28																											
	2022	2023		36																											
	2027	2028						28																							
	2028	2030																											136		
	2030	2031														24															
	2101	2102		40																											
	2104	2105												100																	
	2107	2106		16																											
	2106	2108												24																	
	2110	2111										32																			
	2113	2112		36																											
SHEET TOTALS				208				28				32		124		24													136		

STATION	STRUCTURE NO. FROM	STRUCTURE NO. TO	ENDWALLS STD. 838.01 OR STD. 838.11 (UNLESS NOTED OTHERWISE) CU. YARDS R.C.P.	C.S.P.	QUANTITIES FOR DRAINAGE STRUCTURES PER EACH (0' THRU 5.0')	LIN. FT. A 5.0' THRU 10.0'	B 10.0' AND ABOVE	C.B. STD. 840.01 OR STD. 840.02	FRAME, GRATES, AND HOOD STANDARD 840.03 TYPE OF GRATE E	F	G	CONCRETE TRANSITIONAL SECTION DROP INLET	CATCH BASIN	D.I. STD. 840.14 OR STD. 840.15	D.I. FRAME AND GRATES STD. 840.16	G.D.I. TYPE "A" STD. 840.17 OR 840.26	G.D.I. TYPE "B" STD. 840.18 OR 840.27	G.D.I. TYPE "D" STD. 840.19 OR 840.28	G.D.I. FRAME WITH TWO GRATES STD. 840.22	G.D.I. (N.S.) FRAME WITH TWO GRATES STD. 840.24	G.D.I. (N.S.) FRAME WITH TWO GRATES STD. 840.29	J.B. STD. 840.31 OR 840.32	MANHOLE FRAME AND COVER STD. 840.54	SLOTTED DRAIN (LF)	ADJUST MANHOLE	T.B.J.B. STD. 840.34	ADJUST CB	CROSS PIPE END SECTION STD. 310.03	C. S. PIPE ELBOWS NO. & SIZE	CONC. & BRICK PIPE PLUG, C.Y. STD. 840.71	CONC. COLLARS CL. "B" C.Y. STD. 840.72	PIPE REMOVAL LIN. FT.	REMARKS
233+25 -L-	2013				1												1				1												
	2013	2014																											2 @ 15"				ROD & LUG CONNECTORS
234+70 -L-	2025				1												1				1												
	2025	2026																											2 @ 15"				ROD & LUG CONNECTORS
235+71 -L-	2020				1												1		1														
	2020	2021																														58	
234+57 -L-	2021				1												1		1														
	2021	2024																														22	
233+94 -L-	2022				1												1				1												
	2022	2023																											2 @ 15"				ROD & LUG CONNECTORS
240+06 -L-	2027			2.8																													
	2027	2028																											2 @ 36"				
204+06 -L-	2028				1												1		1														
	2028	2030																												0.232			FLOWABLE FILL
239+70 -L-	2030				1	5	5.5															1	1										
238+96 -L-	2029				1												1		1														
238+50 -L-	2032				1												1				1												
238+96 -L-	2033				1	0.17											1				1												
242+92 -L-	2101				1												1				1												
	2101	2102																											2 @ 15"				ROD & LUG CONNECTORS
10+96 -Y11-	2103				1												1		1														
245+42 -L-	2104				1											1			1														
	2104	2105																														62	
246+41 -L-	2105				1	1.67										1			1														
247+28 -L-	2107				1												1				1												
247+28 -L-	2106				1	0.45																1	1										
244+54 -L-	2109				1												1				1												
245+96 -L-	2110				1	5	1										1				1									2.096			FLOWABLE FILL
248+88 -L-	2113				1												1				1												
	2113	2112																											2 @ 15"				ROD & LUG CONNECTORS
248+84 -L-																																48	
SHEET TOTALS				2.8	19	12.29	6.5									2	15		7		10	2	2						10 @ 15" 2 @ 36"	2.328		190	

*TOTAL L.F. FOR PAY QUANTITY SHALL BE COL. 'A' + (1.3 X COL.'B')

ABBREVIATIONS

C.B.	CATCH BASIN
N.D.I.	NARROW DROP INLET
D.I.	DROP INLET
G.D.I.	GRATED DROP INLET
G.D.I.(N.S.)	(NARROW SLOT)
J.B.	JUNCTION BOX
M.H.	MANHOLE
T.B.D.I.	TRAFFIC BEARING DROP INLET
T.B.J.B.	TRAFFIC BEARING JUNCTION BOX

COMPUTED BY: _____ DATE: _____

CHECKED BY: _____ DATE: _____

NORTH CAROLINA DEPARTMENT OF TRANSPORTATION
DIVISION OF HIGHWAYS

PROJECT NO.	SHEET NO.
R-2309AB	3-N

NC10440

Note: Invert Elevations indicated are for Bid Purposes only and shall not be used for project construction stakeout.

LIST OF PIPES, ENDWALLS, ETC. (FOR PIPES 48 INCHES & UNDER)

STATION	LOCATION (LT, RT, OR CL)'	STRUCTURE NO. FROM	STRUCTURE NO. TO	TOP ELEVATION	INVERT ELEVATION	INVERT ELEVATION	SLOPE CRITICAL	SIDE DRAIN PIPE (RCP, CSP, CAAP, HDPE, or PVC) 12"	15"	18"	24"	30"	36"	42"	48"	DO NOT USE RCP	DO NOT USE CSP	DO NOT USE CAAP	DO NOT USE HDPE
SIZE / THICKNESS OR GAUGE																			
252+98 -L-	RT	2121	2114		859.5	850.1			28							X			
252+98 -L-	RT	2114		853.1	850.1														
		2114	2115		850.1	845.5				128									
251+73 -L-	RT	2120	2115		854.3	845.5			28							X			
251+73 -L-	RT	2115		848.5	845.5														
		2115	2116		845.5	840.8													
250+48 -L-	RT	2116		845.0	840.8														
		2116	2117		840.8	840.6	X				72								
253+50 -L-	LT	2118			853.9	852.0													
		2118	2119		851.9	851.0	X		52										
255+66 -L-	LT	2201		858.4	856.4														
		2201	2118		856.4	851.9			216										
256+50 -L-	RT	2214	2215		867.9	860.5			24							X			
258+55 -L-	RT	2209		865.5	862.8														
		2209	2210		862.8	859.8			28							X			
263+42 -L-	RT	2211		865.5	862.8														
		2211	2212		862.8	861.3			24										
266+60 -L-	RT	2213	2208		868.7	859.1			28							X			
266+60 -L-	RT	2208		862.1	859.1														
		2208	2308		859.1	858.1	X			208									
268+66 -L-	RT	2308		861.1	858.1														
		2308	2309		858.1	857.0	X			120									
		2302	2305		850.4	851.0	X												
269+02 -L-	LT	2305			851.0														
269+76 -L-	RT	2306			853.6														
		2306	2307		853.6	854.1													
269+89 -L-	RT	2307			854.1														
		2302	2304		860.2	865.1					88								
		2303	2304		865.2	865.1	X			12									
269+62 -L-	LT	2304		870.3	865.1														
		2304	2311		865.1	866.2	X				160								
271+20 -L-	LT	2310		869.8	866.6														
		2310	2311		866.6	866.2	X												
271+20 -L-	LT	2311		871.0	866.2														
		2311	2313		866.2	868.6				84									
		2312	2313		879.3	868.6													
272+00 -L-	LT	2313		874.4	868.6														
		2313	2314		868.6	868.9	X		60										
272+50 -L-	LT	2314		871.6	868.9														
		2314	2315		868.9	874.4			100										
273+50 -L-	LT	2315		877.1	874.4														
		2315	2316		874.4	875.4	X												
273+50 -L-	LT	2316		878.6	875.4														
		2316	2317		875.4	886.1													
276+15 -L-	LT	2317		889.3	886.1														
277+32 -L-	LT	2320			880.6														
		2320	2321		880.6	880.5	X												
277+22 -L-	LT	2321		894.4	880.5														
		2321	2322		880.5	877.7													
276+94 -L-	RT	2322			877.7														
		2322	2323		877.7	876.7													
SHEET TOTALS								598	552	320									

STATION	C.S. PIPE 12"	15"	18"	24"	30"	36"	42"	48"	R.C. PIPE CLASS III 12"	15"	18"	24"	30"	36"	42"	48"	R.C. PIPE CLASS IV 12"	15"	18"	24"	30"	36"	42"	48"
SIZE / THICKNESS OR GAUGE	.064	.064	.064	.064	.079	.079	.109	.109																
252+98 -L-																								
252+98 -L-																								
251+73 -L-																								
251+73 -L-																								
											128													
250+48 -L-																								
253+50 -L-																								
255+66 -L-																								
256+50 -L-																								
258+55 -L-																								
263+42 -L-																								
266+60 -L-																								
266+60 -L-																								
268+66 -L-																								
														40										
269+02 -L-																								
269+76 -L-																								
														24										
269+89 -L-																								
269+62 -L-																								
271+20 -L-																								
																	32							
271+20 -L-																								
				28																				
272+00 -L-																								
272+50 -L-																								
273+50 -L-																								
																	56							
273+50 -L-																								
																	268							
276+15 -L-																								
277+32 -L-																								
														40										
277+22 -L-																								
276+94 -L-																								
														40										
SHEET TOTALS				28							128			80	64		356							

STATION	18" WELDED STEEL PIPE, GRADE B (TRENCHLESS INSTALLATION)	24" WELDED STEEL PIPE, GRADE B (TRENCHLESS INSTALLATION)	36" WELDED STEEL PIPE, GRADE B (TRENCHLESS INSTALLATION)	42" WELDED STEEL PIPE, GRADE B (TRENCHLESS INSTALLATION)	ENDWALLS STD. 838.01 OR STD. 838.11 (UNLESS NOTED OTHERWISE) CU. YARDS R.C.P.	C.S.P.	QUANTITIES FOR DRAINAGE STRUCTURES PER EACH (0' THRU 5.0')	LIN. FT. A 5.0' THRU 10.0'	LIN. FT. B 10.0' AND ABOVE	*TOTAL L.F. FOR PAY QUANTITY SHALL BE COL. 'A' + (1.3 X COL.'B')	C.B. STD. 840.01 OR STD. 840.02	FRAME, GRATES, AND HOOD STANDARD 840.03 TYPE OF GRATE E	F	G	CONCRETE TRANSITIONAL SECTION DROP INLET	CATCH BASIN	D.I. STD. 840.14 OR STD. 840.15	D.I. FRAME AND GRATES STD. 840.16	G.D.I. TYPE "A" STD. 840.17 OR 840.26	G.D.I. TYPE "B" STD. 840.18 OR 840.27	G.D.I. TYPE "D" STD. 840.19 OR 840.28	G.D.I. FRAME WITH TWO GRATES STD. 840.22	G.D.I. (N.S.) FRAME WITH TWO GRATES STD. 840.24	G.D.I. (N.S.) FRAME WITH TWO GRATES STD. 840.29	J.B. STD. 840.31 OR 840.32	MANHOLE FRAME AND COVER STD. 840.54	SLOTTED DRAIN (LF)	ADJUST MANHOLE	T.B.J.B. STD. 840.34	ADJUST CB	CROSS PIPE END SECTION STD. 310.03	C. S. PIPE ELBOWS NO. & SIZE	CONC. & BRICK PIPE PLUG, C.Y. STD. 840.71	CONC. COLLARS CL. "B" C.Y. STD. 840.72	PIPE REMOVAL LIN. FT.	REMARKS
252+98 -L-																																								
252+98 -L-							1												1		1																			
																																							60	
251+73 -L-																																								
251+73 -L-							1												1		1																			
																																							175	
250+48 -L-							1												1		1																			
253+50 -L-							1												1		1																			
255+66 -L-							1													1	1																			
256+50 -L-																																								
258+55 -L-							1												1			1																		
263+42 -L-							1												1			1																		
266+60 -L-																																								
266+60 -L-							1												1		1																			
268+66 -L-							1												1		1																			
																																							34	
269+02 -L-																																						1.0126		
269+76 -L-																																						1.0126		
269+89 -L-					6																																			
269+62 -L-							1	0.23												1			1																
271+20 -L-							1						1		1	1																								
271+20 -L-							1									1						1																		
																																					1 @18"			
272+00 -L-							1	0.82													1		1																
272+50 -L-							1														1		1																	
273+50 -L-							1														1		1																	
273+50 -L-							1						1		1	1																								
																																							32	
276+15 -L-							1						1		1	1																								
277+32 -L-					4.5																																			
277+22 -L-							1	5	3.92																1	1														
				104																																0.232			FLOWABLE FILL
276+94 -L-																																					0.8856			
SHEET TOTALS				104	10.5		18	6.05	3.92				3		3	3	2	11	1	9		5	1	1								1 @ 18"	0.232	2.9108	301	

ABBREVIATIONS

C.B.	CATCH BASIN
N.D.I.	NARROW DROP INLET
D.I.	DROP INLET
G.D.I.	GRATED DROP INLET
G.D.I.(N.S.)	(NARROW SLOT)
J.B.	JUNCTION BOX
M.H.	MANHOLE
T.B.D.I.	TRAFFIC BEARING DROP INLET
T.B.J.B.	TRAFFIC BEARING JUNCTION BOX

COMPUTED BY: _____ DATE: _____

CHECKED BY: _____ DATE: _____

NORTH CAROLINA DEPARTMENT OF TRANSPORTATION
DIVISION OF HIGHWAYS

PROJECT NO.	SHEET NO.
R-2309AB	3-O

NC10440

Note: Invert Elevations indicated are for Bid Purposes only and shall not be used for project construction stakeout.

LIST OF PIPES, ENDWALLS, ETC. (FOR PIPES 48 INCHES & UNDER)

| STATION / SIZE / THICKNESS OR GAUGE | LOCATION (LT, RT, OR CL)' | STRUCTURE NO. FROM | STRUCTURE NO. TO | TOP ELEVATION | INVERT ELEVATION | INVERT ELEVATION | SLOPE CRITICAL | SIDE DRAIN PIPE (RCP, CSP, CAAP, HDPE, or PVC) 12" | 15" | 18" | 24" | 30" | 36" | 42" | 48" | DO NOT USE RCP | DO NOT USE CSP | DO NOT USE CAAP | DO NOT USE HDPE | C.S. PIPE 12" | 15" | 18" | 24" | 30" | 36" | 42" | 48" | R.C. PIPE CLASS III 12" | 15" | 18" | 24" | 30" | 36" | 42" | 48" | R.C. PIPE CLASS IV 12" | 15" | 18" | 24" | 30" | 36" | 42" | 48" | 18" WELDED STEEL PIPE, GRADE B (TRENCHLESS INSTALLATION) | 24" WELDED STEEL PIPE, GRADE B (TRENCHLESS INSTALLATION) | 36" WELDED STEEL PIPE, GRADE B (TRENCHLESS INSTALLATION) | 42" WELDED STEEL PIPE, GRADE B (TRENCHLESS INSTALLATION) | ENDWALLS STD. 838.01 OR STD. 838.11 (UNLESS NOTED OTHERWISE) CU. YARDS R.C.P. | C.S.P. | QUANTITIES FOR DRAINAGE STRUCTURES PER EACH (0' THRU 5.0') | LIN. FT. A 5.0' THRU 10.0' | LIN. FT. B 10.0' AND ABOVE | *TOTAL L.F. FOR PAY QUANTITY SHALL BE COL. 'A' + (1.3 X COL. 'B') | C.B. STD. 840.01 OR STD. 840.02 | FRAME, GRATES, AND HOOD STANDARD 840.03 TYPE OF GRATE E | F | G | CONCRETE TRANSITIONAL SECTION DROP INLET | CATCH BASIN | D.I. STD. 840.14 OR STD. 840.15 | D.I. FRAME AND GRATES STD. 840.16 | G.D.I. TYPE "A" STD. 840.17 OR 840.26 | G.D.I. TYPE "B" STD. 840.19 OR 840.27 | G.D.I. TYPE "D" STD. 840.19 OR 840.28 | G.D.I. FRAME WITH TWO GRATES STD. 840.22 | G.D.I. (N.S.) FRAME WITH TWO GRATES STD. 840.24 | G.D.I. (N.S.) FRAME WITH TWO GRATES STD. 840.29 | J.B. STD. 840.31 OR 840.32 | MANHOLE FRAME AND COVER STD. 840.54 | SLOTTED DRAIN (LF) | ADJUST MANHOLE | T.B.J.B. STD. 840.34 | ADJUST CB | CROSS PIPE END SECTION STD. 310.03 | C. S. PIPE ELBOWS NO. & SIZE | CONC. & BRICK PIPE PLUG, C.Y. STD. 840.71 | CONC. COLLARS CL. "B" C.Y. STD. 840.72 | PIPE REMOVAL LIN. FT. | REMARKS |
|---|---|---

COMPUTED BY: DATE:

CHECKED BY: DATE:

NORTH CAROLINA DEPARTMENT OF TRANSPORTATION
DIVISION OF HIGHWAYS

PROJECT NO.	SHEET NO.
R-2309AB	3-P

NC10440

Note: Invert Elevations indicated are for Bid Purposes only and shall not be used for project construction stakeout.

LIST OF PIPES, ENDWALLS, ETC. (FOR PIPES 48 INCHES & UNDER)

SIZE / THICKNESS OR GAUGE

Station	Location (LT, RT, or CL)	Structure No. From	Structure No. To	Top Elevation	Invert Elevation	Invert Elevation	Slope Critical	Side Drain Pipe (RCP, CSP, CAAP, HDPE, or PVC) 12"	15"	18"	24"	30"	36"	42"	48"	Do Not Use RCP	Do Not Use CSP	Do Not Use CAAP	Do Not Use HDPE
287+48 -L-	RT	2419		898.9	897.0														
		2419	2420		897.0	894.3			92										
288+40 -L-	RT	2420		896.2	894.3														
		2420	2421		894.3	887.6			216										
290+54 -L-	RT	2421		890.4	887.6														
		2421	2422		887.6	880.0			248										
293+00 -L-	RT	2422		883.0	880.0														
		2422	2503		880.0	875.4													
294+06 -L-	RT	2503		879.3	875.4														
		2503	2505		875.4	845.1				228									
294+22 -L-	LT	2501			849.8														
		2501	2502		849.8	849.3	X												
294+40 -L-	LT	2502			849.3														
		2502	2504		849.3	846.0	X												
295+88 -L-	RT	2504			846.0														
		2504	2505		846.0	845.1	X												
296+30 -L-	RT	2505		858.2	845.1														
		2505	2506		845.1	843.2													
296+53 -L-	RT	2506			843.2														
		2507	2508		849.4	849.3	X												
294+45 -L-	LT	2508			849.3														
295+93 -L-	RT	2509			845.1														
		2509	2510		845.1	842.6													
294+75 -L-	LT	2511		881.9	879.1														
		2511	2512		879.1	877.1	X		196										
296+71 -L-	LT	2512		879.9	877.1														
		2512	2513		877.1	876.6	X												
296+71 -L-	RT	2513		880.2	876.6														
		2513	2514		876.6	842.6													
		2515	2516		875.5	875.0													
298+97 -L-	LT	2516			875.0														
299+22 -L-	RT	2517			869.3														
		2517	2519		869.3	869.1	X												
298+16 -L-	RT	2518		905.4	902.6														
		2518	2519		902.6	869.1			120										
299+34 -L-	RT	2519		878.3	869.1														
		2519	2520		869.1	863.0													
304+28 -L-	LT																		
305+65 -L-	LT																		
11+00 -Y14-	CL	2525			872.1	871.8	X												
SHEET TOTALS									872	228									

Station	Structure No. From	Structure No. To	C.S. Pipe 12" (.064)	C.S. 15" (.064)	C.S. 18" (.064)	C.S. 24" (.064)	C.S. 30" (.079)	C.S. 36" (.079)	C.S. 42" (.109)	C.S. 48" (.109)	R.C. Pipe Class III 12"	III 15"	III 18"	III 24"	III 30"	III 36"	III 42"	III 48"	R.C. Pipe Class IV 12"	IV 15"	IV 18"	IV 24"	IV 30"	IV 36"	IV 42"	IV 48"	18" Welded Steel Pipe, Grade B (Trenchless Installation)	24" Welded Steel Pipe, Grade B (Trenchless Installation)	36" Welded Steel Pipe, Grade B (Trenchless Installation)	42" Welded Steel Pipe, Grade B (Trenchless Installation)
	2422	2503											108																	
	2501	2502																						28						
	2502	2504																											204	
	2504	2505																						60						
	2505	2506																						32						
	2507	2508																						28						
	2509	2510																						88						
	2512	2513																		96										
	2513	2514		72																										
	2515	2516											16																	
	2517	2519											36																	
	2519	2520			32																									
11+00 -Y14-	2525																					84								
SHEET TOTALS				72	32								160							96		84		236					204	

Endwalls: STD. 838.01 OR STD. 838.11 (UNLESS NOTED OTHERWISE)

Quantities for Drainage Structures: *TOTAL L.F. FOR PAY QUANTITY SHALL BE COL. 'A' + (1.3 X COL.'B')

Frame, Grates, and Hood Standard 840.03

Station	Structure No. From	Structure No. To	Endwalls R.C.P. (CU. YARDS)	Endwalls C.S.P. (CU. YARDS)	Per Each (0' thru 5.0')	Lin. Ft. A (5.0' thru 10.0')	Lin. Ft. B (10.0' and above)	C.B. Std. 840.01 or Std. 840.02	Type of Grate E	F	G	Concrete Transitional Section Drop Inlet	Concrete Transitional Section Catch Basin	D.I. Std. 840.14 or Std. 840.15	D.I. Frame and Grates Std. 840.16	G.D.I. Type "A" Std. 840.17 or 840.26	G.D.I. Type "B" Std. 840.18 or 840.27	G.D.I. Type "D" Std. 840.19 or 840.28	G.D.I. Frame with Two Grates Std. 840.22	G.D.I. (N.S.) Frame with Two Grates Std. 840.24	G.D.I. (N.S.) Frame with Two Grates Std. 840.29	J.B. Std. 840.31 or 840.32	Manhole Frame and Cover Std. 840.54	Slotted Drain (LF)	Adjust Manhole	T.B.J.B. Std. 840.34	Adjust CB	Cross Pipe End Section Std. 310.03	C. S. Pipe Elbows No. & Size	Conc. & Brick Pipe Plug, C.Y. Std. 840.71	Conc. Collars Cl. "B" C.Y. Std. 840.72	Pipe Removal Lin. Ft.	Remarks
287+48 -L-	2419				1												1		1														
288+40 -L-	2420				1												1		1														
	2420	2421																														51	
290+54 -L-	2421				1												1		1														
	2421	2422																														38	
293+00 -L-	2422				1												1		1														
294+06 -L-	2503				1																	1	1										
294+22 -L-	2501		4.5																														
294+40 -L-	2502																														0.764		
295+88 -L-	2504																														0.764		
296+30 -L-	2505				1	5	3.1															1	1										
296+53 -L-	2506		4.5																														
294+45 -L-	2508																														0.764		
295+93 -L-	2509																														0.764		
294+75 -L-	2511				1												1				1												
296+71 -L- (LT)	2512				1												1				1												
296+71 -L- (RT)	2513				1												1				1												
	2513	2514																											2 @ 15"				ROD & LUG CONNECTORS
298+97 -L-	2516																														0.4465		
299+22 -L-	2517																														0.4465		
298+16 -L-	2518				1												1				1												
299+34 -L-	2519				1	4.16																1	1										
	2519	2520																											2 @ 18"				ROD & LUG CONNECTORS
304+28 -L-																																68	
305+65 -L-																																53	
SHEET TOTALS			9		11	9.16	3.1										8		4		4	3	3						2 @ 15" 2 @ 18"		3.949	210	

ABBREVIATIONS

C.B.	CATCH BASIN
N.D.I.	NARROW DROP INLET
D.I.	DROP INLET
G.D.I.	GRATED DROP INLET
G.D.I.(N.S.)	(NARROW SLOT)
J.B.	JUNCTION BOX
M.H.	MANHOLE
T.B.D.I.	TRAFFIC BEARING DROP INLET
T.B.J.B.	TRAFFIC BEARING JUNCTION BOX

COMPUTED BY: _____ DATE: _____

CHECKED BY: _____ DATE: _____

NORTH CAROLINA DEPARTMENT OF TRANSPORTATION
DIVISION OF HIGHWAYS

PROJECT NO.	SHEET NO.
R-2309AB	3-Q

NC10440

Note: Invert Elevations indicated are for Bid Purposes only and shall not be used for project construction stakeout.

LIST OF PIPES, ENDWALLS, ETC. (FOR PIPES 48 INCHES & UNDER)

STATION	LOCATION (LT, RT, OR CL)'	STRUCTURE NO. FROM	STRUCTURE NO. TO	TOP ELEVATION	INVERT ELEVATION	INVERT ELEVATION	SLOPE CRITICAL	SIDE DRAIN PIPE (RCP, CSP, CAAP, HDPE, or PVC) SIZE / THICKNESS OR GAUGE	12"	15"	18"	24"	30"	36"	42"	48"	DO NOT USE RCP	DO NOT USE CSP	DO NOT USE CAAP	DO NOT USE HDPE
		2522	2523		871.5	870.1	X													
10+31 -Y14A-	RT	2523		876.6	870.1															
		2521	2523		875.1	870.1														
13+78 -Y14-	CL	2523	2524		870.1	869.5	X													
14+30 -Y14-	LT																			
12+90 -Y14A-	LT																			
12+54 -Y14A-	RT	2526								32										
306+08 -L-	RT																			
307+00 -L-	LT	2601		870.4	868.2															
		2601	2602		868.2	867.4	X				52									
308+53 -L-	LT																			
306+79 -L-	RT	2603		871.1	868.1															
		2603	2604		868.1	866.7	X													
310+12 -L-	RT	2604		869.7	866.7															
		2604	2628		866.7	864.8														
310+90 -L-	RT	2628		869.8	864.8															
		2628	2606		864.8	863.6														
		2605	2606		863.7	863.6	X													
311+35 -L-	RT	2606		869.0	863.6															
		2606	2607		863.6	860.9														
311+65 -L-	LT	2607			860.9															
		2607	2608		860.9	857.0														
		2609	2610		863.7	863.5	X													
311+38 -L-	RT	2610			863.5															
311+66 -L-	LT	2611			860.5															
		2611	2612		860.5	857.0														
310+94 -L-	LT	2613									36									
312+70 -L-	LT	2614										44								
312+35 -L-	LT	2615		871.6	868.8															
		2615	2623		868.8	855.5				156										
313+92 -L-	LT	2623		870.7	855.2															
		2623	2625		855.5	864.1				180										
315+70 -L-	LT	2625		870.7	864.1															
		2625	2624		864.1	864.6	X													
315+70 -L-	CL	2624		867.4	864.6															
313+23 -L-	RT	2616		866.0	863.3															
		2616	2617		863.3	857.5				52										
313+74 -L-	RT	2617		861.0	857.5															
		2617	2618		857.5	856.3	X													
313+85 -L-	LT	2618			856.3															
		2618	2619		856.3	853.2	X													
SHEET TOTALS										420	88	44								

STATION	C.S. PIPE .064	15"	18"	24"	30"	36"	42"	48"	R.C. PIPE CLASS III 12"	15"	18"	24"	30"	36"	42"	48"	R.C. PIPE CLASS IV 12"	15"	18"	24"	30"	36"	42"	48"	18" WELDED STEEL PIPE, GRADE B (TRENCHLESS INSTALLATION)	24" WELDED STEEL PIPE, GRADE B (TRENCHLESS INSTALLATION)	36" WELDED STEEL PIPE, GRADE B (TRENCHLESS INSTALLATION)	42" WELDED STEEL PIPE, GRADE B (TRENCHLESS INSTALLATION)
																		60									
10+31 -Y14A-																											
																			32								
13+78 -Y14-																				108							
14+30 -Y14-																											
12+90 -Y14A-																											
12+54 -Y14A-																											
306+08 -L-																											
307+00 -L-																											
308+53 -L-																											
306+79 -L-																											
																336											
310+12 -L-																											
																76											
310+90 -L-																											
																48											
																20											
311+35 -L-																											
																								96			
311+65 -L-																											
																68											
																20											
311+38 -L-																											
311+66 -L-																											
																68											
310+94 -L-																											
312+70 -L-																											
312+35 -L-																											
313+92 -L-																											
315+70 -L-																											
																		60									
315+70 -L-																											
313+23 -L-																											
313+74 -L-																											
																									116		
313+85 -L-																											
																76											
SHEET TOTALS																636	76	120	32	108				96	116		

STATION	ENDWALLS STD. 838.01 OR STD. 838.11 (UNLESS NOTED OTHERWISE) CU. YARDS R.C.P.	C.S.P.	QUANTITIES FOR DRAINAGE STRUCTURES PER EACH (0' THRU 5.0')	LIN. FT. A 5.0' THRU 10.0'	LIN. FT. B 10.0' AND ABOVE	C.B. STD. 840.01 OR STD. 840.02	FRAME, GRATES, AND HOOD STANDARD 840.03 TYPE OF GRATE E	F	G	CONCRETE TRANSITIONAL SECTION DROP INLET	CATCH BASIN	D.I. STD. 840.14 OR STD. 840.15	D.I. FRAME AND GRATES STD. 840.16	G.D.I. TYPE "A" STD. 840.17 OR 840.26	G.D.I. TYPE "B" STD. 840.18 OR 840.27	G.D.I. TYPE "D" STD. 840.19 OR 840.28	G.D.I. FRAME WITH TWO GRATES STD. 840.22	G.D.I. (N.S.) FRAME WITH TWO GRATES STD. 840.24	G.D.I. (N.S.) FRAME WITH TWO GRATES STD. 840.29	J.B. STD. 840.31 OR 840.32	MANHOLE FRAME AND COVER STD. 840.54	SLOTTED DRAIN (LF)	ADJUST MANHOLE	T.B.J.B. STD. 840.34	ADJUST CB	CROSS PIPE END SECTION STD. 310.03	C. S. PIPE ELBOWS NO. & SIZE	CONC. & BRICK PIPE PLUG, C.Y. STD. 840.71	CONC. COLLARS CL. "B" C.Y. STD. 840.72	PIPE REMOVAL LIN. FT.	REMARKS
10+31 -Y14A-			1	1.5																1			1							
13+78 -Y14-																													69	
14+30 -Y14-																													44	
12+90 -Y14A-																													35	
12+54 -Y14A-																													30	
306+08 -L-																													60	
307+00 -L-			1											1		1														
308+53 -L-																													86	
306+79 -L-			1											1		1														
																													60	
310+12 -L-			1											1		1														
																													114	
310+90 -L-			1											1		1														
311+35 -L-			1	0.42														1	1											
																												0.4465		
311+65 -L-																														
																													34	
																												0.4465		
311+38 -L-																												0.4465		
311+66 -L-																														
310+94 -L-																													32	
312+70 -L-																														
312+35 -L-			1											1			1													
																													32	
313+92 -L-			1	5	5.44												1													SEE SPECIAL DETAIL
315+70 -L-			1	1.65										1			1													
315+70 -L-			1											1		1														
313+23 -L-			1												1	1														
																													32	
313+74 -L-			1												1	1														
313+85 -L-																												0.5526		
SHEET TOTALS			12	8.57	5.44									7	2	7		3	1	2			1					1.8921	628	

ABBREVIATIONS

C.B.	CATCH BASIN
N.D.I.	NARROW DROP INLET
D.I.	DROP INLET
G.D.I.	GRATED DROP INLET
G.D.I.(N.S.)	(NARROW SLOT)
J.B.	JUNCTION BOX
M.H.	MANHOLE
T.B.D.I.	TRAFFIC BEARING DROP INLET
T.B.J.B.	TRAFFIC BEARING JUNCTION BOX

COMPUTED BY: _____ DATE: _____

CHECKED BY: _____ DATE: _____

NORTH CAROLINA DEPARTMENT OF TRANSPORTATION
DIVISION OF HIGHWAYS

PROJECT NO.	SHEET NO.
R-2309AB	3-R

NC10440

Note: Invert Elevations indicated are for Bid Purposes only and shall not be used for project construction stakeout.

LIST OF PIPES, ENDWALLS, ETC. (FOR PIPES 48 INCHES & UNDER)

STATION	LOCATION (LT, RT, OR CL)	STRUCTURE NO. FROM	STRUCTURE NO. TO	TOP ELEVATION	INVERT ELEVATION	INVERT ELEVATION	SLOPE CRITICAL	SIDE DRAIN PIPE (RCP, CSP, CAAP, HDPE, or PVC) 12"	15"	18"	24"	30"	36"	42"	48"	DO NOT USE RCP	DO NOT USE CSP	DO NOT USE CAAP	DO NOT USE HDPE
SIZE / THICKNESS OR GAUGE																			
		2620	2621		861.0	860.6													
313+79 -L-	RT	2621			860.6														
313+88 -L-	LT	2622			855.6														
		2622	2623		855.6	855.5	X												
		2623	2626		855.5	853.2													
11+50 -Y15-	CL	2627			865.3	865.0	X												
		2701	2710		860.3	857.8	X			36									
5+02 -Y-	RT	2710		860.3															
4+82 -Y-	CL	2702		860.0	856.8														
		2702	2703		856.8	855.1													
4+82 -Y-	LT	2703		858.1	849.9														
		2703	0400		849.9	844.7													
2+44 -Y-	RT	2704		862.4	859.7														
		2704	2705		859.7	859.2	X		76										
3+18 -Y-	RT	2705		861.1	859.2														
		2705	2706		859.2	858.4	X		16										
3+18 -Y-	RT	2706			858.4														
3+54 -Y-	LT	2708		860.4	857.4														
		2708	2707		857.4	856.6													
3+19 -Y-	LT	2707		860.4	856.6														
		2707	2709		857.0	856.2													
13+50 -Y8-	LT																		
SHEET TOTALS								92	36										
TOTAL SHEET 3-A								84		36									
TOTAL SHEET 3-B									8		24								
TOTAL SHEET 3-C								16			48								
TOTAL SHEET 3-D								316											
TOTAL SHEET 3-E								24		92									
TOTAL SHEET 3-F								208	912	28	104								
TOTAL SHEET 3-G								420	28		36								
TOTAL SHEET 3-H								376	504	152	120								
TOTAL SHEET 3-I								416											
TOTAL SHEET 3-J								108	152	176	44								
TOTAL SHEET 3-K								184	116										
TOTAL SHEET 3-L								1384	800	120									
TOTAL SHEET 3-M								280	276	88									
TOTAL SHEET 3-N								588	552	320									
TOTAL SHEET 3-O								904	328										
TOTAL SHEET 3-P								972	228										
TOTAL SHEET 3-Q								420	88	44									
R-2309AB PROJECT TOTALS								6392	3828	1056	376								
R-2413C PROJECT TOTALS								5184	3096	3032	2724	180							
COMBINED PROJECT TOTALS								11576	6924	4088	3100	180							

STATION	C.S. PIPE 12"	15"	18"	24"	30"	36"	42"	48"	.064	.064	.064	.064	.079	.079	.109	.109
SIZE / THICKNESS OR GAUGE																
313+79 -L-																
313+88 -L-																
11+50 -Y15-																
5+02 -Y-																
4+82 -Y-																
4+82 -Y-																
2+44 -Y-																
3+18 -Y-																
3+18 -Y-																
3+54 -Y-																
3+19 -Y-																
13+50 -Y8-																
SHEET TOTALS																
TOTAL SHEET 3-A			52													
TOTAL SHEET 3-B			16													
TOTAL SHEET 3-C													56			
TOTAL SHEET 3-D																
TOTAL SHEET 3-E												176 (CAP)				
TOTAL SHEET 3-F			20										56			
TOTAL SHEET 3-G			16													
TOTAL SHEET 3-H																
TOTAL SHEET 3-I			76	68												
TOTAL SHEET 3-J			56													
TOTAL SHEET 3-K			28	32												
TOTAL SHEET 3-L																
TOTAL SHEET 3-M			208											28		
TOTAL SHEET 3-N				28												
TOTAL SHEET 3-O			100													
TOTAL SHEET 3-P			72	32												
TOTAL SHEET 3-Q																
R-2309AB PROJECT TOTALS			644	160								176 (CAP)	112	28		
R-2413C PROJECT TOTALS			1208										128	92		32
COMBINED PROJECT TOTALS			1852	160								176 (CAP)	240	120		32

STATION	R.C. PIPE CLASS III 12"	15"	18"	24"	30"	36"	42"	48"
SIZE / THICKNESS OR GAUGE								
313+79 -L-								
313+88 -L-								
11+50 -Y15-								
5+02 -Y-								
4+82 -Y-								
4+82 -Y-								
2+44 -Y-								
3+18 -Y-								
3+18 -Y-								
3+54 -Y-								
3+19 -Y-								
13+50 -Y8-								
SHEET TOTALS				24	96			
TOTAL SHEET 3-A					16			
TOTAL SHEET 3-B					16			
TOTAL SHEET 3-C					568			
TOTAL SHEET 3-D					64			
TOTAL SHEET 3-E					84			
TOTAL SHEET 3-F					184			
TOTAL SHEET 3-G				140		28		
TOTAL SHEET 3-H				148	108	144		
TOTAL SHEET 3-I					256			
TOTAL SHEET 3-J			16	24	104	32	188	
TOTAL SHEET 3-K				88			248	40
TOTAL SHEET 3-L				96		76		48
TOTAL SHEET 3-M				32		124		24
TOTAL SHEET 3-N					128			
TOTAL SHEET 3-O				40	372			
TOTAL SHEET 3-P					160			
TOTAL SHEET 3-Q					536	76		
R-2309AB PROJECT TOTALS			16	420	2388	912	580	112
R-2413C PROJECT TOTALS				3844	2812	1836	844	556
COMBINED PROJECT TOTALS			16	4264	5000	2748	1424	668

STATION	R.C. PIPE CLASS IV 12"	15"	18"	24"	30"	36"	42"	48"
SIZE / THICKNESS OR GAUGE								
313+79 -L-								
313+88 -L-								
11+50 -Y15-			48					
5+02 -Y-								
4+82 -Y-								
	40							
4+82 -Y-								
	176							
2+44 -Y-								
3+18 -Y-								
3+18 -Y-								
3+54 -Y-								
	36							
3+19 -Y-								
13+50 -Y8-								
SHEET TOTALS	252	48						
TOTAL SHEET 3-A	184							
TOTAL SHEET 3-B	1020	80		200				
TOTAL SHEET 3-C	804	792	320	144				
TOTAL SHEET 3-D	572							
TOTAL SHEET 3-E	1040		88					
TOTAL SHEET 3-F	328		88	108				
TOTAL SHEET 3-G	480	48						
TOTAL SHEET 3-H	480							
TOTAL SHEET 3-I	504	44						
TOTAL SHEET 3-J	404		56					
TOTAL SHEET 3-K	616							
TOTAL SHEET 3-L	312							
TOTAL SHEET 3-M								
TOTAL SHEET 3-N	356							
TOTAL SHEET 3-O	192							
TOTAL SHEET 3-P	96		84		238			
TOTAL SHEET 3-Q	120	32	108					
R-2309AB PROJECT TOTALS	7540	1044	744	452	238			
R-2413C PROJECT TOTALS	880	152	60		108	380	112	
COMBINED PROJECT TOTALS	8420	1196	804	452	344	380	112	

STATION	16" WELDED STEEL PIPE, GRADE B (TRENCHLESS INSTALLATION)	24" WELDED STEEL PIPE, GRADE B (TRENCHLESS INSTALLATION)	36" WELDED STEEL PIPE, GRADE B (TRENCHLESS INSTALLATION)	42" WELDED STEEL PIPE, GRADE B (TRENCHLESS INSTALLATION)	48" WELDED STEEL PIPE, GRADE B (TRENCHLESS INSTALLATION) (NOT IN SOIL)	ENDWALLS STD. 838.01 OR STD. 838.11 (UNLESS NOTED OTHERWISE) CU. YARDS R.C.P.	C.S.P.	QUANTITIES FOR DRAINAGE STRUCTURES PER EACH (0' THRU 5.0')	5.0' THRU 10.0' (LIN. FT. A)	10.0' AND ABOVE (LIN. FT. B)	TOTAL L.F. FOR PAY QUANTITY SHALL BE COL. "A" + (1.3 X COL. "B")	C.B. STD. 840.01 OR STD. 840.02	FRAME, GRATES, AND HOOD STANDARD 840.03 TYPE OF GRATE E	F	G	CONCRETE TRANSITIONAL SECTION DROP INLET	CATCH BASIN	D.I. STD. 840.14 OR STD. 840.15	D.I. FRAME AND GRATES STD. 840.16	G.D.I. TYPE "A" STD. 840.17 OR 840.26	G.D.I. TYPE "B" STD. 840.18 OR 840.27	G.D.I. TYPE "D" STD. 840.19 OR 840.28	G.D.I. FRAME WITH TWO GRATES STD. 840.20	G.D.I. FRAME WITH ONE GRATE STD. 840.22	G.D.I. FRAME WITH TWO GRATES STD. 840.22	G.D.I. (N.S.) FRAME WITH TWO GRATES STD. 840.24	G.D.I. (N.S.) FRAME WITH TWO GRATES STD. 840.29	J.B. STD. 840.31 OR 840.32	MANHOLE FRAME AND COVER STD. 840.54	SLOTTED DRAIN (LF)	ADJUST MANHOLE	T.B.J.B. STD. 840.34	T.B.D.I. STD. 840.35	O.T.C.B. STD. 840.04 OR 840.05	ADJUST CB	CROSS PIPE END SECTION STD. 310.03 OR 310.05	C. S. PIPE ELBOWS NO. & SIZE	CONC. & BRICK PIPE PLUG, C.Y. STD. 840.71	CONC. COLLARS CL. "B" C.Y. STD. 840.72	PIPE REMOVAL LIN. FT.	REMARKS
313+79 -L-																																								0.5526		REMOVE EXISTING HEADWALL
313+88 -L-																																								0.5526		
11+50 -Y15-																																									45	
5+02 -Y-									1																					1	1											
4+82 -Y-									1									1			1	1																				
4+82 -Y-									1	3.2		1			1																											
																																									40	
2+44 -Y-									1														1					1														
3+18 -Y-									1															1				1														
3+18 -Y-																																								0.399		
3+54 -Y-									1			1			1																											
3+19 -Y-									1			1			1																											
13+50 -Y8-																																									100	
SHEET TOTALS									7	3.2		3			3	1		1	1		1	1				2		1	1											1.5042	185	
TOTAL SHEET 3-A									18	4.71		7		4	4	5		5	5		2					2		1	6	88	2	3			1		3 @ 15"		0.399	96	
TOTAL SHEET 3-B									17	12.01		12	1	6	7	1		1	1		1					1		2	4		1	1			2		1 @ 15"		0.5526	148	
TOTAL SHEET 3-C								2.3	21	0.29		19	2	8	9						2					2										2 @ 30"			344	
TOTAL SHEET 3-D									15	1.28		11	1	6	4						3	1				4														146	
TOTAL SHEET 3-E									17	0.45		11	3	5	3	4		4	4		2					2			1		1									184	
TOTAL SHEET 3-F								2.3	19	6	3.6					5		5	5		13				3		10	1	1								2 @ 15" 2 @ 30"	0.13		60	
TOTAL SHEET 3-G								5.5	15	1.08						1		1	1		14						14								2	2 @ 15"		0.9516		
TOTAL SHEET 3-H								1	18	5.91		1		1		8	1	8	8		9				5		4													280	
TOTAL SHEET 3-I				144					17	6.12		3		1	2	4	3	4	4		9				5		4	1	1							5 @ 15" 2 @ 18"	0.26	1.1052	116	
TOTAL SHEET 3-J									16	10	1.85					2		2	2	2	12				6		8									4 @ 15"		1.458	726	
TOTAL SHEET 3-K								3.4	15	5.4	1.68	1			1	4	1	4	4	2	5	1			6		2	2	2							2 @ 15" 2 @ 18"		2.948	543	
TOTAL SHEET 3-L									20	2.4						2		2	2	1	11				12		3	3	3			3						0.5526	511	
TOTAL SHEET 3-M								2.8	19	12.29	6.5									2	15				7		10	2	2							10 @ 15" 2 @ 36"	2.328		190	
TOTAL SHEET 3-N					104			10.5	18	6.05	3.92					3		3	3	2	11	1			9		5	1	1							1 @ 18"	0.232	2.9108	301	
TOTAL SHEET 3-O									17	8.34						3		3	3		14				14															406	
TOTAL SHEET 3-P				204				9	11	9.16	3.1										8				4		4	3	3							2 @ 15" 2 @ 18"		3.949	210	
TOTAL SHEET 3-Q			96	116					12	8.57	5.44										7	2			7		3	1	2			1							1.8921	628	
R-2309AB PROJECT TOTALS	96	260	340	104		34	2.8	292	103.26	26.09	68	7	31	33	43	5	43	43	9	139	6		78	13	67	18	27	88	4	5	3		3	2	31 @ 15" 7 @ 18" 4 @ 30" 2 @ 36"	2.95	18.2231	5074	
																																				SIDE DRAIN PIPE ELBOWS				
R-2413C PROJECT TOTALS				68	50	37	10	183	56	3	1		1		8		8	8	34	122	6	29	14	128	5	1	7	3			3	1	1			35 @ 15" 22 @ 18" 10 @ 24" 2 @ 36"	1	10	6451	
COMBINED PROJECT TOTALS	96	260	340	172	50	83.8		475	197.08		69	7	32	33	51	5	51	51	43	261	12	29	14	206	18	68	25	30	88	4	8	4	1	3	2		3.95	28.2231	11525	

ABBREVIATIONS

C.B.	CATCH BASIN
N.D.I.	NARROW DROP INLET
D.I.	DROP INLET
G.D.I.	GRATED DROP INLET
G.D.I.(N.S.)	(NARROW SLOT)
J.B.	JUNCTION BOX
M.H.	MANHOLE
T.B.D.I.	TRAFFIC BEARING DROP INLET
T.B.J.B.	TRAFFIC BEARING JUNCTION BOX

COMPUTED BY: _____ DATE: _____

CHECKED BY: _____ DATE: _____

NORTH CAROLINA DEPARTMENT OF TRANSPORTATION
DIVISION OF HIGHWAYS

PROJECT NO.	SHEET NO.
R-2309AB	3-S

NC10440

Note: Invert Elevations indicated are for Bid Purposes only and shall not be used for project construction stakeout.

LIST OF PIPES, ENDWALLS, ETC. (FOR PIPES 54" & OVER)

STATION	LOCATION (LT, RT, OR CL)	STRUCTURE NO. FROM	STRUCTURE NO. TO	TOP ELEVATION	INVERT ELEVATION	INVERT ELEVATION	SLOPE CRITICAL	CLASS III R.C. PIPE (UNLESS NOTED OTHERWISE) SIZE 54" THICKNESS OR GAUGE	60"	66"	72"	78"	84"	C.S. PIPE (UNLESS NOTED OTHERWISE) SIZE 54" THICKNESS OR GAUGE .109	.138	.168	SHOP ELON-GATED .138	SHOP ELON-GATED .168	60" .138	60" .168	66" .138	66" .168	72" .139	72" .168	STRUCTURAL PLATE PIPE SIZE 60" THICKNESS OR GAUGE 12	60" 10	66" 12	66" 10	72" 12	72" 10	REINFORCED ENDWALLS WITH R.C.- C.Y.	REINFORCED ENDWALLS WITH C.S.- C.Y.	MASONRY DRAINAGE STRUCTURES CUBIC YARDS	C.B. STD. 840.01 OR 840.02	FRAMES, GRATES & HOOD STANDARD 840.03 TYPE OF GRATE E	F	G	CONCRETE TRANSITIONAL SECTION DROP INLET	CATCH BASIN	J.B. STD. 840.31 OR 840.32	T.B.J.B. SEE DETAIL	MANHOLE FRAME AND COVER STD. 840.54	G.D.I. TYPE "A" STD. 840.17 OR 840.26	G.D.I. (N.S.) FRAME WITH TWO GRATES STD. 840.29	54" WELDED STEEL PIPE, GRADE B (TRENCHLESS INSTALLATION)	REINF. CONC. FLARED END SECTIONS NO. & SIZE	CORR. STEEL FLARED END SECTIONS NO. & Size	CORR. STEEL ELBOWS NO. & SIZE	CONC. COLLARS CL. "B" C.Y. STD. 840.72	CONC. & BRICK PIPE PLUG, C.Y. STD. 840.71	PIPE REMOVAL LIN. FT.	REMARKS
120+42 -L-	CL	1109			742.36	739.55																			136 (CAP)																											
180+87 -L-	RT	1612		820.79	803.1																											4.703								1												
		1612	1613		803.1	798.6	X			112																																										
179+88 -L-	RT	1613		809.83	798.6																											6.855							1		1											
		1613	1614		798.6	797.5	X			48																																										
181+51 -L-	LT	1618			805.5																										6.6																					
		1618	1619		805.5	804.6				16																																										
181+42 -L-	LT	1619		812	804.6																											4.411							1													
233+48 -L-	LT	2009			818.1																										7.3																					
		2009	2010		818.1	817.39	X	68																																												
233+58 -L-	LT	2010			817.39																																													2.5793			
		2010	2011		817.39	816.26	X																																							108						
233+78 -L-	RT	2011			816.26																																													2.5793			
		2011	2012		816.26	816.1	X	20																																												
233+85 -L-	RT	2012			816.1																										7.3																					
233+48 -L-	LT	2015			819.4																																																
		2015	2016		819.4	818.02	X	72																																												
233+67 -L-	LT	2016			818.02																																													2.5793			
233+87 -L-	RT	2017			817.01																																													2.5793			
		2017	2018		817.01	816.1	X	16																																												
233+85 -L-	RT	2018			816.1																																																
		2202	2203		852.6	853.71				52																																										
260+66 -L-	LT	2203		867	853.71																											4.739								1												
260+66 -L-	RT	2204			857.1																																													3.1307			
		2204	2205		857.1	857.2	X			12																																										
260+66 -L-	RT	2205			857.2																										6.3																					
266+20 -L-	LT	2206			847.5																										5.0																					
		2206	2207		847.5	848.55		28																																												
266+22 -L-	LT	2207		864.4	848.55																											8.3596											1									SEE SPECIAL DETAIL
		2207	2301		848.55	849.05	X	108																																												
267+28 -L-	LT	2301		864.05	849.05																											7.6											1									SEE SPECIAL DETAIL
		2301	2302		849.05	849.85	X	148																																												
268+77 -L-	LT	2302		864.96	849.85																											7.515											1									SEE SPECIAL DETAIL
56+65 -L-	LT																								92																											2.094			
246+75 -L-	LT																								68																											2.094			
R-2309AB TOTAL								460		240															136 (CAP)						32.5		44.1826							2	2	1	0	3	108									13.4479	4.188		
																									160																														
R-2413C TOTAL								592																							10		8							2														0	20	
																									160																														
PROJECT TOTAL								1052		240															136 (CAP)						42.5		52.1826							4	2	1	0	3	108									13.4479	4.188	20	

ABBREVIATIONS

C.B.	CATCH BASIN
N.D.I.	NARROW DROP INLET
D.I.	DROP INLET
G.D.I.	GRATED DROP INLET
G.D.I.(N.S.)	GRATED DROP INLET (NARROW SLOT)
J.B.	JUNCTION BOX
M.H.	MANHOLE
T.B.D.I.	TRAFFIC BEARING DROP INLET
T.B.J.B.	TRAFFIC BEARING JUNCTION BOX

COMPUTED BY: _____ DATE: _____
CHECKED BY: _____ DATE: _____

DIVISION OF HIGHWAYS
STATE OF NORTH CAROLINA

PROJECT REFERENCE NO.	SHEET NO.
R-2309AB	3-T

NC10440

"N" = DISTANCE FROM EDGE OF LANE TO FACE OF GUARDRAIL
TOTAL SHOULDER WIDTH = DISTANCE FROM EDGE OF TRAVEL LANE TO SHOULDER BREAK POINT.
FLARE LENGTH = DISTANCE FROM LAST SECTION OF PARALLEL GUARDRAIL TO END OF GUARDRAIL
W = TOTAL WIDTH OF FLARE FROM BEGIN

GUARDRAIL SUMMARY

G = GATING IMPACT ATTENUATOR TYPE 350
NG = NON-GATING IMPACT ATTENUATOR TYPE 350

SURVEY LINE	BEG. STA.	END STA.	LOCATION	LENGTH			WARRANT POINT		"N" DIST. FROM E.O.L.	TOTAL SHOUL WIDTH	FLARE LENGTH		W		ANCHORS									IMPACT ATTENUATOR TYPE 350		SINGLE FACED CONCRETE BARRIER	REMOVE EXISTING GUARDRAIL	REMOVE & STOCKPILE EXISTING GUARDRAIL	REMARKS
				STRAIGHT	SHOP CURVED	DOUBLE FACED	APPROACH END	TRAILING END			APPROACH END	TRAILING END	APPROACH END	TRAILING END	B-77	III	GRAU 350	M-350	XIII	CAT-1	VI MOD	AT-1	TERM END SECT	G	NG				
-L-	53+21.00	58+46.00	LT	525.00			58+00	53+35	12'	14'	50		1				1			1									BERM WIDTH
-L-	53+50.00	59+25.00	RT	575.00			54+50	59+00	12'	14'	50		1				1			1							336		BERM WIDTH
-L- & -Y1-	64+95.15	8+75.00	LT	293.75	50.00			66+00	12'	14'		50		1			1					1							BERM WIDTH
-Y1- &-L-	8+75.00	71+21.70	LT	306.25	50.00		71+00		12'	14'	50		1				1					1							BERM WIDTH
-L-	75+50.00	77+62.50	RT	212.50			76+50	77+50	12'	14'	50		1				1			1									BERM WIDTH
-L-	88+18.75	91+60.00	LT	300.00	25.00			88+25	12'	15'										1		1							
-L-	100+03.00	111+68.00	RT	1165.00			101+25		12'	15'	50		1				2												
-L-	112+07.50	113+65.50	RT	158.00			113+65.50		12'	15'	50		1			1	1												
-L-	113+40.50	113+65.50	LT	25.00				113+65.50	12'	15'						1				1									
-L-	111+94.50	113+65.50	LT MED	150.00				113+65.50							1										1				
-L-	112+15.50	113+65.50	RT MED	150.00			113+65.50								1														
-L-	114+90.50	116+61.50	LT MED	150.00			114+91.50								1										1				
-L-	114+90.50	116+40.50	RT MED	150.00				114+91.50							1														
-L-	114+90.50	123+53.00	LT	862.50			122+25	114+90.50	12'	15'	50		1			1	1										395		
-L-	114+90.50	133+42.50	RT	1852.00			114+91.50	133+42.50	12'	15'						2											1480		
-Y5- & -L-	11+00.00	133+42.50	LT	150.00	87.50			132+00	12'	15'						1						1					225		
-L-	131+71.50	133+42.50	LT MED	150.00				133+42.50							1										1				
-L-	131+92.50	133+42.50	RT MED	150.00			133+42.50								1														
-L-	135+17.50	136+88.50	LT MED	150.00			135+17.50								1										1				
-L-	135+17.50	136+67.50	RT MED	150.00				135+17.50							1														
-L-	135+17.50	142+80.00	LT	762.50			142+00		12'	15'						1	1										665		
-L- & -Y6-	135+17.50	13+50.00	RT	775.00	62.50				12' & 8'	15' & 11'	50		1			1	1										680		
-L-	165+00.00	170+75.00	LT	575.00			169+50	165+00	12'	15'	50		1				1			1									
-L-	165+77.50	170+40.00	RT	462.50			166+50	170+00			50	50	1	1			2												
-L-	176+68.75	184+25.00	LT	756.25			183+00	176+75	12'	15'	50		1				1			1							705		
-L-	176+00.00	183+25.00	RT	725.00			176+00	182+00	12'	15'	50	50	1	1			2										630		
-L-	200+25.00	203+25.00	LT	300.00			202+00	200+25	12'	15'	50		1				1			1									
-L-	199+75.00	202+75.00	RT	300.00			200+50	202+50	12'	15'	50	50	1	1			2												
-L-	203+20.00	205+82.50	RT	262.50			203+50	204+60	12'	15'	50	50	1	1			2												
-L-	207+93.75	210+87.50	LT	293.75			210+75	208+00	12'	15'	50		1				1			1									
-L- & -Y8-	213+00.00	12+75.00	RT	287.50	137.50		213+25		12'	15'	50		1				1			1									
-L-	230+90.00	248+89.60	RT				230+90																		1	1800.00			
-L-	248+89.60	250+02.10	RT	112.50				249+25	12'	15'		50		1	1		1												
-L-	231+70.00	235+57.50	LT	387.50			234+25	232+00	12'	15'	50	50	1	1			2												
-Y10-	12+95		CL	37.50																			2						
-L-	246+75.00	250+75.00	LT	400.00			250+50	247+00	12'	15'	50	50	1	1			2										430		
-L-	258+67.50	269+30.00	LT	1062.50			260+00	269+00	12'	15'	50	50	1	1			2												
-L-	256+01.60	258+51.60	RT	250.00			258+50		12'	15'	50		1		1		1												
-L-	258+51.60	263+46.60	RT						12'	15'																495.00			
-L-	263+46.60	264+84.10	RT	137.50				264+00	12'	15'		50		1	1		1												
-L-	275+25.00	279+25.00	RT	400.00			276+50	278+00	12'	15'	50	50	1	1			2												
-L-	292+43.75	298+00.00	LT	556.25			296+75	292+50	12'	15'	50		1				1			1									
-L-	294+00.00	298+50.00	RT	456.25	50.00		294+25	298+50	12'	15'		50		1			1					1							
-L-	298+75.00	302+00.00	RT	325.00			299+00	300+75	12'	15'	50	50	1	1			2												
-L-	307+50.00		LT	37.50																			2						
-L-	307+43.75	310+80.00	LT	350.00	25.00			307+50	12'	15'										1		1							
-L-	311+07.00	312+60.00	LT	187.50	50.00				12'	15'												2							
-L-	312+80.00	317+50.00	LT	450.00	25.00		316+75		12'	15'	50		1				1					1							
SUBTOTAL				18275.00	562.50										11	8	40	0		12		9	4		5	2295	5546		
	ANCHOR DEDUCTIONS			-2487.50			ANCHOR DEDUCTIONS																						
								TYPE B-77		11	18.75	206.25																	
10 ADDITIONAL POSTS								TYPE III		8	18.75	150.00																	
								GRAU-350		40	50.00	2000.00																	
								CAT-1		12	6.25	75.00																	
TOTAL R-2309AB				15787.50	562.50			AT-1		9	6.25	56.25			11	8	40	0		12		9	4		5	2295	5546		
TOTAL R-2413C		10 ADD . POSTS		19175.00	300										38	0	49	8		18		2	12		6	2864	820		
PROJECT TOTAL				34962.50	862.50										49	8	89	8		30		11	16		11	5159	6366		
SAY		20 ADD . POSTS		34962.50	862.50										49	8	89	8		30		11	16		11	5159	6366		

NC10440

COMPUTED BY: _____ DATE: _____
CHECKED BY: _____ DATE: _____

DIVISION OF HIGHWAYS
STATE OF NORTH CAROLINA

PROJECT REFERENCE NO.	SHEET NO.
R-2309AB	3-U

"N" = DISTANCE FROM EDGE OF LANE TO FACE OF GUARDRAIL
TOTAL SHOULDER WIDTH = DISTANCE FROM EDGE OF TRAVEL LANE TO SHOULDER BREAK POINT.
FLARE LENGTH = DISTANCE FROM LAST SECTION OF PARALLEL GUARDRAIL TO END OF GUARDRAIL
W = TOTAL WIDTH OF FLARE FROM BEGIN

TEMPRORAY GUARDRAIL SUMMARY

G = GATING IMPACT ATTENUATOR TYPE 350
NG = NON-GATING IMPACT ATTENUATOR TYPE 350

SURVEY LINE	BEG. STA.	END STA.	LOCATION	LENGTH			WARRANT POINT		"N" DIST. FROM E.O.L.	TOTAL SHOUL WIDTH	FLARE LENGTH		W		ANCHORS									IMPACT ATTENUATOR TYPE 350		SINGLE FACED CONCRETE BARRIER	REMOVE EXISTING GUARDRAIL	REMOVE & STOCKPILE EXISTING GUARDRAIL	REMARKS
				STRAIGHT	SHOP CURVED	DOUBLE FACED	APPROACH END	TRAILING END			APPROACH END	TRAILING END	APPROACH END	TRAILING END	B-77	TEMP III	TEMP GRAU 350	M-350	XIII	CAT-1	W-BEAM	AT-1	TERM END SECT	G	NG				
L	119+90		RT																		1								SEE DETAIL 2-BC
SUBTOTAL				0.00	0.00												0				1								
	ANCHOR DEDUCTIONS			0.00			ANCHOR DEDUCTIONS																						
								TYPE B-77		0	18.75	0.00																	
								TYPE III		0	18.75	0.00																	
								GRAU-350		0	50.00	0.00																	
								CAT-1		0	6.25	0.00																	
TOTAL R-2309AB				0.00	0.00			AT-1		0	6.25	0.00					0				1								
TOTAL R-2413C				3750.00													6												
PROJECT TOTAL				3750.00	0.00												6				1								
SAY				3750	0.00												6				1								

DOUBLE FACE CABLE GUIDERAIL SUMMARY

LINE	BEG STA	END STA	LENGTH	INTERMED ANCHORS	TERMINAL ANCHORS
SAY R-2309AB			0.00	0	0
SAY R-2413C			21400.00	9	122
SAY PROJECT			**21400.00**	**9**	**122**
ADDITIONAL GUIDERAIL POSTS - 10					

COMPUTED BY: DATE:
CHECKED BY: DATE:

DIVISION OF HIGHWAYS
STATE OF NORTH CAROLINA

SUMMARY OF EARTHWORK

IN CUBIC YARDS

LOCATION	UNCLASSIFIED EXCAVATION	UNDERCUT	EMBT+%	BORROW	WASTE
SUMMARY NO. 1					
-L- LEFT 21+50.00 TO 50+00.00	9754		953		8801
-Y- 1+50.00 TO 9+49.49	544		1770	1226	
SUBTOTAL SUMMARY NO. 1	10298		2723	1226	8801
SUMMARY NO. 2					
-L- LEFT 50+00.00 TO 80+00.00	8400		47765	39365	
-Y1- 8+05.00 TO 9+54.63			672	672	
SUBTOTAL SUMMARY NO. 2	8400		48437	40037	
SUMMARY NO. 3					
-L- LEFT 80+00.00 TO 113+65.50	3887		19505	15618	
-Y3- 10+47.51 TO 14+58.00	363		1754	1391	
-Y4- 10+35.51 TO 12+75.00	2		961	959	
SUBTOTAL SUMMARY NO. 3	4252		22220	17968	
SUMMARY NO. 4					
-L- LEFT 114+90.50 TO 133+42.50	14756		14549		207
-Y5- 10+48.02 TO 14+00.00	105		198	93	
SUBTOTAL SUMMARY NO. 4	14861		14747	93	207
SUMMARY NO. 5					
-L- LEFT 135+17.50 TO 165+00.00	816		6976	6160	
SUBTOTAL SUMMARY NO. 5	816		6976	6160	
SUMMARY NO. 6					
-L- LEFT 165+00.00 TO 190+00.00	1982		6572	4590	
-Y7- 10+47.50 TO 14+40.00	327		1036	709	
SUBTOTAL SUMMARY NO. 6	2309		7608	5299	
SUMMARY NO. 7					
-L- LEFT 190+00.00 TO 216+53.59	14216		1922		12294
-Y8- 5+20.00 TO 9+48.07	2881		13		2868
SUBTOTAL SUMMARY NO. 7	17097		1936		15161
SUMMARY NO. 8					
-L- LEFT 216+53.59 TO 245+00.00	39292		17417		21875
-Y9- 10+36.77 TO 12+04.00	780		14		766
SUBTOTAL SUMMARY NO. 8	40072		17431		22641
SUMMARY NO. 9					
-L- LEFT 245+00.00 TO 280+40.04	13930		35144	21816	602
-Y11- 10+35.50 TO 11+60.00	710		5		705
-Y12- 6+25.00 TO 9+52.33	787		287		500
SUBTOTAL SUMMARY NO. 9	15427		35436	21816	1807
SUMMARY NO. 10					
-L- LEFT 280+40.04 TO 316+76.67	9461		27204	17743	
-Y14- 10+47.50 TO 14+39.00	2743		24		2719
-Y14A- 10+12.00 TO 15+26.50	1051		707		344
SUBTOTAL SUMMARY NO. 10	13255		27935	17743	3063
SUMMARY NO. 11					
-L- RIGHT 21+50.00 TO 50+00.00	13382		1381		12001
SUBTOTAL SUMMARY NO. 11	13382		1381		12001
SUMMARY NO. 12					
-L- RIGHT 50+00.00 TO 80+00.00	1146		12244	11098	
-Y1- 10+32.15 TO 12+67.88	526		25		501
SUBTOTAL SUMMARY NO. 12	1672		12269	11098	501

PROJECT REFERENCE NO. R-2309AB
SHEET NO. 3-V

COMPUTED BY: B. Wiles DATE: August 2011
CHECKED BY: D. Mary DATE: September 2011

DIVISION OF HIGHWAYS
STATE OF NORTH CAROLINA

SUMMARY OF EARTHWORK

IN CUBIC YARDS

LOCATION	UNCLASSIFIED EXCAVATION	UNDERCUT	EMBT+%	BORROW	WASTE
SUMMARY NO. 13					
-L- RIGHT 80+00.00 TO 113+65.50	7990		38399	30409	
SUBTOTAL SUMMARY NO. 13	7990		38399	30409	
SUMMARY NO. 14					
-L- RIGHT 114+90.50 TO 133+42.50	337		25067	24730	
SUBTOTAL SUMMARY NO. 14	337		25067	24730	
SUMMARY NO. 15					
-L- RIGHT 135+17.50 TO 165+00.00	13571		23310	9739	
-Y6- 10+47.51 TO 14+60.00	122		3360	3238	
SUBTOTAL SUMMARY NO. 15	13693		26670	12977	
SUMMARY NO. 16					
-L- RIGHT 165+00.00 TO 190+00.00	733		49210	48477	
SUBTOTAL SUMMARY NO. 16	733		49210	48477	
SUMMARY NO. 17					
-L- RIGHT 190+00.00 TO 216+53.59	11011		24612	13601	
-Y8- 10+51.80 TO 15+50.00	261		3523	3262	
SUBTOTAL SUMMARY NO. 17	11272		28135	16863	
SUMMARY NO. 18					
-L- RIGHT 216+53.59 TO 245+00.00	4497		6083	1586	
SUBTOTAL SUMMARY NO. 18	4497		6083	1586	
SUMMARY NO. 19					
-L- RIGHT 245+00.00 TO 280+40.04	8074		8971	3087	2190
-Y12- 10+47.78 TO 13+50.00	964		144		820
SUBTOTAL SUMMARY NO. 19	9038		9115	3087	3010
SUMMARY NO. 20					
-L- RIGHT 280+40.04 TO 316+76.67	17543		30766	13223	
-Y13- 10+35.50 TO 12+66.00	530		594	64	
-Y15- 10+58.57 TO 11+60.00			187	187	
SUBTOTAL SUMMARY NO. 20	18073		31547	13474	
SUMMARY NO. 21					
-L- MEDIAN 21+50.00 TO 38+00.00	732				732
SUBTOTAL SUMMARY NO. 21	732				732
SUMMARY SUBTOTAL	208206		413323	273042	67925
MATERIAL FOR SHOULDER CONSTRUCTION			21541	21541	
EST. LOSS DUE TO CLEAR. & GRUB.	-9800			9800	
WASTE IN LIEU OF BORROW				-64725	-64725
PROJECT TOTAL	198406		434864	239658	3200
EST. 5% TO REPLACE TOPSOIL ON BORROW PIT				11983	
R-2309AB GRAND TOTALS	198406	4950	434864	251641	3200
R-2309AB SAY	199000	4950		252000	
R-2413C (ALTERNATE 1) TOTAL	1457635	28910	1453460	407050	420615
R-2413C (ALTERNATE 1) SAY	1457635	28910		407050	
COMBINED PROJECT TOTAL	1656635	33860	1888324	659050	423815
COMBINED PROJECT SAY	1656635	33860		659050	
R-2413C (ALTERNATE 2) TOTAL	1338084	28910	1583433	465390	226712
R-2413C (ALTERNATE 2) SAY	1338084	28910		465390	
COMBINED PROJECT TOTAL	1537084	33860	2018297	717390	229912
COMBINED PROJECT SAY	1537084	33860		717390	

NOTE: Earthwork quantities are calculated by the Roadway Design Unit. These earthwork quantities are based in part on subsurface data provided by the Geotechnical Engineering Unit.

R-2309AB
EST. SHALLOW UNDERCUT STATION (BY GEOTECH.) = 800 CY
EST. SHALLOW UNDERCUT CONTINGENCY (BY GEOTECH.) = 7,500 CY
EST. SHALLOW UNDERCUT TOTAL (BY GEOTECH.) = 8,300 CY
EST. SELECT GRANULAR MATERIAL (BY GEOTECH.) = 2,500 CY
EST. CLASS IV SUBGRADE STABILIZATION MAT. (BY GEOTECH.) = 16,550 TONS
EST. D.D.E. = 5,540 CY
PAVEMENT STRUCTURE VOLUME (-L-) = 26,651 CY

R-2413C (ALTERNATE 1)
EST. SHALLOW UNDERCUT (BY GEOTECH.) = 0 CY
EST. SELECT GRANULAR MATERIAL (BY GEOTECH.) = 26,820 CY
EST. CLASS IV SUBGRADE STABILIZATION MAT. (BY GEOTECH.) = 0 TONS
EST. D.D.E. = 12,660 CY
PAVEMENT STRUCTURE VOLUME = 139,956 CY

R-2413C (ALTERNATE 2)
EST. SHALLOW UNDERCUT (BY GEOTECH.) = 0 CY
EST. SELECT GRANULAR MATERIAL (BY GEOTECH.) = 26,820 CY
EST. CLASS IV SUBGRADE STABILIZATION MAT. (BY GEOTECH.) = 0 TONS
EST. D.D.E. = 12,660 CY
PAVEMENT STRUCTURE VOLUME = 110,395 CY

PROJECT REFERENCE NO. R-2309AB
SHEET NO. 3-W

COMPUTED BY: _____ DATE: _____
CHECKED BY: _____ DATE: _____

PROJECT REFERENCE NO.	SHEET NO.
R-2309AB	3-X

DIVISION OF HIGHWAYS
STATE OF NORTH CAROLINA

PAVEMENT REMOVAL SUMMARY

SURVEY LINE	STATION	STATION	LOCATION LT/RT/CL	ASPHALT SY	CONCRETE SY
-L-	21+50	27+00	LT	61	
-L-	21+50	33+00	RT	128	
-L-	38+50	42+00	CL	933	
-L-	42+00	47+00	CL	889	
-L-	58+00	64+00	RT	1600	
-L-	64+00	72+00	RT	3200	
-L-	72+00	78+00	CL	1467	
-L-	122+00	125+00	LT	533	
-L-	147+50	151+00	LT	467	
-L-	193+00	195+00	RT	267	
-L-	206+00	209+00	CL	267	
-L-	258+00	268+00	RT	222	
-L-	284+50	286+50	LT	267	
-L-	310+00	314+00	RT	267	
-Y-	1+50	3+00	LT	33	
-Y-	1+50	3+00	RT	33	
-Y1-	11+10	12+50	LT	124	
-Y3-	10+00	13+00	RT	667	
-Y4-	10+00	12+00	CL	533	
-Y7-	10+40	12+00	LT	356	
-Y8-	6+00	9+25	CL	1083	
-Y9-	10+00	12+04	CL	408	
-Y10-			CL	440	
-Y11-	10+00	11+60	CL	320	
-Y14-	12+20	13+75	CL	344	
-Y14A-	10+00	13+50	LT	611	
		TOTAL R-2309AB:		15520	
		SAY R-2309AB:		15525	
		SAY R-2413C:		88990	
		SAY PROJECT:		104515	

SUMMARY OF UNDERDRAIN

SURVEY LINE	STATION	STATION	TOTAL L.F.
		CONTINGENT	1700
	TOTAL R-2309AB:		1700
	SAY R-2309AB:		1700
	SAY R-2413C:		13130
	SAY PROJECT:		14830

SUMMARY OF BREAKING OF PAVEMENT

SURVEY LINE	STATION	STATION	LOCATION LT/RT/CL	ASPHALT SY	CONCRETE SY
-L-	106+50	113+75	LT	1933	
-L-	114+80	1119+90	LT	1360	
-L-	120+85	122+00	LT	307	
-Y4-	10+20	11+75	CL	413	
-Y6-	10+10	12+25	CL	526	
-Y8-	10+25	12+50	CL	750	
		TOTAL R-2309AB:		5289	
		SAY R-2309AB:		5290	
		SAY R-2413C:		35650	
		SAY PROJECT:		40940	

SUMMARY OF CHAIN LINK FENCE

BEG. STA.	END STA.	FABRIC FEET	LINE POST	TERMINAL POST
-L- 56+65 LT	-L- 57+60 LT	473	40	3
	16' SINGLE GATE with 2 GATE POSTS			
-L- 111+58 RT	-L- 113+17 RT	525	45	4
	16' SINGLE GATE with 2 GATE POSTS			
-L- 141+78 LT	-L- 142+82 LT	310	27	3
	16' SINGLE GATE with 2 GATE POSTS			
TOTAL R-2309AB		1308	112	10
	6- 16' SINGLE GATE & 6 GATE POSTS			
SAY R-2309AB		1310	112	10
	6- 16' SINGLE GATE & 6 GATE POSTS			
TOTAL R-2413C		0	0	0
SAY		1310	112	10
	6- 16' SINGLE GATE & 6 GATE POSTS			

6/4/99

11/28/2011
R:\Roadway\Proj\R2309AB_rdy_sum_pave_rem_sheet3.dgn
pcarrigan

COMPUTED BY: _____ DATE: _____
CHECKED BY: _____ DATE: _____

PROJECT REFERENCE NO.	SHEET NO.
R-2309AB	3-Y

DIVISION OF HIGHWAYS
STATE OF NORTH CAROLINA
SUMMARY OF WOVEN WIRE FENCE

BEG. STA.	END STA.	FABRIC FEET	4" POST	5" POST
-Y3- 10+80 LT	-Y3- 14+58 LT	380	23	8
-L- 83+47 RT	-L- 111+57 RT	2815	180	38
-L- 84+40 LT	-L- 91+30 LT	692	42	13
-Y4- 11+95 LT	-L- 95+70 LT	488	28	13
-L- 96+50 LT	-L- 100+95 LT	450	27	10
-L- 101+55 LT	-L- 106+25 LT	475	30	7
-L- 106+85 LT	-L- 110+25 LT	340	19	10
-L- 110+85 LT	-L- 113+62 LT	330	18	10
-L- 113+18 RT	-L- 113+62 RT	64	2	4
-L- 115+00 LT	-Y5- 14+00 LT	1850	112	37
-Y5- 14+00 RT	-L- 132+07 LT	390	22	10
-Y6- 12+70 LT	-L- 147+60 RT	755	49	10
-L- 143+32 LT	-L- 155+65 LT	1225	79	16
-L- 148+20 RT	-L- 148+60 RT	40	1	4
-L- 149+20 RT	-L- 150+25 RT	122	5	7
-L- 150+85 RT	-L- 153+90 RT	325	18	10
-L- 154+50 RT	-L- 165+35 RT	1115	64	28
-L- 156+25 LT	-L- 161+30 LT	505	29	13
-L- 161+90 LT	-L- 163+80 LT	190	10	7
-L- 165+25 LT	-L- 168+30 LT	316	19	7
-L- 168+65 LT	-Y7- 13+30 LT	1585	100	25
-L- 165+95 RT	-L- 168+32 RT	243	14	7
-L- 168+65 RT	-L- 168+60 RT	30	1	2
-L- 169+50 RT	-L- 170+26 RT	75	3	4
-L- 170+86 RT	-L- 171+65 RT	78	2	7
-L- 172+25 RT	-L- 174+14 RT	185	11	4
-L- 174+74 RT	-L- 185+10 RT	1047	61	25
-Y7- 13+30 RT	-L- 185+08 LT	1137	71	19
-L- 185+88 LT	-L- 189+12 LT	485	28	13
-L- 185+70 RT	-L- 187+85 RT	215	12	7
-L- 188+45 RT	-L- 194+65 RT	610	33	19
-L- 189+71 LT	-L- 203+60 LT	1600	96	34
-L- 189+71 LT	-L- 203+60 LT	1600	96	34
-L- 195+25 RT	-L- 199+35 RT	412	24	10
-L- 199+75 RT	-L- 202+75 RT	300	18	7
-L- 203+35 RT	-L- 206+90 RT	362	17	16
-L- 204+20 LT	-L- 207+27 LT	309	20	4
-L- 207+88 LT	-L- 211+00 LT	305	18	7
-L- 207+50 RT	-L- 209+00 RT	150	9	4
-L- 210+00 RT	-L- 211+82.6 RT	186	11	4
-L- 211+60 LT	-Y8- 8+25 RT	562	35	10
-L- 212+80 RT	-Y8- 14+70 RT	582	35	13
-Y8- 10+90 LT	-L- 218+00 RT	145	7	7
-Y8- 6+75 LT	-L- 219+10 LT	405	24	10
-L- 219+70 LT	-L- 220+80 LT	110	6	4

BEG. STA.	END STA.	FABRIC FEET	4" POST	5" POST
-L- 218+60 RT	-L- 220+40 RT	182	11	4
-L- 221+25 RT	-L- 223+42 RT	225	12	7
-L- 221+40 LT	-L- 222+60 LT	120	6	4
-L- 223+20 LT	-L- 223+70 LT	50	1	4
-L- 224+30 LT	-L- 224+90 LT	60	2	4
-L- 224+02 RT	-L- 224+40 RT	38	1	4
-L- 225+00 RT	-L- 225+20 RT	20	0	4
-L- 225+50 LT	-Y9- 11+70 LT	178	9	7
-L- 225+80 RT	-L- 227+60 RT	180	11	4
-Y9- 11+50 RT	-L- 231+25 LT	456	24	16
-L- 228+20 RT	-L- 228+65 RT	45	1	4
-L- 229+25 RT	-L- 230+15 RT	90	4	4
-L- 230+75 RT	-L- 245+87 RT	1532	88	40
-L- 231+85 LT	-L- 233+41 LT	168	3	16
-L- 233+54 LT	-Y11- 11+40 LT	1255	73	31
-Y11- 11+40 RT	-L- 247+66 LT	185	6	13
-L- 246+28 RT	-L- 249+90 RT	370	18	16
-L- 248+02 LT	-L- 255+00 LT	710	40	19
-L- 253+17 RT	-L- 268+55 RT	1600	99	28
-L- 255+60 LT	-L- 268+90 LT	1330	83	22
-L- 269+15 RT	-L- 270+31 RT	117	5	7
-L- 269+50 LT	-L- 275+55 LT	638	35	19
-L- 270+91 RT	-L- 274+00 RT	304	16	10
-L- 274+60 RT	-Y12-13+50 RT	670	38	19
-L- 276+15 LT	-Y12- 7+75 RT	510	28	16
-Y12- 7+75 LT	-L- 285+40 LT	587	33	16
-Y12- 11+40 LT	-L- 283+40 RT	360	20	10
-L- 284+00 RT	-L- 286+40 RT	240	13	7
-L- 286+00 LT	-L- 289+75 LT	375	20	13
-L- 287+00 RT	-L- 287+40 RT	40	1	4
-L- 288+00 RT	-L- 288+35 RT	35	0	4
-L- 288+95 RT	-L- 290+48 RT	153	9	4
-L- 290+35 LT	-L- 298+03 LT	768	45	19
-L- 291+08 RT	-Y13- 11+54 RT	275	14	10
-Y13- 11+54 LT	-L- 296+49 RT	255	13	10
-L- 296+60 RT	-L- 298+40 RT	185	6	13
-L- 298+63 LT	-Y14- 12+00 RT	606	31	22
-L- 299+00 RT	-L- 302+40 RT	342	16	16
-L- 303+00 RT	-L- 306+75 RT	397	21	13
-Y14- 11+94 RT	-L- 310+60 LT	730	40	22
-L- 307+35 RT	-L- 310+20 RT	285	17	7
-L- 311+35 RT	-L- 311+85 RT	60	2	4
-L- 311+20 LT	-L- 312+53 LT	135	8	4
-L- 3121+45 RT	-L- 313+25 RT	80	4	4
-L- 313+13 LT	-L- 316+43 LT	346	16	16
-L- 313+85 RT	-Y15- 12+00 RT	240	12	10
TOTAL R-2309AB		41512	2382	1074
SAY R-2309AB		41520	2390	1080
TOTAL R-2413C		53700	3410	790
SAY		95220	5800	1870

6/4/99

11/28/2011
K:\Proj\Pro\R2309AB_rdy_sum_pave_rem_sheet3.dgn
Eliopoulos & Hutchison Inc

PROJ. REFERENCE NO.	SHEET NO.
R-2309AB	3-Z

STATE OF NORTH CAROLINA
DIVISION OF HIGHWAYS

PARCEL INDEX SHEET

PARCEL No.	SHEET No.	PROPERTY OWNER NAME
1	4	GOODWILL INDUSTRIES OF CENTRAL NC, INC.
2	4	STREETS AND AVENUES RESTAURANTS CORP.
3	4	NOSTRA PROPERTY, INC.
4	4	NOSTRA PROPERTY, INC.
5	4	JANE H. WALTER
6	4	MATLIN CORP.
7	4	TRIAD HOLDING COMPANY, LLC
8	4, 27	TONY TAJALLI
9	27	MARVIN D. & BONNIE C. LEWIS
10	27	DONALD E. CATO
11	27	TP-HORSEPEN CREEK, LLC
12	27	BERKLEY HALL DEVELOPMENT CO.
13	27	BERKLEY HALL DEVELOPMENT CO.
14	27	BERKLEY HALL DEVELOPMENT CO.
15	4, 27	BATTLEGROUND, LLC
16	4, 27	SMITH, OSBORNE W. JR. & NAN H
17	4	GRANITE/HORSEPEN CREEK, LLC
17A	5, 6	BATTLEGROUND NORTH APARTMENTS, LLC
17B	4, 5	GRANITE/BATTLEGROUND 5, LLC
17C	5	GRANITE/BATTLEGROUND 5, LLC
17D	5, 6, 7	GRANITE/HORSEPEN CREEK, LLC
17E	5, 6	EDWIN B. MOORE AND RICHARD D. HALL, JR.
18	4, 5, 27	PATTERSON INVESTMENT PROPERTIES, LLC
19	5	AI-FENG & SUMING CHAN
20	5	WILLIAM & CORA BARHAM
21	5	THE WALTER G. BARHAM FAMILY LIMITED PARTNERSHIP
22	5, 6, 7	CHARTER DEVELOPMENT CO.
23	6, 7	ROGER HERMAN & JOYCE GIOLA
26	7	KARL WOODS
27	7	RICHARD H. GREENE
28	7	NCDOT
29	7	C.W. & ETHEL ELLIOTT
30	7	MTM PROPERTY, LLC
31	7	ROBIN & VALERIE DANIEL
32	7	TRUSTEES OF CHARITY BAPTIST CHURCH
33	7	DYLAN DOLAM & JENNIFER DONG
34	7	RICHARD F. LANE
35	7, 8	STEPHEN C. PERDUE
36	7, 8	THEODORE V. HAIRFIELD, SR
37A	8	STERLING RENTAL GROUP, LLC
37B	8	CARLSON FARMS DEVELOPMENT COMPANY
38	8	JAMES H. & KEMBERLY R. DREISBACH
39	8	ENRICE & HA N. SILVA
40	8	DAYSTAR BAPTIST CHURCH
41	8	GUILFORD COUNTY
42	8	SEONG YOUNHO & YOUNGME CHOO
43	8	GREENSBORO COUNTRY CLUB
44	8, 9, 10	GUILFORD COUNTY
45	8, 9	MARYANN KINGSMILL
46	9	JOAN L. ATTAYEK
47	9, 10	SMITH RICHARDSON FOUNDATION PROPERTIES I
48	10, 11, 12, 13	CITY OF GREENSBORO
49		NOT USED
51	13	GUILFORD COUNTY AND CITY OF GREENSBORO
52	13, 14	GUILFORD COUNTY AND CITY OF GREENSBORO
53	13	HARVEY T. MARSHALL & MICKEY M. MARSHALL
54	13	RONALD L. TINNIN
55	13, 14	GEORGE A. RILLINGS

PARCEL No.	SHEET No.	PROPERTY OWNER NAME
56	14, 15	W.H. BOGART, JR. AND NANCY B. KABRICH
57	14	RENEE L. GROCE
58	14, 15	JAMES H. LONG
59	14	JO ANNE L. HANNER
60	15	VINEYARD AT SUMMERFIELD, LLC
61	15	WILLIAM L. BENNETT
62	15	B.J. & RUTH SIMMONS
63	15, 16	KENNETH C. PEEDEN
64	15	DELANO G. & ROSIE A. SIMMONS
65	15, 16	CAROLYN M.P. MARTIN
66	15, 16	SESSOMS DEVELOPMENT, INC
67	16	KAPLAN PROPERTIES, LLC
67A	16	SUMMERFIELD MEDICAL PROPERTIES, LLC
68	16	KRS OF SUMMERFIELD, LLC
69	16	4420 INVESTMENT, LLC
70	16, 17	BUILDING SOLUTIONS DEVELOPMENT, INC.
71	17	WILLIAM D. & GOLDIE D. BAKER
72	17	TAMMIE BAKER
73	17	SUMMERFIELD CENTER, LLC
74	17	CHARLIE P. & RUBY B. PHILLIPS
74A	17	LEONARD P. PHILLIPS
75	17, 18	KOTIS PROPERTIES, INC.
76	17, 18	BILL AGAPION
77	18	JACK & LILLIE MAY STIGALL
78	18	KOTIS SUMMERFIELD, LLC
79	18, 19	OLD SUMMERFIELD SHOPPING CENTER, INC
80	18, 19	WHICKER FAMILY, LLP
80A	19	JAMES A. WOODSIDE
81	18, 19, 28	KOTIS SUMMERFIELD OUTPARCEL. LLC
82	18, 19	CINDA C. WHICKER
83	19, 28	SHUFORD W. & MAXINE P. TILLEY
84	28	MAXINE P. TILLEY
85	19	INLAND AMERICAN ST. PORTFOLIO
86	19	WEC 98H-27, LLC (CVS STORE)
87	19	WANDA K. WINFREE
88	19	MABLE T. PATTERSON
89	19	JAMES W. & CLAUDENE STEPHENS
90	19	MARGIE LYNN W. SEWELL
91	19	SUNTRUST BANK
92	19	BETTY J. WINFREE
93	19	SUMMERFIELD PILGRIM HOLINESS CHURCH
94	19	MAMIE M. ISLEY
95	19	STEVE W. WINFREE
96	19, 20	DONNIE M. MABE
97	19, 20	RALEIGH D. & JANE C. TALLEY
98	20	LINDA C. OVERMAN & JOAN CLAYTON NEWTON
99	20	W. HARRISON TROTTER, TRUSTEE
100	20	JASON T. & TINA L. HEADDEN
101	20	NCDOT
102	20	BOBBY W. & BRENDA R. LOGGINS
103	20	DONALD M. & BARBARA L. REID
104	20	NOEL H. & ERMA P. SHELTON
105	20	LENA H. FLINCHUM
106	20, 21	DAVID D. JESSUP
107	20, 21	ROBERT S. BRODIE, III
108	21	HAROLD L. & LAURIE I. SUMMERS
109	21	STEPHEN G. & TREVA D. HAYES
110	21	CHARLES L. & ELAINE H. ISLEY
111	21	CHUL H. & WHA JIN PARK

PROJ. REFERENCE NO.	SHEET NO.
R-2309AB	3-AA

STATE OF NORTH CAROLINA
DIVISION OF HIGHWAYS

PARCEL INDEX SHEET

PARCEL No.	SHEET No.	PROPERTY OWNER NAME
112	21	JERRY W. WANDA C. WRAY
113	21	HARRIETT TWIGGS SMALLS
114	21	ELMHURST ESTATES III HOMEOWNERS ASSOC.
115	21	CHARLES R. & MARIA BETH SMITH
116	21, 22	PEGGY P. MOORE (WOODWARD)
117	21, 22	JEFFREY R. WISEMAN
118	22	MICHAEL C. & AMBER M. CULLEY
119	22	ROBERT W. & PATRICIA T. WHITE
120	22	JAMES H., JR. & PATSY M. LONG
121	22	JAMES O. & VIRGINIA M. HARRELL
122	22, 23	SESSOMS DEVELOPMENT INC.
123	22, 23	GARY WAYNE MILLER
124	22, 23	WILLIAM P. WALLEY
125	23	JAMES D. & WANDA H. DEAN
126	23	ELIZABETH OGBURN
127	23	COMMUNITY LUTHERAN CHURCH
128	23	CYNTHIA G. WELCH & JAMES E. GAMBLE
129	23, 24	JACK H. LINVILLE
130	23, 24	TRUMAN B. & JUDY M. DOGGETT
131	24	TOWN OF SUMMERFIELD
132	24	JAMES K. & OVIA L. BAYNES
133	24	THOMAS B. FIDLER
134	24	TRUSTEES OF SUMMERFIELD UNITED METHODIST CHURCH
135	24, 25	RALPH GORDON COMPANY
136	24	NOT USED
137	24	CHARLIE & EDNA BURKES
138	24	SAJON PROPERTIES, LLC
139	24	ANTHOUILA E. CONTOGIANNIS
140	24, 25	AYERS FAMILY LIMITED PARTNERSHIP
141	25	ROSE FULTZ COOK
142	25	WILLIAM C. & NORMA JEAN MABERSON
143	25	DOLORES HEREDIA
144	25	JOHN C., JR. & MARGARET E. CHANDLER
145	25	TRUSTEES OF FAIRGROVE BAPTIST CHURCH
146	25	AYERS FAMILY LIMITED PARTNERSHIP
147	25	GAS TOWN INCORPORATED
148		NOT USED
149		NOT USED
150	25	HAROLD E. GILLIAM, JR.
151	25	PERRY LEE GILMER
152	25	LEE H. SPRECKER
152A	25	CURTIS R. & CLARA B. HOLMES
153	25, 26	KYLE R. HORNADAY AND WHITNEY DENNIS
154	25, 26	GAS TOWN INC.
155	26	STEVEN W. GAULDEN
156	26	TOWN OF SUMMERFIELD
157	26	TAFT C. HOLBROOK HEIRS
158	26	NOT USED
159	26	KATHY G. & RANDY B. HOLT
160	26	RANDY GRAVELY
161	26	SUMMERFIELD BAPTIST TEMPLE, INC
162	26	EVERET C. & RACHEL H. BARHAM

PARCEL No.	SHEET No.	PROPERTY OWNER NAME

PROJECT REFERENCE NO.	SHEET NO.
R-2309AB	4
R/W SHEET NO.	
ROADWAY DESIGN ENGINEER	HYDRAULICS ENGINEER
NORTH CAROLINA PROFESSIONAL SEAL 16689 ENGINEER BRIAN ALLEN WILES 10/3/11	NORTH CAROLINA PROFESSIONAL SEAL 19732 ENGINEER SHIHCHEN FUHT 10-03-2011

Florence & Hutcheson
CONSULTING ENGINEERS
5121 Kingdom Way, Suite 100 Raleigh, NC 27607
NC License No: F-0258

-Y- CURVE DATA

PI Sta 5+28.21	PIs Sta 13+06.90	PI Sta 13+85.17	PIs Sta 14+63.27
Δ = 24° 41' 09.4" (LT)	Θs = 5° 37' 02.0"	Δ = 10° 04' 43.5" (RT)	Θs = 5° 37' 02.0"
D = 11° 27' 33.0"	Ls = 100.00'	D = 11° 14' 04.1"	Ls = 100.00'
L = 215.43'	LT = 66.70'	L = 89.71'	LT = 66.70'
T = 109.41'	ST = 33.36'	T = 44.97'	ST = 33.36'
R = 500.00'		R = 510.00'	

-L- CURVE DATA

PIs Sta 15+41.77	PI Sta 21+95.08	PIs Sta 28+38.24
Θs = 0° 43' 47.6"	Δ = 17° 57' 08.2" (RT)	Θs = 0° 43' 47.6"
Ls = 100.00'	D = 1° 27' 35.2"	Ls = 100.00'
LT = 66.67'	L = 1,229.81'	LT = 66.67'
ST = 33.33'	T = 619.98'	ST = 33.33'
	R = 3,925.00'	

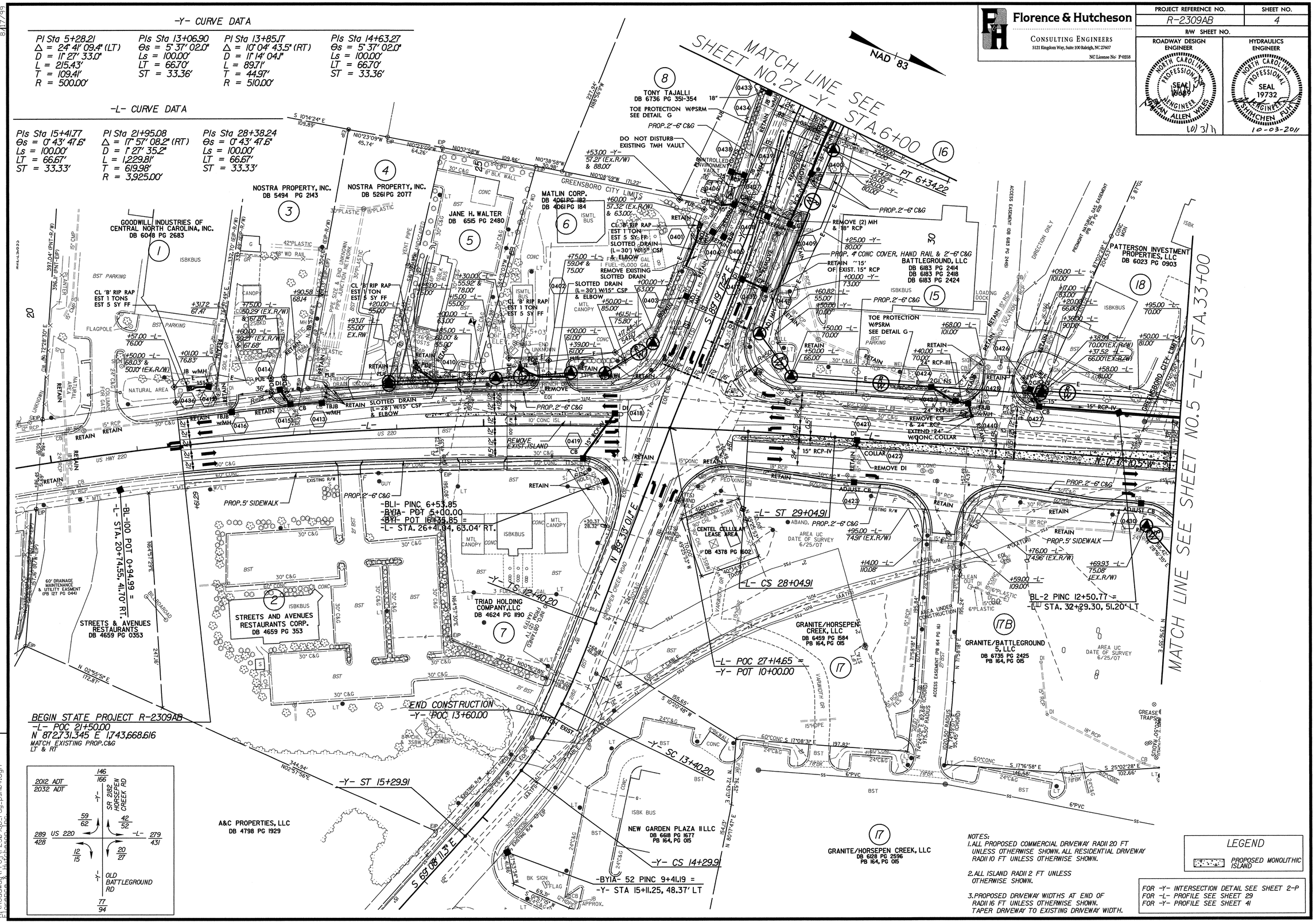

NOTES:
1. ALL PROPOSED COMMERCIAL DRIVEWAY RADII 20 FT UNLESS OTHERWISE SHOWN. ALL RESIDENTIAL DRIVEWAY RADII 10 FT UNLESS OTHERWISE SHOWN.
2. ALL ISLAND RADII 2 FT UNLESS OTHERWISE SHOWN.
3. PROPOSED DRIVEWAY WIDTHS AT END OF RADII 16 FT UNLESS OTHERWISE SHOWN. TAPER DRIVEWAY TO EXISTING DRIVEWAY WIDTH.

LEGEND
PROPOSED MONOLITHIC ISLAND

FOR -Y- INTERSECTION DETAIL SEE SHEET 2-P
FOR -L- PROFILE SEE SHEET 29
FOR -Y- PROFILE SEE SHEET 41

REVISIONS

8/17/99

10/1/2011
R:\Roadway\Proj\r-2309ab_rdy_psh04.dgn
Florence & Hutcheson, Inc.

PROJECT REFERENCE NO.	SHEET NO.
R-2309AB	5
R/W SHEET NO.	
ROADWAY DESIGN ENGINEER	HYDRAULICS ENGINEER
NORTH CAROLINA PROFESSIONAL SEAL 18689 ENGINEER BRIAN ALLEN WILES 11/28/11	NORTH CAROLINA PROFESSIONAL SEAL 19732 ENGINEER SHIHCHEN FUH 11-28-2011

Florence & Hutcheson
CONSULTING ENGINEERS
5121 Kingdom Way, Suite 100 Raleigh, NC 27607
NC License No: F-0258

-L- CURVE DATA

PI Sta 37+18.88
Δ = 0° 51' 23.9" (RT)
D = 0° 34' 22.6"
L = 149.51'
T = 74.76'
R = 10,000.00'
SE = NORMAL CROWN
V = 50 MPH

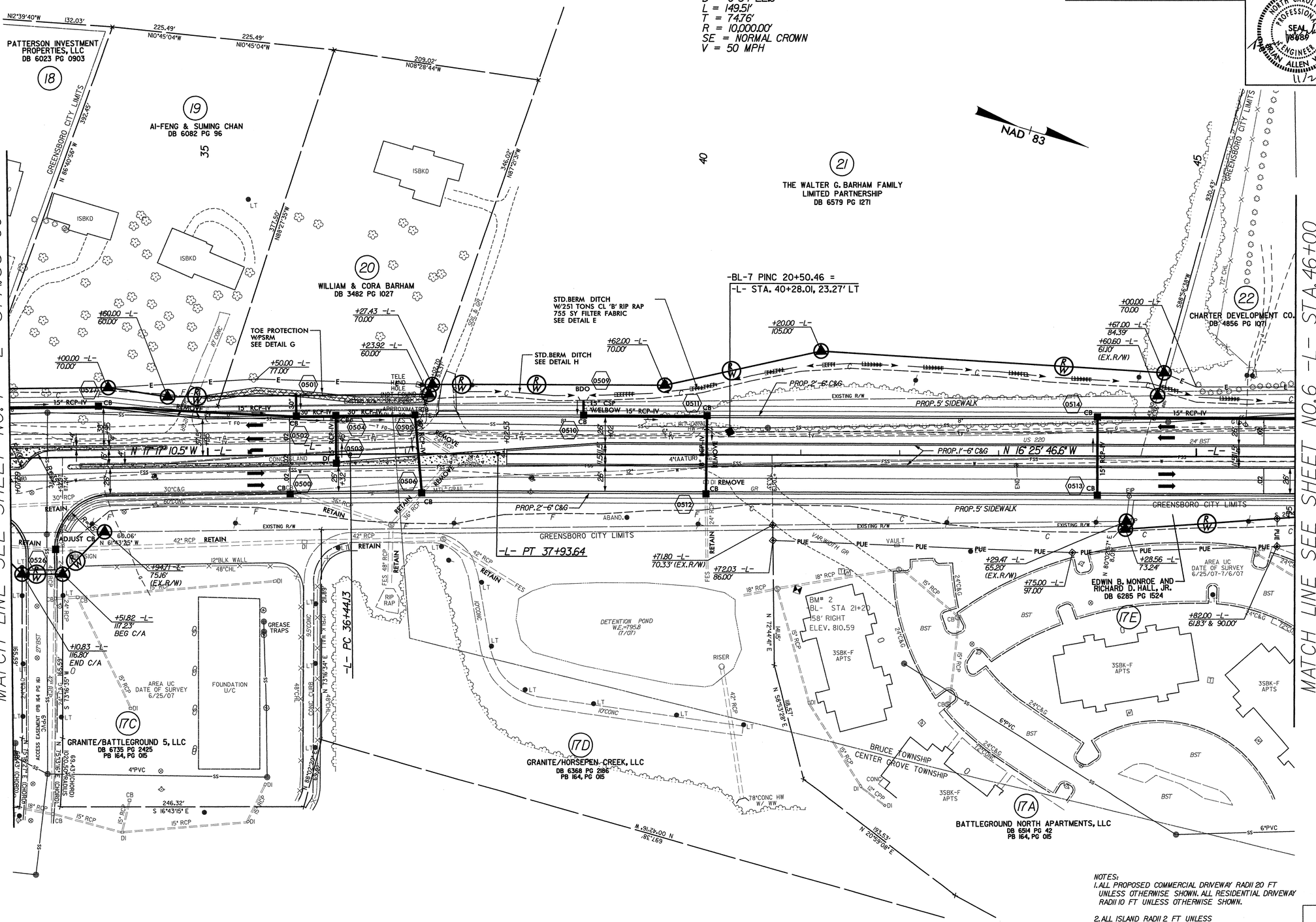

NOTES:
1. ALL PROPOSED COMMERCIAL DRIVEWAY RADII 20 FT UNLESS OTHERWISE SHOWN. ALL RESIDENTIAL DRIVEWAY RADII 10 FT UNLESS OTHERWISE SHOWN.
2. ALL ISLAND RADII 2 FT UNLESS OTHERWISE SHOWN.
3. PROPOSED DRIVEWAY WIDTHS AT END OF RADII 16 FT UNLESS OTHERWISE SHOWN. TAPER DRIVEWAY TO EXISTING DRIVEWAY WIDTH.

LEGEND
PROPOSED MONOLITHIC ISLAND

FOR -L- PROFILE SEE SHEET 29

REVISIONS

8/17/99

11/28/2011
R:\Roadway\Proj\r2309ab_rdy_psh05.dgn
Florence & Hutcheson, Inc.

Florence & Hutcheson
CONSULTING ENGINEERS
5121 Kingsdom Way, Suite 100 Raleigh, NC 27607
NC License No: F-0258

PROJECT REFERENCE NO.	SHEET NO.
R-2309AB	6
R/W SHEET NO.	
ROADWAY DESIGN ENGINEER	HYDRAULICS ENGINEER
NORTH CAROLINA PROFESSIONAL SEAL 16689 ENGINEER JORDAN ALLEN WILES 9/28/11	NORTH CAROLINA PROFESSIONAL SEAL 19732 ENGINEER SHIHCHEN FUH 9-28-2011

REVISIONS

8/17/99

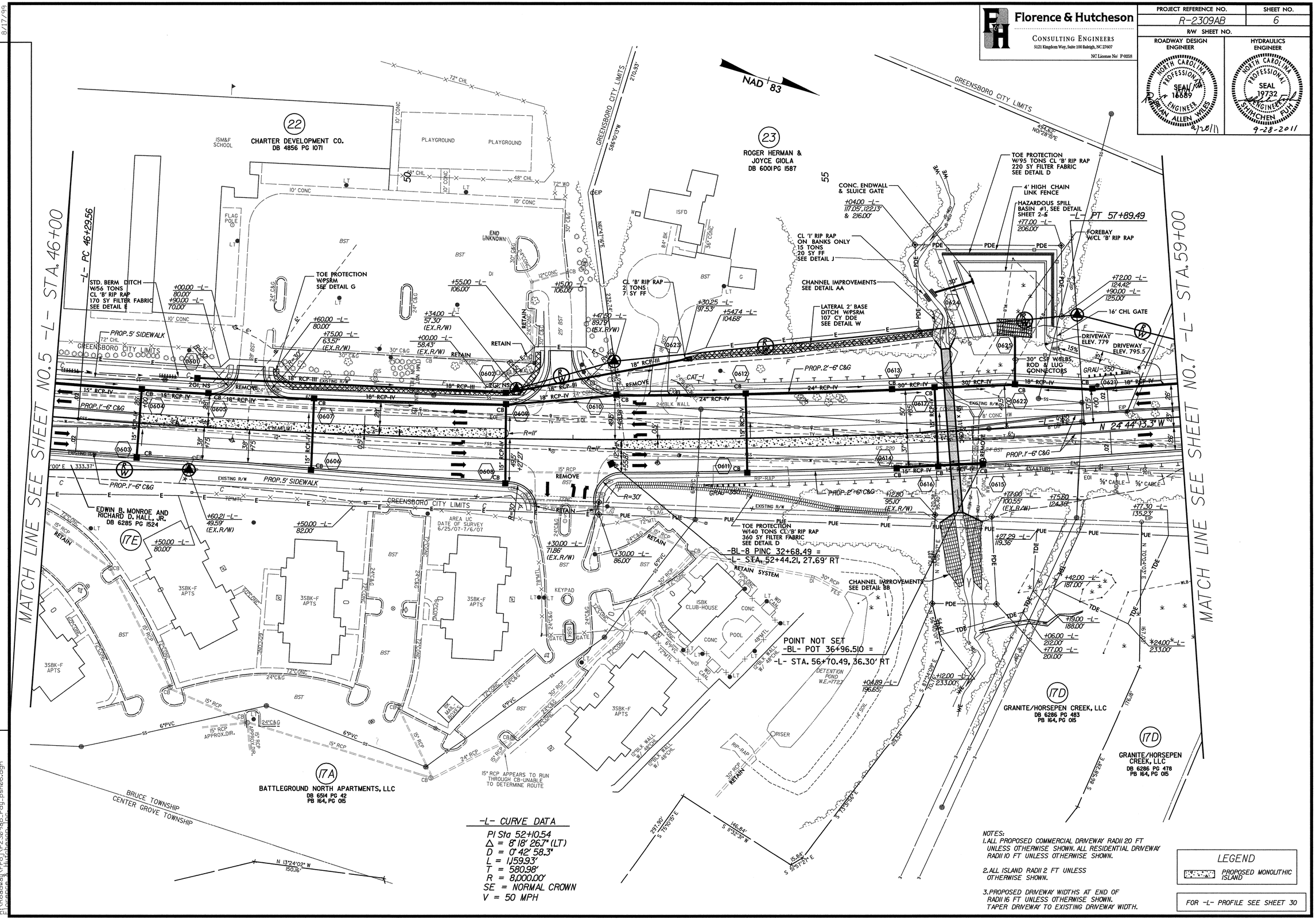

-L- CURVE DATA

PI Sta 52+10.54
Δ = 8° 18' 26.7" (LT)
D = 0° 42' 58.3"
L = 1,159.93'
T = 580.98'
R = 8,000.00'
SE = NORMAL CROWN
V = 50 MPH

NOTES:
1. ALL PROPOSED COMMERCIAL DRIVEWAY RADII 20 FT UNLESS OTHERWISE SHOWN. ALL RESIDENTIAL DRIVEWAY RADII 10 FT UNLESS OTHERWISE SHOWN.
2. ALL ISLAND RADII 2 FT UNLESS OTHERWISE SHOWN.
3. PROPOSED DRIVEWAY WIDTHS AT END OF RADII 16 FT UNLESS OTHERWISE SHOWN. TAPER DRIVEWAY TO EXISTING DRIVEWAY WIDTH.

LEGEND
PROPOSED MONOLITHIC ISLAND

FOR -L- PROFILE SEE SHEET 30

9/6/2011
R:\Roadway\Proj\r2309ab_rdy_psh06.dgn
Florence & Hutcheson, Inc.

PROJECT REFERENCE NO.	SHEET NO.
R-2309AB	7
R/W SHEET NO.	

Florence & Hutcheson
CONSULTING ENGINEERS
5121 Kingdom Way, Suite 100 Raleigh, NC 27607
NC License No: F-0258

ROADWAY DESIGN ENGINEER — NORTH CAROLINA PROFESSIONAL SEAL 19669 ENGINEER BRIAN ALLEN WILES — 11/28/11

HYDRAULICS ENGINEER — NORTH CAROLINA PROFESSIONAL SEAL 19732 ENGINEER SHIHCHEN FUH — 9-28-2011

REVISIONS

8/17/99

-Y1- CURVE DATA

PI Sta 8+28.31	PI Sta 12+98.14
Δ = 14° 43' 40.6" (LT)	Δ = 9° 06' 24.1" (LT)
D = 28° 38' 52.4"	D = 15° 04' 40.2"
L = 51.41'	L = 60.40'
T = 25.85'	T = 30.26'
R = 200.00'	R = 380.00'

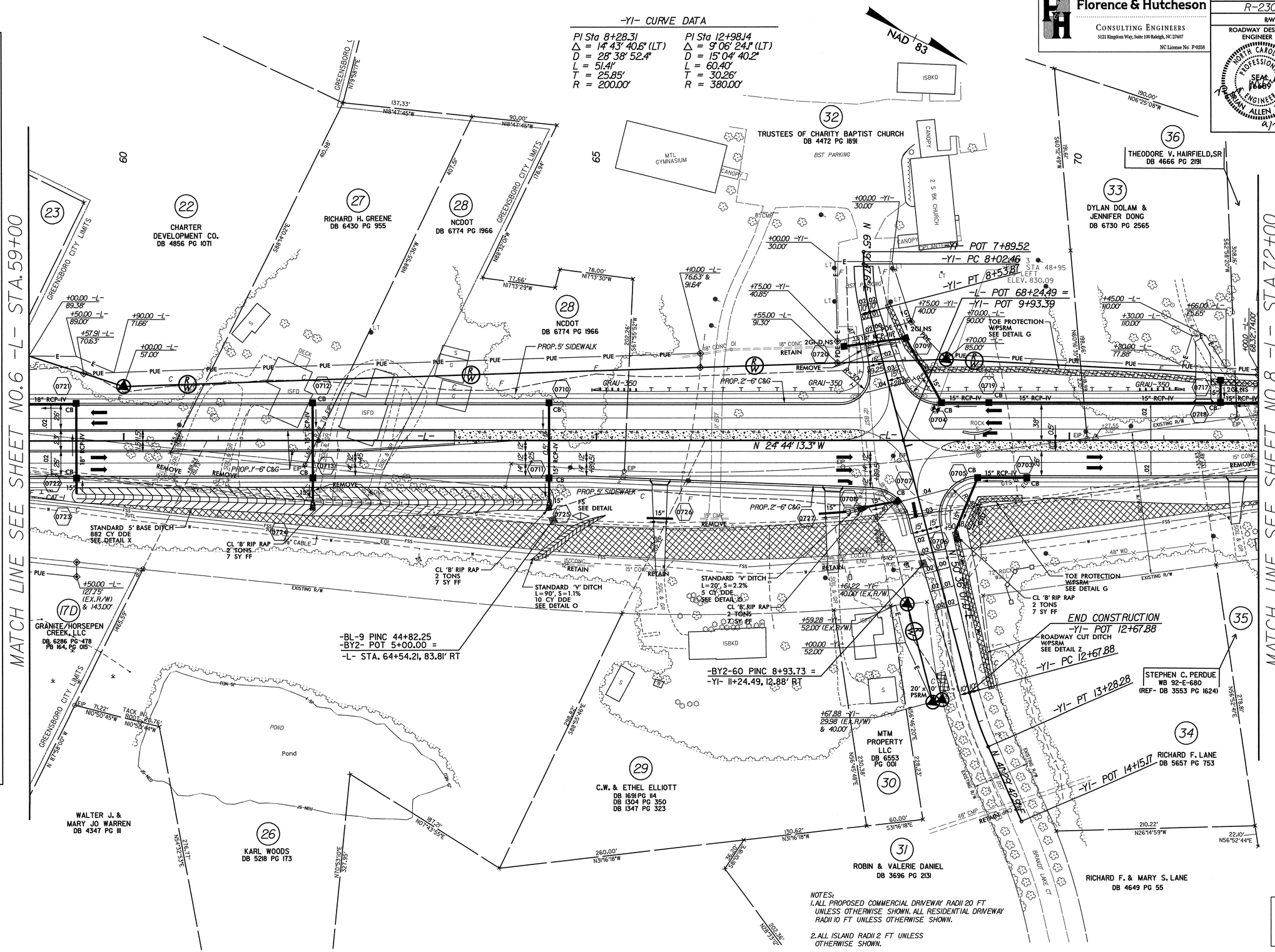

NOTES:
1. ALL PROPOSED COMMERCIAL DRIVEWAY RADII 20 FT UNLESS OTHERWISE SHOWN. ALL RESIDENTIAL DRIVEWAY RADII 10 FT UNLESS OTHERWISE SHOWN.
2. ALL ISLAND RADII 2 FT UNLESS OTHERWISE SHOWN.
3. PROPOSED DRIVEWAY WIDTHS AT END OF RADII 16 FT UNLESS OTHERWISE SHOWN. TAPER DRIVEWAY TO EXISTING DRIVEWAY WIDTH.

LEGEND
- PAVEMENT REMOVAL
- PROPOSED MONOLITHIC ISLAND

FOR -Y1- INTERSECTION DETAIL SEE SHEET 2-Q
FOR -L- PROFILE SEE SHEET 30
FOR -Y1- PROFILE SEE SHEET 41

7/29/2011
R:\Roadway\Proj\r2309ab_rdy_psh07.dgn
Florence & Hutcheson, Inc.

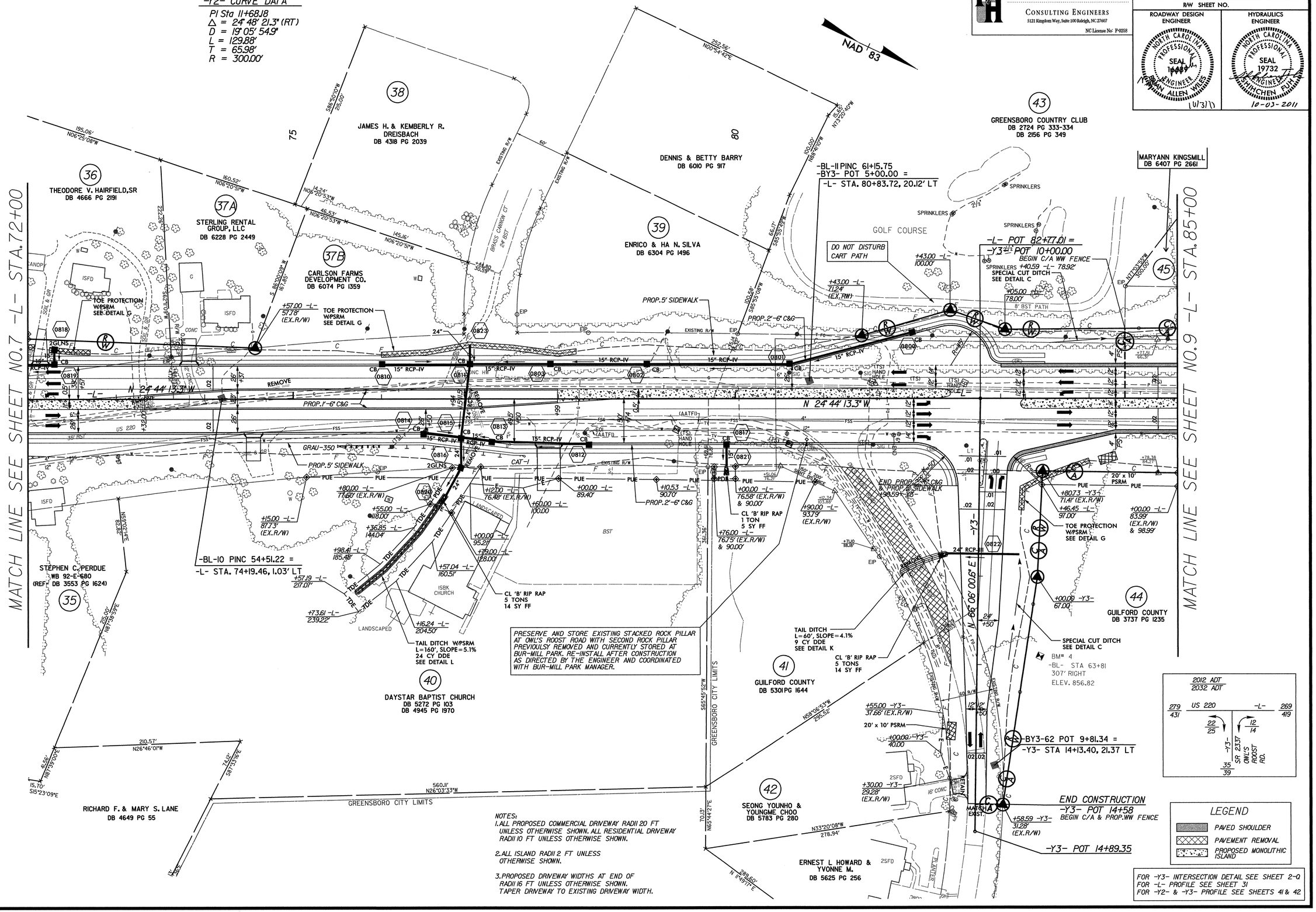

Florence & Hutcheson
CONSULTING ENGINEERS
5121 Kingdom Way, Suite 100 Raleigh, NC 27607
NC License No: F-0258
PROJECT REFERENCE NO.
R-2309AB
SHEET NO.
8
R/W SHEET NO.
ROADWAY DESIGN ENGINEER
HYDRAULICS ENGINEER
NORTH CAROLINA PROFESSIONAL SEAL 16089 ENGINEER BRIAN ALLEN WILES
NORTH CAROLINA PROFESSIONAL SEAL 19732 ENGINEER SHIHCHEN FUH
10-03-2011
-Y2- CURVE DATA
PI Sta 11+68.18
Δ = 24° 48' 21.3" (RT)
D = 19° 05' 54.9"
L = 129.88'
T = 65.98'
R = 300.00'
NAD 83
MATCH LINE SEE SHEET NO.7 -L- STA.72+00
MATCH LINE SEE SHEET NO.9 -L- STA.85+00
36 THEODORE V. HAIRFIELD,SR DB 4666 PG 2191
37A STERLING RENTAL GROUP, LLC DB 6228 PG 2449
37B CARLSON FARMS DEVELOPMENT CO. DB 6074 PG 1359
38 JAMES H. & KEMBERLY R. DREISBACH DB 4318 PG 2039
39 ENRICO & HA N. SILVA DB 6304 PG 1496
DENNIS & BETTY BARRY DB 6010 PG 917
43 GREENSBORO COUNTRY CLUB DB 2724 PG 333-334 DB 2156 PG 349
MARYANN KINGSMILL DB 6407 PG 2661
45
-BL-11 PINC 61+15.75
-BY3- POT 5+00.00 =
-L- STA. 80+83.72, 20.12' LT
GOLF COURSE
DO NOT DISTURB CART PATH
-L- POT 82+77.01 =
-Y3- POT 10+00.00
BEGIN C/A WW FENCE
SPECIAL CUT DITCH SEE DETAIL C
TOE PROTECTION W/PSRM SEE DETAIL G
PROP.5' SIDEWALK
PROP.2'-6" C&G
PROP.1'-6" C&G
N 24° 44' 13.3" W
REMOVE
15" RCP-IV
GRAU-350
CAT-1
-BL-10 PINC 54+51.22 =
-L- STA. 74+19.46, 1.03' LT
STEPHEN C. PERDUE WB 92-E-680 (REF: DB 3553 PG 1624)
35
40 DAYSTAR BAPTIST CHURCH DB 5272 PG 103 DB 4945 PG 1970
CL 'B' RIP RAP 5 TONS 14 SY FF
TAIL DITCH W/PSRM L=160', SLOPE=5.1% 24 CY DDE SEE DETAIL L
PRESERVE AND STORE EXISTING STACKED ROCK PILLAR AT OWL'S ROOST ROAD WITH SECOND ROCK PILLAR PREVIOULSY REMOVED AND CURRENTLY STORED AT BUR-MILL PARK. RE-INSTALL AFTER CONSTRUCTION AS DIRECTED BY THE ENGINEER AND COORDINATED WITH BUR-MILL PARK MANAGER.
41 GUILFORD COUNTY DB 5301 PG 1644
TAIL DITCH L=60', SLOPE=4.1% 9 CY DDE SEE DETAIL K
CL 'B' RIP RAP 5 TONS 14 SY FF
END PROP.2'-6" C&G & PROP.5' SIDEWALK
44 GUILFORD COUNTY DB 3737 PG 1235
SPECIAL CUT DITCH SEE DETAIL C
BM# 4 -BL- STA 63+81 307' RIGHT ELEV. 856.82
-BY3-62 POT 9+81.34 =
-Y3- STA 14+13.40, 21.37 LT
END CONSTRUCTION
-Y3- POT 14+58
BEGIN C/A & PROP.WW FENCE
-Y3- POT 14+89.35
42 SEONG YOUNHO & YOUNGME CHOO DB 5783 PG 280
ERNEST L HOWARD & YVONNE M. DB 5625 PG 256
RICHARD F. & MARY S. LANE DB 4649 PG 55
GREENSBORO CITY LIMITS
2012 ADT
2032 ADT
US 220
SR 2337 OWL'S ROOST RD.
LEGEND
PAVED SHOULDER
PAVEMENT REMOVAL
PROPOSED MONOLITHIC ISLAND
FOR -Y3- INTERSECTION DETAIL SEE SHEET 2-Q
FOR -L- PROFILE SEE SHEET 31
FOR -Y2- & -Y3- PROFILE SEE SHEETS 41 & 42
NOTES:
1. ALL PROPOSED COMMERCIAL DRIVEWAY RADII 20 FT UNLESS OTHERWISE SHOWN. ALL RESIDENTIAL DRIVEWAY RADII 10 FT UNLESS OTHERWISE SHOWN.
2. ALL ISLAND RADII 2 FT UNLESS OTHERWISE SHOWN.
3. PROPOSED DRIVEWAY WIDTHS AT END OF RADII 16 FT UNLESS OTHERWISE SHOWN. TAPER DRIVEWAY TO EXISTING DRIVEWAY WIDTH.
REVISIONS
8/17/99
10/3/2011

Florence & Hutcheson
CONSULTING ENGINEERS
5121 Kingsdown Way, Suite 100 Raleigh, NC 27607
NC License No: F-0258

PROJECT REFERENCE NO.	SHEET NO.
R-2309AB	9
R/W SHEET NO.	
ROADWAY DESIGN ENGINEER	HYDRAULICS ENGINEER
NORTH CAROLINA PROFESSIONAL SEAL 11689 ENGINEER BRIAN ALLEN WILES 11-28-11	NORTH CAROLINA PROFESSIONAL SEAL 19732 ENGINEER SHIHCHEN FUH 11-28-2011

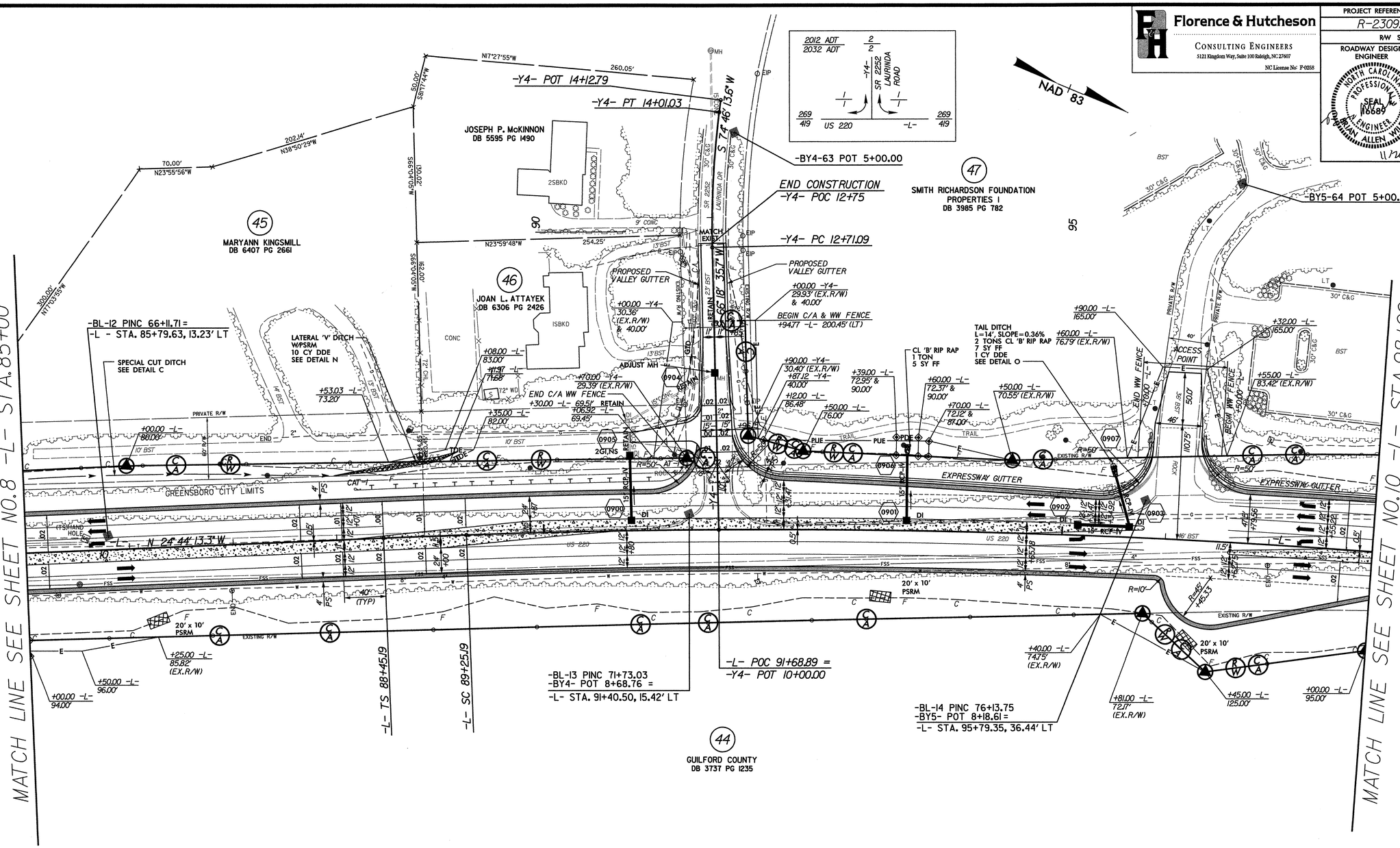

-L- CURVE DATA

PIs Sta 88+98.52	PI Sta 97+15.72	PIs Sta 105+27.81
Θs = 0°17' 11.3"	Δ = 11°17' 13.0" (RT)	Θs = 0°17' 11.3"
Ls = 80.00'	D = 0°42' 58.3"	Ls = 80.00'
LT = 53.33'	L = 1,575.96'	LT = 53.33'
ST = 26.67'	T = 790.54'	ST = 26.67'
	R = 8,000.00'	
	SE = 0.02	
	RUNOFF = SEE PLANS	
	V = 60 MPH	

-Y4- CURVE DATA

PI Sta 13+36.18
Δ = 8°27' 37.9" (RT)
D = 6°30' 39.2"
L = 129.94'
T = 65.09'
R = 880.00'

NOTES:
1. ALL PROPOSED COMMERCIAL DRIVEWAY RADII 20 FT UNLESS OTHERWISE SHOWN. ALL RESIDENTIAL DRIVEWAY RADII 10 FT UNLESS OTHERWISE SHOWN.
2. ALL ISLAND RADII 2 FT UNLESS OTHERWISE SHOWN.
3. PROPOSED DRIVEWAY WIDTHS AT END OF RADII 16 FT UNLESS OTHERWISE SHOWN. TAPER DRIVEWAY TO EXISTING DRIVEWAY WIDTH.

LEGEND
PAVED SHOULDER
PROPOSED MONOLITHIC ISLAND

FOR -L- PROFILE SEE SHEET 31
FOR -Y4- PROFILE SEE SHEET 42

REVISIONS

8/17/99

11/28/2011
R:\Roadway\Proj\r2309ab_rdy_psh09.dgn
Florence & Hutcheson, Inc.

PROJECT REFERENCE NO.	SHEET NO.
R-2309AB	10
R/W SHEET NO.	
ROADWAY DESIGN ENGINEER	HYDRAULICS ENGINEER
NORTH CAROLINA PROFESSIONAL SEAL 16689 ENGINEER RYAN ALLEN WILES 9/28/11	NORTH CAROLINA PROFESSIONAL SEAL 19732 ENGINEER SHIHCHEN FUH 9-28-2011

Florence & Hutcheson
CONSULTING ENGINEERS
5121 Kingdom Way, Suite 100 Raleigh, NC 27607
NC License No: F-0258

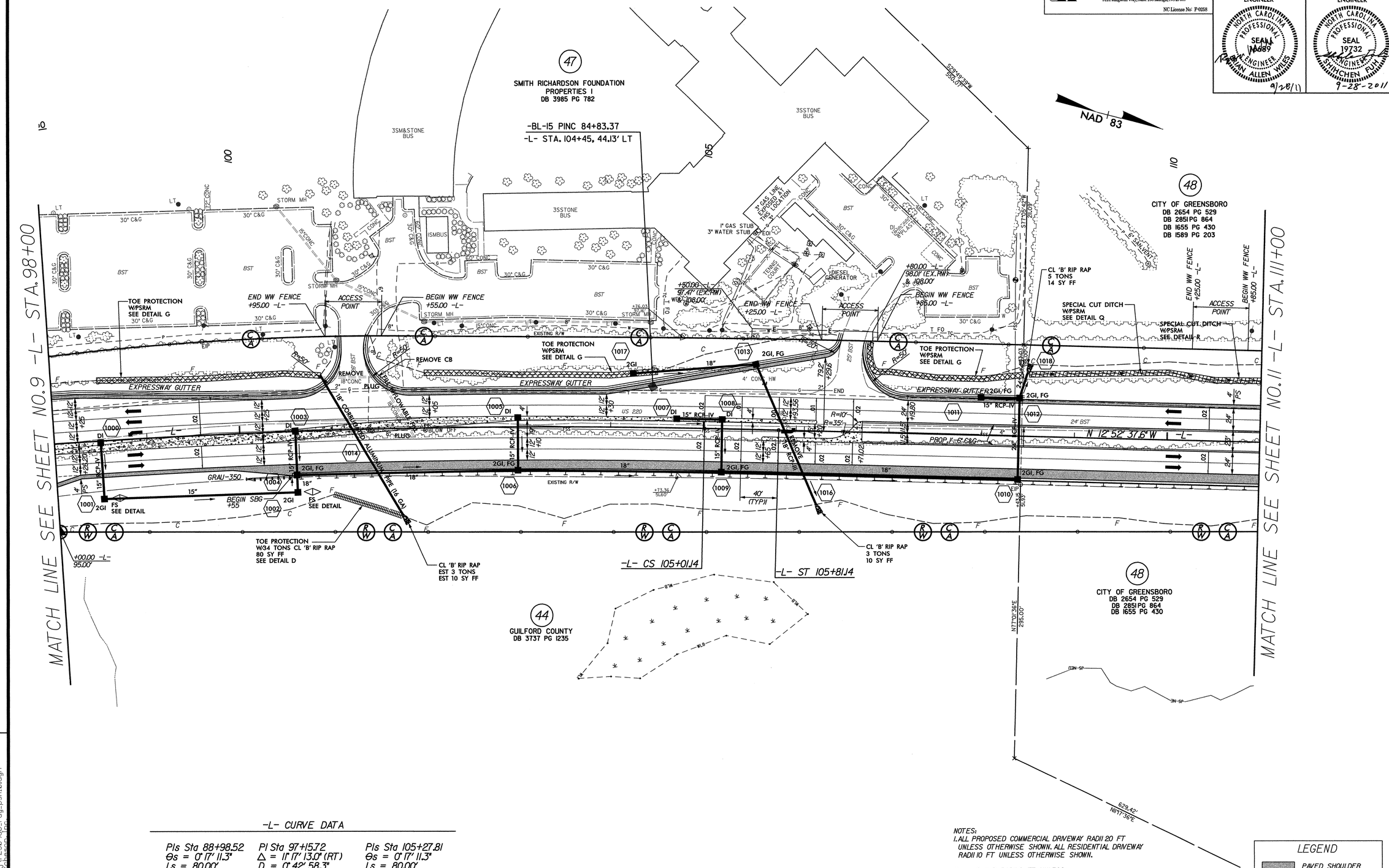

-L- CURVE DATA

PIs Sta 88+98.52	PI Sta 97+15.72	PIs Sta 105+27.81
Θs = 0°17'11.3"	Δ = 11°17'13.0" (RT)	Θs = 0°17'11.3"
Ls = 80.00'	D = 0°42'58.3"	Ls = 80.00'
LT = 53.33'	L = 1,575.96'	LT = 53.33'
ST = 26.67'	T = 790.54'	ST = 26.67'
	R = 8,000.00'	
	SE = 0.02	
	RUNOFF = SEE PLANS	
	V = 60 MPH	

NOTES:
1. ALL PROPOSED COMMERCIAL DRIVEWAY RADII 20 FT UNLESS OTHERWISE SHOWN. ALL RESIDENTIAL DRIVEWAY RADII 10 FT UNLESS OTHERWISE SHOWN.
2. ALL ISLAND RADII 2 FT UNLESS OTHERWISE SHOWN.
3. PROPOSED DRIVEWAY WIDTHS AT END OF RADII 16 FT UNLESS OTHERWISE SHOWN. TAPER DRIVEWAY TO EXISTING DRIVEWAY WIDTH.

LEGEND
PAVED SHOULDER
PROPOSED MONOLITHIC ISLAND

FOR -L- PROFILE SEE SHEET 32

REVISIONS

8/17/99

9/28/2011
R:\Roadway\Proj\r2309ab_rdy_psh10.dgn
Florence & Hutcheson, Inc.

PROJECT REFERENCE NO.	SHEET NO.
R-2309AB	11
R/W SHEET NO.	
ROADWAY DESIGN ENGINEER	HYDRAULICS ENGINEER
NORTH CAROLINA PROFESSIONAL SEAL 16689 ENGINEER BRIAN ALLEN WILES 10/10/11	NORTH CAROLINA PROFESSIONAL SEAL 19732 ENGINEER SHIHCHEN FUH 10-10-2011

Florence & Hutcheson
CONSULTING ENGINEERS
5121 Kingdom Way, Suite 100 Raleigh, NC 27607
NC License No: F-0258

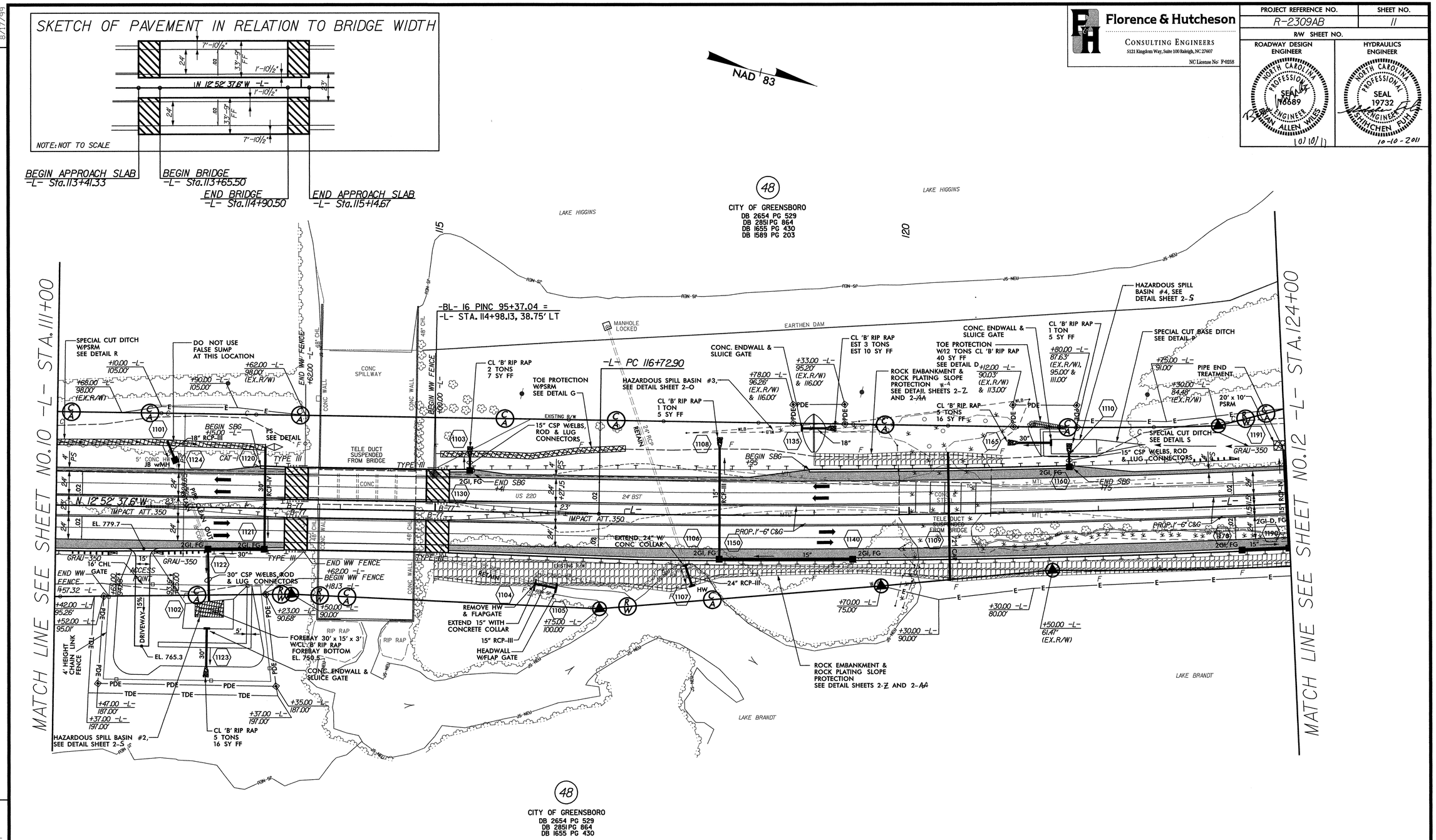

-L- CURVE DATA

PI Sta 124+10.48
Δ = 7° 02' 04.3" (LT)
D = 0° 28' 38.9"
L = 1,473.31'
T = 737.58'
R = 12,000.00'
SE = NORMAL CROWN
V = 60 MPH

NOTES:
1. ALL PROPOSED COMMERCIAL DRIVEWAY RADII 20 FT UNLESS OTHERWISE SHOWN. ALL RESIDENTIAL DRIVEWAY RADII 10 FT UNLESS OTHERWISE SHOWN.
2. ALL ISLAND RADII 2 FT UNLESS OTHERWISE SHOWN.
3. PROPOSED DRIVEWAY WIDTHS AT END OF RADII 16 FT UNLESS OTHERWISE SHOWN. TAPER DRIVEWAY TO EXISTING DRIVEWAY WIDTH.

LEGEND
- PAVED SHOULDER
- APPROACH SLAB
- PROPOSED MONOLITHIC ISLAND

FOR -L- PROFILE SEE SHEET 32

REVISIONS

8/17/99

10/10/2011
R:\Roadway\Proj\r2309ab_rdy_psh11.dgn
Florence & Hutcheson, Inc.

PROJECT REFERENCE NO.	SHEET NO.
R-2309AB	12
R/W SHEET NO.	
ROADWAY DESIGN ENGINEER	HYDRAULICS ENGINEER

Florence & Hutcheson
CONSULTING ENGINEERS
5121 Kingdom Way, Suite 100 Raleigh, NC 27607
NC License No: F-0258

NORTH CAROLINA PROFESSIONAL SEAL 19689 ENGINEER BRIAN ALLEN WILES 10/27/11

NORTH CAROLINA PROFESSIONAL SEAL 19732 ENGINEER SHIHCHEN FUH 10-27-2011

REVISIONS

8/17/99

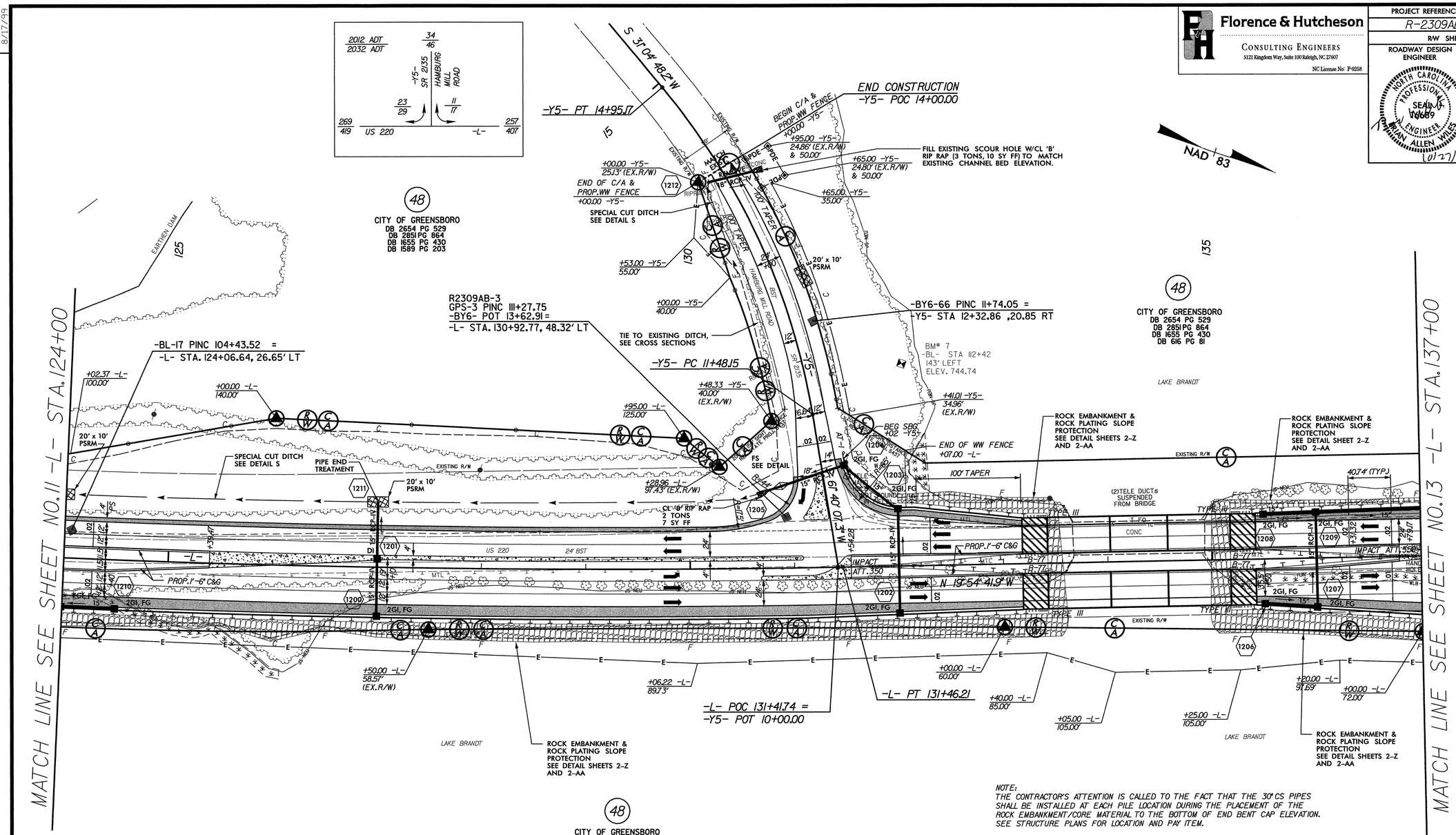

NOTE:
THE CONTRACTOR'S ATTENTION IS CALLED TO THE FACT THAT THE 30" CS PIPES SHALL BE INSTALLED AT EACH PILE LOCATION DURING THE PLACEMENT OF THE ROCK EMBANKMENT/CORE MATERIAL TO THE BOTTOM OF END BENT CAP ELEVATION. SEE STRUCTURE PLANS FOR LOCATION AND PAY ITEM.

SKETCH OF PAVEMENT IN RELATION TO BRIDGE WIDTH

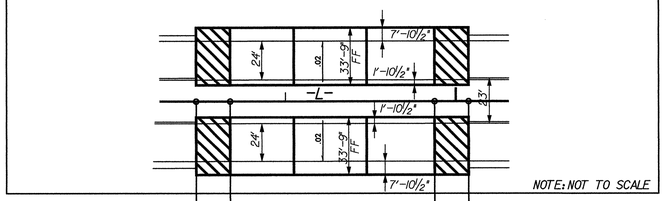

BEGIN APPROACH SLAB
-L- Sta.133+18.33

BEGIN BRIDGE
-L- Sta.133+42.50

END BRIDGE
-L- Sta.135+17.50

END APPROACH SLAB
-L- Sta.135+41.67

-L- CURVE DATA

PI Sta 124+10.48
Δ = 7° 02' 04.3" (LT)
D = 0° 28' 38.9"
L = 1,473.31'
T = 737.58'
R = 12,000.00'
SE = NORMAL CROWN
V = 60 MPH

-Y5- CURVE DATA

PI Sta 13+25.90
Δ = 30° 35' 19.1" (LT)
D = 8° 48' 53.0"
L = 347.02'
T = 177.75'
R = 650.00'

NOTES:
1. ALL PROPOSED COMMERCIAL DRIVEWAY RADII 20 FT UNLESS OTHERWISE SHOWN. ALL RESIDENTIAL DRIVEWAY RADII 10 FT UNLESS OTHERWISE SHOWN.
2. ALL ISLAND RADII 2 FT UNLESS OTHERWISE SHOWN.
3. PROPOSED DRIVEWAY WIDTHS AT END OF RADII 16 FT UNLESS OTHERWISE SHOWN. TAPER DRIVEWAY TO EXISTING DRIVEWAY WIDTH.

LEGEND
- PAVED SHOULDER
- APPROACH SLAB
- PROPOSED MONOLITHIC ISLAND

FOR -Y5- INTERSECTION DETAIL SEE SHEET 2-R
FOR -L- PROFILE SEE SHEET 33
FOR -Y5- PROFILE SEE SHEET 42

10/27/2011
pt:\Roadway\Proj\r2309ab_rdy_psh12.dgn
Florence & Hutcheson, Inc.

8/17/99

REVISIONS

Florence & Hutcheson
CONSULTING ENGINEERS
5121 Kingdom Way, Suite 100 Raleigh, NC 27607
NC License No: F-0258

PROJECT REFERENCE NO.	SHEET NO.
R-2309AB	13
R/W SHEET NO.	
ROADWAY DESIGN ENGINEER	HYDRAULICS ENGINEER

NORTH CAROLINA PROFESSIONAL SEAL 10889 ENGINEER BRIAN ALLEN WILKES 10/3/11

NORTH CAROLINA PROFESSIONAL SEAL 19732 ENGINEER SHIHCHEN FUH 10-03-2011

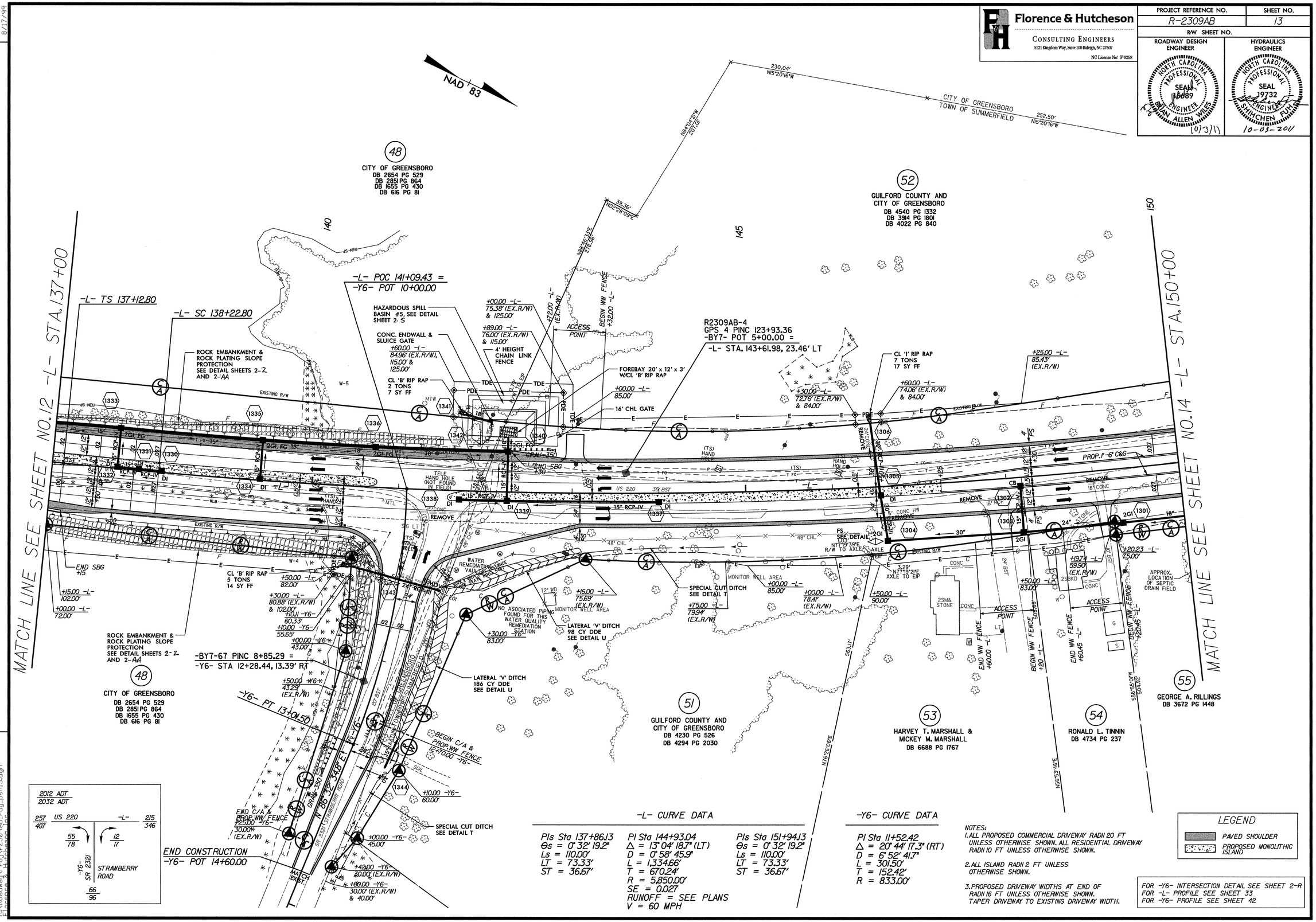

-L- CURVE DATA

PIs Sta 137+86.13	PI Sta 144+93.04	PIs Sta 151+94.13
Θs = 0° 32' 19.2"	Δ = 13° 04' 18.7" (LT)	Θs = 0° 32' 19.2"
Ls = 110.00'	D = 0° 58' 45.9"	Ls = 110.00'
LT = 73.33'	L = 1,334.66'	LT = 73.33'
ST = 36.67'	T = 670.24'	ST = 36.67'
	R = 5,850.00'	
	SE = 0.027	
	RUNOFF = SEE PLANS	
	V = 60 MPH	

-Y6- CURVE DATA

PI Sta 11+52.42
Δ = 20° 44' 17.3" (RT)
D = 6° 52' 41.7"
L = 301.50'
T = 152.42'
R = 833.00'

NOTES:
1. ALL PROPOSED COMMERCIAL DRIVEWAY RADII 20 FT UNLESS OTHERWISE SHOWN. ALL RESIDENTIAL DRIVEWAY RADII 10 FT UNLESS OTHERWISE SHOWN.
2. ALL ISLAND RADII 2 FT UNLESS OTHERWISE SHOWN.
3. PROPOSED DRIVEWAY WIDTHS AT END OF RADII 16 FT UNLESS OTHERWISE SHOWN. TAPER DRIVEWAY TO EXISTING DRIVEWAY WIDTH.

LEGEND
PAVED SHOULDER
PROPOSED MONOLITHIC ISLAND

FOR -Y6- INTERSECTION DETAIL SEE SHEET 2-R
FOR -L- PROFILE SEE SHEET 33
FOR -Y6- PROFILE SEE SHEET 42

10/12/2011
H:\Roadway\Proj\r2309ab_rdy_psh13.dgn

PROJECT REFERENCE NO.	SHEET NO.
R-2309AB	14
R/W SHEET NO.	
ROADWAY DESIGN ENGINEER	HYDRAULICS ENGINEER

Florence & Hutcheson
CONSULTING ENGINEERS
5121 Kingdom Way, Suite 100 Raleigh, NC 27607
NC License No: F-0258

NORTH CAROLINA PROFESSIONAL SEAL 16689 ENGINEER ADRIAN ALLEN WILES 9/28/11

NORTH CAROLINA PROFESSIONAL SEAL 19732 ENGINEER SHIHCHEN FUH 9-28-2011

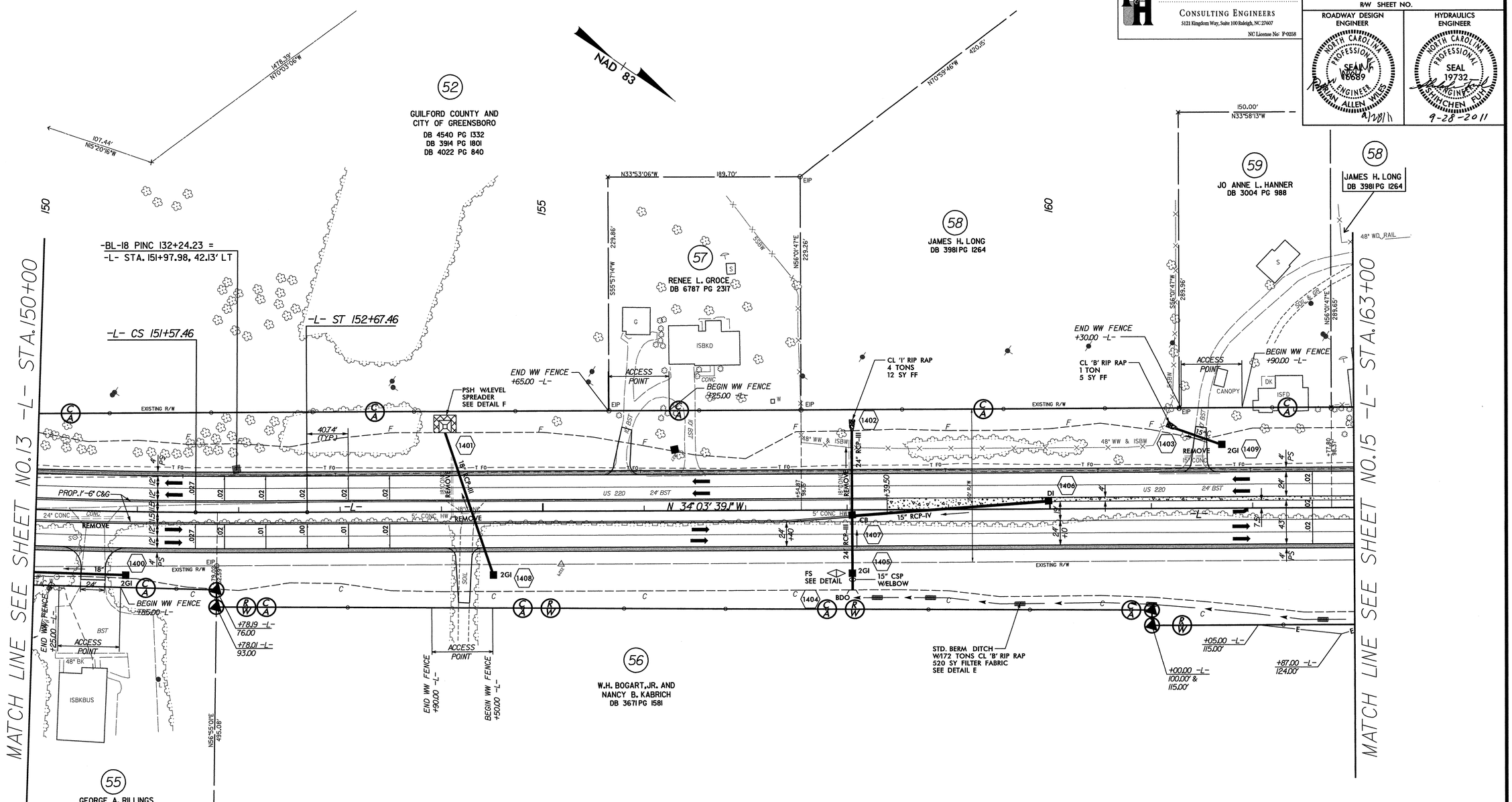

-L- CURVE DATA

PIs Sta 137+86.13	PI Sta 144+93.04	PIs Sta 151+94.13
Θs = 0° 32' 19.2"	Δ = 13° 04' 18.7" (LT)	Θs = 0° 32' 19.2"
Ls = 110.00'	D = 0° 58' 45.9"	Ls = 110.00'
LT = 73.33'	L = 1,334.66'	LT = 73.33'
ST = 36.67'	T = 670.24'	ST = 36.67'
	R = 5,800.00'	
	SE = 0.027	
	RUNOFF = SEE PLANS	
	V = 60 MPH	

NOTES:
1. ALL PROPOSED COMMERCIAL DRIVEWAY RADII 20 FT UNLESS OTHERWISE SHOWN. ALL RESIDENTIAL DRIVEWAY RADII 10 FT UNLESS OTHERWISE SHOWN.
2. ALL ISLAND RADII 2 FT UNLESS OTHERWISE SHOWN.
3. PROPOSED DRIVEWAY WIDTHS AT END OF RADII 16 FT UNLESS OTHERWISE SHOWN. TAPER DRIVEWAY TO EXISTING DRIVEWAY WIDTH.

LEGEND
PAVED SHOULDER
PROPOSED MONOLITHIC ISLAND

FOR -L- PROFILE SEE SHEET 34

REVISIONS

8/17/99

7/29/2011
R:\Roadway\Proj\r2309ab_rdy_psh14.dgn
Florence & Hutcheson, Inc.

PROJECT REFERENCE NO.	SHEET NO.
R-2309AB	15
R/W SHEET NO.	
ROADWAY DESIGN ENGINEER	HYDRAULICS ENGINEER

Florence & Hutcheson
CONSULTING ENGINEERS
5121 Kingdom Way, Suite 100 Raleigh, NC 27607
NC License No: F-0258

NORTH CAROLINA PROFESSIONAL SEAL 16689 ENGINEER BRIAN ALLEN WILKS 9/28/11

NORTH CAROLINA PROFESSIONAL SEAL 19732 ENGINEER SHIHCHEN FUH 9-28-2011

REVISIONS

8/17/99

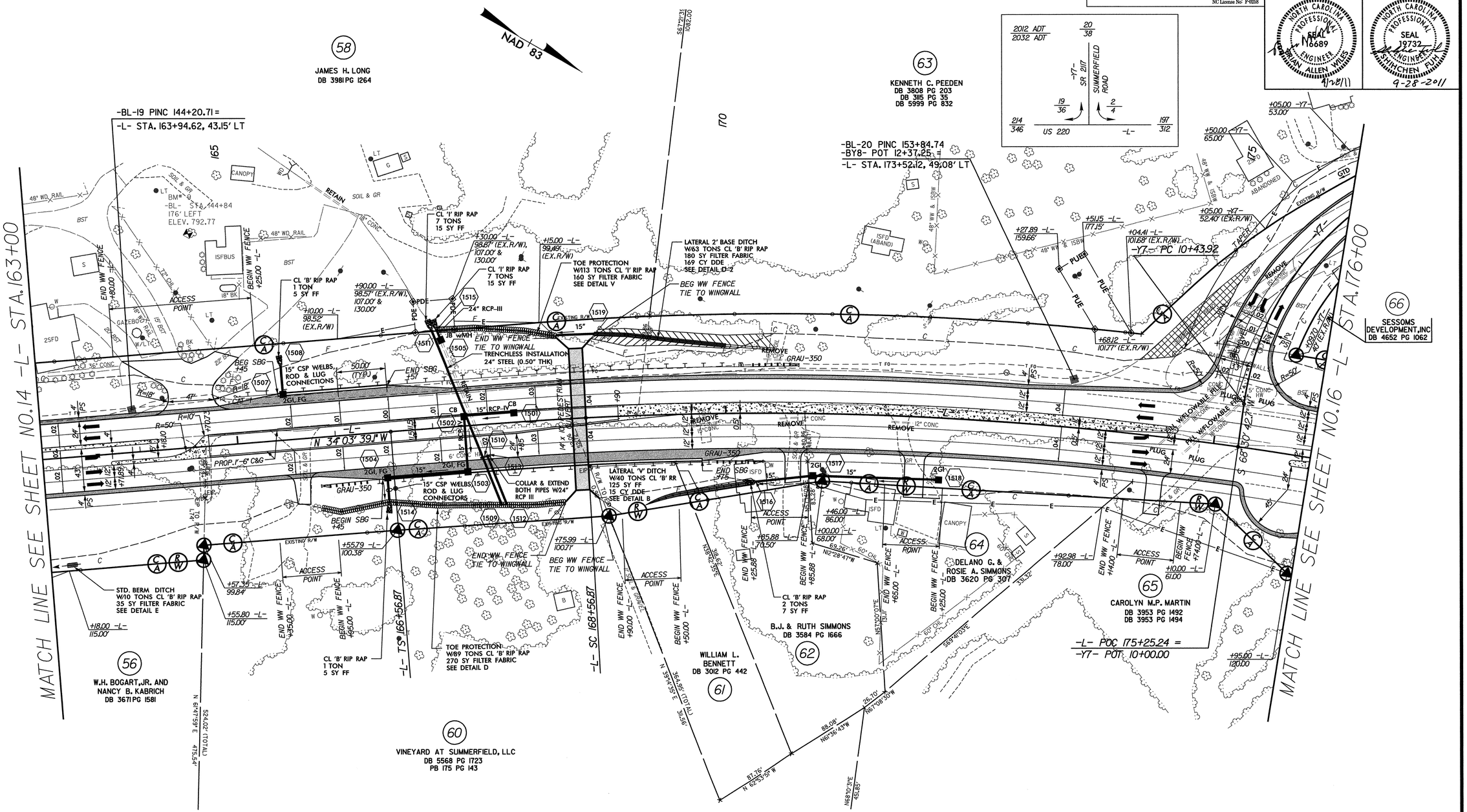

-L- CURVE DATA

Pls Sta 167+90.21	Pl Sta 173+16.51	Pls Sta 178+37.60
Θs = 1° 38' 13.3"	Δ = 14° 57' 48.3" (RT)	Θs = 1° 38' 13.3"
Ls = 200.00'	D = 1° 38' 13.3"	Ls = 200.00'
LT = 133.34'	L = 914.06'	LT = 133.34'
ST = 66.67'	T = 459.65'	ST = 66.67'
	R = 3,500.00'	
	SE = 0.04	
	RUNOFF = SEE PLANS	
	V = 60 MPH	

-Y7- CURVE DATA

Pl Sta 12+09.06
Δ = 57° 39' 36.4" (RT)
D = 19° 05' 54.9"
L = 301.91'
T = 165.13'
R = 300.00'

NOTES:
1. ALL PROPOSED COMMERCIAL DRIVEWAY RADII 20 FT UNLESS OTHERWISE SHOWN. ALL RESIDENTIAL DRIVEWAY RADII 10 FT UNLESS OTHERWISE SHOWN.
2. ALL ISLAND RADII 2 FT UNLESS OTHERWISE SHOWN.
3. PROPOSED DRIVEWAY WIDTHS AT END OF RADII 16 FT UNLESS OTHERWISE SHOWN. TAPER DRIVEWAY TO EXISTING DRIVEWAY WIDTH.

LEGEND
- PAVED SHOULDER
- PAVEMENT REMOVAL
- PROPOSED MONOLITHIC ISLAND

FOR -Y7- INTERSECTION DETAIL SEE SHEET 2-S
FOR -L- PROFILE SEE SHEET 34
FOR -Y7- PROFILE SEE SHEET 43

7/29/2011
H:\Roadway\Proj\r2309ab_rdy_psh15.dgn
Florence & Hutcheson, Inc.

PROJECT REFERENCE NO.	SHEET NO.
R-2309AB	16
R/W SHEET NO.	

Florence & Hutcheson
CONSULTING ENGINEERS
5121 Kingsdown Way, Suite 100 Raleigh, NC 27607
NC License No: F-0258

ROADWAY DESIGN ENGINEER
NORTH CAROLINA PROFESSIONAL SEAL 16689 ENGINEER BRIAN ALLEN WILES
9/26/11

HYDRAULICS ENGINEER

HYDRAULIC DESIGN:
PROVIDED BY NCDOT
PREVIOUSLY PREPARED BY
KCI -L- STA 176+00
TO -L- STA 316+76.67

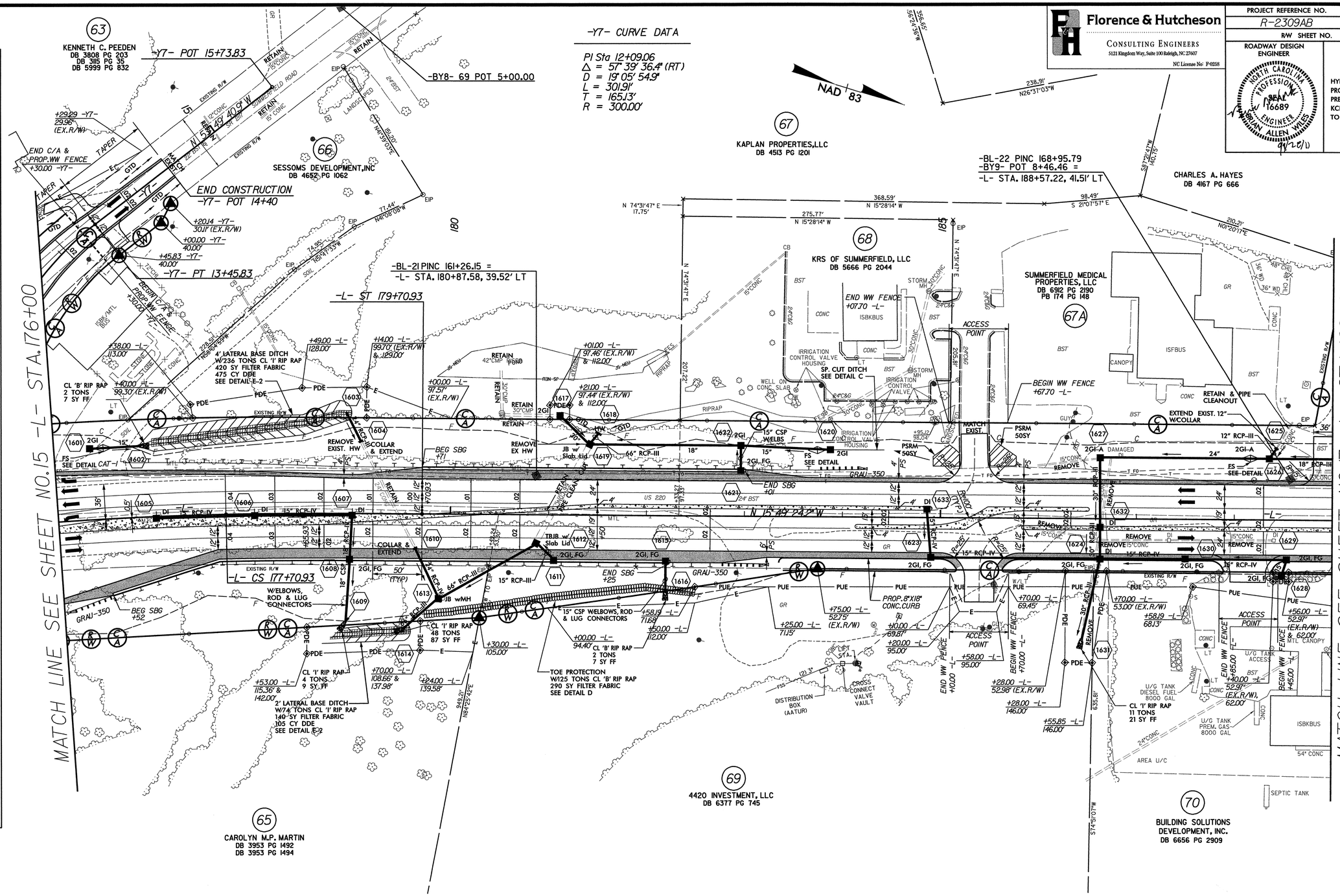

-Y7- CURVE DATA

PI Sta 12+09.06
Δ = 57° 39' 36.4" (RT)
D = 19° 05' 54.9"
L = 301.91'
T = 165.13'
R = 300.00'

-L- CURVE DATA

PIs Sta 167+90.21	PIs Sta 173+16.51	PIs Sta 178+37.60
θs = 1° 38' 13.3"	Δ = 14° 57' 48.3" (RT)	θs = 1° 38' 13.3"
Ls = 200.00'	D = 1° 38' 13.3"	Ls = 200.00'
LT = 133.34'	L = 914.06'	LT = 133.34'
ST = 66.67'	T = 459.65'	ST = 66.67'
	R = 3,500.00'	
	SE = 0.04	
	RUNOFF = SEE PLANS	
	V = 60 MPH	

NOTES:
1. ALL PROPOSED COMMERCIAL DRIVEWAY RADII 20 FT UNLESS OTHERWISE SHOWN. ALL RESIDENTIAL DRIVEWAY RADII 10 FT UNLESS OTHERWISE SHOWN.
2. ALL ISLAND RADII 2 FT UNLESS OTHERWISE SHOWN.
3. PROPOSED DRIVEWAY WIDTHS AT END OF RADII 16 FT UNLESS OTHERWISE SHOWN. TAPER DRIVEWAY TO EXISTING DRIVEWAY WIDTH.

LEGEND
PAVED SHOULDER
PROPOSED MONOLITHIC ISLAND

FOR -Y7- INTERSECTION DETAIL SEE SHEET 2-S
FOR -L- PROFILE SEE SHEET 35
FOR -Y7- PROFILE SEE SHEET 43

REVISIONS

8/17/99

9/6/2011
R:\Roadway\Proj\r2309ab_rdy_psht16.dgn
Florence & Hutcheson, Inc.

PROJECT REFERENCE NO.	SHEET NO.
R-2309AB	17
R/W SHEET NO.	
ROADWAY DESIGN ENGINEER	HYDRAULICS ENGINEER

Florence & Hutcheson
CONSULTING ENGINEERS
5121 Kingdom Way, Suite 100 Raleigh, NC 27607
NC License No: F-0258

NORTH CAROLINA PROFESSIONAL ENGINEER SEAL 16689 BRIAN ALLEN WILES 9/26/11

HYDRAULIC DESIGN:
PROVIDED BY NCDOT
PREVIOUSLY PREPARED BY
KCI -L- STA 176+00
TO -L- STA 316+76.67

REVISIONS

8/17/99

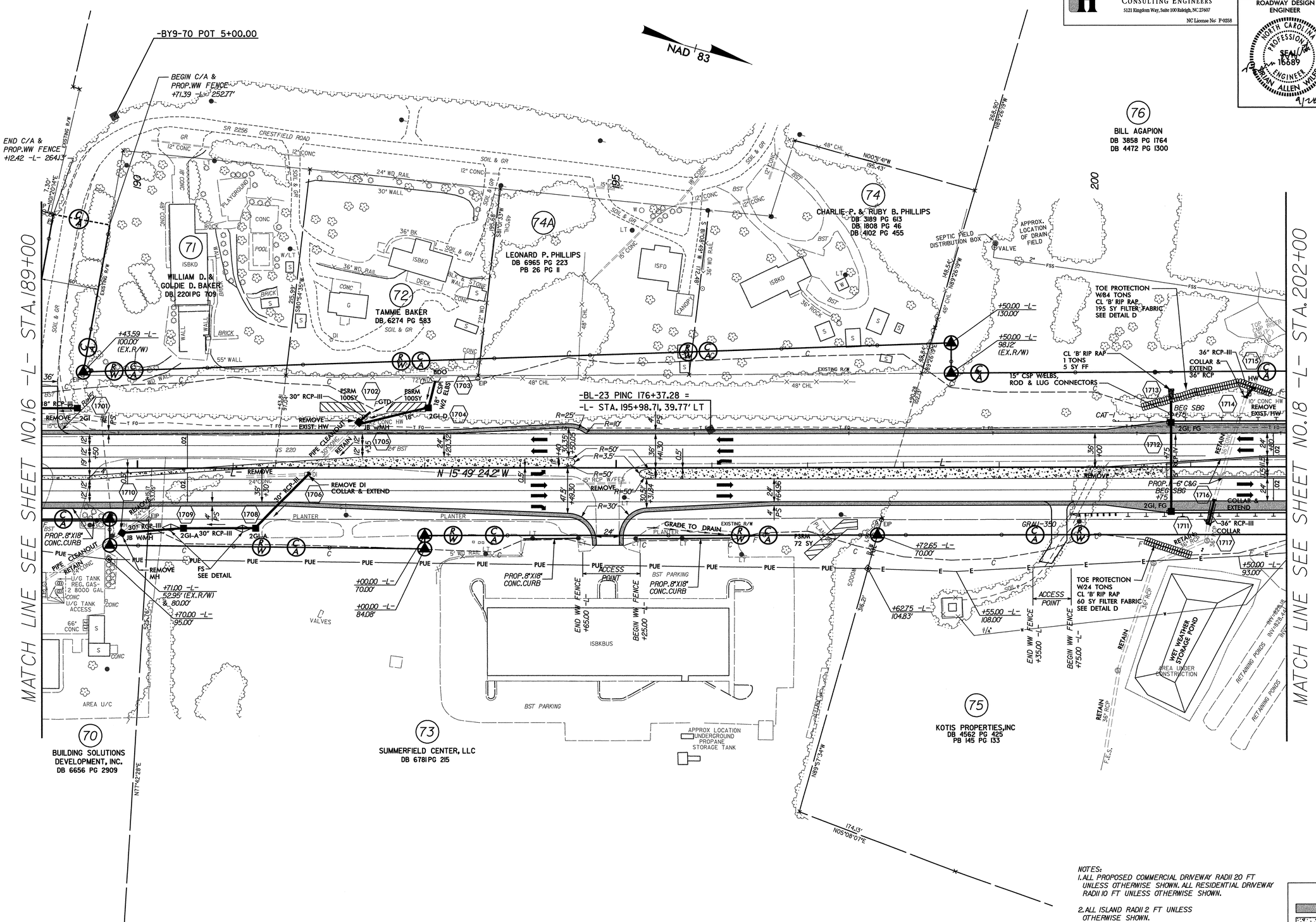

NOTES:
1. ALL PROPOSED COMMERCIAL DRIVEWAY RADII 20 FT UNLESS OTHERWISE SHOWN. ALL RESIDENTIAL DRIVEWAY RADII 10 FT UNLESS OTHERWISE SHOWN.
2. ALL ISLAND RADII 2 FT UNLESS OTHERWISE SHOWN.
3. PROPOSED DRIVEWAY WIDTHS AT END OF RADII 18 FT UNLESS OTHERWISE SHOWN. TAPER DRIVEWAY TO EXISTING DRIVEWAY WIDTH.

LEGEND
PAVED SHOULDER
PROPOSED MONOLITHIC ISLAND

FOR -L- PROFILE SEE SHEET 35

7/29/2011
R:\Roadway\Proj\r2309ab_rdy_psh17.dgn
Florence & Hutcheson, Inc.

8/17/99

-L- CURVE DATA

PIs Sta 208+63.53	PI Sta 213+97.30	PIs Sta 219+25.59
Θs = 1° 38′ 13.3″	Δ = 15° 12′ 12.7″ (LT)	Θs = 1° 38′ 13.3″
Ls = 200.00′	D = 1° 38′ 13.3″	Ls = 200.00′
LT = 133.34′	L = 928.73′	LT = 133.34′
ST = 66.67′	T = 467.11′	ST = 66.67′
	R = 3,500.00′	
	SE = 0.03	
	RUNOFF = SEE PLANS	
	V = 60 MPH	

Florence & Hutcheson
CONSULTING ENGINEERS
5121 Kingdom Way, Suite 100 Raleigh, NC 27607
NC License No: F-0258

PROJECT REFERENCE NO.	SHEET NO.
R-2309AB	18
R/W SHEET NO.	
ROADWAY DESIGN ENGINEER	HYDRAULICS ENGINEER
NORTH CAROLINA PROFESSIONAL ENGINEER SEAL 16689 BRIAN ALLEN WILES 9/20/11	HYDRAULIC DESIGN: PROVIDED BY NCDOT PREVIOUSLY PREPARED BY KCI -L- STA 176+00 TO -L- STA 316+76.67

REVISIONS

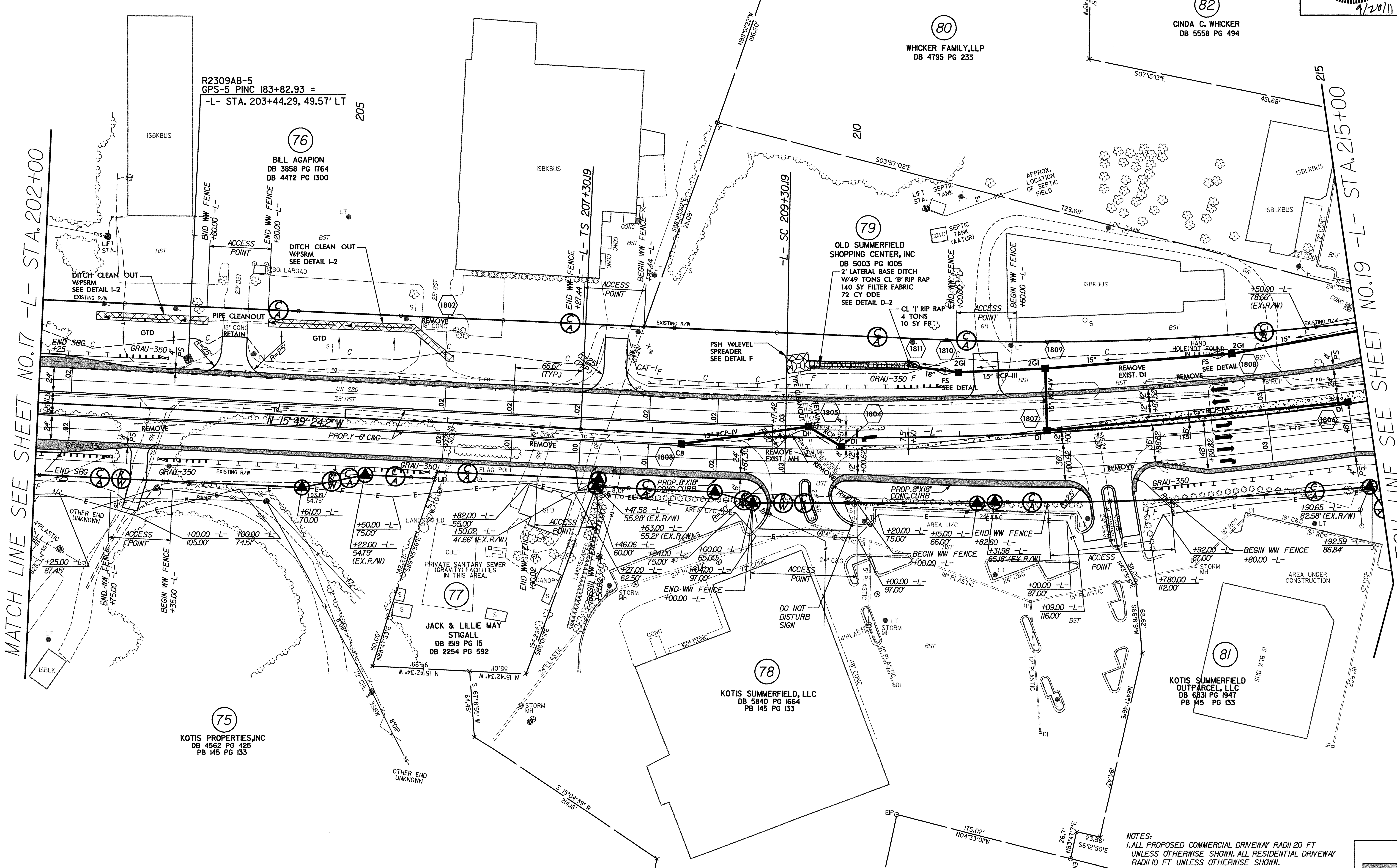

NOTES:

1. ALL PROPOSED COMMERCIAL DRIVEWAY RADII 20 FT UNLESS OTHERWISE SHOWN. ALL RESIDENTIAL DRIVEWAY RADII 10 FT UNLESS OTHERWISE SHOWN.
2. ALL ISLAND RADII 2 FT UNLESS OTHERWISE SHOWN.
3. PROPOSED DRIVEWAY WIDTHS AT END OF RADII 16 FT UNLESS OTHERWISE SHOWN. TAPER DRIVEWAY TO EXISTING DRIVEWAY WIDTH.

LEGEND

- PAVED SHOULDER
- PROPOSED MONOLITHIC ISLAND

FOR -L- PROFILE SEE SHEET 36

8/1/2011
R:\Roadway\Proj\r2309ab_rdy_psh18.dgn
Florence & Hutcheson, Inc.

8/17/99

REVISIONS

Florence & Hutcheson
CONSULTING ENGINEERS
5121 Kingdom Way, Suite 100 Raleigh, NC 27607
NC License No: F-0258

PROJECT REFERENCE NO.	SHEET NO.
R-2309AB	19
R/W SHEET NO.	

ROADWAY DESIGN ENGINEER

NORTH CAROLINA PROFESSIONAL SEAL 16689 ENGINEER BRIAN WILES ALLEN
4/28/11

HYDRAULICS ENGINEER

HYDRAULIC DESIGN: PROVIDED BY NCDOT PREVIOUSLY PREPARED BY KCI -L- STA 176+00 TO -L- STA 316+76.67

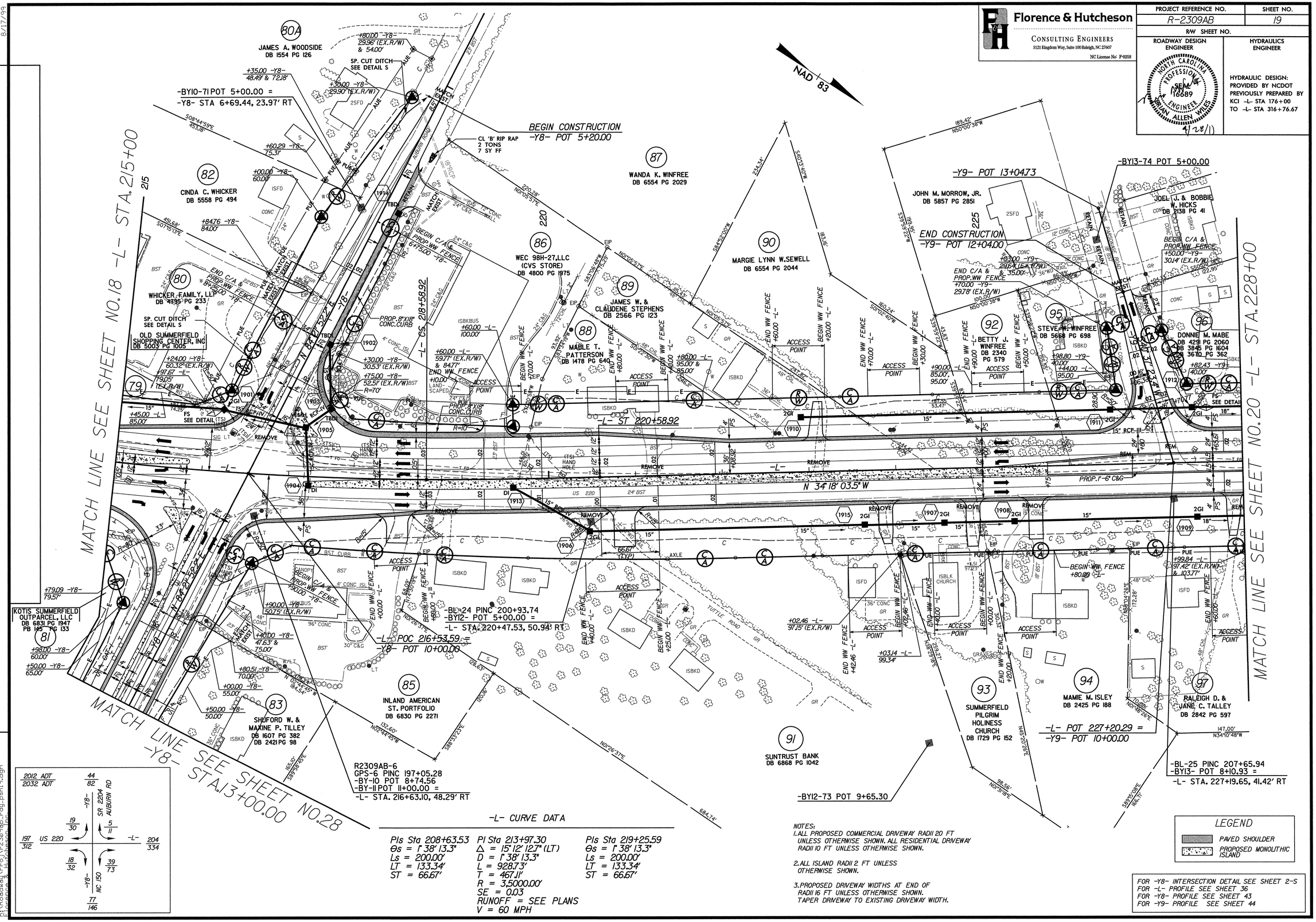

9/6/2011
R:\Roadway\Proj\r2309ab_rdy_psh19.dgn
Florence & Hutcheson, Inc.

8/17/99

REVISIONS

Florence & Hutcheson
CONSULTING ENGINEERS
5121 Kingdom Way, Suite 100 Raleigh, NC 27607
NC License No: F-0258

PROJECT REFERENCE NO.	SHEET NO.
R-2309AB	20
R/W SHEET NO.	
ROADWAY DESIGN ENGINEER	HYDRAULICS ENGINEER

NORTH CAROLINA PROFESSIONAL SEAL 16689 ENGINEER BRIAN ALLEN WILES
10/27/11

HYDRAULIC DESIGN: PROVIDED BY NCDOT PREVIOUSLY PREPARED BY KCI -L- STA 176+00 TO -L- STA 316+76.67

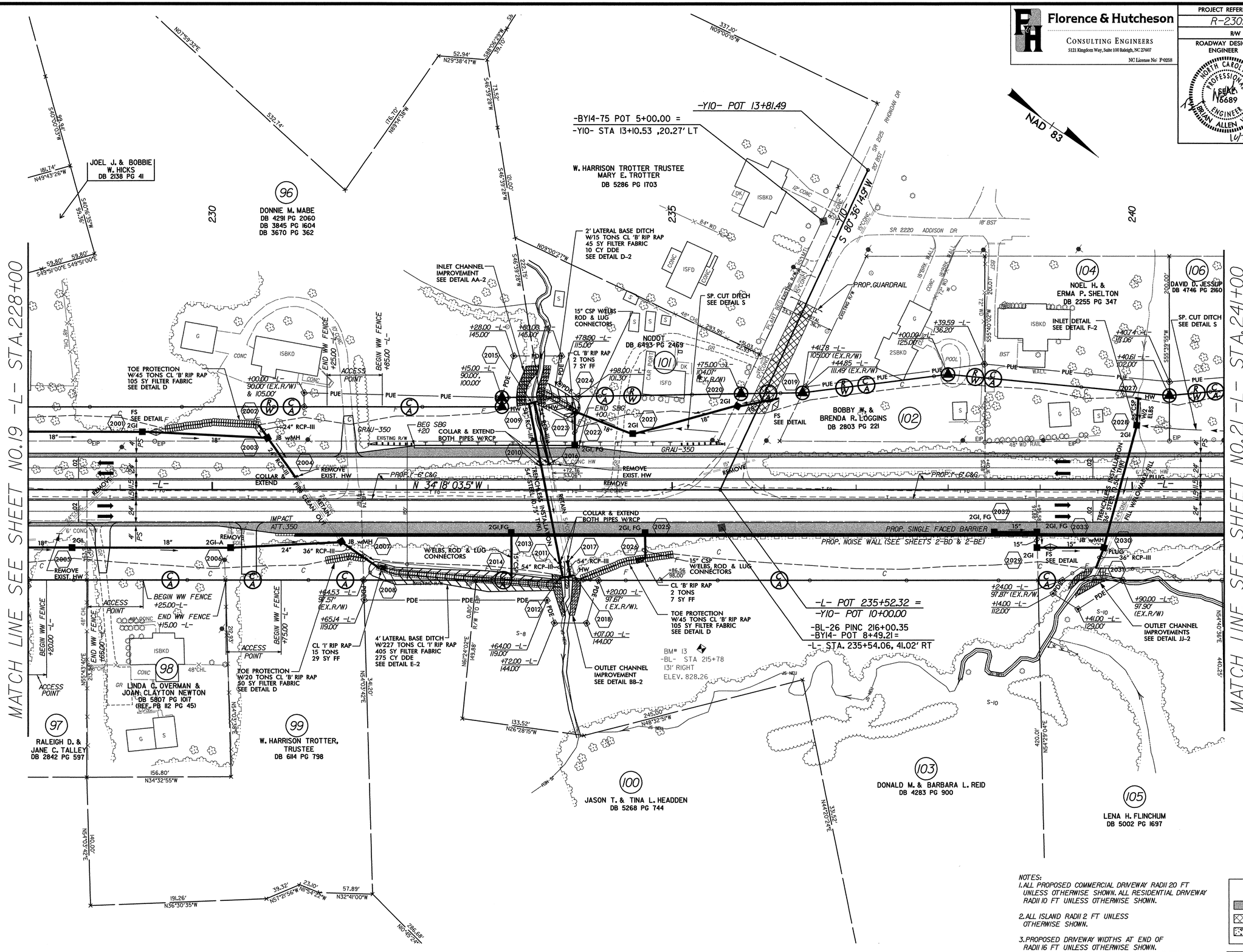

NOTES:
1. ALL PROPOSED COMMERCIAL DRIVEWAY RADII 20 FT UNLESS OTHERWISE SHOWN. ALL RESIDENTIAL DRIVEWAY RADII 10 FT UNLESS OTHERWISE SHOWN.
2. ALL ISLAND RADII 2 FT UNLESS OTHERWISE SHOWN.
3. PROPOSED DRIVEWAY WIDTHS AT END OF RADII 16 FT UNLESS OTHERWISE SHOWN. TAPER DRIVEWAY TO EXISTING DRIVEWAY WIDTH.

LEGEND
- PAVED SHOULDER
- PAVEMENT REMOVAL
- PROPOSED MONOLITHIC ISLAND

FOR -L- PROFILE SEE SHEET 37

10/27/2011
01:\Roadway\Proj\r2309ab_rdy_psh20.dgn
Florence & Hutcheson, Inc.

8/17/99

REVISIONS

Florence & Hutcheson
CONSULTING ENGINEERS
5121 Kingdom Way, Suite 100 Raleigh, NC 27607
NC License No: F-0258

PROJECT REFERENCE NO.	SHEET NO.
R-2309AB	21
R/W SHEET NO.	

ROADWAY DESIGN ENGINEER

NORTH CAROLINA PROFESSIONAL SEAL 16889 ENGINEER BRIAN ALLEN WILES
10/27/11

HYDRAULICS ENGINEER

HYDRAULIC DESIGN: PROVIDED BY NCDOT PREVIOUSLY PREPARED BY KCI -L- STA 176+00 TO -L- STA 316+76.67

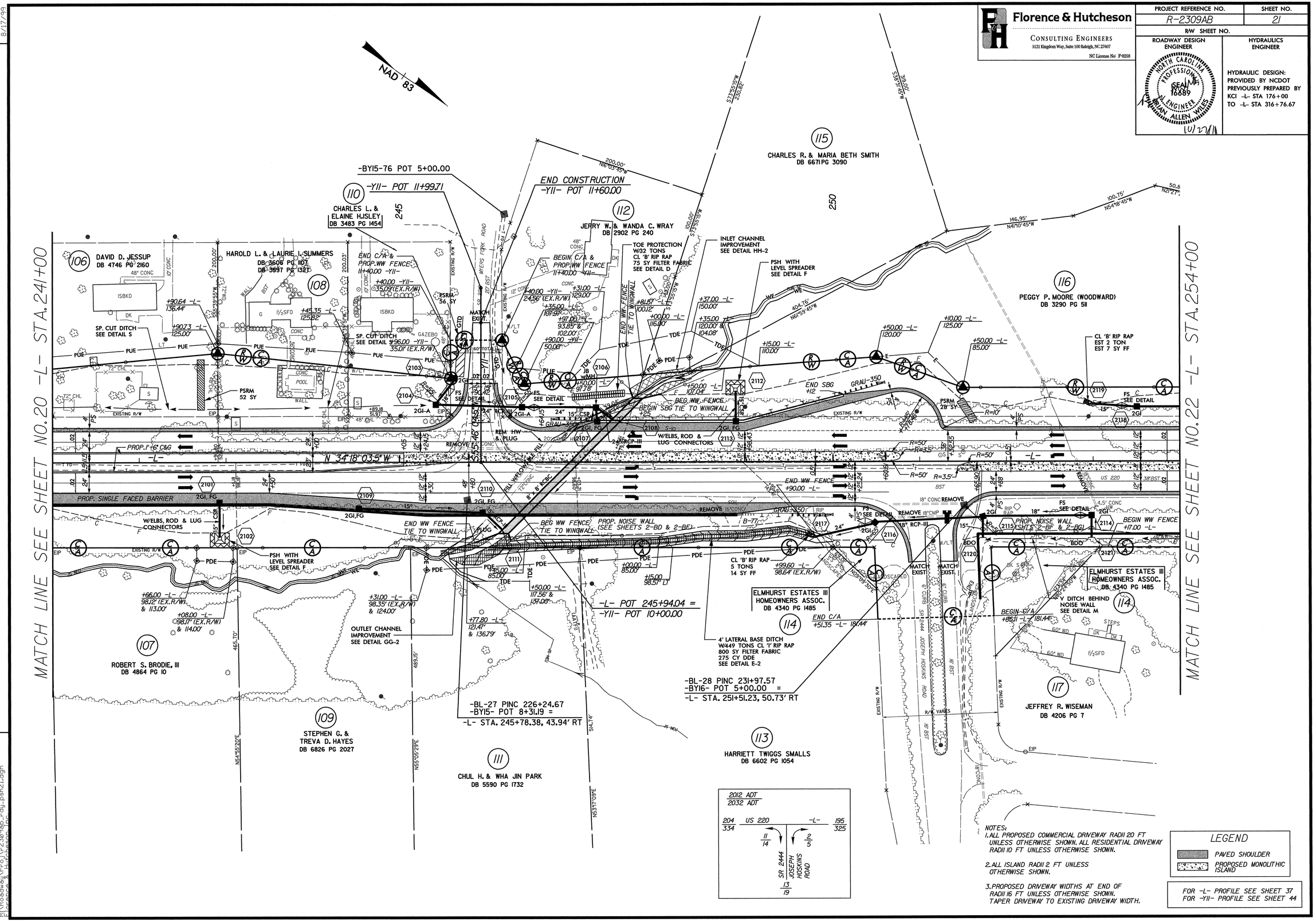

10/27/2011
R:\Roadway\Proj\r2309ab_rdy_psh21.dgn
Florence & Hutcheson, Inc.

PROJECT REFERENCE NO.	SHEET NO.
R-2309AB	22
R/W SHEET NO.	
ROADWAY DESIGN ENGINEER	HYDRAULICS ENGINEER

Florence & Hutcheson
CONSULTING ENGINEERS
5121 Kingdom Way, Suite 100 Raleigh, NC 27607
NC License No: F-0258

NORTH CAROLINA PROFESSIONAL SEAL 16689 ENGINEER BRIAN ALLEN WILES
10/27/11

HYDRAULIC DESIGN:
PROVIDED BY NCDOT
PREVIOUSLY PREPARED BY
KCI -L- STA 176+00
TO -L- STA 316+76.67

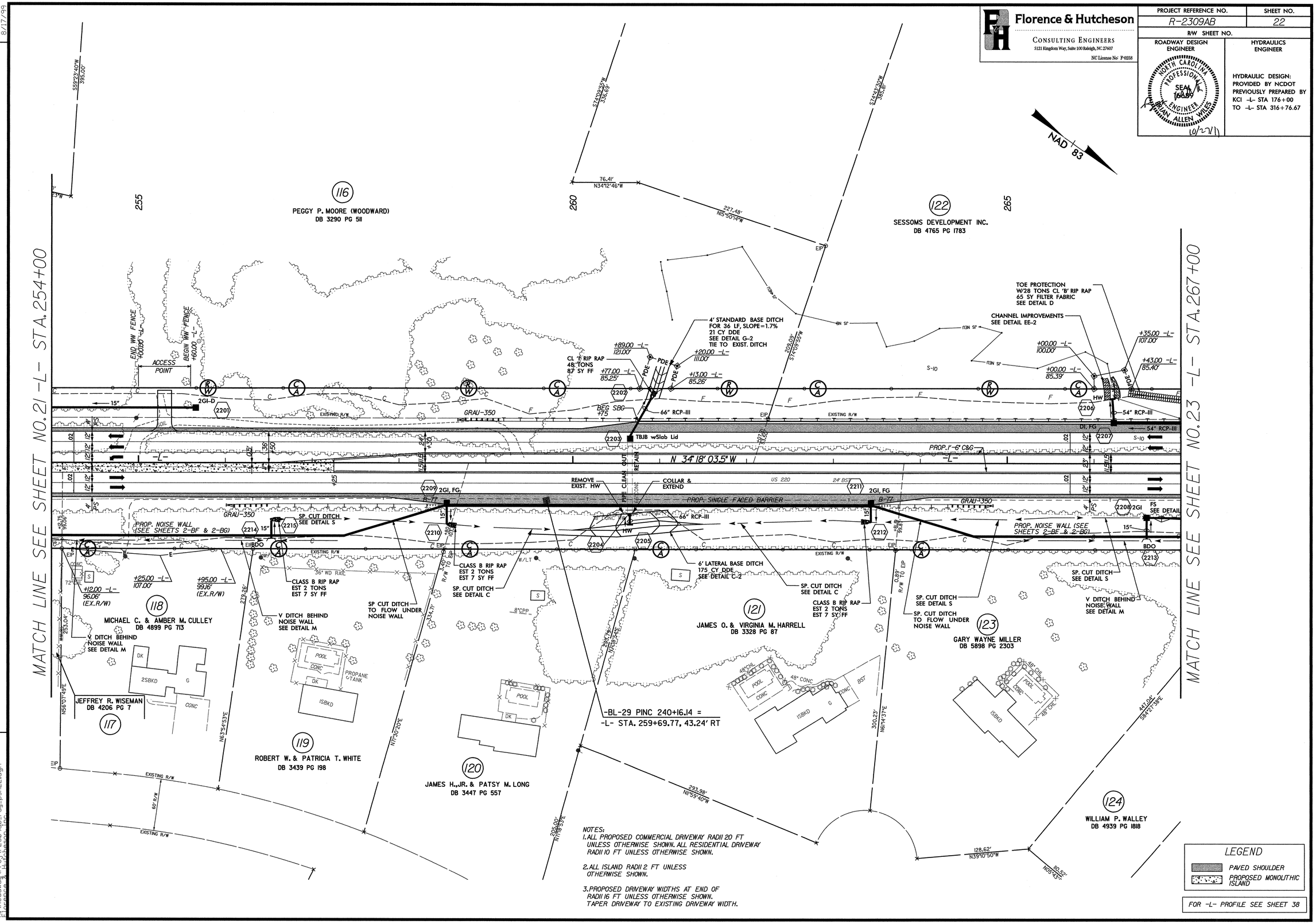

NOTES:
1. ALL PROPOSED COMMERCIAL DRIVEWAY RADII 20 FT UNLESS OTHERWISE SHOWN. ALL RESIDENTIAL DRIVEWAY RADII 10 FT UNLESS OTHERWISE SHOWN.
2. ALL ISLAND RADII 2 FT UNLESS OTHERWISE SHOWN.
3. PROPOSED DRIVEWAY WIDTHS AT END OF RADII 16 FT UNLESS OTHERWISE SHOWN. TAPER DRIVEWAY TO EXISTING DRIVEWAY WIDTH.

LEGEND
PAVED SHOULDER
PROPOSED MONOLITHIC ISLAND

FOR -L- PROFILE SEE SHEET 38

REVISIONS

8/17/99

10/27/2011
R:\Roadway\Proj\r2309ab_rdy_psh22.dgn
Florence & Hutcheson, Inc.

PROJECT REFERENCE NO.	SHEET NO.
R-2309AB	23
R/W SHEET NO.	
ROADWAY DESIGN ENGINEER	HYDRAULICS ENGINEER

Florence & Hutcheson
CONSULTING ENGINEERS
5121 Kingdom Way, Suite 100 Raleigh, NC 27607
NC License No: F-0258

NORTH CAROLINA PROFESSIONAL SEAL 16689 ENGINEER BRIAN ALLEN WILES
10/27/11

HYDRAULIC DESIGN: PROVIDED BY NCDOT PREVIOUSLY PREPARED BY KCI -L- STA 176+00 TO -L- STA 316+76.67

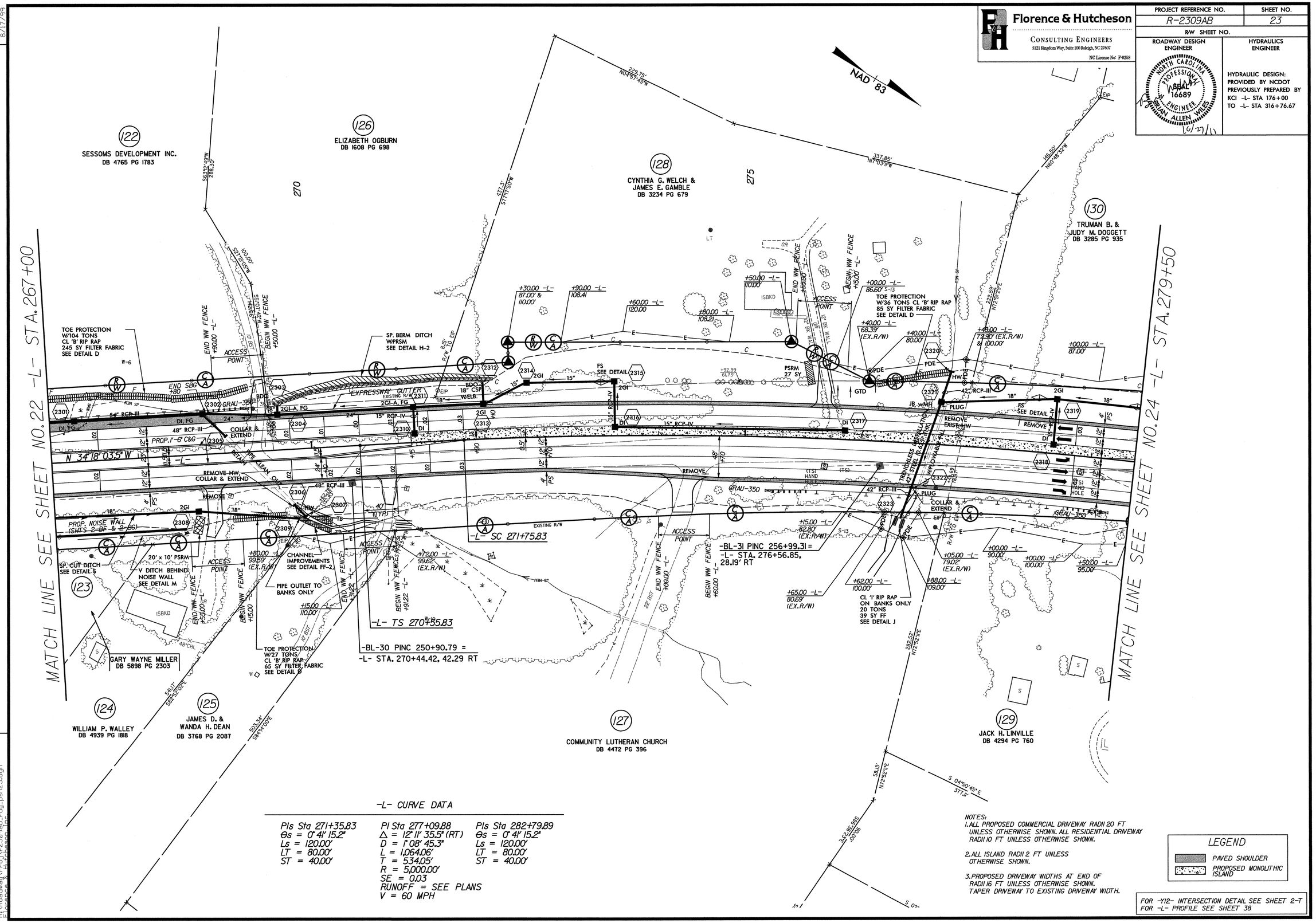

-L- CURVE DATA

PIs Sta 271+35.83	PI Sta 277+09.88	PIs Sta 282+79.89
Θs = 0° 41' 15.2"	Δ = 12° 11' 35.5" (RT)	Θs = 0° 41' 15.2"
Ls = 120.00'	D = 1° 08' 45.3"	Ls = 120.00'
LT = 80.00'	L = 1,064.06'	LT = 80.00'
ST = 40.00'	T = 534.05'	ST = 40.00'
	R = 5,000.00'	
	SE = 0.03	
	RUNOFF = SEE PLANS	
	V = 60 MPH	

NOTES:
1. ALL PROPOSED COMMERCIAL DRIVEWAY RADII 20 FT UNLESS OTHERWISE SHOWN. ALL RESIDENTIAL DRIVEWAY RADII 10 FT UNLESS OTHERWISE SHOWN.
2. ALL ISLAND RADII 2 FT UNLESS OTHERWISE SHOWN.
3. PROPOSED DRIVEWAY WIDTHS AT END OF RADII 16 FT UNLESS OTHERWISE SHOWN. TAPER DRIVEWAY TO EXISTING DRIVEWAY WIDTH.

LEGEND
PAVED SHOULDER
PROPOSED MONOLITHIC ISLAND

FOR -Y12- INTERSECTION DETAIL SEE SHEET 2-T
FOR -L- PROFILE SEE SHEET 38

REVISIONS

8/17/99

10/27/2011
H:\Roadway\Proj\r2309ab_rdy_psh23.dgn
florence & hutcheson, inc.

PROJECT REFERENCE NO.	SHEET NO.
R-2309AB	24
R/W SHEET NO.	
ROADWAY DESIGN ENGINEER	HYDRAULICS ENGINEER

Florence & Hutcheson
CONSULTING ENGINEERS
5121 Kingdom Way, Suite 100 Raleigh, NC 27607
NC License No: F-0258

NORTH CAROLINA PROFESSIONAL SEAL 16689 ENGINEER BRIAN ALLEN WILES 9/28/11

HYDRAULIC DESIGN: PROVIDED BY NCDOT PREVIOUSLY PREPARED BY KCI -L- STA 176+00 TO -L- STA 316+76.67

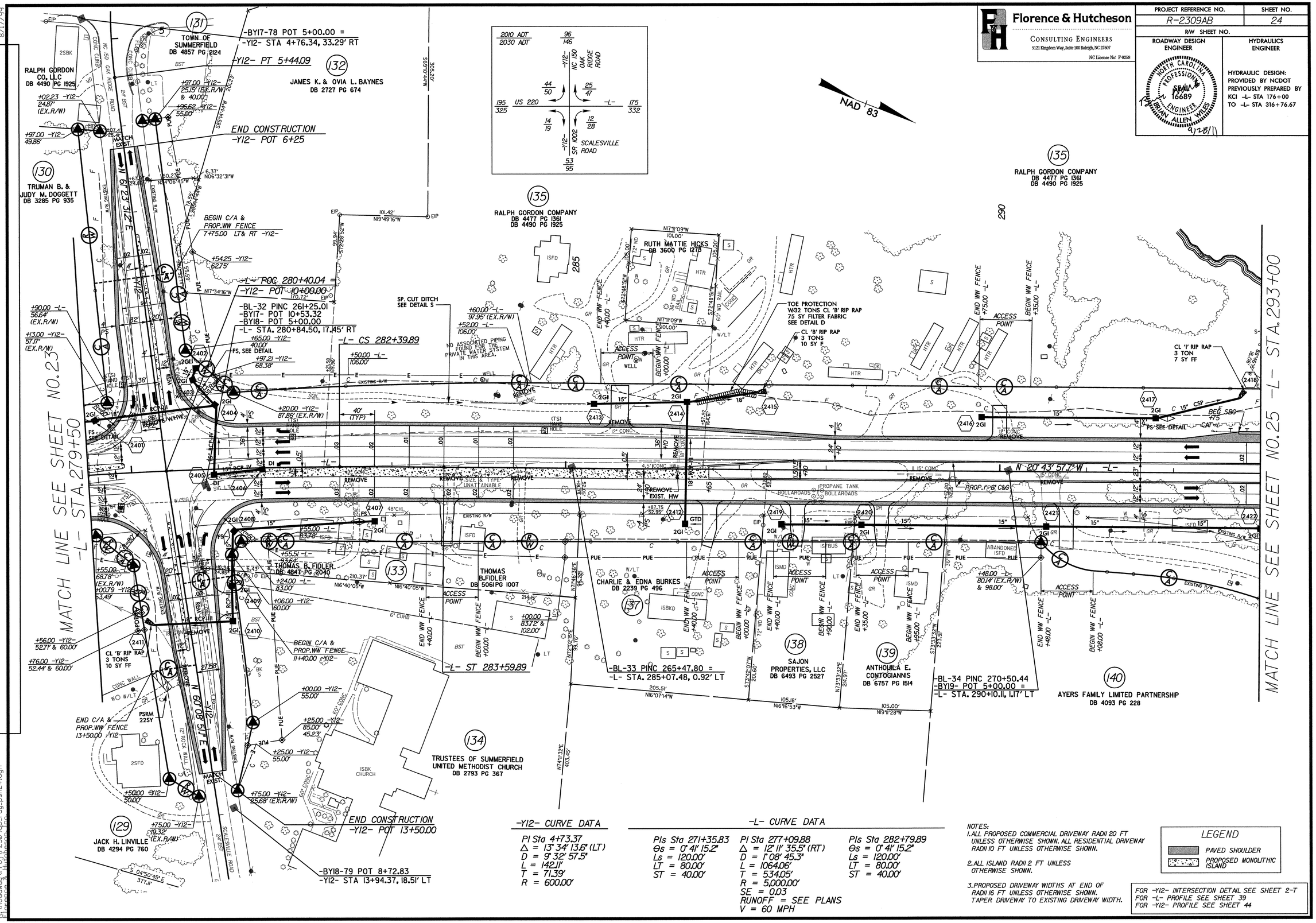

REVISIONS

8/17/99

9/6/2011
R:\Roadway\Proj\r2309ab_rdy_psh24.dgn
Florence & Hutcheson, Inc.

-Y12- CURVE DATA

PI Sta 4+73.37
Δ = 13° 34' 13.6" (LT)
D = 9° 32' 57.5"
L = 142.11'
T = 71.39'
R = 600.00'

-L- CURVE DATA

PIs Sta 271+35.83	PI Sta 277+09.88	PIs Sta 282+79.89
Θs = 0° 41' 15.2"	Δ = 12° 11' 35.5" (RT)	Θs = 0° 41' 15.2"
Ls = 120.00'	D = 1° 08' 45.3"	Ls = 120.00'
LT = 80.00'	L = 1064.06'	LT = 80.00'
ST = 40.00'	T = 534.05'	ST = 40.00'
	R = 5,000.00'	
	SE = 0.03	
	RUNOFF = SEE PLANS	
	V = 60 MPH	

NOTES:
1. ALL PROPOSED COMMERCIAL DRIVEWAY RADII 20 FT UNLESS OTHERWISE SHOWN. ALL RESIDENTIAL DRIVEWAY RADII 10 FT UNLESS OTHERWISE SHOWN.
2. ALL ISLAND RADII 2 FT UNLESS OTHERWISE SHOWN.
3. PROPOSED DRIVEWAY WIDTHS AT END OF RADII 16 FT UNLESS OTHERWISE SHOWN. TAPER DRIVEWAY TO EXISTING DRIVEWAY WIDTH.

LEGEND
PAVED SHOULDER
PROPOSED MONOLITHIC ISLAND

FOR -Y12- INTERSECTION DETAIL SEE SHEET 2-T
FOR -L- PROFILE SEE SHEET 39
FOR -Y12- PROFILE SEE SHEET 44

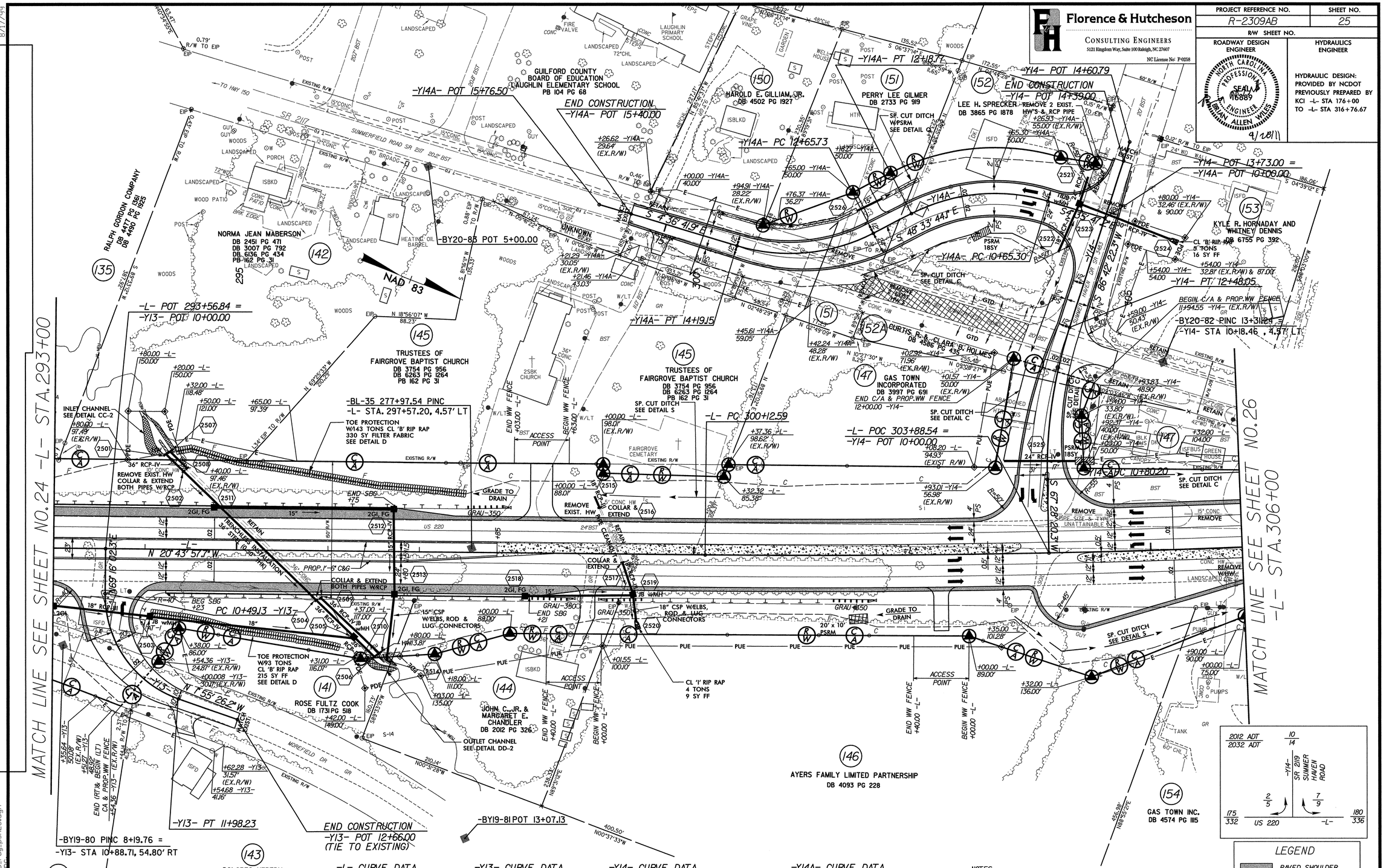
Florence & Hutcheson
CONSULTING ENGINEERS
5121 Kingsdown Way, Suite 100 Raleigh, NC 27607
NC License No: F-0258
PROJECT REFERENCE NO.
R-2309AB
SHEET NO.
25
R/W SHEET NO.
ROADWAY DESIGN ENGINEER
HYDRAULICS ENGINEER
HYDRAULIC DESIGN: PROVIDED BY NCDOT PREVIOUSLY PREPARED BY KCI -L- STA 176+00 TO -L- STA 316+76.67
8/17/99
REVISIONS
MATCH LINE SEE SHEET NO.24 -L- STA.293+00
MATCH LINE SEE SHEET NO.26 -L- STA.306+00
RALPH GORDON COMPANY
DB 4477 PG 956
DB 4480 PG 925
135
NORMA JEAN MABERSON
DB 2451 PG 471
DB 3007 PG 792
DB. 6136, PG. 434
PB-162 PG. 31
142
GUILFORD COUNTY BOARD OF EDUCATION
LAUGHLIN ELEMENTARY SCHOOL
PB 104 PG 68
150
HAROLD E. GILLIAM, JR.
DB 4502 PG 1927
151
PERRY LEE GILMER
DB 2733 PG 919
152
LEE H. SPRECKER
DB 3865 PG 1878
153
KYLE R. HORNADAY AND WHITNEY DENNIS
DB 6755 PG 392
145
TRUSTEES OF FAIRGROVE BAPTIST CHURCH
DB 3754 PG 956
DB 6263 PG 1264
PB 162 PG 31
152A
CURTIS R. & CLARA D. HOLMES
DB 4596 PG 435
147
GAS TOWN INCORPORATED
DB 3997 PG 691
141
ROSE FULTZ COOK
DB 1731 PG 518
144
JOHN C., JR. & MARGARET E. CHANDLER
DB 2012 PG 326
146
AYERS FAMILY LIMITED PARTNERSHIP
DB 4093 PG 228
154
GAS TOWN INC.
DB 4574 PG 1115
140
AYERS FAMILY LIMITED PARTNERSHIP
DB 4093 PG 228
143
DOLORES HEREDIA
DB 4218 PG 1927
-Y14A- POT 15+76.50
END CONSTRUCTION
-Y14A- POT 15+40.00
-Y14A- PC 12+65.73
-Y14A- PT 12+18.77
-Y14A- POT 14+60.79
END CONSTRUCTION
-Y14- POT 14+39.00
-Y14- POT 13+73.00 =
-Y14A- POT 10+09.00
-Y14- PT 12+48.05
-BY20-82-RINC 13+31.24
-Y14- STA 10+18.46, 4.57' LT
-BY20-85 POT 5+00.00
-Y14A- PT 14+19.15
-L- POT 293+56.84 =
-Y13- POT 10+00.00
-BL-35 277+97.54 PINC
-L- STA. 297+57.20, 4.57' LT
-L- PC 300+12.59
-L- POC 303+88.54 =
-Y14- POT 10+00.00
-Y14- PC 10+80.20
-Y13- PC 10+49.13
-Y13- PT 11+98.23
END CONSTRUCTION
-Y13- POT 12+66.00
(TIE TO EXISTING)
-BY19-81 POT 13+07.13
-BY19-80 PINC 8+19.76 =
-Y13- STA 10+88.71, 54.80' RT
NAD 83
INLET CHANNEL SEE DETAIL CC-2
TOE PROTECTION W143 TONS CL 'B' RIP RAP 330 SY FILTER FABRIC SEE DETAIL D
REMOVE EXIST. HW COLLAR & EXTEND BOTH PIPES W/RCP
COLLAR & EXTEND BOTH PIPES W/RCP
SP. CUT DITCH W/PSRM SEE DETAIL
SP. CUT DITCH SEE DETAIL C
SP. CUT DITCH SEE DETAIL S
SP. CUT DITCH SEE DETAIL
TOE PROTECTION W/93 TONS CL 'B' RIP RAP 215 SY FF SEE DETAIL D
CL 'I' RIP RAP 4 TONS 9 SY FF
OUTLET CHANNEL SEE DETAIL DD-2
15" CSP W/ELBS, ROD & LUG CONNECTORS
18" CSP W/ELBS, ROD & LUG CONNECTORS
GRADE TO DRAIN
ACCESS POINT
END WW FENCE
BEGIN WW FENCE
BEGIN C/A & PROP. WW FENCE
END C/A & PROP. WW FENCE
REMOVE PIPE SIZE & TYPE UNATTAINABLE
REMOVE
SR 2117
SUMMERFIELD ROAD SR 2117
US 220
SR 2119 SUMMER HAVEN ROAD
2012 ADT 10/14
2032 ADT 175/332
2/5
7/9
180/336
LEGEND
PAVED SHOULDER
PAVEMENT REMOVAL
PROPOSED MONOLITHIC ISLAND
-L- CURVE DATA
PI Sta 304+26.52
Δ = 3° 57' 04.3" (LT)
D = 0° 28' 38.9"
L = 827.54'
T = 413.93'
R = 12,000.00'
SE = NORMAL CROWN
V = 60 MPH
-Y13- CURVE DATA
PI Sta 11+35.02
Δ = 71° 11' 28.5" (LT)
D = 47° 44' 47.3"
L = 149.10'
T = 85.90'
R = 120.00'
-Y14- CURVE DATA
PI Sta 11+64.92
Δ = 19° 14' 02.1" (RT)
D = 11° 27' 33.0"
L = 167.85'
T = 84.72'
R = 500.00'
-Y14A- CURVE DATA
PI Sta 11+46.04
Δ = 43° 57' 56.8" (LT)
D = 28° 38' 52.4"
L = 153.47'
T = 80.74'
R = 200.00'
PI Sta 13+46.44
Δ = 43° 57' 02.2" (RT)
D = 28° 38' 52.4"
L = 153.42'
T = 80.70'
R = 200.00'
NOTES:
1. ALL PROPOSED COMMERCIAL DRIVEWAY RADII 20 FT UNLESS OTHERWISE SHOWN. ALL RESIDENTIAL DRIVEWAY RADII 10 FT UNLESS OTHERWISE SHOWN.
2. ALL ISLAND RADII 2 FT UNLESS OTHERWISE SHOWN.
3. PROPOSED DRIVEWAY WIDTHS AT END OF RADII 16 FT UNLESS OTHERWISE SHOWN. TAPER DRIVEWAY TO EXISTING DRIVEWAY WIDTH.
FOR -Y13- INTERSECTION DETAIL SEE SHEET 2-T
FOR -Y14-&-Y14A- INTERSECTION DETAILS SEE SHEET 2-U
FOR -L- PROFILE SEE SHEET 39
FOR -Y13- PROFILE SEE SHEET 45
FOR -Y14- PROFILE SEE SHEET 45
FOR -Y14A- PROFILE SEE SHEET 45
7/29/2011
R:\Roadway\Proj\r2309ab_rdy_psh25.dgn
florence & hutcheson, inc.

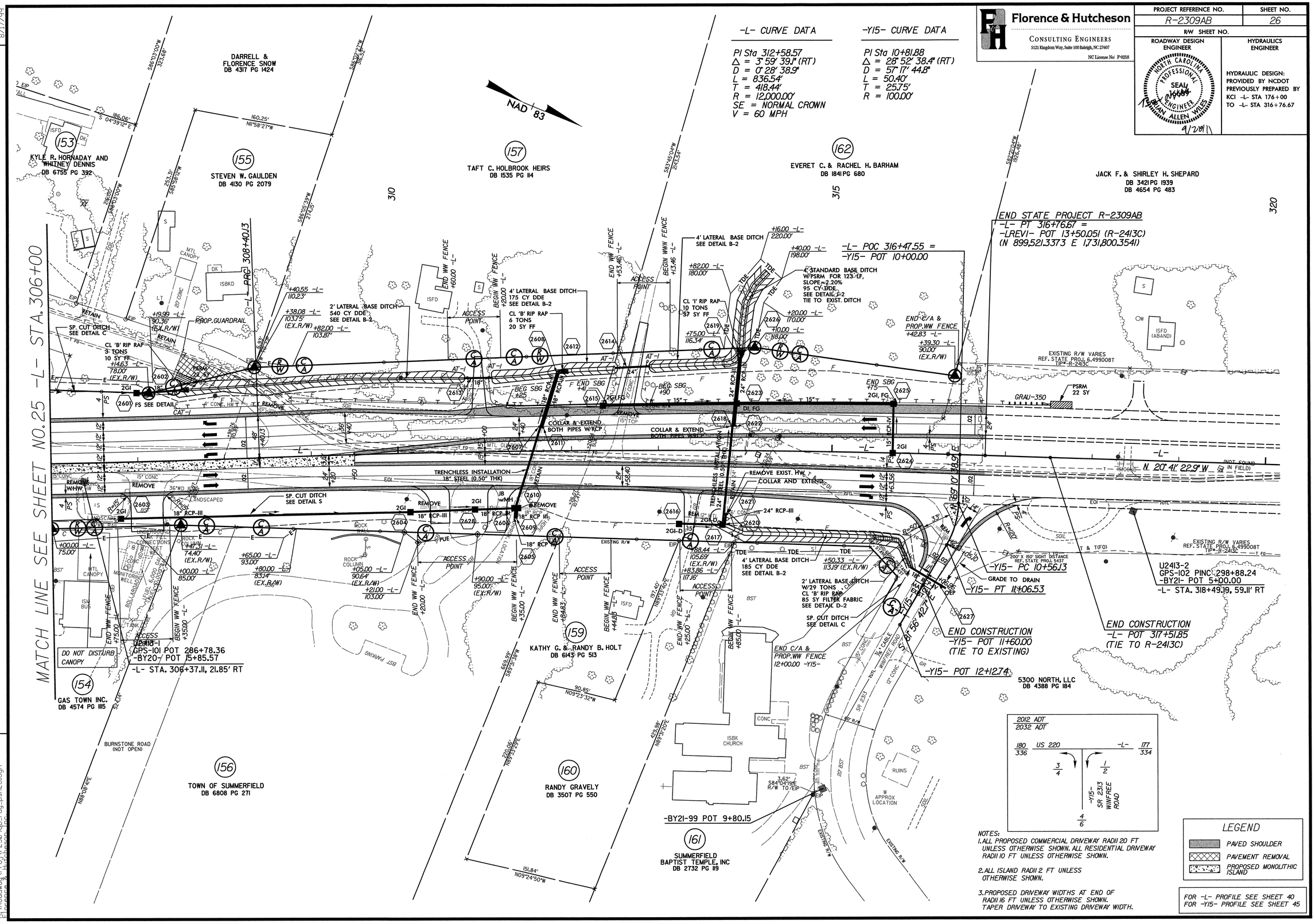

NOTES:
1. ALL PROPOSED COMMERCIAL DRIVEWAY RADII 20 FT UNLESS OTHERWISE SHOWN. ALL RESIDENTIAL DRIVEWAY RADII 10 FT UNLESS OTHERWISE SHOWN.
2. ALL ISLAND RADII 2 FT UNLESS OTHERWISE SHOWN.
3. PROPOSED DRIVEWAY WIDTHS AT END OF RADII 16 FT UNLESS OTHERWISE SHOWN. TAPER DRIVEWAY TO EXISTING DRIVEWAY WIDTH.

REVISIONS

8/17/99

9/6/2011
R:\Roadway\Proj\r2309ab_rdy_psh26.dgn
Florence & Hutcheson, Inc.

Florence & Hutcheson CONSULTING ENGINEERS 5121 Kingdom Way, Suite 100 Raleigh, NC 27607 NC License No: F-0258	PROJECT REFERENCE NO.	SHEET NO.
	R-2309AB	27
	R/W SHEET NO.	
	ROADWAY DESIGN ENGINEER	HYDRAULICS ENGINEER
	NORTH CAROLINA PROFESSIONAL SEAL 16689 ENGINEER NATHAN ALLEN WILES 9/28/11	NORTH CAROLINA PROFESSIONAL SEAL 19732 ENGINEER SHIHCHEN FUH 9-28-2011

REVISIONS

8/17/99

-Y- CURVE DATA

PI Sta 5+28.21
Δ = 24° 41' 09.4" (LT)
D = 11° 27' 33.0"
L = 215.43'
T = 109.41'
R = 500.00'

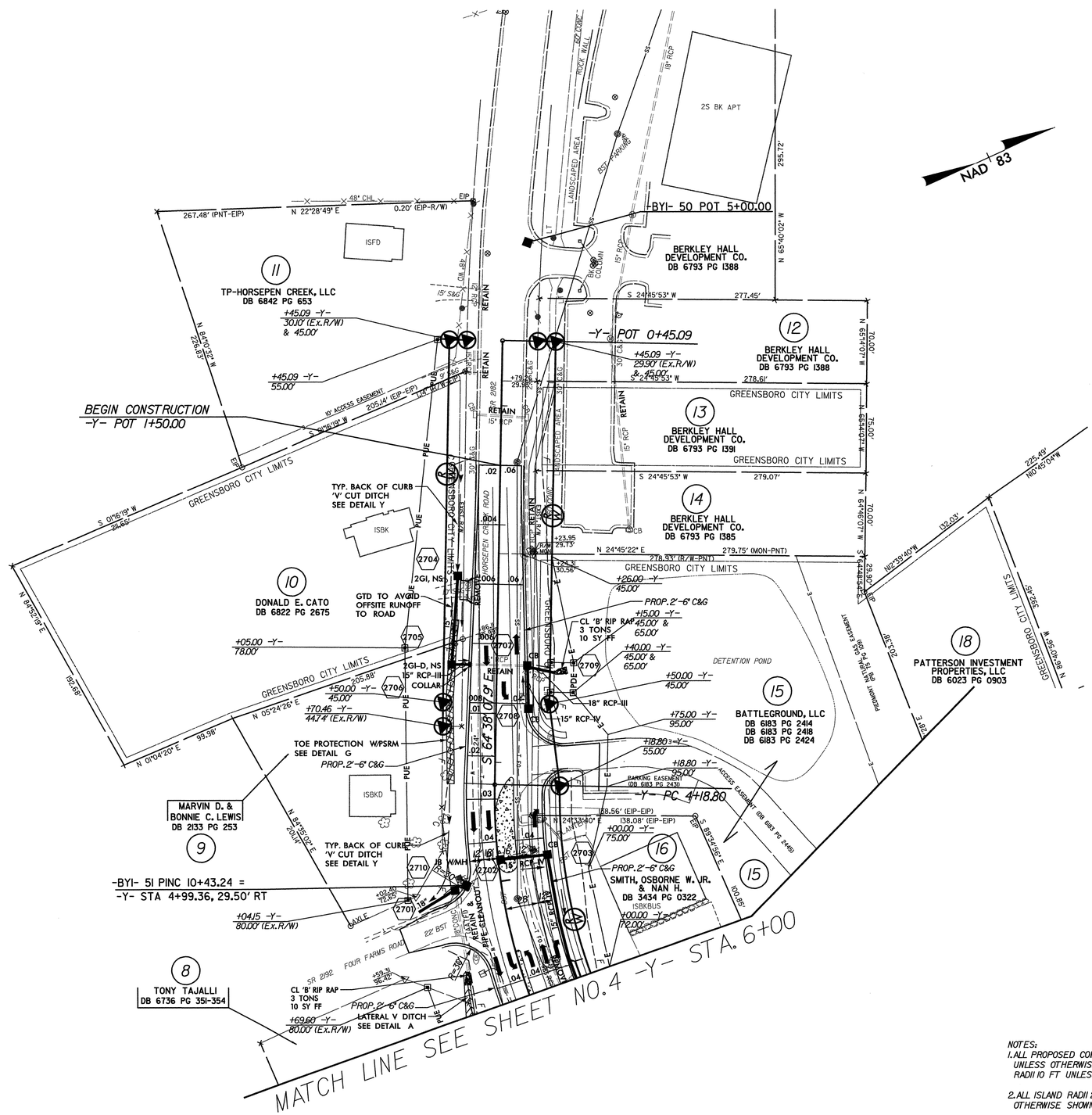

NOTES:
1. ALL PROPOSED COMMERCIAL DRIVEWAY RADII 20 FT UNLESS OTHERWISE SHOWN. ALL RESIDENTIAL DRIVEWAY RADII 10 FT UNLESS OTHERWISE SHOWN.
2. ALL ISLAND RADII 2 FT UNLESS OTHERWISE SHOWN.
3. PROPOSED DRIVEWAY WIDTHS AT END OF RADII 16 FT UNLESS OTHERWISE SHOWN. TAPER DRIVEWAY TO EXISTING DRIVEWAY WIDTH.

LEGEND
PROPOSED MONOLITHIC ISLAND

FOR -Y- PROFILE SEE SHEET 41

7/29/2011
E:\Roadway\Proj\r2309ab_rdy_psh27.dgn

Florence & Hutcheson
CONSULTING ENGINEERS
5121 Kingdom Way, Suite 100 Raleigh, NC 27607
NC License No: F-0258

PROJECT REFERENCE NO.	SHEET NO.
R-2309AB	28
R/W SHEET NO.	
ROADWAY DESIGN ENGINEER	HYDRAULICS ENGINEER

NORTH CAROLINA PROFESSIONAL SEAL 16689 ENGINEER BRIAN ALLEN WILES 9/28/11

HYDRAULIC DESIGN:
PROVIDED BY NCDOT
PREVIOUSLY PREPARED BY
KCI -L- STA 176+00
TO -L- STA 316+76.67

-Y8- CURVE DATA

PIs Sta 18+37.56	PI Sta 21+16.65	PIs Sta 23+94.00
Θs = 1° 25' 56.6"	Δ = 11° 57' 06.1" (LT)	Θs = 1° 25' 56.6"
Ls = 115.00'	D = 2° 29' 28.0"	Ls = 115.00'
LT = 76.67'	L = 479.77'	LT = 76.67'
ST = 38.34'	T = 240.76'	ST = 38.34'
	R = 2,300.00'	

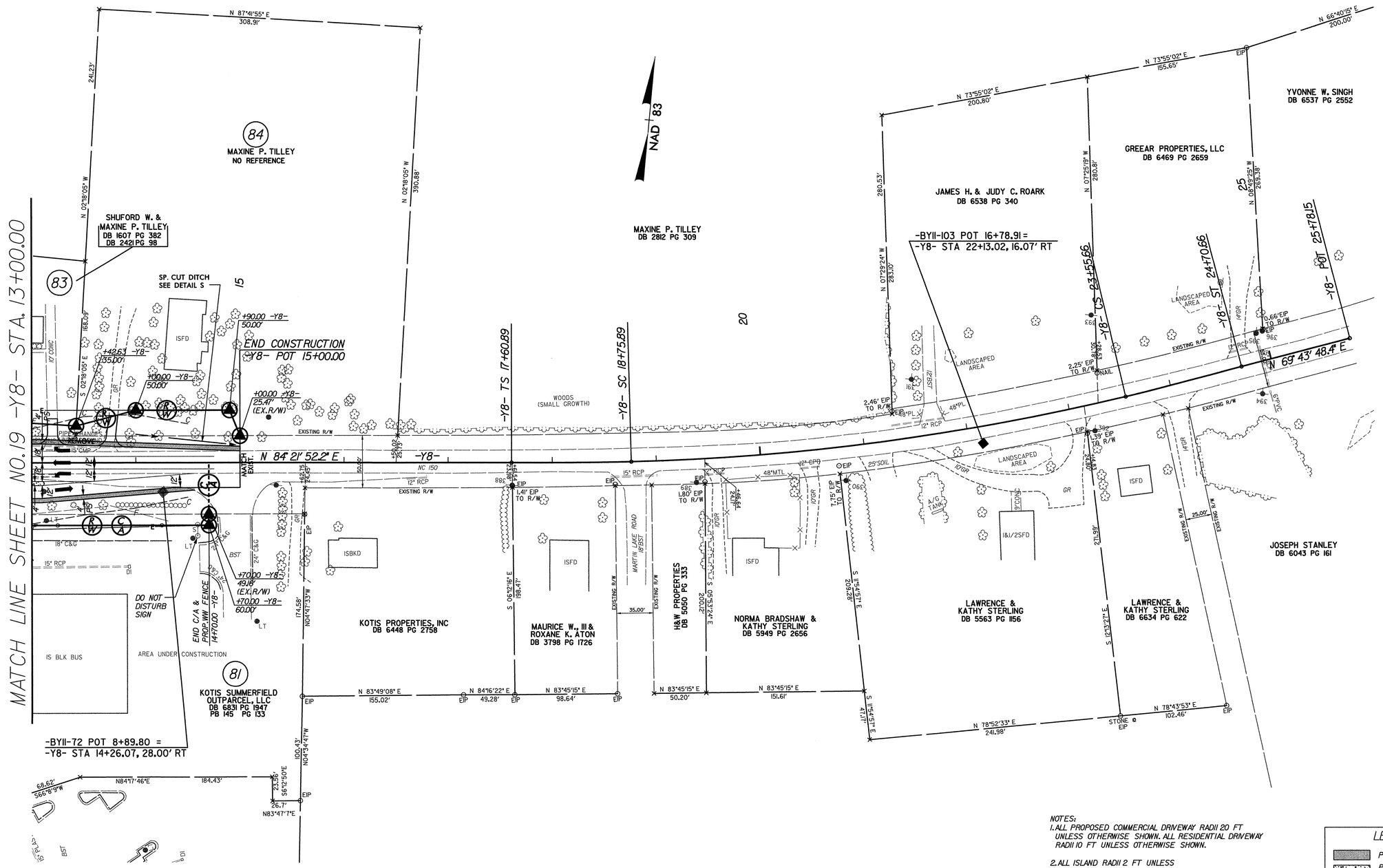

NOTES:
1. ALL PROPOSED COMMERCIAL DRIVEWAY RADII 20 FT UNLESS OTHERWISE SHOWN. ALL RESIDENTIAL DRIVEWAY RADII 10 FT UNLESS OTHERWISE SHOWN.
2. ALL ISLAND RADII 2 FT UNLESS OTHERWISE SHOWN.
3. PROPOSED DRIVEWAY WIDTHS AT END OF RADII 16 FT UNLESS OTHERWISE SHOWN. TAPER DRIVEWAY TO EXISTING DRIVEWAY WIDTH.

LEGEND
PAVED SHOULDER
PROPOSED MONOLITHIC ISLAND

FOR -Y8- INTERSECTION DETAIL SEE SHEET 2-S
FOR -Y8- PROFILE SEE SHEET 43

REVISIONS

8/17/99

9/6/2011
R:\Roadway\Proj\r2309ab_rdy_psh28.dgn
Florence & Hutcheson, Inc.

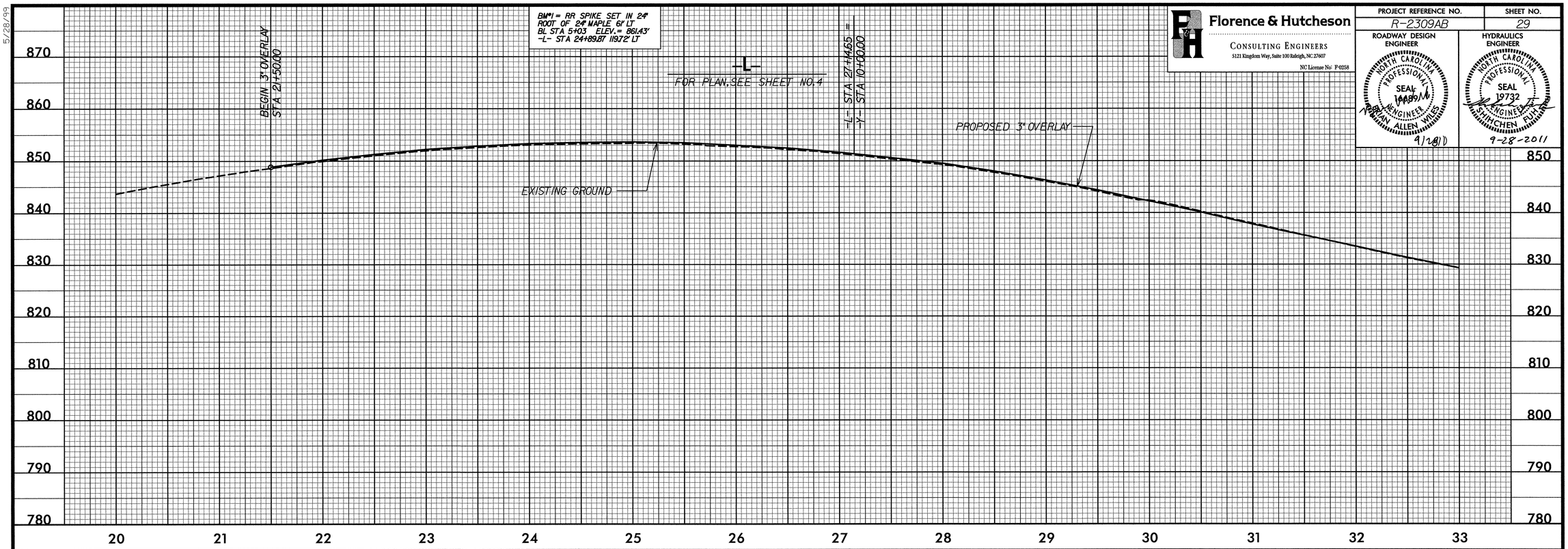

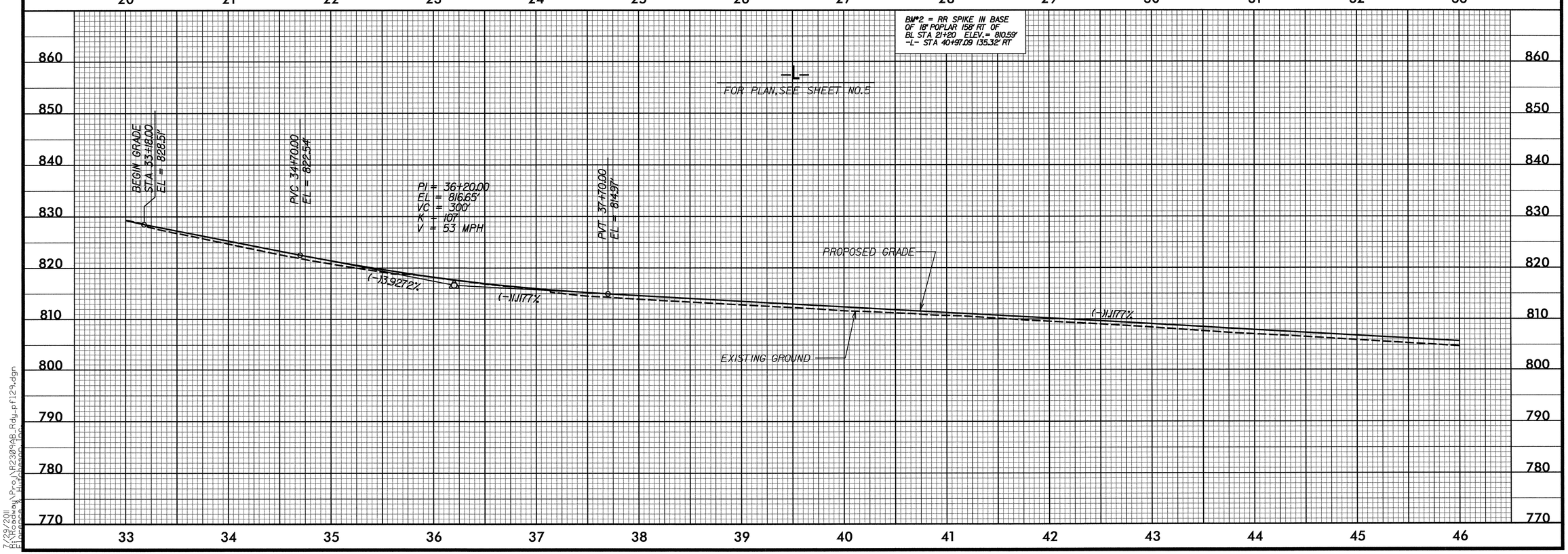

Florence & Hutcheson
CONSULTING ENGINEERS
5121 Kingdom Way, Suite 100 Raleigh, NC 27607
NC License No: F-0258

PROJECT REFERENCE NO.	SHEET NO.
R-2309AB	29

ROADWAY DESIGN ENGINEER
NORTH CAROLINA PROFESSIONAL SEAL 14489 ENGINEER BRIAN ALLEN WILES
9/28/11

HYDRAULICS ENGINEER
NORTH CAROLINA PROFESSIONAL SEAL 19732 ENGINEER SHIHCHEN FUHRMAN
9-28-2011

5/28/99

7/29/2011
R:\Roadway\Proj\R2309AB_Rdy_pf129.dgn
Florence & Hutcheson, Inc.

Florence & Hutcheson
CONSULTING ENGINEERS
5121 Kingdom Way, Suite 100 Raleigh, NC 27607
NC License No: F-0258

PROJECT REFERENCE NO.	SHEET NO.
R-2309AB	30

ROADWAY DESIGN ENGINEER
NORTH CAROLINA PROFESSIONAL SEAL 16689 ENGINEER BRIAN ALLEN WILES
9/28/11

HYDRAULICS ENGINEER
NORTH CAROLINA PROFESSIONAL SEAL 19732 ENGINEER SHIHCHEN FUH
9-28-2011

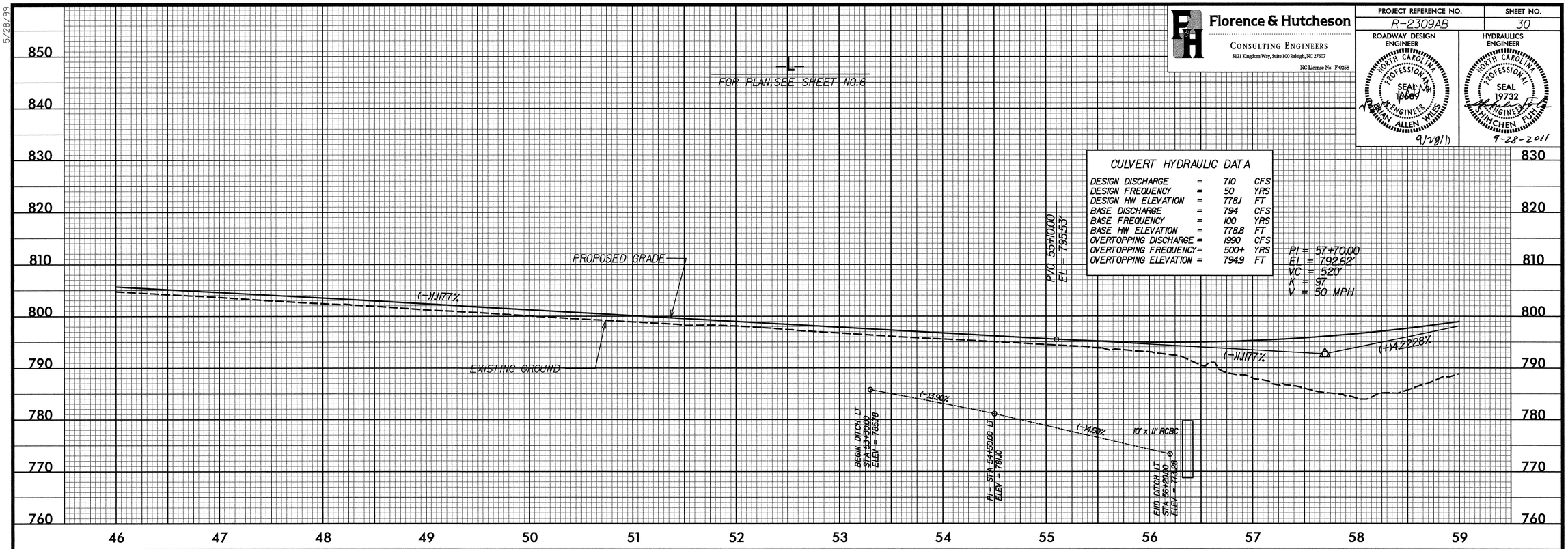

CULVERT HYDRAULIC DATA

DESIGN DISCHARGE	=	710	CFS
DESIGN FREQUENCY	=	50	YRS
DESIGN HW ELEVATION	=	778.1	FT
BASE DISCHARGE	=	794	CFS
BASE FREQUENCY	=	100	YRS
BASE HW ELEVATION	=	778.8	FT
OVERTOPPING DISCHARGE	=	1990	CFS
OVERTOPPING FREQUENCY	=	500+	YRS
OVERTOPPING ELEVATION	=	794.9	FT

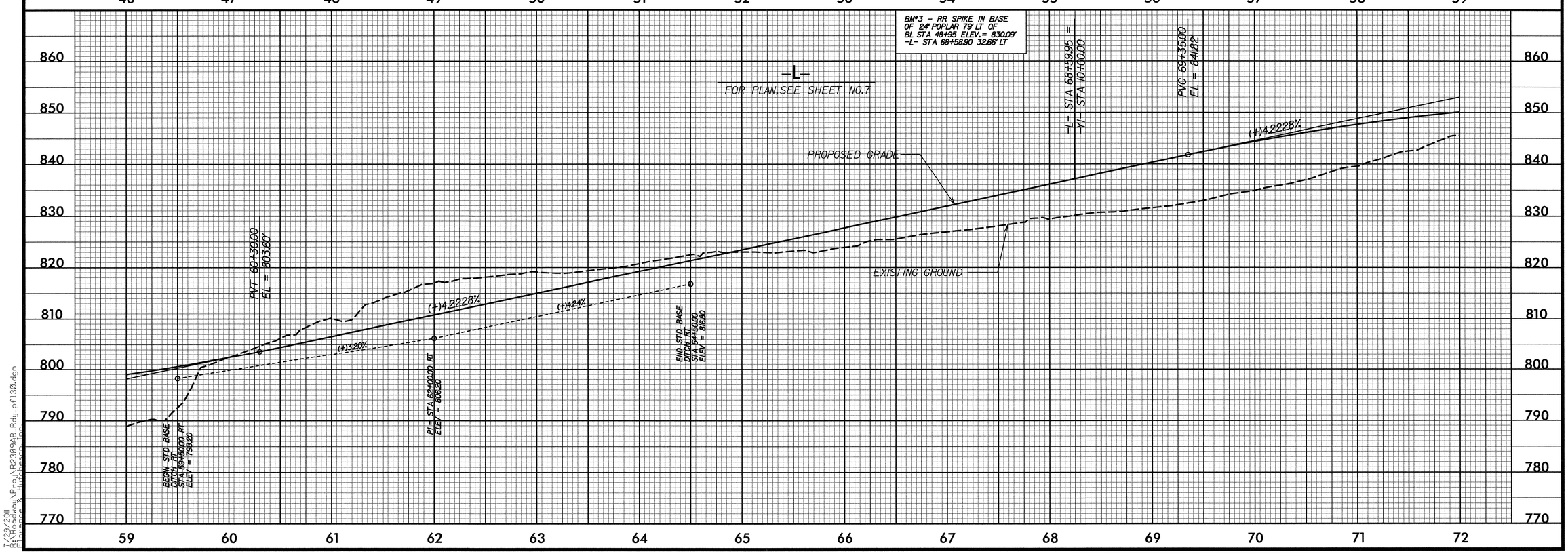

5/28/99

7/29/2011
R:\Roadway\Proj\R2309AB_Rdy_pf130.dgn
Florence & Hutcheson, Inc.

Florence & Hutcheson
CONSULTING ENGINEERS
5121 Kingdom Way, Suite 100 Raleigh, NC 27607
NC License No: F-0258

PROJECT REFERENCE NO.	SHEET NO.
R-2309AB	31

ROADWAY DESIGN ENGINEER
NORTH CAROLINA PROFESSIONAL SEAL 16689 ENGINEER ALLEN WILKS
9/28/11

HYDRAULICS ENGINEER
NORTH CAROLINA PROFESSIONAL SEAL 19732 ENGINEER MINCHEN FUH
9-28-2011

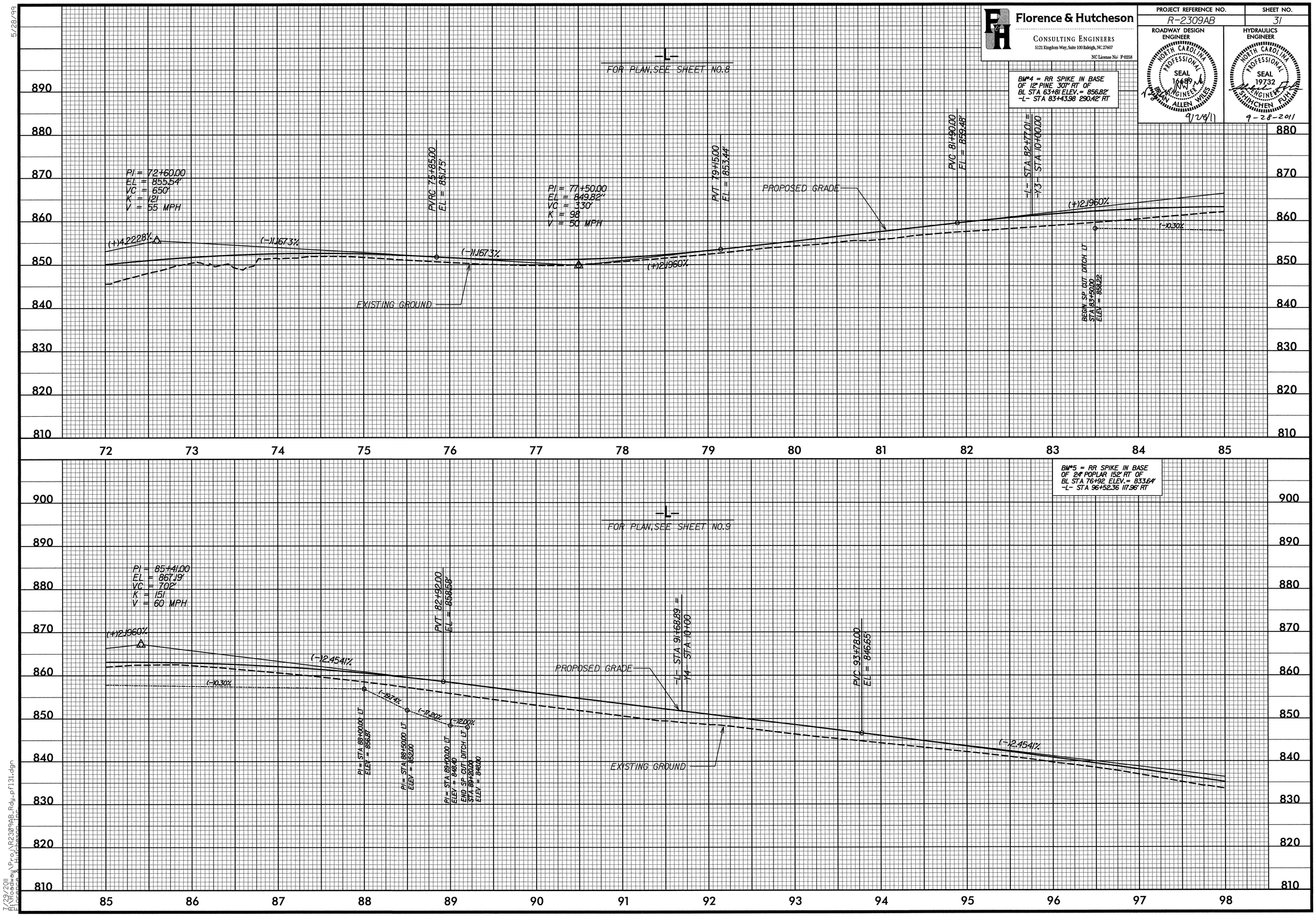

5/28/99

7/29/2011
H:\Roadway\Proj\R2309AB_Rdy_pf131.dgn
Florence & Hutcheson, P.A.

5/28/99

Florence & Hutcheson
CONSULTING ENGINEERS
5121 Kingdom Way, Suite 100 Raleigh, NC 27607
NC License No: F-0258

PROJECT REFERENCE NO.	SHEET NO.
R-2309AB	32

ROADWAY DESIGN ENGINEER
NORTH CAROLINA PROFESSIONAL SEAL 19680 ENGINEER BRIAN ALLEN WILES
9/20/11

HYDRAULICS ENGINEER
NORTH CAROLINA PROFESSIONAL SEAL 19732 ENGINEER MICHAEL CHEN HUTCHEN FUNG
9-28-2011

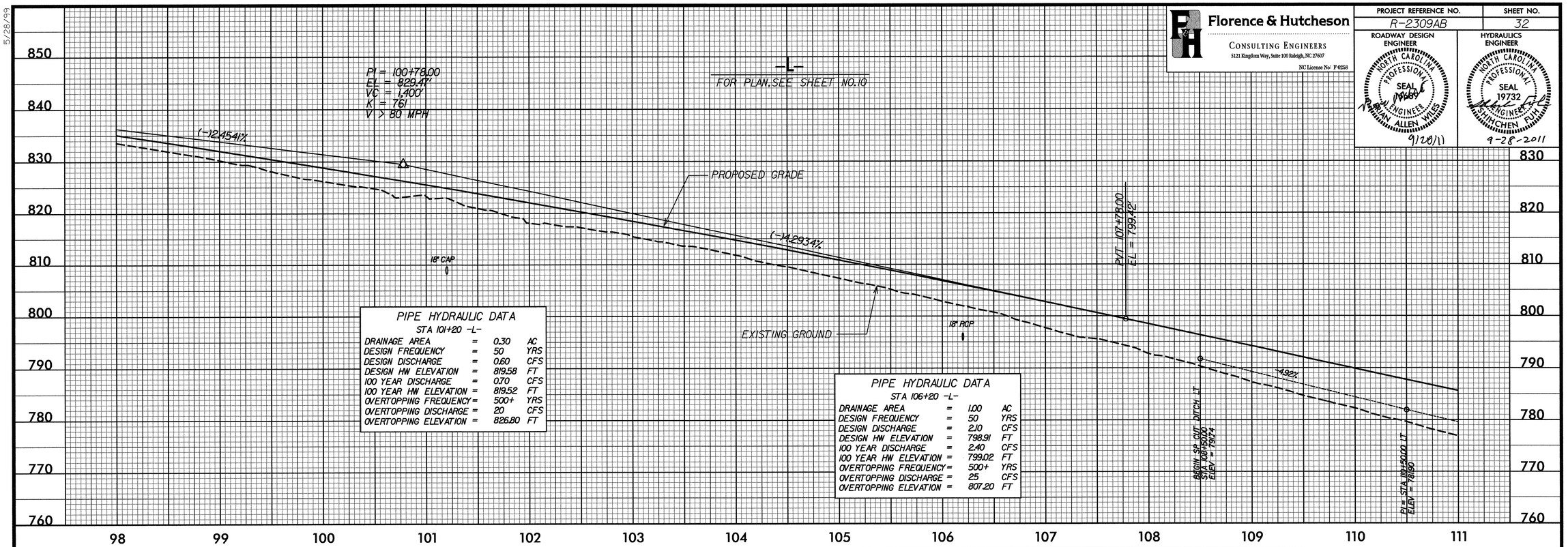

7/29/2011
R:\Roadway\Proj\R2309AB_Rdy_pf132.dgn
hchenfung@hfcengineers.com

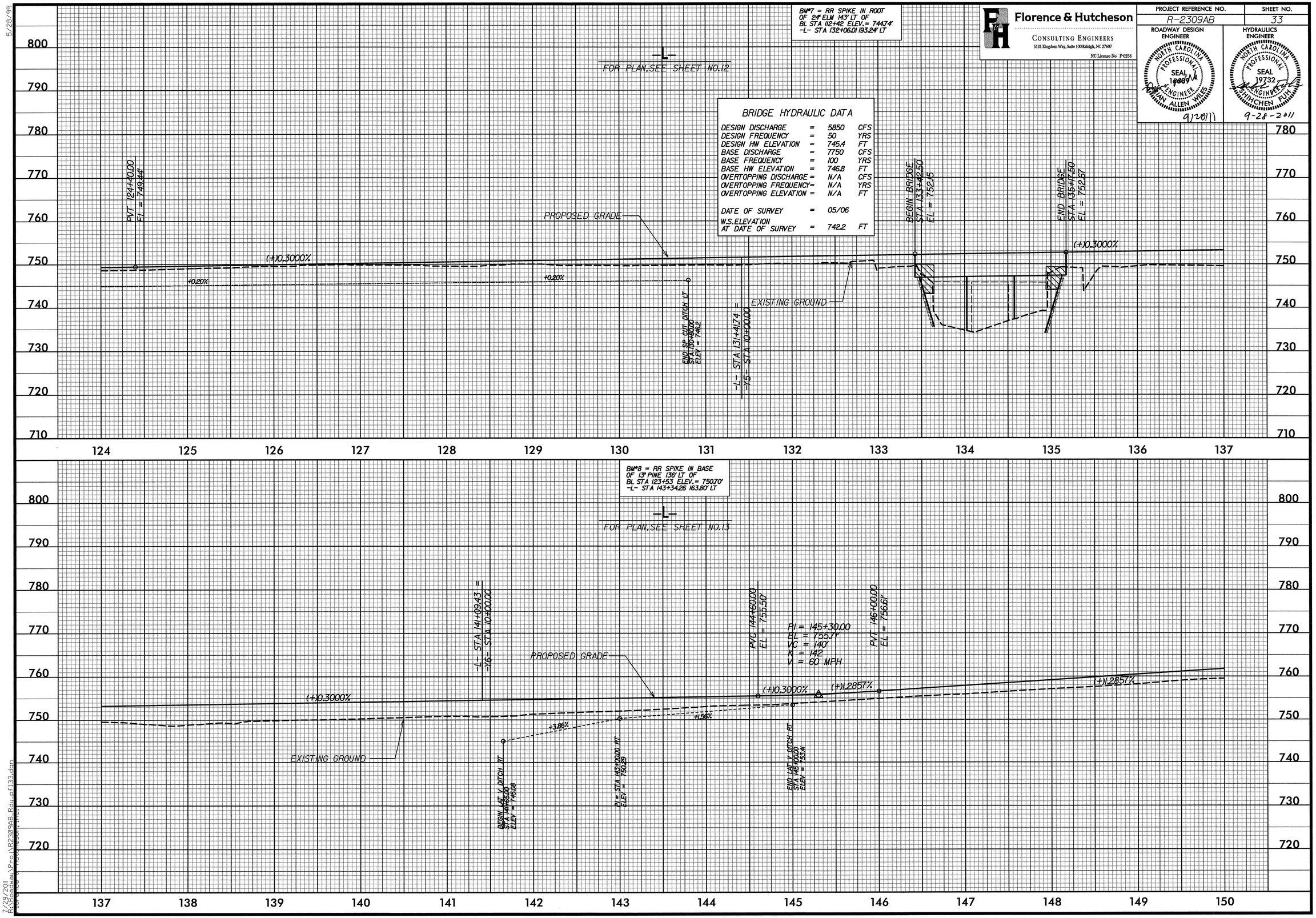

Florence & Hutcheson
CONSULTING ENGINEERS
5121 Kingdom Way, Suite 100 Raleigh, NC 27607
NC License No: F-0258

PROJECT REFERENCE NO.	SHEET NO.
R-2309AB	33

ROADWAY DESIGN ENGINEER
NORTH CAROLINA PROFESSIONAL SEAL 14889 ENGINEER BRIAN ALLEN WILES
9/28/11

HYDRAULICS ENGINEER
NORTH CAROLINA PROFESSIONAL SEAL 19732 ENGINEER SHIHCHEN FUH
9-28-2011

5/28/99

7/29/2011
R:\Roadway\Proj\R2309AB_Rdy_pf133.dgn
Florence & Hutcheson, Inc.

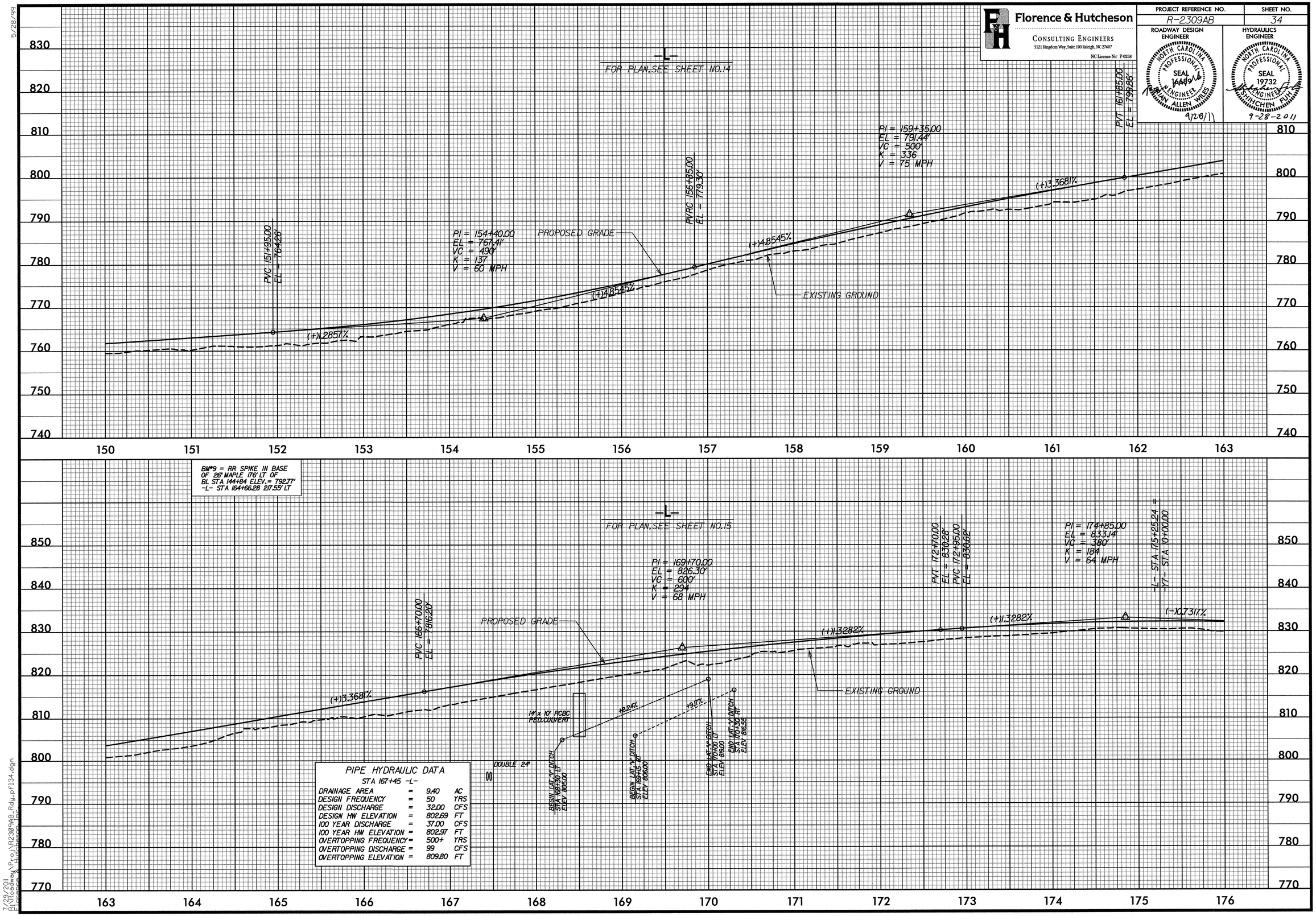

5/28/99

7/29/2011
R:\Roadway\Proj\R2309AB_Rdy_pf134.dgn
Florence & Hutcheson, Inc.

5/28/99

PROJECT REFERENCE NO.	SHEET NO.
R-2309AB	35

Florence & Hutcheson
CONSULTING ENGINEERS
5121 Kingdom Way, Suite 100 Raleigh, NC 27607
NC License No: F-0258

ROADWAY DESIGN ENGINEER
NORTH CAROLINA PROFESSIONAL SEAL 16689 ENGINEER BRIAN ALLEN WILES
9/20/11

HYDRAULICS ENGINEER

HYDRAULIC DESIGN:
PROVIDED BY NCDOT
PREVIOUSLY PREPARED BY
KCI -L- STA 176+00
TO -L- STA 316+76.67

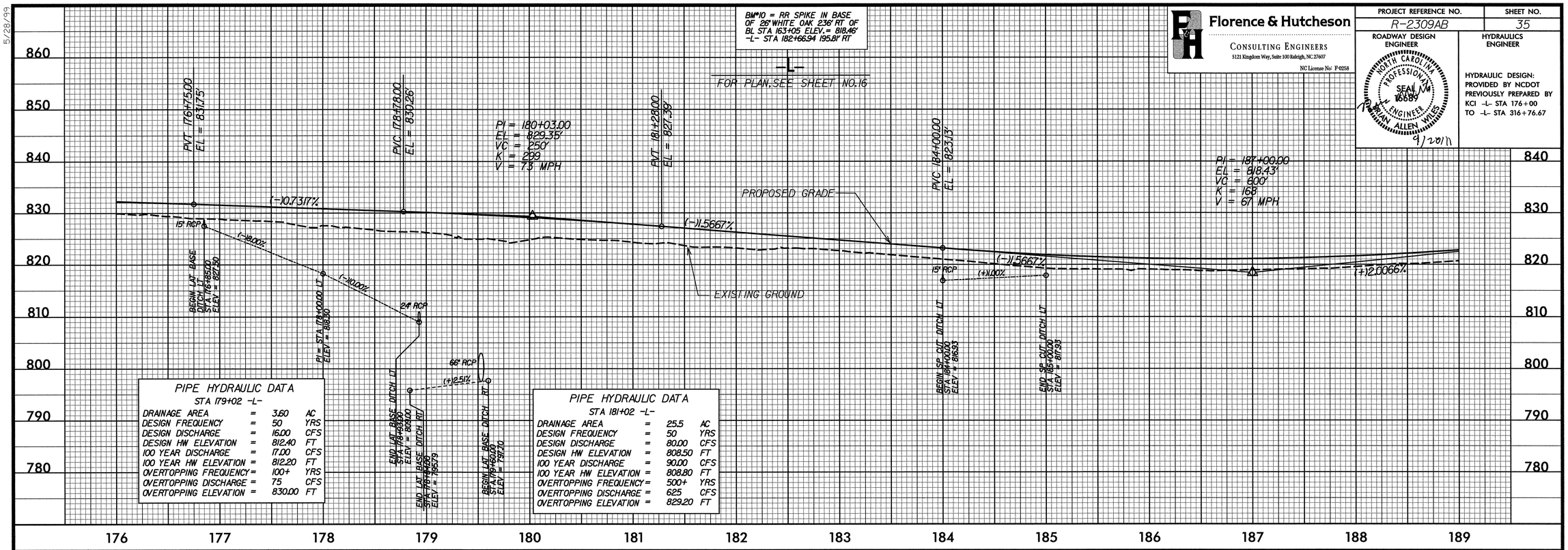

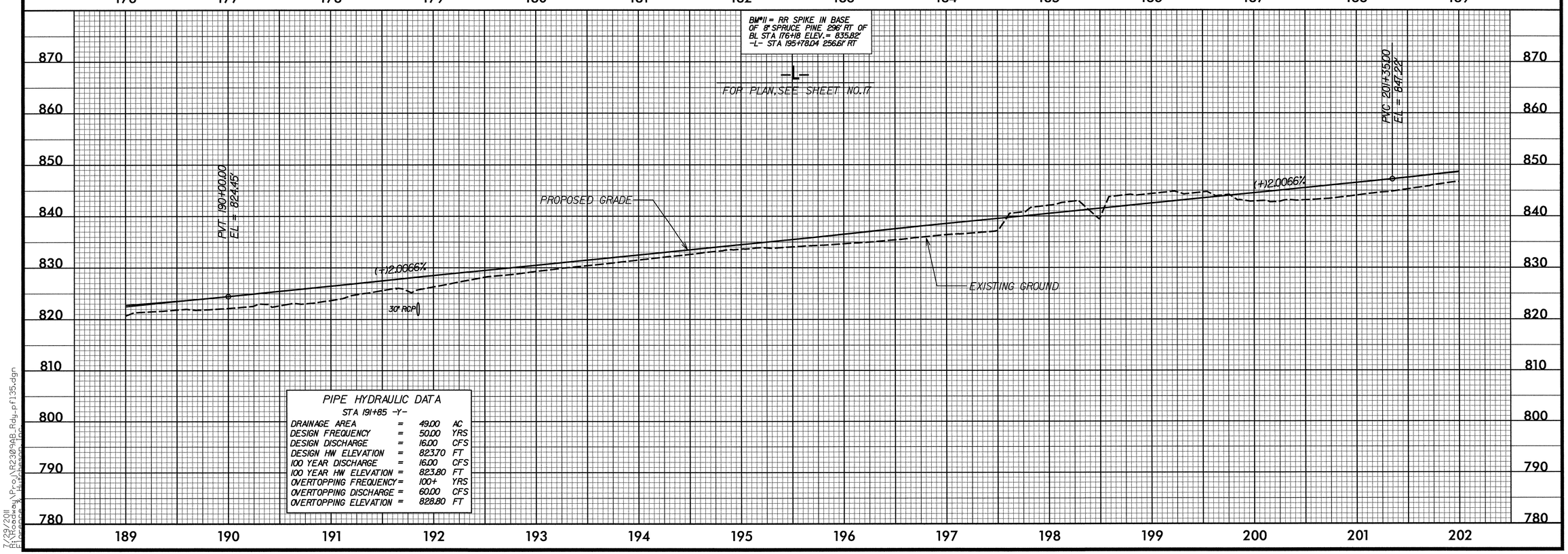

7/29/2011
H:\Roadway\Proj\R2309AB_Rdy_pf135.dgn

Florence & Hutcheson
CONSULTING ENGINEERS
5121 Kingdom Way, Suite 100 Raleigh, NC 27607
NC License No: F-0258

PROJECT REFERENCE NO.	SHEET NO.
R-2309AB	36

ROADWAY DESIGN ENGINEER

NORTH CAROLINA PROFESSIONAL SEAL 16689 ENGINEER BRIAN ALLEN WILES
9/28/11

HYDRAULICS ENGINEER

HYDRAULIC DESIGN:
PROVIDED BY NCDOT
PREVIOUSLY PREPARED BY
KCI -L- STA 176+00
TO -L- STA 316+76.67

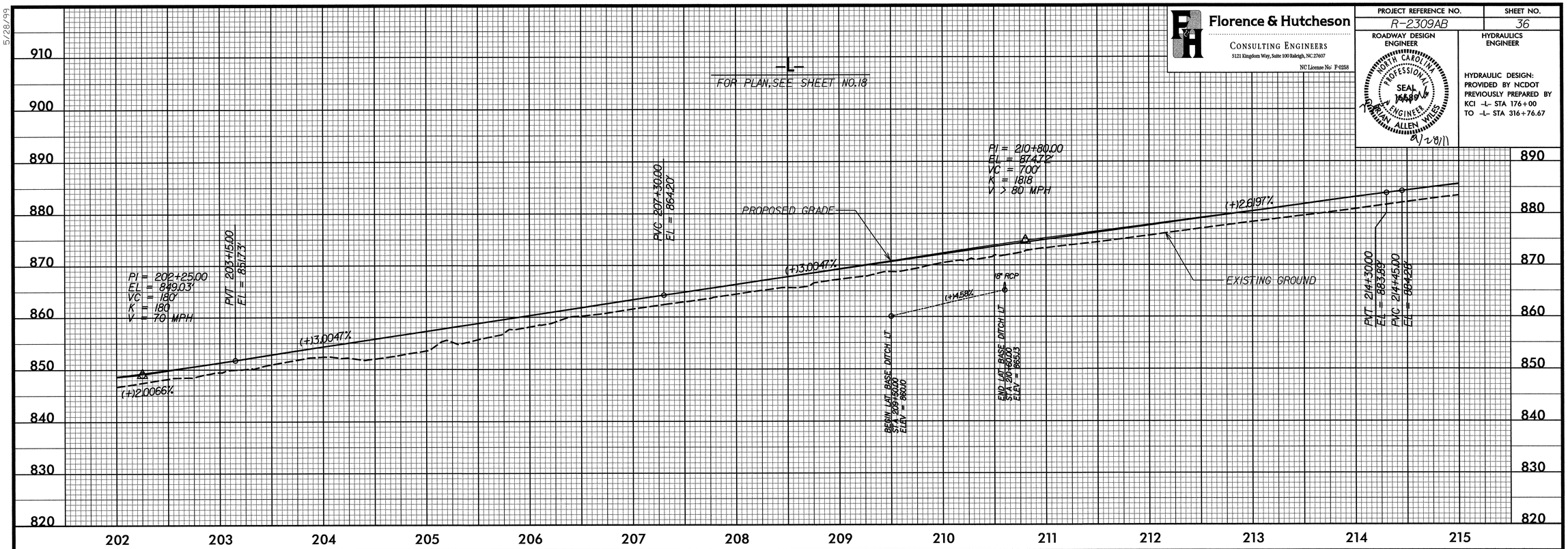

5/28/99

7/29/2011
R:\Roadway\Proj\R2309AB_Rdy_pf136.dgn
Florence & Hutcheson, Inc.

5/28/99

Florence & Hutcheson
CONSULTING ENGINEERS
5121 Kingdom Way, Suite 100 Raleigh, NC 27607
NC License No: F-0258

PROJECT REFERENCE NO.	SHEET NO.
R-2309AB	37

ROADWAY DESIGN ENGINEER

NORTH CAROLINA PROFESSIONAL SEAL 17444 ENGINEER ROBERT ALLEN WILES
4/20/11

HYDRAULICS ENGINEER

HYDRAULIC DESIGN: PROVIDED BY NCDOT PREVIOUSLY PREPARED BY KCI -L- STA 176+00 TO -L- STA 316+76.67

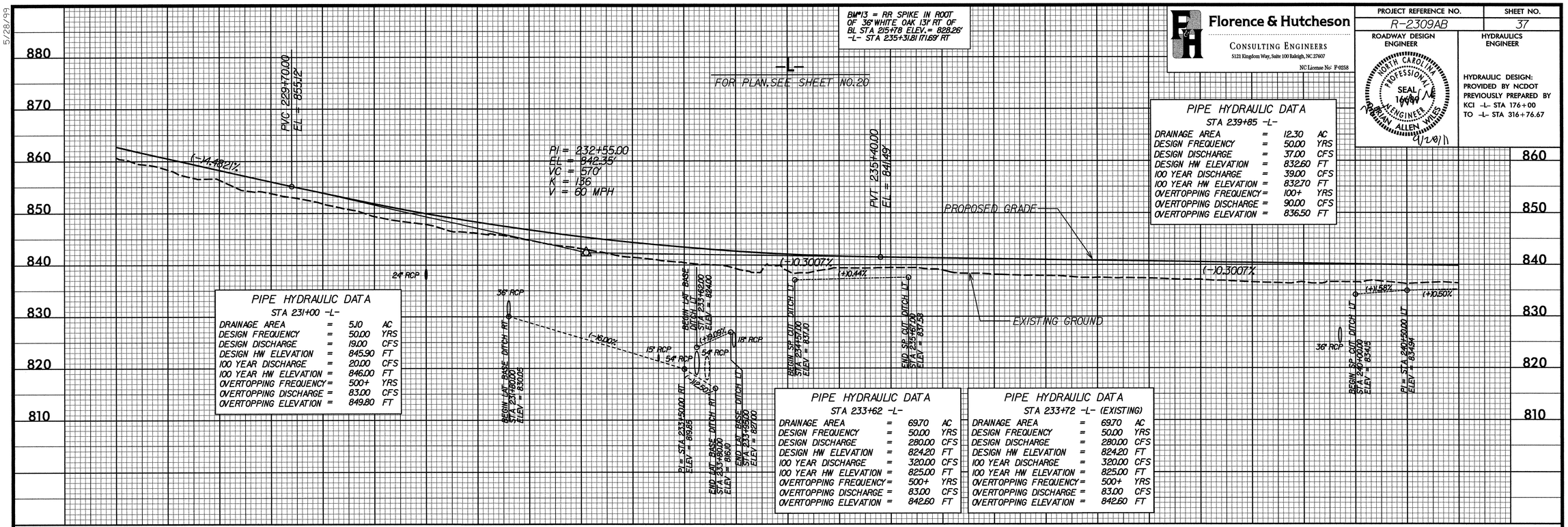

PIPE HYDRAULIC DATA
STA 239+85 -L-

DRAINAGE AREA	=	12.30	AC
DESIGN FREQUENCY	=	50.00	YRS
DESIGN DISCHARGE	=	37.00	CFS
DESIGN HW ELEVATION	=	832.60	FT
100 YEAR DISCHARGE	=	39.00	CFS
100 YEAR HW ELEVATION	=	832.70	FT
OVERTOPPING FREQUENCY	=	100+	YRS
OVERTOPPING DISCHARGE	=	90.00	CFS
OVERTOPPING ELEVATION	=	836.50	FT

PIPE HYDRAULIC DATA
STA 231+00 -L-

DRAINAGE AREA	=	5.10	AC
DESIGN FREQUENCY	=	50.00	YRS
DESIGN DISCHARGE	=	19.00	CFS
DESIGN HW ELEVATION	=	845.90	FT
100 YEAR DISCHARGE	=	20.00	CFS
100 YEAR HW ELEVATION	=	846.00	FT
OVERTOPPING FREQUENCY	=	500+	YRS
OVERTOPPING DISCHARGE	=	83.00	CFS
OVERTOPPING ELEVATION	=	849.80	FT

PIPE HYDRAULIC DATA
STA 233+62 -L-

DRAINAGE AREA	=	69.70	AC
DESIGN FREQUENCY	=	50.00	YRS
DESIGN DISCHARGE	=	280.00	CFS
DESIGN HW ELEVATION	=	824.20	FT
100 YEAR DISCHARGE	=	320.00	CFS
100 YEAR HW ELEVATION	=	825.00	FT
OVERTOPPING FREQUENCY	=	500+	YRS
OVERTOPPING DISCHARGE	=	83.00	CFS
OVERTOPPING ELEVATION	=	842.60	FT

PIPE HYDRAULIC DATA
STA 233+72 -L- (EXISTING)

DRAINAGE AREA	=	69.70	AC
DESIGN FREQUENCY	=	50.00	YRS
DESIGN DISCHARGE	=	280.00	CFS
DESIGN HW ELEVATION	=	824.20	FT
100 YEAR DISCHARGE	=	320.00	CFS
100 YEAR HW ELEVATION	=	825.00	FT
OVERTOPPING FREQUENCY	=	500+	YRS
OVERTOPPING DISCHARGE	=	83.00	CFS
OVERTOPPING ELEVATION	=	842.60	FT

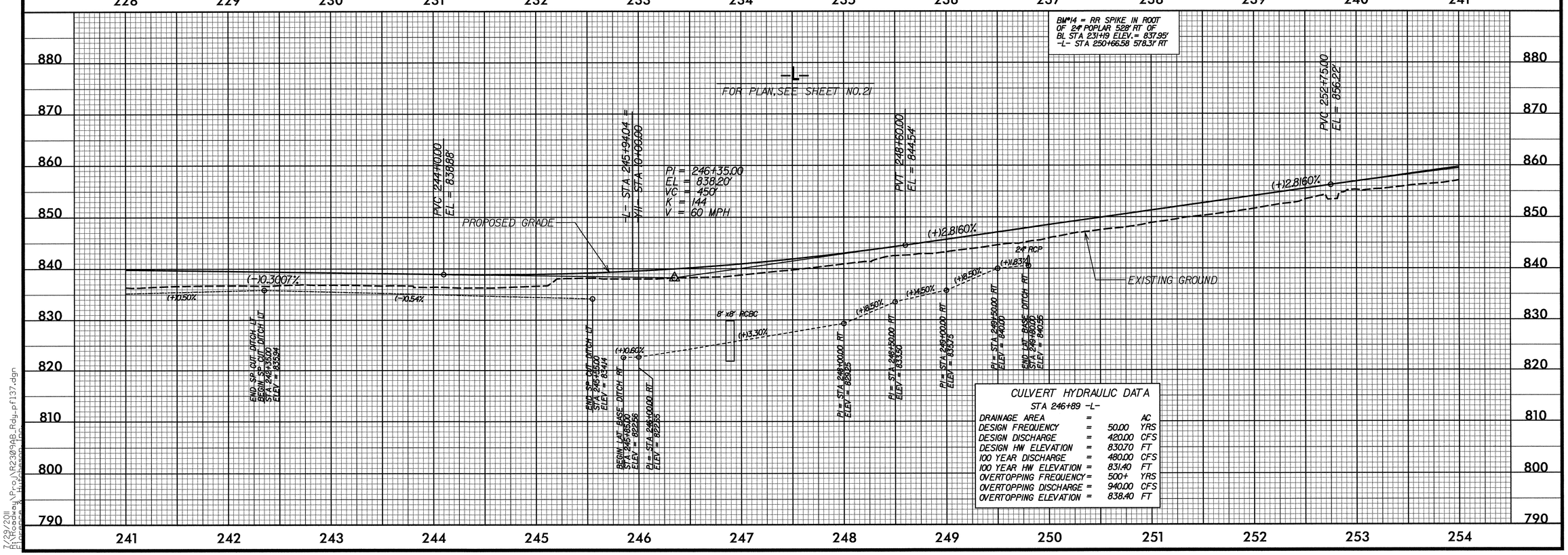

CULVERT HYDRAULIC DATA
STA 246+89 -L-

DRAINAGE AREA	=		AC
DESIGN FREQUENCY	=	50.00	YRS
DESIGN DISCHARGE	=	420.00	CFS
DESIGN HW ELEVATION	=	830.70	FT
100 YEAR DISCHARGE	=	480.00	CFS
100 YEAR HW ELEVATION	=	831.40	FT
OVERTOPPING FREQUENCY	=	500+	YRS
OVERTOPPING DISCHARGE	=	940.00	CFS
OVERTOPPING ELEVATION	=	838.40	FT

7/29/2011
H:\Roadway\Proj\R2309AB_Rdy_pf137.dgn
Florence & Hutcheson, Inc.

5/28/99

Florence & Hutcheson
CONSULTING ENGINEERS
5121 Kingdom Way, Suite 100 Raleigh, NC 27607
NC License No: F-0258

PROJECT REFERENCE NO.	SHEET NO.
R-2309AB	38

ROADWAY DESIGN ENGINEER

NORTH CAROLINA PROFESSIONAL SEAL 16680 ENGINEER BRIAN ALLEN WILES 9/20/11

HYDRAULICS ENGINEER

HYDRAULIC DESIGN: PROVIDED BY NCDOT PREVIOUSLY PREPARED BY KCI -L- STA 176+00 TO -L- STA 316+76.67

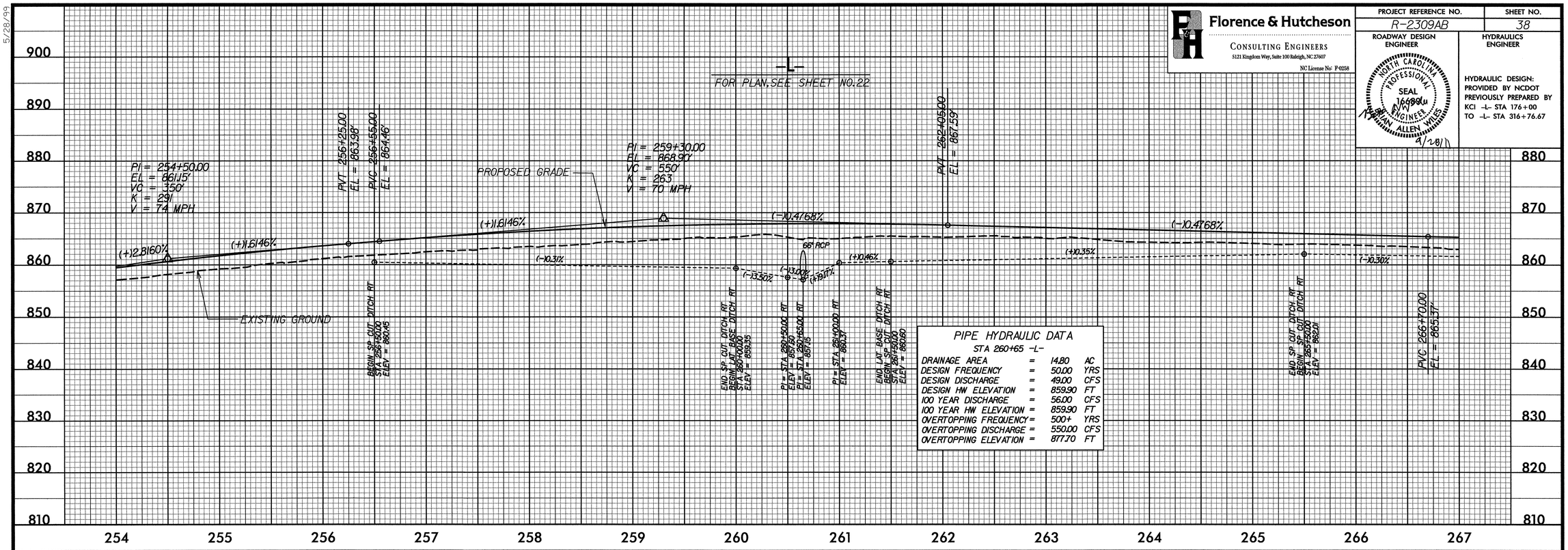

7/29/2011
E:\Projects\Proj\R2309ab_Rdy_pf138.dgn
Florence & Hutcheson, Inc.

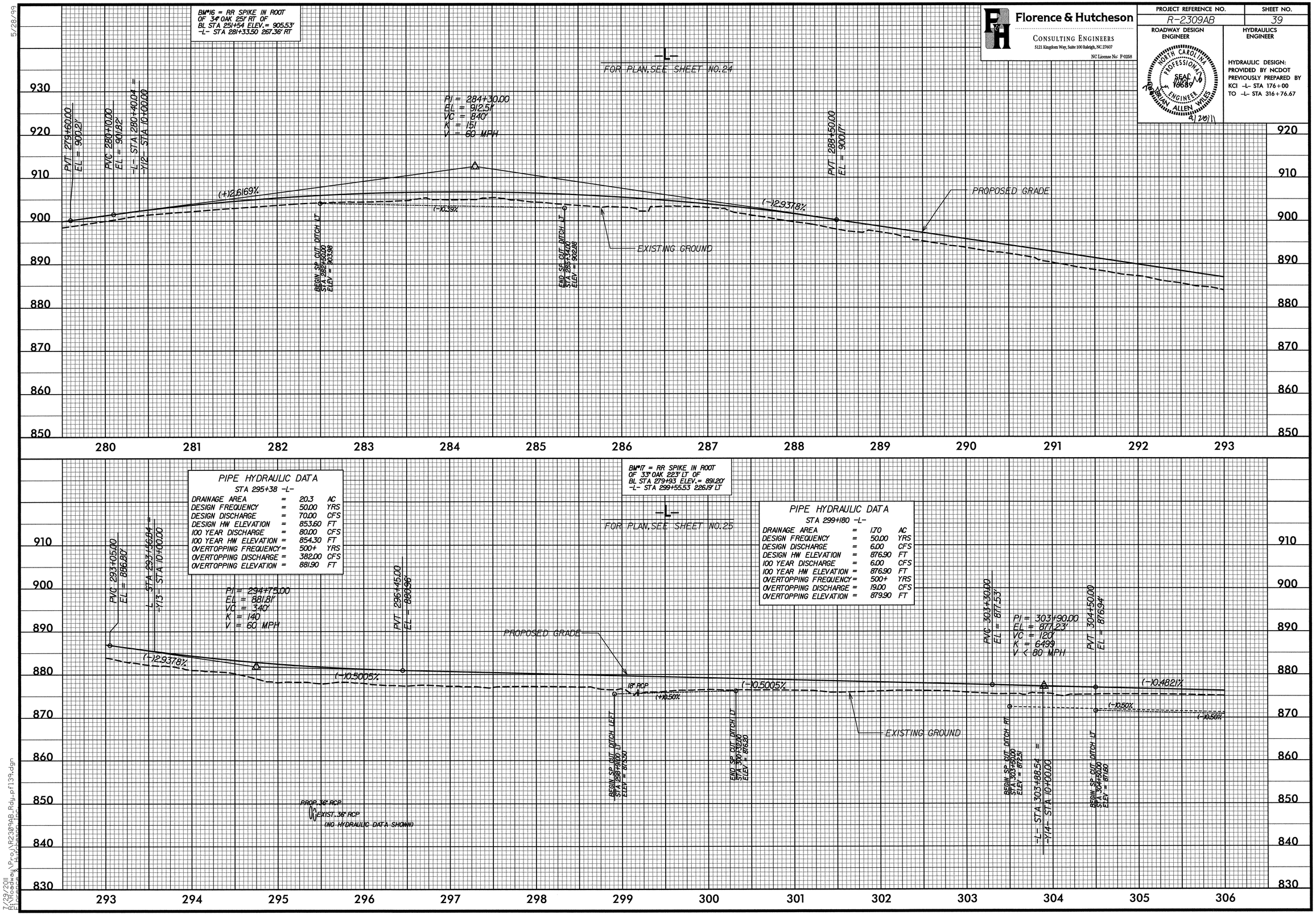

Florence & Hutcheson
CONSULTING ENGINEERS
5121 Kingdom Way, Suite 100 Raleigh, NC 27607
NC License No: F-0258

PROJECT REFERENCE NO.	SHEET NO.
R-2309AB	39

ROADWAY DESIGN ENGINEER

HYDRAULICS ENGINEER

NORTH CAROLINA PROFESSIONAL SEAL 16689 ENGINEER BRIAN ALLEN WILES
9/20/11

HYDRAULIC DESIGN: PROVIDED BY NCDOT PREVIOUSLY PREPARED BY KCI -L- STA 176+00 TO -L- STA 316+76.67

5/28/99

7/29/2011
R:\Roadway\Proj\R2309AB_Rdy_pf139.dgn
Florence & Hutcheson, Inc.

5/26/99

PROJECT REFERENCE NO.	SHEET NO.
R-2309AB	40

Florence & Hutcheson
CONSULTING ENGINEERS
5121 Kingdom Way, Suite 100 Raleigh, NC 27607
NC License No: F-0258

ROADWAY DESIGN ENGINEER

NORTH CAROLINA PROFESSIONAL SEAL 16688 ENGINEER ALLEN WILES
9/28/11

HYDRAULICS ENGINEER

HYDRAULIC DESIGN:
PROVIDED BY NCDOT
PREVIOUSLY PREPARED BY
KCI -L- STA 176+00
TO -L- STA 316+76.67

PIPE HYDRAULIC DATA
STA 311+56 -L-

DRAINAGE AREA	=	4.40	AC
DESIGN FREQUENCY	=	50.00	YRS
DESIGN DISCHARGE	=	16.00	CFS
DESIGN HW ELEVATION	=	865.20	FT
100 YEAR DISCHARGE	=	17.00	CFS
100 YEAR HW ELEVATION	=	865.30	FT
OVERTOPPING FREQUENCY	=	500+	YRS
OVERTOPPING DISCHARGE	=	49.00	CFS
OVERTOPPING ELEVATION	=	870.70	FT

PIPE HYDRAULIC DATA
STA 311+58 -L-

DRAINAGE AREA	=	4.40	AC
DESIGN FREQUENCY	=	50.00	YRS
DESIGN DISCHARGE	=	16.00	CFS
DESIGN HW ELEVATION	=	865.20	FT
100 YEAR DISCHARGE	=	17.00	CFS
100 YEAR HW ELEVATION	=	865.30	FT
OVERTOPPING FREQUENCY	=	500+	YRS
OVERTOPPING DISCHARGE	=	49.00	CFS
OVERTOPPING ELEVATION	=	870.70	FT

PIPE HYDRAULIC DATA
STA 313+82 -L-

DRAINAGE AREA	=	4.50	AC
DESIGN FREQUENCY	=	50.00	YRS
DESIGN DISCHARGE	=	21.00	CFS
DESIGN HW ELEVATION	=	862.70	FT
100 YEAR DISCHARGE	=	21.00	CFS
100 YEAR HW ELEVATION	=	862.70	FT
OVERTOPPING FREQUENCY	=	500+	YRS
OVERTOPPING DISCHARGE	=	54.00	CFS
OVERTOPPING ELEVATION	=	871.70	FT

PIPE HYDRAULIC DATA
STA 313+85 -L-

DRAINAGE AREA	=	4.50	AC
DESIGN FREQUENCY	=	50.00	YRS
DESIGN DISCHARGE	=	21.00	CFS
DESIGN HW ELEVATION	=	862.70	FT
100 YEAR DISCHARGE	=	21.00	CFS
100 YEAR HW ELEVATION	=	862.70	FT
OVERTOPPING FREQUENCY	=	500+	YRS
OVERTOPPING DISCHARGE	=	54.00	CFS
OVERTOPPING ELEVATION	=	871.70	FT

BM#18 = RR SPIKE IN ROOT OF 40" WILLOW OAK 84' RT OF BL STA 297+03 ELEV.= 866.44' -L- STA 316+64.65 143.71' RT

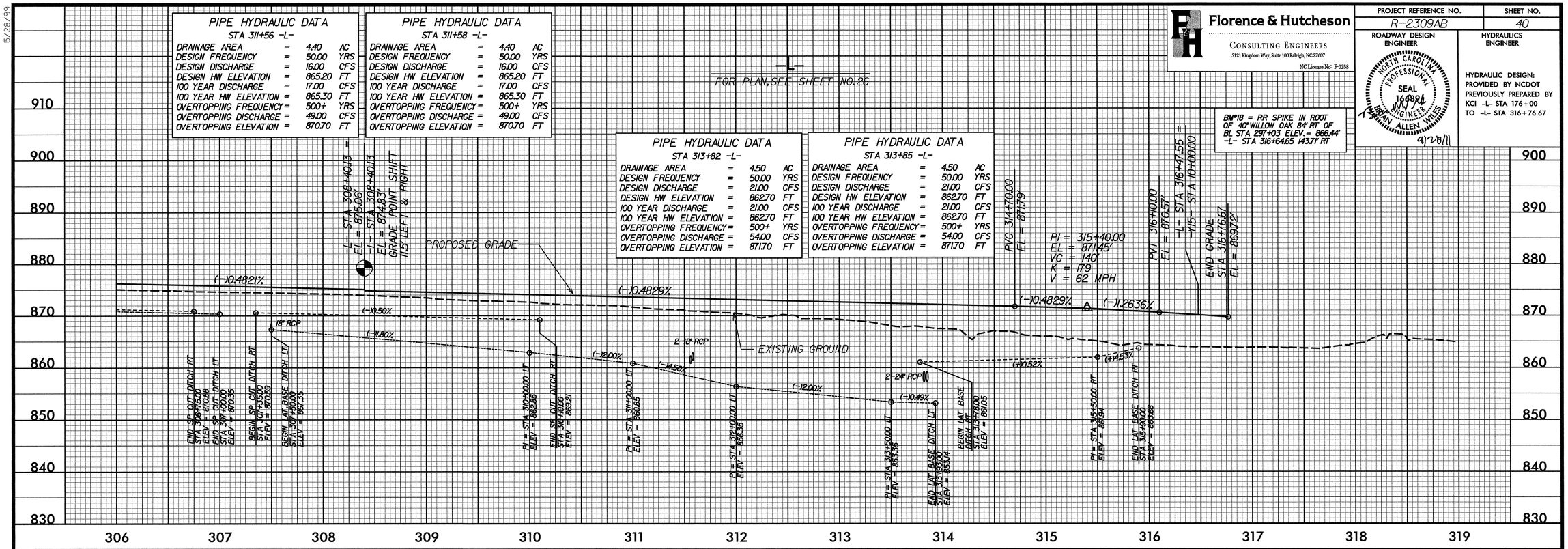

7/29/2011
R:\Hydraulics\Proj\R2309AB_Rdy_pf140.dgn
Florence & Hutcheson, Inc.

5/28/99

REVISIONS

12\10 - Revised -Y1- alignment for full movement intersection.

7/29/2011
R:\Roadway\Proj\R2309AB_Rdy_pf141.dgn
Florence & Hutcheson, Inc.

Florence & Hutcheson
CONSULTING ENGINEERS
5121 Kingdom Way, Suite 100 Raleigh, NC 27607
NC License No: F-0258

PROJECT REFERENCE NO.	SHEET NO.
R-2309AB	41

ROADWAY DESIGN ENGINEER
NORTH CAROLINA PROFESSIONAL SEAL 19089 ENGINEER BRIAN ALLEN WILES
4/28/11

HYDRAULICS ENGINEER
NORTH CAROLINA PROFESSIONAL SEAL 19732 ENGINEER SHIHCHEN BIN
4-28-2011

PIPE HYDRAULIC DATA

STA 3+20 -Y-

DRAINAGE AREA	=	2.70	AC
DESIGN FREQUENCY	=	25	YRS
DESIGN DISCHARGE	=	9.00	CFS
DESIGN HW ELEVATION	=	860.53	FT
100 YEAR DISCHARGE	=	11.00	CFS
100 YEAR HW ELEVATION	=	860.94	FT
OVERTOPPING FREQUENCY	=	200+	YRS
OVERTOPPING DISCHARGE	=	16	CFS
OVERTOPPING ELEVATION	=	862.20	FT

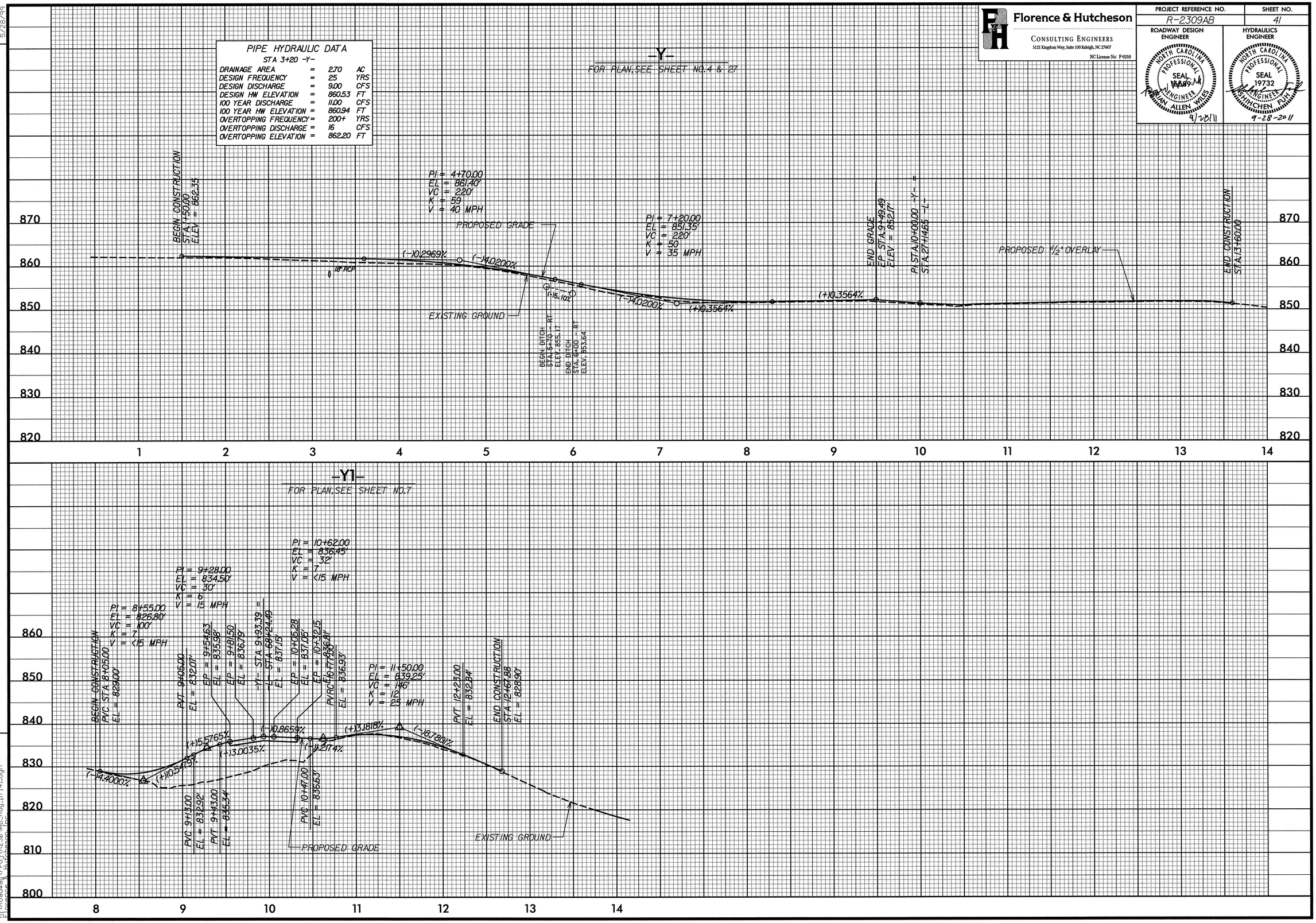

PROJECT REFERENCE NO.	SHEET NO.
R-2309AB	42

Florence & Hutcheson
CONSULTING ENGINEERS
5121 Kingdom Way, Suite 100 Raleigh, NC 27607
NC License No: F-0258

ROADWAY DESIGN ENGINEER
NORTH CAROLINA PROFESSIONAL SEAL 19682 ENGINEER BRIAN ALLEN WILS
9/1/2011

HYDRAULICS ENGINEER
NORTH CAROLINA PROFESSIONAL SEAL 19732 ENGINEER KITCHEN FIX
9-28-2011

-Y3-

FOR PLAN, SEE SHEET NO. 8

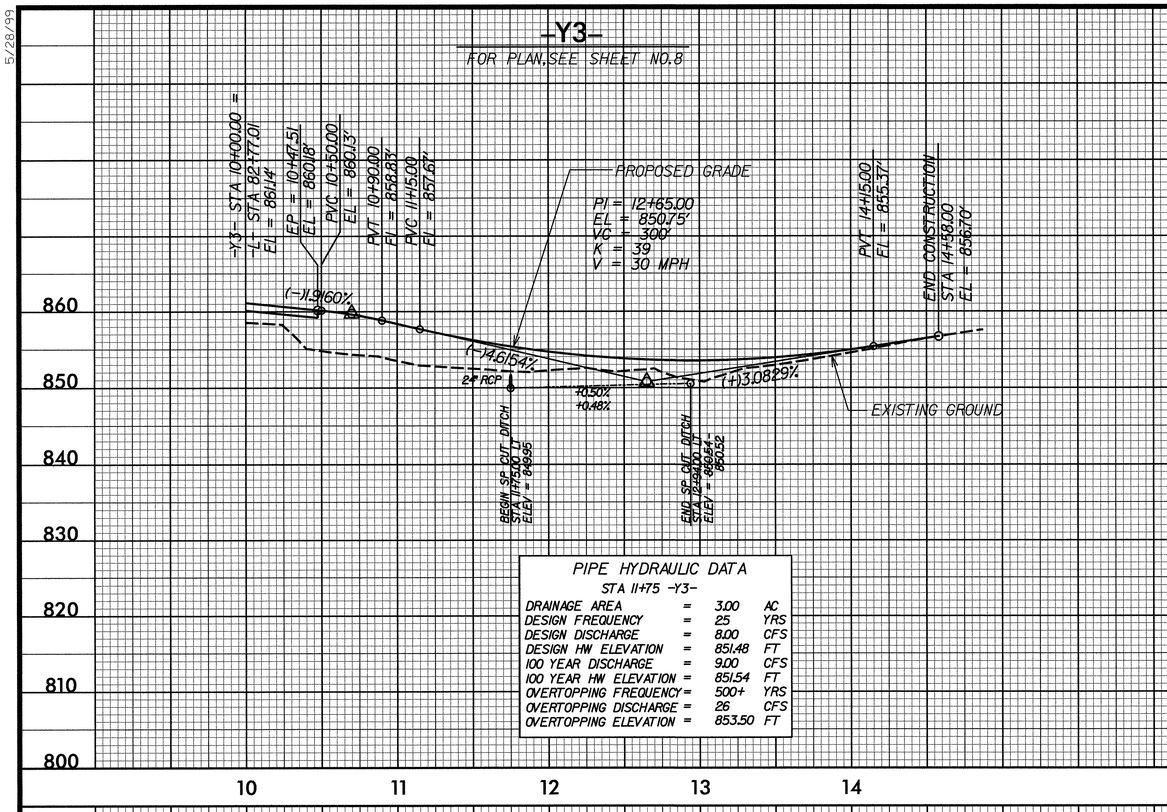

PIPE HYDRAULIC DATA
STA 11+75 -Y3-

DRAINAGE AREA	=	3.00	AC
DESIGN FREQUENCY	=	25	YRS
DESIGN DISCHARGE	=	8.00	CFS
DESIGN HW ELEVATION	=	851.48	FT
100 YEAR DISCHARGE	=	9.00	CFS
100 YEAR HW ELEVATION	=	851.54	FT
OVERTOPPING FREQUENCY	=	500+	YRS
OVERTOPPING DISCHARGE	=	26	CFS
OVERTOPPING ELEVATION	=	853.50	FT

-Y4-

FOR PLAN, SEE SHEET NO. 9

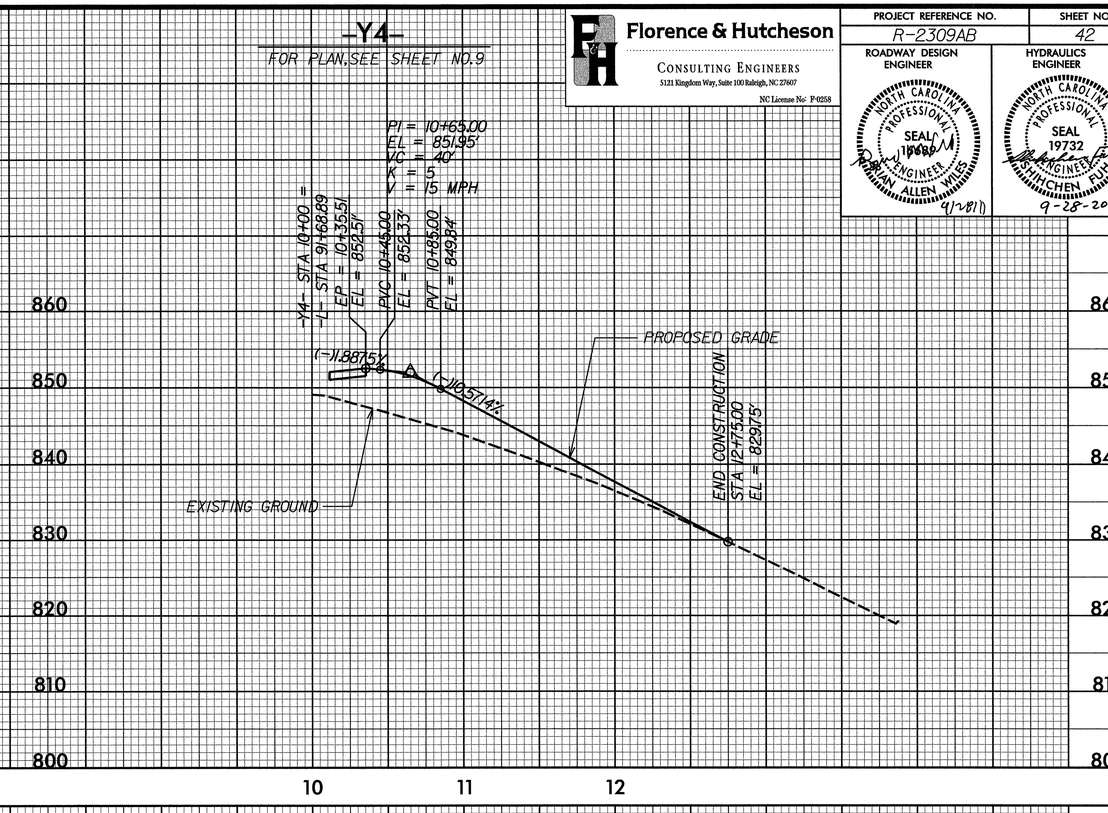

-Y5-

FOR PLAN, SEE SHEET NO. 12

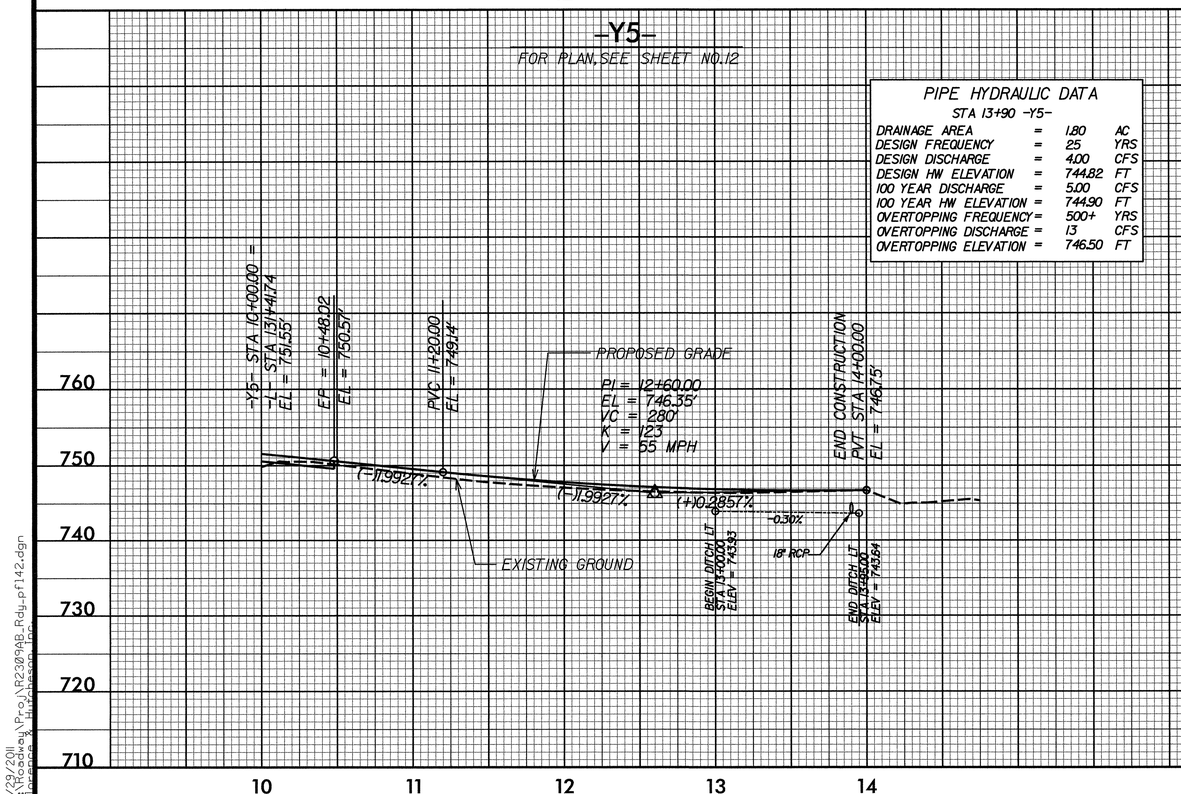

PIPE HYDRAULIC DATA
STA 13+90 -Y5-

DRAINAGE AREA	=	1.80	AC
DESIGN FREQUENCY	=	25	YRS
DESIGN DISCHARGE	=	4.00	CFS
DESIGN HW ELEVATION	=	744.82	FT
100 YEAR DISCHARGE	=	5.00	CFS
100 YEAR HW ELEVATION	=	744.90	FT
OVERTOPPING FREQUENCY	=	500+	YRS
OVERTOPPING DISCHARGE	=	13	CFS
OVERTOPPING ELEVATION	=	746.50	FT

-Y6-

FOR PLAN, SEE SHEET NO. 13

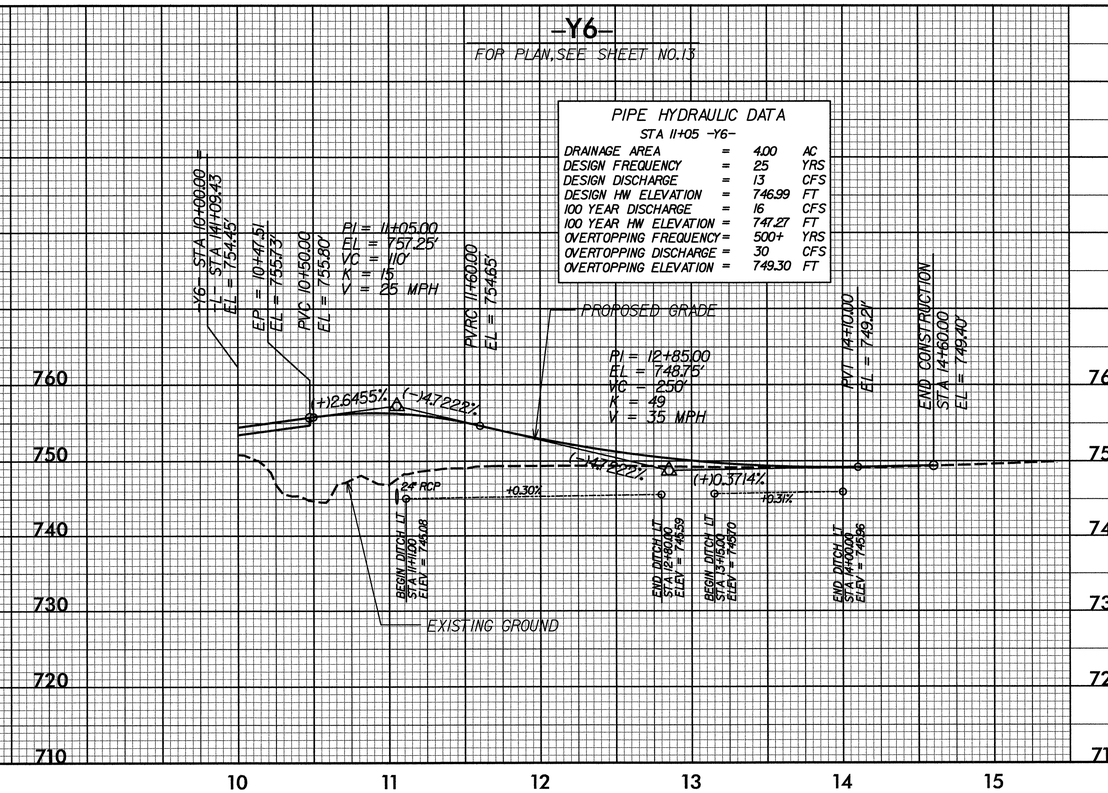

PIPE HYDRAULIC DATA
STA 11+05 -Y6-

DRAINAGE AREA	=	4.00	AC
DESIGN FREQUENCY	=	25	YRS
DESIGN DISCHARGE	=	13	CFS
DESIGN HW ELEVATION	=	746.99	FT
100 YEAR DISCHARGE	=	16	CFS
100 YEAR HW ELEVATION	=	747.27	FT
OVERTOPPING FREQUENCY	=	500+	YRS
OVERTOPPING DISCHARGE	=	30	CFS
OVERTOPPING ELEVATION	=	749.30	FT

5/28/99

7/29/2011
H:\Roadway\Proj\R2309AB_Rdy_pl42.dgn
florence&hutcheson

PROJECT REFERENCE NO.	SHEET NO.
R-2309AB	43

Florence & Hutcheson
CONSULTING ENGINEERS
5121 Kingdom Way, Suite 100 Raleigh, NC 27607
NC License No: F-0258

ROADWAY DESIGN ENGINEER
NORTH CAROLINA PROFESSIONAL SEAL 16689 ENGINEER BRIAN ALLEN WILES
9/28/11

HYDRAULICS ENGINEER -Y7-
NORTH CAROLINA PROFESSIONAL SEAL 19732 ENGINEER SHIHCHEN FUH
9-28-2011

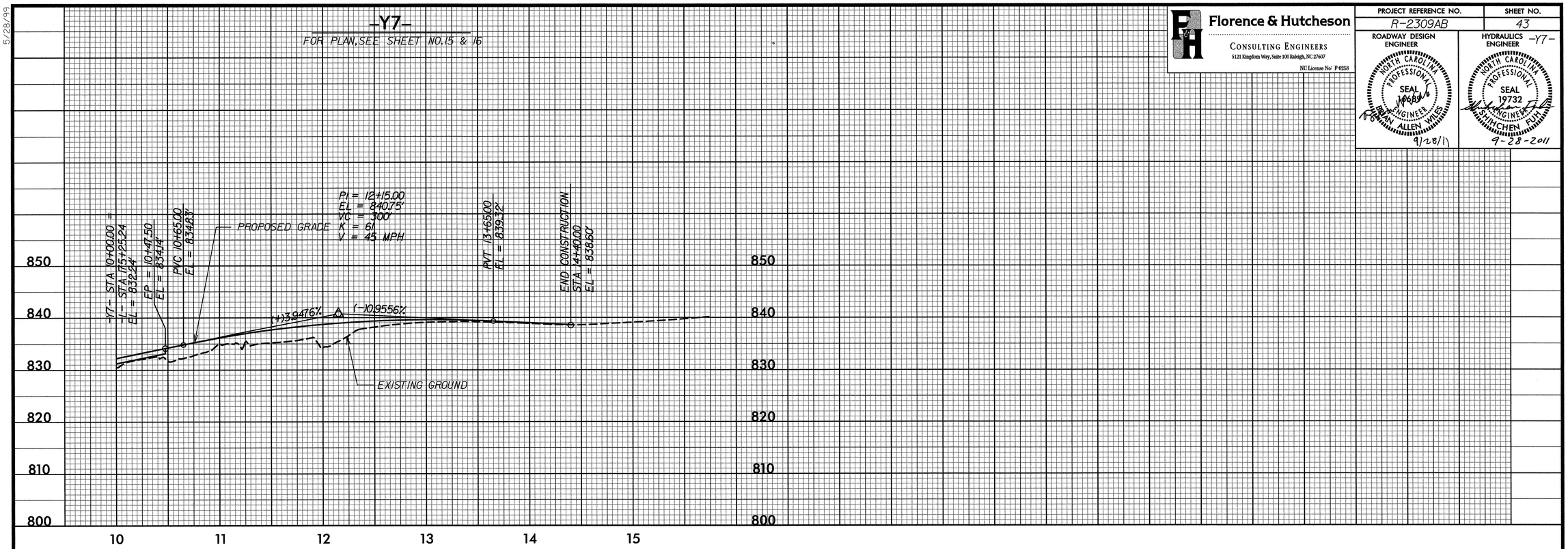

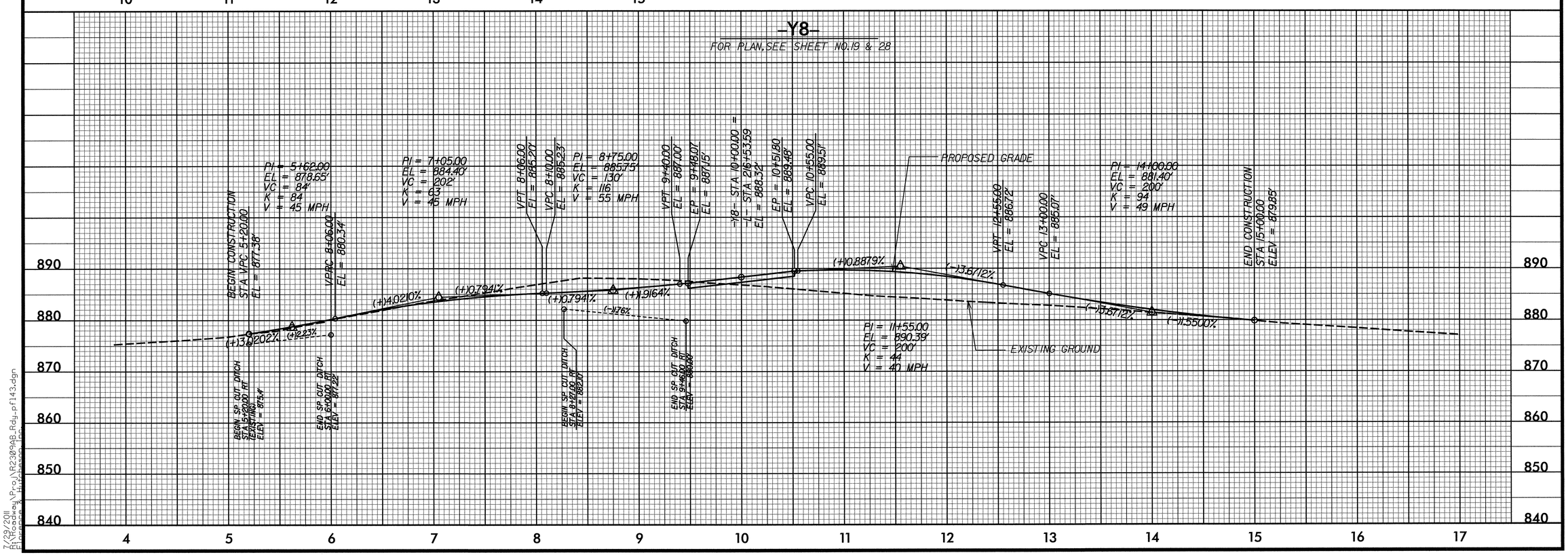

5/28/99

7/29/2011
R:\Roadway\Proj\R2309AB_Rdy_pf143.dgn
Florence & Hutcheson, Inc.

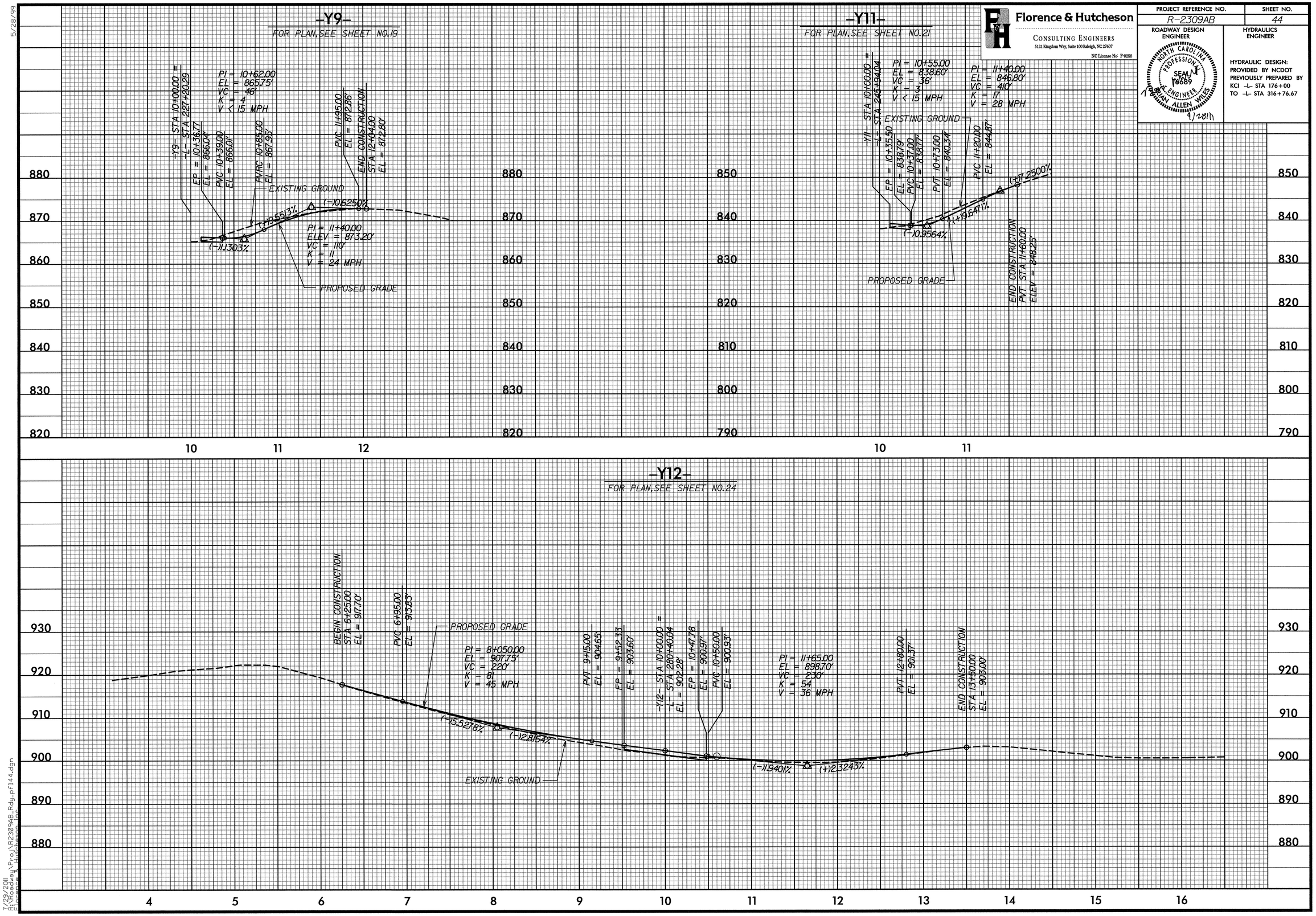

Florence & Hutcheson
CONSULTING ENGINEERS
5121 Kingdom Way, Suite 100 Raleigh, NC 27607
NC License No: F-0258

PROJECT REFERENCE NO.	SHEET NO.
R-2309AB	44

ROADWAY DESIGN ENGINEER

HYDRAULICS ENGINEER

NORTH CAROLINA PROFESSIONAL SEAL 18689 ENGINEER BRIAN ALLEN WILES
9/28/11

HYDRAULIC DESIGN:
PROVIDED BY NCDOT
PREVIOUSLY PREPARED BY
KCI -L- STA 176+00
TO -L- STA 316+76.67

5/28/99

7/29/2011
R:\Roadway\Proj\R2309AB_Rdy_pf144.dgn
Florence & Hutcheson, Inc.

5/28/99

Florence & Hutcheson
CONSULTING ENGINEERS
5121 Kingdom Way, Suite 100 Raleigh, NC 27607
NC License No: F-0258

PROJECT REFERENCE NO.	SHEET NO.
R-2309AB	45

ROADWAY DESIGN ENGINEER

NORTH CAROLINA PROFESSIONAL SEAL 16889 ENGINEER BRIAN ALLEN WILES
9/28/11

HYDRAULICS ENGINEER

HYDRAULIC DESIGN:
PROVIDED BY NCDOT
PREVIOUSLY PREPARED BY
KCI -L- STA 176+00
TO -L- STA 316+76.67

-Y13-

FOR PLAN, SEE SHEET NO.25

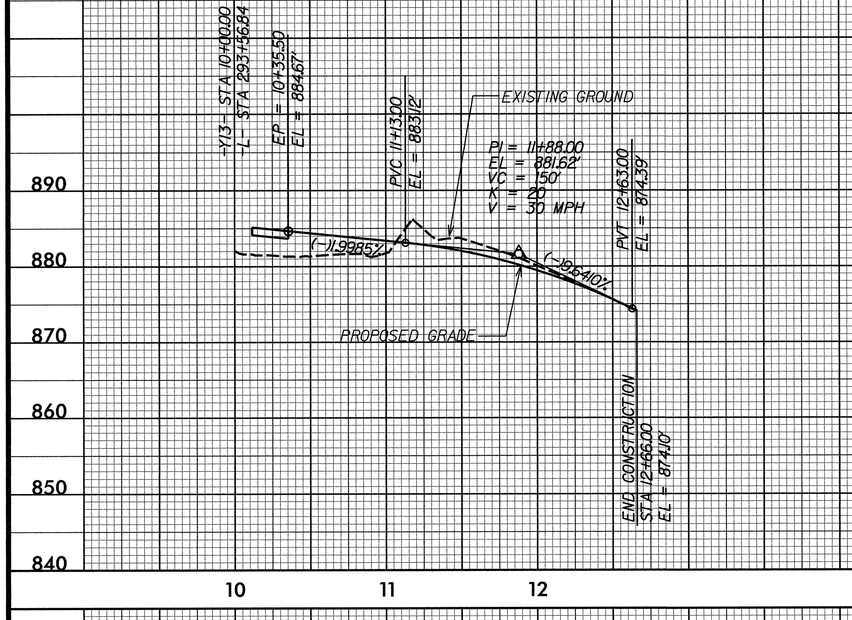

-Y14-

FOR PLAN, SEE SHEET NO.25

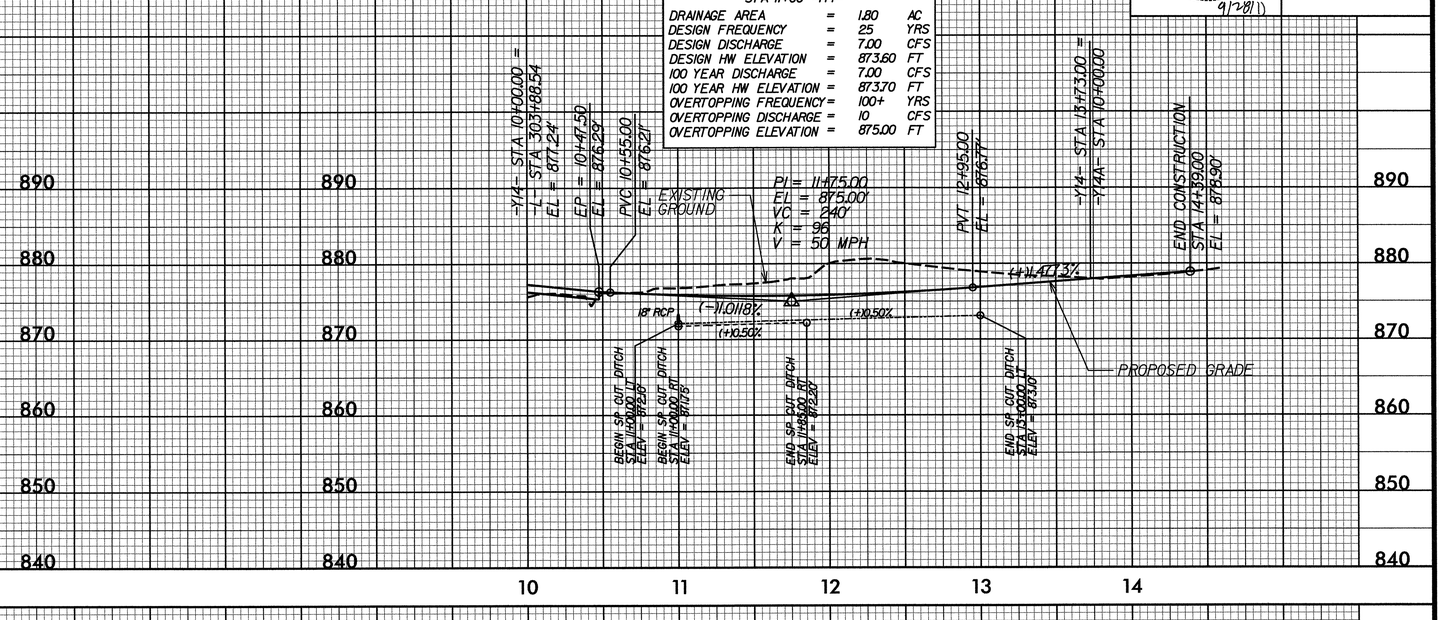

-Y14A-

FOR PLAN, SEE SHEET NO.25

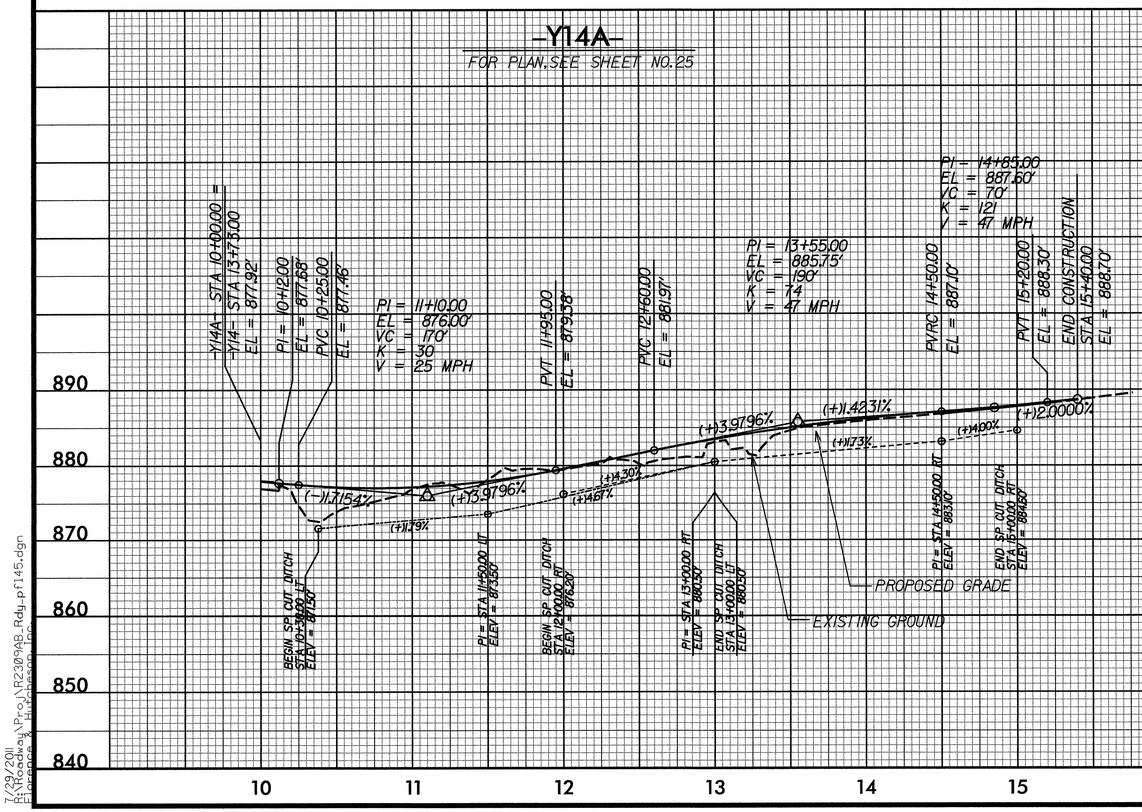

-Y15-

FOR PLAN, SEE SHEET NO.26

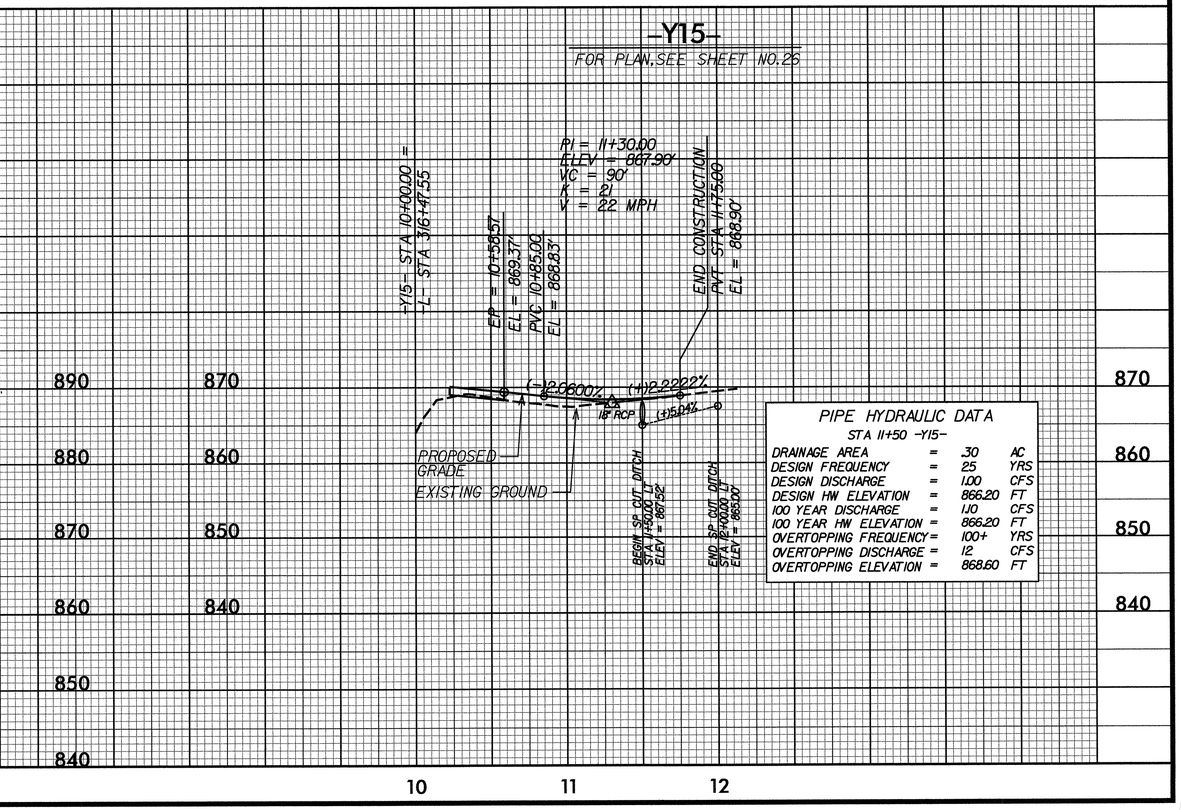

PIPE HYDRAULIC DATA
STA 11+00 -Y14-

DRAINAGE AREA	=	1.80	AC
DESIGN FREQUENCY	=	25	YRS
DESIGN DISCHARGE	=	7.00	CFS
DESIGN HW ELEVATION	=	873.60	FT
100 YEAR DISCHARGE	=	7.00	CFS
100 YEAR HW ELEVATION	=	873.70	FT
OVERTOPPING FREQUENCY	=	100+	YRS
OVERTOPPING DISCHARGE	=	10	CFS
OVERTOPPING ELEVATION	=	875.00	FT

PIPE HYDRAULIC DATA
STA 11+50 -Y15-

DRAINAGE AREA	=	.30	AC
DESIGN FREQUENCY	=	25	YRS
DESIGN DISCHARGE	=	1.00	CFS
DESIGN HW ELEVATION	=	866.20	FT
100 YEAR DISCHARGE	=	1.10	CFS
100 YEAR HW ELEVATION	=	866.20	FT
OVERTOPPING FREQUENCY	=	100+	YRS
OVERTOPPING DISCHARGE	=	12	CFS
OVERTOPPING ELEVATION	=	868.60	FT

7/23/2011
R:\Roadway\Proj\R2309AB_Rdy_pt45.dgn
Florence & Hutcheson, Inc.