TIP PROJECT: U-3326A/B

STATE OF NORTH CAROLINA
DIVISION OF HIGHWAYS

T.I.P. NO.	SHEET NO.
U-3326A/B	UC-1

UTILITY CONSTRUCTION PLANS ROCKINGHAM COUNTY

LOCATION: US 29 BUSINESS (FREEWAY DRIVE) FROM SR 2670 (SOUTH SCALES STREET) TO NC 14 IN REIDSVILLE

TYPE OF WORK: UTILITIES RELOCATION

VICINITY MAP

DETOUR ROUTE

A PORTION OF THIS PROJECT IS WITHIN THE MUNICIPAL BOUNDARIES OF REIDSVILLE.

GRAPHIC SCALES

50 25 0 50 100 — PLANS

50 25 0 50 100 — PROFILE (HORIZONTAL)

5 2.5 0 5 10 — PROFILE (VERTICAL)

INDEX OF SHEETS

SHEET NO.	DESCRIPTION
UC-1	TITLE SHEET
UC-2 THRU UC-28	UTILITY CONSTRUCTION PLAN SHEETS
UC-29 THRU UC-35	UTILITY CONSTRUCTION PROFILE SHEETS
UC-36	UTILITY CONSTRUCTION DETAIL SHEET
UC-37 THRU UC-40	UTILITY CONSTRUCTION SANITARY SEWER PUMP STATION SITE PLAN AND DETAILS

WATER AND SEWER OWNERS ON PROJECT

WATER - CITY OF REIDSVILLE
SEWER - CITY OF REIDSVILLE

PREPARED IN THE OFFICE OF:
DAVIS-MARTIN-POWELL AND ASSOCIATES, INC.
6415 OLD PLANK ROAD
HIGH POINT, NC 27265
PHONE (336) 886-4821
FAX (336) 886-4458

Randy McNeill, P.E.	UTILITIES PROJECT MANAGER
Andy Larrick, P.E.	UTILITIES PROJECT ENGINEER
Andy Larrick, P.E.	UTILITIES PROJECT DESIGNER

SEAL
NORTH CAROLINA PROFESSIONAL ENGINEER SEAL 26457 ANDREW P. LARRICK
5-18-11

DIVISION OF HIGHWAYS UTILITIES ENGINEERING SECTION
1591 MAIL SERVICES CENTER
RALEIGH NC 27699-1591
PHONE (919) 250-4128
FAX (919) 250-4119

Roger Worthington, P.E.	UTILITIES SECTION ENGINEER
Ronald B. Wilkins, P.E.	UTILITIES SQUAD LEADER PROJECT ENGINEER
Jordan K. Chapman	UTILITIES PROJECT DESIGNER

09/08/99

$$$$$$SYSTIME$$$$$
$$$$$$$$$$$$$DGN$$$$$$$$$$$$$$$
$$$$USERNAME$$$$

8/17/99

REVISIONS

$$$$SYSTIME$$$$
$$$$DGN$$$$
$$$$STAGE$$$$

-L-	-Y1-
PI Sta 38+14.77	PI Sta 19+70.59
Δ = 62° 00' 31.6" (RT)	Δ = 10° 45' 19.9" (RT)
D = 1° 18' 18.5"	D = 6° 21' 58.3"
L = 4,751.11'	L = 168.95'
T = 2,638.24'	T = 84.72'
R = 4,390.00'	R = 900.00'
SE = 0.02	SE = EXIST.
RO = SEE PLANS	

NAD 83/95

25 0 50

PROJECT REFERENCE NO.	SHEET NO.
U-3326A/B	UC-2
DESIGNED BY: DMP	
DRAWN BY: DMP	
CHECKED BY: DMP	
APPROVED BY:	
REVISED:	

NORTH CAROLINA DEPARTMENT OF TRANSPORTATION

UTILITIES ENGINEERING SEC.
PHONE: (919) 250-4128
FAX: (919) 250-4119

NORTH CAROLINA PROFESSIONAL ENGINEER SEAL 26457 ANDREW P. LARRICK 5-18-11

UTILITY CONSTRUCTION PLANS ONLY

UTILITY CONSTRUCTION

MATCHLINE -L- STA. 23+00.00 SEE SHEET UC-3

-L- STA. 14+00.00
BEGIN PROJECT U-3326A/B

-Y1- STA. 16+55.00
BEGIN CONSTRUCTION

-Y1- STA. 19+75.00
END CONSTRUCTION

PROP. - 724 L.F. OF 8" FORCE MAIN SEWER

PROP. - 1 - 2" AIR RELEASE VALVE

TIE 4' PS TO EXIST. C&G

CL B RIP RAP W/FILTER FABRIC EST. 1 TONS EST. 5 SY FABRIC

-L- POT Sta. 10+00.00

-L- PC Sta. 11+76.54

-Y1- PT Sta. 20+54.82

-L- POC Sta. 15+54.00=
-Y1- Sta. 18+93.92

-L- PT Sta. 13+85.87

TO GREENSBORO

TO US 29 BYP.

NC 87 FREEWAY DR

S 89° 20' 32.6" W

S 67°17'06" W 367.52'

S 65°01'31" W 169.37'

S 65°01'31" W 174.36'

S 72°37'25" W 752.45'

N 32°58'29" W 224.04'

S 64°05'29" W 310.29'

S 67°28'19" W 166.17'

N 22° 49' 53.8" W

N 89°00'33" W 956.79'

S 88°52'04" E 227.47'

N 88°13'26" W 229.58'

N 88°13'26" W 136.24'

N 88°13'26" W 72.57'

N 22°19'17" W 100.54'

S 09°21'39" W 173.40'

N 00°46'34" E 100.00'

S 26°43'42" W 276.13'

N 22°16'18" W 95.00'

N 22°19'17" W 43.14'

	-Y1- SR 2670 SOUTH SCALES STREET		
	8,778 / 16,000		
-L- FREEWAY DRIVE	430 / 800	4,389 / 8,000	-L- FREEWAY DRIVE
9,589 / 23,200			12,804 / 29,100
	1,497 / 2,700	752 / 1,400	
	6,208 / 11,300		
	-Y1- SR 2670 SOUTH SCALES STREET		2010 ADT / 2035 ADT

UTILITY CONSTRUCTION PLANS DESIGNED BY:
DAVIS-MARTIN-POWELL & ASSOCIATES, INC.
ENGINEERING-LAND PLANNING-SURVEYING
6415 OLD PLANK ROAD
HIGH POINT, NC 27265
PHONE: (336) 886-4821 FAX: (336) 886-4458

8/17/99

REVISIONS

PROJECT REFERENCE NO.	SHEET NO.
U-3326A/B	UC-3
DESIGNED BY: DMP	
DRAWN BY: DMP	
CHECKED BY: DMP	
APPROVED BY:	
REVISED:	

NORTH CAROLINA DEPARTMENT OF TRANSPORTATION

UTILITIES ENGINEERING SEC.
PHONE: (919) 250-4128
FAX: (919) 250-4119

NORTH CAROLINA PROFESSIONAL SEAL 26457 ENGINEER ANDREW P. LARRICK 5-18-11

UTILITY CONSTRUCTION PLANS ONLY

UTILITY CONSTRUCTION

25 0 50

NAD 83/95

DETAIL B
BANK STABILIZATION
(Not to Scale)

Natural Ground — EXISTING BANK — EXISTING BANK — Natural Ground — d= 1.0 ft.

CHANNEL BED (Varies)

Length= 25 Ft.
D= 3 Ft.
Est.= 35 Tons of Class I Rip-Rap

-L- STA. 35+00 Lt.

DETAIL H
STANDARD BASE DITCH
(Not to Scale)

Natural Ground — 2:1 — D — 2:1 — Natural Ground

Filter Fabric — B — Min. D= 2.0 Ft. Max. d= 1.0 Ft. B= 3.0 Ft.

•When B Is < 6.0'

Type of Liner= CLASS B Rip-Rap

FROM -L- STA. 34+65 TO 35+30 Lt.
DDE = 84 CY

DETAIL A17
HAZARDOUS SPILLBASIN
TOTAL CAPACITY REQUIRED : 6500 cu. ft.
TOTAL CAPACITY PROVIDED : 6750 cu. ft.
@ ELEV. 773.4 W/ 1.0 Ft. FREEBOARD.

4.0 — 2:1 — 3.0 — 2:1

MODEL 20-10C SLUICE GATE

SLUICE GATE W/HDWL — 40'-50' Var. — 25' — 90' — 115'

FROM -L- STA. 33+60 TO STA. 34+50 Lt.

DETAIL A18
SPECIAL LATERAL 'V' DITCH
(Not to Scale)

Natural Ground — 2:1 — D VAR. 2:1 TO 3:1 — Fill Slope

Filter Fabric — Min. D= 2.0 Ft. Max. d= 1.0 Ft.

Type of Liner= CLASS B Rip-Rap

FROM -L- STA. 32+00 TO STA. 33+00 Lt.

RICHARD W. WIKLE AND WIFE CLAUDINE P. WIKLE
DB 1084 PG 1468
3

-Y2- STA. 11+05.00
BEGIN CONSTRUCTION

BM#2
-BL- STA 18+91
263' LT
ELEV. 809.21'

-BY2-52 POT 5+00.00 =
-Y2- Sta. 11+15.58 (18.54' RT.)

-Y2- POT Sta. 10+00.00

N 43°20'53"E 18.54'

PROP. - 1,350 L.F. OF 8" FORCE MAIN SEWER

PROP. - 1 - 2" AIR RELEASE VALVE

SEE DETAIL A17
HAZARDOUS SPILL BASIN
(LUMP SUM PAY ITEM)

SEE DETAIL A18
SPECIAL LATERAL V DITCH
W/CLASS B RIP RAP
EST. 35 TONS
EST. 105 SY FABRIC

SEE DETAIL B
BANK STABILIZATION
W/CL I RIP RAP
W/FILTER FABRIC
EST. 35 TONS
EST. 69 SY FABRIC

SEE DETAIL H
STD. BASE DITCH
W/CL B RIP RAP
EST. 33 TONS
EST. 90 SY FABRIC

CL B RIP RAP
W/FILTER FABRIC
EST. 5 TONS
EST. 14 SY FABRIC

CLAUDINE P. WIKLE
DB 1167 PG 1059
5

PFM100 (SEE SHT. UC-29 FOR PROFILE)

EFM100 — EW300 — 52' — 30+00 — 25+00 — US 29 BUS NC 8T FREEWAY DR — 24' BST

100' TAPER — 8" PLASTIC — REMOVE 3" PLASTIC — 1'-6" C&G — 4' PS — 2GI — DI — CB — RETAIN — JB wSlab Lid — COLLAR/EXTEND — 36" RCP — 24" RCP — 18" — 15" — 10' — 28.00' — 16.5' — 25.00' — 35.00' — 65.00' — 90° — 8:1 GRAU 350 — BEGIN SBD -L- STA. 32+50 RT — FRENCH DRAIN INSTALLATION

+00.00 -L- 85.00' (RT) — +50.00 -L- @ EXIST. R/W — +00.00 -L- @ EXIST. R/W — +50.00 -L- 85.00' (RT) — +80.00 -L- @ EXIST. R/W 85.00' (RT) 100.00' (RT)

-L- POC Sta. 24+62.62=
-Y2- POT Sta. 12+98.32

-BL-13 PINC 23+08.85 =
-L- Sta. 27+26.30 (27.02' RT.)

-BL-14 PINC 29+68.84 =
-L- Sta. 33+89.97 (14.83' RT.)

PROP. - 40 L.F. OF 16" WATER MAIN

PROP. - 40 L.F. OF 16" WATER MAIN

MATCHLINE -L- STA. 23+00.00 SEE SHEET UC-2

MATCHLINE -L- STA. 36+00.00 SEE SHEET UC-4

2
KATHLEEN B. CASSADY AND HUSBAND WILLIAM J. CASSADY
DB 840 PG 1524

4
ROY GARLAND CHRISMON
REBECCA RAKESTRAW
DB 03E PG 104

6
HOLY INFANT CATHOLIC CHURCH
DB 515 PG 285

N 88°17'26" W 813.15'

N 88°52'42" W 111.40'

N 14°45'42" W 474.05'

TOP=767.76'
INV=759.56'

TOP=783.48'
INV=774.08'

TOP=781.30'
INV=769.10'

E5400 — 40' SANITARY SEWER EASEMENT — 72" CMP — 258' — 202.39' — S 16°32'06" W

N 81°50'15" E 134.87'

N 27°05'38" E 244.82'

WATER NOTES:

1. **PIPE AND FITTINGS FOR WATER LINES 4" AND LARGER SHALL BE DUCTILE IRON, PC 350.**
2. **WATER LINE VALVES SHALL BE RESILIENT-SEAT GATE VALVES, 200 PSI MIN. WORKING PRESSURE.**

-L-

PI Sta. 38+14.77
△ = 62° 00' 31.6" (RT)
D = 1° 18' 18.5"
L = 4,751.11'
T = 2,638.24'
R = 4,390.00'
SE = 0.02
RO = 72'

DETAIL A
LATERAL BASE DITCH
(Not to Scale)

Fill Slope — b — 1'/Ft. — 2:1 — D — 2:1 — Natural Ground — B

Min. D= 2.0 Ft.
B= 2.0 Ft.
b= 3.0 Ft.

FROM STA 34+50 -L- TO STA 36+00 -L- Rt.
DDE = 115 CY

UTILITY CONSTRUCTION PLANS DESIGNED BY:
DAVIS-MARTIN-POWELL & ASSOCIATES, INC.
ENGINEERING-LAND PLANNING-SURVEYING
6415 OLD PLANK ROAD
HIGH POINT, NC 27265
PHONE: (336) 886-4821 FAX: (336) 886-4458

$$$$SYSTIMES$$$$ $$$$USERNAME$$$$ $$$$DGN$$$$

PROJECT REFERENCE NO.	SHEET NO.
U-3326A/B	UC-4

DESIGNED BY: DMP
DRAWN BY: DMP
CHECKED BY: DMP
APPROVED BY:
REVISED:

NORTH CAROLINA DEPARTMENT OF TRANSPORTATION

UTILITIES ENGINEERING SEC.
PHONE: (919) 250-4128
FAX: (919) 250-4119

UTILITY CONSTRUCTION PLANS ONLY

NORTH CAROLINA PROFESSIONAL SEAL 26457 ENGINEER ANDREW P. LARRICK 5-18-11

UTILITY CONSTRUCTION

25 0 50

NAD 83/95

REVISIONS

8/17/99

-L-	-DRV-	
PI Sta 38+14.77	PI Sta 11+02.19	PI Sta 12+29.25
△ = 62° 00′ 31.6″ (RT)	△ = 89° 49′ 24.2″ (RT)	△ = 70° 02′ 40.5″ (LT)
D = 1° 18′ 18.5″	D = 229° 10′ 59.2″	D = 71° 37′ 11.0″
L = 4,751.11′	L = 39.19′	L = 97.80′
T = 2,638.24′	T = 24.92′	T = 56.06′
R = 4,390.00′	R = 25.00′	R = 80.00′
SE = 0.02	SE = 0.02	SE = 0.02
RO = 72′	RO = SEE PLANS	RO = SEE PLANS

WATER NOTES:

1. ***PIPE AND FITTINGS FOR WATER LINES 4" AND LARGER SHALL BE DUCTILE IRON, PC 350.***
2. ***WATER LINE VALVES SHALL BE RESILIENT-SEAT GATE VALVES, 200 PSI MIN. WORKING PRESSURE.***

FROM -L- STA. 45+50 TO STA. 46+50 Rt.

FROM -L- STA. 48+50 TO STA. 49+50 Rt.
DDE = 35 CY

UTILITY CONSTRUCTION PLANS DESIGNED BY:
dmp
DAVIS-MARTIN-POWELL & ASSOCIATES, INC.
ENGINEERING-LAND PLANNING-SURVEYING
6415 OLD PLANK ROAD
HIGH POINT, NC 27265
PHONE: (336) 886-4821 FAX: (336) 886-4458

$$$$SYSTIME$$$$
$$$$DGN$$$$$$$$$$$$$$$
$$$$USERNAME$$$$

PROJECT REFERENCE NO.	SHEET NO.
U-3326A/B	UC-5

DESIGNED BY: DMP
DRAWN BY: DMP
CHECKED BY: DMP
APPROVED BY:
REVISED:

NORTH CAROLINA DEPARTMENT OF TRANSPORTATION

UTILITIES ENGINEERING SEC.
PHONE: (919) 250-4128
FAX: (919) 250-4119

UTILITY CONSTRUCTION PLANS ONLY

NORTH CAROLINA PROFESSIONAL SEAL 26457 ENGINEER ANDREW P. LARRICK 5-18-11

UTILITY CONSTRUCTION

WATER NOTES:

1. ***PIPE AND FITTINGS FOR WATER LINES 4" AND LARGER SHALL BE DUCTILE IRON, PC 350.***
2. ***WATER LINE VALVES SHALL BE RESILIENT-SEAT GATE VALVES, 200 PSI MIN. WORKING PRESSURE.***

-L-	-Y3-
PI Sta 38+14.77	PI Sta 12+83.52
△ = 62° 00' 31.6" (RT)	△ = 44° 43' 08.4" (RT)
D = 1° 18' 18.5"	D = 28° 38' 52.4"
L = 4,751.11'	L = 156.10
T = 2,638.24'	T = 82.27'
R = 4,390.00'	R = 200.00'
SE = 0.02	SE = 0.02
RO = 72'	RO = SEE PLANS

-Y3-
SR 2438
GIBBS LAKE ROAD

100-/200; 100-/100; 100-/100

-L- FREEWAY DRIVE 12,804 / 29,100 — -L- FREEWAY DRIVE 12,804 / 29,100

2010 ADT
2035 ADT

REVISIONS

8/17/99

UTILITY CONSTRUCTION PLANS DESIGNED BY:
DAVIS-MARTIN-POWELL & ASSOCIATES, INC.
ENGINEERING-LAND PLANNING-SURVEYING
6415 OLD PLANK ROAD
HIGH POINT, NC 27265
PHONE: (336) 886-4821 FAX: (336) 886-4458

$$$$$$SYSTIME$$$$$ $$$$$$$$$DGN$$$$$$$$$$$$$$$$ $$$$USERNAME$$$$

PROJECT REFERENCE NO.	SHEET NO.
U-3326A/B	UC-6

DESIGNED BY: DMP
DRAWN BY: DMP
CHECKED BY: DMP
APPROVED BY:
REVISED:

NORTH CAROLINA DEPARTMENT OF TRANSPORTATION

UTILITIES ENGINEERING SEC.
PHONE: (919) 250-4128
FAX: (919) 250-4119

NORTH CAROLINA PROFESSIONAL SEAL 26457 ENGINEER ANDREW P. LARRICK 5-18-11

UTILITY CONSTRUCTION PLANS ONLY

UTILITY CONSTRUCTION

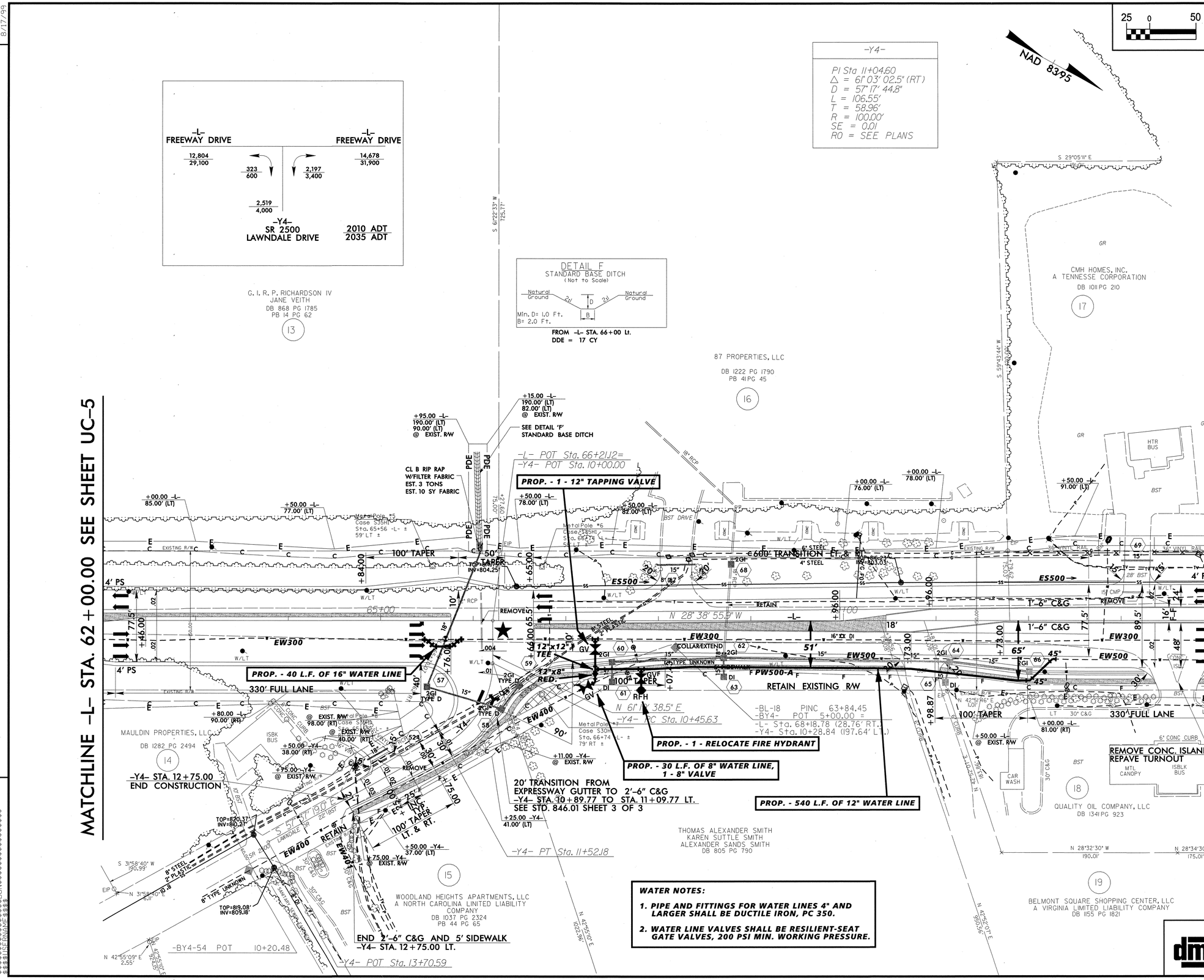

WATER NOTES:

1. PIPE AND FITTINGS FOR WATER LINES 4" AND LARGER SHALL BE DUCTILE IRON, PC 350.
2. WATER LINE VALVES SHALL BE RESILIENT-SEAT GATE VALVES, 200 PSI MIN. WORKING PRESSURE.

UTILITY CONSTRUCTION PLANS DESIGNED BY:
DAVIS-MARTIN-POWELL & ASSOCIATES, INC.
ENGINEERING-LAND PLANNING-SURVEYING
6415 OLD PLANK ROAD
HIGH POINT, NC 27265
PHONE: (336) 886-4821 FAX: (336) 886-4458

REVISIONS

8/17/99

PROJECT REFERENCE NO.	SHEET NO.
U-3326A/B	UC-7
DESIGNED BY: DMP	
DRAWN BY: DMP	
CHECKED BY: DMP	
APPROVED BY:	
REVISED:	

NORTH CAROLINA DEPARTMENT OF TRANSPORTATION

UTILITIES ENGINEERING SEC.
PHONE: (919) 250-4128
FAX: (919) 250-4119

NORTH CAROLINA PROFESSIONAL ENGINEER SEAL 26457 ANDREW P. LARRICK 5-19-11

UTILITY CONSTRUCTION PLANS ONLY

UTILITY CONSTRUCTION

25 0 50

NAD 8395

8/17/99

REVISIONS

MATCHLINE –L– STA. 74+00.00 SEE SHEET UC-6

MATCHLINE –L– STA. 88+00.00 SEE SHEET UC-8

–Y5– SR 2437 McCOY ROAD
3,423 / 6,200
967 / 1,800
1,067 / 1,900
14,678 / 31,900
1,282 / 2,300
2,786 / 5,100
16,282 / 34,800
5,456 / 9,900
–Y6– SR 2512 SOUTH PARK DRIVE
2010 ADT 2035 ADT
–L– FREEWAY DRIVE

–L– FREEWAY DRIVE
16,282 / 34,800
215 / 400
615 / 800
16,682 / 30,800
830 / 1,200
–Y7– BELMONT DRIVE
2010 ADT 2035 ADT

DETAIL F
STANDARD BASE DITCH
(Not to Scale)
Natural Ground, 2H, D, 2H, Natural Ground
Min. D= 1.0 Ft.
B= 2.0 Ft.
FROM –L– STA. 82+00 Lt.
DDE = 29 CY

PI Sta 11+02.01
Δ = 10° 29' 57.3" (LT)
D = 6° 59' 14.2"
L = 150.26'
T = 75.34'
R = 820.00'
SE = SEE PLANS
RO = SEE PLANS

–Y5– STA. 11+00.00 BEGIN CONSTRUCTION
–Y5– POT Sta. 10+00.00
–L– POT Sta. 75+89.64= –Y5– POT Sta. 15+56.04
–L– POT Sta. 75+92.44= –Y6– POT Sta. 10+00.00
–Y7– PC Sta. 10+26.67 N 59° 19' 28.4" E
–L– POT Sta. 83+37.32= –Y7– POT Sta. 10+00.00
–Y7– POT Sta. 12+06.80
–Y7– PT Sta. 11+76.93
–Y7– STA. 11+00.00 END CONSTRUCTION
–Y6– STA. 13+75.00 END RESURFACING

ASHCROFT BUSINESS PARK, LLC A NORTH CAROLINA LIMITED LIABILITY COMPANY DB 1009 PG 1673 (20)
CMH HOMES, INC. A TENNESSEE CORPORATION DB 1011 PG 210 (17)
ELIXIR INDUSTRIES DB 685 PG 730 (21)
BETA FLUID SYSTEMS, LLC DB 1041 PG 1342 (26)
JOSEPH B. KING, JR. DB 1029 PG 567 PB 24 PG 2 (27)
HILL/GRAY SEVEN, LLC DB 1173 PG 605 PB 24 PG 2 (29)
MELVIN S. KREIGSMAN DB 811 PG 1286 PB 24 PG 2 (30)
THOMAS A. VAUGHN MCCOL DB 1138 PG 1361 PB 24 PG 2 (31)
QUALITY OIL COMPANY, LLC DB 1341 PG 923 (18)
EUNICE JONES-OBENG DB 1029 PG 1200 PB 38 PG 82 (24)
MARK E. OVERBY AND WIFE DEBRA A. OVERBY DB 1148 PG 445 DB 1148 PG 448 PB 38 PG 82 (23)
SONSET HOLDING LLC DB 1333 PG 260 PB 38 PG 82 (25)
ALEXANDER SANDS SMITH DB 719 PG 915 (22)
JEFF WAYNE JOHNSON AND WIFE JAN APPLE JOHNSON DB 775 PG 488 (28)
ELDEN LIONG DEWEY PRYER DOUGLAS CLYMER ALVIN A. KEEN TRUSTEES OF CHRISTIAN AND MISSIONARY ALLIANCE CHURCH OF REIDSVILLE, NORTH CAROLINA AND THEIR SUCCESSORS IN OFFICE DB 730 PG 866 DB 764 PG 707 (32)

PROP. - 40 L.F. OF 12" WATER LINE
PROP. - 10 L.F. OF 8" SAN. GRAVITY SEWER
PROP. - 1 - 12" VALVE
600' TRANSITION LT. & RT.
330' FULL LANE
100' TAPER
150' LANE TRANSITION
TRANSITION PROP. EXPRESSWAY GUTTER TO EXIST. 2'-6" C&G –Y7– STA. 10+80.00 TO 11+00.00 LT. & RT.
SEE DETAIL 'F' STANDARD BASE DITCH
PROP. - 1 - RELOCATE FIRE HYDRANT
PROP. - 630 L.F. OF 12" WATER LINE
PROP. - 196 L.F. OF 8" SANITARY GRAVITY SEWER (SEE SHT. UC-30 FOR PROFILE)
REMOVE CONC. ISLAND REPAVE TURNOUT
PROP. - 1 - RELOCATE WATER METER
PROP. - 84 L.F. OF 8" SANITARY GRAVITY SEWER
REMOVE UTILITY MH
PROP. MH 3 (4' DIA.) STA. 2+80.14, LINE PS500 -Y6- STA 10+88.04, 48.35' LT.
PROP. MH 2 (4' DIA.) STA. 0+84.45, LINE PS500 -Y6- STA 12+83.72, 46.40' LT.
PROP. MH 1 (4' DIA.) STA. 0+00.00, LINE PS500 -Y6- STA 13+67.48, 35.63' LT.

SEWER NOTES:

1. PIPE AND FITTINGS FOR PROPOSED 8" SANITARY SEWER ON LINE PS500 SHALL BE DUCTILE IRON, PC 350.

WATER NOTES:

1. PIPE AND FITTINGS FOR WATER LINES 4" AND LARGER SHALL BE DUCTILE IRON, PC 350.
2. WATER LINE VALVES SHALL BE RESILIENT-SEAT GATE VALVES, 200 PSI MIN. WORKING PRESSURE.

UTILITY CONSTRUCTION PLANS DESIGNED BY:
DAVIS-MARTIN-POWELL & ASSOCIATES, INC.
ENGINEERING-LAND PLANNING-SURVEYING
6415 OLD PLANK ROAD
HIGH POINT, NC 27265
PHONE: (336) 886-4821 FAX: (336) 886-4458

$$$$SYSTIME$$$$
$$$$USERNAME$$$$

-Y8-	-Y8A-	-Y9-	
PI Sta 12+27.30	PI Sta 12+23.12	PI Sta 10+95.85	PI Sta 13+39.80
△ = 67° 59' 50.0" (LT)	△ = 14° 22' 48.6" (RT)	△ = 63° 27' 50.6" (LT)	△ = 11° 50' 49.2" (LT)
D = 17° 00' 06.2"	D = 6° 46' 50.0"	D = 36° 57' 54.1"	D = 3° 41' 47.4"
L = 399.94'	L = 212.08'	L = 171.69'	L = 320.49'
T = 227.30'	T = 106.60'	T = 95.85'	T = 160.82'
R = 337.00'	R = 845.00'	R = 155.00'	R = 1,550.00'
SE = EXIST.	SE = 0.03	SE = 0.02	SE = 0.02
	RO = 68'	RO = SEE PLANS	RO = SEE PLANS

WATER NOTES:

1. PIPE AND FITTINGS FOR WATER LINES 4" AND LARGER SHALL BE DUCTILE IRON, PC 350.
2. WATER LINE VALVES SHALL BE RESILIENT-SEAT GATE VALVES, 200 PSI MIN. WORKING PRESSURE.

PROJECT REFERENCE NO.	SHEET NO.
U-3326A/B	UC-8

DESIGNED BY: DMP
DRAWN BY: DMP
CHECKED BY: DMP
APPROVED BY:
REVISED:

NORTH CAROLINA DEPARTMENT OF TRANSPORTATION

UTILITIES ENGINEERING SEC.
PHONE: (919) 250-4128
FAX: (919) 250-4119

NORTH CAROLINA PROFESSIONAL ENGINEER SEAL 26457 ANDREW P. LARRICK 5-18-11

UTILITY CONSTRUCTION PLANS ONLY

UTILITY CONSTRUCTION

REVISIONS

8/17/99

UTILITY CONSTRUCTION PLANS DESIGNED BY:
DAVIS-MARTIN-POWELL & ASSOCIATES, INC.
ENGINEERING-LAND PLANNING-SURVEYING
6415 OLD PLANK ROAD
HIGH POINT, NC 27265
PHONE: (336) 886-4821 FAX: (336) 886-4458

$$$$$$SYSTIME$$$$
$$$$$$$$DGN$$$$$$$$$$$$$$
$$$$$USERNAME$$$$

REVISIONS

PROJECT REFERENCE NO.	SHEET NO.
U-3326A/B	UC-9
DESIGNED BY: DMP	
DRAWN BY: DMP	
CHECKED BY: DMP	
APPROVED BY:	
REVISED:	

NORTH CAROLINA DEPARTMENT OF TRANSPORTATION

UTILITIES ENGINEERING SEC.
PHONE: (919) 250-4128
FAX: (919) 250-4119

UTILITY CONSTRUCTION PLANS ONLY

UTILITY CONSTRUCTION

25 0 50

NAD 83/95

MATCHLINE –Y10– STA. 18+00.00 SEE SHEET UC–25

MATCHLINE –Y8A– STA. 20+00.00 SEE SHEET UC–8

MATCHLINE –L– STA. 101+00.00 SEE SHEET UC–8

MATCHLINE –L– STA. 127+00.00 SEE SHEET UC–10

–Y10– US 158
2,563 / 4,600
2,356 / 4,300
17,082 / 30,600
2,356 / 4,300
16,667 / 30,000
2,563 / 4,600
10,482 / 19,000
FREEWAY DRIVE
FREEWAY DRIVE
–Y10– SR 2686 RICHARDSON DRIVE
2010 ADT
2035 ADT

DETAIL J
LATERAL "V" DITCH
(Not to Scale)
Natural Ground
Min. Dr 1.0 Ft., Typ 3.0 Ft.
FROM –L– STA. 104+25 TO STA. 103+00 Lt.
FROM –Y10/LPC– STA. 12+20 TO 14+00 Lt.

DETAIL K
LATERAL "V" DITCH
(Not to Scale)
Natural Ground
Min. Dr 2.0 Ft., Typ 3.0 Ft.
FROM –L– STA. 103+00 TO STA.104+00 Rt
DOE = 24 CY

DETAIL KI
BERM "V" DITCH
(Not to Scale)
Natural Ground
Min. Dr 2.0 Ft., Typ 3.0 Ft.
FROM –L– STA. 104+00 TO STA. 107+00 Rt.

DETAIL AS
LATERAL "V" DITCH
(Not to Scale)
Natural Ground
Min. Dr 1.0 Ft., Typ 3.0 Ft.
FROM –L– STA. 122+95 TO STA. 123+50 Lt.
DOE = 10 CY

SEWER NOTES:

1. **PIPE AND FITTINGS FOR PROPOSED 8" SANITARY SEWER ON LINE PS900-A SHALL BE DUCTILE IRON, PC 350.**

END U-3326A
BEGIN U-3326B
–L– STA. 126+85.00

WATER NOTES:

1. **PIPE AND FITTINGS FOR WATER LINES 4" AND LARGER SHALL BE DUCTILE IRON, PC 250.**
2. **WATER LINE VALVES SHALL BE RESILIENT-SEAT GATE VALVES, 200 PSI MIN. WORKING PRESSURE.**

FUTURE 5.5' SIDEWALK

BEGIN BRIDGE –Y10– STA. 23+64.10
END BRIDGE –Y10– STA. 25+35.10
2–BAR METAL RAIL
TYPE III
4' PS
7.5'
6.4'
77.5' FOR –Y10–
NC
TYPE B–77
BEGIN APPR. SLAB –Y10– STA. 23+39.94
END APPR. SLAB –Y10– STA. 25+59.26
6'

FOR (FACE OF RAIL)
SKETCH SHOWING BRIDGE /ROADWAY RELATIONSHIP

–Y10RPB–

PI Sta 10+88.68	PI Sta 12+81.72	PI Sta 14+73.36	PI Sta 17+75.35
θs = 3° 25' 51.7"	Δ = 13° 41' 09.21" (LT)	θs = 3° 05' 51.7"	Δ = 24° 26' 49.82" (RT)
Ls = 133.00'	D = 4° 39' 29.5"	Ls = 133.00'	D = 8° 48' 53.0"
LT = 88.68'	L = 296.01'	LT = 88.68'	L = 277.14'
ST = 44.35'	T = 148.72'	ST = 44.35'	T = 140.81'
	R = 1,230.00'		R = 650.00'
	SE = 0.06		SE = 0.06
			RO = SEE PLANS

–Y10RPC–

PI Sta 12+96.48	PI Sta 14+79.00	PI Sta 16+58.40	PI Sta 18+94.58
θs = 8° 24' 55.9"	Δ = 23° 13' 50.2" (RT)	θs = 8° 29' 55.9"	Δ = 29° 53' 29.8" (LT)
Ls = 178.00'	D = 9° 32' 51.5"	Ls = 178.00'	D = 8° 58' 59.52"
LT = 118.80'	L = 244.32'	LT = 118.80'	L = 104.34'
ST = 59.46'	T = 123.33'	ST = 59.46'	T = 53.35'
	R = 600.00'		R = 200.00'
	SE = 0.08		SE = 0.04
			RO = SEE PLANS

–Y10LPC–

PI Sta 10+90.27
θs = 26° 12' 00.8"
Ls = 137.00'
LT = 90.27'
ST = 46.99'

–L–

PI Sta 116+13.49	PI Sta 122+64.24
Δ = 30° 01' 38.2" (RT)	Δ = 34° 56' 33.9" (RT)
D = 1° 51' 01.8"	D = 9° 42' 40.1"
L = 1,553.24'	L = 559.83'
T = 796.34'	T = 285.70'
R = 2,935.00'	R = 590.00'
SE = 0.03	SE = 0.03
RO = 108'	RO = 68'

–Y8A–

PI Sta 22+64.24
Δ = 34° 56' 33.9" (RT)
D = 9° 42' 40.1"
L = 559.83'
T = 285.70'
R = 590.00'
SE = 0.03
RO = 68'

–Y10–

PI Sta 19+60.22	PI Sta 29+39.35
Δ = 6° 35' 31.3" (LT)	Δ = 11° 07' 08.8" (LT)
D = 0° 57' 17.7"	D = 3° 34' 51.6"
L = 271.44'	L = 479.45'
T = 135.74'	T = 241.54'
R = 6,000.00'	R = 1,600.00'
SE = 0.02	SE = 0.06
RO = 72'	RO = SEE PLANS

–Y10A–

PI Sta 11+70.81	PI Sta 15+44.06
Δ = 45° 28' 11.9" (RT)	Δ = 79° 11' 05.7" (LT)
D = 17° 53' 49.2"	D = 15° 28' 10.9"
L = 257.93'	L = 581.61'
T = 136.19'	T = 370.70'
R = 320.00'	R = 425.00'
SE = 0.04	SE = 0.04
RO = SEE PLANS	RO = SEE PLANS

–Y10C–

PI Sta 11+79.97
Δ = 46° 13' 14.4" (LT)
D = 17° 44.8"
L = 80.63'
T = 42.67'
R = 100.00'
SE = EXIST.

–Y10RPA–

PI Sta 10+88.68	PI Sta 12+50.37
θs = 3° 10' 30.5"	Δ = 13° 01' 07.6" (LT)
Ls = 133.00'	D = 14° 45' 28.7"
LT = 88.68'	L = 233.59'
ST = 44.35'	T = 117.37'
	R = 1,200.00'
	SE = 0.06

–Y10F–

PI Sta 10+62.89
Δ = 23° 43' 14.4" (LT)
D = 57° 17' 44.8"
L = 41.42'
T = 21.02'
R = 100.00'
SE = SEE PLANS

UTILITY CONSTRUCTION PLANS DESIGNED BY:
DAVID MARTIN POWELL & ASSOCIATES, INC.
ENGINEERING LAND PLANNING SURVEYING
4410 OLD PLANK ROAD
HIGH POINT, NC 27265
PHONE: (336) 886-6831 FAX: (336) 886-6408

PROJECT REFERENCE NO.	SHEET NO.
U-3326A/B	UC-10

DESIGNED BY: DMP
DRAWN BY: DMP
CHECKED BY: DMP
APPROVED BY:
REVISED:

NORTH CAROLINA DEPARTMENT OF TRANSPORTATION

UTILITIES ENGINEERING SEC.
PHONE: (919) 250-4128
FAX: (919) 250-4119

NORTH CAROLINA PROFESSIONAL SEAL 26457 ENGINEER ANDREW P. LARRICK 5-18-11

UTILITY CONSTRUCTION PLANS ONLY

UTILITY CONSTRUCTION

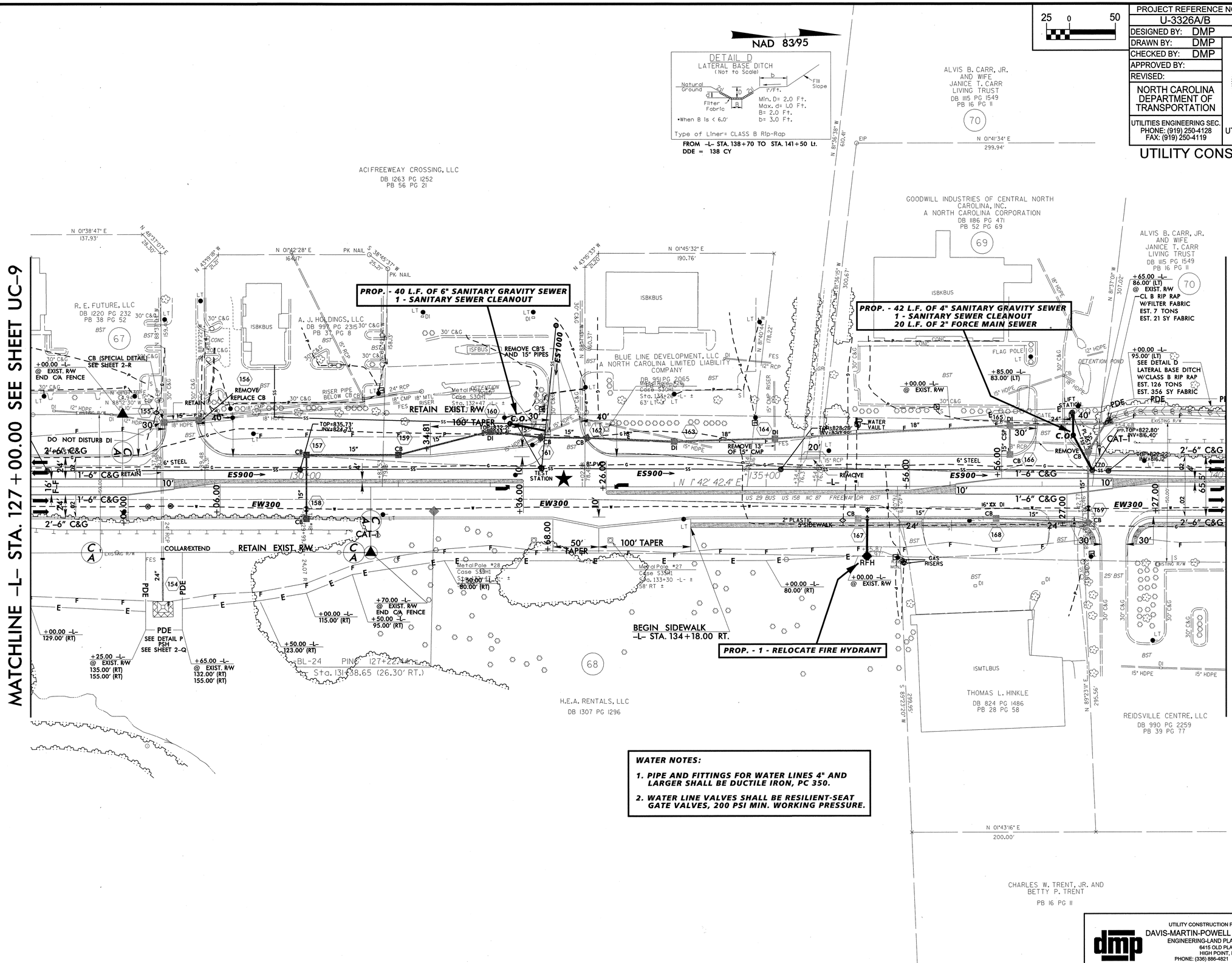

WATER NOTES:

1. PIPE AND FITTINGS FOR WATER LINES 4" AND LARGER SHALL BE DUCTILE IRON, PC 350.
2. WATER LINE VALVES SHALL BE RESILIENT-SEAT GATE VALVES, 200 PSI MIN. WORKING PRESSURE.

UTILITY CONSTRUCTION PLANS DESIGNED BY:
DAVIS-MARTIN-POWELL & ASSOCIATES, INC.
ENGINEERING-LAND PLANNING-SURVEYING
6415 OLD PLANK ROAD
HIGH POINT, NC 27265
PHONE: (336) 886-4821 FAX: (336) 886-4458

REVISIONS

8/17/99

PROJECT REFERENCE NO.	SHEET NO.
U-3326A/B	UC-11

DESIGNED BY: DMP
DRAWN BY: DMP
CHECKED BY: DMP
APPROVED BY:
REVISED:

NORTH CAROLINA DEPARTMENT OF TRANSPORTATION

UTILITIES ENGINEERING SEC.
PHONE: (919) 250-4128
FAX: (919) 250-4119

UTILITY CONSTRUCTION PLANS ONLY

UTILITY CONSTRUCTION

SEWER NOTES:

1. ***PIPE AND FITTINGS FOR PROPOSED 8" SANITARY SEWER ON LINE PS900-B SHALL BE DUCTILE IRON, PC 350.***

WATER NOTES:

1. ***PIPE AND FITTINGS FOR WATER LINES 4" AND LARGER SHALL BE DUCTILE IRON, PC 350.***
2. ***WATER LINE VALVES SHALL BE RESILIENT-SEAT GATE VALVES, 200 PSI MIN. WORKING PRESSURE.***

UTILITY CONSTRUCTION PLANS DESIGNED BY:
DAVIS-MARTIN-POWELL & ASSOCIATES, INC.
ENGINEERING-LAND PLANNING-SURVEYING
6415 OLD PLANK ROAD
HIGH POINT, NC 27265
PHONE: (336) 886-4821 FAX: (336) 886-4458

$$$$$$$SYSTIME$$$$ $$$$$$$$DGN$$$$$$$$$$$$$ $$$$$$USERNAME$$$$

PROJECT REFERENCE NO.	SHEET NO.
U-3326A/B	UC-12
DESIGNED BY: DMP	
DRAWN BY: DMP	
CHECKED BY: DMP	
APPROVED BY:	
REVISED:	

NORTH CAROLINA DEPARTMENT OF TRANSPORTATION

UTILITIES ENGINEERING SEC.
PHONE: (919) 250-4128
FAX: (919) 250-4119

NORTH CAROLINA PROFESSIONAL SEAL 26457 ENGINEER ANDREW P. LARRICK 5-18-11

UTILITY CONSTRUCTION PLANS ONLY

UTILITY CONSTRUCTION

25 0 50

NAD 83/95

REVISIONS 8/17/99

MATCHLINE –L– STA. 153+00.00 SEE SHEET UC-11

MATCHLINE –L– STA. 167+00.00 SEE SHEET UC-13

-BYII-66 POT 5+00.00

-YII- POT Sta. 10+00.00

-Y11- STA. 11+25.00
BEGIN CONSTRUCTION

S 01°33'30" W 206.52'

N 00°40'22" W 507.81'

N 00°40'22" W 529.68'

N 00°59'42" W 102.83'

SUNNYCREST CHURCH OF CHRIST
DB 7716 PG 1183

STATE EMPLOYEES CREDIT UNION
DB 1052 PG 692
PB 41 PG 87

REIDSVILLE CENTRE, LLC
A NORTH CAROLINA LIMITED LIABILITY COMPANY
DB 1014 PG 2006
DB 1035 PG 1287
PB 41 PG 87

LINDA PRIDDY HUNDLEY AND HUSBAND
MILTON D. HUNDLEY
DB 1046 PG 917

LIBBY HILL SEAFOOD, INC
A NORTH CAROLINA CORPORATION
DB 821 PG 2284

74 75 76 77 78

N 89°23'30" W 371.41'

N 88°57'58" W 376.23'

N 77°51'02" E 1040.38'

ES1400 ES1300 ES1200 ES1100 ES1000 ES900 EW300

SEWER NOTES:

1. **PIPE AND FITTINGS FOR PROPOSED 24" SANITARY SEWER ON LINE PS1000 SHALL BE DUCTILE IRON, PC 350, WITH INTERIOR CERAMIC EPOXY COATING AS DESCRIBED IN SPECIAL PROVISIONS.**
2. **PROPOSED MANHOLES ON LINE PS1000 SHALL HAVE AN INTERIOR CERAMIC EPOXY COATING AS DESCRIBED IN SPECIAL PROVISIONS.**

ABANDON 3 UTILITY MH'S

PROP. MH 8 (6' DIA)
STA 5+77.99, LINE PS1000
-L- STA 163+99.33, 65.85' LT.

PROP. - 300 L.F. OF 24" SANITARY GRAVITY SEWER

LINE PS1000, SEE SHT. UC-31 FOR PROFILE

SEE DETAIL U
SPECIAL LATERAL GRASS SWALE

CL B RIP RAP W/FILTER FABRIC EST. 5 TON EST. 14 SY FABRIC

ABANDON 745 L.F. 18" UTILITY PIPE

CL B RIP RAP W/FILTER FABRIC EST. 5 TON EST. 14 SY FABRIC

DO NOT DISTURB WATER VAULT

270' TAPER

100' TAPER

50' TAPER

GRAU 350

1'-6" C&G

2'-6" C&G

US 29 BUS US 158 NC 87 24' BST

5' SIDEWALK

ABANDON UTILITY MH

ABANDON UTILITY MH

(LINE PS1000, SEE SHT. UC-31 FOR PROFILE)

PROP. - 80 L.F. OF 16" WATER LINE

CL B RIP RAP W/FILTER FABRIC EST. 1 TON EST. 5 SY FABRIC

-BL-26 PINC 150+68.74
-BYII POT 9+61.50 =
-L- Sta. 154+84.92 (22.07' RT.)

-L- POT Sta. 13+75.14
-YII- POT Sta. 13+75.14

ABANDON 118 L.F. 18" UTILITY PIPE

SEE DETAIL M PSH SHEET 2-Q

SEE DETAIL M PSH SHEET 2-Q

CL B RIP RAP ON BANKS ONLY EST. 10 TONS EST. 14 SY FABRIC

SEE DETAIL D LATERAL BASE DITCH WCL B RIP RAP EST. 23 TON EST. 64 SY FABRIC

SEE DETAIL V SPECIAL LATERAL BASE DITCH WCL B RIP RAP EST. 45 TON EST. 127 SY FABRIC

PROP. - 37 L.F. OF 24" SANITARY GRAVITY SEWER

PROP. - 425 L.F. OF 24" SANITARY GRAVITY SEWER

PROP. MH 6 (5' DIA.)
STA 0+36.89, LINE PS1000
-L- STA 159+74.33, 50.25' RT.

SEE DETAIL U
SPECIAL LATERAL GRASS SWALE

CL B RIP RAP W/FILTER FABRIC EST. 2 TON EST. 7 SY FABRIC

PROP. - 116 L.F. OF 24" SANITARY GRAVITY SEWER

PROP. MH 7 (6' DIA.)
STA 4+61.89, LINE PS1000
-L- STA 163+99.33, 50.25' RT.

PROP. - 1 - RELOCATE FIRE HYDRANT

WILCOX
DB 1152 PG 682

BM=10
-BL- STA 161+58
206' RT
ELEV. 800.93'

N 01°42'52" E 300.00'

N 88°17'08" W 175.03'

N 02°32'03" E 144.84'

S 88°17'08" E 124.37'

PROP. - 60 L.F. OF 42" STEEL ENCASEMENT PIPE
30 L.F. OF TRENCHLESS INSTALLATION OF 42" PIPE IN SOIL
30 L.F. OF TRENCHLESS INSTALLATION OF 42" PIPE NOT IN SOIL

DETAIL ?
PIPE OUTLET CHANNEL
(Not to Scale)

Length= Ft.
D= Ft.
Est.= ? Tons of Class ? Rip-Rap

FROM STA. TO STA.

DETAIL D
LATERAL BASE DITCH
(Not to Scale)

Min. D= 2.0 Ft.
Max. d= 1.0 Ft.
B= 2.0 Ft.
b= 3.0 Ft.

*When B is < 6.0'

Type of Liner= CLASS B Rip-Rap

FROM –L– STA. 158+80 TO STA.159+50 Rt.
DDE = 30 CY

DETAIL V
SPECIAL LATERAL BASE DITCH
(Not to Scale)

Min. D= 2.0 Ft.
Max. d= 1.0 Ft.
B= 2.0 Ft.

Type of Liner= CLASS B Rip-Rap

FROM –L– STA. 159+50 TO STA. 160+50 Rt.

DETAIL U
SPECIAL LATERAL GRASSED SWALE
(Not to Scale)

Min. D= 2.0Ft.
B= 2.0Ft.

FROM –L– STA. 160+65 TO STA. 163+50 Lt
FROM –L– STA. 160+50 TO STA. 163+50 Rt

WATER NOTES:

1. **PIPE AND FITTINGS FOR WATER LINES 4" AND LARGER SHALL BE DUCTILE IRON, PC 350.**
2. **WATER LINE VALVES SHALL BE RESILIENT-SEAT GATE VALVES, 200 PSI MIN. WORKING PRESSURE.**

-Y11-
SR 2462
SUNNYCREST DRIVE

	830 / 1,200	
–L– FREEWAY DRIVE	415 / 600	415 / 600 –L– FREEWAY DRIVE
20,260 / 41,000		20,260 / 41,000

2010 ADT
2035 ADT

STEPHEN E. SMITH
DB 1082 PG 1247
PB 18 PG 5

73

UTILITY CONSTRUCTION PLANS DESIGNED BY:
DAVIS-MARTIN-POWELL & ASSOCIATES, INC.
ENGINEERING-LAND PLANNING-SURVEYING
6415 OLD PLANK ROAD
HIGH POINT, NC 27265
PHONE: (336) 886-4821 FAX: (336) 886-4458

$$$$SYSTIME$$$$ $$$$DGN$$$$ $$$$USERNAME$$$$

PROJECT REFERENCE NO. U-3326A/B | SHEET NO. UC-13

DESIGNED BY:	DMP
DRAWN BY:	DMP
CHECKED BY:	DMP
APPROVED BY:	
REVISED:	

NORTH CAROLINA DEPARTMENT OF TRANSPORTATION

UTILITIES ENGINEERING SEC.
PHONE: (919) 250-4128
FAX: (919) 250-4119

UTILITY CONSTRUCTION PLANS ONLY

NORTH CAROLINA PROFESSIONAL ENGINEER SEAL 26457 ANDREW P. LARRICK 5-18-11

UTILITY CONSTRUCTION

-L-	-Y12-	
PI Sta 186+88.71	PI Sta 11+50.14	PI Sta 17+41.77
△ = 31° 56′ 07.0″ (RT)	△ = 2° 35′ 54.5″ (RT)	△ = 3° 23′ 46.7″ (LT)
D = 1° 58′ 44.9″	D = 0° 59′ 59.7″	D = 0° 49′ 06.6″
L = 1,613.60′	L = 259.87′	L = 414.94′
T = 828.36′	T = 129.96′	T = 207.53′
R = 2,895.00′	R = 5,730.00′	R = 7,000.00′
SE = 0.03	SE = NC	SE = NC
RO = 108′		

SEWER NOTES:

1. PIPE AND FITTINGS FOR PROPOSED 24" SANITARY SEWER ON LINE PS1000 SHALL BE DUCTILE IRON, PC 350, WITH INTERIOR CERAMIC EPOXY COATING AS DESCRIBED IN SPECIAL PROVISIONS.
2. PROPOSED MANHOLES ON LINE PS1000 SHALL HAVE AN INTERIOR CERAMIC EPOXY COATING AS DESCRIBED IN SPECIAL PROVISIONS.
3. PIPE AND FITTINGS FOR PROPOSED 18" FORCE MAIN SEWER ON LINE PFM500 SHALL BE DUCTILE IRON, PC 350, WITH INTERIOR CERAMIC EPOXY COATING AS DESCRIBED IN SPECIAL PROVISIONS, AND WITHIN STATION LIMITS SHOWN ON PROFILE SHEETS.

WATER NOTES:

1. PIPE AND FITTINGS FOR WATER LINES 4" AND LARGER SHALL BE DUCTILE IRON, PC 350.
2. WATER LINE VALVES SHALL BE RESILIENT-SEAT GATE VALVES, 200 PSI MIN. WORKING PRESSURE.

UTILITY CONSTRUCTION PLANS DESIGNED BY:
DAVIS-MARTIN-POWELL & ASSOCIATES, INC.
ENGINEERING-LAND PLANNING-SURVEYING
6415 OLD PLANK ROAD
HIGH POINT, NC 27265
PHONE: (336) 886-4821 FAX: (336) 886-4458

REVISIONS

8/17/99

8.17/99

REVISIONS

MATCHLINE –Y12– STA. 18+00.00 SEE SHEET UC–13

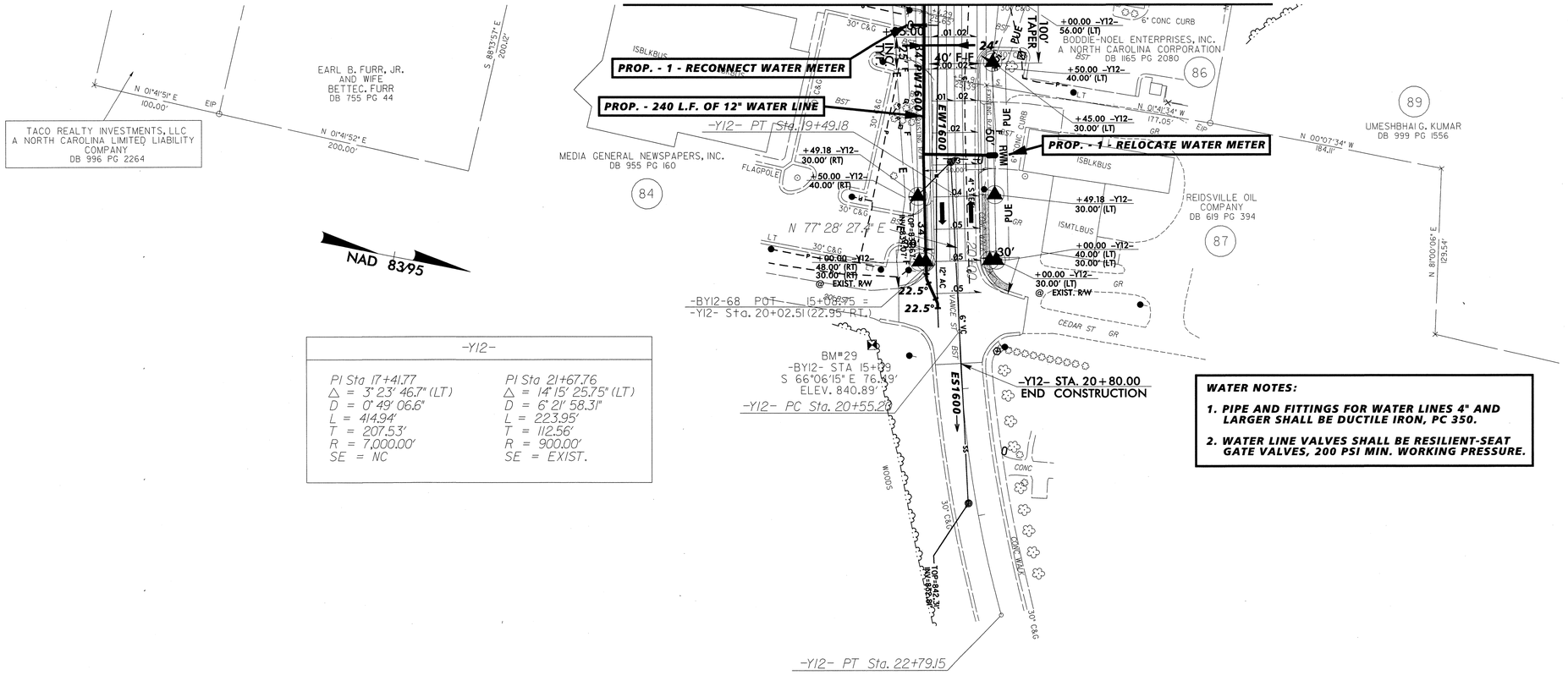

–Y12–	
PI Sta 17+41.77	PI Sta 21+67.76
△ = 3° 23' 46.7" (LT)	△ = 14° 15' 25.75" (LT)
D = 0° 49' 06.6"	D = 6° 21' 58.31"
L = 414.94'	L = 223.95'
T = 207.53'	T = 112.56'
R = 7,000.00'	R = 900.00'
SE = NC	SE = EXIST.

WATER NOTES:

1. **PIPE AND FITTINGS FOR WATER LINES 4" AND LARGER SHALL BE DUCTILE IRON, PC 350.**
2. **WATER LINE VALVES SHALL BE RESILIENT-SEAT GATE VALVES, 200 PSI MIN. WORKING PRESSURE.**

25 0 50

PROJECT REFERENCE NO.	SHEET NO.
U-3326A/B	UC-14
DESIGNED BY: DMP	
DRAWN BY: DMP	
CHECKED BY: DMP	
APPROVED BY:	
REVISED:	

NORTH CAROLINA DEPARTMENT OF TRANSPORTATION

UTILITIES ENGINEERING SEC.
PHONE: (919) 250-4128
FAX: (919) 250-4119

NORTH CAROLINA PROFESSIONAL ENGINEER SEAL 26457 ANDREW P. LARRICK 5-18-11

UTILITY CONSTRUCTION PLANS ONLY

UTILITY CONSTRUCTION

$$$$$$SYSTIME$$$$$$
$$$$$$DGN$$$$$$
$$$$$$ENAME$$$$$$

UTILITY CONSTRUCTION PLANS DESIGNED BY:
DAVIS-MARTIN-POWELL & ASSOCIATES, INC.
ENGINEERING-LAND PLANNING-SURVEYING
6415 OLD PLANK ROAD
HIGH POINT, NC 27265
PHONE: (336) 886-4821 FAX: (336) 886-4458

PROJECT REFERENCE NO.	SHEET NO.
U-3326A/B	UC-15

DESIGNED BY: DMP
DRAWN BY: DMP
CHECKED BY: DMP
APPROVED BY:
REVISED:

NORTH CAROLINA DEPARTMENT OF TRANSPORTATION

UTILITIES ENGINEERING SEC.
PHONE: (919) 250-4128
FAX: (919) 250-4119

NORTH CAROLINA PROFESSIONAL ENGINEER 26457 ANDREW P. LARRICK 5-18-11

UTILITY CONSTRUCTION PLANS ONLY

UTILITY CONSTRUCTION

-L-	-Y12C-
PI Sta 186+88.71	PI Sta 12+87.38
Δ = 31° 56' 07.0" (RT)	Δ = 13° 10' 39.5" (RT)
D = 1° 58' 44.9"	D = 3° 49' 11.0"
L = 1,613.60'	L = 344.99'
T = 828.36'	T = 173.26'
R = 2,895.00'	R = 1,500.00'
SE = 0.03	SE = 0.02
RO = 108'	RO = SEE PLANS

SEWER NOTES:

1. PIPE AND FITTINGS FOR PROPOSED 18" FORCE MAIN SEWER ON LINE PFM500 SHALL BE DUCTILE IRON, PC 350, WITH INTERIOR CERAMIC EPOXY COATING AS DESCRIBED IN SPECIAL PROVISIONS, AND WITHIN STATION LIMITS SHOWN ON PROFILE SHEETS.
2. PROPOSED MANHOLES FOR AIR RELEASE VALVES ON LINE PFM500 SHALL HAVE AN INTERIOR EPOXY COATING AS DESCRIBED IN SPECIAL PROVISIONS.

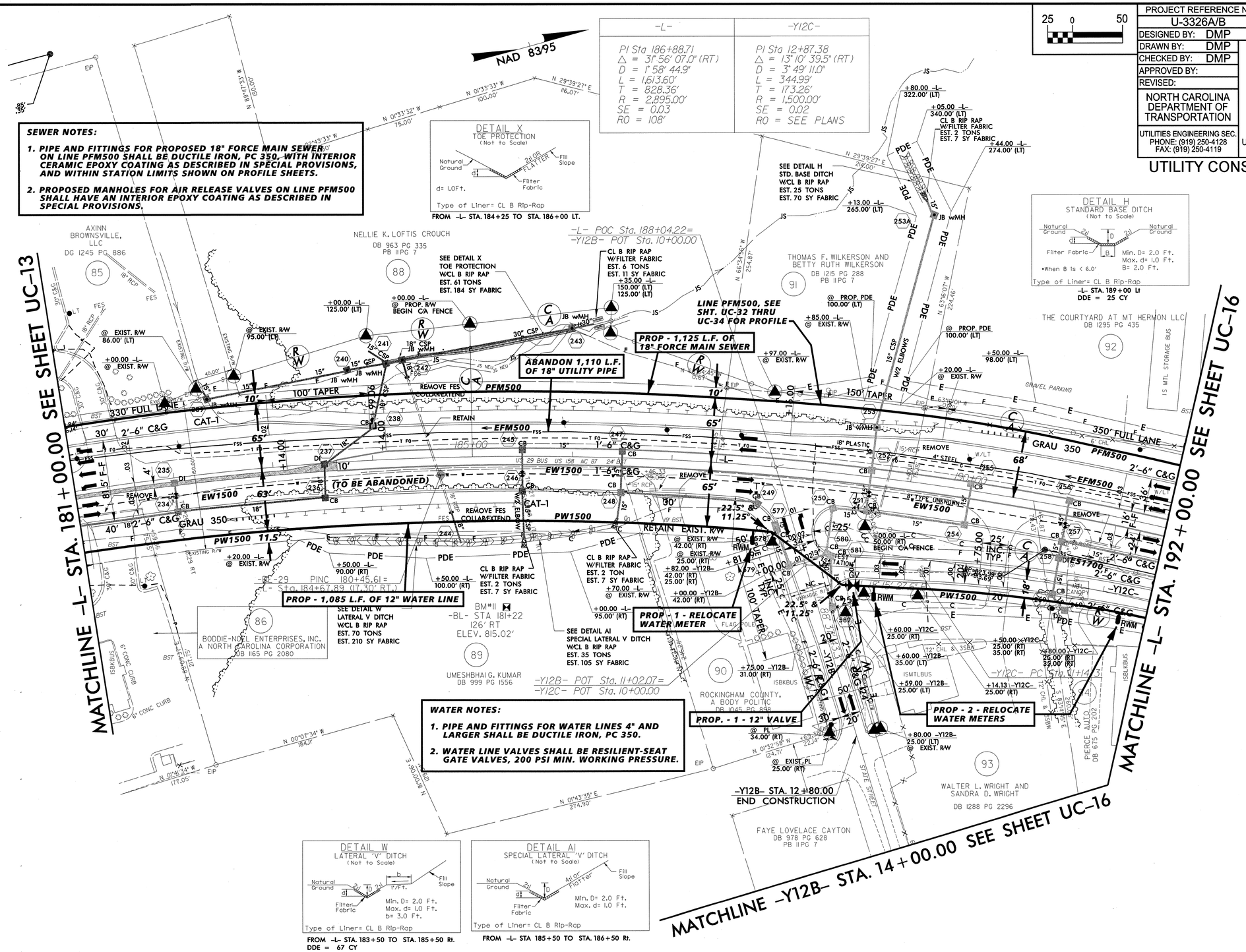

WATER NOTES:

1. PIPE AND FITTINGS FOR WATER LINES 4" AND LARGER SHALL BE DUCTILE IRON, PC 350.
2. WATER LINE VALVES SHALL BE RESILIENT-SEAT GATE VALVES, 200 PSI MIN. WORKING PRESSURE.

FROM -L- STA. 183+50 TO STA. 185+50 Rt.
DDE = 67 CY

FROM -L- STA 185+50 TO STA. 186+50 Rt.

FROM -L- STA. 184+25 TO STA. 186+00 LT.

-L- STA. 189+00 Lt
DDE = 25 CY

REVISIONS

8/17/99

$$$$$SYSTIME$$$$$
$$$$$DGN$$$$$
$$$$$USERNAME$$$$$

UTILITY CONSTRUCTION PLANS DESIGNED BY:
DAVIS-MARTIN-POWELL & ASSOCIATES, INC.
ENGINEERING-LAND PLANNING-SURVEYING
6415 OLD PLANK ROAD
HIGH POINT, NC 27265
PHONE: (336) 886-4821 FAX: (336) 886-4458

REVISIONS

PROJECT REFERENCE NO.	SHEET NO.
U-3326A/B	UC-16

DESIGNED BY:	DMP
DRAWN BY:	DMP
CHECKED BY:	DMP
APPROVED BY:	
REVISED:	

NORTH CAROLINA DEPARTMENT OF TRANSPORTATION

UTILITIES ENGINEERING SEC.
PHONE: (919) 250-4129
FAX: (919) 250-4119

UTILITY CONSTRUCTION PLANS ONLY

UTILITY CONSTRUCTION

25 0 50

BEGIN BRIDGE -L- STA. 202+48.46
END APPR. SLAB -L- STA. 203+77.38
BEGIN APPR. SLAB -L- STA. 202+24.54
END BRIDGE -L- STA. 203+53.46
GRADE LINE LEFT
2'-6" C&G
TYPE B-77
40' FOR TO FOR 17.5'
36'
34' FOR TO FOR 15'
4' PS
BEGIN BRIDGE -L- STA. 202+55.54
BEGIN APPR. SLAB -L- STA. 202+31.62
GRADE LINE RIGHT
END BRIDGE -L- STA. 203+60.54
END APPR. SLAB -L- STA. 203+84.46

SKETCH SHOWING BRIDGE /ROADWAY RELATIONSHIP

-Y13C- MATCHLINE -L- STA. 15+35.00 SEE SHEET UC-26

MATCHLINE -Y13- STA. 16+00.00 SEE SHEET UC-26

MATCHLINE -Y12B- STA. 14+00.00 SEE SHEET UC-15

MATCHLINE -L- STA. 192+00.00 SEE SHEET UC-15

MATCHLINE -Y13- STA. 31+00.00 SEE SHEET UC-27

MATCHLINE -L- STA. 218+00.00 SEE SHEET UC-17

-L-

PI Sta 186+88.71 Δ = 31° 56' 07.0" (RT) D = 7° 58' 44.5" Ls = 180.00' T = 825.56' R = 718.00' SE = 0.03 RD = SEE PLANS	PI Sta 198+52.87 Δ = 9° 12' 24.8" (RT) D = 2° 25' 56.6" Ls = 642.76' T = 322.07' R = 2,360.00' SE = 0.02 RD = 1°0'	PI Sta 207+08.62 Δ = 2° 46' 04.0" (RT) D = 0° 34' 22.6" Ls = 483.07' T = 241.58' R = 10,000.00' SE = NC	PI Sta 211+91.68 Δ = 2° 46' 04.0" (LT) D = 0° 34' 22.6" Ls = 483.07' T = 241.58' R = 10,000.00' SE = NC

-DRVI-

PI Sta 10+25.98 Δ = 37° 01' 37.9" (RT) D = 40° 55' 13.2" Ls = 51.38' T = 25.98' R = 140.00' SE = SEE PLANS	PI Sta 11+81.21 Δ = 89° 23' 29.8" (LT) D = 73° 31' 24.5" Ls = 51.49' T = 32.65' R = 33.00' SE = SEE PLANS	PI Sta [illegible] Δ = 46° 45' 44.2" (RT) D = 143° 14' 22.0" Ls = 33.65' T = 17.25' R = 40.00' SE = 0.06 RD = SEE PLANS	

-Y13RPB-

PI Sta 11+18.80 Gs = 8° 29' 55.9" Ls = 178.00' LT = 118.80' ST = 59.46'	PI Sta 13+13.34 Δ = 25° 25' 01.1" (LT) D = 9° 32' 57.5" L = 266.22' T = 135.34' R = 600.00' SE = 0.08	PI Sta 15+03.68 Gs = 8° 29' 55.9" Ls = 178.00' LT = 118.80' ST = 59.46'	PI Sta 17+76.78 Δ = 35° 13' 10.4" (RT) D = 25° 34' 42.5" L = 137.69' T = 71.00' R = 224.00' SE = 0.04 RD = SEE PLANS

-Y13RPC-

Pls Sta 11+38.13 Gs = 8° 29' 55.9" Ls = 178.00' LT = 118.80' ST = 59.46'	Pl Sta 12+74.66 Δ = 14° 41' 22.1" (RT) D = 9° 32' 57.5" L = 153.83' T = 77.34' R = 600.00' SE = 0.08	Pls Sta 14+10.61 Gs = 8° 29' 55.9" Ls = 178.00' LT = 118.80' ST = 59.46'	Pl Sta 17+75.57 Δ = 23° 32' 40.9" (LT) D = 33° 42' 12.2" L = 87.66' T = 44.63' R = 170.00' SE = 0.02 RD = SEE PLANS	

-Y13PB-

PI Sta 10+25.98 Δ = 37° 01' 37.9" (RT) D = 40° 55' 13.2" L = 51.38' T = 25.98' R = 140.00' SE = 0.02 RD = SEE PLANS	PI Sta 11+81.71 Δ = 89° 23' 29.8" (LT) D = 73° 31' 24.9" L = 51.49' T = 32.65' R = 33.00' SE = SEE PLANS	-Y12C- PI Sta 13+22.29 Δ = 5° 12' 10.6" (RT) D = 1° 54' 35.5" L = 270.06' R = 3,000.00' SE = NC	-Y13- PI Sta 24+41.60 Δ = 6° 11' 09.2" (LT) D = 0° 38' 11.8" L = 969.08' T = 485.01' R = 9,000.00' SE = NC	-Y13A- PI Sta 13+44.49 Δ = 13° 23' 10.5" (RT) D = 10° 30' 46.8" L = 121.33' T = 61.06' R = 545.00' SE = SEE PLANS	-Y13C- PI Sta 10+69.22 Δ = 25° 59' 07.8" (LT) D = 19° 05' 54.9" L = 136.06' T = 69.22' R = 300.00' SE = SEE PLANS	-Y14- PI Sta 12+14.67 Δ = 67° 18' 41.2" (LT) D = 22° 05' 12.6" L = 278.22' T = 156.93' R = 260.00' SE = 0.04 RD = 80'	PI Sta 16+90.11 Δ = 6° 16' 38.5" (RT) D = 4° 05' 33.2" L = 153.38' T = 76.77' R = 1,400.00' SE = EXIST.

-Y13PB-

PI Sta 10+25.98 Δ = 37° 01' 37.9" (RT) D = 40° 55' 13.2" L = 51.38' T = 25.98' R = 140.00' SE = 0.02 RD = SEE PLANS	PI Sta 11+81.71 Δ = 89° 23' 29.8" (LT) D = 73° 31' 24.9" L = 51.49' T = 32.65' R = 33.00' SE = SEE PLANS	-Y12C- PI Sta 13+22.29 Δ = 5° 12' 10.6" (RT) D = 1° 54' 35.5" L = 270.06' R = 3,000.00' SE = NC	-Y13- PI Sta 24+41.60 Δ = 6° 11' 09.2" (LT) D = 0° 38' 11.8" L = 969.08' T = 485.01' R = 9,000.00' SE = NC	-Y13A- PI Sta 13+44.49 Δ = 13° 23' 10.5" (RT) D = 10° 30' 46.8" L = 121.33' T = 61.06' R = 545.00' SE = SEE PLANS	-Y13C- PI Sta 10+69.22 Δ = 25° 59' 07.8" (LT) D = 19° 05' 54.9" L = 136.06' T = 69.22' R = 300.00' SE = SEE PLANS	-Y14- PI Sta 12+14.67 Δ = 67° 18' 41.2" (LT) D = 22° 05' 12.6" L = 278.22' T = 156.93' R = 260.00' SE = 0.04 RD = 80'	PI Sta 16+90.11 Δ = 6° 16' 38.5" (RT) D = 4° 05' 33.2" L = 153.38' T = 76.77' R = 1,400.00' SE = EXIST.

-Y13RPD-

Pls Sta 11+18.80 Gs = 8° 29' 55.9" Ls = 178.00' LT = 118.80' ST = 59.46'	Pl Sta 12+70.95 Δ = 17° 36' 42.0" (LT) D = 9° 32' 57.5" L = 184.43' T = 92.95' R = 600.00' SE = 0.08	Pls Sta 14+21.89 Gs = 8° 29' 55.9" Ls = 178.00' LT = 118.80' ST = 59.46'

8/17/99

REVISIONS

$$$$SYSTIME$$$$
$$$$USERNAME$$$$

-L-	-Y15-	-Y15A-
PI Sta 235+67.97	PI Sta 11+85.76	PI Sta 11+95.76
△ = 14° 10' 46.6" (LT)	△ = 41° 08' 17.8" (RT)	△ = 30° 20' 54.1" (RT)
D = 0° 55' 26.9"	D = 13° 38' 30.7"	D = 9° 32' 57.5"
L = 1,534.38'	L = 301.56'	L = 317.81'
T = 771.13'	T = 157.61'	T = 162.73'
R = 6,200.00'	R = 420.00'	R = 600.00'
SE = 0.02	SE = EXIST.	SE = SEE PLANS
RO = 72'		

25 0 50

PROJECT REFERENCE NO.	SHEET NO.
U-3326A/B	UC-17
DESIGNED BY: DMP	
DRAWN BY: DMP	
CHECKED BY: DMP	
APPROVED BY:	
REVISED:	

NORTH CAROLINA DEPARTMENT OF TRANSPORTATION

UTILITIES ENGINEERING SEC.
PHONE: (919) 250-4128
FAX: (919) 250-4119

NORTH CAROLINA PROFESSIONAL SEAL 26457 ENGINEER ANDREW P. LARRICK 5-18-11

UTILITY CONSTRUCTION PLANS ONLY

UTILITY CONSTRUCTION

-Y15- SR 2003 GIBBS DRIVE
645 / 1,200
430 / 800 — 215 / 400
-L- FREEWAY DRIVE — -L- FREEWAY DRIVE
16,149 / 33,000 — 15,934 / 32,600
100- / 200 — 100- / 200
100- / 400
-Y15A- GIBBS DRIVE
2010 ADT / 2035 ADT

-Y15- POT Sta. 10+00.00
-BY15-73 POT 5+00.00 =
-Y15- Sta. 10+09.27 (16.62' LT.)
-Y15- PC Sta. 10+28.15

SEWER NOTES:

1. PIPE AND FITTINGS FOR PROPOSED 18" FORCE MAIN SEWER ON LINE PFM500 SHALL BE DUCTILE IRON, PC 350, WITH INTERIOR CERAMIC EPOXY COATING AS DESCRIBED IN SPECIAL PROVISIONS, AND WITHIN STATION LIMITS SHOWN ON PROFILE SHEETS.

NAD 83/95

MATCHLINE -L- STA. 218+00.00 SEE SHEET UC-16

MATCHLINE -L- STA. 231+00.00 SEE SHEET UC-18

JOANNA H. GIBBS DB 866 PG 640 — (107)
ROCKINGHAM COUNTY FARM BUREAU,INC DB 709 PG 70
CAROL ANN ADAMS — (113)
SCOTT COOK, LLC DB 1196 PG 1764 PB 13 PG 68 — (115)
DAVID L. HOWERTON AND WIFE KATHERINE B. HOWERTON DB 1136 PG 1726 — (111)
RAMESH PATEL MANJULABEN PATEL DB 1105 PG 1555 — (112)
IRVING K. BASS AND WIFE MAE P. BASS DB 726 PG 782 — (114)
CHARLES P. BALLENTINE AND WIFE AUDREY T. BALLENTINE DB 877 PG 801 — (116)
ANNIE PEARL GORDON DB 832 PG 283

-Y15- STA. 12+60.00 BEGIN CONSTRUCTION
+35.00 -L- 278.00' (LT)
+55.00 -L- 270.00' (LT)
CL B RIP RAP W/FILTER FABRIC EST. 3 TON EST. 11 SY FABRIC

PROP. - 1,300 L.F. OF 18" FORCE MAIN SEWER

PROP. - 1 - RECONNECT WATER METER

PROP. - 1 - RELOCATE WATER METER

PROP. - 1 - RELOCATE FIRE HYDRANT

PROP. - 1 - 12" VALVE

PROP. - 1,305 L.F. OF 12" WATER LINE

ABANDON 1,300 L.F. OF 18" UTILITY PIPE

-L- POT Sta. 223+14.66=
-Y15- POT Sta. 14+21.42
-Y15A- POT Sta. 10+00.00

-BL- STA 220+19 117' RT ELEV. 710.41'
BM#13

-BL-33 PINC 219+45.12
-BY-15 PINC 9+46.86 =
-L- Sta. 223+63.94 (28.26' RT.)
-Y15A- Sta. 10+26.34 (50.33' LT.)

-Y15A- STA. 13+00.00 END CONSTRUCTION

-L- PC Sta. 227+98.84

-Y15- PT Sta. 13+13.71

-Y15- PT Sta. 13+29.71

-Y15A- PC Sta. 10+33.62

-Y15A- PT Sta. 13+50.86

-BY15-74 POT 14+70.66

-Y15A- POT Sta. 14+78.20

WATER NOTES:

1. PIPE AND FITTINGS FOR WATER LINES 4" AND LARGER SHALL BE DUCTILE IRON, PC 350.
2. WATER LINE VALVES SHALL BE RESILIENT-SEAT GATE VALVES, 200 PSI MIN. WORKING PRESSURE.

DETAIL D
LATERAL BASE DITCH
(Not to Scale)
Natural Ground, 2H, d, D, 2H, Filter Fabric, b, 1'/Ft., Fill Slope
Min. D= 2.0 Ft.
Max. d= 1.0 Ft.
B= 2.0 Ft.
b= 3.0 Ft.
•When B Is < 6.0'
Type of Liner= CLASS B Rip-Rap
FROM -L- STA. 226+95 TO STA. 227+20 Lt.
DDE = 6 CY

DETAIL X
TOE PROTECTION
(Not to Scale)
Natural Ground, d, 2H OR FLATTER, Fill Slope, Filter Fabric
d= 1.0Ft.
Type of Liner= CL B Rip-Rap
FROM -L- STA. 226+20 TO STA. 227+10 Rt.
FROM -Y15A- STA. 11+80 TO STA. 12+25 Rt.

DETAIL J
BERM "V" DITCH
(Not to Scale)
Natural Ground, 2H, D, 2H, b, RDWY, 2H
Min. D= 1.0Ft.
b= 3.0 Ft.
FROM -L- STA. 228+50 TO STA. 229+00 Rt.

UTILITY CONSTRUCTION PLANS DESIGNED BY:
DAVIS-MARTIN-POWELL & ASSOCIATES, INC.
ENGINEERING-LAND PLANNING-SURVEYING
6415 OLD PLANK ROAD
HIGH POINT, NC 27265
PHONE: (336) 886-4821 FAX: (336) 886-4458

PROJECT REFERENCE NO.	SHEET NO.
U-3326A/B	UC-18
DESIGNED BY: DMP	
DRAWN BY: DMP	
CHECKED BY: DMP	
APPROVED BY:	
REVISED:	

NORTH CAROLINA DEPARTMENT OF TRANSPORTATION

UTILITIES ENGINEERING SEC.
PHONE: (919) 250-4128
FAX: (919) 250-4119

NORTH CAROLINA PROFESSIONAL ENGINEER SEAL 26457 ANDREW P. LARRICK 5-18-17

UTILITY CONSTRUCTION PLANS ONLY

UTILITY CONSTRUCTION

25 0 50

8/17/99

REVISIONS

-L-	-Y16-	-Y16A-	
PI Sta 235+67.97	PI Sta 11+86.30	PI Sta 11+69.27	PI Sta 13+21.62
Δ = 14° 10' 46.6" (LT)	Δ = 18° 24' 03.2" (LT)	Δ = 88° 33' 17.2" (RT)	Δ = 44° 51' 28.6" (LT)
D = 0° 55' 26.9"	D = 5° 43' 46.5"	D = 114° 35' 29.6"	D = 19° 05' 54.9"
L = 1,534.38'	L = 321.16'	L = 77.28'	L = 234.88'
T = 771.13'	T = 161.97'	T = 48.75'	T = 123.83'
R = 6,200.00'	R = 1,000.00'	R = 50.00'	R = 300.00'
SE = 0.02	SE = SEE PLANS	SE = EXIST.	SE = EXIST.
RO = 72'			

SEWER NOTES:

1. **PIPE AND FITTINGS FOR PROPOSED 18" FORCE MAIN SEWER ON LINE PFM500 SHALL BE DUCTILE IRON, PC 350, WITH INTERIOR CERAMIC EPOXY COATING AS DESCRIBED IN SPECIAL PROVISIONS, AND WITHIN STATION LIMITS SHOWN ON PROFILE SHEETS.**
2. **PROPOSED MANHOLES FOR AIR RELEASE VALVES ON LINE PFM500 SHALL HAVE AN INTERIOR EPOXY COATING AS DESCRIBED IN SPECIAL PROVISIONS.**

WATER NOTES:

1. **PIPE AND FITTINGS FOR WATER LINES 4" AND LARGER SHALL BE DUCTILE IRON, PC 350.**
2. **WATER LINE VALVES SHALL BE RESILIENT-SEAT GATE VALVES, 200 PSI MIN. WORKING PRESSURE.**

SCOTT COOK, LLC
DB 1196 PG 1764
PB 13 PG 68
115

CHARLES P. BALLENTINE AND WIFE AUDREY T. BALLENTINE
DB 877 PG 801
116

ISAAC J. IRVING, JR.
DB 794 PG 213
118

E.G. DUNCAN
JOSEPH WARR, JR.
RALPH L. PERKINS
TRUSTEES OF PENN MEMORIAL BAPTIST CHURCH AND THEIR SUCCESSORS
DB 838 PG 1998
117

ROCKINGHAM COUNTY
DB 1194 PG 643
119

ROCKINGHAM COUNTY SCHOOL
120

MATCHLINE -L- STA. 231+00.00 SEE SHEET UC-17

MATCHLINE -L- STA. 244+00.00 SEE SHEET UC-19

NAD 83/95

BM#15
-BY16- STA 5+00
N 8°31'37" W 125.20'
ELEV. 724.27'

BM#14
-BY16- STA 12+50
N 82°00'04" E 129.75'
ELEV. 737.97'

-BY16- POT 5+00.00

-Y16- POT Sta. 10+00.00

-Y16- PC Sta. 10+24.33

-Y16- STA. 12+38.86
BEGIN CONSTRUCTION

-Y16- PT Sta. 13+45.49

-L- POC Sta. 238+59.36=
-Y16A- POT Sta. 10+00.00

-L- Sta. 238+24 -L- ± 73' LT ±

-L- Sta. 242+58 -L- ± 55' LT ±

-L- Sta. 243+31 -L- ± 53' RT ±

-L- Sta. 237+85 75' RT ±

-L- Sta. 238+82.60 (38.27' RT.)
-Y16A- Sta. 10+32.18 (31.18' LT.)

-BL-34 PINC 227+70.18 =
-L- Sta. 231+87.40 (26.73' RT.)

-BL-35 PINC 234+68.71 =
-BY16 PINC 9+49.10
-BY16A POT 5+00.00
-L- Sta. 238+82.60 (38.27' RT.)
-Y16A- Sta. 10+32.18 (31.18' LT.)

-BY16A-77 POT 9+31.39

-Y16A- PRC Sta. 11+79.79

-Y16A- POT Sta. 14+58.65

-Y16A- PT Sta. 14+32.67

-BY16-76 POT 12+50.48

-Y16A- PC Sta. 11+20.51

-Y16A- STA. 11+20.00
END CONSTRUCTION

PROP. - 1 - 4" AIR RELEASE VALVE

PROP. - 1 - 4" AIR RELEASE VALVE

PROP. - 1 - RECONNECT WATER METER

ABANDON 1,072 L.F. OF 18" UTILITY PIPE

PROP. - 1 - RECONNECT WATER METER

PROP. - 1,010 L.F. OF 18" FORCE MAIN SEWER

ABANDON 1 UTILITY MH

PROP. - 760 L.F. OF 12" WATER LINE

PROP. - 1 12" VALVE

PROP. - 1 - RELOCATE FIRE HYDRANT

SEE DETAIL A2
SPECIAL LATERAL V DITCH

SEE DETAIL A3
BERM V DITCH
W/CL B RIP RAP
EST. 18 TONS
EST. 53 SY FABRIC

SEE DETAIL J
BERM V DITCH

SEE DETAIL A4
LINE EXSITING DITCH
W/CLASS I RIP RAP
EST. 237 TONS
EST. 419 SY FABRIC

REMOVE (TO BE ABANDONED)

RETAIN

REMOVE

100' TAPER

265' TAPER

330' FULL LANE

45° 12" CSP

REMOVE 18' OF 15" RCP

REMOVE 17' OF 24" RCP

CONV. CB TO JB

BAND/EXTEND 4OTCB

RETAIN EXISTING R/W

CUT DITCH

FILL DITCH

DETAIL A2
SPECIAL LATERAL 'V' DITCH
(Not to Scale)

Natural Ground, 2:1, D, 4:1 or Flatter, Fill Slope
Min. D= 2.0 Ft.

FROM -L- STA. 231+00 TO STA. 232+00 Rt.

DETAIL J
BERM 'V' DITCH
(Not to Scale)

Natural Ground, 2:1, D, 2:1, b, RDWY
Min. D= 1.0Ft.
b= 3.0 Ft.

FROM -L- STA. 232+50 TO STA. 235+00 Rt.

DETAIL A3
BERM 'V' DITCH
(Not to Scale)

Natural Ground, 2:1, D, 2:1, b, d, RDWY
Filter Fabric
Min. D= 1.0 Ft.
b= 3.0 Ft. Max. d= 1.0 Ft.
Type of Liner= CLASS B RIP RAP

FROM -L- STA. 232+00 TO STA. 232+50 Rt.

DETAIL A4
LINE EXSITING DITCH
(Not to Scale)

Natural Ground, EXIST, D, EXIST, Natural Ground, d, Filter Fabric, B
Min. D= VAR. Ft.
Max. d= 2.0 Ft.
B= VAR. Ft.
*When B Is < 6.0'
Type of Liner= I Rip-Rap

FROM -L- STA. 241+00 Lt.

-Y16-
MOSS STREET

2,319 / 3,800	
1,475 / 2,400	108 / 200
-L- FREEWAY DRIVE	-L- FREEWAY DRIVE
15,934 / 32,600	14,445 / 30,000
1,152 / 1,800	845 / 1,400
2,744 / 4,400	

-Y16A- MOSS STREET

2010 ADT
2035 ADT

UTILITY CONSTRUCTION PLANS DESIGNED BY:
DAVIS-MARTIN-POWELL & ASSOCIATES, INC.
ENGINEERING-LAND PLANNING-SURVEYING
6415 OLD PLANK ROAD
HIGH POINT, NC 27265
PHONE: (336) 886-4821 FAX: (336) 886-4458

8/17/99

REVISIONS

PROJECT REFERENCE NO.	SHEET NO.
U-3326A/B	UC-19
DESIGNED BY: DMP	
DRAWN BY: DMP	
CHECKED BY: DMP	
APPROVED BY:	
REVISED:	

NORTH CAROLINA DEPARTMENT OF TRANSPORTATION

UTILITIES ENGINEERING SEC.
PHONE: (919) 250-4128
FAX: (919) 250-4119

NORTH CAROLINA PROFESSIONAL ENGINEER SEAL 26457 ANDREW P. LARRICK 5-18-11

UTILITY CONSTRUCTION PLANS ONLY

UTILITY CONSTRUCTION

25 0 50

MATCHLINE –L– STA. 244+00.00 SEE SHEET UC-18

MATCHLINE –L– STA. 257+00.00 SEE SHEET UC-20

LOW- FLOW DIVERSION AT CULVERT INLET/OUTLET
(Not to Scale)

PLAN VIEW

FOOTER ROCKS
BOULDERS
LOW FLOW

Boulders should have approximate dimensions of 3.0ft x 2.0ft x 2.0ft and have no spaces between rocks. Approximate weight = 2000lbs

FRONT VIEW

0.50ft or 0.20ft above low flow water surface
BURY 1.5ft
Low flow (normal) water surface

DETAIL X
TOE PROTECTION
(Not to Scale)

Natural Ground
d1
1.5:1 OR FLATTER
Fill Slope
Filter Fabric
d= 1.0 Ft.
Type of Liner= CLASS B RIP RAP

FROM –L– STA. 249+00 TO STA. 250+50 Lt.

DETAIL G
LATERAL BASE DITCH
(Not to Scale)

Natural Ground
2d
d1
b
1':1'
Fill Slope
Filter Fabric
*When B Is < 6.0'
Min. D= 2.0 Ft.
Max. d= 1.0 Ft.
B= 3.0 Ft.
b= 3.0 Ft.
Type of Liner= CLASS B RIP RAP

FROM STA. 255+80 TO STA. 256+37–L–LT
DDE = 28 CY

DETAIL W
LATERAL 'V' DITCH
(Not to Scale)

Natural Ground
d1
2d
b
1':1'
Fill Slope
Filter Fabric
Min. D= 2.0 Ft.
Max. d= 1.0 Ft.
b= 3.0 Ft.
Type of Liner= CLASS B RIP RAP

FROM –L– STA. 249+60 STA. TO STA. 253+50 Rt.
DDE = 223 CY

PROP. - 1 - RECONNECT WATER METER

PROP. - 1 - RELOCATE FIRE HYDRANT

PROP. MH 16 (5' DIA.)
STA 0+00.00, LINE PS2100
-L- STA 252+76.73, 108.56' LT.

PROP. MH 17 (5' DIA.)
STA 0+18.00, LINE PS2100
-L- STA 252+70.01, 91.86' LT.

PROP. MH 18 (5' DIA.)
STA 2+47.86, LINE PS2100
-L- STA 251+01.57, 64.55' RT.

PROP. MH 19 (5' DIA.)
STA 2+88.22, LINE PS2100
-L- STA 250+63.54, 78.09' RT.

ABANDON 283 L.F. OF 16" UTILITY PIPE

PROP. - 18 L.F. OF 16" SANITARY GRAVITY SEWER

PROP. - 230 L.F. OF 16" SANITARY GRAVITY SEWER

PROP. - 40 L.F. OF 16" SANITARY GRAVITY SEWER

PROP. - 180 L.F. OF 30" STEEL ENCASEMENT PIPE
90 L.F. OF TRENCHLESS INSTALLATION OF 30" PIPE IN SOIL
90 L.F. OF TRENCHLESS INSTALLATION OF 30" PIPE NOT IN SOIL

LINE PS2100, SEE SHT. UC-34 FOR PROFILE

EFM600 (ABANDONED)

ES2100

ES1800

EW1900

SEE DETAIL X
TOE PROTECTION
W/CL B RIP RAP
EST. 53 TONS
EST. 157 SY FABRIC

SEE DETAIL G
3' LATERAL BASE DITCH
W/CLASS B RIP RAP
EST. 35 TONS
EST. 97 SY FABRIC

SEE DETAIL ??
2' LATERAL BASE DITCH
W/CLASS I RIP RAP
EST. 136 TONS
EST. 409 SY FABRIC

CL B RIP RAP
W/FILTER FABRIC
EST. 1 TON
EST. 5 SY FABRIC

CL B RIP RAP
W/FILTER FABRIC
EST. 3 TON
EST. 11 SY FABRIC

CL B RIP RAP
W/FILTER FABRIC
EST. 5 TON
EST. 14 SY FABRIC

CL B RIP RAP
W/FILTER FABRIC
EST. 5 TON
EST. 14 SY FABRIC

BM#16
-BL- STA 246+195' LT
ELEV. 712.03

BL-36 PINC 246+86.57 = -L- Sta. 250+98.09 (23.45' RT.)

DUKE POWER COMPANY
DB 691PG 353
121
ISBKBUS

ROCKINGHAM COUNTY
DB 1194 PG 643
119

VEITA J. BLAND
DB 796 PG 1939
123

ROCKINGHAM COUNTY SCHOOL
120

REIDSVILLE INSURANCE COMPANY
PB 7 PG 139
PB 3 PG III
122

RAYMOND J. HOLCOMB
DB 883 PG 476
PB 3 PG III

GRAU 350

CAT-1

WATER NOTES:

1. PIPE AND FITTINGS FOR WATER LINES 4" AND LARGER SHALL BE DUCTILE IRON, PC 350.
2. WATER LINE VALVES SHALL BE RESILIENT-SEAT GATE VALVES, 200 PSI MIN. WORKING PRESSURE.

SEWER NOTES:

1. PIPE AND FITTINGS FOR PROPOSED 16" SANITARY SEWER ON LINE PS2100 SHALL BE DUCTILE IRON, PC 350.

UTILITY CONSTRUCTION PLANS DESIGNED BY:
DAVIS-MARTIN-POWELL & ASSOCIATES, INC.
ENGINEERING-LAND PLANNING-SURVEYING
6415 OLD PLANK ROAD
HIGH POINT, NC 27265
PHONE: (336) 886-4821 FAX: (336) 886-4458

-L-	-Y17-	
PI Sta 268+39.37	PI Sta 13+64.58	PI Sta 19+67
△ = 17° 59' 20.6" (RT)	△ = 18° 40' 30.5" (RT)	△ = 17° 03' 14.8" (LT)
D = 2° 00' 37.4"	D = 4° 51' 20.1"	D = 15° 04' 40.2"
L = 894.81'	L = 384.61'	L = 113.11'
T = 451.12'	T = 194.03'	T = 56.97'
R = 2,850.00'	R = 1,180.00'	R = 380.00'
SE = 0.03	SE = 0.03	SE = 0.02
RO = 108'	RO = SEE PLANS	RO = SEE PLANS

SEWER NOTES:

1. PIPE AND FITTINGS FOR PROPOSED 8" SANITARY SEWER ON LINE PS2200 SHALL BE DUCTILE IRON, PC 350.

WATER NOTES:

1. PIPE AND FITTINGS FOR WATER LINES 4" AND LARGER SHALL BE DUCTILE IRON, PC 350.
2. WATER LINE VALVES SHALL BE RESILIENT-SEAT GATE VALVES, 200 PSI MIN. WORKING PRESSURE.

PROJECT REFERENCE NO.	SHEET NO.
U-3326A/B	UC-20

DESIGNED BY: DMP
DRAWN BY: DMP
CHECKED BY: DMP
APPROVED BY:
REVISED:

NORTH CAROLINA DEPARTMENT OF TRANSPORTATION

UTILITIES ENGINEERING SEC.
PHONE: (919) 250-4128
FAX: (919) 250-4119

NORTH CAROLINA PROFESSIONAL ENGINEER SEAL 26457 ANDREW P. LARRICK 5-18-11

UTILITY CONSTRUCTION PLANS ONLY

UTILITY CONSTRUCTION

REVISIONS

8/17/99

UTILITY CONSTRUCTION PLANS DESIGNED BY:
DAVIS-MARTIN-POWELL & ASSOCIATES, INC.
ENGINEERING-LAND PLANNING-SURVEYING
6415 OLD PLANK ROAD
HIGH POINT, NC 27265
PHONE: (336) 886-4821 FAX: (336) 886-4458

$$$$$$SYSTIME$$$$$ $$$$$$$$DGN$$$$$$$$$$$$$ $$$$$USERNAME$$$$

8/17/99

REVISIONS

DETAIL A5
LATERAL 'V' DITCH
(Not to Scale)

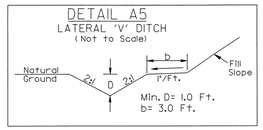

FROM -L- STA. 270+00 TO STA. 271+30 Lt.
DDE = 32 CY

DETAIL A6
SPECIAL LATERAL 'V' DITCH
(Not to Scale)

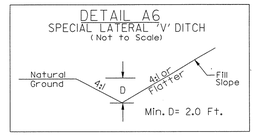

FROM -L- STA. 272+30 TO STA. 273+90 Lt.

-L-	-Y19-	-Y20-
PI Sta 268+39.37	PI Sta 10+59.84	PI Sta 12+49.09
Δ = 17° 59' 20.6" (RT)	Δ = 14° 11' 12.7" (RT)	Δ = 12° 17' 08.2" (LT)
D = 2° 00' 37.4"	D = 19° 05' 54.9"	D = 12° 43' 56.6"
L = 894.81'	L = 74.28'	L = 96.49'
T = 451.12'	T = 37.33'	T = 48.43'
R = 2,850.00'	R = 300.00'	R = 450.00'
SE = 0.03	SE = SEE PLANS	SE = SEE PLANS
RO = 108'		

25 0 50

PROJECT REFERENCE NO.	SHEET NO.
U-3326A/B	UC-21
DESIGNED BY: DMP	
DRAWN BY: DMP	
CHECKED BY: DMP	
APPROVED BY:	
REVISED:	

NORTH CAROLINA DEPARTMENT OF TRANSPORTATION

UTILITIES ENGINEERING SEC.
PHONE: (919) 250-4128
FAX: (919) 250-4119

NORTH CAROLINA PROFESSIONAL ENGINEER SEAL 26457 ANDREW P. LARRICK 5-18-11

UTILITY CONSTRUCTION PLANS ONLY

UTILITY CONSTRUCTION

MATCHLINE -L- STA. 270+00.00 SEE SHEET UC-20

MATCHLINE -L- STA. 283+00.00 SEE SHEET UC-22

NAD 83/95

SEE DETAIL A5 LATERAL V DITCH

KENAN C. WRIGHT
DB 787 PG 2298
(131)

TIE ISLAND TO EXIST. AT -Y18- STA. 11+50.00

+25.00 -Y18- 47.00' (RT)
+65.00 -Y18- 35.00' (RT) @ PROP. PDE
45.00' (RT) CL B RIP RAP W/FILTER FABRIC EST. 5 TON EST. 14 SY FABRIC
+28.00 -L- @ EXIST. R/W
+89.00 -L- 96.00' (LT)

-Y18- POT Sta. 10+00.00

-Y18- STA. 11+00.00
BEGIN CONSTRUCTION

-BY18-83 PINC 9+14.93 =
-Y18- Sta. 10+50.33 (23.06' LT.)
-BL-38 PINC 267+31.82
-BY18- POT 10+91.63
-BY19- POT 5+00.00 =
-L- Sta. 271+38.06 (28.81' LT.)
-Y18- Sta. 12+17.41 (34.41' RT.)

+00.00 -Y18- @ EXIST. R/W 35.00' (RT)
+00.00 -Y18- @ EXIST. R/W

WRIGHT AND WRIGHT I
DB 771PG 1522
PB 34 PG 21
(133)

+25.00 -Y18- 41.00' (LT)

END ISLAND W/2'-6' C&G AT -Y18- STA. 12+04.50

-L- POC Sta. 271+72.78=
-Y18- POT Sta. 12+46.78
-L- POC Sta. 271+82.86=
-Y19- POT Sta. 10+00.00
-L- POC Sta. 272+80.37=
-DRV2- POT Sta. 10+00.00
-L- PT Sta. 272+83.06

PROP. - 40 L.F. OF 6" WATER LINE

LUKING REAL ESTATE,LLC
A NORTH CAROLINA LIMITED LIABILITY COMPANY
DB 979 PG 646
PB 34 PG 21

DALE A. HEISLER AND WIFE VICKI L. HEISLER
DB 808 PG 2316

LILLIE ROACH HEIRS
PB 28 PG 116
PB 2 PG 33

-BL-39 PINC 274+52.43
-BY20- POT 5+00.00 =
-L- Sta. 278+57.26 (21.18' LT.)

PROP. - 1 - RELOCATE WATER METER

-L- POT Sta. 279+94.72=
-Y20- POT Sta. 10+00.00

PROP. - 150 L.F. OF 6" WATER LINE

PROP. - 60 L.F. OF 6" WATER LINE

PROP. - 1 - RELOCATE WATER METER

PROP. - 1 - RELOCATE FIRE HYDRANT

LINE PFM700 - SEE SHT. UC-35 FOR PROFILE

PROP. - 360 L.F. OF 2.5" FORCE MAIN SEWER

-Y19- PC Sta. 12+00.86

-Y19- STA. 12+05.00
END CONSTRUCTION

-Y19- PT Sta. 10+22.51

-Y20- PC Sta. 10+38.65

-Y20- PT Sta. 10+98.79

-Y20- STA. 11+25.00
END CONSTRUCTION

-BY20-85 POT 7+72.87 =
-Y20- Sta. 13+05.66 (20.33' LT.)

-Y20- POT Sta. 13+07.93

-Y19A- POT Sta. 11+09.28

-Y19- POC Sta. 12+72.57=
-Y19A- POT Sta. 10+00.00
-BY19-84 POT 8+01.09
-Y19- Sta. 12+98.23 (20.19' LT.)

DOROTHY RETHWISCH
DB 908 PG 548

HALL RENTAL PROPERTIES, LLC
DB 1338 PG 2239
(135)

PREBLE PROPERTIES, LLC
DB 1080 PG 1596
(134)

TWENTY-NINE SELF STORAGE
DB 776 PG 663

JERRY DALE GILMORE
DB 1200 PG 1006

BM#19
-BL- STA 273+28
127' RT
ELEV. 790.15'
(136)

M. J. GILMORE AND WIFE DOROTHY P. GILMORE
DB 1075 PG 1112

LILLIE ROACH HEIRS
PB 28 PG 116
PB 2 PG 33
(137)

-Y18- DEERFIELD DRIVE

-L- FREEWAY DRIVE

923 / 1,200	
715 / 900	108 / 200
14,445 / 30,000	13,230 / 28,600
715 / 900	108 / 200
923 / 1,200	

-Y19- GEORGE STREET

2010 ADT
2035 ADT

WATER NOTES:

1. PIPE AND FITTINGS FOR WATER LINES 4" AND LARGER SHALL BE DUCTILE IRON, PC 350.
2. WATER LINE VALVES SHALL BE RESILIENT-SEAT GATE VALVES, 200 PSI MIN. WORKING PRESSURE.

UTILITY CONSTRUCTION PLANS DESIGNED BY:
DAVIS-MARTIN-POWELL & ASSOCIATES, INC.
ENGINEERING-LAND PLANNING-SURVEYING
6415 OLD PLANK ROAD
HIGH POINT, NC 27265
PHONE: (336) 886-4821 FAX: (336) 886-4458

REVISIONS
6-17-09

-L-
PI Sta 299+65.13 Δ = 25°05'05.5" (RT) D = 7°57'43.9" L = 1,278.37' T = 649.59' R = 2,920.00' SE = 0.03 RO = 108°

-Y20B-		
PI Sta 11+49.94 Δ = 101°15'25.2" (RT) D = 5°43'46.5" L = 1,710.02' T = 1,197.5' R = 1,000.00' SE = SEE PLANS	PI Sta 13+28.77 Δ = 101°14'04.4" (LT) D = 5°43'46.5" L = 1,718.63' T = 1,195.55' R = 1,000.00' SE = SEE PLANS	PI Sta 16+59.67 Δ = 3°13'10.4" (RT) D = 1°54'35.5" L = 168.66' T = 84.32' R = 3,000.00' SE = 0.08 RO = SEE PLANS

-Y21-		
PI Sta 16+50.81 Δ = 7°28'06.3" (LT) D = 1°25'56.6" L = 521.59' T = 261.01' R = 4,000.00' SE = 0.03 RO = 90°	PI Sta 26+22.04 Δ = 127°34'40.3" (RT) D = 7°32'20.7" L = 1,365.82' L = 186.52' R = 760.00' SE = 0.04 RO = SEE PLANS	PI Sta 30+45.86 Δ = 13°31'12.5" (LT) D = 5°12'31.3" L = 256.37' T = 128.77' R = 1,100.00' SE = EXIST.

-Y21LPB-
PIs Sta 10+92.35 θs = 20°05'54.3" Ls = 137.00' LT = 92.35' ST = 46.59'
PI Sta 18+41.44 Δ = 155°57'30.0" (RT) D = 38°11'49.5" L = 408.30' T = 704.44' R = 150.00' SE = 0.08 RO = SEE PLANS

-Y21LPC-
PIs Sta 10+92.35 θs = 26°09'54.3" Ls = 137.00' LT = 92.35' ST = 46.59'
PI Sta 15+32.32 Δ = 138°06'34.4" (LT) D = 38°11'49.5" L = 362.44' T = 395.32' R = 150.00' SE = 0.08 RO = SEE PLANS

-Y21RPB-		
PIs Sta 10+80.38 θs = 17°11'19.4" Ls = 120.00' LT = 80.38' ST = 40.35'	PI Sta 12+18.03 Δ = 52°13'23.3" (LT) D = 28°38'52.4" L = 182.29' T = 98.03' R = 200.00' SE = 0.03 RO = SEE PLANS	PI Sta 15+17.47 Δ = 80°54'00.8" (RT) D = 31°58'59.3" L = 256.98' T = 156.71' R = 180.00' SE = 0.04 RO = SEE PLANS

-Y21RPC-		
PIs Sta 10+80.38 θs = 17°11'19.4" Ls = 120.00' LT = 80.38' ST = 40.35'	PI Sta 12+58.32 Δ = 69°20'10.4" (RT) D = 28°38'52.4" L = 242.03' T = 136.12' R = 200.00' SE = 0.01' RO = SEE PLANS	PI Sta 14+78.42 Δ = 60°24'09.7" (LT) D = 31°28'52.3" L = 191.88' T = 105.94' R = 180.00' SE = 0.03 RO = SEE PLANS

SKETCH SHOWING BRIDGE /ROADWAY RELATIONSHIP

DETAIL A19
STANDARD V-DITCH
(Not to Scale)
Natural Ground
Min. Dr 2.0 Ft.
FROM STA. 10+25 TO STA. 10+65 -Y21LPB- RT
DDE = 15 CY
DETAIL A8
LATERAL BASE DITCH
(Not to Scale)
Fill Slope
Natural Ground
Fill or Fabric
*When B is < 6.0'
Type of Liner: CLASS I RIP RAP
FROM STA. 299+00 TO STA. 299+60 -L- LT
DDE = 74 CY
DETAIL A9
STONE V-DITCH
(Not to Scale)
Natural Ground
Min. Dr 1.0 Ft.
Br. 3.0, 5.0, 6.0, 8.0 Ft.
FROM STA. 307+00 TO STA. 308+50 -L- RT
MATCHLINE -Y21- STA. 15+00.00 SEE SHEET UC-28
MATCHLINE -L- STA. 283+00.00 SEE SHEET UC-21
MATCHLINE -L- STA. 309+00.00 SEE SHEET UC-23
NAD 83/95
-Y21RPB- PT Sta. 15+19.28
-Y21RPB- PT Sta. 11+69.57
-Y21RPB- PC Sta. 13+62.30
-Y21RPB- PT Sta. 13+02.29
-Y21RPB- SC Sta. 11+37.00
-Y21LPB- SC Sta. 11+37.00
-Y21LPC- SC Sta. 11+20.00
-Y21RPC- PT Sta. 13+62.03
-Y21RPC- PC Sta. 12+72.48
-Y21RPC- PT Sta. 15+64.36
-Y21- PC Sta. 15+45.30
-Y21- PT Sta. 15+49.14
-Y21- PC Sta. 29+04.55
-Y21- PT Sta. 29+17.09
-Y21- PT Sta. 28+40.33
-Y21- POC Sta. 15+46.95 (5.70' RT.)
-Y21- POC Sta. 16+56.00=
-Y21RPB- POT Sta. 11+69.57
-Y21- POC Sta. 16+88.00=
-Y21LPB- POT Sta. 16+95.20
-Y21- POC Sta. 28+36.57=
-Y21- POT Sta. 17+91.53
-Y21- POC Sta. 28+04.55=
-Y21- POT Sta. 16+81.40
-Y21- POC Sta. 29+36.07 OFF 32.75'=
-Y21RPC- PC Sta. 12+72.48
-Y21RPC- POT Sta. 13+62.03
-Y21LPC- SC Sta. 11+20.00
-Y21LPC- POC Sta. 10+82.82 OFF 32.75'=
-Y21LPC- POT Sta. 10+00.00
-Y21RPB- POC Sta. 10+82.82 OFF 32.75'=
-Y21RPB- POT Sta. 10+00.00
-Y21RPB- SC Sta. 11+37.00 OFF 32.75'=
-Y21RPB- SC Sta. 11+37.00
-Y21LPB- SC Sta. 11+37.00
-Y21- POC Sta. 29+36.07 OFF 32.75'=
-Y21RPC- SC Sta. 11+20.00
-Y21- POC Sta. 29+36.07 OFF 32.75'=
-Y21LPC- SC Sta. 11+20.00
-Y21- POC Sta. 29+36.07 OFF 32.75'=
-Y21- POT Sta. 10+00.00
-Y20A- POC Sta. 10+63.00=
-Y20A- POT Sta. 10+00.00
-Y20A- STA. 10+63.00
BEGIN CONSTRUCTION
-Y20B- POC Sta. 11+41.01=
-Y20B- POT Sta. 10+00.00
-Y20B- PC Sta. 10+60.20
-Y20B- PRC Sta. 12+39.21
-Y20B- PT Sta. 14+17.84
-Y20B- PC Sta. 15+75.75
-Y20B- PT Sta. 17+43.95
-Y20B- STA. 17+43.95
END CONSTRUCTION
-Y20A- POC Sta. 10+63.00=
-Y20A- POT Sta. 10+00.00
-Y20A- POC Sta. 10+63.00=
-Y20A- POT Sta. 12+43.76
-L- STA. 285+30.86 10.44' LT.
-L- STA. 287+50.90 =
-Y20A- POT Sta. 12+43.76
-L- STA. 289+79.58 =
-Y20A- POT Sta. 14+60.20
-L- STA. 289+82.82 122.78' LT.
-L- STA. 303+18.69 OFF 32.75'=
-L- STA. 307+00.00
-L- STA. 303+49.36 =
-Y21- POC Sta. 22+23.96
Δ = 90° 38' 24.8"
-Y21- PT Sta. 30+49.31
-L- STA. 304+21.27 TO STA. 308+00.00 -L- LT.
PROPOSED RETAINING WALL
PROP. - 1 - RELOCATE WATER METER
PROP. - 1 - RELOCATE FIRE HYDRANT
PROP. - 225 L.F. OF 1" WATER MAIN
PROP. - 655 L.F. OF 2.5" FORCE MAIN SEWER
LINE PSM700 SEE SHT. UC-35 FOR PROFILE
PROP. SANITARY SEWER LIFT STATION
SEE SHEETS UC-37 THROUGH UC-40 FOR DETAILS
PROP. MH 23 (4' DIA.)
STA 0+23.50, LINE PS5000
RIM = 715.52
INV. IN = 708.48
INV. OUT = 708.38
-L- STA 289+08.34, 217.72' RT.
PROP. - 20 L.F. OF 6" SANITARY GRAVITY SEWER
PROP. - 40 L.F. OF 12" WATER MAIN
PROP. - 1 - RELOCATE FIRE HYDRANT
ABANDON EX. SANITARY SEWER PUMP STATION
TO BE ABANDONED
PROP. - 4 - REMOVE WATER METERS
PROP. - 1 - RECONNECT WATER METER
PROP. - 1 - RELOCATE WATER METER
PROP. - 2 - RELOCATE WATER METERS
PROP. - 2 - RELOCATE WATER METERS
PROP. - 18 L.F. OF 12" WATER MAIN
1 - 12" VALVE, 2 - 6" VALVES
PROP. - 915 L.F. OF 6" WATER MAIN
PROP. - 1 - RELOCATE FIRE HYDRANT
WATER NOTES:
1. PIPE AND FITTINGS FOR WATER LINES 4" AND LARGER SHALL BE DUCTILE IRON, PC 350.
2. WATER LINE VALVES SHALL BE RESILIENT-SEAT GATE VALVES, 200 PSI MIN. WORKING PRESSURE.
SEWER NOTES:
1. PIPE AND FITTINGS FOR PROPOSED 8" SANITARY SEWER ON LINE PS5000 SHALL BE DUCTILE IRON, PC 350.
TIE FENCING TO PIPE ENDWALLS (TYP.)
TIE IN DRIVES
BEGIN 2'-6" C&G AND SIDEWALK -Y21- STA. 17+83.55
BEGIN CA FENCE
END CA FENCE
RETAIN EXIST. R/W
RETAIN EXIST. SW
REMOVE
REMOVE FES
REMOVE 6" CMP
REMOVE 18" RCP
REMOVE 24" RCP
REMOVE 30" RCP
REMOVE 36" RCP
REMOVE 42" RCP
REMOVE 48" RCP
REMOVE 54" RCP
REMOVE 60" RCP
REMOVE 66" RCP
REMOVE 72" RCP
REMOVE 78" RCP
REMOVE 84" RCP
REMOVE 90" RCP
REMOVE

8/17/99

REVISIONS

PROJECT REFERENCE NO.	SHEET NO.
U-3326A/B	UC-23
DESIGNED BY: DMP	
DRAWN BY: DMP	
CHECKED BY: DMP	
APPROVED BY:	
REVISED:	

NORTH CAROLINA DEPARTMENT OF TRANSPORTATION

UTILITIES ENGINEERING SEC.
PHONE: (919) 250-4128
FAX: (919) 250-4119

NORTH CAROLINA PROFESSIONAL ENGINEER SEAL 26457 ANDREW P. LARRICK 5-18-11

UTILITY CONSTRUCTION PLANS ONLY

UTILITY CONSTRUCTION

25 0 50

NAD 83/95

DETAIL A11
LATERAL BASE DITCH
(Not to Scale)

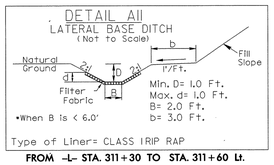

FROM –L– STA. 311+30 TO STA. 311+60 Lt.
DDE = 6 CY

DETAIL A12
LATERAL BASE DITCH
(Not to Scale)

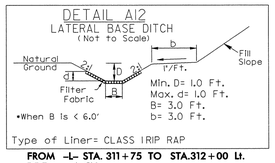

FROM –L– STA. 311+75 TO STA.312+00 Lt.
DDE = 4 CY

DETAIL A13
SPECIAL LATERAL V DITCH
(Not to Scale)

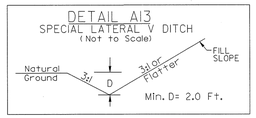

FROM –L– STA. 315+00 TO STA.322+00 Lt.

DETAIL A10
TOE PROTECTION
(Not to Scale)

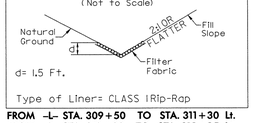

FROM –L– STA. 309+50 TO STA. 311+30 Lt.
FROM –L– STA. 312+00 TO STA. 312+25 Lt.
FROM –L– STA. 310+50 TO STA. 311+00 Rt.
FROM –L– STA. 311+15 TO STA. 312+50 Rt.

MATCHLINE –L– STA. 309+00 SEE SHEET UC-22

MATCHLINE –L– STA. 321+00 SEE SHEET UC-24

HOWARD VAUGHN
WILLIE SETLIFF
JOE W. ROBERTSON
TRAUSTESS OF
LITTLE SALEM CHRISTIAN CHURCH OF
REIDSVILLE, N.C.
156

LIMA HOLDINGS, LLC
A NORTH CAROLINA LIMITED LIABILITY COMPANY
DB 978 PG 611
PB 61PG 48
161

REIDSVILLE ABC BOARD
DB 1079 PG 1229
PB 61PG 48

REIDSVILLE CROSS POINTE, LLC
DB 1345 PG 136
PB 61PG 48
162

LIMA HOLDINGS, LLC
A NORTH CAROLINA LIMITED LIABILITY COMPANY
DB 1327 PG 1025
PB 61PG 45

LOWE'S HOME CENTERS, INC.
A NORTH CAROLIA CORPORATION
DB 1068 PG 1530
DB 1048 PG 979
160

SEE DETAIL A11
LATERAL BASE DITCH
W/CL I RIP RAP
EST. 25 TONS
EST. 47 SY FABRIC

SEE DETAIL A10
TOE PROTECTION
CL I RIP RAP
EST. 148 TONS
EST. 283 SY FABRIC

+05.00 –L– @ EXIST. R/W BEGIN C/A FENCE

+50.00 –L– @ EXIST. R/W

+25.00 –L– 160.00' (LT)

TIE FENCING TO CULVERT WINGWALLS (TYP.)

SEE DETAIL A12
LATERAL BASE DITCH
W/CL I RIP RAP
EST. 23 TONS
EST. 42 SY FABRIC

+00.00 –L– 150.00' (LT)

SEE DETAIL A10
TOE PROTECTION
CL I RIP RAP
EST. 21 TONS
EST. 40 SY FABRIC

+60.00 –L– @ EXIST. R/W

+50.00 –L– @ EXIST. R/W END C/A FENCE

+10.00 –L– 93.00' (LT) @ EXIST. R/W

+90.00 –L– 93.00' (LT) @ EXIST. R/W

SEE DETAIL A13
SPECIAL LATERAL V DITCH

PROP. - 40 L.F. OF 12" WATER LINE

RETAIN EXIST. R/W

RETAIN SYSTEM

+00.00 CAT-1

+40.00 GRAU 350

+15.00 CAT-1

+75.00 –L– @ EXIST. R/W

SEE DETAIL A10
TOE PROTECTION
CL I RIP RAP
EST. 45 TONS
EST. 79 SY FABRIC

+00.00 –L– 145.00' (RT)

+50.00 –L– 130.00' (RT)

TIE FENCING TO CULVERT WINGWALLS (TYP.)

+40.00 –L– @ EXIST. R/W

+50.00 –L– @ EXIST. R/W END C/A FENCE

+10.00 –L– 93.00' (RT) @ EXIST. R/W

+90.00 –L– 93.00' (RT) @ EXIST. R/W

-BL-43 PINC 310+06.35 =
-L- Sta. 314+16.75 (33.42' RT.)

PROP. - 40 L.F. OF 12" WATER LINE

+35.00 –L– @ EXIST. R/W

+00.00 –L– 81.00' (RT)

+00.00 –L– 85.00' (RT)

100' TAPER

300' FULL LANE

WATER NOTES:

1. ***PIPE AND FITTINGS FOR WATER LINES 4" AND LARGER SHALL BE DUCTILE IRON, PC 350.***
2. ***WATER LINE VALVES SHALL BE RESILIENT-SEAT GATE VALVES, 200 PSI MIN. WORKING PRESSURE.***

UTILITY CONSTRUCTION PLANS DESIGNED BY:
DAVIS-MARTIN-POWELL & ASSOCIATES, INC.
ENGINEERING-LAND PLANNING-SURVEYING
6415 OLD PLANK ROAD
HIGH POINT, NC 27265
PHONE: (336) 886-4821 FAX: (336) 886-4458

WATER NOTES:

1. **PIPE AND FITTINGS FOR WATER LINES 4" AND LARGER SHALL BE DUCTILE IRON, PC 350.**
2. **WATER LINE VALVES SHALL BE RESILIENT-SEAT GATE VALVES, 200 PSI MIN. WORKING PRESSURE.**

PROJECT REFERENCE NO.	SHEET NO.
U-3326A/B	UC-24

DESIGNED BY: DMP
DRAWN BY: DMP
CHECKED BY: DMP
APPROVED BY:
REVISED:

NORTH CAROLINA DEPARTMENT OF TRANSPORTATION

UTILITIES ENGINEERING SEC.
PHONE: (919) 250-4128
FAX: (919) 250-4119

UTILITY CONSTRUCTION PLANS ONLY

UTILITY CONSTRUCTION

NORTH CAROLINA PROFESSIONAL ENGINEER SEAL 26457 ANDREW P. LARRICK 5-18-11

REVISIONS

8/17/99

UTILITY CONSTRUCTION PLANS DESIGNED BY:
DAVIS-MARTIN-POWELL & ASSOCIATES, INC.
ENGINEERING-LAND PLANNING-SURVEYING
6415 OLD PLANK ROAD
HIGH POINT, NC 27265
PHONE: (336) 886-4821 FAX: (336) 886-4458

$$$$$$SYSTIME$$$$$
$$$$$$$$DGN$$$$$$$$$$$$$$$$
$$$$$$USERNAME$$$$

PROJECT REFERENCE NO.	SHEET NO.
U-3326A/B	UC-25

DESIGNED BY: DMP
DRAWN BY: DMP
CHECKED BY: DMP
APPROVED BY:
REVISED:

NORTH CAROLINA DEPARTMENT OF TRANSPORTATION

UTILITIES ENGINEERING SEC.
PHONE: (919) 250-4128
FAX: (919) 250-4119

NORTH CAROLINA PROFESSIONAL SEAL 26457 ENGINEER ANDREW P. LARRICK 5-18-11

UTILITY CONSTRUCTION PLANS ONLY

UTILITY CONSTRUCTION

25 0 50

-Y10A-	
PI Sta 11+70.61	PI Sta 16+44.06
△ = 45° 28' 17.9" (RT)	△ = 79° 13' 05.7" (LT)
D = 17° 37' 46.1"	D = 13° 28' 52.9"
L = 257.93'	L = 587.61'
T = 136.19'	T = 351.70'
R = 325.00'	R = 425.00'
SE = 0.04	SE = 0.04
RO = SEE PLANS	RO = SEE PLANS

WATER NOTES:

1. PIPE AND FITTINGS FOR WATER LINES 4" AND LARGER SHALL BE DUCTILE IRON, PC 350.
2. WATER LINE VALVES SHALL BE RESILIENT-SEAT GATE VALVES, 200 PSI MIN. WORKING PRESSURE.

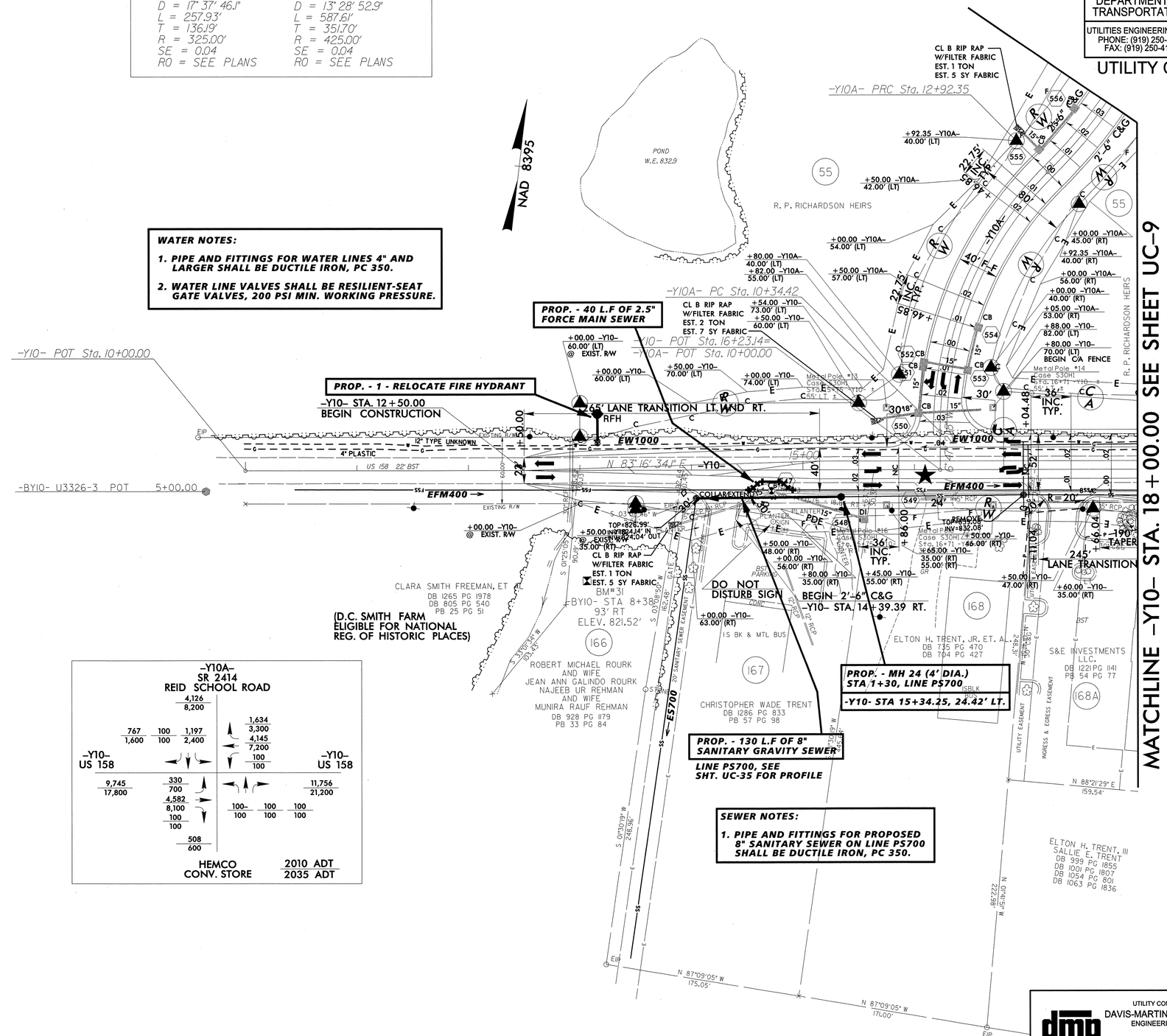

SEWER NOTES:

1. PIPE AND FITTINGS FOR PROPOSED 8" SANITARY SEWER ON LINE PS700 SHALL BE DUCTILE IRON, PC 350.

REVISIONS

8/17/99

UTILITY CONSTRUCTION PLANS DESIGNED BY:
DAVIS-MARTIN-POWELL & ASSOCIATES, INC.
ENGINEERING-LAND PLANNING-SURVEYING
6415 OLD PLANK ROAD
HIGH POINT, NC 27265
PHONE: (336) 886-4821 FAX: (336) 886-4458

PROJECT REFERENCE NO.	SHEET NO.
U-3326A/B	UC-26
DESIGNED BY: DMP	
DRAWN BY: DMP	
CHECKED BY: DMP	
APPROVED BY:	
REVISED:	

NORTH CAROLINA DEPARTMENT OF TRANSPORTATION

UTILITIES ENGINEERING SEC.
PHONE: (919) 250-4128
FAX: (919) 250-4119

NORTH CAROLINA PROFESSIONAL ENGINEER SEAL 26457 ANDREW P. LARRICK 5-18-11

UTILITY CONSTRUCTION PLANS ONLY

UTILITY CONSTRUCTION

25 0 50

NAD 83'95

-Y13C-	-DRV3-
PI Sta 17+06.44 Δ = 51° 11' 24.4" (RT) D = 19° 05' 54.9" L = 268.03' T = 143.70' R = 300.00' SE = SEE PLANS	PI Sta 10+50.08 Δ = 64° 15' 33.5" (LT) D = 173° 37' 24.9" L = 37.01' T = 20.72' R = 33.00' SE = SEE PLANS

SEWER NOTES:

1. PIPE AND FITTINGS FOR PROPOSED 8" SANITARY SEWER ON LINE PS1900 SHALL BE DUCTILE IRON, PC 350.

PROP. MH 25 (4' DIA.)
STA 0+00.00, LINE PS1900
-Y13- STA 8+39.53, 28.47' LT.

PROP. - 54 L.F. OF 8" SANITARY GRAVITY SEWER

PROP. MH 26 (4' DIA.)
STA 0+54.38, LINE PS1900
-Y13- STA 8+92.85, 39.14' LT.

PROP. - 307 L.F. OF 8" SANITARY GRAVITY SEWER

PROP. MH 27 (4' DIA.)
STA 3+43.26, LINE PS1900
-Y13- STA 11+81.68, 44.94' LT.

LINE PS1900, SEE SHT. UC-35 FOR PROFILE

PROP. - 315 L.F. OF 8" SANITARY GRAVITY SEWER

PROP. MH 28 (4' DIA.)
STA 6+57.95, LINE PS1900
-Y13- STA 14+96.36, 45.78' LT.

PROP. - 40 L.F. OF 8" SANITARY GRAVITY SEWER

ABANDON - 2 UTILITY MH'S

ABANDON UTILITY MH

2'-6" C&G

-Y13- STA. 8+70.00
BEGIN RESURFACING

-Y13- STA. 8+50.00
BEGIN CONSTRUCTION

BEGIN 2'-6" C&G
-Y13- STA. 15+50.00
58.00' LT.

TIE -DRV3- TO EXIST. PARKING AS DIRECTED BY ENGINEER

MATCHLINE -Y13- STA. 16+00.00 SEE SHEET UC-16

MATCHLINE -Y13C- STA. 15+35.00 SEE SHEET UC-16

ROBERT J. FRENCH
DB 1030 PG 2375

JOHN D. LOVE OIL COMPANY
DB 1072 PG 1846

LOVE TRACTOR SALES, INC.
DB 714 PG 720

WILLIAM BUSICK
DB 1222 PG 1609

-DRV3- POT Sta. 10+00.00
S 87° 34' 07.5" W

-DRV3- PC Sta. 10+29.36

-DRV3- PT Sta. 10+66.37
S 23° 18' 34.1" W

-Y13- POT Sta. 7+00.00

-Y13- POT Sta. 14+33.84=
-DRV3- POT Sta. 11+19.10

-Y13- POT Sta. 14+35.30=
-Y13C- POT Sta. 18+61.18
N 23° 19' 12.5" E

-Y13C- PT Sta. 18+30.77

-Y13C- PC Sta. 15+62.74
N 27° 52' 11.9" W

-BY13-69 POT Sta. 10+00.00 =
-Y13- Sta. 11+49.36 (17.22' RT.)

BM#27
-BY13- STA 5+69
78' RT
ELEV. 762.46'

UTILITY CONSTRUCTION PLANS DESIGNED BY:
DAVIS-MARTIN-POWELL & ASSOCIATES, INC.
ENGINEERING-LAND PLANNING-SURVEYING
6415 OLD PLANK ROAD
HIGH POINT, NC 27265
PHONE: (336) 886-4821 FAX: (336) 886-4458

REVISIONS

8/17/99

$$$$SYSTIME$$$$ $$$$DGN$$$$ $$$$USERNAME$$$$

8/17/99

REVISIONS

MATCHLINE –Y13– STA. 31+00.00 SEE SHEET UC-16

WATER NOTES:

1. **PIPE AND FITTINGS FOR WATER LINES 4" AND LARGER SHALL BE DUCTILE IRON, PC 350.**
2. **WATER LINE VALVES SHALL BE RESILIENT-SEAT GATE VALVES, 200 PSI MIN. WORKING PRESSURE.**

105
ADOLA INVESTMENTS, LLC
DB 1038 PG 2205

PROP - 1 - RELOCATE FIRE HYDRANT

–Y13– POT Sta. 34+58.17=
–Y14– POT Sta. 22+27.28
–BL– US 321 BUS
–BY13– PINC @ 26+64.47 RT
–L– Sta. 2004+4.86 (854.16' RT.)
–Y13– Sta. 32+98.80 (19.60' LT.)

+00.00 –Y14– @ EXIST. R/W
+00.00 –Y13– 63.00' (LT)
+00.00 –Y13– 73.00' (LT)
+50.00 –Y13– @ EXIST. R/W
+50.00 –Y13– @ EXIST. R/W
+52.00 –Y13– @ EXIST. R/W
+15.00 –Y13– @ EXIST. R/W
+50.00 –Y13– 98.00' (RT)

ISBKBUS
GRAU 350
4' PS
ES1700
S 87° 21' 35.7" E
–Y13–
2" STEEL
CAT–1
EW1800 4' PS
620' LANE TRANSITION LT. & RT.
JB w/Slab Lid
PDE
FHV
ISFD
S 85°01'45" E 226.00'
@ EXIST. R/W 60.00' (RT)
JAMES K. FESTERMAN AND PRISCILLA FESTERMAN
DB 1206 PG 1044
170
–Y13– POT Sta. 34+64.80=
–Y13B– POT Sta. 10+80.00
CARDINAL HOLDINGS, LLC
DB 1250 PG 2316
101
JAMES K. FESTERMAN AND WIFE PRISCILLA G. FESTERMAN
DB 915 PG 2239
S 27°00'04" E 146.50'
S 76°33'09" W 250.22'

ES1800
S 11°54'31.4" E
20'100 WATERS ST 22' BST
EW3000 6" DUCTILE UNKNOWN
EW3001 6" STEEL TYPE UNKNOWN
2" STEEL GATE
TEST STATION
RFFH
TOP=788.27'
INV=781.67' IN
INV=781.67' OUT
RETAIN 10'
–Y14– STA. 21+00.00
BEGIN CONSTRUCTION
–Y14– POT Sta. 21+95.88=
–Y14B– POT Sta. 10+00.00
–Y14B– PC Sta. 10+15.97
N 86° 00' 24.4" E
–Y14B– STA. 10+50.00
END CONSTRUCTION
–Y14B– PT Sta. 10+65.99
–Y14B– POT Sta. 11+41.04
TOP=797.87'
INV=789.87'
ES1701
72' CHL & 35BW
HAWKINS ST 18' BST
–Y14B–
S 86° 30' 54.8" E
–Y13– STA. 35+50.00
END CONSTRUCTION
COLLAR/EXTEND
SR 2687 HARRISON ST 26' BST
–Y13– POT Sta. 36+03.30
–Y13B– STA. 10+60.00
END CONSTRUCTION
EW1800
UNKNOWN 8" DUCTILE
–Y13B–
WATERS ST 20' BST
ES1800
TOP=806.49'
INV=797.89'
ISBKBUS
BM#28
–BY13– STA 31+45
156' RT
ELEV. 792.22'

–Y14B–
PI Sta 10+40.99
△ = 4° 28' 40.8" (RT)
D = 8° 57' 08.9"
L = 50.02'
T = 25.02'
R = 640.00'
SE = EXIST.

–BY13–71 POT 31+53.30

25 0 50

NAD 83'99

PROJECT REFERENCE NO.	SHEET NO.
U-3326A/B	UC-27
DESIGNED BY: DMP	
DRAWN BY: DMP	
CHECKED BY: DMP	
APPROVED BY:	
REVISED:	

NORTH CAROLINA DEPARTMENT OF TRANSPORTATION
UTILITIES ENGINEERING SEC.
PHONE: (919) 250-4128
FAX: (919) 250-4119

NORTH CAROLINA PROFESSIONAL 26457 ENGINEER ANDREW P. LAPPRICK 5-18-11

UTILITY CONSTRUCTION PLANS ONLY

UTILITY CONSTRUCTION

UTILITY CONSTRUCTION PLANS DESIGNED BY:
DAVIS-MARTIN-POWELL & ASSOCIATES, INC.
ENGINEERING-LAND PLANNING-SURVEYING
6415 OLD PLANK ROAD
HIGH POINT, NC 27265
PHONE: (336) 886-4821 FAX: (336) 886-4458

$$$$SYSTIME$$$$
$$$$LEVNAME$$$$ DGN $$$$$$$$$$$$$$$$$$$$

-Y21-		-Y21A-	
PI Sta 11+42.72	PI Sta 16+50.81	PI Sta 12+33.50	PI Sta 13+31.59
△ = 8° 58′ 47.5″ (LT)	△ = 7° 28′ 06.3″ (LT)	△ = 3° 40′ 24.5″ (LT)	△ = 58° 36′ 21.2″ (RT)
D = 5° 43′ 46.5″	D = 1° 25′ 56.6″	D = 3° 27′ 05.6″	D = 71° 37′ 11.0″
L = 156.73′	L = 521.39′	L = 106.43′	L = 81.83′
T = 78.52′	T = 261.07′	T = 53.23′	T = 44.90′
R = 1,000.00′	R = 4,000.00′	R = 1,660.00′	R = 80.00′
SE = EXIST.	SE = 0.03	SE = SEE PLANS	SE = SEE PLANS
	RO = SEE PLANS		

WATER NOTES:

1. ***PIPE AND FITTINGS FOR WATER LINES 4" AND LARGER SHALL BE DUCTILE IRON, PC 350.***
2. ***WATER LINE VALVES SHALL BE RESILIENT-SEAT GATE VALVES, 200 PSI MIN. WORKING PRESSURE.***

25 0 50

PROJECT REFERENCE NO.	SHEET NO.
U-3326A/B	UC-28
DESIGNED BY: DMP	
DRAWN BY: DMP	
CHECKED BY: DMP	
APPROVED BY:	
REVISED:	

NORTH CAROLINA
DEPARTMENT OF
TRANSPORTATION

UTILITIES ENGINEERING SEC.
PHONE: (919) 250-4128
FAX: (919) 250-4119

NORTH CAROLINA PROFESSIONAL SEAL 26457 ENGINEER ANDREW P. LARRICK 5-18-11

UTILITY CONSTRUCTION PLANS ONLY

UTILITY CONSTRUCTION

REVISIONS

8/17/99

$$$$$SYSTIME$$$$$
$$$$$$$$DGN$$$$$$$$$$$$$$$$$
$$$$USERNAME$$$$

UTILITY CONSTRUCTION PLANS DESIGNED BY:
DAVIS-MARTIN-POWELL & ASSOCIATES, INC.
ENGINEERING-LAND PLANNING-SURVEYING
6415 OLD PLANK ROAD
HIGH POINT, NC 27265
PHONE: (336) 886-4821 FAX: (336) 886-4458

05/12/11

PROJECT REFERENCE NO.	SHEET NO.
U-3326A/B	UC-29

25 0 50

1" = 50' HORIZ
1" = 5' VERT

DESIGNED BY: DMP
DRAWN BY: DMP
CHECKED BY: DMP
APPROVED BY:
REVISED:

NORTH CAROLINA
DEPARTMENT OF
TRANSPORTATION

UTILITIES ENGINEERING SEC.
PHONE: (919) 250-4128
FAX: (919) 250-4119

NORTH CAROLINA PROFESSIONAL ENGINEER SEAL 26457 ANDREW P. LARRICK 5-18-11

UTILITY CONSTRUCTION PLANS ONLY

UTILITY CONSTRUCTION

REVISIONS

DRAWING NAME: P:\2010\100103\PROFILES\100103_PROFILES.dwg - UC-29 - 5/13/2011 4:05 PM
$$$$SYSTIME$$$$
$$$$$$$$DGN$$$$$$$$$$$$$$$
$$$$USERNAME$$$$

UTILITY CONSTRUCTION PLANS DESIGNED BY:
DAVIS-MARTIN-POWELL & ASSOCIATES, INC.
ENGINEERING-LAND PLANNING-SURVEYING
6415 OLD PLANK ROAD
HIGH POINT, NC 27265
PHONE: (336) 886-4821 FAX: (336) 886-4458

05/12/11

REVISIONS

25 0 50
1" = 50' HORIZ
1" = 5' VERT

PROJECT REFERENCE NO.	SHEET NO.
U-3326A/B	UC-30

DESIGNED BY: DMP
DRAWN BY: DMP
CHECKED BY: DMP
APPROVED BY:
REVISED:

NORTH CAROLINA DEPARTMENT OF TRANSPORTATION

UTILITIES ENGINEERING SEC.
PHONE: (919) 250-4128
FAX: (919) 250-4119

NORTH CAROLINA PROFESSIONAL SEAL 26457 ENGINEER ANDREW P. LARRICK 5-18-11

UTILITY CONSTRUCTION PLANS ONLY

UTILITY CONSTRUCTION

UTILITY CONSTRUCTION PLANS DESIGNED BY:
DAVIS-MARTIN-POWELL & ASSOCIATES, INC.
ENGINEERING-LAND PLANNING-SURVEYING
6415 OLD PLANK ROAD
HIGH POINT, NC 27265
PHONE: (336) 886-4821 FAX: (336) 886-4458

DRAWING NAME: P:\2010\100103\PROFILES\100103_PROFILES.dwg - UC-30 - 5/13/2011 4:05 PM
$$$$$SYSTIME$$$$$
$$$$$$$DGN$$$$$$$$$$$$$$$$
$$$$USERNAME$$$$

PROJECT REFERENCE NO.	SHEET NO.
U-3326A/B	UC-31

25 0 50

1" = 50' HORIZ
1" = 5' VERT

DESIGNED BY: DMP
DRAWN BY: DMP
CHECKED BY: DMP
APPROVED BY:
REVISED:

NORTH CAROLINA
DEPARTMENT OF
TRANSPORTATION

UTILITIES ENGINEERING SEC.
PHONE: (919) 250-4128
FAX: (919) 250-4119

NORTH CAROLINA PROFESSIONAL ENGINEER 26457 ANDREW P. LARRICK
5-18-11

UTILITY CONSTRUCTION PLANS ONLY

UTILITY CONSTRUCTION

REVISIONS

Ø5/12/11

1. PIPE AND FITTINGS FOR PROPOSED 24" SANITARY SEWER ON LINE PS1000 SHALL BE DUCTILE IRON, PC 350, WITH INTERIOR CERAMIC EPOXY COATING AS DESCRIBED IN SPECIAL PROVISIONS.

2. PROPOSED MANHOLES ON LINE PS1000 SHALL HAVE AN INTERIOR CERAMIC EPOXY COATING AS DESCRIBED IN SPECIAL PROVISIONS.

1. PIPE AND FITTINGS FOR PROPOSED 24" SANITARY SEWER ON LINE PS1000 SHALL BE DUCTILE IRON, PC 350, WITH INTERIOR CERAMIC EPOXY COATING AS DESCRIBED IN SPECIAL PROVISIONS.

2. PROPOSED MANHOLES ON LINE PS1000 SHALL HAVE AN INTERIOR CERAMIC EPOXY COATING AS DESCRIBED IN SPECIAL PROVISIONS.

DRAWING NAME: P:\2010\100103\PROFILES\100103_PROFILES.dwg – UC-31 – 5/13/2011 4:26 PM
$$$$$SYSTIME$$$$$
$$$$$$$$$$DGN$$$$$$$$$$$$$$$$
$$$$USERNAME$$$$

UTILITY CONSTRUCTION PLANS DESIGNED BY:
DAVIS-MARTIN-POWELL & ASSOCIATES, INC.
ENGINEERING-LAND PLANNING-SURVEYING
6415 OLD PLANK ROAD
HIGH POINT, NC 27265
PHONE: (336) 886-4821 FAX: (336) 886-4458

PROJECT REFERENCE NO. U-3326A/B | SHEET NO. UC-32

DESIGNED BY: DMP
DRAWN BY: DMP
CHECKED BY: DMP
APPROVED BY:
REVISED:

NORTH CAROLINA DEPARTMENT OF TRANSPORTATION

UTILITIES ENGINEERING SEC.
PHONE: (919) 250-4128
FAX: (919) 250-4119

UTILITY CONSTRUCTION PLANS ONLY

UTILITY CONSTRUCTION

NORTH CAROLINA PROFESSIONAL SEAL 26457 ENGINEER ANDREW P. LARRICK 5-18-11

25 0 50
1" = 50' HORIZ
1" = 5' VERT

PFM500 0+00 – 14+00 (SEE SHT UC-13 UC 15 & UC-16)

1. PIPE AND FITTINGS FOR PROPOSED 18" FORCE MAIN SEWER ON LINE PFM500 SHALL BE DUCTILE IRON, PC 350, WITH INTERIOR CERAMIC EPOXY COATING AS DESCRIBED IN SPECIAL PROVISIONS, AND WITHIN STATION LIMITS INDICATED ON THIS PROFILE SHEET.

2. PROPOSED MANHOLES FOR AIR RELEASE VALVES ON LINE PFM500 SHALL HAVE AN INTERIOR EPOXY COATING AS DESCRIBED IN SPECIAL PROVISIONS.

PFM500 14+00 – 28+00 (SEE SHT UC-16)

1. PIPE AND FITTINGS FOR PROPOSED 18" FORCE MAIN SEWER ON LINE PFM500 SHALL BE DUCTILE IRON, PC 350, WITH INTERIOR CERAMIC EPOXY COATING AS DESCRIBED IN SPECIAL PROVISIONS, AND WITHIN STATION LIMITS INDICATED ON THIS PROFILE SHEET.

2. PROPOSED MANHOLES FOR AIR RELEASE VALVES ON LINE PFM500 SHALL HAVE AN INTERIOR EPOXY COATING AS DESCRIBED IN SPECIAL PROVISIONS.

REVISIONS

Ø5/12/11

DRAWING NAME: P:\2010\100103\PROFILES\100103_PROFILES.dwg – UC-32 – 5/13/2011 4:04 PM
$$$$$$SYSTIME$$$$$
$$$$$$$$$$$$DGN$$$$$$$$$$$$$$$$
$$$$USERNAME$$$$

UTILITY CONSTRUCTION PLANS DESIGNED BY:
DAVIS-MARTIN-POWELL & ASSOCIATES, INC.
ENGINEERING-LAND PLANNING-SURVEYING
6415 OLD PLANK ROAD
HIGH POINT, NC 27265
PHONE: (336) 886-4821 FAX: (336) 886-4458

05/12/11

REVISIONS

PFM500 28+00 – 42+00 (SEE SHT UC– 16)

1. PIPE AND FITTINGS FOR PROPOSED 18" FORCE MAIN SEWER ON LINE PFM500 SHALL BE DUCTILE IRON, PC 350, WITH INTERIOR CERAMIC EPOXY COATING AS DESCRIBED IN SPECIAL PROVISIONS, AND WITHIN STATION LIMITS INDICATED ON THIS PROFILE SHEET.

2. PROPOSED MANHOLES FOR AIR RELEASE VALVES ON LINE PFM500 SHALL HAVE AN INTERIOR EPOXY COATING AS DESCRIBED IN SPECIAL PROVISIONS.

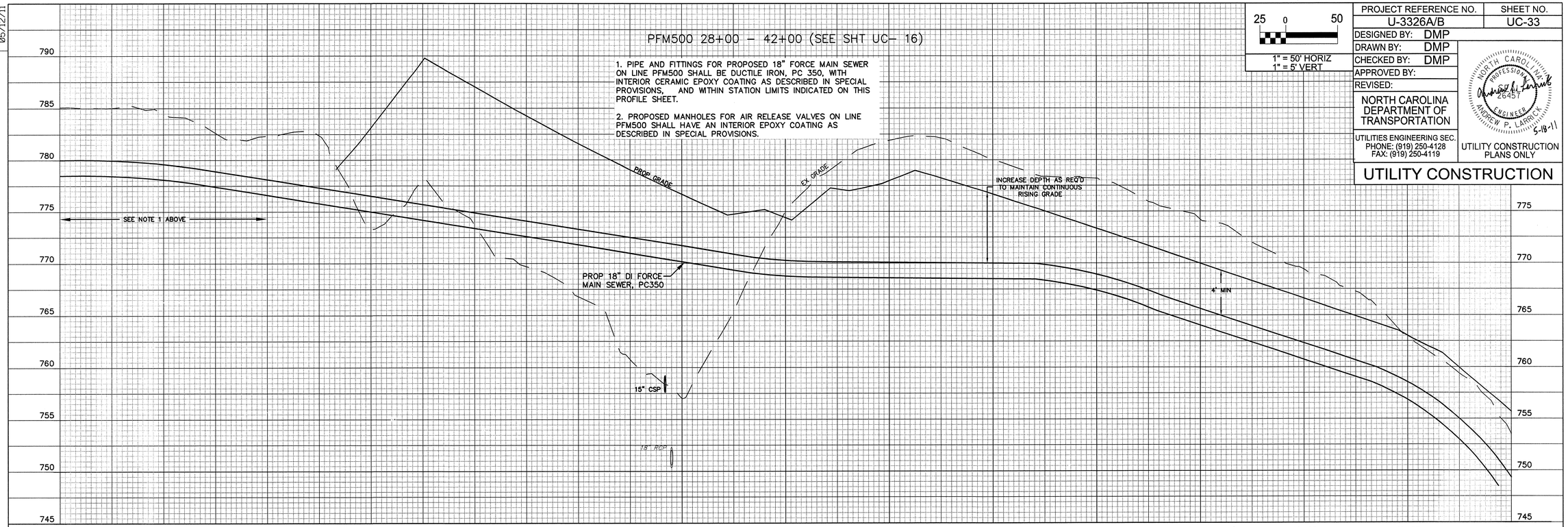

25 0 50

1" = 50' HORIZ
1" = 5' VERT

PROJECT REFERENCE NO.	SHEET NO.
U-3326A/B	UC-33
DESIGNED BY: DMP	
DRAWN BY: DMP	
CHECKED BY: DMP	
APPROVED BY:	
REVISED:	

NORTH CAROLINA DEPARTMENT OF TRANSPORTATION

UTILITIES ENGINEERING SEC.
PHONE: (919) 250-4128
FAX: (919) 250-4119

NORTH CAROLINA PROFESSIONAL 26457 ENGINEER ANDREW P. LARRICK 5-18-11

UTILITY CONSTRUCTION PLANS ONLY

UTILITY CONSTRUCTION

PFM500 42+00 – 56+00 (SEE SHT UC–17)

1. PIPE AND FITTINGS FOR PROPOSED 18" FORCE MAIN SEWER ON LINE PFM500 SHALL BE DUCTILE IRON, PC 350, WITH INTERIOR CERAMIC EPOXY COATING AS DESCRIBED IN SPECIAL PROVISIONS, AND WITHIN STATION LIMITS INDICATED ON THIS PROFILE SHEET.

2. PROPOSED MANHOLES FOR AIR RELEASE VALVES ON LINE PFM500 SHALL HAVE AN INTERIOR EPOXY COATING AS DESCRIBED IN SPECIAL PROVISIONS.

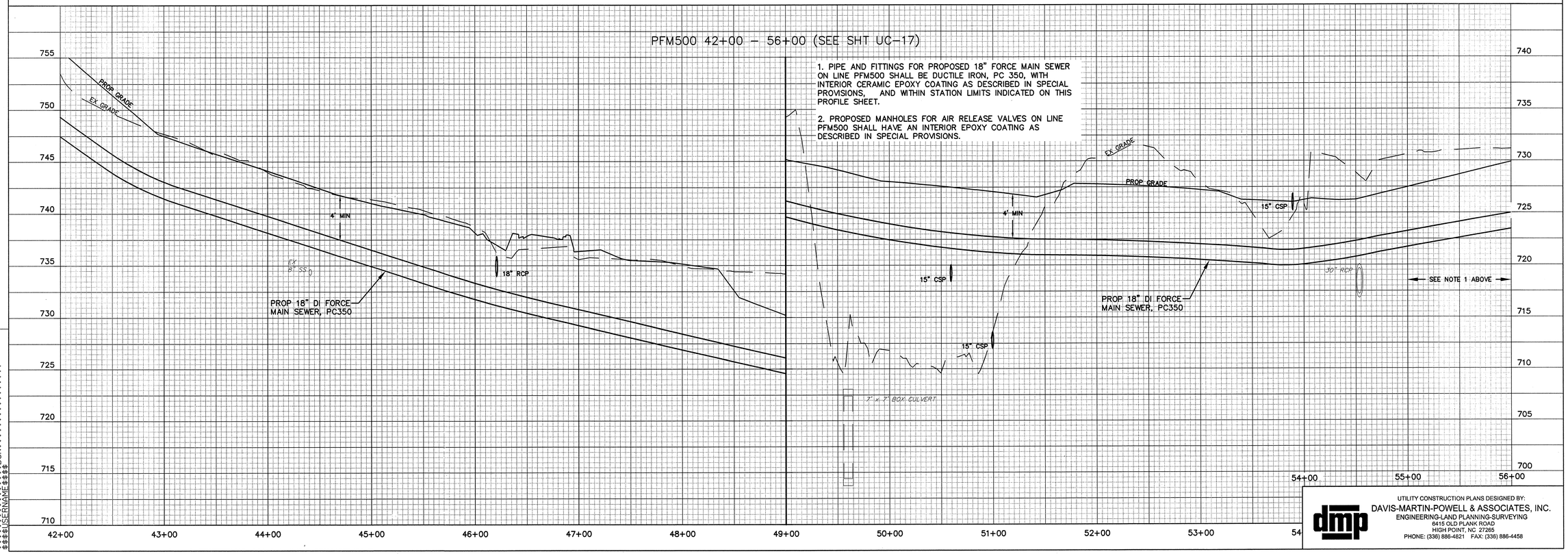

UTILITY CONSTRUCTION PLANS DESIGNED BY:
DAVIS-MARTIN-POWELL & ASSOCIATES, INC.
ENGINEERING-LAND PLANNING-SURVEYING
6415 OLD PLANK ROAD
HIGH POINT, NC 27265
PHONE: (336) 886-4821 FAX: (336) 886-4458

DRAWING NAME: P:\2010\100103\PROFILES\100103_PROFILES.dwg – UC–33 – 5/13/2011 4:16 PM
$$$$USERNAME$$$$
$$$$SYSTIME$$$$
$$$$FILE$$$$
$$$$DGN$$$$

25 0 50
1" = 50' HORIZ
1" = 5' VERT

DESIGNED BY: DMP
DRAWN BY: DMP
CHECKED BY: DMP
APPROVED BY:
REVISED:

NORTH CAROLINA
DEPARTMENT OF
TRANSPORTATION

UTILITIES ENGINEERING SEC.
PHONE: (919) 250-4128
FAX: (919) 250-4119

NORTH CAROLINA PROFESSIONAL ENGINEER
ANDREW P. LARRICK 26457
5-18-11

UTILITY CONSTRUCTION
PLANS ONLY

UTILITY CONSTRUCTION

REVISIONS

05/12/11

DRAWING NAME: P:\2010\100103\PROFILES\100103_PROFILES.dwg – UC-34 – 5/13/2011 4:02 PM
$$$$$SYSTIME$$$$$
$$$$$$$$$$$$DGN$$$$$$$$$$$$$$$$
$$$$USERNAME$$$$

UTILITY CONSTRUCTION PLANS DESIGNED BY:
dmp
DAVIS-MARTIN-POWELL & ASSOCIATES, INC.
ENGINEERING-LAND PLANNING-SURVEYING
6415 OLD PLANK ROAD
HIGH POINT, NC 27265
PHONE: (336) 886-4821 FAX: (336) 886-4458

05/12/11

REVISIONS

PROJECT REFERENCE NO.	SHEET NO.
U-3326A/B	UC-35

25 0 50

1" = 50' HORIZ
1" = 5' VERT

DESIGNED BY: DMP
DRAWN BY: DMP
CHECKED BY: DMP
APPROVED BY:
REVISED:

NORTH CAROLINA
DEPARTMENT OF
TRANSPORTATION

UTILITIES ENGINEERING SEC.
PHONE: (919) 250-4128
FAX: (919) 250-4119

NORTH CAROLINA PROFESSIONAL ENGINEER 26457 ANDREW P. LARRICK 5-18-11

UTILITY CONSTRUCTION PLANS ONLY

UTILITY CONSTRUCTION

UTILITY CONSTRUCTION PLANS DESIGNED BY:
DAVIS-MARTIN-POWELL & ASSOCIATES, INC.
ENGINEERING-LAND PLANNING-SURVEYING
6415 OLD PLANK ROAD
HIGH POINT, NC 27265
PHONE: (336) 886-4821 FAX: (336) 886-4458

DRAWING NAME: P:\2010\100103\PROFILES\100103_PROFILES.dwg – UC-35 – 5/13/2011 4:17 PM
$$$$$SYSTIME$$$$$
$$$$$$$$$$$DGN$$$$$$$$$$$$$$$
$$$$USERNAME$$$$

8/17/99

REVISIONS

PROJECT REFERENCE NO.	SHEET NO.
U-3326A/B	UC-36
DESIGNED BY: DMP	
DRAWN BY: DMP	
CHECKED BY: DMP	
APPROVED BY:	
REVISED:	

NORTH CAROLINA DEPARTMENT OF TRANSPORTATION

UTILITIES ENGINEERING SEC.
PHONE: (919) 250-4128
FAX: (919) 250-4119

NORTH CAROLINA PROFESSIONAL SEAL 26457 ENGINEER ANDREW P. LARRICK 5-18-11

UTILITY CONSTRUCTION PLANS ONLY

UTILITY CONSTRUCTION

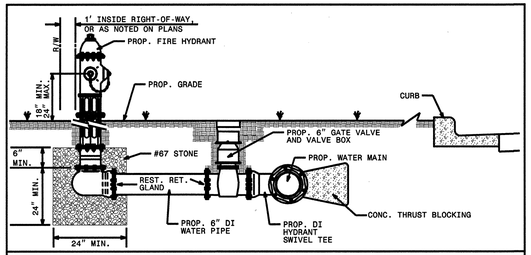

FIRE HYDRANT INSTALLATION DETAIL
(UNPAVED AREAS)

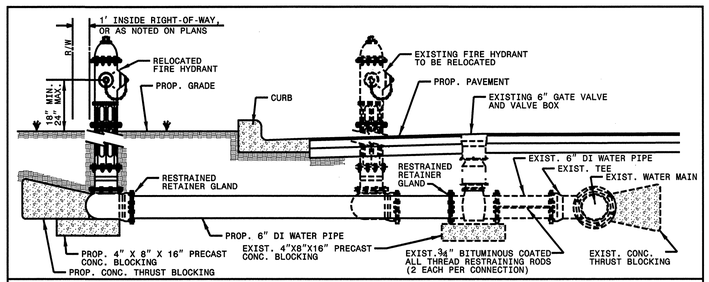

FIRE HYDRANT RELOCATION DETAIL

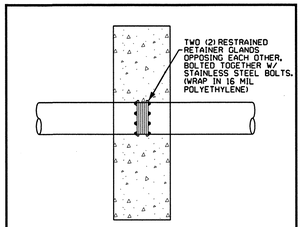

THRUST COLLAR ANCHOR

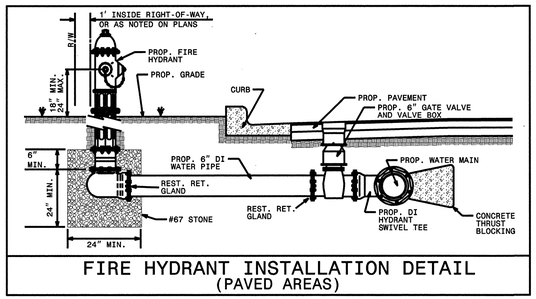

FIRE HYDRANT INSTALLATION DETAIL
(PAVED AREAS)

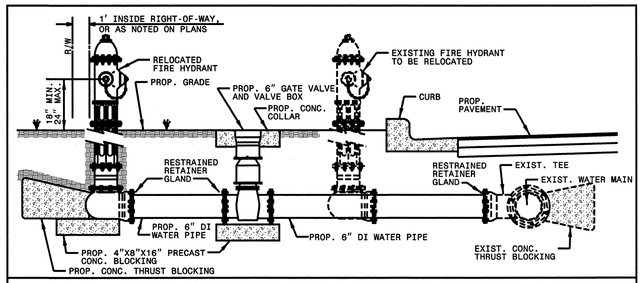

FIRE HYDRANT RELOCATION DETAIL

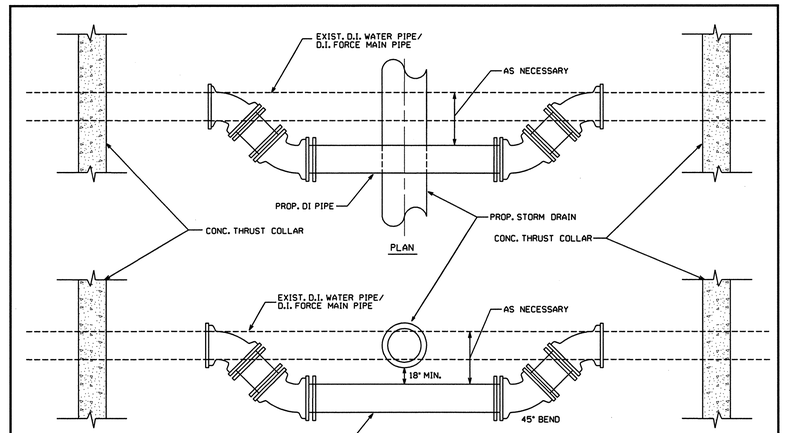

NOTE:
1. ALL FITTINGS SHALL BE RESTRAINED USING RESTRAINED RETAINER GLANDS.
2. CONC. THRUST BLOCK SHALL BE PLACED AND CURED THREE DAYS PRIOR TO CUTTING EXISTING PIPE.

•NTS

RELOCATION OF D.I. WATER PIPE OR D.I. FORCE MAIN PIPE AT PROPOSED STORM DRAINAGE AS SHOWN ON PLANS

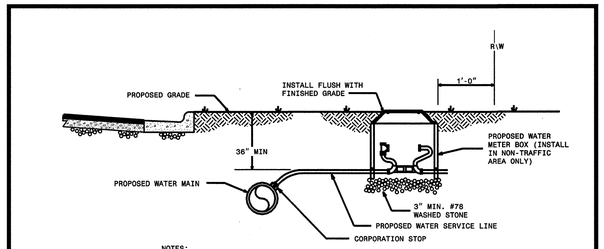

NOTES:
1. INSTALLATION SHALL INCLUDE THE APPROPRIATE LOCATION OF THE METER SETTER AND YOKE, METER VALVES, AND METER BOX WITH LID.
2. THE NEW WATER SERVICE LINE SHALL BE INSTALLED WITH A MINIMUN OF 36" COVER BELOW FINISHED GRADE.

WATER METER INSTALLATION DETAIL

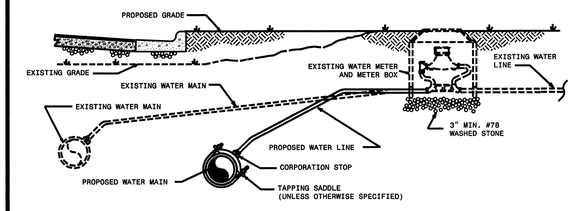

NOTES:
1. THE NEW WATER SERVICE LINE SHALL BE OF THE SAME TYPE AND GRADE AS THE EXISTING WATER SERVICE LINE UNLESS OTHERWISE SHOWN ON THE PLANS OR DIRECTED BY THE ENGINEER.
2. THE NEW WATER SERVICE LINE SHALL BE INSTALLED WITH A MINIMUM OF 36" COVER BELOW FINISHED GRADE.

RECONNECT EXISTING WATER METER DETAIL

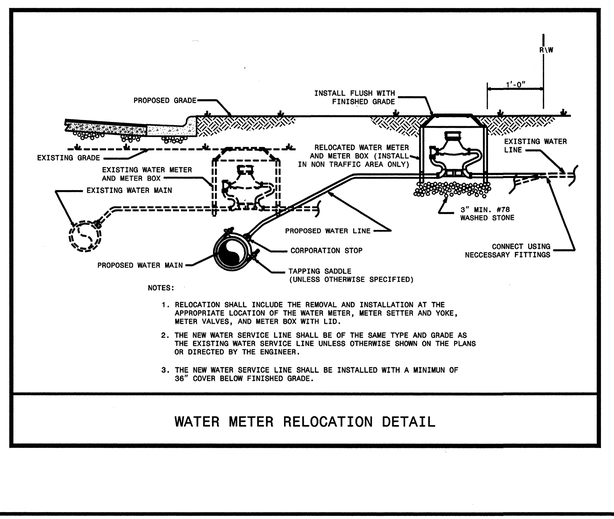

NOTES:
1. RELOCATION SHALL INCLUDE THE REMOVAL AND INSTALLATION AT THE APPROPRIATE LOCATION OF THE WATER METER, METER SETTER AND YOKE, METER VALVES, AND METER BOX WITH LID.
2. THE NEW WATER SERVICE LINE SHALL BE OF THE SAME TYPE AND GRADE AS THE EXISTING WATER SERVICE LINE UNLESS OTHERWISE SHOWN ON THE PLANS OR DIRECTED BY THE ENGINEER.
3. THE NEW WATER SERVICE LINE SHALL BE INSTALLED WITH A MINIMUN OF 36" COVER BELOW FINISHED GRADE.

WATER METER RELOCATION DETAIL

TYPE "2"
(BEDDING FOR D.I. PIPE)

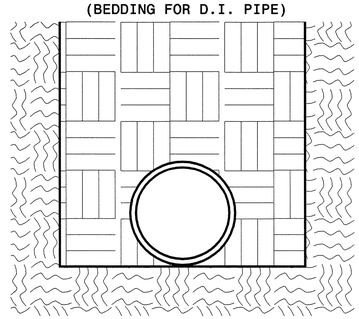

PIPE BEDDED IN FLAT-BOTTOM TRENCH. TRENCH BACKFILLED IN LOOSE 6" LAYERS COMPACTED TO TOP OF TRENCH USING LOCAL EXCAVATED MATERIAL, IF APPROVED BY THE ENGINEER, OR SELECT MATERIAL. ALL MATERIAL SHALL BE FREE OF ROCKS, FOREIGN MATERIAL, AND FROZEN EARTH. COMPACTION SHALL BE TO APPROX. 95% DENSITY IN ACCORDANCE WITH AASHTO T-99 AS MODIFIED BY THE DEPARTMENT OF TRANSPORTATION.

MAXIMUM TRENCH WIDTH
AT TOP OF PIPE

NOMINAL PIPE SIZE (INCHES)	TRENCH WIDTH (INCHES)	NOMINAL PIPE SIZE (INCHES)	TRENCH WIDTH (INCHES)
4	28	20	44
6	30	24	48
8	32	30	54
10	34	36	60
12	36	42	66
14	38	48	72
16	40	54	78
18	42		

SANITARY SEWER CLEANOUT

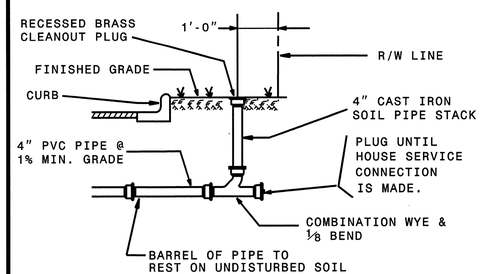

THE CONTRACTOR SHALL REPLACE ANY DAMAGED SEWER LATERALS AND/OR CLEANOUTS AS DIRECTED BY THE ENGINEER. THE NECESSARY QUANTITIES HAVE BEEN ADDED TO THE CONTRACT TO FACILITATE THIS PROCEDURE.

UTILITY CONSTRUCTION PLANS DESIGNED BY:
DAVIS-MARTIN-POWELL & ASSOCIATES, INC.
ENGINEERING-LAND PLANNING-SURVEYING
6415 OLD PLANK ROAD
HIGH POINT, NC 27265
PHONE: (336) 886-4821 FAX: (336) 886-4458

SYSTIME=$$$$$$$$ DGN=$$$$$$$$ USERNAME=$$$$$$$$

8/17/99

REVISIONS

PROJECT REFERENCE NO.	SHEET NO.
U-3326A/B	UC-36A
DESIGNED BY: DMP	
DRAWN BY: DMP	
CHECKED BY: DMP	
APPROVED BY:	
REVISED:	

NORTH CAROLINA DEPARTMENT OF TRANSPORTATION

UTILITIES ENGINEERING SEC.
PHONE: (919) 250-4128
FAX: (919) 250-4119

NORTH CAROLINA PROFESSIONAL SEAL 26457 ENGINEER ANDREW P. LARRICK 5-23-11

UTILITY CONSTRUCTION PLANS ONLY

UTILITY CONSTRUCTION

NOTES:
1. MANHOLES SHALL BE PRECAST CONCRETE, CONFORMING TO SECTION 1525 OF THE NCDOT STANDARD SPECIFICATIONS.
2. FOR PVC FORCE MAINS OF ANY SIZE, OR DI FORCE MAINS SMALLER THAN 8" DIA., USE SERVICE SADDLE.

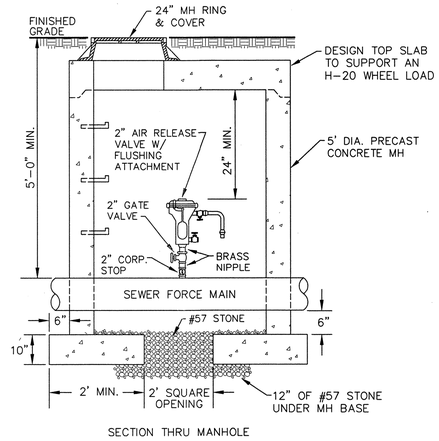

SECTION THRU MANHOLE

2" AIR RELEASE VALVE IN MANHOLE
FOR SEWER FORCE MAIN
(NOT TO SCALE)

NOTES:
1. MANHOLES SHALL BE PRECAST CONCRETE, CONFORMING TO SECTION 1525 OF THE NCDOT STANDARD SPECIFICATIONS.
2. MANHOLES FOR AIR RELEASE VALVES ON LINE PFM500 SHALL HAVE AN INTERIOR CERAMIC EPOXY COATING AS DESCRIBED IN THE UTILITY CONSTRUCTION SPECIAL PROVISIONS.

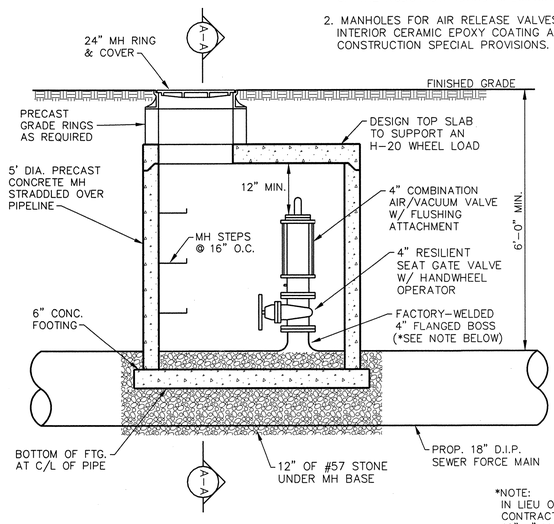

PROFILE

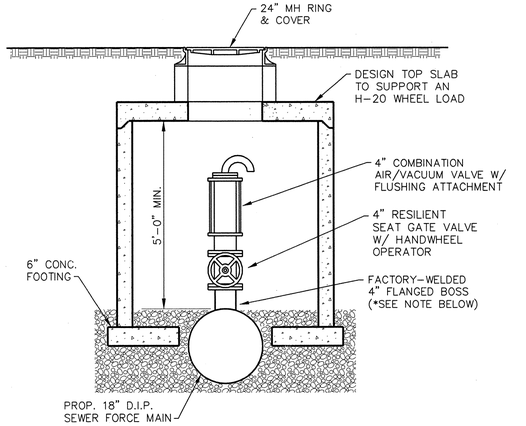

SECTION A-A

*NOTE:
IN LIEU OF FLANGED BOSS, CONTRACTOR MAY INSTALL 18"x4" MJ x MJ x FE TEE OR 18"x4" S.S. TAPPING SLEEVE.

4" AIR RELEASE VALVE IN MANHOLE
FOR SEWER FORCE MAIN
(NOT TO SCALE)

UTILITY CONSTRUCTION PLANS DESIGNED BY:
DAVIS-MARTIN-POWELL & ASSOCIATES, INC.
ENGINEERING-LAND PLANNING-SURVEYING
6415 OLD PLANK ROAD
HIGH POINT, NC 27265
PHONE: (336) 886-4821 FAX: (336) 886-4458

$$$$SYSTIME$$$$
$$$$USERNAME$$$$
$$$$DGN$$$$

PROJECT REFERENCE NO.	SHEET NO.
U-3326A/B	UC-37
DESIGNED BY: DMP	
DRAWN BY: DMP	
CHECKED BY: DMP	
APPROVED BY:	
REVISED:	

NORTH CAROLINA DEPARTMENT OF TRANSPORTATION

UTILITIES ENGINEERING SEC.
PHONE: (919) 250-4128
FAX: (919) 250-4119

NORTH CAROLINA PROFESSIONAL SEAL 26457 ENGINEER ANDREW P. LARRICK 5-18-11

UTILITY CONSTRUCTION PLANS ONLY

UTILITY CONSTRUCTION

REVISIONS 8/17/99

$$$$SYSTIME$$$$ $$$$USERNAME$$$$ $$$$DGN$$$$

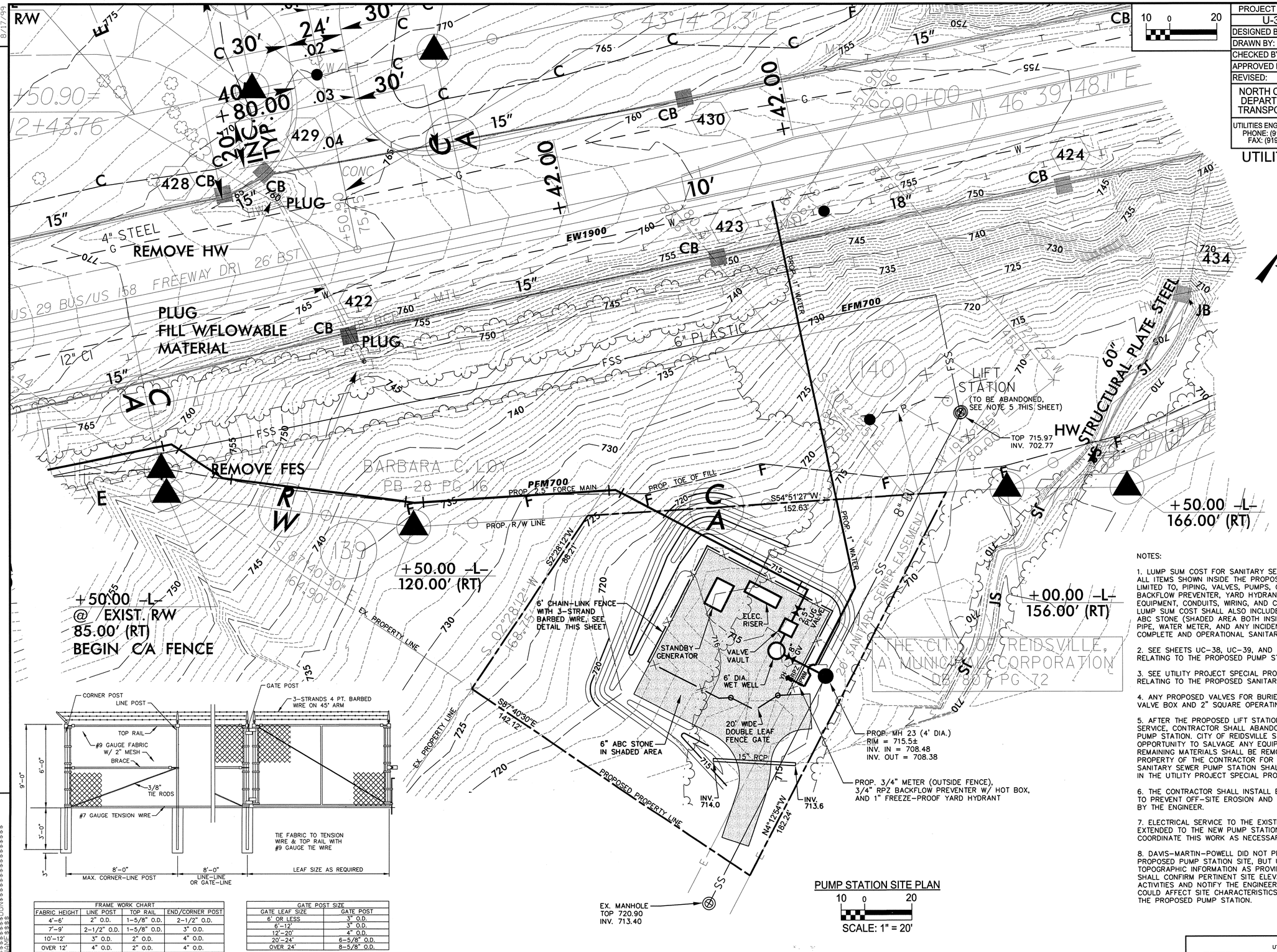

PUMP STATION SITE PLAN

10 0 20

SCALE: 1" = 20'

FRAME WORK CHART			
FABRIC HEIGHT	LINE POST	TOP RAIL	END/CORNER POST
4'-6'	2" O.D.	1-5/8" O.D.	2-1/2" O.D.
7'-9'	2-1/2" O.D.	1-5/8" O.D.	3" O.D.
10'-12'	3" O.D.	2" O.D.	4" O.D.
OVER 12'	4" O.D.	2" O.D.	4" O.D.

GATE POST SIZE	
GATE LEAF SIZE	GATE POST
6' OR LESS	3" O.D.
6'-12'	3" O.D.
12'-20'	4" O.D.
20'-24'	6-5/8" O.D.
OVER 24'	8-5/8" O.D.

DETAIL - CHAIN LINK FENCE

NTS

NOTES:

1. LUMP SUM COST FOR SANITARY SEWER PUMP STATION SHALL INCLUDE ALL ITEMS SHOWN INSIDE THE PROPOSED FENCE, INCLUDING, BUT NOT LIMITED TO, PIPING, VALVES, PUMPS, CONTROLS, VAULT, WET WELL, BACKFLOW PREVENTER, YARD HYDRANT, GENERATOR, ELECTRICAL EQUIPMENT, CONDUITS, WIRING, AND CHAIN-LINK FENCE W/ GATE, LUMP SUM COST SHALL ALSO INCLUDE SITE GRADING, 6" COMPACTED ABC STONE (SHADED AREA BOTH INSIDE AND OUTSIDE FENCE), DRIVEWAY PIPE, WATER METER, AND ANY INCIDENTALS NECESSARY TO PROVIDE A COMPLETE AND OPERATIONAL SANITARY SEWER PUMP STATION.

2. SEE SHEETS UC-38, UC-39, AND UC-40 FOR ADDITIONAL DETAILS RELATING TO THE PROPOSED PUMP STATION.

3. SEE UTILITY PROJECT SPECIAL PROVISIONS FOR SPECIFICATIONS RELATING TO THE PROPOSED SANITARY SEWER PUMP STATION.

4. ANY PROPOSED VALVES FOR BURIED SERVICE SHALL INCLUDE A VALVE BOX AND 2" SQUARE OPERATING NUT.

5. AFTER THE PROPOSED LIFT STATION IS COMPLETED AND PLACED IN SERVICE, CONTRACTOR SHALL ABANDON THE EXISTING SANITARY SEWER PUMP STATION. CITY OF REIDSVILLE STAFF SHALL BE GIVEN THE OPPORTUNITY TO SALVAGE ANY EQUIPMENT THEY DESIRE TO KEEP. REMAINING MATERIALS SHALL BE REMOVED AND SHALL BECOME THE PROPERTY OF THE CONTRACTOR FOR PROPER DISPOSAL. THE EXISTING SANITARY SEWER PUMP STATION SHALL BE ABANDONED AS DESCRIBED IN THE UTILITY PROJECT SPECIAL PROVISIONS.

6. THE CONTRACTOR SHALL INSTALL EROSION CONTROL MEASURES TO PREVENT OFF-SITE EROSION AND SEDIMENTATION AS DIRECTED BY THE ENGINEER.

7. ELECTRICAL SERVICE TO THE EXISTING PUMP STATION SHALL BE EXTENDED TO THE NEW PUMP STATION SITE. CONTRACTOR SHALL COORDINATE THIS WORK AS NECESSARY WITH DUKE ENERGY.

8. DAVIS-MARTIN-POWELL DID NOT PERFORM FIELD SURVEYING OF THE PROPOSED PUMP STATION SITE, BUT UTILIZED SURVEY DATA AND TOPOGRAPHIC INFORMATION AS PROVIDED BY NCDOT. CONTRACOR SHALL CONFIRM PERTINENT SITE ELEVATIONS PRIOR TO CONSTRUCTION ACTIVITIES AND NOTIFY THE ENGINEER OF ANY DISCREPANCIES THAT COULD AFFECT SITE CHARACTERISTICS AND/OR PROPER OPERATION OF THE PROPOSED PUMP STATION.

UTILITY CONSTRUCTION PLANS DESIGNED BY:
DAVIS-MARTIN-POWELL & ASSOCIATES, INC.
ENGINEERING-LAND PLANNING-SURVEYING
6415 OLD PLANK ROAD
HIGH POINT, NC 27265
PHONE: (336) 886-4821 FAX: (336) 886-4458

8/17/99

REVISIONS

SCALE AS NOTED	PROJECT REFERENCE NO.	SHEET NO.
	U-3326A/B	UC-38
DESIGNED BY: DMP		
DRAWN BY: DMP		
CHECKED BY: DMP		
APPROVED BY:		
REVISED:		

NORTH CAROLINA DEPARTMENT OF TRANSPORTATION

UTILITIES ENGINEERING SEC.
PHONE: (919) 250-4128
FAX: (919) 250-4119

NORTH CAROLINA PROFESSIONAL ENGINEER SEAL 26457 ANDREW P. LARRICK 5-18-11

UTILITY CONSTRUCTION PLANS ONLY

UTILITY CONSTRUCTION

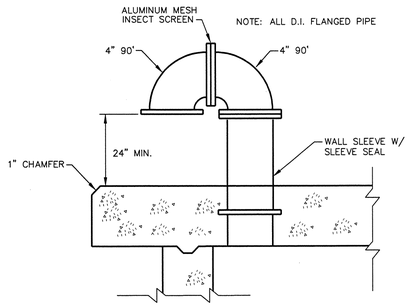

DETAIL – WET WELL VENT
NTS

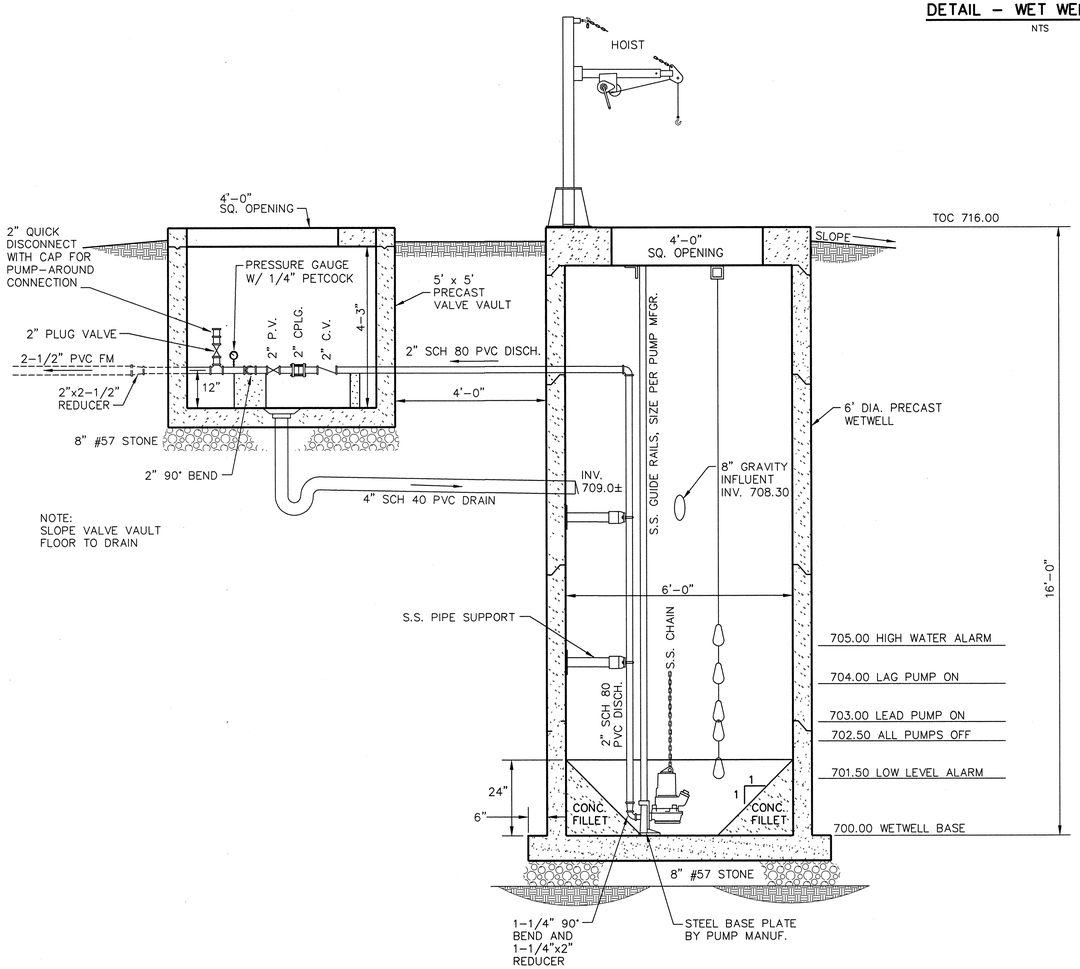

SECTION A A
1 0 2
SCALE: 1/2"=1'-0"

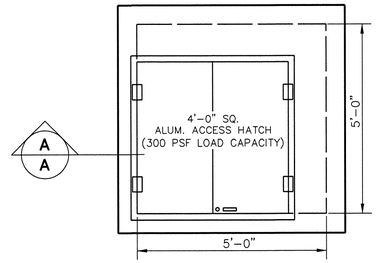

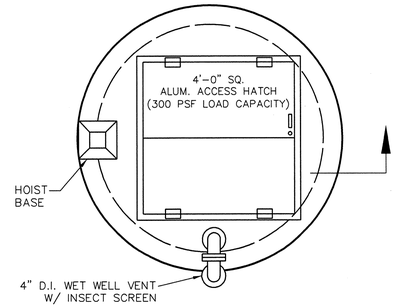

TOP PLAN
1 0 2
SCALE: 1/2"=1'-0"

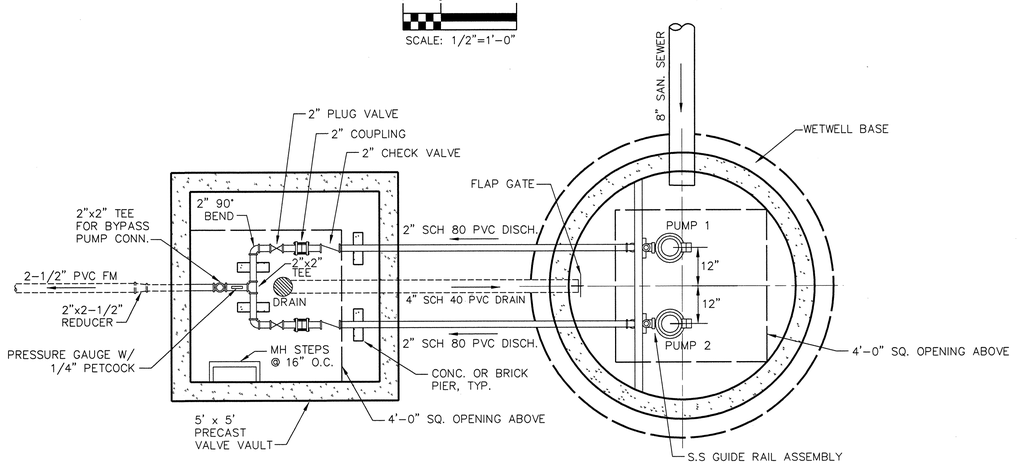

BOTTOM PLAN
1 0 2
SCALE: 1/2"=1'-0"

UTILITY CONSTRUCTION PLANS DESIGNED BY:
DAVIS-MARTIN-POWELL & ASSOCIATES, INC.
ENGINEERING-LAND PLANNING-SURVEYING
6415 OLD PLANK ROAD
HIGH POINT, NC 27265
PHONE: (336) 886-4821 FAX: (336) 886-4458

I:\SIMEL\DGN\UC38.DGN 8/17/99 8:19:11 AM

8/17/99

REVISIONS

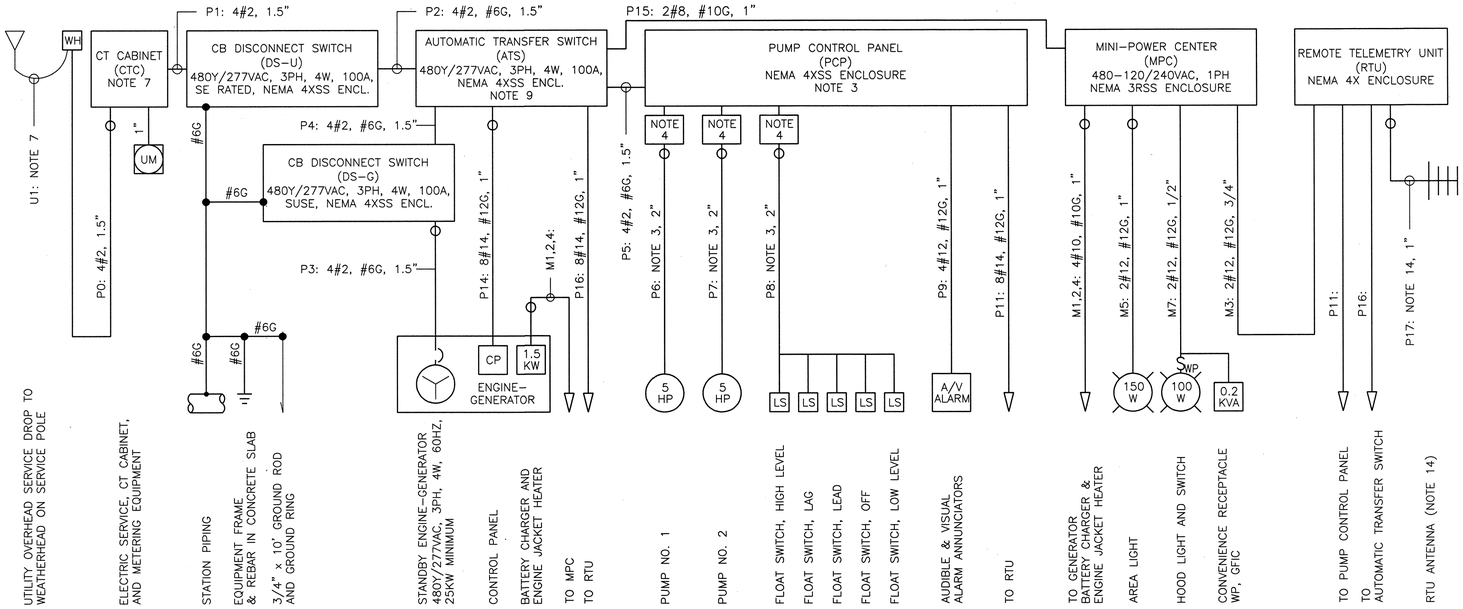

PUMP STATION ELECTRICAL ONE-LINE DIAGRAM

NO TO SCALE

PANELBOARD: MPC							BUS: AS REQ'D RATING: 5 KVA	MAIN CB: 25A-2P XFMR PRIMARY
SERVICE: 480 - 120/240 VAC, 1PH								MAIN CB: 30A-2P XFMR SECONDARY
MOUNTING: POST, NEMA 3R SS								LOCATION: PUMP STATION
LOAD	AMP	POLE	CKT#		POLE	AMP	LOAD	
ENGINE BATTERY CHARGER	20	1P	1	2	2P	20	ENGINE JACKET HEATER	
REMOTE TELEMETRY UNIT	15	1P	3	4	|	|	| (NOTE 8)	
AREA LIGHT	15	1P	5	6	1P	20	RECPT. AT BACKFLOW PREVENTER	
HOOD LIGHT & RECEPTACLE	20	1P	7	8	1P	20	SPARE	

NOTES:

1. CONTRACTOR SHALL PROVIDE ALL LABOR, MATERIALS, TOOLS, EQUIPMENT, PERMITS, AND OPERATIONS NECESSARY FOR THE PROPER EXECUTION AND COMPLETION OF ALL ELECTRICAL WORK INDICATED ON THE DRAWINGS.

2. ALL ELECTRICAL WORK AND MATERIALS SHALL COMPLY WITH THE NEC AND OTHER APPLICABLE FEDERAL, STATE, AND LOCAL CODES. ALL ELECTRICAL EQUIPMENT SHALL BE LISTED OR LABELED.

3. PUMP CONTROL PANEL (PCP), PUMPS, FLOAT SWITCHES (LS), AND AUDIBLE & VISUAL ALARM PROVIDED BY PUMP SUPPLIER. CABLES FOR PUMPS AND FLOAT SWITCHES PROVIDED WITH THE EQUIPMENT. CONDUIT AND INSTALLATION BY THE ELECTRICAL CONTRACTOR.

4. WETWELL IS CLASSIFIED HAZARDOUS, CLASS I, DIVISION 1, GROUP D BY THE NFPA 820. ALL CONDUITS ENTERING THIS AREA SHALL BE PROVIDED WITH SUITABLE SEALOFFS.

5. CONTRACTOR SHALL BE RESPONSIBLE FOR ROUTING ALL CONDUITS. ALL CONDUIT SHALL BE CONCEALED WHERE POSSIBLE. CONDUITS SHALL BE INSTALLED SO AS NOT TO CREATE A TRIP HAZARD. CONTRACTOR SHALL FIELD VERIFY EQUIPMENT LOCATIONS PRIOR TO INSTALLATION OF CABLE AND CONDUIT.

6. ELECTRICAL EQUIPMENT RACK SHALL BE PROVIDED WITH A WEATHER HOOD. SEE HOOD DETAIL. LUMINARY IN WEATHER HOOD SHALL BE 4' FLUORESCENT WITH ENCLOSED FIBERGLASS HOUSING, WET LABEL LISTED, TWO 32WT8 TUBES, AND ELECTRONIC BALLAST. COLUMBIA LUN4-232-EB8-120, LITHONIA DM232-120GEB10IS, METALUX VT2-232DR-120EB81Z-WL OR EQUAL.

7. SERVICE LATERAL (U1), CURRENT TRANSFORMERS, AND METER PROVIDED BY DUKE POWER. CT CABINET AND METER SOCKET PROVIDED AND INSTALLED BY CONTRACTOR PER DUKE POWER SPECIFICATIONS. DUKE POWER WILL INSTALL SERVICE LATERAL TO SERVICE POLE.

8. CONTRACTOR SHALL PROVIDE AND INSTALL CIRCUITS FOR THE GENERATOR BATTERY CHARGER AND ENGINE JACKET HEATER IN ACCORDANCE WITH THE GENERATOR MANUFACTURER'S INSTRUCTIONS.

9. AUTOMATIC TRANSFER SWITCH SHALL BE PROVIDED WITH DUAL LUGS ON THE LOAD SIDE FOR CONNECTION OF THE CONDUCTORS INDICATED.

10. WIDTH OF EQUIPMENT RACK TO BE DETERMINED BY EQUIPMENT SUPPLIED. CONTRACTOR TO PROVIDE RACK FABRICATION DETAILS WITH EQUIPMENT SUBMITTALS.

11. ALL CORNERS AND EDGES OF EQUIPMENT RACK SHALL BE ROUNDED AND SMOOTH.

12. ZINC-RICH PAINT SHALL BE FIELD APPLIED TO ALL SAW CUTS, PIPE THREADS, FASTENER HARDWARE, AND DAMAGED FINISHES OF GALVANIZED MATERIALS.

13. CORROSION-RESISTANT COATING OF COAL TAR PAINT SHALL BE APPLIED TO ALL CONDUITS AND SUPPORT POSTS THAT TURN OUT OF CONCRETE, MASONRY, OR SOIL. THE COATING SHALL CONSIST OF A HEAVY COAT OF COAL TAR PAINT EXTENDING SIX INCHES ON EACH SIDE OF THE POINT OF TURN-OUT.

14. RTU ANTENNA AND CABLE PROVIDED WITH REMOTE TELEMETRY UNIT. CONDUIT AND INSTALLATION BY CONTRACTOR. CONTRACTOR TO COORDINATE CONDUIT SIZE WITH ANTENNA CABLE.

15. ALL DISCONNECT SWITCHES, JUNCTION BOXES, MOTOR CONTROLLERS, AND OTHER EQUIPMENT REQUIRING ELECTRICAL POWER CONNECTION SHALL BE MARKED WITH VOLTAGE PRESENT, AS APPROPRIATE TO DESIGNATE 120, 208, 240, 277, OR 480, VOLTS AND SINGLE OR THREE PHASE, AS APPLICABLE.

16. ELECTRICAL CONDUIT UNDER ROADS AND WHERE SUBJECT TO VEHICULAR TRAFFIC SHALL BE CONCRETE ENCASED. CONCRETE ENCASEMENT SHALL EXTEND FIVE FEET OR MORE BEYOND EDGE OF THE ROAD.

ONE - LINES

- 480V / 45KVA / 208Y/120V — TRANSFORMER WITH AND CONNECTION INDICATED. PRIMARY VOLTAGE, ,KVA RATING, SECONDARY VOLTAGE
- P6: 3#6, #8G, 1" (25 HP) — ONE-LINE SHOWING CIRCUIT "P6" WITH THREE #6 AWG PHASE CONDUCTORS AMD ONE #8 EQUIPMENT GROUNDING CONDUCTOR IN A 1" CONDUIT TO A 25 HP LOAD.
- SMALL CIRCLE DENOTES ALL OR PART OF CONDUIT IS UNDERGROUND
- 3P-50A — LOW VOLTAGE AIR CIRCUIT BREAKER, 3 POLE, 50 AMPERE
- 3P-30A — THREE POLE DISCONNECT SWITCH AND FUSES
- S3 — SIZE 3 COMBINATION MAGNETIC MOTOR STARTER

PLANS

- LP-2 — TYPICAL HOMERUN ROUTED TO LIGHTING PANEL "LP" CIRCUIT NUMBER 2. SHORT DASH INDICATES PHASE CONDUCTOR, LONG DASH INDICATES NEUTRAL CONDUCTOR, CURVED DASH INDICATES GROUNDING CONDUCTOR.
- HEAVY LINES INDICATE NEW WORK
- LIGHT LINES INDICATE EXISTING EQUIPMENT
- OHE — OVERHEAD ELECTRIC LINE
- E — E — CONCRETE ENCASED DUCT BANK
- EE — EE — DIRECT BURIED CONDUIT
- GROUND CONDUCTOR
- $ — SINGLE POLE SWITCH
- $3 — THREE WAY SWITCH
- $M — MOTOR RATED SWITCH
- $WP — WEATHERPROOF SWITCH
- 4 — SIMPLEX RECEPTACLE ON CIRCUIT LP-4
- 2 — DUPLEX RECEPTACLE ON CIRCUIT LP-2
- GFI, WP — GROUND FAULT CIRCUIT INTERRUPTER WITH WEATHERPROOF IN-USE COVER
- TELEPHONE OUTLET
- JB — JUNCTION BOX
- LIGHTING PANEL
- MISCELLANEOUS PANEL
- COMBINATION MOTOR STARTER
- DISCONNECT SWITCH
- GROUND ROD

A	AMPERE
AC	ALTERNATING CURRENT
AFF	ABOVE FINISHED FLOOR
AGL	ABOVE GROUND LEVEL
AMP	AMPERE
ATS	AUTOMATIC TRANSFER SWITCH
AWG	AMERICAN WIRE GAUGE
C	CONDUIT
CB	CIRCUIT BREAKER
CP	CONTROL PANEL
CT	CURRENT TRANSFORMER
DS	DISCONNECT SWITCH
EC	EMPTY CONDUIT
E.C.	ELECTRICAL CONTRACTOR
EL	ELEVATION
EX.	EXISTING
EXP	EXPLOSION PROOF
G	GROUND
GEN	GENERATOR
GFCI	GROUND FAULT CIRCUIT INTERRUPTER
GFI	GROUND FAULT INTERRUPTER
GND	GROUND
HP	HORSEPOWER
HZ	HERTZ
JB	JUNCTION BOX
KVA	KILOVOLT-AMPERE
KW	KILOWATT
LAHJ	LOCAL AUTHORITY HAVING JURISDICTION
LP	LIGHTING PANEL
LS	LEVEL SWITCH
M	MOTOR
MA	MILLIAMPERE
MAX	MAXIMUM
MCB	MAIN CIRCUIT BREAKER
MIN	MINIMUM
MLO	MAIN LUG ONLY
MPC	MINI-POWER CENTER
N	NEUTRAL
NEC	NATIONAL ELECTRICAL CODE
PCP	PUMP CONTROL PANEL
PE	PHOTO-ELECTRIC CONTROL
PH	PHASE
PROP.	PROPOSED
REQD	REQUIRED
RTU	REMOTE TELEMETRY UNIT
SE	SERVICE ENTRANCE
SPD	SURGE PROTECTION DEVICE
SS	STAINLESS STEEL
SUSE	SUITABLE FOR USE AS SE.
TYP	TYPICAL
UM	UTILITY METER
V	VOLTS
VAC	VOLTS ALTERNATING CURRENT
W	WATTS OR WHITE
WH	WEATHER HEAD
WP	WEATHERPROOF
XP	EXPLOSION PROOF
3-PH	THREE PHASE
4P	FOUR POLE
&	AND

ELECTRICAL LEGEND AND ABBREVIATIONS

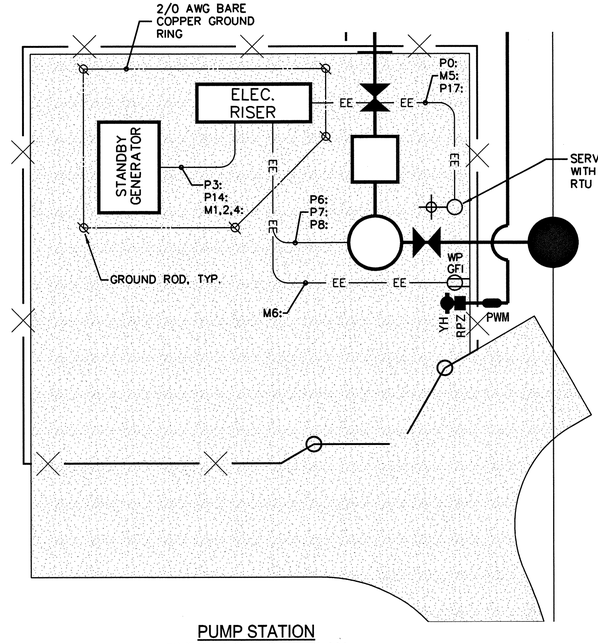

PUMP STATION ELECTRICAL SITE PLAN

5 0 10

SCALE: 1" = 10'

5 0 10

PROJECT REFERENCE NO.	SHEET NO.
U-3326A/B	UC-39
DESIGNED BY: DMP	
DRAWN BY: DMP	
CHECKED BY: DMP	
APPROVED BY:	
REVISED:	

NORTH CAROLINA DEPARTMENT OF TRANSPORTATION

UTILITIES ENGINEERING SEC.
PHONE: (919) 250-4128
FAX: (919) 250-4119

NORTH CAROLINA PROFESSIONAL 26457 ENGINEER ANDREW P. LARRICK 5-18-11

UTILITY CONSTRUCTION PLANS ONLY

UTILITY CONSTRUCTION

NAD 83'95

UTILITY CONSTRUCTION PLANS DESIGNED BY:
DAVIS-MARTIN-POWELL & ASSOCIATES, INC.
ENGINEERING-LAND PLANNING-SURVEYING
8415 OLD PLANK ROAD
HIGH POINT, NC 27265
PHONE: (336) 886-4821 FAX: (336) 886-4458

$$$$$SYSTIME$$$$$
$$$$$FILENAME$$$$$

8/17/99

REVISIONS

PROJECT REFERENCE NO.	SHEET NO.
U-3326A/B	UC-40
DESIGNED BY: DMP	
DRAWN BY: DMP	
CHECKED BY: DMP	
APPROVED BY:	
REVISED:	

NORTH CAROLINA DEPARTMENT OF TRANSPORTATION

UTILITIES ENGINEERING SEC.
PHONE: (919) 250-4128
FAX: (919) 250-4119

SEAL 26457 ENGINEER ANDREW P. LARRICK 5-18-11

UTILITY CONSTRUCTION PLANS ONLY

UTILITY CONSTRUCTION

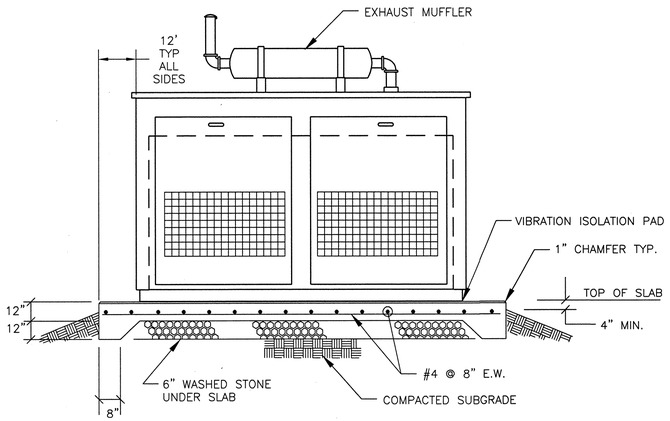

ELEVATION

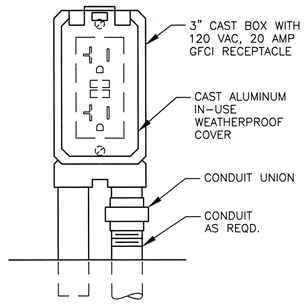

WEATHERPROOF RECEPTACLE DETAIL

NOT TO SCALE

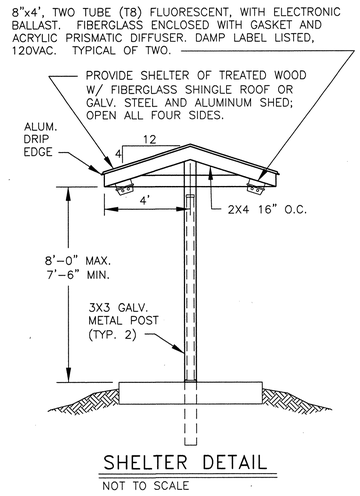

SHELTER DETAIL

NOT TO SCALE

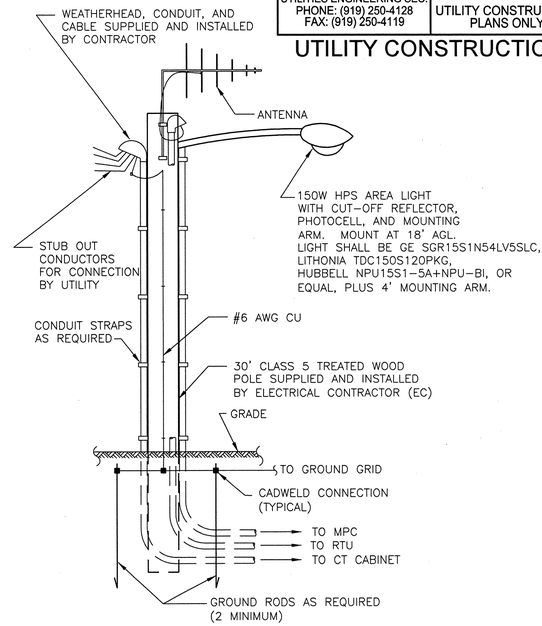

SERVICE/LIGHT POLE DETAIL

NOT TO SCALE

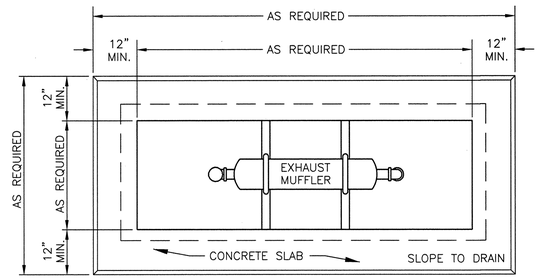

PLAN VIEW

GENERATOR NOTES:

G1. THE SYSTEM SHALL BE COMPLETELY SELF CONTAINED. COMPLETE WITH GENERATOR SET, FUEL FEED LINES, STARTING BATTERIES AND CHARGER, AND ALL OTHER MISC. ITEMS TO FORM A COMPLETE AND OPERABLE SYSTEM.

G2. DIMENSIONS MAY VARY DEPENDING UPON THE ACTUAL GENERATOR UNIT SUPPLIED.

G3. GENERATOR TO BE ANCHOR BOLTED TO SLAB PER MANUFACTURER'S INSTRUCTIONS. VIBRATION ISOLATION PADS TO BE INSTALLED BETWEEN CONCRETE PAD & GENERATOR.

G4. PROPANE TANK SHALL BE SEPARATE FROM THE GENERATOR UNIT. PROPANE TANK SHALL BE SIZED ACCORDING TO SECTION 16300 OF THE SPECIFICATIONS, BASED ON THE HOURLY FUEL CONSUMPTION OF THE SELECTED GENERATOR UNIT.

GENERATOR DETAIL

NO TO SCALE

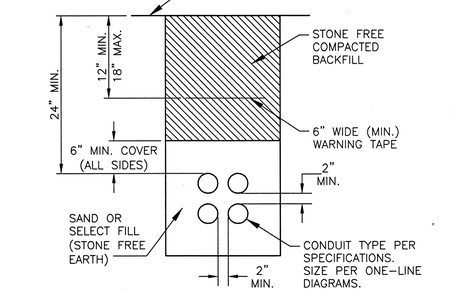

DIRECT BURIED CONDUIT DETAIL

NOT TO SCALE

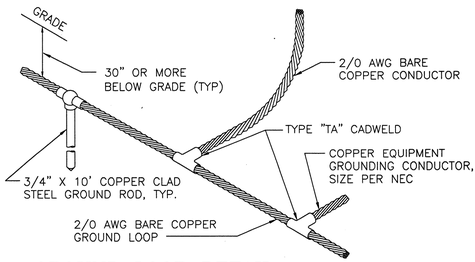

GROUND LOOP DETAIL

NOT TO SCALE

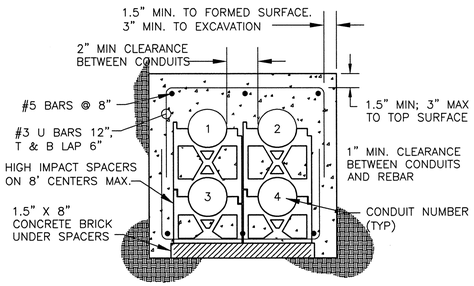

CONCRETE ENCASED CONDUIT DETAIL

NOT TO SCALE

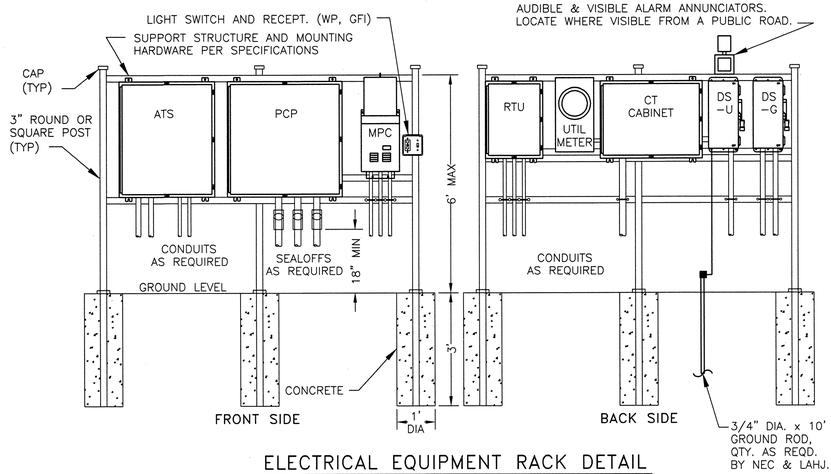

ELECTRICAL EQUIPMENT RACK DETAIL

NOT TO SCALE

UTILITY CONSTRUCTION PLANS DESIGNED BY:
DAVIS-MARTIN-POWELL & ASSOCIATES, INC.
ENGINEERING-LAND PLANNING-SURVEYING
6415 OLD PLANK ROAD
HIGH POINT, NC 27265
PHONE: (336) 886-4821 FAX: (336) 886-4458

$$$$SYSTIME$$$$
$$$$USERNAME$$$$
$$$$DGN$$$$

09/08/99

TIP PROJECT: U-3326

T.I.P. NO.	SHEET NO.
U-3326	UO-1

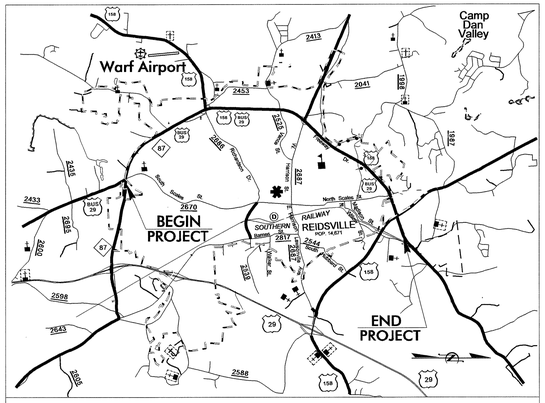

VICINITY MAP

STATE OF NORTH CAROLINA
DIVISION OF HIGHWAYS

UTILITIES BY OTHERS PLANS
ROCKINGHAM COUNTY

LOCATION: US 29 BUSINESS(FREEWAY DRIVE) FROM SR 2670 (SOUTH SCALES STREET) TO NC 14 IN REIDSVILLE

TYPE OF WORK: UTILITIES WORK BY OTHERS

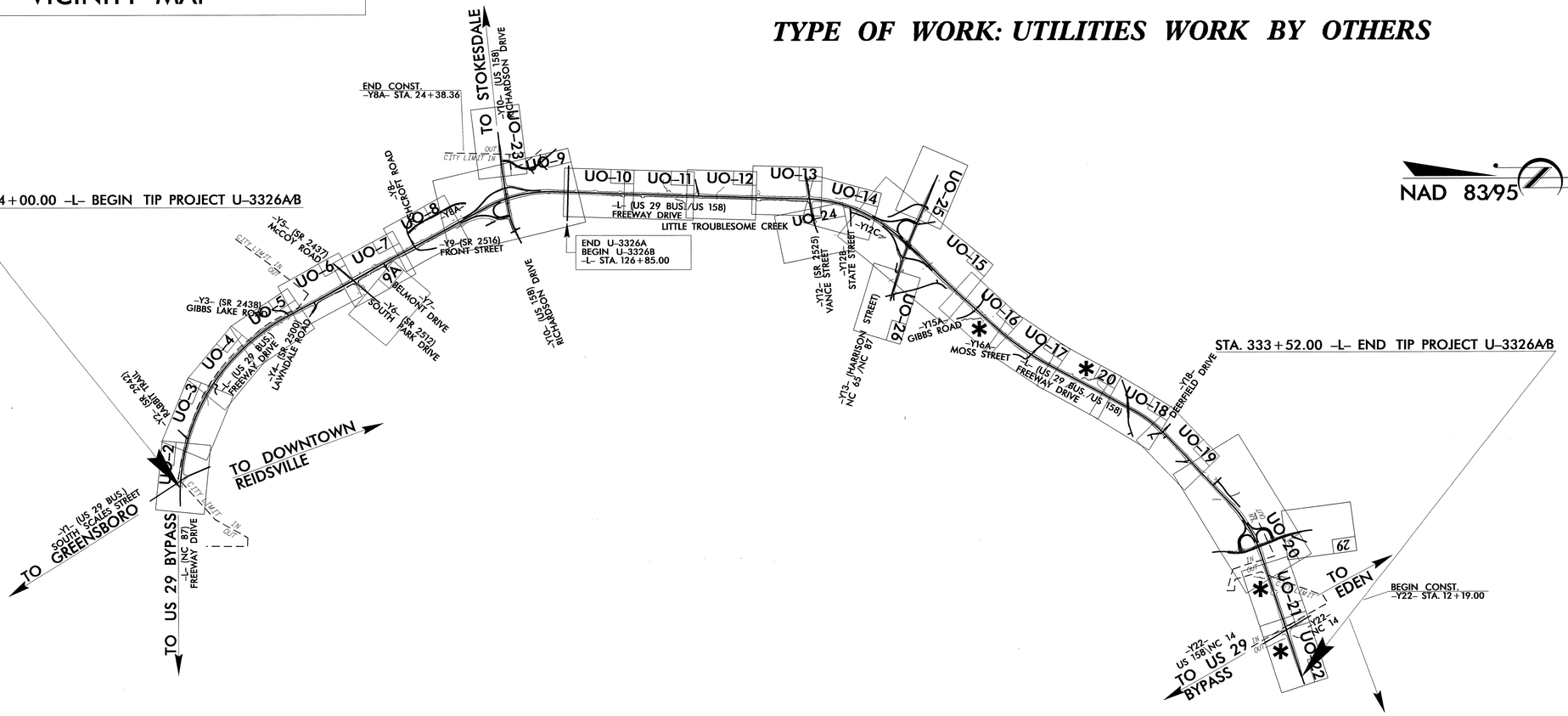

GRAPHIC SCALES

50 25 0 50 100
PLANS

50 25 0 50 100
PROFILE (HORIZONTAL)

10 5 0 10 20
PROFILE (VERTICAL)

INDEX OF SHEETS

SHEET NO.	*DESCRIPTION*
UO–1	*TITLE SHEET*
UO–2 THRU UO–26	*UTILITY BY OTHERS PLAN SHEETS*

UTILITY OWNERS ON PROJECT

(1) POWER : DUKE ENERGY
(2) TELEPHONE : AT&T, LEVEL 3
(3) CATV : TIME WARNER CABLE
(4) GAS : PIEDMONT NATURAL GAS
(5) CONDUIT FOR FIBER OPTIC CABLE : MCNC

PREPARED IN THE OFFICE OF:
DIVISION OF HIGHWAYS
UTILITIES ENGINEERING SECTION
1555 MAIL SERVICES CENTER
RALEIGH NC 27699-1555
PHONE (919) 250-4128
FAX (919) 250-4151

Roger Worthington, P.E. — *UTILITIES SECTION ENGINEER*
R.B.WILKINS, P.E. — *UTILITIES SQUAD LEADER PROJECT ENGINEER*
JONG-TAE YOON — *UTILITIES PROJECT DESIGNER*

04-JAN-2012 14:56
R:\Utilities\Rdy_Ut\Proj\U3326_Ut_Title_UO1_psh.dgn
$$$$USERNAME$$$$

5/14/99

PROJECT REFERENCE NO.	SHEET NO.
U-3326	U0-2

UTILITIES BY OTHERS

NOTE:
ALL PROPOSED UTILITY WORK SHOWN ON THIS SHEET WILL BE DONE BY OTHERS

NAD 83/95

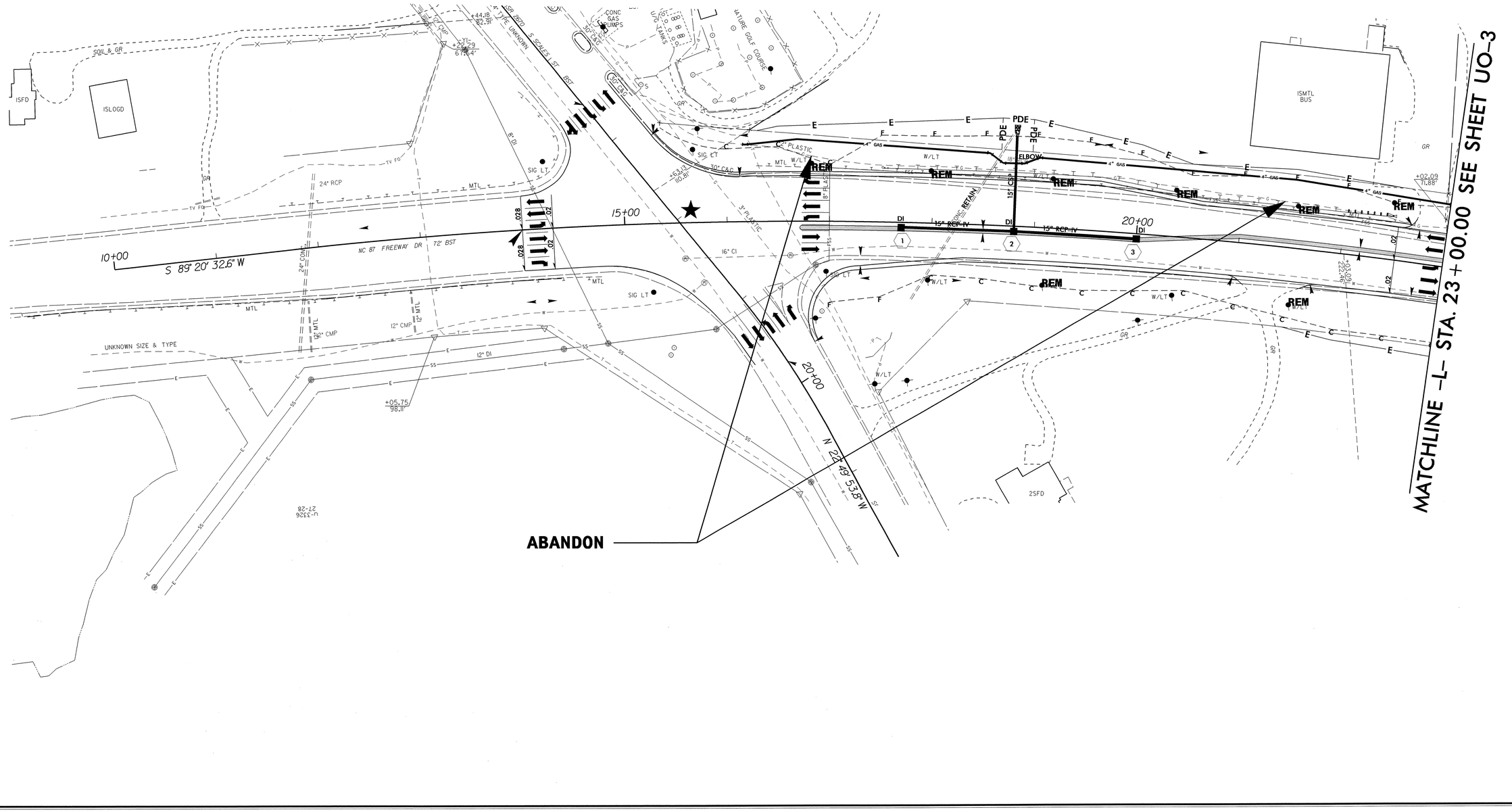

R:\Utilities\Projects\Proj\U3326_Ut_4_U02_psh.dgn
06-OCT-2011 10:50
$$$$USERNAME$$$$

PROJECT REFERENCE NO.	SHEET NO.
U-3326	U0-3

UTILITIES BY OTHERS

NOTE:
ALL PROPOSED UTILITY WORK SHOWN ON THIS SHEET WILL BE DONE BY OTHERS

NAD 83/95

MATCHLINE –L– STA. 23+00.00 SEE SHEET U0-2

MATCHLINE –L– STA. 36+00.00 SEE SHEET U0-4

ABANDON

5/14/99

06-OCT-2011[05]
R:\tip\U3326\Roadway\U3326_Ut_5_U03_psh.dgn
$$$$USERNAME$$$$

PROJECT REFERENCE NO.	SHEET NO.
U-3326	U0-4

UTILITIES BY OTHERS

NOTE:
ALL PROPOSED UTILITY WORK SHOWN ON THIS SHEET WILL BE DONE BY OTHERS

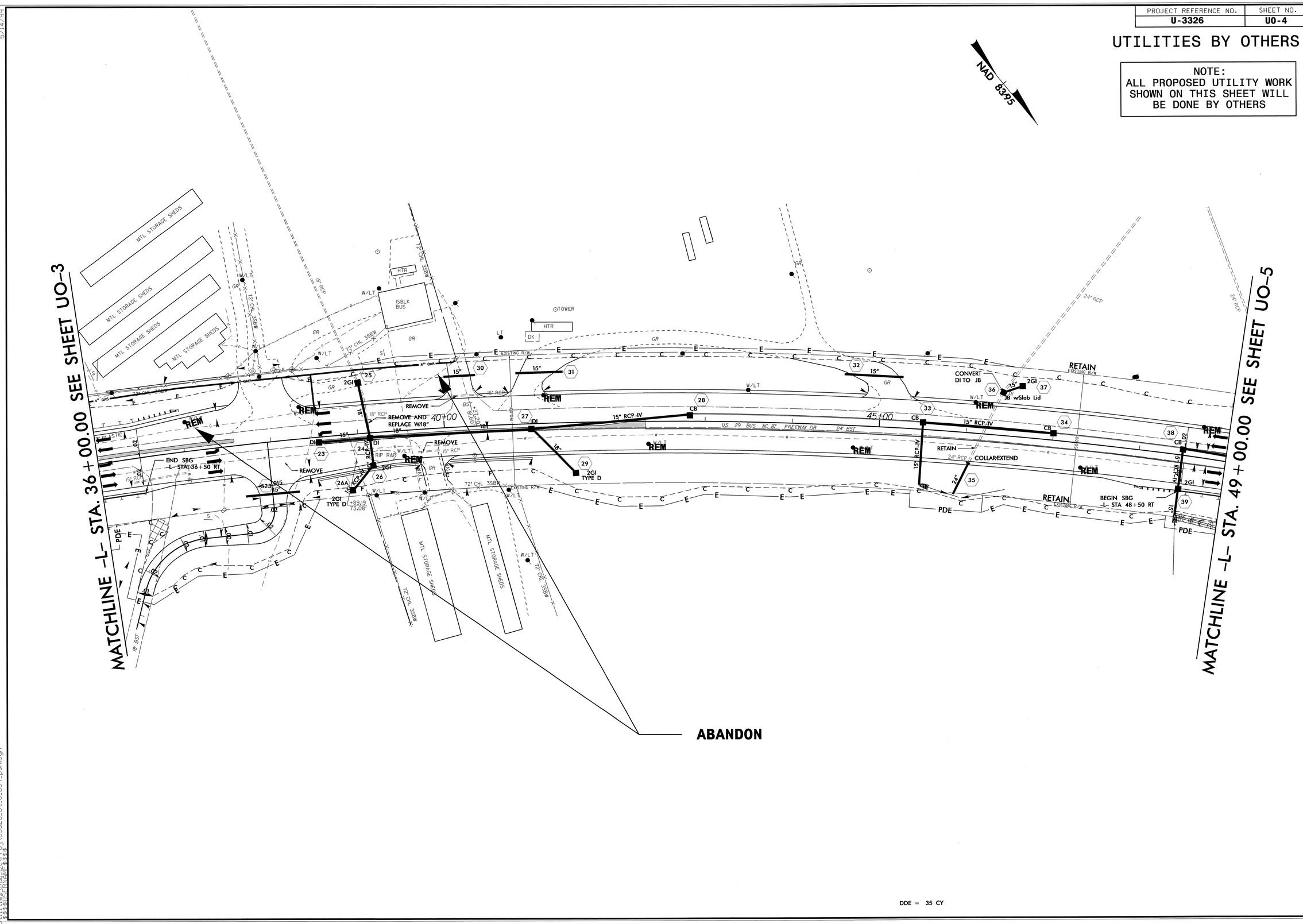

DDE = 35 CY

5/14/99

06-OCT-2011 10:54
R:\Utilities\Rdy_Ut\Proj\U3326_Ut_6_U04_psh.dgn
$$$$USERNAME$$$$

PROJECT REFERENCE NO.	SHEET NO.
U-3326	U0-5

UTILITIES BY OTHERS

NOTE:
ALL PROPOSED UTILITY WORK SHOWN ON THIS SHEET WILL BE DONE BY OTHERS

NAD 8395

MATCHLINE –L– STA. 49+00.00 SEE SHEET U0-4

MATCHLINE –L– STA. 62+00.00 SEE SHEET U0-6

5/14/99

R:\Utilities\Proj\U3326_Ut_7_U05_psh.dgn
06-OCT-20 10:56
$$$$USERNAME$$$$

PROJECT REFERENCE NO.	SHEET NO.
U-3326	U0-6

UTILITIES BY OTHERS

NOTE:
ALL PROPOSED UTILITY WORK SHOWN ON THIS SHEET WILL BE DONE BY OTHERS

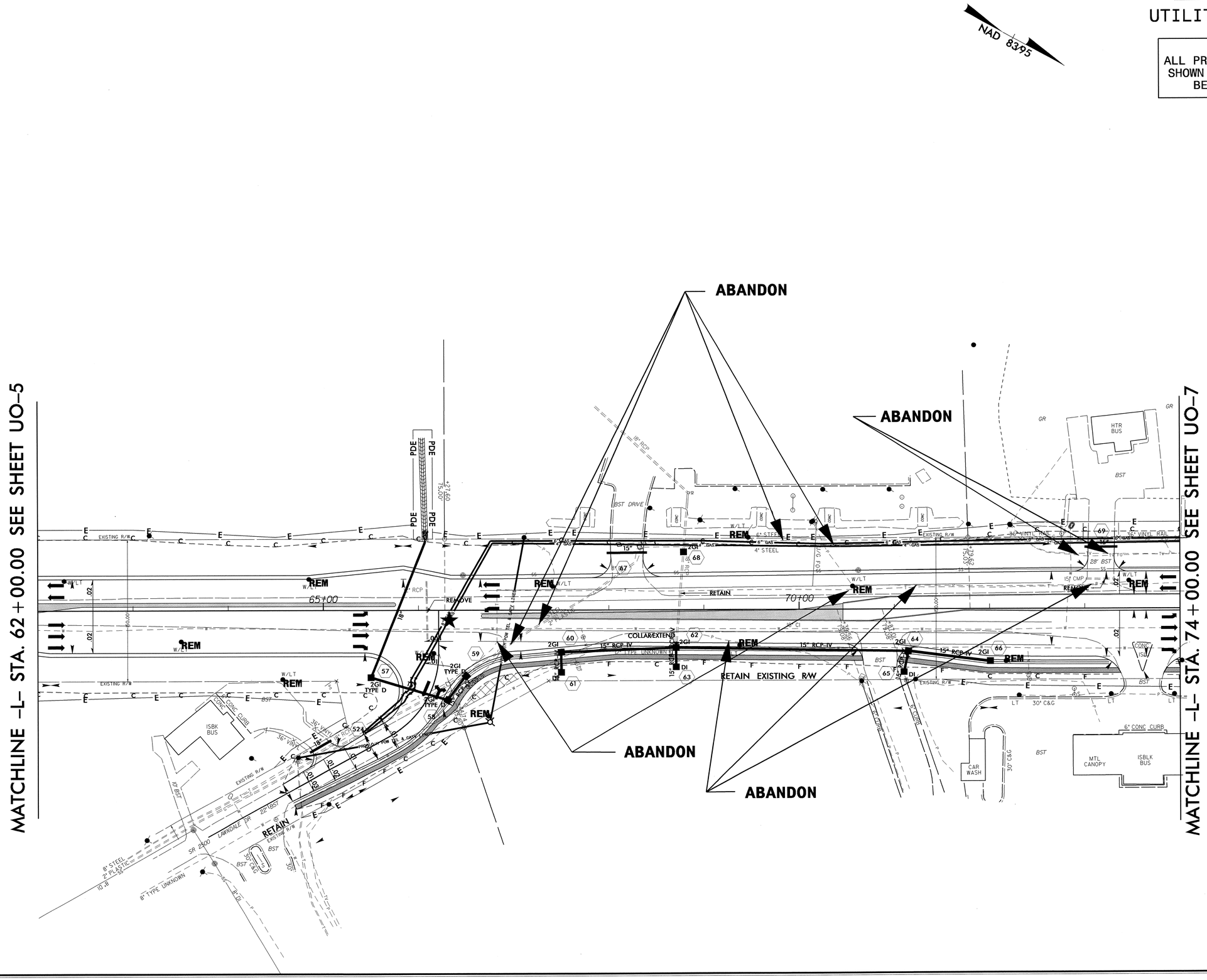

5/14/99

06-OCT-2011 13:44
R:\Utilities\Rdy_Ut\Proj\U3326_Ut_8_U06_psh.dgn
$$$$USERNAME$$$$

5/14/99

PROJECT REFERENCE NO.	SHEET NO.
U-3326	U0-7

UTILITIES BY OTHERS

NOTE:
ALL PROPOSED UTILITY WORK SHOWN ON THIS SHEET WILL BE DONE BY OTHERS

NAD 83/93

ABANDON

ABANDON

ABANDON

ABANDON

MATCHLINE –L– STA. 74+00.00 SEE SHEET U0-6

MATCHLINE –L– STA. 88+00.00 SEE SHEET U0-8

–Y6– STA. 13+75.00
END RESURFACING

US 29 BUS | NC 87 | FREEWAY DR | BST

US 29 BUS NC 87 FREEWAY DR 24' BST

CMH HOMES, INC.
A TENNESSEE CORPORATI

ISBK BUS

ISBK CHURCH

MTL CANOPY

RETAIN

06-OCT-2011 13:46
R:\Utilities\Projects\Proj\U3326_Ut_9_U07_psh.dgn
$$$$USERNAME$$$$

5/14/99

PROJECT REFERENCE NO.	SHEET NO.
U-3326	U0-8

UTILITIES BY OTHERS

NOTE:
ALL PROPOSED UTILITY WORK SHOWN ON THIS SHEET WILL BE DONE BY OTHERS

NAD 83/95

MATCHLINE –L– STA. 88+00.00 SEE SHEET UO-7

MATCHLINE –Y8A– STA. 20+00.00 SEE SHEET UO-9

MATCHLINE –L– STA. 101+00.00 SEE SHEET UO-9

ABANDON

ABANDON

DDE = 14 CY

DDE = 17 CY

R:\Utilities\Proj\U3326_Ut_10_U08_psh.dgn
06-OCT-2011 13:47
$$$$USERNAME$$$$

PROJECT REFERENCE NO.	SHEET NO.
U-3326	U0-9

UTILITIES BY OTHERS

NOTE:
ALL PROPOSED UTILITY WORK SHOWN ON THIS SHEET WILL BE DONE BY OTHERS

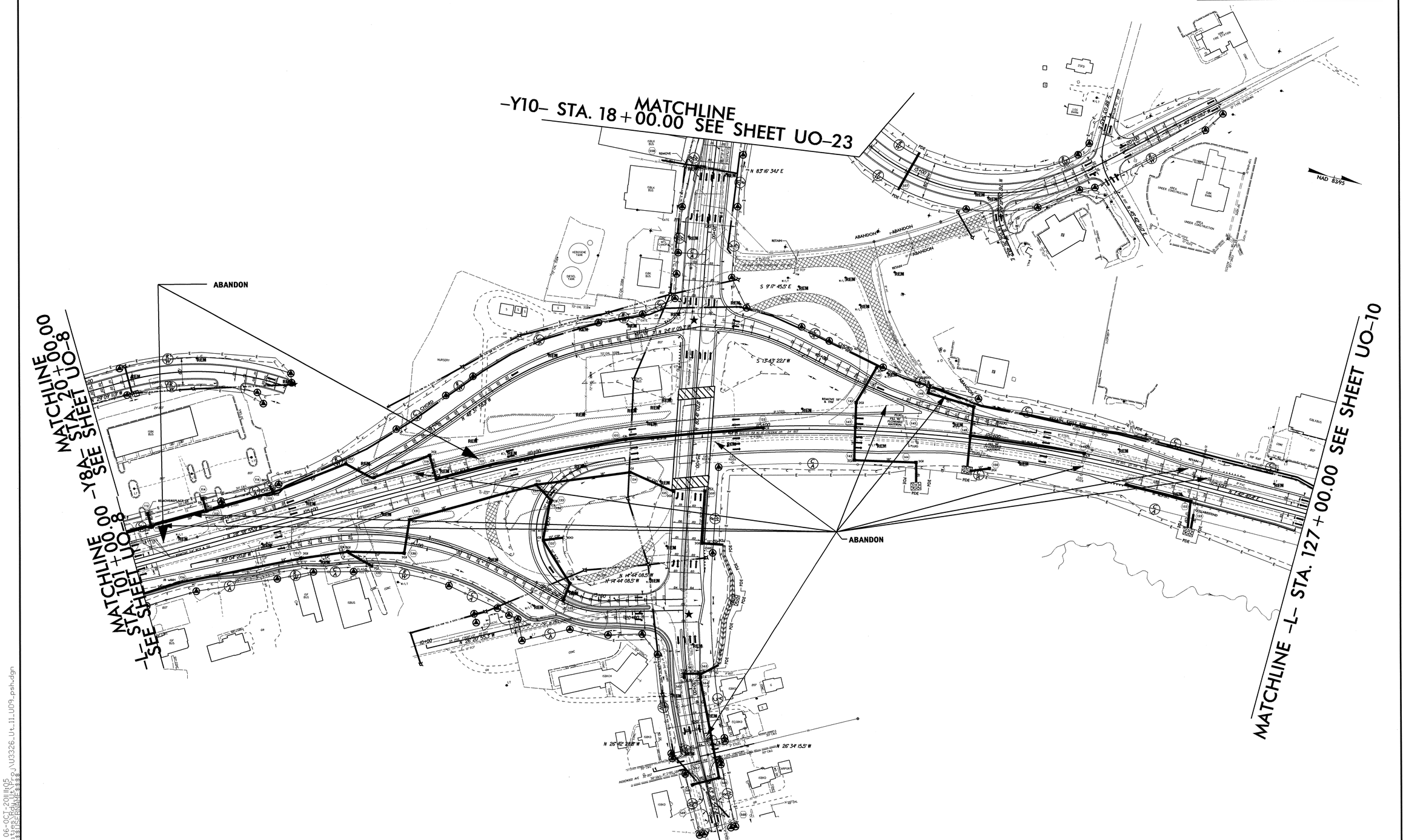

5/14/99

06-OCT-2011 11:05
R:\Utilities\Rdy\Proj\U3326_Ut_11_U09_psh.dgn
$$$$USERNAME$$$$

PROJECT REFERENCE NO.	SHEET NO.
U-3326	U0-10

UTILITIES BY OTHERS

NOTE:
ALL PROPOSED UTILITY WORK SHOWN ON THIS SHEET WILL BE DONE BY OTHERS

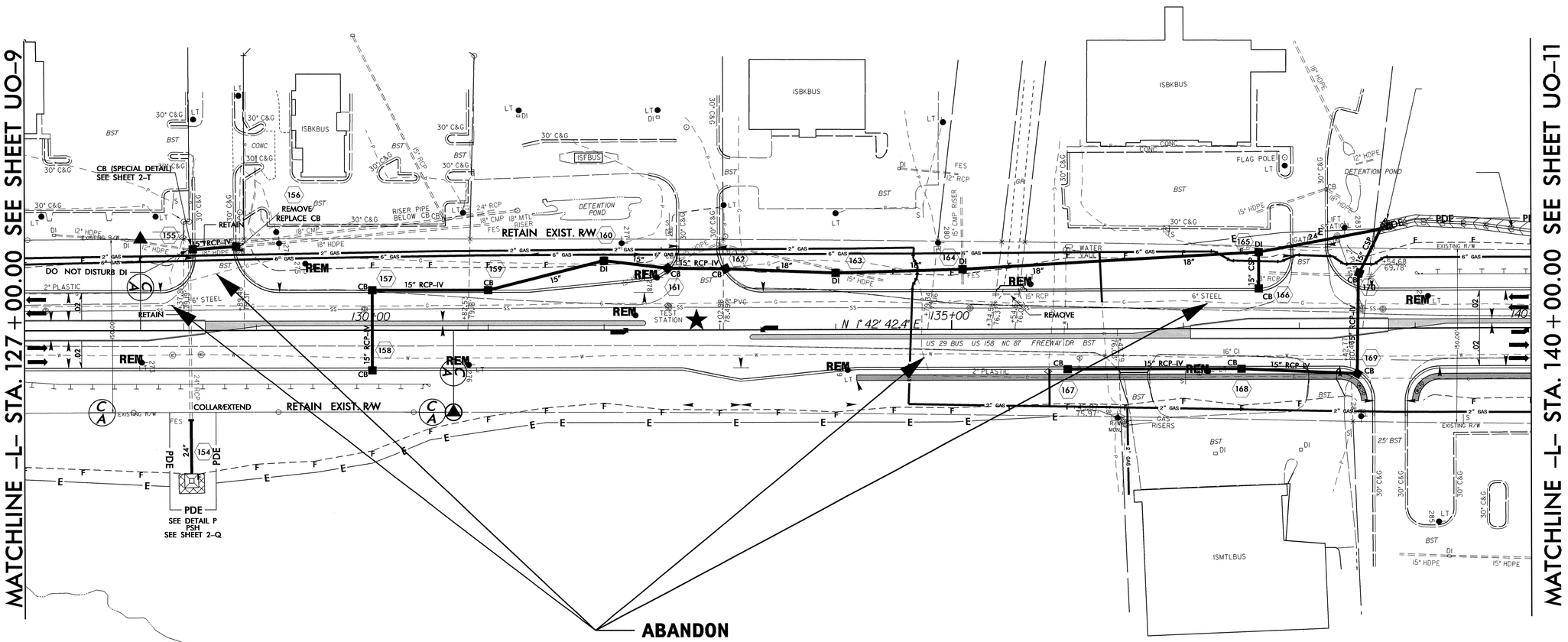

5/14/99

06-OCT-2011 11:06
R:\Utilities\Rdy_Ut_Proj\U3326_Ut_12_U010_psh.dgn
$$$$USERNAME$$$$

PROJECT REFERENCE NO.	SHEET NO.
U-3326	U0-11

NAD 83/95

UTILITIES BY OTHERS

NOTE:
ALL PROPOSED UTILITY WORK SHOWN ON THIS SHEET WILL BE DONE BY OTHERS

MATCHLINE –L– STA. 140+00.00 SEE SHEET U0-10

MATCHLINE –L– STA. 153+00.00 SEE SHEET U0-12

ABANDON

SEE DETAIL X
TOE PROTECTION
W/CL B RIP RAP
EST. 53 TONS
EST. 157 SY FABRIC

ISMTLBUS

ISFBUS

RETAIN

36" WELDED STEEL PIPE LINER

I" TYPE UNKNOWN

N 1° 42' 42.4" E

145.00

150.00

5/14/99

06-OCT-2011 11:08
R:\U-3326\Roadway\Design\U3326_Ut_13_U011_psh.dgn
$$$$USERNAME$$$$

PROJECT REFERENCE NO.	SHEET NO.
U-3326	U0-12

UTILITIES BY OTHERS

NAD 83/95

NOTE:
ALL PROPOSED UTILITY WORK SHOWN ON THIS SHEET WILL BE DONE BY OTHERS

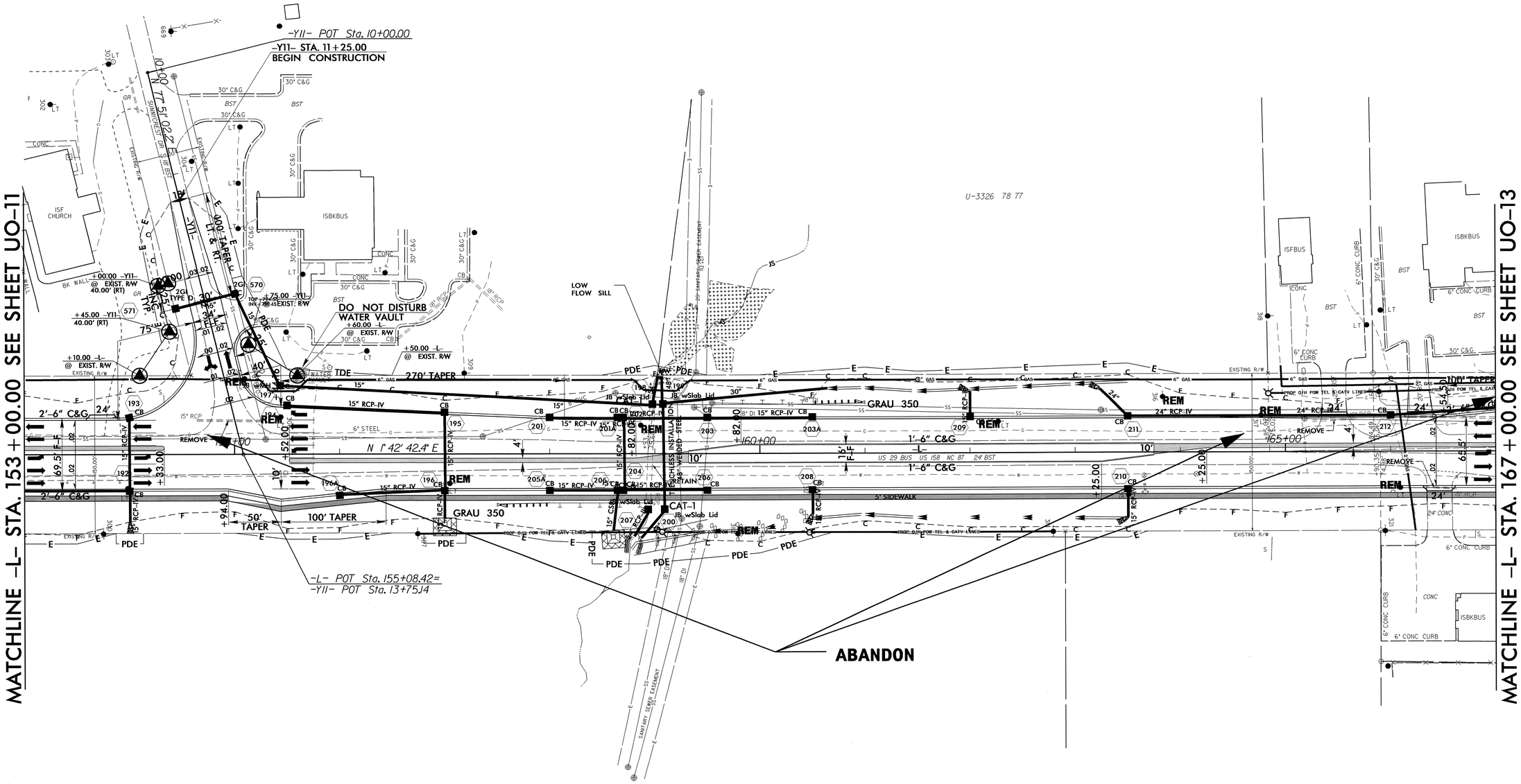

5/14/99

06-OCT-2011 13:48
R:\Utilities\Rdu_Ut\Proj\U3326_Ut_14_U012_psh.dgn
$$$$USERNAME$$$$

PROJECT REFERENCE NO.	SHEET NO.
U-3326	U0-13

UTILITIES BY OTHERS

NOTE:
ALL PROPOSED UTILITY WORK SHOWN ON THIS SHEET WILL BE DONE BY OTHERS

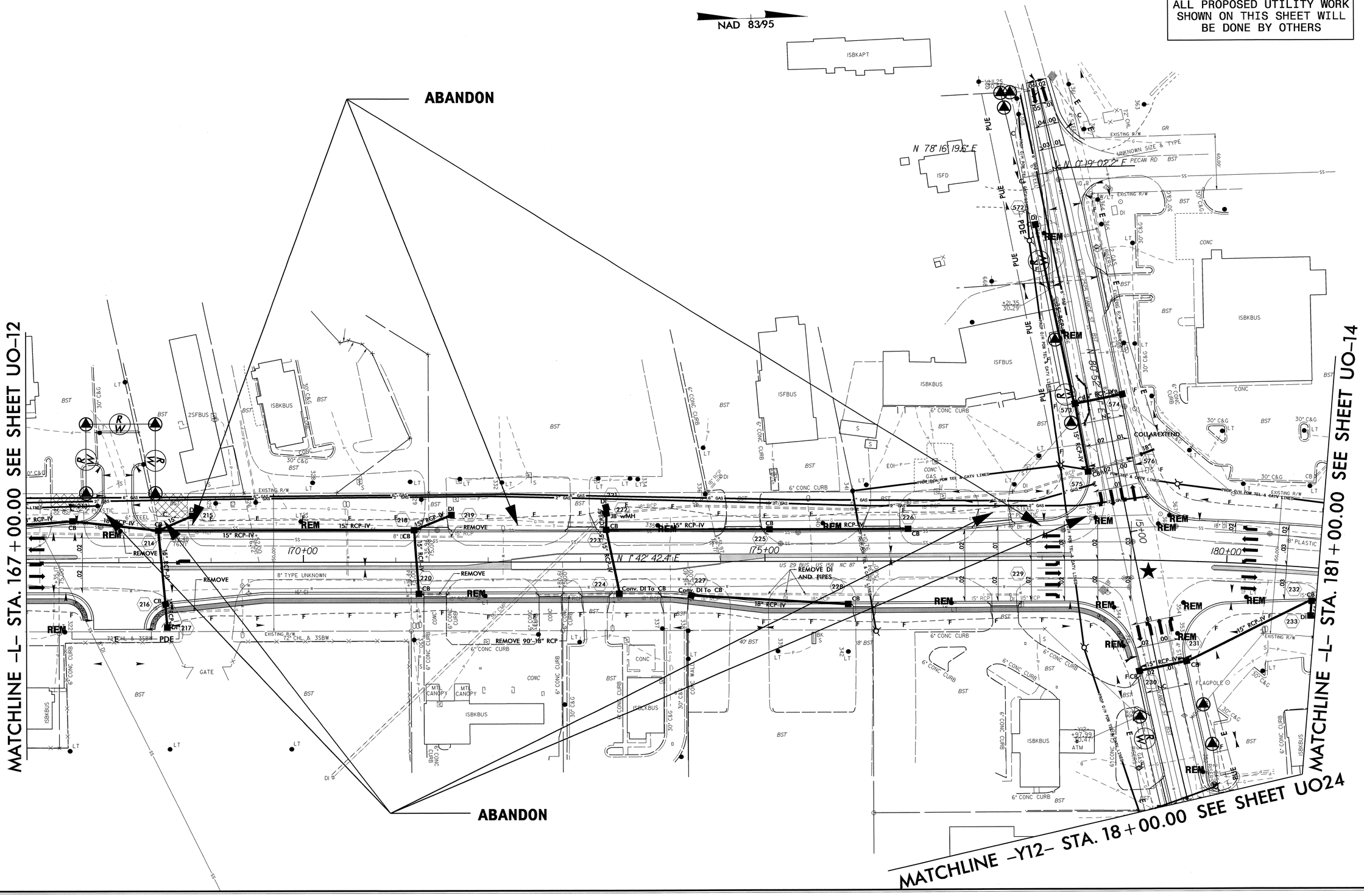

5/14/99

06-OCT-2011 13:49
R:\Utilities\Rdy_Ut\Proj\U3326_Ut_15_U013_psh.dgn
$$$$USERNAME$$$$

PROJECT REFERENCE NO.	SHEET NO.
U-3326	UO-14

UTILITIES BY OTHERS

NOTE:
ALL PROPOSED UTILITY WORK SHOWN ON THIS SHEET WILL BE DONE BY OTHERS

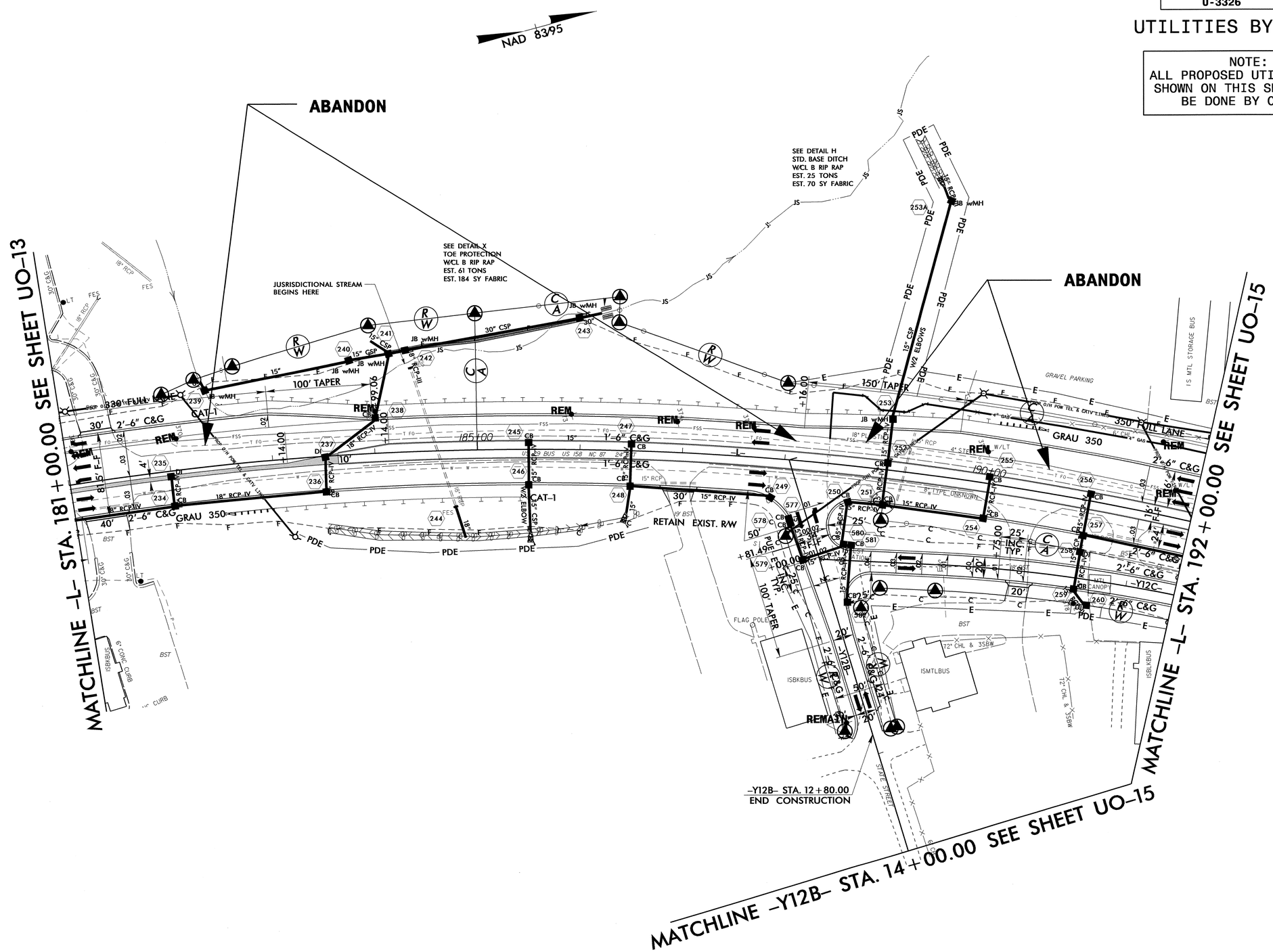

5/14/99

06-OCT-2011 13:51
R:\Utilities\Rdy_Utl_Proj\U3326_Ut_16_U014_psh.dgn
$$$$USERNAME$$$$

PROJECT REFERENCE NO.	SHEET NO.
U-3326	UO-15

UTILITIES BY OTHERS

NOTE:
ALL PROPOSED UTILITY WORK SHOWN ON THIS SHEET WILL BE DONE BY OTHERS

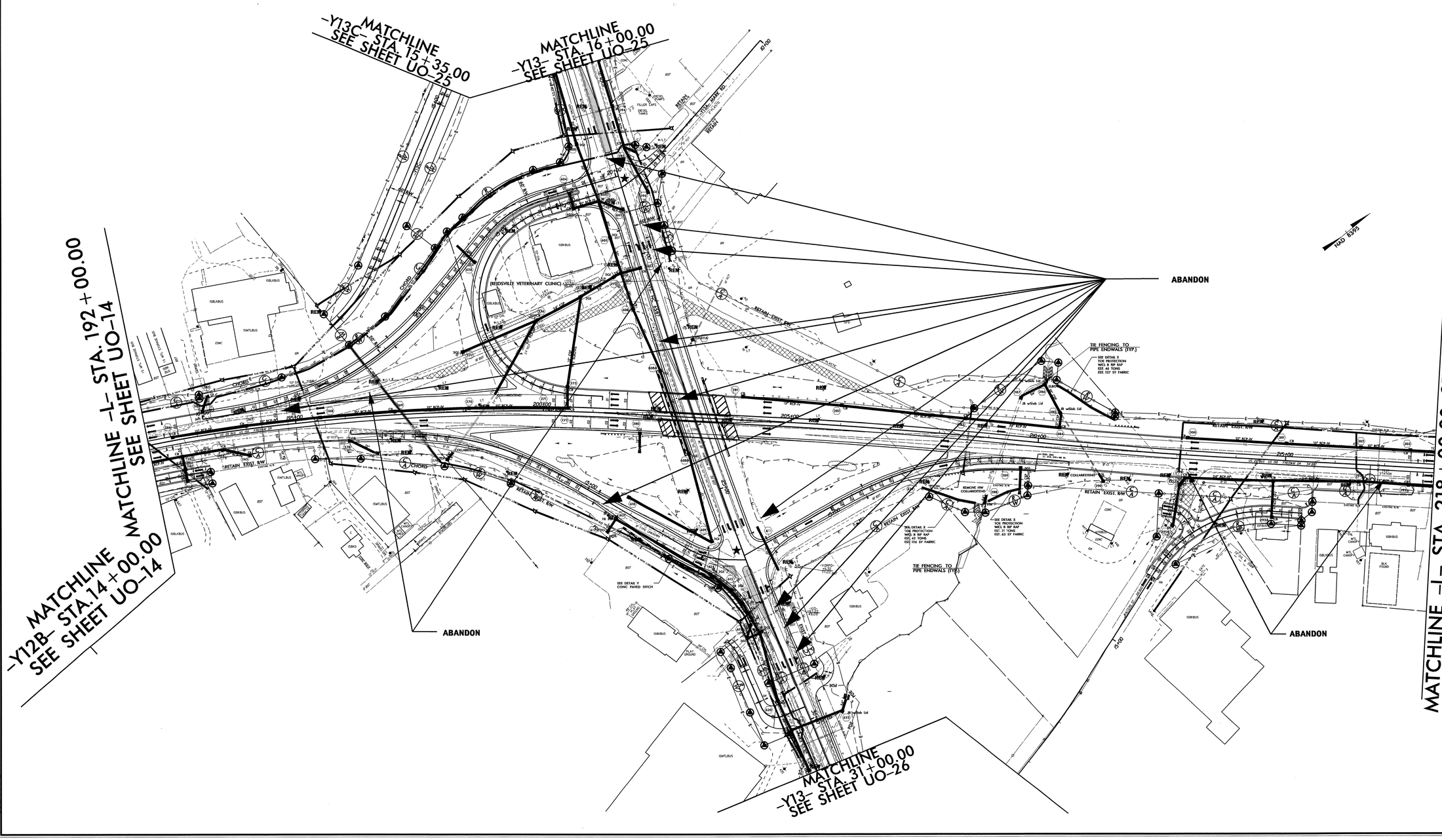

5/14/99

04-JAN-2012 13:54
R:\Utilities\Rdu_Ut_Proj\U3326_Ut_17_U015_psh.dgn
$$$$USERNAME$$$$

5/14/99

PROJECT REFERENCE NO.	SHEET NO.
U-3326	U0-16

UTILITIES BY OTHERS

NOTE:
ALL PROPOSED UTILITY WORK SHOWN ON THIS SHEET WILL BE DONE BY OTHERS

NAD 83/95

MATCHLINE –L– STA. 218+00.00 SEE SHEET U0-15

MATCHLINE –L– STA. 231+00.00 SEE SHEET U0-17

RETAIN EXIST. R/W

RETAIN EXIST. R/W

ABANDON

SEE DETAIL X
TOE PROTECTION
WCL B RIP RAP
EST. 16 TONS
EST. 48 SY FABRIC

RETAIN

RETAIN

RETAIN

RETAIN 15" CONC.

COLLAR/EXTEND

COLLAR/EXTEND

REMOVE

REMOVE

REMOVE DI

REMOVE

BDO

JB w/Slab Lid

JB w/Slab Lid

JB w/Slab Lid

ISBKBUS

ISBKBUS

ISBLKBUS

BST

BST

BST

BST

BST

US 29 BUS/US 158 FREEWAY DR 36' BST

47' BST

60' CONC

7' X 7' CONC

EXISTING R/W

VARIABLE R/W

PROP O/H POW TEL & CATV LINES

4" GAS

4" STEEL

24" RCP-IV

18" RCP-IV

15" RCP-IV

15" CSP

30" RCP

36" RCP

24" PDE

15" PDE

2GI

2GI TYPE A

CB

REM

RIP RAP

CONC

GATE

W2 WELDOWS

220+00

225+00

230+00

296

297

298

299

304

305

306

307

308

309

310

311

312

313

314

315

316

317

318

319

320

321

322

324

325

463

463A

464

464A

465

466

467

468

06-OCT-2011 08:
R:\Utilities\Projects\U3326_Ut_18_U016_psh.dgn
$$$$USERNAME$$$$

5/14/99

PROJECT REFERENCE NO.	SHEET NO.
U-3326	U0-17

UTILITIES BY OTHERS

NOTE:
ALL PROPOSED UTILITY WORK SHOWN ON THIS SHEET WILL BE DONE BY OTHERS

NAD 83/95

MATCHLINE -L- STA. 231+00.00 SEE SHEET U0-16

MATCHLINE -L- STA. 244+00.00 SEE SHEET 20

ABANDON

06-OCT-2011 11:20
R:\Utilities\Projects\U3326_Ut_19_U017_psh.dgn
$$$$USERNAME$$$$

PROJECT REFERENCE NO.	SHEET NO.
U-3326	U0-18

UTILITIES BY OTHERS

NOTE:
ALL PROPOSED UTILITY WORK SHOWN ON THIS SHEET WILL BE DONE BY OTHERS

NAD 83/95

MATCHLINE -L- STA. 257+00.00 SEE SHEET 20

MATCHLINE -L- STA. 270+00.00 SEE SHEET U0-19

US 29 BUS/US 158 FREEWAY DR 24' BST

11TH ST 25' BST

REMOVE DI PLUG

REMOVE 18" RCP

REMOVE HW

RETAIN

REM

PUE

BERM DITCH SEE DETAIL J

ISFD

ISBK CHURCH

ISBKD

CONC

END WASHED OUT

18" RCP

24" RCP-IV

30" RCP-IV

15" RCP-IV

36" RCP-IV

12" CI

8" DI

5' TYP. UNKNOWN

20' SAN. SEWER EASEMENT

12" CONC

8" CONC

30" CMP

EXISTING R/W

R:\Utilities\Plan Sheets\U3326_Ut_21_U0018_psh.dgn
06-OCT-2011 11:21
$$$$USERNAME$$$$

PROJECT REFERENCE NO.	SHEET NO.
U-3326	UO-19

UTILITIES BY OTHERS

NOTE:
ALL PROPOSED UTILITY WORK SHOWN ON THIS SHEET WILL BE DONE BY OTHERS

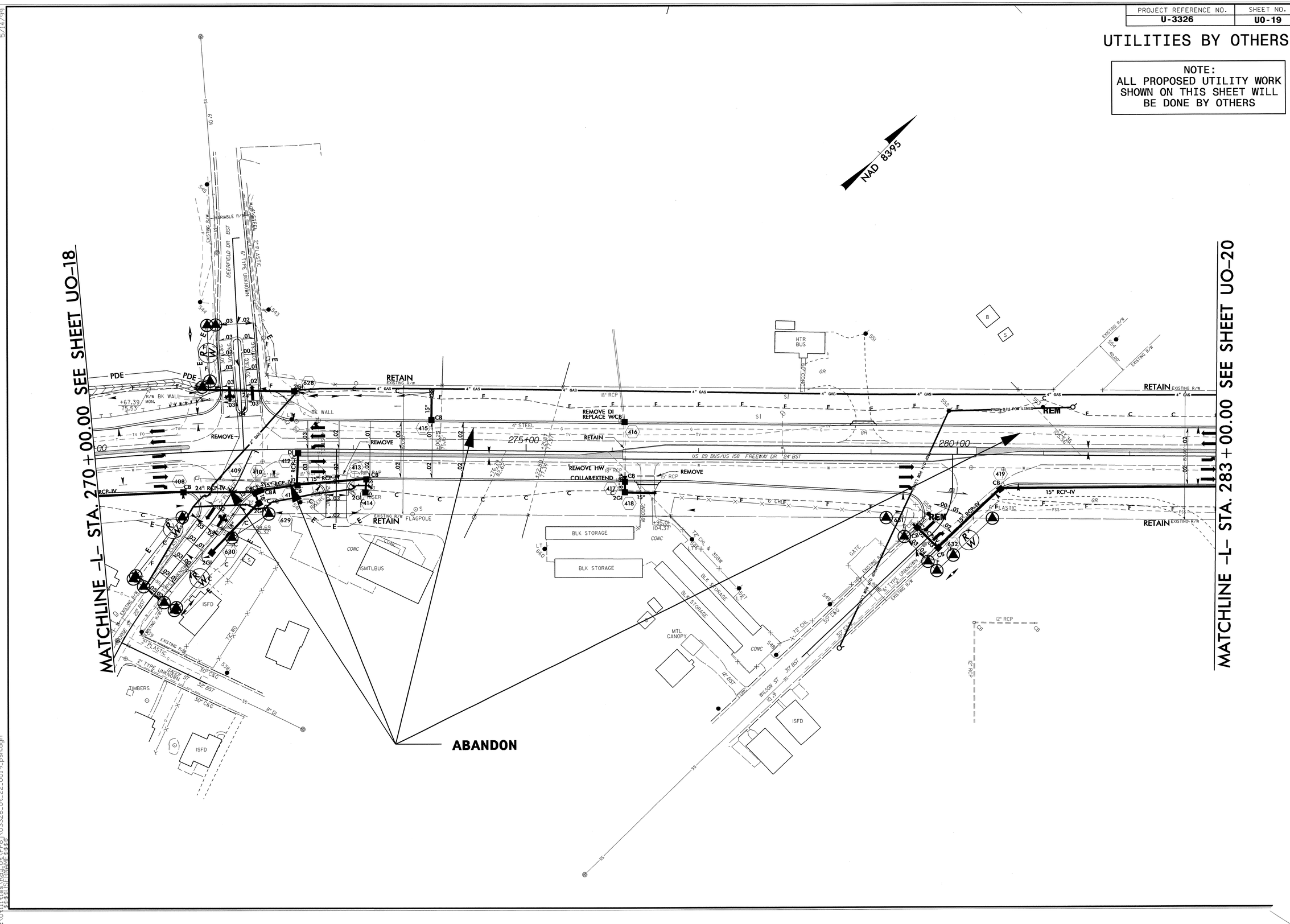

5/14/99

06-OCT-2011 11:22
R:\Utilities\Rdy_Ut_Proj\U3326_Ut_22_U019_psh.dgn
$$$$USERNAME$$$$

PROJECT REFERENCE NO.	SHEET NO.
U-3326	U0-20

UTILITIES BY OTHERS

NOTE:
ALL PROPOSED UTILITY WORK SHOWN ON THIS SHEET WILL BE DONE BY OTHERS

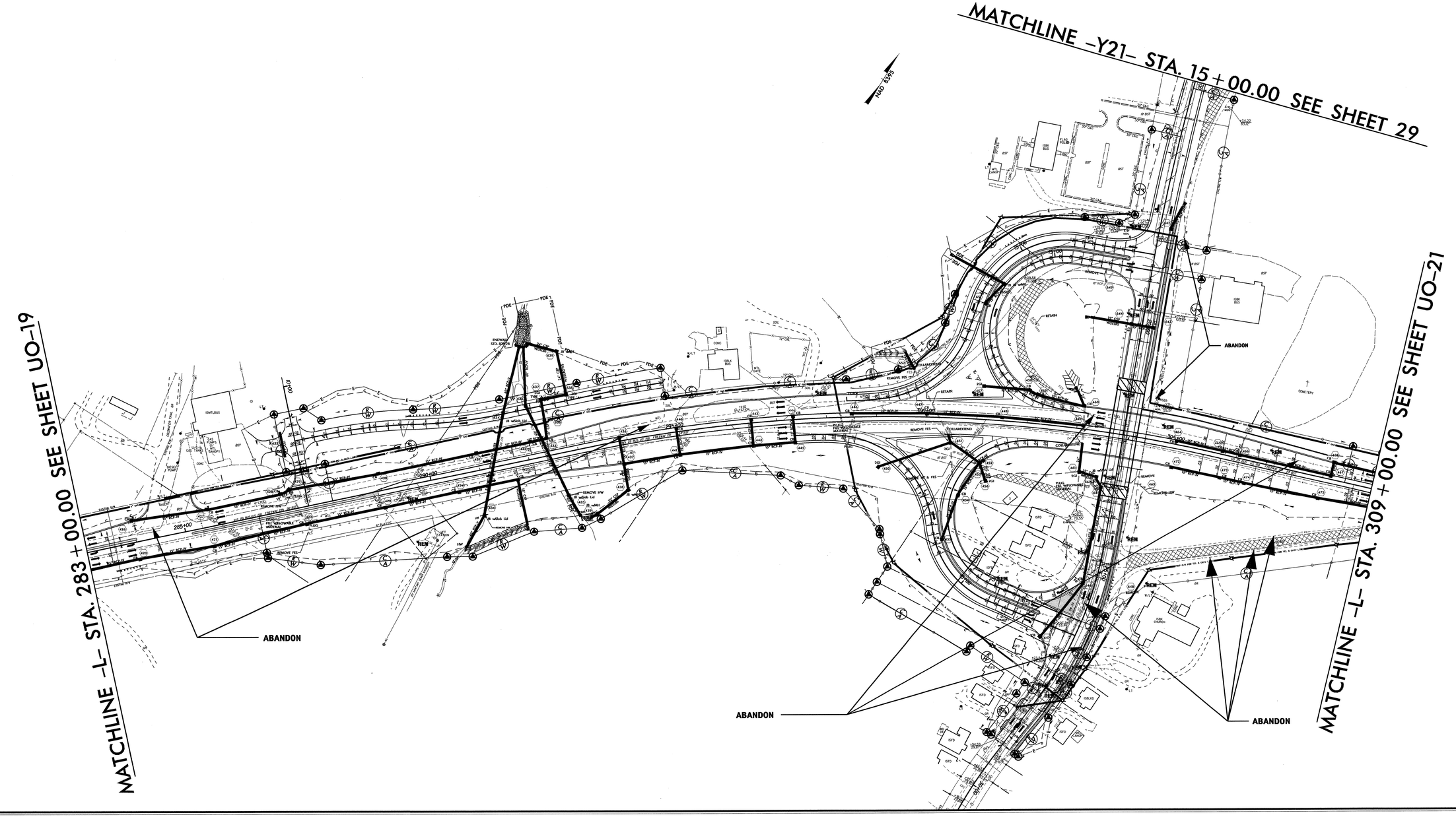

5/14/99

06-OCT-2011 11:24
R:\Utilities\Rdy_Ut_Proj\U3326_Ut_23_U020_psh.dgn
$$$$USERNAME$$$$

PROJECT REFERENCE NO.	SHEET NO.
U-3326	UO-21

UTILITIES BY OTHERS

NOTE:
ALL PROPOSED UTILITY WORK SHOWN ON THIS SHEET WILL BE DONE BY OTHERS

NAD 83/95

MATCHLINE –L– STA. 309+00.00 SEE SHEET UO-20

MATCHLINE –L– STA. 321+00.00 SEE SHEET UO-22

ABANDON

REMOVE

RETAIN SYSTEM

5/14/99
06-OCT-2011 11:33
U:\Utilities\Projects\U3326_Ut_24_UO21_psh.dgn
$$USER$$

5/14/99

PROJECT REFERENCE NO.	SHEET NO.
U-3326	U0-22

UTILITIES BY OTHERS

NOTE:
ALL PROPOSED UTILITY WORK SHOWN ON THIS SHEET WILL BE DONE BY OTHERS

NAD 83/95

MATCHLINE –L– STA. 321+00.00 SEE SHEET U0-21

ABANDON

06-OCT-2011 14:34
R:\Utilities\Projects\U3326_Ut_25_U022_psh.dgn
$$$$USERNAME$$$$

PROJECT REFERENCE NO.	SHEET NO.
U-3326	UO-23

UTILITIES BY OTHERS

NOTE:
ALL PROPOSED UTILITY WORK SHOWN ON THIS SHEET WILL BE DONE BY OTHERS

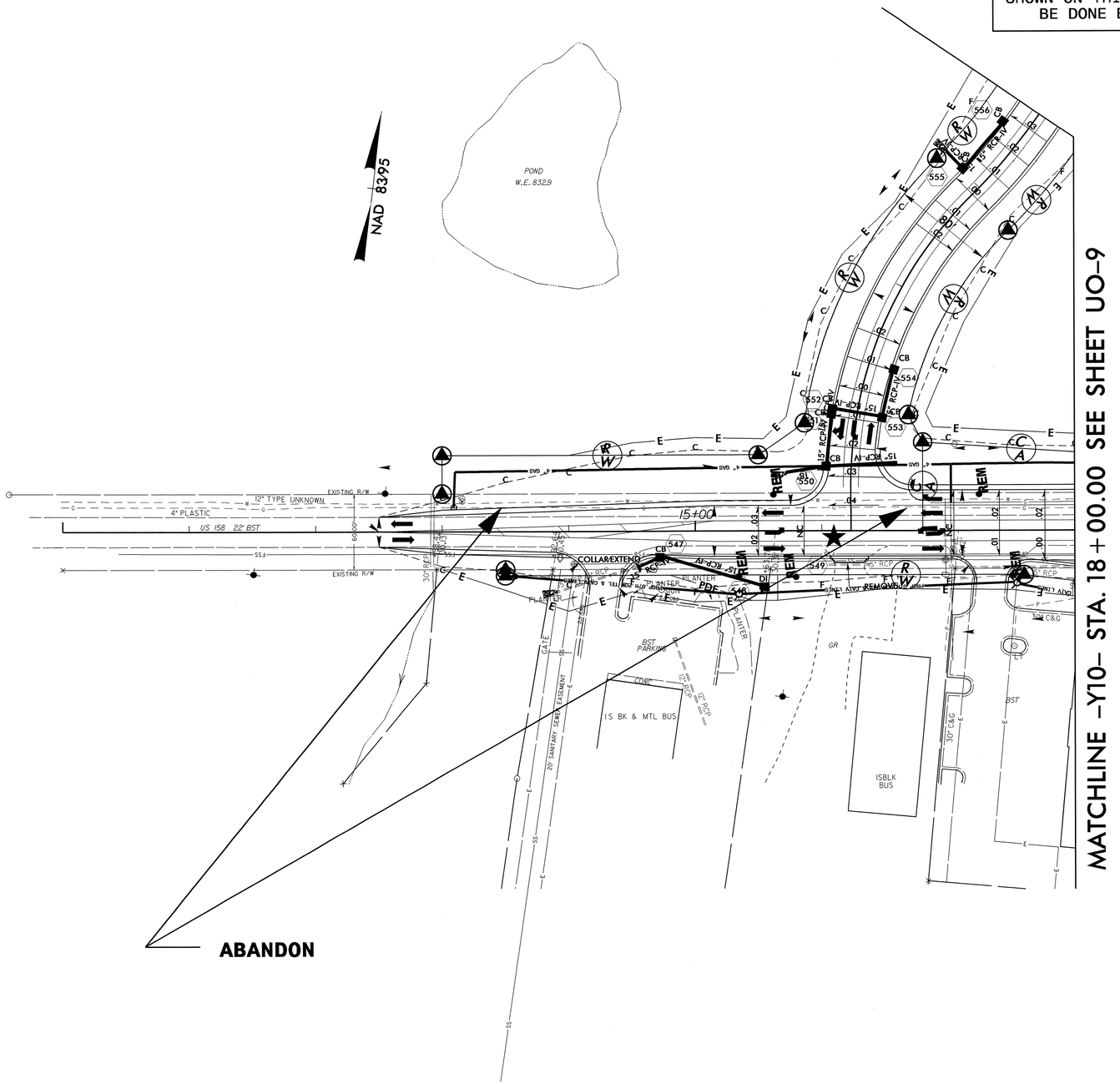

MATCHLINE -Y10- STA. 18+00.00 SEE SHEET UO-9

5/14/99

06-OCT-2011 11:36
R:\Utilities\Rdy_Ut_Proj\U3326_Ut_26_U023_psh.dgn
$$$$USERNAME$$$$

PROJECT REFERENCE NO.	SHEET NO.
U-3326	U0-24

UTILITIES BY OTHERS

NOTE:
ALL PROPOSED UTILITY WORK SHOWN ON THIS SHEET WILL BE DONE BY OTHERS

MATCHLINE -Y12- STA. 18+00.00 SEE SHEET U013

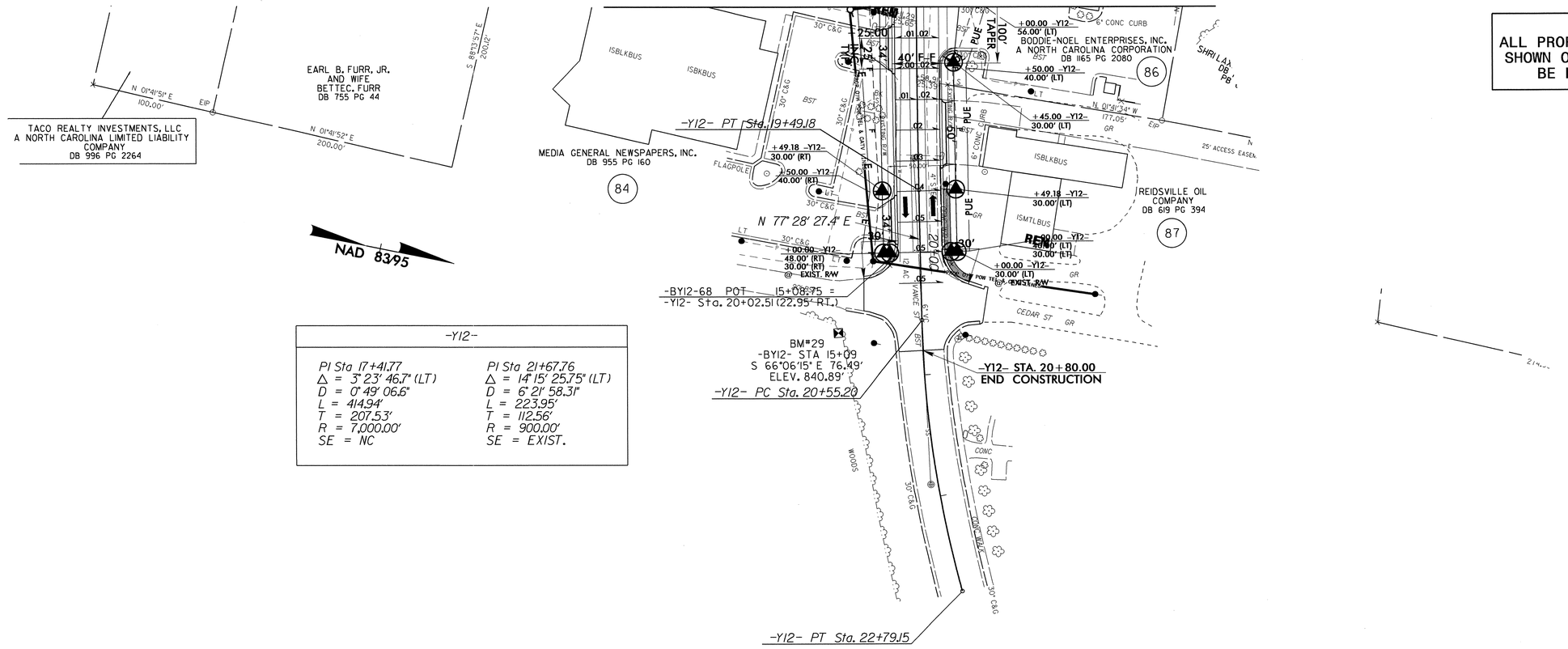

-Y12-	
PI Sta 17+41.77	PI Sta 21+67.76
Δ = 3° 23' 46.7" (LT)	Δ = 14° 15' 25.75" (LT)
D = 0° 49' 06.6"	D = 6° 21' 58.31"
L = 414.94'	L = 223.95'
T = 207.53'	T = 112.56'
R = 7,000.00'	R = 900.00'
SE = NC	SE = EXIST.

5/14/99

06-OCT-2011 11:12

5/14/99

PROJECT REFERENCE NO.	SHEET NO.
U-3326	U0-25

UTILITIES BY OTHERS

NOTE:
ALL PROPOSED UTILITY WORK SHOWN ON THIS SHEET WILL BE DONE BY OTHERS

NAD 83/96

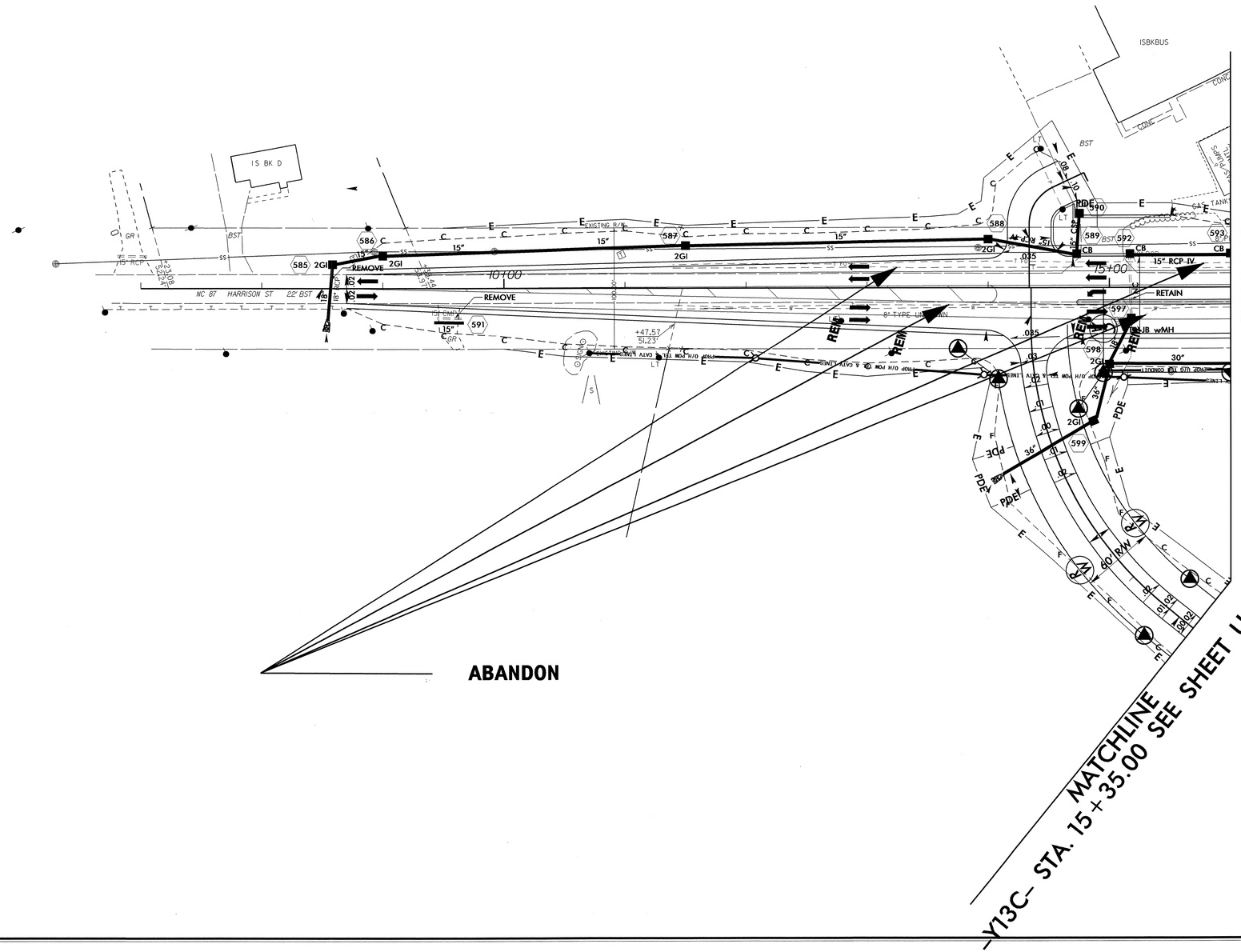

04-JAN-2012 13:55
R:\Utilities\Proj\U3326_Ut_27_U025_psh.dgn
$$$$USER_NAME$$$$

PROJECT REFERENCE NO.	SHEET NO.
U-3326	UO-26

UTILITIES BY OTHERS

NOTE:
ALL PROPOSED UTILITY WORK SHOWN ON THIS SHEET WILL BE DONE BY OTHERS

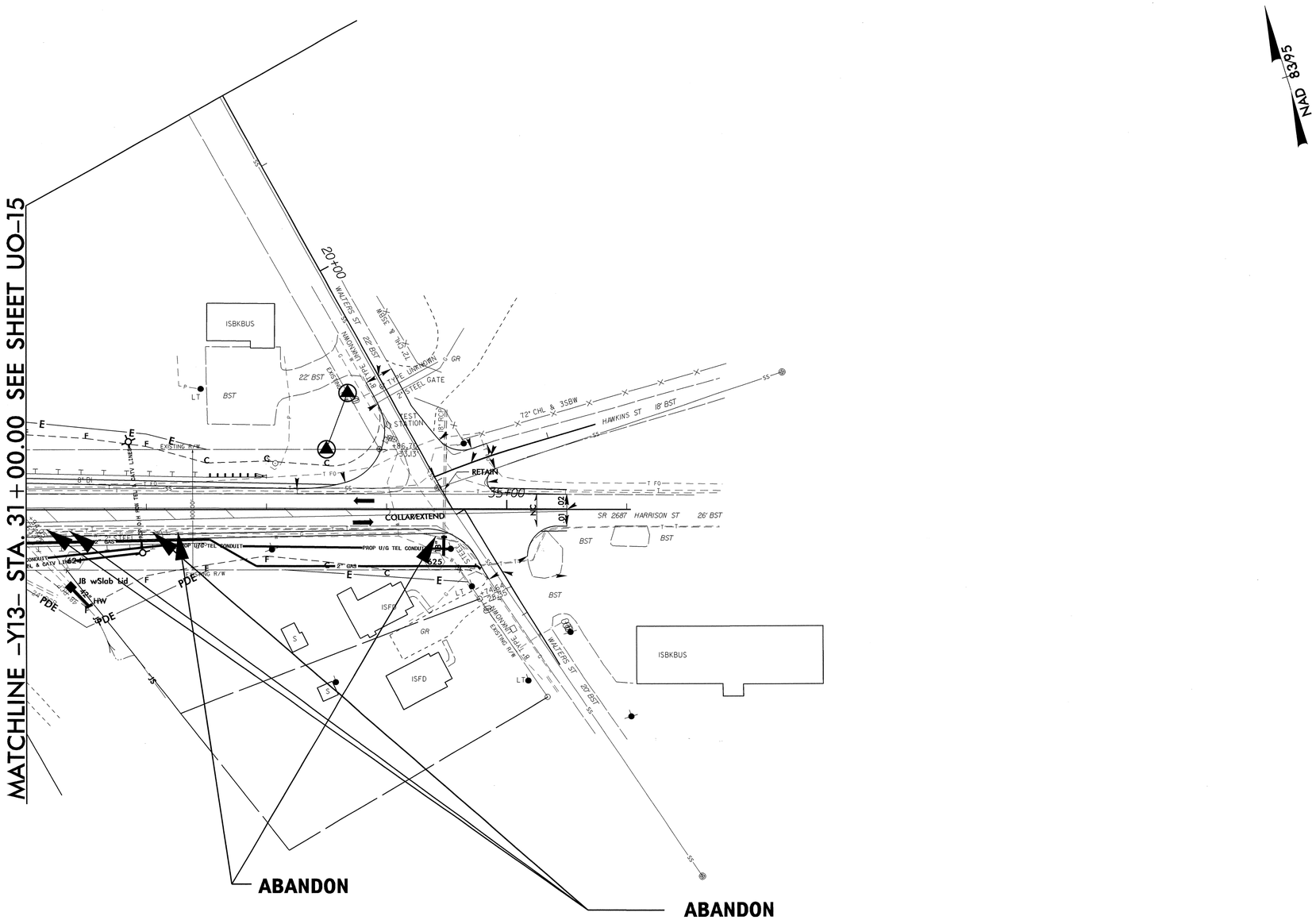

5/14/99

04-JAN-2012 13:57
R:\Utilities\Rdy_Ut\Proj\U3326_Ut_28_U026_psh.dgn
$$$$USERNAME$$$$