STATE OF NORTH CAROLINA
DIVISION OF HIGHWAYS

TRANSPORTATION MANAGEMENT PLAN

ROCKINGHAM COUNTY

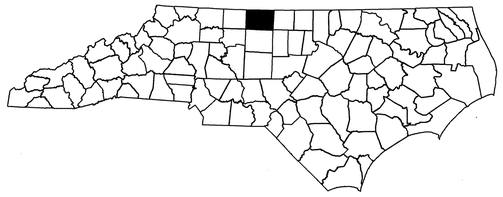

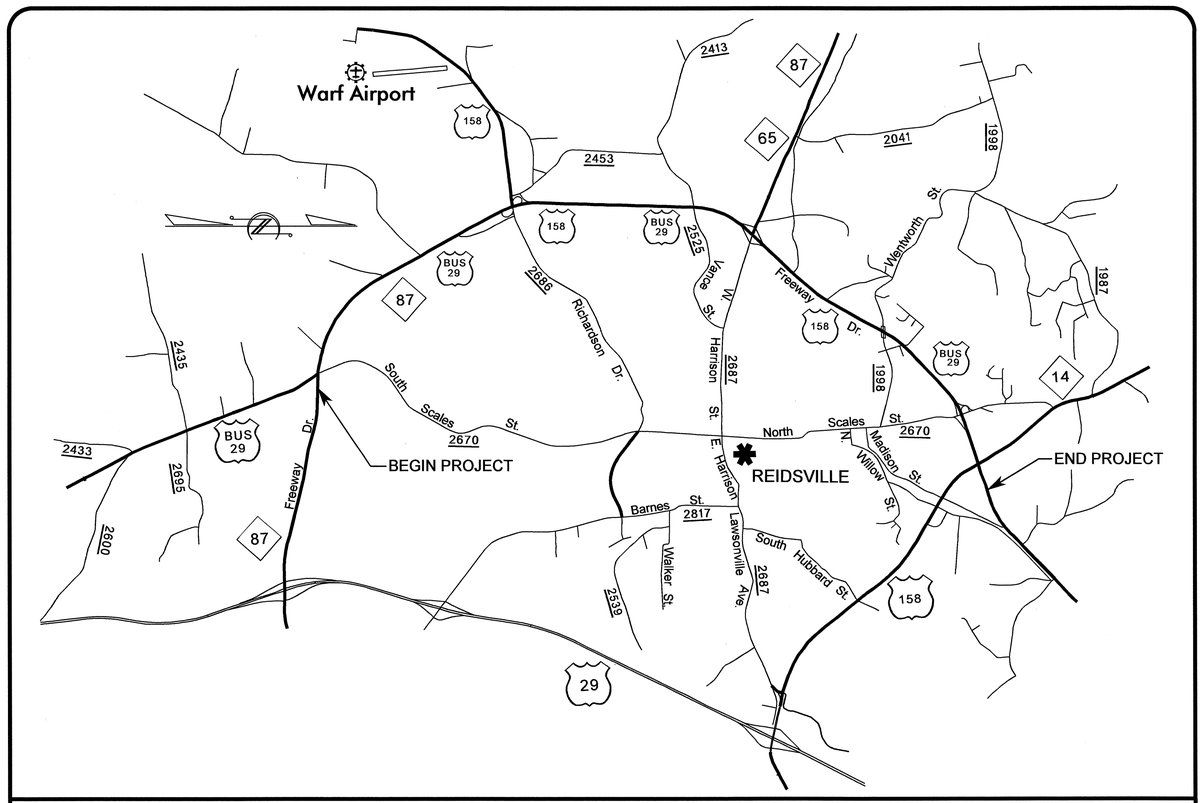

VICINITY MAP

WORK ZONE SAFETY & MOBILITY
"from the MOUNTAINS to the COAST"

N.C.D.O.T. WORK ZONE TRAFFIC CONTROL
1580 MAIL SERVICE CENTER (MSC) RALEIGH, NC 27699-1580
1020 BIRCH RIDGE DRIVE, RALEIGH, NC 27610 (DELIVERY)
PHONE: (919) 250-4094 FAX: (919) 250-4098

J. S. BOURNE, P.E. — *STATE TRAFFIC MANAGEMENT ENGINEER*
G. L. GETTIER, P.E. — *TRAFFIC CONTROL PROJECT ENGINEER*
J. W. GILSTRAP — *TRAFFIC CONTROL PROJECT DESIGN ENGINEER*
S. B. COATS — *TRAFFIC CONTROL DESIGN ENGINEER*

DIVISION OF HIGHWAYS * STATE OF NORTH CAROLINA * DEPARTMENT OF TRANSPORTATION * WORK ZONE TRAFFIC CONTROL *

INDEX OF SHEETS

SHEET NO.	TITLE
TMP-1	TITLE SHEET, AND INDEX OF SHEETS
TMP-1A	LIST OF APPLICABLE ROADWAY STANDARD DRAWINGS, LEGEND, AND TEMPORARY PAVEMENT MARKING
TMP-1B	GENERAL NOTES
TMP-2A	PORTABLE CONCRETE BARRIER AT TEMPORARY SHORING LOCATIONS
TMP-2B	DETAIL DRAWING FOR TWO-WAY UNDIVIDED AND URBAN FREEWAYS ADVANCED WORK ZONE WARNING SIGNS
TMP-2C	SIGN DESIGN - FREEWAY DRIVE, LAWNDALE DRIVE, RICHARDSON DRIVE
TMP-2D	SIGN DESIGN - W. HARRISON STREET, WENTWORTH STREET, NORTH SCALES STREET
TMP-3 THRU TMP-3G	TEMPORARY TRAFFIC CONTROL PHASING
TMP-4	SITE OVERVIEW
	-L- LINE
TMP-5 THRU TMP-8	PHASE I DETAILS
TMP-8A	PHASE I- OFF-SITE DETOUR -LAWNDALE DR.
TMP-9 THRU TMP-22	PHASE I DETAILS
TMP-23 THRU TMP-42	PHASE II DETAILS
	-Y10- SITE
TMP-43 THRU TMP-45	PHASE I DETAILS
TMP-46	PHASE II DETAILS
TMP-47 THRU TMP-48	PHASE III DETAILS
TMP-49	PHASE III- OFF-SITE DETOUR -FREEWAY DR.
TMP-50 THRU TMP-52	PHASE III DETAILS
TMP-53 THRU TMP-55	PHASE IV DETAILS
TMP-56 THRU TMP-57	PHASE V DETAILS
TMP-58 THRU TMP-59	PHASE VI DETAILS
TMP-60	PHASE VII DETAILS
TMP-61	PHASE VII- OFF-SITE DETOURS -FREEWAY DR. AND RICHARDSON DR.
TMP-62	SHORING CROSS SECTIONS AND SHORING NOTES
	-Y13- SITE
TMP-63 THRU TMP-64	PHASE I DETAILS
TMP-65 THRU TMP-69	PHASE II DETAILS
TMP-70	PHASE II- OFF-SITE DETOUR -W. HARRISON ST.
TMP-71 THRU TMP-72	PHASE III DETAILS
TMP-73	PHASE III- OFF-SITE DETOUR -W. HARRISON ST.
TMP-74 THRU TMP-76	PHASE III DETAILS
TMP-77	PHASE III- OFF-SITE DETOURS -FREEWAY DR. AND W. HARRISON ST.
TMP-78	SHORING CROSS SECTIONS AND SHORING NOTES
TMP-79 THRU TMP-80	SHORING CROSS SECTIONS
TMP-81	SHORING NOTES
TMP-82 THRU TMP-83	SHORING CROSS SECTIONS AND SHORING NOTES
	-Y17- SITE
TMP-84	PHASE I- OFF-SITE DETOUR - WENTWORTH ST.
TMP-85 THRU TMP-86	PHASE I DETAILS
TMP-87 THRU TMP-88	PHASE II DETAILS
TMP-89 THRU TMP-90	PHASE III DETAILS
TMP-91 THRU TMP-92	SHORING CROSS SECTIONS
TMP-93	SHORING NOTES
	-Y21- SITE
TMP-94 THRU TMP-97	PHASE I DETAILS
TMP-98 THRU TMP-99	PHASE II DETAILS
TMP-100	PHASE II- OFF-SITE DETOUR -FREEWAY DR.
TMP-101 THRU TMP-102	PHASE II DETAILS
TMP-103 THRU TMP-106	PHASE III DETAILS
TMP-107 THRU TMP-109	PHASE IV DETAILS
TMP-110	PHASE IV- OFF-SITE DETOUR -N. SCALES ST.
TMP-111 THRU TMP-112	PHASE V DETAILS
TMP-113 THRU TMP-114	PHASE VI DETAILS
TMP-115	PHASE VI- OFF-SITE DETOUR -N. SCALES ST.
TMP-116	SHORING CROSS SECTIONS AND SHORING NOTES

APPROVED: _____

DATE: _____

SEAL

SHEET NO.
TMP-1

U-3326A/B

TIP PROJECT:

12-OCT-2011 12:41
\\dot\dfsroot\Unpro\TIPProjects-U\U3326\Traffic\TrafficControl\tcp\GENERAL\U3326_TC_TMP01.dgn
sngreen AT TE24733

PROJ. REFERENCE NO.	SHEET NO.
U-3326A/B	TMP-1A

ROADWAY STANDARD DRAWINGS

THE FOLLOWING ROADWAY STANDARDS AS SHOWN IN "ROADWAY STANDARD DRAWINGS" - PROJECT SERVICES UNIT - N.C. DEPARTMENT OF TRANSPORTATION - RALEIGH, N.C., DATED JULY 2006 ARE APPLICABLE TO THIS PROJECT AND BY REFERENCE HEREBY ARE CONSIDERED A PART OF THESE PLANS:

STD. NO.	TITLE
1101.02	TEMPORARY LANE CLOSURES
1101.03	TEMPORARY ROAD CLOSURES
1101.04	TEMPORARY SHOULDER CLOSURES
1101.05	WORK ZONE VEHICLE ACCESSES
1101.06	WARNING SIGNS FOR BLASTING ZONES
1101.11	TRAFFIC CONTROL DESIGN TABLES
1110.01	STATIONARY WORK ZONE SIGNS
1110.02	PORTABLE WORK ZONE SIGNS
1115.01	FLASHING ARROW PANELS
1130.01	DRUMS
1135.01	CONES
1145.01	BARRICADES
1150.01	FLAGGING DEVICES
1160.01	TEMPORARY CRASH CUSHION
1165.01	TRUCK MOUNTED IMPACT ATTENUATOR
1170.01	PORTABLE CONCRETE BARRIER
1180.01	SKINNY-DRUM
1205.01	PAVEMENT MARKINGS - LINE TYPES & OFFSETS
1205.02	PAVEMENT MARKINGS - 2 LANE & MULTILANE ROADWAYS
1205.03	PAVEMENT MARKINGS - INTERCHANGES
1205.04	PAVEMENT MARKINGS - INTERSECTIONS
1205.05	PAVEMENT MARKINGS - TURN LANES
1205.06	PAVEMENT MARKINGS - THRU LANE DROPS
1205.08	PAVEMENT MARKINGS - SYMBOLS & WORD MESSAGES
1205.09	PAVEMENT MARKINGS - PAINTED ISLANDS
1205.10	PAVEMENT MARKINGS - SCHOOL AREAS
1205.12	PAVEMENT MARKINGS - BRIDGES
1250.01	PAVEMENT MARKER SPACING
1251.01	RAISED PAVEMENT MARKERS - (TEMPORARY & PERMANENT)
1261.01	GUARDRAIL & BARRIER DELINEATOR SPACING
1261.02	GUARDRAIL & BARRIER DELINEATOR TYPES
1262.01	GUARDRAIL END DELINEATION

LEGEND

GENERAL

- DIRECTION OF TRAFFIC FLOW
- DIRECTION OF PEDESTRIAN TRAFFIC FLOW
- EXIST. PVMT.
- NORTH ARROW
- PROPOSED PVMT.
- WORK AREA
- REMOVAL
- USER DEFINED (IF NEEDED)
- USER DEFINED (IF NEEDED)

TRAFFIC CONTROL DEVICES

- BARRICADE (TYPE III)
- CONE
- DRUM SKINNY DRUM TUBULAR MARKER
- TEMPORARY CRASH CUSHION
- FLASHING ARROW PANEL (TYPE C)
- FLAGGER
- LAW ENFORCEMENT
- TRUCK MOUNTED IMPACT ATTENUATOR (TMIA)
- CHANGEABLE MESSAGE SIGN

TEMPORARY SIGNING

- PORTABLE SIGN
- STATIONARY SIGN
- STATIONARY OR PORTABLE SIGN

SIGNALS

EXISTING PROPOSED TEMP TEMPORARY

PAVEMENT MARKINGS

- EXISTING LINES
- TEMPORARY LINES

PAVEMENT MARKERS

- CRYSTAL/CRYSTAL
- CRYSTAL/RED
- YELLOW/YELLOW

PAVEMENT MARKING SYMBOLS

PAVEMENT MARKING SYMBOLS

TEMPORARY PAVEMENT MARKING

CA - WHITE EDGELINE (COLD APPLIED PLASTIC-TYPE 4) - 4"
CC - 10 FT. WHITE SKIP (COLD APPLIED PLASTIC-TYPE 4) - 4"
CD - 2 FT. WHITE MINISKIP (COLD APPLIED PLASTIC-TYPE 4) - 4"
CE - WHITE SOLID LANE LINE (COLD APPLIED PLASTIC-TYPE 4) - 4"
CI - YELLOW DOUBLE CENTER (COLD APPLIED PLASTIC-TYPE 4) - 4"
CV - YELLOW DIAGONAL (COLD APPLIED PLASTIC-TYPE 4) - 4"
DA - LEFT TURN ARROW (COLD APPLIED PLASTIC-TYPE 4)
DB - RIGHT TURN ARROW (COLD APPLIED PLASTIC-TYPE 4)
DC - STRAIGHT ARROW (COLD APPLIED PLASTIC-TYPE 4)
PA - WHITE EDGELINE (PAINT) - 4"
PB - YELLOW EDGELINE (PAINT) - 4"
PC - 10 FT. WHITE SKIP (PAINT) - 4"
PD - 2 FT. WHITE MINISKIP (PAINT) - 4"
PF - 10 FT. YELLOW SKIP (PAINT) - 4"
PH - YELLOW SINGLE CENTER (PAINT) - 4"
PI - YELLOW DOUBLE CENTER (PAINT) - 4"
PR - WHITE GORELINE (PAINT) - 8"
PV - YELLOW DIAGONAL (PAINT) - 8"
P4 - WHITE STOP BAR (PAINT) - 24"
QA - LEFT TURN ARROW (PAINT)
QB - RIGHT TURN ARROW (PAINT)
QC - STRAIGHT ARROW (PAINT)
QD - COMBO. STRAIGHT/LEFT ARROW (PAINT)
QE - COMBO. STRAIGHT/RIGHT ARROW (PAINT)
QF - COMBO. LEFT/RIGHT ARROW (PAINT)
QG - COMBO. LEFT/RIGHT/STRAIGHT ARROW (PAINT)
QI - ALPHANUMERIC CHARACTER (PAINT)
QN - 24" YIELD LINE TRIANGLE (PAINT)
QT - U-TURN ARROW (PAINT)

APPROVED: _____ DATE: _____

SEAL

NORTH CAROLINA PROFESSIONAL ENGINEER SEAL 8973 G. GETTIER 13 OCT 11

DIVISION OF HIGHWAYS • STATE OF NORTH CAROLINA • DEPARTMENT OF TRANSPORTATION • WORK ZONE TRAFFIC CONTROL

ROADWAY STANDARD DRAWINGS & LEGEND

12-OCT-2011 12:40
\\dot\dfsroot0\proj\TIPProjects-U\U3326\Traffic\TrafficControl\tcp\GENERAL\U3326_TC_TMP01A.dgn
sngreen AT TE24733

PROJ. REFERENCE NO.	SHEET NO.
U-3326A/B	TMP-1B

GENERAL NOTES

DRAWINGS, STANDARD DETAILS AND ROADWAY DETAILS ARE NOT ATTAINABLE TO MEET FIELD CONDITIONS, OR RESULT IN DUPLICATE, OR UNDESIRED OVERLAPPING OF DEVICES. MODIFICATION MAY INCLUDE: MOVING, SUPPLEMENTING, COVERING OR REMOVAL OF DEVICES, AS DIRECTED BY THE ENGINEER.

THE FOLLOWING GENERAL NOTES APPLY AT ALL TIMES FOR THE DURATION OF THE CONSTRUCTION PROJECT EXCEPT WHEN OTHERWISE NOTED IN THE PLAN OR AS DIRECTED BY THE ENGINEER.

TIME RESTRICTIONS

A) DO NOT CLOSE OR NARROW TRAVEL LANES AS FOLLOWS:

ROAD NAME	DAY AND TIME RESTRICTIONS
1. FREEWAY DR./ US 29 BUS (-L-)	MONDAY TO FRIDAY, 6:00 AM TO 9:00 PM SATURDAY & SUNDAY, 8:00 AM TO 9:00 PM
2. SOUTH SCALES ST./ US 29 BUS/SR 2670(-Y1-)	MONDAY TO THURSDAY, 7:00 AM TO 9:00 AM AND 2:00 PM TO 7:00 PM FRIDAY, 7:00 AM TO 7:00 PM
3. RICHARDSON DR./ US 158 (-Y10-)	MONDAY TO THURSDAY, 7:00 AM TO 9:00 AM AND 2:00 PM TO 7:00 PM FRIDAY, 7:00 AM TO 7:00 PM
4. VANCE ST./ SR 2413/ SR 2525 (-Y12-)	MONDAY TO FRIDAY, 7:00 AM TO 9:00 AM AND 3:00 PM TO 6:00 PM
5. HARRISON ST./ NC 65/NC 87 (-Y13-)	MONDAY TO FRIDAY, 7:00 AM TO 6:00 PM
6. NORTH SCALES ST./ SR 2670(-Y21-)	MONDAY TO FRIDAY, 7:00 AM to 7:00 PM

B) DO NOT CLOSE OR NARROW TRAVEL LANES DURING HOLIDAYS AND SPECIAL EVENTS AS FOLLOWS:

ROAD NAME

1. FREEWAY DR./US 29 BUS (-L-)
2. SOUTH SCALES ST./US 29 BUS/SR 2670(-Y1-)
3. RICHARDSON DR./US 158 (-Y10-)
4. VANCE ST./SR 2413/SR 2525 (-Y12-)
5. HARRISON ST./NC 65/NC 87 (-Y13-)
6. NORTH SCALES ST./SR 2670(-Y21-)

HOLIDAY

1. FOR ANY UNEXPECTED OCCURRENCE THAT CREATE UNUSUALLY HIGH TRAFFIC VOLUMES, AS DIRECTED BY THE ENGINEER.
2. FOR NEW YEAR'S, BETWEEN THE HOURS OF 6:00 AM DECEMBER 31st TO 9:00 PM JANUARY 2ND. IF NEW YEAR'S DAY IS ON A FRIDAY, SATURDAY, SUNDAY, OR MONDAY THEN UNTIL 9:00 PM THE FOLLOWING TUESDAY.
3. FOR EASTER, BETWEEN THE HOURS OF 6:00 AM THURSDAY AND 9:00 PM MONDAY.
4. FOR MEMORIAL DAY, BETWEEN THE HOURS OF 6:00 AM FRIDAY TO 9:00 PM TUESDAY.
5. FOR INDEPENDENCE DAY, BETWEEN THE HOURS OF 6:00 AM THE DAY BEFORE INDEPENDENCE DAY AND 9:00 PM THE DAY AFTER INDEPENDENCE DAY.

   IF INDEPENDENCE DAY IS ON A FRIDAY, SATURDAY, SUNDAY, OR MONDAY THEN BETWEEN THE HOURS OF 6:00 AM THE THURSDAY BEFORE INDEPENDENCE DAY AND 9:00 PM THE TUESDAY AFTER INDEPENDENCE DAY.
6. FOR LABOR DAY, BETWEEN THE HOURS OF 6:00 AM FRIDAY AND 9:00 PM TUESDAY.
7. FOR THANKSGIVING DAY, BETWEEN THE HOURS OF 6:00 AM TUESDAY TO 9:00 PM MONDAY.
8. FOR CHRISTMAS, BETWEEN THE HOURS OF 6:00 AM THE FRIDAY BEFORE THE WEEK OF CHRISTMAS DAY AND 9:00 PM THE FOLLOWING TUESDAY AFTER THE WEEK OF CHRISTMAS.

C) DO NOT STOP TRAFFIC AS FOLLOWS:

ROAD NAME	DAY AND TIME RESTRICTIONS	DURATION AND OPERATION
1. FREEWAY DR./ US 29 BUS (-L-)	MONDAY TO FRIDAY, 6:00 AM TO 9:00 PM SATURDAY & SUNDAY, 8:00 AM TO 9:00 PM	15 MINUTES/TRAFFIC OPERATIONS AS DIRECTED BY THE ENGINEER
2. SOUTH SCALES ST./ US 29 BUS/ SR 2670(-Y1-)	MONDAY TO THURSDAY, 7:00 AM TO 9:00 AM & 2:00 PM TO 7:00 PM FRIDAY, 7:00 AM TO 7:00 PM	15 MINUTES/TRAFFIC OPERATIONS AS DIRECTED BY THE ENGINEER
3. RICHARDSON DR./ US 158 (-Y10-)	MONDAY TO THURSDAY, 7:00 AM TO 9:00 AM & 2:00 PM TO 7:00 PM FRIDAY, 7:00 AM TO 7:00 PM	15 MINUTES/TRAFFIC OPERATIONS AS DIRECTED BY THE ENGINEER
4. VANCE ST./ SR 2413/ SR 2525 (-Y12-)	MONDAY TO FRIDAY, 7:00 AM TO 9:00 AM & 3:00 PM TO 6:00 PM	15 MINUTES/TRAFFIC OPERATIONS AS DIRECTED BY THE ENGINEER
5. HARRISON ST./ NC 65/ NC 87 (-Y13-)	MONDAY TO FRIDAY, 7:00 AM TO 6:00 PM	15 MINUTES/TRAFFIC OPERATIONS AS DIRECTED BY THE ENGINEER
6. NORTH SCALES ST./ SR 2670(-Y21-)	MONDAY TO FRIDAY, 7:00 AM to 7:00 PM	15 MINUTES/TRAFFIC OPERATIONS AS DIRECTED BY THE ENGINEER
7. ALL OTHER ROADWAYS	NONE	15 MINUTES/TRAFFIC OPERATIONS AS DIRECTED BY THE ENGINEER

D) DO NOT CONDUCT ANY HAULING OPERATIONS AGAINST THE FLOW OF TRAFFIC OF AN OPEN TRAVELWAY UNLESS THE HAULING OPERATION IS PROTECTED BY BARRIER OR GUARDRAIL OR AS DIRECTED BY THE ENGINEER.

LANE AND SHOULDER CLOSURE REQUIREMENTS

E) REMOVE LANE CLOSURE DEVICES FROM THE LANE WHEN WORK IS NOT BEING PERFORMED BEHIND THE LANE CLOSURE OR WHEN A LANE CLOSURE IS NO LONGER NEEDED, OR AS DIRECTED BY THE ENGINEER.

F) WHEN PERSONNEL AND/OR EQUIPMENT ARE WORKING WITHIN 15 FT OF AN OPEN TRAVEL LANE, CLOSE THE NEAREST OPEN SHOULDER USING ROADWAY STANDARD DRAWING NO. 1101.04 UNLESS THE WORK AREA IS PROTECTED BY BARRIER OR GUARDRAIL OR A LANE CLOSURE IS INSTALLED.

G) WHEN PERSONNEL AND/OR EQUIPMENT ARE WORKING ON THE SHOULDER ADJACENT TO AN UNDIVIDED FACILITY AND WITHIN 5 FT OF AN OPEN TRAVEL LANE, CLOSE THE NEAREST OPEN TRAVEL LANE USING ROADWAY STANDARD DRAWING NO. 1101.02 UNLESS THE WORK AREA IS PROTECTED BY BARRIER OR GUARDRAIL.

WHEN PERSONNEL AND/OR EQUIPMENT ARE WORKING ON THE SHOULDER ADJACENT TO A DIVIDED FACILITY AND WITHIN 10 FT OF AN OPEN TRAVEL LANE, CLOSE THE NEAREST OPEN TRAVEL LANE USING ROADWAY STANDARD DRAWING NO. 1101.02 UNLESS THE WORK AREA IS PROTECTED BY BARRIER OR GUARDRAIL.

H) WHEN PERSONNEL AND/OR EQUIPMENT ARE WORKING WITHIN A LANE OF TRAVEL OF AN UNDIVIDED OR DIVIDED FACILITY, CLOSE THE LANE ACCORDING TO THE TRAFFIC CONTROL PLANS, ROADWAY STANDARD DRAWINGS OR AS DIRECTED BY THE ENGINEER. CONDUCT THE WORK SO THAT ALL PERSONNEL AND/OR EQUIPMENT REMAIN WITHIN THE CLOSED TRAVEL LANE.

I) DO NOT WORK SIMULTANEOUSLY WITHIN 15 FT ON BOTH SIDES OF AN OPEN TRAVELWAY, RAMP OR LOOP WITHIN THE SAME LOCATION UNLESS PROTECTED WITH GUARDRAIL OR BARRIER.

J) PROVIDE TRAFFIC CONTROL FOR APPROPRIATE LANE CLOSURES FOR SURVEYING DONE BY THE DEPARTMENT.

PAVEMENT EDGE DROP OFF REQUIREMENTS

K) BACKFILL AT A 6:1 SLOPE UP TO THE EDGE AND ELEVATION OF EXISTING PAVEMENT IN AREAS ADJACENT TO AN OPENED TRAVEL LANE THAT HAS A DROP-OFF AS FOLLOWS:

BACKFILL DROP-OFFS THAT EXCEED 2 INCHES ON ROADWAYS WITH POSTED SPEED LIMITS OF 45 MPH OR GREATER.

BACKFILL DROP-OFFS THAT EXCEED 3 INCHES ON ROADWAYS WITH POSTED SPEED LIMITS LESS THAN 45 MPH.

BACKFILL WITH SUITABLE COMPACTED MATERIAL, AS APPROVED BY THE ENGINEER, AT NO EXPENSE TO THE DEPARTMENT.

L) DO NOT EXCEED A DIFFERENCE OF 2 INCHES IN ELEVATION BETWEEN OPEN LANES OF TRAFFIC FOR NOMINAL LIFTS OF 1.5 INCHES. INSTALL ADVANCE WARNING "UNEVEN LANES" SIGNS (W8-11) 350 FT IN ADVANCE AND A MINIMUM OF ONCE EVERY HALF MILE THROUGHOUT THE UNEVEN AREA.

TRAFFIC PATTERN ALTERATIONS

M) NOTIFY THE ENGINEER TWENTY ONE (21) CALENDAR DAYS PRIOR TO ANY TRAFFIC PATTERN ALTERATION.

SIGNING

N) INSTALL ADVANCE WORK ZONE WARNING SIGNS WHEN WORK IS WITHIN 40 FT FROM THE EDGE OF TRAVEL LANE AND NO MORE THAN THREE (3) DAYS PRIOR TO THE BEGINNING OF CONSTRUCTION.

O) PROVIDE PERMANENT SIGNING.

P) PROVIDE SIGNING AND DEVICES REQUIRED TO CLOSE THE ROAD ACCORDING TO THE ROADWAY STANDARD DRAWINGS AND TRAFFIC CONTROL PLANS.

PROVIDE SIGNING REQUIRED FOR THE OFF-SITE DETOUR ROUTE AS SHOWN IN THE TRAFFIC CONTROL PLANS.

Q) COVER OR REMOVE ALL SIGNS AND DEVICES REQUIRED TO CLOSE THE ROAD WHEN ROAD CLOSURE IS NOT IN OPERATION.

COVER OR REMOVE ALL SIGNS REQUIRED FOR THE OFF-SITE DETOUR WHEN THE DETOUR IS NOT IN OPERATION.

R) ENSURE ALL NECESSARY SIGNING IS IN PLACE PRIOR TO ALTERING ANY TRAFFIC PATTERN.

TRAFFIC BARRIER

S) INSTALL TEMPORARY BARRIER ACCORDING TO THE TRAFFIC CONTROL PLANS A MAXIMUM OF TWO (2) WEEKS PRIOR TO BEGINNING WORK IN ANY LOCATION. ONCE TEMPORARY BARRIER IS INSTALLED AT ANY LOCATION, PROCEED IN A CONTINUOUS MANNER TO COMPLETE THE PROPOSED WORK IN THAT LOCATION UNLESS OTHERWISE STATED IN THE TRAFFIC CONTROL PLANS OR AS DIRECTED BY THE ENGINEER.

DO NOT PLACE BARRIER DIRECTLY ON ANY SURFACE OTHER THAN ASPHALT OR CONCRETE.

ONCE TEMPORARY BARRIER IS INSTALLED AT ANY LOCATION AND NO WORK IS PERFORMED BEHIND THE TEMPORARY BARRIER FOR A PERIOD LONGER THAN TWO (2) MONTHS, REMOVE/RESET TEMPORARY BARRIER AT NO COST TO THE DEPARTMENT UNLESS OTHERWISE STATED IN THE TRAFFIC CONTROL PLANS, TEMPORARY BARRIER IS PROTECTING A HAZARD, OR AS DIRECTED BY THE ENGINEER.

INSTALL TEMPORARY BARRIER WITH THE TRAFFIC FLOW, BEGINNING WITH THE UPSTREAM SIDE OF TRAFFIC. REMOVE TEMPORARY BARRIER AGAINST THE TRAFFIC FLOW, BEGINNING WITH THE DOWNSTREAM SIDE OF TRAFFIC.

INSTALL AND SPACE DRUMS NO GREATER THAN TWICE THE POSTED SPEED LIMIT (MPH) TO CLOSE OR KEEP THE SECTION OF THE ROADWAY CLOSED UNTIL THE TEMPORARY BARRIER CAN BE PLACED OR AFTER THE TEMPORARY BARRIER IS REMOVED.

T) PROTECT THE APPROACH END OF MOVABLE/PORTABLE CONCRETE BARRIER AT ALL TIMES DURING THE INSTALLATION AND REMOVAL OF THE BARRIER BY EITHER A TRUCK MOUNTED IMPACT ATTENUATOR (MAXIMUM 72 HOURS) OR A TEMPORARY CRASH CUSHION.

PROTECT THE APPROACH END OF MOVABLE/PORTABLE CONCRETE BARRIER FROM ONCOMING TRAFFIC AT ALL TIMES BY A TEMPORARY CRASH CUSHION UNLESS THE APPROACH END OF MOVABLE/PORTABLE CONCRETE BARRIER IS OFFSET FROM ONCOMING TRAFFIC AS FOLLOWS OR AS SHOWN IN THE PLANS:

POSTED SPEED LIMIT	MINIMUM OFFSET
40 OR LESS	15 FT
45-50	20 FT
55	25 FT
60 MPH or HIGHER	30 FT

TRAFFIC CONTROL DEVICES

U) SPACE CHANNELIZING DEVICES IN WORK AREAS NO GREATER IN FEET THAN TWICE THE POSTED SPEED LIMIT (MPH), EXCEPT 10 FT ON-CENTER IN RADII, AND 3 FT OFF THE EDGE OF AN OPEN TRAVELWAY, WHEN LANE CLOSURES ARE NOT IN EFFECT. WHEN SKINNY DRUMS ARE ALLOWED REFER TO SECTION 1180 OF STANDARD SPECIFICATIONS FOR ROADS AND STRUCTURES OR AS SHOWN IN THE PLANS.

V) PLACE TYPE III BARRICADES WITH "ROAD CLOSED" SIGN R11-2 ATTACHED OF SUFFICIENT LENGTH TO CLOSE ENTIRE ROADWAY.

W) PLACE ADDITIONAL SETS OF THREE CHANNELIZING DEVICES (DRUMS, CONES OR SKINNY DRUMS) PERPENDICULAR TO THE EDGE OF TRAVELWAY ON 1,000 FT CENTERS WHEN UNOPENED LANES ARE CLOSED TO TRAFFIC.

PAVEMENT MARKINGS AND MARKERS

X) INSTALL PAVEMENT MARKINGS AND PAVEMENT MARKERS ON THE FINAL SURFACE AS SHOWN IN THE PAVEMENT MARKING PLAN.

Y) INSTALL TEMPORARY PAVEMENT MARKINGS AND TEMPORARY PAVEMENT MARKERS ON INTERIM LAYERS OF PAVEMENT AS FOLLOWS:

ROAD NAME	MARKING	MARKER
1. ALL ROADWAYS, INCLUDING EXISTING BRIDGES	PAINT	TEMPORARY RAISED PAVEMENT MARKERS
2. PROPOSED BRIDGES	COLD APPLIED, PLASTIC TYPE IV (REMOVABLE TAPE)	TEMPORARY RAISED PAVEMENT MARKERS

Z) PLACE ONE APPLICATION OF PAINT FOR TEMPORARY TRAFFIC PATTERNS. PLACE A SECOND APPLICATION OF PAINT SIX (6) MONTHS AFTER THE INITIAL APPLICATION AND EVERY SIX MONTHS AS DIRECTED BY THE ENGINEER.

AA) TIE PROPOSED PAVEMENT MARKING LINES TO EXISTING PAVEMENT MARKING LINES.

BB) REMOVE/REPLACE ANY CONFLICTING/DAMAGED PAVEMENT MARKINGS AND MARKERS BY THE END OF EACH DAY'S OPERATION.

CC) TRACE THE (EXISTING AND/OR PROPOSED) MONOLITHIC ISLAND LOCATIONS WITH THE PROPER COLOR PAVEMENT MARKING PRIOR TO (REMOVAL AND/OR INSTALLATION). PLACE DRUMS TO DELINEATE ANY (EXISTING AND/OR PROPOSED) MONOLITHIC ISLANDS (AFTER REMOVAL AND/OR BEFORE INSTALLATION).

TEMPORARY/FINAL SIGNALS

DD) SHIFT AND REVISE ALL SIGNAL HEADS AS SHOWN ON THE SIGNAL PLANS.

MISCELLANEOUS

EE) LAW ENFORCEMENT USED TO MAINTAIN TRAFFIC THROUGH THE WORK AREA AND/OR INTERSECTIONS WILL BE DETERMINED AND COORDINATED BY THE ENGINEER.

FF) ALL WHEEL CHAIR RAMP LOCATIONS SHALL BE DERIVED FROM STATIONING SHOWN ON PAVEMENT MARKING PLANS OR AS DIRECTED BY THE ENGINEER IN COORDINATION WITH THE SIGNING AND DELINEATION UNIT.

GG) CONTRACTOR SHALL MAINTAIN SIDEWALK ACCESS AT ALL TIME AS STATED IN THE PHASING. CONTRACTOR SHALL BE RESPONSIBLE TO PROVIDE TEMPORARY SIDEWALKS (CONCRETE, ASPHALT, OR OTHER SUITABLE MATERIAL AS APPROVED BY THE ENGINEER) AT ALL LOCATIONS WHERE THE OPEN PEDESTRIAN TRAVELWAY HAS BEEN REMOVED FOR CONSTRUCTION OPERATIONS (UTILITIES, DRAINAGE, ETC.).

HH) BLASTING ZONES, IF REQUIRED, WILL BE DETERMINED BY THE ENGINEER AND SETUP IAW ROADWAY STANDARD DRAWING NO. 1101.06.

APPROVED: ____________ DATE: ________

SEAL

NORTH CAROLINA PROFESSIONAL ENGINEER SEAL 8973 G. L. GETTIER — 13 OCT 11

DIVISION OF HIGHWAYS — STATE OF NORTH CAROLINA — DEPARTMENT OF TRANSPORTATION — WORK ZONE TRAFFIC CONTROL

GENERAL NOTES

12-OCT-2011 12:39
\\dot\dfsroot01\proj\TIPProjects-U\U3326\Traffic\TrafficControl\tcp\GENERAL\U3326_TC_TMP01B.dgn
sngreen AT TE244733

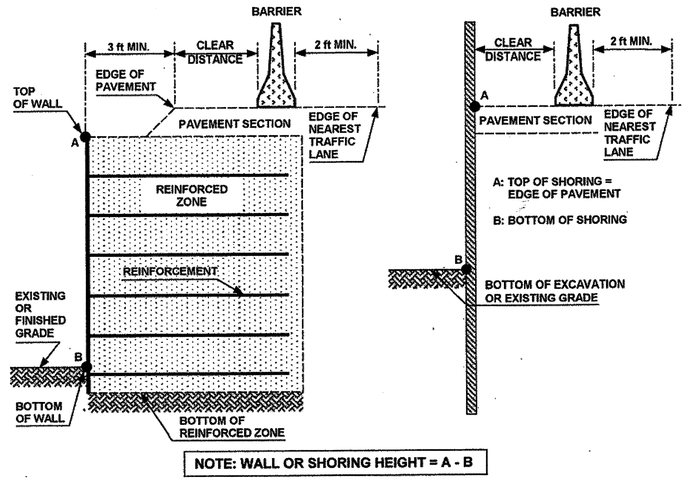

FIGURE A

NOTES

1- REFER TO THE TRAFFIC CONTROL PLANS FOR SHORING LOCATIONS AND SOIL PARAMETERS.

2- REFER TO THE "TEMPORARY SHORING" PROJECT SPECIAL PROVISION FOR MORE INFORMATION ABOUT TEMPORARY SHORING, MEASUREMENT AND PAYMENT.

3- PROVIDE PORTABLE CONCRETE BARRIER TO PROTECT TEMPORARY SHORING IF SHORING IS LOCATED WITHIN THE CLEAR ZONE AS DEFINED IN THE AASHTO ROADSIDE DESIGN GUIDE. DO NOT PLACE BARRIER DIRECTLY ON ANY SURFACE OTHER THAN ASPHALT OR CONCRETE. (CONTACT NCDOT PAVEMENT MANAGEMENT UNIT FOR APPLICABLE PAVEMENT DESIGN).

4- BASED ON THE CLEAR DISTANCE, OFFSET, DESIGN SPEED AND PAVEMENT TYPE, CHOOSE AN UNANCHORED PCB, ANCHORED PCB OR AN OREGON BARRIER FROM THE TABLE SHOWN IN FIGURE B. FOR TRAFFIC LANES AND PORTABLE CONCRETE BARRIER LOCATED ABOVE AND BEHIND TEMPORARY SHORING, THE FOLLOWING ARE DEFINED AS:

CLEAR DISTANCE - HORIZONTAL DISTANCE FROM THE BACK FACE OF THE BARRIER TO THE EDGE OF PAVEMENT FOR TEMPORARY MSE WALL OR TO THE FACE OF NON-ANCHORED TEMPORARY SHORING AS SHOWN IN FIGURE A.

OFFSET - HORIZONTAL DISTANCE FROM THE FRONT FACE OF THE BARRIER TO CENTERLINE OF THE FURTHEST TRAFFIC LANE AS SHOWN IN FIGURE B FOR 3 TRAFFIC LANES.

5- AT THE CONTRACTOR'S OPTION OR IF THE MINIMUM REQUIRED CLEAR DISTANCE IS NOT AVAILABLE, SET AN UNANCHORED PCB AGAINST THE TRAFFIC SIDE OF THE SHORING AND DESIGN SHORING FOR TRAFFIC IMPACT OR USE THE "SURCHARGE CASE WITH TRAFFIC IMPACT" FOR THE STANDARD TEMPORARY SHORING. DO NOT PLACE BARRIER DIRECTLY ON ANY SURFACE OTHER THAN ASPHALT OR CONCRETE. (CONTACT NCDOT PAVEMENT MANAGEMENT UNIT FOR APPLICABLE PAVEMENT DESIGN).

6- USE NCDOT PORTABLE CONCRETE BARRIER (PCB) IN ACCORDANCE WITH ROADWAY STANDARD DRAWING NO. 1170.01 AND SECTION 1170 OF THE STANDARD SPECIFICATIONS.

7- USE OREGON TALL F-SHAPE CONCRETE BARRIER IN ACCORDANCE WITH DETAIL DRAWING AND SPECIAL PROVISION OBTAINED FROM: WORK ZONE TRAFFIC CONTROL UNIT WEB PAGE.

8- UNLESS NOTED OTHERWISE ON THE PLANS, SET PORTABLE CONCRETE BARRIER WITH A MINIMUM DISTANCE OF 2 FT BETWEEN THE FRONT FACE OF THE BARRIER AND THE EDGE OF THE NEAREST TRAFFIC LANE AS SHOWN IN FIGURE A.

9- FOR PORTABLE CONCRETE BARRIER ABOVE AND BEHIND TEMPORARY MSE WALLS, PROVIDE A MINIMUM DISTANCE OF 3 FT BETWEEN THE EDGE OF PAVEMENT AND THE WALL FACE AS SHOWN IN FIGURE A. IF THESE MINIMUM REQUIRED DISTANCES ARE NOT AVAILABLE, CONTACT THE ENGINEER.

10- TABLE SHOWN IN FIGURE B IS BASED ON NCDOT RESEARCH PROJECT NO. 2005-010 WITH VEHICLE TYPE USED FOR NCHRP 350 CRASH TESTS. BARRIER DEFLECTIONS AND RESULTING MINIMUM REQUIRED CLEAR DISTANCES MIGHT VARY SIGNIFICANTLY FOR LARGER HEAVIER VEHICLES, RUNS OF BARRIER LESS THAN 200' IN LENGTH AND WET OR DRY PAVEMENT.

PROJ. REFERENCE NO.	SHEET NO.
U-3326A/B	TMP-2A

MINIMUM REQUIRED CLEAR DISTANCE, inches

Barrier Type	Pavement Type	Offset * ft	Design Speed, mph					
			<30	31-40	41-50	51-60	61-70	71-80
Unanchored PCB	Asphalt	<8	24	26	29	32	36	40
		8-14	26	28	31	35	38	42
		14-20	27	29	34	36	39	43
		20-26	28	31	35	38	40	44
		26-32	29	32	36	39	42	45
		32-38	30	34	38	41	43	46
		38-44	31	34	41	43	45	48
		44-50	31	35	41	43	46	49
		50-56	32	36	42	44	47	50
		>56	32	36	42	45	47	51
	Concrete	<8	17	18	21	22	25	26
		8-14	19	20	23	25	26	29
		14-20	22	22	24	26	28	31
		20-26	23	24	26	27	30	34
		26-32	24	25	27	28	32	35
		32-38	24	26	27	30	33	36
		38-44	25	26	28	30	34	37
		44-50	26	26	28	32	35	37
		50-56	26	26	28	32	35	38
		>56	26	27	29	32	36	38
Anchored PCB or Oregon Barrier	Asphalt	All Offsets	24 for All Design Speeds					
Anchored PCB or Oregon Barrier	Concrete (including bridge approach slabs)	All Offsets	12 for All Design Speeds					

*** See Figure Below**

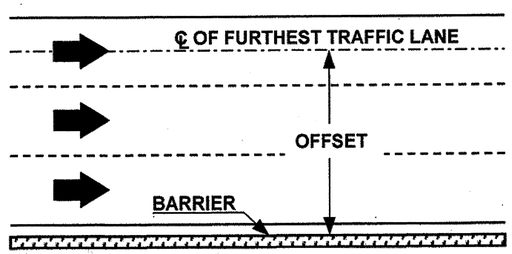

FIGURE B

APPROVED: _____ DATE: _____

SEAL 028380 ENGINEER JOSEPH T. HUNT

Sept 2010

DIVISION OF HIGHWAYS · STATE OF NORTH CAROLINA · DEPARTMENT OF TRANSPORTATION · WORK ZONE TRAFFIC CONTROL

PORTABLE CONCRETE BARRIER
AT
TEMPORARY SHORING LOCATIONS

PROJ. REFERENCE NO.	SHEET NO.
U-3326A/B	TMP-2B

TWO-WAY UNDIVIDED ** (L-LINES)

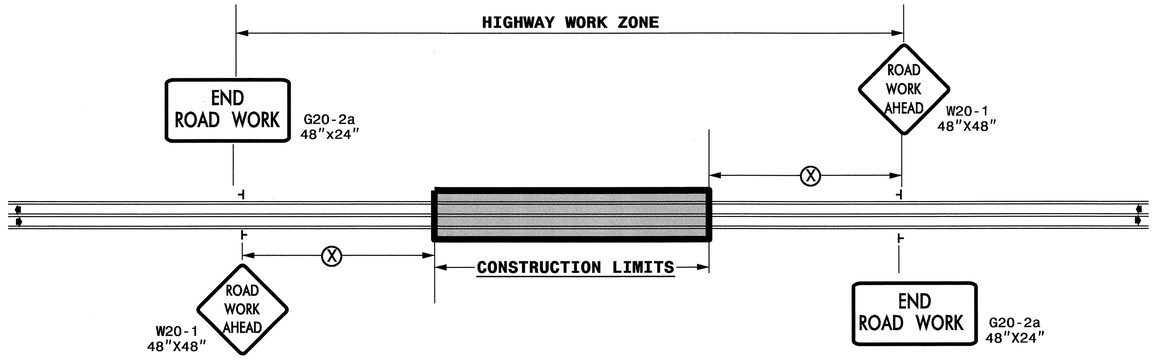

POSTED SPEED LIMIT (M.P.H.)	RECOMMENDED MINIMUM SIGN SPACING (X)
≤ 50	500′
≥ 55	1000′

ROADWAYS INTERSECTING ALONG 2 WAY UNDIVIDED WORK ZONE (Y-LINES)

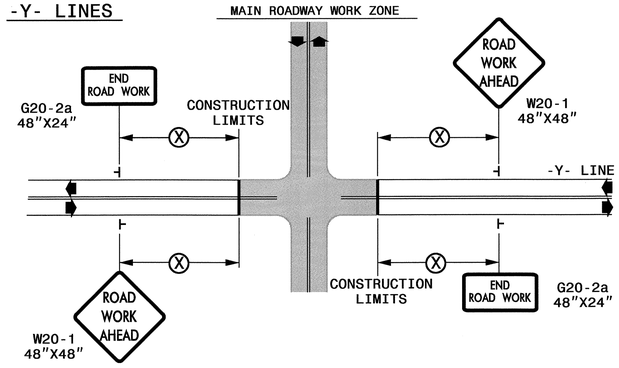

GENERAL NOTES

- USE FLUORESCENT ORANGE SHEETING (TYPE VII OR HIGHER) ON ALL ADVANCED WORK ZONE SIGNS.
- DO NOT INSTALL ADVANCE WARNING SIGNS MORE THAN 3 DAYS PRIOR TO BEGINNING OF WORK.
- SIGNS SHOWN ARE REQUIRED FOR WORK ZONES THAT WILL REMAIN IN EFFECT OVERNIGHT. FOR SHORT-TERM DAILY MAINTENANCE TYPE OPERATIONS, THIS SIGNING APPLICATION IS OPTIONAL; MAY USE ONLY APPLICABLE ROADWAY STANDARD DRAWINGS INSTEAD. HOWEVER, IF THIS SIGNING APPLICATION IS USED, SIGNS MAY BE PORTABLE MOUNTED.
- ALL SIGN SPACING DIMENSIONS ARE APPROXIMATE, FIELD ADJUST AS NECESSARY OR AS DIRECTED.
- USE 3LB STEEL U-CHANNEL POST OR 4" X 4" WOOD POST FOR ALL WORK ZONE SIGNS. 3LB STEEL U-CHANNEL POSTS MUST MEET THE REQUIREMENTS OF STANDARD SPECIFICATION SECTION 1094-1(B), MAY BE GALVANIZED STEEL, OR MAY BE PAINTED GREEN BY THE POST MANUFACTURER. SQUARE STEEL TUBING POSTS HAVING EQUIVALENT STRENGTH OF THE 3 LB STEEL U-CHANNEL POST ARE ALSO ACCEPTABLE FOR USE. ERECT SIGNS PER ROADWAY STANDARD DRAWING 1110.01. PAYMENT FOR WOOD POSTS, 3LB STEEL U-CHANNEL AND SQUARE STEEL TUBING POSTS WITH SIGNS WILL BE MADE ACCORDING TO STANDARD SPECIFICATION "WORK ZONE SIGNS" SECTION 1110.
- WHEN NECESSARY, USE SPLICING IN ACCORDANCE WITH ROADWAY STANDARD DRAWING NO. 1110.01. REMOVE ENTIRE POST WHEN REMOVING SIGNS WITH SPLICED POSTS.
- DO NOT BACK BRACE SIGN SUPPORTS.
- ** TWO-WAY UNDIVIDED ADVANCE WARNING SIGN CONFIGURATION MAY BE USED ON URBAN MULTI-LANE FACILITIES WHERE CONDITIONS LIMIT THE USE OF DUAL MOUNTED SIGNS AS DETERMINED BY THE ENGINEER.

LEGEND

- ⊢ STATIONARY SIGN
- ⬅ DIRECTION OF TRAFFIC FLOW

STATE OF NORTH CAROLINA
DEPT. OF TRANSPORTATION
DIVISION OF HIGHWAYS
RALEIGH, N.C.

DETAIL DRAWING FOR TWO-WAY UNDIVIDED WORK ZONE WARNING SIGNS

SHEET 1 OF 1

APPROVED:_____ DATE:_____

SEAL

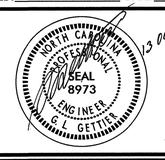

DETAIL DRAWING FOR TWO-WAY UNDIVIDED AND URBAN FREEWAYS

WORK ZONE WARNING SIGNS

12-OCT-2011 12:39
\\dot\dfsroot\Dproj\TIPProjects-U\U3326\Traffic\TrafficControl\tcp\GENERAL\U3326_TC_TMP02B.dgn
sngreen AT TE24733

PROJ. REFERENCE NO.	SHEET NO.
U-3326A/B	TMP-2C

SIGN NUMBER: SP11264 BACKG COLOR: Fluorescent Orange
TYPE: STATIONARY COPY COLOR: Black
QUANTITY: SEE PLANS

SYMBOL	X	Y	WID	HT

SIGN WIDTH: 4′-0″
HEIGHT: 1′-6″
TOTAL AREA: 6.0 Sq.Ft.

BORDER TYPE: INSET
RECESS: 0.38″
WIDTH: 0.63″
RADII: 1.5″

NO. Z BARS:
LENGTH:

MAT′L: 0.080″ (2.0 mm) ALUMINUM
0.079″ (2.0 mm) COMPOSITE

USE NOTES: 1,2

1. Legend and border shall be direct applied black non-reflective sheeting.
2. Background shall be Type VII, VIII, or IX (prismatic) fluorescent orange retroreflective sheeting.

DESIGN BY: GMT CHECKED BY: SUSAN B. KUNZ DATE: Sep 28, 2011
PROJECT ID: U-3326A/B DIV: 7

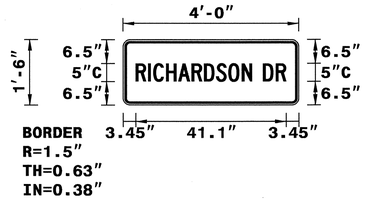

Spacing Factor is 1 unless specified otherwise

LETTER POSITIONS

Letter spacings are to start of next letter

	R	I	C	H	A	R	D	S	O	N		D	R													Series/Size Text Length
3.5	3.4	1.4	3.5	3.3	3.7	3.4	3.3	3.3	3.7	2.8	3	3.5	2.8	3.5												C 2000 41.1

FILENAME: Sign Designs NORTH CAROLINA D.O.T. SIGN DETAIL

SIGN NUMBER:SP11300 BACKG COLOR: Fluorescent Orange
TYPE: STATIONARY COPY COLOR: Black
QUANTITY: SEE PLANS

SYMBOL	X	Y	WID	HT

SIGN WIDTH: 4′-0″
HEIGHT: 1′-6″
TOTAL AREA: 6.0 Sq.Ft.

BORDER TYPE: INSET
RECESS: 0.38″
WIDTH: 0.63″
RADII: 1.5″

NO. Z BARS:
LENGTH:

MAT′L: 0.080″ (2.0 mm) ALUMINUM

USE NOTES: 1,2

1. Legend and border shall be direct applied black non-reflective sheeting.
2. Background shall be Type VII, VIII, or IX (prismatic) fluorescent orange retroreflective sheeting.

DESIGN BY: S COLEMAN CHECKED BY: S. KUNZ DATE: Jun 23, 2011
PROJECT ID:U-3326A/B DIV: 7

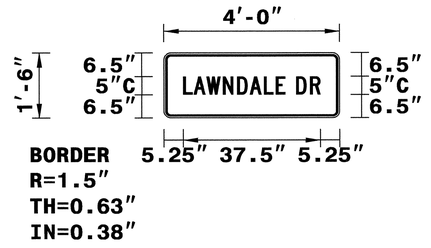

Spacing Factor is 1 unless specified otherwise

LETTER POSITIONS

Letter spacings are to start of next letter

	L	A	W	N	D	A	L	E		D	R															Series/Size Text Length
5.3	2.9	3.5	4.5	3.9	3.4	3.9	3.3	2.6	3	3.8	2.8	5.3														C 2000 37.5

FILENAME: Sign Designs NORTH CAROLINA D.O.T. SIGN DETAIL

SIGN NUMBER: SP11265 BACKG COLOR: Fluorescent Orange
TYPE: STATIONARY COPY COLOR: Black
QUANTITY: SEE PLANS

SYMBOL	X	Y	WID	HT

SIGN WIDTH: 4′-0″
HEIGHT: 1′-6″
TOTAL AREA: 6.0 Sq.Ft.

BORDER TYPE: INSET
RECESS: 0.38″
WIDTH: 0.63″
RADII: 1.5″

NO. Z BARS:
LENGTH:

MAT′L: 0.080″ (2.0 mm) ALUMINUM
0.079″ (2.0 mm) COMPOSITE

USE NOTES: 1,2

1. Legend and border shall be direct applied black non-reflective sheeting.
2. Background shall be Type VII, VIII, or IX (prismatic) fluorescent orange retroreflective sheeting.

DESIGN BY: GMT CHECKED BY: SUSAN B. KUNZ DATE: May 11, 2011
PROJECT ID:U-3326A/B DIV: 7

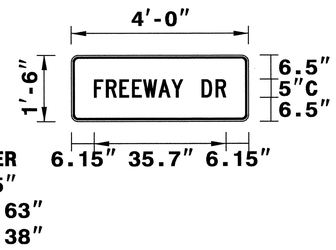

Spacing Factor is 1 unless specified otherwise

LETTER POSITIONS

Letter spacings are to start of next letter

	F	R	E	E	W	A	Y		D	R																Series/Size Text Length
6.1	3.3	3.6	3.4	3	4.1	3.5	3.2	5	3.8	2.8	6.2															C 2000 35.7

FILENAME: Sign Designs NORTH CAROLINA D.O.T. SIGN DETAIL

APPROVED: _____ DATE: _____

SEAL

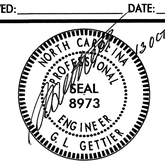

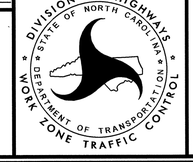

SIGN DESIGNS

12-OCT-2011 12:38
\\dot\dfsroot\proj\TIPProjects-U\U3326\Traffic\TrafficControl\tcp\GENERAL\U3326_TC_TMP02C.dgn
sngreen AT TE244733

PROJ. REFERENCE NO.	SHEET NO.
U-3326A/B	TMP-2D

SIGN NUMBER: SP11261
TYPE: STATIONARY
QUANTITY: SEE PLANS

SIGN WIDTH: 4′-0″
HEIGHT: 1′-6″
TOTAL AREA: 6.0 Sq.Ft.

BORDER TYPE: INSET
RECESS: 0.38″
WIDTH: 0.63″
RADII: 1.5″

NO. Z BARS:
LENGTH:

BACKG COLOR: Fluorescent Orange
COPY COLOR: Black

SYMBOL	X	Y	WID	HT

MAT'L: 0.080″ (2.0 mm) ALUMINUM
0.079″ (2.0 mm) COMPOSITE

USE NOTES: 1,2

1. Legend and border shall be direct applied black non-reflective sheeting.
2. Background shall be Type VII, VIII, or IX (prismatic) fluorescent orange retroreflective sheeting.

DESIGN BY: GMT
PROJECT ID: U-3326A/B
CHECKED BY: SUSAN B. KUNZ
DIV: 7
DATE: May 11, 2011

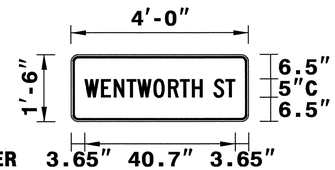

BORDER 3.65″ 40.7″ 3.65″
R=1.5″
TH=0.63″
IN=0.38″

Spacing Factor is 1 unless specified otherwise

LETTER POSITIONS

Letter spacings are to start of next letter

		W	E	N	T	W	O	R	T	H		S	T														Series/Size Text Length
	3.7	4.5	3.4	3.5	2.9	4.4	3.9	3.2	3.3	2.8	3	3.3	2.6	3.7													C 2000
																											40.7

FILENAME: Sign Designs

NORTH CAROLINA D.O.T. SIGN DETAIL

SIGN NUMBER: SP11263
TYPE: STATIONARY
QUANTITY: SEE PLANS

SIGN WIDTH: 3′-6″
HEIGHT: 1′-6″
TOTAL AREA: 5.3 Sq.Ft.

BORDER TYPE: INSET
RECESS: 0.38″
WIDTH: 0.63″
RADII: 1.5″

NO. Z BARS:
LENGTH:

BACKG COLOR: Fluorescent Orange
COPY COLOR: Black

SYMBOL	X	Y	WID	HT

MAT'L: 0.080″ (2.0 mm) ALUMINUM
0.079″ (2.0 mm) COMPOSITE

USE NOTES: 1,2

1. Legend and border shall be direct applied black non-reflective sheeting.
2. Background shall be Type VII, VIII, or IX (prismatic) fluorescent orange retroreflective sheeting.

DESIGN BY: GMT
PROJECT ID: U-3326A/B
CHECKED BY: SUSAN B. KUNZ
DIV: 7
DATE: May 18, 2011

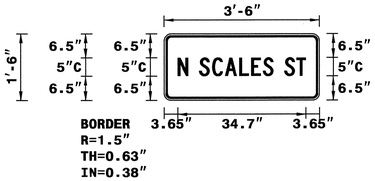

BORDER 3.65″ 34.7″ 3.65″
R=1.5″
TH=0.63″
IN=0.38″

Spacing Factor is 1 unless specified otherwise

LETTER POSITIONS

Letter spacings are to start of next letter

		N		S	C	A	L	E	S		S	T															Series/Size Text Length
	3.7	2.8	3	3.5	3.4	3.9	3.3	3.1	2.8	3	3.2	2.6	3.7														C 2000
																											34.7

FILENAME: Sign Designs

NORTH CAROLINA D.O.T. SIGN DETAIL

SIGN NUMBER: SP11262
TYPE: STATIONARY
QUANTITY: SEE PLANS

SIGN WIDTH: 4′-0″
HEIGHT: 1′-6″
TOTAL AREA: 6.0 Sq.Ft.

BORDER TYPE: INSET
RECESS: 0.38″
WIDTH: 0.63″
RADII: 1.5″

NO. Z BARS:
LENGTH:

BACKG COLOR: Fluorescent Orange
COPY COLOR: Black

SYMBOL	X	Y	WID	HT

MAT'L: 0.080″ (2.0 mm) ALUMINUM
0.079″ (2.0 mm) COMPOSITE

USE NOTES: 1,2

1. Legend and border shall be direct applied black non-reflective sheeting.
2. Background shall be Type VII, VIII, or IX (prismatic) fluorescent orange retroreflective sheeting.

DESIGN BY: GMT
PROJECT ID: U-3326A/B
CHECKED BY: SUSAN B. KUNZ
DIV: 7
DATE: May 11, 2011

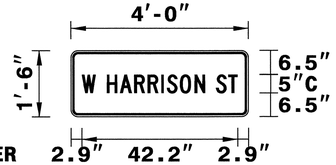

BORDER 2.9″ 42.2″ 2.9″
R=1.5″
TH=0.63″
IN=0.38″

Spacing Factor is 1 unless specified otherwise

LETTER POSITIONS

Letter spacings are to start of next letter

		W		H	A	R	R	I	S	O	N		S	T														Series/Size Text Length
	2.9	3.8	3	3.5	3.9	3.6	3.6	1.6	3.5	4	2.8	3	3.2	2.6	2.9													C 2000
																												42.2

FILENAME: Sign Designs

NORTH CAROLINA D.O.T. SIGN DETAIL

APPROVED: _____ DATE: _____

SEAL

NORTH CAROLINA PROFESSIONAL SEAL 8973 ENGINEER G L GETTIER
13 OCT 11

DIVISION OF HIGHWAYS * STATE OF NORTH CAROLINA * DEPARTMENT OF TRANSPORTATION * WORK ZONE TRAFFIC CONTROL

SIGN DESIGNS

12-OCT-2011 12:38
\\dot\dfsroot\Unpro\TIPProjects-U\U3326\Traffic\TrafficControl\Tcp\GENERAL\U3326_TC_TMP02D.dgn
sngreen AT TE24733

PHASING

PROJ. REFERENCE NO.	SHEET NO.
U-3326A/B	TMP-3

THIS PROJECT IS DIVIDED INTO THE CONSTRUCTION OF THE PROPOSED US 29 BUS (-L-), INCLUDING PROPOSED -Y- LINES, AND THE CONSTRUCTION OF THE FOUR PROPOSED BRIDGE SITES [-Y10- SITE (US 158/RICHARDSON DRIVE); -Y13- SITE (NC 65 & 87/HARRISON STREET); -Y17- SITE (WENTWORTH STREET/SR 1998); AND -Y21- SITE (NORTH SCALE STREET/SR 2670)] [SEE OVERVIEW ON SHEET TMP-4].

THE CONTRACTOR SHALL WORK SIMULTANEOUSLY ON PROPOSED US 29 (-L-), INCLUDING PROPOSED -Y- LINES AND ALL FOUR PROPOSED BRIDGE SITES (SEE OVERVIEW ON SHEET TMP-4).

NOTE: BEFORE BEGINNING CONSTRUCTION THE CONTRACTOR SHALL:

- PLACE ADVANCE WORK ZONE WARNING SIGNS ALONG EXISTING US 29 BUS (-L-) AND ALL -Y- LINES (SEE SHEET TMP-2B).

CONSTRUCTION OF PROPOSED US 29 BUS (-L-) AND PROPOSED -Y- LINES

PHASE I

THE FOLLOWING NOTES ARE APPLICABLE FOR PHASE I.

NOTE: CONTRACTOR SHALL CONSTRUCT ALL PAVEMENT (TEMPORARY AND/OR PROPOSED) TO MAINTAIN DRAINAGE AND NOT POND WATER IN THE TRAFFIC LANES.

NOTE: CONTRACTOR SHALL PLACE TRAFFIC BACK INTO THE EXISTING PATTERN AT THE END OF EACH WORK PERIOD.

NOTE: CONTRACTOR SHALL PLACE TYPE III BARRICADES & DRUMS AT ALL -Y- LINES AND DRUMS AT ALL DRIVEWAYS TO KEEP PROPOSED/TEMPORARY WIDENING CLOSED TO TRAFFIC.

NOTE: TEMPORARY PAVEMENT MAY BE UTILIZED IN THE CONSTRUCTION OF PROPOSED PAVEMENT AS DIRECT BY THE ENGINEER.

NOTE: WHEN CONSTRUCTING DRAINAGE STRUCTURES ADJACENT TO TRAFFIC, INSTALL TEMPORARY STEEL PLATES, AS DIRECTED BY THE ENGINEER. MAY WORK EACH LOCATION INDEPENDENTLY OR CONCURRENTLY, UNLESS OTHERWISE DIRECTED BY THE ENGINEER. WORK IN A CONTINUOUS MANNER TO PERFORM THE WORK IN THE FOLLOWING SEQUENCE, IN STEPS 'A' THRU 'E'.

A: CLOSE THE APPROPRIATE TRAVEL LANE TO TRAFFIC USING ROADWAY STANDARD DRAWING NO. 1101.02 SHEETS 1, 2 & 3 OF 9.

B: CONSTRUCT PROPOSED STRUCTURE OR INSTALL PRE-CAST DRAINAGE STRUCTURE AS SHOWN IN THE CONSTRUCTION PLANS AND COVER WITH STEEL PLATES TO PROTECT STRUCTURE DURING CURING.

C: OPEN TRAVEL LANE TO EXISTING TRAFFIC PATTERN BY THE END OF EACH WORK PERIOD.

D: WHEN PROPERLY CURED, CLOSE THE APPROPRIATE TRAVEL LANE USING ROADWAY STANDARD DRAWING NO. 1101.02, SHEETS 1, 2 & 3 OF 9. BACKFILL & PAVE, IF REQUIRED, UP TO THE EDGE AND ELEVATION OF EXISTING PAVEMENT (SEE CONSTRUCTION PLANS).

E: OPEN TRAVEL LANE TO EXISTING TRAFFIC PATTERN BY THE END OF THE WORK PERIOD.

STEP 1: - CONTRACTOR, USING ROADWAY STANDARD DRAWING NO. 1101.02, SHEET 1, 2 & 3 OF 9:

-- MAY BEGIN CLEARING/GRUBBING & GRADING OPERATIONS, AND CONSTRUCTION OF PROPOSED DRAINAGE (INCLUDING CURB & GUTTER) ALONG & ACROSS EXISTING US 29 BUS (-L-) AND ALL -Y-LINES/DRIVEWAYS, AS DIRECTED BY THE ENGINEER (SEE CONSTRUCTION PLANS).

-- MAY BEGIN TRENCHLESS INSTALLATION OF PROPOSED DRAINAGE UNDER EXISTING US 29 BUS (-L-) AS DIRECTED BY THE ENGINEER (SEE CONSTRUCTION PLANS).

-- SHALL CONSTRUCT PROPOSED WIDENING OF US 29 BUS (-L-) (INCLUDING PROPOSED SHOULDERS, PROPOSED CURB & GUTTER, AND PROPOSED DRAINAGE) UP TO, BUT NOT INCLUDING THE FINAL LAYER OF SURFACE COURSE AS SHOWN ON SHEETS TMP-5 THRU TMP-22 (SEE CONSTRUCTION PLANS).

NOTE: CONTRACTOR SHALL CONDUCT PAVING & WEDGING OPERATIONS ON EXISTING PAVEMENT AS REQUIRED (EITHER PARTIALLY OR ACROSS ENTIRE ROADWAY) DURING CONSTRUCTION OF PROPOSED WIDENING.

NOTE: CONTRACTOR MAY CONSTRUCT PROPOSED SIDEWALKS (SEE CONSTRUCTION PLANS).

-- SHALL CONSTRUCT THE FOLLOWING PROPOSED -Y- LINES AND PROPOSED DRIVEWAYS UP TO, BUT NOT INCLUDING THE FINAL LAYER OF SURFACE COURSE:

--- -Y1- (SOUTH SCALES STREET/US 29 BUS/SR 2670)
--- -Y2- (RABBIT TRAIL/SR 2942)
--- -Y5- (McCOY ROAD/SR 2437)
--- -Y6- (SOUTH PARK DRIVE/SR 2512)
--- -Y8A- (AWAY FROM TRAFFIC)

NOTE: -Y8A- MUST BE COMPLETED AND OPEN TO TRAFFIC PRIOR TO DRIVEWAY ACCESSES ARE CLOSED TO US 29 BUS (-L-).

--- -Y15- (GIBBS DRIVE/SR 2003) LEFT OF -L-
--- -Y16- (MOSS STREET)
--- -Y16A- (MOSS STREET)
--- -Y18- (DEARFIELD DRIVE)
--- -Y19- (GEORGE STREET)
--- -Y19A- (GADDY STREET)
--- -Y20- (WILSON STREET)
--- -Y22- (US 158/NC 14)

-- SHALL CONSTRUCT THE FOLLOWING PROPOSED -Y- LINES AND PROPOSED DRIVEWAYS UP TO, BUT NOT INCLUDING THE FINAL LAYER OF SURFACE COURSE IN THE FOLLOWING SEQUENCE (NOTE: CONTRACTOR SHALL MAINTAIN ACCESS AT ALL TIMES):

--- -Y3- (GIBBS LAKE ROAD/SR 2438) (FILL)
--- -Y7- (BELMONT DRIVE) (CUT)
--- -Y8- (ASHCROFT ROAD) (CUT)
--- -Y11- (SUNNY CREST DRIVE/SR 2462) (CUT)
--- -Y12- (VANCE STREET/SR 2413/2525) (FILL)
--- -Y12A- (PECAN ROAD) (WEDGING)
--- -Y15- (GIBBS DRIVE) RIGHT SIDE OF -L- (FILL)
--- DRIVEWAY 4 (FILL)

---- CONSTRUCTION OF PROPOSED -Y- LINES/DRIVEWAYS REQUIRE A FILL & CUT SECTION OF EXISTING ROADWAY. THE CONTRACTOR SHALL, AS DIRECTED BY THE ENGINEER, AND USING ROADWAY STANDARD DRAWING NO. 1101.02, SHEET 1 OF 9, CONSTRUCT PROPOSED ROADWAY UP TO, BUT NOT INCLUDING THE FINAL LAYER OF SURFACE COURSE BY PLACING AGGREGATE BASE COURSE, INCIDENTAL STONE OR ASPHALT BASE COURSE & BINDER COURSE TO MAINTAIN ACCESS. PLACE TEMPORARY PAVEMENT MARKINGS AND OPEN TO TRAFFIC.

NOTE: CONTRACTOR SHALL PLACE TEMPORARY PAVEMENT MARKINGS ON ASPHALT BINDER/SURFACE COURSE OR DRUMS ON AGGREGATE BASE COURSE/ INCIDENTAL STONE TO DELINEATE THE TRAVEL WAY DURING CONSTRUCTION.

NOTE: WITH THE APPROVAL OF THE ENGINEER AND AN OUTLET EXISTING, THE CONTRACTOR MAY CLOSE THE ROADWAY TO TRAFFIC USING ROADWAY STANDARD DRAWINGS 1101.03 SHEETS 1 & 2 OF 9. THE DURATION OF THE CLOSURE SHALL BE KEPT TO A MINIMUM AND SHALL BE DETERMINED WITH THE ENGINEER PRIOR TO ROAD CLOSURE.

CONTRACTOR SHALL WORK IN A CONTINUOUS MANNER TO COMPLETE THE WORK IN "CONSTRUCTION OF PROPOSED US 29 BUS (-L-) AND PROPOSED -Y- LINES" PHASE I, STEP 1, CONSTRUCTION OF PROPOSED -Y4- (LAWNDALE DRIVE/SR 2500) STEPS A THRU C IN 45 CONSECUTIVE DAYS (SEE INTERMEDIATE CONTRACT TIME AND SPECIAL PROVISIONS).

-- CONTRACTOR SHALL CONSTRUCT PROPOSED -Y4- (LAWNDALE DRIVE/ SR 2500) AS FOLLOWS:

A. USING ROADWAY STANDARD DRAWING NO. 1101.03, SHEETS 1 & 2 OF 9 AND SHEETS TMP-8 & TMP-8A TO CLOSE -Y4- (LAWNDALE DRIVE/SR 2500) TO TRAFFIC.

B. CONSTRUCT PROPOSED -Y4- (LAWNDALE DRIVE/SR 2500) UP TO, BUT NOT INCLUDING THE FINAL LAYER OF SURFACE COURSE AND PLACE TEMPORARY PAVEMENT MARKINGS AND TEMPORARY PAVEMENT MARKERS (SEE CONSTRUCTION PLANS AND SHEET TMP-8).

C. OPEN PROPOSED -Y4- (LAWNDALE DRIVE/SR 2500) TO TRAFFIC.

APPROVED:_____ DATE:_____

SEAL

NORTH CAROLINA PROFESSIONAL SEAL 8973 ENGINEER G.L. GETTIER 9 OCT 11

DIVISION OF HIGHWAYS STATE OF NORTH CAROLINA DEPARTMENT OF TRANSPORTATION WORK ZONE TRAFFIC CONTROL

TEMPORARY TRAFFIC CONTROL PHASING

12-OCT-2011 12:37
\\dot\dfsroot\proj\TIPProjects-U\U3326\Traffic\TrafficControl\tcp\GENERAL\U3326_TC_TMP03.dgn
sngreen AT T2247133

PHASING

PROJ. REFERENCE NO.	SHEET NO.
U-3326A/B	TMP-3A

-- CONTRACTOR SHALL PLACE TYPE III BARRICADES AND CLOSE THE EXISTING DRIVEWAY LEFT OF STA. 287+50 +/- -L- AND CONSTRUCT THE FOLLOWING PROPOSED ROADWAYS UP TO, BUT NOT INCLUDING THE FINAL LAYER OF SURFACE COURSE (SEE CONSTRUCTION PLANS AND SHEET TMP-21). PLACE TEMPORARY PAVEMENT MARKINGS & TEMPORARY PAVEMENT MARKERS AND OPEN TO TRAFFIC (SEE FINAL PAVEMENT MARKING PLANS):

--- -Y20A- (AWAY FOR TRAFFIC)
--- -Y20B- (AWAY FOR TRAFFIC)

-- CONTRACTOR SHALL CONSTRUCT THE FOLLOWING PROPOSED -Y- LINES AND PROPOSED DRIVEWAYS WITH THE FOLLOWING BRIDGE SITES:

--- BRIDGE SITE -Y10-:

---- -Y9- (FRONT STREET/SR 2516)
---- -Y10- (US 158/RICHARDSON DRIVE)
---- -Y10A- (REID SCHOOL ROAD/SR 2414)
---- -Y10B- (FRONT STREET/SR 2516 TURN-AROUND)
---- -Y10C- (SWALLOW ROAD/SR 2417)
---- -Y10D- (RIDGEWOOD AVENUE)
---- -Y10E- (RIDGEWOOD AVENUE)
---- -Y10F- (DRIVEWAY)

--- BRIDGE SITE -Y13-:

---- -Y12B- (STATE STREET)
---- -Y12C- (AWAY FROM TRAFFIC)
---- -Y13- (NC 65 & 87/HARRISON STREET)
---- -Y13A- (MARK ROAD)
---- -Y13B- (WALTERS STREET)
---- -Y13C- (AWAY FROM TRAFFIC)
---- -Y14- (WALTERS STREET)
---- -Y14B- (HAWKINS STREET)
---- -Y14C- (DRIVEWAY)
---- DRIVEWAY 1
---- DRIVEWAY 2
---- DRIVEWAY 3

--- BRIDGE SITE -Y17-:

---- -Y17- (WENTWORTH STREET/SR 1998)

--- BRIDGE SITE -Y21-:

---- -Y21- (NORTH SCALES STREET/SR 2670)
---- -Y21A- (CITY HEIGHTS LOOP/SR 2034)

-- SHALL INSTALL/CONSTRUCT PROPOSED/REVISED SIGNALS (BUT DO NOT ACTIVATE) AT THE FOLLOWING INTERSECTIONS WITH US 29 BUS (-L-)(SEE SIGNAL PLANS AND FINAL PAVEMENT MARKING PLANS):

--- -Y1- (SOUTH SCALES STREET/US 29 BUS/SR 2670) REVISED
--- -Y4- (LAWNDALE ROAD/SR 2500) PROPOSED
--- -Y5-/-Y6- (McCOY ROAD/SR 2437 & SOUTH PARK DRIVE/ SR 2512) REVISED
--- -Y12- (VANCE STREET/SR 2413/2525) REVISED
--- -Y16-/-Y16A- (MOSS STREET) REVISED
--- -Y22- (US 158/NC 14) REVISED
--- DRIVEWAY LEFT OF STA. 132+75 +/- -L-, PROPOSED

PHASE II

THE FOLLOWING NOTES ARE APPLICABLE FOR PHASE II.

NOTE: CONTRACTOR SHALL CONSTRUCT ALL PAVEMENT (TEMPORARY AND/OR PROPOSED) TO MAINTAIN DRAINAGE AND NOT POND WATER IN THE TRAFFIC LANES.

NOTE: CONTRACTOR SHALL PLACE TRAFFIC BACK INTO THE EXISTING PATTERN AT THE END OF EACH WORK PERIOD.

NOTE: CONTRACTOR SHALL PLACE TYPE III BARRICADES & DRUMS AT ALL -Y- LINES AND DRUMS AT ALL DRIVEWAYS TO KEEP PROPOSED/TEMPORARY WIDENING CLOSED TO TRAFFIC.

NOTE: TEMPORARY PAVEMENT MAY BE UTILIZED IN THE CONSTRUCTION OF PROPOSED PAVEMENT AS DIRECT BY THE ENGINEER.

NOTE: WHEN CONSTRUCTING DRAINAGE STRUCTURES ADJACENT TO TRAFFIC, INSTALL TEMPORARY STEEL PLATES, AS DIRECTED BY THE ENGINEER. MAY WORK EACH LOCATION INDEPENDENTLY OR CONCURRENTLY, UNLESS OTHERWISE DIRECTED BY THE ENGINEER. WORK IN A CONTINUOUS MANNER TO PERFORM THE WORK IN THE FOLLOWING SEQUENCE, IN STEPS 'A' THRU 'E'.

A: CLOSE THE APPROPRIATE TRAVEL LANE TO TRAFFIC USING ROADWAY STANDARD DRAWING NO. 1101.02 SHEETS 1, 2 & 3 OF 9.

B: CONSTRUCT PROPOSED STRUCTURE OR INSTALL PRE-CAST DRAINAGE STRUCTURE AS SHOWN IN THE CONSTRUCTION PLANS AND COVER WITH STEEL PLATES TO PROTECT STRUCTURE DURING CURING.

C: OPEN TRAVEL LANE TO EXISTING TRAFFIC PATTERN BY THE END OF EACH WORK PERIOD.

D: WHEN PROPERLY CURED, CLOSE THE APPROPRIATE TRAVEL LANE USING ROADWAY STANDARD DRAWING NO. 1101.02, SHEETS 1, 2 & 3 OF 9. BACKFILL & PAVE, IF REQUIRED, UP TO THE EDGE AND ELEVATION OF EXISTING PAVEMENT (SEE CONSTRUCTION PLANS).

E: OPEN TRAVEL LANE TO EXISTING TRAFFIC PATTERN BY THE END OF THE WORK PERIOD.

CONTRACTOR SHALL WORK IN A CONTINUOUS MANNER TO COMPLETE THE WORK OF PHASE II, STEP 1.

STEP 1: - CONTRACTOR SHALL, USING ROADWAY STANDARD DRAWING NO. 1101.02, SHEET 1, 2, 3 & 4 OF 9:

-- PLACE TEMPORARY PAVEMENT MARKINGS & TEMPORARY RAISED PAVEMENT MARKERS ON NEWLY COMPLETED PROPOSED WIDENING ON BOTH SIDES OF US 29 BUS (-L-) AND ALL -Y- LINES AS SHOWN ON SHEETS TMP-23 THRU TMP 40, SHIFT TRAFFIC TO A TWO-LANE, TWO-WAY DIVIDED TRAFFIC PATTERN (PROPOSED OUTSIDE LANES) AND ACTIVATE REVISED SIGNALS AT THE FOLLOWING INTERSECTIONS WITH US 29 BUS (-L-) (SEE SIGNAL PLANS):

--- -Y1- (SOUTH SCALES STREET/US 29 BUS/SR 2670) REVISED
--- -Y5-/-Y6- (McCOY ROAD/SR 2437 & SOUTH PARK DRIVE/ SR 2512) REVISED
--- -Y12- (VANCE STREET/SR 2413/2525) REVISED
--- -Y16-/-Y16A- (MOSS STREET) REVISED
--- -Y22- (US 158/NC 14) REVISED

STEP 2: - CONTRACTOR SHALL, USING ROADWAY STANDARD DRAWING NO. 1101.02, SHEET 1, 2, 3 & 4 OF 9:

-- CONSTRUCT PROPOSED MEDIAN CURB & GUTTER (INCLUDING GRASS/EARTH MATERIAL) AND PROPOSED CONCRETE ISLANDS ON US 29 BUS (-L-) (SEE CONSTRUCTION PLANS AND SHEETS TMP-23 THRU TMP-42).

NOTE: AS DIRECTED BY THE ENGINEER, CONTRACTOR MAY INSTALL WATER FILLED BARRIER IN THOSE AREAS (AS SHOWN ON SHEETS TMP-23 THRU TMP-40) ON US 29 BUS (-L-) WHERE EXISTING PAVEMENT IS TO BE REMOVED. AS DIRECTED BY THE ENGINEER, THE CONTRACTOR MAY WORK ONE AREA OR MULTIPLE AREAS (IN ANY SEQUENCE) BY REMOVING & RESETTING THE WATER FILLED BARRIER AS REQUIRED.

-- CONSTRUCT REMAINDER OF PROPOSED SIDEWALKS (SEE CONSTRUCTION PLANS).

STEP 3: - CONTRACTOR SHALL, USING ROADWAY STANDARD DRAWING NO. 1101.02, SHEET 1, 2, 3 & 4 OF 9:

-- REMOVE/PLACE/INSTALL TEMPORARY PAVEMENT MARKINGS (PAINT ON ASPHALT & REMOVABLE TAPE ON BRIDGES) & TEMPORARY RAISED PAVEMENT MARKERS ON NEWLY COMPLETED PROPOSED US 29 BUS (-L-) & ASSOCIATED -Y- FOR THE FINAL TRAFFIC PATTERN (SEE FINAL PAVEMENT MARKING PLANS).

-- ACTIVATE THE FOLLOWING PROPOSED SIGNALS AND OPEN TO FINAL TRAFFIC PATTERN (SIGNAL PLANS AND FINAL PAVEMENT MARKING PLANS).

--- -Y4- (LAWNDALE ROAD/SR 2500) PROPOSED
--- DRIVEWAY LEFT OF STA. 132+75 +/- -L-, PROPOSED

NOTE: PAVING OF THE FINAL LAYER OF SURFACE COURSE AND PLACING/INSTALLING THE FINAL PAVEMENT MARKINGS & MARKERS ON US 29 BUS (-L-) AND ALL -Y- LINES WILL BE ACCOMPLISHED WHEN CONSTRUCTION HAS BEEN COMPLETED IN ALL FOUR BRIDGE SITES.

APPROVED:_____ DATE:_____

SEAL

NORTH CAROLINA PROFESSIONAL SEAL 8973 ENGINEER GREGORY GETTIER 13 OCT 11

DIVISION OF HIGHWAYS • STATE OF NORTH CAROLINA • DEPARTMENT OF TRANSPORTATION • WORK ZONE TRAFFIC CONTROL

TEMPORARY TRAFFIC CONTROL PHASING

12-OCT-2011 12:37
\\dot\dfsroot01\proj\TIPProjects-U\U3326\Traffic\TrafficControl\tcp\GENERAL\U3326_TC_TMP03A.dgn
sngreen AT TE24733

PHASING

PROJ. REFERENCE NO.	SHEET NO.
U-3326A/B	TMP-3B

PHASE III

STEP 1: - CONTRACTOR SHALL, USING ROADWAY STANDARD DRAWING NO. 1101.02, SHEET 1, 2, 3 & 4 OF 9:

-- PAVE THE FINAL LAYER OF SURFACE COURSE, PLACE FINAL PAVEMENT MARKINGS & INSTALL PERMANENT PAVEMENT MARKERS ON US 29 BUS (-L-) AND ALL -Y- LINES AND OPEN TO FINAL TRAFFIC PATTERN (SEE CONSTRUCTION PLANS AND FINAL PAVEMENT MARKING PLANS).

-- ACTIVATE THE FOLLOWING PROPOSED SIGNALS AND OPEN ENTIRE PROJECT TO FINAL TRAFFIC PATTERN (SIGNAL PLANS AND FINAL PAVEMENT MARKING PLANS).

--- -Y4- (LAWNDALE ROAD/SR 2500) PROPOSED
--- DRIVEWAY LEFT OF STA. 132+75 +/- -L-, PROPOSED

STEP 2: - CONTRACTOR SHALL REMOVE ALL TRAFFIC CONTROL DEVICES FROM THE PROJECT.

CONSTRUCTION OF PROPOSED BRIDGE SITE -Y10- (US 158/RICHARDSON DRIVE) AND PROPOSED -Y- LINES

THE FOLLOWING NOTES ARE APPLICABLE FOR THE CONSTRUCTION OF PROPOSED BRIDGE SITE -Y10- (US 158/RICHARDSON DRIVE) AND PROPOSED -Y- LINES.

NOTE: CONTRACTOR SHALL CONSTRUCT ALL PAVEMENT (TEMPORARY AND/OR PROPOSED) TO MAINTAIN DRAINAGE AND NOT POND WATER IN THE TRAFFIC LANES.

NOTE: CONTRACTOR SHALL PLACE TRAFFIC BACK INTO THE EXISTING PATTERN AT THE END OF EACH WORK PERIOD.

NOTE: CONTRACTOR SHALL PLACE TYPE III BARRICADES & DRUMS AT ALL -Y- LINES AND DRUMS AT ALL DRIVEWAYS TO KEEP PROPOSED/TEMPORARY WIDENING CLOSED TO TRAFFIC.

NOTE: TEMPORARY PAVEMENT MAY BE UTILIZED IN THE CONSTRUCTION OF PROPOSED PAVEMENT AS DIRECT BY THE ENGINEER.

NOTE: WHEN CONSTRUCTING DRAINAGE STRUCTURES ADJACENT TO TRAFFIC, INSTALL TEMPORARY STEEL PLATES, AS DIRECTED BY THE ENGINEER. MAY WORK EACH LOCATION INDEPENDENTLY OR CONCURRENTLY, UNLESS OTHERWISE DIRECTED BY THE ENGINEER. WORK IN A CONTINUOUS MANNER TO PERFORM THE WORK IN THE FOLLOWING SEQUENCE, IN STEPS 'A' THRU 'E'.

A: CLOSE THE APPROPRIATE TRAVEL LANE TO TRAFFIC USING ROADWAY STANDARD DRAWING NO. 1101.02 SHEETS 1, 2 & 3 OF 9.

B: CONSTRUCT PROPOSED STRUCTURE OR INSTALL PRE-CAST DRAINAGE STRUCTURE AS SHOWN IN THE CONSTRUCTION PLANS AND COVER WITH STEEL PLATES TO PROTECT STRUCTURE DURING CURING.

C: OPEN TRAVEL LANE TO EXISTING TRAFFIC PATTERN BY THE END OF EACH WORK PERIOD.

D: WHEN PROPERLY CURED, CLOSE THE APPROPRIATE TRAVEL LANE USING ROADWAY STANDARD DRAWING NO. 1101.02, SHEETS 1, 2 & 3 OF 9. BACKFILL & PAVE, IF REQUIRED, UP TO THE EDGE AND ELEVATION OF EXISTING PAVEMENT (SEE CONSTRUCTION PLANS).

E: OPEN TRAVEL LANE TO EXISTING TRAFFIC PATTERN BY THE END OF THE WORK PERIOD.

PHASE I

STEP 1: - CONTRACTOR SHALL, USING ROADWAY STANDARD DRAWING NO. 1101.02, SHEET 1 & 2 OF 9:

-- BEGIN CONSTRUCTION OF PROPOSED WIDENING OF US 29 BUS (-L-), PROPOSED RAMPS (-Y10RPB- & -Y10RPC-), PROPOSED WIDENING OF -Y10- (US 158/RICHARDSON DRIVE), PROPOSED & WIDENING OF -Y10A- (REID SCHOOL ROAD/SR 2414), -Y10C- (SWALLOW ROAD/ SR 2417), -Y10D- & -Y10E- (RIDGEWOOD AVENUE) AND -Y10F- (DRIVEWAY), UP TO, BUT NOT INCLUDING THE FINAL LAYER OF SURFACE COURSE (SEE CONSTRUCTIONS PLANS AND SHEETS TMP-43 THRU TMP-46).

-- CONSTRUCT TEMPORARY DETOUR (-Y10DETB-) AND PROPOSED WIDENING LEFT SIDE OF US 29 BUS (-L-) UP TO, BUT NOT INCLUDING THE FINAL LAYER OF SURFACE COURSE FROM STA. 106+00 +/- -L- TO STA. 111+00 +/- -L- FOR TEMPORARY TRAFFIC PATTERN ON SHEET TMP-46 (SEE CONSTRUCTION PLANS AND SHEET TMP-43).

-- INSTALL TEMPORARY SIGNAL AT THE INTERSECTION OF EXISTING US 29 BUS (-L-) AND TEMPORARY DETOURS (-Y10DETB- & -Y10DETC-) (SEE SIGNAL PLANS AND SHEETS TMP-46 & TMP-47).

STEP 2: - CONTRACTOR SHALL, USING ROADWAY STANDARD DRAWING NO. 1101.02, SHEET 1 & 2 OF 9, PLACE/INSTALL THE TEMPORARY PAVEMENT MARKINGS & TEMPORARY RAISED MARKERS ON TEMPORARY DETOUR (-10DETB-), WIDENING ON THE LEFT SIDE OF US 29 BUS (-L-), ACTIVATE THE TEMPORARY SIGNAL, OPEN TO TEMPORARY TRAFFIC PATTERN AND CLOSE THE EXISTING ON LOOPS TO NB & SB US 29 BUS (-L-) (SEE SIGNAL PLANS AND TMP 46).

PHASE II

STEP 1: - CONTRACTOR SHALL, USING ROADWAY STANDARD DRAWING NO. 1101.02, SHEET 1 & 2 OF 9:

-- CONSTRUCT PROPOSED -Y9- (FRONT STREET/SR 2516) PRIOR TO CLOSING NORTH END OF FRONT STREET (-Y10B-) TO TRAFFIC AS FOLLOWS:

--- CONSTRUCTION OF PROPOSED -Y9- REQUIRES A CUT SECTION OF EXISTING ROADWAY. THE CONTRACTOR SHALL, AS DIRECTED BY THE ENGINEER, AND USING ROADWAY STANDARD DRAWING NO. 1101.02, SHEET 1 OF 9, CONSTRUCT PROPOSED ROADWAY UP TO, BUT NOT INCLUDING THE FINAL LAYER OF SURFACE COURSE BY PLACING AGGREGATE BASE COURSE, INCIDENTAL STONE OR ASPHALT BASE COURSE & BINDER COURSE TO MAINTAIN ACCESS. PLACE TEMPORARY PAVEMENT MARKINGS AND OPEN TO TRAFFIC.

NOTE: CONTRACTOR SHALL PLACE TEMPORARY PAVEMENT MARKINGS ON ASPHALT BINDER/SURFACE COURSE OR DRUMS ON AGGREGATE BASE COURSE/INCIDENTAL STONE TO DELINEATE THE TRAVEL WAY DURING CONSTRUCTION.

NOTE: WITH THE APPROVAL OF THE ENGINEER THE CONTRACTOR MAY CLOSE -Y9- TO TRAFFIC USING ROADWAY STANDARD DRAWINGS NO. 1101.03, SHEETS 1 & 2 OF 9. THE DURATION OF THE CLOSURE SHALL BE KEPT TO A MINIMUM AND SHALL BE DETERMINED WITH THE ENGINEER PRIOR TO ROAD CLOSURE.

-- CLOSE EXISTING NORTH END OF FRONT STREET (-Y10B-) AND CONSTRUCT PROPOSED TURN-AROUND (-Y10B-), TEMPORARY DETOUR (-Y10DETC-) AND WIDENING (BOTH PROPOSED & TEMPORARY PAVEMENT) RIGHT SIDE OF US 29 BUS (-L-) UP TO, BUT NOT INCLUDING THE FINAL LAYER OF SURFACE COURSE FROM STA. 102+44 +/- -L- TO STA. 114+00 +/- -L- FOR TEMPORARY TRAFFIC PATTERN ON SHEET TMP-47 (SEE CONSTRUCTION PLANS AND SHEET TMP-46).

STEP 2: - CONTRACTOR SHALL, USING ROADWAY STANDARD DRAWING NO. 1101.02, SHEET 1 & 2 OF 9, PLACE/INSTALL THE TEMPORARY PAVEMENT MARKINGS & TEMPORARY RAISED MARKERS ON TEMPORARY DETOUR (-10DETC-), WIDENING ON THE RIGHT SIDE OF US 29 BUS (-L-) AND OPEN TO TEMPORARY TRAFFIC PATTERN (SEE SIGNAL PLANS AND TMP 47).

CONTRACTOR SHALL WORK IN A CONTINUOUS MANNER TO COMPLETE THE WORK IN "CONSTRUCTION OF PROPOSED BRIDGE SITE -Y10- (US 158/RICHARDSON DRIVE) AND PROPOSED -Y- LINES" PHASE III, STEP 1 THRU STEP 3, FROM 8:00 PM FRIDAY THRU 6:00 AM THE FOLLOWING MONDAY (SEE INTERMEDIATE CONTRACT TIMES AND SPECIAL PROVISIONS).

PHASE III

STEP 1: - USING ROADWAY STANDARD DRAWING NO. 1101.03, SHEET 2 OF 9, AND SHEETS TMP-47 THRU TMP-49 CLOSE US 29 BUS (-L-) AND -Y10- (US 158/RICHARDSON DRIVE) TO TRAFFIC.

STEP 2: - REMOVE THE CENTER SPAN OF THE EXISTING BRIDGE AS SHOWN ON CONSTRUCTION PLANS AND SHEET TMP-48.

STEP 3: - OPEN US 29 BUS (-L-) TO TRAFFIC, BUT KEEP -Y10- (US 158/ RICHARDSON DRIVE) CLOSED AS SHOWN ON SHEET TMP-50.

STEP 4: - CONTRACTOR SHALL, USING ROADWAY STANDARD DRAWING NO. 1101.02, SHEET 1 & 2 OF 9:

-- INSTALL TEMPORARY SHORING AND PORTABLE CONCRETE BARRIER (PCB) ALONG THE RIGHT SIDE OF EXISTING US 29 BUS (-L-) AND REMOVE BOTH EXISTING INTERIOR & END BENTS AND EXISTING SPAN ON THE EAST END OF THE EXISTING BRIDGE (SEE SHEET TMP-50).

-- CONSTRUCT TEMPORARY PAVEMENT/WIDENING OF US 29 BUS (-L-) UP TO THE EDGE & ELEVATION OF EXISTING PAVEMENT FROM STA. 113+00 +/- -L- TO STA. 122+00 +/- -L- (SEE CONSTRUCTION PLANS AND SHEETS TMP-51 & TMP-52).

STEP 5: - CONTRACTOR SHALL, USING ROADWAY STANDARD DRAWING NO. 1101.02, SHEET 1 & 2 OF 9, PLACE/INSTALL THE TEMPORARY PAVEMENT MARKINGS & TEMPORARY RAISED MARKERS ON THE RIGHT SIDE OF US 29 BUS (-L-) AND SHIFT TRAFFIC TO THE TEMPORARY TRAFFIC PATTERN AS SHOWN ON SHEETS TMP-53 & TMP-54.

APPROVED: _____ DATE: _____

SEAL

NORTH CAROLINA PROFESSIONAL SEAL 8973 ENGINEER G. L. GETTIER 8 OCT 11

DIVISION OF HIGHWAYS • STATE OF NORTH CAROLINA • DEPARTMENT OF TRANSPORTATION • WORK ZONE TRAFFIC CONTROL

TEMPORARY TRAFFIC CONTROL PHASING

12-OCT-2011 12:36
\\dot\dfsroot1\proj\TIPProjects-U\U3326\Traffic\TrafficControl\tcp\GENERAL\U3326_TC_TMP03B.dgn
sngreen AT T2247J3

PHASING

PROJ. REFERENCE NO.	SHEET NO.
U-3326A/B	TMP-3C

PHASE IV

STEP 1: - CONTRACTOR SHALL, USING ROADWAY STANDARD DRAWING NO. 1101.02, SHEET 1 & 2 OF 9:

-- INSTALL TEMPORARY SHORING AND PORTABLE CONCRETE BARRIER (PCB) ALONG THE LEFT SIDE OF US 29 BUS (-L-) AND CONSTRUCT PROPOSED -Y10- (US 158/RICHARDSON DRIVE) UP TO, BUT NOT INCLUDING THE FINAL LAYER OF SURFACE COURSE AND WEST END OF PROPOSED BRIDGE AS SHOWN ON SHEET TMP-53 (SEE CONSTRUCTION PLANS).

-- CONSTRUCT PROPOSED US 29 BUS (-L-) AND PROPOSED OFF-RAMP -Y10RPA- UP TO, BUT NOT INCLUDING THE FINAL LAYER OF SURFACE COURSE AS SHOWN ON SHEETS TMP-53 & TMP-54 (SEE CONSTRUCTION PLANS).

-- COMPLETE CONSTRUCTION OF PROPOSED WIDENING OF -Y10- (US 158/RICHARDSON DRIVE), PROPOSED & WIDENING OF -Y10A- (REID SCHOOL ROAD/SR 2414), -Y10C- (SWALLOW ROAD/ SR 2417), AND -Y10F- (DRIVEWAY) BEGUN IN PHASE I, STEP 1. PLACE/INSTALL TEMPORARY PAVEMENT MARKINGS & TEMPORARY RAISE PAVEMENT MARKERS AND OPEN TO TRAFFIC (SEE CONSTRUCTIONS PLANS AND SHEETS TMP-55 & TMP-59).

-- BEGIN INSTALL/CONSTRUCTION OF PROPOSED SIGNALS ON PROPOSED -Y10- (US 158/RICHARDSON DRIVE) AT THE INTERSECTIONS OF PROPOSED ON/OFF-RAMPS -10RPA-/-Y10RPB- & PROPOSED OFF/ON RAMP/LOOP -Y10RPC-/-Y10LPC- (SEE SIGNAL PLANS AND FINAL PAVEMENT MARKING PLANS).

STEP 2: - CONTRACTOR SHALL, USING ROADWAY STANDARD DRAWING NO. 1101.02, SHEET 1 & 2 OF 9, PLACE/INSTALL THE TEMPORARY PAVEMENT MARKINGS & TEMPORARY RAISED MARKERS ON THE LEFT SIDE OF US 29 BUS (-L-) AND SHIFT TRAFFIC TO THE TEMPORARY TRAFFIC PATTERN AS SHOWN ON SHEET TMP-56.

PHASE V

STEP 1: - CONTRACTOR SHALL, USING ROADWAY STANDARD DRAWING NO. 1101.02, SHEET 1 & 2 OF 9:

-- CONSTRUCT PROPOSED -Y10- (US 158/RICHARDSON DRIVE) UP TO, BUT NOT INCLUDING THE FINAL LAYER OF SURFACE COURSE AND REMAINDER OF PROPOSED BRIDGE AS SHOWN ON SHEET TMP-56 (SEE CONSTRUCTION PLANS).

-- BEGIN CONSTRUCTION OF PROPOSED US 29 BUS (-L-) UP TO, BUT NOT INCLUDING THE FINAL LAYER OF SURFACE COURSE AS SHOWN ON SHEETS TMP-56 & TMP-57 (SEE CONSTRUCTION PLANS).

-- AS DIRECTED BY THE ENGINEER, BEGIN PAVING/WEDGING OPERATIONS, UNDER TRAFFIC, TO CONSTRUCT PROPOSED -Y10- (US 158/RICHARDSON DRIVE) AS SHOWN ON SHEET TMP-58 AND STILL MAINTAIN TRAFFIC TO TEMPORARY DETOURS -Y10DETB- & -Y10DETC- (SEE CONSTRUCTION PLANS).

PHASE VI

STEP 1: - CONTRACTOR SHALL, USING ROADWAY STANDARD DRAWING NO. 1101.02, SHEET 1 & 2 OF 9,

-- COMPLETE PAVING/WEDGING OPERATIONS, UNDER TRAFFIC, TO CONSTRUCT PROPOSED -Y10- (US 158/RICHARDSON DRIVE) AND COMPLETE CONSTRUCTION OF -Y10D- AND -Y10E- (RIDGEWOOD AVENUE) BEGUN IN PHASE I, STEP 1, UP TO, BUT NOT INCLUDING THE FINAL LAYER OF SURFACE COURSE AS SHOWN ON SHEET TMP-58 (SEE CONSTRUCTION PLANS).

-- PLACE/INSTALL TEMPORARY PAVEMENT MARKINGS & TEMPORARY RAISED PAVEMENT MARKERS ON PROPOSED -Y10- (US 158/RICHARDSON DRIVE), -Y10D- AND -Y10E- (RIDGEWOOD AVENUE) AND OPEN TO FINAL TRAFFIC PATTERN AS SHOWN ON SHEET TMP-58.

-- CLOSE TEMPORARY DETOUR -10DETB- AND OPEN OFF-RAMP -Y10RPA- TO TRAFFIC (SEE SHEET TMP-58).

STEP 2: - CONTRACTOR SHALL, USING ROADWAY STANDARD DRAWING NO. 1101.02, SHEET 1 & 2 OF 9,

-- CONSTRUCT PROPOSED ON-RAMP -10RPB- AND COMPLETE CONSTRUCTION OF PROPOSED SECTION OF ON-RAMP -Y10RPB- BEGUN IN PHASE I, STEP 1 UP TO, BUT NOT INCLUDING THE FINAL LAYER OF SURFACE COURSE (SEE CONSTRUCTION PLANS AND TMP-58).

-- COMPLETE INSTALL/CONSTRUCTION OF PROPOSED SIGNALS ON PROPOSED -Y10- (US 158/RICHARDSON DRIVE) AT THE INTERSECTIONS OF PROPOSED ON/OFF-RAMPS -10RPA-/-Y10RPB- & PROPOSED OFF/ON RAMP/LOOP -Y10RPC-/-Y10LPC-, BEGUN IN PHASE IV, STEP 1 (SEE SIGNAL PLANS AND FINAL PAVEMENT MARKING PLANS).

CONTRACTOR SHALL WORK IN A CONTINUOUS MANNER TO COMPLETE THE WORK IN "CONSTRUCTION OF PROPOSED BRIDGE SITE -Y10- (US 158/RICHARDSON DRIVE) AND PROPOSED -Y- LINES" PHASE VII, STEP 1 THRU STEP 4 IN 21 CONSECUTIVE DAYS (SEE INTERMEDIATE CONTRACT TIME AND SPECIAL PROVISIONS).

THE CONTRACTOR SHALL WORK "CONSTRUCTION OF PROPOSED BRIDGE SITE -Y10- (US 158/RICHARDSON DRIVE) AND PROPOSED -Y- LINES" PHASE VII, STEP 1 & STEP 2 SIMULTANEOUSLY.

PHASE VII

STEP 1: - CONTRACTOR SHALL, USING ROADWAY STANDARD DRAWING NO. 1101.02, SHEET 1 & 2 OF 9, PLACE/INSTALL THE TEMPORARY PAVEMENT MARKINGS & TEMPORARY RAISED MARKERS ON PROPOSED ON-RAMP -Y10RPB-, US 29 BUS (-L-), ACTIVATE PROPOSED SIGNAL AT THE INTERSECTION OF -Y10- (US 158/RICHARDSON DRIVE) & ON/OFF-RAMPS -Y10RPA-/-Y10RPB- AND OPEN TO TRAFFIC (SEE SIGNAL PLANS, FINAL PAVEMENT MARKING PLANS AND SHEET TMP-60).

STEP 2: - CONTRACTOR SHALL, USING ROADWAY STANDARD DRAWING NO. 1101.03, SHEET 2 OF 9, AND SHEETS TMP-60 & TMP-61 CLOSE TEMPORARY DETOUR -Y10DETC- TO TRAFFIC.

STEP 3. - CONTRACTOR SHALL CONSTRUCT PROPOSED OFF-RAMP -Y10RPC- AND ON-LOOP -Y10LPC- AND COMPLETE REMAINDER OF PROPOSED OFF-RAMP -Y10RPC- BEGUN IN PHASE I, STEP 1 UP TO, BUT NOT INCLUDING THE FINAL LAYER OF SURFACE COURSE (SEE CONSTRUCTION PLANS AND SHEET TMP-60).

STEP 4: - CONTRACTOR SHALL PLACE/INSTALL THE TEMPORARY PAVEMENT MARKINGS & TEMPORARY RAISED MARKERS ON OFF-RAMP -Y10RPC- & ON-LOOP -Y10LPC-, ACTIVATE PROPOSED SIGNAL AND OPEN TO TRAFFIC (SEE SIGNAL PLANS, FINAL PAVEMENT MARKING PLANS AND SHEET TMP-60).

STEP 5: - CONTRACTOR SHALL CONSTRUCT PROPOSED SIDEWALKS (SEE CONSTRUCTION PLANS).

CONSTRUCTION OF PROPOSED BRIDGE SITE -Y13- (NC 65 & 87/HARRISON STREET) AND PROPOSED -Y- LINES

THE FOLLOWING NOTES ARE APPLICABLE FOR THE CONSTRUCTION OF PROPOSED BRIDGE SITE -Y13- (NC 65 & 87/HARRISON STREET) AND PROPOSED -Y- LINES.

NOTE: CONTRACTOR SHALL CONSTRUCT ALL PAVEMENT (TEMPORARY AND/OR PROPOSED) TO MAINTAIN DRAINAGE AND NOT POND WATER IN THE TRAFFIC LANES.

NOTE: CONTRACTOR SHALL PLACE TRAFFIC BACK INTO THE EXISTING PATTERN AT THE END OF EACH WORK PERIOD.

NOTE: CONTRACTOR SHALL PLACE TYPE III BARRICADES & DRUMS AT ALL -Y- LINES AND DRUMS AT ALL DRIVEWAYS TO KEEP PROPOSED/TEMPORARY WIDENING CLOSED TO TRAFFIC.

NOTE: TEMPORARY PAVEMENT MAY BE UTILIZED IN THE CONSTRUCTION OF PROPOSED PAVEMENT AS DIRECT BY THE ENGINEER.

NOTE: WHEN CONSTRUCTING DRAINAGE STRUCTURES ADJACENT TO TRAFFIC, INSTALL TEMPORARY STEEL PLATES, AS DIRECTED BY THE ENGINEER. MAY WORK EACH LOCATION INDEPENDENTLY OR CONCURRENTLY, UNLESS OTHERWISE DIRECTED BY THE ENGINEER. WORK IN A CONTINUOUS MANNER TO PERFORM THE WORK IN THE FOLLOWING SEQUENCE, IN STEPS 'A' THRU 'E'.

A: CLOSE THE APPROPRIATE TRAVEL LANE TO TRAFFIC USING ROADWAY STANDARD DRAWING NO. 1101.02 SHEETS 1, 2 & 3 OF 9.

B: CONSTRUCT PROPOSED STRUCTURE OR INSTALL PRE-CAST DRAINAGE STRUCTURE AS SHOWN IN THE CONSTRUCTION PLANS AND COVER WITH STEEL PLATES TO PROTECT STRUCTURE DURING CURING.

C: OPEN TRAVEL LANE TO EXISTING TRAFFIC PATTERN BY THE END OF EACH WORK PERIOD.

D: WHEN PROPERLY CURED, CLOSE THE APPROPRIATE TRAVEL LANE USING ROADWAY STANDARD DRAWING NO. 1101.02, SHEETS 1, 2 & 3 OF 9. BACKFILL & PAVE, IF REQUIRED, UP TO THE EDGE AND ELEVATION OF EXISTING PAVEMENT (SEE CONSTRUCTION PLANS).

E: OPEN TRAVEL LANE TO EXISTING TRAFFIC PATTERN BY THE END OF THE WORK PERIOD.

APPROVED: _____ DATE: _____

SEAL — NORTH CAROLINA PROFESSIONAL SEAL 8973 ENGINEER G. L. GETTIER — 13 OCT 11

DIVISION OF HIGHWAYS · STATE OF NORTH CAROLINA · DEPARTMENT OF TRANSPORTATION · WORK ZONE TRAFFIC CONTROL

TEMPORARY TRAFFIC CONTROL PHASING

12-OCT-2011 12:35
\\dot\dfsroot\Proj\TIPProjects-U\U3326\Traffic\TrafficControl\tcp\GENERAL\U3326_TC_TMP03C.dgn
sngreen AT IE244733

PHASING

PROJ. REFERENCE NO.	SHEET NO.
U-3326A/B	TMP-3D

PHASE I

STEP 1: - CONTRACTOR SHALL, USING ROADWAY STANDARD DRAWING NO. 1101.02, SHEET 1 & 2 OF 9:

-- CONSTRUCT TEMPORARY PAVEMENT RIGHT SIDE OF EXISTING US 29 BUS (-L-) UP TO THE EDGE & ELEVATION OF EXISTING PAVEMENT FROM STA. 181+74 +/- -L- TO STA. 199+00 +/- -L- (SEE CONSTRUCTION PLANS AND SHEETS TMP-63 & TMP-64).

-- CONSTRUCT PROPOSED -Y13C- UP TO, BUT NOT INCLUDING THE FINAL LAYER (SEE CONSTRUCTION PLANS AND SHEET TMP-64).

-- BEGIN CONSTRUCTION OF PROPOSED WIDENING ON THE LEFT SIDE OF US 29 BUS (-L-) FROM STA. 189+66 +/- -L- TO STA. 194+91 +/- -L- AND ON-RAMP -Y13RPB- UP TO, BUT NOT INCLUDING THE FINAL LAYER OF SURFACE COURSE (SEE CONSTRUCTION PLANS AND SHEETS TMP-63 & TMP-64).

NOTE: CONTRACTOR SHALL MAINTAIN ACCESS TO PARCEL NO. 92 UNTIL PROPOSED -Y13C- IS OPEN TO TRAFFIC.

-- BEGIN CONSTRUCTION OF PROPOSED WIDENING OF -Y13- (NC 67 & 87/HARRISON STREET), DRIVEWAY -DRV3- & -Y13A- (MARK ROAD) UP TO BUT NOT INCLUDING THE FINAL LAYER OF SURFACE COUSE (SEE CONSTRUCTION PLANS AND SHEET TMP-64).

PHASE II

STEP 1: - CONTRACTOR SHALL, USING ROADWAY STANDARD DRAWING NO. 1101.02, SHEET 1 & 2 OF 9, PLACE/INSTALL THE TEMPORARY PAVEMENT MARKINGS & TEMPORARY RAISED MARKERS ON TEMPORARY PAVEMENT ALONG RIGHT SIDE OF US 29 BUS (-L-) AND -Y13C- AS SHOWN ON SHEETS TMP-65 & TMP-66 AND OPEN TO TRAFFIC.

STEP 2: - CONTRACTOR SHALL, USING ROADWAY STANDARD DRAWING NO. 1101.02, SHEET 1 & 2 OF 9:

-- COMPLETE CONSTRUCTION OF PROPOSED WIDENING ON THE LEFT SIDE OF US 29 BUS (-L-) FROM STA. 189+66 +/- -L- TO STA. 194+91 +/- -L- AND ON-RAMP -Y13RPB- UP TO, BUT NOT INCLUDING THE FINAL LAYER OF SURFACE COURSE BEGUN IN PHASE I, STEP 1 AND PLACE/INSTALL TEMPORARY PAVEMENT MARKINGS & TEMPORARY RAISED MARKERS AND OPEN TO TRAFFIC (SEE CONSTRUCTION PLANS AND SHEET TMP-66).

NOTE: CONTRACTOR SHALL CLOSE EXISTING ON-RAMP -Y13RPB- TO TRAFFIC (SEE SHEET TMP-66).

-- COMPLETE CONSTRUCTION OF PROPOSED WIDENING OF -Y13- (NC 67 & 87/HARRISON STREET), DRIVEWAY -DRV3- & -Y13A- (MARK ROAD) UP TO, BUT NOT INCLUDING THE FINAL LAYER OF SURFACE COUSE BEGUN IN PHASE I, AND PLACE/INSTALL TEMPORARY PAVEMENT MARKINGS & TEMPORARY RAISED MARKERS AND OPEN TO TRAFFIC (SEE CONSTRUCTION PLANS AND SHEET TMP-66).

STEP 3: - CONTRACTOR SHALL, USING ROADWAY STANDARD DRAWING NO. 1101.02, SHEET 1 & 2 OF 9:

-- INSTALL TEMPORARY SHORING & PORTABLE CONCRETE BARRIER (PCB) ALONG THE LEFT SIDE OF EXISTING US 29 BUS (-L-), INSTALL WATER FILLED BARRIER ALONG BOTH SIDES OF -Y13- (NC 67 & 87/HARRISON STREET) AND CONSTRUCT PROPOSED US 29 BUS (-L-), INCLUDING PROPOSED STRUCTURE AND OFF-LOOP -Y13LPB- UP TO, BUT NOT INCLUDING THE FINAL LAYER OF SURFACE COURSE (SEE CONSTRUCTION PLANS AND SHEETS TMP-67 & TMP-68).

-- CONSTRUCT PROPOSED WIDENING OF -Y13- (NC 67 & 87/HARRISON STREET), PROPOSED WIDENING OF ON/OFF-RAMPS -Y13RPC- & -Y13RPD-, DRIVEWAYS -DRV1- & -DRV2-, -Y13B-/-Y14- (WALTERS STREET), -Y14B- (HAWKINS STREET) & -Y14C- UP TO, BUT NOT INCLUDING THE FINAL LAYER OF SURFACE COURSE (SEE CONSTRUCTION PLANS AND SHEET TMP-68).

-- PLACE/INSTALL THE TEMPORARY PAVEMENT MARKINGS & TEMPORARY RAISED MARKERS ON PROPOSED WIDENING OF -Y13- (NC 67 & 87/ HARRISON STREET), -Y13B-/-Y14- (WALTERS STREET), -Y14B- (HAWKINS STREET) & -Y14C- AND OPEN TO TRAFFIC (SEE SHEET TMP-72).

CONTRACTOR SHALL WORK IN A CONTINUOUS MANNER TO COMPLETE THE WORK IN "CONSTRUCTION OF PROPOSED BRIDGE SITE -Y13- (NC 67 & 87/HARRISON STREET) AND PROPOSED -Y- LINES" PHASE II, STEP 4 THRU STEP 6 IN 21 CONSECUTIVE DAYS (SEE INTERMEDIATE CONTRACT TIME AND SPECIAL PROVISIONS).

STEP 4: - CONTRACTOR USING SHEET TMP-69 & TMP-70 TO CLOSE OFF-RAMP FROM SB US 29 BUS (-L-) TO -Y13- (NC 67 & 87/HARRISON STREET).

STEP 5: - CONTRACTOR SHALL CONSTRUCT PROPOSED US 29 BUS (-L-) UP TO, BUT NOT INCLUDING THE FINAL LAYER OF SURFACE COURSE FROM STA. 206+00 +/- -L- TO STA. 210+00 +/- -L- (SEE CONSTRUCTION PLANS AND SHEET TMP-69).

STEP 6: - CONTRACTOR SHALL, USING ROADWAY STANDARD DRAWING NO. 1101.02, SHEET 1 & 2 OF 9:

-- PLACE/INSTALL THE TEMPORARY PAVEMENT MARKINGS & TEMPORARY RAISED MARKERS ON US 29 BUS (-L-) & OFF-LOOP -Y13LPB-, INSTALL WATER FILLED BARRIER AND OPEN TO TRAFFIC (SEE SHEETS TMP-71 & TMP-72).

PHASE III

STEP 1: - CONTRACTOR SHALL, USING ROADWAY STANDARD DRAWING NO. 1101.02, SHEET 1 & 2 OF 9:

-- BEGIN CONSTRUCT OF PROPOSED US 29 BUS (-L-), -Y12B- (STATE STREET) & -Y12C- UP TO, BUT NOT INCLUDING THE FINAL LAYER OF SURFACE COURSE FROM STA. 181+74 +/- -L- TO STA. 197+80 +/- -L- (SEE CONSTRUCTION PLANS AND SHEETS TMP-71 & TMP-72).

CONTRACTOR SHALL WORK IN A CONTINUOUS MANNER TO COMPLETE THE WORK IN "CONSTRUCTION OF PROPOSED BRIDGE SITE -Y13- (NC 67 & 87/HARRISON STREET) AND PROPOSED -Y- LINES" PHASE III, STEP 2 THRU STEP 4, FROM 8:00 PM FRIDAY THRU 6:00 AM THE FOLLOWING MONDAY (SEE INTERMEDIATE CONTRACT TIME AND SPECIAL PROVISIONS).

STEP 2: - CONTRACTOR SHALL USING ROADWAY STANDARD DRAWING NO. 1101.03, SHEET 1 OF 9 AND SHEETS TMP-72 & TMP-73 TO CLOSE -Y13- (NC 67 & 87/HARRISON STREET) TO TRAFFIC.

STEP 3: - CONTRACTOR SHALL REMOVE THE CENTER SPAN OF THE EXISTING BRIDGE AS SHOWN ON CONSTRUCTION PLANS & SHEET TMP-72.

NOTE: AS APPROVED BY THE ENGINEER, THE CONTRACTOR MAY REMOVE ADDITIONAL SECTIONS OF THE EXISTING BRIDGE.

STEP 4: - CONTRACTOR SHALL OPEN (NC 67 & 87/HARRISON STREET) TO TRAFFIC.

STEP 5: - CONTRACTOR SHALL, USING ROADWAY STANDARD DRAWING NO. 1101.02, SHEET 1 & 2 OF 9:

-- PLACE/INSTALL THE TEMPORARY PAVEMENT MARKINGS & TEMPORARY RAISED MARKERS ON -Y13- (NC 67 & 87/HARRISON STREET) (SEE SHEET TMP-72).

-- INSTALL TEMPORARY SHORING AND PORTABLE CONCRETE BARRIER ALONG -Y13- (NC 67 & 87/HARRISON STREET) AND CONSTRUCT PROPOSED US 29 BUS (-L-), INCLUDING PROPOSED STRUCTURE, AND PROPOSED -Y13- (NC 67 & 87/HARRISON STREET) UP TO, BUT NOT INCLUDING THE FINAL LAYER OF SURFACE COURSE FROM STA. 197+76 +/- -L- TO STA. 209+00 +/- -L- (SEE CONSTRUCTION PLANS AND SHEETS TMP-72, TMP-74 & TMP-75).

-- COMPLETE CONSTRUCTION OF PROPOSED US 29 BUS (-L-), -Y12B- (STATE STREET) & -Y12C- UP TO, BUT NOT INCLUDING THE FINAL LAYER OF SURFACE COURSE FROM STA. 181+74 +/- -L- TO STA. 197+80 +/- -L-, BEGUN IN PHASE III, STEP 1 (SEE CONSTRUCTION PLANS AND SHEETS TMP-71 & TMP-72).

-- INSTALL/CONSTRUCTION PROPOSED SIGNALS ON PROPOSED -Y13- (NC 67 & 87/HARRISON STREET) AT THE INTERSECTIONS OF PROPOSED ON/OFF-RAMPS/LOOP -13RPB-/-Y13LPB- & -Y13RPC-/ -Y13RPD- (SEE SIGNAL PLANS AND FINAL PAVEMENT MARKING PLANS).

-- PLACE/INSTALL THE TEMPORARY PAVEMENT MARKINGS & TEMPORARY RAISED MARKERS ON US 29 BUS (-L-) & PROPOSED WIDENING OF -Y13- (NC 67 & 87/HARRISON STREET) AS MUCH AS POSSIBLE AWAY FROM TRAFFIC (SEE FINAL PAVEMENT MARKING PLANS).

APPROVED:_____ DATE:_____

SEAL

NORTH CAROLINA PROFESSIONAL SEAL 6973 ENGINEER G. L. GETTIES

12 OCT 11

DIVISION OF HIGHWAYS • STATE OF NORTH CAROLINA • DEPARTMENT OF TRANSPORTATION • WORK ZONE TRAFFIC CONTROL

TEMPORARY TRAFFIC CONTROL PHASING

12-OCT-2011 12:35
\\dot\dfsroot01\proj\TIPProjects-U\U3326\TrafficControl\tcp\GENERAL\U3326_TC_TMP03D.dgn
sngreen AT TE24733

PHASING

PROJ. REFERENCE NO.	SHEET NO.
U-3326A/B	TMP-3E

CONTRACTOR SHALL WORK IN A CONTINUOUS MANNER TO COMPLETE THE WORK IN "CONSTRUCTION OF PROPOSED BRIDGE SITE -Y13- (NC 67 & 87/HARRISON STREET) AND PROPOSED -Y- LINES" PHASE III, STEP 6 THRU STEP 8 IN 10 CONSECUTIVE DAYS (SEE INTERMEDIATE CONTRACT TIME AND SPECIAL PROVISIONS).

STEP 6: - CONTRACTOR SHALL USING SHEETS TMP-76 & TMP-77 TO CLOSE ON/OFF-RAMPS -Y13RPC- & -Y13RPD- TO TRAFFIC.

STEP 7: - CONTRACTOR SHALL CONSTRUCT PROPOSED ON/OFF-RAMPS -Y13RPC- & -Y13RPD- UP TO, BUT NOT INCLUDING THE FINAL LAYER OF SURFACE COURSE (SEE CONSTRUCTION PLANS AND SHEET TMP-76).

- CONTRACTOR SHALL PLACE/INSTALL THE TEMPORARY PAVEMENT MARKINGS & TEMPORARY RAISED MARKERS ON PROPOSED ON/OFF-RAMPS -Y13RPC- & -Y13RPD- (SEE FINAL PAVEMENT MARKING PLANS).

STEP 8: - CONTRACTOR SHALL ACTIVATE PROPOSED SIGNAL ON -Y13- (NC 67 & 87/HARRISON STREET) AT PROPOSED ON/OFF-RAMPS/LOOP -13RPB-/ -Y13LPB- & -Y13RPC-/-Y13RPD- AND OPEN TO TRAFFIC (SEE SIGNAL PLANS AND FINAL PAVEMENT MARKING PLANS).

CONSTRUCTION OF PROPOSED BRIDGE SITE -Y17- (WENTWORTH STREET/SR 1998)

THE FOLLOWING NOTES ARE APPLICABLE FOR THE CONSTRUCTION OF PROPOSED BRIDGE SITE -Y17- (WENTWORTH STREET/SR 1998).

NOTE: CONTRACTOR SHALL CONSTRUCT ALL PAVEMENT (TEMPORARY AND/OR PROPOSED) TO MAINTAIN DRAINAGE AND NOT POND WATER IN THE TRAFFIC LANES.

NOTE: CONTRACTOR SHALL PLACE TRAFFIC BACK INTO THE EXISTING PATTERN AT THE END OF EACH WORK PERIOD.

NOTE: CONTRACTOR SHALL PLACE TYPE III BARRICADES & DRUMS AT ALL -Y- LINES AND DRUMS AT ALL DRIVEWAYS TO KEEP PROPOSED/TEMPORARY WIDENING CLOSED TO TRAFFIC.

NOTE: TEMPORARY PAVEMENT MAY BE UTILIZED IN THE CONSTRUCTION OF PROPOSED PAVEMENT AS DIRECT BY THE ENGINEER.

NOTE: WHEN CONSTRUCTING DRAINAGE STRUCTURES ADJACENT TO TRAFFIC, INSTALL TEMPORARY STEEL PLATES, AS DIRECTED BY THE ENGINEER. MAY WORK EACH LOCATION INDEPENDENTLY OR CONCURRENTLY, UNLESS OTHERWISE DIRECTED BY THE ENGINEER. WORK IN A CONTINUOUS MANNER TO PERFORM THE WORK IN THE FOLLOWING SEQUENCE, IN STEPS 'A' THRU 'E'.

A: CLOSE THE APPROPRIATE TRAVEL LANE TO TRAFFIC USING ROADWAY STANDARD DRAWING NO. 1101.02 SHEETS 1, 2 & 3 OF 9.

B: CONSTRUCT PROPOSED STRUCTURE OR INSTALL PRE-CAST DRAINAGE STRUCTURE AS SHOWN IN THE CONSTRUCTION PLANS AND COVER WITH STEEL PLATES TO PROTECT STRUCTURE DURING CURING.

C: OPEN TRAVEL LANE TO EXISTING TRAFFIC PATTERN BY THE END OF EACH WORK PERIOD.

D: WHEN PROPERLY CURED, CLOSE THE APPROPRIATE TRAVEL LANE USING ROADWAY STANDARD DRAWING NO. 1101.02, SHEETS 1, 2 & 3 OF 9. BACKFILL & PAVE, IF REQUIRED, UP TO THE EDGE AND ELEVATION OF EXISTING PAVEMENT (SEE CONSTRUCTION PLANS).

E: OPEN TRAVEL LANE TO EXISTING TRAFFIC PATTERN BY THE END OF THE WORK PERIOD.

CONTRACTOR SHALL WORK IN A CONTINUOUS MANNER TO COMPLETE THE WORK IN "CONSTRUCTION OF PROPOSED BRIDGE SITE -Y17- (WENTWORTH STREET/SR 1998)" PHASE I, STEP 1 THRU PHASE III, STEP 2 IN 365 COSECUTIVE DAYS (SEE INTERMEDIATE CONTRACT TIME AND SPECIAL PROVISIONS).

PHASE I

STEP 1: - CONTRACTOR SHALL USING ROADWAY STANDARD DRAWING NO. 1101.03, SHEET 1 OF 9 AND SHEET TMP-84 TO CLOSE -Y17- (WENTWORTH STREET/ SR 1998) TO TRAFFIC.

STEP 2: - CONTRACTOR SHALL, USING ROADWAY STANDARD DRAWING NO. 1101.02, SHEET 1 & 2 OF 9:

-- REMOVE THE EAST SPAN OF THE EXISTING BRIDGE (SEE CONSTRUCTION PLANS AND SHEET TMP-86).

-- CONSTRUCT PROPOSED WIDENING AND TEMPORARY PAVEMENT (ON-SITE DETOUR) ON THE RIGHT SIDE OF US 29 BUS (-L-) UP TO, BUT NOT INCLUDING THE FINAL LAYER OF SURFACE COURSE FROM STA. 249+38 +/- -L- TO STA. 271+45 +/- -L- AND INSTALL TEMPORARY SHORING (SEE CONSTRUCTION PLANS AND SHEETS TMP-85 & TMP-86).

STEP 3: - CONTRACTOR SHALL, USING ROADWAY STANDARD DRAWING NO. 1101.02, SHEET 1 & 2 OF 9:

-- PLACE/INSTALL THE TEMPORARY PAVEMENT MARKINGS & TEMPORARY RAISED MARKERS ON US 29 BUS (-L-) AND ON-SITE DETOUR FROM STA. 249+38 +/- -L- TO STA. 271+45 +/- -L- , INSTALL WATER FILLED BARRIER & PORTABLE CONCRETE BARRIER (PCB) ALONG THE ON-SITE DETOUR AND SHIFT TRAFFIC TO TEMPORARY TRAFFIC PATTERN (SEE SHEETS TMP-87 & TMP-88).

PHASE II

STEP 1: - CONTRACTOR SHALL, USING ROADWAY STANDARD DRAWING NO. 1101.02, SHEET 1 & 2 OF 9:

-- CONSTRUCT PROPOSED -Y17- (WENTWORTH STREET/SR 1998), INCLUDING WEST SIDE OF THE PROPOSED BRIDGE, UP TO, BUT NOT INCLUDING THE FINAL LAYER OF SURFACE COURSE FROM STA. 13+00 +/- -Y17- TO AND INCLUDING THE CENTER BENT (SEE CONSTRUCTION PLANS AND SHEETS TMP-88).

-- CONSTRUCT LEFT SIDE OF PROPOSED US 29 BUS (-L-) UP TO, BUT NOT INCLUDING THE FINAL LAYER OF SURFACE COURSE FROM STA. 249+38 +/- -L- TO STA. 271+45 +/- -L- UP TO, BUT NOT INCLUDING THE FINAL LAYER OF SURFACE COURSE (SEE CONSTRUCTION PLANS AND SHEETS TMP-87 & TMP-88).

STEP 2: - CONTRACTOR SHALL, USING ROADWAY STANDARD DRAWING NO. 1101.02, SHEET 1 & 2 OF 9:

-- PLACE/INSTALL THE TEMPORARY PAVEMENT MARKINGS & TEMPORARY RAISED MARKERS ON THE LEFT SIDE OF US 29 BUS (-L-) FROM STA. 249+38 +/- -L- TO STA. 271+45 +/- -L- AND SHIFT TRAFFIC TO TEMPORARY TRAFFIC PATTERN (SEE SHEETS TMP-89 & TMP-90).

PHASE III

STEP 1: - CONTRACTOR SHALL, USING ROADWAY STANDARD DRAWING NO. 1101.02, SHEET 1 & 2 OF 9:

-- CONSTRUCT PROPOSED -Y17- (WENTWORTH STREET/SR 1998), INCLUDING EAST SIDE OF THE PROPOSED BRIDGE, UP TO, BUT NOT INCLUDING THE FINAL LAYER OF SURFACE COURSE FROM CENTER BENT TO STA. STA. 18+50 +/- -Y17- (SEE CONSTRUCTION PLANS AND SHEETS TMP-90).

-- CONSTRUCT RIGHT SIDE OF PROPOSED US 29 BUS (-L-) UP TO, BUT NOT INCLUDING THE FINAL LAYER OF SURFACE COURSE FROM STA. 252+78 +/- -L- TO STA. 271+50 +/- -L- UP TO, BUT NOT INCLUDING THE FINAL LAYER OF SURFACE COURSE (SEE CONSTRUCTION PLANS AND SHEETS TMP-89 & TMP-90).

STEP 2: - CONTRACTOR SHALL, USING ROADWAY STANDARD DRAWING NO. 1101.02, SHEET 1 & 2 OF 9:

-- PLACE/INSTALL THE TEMPORARY PAVEMENT MARKINGS & TEMPORARY RAISED MARKERS ON -Y17- (WENTWORTH STREET/SR 1998) FROM STA. 13+00 +/- -Y17- TO STA. 18+50 +/- -Y17- AND OPEN TO FINAL TRAFFIC PATTERN (SEE FINAL PAVEMENT MARKING PLANS).

APPROVED: _____ DATE: _____

SEAL

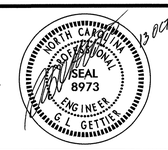

TEMPORARY TRAFFIC CONTROL PHASING

12-OCT-2011 12:34
\\dot\dfsroot\Dpro\TIPProjects-U\U3326\Traffic\TrafficControl\tcp\GENERAL\U3326_TC_TMP03E.dgn
sngreen AT TE24733

PHASING

PROJ. REFERENCE NO.	SHEET NO.
U-3326A/B	TMP-3F

CONSTRUCTION OF PROPOSED BRIDGE SITE -Y21- (NORTH SCALES STREET/SR 2670) AND PROPOSED -Y- LINES

THE FOLLOWING NOTES ARE APPLICABLE FOR THE CONSTRUCTION OF PROPOSED BRIDGE SITE -Y21- (NORTH SCALES STREET/SR 2670).

NOTE: CONTRACTOR SHALL CONSTRUCT ALL PAVEMENT (TEMPORARY AND/OR PROPOSED) TO MAINTAIN DRAINAGE AND NOT POND WATER IN THE TRAFFIC LANES.

NOTE: CONTRACTOR SHALL PLACE TRAFFIC BACK INTO THE EXISTING PATTERN AT THE END OF EACH WORK PERIOD.

NOTE: CONTRACTOR SHALL PLACE TYPE III BARRICADES & DRUMS AT ALL -Y- LINES AND DRUMS AT ALL DRIVEWAYS TO KEEP PROPOSED/TEMPORARY WIDENING CLOSED TO TRAFFIC.

NOTE: TEMPORARY PAVEMENT MAY BE UTILIZED IN THE CONSTRUCTION OF PROPOSED PAVEMENT AS DIRECT BY THE ENGINEER.

NOTE: WHEN CONSTRUCTING DRAINAGE STRUCTURES ADJACENT TO TRAFFIC, INSTALL TEMPORARY STEEL PLATES, AS DIRECTED BY THE ENGINEER. MAY WORK EACH LOCATION INDEPENDENTLY OR CONCURRENTLY, UNLESS OTHERWISE DIRECTED BY THE ENGINEER. WORK IN A CONTINUOUS MANNER TO PERFORM THE WORK IN THE FOLLOWING SEQUENCE, IN STEPS 'A' THRU 'E'.

A: CLOSE THE APPROPRIATE TRAVEL LANE TO TRAFFIC USING ROADWAY STANDARD DRAWING NO. 1101.02 SHEETS 1, 2 & 3 OF 9.

B: CONSTRUCT PROPOSED STRUCTURE OR INSTALL PRE-CAST DRAINAGE STRUCTURE AS SHOWN IN THE CONSTRUCTION PLANS AND COVER WITH STEEL PLATES TO PROTECT STRUCTURE DURING CURING.

C: OPEN TRAVEL LANE TO EXISTING TRAFFIC PATTERN BY THE END OF EACH WORK PERIOD.

D: WHEN PROPERLY CURED, CLOSE THE APPROPRIATE TRAVEL LANE USING ROADWAY STANDARD DRAWING NO. 1101.02, SHEETS 1, 2 & 3 OF 9. BACKFILL & PAVE, IF REQUIRED, UP TO THE EDGE AND ELEVATION OF EXISTING PAVEMENT (SEE CONSTRUCTION PLANS).

E: OPEN TRAVEL LANE TO EXISTING TRAFFIC PATTERN BY THE END OF THE WORK PERIOD.

PHASE I

STEP 1: - CONTRACTOR SHALL, USING ROADWAY STANDARD DRAWING NO. 1101.02, SHEET 1 & 2 OF 9:

-- CONSTRUCT TEMPORARY DETOUR (-Y21DETB-) UP TO, BUT NOT INCLUDING THE FINAL LAYER OF SURFACE COURSE AND MAINTAIN TRAFFIC ON EXISTING ON-RAMP (SEE CONSTRUCTION PLANS AND SHEET TMP-95).

-- CONSTRUCT TEMPORARY PAVEMENT RIGHT SIDE OF EXISTING US 29 BUS (-L-) UP TO THE EDGE & ELEVATION OF EXISTING PAVEMENT FROM STA. 298+76 +/- -L- TO STA. 303+80 +/- -L- (SEE CONSTRUCTION PLANS AND SHEET TMP-95).

-- BEGIN CONSTRUCTION PROPOSED WIDENING OF US 29 BUS (-L-) UP TO, BUT NOT INCLUDING THE FINAL LAYER OF SURFACE COURSE AS FOLLOWS (SEE CONSTRUCTION PLANS AND SHEETS TMP-94 & TMP-95):

--- STA. 285+50 +/- -L- TO STA. 294+50 +/- -L- (LEFT SIDE)
--- STA. 309+50 +/- -L- TO STA. 315+00 +/- -L- (LEFT SIDE)
--- STA. 285+50 +/- -L- TO STA. 288+92 +/- -L- (RIGHT SIDE)

-- BEGIN CONSTRUCTION OF TEMPORARY PAVEMENT RIGHT SIDE OF EXISTING US 29 BUS (-L-) UP TO THE EDGE & ELEVATION OF EXISTING PAVEMENT FROM STA. 288+92 +/- -L- TO STA. 298+00 +/- -L- (SEE CONSTRUCTION PLANS AND SHEET TMP-94).

-- INSTALL TYPE III BARRICADES AND BEGIN CONSTRUCTION OF PROPOSED -Y20A- AND -Y20B- UP TO, BUT NOT INCLUDING THE FINAL LAYER OF SURFACE COURSE (SEE CONSTRUCTION PLANS AND SHEET TMP-94).

-- INSTALL TEMPORARY SIGNAL (BUT DO NOT ACTIVATE) AT THE INTERSECTION OF EXISTING US 29 BUS (-L-) AND TEMPORARY DETOURS (-Y21DETB- & -Y21DETC-) (SEE SIGNAL PLANS AND SHEETS TMP-97 & TMP-99).

STEP 2: - CONTRACTOR SHALL, USING ROADWAY STANDARD DRAWING NO. 1101.02, SHEET 1 & 2 OF 9:

-- CONSTRUCT PROPOSED TIE-INS OF TEMPORARY DETOUR -Y21DETB- WITH EXISTING -Y21- (NORTH SCALES STREET/SR 2670) & EXISTING US 29 BUS (-L-) (SEE CONSTRUCTION PLANS AND SHEET TMP-97).

-- PLACE/INSTALL THE TEMPORARY PAVEMENT MARKINGS & TEMPORARY RAISED MARKERS ON TEMPORARY DETOUR (-21DETB-) & TEMPORARY PAVEMENT ON THE RIGHT SIDE OF US 29 BUS (-L-), ACTIVATE THE TEMPORARY SIGNAL, OPEN TO TEMPORARY TRAFFIC PATTERN AND CLOSE THE EXISTING ON/OFF-RAMPS TO US 29 BUS (-L-) (SEE SIGNAL PLANS AND TMP 97).

PHASE II

STEP 1: - CONTRACTOR SHALL, USING ROADWAY STANDARD DRAWING NO. 1101.02, SHEET 1 & 2 OF 9:

-- CONSTRUCT PROPOSED TEMPORARY DETOUR (-Y21DETC-) UP TO, BUT NOT INCLUDING THE FINAL LAYER OF SURFACE COURSE AND PLACE/INSTALL THE TEMPORARY PAVEMENT MARKINGS & TEMPORARY RAISED MARKERS AND OPEN TO TEMPORARY TRAFFIC PATTERN (SEE CONSTRUCTION PLANS AND SHEETS TMP 98 & TMP-99).

CONTRACTOR SHALL WORK IN A CONTINUOUS MANNER TO COMPLETE THE WORK IN "CONSTRUCTION OF PROPOSED BRIDGE SITE -Y21- (NORTH SCALES STREET/SR 2670) AND PROPOSED -Y- LINES" PHASE II, STEP 2 THRU STEP 4, FROM 8:00 PM FRIDAY THRU 6:00 AM THE FOLLOWING MONDAY (SEE INTERMEDIATE CONTRACT TIME AND SPECIAL PROVISIONS).

STEP 2: - USING ROADWAY STANDARD DRAWING NO. 1101.03, SHEETS 1 & 2 OF 9, AND SHEETS TMP-99 & TMP-100 CLOSE US 29 BUS (-L-) AND -Y21- (NORTH SCALES STREET/SR 2670) TO TRAFFIC.

NOTE: KEEP ON-RAMP TO NB US 29 BUS (-L-) OPEN TO TRAFFIC UNTIL CENTER SPAN OF EXISTING BRIDGE IS REMOVED AND US 29 BUS (-L-) IS REOPENED TO TRAFFIC (SEE SHEETS TMP-99 & TMP-101).

STEP 3: - REMOVE THE CENTER SPAN OF THE EXISTING BRIDGE (SEE CONSTRUCTION PLANS AND SHEET TMP-99.

STEP 4: - REMOVE & RESET TYPE III BARRICADES AND OPEN US 29 BUS (-L-) TO TRAFFIC, BUT KEEP -Y21- (NORTH SCALES STREET/SR 2670) CLOSED (SEE SHEET TMP-101.

STEP 5: - CONTRACTOR SHALL, USING ROADWAY STANDARD DRAWING NO. 1101.02, SHEET 1 & 2 OF 9:

-- INSTALL TEMPORARY SHORING AND PORTABLE CONCRETE BARRIER (PCB) ALONG THE RIGHT SIDE OF EXISTING US 29 BUS (-L-) AND REMOVE BOTH EXISTING INTERIOR & END BENTS AND EXISTING SPAN ON THE EAST END OF THE EXISTING BRIDGE (SEE SHEETS TMP-99 & TMP-101).

-- CONSTRUCT TEMPORARY PAVEMENT/WIDENING RIGHT SIDE OF US 29 BUS (-L-) FROM STA. 303+80 +/- -L- TO STA. 311+31 +/- -L- UP TO THE EDGE & ELEVATION OF EXISTING PAVEMENT (SEE CONSTRUCTION PLANS AND SHEET TMP-102).

-- COMPLETE CONSTRUCTION OF PROPOSED WIDENING RIGHT SIDE OF US 29 BUS (-L-) UP TO, BUT NOT INCLUDING THE FINAL LAYER OF SURFACE COURSE FROM STA. 285+50 +/- -L- TO STA. 288+92 +/- -L- AND TEMPORARY PAVEMENT RIGHT SIDE OF EXISTING US 29 BUS (-L-) UP TO THE EDGE & ELEVATION OF EXISTING PAVEMENT FROM STA. 288+92 +/- -L- TO STA. 298+00 +/- -L- BEGUN IN PHASE I, STEP 1 (SEE CONSTRUCTION PLANS AND SHEET TMP-94)

STEP 6: - CONTRACTOR SHALL, USING ROADWAY STANDARD DRAWING NO. 1101.02, SHEET 1 & 2 OF 9:

-- PLACE/INSTALL THE TEMPORARY PAVEMENT MARKINGS & TEMPORARY RAISED MARKERS ON PROPOSED/TEMPORARY PAVEMENT OF THE RIGHT SIDE OF US 29 BUS (-L-) FROM STA. 285+50 +/- -L TO STA. 315+00 +/- -L- AND SHIFT TRAFFIC TEMPORARY TRAFFIC PATTERN (SEE SHEETS TMP-103 & TMP-104).

APPROVED: _____ DATE: _____

SEAL

NORTH CAROLINA PROFESSIONAL SEAL 8973 ENGINEER G. J. GETTIER 3 OCT 11

DIVISION OF HIGHWAYS • STATE OF NORTH CAROLINA • DEPARTMENT OF TRANSPORTATION • WORK ZONE TRAFFIC CONTROL

TEMPORARY TRAFFIC CONTROL PHASING

12-OCT-2011 12:33
\\dot\dfsroot01\proj\TIPProjects-U\U3326\Traffic\TrafficControl\tcp\GENERAL\U3326_TC_TMP03F.dgn
sngreen AT TE24733

PHASING

PROJ. REFERENCE NO.	SHEET NO.
U-3326A/B	TMP-3G

PHASE III

STEP 1: - CONTRACTOR SHALL, USING ROADWAY STANDARD DRAWING NO. 1101.02, SHEET 1 & 2 OF 9:

-- INSTALL WATER FILLED BARRIER ALONG THE LEFT SIDE OF US 29 BUS (-L-) AND CONSTRUCT PROPOSED -Y21- (NORTH SCALES STREET/SR 2670) UP TO, BUT NOT INCLUDING THE FINAL LAYER OF SURFACE COURSE AND NORTHWEST SECTION OF PROPOSED BRIDGE (SEE CONSTRUCTION PLANS AND SHEETS TMP-106).

-- CONSTRUCT LEFT SIDE OF PROPOSED US 29 BUS (-L-), UP TO, BUT NOT INCLUDING THE FINAL LAYER OF SURFACE COURSE FROM STA. 288+92 +/- -L- TO STA. 311+31 +/- -L- (SEE CONSTRUCTION PLANS AND SHEETS TMP-105 & TMP-106).

NOTE: CONTRACTOR SHALL COMPLETE CONSTRUCTION OF PROPOSED -Y20A- AND -Y20B- BEGUN IN PHASE I, STEP 1 PRIOR TO CLOSING EXISTING DRIVEWAYS LEFT OF STA. 295+00 +/- -L- & STA. 297+00 +/- -L-(SEE CONSTRUCTION PLANS AND SHEET TMP-94).

-- COMPLETE CONSTRUCTION OF PROPOSED -Y20A- AND -Y20B- BEGUN IN PHASE I, STEP 1, PLACE/INSTALL THE TEMPORARY PAVEMENT MARKINGS & TEMPORARY RAISED MARKERS AND OPEN TO TRAFFIC (SEE CONSTRUCTION PLANS, FINAL PAVEMENT MARKING PLANS AND SHEET TMP-94).

-- COMPLETE CONSTRUCTION OF PROPOSED WIDENING OF LEFT SIDE OF US 29 BUS (-L-) FROM STA. 285+50 +/- -L- TO STA. 294+50 +/- -L- AND STA. 309+50 +/- -L- TO STA. 315+00 +/- -L- BEGUN IN PHASE I, STEP 1 (SEE CONSTRUCTION PLANS AND SHEETS TMP-94 & TMP-95).

-- SHALL BEGIN CONSTRUCTION OF PROPOSED -Y21A- (CITY HEIGHTS LOOP/SR 2034) AND PROPOSED WIDENING OF -Y21- (NORTH SCALES STREET/SR 2670) UP TO, BUT INCLUDING THE FINAL LAYER OF SURFACE COURSE (SEE CONSTRUCTION PLANS AND SHEET TMP-109).

STEP 2: - CONTRACTOR SHALL, USING ROADWAY STANDARD DRAWING NO. 1101.02, SHEET 1 & 2 OF 9:

-- PLACE/INSTALL THE TEMPORARY PAVEMENT MARKINGS & TEMPORARY RAISED MARKERS ON PROPOSED WIDENING OF THE LEFT SIDE OF US 29 BUS (-L-) FROM STA. 285+50 +/- -L- TO STA. 315+00 +/- -L- AND SHIFT TRAFFIC TO TEMPORARY TRAFFIC PATTERN (SEE SHEETS TMP-107 & TMP-108).

PHASE IV

STEP 1: - CONTRACTOR SHALL, USING ROADWAY STANDARD DRAWING NO. 1101.02, SHEET 1 & 2 OF 9:

-- CONSTRUCT PROPOSED -Y21- (NORTH SCALES STREET/SR 2670) AND THE REMAINDER OF PROPOSED BRIDGE (SEE CONSTRUCTION PLANS AND SHEET TMP-108).

-- CONSTRUCT RIGHT SIDE OF PROPOSED US 29 BUS (-L-), UP TO, BUT NOT INCLUDING THE FINAL LAYER OF SURFACE COURSE FROM STA. 288+92 +/- -L- TO STA. 311+31 +/- -L- (SEE CONSTRUCTION PLANS AND SHEETS TMP-107 & TMP-108).

-- AS DIRECTED BY THE ENGINEER, MAY BEGIN PAVING/WEDGING OPERATIONS, UNDER TRAFFIC, TO CONSTRUCT PROPOSED -Y21- (NORTH SCALES STREET/SR 2670) AS SHOWN ON SHEET TMP-109 AND STILL MAINTAIN TRAFFIC TO TEMPORARY DETOURS -Y21DETB- & -Y21DETC- (SEE CONSTRUCTION PLANS).

STEP 2: - CONTRACTOR SHALL, USING ROADWAY STANDARD DRAWING NO. 1101.02, SHEET 1 & 2 OF 9,

-- CONDUCT PAVING/WEDGING OPERATIONS, UNDER TRAFFIC, TO TO COMPLETE CONSTRUCT OF PROPOSED TIE-IN OF -Y21- (NORTH SCALES STREET/SR 2670) AND TEMPORARY DETOUR -Y21DETC- (SEE CONSTRUCTION PLANS AND SHEET TMP-109).

CONTRACTOR SHALL WORK IN A CONTINUOUS MANNER TO COMPLETE THE WORK IN "CONSTRUCTION OF PROPOSED BRIDGE SITE -Y21- (NORTH SCALES STREET/SR 2670) AND PROPOSED -Y- LINES" PHASE IV, STEP 3 THRU STEP 5 IN 21 CONSECUTIVE DAYS (SEE INTERMEDIATE CONTRACT TIME AND SPECIAL PROVISIONS).

STEP 3: - CONTRACTOR SHALL, USING ROADWAY STANDARD DRAWING NO. 1101.03, SHEETS 1 & 2 OF 9, AND SHEETS TMP-109 & TMP-110 CLOSE TEMPORARY DETOUR -Y21DETB- TO TRAFFIC.

STEP 4. - CONTRACTOR SHALL CONSTRUCT PROPOSED -Y21- (NORTH SCALES STREET/ SR 2670) AND PROPOSED ON/OFF RAMP/LOOP STUB OUT UP TO, BUT NOT INCLUDING THE FINAL LAYER OF SURFACE COURSE (SEE CONSTRUCTION PLANS AND SHEET TMP-109).

- CONTRACTOR SHALL PLACE/INSTALL THE TEMPORARY PAVEMENT MARKINGS & TEMPORARY RAISED MARKERS ON PROPOSED -Y21- (NORTH SCALES STREET/SR 2670) AS SHOWN ON SHEET TMP-109.

STEP 5: - CONTRACTOR SHALL OPEN PROPOSED -Y21- (NORTH SCALES STREET/ SR 2670) TO THE TEMPORARY TRAFFIC PATTERN AS SHOWN ON SHEET TMP-112.

NOTE: TEMPORARY DETOUR -Y21DETB- SHALL BE CLOSED TO TRAFFIC.

PHASE V

STEP 1: - CONTRACTOR SHALL, USING ROADWAY STANDARD DRAWING NO. 1101.02, SHEET 1 & 2 OF 9,

-- REMOVE AND REPLACE/REINSTALL TEMPORARY PAVEMENT MARKINGS & TEMPORARY RAISED MARKERS, AS REQUIRED, FOR TEMPORARY TRAFFIC PATTERN ON THE RIGHT SIDE OF PROPOSED US 29 BUS (-L-) FROM STA. 284+17 +/- -L- TO STA. 315+00 +/- -L- AND SHIFT TRAFFIC TO TEMPORARY TRAFFIC PATTERN (SEE SHEETS TMP-111 & TMP-112).

STEP 2: - CONTRACTOR SHALL, USING ROADWAY STANDARD DRAWING NO. 1101.02, SHEET 1 & 2 OF 9:

-- CONSTRUCT PROPOSED ON/OFF RAMP/LOOP -Y21RPB- & -Y21LPB- AND LEFT SIDE OF PROPOSED US 29 BUS (-L-) FROM STA. 296+17 +/- -L- TO STA. 303+65 +/- -L- UP TO, BUT NOT INCLUDING THE FINAL LAYER OF SURFACE COURSE (SEE CONSTRUCTION PLANS AND SHEETS TMP-111 & TMP-112).

-- CONTRACTOR SHALL PLACE/INSTALL THE TEMPORARY PAVEMENT MARKINGS & TEMPORARY RAISED MARKERS ON PROPOSED ON/OFF RAMP/LOOP -Y21RPB- & -Y21LPB- AND LEFT SIDE OF PROPOSE US 29 BUS (-L-) AS MUCH AS POSSIBLE WITHOUT INTERFERING WITH TRAFFIC (SEE SHEETS TMP-113 & TMP-114).

CONTRACTOR SHALL WORK IN A CONTINUOUS MANNER TO COMPLETE THE WORK OF "CONSTRUCTION OF PROPOSED BRIDGE SITE -Y21- (NORTH SCALES STREET/SR 2670) AND PROPOSED -Y- LINES" PHASE VI, STEP 1 AND STEP 2 IN ONE WORK PERIOD.

PHASE VI

STEP 1: - CONTRACTOR SHALL, USING ROADWAY STANDARD DRAWING NO. 1101.02, SHEET 1 & 2 OF 9,

-- REMOVE AND REPLACE/REINSTALL TEMPORARY PAVEMENT MARKINGS & TEMPORARY RAISED MARKERS, AS REQUIRED, FOR TEMPORARY TRAFFIC PATTERN ON THE LEFT SIDE OF PROPOSED US 29 BUS (-L-) FROM STA. 285+50 +/- -L- TO STA. 315+00 +/- -L-, SHIFT TRAFFIC TO TO TEMPORARY TRAFFIC PATTERN AND OPEN PROPOSED ON/OFF RAMP/LOOP -Y21RPB- & -Y21LPB- TO TRAFFIC (SEE SHEETS TMP-113 & TMP-114).

CONTRACTOR SHALL WORK IN A CONTINUOUS MANNER TO COMPLETE THE WORK IN "CONSTRUCTION OF PROPOSED BRIDGE SITE -Y21- (NORTH SCALES STREET/SR 2670) AND PROPOSED -Y- LINES" PHASE VI, STEP 2 THRU STEP 4 IN 45 CONSECUTIVE DAYS (SEE INTERMEDIATE CONTRACT TIME AND SPECIAL PROVISIONS).

STEP 2: - CONTRACTOR SHALL, USING ROADWAY STANDARD DRAWING NO. 1101.03, SHEET 2 OF 9, AND SHEETS TMP-114 & TMP-115 CLOSE TEMPORARY DETOUR -Y21DETC- TO TRAFFIC.

STEP 3. - CONTRACTOR SHALL CONSTRUCT PROPOSED OFF/ON RAMP/LOOP -Y21RPC- & -Y21LPC- UP TO, BUT NOT INCLUDING THE FINAL LAYER OF SURFACE COURSE (SEE CONSTRUCTION PLANS AND SHEET TMP-114).

- CONTRACTOR SHALL PLACE/INSTALL THE TEMPORARY PAVEMENT MARKINGS & TEMPORARY RAISED MARKERS ON PROPOSED ON/OFF RAMP/LOOP -Y21RPC- & -Y21LPC- (SEE FINAL PAVEMENT MARKING PLANS AND SHEET TMP-114).

STEP 4: - CONTRACTOR SHALL OPEN PROPOSED OFF/ON RAMP/LOOP -Y21RPC- & -Y21LPC- TO TRAFFIC (SEE FINAL PAVEMENT MARKING PLANS).

STEP 5: - CONTRACTOR SHALL, USING ROADWAY STANDARD DRAWING NO. 1101.02, SHEET 1 & 2 OF 9:

-- COMPLETE CONSTRUCTION OF PROPOSED -Y21A- (CITY HEIGHTS LOOP/SR 2034)BEGUN IN PHASE III, STEP 1, PLACE/INSTALL TEMPORARY PAVEMENT MARKINGS & TEMPORARY RAISED MARKERS AND OPEN TO TRAFFIC (SEE CONSTRUCTION AND FINAL PAVEMENT MARKING PLANS).

-- CONSTRUCT PROPOSED SIDEWALKS (SEE CONSTRUCTION PLANS).

APPROVED:_____ DATE:_____

SEAL

NORTH CAROLINA PROFESSIONAL SEAL 8973 ENGINEER G. L. GETTIES

DIVISION OF HIGHWAYS * STATE OF NORTH CAROLINA * DEPARTMENT OF TRANSPORTATION * WORK ZONE TRAFFIC CONTROL

TEMPORARY TRAFFIC CONTROL PHASING

12-OCT-2011 12:33
\\dot\dfsroot01\proj\TPProjects-U\U3326\Traffic\TrafficControl\tcp\GENERAL\U3326_TC_TMP03G.dgn
sngreen AT TE24733

PROJ. REFERENCE NO.	SHEET NO.
U-3326A/B	TMP-4

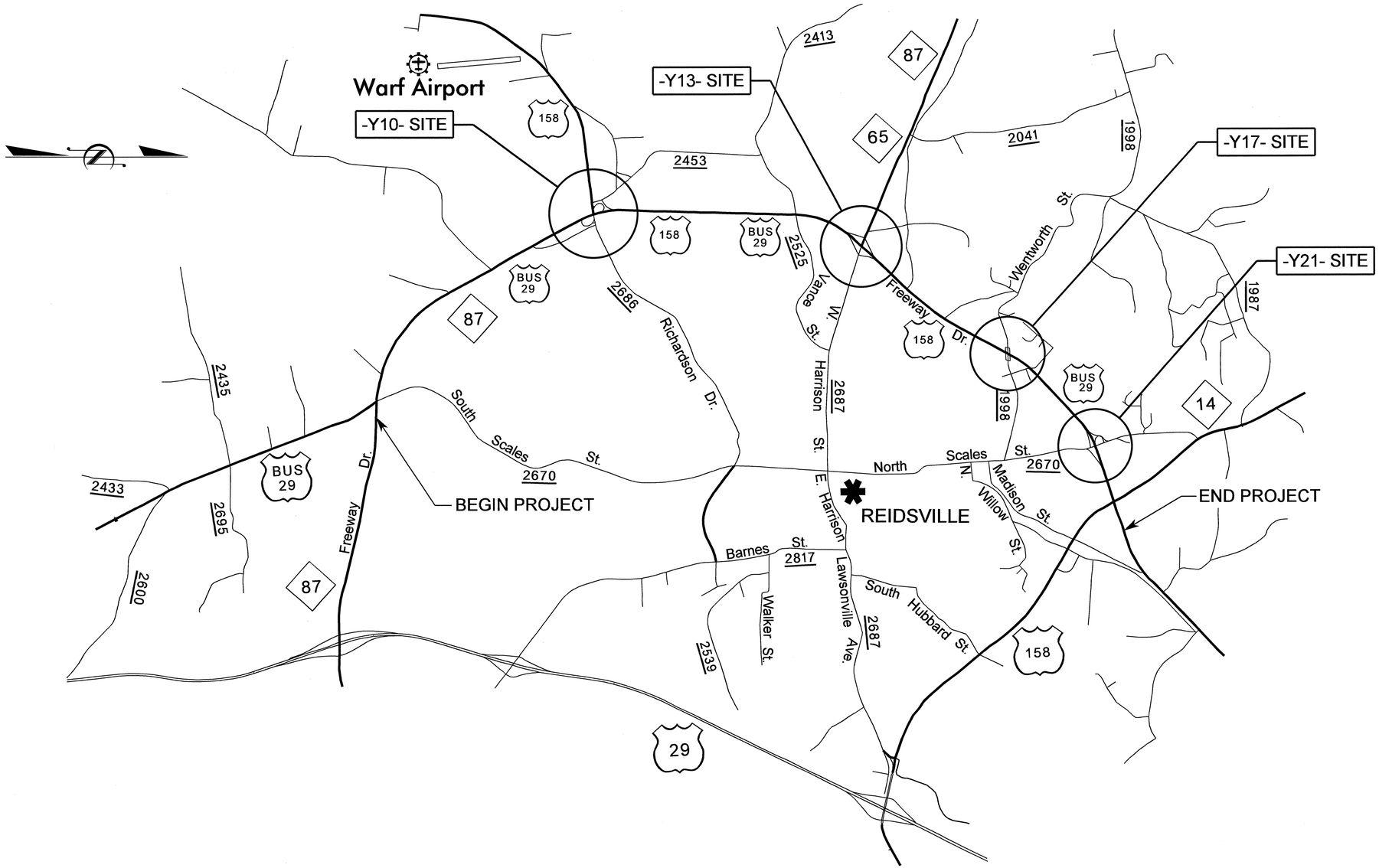

APPROVED: _____ DATE: _____

SEAL

NORTH CAROLINA PROFESSIONAL SEAL 8973 ENGINEER G. L. GETTIER

3 OCT 11

DIVISION OF HIGHWAYS · STATE OF NORTH CAROLINA · DEPARTMENT OF TRANSPORTATION · WORK ZONE TRAFFIC CONTROL

SITE OVERVIEW

12-OCT-2011 13:05
\\dot\dfsroot01\proj\TIPProjects-U\U3326\Traffic\TrafficControl\tcp\-L- LINE\U3326_-L-_phl_tmp04.dgn
sngreen AT TE244733

PROJ. REFERENCE NO.	SHEET NO.
U-3326A/B	TMP-5

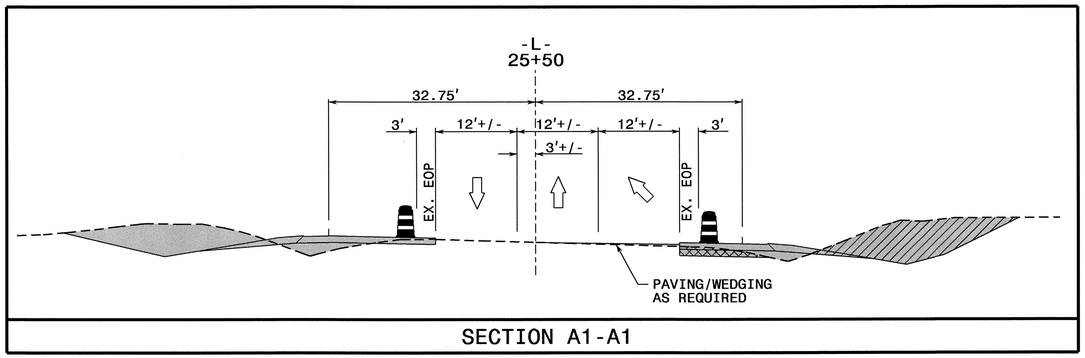

SECTION A1-A1

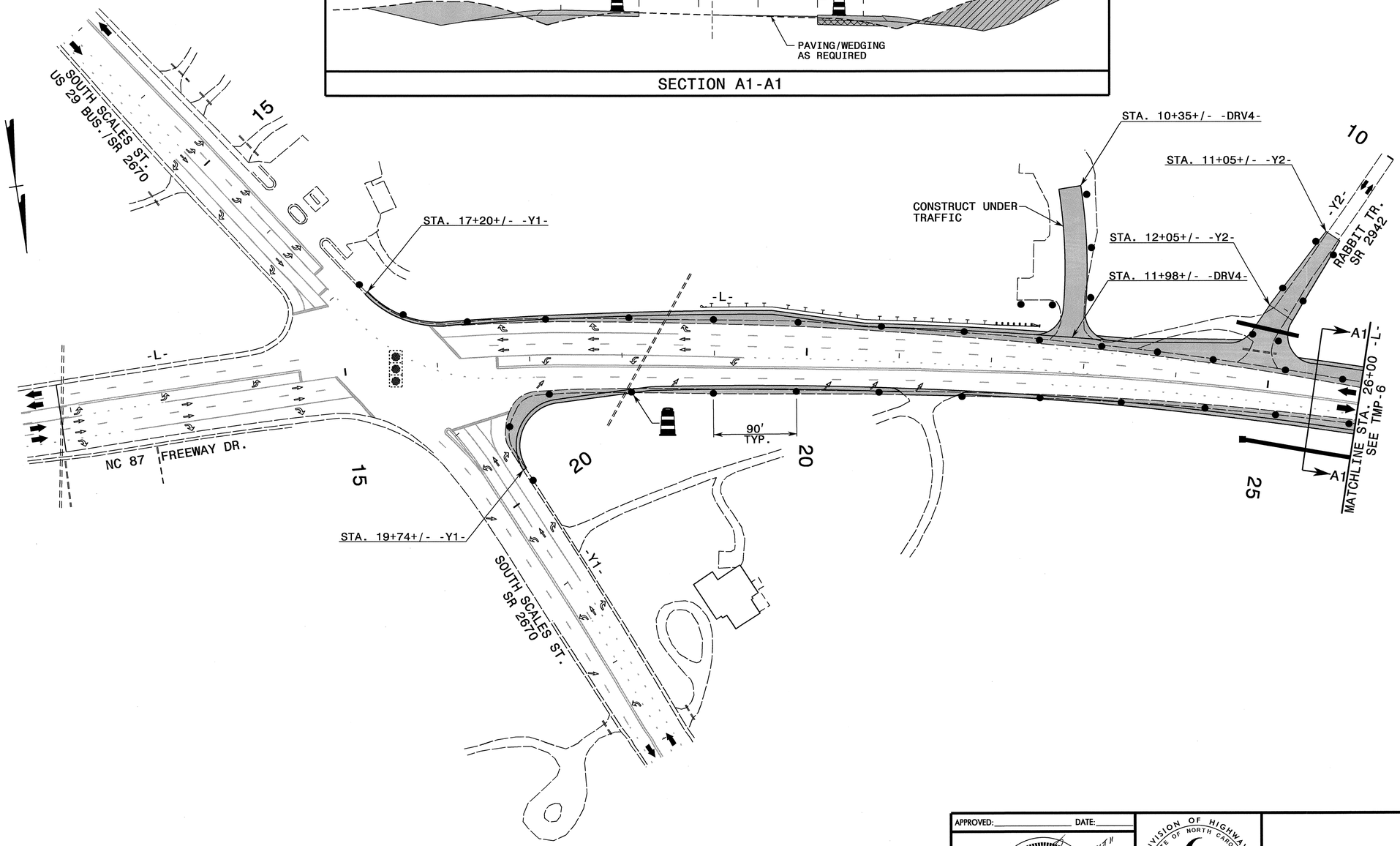

APPROVED: _____ DATE: _____

SEAL

NORTH CAROLINA PROFESSIONAL SEAL 8973 ENGINEER G. L. GETTES

DIVISION OF HIGHWAYS · STATE OF NORTH CAROLINA · DEPARTMENT OF TRANSPORTATION · WORK ZONE TRAFFIC CONTROL

PHASE I DETAILS

12-OCT-2011 13:04
\\dot\dfsroot01\proj\TIPProjects-U\U3326\Traffic\TrafficControl\tcp\-L- LINE\U3326_-L-_ph1_tmp05.dgn
sngreen AT TE24733

PROJ. REFERENCE NO.	SHEET NO.
U-3326A/B	TMP-6

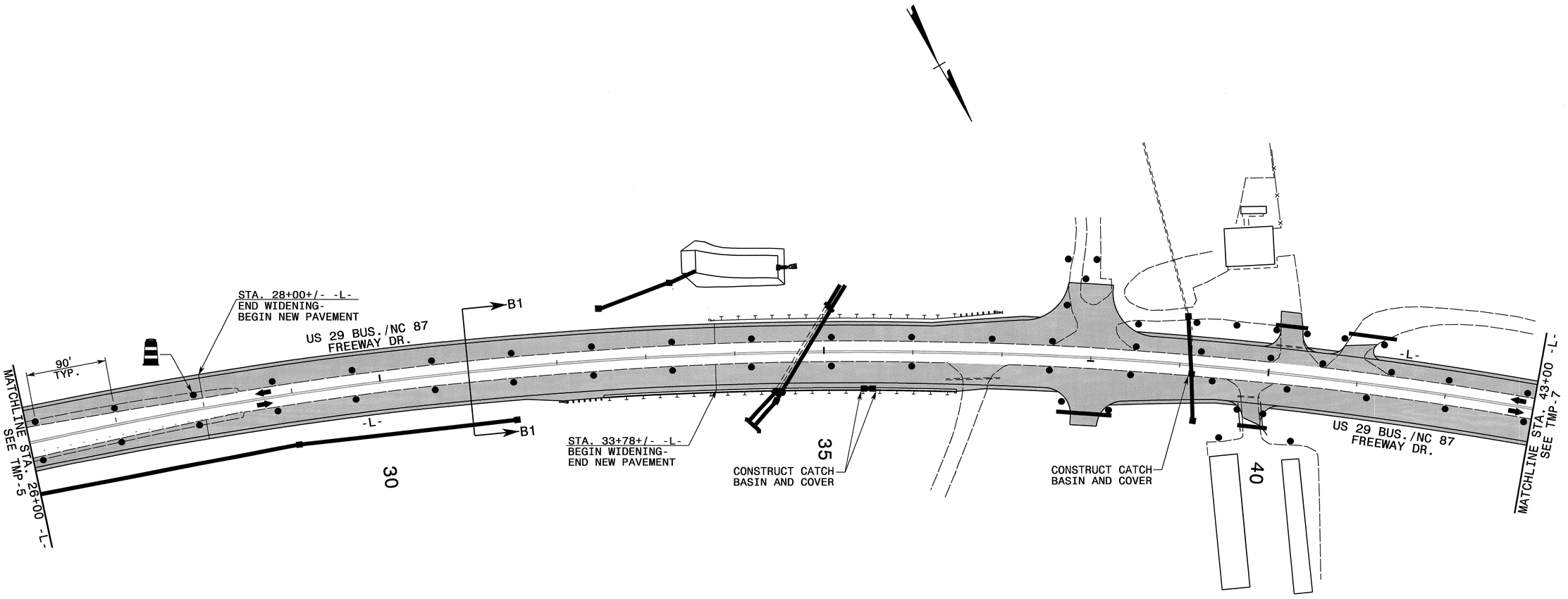

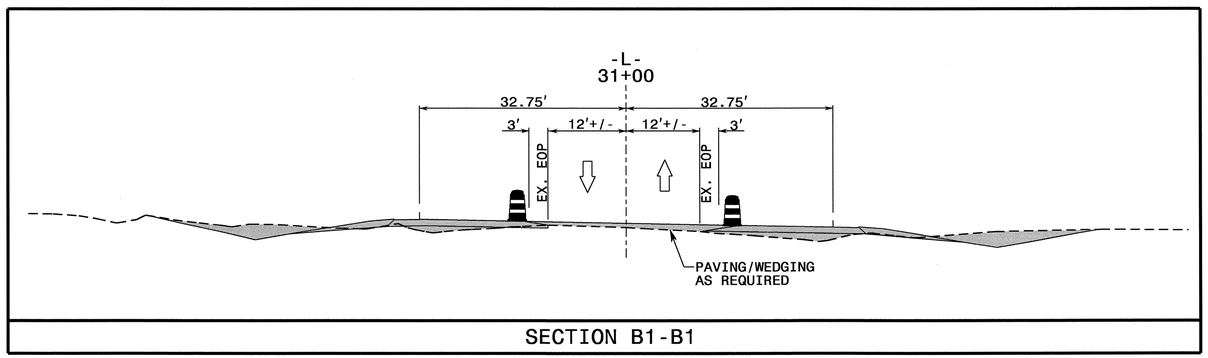

SECTION B1-B1

APPROVED: _____ DATE: _____

SEAL

NORTH CAROLINA PROFESSIONAL SEAL 8973 ENGINEER G L GETTIER

13 OCT 11

DIVISION OF HIGHWAYS · STATE OF NORTH CAROLINA · DEPARTMENT OF TRANSPORTATION · WORK ZONE TRAFFIC CONTROL

PHASE I DETAILS

12-OCT-2011 13:04
\\dot\dfsroot\proj\TIPProjects-U\U3326\Traffic\TrafficControl\top\-L- LINE\U3326_-L-_phl_tmp06.dgn
sngreen AT TE24733

PROJ. REFERENCE NO.	SHEET NO.
U-3326A/B	TMP-7

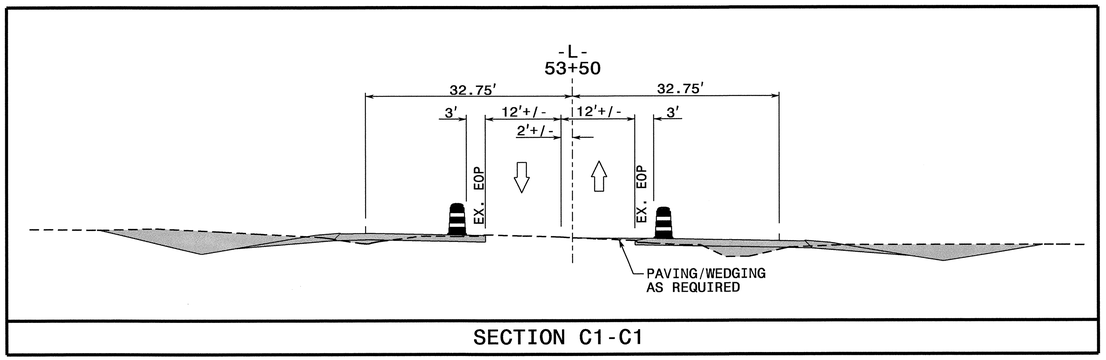

SECTION C1-C1

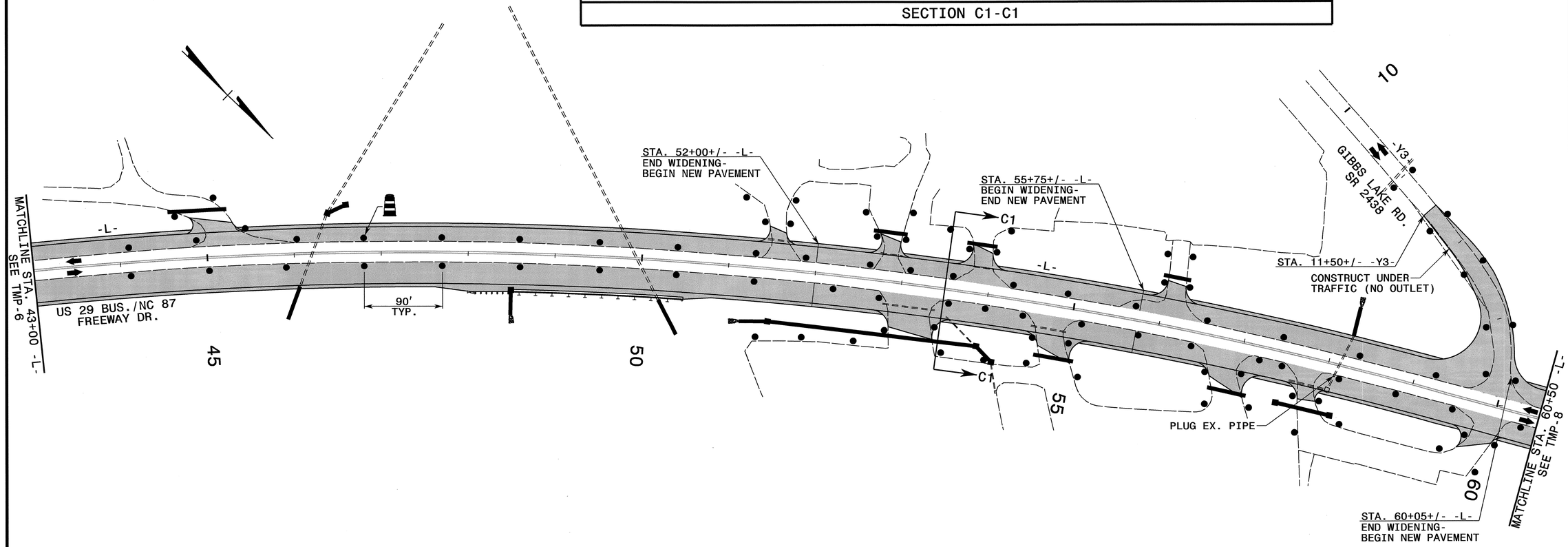

APPROVED: _____ DATE: _____

SEAL

NORTH CAROLINA PROFESSIONAL SEAL 8973 ENGINEER G. L. GETTIES

SPOT II

DIVISION OF HIGHWAYS
STATE OF NORTH CAROLINA
DEPARTMENT OF TRANSPORTATION
WORK ZONE TRAFFIC CONTROL

PHASE I DETAILS

12-OCT-2011 13:04
\\dot\dfsroot\Dpro\TIPProjects-U\U3326\Traffic\TrafficControl\tcp\-L- LINE\U3326_-L-_phl_tmp07.dgn
sngreen AT TE24733

PROJ. REFERENCE NO.	SHEET NO.
U-3326A/B	TMP-8

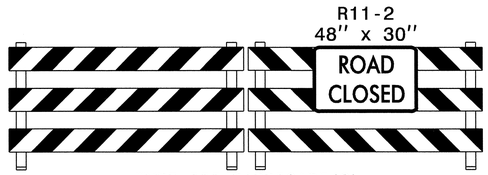

TYPE III BARRICADE(S)

①

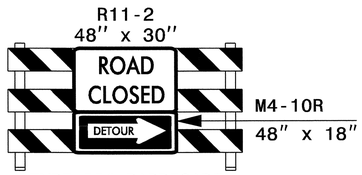

TYPE III BARRICADE

②

NOTE: FOR OFF SITE DETOUR OF LAWNDALE DR. SIGNAGE AND BARRICADES, SEE TMP-8A.

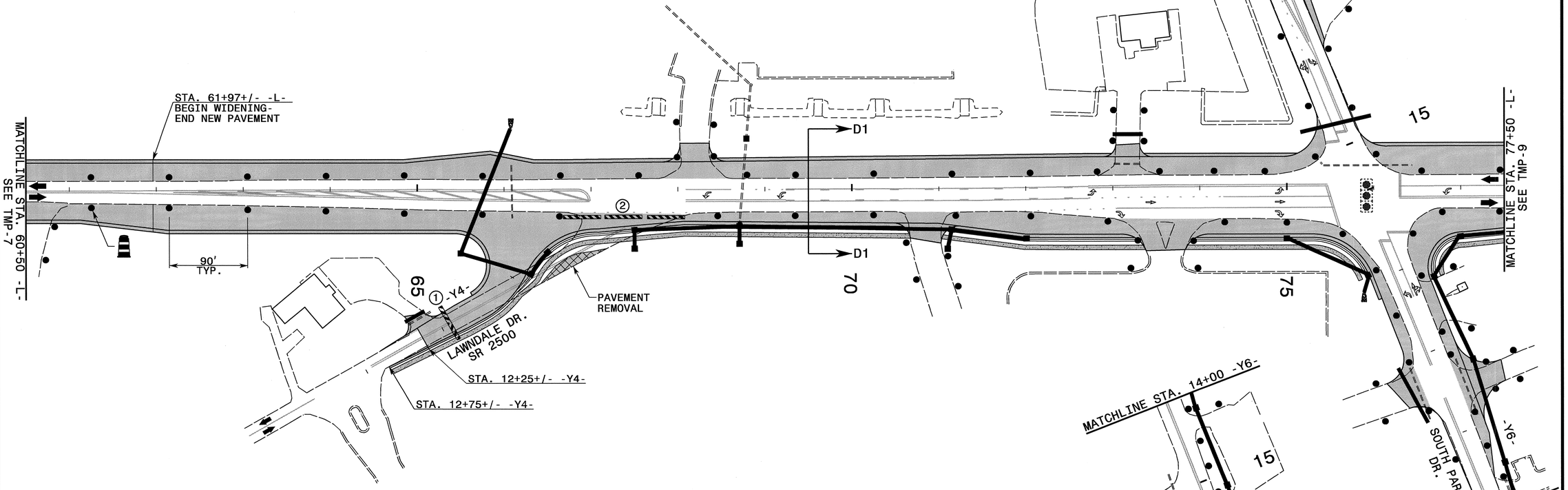

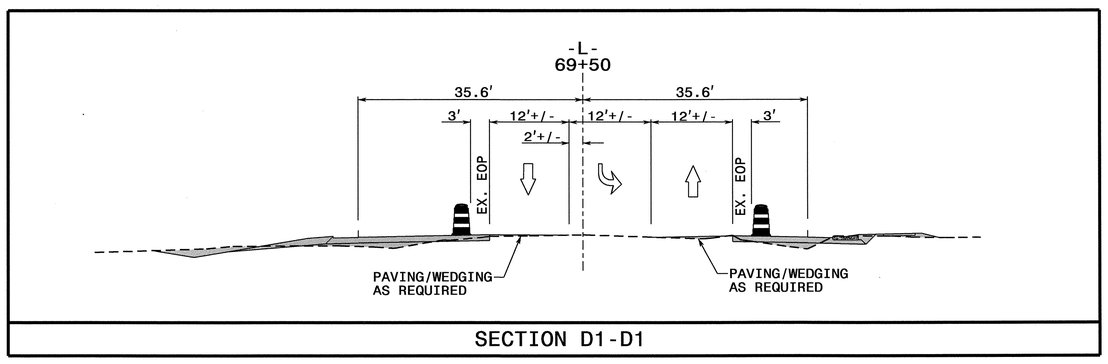

SECTION D1-D1

APPROVED: _____ DATE: _____

SEAL

NORTH CAROLINA PROFESSIONAL SEAL 8973 ENGINEER G. L. GETTIS 13 OCT 11

DIVISION OF HIGHWAYS
STATE OF NORTH CAROLINA
DEPARTMENT OF TRANSPORTATION
WORK ZONE TRAFFIC CONTROL

PHASE I DETAILS

12-OCT-2011 13:04
\\dot\dfsroot\Proj\TIPProjects-U\U3326\Traffic\TrafficControl\tcp\-L- LINE\U3326_-L-_ph1_tmp08.dgn
sngreen AT TE244733

PROJ. REFERENCE NO.	SHEET NO.
U-3326A/B	TMP-8A

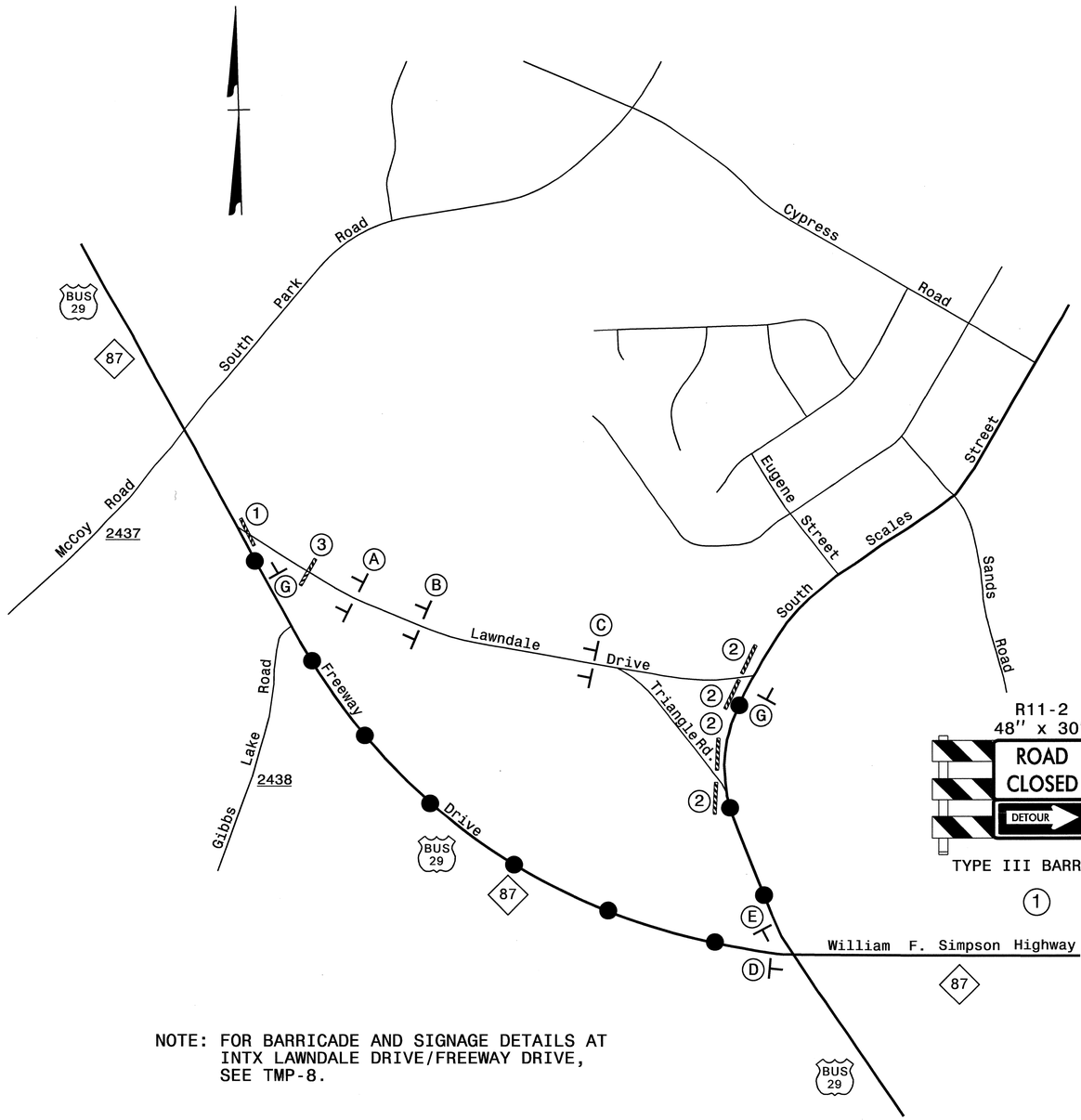

NOTE: FOR BARRICADE AND SIGNAGE DETAILS AT INTX LAWNDALE DRIVE/FREEWAY DRIVE, SEE TMP-8.

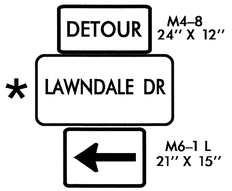

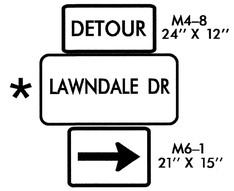

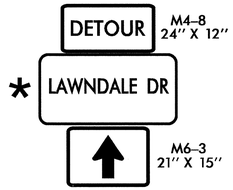

* SEE SHEET TMP-2C FOR SIGN DESIGN

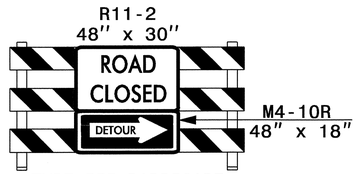

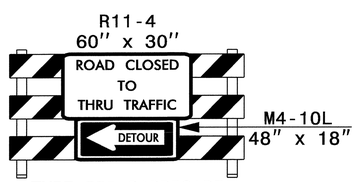

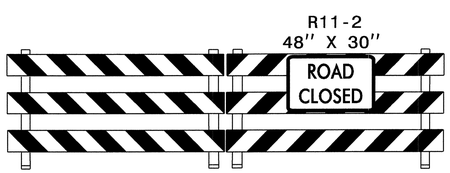

DETOUR ROUTE

APPROVED:_____ DATE:_____

SEAL

NORTH CAROLINA PROFESSIONAL SEAL 8973 ENGINEER G. L. GETTIES

DIVISION OF HIGHWAYS * STATE OF NORTH CAROLINA * DEPARTMENT OF TRANSPORTATION * WORK ZONE TRAFFIC CONTROL

-L- LINE PHASE I OFF-SITE DETOUR LAWNDALE DR.

12-OCT-2011 13:04
\\dot\dfsroot\proj\TIPProjects-U\U3326\Traffic\TrafficControl\tcp\-L- LINE\U3326_-L-_phl_tmp08a.dgn
sngreen AT TE24733

PROJ. REFERENCE NO.	SHEET NO.
U-3326A/B	TMP-9

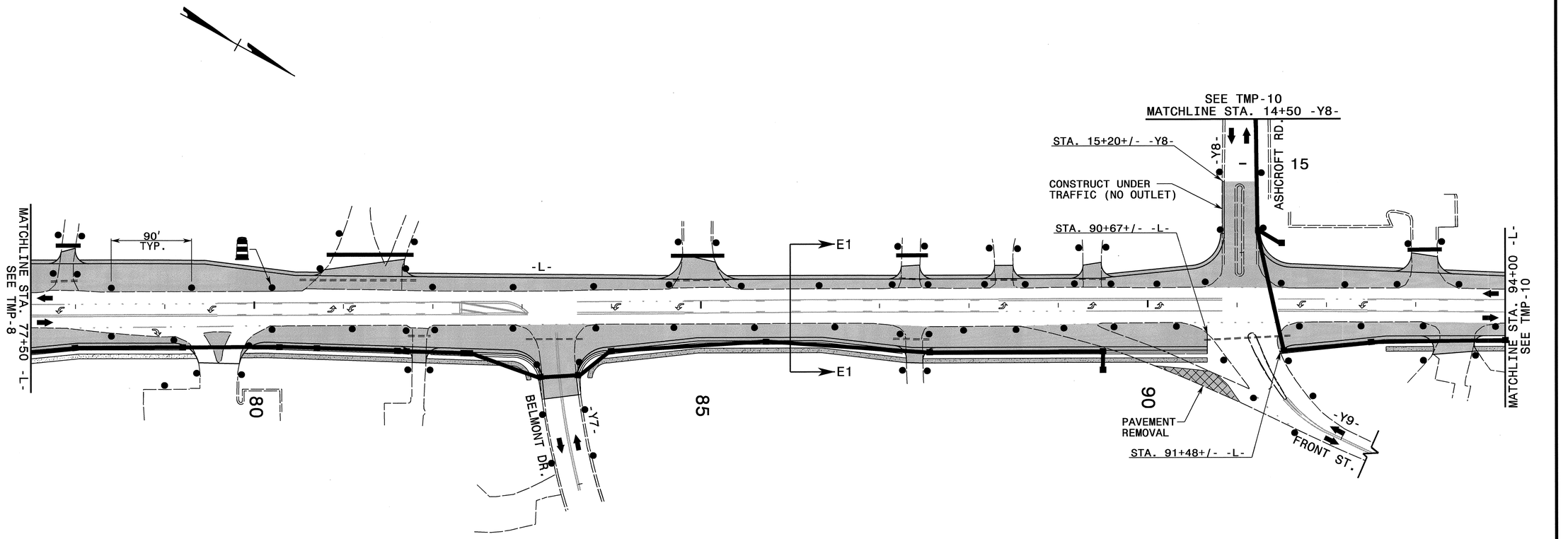

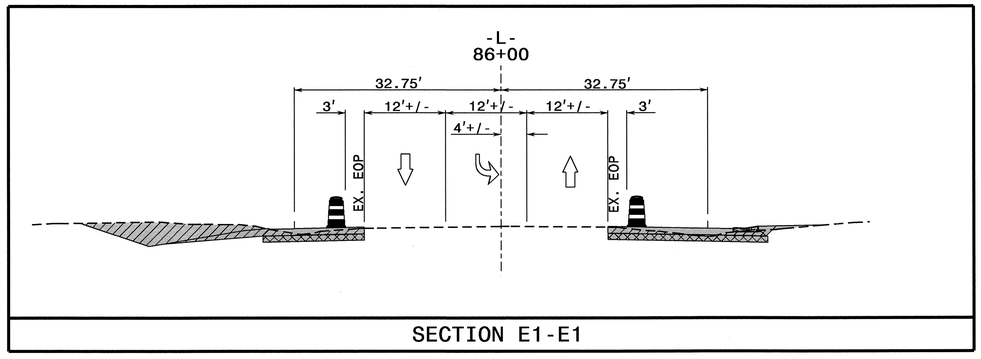

SECTION E1-E1

APPROVED:_____ DATE:_____

SEAL

NORTH CAROLINA PROFESSIONAL SEAL 8973 ENGINEER L. L. GETTIER 13 Oct 11

DIVISION OF HIGHWAYS
STATE OF NORTH CAROLINA
DEPARTMENT OF TRANSPORTATION
WORK ZONE TRAFFIC CONTROL

PHASE I DETAILS

12-OCT-2011 13:04
\\dot\dfsroot01\proj\TIPProjects-U\U3326\Traffic\TrafficControl\tcp\-L- LINE\U3326_-L-_phl_tmp09.dgn
sngreen AT TE24473

PROJ. REFERENCE NO.	SHEET NO.
U-3326A/B	TMP-10

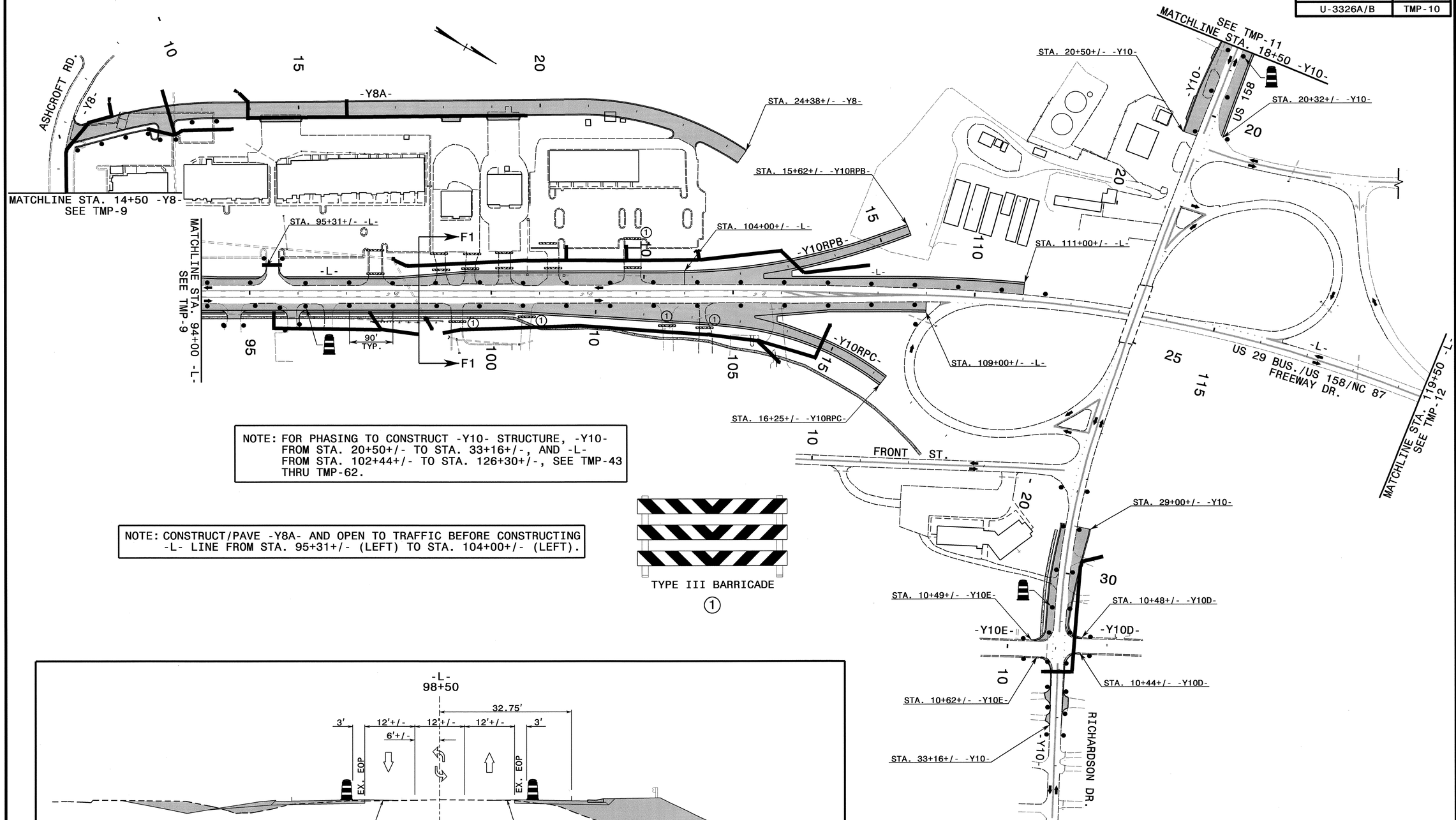

NOTE: FOR PHASING TO CONSTRUCT -Y10- STRUCTURE, -Y10- FROM STA. 20+50+/- TO STA. 33+16+/-, AND -L- FROM STA. 102+44+/- TO STA. 126+30+/-, SEE TMP-43 THRU TMP-62.

NOTE: CONSTRUCT/PAVE -Y8A- AND OPEN TO TRAFFIC BEFORE CONSTRUCTING -L- LINE FROM STA. 95+31+/- (LEFT) TO STA. 104+00+/- (LEFT).

TYPE III BARRICADE

①

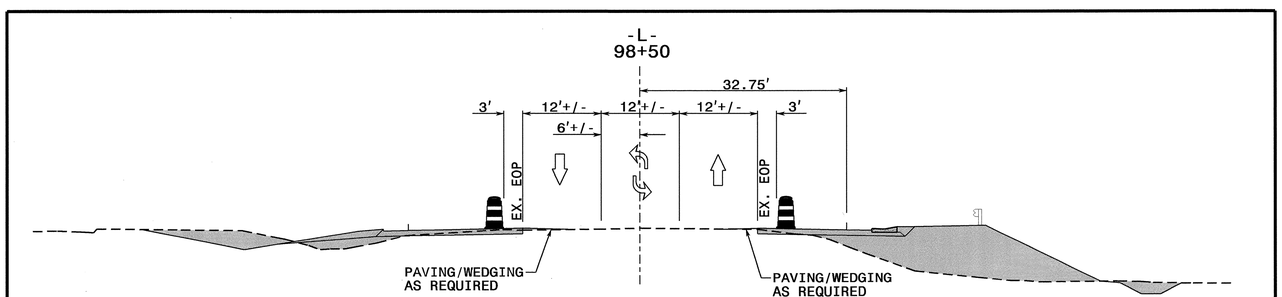

SECTION F1-F1

APPROVED:_____ DATE:_____

SEAL

NORTH CAROLINA PROFESSIONAL SEAL 8973 ENGINEER G. L. GETTIER

DIVISION OF HIGHWAYS STATE OF NORTH CAROLINA DEPARTMENT OF TRANSPORTATION WORK ZONE TRAFFIC CONTROL

PHASE I DETAILS

12-OCT-2011 13:04
\\dot\dfsroot01\proj\TPProjects-U\U3326\Traffic\TrafficControl\tcp\-L- LINE\U3326_-L-_phI_tmp10.dgn
sngreen AT TE24733

PROJ. REFERENCE NO.	SHEET NO.
U-3326A/B	TMP-11

TYPE III BARRICADE(S)

①

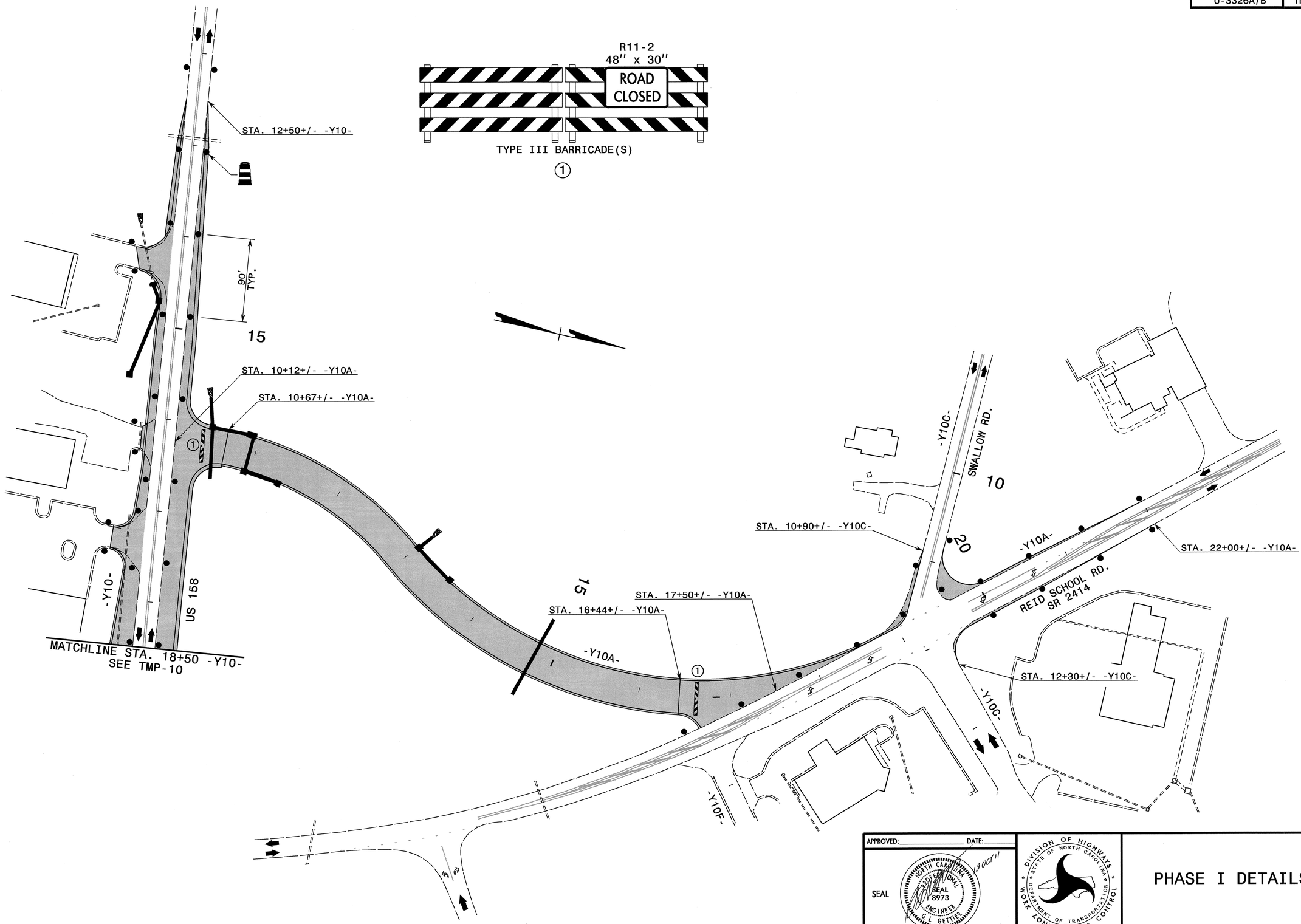

APPROVED: _____ DATE: _____

SEAL

NORTH CAROLINA PROFESSIONAL SEAL 8973 ENGINEER G. L. GETTIER

19 OCT 11

DIVISION OF HIGHWAYS
STATE OF NORTH CAROLINA
DEPARTMENT OF TRANSPORTATION
WORK ZONE TRAFFIC CONTROL

PHASE I DETAILS

12-OCT-2011 13:03
\\dot\dfsroot0\proj\TIPProjects-UU3326\Traffic\TrafficControl\tep\-L- LINE\U3326_-L-_phI_tmpll.dgn
sngreen AT T224733

PROJ. REFERENCE NO.	SHEET NO.
U-3326A/B	TMP-12

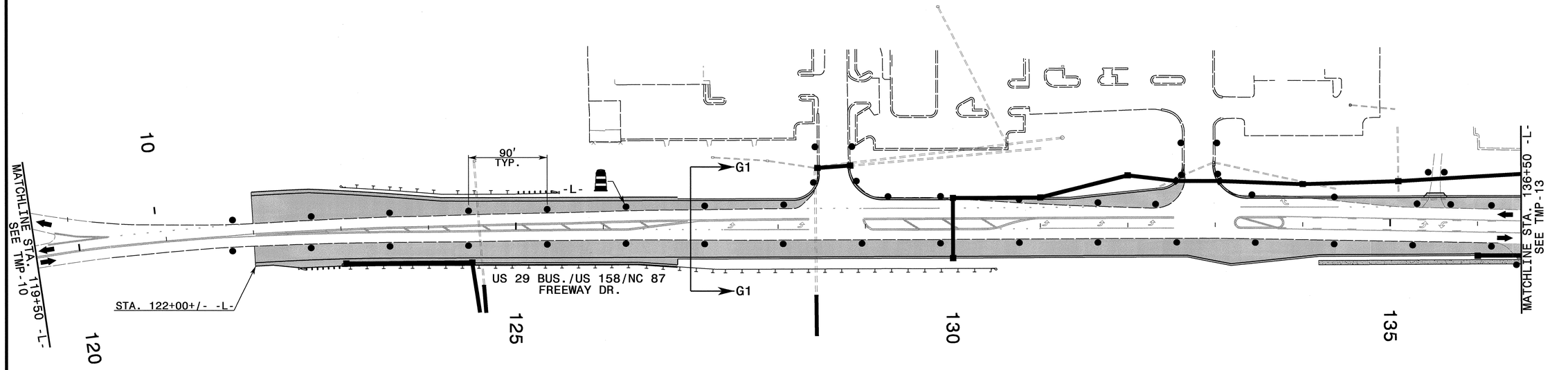

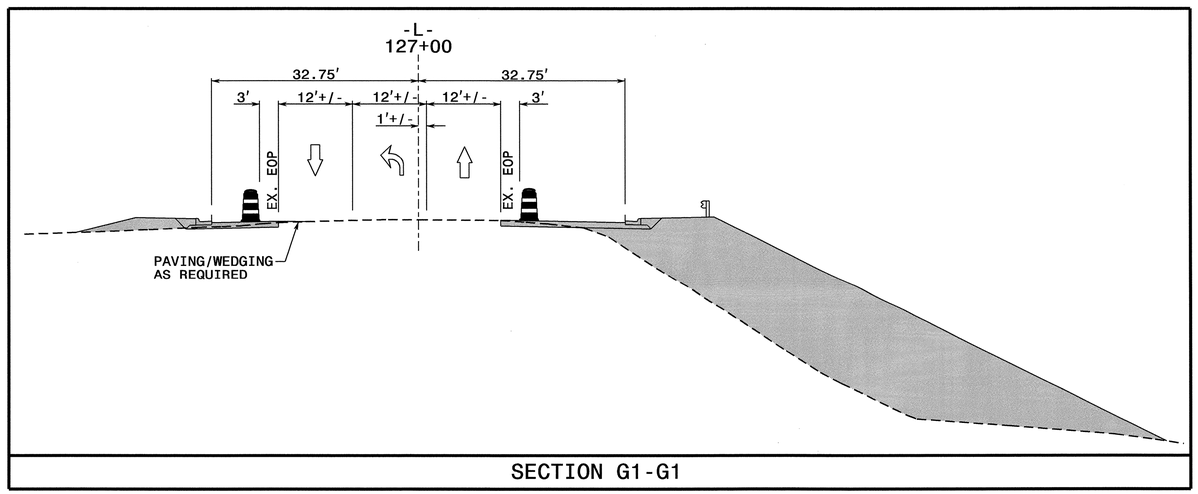

SECTION G1-G1

APPROVED: _____ DATE: _____

SEAL

NORTH CAROLINA PROFESSIONAL SEAL 8973 ENGINEER G L GETTIER

13 OCT 11

DIVISION OF HIGHWAYS
STATE OF NORTH CAROLINA
DEPARTMENT OF TRANSPORTATION
WORK ZONE TRAFFIC CONTROL

PHASE I DETAILS

12-OCT-2011 13:03
\\dot\dfsroot\Unpriv\TIPProjects-U\U3326\Traffic\TrafficControl\top\-L- LINE\U3326_-L-_phl_tmpl2.dgn
sngreen AT TE244733

PROJ. REFERENCE NO.	SHEET NO.
U-3326A/B	TMP-13

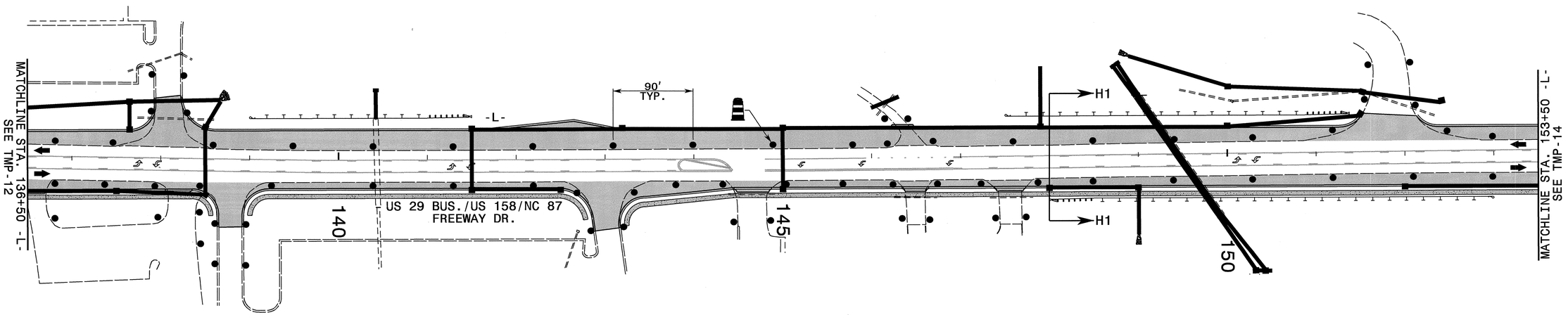

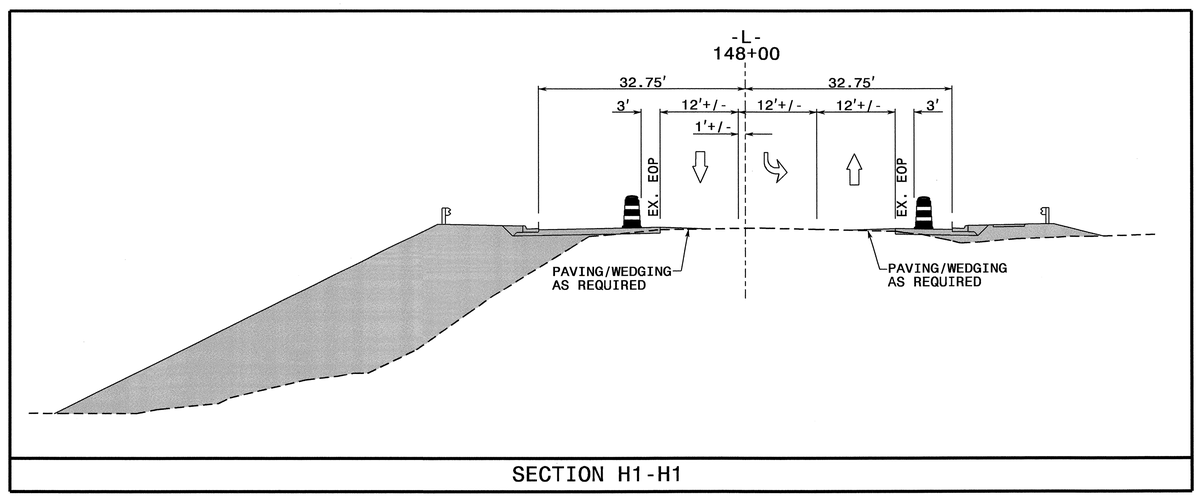

SECTION H1-H1

APPROVED: _____ DATE: _____

SEAL

NORTH CAROLINA PROFESSIONAL SEAL 8973 ENGINEER S. L. GETTER

DIVISION OF HIGHWAYS
STATE OF NORTH CAROLINA
DEPARTMENT OF TRANSPORTATION
WORK ZONE TRAFFIC CONTROL

PHASE I DETAILS

12-OCT-2011 13:03
\\dot\dfsroot\Projects\TIPProjects-U\U3326\Traffic\TrafficControl\tcp\-L- LINE\U3326_-L-_ph1_tmp13.dgn
smgreen AT TE24733

PROJ. REFERENCE NO.	SHEET NO.
U-3326A/B	TMP-14

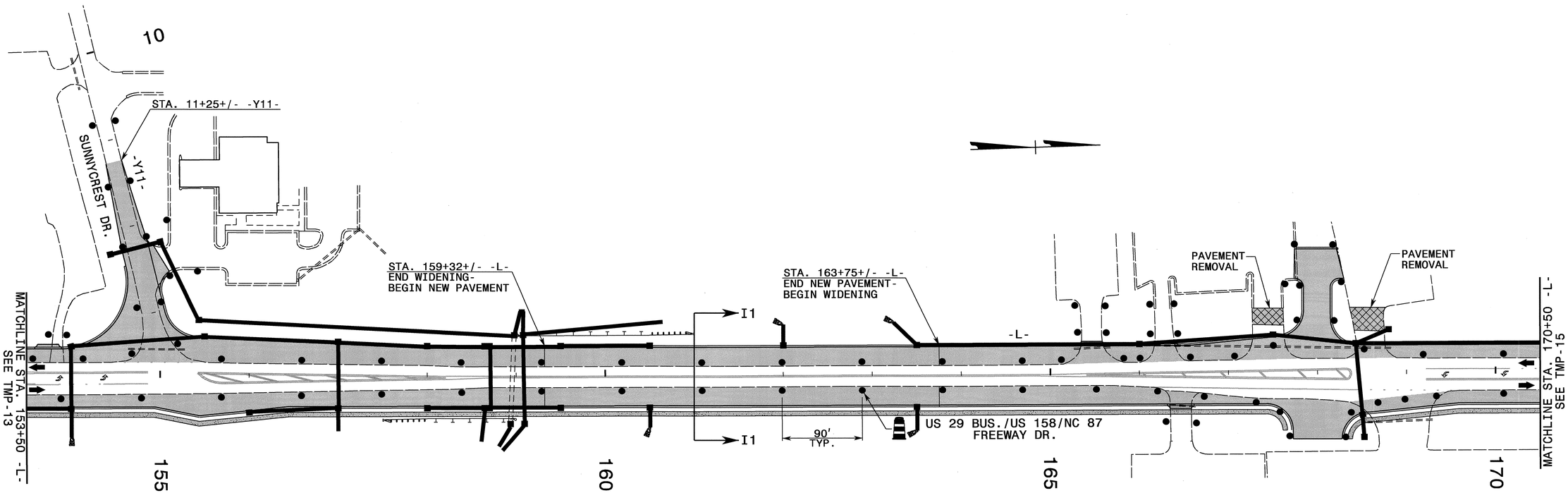

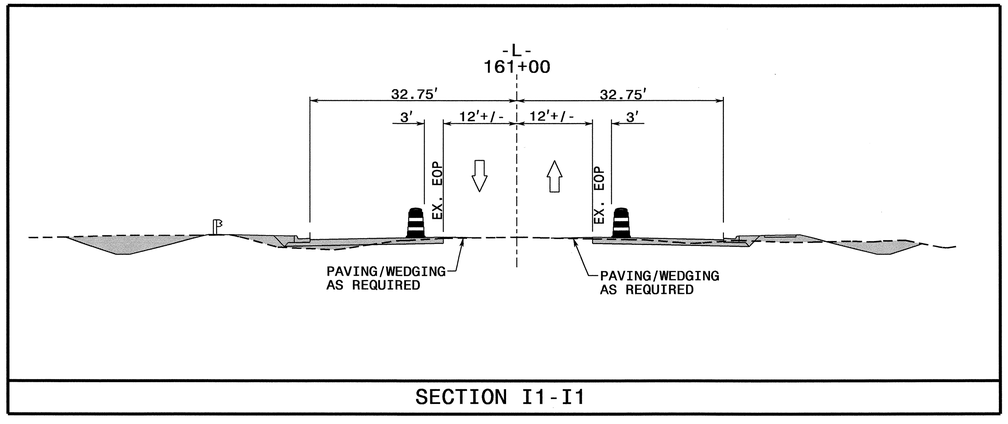

SECTION I1-I1

APPROVED:_____ DATE:_____

SEAL

NORTH CAROLINA PROFESSIONAL SEAL 8973 ENGINEER G L GETTIER

8 OCT 11

DIVISION OF HIGHWAYS WORK ZONE TRAFFIC CONTROL

PHASE I DETAILS

12-OCT-2011 13:03
\\dot\dfsroot0\proj\TIPProjects-U\U3326\Traffic\TrafficControl\tcp\-L- LINE\U3326_-L-_phI_tmpl4.dgn
sngreen AT T1244733

PROJ. REFERENCE NO.	SHEET NO.
U-3326A/B	TMP-15

10

STA. 10+00+/- -Y12-

PECAN RD.

-Y12A-

VANCE ST.
SR 2525

-Y12-

K1

K1

CONDUCT PAVING AND WEDGING
OPERATIONS AS REQUIRED

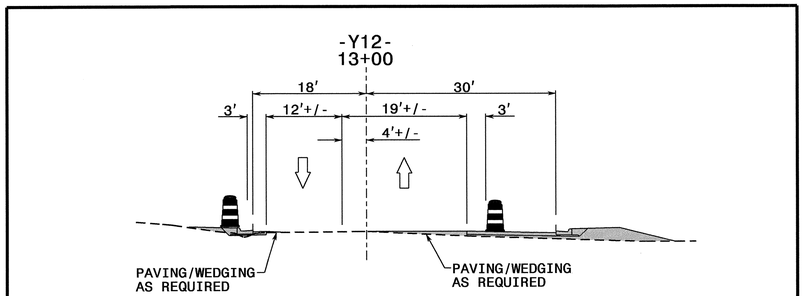

SECTION K1-K1

15

STA. 183+64+/- -L-
END WIDENING-
BEGIN NEW PAVEMENT

MATCHLINE STA. 170+50 -L-
SEE TMP-14

J1

J1

175

180

STA. 181+74+/- -L-
END WIDENING

-L-

US 29 BUS./US 158/NC 87
FREEWAY DR.

185

MATCHLINE STA. 187+50 -L-
SEE TMP-16

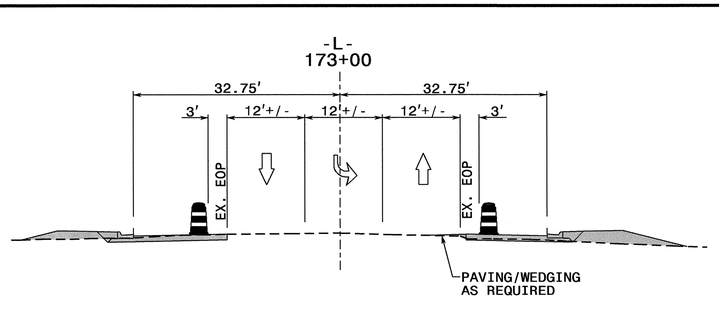

SECTION J1-J1

VANCE ST.
SR 2525

-Y12-

20

CEDAR ST.

STA. 20+20+/- -Y12-

STA. 20+27+/- -Y12-

APPROVED: _____ DATE: _____

SEAL

NORTH CAROLINA PROFESSIONAL SEAL 8973 ENGINEER G. I. GETTIER

DIVISION OF HIGHWAYS
STATE OF NORTH CAROLINA
DEPARTMENT OF TRANSPORTATION
WORK ZONE TRAFFIC CONTROL

PHASE I DETAILS

12-OCT-2011 13:03
\\dot\dfsroot01\proj\TIPProjects-U\U3326\TrafficControl\tcp\-L- LINE\U3326_-L-_phl_tmpl5.dgn
sngreen AT TE24733

PROJ. REFERENCE NO.	SHEET NO.
U-3326A/B	TMP-16

R11-2
48" x 30"
ROAD CLOSED
TYPE III BARRICADE(S)
(1)

STA. 8+70+/- -Y13-
HARRISON ST.
NC 87
90' TYP.
-DRV3-
-Y13-
STA. 13+00+/- -Y13A-
MARK RD.
-Y13A-
CONSTRUCT AND COVER DROP INLET
STA. 19+75+/- -Y13-
STA. 20+00+/- -Y13-
CONSTRUCT AND COVER DROP INLET
-Y13C-
-Y13RPB-
STA. 14+00+/- -Y13LPB-
-Y13RPC-
STA. 15+23+/- -Y13RPC-
STA. 24+00+/- -Y13-
-DRV1-
-DRV2-
-Y13RPD-
STA. 16+34+/- -Y13RPD-
STA. 27+30+/- -Y13-
STA. 12+50+/- -Y13RPD-
STA. 12+82+/- -Y13RPD-
-L-
STA. 210+00+/- -L-
US 29 BUS./US 158
FREEWAY DR.
-Y14-
STA. 10+00+/- -Y14-
PAVEMENT REMOVAL
STA. 13+50+/- -Y14-
WALTERS ST.
STA. 22+70+/- -Y14-
HARRISON ST.
SR 2687
-Y14B-
HAWKINS ST.
STA. 35+50+/- -Y13-
-Y13B-
WALTERS ST.
MATCHLINE STA. 216+75 -L-
SEE TMP-17
MATCHLINE STA. 187+50 -L-
SEE TMP-15
-Y12B-
STATE ST.
-Y12C-
ELM STREET
165' OF PAVING

NOTE: CONSTRUCT/PAVE -Y13C- AND OPEN TO TRAFFIC BEFORE CONSTRUCTING -L- LINE FROM STA. 192+50+/- (LEFT) TO STA. 193+50+/- (LEFT).

NOTE: FOR PHASING TO CONSTRUCT -Y13- STRUCTURE, -Y13- FROM STA. 19+75+/- TO STA. 24+00+/-, AND -L- FROM STA. 181+72+/- TO STA. 214+00+/-, SEE TMP-63 THRU TMP-83.

APPROVED: _____ DATE: _____

SEAL
NORTH CAROLINA PROFESSIONAL SEAL 8973 ENGINEER G. L. GETTIER
10 OCT 11

DIVISION OF HIGHWAYS
STATE OF NORTH CAROLINA
DEPARTMENT OF TRANSPORTATION
WORK ZONE TRAFFIC CONTROL

PHASE I DETAILS

12-OCT-2011 13:02
\\dot\dfsroot01\proj\TIPProjects-U\U3326\Traffic\TrafficControl\top\-L- LINE\U3326_-L-_phl_tmpl6.dgn
sngreen AT TE24733

PROJ. REFERENCE NO.	SHEET NO.
U-3326A/B	TMP-17

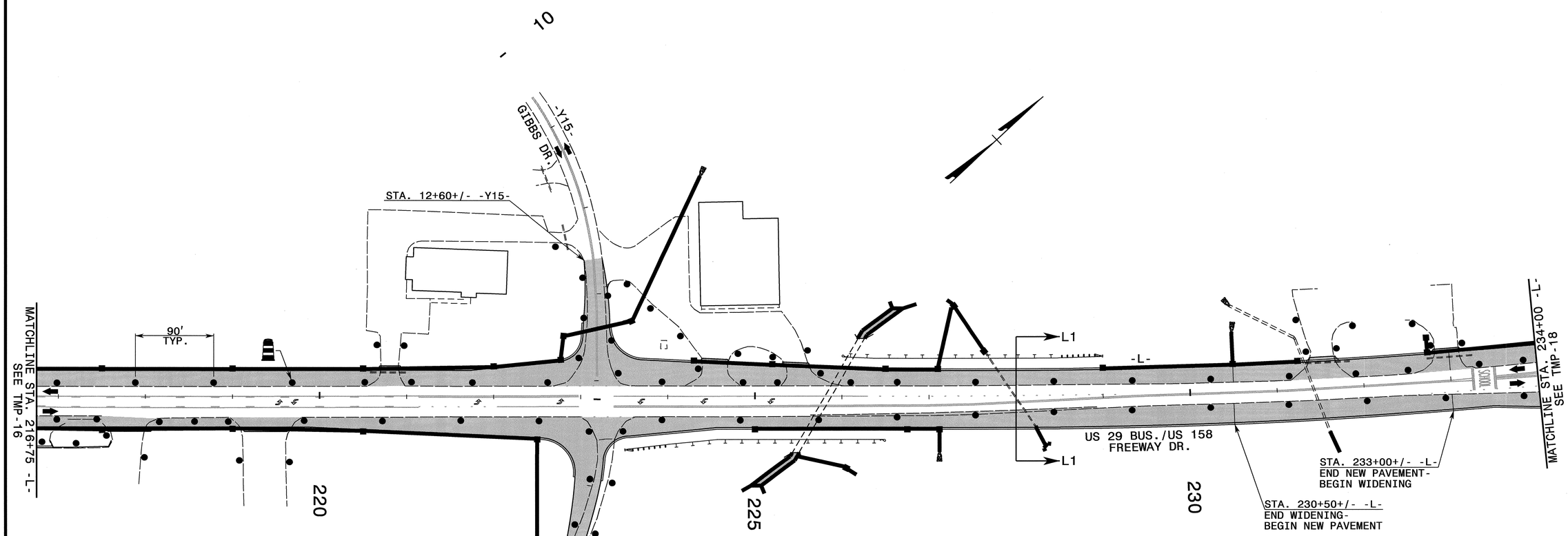

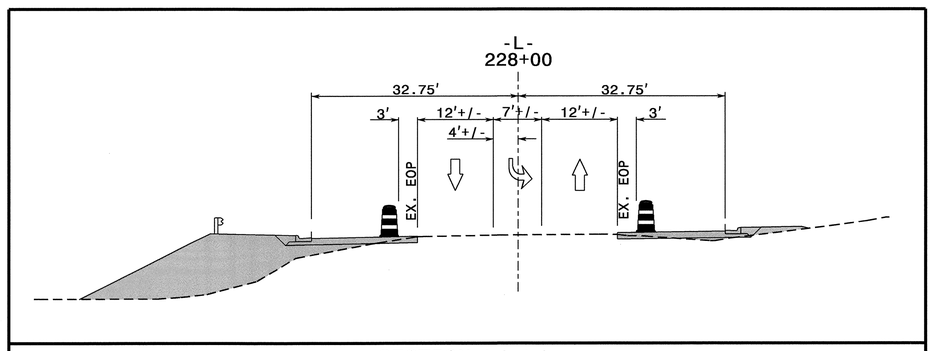

SECTION L1-L1

APPROVED: _____ DATE: _____

SEAL

NORTH CAROLINA PROFESSIONAL SEAL 8973 ENGINEER G. L. GETTIER

13 OCT 11

DIVISION OF HIGHWAYS
STATE OF NORTH CAROLINA
DEPARTMENT OF TRANSPORTATION
WORK ZONE TRAFFIC CONTROL

PHASE I DETAILS

12-OCT-2011 13:02
\\dot\dfsroot01\proj\TIPProjects-U\U3326\Traffic\TrafficControl\tcp\-L- LINE\U3326_-L-_phl_tmpl7.dgn
sngreen AT TE244733

PROJ. REFERENCE NO.	SHEET NO.
U-3326A/B	TMP-18

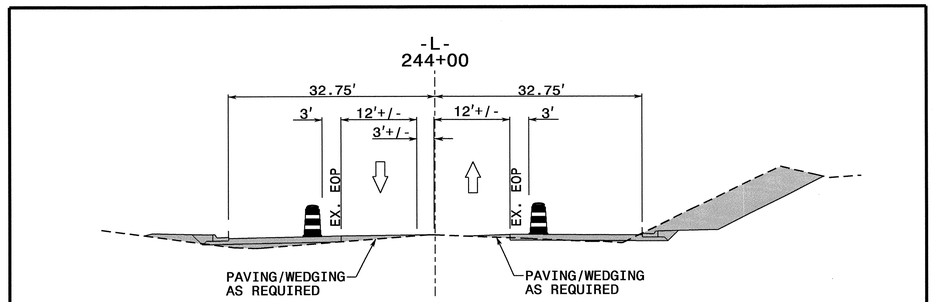

SECTION M1-M1

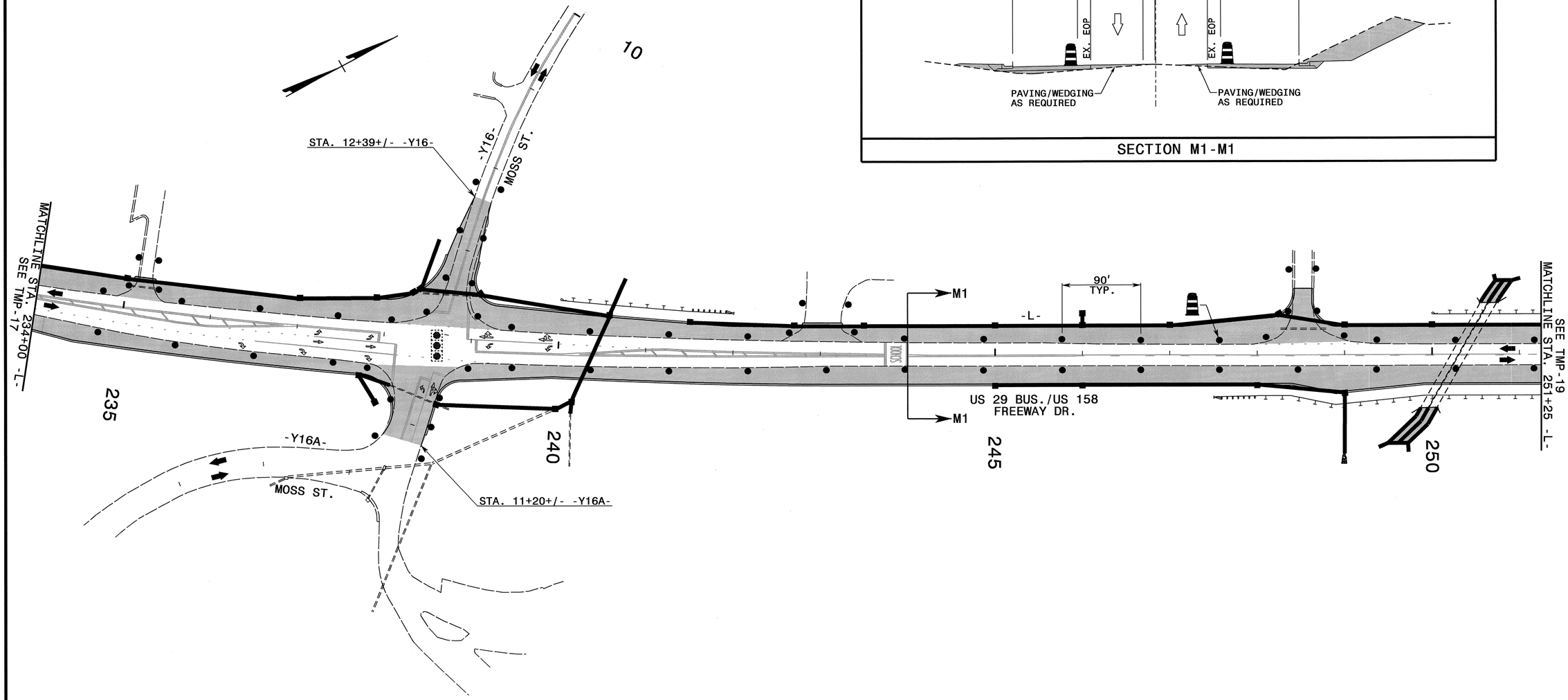

APPROVED: _____ DATE: _____

SEAL

NORTH CAROLINA PROFESSIONAL SEAL 8973 ENGINEER G.L. GETTIER

13 OCT 11

DIVISION OF HIGHWAYS
STATE OF NORTH CAROLINA
DEPARTMENT OF TRANSPORTATION
WORK ZONE TRAFFIC CONTROL

PHASE I DETAILS

12-OCT-2011 13:02
\\dot\dfsroot01\proj\TIPProjects-U\U3326\Traffic\TrafficControl\tcp\-L- LINE\U3326_-L-_ph1_tmp18.dgn
sngreen AT TE24733

PROJ. REFERENCE NO.	SHEET NO.
U-3326A/B	TMP-19

NOTE: FOR PHASING TO CONSTRUCT -Y17- STRUCTURE, -Y17- FROM STA. 13+00+/- TO STA. 18+50+/-, AND -L- FROM STA. 249+38+/- TO STA. 271+45+/-, SEE TMP-84 THRU TMP-93.

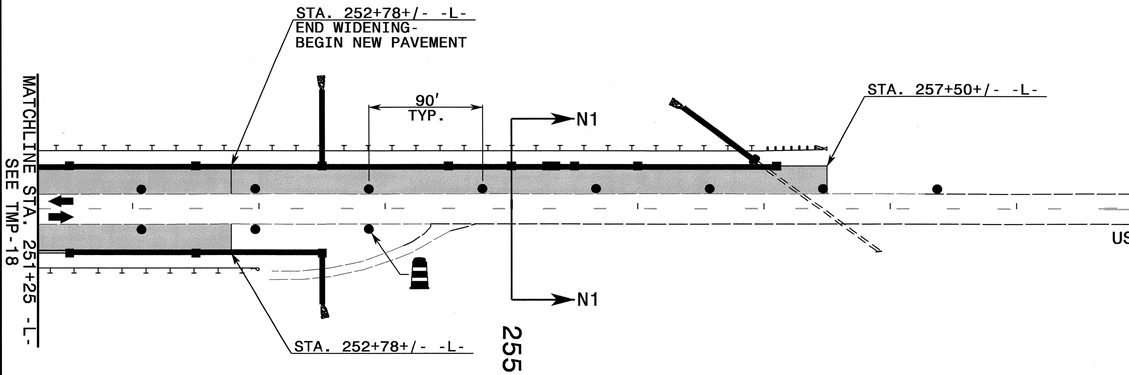

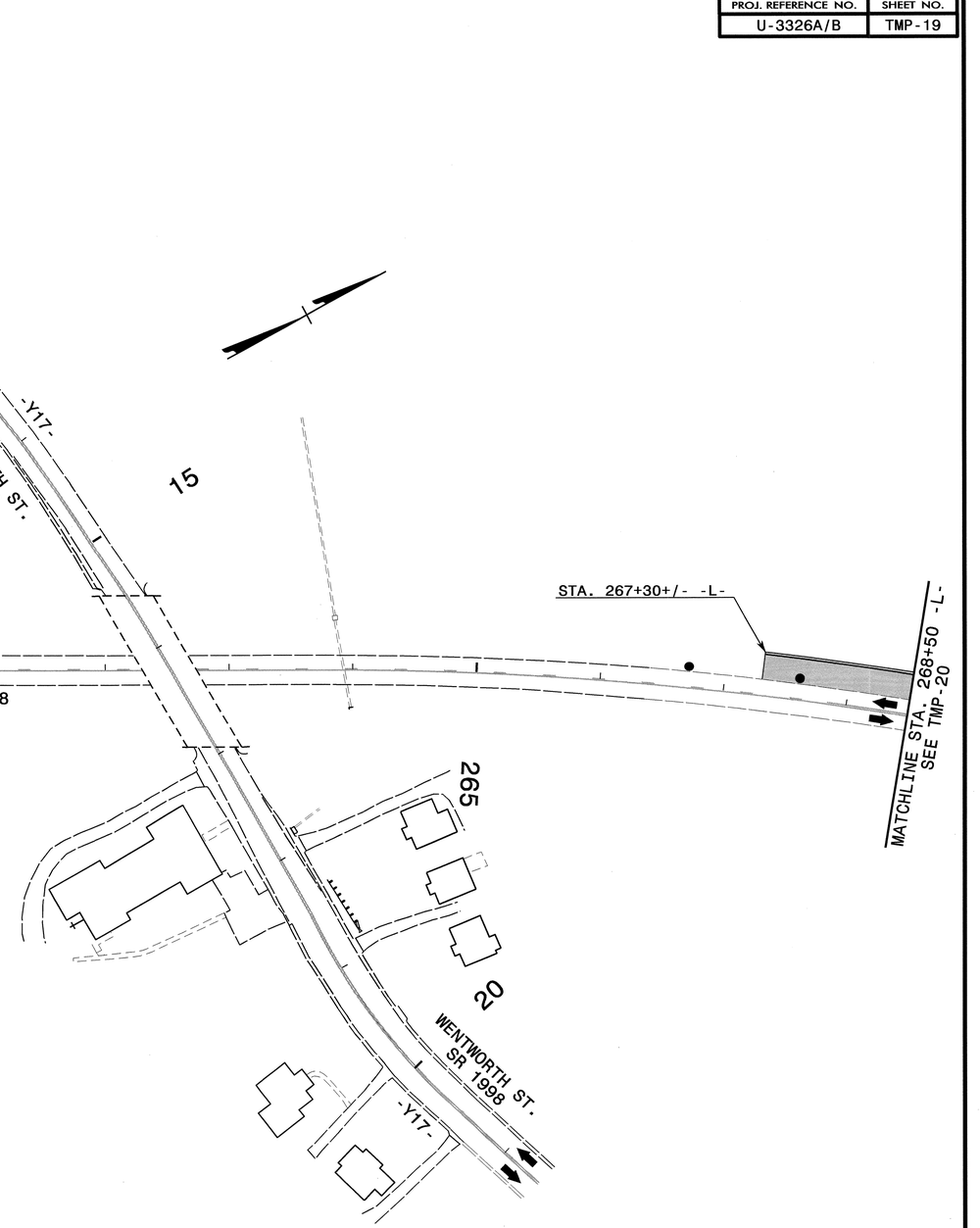

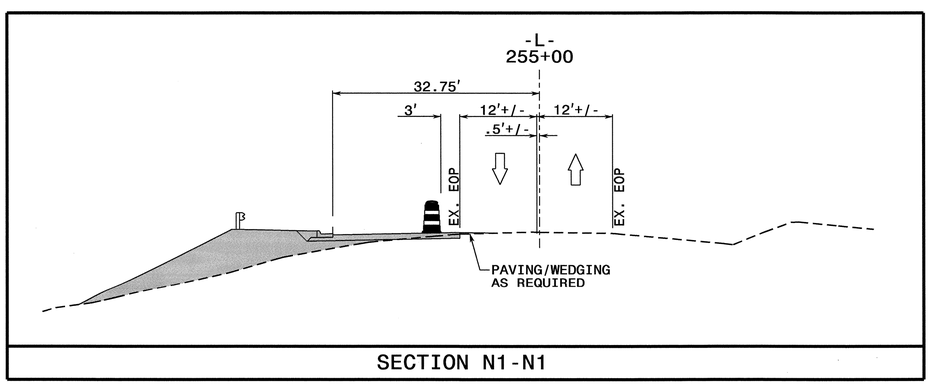

SECTION N1-N1

APPROVED: _____ DATE: _____

SEAL

NORTH CAROLINA PROFESSIONAL SEAL 8973 ENGINEER G. L. GETTIER 13 OCT 11

DIVISION OF HIGHWAYS STATE OF NORTH CAROLINA DEPARTMENT OF TRANSPORTATION WORK ZONE TRAFFIC CONTROL

PHASE I DETAILS

12-OCT-2011 13:02
\\dot\dfsroot01\proj\TIPProjects-U\U3326\Traffic\TrafficControl\tcp\-L- LINE\U3326_-L-_phl_tmp19.dgn
sngreen AT TE24733

PROJ. REFERENCE NO.	SHEET NO.
U-3326A/B	TMP-20

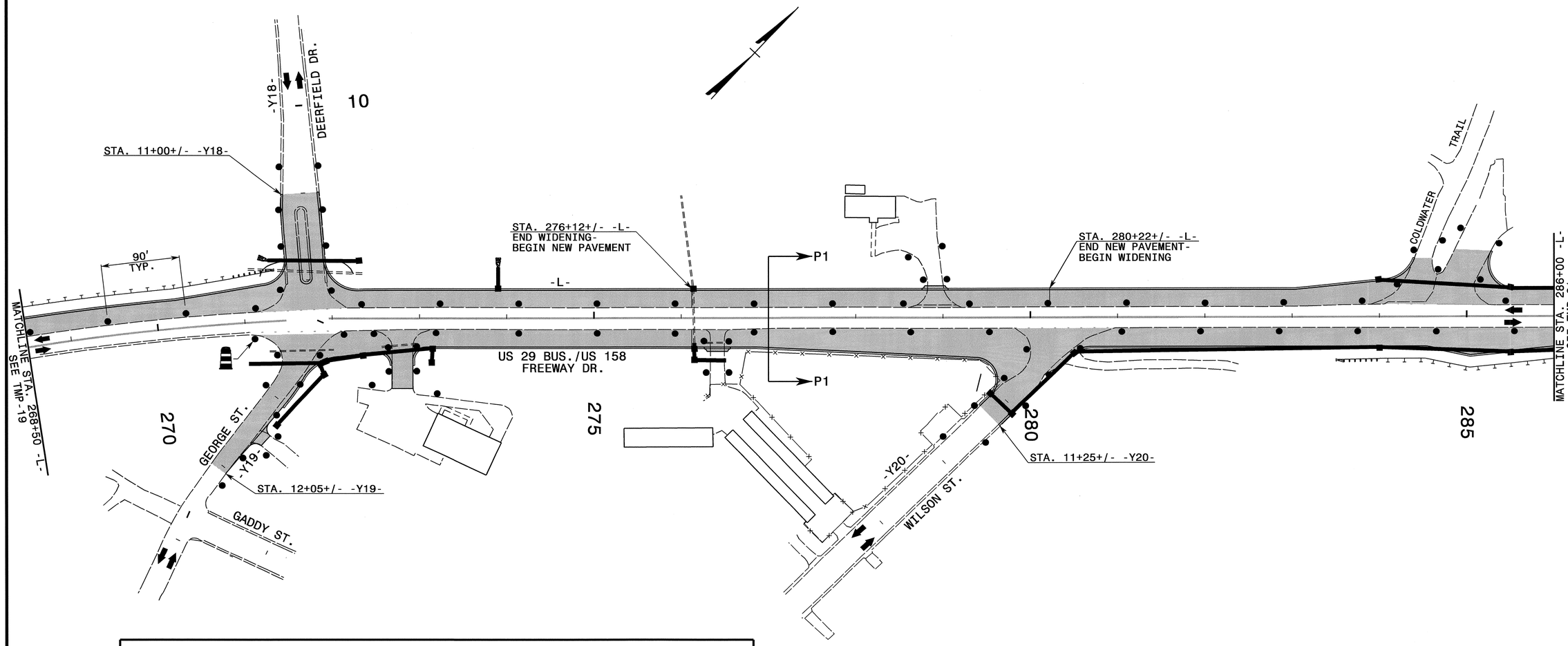

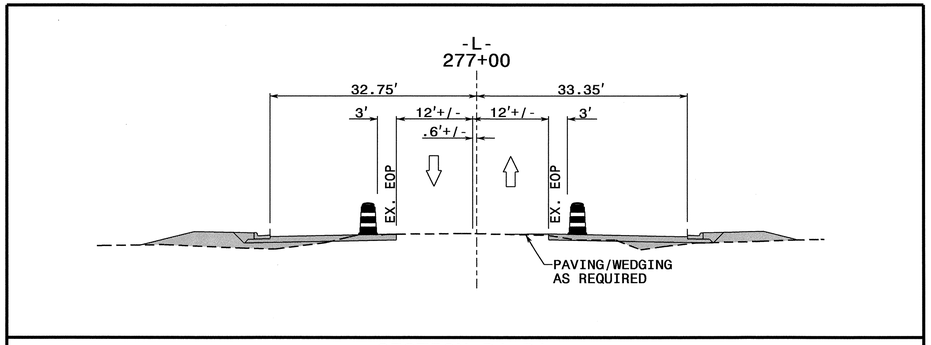

SECTION P1-P1

APPROVED: _____ DATE: _____

SEAL

NORTH CAROLINA PROFESSIONAL SEAL 8973 ENGINEER G L GETTIER

13 OCT 11

DIVISION OF HIGHWAYS
STATE OF NORTH CAROLINA
DEPARTMENT OF TRANSPORTATION
WORK ZONE TRAFFIC CONTROL

PHASE I DETAILS

12-OCT-2011 13:02
\\dot\dfsroot01\proj\TIPProjects-U\U3326\Traffic\TrafficControl\tcp\-L- LINE\U3326_-L-_phl_tmp20.dgn
sngreen AT TE244733

PROJ. REFERENCE NO.	SHEET NO.
U-3326A/B	TMP-21

SECTION Q1-Q1

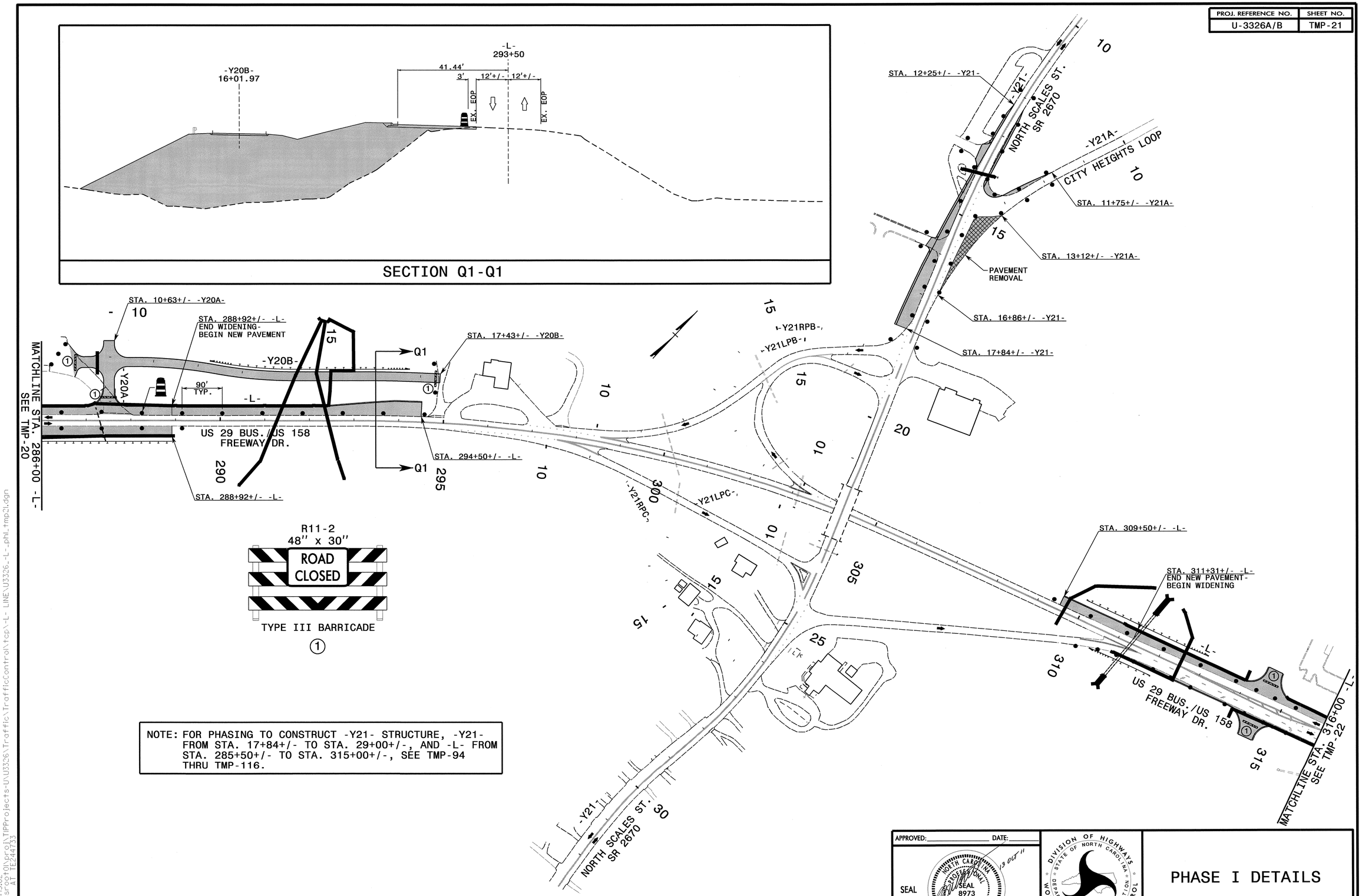

R11-2
48" x 30"

TYPE III BARRICADE

①

NOTE: FOR PHASING TO CONSTRUCT -Y21- STRUCTURE, -Y21- FROM STA. 17+84+/- TO STA. 29+00+/-, AND -L- FROM STA. 285+50+/- TO STA. 315+00+/-, SEE TMP-94 THRU TMP-116.

APPROVED: _____ DATE: _____

SEAL

NORTH CAROLINA PROFESSIONAL SEAL 8973 ENGINEER G.L. GETTIER

13 OCT 11

DIVISION OF HIGHWAYS
STATE OF NORTH CAROLINA
DEPARTMENT OF TRANSPORTATION
WORK ZONE TRAFFIC CONTROL

PHASE I DETAILS

12-OCT-2011 13:02
\\dot\dfsroot01\proj\TIPProjects-U\U3326\Traffic\TrafficControl\tcp\-L- LINE\U3326_-L-_phl_tmp21.dgn
sngreen AT TE244733

PROJ. REFERENCE NO.	SHEET NO.
U-3326A/B	TMP-22

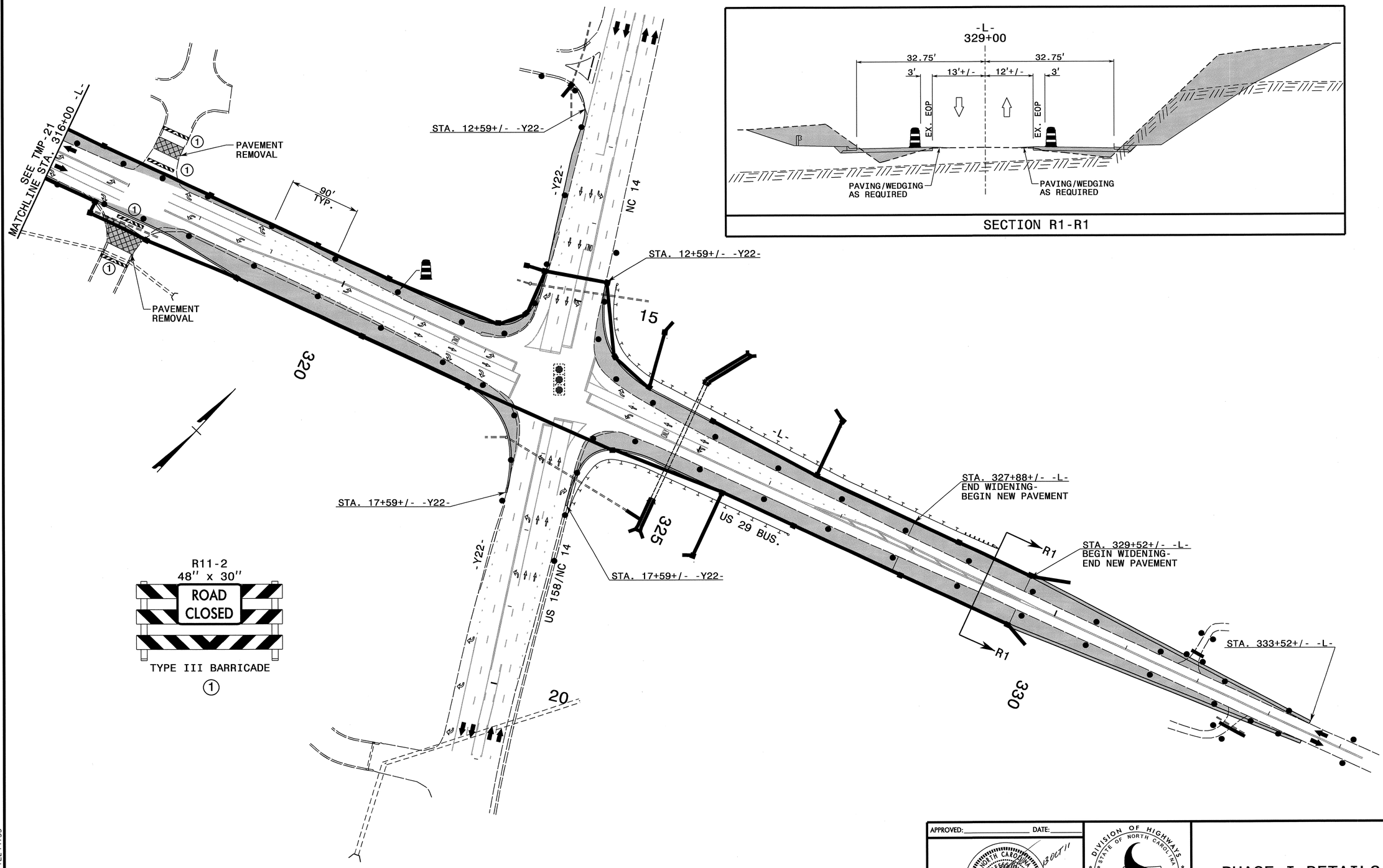

SECTION R1-R1

R11-2
48" x 30"
ROAD CLOSED
TYPE III BARRICADE
①

APPROVED:_____ DATE:_____

SEAL

NORTH CAROLINA PROFESSIONAL SEAL 8973 ENGINEER G.L. GETTIER 13 OCT 11

DIVISION OF HIGHWAYS
STATE OF NORTH CAROLINA
DEPARTMENT OF TRANSPORTATION
WORK ZONE TRAFFIC CONTROL

PHASE I DETAILS

12-OCT-2011 13:02
\\dot\dfsroot01\proj\TIPProjects-U\U3326\TrafficTrafficControl\tcp\-L- LINE\U3326_-L-_ph1_tmp22.dgn
sngreen AT TE24733

PROJ. REFERENCE NO.	SHEET NO.
U-3326A/B	TMP-23

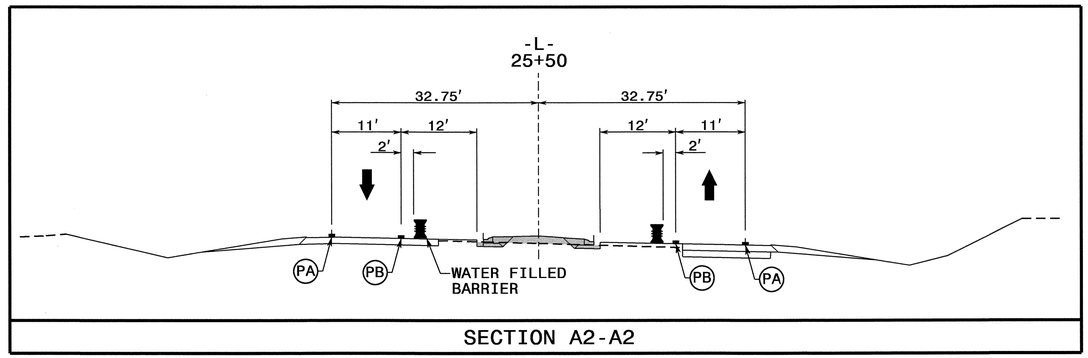

SECTION A2-A2

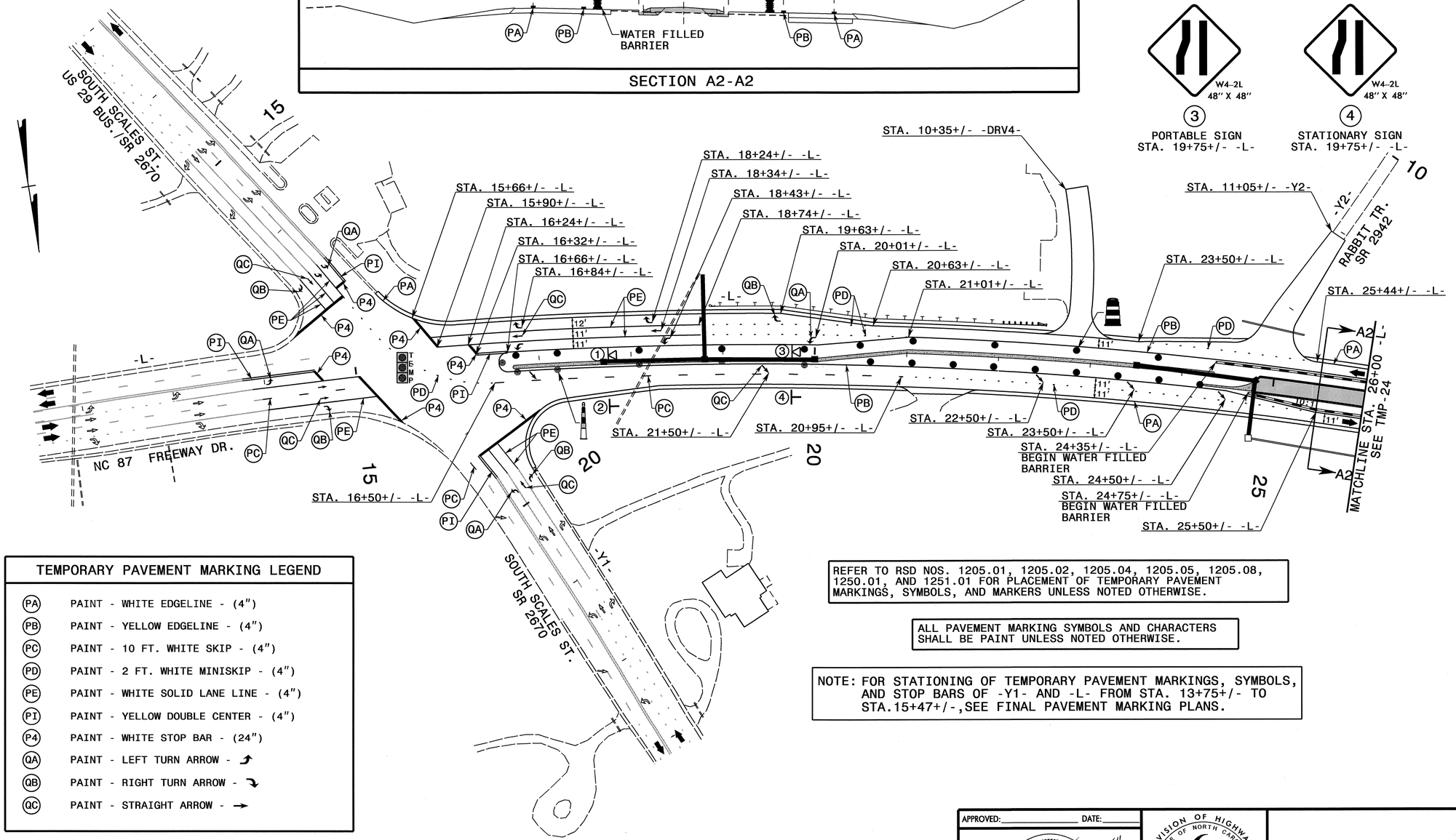

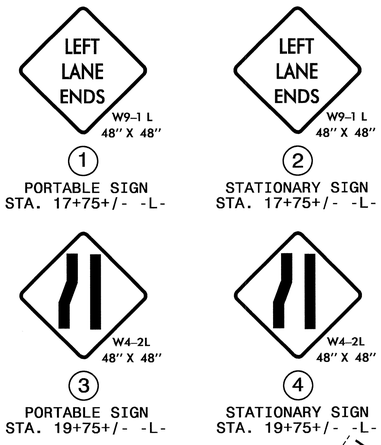

TEMPORARY PAVEMENT MARKING LEGEND

(PA)	PAINT - WHITE EDGELINE - (4")
(PB)	PAINT - YELLOW EDGELINE - (4")
(PC)	PAINT - 10 FT. WHITE SKIP - (4")
(PD)	PAINT - 2 FT. WHITE MINISKIP - (4")
(PE)	PAINT - WHITE SOLID LANE LINE - (4")
(PI)	PAINT - YELLOW DOUBLE CENTER - (4")
(P4)	PAINT - WHITE STOP BAR - (24")
(QA)	PAINT - LEFT TURN ARROW - ↰
(QB)	PAINT - RIGHT TURN ARROW - ↱
(QC)	PAINT - STRAIGHT ARROW - →

REFER TO RSD NOS. 1205.01, 1205.02, 1205.04, 1205.05, 1205.08, 1250.01, AND 1251.01 FOR PLACEMENT OF TEMPORARY PAVEMENT MARKINGS, SYMBOLS, AND MARKERS UNLESS NOTED OTHERWISE.

ALL PAVEMENT MARKING SYMBOLS AND CHARACTERS SHALL BE PAINT UNLESS NOTED OTHERWISE.

NOTE: FOR STATIONING OF TEMPORARY PAVEMENT MARKINGS, SYMBOLS, AND STOP BARS OF -Y1- AND -L- FROM STA. 13+75+/- TO STA.15+47+/-,SEE FINAL PAVEMENT MARKING PLANS.

APPROVED:_____ DATE:_____

SEAL

NORTH CAROLINA PROFESSIONAL SEAL 8973 ENGINEER G.L. GETTIER 8 OCT 11

DIVISION OF HIGHWAYS · STATE OF NORTH CAROLINA · DEPARTMENT OF TRANSPORTATION · WORK ZONE TRAFFIC CONTROL

PHASE II DETAILS

12-OCT-2011 13:01
\\dot\dfsroot0\proj\TIPProjects-U\U3326\Traffic\TrafficControl\tep\-L- LINE\U3326_-L-_ph2_tmp23.dgn
sngreen AT T2247J3

PROJ. REFERENCE NO.	SHEET NO.
U-3326A/B	TMP-24

TEMPORARY PAVEMENT MARKING LEGEND

- (PA) PAINT - WHITE EDGELINE - (4")
- (PB) PAINT - YELLOW EDGELINE - (4")
- (PD) PAINT - 2 FT. WHITE MINISKIP - (4")
- (PE) PAINT - WHITE SOLID LANE LINE - (4")
- (QA) PAINT - LEFT TURN ARROW - ↰

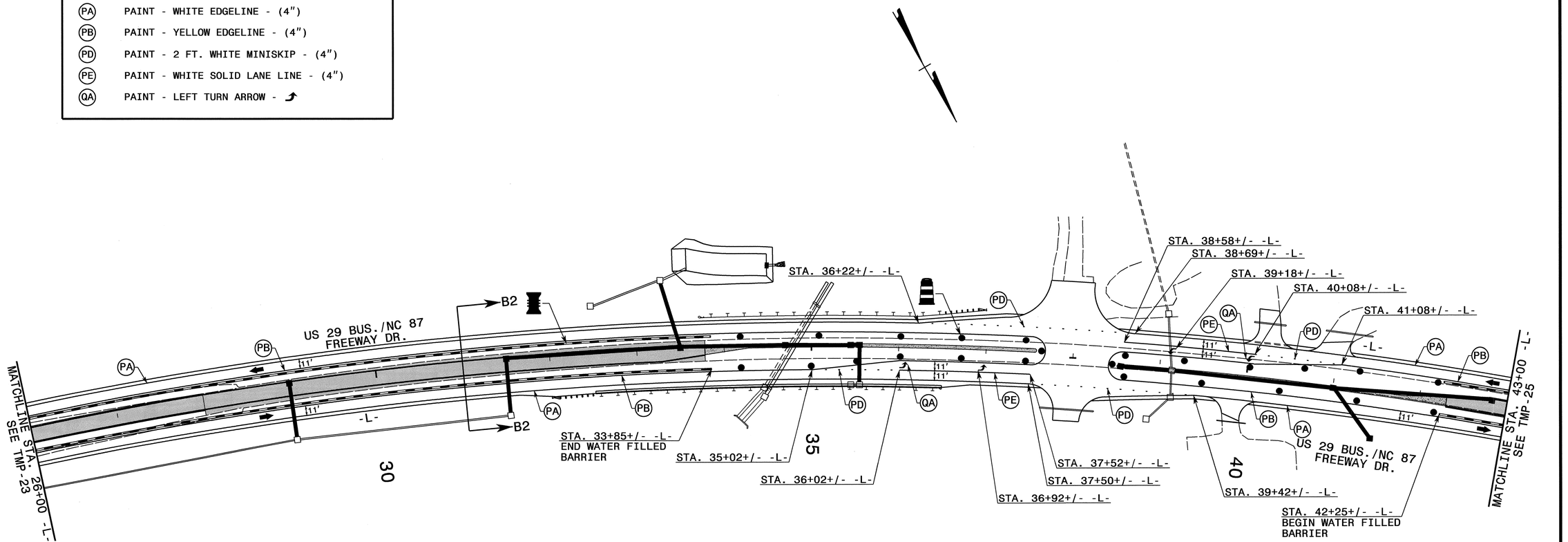

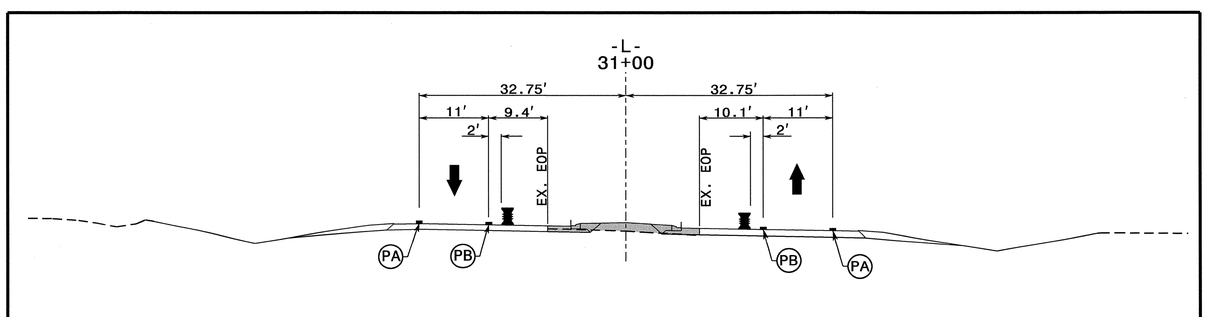

SECTION B2-B2

REFER TO RSD NOS. 1205.01, 1205.02, 1205.04, 1205.05, 1205.08 1205.09, 1250.01, AND 1251.01 FOR PLACEMENT OF TEMPORARY PAVEMENT MARKINGS, SYMBOLS, AND MARKERS UNLESS NOTED OTHERWISE.

ALL PAVEMENT MARKING SYMBOLS AND CHARACTERS SHALL BE PAINT UNLESS NOTED OTHERWISE.

APPROVED: _____ DATE: _____

SEAL

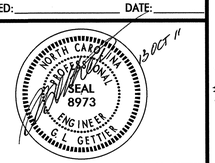

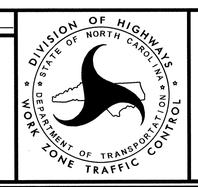

PHASE II DETAILS

12-OCT-2011 13:01
\\dot\dfsroot\Proj\TIPProjects-U\U3326\Traffic\TrafficControl\tcp\-L- LINE\U3326_-L-_ph2_tmp24.dgn
sngreen AT TE244733

PROJ. REFERENCE NO.	SHEET NO.
U-3326A/B	TMP-25

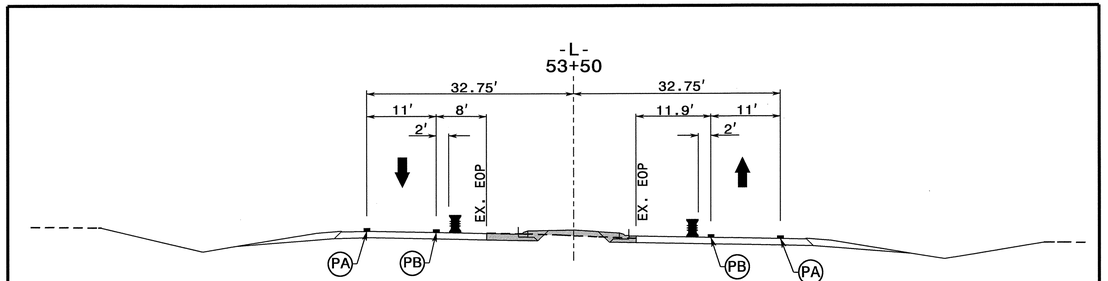

SECTION C2-C2

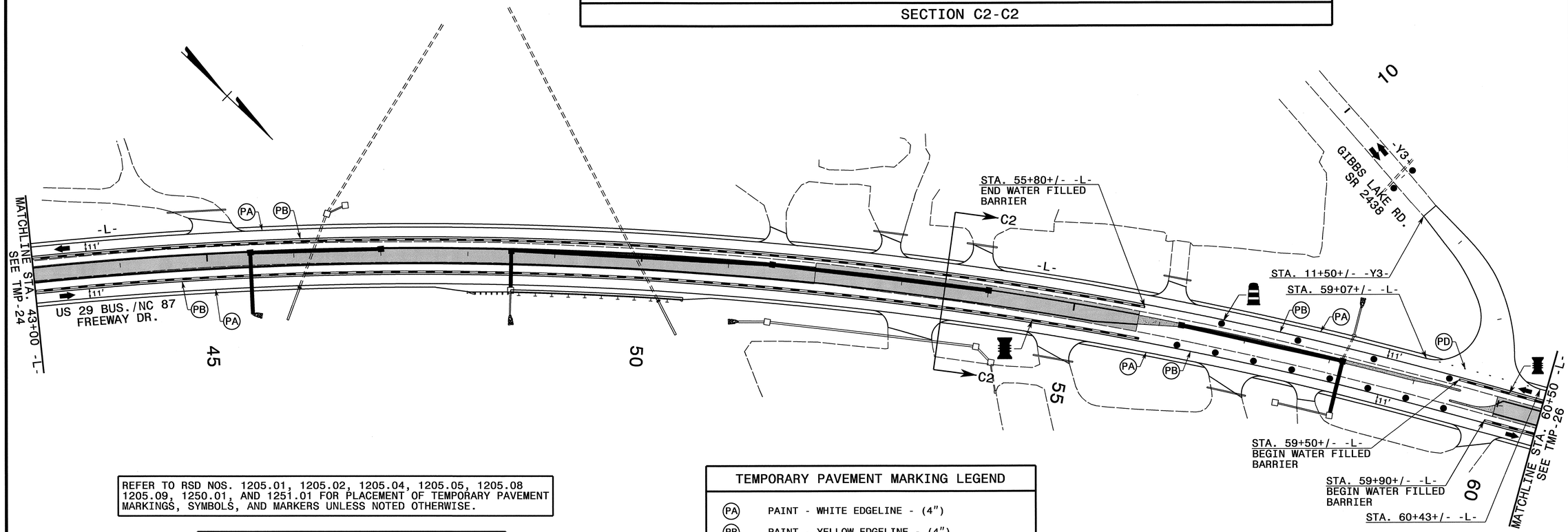

REFER TO RSD NOS. 1205.01, 1205.02, 1205.04, 1205.05, 1205.08 1205.09, 1250.01, AND 1251.01 FOR PLACEMENT OF TEMPORARY PAVEMENT MARKINGS, SYMBOLS, AND MARKERS UNLESS NOTED OTHERWISE.

ALL PAVEMENT MARKING SYMBOLS AND CHARACTERS SHALL BE PAINT UNLESS NOTED OTHERWISE.

TEMPORARY PAVEMENT MARKING LEGEND

(PA)	PAINT - WHITE EDGELINE - (4")
(PB)	PAINT - YELLOW EDGELINE - (4")
(PD)	PAINT - 2 FT. WHITE MINISKIP - (4")

APPROVED: _____ DATE: _____

SEAL

NORTH CAROLINA PROFESSIONAL SEAL 8973 ENGINEER G. L. GETTIER 8 OCT 11

DIVISION OF HIGHWAYS • STATE OF NORTH CAROLINA • DEPARTMENT OF TRANSPORTATION • WORK ZONE TRAFFIC CONTROL

PHASE II DETAILS

12-OCT-2011 13:01
\\dot\dfsroot01\proj\TIPProjects-U\U3326\Traffic\TrafficControl\tcp\-L- LINE\U3326_-L-_ph2_tmp25.dgn
sngreen AT TE24733

PROJ. REFERENCE NO.	SHEET NO.
U-3326A/B	TMP-26

TEMPORARY PAVEMENT MARKING LEGEND

(PA)	PAINT - WHITE EDGELINE - (4")
(PB)	PAINT - YELLOW EDGELINE - (4")
(PD)	PAINT - 2 FT. WHITE MINISKIP - (4")
(PE)	PAINT - WHITE SOLID LANE LINE - (4")
(PI)	PAINT - YELLOW DOUBLE CENTER - (4")
(PX)	PAINT - WHITE CROSSWALK LINE - (8")
(P4)	PAINT - WHITE STOP BAR - (24")
(QA)	PAINT - LEFT TURN ARROW -
(QB)	PAINT - RIGHT TURN ARROW -
(QC)	PAINT - STRAIGHT ARROW -
(QE)	PAINT - COMBO. STRAIGHT/RIGHT ARROW -
(QT)	PAINT - U-TURN SYMBOL -

NOTE: FOR STATIONING OF TEMPORARY PAVEMENT MARKINGS, SYMBOLS, CROSSWALKS, AND STOP BARS OF -Y4- AND -Y5-/-Y6-, SEE FINAL PAVEMENT MARKING PLANS.

REFER TO RSD NOS. 1205.01, 1205.02, 1205.04, 1205.05, 1205.07 1205.08, 1250.01, AND 1251.01 FOR PLACEMENT OF TEMPORARY PAVEMENT MARKINGS, SYMBOLS, AND MARKERS UNLESS NOTED OTHERWISE.

ALL PAVEMENT MARKING SYMBOLS AND CHARACTERS SHALL BE PAINT UNLESS NOTED OTHERWISE.

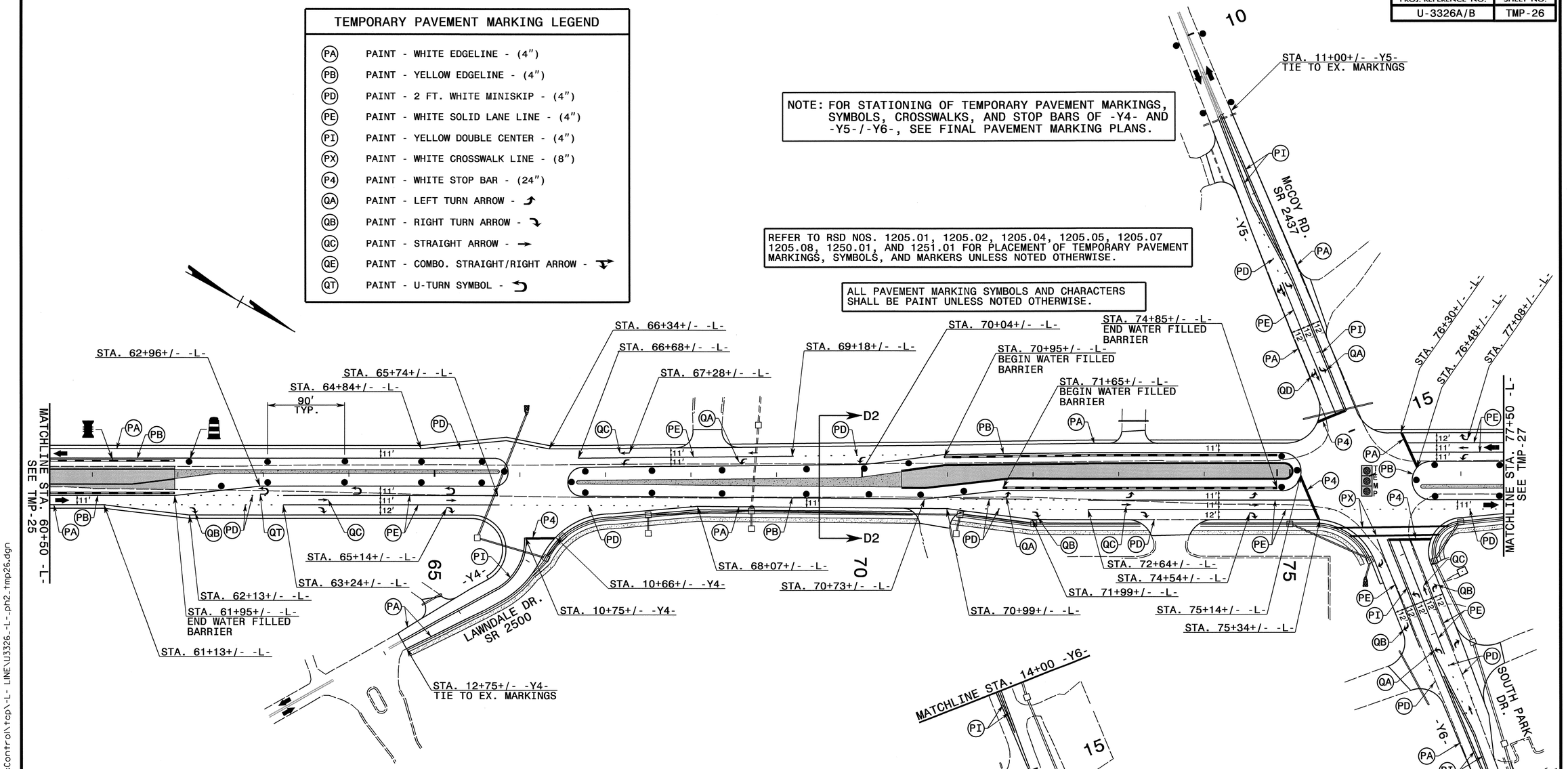

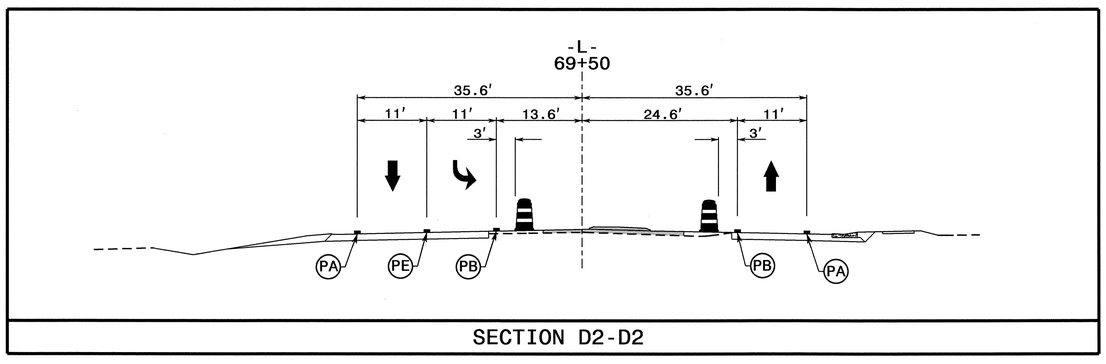

SECTION D2-D2

APPROVED: _____ DATE: _____

SEAL

NORTH CAROLINA PROFESSIONAL SEAL 8973 ENGINEER G. L. GETTIER 13 OCT 11

DIVISION OF HIGHWAYS
STATE OF NORTH CAROLINA
DEPARTMENT OF TRANSPORTATION
WORK ZONE TRAFFIC CONTROL

PHASE II DETAILS

12-OCT-2011 13:01
\\dot\dfsroot01\proj\TIPProjects-U\U3326\Traffic\TrafficControl\tcp\-L- LINE\U3326_-L-_ph2_tmp26.dgn
sngreen AT TE24733

PROJ. REFERENCE NO.	SHEET NO.
U-3326A/B	TMP-27

TEMPORARY PAVEMENT MARKING LEGEND

- (PA) PAINT - WHITE EDGELINE - (4")
- (PB) PAINT - YELLOW EDGELINE - (4")
- (PD) PAINT - 2 FT. WHITE MINISKIP - (4")
- (PE) PAINT - WHITE SOLID LANE LINE - (4")
- (QA) PAINT - LEFT TURN ARROW -
- (QB) PAINT - RIGHT TURN ARROW -
- (QC) PAINT - STRAIGHT ARROW - →

REFER TO RSD NOS. 1205.01, 1205.02, 1205.04, 1205.05, 1205.07 1205.08, 1250.01, AND 1251.01 FOR PLACEMENT OF TEMPORARY PAVEMENT MARKINGS, SYMBOLS, AND MARKERS UNLESS NOTED OTHERWISE.

ALL PAVEMENT MARKING SYMBOLS AND CHARACTERS SHALL BE PAINT UNLESS NOTED OTHERWISE.

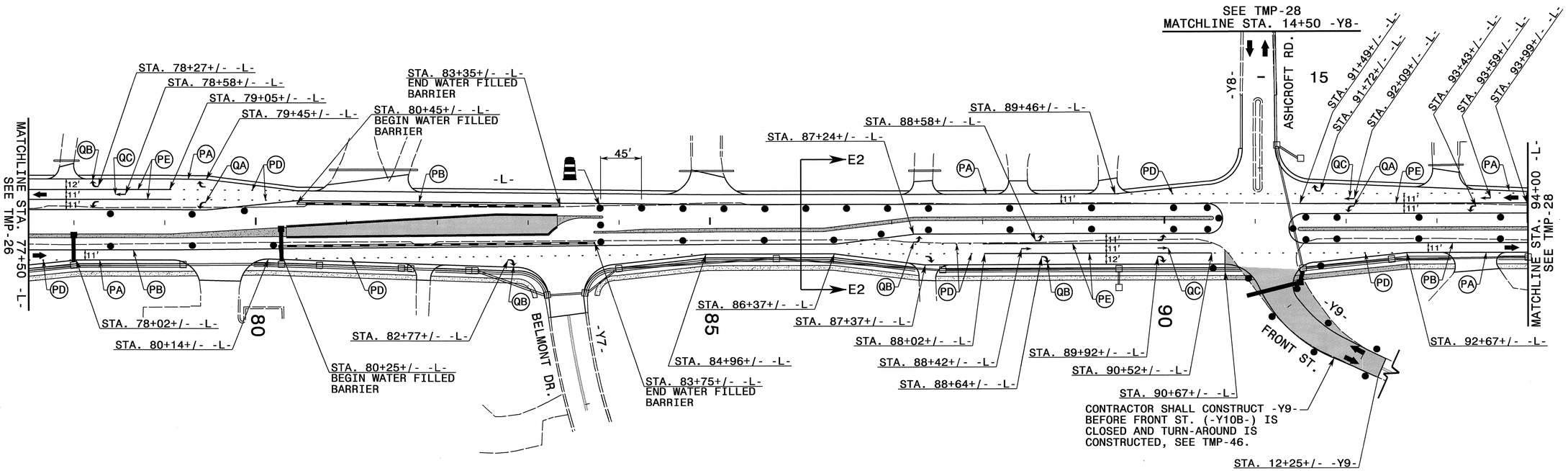

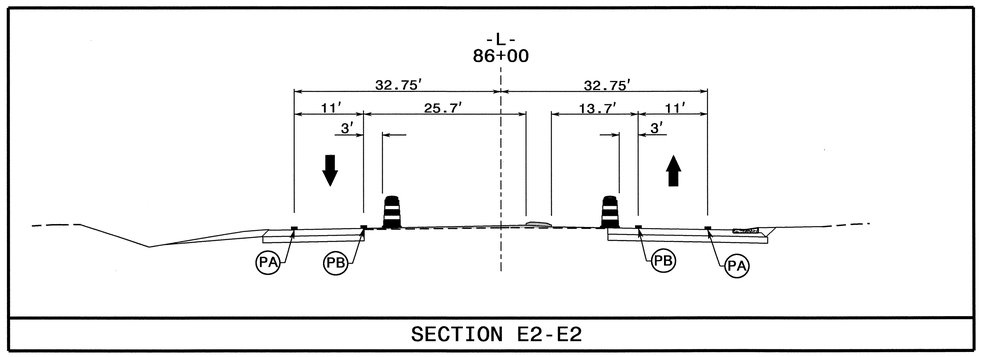

SECTION E2-E2

APPROVED:_____ DATE:_____

SEAL

NORTH CAROLINA PROFESSIONAL SEAL 8973 ENGINEER G L GETTIER 15 OCT 11

DIVISION OF HIGHWAYS • STATE OF NORTH CAROLINA • DEPARTMENT OF TRANSPORTATION • WORK ZONE TRAFFIC CONTROL

PHASE II DETAILS

12-OCT-2011 13:01
\\dot\dfsroot01\proj\TIPProjects-U\U3326\TrafficTraffic Control\tcp\-L- LINE\U3326_-L-_ph2_tmp27.dgn
sngreen AT TE24733

PROJ. REFERENCE NO.	SHEET NO.
U-3326A/B	TMP-28

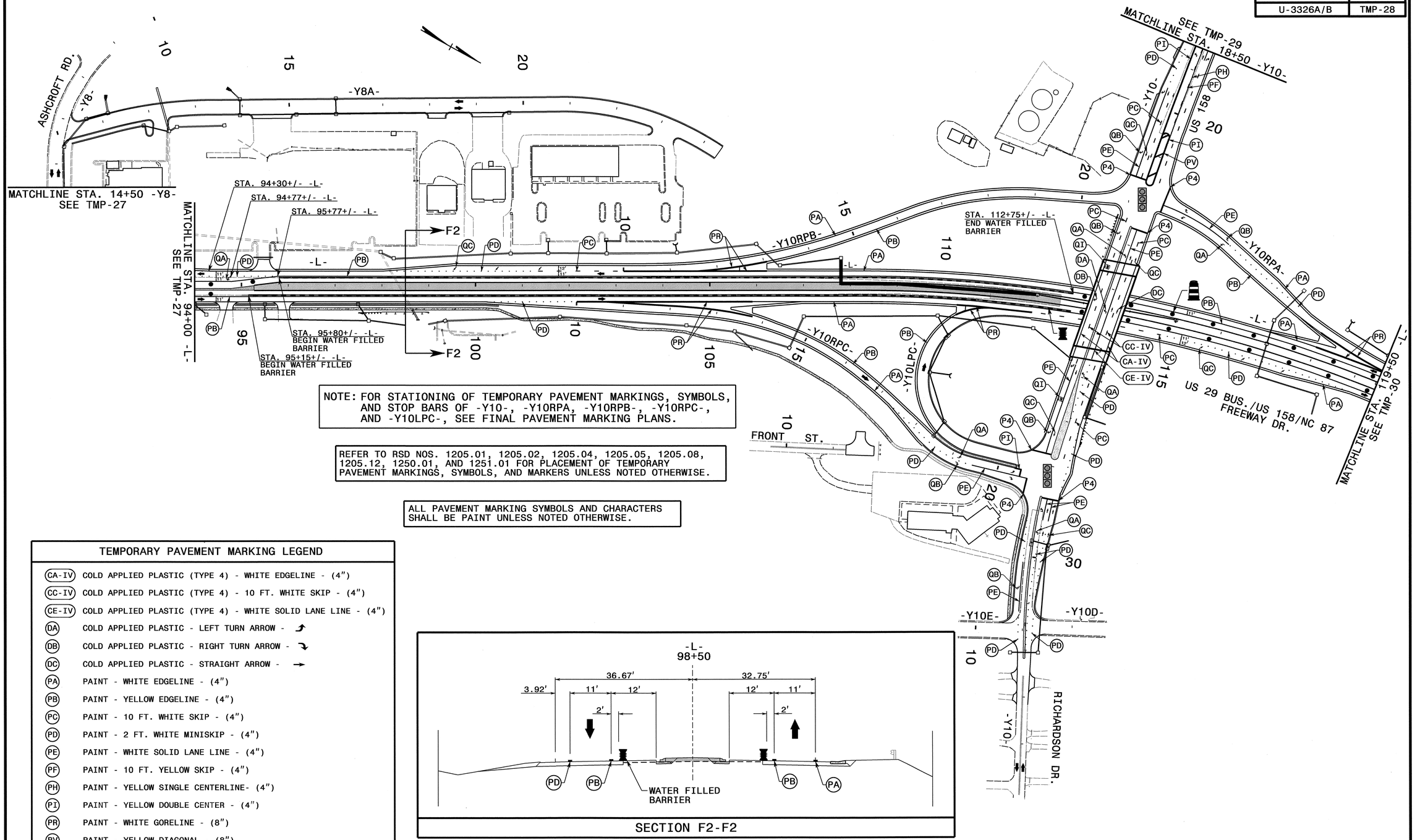

NOTE: FOR STATIONING OF TEMPORARY PAVEMENT MARKINGS, SYMBOLS, AND STOP BARS OF -Y10-, -Y10RPA, -Y10RPB-, -Y10RPC-, AND -Y10LPC-, SEE FINAL PAVEMENT MARKING PLANS.

REFER TO RSD NOS. 1205.01, 1205.02, 1205.04, 1205.05, 1205.08, 1205.12, 1250.01, AND 1251.01 FOR PLACEMENT OF TEMPORARY PAVEMENT MARKINGS, SYMBOLS, AND MARKERS UNLESS NOTED OTHERWISE.

ALL PAVEMENT MARKING SYMBOLS AND CHARACTERS SHALL BE PAINT UNLESS NOTED OTHERWISE.

TEMPORARY PAVEMENT MARKING LEGEND

CA-IV	COLD APPLIED PLASTIC (TYPE 4) - WHITE EDGELINE - (4")
CC-IV	COLD APPLIED PLASTIC (TYPE 4) - 10 FT. WHITE SKIP - (4")
CE-IV	COLD APPLIED PLASTIC (TYPE 4) - WHITE SOLID LANE LINE - (4")
DA	COLD APPLIED PLASTIC - LEFT TURN ARROW - ↰
DB	COLD APPLIED PLASTIC - RIGHT TURN ARROW - ↱
DC	COLD APPLIED PLASTIC - STRAIGHT ARROW - →
PA	PAINT - WHITE EDGELINE - (4")
PB	PAINT - YELLOW EDGELINE - (4")
PC	PAINT - 10 FT. WHITE SKIP - (4")
PD	PAINT - 2 FT. WHITE MINISKIP - (4")
PE	PAINT - WHITE SOLID LANE LINE - (4")
PF	PAINT - 10 FT. YELLOW SKIP - (4")
PH	PAINT - YELLOW SINGLE CENTERLINE- (4")
PI	PAINT - YELLOW DOUBLE CENTER - (4")
PR	PAINT - WHITE GORELINE - (8")
PV	PAINT - YELLOW DIAGONAL - (8")
P4	PAINT - WHITE STOP BAR - (24")
QA	PAINT - LEFT TURN ARROW - ↰
QB	PAINT - RIGHT TURN ARROW - ↱
QC	PAINT - STRAIGHT ARROW - →
QI	PAINT - ALPHANUMERIC CHARACTER - ONLY

SECTION F2-F2

APPROVED:_____ DATE:_____

SEAL

NORTH CAROLINA PROFESSIONAL SEAL 8973 ENGINEER G. L. GETTIER

DIVISION OF HIGHWAYS STATE OF NORTH CAROLINA DEPARTMENT OF TRANSPORTATION WORK ZONE TRAFFIC CONTROL

PHASE II DETAILS

12-OCT-2011 3:00
\\dot\dfsroot\proj\TIPProjects-UNU3326\Traffic\TrafficControl\top\-L- LINE\U3326_-L-_ph2_tmp28.dgn
sngreen AT TE24733

PROJ. REFERENCE NO.	SHEET NO.
U-3326A/B	TMP-29

NOTE: FOR STATIONING OF TEMPORARY PAVEMENT MARKINGS, SYMBOLS, AND STOP BARS OF -Y10-, -Y10A-, -Y10C, AND -Y10F-, SEE FINAL PAVEMENT MARKING PLANS.

REFER TO RSD NOS. 1205.01, 1205.02, 1205.04, 1205.05, 1205.08 1205.09, 1250.01, AND 1251.01 FOR PLACEMENT OF TEMPORARY PAVEMENT MARKINGS, SYMBOLS, AND MARKERS UNLESS NOTED OTHERWISE.

ALL PAVEMENT MARKING SYMBOLS AND CHARACTERS SHALL BE PAINT UNLESS NOTED OTHERWISE.

TEMPORARY PAVEMENT MARKING LEGEND

(PA)	PAINT - WHITE EDGELINE - (4")
(PD)	PAINT - 2 FT. WHITE MINISKIP - (4")
(PE)	PAINT - WHITE SOLID LANE LINE - (4")
(PF)	PAINT - 10 FT. YELLOW SKIP - (4")
(PH)	PAINT - YELLOW SINGLE CENTERLINE- (4")
(PI)	PAINT - YELLOW DOUBLE CENTER - (4")
(PV)	PAINT - YELLOW DIAGONAL - (8")
(P4)	PAINT - WHITE STOP BAR - (24")
(QA)	PAINT - LEFT TURN ARROW - ↰
(QB)	PAINT - RIGHT TURN ARROW - ↱
(QC)	PAINT - STRAIGHT ARROW - →
(QI)	PAINT - ALPHANUMERIC CHARACTER - ONLY

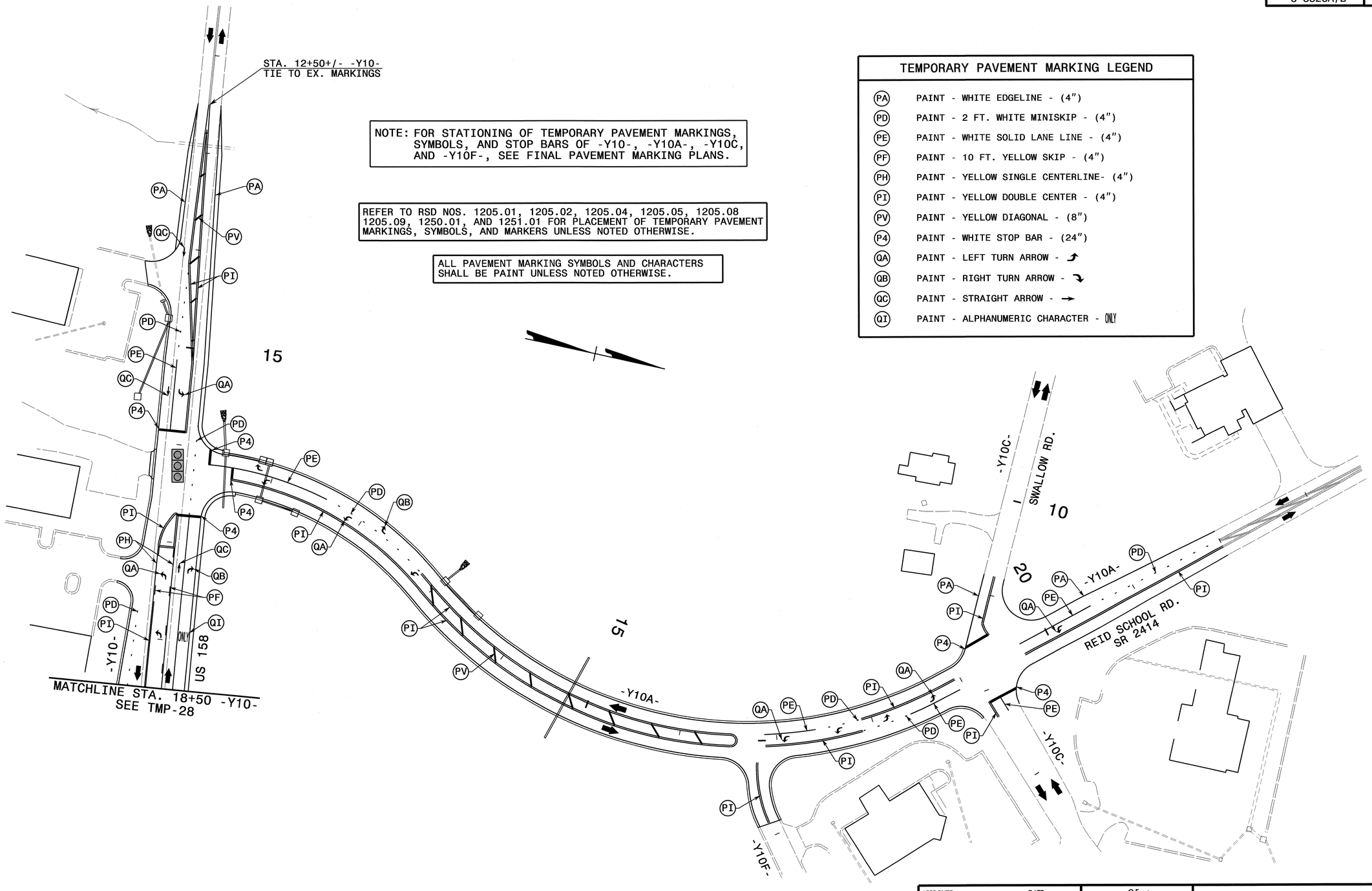

APPROVED:_____ DATE:_____

SEAL

NORTH CAROLINA PROFESSIONAL SEAL 8973 ENGINEER G. J. GETTIER 13 OCT 11

DIVISION OF HIGHWAYS · STATE OF NORTH CAROLINA · DEPARTMENT OF TRANSPORTATION · WORK ZONE TRAFFIC CONTROL

PHASE II DETAILS

12-OCT-2011 13:00
\\dot\dfsroot01\proj\TIPProjects-U3326\Traffic\TrafficControl\tcp\-L- LINE\U3326_-L-_ph2_tmp29.dgn
sngreen AT TE24733

PROJ. REFERENCE NO.	SHEET NO.
U-3326A/B	TMP-30

TEMPORARY PAVEMENT MARKING LEGEND

(PA)	PAINT - WHITE EDGELINE - (4″)
(PB)	PAINT - YELLOW EDGELINE - (4″)
(PC)	PAINT - 10 FT. WHITE SKIP - (4″)
(PD)	PAINT - 2 FT. WHITE MINISKIP - (4″)
(PE)	PAINT - WHITE SOLID LANE LINE - (4″)
(PI)	PAINT - YELLOW DOUBLE CENTER - (4″)
(PR)	PAINT - WHITE GORELINE - (8″)
(P4)	PAINT - WHITE STOP BAR - (24″)
(QA)	PAINT - LEFT TURN ARROW -
(QB)	PAINT - RIGHT TURN ARROW -
(QC)	PAINT - STRAIGHT ARROW -
(QE)	PAINT - COMBO. STRAIGHT/RIGHT ARROW -
(QT)	PAINT - U-TURN SYMBOL -

REFER TO RSD NOS. 1205.01, 1205.02, 1205.04, 1205.05, 1205.07 1205.08, 1250.01, AND 1251.01 FOR PLACEMENT OF TEMPORARY PAVEMENT MARKINGS, SYMBOLS, AND MARKERS UNLESS NOTED OTHERWISE.

ALL PAVEMENT MARKING SYMBOLS AND CHARACTERS SHALL BE PAINT UNLESS NOTED OTHERWISE.

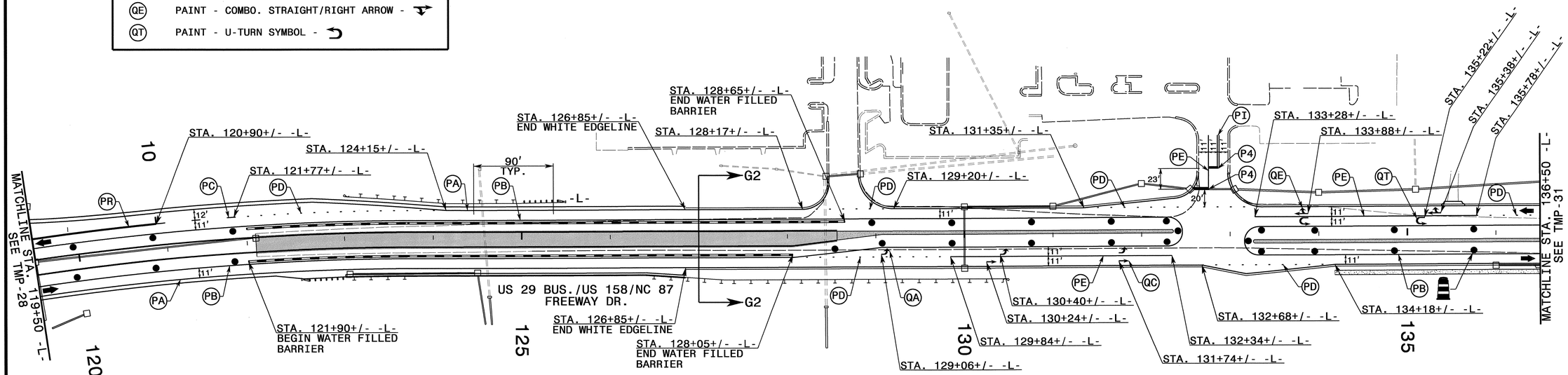

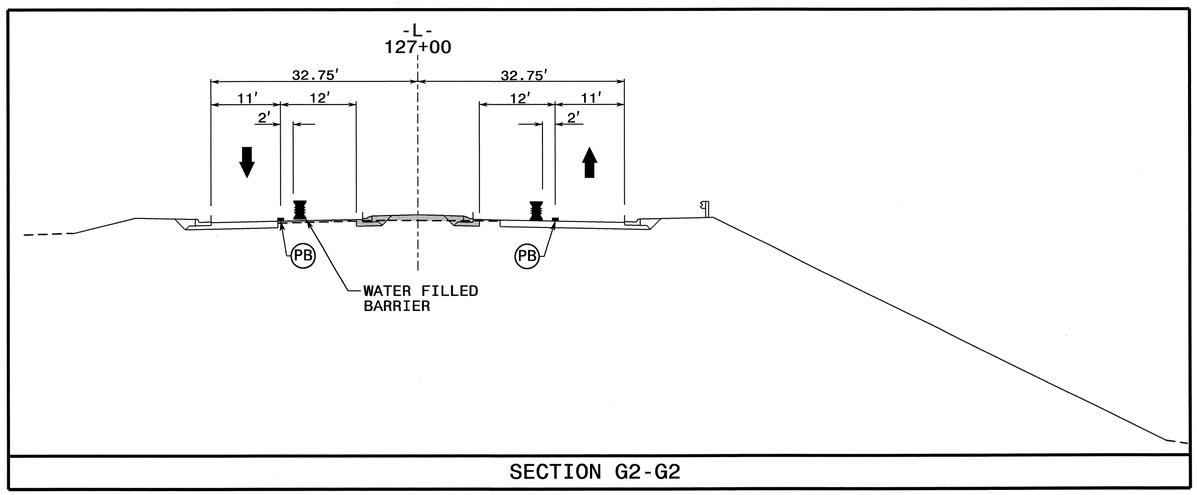

SECTION G2-G2

APPROVED:_____ DATE:_____

SEAL

NORTH CAROLINA PROFESSIONAL SEAL 8973 ENGINEER G L GETTIER

12 OCT 11

DIVISION OF HIGHWAYS · STATE OF NORTH CAROLINA · DEPARTMENT OF TRANSPORTATION · WORK ZONE TRAFFIC CONTROL

PHASE II DETAILS

12-OCT-2011 13:00
\\dot\dfsroot01\proj\TIPProjects-U\U3326\Traffic\TrafficControl\tcp\-L- LINE\U3326_-L-_ph2_tmp30.dgn
sngreen 4T TE24753

PROJ. REFERENCE NO.	SHEET NO.
U-3326A/B	TMP-31

REFER TO RSD NOS. 1205.01, 1205.02, 1205.04, 1205.05,1205.08, 1250.01, AND 1251.01 FOR PLACEMENT OF TEMPORARY PAVEMENT MARKINGS, SYMBOLS, AND MARKERS UNLESS NOTED OTHERWISE.

ALL PAVEMENT MARKING SYMBOLS AND CHARACTERS SHALL BE PAINT UNLESS NOTED OTHERWISE.

TEMPORARY PAVEMENT MARKING LEGEND

- (PB) PAINT - YELLOW EDGELINE - (4")
- (PD) PAINT - 2 FT. WHITE MINISKIP - (4")
- (PE) PAINT - WHITE SOLID LANE LINE - (4")
- (QA) PAINT - LEFT TURN ARROW -
- (QB) PAINT - RIGHT TURN ARROW -
- (QC) PAINT - STRAIGHT ARROW -
- (QT) PAINT - U-TURN SYMBOL -

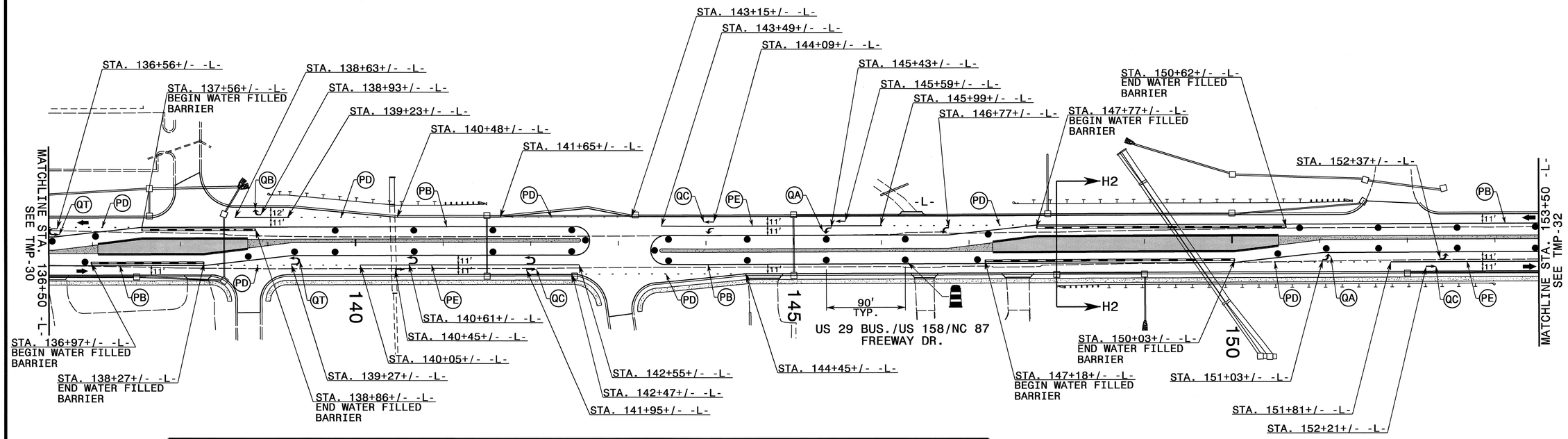

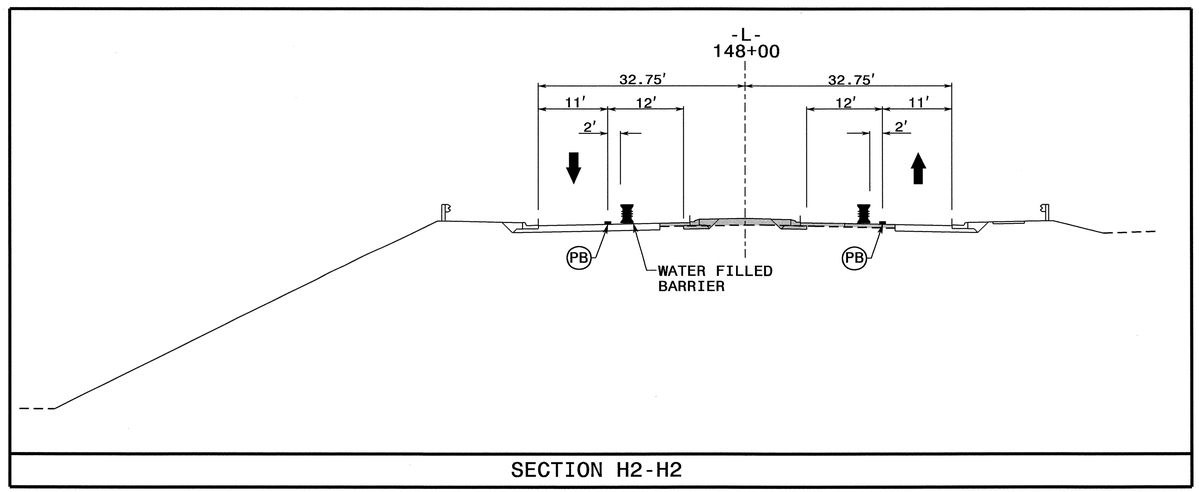

SECTION H2-H2

APPROVED: _____ DATE: _____

SEAL

NORTH CAROLINA PROFESSIONAL SEAL 8973 ENGINEER G L GETTIER 13 OCT 11

DIVISION OF HIGHWAYS • STATE OF NORTH CAROLINA • DEPARTMENT OF TRANSPORTATION • WORK ZONE TRAFFIC CONTROL

PHASE II DETAILS

12-OCT-2011 13:00
\\dot\dfsroot01\proj\TIPProjects-U\U3326\Traffic\TrafficControl\tcp\-L- LINE\U3326_-L-_ph2_tmp3i.dgn
sngreen AT TE24433

PROJ. REFERENCE NO.	SHEET NO.
U-3326A/B	TMP-32

TEMPORARY PAVEMENT MARKING LEGEND

PB	PAINT - YELLOW EDGELINE - (4")
PD	PAINT - 2 FT. WHITE MINISKIP - (4")
PE	PAINT - WHITE SOLID LANE LINE - (4")
PI	PAINT - YELLOW DOUBLE CENTER - (4")
P4	PAINT - WHITE STOP BAR - (24")
QA	PAINT - LEFT TURN ARROW -
QB	PAINT - RIGHT TURN ARROW -
QC	PAINT - STRAIGHT ARROW -
QT	PAINT - U-TURN SYMBOL -

REFER TO RSD NOS. 1205.01, 1205.02, 1205.04, 1205.05,1205.08, 1250.01, AND 1251.01 FOR PLACEMENT OF TEMPORARY PAVEMENT MARKINGS, SYMBOLS, AND MARKERS UNLESS NOTED OTHERWISE.

ALL PAVEMENT MARKING SYMBOLS AND CHARACTERS SHALL BE PAINT UNLESS NOTED OTHERWISE.

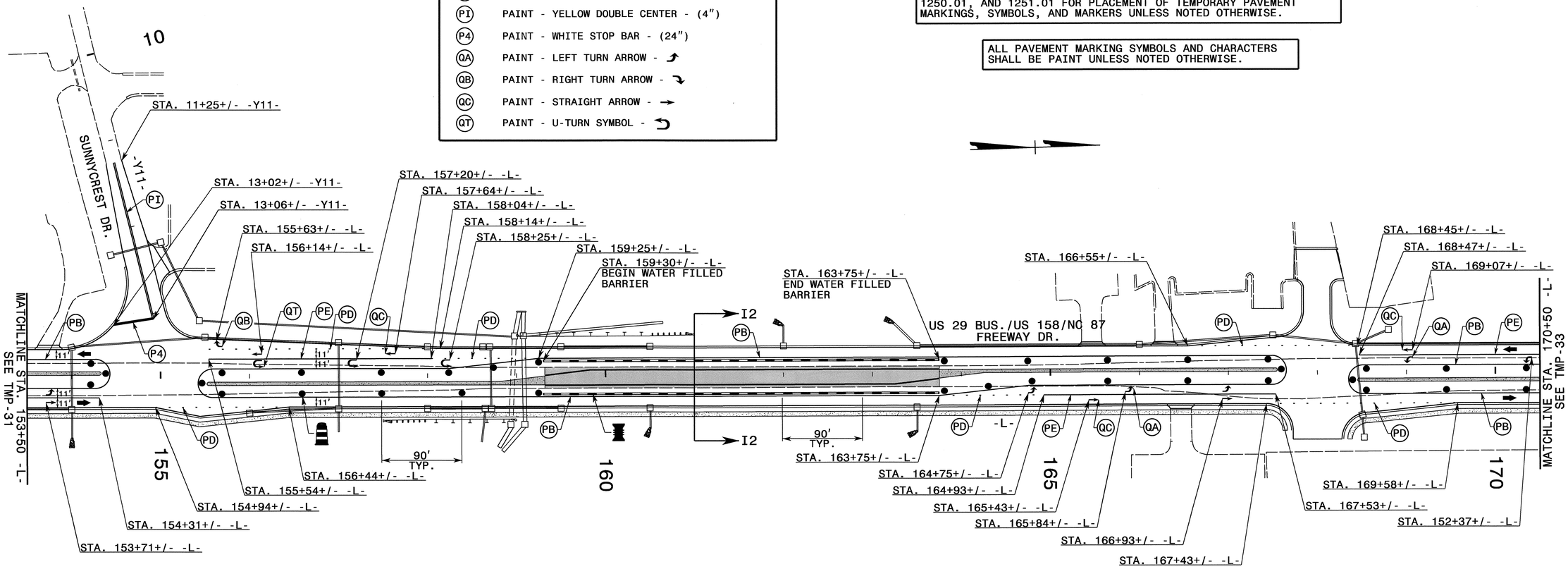

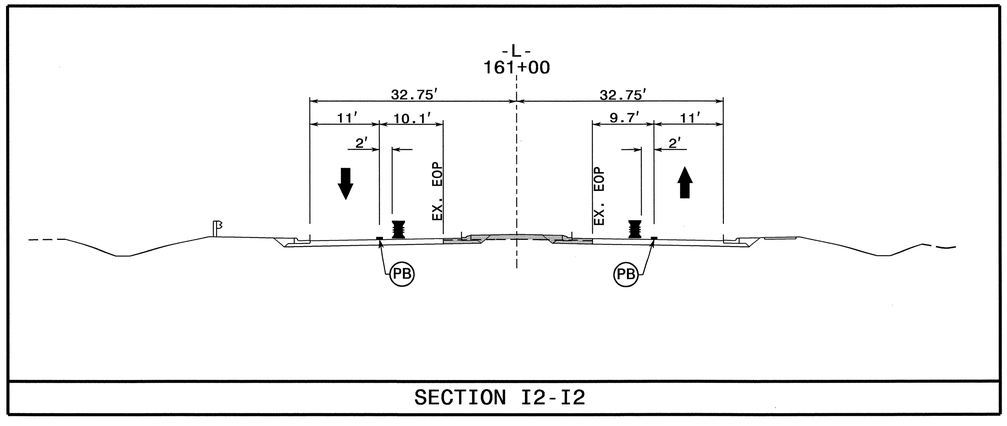

SECTION I2-I2

APPROVED:_____ DATE:_____

SEAL

NORTH CAROLINA PROFESSIONAL SEAL 8973 ENGINEER G. L. GETTIER 13 OCT 11

DIVISION OF HIGHWAYS STATE OF NORTH CAROLINA DEPARTMENT OF TRANSPORTATION WORK ZONE TRAFFIC CONTROL

PHASE II DETAILS

12-OCT-2011 13:00
\\dot\dfsroot01\proj\TIPProjects-U\U3326\Traffic\TrafficControl\tcp\-L- LINE\U3326_-L-_ph2_tmp32.dgn
sngreen AT TE244733

PROJ. REFERENCE NO.	SHEET NO.
U-3326A/B	TMP-33

TEMPORARY PAVEMENT MARKING LEGEND

PA	PAINT - WHITE EDGELINE - (4")
PB	PAINT - YELLOW EDGELINE - (4")
PC	PAINT - 10 FT. WHITE SKIP - (4")
PD	PAINT - 2 FT. WHITE MINISKIP - (4")
PE	PAINT - WHITE SOLID LANE LINE - (4")
PI	PAINT - YELLOW DOUBLE CENTER - (4")
P4	PAINT - WHITE STOP BAR - (24")
QA	PAINT - LEFT TURN ARROW -
QB	PAINT - RIGHT TURN ARROW -
QC	PAINT - STRAIGHT ARROW -

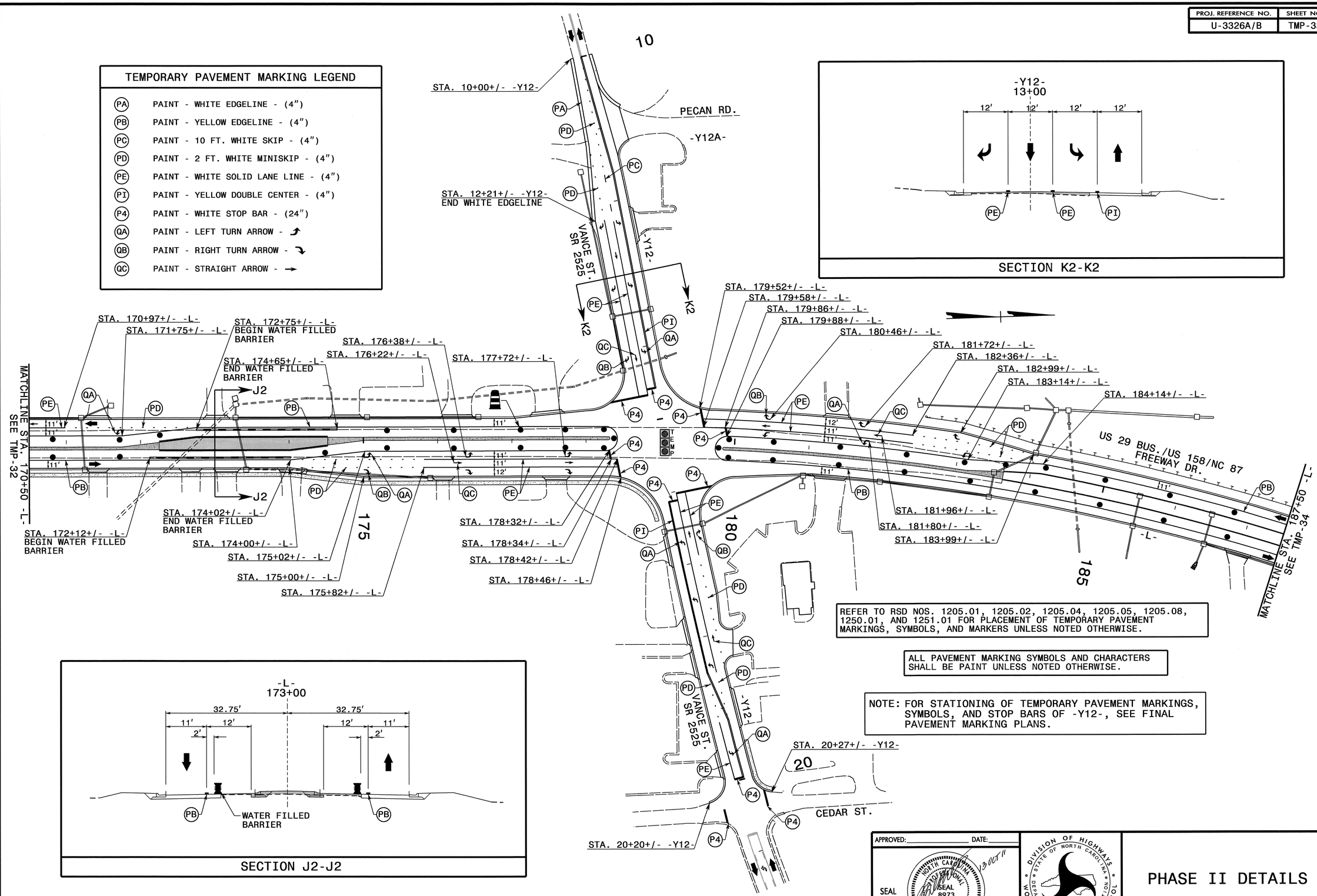

SECTION K2-K2

SECTION J2-J2

REFER TO RSD NOS. 1205.01, 1205.02, 1205.04, 1205.05, 1205.08, 1250.01, AND 1251.01 FOR PLACEMENT OF TEMPORARY PAVEMENT MARKINGS, SYMBOLS, AND MARKERS UNLESS NOTED OTHERWISE.

ALL PAVEMENT MARKING SYMBOLS AND CHARACTERS SHALL BE PAINT UNLESS NOTED OTHERWISE.

NOTE: FOR STATIONING OF TEMPORARY PAVEMENT MARKINGS, SYMBOLS, AND STOP BARS OF -Y12-, SEE FINAL PAVEMENT MARKING PLANS.

APPROVED: _____ DATE: _____

SEAL

NORTH CAROLINA PROFESSIONAL SEAL 8973 ENGINEER G. L. GETTIER

13 OCT 11

DIVISION OF HIGHWAYS
STATE OF NORTH CAROLINA
DEPARTMENT OF TRANSPORTATION
WORK ZONE TRAFFIC CONTROL

PHASE II DETAILS

12-OCT-2011 12:59
\\dot\dfsroot01\proj\TIPProjects-U\U3326\Traffic\TrafficControl\tcp\-L- LINE\U3326_-L-_ph2_tmp33.dgn
sngreen AT TE244733

PROJ. REFERENCE NO.	SHEET NO.
U-3326A/B	TMP-34

TEMPORARY PAVEMENT MARKING LEGEND

(CA-IV)	COLD APPLIED PLASTIC (TYPE 4) - WHITE EDGELINE - (4")
(CB-IV)	COLD APPLIED PLASTIC (TYPE 4) - YELLOW EDGELINE - (4")
(CC-IV)	COLD APPLIED PLASTIC (TYPE 4) - 10 FT. WHITE SKIP - (4")
(CD-IV)	COLD APPLIED PLASTIC (TYPE 4) - 2 FT. WHITE MINISKIP - (4")
(PA)	PAINT - WHITE EDGELINE - (4")
(PB)	PAINT - YELLOW EDGELINE - (4")
(PC)	PAINT - 10 FT. WHITE SKIP - (4")
(PD)	PAINT - 2 FT. WHITE MINISKIP - (4")
(PE)	PAINT - WHITE SOLID LANE LINE - (4")
(PI)	PAINT - YELLOW DOUBLE CENTER - (4")
(PR)	PAINT - WHITE GORELINE - (8")
(PV)	PAINT - YELLOW DIAGONAL - (8")
(P4)	PAINT - WHITE STOP BAR - (24")
(QA)	PAINT - LEFT TURN ARROW -
(QB)	PAINT - RIGHT TURN ARROW -
(QC)	PAINT - STRAIGHT ARROW -
(QD)	PAINT - COMBO. STRAIGHT/LEFT ARROW -
(QE)	PAINT - COMBO. STRAIGHT/RIGHT ARROW -
(QI)	PAINT - ALPHANUMERIC CHARACTER - ONLY
(QN)	PAINT - 24" YIELD LINE TRIANGLE -

STA. 8+70+/- -Y13-
TIE TO EX. MARKINGS

HARRISON ST.
NC 87

-Y13-

-DRV3-

MARK RD.
-Y13A-

-Y13C-

-Y13LPB-

-Y13RPB-

-Y13RPC-

-Y13RPD-

-Y12C-

ELM STREET

STATE ST.
-Y12B-

MATCHLINE STA. 187+50 -L-
SEE TMP-33

STA. 208+80+/- -L-
BEGIN WATER FILLED
BARRIER

US 29 BUS./US 158
FREEWAY DR.

-Y14C-

-Y14-

WALTERS ST.

MATCHLINE STA. 216+75 -L-
SEE TMP-35

-DRV2-

-DRV1-

-Y13-

HARRISON ST.
SR 2687

-Y14B-

HAWKINS ST.

STA. 35+50+/- -Y13-
TIE TO EX. MARKINGS

-Y19B-

NOTE: FOR STATIONING OF TEMPORARY PAVEMENT MARKINGS, SYMBOLS, AND STOP BARS OF -Y13-, -Y13RPB, -Y13LPB-, -Y13RPC-, AND -Y13RPD-, SEE FINAL PAVEMENT MARKING PLANS.

REFER TO RSD NOS. 1205.01, 1205.02, 1205.04, 1205.05, 1205.08, 1205.12, 1250.01, AND 1251.01 FOR PLACEMENT OF TEMPORARY PAVEMENT MARKINGS, SYMBOLS, AND MARKERS UNLESS NOTED OTHERWISE.

ALL PAVEMENT MARKING SYMBOLS AND CHARACTERS SHALL BE PAINT UNLESS NOTED OTHERWISE.

APPROVED: _____ DATE: _____

SEAL

NORTH CAROLINA PROFESSIONAL SEAL 8973 ENGINEER G. GETTIES

3 OCT 11

DIVISION OF HIGHWAYS
STATE OF NORTH CAROLINA
DEPARTMENT OF TRANSPORTATION
WORK ZONE TRAFFIC CONTROL

PHASE II DETAILS

12-OCT-2011 12:59
\\dot\dfsroot01\proj\TIPProjects-U\U3326\TrafficTrafficControl\top\-L- LINE\U3326_-L-_ph2_tmp34.dgn
sngreen AT TE24733

PROJ. REFERENCE NO.	SHEET NO.
U-3326A/B	TMP-35

REFER TO RSD NOS. 1205.01, 1205.02, 1205.04, 1205.05, 1205.08, 1250.01, AND 1251.01 FOR PLACEMENT OF TEMPORARY PAVEMENT MARKINGS, SYMBOLS, AND MARKERS UNLESS NOTED OTHERWISE.

ALL PAVEMENT MARKING SYMBOLS AND CHARACTERS SHALL BE PAINT UNLESS NOTED OTHERWISE.

NOTE: FOR STATIONING OF TEMPORARY PAVEMENT MARKINGS, SYMBOLS, AND STOP BARS OF -Y15- AND -Y15A-, SEE FINAL PAVEMENT MARKING PLANS.

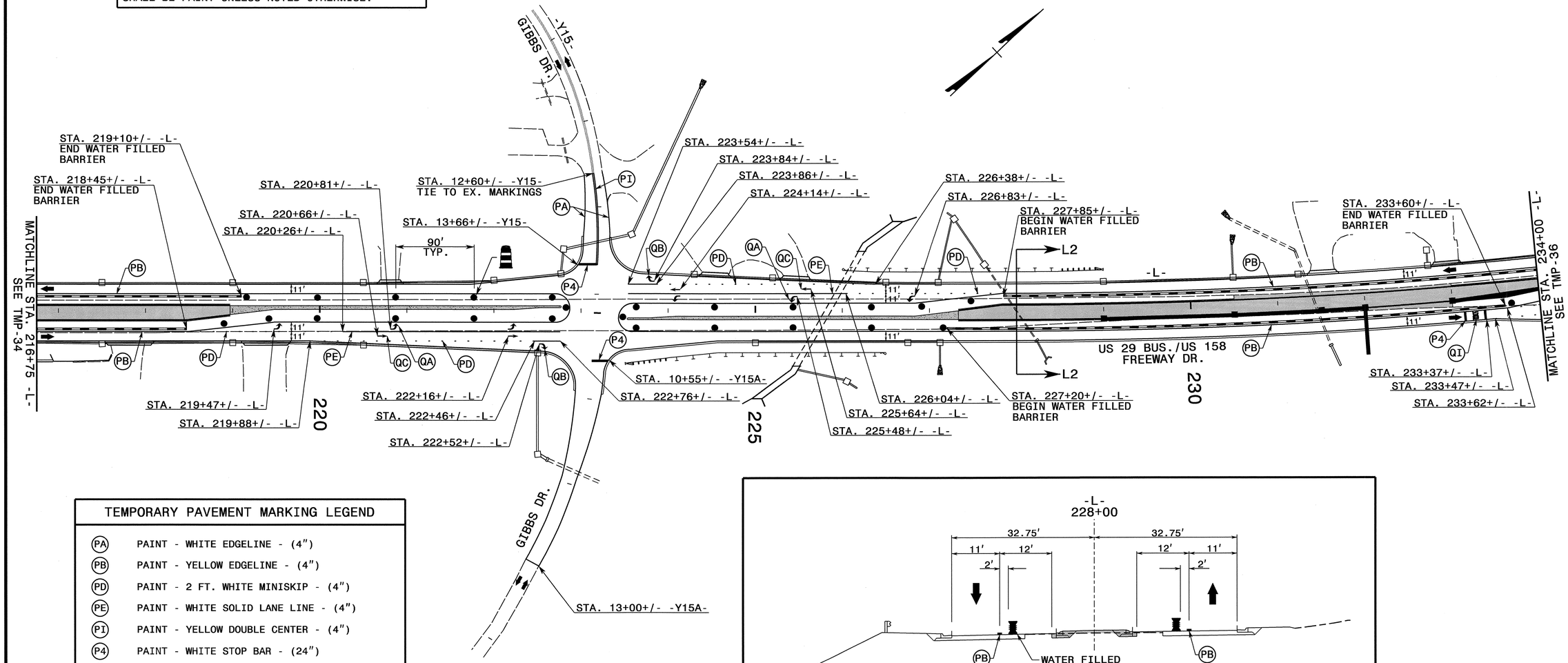

TEMPORARY PAVEMENT MARKING LEGEND

(PA)	PAINT - WHITE EDGELINE - (4")
(PB)	PAINT - YELLOW EDGELINE - (4")
(PD)	PAINT - 2 FT. WHITE MINISKIP - (4")
(PE)	PAINT - WHITE SOLID LANE LINE - (4")
(PI)	PAINT - YELLOW DOUBLE CENTER - (4")
(P4)	PAINT - WHITE STOP BAR - (24")
(QA)	PAINT - LEFT TURN ARROW - ↰
(QB)	PAINT - RIGHT TURN ARROW - ↱
(QC)	PAINT - STRAIGHT ARROW - →
(QI)	PAINT - ALPANUMERIC CHARACTER - SCHOOL

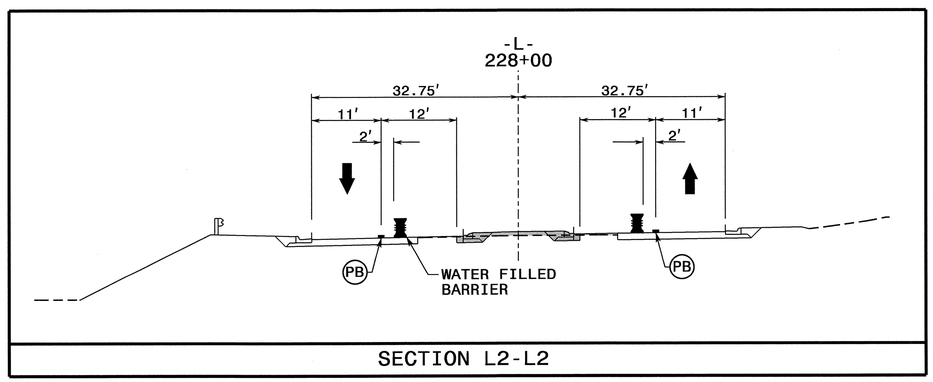

SECTION L2-L2

APPROVED: _____ DATE: _____

SEAL

NORTH CAROLINA PROFESSIONAL SEAL 8973 ENGINEER G. L. GETTIER 13 OCT 11

DIVISION OF HIGHWAYS * STATE OF NORTH CAROLINA * DEPARTMENT OF TRANSPORTATION * WORK ZONE TRAFFIC CONTROL

PHASE II DETAILS

12-OCT-2011 12:59
\\dot\dfsroot01\proj\TIPProjects-U\U3326\Traffic\TrafficControl\tcp\-L- LINE\U3326_-L-_ph2_tmp35.dgn
sngreen AT TE24733

PROJ. REFERENCE NO.	SHEET NO.
U-3326A/B	TMP-36

NOTE: FOR STATIONING OF TEMPORARY PAVEMENT MARKINGS, SYMBOLS, AND STOP BARS OF -Y16- AND -Y16A-, SEE FINAL PAVEMENT MARKING PLANS.

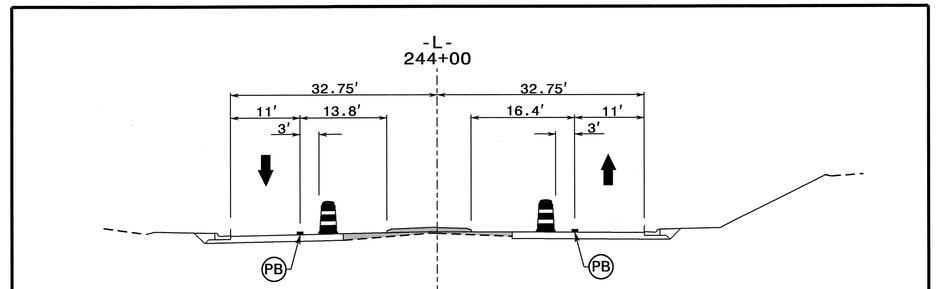

SECTION M2-M2

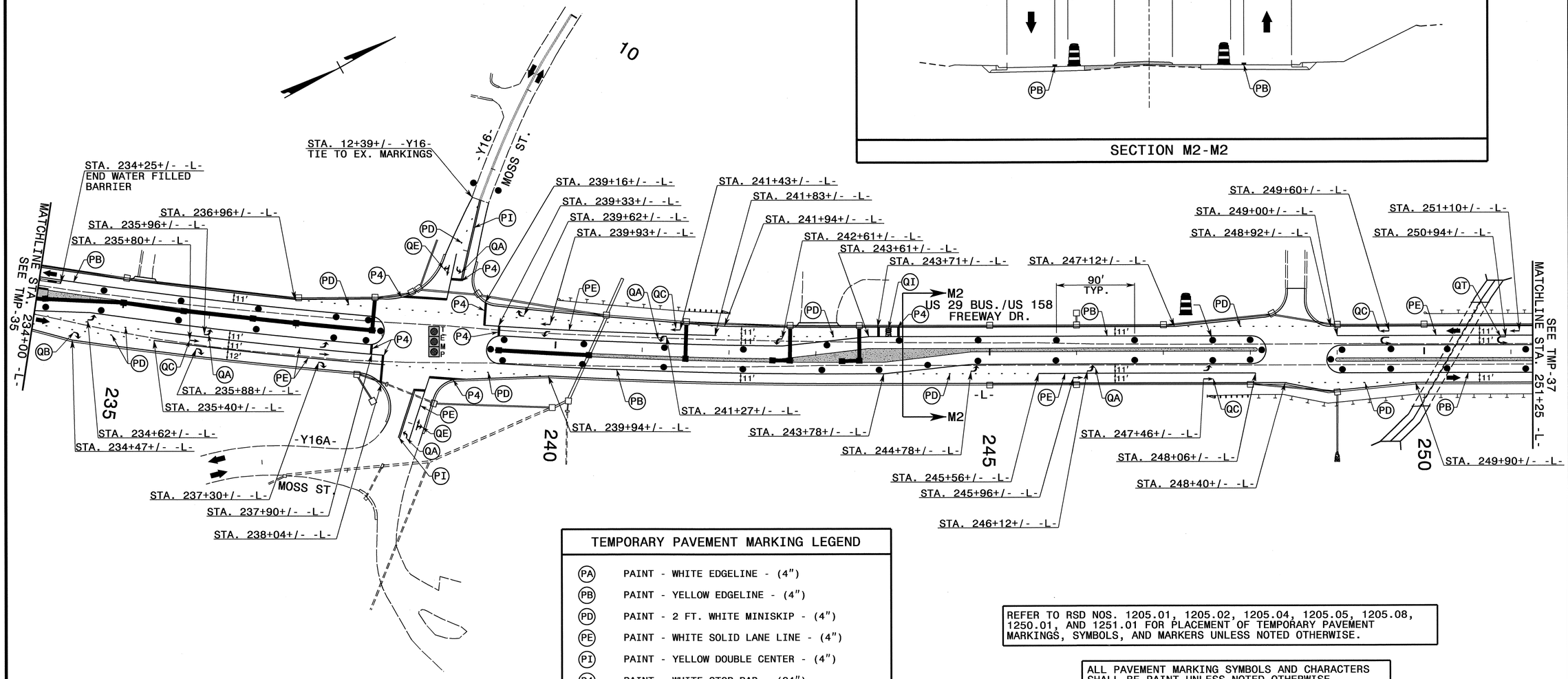

TEMPORARY PAVEMENT MARKING LEGEND

(PA)	PAINT - WHITE EDGELINE - (4")
(PB)	PAINT - YELLOW EDGELINE - (4")
(PD)	PAINT - 2 FT. WHITE MINISKIP - (4")
(PE)	PAINT - WHITE SOLID LANE LINE - (4")
(PI)	PAINT - YELLOW DOUBLE CENTER - (4")
(P4)	PAINT - WHITE STOP BAR - (24")
(QA)	PAINT - LEFT TURN ARROW - ↰
(QB)	PAINT - RIGHT TURN ARROW - ↱
(QC)	PAINT - STRAIGHT ARROW - →
(QE)	PAINT - COMBO. STRAIGHT/RIGHT ARROW - ↱
(QI)	PAINT - ALPHANUMERIC CHARACTER - SCHOOL
(QT)	PAINT - U-TURN SYMBOL - ↩

REFER TO RSD NOS. 1205.01, 1205.02, 1205.04, 1205.05, 1205.08, 1250.01, AND 1251.01 FOR PLACEMENT OF TEMPORARY PAVEMENT MARKINGS, SYMBOLS, AND MARKERS UNLESS NOTED OTHERWISE.

ALL PAVEMENT MARKING SYMBOLS AND CHARACTERS SHALL BE PAINT UNLESS NOTED OTHERWISE.

APPROVED: _____ DATE: _____

SEAL

NORTH CAROLINA PROFESSIONAL SEAL 8973 ENGINEER G. L. GETTIER

DIVISION OF HIGHWAYS · STATE OF NORTH CAROLINA · DEPARTMENT OF TRANSPORTATION · WORK ZONE TRAFFIC CONTROL

PHASE II DETAILS

12-OCT-2011 12:59
\\dot\dfsroot\proj\TIPProjects-UU3326\Traffic\TrafficControl\tcp\-L- LINE\U3326_-L-_ph2_tmp36.dgn
snigreen AT TE244733

PROJ. REFERENCE NO.	SHEET NO.
U-3326A/B	TMP-37

TEMPORARY PAVEMENT MARKING LEGEND

CA-IV	COLD APPLIED PLASTIC (TYPE 4) - WHITE EDGELINE - (4")
CI-IV	COLD APPLIED PLASTIC (TYPE 4) - YELLOW DOUBLE CENTER - (4")
PA	PAINT - WHITE EDGELINE - (4")
PB	PAINT - YELLOW EDGELINE - (4")
PD	PAINT - 2 FT. WHITE MINISKIP - (4")
PE	PAINT - WHITE SOLID LANE LINE - (4")
PI	PAINT - YELLOW DOUBLE CENTER - (4")
P4	PAINT - WHITE STOP BAR - (24")
QA	PAINT - LEFT TURN ARROW - ↱
QT	PAINT - U-TURN SYMBOL - ↩

REFER TO RSD NOS. 1205.01, 1205.02, 1205.04, 1205.05, 1205.08, 1250.01, AND 1251.01 FOR PLACEMENT OF TEMPORARY PAVEMENT MARKINGS, SYMBOLS, AND MARKERS UNLESS NOTED OTHERWISE.

ALL PAVEMENT MARKING SYMBOLS AND CHARACTERS SHALL BE PAINT UNLESS NOTED OTHERWISE.

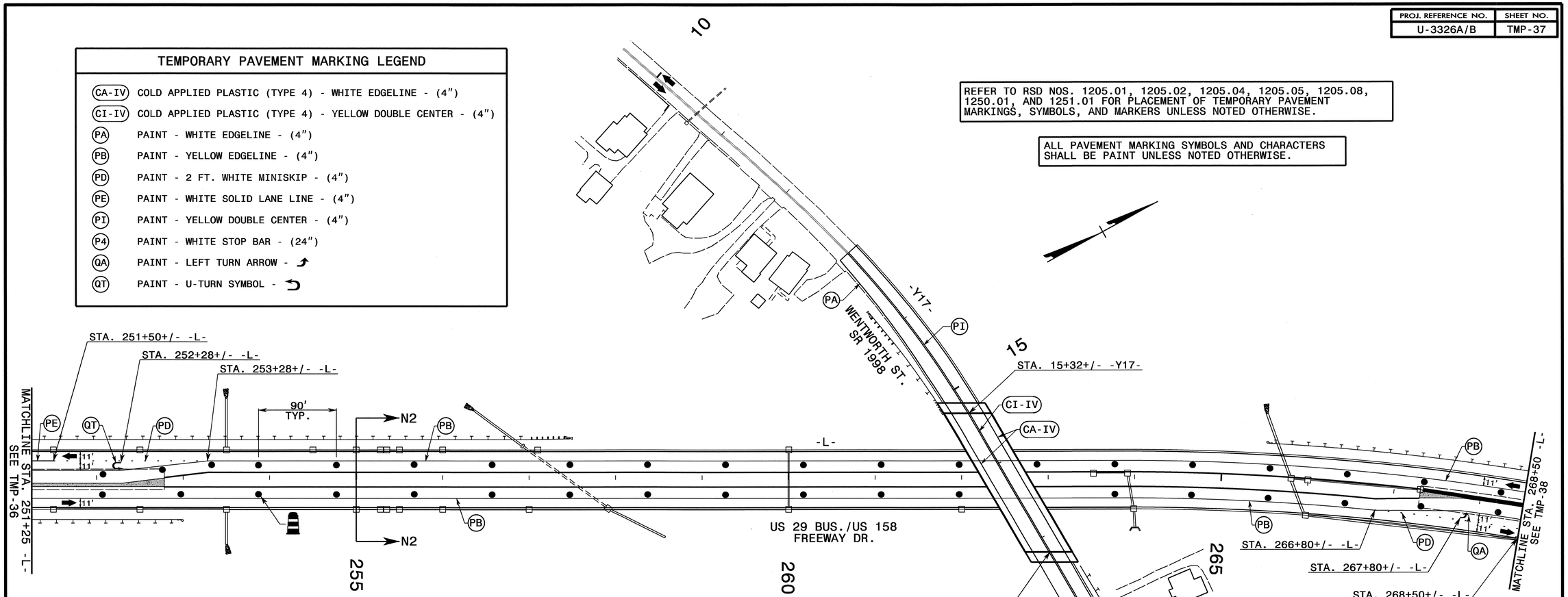

NOTE: FOR STATIONING OF TEMPORARY PAVEMENT MARKINGS OF -Y17-, SEE FINAL PAVEMENT MARKING PLANS.

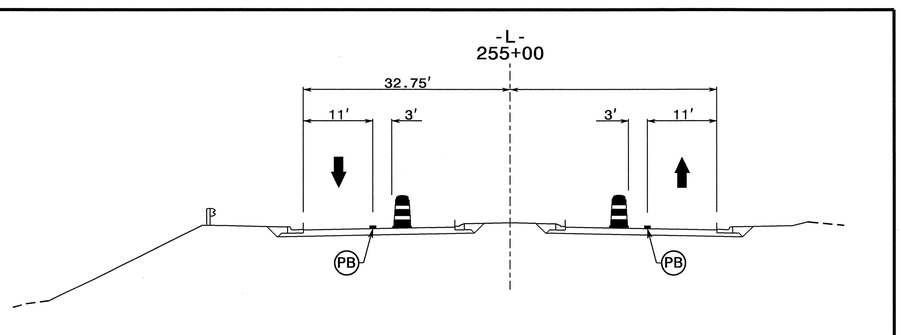

SECTION N2-N2

APPROVED: _____ DATE: _____

SEAL

NORTH CAROLINA PROFESSIONAL SEAL 8973 ENGINEER G L GETTIER 13 OCT 11

DIVISION OF HIGHWAYS STATE OF NORTH CAROLINA DEPARTMENT OF TRANSPORTATION WORK ZONE TRAFFIC CONTROL

PHASE II DETAILS

12-OCT-2011 12:59
\\dot\dfsroot\Proj\TIPProjects-U\U3326\Traffic\TrafficControl\top\-L- LINE\U3326_-L-_ph2_tmp37.dgn
sngreen AT TE24733

PROJ. REFERENCE NO.	SHEET NO.
U-3326A/B	TMP-38

TEMPORARY PAVEMENT MARKING LEGEND

(PA)	PAINT - WHITE EDGELINE - (4")
(PB)	PAINT - YELLOW EDGELINE - (4")
(PD)	PAINT - 2 FT. WHITE MINISKIP - (4")
(PE)	PAINT - WHITE SOLID LANE LINE - (4")
(PI)	PAINT - YELLOW DOUBLE CENTER - (4")
(P4)	PAINT - WHITE STOP BAR - (24")
(QA)	PAINT - LEFT TURN ARROW - ↱
(QB)	PAINT - RIGHT TURN ARROW - ↴
(QC)	PAINT - STRAIGHT ARROW - →
(QE)	PAINT - COMBO. STRAIGHT/RIGHT ARROW - ⇄
(QT)	PAINT - U-TURN SYMBOL - ↩

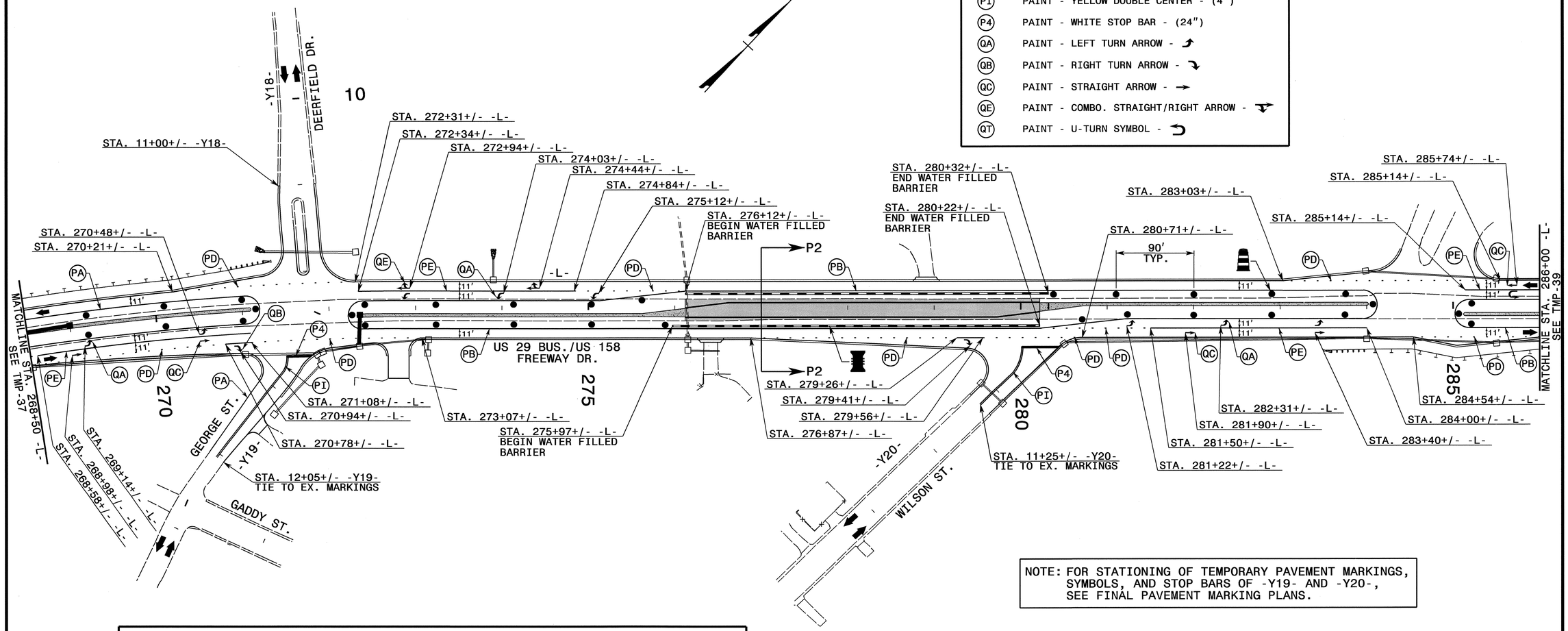

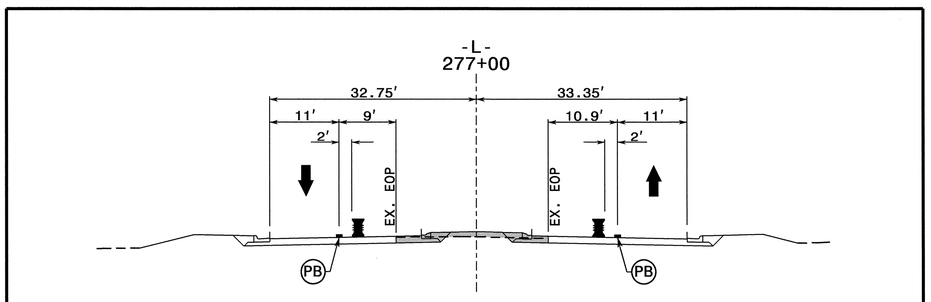

SECTION P2-P2

NOTE: FOR STATIONING OF TEMPORARY PAVEMENT MARKINGS, SYMBOLS, AND STOP BARS OF -Y19- AND -Y20-, SEE FINAL PAVEMENT MARKING PLANS.

REFER TO RSD NOS. 1205.01, 1205.02, 1205.04, 1205.05, 1205.08, 1250.01, AND 1251.01 FOR PLACEMENT OF TEMPORARY PAVEMENT MARKINGS, SYMBOLS, AND MARKERS UNLESS NOTED OTHERWISE.

ALL PAVEMENT MARKING SYMBOLS AND CHARACTERS SHALL BE PAINT UNLESS NOTED OTHERWISE.

APPROVED:_____ DATE:_____

SEAL

NORTH CAROLINA PROFESSIONAL SEAL 8973 ENGINEER G. L. GETTIER 13 OCT 11

DIVISION OF HIGHWAYS • STATE OF NORTH CAROLINA • DEPARTMENT OF TRANSPORTATION • WORK ZONE TRAFFIC CONTROL

PHASE II DETAILS

12-OCT-2011 12:58
\\dot\dfsroot\Unpro\TIPProjects-U\U3326\Traffic\TrafficControl\top\-L- LINE\U3326_-L-_ph2_tmp38.dgn
sngreen AT TE244733

PROJ. REFERENCE NO.	SHEET NO.
U-3326A/B	TMP-39

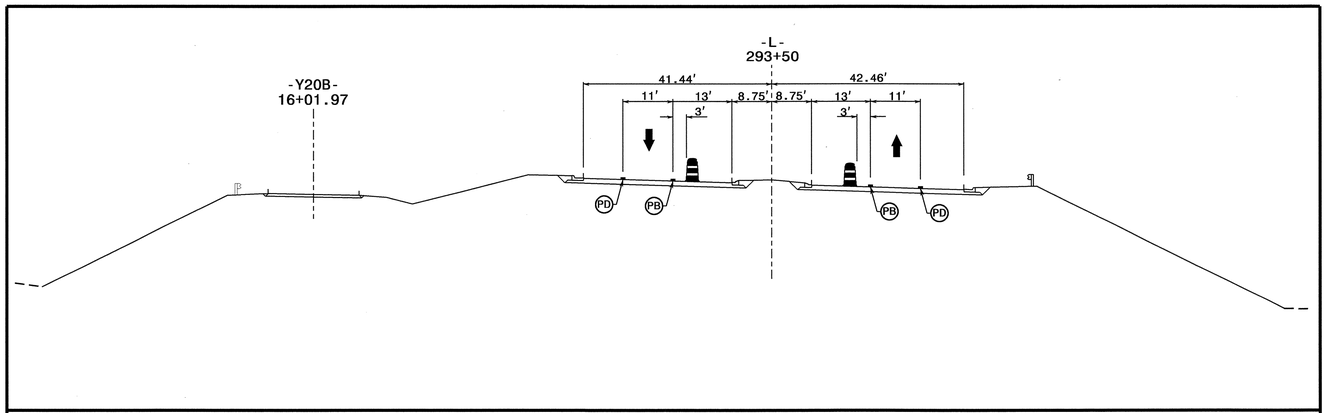

SECTION Q2-Q2

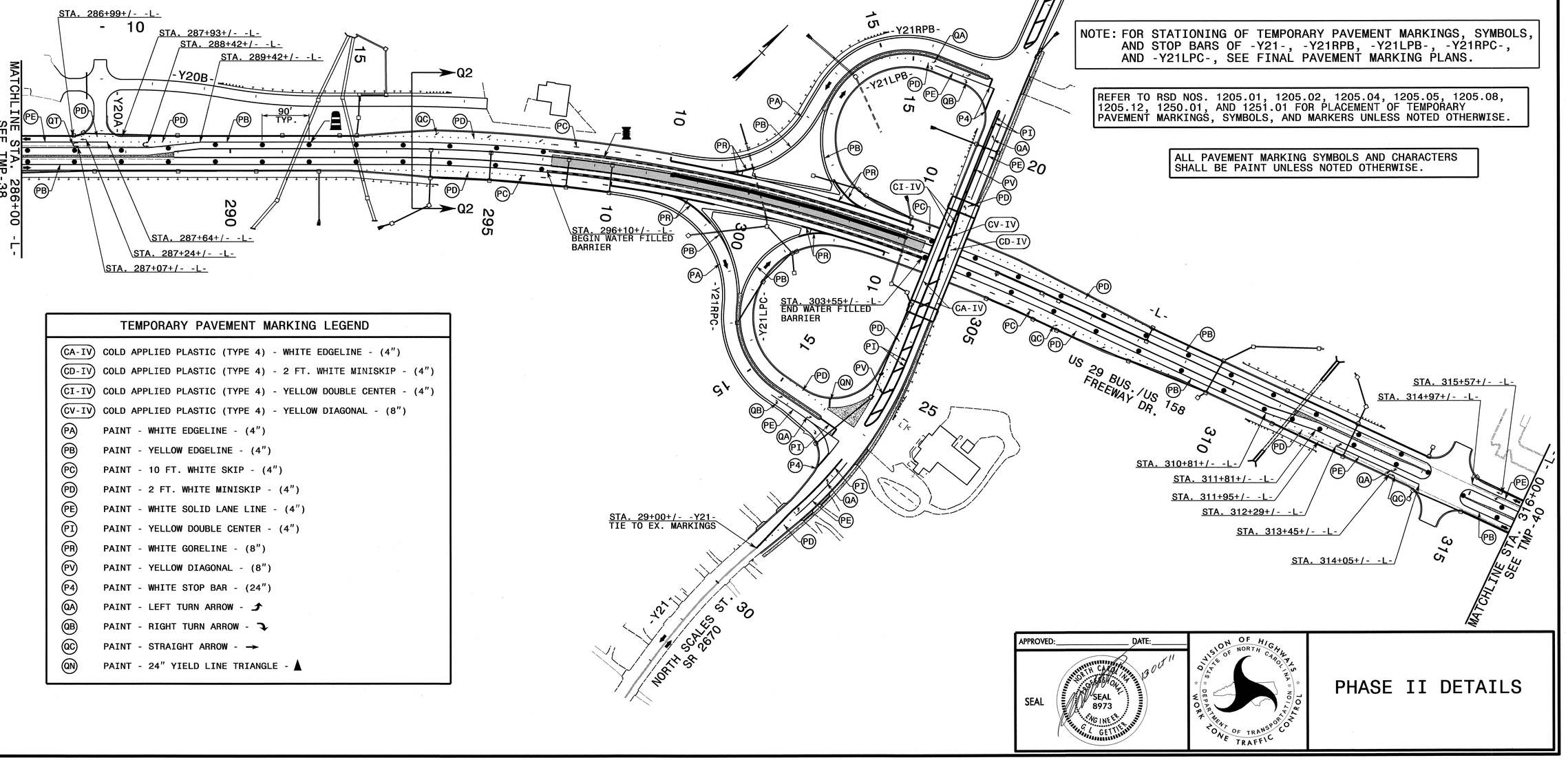

NOTE: FOR STATIONING OF TEMPORARY PAVEMENT MARKINGS, SYMBOLS, AND STOP BARS OF -Y21-, -Y21RPB, -Y21LPB-, -Y21RPC-, AND -Y21LPC-, SEE FINAL PAVEMENT MARKING PLANS.

REFER TO RSD NOS. 1205.01, 1205.02, 1205.04, 1205.05, 1205.08, 1205.12, 1250.01, AND 1251.01 FOR PLACEMENT OF TEMPORARY PAVEMENT MARKINGS, SYMBOLS, AND MARKERS UNLESS NOTED OTHERWISE.

ALL PAVEMENT MARKING SYMBOLS AND CHARACTERS SHALL BE PAINT UNLESS NOTED OTHERWISE.

TEMPORARY PAVEMENT MARKING LEGEND

CA-IV	COLD APPLIED PLASTIC (TYPE 4) - WHITE EDGELINE - (4")
CD-IV	COLD APPLIED PLASTIC (TYPE 4) - 2 FT. WHITE MINISKIP - (4")
CI-IV	COLD APPLIED PLASTIC (TYPE 4) - YELLOW DOUBLE CENTER - (4")
CV-IV	COLD APPLIED PLASTIC (TYPE 4) - YELLOW DIAGONAL - (8")
PA	PAINT - WHITE EDGELINE - (4")
PB	PAINT - YELLOW EDGELINE - (4")
PC	PAINT - 10 FT. WHITE SKIP - (4")
PD	PAINT - 2 FT. WHITE MINISKIP - (4")
PE	PAINT - WHITE SOLID LANE LINE - (4")
PI	PAINT - YELLOW DOUBLE CENTER - (4")
PR	PAINT - WHITE GORELINE - (8")
PV	PAINT - YELLOW DIAGONAL - (8")
P4	PAINT - WHITE STOP BAR - (24")
QA	PAINT - LEFT TURN ARROW - ↰
QB	PAINT - RIGHT TURN ARROW - ↱
QC	PAINT - STRAIGHT ARROW - →
QN	PAINT - 24" YIELD LINE TRIANGLE - ▲

APPROVED:_____ DATE:_____

SEAL

NORTH CAROLINA PROFESSIONAL SEAL 8973 ENGINEER GARY L. GETTIER

DIVISION OF HIGHWAYS · STATE OF NORTH CAROLINA · DEPARTMENT OF TRANSPORTATION · WORK ZONE TRAFFIC CONTROL

PHASE II DETAILS

12-OCT-2011 12:58
\\dot\dfsroot01\proj\TPProjects-U\U3326\Traffic\TrafficControl\tcp\-L- LINE\U3326_-L-_ph2_tmp39.dgn
sngreen AT TE244733

PROJ. REFERENCE NO.	SHEET NO.
U-3326A/B	TMP-40

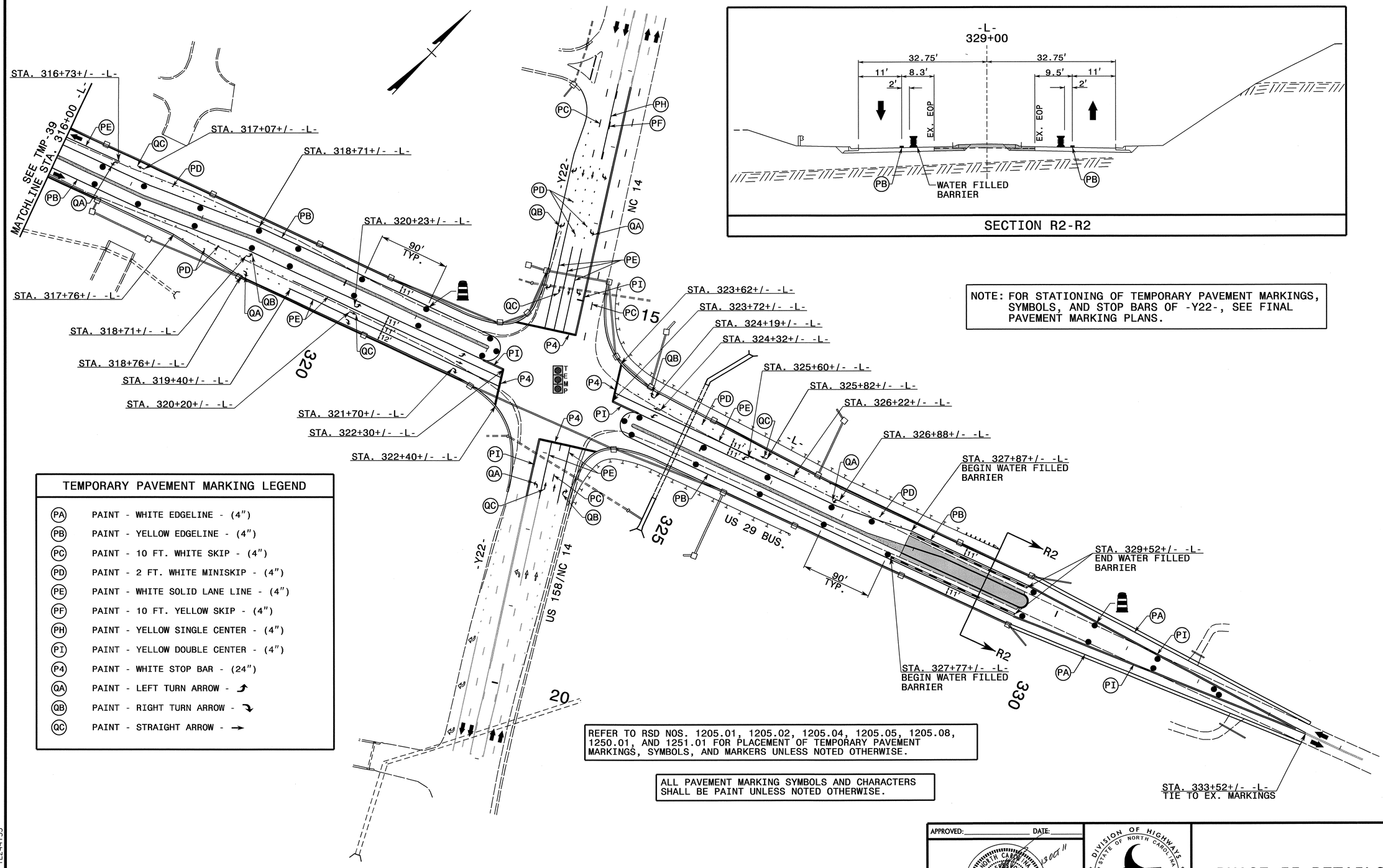

SECTION R2-R2

NOTE: FOR STATIONING OF TEMPORARY PAVEMENT MARKINGS, SYMBOLS, AND STOP BARS OF -Y22-, SEE FINAL PAVEMENT MARKING PLANS.

TEMPORARY PAVEMENT MARKING LEGEND

PA	PAINT - WHITE EDGELINE - (4")
PB	PAINT - YELLOW EDGELINE - (4")
PC	PAINT - 10 FT. WHITE SKIP - (4")
PD	PAINT - 2 FT. WHITE MINISKIP - (4")
PE	PAINT - WHITE SOLID LANE LINE - (4")
PF	PAINT - 10 FT. YELLOW SKIP - (4")
PH	PAINT - YELLOW SINGLE CENTER - (4")
PI	PAINT - YELLOW DOUBLE CENTER - (4")
P4	PAINT - WHITE STOP BAR - (24")
QA	PAINT - LEFT TURN ARROW - ↰
QB	PAINT - RIGHT TURN ARROW - ↱
QC	PAINT - STRAIGHT ARROW - →

REFER TO RSD NOS. 1205.01, 1205.02, 1205.04, 1205.05, 1205.08, 1250.01, AND 1251.01 FOR PLACEMENT OF TEMPORARY PAVEMENT MARKINGS, SYMBOLS, AND MARKERS UNLESS NOTED OTHERWISE.

ALL PAVEMENT MARKING SYMBOLS AND CHARACTERS SHALL BE PAINT UNLESS NOTED OTHERWISE.

APPROVED: _____ DATE: _____

SEAL

NORTH CAROLINA DEPARTMENT OF TRANSPORTATION SEAL 8973 ENGINEER G. L. GETTIER 3 OCT 11

DIVISION OF HIGHWAYS • STATE OF NORTH CAROLINA • DEPARTMENT OF TRANSPORTATION • WORK ZONE TRAFFIC CONTROL

PHASE II DETAILS

12-OCT-2011 12:58
\\dot\dfsroot01\proj\TPProjects-U\U3326\TrafficTrafficControl\tcp\-L- LINE\U3326_-L-_ph2_tmp40.dgn
sngreen AT TE24733

PROJ. REFERENCE NO.	SHEET NO.
U-3326A/B	TMP-41

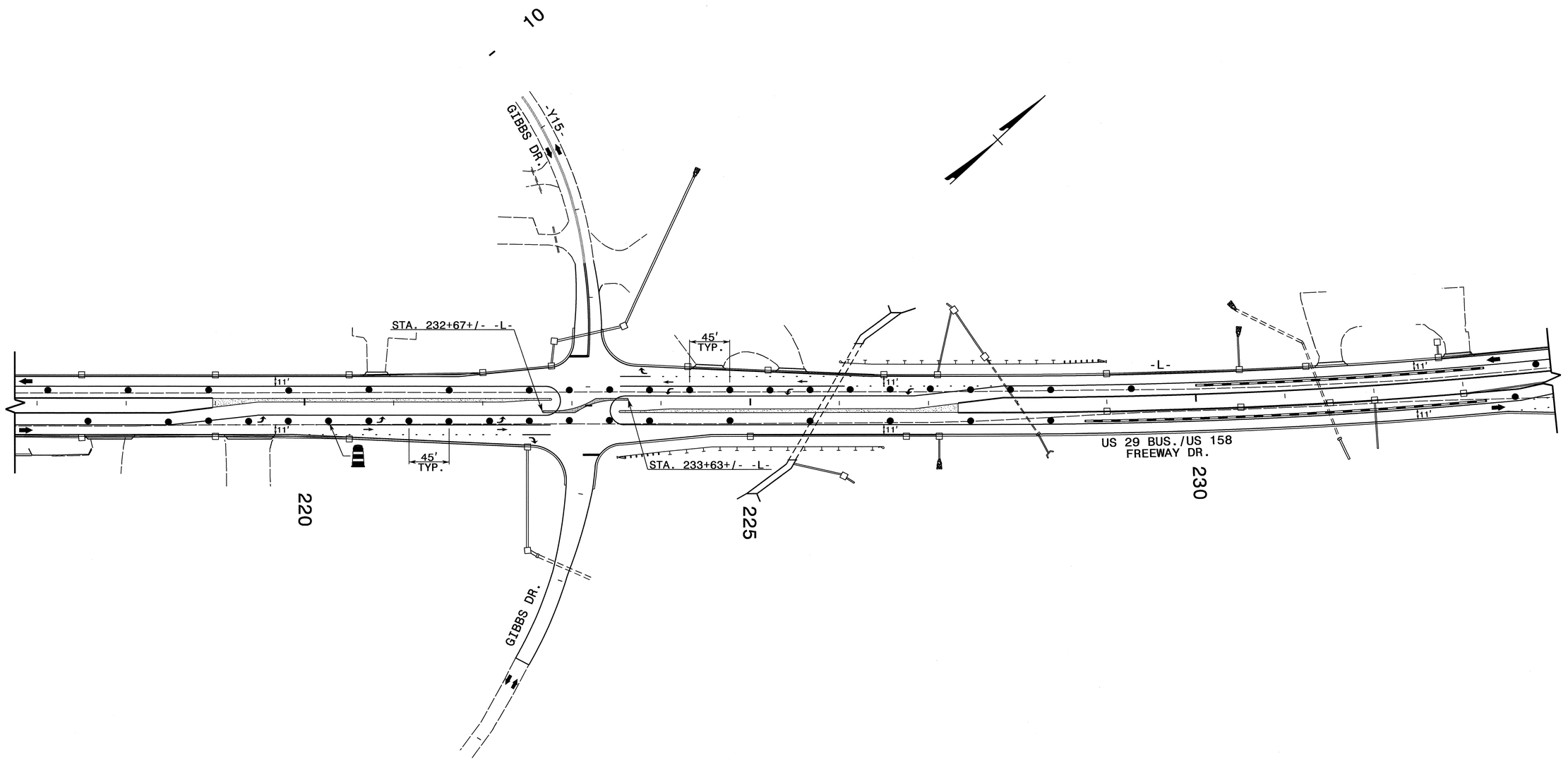

APPROVED: _____ DATE: 3/07/11

SEAL

NORTH CAROLINA PROFESSIONAL SEAL 8973 ENGINEER G. L. GETTIER

DIVISION OF HIGHWAYS • STATE OF NORTH CAROLINA • DEPARTMENT OF TRANSPORTATION • WORK ZONE TRAFFIC CONTROL

PHASE II DETAILS

12-OCT-2011 12:58
\\dot\dfsroot01\proj\TIPProjects-U\U3326\TrafficControl\tcp\-L- LINE\U3326_-L-_ph3_tmp41.dgn
sngreen AT TE24733

PROJ. REFERENCE NO.	SHEET NO.
U-3326A/B	TMP-42

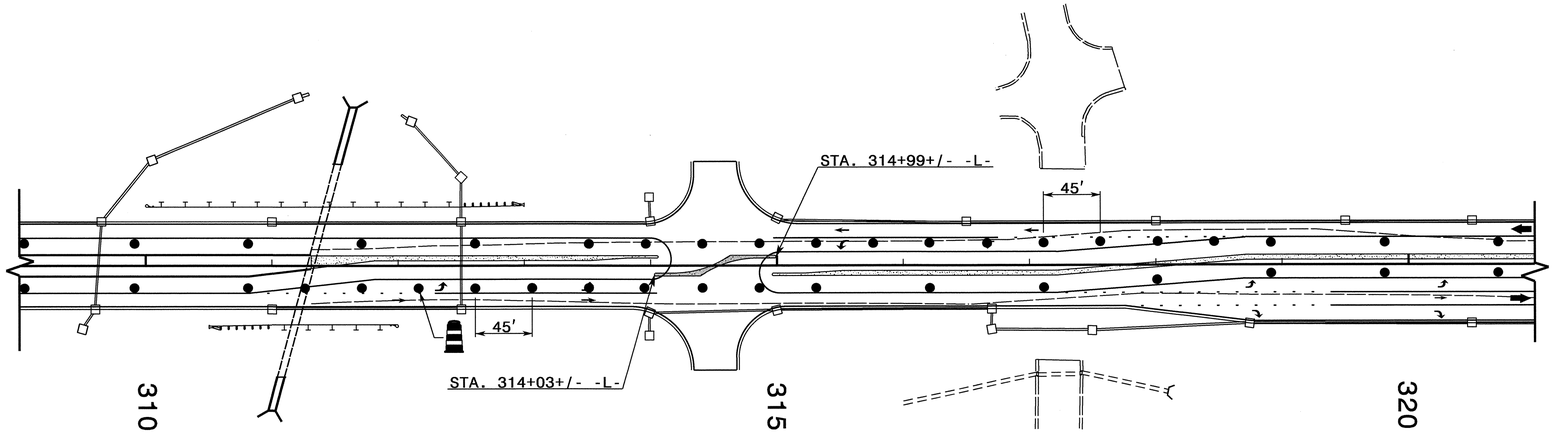

APPROVED:_____ DATE:_____

SEAL

NORTH CAROLINA PROFESSIONAL SEAL 8973 ENGINEER G.L. GETTIER 13 OCT 11

DIVISION OF HIGHWAYS • STATE OF NORTH CAROLINA • DEPARTMENT OF TRANSPORTATION • WORK ZONE TRAFFIC CONTROL

PHASE II DETAILS

12-OCT-2011 12:58
\\dot\dfsroot01\proj\TIPProjects-U\U3326\Traffic\TrafficControl\tcp\-L- LINE\U3326_-L-_ph3_tmp42.dgn
sngreen AT TE24733

PROJ. REFERENCE NO.	SHEET NO.
U-3326A/B	TMP-43

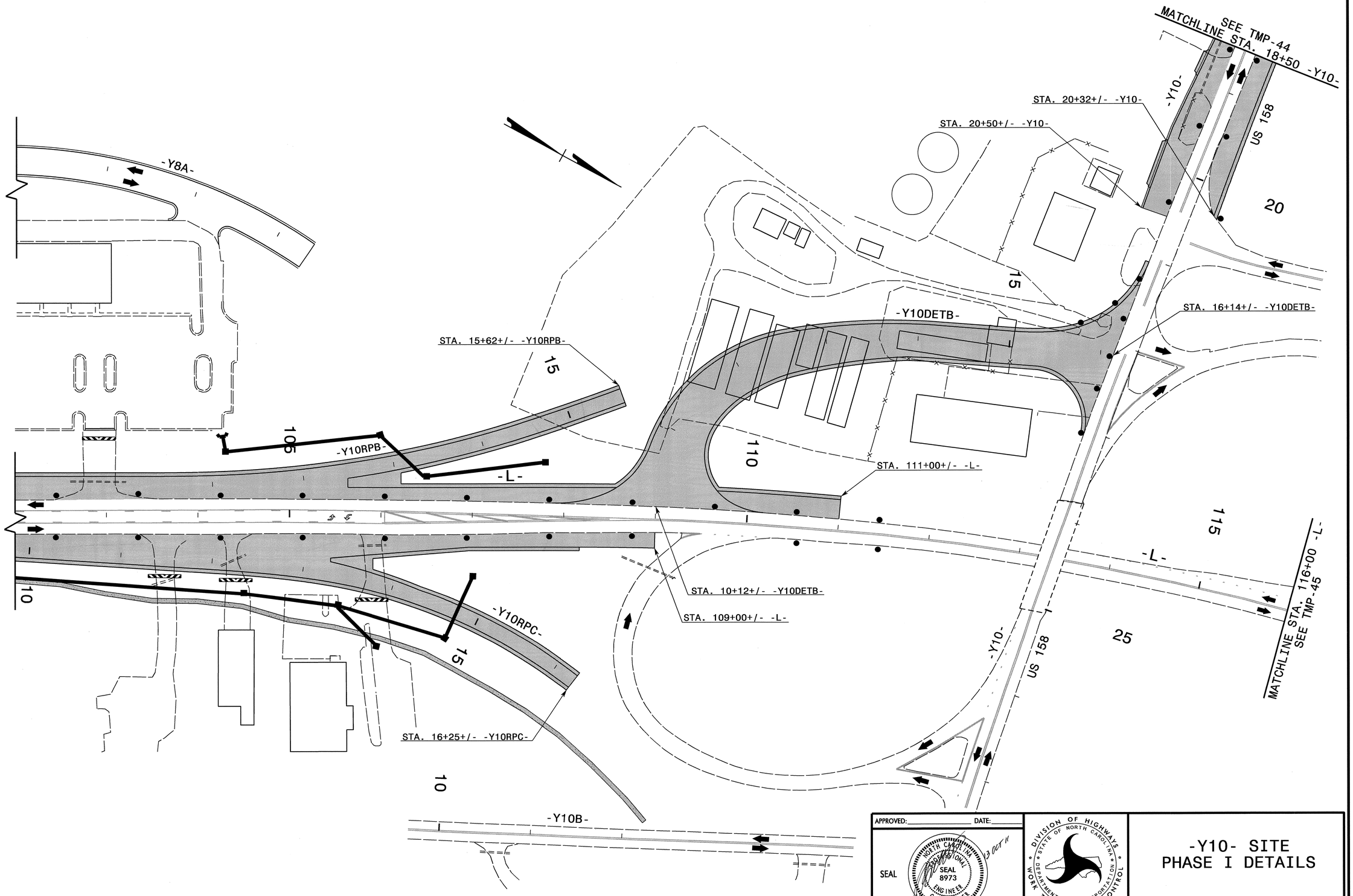

APPROVED: _____ DATE: _____

SEAL

NORTH CAROLINA PROFESSIONAL SEAL 8973 ENGINEER G. L. GETTIER 13 OCT 11

DIVISION OF HIGHWAYS * STATE OF NORTH CAROLINA * DEPARTMENT OF TRANSPORTATION * WORK ZONE TRAFFIC CONTROL

-Y10- SITE PHASE I DETAILS

13-OCT-2011 11:23
\\dot\dfsroot0\proj\TIPProjects-U\U3326\Traffic\TrafficControl\tcp\SITE I -Y10- \U3326_-Y10-_phI_tmp43.dgn
msishak AT TE244732

PROJ. REFERENCE NO.	SHEET NO.
U-3326A/B	TMP-44

TYPE III BARRICADE(S)

①

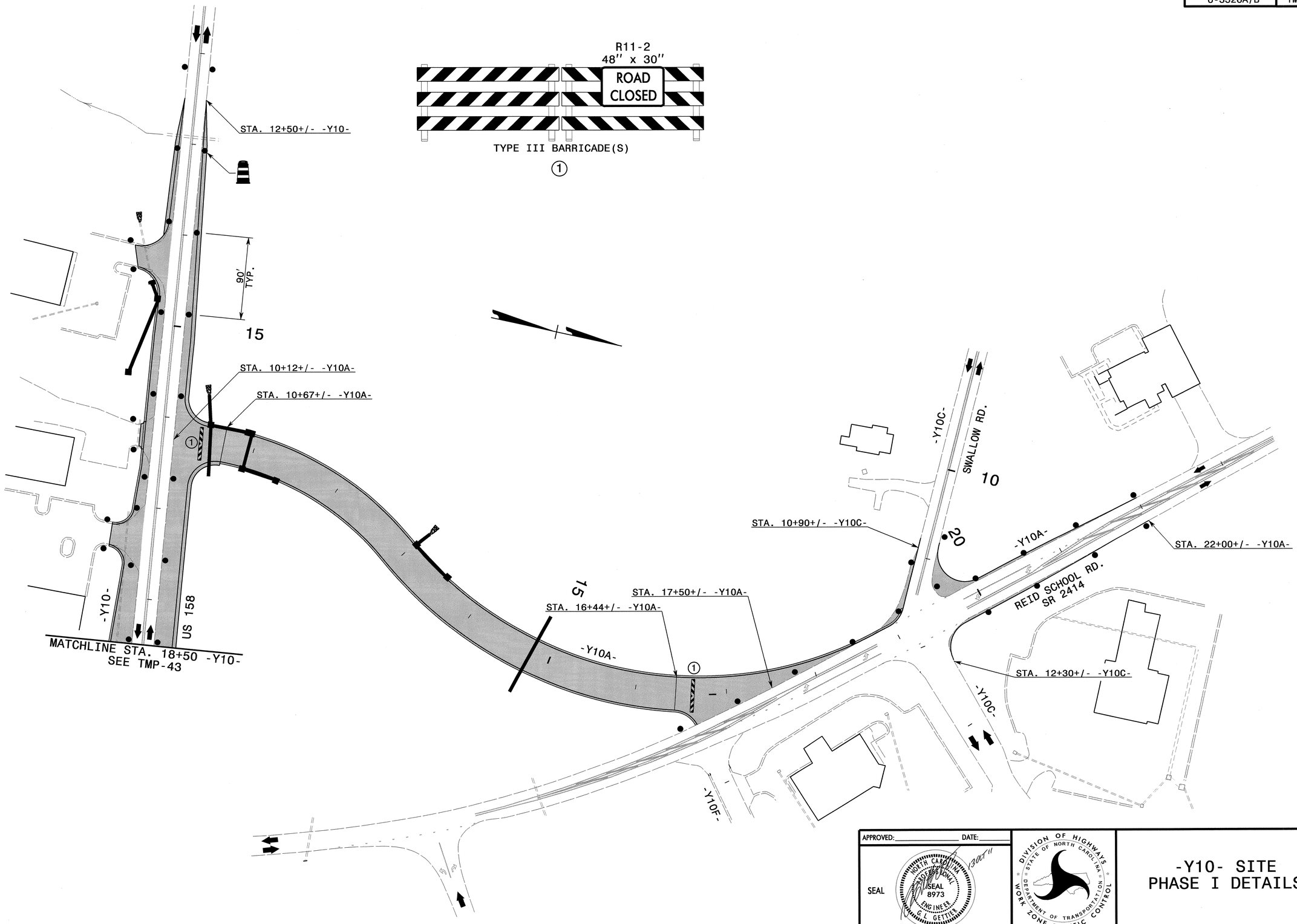

APPROVED: _____ DATE: _____

SEAL

NORTH CAROLINA PROFESSIONAL SEAL 8973 ENGINEER G. T. GETTIER 13OCT11

DIVISION OF HIGHWAYS
STATE OF NORTH CAROLINA
DEPARTMENT OF TRANSPORTATION
WORK ZONE TRAFFIC CONTROL

-Y10- SITE PHASE I DETAILS

13-OCT-2011 13:23
\\dot\dfsroot01\proj\TIPProjects-U\U3326\Traffic\TrafficControl\tcp\SITE I-Y10-\U3326_-Y10-_phI_tmp44.dgn
msishak
AT TE-24473.2

PROJ. REFERENCE NO.	SHEET NO.
U-3326A/B	TMP-45

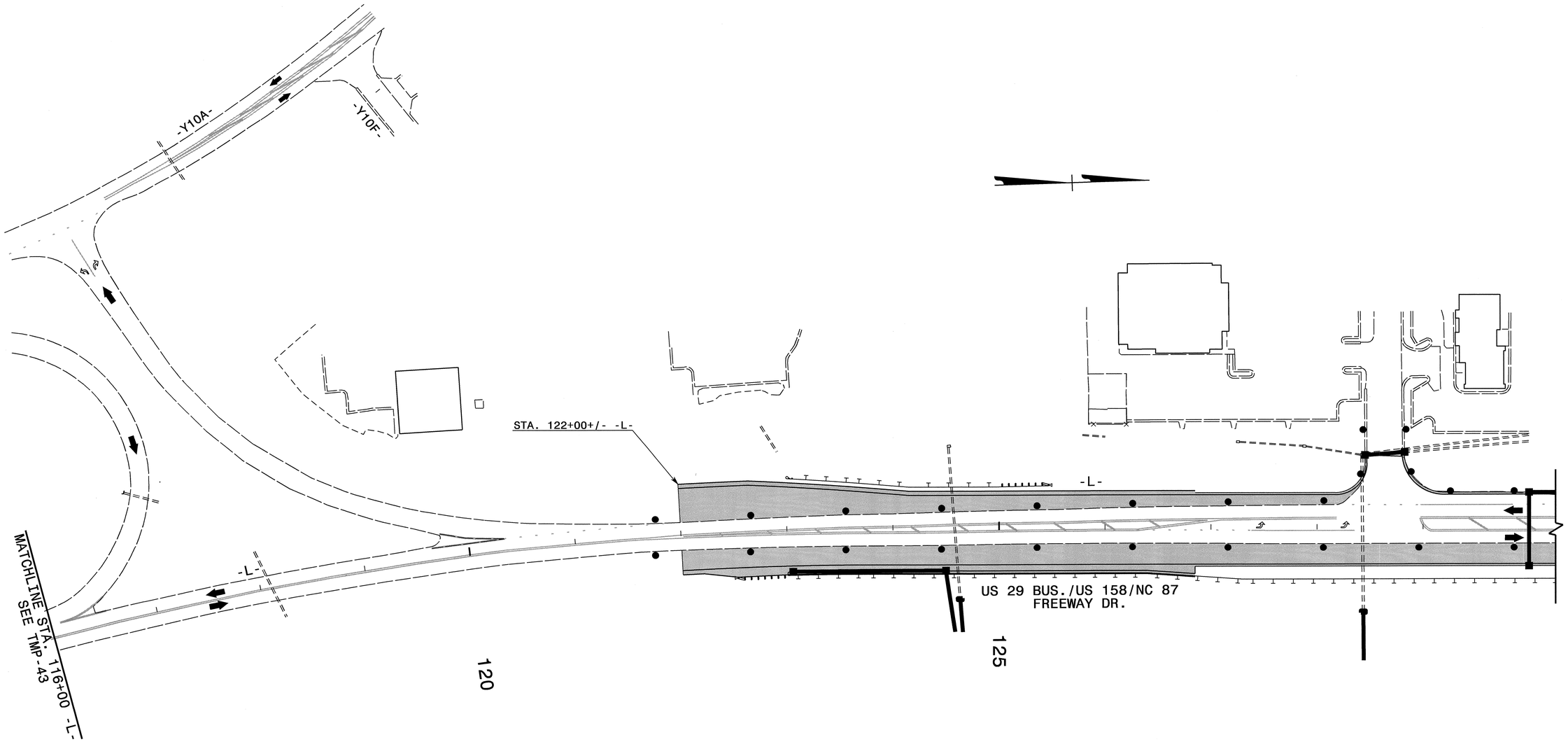

APPROVED: _____ DATE: _____

SEAL

NORTH CAROLINA PROFESSIONAL SEAL 8973 ENGINEER G. L. GETTIER

DIVISION OF HIGHWAYS • STATE OF NORTH CAROLINA • DEPARTMENT OF TRANSPORTATION • WORK ZONE TRAFFIC CONTROL

-Y10- SITE PHASE I DETAILS

13-OCT-2011 11:23
\\dot\dfsroot0\proj\TIPProjects-U\U3326\Traffic\TrafficControl\tcp\SITE I-Y10-\U3326_-Y10-_ph1_tmp45.dgn
msishak
AT TE244732

PROJ. REFERENCE NO.	SHEET NO.
U-3326A/B	TMP-46

-Y8A-

-Y10RPB-

-Y10RPC-

-Y10B-

-Y10DETB-

-Y10DETC-

-Y10-

US 158

STA. 106+04+/- -L-
TIE TO EX. MARKINGS

STA. 10+28+/- -Y10DETB-

STA. 10+94+/- -Y10DETB-

STA. 11+84+/- -Y10DETB-

STA. 12+08+/- -Y10DETB-

STA. 13+88+/- -Y10DETB-

STA. 16+04+/- -Y10DETB-

STA. 21+24+/- -Y10-

STA. 21+50+/- -Y10-
TIE TO EX. MARKINGS

STA. 22+38+/- -Y10-

STA. 22+98+/- -Y10-

STA. 10+34+/- -Y10DETB-

STA. 109+52+/- -L-

STA. 15+29+/- -Y10DETB-

STA. 15+44+/- -Y10DETB-

STA. 15+86+/- -Y10DETB-

STA. 110+12+/- -L-

STA. 111+00+/- -L-
TIE TO EX. MARKINGS

STA. 111+00+/- -L- (32.75'R)
BEGIN TEMPORARY PAVEMENT

STA. 107+20+/- -L-

STA. 107+85+/- -L-

STA. 108+45+/- -L-

STA. 109+29+/- -L-

STA. 110+38+/- -L-

STA. 10+33+/- -Y10DETC-

STA. 113+00+/- -L- (37'R)
END TEMPORARY PAVEMENT

STA. 113+00+/- -L- (16'R)
BEGIN TEMPORARY PAVEMENT

STA. 114+00+/- -L- (16'R)
END TEMPORARY PAVEMENT

STA. 15+93+/- -Y10DETC-

END OF ROAD MARKERS
(TYP. OF 3)

R11-2
48" X 30"
ROAD CLOSED

TYPE III BARRICADE(S)
①

REFER TO RSD NOS. 1205.01, 1205.02, 1205.04, 1205.05, 1205.08 1205.09, 1250.01, AND 1251.01 FOR PLACEMENT OF TEMPORARY PAVEMENT MARKINGS, SYMBOLS, AND MARKERS UNLESS NOTED OTHERWISE.

ALL PAVEMENT MARKING SYMBOLS AND CHARACTERS SHALL BE PAINT UNLESS NOTED OTHERWISE.

TEMPORARY PAVEMENT MARKING LEGEND

(PA)	PAINT - WHITE EDGELINE - (4")
(PD)	PAINT - 2 FT. WHITE MINISKIP - (4")
(PE)	PAINT - WHITE SOLID LANE LINE - (4")
(PI)	PAINT - YELLOW DOUBLE CENTER - (4")
(P4)	PAINT - WHITE STOP BAR - (24")
(QA)	PAINT - LEFT TURN ARROW -
(QB)	PAINT - RIGHT TURN ARROW -
(QC)	PAINT - STRAIGHT ARROW -
(QD)	PAINT - COMBO. STRAIGHT/LEFT ARROW -
(QE)	PAINT - COMBO. STRAIGHT/RIGHT ARROW -
(QF)	PAINT - COMBO. LEFT/RIGHT ARROW -

APPROVED:_____ DATE:_____

SEAL

NORTH CAROLINA PROFESSIONAL SEAL 8973 ENGINEER G. T. GETTIES 13 OCT 11

DIVISION OF HIGHWAYS
STATE OF NORTH CAROLINA
DEPARTMENT OF TRANSPORTATION
WORK ZONE TRAFFIC CONTROL

-Y10- SITE PHASE II DETAILS

13-OCT-2011 11:22
\\dot\dfsroot01\proj\TIPProjects-U\U3326\Traffic\TrafficControl\tcp\SITE 1-Y10-\U3326_-Y10-_ph2_tmp46.dgn
msishak
AT TE244732

PROJ. REFERENCE NO.	SHEET NO.
U-3326A/B	TMP-47

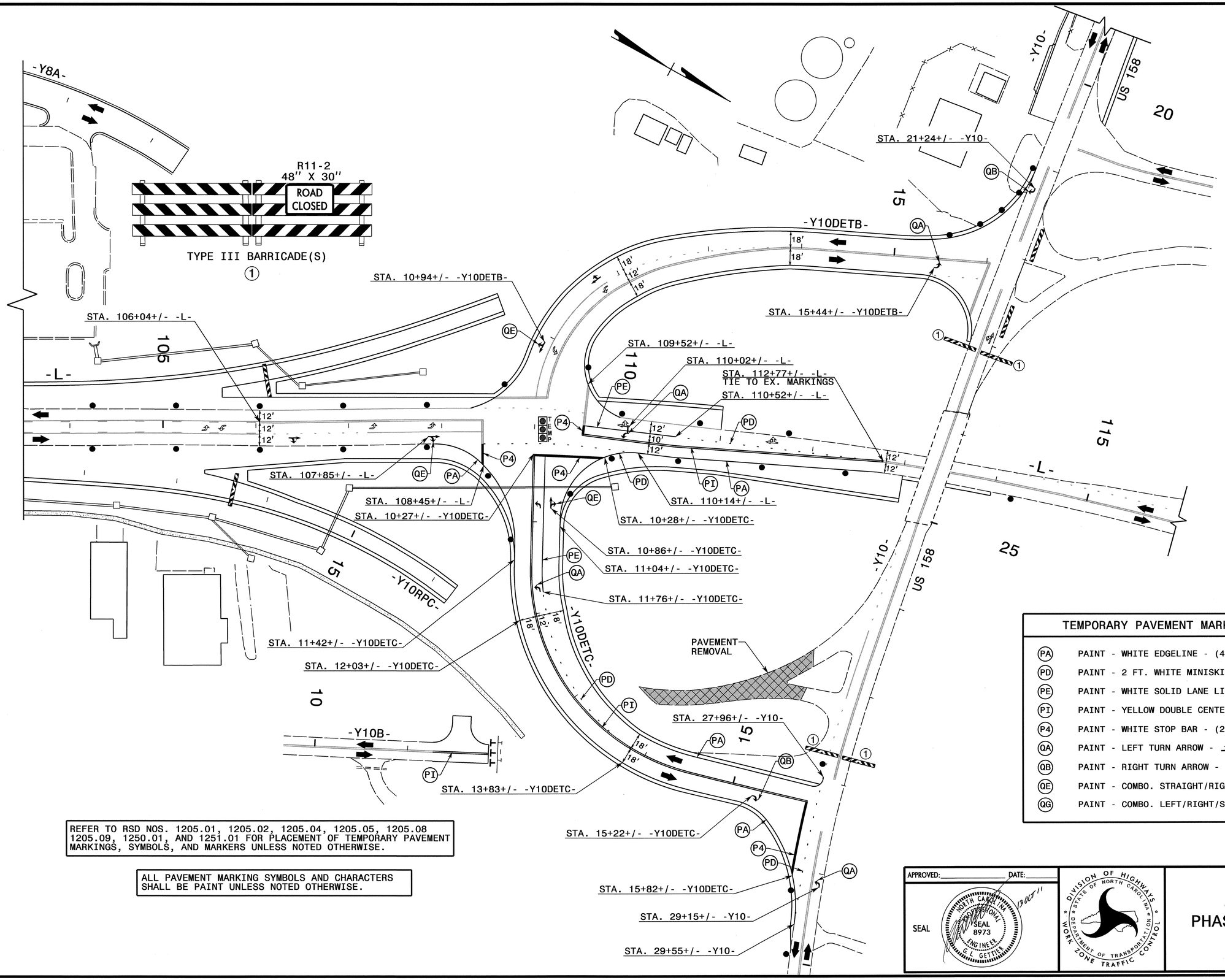

TEMPORARY PAVEMENT MARKING LEGEND

PA	PAINT - WHITE EDGELINE - (4")
PD	PAINT - 2 FT. WHITE MINISKIP - (4")
PE	PAINT - WHITE SOLID LANE LINE - (4")
PI	PAINT - YELLOW DOUBLE CENTER - (4")
P4	PAINT - WHITE STOP BAR - (24")
QA	PAINT - LEFT TURN ARROW -
QB	PAINT - RIGHT TURN ARROW -
QE	PAINT - COMBO. STRAIGHT/RIGHT ARROW -
QG	PAINT - COMBO. LEFT/RIGHT/STRAIGHT ARROW -

REFER TO RSD NOS. 1205.01, 1205.02, 1205.04, 1205.05, 1205.08 1205.09, 1250.01, AND 1251.01 FOR PLACEMENT OF TEMPORARY PAVEMENT MARKINGS, SYMBOLS, AND MARKERS UNLESS NOTED OTHERWISE.

ALL PAVEMENT MARKING SYMBOLS AND CHARACTERS SHALL BE PAINT UNLESS NOTED OTHERWISE.

APPROVED: _____ DATE: _____

SEAL

NORTH CAROLINA PROFESSIONAL SEAL 8973 ENGINEER G. L. GETTIER

13 OCT 11

DIVISION OF HIGHWAYS STATE OF NORTH CAROLINA DEPARTMENT OF TRANSPORTATION WORK ZONE TRAFFIC CONTROL

-Y10- SITE PHASE II DETAILS

13-OCT-2011 11:22
\\dot\dfsroot01\proj\TIPProjects-U\U3326\Traffic\TrafficControl\tcp\SITE I-Y10-\U3326_-Y10-_ph2_tmp47.dgn
msishak AT TE244732

PROJ. REFERENCE NO.	SHEET NO.
U-3326A/B	TMP-48

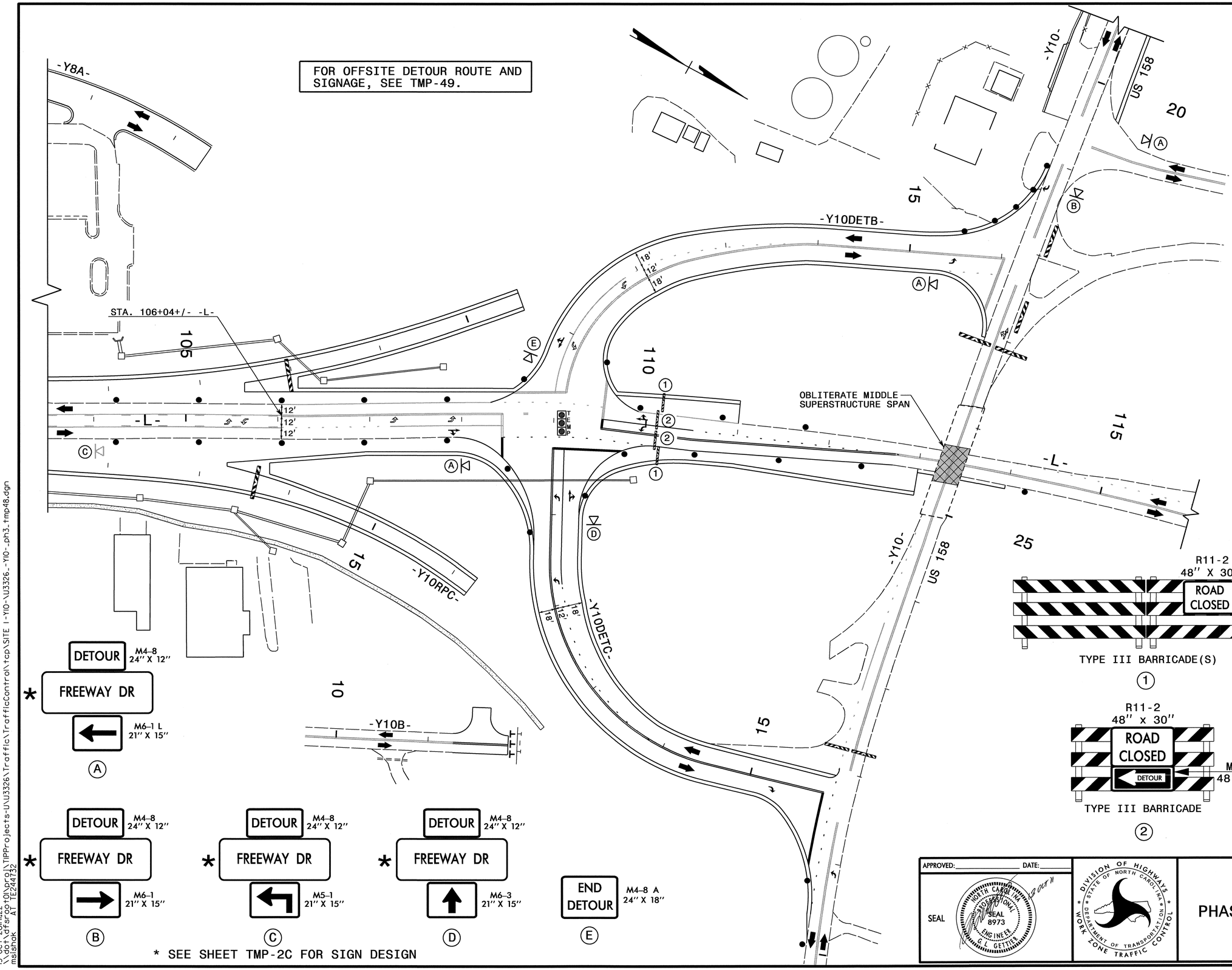

APPROVED: _____ DATE: _____

SEAL

NORTH CAROLINA PROFESSIONAL SEAL 8973 ENGINEER G. L. GETTIER

DIVISION OF HIGHWAYS STATE OF NORTH CAROLINA DEPARTMENT OF TRANSPORTATION WORK ZONE TRAFFIC CONTROL

-Y10- SITE PHASE III DETAILS

13-OCT-2011 11:22
\\dot\dfsroot01\proj\TIPProjects-U\U3326\Traffic\TrafficControl\tcp\SITE I-Y10-\U3326_-Y10-_ph3_tmp48.dgn
msishak AT TE244732

PROJ. REFERENCE NO.	SHEET NO.
U-3326A/B	TMP-49

DETOUR ROUTE

NOTE: FOR BARRICADE AND SIGNAGE DETAILS AT INTX -Y10DETB-/FREEWAY DRIVE, SEE TMP-48.

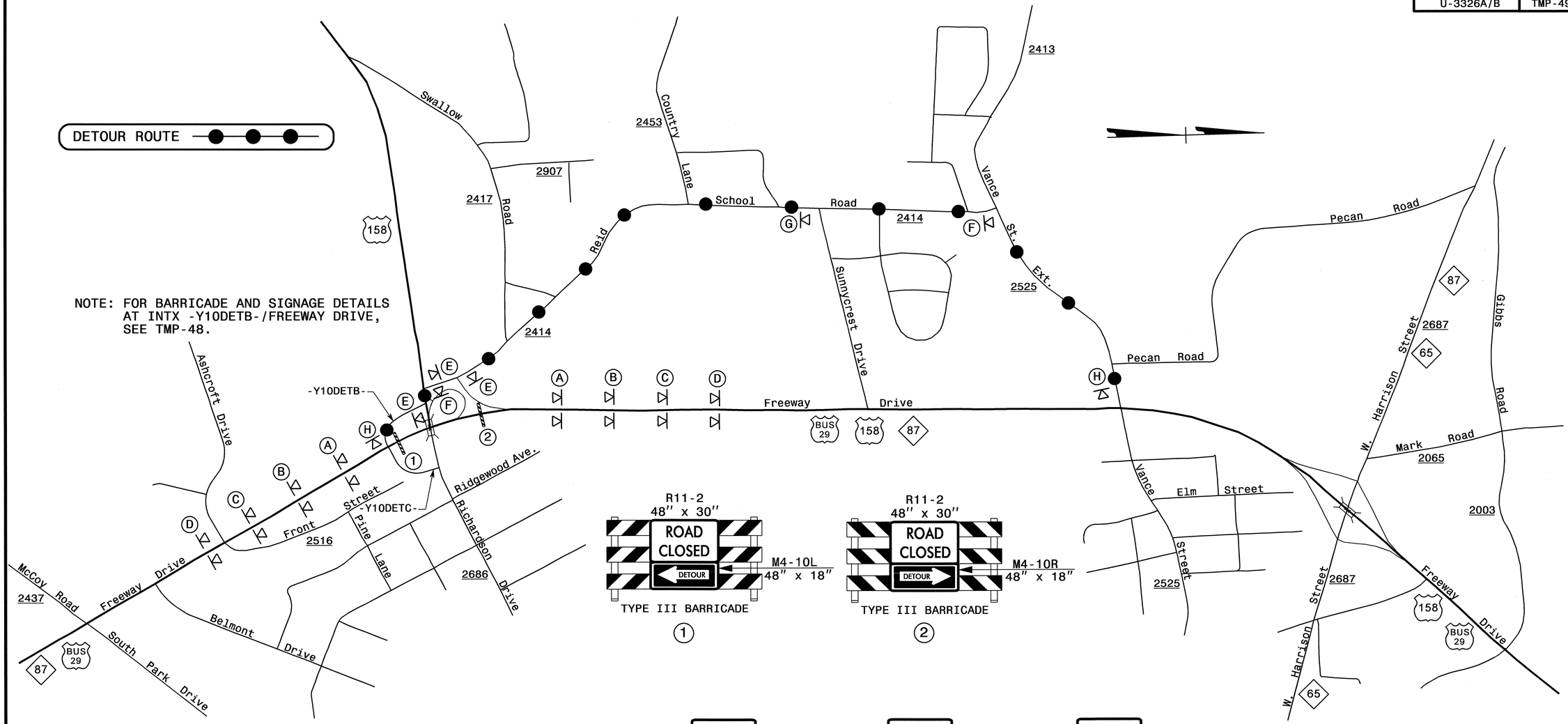

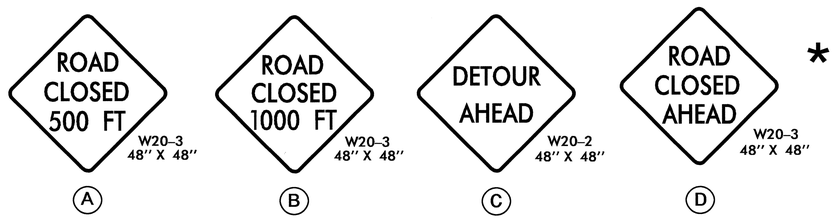

* SEE SHEET TMP-2C FOR SIGN DESIGN

APPROVED: _____ DATE: _____

SEAL

NORTH CAROLINA PROFESSIONAL SEAL 8973 ENGINEER G. L. GETTYS

13 OCT 11

DIVISION OF HIGHWAYS * STATE OF NORTH CAROLINA * DEPARTMENT OF TRANSPORTATION * WORK ZONE TRAFFIC CONTROL

-Y10- SITE - PHASE III OFF-SITE DETOUR FREEWAY DRIVE

13-OCT-2011 11:21
\\dot\dfsroot\hpro\TIPProjects-U\U3326\Traffic\TrafficControl\tcp\SITE 1-Y10-\U3326_-Y10-_ph3_tmp49.dgn
mslshak AT TE244732

PROJ. REFERENCE NO.	SHEET NO.
U-3326A/B	TMP-50

FOR TEMPORARY SHORING NOTES AND SHORING CROSS SECTIONS, SEE TMP-62.

Shoring I.D. No.	Estimated Average Height (ft.)	Quantity (sq. ft.)
1A	4.00 FT.	120 SQ. FT.

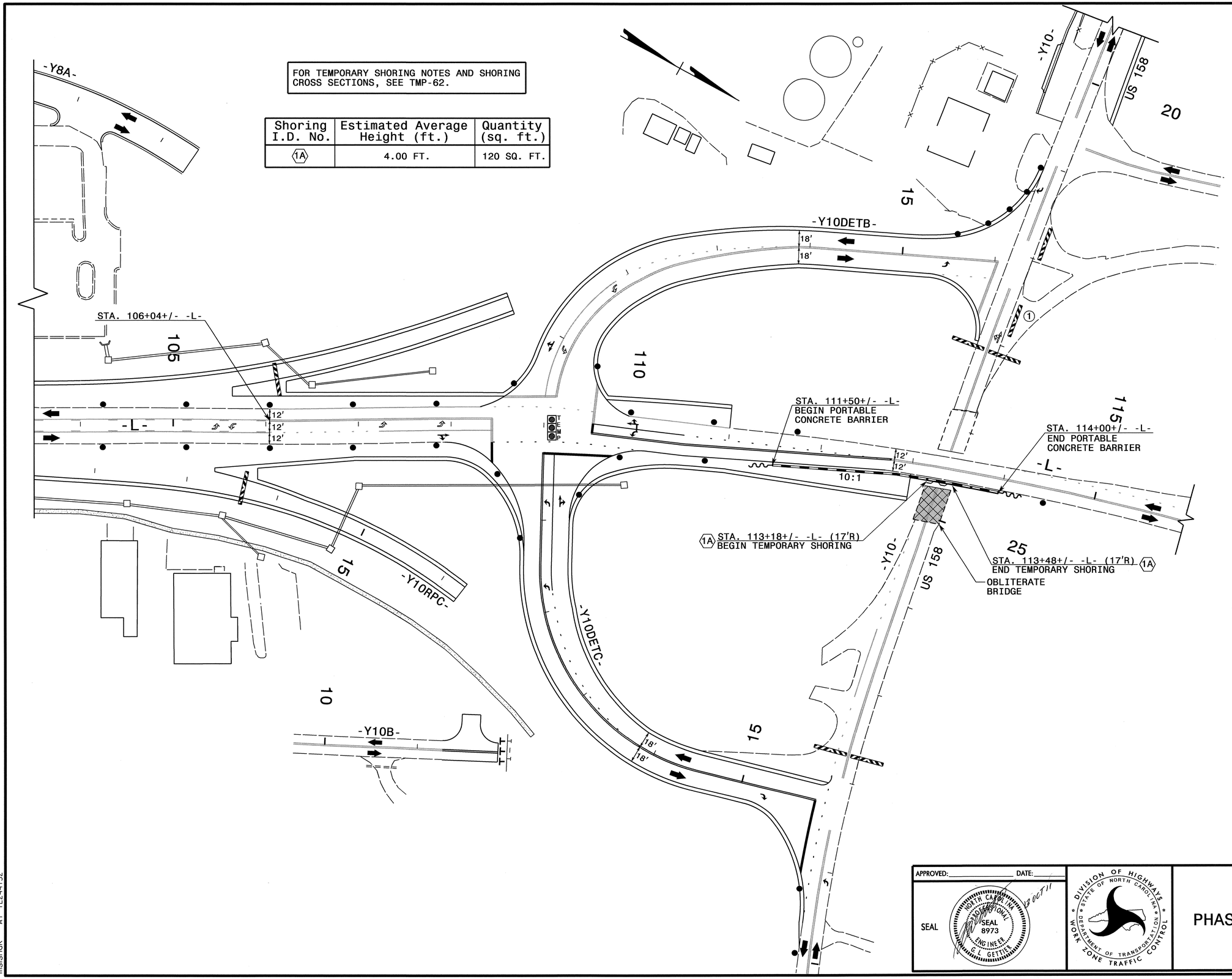

APPROVED: _____ DATE: _____

SEAL

NORTH CAROLINA PROFESSIONAL SEAL 8973 ENGINEER G. L. GETTIER

13 OCT 11

DIVISION OF HIGHWAYS
STATE OF NORTH CAROLINA
DEPARTMENT OF TRANSPORTATION
WORK ZONE TRAFFIC CONTROL

-Y10- SITE PHASE III DETAILS

13-OCT-2011 11:21
\\dot\dfsroot01\proj\TIPProjects-U\U3326\Traffic\TrafficControl\tcp\SITE I-Y10-\U3326_-Y10-_ph3_tmp50.dgn
msishak AT TE244732

PROJ. REFERENCE NO.	SHEET NO.
U-3326A/B	TMP-51

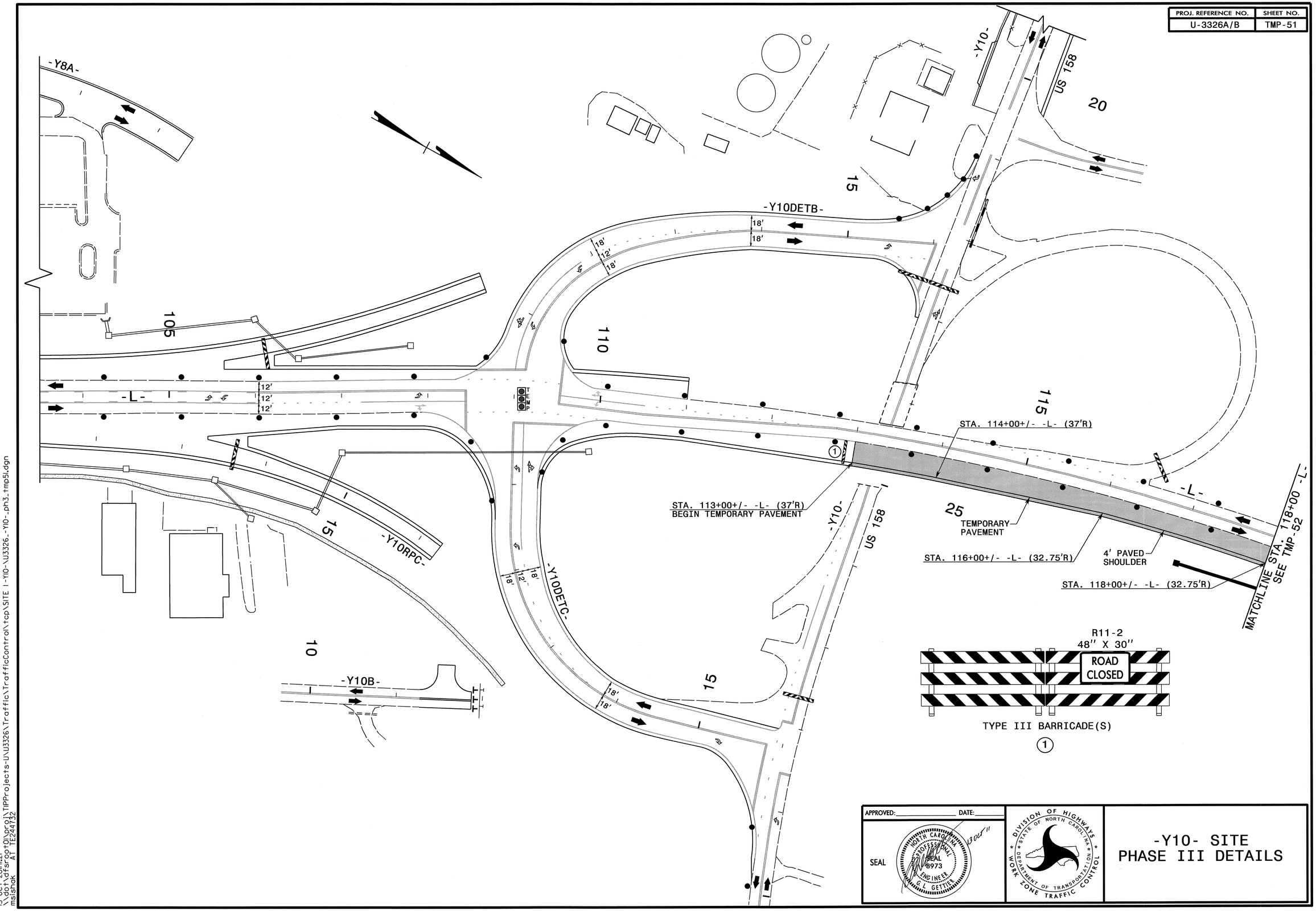

APPROVED: _____ DATE: _____

SEAL

NORTH CAROLINA PROFESSIONAL SEAL 8973 ENGINEER G. L. GETTIER

13 OCT 11

DIVISION OF HIGHWAYS
STATE OF NORTH CAROLINA
DEPARTMENT OF TRANSPORTATION
WORK ZONE TRAFFIC CONTROL

-Y10- SITE PHASE III DETAILS

13-OCT-2011 11:21
\\dot\dfsroot01\proj\TIPProjects-U\U3326\Traffic\TrafficControl\tcp\SITE I-Y10-\U3326_-Y10-_ph3_tmp51.dgn
msishak AT TE244732

PROJ. REFERENCE NO.	SHEET NO.
U-3326A/B	TMP-52

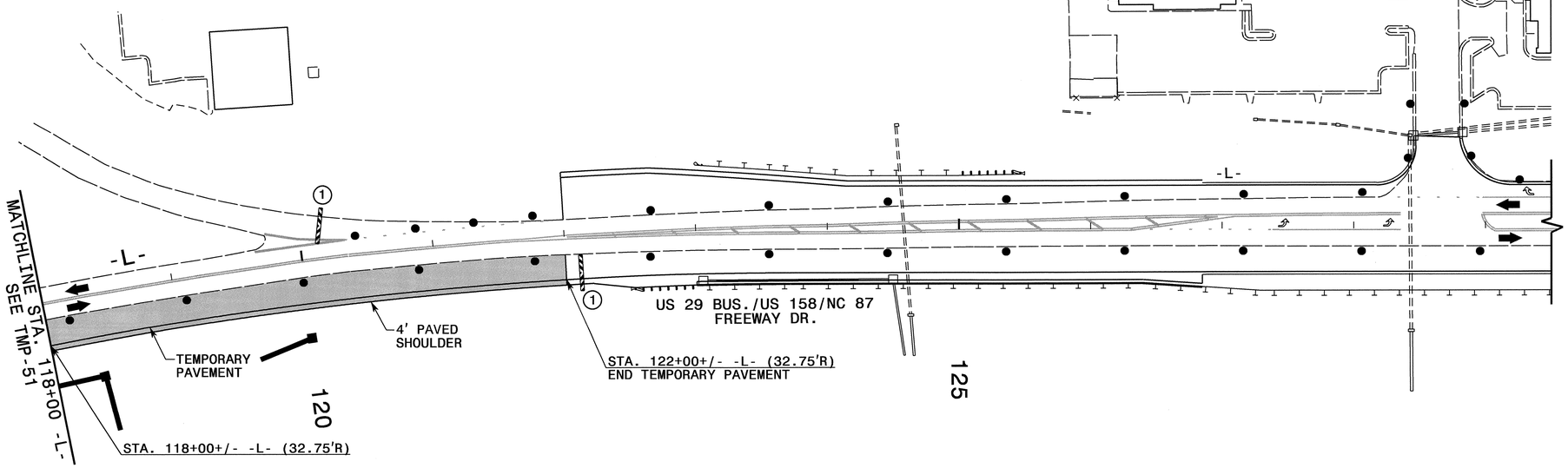

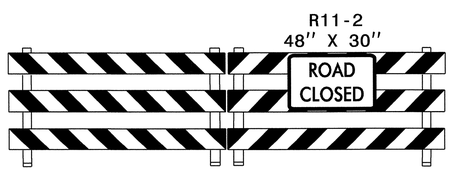

TYPE III BARRICADE(S)

①

APPROVED: _____ DATE: _____

SEAL

NORTH CAROLINA PROFESSIONAL SEAL 8973 ENGINEER G. GETTIER

8 OCT 11

DIVISION OF HIGHWAYS
STATE OF NORTH CAROLINA
DEPARTMENT OF TRANSPORTATION
WORK ZONE TRAFFIC CONTROL

-Y10- SITE PHASE III DETAILS

13-OCT-2011 11:21
\\dot\dfsroot01\proj\TIPProjects-U\U3326\Traffic\TrafficControl\tcp\SITE 1-Y10-\U3326_-Y10-_ph3_tmp52.dgn
msishak AT TE244732

PROJ. REFERENCE NO.	SHEET NO.
U-3326A/B	TMP-53

FOR TEMPORARY SHORING NOTES AND SHORING CROSS SECTIONS, SEE TMP-62.

Shoring I.D. No.	Estimated Average Height (ft.)	Quantity (sq. ft.)
1B	4.94 FT.	400 SQ. FT.

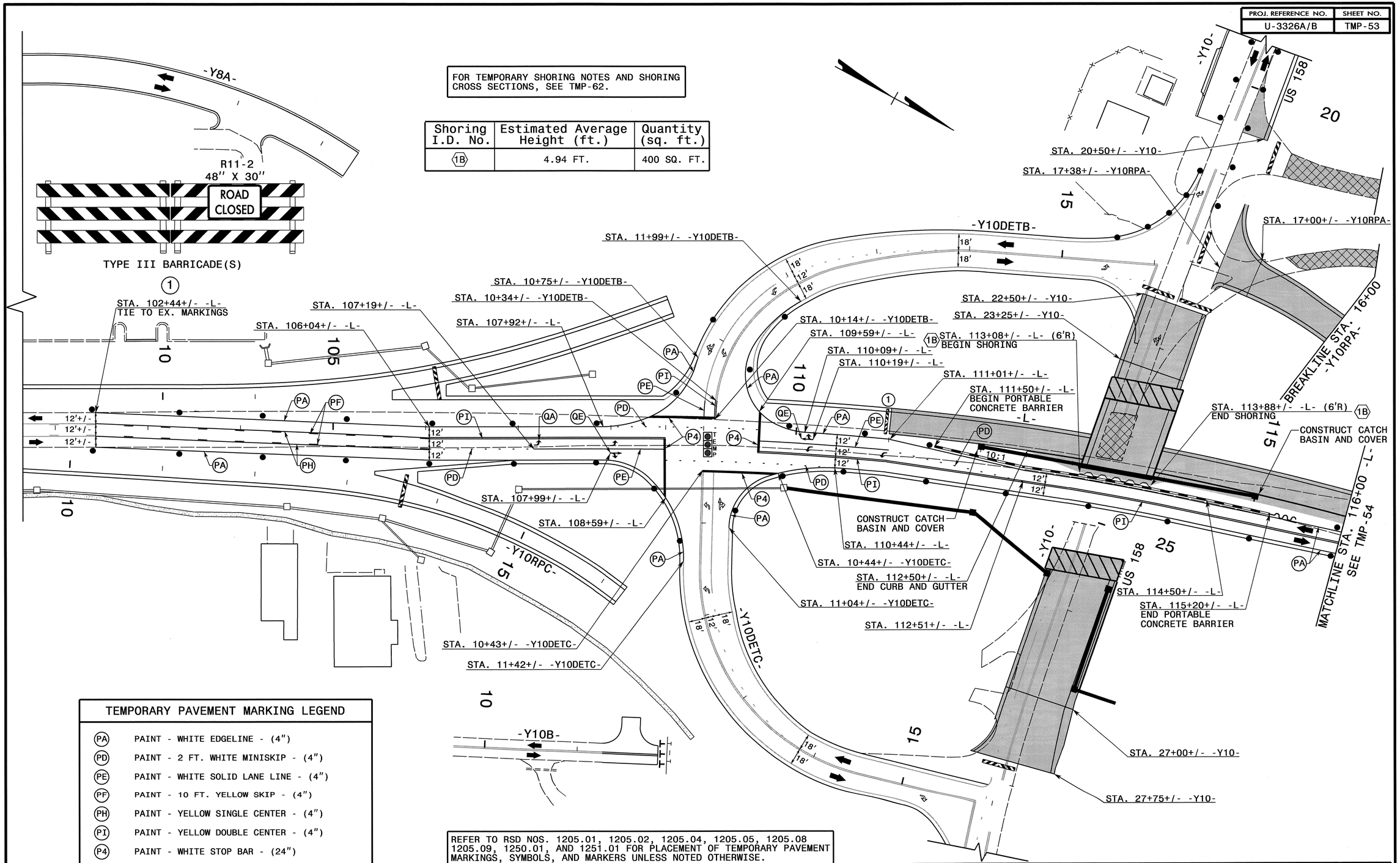

TEMPORARY PAVEMENT MARKING LEGEND

PA	PAINT - WHITE EDGELINE - (4")
PD	PAINT - 2 FT. WHITE MINISKIP - (4")
PE	PAINT - WHITE SOLID LANE LINE - (4")
PF	PAINT - 10 FT. YELLOW SKIP - (4")
PH	PAINT - YELLOW SINGLE CENTER - (4")
PI	PAINT - YELLOW DOUBLE CENTER - (4")
P4	PAINT - WHITE STOP BAR - (24")
QA	PAINT - LEFT TURN ARROW -
QE	PAINT - COMBO. STRAIGHT/RIGHT ARROW -

REFER TO RSD NOS. 1205.01, 1205.02, 1205.04, 1205.05, 1205.08 1205.09, 1250.01, AND 1251.01 FOR PLACEMENT OF TEMPORARY PAVEMENT MARKINGS, SYMBOLS, AND MARKERS UNLESS NOTED OTHERWISE.

ALL PAVEMENT MARKING SYMBOLS AND CHARACTERS SHALL BE PAINT UNLESS NOTED OTHERWISE.

APPROVED: _____ DATE: _____

SEAL

NORTH CAROLINA PROFESSIONAL SEAL 8973 ENGINEER G. L. GETTIER

13 OCT 11

DIVISION OF HIGHWAYS STATE OF NORTH CAROLINA DEPARTMENT OF TRANSPORTATION WORK ZONE TRAFFIC CONTROL

-Y10- SITE PHASE IV DETAILS

13-OCT-2011 11:20
\\dot\dfsroot01\proj\TIPProjects-U\U3326\Traffic\TrafficControl\tcp\SITE I-Y10-\U3326_-Y10-_ph4_tmp53.dgn
msishak AT TE244732

PROJ. REFERENCE NO.	SHEET NO.
U-3326A/B	TMP-54

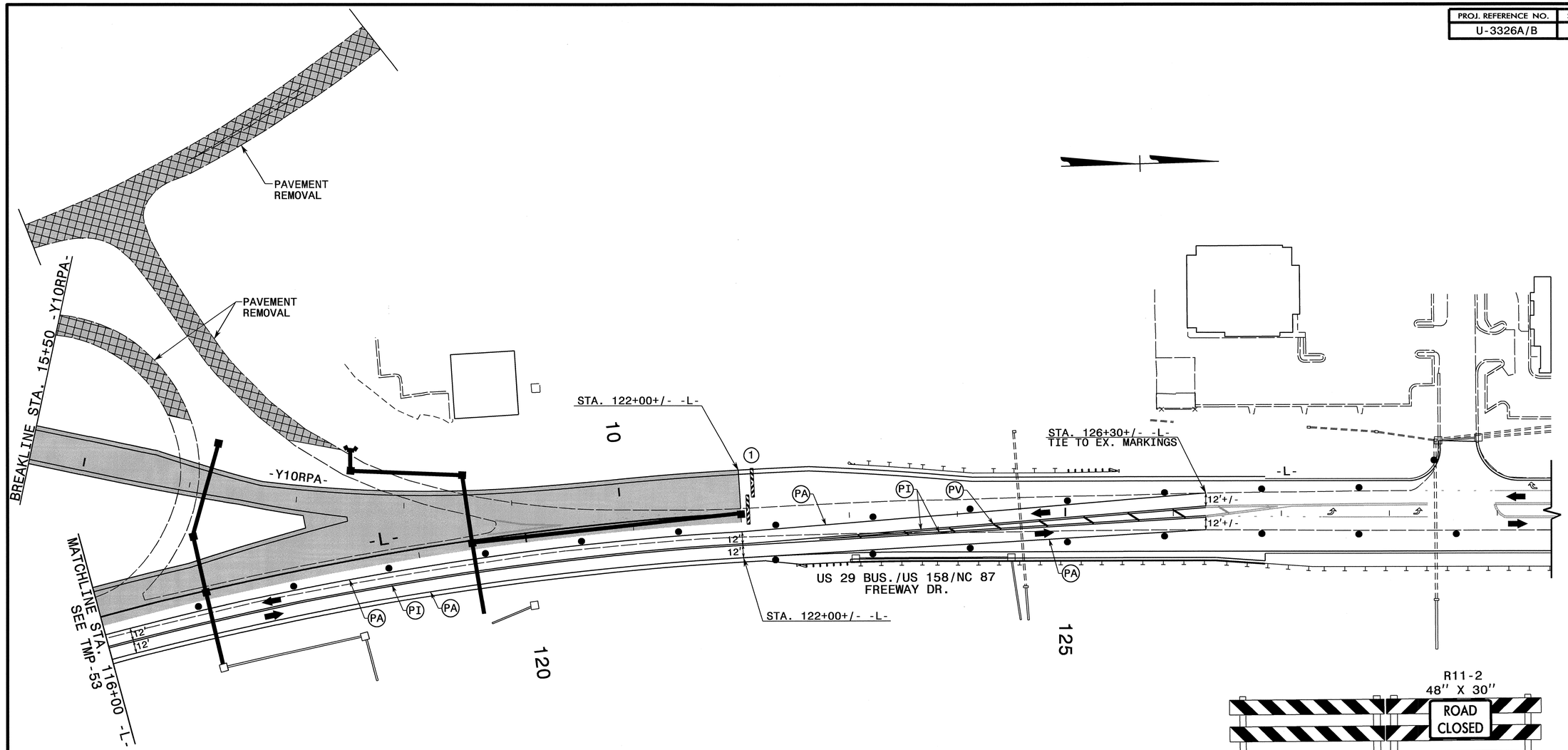

REFER TO RSD NOS. 1205.01, 1205.02, 1205.04, 1205.05, 1205.08 1205.09, 1250.01, AND 1251.01 FOR PLACEMENT OF TEMPORARY PAVEMENT MARKINGS, SYMBOLS, AND MARKERS UNLESS NOTED OTHERWISE.

ALL PAVEMENT MARKING SYMBOLS AND CHARACTERS SHALL BE PAINT UNLESS NOTED OTHERWISE.

TEMPORARY PAVEMENT MARKING LEGEND

(PA)	PAINT - WHITE EDGELINE - (4")
(PI)	PAINT - YELLOW DOUBLE CENTER - (4")
(PV)	PAINT - YELLOW DIAGONAL - (8")

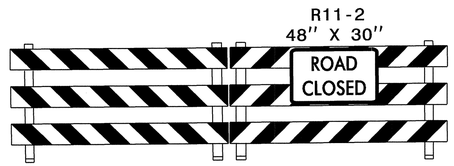

TYPE III BARRICADE(S)

(1)

APPROVED: _____ DATE: _____

SEAL

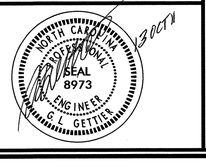

-Y10- SITE PHASE IV DETAILS

13-OCT-2011 lk20
\\dot\dfsroot01\proj\TIPProjects-U\U3326\Traffic\TrafficControl\tcp\SITE 1-Y10-\U3326_-Y10-_ph4_tmp54.dgn
mslshak AT TE244732

PROJ. REFERENCE NO.	SHEET NO.
U-3326A/B	TMP-55

REFER TO RSD NOS. 1205.01, 1205.02, 1205.04, 1205.05, 1205.08 1205.09, 1250.01, AND 1251.01 FOR PLACEMENT OF TEMPORARY PAVEMENT MARKINGS, SYMBOLS, AND MARKERS UNLESS NOTED OTHERWISE.

ALL PAVEMENT MARKING SYMBOLS AND CHARACTERS SHALL BE PAINT UNLESS NOTED OTHERWISE.

TEMPORARY PAVEMENT MARKING LEGEND

(PA)	PAINT - WHITE EDGELINE - (4")
(PD)	PAINT - 2 FT. WHITE MINISKIP - (4")
(PE)	PAINT - WHITE SOLID LANE LINE - (4")
(PI)	PAINT - YELLOW DOUBLE CENTER - (4")
(P4)	PAINT - WHITE STOP BAR - (24")
(QA)	PAINT - LEFT TURN ARROW - ↱
(QB)	PAINT - RIGHT TURN ARROW - ↴

NOTE: FOR STATIONING OF TEMPORARY PAVEMENT MARKINGS, SYMBOLS, AND STOP BARS OF -Y10A-, -Y10C, AND -Y10F-, SEE FINAL PAVEMENT MARKING PLANS.

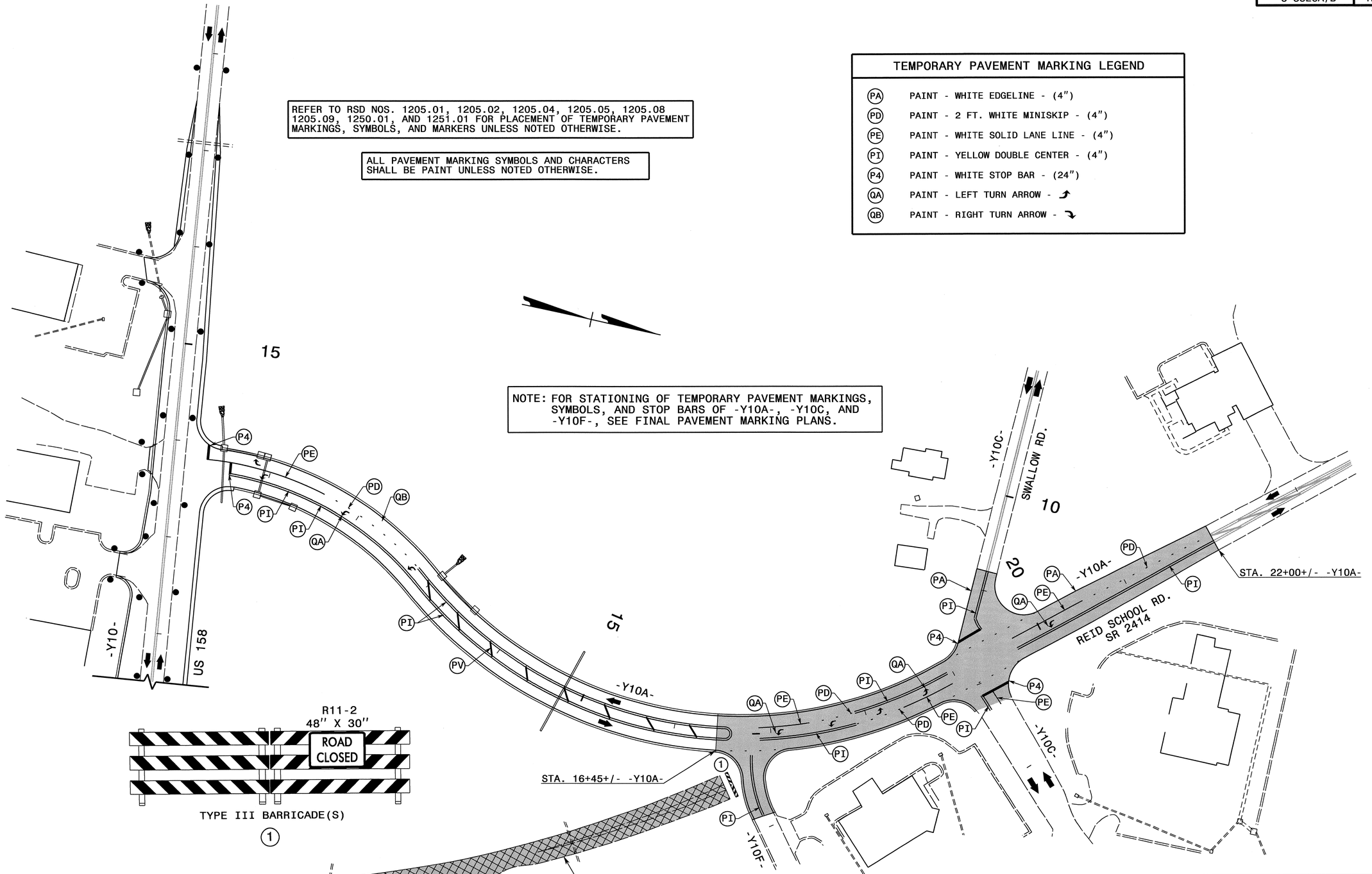

APPROVED: _____ DATE: _____

SEAL

NORTH CAROLINA PROFESSIONAL SEAL 8973 ENGINEER G. T. GETTIER 13 OCT 11

DIVISION OF HIGHWAYS · STATE OF NORTH CAROLINA · DEPARTMENT OF TRANSPORTATION · WORK ZONE TRAFFIC CONTROL

-Y10- SITE PHASE IV DETAILS

13-OCT-2011 11:19
\\dot\dfsroot01\proj\TIPProjects-U\U3326\Traffic\TrafficControl\tcp\SITE 1-Y10-\U3326_-Y10-_ph4_tmp55.dgn
msishak
AT TE244732

PROJ. REFERENCE NO.	SHEET NO.
U-3326A/B	TMP-56

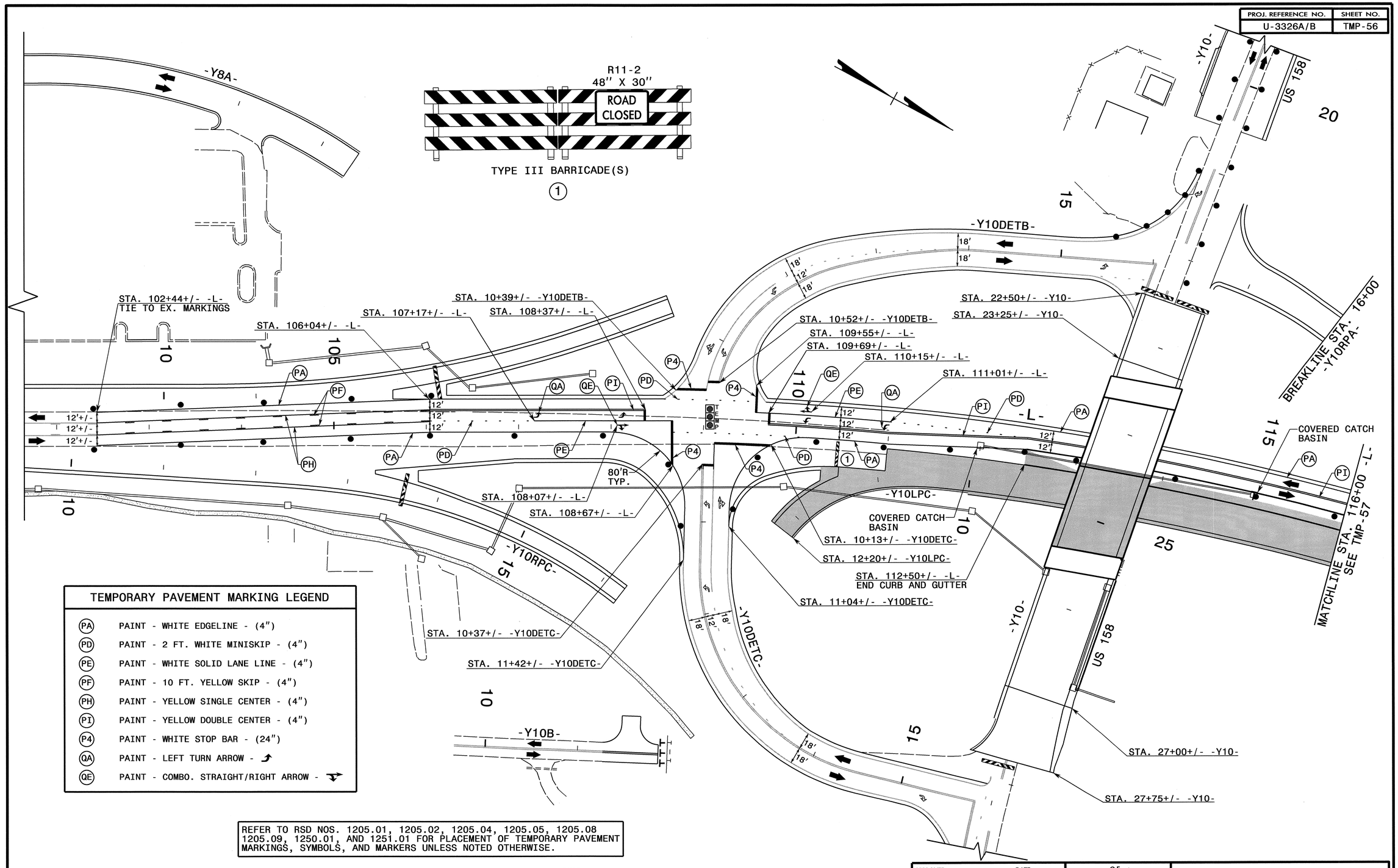

TEMPORARY PAVEMENT MARKING LEGEND

PA	PAINT - WHITE EDGELINE - (4")
PD	PAINT - 2 FT. WHITE MINISKIP - (4")
PE	PAINT - WHITE SOLID LANE LINE - (4")
PF	PAINT - 10 FT. YELLOW SKIP - (4")
PH	PAINT - YELLOW SINGLE CENTER - (4")
PI	PAINT - YELLOW DOUBLE CENTER - (4")
P4	PAINT - WHITE STOP BAR - (24")
QA	PAINT - LEFT TURN ARROW - ↰
QE	PAINT - COMBO. STRAIGHT/RIGHT ARROW - ↰↑

REFER TO RSD NOS. 1205.01, 1205.02, 1205.04, 1205.05, 1205.08 1205.09, 1250.01, AND 1251.01 FOR PLACEMENT OF TEMPORARY PAVEMENT MARKINGS, SYMBOLS, AND MARKERS UNLESS NOTED OTHERWISE.

ALL PAVEMENT MARKING SYMBOLS AND CHARACTERS SHALL BE PAINT UNLESS NOTED OTHERWISE.

APPROVED: _____ DATE: _____

SEAL

NORTH CAROLINA PROFESSIONAL SEAL 8973 ENGINEER G. GETTIER 30 OCT 11

DIVISION OF HIGHWAYS • STATE OF NORTH CAROLINA • DEPARTMENT OF TRANSPORTATION • WORK ZONE TRAFFIC CONTROL

-Y10- SITE PHASE V DETAILS

13-OCT-2011 11:09
\\dot\dfsroot01\proj\TIPProjects-U\U3326\Traffic\TrafficControl\tcp\SITE 1-Y10-\U3326_-Y10-_ph5_tmp56.dgn
msishak
AT TE2447732

PROJ. REFERENCE NO.	SHEET NO.
U-3326A/B	TMP-57

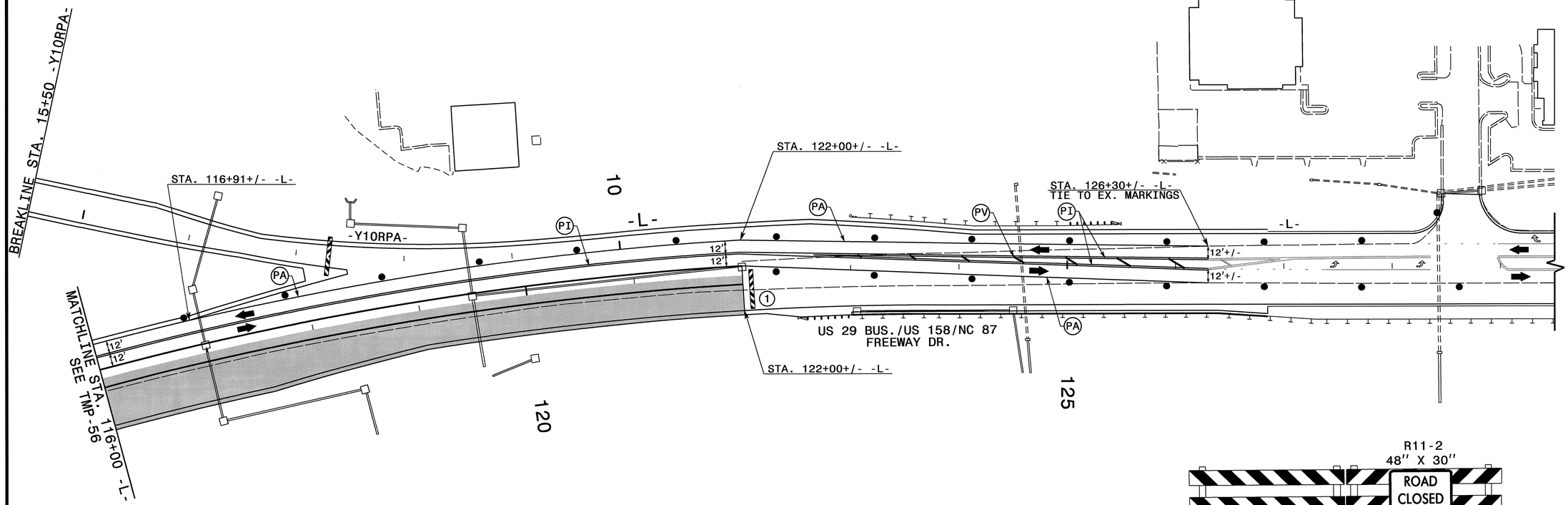

REFER TO RSD NOS. 1205.01, 1205.02, 1205.04, 1205.05, 1205.08 1205.09, 1250.01, AND 1251.01 FOR PLACEMENT OF TEMPORARY PAVEMENT MARKINGS, SYMBOLS, AND MARKERS UNLESS NOTED OTHERWISE.

ALL PAVEMENT MARKING SYMBOLS AND CHARACTERS SHALL BE PAINT UNLESS NOTED OTHERWISE.

TEMPORARY PAVEMENT MARKING LEGEND

(PA)	PAINT - WHITE EDGELINE - (4")
(PI)	PAINT - YELLOW DOUBLE CENTER - (4")
(PV)	PAINT - YELLOW DIAGONAL - (8")

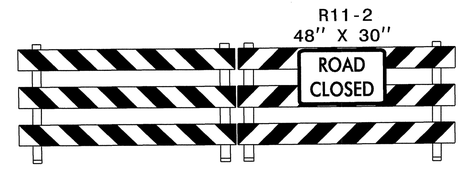

TYPE III BARRICADE(S)

(1)

APPROVED: _____ DATE: _____

SEAL

NORTH CAROLINA PROFESSIONAL SEAL 8973 ENGINEER G. L. GETTIER 13 OCT 11

DIVISION OF HIGHWAYS * STATE OF NORTH CAROLINA * DEPARTMENT OF TRANSPORTATION * WORK ZONE TRAFFIC CONTROL

-Y10- SITE PHASE V DETAILS

13-OCT-2011 lu9
\\dot\dfsroot0\proj\TIPProjects-U\U3326\Traffic\TrafficControl\tcp\SITE 1-Y10-\U3326_-Y10-_ph5_tmp57.dgn
msishak
AT TE244732

PROJ. REFERENCE NO.	SHEET NO.
U-3326A/B	TMP-58

NOTE: FOR STATIONING OF TEMPORARY PAVEMENT MARKINGS, SYMBOLS, AND STOP BARS OF -Y10-, -Y10RPA, -Y10RPB-, SEE FINAL PAVEMENT MARKING PLANS.

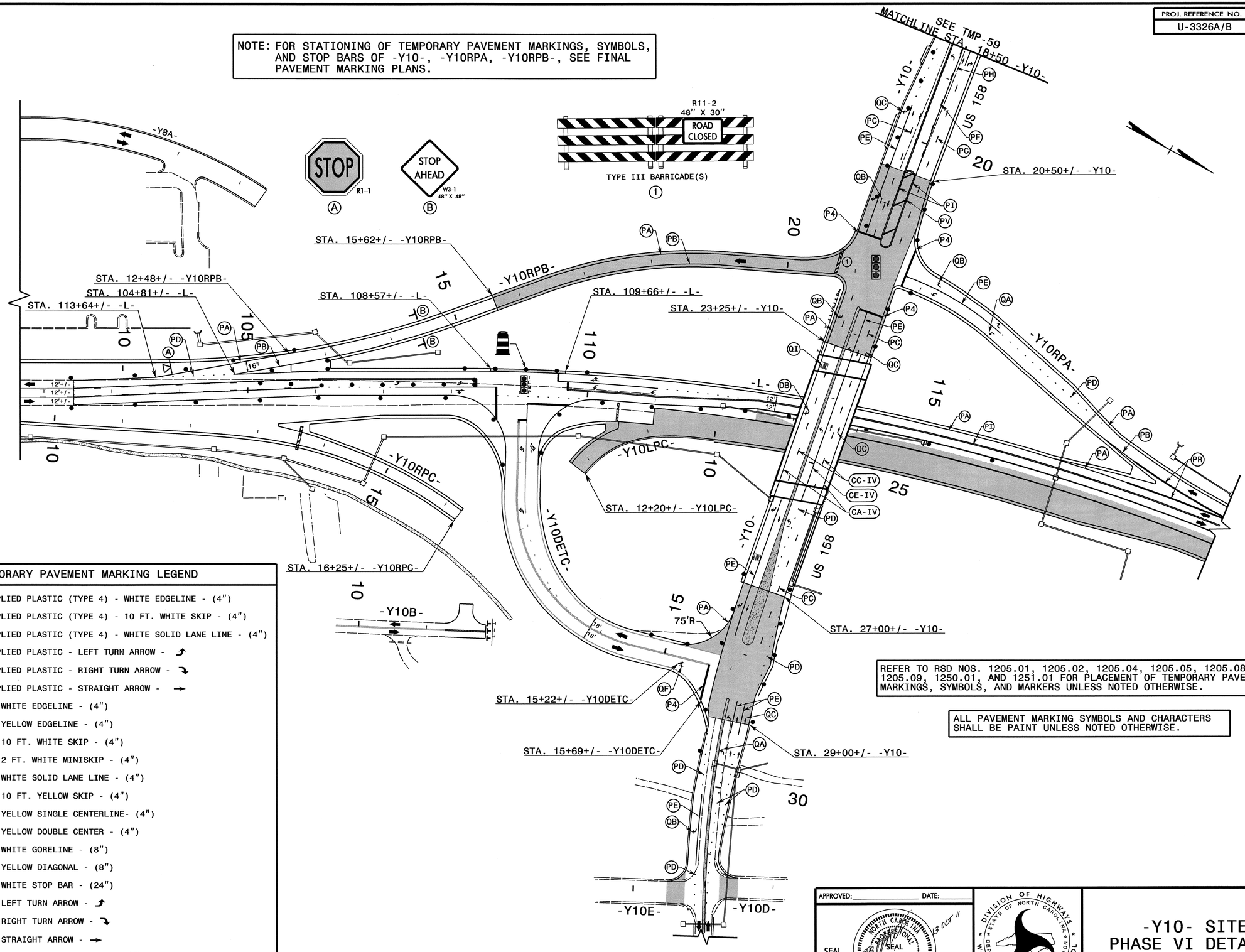

TEMPORARY PAVEMENT MARKING LEGEND

CA-IV	COLD APPLIED PLASTIC (TYPE 4) - WHITE EDGELINE - (4")
CC-IV	COLD APPLIED PLASTIC (TYPE 4) - 10 FT. WHITE SKIP - (4")
CE-IV	COLD APPLIED PLASTIC (TYPE 4) - WHITE SOLID LANE LINE - (4")
DA	COLD APPLIED PLASTIC - LEFT TURN ARROW - ↰
DB	COLD APPLIED PLASTIC - RIGHT TURN ARROW - ↱
DC	COLD APPLIED PLASTIC - STRAIGHT ARROW - →
PA	PAINT - WHITE EDGELINE - (4")
PB	PAINT - YELLOW EDGELINE - (4")
PC	PAINT - 10 FT. WHITE SKIP - (4")
PD	PAINT - 2 FT. WHITE MINISKIP - (4")
PE	PAINT - WHITE SOLID LANE LINE - (4")
PF	PAINT - 10 FT. YELLOW SKIP - (4")
PH	PAINT - YELLOW SINGLE CENTERLINE- (4")
PI	PAINT - YELLOW DOUBLE CENTER - (4")
PR	PAINT - WHITE GORELINE - (8")
PV	PAINT - YELLOW DIAGONAL - (8")
P4	PAINT - WHITE STOP BAR - (24")
QA	PAINT - LEFT TURN ARROW - ↰
QB	PAINT - RIGHT TURN ARROW - ↱
QC	PAINT - STRAIGHT ARROW - →
QI	PAINT - ALPHANUMERIC CHARACTER - ONLY

REFER TO RSD NOS. 1205.01, 1205.02, 1205.04, 1205.05, 1205.08 1205.09, 1250.01, AND 1251.01 FOR PLACEMENT OF TEMPORARY PAVEMENT MARKINGS, SYMBOLS, AND MARKERS UNLESS NOTED OTHERWISE.

ALL PAVEMENT MARKING SYMBOLS AND CHARACTERS SHALL BE PAINT UNLESS NOTED OTHERWISE.

APPROVED:_____ DATE:_____

SEAL

NORTH CAROLINA PROFESSIONAL SEAL 8973 ENGINEER G. L. GETTIER 13 OCT 11

DIVISION OF HIGHWAYS • STATE OF NORTH CAROLINA • DEPARTMENT OF TRANSPORTATION • WORK ZONE TRAFFIC CONTROL

-Y10- SITE PHASE VI DETAILS

13-OCT-2011 11:18
\\dot\dfsroot0\proj\TIPProjects-UU3326\Traffic\TrafficControl\top\SITE 1-Y10-UU3326_-Y10-_ph6_tmp58.dgn
mslshak AT TE244732

PROJ. REFERENCE NO.	SHEET NO.
U-3326A/B	TMP-59

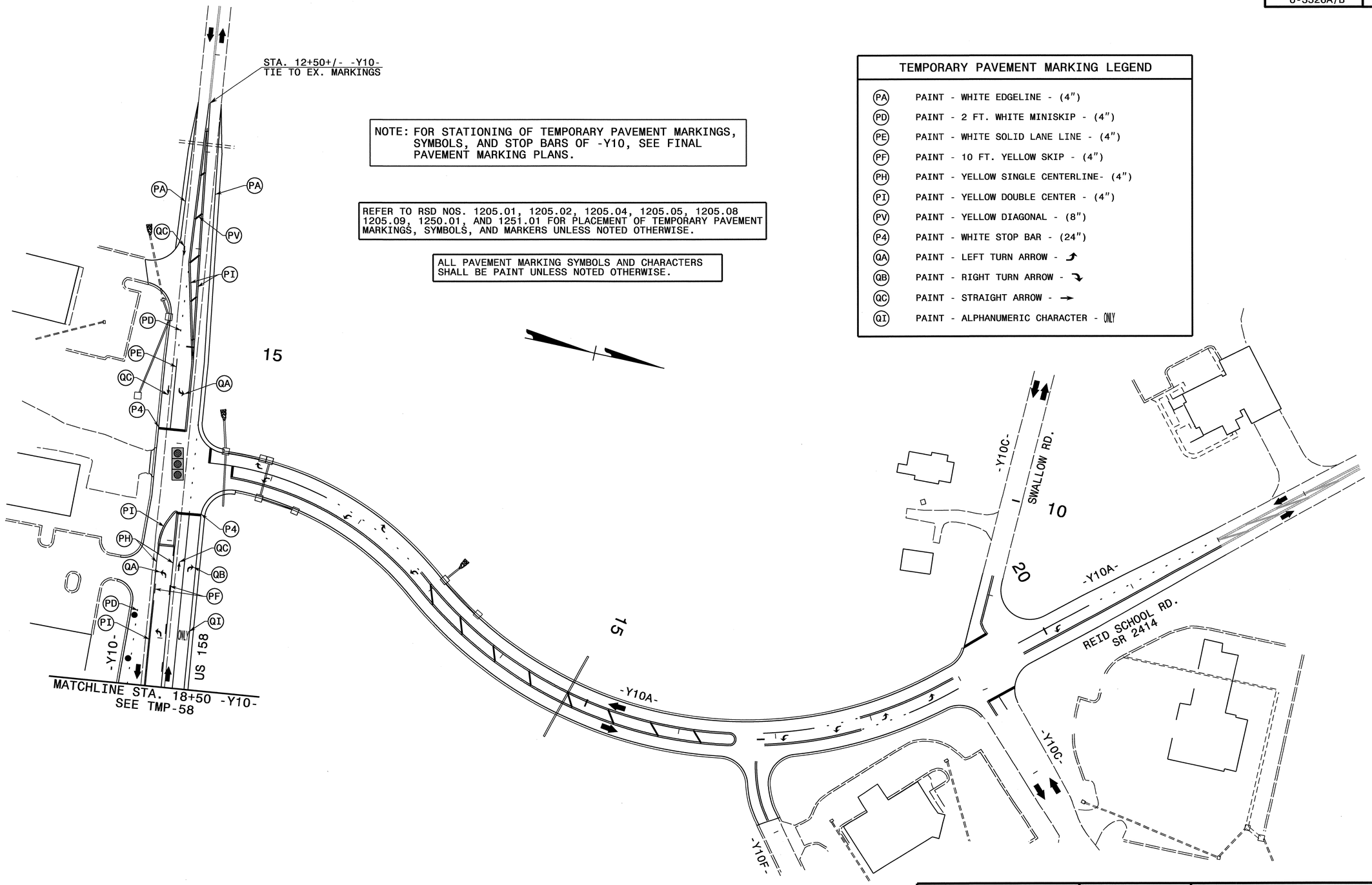

NOTE: FOR STATIONING OF TEMPORARY PAVEMENT MARKINGS, SYMBOLS, AND STOP BARS OF -Y10, SEE FINAL PAVEMENT MARKING PLANS.

REFER TO RSD NOS. 1205.01, 1205.02, 1205.04, 1205.05, 1205.08 1205.09, 1250.01, AND 1251.01 FOR PLACEMENT OF TEMPORARY PAVEMENT MARKINGS, SYMBOLS, AND MARKERS UNLESS NOTED OTHERWISE.

ALL PAVEMENT MARKING SYMBOLS AND CHARACTERS SHALL BE PAINT UNLESS NOTED OTHERWISE.

TEMPORARY PAVEMENT MARKING LEGEND

(PA)	PAINT - WHITE EDGELINE - (4")
(PD)	PAINT - 2 FT. WHITE MINISKIP - (4")
(PE)	PAINT - WHITE SOLID LANE LINE - (4")
(PF)	PAINT - 10 FT. YELLOW SKIP - (4")
(PH)	PAINT - YELLOW SINGLE CENTERLINE- (4")
(PI)	PAINT - YELLOW DOUBLE CENTER - (4")
(PV)	PAINT - YELLOW DIAGONAL - (8")
(P4)	PAINT - WHITE STOP BAR - (24")
(QA)	PAINT - LEFT TURN ARROW - ↰
(QB)	PAINT - RIGHT TURN ARROW - ↱
(QC)	PAINT - STRAIGHT ARROW - →
(QI)	PAINT - ALPHANUMERIC CHARACTER - ONLY

APPROVED: _____ DATE: _____

SEAL

NORTH CAROLINA PROFESSIONAL SEAL 8973 ENGINEER G. T. GETTIER 13 OCT 11

DIVISION OF HIGHWAYS STATE OF NORTH CAROLINA DEPARTMENT OF TRANSPORTATION WORK ZONE TRAFFIC CONTROL

-Y10- SITE PHASE VI DETAILS

13-OCT-2011 11:18
\\dot\dfsroot01\proj\TIPProjects-U\U3326\Traffic\TrafficControl\tcp\SITE 1-Y10-\U3326_-Y10-_ph6_tmp59.dgn
msishak
AT TE244732

PROJ. REFERENCE NO.	SHEET NO.
U-3326A/B	TMP-60

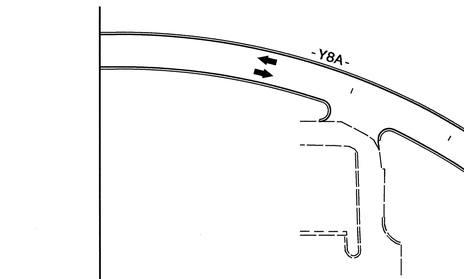

FOR OFFSITE DETOUR ROUTE AND SIGNAGE, SEE TMP-61.

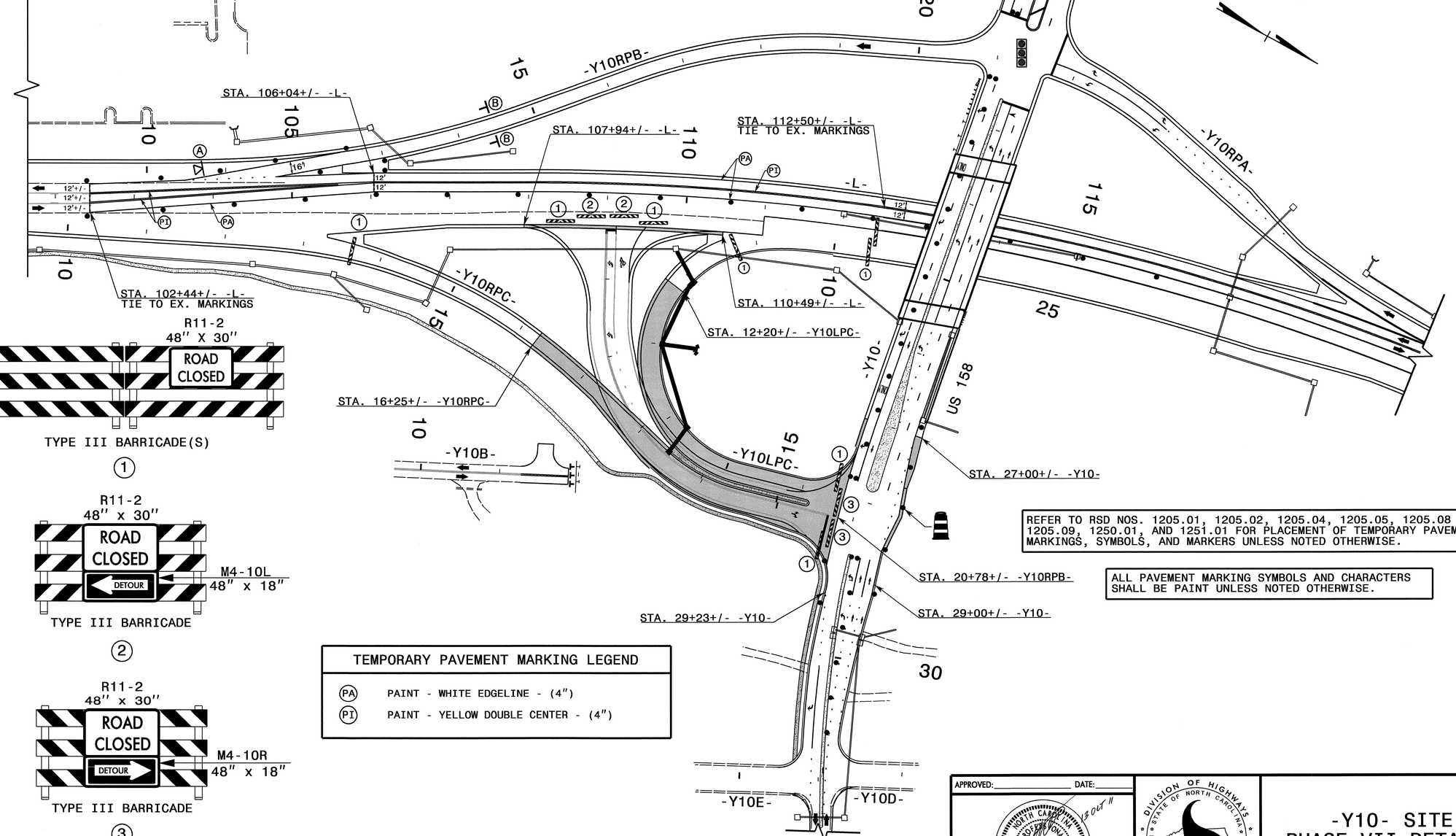

R11-2
48" X 30"
ROAD CLOSED

TYPE III BARRICADE(S)

①

R11-2
48" x 30"
ROAD CLOSED
DETOUR
M4-10L
48" x 18"

TYPE III BARRICADE

②

R11-2
48" x 30"
ROAD CLOSED
DETOUR
M4-10R
48" x 18"

TYPE III BARRICADE

③

TEMPORARY PAVEMENT MARKING LEGEND	
(PA)	PAINT - WHITE EDGELINE - (4")
(PI)	PAINT - YELLOW DOUBLE CENTER - (4")

REFER TO RSD NOS. 1205.01, 1205.02, 1205.04, 1205.05, 1205.08 1205.09, 1250.01, AND 1251.01 FOR PLACEMENT OF TEMPORARY PAVEMENT MARKINGS, SYMBOLS, AND MARKERS UNLESS NOTED OTHERWISE.

ALL PAVEMENT MARKING SYMBOLS AND CHARACTERS SHALL BE PAINT UNLESS NOTED OTHERWISE.

APPROVED: _____ DATE: _____

SEAL

NORTH CAROLINA PROFESSIONAL SEAL 8973 ENGINEER G. L. GETTLER 13 OCT 11

DIVISION OF HIGHWAYS * STATE OF NORTH CAROLINA * DEPARTMENT OF TRANSPORTATION * WORK ZONE TRAFFIC CONTROL

-Y10- SITE PHASE VII DETAILS

13-OCT-2011 lwj7
\\dot\dfsroot01\prg\TIPProjects-U\U3326\Traffic\TrafficControl\tcp\SITE 1-Y10-\U3326_-Y10-_ph7_tmp60.dgn
msishak AT TE244732

PROJ. REFERENCE NO.	SHEET NO.
U-3326A/B	TMP-61

NOTE: FOR BARRICADE AND SIGNAGE DETAILS AT INTX -Y10DETC-/FREEWAY DRIVE,AND -Y10DETC/RICHARDSON DR., SEE TMP-60.

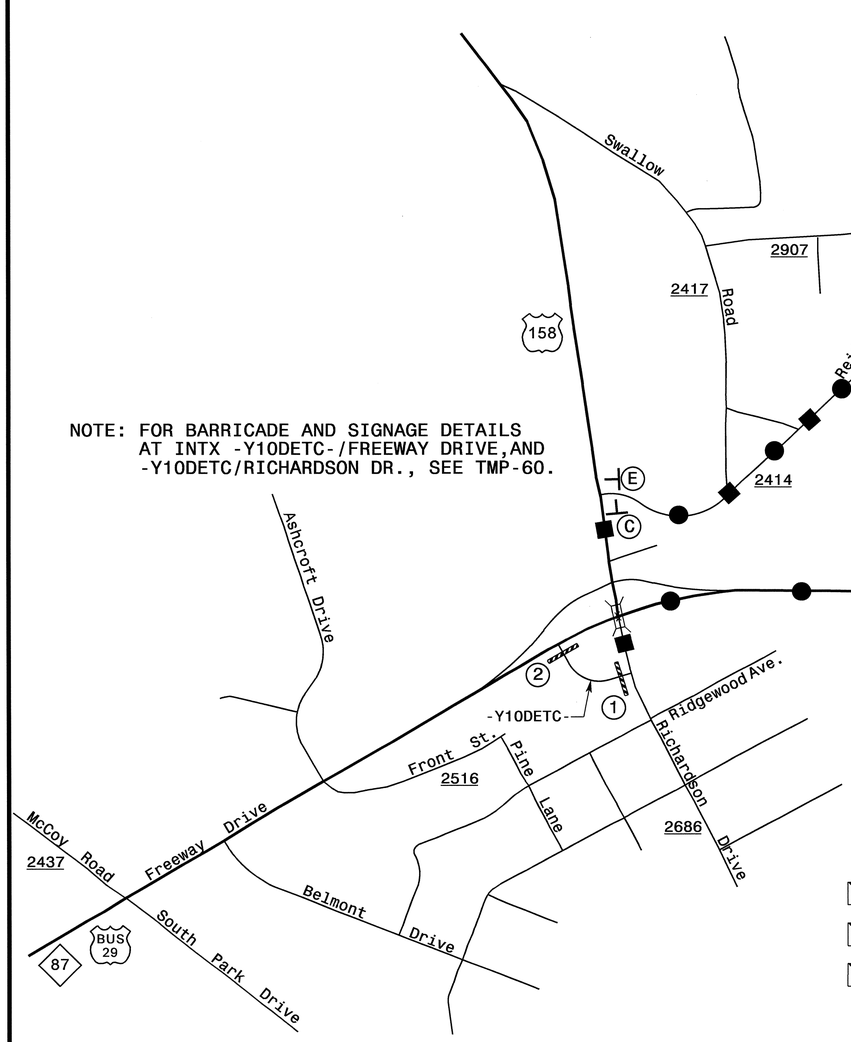

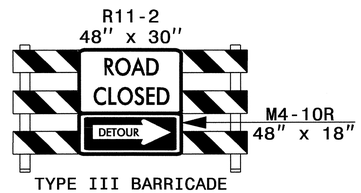

TYPE III BARRICADE

①

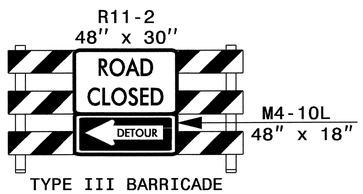

TYPE III BARRICADE

②

RICHARDSON DR. DETOUR ROUTE

FREEWAY DR. DETOUR ROUTE

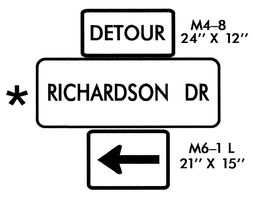

Ⓐ

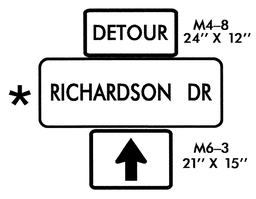

Ⓑ

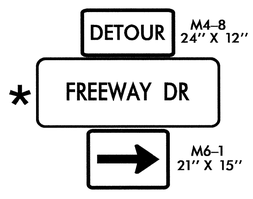

Ⓒ

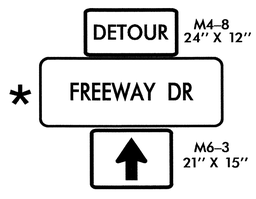

Ⓓ

Ⓔ

* SEE SHEET TMP-2C FOR SIGN DESIGN

APPROVED: _____ DATE: _____

SEAL

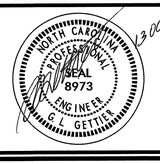

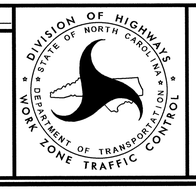

-Y10- SITE PHASE VII OFF-SITE DETOURS FREEWAY DRIVE RICHARDSON DRIVE

13-OCT-2011 jw7
\\dot\dfsroot01\proj\TIPProjects-U\U3326\TrafficTrafficControl\tcp\SITE 1-Y10-\U3326_-Y10-_ph7_tmp6i.dgn
msishak
AT TE244732

PROJ. REFERENCE NO.	SHEET NO.
U-3326A/B	TMP-62

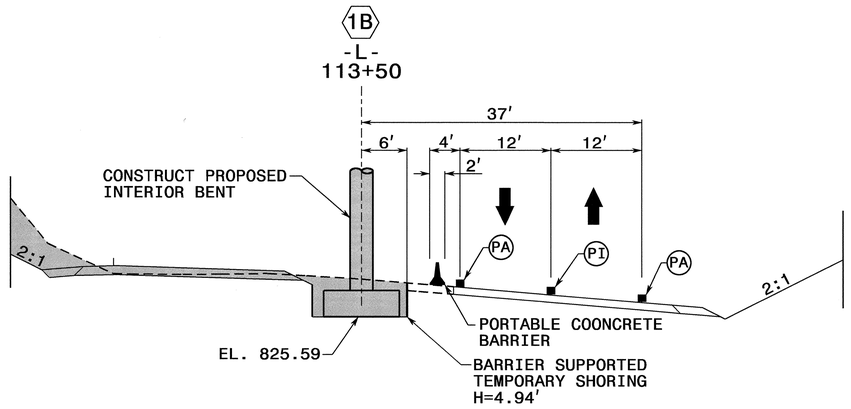

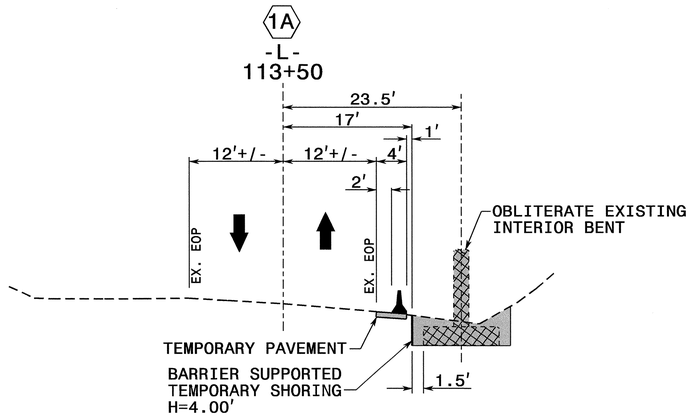

TEMPORARY SHORING NOTES

1A TEMPORARY SHORING NO. 1A (SEE SHEET TMP-50)

FOR TEMPORARY SHORING, SEE TEMPORARY SHORING PROVISION.

TEMPORARY SHORING IS REQUIRED FOR THE REMOVAL OF EXISTING BRIDGE BENT FROM STA. 113+18+/- -L-, 17 FT. RIGHT TO STA. 113+48+/- -L-, 17 FT. RIGHT. SEE TEMPORARY SHORING PROVISION.

WHEN USING CONTRACTOR DESIGNED SHORING FROM STA. 113+18+/- -L-, 17 FT. RIGHT TO STA. 113+48+/- -L-, 17 FT. RIGHT, DESIGN SHORING FOR THE FOLLOWING IN-SITU ASSUMED SOIL PARAMETERS:

UNIT WEGHT OF SOIL ABOVE WATER TABLE, γ = 120 PCF
UNIT WEIGHT OF SOIL BELOW WATER TABLE, γ' = 60 PCF
FRICTION ANGLE, ϕ = 30°
COHESION, c = 0 PCF

FOR CONTRACTOR DESIGNED SHORING, SURVEY THE SHORING LOCATION TO DETERMINE EXISTING ELEVATIONS AND ACTUAL DESIGN HEIGHTS BEFORE BEGINNING DESIGN.

FOR PORTABLE CONCRETE BARRIERS ABOVE AND BEHIND TEMPORARY SHORING, USE A NCDOT PORTABLE CONCRETE BARRIER (UNANCHORED OR ANCHORED) OR AN OREGON TALL F-SHAPE CONCRETE BARRIER IN ACCORDANCE WITH THE TRAFFIC CONTROL PLANS.

1B TEMPORARY SHORING NO. 1B (SEE SHEET TMP-53)

FOR TEMPORARY SHORING, SEE TEMPORARY SHORING PROVISION.

TEMPORARY SHORING IS REQUIRED FOR THE REMOVAL OF EXISTING BRIDGE BENT FROM STA. 113+08+/- -L-, 6 FT. RIGHT TO STA. 113+88+/- -L-, 6 FT. RIGHT. SEE TEMPORARY SHORING PROVISION.

WHEN USING CONTRACTOR DESIGNED SHORING FROM STA. 113+08+/- -L-, 6 FT. RIGHT TO STA. 113+88+/- -L-, 6 FT. RIGHT, DESIGN SHORING FOR THE FOLLOWING IN-SITU ASSUMED SOIL PARAMETERS:

UNIT WEGHT OF SOIL ABOVE WATER TABLE, γ = 120 PCF
UNIT WEIGHT OF SOIL BELOW WATER TABLE, γ' = 60 PCF
FRICTION ANGLE, ϕ = 30°
COHESION, c = 0 PCF

FOR CONTRACTOR DESIGNED SHORING, SURVEY THE SHORING LOCATION TO DETERMINE EXISTING ELEVATIONS AND ACTUAL DESIGN HEIGHTS BEFORE BEGINNING DESIGN.

FOR PORTABLE CONCRETE BARRIERS ABOVE AND BEHIND TEMPORARY SHORING, USE A NCDOT PORTABLE CONCRETE BARRIER (UNANCHORED OR ANCHORED) OR AN OREGON TALL F-SHAPE CONCRETE BARRIER IN ACCORDANCE WITH THE TRAFFIC CONTROL PLANS.

THE TEMPORARY SHORING NOTES WERE PROVIDED THROUGH A SEALED DOCUMENT FROM THE GEOTECHNICAL ENGINEERING UNIT. THE DOCUMENT WAS SUBMITTED TO THE WZTCU ON 09-11-2011 AND SEALED BY A PROFESSIONAL ENGINEER, ERIC WILLIAMS, P.E., LICENSE #26962.

APPROVED: _____ DATE: _____

SEAL

NORTH CAROLINA PROFESSIONAL SEAL 8973 ENGINEER C. L. GETTIER

DIVISION OF HIGHWAYS * STATE OF NORTH CAROLINA * DEPARTMENT OF TRANSPORTATION * WORK ZONE TRAFFIC CONTROL

-Y10- SITE SHORING CROSS SECTIONS AND TEMPORARY SHORING NOTES

13-OCT-2011 lal7
\\dot\dfsroot01\proj\TIPProjects-U\U3326\Traffic\TrafficControl\tcp\SITE 1-Y10-\U3326_-Y10-_xsc_tmp62.dgn
msishak AT TE244732

PROJ. REFERENCE NO.	SHEET NO.
U-3326A/B	TMP-63

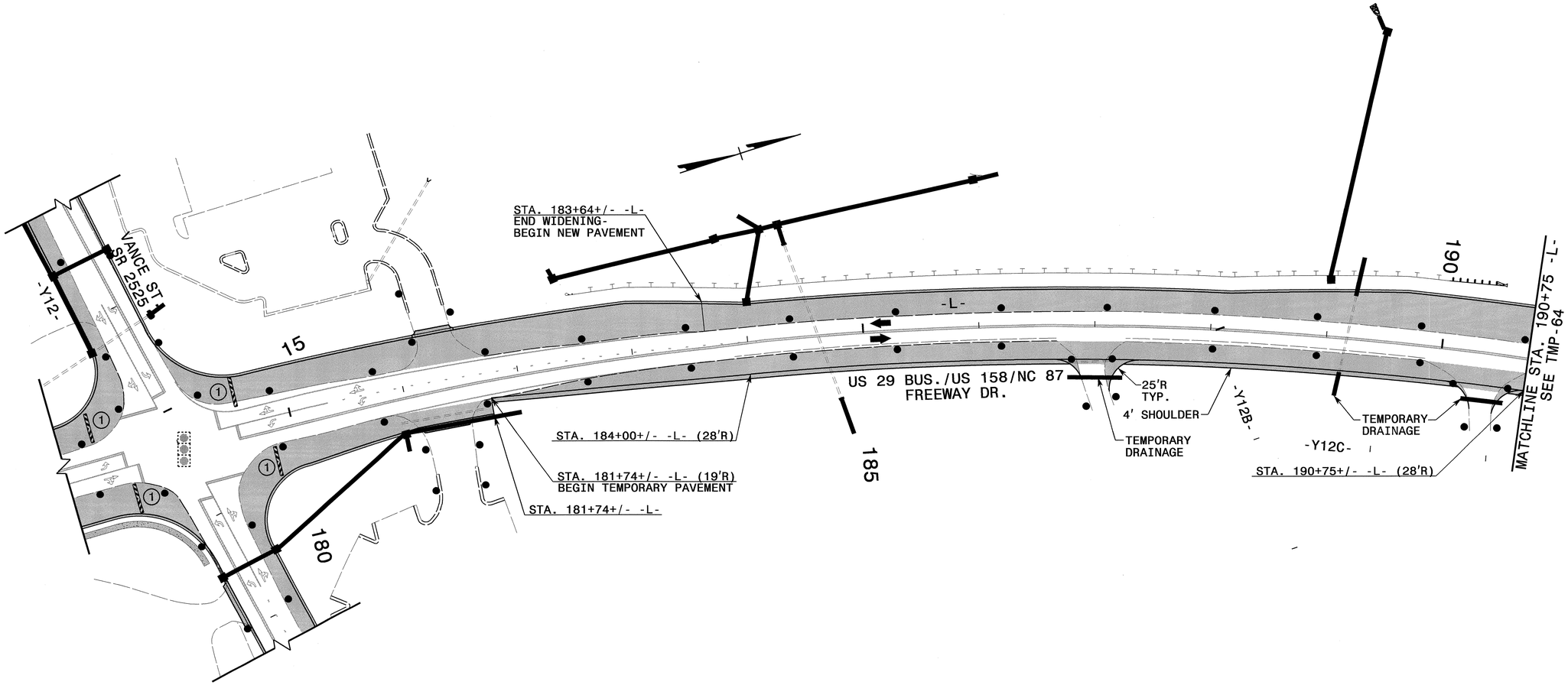

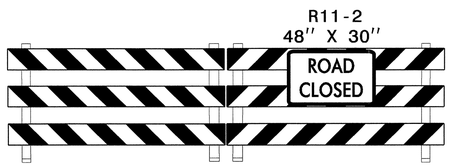

TYPE III BARRICADE(S)

(1)

APPROVED: _____ DATE: _____

SEAL

NORTH CAROLINA PROFESSIONAL SEAL 8973 ENGINEER G. L. GETTIER

13 OCT 11

DIVISION OF HIGHWAYS STATE OF NORTH CAROLINA DEPARTMENT OF TRANSPORTATION WORK ZONE TRAFFIC CONTROL

-Y13- SITE PHASE I DETAILS

13-OCT-2011 11:32
\\dot\dfsroot0\proj\TIPProjects-U\U3326\Traffic\TrafficControl\tcp\SITE 2 -Y13-\U3326_-Y13-_ph1_tmp63.dgn
mslshak AT TE244732

PROJ. REFERENCE NO.	SHEET NO.
U-3326A/B	TMP-64

REFER TO RSD NOS. 1205.01, 1205.02, 1205.04, 1205.05, 1205.08 1205.09, 1250.01, AND 1251.01 FOR PLACEMENT OF TEMPORARY PAVEMENT MARKINGS, SYMBOLS, AND MARKERS UNLESS NOTED OTHERWISE.

ALL PAVEMENT MARKING SYMBOLS AND CHARACTERS SHALL BE PAINT UNLESS NOTED OTHERWISE.

TEMPORARY PAVEMENT MARKING LEGEND

- (PA) PAINT - WHITE EDGELINE - (4")
- (PI) PAINT - YELLOW DOUBLE CENTER - (4")
- (P4) PAINT - WHITE STOP BAR - (24")

NOTE: CONSTRUCT/PAVE -Y13C- AND OPEN TO TRAFFIC BEFORE CONSTRUCTING -L- LINE FROM STA. 192+50+/- (LEFT) TO STA. 193+50+/- (LEFT).

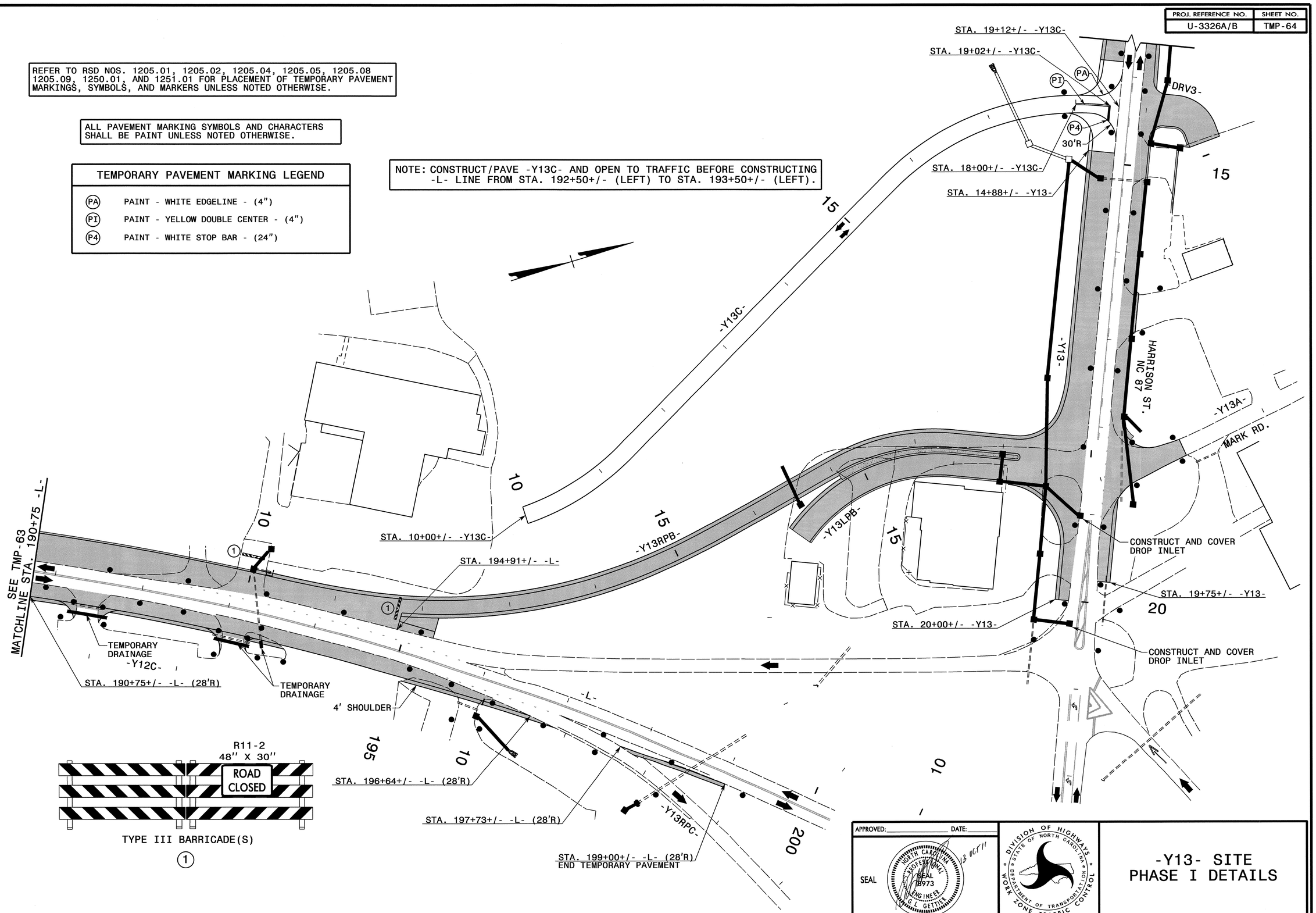

R11-2
48" X 30"
ROAD CLOSED

TYPE III BARRICADE(S)
(1)

APPROVED: _____ DATE: _____

SEAL

NORTH CAROLINA PROFESSIONAL SEAL 18973 ENGINEER G. L. GETTIER 13 OCT 11

DIVISION OF HIGHWAYS STATE OF NORTH CAROLINA DEPARTMENT OF TRANSPORTATION WORK ZONE TRAFFIC CONTROL

-Y13- SITE PHASE I DETAILS

13-OCT-2011 11:31
\\dot\dfsroot0\proj\TIPProjects-U\U3326\Traffic\TrafficControl\tcp\SITE 2 -Y13-\U3326_-Y13-_phi_tmp64.dgn
msishak
AT TE244732

PROJ. REFERENCE NO.	SHEET NO.
U-3326A/B	TMP-65

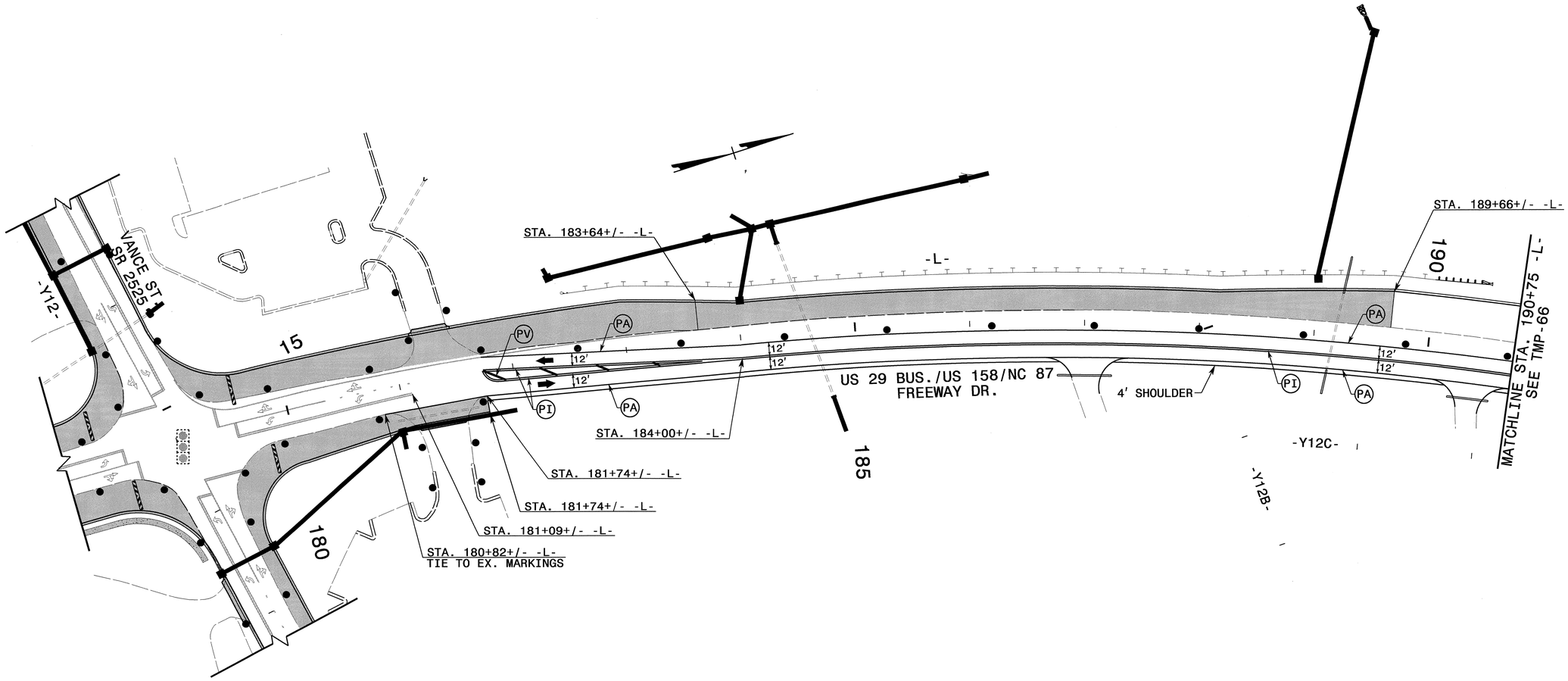

TEMPORARY PAVEMENT MARKING LEGEND	
(PA)	PAINT - WHITE EDGELINE - (4")
(PI)	PAINT - YELLOW DOUBLE CENTER - (4")
(PV)	PAINT - YELLOW DIAGONAL - (8")

REFER TO RSD NOS. 1205.01, 1205.02, 1205.04, 1205.05, 1205.08 1205.09, 1250.01, AND 1251.01 FOR PLACEMENT OF TEMPORARY PAVEMENT MARKINGS, SYMBOLS, AND MARKERS UNLESS NOTED OTHERWISE.

ALL PAVEMENT MARKING SYMBOLS AND CHARACTERS SHALL BE PAINT UNLESS NOTED OTHERWISE.

APPROVED: _____ DATE: _____

SEAL

NORTH CAROLINA PROFESSIONAL SEAL 18973 ENGINEER G. L. GETTIER

13 OCT 11

DIVISION OF HIGHWAYS STATE OF NORTH CAROLINA DEPARTMENT OF TRANSPORTATION WORK ZONE TRAFFIC CONTROL

-Y13- SITE PHASE II DETAILS

13-OCT-2011 13:31
\\dot\dfsroot0\proj\TIPProjects-U\U3326\Traffic\TrafficControl\tcp\SITE 2 -Y13-\U3326_-Y13-_ph2_tmp65.dgn
msishak AT TE244732

PROJ. REFERENCE NO.	SHEET NO.
U-3326A/B	TMP-66

REFER TO RSD NOS. 1205.01, 1205.02, 1205.04, 1205.05, 1205.08 1205.09, 1250.01, AND 1251.01 FOR PLACEMENT OF TEMPORARY PAVEMENT MARKINGS, SYMBOLS, AND MARKERS UNLESS NOTED OTHERWISE.

ALL PAVEMENT MARKING SYMBOLS AND CHARACTERS SHALL BE PAINT UNLESS NOTED OTHERWISE.

TEMPORARY PAVEMENT MARKING LEGEND	
PA	PAINT - WHITE EDGELINE - (4")
PB	PAINT - YELLOW EDGELINE - (4")
PD	PAINT - 2 FT. WHITE MINISKIP - (4")
PI	PAINT - YELLOW DOUBLE CENTER - (4")

A

B

TYPE III BARRICADE(S)

1

TYPE III BARRICADE

2

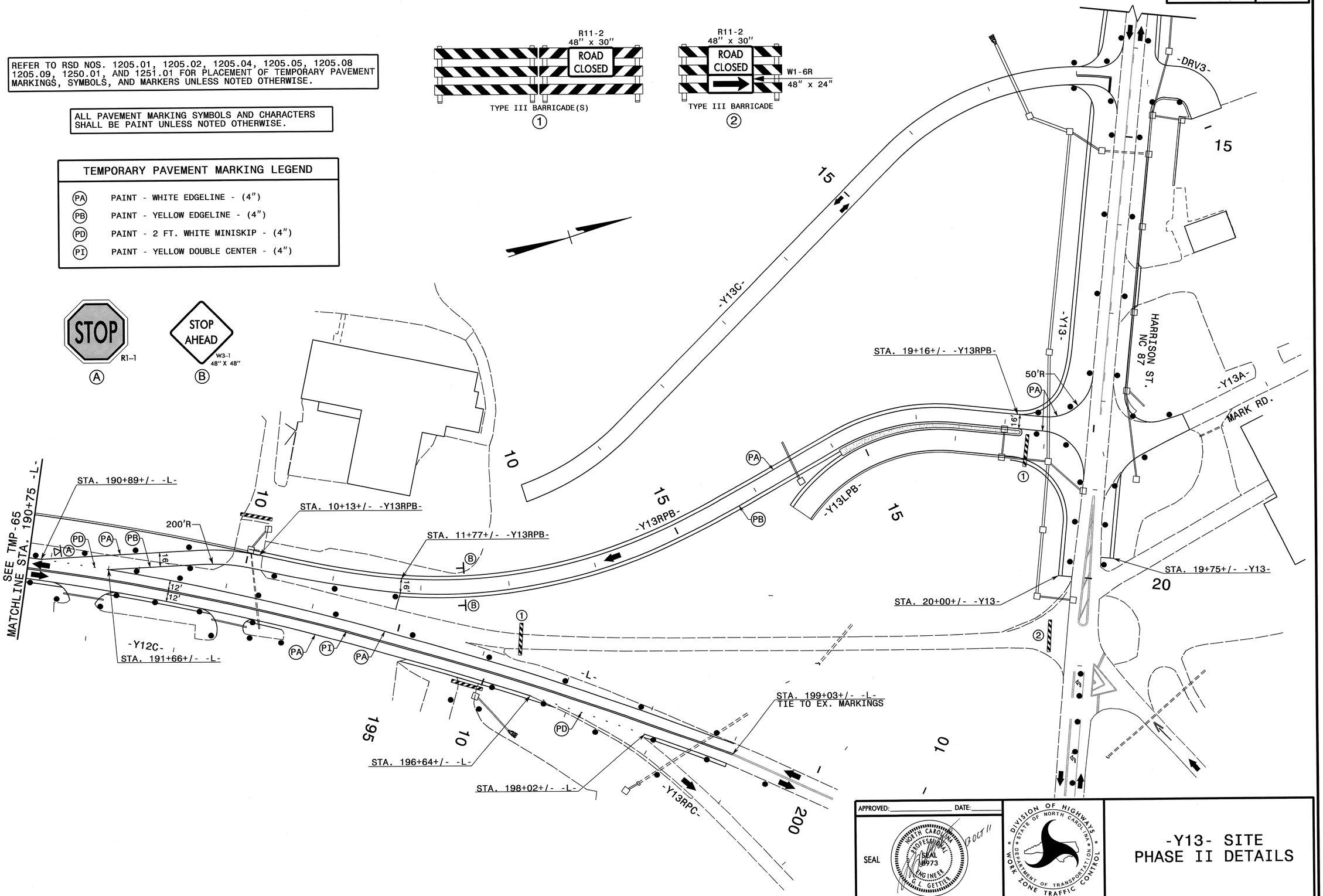

APPROVED: _____ DATE: _____

SEAL

NORTH CAROLINA PROFESSIONAL SEAL 8973 ENGINEER G. L. GETTIER

13 OCT 11

DIVISION OF HIGHWAYS
STATE OF NORTH CAROLINA
DEPARTMENT OF TRANSPORTATION
WORK ZONE TRAFFIC CONTROL

-Y13- SITE PHASE II DETAILS

13-OCT-2011 11:31
\\dot\dfsroot01\proj\TIPProjects-U\U3326\Traffic\TrafficControl\tcp\SITE 2 -Y13-\U3326_-Y13-_ph2_tmp66.dgn
msishak AT TE24732

PROJ. REFERENCE NO.	SHEET NO.
U-3326A/B	TMP-67

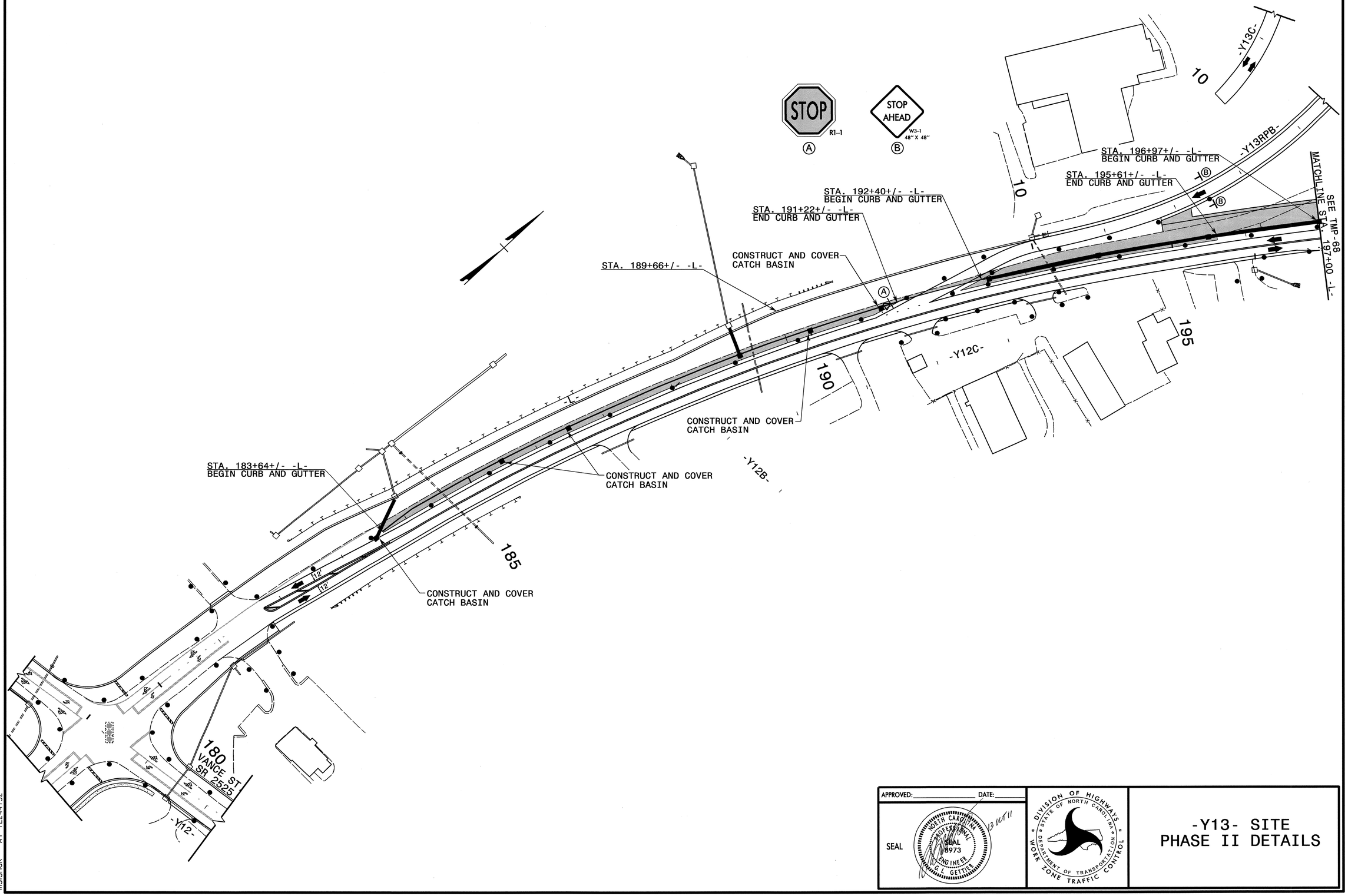

APPROVED: _____ DATE: _____

SEAL

NORTH CAROLINA PROFESSIONAL SEAL 8973 ENGINEER G. L. GETTIER

13 OCT 11

DIVISION OF HIGHWAYS
STATE OF NORTH CAROLINA
DEPARTMENT OF TRANSPORTATION
WORK ZONE TRAFFIC CONTROL

-Y13- SITE PHASE II DETAILS

13-OCT-2011 11:31
\\dot\dfsroot0\proj\TIPProjects-UU3326\Traffic\TrafficControl\tcp\SITE 2 -Y13-\U3326_-Y13-_ph2_tmp67.dgn
msishak AT TE244732

PROJ. REFERENCE NO.	SHEET NO.
U-3326A/B	TMP-68

Shoring I.D. No.	Estimated Average Height (ft.)	Quantity (sq. ft.)
2A	12.81 FT.	900 SQ. FT.
2B	9.16 FT.	2,860 SQ. FT.
2C	9.95 FT.	600 SQ. FT.
2D	11.67 FT.	2,665 SQ. FT.

FOR TEMPORARY SHORING NOTES AND SHORING CROSS SECTIONS, SEE TMP-78 THRU TMP-82.

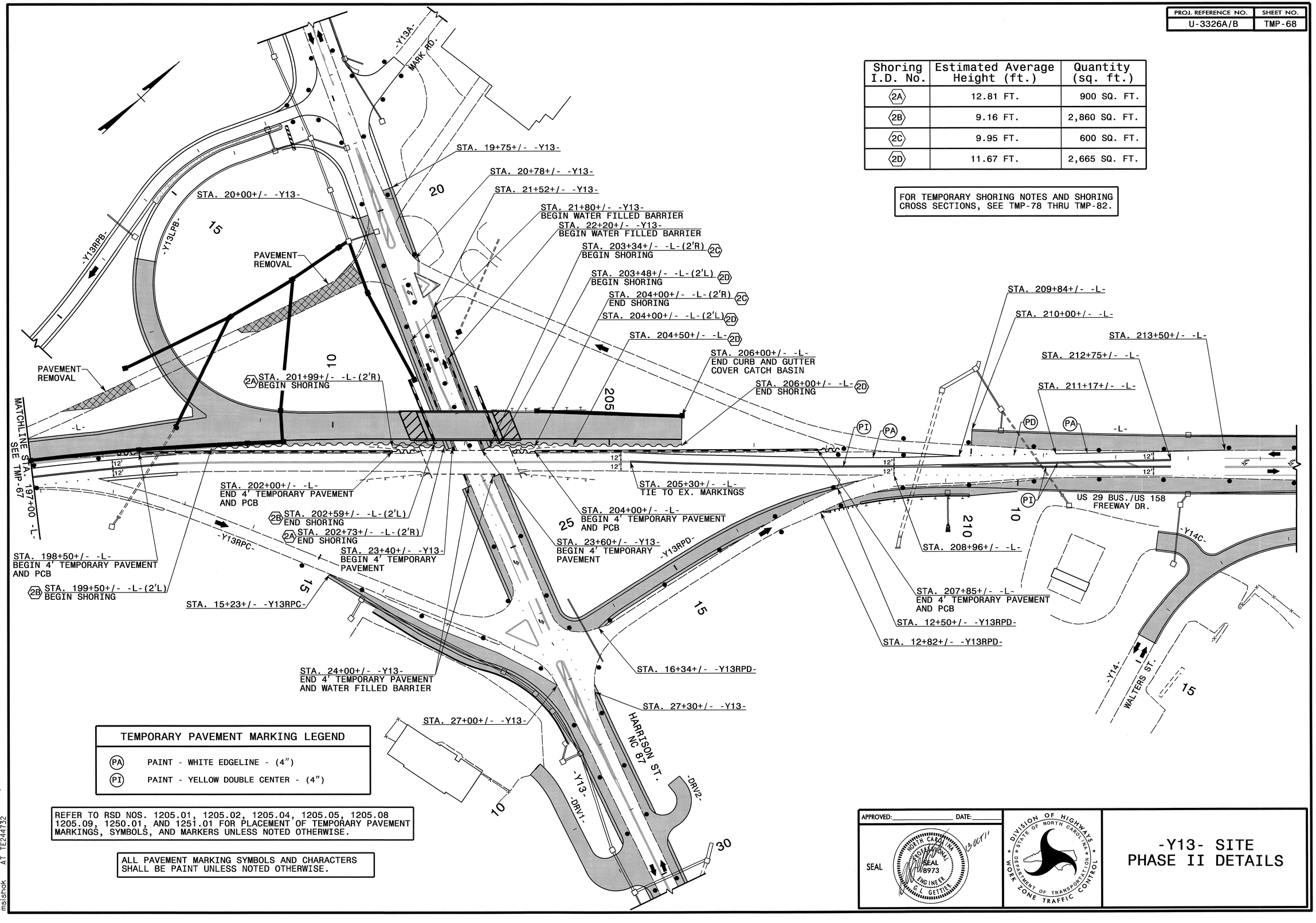

TEMPORARY PAVEMENT MARKING LEGEND	
PA	PAINT - WHITE EDGELINE - (4")
PI	PAINT - YELLOW DOUBLE CENTER - (4")

REFER TO RSD NOS. 1205.01, 1205.02, 1205.04, 1205.05, 1205.08 1205.09, 1250.01, AND 1251.01 FOR PLACEMENT OF TEMPORARY PAVEMENT MARKINGS, SYMBOLS, AND MARKERS UNLESS NOTED OTHERWISE.

ALL PAVEMENT MARKING SYMBOLS AND CHARACTERS SHALL BE PAINT UNLESS NOTED OTHERWISE.

APPROVED:_____ DATE:_____

SEAL

NORTH CAROLINA PROFESSIONAL SEAL 8973 ENGINEER G. L. GETTIER

13 OCT 11

DIVISION OF HIGHWAYS
STATE OF NORTH CAROLINA
DEPARTMENT OF TRANSPORTATION
WORK ZONE TRAFFIC CONTROL

-Y13- SITE PHASE II DETAILS

13-OCT-2011 11:30
\\dot\dfsroot01\proj\TIPProjects-U\U3326\Traffic\TrafficControl\tcp\SITE 2 -Y13-\U3326_-Y13-_ph2_tmp68.dgn
msishak AT TE244732

PROJ. REFERENCE NO.	SHEET NO.
U-3326A/B	TMP-69

RAMP CLOSED 500 FT
W20-3
48" X 48"
(A)

DETOUR M4-8 24" X 12"
W HARRISON ST
M6-3 21" X 15"
(B)

Shoring I.D. No.	Estimated Average Height (ft.)	Quantity (sq. ft.)
2D	5.68 FT.	880 SQ. FT.

FOR TEMPORARY SHORING NOTES AND SHORING CROSS SECTIONS, SEE TMP-82.

FOR OFFSITE DETOUR ROUTE AND SIGNAGE, SEE TMP-70.

R11-2
48" x 30"
ROAD CLOSED
TYPE III BARRICADE(S)
(1)

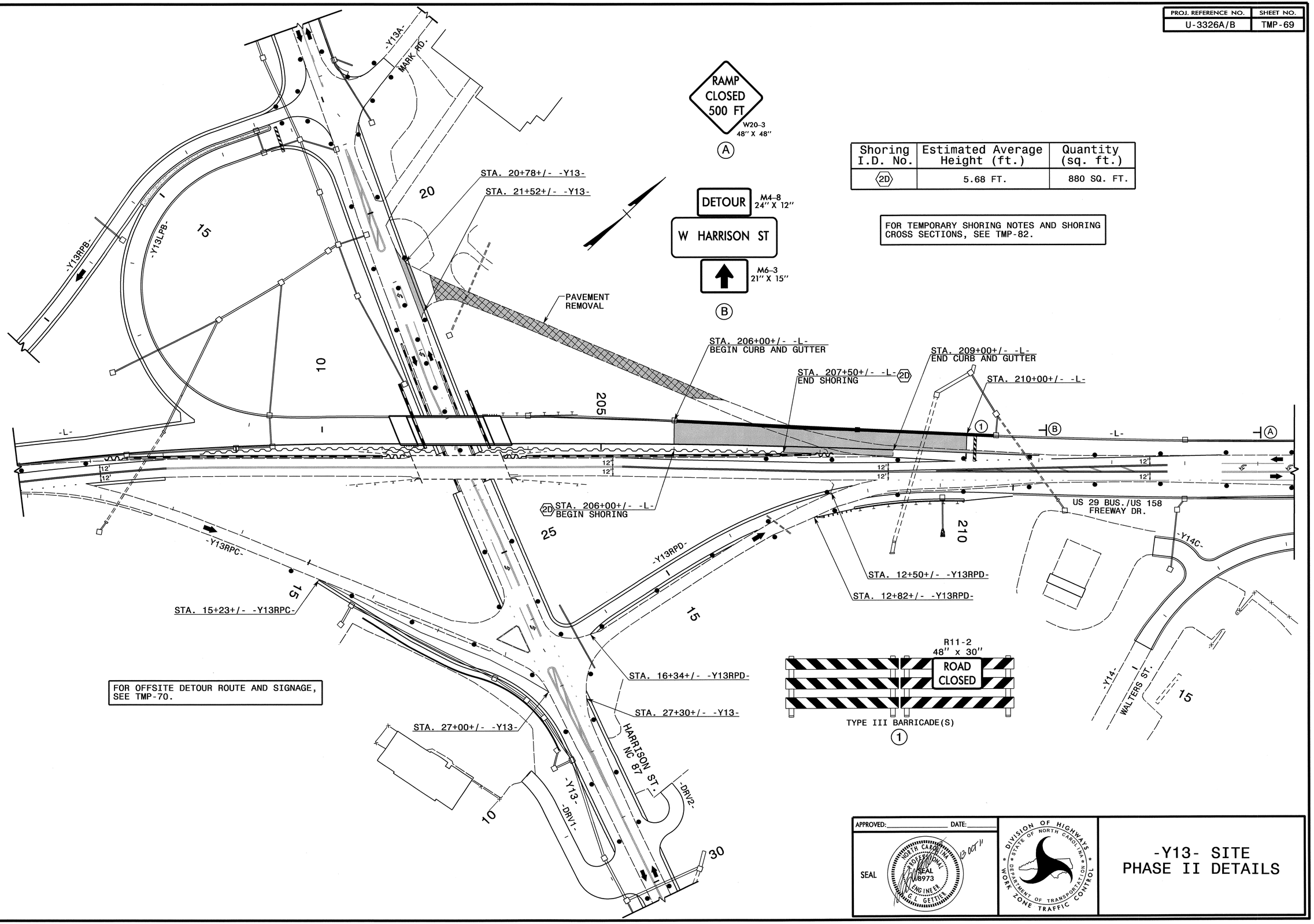

APPROVED: _____ DATE: _____

SEAL

NORTH CAROLINA PROFESSIONAL SEAL 8973 ENGINEER G. L. GETTIER
18 OCT 11

DIVISION OF HIGHWAYS
STATE OF NORTH CAROLINA
DEPARTMENT OF TRANSPORTATION
WORK ZONE TRAFFIC CONTROL

-Y13- SITE PHASE II DETAILS

13-OCT-2011 11:30
\\dot\dfsroot01\proj\TIPProjects-U\U3326\Traffic\TrafficControl\tcp\SITE 2 -Y13-\U3326_-Y13-_ph2_tmp69.dgn
msishak AT TE244732

PROJ. REFERENCE NO.	SHEET NO.
U-3326A/B	TMP-70

NOTE: SEE RSD 1101.03 (SHT 1 OF 9) FOR ADDITIONAL ROAD CLOSURE SIGNAGE.

R11-2
48" X 30"

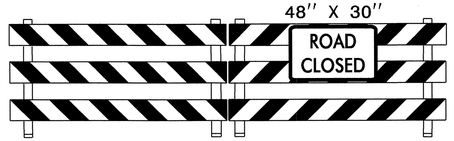

TYPE III BARRICADE(S)

(1)

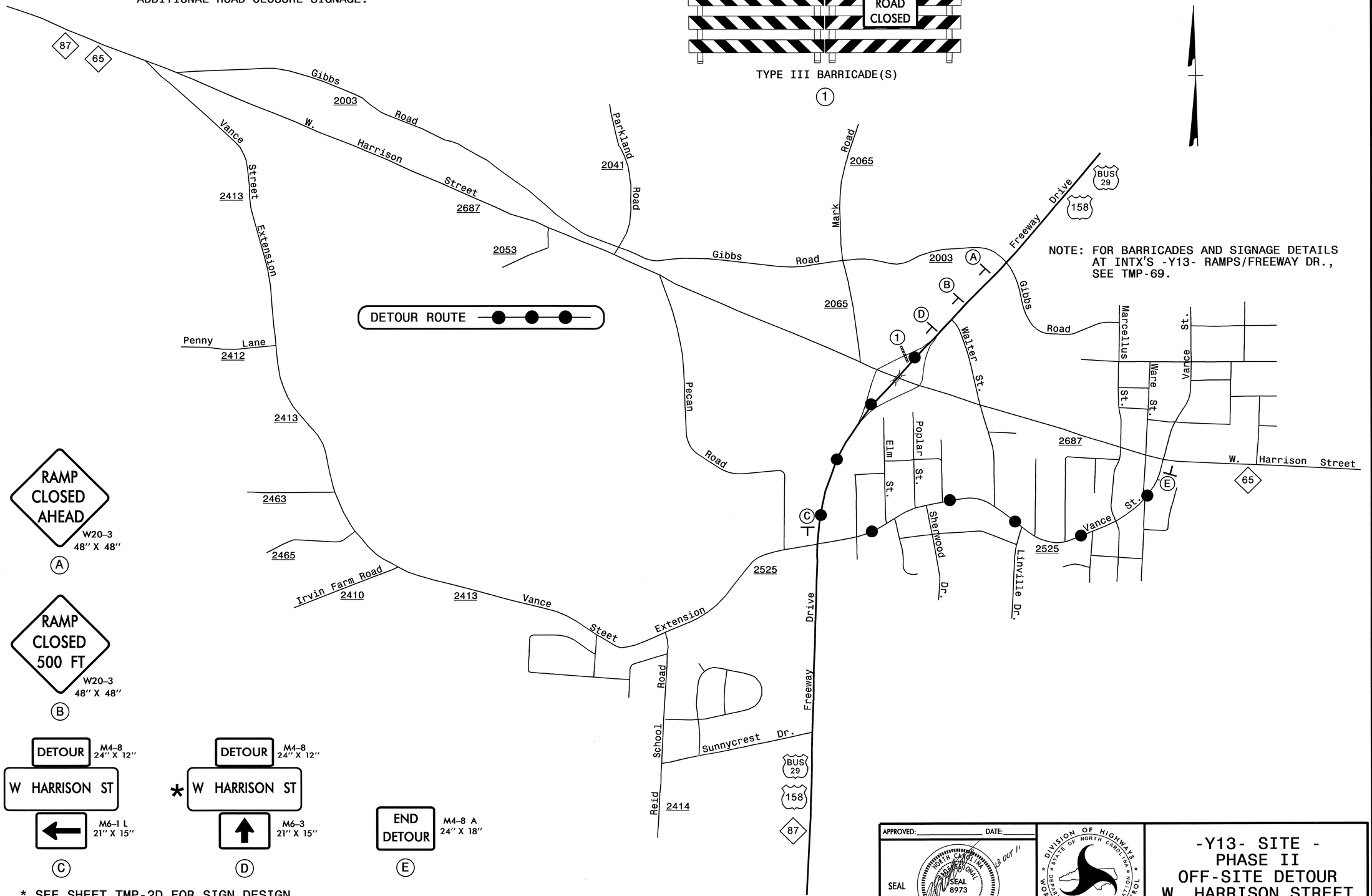

NOTE: FOR BARRICADES AND SIGNAGE DETAILS AT INTX'S -Y13- RAMPS/FREEWAY DR., SEE TMP-69.

RAMP CLOSED AHEAD
W20-3
48" X 48"

(A)

RAMP CLOSED 500 FT
W20-3
48" X 48"

(B)

DETOUR M4-8 24" X 12"
* W HARRISON ST
M6-1 L 21" X 15"

(C)

DETOUR M4-8 24" X 12"
* W HARRISON ST
M6-3 21" X 15"

(D)

END DETOUR M4-8 A 24" X 18"

(E)

* SEE SHEET TMP-2D FOR SIGN DESIGN

APPROVED:_____ DATE:_____

SEAL

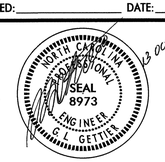

13 OCT 11

-Y13- SITE - PHASE II OFF-SITE DETOUR W. HARRISON STREET

13-OCT-2011 11:30
\\dot\dfsroot\proj\TIPProjects-U\U3326\TrafficTrafficControl\tcp\SITE 2 -Y13-\U3326_-Y13-_ph2_tmp70.dgn
mslshak
AT TE244732

PROJ. REFERENCE NO.	SHEET NO.
U-3326A/B	TMP-71

TEMPORARY PAVEMENT MARKING LEGEND

(PA)	PAINT - WHITE EDGELINE - (4")
(PB)	PAINT - YELLOW EDGELINE - (4")
(PC)	PAINT - 10 FT. WHITE SKIP - (4")
(PD)	PAINT - 2 FT. WHITE MINISKIP - (4")
(PI)	PAINT - YELLOW DOUBLE CENTER - (4")
(PR)	PAINT - WHITE GORELINE - (8")
(QC)	PAINT - STRAIGHT ARROW - →

REFER TO RSD NOS. 1205.01, 1205.02, 1205.04, 1205.08, 1205.09, 1250.01, AND 1251.01 FOR PLACEMENT OF TEMPORARY PAVEMENT MARKINGS, SYMBOLS, AND MARKERS UNLESS NOTED OTHERWISE.

ALL PAVEMENT MARKING SYMBOLS AND CHARACTERS SHALL BE PAINT UNLESS NOTED OTHERWISE.

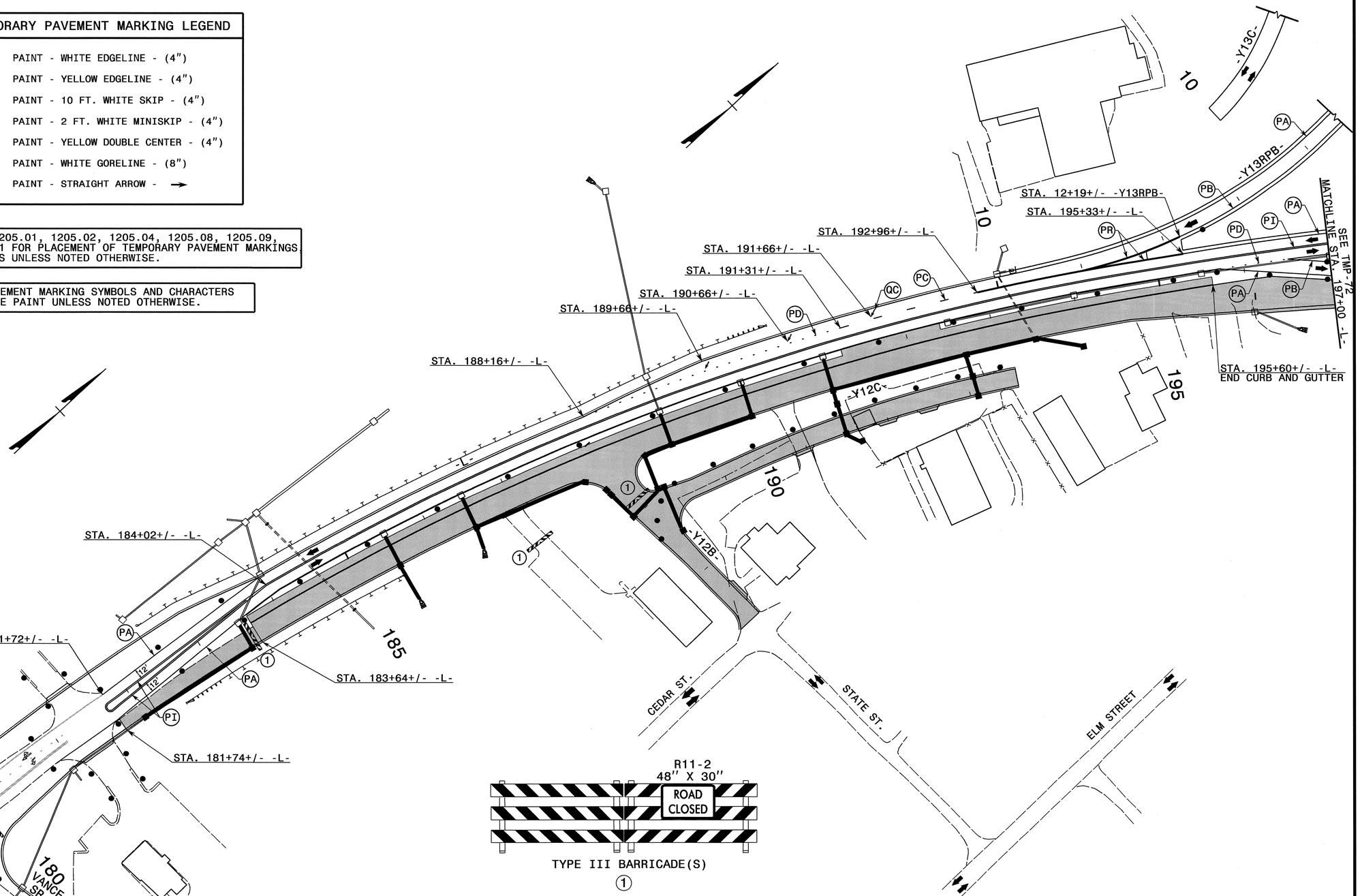

R11-2
48" X 30"
ROAD CLOSED

TYPE III BARRICADE(S)
(1)

APPROVED: _____ DATE: _____

SEAL

NORTH CAROLINA PROFESSIONAL SEAL 18973 ENGINEER G. L. GETTIER

13 OCT 11

DIVISION OF HIGHWAYS · STATE OF NORTH CAROLINA · DEPARTMENT OF TRANSPORTATION · WORK ZONE TRAFFIC CONTROL

-Y13- SITE PHASE III DETAILS

13-OCT-2011 11:29
\\dot\dfsroot01\proj\TIPProjects-U\U3326\Traffic\TrafficControl\top\SITE 2 -Y13-\U3326_-Y13-_ph3_tmp71.dgn
msilsbak AT TE244732

PROJ. REFERENCE NO.	SHEET NO.
U-3326A/B	TMP-72

SECTION A-A

SECTION B-B

FOR OFFSITE DETOUR ROUTE AND SIGNAGE, SEE TMP-73.

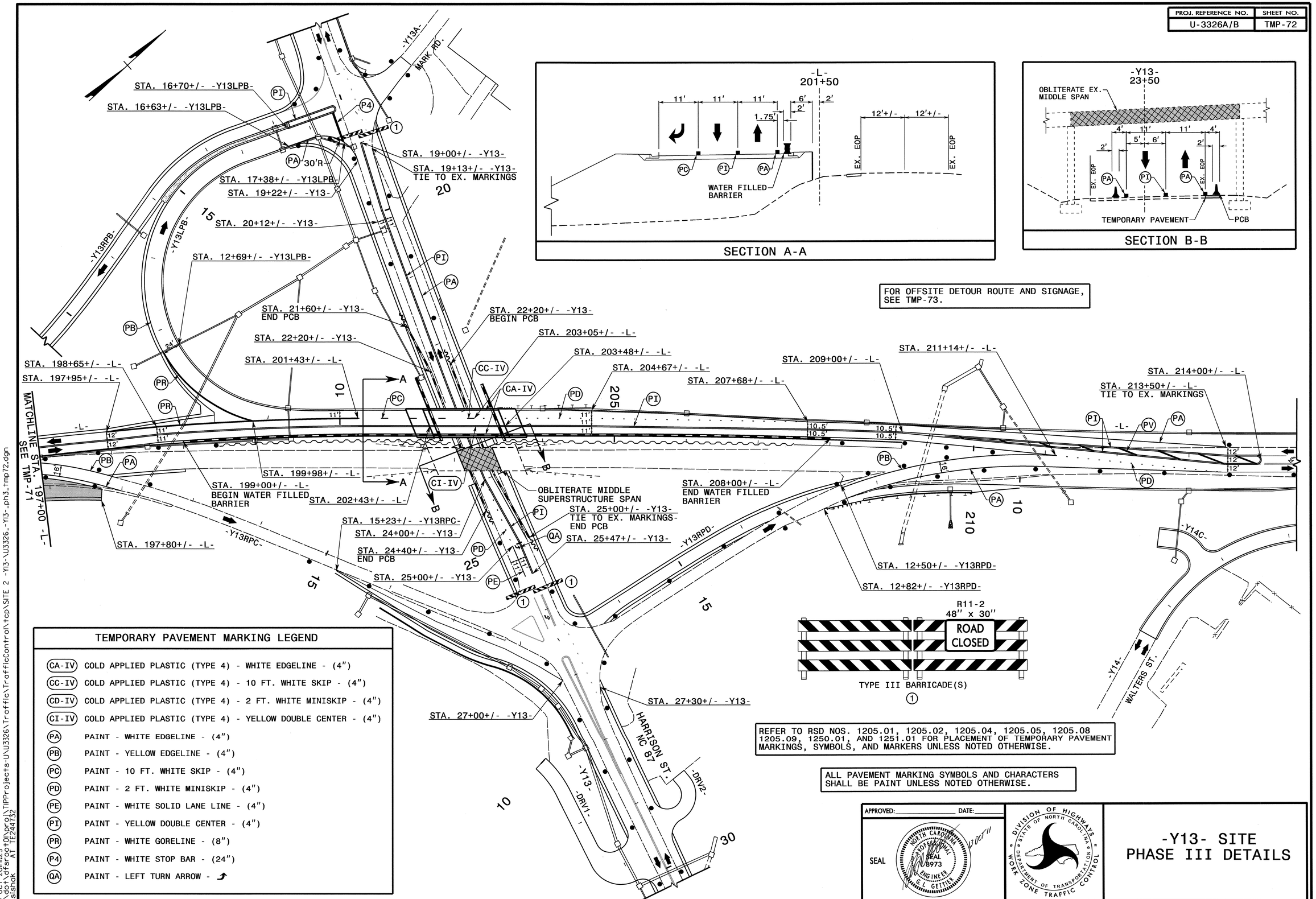

R11-2
48" x 30"

TYPE III BARRICADE(S)
1

TEMPORARY PAVEMENT MARKING LEGEND

CA-IV	COLD APPLIED PLASTIC (TYPE 4) - WHITE EDGELINE - (4")
CC-IV	COLD APPLIED PLASTIC (TYPE 4) - 10 FT. WHITE SKIP - (4")
CD-IV	COLD APPLIED PLASTIC (TYPE 4) - 2 FT. WHITE MINISKIP - (4")
CI-IV	COLD APPLIED PLASTIC (TYPE 4) - YELLOW DOUBLE CENTER - (4")
PA	PAINT - WHITE EDGELINE - (4")
PB	PAINT - YELLOW EDGELINE - (4")
PC	PAINT - 10 FT. WHITE SKIP - (4")
PD	PAINT - 2 FT. WHITE MINISKIP - (4")
PE	PAINT - WHITE SOLID LANE LINE - (4")
PI	PAINT - YELLOW DOUBLE CENTER - (4")
PR	PAINT - WHITE GORELINE - (8")
P4	PAINT - WHITE STOP BAR - (24")
QA	PAINT - LEFT TURN ARROW - ↰

REFER TO RSD NOS. 1205.01, 1205.02, 1205.04, 1205.05, 1205.08 1205.09, 1250.01, AND 1251.01 FOR PLACEMENT OF TEMPORARY PAVEMENT MARKINGS, SYMBOLS, AND MARKERS UNLESS NOTED OTHERWISE.

ALL PAVEMENT MARKING SYMBOLS AND CHARACTERS SHALL BE PAINT UNLESS NOTED OTHERWISE.

APPROVED: _____ DATE: _____

SEAL

-Y13- SITE
PHASE III DETAILS

13-OCT-2011 11:29
\\dot\dfsroot01\proj\TIPProjects-U\U3326\TrafficTrafficControl\tcp\SITE 2 -Y13-\U3326_-Y13-_ph3_tmp72.dgn
mslshak AT TE244732

PROJ. REFERENCE NO.	SHEET NO.
U-3326A/B	TMP-73

NOTE: SEE RSD 1101.03 (SHT 1 OF 9) FOR ADDITIONAL ROAD CLOSURE SIGNAGE.

R11-4
60"x30"
ROAD CLOSED TO THRU TRAFFIC
DETOUR
M4-10L
48"x18"
TYPE III BARRICADE
(1)

R11-3
60"x30"
ROAD CLOSED 2 MILES AHEAD LOCAL TRAFFIC ONLY
DETOUR
M4-10R
48"x18"
TYPE III BARRICADE
(2)

R11-4
60" X 30"
ROAD CLOSED TO THRU TRAFFIC
TYPE III BARRICADE
(3)

R11-2
48" X 30"
ROAD CLOSED
TYPE III BARRICADE(S)
(4)

DETOUR M4-8 24" X 12"
* W HARRISON ST
M6-3 21" X 15"
(D)

END DETOUR M4-8 A 24" X 18"
(E)

DETOUR ROUTE

* SEE SHEET TMP-2D FOR SIGN DESIGN

NOTE: FOR BARRICADES AND SIGNAGE DETAILS AT INTX'S -Y13- RAMPS/W. HARRISON ST., SEE TMP-72.

DETOUR M4-8 24" X 12"
NORTH M3-1 24" X 12"
87 M1-5 24" X 24"
M5-1 21" X 15"
(F)

DETOUR M4-8 24" X 12"
NORTH M3-1 24" X 12"
65 M1-5 24" X 24"
M5-1 21" X 15"
(G)

DETOUR M4-8 24" X 12"
NORTH M3-1 24" X 12"
87 M1-5 24" X 24"
M6-1L 21" X 15"
(H)

DETOUR M4-8 24" X 12"
NORTH M3-1 24" X 12"
65 M1-5 24" X 24"
M6-1L 21" X 15"
(I)

DETOUR M4-8 24" X 12"
SOUTH M3-3 24" X 12"
65 M1-5 24" X 24"
M6-3 21" X 15"
(J)

DETOUR M4-8 24" X 12"
SOUTH M3-3 24" X 12"
65 M1-5 24" X 24"
M6-1L 21" X 15"
(K)

ROAD CLOSED 500 FT W20-3 48" X 48"
(A)

ROAD CLOSED 1000 FT W20-3 48" X 48"
(B)

ROAD CLOSED AHEAD W20-3 48" X 48"
(C)

DETOUR AHEAD W20-2 48" X 48"
(L)

APPROVED: _____ DATE: _____

SEAL

NORTH CAROLINA PROFESSIONAL SEAL 8973 ENGINEER G. L. GETTIES
8 OCT 11

DIVISION OF HIGHWAYS * STATE OF NORTH CAROLINA * DEPARTMENT OF TRANSPORTATION
WORK ZONE TRAFFIC CONTROL

-Y13- SITE - PHASE III OFF-SITE DETOUR W. HARRISON STREET

13-OCT-2011 11:28
\\dot\dfsroot\Proj\TIPProjects-U\U3326\Traffic\TrafficControl\tcp\SITE 2 -Y13-\U3326_-Y13-_ph3_tmp73.dgn
msishak AT TE244732

PROJ. REFERENCE NO.	SHEET NO.
U-3326A/B	TMP-74

SECTION A-A

SECTION B-B

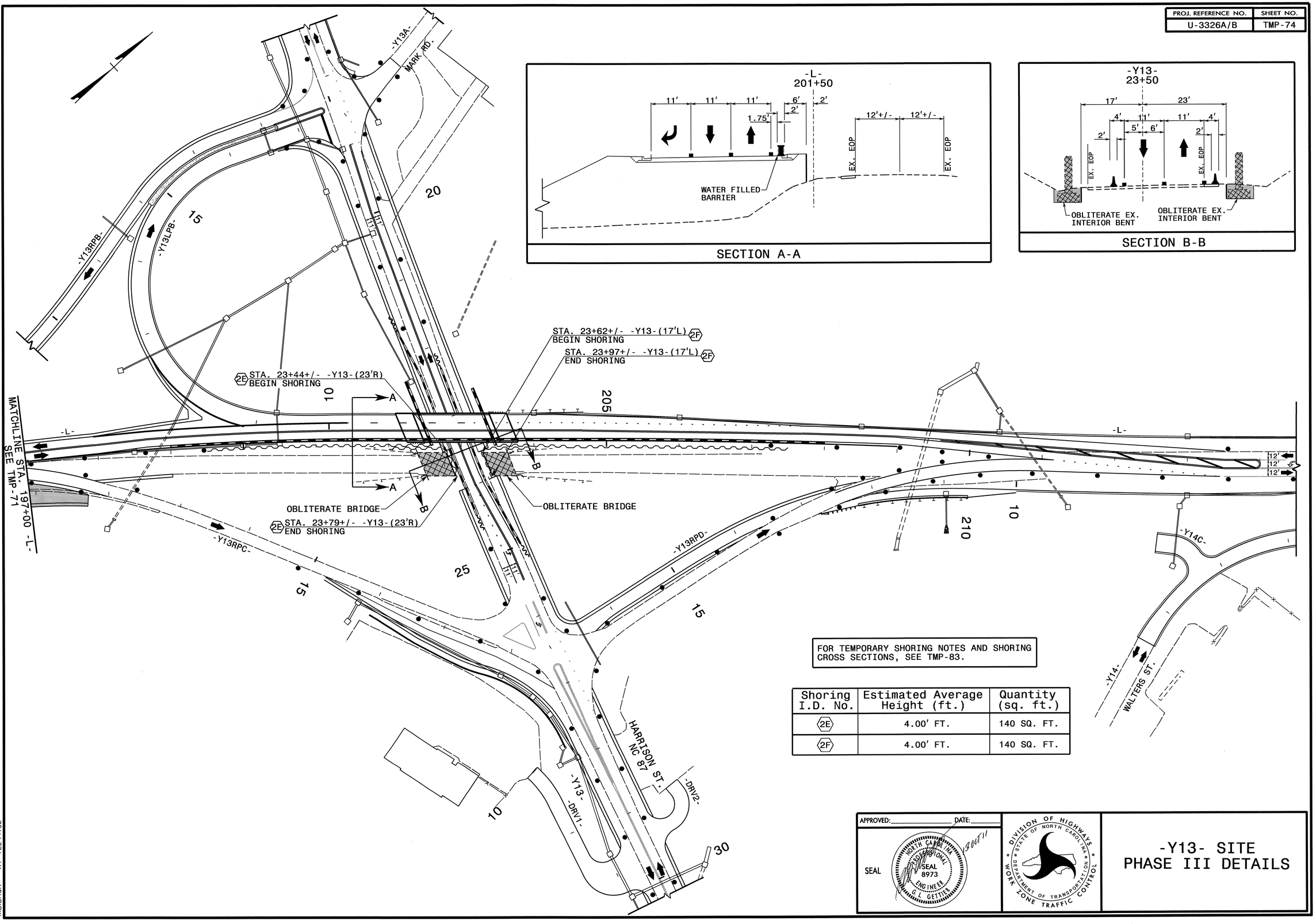

FOR TEMPORARY SHORING NOTES AND SHORING CROSS SECTIONS, SEE TMP-83.

Shoring I.D. No.	Estimated Average Height (ft.)	Quantity (sq. ft.)
2E	4.00' FT.	140 SQ. FT.
2F	4.00' FT.	140 SQ. FT.

APPROVED: _____ DATE: _____

SEAL

NORTH CAROLINA PROFESSIONAL SEAL 8973 ENGINEER G. L. GETTIES

DIVISION OF HIGHWAYS * STATE OF NORTH CAROLINA * DEPARTMENT OF TRANSPORTATION * WORK ZONE TRAFFIC CONTROL

-Y13- SITE PHASE III DETAILS

13-OCT-2011 11:28
\\dot\dfsroot\Lproj\TIPProjects-U\U3326\Traffic\TrafficControl\tcp\SITE 2 -Y13-\U3326_-Y13-_ph3_tmp74.dgn
mslshak AT TE244732

PROJ. REFERENCE NO.	SHEET NO.
U-3326A/B	TMP-75

SECTION A-A

SECTION B-B

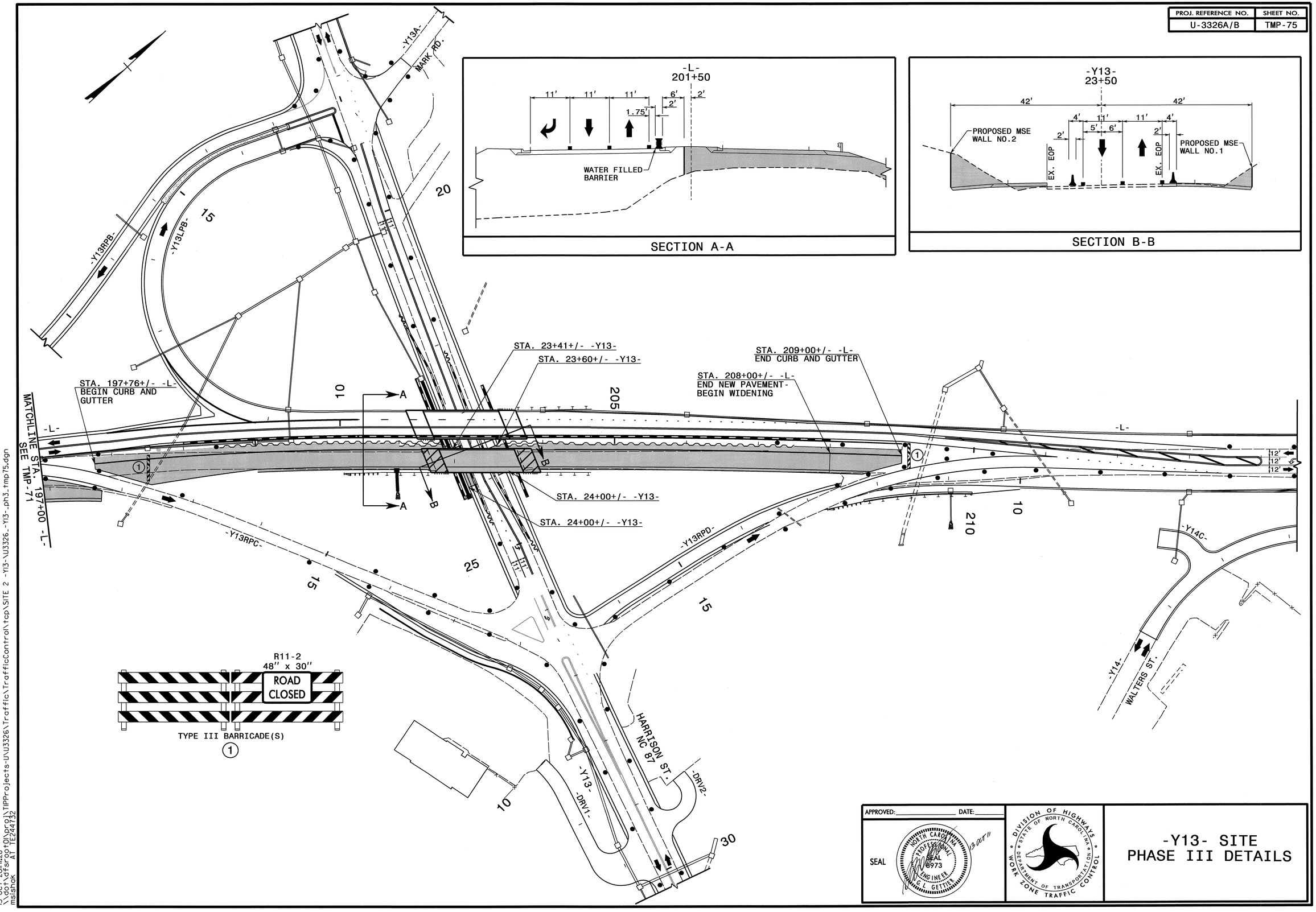

R11-2
48" x 30"
ROAD CLOSED
TYPE III BARRICADE(S)
(1)

APPROVED: _____ DATE: _____

SEAL

NORTH CAROLINA PROFESSIONAL SEAL 6973 ENGINEER G. L. GETTIER

IS OUT

DIVISION OF HIGHWAYS
STATE OF NORTH CAROLINA
DEPARTMENT OF TRANSPORTATION
WORK ZONE TRAFFIC CONTROL

-Y13- SITE PHASE III DETAILS

13-OCT-2011 11:28
\\dot\dfsroot\Nproj\TIPProjects-U\U3326\Traffic\TrafficControl\tcp\SITE 2 -Y13-\U3326_-Y13-_ph3_tmp75.dgn
mslshak AT TE244732

PROJ. REFERENCE NO.	SHEET NO.
U-3326A/B	TMP-76

TEMPORARY PAVEMENT MARKING LEGEND

(PA)	PAINT - WHITE EDGELINE - (4")
(PB)	PAINT - YELLOW EDGELINE - (4")
(PC)	PAINT - 10 FT. WHITE SKIP - (4")
(PD)	PAINT - 2 FT. WHITE MINISKIP - (4")
(PE)	PAINT - WHITE SOLID LANE LINE - (4")
(PI)	PAINT - YELLOW DOUBLE CENTER - (4")
(PR)	PAINT - WHITE GORELINE - (8")
(PV)	PAINT - YELLOW DIAGONAL - (8")
(P4)	PAINT - WHITE STOP BAR - (24")
(QA)	PAINT - LEFT TURN ARROW - ↰
(QB)	PAINT - RIGHT TURN ARROW - ↱
(QC)	PAINT - STRAIGHT ARROW - ↑
(QD)	PAINT - COMBO. STRAIGHT/LEFT ARROW - ↰↑
(QE)	PAINT - COMBO. STRAIGHT/RIGHT ARROW - ↱↑
(QI)	PAINT - ALPHANUMERIC CHARACTER - ONLY
(QN)	PAINT - 24" YIELD LINE TRIANGLE - ▲

-Y13A- MARK RD.

-Y13RPB-

-Y13LPB-

STA. 195+60+/- -L-
BEGIN CURB AND GUTTER

STA. 195+60+/- -L-
BEGIN CURB AND GUTTER

STA. 197+75+/- -L-
END CURB AND GUTTER

STA. 196+98+/- -L-
END CURB AND GUTTER

-Y13RPC-

STA. 209+00+/- -L-
END CURB AND GUTTER

-Y13RPD-

STA. 10+00+/- -Y13RPD-

HARRISON ST. NC 87

-Y13- -DRV1-

-DRV2-

R11-2
48" x 30"
ROAD CLOSED

TYPE III BARRICADE(S)
①

R11-2
48" x 30"
ROAD CLOSED
DETOUR
M4-10R
48" x 18"

TYPE III BARRICADE
②

FOR OFFSITE DETOUR ROUTE AND SIGNAGE, SEE TMP-77.

NOTE: FOR STATIONING OF TEMPORARY PAVEMENT MARKINGS, SYMBOLS, AND STOP BARS OF -Y13-, -Y13RPB, -Y13LPB-, -Y13RPC-, AND -Y13RPD-, SEE FINAL PAVEMENT MARKING PLANS.

REFER TO RSD NOS. 1205.01, 1205.02, 1205.04, 1205.05, 1205.08, 1205.12, 1250.01, AND 1251.01 FOR PLACEMENT OF TEMPORARY PAVEMENT MARKINGS, SYMBOLS, AND MARKERS UNLESS NOTED OTHERWISE.

ALL PAVEMENT MARKING SYMBOLS AND CHARACTERS SHALL BE PAINT UNLESS NOTED OTHERWISE.

APPROVED: _____ DATE: _____

SEAL

NORTH CAROLINA PROFESSIONAL SEAL 8973 ENGINEER G. L. GETTIER

13 OCT 11

DIVISION OF HIGHWAYS
STATE OF NORTH CAROLINA
DEPARTMENT OF TRANSPORTATION
WORK ZONE TRAFFIC CONTROL

-Y13- SITE PHASE III DETAILS

13-OCT-2011 11:27
\\dot\dfsroot\proj\TIPProjects-U\U3326\Traffic\TrafficControl\tcp\SITE 2 -Y13-\U3326_-Y13-_ph3_tmp76.dgn
msishak AT TE244732

PROJ. REFERENCE NO.	SHEET NO.
U-3326A/B	TMP-77

NOTE: SEE RSD 1101.03 (SHT 1 OF 9) FOR ADDITIONAL ROAD CLOSURE SIGNAGE.

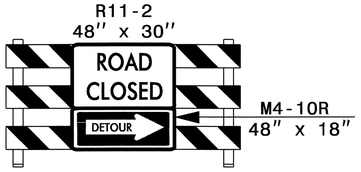

TYPE III BARRICADE

(1)

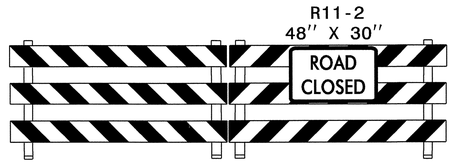

TYPE III BARRICADE(S)

(2)

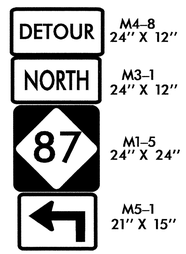

(G)

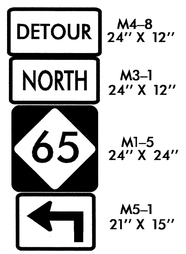

(H)

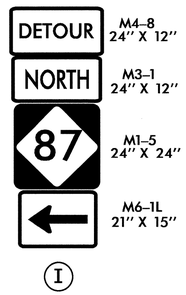

(I)

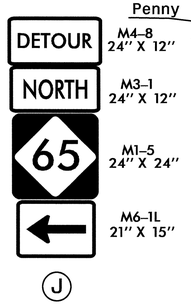

(J)

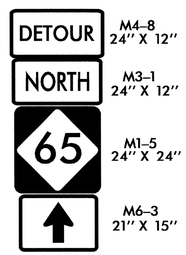

(K)

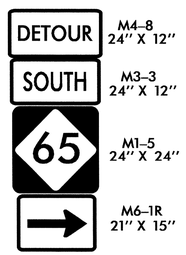

(L)

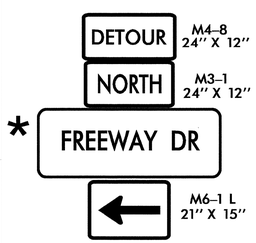

(C)

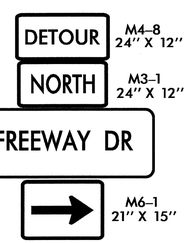

(D)

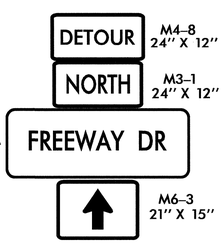

(E)

(F)

* SEE SHEET TMP-2C AND TMP-2D FOR SIGN DESIGN

DETOUR ROUTE

NOTE: FOR BARRICADES AND SIGNAGE DETAILS AT INTX'S -Y13- RAMPS/W. HARRISON ST., SEE TMP-76.

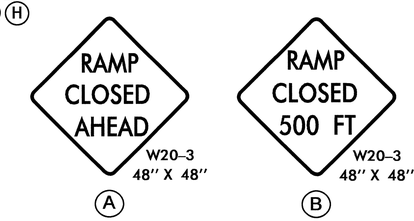

(A)

(B)

APPROVED: _____ DATE: _____

SEAL

NORTH CAROLINA PROFESSIONAL SEAL 8973 ENGINEER G. L. GETTIER 13 OCT 11

DIVISION OF HIGHWAYS * STATE OF NORTH CAROLINA * DEPARTMENT OF TRANSPORTATION * WORK ZONE TRAFFIC CONTROL

-Y13- SITE - PHASE III OFF-SITE DETOUR W. HARRISON STREET FREEWAY DRIVE

13-OCT-2011 11:26
\\dot\dfsroot\proj\TIPProjects-U\U3326\Traffic\TrafficControl\top\SITE 2 -Y13-\U3326_-Y13-_ph3_tmp77.dgn
mslshak AT TE244732

PROJ. REFERENCE NO.	SHEET NO.
U-3326A/B	TMP-78

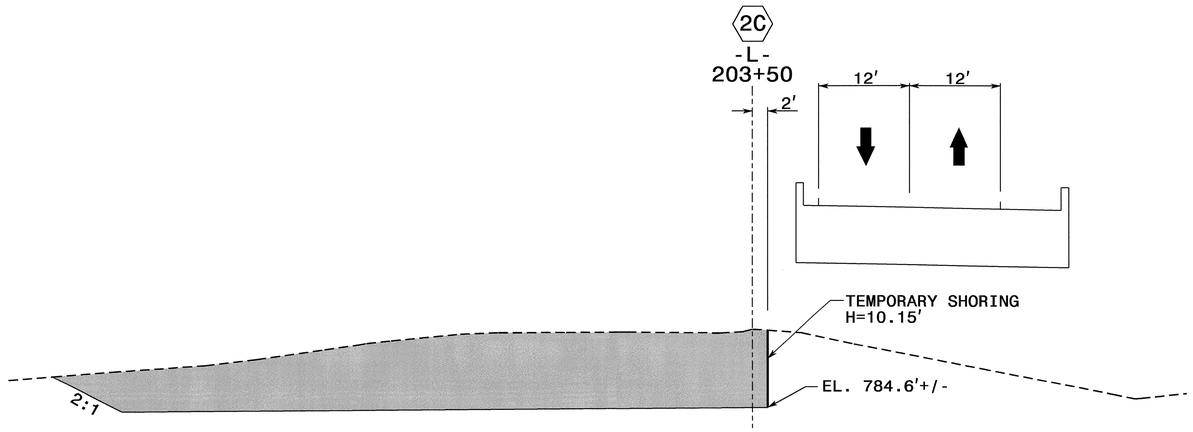

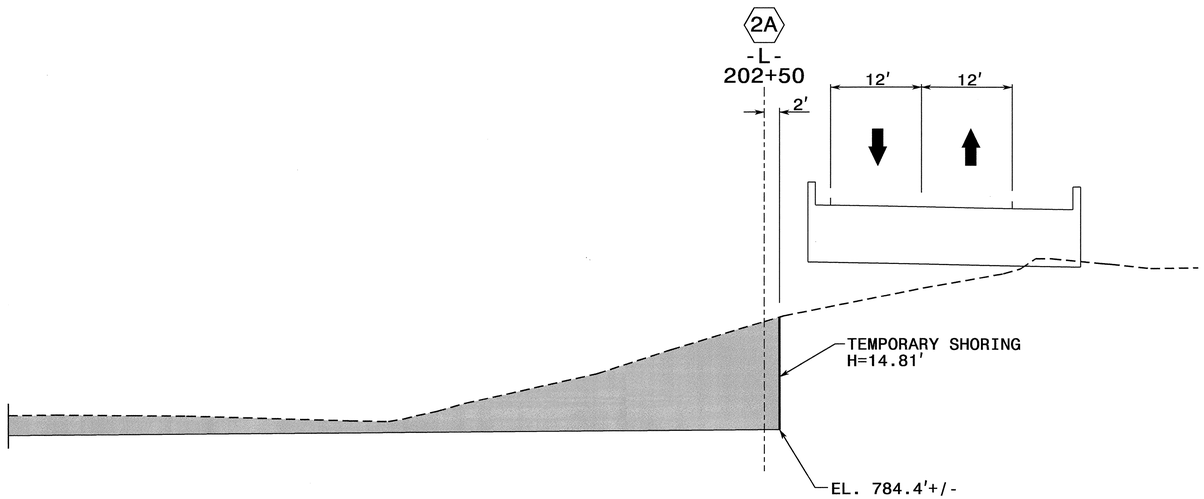

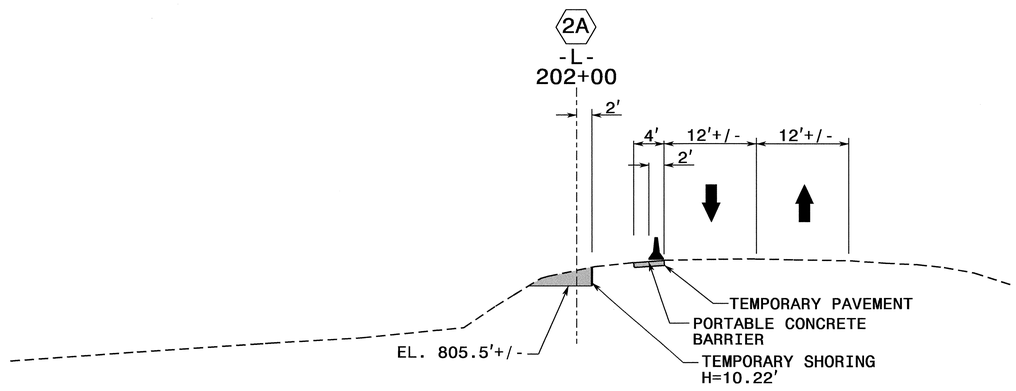

TEMPORARY SHORING NOTES

2A TEMPORARY SHORING NO. 2A (SEE SHEET TMP-68)

FOR TEMPORARY SHORING, SEE TEMPORARY SHORING PROVISION.

DO NOT USE STANDARD SHORING FROM STA. 201+99+/- -L-, 2 FT. RIGHT TO STA. 202+73+/- -L-, 2 FT. RIGHT.

WHEN USING CONTRACTOR DESIGNED SHORING FROM STA. 201+99+/- -L-, 2 FT. RIGHT TO STA. 202+73+/- -L-, 2 FT. RIGHT, DESIGN SHORING FOR THE FOLLOWING IN-SITU ASSUMED SOIL PARAMETERS:

UNIT WEGHT OF SOIL ABOVE WATER TABLE, γ = 120 PCF
UNIT WEIGHT OF SOIL BELOW WATER TABLE, γ' = 60 PCF
FRICTION ANGLE, ϕ = 30°
COHESION, c = 0 PCF

DRIVEN PILING FOR TEMPORARY SHORING FROM STA. 201+99+/- -L-, 2 FT. RIGHT TO STA. 202+73+/- -L-, 2 FT. RIGHT, WILL BE LIMITED DUE TO THE PRESENCE OF WEATHERED OR HARD ROCK. SEE GEOTECHNICAL INVENTORY REPORT FOR LOCATION OF WEATHERED OR HARD ROCK.

IT MAY BE PREFERRED OR NECESSARY TO ANCHOR TEMPORARY SHORING FROM STA. 201+99+/- -L-, 2 FT. RIGHT TO STA. 202+73+/- -L-, 2 FT. RIGHT, FOR ANCHORED TEMPORARY SHORING, SEE ANCHORED TEMPORARY SHORING PROVISION.

FOR CONTRACTOR DESIGNED SHORING, SURVEY THE SHORING LOCATION TO DETERMINE EXISTING ELEVATIONS AND ACTUAL DESIGN HEIGHTS BEFORE BEGINNING DESIGN.

FOR PORTABLE CONCRETE BARRIERS ABOVE AND BEHIND TEMPORARY SHORING, USE A NCDOT PORTABLE CONCRETE BARRIER (UNANCHORED OR ANCHORED) OR AN OREGON TALL F-SHAPE CONCRETE BARRIER IN ACCORDANCE WITH THE TRAFFIC CONTROL PLANS.

2C TEMPORARY SHORING NO. 2C (SEE SHEET TMP-68)

FOR TEMPORARY SHORING, SEE TEMPORARY SHORING PROVISION.

DO NOT USE STANDARD SHORING FROM STA. 203+34+/- -L-, 2 FT. RIGHT TO STA. 204+00+/- -L-, 2 FT. RIGHT.

WHEN USING CONTRACTOR DESIGNED SHORING FROM STA. 203+34+/- -L-, 2 FT. RIGHT TO STA. 204+00+/- -L-, 2 FT. RIGHT, DESIGN SHORING FOR THE FOLLOWING IN-SITU ASSUMED SOIL PARAMETERS:

UNIT WEGHT OF SOIL ABOVE WATER TABLE, γ = 120 PCF
UNIT WEIGHT OF SOIL BELOW WATER TABLE, γ' = 60 PCF
FRICTION ANGLE, ϕ = 30°
COHESION, c = 0 PCF

DRIVEN PILING FOR TEMPORARY SHORING FROM STA. 203+34+/- -L-, 2 FT. RIGHT TO STA. 204+00+/- -L-, 2 FT. RIGHT, WILL BE LIMITED DUE TO THE PRESENCE OF WEATHERED OR HARD ROCK. SEE GEOTECHNICAL INVENTORY REPORT FOR LOCATION OF WEATHERED OR HARD ROCK.

IT MAY BE PREFERRED OR NECESSARY TO ANCHOR TEMPORARY SHORING FROM STA. 203+34+/- -L-, 2 FT. RIGHT TO STA. 204+00+/- -L-, 2 FT. RIGHT, FOR ANCHORED TEMPORARY SHORING, SEE ANCHORED TEMPORARY SHORING PROVISION.

FOR CONTRACTOR DESIGNED SHORING, SURVEY THE SHORING LOCATION TO DETERMINE EXISTING ELEVATIONS AND ACTUAL DESIGN HEIGHTS BEFORE BEGINNING DESIGN.

FOR PORTABLE CONCRETE BARRIERS ABOVE AND BEHIND TEMPORARY SHORING, USE A NCDOT PORTABLE CONCRETE BARRIER (UNANCHORED OR ANCHORED) OR AN OREGON TALL F-SHAPE CONCRETE BARRIER IN ACCORDANCE WITH THE TRAFFIC CONTROL PLANS.

THE TEMPORARY SHORING NOTES WERE PROVIDED THROUGH A SEALED DOCUMENT FROM THE GEOTECHNICAL ENGINEERING UNIT. THE DOCUMENT WAS SUBMITTED TO THE WZTCU ON 09-11-2011 AND SEALED BY A PROFESSIONAL ENGINEER, ERIC WILLIAMS, P.E., LICENSE #26962.

APPROVED:_____ DATE:_____

SEAL

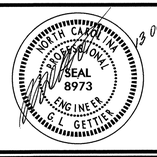

-Y13- SITE
PHASE II
SHORING CROSS SECTIONS AND SHORING NOTES

13-OCT-2011 11:26
\\dot\dfsroot\proj\TIPProjects-U\U3326\Traffic\TrafficControl\top\SITE 2 -Y13-\U3326_-Y13-_xsc_tmp78.dgn
msishak AT TE244732

PROJ. REFERENCE NO.	SHEET NO.
U-3326A/B	TMP-79

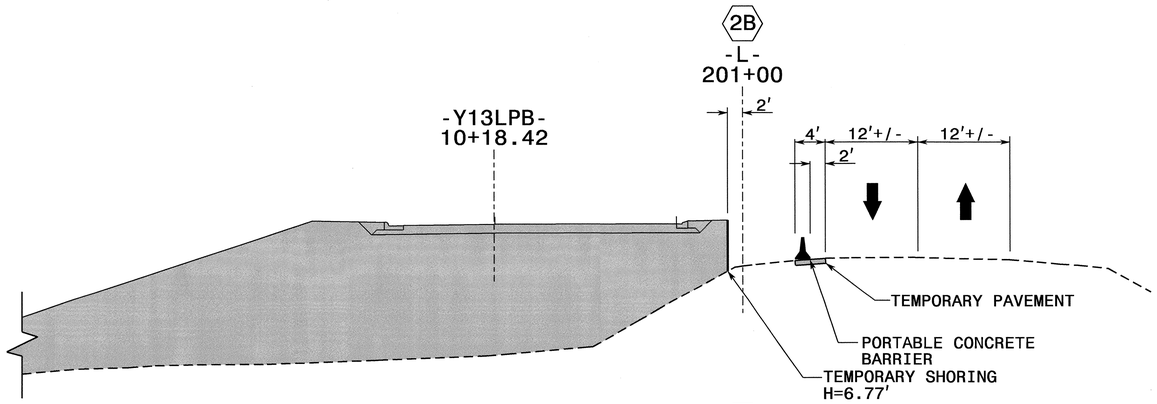

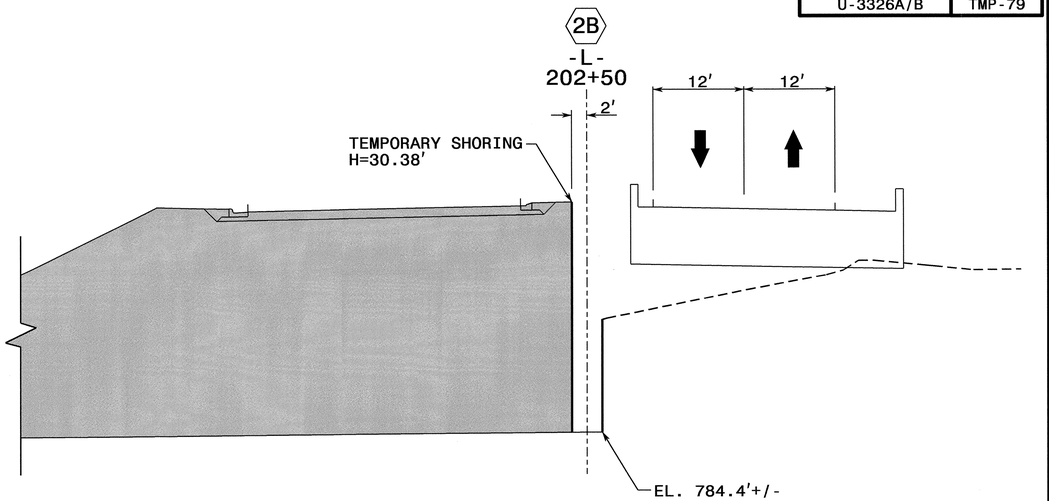

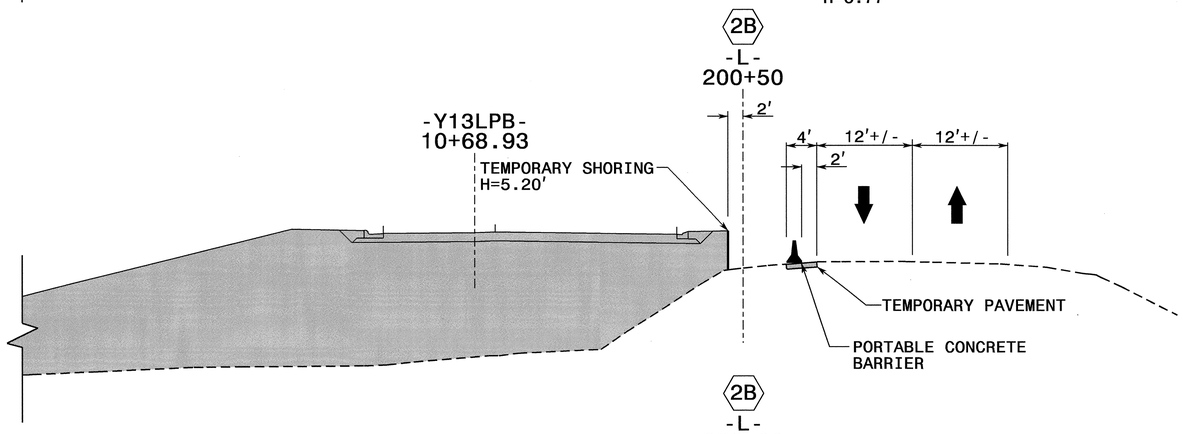

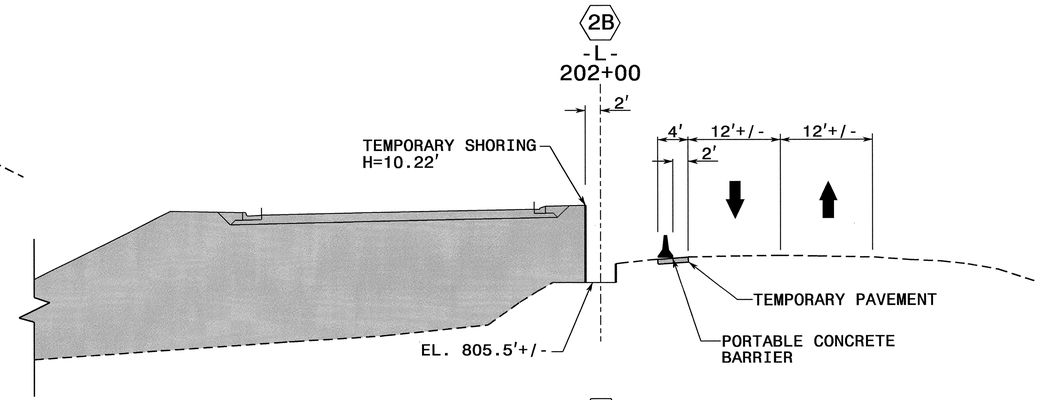

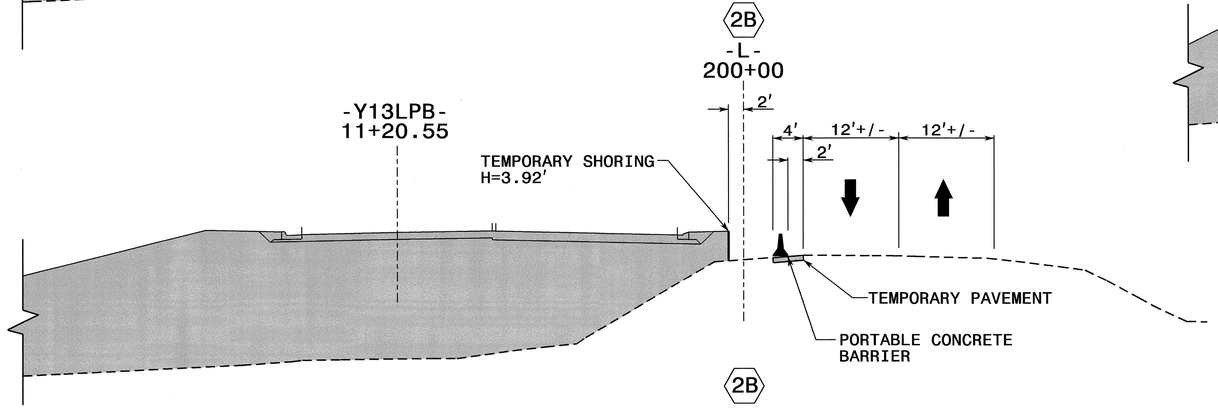

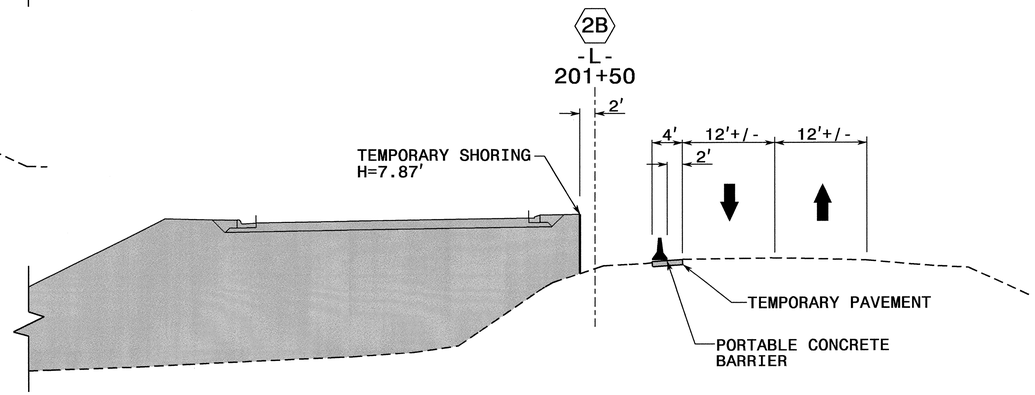

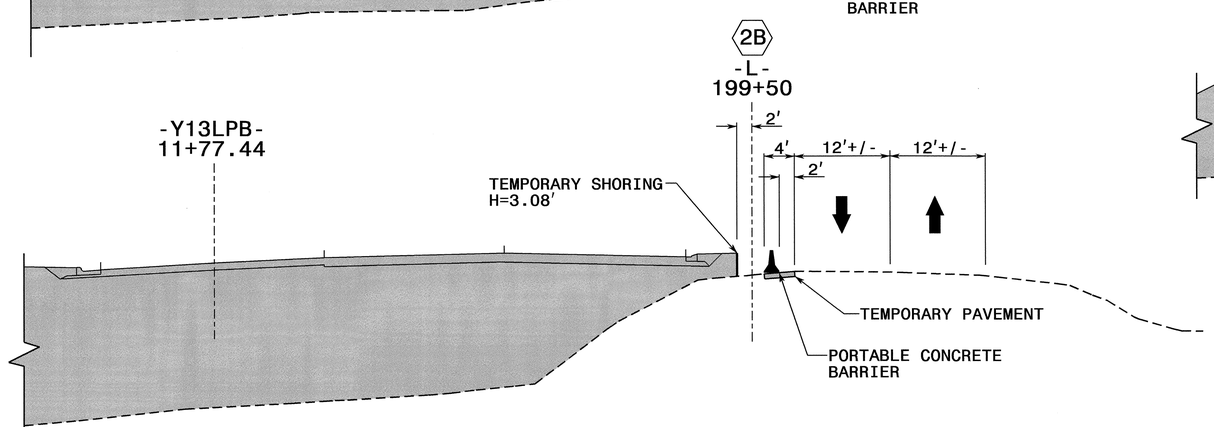

APPROVED: _____ DATE: _____

SEAL

NORTH CAROLINA PROFESSIONAL SEAL 8973 ENGINEER G. GETTIER 15 Oct 11

DIVISION OF HIGHWAYS • STATE OF NORTH CAROLINA • DEPARTMENT OF TRANSPORTATION • WORK ZONE TRAFFIC CONTROL

-Y13- SITE PHASE II SHORING CROSS SECTIONS

13-OCT-2011 11:25
\\dot\dfsrgot01\prg\TIPProjects-U\U3326\Traffic\TrafficControl\tcp\SITE 2 -Y13-\U3326_-Y13-_xsc_tmp79.dgn
msishak
AT TE244732

PROJ. REFERENCE NO.	SHEET NO.
U-3326A/B	TMP-80

2D
-L-
205+00

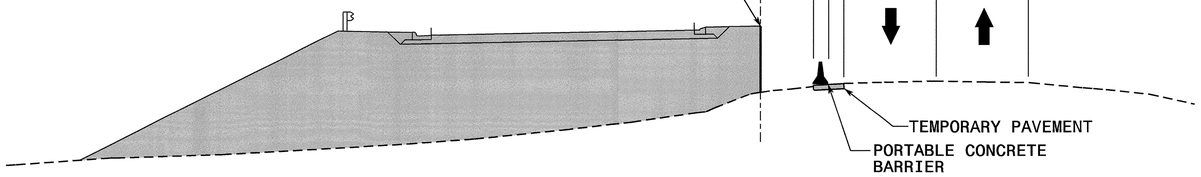

2D
-L-
204+50

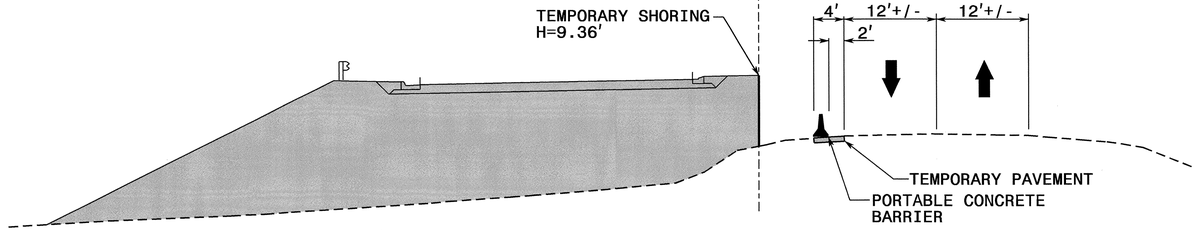

2D
-L-
204+00

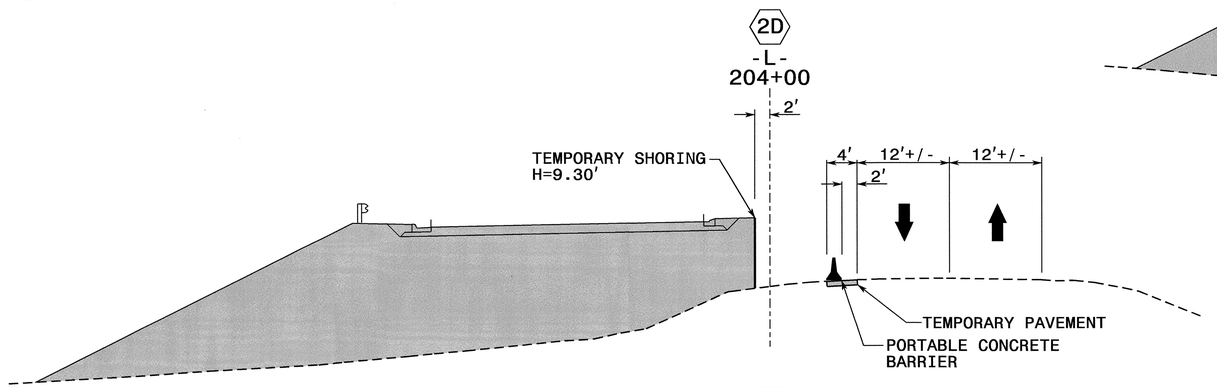

2D
-L-
203+50

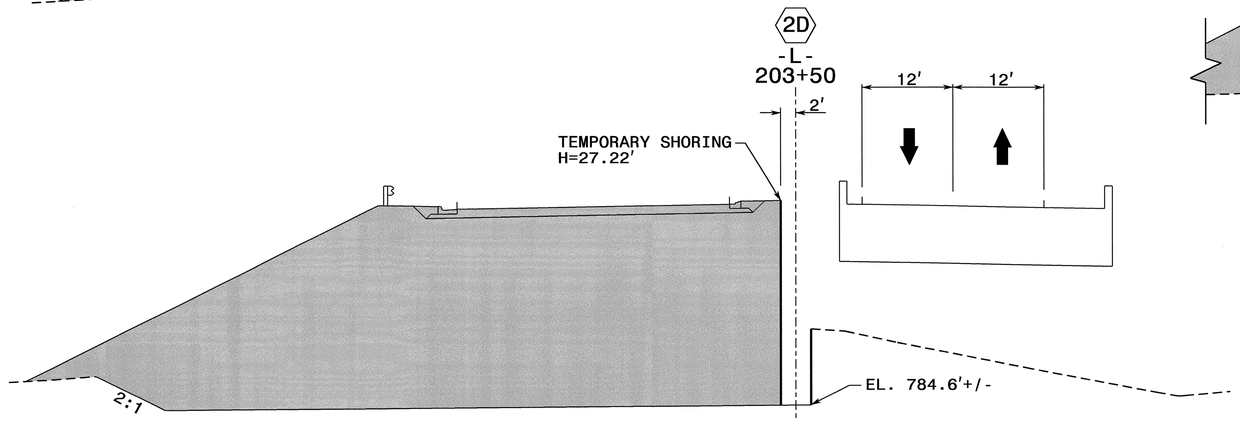

2D
-L-
206+00

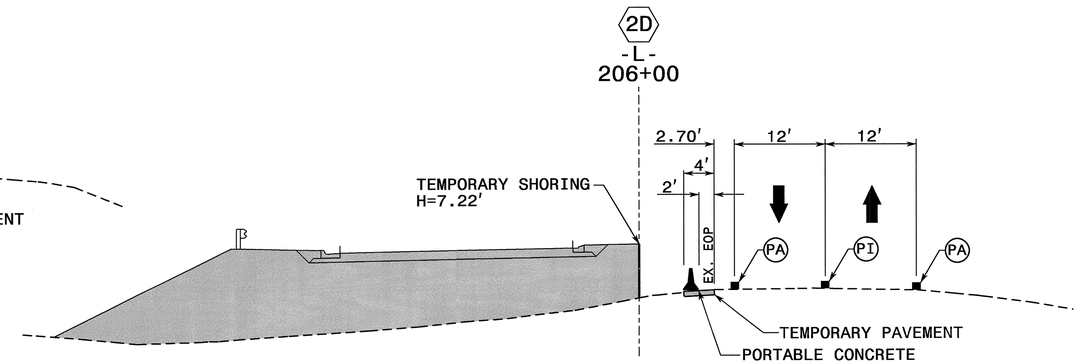

2D
-L-
205+50

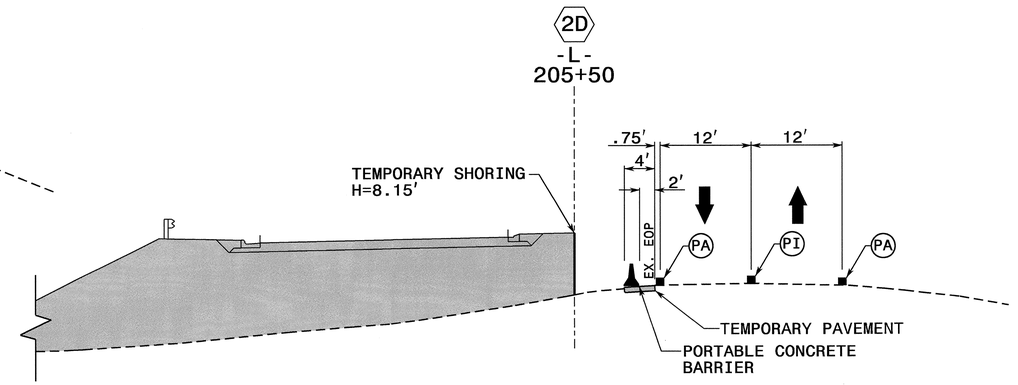

APPROVED: _____ DATE: _____

SEAL

NORTH CAROLINA PROFESSIONAL SEAL 16973 ENGINEER G. L. GETTIER 13 OCT 11

DIVISION OF HIGHWAYS
STATE OF NORTH CAROLINA
DEPARTMENT OF TRANSPORTATION
WORK ZONE TRAFFIC CONTROL

-Y13- SITE PHASE II SHORING CROSS SECTIONS

13-OCT-2011 11:25
\\dot\dfsroot0\hpro\TIPProjects-U\U3326\Traffic\TrafficControl\tcp\SITE 2 -Y13-\U3326_-Y13-_xsc_tmp80.dgn
msisnak AT TE244732

PROJ. REFERENCE NO.	SHEET NO.
U-3326A/B	TMP-81

TEMPORARY SHORING NOTES

2B TEMPORARY SHORING NO. 2B (SEE SHEET TMP-68)

FOR TEMPORARY SHORING, SEE TEMPORARY SHORING PROVISION.

DO NOT USE STANDARD SHORING FROM STA. 199+50+/- -L-, 2 FT. LEFT TO STA. 202+59+/- -L-, 2 FT. LEFT.

USE A TEMPORARY MSE WALL FROM STA. 199+50+/- -L-, 2 FT. LEFT TO STA. 202+59+/- -L-, 2 FT. LEFT.

WHEN BACKFILL FOR A RETAINING WALL OVERLAPS WITH THE REINFORCED ZONE OF A TEMPORARY MSE WALL, USE EITHER SHORING BACKFILL OR THE MATERIAL SPECIFIED FOR THE RETAINING WALL, WHICHEVER IS BETTER, IN THE REINFORCED ZONE.

WHEN USING CONTRACTOR DESIGNED SHORING FROM STA. 199+50+/- -L-, 2 FT. LEFT TO STA. 202+59+/- -L-, 2 FT. LEFT, DESIGN SHORING FOR THE FOLLOWING IN-SITU ASSUMED SOIL PARAMETERS:

UNIT WEGHT OF SOIL ABOVE WATER TABLE, γ = 120 PCF
UNIT WEIGHT OF SOIL BELOW WATER TABLE, γ' = 60 PCF
FRICTION ANGLE, ϕ = 30°
COHESION, c = 0 PCF

USE REINFORCED SOIL PARAMETERS FROM RETAINING WALL NO. 3 (MSE ABUTMENT WALL) FOR THE DESIGN OF TEMPORARY MSE WALL.

FOR CONTRACTOR DESIGNED SHORING, SURVEY THE SHORING LOCATION TO DETERMINE EXISTING ELEVATIONS AND ACTUAL DESIGN HEIGHTS BEFORE BEGINNING DESIGN.

FOR PORTABLE CONCRETE BARRIERS ABOVE AND BEHIND TEMPORARY SHORING, USE A NCDOT PORTABLE CONCRETE BARRIER (UNANCHORED OR ANCHORED) OR AN OREGON TALL F-SHAPE CONCRETE BARRIER IN ACCORDANCE WITH THE TRAFFIC CONTROL PLANS.

2D TEMPORARY SHORING NO. 2D (SEE SHEET TMP-68)

FOR TEMPORARY SHORING, SEE TEMPORARY SHORING PROVISION.

DO NOT USE STANDARD SHORING FROM STA. 203+48+/- -L-, 2 FT. LEFT TO STA. 204+00+/- -L-, 2 FT. LEFT AND FROM STA. 204+00+/-, 2 FT. LEFT TO STA. 204+50 CL AND FROM STA. 204+50+/- CL TO STA. 206+00+/- CL.

USE A TEMPORARY MSE WALL FROM STA. 203+48+/- -L-, 2 FT. LEFT TO STA. 204+00+/- -L-, 2 FT. LEFT AND FROM STA. 204+00+/-, 2 FT. LEFT TO STA. 204+50 CL AND FROM STA. 204+50+/- CL TO STA. 206+00+/- CL.

WHEN BACKFILL FOR A RETAINING WALL OVERLAPS WITH THE REINFORCED ZONE OF A TEMPORARY MSE WALL, USE EITHER SHORING BACKFILL OR THE MATERIAL SPECIFIED FOR THE RETAINING WALL, WHICHEVER IS BETTER, IN THE REINFORCED ZONE.

WHEN USING CONTRACTOR DESIGNED SHORING FROM STA. 203+48+/- -L-, 2 FT. LEFT TO STA. 204+00+/- -L-, 2 FT. LEFT AND FROM STA. 204+00+/-, 2 FT. LEFT TO STA. 204+50 CL AND FROM STA. 204+50+/- CL TO STA. 206+00+/- CL, DESIGN SHORING FOR THE FOLLOWING IN-SITU ASSUMED SOIL PARAMETERS:

UNIT WEGHT OF SOIL ABOVE WATER TABLE, γ = 120 PCF
UNIT WEIGHT OF SOIL BELOW WATER TABLE, γ' = 60 PCF
FRICTION ANGLE, ϕ = 30°
COHESION, c = 0 PCF

USE REINFORCED SOIL PARAMETERS FROM RETAINING WALL NO. 4 (MSE ABUTMENT WALL) FOR THE DESIGN OF TEMPORARY MSE WALL.

FOR CONTRACTOR DESIGNED SHORING, SURVEY THE SHORING LOCATION TO DETERMINE EXISTING ELEVATIONS AND ACTUAL DESIGN HEIGHTS BEFORE BEGINNING DESIGN.

FOR PORTABLE CONCRETE BARRIERS ABOVE AND BEHIND TEMPORARY SHORING, USE A NCDOT PORTABLE CONCRETE BARRIER (UNANCHORED OR ANCHORED) OR AN OREGON TALL F-SHAPE CONCRETE BARRIER IN ACCORDANCE WITH THE TRAFFIC CONTROL PLANS.

THE TEMPORARY SHORING NOTES WERE PROVIDED THROUGH A SEALED DOCUMENT FROM THE GEOTECHNICAL ENGINEERING UNIT. THE DOCUMENT WAS SUBMITTED TO THE WZTCU ON 09-11-2011 AND SEALED BY A PROFESSIONAL ENGINEER, ERIC WILLIAMS, P.E., LICENSE #26962.

APPROVED:_____ DATE:_____

SEAL

NORTH CAROLINA PROFESSIONAL SEAL 8973 ENGINEER G. L. GETTIES 13 OCT 11

DIVISION OF HIGHWAYS * STATE OF NORTH CAROLINA * DEPARTMENT OF TRANSPORTATION * WORK ZONE TRAFFIC CONTROL

-Y13- SITE
PHASE II
SHORING NOTES

13-OCT-2011 11:25
\\dot\dfsroot\proj\TIPProjects-U\U3326\TrafficTrafficControl\tcp\SITE 2 -Y13-\U3326_-Y13-_xsc_tmp8l.dgn
msishak AT TE244732

PROJ. REFERENCE NO.	SHEET NO.
U-3326A/B	TMP-82

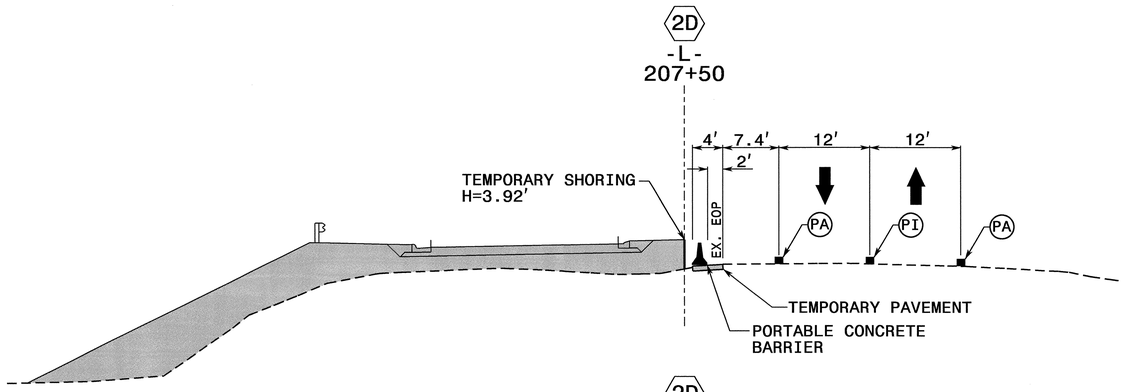

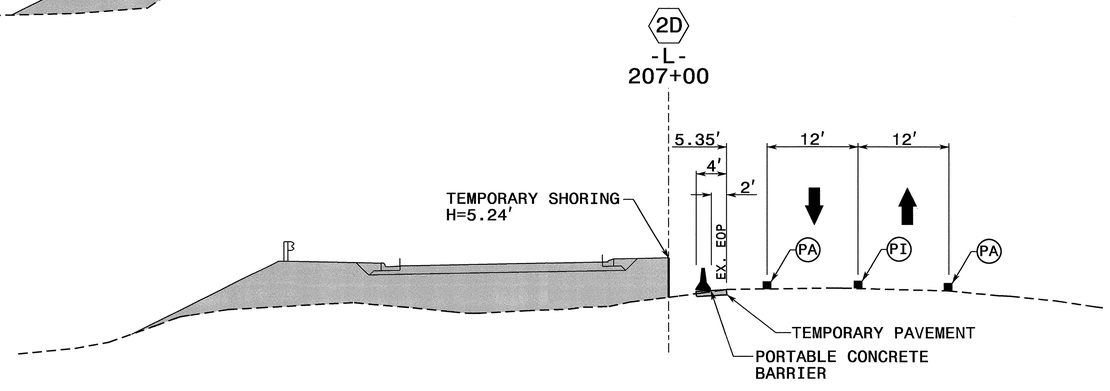

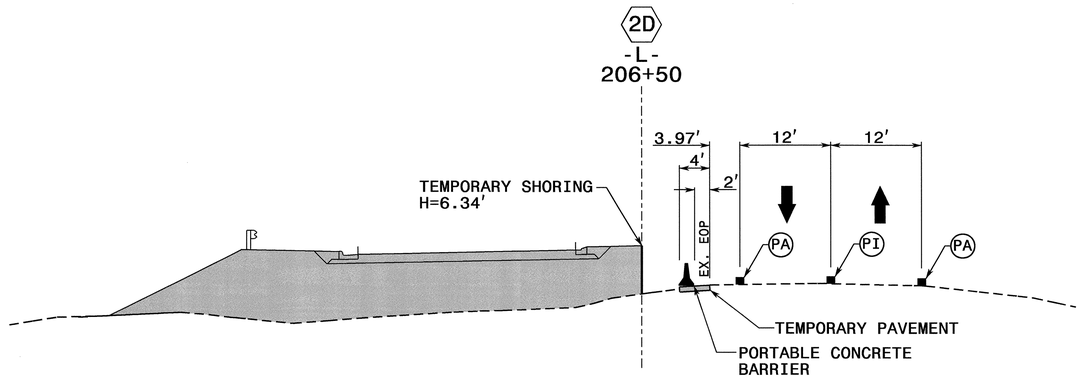

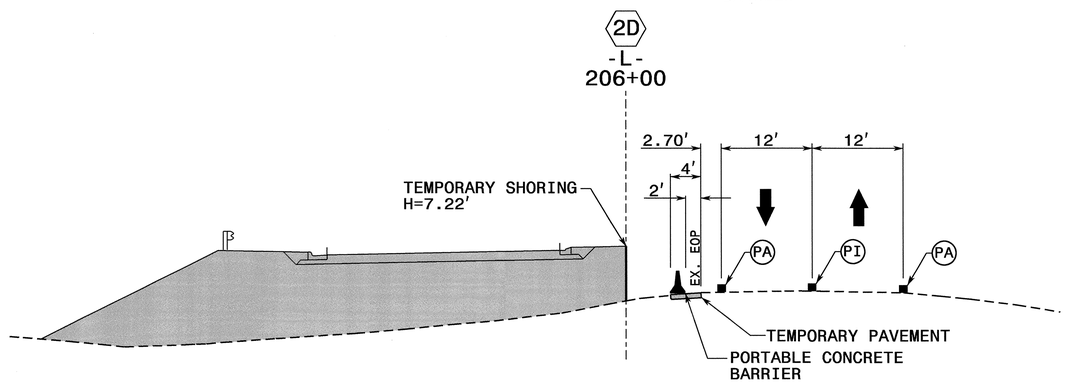

TEMPORARY SHORING NOTES

2D TEMPORARY SHORING NO. 2D (SEE SHEET TMP-69)

FOR TEMPORARY SHORING, SEE TEMPORARY SHORING PROVISION.

DO NOT USE STANDARD SHORING FROM STA. 206+00+/- -L-, CL TO STA. 207+50+/- -L-, CL.

USE A TEMPORARY MSE WALL FROM STA. 206+00+/- -L-, CL TO STA. 207+50+/- -L-, CL.

WHEN BACKFILL FOR A RETAINING WALL OVERLAPS WITH THE REINFORCED ZONE OF A TEMPORARY MSE WALL, USE EITHER SHORING BACKFILL OR THE MATERIAL SPECIFIED FOR THE RETAINING WALL, WHICHEVER IS BETTER, IN THE REINFORCED ZONE.

WHEN USING CONTRACTOR DESIGNED SHORING FROM STA. 206+00+/- -L-, CL TO STA. 207+50+/- -L-, CL, DESIGN SHORING FOR THE FOLLOWING IN-SITU ASSUMED SOIL PARAMETERS:

UNIT WEGHT OF SOIL ABOVE WATER TABLE, γ = 120 PCF
UNIT WEIGHT OF SOIL BELOW WATER TABLE, γ' = 60 PCF
FRICTION ANGLE, ϕ = 30°
COHESION, c = 0 PCF

USE REINFORCED SOIL PARAMETERS FROM RETAINING WALL NO. 4 (MSE ABUTMENT WALL) FOR THE DESIGN OF TEMPORARY MSE WALL.

FOR CONTRACTOR DESIGNED SHORING, SURVEY THE SHORING LOCATION TO DETERMINE EXISTING ELEVATIONS AND ACTUAL DESIGN HEIGHTS BEFORE BEGINNING DESIGN.

FOR PORTABLE CONCRETE BARRIERS ABOVE AND BEHIND TEMPORARY SHORING, USE A NCDOT PORTABLE CONCRETE BARRIER (UNANCHORED OR ANCHORED) OR AN OREGON TALL F-SHAPE CONCRETE BARRIER IN ACCORDANCE WITH THE TRAFFIC CONTROL PLANS.

THE TEMPORARY SHORING NOTES WERE PROVIDED THROUGH A SEALED DOCUMENT FROM THE GEOTECHNICAL ENGINEERING UNIT. THE DOCUMENT WAS SUBMITTED TO THE WZTCU ON 09-11-2011 AND SEALED BY A PROFESSIONAL ENGINEER, ERIC WILLIAMS, P.E., LICENSE #26962.

APPROVED: _____ DATE: _____

SEAL

NORTH CAROLINA PROFESSIONAL SEAL 8973 ENGINEER ERIC L. GETTIER 13 OCT 11

DIVISION OF HIGHWAYS * STATE OF NORTH CAROLINA * DEPARTMENT OF TRANSPORTATION * WORK ZONE TRAFFIC CONTROL

-Y13- SITE PHASE II SHORING CROSS SECTIONS AND SHORING NOTES

13-OCT-2011 11:24
\\dot\dfsroot01\proj\TIPProjects-U\U3326\Traffic\TrafficControl\tcp\SITE 2 -Y13-\U3326_-Y13-_xsc_tmp82.dgn
msishak AT TE244732

PROJ. REFERENCE NO.	SHEET NO.
U-3326A/B	TMP-83

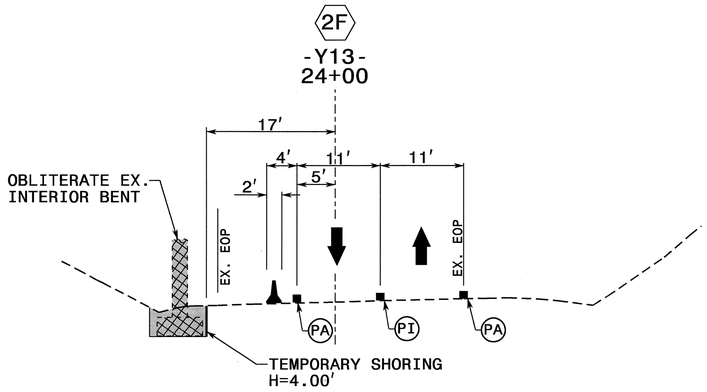

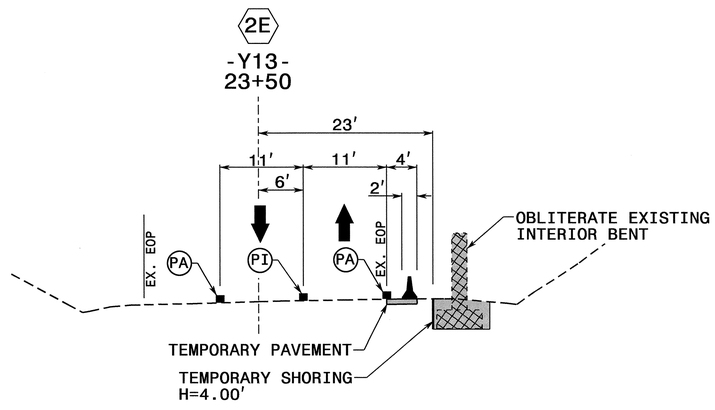

TEMPORARY SHORING NOTES

2E TEMPORARY SHORING NO. 2E (SEE SHEET TMP-74)

FOR TEMPORARY SHORING, SEE TEMPORARY SHORING PROVISION.

TEMPORARY SHORING IS REQUIRED FOR THE REMOVAL OF EXISTING BRIDGE BENT FROM STA. 23+44+/- -Y13-, 23 FT. RIGHT TO STA. 23+79+/- -L-, 23 FT. RIGHT. SEE TEMPORARY SHORING PROVISION.

WHEN USING CONTRACTOR DESIGNED SHORING FROM STA. 23+44+/- -Y13-, 23 FT. RIGHT TO STA. 23+79+/- -Y13-, 23 FT. RIGHT, DESIGN SHORING FOR THE FOLLOWING IN-SITU ASSUMED SOIL PARAMETERS:

UNIT WEGHT OF SOIL ABOVE WATER TABLE, γ = 120 PCF
UNIT WEIGHT OF SOIL BELOW WATER TABLE, γ' = 60 PCF
FRICTION ANGLE, ϕ = 30°
COHESION, c = 0 PCF

DRIVEN PILING FOR TEMPORARY SHORING FROM STA. 23+44+/- -Y13-, 23 FT. RIGHT TO STA. 23+79+/- -Y13-, 23 FT. RIGHT, WILL BE LIMITED DUE TO THE PRESENCE OF WEATHERED OR HARD ROCK. SEE GEOTECHNICAL INVENTORY REPORT FOR LOCATION OF WEATHERED OR HARD ROCK.

FOR CONTRACTOR DESIGNED SHORING, SURVEY THE SHORING LOCATION TO DETERMINE EXISTING ELEVATIONS AND ACTUAL DESIGN HEIGHTS BEFORE BEGINNING DESIGN.

FOR PORTABLE CONCRETE BARRIERS ABOVE AND BEHIND TEMPORARY SHORING, USE A NCDOT PORTABLE CONCRETE BARRIER (UNANCHORED OR ANCHORED) OR AN OREGON TALL F-SHAPE CONCRETE BARRIER IN ACCORDANCE WITH THE TRAFFIC CONTROL PLANS.

2F TEMPORARY SHORING NO. 2F (SEE SHEET TMP-74)

FOR TEMPORARY SHORING, SEE TEMPORARY SHORING PROVISION.

TEMPORARY SHORING IS REQUIRED FOR THE REMOVAL OF EXISTING BRIDGE BENT FROM STA. 23+62+/- -Y13-, 17 FT. LEFT TO STA. 23+97+/- -L-, 17 FT. LEFT. SEE TEMPORARY SHORING PROVISION.

WHEN USING CONTRACTOR DESIGNED SHORING FROM STA. 23+62+/- -Y13-, 17 FT. LEFT TO STA. 23+97+/- -Y13-, 17 FT. LEFT, DESIGN SHORING FOR THE FOLLOWING IN-SITU ASSUMED SOIL PARAMETERS:

UNIT WEGHT OF SOIL ABOVE WATER TABLE, γ = 120 PCF
UNIT WEIGHT OF SOIL BELOW WATER TABLE, γ' = 60 PCF
FRICTION ANGLE, ϕ = 30°
COHESION, c = 0 PCF

DRIVEN PILING FOR TEMPORARY SHORING FROM STA. 23+62+/- -Y13-, 17 FT. LEFT TO STA. 23+97+/- -Y13-, 17 FT. LEFT, WILL BE LIMITED DUE TO THE PRESENCE OF WEATHERED OR HARD ROCK. SEE GEOTECHNICAL INVENTORY REPORT FOR LOCATION OF WEATHERED OR HARD ROCK.

FOR CONTRACTOR DESIGNED SHORING, SURVEY THE SHORING LOCATION TO DETERMINE EXISTING ELEVATIONS AND ACTUAL DESIGN HEIGHTS BEFORE BEGINNING DESIGN.

FOR PORTABLE CONCRETE BARRIERS ABOVE AND BEHIND TEMPORARY SHORING, USE A NCDOT PORTABLE CONCRETE BARRIER (UNANCHORED OR ANCHORED) OR AN OREGON TALL F-SHAPE CONCRETE BARRIER IN ACCORDANCE WITH THE TRAFFIC CONTROL PLANS.

THE TEMPORARY SHORING NOTES WERE PROVIDED THROUGH A SEALED DOCUMENT FROM THE GEOTECHNICAL ENGINEERING UNIT. THE DOCUMENT WAS SUBMITTED TO THE WZTCU ON 09-11-2011 AND SEALED BY A PROFESSIONAL ENGINEER, ERIC WILLIAMS, P.E., LICENSE #26962.

APPROVED:_____ DATE:_____

SEAL

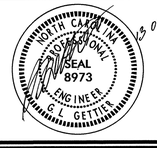

-Y13- SITE
PHASE III
SHORING CROSS SECTIONS AND SHORING NOTES

13-OCT-2011 11:24
\\dot\dfsroot\proj\TIPProjects-U\U3326\Traffic\TrafficControl\top\SITE 2 -Y13-\U3326_-Y13-_xsc_tmp83.dgn
msishak AT TE244732

PROJ. REFERENCE NO.	SHEET NO.
U-3326A/B	TMP-84

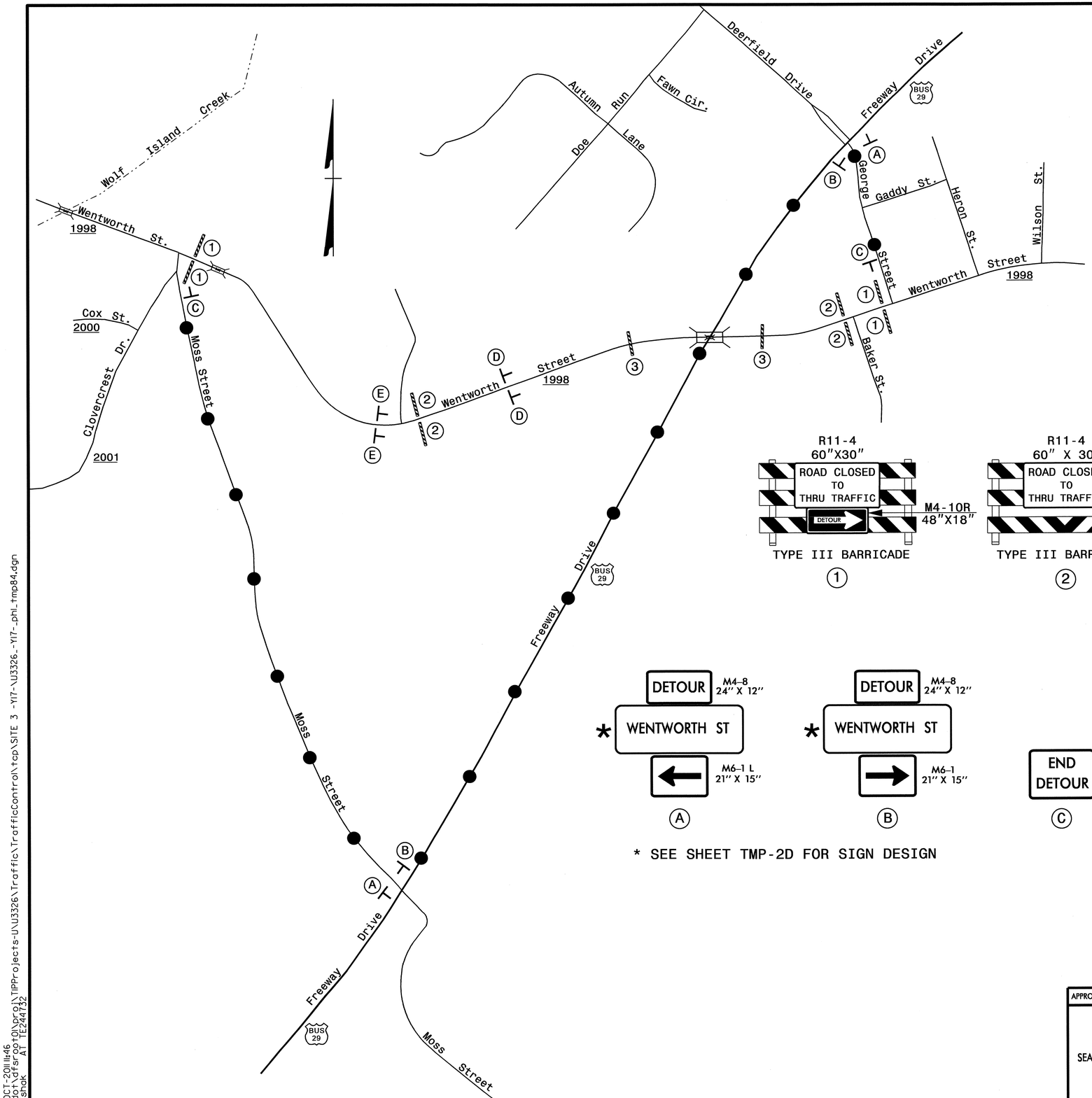

DETOUR ROUTE

R11-4
60"X30"
ROAD CLOSED TO THRU TRAFFIC
DETOUR
M4-10R
48"X18"
TYPE III BARRICADE
1

R11-4
60" X 30"
ROAD CLOSED TO THRU TRAFFIC
TYPE III BARRICADE
2

R11-2
48" X 30"
ROAD CLOSED
TYPE III BARRICADE(S)
3

DETOUR M4-8 24" X 12"
* WENTWORTH ST
M6-1 L 21" X 15"
A

DETOUR M4-8 24" X 12"
* WENTWORTH ST
M6-1 21" X 15"
B

END DETOUR
M4-8 A 24" X 18"
C

ROAD CLOSED 500 FT
W20-3 48" X 48"
D

ROAD CLOSED 1000 FT
W20-3 48" X 48"
E

* SEE SHEET TMP-2D FOR SIGN DESIGN

APPROVED: _____ DATE: _____

SEAL

NORTH CAROLINA PROFESSIONAL SEAL 8973 ENGINEER G. T. GETTIES

DIVISION OF HIGHWAYS * STATE OF NORTH CAROLINA * DEPARTMENT OF TRANSPORTATION * WORK ZONE TRAFFIC CONTROL

-Y17- SITE
PHASE I
OFF-SITE DETOUR
WENTWORTH STREET

13-OCT-2011 11:46
\\dot\dfsroot01\proj\TIPProjects-U\U3326\Traffic\TrafficControl\tcp\SITE 3 -Y17-\U3326_-Y17-_phl_tmp84.dgn
msishak
AT TE244732

PROJ. REFERENCE NO.	SHEET NO.
U-3326A/B	TMP-85

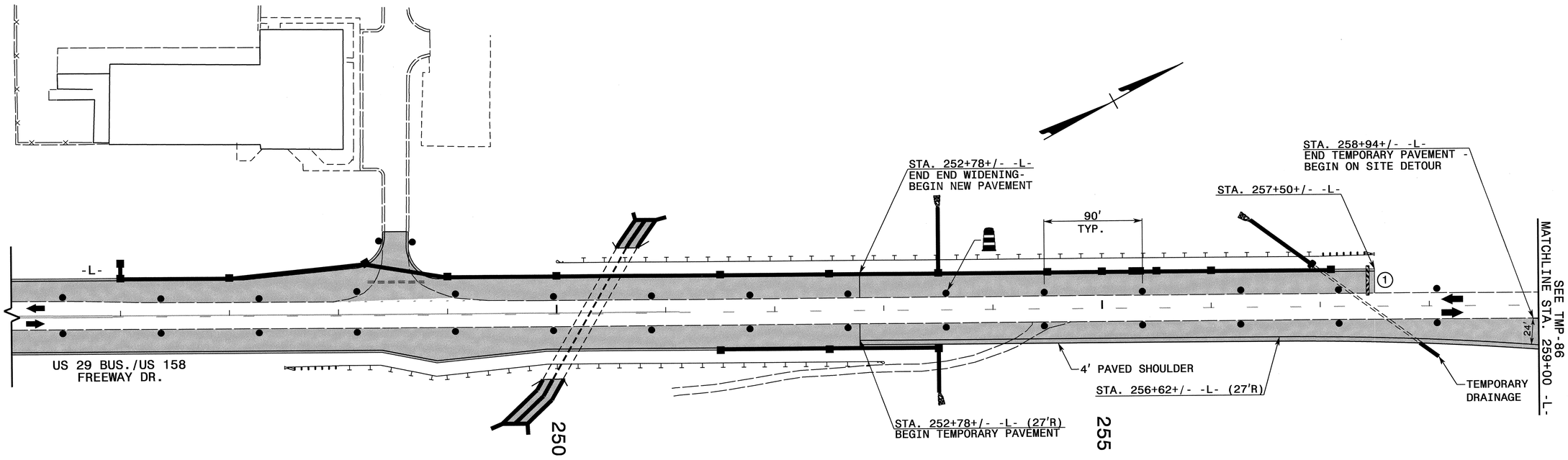

R11-2
48" X 30"

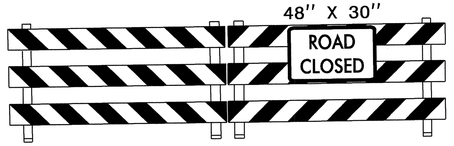

TYPE III BARRICADE(S)

(1)

APPROVED: _____ DATE: _____

SEAL

NORTH CAROLINA PROFESSIONAL SEAL 8973 ENGINEER G. L. GETTYS 13 OCT 11

DIVISION OF HIGHWAYS
STATE OF NORTH CAROLINA
DEPARTMENT OF TRANSPORTATION
WORK ZONE TRAFFIC CONTROL

-Y17-SITE PHASE I DETAILS

13-OCT-2011 11:45
\\dot\dfsroot01\proj\TIPProjects-U\U3326\Traffic\TrafficControl\tcp\SITE 3 -Y17-\U3326_-Y17-_phl_tmp85.dgn
mslshak AT TE24732

PROJ. REFERENCE NO.	SHEET NO.
U-3326A/B	TMP-86

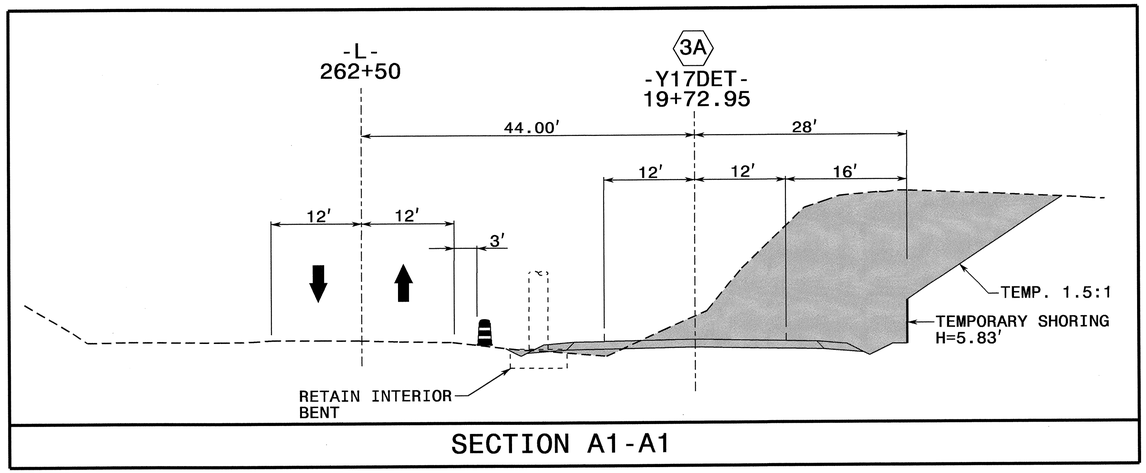

SECTION A1-A1

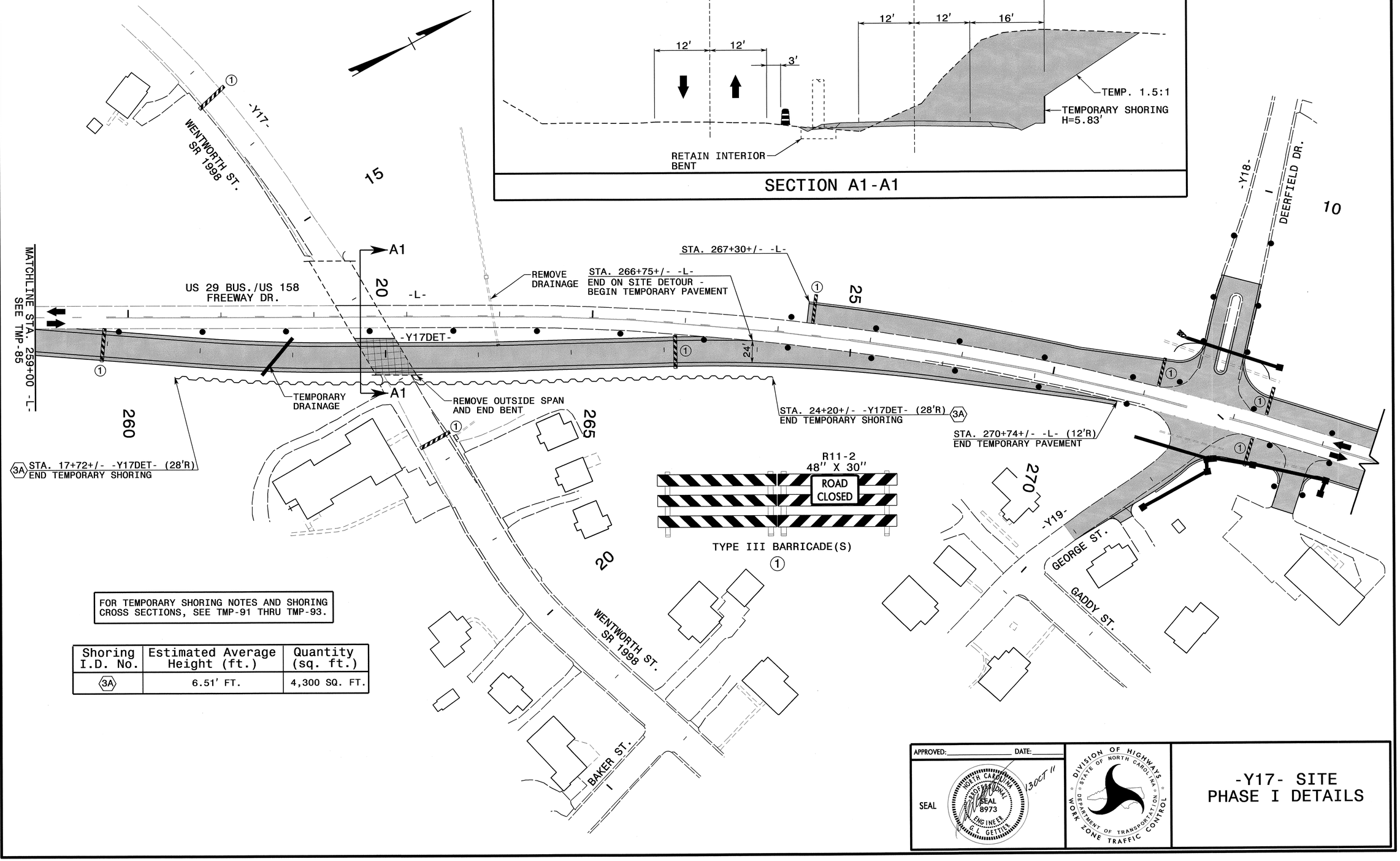

FOR TEMPORARY SHORING NOTES AND SHORING CROSS SECTIONS, SEE TMP-91 THRU TMP-93.

Shoring I.D. No.	Estimated Average Height (ft.)	Quantity (sq. ft.)
3A	6.51' FT.	4,300 SQ. FT.

APPROVED: _____ DATE: _____

SEAL

NORTH CAROLINA PROFESSIONAL SEAL 8973 ENGINEER G. L. GETTIER

13OCT11

DIVISION OF HIGHWAYS
STATE OF NORTH CAROLINA
DEPARTMENT OF TRANSPORTATION
WORK ZONE TRAFFIC CONTROL

-Y17- SITE PHASE I DETAILS

13-OCT-2011 14:45
\\dot.ctdfs\rdu\prj\TIPProjects-U\U3326\Traffic\TrafficControl\tcp\SITE 3 -Y17-\U3326_-Y17-_phl_tmp86.dgn
msilshok
AT TE244732

PROJ. REFERENCE NO.	SHEET NO.
U-3326A/B	TMP-87

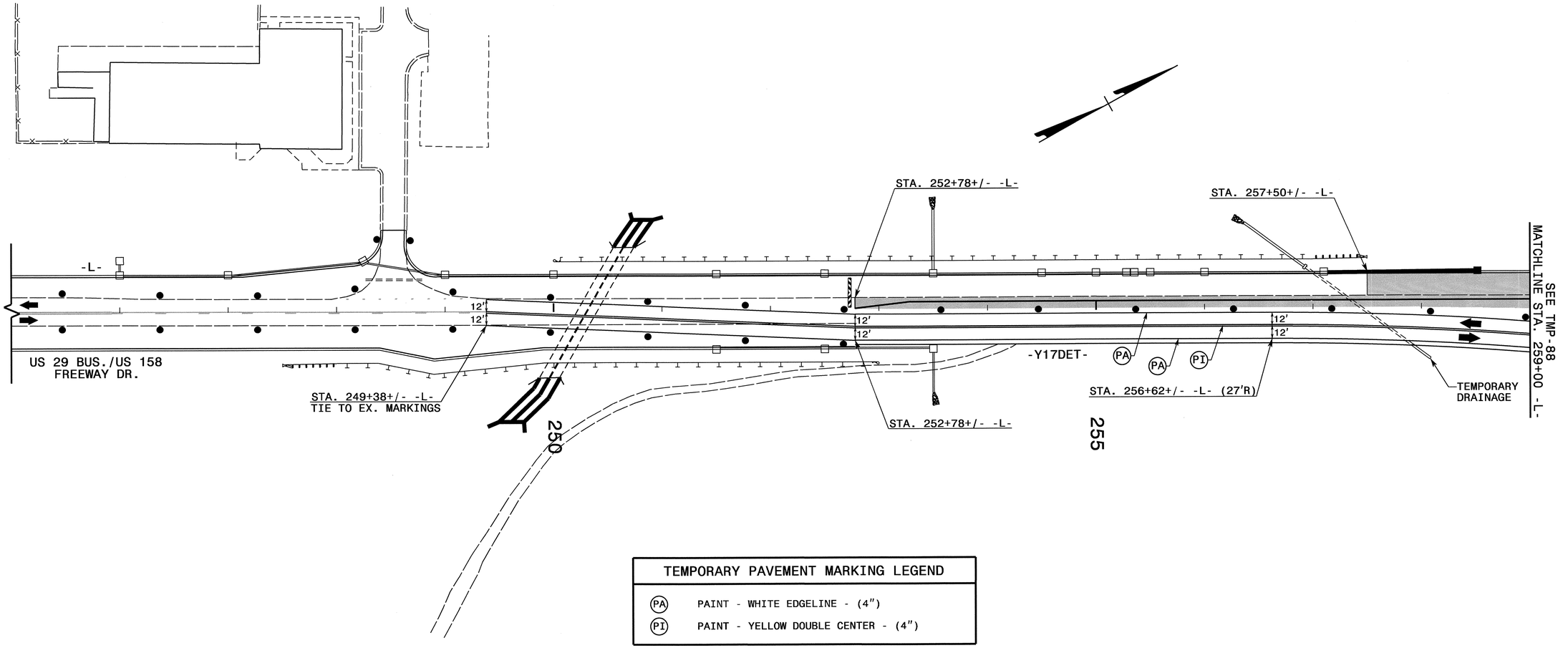

TEMPORARY PAVEMENT MARKING LEGEND	
(PA)	PAINT - WHITE EDGELINE - (4")
(PI)	PAINT - YELLOW DOUBLE CENTER - (4")

REFER TO RSD NOS. 1205.01, 1205.02, 1205.04, 1205.05, 1205.08 1205.09, 1250.01, AND 1251.01 FOR PLACEMENT OF TEMPORARY PAVEMENT MARKINGS, SYMBOLS, AND MARKERS UNLESS NOTED OTHERWISE.

ALL PAVEMENT MARKING SYMBOLS AND CHARACTERS SHALL BE PAINT UNLESS NOTED OTHERWISE.

APPROVED: _____ DATE: _____

SEAL

NORTH CAROLINA PROFESSIONAL SEAL 8973 ENGINEER C. L. GETTIER

DIVISION OF HIGHWAYS
STATE OF NORTH CAROLINA
DEPARTMENT OF TRANSPORTATION
WORK ZONE TRAFFIC CONTROL

-Y17- SITE PHASE II DETAILS

13-OCT-2011 11:45
\\dot\dfsroot0\proj\TIPProjects-U\U3326\TrafficControl\tcp\SITE 3 -Y17-\U3326_-Y17-_ph2_tmp87.dgn
msishak AT TE244732

PROJ. REFERENCE NO.	SHEET NO.
U-3326A/B	TMP-88

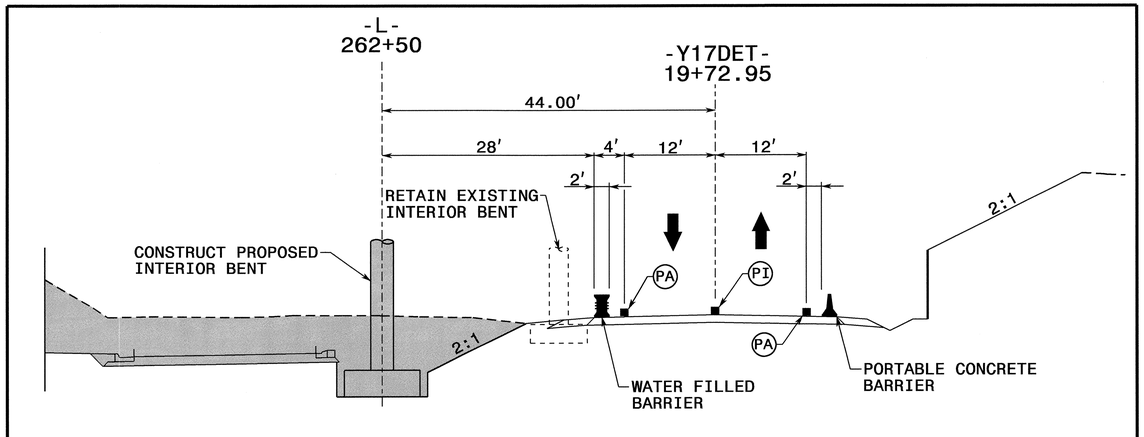

SECTION A2-A2

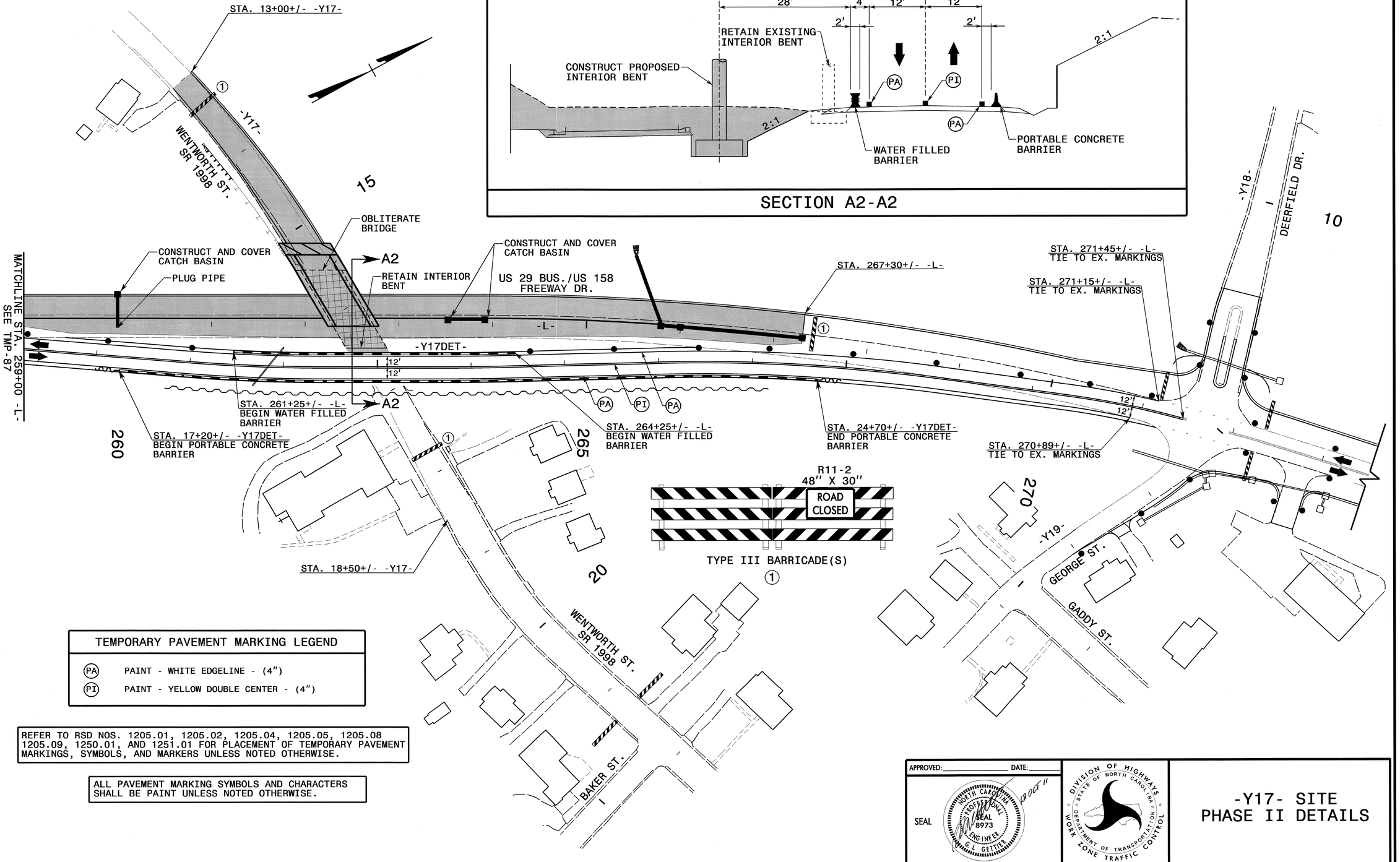

TEMPORARY PAVEMENT MARKING LEGEND	
(PA)	PAINT - WHITE EDGELINE - (4")
(PI)	PAINT - YELLOW DOUBLE CENTER - (4")

REFER TO RSD NOS. 1205.01, 1205.02, 1205.04, 1205.05, 1205.08 1205.09, 1250.01, AND 1251.01 FOR PLACEMENT OF TEMPORARY PAVEMENT MARKINGS, SYMBOLS, AND MARKERS UNLESS NOTED OTHERWISE.

ALL PAVEMENT MARKING SYMBOLS AND CHARACTERS SHALL BE PAINT UNLESS NOTED OTHERWISE.

APPROVED: _____ DATE: _____

SEAL

NORTH CAROLINA PROFESSIONAL SEAL 8973 ENGINEER G. L. GETTIER 18 OCT 11

DIVISION OF HIGHWAYS STATE OF NORTH CAROLINA DEPARTMENT OF TRANSPORTATION WORK ZONE TRAFFIC CONTROL

-Y17- SITE PHASE II DETAILS

13-OCT-2011 11:45
\\dot\dfsroot01\proj\TIPProjects-U3326\Traffic\TrafficControl\tcp\SITE 3 -Y17-\U3326_-Y17-_ph2_tmp88.dgn
msishak AT TE244732

PROJ. REFERENCE NO.	SHEET NO.
U-3326A/B	TMP-89

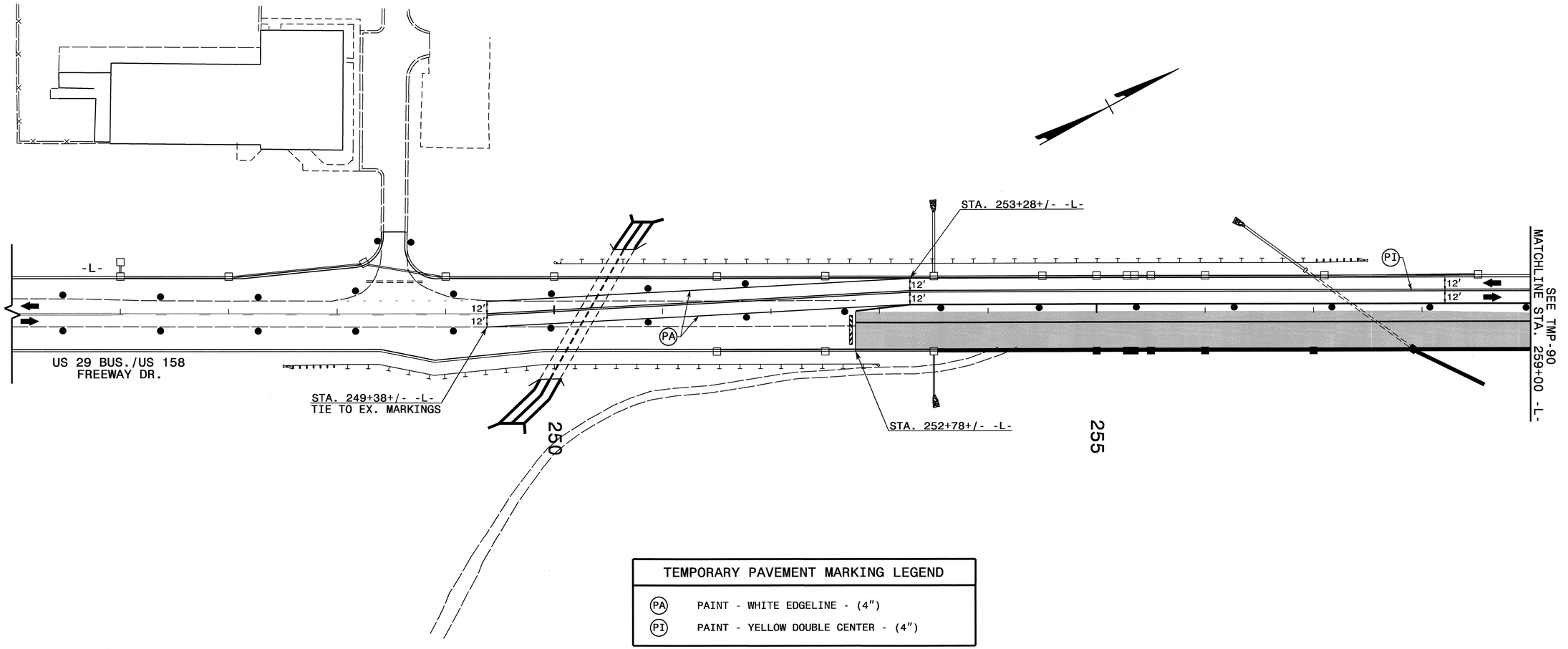

TEMPORARY PAVEMENT MARKING LEGEND	
(PA)	PAINT - WHITE EDGELINE - (4")
(PI)	PAINT - YELLOW DOUBLE CENTER - (4")

REFER TO RSD NOS. 1205.01, 1205.02, 1205.04, 1205.05, 1205.08 1205.09, 1250.01, AND 1251.01 FOR PLACEMENT OF TEMPORARY PAVEMENT MARKINGS, SYMBOLS, AND MARKERS UNLESS NOTED OTHERWISE.

ALL PAVEMENT MARKING SYMBOLS AND CHARACTERS SHALL BE PAINT UNLESS NOTED OTHERWISE.

APPROVED:_____ DATE:_____

SEAL

NORTH CAROLINA PROFESSIONAL SEAL 8973 ENGINEER G. I. GETTIES

DIVISION OF HIGHWAYS • STATE OF NORTH CAROLINA • DEPARTMENT OF TRANSPORTATION • WORK ZONE TRAFFIC CONTROL

-Y17- SITE PHASE III DETAILS

13-OCT-2011 14:44
\\dot\dfsroot01\proj\TIPProjects-U\U3326\TrafficControl\tcp\SITE 3 -Y17-\U3326_-Y17-_ph3_tmp89.dgn
msishak AT TE244732

PROJ. REFERENCE NO.	SHEET NO.
U-3326A/B	TMP-90

REFER TO RSD NOS. 1205.01, 1205.02, 1205.04, 1205.05, 1205.08 1205.09, 1250.01, AND 1251.01 FOR PLACEMENT OF TEMPORARY PAVEMENT MARKINGS, SYMBOLS, AND MARKERS UNLESS NOTED OTHERWISE.

ALL PAVEMENT MARKING SYMBOLS AND CHARACTERS SHALL BE PAINT UNLESS NOTED OTHERWISE.

TEMPORARY PAVEMENT MARKING LEGEND

(PA) PAINT - WHITE EDGELINE - (4")

(PI) PAINT - YELLOW DOUBLE CENTER - (4")

STA. 13+00+/- -Y17-

-Y17-

WENTWORTH ST.
SR 1998

15

MATCHLINE STA. 259+00 -L-
SEE TMP-89

US 29 BUS./US 158
FREEWAY DR.

260

(PI)

-L-

12"
12"

STA. 267+30+/- -L-

STA. 269+00+/- -L-

STA. 270+02+/- -L-

STA. 270+49+/- -L-

(PA)

(PI)

12"
12"

-Y18-

DEERFIELD DR.

10

1

P.I. STA. 268+25+/- -L-
△ = 08°49'14"
R = 1000'

2

P.I. STA. 270+25+/- -L-
△ = 03°36'42"
R = 1000'

STA. 267+30+/- -L-

STA. 271+15+/- -L-
TIE TO EX. MARKINGS

270

STA. 12+00+/- -Y19-

-Y19-

GEORGE ST.

GADDY ST.

265

20

STA. 18+50+/- -Y17-

WENTWORTH ST.
SR 1998

BAKER ST.

APPROVED: _____ DATE: _____

SEAL

NORTH CAROLINA PROFESSIONAL SEAL 8973 ENGINEER G. I. GETTIES 13 OCT 11

DIVISION OF HIGHWAYS
STATE OF NORTH CAROLINA
DEPARTMENT OF TRANSPORTATION
WORK ZONE TRAFFIC CONTROL

-Y17- SITE
PHASE III DETAILS

13-OCT-2011 11:44
\\dot\dfsroot01\proj\TIPProjects-U\U3326\Traffic\TrafficControl\tcp\SITE 3 -Y17-_U3326_-Y17-_ph3_tmp90.dgn
mslshak AT TE244732

PROJ. REFERENCE NO.	SHEET NO.
U-3326A/B	TMP-91

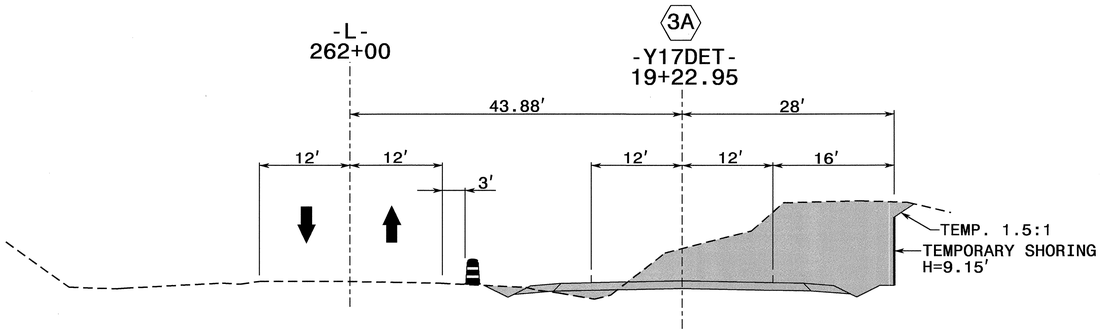

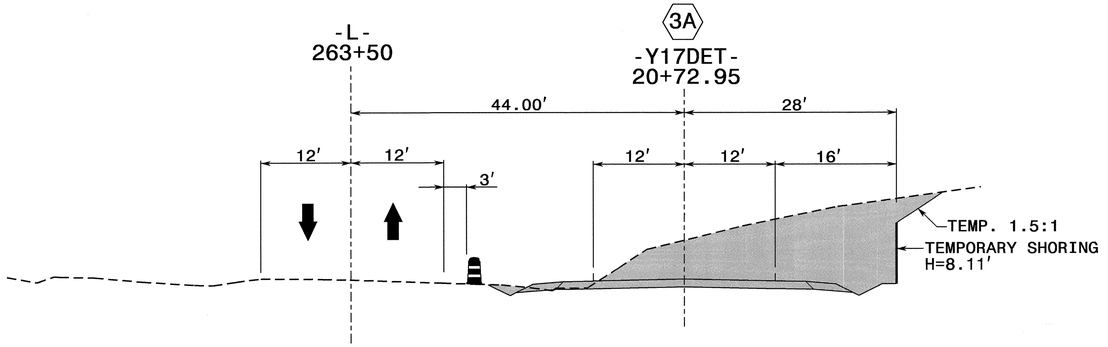

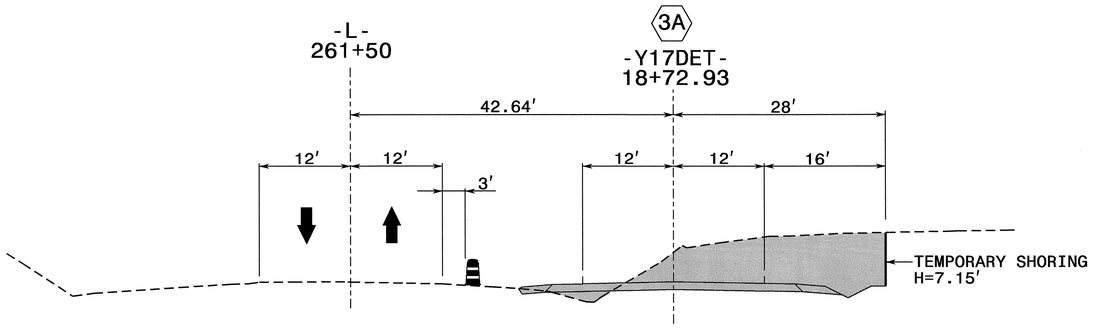

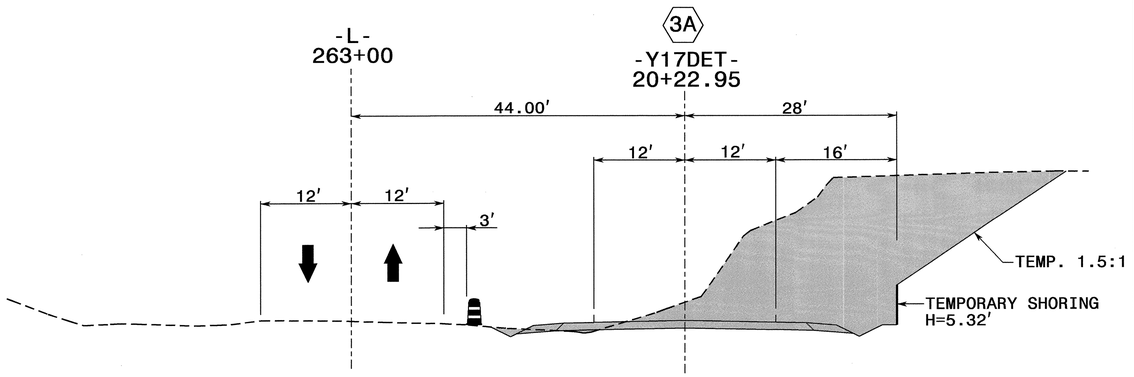

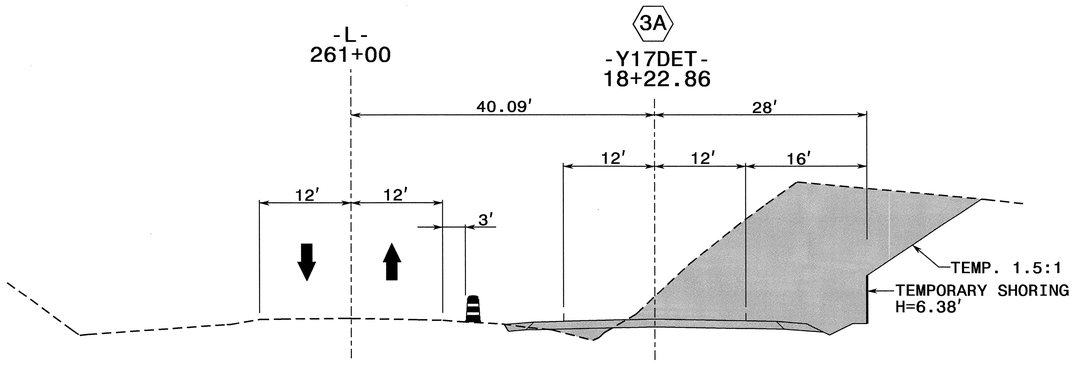

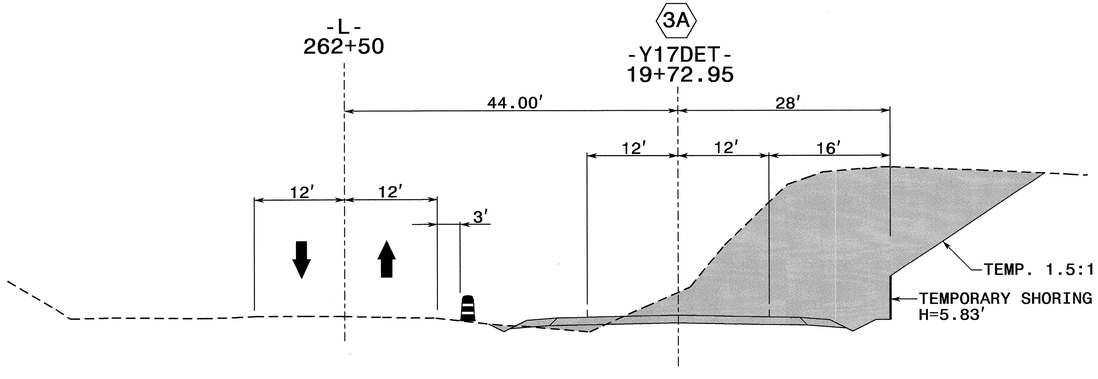

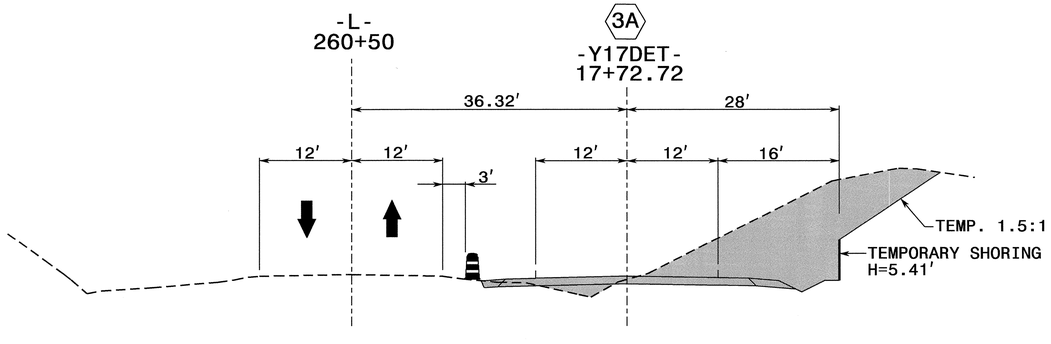

APPROVED: _____ DATE: _____

SEAL

NORTH CAROLINA PROFESSIONAL SEAL 8973 ENGINEER G. I. GETTIES 13 OCT 11

DIVISION OF HIGHWAYS
STATE OF NORTH CAROLINA
DEPARTMENT OF TRANSPORTATION
WORK ZONE TRAFFIC CONTROL

-Y17- SITE PHASE I SHORING CROSS SECTIONS

13-OCT-2011 11:44
\\dot\dfsroot01\proj\TIPProjects-U\U3326\Traffic\TrafficControl\tcp\SITE 3 -Y17-\U3326_-Y17-_xsc_tmp91.dgn
msishak AT TE244732

PROJ. REFERENCE NO.	SHEET NO.
U-3326A/B	TMP-92

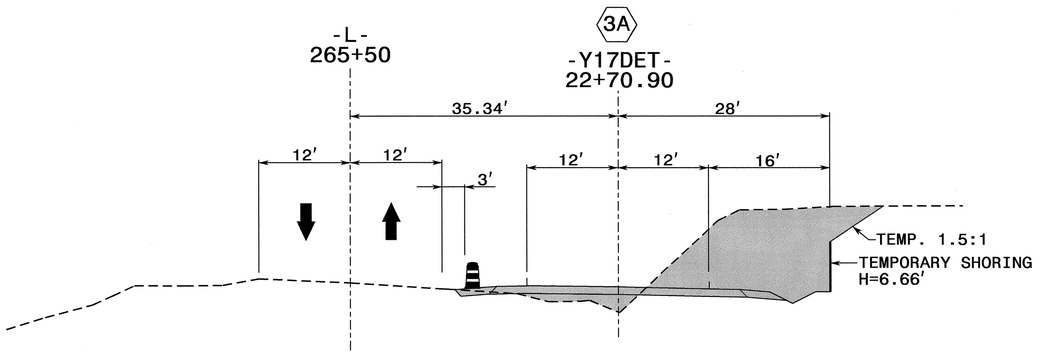

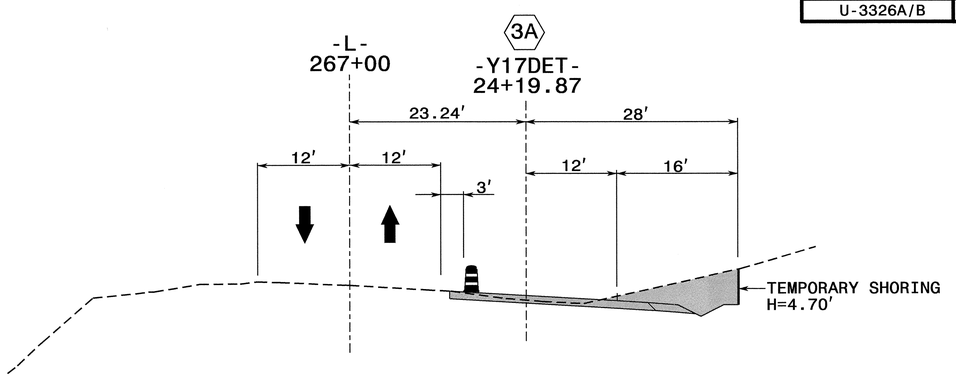

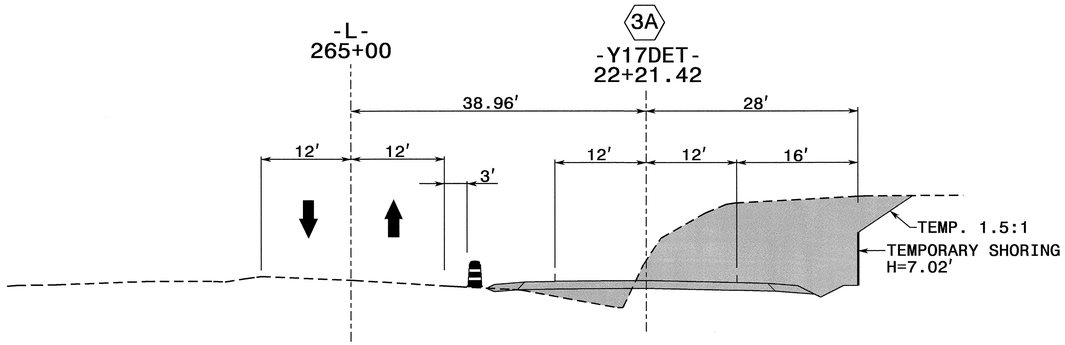

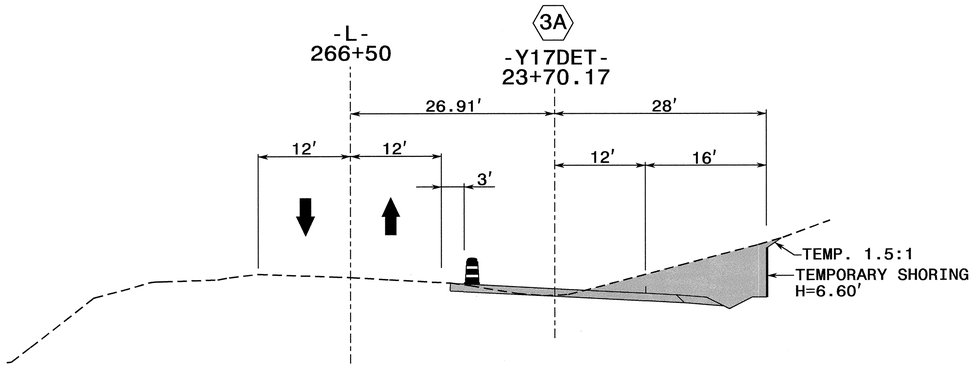

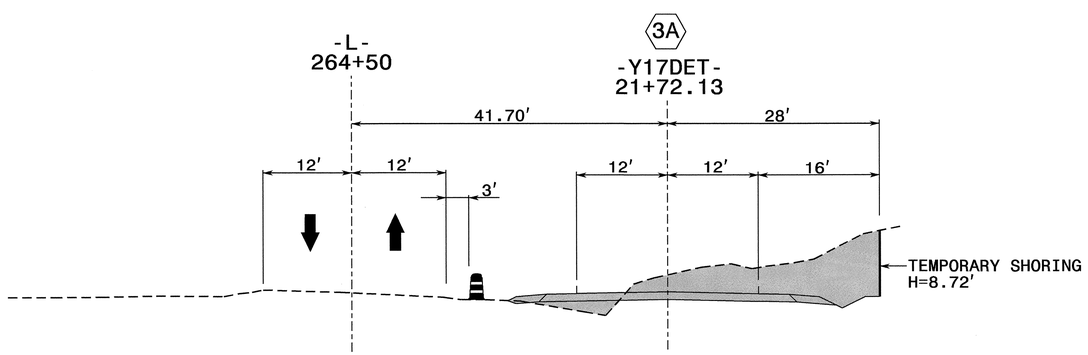

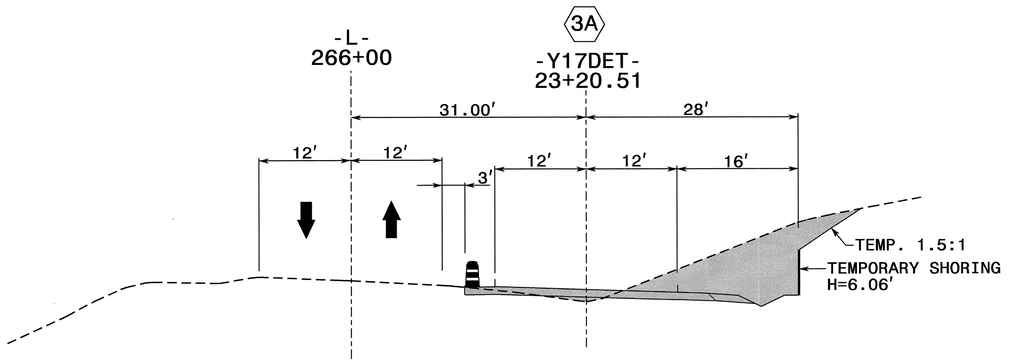

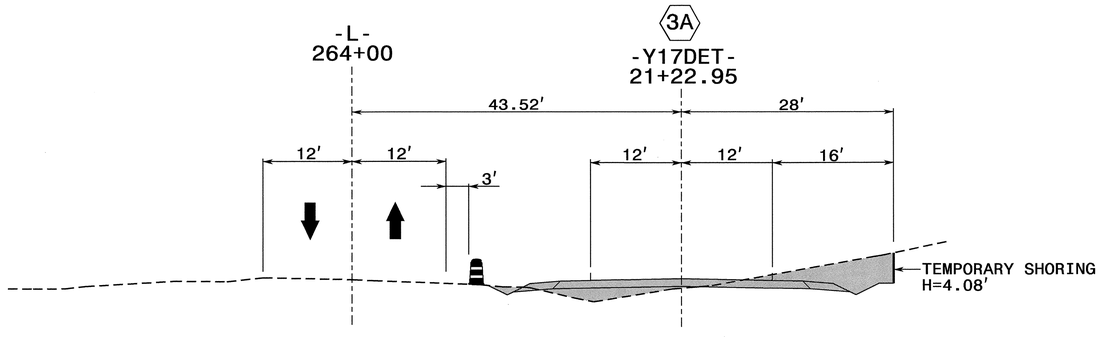

APPROVED: _____ DATE: _____

SEAL

NORTH CAROLINA PROFESSIONAL SEAL 8973 ENGINEER G. GETTIER 13 OCT 11

DIVISION OF HIGHWAYS
STATE OF NORTH CAROLINA
DEPARTMENT OF TRANSPORTATION
WORK ZONE TRAFFIC CONTROL

-Y17- SITE PHASE I SHORING CROSS SECTIONS

13-OCT-2011 11:44
\\dot\dfsroot\Dprg\TIPProjects-U\U3326\Traffic\TrafficControl\tcp\SITE 3 -Y17-\U3326_-Y17-_xsc_tmp92.dgn
msishak
AT TE244732

PROJ. REFERENCE NO.	SHEET NO.
U-3326A/B	TMP-93

TEMPORARY SHORING NOTES

3A TEMPORARY SHORING NO. 3A (SEE SHEET TMP-86)

FOR TEMPORARY SHORING, SEE TEMPORARY SHORING PROVISION.

DO NOT USE STANDARD SHORING FROM STA. 17+72+/- -Y17DET-, 28 FT. RIGHT TO STA. 24+20+/- -Y17DET-, 28 FT. RIGHT.

A 1.5:1 (H:V) TEMPORARY SLOPE MAY BE USED TO REDUCE SHORING HEIGHT FROM STA. 17+72+/- -Y17DET-, 28 FT. RIGHT TO STA. 24+20+/- -Y17DET-, 28 FT. RIGHT, AS SHOWN ON THE PLANS.

WHEN USING CONTRACTOR DESIGNED SHORING FROM STA. 17+72+/- -Y17DET-, 28 FT. RIGHT TO STA. 24+20+/- -Y17DET-, 28 FT. RIGHT, DESIGN SHORING FOR THE FOLLOWING IN-SITU ASSUMED SOIL PARAMETERS:

UNIT WEGHT OF SOIL ABOVE WATER TABLE, γ = 120 PCF
UNIT WEIGHT OF SOIL BELOW WATER TABLE, γ' = 60 PCF
FRICTION ANGLE, ϕ = 30°
COHESION, c = 0 PCF

FOR CONTRACTOR DESIGNED SHORING, SURVEY THE SHORING LOCATION TO DETERMINE EXISTING ELEVATIONS AND ACTUAL DESIGN HEIGHTS BEFORE BEGINNING DESIGN.

DUE TO THE PRESENCE OF OVERHEAD CONFLICTS, IT MAY BE PREFERRED OR NECESSARY TO USE A TEMPORARY SOIL NAIL WALL FRO STA. 17+72+/- -Y17DET-, 28 FT. RIGHT TO STA. 24+20+/- -Y17DET-, 28 FT. RIGHT. FOR TEMPORARY SOIL NAIL WALLS, SEE TEMPORARY SOIL NAIL WALLS PROVISION.

FOR PORTABLE CONCRETE BARRIERS ABOVE AND BEHIND TEMPORARY SHORING, USE A NCDOT PORTABLE CONCRETE BARRIER (UNANCHORED OR ANCHORED) OR AN OREGON TALL F-SHAPE CONCRETE BARRIER IN ACCORDANCE WITH THE TRAFFIC CONTROL PLANS.

LIMITED SUBSURFACE INFORMATION IS AVAILABLE IN THE VICINITY OF THE TEMPORARY SHORING FROM STA. 17+72+/- -Y17DET-, 28 FT. RIGHT TO STA. 24+20+/- -Y17DET-, 28 FT. RIGHT. THE INFORMATION PROVIDED FOR DESIGN WAS ASSUMED AND MAY NOT BE APPLICABLE TO THE ACTUAL SITE CONDITIONS ENCOUNTERED DURING CONSTRUCTION.

THE TEMPORARY SHORING NOTES WERE PROVIDED THROUGH A SEALED DOCUMENT FROM THE GEOTECHNICAL ENGINEERING UNIT. THE DOCUMENT WAS SUBMITTED TO THE WZTCU ON 09-11-2011 AND SEALED BY A PROFESSIONAL ENGINEER, ERIC WILLIAMS, P.E., LICENSE #26962.

APPROVED:_____ DATE:_____

SEAL

NORTH CAROLINA PROFESSIONAL SEAL 8973 ENGINEER G. L. GETTIER

13 OCT 11

DIVISION OF HIGHWAYS * STATE OF NORTH CAROLINA * DEPARTMENT OF TRANSPORTATION * WORK ZONE TRAFFIC CONTROL

-Y17- SITE
TEMPORARY SHORING NOTES

13-OCT-2011 11:43
\\dot\dfsroot0\proj\TIPProjects-U\U3326\Traffic\TrafficControl\tcp\SITE 3 -Y17-\U3326_-Y17-_xsc_tmp93.dgn
mslshak AT TE244732

PROJ. REFERENCE NO.	SHEET NO.
U-3326A/B	TMP-94

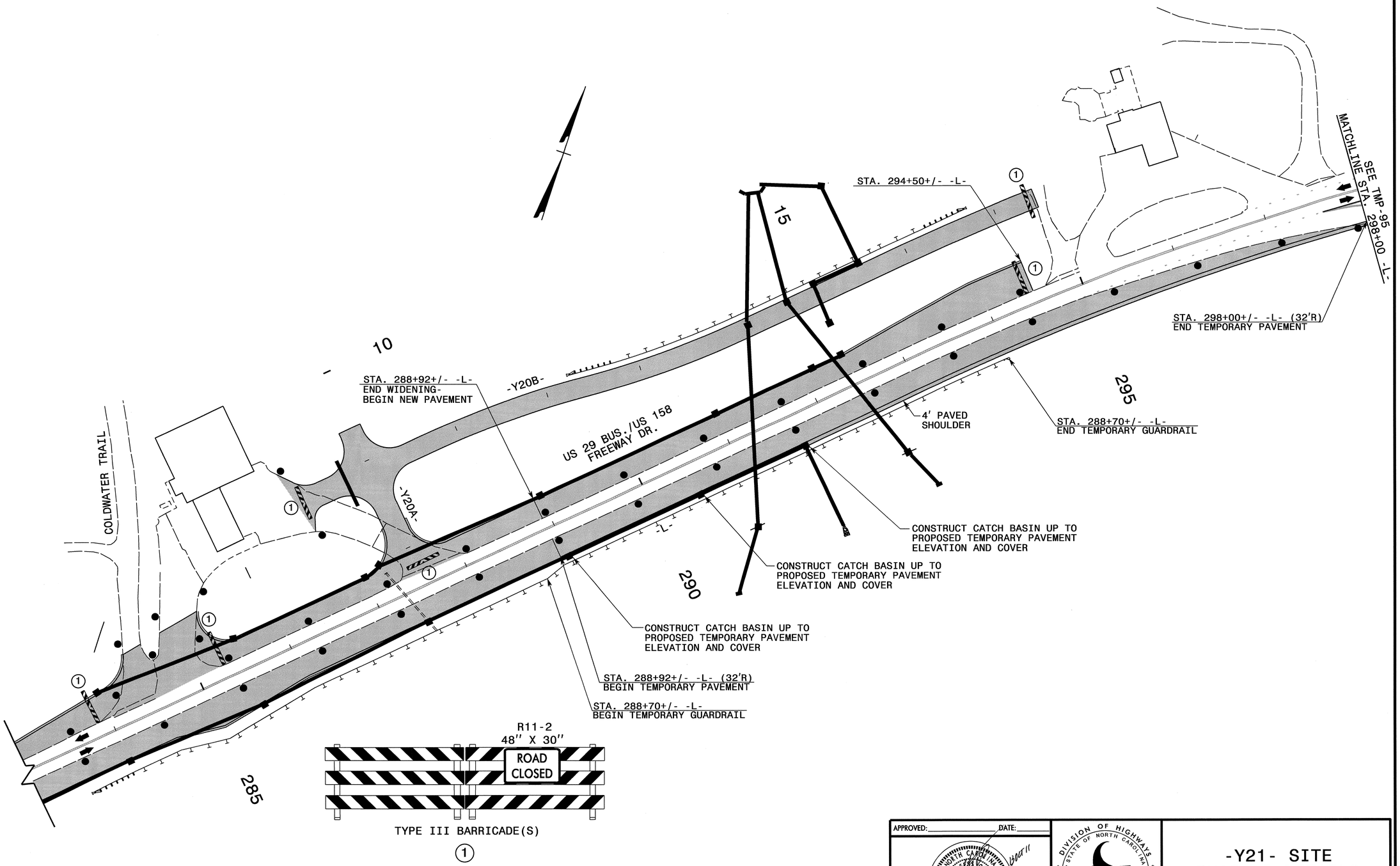

APPROVED: _____ DATE: _____

SEAL

NORTH CAROLINA PROFESSIONAL SEAL 8973 ENGINEER G. L. GETTIER

DIVISION OF HIGHWAYS * STATE OF NORTH CAROLINA * DEPARTMENT OF TRANSPORTATION * WORK ZONE TRAFFIC CONTROL

-Y21- SITE PHASE I DETAILS

13-OCT-2011 11:55
\\dot\dfsroot0\proj\TIPProjects-UU3326\Traffic\TrafficControl\tcp\SITE 4 -Y2i-\U3326_-Y2i-_phl_tmp94.dgn
mslshak AT TE244732

PROJ. REFERENCE NO.	SHEET NO.
U-3326A/B	TMP-95

STA. 16+73+/- -Y21DETB-

STA. 15+25+/- -Y21DETB-

CONSTRUCT CATCH BASIN UP TO PROPOSED -Y21DETB- ELEVATION AND COVER

STA. 11+50+/- -Y21DETB-

STA. 301+03+/- -L- (12'L)

MATCHLINE STA. 298+00 -L- SEE TMP-94

CONSTRUCT CATCH BASIN UP TO PROPOSED -L- ELEVATION AND COVER

STA. 298+76+/- -L- (32'R)
BEGIN TEMPORARY PAVEMENT

STA. 303+80+/- -L- (37'R)
END TEMPORARY PAVEMENT

-Y21-

NORTH SCALES ST.
SR 2670

20

25

300

305

STA. 309+50+/- -L-

-L-

US 29 BUS./US 158
FREEWAY DR.

310

315

STA. 311+31+/- -L-

CONSTRUCT CATCH BASIN UP TO EXISTING PAVEMENT ELEVATION AND COVER

R11-2
48" X 30"
ROAD CLOSED

TYPE III BARRICADE(S)

(1)

APPROVED: _____ DATE: _____

SEAL

NORTH CAROLINA PROFESSIONAL SEAL 8973 ENGINEER G. L. GETTIER

13 OCT 11

DIVISION OF HIGHWAYS
STATE OF NORTH CAROLINA
DEPARTMENT OF TRANSPORTATION
WORK ZONE TRAFFIC CONTROL

-Y21- SITE PHASE I DETAILS

13-OCT-2011 11:55
\\dot\dfsroot01\proj\TIPProjects-U\U3326\Traffic\TrafficControl\tcp\SITE 4 -Y2I-\U3326_-Y2I-_phl_tmp95.dgn
msilshak
AT TE244732

PROJ. REFERENCE NO.	SHEET NO.
U-3326A/B	TMP-96

REFER TO RSD NOS. 1205.01, 1205.02, 1205.05, 1205.08, 1205.09, 1250.01, AND 1251.01 FOR PLACEMENT OF TEMPORARY PAVEMENT MARKINGS, SYMBOLS, AND MARKERS UNLESS NOTED OTHERWISE.

ALL PAVEMENT MARKING SYMBOLS AND CHARACTERS SHALL BE PAINT UNLESS NOTED OTHERWISE.

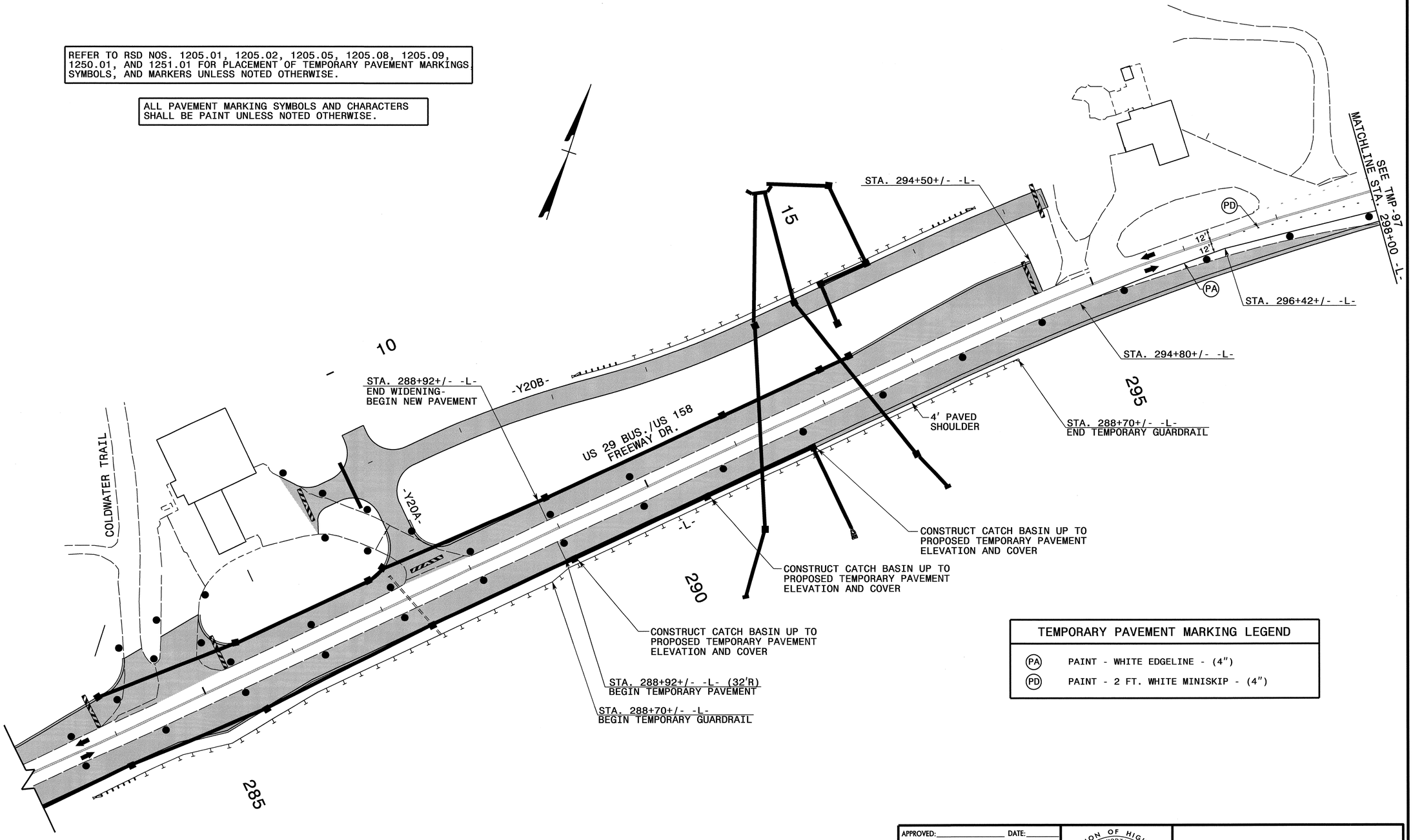

TEMPORARY PAVEMENT MARKING LEGEND	
(PA)	PAINT - WHITE EDGELINE - (4")
(PD)	PAINT - 2 FT. WHITE MINISKIP - (4")

APPROVED: _____ DATE: _____

SEAL

NORTH CAROLINA PROFESSIONAL SEAL 8973 ENGINEER G. L. GETTIER

DIVISION OF HIGHWAYS STATE OF NORTH CAROLINA DEPARTMENT OF TRANSPORTATION WORK ZONE TRAFFIC CONTROL

-Y21- SITE PHASE I DETAILS

13-OCT-2011 11:54
\\dot\dfsroot0\proj\TIPProjects-U\U3326\Traffic\TrafficControl\tcp\SITE 4 -Y2i-\U3326.-Y2i-_phl_tmp96.dgn
msilshak AT TE244732

PROJ. REFERENCE NO.	SHEET NO.
U-3326A/B	TMP-97

REFER TO RSD NOS. 1205.01, 1205.02, 1205.04, 1205.05, 1205.08 1205.09, 1250.01, AND 1251.01 FOR PLACEMENT OF TEMPORARY PAVEMENT MARKINGS, SYMBOLS, AND MARKERS UNLESS NOTED OTHERWISE.

ALL PAVEMENT MARKING SYMBOLS AND CHARACTERS SHALL BE PAINT UNLESS NOTED OTHERWISE.

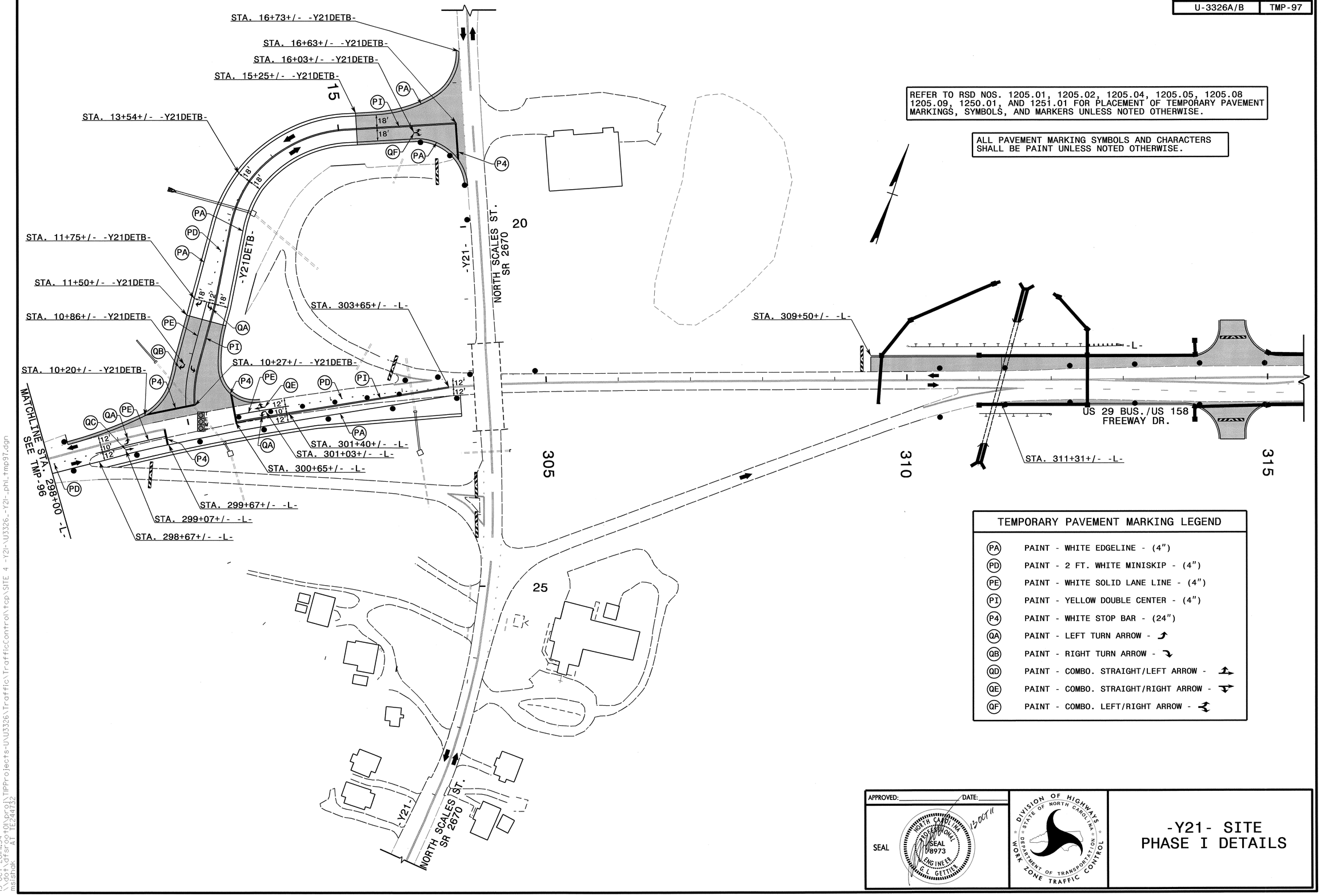

TEMPORARY PAVEMENT MARKING LEGEND

(PA)	PAINT - WHITE EDGELINE - (4″)
(PD)	PAINT - 2 FT. WHITE MINISKIP - (4″)
(PE)	PAINT - WHITE SOLID LANE LINE - (4″)
(PI)	PAINT - YELLOW DOUBLE CENTER - (4″)
(P4)	PAINT - WHITE STOP BAR - (24″)
(QA)	PAINT - LEFT TURN ARROW - ↰
(QB)	PAINT - RIGHT TURN ARROW - ↱
(QD)	PAINT - COMBO. STRAIGHT/LEFT ARROW - ⇡↰
(QE)	PAINT - COMBO. STRAIGHT/RIGHT ARROW - ⇡↱
(QF)	PAINT - COMBO. LEFT/RIGHT ARROW - ↰↱

APPROVED: _____ DATE: _____

SEAL

NORTH CAROLINA PROFESSIONAL SEAL 8973 ENGINEER G. L. GETTIER 13 OCT 11

DIVISION OF HIGHWAYS STATE OF NORTH CAROLINA DEPARTMENT OF TRANSPORTATION WORK ZONE TRAFFIC CONTROL

-Y21- SITE PHASE I DETAILS

13-OCT-2011 11:54
\\dot\dfsroot0\proj\TIPProjects-U\U3326\Traffic\TrafficControl\tcp\SITE 4 -Y2l-\U3326_-Y2l-_phl_tmp97.dgn
mslshak
AT TE244732

PROJ. REFERENCE NO.	SHEET NO.
U-3326A/B	TMP-98

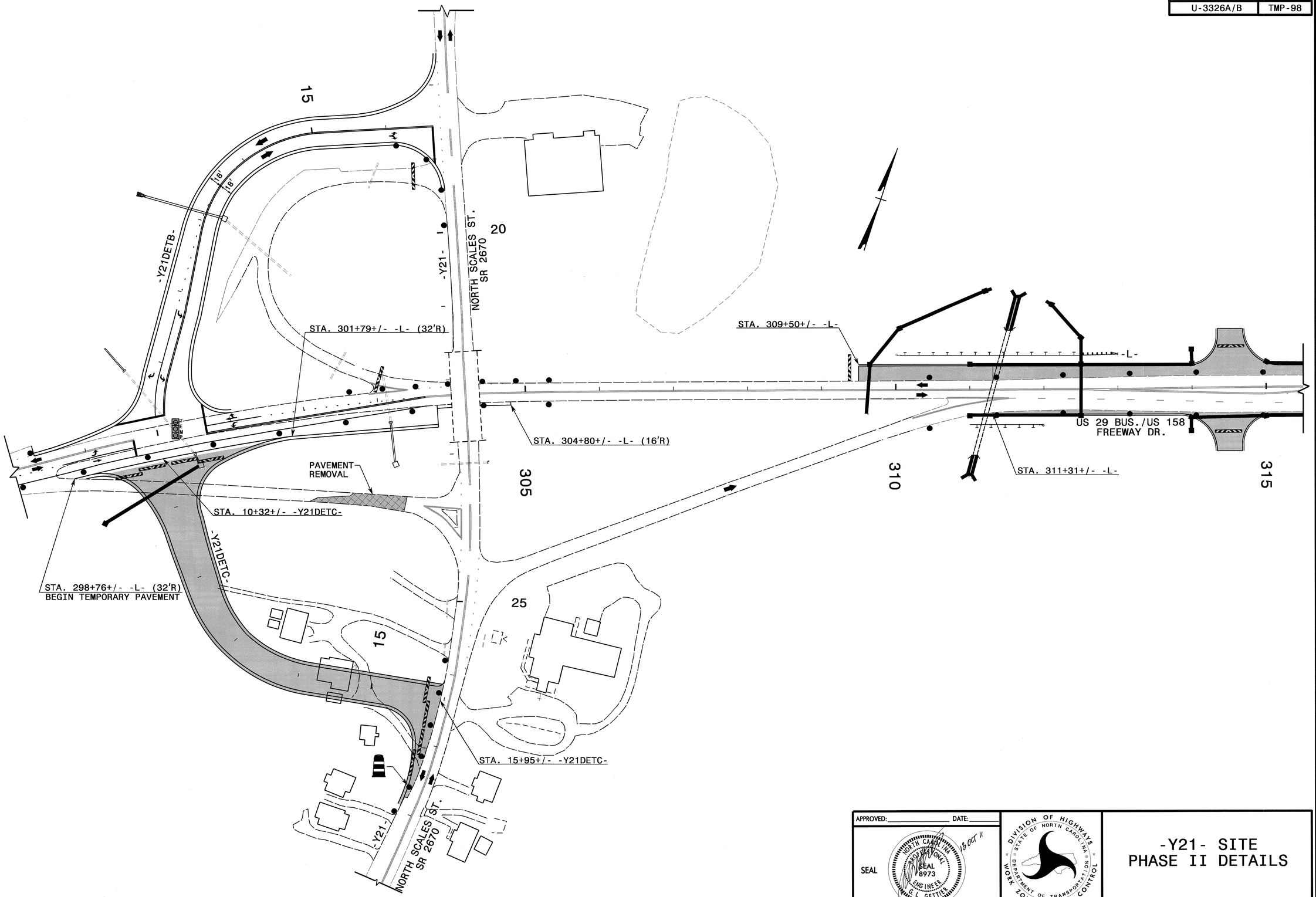

APPROVED:_____ DATE:_____

SEAL

NORTH CAROLINA PROFESSIONAL SEAL 8973 ENGINEER G. L. GETTIER

13 OCT 11

DIVISION OF HIGHWAYS
STATE OF NORTH CAROLINA
DEPARTMENT OF TRANSPORTATION
WORK ZONE TRAFFIC CONTROL

-Y21- SITE
PHASE II DETAILS

13-OCT-2011 11:53
\\dot\dfsroot0\pro\TIPProjects-U\U3326\Traffic\TrafficControl\tcp\SITE 4 -Y21-\U3326_-Y21-_ph2_tmp98.dgn
msilsbak AT TE244732

PROJ. REFERENCE NO.	SHEET NO.
U-3326A/B	TMP-99

* SEE SHEET TMP-2C FOR SIGN DESIGN

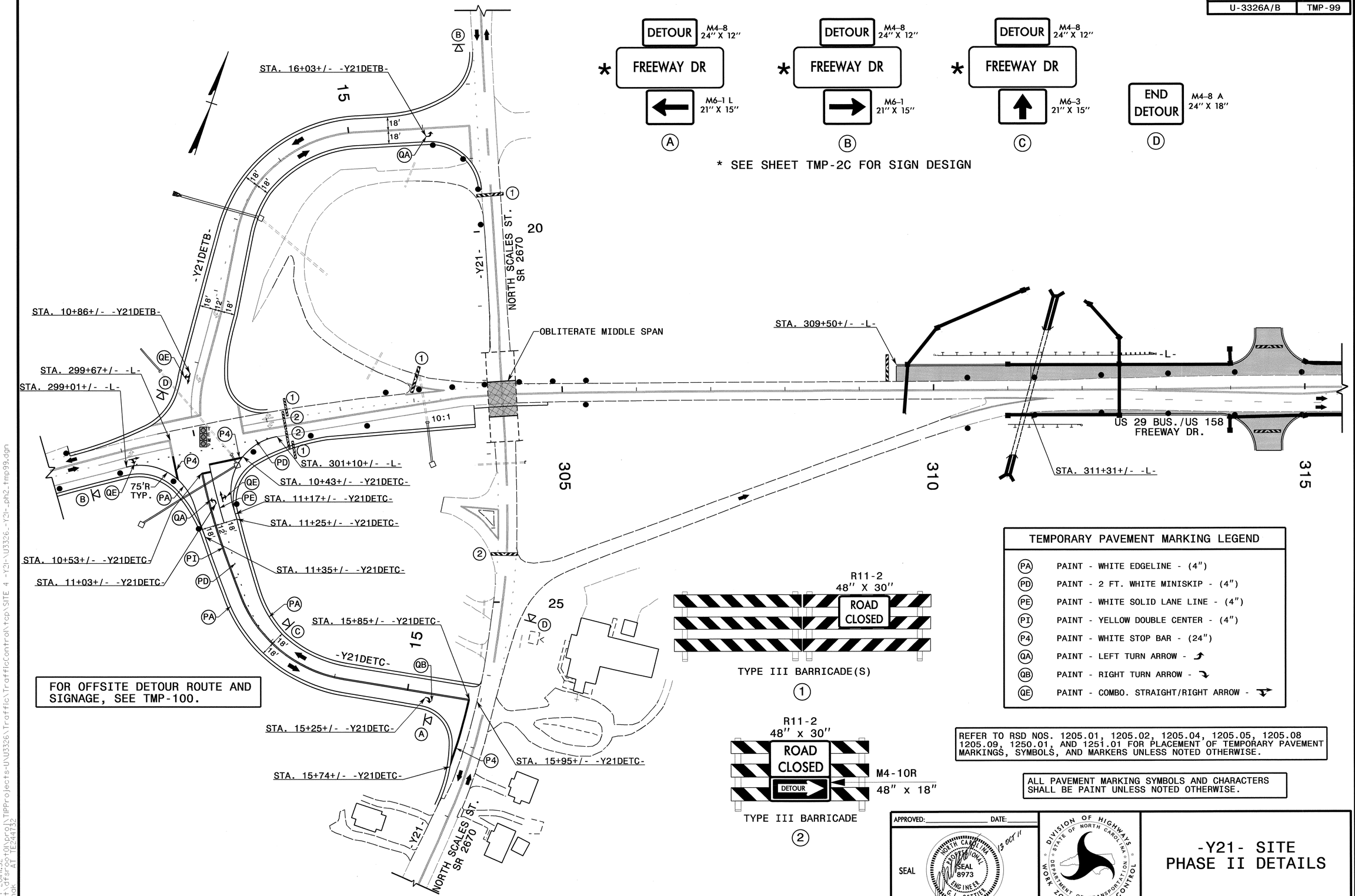

FOR OFFSITE DETOUR ROUTE AND SIGNAGE, SEE TMP-100.

TYPE III BARRICADE(S)

①

TYPE III BARRICADE

②

TEMPORARY PAVEMENT MARKING LEGEND	
(PA)	PAINT - WHITE EDGELINE - (4")
(PD)	PAINT - 2 FT. WHITE MINISKIP - (4")
(PE)	PAINT - WHITE SOLID LANE LINE - (4")
(PI)	PAINT - YELLOW DOUBLE CENTER - (4")
(P4)	PAINT - WHITE STOP BAR - (24")
(QA)	PAINT - LEFT TURN ARROW -
(QB)	PAINT - RIGHT TURN ARROW -
(QE)	PAINT - COMBO. STRAIGHT/RIGHT ARROW -

REFER TO RSD NOS. 1205.01, 1205.02, 1205.04, 1205.05, 1205.08 1205.09, 1250.01, AND 1251.01 FOR PLACEMENT OF TEMPORARY PAVEMENT MARKINGS, SYMBOLS, AND MARKERS UNLESS NOTED OTHERWISE.

ALL PAVEMENT MARKING SYMBOLS AND CHARACTERS SHALL BE PAINT UNLESS NOTED OTHERWISE.

APPROVED:_____ DATE:_____

SEAL

NORTH CAROLINA PROFESSIONAL SEAL 8973 ENGINEER G. L. GETTIER 13 OCT 11

DIVISION OF HIGHWAYS STATE OF NORTH CAROLINA DEPARTMENT OF TRANSPORTATION WORK ZONE TRAFFIC CONTROL

-Y21- SITE PHASE II DETAILS

13-OCT-2011 11:52
\\dot\dfsroot01\proj\TIPProjects-U\U3326\Traffic\TrafficControl\tcp\SITE 4 -Y2l-\U3326_-Y2l-_ph2_tmp99.dgn
msishak AT TE244732

PROJ. REFERENCE NO.	SHEET NO.
U-3326A/B	TMP-100

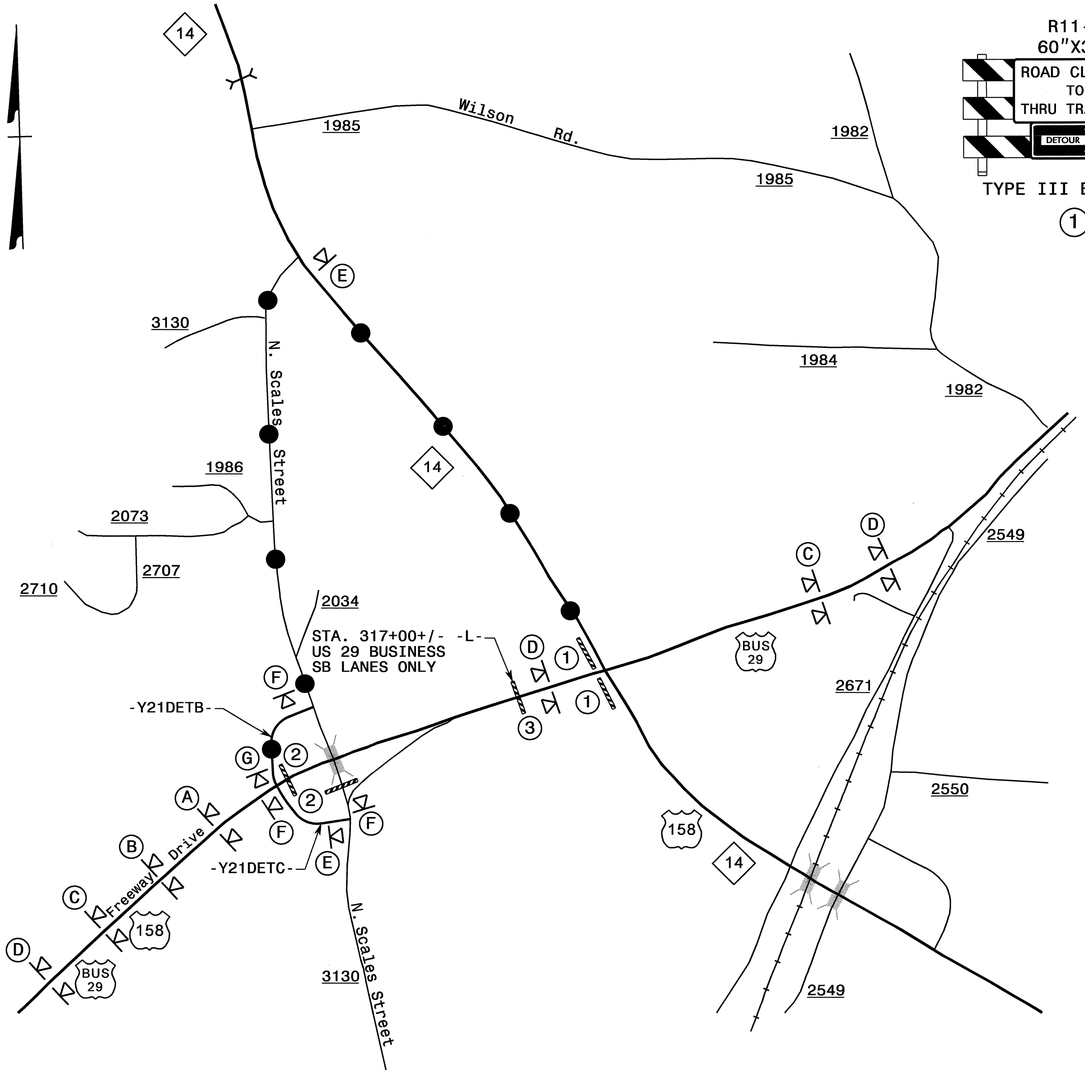

DETOUR ROUTE

R11-4
60"X30"
ROAD CLOSED TO THRU TRAFFIC
DETOUR
M4-10R
48"X18"
TYPE III BARRICADE
(1)

R11-2
48" x 30"
ROAD CLOSED
DETOUR
M4-10R
48" x 18"
TYPE III BARRICADE
(2)

R11-2
48" X 30"
ROAD CLOSED
TYPE III BARRICADE(S)
(3)

ROAD CLOSED 500 FT
W20-3
48" X 48"
(A)

ROAD CLOSED 1000 FT
W20-3
48" X 48"
(B)

DETOUR AHEAD
W20-2
48" X 48"
(C)

ROAD CLOSED AHEAD
W20-3
48" X 48"
(D)

DETOUR
M4-8
24" X 12"
* FREEWAY DR
M6-1 L
21" X 15"
(E)

DETOUR
M4-8
24" X 12"
* FREEWAY DR
M6-1
21" X 15"
(F)

END DETOUR
M4-8 A
24" X 18"
(G)

* SEE SHEET TMP-2C FOR SIGN DESIGN

NOTE: FOR BARRICADE AND SIGNAGE DETAILS AT INTX -Y21DETB-/FREEWAY DRIVE, SEE TMP-99.

APPROVED: _____ DATE: _____

SEAL

NORTH CAROLINA REGISTERED PROFESSIONAL ENGINEER SEAL 8973 G. I. GETTER

12 OCT 11

DIVISION OF HIGHWAYS * STATE OF NORTH CAROLINA * DEPARTMENT OF TRANSPORTATION * WORK ZONE TRAFFIC CONTROL

-Y21- SITE- PHASE II OFF-SITE DETOUR FREEWAY DRIVE

13-OCT-2011 11:54
\\dot\dfsroot01\proj\TIPProjects-U\U3326\TrafficControl\tcp\SITE 4 -Y21-\U3326_-Y21-_ph2_tmpl00.dgn
mslshak
AT TE244732

PROJ. REFERENCE NO.	SHEET NO.
U-3326A/B	TMP-101

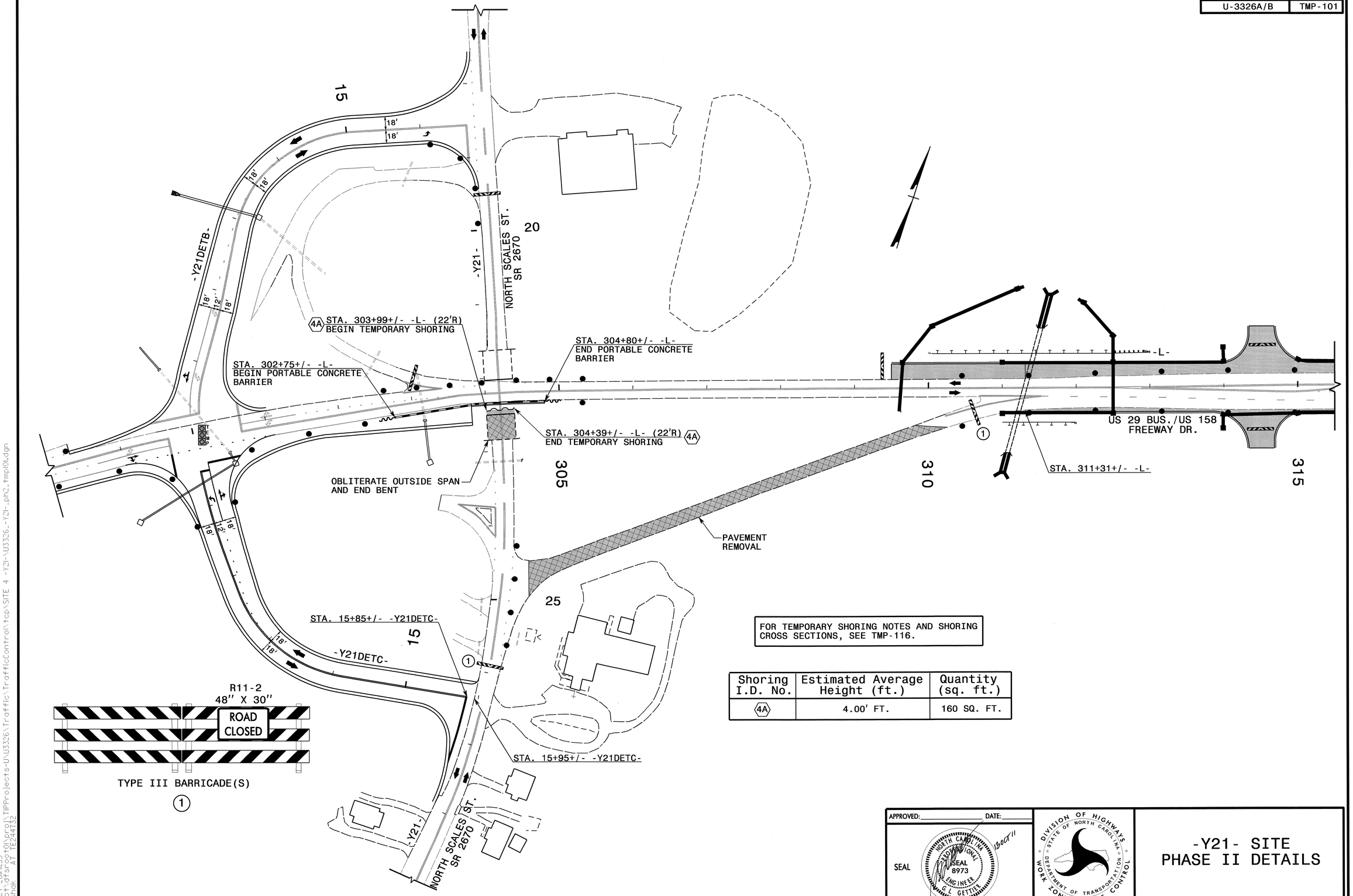

FOR TEMPORARY SHORING NOTES AND SHORING CROSS SECTIONS, SEE TMP-116.

Shoring I.D. No.	Estimated Average Height (ft.)	Quantity (sq. ft.)
4A	4.00' FT.	160 SQ. FT.

APPROVED: _____ DATE: _____

SEAL

NORTH CAROLINA PROFESSIONAL SEAL 8973 ENGINEER G. L. GETTIS

18 OCT 11

DIVISION OF HIGHWAYS
STATE OF NORTH CAROLINA
DEPARTMENT OF TRANSPORTATION
WORK ZONE TRAFFIC CONTROL

-Y21- SITE PHASE II DETAILS

13-OCT-2011 11:53
\\dot.dfsroot01\proj\TIPProjects-U\U3326\Traffic\TrafficControl\tcp\SITE 4 -Y21-\U3326_-Y21-_ph2_tmp101.dgn
mslishak AT TE244732

PROJ. REFERENCE NO.	SHEET NO.
U-3326A/B	TMP-102

STA. 16+03+/- -Y21DETB-

15

18'
18'

QA

18'
18'

-Y21DETB-

18'
12'
18'

-Y21-

NORTH SCALES ST.
SR 2670

20

-L-

US 29 BUS./US 158
FREEWAY DR.

4' PAVED
SHOULDER

STA. 306+05+/- -L- (32'R)

STA. 304+42+/- -L- (37'R)

305

310

STA. 311+31+/- -L- (32'R)
END TEMPORARY PAVEMENT

315

STA. 303+80+/- -L- (37'R)
BEGIN TEMPORARY PAVEMENT

1

25

15

18'
18'

-Y21DETC-

R11-2
48" X 30"
ROAD
CLOSED

TYPE III BARRICADE(S)

1

-Y21-

NORTH SCALES ST.
SR 2670

APPROVED:_____ DATE:_____

SEAL

NORTH CAROLINA
PROFESSIONAL
SEAL
8973
ENGINEER
G. L. GETTIS

13 OCT 11

DIVISION OF HIGHWAYS
STATE OF NORTH CAROLINA
DEPARTMENT OF TRANSPORTATION
WORK ZONE TRAFFIC CONTROL

-Y21- SITE PHASE II DETAILS

13-OCT-2011 11:53
\\dot.dfsroot01\proj\TIPProjects-U\U3326\TrafficControl\tcp\SITE 4 -Y2l-\U3326_-Y2l-_ph2_tmp02.dgn
msilshak
AT TE244732

PROJ. REFERENCE NO.	SHEET NO.
U-3326A/B	TMP-103

REFER TO RSD NOS. 1205.01, 1205.02, 1205.05, 1205.08, 1205.09, 1250.01, AND 1251.01 FOR PLACEMENT OF TEMPORARY PAVEMENT MARKINGS, SYMBOLS, AND MARKERS UNLESS NOTED OTHERWISE.

ALL PAVEMENT MARKING SYMBOLS AND CHARACTERS SHALL BE PAINT UNLESS NOTED OTHERWISE.

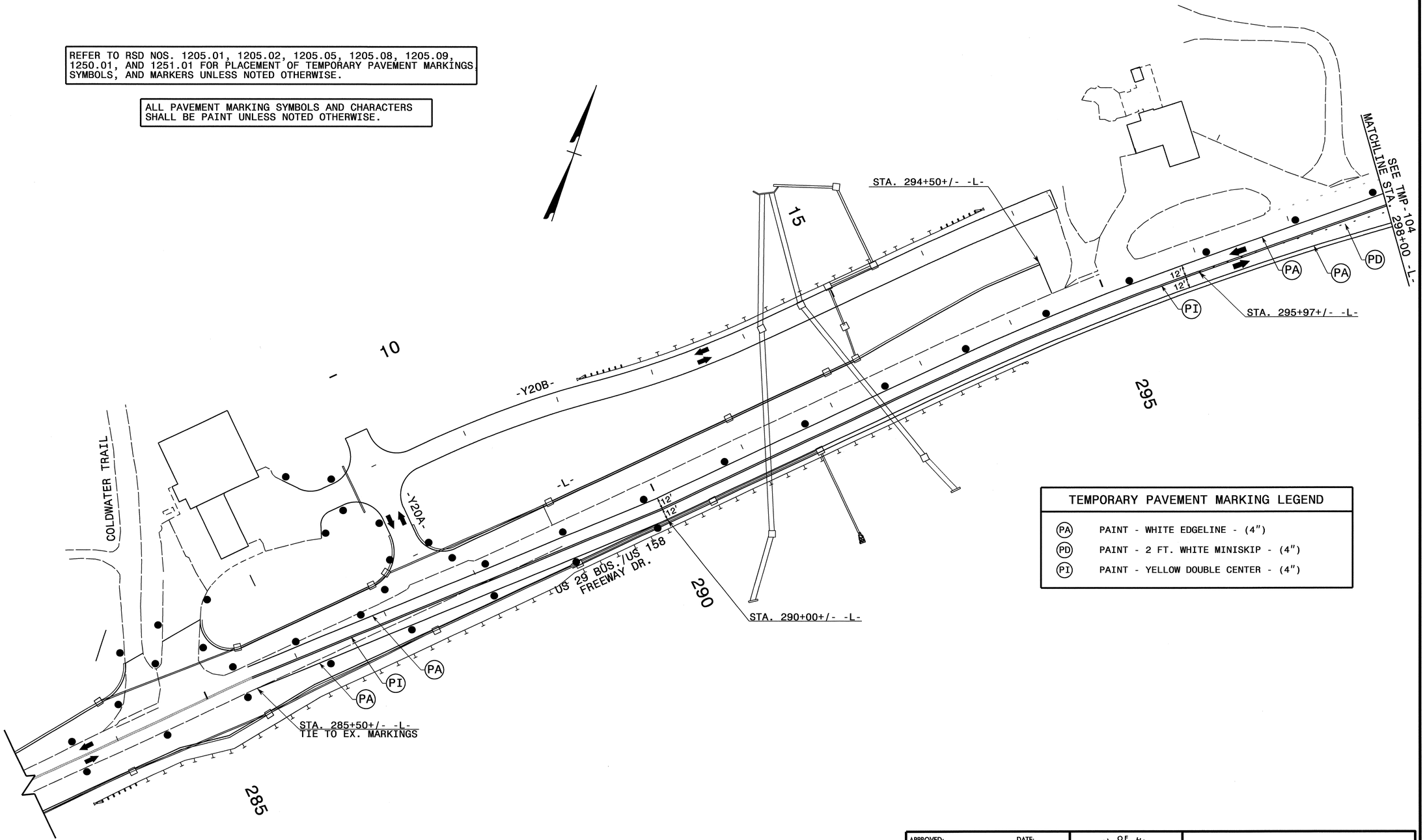

TEMPORARY PAVEMENT MARKING LEGEND	
(PA)	PAINT - WHITE EDGELINE - (4")
(PD)	PAINT - 2 FT. WHITE MINISKIP - (4")
(PI)	PAINT - YELLOW DOUBLE CENTER - (4")

APPROVED: _____ DATE: _____

SEAL

NORTH CAROLINA PROFESSIONAL SEAL 8973 ENGINEER G. L. GETTIER 15 OCT 11

DIVISION OF HIGHWAYS • STATE OF NORTH CAROLINA • DEPARTMENT OF TRANSPORTATION • WORK ZONE TRAFFIC CONTROL

-Y21- SITE PHASE III DETAILS

13-OCT-2011 11:52
\\dot\dfsroot0\proj\TIPProjects-UU3326\Traffic\TrafficControl\tcp\SITE 4 -Y2i-\U3326_-Y2i-_ph3_tmpl03.dgn
mslshak AT TE244732

PROJ. REFERENCE NO.	SHEET NO.
U-3326A/B	TMP-104

REFER TO RSD NOS. 1205.01, 1205.02, 1205.04, 1205.05, 1205.08 1205.09, 1250.01, AND 1251.01 FOR PLACEMENT OF TEMPORARY PAVEMENT MARKINGS, SYMBOLS, AND MARKERS UNLESS NOTED OTHERWISE.

ALL PAVEMENT MARKING SYMBOLS AND CHARACTERS SHALL BE PAINT UNLESS NOTED OTHERWISE.

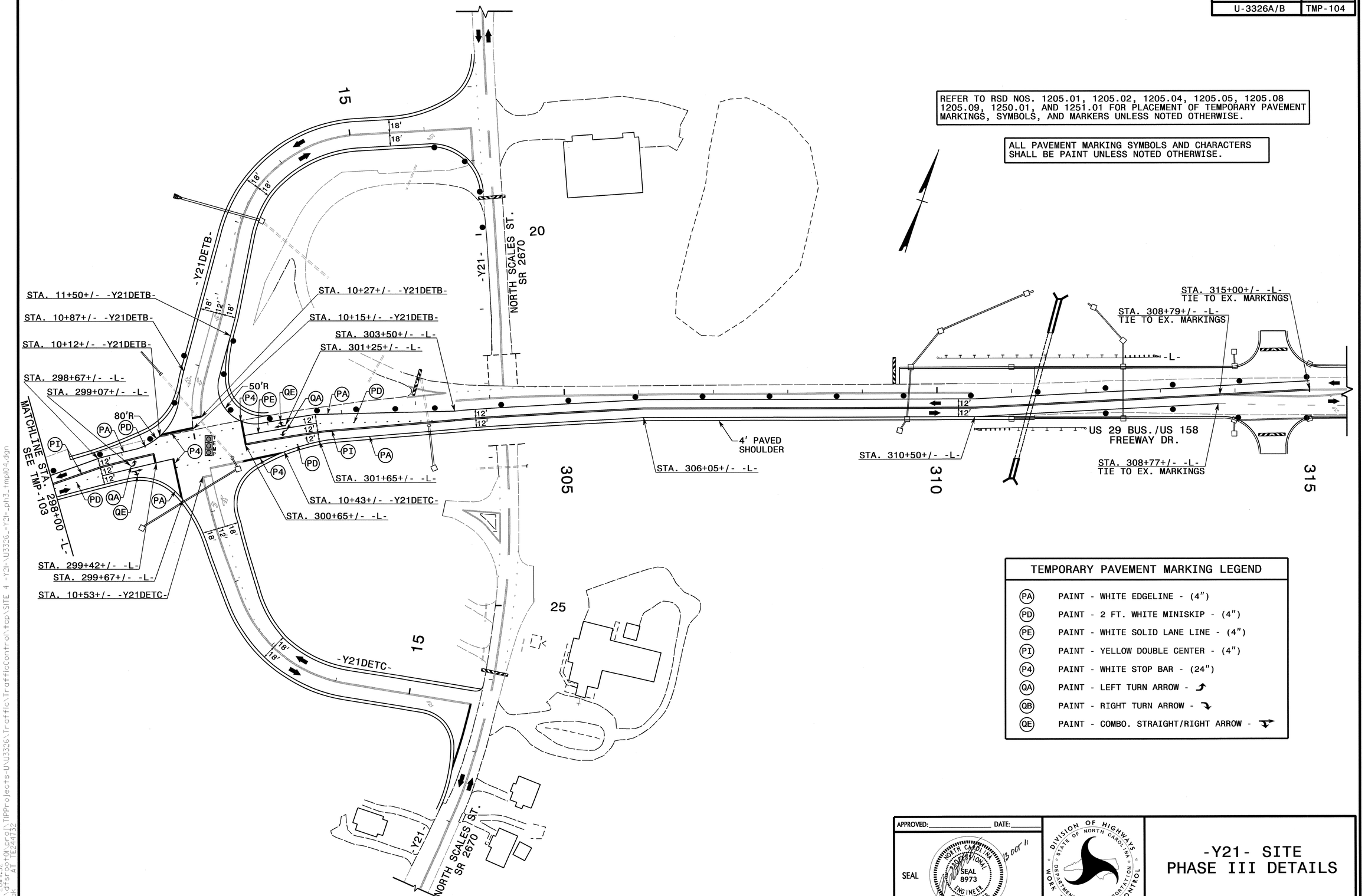

TEMPORARY PAVEMENT MARKING LEGEND

(PA)	PAINT - WHITE EDGELINE - (4")
(PD)	PAINT - 2 FT. WHITE MINISKIP - (4")
(PE)	PAINT - WHITE SOLID LANE LINE - (4")
(PI)	PAINT - YELLOW DOUBLE CENTER - (4")
(P4)	PAINT - WHITE STOP BAR - (24")
(QA)	PAINT - LEFT TURN ARROW - ↰
(QB)	PAINT - RIGHT TURN ARROW - ↱
(QE)	PAINT - COMBO. STRAIGHT/RIGHT ARROW - ↱↑

APPROVED: _____ DATE: _____

SEAL

NORTH CAROLINA PROFESSIONAL SEAL 8973 ENGINEER G. L. GETTIER — 13 OCT 11

DIVISION OF HIGHWAYS STATE OF NORTH CAROLINA DEPARTMENT OF TRANSPORTATION WORK ZONE TRAFFIC CONTROL

-Y21- SITE PHASE III DETAILS

13-OCT-2011 11:52
\\dot.dfsroot01\proj\TIPProjects-U\U3326\Traffic\TrafficControl\tcp\SITE 4 -Y21-\U3326_-Y21-_ph3_tmpl04.dgn
msishak AT TE244732

PROJ. REFERENCE NO.	SHEET NO.
U-3326A/B	TMP-105

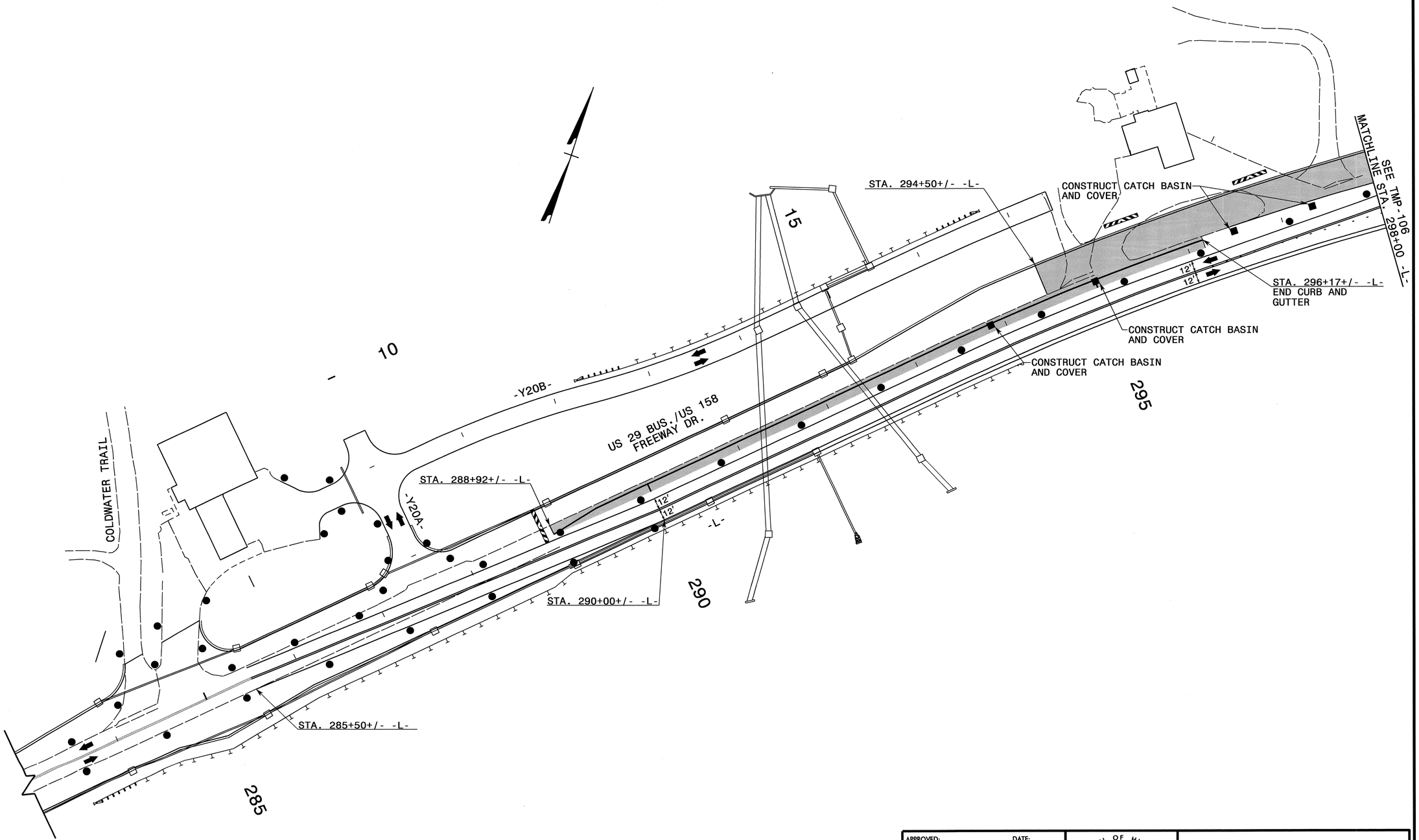

APPROVED: _____ DATE: _____

SEAL

NORTH CAROLINA PROFESSIONAL SEAL 8973 ENGINEER G. L. GETTIER

15 OCT 11

DIVISION OF HIGHWAYS
STATE OF NORTH CAROLINA
DEPARTMENT OF TRANSPORTATION
WORK ZONE TRAFFIC CONTROL

-Y21- SITE
PHASE III DETAILS

13-OCT-2011 11:52
\\dot\dfsroot0\proj\TIPProjects-U\U3326\Traffic\TrafficControl\tcp\SITE 4 -Y2i-\U3326_-Y2i-_ph3_tmp105.dgn
mstshak AT TE244732

PROJ. REFERENCE NO.	SHEET NO.
U-3326A/B	TMP-106

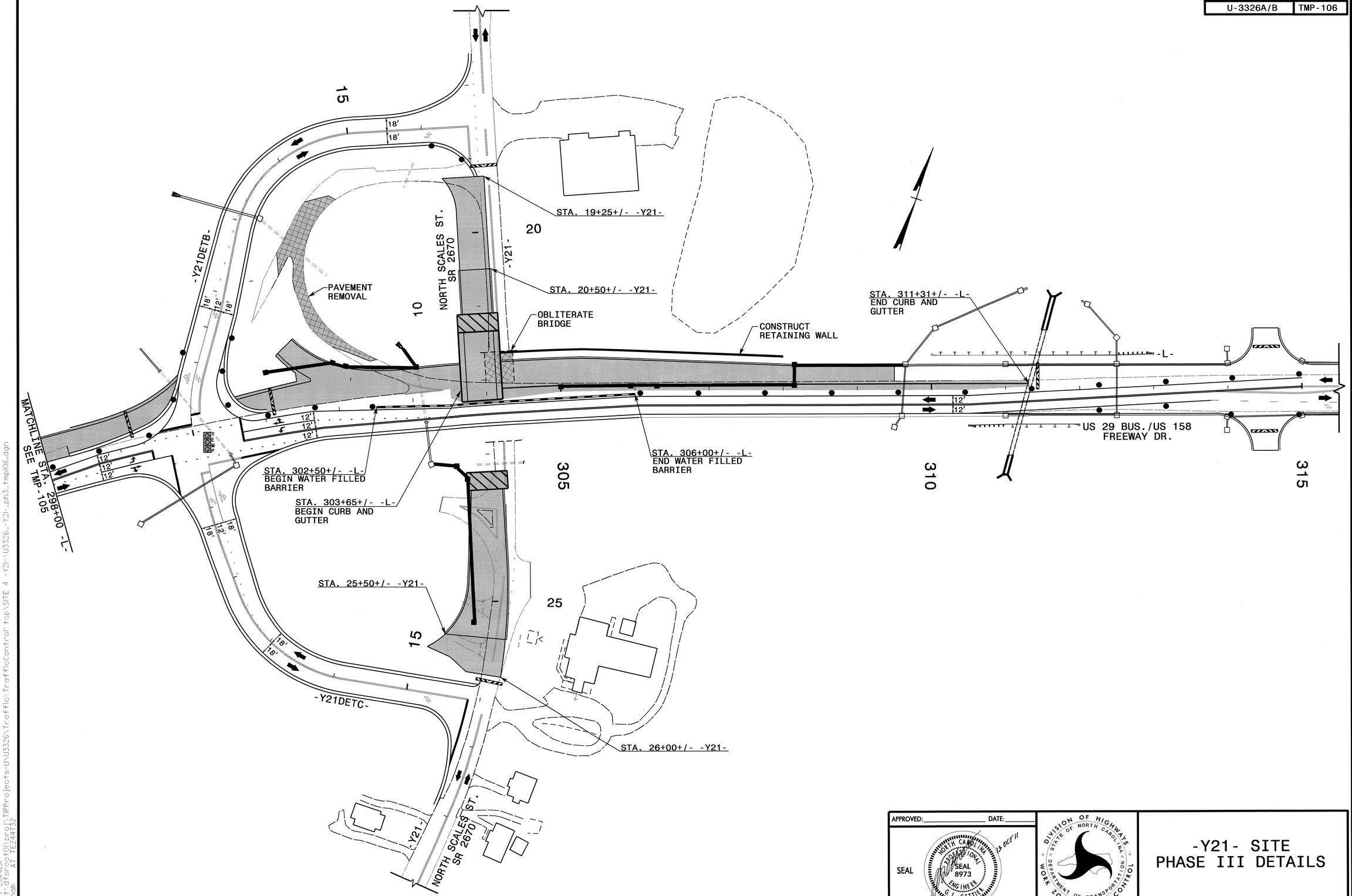

APPROVED: _____ DATE: _____

SEAL

SEAL 8973 ENGINEER G. L. GETTIS 13 OCT 11

DIVISION OF HIGHWAYS STATE OF NORTH CAROLINA DEPARTMENT OF TRANSPORTATION WORK ZONE TRAFFIC CONTROL

-Y21- SITE PHASE III DETAILS

13-OCT-2011 11:51
\\dot.dfsroot01\proj\TIPProjects-U\U3326\Traffic\TrafficControl\tcp\SITE 4 -Y21-\U3326_-Y21-_ph3_tmpl06.dgn
msishak
AT TE244732

PROJ. REFERENCE NO.	SHEET NO.
U-3326A/B	TMP-107

REFER TO RSD NOS. 1205.01, 1205.02, 1205.05, 1205.08, 1205.09, 1250.01, AND 1251.01 FOR PLACEMENT OF TEMPORARY PAVEMENT MARKINGS, SYMBOLS, AND MARKERS UNLESS NOTED OTHERWISE.

ALL PAVEMENT MARKING SYMBOLS AND CHARACTERS SHALL BE PAINT UNLESS NOTED OTHERWISE.

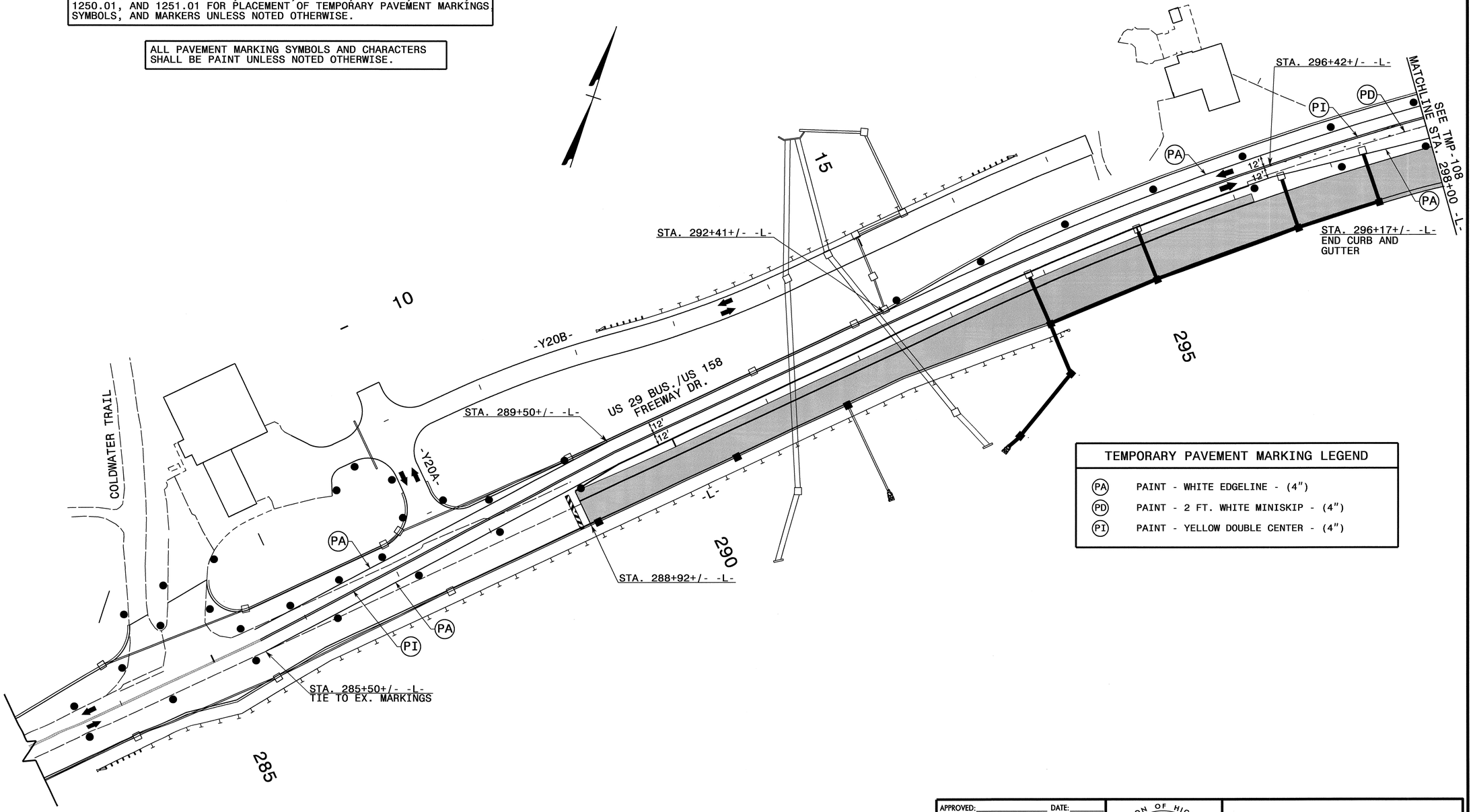

TEMPORARY PAVEMENT MARKING LEGEND

(PA)	PAINT - WHITE EDGELINE - (4")
(PD)	PAINT - 2 FT. WHITE MINISKIP - (4")
(PI)	PAINT - YELLOW DOUBLE CENTER - (4")

APPROVED: _____ DATE: _____

SEAL

NORTH CAROLINA PROFESSIONAL SEAL 8973 ENGINEER G. L. GETTIER 13 OCT 11

DIVISION OF HIGHWAYS STATE OF NORTH CAROLINA DEPARTMENT OF TRANSPORTATION WORK ZONE TRAFFIC CONTROL

-Y21- SITE PHASE IV DETAILS

13-OCT-2011 11:51
\\dot\dfsroot0\proj\TIPProjects-U\U3326\Traffic\TrafficControl\top\SITE 4 -Y21-\U3326_-Y21-_ph4_tmpl07.dgn
mslshak AT TE244732

PROJ. REFERENCE NO.	SHEET NO.
U-3326A/B	TMP-108

REFER TO RSD NOS. 1205.01, 1205.02, 1205.04, 1205.05, 1205.08 1205.09, 1250.01, AND 1251.01 FOR PLACEMENT OF TEMPORARY PAVEMENT MARKINGS, SYMBOLS, AND MARKERS UNLESS NOTED OTHERWISE.

ALL PAVEMENT MARKING SYMBOLS AND CHARACTERS SHALL BE PAINT UNLESS NOTED OTHERWISE.

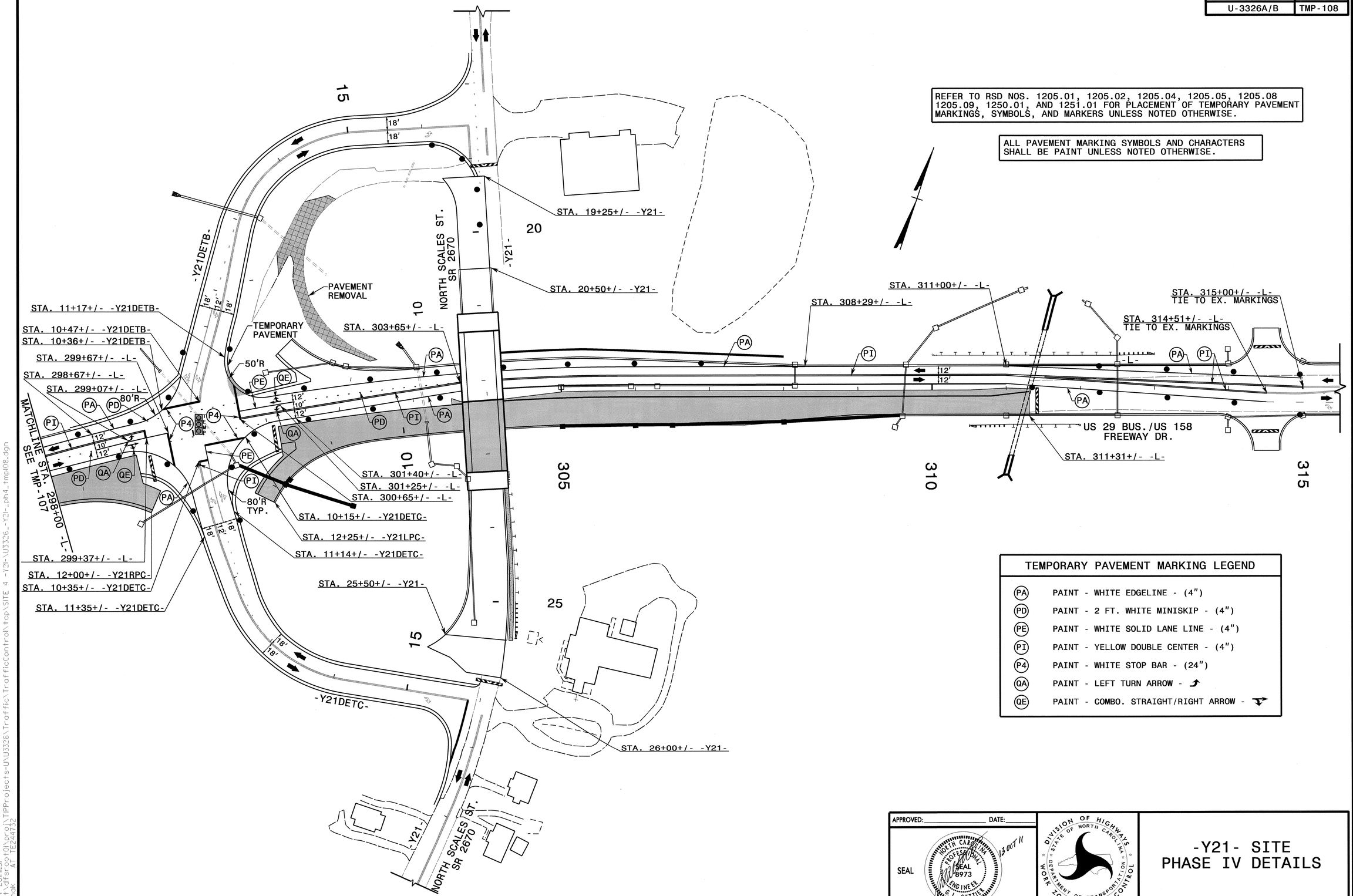

TEMPORARY PAVEMENT MARKING LEGEND

(PA)	PAINT - WHITE EDGELINE - (4")
(PD)	PAINT - 2 FT. WHITE MINISKIP - (4")
(PE)	PAINT - WHITE SOLID LANE LINE - (4")
(PI)	PAINT - YELLOW DOUBLE CENTER - (4")
(P4)	PAINT - WHITE STOP BAR - (24")
(QA)	PAINT - LEFT TURN ARROW -
(QE)	PAINT - COMBO. STRAIGHT/RIGHT ARROW -

APPROVED: _____ DATE: _____

SEAL

NORTH CAROLINA PROFESSIONAL SEAL 8973 ENGINEER G. T. GETTIER

13 OCT 11

DIVISION OF HIGHWAYS STATE OF NORTH CAROLINA DEPARTMENT OF TRANSPORTATION WORK ZONE TRAFFIC CONTROL

-Y21- SITE PHASE IV DETAILS

13-OCT-2011 11:51
\\dot\dfsroot01\prg\TIPProjects-U\U3326\Traffic\TrafficControl\tcp\SITE 4 -Y21-\U3326_-Y21-_ph4_tmp08.dgn
msishak AT TE244732

PROJ. REFERENCE NO.	SHEET NO.
U-3326A/B	TMP-109

NOTE: FOR STATIONING OF TEMPORARY PAVEMENT MARKINGS, SYMBOLS, AND STOP BARS OF -Y21-, -Y21DETC, SEE FINAL PAVEMENT MARKING PLANS.

REFER TO RSD NOS. 1205.01, 1205.02, 1205.04, 1205.05, 1205.08, 1205.12, 1250.01, AND 1251.01 FOR PLACEMENT OF TEMPORARY PAVEMENT MARKINGS, SYMBOLS, AND MARKERS UNLESS NOTED OTHERWISE.

ALL PAVEMENT MARKING SYMBOLS AND CHARACTERS SHALL BE PAINT UNLESS NOTED OTHERWISE.

TYPE III BARRICADE

(1)

TYPE III BARRICADE(S)

(2)

(A)

* SEE SHEET TMP-2D FOR SIGN DESIGN

(B)

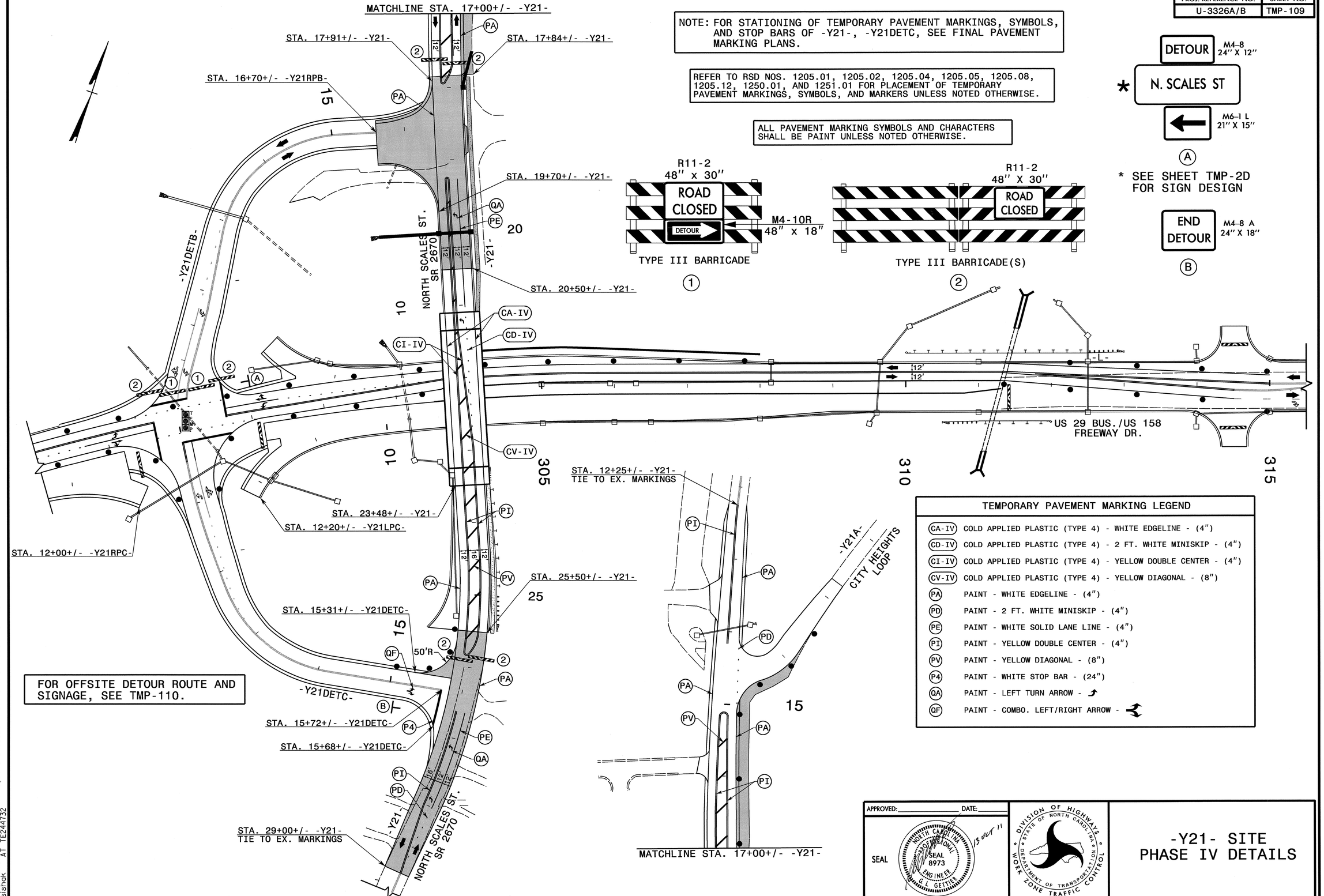

FOR OFFSITE DETOUR ROUTE AND SIGNAGE, SEE TMP-110.

TEMPORARY PAVEMENT MARKING LEGEND

(CA-IV)	COLD APPLIED PLASTIC (TYPE 4) - WHITE EDGELINE - (4")
(CD-IV)	COLD APPLIED PLASTIC (TYPE 4) - 2 FT. WHITE MINISKIP - (4")
(CI-IV)	COLD APPLIED PLASTIC (TYPE 4) - YELLOW DOUBLE CENTER - (4")
(CV-IV)	COLD APPLIED PLASTIC (TYPE 4) - YELLOW DIAGONAL - (8")
(PA)	PAINT - WHITE EDGELINE - (4")
(PD)	PAINT - 2 FT. WHITE MINISKIP - (4")
(PE)	PAINT - WHITE SOLID LANE LINE - (4")
(PI)	PAINT - YELLOW DOUBLE CENTER - (4")
(PV)	PAINT - YELLOW DIAGONAL - (8")
(P4)	PAINT - WHITE STOP BAR - (24")
(QA)	PAINT - LEFT TURN ARROW - ↱
(QF)	PAINT - COMBO. LEFT/RIGHT ARROW - ↰↱

APPROVED: _____ DATE: _____

SEAL

-Y21- SITE PHASE IV DETAILS

13-OCT-2011 11:50
\\dot\dfsroot0\proj\TIPProjects-UU3326\Traffic\TrafficControl\tcp\SITE 4 -Y2i-\U3326_-Y2i-_ph4_tmpl09.dgn
mslshak AT TE244732

PROJ. REFERENCE NO.	SHEET NO.
U-3326A/B	TMP-110

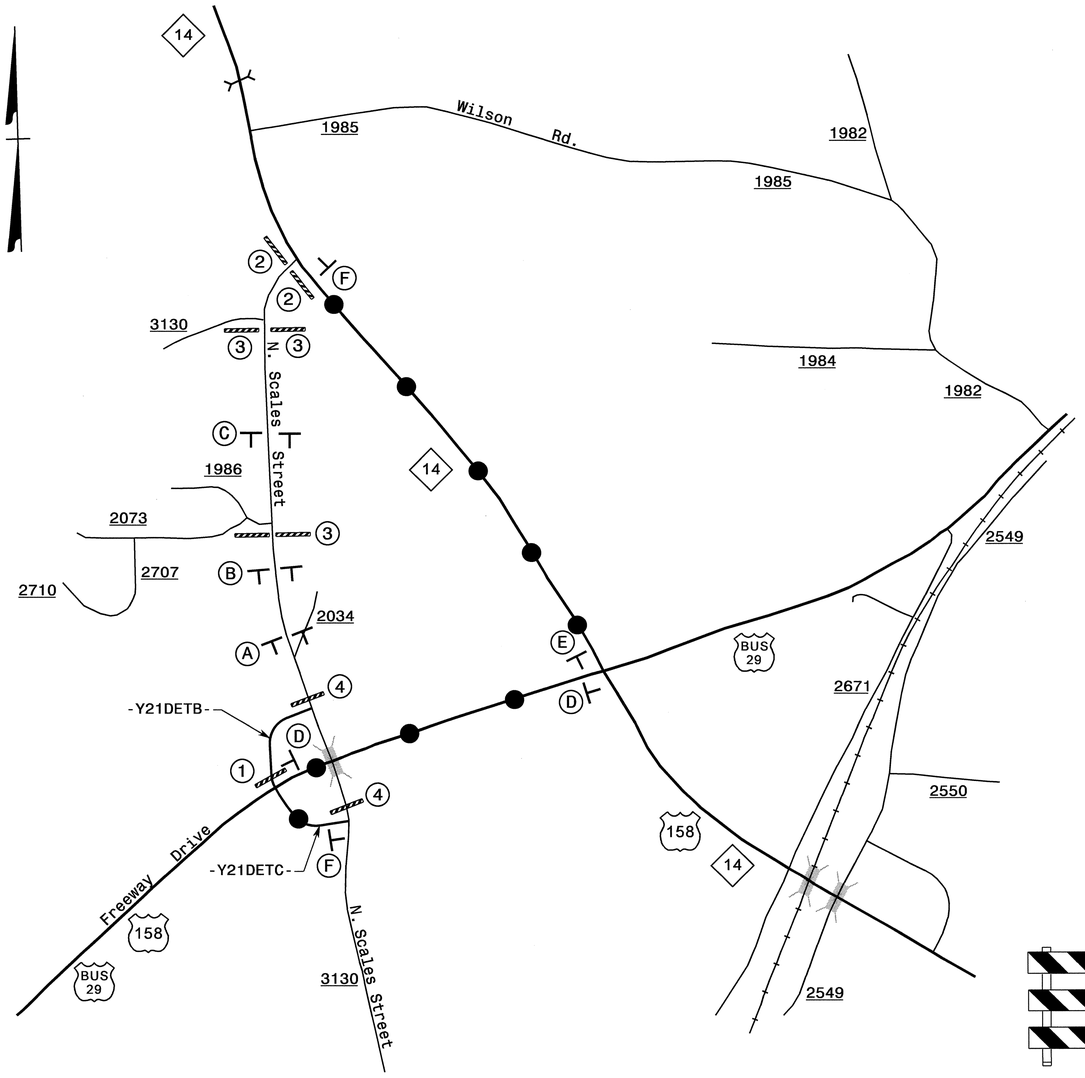

(A)

(B)

(C)

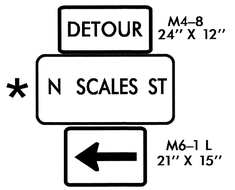

(D)

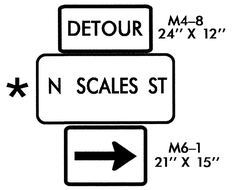

(E)

(F)

* SEE SHEET TMP-2D FOR SIGN DESIGN

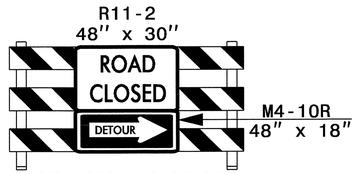

TYPE III BARRICADE

(1)

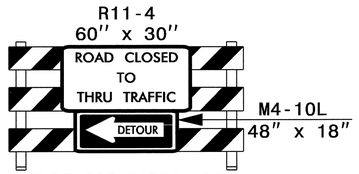

TYPE III BARRICADE

(2)

TYPE III BARRICADE

(3)

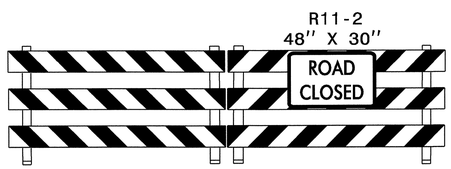

TYPE III BARRICADE(S)

(4)

DETOUR ROUTE

NOTE: FOR BARRICADE AND SIGNAGE DETAILS AT INTX -Y21DETB-/FREEWAY DRIVE, SEE TMP-109.

APPROVED:_____ DATE:_____

SEAL

NORTH CAROLINA PROFESSIONAL SEAL 8973 ENGINEER G. L. GETTIER 13 OCT 11

DIVISION OF HIGHWAYS STATE OF NORTH CAROLINA DEPARTMENT OF TRANSPORTATION WORK ZONE TRAFFIC CONTROL

-Y21- SITE - PHASE IV OFF-SITE DETOUR N. SCALES ST.

13-OCT-2011 11:50
\\dot\dfsroot\proj\TIPProjects-U\U3326\Traffic\TrafficControl\tcp\SITE 4 -Y2I-\U3326_-Y2I-_ph4_tmpl10.dgn
msishak AT TE244732

PROJ. REFERENCE NO.	SHEET NO.
U-3326A/B	TMP-111

REFER TO RSD NOS. 1205.01, 1205.02, 1205.05, 1205.08, 1205.09, 1250.01, AND 1251.01 FOR PLACEMENT OF TEMPORARY PAVEMENT MARKINGS, SYMBOLS, AND MARKERS UNLESS NOTED OTHERWISE.

ALL PAVEMENT MARKING SYMBOLS AND CHARACTERS SHALL BE PAINT UNLESS NOTED OTHERWISE.

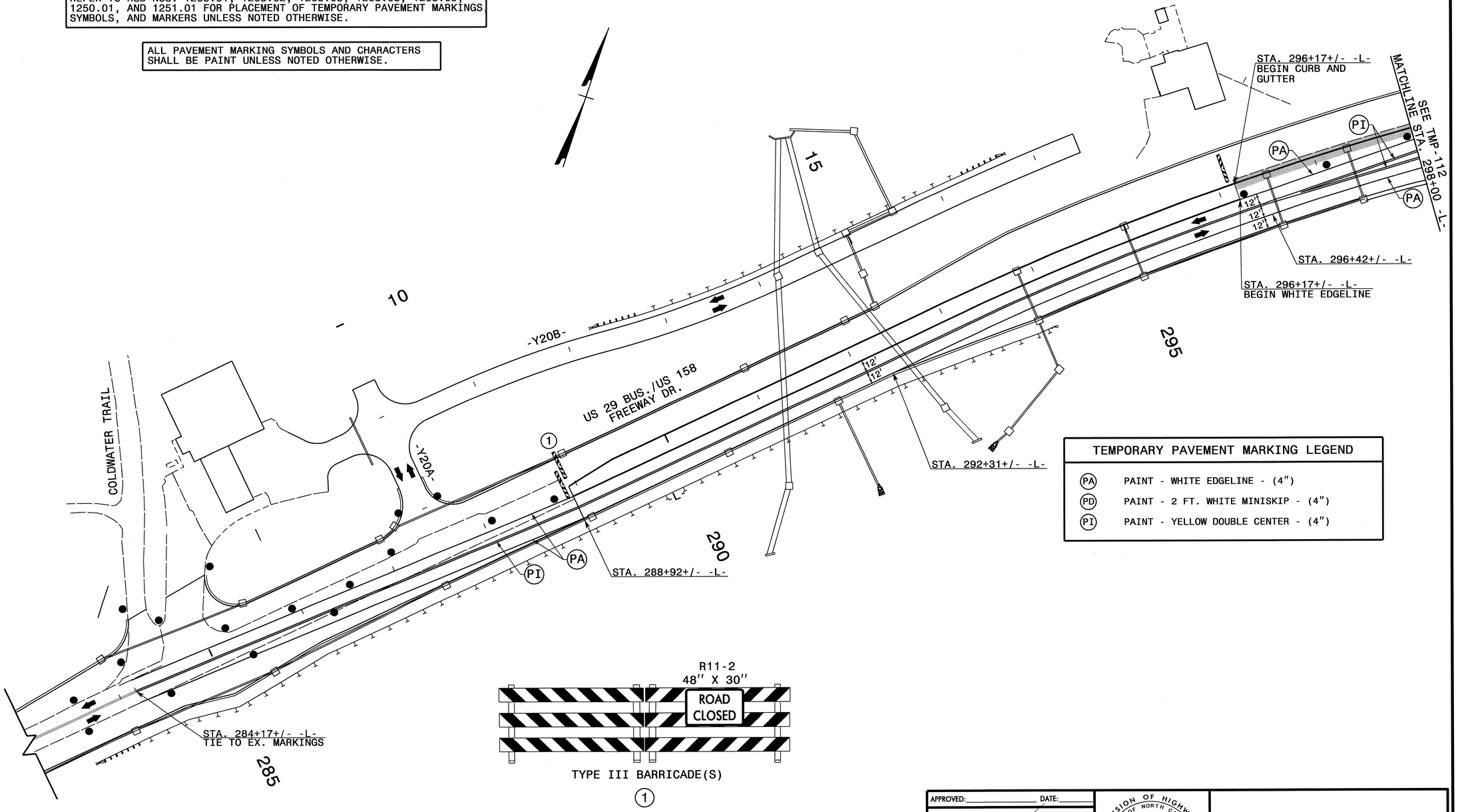

TEMPORARY PAVEMENT MARKING LEGEND	
(PA)	PAINT - WHITE EDGELINE - (4")
(PD)	PAINT - 2 FT. WHITE MINISKIP - (4")
(PI)	PAINT - YELLOW DOUBLE CENTER - (4")

TYPE III BARRICADE(S)

(1)

APPROVED: _____ DATE: _____

SEAL

NORTH CAROLINA PROFESSIONAL SEAL 8973 ENGINEER G. L. GETTIER

13 OCT 11

DIVISION OF HIGHWAYS * STATE OF NORTH CAROLINA * DEPARTMENT OF TRANSPORTATION * WORK ZONE TRAFFIC CONTROL

-Y21- SITE PHASE V DETAILS

13-OCT-2011 11:49
\\dot\dfsroot1\prj\TIPProjects-U\U3326\Traffic\TrafficControl\tcp\SITE 4 -Y2l-_U3326_-Y2l-_ph5_tmpIII.dgn
msisnak AT TE244732

PROJ. REFERENCE NO.	SHEET NO.
U-3326A/B	TMP-112

REFER TO RSD NOS. 1205.01, 1205.02, 1205.04, 1205.05, 1205.08 1205.09, 1250.01, AND 1251.01 FOR PLACEMENT OF TEMPORARY PAVEMENT MARKINGS, SYMBOLS, AND MARKERS UNLESS NOTED OTHERWISE.

ALL PAVEMENT MARKING SYMBOLS AND CHARACTERS SHALL BE PAINT UNLESS NOTED OTHERWISE.

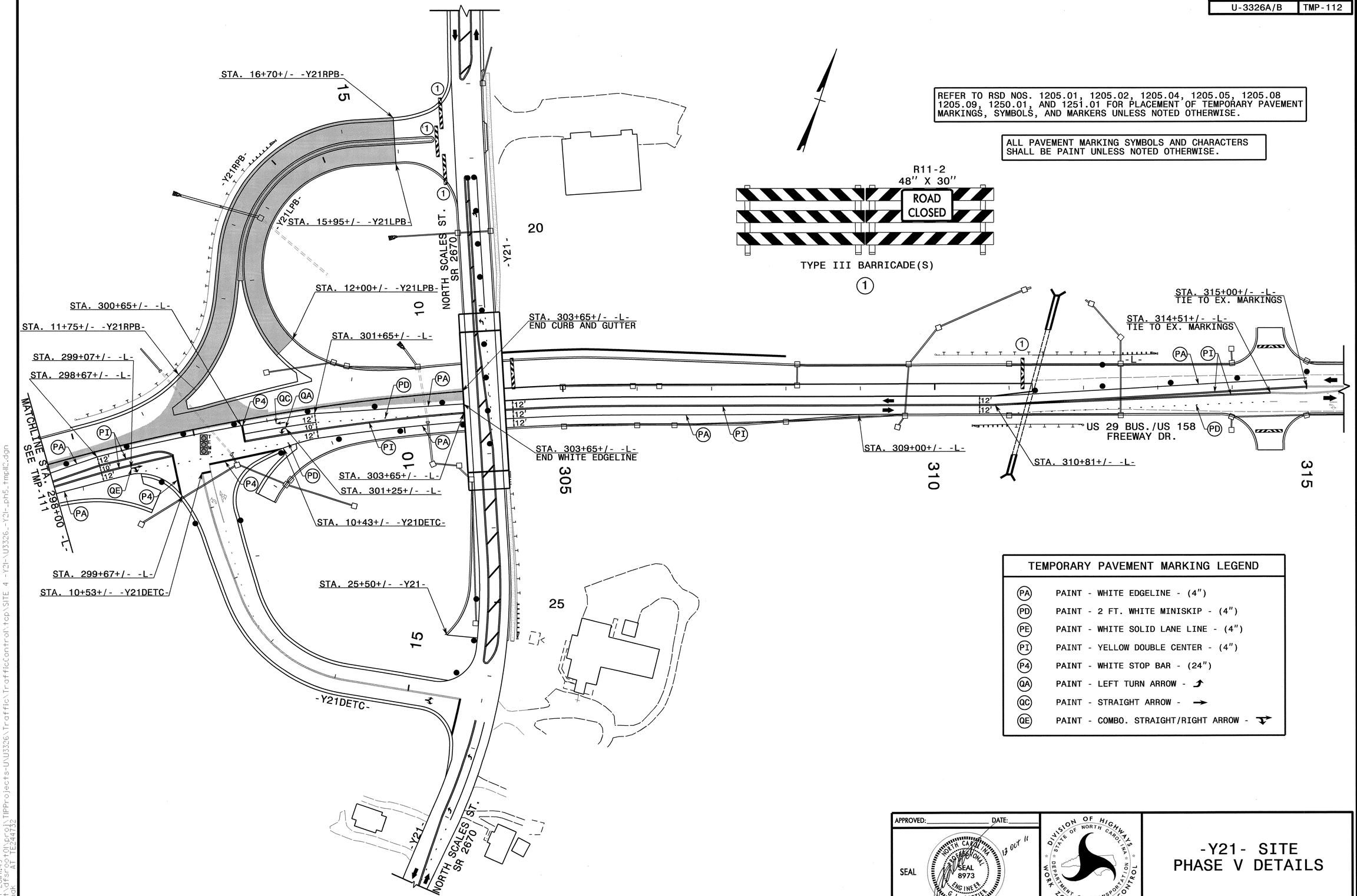

TEMPORARY PAVEMENT MARKING LEGEND

PA	PAINT - WHITE EDGELINE - (4")
PD	PAINT - 2 FT. WHITE MINISKIP - (4")
PE	PAINT - WHITE SOLID LANE LINE - (4")
PI	PAINT - YELLOW DOUBLE CENTER - (4")
P4	PAINT - WHITE STOP BAR - (24")
QA	PAINT - LEFT TURN ARROW - ↰
QC	PAINT - STRAIGHT ARROW - →
QE	PAINT - COMBO. STRAIGHT/RIGHT ARROW - ↱↑

APPROVED: _____ DATE: _____

SEAL

NORTH CAROLINA PROFESSIONAL SEAL 8973 ENGINEER G. I. GETTYS

13 OCT 11

DIVISION OF HIGHWAYS
STATE OF NORTH CAROLINA
DEPARTMENT OF TRANSPORTATION
WORK ZONE TRAFFIC CONTROL

-Y21- SITE PHASE V DETAILS

13-OCT-2011 11:49
\\dot\dfsroot01\proj\TIPProjects-U3326\Traffic\TrafficControl\tcp\SITE 4 -Y2l-U3326_-Y2l-_ph5_tmpll2.dgn
msishak AT TE244732

PROJ. REFERENCE NO.	SHEET NO.
U-3326A/B	TMP-113

REFER TO RSD NOS. 1205.01, 1205.02, 1205.05, 1205.08, 1205.09, 1250.01, AND 1251.01 FOR PLACEMENT OF TEMPORARY PAVEMENT MARKINGS, SYMBOLS, AND MARKERS UNLESS NOTED OTHERWISE.

ALL PAVEMENT MARKING SYMBOLS AND CHARACTERS SHALL BE PAINT UNLESS NOTED OTHERWISE.

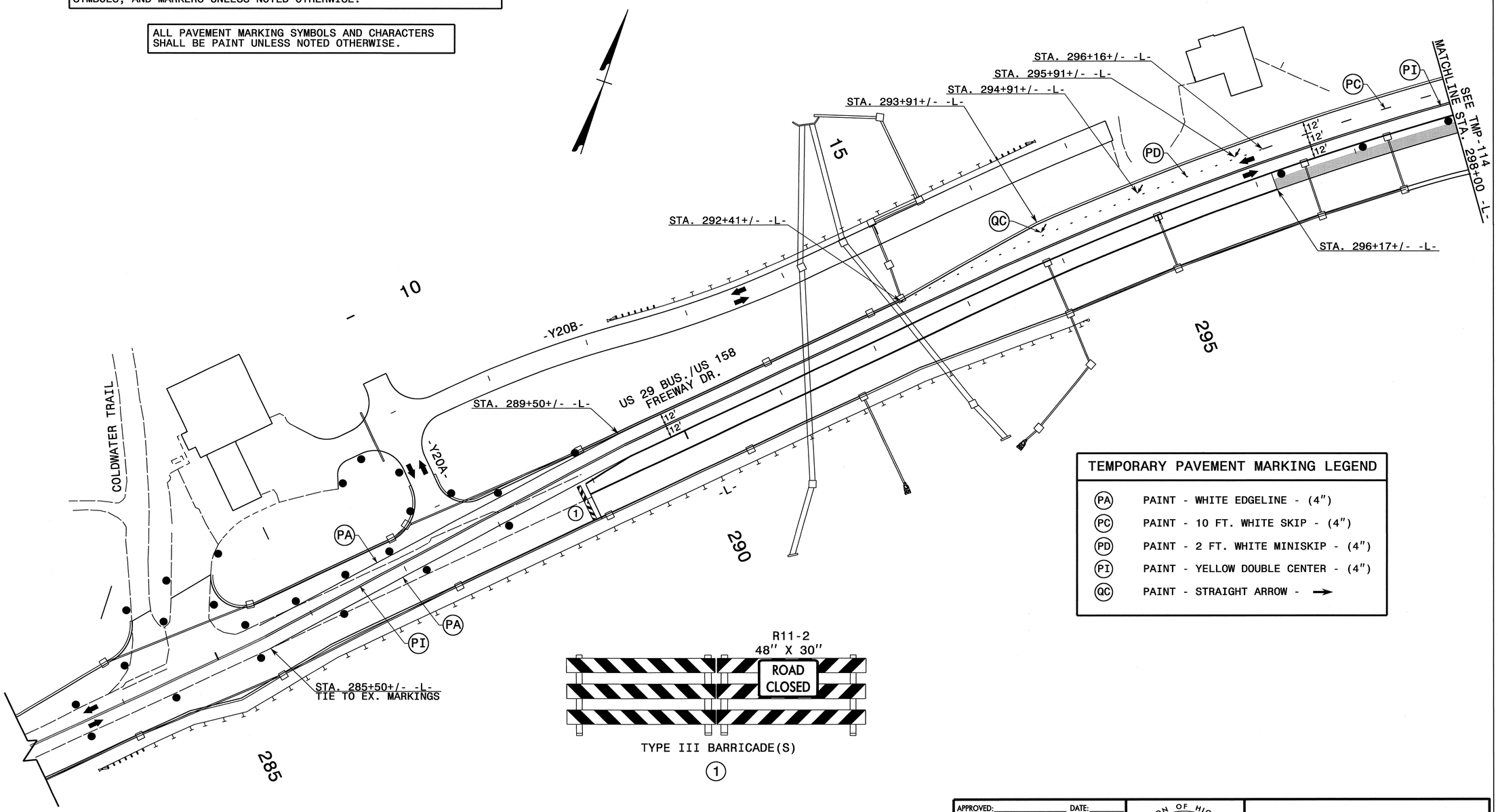

TEMPORARY PAVEMENT MARKING LEGEND	
PA	PAINT - WHITE EDGELINE - (4")
PC	PAINT - 10 FT. WHITE SKIP - (4")
PD	PAINT - 2 FT. WHITE MINISKIP - (4")
PI	PAINT - YELLOW DOUBLE CENTER - (4")
QC	PAINT - STRAIGHT ARROW - →

APPROVED: _____ DATE: _____

SEAL

NORTH CAROLINA PROFESSIONAL SEAL 8973 ENGINEER G. L. GETTIER

13 OCT 11

DIVISION OF HIGHWAYS
STATE OF NORTH CAROLINA
DEPARTMENT OF TRANSPORTATION
WORK ZONE TRAFFIC CONTROL

-Y21- SITE PHASE VI DETAILS

13-OCT-2011 13:02
\\dot\dfsroot01\proj\TIPProjects-U\U3326\Traffic\TrafficControl\tcp\SITE 4 -Y21-\U3326_-Y21-_ph6_tmpl13.dgn
sngreen AT TE244733

PROJ. REFERENCE NO.	SHEET NO.
U-3326A/B	TMP-114

NOTE: FOR STATIONING OF TEMPORARY PAVEMENT MARKINGS, SYMBOLS, AND STOP BARS OF -Y21LPB-, -Y21RPB, SEE FINAL PAVEMENT MARKING PLANS.

REFER TO RSD NOS. 1205.01, 1205.02, 1205.04, 1205.05, 1205.08 1205.09, 1250.01, AND 1251.01 FOR PLACEMENT OF TEMPORARY PAVEMENT MARKINGS, SYMBOLS, AND MARKERS UNLESS NOTED OTHERWISE.

ALL PAVEMENT MARKING SYMBOLS AND CHARACTERS SHALL BE PAINT UNLESS NOTED OTHERWISE.

TYPE III BARRICADE

(1)

TYPE III BARRICADE

(2)

TYPE III BARRICADE(S)

(3)

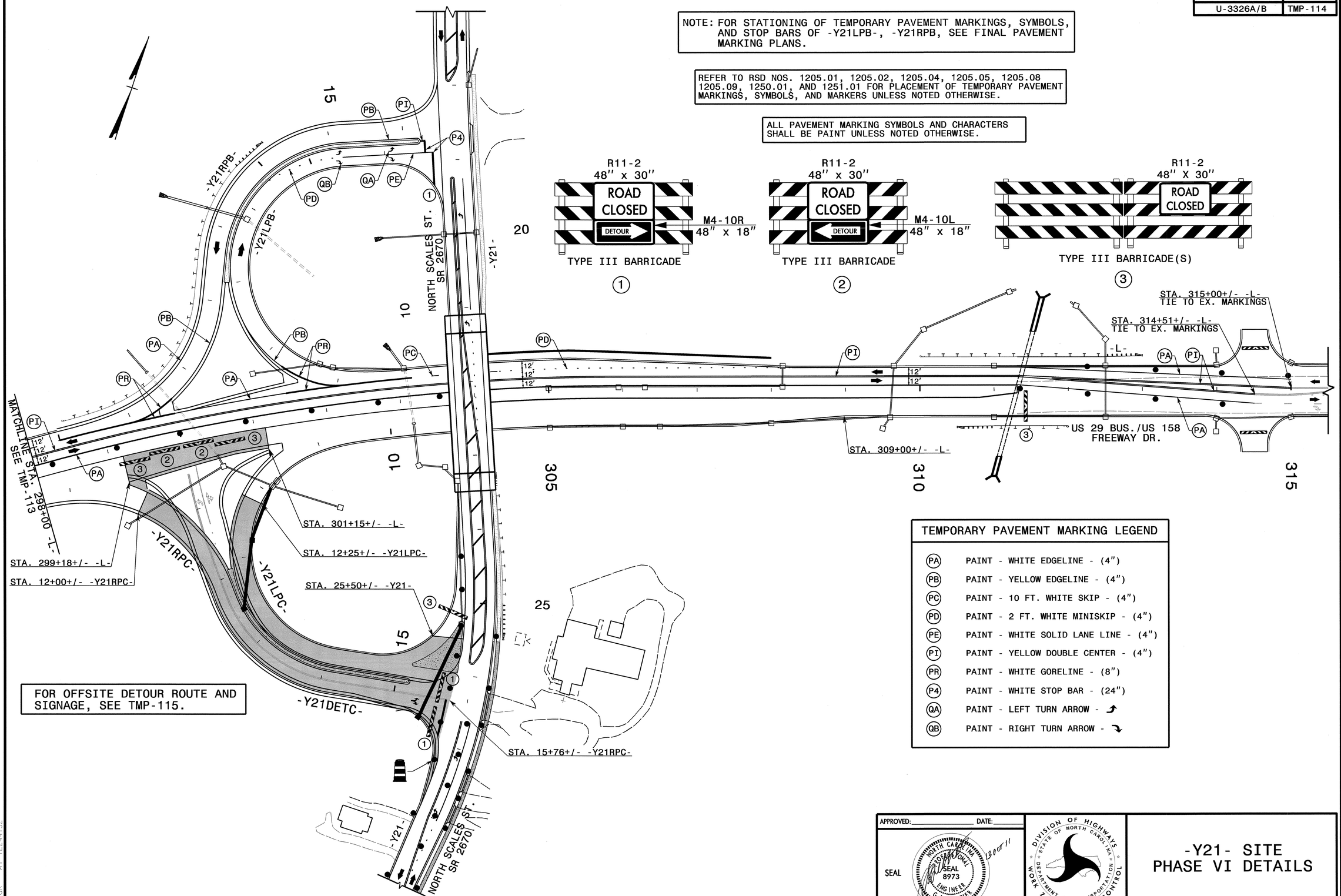

FOR OFFSITE DETOUR ROUTE AND SIGNAGE, SEE TMP-115.

TEMPORARY PAVEMENT MARKING LEGEND

(PA)	PAINT - WHITE EDGELINE - (4")
(PB)	PAINT - YELLOW EDGELINE - (4")
(PC)	PAINT - 10 FT. WHITE SKIP - (4")
(PD)	PAINT - 2 FT. WHITE MINISKIP - (4")
(PE)	PAINT - WHITE SOLID LANE LINE - (4")
(PI)	PAINT - YELLOW DOUBLE CENTER - (4")
(PR)	PAINT - WHITE GORELINE - (8")
(P4)	PAINT - WHITE STOP BAR - (24")
(QA)	PAINT - LEFT TURN ARROW - ↰
(QB)	PAINT - RIGHT TURN ARROW - ↱

APPROVED: _____ DATE: _____

SEAL

NORTH CAROLINA PROFESSIONAL SEAL 8973 ENGINEER G. I. GETTIES

DIVISION OF HIGHWAYS STATE OF NORTH CAROLINA DEPARTMENT OF TRANSPORTATION WORK ZONE TRAFFIC CONTROL

-Y21- SITE PHASE VI DETAILS

13-OCT-2011 11:48
\\dot\dfsroot0\proj\TIPProjects-U\U3326\Traffic\TrafficControl\tcp\SITE 4 -Y21-\U3326_-Y21-_ph6_tmpl14.dgn
mslishak AT TE244732

PROJ. REFERENCE NO.	SHEET NO.
U-3326A/B	TMP-115

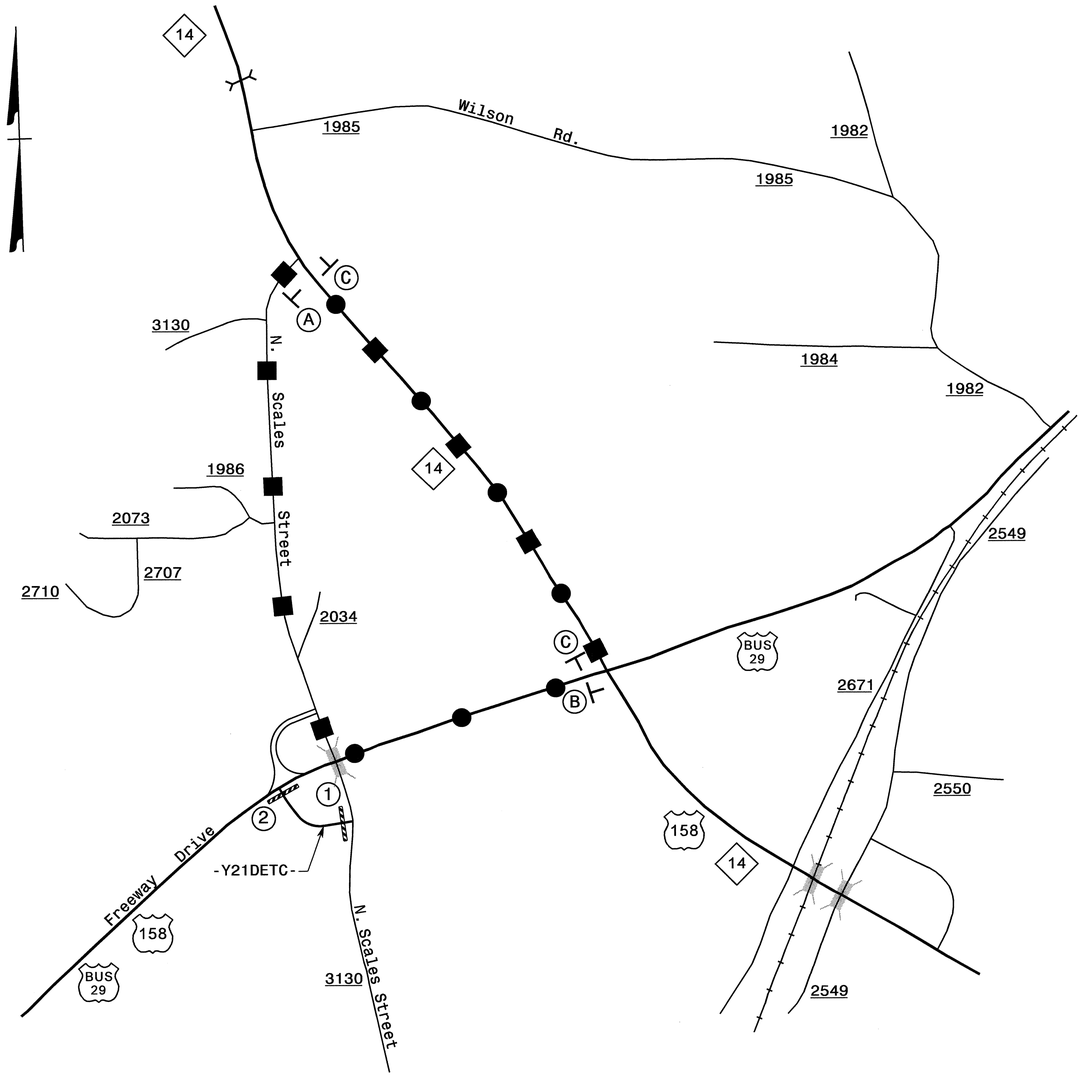

NOTE: FOR BARRICADE AND SIGNAGE DETAILS AT INTX -Y21DETC-/FREEWAY DRIVE, SEE TMP-114.

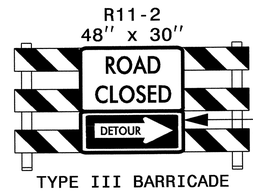

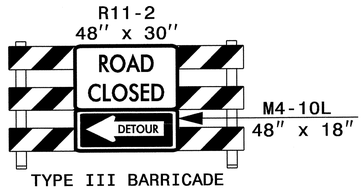

N. SCALES ST. DETOUR ROUTE

FREEWAY DR. DETOUR ROUTE

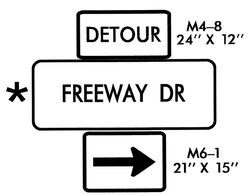

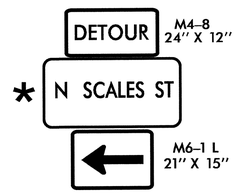

* SEE SHEET TMP-2C AND TMP-2D FOR SIGN DESIGN

APPROVED:_____ DATE:_____

SEAL

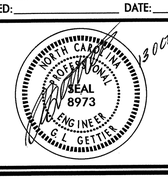

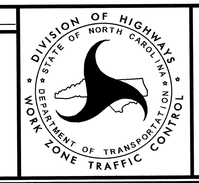

-Y21- SITE - PHASE VI OFF-SITE DETOUR FREEWAY DRIVE N.SCALES ST.

13-OCT-2011 11:48
\\Cfsroot\DOT\proj\TIPProjects-U\U3326\Traffic\TrafficControl\tcp\SITE 4 -Y21-\U3326_-Y21-_ph6_tmpl15.dgn
mslshok
XFT TE244732

PROJ. REFERENCE NO.	SHEET NO.
U-3326A/B	TMP-116

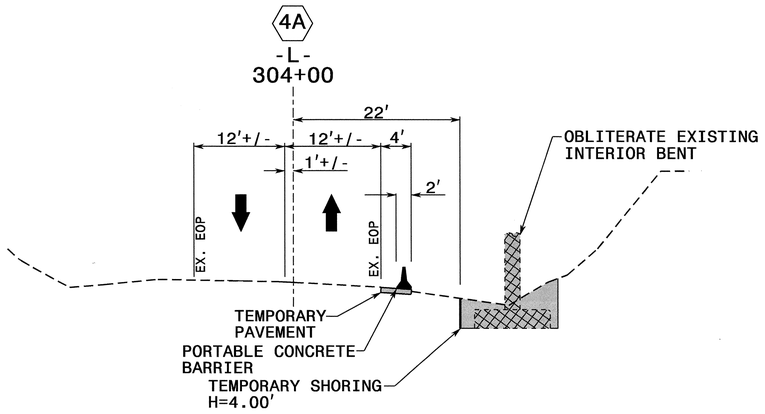

TEMPORARY SHORING NOTES

4A TEMPORARY SHORING NO. 4A (SEE SHEET TMP-101)

FOR TEMPORARY SHORING, SEE TEMPORARY SHORING PROVISION.

TEMPORARY SHORING IS REQUIRED FOR THE REMOVAL OF EXISTING BRIDGE BENT FROM STA. 303+99+/- -L-, 22 FT. RIGHT TO STA. 304+39+/- -L-, 22 FT. RIGHT. SEE TEMPORARY SHORING PROVISION.

WHEN USING CONTRACTOR DESIGNED SHORING FROM STA. 303+99+/- -L-, 22 FT. RIGHT TO STA. 304+39+/- -L-, 22 FT. RIGHT, DESIGN SHORING FOR THE FOLLOWING IN-SITU ASSUMED SOIL PARAMETERS:

UNIT WEGHT OF SOIL ABOVE WATER TABLE, γ = 120 PCF
UNIT WEIGHT OF SOIL BELOW WATER TABLE, γ' = 60 PCF
FRICTION ANGLE, ϕ = 30°
COHESION, c = 0 PCF

FOR CONTRACTOR DESIGNED SHORING, SURVEY THE SHORING LOCATION TO DETERMINE EXISTING ELEVATIONS AND ACTUAL DESIGN HEIGHTS BEFORE BEGINNING DESIGN.

FOR PORTABLE CONCRETE BARRIERS ABOVE AND BEHIND TEMPORARY SHORING, USE A NCDOT PORTABLE CONCRETE BARRIER (UNANCHORED OR ANCHORED) OR AN OREGON TALL F-SHAPE CONCRETE BARRIER IN ACCORDANCE WITH THE TRAFFIC CONTROL PLANS.

THE TEMPORARY SHORING NOTES WERE PROVIDED THROUGH A SEALED DOCUMENT FROM THE GEOTECHNICAL ENGINEERING UNIT. THE DOCUMENT WAS SUBMITTED TO THE WZTCU ON 09-11-2011 AND SEALED BY A PROFESSIONAL ENGINEER, ERIC WILLIAMS, P.E., LICENSE #26962.

13-OCT-2011 11:48
\\dot\dfsroot\proj\TIPProjects-U\U3326\Traffic\TrafficControl\top\SITE 4 -Y21-\U3326_-Y21-_xsc_tmpl16.dgn
msishak AT TE244732

APPROVED:_____ DATE:_____

SEAL

NORTH CAROLINA PROFESSIONAL SEAL 8973 ENGINEER G. L. GETTIER

13 OCT 11

DIVISION OF HIGHWAYS * STATE OF NORTH CAROLINA * DEPARTMENT OF TRANSPORTATION * WORK ZONE TRAFFIC CONTROL

-Y21- SITE SHORING CROSS SECTIONS AND SHORING NOTES