CONTRACT: C202652 TIP PROJECT: U-3326A/B

STRUCTURES

STATE	STATE PROJECT REFERENCE NO.	SHEET NO.	TOTAL SHEETS
N.C.	U-3326A/B		

STATE PROJ. NO.	F. A. PROJ. NO.	DESCRIPTION
34924.1.1	STP-29B(1)	P.E.
(A) 34924.2.4	HPPSTP-029B(2)	R/W & UTILITIES
(B) 34924.2.3	HPPSTP-029B(3)	R/W & UTILITIES
(A) 34924.3.1	STP-029B(2)	CONST.
(B) 34924.3.2	STP-029B(3)	CONST.

STATE OF NORTH CAROLINA
DIVISION OF HIGHWAYS

ROCKINGHAM COUNTY

LOCATION: US 29 BUSINESS (FREEWAY DRIVE) FROM SR 2670 (SOUTH SCALES STREET) TO NC 14 IN REIDSVILLE

TYPE OF WORK: GRADING, DRAINAGE, PAVING, CURB AND GUTTER, RETAINING WALLS, STRUCTURES, CULVERTS, AND TRAFFIC SIGNALS

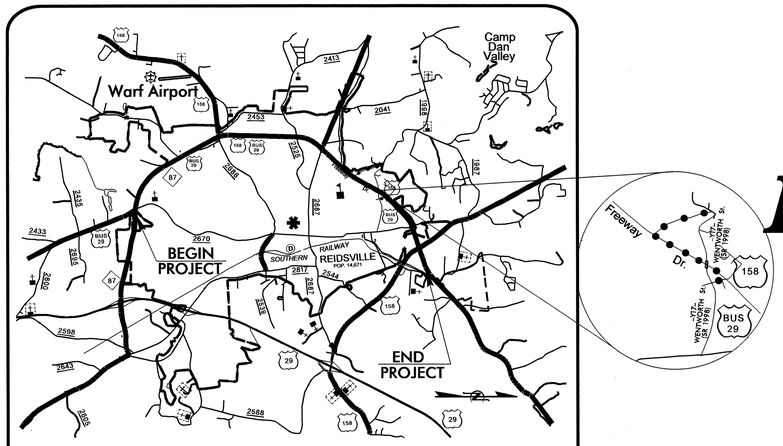

VICINITY MAP

DETOUR ROUTE

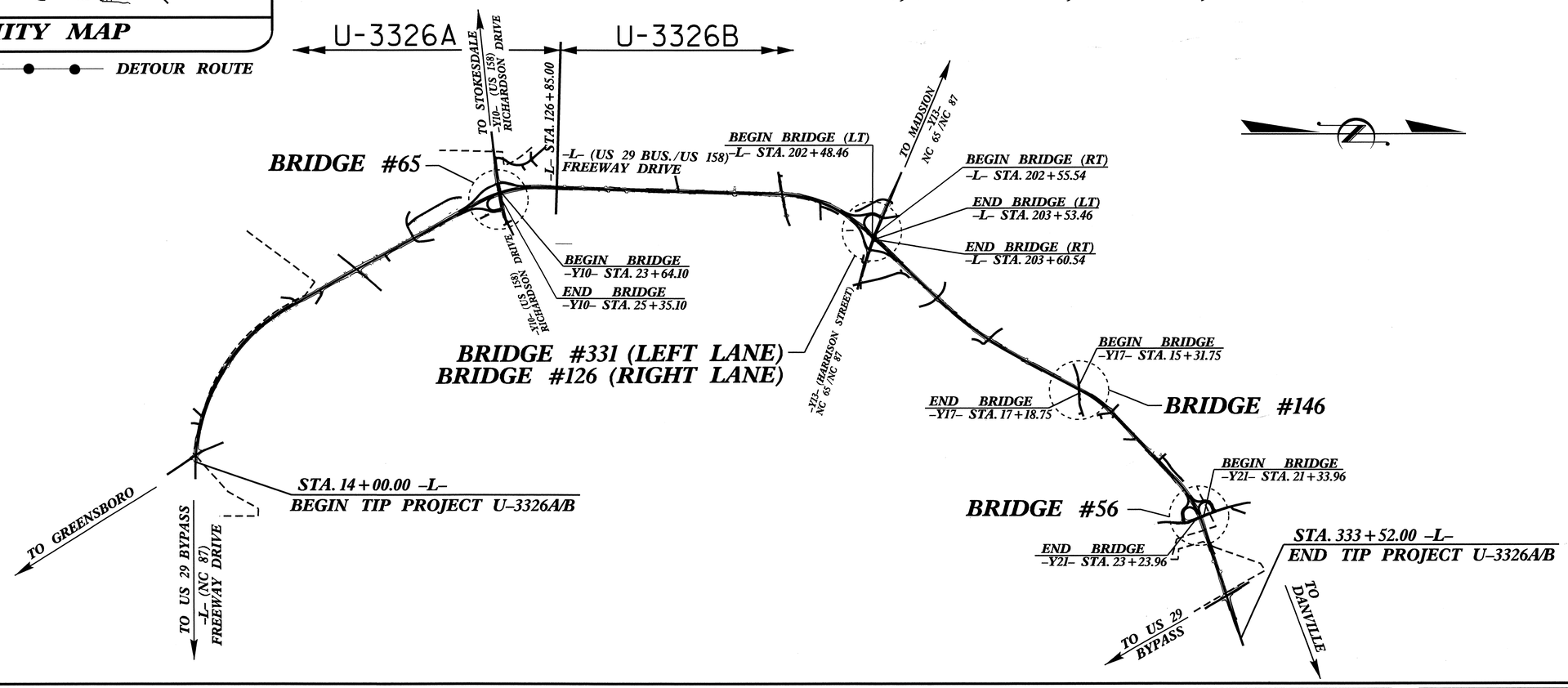

STATE OF NORTH CAROLINA DEPARTMENT OF TRANSPORTATION

DESIGN DATA

ADT 2011	=	21,090
ADT 2035	=	41,000
DHV	=	10 %
D	=	55 %
T	=	11 % *
V	=	50 MPH
CLASS	=	URBAN ARTERIAL

* TTST 5% DUAL 6%

PROJECT LENGTH

LENGTH ROADWAY TIP PROJECT U-3626 = 6.032 MI

LENGTH STRUCTURE TIP PROJECT U-3626 = 0.020 MI

TOTAL LENGTH TIP PROJECT U-3626 = 6.052 MI

Prepared in the Office of:

DIVISION OF HIGHWAYS

2006 STANDARD SPECIFICATIONS

LETTING DATE :

January 17, 2012

J. C. FRYE, P.E.
PROJECT ENGINEER

T. H. FANG, P.E.
PROJECT DESIGN ENGINEER

STRUCTURE DESIGN UNIT
1000 BIRCH RIDGE DR.
RALEIGH, N.C. 27610

DIVISION OF HIGHWAYS
STATE OF NORTH CAROLINA

P.E.
STATE DESIGN ENGINEER

DEPARTMENT OF TRANSPORTATION
FEDERAL HIGHWAY ADMINISTRATION

APPROVED
DIVISION ADMINISTRATOR DATE

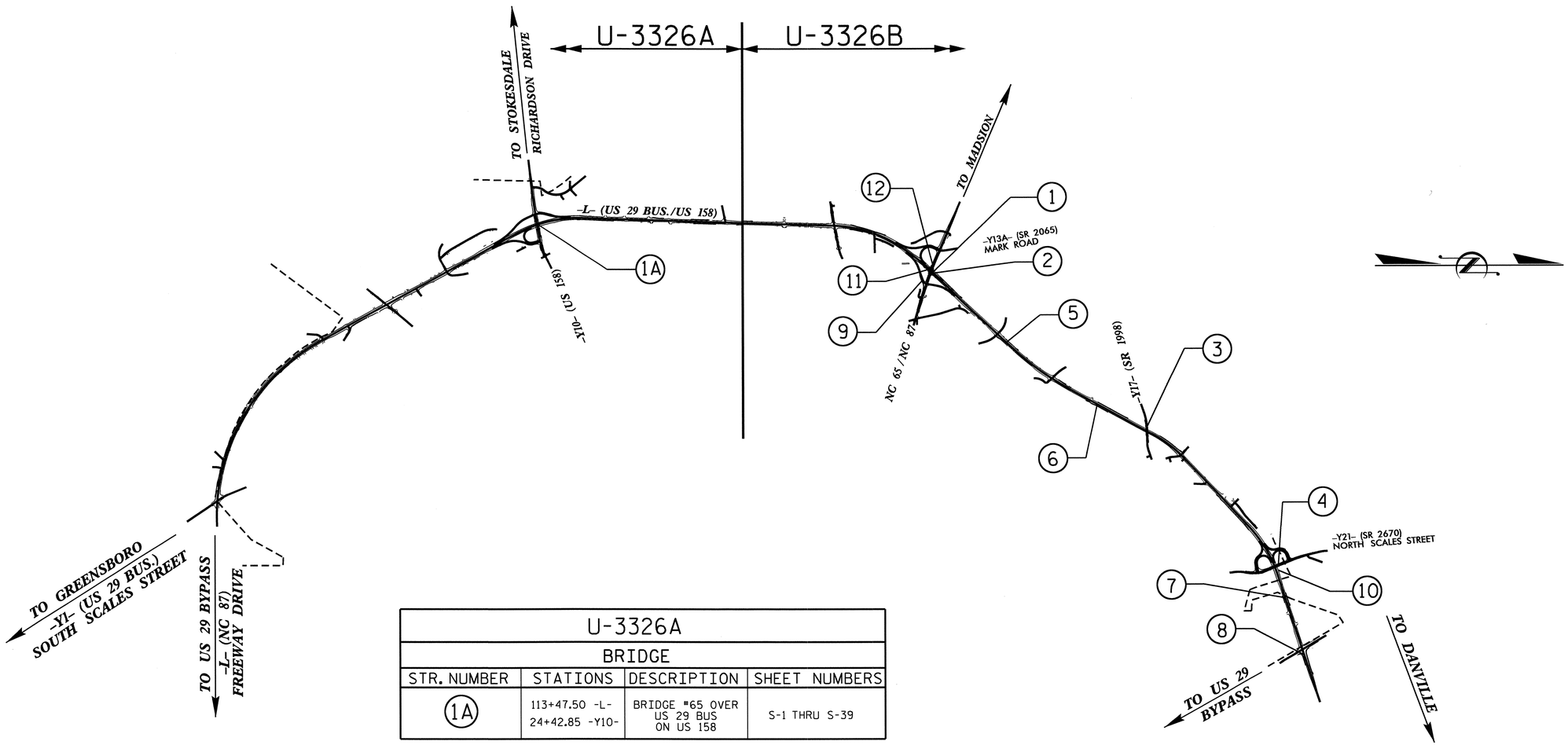

U-3326A			
BRIDGE			
STR. NUMBER	STATIONS	DESCRIPTION	SHEET NUMBERS
1A	113+47.50 -L- 24+42.85 -Y10-	BRIDGE #65 OVER US 29 BUS ON US 158	S-1 THRU S-39

U-3326B											
BRIDGES				CULVERTS				WALLS			
STR. NUMBER	STATIONS	DESCRIPTION	SHEET NUMBERS	STR. NUMBER	STATION	DESCRIPTION	SHEET NUMBERS	STR. NUMBER	STATION	DESCRIPTION	SHEET NUMBERS
1	203+04.30 -L- 23+46.07-Y13-POC (LEFT LANE)	BRIDGE #331 ON US 29 BUS OVER NC 65/87	S-40 THRU S-64	5	225+82.25 -L-	SINGLE 7' X 8' RCBC SINGLE 7' X 7' RCBC	C-1 THRU C-7	9	16+00.00 -Y13RPC-	RETAINING NO. 1 (SOLDIER PILE WALL)	W-1 TO W-2
2	203+04.30 -L- 23+46.07-Y13-POC (RIGHT LANE)	BRIDGE #126 ON US 29 BUS OVER NC 65/87	S-65 THRU S-89	6	250+30.41 -L-	DOUBLE 8' X 8' RCBC	C-8 THRU C-18	10	304+50.00 -L-	RETAINING NO. 2 (SOIL NAIL WALL)	W-3 TO W-4
3	262+51.60 -L- 16+20.75 -Y17-	BRIDGE #146 ON SR 1998 OVER US 29 BUS	S-90 THRU S-121	7	311+30.62 -L-	SINGLE 6' X 7' RCBC SINGLE 6' X 6' RCBC	C-19 THRU C-25	11	22+32.00 -Y13- TO 24+44.00 -Y13-	RETAINING NO. 3 (MSE WALL)	W-5 THRU W-8
4	303+93.67 -L-POC 22+21.46 -Y21-	BRIDGE #56 ON SR 2670 OVER US 29 BUS	S-122 THRU S-159	8	324+72.83 -L-	SINGLE 5' X 6' RCBC	C-26 THRU C-32	12	22+74.00 -Y13- TO 24+44.00 -Y13-	RETAINING NO. 4 (MSE WALL)	W-5 THRU W-8

PROJECT NO. U-3326A/B

ROCKINGHAM COUNTY

STATE OF NORTH CAROLINA
DEPARTMENT OF TRANSPORTATION
RALEIGH

INDEX SHEET

REVISIONS					
	BY:	DATE:	NO.	BY:	DATE:
1			3		
2			4		

26-AUG-2011 15:03
Y:\TIPProjects-U\U3326A\Structures\U3326_SD_IS.dgn
qtnguyen

F. A. PROJ. NO. STP-29B (2)

GRADE DATA -Y10-

PI = 23+60.00
EL. 860.92'
VC= 620'

(+)2.9870% (-)2.6810%

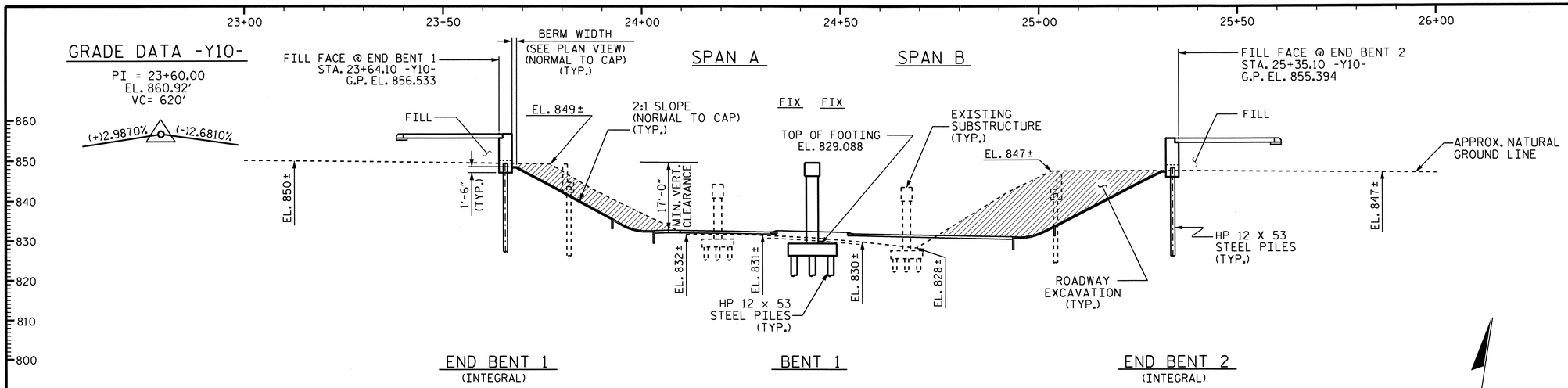

SECTION ALONG -Y10-

SECTIONS AT END BENTS AND BENT ARE TAKEN AT RIGHT ANGLES

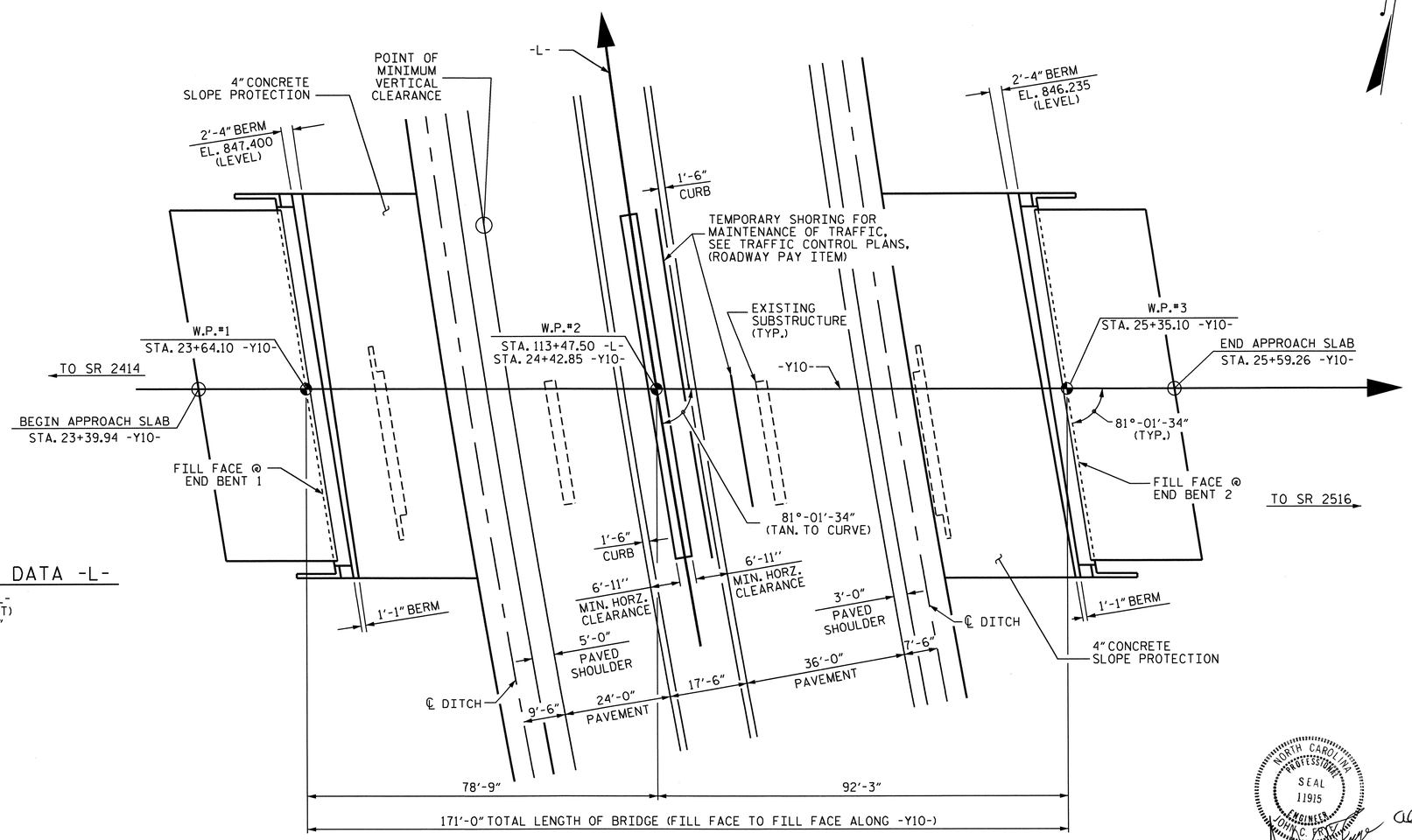

PLAN

PILES NOT SHOWN IN PLAN VIEW

HORIZONTAL CURVE DATA -L-

PI = 116+13.19 -L-
Δ = 30°-21'-38.2 (RT)
D = 1°-57'-07.8"
L = 1,555.24'
T = 796.34'
R =2,935.00'

PROJECT NO. U-3326A
ROCKINGHAM COUNTY
STATION: 113+47.50 -L-
24+42.85 -Y10-

SHEET 1 OF 3 REPLACES BRIDGE NO. 65

STATE OF NORTH CAROLINA
DEPARTMENT OF TRANSPORTATION
RALEIGH

GENERAL DRAWING
FOR BRIDGE OVER US 29 BUS
ON US 158 BETWEEN
SR 2414 AND SR 2516

NORTH CAROLINA PROFESSIONAL SEAL 11915 ENGINEER JOHN C. FRYE
10/27/11

NORTH CAROLINA PROFESSIONAL SEAL 030787 ENGINEER ALBERT C. OUTLAW, JR.
10/27/11

REVISIONS						SHEET NO.
NO.	BY:	DATE:	NO.	BY:	DATE:	S-1
1			3			TOTAL SHEETS
2			4			159

STR. #1A

DRAWN BY : A.L. FIGUEROA DATE : 12-02-08
CHECKED BY : A.S. CALLAWAY DATE : 12-04-08

26-OCT-2011 15:09
R:\Structures\str01\Final Plans\U3326A_SD_GD_01.dgn
aoutlaw

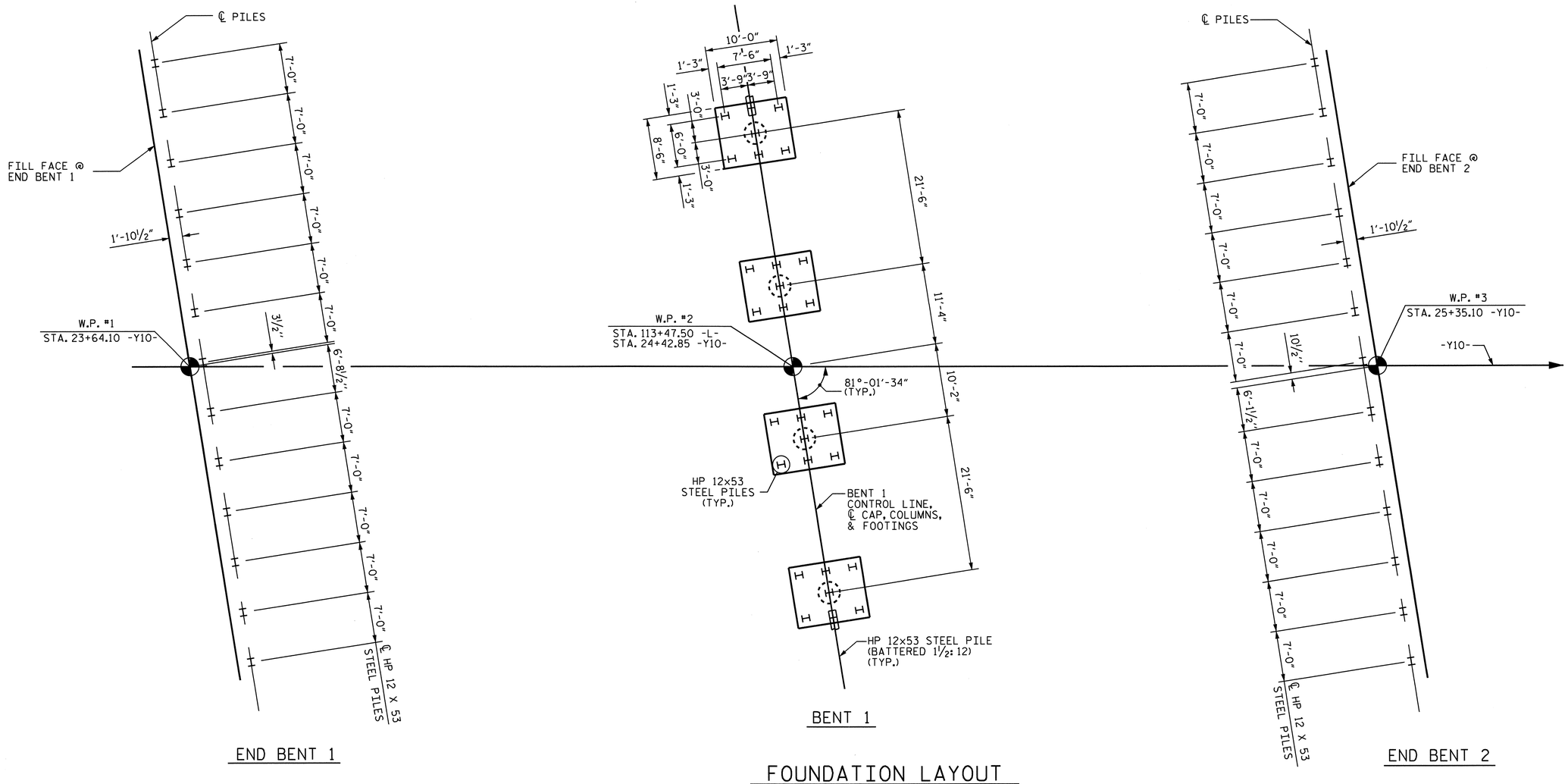

FOUNDATION LAYOUT

DIMENSIONS LOCATING PILES ARE SHOWN TO PILE CENTERLINE AND MEASURED AT BOTTOM OF CAP OR FOOTING

NOTES

FOR PILES, SEE SPECIAL PROVISIONS.

PILES AT END BENT 1 ARE DESIGNED FOR A FACTORED RESISTANCE OF 110 TONS PER PILE.

PILES AT BENT 1 ARE DESIGNED FOR A FACTORED RESISTANCE OF 120 TONS PER PILE.

PILES AT END BENT 2 ARE DESIGNED FOR A FACTORED RESISTANCE OF 115 TONS PER PILE.

DRIVE PILES AT END BENT 1 TO A REQUIRED DRIVING RESISTANCE OF 185 TONS PER PILE.

DRIVE PILES AT BENT 1 TO A REQUIRED DRIVING RESISTANCE OF 200 TONS PER PILE.

DRIVE PILES AT END BENT 2 TO A REQUIRED DRIVING RESISTANCE OF 195 TONS PER PILE.

IT HAS BEEN ESTIMATED THAT A HAMMER WITH AN EQUIVALENT RATED ENERGY IN THE RANGE OF 50-80 FT-KIPS PER BLOW WILL BE REQUIRED TO DRIVE PILES AT END BENT 1, BENT 1 AND END BENT 2. THIS ESTIMATED ENERGY RANGE DOES NOT RELEASE THE CONTRACTOR FROM PROVIDING DRIVING EQUIPMENT IN ACCORDANCE WITH THE PILES PROVISION.

PROJECT NO. U-3326A
ROCKINGHAM COUNTY
STATION: 113+47.50 -L-

SHEET 2 OF 3

STATE OF NORTH CAROLINA
DEPARTMENT OF TRANSPORTATION
RALEIGH

GENERAL DRAWING

FOR BRIDGE OVER US 29 BUS ON US 158 BETWEEN SR 2414 AND SR 2516

NORTH CAROLINA PROFESSIONAL SEAL 10754 ENGINEER A.C. OUTLAW

10/24/11

REVISIONS						SHEET NO.
NO.	BY:	DATE:	NO.	BY:	DATE:	S-2
1			3			TOTAL SHEETS
2			4			159

STR. #1A

DRAWN BY : HARISH SHAH DATE : 12/10
CHECKED BY : A.C. OUTLAW DATE : 2/3/11

24-OCT-2011 08:16
R:\Structures\str01\Final Plans\U3326A_SD_GD_01.dgn
ooutlaw

TOTAL BILL OF MATERIAL

	REMOVAL OF EXISTING STRUCTURE	FOUNDATION EXCAVATION FOR BENT	REINFORCED CONCRETE DECK SLAB	GROOVING BRIDGE FLOORS	CLASS A CONCRETE	BRIDGE APPROACH SLABS	REINFORCING STEEL	SPIRAL COLUMN REINFORCING STEEL	MODIFIED 63" PRESTRESSED CONCRETE GIRDER		HP 12x53 STEEL PILES		TWO BAR METAL RAIL	CONCRETE BARRIER RAIL	1'-2" x 2'-8" CONCRETE PARAPET	4" SLOPE PROTECTION	ELASTOMERIC BEARINGS	EVAZOTE JOINT SEALS
	LUMP SUM	LUMP SUM	SQ.FT.	SQ.FT.	CU.YDS.	LUMP SUM	LBS.	LBS.	NO.	LIN. FT.	NO.	LIN. FT.	LIN. FT.	LIN. FT.	LIN. FT.	SQ. YDS.	LUMP SUM	LUMP SUM
SUPERSTRUCTURE			13,751	14,424					18	1,510.13			161.63	169.31	169.31			
END BENT 1					50.9		6,377				13	950				323		
BENT 1					106.3		18,901	1,499			28	1,820						
END BENT 2					51.5		6,398				13	1,040				351		
TOTAL	LUMP SUM	LUMP SUM	13,751	14,424	208.7	LUMP SUM	31,676	1,499	18	1,510.13	54	3,810	161.63	169.31	169.31	674	LUMP SUM	LUMP SUM

BM #31: RR SPIKE IN BASE OF 12" ASH, 98.56' RIGHT, STA. 13+06.30 -Y10-, EL. 821.52

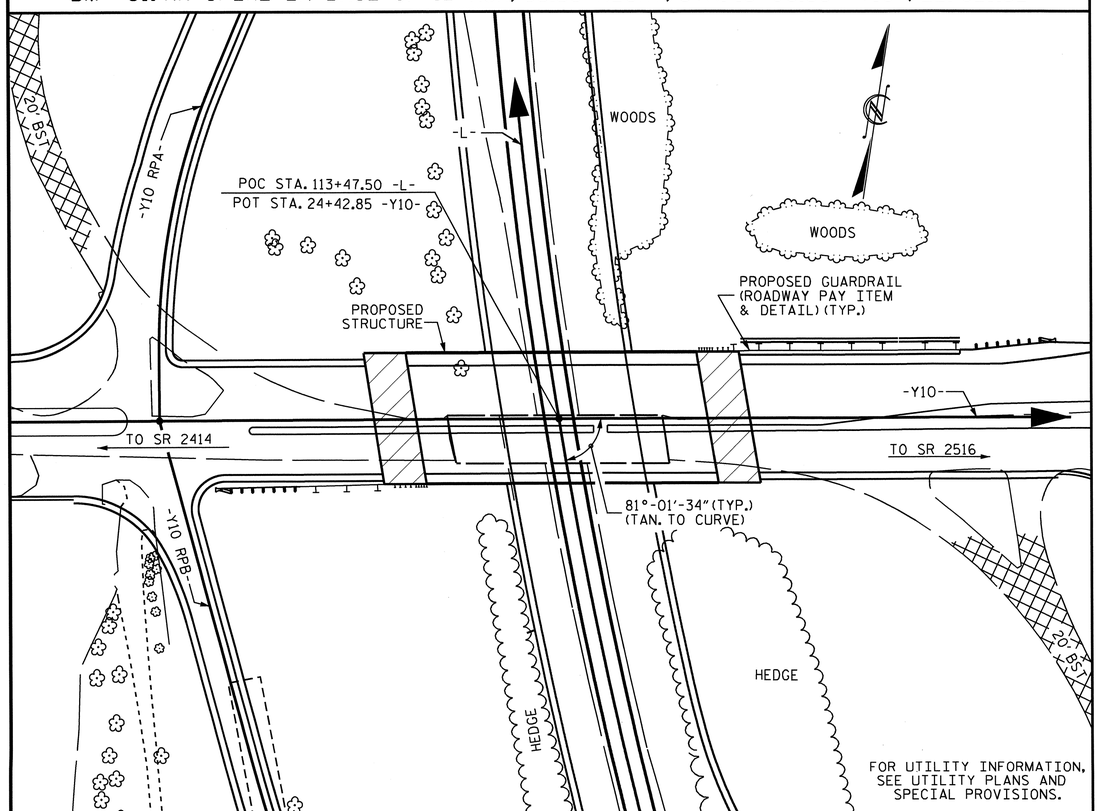

LOCATION SKETCH

NOTES

ASSUMED LIVE LOAD = HL-93 OR ALTERNATE LOADING.

FOR OTHER DESIGN DATA AND GENERAL NOTES, SEE SHEET SN.

FOR EROSION CONTROL MEASURES SEE EROSION CONTROL PLANS.

THIS BRIDGE HAS BEEN DESIGNED IN ACCORDANCE WITH THE AASHTO LRFD BRIDGE DESIGN SPECIFICATIONS.

PRESTRESSED CONCRETE DECK PANELS MAY BE USED IN LIEU OF METAL STAY-IN-PLACE FORMS IN ACCORDANCE WITH ARTICLE 420-3 OF THE STANDARD SPECIFICATIONS.

REMOVABLE FORMS MAY BE USED IN LIEU OF METAL STAY-IN-PLACE FORMS IN ACCORDANCE WITH ARTICLE 420-3 OF THE STANDARD SPECIFICATIONS.

THE EXISTING STRUCTURE CONSISTING OF THREE SPANS 39'-0", 47'-6" AND 39'-0"; 28'-0" CLEAR ROADWAY WIDTH AND RC DECK ON I-BEAMS: END BENTS CONSISTING OF RC CAPS ON TIMBER PILES, INTERIOR BENTS CONSISTING OF RC P&B ON PILE FOOTINGS, AND LOCATED AT THE PROPOSED STRUCTURE SITE SHALL BE REMOVED. THE EXISTING BRIDGE IS PRESENTLY NOT POSTED FOR LOAD LIMIT. SHOULD THE STRUCTURAL INTEGRITY OF THE BRIDGE DETERIORATE A LOAD LIMIT MAY BE POSTED AND MAY BE REDUCED AS FOUND NECESSARY DURING THE LIFE OF THE PROJECT.

THE SUBSTRUCTURE OF THE EXISTING BRIDGE INDICATED ON THE PLANS IS FROM THE BEST INFORMATION AVAILABLE. SINCE THIS INFORMATION IS SHOWN FOR THE CONVENIENCE OF THE CONTRACTOR, THE CONTRACTOR SHALL HAVE NO CLAIM WHATSOEVER AGAINST THE DEPARTMENT OF TRANSPORTATION FOR ANY DELAYS OR ADDITIONAL COST INCURRED BASED ON DIFFERENCES BETWEEN THE EXISTING BRIDGE SUBSTRUCTURE SHOWN ON THE PLANS AND THE ACTUAL CONDITIONS AT THE PROJECT SITE.

FOR LIMITS OF TEMPORARY SHORING FOR MAINTENANCE OF TRAFFIC, SEE TRAFFIC CONTROL PLANS. FOR PAY ITEM FOR TEMPORARY SHORING FOR MAINTENANCE OF TRAFFIC, SEE ROADWAY PLANS.

THE CONTRACTOR SHALL PROVIDE INDEPENDENT ASSURANCE SAMPLES OF REINFORCING STEEL AS FOLLOWS: FOR PROJECTS REQUIRING UP TO 400 TONS OF REINFORCING STEEL, ONE 30 INCH SAMPLE OF EACH SIZE BAR USED, AND FOR PROJECTS REQUIRING OVER 400 TONS OF REINFORCING STEEL, TWO 30 INCH SAMPLES OF EACH SIZE BAR USED. THE BARS FROM WHICH THE SAMPLES ARE TAKEN MUST THEN BE SPLICED WITH REPLACEMENT BARS OF THE SIZE AND LENGTH OF THE SAMPLE, PLUS A MINIMUM LAP SPLICE OF THIRTY BAR DIAMETERS. PAYMENT FOR THE SAMPLES OF REINFORCING STEEL SHALL BE CONSIDERED INCIDENTAL TO VARIOUS PAY ITEMS.

INASMUCH AS THE PAINT SYSTEM ON THE EXISTING STRUCTURAL STEEL CONTAINS LEAD, THE CONTRACTOR'S ATTENTION IS DIRECTED TO ARTICLE 107-1 OF THE STANDARD SPECIFICATIONS. ANY COSTS RESULTING FROM COMPLIANCE WITH APPLICABLE STATE OR FEDERAL REGULATIONS PERTAINING TO HANDLING OF MATERIALS CONTAINING LEAD BASED PAINT SHALL BE INCLUDED IN THE BID PRICE FOR "REMOVAL OF EXISTING STRUCTURE AT STATION 113+47.50 -L-".

THE CLASS AA CONCRETE IN THE BRIDGE DECK SHALL CONTAIN FLY ASH OR GROUND GRANULATED BLAST FURNACE SLAG AT THE SUBSTITUTION RATE SPECIFIED IN ARTICLE 1024-1 AND IN ACCORDANCE WITH ARTICLES 1024-5 AND 1024-6 OF THE STANDARD SPECIFICATIONS. NO PAYMENT WILL BE MADE FOR THIS SUBSTITUTION AS IT IS CONSIDERED INCIDENTAL TO THE COST OF THE REINFORCED CONCRETE DECK SLAB.

NEEDLE BEAMS WILL NOT BE ALLOWED UNLESS OTHERWISE CALLED FOR ON THE PLANS OR APPROVED BY THE ENGINEER.

FOR MAINTENANCE AND PROTECTION OF TRAFFIC BENEATH PROPOSED STRUCTURE, SEE SPECIAL PROVISIONS.

STEEL SHEET PILING REQUIRED FOR SHORING SHALL BE HOT ROLLED.

FOR SUBMITTAL OF WORKING DRAWINGS, SEE SPECIAL PROVISIONS.

FOR FALSEWORK AND FORMWORK, SEE SPECIAL PROVISIONS.

FOR PRESTRESSED CONCRETE MEMBERS, SEE SPECIAL PROVISIONS.

FOR GROUT FOR STRUCTURES, SEE SPECIAL PROVISIONS.

FOR CURING CONCRETE, SEE SPECIAL PROVISIONS.

FOR CRANE SAFETY, SEE SPECIAL PROVISIONS.

FOR FORMS FOR CONCRETE BRIDGE DECKS, SEE SPECIAL PROVISIONS.

FOR PLACING LOAD ON STRUCTURE MEMBERS, SEE SPECIAL PROVISIONS.

PROJECT NO. U-3326A
ROCKINGHAM COUNTY
STATION: 113+47.50 -L-

SHEET 3 OF 3

STATE OF NORTH CAROLINA
DEPARTMENT OF TRANSPORTATION
RALEIGH

GENERAL DRAWING
FOR BRIDGE OVER US 29 BUS ON US 158 BETWEEN SR 2414 AND SR 2516

NORTH CAROLINA PROFESSIONAL SEAL 019549 ENGINEER ALBERT C. OUTLAW, JR.
10/27/11

REVISIONS						SHEET NO.
NO.	BY:	DATE:	NO.	BY:	DATE:	S-3
1			3			TOTAL SHEETS
2			4			159

STR. #1A

DRAWN BY : HARISH SHAH DATE : 12/10
CHECKED BY : A. C. OUTLAW DATE : 5/10/11

27-OCT-2011 09:29
R:\Structures\str01\Final Plans\U3326A_SD_GD_01.dgn
aoutlaw

LOAD AND RESISTANCE FACTOR RATING (LRFD) SUMMARY FOR PRESTRESSED CONCRETE GIRDERS

LEVEL		VEHICLE	WEIGHT (W) (TONS)	CONTROLLING LOAD RATING (#)	MINIMUM RATING FACTORS (RF)	TONS = W X RF	STRENGTH I LIMIT STATE											SERVICE III LIMIT STATE						COMMENT NUMBER
								MOMENT					SHEAR						MOMENT					
							LIVE-LOAD FACTORS (γ_{LL})	DISTRIBUTION FACTORS (DF)	RATING FACTOR	SPAN	GIRDER LOCATION	DISTANCE FROM LEFT END OF SPAN (ft)	DISTRIBUTION FACTORS (DF)	RATING FACTOR	SPAN	GIRDER LOCATION	DISTANCE FROM LEFT END OF SPAN (ft)	LIVE-LOAD FACTORS (γ_{LL})	DISTRIBUTION FACTORS (DF)	RATING FACTOR	SPAN	GIRDER LOCATION	DISTANCE FROM LEFT END OF SPAN (ft)	
DESIGN LOAD RATING		HL-93 (INVENTORY)	N/A	1	1.38	--	1.75	0.922	1.60	B	EL	44.613	0.943	1.51	B	EL	26.768	0.80	0.922	1.38	B	EL	44.613	
		HL-93 (OPERATING)	N/A	--	1.95	--	1.35	0.922	2.07	B	EL	44.613	0.943	1.95	B	EL	26.768	N/A	--	--	--	--	--	
		HS-20 (INVENTORY)	36.000	2	1.85	66.7	1.75	0.922	2.18	B	EL	44.613	0.942	1.85	A	EL	22.718	0.80	0.922	1.88	B	EL	44.613	
		HS-20 (OPERATING)	36.000	--	2.40	86.5	1.35	0.922	2.82	B	EL	44.613	0.942	2.40	A	EL	22.718	N/A	--	--	--	--	--	
LEGAL LOAD RATING	SINGLE VEHICLE (SV)	SNSH	13.500	--	4.39	59.3	1.40	0.922	6.23	A	EL	37.863	0.942	5.35	A	EL	22.718	0.80	0.922	4.39	B	EL	44.613	
		SNGARBS2	20.000	--	3.21	64.1	1.40	0.922	4.62	A	EL	37.863	0.942	3.86	A	EL	22.718	0.80	0.922	3.21	B	EL	44.613	
		SNAGRIS2	22.000	--	3.01	66.2	1.40	0.922	4.36	B	EL	44.613	0.942	3.60	A	EL	22.718	0.80	0.922	3.01	B	EL	44.613	
		SNCOTTS3	27.250	--	2.18	59.5	1.40	0.922	3.10	A	EL	37.863	0.942	2.68	A	EL	22.718	0.80	0.922	2.18	B	EL	44.613	
		SNAGGRS4	34.925	--	1.80	62.8	1.40	0.922	2.58	A	EL	37.863	0.942	2.26	A	EL	22.718	0.80	0.922	1.80	B	EL	44.613	
		SNS5A	35.550	--	1.76	62.6	1.40	0.922	2.53	A	EL	37.863	0.942	2.31	A	EL	22.718	0.80	0.922	1.76	B	EL	44.613	
		SNS6A	39.950	--	1.61	64.1	1.40	0.922	2.32	A	EL	37.863	0.942	2.12	A	EL	22.718	0.80	0.922	1.61	B	EL	44.613	
		SNS7B	42.000	--	1.53	64.2	1.40	0.922	2.20	A	EL	37.863	0.942	2.10	A	EL	22.718	0.80	0.922	1.53	B	EL	44.613	
	TRUCK TRACTOR SEMI-TRAILER (TTST)	TNAGRIT3	33.000	--	1.96	64.5	1.40	0.922	2.82	A	EL	37.863	0.942	2.51	A	EL	22.718	0.80	0.922	1.95	B	EL	44.613	
		TNT4A	33.075	--	1.96	64.8	1.40	0.922	2.83	A	EL	37.863	0.942	2.43	A	EL	22.718	0.80	0.922	1.96	B	EL	44.613	
		TNT6A	41.600	--	1.59	66.1	1.40	0.922	2.31	B	EL	44.613	0.943	2.26	B	EL	26.768	0.80	0.922	1.59	B	EL	44.613	
		TNT7A	42.000	--	1.60	67.0	1.40	0.922	2.31	B	EL	44.613	0.943	2.21	B	EL	26.768	0.80	0.922	1.60	B	EL	44.613	
		TNT7B	42.000	--	1.64	68.8	1.40	0.922	2.37	B	EL	44.613	0.942	2.04	A	EL	22.718	0.80	0.922	1.64	B	EL	44.613	
		TNAGRIT4	43.000	--	1.57	67.4	1.40	0.922	2.27	B	EL	44.613	0.942	1.97	A	EL	22.718	0.80	0.922	1.57	B	EL	44.613	
		TNAGT5A	45.000	--	1.48	66.7	1.40	0.922	2.15	B	EL	44.613	0.942	1.98	A	EL	22.718	0.80	0.922	1.48	B	EL	44.613	
		TNAGT5B	45.000	3	1.47	66.1	1.40	0.922	2.13	B	EL	44.613	0.942	1.87	A	EL	22.718	0.80	0.922	1.47	B	EL	44.613	

LOAD FACTORS:

DESIGN LOAD RATING FACTORS	LIMIT STATE	γ_{DC}	γ_{DW}
	STRENGTH I	1.25	1.50
	SERVICE III	1.00	1.00

NOTES:

MINIMUM RATING FACTORS ARE BASED ON THE STRENGTH I AND SERVICE III LIMIT STATES.

ALLOWABLE STRESSES FOR SERVICE III LIMIT STATE ARE AS REQUIRED FOR DESIGN.

COMMENTS:

1.
2.
3.
4.

(#) CONTROLLING LOAD RATING

(1) DESIGN LOAD RATING (HL-93)
(2) DESIGN LOAD RATING (HS-20)
(3) LEGAL LOAD RATING **
** SEE CHART FOR VEHICLE TYPE

GIRDER LOCATION

I - INTERIOR GIRDER
EL - EXTERIOR LEFT GIRDER
ER - EXTERIOR RIGHT GIRDER

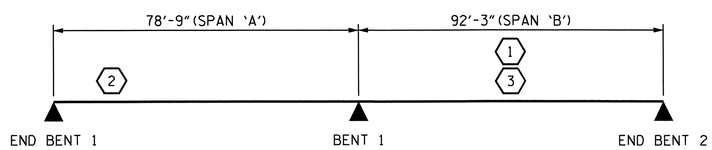

LRFR SUMMARY

PROJECT NO. U-3326A
ROCKINGHAM COUNTY
STATION: 113+47.50 -L-

STATE OF NORTH CAROLINA
DEPARTMENT OF TRANSPORTATION
RALEIGH

STANDARD
LRFR SUMMARY FOR PRESTRESSED CONCRETE GIRDERS
(NON-INTERSTATE TRAFFIC)

NORTH CAROLINA PROFESSIONAL SEAL 10257 ENGINEER ALBERT C. OUTLAW, JR.
10/24/11

REVISIONS						SHEET NO.
NO.	BY:	DATE:	NO.	BY:	DATE:	S-4
1			3			TOTAL SHEETS
2			4			159

STR. #1A STD. NO. LRFR1

ASSEMBLED BY : A. C. OUTLAW DATE : 10/29/10
CHECKED BY : W. F. PARKER DATE : 6/01/11
DRAWN BY : MAA 1/08
CHECKED BY : GM/DI 2/08
REV. 11/12/08RR MAA/GM

24-OCT-2011 08:16
R:\Structures\str01\Final Plans\U3326A_SD_R_01.dgn
aoutlaw

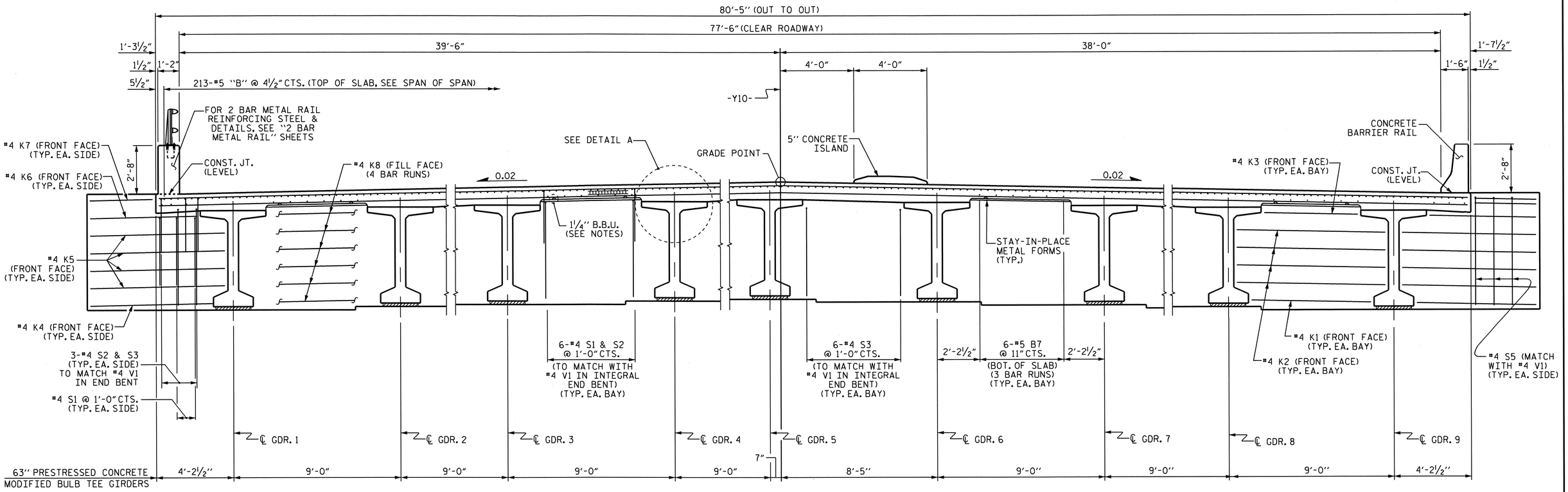

TYPICAL SECTION

(SHOWING ABUTMENT WALL AT END BENT)

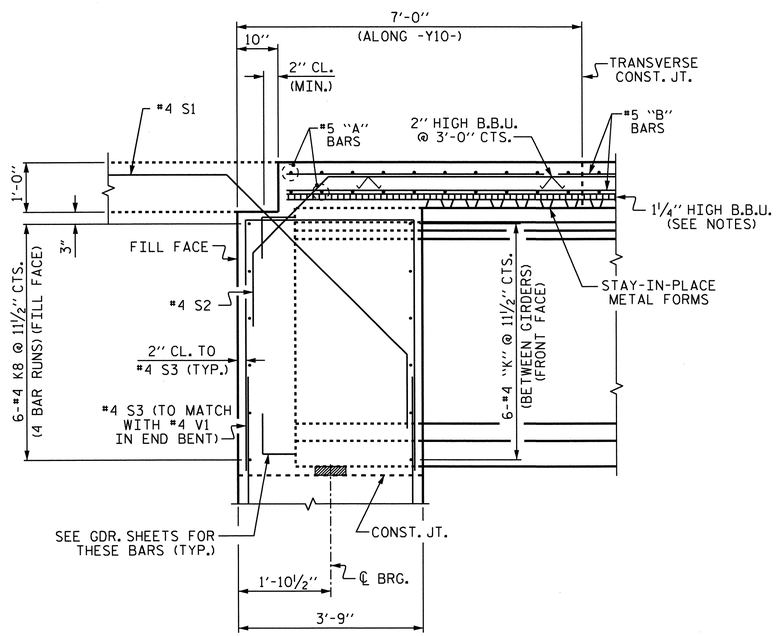

SECTION THRU INTEGRAL END BENT

NOTES

PROVIDE 1 1/4" HIGH BEAM BOLSTERS UPPER AT 4'-0" CTS. ATOP THE METAL STAY-IN-PLACE FORMS TO SUPPORT THE BOTTOM MAT OF 'A' BARS. WHEN USING REMOVABLE FORMS, PROVIDE CONTINUOUS HIGH CHAIRS FOR METAL DECK (C.H.C.M.) @ 4'-0" CTS. WITH A HEIGHT TO SUPPORT THE BOTTOM MAT OF 'A' BARS A CLEAR DISTANCE OF 2 1/2" ABOVE THE TOP OF THE REMOVABLE FORM.

LONGITUDINAL STEEL MAY BE SHIFTED SLIGHTLY, AS NECESSARY, TO AVOID INTERFERENCE WITH STIRRUPS IN PRESTRESSED CONCRETE GIRDERS.

PREVIOUSLY CAST CONCRETE IN A CONTINUOUS UNIT SHALL HAVE ATTAINED A MINIMUM COMPRESSIVE STRENGTH OF 3,000 PSI BEFORE ADDITIONAL CONCRETE IS CAST IN THE UNIT.

BARRIER RAIL, PARAPET AND CONCRETE MEDIAN IN A CONTINUOUS UNIT SHALL NOT BE CAST UNTIL ALL SLAB CONCRETE IN THE UNIT HAS BEEN CAST AND HAS REACHED A MINIMUM COMPRESSIVE STRENGTH OF 3,000 PSI.

FOR INTERMEDIATE STEEL DIAPHRAGMS DETAILS, SEE "INTERMEDIATE STEEL DIAPHRAGMS FOR 63" PRESTRESSED CONCRETE MODIFIED BULB TEE GIRDERS" SHEET.

PROJECT NO. U-3326A
ROCKINGHAM COUNTY
STATION: 113+47.50 -L-

SHEET 1 OF 2

STATE OF NORTH CAROLINA
DEPARTMENT OF TRANSPORTATION
RALEIGH

SUPERSTRUCTURE

TYPICAL SECTION

NORTH CAROLINA PROFESSIONAL SEAL 10736 ENGINEER ALBERT C. OUTLAW, JR.
10/27/11

REVISIONS								SHEET NO.
NO.	BY:	DATE:	NO.	BY:	DATE:			S-5
1			3					TOTAL SHEETS
2			4					159

STR. #1A

DRAWN BY : A.S. CALLAWAY DATE : 3/31/10
CHECKED BY : A. C. OUTLAW DATE : 1/26/11

27-OCT-2011 08:49
R:\Structures\str01\Final Plans\U3326A_SD_TS_01.dgn
aoutlaw

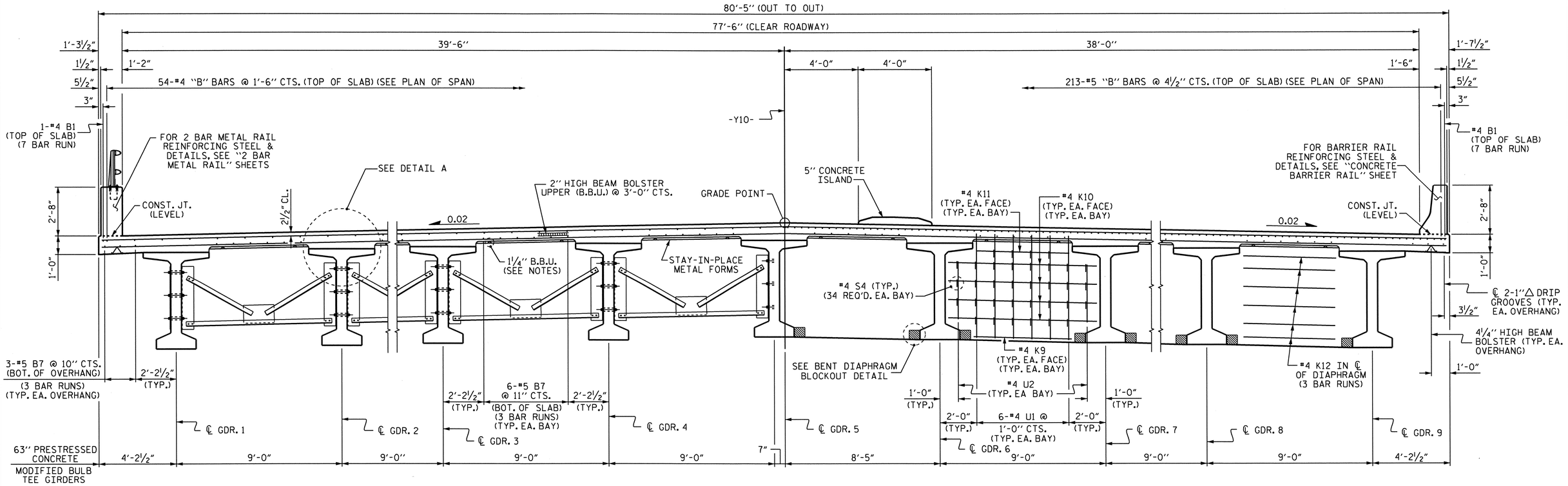

AT INTERMEDIATE STEEL DIAPHRAGMS

AT CONTINUOUS BENT DIAPHRAGM

TYPICAL SECTION

(SHOWING INTERMEDIATE AND BENT DIAPHRAGMS)

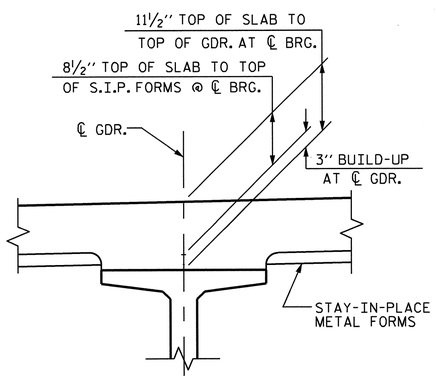

DETAIL A

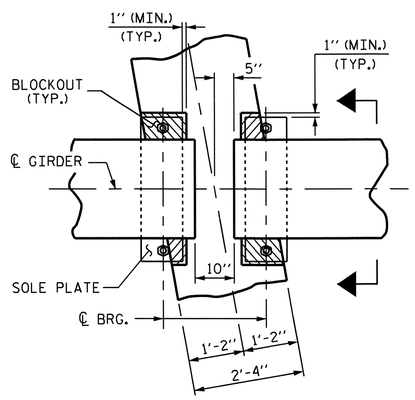

PLAN

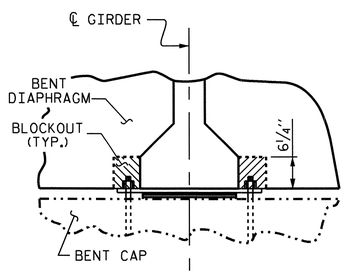

SECTION

BENT DIAPHRAGM BLOCKOUT DETAIL

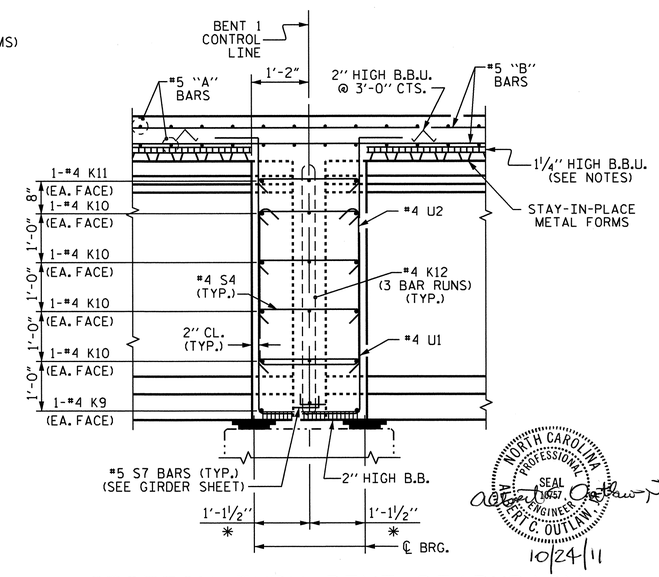

✱ MEASURED ALONG ℄ GIRDER

SECTION THRU BENT DIAPHRAGM

NORTH CAROLINA PROFESSIONAL SEAL 10657 ENGINEER ALBERT C. OUTLAW JR.
10/24/11

PROJECT NO. U-3326A
ROCKINGHAM COUNTY
STATION: 113+47.50 -L-

SHEET 2 OF 2

STATE OF NORTH CAROLINA
DEPARTMENT OF TRANSPORTATION
RALEIGH

SUPERSTRUCTURE

TYPICAL SECTION

REVISIONS						SHEET NO.
NO.	BY:	DATE:	NO.	BY:	DATE:	S-6
1			3			TOTAL SHEETS
2			4			159

DRAWN BY : A.S. CALLAWAY DATE : 3/31/10
CHECKED BY : A. C. OUTLAW DATE : 1/21/11

24-OCT-2011 08:16
R:\Structures\str01\Final Plans\U3326A_SD_TS_01.dgn
aoutlaw

STR. #1A

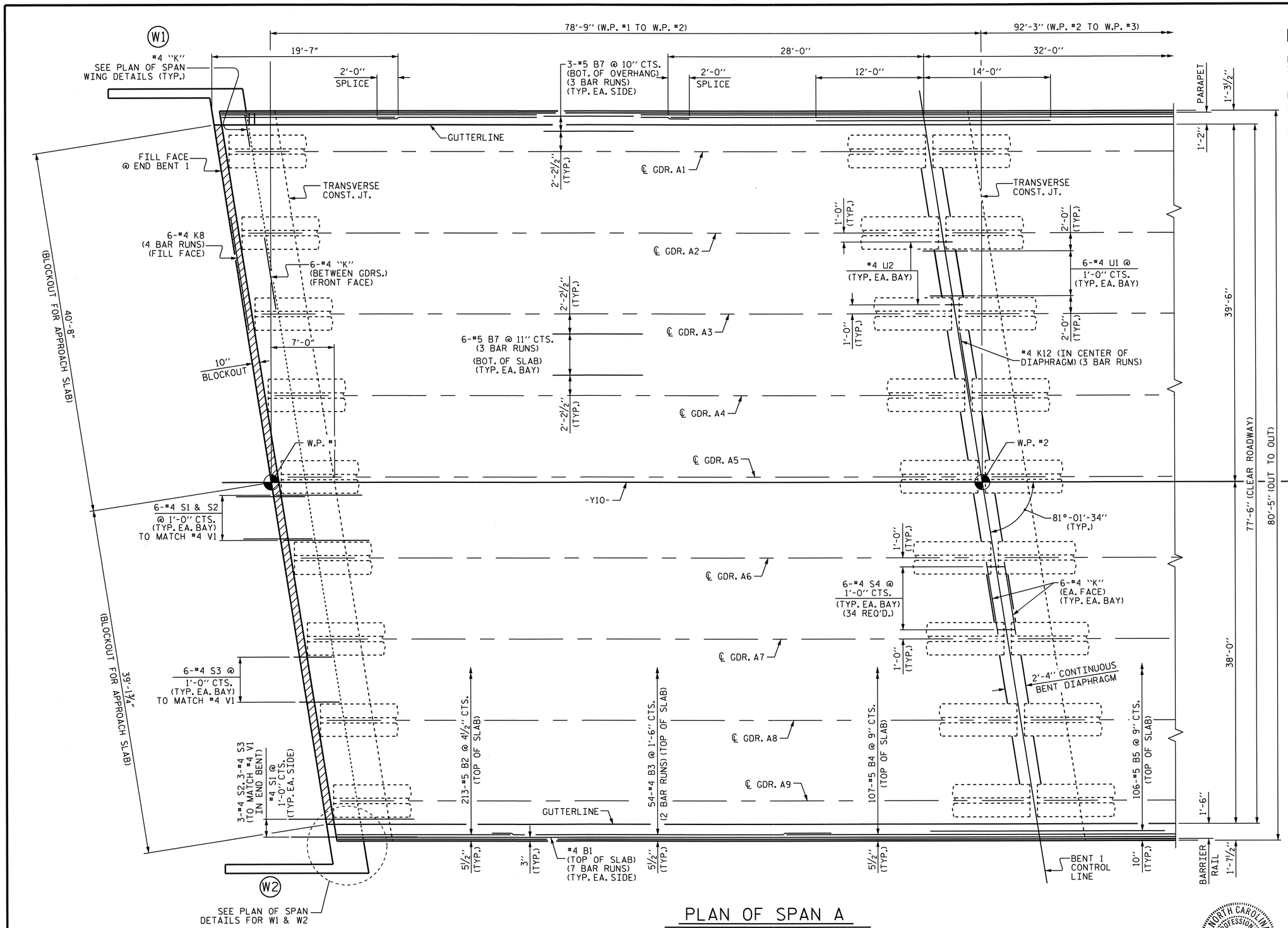

PLAN OF SPAN A

NOTES

FOR TOP AND BOTTOM "A" BAR REINFORCING STEEL, SEE "PLAN OF SPANS" SHEET 3 OF 7 AND SHEET 4 OF 7.

FOR LOCATION OF TRANSVERSE CONSTRUCTION JOINTS, SEE "SUPERSTRUCTURE BILL OF MATERIAL" SHEET.

FOR CONCRETE MEDIAN REINFORCING STEEL AND DETAILS, SEE "PLAN OF SPANS" SHEET 5 OF 7.

FOR CONCRETE BARRIER RAIL REINFORCING STEEL AND DETAILS, SEE "CONCRETE BARRIER RAIL" SHEET.

FOR END POST AND PARAPET REINFORCING STEEL AND DETAILS, SEE "TWO BAR METAL RAIL END POST DETAILS" SHEET.

FOR SECTIONS, SEE "TYPICAL SECTIONS" SHEETS.

PROJECT NO. U-3326A
ROCKINGHAM COUNTY
STATION: 113+47.50 -L-

SHEET 1 OF 7

STATE OF NORTH CAROLINA
DEPARTMENT OF TRANSPORTATION
RALEIGH

SUPERSTRUCTURE
PLAN OF SPANS

NORTH CAROLINA PROFESSIONAL SEAL 025 ENGINEER ALBERT C. OUTLAW, JR.
10/27/11

REVISIONS						SHEET NO.
NO.	BY:	DATE:	NO.	BY:	DATE:	S-7
1			3			TOTAL SHEETS
2			4			159

STR. #1A

DRAWN BY : A.S. CALLAWAY DATE : 4/8/10
CHECKED BY : A. C. OUTLAW DATE : 1/27/11

27-OCT-2011 09:03
R:\Structures\str01\Final Plans\U3326A_SD_S*_01.dgn
aoutlaw

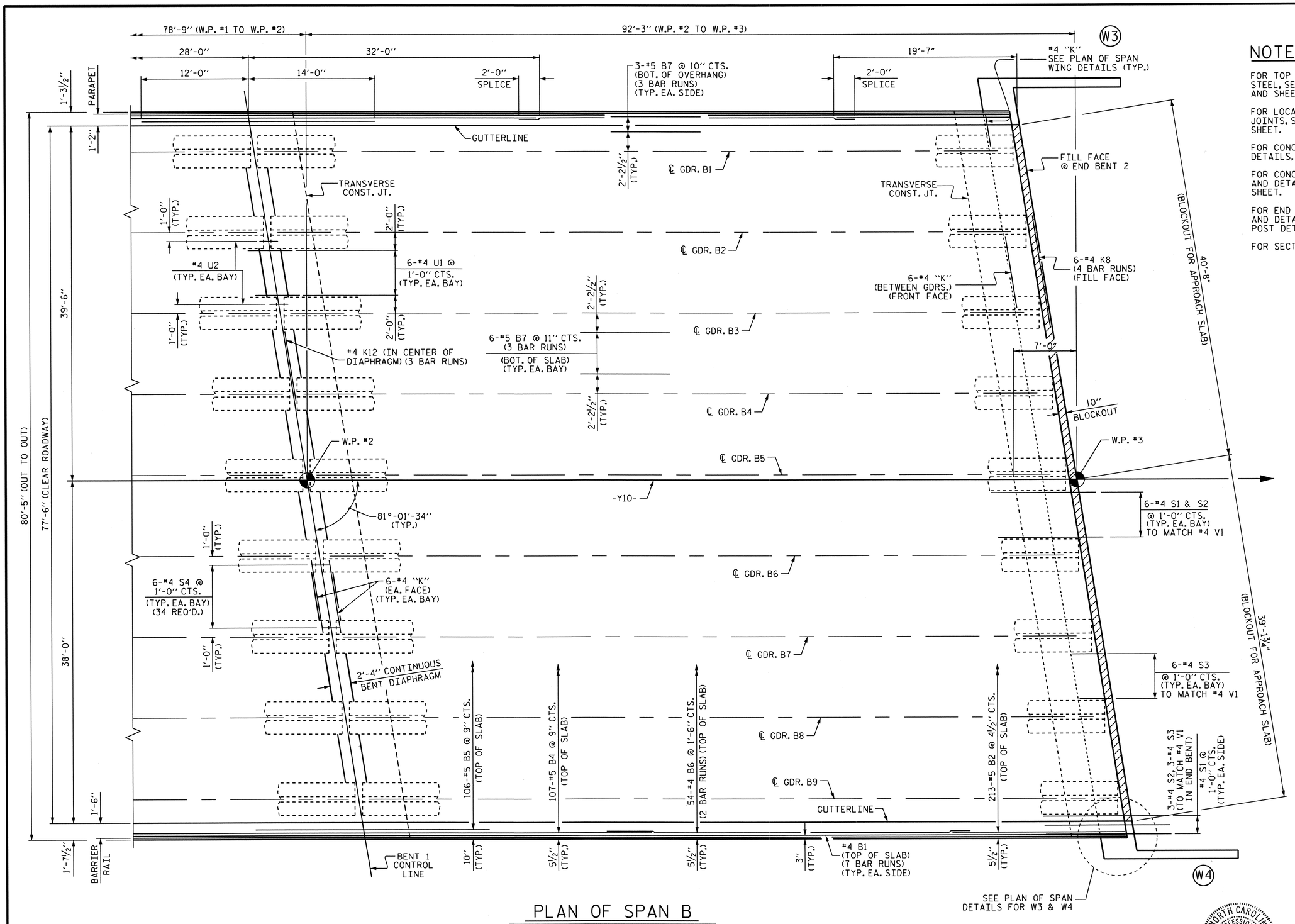

PLAN OF SPAN B

NOTES

FOR TOP AND BOTTOM "A" BAR REINFORCING STEEL, SEE "PLAN OF SPANS" SHEET 3 OF 7 AND SHEET 4 OF 7.

FOR LOCATION OF TRANSVERSE CONSTRUCTION JOINTS, SEE "SUPERSTRUCTURE BILL OF MATERIAL" SHEET.

FOR CONCRETE MEDIAN REINFORCING STEEL AND DETAILS, SEE "PLAN OF SPANS" SHEET 5 OF 7.

FOR CONCRETE BARRIER RAIL REINFORCING STEEL AND DETAILS, SEE "CONCRETE BARRIER RAIL" SHEET.

FOR END POST AND PARAPET REINFORCING STEEL AND DETAILS, SEE "TWO BAR METAL RAIL END POST DETAILS" SHEET.

FOR SECTIONS, SEE "TYPICAL SECTIONS" SHEETS.

PROJECT NO. U-3326A
ROCKINGHAM COUNTY
STATION: 113+47.50 -L-

SHEET 2 OF 7

STATE OF NORTH CAROLINA
DEPARTMENT OF TRANSPORTATION
RALEIGH

SUPERSTRUCTURE
PLAN OF SPANS

NORTH CAROLINA PROFESSIONAL SEAL 19057 ENGINEER ALBERT C. OUTLAW, JR.
10/27/11

REVISIONS						SHEET NO.
NO.	BY:	DATE:	NO.	BY:	DATE:	S-8
1			3			TOTAL SHEETS
2			4			159

STR. #1A

DRAWN BY : A.S. CALLAWAY DATE : 4/8/10
CHECKED BY : A. C. OUTLAW DATE : 1/27/11

27-OCT-2011 08:49
R:\Structures\str01\Final Plans\U3326A_SD_S*_01.dgn
aoutlaw

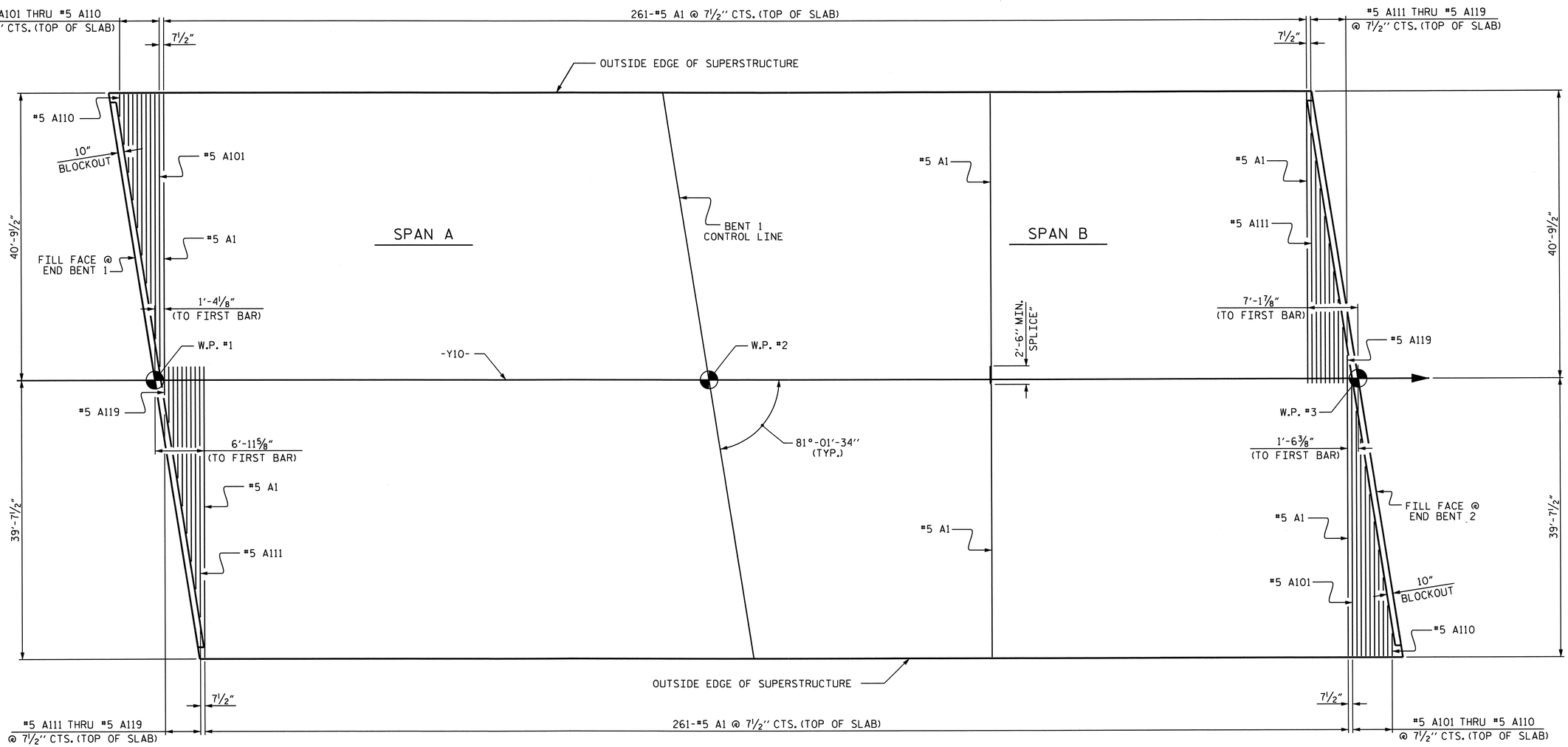

TOP MAT REINFORCING STEEL

PROJECT NO. U-3326A
ROCKINGHAM COUNTY
STATION: 113+47.50 -L-

SHEET 3 OF 7

STATE OF NORTH CAROLINA
DEPARTMENT OF TRANSPORTATION
RALEIGH

SUPERSTRUCTURE
PLAN OF SPANS

NORTH CAROLINA PROFESSIONAL SEAL 10257 ENGINEER ALBERT C. OUTLAW JR.
9/13/11

REVISIONS						SHEET NO.
NO.	BY:	DATE:	NO.	BY:	DATE:	S-9
1			3			TOTAL SHEETS
2			4			159

DRAWN BY : A.S. CALLAWAY DATE : 4/8/10
CHECKED BY : A. C. OUTLAW DATE : 1/27/11

13-SEP-2011 15:35
R:\Structures\str01\Final Plans\U3326A_SD_S*_01.dgn
qtnguyen

STR. #1A

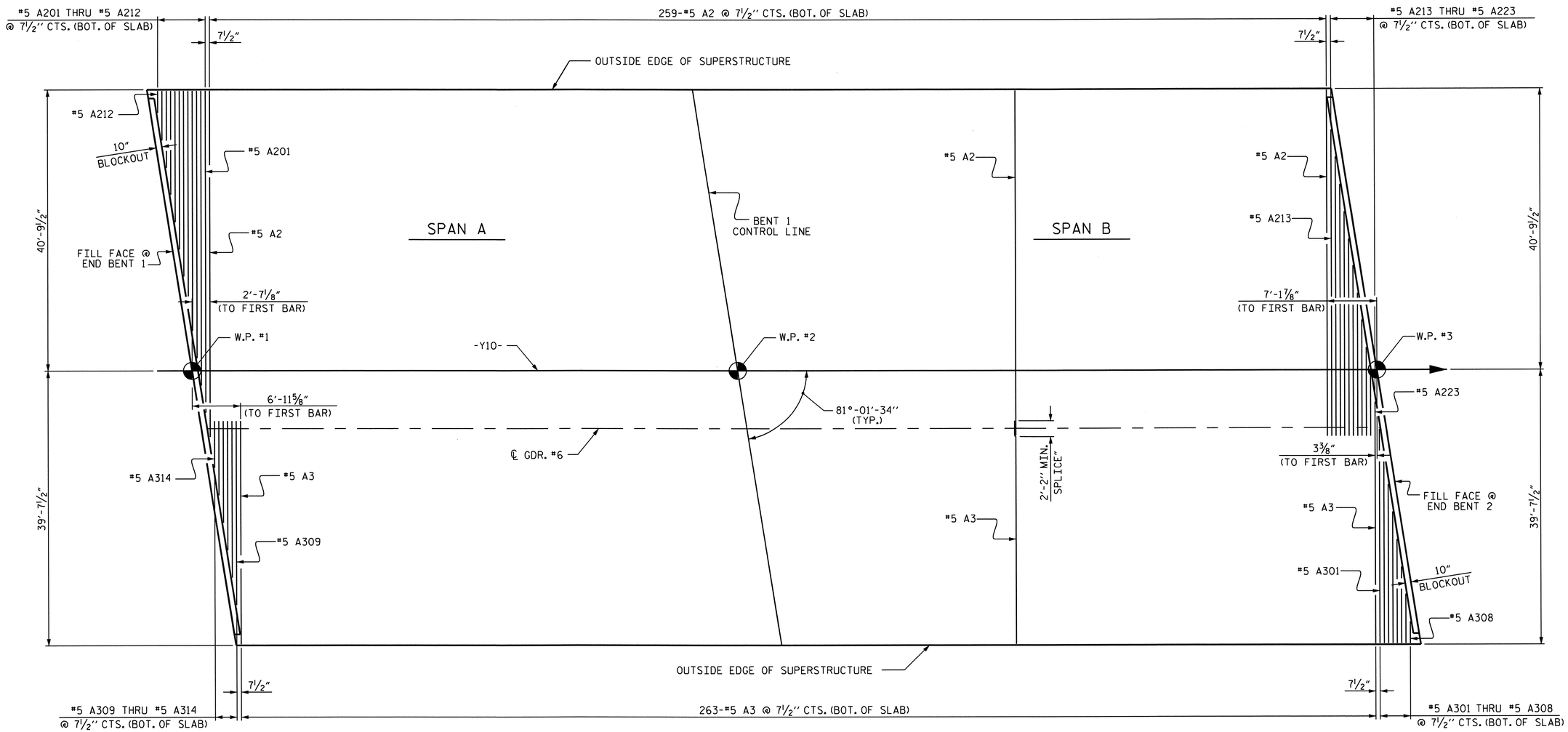

BOTTOM MAT REINFORCING STEEL

PROJECT NO. U-3326A
ROCKINGHAM COUNTY
STATION: 113+47.50 -L-

SHEET 4 OF 7

STATE OF NORTH CAROLINA
DEPARTMENT OF TRANSPORTATION
RALEIGH

SUPERSTRUCTURE
PLAN OF SPANS

NORTH CAROLINA PROFESSIONAL SEAL 10757 ENGINEER ALBERT C. OUTLAW, JR.
9/13/11

REVISIONS						SHEET NO.
NO.	BY:	DATE:	NO.	BY:	DATE:	S-10
1			3			TOTAL SHEETS
2			4			159

STR. #1A

DRAWN BY : A.S. CALLAWAY DATE : 4/8/10
CHECKED BY : A. C. OUTLAW DATE : 1/27/11

13-SEP-2011 15:35
R:\Structures\str01\FinalPlans\U3326A_SD_S*_01.dgn
qtnguyen

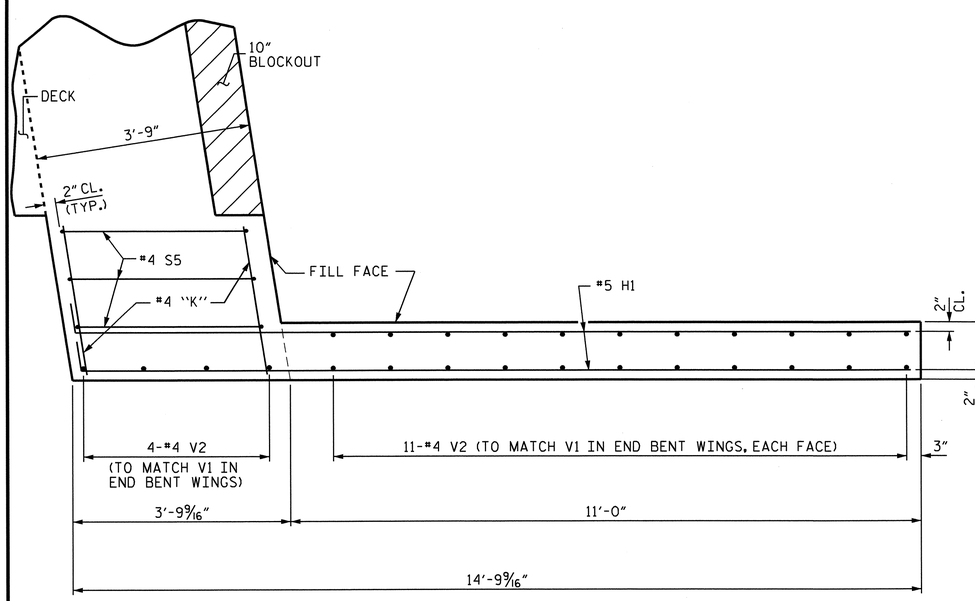

PLAN OF WING (W1)

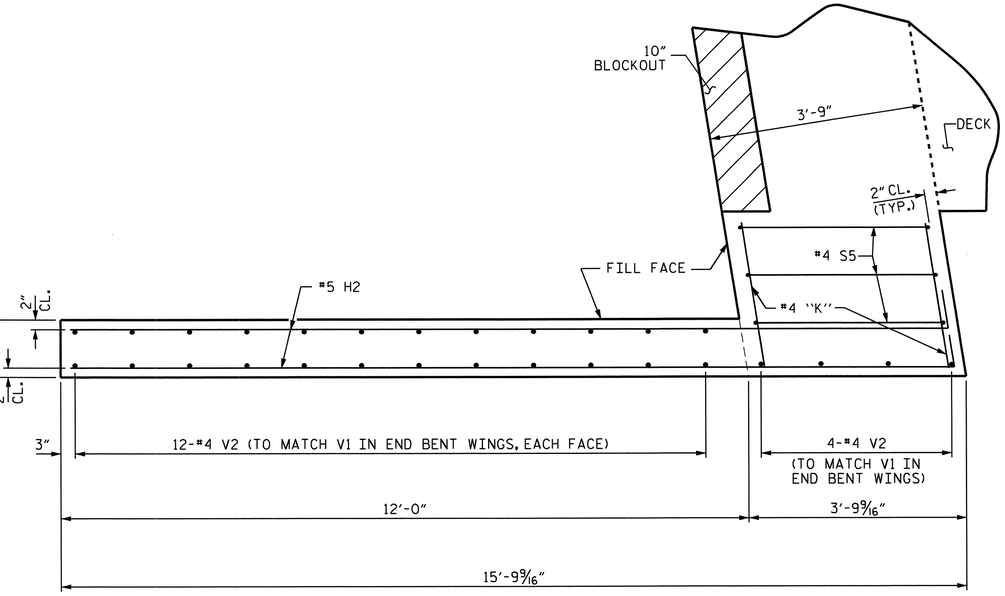

PLAN OF WING (W2)

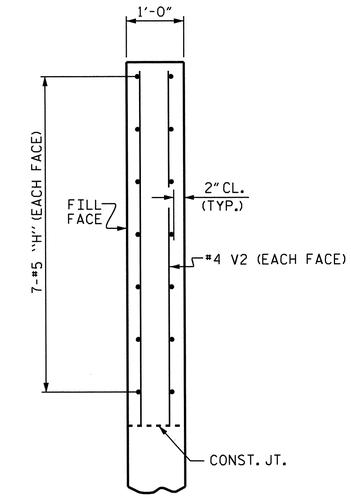

SECTION X-X

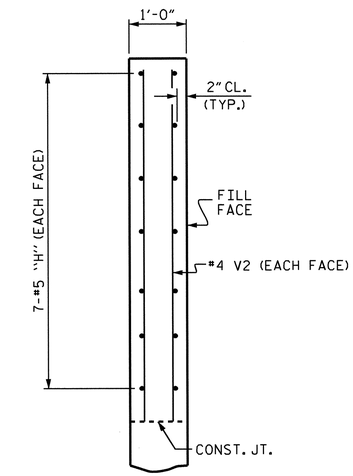

SECTION Y-Y

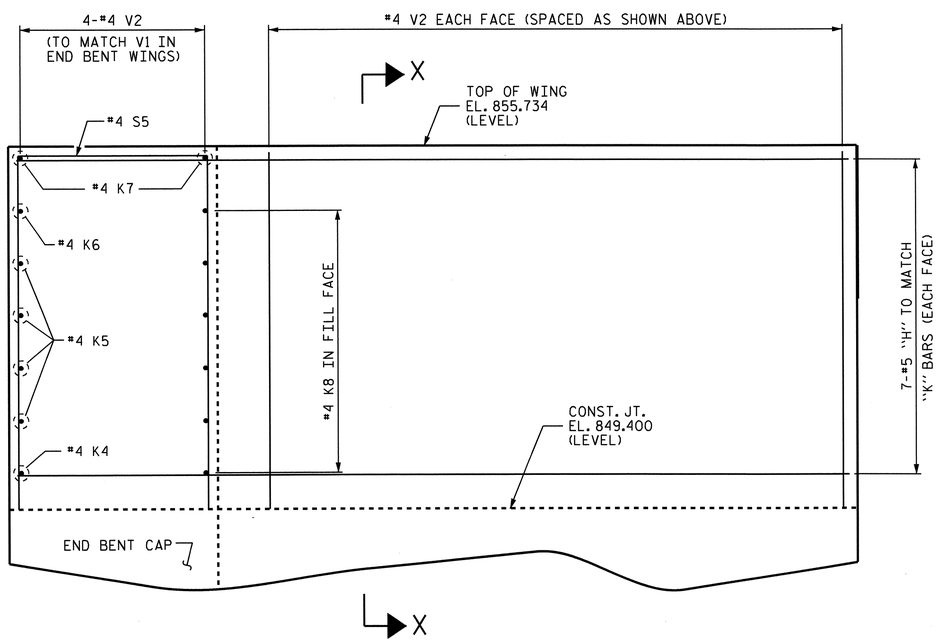

ELEVATION OF WING (W1)

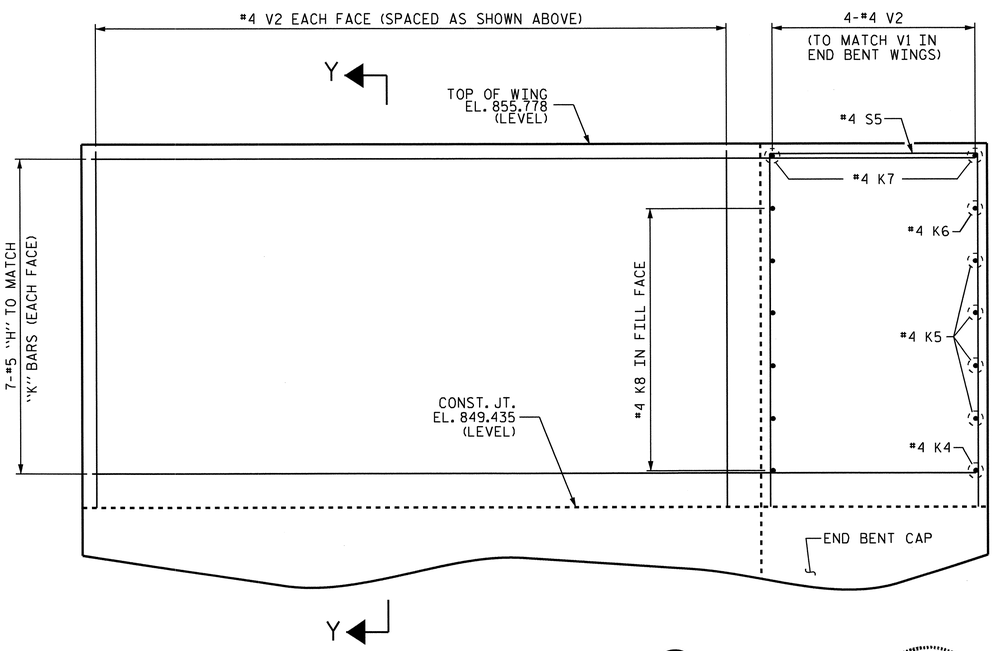

ELEVATION OF WING (W2)

ABUTMENT WINGS AT END BENT 1

FOR END BENT REINFORCING STEEL AND DETAILS, "SEE END BENT 1" SHEETS

NORTH CAROLINA PROFESSIONAL SEAL 16057 ENGINEER ALBERT C. OUTLAW, JR.

10/24/11

PROJECT NO. U-3326A
ROCKINGHAM COUNTY
STATION: 113+47.50 -L-

SHEET 5 OF 7

STATE OF NORTH CAROLINA
DEPARTMENT OF TRANSPORTATION
RALEIGH

SUPERSTRUCTURE

PLAN OF SPANS DETAILS

REVISIONS						SHEET NO.
NO.	BY:	DATE:	NO.	BY:	DATE:	S-11
1			3			TOTAL SHEETS
2			4			159

DRAWN BY : A.C. OUTLAW DATE : 1/31/11
CHECKED BY : W.F. PARKER DATE : 5/24/11

24-OCT-2011 08:17
R:\Structures\str01\Final Plans\U3326A_SD_S*_01.dgn
aoutlaw

STR. #1A

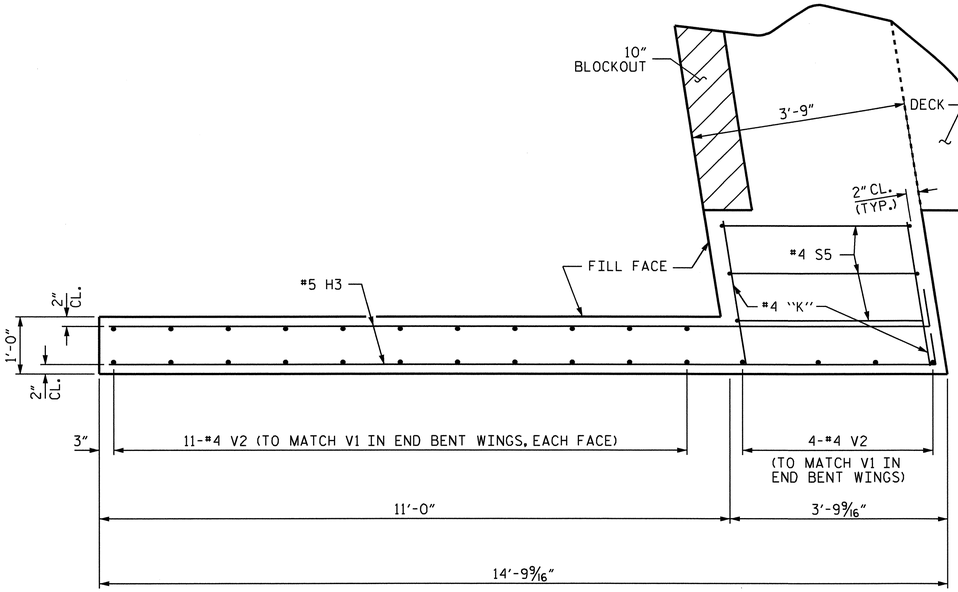

PLAN OF WING (W3)

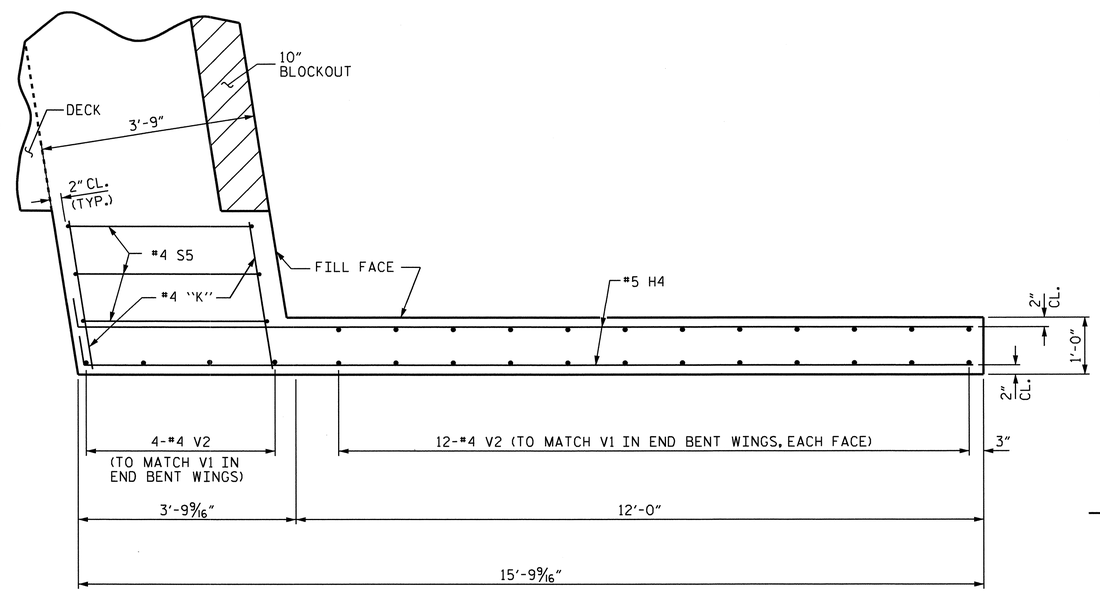

PLAN OF WING (W4)

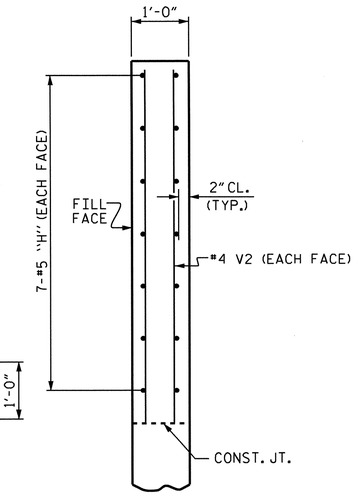

SECTION X-X

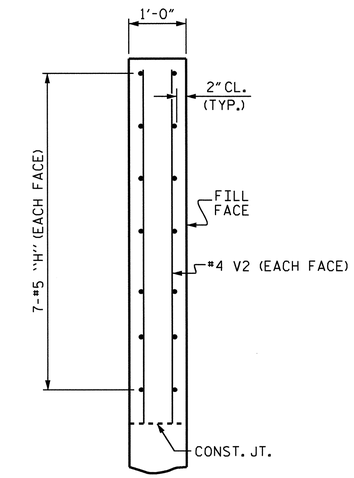

SECTION Y-Y

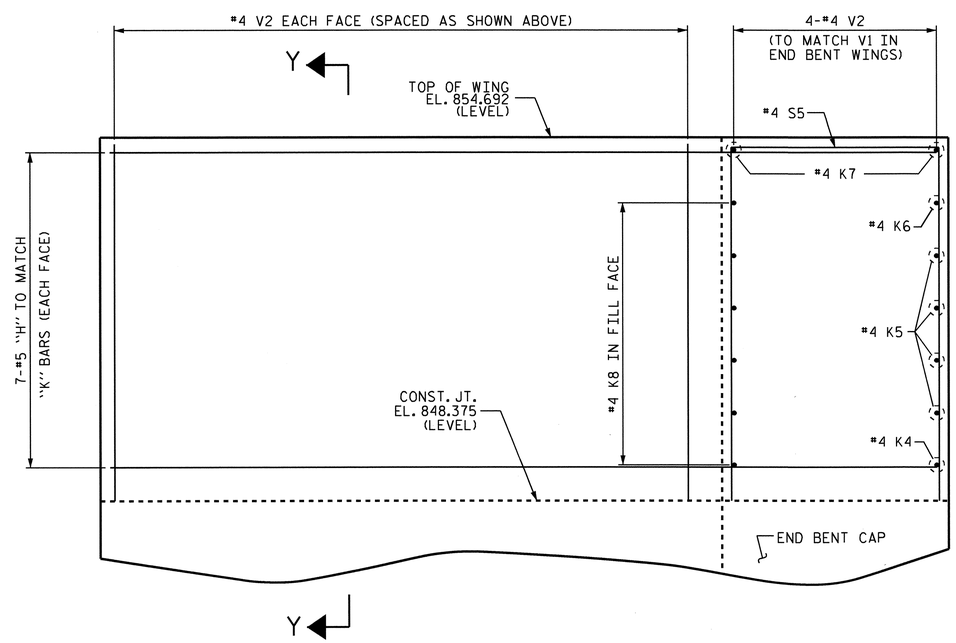

ELEVATION OF WING (W3)

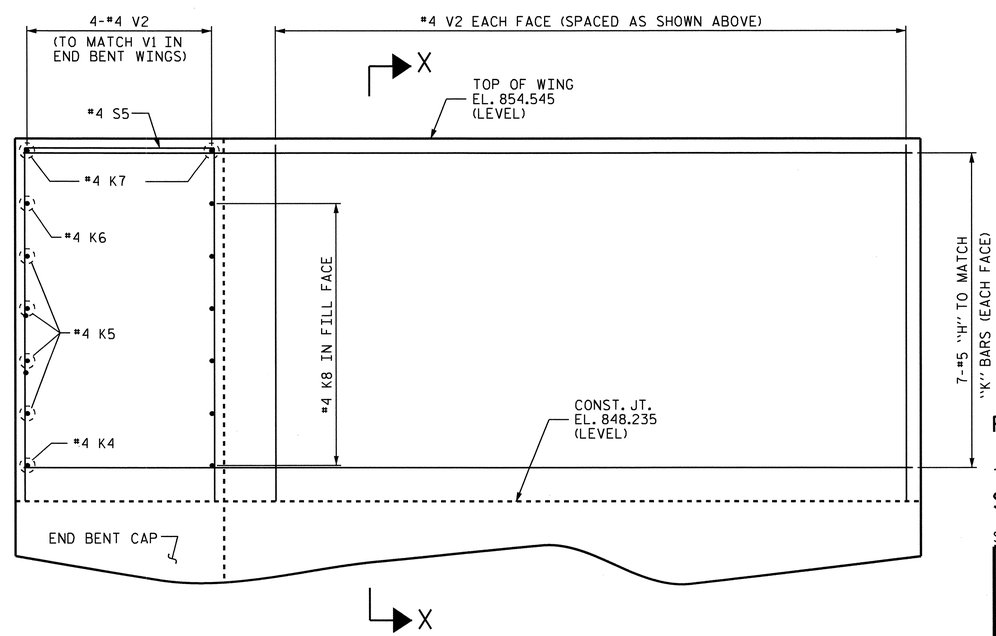

ELEVATION OF WING (W4)

ABUTMENT WINGS AT END BENT 2

FOR END BENT REINFORCING STEEL AND DETAILS, "SEE END BENT 2" SHEETS

PROJECT NO. U-3326A
ROCKINGHAM COUNTY
STATION: 113+47.50 -L-

SHEET 6 OF 7

STATE OF NORTH CAROLINA
DEPARTMENT OF TRANSPORTATION
RALEIGH

SUPERSTRUCTURE

PLAN OF SPANS DETAILS

NORTH CAROLINA PROFESSIONAL SEAL 10157 ENGINEER ALBERT C. OUTLAW, JR.
10/24/11

REVISIONS						SHEET NO.
NO.	BY:	DATE:	NO.	BY:	DATE:	S-12
1			3			TOTAL SHEETS
2			4			159

DRAWN BY : A.C. OUTLAW DATE : 1/31/11
CHECKED BY : W. F. PARKER DATE : 5/24/11

24-OCT-2011 08:17
R:\Structures\str01\Final Plans\U3326A_SD_S*_01.dgn
aoutlaw

STR. #1A

NOTES

CONCRETE MEDIAN IN A CONTINUOUS UNIT SHALL NOT BE CAST UNTIL ALL SLAB CONCRETE IN THE UNIT HAS BEEN CAST AND HAS REACHED A MINIMUM COMPRESSIVE STRENGTH OF 3,000 PSI.

ALL REINFORCING STEEL IN CONCRETE MEDIANS SHALL BE EPOXY COATED.

GROOVED CONTRACTION JOINTS 1/2" IN DEPTH, SHALL BE TOOLED IN ALL EXPOSED FACES OF MEDIAN ISLAND IN ACCORDANCE WITH ARTICLE 825-10(B) OF THE STANDARD SPECIFICATIONS. THE CONTRACTION JOINTS SHALL BE LOCATED AT A SPACING OF 8 FEET TO 10 FEET BETWEEN EXPANSION JOINTS. NO CONTRACTION JOINTS WILL BE REQUIRED FOR SEGMENTS LESS THAN 10 FEET IN LENGTH.

CONCRETE MEDIAN REINFORCING STEEL AND CONCRETE WILL BE PAID WITH REINFORCED CONCRETE DECK SLAB.

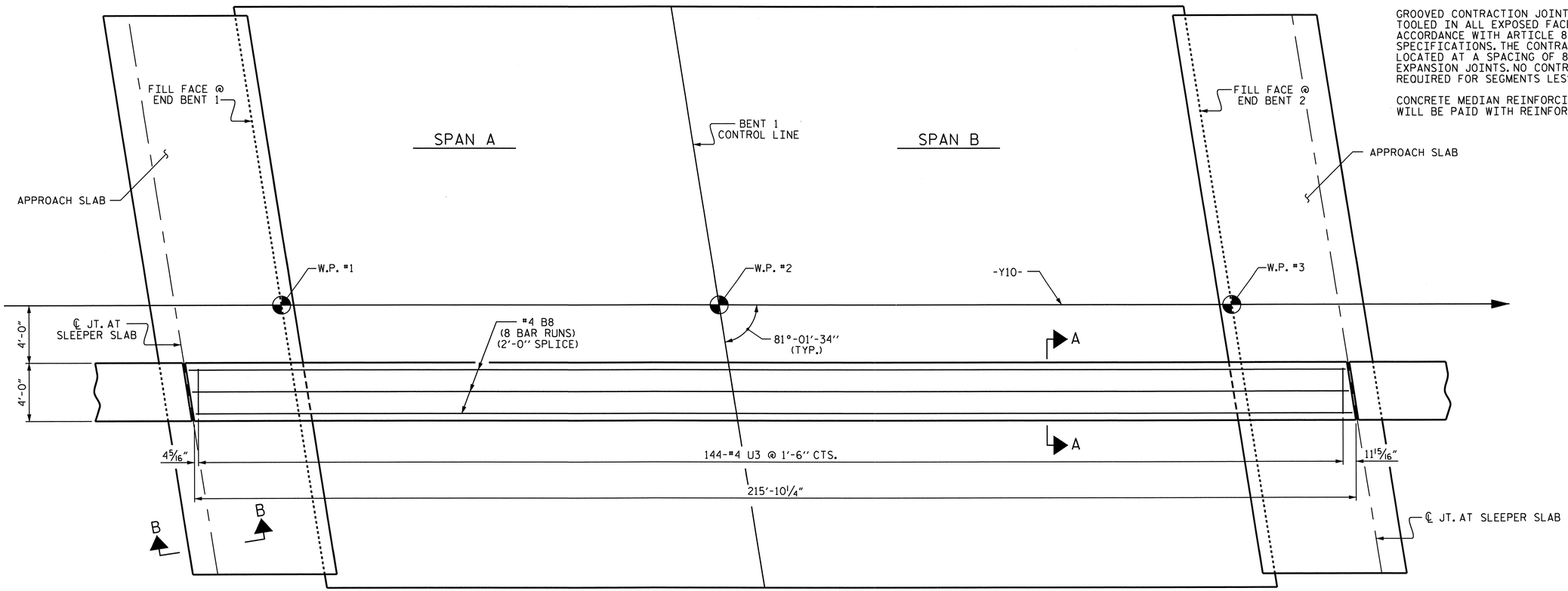

PLAN

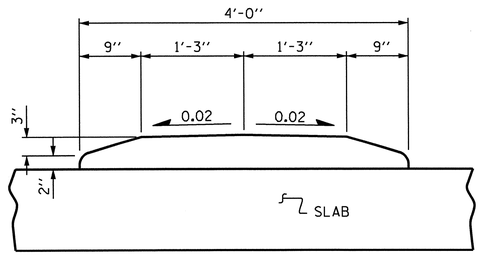

SECTION A-A
(SHOWING CONCRETE MEDIAN DIMENSIONS)

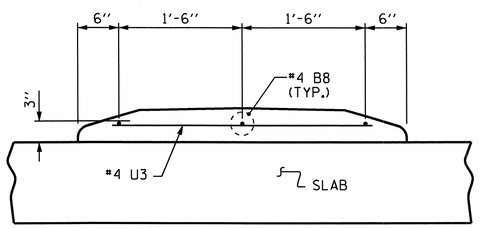

SECTION A-A
(SHOWING REINFORCING STEEL)

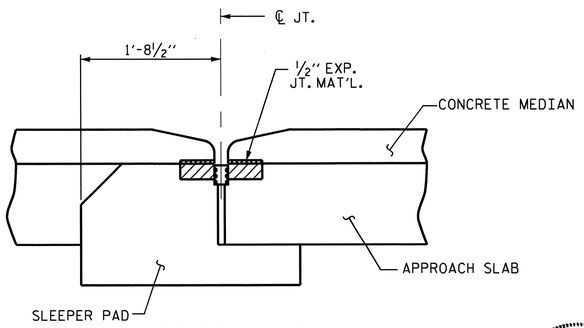

SECTION B-B
(END BENT 1 SHOWN, END BENT 2 SIMILAR)

CONCRETE MEDIAN DETAILS

PROJECT NO. U-3326A
ROCKINGHAM COUNTY
STATION: 113+47.50 -L-

SHEET 7 OF 7

STATE OF NORTH CAROLINA
DEPARTMENT OF TRANSPORTATION
RALEIGH

SUPERSTRUCTURE

PLAN OF SPANS

NORTH CAROLINA PROFESSIONAL SEAL 10051 ENGINEER ALBERT C. OUTLAW, JR.
10/24/11

REVISIONS						SHEET NO.
NO.	BY:	DATE:	NO.	BY:	DATE:	S-13
1			3			TOTAL SHEETS
2			4			159

DRAWN BY : A.S. CALLAWAY DATE : 4/9/10
CHECKED BY : A. C. OUTLAW DATE : 1/21/11

24-OCT-2011 08:17
R:\Structures\str01\Final Plans\U3326A_SD_S*_01.dgn
aoutlaw

STR. #1A

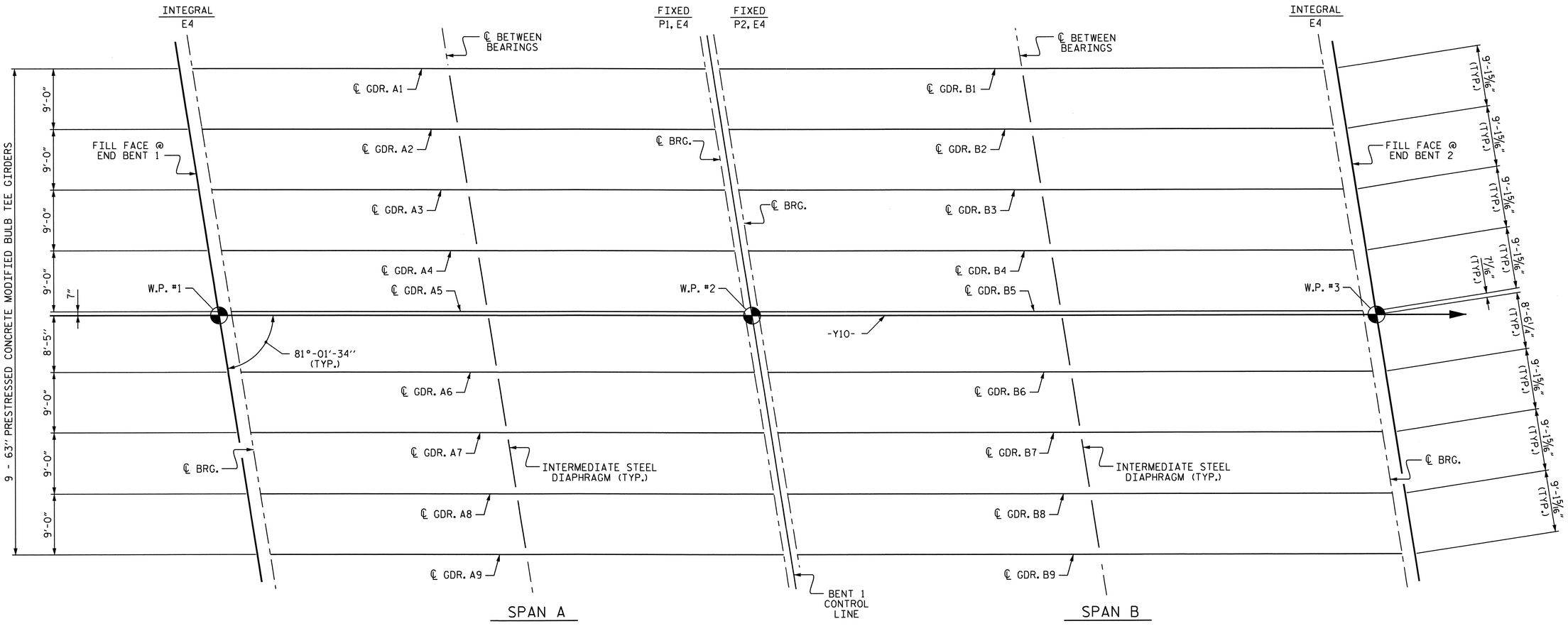

FRAMING PLAN

FOR INTERMEDIATE STEEL DIAPHRAGM DETAILS, SEE "INTERMEDIATE STEEL DIAPHRAGMS FOR 63" PRESTRESSED CONCRETE MODIFIED BULB TEE GIRDERS" SHEET.

PROJECT NO. U-3326A
ROCKINGHAM COUNTY
STATION: 113+47.50 -L-

STATE OF NORTH CAROLINA
DEPARTMENT OF TRANSPORTATION
RALEIGH

SUPERSTRUCTURE

FRAMING PLAN

NORTH CAROLINA PROFESSIONAL SEAL 10652 ENGINEER ALBERT C. OUTLAW, JR.

Albert C. Outlaw, Jr.
9/13/11

REVISIONS						SHEET NO.
NO.	BY:	DATE:	NO.	BY:	DATE:	S-14
1			3			TOTAL SHEETS
2			4			159

STR. #1A

DRAWN BY : A.S. CALLAWAY DATE : 3/9/10
CHECKED BY : A. C. OUTLAW DATE : 1/21/11

13-SEP-2011 15:35
R:\Structures\str01\FinalPlans\U3326A_SD_FP_01.dgn
qtnguyen

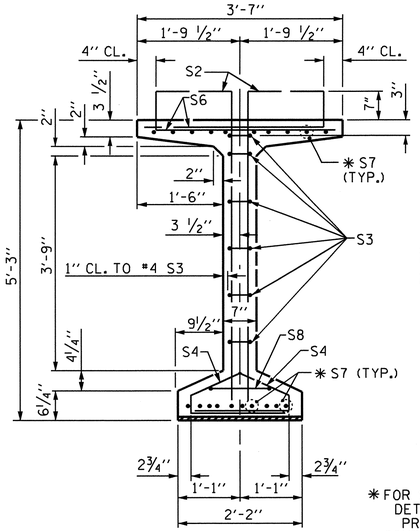

SECTION A-A

✱ FOR S7 BARS, SEE DETAIL "C" OF PRESTRESSED CONCRETE GIRDER CONTINUOUS FOR LIVE LOAD DETAILS SHEET

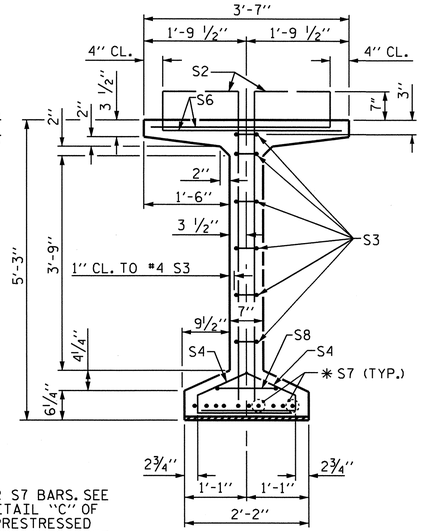

SECTION B-B

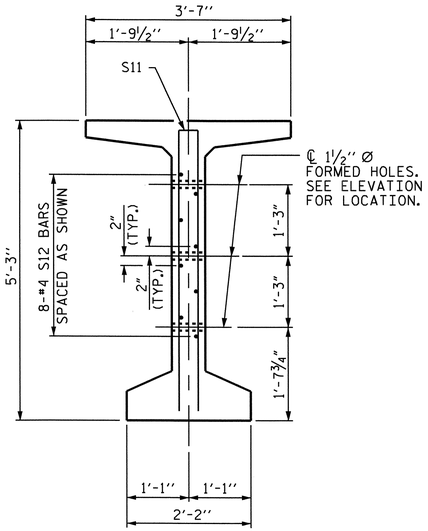

SECTION C-C

(S1, S6 AND S9 BARS NOT SHOWN)

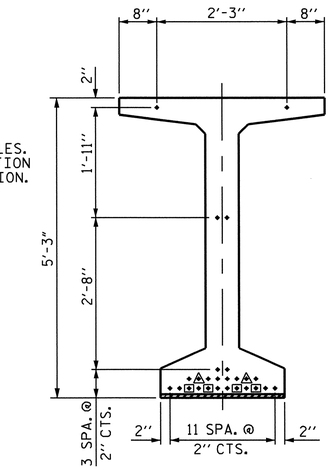

AT END OF GIRDER

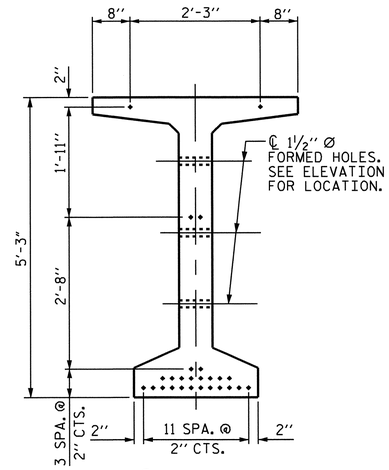

AT ℄ OF GIRDER

0.6" Ø LOW RELAXATION STRAND LAYOUT

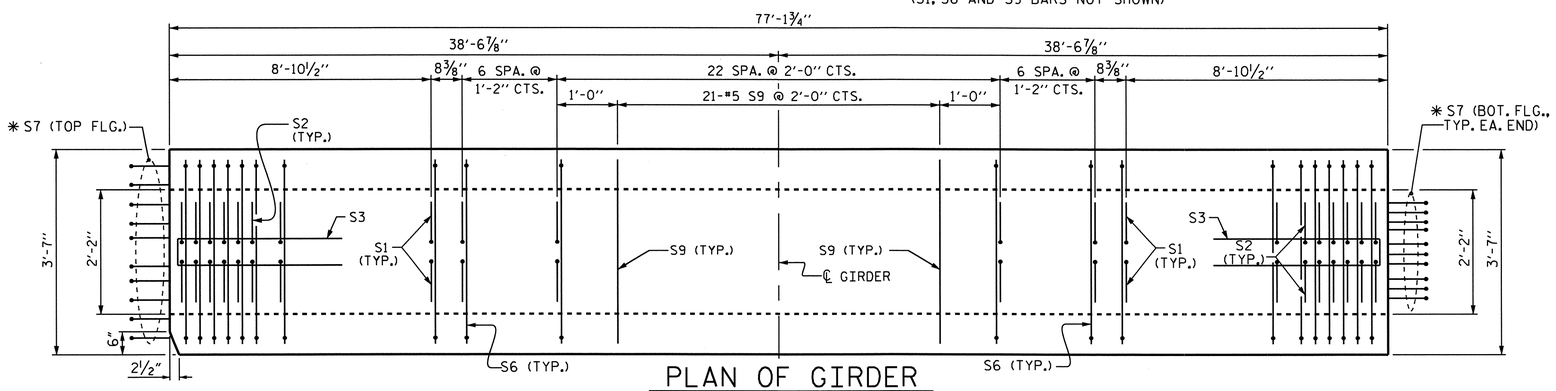

PLAN OF GIRDER

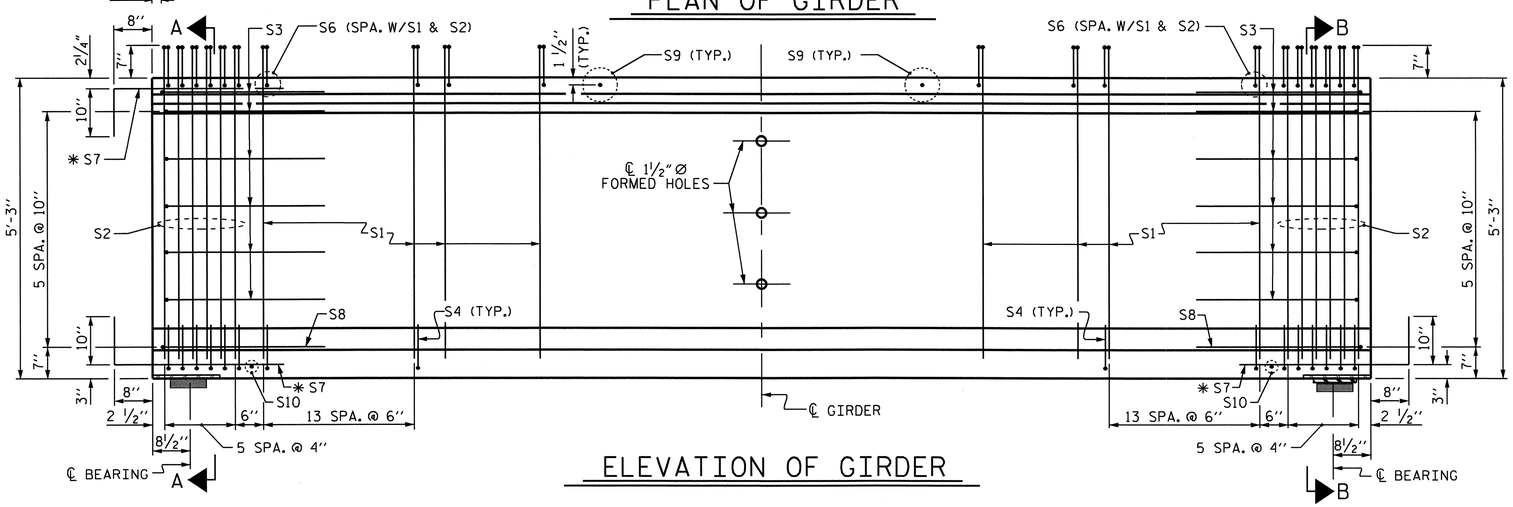

INTEGRAL END BENT

ELEVATION OF GIRDER

FIX

DEBONDING LEGEND

- ● FULLY BONDED STRANDS
- ▣ STRANDS DEBONDED FOR 12'-0" FROM END OF GIRDER
- ◭ STRANDS DEBONDED FOR 8'-0" FROM END OF GIRDER

0.6" Ø L. R. GRADE 270 STRANDS

AREA (SQUARE INCHES)	ULTIMATE STRENGTH (LBS. PER STRAND)	APPLIED PRESTRESS (LBS. PER STRAND)
0.217	58,600	43,950

REINFORCING STEEL FOR ONE GDR

BAR	NUMBER	SIZE	TYPE	LENGTH	WEIGHT
S1	126	#4	1	6'-2"	519
S2	24	#5	1	6'-2"	154
S3	12	#4	2	8'-5"	67
S4	80	#4	3	3'-0"	160
S6	150	#5	4	4'-5"	691
✱ S7	30	#5	STR	3'-8"	115
S8	2	#5	2	9'-0"	19
S9	21	#5	STR	3'-3"	71
S10	2	#3	STR	1'-10"	1
S11	4	#5	STR	10'-2"	42
S12	8	#4	STR	8'-0"	43

✱ NOTE: S7 BARS SHALL BE BENT BEFORE SHIPMENT. HEAT BENDING SHALL NOT BE ALLOWED.

BAR TYPES

ALL BAR DIMENSIONS ARE OUT-TO-OUT.

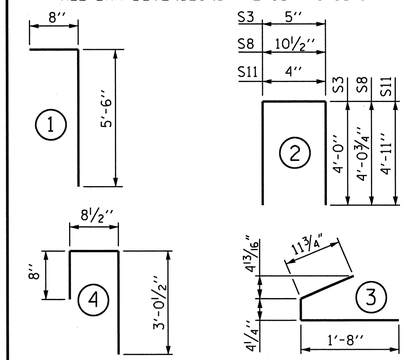

QUANTITIES FOR ONE GIRDER

	REINF. STEEL	6500 PSI CONCRETE	0.6" Ø L. R. STRANDS
	LB.	C.Y.	NO.
	1,882	15.3	26

GIRDERS REQUIRED

NUMBER	LENGTH	TOTAL LENGTH
9	77'-1 3/4"	694'-3 3/4"

PROJECT NO. U-3326A

ROCKINGHAM COUNTY

STATION: 113+47.50 -L-

SHEET 1 OF 4

STATE OF NORTH CAROLINA
DEPARTMENT OF TRANSPORTATION
RALEIGH

STANDARD

63" PRESTRESSED CONCRETE MODIFIED BULB TEE CONTINUOUS FOR LIVE LOAD

SPAN A

NORTH CAROLINA PROFESSIONAL SEAL 10157 ENGINEER ALBERT C. OUTLAW, JR.

10/24/11

REVISIONS						SHEET NO.
NO.	BY:	DATE:	NO.	BY:	DATE:	S-15
1			3			TOTAL SHEETS
2			4			159

STR. #1A

STD. NO. PCG9

ASSEMBLED BY : A.S. CALLAWAY	DATE : 3/12/10		
CHECKED BY : A. C. OUTLAW	DATE : 2/7/11		
DRAWN BY : EEM 2/6/97	REV. 8/16/99	RWW/LES	
CHECKED BY : VAP 2/6/97	REV. 10/17/00	RWW/LES	
	REV. 5/1/06R	TLA/GM	

24-OCT-2011 08:17
R:\Structures\str01\Final Plans\U3326A_SD_G*_01.dgn
aoutlaw

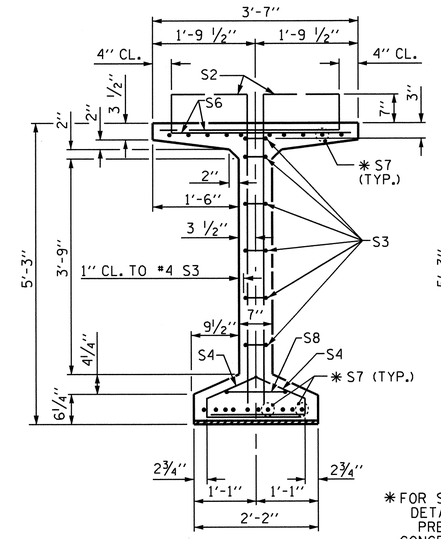

SECTION B-B

✱ FOR S7 BARS. SEE DETAIL "C" OF PRESTRESSED CONCRETE GIRDER CONTINUOUS FOR LIVE LOAD DETAILS SHEET

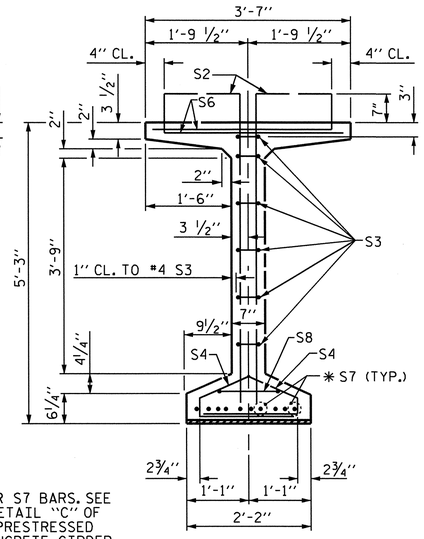

SECTION A-A

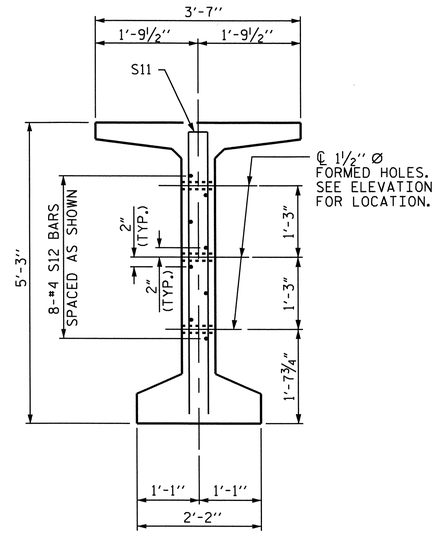

SECTION C-C

(S1, S6 AND S9 BARS NOT SHOWN)

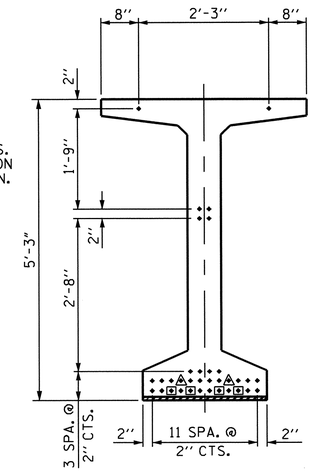

AT END OF GIRDER

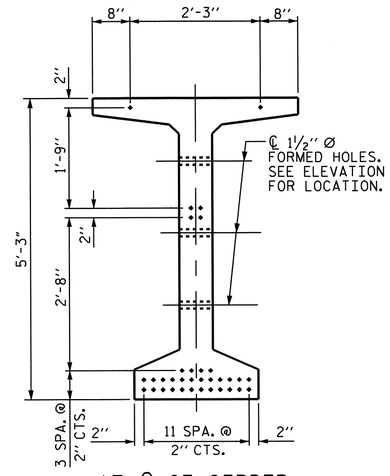

AT ℄ OF GIRDER

0.6" Ø LOW RELAXATION STRAND LAYOUT

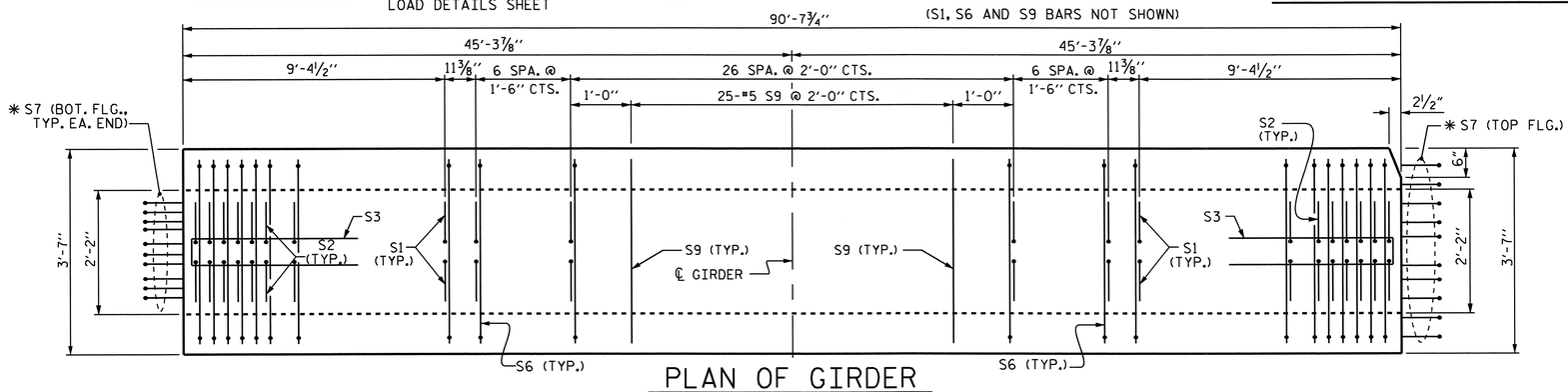

PLAN OF GIRDER

DEBONDING LEGEND

- ● FULLY BONDED STRANDS
- ▣ STRANDS DEBONDED FOR 12'-0" FROM END OF GIRDER
- ▲ STRANDS DEBONDED FOR 8'-0" FROM END OF GIRDER

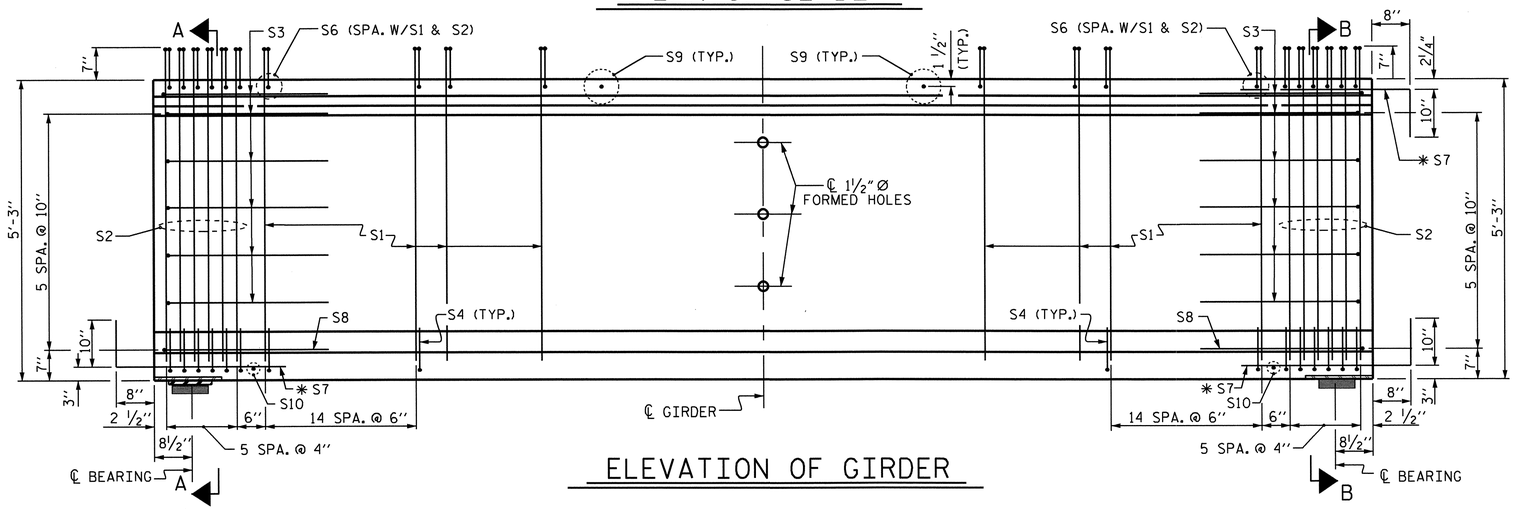

FIX

ELEVATION OF GIRDER

INTEGRAL END BENT

0.6" Ø L. R. GRADE 270 STRANDS		
AREA (SQUARE INCHES)	ULTIMATE STRENGTH (LBS. PER STRAND)	APPLIED PRESTRESS (LBS. PER STRAND)
0.217	58,600	43,950

REINFORCING STEEL FOR ONE GDR

BAR	NUMBER	SIZE	TYPE	LENGTH	WEIGHT
S1	138	#4	1	6'-2"	568
S2	24	#5	1	6'-2"	154
S3	12	#4	2	8'-5"	67
S4	84	#4	3	3'-0"	168
S6	162	#5	4	4'-5"	746
✱ S7	30	#5	STR	3'-8"	115
S8	2	#5	2	9'-0"	19
S9	25	#5	STR	3'-3"	85
S10	2	#3	STR	1'-10"	1
S11	4	#5	STR	10'-2"	42
S12	8	#4	STR	8'-0"	43

✱ NOTE: S7 BARS SHALL BE BENT BEFORE SHIPMENT. HEAT BENDING SHALL NOT BE ALLOWED.

BAR TYPES

ALL BAR DIMENSIONS ARE OUT-TO-OUT.

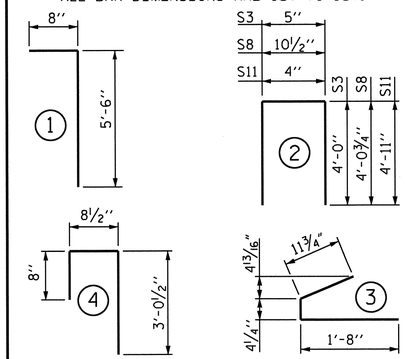

QUANTITIES FOR ONE GIRDER

	REINF. STEEL	8500 PSI CONCRETE	0.6" Ø L. R. STRANDS
	LB.	C.Y.	NO.
	2,008	18.0	34

GIRDERS REQUIRED

NUMBER	LENGTH	TOTAL LENGTH
9	90'-7 3/4"	815'-9 3/4"

PROJECT NO. U-3326A

ROCKINGHAM COUNTY

STATION: 113+47.50 -L-

SHEET 2 OF 4

STATE OF NORTH CAROLINA
DEPARTMENT OF TRANSPORTATION
RALEIGH

STANDARD

63" PRESTRESSED CONCRETE MODIFIED BULB TEE CONTINUOUS FOR LIVE LOAD SPAN B

NORTH CAROLINA PROFESSIONAL SEAL 11051 ENGINEER ALBERT C. OUTLAW

9/13/11

REVISIONS						
NO.	BY:	DATE:	NO.	BY:	DATE:	
1			3			
2			4			

SHEET NO. S-16

TOTAL SHEETS 159

STR. #1A

STD. NO. PCG9

ASSEMBLED BY : A.S. CALLAWAY	DATE : 3/12/10
CHECKED BY : A. C. OUTLAW	DATE : 2/7/11
DRAWN BY : EEM 2/6/97	REV. 8/16/99 RWW/LES
CHECKED BY : VAP 2/6/97	REV. 10/17/00 RWW/LES
	REV. 5/1/06R TLA/GM

13-SEP-2011 15:35
R:\Structures\str01\Final Plans\U3326A_SD_G*_01.dgn
qtnguyen

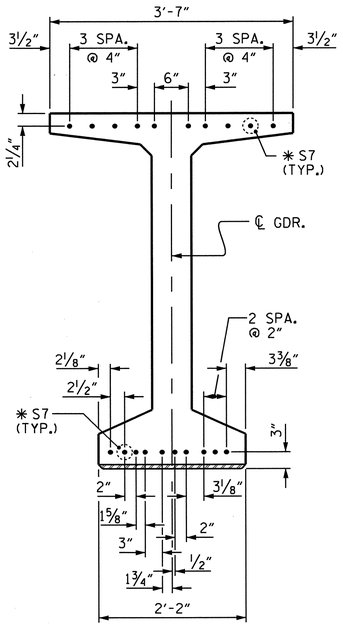

DETAIL "C"

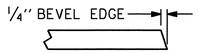

SECTION "G"

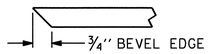

SECTION "F"

(SEE NOTES)

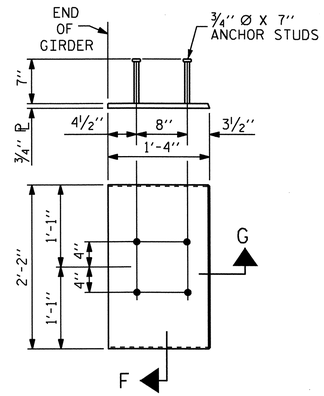

EMBEDDED PLATE "B-1" DETAILS FOR 63" PRESTRESSED CONCRETE MODIFIED BULB TEE GIRDERS

(2 REQ'D PER GIRDER)

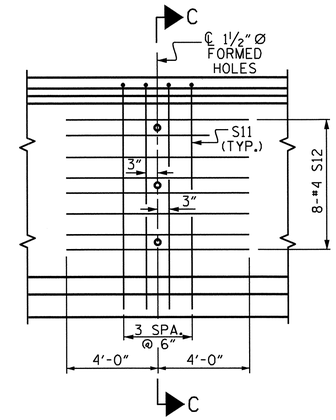

PARTIAL ELEVATION

SHOWING INTERMEDIATE STEEL DIAPHRAGM REINFORCING STEEL FOR GIRDERS.

NOTES

ALL PRESTRESSING STRANDS SHALL BE 7-WIRE LOW-RELAXATION GRADE 270 STRANDS AND SHALL CONFORM TO AASHTO M203 EXCEPT FOR SAMPLING REQUIREMENTS WHICH SHALL BE IN ACCORDANCE WITH THE STANDARD SPECIFICATIONS.

ALL REINFORCING STEEL SHALL BE GRADE 60.

EMBEDDED PLATE "B-1" SHALL BE GALVANIZED IN ACCORDANCE WITH THE STANDARD SPECIFICATIONS. BEVEL EDGES OF PLATE "B-1" TO GIVE CLOSE FIT BUT NOT TIGHT FIT TO STEEL CASTING FORM.

ANCHOR STUDS SHALL CONFORM TO AASHTO M169 GRADES 1010 THROUGH 1020 OR APPROVED EQUAL, AND SHALL MEET THE TYPE "B" REQUIREMENTS OF SUBSECTION 7.3 OF THE ANSI/AASHTO/AWS D1.5 BRIDGE WELDING CODE.

AT ENDS OF GIRDERS TO BE EMBEDDED IN CONCRETE DIAPHRAGMS OR END WALLS, PRESTRESSING STRANDS MAY EXTEND A MAXIMUM OF 2" BEYOND THE GIRDER ENDS. OTHERWISE, PRESTRESSING STRANDS SHALL BE CUT FLUSH WITH THE GIRDER ENDS.

THE TRANSFER OF LOAD FROM THE ANCHORAGES TO THE GIRDER SHALL BE DONE WHEN CONCRETE HAS REACHED A COMPRESSIVE STRENGTH OF NOT LESS THAN 4800 PSI IN SPAN A AND 6100 PSI IN SPAN B.

DEPENDING ON THE TYPE OF SYSTEM USED TO SUPPORT THE DECK SLAB FORMS, PRESET ANCHORS MAY BE NECESSARY IN THE PRESTRESSED CONCRETE GIRDER.

THE TOP SURFACE OF THE GIRDER, EXCLUDING THE OUTSIDE 4", SHALL BE RAKED TO A DEPTH OF ¼".

A 2" x 2" CHAMFER IS ALLOWED AT THE INTERSECTION OF THE WEB AND THE BOTTOM FLANGE OF THE 63" AND 72" MODIFIED BULB TEES ONLY.

THE CONTRACTOR HAS THE OPTION TO PROVIDE, AT NO ADDITIONAL COST TO THE DEPARTMENT, 2 ADDITIONAL STRANDS AT THE TOP OF THE GIRDER TO FACILITATE TYING OF THE REINFORCING STEEL. THESE STRANDS SHALL BE PULLED TO A LOAD OF 4500 lbs.

FOR PRESTRESSED CONCRETE MEMBERS, SEE SPECIAL PROVISIONS.

DEAD LOAD DEFLECTION TABLE FOR GIRDERS

0.6" Ø LOW RELAXATION	SPAN A																																		
	GIRDER A1											GIRDERS A2 THUR A8												GIRDER A9											
TENTH POINTS	BRG.	0.1	0.2	0.3	0.4	0.5	0.6	0.7	0.8	0.9	BRG.	BRG.	0.1	0.2	0.3	0.4	0.5	0.6	0.7	0.8	0.9	BRG.	BRG.	0.1	0.2	0.3	0.4	0.5	0.6	0.7	0.8	0.9	BRG.
CAMBER (GIRDER ALONE IN PLACE) ↑	0	0.054	0.103	0.141	0.165	0.173	0.165	0.141	0.103	0.054	0	0	0.054	0.103	0.141	0.165	0.173	0.165	0.141	0.103	0.054	0	0	0.054	0.103	0.141	0.165	0.173	0.165	0.141	0.103	0.054	0
✱ DEFLECTION DUE TO SUPERIMPOSED D.L. ↓	0	0.014	0.026	0.035	0.041	0.043	0.041	0.035	0.026	0.014	0	0	0.014	0.026	0.035	0.041	0.043	0.041	0.035	0.026	0.014	0	0	0.014	.026	0.035	0.041	0.043	0.041	0.035	0.026	0.014	0
FINAL CAMBER ↑	0	½"	15/16"	1¼"	1½"	1 9/16"	1½"	1¼"	15/16"	½"	0	0	½"	15/16"	1¼"	1½"	1 9/16"	1½"	1¼"	15/16"	½"	0	0	½"	15/16"	1¼"	1½"	1 9/16"	1½"	1¼"	15/16"	½"	0

✱ INCLUDES FUTURE WEARING SURFACE
ALL VALUES ARE SHOWN IN FEET (DECIMAL FORM), EXCEPT "FINAL CAMBER", WHICH IS GIVEN IN INCHES (FRACTION FORM).

DEAD LOAD DEFLECTION TABLE FOR GIRDERS

0.6" Ø LOW RELAXATION	SPAN B																																		
	GIRDER B1											GIRDERS B2 THUR B8												GIRDER B9											
TENTH POINTS	BRG.	0.1	0.2	0.3	0.4	0.5	0.6	0.7	0.8	0.9	BRG.	BRG.	0.1	0.2	0.3	0.4	0.5	0.6	0.7	0.8	0.9	BRG.	BRG.	0.1	0.2	0.3	0.4	0.5	0.6	0.7	0.8	0.9	BRG.
CAMBER (GIRDER ALONE IN PLACE) ↑	0	0.080	0.151	0.207	0.242	0.254	0.242	0.207	0.151	0.080	0	0	0.080	0.151	0.207	0.242	0.254	0.242	0.207	0.151	0.080	0	0	0.080	0.151	0.207	0.242	0.254	0.242	0.207	0.151	0.080	0
✱ DEFLECTION DUE TO SUPERIMPOSED D.L. ↓	0	0.023	0.044	0.060	0.070	0.073	0.070	0.060	0.044	0.023	0	0	0.023	0.044	0.060	0.070	0.073	0.070	0.060	0.044	0.023	0	0	0.023	0.043	0.059	0.069	0.073	0.069	0.059	0.043	0.023	0
FINAL CAMBER ↑	0	11/16"	15/16"	1¾"	2 1/16"	2 3/16"	2 1/16"	1¾"	15/16"	11/16"	0	0	11/16"	15/16"	1¾"	2 1/16"	2 3/16"	2 1/16"	1¾"	15/16"	11/16"	0	0	11/16"	15/16"	1¾"	2 1/16"	2 3/16"	2 1/16"	1¾"	15/16"	11/16"	0

✱ INCLUDES FUTURE WEARING SURFACE
ALL VALUES ARE SHOWN IN FEET (DECIMAL FORM), EXCEPT "FINAL CAMBER", WHICH IS GIVEN IN INCHES (FRACTION FORM).

PROJECT NO. U-3326A
ROCKINGHAM COUNTY
STATION: 113+47.50 -L-

SHEET 3 OF 4

STATE OF NORTH CAROLINA
DEPARTMENT OF TRANSPORTATION
RALEIGH

STANDARD

PRESTRESSED CONCRETE GIRDER CONTINUOUS FOR LIVE LOAD DETAILS

NORTH CAROLINA PROFESSIONAL SEAL 19751 ENGINEER ALBERT C. OUTLAW JR.

10/27/11

REVISIONS						SHEET NO.
NO.	BY:	DATE:	NO.	BY:	DATE:	S-17
1			3			TOTAL SHEETS
2			4			159

STR. #1A

STD. NO. PCG11

ASSEMBLED BY : A.S. CALLAWAY	DATE : 3/10/10
CHECKED BY : A. C. OUTLAW	DATE : 1/21/11
DRAWN BY : ELR 11/91	REV. 10/17/00 RWW/LES
CHECKED BY : GRP 11/91	REV. 7/10/01RR LES/RDR
	REV. 5/1/06 TLA/GM

27-OCT-2011 08:49
R:\Structures\str01\FinalPlans\U3326A_SD_G*_01.dgn
aoutlaw

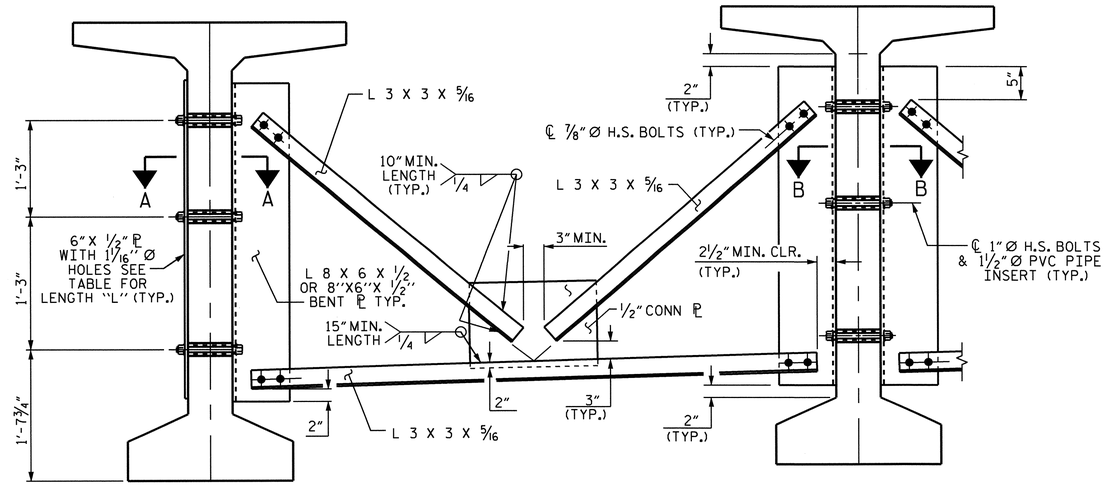

EXTERIOR GIRDER

INTERIOR GIRDER

PART SECTION AT INTERMEDIATE DIAPHRAGM

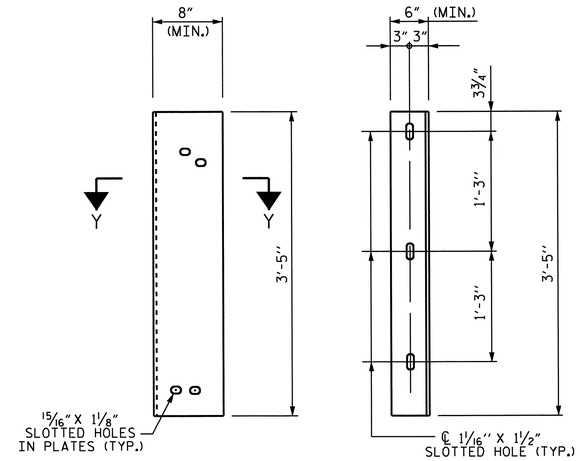

DIAPHRAGM FACE

WEB FACE

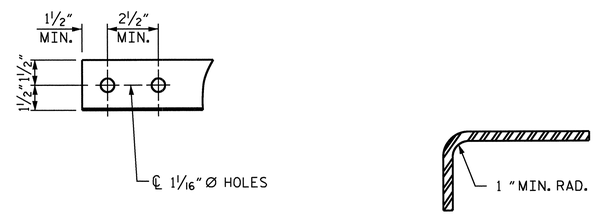

ANGLE END

(L 3 X 3 X 5/16)

SECTION Y-Y

CONNECTOR PLATE DETAILS

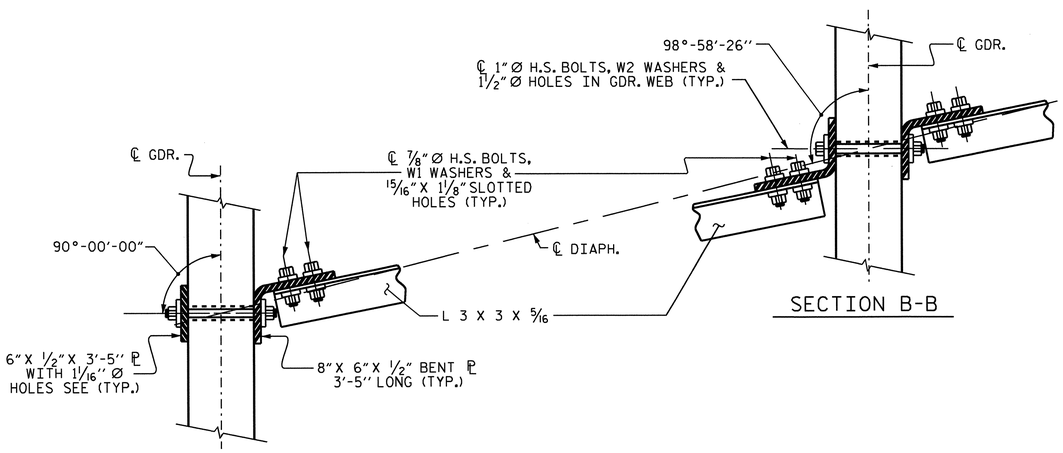

SECTION B-B

SECTION A-A

CONNECTION DETAILS

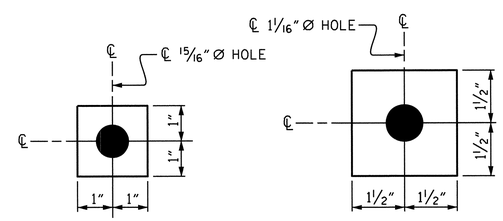

W1

ℙ 7/16" X 2" X 2"

USE WITH 7/8" Ø HVY. HEX NUTS & DIRECT TENSION INDICATOR WASHERS AT DIAPHRAGM ANGLE TO CONNECTOR PLATE CONNECTIONS

W2

ℙ 7/16" X 3" X 3"

USE WITH 1" Ø HVY. HEX NUTS AT CONNECTOR PLATE TO GIRDER CONNECTIONS

WASHER DETAILS

STRUCTURE STEEL NOTES

ALL INTERMEDIATE DIAPHRAGM STEEL, CONNECTOR PLATES AND PLATE WASHERS SHALL BE AASHTO M270 GRADE 50 OR APPROVED EQUAL.

TENSION ON THE AASHTO M164 BOLTS THROUGH THE ANGLE MEMBER SHALL BE CALIBRATED USING DIRECT TENSION INDICATOR WASHERS IN ACCORDANCE WITH THE STANDARD SPECIFICATIONS. FOR DIRECT TENSION INDICATORS, SEE SPECIAL PROVISION.

TENSION ON THE AASHTO M164 BOLTS THROUGH THE GIRDER WEB SHALL BE SNUG TIGHTENED FOLLOWED BY AN ADDITIONAL 1/4 TURN.

THE PLATES, BENT PLATES, ANGLES, AND PLATE WASHERS SHALL BE GALVANIZED OR METALLIZED IN ACCORDANCE WITH THE STANDARD SPECIFICATIONS. FOR THERMAL SPRAYED COATINGS (METALLIZATION), SEE SPECIAL PROVISIONS.

FOR METALLIZATION, APPLY AN 8 MIL THICK 99.99 PERCENT ZINC (W-Zn-1) THERMAL SPRAYED COATING WITH A 0.5 MIL THICK SEAL COAT TO ALL STEEL DIAPHRAGM SURFACES IN ACCORDANCE WITH THE THERMAL SPRAYED COATINGS SPECIAL PROVISIONS AND SECTION 442 OF THE STANDARD SPECIFICATIONS.

GALVANIZE THE HIGH STRENGTH BOLTS, NUTS, WASHERS AND DIRECT TENSION INDICATORS IN ACCORDANCE WITH THE STANDARD SPECIFICATIONS. FOR HIGH STRENGTH BOLTS, SEE SPECIAL PROVISIONS.

USE A MINIMUM 7/16" THICK PLATE WASHER WITH STANDARD HOLES UNDER EACH BOLT HEAD AND NUT. THE PLATE WASHERS SHALL HAVE SUFFICIENT SIZE TO COVER THE HOLES AFTER INSTALLATION. HARDENED WASHERS AND DIRECT TENSION INDICATORS ARE TO BE USED IN CONJUNCTION WITH THE PLATE WASHERS IN THE L 3 X 3 X 5/16 ANGLE MEMBER CONNECTION.

FOR BOLTS THROUGH THE GIRDER WEB, PROVIDE SUFFICIENT LENGTH OF ALL BOLTS TO ACCOMMODATE WASHERS AND THE THICKNESS OF CONNECTING MEMBER PLUS AT LEAST 1/4" PROJECTION BEYOND THE NUT.

INTERMEDIATE DIAPHRAGM ASSEMBLY SHALL COMPLY WITH SECTION 1072 OF THE STANDARD SPECIFICATIONS.

CONTRACTOR SHALL SUBMIT TWO SETS OF WORKING DRAWINGS FOR THE INTERMEDIATE DIAPHRAGM ASSEMBLY FOR REVIEW, COMMENTS AND ACCEPTANCE. AFTER REVIEW, COMMENTS, AND ACCEPTANCE, SUBMIT SEVEN SETS FOR DISTRIBUTION.

IN THE EXTERIOR BAYS, TEMPORARY STRUTS SHALL BE PLACED BETWEEN PRESTRESSED GIRDERS ADJACENT TO THE STEEL DIAPHRAGMS. STRUTS SHALL REMAIN IN PLACE 3 DAYS AFTER CONCRETE IS PLACED. ALL AASHTO M164 H.S. BOLTS SHALL BE FULLY TIGHTENED AFTER THE STRUTS HAVE BEEN REMOVED.

THE COST OF THE STEEL DIAPHRAGMS AND ASSEMBLIES SHALL BE INCLUDED IN THE UNIT PRICE BID FOR PRESTRESSED CONCRETE GIRDERS.

PROJECT NO. U-3326A

ROCKINGHAM COUNTY

STATION: 113+47.50 -L-

SHEET 4 OF 4

STATE OF NORTH CAROLINA
DEPARTMENT OF TRANSPORTATION
RALEIGH

STANDARD
INTERMEDIATE STEEL DIAPHRAGMS FOR 63" PRESTRESSED CONCRETE MODIFIED BULB TEE GIRDERS

NORTH CAROLINA PROFESSIONAL SEAL 027 ENGINEER ALBERT C. OUTLAW, JR.

9/13/11

REVISIONS						
NO.	BY:	DATE:	NO.	BY:	DATE:	
1			3			
2			4			

SHEET NO. S-18

TOTAL SHEETS 159

STR. #1A

STD. NO. PCG13

ASSEMBLED BY : A.S. CALLAWAY	DATE : 3/10/10
CHECKED BY : A. C. OUTLAW	DATE : 1/21/11
DRAWN BY : RWW 11/09	ADDED 11/23/09
CHECKED BY : GM 11/09	

13-SEP-2011 15:35
R:\Structures\str01\Final Plans\U3326A_SD_G*_01.dgn
qtnguyen

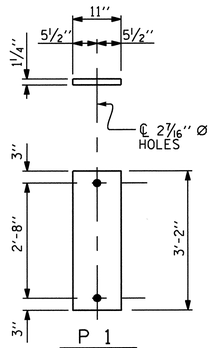

P 1
(FIXED)
(9 REQ'D)

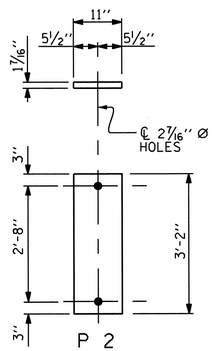

P 2
(FIXED)
(9 REQ'D)

SOLE PLATE DETAILS

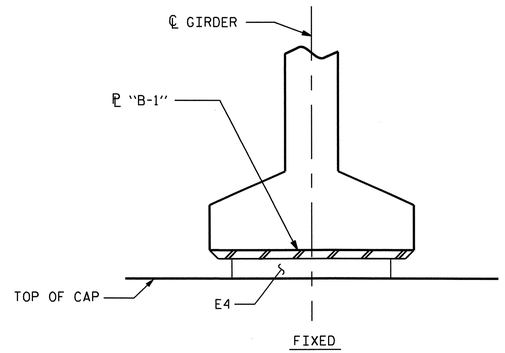

SECTION D-D

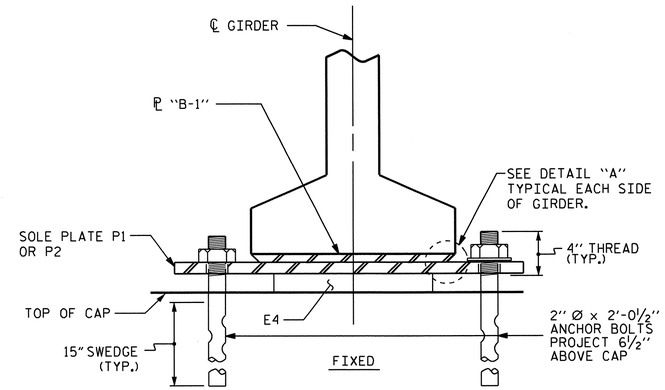

SECTION E-E

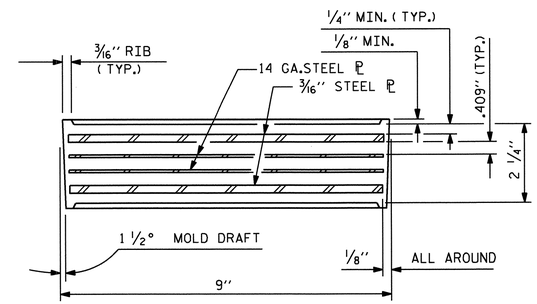

TYPICAL SECTION OF ELASTOMERIC BEARINGS

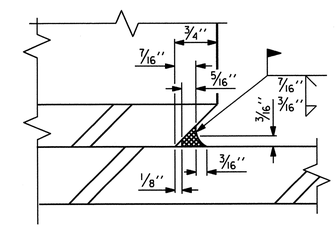

DETAIL "A"

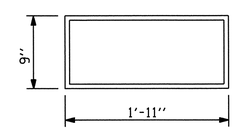

E4 (36 REQ'D.)

PLAN VIEW OF ELASTOMERIC BEARINGS

TYPE V

NOTES

AT ALL FIXED POINTS OF SUPPORT, NUTS FOR ANCHOR BOLTS ARE TO BE TIGHTENED FINGER TIGHT AND THEN BACKED OFF ½ TURN. THE THREAD OF THE NUT AND BOLT SHALL THEN BE BURRED WITH A SHARP POINTED TOOL.

STEEL SOLE PLATES, ANCHOR BOLTS, NUTS, AND WASHERS SHALL BE GALVANIZED IN ACCORDANCE WITH THE STANDARD SPECIFICATIONS.

PRIOR TO WELDING, GRIND THE GALVANIZED SURFACE OF THE PORTION OF THE EMBEDDED PLATE AND SOLE PLATE THAT ARE TO BE WELDED. AFTER WELDING, DAMAGED GALVANIZED SURFACES SHALL BE REPAIRED IN ACCORDANCE WITH THE STANDARD SPECIFICATIONS.

WHEN WELDING THE SOLE PLATE TO THE EMBEDDED PLATE IN THE GIRDER, USE TEMPERATURE INDICATING WAX PENS, OR OTHER SUITABLE MEANS, TO ENSURE THAT THE TEMPERATURE OF THE SOLE PLATE DOES NOT EXCEED 300°F. TEMPERATURES ABOVE THIS MAY DAMAGE THE ELASTOMER.

SOLE PLATE P1, BOLTS, NUTS, WASHERS, AND PIPE SLEEVE SHALL BE INCLUDED IN THE PAY ITEM FOR PRESTRESSED CONCRETE GIRDERS.

ANCHOR BOLTS SHALL MEET THE REQUIREMENTS OF ASTM A449. NUTS SHALL MEET THE REQUIREMENTS OF AASHTO M291-DH OR AASHTO M292-2H. WASHERS SHALL MEET THE REQUIREMENTS OF AASHTO M293. NO SHOP DRAWINGS ARE REQUIRED FOR ANCHOR BOLTS, NUTS AND WASHERS. SHOP INSPECTION IS REQUIRED.

ALL SURFACES OF BEARING PLATES SHALL BE SMOOTH AND STRAIGHT.

ELASTOMER IN ALL BEARINGS SHALL BE 50 DUROMETER HARDNESS.

LOAD RATINGS	
	MAX.D.L.+ L.L.
TYPE V	225 K

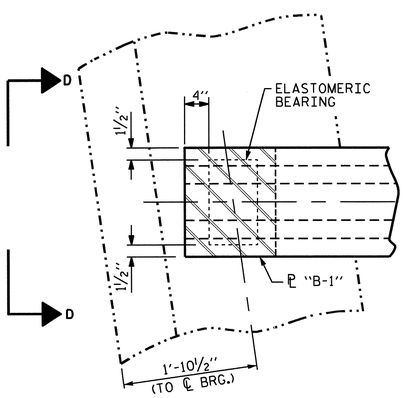

PLAN VIEW @ END BENT
(END BENT 1 SHOWN, END BENT 2 SIMILAR)

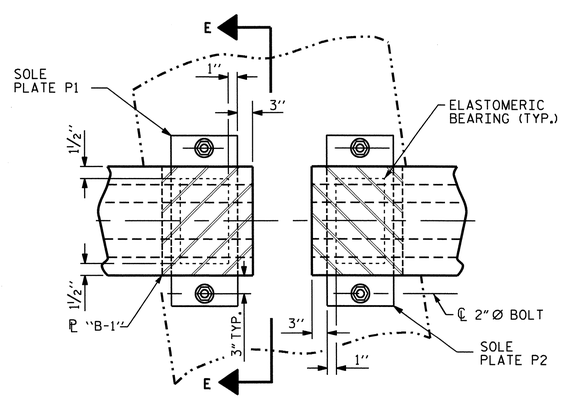

PLAN VIEW @ BENT

PROJECT NO. U-3326A
ROCKINGHAM COUNTY
STATION: 113+47.50 -L-

STATE OF NORTH CAROLINA
DEPARTMENT OF TRANSPORTATION
RALEIGH

ELASTOMERIC BEARING DETAILS
PRESTRESSED CONCRETE GIRDER SUPERSTRUCTURE

NORTH CAROLINA PROFESSIONAL SEAL 10751 ENGINEER ALBERT C. OUTLAW JR.
9/13/11

REVISIONS						SHEET NO.
NO.	BY:	DATE:	NO.	BY:	DATE:	S-19
1			3			TOTAL SHEETS
2			4			159

DRAWN BY: A.S. CALLAWAY DATE: 3/9/10
CHECKED BY: A. C. OUTLAW DATE: 1/24/11

13-SEP-2011 15:35
R:\Structures\str01\Final Plans\U3326A_SD_BG_01.dgn
qtnguyen

STR. #1A

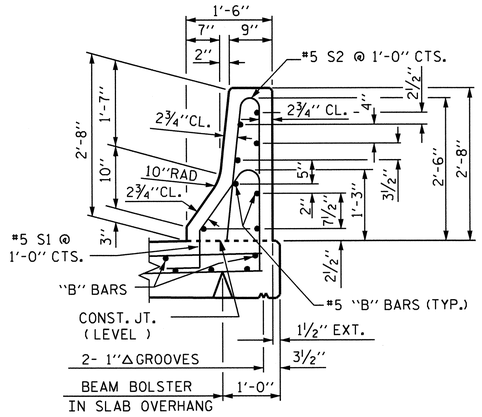

SECTION THRU RAIL

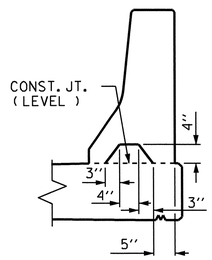

SECTION S-S

AT DAM IN OPEN JOINT
(THIS IS TO BE USED ONLY WHEN SLIP FORM IS USED)

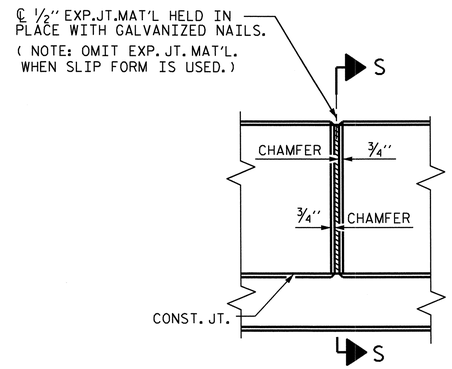

ELEVATION AT EXPANSION JOINTS

BARRIER RAIL DETAILS

NOTES

THE BARRIER RAIL IN A CONTINUOUS UNIT SHALL NOT BE CAST UNTIL ALL SLAB CONCRETE IN THAT UNIT HAS BEEN CAST AND HAS REACHED A MINIMUM COMPRESSIVE STRENGTH OF 3,000 PSI.

ALL REINFORCING STEEL IN BARRIER RAILS SHALL BE EPOXY COATED.

VERTICAL GROOVED CONTRACTION JOINTS, ½" IN DEPTH, SHALL BE TOOLED IN ALL EXPOSED FACES OF THE BARRIER RAIL AND IN ACCORDANCE WITH ARTICLE 825-10(B) OF THE STANDARD SPECIFICATIONS. THE CONTRACTION JOINT SHALL BE LOCATED AT EACH THIRD POINT BETWEEN BARRIER RAIL EXPANSION JOINTS. ONLY ONE CONTRACTION JOINT IS REQUIRED AT MIDPOINT OF BARRIER RAIL SEGMENTS LESS THAN 20 FEET IN LENGTH AND NO CONTRACTION JOINTS ARE REQUIRED FOR THOSE SEGMENTS LESS THAN 10 FEET IN LENGTH.

BAR TYPES

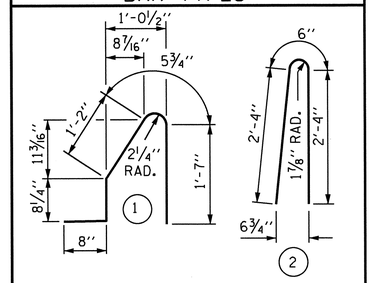

ALL BAR DIMENSIONS ARE OUT TO OUT.

BILL OF MATERIAL

FOR CONCRETE BARRIER RAIL ONLY

BAR	NO.	SIZE	TYPE	LENGTH	WEIGHT
* B1	8	#5	STR	23'-7"	197
* B2	40	#5	STR	26'-7"	1109
* B3	8	#5	STR	9'-8"	81
* S1	169	#5	1	4'-7"	808
* S2	169	#5	2	5'-2"	911
* EPOXY COATED REINFORCING STEEL				LBS.	3,106
CLASS AA CONCRETE				CU. YDS.	17.1
CONCRETE BARRIER RAIL				LIN. FT.	169.31

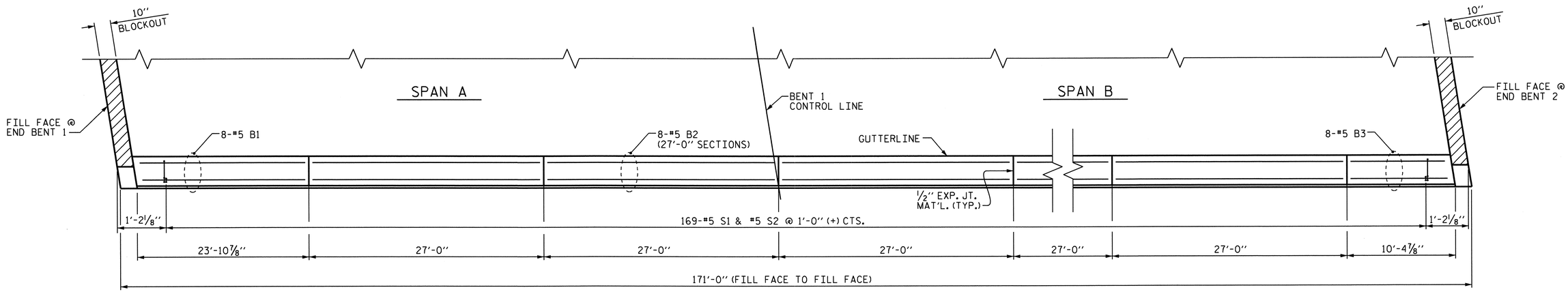

PLAN

PROJECT NO. U-3326A
ROCKINGHAM COUNTY
STATION: 113+47.50 -L-

STATE OF NORTH CAROLINA
DEPARTMENT OF TRANSPORTATION
RALEIGH

STANDARD
CONCRETE BARRIER RAIL

NORTH CAROLINA PROFESSIONAL SEAL 10710 ENGINEER ALBERT C. OUTLAW, JR.
9/13/11

REVISIONS						
NO.	BY:	DATE:	NO.	BY:	DATE:	
1			3			
2			4			

SHEET NO. S-20
TOTAL SHEETS 159

STR. #1A

STD. NO. CBR1

ASSEMBLED BY : A.S. CALLAWAY	DATE : 3/9/10		
CHECKED BY : A. C. OUTLAW	DATE : 2/7/11		
DRAWN BY : ARB 5/87	REV. 10/17/00	RWW/LES	
CHECKED BY : SJD 9/87	REV. 5/7/03R	RWW/JTE	
	REV. 5/1/06	TLA/GM	

13-SEP-2011 15:35
R:\Structures\str01\FinalPlans\U3326A_SD_BR_01.dgn
qtnguyen

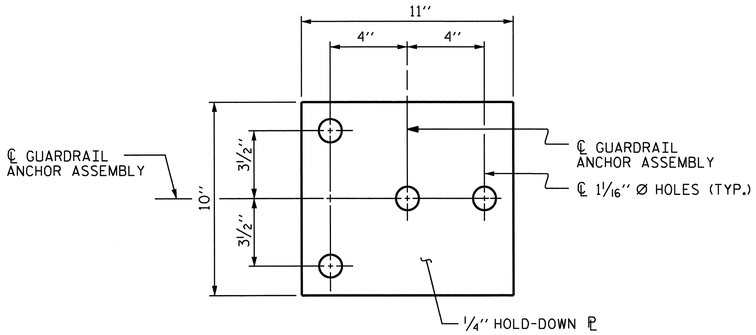

PLAN

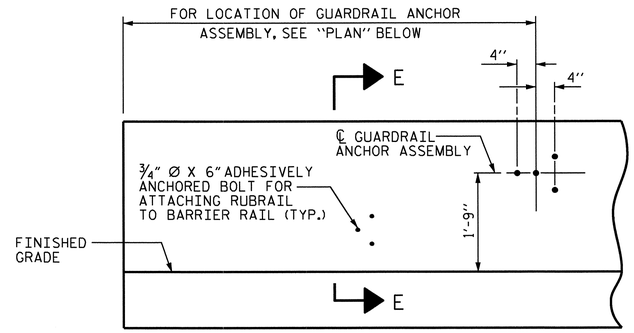

ELEVATION

FOR LOCATION OF RUBRAIL, SEE ROADWAY STD. 862.03

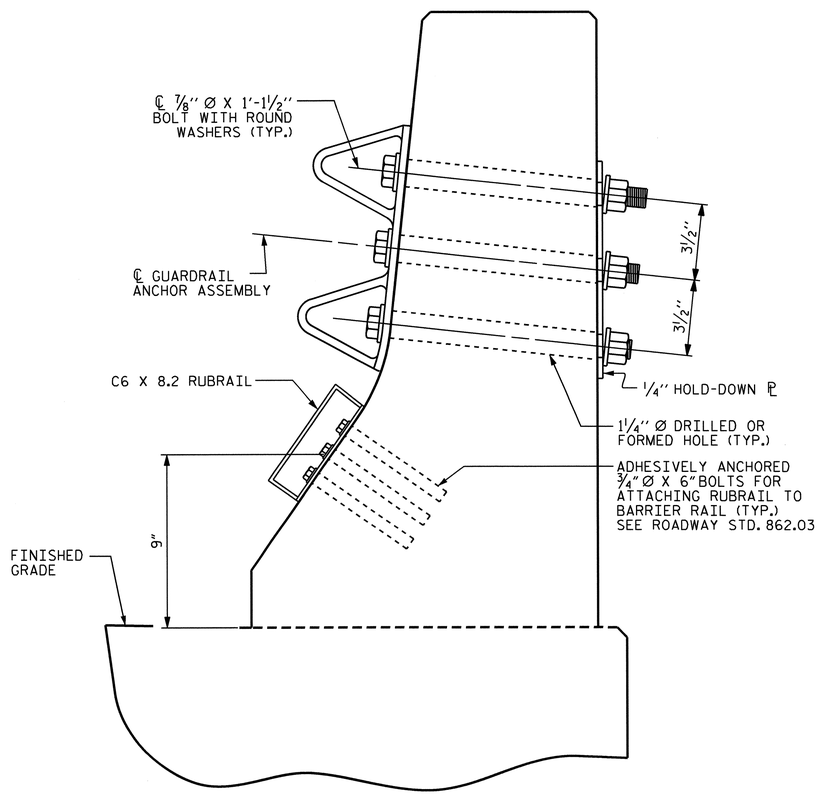

SECTION E-E

GUARDRAIL ANCHOR ASSEMBLY DETAILS

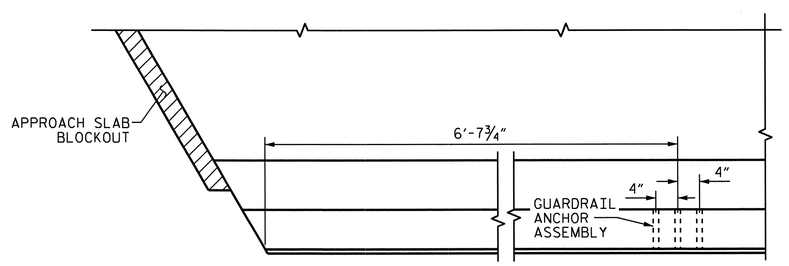

PLAN

LOCATION OF ANCHORS FOR GUARDRAIL

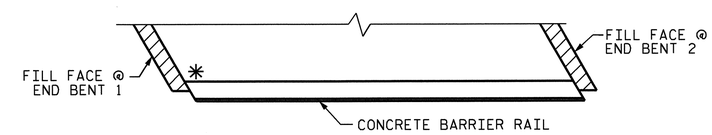

SKETCH SHOWING POINTS OF ATTACHMENTS

✳ DENOTES GUARDRAIL ANCHOR ASSEMBLY

NOTES

THE GUARDRAIL ANCHOR ASSEMBLY SHALL CONSIST OF A 1/4'' HOLD DOWN PLATE AND 4 - 7/8'' Ø BOLTS WITH NUTS AND WASHERS, RUBRAIL, AND ADHESIVELY ANCHORED BOLTS.

THE HOLD-DOWN PLATE SHALL CONFORM TO AASHTO M270 GRADE 36. AFTER FABRICATION, THE HOLD-DOWN PLATE SHALL BE HOT-DIP GALVANIZED IN ACCORDANCE WITH AASHTO M111.

BOLTS SHALL CONFORM TO THE REQUIREMENTS OF ASTM A307 AND NUTS SHALL CONFORM TO THE REQUIREMENTS OF AASHTO M291. BOLTS, NUTS AND WASHERS SHALL BE GALVANIZED. (AT THE CONTRACTOR'S OPTION, STAINLESS STEEL BOLTS, NUTS AND WASHERS MAY BE USED AS AN ALTERNATE FOR THE 7/8'' Ø GALVANIZED BOLTS, NUTS AND WASHERS. THEY SHALL CONFORM TO OR EXCEED THE MECHANICAL REQUIREMENTS OF ASTM A307. THE USE OF THIS ALTERNATE SHALL BE APPROVED BY THE ENGINEER.)

THE GUARDRAIL ANCHOR ASSEMBLY IS REQUIRED AT ALL POINTS WHERE APPROACH GUARDRAIL IS TO BE ATTACHED TO THE END OF BARRIER RAIL. FOR POINTS OF ATTACHMENT, SEE SKETCH.

AFTER INSTALLATION, THE EXPOSED THREAD OF THE BOLT SHALL BE BURRED WITH A SHARP POINTED TOOL.

THE COST OF THE GUARDRAIL ANCHOR ASSEMBLY SHALL BE INCLUDED IN THE UNIT CONTRACT PRICE BID FOR CONCRETE BARRIER RAIL.

THE 1 1/4'' Ø HOLES SHALL BE FORMED OR DRILLED WITH A CORE BIT. IMPACT TOOLS WILL NOT BE PERMITTED. ANY CONCRETE DAMAGED BY THIS WORK SHALL BE REPAIRED TO THE SATISFACTION OF THE ENGINEER.

THE C6 X 8.2 RUBRAIL IS TO BE ADHESIVELY ANCHORED TO THE RAIL USING THREE 3/4"Ø X 6" BOLTS WITH WASHERS. LEVEL ONE FIELD TESTING IS REQUIRED, AND THE YIELD LOAD OF THE 3/4"Ø BOLT IS 12 KIPS. FOR ADHESIVELY ANCHORED ANCHOR BOLTS OR DOWELS, SEE SPECIAL PROVISIONS. SEE ROADWAY STANDARD 862.03 FOR DETAILS AND LOCATION OF THE RUBRAIL.

PROJECT NO. U-3326A
ROCKINGHAM COUNTY
STATION: 113+47.50 -L-

NORTH CAROLINA PROFESSIONAL SEAL 019257 ENGINEER ALBERT C. OUTLAW, JR.
9/13/11

STATE OF NORTH CAROLINA
DEPARTMENT OF TRANSPORTATION
RALEIGH

STANDARD
GUARDRAIL ANCHORAGE FOR BARRIER RAIL

REVISIONS						SHEET NO.
NO.	BY:	DATE:	NO.	BY:	DATE:	S-21
1			3			TOTAL SHEETS
2			4			159

STR. #1A

STD. NO. GRA2

ASSEMBLED BY : A.S. CALLAWAY	DATE : 3/9/10
CHECKED BY : A. C. OUTLAW	DATE : 1/25/11
DRAWN BY : TLA 5/06	ADDED 5/1/06R KMM/GM
CHECKED BY : GM 5/06	

13-SEP-2011 15:35
R:\Structures\str01\Final Plans\U3326A_SD_BR_01.dgn
qtnguyen

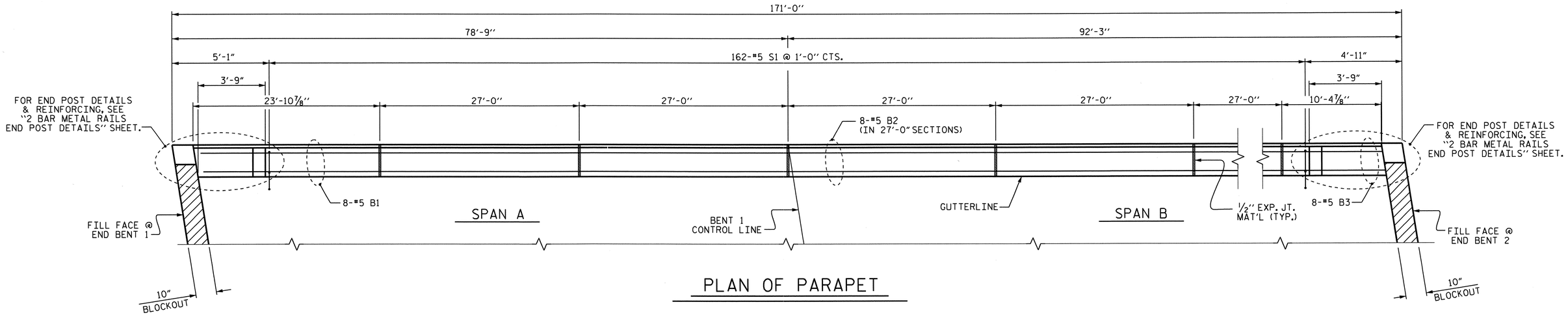

PLAN OF PARAPET

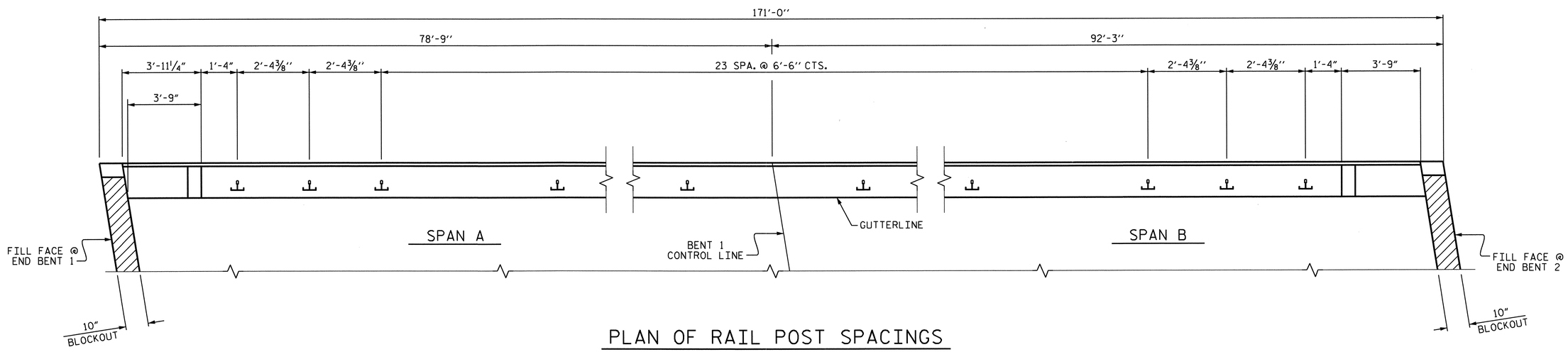

PLAN OF RAIL POST SPACINGS

PROJECT NO. U-3326A
ROCKINGHAM COUNTY
STATION: 113+47.50 -L-

NOTES

THE PARAPET IN A CONTINUOUS UNIT SHALL NOT BE CAST UNTIL ALL SLAB CONCRETE IN THE UNIT HAS BEEN CAST AND HAS REACHED A MINIMUM COMPRESSIVE STRENGTH OF 3,000 PSI.

ALL REINFORCING STEEL IN THE PARAPET SHALL BE EPOXY COATED.

GROOVED CONTRACTION JOINTS 1/2" IN DEPTH, SHALL BE TOOLED IN ALL EXPOSED FACES OF PARAPET IN ACCORDANCE WITH ARTICLE 825-10(B) OF THE STANDARD SPECIFICATIONS. THE CONTRACTION JOINTS SHALL BE LOCATED AT A SPACING OF 8 FEET TO 10 FEET BETWEEN EXPANSION JOINTS. NO CONTRACTION JOINTS WILL BE REQUIRED FOR SEGMENTS LESS THAN 10 FEET IN LENGTH.

FOR DETAIL OF CONCRETE INSERTS, SEE "RAIL POST SPACING AND END OF RAIL DETAILS" SHEET.

FOR DETAILS OF GUARDRAIL ANCHOR ASSEMBLIES, SEE "GUARDRAIL ANCHORAGE DETAILS FOR METAL RAILS" SHEET.

#5 S1 BARS MAY BE SHIFTED SLIGHTLY IN ORDER TO PROVIDE PROPER CLEARANCE TO JOINTS.

NORTH CAROLINA PROFESSIONAL SEAL ENGINEER ALBERT C. OUTLAW, JR.
10/24/11

STATE OF NORTH CAROLINA
DEPARTMENT OF TRANSPORTATION
RALEIGH

SUPERSTRUCTURE
1'-2" X 2'-8"
CONCRETE PARAPET
AND
RAIL POST SPACINGS

REVISIONS						SHEET NO.
NO.	BY:	DATE:	NO.	BY:	DATE:	S-22
1			3			TOTAL SHEETS
2			4			159

STR. #1A

DRAWN BY : A.S. CALLAWAY DATE : 3/8/10
CHECKED BY : A. C. OUTLAW DATE : 1/25/11

24-OCT-2011 08:17
R:\Structures\str01\Final Plans\U3326A_SD_2MR_01.dgn
aoutlaw

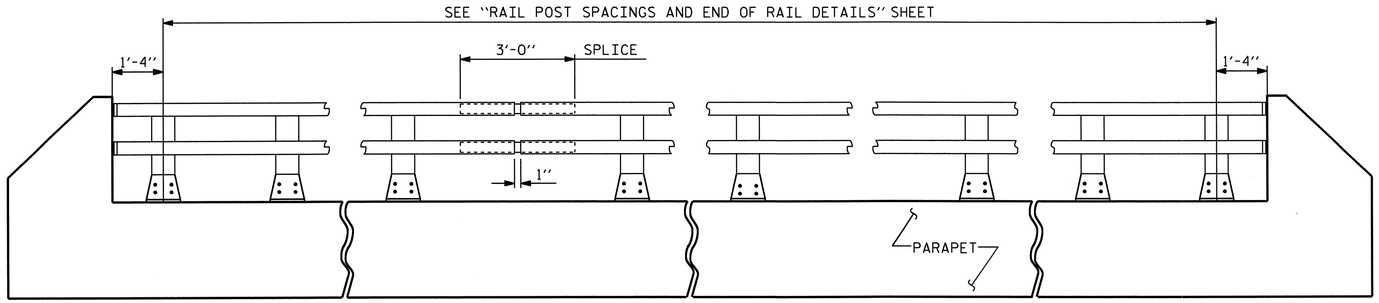

ELEVATION

NOTE : FOR ATTACHMENT OF METAL RAIL TO END POST, SEE STANDARD NO. BMR2.

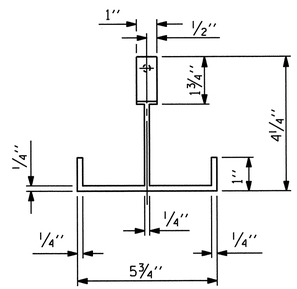

PLAN

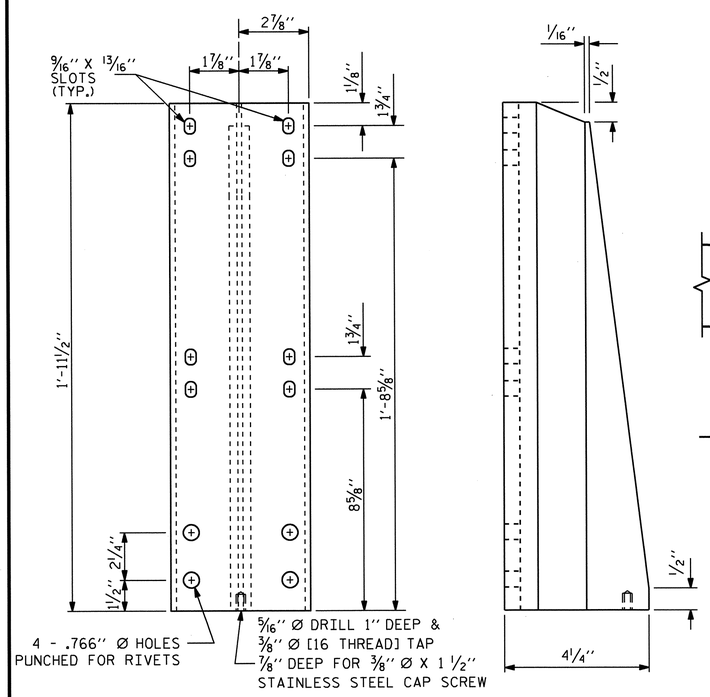

FRONT ELEVATION

SIDE ELEVATION

DETAILS OF POST

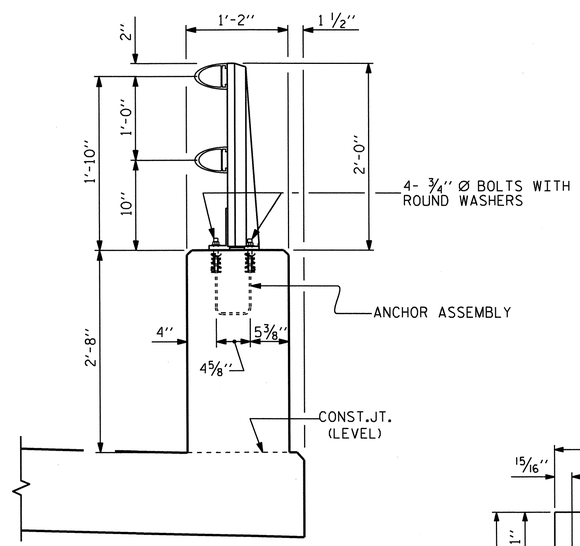

SECTION THRU PARAPET AND RAIL

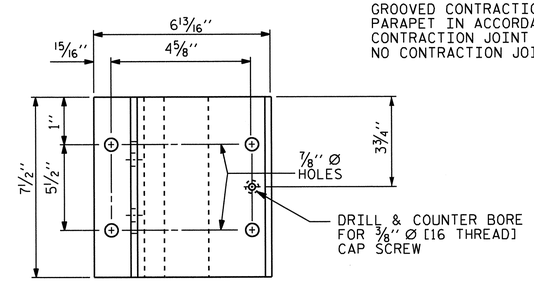

PLAN

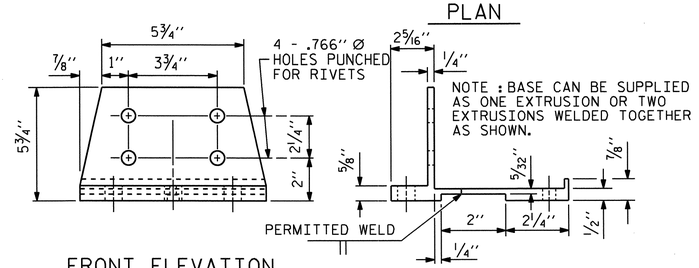

FRONT ELEVATION

SIDE ELEVATION

POST BASE DETAILS

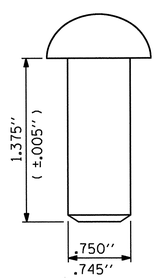

RIVET DETAIL

NOTES

AT THE CONTRACTOR'S OPTION, METAL RAIL MAY BE EITHER ALUMINUM OR GALVANIZED STEEL IN ACCORDANCE WITH THE REQUIREMENTS OF THE GENERAL NOTES AND THE FOLLOWING SPECIFICATIONS FOR THE ALTERNATE MATERIALS; HOWEVER, THE CONTRACTOR WILL BE REQUIRED TO USE THE SAME RAIL MATERIAL ON ALL STRUCTURES ON THE PROJECT FOR WHICH METAL RAIL IS DESIGNATED.

ALUMINUM RAILS

MATERIAL FOR POSTS, BASES AND RAILS, EXPANSION BARS AND CLAMP BARS SHALL BE ASTM B-221 ALLOY 6061-T6.

MATERIAL FOR RIVETS SHALL BE ASTM B316 ALLOY 6061-T6. RIVETS SHALL BE STANDARD BUTTON HEAD AND CONE POINT COLD DRIVEN AS PER DRAWING.

THE BASE OF RAIL POSTS, OR ANY OTHER ALUMINUM SURFACE IN CONTACT WITH CONCRETE SHALL BE THOROUGHLY COATED WITH AN ALUMINUM IMPREGNATED CAULKING COMPOUND OF APPROVED QUALITY.

MATERIAL FOR SHIMS TO BE ASTM B209 ALLOY 6061-T6.

GALVANIZED STEEL RAILS

MATERIAL AND GALVANIZING ARE TO CONFORM TO THE FOLLOWING SPECIFICATIONS:

POST, POST BASES, RAILS, EXPANSION BARS AND CLAMP BARS: AASHTO M270 GRADE 36 STRUCTURAL STEEL - GALVANIZED TO AASHTO M111.

RIVETS: RIVETS SHALL MEET THE REQUIREMENTS OF ASTM A502 FOR GRADE 1 RIVETS.

THE CUT ENDS OF GALVANIZED STEEL RAILING, AFTER GRINDING SMOOTH SHALL BE GIVEN TWO COATS OF ZINC RICH PAINT MEETING THE REQUIREMENTS OF FEDERAL SPECIFICATION MIL-P-26915 USAF TYPE 1, OR OF FEDERAL SPECIFICATIONS TT-P-641.

SHIMS: SHIMS SHALL MEET THE REQUIREMENTS OF ASTM A570 FOR GRADE 33 OR A611 FOR GRADE C AND SHALL BE GALVANIZED IN ACCORDANCE WITH AASHTO M111.

RAIL CAPS: RAIL CAPS SHALL MEET THE REQUIREMENTS OF ASTM A570 FOR GRADE 33 OR A611 FOR GRADE C AND SHALL BE GALVANIZED IN ACCORDANCE WITH AASHTO M111.

GENERAL NOTES

RAILING SHALL BE CONTINUOUS FROM END POST TO END POST OF BRIDGE. EACH JOINT IN RAIL LENGTH SHALL BE SPLICED AS DETAILED. PANEL LENGTHS OF RAIL SHALL BE ATTACHED TO A MINIMUM OF THREE POSTS.

FOR END OF RAIL TO CLEAR FACE OF CONCRETE END POST DIMENSION, SEE STANDARD NO. BMR2.

CAP SCREWS SHALL BE ASTM F593 ALLOY 305 STAINLESS STEEL. WASHERS SHALL MEET THE REQUIREMENTS OF ASTM F844 EXCEPT THEY SHALL BE MADE FROM ALLOY 304 STAINLESS STEEL.

CERTIFIED MILL REPORTS ARE REQUIRED FOR RAILS AND POSTS. SHOP INSPECTION IS NOT REQUIRED.

METAL RAIL POSTS SHALL BE SET NORMAL TO CURB GRADE.

METHOD OF MEASUREMENT FOR METAL RAILS: FOR LENGTH OF METAL RAILS TO BE PAID FOR, SEE THE STANDARD SPECIFICATIONS.

CURVED RAIL USAGE: WHERE RAILS ARE TO BE USED ON BRIDGES ON HORIZONTAL AND/OR VERTICAL CURVATURE THE CONTRACTOR MAY, AT HIS OPTION, HAVE THE REQUIRED CURVATURE IN THE RAIL FORMED IN THE SHOP OR IN THE FIELD. IN EITHER EVENT, THE RAIL SHALL CONFORM WITHOUT BUCKLING OR KINKING TO THE REQUIRED CURVATURE IN A UNIFORM MANNER ACCEPTABLE TO THE ENGINEER.

TO INSURE FUTURE IDENTIFICATION OF THE FABRICATOR, A PERMANENT IDENTIFYING MARK SHALL BE PLACED ON EACH POST. THE METHOD OF MARKING AND LOCATION SHALL BE SUCH THAT IT DOES NOT DETRACT FROM THE APPEARANCE OF THE POST, BUT REMAINS VISIBLE AFTER RAIL PLACEMENT.

SHIMS SHALL BE USED AS NECESSARY FOR POST ALIGNMENT.

ALLOY 6351-T5 MAY BE SUBSTITUTED FOR ALLOY 6061-T6 WHERE APPLICABLE.

MINOR VARIATIONS IN DETAILS OF METAL RAIL WILL BE CONSIDERED. DETAILS OF SUCH VARIATIONS, IF DESIRED, SHALL BE SUBMITTED FOR APPROVAL.

GROOVED CONTRACTION JOINTS, 1/2" IN DEPTH, SHALL BE TOOLED IN ALL EXPOSED FACES OF THE PARAPET IN ACCORDANCE WITH ARTICLE 825-10(B) OF THE STANDARD SPECIFICATIONS. THE CONTRACTION JOINT SHALL BE LOCATED AT A SPACING OF 8FT. TO 10FT. BETWEEN EXPANSION JOINTS. NO CONTRACTION JOINTS WILL BE REQUIRED FOR SEGMENTS LESS THAN 10 FEET IN LENGTH.

PAY LENGTH = 161.63 LIN. FT.

PROJECT NO. U-3326A
ROCKINGHAM COUNTY
STATION: 113+47.50 -L-

SHEET 1 OF 4

STATE OF NORTH CAROLINA
DEPARTMENT OF TRANSPORTATION
RALEIGH

STANDARD

2 BAR METAL RAIL

NORTH CAROLINA PROFESSIONAL SEAL 007571 ENGINEER ALBERT C. OUTLAW, JR.
10/27/11

REVISIONS						SHEET NO.
NO.	BY:	DATE:	NO.	BY:	DATE:	S-23
1			3			TOTAL SHEETS
2			4			159

ASSEMBLED BY : A.S. CALLAWAY	DATE : 3/8/10		
CHECKED BY : A. C. OUTLAW	DATE : 1/25/11		
DRAWN BY : EEM 6/94	REV. 10/17/00	LES/RDR	
CHECKED BY : RGW 6/94	REV. 5/7/03R	RWW/JTE	
	REV. 5/1/06	TLA/GM	

27-OCT-2011 09:13
R:\Structures\str01\FinalPlans\U3326A_SD_2MR_01.dgn
aoutlaw

STR. #1A

STD. NO. BMR3

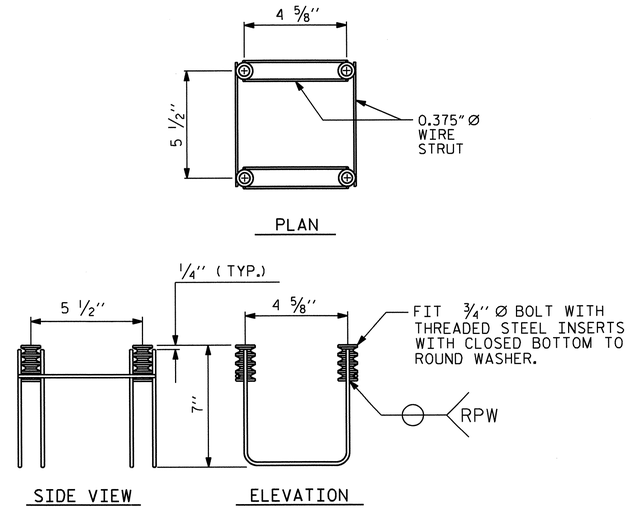

MINIMUM LENGTH OF THREADS IN INSERT (FERRULE): 1 3/4''

4-BOLT METAL RAIL ANCHOR ASSEMBLY

(28 ASSEMBLIES REQUIRED)

NOTES

STRUCTURAL CONCRETE ANCHOR ASSEMBLY

THE STRUCTURAL CONCRETE ANCHOR ASSEMBLY SHALL CONSIST OF THE FOLLOWING COMPONENTS :

A. FERRULES SHALL BE MADE FROM STEEL MEETING THE REQUIREMENTS OF AASHTO M169, GRADE 12L14 AND SHALL HAVE A MINIMUM LENGTH OF THREADS OF 2'' FOR 3/4'' FERRULES.

B. 4 - 3/4'' Ø X 2 1/2'' BOLTS WITH WASHERS. BOLTS SHALL CONFORM TO THE REQUIREMENTS OF ASTM A307. BOLTS AND WASHERS SHALL BE GALVANIZED. AT THE CONTRACTOR'S OPTION, STAINLESS STEEL BOLTS AND WASHERS MAY BE USED AS AN ALTERNATE FOR THE 3/4'' Ø X 2 1/2'' GALVANIZED BOLTS AND WASHERS. THEY SHALL CONFORM TO OR EXCEED THE MECHANICAL REQUIREMENTS OF ASTM A307. THE USE OF THIS ALTERNATE SHALL BE APPROVED BY THE ENGINEER.

C. WIRE STRUT SHOWN IN THE CONCRETE ANCHOR ASSEMBLY DETAIL IS THE MINIMUM ALLOWABLE SIZE AND SHALL HAVE A MINIMUM TENSILE STRENGTH OF 100,000 PSI. AS AN OPTION, A 7/16'' Ø WIRE STRUT WITH A MINIMUM TENSILE STRENGTH OF 90,000 PSI IS ACCEPTABLE.

D. THE METAL RAIL ANCHOR ASSEMBLIES TO BE HOT DIPPED GALVANIZED TO CONFORM TO REQUIREMENTS OF AASHTO M111.

E. THE COST OF THE METAL RAIL ANCHOR ASSEMBLY WITH BOLTS AND WASHERS COMPLETE IN PLACE SHALL BE INCLUDED IN THE PRICE BID FOR LINEAR FEET OF METAL RAIL.

F. BOLTS TO BE TIGHTENED ONE-HALF TURN WITH A WRENCH FROM A FINGER-TIGHT POSITION.

THE CONTRACTOR MAY USE ADHESIVELY ANCHORED ANCHOR BOLTS IN PLACE OF THE METAL RAIL ANCHOR ASSEMBLY. LEVEL ONE FIELD TESTING IS REQUIRED, AND THE YIELD LOAD OF THE 3/4'' Ø BOLT IS 10 KIPS. FOR ADHESIVELY ANCHORED ANCHOR BOLTS OR DOWELS, SEE SPECIAL PROVISIONS.

WHEN ADHESIVELY ANCHORED ANCHOR BOLTS ARE USED, BOLTS SHALL MEET THE REQUIREMENTS OF ASTM F593 ALLOY 304 STAINLESS STEEL WITH MINIMUM 75,000 PSI ULTIMATE STRENGTH. NUTS SHALL MEET THE REQUIREMENTS OF ASTM F594 ALLOY 304 STAINLESS STEEL AND WASHERS SHALL MEET THE REQUIREMENTS OF ASTM F844 EXCEPT THEY SHALL BE MADE FROM ALLOY 304 STAINLESS STEEL.

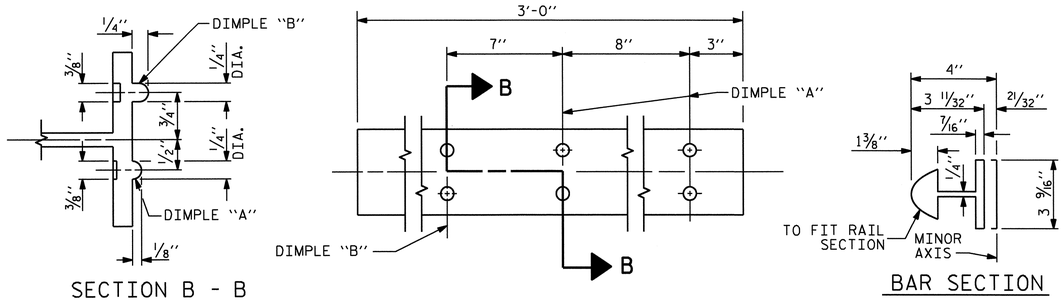

EXPANSION BAR DETAILS

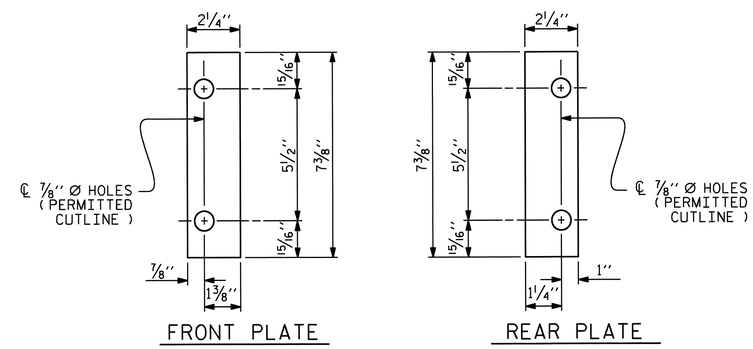

SHIM DETAILS

NOTE :
SHIMS MAY BE CUT ALONG PERMITTED CUTLINE OR SLOTTED TO EDGE OF PLATE TO FACILITATE PLACEMENT.

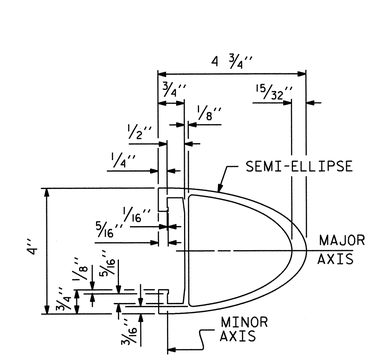

RAIL SECTION

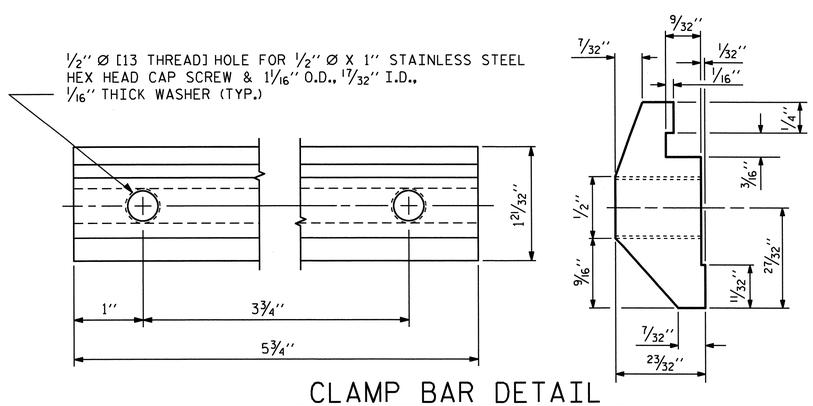

CLAMP BAR DETAIL

(4 REQUIRED PER POST)

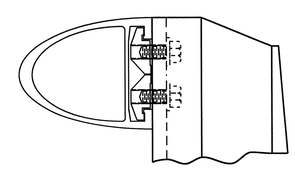

CLAMP ASSEMBLY

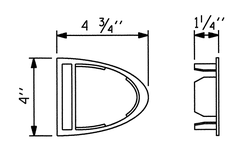

RAIL CAP

PROJECT NO. U-3326A
ROCKINGHAM COUNTY
STATION: 113+47.50 -L-

SHEET 2 OF 4

STATE OF NORTH CAROLINA
DEPARTMENT OF TRANSPORTATION
RALEIGH

STANDARD

2 BAR METAL RAIL

NORTH CAROLINA PROFESSIONAL SEAL 10759 ENGINEER ALBERT C. OUTLAW JR.

9/13/11

ASSEMBLED BY : A.S. CALLAWAY	DATE : 3/8/10
CHECKED BY : A. C. OUTLAW	DATE : 1/25/11
DRAWN BY : EEM 6/94	REV. 2/6/97 EEM/RGW
CHECKED BY : RGW 6/94	REV. 8/16/99 MAB/LES
	REV. 5/1/06R KMM/GM

REVISIONS							SHEET NO.
NO.	BY:	DATE:	NO.	BY:	DATE:		S-24
1			3				TOTAL SHEETS
2			4				159

STR. #1A

STD. NO. BMR4

13-SEP-2011 15:35
R:\Structures\str01\Final Plans\U3326A_SD_2MR_01.dgn
qtnguyen

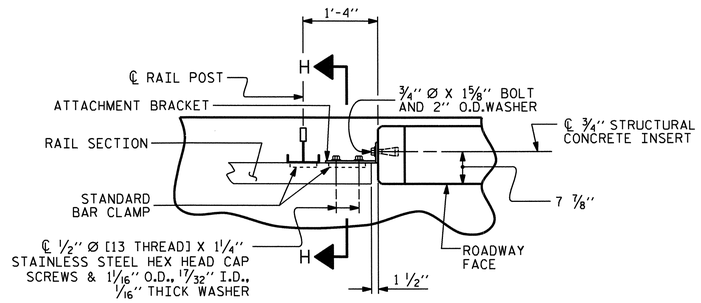

PLAN - RAIL AND END POST

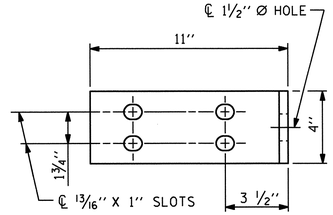

ELEVATION

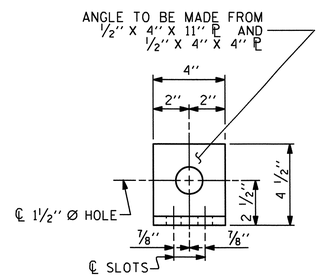

END VIEW

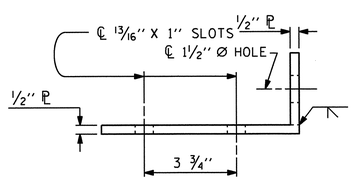

TOP VIEW

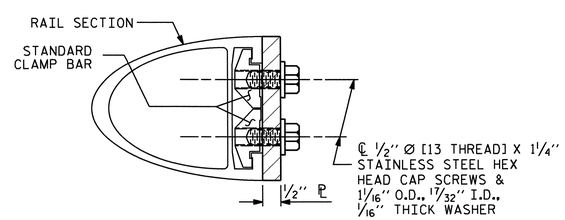

SECTION H-H

FIXED

DETAILS FOR ATTACHING METAL RAIL TO END POST

NOTES

STRUCTURAL CONCRETE INSERT

THE STRUCTURAL CONCRETE INSERT ASSEMBLY SHALL CONSIST OF THE FOLLOWING COMPONENTS:

A. FERRULES SHALL BE MADE FROM STEEL MEETING THE REQUIREMENTS OF AASHTO M169, GRADE 12L14 AND SHALL HAVE A MINIMUM LENGTH OF THREADS OF 1 1/2".

B. 1 - 3/4" Ø X 1 5/8" BOLT WITH WASHER. BOLT SHALL CONFORM TO THE REQUIREMENTS OF ASTM A307. BOLT AND WASHER SHALL BE GALVANIZED. (AT THE CONTRACTOR'S OPTION, STAINLESS STEEL BOLT AND WASHER MAY BE USED AS AN ALTERNATE FOR THE 3/4" Ø X 1 5/8" GALVANIZED BOLT AND WASHER. THEY SHALL CONFORM TO OR EXCEED THE MECHANICAL REQUIREMENTS OF ASTM A307. THE USE OF THIS ALTERNATE SHALL BE APPROVED BY THE ENGINEER.)

C. WIRE STRUT SHOWN IN THE CONCRETE INSERT ASSEMBLY DETAIL IS THE MINIMUM ALLOWABLE SIZE AND SHALL HAVE A MINIMUM TENSILE STRENGTH OF 100,000 PSI. AS AN OPTION, A 7/16" Ø WIRE STRUT WITH A MINIMUM TENSILE STRENGTH OF 90,000 PSI IS ACCEPTABLE.

NOTES

METAL RAIL TO END POST CONNECTION

THE METAL RAIL TO END POST CONNECTION SHALL CONSIST OF THE FOLLOWING COMPONENTS:

A. 1/2" PLATES SHALL CONFORM TO AASHTO M270 GRADE 36 AND SHALL BE GALVANIZED AFTER FABRICATION.

B. 3/4" STRUCTURAL CONCRETE INSERT SHALL HAVE A WORKING LOAD SHEAR CAPACITY OF 4800 LBS. THE FERRULES SHALL ENGAGE A 3/4"Ø X 1 5/8" BOLT WITH 2" O.D. WASHER IN PLACE. THE 3/4"Ø X 1 5/8" BOLT SHALL HAVE N. C. THREADS.

C. CAP SCREWS FOR RAIL ATTACHMENT TO ANGLE SHALL CONFORM TO THE REQUIREMENTS OF ASTM F593 ALLOY 305 STAINLESS STEEL. CAP SCREWS TO BE CENTERED IN SLOTS AT 60°F.

D. STANDARD CLAMP BARS (SEE METAL RAIL SHEET).

E. 1/2" Ø PIPE SLEEVES (IF REQUIRED) TO BE GALVANIZED.

THE COST OF THE STANDARD CLAMP BARS AND CAP SCREWS USED IN THE METAL RAIL TO END POST CONNECTION SHALL BE INCLUDED IN THE UNIT CONTRACT PRICE BID FOR LINEAR FEET OF 1 OR 2 BAR METAL RAILS.

THE 3/4" STRUCTURAL CONCRETE INSERT WITH BOLT SHALL BE ASSEMBLED IN THE SHOP.

THE COST OF THE 3/4" STRUCTURAL CONCRETE INSERT ASSEMBLY, AND THE 1/2" PLATES COMPLETE IN PLACE SHALL BE INCLUDED IN THE VARIOUS PAY ITEMS.

THE CONTRACTOR, AT HIS OPTION, MAY USE AN ADHESIVE BONDING SYSTEM IN LIEU OF THE STRUCTURAL CONCRETE INSERT EMBEDDED IN THE END POST. IF THE ADHESIVE BONDING SYSTEM IS USED, THE 3/4" Ø X 1 5/8" BOLT WITH WASHER SHALL BE REPLACED WITH A 3/4"Ø X 6 1/2" BOLT AND 2" O.D. WASHER. ALL SPECIFICATIONS THAT APPLY TO THE 3/4" Ø X 1 5/8" BOLT SHALL APPLY TO THE 3/4"Ø X 6 1/2" BOLT. FIELD TESTING OF THE ADHESIVE BONDING SYSTEM IS NOT REQUIRED.

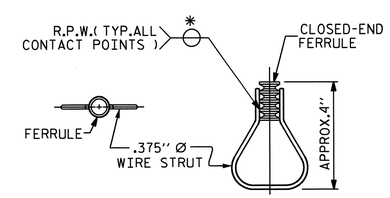

PLAN ELEVATION

STRUCTURAL CONCRETE INSERT

* EACH WELDED ATTACHMENT OF WIRE TO FERRULE SHALL DEVELOP THE TENSILE STRENGTH OF THE WIRE.

PROJECT NO. U-3326A

ROCKINGHAM COUNTY

STATION: 113+47.50 -L-

SHEET 3 OF 4

STATE OF NORTH CAROLINA
DEPARTMENT OF TRANSPORTATION
RALEIGH

STANDARD

END OF RAIL DETAILS
FOR TWO BAR METAL RAILS

NORTH CAROLINA PROFESSIONAL SEAL 10724 ENGINEER ALBERT C. OUTLAW

10/24/11

REVISIONS						SHEET NO.
NO.	BY:	DATE:	NO.	BY:	DATE:	S-25
1			3			TOTAL SHEETS
2			4			159

ASSEMBLED BY : A.S. CALLAWAY	DATE : 3/8/10		
CHECKED BY : A. C. OUTLAW	DATE : 1/25/11		
DRAWN BY : FCJ 1/88	REV. 10/17/00	LES/RDR	
CHECKED BY : CRK 3/89	REV. 5/7/03	RWW/JTE	
	REV. 5/1/06	TLA/GM	

24-OCT-2011 08:17
R:\Structures\str01\Final Plans\U3326A_SD_2MR_01.dgn
aoutlaw

STR. #1A

STD. NO. BMR2

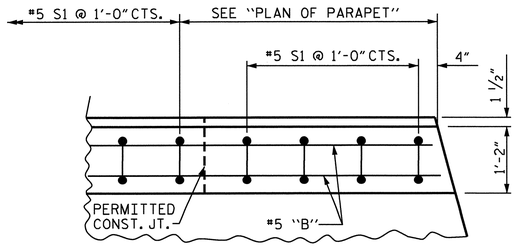

PLAN OF PARAPET

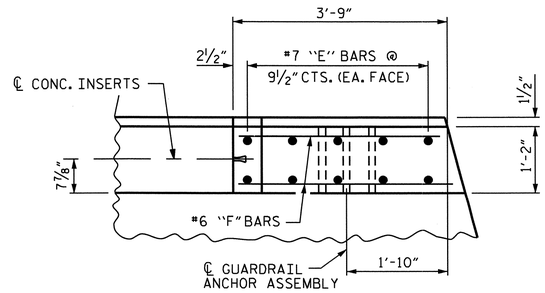

PLAN OF END POST

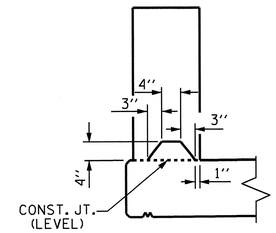

SECTION S-S

AT DAM IN OPEN JOINT
(THIS IS TO BE USED ONLY
WHEN SLIP FORM IS USED)

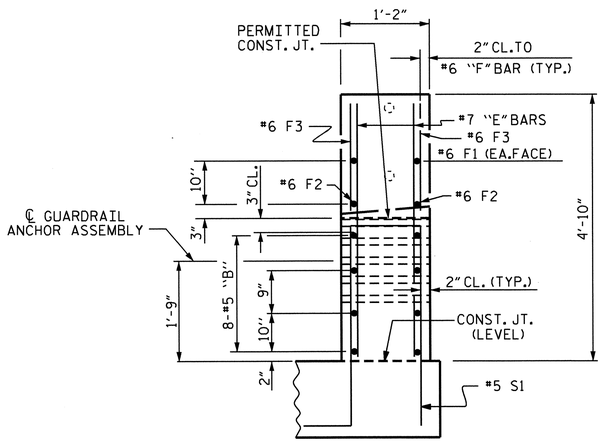

END VIEW

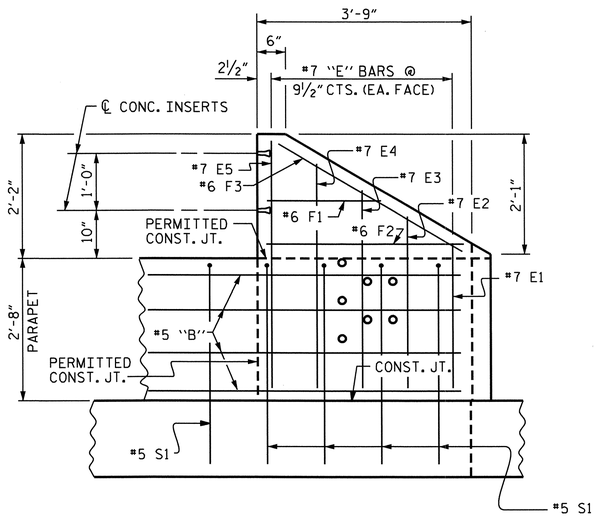

ELEVATION

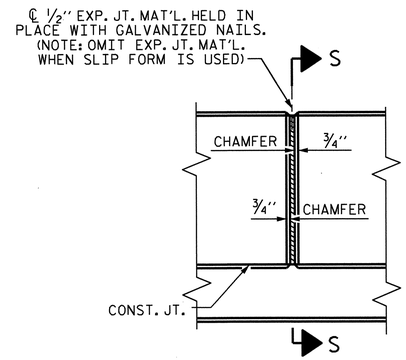

ELEVATION AT EXPANSION JOINTS

PARAPET AND END POST FOR TWO BAR RAIL

END BENT 2 SHOWN, END BENT 1 SIMILAR.

TWO BAR METAL RAIL

BILL OF MATERIAL FOR PARAPET & TWO END POSTS

BAR	NO.	SIZE	TYPE	LENGTH	WEIGHT
* B1	8	#5	STR	23'-7"	197
* B2	40	#5	STR	26'-7"	1109
* B3	8	#5	STR	9'-8"	81
* E1	4	#7	STR	2'-8"	22
* E2	4	#7	STR	3'-2"	26
* E3	4	#7	STR	3'-8"	30
* E4	4	#7	STR	4'-2"	34
* E5	4	#7	STR	4'-6"	37
* F1	4	#6	STR	1'-9"	11
* F2	4	#6	STR	3'-2"	19
* F3	4	#6	STR	3'-10"	23
* S1	170	#5	1	7'-4"	1300

* EPOXY COATED REINFORCING STEEL LBS. 2,889

CLASS "AA" CONCRETE C.Y. 20.1

CONCRETE PARAPET L.F. 169.31

BAR TYPE

BAR DIMENSIONS ARE OUT TO OUT.

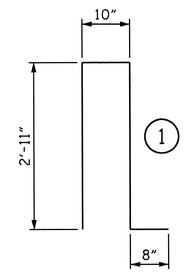

PROJECT NO. U-3326A
ROCKINGHAM COUNTY
STATION: 113+47.50 -L-

SHEET 4 OF 4

STATE OF NORTH CAROLINA
DEPARTMENT OF TRANSPORTATION
RALEIGH

SUPERSTRUCTURE

2 BAR METAL RAIL
END POST DETAILS

NORTH CAROLINA PROFESSIONAL SEAL 10742 ENGINEER ALBERT C. OUTLAW, JR.

10/24/11

REVISIONS						SHEET NO.
NO.	BY:	DATE:	NO.	BY:	DATE:	S-26
1			3			TOTAL SHEETS
2			4			159

DRAWN BY : A.S. CALLAWAY DATE : 3/9/10
CHECKED BY : A. C. OUTLAW DATE : 2/7/11

24-OCT-2011 08:17
R:\Structures\str01\FinalPlans\U3326A_SD_2MR_01.dgn
aoutlaw

STR. #1A

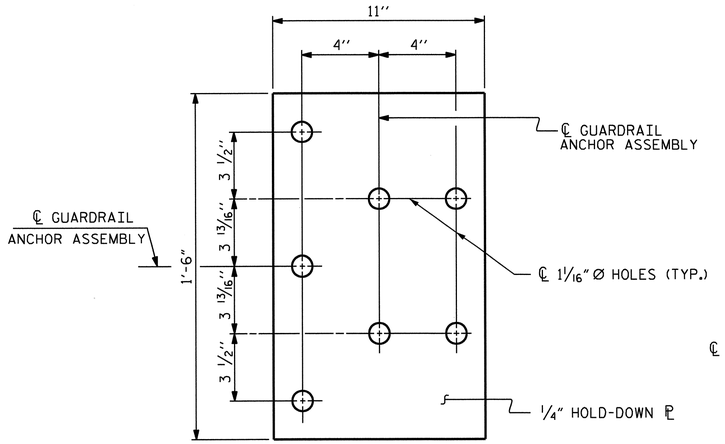

PLAN

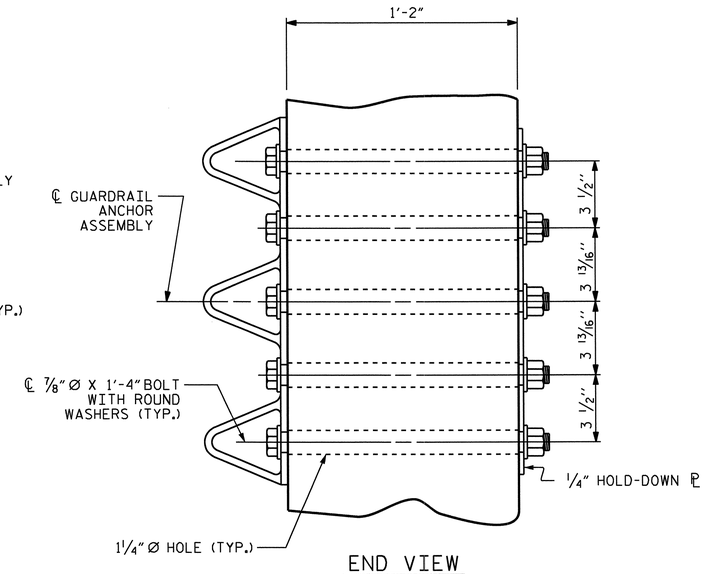

END VIEW

GUARDRAIL ANCHOR ASSEMBLY DETAILS

NOTES (FOR METAL RAILS)

THE GUARDRAIL ANCHOR ASSEMBLY SHALL CONSIST OF A 1/4'' HOLD DOWN PLATE AND 7 - 7/8'' Ø BOLTS WITH NUTS AND WASHERS.

THE HOLD-DOWN PLATE SHALL CONFORM TO AASHTO M270 GRADE 36. AFTER FABRICATION, THE HOLD-DOWN PLATE SHALL BE HOT-DIP GALVANIZED IN ACCORDANCE WITH AASHTO M111.

BOLTS SHALL CONFORM TO THE REQUIREMENTS OF ASTM A307 AND NUTS SHALL CONFORM TO THE REQUIREMENTS OF AASHTO M291. BOLTS, NUTS AND WASHERS SHALL BE GALVANIZED. AT THE CONTRACTOR'S OPTION, STAINLESS STEEL BOLTS, NUTS AND WASHERS MAY BE USED AS AN ALTERNATE FOR THE 7/8'' Ø GALVANIZED BOLTS, NUTS AND WASHERS. THEY SHALL CONFORM TO OR EXCEED THE MECHANICAL REQUIREMENTS OF ASTM A307. THE USE OF THIS ALTERNATE SHALL BE APPROVED BY THE ENGINEER.

THE GUARDRAIL ANCHOR ASSEMBLY IS REQUIRED AT ALL POINTS WHERE APPROACH GUARDRAIL IS TO BE ATTACHED TO THE END OF THE PARAPET. FOR POINTS OF ATTACHMENT, SEE SKETCH.

AFTER INSTALLATION, THE EXPOSED THREAD OF THE BOLT SHALL BE BURRED WITH A SHARP POINTED TOOL.

THE COST OF THE GUARDRAIL ANCHOR ASSEMBLIES WITH BOLTS, NUTS AND WASHERS COMPLETE IN PLACE, SHALL BE INCLUDED IN THE VARIOUS PAY ITEMS.

THE VERTICAL REINFORCING BARS MAY BE SHIFTED SLIGHTLY IN THE END POST TO CLEAR ASSEMBLY BOLTS.

THE 1 1/4'' Ø HOLES SHALL BE FORMED OR DRILLED WITH A CORE BIT. IMPACT TOOLS WILL NOT BE PERMITTED. ANY CONCRETE DAMAGED BY THIS WORK SHALL BE REPAIRED TO THE SATISFACTION OF THE ENGINEER.

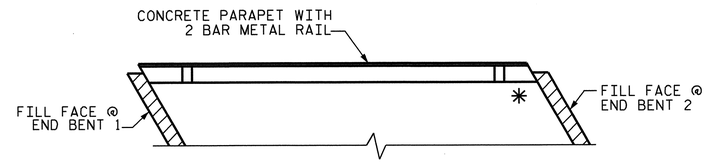

SKETCH SHOWING POINTS OF ATTACHMENT

* LOCATION OF GUARDRAIL ATTACHMENT

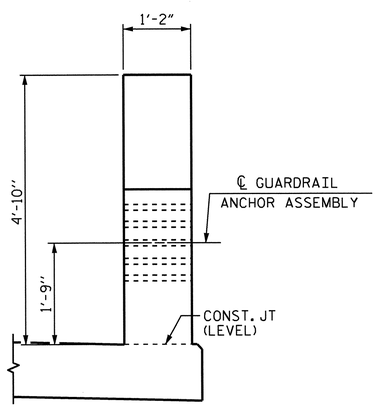

END VIEW
(TWO BAR METAL RAIL)

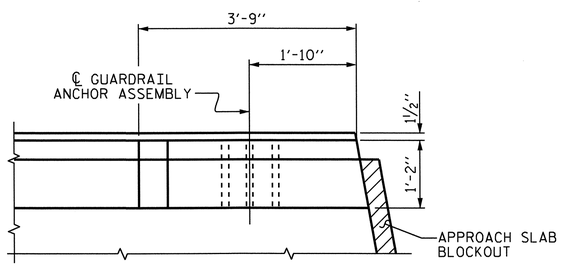

PLAN

LOCATION OF GUARDRAIL ANCHOR AT END POST

PROJECT NO. U-3326A
ROCKINGHAM COUNTY
STATION: 113+47.50 -L-

NORTH CAROLINA PROFESSIONAL SEAL 10157 ENGINEER ALBERT C. OUTLAW, JR.
10/24/11

STATE OF NORTH CAROLINA
DEPARTMENT OF TRANSPORTATION
RALEIGH

STANDARD
GUARDRAIL ANCHORAGE DETAILS FOR METAL RAILS & VERTICAL CONCRETE BARRIER RAIL

REVISIONS						SHEET NO.
NO.	BY:	DATE:	NO.	BY:	DATE:	S-27
1			3			TOTAL SHEETS
2			4			159

ASSEMBLED BY : A.C. OUTLAW DATE : 1/26/11	
CHECKED BY : W. F. PARKER DATE : 5/25/11	
DRAWN BY : MAA 5/10	ADDED 5/6/10
CHECKED BY : GM 5/10	

24-OCT-2011 08:17
R:\Structures\str01\Final Plans\U3326A_SD_2MR_01.dgn
aoutlaw

STR. #1A

STD. NO. GRA3

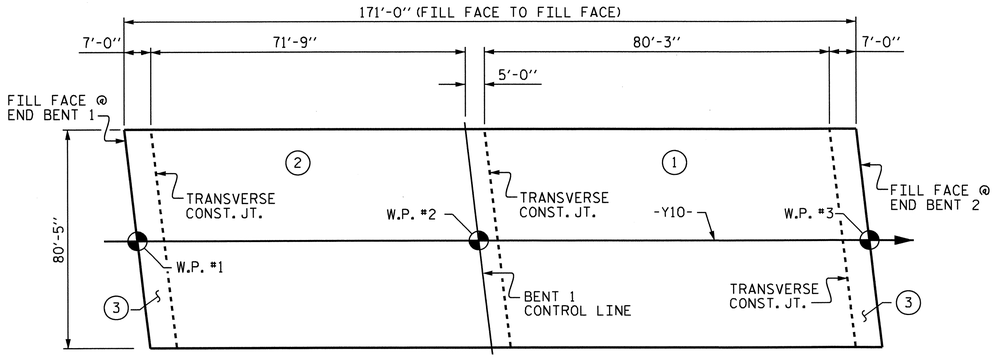

POURING SEQUENCE

POUR (3) CANNOT BE STARTED UNTIL BOTH ADJACENT POURS REACH A MINIMUM OF 3000 PSI.

POUR (3) SHALL INCLUDE INTEGRAL CAP AND UPPER WINGS.

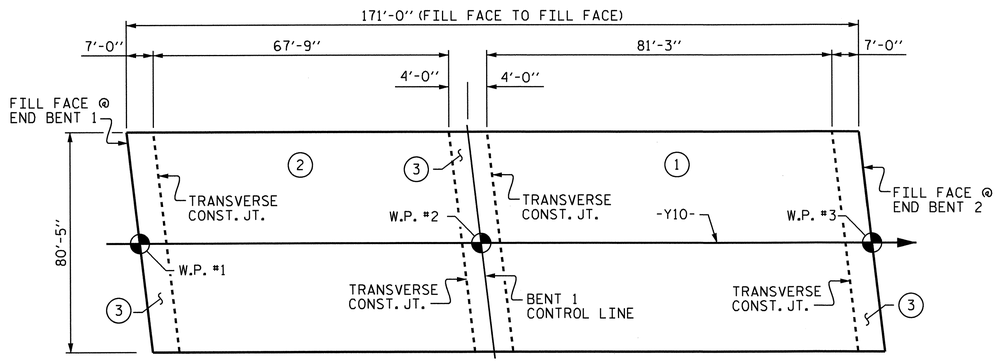

OPTIONAL POURING SEQUENCE

POUR (3) CANNOT BE STARTED UNTIL BOTH ADJACENT POURS REACH A MINIMUM OF 3000 PSI.

POUR (3) SHALL INCLUDE INTEGRAL CAP AND UPPER WINGS.

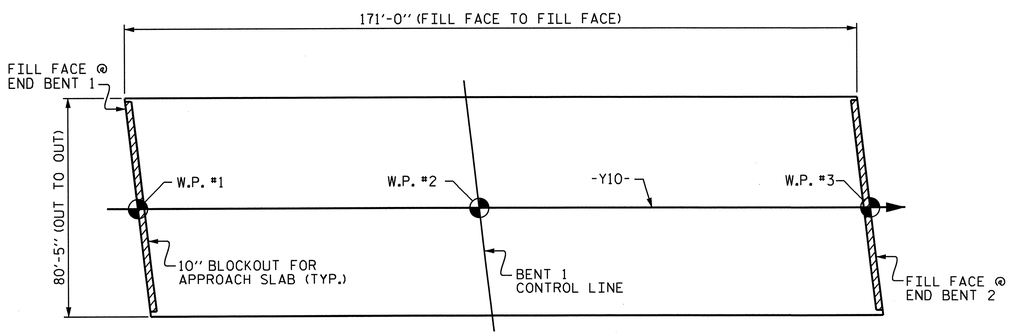

LAYOUT FOR COMPUTING AREA REINFORCED CONCRETE DECK SLAB (SQ. FT. = 13,751)

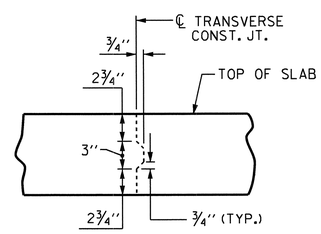

TRANSVERSE CONSTRUCTION JOINT DETAIL

NOTE: REINFORCING STEEL IN SLAB NOT SHOWN. LONGITUDINAL REINFROCING STEEL SHALL BE CONTINUOUS THRU JOINT.

BAR SCHEDULE

SPANS "A" & "B"

BAR	NO.	SIZE	TYPE	LENGTH	WEIGHT	BAR	NO.	SIZE	TYPE	LENGTH	WEIGHT
* A1	522	#5	STR	41'-4"	22504	A304	1	#5	STR	19'-0"	20
* A101	2	#5	STR	38'-9"	81	A305	1	#5	STR	15'-0"	16
* A102	2	#5	STR	34'-10"	73	A306	1	#5	STR	11'-1"	12
* A103	2	#5	STR	30'-10"	64	A307	1	#5	STR	7'-1"	7
* A104	2	#5	STR	26'-11"	56	A308	1	#5	STR	3'-2"	3
* A105	2	#5	STR	22'-11"	48	A309	1	#5	STR	26'-6"	28
* A106	2	#5	STR	19'-0"	40	A310	1	#5	STR	22'-6"	23
* A107	2	#5	STR	15'-0"	31	A311	1	#5	STR	18'-7"	19
* A108	2	#5	STR	11'-1"	23	A312	1	#5	STR	14'-7"	15
* A109	2	#5	STR	7'-1"	15	A313	1	#5	STR	10'-8"	11
* A110	2	#5	STR	3'-2"	7	A314	1	#5	STR	6'-8"	7
* A111	2	#5	STR	35'-8"	74						
* A112	2	#5	STR	31'-8"	66	* B1	14	#4	STR	26'-1"	244
* A113	2	#5	STR	27'-9"	58	* B2	426	#5	STR	18'-6"	8220
* A114	2	#5	STR	23'-9"	50	* B3	108	#4	STR	18'-8"	1347
* A115	2	#5	STR	19'-10"	41	* B4	107	#5	STR	60'-0"	6696
* A116	2	#5	STR	15'-10"	33	* B5	106	#5	STR	26'-0"	2875
* A117	2	#5	STR	11'-11"	25	* B6	108	#4	STR	23'-5"	1689
* A118	2	#5	STR	7'-11"	17	B7	162	#5	STR	57'-11"	9785
* A119	2	#5	STR	4'-0"	8	* B8	24	#4	STR	28'-8"	460
A2	259	#5	STR	50'-2"	13552	H1	14	#5	6	15'-1"	220
A201	1	#5	STR	46'-8"	49	H2	14	#5	7	16'-0"	234
A202	1	#5	STR	42'-9"	45	H3	14	#5	7	15'-0"	219
A203	1	#5	STR	38'-9"	40	H4	14	#5	6	16'-1"	235
A204	1	#5	STR	34'-10"	36						
A205	1	#5	STR	30'-10"	32	K1	16	#4	STR	6'-7"	70
A206	1	#5	STR	26'-11"	28	K2	64	#4	STR	8'-2"	349
A207	1	#5	STR	22'-11"	24	K3	16	#4	STR	5'-2"	55
A208	1	#5	STR	19'-0"	20	K4	4	#4	STR	5'-10"	16
A209	1	#5	STR	15'-0"	16	K5	16	#4	STR	6'-8"	71
A210	1	#5	STR	11'-1"	12	K6	4	#4	STR	5'-2"	14
A211	1	#5	STR	7'-1"	7	K7	8	#4	STR	2'-8"	14
A212	1	#5	STR	3'-2"	3	K8	48	#4	STR	23'-2"	743
A213	1	#5	STR	44'-6"	46	K9	16	#4	STR	5'-4"	57
A214	1	#5	STR	40'-6"	42	K10	64	#4	STR	8'-2"	349
A215	1	#5	STR	36'-7"	38	K11	16	#4	STR	5'-2"	55
A216	1	#5	STR	32'-7"	34	K12	18	#4	STR	25'-6"	307
A217	1	#5	STR	28'-8"	30						
A218	1	#5	STR	24'-8"	26	* S1	104	#4	1	10'-8"	741
A219	1	#5	STR	20'-9"	22	* S2	108	#4	1	11'-8"	842
A220	1	#5	STR	16'-9"	17	S3	108	#4	4	13'-9"	992
A221	1	#5	STR	12'-10"	13	S4	272	#4	3	2'-9"	500
A222	1	#5	STR	8'-10"	9	S5	12	#4	4	15'-5"	124
A223	1	#5	STR	4'-11"	5						
						U1	48	#4	2	16'-4"	524
A3	263	#5	STR	32'-2"	8824	U2	16	#4	5	9'-1"	97
A301	1	#5	STR	30'-10"	32	* U3	144	#4	STR	3'-2"	305
A302	1	#5	STR	26'-11"	28						
A303	1	#5	STR	22'-11"	24	V2	108	#4	STR	6'-0"	433

BAR TYPES

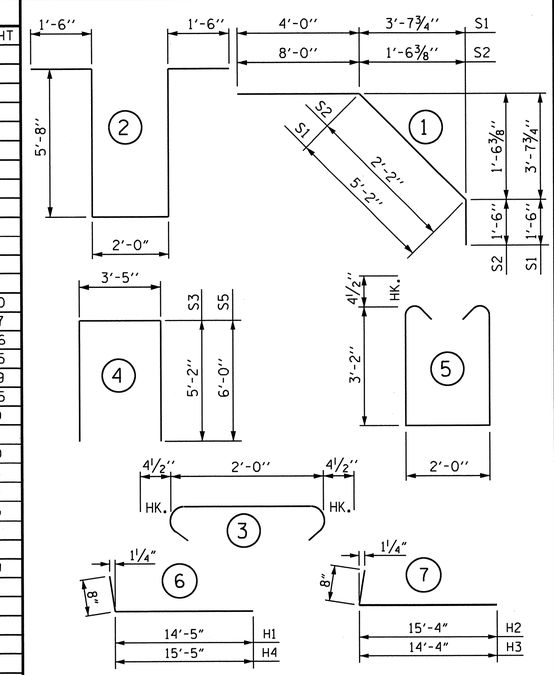

ALL BAR DIMENSIONS ARE OUT TO OUT.

SUPERSTRUCTURE BILL OF MATERIAL

	CLASS AA CONCRETE	REINFORCING STEEL	* EPOXY COATED REINFORCING STEEL
	(CU. YDS.)	(LBS.)	(LBS.)
SPAN "A" & "B"	——	38678	46733
POUR #1	203.8	——	——
POUR #2	227.0	——	——
POUR #3	207.7	——	——
CONCRETE MEDIAN	10.3	——	——
TOTALS **	648.8	38634	46762

** QUANTITIES FOR END POSTS & PARAPET ARE NOT INCLUDED.

SUPERSTRUCTURE REINFORCING STEEL LENGTHS ARE BASED ON THE FOLLOWING MINIMUM SPLICE LENGTHS

BAR SIZE	SUPERSTRUCTURE EXCEPT APPROACH SLABS, PARAPET, AND BARRIER RAIL		APPROACH SLABS		PARAPET AND BARRIER RAIL
	EPOXY COATED	UNCOATED	EPOXY COATED	UNCOATED	
#4	2'-0"	1'-9"	2'-0"	1'-9"	2'-9"
#5	2'-6"	2'-2"	2'-6"	2'-2"	3'-5"
#6	3'-0"	2'-7"	3'-10"	2'-7"	4'-4"
#7	5'-3"	3'-6"			
#8	6'-10"	4'-7"			

GROOVING BRIDGE FLOORS

APPROACH SLABS	3020	SQ.FT.
BRIDGE DECK	11404	SQ.FT.
TOTAL	14424	SQ.FT.

PROJECT NO. U-3326A

ROCKINGHAM COUNTY

STATION: 113+47.50 -L-

STATE OF NORTH CAROLINA
DEPARTMENT OF TRANSPORTATION
RALEIGH

STANDARD

SUPERSTRUCTURE BILL OF MATERIAL

NORTH CAROLINA PROFESSIONAL SEAL 16757 ENGINEER ALBERT C. OUTLAW, JR.

10/27/11

ASSEMBLED BY : A.S. CALLAWAY	DATE : 3/15/10
CHECKED BY : A. C. OUTLAW	DATE : 5/11/11

DRAWN BY : JMB	5/87	REV. 6/1/94	EEM/GRP
CHECKED BY : SJD	9/87	REV. 8/16/99	RWW/LES
		REV. 5/1/06	TLA/GM

REVISIONS

NO.	BY:	DATE:	NO.	BY:	DATE:
1			3		
2			4		

SHEET NO. S-28

TOTAL SHEETS 159

STR. #1A

STD. NO. BOM2

27-OCT-2011 08:49
R:\Structures\str01\FinalPlans\U3326A_SD_BM_01.dgn
aoutlaw

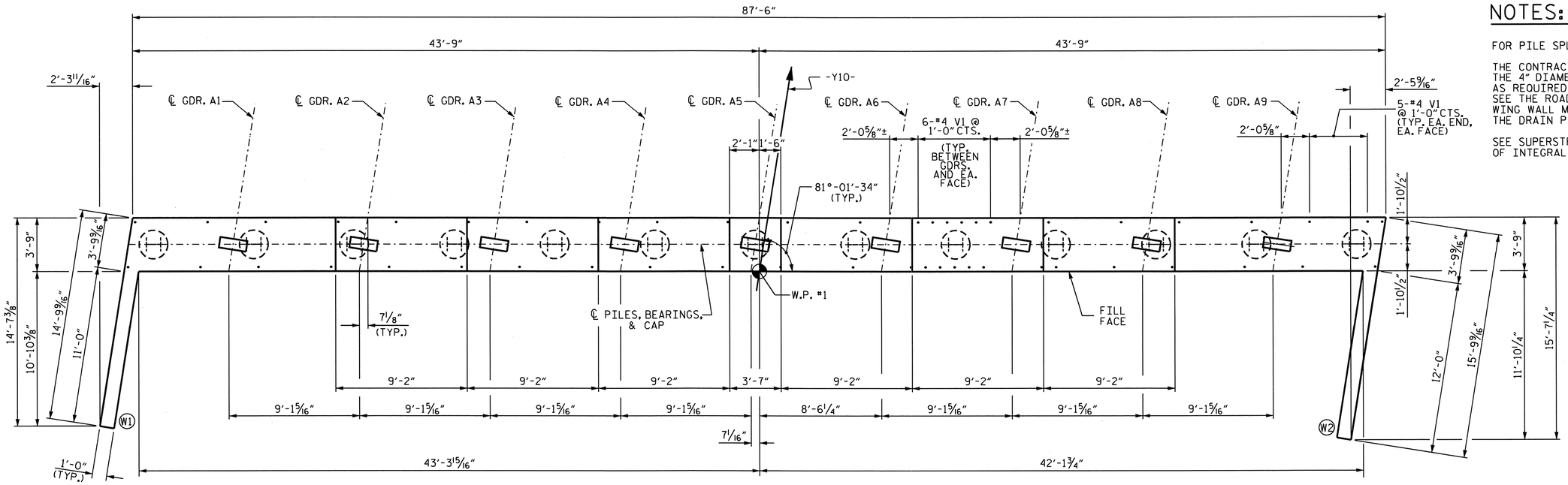

PLAN

NOTES:

FOR PILE SPLICE DETAILS, SEE SHEET 3 OF 3.

THE CONTRACTOR SHALL PROVIDE FOR INSTALLATION OF THE 4" DIAMETER DRAIN PIPE THROUGH THE WING WALL AS REQUIRED FOR REINFORCED BRIDGE APPROACH FILLS. SEE THE ROADWAY PLANS. REINFORCING STEEL IN THE WING WALL MAY BE SHIFTED AS NECESSARY TO CLEAR THE DRAIN PIPE.

SEE SUPERSTRUCTURE SHEETS FOR THE UPPER PORTION OF INTEGRAL END BENT DETAILS.

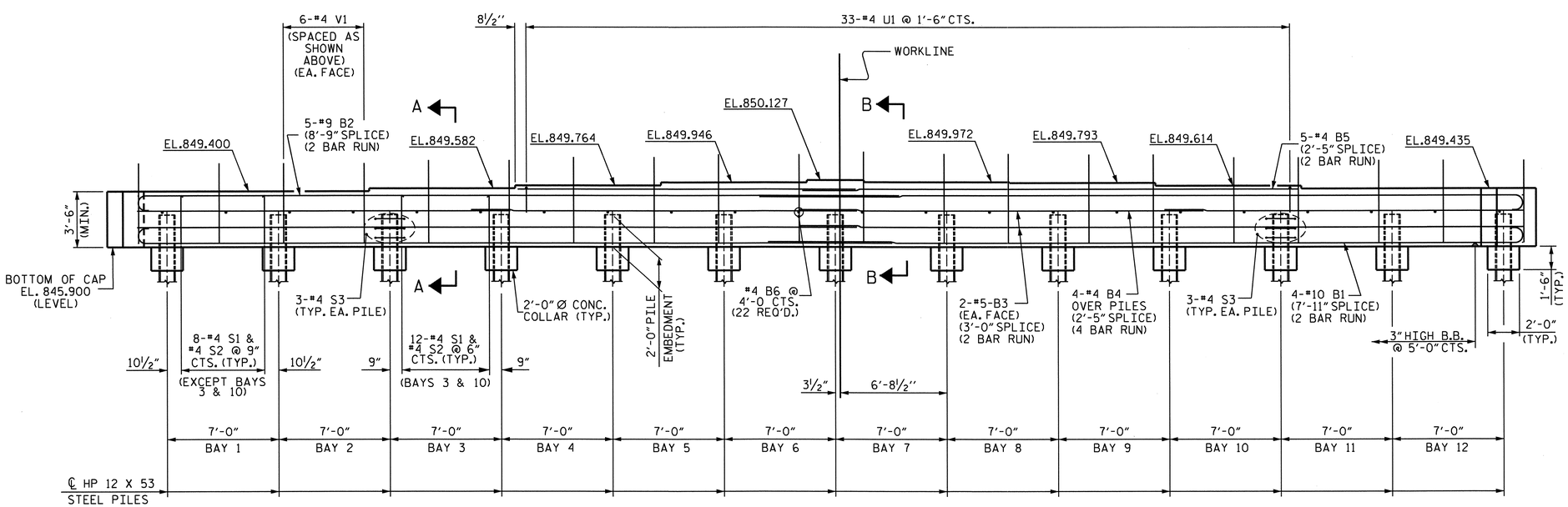

ELEVATION

PROJECT NO. U-3326A
ROCKINGHAM COUNTY
STATION: 113+47.50 -L-

SHEET 1 OF 3

STATE OF NORTH CAROLINA
DEPARTMENT OF TRANSPORTATION
RALEIGH

SUBSTRUCTURE

END BENT 1 (INTEGRAL)

NORTH CAROLINA PROFESSIONAL SEAL 10750 ENGINEER ALBERT C. OUTLAW, JR.
10/27/11

REVISIONS						SHEET NO.
NO.	BY:	DATE:	NO.	BY:	DATE:	S-29
1			3			TOTAL SHEETS
2			4			159

STR. #1A

DRAWN BY : RAMAN PATEL DATE : 12-06-10
CHECKED BY : A. C. OUTLAW DATE : 2/7/11

27-OCT-2011 09:03
R:\Structures\str01\Final Plans\U3326A_SD_EB_01.dgn
aoutlaw

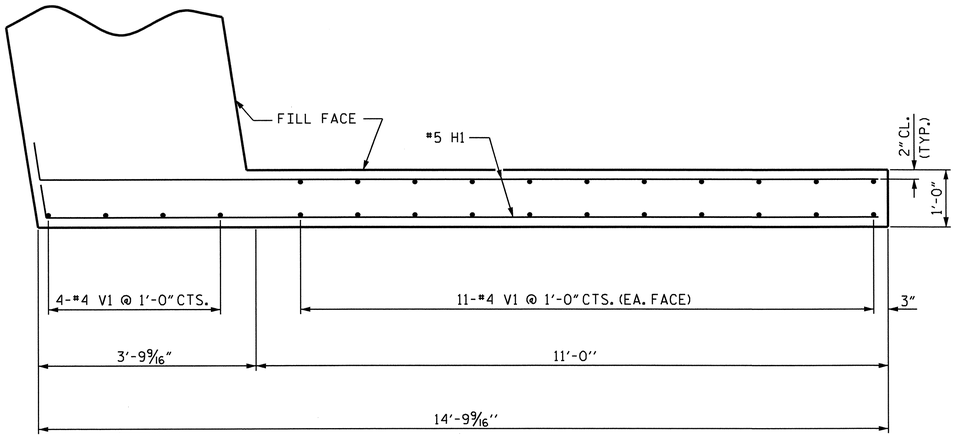

PLAN OF WING (W1)

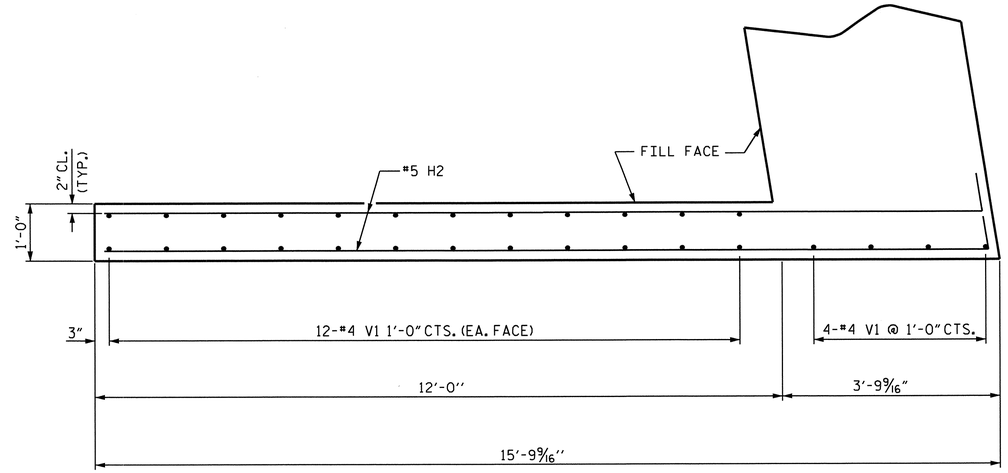

PLAN OF WING (W2)

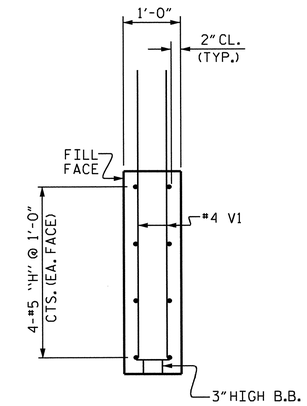

SECTION X-X

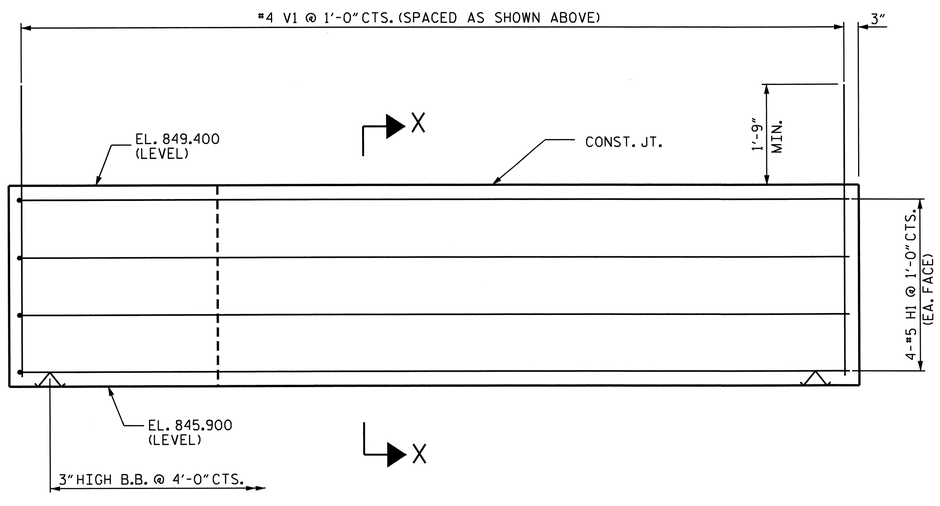

ELEVATION OF WING (W1)

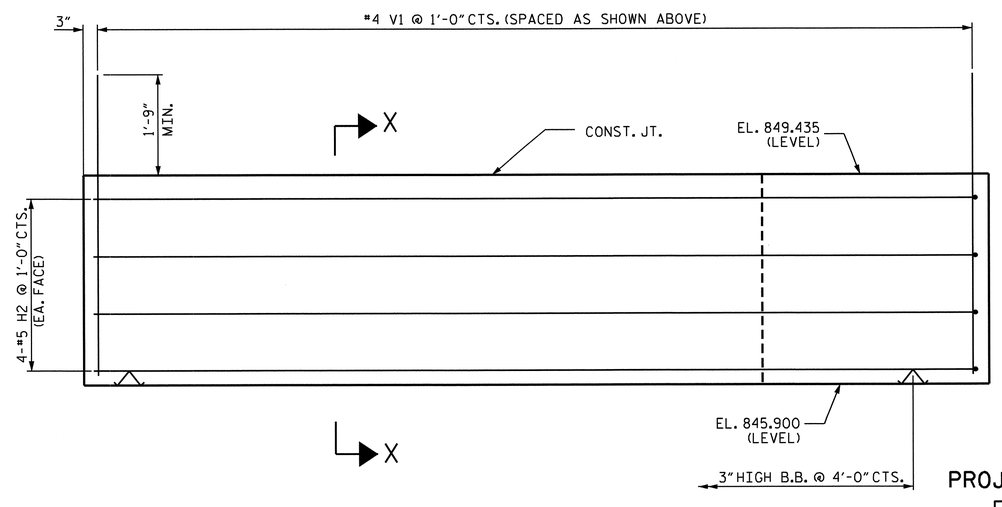

ELEVATION OF WING (W2)

PROJECT NO. U-3326A
ROCKINGHAM COUNTY
STATION: 113+47.50 -L-

SHEET 2 OF 3

STATE OF NORTH CAROLINA
DEPARTMENT OF TRANSPORTATION
RALEIGH

SUBSTRUCTURE

END BENT 1
(INTEGRAL)

NORTH CAROLINA PROFESSIONAL SEAL 20179 ENGINEER ALBERT C. OUTLAW, JR.

Albert C. Outlaw, Jr.
9/13/11

REVISIONS						SHEET NO.
NO.	BY:	DATE:	NO.	BY:	DATE:	S-30
1			3			TOTAL SHEETS
2			4			159

DRAWN BY : RAMAN PATEL DATE : 11-15-10
CHECKED BY : A. C. OUTLAW DATE : 2/7/11

13-SEP-2011 15:35
R:\Structures\str01\FinalPlans\U3326A_SD_EB_01.dgn
qtnguyen

STR. #1A

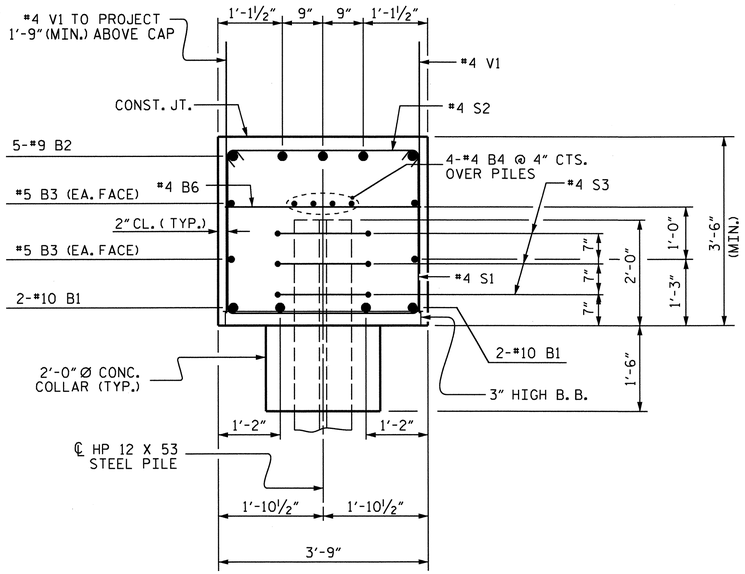

SECTION A-A

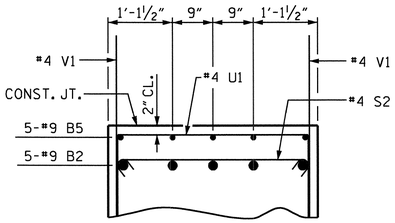

PARTIAL SECTION B-B

BILL OF MATERIAL

END BENT 1

BAR	NO.	SIZE	TYPE	LENGTH	WEIGHT
B1	8	#10	1	48'-11"	1684
B2	10	#9	1	49'-2"	1672
B3	8	#5	STR	45'-1"	376
B4	16	#4	STR	23'-8"	253
B5	10	#4	STR	25'-9"	172
B6	22	#4	STR	3'-5"	50
H1	8	#5	2	15'-1"	126
H2	8	#5	3	16'-0"	134
S1	104	#4	4	10'-5"	724
S2	104	#4	5	4'-2"	289
S3	39	#4	6	6'-6"	169
U1	33	#4	7	6'-5"	141
V1	170	#4	STR	5'-2"	587
REINFORCING STEEL				=	6377 LBS

CLASS A CONCRETE BREAKDOWN :

CAP, LOWER WINGS & COLLARS = 50.9 C.Y.

HP 12 X 53 STEEL PILES :

NO. 13 LIN. FT. 950

BAR TYPES

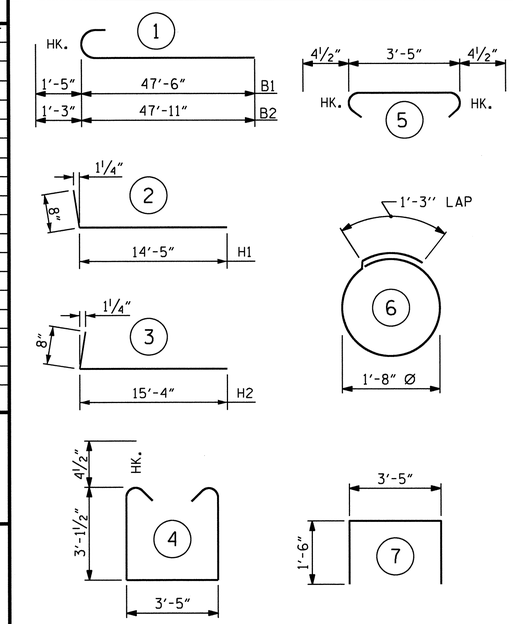

ALL BAR DIMENSIONS ARE OUT TO OUT.

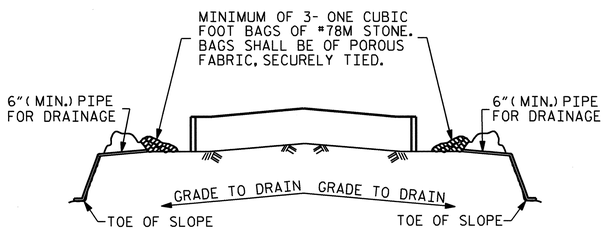

BAGGED STONE AND PIPE SHALL BE PLACED IMMEDIATELY AFTER COMPLETION OF END BENT EXCAVATION. PIPE MAY BE EITHER CONCRETE, CORRUGATED STEEL, CORRUGATED ALUMINUM ALLOY, OR CORRUGATED PLASTIC. PERFORATED PIPE WILL NOT BE ALLOWED.

BAGGED STONE SHALL REMAIN IN PLACE UNTIL THE ENGINEER DIRECTS THAT IT BE REMOVED. THE CONTRACTOR SHALL REMOVE AND DISPOSE OF SILT ACCUMULATIONS AT BAGGED STONE WHEN SO DIRECTED BY THE ENGINEER. BAGS SHALL BE REMOVED AND REPLACED WHENEVER THE ENGINEER DETERMINES THAT THEY HAVE DETERIORATED AND LOST THEIR EFFECTIVENESS.

NO SEPARATE PAYMENT WILL BE MADE FOR THIS WORK AND THE ENTIRE COST OF THIS WORK SHALL BE INCLUDED IN THE UNIT CONTRACT PRICE BID FOR THE SEVERAL PAY ITEMS.

TEMPORARY DRAINAGE AT END BENT

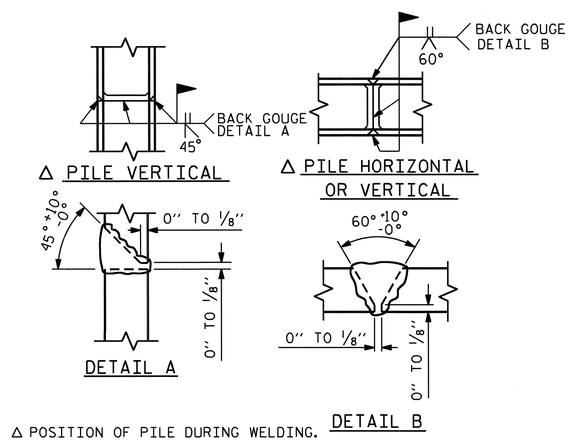

Δ POSITION OF PILE DURING WELDING.

PILE SPLICE DETAILS

PROJECT NO. U-3326A

ROCKINGHAM COUNTY

STATION: 113+47.50 -L-

SHEET 3 OF 3

STATE OF NORTH CAROLINA
DEPARTMENT OF TRANSPORTATION
RALEIGH

SUBSTRUCTURE

END BENT 1 (INTEGRAL)

NORTH CAROLINA PROFESSIONAL SEAL 10751 ENGINEER ALBERT C. OUTLAW, JR.

10/24/11

REVISIONS						SHEET NO.
NO.	BY:	DATE:	NO.	BY:	DATE:	S-31
1			3			TOTAL SHEETS
2			4			159

STR. #1A

DRAWN BY : RAMAN PATEL DATE : 11-16-10
CHECKED BY : A. C. OUTLAW DATE : 2/7/11

24-OCT-2011 08:17
R:\Structures\str01\Final Plans\U3326A_SD_EB_01.dgn
aoutlaw

NOTES

STIRRUPS AND "U" BARS IN CAP MAY BE SHIFTED AS NECESSARY TO CLEAR ANCHOR BOLTS.

HOOKS ON M1 & V1 BARS MAY BE TURNED AS NECESSARY FOR PLACING REINFORCING STEEL.

THE TOP SURFACE AREAS OF THE BENT CAPS SHALL BE CURED IN ACCORDANCE WITH THE STANDARD SPECIFICATIONS EXCEPT THE MEMBRANE CURING COMPOUND METHOD SHALL NOT BE USED.

SEE SHEET 3 OF 3 END BENT 1 FOR PILE SPLICE DETAILS.

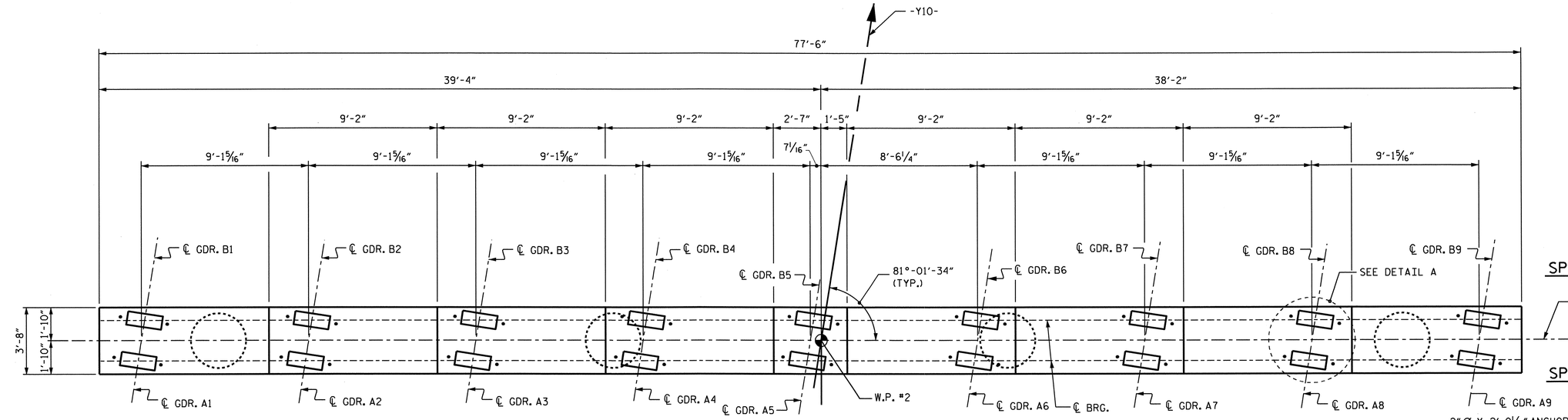

PLAN

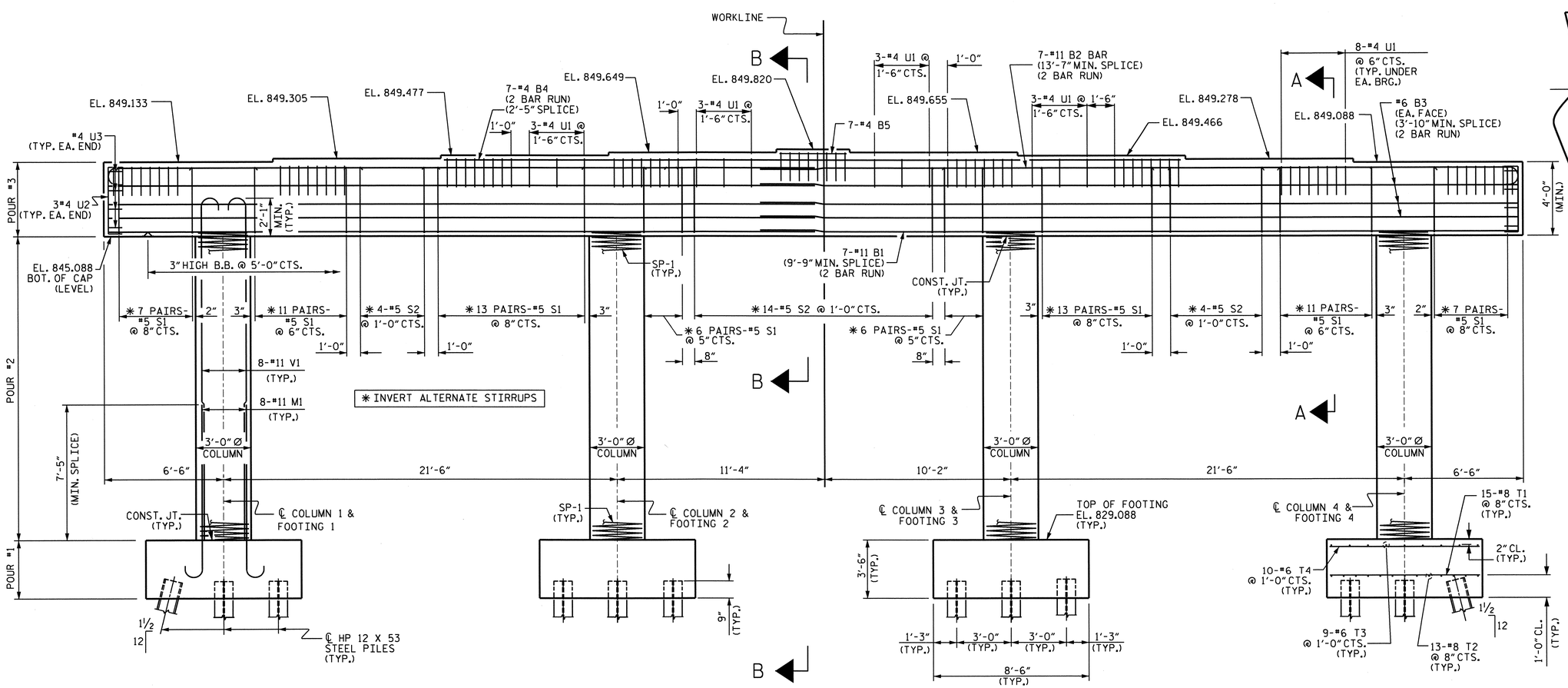

ELEVATION

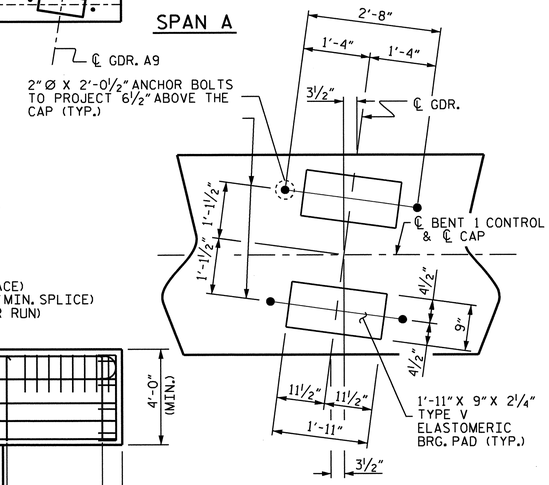

DETAIL A

(TYP. EA. GDR.)

NORTH CAROLINA PROFESSIONAL SEAL 19051 ENGINEER A. SORSENGINH, JR. P.E. C. OUTLAW

10/27/11

PROJECT NO. U-3326A

ROCKINGHAM COUNTY

STATION: 113+47.50 -L-

SHEET 1 OF 2

STATE OF NORTH CAROLINA
DEPARTMENT OF TRANSPORTATION
RALEIGH

SUBSTRUCTURE

BENT 1

REVISIONS						SHEET NO.
NO.	BY:	DATE:	NO.	BY:	DATE:	S-32
1			3			TOTAL SHEETS
2			4			159

DRAWN BY : HARISH SHAH DATE : 12/10
CHECKED BY : A. SORSENGINH DATE : 2/11

27-OCT-2011 08:49
R:\Structures\str01\Final Plans\U3326A_SD_B*_01.dgn
aoutlaw

STR. #1A

NCDOS

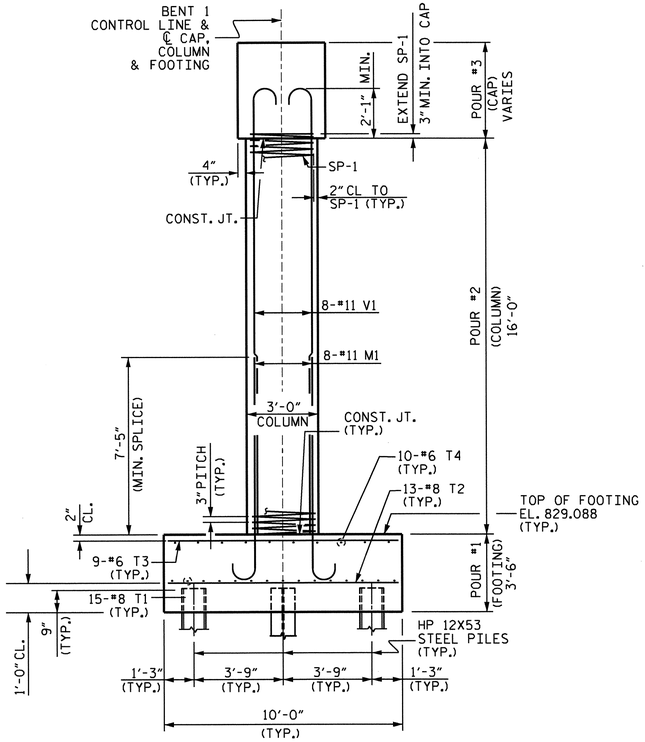

END ELEVATION

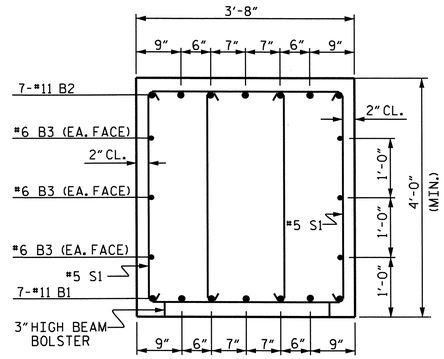

SECTION A-A
(STIRRUP PAIRS)

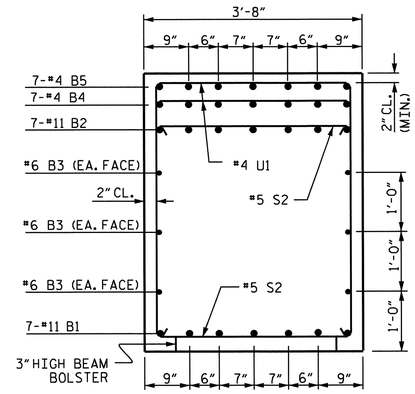

SECTION B-B

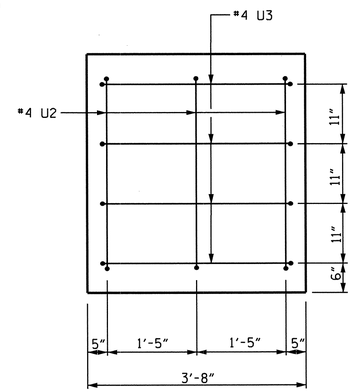

END VIEW

BAR TYPES

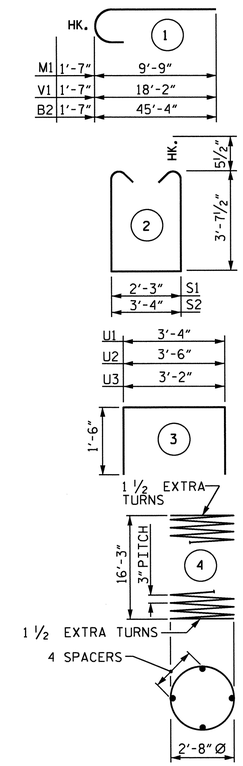

ALL BAR DIMENSIONS ARE OUT TO OUT.

BILL OF MATERIAL

BENT 1

BAR	NO.	SIZE	TYPE	LENGTH	WEIGHT
B1	14	#11	STR	43'-5"	3229
B2	14	#11	1	46'-11"	3490
B3	12	#6	STR	40'-6"	730
B4	14	#4	STR	21'-4"	200
B5	7	#4	STR	3'-8"	17
M1	32	#11	1	11'-4"	1927
S1	148	#5	2	10'-5"	1608
S2	22	#5	2	11'-6"	264
T1	60	#8	STR	8'-2"	1308
T2	52	#8	STR	9'-8"	1342
T3	36	#6	STR	9'-8"	523
T4	40	#6	STR	8'-2"	491
U1	84	#4	3	6'-4"	355
U2	6	#4	3	6'-6"	26
U3	8	#4	3	6'-2"	33
V1	32	#11	1	19'-9"	3358
REINFORCING STEEL					18901 LBS.
SP-1	4	**	4	561'-0"	1499
SPIRAL COLUMN REINFORCING STEEL				1499	LBS.

CLASS A CONCRETE BREAKDOWN:

POUR #1 (FOOTINGS)	44.1 C.Y.
POUR #2 (COLUMNS)	16.8 C.Y.
POUR #3 (CAP)	45.4 C.Y.
TOTAL CLASS A CONCRETE	106.3 C.Y.

HP 12 X 53 STEEL PILES
NO. 28 LIN. FT. 1820

** THE SP-1 SPIRAL REINFORCING STEEL SHALL BE W-20 OR D-20 COLD DRAWN WIRE OR #4 PLAIN OR DEFORMED BAR.

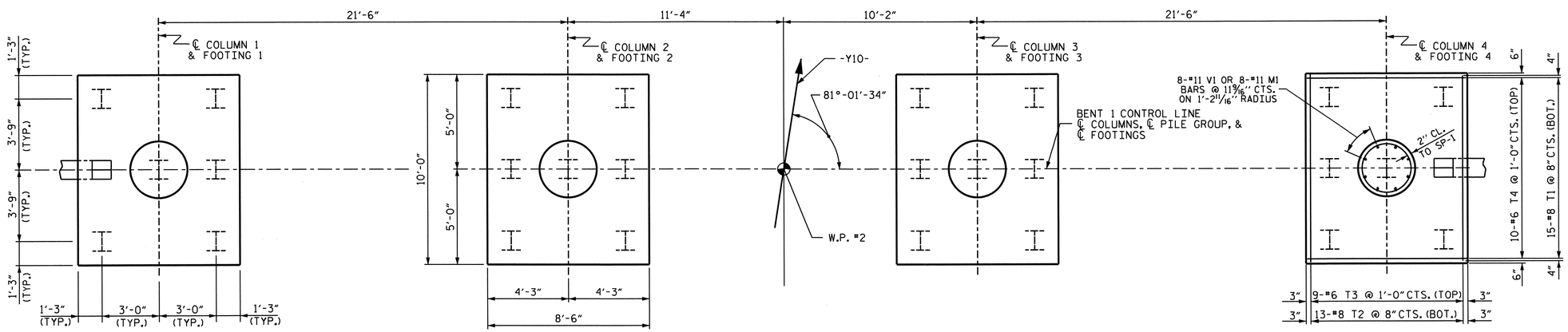

PLAN OF COLUMNS AND FOOTINGS

PROJECT NO. U-3326A
ROCKINGHAM COUNTY
STATION: 113+47.50 -L-

SHEET 2 OF 2

STATE OF NORTH CAROLINA
DEPARTMENT OF TRANSPORTATION
RALEIGH

SUBSTRUCTURE

BENT 1

NORTH CAROLINA PROFESSIONAL SEAL ENGINEER ALBERT C. OUTLAW JR.
10/27/11

REVISIONS						SHEET NO.
NO.	BY:	DATE:	NO.	BY:	DATE:	S-33
1			3			TOTAL SHEETS
2			4			159

DRAWN BY : HARISH SHAH DATE : 12/10
CHECKED BY : A. SORSENGINH DATE : 2/11

27-OCT-2011 10:56
R:\Structures\str01\Final Plans\U3326A_SD_B*_01.dgn
aoutlaw

STR. #1A

NCDOS

NOTES:

FOR PILE SPLICE DETAILS, SEE SHEET 3 OF 3.

THE CONTRACTOR SHALL PROVIDE FOR INSTALLATION OF THE 4" DIAMETER DRAIN PIPE THROUGH THE WING WALL AS REQUIRED FOR REINFORCED BRIDGE APPROACH FILLS. SEE THE ROADWAY PLANS. REINFORCING STEEL IN THE WING WALL MAY BE SHIFTED AS NECESSARY TO CLEAR THE DRAIN PIPE.

SEE SUPERSTRUCTURE SHEETS FOR THE UPPER PORTION OF INTEGRAL END BENT DETAILS.

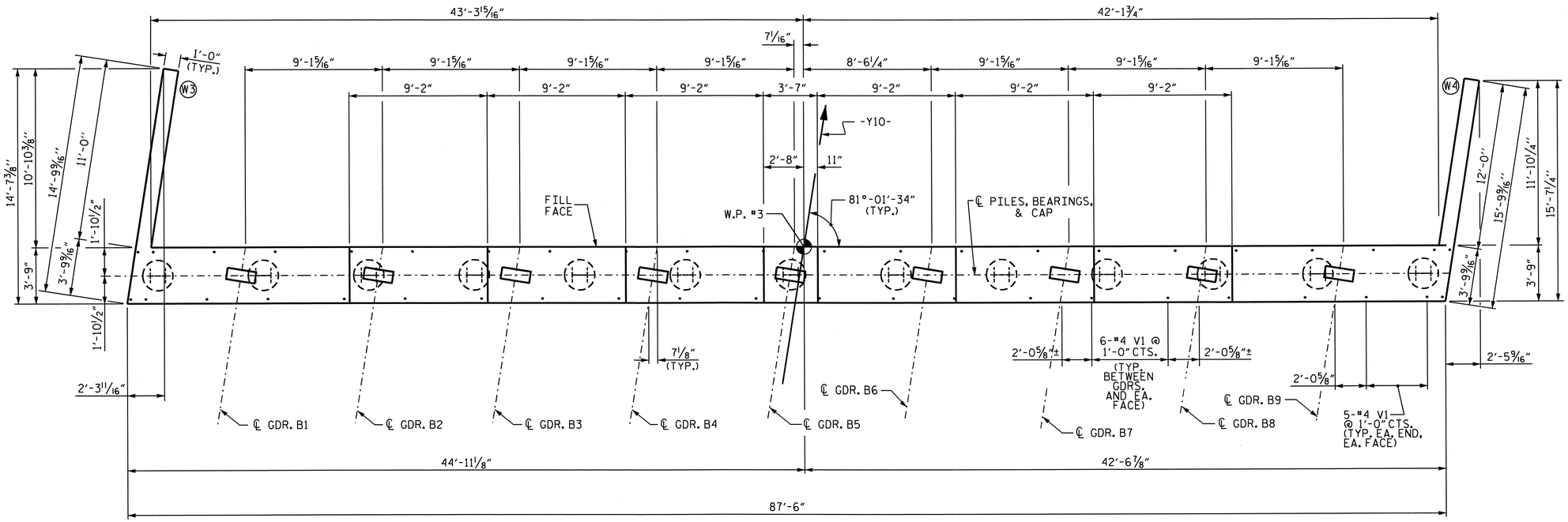

PLAN

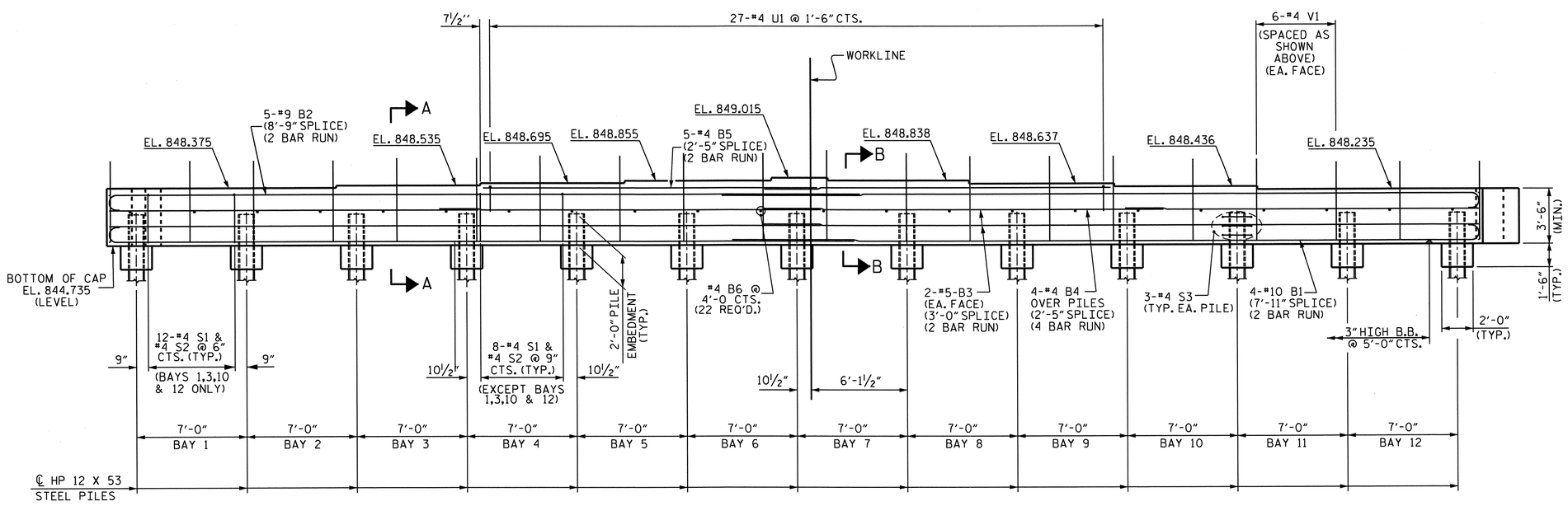

ELEVATION

PROJECT NO. U-3326A

ROCKINGHAM COUNTY

STATION: 113+47.50 -L-

SHEET 1 OF 3

STATE OF NORTH CAROLINA
DEPARTMENT OF TRANSPORTATION
RALEIGH

SUBSTRUCTURE
END BENT 2
(INTEGRAL)

NORTH CAROLINA PROFESSIONAL SEAL ENGINEER A. C. OUTLAW

10/27/11

REVISIONS						SHEET NO.
NO.	BY:	DATE:	NO.	BY:	DATE:	S-34
1			3			TOTAL SHEETS
2			4			159

STR. #1A

DRAWN BY : RAMAN PATEL DATE : 12-06-10
CHECKED BY : A. C. OUTLAW DATE : 2/7/11

27-OCT-2011 09:03
R:\Structures\str01\Final Plans\U3326A_SD_EB_01.dgn
aoutlaw

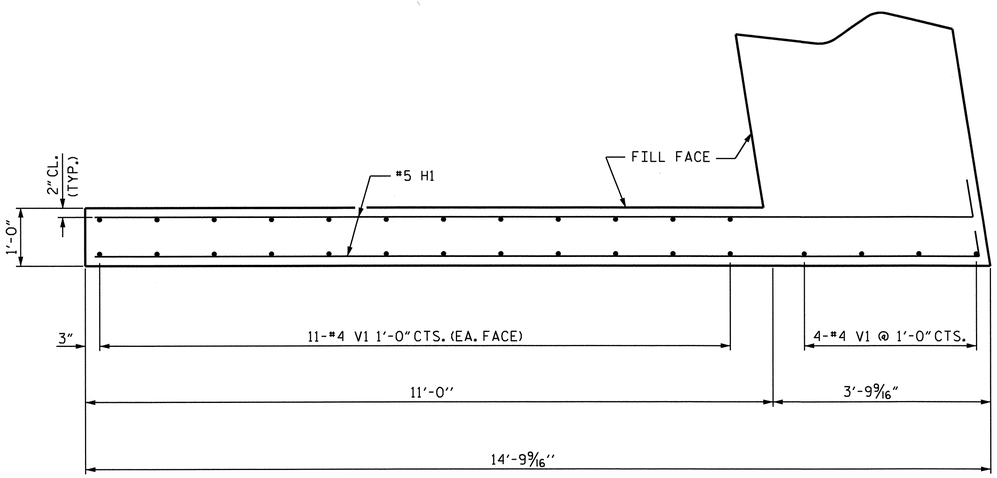

PLAN OF WING (W3)

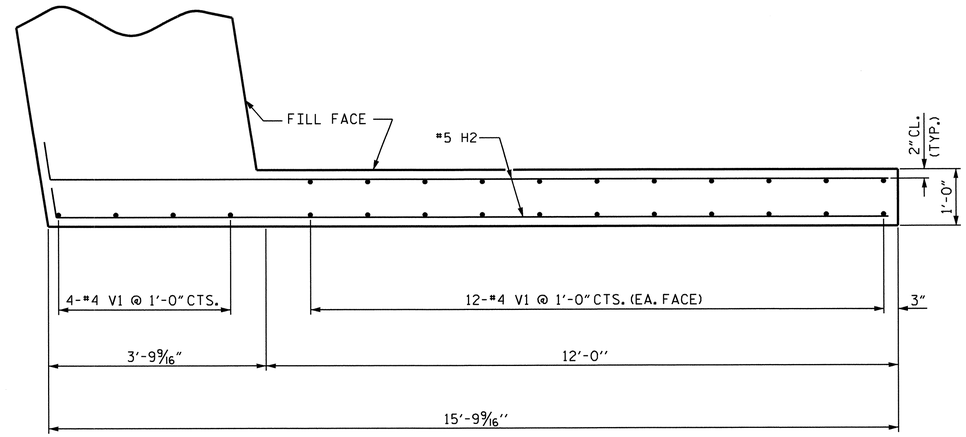

PLAN OF WING (W4)

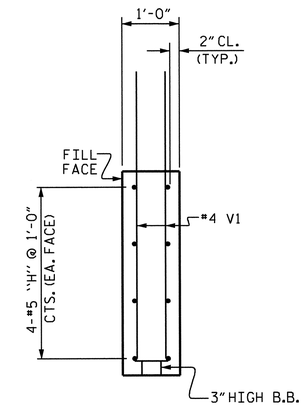

SECTION X-X

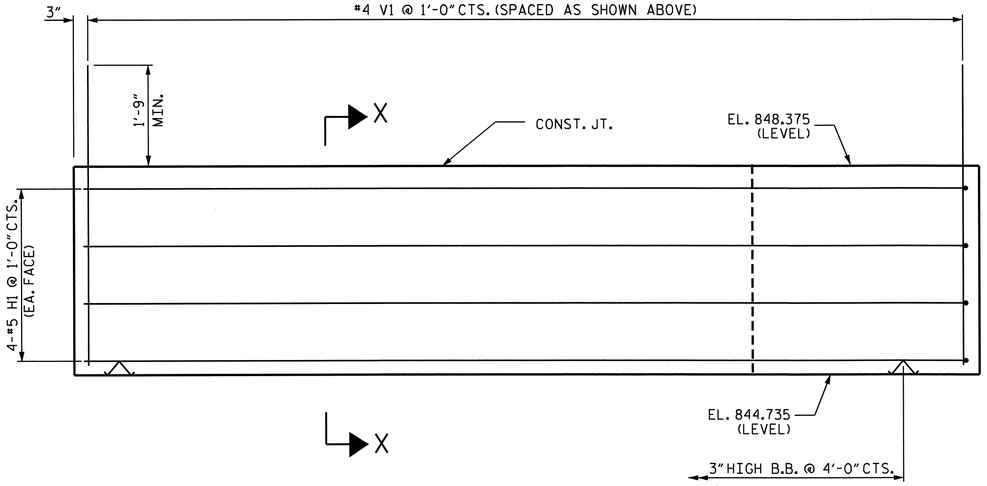

ELEVATION OF WING (W3)

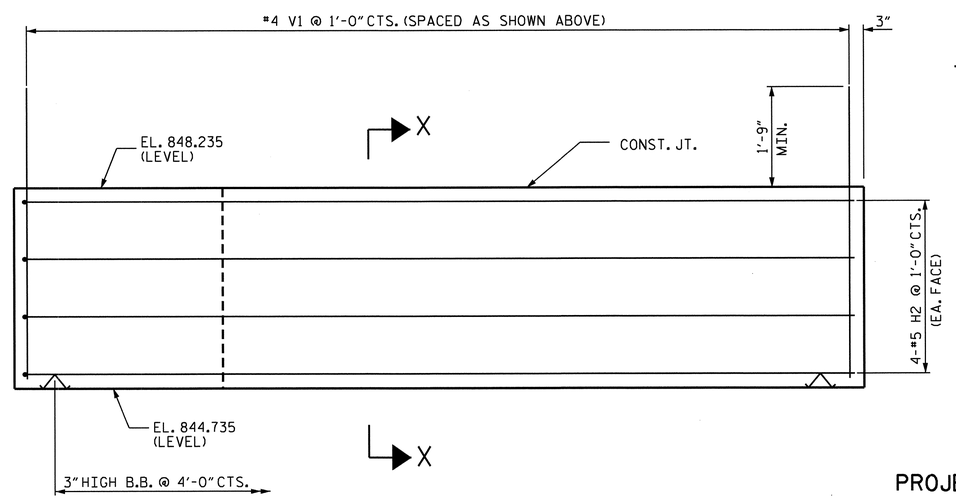

ELEVATION OF WING (W4)

PROJECT NO. U-3326A
ROCKINGHAM COUNTY
STATION: 113+45.50 -L-

SHEET 2 OF 3

STATE OF NORTH CAROLINA
DEPARTMENT OF TRANSPORTATION
RALEIGH

SUBSTRUCTURE

END BENT 2
(INTEGRAL)

NORTH CAROLINA PROFESSIONAL SEAL 007 ENGINEER ALBERT C. OUTLAW, JR.
Albert C. Outlaw, Jr.
9/13/11

REVISIONS						SHEET NO.
NO.	BY:	DATE:	NO.	BY:	DATE:	S-35
1			3			TOTAL SHEETS
2			4			159

DRAWN BY : RAMAN PATEL DATE : 11-15-10
CHECKED BY : A. C. OUTLAW DATE : 2/7/11

13-SEP-2011 15:35
R:\Structures\str01\FinalPlans\U3326A_SD_EB_01.dgn
qtnguyen

STR. #1A

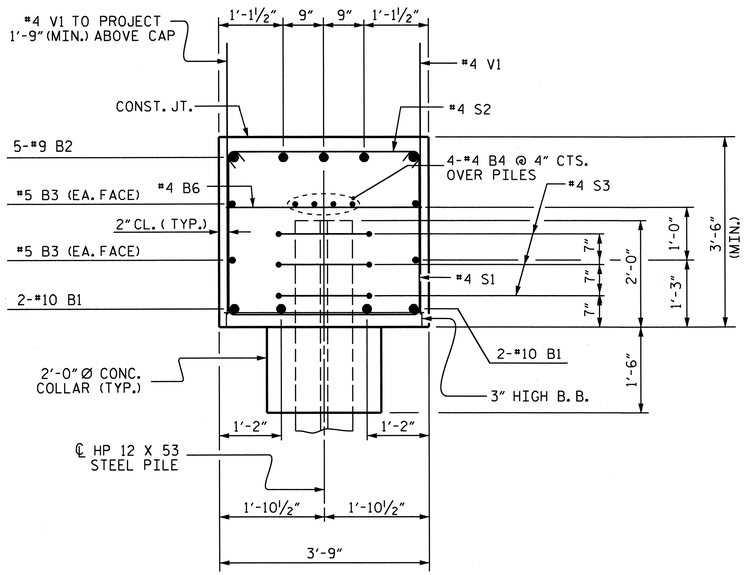

SECTION A-A

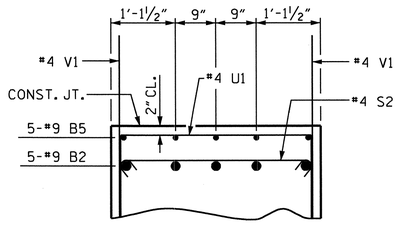

PARTIAL SECTION B-B

BILL OF MATERIAL

END BENT 2

BAR	NO.	SIZE	TYPE	LENGTH	WEIGHT
B1	8	#10	1	48'-11"	1684
B2	10	#9	1	49'-2"	1672
B3	8	#5	STR	45'-1"	376
B4	16	#4	STR	23'-8"	253
B5	10	#4	STR	21'-2"	141
B6	22	#4	STR	3'-5"	50
H1	8	#5	2	15'-0"	125
H2	8	#5	3	16'-1"	134
S1	112	#4	4	10'-5"	779
S2	112	#4	5	4'-2"	312
S3	39	#4	6	6'-6"	169
U1	27	#4	7	6'-5"	116
V1	170	#4	STR	5'-2"	587
REINFORCING STEEL				=	6398 LBS

CLASS A CONCRETE BREAKDOWN :

CAP, LOWER WINGS & COLLARS = 51.5 C.Y.

HP 12 X 53 STEEL PILES :

NO. 13 LIN. FT. 1040

BAR TYPES

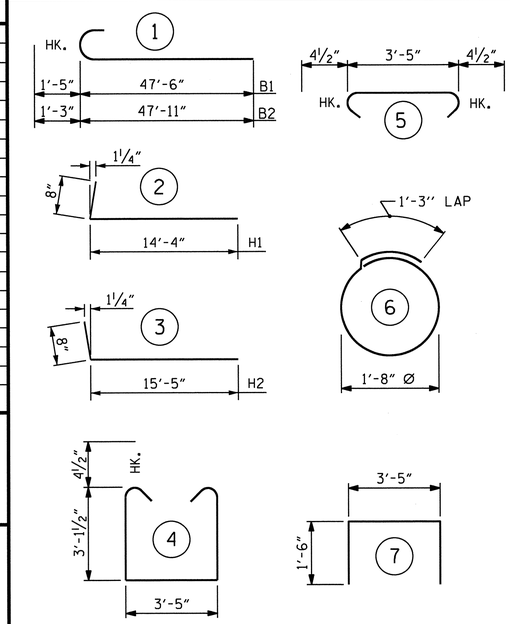

ALL BAR DIMENSIONS ARE OUT TO OUT.

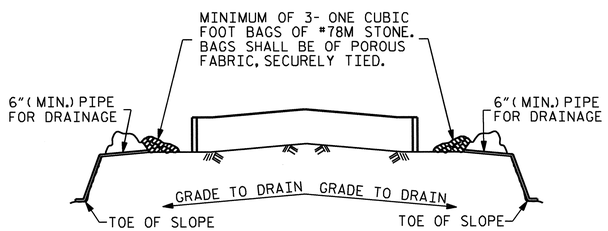

BAGGED STONE AND PIPE SHALL BE PLACED IMMEDIATELY AFTER COMPLETION OF END BENT EXCAVATION. PIPE MAY BE EITHER CONCRETE, CORRUGATED STEEL, CORRUGATED ALUMINUM ALLOY, OR CORRUGATED PLASTIC. PERFORATED PIPE WILL NOT BE ALLOWED.

BAGGED STONE SHALL REMAIN IN PLACE UNTIL THE ENGINEER DIRECTS THAT IT BE REMOVED. THE CONTRACTOR SHALL REMOVE AND DISPOSE OF SILT ACCUMULATIONS AT BAGGED STONE WHEN SO DIRECTED BY THE ENGINEER. BAGS SHALL BE REMOVED AND REPLACED WHENEVER THE ENGINEER DETERMINES THAT THEY HAVE DETERIORATED AND LOST THEIR EFFECTIVENESS.

NO SEPARATE PAYMENT WILL BE MADE FOR THIS WORK AND THE ENTIRE COST OF THIS WORK SHALL BE INCLUDED IN THE UNIT CONTRACT PRICE BID FOR THE SEVERAL PAY ITEMS.

TEMPORARY DRAINAGE AT END BENT

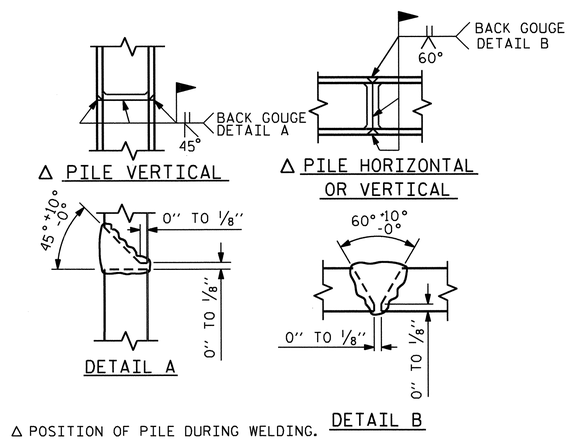

Δ POSITION OF PILE DURING WELDING.

PILE SPLICE DETAILS

PROJECT NO. U-3326A

ROCKINGHAM COUNTY

STATION: 113+47.50 -L-

SHEET 3 OF 3

STATE OF NORTH CAROLINA
DEPARTMENT OF TRANSPORTATION
RALEIGH

SUBSTRUCTURE

END BENT 2 (INTEGRAL)

NORTH CAROLINA PROFESSIONAL SEAL 10151 ENGINEER ALBERT C. OUTLAW

10/24/11

REVISIONS						SHEET NO.
NO.	BY:	DATE:	NO.	BY:	DATE:	S-36
1			3			TOTAL SHEETS
2			4			159

STR. #1A

DRAWN BY : RAMAN PATEL DATE : 11-16-10
CHECKED BY : A. C. OUTLAW DATE : 2/7/11

24-OCT-2011 08:17
R:\Structures\str01\Final Plans\U3326A_SD_EB_01.dgn
aoutlaw

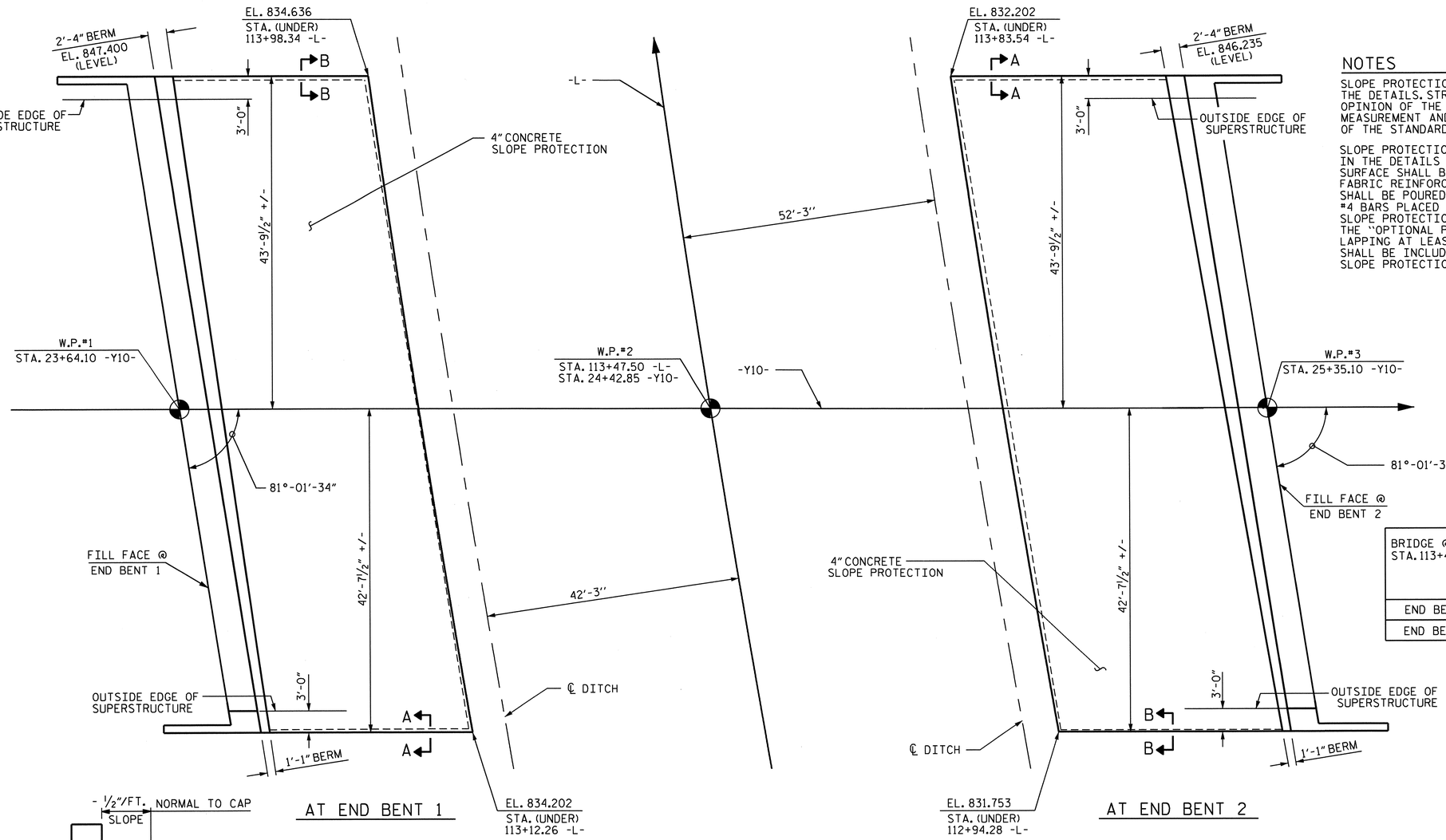

AT END BENT 1

AT END BENT 2

NOTES

SLOPE PROTECTION SHALL BE PLACED UNDER THE ENDS OF THE BRIDGE AS SHOWN IN THE DETAILS. STRAIGHT EDGING WILL NOT BE REQUIRED UNLESS, IN THE OPINION OF THE ENGINEER, VISUAL INSPECTION INDICATES A NEED FOR IT. MEASUREMENT AND PAYMENT SHALL BE AS PRESCRIBED IN SECTION 462 OF THE STANDARD SPECIFICATIONS.

SLOPE PROTECTION SHALL CONSIST OF 4" POURED-IN-PLACE CONCRETE PAVING AS SHOWN IN THE DETAILS ON THIS SHEET. CONCRETE SHALL BE CLASS "B". THE CONCRETE SURFACE SHALL BE FLOATED WITH A WOODEN FLOAT AND FINISHED. WELDED WIRE FABRIC REINFORCING SHALL BE 6 X 6 - W1.4 X W1.4, 60" WIDE. SLOPE PROTECTION SHALL BE POURED IN 5' STRIPS AS SHOWN IN THE "POURING DETAIL" WITH 2'-0" LONG #4 BARS PLACED ALONG THE SLOPE BETWEEN STRIPS AT 1'-6" MAXIMUM SPACING. SLOPE PROTECTION MAY BE POURED IN ALTERNATE 4' AND 5' STRIPS AS SHOWN IN THE "OPTIONAL POURING DETAIL" WITH ADJACENT RUNS OF WELDED WIRE FABRIC LAPPING AT LEAST 6". THE COST OF THE WELDED WIRE FABRIC AND #4 BARS, IF USED, SHALL BE INCLUDED IN THE CONTRACT UNIT PRICE BID PER SQUARE YARD FOR SLOPE PROTECTION.

BRIDGE @ STA. 113+47.50 -L-	4 INCH SLOPE PROTECTION	* WELDED WIRE FABRIC 60 INCHES WIDE
	SQUARE YARDS	APPROX. L.F.
END BENT 1	323	646
END BENT 2	351	702

* QUANTITY SHOWN IS BASED ON 5' POURS.

SLOPE PROTECTION

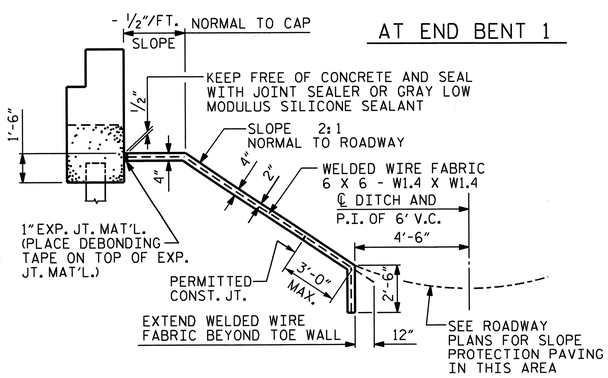

SECTION ALONG ℄ ROADWAY WHEN FILL CATCHES IN DITCH

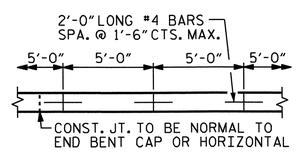

POURING DETAIL

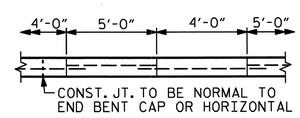

OPTIONAL POURING DETAIL

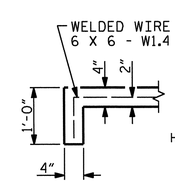

SECTION A-A

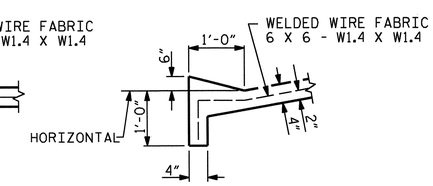

SECTION B-B

PROJECT NO. U-3326A
ROCKINGHAM COUNTY
STATION: 113+47.50 -L-

STATE OF NORTH CAROLINA
DEPARTMENT OF TRANSPORTATION
RALEIGH

STANDARD
SLOPE PROTECTION DETAILS

NORTH CAROLINA PROFESSIONAL SEAL 20157 ENGINEER ALBERT C. OUTLAW, JR.
10/24/11

ASSEMBLED BY : S. M. RASHIDI	DATE : 10-12-09
CHECKED BY : A.S. CALLAWAY	DATE : 10/20/09

DRAWN BY : ELR 5/92	REV. 7/10/01 LES/RDR
CHECKED BY : GRP 6/92	REV. 5/7/03 RWW/JTE
	REV. 5/1/06 TLA/GM

REVISIONS								SHEET NO.
NO.	BY:	DATE:	NO.	BY:	DATE:			S-37
1			3					TOTAL SHEETS
2			4					159

STR. #1A

STD. NO. SP1

24-OCT-2011 08:17
R:\Structures\str01\Final Plans\U3326A_SD_SP_01.dgn
aoutlaw

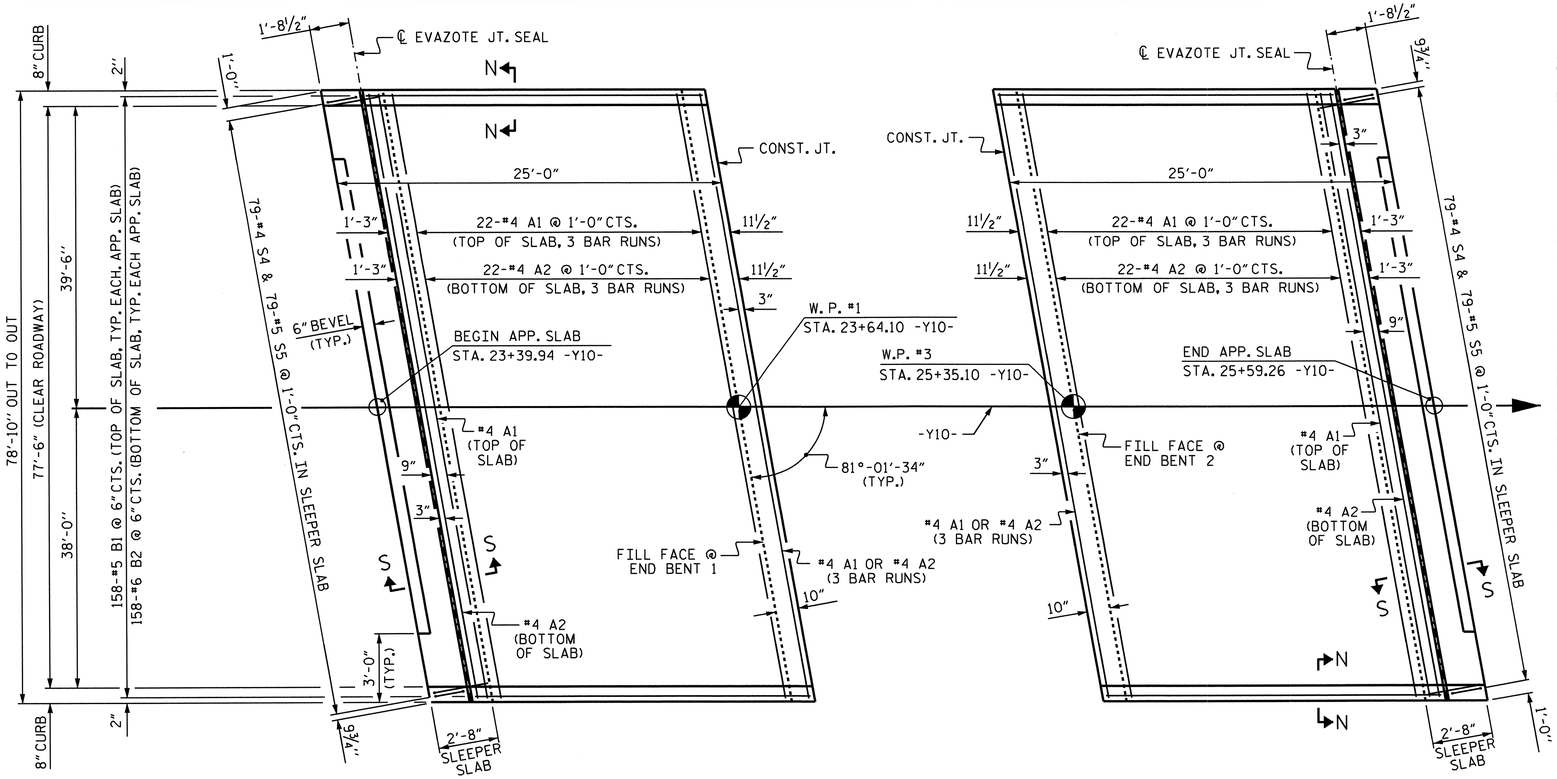

PLAN @ END BENT 1

PLAN @ END BENT 2

DIMENSIONS SHOWN ARE TYPICAL FOR BOTH APPROACH SLABS. #4 A1 BARS IN SLEEPER SLAB NOT SHOWN FOR CLARITY.

NOTES

APPROACH SLAB SHALL NOT BE CONSTRUCTED PRIOR TO COMPLETION OF THE BRIDGE DECK.

FOR REINFORCED BRIDGE APPROACH FILL INCLUDING FABRIC, IMPERMEABLE GEOMEMBRANE, 4" Ø DRAINAGE PIPE, #78M STONE, AND SELECT MATERIAL, SEE ROADWAY PLANS.

AREA BETWEEN THE WINGWALL AND APPROACH SLAB SHALL BE GRADED TO DRAIN THE WATER AWAY FROM THE FILL FACE OF THE BRIDGE AND SHALL BE PAVED. SEE ROADWAY PLANS.

THE 6" COMP. A.B.C. SHALL BE FLUSH WITH THE SLEEPER SLAB AND SHALL EXTEND 1'-0" OUTSIDE OF EACH EDGE OF THE APPROACH SLAB.

THE CONTRACTOR MAY USE 4" TYPE B-25.0B ASPHALT CONCRETE BASE COURSE IN LIEU OF 6" COMP. A.B.C. IF THIS OPTION IS USED, THE BASE COURSE SHALL BE FLUSH WITH THE SLEEPER SLAB AND THE WIDTH SHALL BE THE SAME AS THAT OF THE APPROACH SLAB.

THE CONTRACTOR MAY USE 5" CLASS "A" CONCRETE BASE IN LIEU OF 6" COMP. A.B.C. IF THIS OPTION IS USED, THE CONCRETE BASE SHALL BE FLUSH WITH THE SLEEPER SLAB AND THE WIDTH SHALL BE THE SAME AS THAT OF THE APPROACH SLAB. THE CONCRETE SHALL BE FINISHED TO A SMOOTH SURFACE AND A LAYER OF 30 LB ROOFING FELT SHALL BE PLACED BETWEEN THE CONCRETE BASE AND THE APPROACH SLAB TO PREVENT BOND. THE APPROACH SLAB SHALL NOT BE CAST UNTIL THE CONCRETE BASE HAS REACHED AN AGE OF THREE CURING DAYS.

THE VERTICAL JOINT ON THE RIGHT AND LEFT SIDE OF THE APPROACH SLAB AT THE ENDS OF THE EVAZOTE JOINT SHALL BE FILLED WITH SILICONE OR OTHER APPROVED MATERIAL IN ORDER TO PREVENT BACKFILL FROM ENTERING THE JOINT OPENING.

THE JOINT OPENING AT THE APPROACH SLAB/DECK INTERFACE SHALL BE SAWED NO MORE THAN 12 HOURS AFTER THE APPROACH SLAB IS CAST. THE JOINT SHALL BE CLEANED OF ALL DEBRIS BEFORE THE SEALANT IS APPLIED. THE JOINT SEALER MATERIAL SHALL CONFORM TO THE REQUIREMENTS OF TYPE SL LOW MODULUS SILICONE SEALANT.

GROOVING BRIDGE FLOORS IS NOT REQUIRED ON TOP SURFACE OF THE SLEEPER SLAB. INSTEAD, APPLY A BROOMED TEXTURE IN ACCORDANCE WITH ARTICLE 442-3 OF THE STANDARD SPECIFICATIONS

WITH EVAZOTE JOINT SEAL

FOR EVAZOTE JOINT SEALS, SEE SPECIAL PROVISIONS.

THE NOMINAL UNCOMPRESSED SEAL WIDTH OF THE EVAZOTE JOINT SEAL SHALL BE 2½".

FOR ELASTOMERIC CONCRETE, SEE SPECIAL PROVISIONS.

BILL OF MATERIAL

FOR ONE APPROACH SLAB (2 REQ'D)

BAR	NO.	SIZE	TYPE	LENGTH	WEIGHT
* A1	93	#4	STR	27'-10"	1729
A2	72	#4	STR	27'-8"	1331
* B1	158	#5	STR	22'-4"	3680
B2	158	#6	STR	22'-10"	5419
* S4	79	#4	1	3'-11"	207
S5	79	#5	2	2'-11"	240

REINFORCING STEEL	LBS.	6,990
* EPOXY COATED REINFORCING STEEL	LBS.	5,616
CLASS AA CONCRETE		
POUR #1 - SLEEPER SLAB	CU. YDS.	8.3
POUR #2 - SLAB & CURB	CU. YDS.	67.7
TOTAL	CU. YDS.	76.0

BAR TYPES

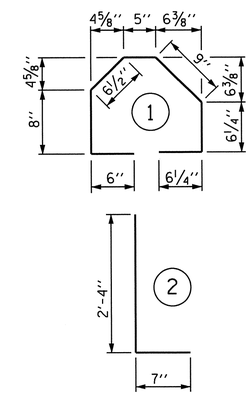

ALL BAR DIMENSIONS ARE OUT TO OUT.

SPLICE CHART

BAR	SIZE	SPLICE
* A1	#4	2'-0"
A2	#4	1'-9"

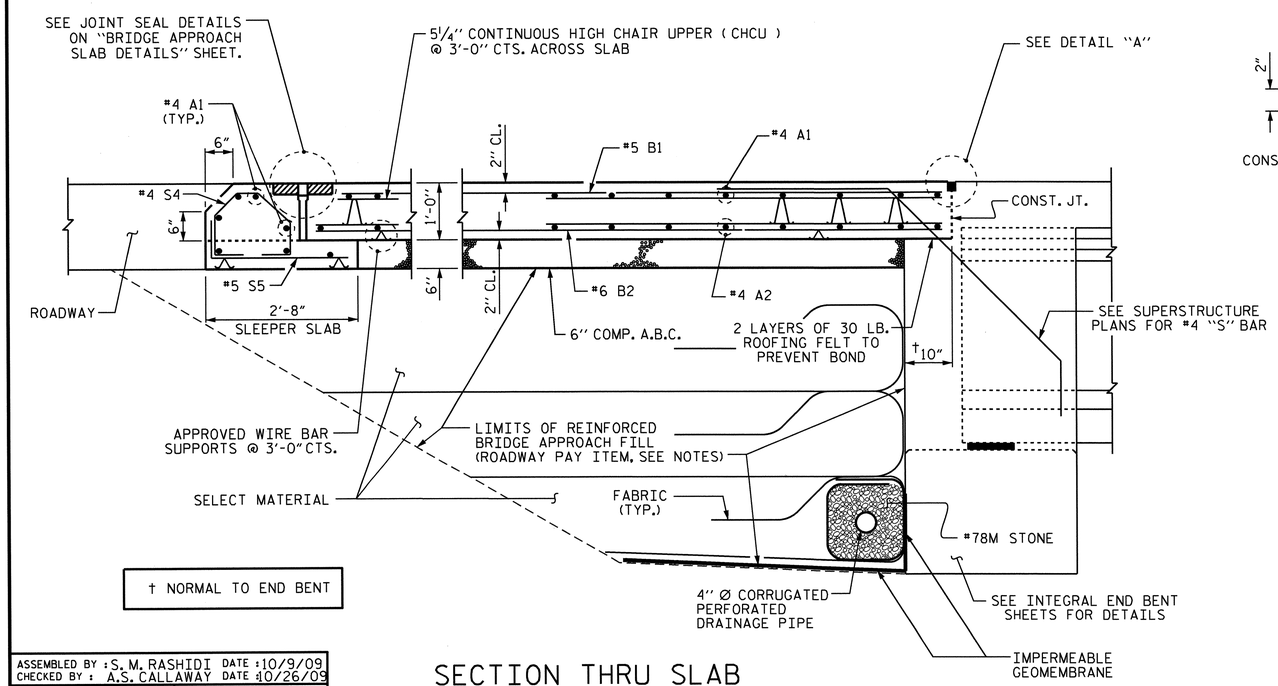

† NORMAL TO END BENT

SECTION THRU SLAB

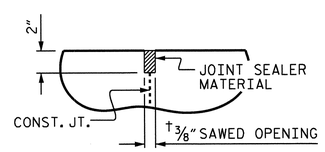

DETAIL "A"

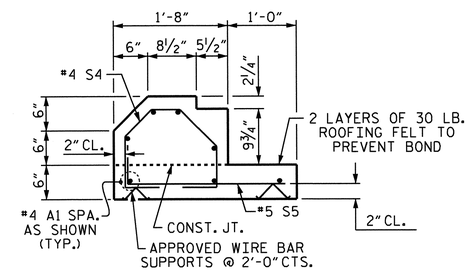

SECTION S-S

SHOWING SLEEPER SLAB

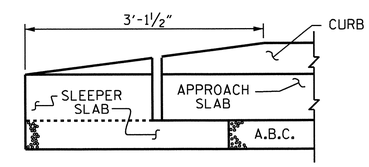

END OF CURB WITHOUT SHOULDER BERM GUTTER

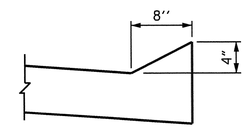

SECTION N-N

PROJECT NO. U-3326A

ROCKINGHAM COUNTY

STATION: 113+47.50 -L-

SHEET 1 OF 2

STATE OF NORTH CAROLINA
DEPARTMENT OF TRANSPORTATION
RALEIGH

STANDARD

BRIDGE APPROACH SLAB FOR INTEGRAL ABUTMENT

NORTH CAROLINA PROFESSIONAL SEAL ENGINEER ALBERT C. OUTLAW, JR.

10/24/11

ASSEMBLED BY : S. M. RASHIDI	DATE : 10/9/09
CHECKED BY : A.S. CALLAWAY	DATE : 10/26/09
DRAWN BY : TLA 10/05	ADDED 5/1/06R KMM/GM
CHECKED BY : GM 5/06	

REVISIONS							SHEET NO.
NO.	BY:	DATE:	NO.	BY:	DATE:		S-38
1			3				TOTAL SHEETS
2			4				159

STR. #1A

STD. NO. BAS11

24-OCT-2011 08:17
R:\Structures\str01\Final Plans\U3326A_SD_AS_01.dgn
aoutlaw

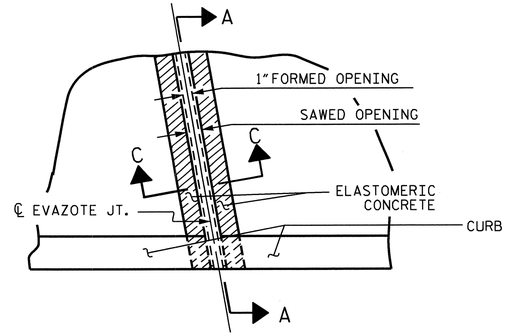

PLAN

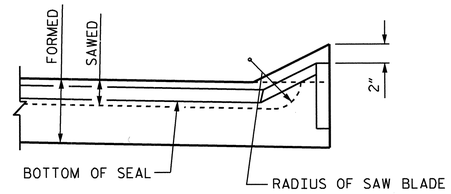

SECTION A-A

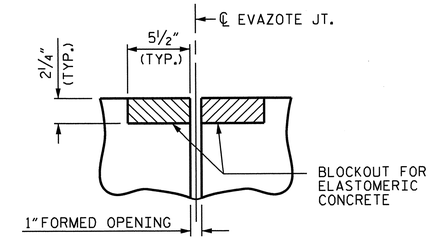

SECTION C-C
EVAZOTE JOINT SEAL
(PRE-SAWED ELASTOMERIC CONCRETE DIMENSIONS)

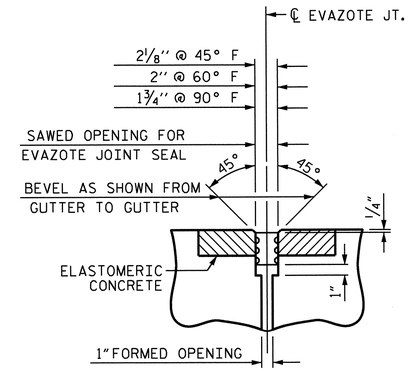

SECTION C-C
EVAZOTE JOINT SEAL

ELASTOMERIC CONCRETE	
END BENT	ELASTOMERIC CONCRETE ▲ (CU. FT.)
1	13.5
2	13.5
TOTAL	27.0

▲ BASED ON THE MINIMUM BLOCKOUT SHOWN.

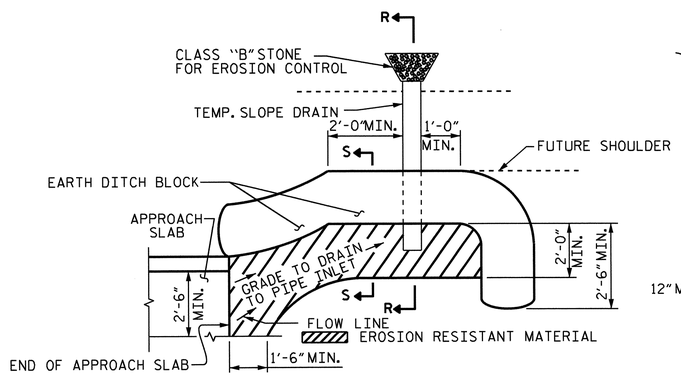

NOTE: IMMEDIATELY AFTER THE CONSTRUCTION OF THE APPROACH SLAB, THE CONTRACTOR SHALL PROVIDE TEMPORARY BERM AND SLOPE DRAIN. CONTRACTOR SHALL GRADE TO PIPE INLET AND PROVIDE EROSION RESISTANT MATERIAL AS SHOWN. THE EROSION RESISTANT MATERIAL SHALL BE EITHER 1) ASPHALT PLANT MIX, TYPE 1 OR TYPE 2, MIN. 2" DEPTH, 2) EROSION CONTROL MAT, OR 3) CONCRETE, AS DIRECTED BY THE ENGINEER. THE SLOPE DRAIN SHALL CONSIST OF A NON-PERFORATED TEMPORARY DRAINAGE PIPE, 12 INCHES IN DIAMETER.

PLAN VIEW

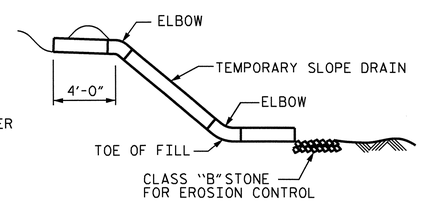

SECTION R-R

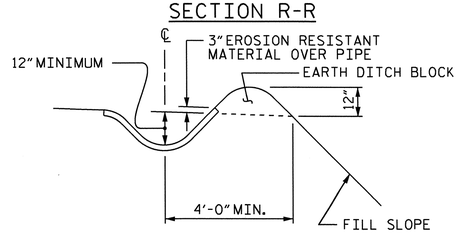

SECTION S-S

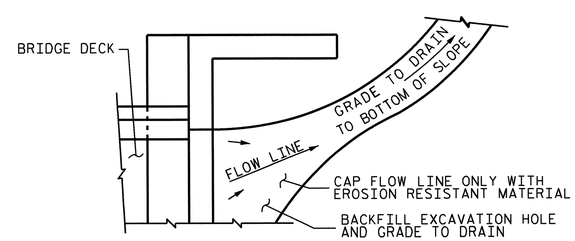

NOTE: IF THE APPROACH SLAB IS NOT CONSTRUCTED IMMEDIATELY AFTER THE BACKFILLING OF THE END BENT EXCAVATION, GRADE TO DRAIN TO THE BOTTOM OF THE SLOPE AND PROVIDE EROSION RESISTANT MATERIAL, SUCH AS FIBERGLASS ROVING OR AS DIRECTED BY THE ENGINEER TO PREVENT SOIL EROSION AND TO PROTECT THE AREA ADJACENT TO THE STRUCTURE. THE CONTRACTOR WILL BE REQUIRED TO REMOVE THESE MATERIALS PRIOR TO CONSTRUCTION OF THE APPROACH SLAB.

TEMPORARY DRAINAGE DETAIL

TEMPORARY BERM AND SLOPE DRAIN DETAILS

(TO BE USED WHEN SHOULDER BERM GUTTER IS REQUIRED)

PROJECT NO. U-3326A
ROCKINGHAM COUNTY
STATION: 113+47.50 -L-

SHEET 2 OF 2

STATE OF NORTH CAROLINA
DEPARTMENT OF TRANSPORTATION
RALEIGH

STANDARD

BRIDGE APPROACH SLAB DETAILS

NORTH CAROLINA PROFESSIONAL SEAL 10757 ENGINEER ALBERT C. OUTLAW JR.
10/24/11

REVISIONS						SHEET NO.
NO.	BY:	DATE:	NO.	BY:	DATE:	S-39
1			3			TOTAL SHEETS
2			4			159

STR. #1A STD. NO. BAS10

ASSEMBLED BY : S. M. RASHIDI		DATE : 10/9/08	
CHECKED BY : A.S. CALLAWAY		DATE :10/26/08	
DRAWN BY : FCJ 11/88	REV. 10/17/00	RWW/LES	
CHECKED BY : ARB 11/88	REV. 5/7/03	RWW/JTE	
	REV. 5/1/06R	MAA/KMM	

24-OCT-2011 08:17
R:\Structures\str01\Final Plans\U3326A_SD_AS_01.dgn
aoutlaw

F.A. PROJ. NO. STP-29B(3)

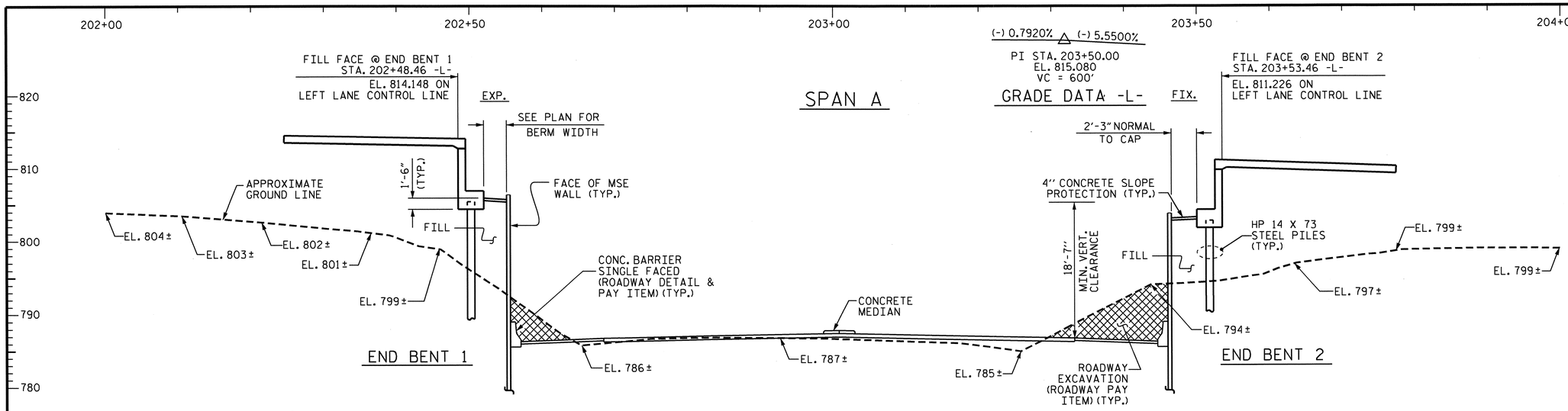

SECTION ALONG LEFT LANE CONTROL LINE

SECTION AT END BENTS ARE TAKEN AT RIGHT ANGLES

+1.1267% +0.5857%

PI STA. 23+25.00
EL. 787.92
VC = 670'

GRADE DATA -Y13-

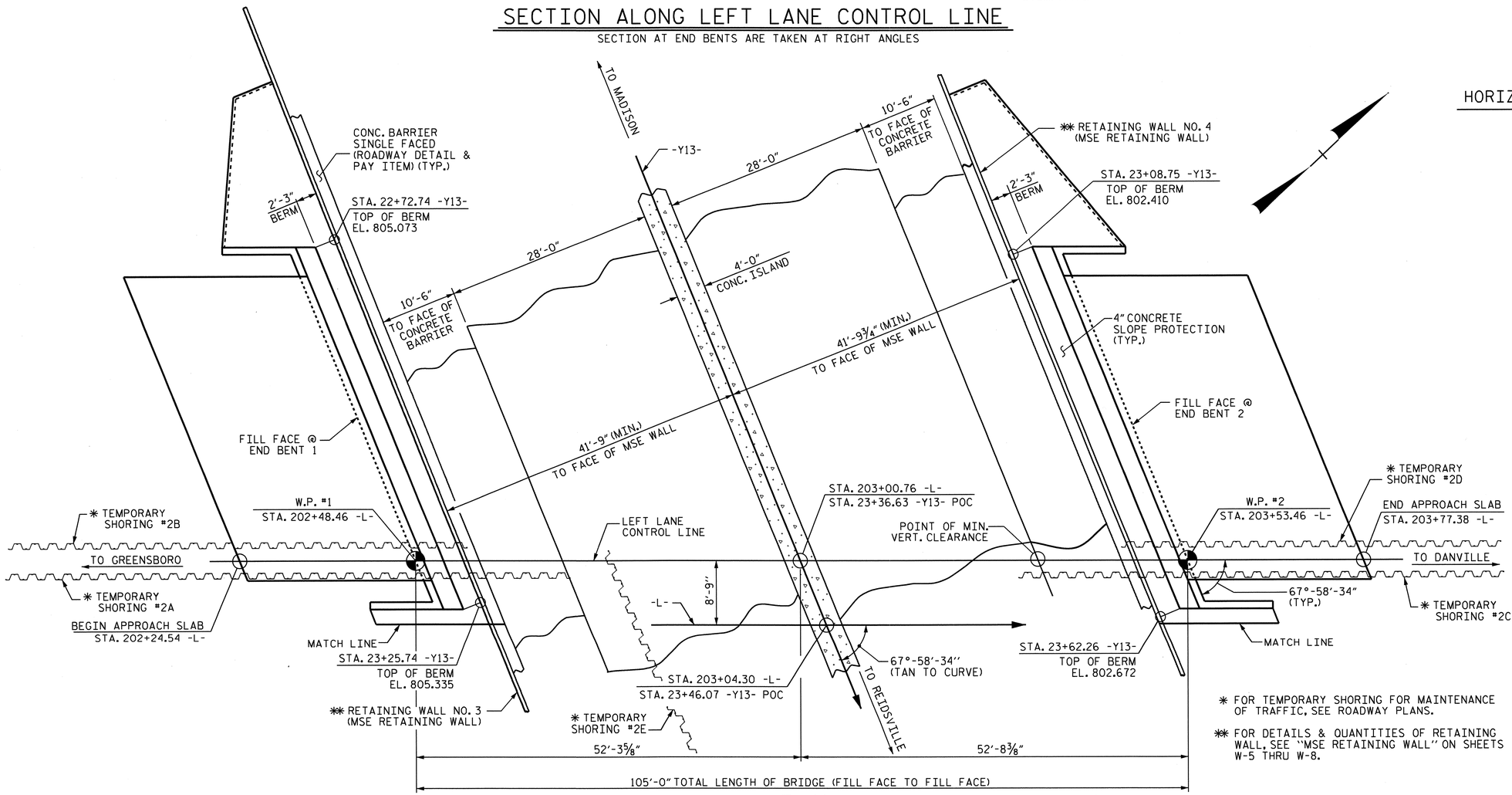

PLAN

PILES NOT SHOWN FOR CLARITY

* FOR TEMPORARY SHORING FOR MAINTENANCE OF TRAFFIC, SEE ROADWAY PLANS.

** FOR DETAILS & QUANTITIES OF RETAINING WALL, SEE "MSE RETAINING WALL" ON SHEETS W-5 THRU W-8.

HORIZONTAL CURVE DATA -Y13-

PI STA. 24+41.60
Δ = 6°-10'-09.7" (LT)
D = 0°-38'-11.8"
L = 969.08'
T = 485.01'
R = 9000.00'

NORTH CAROLINA PROFESSIONAL SEAL 11915 ENGINEER JOHN C. FRYE 10/31/11

NORTH CAROLINA PROFESSIONAL SEAL 16301 ENGINEER TING HSIANG FANG 10/28/11

PROJECT NO. U-3326B
ROCKINGHAM COUNTY
STATION: 203+04.30 -L-
23+46.07 -Y13-POC

SHEET 1 OF 3

BRIDGE NO. 311

STATE OF NORTH CAROLINA
DEPARTMENT OF TRANSPORTATION
RALEIGH

GENERAL DRAWING

FOR BRIDGE ON US 29/US 158 OVER NC 65/NC 87 BETWEEN SR 2413 AND SR 2003

— LEFT LANE —

REVISIONS						SHEET NO.
NO.	BY:	DATE:	NO.	BY:	DATE:	S-40
1			3			TOTAL SHEETS
2			4			159

DRAWN BY : A.S. CALLAWAY DATE : 6/15/09
CHECKED BY : M.K. BEARD DATE : 6/18/09

28-OCT-2011 10:10
K:\TIPProjects-U\U3326B\Structures\str01\FinalPlans\u3326b_sd_gd_01.dgn
tfang

STR. #1

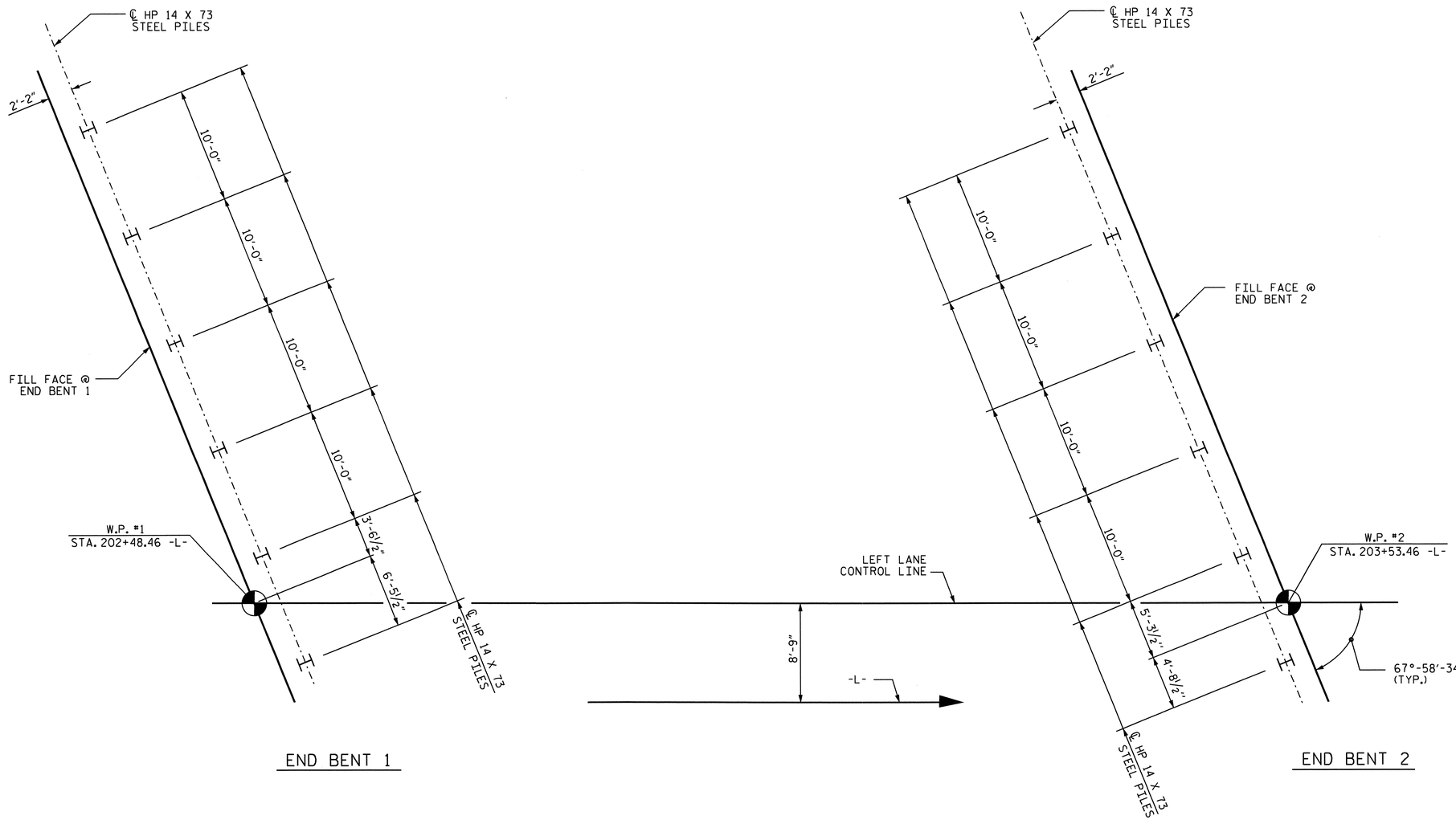

END BENT 1

END BENT 2

FOUNDATION LAYOUT

DIMENSIONS LOCATING PILES ARE SHOWN TO PILE CENTERLINE AT THE BOTTOM OF CAP.

ALL HP 14 X 73 STEEL PILES ARE VERTICAL.

NOTES

FOR PILES, SEE SPECIAL PROVISIONS.

PILES AT END BENTS 1 AND 2 ARE DESIGNED FOR A FACTORED RESISTANCE OF 145 TONS PER PILE.

CONCRETE IS REQUIRED TO FILL HOLES FOR PILE EXCAVATION AT END BENTS 1 AND 2 TO BOTTOM OF WALL.

PERFORM WALL EXCAVATION PRIOR TO INSTALLING PILES AT END BENTS 1 AND 2.

PILE EXCAVATION IS REQUIRED TO INSTALL PILES AT END BENTS 1 AND 2. EXCAVATE HOLES TO ELEVATION 770 FT AND A MINIMUM PENETRATION OF 5 FT IN WEATHERED ROCK/HARD ROCK. FOR PILE EXCAVATION, SEE PILES SPECIAL PROVISIONS.

PILES REQUIRING PILE EXCAVATION ARE NOT REQUIRED TO BE DRIVEN. SEE SPECIAL PROVISION.

NORTH CAROLINA PROFESSIONAL SEAL 16301 ENGINEER T.H. FANG

8/29/11

PROJECT NO. U-3326B
ROCKINGHAM COUNTY
STATION: 203+04.30 -L-

SHEET 2 OF 3

STATE OF NORTH CAROLINA
DEPARTMENT OF TRANSPORTATION
RALEIGH

GENERAL DRAWING

FOR BRIDGE ON US 29/US 158 OVER NC 65/NC 87 BETWEEN SR 2413 AND SR 2003

— LEFT LANE —

REVISIONS						SHEET NO.
NO.	BY:	DATE:	NO.	BY:	DATE:	S-41
1			3			TOTAL SHEETS
2			4			159

STR. #1

DRAWN BY : HARISH SHAH DATE : 01/11
CHECKED BY : T.H. FANG DATE : 02-24-11

29-AUG-2011 13:38
X:\TIPProjects-U\U3326B\Structures\str01\FinalPlans\u3326b_sd_gd_01.dgn
OTNGUYEN

TOTAL BILL OF MATERIAL

	PILE EXCAVATION IN SOIL	PILE EXCAVATION NOT IN SOIL	REINFORCED CONCRETE DECK SLAB	GROOVING BRIDGE FLOORS	CLASS A CONCRETE	BRIDGE APPROACH SLABS	REINFORCING STEEL	MODIFIED 63" PRESTRESSED CONCRETE GIRDERS		HP 14X73 STEEL PILES		CONCRETE BARRIER RAIL	4" SLOPE PROTECTION	ELASTOMERIC BEARINGS	EXPANSION JOINT SEALS
	LIN. FT.	LIN. FT.	SQ. FT.	SQ. FT.	CU.YDS.	LUMP SUM	LBS.	NO.	LIN. FT.	NO.	LIN. FT.	LIN. FT.	SQ. YDS.	LUMP SUM	LUMP SUM
SUPERSTRUCTURE			4,442	5,511				5	505.10			246.64			
END BENT 1	30	60			46.1		5,477			6	210		45		
END BENT 2	30	60			45.3		5,464			6	180		45		
TOTAL	60	120	4,442	5,511	91.4	LUMP SUM	10,941	5	505.10	12	390	246.64	90	LUMP SUM	LUMP SUM

BM #12: RR SPIKE IN BASE OF 14'' POPLAR, 213' RIGHT, STA. 209+18 -L-, EL. 758.56.

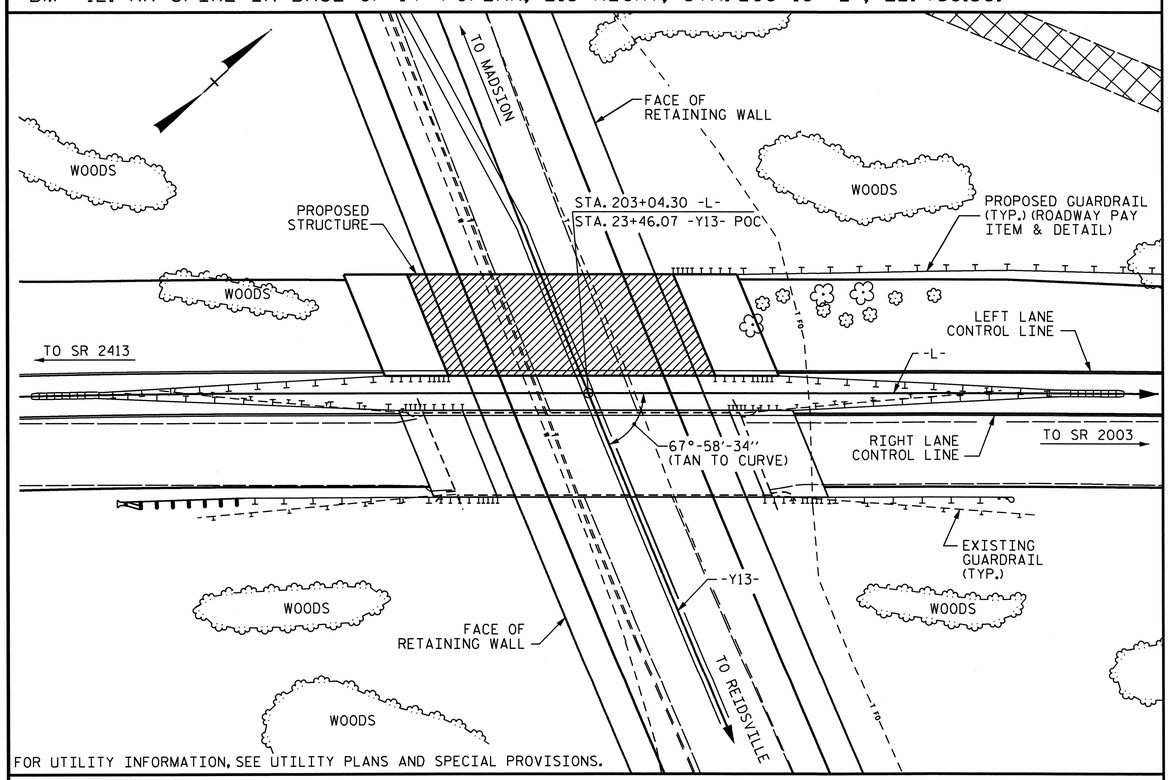

FOR UTILITY INFORMATION, SEE UTILITY PLANS AND SPECIAL PROVISIONS.

LOCATION SKETCH

NOTES

ASSUMED LIVE LOAD = HL 93 OR ALTERNATE LOADING.

FOR OTHER DESIGN DATA AND GENERAL NOTES, SEE SHEET SN.

FOR EROSION CONTROL MEASURES SEE EROSION CONTROL PLANS.

THIS BRIDGE HAS BEEN DESIGNED IN ACCORDANCE WITH THE AASHTO LRFD BRIDGE DESIGN SPECIFICATIONS.

PRESTRESSED CONCRETE DECK PANELS MAY BE USED IN LIEU OF METAL STAY-IN-PLACE FORMS IN ACCORDANCE WITH ARTICLE 420-3 OF THE STANDARD SPECIFICATIONS.

THE CONTRACTOR SHALL PROVIDE INDEPENDENT ASSURANCE SAMPLES OF REINFORCING STEEL AS FOLLOWS: FOR PROJECTS REQUIRING UP TO 400 TONS OF REINFORCING STEEL, ONE 30 INCH SAMPLE OF EACH SIZE BAR USED, AND FOR PROJECTS REQUIRING OVER 400 TONS OF REINFORCING STEEL, TWO 30 INCH SAMPLES OF EACH SIZE BAR USED. THE BARS FROM WHICH THE SAMPLES ARE TAKEN MUST THEN BE SPLICED WITH REPLACEMENT BARS OF THE SIZE AND LENGTH OF THE SAMPLE, PLUS A MINIMUM LAP SPLICE OF THIRTY BAR DIAMETERS. PAYMENT FOR THE SAMPLES OF REINFORCING STEEL SHALL BE CONSIDERED INCIDENTAL TO VARIOUS PAY ITEMS.

FOR LIMITS OF TEMPORARY SHORING FOR MAINTENANCE OF TRAFFIC, SEE TRAFFIC CONTROL PLANS. FOR PAY ITEM FOR TEMPORARY SHORING FOR MAINTENANCE OF TRAFFIC, SEE ROADWAY PLANS.

NEEDLE BEAMS WILL NOT BE ALLOWED UNLESS OTHERWISE CALLED FOR ON THE PLANS OR APPROVED BY THE ENGINEER.

REMOVABLE FORMS MAY BE USED IN LIEU OF METAL STAY-IN-PLACE FORMS IN ACCORDANCE WITH ARTICLE 420-3 OF THE STANDARD SPECIFICATIONS.

FOR MAINTENANCE AND PROTECTION OF TRAFFIC BENEATH PROPOSED STRUCTURE, SEE SPECIAL PROVISIONS.

THE CLASS AA CONCRETE IN THE BRIDGE DECK SHALL CONTAIN FLY ASH OR GROUND GRANULATED BLAST FURNACE SLAG AT THE SUBSTITUTION RATE SPECIFIED IN ARTICLE 1024-1 AND IN ACCORDANCE WITH ARTICLES 1024-5 AND 1024-6 OF THE STANDARD SPECIFICATIONS. NO PAYMENT WILL BE MADE FOR THIS SUBSTITUTION AS IT IS CONSIDERED INCIDENTAL TO THE COST OF THE REINFORCED CONCRETE DECK SLAB.

STEEL SHEET PILING REQUIRED FOR SHORING SHALL BE HOT ROLLED.

FOR CURING CONCRETE, SEE SPECIAL PROVISIONS.

FOR FORMS FOR CONCRETE BRIDGE DECKS, SEE SPECIAL PROVISIONS.

FOR SUBMITTAL OF WORKING DRAWINGS, SEE SPECIAL PROVISIONS.

FOR FALSEWORK AND FORMWORK, SEE SPECIAL PROVISIONS.

FOR PRESTRESSED CONCRETE MEMBERS, SEE SPECIAL PROVISIONS.

FOR PLACING LOAD ON STRUCTURE MEMBERS, SEE SPECIAL PROVISIONS.

FOR GROUT FOR STRUCTURES, SEE SPECIAL PROVISIONS.

FOR CRANE SAFETY, SEE SPECIAL PROVISIONS.

PROJECT NO. U-3326B
ROCKINGHAM COUNTY
STATION: 203+04.30 -L-

SHEET 3 OF 3

STATE OF NORTH CAROLINA
DEPARTMENT OF TRANSPORTATION
RALEIGH

GENERAL DRAWING
FOR BRIDGE ON US 29/US 158 OVER NC 65/NC 87 BETWEEN SR 2413 AND SR 2003
— LEFT LANE —

NORTH CAROLINA PROFESSIONAL SEAL 16301 ENGINEER TING HSIUNG FANG
8/29/11

REVISIONS						SHEET NO.
NO.	BY:	DATE:	NO.	BY:	DATE:	S-42
1			3			TOTAL SHEETS
2			4			159

STR. #1

DRAWN BY : HARISH SHAH DATE : 01/11
CHECKED BY : T. H. FANG DATE : 03/25/11

29-AUG-2011 13:38
X:\TIP\Projects-U\U3326B\Structures\str01\Final Plans\u3326b_sd_gd_01.dgn
OTNGUYEN

LOAD AND RESISTANCE FACTOR RATING (LRFR) SUMMARY FOR PRESTRESSED CONCRETE GIRDERS

LEVEL		VEHICLE	WEIGHT (W) (TONS)	CONTROLLING LOAD RATING (#)	MINIMUM RATING FACTORS (RF)	TONS = W × RF	STRENGTH I LIMIT STATE											SERVICE III LIMIT STATE						COMMENT NUMBER
							LIVE-LOAD FACTORS $\gamma_{(LL)}$	MOMENT					SHEAR					LIVE-LOAD FACTORS $\gamma_{(LL)}$	MOMENT					
								DISTRIBUTION FACTORS (DF)	RATING FACTOR	SPAN	GIRDER LOCATION	DISTANCE FROM LEFT END OF SPAN (ft)	DISTRIBUTION FACTORS (DF)	RATING FACTOR	SPAN	GIRDER LOCATION	DISTANCE FROM LEFT END OF SPAN (ft)		DISTRIBUTION FACTORS (DF)	RATING FACTOR	SPAN	GIRDER LOCATION	DISTANCE FROM LEFT END OF SPAN (ft)	
DESIGN LOAD RATING		HL-93 (INVENTORY)	N/A	1	1.150	--	1.75	0.857	1.55	A	ER	49.803	0.907	1.23	A	ER	9.961	0.80	0.857	1.15	A	ER	49.803	
		HL-93 (OPERATING)	N/A		1.601	--	1.35	0.857	2.01	A	ER	49.803	0.907	1.60	A	ER	9.961	N/A	--	--	--	--	--	
		HS-20 (INVENTORY)	36.000	2	1.604	57.8	1.75	0.857	2.16	A	ER	49.803	0.907	1.65	A	ER	9.961	0.80	0.857	1.60	A	ER	49.803	
		HS-20 (OPERATING)	36.000		2.138	77.0	1.35	0.857	2.80	A	ER	49.803	0.907	2.14	A	ER	9.961	N/A	--	--	--	--	--	
LEGAL LOAD RATING	SINGLE VEHICLE (SV)	SNSH	13.500		3.809	51.4	1.40	0.857	6.41	A	ER	49.803	0.907	5.07	A	ER	9.961	0.80	0.857	3.81	A	ER	49.803	
		SNGARBS2	20.000		2.757	55.1	1.40	0.857	4.64	A	ER	49.803	0.907	3.55	A	ER	9.961	0.80	0.857	2.76	A	ER	49.803	
		SNAGRIS2	22.000		2.578	56.7	1.40	0.857	4.34	A	ER	49.803	0.907	3.28	A	ER	9.961	0.80	0.857	2.58	A	ER	49.803	
		SNCOTTS3	27.250		1.893	51.6	1.40	0.857	3.19	A	ER	49.803	0.907	2.53	A	ER	9.961	0.80	0.857	1.89	A	ER	49.803	
		SNAGGRS4	34.925		1.550	54.1	1.40	0.857	2.61	A	ER	49.803	0.907	2.06	A	ER	9.961	0.80	0.857	1.55	A	ER	49.803	
		SNS5A	35.550		1.518	54.0	1.40	0.857	2.56	A	ER	49.803	0.907	2.07	A	ER	9.961	0.80	0.857	1.52	A	ER	49.803	
		SNS6A	39.950		1.380	55.1	1.40	0.857	2.32	A	ER	49.803	0.907	1.87	A	ER	9.961	0.80	0.857	1.38	A	ER	49.803	
		SNS7B	42.000		1.314	55.2	1.40	0.857	2.21	A	ER	49.803	0.907	1.82	A	ER	9.961	0.80	0.857	1.31	A	ER	49.803	
	TRUCK TRACTOR SEMI-TRAILER (TTST)	TNAGRIT3	33.000		1.679	55.4	1.40	0.857	2.83	A	ER	49.803	0.907	2.24	A	ER	9.961	0.80	0.857	1.68	A	ER	49.803	
		TNT4A	33.075		1.683	55.7	1.40	0.857	2.83	A	ER	49.803	0.907	2.20	A	ER	9.961	0.80	0.857	1.68	A	ER	49.803	
		TNT6A	41.600		1.364	56.8	1.40	0.857	2.30	A	ER	49.803	0.907	1.91	A	ER	9.961	0.80	0.857	1.36	A	ER	49.803	
		TNT7A	42.000		1.365	57.3	1.40	0.857	2.30	A	ER	49.803	0.907	1.88	A	ER	9.961	0.80	0.857	1.36	A	ER	49.803	
		TNT7B	42.000		1.397	58.7	1.40	0.857	2.35	A	ER	49.803	0.907	1.79	A	ER	9.961	0.80	0.857	1.40	A	ER	49.803	
		TNAGRIT4	43.000		1.340	57.6	1.40	0.857	2.26	A	ER	49.803	0.907	1.74	A	ER	9.961	0.80	0.857	1.34	A	ER	49.803	
		TNAGT5A	45.000		1.269	57.1	1.40	0.857	2.14	A	ER	49.803	0.907	1.71	A	ER	9.961	0.80	0.857	1.27	A	ER	49.803	
		TNAGT5B	45.000	3	1.258	56.6	1.40	0.857	2.12	A	ER	49.803	0.907	1.66	A	ER	9.961	0.80	0.857	1.26	A	ER	49.803	

LOAD FACTORS:

DESIGN LOAD RATING FACTORS	LIMIT STATE	γ_{DC}	γ_{DW}
	STRENGTH I	1.25	1.50
	SERVICE III	1.00	1.00

NOTES:

MINIMUM RATING FACTORS ARE BASED ON THE STRENGTH I AND SERVICE III LIMIT STATES.

ALLOWABLE STRESSES FOR SERVICE III LIMIT STATE ARE AS REQUIRED FOR DESIGN.

COMMENTS:

1.
2.
3.
4.

(#) CONTROLLING LOAD RATING

(1) DESIGN LOAD RATING (HL-93)
(2) DESIGN LOAD RATING (HS-20)
(3) LEGAL LOAD RATING **
** SEE CHART FOR VEHICLE TYPE

GIRDER LOCATION

I - INTERIOR GIRDER
EL - EXTERIOR LEFT GIRDER
ER - EXTERIOR RIGHT GIRDER

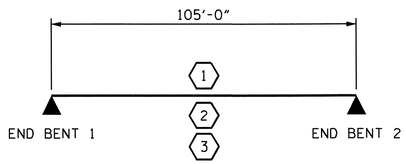

LRFR SUMMARY

PROJECT NO. U-3326B
ROCKINGHAM COUNTY
STATION: 203+04.30 -L-

STATE OF NORTH CAROLINA
DEPARTMENT OF TRANSPORTATION
RALEIGH

STANDARD
LRFR SUMMARY FOR PRESTRESSED CONCRETE GIRDERS
(NON-INTERSTATE TRAFFIC)

NORTH CAROLINA PROFESSIONAL SEAL 16301 ENGINEER HSIUNG TING FANG
8/30/11

REVISIONS						SHEET NO.
NO.	BY:	DATE:	NO.	BY:	DATE:	S-43
1			3			TOTAL SHEETS
2			4			159

ASSEMBLED BY : Z.H.BROWN DATE : 2/17/2011
CHECKED BY : J.H.CARDEN DATE : 6/7/2011
DRAWN BY : MAA 1/08
CHECKED BY : GM/DI 2/08
REV. 11/12/08RR MAA/GM

30-AUG-2011 08:39
O:\TIPProjects-U\U3326B\Structures\str01\FinalPlans\U3326B_SD_LRFR_01.dgn
qtnguyen

STR. #1 STD. NO. LRFR1

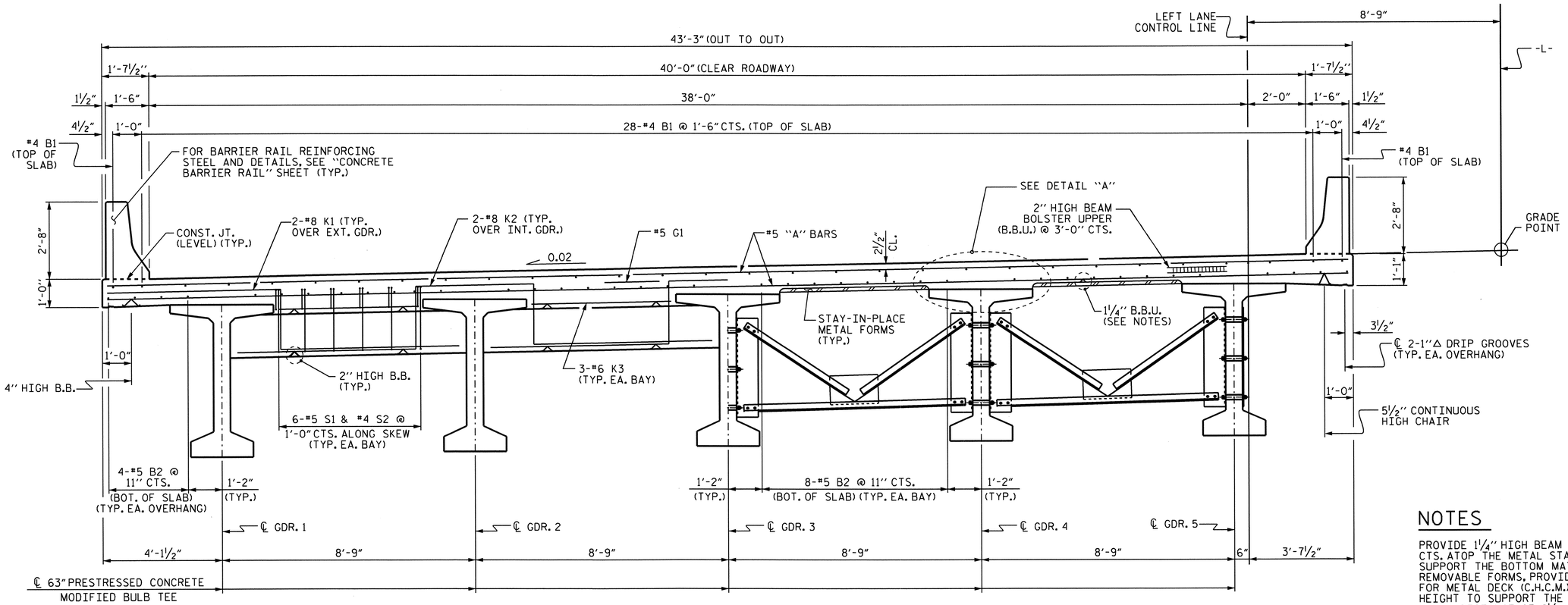

HALF TYPICAL SECTION

SHOWING END BENT DIAPHRAGMS

HALF TYPICAL SECTION

SHOWING INTERMEDIATE DIAPHRAGMS

NOTES

PROVIDE 1¼" HIGH BEAM BOLSTERS UPPER AT 4'-0" CTS. ATOP THE METAL STAY-IN-PLACE FORMS TO SUPPORT THE BOTTOM MAT OF 'A' BARS. WHEN USING REMOVABLE FORMS, PROVIDE CONTINUOUS HIGH CHAIRS FOR METAL DECK (C.H.C.M.) @ 4'-0" CTS. WITH A HEIGHT TO SUPPORT THE BOTTOM MAT OF 'A' BARS A CLEAR DISTANCE OF 2½" ABOVE THE TOP OF THE REMOVABLE FORM.

LONGITUDINAL STEEL MAY BE SHIFTED SLIGHTLY, AS NECESSARY, TO AVOID INTERFERENCE WITH STIRRUPS IN PRESTRESSED CONCRETE GIRDERS.

BARRIER RAIL IN THE SPAN SHALL NOT BE CAST UNTIL ALL SLAB CONCRETE IN THAT SPAN HAS BEEN CAST AND HAS REACHED A MINIMUM COMPRESSIVE STRENGTH OF 3,000 PSI.

CONCRETE IN END BENT DIAPHRAGMS MAY BE CLASS A IN LIEU OF CLASS AA. PAYMENT SHALL BE MADE UNDER THE UNIT CONTRACT PRICE FOR REINFORCED CONCRETE DECK SLAB.

THE JOINT IN THE DECK SHALL BE FORMED PRIOR TO THE CASTING OF THE BARRIER RAIL.

FOR INTERMEDIATE DIAPHRAGM DETAILS, SEE "INTERMEDIATE STEEL DIAPHRAGMS FOR 63" PRESTRESSED CONCRETE MODIFIED BULB TEE" SHEET.

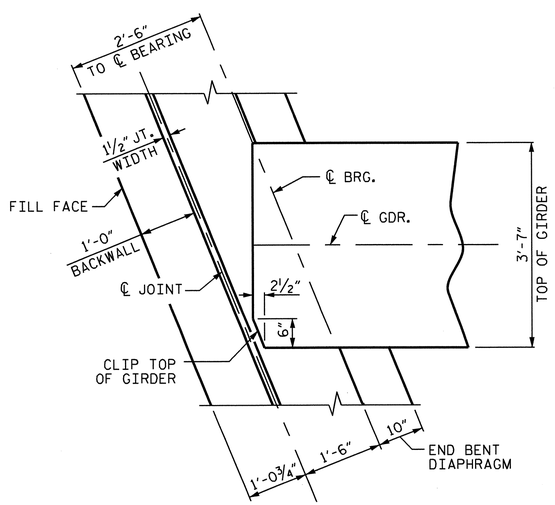

END BENT DIAPHRAGM

END BENT 1 SHOWN, END BENT 2 SIMILAR

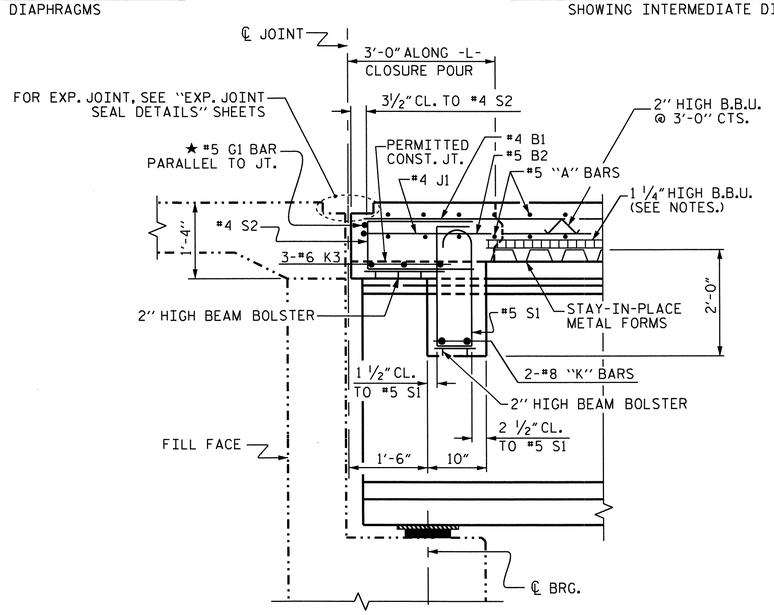

SECTION @ END BENT

★ #5 G1 BAR MAY BE SHIFTED SLIGHTLY, AS NECESSARY, TO CLEAR REINFORCING STEEL AND STIRRUPS.

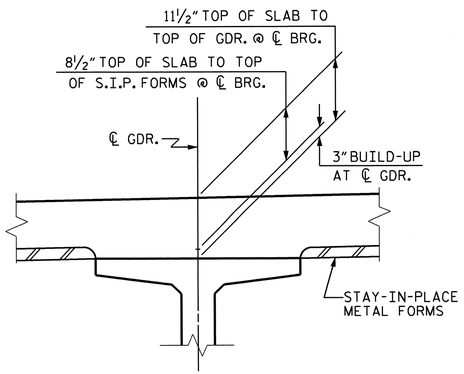

DETAIL "A"

PROJECT NO. U-3326B

ROCKINGHAM COUNTY

STATION: 203+04.30 -L-

STATE OF NORTH CAROLINA
DEPARTMENT OF TRANSPORTATION
RALEIGH

SUPERSTRUCTURE

TYPICAL SECTION

— LEFT LANE —

NORTH CAROLINA PROFESSIONAL SEAL 16301 ENGINEER TING-YIPLING FANG
10/21/11

REVISIONS						SHEET NO.
NO.	BY:	DATE:	NO.	BY:	DATE:	S-44
1			3			TOTAL SHEETS
2			4			159

DRAWN BY : A.S. CALLAWAY DATE : 8/7/09
CHECKED BY : L.E. SUTTON DATE : 1/26/10

21-OCT-2011 09:17
K:\TIPProjects-U\U3326B\Structures\str01\Final Plans\U3326B_SD_TS_01.dgn
ttfang

STR. #1

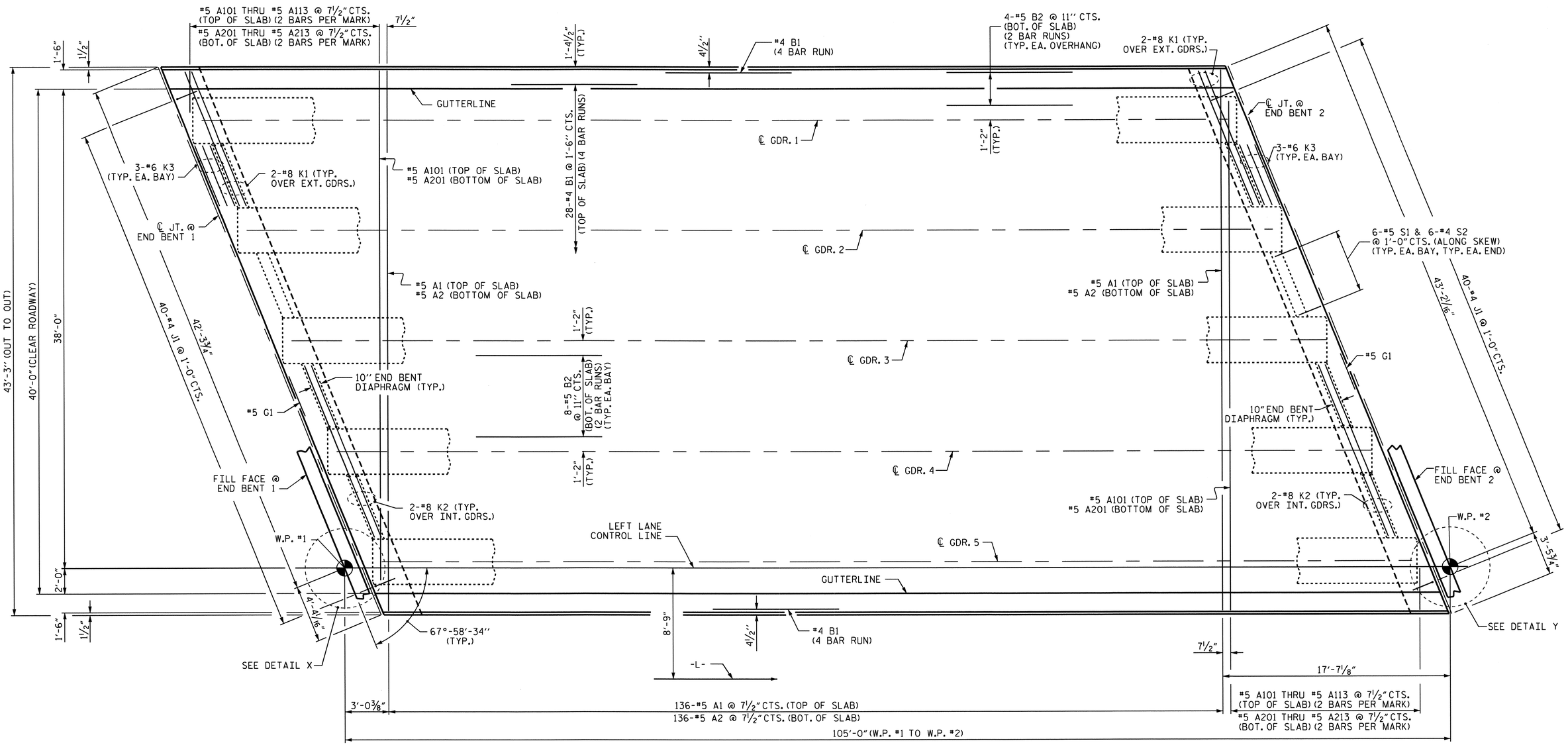

PLAN OF SPAN A

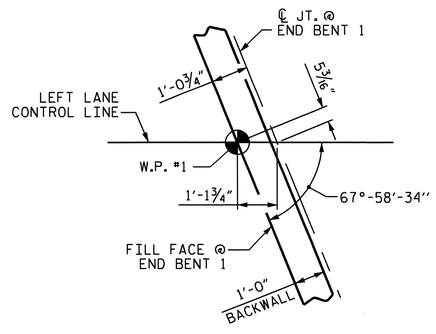

DETAIL X

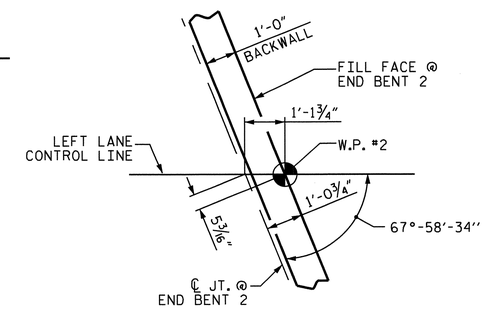

DETAIL Y

PROJECT NO. U-3326B
ROCKINGHAM COUNTY
STATION: 203+04.30 -L-

STATE OF NORTH CAROLINA
DEPARTMENT OF TRANSPORTATION
RALEIGH

SUPERSTRUCTURE

PLAN OF SPAN

— LEFT LANE —

NORTH CAROLINA PROFESSIONAL SEAL 16301 ENGINEER HSIUNG-FANG TING
8/29/11

REVISIONS								SHEET NO.
NO.	BY:	DATE:	NO.	BY:	DATE:			S-45
1			3					TOTAL SHEETS
2			4					159

STR. #1

DRAWN BY : A.S. CALLAWAY DATE : 8/21/09
CHECKED BY : L.E. SUTTON DATE : 1/27/10

29-AUG-2011 13:38
X:\TIPProjects-U\U3326B\Structures\str01\FinalPlans\U3326B_SD_S*_01.dgn
OTNGUYEN

DEAD LOAD DEFLECTION TABLE FOR GIRDERS

0.6" Ø LOW RELAXATION	SPAN A																																	
	GIRDER 1											GIRDERS 2, 3 & 4											GIRDER 5											
TENTH POINTS	BRG.	0.1	0.2	0.3	0.4	0.5	0.6	0.7	0.8	0.9	BRG.	BRG.	0.1	0.2	0.3	0.4	0.5	0.6	0.7	0.8	0.9	BRG.	BRG.	0.1	0.2	0.3	0.4	0.5	0.6	0.7	0.8	0.9	BRG.
CAMBER (GIRDER ALONE IN PLACE) ↑	0	0.109	0.207	0.283	0.332	0.348	0.332	0.283	0.207	0.109	0	0	0.109	0.207	0.283	0.332	0.348	0.332	0.283	0.207	0.109	0	0	0.109	0.207	0.283	0.332	0.348	0.332	0.283	0.207	0.109	0
* DEFLECTION DUE TO SUPERIMPOSED D.L. ↓	0	0.035	0.066	0.090	0.106	0.111	0.106	0.090	0.066	0.035	0	0	0.035	0.066	0.090	0.105	0.111	0.105	0.090	0.066	0.035	0	0	0.036	0.068	0.093	0.109	0.114	0.109	0.093	0.068	0.036	0
FINAL CAMBER ↑	0	7/8"	1 11/16"	2 5/16"	2 11/16"	2 7/8"	2 11/16"	2 5/16"	1 11/16"	7/8"	0	0	7/8"	1 11/16"	2 5/16"	2 11/16"	2 7/8"	2 11/16"	2 5/16"	1 11/16"	7/8"	0	0	7/8"	1 11/16"	2 1/4"	2 11/16"	2 13/16"	2 11/16"	2 1/4"	1 11/16"	7/8"	0

* INCLUDES FUTURE WEARING SURFACE
ALL VALUES ARE SHOWN IN FEET (DECIMAL FORM), EXCEPT "FINAL CAMBER", WHICH IS GIVEN IN INCHES (FRACTION FORM).

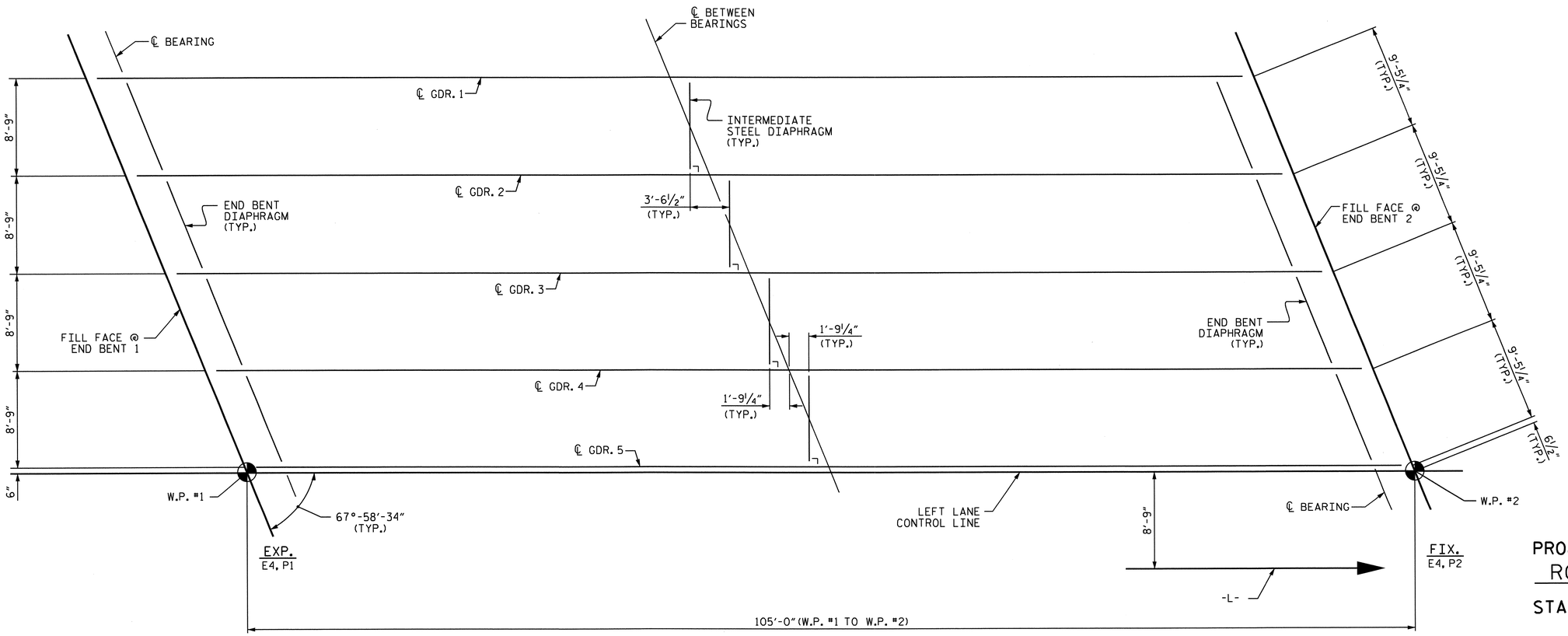

FRAMING PLAN

PROJECT NO. U-3326B
ROCKINGHAM COUNTY
STATION: 203+04.30 -L-

STATE OF NORTH CAROLINA
DEPARTMENT OF TRANSPORTATION
RALEIGH

SUPERSTRUCTURE
FRAMING PLAN AND DEAD LOAD DEFLECTIONS
— LEFT LANE —

NORTH CAROLINA PROFESSIONAL SEAL 16301 ENGINEER TING HSIUNG FANG
10/21/11

REVISIONS						SHEET NO.
NO.	BY:	DATE:	NO.	BY:	DATE:	S-46
1			3			TOTAL SHEETS
2			4			159

DRAWN BY : A.S. CALLAWAY DATE : 8/3/09
CHECKED BY : L.E. SUTTON DATE : 1/25/10

21-OCT-2011 12:18
K:\TIPProjects-U\U3326B\Structures\str01\FinalPlans\U3326B_SD_FP_01.dgn
ttfang

STR. #1

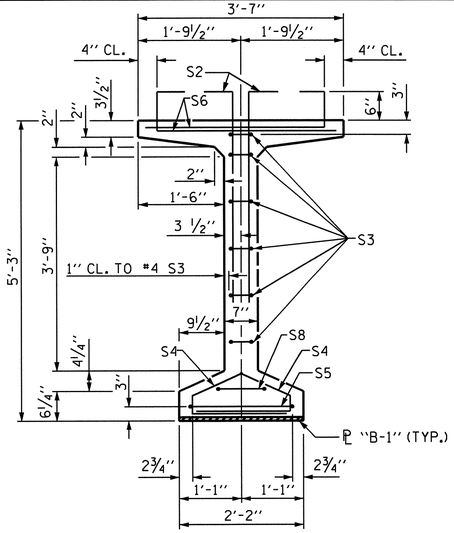

SECTION A-A

FOR EMBEDED ℄ "B-1" DETAILS, SEE SHEET 2 OF 2

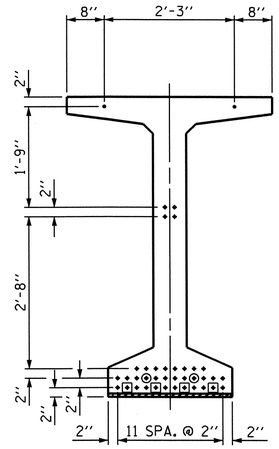

AT END OF GIRDER

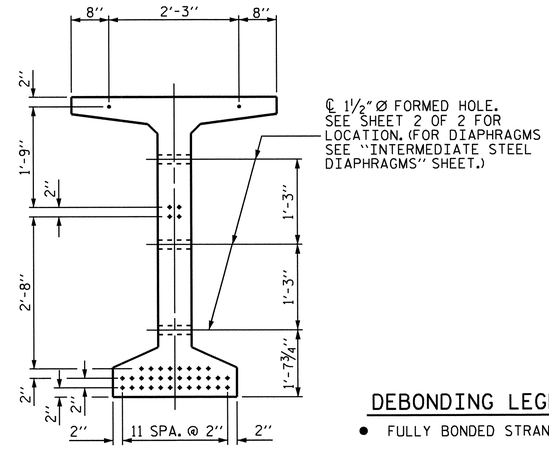

AT ℄ OF GIRDER

0.6" Ø LOW RELAXATION STRAND LAYOUT

(38 STRANDS, ALL STRAIGHT, 6 DEBONDED STRANDS)

DEBONDING LEGEND

- ● FULLY BONDED STRANDS
- ⦿ STRANDS DEBONDED FOR 8'-0" FROM END OF GIRDER
- ▣ STRANDS DEBONDED FOR 12'-0" FROM END OF GIRDER

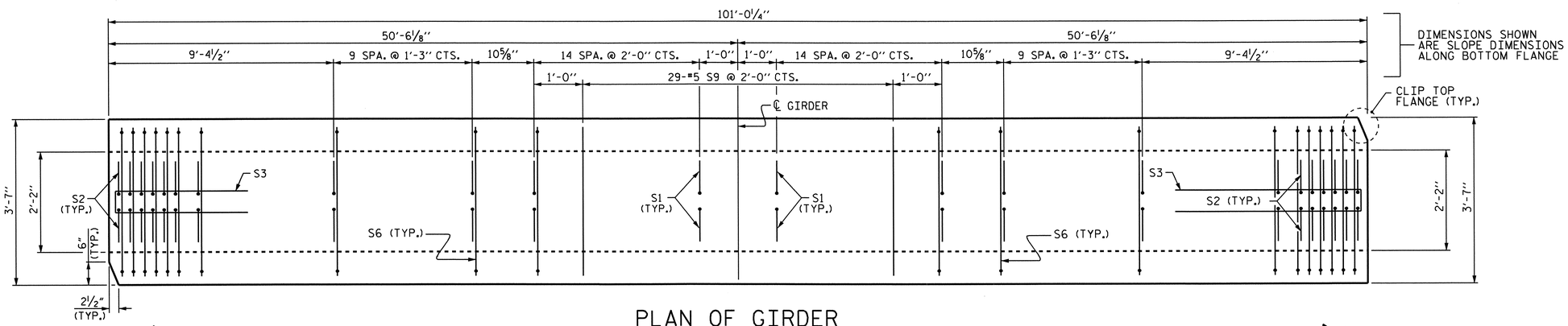

PLAN OF GIRDER

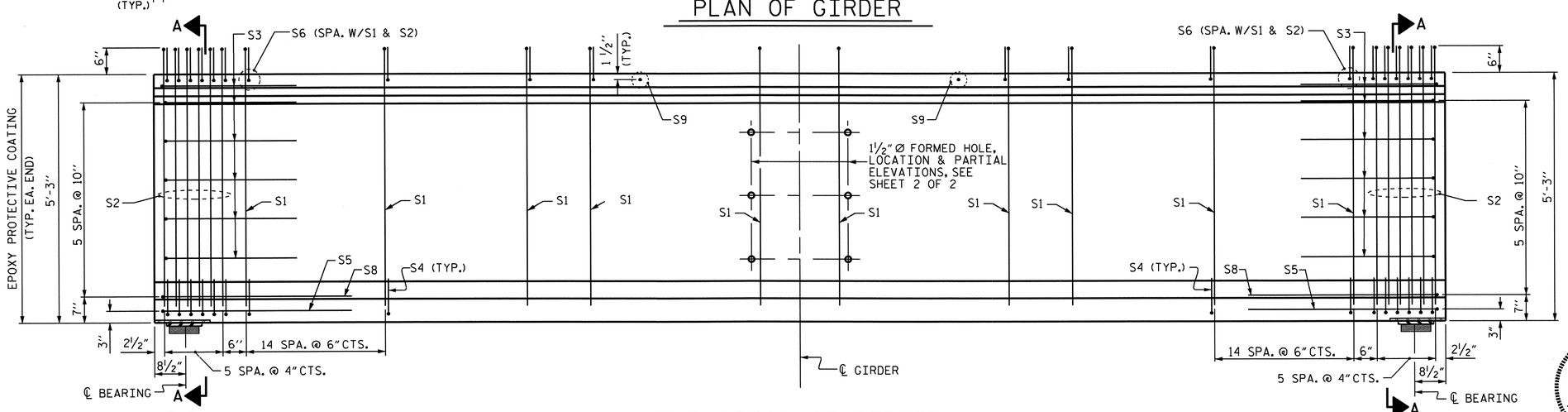

EXP.

ELEVATION OF GIRDER

FIX.

0.6" Ø L. R. GRADE 270 STRANDS		
AREA (SQUARE INCHES)	ULTIMATE STRENGTH (LBS. PER STRAND)	APPLTED PRESTRESS (LBS. PER STRAND)
0.217	58,600	43,950

REINFORCING STEEL FOR ONE GIRDER

	BAR	NUMBER	SIZE	TYPE	LENGTH	WEIGHT
	S1	156	#4	1	6'-1"	634
	S2	24	#5	1	6'-1"	152
	S3	12	#4	2	8'-5"	67
	S4	84	#4	3	3'-0"	168
	S5	2	#5	2	9'-10"	21
	S6	180	#5	4	4'-4"	814
	S8	2	#5	2	9'-0"	19
	S9	29	#5	STR	3'-3"	98
EXT. GDR.	S11	4	#5	2	10'-2"	42
INT. GDR.	S11	8	#5	2	10'-2"	85
EXT. GDR.	S12	8	#4	STR	8'-0"	43
INT. GDR.	S13	8	#4	STR	11'-8"	62

BAR TYPES

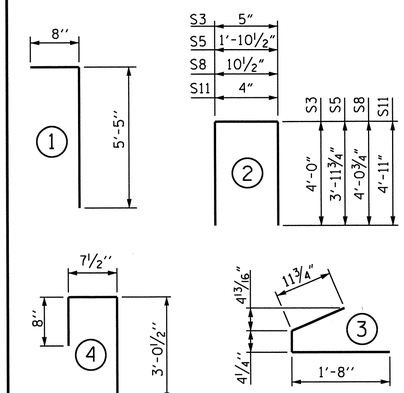

ALL BAR DIMENSIONS ARE OUT-TO-OUT.

QUANTITIES FOR ONE GIRDER

	REINFORCING STEEL	8500 PSI CONCRETE	0.6" Ø L. R. STRANDS
	LB.	C.Y.	NO.
INT. GDR.	2,120	20.0	38
EXT. GDR.	2,058	20.0	38

GIRDERS REQUIRED

NUMBER	LENGTH	TOTAL LENGTH
5	101'- 0¼"	505.10'

PROJECT NO. U-3326B

ROCKINGHAM COUNTY

STATION: 203+04.30 -L-

SHEET 1 OF 2

STATE OF NORTH CAROLINA
DEPARTMENT OF TRANSPORTATION
RALEIGH

STANDARD

63" PRESTRESSED CONCRETE MODIFIED BULB TEE CONTINUOUS FOR LIVE LOAD

— LEFT LANE —

NORTH CAROLINA PROFESSIONAL SEAL 16301 ENGINEER HSIUNG-LANG TING 8/29/11

REVISIONS								SHEET NO.
NO.	BY:	DATE:	NO.	BY:	DATE:			S-47
1			3					TOTAL SHEETS
2			4					159

ASSEMBLED BY : A.S. CALLAWAY	DATE : 11/5/09		
CHECKED BY : L.E. SUTTON	DATE : 1/26/10		
DRAWN BY : EEM 2/6/97	REV. 8/16/99	RWW/LES	
CHECKED BY : VAP 2/6/97	REV. 10/17/00	RWW/LES	
	REV. 5/1/06R	TLA/GM	

29-AUG-2011 13:38
X:\TIPProjects-U\U3326B\Structures\str01\FinalPlans\U3326B_SD_G*_01.dgn
OTNGUYEN

STR. #1

STD. NO. PCG9

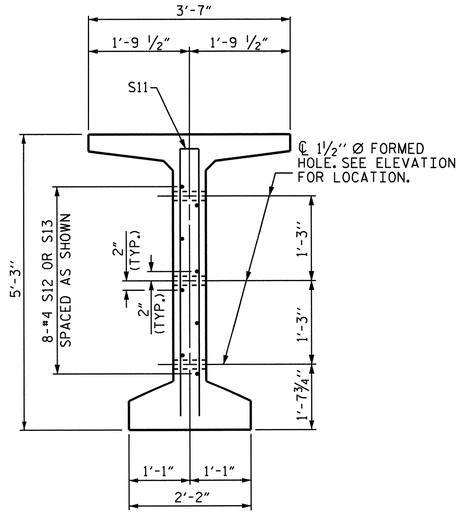

SECTION C-C

(S1, S6 AND S9 BARS NOT SHOWN)

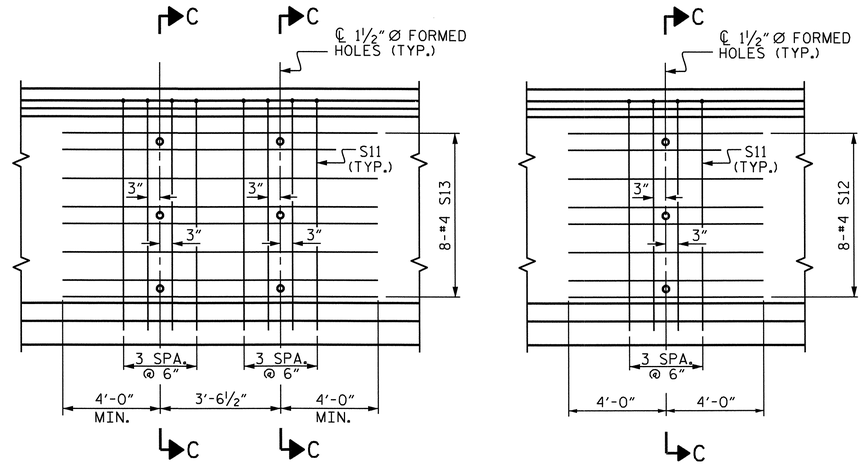

PARTIAL ELEVATION

SHOWING INTERMEDIATE STEEL DIAPHRAGM REINFORCING STEEL FOR GIRDERS

NOTES

ALL PRESTRESSING STRANDS SHALL BE 7-WIRE LOW-RELAXATION GRADE 270 STRANDS AND SHALL CONFORM TO AASHTO M203 EXCEPT FOR SAMPLING REQUIREMENTS WHICH SHALL BE IN ACCORDANCE WITH THE STANDARD SPECIFICATIONS.

ALL REINFORCING STEEL SHALL BE GRADE 60.

APPLY EPOXY PROTECTIVE COATING TO END OF GIRDER SURFACES INDICATED IN ELEVATION VIEW.

EMBEDDED PLATE "B-1" SHALL BE GALVANIZED IN ACCORDANCE WITH THE STANDARD SPECIFICATIONS. BEVEL EDGES OF PLATE "B-1" TO GIVE CLOSE FIT BUT NOT TIGHT FIT TO STEEL CASTING FORM.

ANCHOR STUDS SHALL CONFORM TO AASHTO M169 GRADES 1010 THROUGH 1020 OR APPROVED EQUAL, AND SHALL MEET THE TYPE "B" REQUIREMENTS OF SUBSECTION 7.3 OF THE ANSI/AASHTO/AWS D1.5 BRIDGE WELDING CODE.

THE TRANSFER OF LOAD FROM THE ANCHORAGES TO THE GIRDER SHALL BE DONE WHEN CONCRETE HAS REACHED A COMPRESSIVE STRENGTH OF NOT LESS THAN 6800 PSI.

DEPENDING ON THE TYPE OF SYSTEM USED TO SUPPORT THE DECK SLAB FORMS, PRESET ANCHORS MAY BE NECESSARY IN THE PRESTRESSED CONCRETE GIRDER.

THE TOP SURFACE OF THE GIRDER, EXCLUDING THE OUTSIDE 4", SHALL BE RAKED TO A DEPTH OF 1/4".

A 2" x 2" CHAMFER IS ALLOWED AT THE INTERSECTION OF THE WEB AND THE BOTTOM FLANGE OF THE 63" MODIFIED BULB TEES.

THE CONTRACTOR HAS THE OPTION TO PROVIDE, AT NO ADDITIONAL COST TO THE DEPARTMENT, 2 ADDITIONAL STRANDS AT THE TOP OF THE GIRDER TO FACILITATE TYING OF THE REINFORCING STEEL. THESE STRANDS SHALL BE PULLED TO A LOAD OF 4500 lbs.

FOR PRESTRESSED CONCRETE MEMBERS, SEE SPECIAL PROVISIONS.

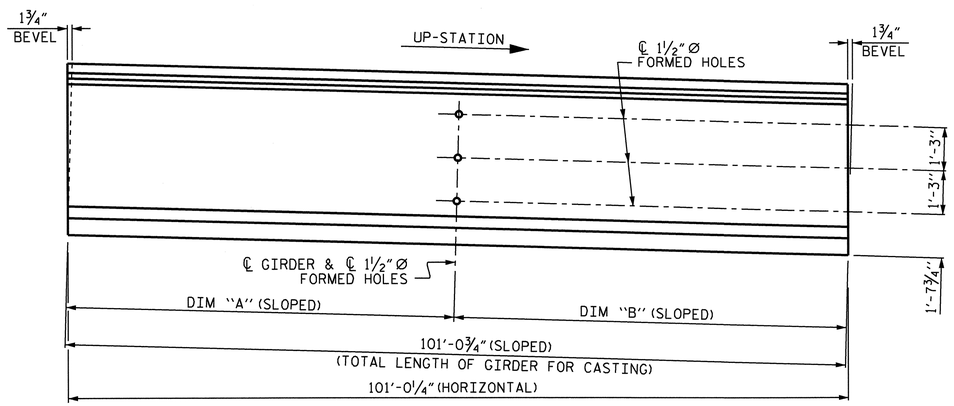

ELEVATION OF EXTERIOR GIRDER

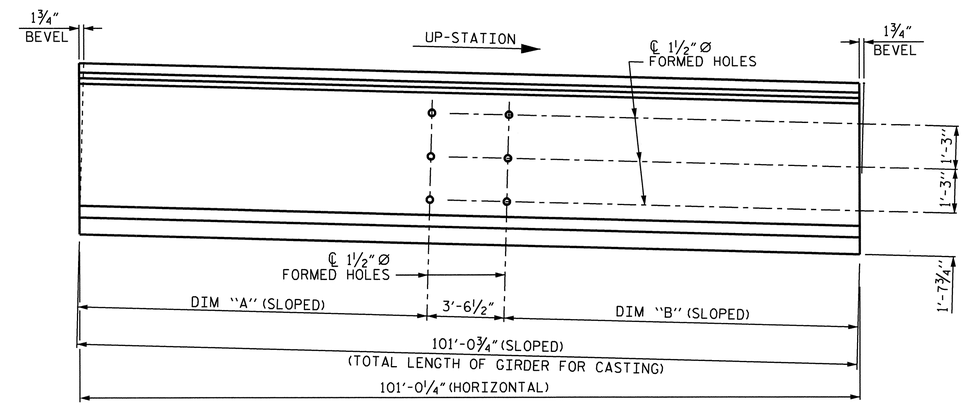

ELEVATION OF INTERIOR GIRDER

BOLT HOLE PLACEMENT DETAILS

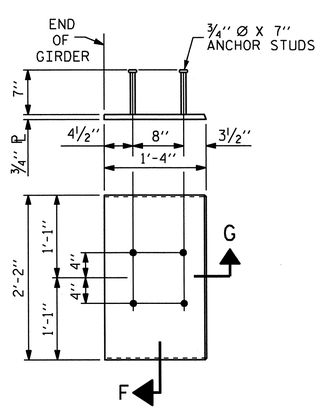

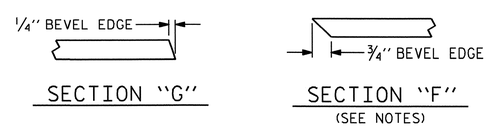

SECTION "G"

SECTION "F"

(SEE NOTES)

EMBEDDED PLATE "B-1" DETAILS

(2 REQ'D PER GIRDER)

BOLT HOLE PLACEMENT TABLE		
GIRDER NO.	DIM. "A"	DIM. "B"
1	52'-3 5/8"	48'-9 1/8"
2 & 3	48'-9 1/8"	48'-9 1/8"
4	48'-9 1/8"	52'-3 5/8"

PROJECT NO. U-3326B
ROCKINGHAM COUNTY
STATION: 203+04.30 -L-

SHEET 2 OF 2

STATE OF NORTH CAROLINA
DEPARTMENT OF TRANSPORTATION
RALEIGH

STANDARD

PRESTRESSED CONCRETE GIRDER CONTINUOUS FOR LIVE LOAD DETAILS

— LEFT LANE —

NORTH CAROLINA PROFESSIONAL SEAL 16301 ENGINEER TING HSIUNG FANG
8/29/11

REVISIONS						SHEET NO.
NO.	BY:	DATE:	NO.	BY:	DATE:	S-48
1			3			TOTAL SHEETS
2			4			159

STR. #1

STD. NO. PCG11

ASSEMBLED BY : A.S.CALLAWAY		DATE : 11/5/09	
CHECKED BY : L.E. SUTTON		DATE : 2/8/10	
DRAWN BY : ELR 11/91	REV. 10/17/00 RWW/LES		
CHECKED BY : GRP 11/91	REV. 7/10/01RR LES/RDR		
	REV. 5/1/06 TLA/GM		

29-AUG-2011 13:38
X:\TIPProjects-U\U3326B\Structures\str01\FinalPlans\U3326B_SD_G*_01.dgn
OTNGUYEN

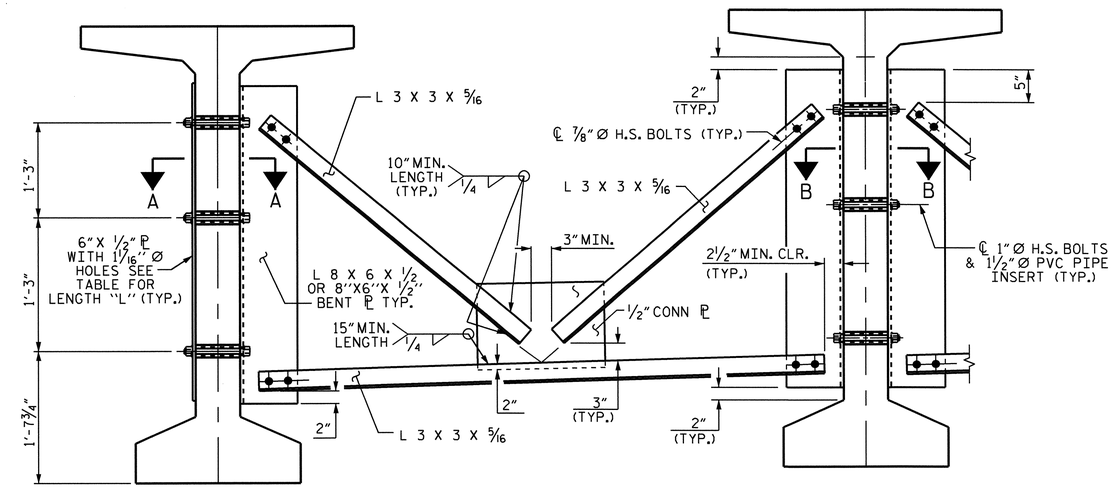

EXTERIOR GIRDER

INTERIOR GIRDER

PART SECTION AT INTERMEDIATE DIAPHRAGM

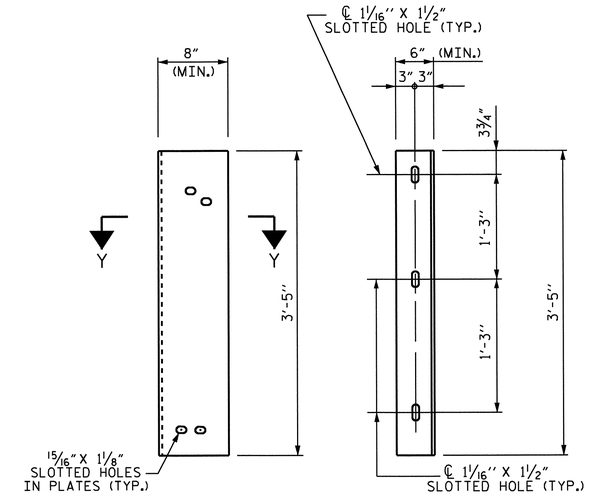

DIAPHRAGM FACE

WEB FACE

STRUCTURAL STEEL NOTES

ALL INTERMEDIATE DIAPHRAGM STEEL, CONNECTOR PLATES AND PLATE WASHERS SHALL BE AASHTO M270 GRADE 50 OR APPROVED EQUAL.

TENSION ON THE AASHTO M164 BOLTS THROUGH THE ANGLE MEMBER SHALL BE CALIBRATED USING DIRECT TENSION INDICATOR WASHERS IN ACCORDANCE WITH THE STANDARD SPECIFICATIONS. FOR DIRECT TENSION INDICATORS, SEE SPECIAL PROVISION.

TENSION ON THE AASHTO M164 BOLTS THROUGH THE GIRDER WEB SHALL BE SNUG TIGHTENED FOLLOWED BY AN ADDITIONAL 1/4 TURN.

THE PLATES, BENT PLATES, ANGLES, AND PLATE WASHERS SHALL BE GALVANIZED OR METALLIZED IN ACCORDANCE WITH THE STANDARD SPECIFICATIONS. FOR THERMAL SPRAYED COATINGS (METALLIZATION), SEE SPECIAL PROVISIONS.

FOR METALLIZATION, APPLY AN 8 MIL THICK 99.99 PERCENT ZINC (W-Zn-1) THERMAL SPRAYED COATING WITH A 0.5 MIL THICK SEAL COAT TO ALL STEEL DIAPHRAGM SURFACES IN ACCORDANCE WITH THE THERMAL SPRAYED COATINGS SPECIAL PROVISIONS AND SECTION 442 OF THE STANDARD SPECIFICATIONS.

GALVANIZE THE HIGH STRENGTH BOLTS, NUTS, WASHERS AND DIRECT TENSION INDICATORS IN ACCORDANCE WITH THE STANDARD SPECIFICATIONS. FOR HIGH STRENGTH BOLTS, SEE SPECIAL PROVISIONS.

USE A MINIMUM 7/16" THICK PLATE WASHER WITH STANDARD HOLES UNDER EACH BOLT HEAD AND NUT. THE PLATE WASHERS SHALL HAVE SUFFICIENT SIZE TO COVER THE HOLES AFTER INSTALLATION. HARDENED WASHERS AND DIRECT TENSION INDICATORS ARE TO BE USED IN CONJUNCTION WITH THE PLATE WASHERS IN THE L 3 X 3 X 5/16 ANGLE MEMBER CONNECTION.

FOR BOLTS THROUGH THE GIRDER WEB, PROVIDE SUFFICIENT LENGTH OF ALL BOLTS TO ACCOMMODATE WASHERS AND THE THICKNESS OF CONNECTING MEMBER PLUS AT LEAST 1/4" PROJECTION BEYOND THE NUT.

INTERMEDIATE DIAPHRAGM ASSEMBLY SHALL COMPLY WITH SECTION 1072 OF THE STANDARD SPECIFICATIONS.

CONTRACTOR SHALL SUBMIT TWO SETS OF WORKING DRAWINGS FOR THE INTERMEDIATE DIAPHRAGM ASSEMBLY FOR REVIEW, COMMENTS AND ACCEPTANCE. AFTER REVIEW, COMMENTS, AND ACCEPTANCE, SUBMIT SEVEN SETS FOR DISTRIBUTION.

IN THE EXTERIOR BAYS, TEMPORARY STRUTS SHALL BE PLACED BETWEEN PRESTRESSED GIRDERS ADJACENT TO THE STEEL DIAPHRAGMS. STRUTS SHALL REMAIN IN PLACE 3 DAYS AFTER CONCRETE IS PLACED. ALL AASHTO M164 H.S. BOLTS SHALL BE FULLY TIGHTENED AFTER THE STRUTS HAVE BEEN REMOVED.

THE COST OF THE STEEL DIAPHRAGMS AND ASSEMBLIES SHALL BE INCLUDED IN THE UNIT PRICE BID FOR PRESTRESSED CONCRETE GIRDERS.

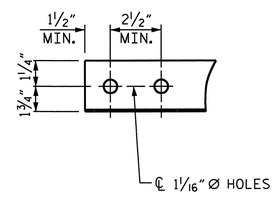

ANGLE END

(L 3 X 3 X 5/16)

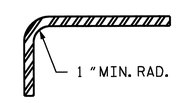

SECTION Y-Y

CONNECTOR PLATE DETAILS

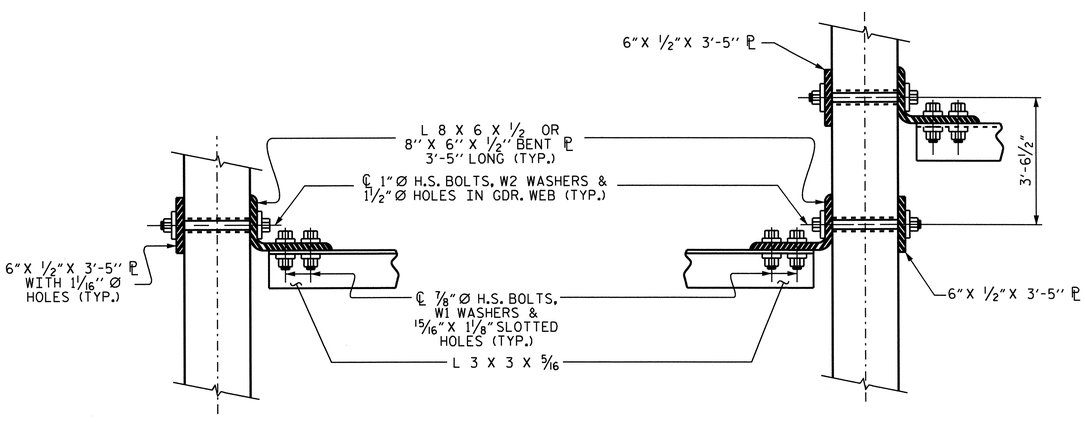

SECTION A-A

SECTION B-B

CONNECTION DETAILS

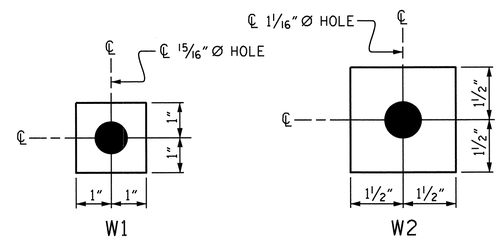

W1

ℙ 7/16" X 2" X 2"

USE WITH 7/8" Ø HVY. HEX NUTS & DIRECT TENSION INDICATOR WASHERS AT DIAPHRAGM ANGLE TO CONNECTOR PLATE CONNECTIONS

W2

ℙ 7/16" X 3" X 3"

USE WITH 1" Ø HVY. HEX NUTS AT CONNECTOR PLATE TO GIRDER CONNECTIONS

WASHER DETAILS

PROJECT NO. U-3326B

ROCKINGHAM COUNTY

STATION: 203+04.30 -L-

NORTH CAROLINA PROFESSIONAL SEAL 16301 ENGINEER HSIENG TING LANG

8/29/11

STATE OF NORTH CAROLINA
DEPARTMENT OF TRANSPORTATION
RALEIGH

STANDARD
INTERMEDIATE STEEL
DIAPHRAGMS FOR
63" PRESTRESSED CONCRETE
MODIFIED BULB TEE GIRDERS
— LEFT LANE —

REVISIONS						SHEET NO.
NO.	BY:	DATE:	NO.	BY:	DATE:	S-49
1			3			TOTAL SHEETS
2			4			159

ASSEMBLED BY : A.S. CALLAWAY DATE : 12/30/09
CHECKED BY : L.E. SUTTON DATE : 1/26/10

DRAWN BY : RWW 11/09
CHECKED BY : GM 11/09

ADDED 11/23/09

29-AUG-2011 13:38
X:\TIPProjects-U\U3326B\Structures\str01\FinalPlans\U3326B_SD_G*_01.dgn
OTNGUYEN

STR. #1

STD. NO. PCG13

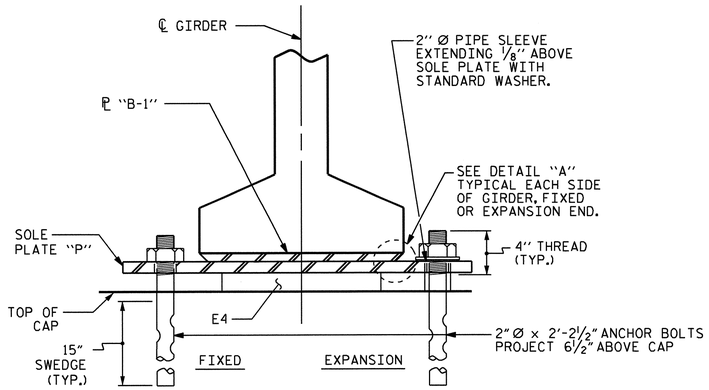

SECTION E-E

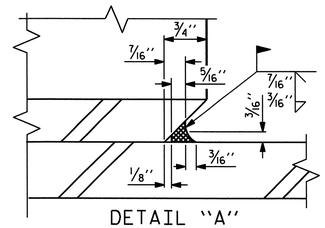

DETAIL "A"

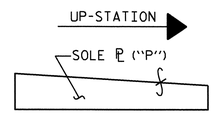

SOLE ℗ PLACEMENT DETAIL

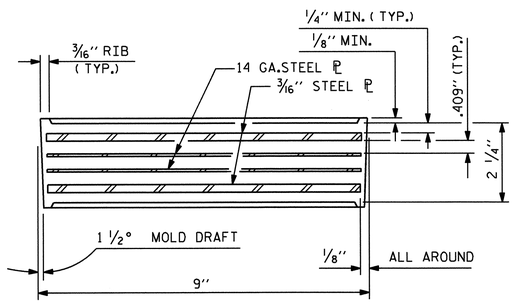

TYPICAL SECTION OF ELASTOMERIC BEARINGS

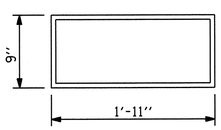

E4 (10 REQ'D)

PLAN VIEW OF ELASTOMERIC BEARING

TYPE V

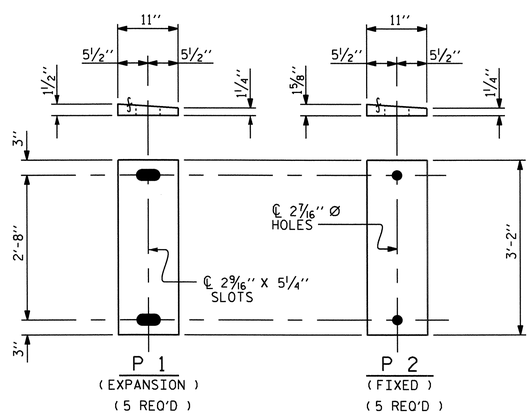

SOLE PLATE DETAILS ("P")

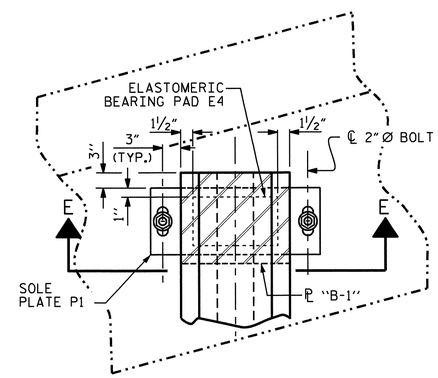

AT END BENT 1

(EXPANSION)

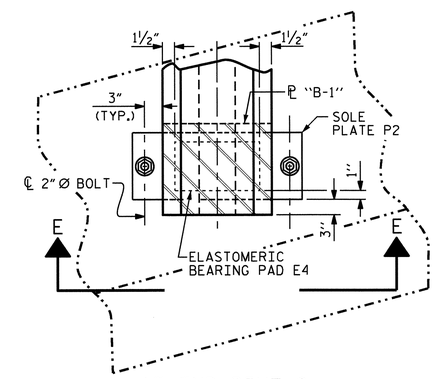

AT END BENT 2

(FIXED)

LOAD RATINGS	
	MAX.D.L.+ L.L.
TYPE V	225 K

NOTES

AT ALL FIXED POINTS OF SUPPORT, NUTS FOR ANCHOR BOLTS ARE TO BE TIGHTENED FINGER TIGHT AND THEN BACKED OFF 1/2 TURN. THE THREAD OF THE NUT AND BOLT SHALL THEN BE BURRED WITH A SHARP POINTED TOOL.

THE 2" Ø PIPE SLEEVE SHALL BE CUT FROM SCHEDULE 40 PVC PLASTIC PIPE. THE PVC PLASTIC PIPE SHALL MEET THE REQUIREMENTS OF ASTM D1785.

STEEL SOLE PLATES, ANCHOR BOLTS, NUTS, AND WASHERS SHALL BE GALVANIZED IN ACCORDANCE WITH THE STANDARD SPECIFICATIONS.

PRIOR TO WELDING, GRIND THE GALVANIZED SURFACE OF THE PORTION OF THE EMBEDDED PLATE AND SOLE PLATE THAT ARE TO BE WELDED. AFTER WELDING, DAMAGED GALVANIZED SURFACES SHALL BE REPAIRED IN ACCORDANCE WITH THE STANDARD SPECIFICATIONS.

WHEN WELDING THE SOLE PLATE TO THE EMBEDDED PLATE IN THE GIRDER, USE TEMPERATURE INDICATING WAX PENS, OR OTHER SUITABLE MEANS, TO ENSURE THAT THE TEMPERATURE OF THE SOLE PLATE DOES NOT EXCEED 300°F. TEMPERATURES ABOVE THIS MAY DAMAGE THE ELASTOMER.

SOLE PLATE "P", BOLTS, NUTS, WASHERS, AND PIPE SLEEVE SHALL BE INCLUDED IN THE PAY ITEM FOR PRESTRESSED CONCRETE GIRDERS.

ANCHOR BOLTS SHALL MEET THE REQUIREMENTS OF ASTM A449. NUTS SHALL MEET THE REQUIREMENTS OF AASHTO M291-DH OR AASHTO M292-2H. WASHERS SHALL MEET THE REQUIREMENTS OF AASHTO M293. NO SHOP DRAWINGS ARE REQUIRED FOR ANCHOR BOLTS, NUTS AND WASHERS. SHOP INSPECTION IS REQUIRED.

ALL SURFACES OF BEARING PLATES SHALL BE SMOOTH AND STRAIGHT.

PROJECT NO. U-3326B
ROCKINGHAM COUNTY
STATION: 203+04.30 -L-

STATE OF NORTH CAROLINA
DEPARTMENT OF TRANSPORTATION
RALEIGH

ELASTOMERIC BEARING DETAILS
PRESTRESSED CONCRETE GIRDER SUPERSTRUCTURE
LEFT LANE

NORTH CAROLINA PROFESSIONAL SEAL 16301 ENGINEERING
8/29/11

REVISIONS						SHEET NO.
NO.	BY:	DATE:	NO.	BY:	DATE:	S-50
1			3			TOTAL SHEETS
2			4			159

STR. #1

DRAWN BY : A.S. CALLAWAY DATE : 8/6/09
CHECKED BY : L.E. SUTTON DATE : 1/25/10

29-AUG-2011 13:38
X:\TIPProjects-U\U3326B\Structures\str01\FinalPlans\U3326B_SD_BG_01.dgn
OTNGUYEN

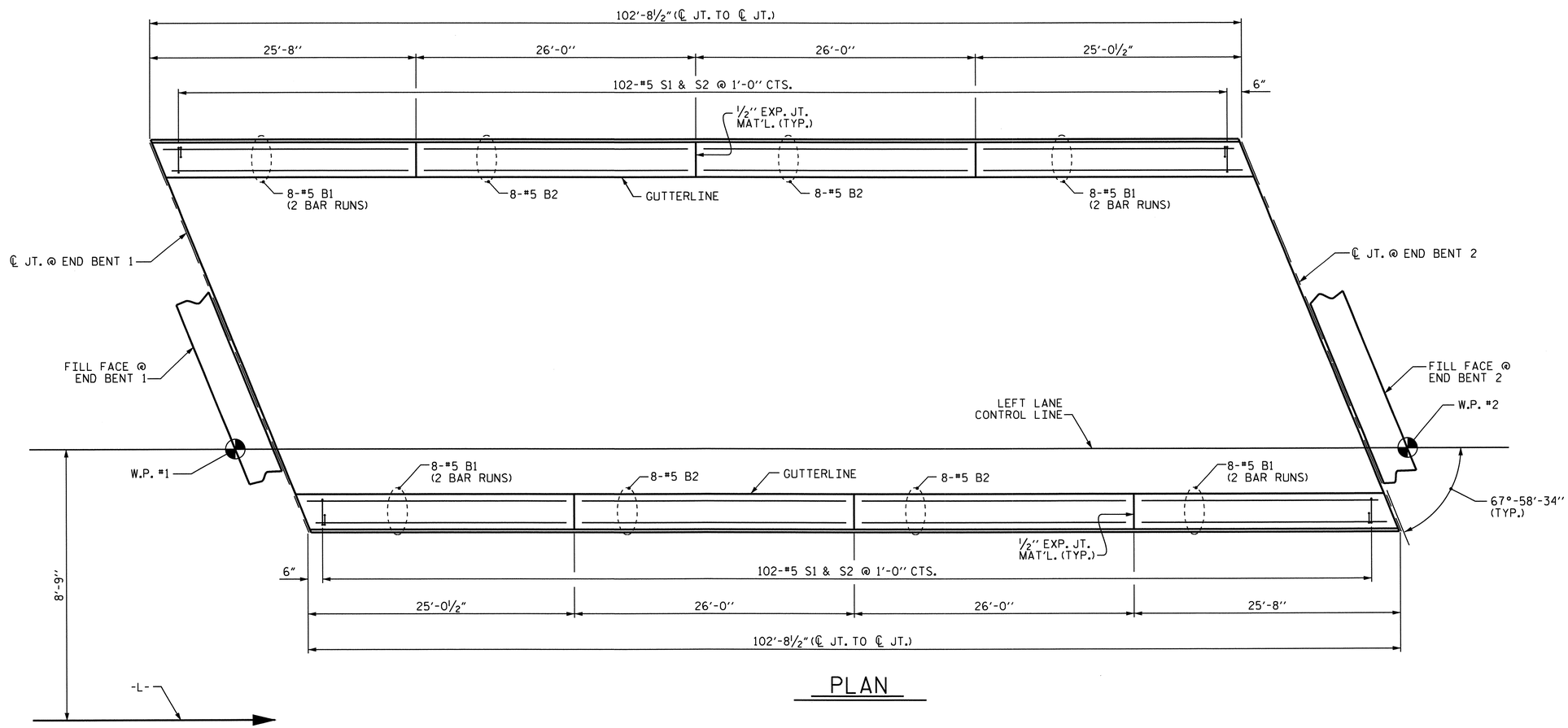

PLAN

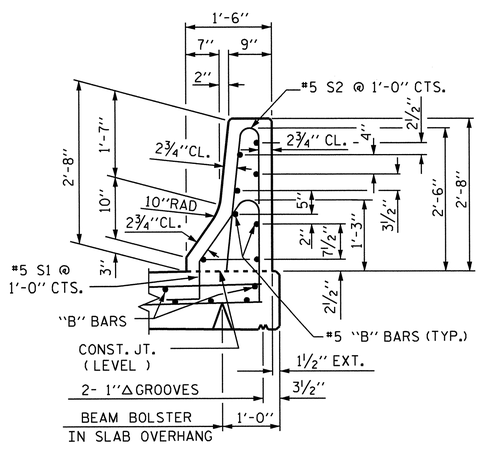

SECTION THRU RAIL

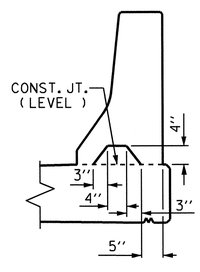

SECTION S-S

AT DAM IN OPEN JOINT
(THIS IS TO BE USED ONLY WHEN SLIP FORM IS USED)

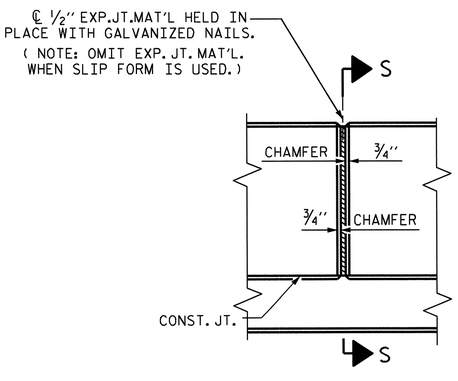

ELEVATION AT EXPANSION JOINTS

BAR TYPES

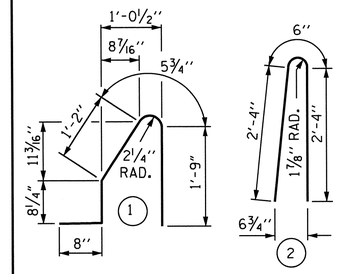

ALL BAR DIMENSIONS ARE OUT TO OUT

BILL OF MATERIAL

FOR CONCRETE BARRIER RAIL ONLY

BAR	NO.	SIZE	TYPE	LENGTH	WEIGHT
* B1	64	#5	STR	14'-4"	957
* B2	32	#5	STR	25'-7"	854
* S1	204	#5	1	4'-9"	1011
* S2	204	#5	2	5'-2"	1099

*EPOXY COATED REINFORCING STEEL	3,921	LBS.
CLASS AA CONCRETE	20.6	CU. YDS.
CONCRETE BARRIER RAIL		
DECK	205.33	LIN. FT.
APPROACH SLABS	41.31	LIN. FT.
TOTAL	246.64	LIN. FT.

NOTES

THE BARRIER RAIL IN EACH SPAN SHALL NOT BE CAST UNTIL ALL SLAB CONCRETE IN THAT SPAN HAS BEEN CAST AND HAS REACHED A MINIMUM COMPRESSIVE STRENGTH OF 3,000 PSI.

ALL REINFORCING STEEL IN BARRIER RAILS SHALL BE EPOXY COATED.

VERTICAL GROOVED CONTRACTION JOINTS, ½" IN DEPTH, SHALL BE TOOLED IN ALL EXPOSED FACES OF THE BARRIER RAIL AND IN ACCORDANCE WITH ARTICLE 825-10(B) OF THE STANDARD SPECIFICATIONS. THE CONTRACTION JOINT SHALL BE LOCATED AT EACH THIRD POINT BETWEEN BARRIER RAIL EXPANSION JOINTS. ONLY ONE CONTRACTION JOINT IS REQUIRED AT MIDPOINT OF BARRIER RAIL SEGMENTS LESS THAN 20 FEET IN LENGTH AND NO CONTRACTION JOINTS ARE REQUIRED FOR THOSE SEGMENTS LESS THAN 10 FEET IN LENGTH.

THE COST OF THE BARRIER RAIL ON THE APPROACH SLAB SHALL BE INCLUDED IN THE LINEAR FOOT CONTRACT PRICE BID FOR "CONCRETE BARRIER RAIL".

PROJECT NO. U-3326B
ROCKINGHAM COUNTY
STATION: 203+04.30 -L-

NORTH CAROLINA PROFESSIONAL SEAL 16301 ENGINEER TING-HSUNG FANG
8/29/11

STATE OF NORTH CAROLINA
DEPARTMENT OF TRANSPORTATION
RALEIGH

STANDARD
CONCRETE BARRIER RAIL

— LEFT LANE —

REVISIONS								SHEET NO.
NO.	BY:	DATE:	NO.	BY:	DATE:			S-51
1			3					TOTAL SHEETS
2			4					159

STR. #1 STD. NO. CBR1

ASSEMBLED BY : A.S. CALLAWAY	DATE : 8/5/09		
CHECKED BY : L.E. SUTTON	DATE : 1/26/10		
DRAWN BY : ARB 5/87	REV. 10/17/00	RWW/LES	
CHECKED BY : SJD 9/87	REV. 5/7/03R	RWW/JTE	
	REV. 5/1/06	TLA/GM	

29-AUG-2011 13:38
X:\TIPProjects-U\U3326B\Structures\str01\FinalPlans\U3326B_SD_BR_01.dgn
OTNGUYEN

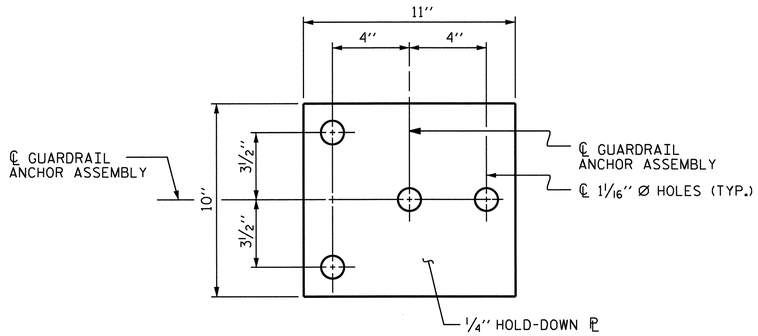

PLAN

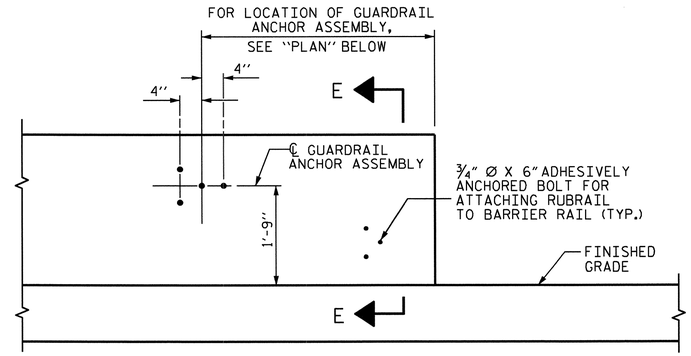

ELEVATION

FOR LOCATION OF RUBRAIL, SEE ROADWAY STD. 862.03

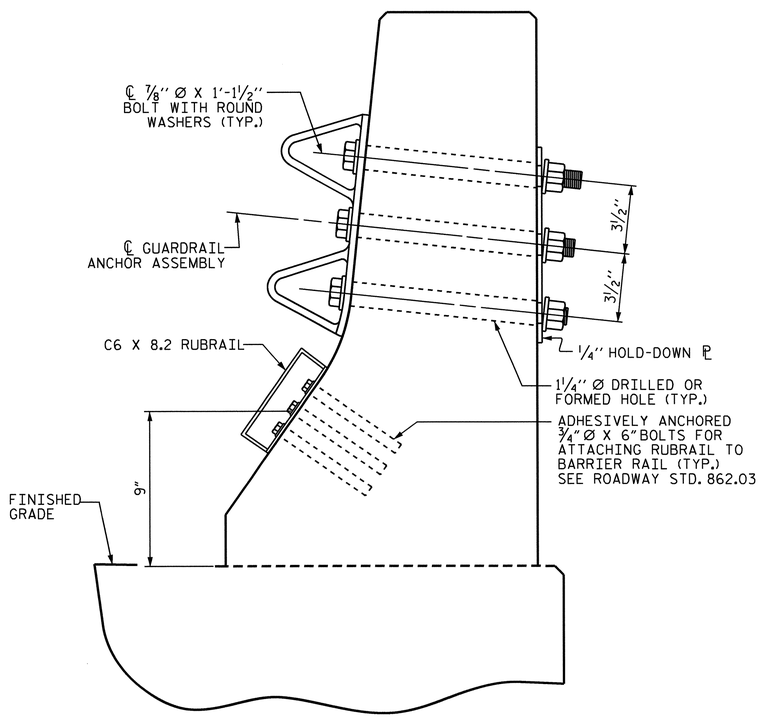

SECTION E-E

GUARDRAIL ANCHOR ASSEMBLY DETAILS

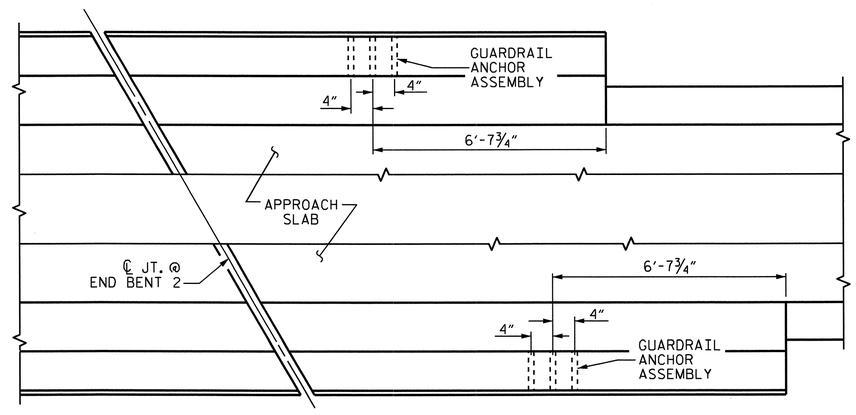

PLAN

LOCATION OF ANCHORS FOR GUARDRAIL

END BENT 2 SHOWN, END BENT 1 SIMILAR

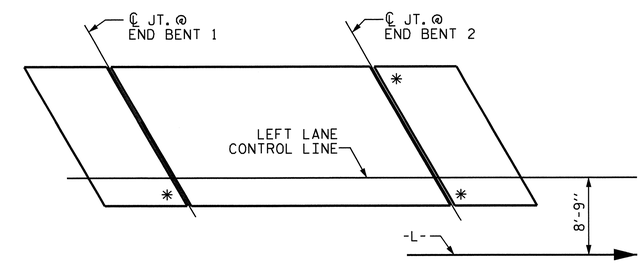

SKETCH SHOWING POINTS OF ATTACHMENTS

* DENOTES GUARDRAIL ANCHOR ASSEMBLY

NOTES

THE GUARDRAIL ANCHOR ASSEMBLY SHALL CONSIST OF A 1/4'' HOLD DOWN PLATE AND 4 - 7/8'' Ø BOLTS WITH NUTS AND WASHERS, RUBRAIL, AND ADHESIVELY ANCHORED BOLTS.

THE HOLD-DOWN PLATE SHALL CONFORM TO AASHTO M270 GRADE 36. AFTER FABRICATION, THE HOLD-DOWN PLATE SHALL BE HOT-DIP GALVANIZED IN ACCORDANCE WITH AASHTO M111.

BOLTS SHALL CONFORM TO THE REQUIREMENTS OF ASTM A307 AND NUTS SHALL CONFORM TO THE REQUIREMENTS OF AASHTO M291. BOLTS, NUTS AND WASHERS SHALL BE GALVANIZED. (AT THE CONTRACTOR'S OPTION, STAINLESS STEEL BOLTS, NUTS AND WASHERS MAY BE USED AS AN ALTERNATE FOR THE 7/8'' Ø GALVANIZED BOLTS, NUTS AND WASHERS. THEY SHALL CONFORM TO OR EXCEED THE MECHANICAL REQUIREMENTS OF ASTM A307. THE USE OF THIS ALTERNATE SHALL BE APPROVED BY THE ENGINEER.)

THE GUARDRAIL ANCHOR ASSEMBLY IS REQUIRED AT ALL POINTS WHERE APPROACH GUARDRAIL IS TO BE ATTACHED TO THE END OF BARRIER RAIL. FOR POINTS OF ATTACHMENT, SEE SKETCH.

AFTER INSTALLATION, THE EXPOSED THREAD OF THE BOLT SHALL BE BURRED WITH A SHARP POINTED TOOL.

THE COST OF THE GUARDRAIL ANCHOR ASSEMBLY SHALL BE INCLUDED IN THE UNIT CONTRACT PRICE BID FOR CONCRETE BARRIER RAIL.

THE 1 1/4'' Ø HOLES SHALL BE FORMED OR DRILLED WITH A CORE BIT. IMPACT TOOLS WILL NOT BE PERMITTED. ANY CONCRETE DAMAGED BY THIS WORK SHALL BE REPAIRED TO THE SATISFACTION OF THE ENGINEER.

THE C6 X 8.2 RUBRAIL IS TO BE ADHESIVELY ANCHORED TO THE RAIL USING THREE 3/4'' Ø X 6'' BOLTS WITH WASHERS. LEVEL ONE FIELD TESTING IS REQUIRED, AND THE YIELD LOAD OF THE 3/4'' Ø BOLT IS 12 KIPS. FOR ADHESIVELY ANCHORED ANCHOR BOLTS OR DOWELS, SEE SPECIAL PROVISIONS. SEE ROADWAY STANDARD 862.03 FOR DETAILS AND LOCATION OF THE RUBRAIL.

PROJECT NO. U-3326B
ROCKINGHAM COUNTY
STATION: 203+04.30 -L-

NORTH CAROLINA PROFESSIONAL SEAL 16301 ENGINEER TING HSIONG FANG
8/29/11

STATE OF NORTH CAROLINA
DEPARTMENT OF TRANSPORTATION
RALEIGH

STANDARD
GUARDRAIL ANCHORAGE FOR BARRIER RAIL

— LEFT LANE —

REVISIONS						SHEET NO.
NO.	BY:	DATE:	NO.	BY:	DATE:	S-52
1			3			TOTAL SHEETS
2			4			159

STR. #1 STD. NO. GRA2

ASSEMBLED BY : OT NGUYEN	DATE : 2-17-12	
CHECKED BY : T.H. FANG	DATE : 1/22/11	
DRAWN BY : TLA 5/06	ADDED 5/1/06R KMM/GM	
CHECKED BY : GM 5/06		

29-AUG-2011 13:38
X:\TIPProjects-U\U3326B\Structures\str01\FinalPlans\U3326B_SD_GR_01.dgn
OTNGUYEN

MOVEMENT AND SETTING AT EXPANSION JOINT					
END BENT	SKEW ANGLE	TOTAL MOVEMENT (ALONG ℄ RDWY)	PERPENDICULAR JOINT OPENING AT 45° F	PERPENDICULAR JOINT OPENING AT 60° F	PERPENDICULAR JOINT OPENING AT 90° F
1	67°-58′-34″	7/8″	1 11/16″	1 1/2″	1 1/4″
2	67°-58′-34″	0″	1 1/2″	1 1/2″	1 1/2″

TOTAL MOVEMENT IS CALCULATED ALONG THE CENTERLINE OF ROADWAY.
JOINT OPENINGS ARE MEASURED PERPENDICULAR TO THE JOINT.

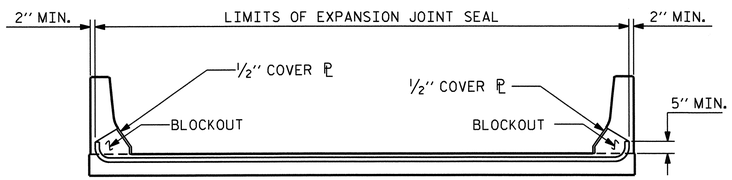

SKETCH SHOWING LIMITS OF EXPANSION JOINT SEAL

INSTALLATION PROCEDURE

1. A TEMPLATE OR OTHER SUITABLE DEVICE SHALL BE USED TO FORM THE TOP OF THE EXPANSION JOINT SEAL BLOCKOUT TO THE PROPER DEPTH AND WIDTH. THE TEMPLATE SHALL BE 4 1/8″ TO 4 1/4″ WIDE AND OF SUCH THICKNESS AS TO PROVIDE FOR CORRECT FINAL ELEVATION OF TOP OF HOLD-DOWN PLATES. THE TEMPLATE SHALL BE ATTACHED TO THE BASE ANGLE ASSEMBLY WITH THE 3/4″ Ø HEX HEAD BOLTS PROVIDED FOR THE HOLD-DOWN PLATES. A 1″ Ø HOLE SHALL BE PROVIDED IN THE TEMPLATE CENTERED OVER EACH WEEP HOLE IN THE 4″X 4″X 1/2″BASE ANGLE. OTHER METHODS OF INSURING DRAINAGE THROUGH WEEP HOLES MAY BE EMPLOYED SUBJECT TO ENGINEER'S APPROVAL.
2. AFTER THE CONCRETE HAS BEEN CAST ON BOTH SIDES OF THE JOINT, REMOVE THE TEMPLATE. THOROUGHLY CLEAN THE BOLT HOLES AND THE ANGLE PLATE. REMOVE ANY EXCESS CONCRETE THAT COMES OUT OF THE WEEP HOLES. ANY DAMAGED STEEL SHALL BE COATED WITH A MINIMUM THICKNESS OF 4 DRY MILS OF ZINC-RICH PAINT IN ACCORDANCE WITH THE STANDARD SPECIFICATIONS.
3. LAY THE GLAND ON THE BASE ANGLE AND FIELD MARK THE GLAND FOR THE BOLT HOLES. HOLES IN THE GLAND SHALL BE PUNCHED 7/8″ IN DIAMETER WITH A HAND PUNCH.
4. IN ORDER TO CHECK FOR PROPER ALIGNMENT, PLACE THE GLAND AND HOLD-DOWN PLATES ON THE BASE ANGLE. DO NOT APPLY NEOPRENE SEALANT. BOLT THE HOLD-DOWN PLATES TO THE BASE ANGLE BUT DO NOT TIGHTEN. THE ENGINEER SHALL INSPECT THE JOINT SEAL DEVICE FOR PROPER ALIGNMENT.
5. AFTER INSPECTION, REMOVE THE HOLD-DOWN PLATES AND GLAND. APPLY NEOPRENE SEALANT TO THE BASE ANGLE IN ACCORDANCE WITH THE "INSTALLATION SKETCH". PLACE GLAND AND HOLD-DOWN PLATES ON THE BASE ANGLE. BOLT THE HOLD-DOWN PLATES TO THE BASE ANGLE ASSEMBLY AND TORQUE THE BOLTS TO 88 FT-LBS WITH A TORQUE WRENCH. THE TORQUE WRENCH SHALL BE CALIBRATED IN ACCORDANCE WITH SECTION 440-10 (D) OF THE STANDARD SPECIFICATIONS. CHECK THE TORQUE AFTER THREE (3) HOURS AND, IF NECESSARY, RETIGHTEN TO 88 FT-LBS. A FINAL CHECK SHALL BE MADE AT SEVEN (7) DAYS. TORQUE SHALL NOT BE LESS THAN 80 FT-LBS AFTER SEVEN (7) DAYS.
6. AFTER PROPER TORQUING, CLEAN THE BOLT HOLE RECESSES AND THE RECESS BETWEEN THE JOINT SEAL DEVICE AND CONCRETE, COMPLETELY FILL THESE RECESSES WITH NEOPRENE SEALANT.

GENERAL NOTES

1. FOR EXPANSION JOINT SEALS, SEE SPECIAL PROVISIONS.
2. ALL PLATES AND ANGLES SHALL CONFORM TO AASHTO M270 GRADE 36 STEEL OR APPROVED EQUAL. ALL HOLD-DOWN BOLTS SHALL CONFORM TO ASTM F593 ALLOY 304 STAINLESS STEEL AND WASHERS SHALL CONFORM TO ASTM F844 EXCEPT THEY SHALL BE MADE FROM ALLOY 304 STAINLESS STEEL. ALL STUD ANCHORS SHALL CONFORM TO AASHTO M169, GRADES 1010 THRU 1020 OR APPROVED EQUAL. ALL CONCRETE INSERTS SHALL BE CLOSED END AND SHALL CONFORM TO AASHTO M169, GRADE 12L14. TENSILE CAPACITY SHALL BE 3000 LBS. MIN.
3. A PREMOLDED CORRUGATED OR NON-CORRUGATED GLAND SHALL BE USED FOR JOINTS SKEWED BETWEEN 50° THRU 130°. FOR JOINTS SKEWED LESS THAN 50° OR MORE THAN 130°, ONLY A CORRUGATED GLAND SHALL BE USED.
4. CLOSED END FERRULES AND STUD ANCHORS SHALL BE SHOP WELDED AND ALL HOLES SHALL BE SHOP DRILLED AS SHOWN ON PLANS. STUD ANCHORS SHALL BE ELECTRIC ARC END WELDED WITH COMPLETE FUSION.
5. SURFACES COMING IN CONTACT WITH NEOPRENE SHALL BE GROUND SMOOTH PRIOR TO METALLIZING.
6. UPON COMPLETION OF SHOP FABRICATION, THE HOLD DOWN PLATE AND BASE ANGLE ASSEMBLY, AS SHOWN IN THE "TYPICAL SECTION OF BASE ANGLE ASSEMBLY", SHALL BE METALLIZED. SEE SPECIAL PROVISION FOR THERMAL SPRAYED COATINGS (METALLIZATION).
7. BASE ANGLE ASSEMBLY SHALL BE CONTINUOUS FOR THE LENGTH OF THE JOINT. AT CROWN BREAKS, THE ENDS OF THE BASE ANGLE ASSEMBLY SHALL BE CUT PARALLEL TO THE BRIDGE CENTERLINE FOR SKEWS LESS THAN 80° AND GREATER THAN 100°. FINISHED WELD SHALL BE GROUND SMOOTH AND COATED WITH A MINIMUM THICKNESS OF 4 DRY MILS OF ZINC-RICH PAINT IN ACCORDANCE WITH THE STANDARD SPECIFICATIONS.
8. FIELD SPLICES OF HOLD-DOWN PLATES SHALL BE KEPT TO A MINIMUM. CONTRACTOR SHALL FURNISH DETAILED PLANS SHOWING PROPOSED SPLICE LOCATIONS FOR APPROVAL. HOLD-DOWN PLATES SHALL NOT EXCEED 20′ LENGTHS UNLESS APPROVED BY THE ENGINEER.
9. NO ALTERNATE JOINT DETAILS SHALL BE PERMITTED IN LIEU OF THOSE SHOWN ON THESE PLANS.
10. THE CONTRACTOR MAY, AT HIS OPTION, USE ADHESIVELY ANCHORED ANCHOR BOLTS IN PLACE OF CONCRETE INSERTS FOR COVER PLATES. THE YIELD LOAD OF THE 3/4″ Ø BOLT IS 10 KIPS. FIELD TESTING OF THE ADHESIVE BONDING SYSTEM IS NOT REQUIRED.

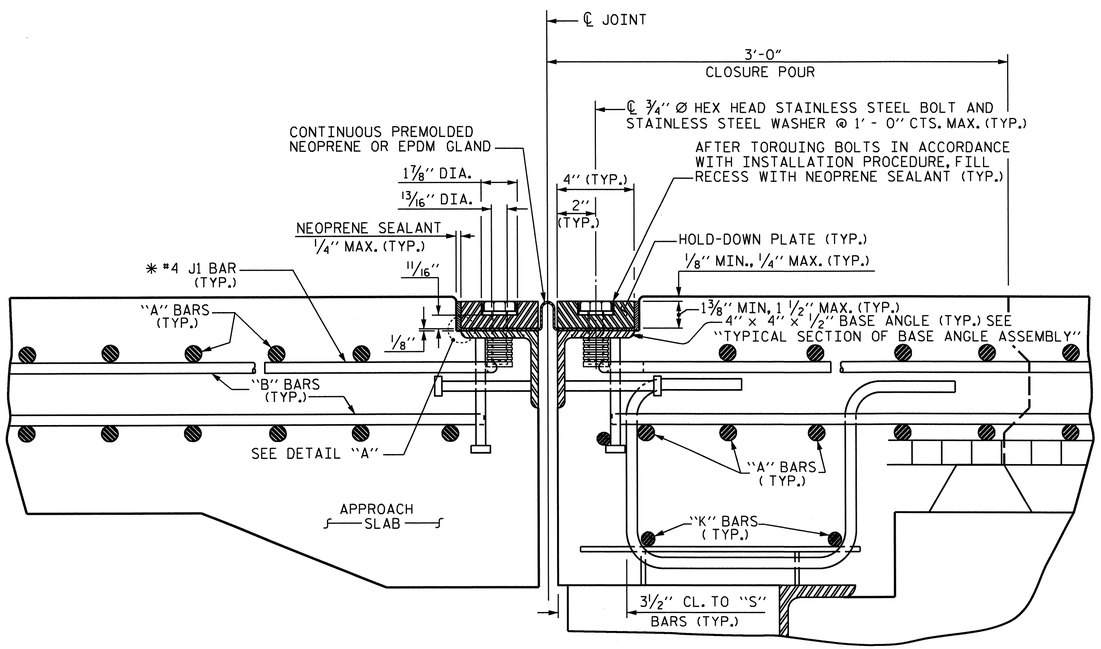

EXPANSION JOINT DETAILS

SECTION NORMAL TO JOINT -- PRESTRESSED CONCRETE GIRDER SUPERSTRUCTURE

✱ THE QUANTITY OF #4 J1 BARS ON THE BILL OF MATERIAL IS BASED ON 1′-0″CENTERS. J1 BARS SHALL BE PLACED AT EACH VERTICAL STUD ANCHOR BOLT. IN THE EVENT THAT THE NUMBER OF VERTICAL STUD ANCHORS EXCEEDS THE NUMBER OF J1 BARS SPECIFIED, ADDITIONAL J1 BARS WILL NOT BE REQUIRED.

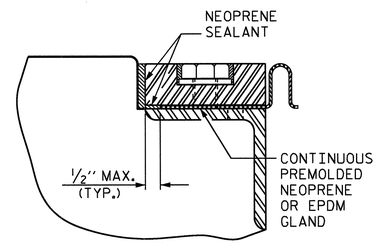

DETAIL "A"

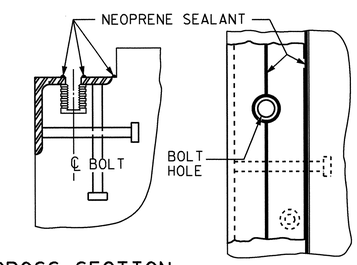

CROSS SECTION

PLAN VIEW

INSTALLATION SKETCH

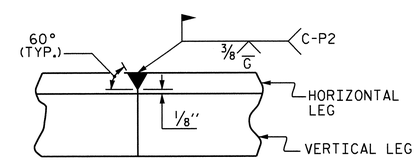

DETAIL- FIELD WELD SPLICE OF BASE ANGLE

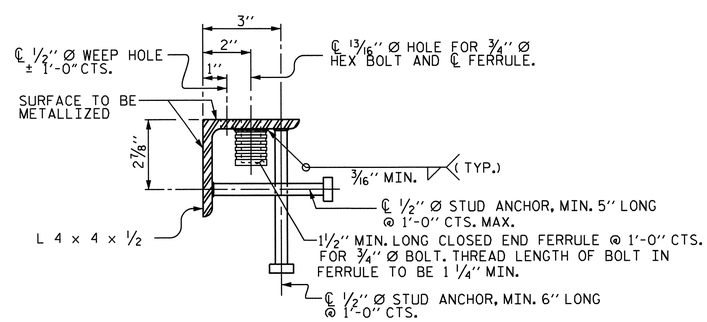

TYPICAL SECTION OF BASE ANGLE ASSEMBLY

PROJECT NO. U-3326B
ROCKINGHAM COUNTY
STATION: 203+04.30 -L-

SHEET 1 OF 2

STATE OF NORTH CAROLINA
DEPARTMENT OF TRANSPORTATION
RALEIGH

STANDARD

EXPANSION JOINT SEAL DETAILS

— LEFT LANE —

NORTH CAROLINA PROFESSIONAL SEAL 16301 ENGINEER TING HSIUNG FANG
8/29/11

REVISIONS							
NO.	BY:	DATE:	NO.	BY:	DATE:	SHEET NO. S-53
1			3			TOTAL SHEETS 159
2			4			

ASSEMBLED BY : OT NGUYEN	DATE : 2-22-11		
CHECKED BY : T.H. FANG	DATE : 2-22-11		
DRAWN BY : REK 9/87	REV. 10/17/00	RWW/LES	
CHECKED BY : CRK 10/87	REV. 5/7/03R	RWW/JTE	
	REV. 5/1/06	TLA/GM	

29-AUG-2011 13:38
X:\TIPProjects-U\U3326B\Structures\str01\FinalPlans\U3326B_SD_JS_01.dgn
OTNGUYEN

STR. #1

STD. NO. EJS1 (SHT 2)

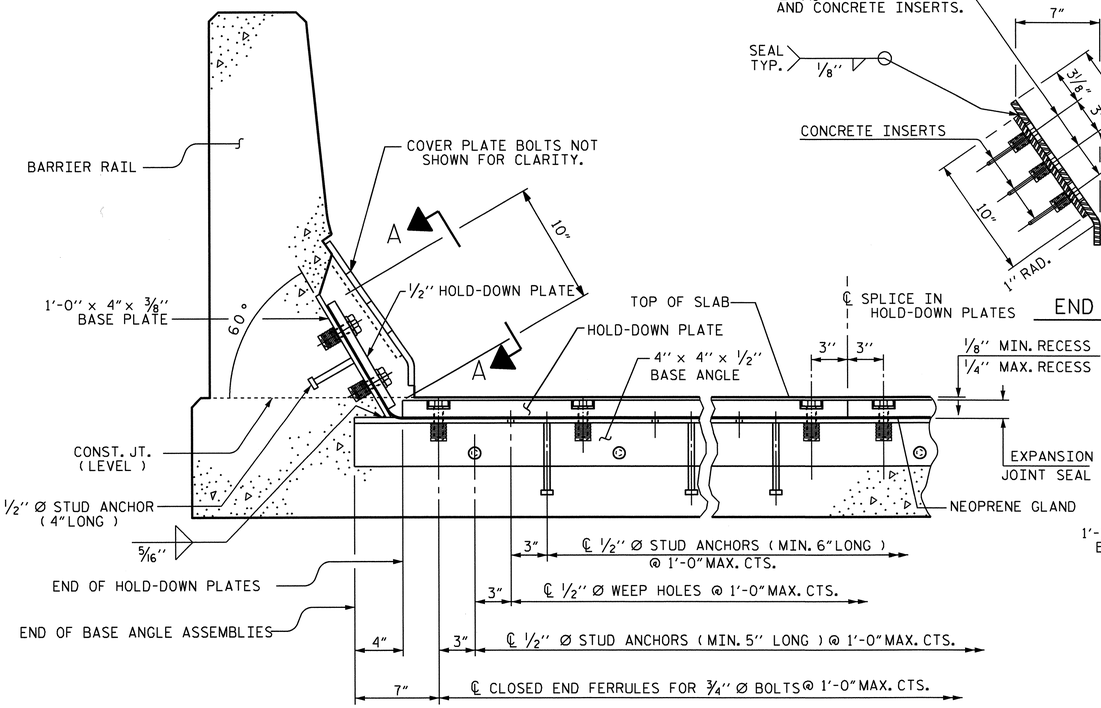

SECTION THRU RAIL NORMAL TO JOINT

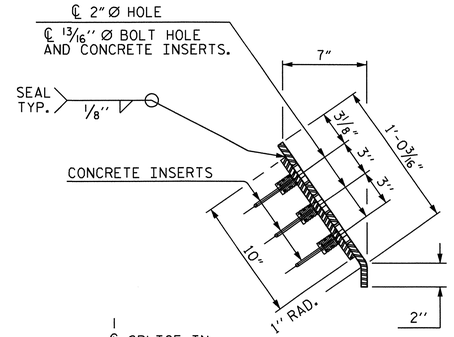

END VIEW

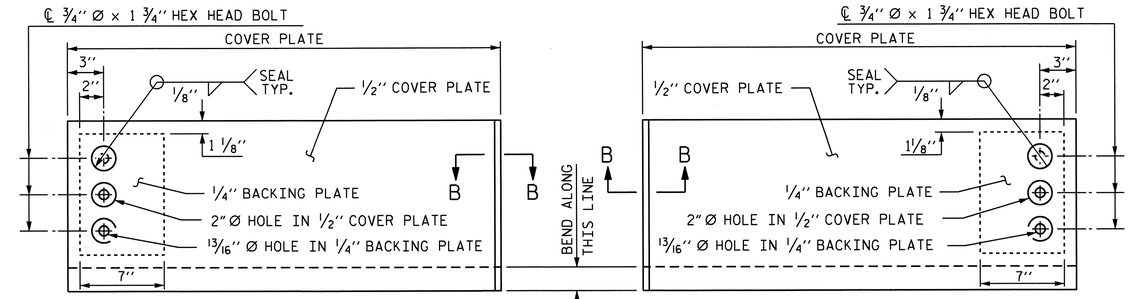

TYPE I - ELEVATION VIEW

TYPE II - ELEVATION VIEW

COVER PLATE DETAILS

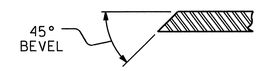

SECTION B-B

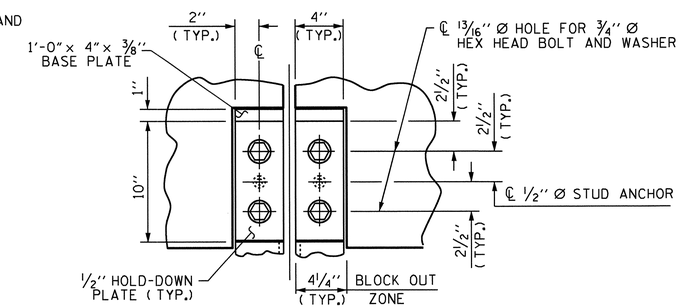

SECTION A-A

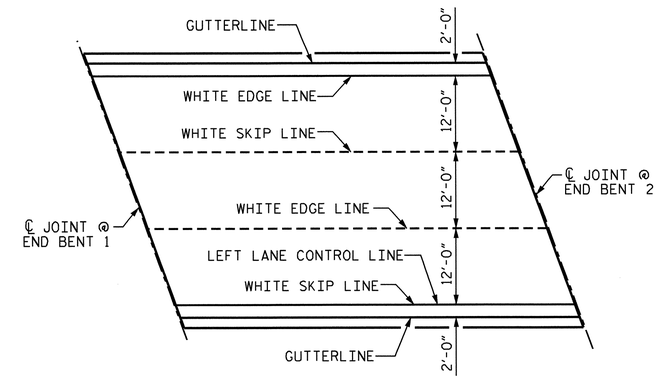

PAVEMENT MARKING ALIGNMENT

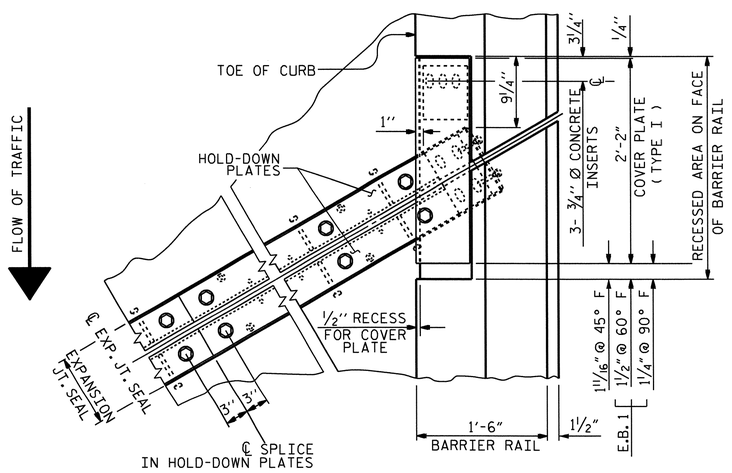

PLAN OF EXPANSION JOINT SEAL-RIGHT SIDE

RIGHT SIDE SHOWN, LEFT SIDE SIMILAR.

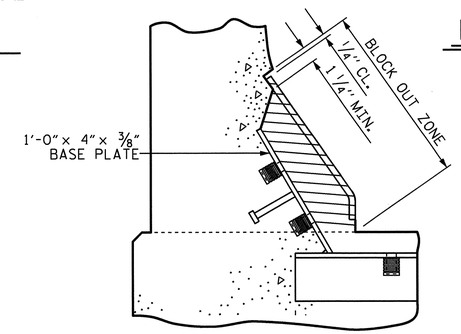

BLOCK OUT DETAIL

SEE "SECTION A-A" FOR OTHER DETAILS.

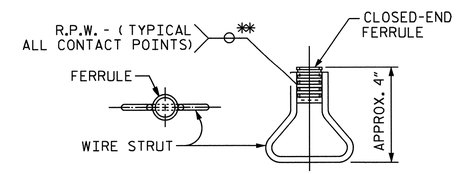

PLAN ELEVATION

CONCRETE INSERT

** EACH WELDED ATTACHMENT OF WIRE TO FERRULE SHALL DEVELOP THE TENSILE STRENGTH OF THE WIRE.

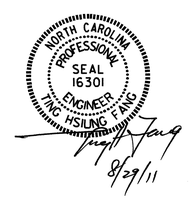

PROJECT NO. U-3326B

ROCKINGHAM COUNTY

STATION: 203+04.30 -L-

SHEET 2 OF 2

STATE OF NORTH CAROLINA
DEPARTMENT OF TRANSPORTATION
RALEIGH

STANDARD

EXPANSION JOINT SEAL DETAILS FOR BARRIER RAIL

— LEFT LANE —

REVISIONS						SHEET NO.
NO.	BY:	DATE:	NO.	BY:	DATE:	S-54
1			3			TOTAL SHEETS
2			4			159

STR. #1 STD. NO. EJS2

ASSEMBLED BY : OT NGUYEN		DATE : 2-22-11	
CHECKED BY : T.H. FANG		DATE : 2-22-11	
DRAWN BY : REK 9/87	REV. 7/17/98	RWW/LES	
CHECKED BY : CRK 10/87	REV. 10/17/00	RWW/LES	
	REV. 5/1/06	TLA/GM	

29-AUG-2011 13:38
X:\TIPProjects-U\U3326B\Structures\str01\FinalPlans\U3326B_SD_JS_01.dgn
OTNGUYEN

SUPERSTRUCTURE REINFORCING STEEL LENGTHS ARE BASED ON THE FOLLOWING MINIMUM SPLICE LENGTHS

BAR SIZE	SUPERSTRUCTURE EXCEPT APPROACH SLABS, PARAPET, AND BARRIER RAIL		APPROACH SLABS		PARAPET AND BARRIER RAIL
	EPOXY COATED	UNCOATED	EPOXY COATED	UNCOATED	
#4	2'-0"	1'-9"	2'-0"	1'-9"	2'-9"
#5	2'-6"	2'-2"	2'-6"	2'-2"	3'-5"
#6	3'-0"	2'-7"	3'-10"	2'-7"	4'-4"
#7	5'-3"	3'-6"			
#8	6'-10"	4'-7"			

GROOVING BRIDGE FLOORS

APPROACH SLABS	1,757	SQ.FT.
BRIDGE DECK	3,754	SQ.FT.
TOTAL	5,511	SQ.FT.

BILL OF MATERIAL

BAR	NO.	SIZE	TYPE	LENGTH	WEIGHT
* A1	136	#5	STR	42'-11"	6088
A2	136	#5	STR	42'-11"	6088
* A101	4	#5	STR	39'-6"	165
* A102	4	#5	STR	36'-5"	152
* A103	4	#5	STR	33'-4"	139
* A104	4	#5	STR	30'-3"	126
* A105	4	#5	STR	27'-2"	113
* A106	4	#5	STR	24'-0"	100
* A107	4	#5	STR	20'-11"	87
* A108	4	#5	STR	17'-10"	74
* A109	4	#5	STR	14'-9"	62
* A110	4	#5	STR	11'-8"	49
* A111	4	#5	STR	8'-7"	36
* A112	4	#5	STR	5'-6"	23
* A113	4	#5	STR	2'-5"	10
A201	4	#5	STR	40'-5"	169
A202	4	#5	STR	37'-4"	156
A203	4	#5	STR	34'-3"	143
A204	4	#5	STR	31'-2"	130
A205	4	#5	STR	28'-1"	117
A206	4	#5	STR	24'-11"	104
A207	4	#5	STR	21'-10"	91
A208	4	#5	STR	18'-9"	78
A209	4	#5	STR	15'-8"	65
A210	4	#5	STR	12'-7"	52
A211	4	#5	STR	9'-6"	40
A212	4	#5	STR	6'-5"	27
A213	4	#5	STR	3'-4"	14
* B1	120	#4	STR	26'-10"	2151
B2	80	#5	STR	52'-3"	4360
* G1	2	#5	STR	46'-3"	96
* J1	80	#4	5	1'-5"	76
* K1	8	#8	1	15'-3"	326
* K2	12	#8	2	22'-3"	713
* K3	24	#6	STR	5'-2"	186
* S1	48	#5	3	5'-11"	296
* S2	48	#4	4	4'-6"	144

REINFORCING STEEL = 11,633 LBS

* EPOXY COATING REINF. STEEL = 11,212 LBS

BAR TYPES

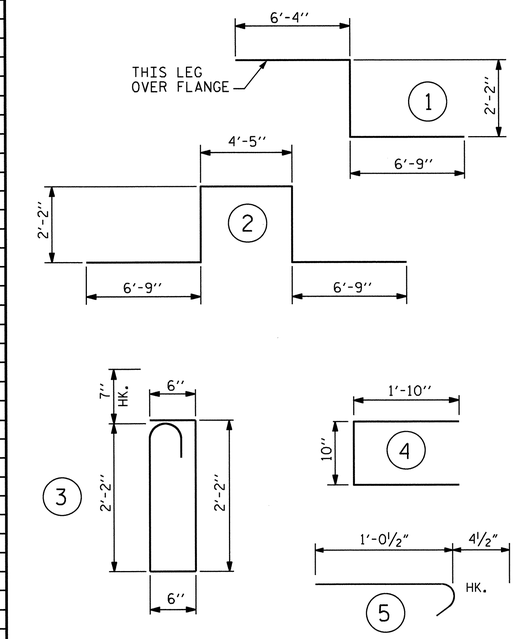

ALL BAR DIMENSIONS ARE OUT TO OUT.

SUPERSTRUCTURE BILL OF MATERIAL

	CLASS AA CONCRETE	REINFORCING STEEL	* EPOXY COATED REINFORCING STEEL
	(CU. YDS.)	(LBS.)	(LBS.)
SPAN A		11,633	11,212
POUR 1	144.2		
POUR 2	14.0		
TOTALS**	158.2	11,633	11,212

** QUANTITIES FOR BARRIER RAIL ARE NOT INCLUDED.

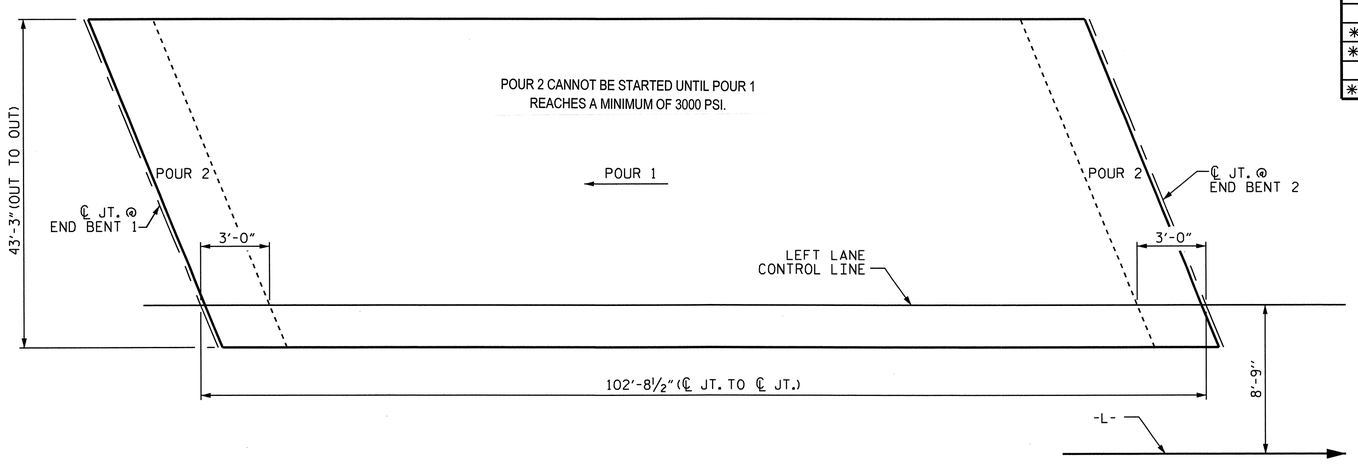

POURING SEQUENCE AND LAYOUT FOR COMPUTING AREA OF REINFORCED CONCRETE DECK SLAB

(SQ. FT. = 4,442)

PROJECT NO. U-3326B
ROCKINGHAM COUNTY
STATION: 203+04.30 -L-

NORTH CAROLINA PROFESSIONAL SEAL 16301 ENGINEER T.ING HSUEH FANG
10/21/11

STATE OF NORTH CAROLINA
DEPARTMENT OF TRANSPORTATION
RALEIGH

STANDARD
SUPERSTRUCTURE BILL OF MATERIAL
— LEFT LANE —

REVISIONS						SHEET NO.
NO.	BY:	DATE:	NO.	BY:	DATE:	S-55
1			3			TOTAL SHEETS
2			4			159

STR. #1 STD. NO. BOM2

ASSEMBLED BY : A.S. CALLAWAY	DATE : 8/7/09		
CHECKED BY : L.E. SUTTON	DATE : 2/8/10		
DRAWN BY : JMB 5/87	REV. 6/1/94	EEM/GRP	
CHECKED BY : SJD 9/87	REV. 8/16/99	RWW/LES	
	REV. 5/1/06	TLA/GM	

21-OCT-2011 11:08
K:\TIPProjects-U\U3326B\Structures\str01\FinalPlans\U3326B_SD_BM_01.dgn
ttfang

NOTES

STIRRUPS IN CAP MAY BE SHIFTED AS NECESSARY TO CLEAR ANCHOR BOLTS.

BACKWALL SHALL BE PLACED BEFORE APPLYING THE EPOXY PROTECTIVE COATING.

THE TOP SURFACE AREAS OF THE END BENT CAPS SHALL BE CURED IN ACCORDANCE WITH THE STANDARD SPECIFICATIONS EXCEPT THE MEMBRANE CURING COMPOUND METHOD SHALL NOT BE USED.

* THE TOP SURFACE OF THE END BENT CAP EXCEPT THE BRIDGE SEAT BUILDUPS SHALL BE SLOPED TRANSVERSELY FROM THE FILL FACE TO THE BACK FACE AT THE RATE OF 2%.

THE CONTRACTOR SHALL PROVIDE FOR INSTALLATION OF THE 4"DIAMETER DRAIN PIPE THROUGH THE WING WALL AS REQUIRED FOR REINFORCED BRIDGE APPROACH FILLS, SEE THE ROADWAY PLANS. REINFORCING STEEL IN THE WING WALL MAY BE SHIFTED AS NECESSARY TO CLEAR THE DRAIN PIPE.

THE CONCRETE IN THE SHADED AREA OF THE WING SHALL BE POURED AFTER THE BARRIER RAILS ARE CAST IF SLIP FORMING IS USED.

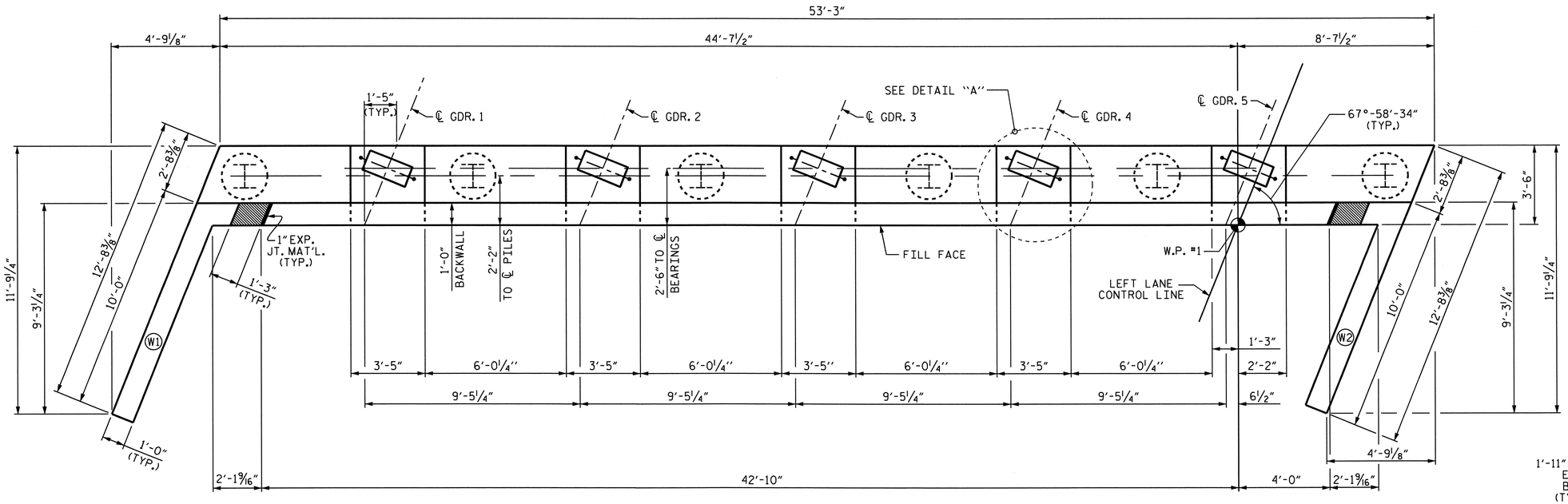

PLAN

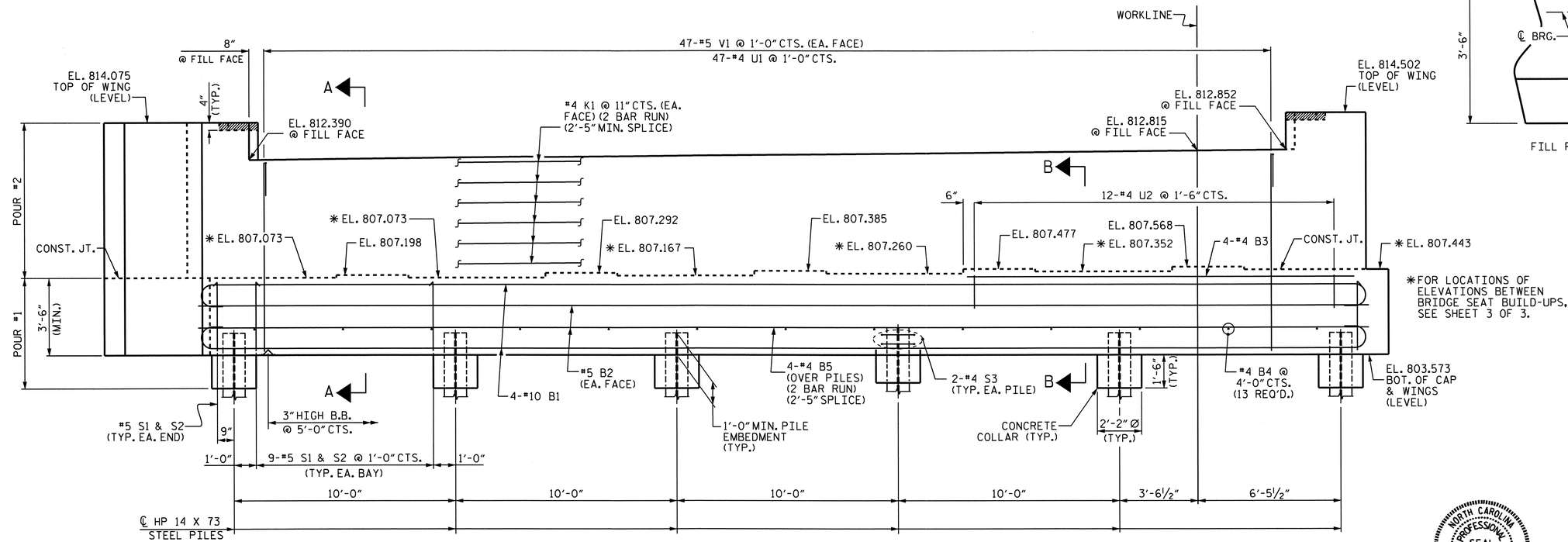

ELEVATION

RIGHT WING NOT SHOWN FOR CLARITY.

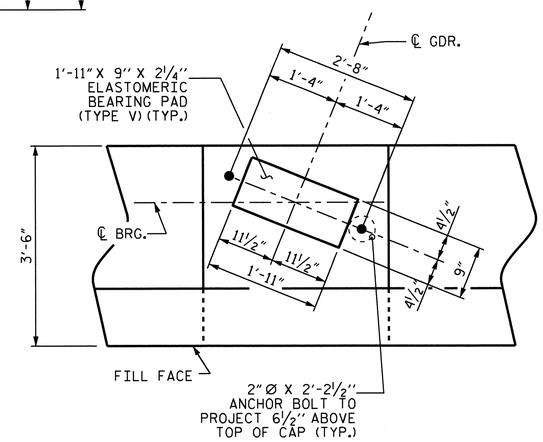

DETAIL "A"

(TYP. EACH GIRDER)

PROJECT NO. U-3326B

ROCKINGHAM COUNTY

STATION: 203+04.30 -L-

SHEET 1 OF 3

STATE OF NORTH CAROLINA
DEPARTMENT OF TRANSPORTATION
RALEIGH

SUBSTRUCTURE

END BENT 1

—LEFT LANE—

NORTH CAROLINA PROFESSIONAL SEAL 16301 ENGINEER HSIANG-TING HSIANG

8/29/11

REVISIONS							SHEET NO.
NO.	BY:	DATE:	NO.	BY:	DATE:		S-56
1			3				TOTAL SHEETS
2			4				159

STR. #1

DRAWN BY : RAMAN PATEL DATE : 11-02-10
CHECKED BY : K. H. COMPTON DATE : 11-16-10

29-AUG-2011 13:38
X:\TIPProjects-U\U3326B\Structures\str01\FinalPlans\U3326B_sd_e*_01.dgn
OTNGUYEN

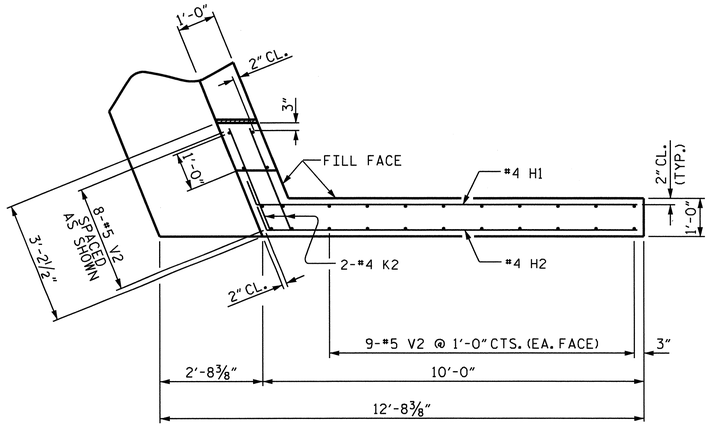

PLAN OF WING (W1)

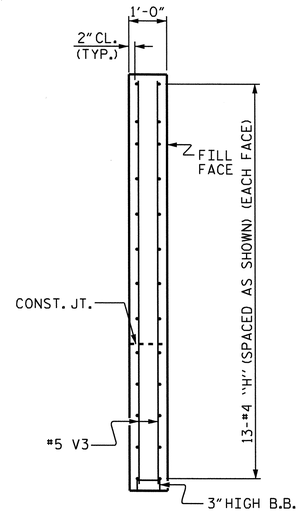

SECTION Y-Y

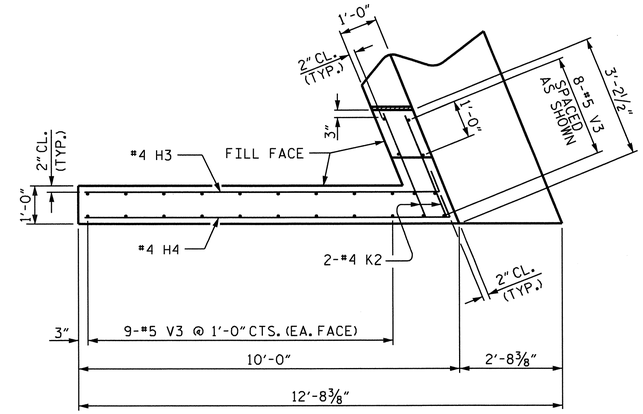

PLAN OF WING (W2)

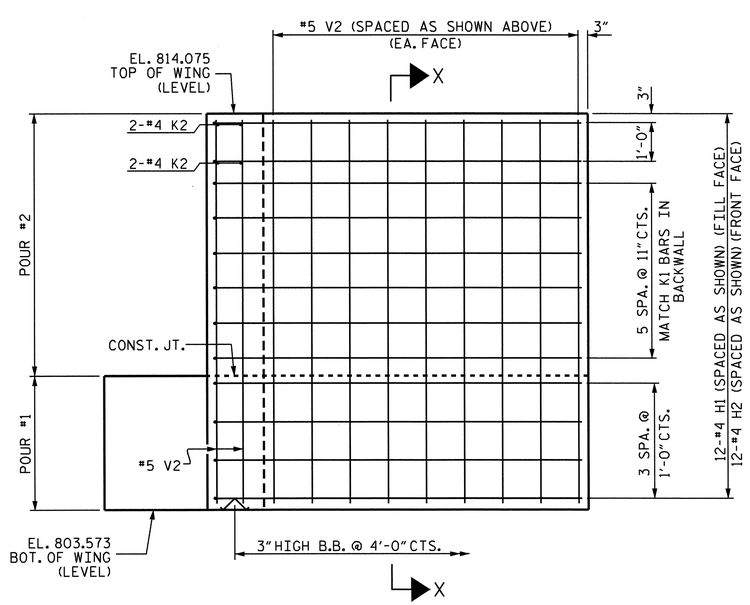

ELEVATION OF WING (W1)

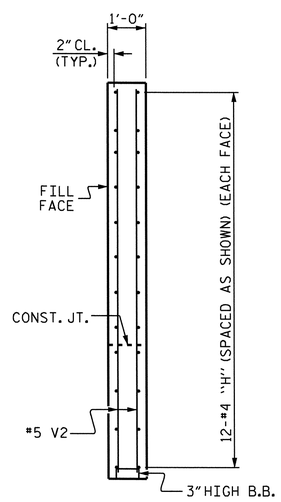

SECTION X-X

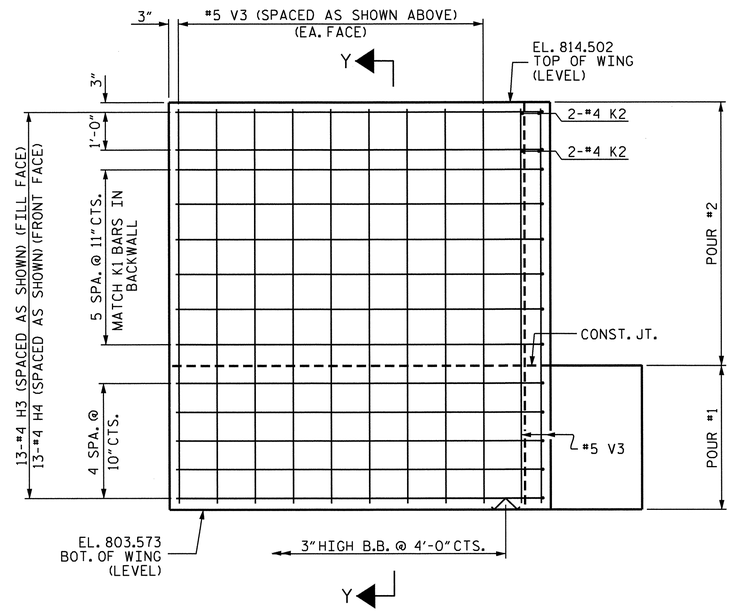

ELEVATION OF WING (W2)

PROJECT NO. U-3326B
ROCKINGHAM COUNTY
STATION: 203+04.30-L-

SHEET 2 OF 3

STATE OF NORTH CAROLINA
DEPARTMENT OF TRANSPORTATION
RALEIGH

SUBSTRUCTURE

END BENT 1
—LEFT LANE—

REVISIONS						SHEET NO.
NO.	BY:	DATE:	NO.	BY:	DATE:	S-57
1			3			TOTAL SHEETS
2			4			159

STR. #1

DRAWN BY : RAMAN PATEL DATE : 11-02-10
CHECKED BY : K. H. COMPTON DATE : 11-16-10

29-AUG-2011 13:38
X:\TIPProjects-U\U3326B\Structures\str01\FinalPlans\U3326B_sd_e*_01.dgn
QTNGUYEN

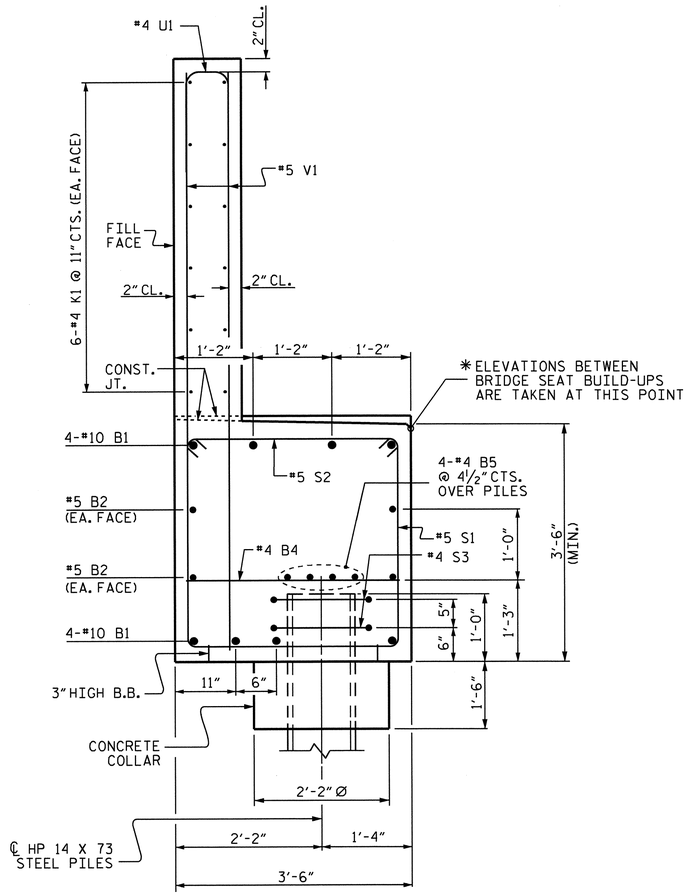

SECTION A-A

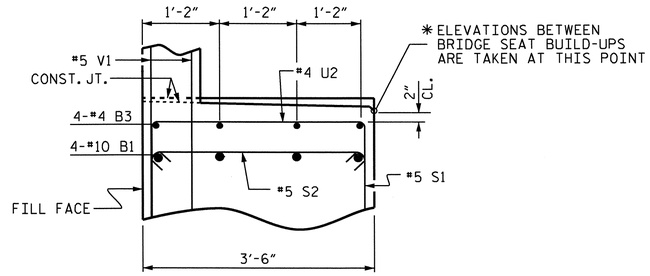

PARTIAL SECTION B-B

BAR TYPES

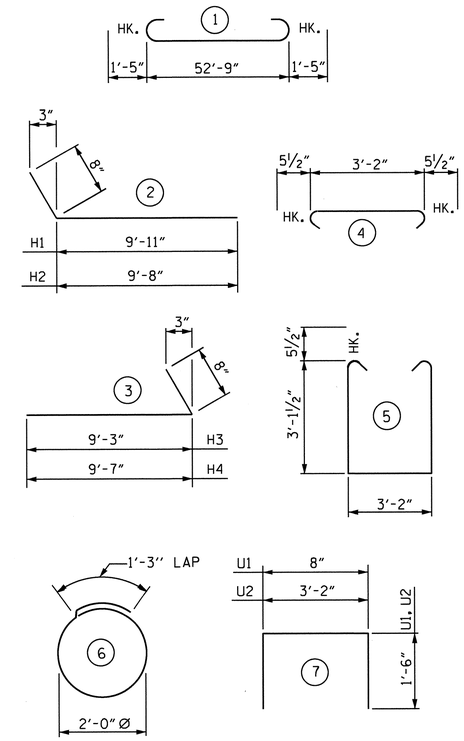

ALL BAR DIMENSIONS ARE OUT TO OUT.

BILL OF MATERIAL

END BENT 1

BAR	NO.	SIZE	TYPE	LENGTH	WEIGHT
B1	8	#10	1	55'-7"	1913
B2	4	#5	STR	52'-11"	221
B3	4	#4	STR	17'-6"	47
B4	13	#4	STR	3'-2"	27
B5	8	#4	STR	27'-8"	148
H1	12	#4	2	10'-7"	85
H2	12	#4	2	10'-4"	83
H3	13	#4	3	9'-11"	86
H4	13	#4	3	10'-3"	89
K1	24	#4	STR	27'-8"	444
K2	8	#4	STR	2'-10"	15
S1	47	#5	5	10'-4"	507
S2	47	#5	4	4'-1"	200
S3	12	#4	6	7'-6"	60
U1	47	#4	7	3'-8"	115
U2	12	#4	7	6'-2"	49
V1	94	#5	STR	8'-5"	825
V2	26	#5	STR	10'-2"	276
V3	26	#5	STR	10'-7"	287

REINFORCING STEEL 5,477 LBS

CLASS A CONCRETE

POUR 1 (CAP & LOWER WINGS & COLLARS)	29.0 C.Y.
POUR 2 (BACKWALL & UPPER WINGS)	17.1 C.Y.
TOTAL	46.1 C.Y.

HP 14 X 73 STEEL PILES

NO. 6	210 LIN. FT.

PILE EXCAVATION

IN SOIL	30 LIN. FT.
NOT IN SOIL	60 LIN. FT.

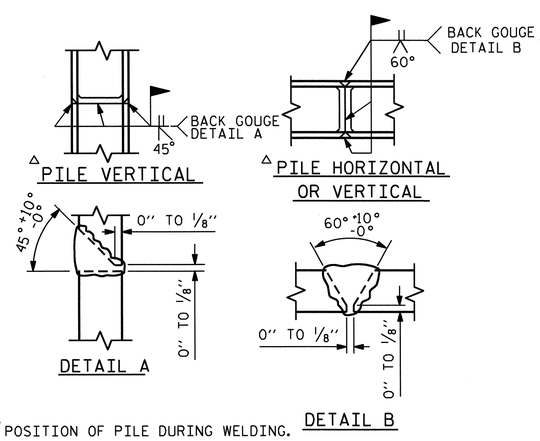

△ POSITION OF PILE DURING WELDING.

PILE SPLICE DETAILS

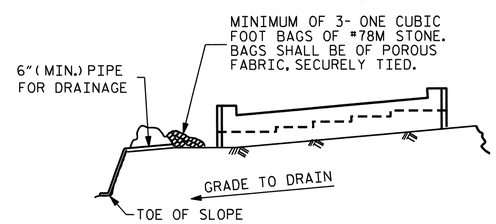

BAGGED STONE AND PIPE SHALL BE PLACED IMMEDIATELY AFTER COMPLETION OF END BENT EXCAVATION. PIPE MAY BE EITHER CONCRETE, CORRUGATED STEEL, CORRUGATED ALUMINUM ALLOY, OR CORRUGATED PLASTIC. PERFORATED PIPE WILL NOT BE ALLOWED.

BAGGED STONE SHALL REMAIN IN PLACE UNTIL THE ENGINEER DIRECTS THAT IT BE REMOVED. THE CONTRACTOR SHALL REMOVE AND DISPOSE OF SILT ACCUMULATIONS AT BAGGED STONE WHEN SO DIRECTED BY THE ENGINEER. BAGS SHALL BE REMOVED AND REPLACED WHENEVER THE ENGINEER DETERMINES THAT THEY HAVE DETERIORATED AND LOST THEIR EFFECTIVENESS.

NO SEPARATE PAYMENT WILL BE MADE FOR THIS WORK AND THE ENTIRE COST OF THIS WORK SHALL BE INCLUDED IN THE UNIT CONTRACT PRICE BID FOR THE SEVERAL PAY ITEMS.

TEMPORARY DRAINAGE AT END BENT

NORTH CAROLINA PROFESSIONAL SEAL 16301 ENGINEER
10/20/11

PROJECT NO. U-3326B
ROCKINGHAM COUNTY
STATION: 203+04.30-L-

SHEET 3 OF 3

STATE OF NORTH CAROLINA
DEPARTMENT OF TRANSPORTATION
RALEIGH

SUBSTRUCTURE

END BENT 1

—LEFT LANE—

REVISIONS						SHEET NO.
NO.	BY:	DATE:	NO.	BY:	DATE:	S-58
1			3			TOTAL SHEETS
2			4			159

STR. #1

DRAWN BY : RAMAN PATEL DATE : 11-02-10
CHECKED BY : K. H. COMPTON DATE : 11-16-10

20-OCT-2011 16:27
K:\TIPProjects-U\U3326B\Structures\str01\FinalPlans\U3326B_sd_e*_01.dgn
ttfang

NOTES

STIRRUPS IN CAP MAY BE SHIFTED AS NECESSARY TO CLEAR ANCHOR BOLTS.

BACKWALL SHALL BE PLACED BEFORE APPLYING THE EPOXY PROTECTIVE COATING.

THE TOP SURFACE AREAS OF THE END BENT CAPS SHALL BE CURED IN ACCORDANCE WITH THE STANDARD SPECIFICATIONS EXCEPT THE MEMBRANE CURING COMPOUND METHOD SHALL NOT BE USED.

* THE TOP SURFACE OF THE END BENT CAP EXCEPT THE BRIDGE SEAT BUILDUPS SHALL BE SLOPED TRANSVERSELY FROM THE FILL FACE TO THE BACK FACE AT THE RATE OF 2%.

THE CONTRACTOR SHALL PROVIDE FOR INSTALLATION OF THE 4"DIAMETER DRAIN PIPE THROUGH THE WING WALL AS REQUIRED FOR REINFORCED BRIDGE APPROACH FILLS, SEE THE ROADWAY PLANS. REINFORCING STEEL IN THE WING WALL MAY BE SHIFTED AS NECESSARY TO CLEAR THE DRAIN PIPE.

THE CONCRETE IN THE SHADED AREA OF THE WING SHALL BE POURED AFTER THE BARRIER RAILS ARE CAST IF SLIP FORMING IS USED.

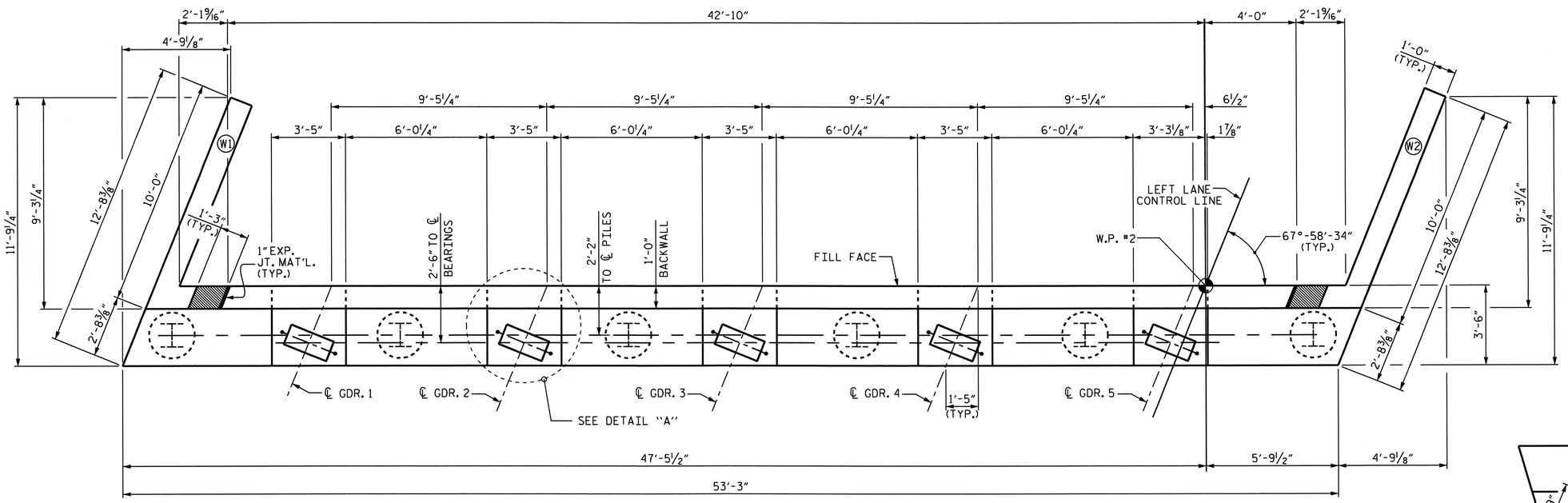

PLAN

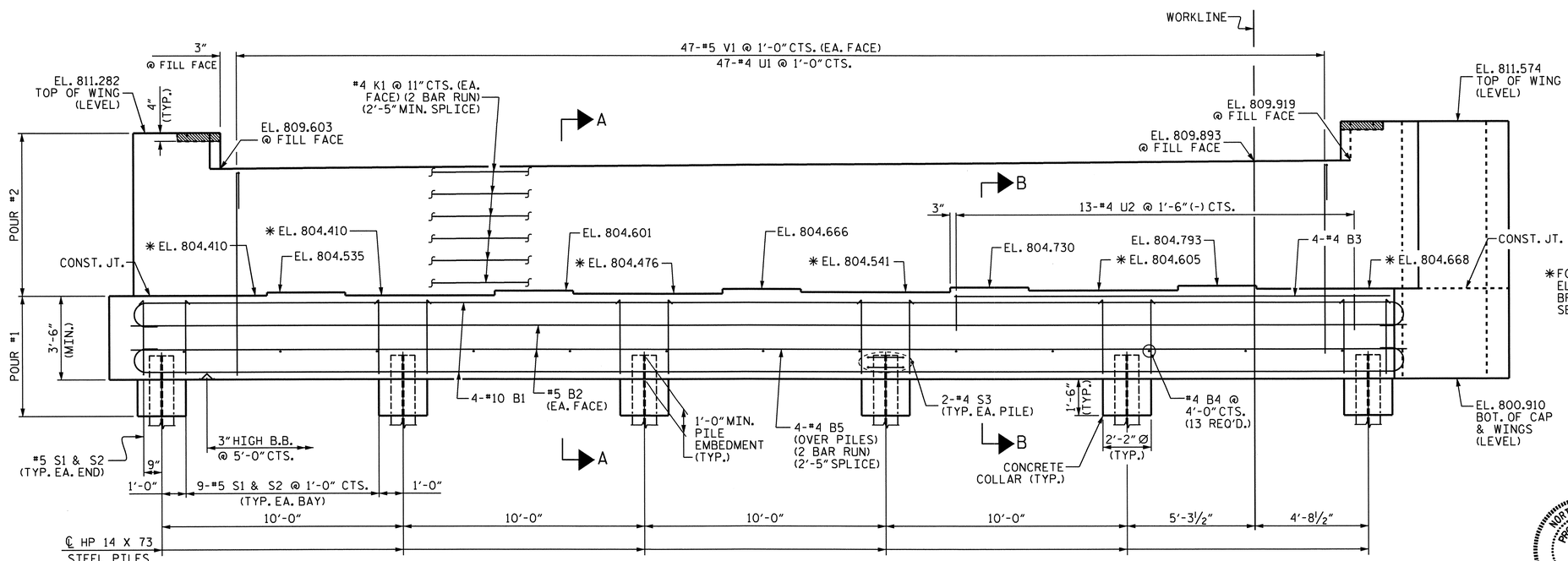

*FOR LOCATIONS OF ELEVATIONS BETWEEN BRIDGE SEAT BUILD-UPS, SEE SHEET 3 OF 3.

ELEVATION

LEFT WING NOT SHOWN FOR CLARITY.

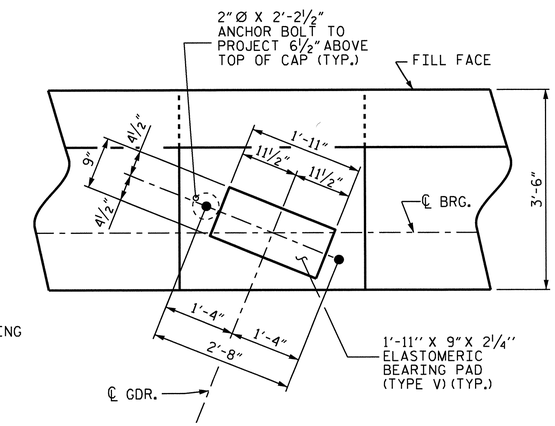

DETAIL "A"

(TYP. EACH GIRDER)

PROJECT NO. U-3326B

ROCKINGHAM COUNTY

STATION: 203+04.30 -L-

SHEET 1 OF 3

STATE OF NORTH CAROLINA
DEPARTMENT OF TRANSPORTATION
RALEIGH

SUBSTRUCTURE

END BENT 2

—LEFT LANE—

NORTH CAROLINA PROFESSIONAL SEAL 16301 ENGINEER SUNG KANG

8/29/11

REVISIONS							SHEET NO.
NO.	BY:	DATE:	NO.	BY:	DATE:		S-59
1			3				TOTAL SHEETS
2			4				159

STR. #1

DRAWN BY : RAMAN PATEL DATE : 11-02-10
CHECKED BY : K. H. COMPTON DATE : 11-29-10

29-AUG-2011 13:38
X:\TIPProjects-U\U3326B\Structures\str01\FinalPlans\U3326B_sd_e*_01.dgn
OTNGUYEN

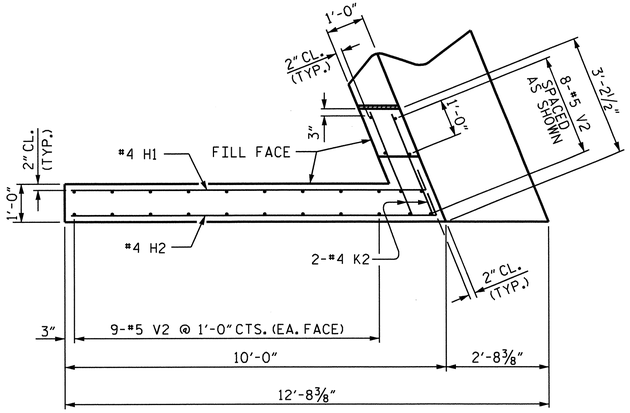

PLAN OF WING (W1)

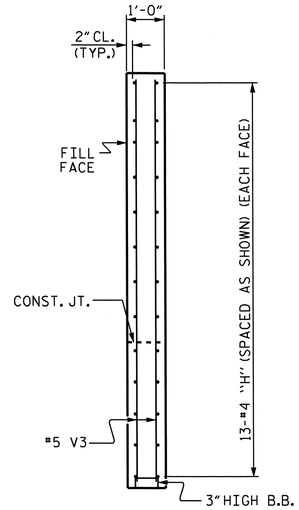

SECTION Y-Y

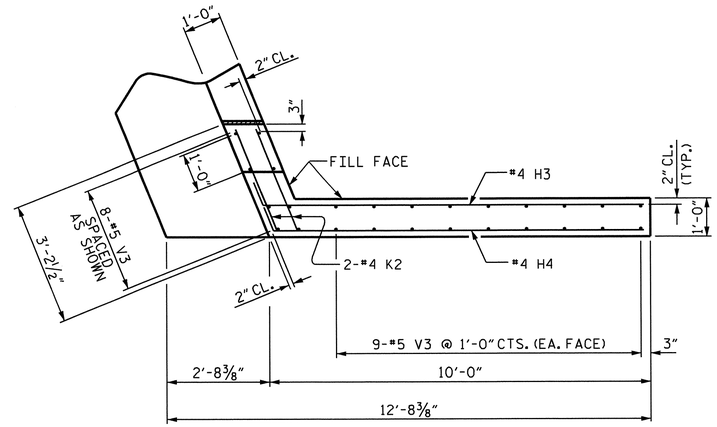

PLAN OF WING (W2)

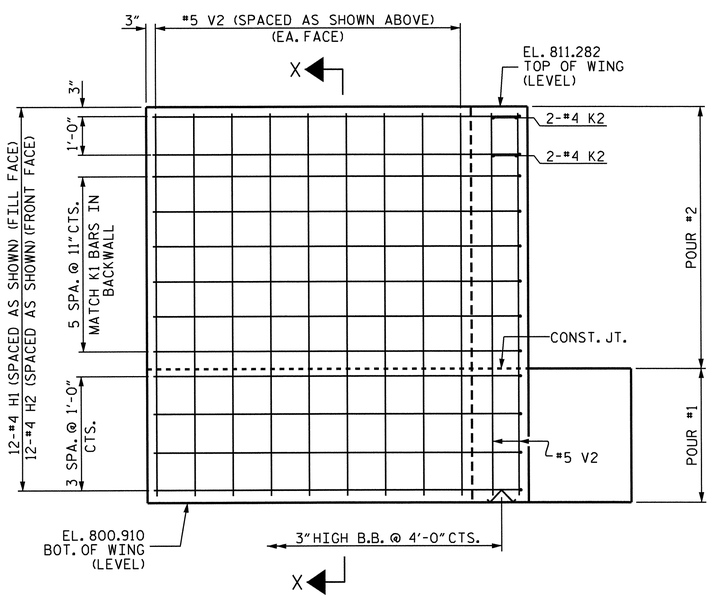

ELEVATION OF WING (W1)

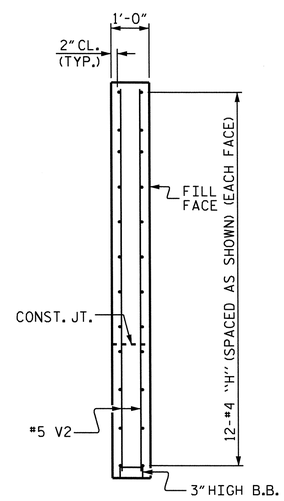

SECTION X-X

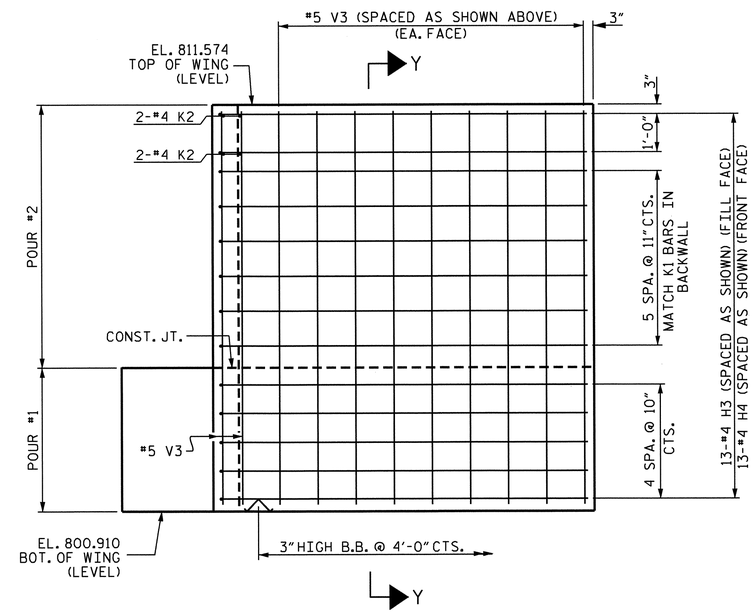

ELEVATION OF WING (W2)

PROJECT NO. U-3326B

ROCKINGHAM COUNTY

STATION: 203+04.30-L-

SHEET 2 OF 3

STATE OF NORTH CAROLINA
DEPARTMENT OF TRANSPORTATION
RALEIGH

SUBSTRUCTURE

END BENT 2

—LEFT LANE—

REVISIONS						SHEET NO.
NO.	BY:	DATE:	NO.	BY:	DATE:	S-60
1			3			TOTAL SHEETS
2			4			159

DRAWN BY : RAMAN PATEL DATE : 11-02-10
CHECKED BY : K. H. COMPTON DATE : 11-29-10

29-AUG-2011 13:38
X:\TIPProjects-U\U3326B\Structures\str01\FinalPlans\U3326B_sd_e*_01.dgn
OTNGUYEN

STR. #1

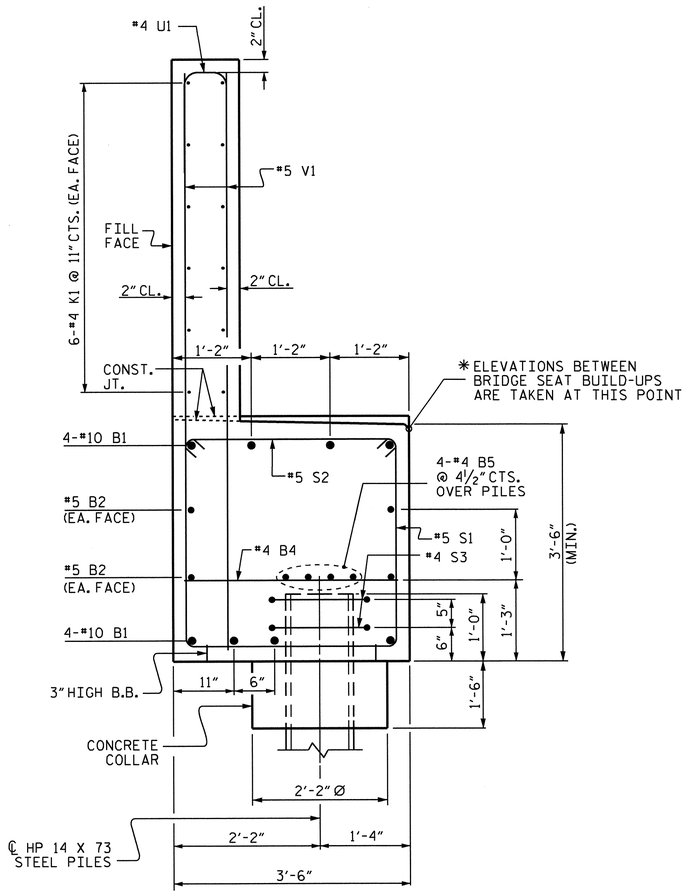

SECTION A-A

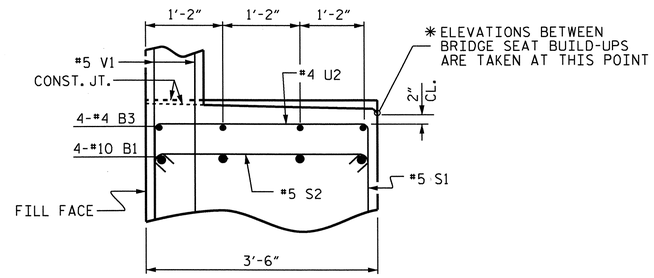

PARTIAL SECTION B-B

BAR TYPES

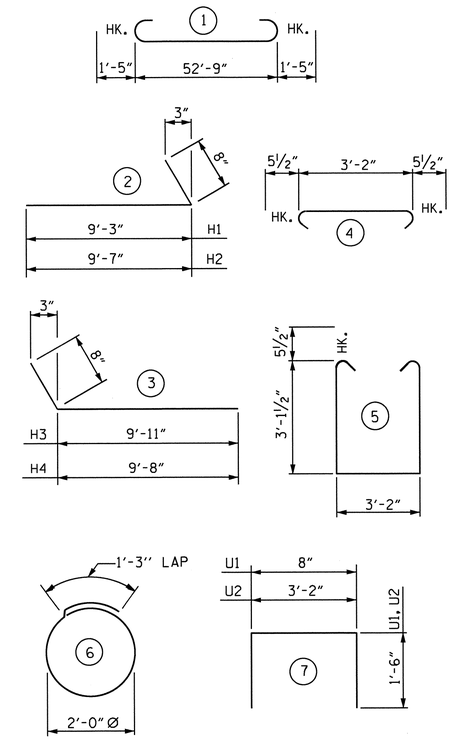

ALL BAR DIMENSIONS ARE OUT TO OUT.

BILL OF MATERIAL

END BENT 2

BAR	NO.	SIZE	TYPE	LENGTH	WEIGHT
B1	8	#10	1	55'-7"	1913
B2	4	#5	STR	52'-11"	221
B3	4	#4	STR	18'-2"	49
B4	13	#4	STR	3'-2"	27
B5	8	#4	STR	27'-8"	148
H1	12	#4	2	9'-11"	79
H2	12	#4	2	10'-3"	82
H3	13	#4	3	10'-7"	92
H4	13	#4	3	10'-4"	90
K1	24	#4	STR	27'-8"	444
K2	8	#4	STR	2'-10"	15
S1	47	#5	5	10'-4"	507
S2	47	#5	4	4'-1"	200
S3	12	#4	6	7'-6"	60
U1	47	#4	7	3'-8"	115
U2	13	#4	7	6'-2"	54
V1	94	#5	STR	8'-4"	817
V2	26	#5	STR	10'-0"	271
V3	26	#5	STR	10'-4"	280

REINFORCING STEEL 5,464 LBS

CLASS A CONCRETE

POUR 1 (CAP & LOWER WINGS & COLLARS)	28.7 C.Y.
POUR 2 (BACKWALL & UPPER WINGS)	16.6 C.Y.
TOTAL	45.3 C.Y.

HP 14 X 73 STEEL PILES

NO. 6	180 LIN. FT.

PILE EXCAVATION

IN SOIL	30 LIN. FT.
NOT IN SOIL	60 LIN. FT.

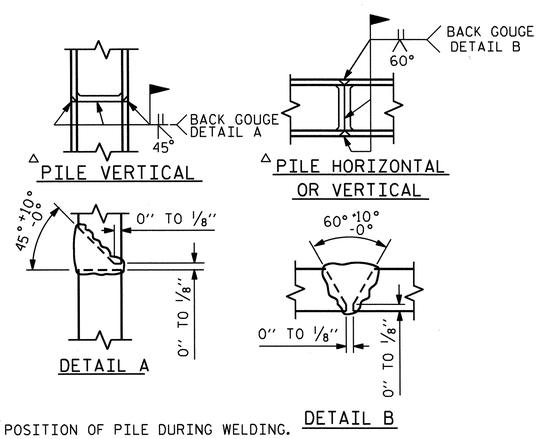

△ POSITION OF PILE DURING WELDING.

PILE SPLICE DETAILS

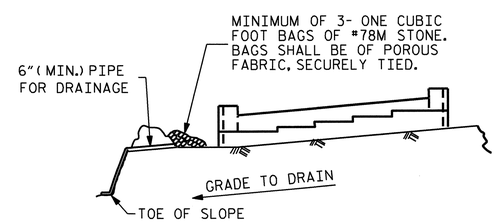

BAGGED STONE AND PIPE SHALL BE PLACED IMMEDIATELY AFTER COMPLETION OF END BENT EXCAVATION. PIPE MAY BE EITHER CONCRETE, CORRUGATED STEEL, CORRUGATED ALUMINUM ALLOY, OR CORRUGATED PLASTIC. PERFORATED PIPE WILL NOT BE ALLOWED.

BAGGED STONE SHALL REMAIN IN PLACE UNTIL THE ENGINEER DIRECTS THAT IT BE REMOVED. THE CONTRACTOR SHALL REMOVE AND DISPOSE OF SILT ACCUMULATIONS AT BAGGED STONE WHEN SO DIRECTED BY THE ENGINEER. BAGS SHALL BE REMOVED AND REPLACED WHENEVER THE ENGINEER DETERMINES THAT THEY HAVE DETERIORATED AND LOST THEIR EFFECTIVENESS.

NO SEPARATE PAYMENT WILL BE MADE FOR THIS WORK AND THE ENTIRE COST OF THIS WORK SHALL BE INCLUDED IN THE UNIT CONTRACT PRICE BID FOR THE SEVERAL PAY ITEMS.

TEMPORARY DRAINAGE AT END BENT

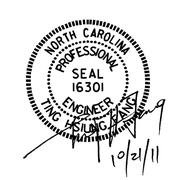

PROJECT NO. U-3326B
ROCKINGHAM COUNTY
STATION: 203+04.30-L-

SHEET 3 OF 3

STATE OF NORTH CAROLINA
DEPARTMENT OF TRANSPORTATION
RALEIGH

SUBSTRUCTURE

END BENT 2

—LEFT LANE—

REVISIONS						SHEET NO.
NO.	BY:	DATE:	NO.	BY:	DATE:	S-61
1			3			TOTAL SHEETS
2			4			159

STR. #1

DRAWN BY : RAMAN PATEL DATE : 11-02-10
CHECKED BY : K. H. COMPTON DATE : 11-16-10

21-OCT-2011 12:43
K:\TIPProjects-U\U3326B\Structures\str01\FinalPlans\U3326B_sd_e*_01.dgn
ttfang

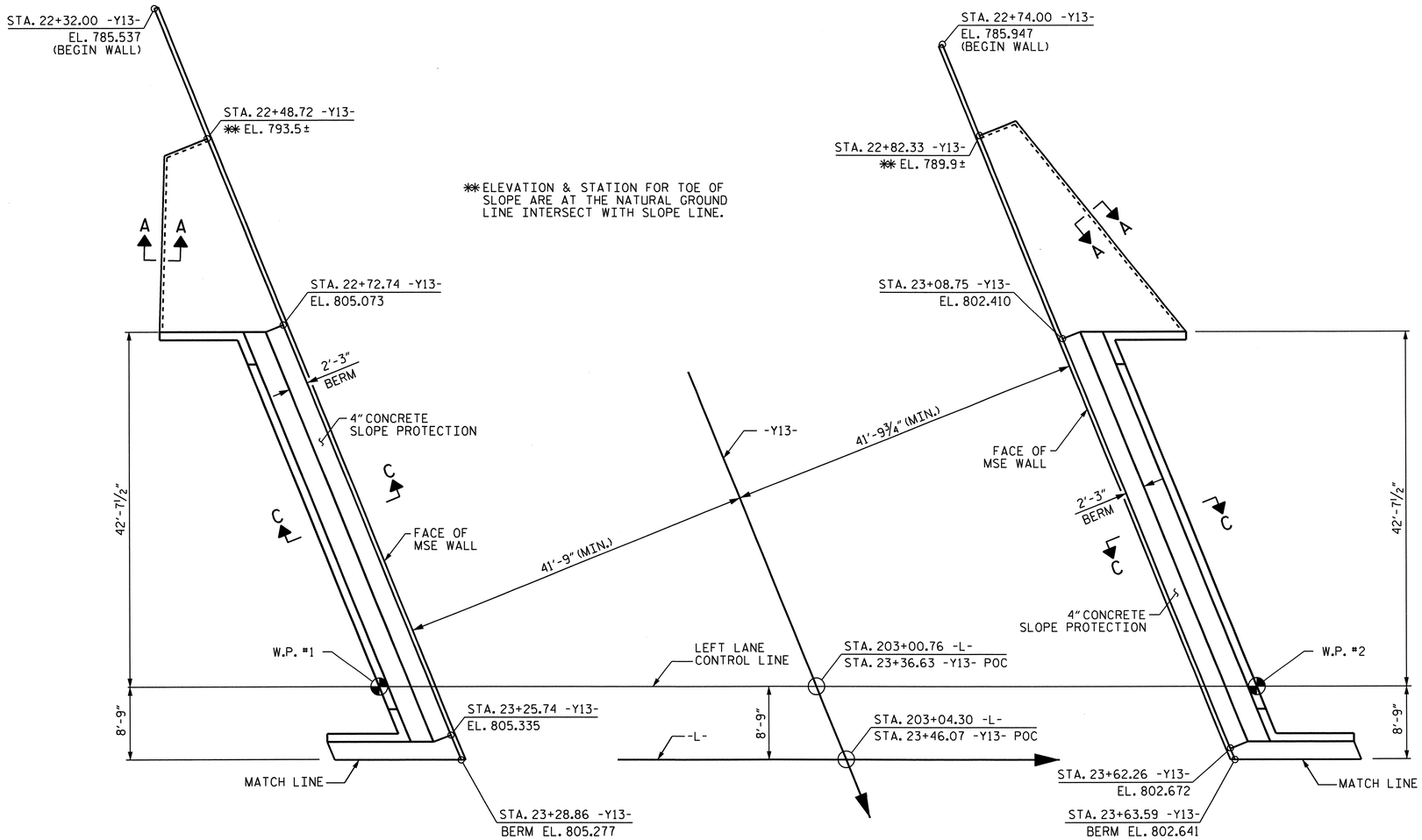

PLAN

FOR DETAILS & QUANTITIES OF MSE WALL, SEE "MSE RETAINING WALL" ON SHEETS W-5 THRU W-8.

GENERAL NOTES

SLOPE PROTECTION SHALL BE PLACED UNDER THE ENDS OF THE BRIDGE AS SHOWN IN THE DETAILS. STRAIGHT EDGING WILL NOT BE REQUIRED UNLESS, IN THE OPINION OF THE ENGINEER, VISUAL INSPECTION INDICATES A NEED FOR IT. MEASUREMENT AND PAYMENT SHALL BE AS PRESCRIBED IN SECTION 462 OF THE STANDARD SPECIFICATIONS.

SLOPE PROTECTION SHALL CONSIST OF 4" POURED-IN-PLACE CONCRETE PAVING AS SHOWN IN THE DETAILS ON THIS SHEET. CONCRETE SHALL BE CLASS "B". THE CONCRETE SURFACE SHALL BE FLOATED WITH A WOODEN FLOAT AND FINISHED. WELDED WIRE FABRIC REINFORCING SHALL BE 6 X 6 - W1.4 X W1.4, 60" WIDE. SLOPE PROTECTION SHALL BE POURED IN 5' STRIPS AS SHOWN IN THE "POURING DETAIL" WITH 2'-0" LONG #4 BARS PLACED ALONG THE SLOPE BETWEEN STRIPS AT 1'-6" MAXIMUM SPACING. SLOPE PROTECTION MAY BE POURED IN ALTERNATE 4' AND 5' STRIPS AS SHOWN IN THE "OPTIONAL POURING DETAIL" WITH ADJACENT RUNS OF WELDED WIRE FABRIC LAPPING AT LEAST 6". THE COST OF THE WELDED WIRE FABRIC AND #4 BARS, IF USED, SHALL BE INCLUDED IN THE CONTRACT UNIT PRICE BID PER SQUARE YARD FOR SLOPE PROTECTION.

BRIDGE @ STA. 203+04.30 -L- (LEFT LANE)	4" INCH SLOPE PROTECTION	✱ WELDED WIRE FABRIC 60 INCHES WIDE
	SQUARE YARDS	APPROX. L.F.
END BENT 1	45	90
END BENT 2	45	90

✱ QUANTITY SHOWN IS BASED ON 5' POURS.

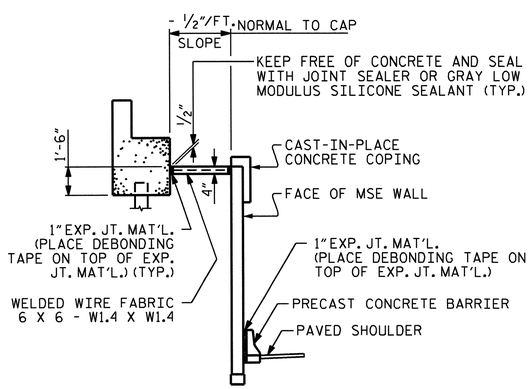

SECTION C-C

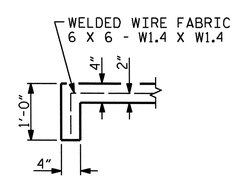

SECTION A-A

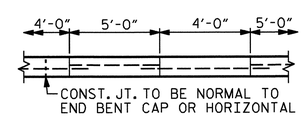

POUR A 4'-0" STRIP FIRST. STRIP WIDTHS MAY VARY IN CURVED PORTION.

OPTIONAL POURING DETAIL

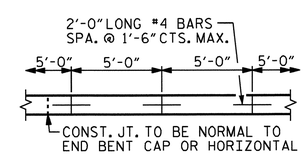

STRIP WIDTHS MAY VARY IN CURVED PORTION.

POURING DETAIL

DETAILS FOR SLOPE PROTECTION

PROJECT NO. U-3326B
ROCKINGHAM COUNTY
STATION: 203+04.30 -L-

STATE OF NORTH CAROLINA
DEPARTMENT OF TRANSPORTATION
RALEIGH

SLOPE PROTECTION DETAILS

— LEFT LANE —

NORTH CAROLINA PROFESSIONAL SEAL 32492 ENGINEER JOHN A. YANNACCONE
8/30/11

REVISIONS							SHEET NO.
NO.	BY:	DATE:	NO.	BY:	DATE:		S-62
1			3				TOTAL SHEETS
2			4				161

STR. #1

DRAWN BY : J. A. YANNACCONE DATE : 5/13/11
CHECKED BY : T. H. FANG DATE : 8/29/11

29-AUG-2011 13:38
X:\TIPProjects-U\U3326B\Structures\str01\FinalPlans\u3326b_sd_sp_01.dgn
OTNGUYEN

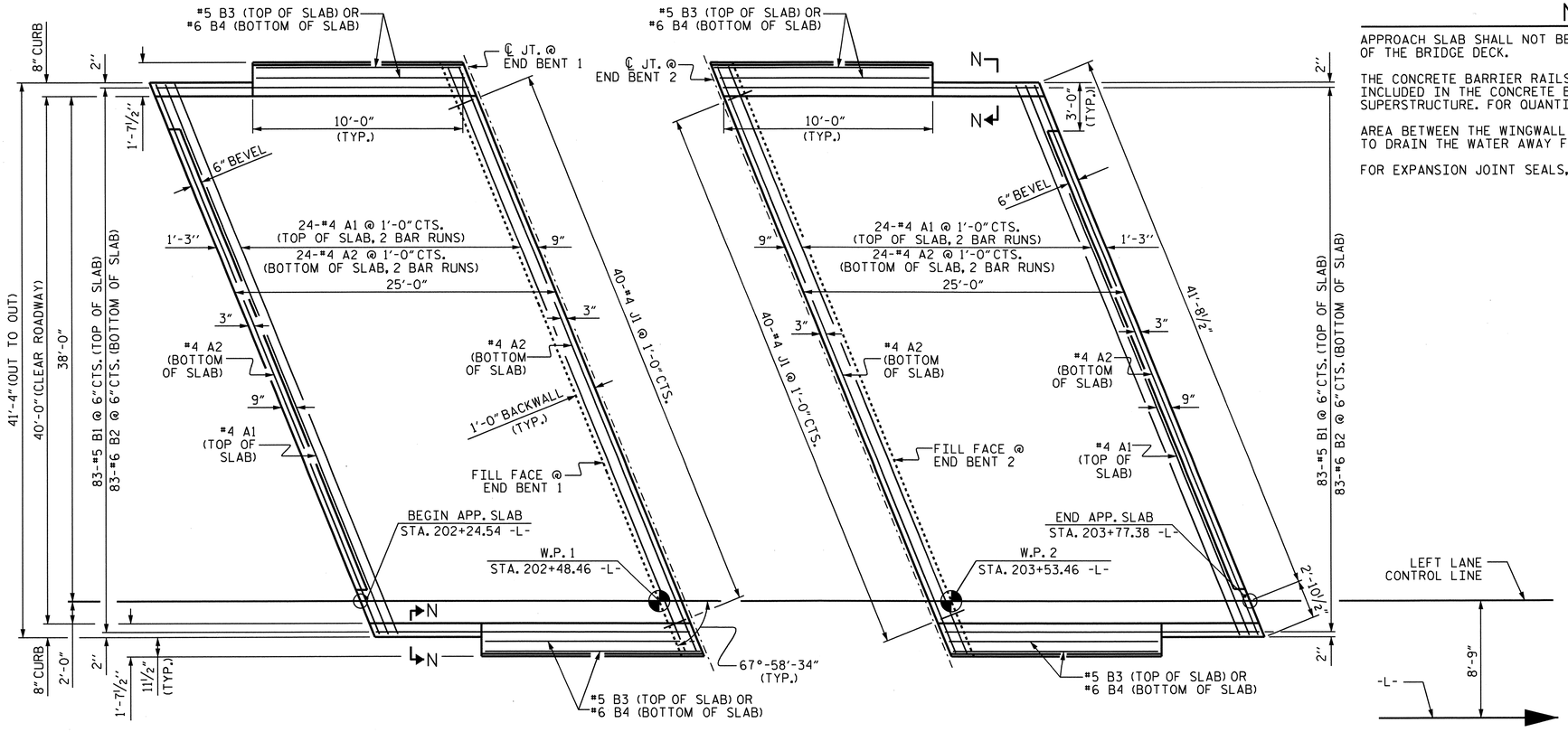

AT END BENT 1 — PLAN — AT END BENT 2

DIMENSIONS SHOWN ARE TYPICAL FOR BOTH APPROACH SLABS

NOTES

APPROACH SLAB SHALL NOT BE CONSTRUCTED PRIOR TO COMPLETION OF THE BRIDGE DECK.

THE CONCRETE BARRIER RAILS ON THE APPROACH SLABS SHALL BE INCLUDED IN THE CONCRETE BARRIER RAIL QUANTITY FOR THE SUPERSTRUCTURE. FOR QUANTITIES AND DETAILS, SEE SHEET 2 OF 2.

AREA BETWEEN THE WINGWALL AND APPROACH SLAB SHALL BE GRADED TO DRAIN THE WATER AWAY FROM THE FILL FACE OF THE BRIDGE.

FOR EXPANSION JOINT SEALS, SEE SPECIAL PROVISIONS.

BILL OF MATERIAL
FOR ONE APPROACH SLAB (2 REQ'D)

BAR	NO.	SIZE	TYPE	LENGTH	WEIGHT
* A1	50	#4	STR	24'-2"	808
A2	52	#4	STR	24'-0"	834
* B1	83	#5	STR	23'-8"	2049
B2	83	#6	STR	24'-7"	3065
* B3	4	#5	STR	9'-8"	40
B4	4	#6	STR	9'-8"	58
* J1	40	#4	1	1'-5"	38
REINFORCING STEEL				LBS.	3957
* EPOXY COATED REINFORCING STEEL				LBS.	2935
CLASS AA CONCRETE				C. Y.	45.8

BAR TYPES

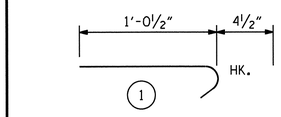

ALL BAR DIMENSIONS ARE OUT TO OUT

QUANTITIES FOR BARRIER RAIL NOT INCLUDED.

SPLICE CHART

BAR	SIZE	SPLICE
* A1	#4	2'-0"
A2	#4	1'-9"

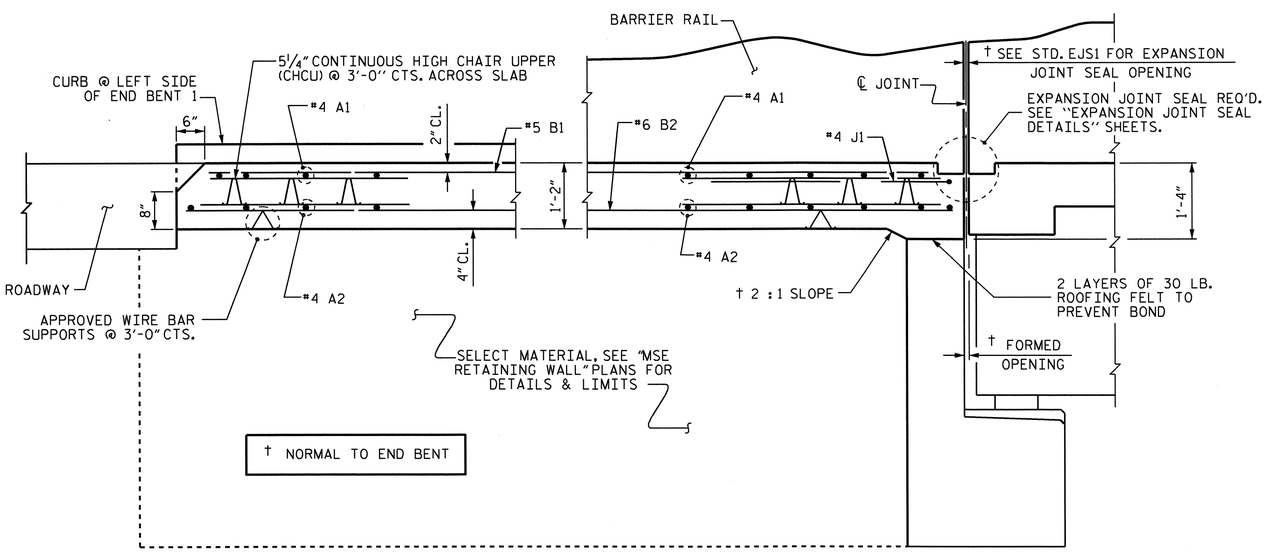

SECTION THRU SLAB

SHOWING SECTION WITHOUT CONCRETE WEARING SURFACE

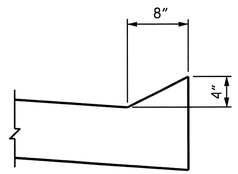

SECTION N-N

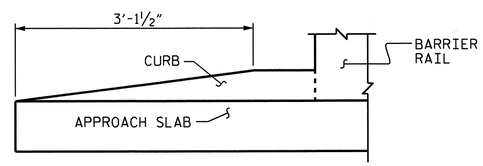

END OF CURB WITHOUT SHOULDER BERM GUTTER

(EXCEPT AT LEFT SIDE OF END BENT 1)

CURB DETAILS

NORTH CAROLINA PROFESSIONAL SEAL 16301 ENGINEER
12/05/11

PROJECT NO. U-3326B
ROCKINGHAM COUNTY
STATION: 203+04.30 -L-

SHEET 1 OF 2

STATE OF NORTH CAROLINA
DEPARTMENT OF TRANSPORTATION
RALEIGH

STANDARD
BRIDGE APPROACH SLAB FOR FLEXIBLE PAVEMENT
-LEFT LANE-

REVISIONS						SHEET NO.
NO.	BY:	DATE:	NO.	BY:	DATE:	S-63
1			3			TOTAL SHEETS
2			4			159

ASSEMBLED BY : O. T. NGUYEN DATE : 2/10/11
CHECKED BY : T. H. FANG DATE : 2/14/11

DRAWN BY : EEM 3/95
CHECKED BY : VAP 3/95

REV. 7/10/01 LES/RDR
REV. 5/7/03R RWW/JTE
REV. 5/1/06R KMM/GM

05-DEC-2011 15:23
K:\TIPProjects-U\U3326B\Structures\str01\FinalPlans\u3326b_sd_as_01.dgn
tfang

STR. 1

STD. NO. BAS4

NOTES

THE BARRIER RAIL ON EACH APPROACH SLAB SHALL NOT BE CAST UNTIL ALL APPROACH SLAB CONCRETE HAS BEEN CAST AND HAS REACHED A MINIMUM COMPRESSIVE STRENGTH OF 3,000 PSI.

ALL REINFORCING STEEL IN BARRIER RAILS SHALL BE EPOXY COATED.

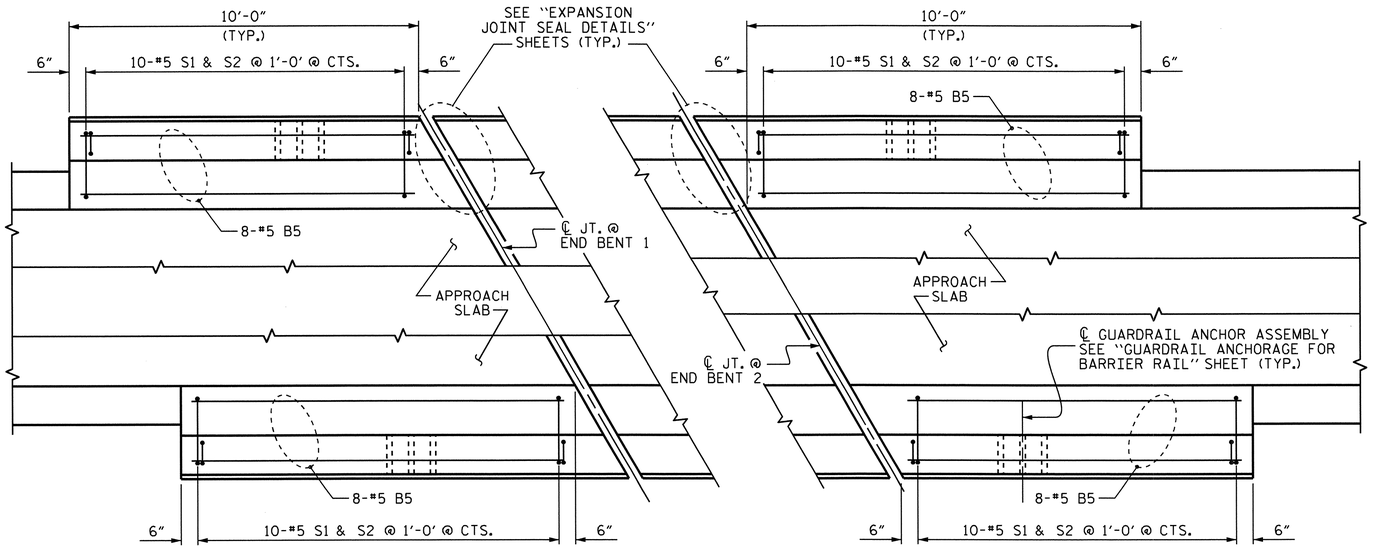

AT END BENT 1

AT END BENT 2

PLAN OF BARRIER RAIL

FOR EXPANSION JOINT SEAL, SEE "EXPANSION JOINT SEAL DETAILS" SHEET

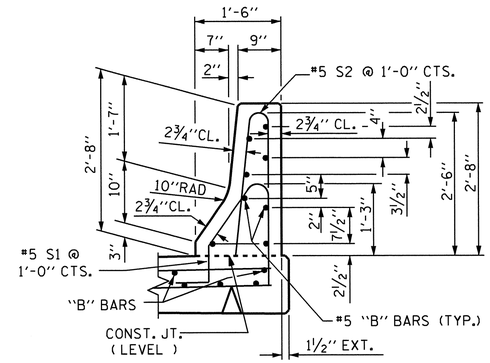

SECTION THRU RAIL

BAR TYPES

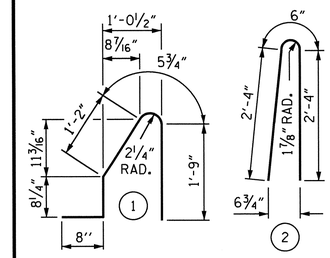

ALL BAR DIMENSIONS ARE OUT TO OUT

BILL OF MATERIAL

BARRIER RAILS ONLY

BAR	NO.	SIZE	TYPE	LENGTH	WEIGHT
* B5	32	#5	STR	9'-8"	323
* S1	40	#5	1	4'-9"	198
* S2	40	#5	2	5'-2"	216
* EPOXY COATED REINFORCING STEEL				LBS.	737
CLASS AA CONCRETE				C. Y.	4.1
CONCRETE BARRIER RAIL				** 41.31	LIN. FT.

** PAYMENT FOR CONCRETE BARRIER RAIL TO BE INCLUDED IN THE LINEAR FT. QUANTITY ON "CONCRETE BARRIER RAIL" SHEET.

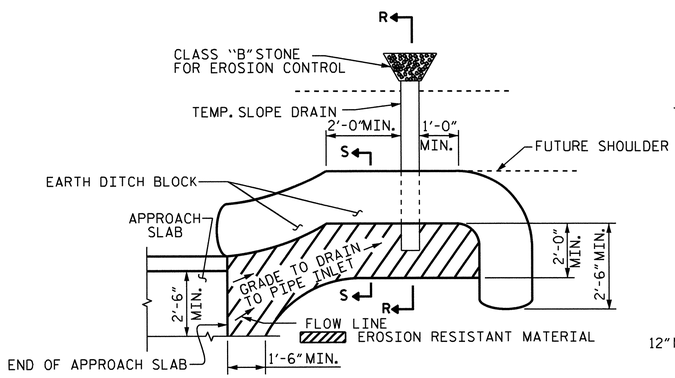

NOTE: IMMEDIATELY AFTER THE CONSTRUCTION OF THE APPROACH SLAB, THE CONTRACTOR SHALL PROVIDE TEMPORARY BERM AND SLOPE DRAIN. CONTRACTOR SHALL GRADE TO PIPE INLET AND PROVIDE EROSION RESISTANT MATERIAL AS SHOWN. THE EROSION RESISTANT MATERIAL SHALL BE EITHER 1) ASPHALT PLANT MIX, TYPE 1 OR TYPE 2, MIN. 2" DEPTH, 2) EROSION CONTROL MAT, OR 3) CONCRETE, AS DIRECTED BY THE ENGINEER. THE SLOPE DRAIN SHALL CONSIST OF A NON-PERFORATED TEMPORARY DRAINAGE PIPE, 12 INCHES IN DIAMETER.

PLAN VIEW

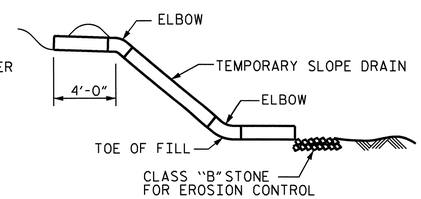

SECTION R-R

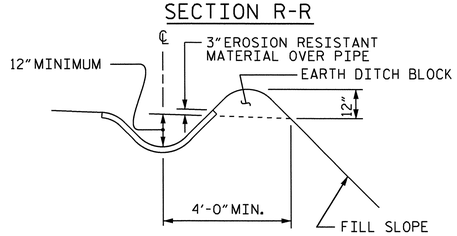

SECTION S-S

TEMPORARY BERM AND SLOPE DRAIN DETAILS

(TO BE USED WHEN SHOULDER BERM GUTTER IS REQUIRED)

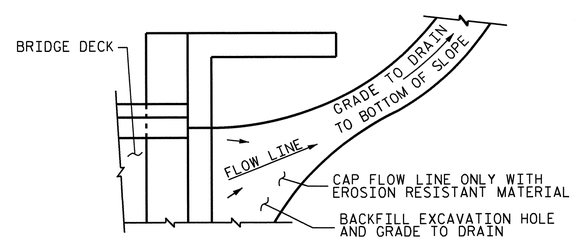

NOTE: IF THE APPROACH SLAB IS NOT CONSTRUCTED IMMEDIATELY AFTER THE BACKFILLING OF THE END BENT EXCAVATION, GRADE TO DRAIN TO THE BOTTOM OF THE SLOPE AND PROVIDE EROSION RESISTANT MATERIAL, SUCH AS FIBERGLASS ROVING OR AS DIRECTED BY THE ENGINEER TO PREVENT SOIL EROSION AND TO PROTECT THE AREA ADJACENT TO THE STRUCTURE. THE CONTRACTOR WILL BE REQUIRED TO REMOVE THESE MATERIALS PRIOR TO CONSTRUCTION OF THE APPROACH SLAB.

TEMPORARY DRAINAGE DETAIL

NORTH CAROLINA PROFESSIONAL SEAL 16301 ENGINEER TING-HSIUNG FANG

8/29/11

PROJECT NO. U-3326B

ROCKINGHAM COUNTY

STATION: 203+04.30 -L-

SHEET 2 OF 2

STATE OF NORTH CAROLINA
DEPARTMENT OF TRANSPORTATION
RALEIGH

STANDARD

BRIDGE APPROACH SLAB DETAILS

—LEFT LANE—

REVISIONS						SHEET NO.
NO.	BY:	DATE:	NO.	BY:	DATE:	S-64
1			3			TOTAL SHEETS
2			4			159

STR. 1

STD. NO. BAS10

ASSEMBLED BY : OT NGUYEN		DATE : 2/10/11	
CHECKED BY : T.H. FANG		DATE : 2/14/11	
DRAWN BY : FCJ 11/88	REV. 10/17/00	RWW/LES	
CHECKED BY : ARB 11/88	REV. 5/7/03	RWW/JTE	
	REV. 5/1/06R	MAA/KMM	

29-AUG-2011 13:38
X:\TIPProjects-U\U3326B\Structures\str01\FinalPlans\u3326b_sd_as_01.dgn
OTNGUYEN

F.A. PROJ. NO. STP-29B(3)

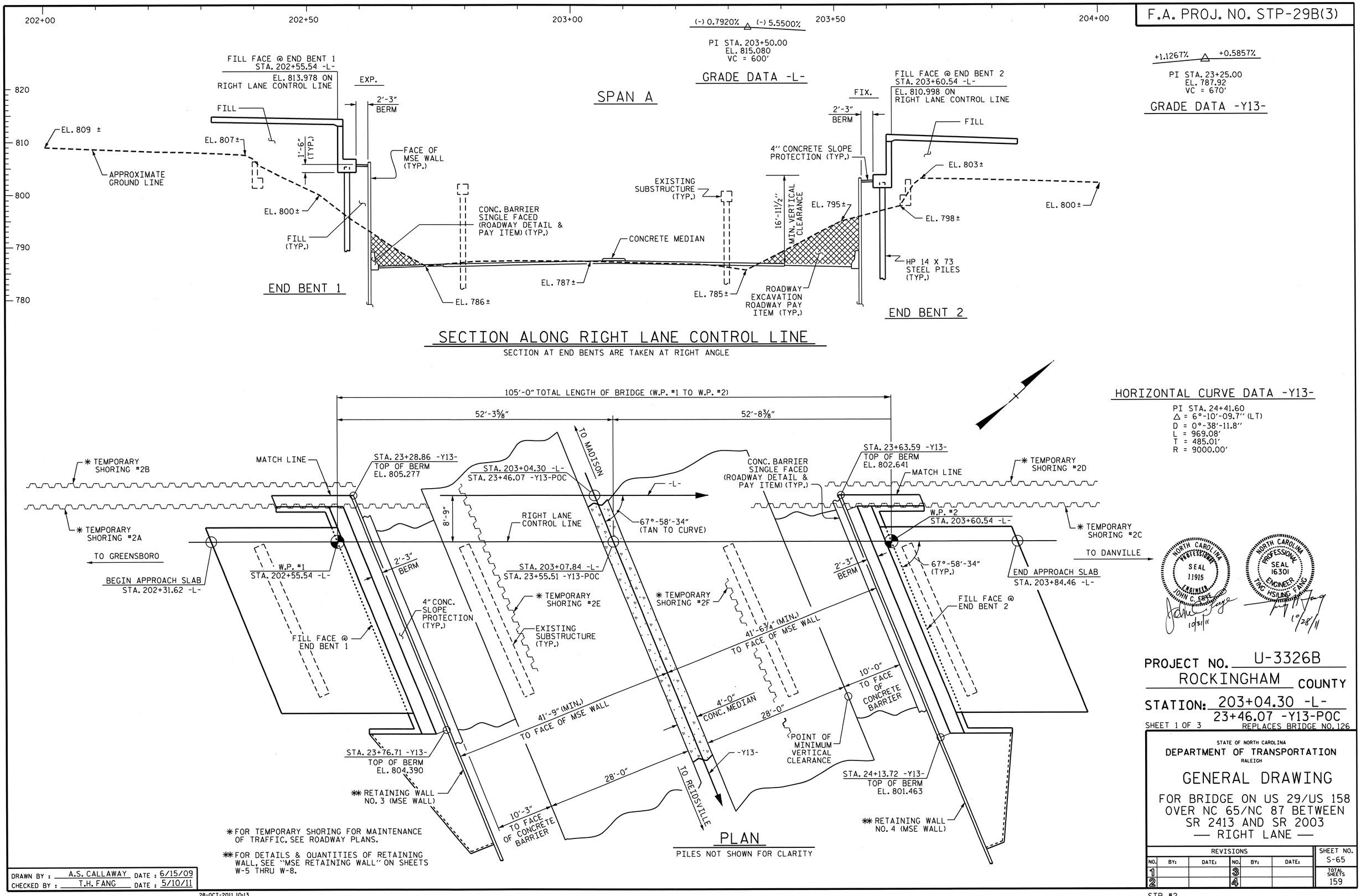

HORIZONTAL CURVE DATA -Y13-

PI STA. 24+41.60
△ = 6°-10'-09.7" (LT)
D = 0°-38'-11.8"
L = 969.08'
T = 485.01'
R = 9000.00'

✱ FOR TEMPORARY SHORING FOR MAINTENANCE OF TRAFFIC, SEE ROADWAY PLANS.

✱✱ FOR DETAILS & QUANTITIES OF RETAINING WALL, SEE "MSE RETAINING WALL" ON SHEETS W-5 THRU W-8.

NORTH CAROLINA PROFESSIONAL SEAL 11915 ENGINEER JOHN C. FAYE 10/31/11

NORTH CAROLINA PROFESSIONAL SEAL 16301 ENGINEER TING-HSIUNG FANG 10/28/11

PROJECT NO. U-3326B
ROCKINGHAM COUNTY
STATION: 203+04.30 -L-
23+46.07 -Y13-POC

SHEET 1 OF 3

REPLACES BRIDGE NO. 126

STATE OF NORTH CAROLINA
DEPARTMENT OF TRANSPORTATION
RALEIGH

GENERAL DRAWING

FOR BRIDGE ON US 29/US 158 OVER NC 65/NC 87 BETWEEN SR 2413 AND SR 2003
— RIGHT LANE —

REVISIONS						SHEET NO.
NO.	BY:	DATE:	NO.	BY:	DATE:	S-65
1			3			TOTAL SHEETS
2			4			159

DRAWN BY : A.S. CALLAWAY DATE : 6/15/09
CHECKED BY : T.H. FANG DATE : 5/10/11

28-OCT-2011 10:13
K:\TIPProjects-U\U3326B\Structures\str02\FinalPlans\u3326b_sd_gd_02.dgn
ttfang

STR. #2

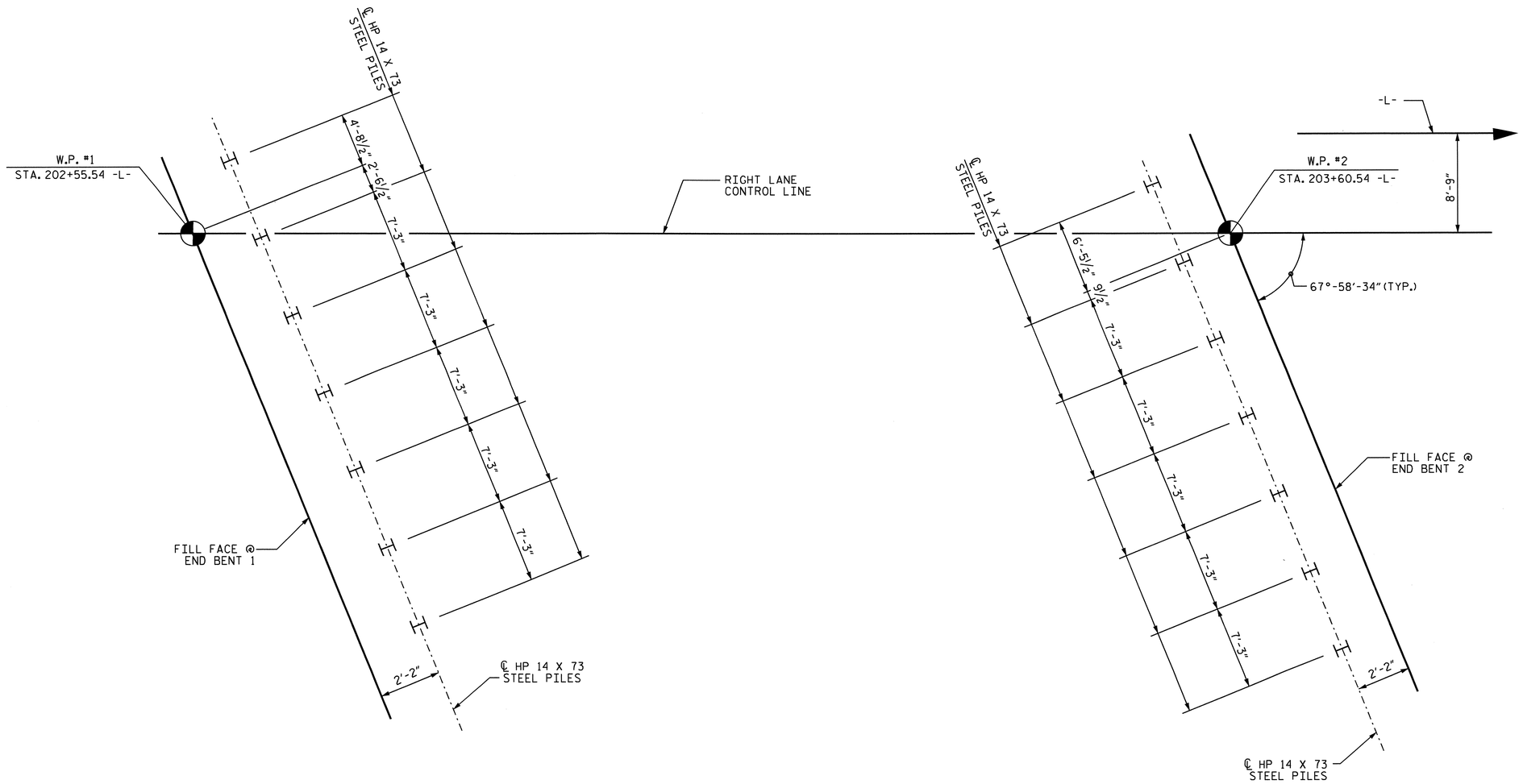

END BENT 1

END BENT 2

FOUNDATION LAYOUT

DIMENSIONS LOCATING PILES ARE SHOWN TO PILE CENTERLINE AT THE BOTTOM OF CAP.

ALL HP 14 X 73 STEEL PILES ARE VERTICAL.

NOTES

FOR PILES, SEE SPECIAL PROVISIONS.

PILES AT END BENTS 1 AND 2 ARE DESIGNED FOR A FACTORED RESISTANCE OF 115 TONS PER PILE. DRIVE PILES TO A REQUIRED DRIVING RESISTANCE OF 195 TONS PER PILE.

CONCRETE IS REQUIRED TO FILL HOLES FOR PILE EXCAVATION AT END BENTS 1 AND 2 TO BOTTOM OF WALL.

PERFORM WALL EXCAVATION PRIOR TO INSTALLING PILES AT END BENTS 1 AND 2.

PILE EXCAVATION MAY BE REQUIRED TO INSTALL PILES AT END BENTS 1 AND 2. IF PILES CAN NOT BE DRIVEN TO ELEVATION 770 FT, THEN USE PILE EXCAVATION TO ELEVATION 770 FT AND A MINIMUM PENETRATION OF 5 FT IN WEATHERED ROCK/HARD ROCK. PILES REQUIRING PILE EXCAVATION ARE NOT REQUIRED TO BE DRIVEN. FOR PILE EXCAVATION, SEE PILES SPECIAL PROVISIONS.

STEEL H-PILE POINTS ARE REQUIRED FOR DRIVEN H-PILES AT END BENTS 1 AND 2. FOR STEEL PILE POINTS, SEE PILES SPECIAL PROVISION.

NORTH CAROLINA PROFESSIONAL SEAL 16301 ENGINEER TING-HSIUNG FANG

8/29/11

PROJECT NO. U-3326B
ROCKINGHAM COUNTY
STATION: 203+04.30 -L-

SHEET 2 OF 3

STATE OF NORTH CAROLINA
DEPARTMENT OF TRANSPORTATION
RALEIGH

GENERAL DRAWING

FOR BRIDGE ON US 29/US 158 OVER NC 65/NC 87 BETWEEN SR 2413 AND SR 2003

—RIGHT LANE—

REVISIONS						SHEET NO.
NO.	BY:	DATE:	NO.	BY:	DATE:	S-66
1			3			TOTAL SHEETS
2			4			159

DRAWN BY : HARISH SHAH DATE : 01/11
CHECKED BY : T.H. FANG DATE : 5/10/11

29-AUG-2011 15:19
X:\TIPProjects-U\U3326B\Structures\str02\FinalPlans\u3326b_sd_gd_02.dgn
OTNGUYEN

STR. #2

TOTAL BILL OF MATERIAL

	REMOVAL OF EXISTING STRUCTURE	PILE EXCAVATION IN SOIL	PILE EXCAVATION NOT IN SOIL	REINFORCED CONCRETE DECK SLAB	GROOVING BRIDGE FLOORS	CLASS A CONCRETE	BRIDGE APPROACH SLABS	REINFORCING STEEL	MODIFIED 63" PRESTRESSED CONCRETE GIRDERS		HP 14X73 STEEL PILES		STEEL PILE POINTS	CONCRETE BARRIER RAIL	4" SLOPE PROTECTION	ELASTOMERIC BEARINGS	EXPANSION JOINT SEALS
	LUMP SUM	LIN. FT.	LIN. FT.	SQ.FT.	SQ.FT.	CU.YDS.	LUMP SUM	LBS.	NO.	LIN. FT.	NO.	LIN. FT.	EA	LIN. FT.	SQ. YDS.	LUMP SUM	LUMP SUM
SUPERSTRUCTURE				3,826	4,617				4	404.08				246.64			
END BENT 1		15.00	15.00			43.6		5,361			7	245	7		45		
END BENT 2		35.00	70.00			43.7		5,334			7	210	7		45		
TOTAL	LUMP SUM	50.00	85.00	3,826	4,617	87.3	LUMP SUM	10,695	4	404.08	14	455	14	246.64	90	LUMP SUM	LUMP SUM

BM #12: RR SPIKE IN BASE OF 14" POPLAR, 212.48' RIGHT, STA. 209+18.10 -L-, EL. 758.56.

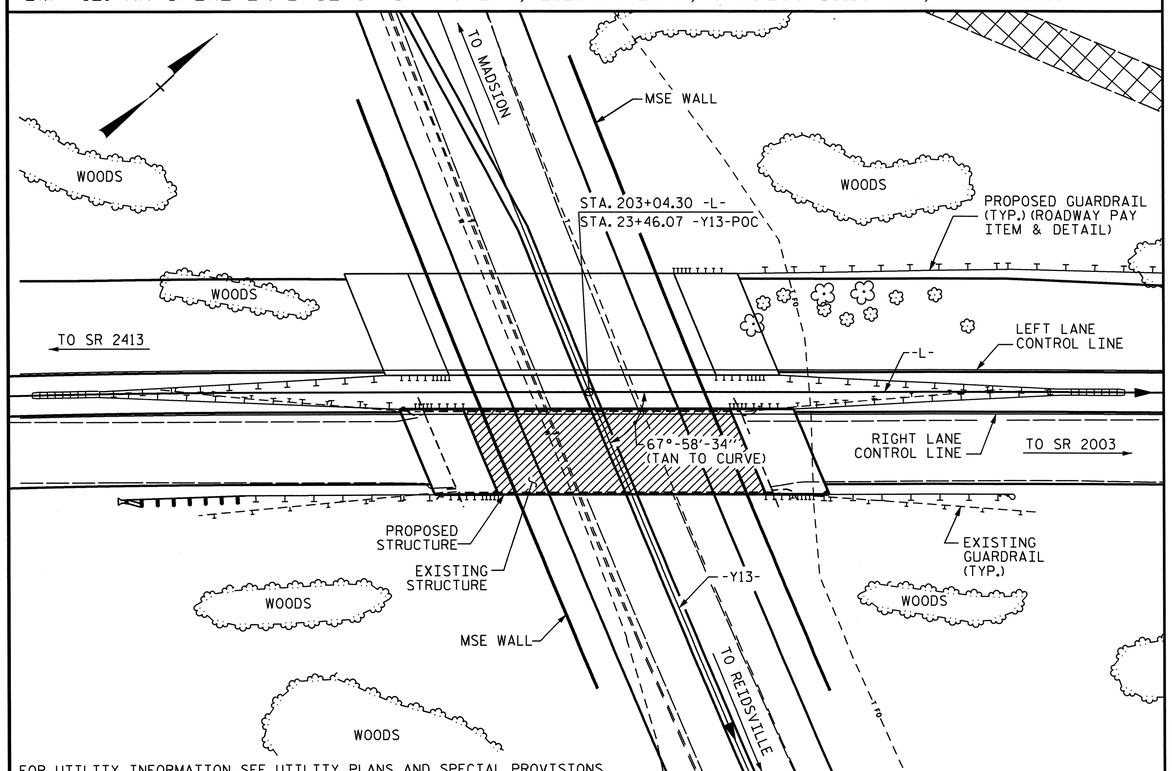

FOR UTILITY INFORMATION, SEE UTILITY PLANS AND SPECIAL PROVISIONS.

LOCATION SKETCH

NOTES

ASSUMED LIVE LOAD = HL 93 OR ALTERNATE LOADING.

FOR OTHER DESIGN DATA AND GENERAL NOTES, SEE SHEET SN.

FOR EROSION CONTROL MEASURES SEE EROSION CONTROL PLANS.

THIS BRIDGE HAS BEEN DESIGNED IN ACCORDANCE WITH THE AASHTO LRFD BRIDGE DESIGN SPECIFICATIONS.

PRESTRESSED CONCRETE DECK PANELS MAY BE USED IN LIEU OF METAL STAY-IN-PLACE FORMS IN ACCORDANCE WITH ARTICLE 420-3 OF THE STANDARD SPECIFICATIONS.

REMOVABLE FORMS MAY BE USED IN LIEU OF METAL STAY-IN-PLACE FORMS IN ACCORDANCE WITH ARTICLE 420-3 OF THE STANDARD SPECIFICATIONS.

THE CLASS AA CONCRETE IN THE BRIDGE DECK SHALL CONTAIN FLY ASH OR GROUND GRANULATED BLAST FURNACE SLAG AT THE SUBSTITUTION RATE SPECIFIED IN ARTICLE 1024-1 AND IN ACCORDANCE WITH ARTICLES 1024-5 AND 1024-6 OF THE STANDARD SPECIFICATIONS. NO PAYMENT WILL BE MADE FOR THIS SUBSTITUTION AS IT IS CONSIDERED INCIDENTAL TO THE COST OF THE REINFORCED CONCRETE DECK SLAB.

INASMUCH AS THE PAINT SYSTEM ON THE EXISTING STRUCTURAL STEEL CONTAINS LEAD, THE CONTRACTOR'S ATTENTION IS DIRECTED TO ARTICLE 107-1 OF THE STANDARD SPECIFICATIONS. ANY COSTS RESULTING FROM COMPLIANCE WITH APPLICABLE STATE OR FEDERAL REGULATIONS PERTAINING TO HANDLING OF MATERIALS CONTAINING LEAD BASED PAINT SHALL BE INCLUDED IN THE BID PRICE FOR "REMOVAL OF EXISTING STRUCTURE AT STATION 203+04.30 -L-".

AFTER SERVING AS A TEMPORARY STRUCTURE THE EXISTING STRUCTURE CONSISTING OF 3 SPANS: 1 @ 39'-0", 1 @ 47'-6" AND 1 @ 39'-0"; 28'-0" CLEAR ROADWAY WIDTH AND A RC DECK ON I-BEAMS; BOTH END BENTS CONSISTING OF RC CAPS AND TIMBER PILES, INTERIOR BENT CONSISTING OF RCP&B ON PILE FOOTINGS, AND LOCATED AT THE PROPOSED STRUCTURE SITE SHALL BE REMOVED. THE EXISTING BRIDGE IS PRESENTLY NOT POSTED FOR LOAD LIMIT. SHOULD THE STRUCTURAL INTEGRITY OF THE BRIDGE DETERIORATE A LOAD LIMIT MAY BE POSTED AND MAY BE REDUCED AS FOUND NECESSARY DURING THE LIFE OF THE PROJECT.

THE SUBSTRUCTURE OF THE EXISTING BRIDGE INDICATED ON THE PLANS IS FROM THE BEST INFORMATION AVAILABLE. SINCE THIS INFORMATION IS SHOWN FOR THE CONVENIENCE OF THE CONTRACTOR, THE CONTRACTOR SHALL HAVE NO CLAIM WHATSOEVER AGAINST THE DEPARTMENT OF TRANSPORTATION FOR ANY DELAYS OR ADDITIONAL COST INCURRED BASED ON DIFFERENCES BETWEEN THE EXISTING BRIDGE SUBSTRUCTURE SHOWN ON THE PLANS AND THE ACTUAL CONDITIONS AT THE PROJECT SITE.

THE CONTRACTOR SHALL PROVIDE INDEPENDENT ASSURANCE SAMPLES OF REINFORCING STEEL AS FOLLOWS: FOR PROJECTS REQUIRING UP TO 400 TONS OF REINFORCING STEEL, ONE 30 INCH SAMPLE OF EACH SIZE BAR USED, AND FOR PROJECTS REQUIRING OVER 400 TONS OF REINFORCING STEEL, TWO 30 INCH SAMPLES OF EACH SIZE BAR USED. THE BARS FROM WHICH THE SAMPLES ARE TAKEN MUST THEN BE SPLICED WITH REPLACEMENT BARS OF THE SIZE AND LENGTH OF THE SAMPLE PLUS A MINIMUM LAP SPLICE OF THIRTY BAR DIAMETERS. PAYMENT FOR THE SAMPLES OF REINFORCING STEEL SHALL BE CONSIDERED INCIDENTAL TO VARIOUS PAY ITEMS.

FOR MAINTENANCE AND PROTECTION OF TRAFFIC BENEATH PROPOSED STRUCTURE, SEE SPECIAL PROVISIONS.

FOR LIMITS OF TEMPORARY SHORING FOR MAINTENANCE OF TRAFFIC, SEE TRAFFIC CONTROL PLANS. FOR PAY ITEM FOR TEMPORARY SHORING FOR MAINTENANCE OF TRAFFIC, SEE ROADWAY PLANS.

STEEL SHEET PILING REQUIRED FOR SHORING SHALL BE HOT ROLLED.

NEEDLE BEAMS WILL NOT BE ALLOWED UNLESS OTHERWISE CALLED FOR ON THE PLANS OR APPROVED BY THE ENGINEER.

FOR CURING CONCRETE, SEE SPECIAL PROVISIONS.

FOR FORMS FOR CONCRETE BRIDGE DECKS, SEE SPECIAL PROVISIONS.

FOR SUBMITTAL OF WORKING DRAWINGS, SEE SPECIAL PROVISIONS.

FOR PLACING LOAD ON STRUCTURE MEMBERS, SEE SPECIAL PROVISIONS.

FOR FALSEWORK AND FORMWORK, SEE SPECIAL PROVISIONS.

FOR CRANE SAFETY, SEE SPECIAL PROVISIONS.

FOR PRESTRESSED CONCRETE MEMBERS, SEE SPECIAL PROVISIONS.

FOR GROUT FOR STRUCTURES, SEE SPECIAL PROVISIONS.

NORTH CAROLINA PROFESSIONAL SEAL 16301 ENGINEER T.H. FANG, JR. 10/20/11

PROJECT NO. U-3326B
ROCKINGHAM COUNTY
STATION: 203+04.30 -L-

SHEET 3 OF 3

STATE OF NORTH CAROLINA
DEPARTMENT OF TRANSPORTATION
RALEIGH

GENERAL DRAWING
FOR BRIDGE ON US 29/US 158 OVER NC 65/NC 87 BETWEEN SR 2413 AND SR 2003
— RIGHT LANE —

REVISIONS						SHEET NO.
NO.	BY:	DATE:	NO.	BY:	DATE:	S-67
1			3			TOTAL SHEETS
2			4			159

STR. #2

DRAWN BY : HARISH SHAH DATE : 01/11
CHECKED BY : T.H. FANG DATE : 5/10/11

20-OCT-2011 16:57
K:\TIPProjects-U\U3326B\Structures\str02\FinalPlans\u3326b_sd_gd_02.dgn
tfang

LOAD AND RESISTANCE FACTOR RATING (LRFR) SUMMARY FOR PRESTRESSED CONCRETE GIRDERS

LEVEL		VEHICLE	WEIGHT (W) (TONS)	CONTROLLING LOAD RATING (#)	MINIMUM RATING FACTORS (RF)	TONS = W × RF	STRENGTH I LIMIT STATE											SERVICE III LIMIT STATE						COMMENT NUMBER
							LIVE-LOAD FACTORS $\gamma_{(LL)}$	MOMENT					SHEAR					LIVE-LOAD FACTORS $\gamma_{(LL)}$	MOMENT					
								DISTRIBUTION FACTORS (DF)	RATING FACTOR	SPAN	GIRDER LOCATION	DISTANCE FROM LEFT END OF SPAN (ft)	DISTRIBUTION FACTORS (DF)	RATING FACTOR	SPAN	GIRDER LOCATION	DISTANCE FROM LEFT END OF SPAN (ft)		DISTRIBUTION FACTORS (DF)	RATING FACTOR	SPAN	GIRDER LOCATION	DISTANCE FROM LEFT END OF SPAN (ft)	
DESIGN LOAD RATING		HL-93 (INVENTORY)	N/A	1	1.04	--	1.75	0.890	1.46	A	EL	49.803	0.984	1.06	A	I	9.961	0.80	0.89	1.04	A	EL	49.803	
		HL-93 (OPERATING)	N/A		1.38	--	1.35	0.890	1.89	A	EL	49.803	0.984	1.38	A	I	9.961	N/A	--	--	--	--	--	
		HS-20 (INVENTORY)	36.000	2	1.42	51.1	1.75	0.890	2.04	A	EL	49.803	0.984	1.42	A	I	9.961	0.80	0.89	1.45	A	EL	49.803	
		HS-20 (OPERATING)	36.000		1.84	66.2	1.35	0.890	2.64	A	EL	49.803	0.984	1.84	A	I	9.961	N/A	--	--	--	--	--	
LEGAL LOAD RATING	SINGLE VEHICLE (SV)	SNSH	13.500		3.45	46.5	1.40	0.890	6.05	A	EL	49.803	0.984	4.36	A	I	9.961	0.80	0.89	3.45	A	EL	49.803	
		SNGARBS2	20.000		2.49	49.9	1.40	0.890	4.38	A	EL	49.803	0.984	3.06	A	I	9.961	0.80	0.89	2.49	A	EL	49.803	
		SNAGRIS2	22.000		2.33	51.3	1.40	0.890	4.09	A	EL	49.803	0.984	2.82	A	I	9.961	0.80	0.89	2.33	A	EL	49.803	
		SNCOTTS3	27.250		1.71	46.7	1.40	0.890	3.00	A	EL	49.803	0.984	2.17	A	I	9.961	0.80	0.89	1.71	A	EL	49.803	
		SNAGGRS4	34.925		1.40	49.0	1.40	0.890	2.46	A	EL	49.803	0.984	1.77	A	I	9.961	0.80	0.89	1.40	A	EL	49.803	
		SNS5A	35.550		1.37	48.8	1.40	0.890	2.41	A	EL	49.803	0.984	1.78	A	I	9.961	0.80	0.89	1.37	A	EL	49.803	
		SNS6A	39.950		1.25	49.9	1.40	0.890	2.19	A	EL	49.803	0.984	1.61	A	I	9.961	0.80	0.89	1.25	A	EL	49.803	
		SNS7B	42.000		1.19	49.9	1.40	0.890	2.09	A	EL	49.803	0.984	1.57	A	I	9.961	0.80	0.89	1.19	A	EL	49.803	
	TRUCK TRACTOR SEMI-TRAILER (TTST)	TNAGRIT3	33.000		1.52	50.1	1.40	0.890	2.67	A	EL	49.803	0.984	1.93	A	I	9.961	0.80	0.89	1.52	A	EL	49.803	
		TNT4A	33.075		1.52	50.4	1.40	0.890	2.67	A	EL	49.803	0.984	1.89	A	I	9.961	0.80	0.89	1.52	A	EL	49.803	
		TNT6A	41.600		1.23	51.3	1.40	0.890	2.17	A	EL	49.803	0.984	1.64	A	I	9.961	0.80	0.89	1.23	A	EL	49.803	
		TNT7A	42.000		1.24	51.9	1.40	0.890	2.17	A	EL	49.803	0.984	1.61	A	I	9.961	0.80	0.89	1.23	A	EL	49.803	
		TNT7B	42.000		1.26	53.1	1.40	0.890	2.22	A	EL	49.803	0.984	1.54	A	I	9.961	0.80	0.89	1.26	A	EL	49.803	
		TNAGRIT4	43.000		1.21	52.1	1.40	0.890	2.13	A	EL	49.803	0.984	1.50	A	I	9.961	0.80	0.89	1.21	A	EL	49.803	
		TNAGT5A	45.000		1.15	51.6	1.40	0.890	2.01	A	EL	49.803	0.984	1.47	A	I	9.961	0.80	0.89	1.15	A	EL	49.803	
		TNAGT5B	45.000	3	1.14	51.2	1.40	0.890	2.00	A	EL	49.803	0.984	1.43	A	I	9.961	0.80	0.89	1.14	A	EL	49.803	

LOAD FACTORS:

DESIGN LOAD RATING FACTORS	LIMIT STATE	γ_{DC}	γ_{DW}
	STRENGTH I	1.25	1.50
	SERVICE III	1.00	1.00

NOTES:

MINIMUM RATING FACTORS ARE BASED ON THE STRENGTH I AND SERVICE III LIMIT STATES.

ALLOWABLE STRESSES FOR SERVICE III LIMIT STATE ARE AS REQUIRED FOR DESIGN.

COMMENTS:

1.
2.
3.
4.

(#) CONTROLLING LOAD RATING

(1) DESIGN LOAD RATING (HL-93)
(2) DESIGN LOAD RATING (HS-20)
(3) LEGAL LOAD RATING **
** SEE CHART FOR VEHICLE TYPE

GIRDER LOCATION

I - INTERIOR GIRDER
EL - EXTERIOR LEFT GIRDER
ER - EXTERIOR RIGHT GIRDER

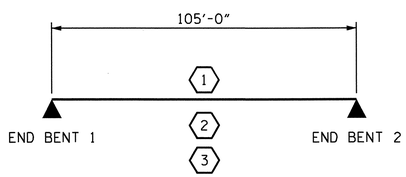

LRFR SUMMARY

PROJECT NO. U-3326B
ROCKINGHAM COUNTY
STATION: 203+04.30 -L-

STATE OF NORTH CAROLINA
DEPARTMENT OF TRANSPORTATION
RALEIGH

STANDARD
LRFR SUMMARY FOR PRESTRESSED CONCRETE GIRDERS
(NON-INTERSTATE TRAFFIC)

NORTH CAROLINA PROFESSIONAL SEAL 16301 ENGINEER HSILING LIANG
8/30/11

REVISIONS						SHEET NO.
NO.	BY:	DATE:	NO.	BY:	DATE:	S-68
1			3			TOTAL SHEETS
2			4			159

STR. #2 STD. NO. LRFR1

ASSEMBLED BY : A.C.OUTLAW	DATE : 1/10/11	
CHECKED BY : J.H.CARDEN	DATE : 6/10/11	
DRAWN BY : MAA 1/08	REV. 11/12/08RR MAA/GM	
CHECKED BY : GM/DI 2/08		

30-AUG-2011 08:41
X:\TIPProjects-U\U3326B\Structures\str02\FinalPlans\u3326b_sd_lrfr_02.dgn
qtnguyen

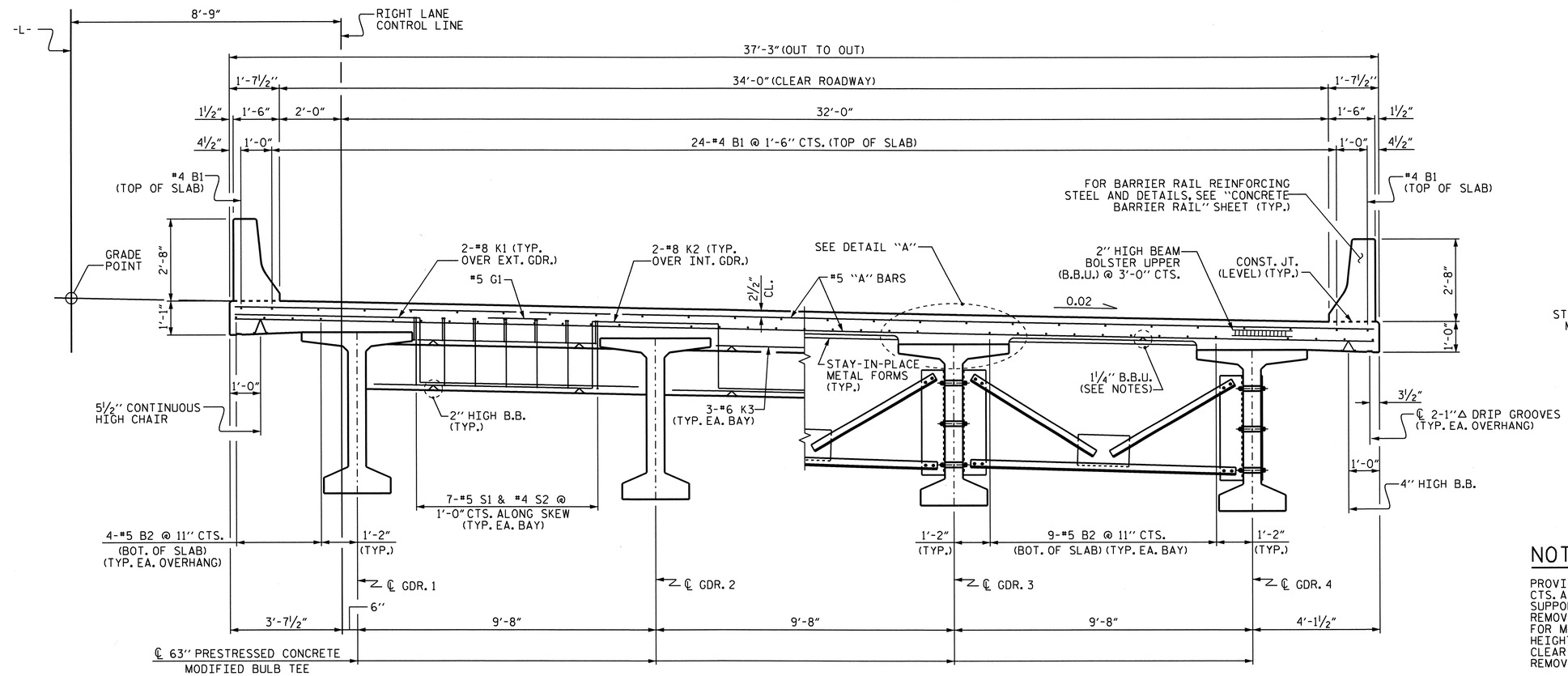

HALF TYPICAL SECTION

SHOWING END BENT DIAPHRAGMS

HALF TYPICAL SECTION

SHOWING INTERMEDIATE DIAPHRAGMS

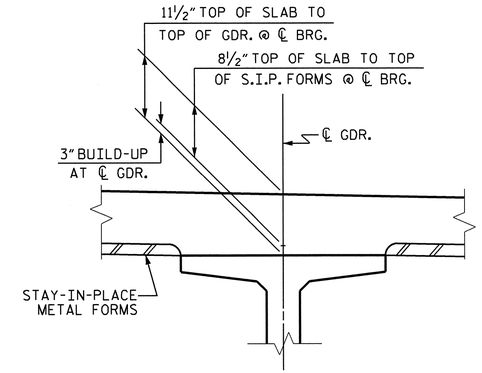

DETAIL "A"

NOTES

PROVIDE 1¼" HIGH BEAM BOLSTERS UPPER AT 4'-0" CTS. ATOP THE METAL STAY-IN-PLACE FORMS TO SUPPORT THE BOTTOM MAT OF 'A' BARS. WHEN USING REMOVABLE FORMS, PROVIDE CONTINUOUS HIGH CHAIRS FOR METAL DECK (C.H.C.M.) @ 4'-0" CTS. WITH A HEIGHT TO SUPPORT THE BOTTOM MAT OF 'A' BARS A CLEAR DISTANCE OF 2½" ABOVE THE TOP OF THE REMOVABLE FORM.

LONGITUDINAL STEEL MAY BE SHIFTED SLIGHTLY, AS NECESSARY, TO AVOID INTERFERENCE WITH STIRRUPS IN PRESTRESSED CONCRETE GIRDERS.

BARRIER RAIL IN EACH SPAN SHALL NOT BE CAST UNTIL ALL SLAB CONCRETE IN THAT SPAN HAS BEEN CAST AND HAS REACHED A MINIMUM COMPRESSIVE STRENGTH OF 3,000 PSI.

CONCRETE IN END BENT DIAPHRAGMS MAY BE CLASS A IN LIEU OF CLASS AA. PAYMENT SHALL BE MADE UNDER THE UNIT CONTRACT PRICE FOR REINFORCED CONCRETE DECK SLAB.

THE JOINT IN THE DECK SHALL BE FORMED PRIOR TO THE CASTING OF THE BARRIER RAIL.

FOR INTERMEDIATE DIAPHRAGM DETAILS, SEE "INTERMEDIATE STEEL DIAPHRAGMS FOR 63" PRESTRESSED CONCRETE MODIFIED BULB TEE" SHEET.

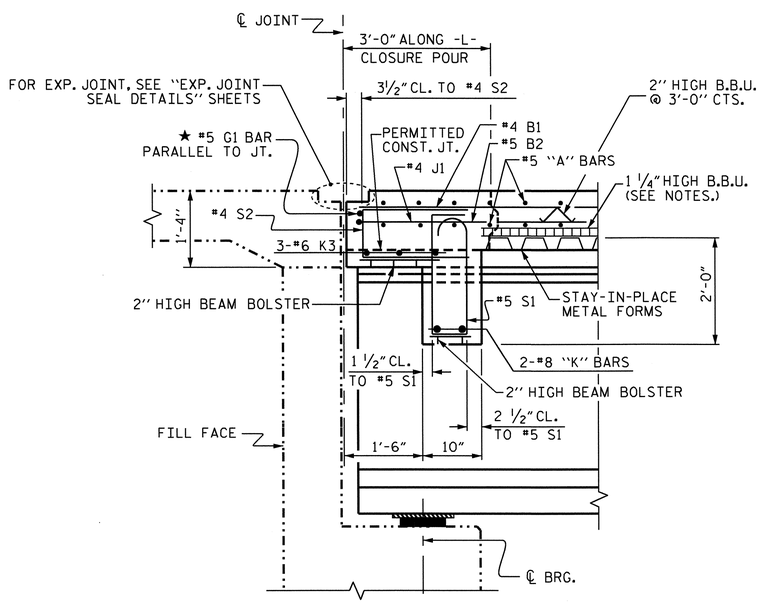

SECTION @ END BENT

★ #5 G1 BAR MAY BE SHIFTED SLIGHTLY, AS NECESSARY, TO CLEAR REINFORCING STEEL AND STIRRUPS.

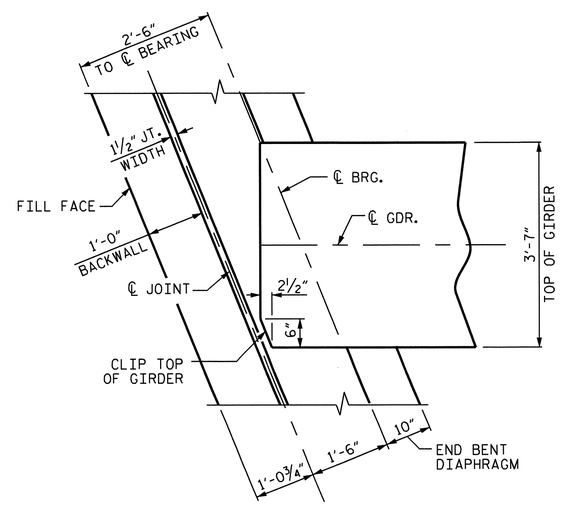

END BENT DIAPHRAGM

END BENT 1 SHOWN, END BENT 2 SIMILAR

PROJECT NO. U-3326B

ROCKINGHAM COUNTY

STATION: 203+04.30 -L-

STATE OF NORTH CAROLINA
DEPARTMENT OF TRANSPORTATION
RALEIGH

SUPERSTRUCTURE

TYPICAL SECTION

— RIGHT LANE —

NORTH CAROLINA PROFESSIONAL SEAL 16301 ENGINEER T.NG HSIANG-FANG

10/21/11

REVISIONS						SHEET NO.
NO.	BY:	DATE:	NO.	BY:	DATE:	S-69
1			3			TOTAL SHEETS
2			4			159

STR. #2

DRAWN BY : A.S. CALLAWAY DATE : 8/14/09
CHECKED BY : L.E. SUTTON DATE : 2/8/10

21-OCT-2011 09:23
K:\TIPProjects-U\U3326B\Structures\str02\FinalPlans\u3326b_sd_ts_02.dgn
ttfang

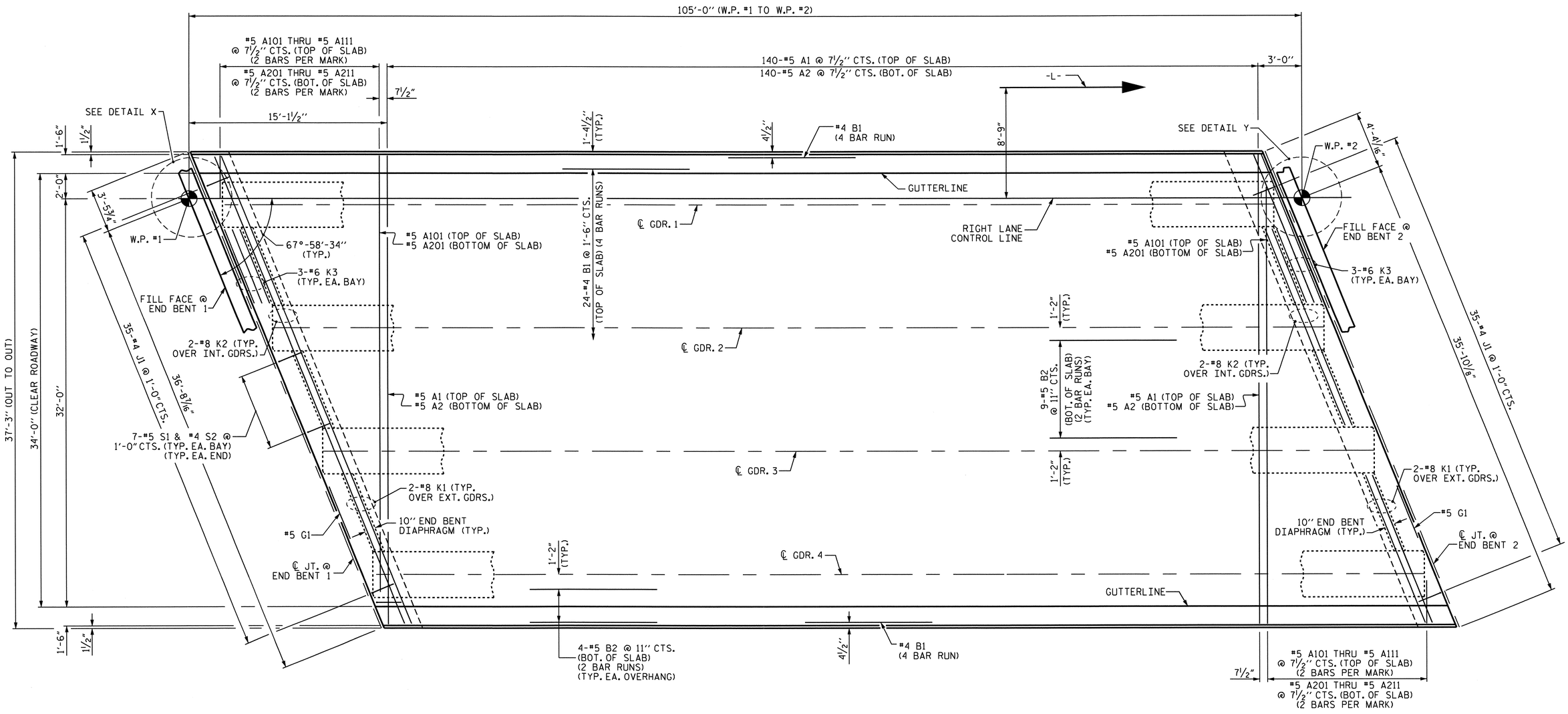

PLAN OF SPAN A

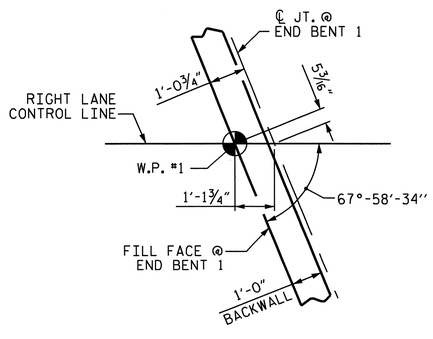

DETAIL X

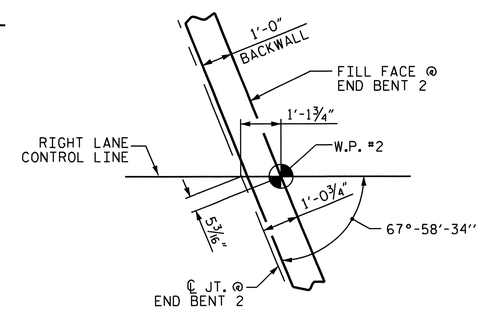

DETAIL Y

PROJECT NO. U-3326B
ROCKINGHAM COUNTY
STATION: 203+04.30 -L-

STATE OF NORTH CAROLINA
DEPARTMENT OF TRANSPORTATION
RALEIGH

SUPERSTRUCTURE
PLAN OF SPAN
— RIGHT LANE —

NORTH CAROLINA PROFESSIONAL SEAL 16301 ENGINEER TING-HSIUNG FANG
8/29/11

REVISIONS								SHEET NO.
NO.	BY:	DATE:	NO.	BY:	DATE:			S-70
1			3					TOTAL SHEETS
2			4					159

STR. #2

DRAWN BY : A.S. CALLAWAY DATE : 8/21/09
CHECKED BY : L.E. SUTTON DATE : 2/8/10

29-AUG-2011 15:19
X:\TIPProjects-U\U3326B\Structures\str02\FinalPlans\u3326b_sd_s*_02.dgn
OTNGUYEN

DEAD LOAD DEFLECTION TABLE FOR GIRDERS

0.6"Ø LOW RELAXATION	SPAN A																																	
	GIRDER 1											GIRDERS 2 & 3											GIRDER 4										
TENTH POINTS	BRG.	0.1	0.2	0.3	0.4	0.5	0.6	0.7	0.8	0.9	BRG.	BRG.	0.1	0.2	0.3	0.4	0.5	0.6	0.7	0.8	0.9	BRG.	BRG.	0.1	0.2	0.3	0.4	0.5	0.6	0.7	0.8	0.9	BRG.
CAMBER (GIRDER ALONE IN PLACE) ↑	0	0.109	0.207	0.283	0.332	0.348	0.332	0.283	0.207	0.109	0	0	0.109	0.207	0.283	0.332	0.348	0.332	0.283	0.207	0.109	0	0	0.109	0.207	0.283	0.332	0.348	0.332	0.283	0.207	0.109	0
* DEFLECTION DUE TO SUPERIMPOSED D.L. ↓	0	0.038	0.072	0.098	0.115	0.121	0.115	0.098	0.072	0.038	0	0	0.038	0.072	0.099	0.116	0.122	0.116	0.099	0.072	0.038	0	0	0.037	0.070	0.096	0.112	0.118	0.112	0.096	0.070	0.037	0
FINAL CAMBER ↑	0	7/8"	1 5/8"	2 1/4"	2 5/8"	2 3/4"	2 5/8"	2 1/4"	1 5/8"	7/8"	0	0	7/8"	1 5/8"	2 3/16"	2 9/16"	2 11/16"	2 9/16"	2 3/16"	1 5/8"	7/8"	0	0	7/8"	1 5/8"	2 11/16"	2 5/8"	2 3/4"	2 5/8"	2 11/16"	1 5/8"	7/8"	0

* INCLUDES FUTURE WEARING SURFACE
ALL VALUES ARE SHOWN IN FEET (DECIMAL FORM), EXCEPT "FINAL CAMBER", WHICH IS GIVEN IN INCHES (FRACTION FORM).

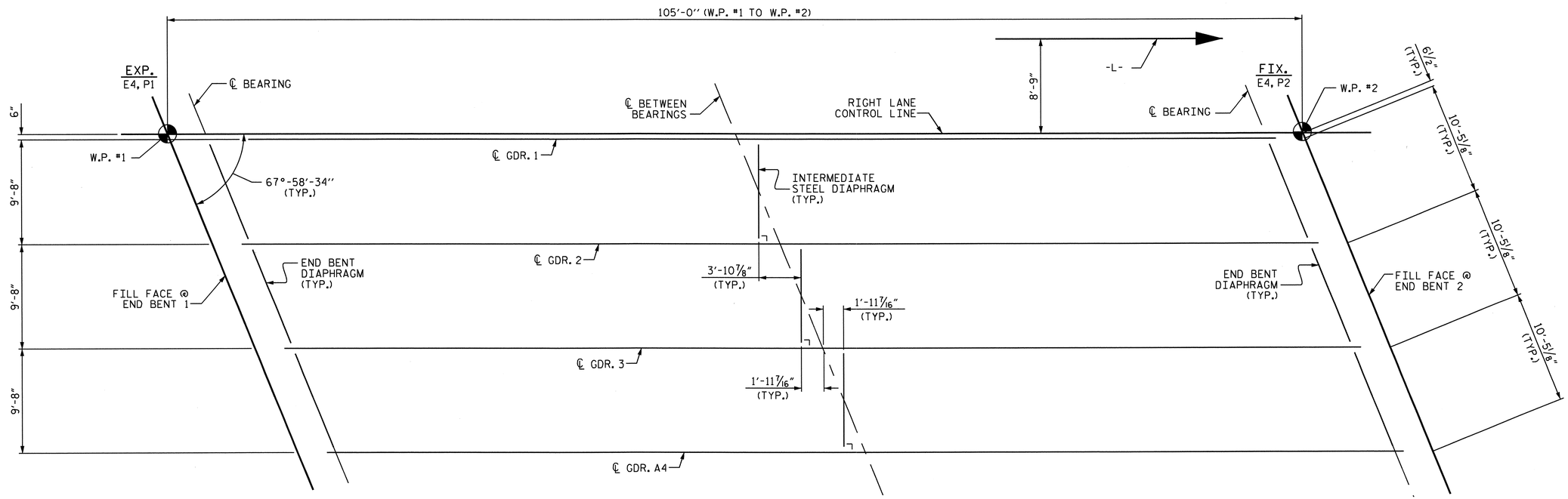

FRAMING PLAN

PROJECT NO. U-3326B
ROCKINGHAM COUNTY
STATION: 203+04.30 -L-

NORTH CAROLINA PROFESSIONAL SEAL 16301 ENGINEER TING HSUNG FANG
10/21/11

STATE OF NORTH CAROLINA
DEPARTMENT OF TRANSPORTATION
RALEIGH

SUPERSTRUCTURE
FRAMING PLAN AND DEAD LOAD DEFLECTIONS
— RIGHT LANE —

REVISIONS						SHEET NO.
NO.	BY:	DATE:	NO.	BY:	DATE:	S-71
1			3			TOTAL SHEETS
2			4			161

STR. #2

DRAWN BY : A.S. CALLAWAY DATE : 8/4/09
CHECKED BY : L.E. SUTTON DATE : 2/8/10

21-OCT-2011 12:29
K:\TIPProjects-U\U3326B\Structures\str02\FinalPlans\u3326b_sd_fp_02.dgn
ttfang

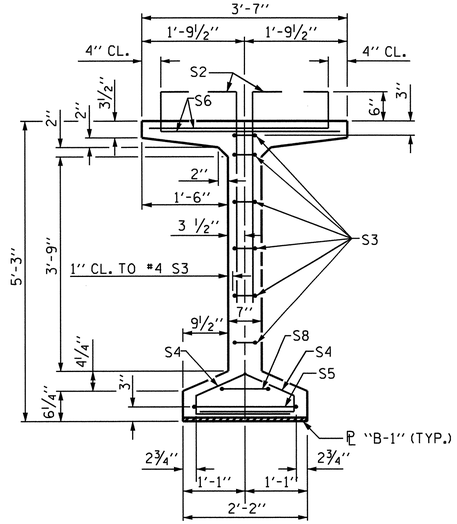

SECTION A-A

FOR EMBEDED ℄ "B-1" DETAILS, SEE SHEET 2 OF 2

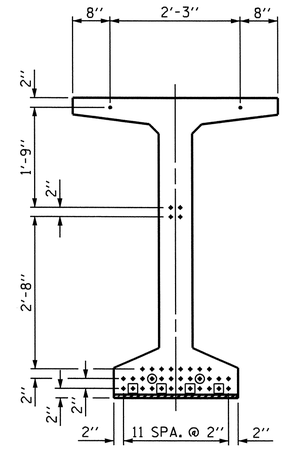

AT END OF GIRDER

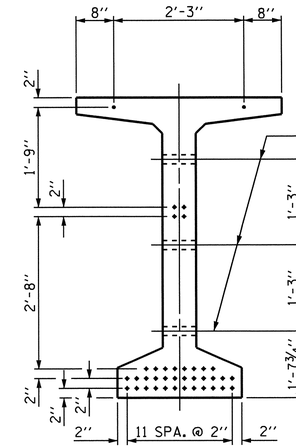

AT ℄ OF GIRDER

℄ 1½" Ø FORMED HOLE. SEE SHEET 2 OF 2 FOR LOCATION. (FOR DIAPHRAGMS SEE "INTERMEDIATE STEEL DIAPHRAGMS" SHEET.)

0.6" Ø LOW RELAXATION STRAND LAYOUT

(38 STRANDS, ALL STRAIGHT, 6 DEBONDED STRANDS)

DEBONDING LEGEND

- ● FULLY BONDED STRANDS
- ⊙ STRANDS DEBONDED FOR 8'-0" FROM END OF GIRDER
- ▣ STRANDS DEBONDED FOR 12'-0" FROM END OF GIRDER

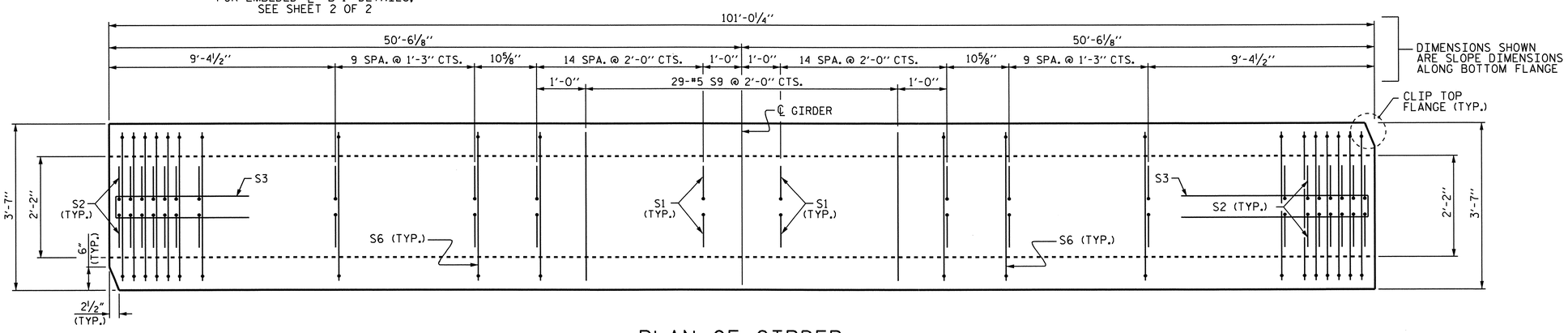

PLAN OF GIRDER

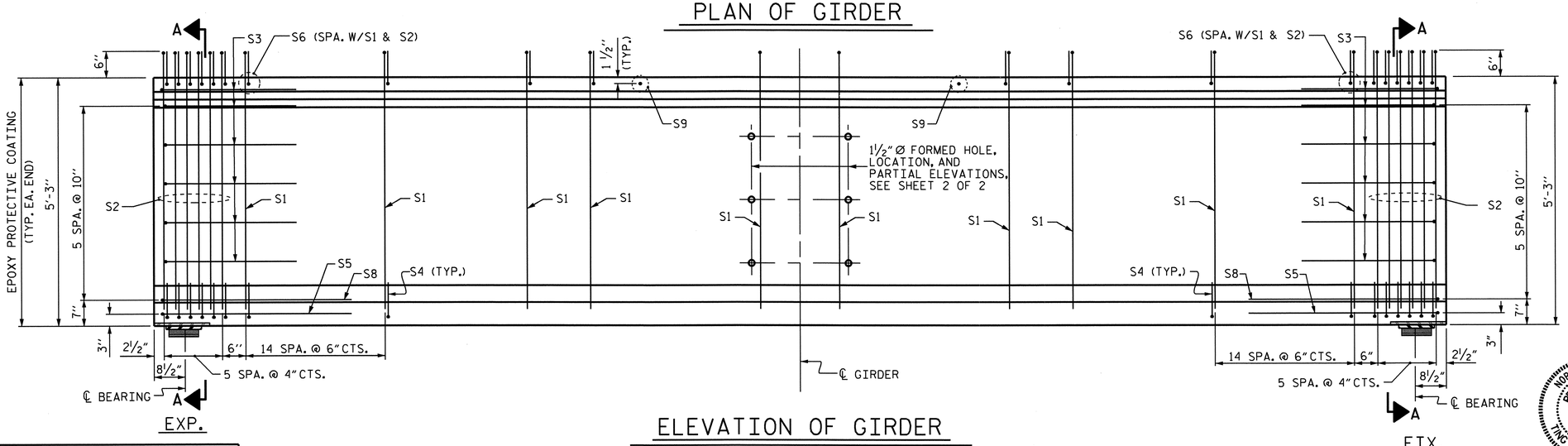

EXP.

ELEVATION OF GIRDER

FIX.

0.6" Ø L. R. GRADE 270 STRANDS		
AREA (SQUARE INCHES)	ULTIMATE STRENGTH (LBS. PER STRAND)	APPLTED PRESTRESS (LBS. PER STRAND)
0.217	58,600	43,950

REINFORCING STEEL FOR ONE GIRDER

	BAR	NUMBER	SIZE	TYPE	LENGTH	WEIGHT
	S1	156	#4	1	6'-1"	634
	S2	24	#5	1	6'-1"	152
	S3	12	#4	2	8'-5"	67
	S4	84	#4	3	3'-0"	168
	S5	2	#5	2	9'-10"	21
	S6	180	#5	4	4'-4"	814
	S8	2	#5	2	9'-0"	19
	S9	29	#5	STR	3'-3"	98
EXT. GDR.	S11	4	#5	2	10'-2"	42
INT. GDR.	S11	8	#5	2	10'-2"	85
EXT. GDR.	S12	8	#4	STR	8'-0"	43
INT. GDR.	S13	8	#4	STR	11'-11"	64

BAR TYPES

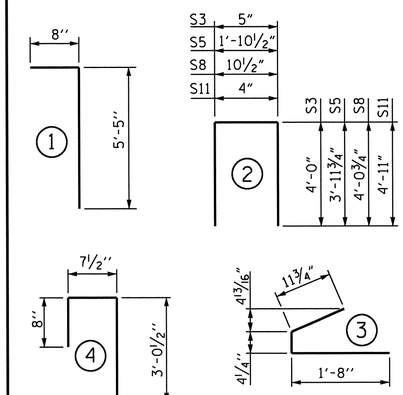

ALL BAR DIMENSIONS ARE OUT-TO-OUT.

QUANTITIES FOR ONE GIRDER

	REINFORCING STEEL	8500 PSI CONCRETE	0.6" Ø L. R. STRANDS
	LB.	C.Y.	NO.
INT. GDR.	2,122	20.0	38
EXT. GDR.	2,058	20.0	38

GIRDERS REQUIRED

NUMBER	LENGTH	TOTAL LENGTH
4	101'- 0¼"	404.08'

PROJECT NO. U-3326B
ROCKINGHAM COUNTY
STATION: 203+04.30 -L-

SHEET 1 OF 2

STATE OF NORTH CAROLINA
DEPARTMENT OF TRANSPORTATION
RALEIGH

STANDARD
63" PRESTRESSED CONCRETE MODIFIED BULB TEE CONTINUOUS FOR LIVE LOAD
—RIGHT LANE—

NORTH CAROLINA PROFESSIONAL SEAL 16301 ENGINEER HSIUNG-FANG TING
8/29/11

REVISIONS							
NO.	BY:	DATE:	NO.	BY:	DATE:		
1			3				
2			4				

SHEET NO. S-72
TOTAL SHEETS 159

STR. #2

STD. NO. PCG9

ASSEMBLED BY : A.S. CALLAWAY	DATE : 11/5/09		
CHECKED BY : L.E. SUTTON	DATE : 2/8/10		
DRAWN BY : EEM 2/6/97	REV. 8/16/99	RWW/LES	
CHECKED BY : VAP 2/6/97	REV. 10/17/00	RWW/LES	
	REV. 5/1/06R	TLA/GM	

29-AUG-2011 15:19
X:\TIPProjects-U\U3326B\Structures\str02\FinalPlans\u3326b_sd_g*_02.dgn
OTNGUYEN

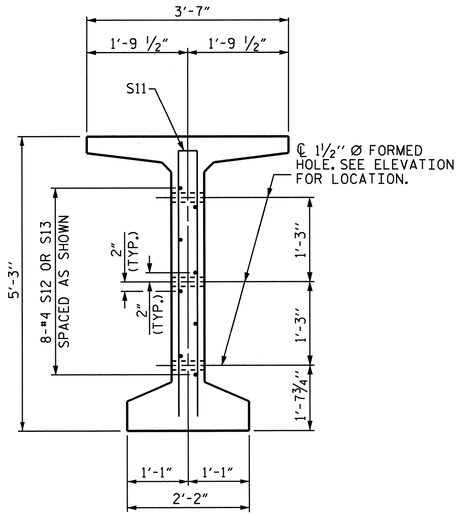

SECTION C-C

(S1, S6 AND S9 BARS NOT SHOWN)

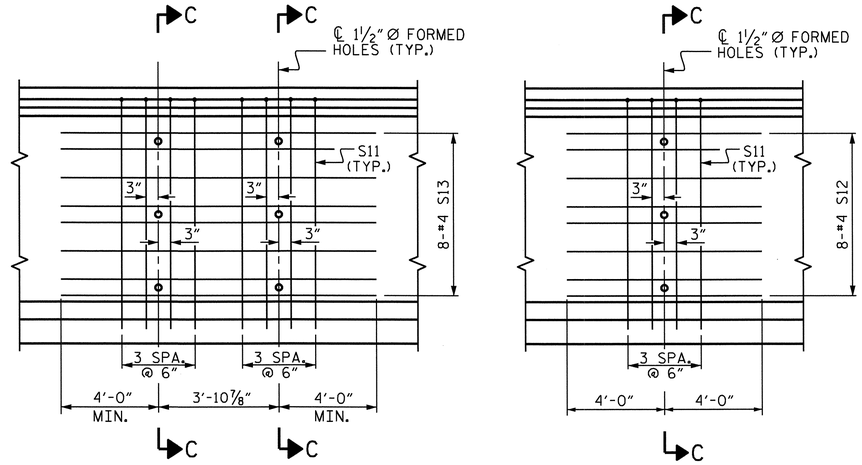

INTERIOR GIRDER

EXTERIOR GIRDER

PARTIAL ELEVATION

SHOWING INTERMEDIATE STEEL DIAPHRAGM REINFORCING STEEL FOR GIRDERS

NOTES

ALL PRESTRESSING STRANDS SHALL BE 7-WIRE LOW-RELAXATION GRADE 270 STRANDS AND SHALL CONFORM TO AASHTO M203 EXCEPT FOR SAMPLING REQUIREMENTS WHICH SHALL BE IN ACCORDANCE WITH THE STANDARD SPECIFICATIONS.

ALL REINFORCING STEEL SHALL BE GRADE 60.

APPLY EPOXY PROTECTIVE COATING TO END OF GIRDER SURFACES INDICATED IN ELEVATION VIEW.

EMBEDDED PLATE "B-1" SHALL BE GALVANIZED IN ACCORDANCE WITH THE STANDARD SPECIFICATIONS. BEVEL EDGES OF PLATE "B-1" TO GIVE CLOSE FIT BUT NOT TIGHT FIT TO STEEL CASTING FORM.

ANCHOR STUDS SHALL CONFORM TO AASHTO M169 GRADES 1010 THROUGH 1020 OR APPROVED EQUAL, AND SHALL MEET THE TYPE "B" REQUIREMENTS OF SUBSECTION 7.3 OF THE ANSI/AASHTO/AWS D1.5 BRIDGE WELDING CODE.

THE TRANSFER OF LOAD FROM THE ANCHORAGES TO THE GIRDER SHALL BE DONE WHEN CONCRETE HAS REACHED A COMPRESSIVE STRENGTH OF NOT LESS THAN 6800 PSI.

DEPENDING ON THE TYPE OF SYSTEM USED TO SUPPORT THE DECK SLAB FORMS, PRESET ANCHORS MAY BE NECESSARY IN THE PRESTRESSED CONCRETE GIRDER.

THE TOP SURFACE OF THE GIRDER, EXCLUDING THE OUTSIDE 4", SHALL BE RAKED TO A DEPTH OF 1/4".

A 2" x 2" CHAMFER IS ALLOWED AT THE INTERSECTION OF THE WEB AND THE BOTTOM FLANGE OF THE 63" MODIFIED BULB TEES.

THE CONTRACTOR HAS THE OPTION TO PROVIDE, AT NO ADDITIONAL COST TO THE DEPARTMENT, 2 ADDITIONAL STRANDS AT THE TOP OF THE GIRDER TO FACILITATE TYING OF THE REINFORCING STEEL. THESE STRANDS SHALL BE PULLED TO A LOAD OF 4500 lbs.

FOR PRESTRESSED CONCRETE MEMBERS, SEE SPECIAL PROVISIONS.

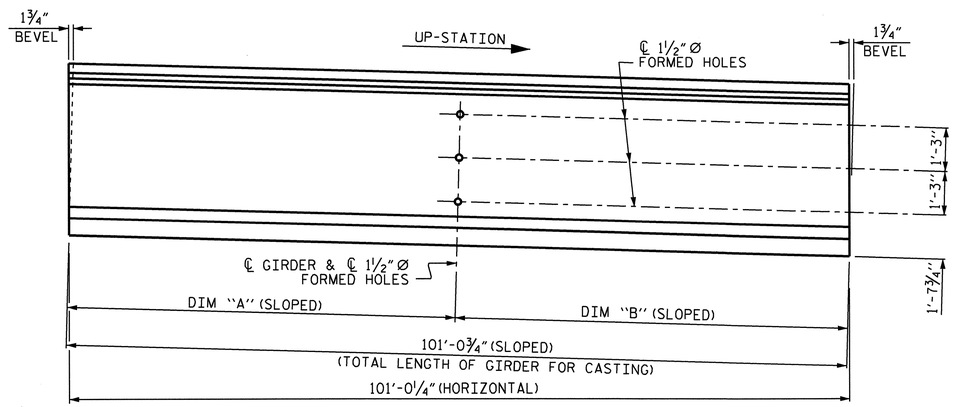

ELEVATION OF EXTERIOR GIRDER

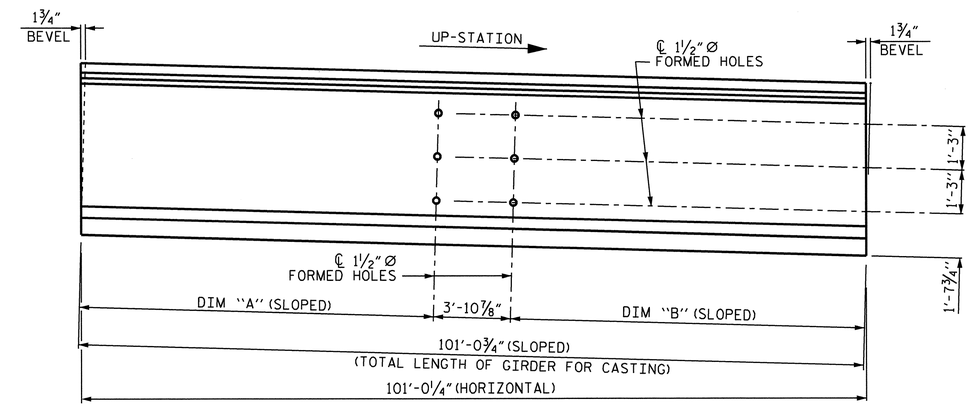

ELEVATION OF INTERIOR GIRDER

BOLT HOLE PLACEMENT DETAILS

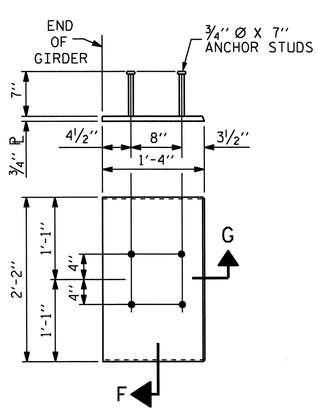

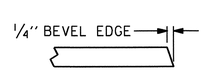

SECTION "G"

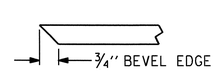

SECTION "F"

(SEE NOTES)

EMBEDDED PLATE "B-1" DETAILS

(2 REQ'D PER GIRDER)

BOLT HOLE PLACEMENT TABLE		
GIRDER NO.	DIM. "A"	DIM. "B"
1	52'-5 13/16"	48'-6 15/16"
2 & 3	48'-6 15/16"	48'-6 15/16"
4	48'-6 15/16"	52'-5 13/16"

PROJECT NO. U-3326B
ROCKINGHAM COUNTY
STATION: 203+04.30 -L-

SHEET 2 OF 2

STATE OF NORTH CAROLINA
DEPARTMENT OF TRANSPORTATION
RALEIGH

STANDARD
PRESTRESSED CONCRETE GIRDER CONTINUOUS FOR LIVE LOAD DETAILS
—RIGHT LANE—

NORTH CAROLINA PROFESSIONAL SEAL 16301 ENGINEER HING HSIUNG LANG
8/29/11

REVISIONS						SHEET NO.
NO.	BY:	DATE:	NO.	BY:	DATE:	S-73
1			3			TOTAL SHEETS
2			4			159

STR. #2

STD. NO. PCG11

ASSEMBLED BY : A.S.CALLAWAY DATE : 11/5/09	
CHECKED BY : L.E. SUTTON DATE : 2/8/10	
DRAWN BY : ELR 11/91	REV. 10/17/00 RWW/LES
CHECKED BY : GRP 11/91	REV. 7/10/01RR LES/RDR
	REV. 5/1/06 TLA/GM

29-AUG-2011 15:19
X:\TIPProjects-U\U3326B\Structures\str02\FinalPlans\u3326b_sd_g*_02.dgn
OTNGUYEN

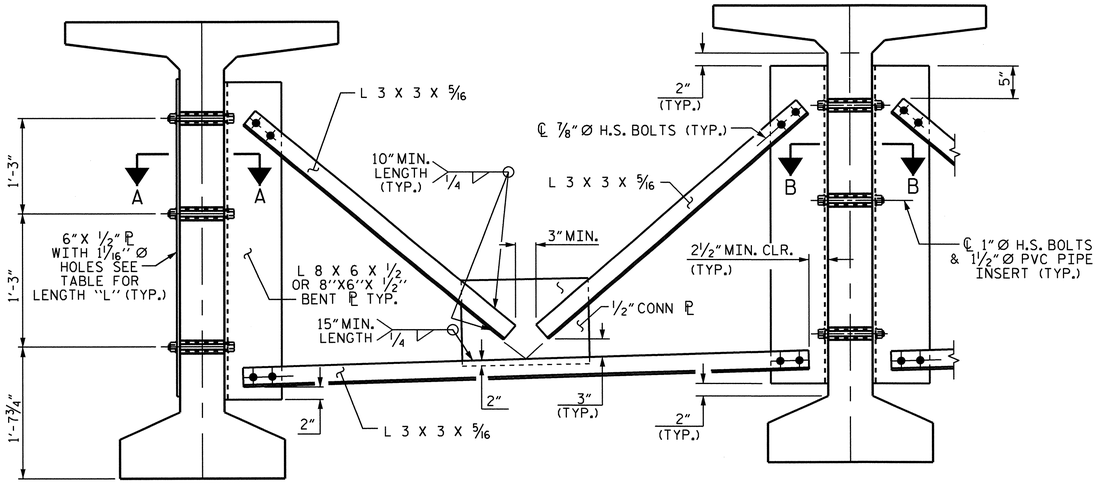

EXTERIOR GIRDER

INTERIOR GIRDER

PART SECTION AT INTERMEDIATE DIAPHRAGM

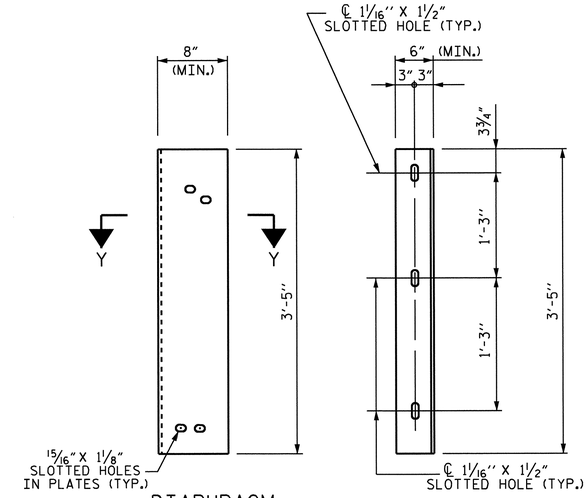

DIAPHRAGM FACE

WEB FACE

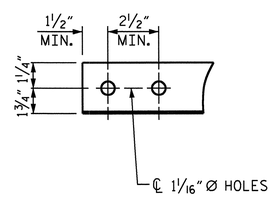

ANGLE END

(L 3 X 3 X 5/16)

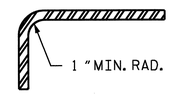

SECTION Y-Y

CONNECTOR PLATE DETAILS

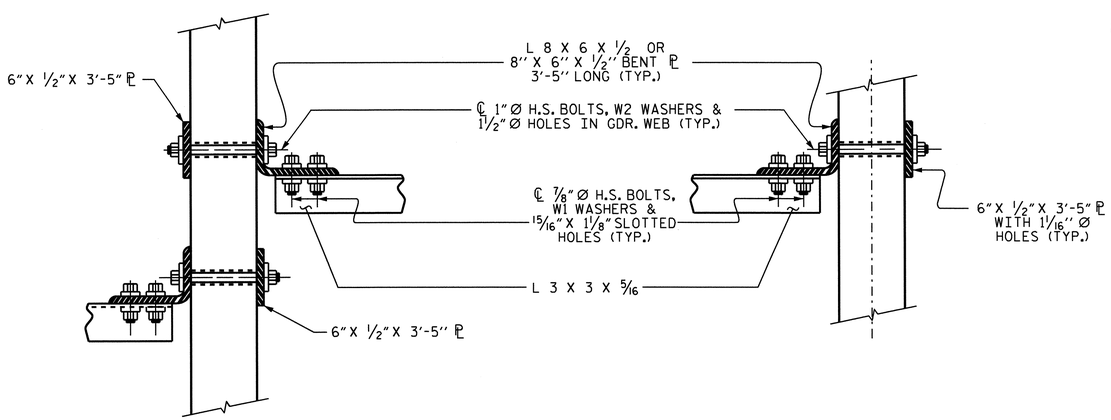

SECTION B-B

SECTION A-A

CONNECTION DETAILS

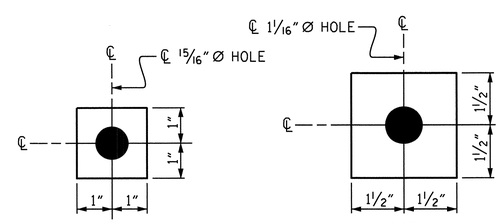

W1

ℙ 7/16" X 2" X 2"

USE WITH 7/8" Ø HVY. HEX NUTS & DIRECT TENSION INDICATOR WASHERS AT DIAPHRAGM ANGLE TO CONNECTOR PLATE CONNECTIONS

W2

ℙ 7/16" X 3" X 3"

USE WITH 1" Ø HVY. HEX NUTS AT CONNECTOR PLATE TO GIRDER CONNECTIONS

WASHER DETAILS

STRUCTURAL STEEL NOTES

ALL INTERMEDIATE DIAPHRAGM STEEL, CONNECTOR PLATES AND PLATE WASHERS SHALL BE AASHTO M270 GRADE 50 OR APPROVED EQUAL.

TENSION ON THE AASHTO M164 BOLTS THROUGH THE ANGLE MEMBER SHALL BE CALIBRATED USING DIRECT TENSION INDICATOR WASHERS IN ACCORDANCE WITH THE STANDARD SPECIFICATIONS. FOR DIRECT TENSION INDICATORS, SEE SPECIAL PROVISION.

TENSION ON THE AASHTO M164 BOLTS THROUGH THE GIRDER WEB SHALL BE SNUG TIGHTENED FOLLOWED BY AN ADDITIONAL 1/4 TURN.

THE PLATES, BENT PLATES, ANGLES, AND PLATE WASHERS SHALL BE GALVANIZED OR METALLIZED IN ACCORDANCE WITH THE STANDARD SPECIFICATIONS. FOR THERMAL SPRAYED COATINGS (METALLIZATION), SEE SPECIAL PROVISIONS.

FOR METALLIZATION, APPLY AN 8 MIL THICK 99.99 PERCENT ZINC (W-Zn-1) THERMAL SPRAYED COATING WITH A 0.5 MIL THICK SEAL COAT TO ALL STEEL DIAPHRAGM SURFACES IN ACCORDANCE WITH THE THERMAL SPRAYED COATINGS SPECIAL PROVISIONS AND SECTION 442 OF THE STANDARD SPECIFICATIONS.

GALVANIZE THE HIGH STRENGTH BOLTS, NUTS, WASHERS AND DIRECT TENSION INDICATORS IN ACCORDANCE WITH THE STANDARD SPECIFICATIONS. FOR HIGH STRENGTH BOLTS, SEE SPECIAL PROVISIONS.

USE A MINIMUM 7/16" THICK PLATE WASHER WITH STANDARD HOLES UNDER EACH BOLT HEAD AND NUT. THE PLATE WASHERS SHALL HAVE SUFFICIENT SIZE TO COVER THE HOLES AFTER INSTALLATION. HARDENED WASHERS AND DIRECT TENSION INDICATORS ARE TO BE USED IN CONJUNCTION WITH THE PLATE WASHERS IN THE L 3 X 3 X 5/16 ANGLE MEMBER CONNECTION.

FOR BOLTS THROUGH THE GIRDER WEB, PROVIDE SUFFICIENT LENGTH OF ALL BOLTS TO ACCOMMODATE WASHERS AND THE THICKNESS OF CONNECTING MEMBER PLUS AT LEAST 1/4" PROJECTION BEYOND THE NUT.

INTERMEDIATE DIAPHRAGM ASSEMBLY SHALL COMPLY WITH SECTION 1072 OF THE STANDARD SPECIFICATIONS.

CONTRACTOR SHALL SUBMIT TWO SETS OF WORKING DRAWINGS FOR THE INTERMEDIATE DIAPHRAGM ASSEMBLY FOR REVIEW, COMMENTS AND ACCEPTANCE. AFTER REVIEW, COMMENTS, AND ACCEPTANCE, SUBMIT SEVEN SETS FOR DISTRIBUTION.

IN THE EXTERIOR BAYS, TEMPORARY STRUTS SHALL BE PLACED BETWEEN PRESTRESSED GIRDERS ADJACENT TO THE STEEL DIAPHRAGMS. STRUTS SHALL REMAIN IN PLACE 3 DAYS AFTER CONCRETE IS PLACED. ALL AASHTO M164 H.S. BOLTS SHALL BE FULLY TIGHTENED AFTER THE STRUTS HAVE BEEN REMOVED.

THE COST OF THE STEEL DIAPHRAGMS AND ASSEMBLIES SHALL BE INCLUDED IN THE UNIT PRICE BID FOR PRESTRESSED CONCRETE GIRDERS.

PROJECT NO. U-3326B
ROCKINGHAM COUNTY
STATION: 203+04.30 -L-

STATE OF NORTH CAROLINA
DEPARTMENT OF TRANSPORTATION
RALEIGH

STANDARD
INTERMEDIATE STEEL
DIAPHRAGMS FOR
63" MODIFIED BULB TEE
PRESTRESSED CONCRETE GDRS.

-RIGHT LANE-

NORTH CAROLINA PROFESSIONAL SEAL 16301 ENGINEER HSIANG-TING FANG
8/29/11

REVISIONS						SHEET NO.
NO.	BY:	DATE:	NO.	BY:	DATE:	S-74
1			3			TOTAL SHEETS
2			4			159

ASSEMBLED BY : A.S. CALLAWAY DATE : 12/30/09
CHECKED BY : L.E. SUTTON DATE : 2/8/10
DRAWN BY : RWW 11/09
CHECKED BY : GM 11/09
ADDED 11/23/09

29-AUG-2011 15:19
X:\TIPProjects-U\U3326B\Structures\str02\FinalPlans\u3326b_sd_g*_02.dgn
OTNGUYEN

STR. #2

STD. NO. PCG13

NOTES

AT ALL FIXED POINTS OF SUPPORT, NUTS FOR ANCHOR BOLTS ARE TO BE TIGHTENED FINGER TIGHT AND THEN BACKED OFF 1/2 TURN. THE THREAD OF THE NUT AND BOLT SHALL THEN BE BURRED WITH A SHARP POINTED TOOL.

THE 2" Ø PIPE SLEEVE SHALL BE CUT FROM SCHEDULE 40 PVC PLASTIC PIPE. THE PVC PLASTIC PIPE SHALL MEET THE REQUIREMENTS OF ASTM D1785.

STEEL SOLE PLATES, ANCHOR BOLTS, NUTS, AND WASHERS SHALL BE GALVANIZED IN ACCORDANCE WITH THE STANDARD SPECIFICATIONS.

PRIOR TO WELDING, GRIND THE GALVANIZED SURFACE OF THE PORTION OF THE EMBEDDED PLATE AND SOLE PLATE THAT ARE TO BE WELDED. AFTER WELDING, DAMAGED GALVANIZED SURFACES SHALL BE REPAIRED IN ACCORDANCE WITH THE STANDARD SPECIFICATIONS.

WHEN WELDING THE SOLE PLATE TO THE EMBEDDED PLATE IN THE GIRDER, USE TEMPERATURE INDICATING WAX PENS, OR OTHER SUITABLE MEANS, TO ENSURE THAT THE TEMPERATURE OF THE SOLE PLATE DOES NOT EXCEED 300°F. TEMPERATURES ABOVE THIS MAY DAMAGE THE ELASTOMER.

SOLE PLATE "P", BOLTS, NUTS, WASHERS, AND PIPE SLEEVE SHALL BE INCLUDED IN THE PAY ITEM FOR PRESTRESSED CONCRETE GIRDERS.

ANCHOR BOLTS SHALL MEET THE REQUIREMENTS OF ASTM A449. NUTS SHALL MEET THE REQUIREMENTS OF AASHTO M291-DH OR AASHTO M292-2H. WASHERS SHALL MEET THE REQUIREMENTS OF AASHTO M293. NO SHOP DRAWINGS ARE REQUIRED FOR ANCHOR BOLTS, NUTS AND WASHERS. SHOP INSPECTION IS REQUIRED.

ALL SURFACES OF BEARING PLATES SHALL BE SMOOTH AND STRAIGHT.

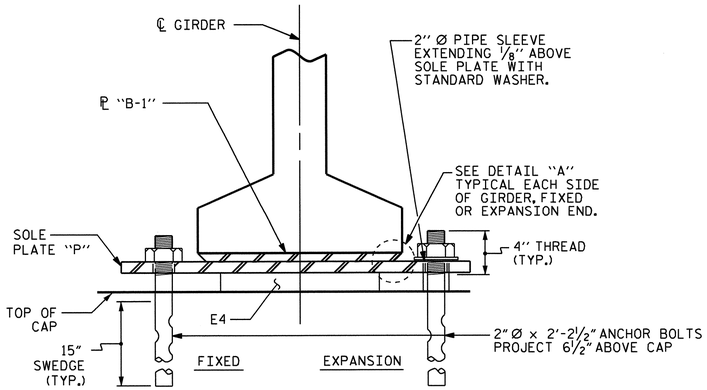

SECTION E-E

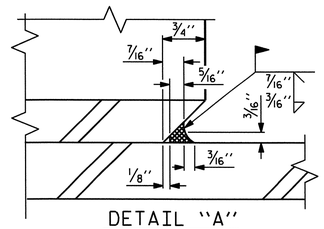

DETAIL "A"

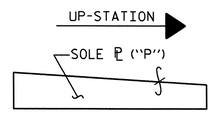

SOLE ℗ PLACEMENT DETAIL

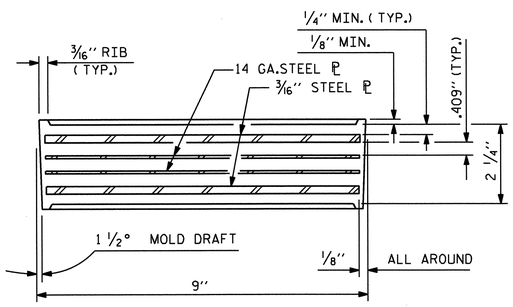

TYPICAL SECTION OF ELASTOMERIC BEARINGS

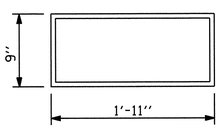

E4 (8 REQ'D)

PLAN VIEW OF ELASTOMERIC BEARING

TYPE V

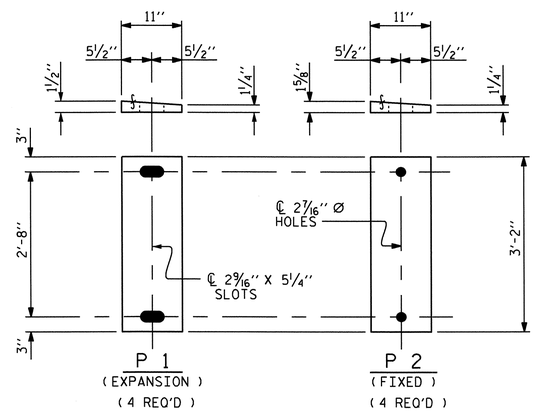

SOLE PLATE DETAILS ("P")

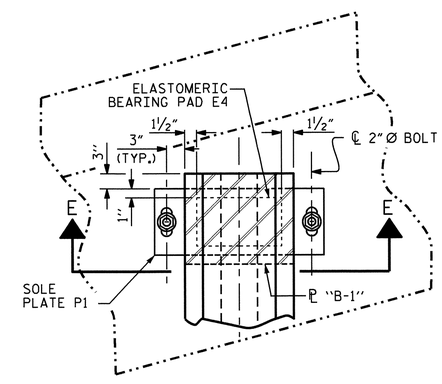

AT END BENT 1

(EXPANSION)

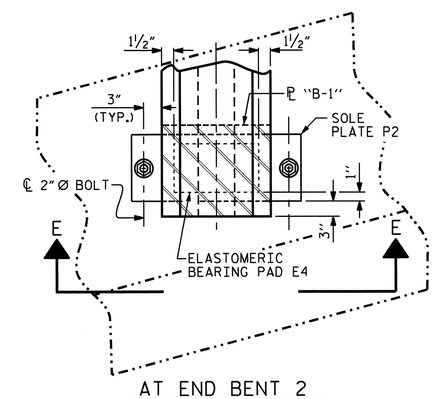

AT END BENT 2

(FIXED)

LOAD RATINGS	
	MAX.D.L.+ L.L.
TYPE V	225 K

PROJECT NO. U-3326B

ROCKINGHAM COUNTY

STATION: 203+04.30 -L-

NORTH CAROLINA PROFESSIONAL SEAL 16301 ENGINEER TING HSIUNG LANG

8/29/11

STATE OF NORTH CAROLINA
DEPARTMENT OF TRANSPORTATION
RALEIGH

ELASTOMERIC BEARING DETAILS

PRESTRESSED CONCRETE GIRDER SUPERSTRUCTURE

RIGHT LANE

REVISIONS						SHEET NO.
NO.	BY:	DATE:	NO.	BY:	DATE:	S-75
1			3			TOTAL SHEETS
2			4			159

STR. #2

DRAWN BY : A.S. CALLAWAY DATE : 8/6/09
CHECKED BY : L.E. SUTTON DATE : 2/8/10

29-AUG-2011 15:19
X:\TIPProjects-U\U3326B\Structures\str02\FinalPlans\u3326b_sd_bg_02.dgn
OTNGUYEN

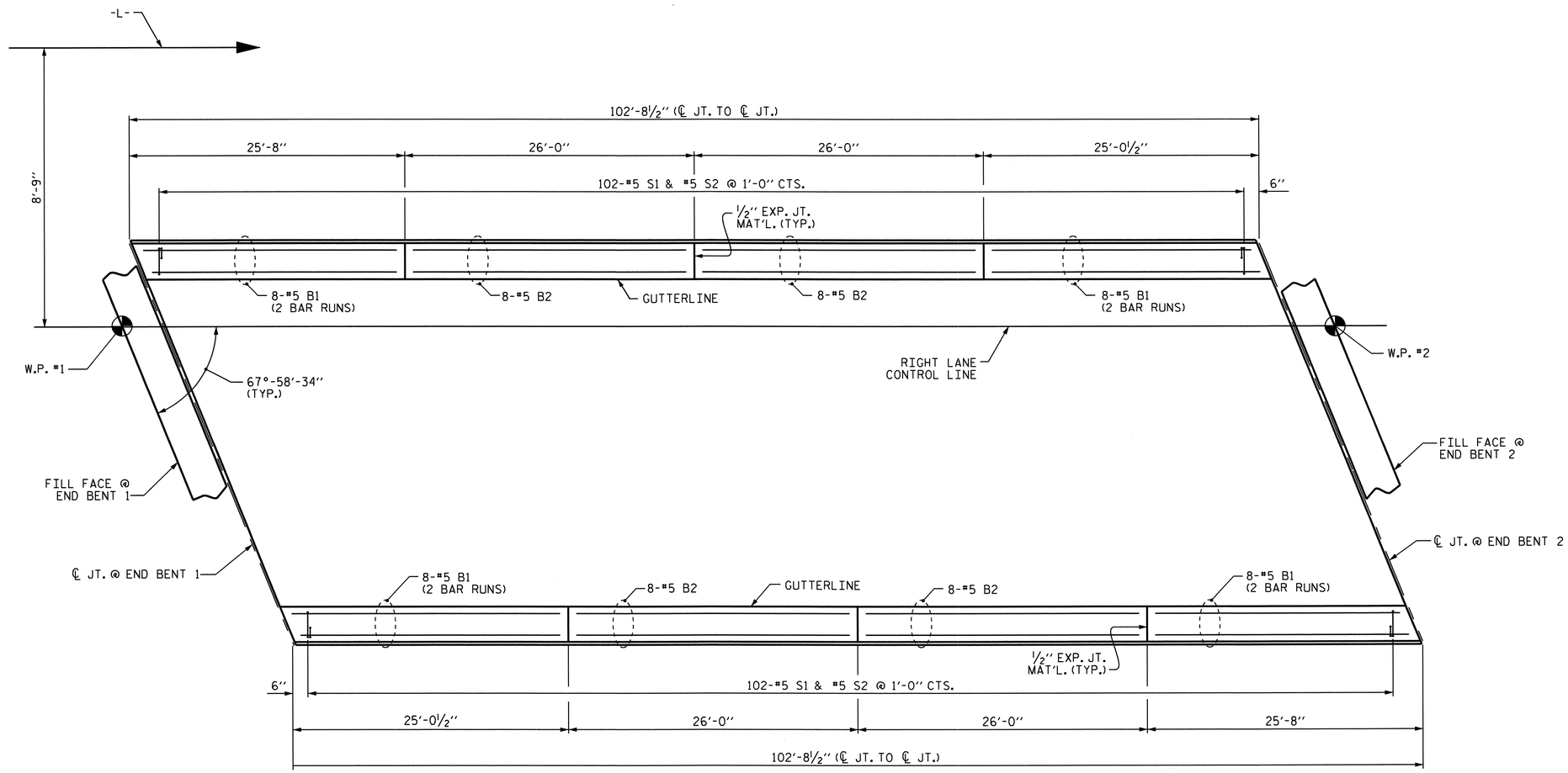

PLAN

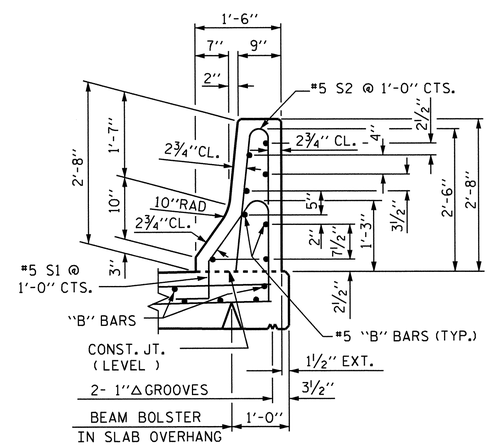

SECTION THRU RAIL

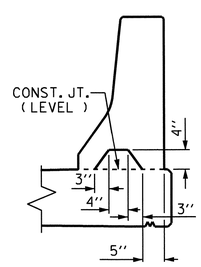

SECTION S-S

AT DAM IN OPEN JOINT
(THIS IS TO BE USED ONLY WHEN SLIP FORM IS USED)

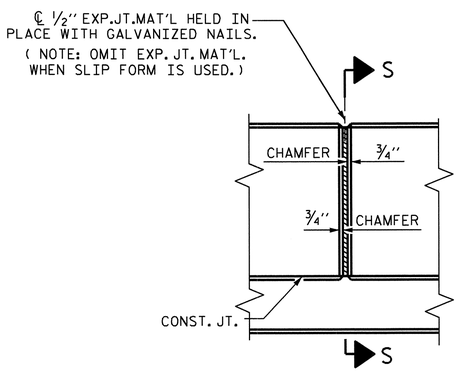

ELEVATION AT EXPANSION JOINTS

BAR TYPES

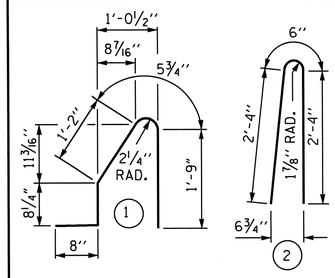

ALL BAR DIMENSIONS ARE OUT TO OUT

BILL OF MATERIAL

FOR CONCRETE BARRIER RAIL ONLY

BAR	NO.	SIZE	TYPE	LENGTH	WEIGHT
* B1	64	#5	STR	14'-4"	957
* B2	32	#5	STR	25'-7"	854
* S1	204	#5	1	4'-9"	1011
* S2	204	#5	2	5'-2"	1099

*EPOXY COATED REINFORCING STEEL	3,921	LBS.
CLASS AA CONCRETE	20.6	CU. YDS.
CONCRETE BARRIER RAIL		
DECK	205.33	LIN. FT.
APPROACH SLABS	41.31	LIN. FT.
TOTAL	246.64	LIN. FT.

NOTES

THE BARRIER RAIL IN EACH SPAN SHALL NOT BE CAST UNTIL ALL SLAB CONCRETE IN THAT SPAN HAS BEEN CAST AND HAS REACHED A MINIMUM COMPRESSIVE STRENGTH OF 3,000 PSI.

ALL REINFORCING STEEL IN BARRIER RAILS SHALL BE EPOXY COATED.

VERTICAL GROOVED CONTRACTION JOINTS, ½" IN DEPTH, SHALL BE TOOLED IN ALL EXPOSED FACES OF THE BARRIER RAIL AND IN ACCORDANCE WITH ARTICLE 825-10(B) OF THE STANDARD SPECIFICATIONS. THE CONTRACTION JOINT SHALL BE LOCATED AT EACH THIRD POINT BETWEEN BARRIER RAIL EXPANSION JOINTS. ONLY ONE CONTRACTION JOINT IS REQUIRED AT MIDPOINT OF BARRIER RAIL SEGMENTS LESS THAN 20 FEET IN LENGTH AND NO CONTRACTION JOINTS ARE REQUIRED FOR THOSE SEGMENTS LESS THAN 10 FEET IN LENGTH.

THE COST OF THE BARRIER RAIL ON THE APPROACH SLAB SHALL BE INCLUDED IN THE LINEAR FOOT CONTRACT PRICE BID FOR "CONCRETE BARRIER RAIL".

PROJECT NO. U-3326B
ROCKINGHAM COUNTY
STATION: 203+04.30 -L-

STATE OF NORTH CAROLINA
DEPARTMENT OF TRANSPORTATION
RALEIGH

STANDARD
CONCRETE BARRIER RAIL
— RIGHT LANE —

NORTH CAROLINA PROFESSIONAL SEAL 16301 ENGINEER TING HSIONG FANG
8/29/11

REVISIONS						SHEET NO.
NO.	BY:	DATE:	NO.	BY:	DATE:	S-76
1			3			TOTAL SHEETS
2			4			159

STR. #2 STD. NO. CBR1

BARRIER RAIL DETAILS

ASSEMBLED BY : A.S. CALLAWAY	DATE : 8/5/09		
CHECKED BY : L.E. SUTTON	DATE : 2/8/10		
DRAWN BY : ARB 5/87	REV. 10/17/00	RWW/LES	
CHECKED BY : SJD 9/87	REV. 5/7/03R	RWW/JTE	
	REV. 5/1/06	TLA/GM	

29-AUG-2011 15:19
X:\TIPProjects-U\U3326B\Structures\str02\FinalPlans\u3326b_sd_br_02.dgn
OTNGUYEN

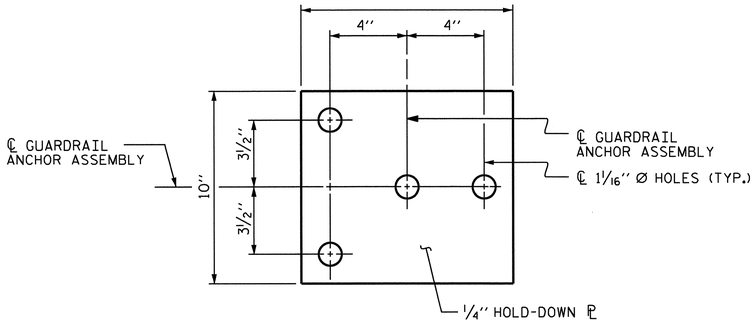

PLAN

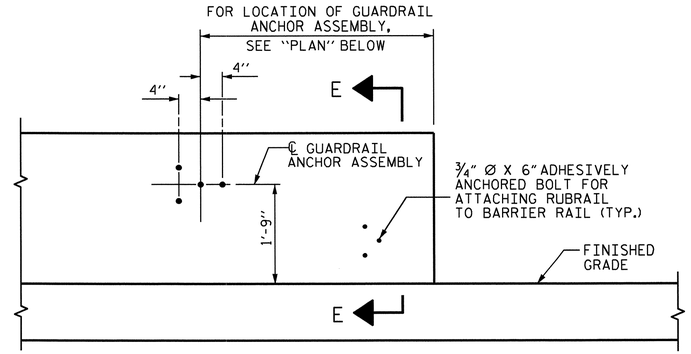

ELEVATION

FOR LOCATION OF RUBRAIL, SEE ROADWAY STD. 862.03

NOTES

THE GUARDRAIL ANCHOR ASSEMBLY SHALL CONSIST OF A 1/4" HOLD DOWN PLATE AND 4 - 7/8" Ø BOLTS WITH NUTS AND WASHERS, RUBRAIL, AND ADHESIVELY ANCHORED BOLTS.

THE HOLD-DOWN PLATE SHALL CONFORM TO AASHTO M270 GRADE 36. AFTER FABRICATION, THE HOLD-DOWN PLATE SHALL BE HOT-DIP GALVANIZED IN ACCORDANCE WITH AASHTO M111.

BOLTS SHALL CONFORM TO THE REQUIREMENTS OF ASTM A307 AND NUTS SHALL CONFORM TO THE REQUIREMENTS OF AASHTO M291. BOLTS, NUTS AND WASHERS SHALL BE GALVANIZED. (AT THE CONTRACTOR'S OPTION, STAINLESS STEEL BOLTS, NUTS AND WASHERS MAY BE USED AS AN ALTERNATE FOR THE 7/8" Ø GALVANIZED BOLTS, NUTS AND WASHERS. THEY SHALL CONFORM TO OR EXCEED THE MECHANICAL REQUIREMENTS OF ASTM A307. THE USE OF THIS ALTERNATE SHALL BE APPROVED BY THE ENGINEER.)

THE GUARDRAIL ANCHOR ASSEMBLY IS REQUIRED AT ALL POINTS WHERE APPROACH GUARDRAIL IS TO BE ATTACHED TO THE END OF BARRIER RAIL. FOR POINTS OF ATTACHMENT, SEE SKETCH.

AFTER INSTALLATION, THE EXPOSED THREAD OF THE BOLT SHALL BE BURRED WITH A SHARP POINTED TOOL.

THE COST OF THE GUARDRAIL ANCHOR ASSEMBLY SHALL BE INCLUDED IN THE UNIT CONTRACT PRICE BID FOR CONCRETE BARRIER RAIL.

THE 1 1/4" Ø HOLES SHALL BE FORMED OR DRILLED WITH A CORE BIT. IMPACT TOOLS WILL NOT BE PERMITTED. ANY CONCRETE DAMAGED BY THIS WORK SHALL BE REPAIRED TO THE SATISFACTION OF THE ENGINEER.

THE C6 X 8.2 RUBRAIL IS TO BE ADHESIVELY ANCHORED TO THE RAIL USING THREE 3/4" Ø X 6" BOLTS WITH WASHERS. LEVEL ONE FIELD TESTING IS REQUIRED, AND THE YIELD LOAD OF THE 3/4" Ø BOLT IS 12 KIPS. FOR ADHESIVELY ANCHORED ANCHOR BOLTS OR DOWELS, SEE SPECIAL PROVISIONS. SEE ROADWAY STANDARD 862.03 FOR DETAILS AND LOCATION OF THE RUBRAIL.

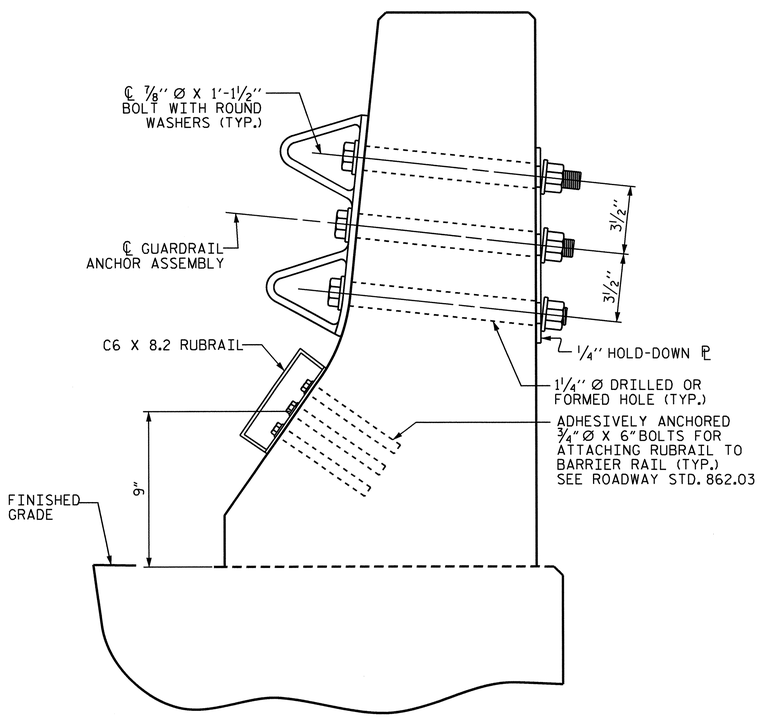

SECTION E-E

GUARDRAIL ANCHOR ASSEMBLY DETAILS

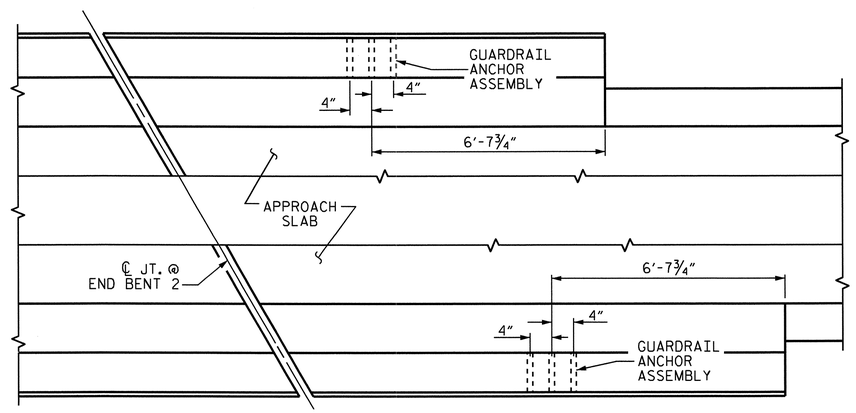

PLAN

LOCATION OF ANCHORS FOR GUARDRAIL

END BENT 2 SHOWN, END BENT 1 SIMILAR

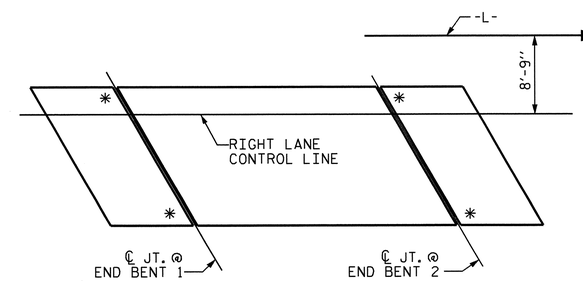

SKETCH SHOWING POINTS OF ATTACHMENTS

* DENOTES GUARDRAIL ANCHOR ASSEMBLY

PROJECT NO. U-3326B
ROCKINGHAM COUNTY
STATION: 203+04.30 -L-

NORTH CAROLINA PROFESSIONAL SEAL 16301 ENGINEER TING HSIUNG LANG
8/29/11

STATE OF NORTH CAROLINA
DEPARTMENT OF TRANSPORTATION
RALEIGH

STANDARD
GUARDRAIL ANCHORAGE FOR BARRIER RAIL

— RIGHT LANE —

REVISIONS						SHEET NO.
NO.	BY:	DATE:	NO.	BY:	DATE:	S-77
1			3			TOTAL SHEETS
2			4			159

STR. #2

STD. NO. GRA2

ASSEMBLED BY : A.S. CALLAWAY	DATE : 8/5/09
CHECKED BY : L.E. SUTTON	DATE : 2/8/10
DRAWN BY : TLA 5/06	ADDED 5/1/06R KMM/GM
CHECKED BY : GM 5/06	

29-AUG-2011 15:19
X:\TIPProjects-U\U3326B\Structures\str02\FinalPlans\u3326b_sd_gr_02.dgn
OTNGUYEN

MOVEMENT AND SETTING AT EXPANSION JOINT					
END BENT	SKEW ANGLE	TOTAL MOVEMENT (ALONG ℄ RDWY)	PERPENDICULAR JOINT OPENING AT 45° F	PERPENDICULAR JOINT OPENING AT 60° F	PERPENDICULAR JOINT OPENING AT 90° F
1	67°-58′-34″	7/8″	1 11/16″	1 1/2″	1 1/4″
2	67°-58′-34″	0″	1 1/2″	1 1/2″	1 1/2″

TOTAL MOVEMENT IS CALCULATED ALONG THE CENTERLINE OF ROADWAY.
JOINT OPENINGS ARE MEASURED PERPENDICULAR TO THE JOINT.

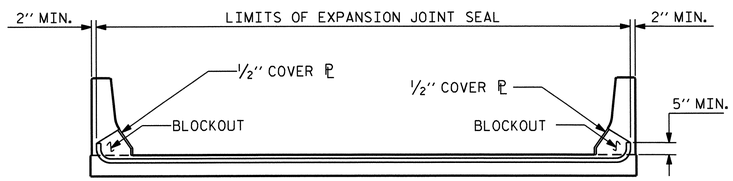

SKETCH SHOWING LIMITS OF EXPANSION JOINT SEAL

INSTALLATION PROCEDURE

1. A TEMPLATE OR OTHER SUITABLE DEVICE SHALL BE USED TO FORM THE TOP OF THE EXPANSION JOINT SEAL BLOCKOUT TO THE PROPER DEPTH AND WIDTH. THE TEMPLATE SHALL BE 4 1/8″ TO 4 1/4″ WIDE AND OF SUCH THICKNESS AS TO PROVIDE FOR CORRECT FINAL ELEVATION OF TOP OF HOLD-DOWN PLATES. THE TEMPLATE SHALL BE ATTACHED TO THE BASE ANGLE ASSEMBLY WITH THE 3/4″ Ø HEX HEAD BOLTS PROVIDED FOR THE HOLD-DOWN PLATES. A 1″ Ø HOLE SHALL BE PROVIDED IN THE TEMPLATE CENTERED OVER EACH WEEP HOLE IN THE 4″X 4″X 1/2″BASE ANGLE. OTHER METHODS OF INSURING DRAINAGE THROUGH WEEP HOLES MAY BE EMPLOYED SUBJECT TO ENGINEER'S APPROVAL.
2. AFTER THE CONCRETE HAS BEEN CAST ON BOTH SIDES OF THE JOINT, REMOVE THE TEMPLATE. THOROUGHLY CLEAN THE BOLT HOLES AND THE ANGLE PLATE. REMOVE ANY EXCESS CONCRETE THAT COMES OUT OF THE WEEP HOLES. ANY DAMAGED STEEL SHALL BE COATED WITH A MINIMUM THICKNESS OF 4 DRY MILS OF ZINC-RICH PAINT IN ACCORDANCE WITH THE STANDARD SPECIFICATIONS.
3. LAY THE GLAND ON THE BASE ANGLE AND FIELD MARK THE GLAND FOR THE BOLT HOLES. HOLES IN THE GLAND SHALL BE PUNCHED 7/8″ IN DIAMETER WITH A HAND PUNCH.
4. IN ORDER TO CHECK FOR PROPER ALIGNMENT, PLACE THE GLAND AND HOLD-DOWN PLATES ON THE BASE ANGLE. DO NOT APPLY NEOPRENE SEALANT. BOLT THE HOLD-DOWN PLATES TO THE BASE ANGLE BUT DO NOT TIGHTEN. THE ENGINEER SHALL INSPECT THE JOINT SEAL DEVICE FOR PROPER ALIGNMENT.
5. AFTER INSPECTION, REMOVE THE HOLD-DOWN PLATES AND GLAND. APPLY NEOPRENE SEALANT TO THE BASE ANGLE IN ACCORDANCE WITH THE "INSTALLATION SKETCH". PLACE GLAND AND HOLD-DOWN PLATES ON THE BASE ANGLE. BOLT THE HOLD-DOWN PLATES TO THE BASE ANGLE ASSEMBLY AND TORQUE THE BOLTS TO 88 FT-LBS WITH A TORQUE WRENCH. THE TORQUE WRENCH SHALL BE CALIBRATED IN ACCORDANCE WITH SECTION 440-10 (D) OF THE STANDARD SPECIFICATIONS. CHECK THE TORQUE AFTER THREE (3) HOURS AND, IF NECESSARY, RETIGHTEN TO 88 FT-LBS. A FINAL CHECK SHALL BE MADE AT SEVEN (7) DAYS. TORQUE SHALL NOT BE LESS THAN 80 FT-LBS AFTER SEVEN (7) DAYS.
6. AFTER PROPER TORQUING, CLEAN THE BOLT HOLE RECESSES AND THE RECESS BETWEEN THE JOINT SEAL DEVICE AND CONCRETE, COMPLETELY FILL THESE RECESSES WITH NEOPRENE SEALANT.

GENERAL NOTES

1. FOR EXPANSION JOINT SEALS, SEE SPECIAL PROVISIONS.
2. ALL PLATES AND ANGLES SHALL CONFORM TO AASHTO M270 GRADE 36 STEEL OR APPROVED EQUAL. ALL HOLD-DOWN BOLTS SHALL CONFORM TO ASTM F593 ALLOY 304 STAINLESS STEEL AND WASHERS SHALL CONFORM TO ASTM F844 EXCEPT THEY SHALL BE MADE FROM ALLOY 304 STAINLESS STEEL. ALL STUD ANCHORS SHALL CONFORM TO AASHTO M169, GRADES 1010 THRU 1020 OR APPROVED EQUAL. ALL CONCRETE INSERTS SHALL BE CLOSED END AND SHALL CONFORM TO AASHTO M169, GRADE 12L14. TENSILE CAPACITY SHALL BE 3000 LBS. MIN.
3. A PREMOLDED CORRUGATED OR NON-CORRUGATED GLAND SHALL BE USED FOR JOINTS SKEWED BETWEEN 50° THRU 130°. FOR JOINTS SKEWED LESS THAN 50° OR MORE THAN 130°, ONLY A CORRUGATED GLAND SHALL BE USED.
4. CLOSED END FERRULES AND STUD ANCHORS SHALL BE SHOP WELDED AND ALL HOLES SHALL BE SHOP DRILLED AS SHOWN ON PLANS. STUD ANCHORS SHALL BE ELECTRIC ARC END WELDED WITH COMPLETE FUSION.
5. SURFACES COMING IN CONTACT WITH NEOPRENE SHALL BE GROUND SMOOTH PRIOR TO METALLIZING.
6. UPON COMPLETION OF SHOP FABRICATION, THE HOLD DOWN PLATE AND BASE ANGLE ASSEMBLY, AS SHOWN IN THE "TYPICAL SECTION OF BASE ANGLE ASSEMBLY", SHALL BE METALLIZED. SEE SPECIAL PROVISION FOR THERMAL SPRAYED COATINGS (METALLIZATION).
7. BASE ANGLE ASSEMBLY SHALL BE CONTINUOUS FOR THE LENGTH OF THE JOINT. AT CROWN BREAKS, THE ENDS OF THE BASE ANGLE ASSEMBLY SHALL BE CUT PARALLEL TO THE BRIDGE CENTERLINE FOR SKEWS LESS THAN 80° AND GREATER THAN 100°. FINISHED WELD SHALL BE GROUND SMOOTH AND COATED WITH A MINIMUM THICKNESS OF 4 DRY MILS OF ZINC-RICH PAINT IN ACCORDANCE WITH THE STANDARD SPECIFICATIONS.
8. FIELD SPLICES OF HOLD-DOWN PLATES SHALL BE KEPT TO A MINIMUM. CONTRACTOR SHALL FURNISH DETAILED PLANS SHOWING PROPOSED SPLICE LOCATIONS FOR APPROVAL. HOLD-DOWN PLATES SHALL NOT EXCEED 20′ LENGTHS UNLESS APPROVED BY THE ENGINEER.
9. NO ALTERNATE JOINT DETAILS SHALL BE PERMITTED IN LIEU OF THOSE SHOWN ON THESE PLANS.
10. THE CONTRACTOR MAY, AT HIS OPTION, USE ADHESIVELY ANCHORED ANCHOR BOLTS IN PLACE OF CONCRETE INSERTS FOR COVER PLATES. THE YIELD LOAD OF THE 3/4″ Ø BOLT IS 10 KIPS. FIELD TESTING OF THE ADHESIVE BONDING SYSTEM IS NOT REQUIRED.

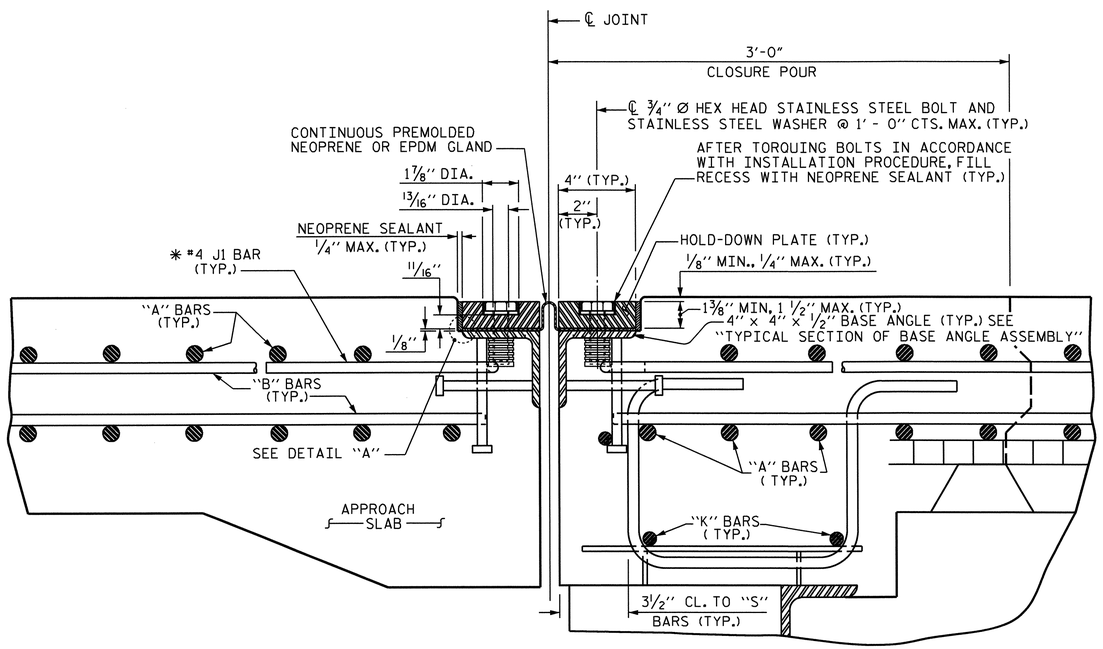

EXPANSION JOINT DETAILS

SECTION NORMAL TO JOINT -- PRESTRESSED CONCRETE GIRDER SUPERSTRUCTURE

* THE QUANTITY OF #4 J1 BARS ON THE BILL OF MATERIAL IS BASED ON 1′-0″ CENTERS. J1 BARS SHALL BE PLACED AT EACH VERTICAL STUD ANCHOR BOLT. IN THE EVENT THAT THE NUMBER OF VERTICAL STUD ANCHORS EXCEEDS THE NUMBER OF J1 BARS SPECIFIED, ADDITIONAL J1 BARS WILL NOT BE REQUIRED.

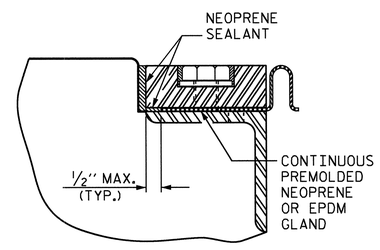

DETAIL "A"

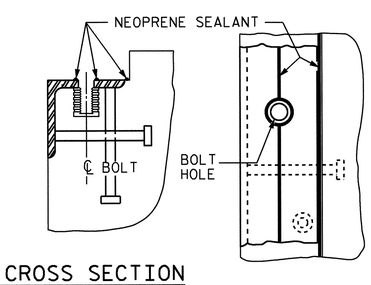

CROSS SECTION

PLAN VIEW

INSTALLATION SKETCH

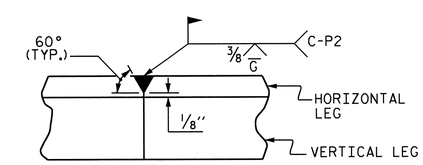

DETAIL- FIELD WELD SPLICE OF BASE ANGLE

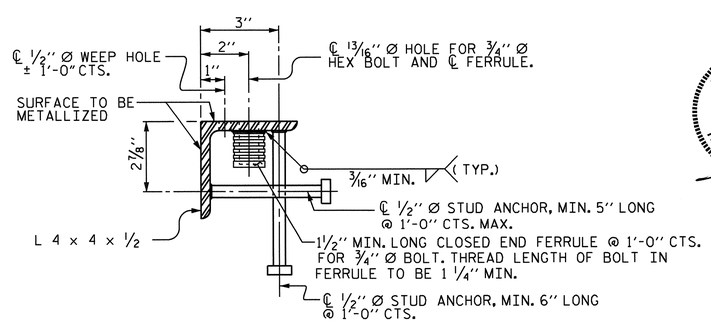

TYPICAL SECTION OF BASE ANGLE ASSEMBLY

NORTH CAROLINA PROFESSIONAL SEAL 16301 ENGINEER TING HSIUNG FANG
8/29/11

PROJECT NO. U-3326B
ROCKINGHAM COUNTY
STATION: 203+04.30 -L-

SHEET 1 OF 2

STATE OF NORTH CAROLINA
DEPARTMENT OF TRANSPORTATION
RALEIGH

STANDARD

EXPANSION JOINT SEAL DETAILS

RIGHT LANE

REVISIONS							
NO.	BY:	DATE:	NO.	BY:	DATE:	SHEET NO.	S-78
1			3			TOTAL SHEETS	159
2			4				

STR. #2

STD. NO. EJS1 (SHT 2)

ASSEMBLED BY : QT NGUYEN		DATE : 2-23-11	
CHECKED BY : T.H. FANG		DATE : 5-10-11	
DRAWN BY : REK 9/87	REV. 10/17/00	RWW/LES	
CHECKED BY : CRK 10/87	REV. 5/7/03R	RWW/JTE	
	REV. 5/1/06	TLA/GM	

29-AUG-2011 15:19
X:\TIPProjects-U\U3326B\Structures\str02\FinalPlans\u3326b_sd_js_02.dgn
OTNGUYEN

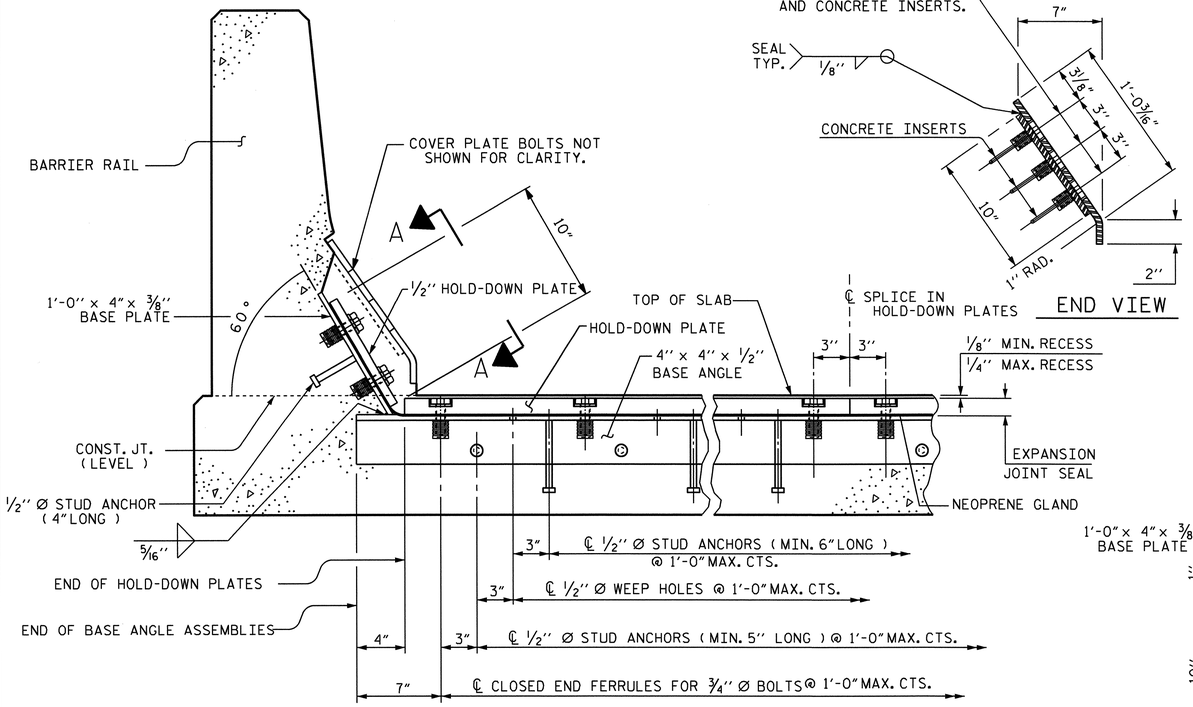

SECTION THRU RAIL NORMAL TO JOINT

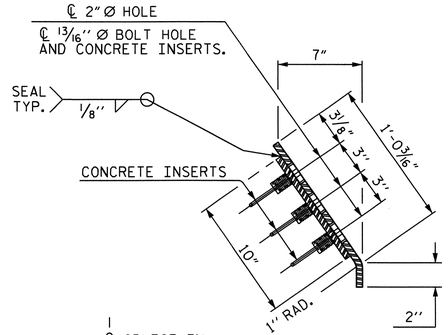

END VIEW

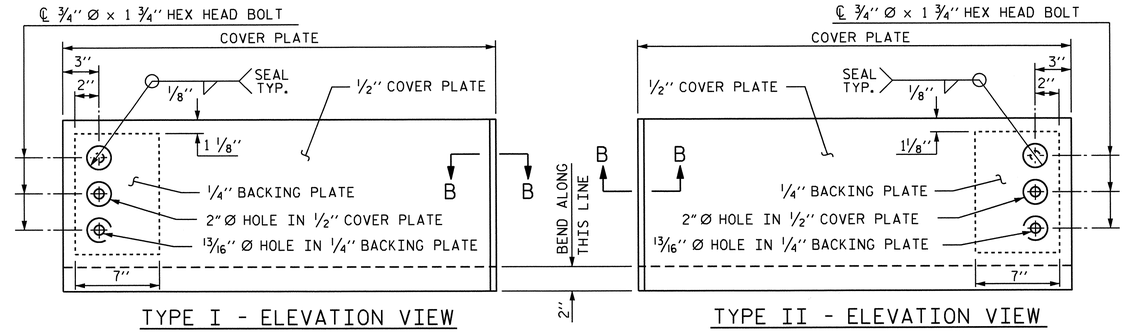

TYPE I - ELEVATION VIEW

TYPE II - ELEVATION VIEW

COVER PLATE DETAILS

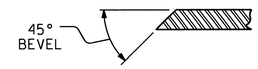

SECTION B-B

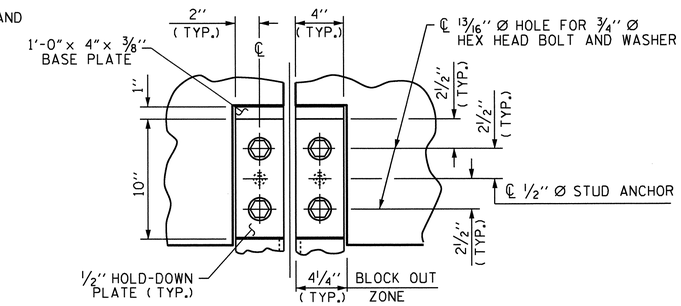

SECTION A-A

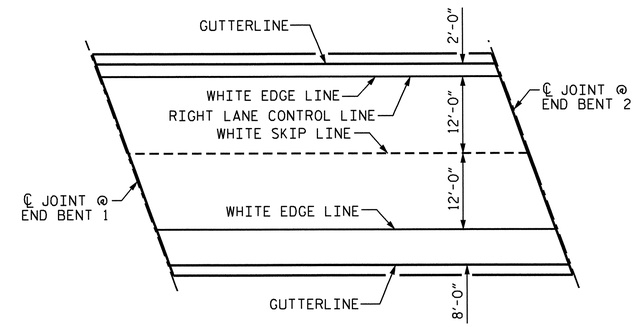

PAVEMENT MARKING ALIGNMENT

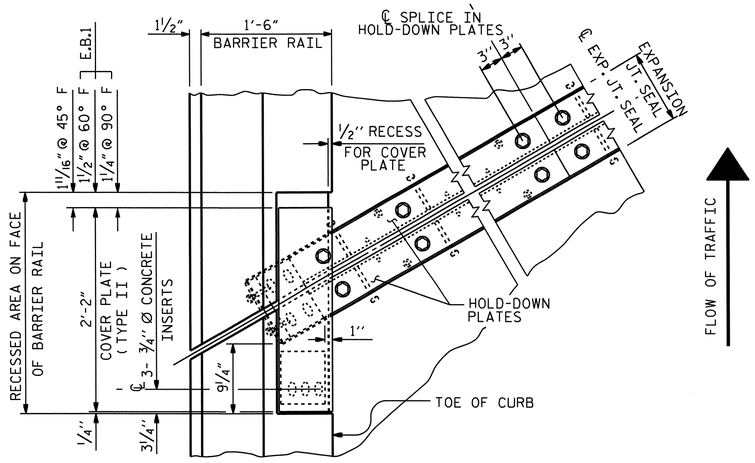

PLAN OF EXPANSION JOINT SEAL-LEFT SIDE

LEFT SIDE SHOWN, RIGHT SIDE SIMILAR.

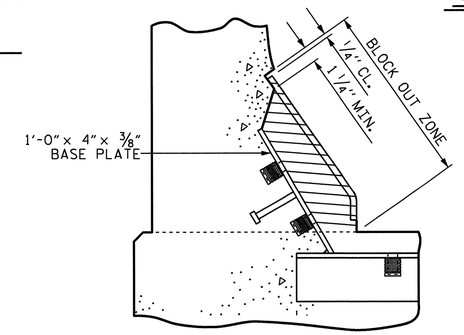

BLOCK OUT DETAIL

SEE "SECTION A-A" FOR OTHER DETAILS.

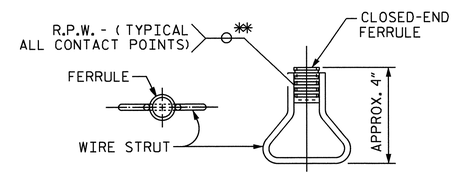

PLAN ELEVATION

CONCRETE INSERT

** EACH WELDED ATTACHMENT OF WIRE TO FERRULE SHALL DEVELOP THE TENSILE STRENGTH OF THE WIRE.

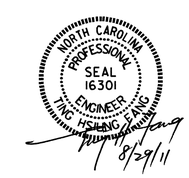

PROJECT NO. U-3326B

ROCKINGHAM COUNTY

STATION: 203+04.30 -L-

SHEET 2 OF 2

STATE OF NORTH CAROLINA
DEPARTMENT OF TRANSPORTATION
RALEIGH

STANDARD

EXPANSION JOINT SEAL DETAILS FOR BARRIER RAIL

— RIGHT LANE —

REVISIONS								SHEET NO.
NO.	BY:	DATE:	NO.	BY:	DATE:			S-79
1			3					TOTAL SHEETS
2			4					159

STR. #2

STD. NO. EJS2

ASSEMBLED BY : OT NGUYEN		DATE : 2-23-11	
CHECKED BY : T.H. FANG		DATE : 5-10-11	
DRAWN BY : REK 9/87	REV. 7/17/98	RWW/LES	
CHECKED BY : CRK 10/87	REV. 10/17/00	RWW/LES	
	REV. 5/1/06	TLA/GM	

29-AUG-2011 15:19
X:\TIPProjects-U\U3326B\Structures\str02\FinalPlans\u3326b_sd_js_02.dgn
OTNGUYEN

SUPERSTRUCTURE REINFORCING STEEL LENGTHS ARE BASED ON THE FOLLOWING MINIMUM SPLICE LENGTHS

BAR SIZE	SUPERSTRUCTURE EXCEPT APPROACH SLABS, PARAPET, AND BARRIER RAIL		APPROACH SLABS		PARAPET AND BARRIER RAIL
	EPOXY COATED	UNCOATED	EPOXY COATED	UNCOATED	
#4	2'-0"	1'-9"	2'-0"	1'-9"	2'-9"
#5	2'-6"	2'-2"	2'-6"	2'-2"	3'-5"
#6	3'-0"	2'-7"	3'-10"	2'-7"	4'-4"
#7	5'-3"	3'-6"			
#8	6'-10"	4'-7"			

GROOVING BRIDGE FLOORS

APPROACH SLABS	1,472	SQ.FT.
BRIDGE DECK	3,145	SQ.FT.
TOTAL	4,617	SQ.FT.

BILL OF MATERIAL

BAR	NO.	SIZE	TYPE	LENGTH	WEIGHT
* A1	140	#5	STR	36'-11"	5391
A2	140	#5	STR	36'-11"	5391
* A101	4	#5	STR	33'-5"	139
* A102	4	#5	STR	30'-4"	127
* A103	4	#5	STR	27'-3"	114
* A104	4	#5	STR	24'-1"	100
* A105	4	#5	STR	21'-1"	88
* A106	4	#5	STR	17'-11"	75
* A107	4	#5	STR	14'-10"	62
* A108	4	#5	STR	11'-9"	49
* A109	4	#5	STR	8'-8"	36
* A110	4	#5	STR	5'-7"	23
* A111	4	#5	STR	2'-6"	10
A201	4	#5	STR	34'-4"	143
A202	4	#5	STR	31'-3"	130
A203	4	#5	STR	28'-2"	118
A204	4	#5	STR	25'-0"	104
A205	4	#5	STR	21'-11"	91
A206	4	#5	STR	18'-10"	79
A207	4	#5	STR	15'-9"	66
A208	4	#5	STR	12'-8"	53
A209	4	#5	STR	9'-7"	40
A210	4	#5	STR	6'-6"	27
A211	4	#5	STR	3'-5"	14
* B1	104	#4	STR	27'-0"	1876
B2	70	#5	STR	52'-3"	3815
* G1	2	#5	STR	39'-9"	83
* J1	70	#4	5	1'-5"	66
* K1	8	#8	1	15'-9"	340
* K2	8	#8	2	23'-3"	497
* K3	18	#6	STR	6'-2"	167
* S1	42	#5	3	5'-11"	259
* S2	42	#4	4	4'-6"	126

REINFORCING STEEL = 10,071 LBS

* EPOXY COATING REINF. STEEL = 9,624 LBS

BAR TYPES

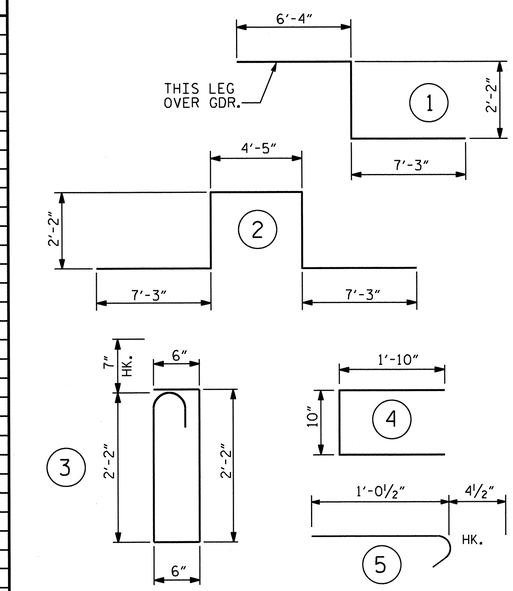

ALL BAR DIMENSIONS ARE OUT TO OUT.

SUPERSTRUCTURE BILL OF MATERIAL

	CLASS AA CONCRETE	REINFORCING STEEL	* EPOXY COATED REINFORCING STEEL
	(CU. YDS.)	(LBS.)	(LBS.)
SPAN A		10,071	9,624
POUR 1	123.1		
POUR 2	11.6		
TOTALS**	134.7	10,071	9,624

** QUANTITIES FOR BARRIER RAIL ARE NOT INCLUDED

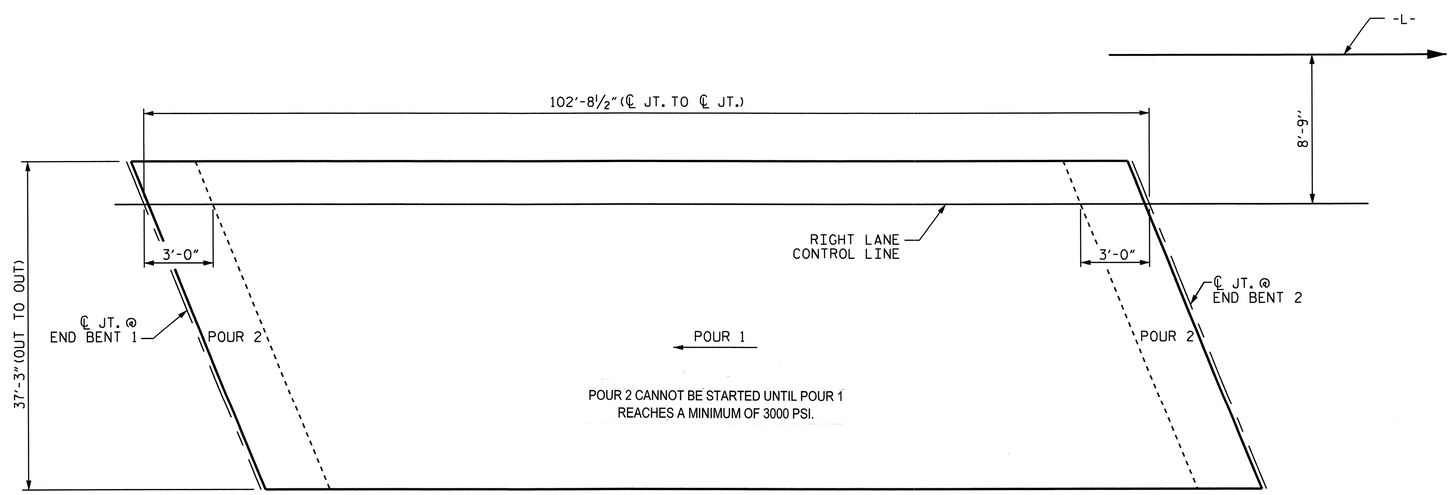

POURING SEQUENCE AND LAYOUT FOR COMPUTING AREA OF REINFORCED CONCRETE DECK SLAB

(SQ. FT. = 3,826)

PROJECT NO. U-3326B
ROCKINGHAM COUNTY
STATION: 203+04.30 -L-

NORTH CAROLINA PROFESSIONAL SEAL 16301 ENGINEER TING-HSIUNG FANG
10/21/11

STATE OF NORTH CAROLINA
DEPARTMENT OF TRANSPORTATION
RALEIGH

STANDARD
SUPERSTRUCTURE BILL OF MATERIAL
— RIGHT LANE —

REVISIONS						SHEET NO.
NO.	BY:	DATE:	NO.	BY:	DATE:	S-80
1			3			TOTAL SHEETS
2			4			159

ASSEMBLED BY : A.S. CALLAWAY	DATE : 8/7/09		
CHECKED BY : L.E. SUTTON	DATE : 2/8/10		
DRAWN BY : JMB 5/87	REV. 6/1/94	EEM/GRP	
CHECKED BY : SJD 9/87	REV. 8/16/99	RWW/LES	
	REV. 5/1/06	TLA/GM	

21-OCT-2011 11:14
K:\TIPProjects-U\U3326B\Structures\str02\FinalPlans\u3326b_sd_bm_02.dgn
ttfang

STR. #2

STD. NO. BOM2

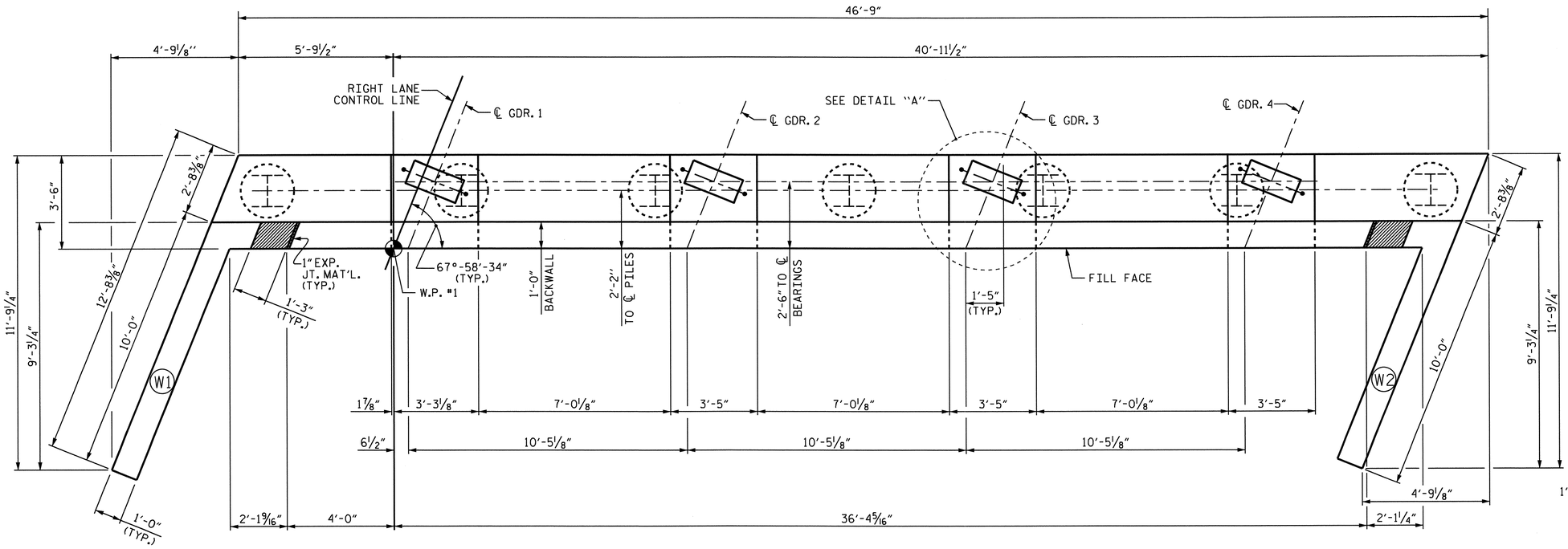

PLAN

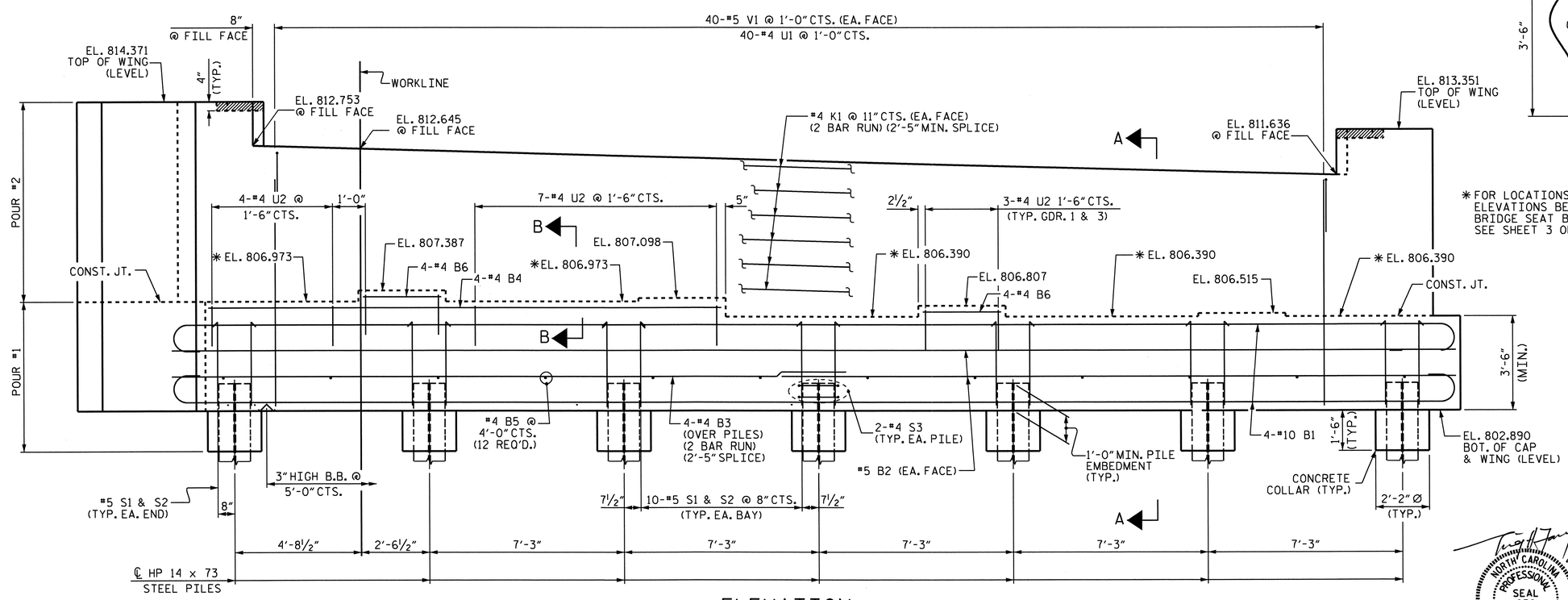

ELEVATION

RIGHT WING NOT SHOWN FOR CLARITY.

NOTES

STIRRUPS IN CAP MAY BE SHIFTED AS NECESSARY TO CLEAR ANCHOR BOLTS.

BACKWALL SHALL BE PLACED BEFORE APPLYING THE EPOXY PROTECTIVE COATING.

THE TOP SURFACE AREAS OF THE END BENT CAPS SHALL BE CURED IN ACCORDANCE WITH THE STANDARD SPECIFICATIONS EXCEPT THE MEMBRANE CURING COMPOUND METHOD SHALL NOT BE USED.

*THE TOP SURFACE OF THE END BENT CAP EXCEPT THE BRIDGE SEAT BUILDUPS SHALL BE SLOPED TRANSVERSELY FROM THE FILL FACE TO THE BACK FACE AT THE RATE OF 2%.

THE CONTRACTOR SHALL PROVIDE FOR INSTALLATION OF THE 4" DIAMETER DRAIN PIPE THROUGH THE WING WALL AS REQUIRED FOR REINFORCED BRIDGE APPROACH FILLS. SEE THE ROADWAY PLANS. REINFORCING STEEL IN THE WING WALL MAY BE SHIFTED AS NECESSARY TO CLEAR THE DRAIN PIPE.

THE CONCRETE IN THE SHADED AREA OF THE WING SHALL BE POURED AFTER THE BARRIER RAILS ARE CAST IF SLIP FORMING IS USED.

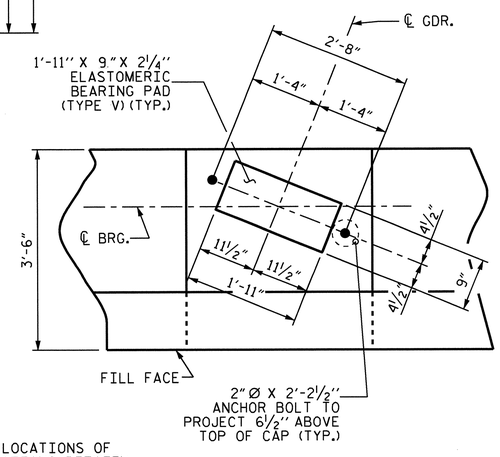

* FOR LOCATIONS OF ELEVATIONS BETWEEN BRIDGE SEAT BUILD-UPS, SEE SHEET 3 OF 3.

DETAIL "A"

(TYP. EACH GIRDER)

PROJECT NO. U-3326B
ROCKINGHAM COUNTY
STATION: 203+04.30 -L-

SHEET 1 OF 3

STATE OF NORTH CAROLINA
DEPARTMENT OF TRANSPORTATION
RALEIGH

SUBSTRUCTURE
END BENT 1
-RIGHT LANE-

NORTH CAROLINA PROFESSIONAL SEAL 16301 ENGINEER TING-HSIUNG FANG
8/19/11

REVISIONS						SHEET NO.
NO.	BY:	DATE:	NO.	BY:	DATE:	S-81
1			3			TOTAL SHEETS
2			4			159

STR. #2

DRAWN BY : RAMAN PATEL DATE : 11-10-10
CHECKED BY : B. MATHEW DATE : 2-11

29-AUG-2011 15:19
X:\TIPProjects-U\U3326B\Structures\str02\FinalPlans\u3326b_sd_e*_02.dgn
OTNGUYEN

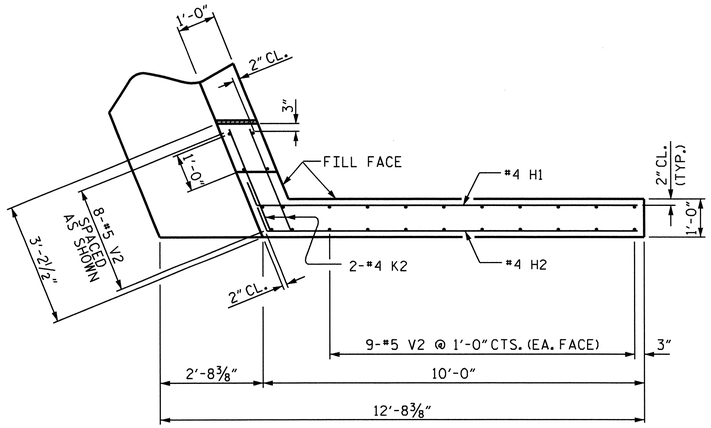

PLAN OF WING (W1)

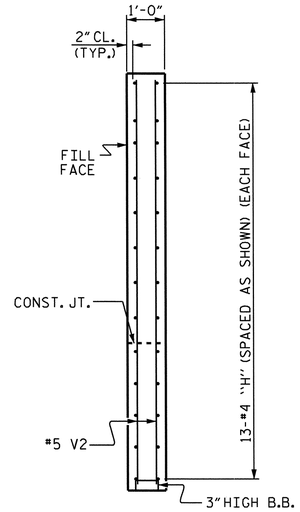

SECTION X-X

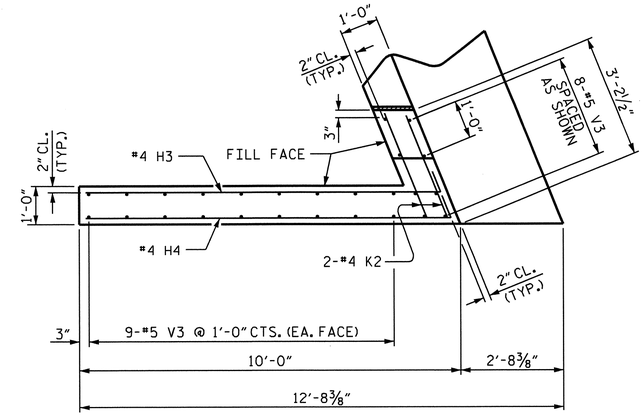

PLAN OF WING (W2)

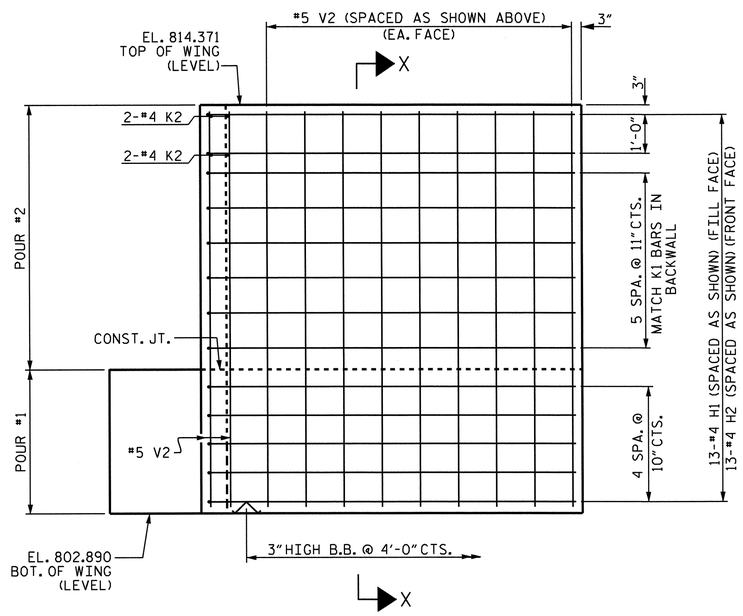

ELEVATION OF WING (W1)

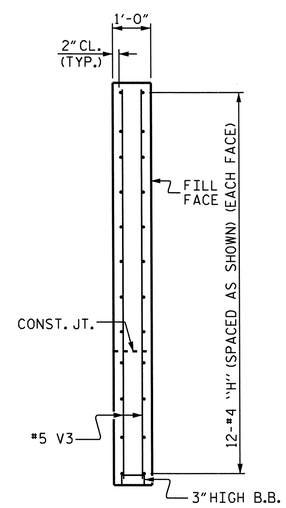

SECTION Y-Y

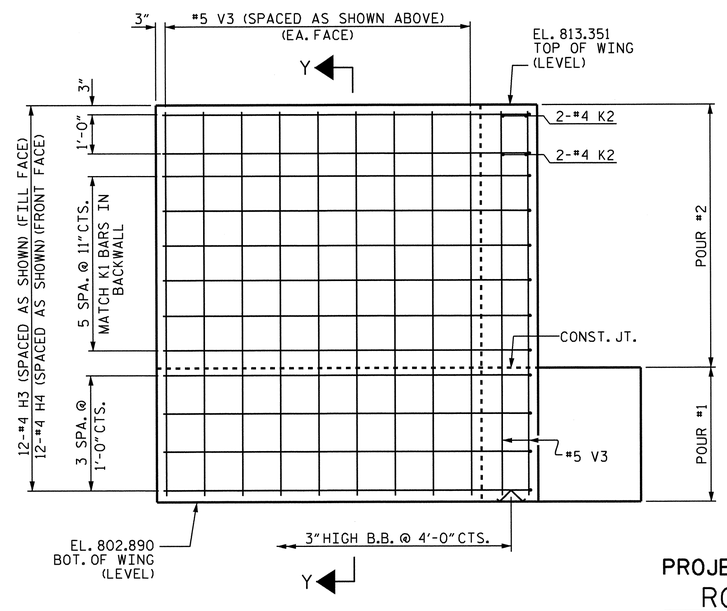

ELEVATION OF WING (W2)

PROJECT NO. U-3326B
ROCKINGHAM COUNTY
STATION: 203+04.30-L-

SHEET 2 OF 3

STATE OF NORTH CAROLINA
DEPARTMENT OF TRANSPORTATION
RALEIGH

SUBSTRUCTURE

END BENT 1

-RIGHT LANE-

NORTH CAROLINA PROFESSIONAL SEAL 16301 ENGINEER TING HSIANG FANG
8/29/11

REVISIONS						SHEET NO.
NO.	BY:	DATE:	NO.	BY:	DATE:	S-82
1			3			TOTAL SHEETS
2			4			159

STR. #2

DRAWN BY : RAMAN PATEL DATE : 11-12-10
CHECKED BY : B. MATHEW DATE : 2-11

29-AUG-2011 15:19
X:\TIPProjects-U\U3326B\Structures\str02\FinalPlans\u3326b_sd_e*_02.dgn
OTNGUYEN

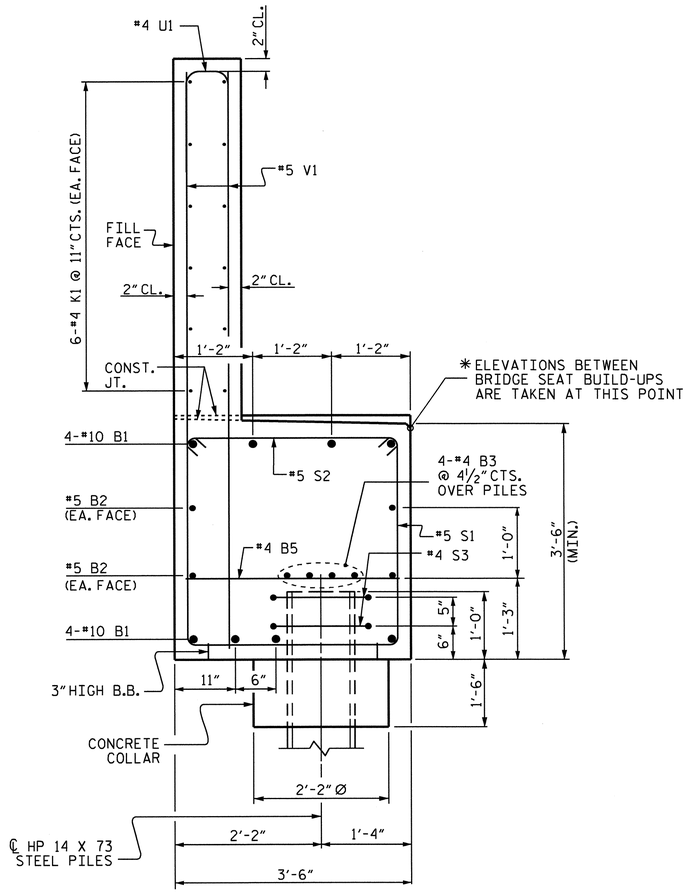

SECTION A-A

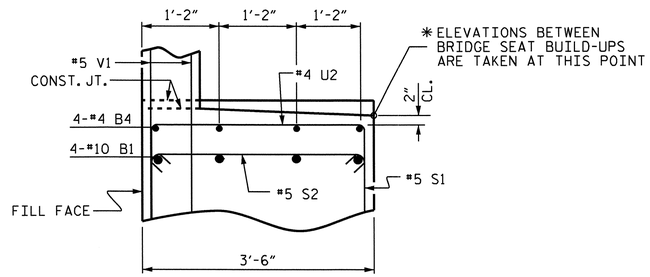

PARTIAL SECTION B-B

BAR TYPES

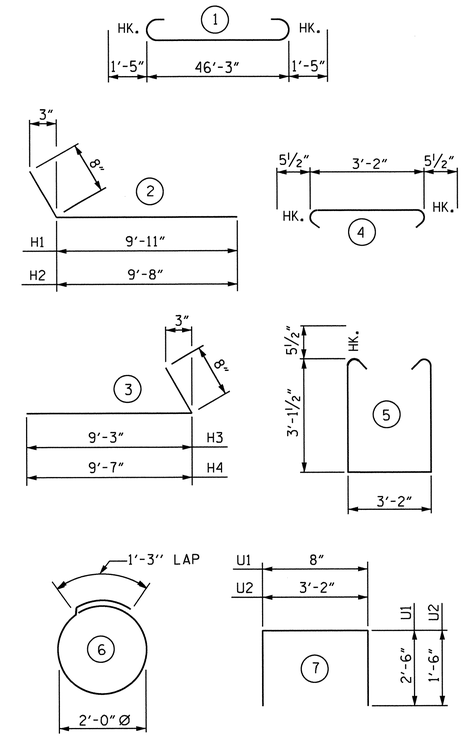

ALL BAR DIMENSIONS ARE OUT TO OUT.

BILL OF MATERIAL

END BENT 1

BAR	NO.	SIZE	TYPE	LENGTH	WEIGHT
B1	8	#10	1	49'-1"	1690
B2	4	#5	STR	46'-5"	194
B3	8	#4	STR	24'-5"	130
B4	4	#4	STR	19'-3"	51
B5	12	#4	STR	3'-2"	25
B6	8	#4	STR	3'-1"	16
H1	13	#4	2	10'-7"	92
H2	13	#4	2	10'-4"	90
H3	12	#4	3	9'-11"	79
H4	12	#4	3	10'-3"	82
K1	24	#4	STR	24'-5"	391
K2	8	#4	STR	2'-10"	15
S1	62	#5	5	10'-4"	668
S2	62	#5	4	4'-1"	264
S3	14	#4	6	7'-6"	70
U1	40	#4	7	5'-8"	151
U2	17	#4	7	6'-2"	70
V1	80	#5	STR	8'-6"	709
V2	26	#5	STR	11'-1"	301
V3	26	#5	STR	10'-1"	273

REINFORCING STEEL 5,361 LBS

CLASS A CONCRETE

POUR #1 (CAP & LOWER WINGS & COLLARS)	27.1 C.Y.
POUR #2 (BACKWALL & UPPER WINGS)	16.5 C.Y.
TOTAL	43.6 C.Y.

HP 14 X 73 STEEL PILES

NO. 7	245 LIN. FT.
STEEL PILE POINTS	7 EA.
PILE EXCAVATION	
IN SOIL	15 LIN. FT.
NOT IN SOIL	15 LIN. FT.

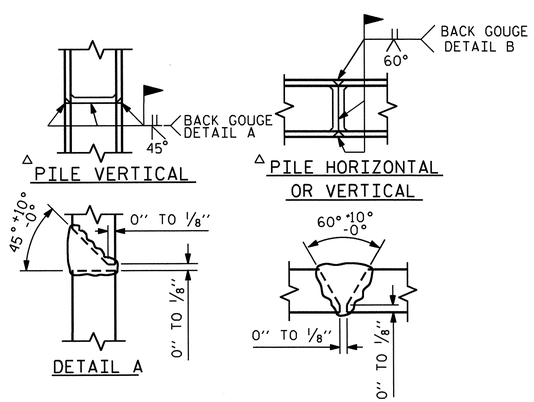

△ POSITION OF PILE DURING WELDING.

PILE SPLICE DETAILS

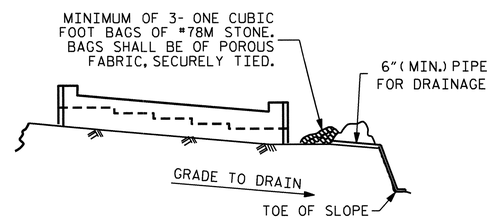

BAGGED STONE AND PIPE SHALL BE PLACED IMMEDIATELY AFTER COMPLETION OF END BENT EXCAVATION. PIPE MAY BE EITHER CONCRETE, CORRUGATED STEEL, CORRUGATED ALUMINUM ALLOY, OR CORRUGATED PLASTIC. PERFORATED PIPE WILL NOT BE ALLOWED.

BAGGED STONE SHALL REMAIN IN PLACE UNTIL THE ENGINEER DIRECTS THAT IT BE REMOVED. THE CONTRACTOR SHALL REMOVE AND DISPOSE OF SILT ACCUMULATIONS AT BAGGED STONE WHEN SO DIRECTED BY THE ENGINEER. BAGS SHALL BE REMOVED AND REPLACED WHENEVER THE ENGINEER DETERMINES THAT THEY HAVE DETERIORATED AND LOST THEIR EFFECTIVENESS.

NO SEPARATE PAYMENT WILL BE MADE FOR THIS WORK AND THE ENTIRE COST OF THIS WORK SHALL BE INCLUDED IN THE UNIT CONTRACT PRICE BID FOR THE SEVERAL PAY ITEMS.

TEMPORARY DRAINAGE AT END BENT

NORTH CAROLINA PROFESSIONAL SEAL 16301 ENGINEER TING-HSIUNG FANG
8/29/11

PROJECT NO. U-3326B
ROCKINGHAM COUNTY
STATION: 203+04.30 -L-

SHEET 3 OF 3

STATE OF NORTH CAROLINA
DEPARTMENT OF TRANSPORTATION
RALEIGH

SUBSTRUCTURE
END BENT 1
-RIGHT LANE-

REVISIONS						SHEET NO.
NO.	BY:	DATE:	NO.	BY:	DATE:	S-83
1			3			TOTAL SHEETS
2			4			159

STR. #2

DRAWN BY : RAMAN PATEL DATE : 11-10-10
CHECKED BY : B. MATHEW DATE : 2-11

29-AUG-2011 15:19
X:\TIPProjects-U\U3326B\Structures\str02\FinalPlans\u3326b_sd_e*_02.dgn
OTNGUYEN

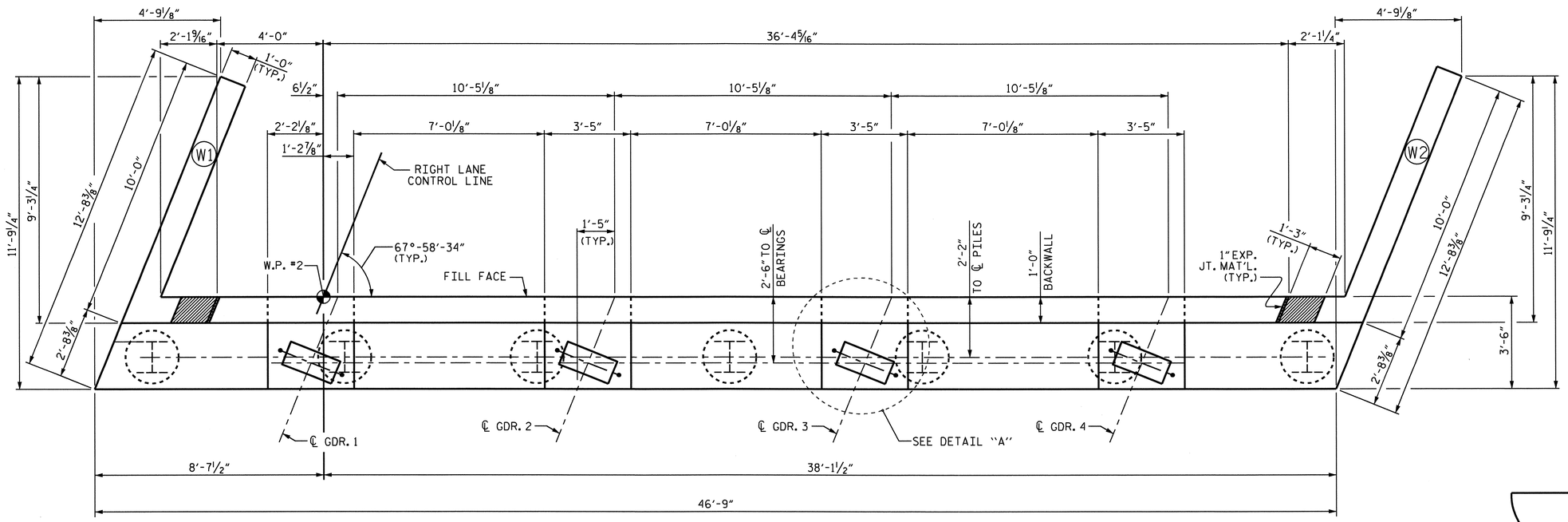

PLAN

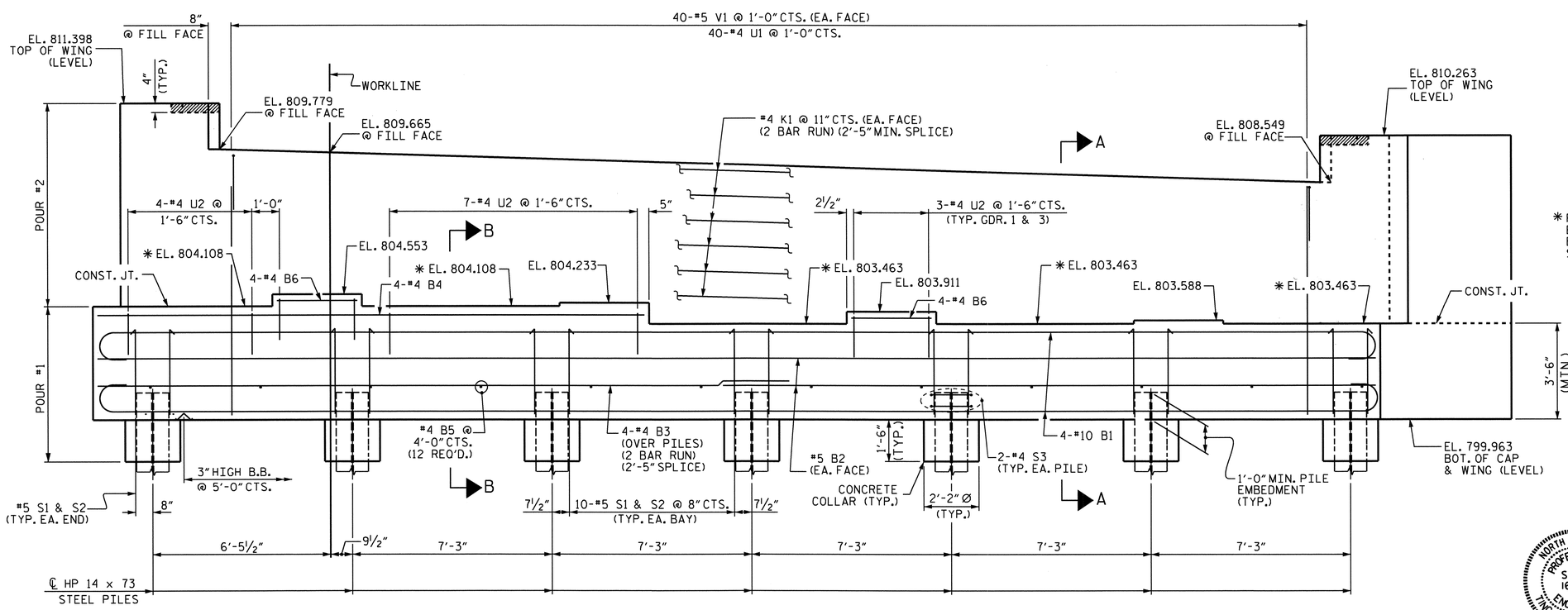

ELEVATION

LEFT WING NOT SHOWN FOR CLARITY.

NOTES

STIRRUPS IN CAP MAY BE SHIFTED AS NECESSARY TO CLEAR ANCHOR BOLTS.

BACKWALL SHALL BE PLACED BEFORE APPLYING THE EPOXY PROTECTIVE COATING.

✱ THE TOP SURFACE AREAS OF THE END BENT CAPS SHALL BE CURED IN ACCORDANCE WITH THE STANDARD SPECIFICATIONS EXCEPT THE MEMBRANE CURING COMPOUND METHOD SHALL NOT BE USED.

THE TOP SURFACE OF THE END BENT CAP EXCEPT THE BRIDGE SEAT BUILDUPS SHALL BE SLOPED TRANSVERSELY FROM THE FILL FACE TO THE BACK FACE AT THE RATE OF 2%.

THE CONTRACTOR SHALL PROVIDE FOR INSTALLATION OF THE 4" DIAMETER DRAIN PIPE THROUGH THE WING WALL AS REQUIRED FOR REINFORCED BRIDGE APPROACH FILLS, SEE THE ROADWAY PLANS. REINFORCING STEEL IN THE WING WALL MAY BE SHIFTED AS NECESSARY TO CLEAR THE DRAIN PIPE.

THE CONCRETE IN THE SHADED AREA OF THE WING SHALL BE POURED AFTER THE BARRIER RAILS ARE CAST IF SLIP FORMING IS USED.

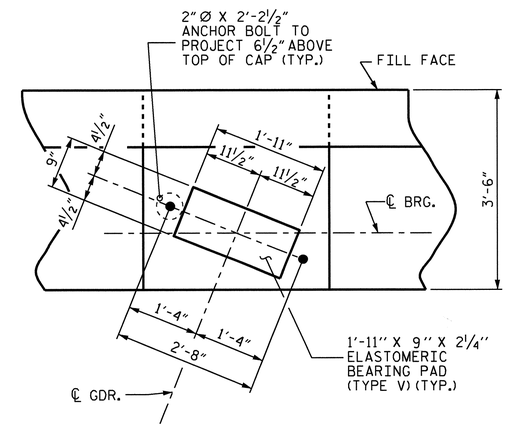

DETAIL "A"

(TYP. EACH GIRDER)

✱ FOR LOCATIONS OF ELEVATIONS BETWEEN BRIDGE SEAT BUILD-UPS, SEE SHEET 3 OF 3.

PROJECT NO. U-3326B
ROCKINGHAM COUNTY
STATION: 203+04.30 -L-

SHEET 1 OF 3

STATE OF NORTH CAROLINA
DEPARTMENT OF TRANSPORTATION
RALEIGH

SUBSTRUCTURE
END BENT 2
-RIGHT LANE-

NORTH CAROLINA PROFESSIONAL SEAL 16301 ENGINEER TING HSUNG FANG
8/29/11

REVISIONS						SHEET NO.
NO.	BY:	DATE:	NO.	BY:	DATE:	S-84
1			3			TOTAL SHEETS
2			4			159

STR. #2

DRAWN BY : RAMAN PATEL DATE : 11-10-10
CHECKED BY : B. MATHEW DATE : 2-11

29-AUG-2011 15:19
X:\TIPProjects-U\U3326B\Structures\str02\FinalPlans\u3326b_sd_e*_02.dgn
OTNGUYEN

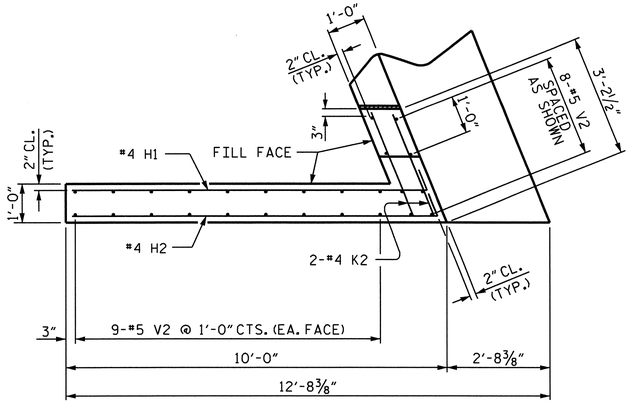

PLAN OF WING (W1)

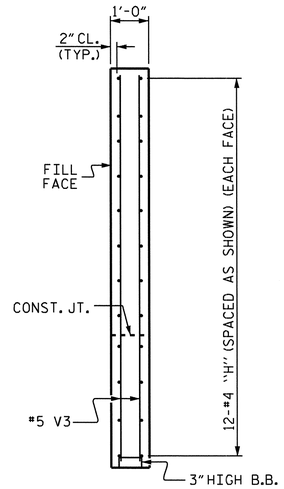

SECTION Y-Y

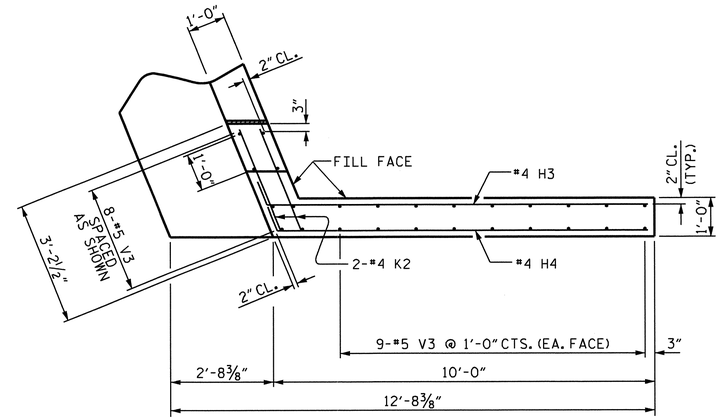

PLAN OF WING (W2)

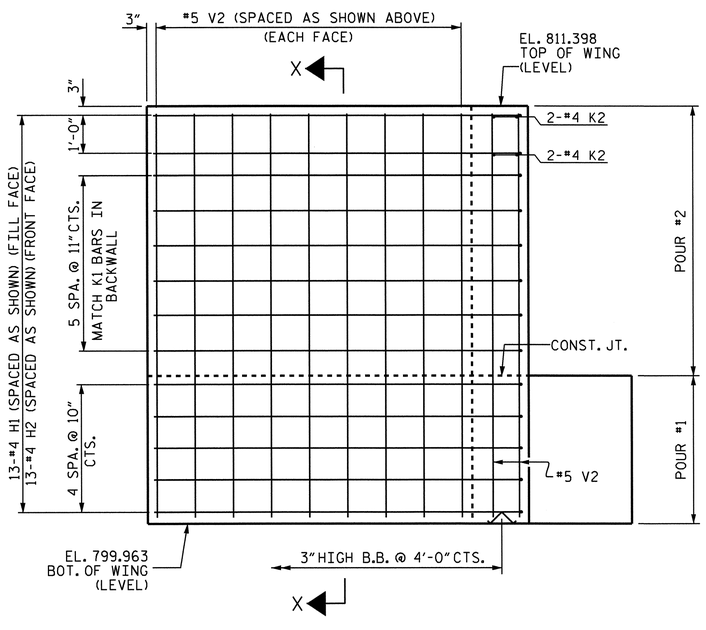

ELEVATION OF WING (W1)

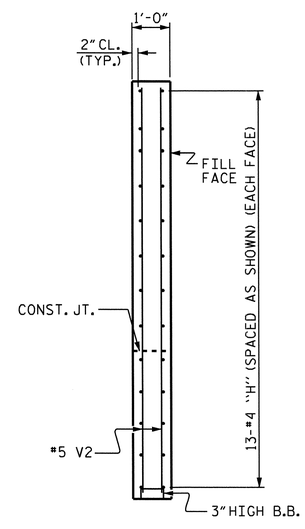

SECTION X-X

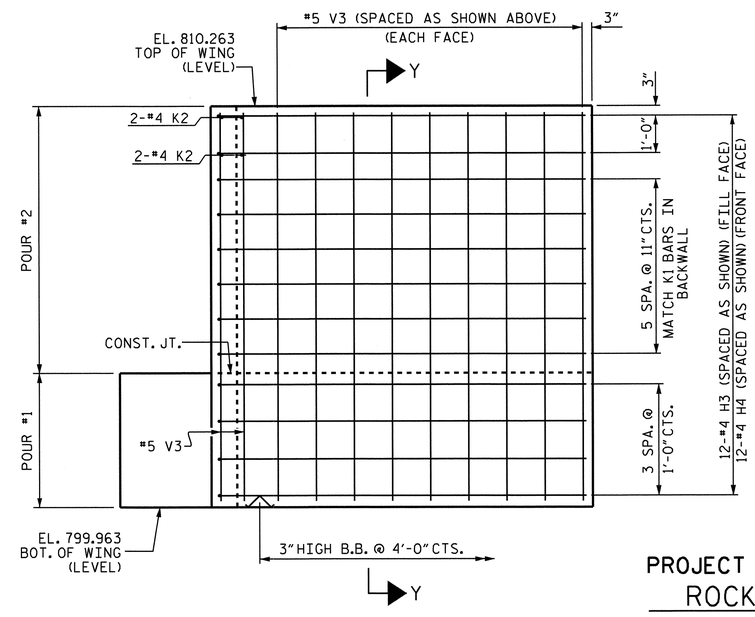

ELEVATION OF WING (W2)

PROJECT NO. U-3326B
ROCKINGHAM COUNTY
STATION: 203+04.30-L-

SHEET 2 OF 3

STATE OF NORTH CAROLINA
DEPARTMENT OF TRANSPORTATION
RALEIGH

SUBSTRUCTURE

END BENT 2

-RIGHT LANE-

NORTH CAROLINA PROFESSIONAL SEAL 16301 ENGINEER TING HSIUNG FANG
8/29/11

REVISIONS						SHEET NO.
NO.	BY:	DATE:	NO.	BY:	DATE:	S-85
1			3			TOTAL SHEETS
2			4			159

STR. #2

DRAWN BY : RAMAN PATEL DATE : 11-12-10
CHECKED BY : B. MATHEW DATE : 2-11

29-AUG-2011 15:19
X:\TIPProjects-U\U3326B\Structures\str02\FinalPlans\u3326b_sd_e*_02.dgn
OTNGUYEN

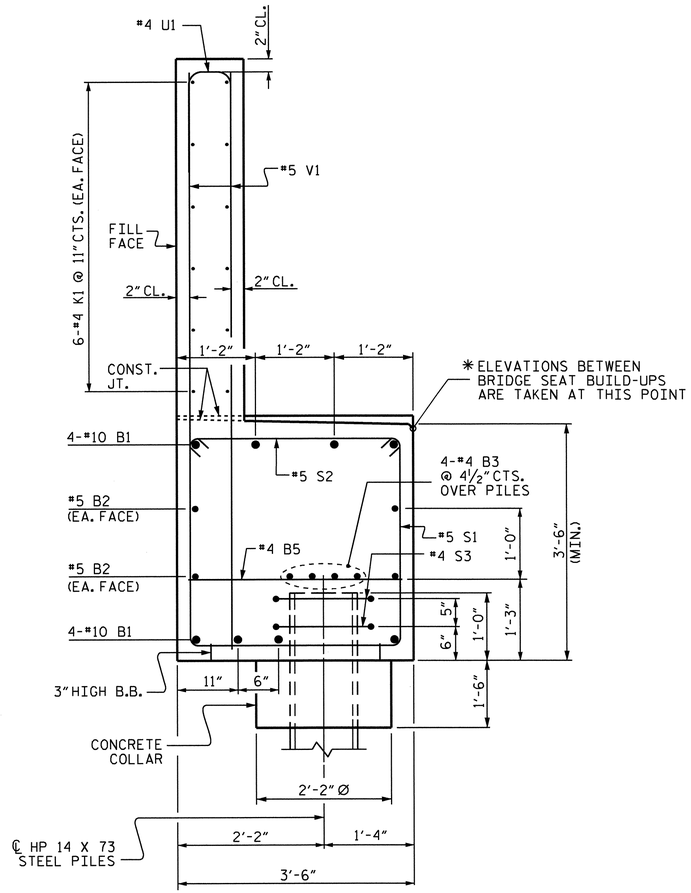

SECTION A-A

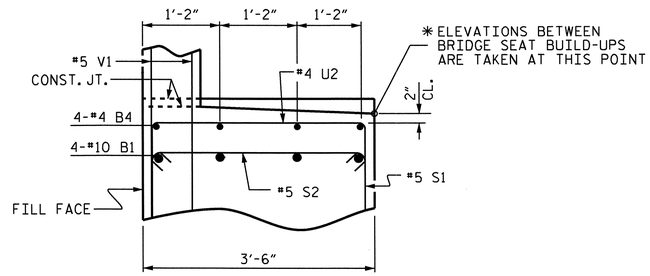

PARTIAL SECTION B-B

BAR TYPES

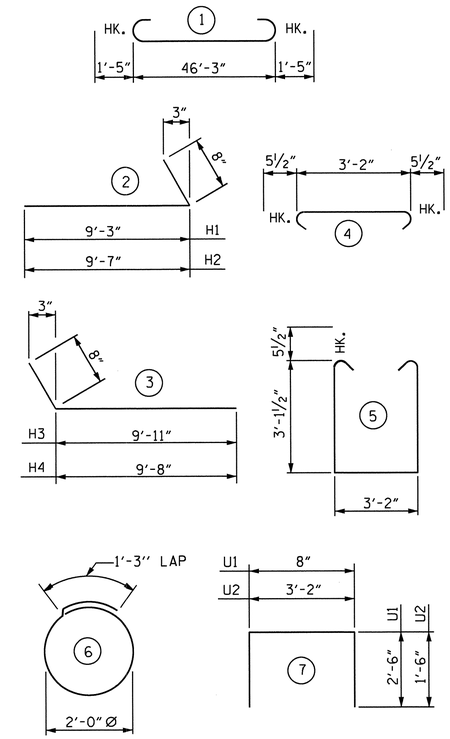

ALL BAR DIMENSIONS ARE OUT TO OUT.

BILL OF MATERIAL

END BENT 2

BAR	NO.	SIZE	TYPE	LENGTH	WEIGHT
B1	8	#10	1	49'-1"	1690
B2	4	#5	STR	46'-5"	194
B3	8	#4	STR	24'-5"	130
B4	4	#4	STR	18'-6"	49
B5	12	#4	STR	3'-2"	25
B6	8	#4	STR	3'-1"	16
H1	13	#4	2	9'-11"	86
H2	13	#4	2	10'-3"	89
H3	12	#4	3	10'-7"	85
H4	12	#4	3	10'-4"	93
K1	24	#4	STR	24'-5"	391
K2	8	#4	STR	2'-10"	15
S1	62	#5	5	10'-4"	668
S2	62	#5	4	4'-1"	264
S3	14	#4	6	7'-6"	70
U1	40	#4	7	5'-8"	151
U2	17	#4	7	6'-2"	70
V1	80	#5	STR	8'-3"	688
V2	26	#5	STR	11'-1"	301
V3	26	#5	STR	9'-11	269

REINFORCING STEEL 5,334 LBS

CLASS A CONCRETE

POUR #1 (CAP & LOWER WINGS & COLLARS)	27.3 C.Y.
POUR #2 (BACKWALL & UPPER WINGS)	16.4 C.Y.
TOTAL	43.7 C.Y.

HP 14 X 73 STEEL PILES	
NO. 7	210 LIN. FT.
STEEL PILE POINTS	7 EA.
PILE EXCAVATION	
IN SOIL	35 LIN. FT.
NOT IN SOIL	70 LIN. FT.

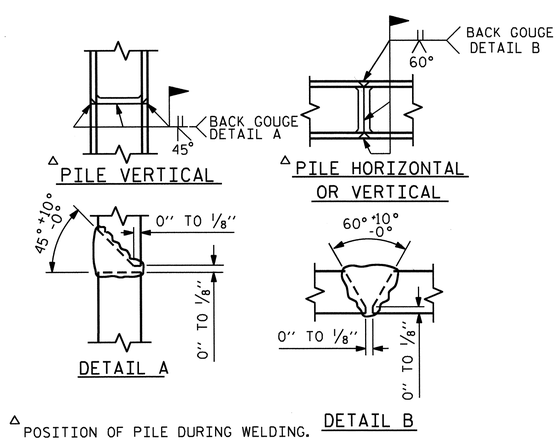

△ POSITION OF PILE DURING WELDING.

PILE SPLICE DETAILS

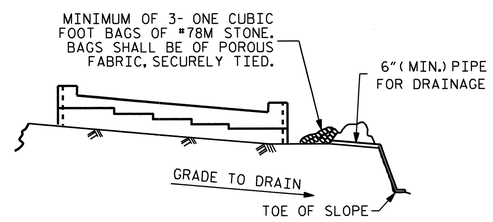

BAGGED STONE AND PIPE SHALL BE PLACED IMMEDIATELY AFTER COMPLETION OF END BENT EXCAVATION. PIPE MAY BE EITHER CONCRETE, CORRUGATED STEEL, CORRUGATED ALUMINUM ALLOY, OR CORRUGATED PLASTIC. PERFORATED PIPE WILL NOT BE ALLOWED.

BAGGED STONE SHALL REMAIN IN PLACE UNTIL THE ENGINEER DIRECTS THAT IT BE REMOVED. THE CONTRACTOR SHALL REMOVE AND DISPOSE OF SILT ACCUMULATIONS AT BAGGED STONE WHEN SO DIRECTED BY THE ENGINEER. BAGS SHALL BE REMOVED AND REPLACED WHENEVER THE ENGINEER DETERMINES THAT THEY HAVE DETERIORATED AND LOST THEIR EFFECTIVENESS.

NO SEPARATE PAYMENT WILL BE MADE FOR THIS WORK AND THE ENTIRE COST OF THIS WORK SHALL BE INCLUDED IN THE UNIT CONTRACT PRICE BID FOR THE SEVERAL PAY ITEMS.

TEMPORARY DRAINAGE AT END BENT

NORTH CAROLINA PROFESSIONAL SEAL 16301 ENGINEER TING HSILING FANG
8/29/11

PROJECT NO. U-3326B
ROCKINGHAM COUNTY
STATION: 203+04.30 -L-

SHEET 3 OF 3

STATE OF NORTH CAROLINA
DEPARTMENT OF TRANSPORTATION
RALEIGH

SUBSTRUCTURE
END BENT 2
—RIGHT LANE—

REVISIONS						SHEET NO.
NO.	BY:	DATE:	NO.	BY:	DATE:	S-86
1			3			TOTAL SHEETS
2			4			159

STR. #2

DRAWN BY : RAMAN PATEL DATE : 11-10-10
CHECKED BY : B. MATHEW DATE : 2-11

29-AUG-2011 15:19
X:\TIPProjects-U\U3326B\Structures\str02\FinalPlans\u3326b_sd_e*_02.dgn
OTNGUYEN

GENERAL NOTES

SLOPE PROTECTION SHALL BE PLACED UNDER THE ENDS OF THE BRIDGE AS SHOWN IN THE DETAILS. STRAIGHT EDGING WILL NOT BE REQUIRED UNLESS, IN THE OPINION OF THE ENGINEER, VISUAL INSPECTION INDICATES A NEED FOR IT. MEASUREMENT AND PAYMENT SHALL BE AS PRESCRIBED IN SECTION 462 OF THE STANDARD SPECIFICATIONS.

SLOPE PROTECTION SHALL CONSIST OF 4" POURED-IN-PLACE CONCRETE PAVING AS SHOWN IN THE DETAILS ON THIS SHEET. CONCRETE SHALL BE CLASS "B". THE CONCRETE SURFACE SHALL BE FLOATED WITH A WOODEN FLOAT AND FINISHED. WELDED WIRE FABRIC REINFORCING SHALL BE 6 X 6 - W1.4 X W1.4, 60" WIDE. SLOPE PROTECTION SHALL BE POURED IN 5' STRIPS AS SHOWN IN THE "POURING DETAIL" WITH 2'-0" LONG #4 BARS PLACED ALONG THE SLOPE BETWEEN STRIPS AT 1'-6" MAXIMUM SPACING. SLOPE PROTECTION MAY BE POURED IN ALTERNATE 4' AND 5' STRIPS AS SHOWN IN THE "OPTIONAL POURING DETAIL" WITH ADJACENT RUNS OF WELDED WIRE FABRIC LAPPING AT LEAST 6". THE COST OF THE WELDED WIRE FABRIC AND #4 BARS, IF USED, SHALL BE INCLUDED IN THE CONTRACT UNIT PRICE BID PER SQUARE YARD FOR SLOPE PROTECTION.

BRIDGE @ STA. 203+04.30 -L- (RIGHT LANE)	4" INCH SLOPE PROTECTION	* WELDED WIRE FABRIC 60 INCHES WIDE
	SQUARE YARDS	APPROX. L.F.
END BENT 1	45	90
END BENT 2	45	90

* QUANTITY SHOWN IS BASED ON 5' POURS.

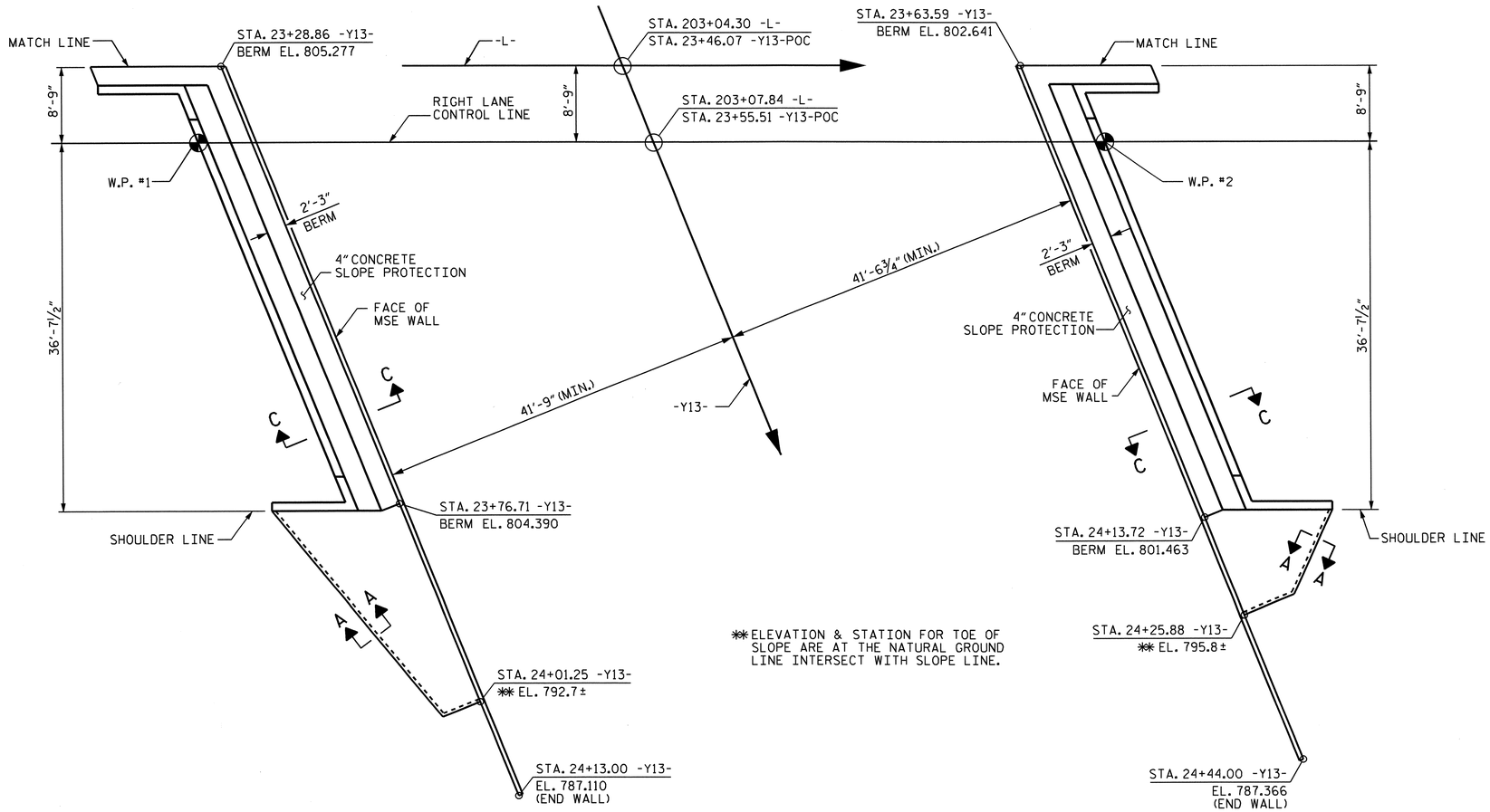

** ELEVATION & STATION FOR TOE OF SLOPE ARE AT THE NATURAL GROUND LINE INTERSECT WITH SLOPE LINE.

END BENT 1

PLAN

FOR DETAILS & QUANTITIES OF MSE WALL, SEE "MSE RETAINING WALL" ON SHEETS W-5 THRU W-8.

END BENT 2

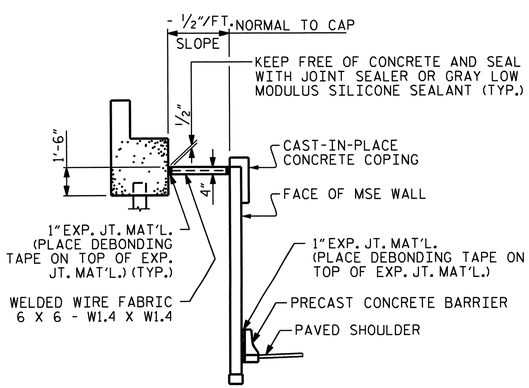

SECTION C-C

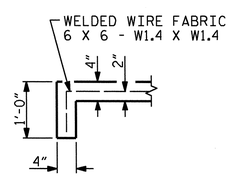

SECTION A-A

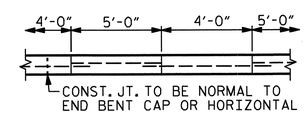

POUR A 4'-0" STRIP FIRST. STRIP WIDTHS MAY VARY IN CURVED PORTION.

OPTIONAL POURING DETAIL

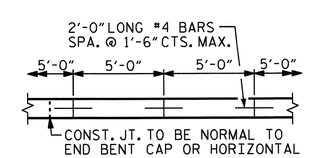

STRIP WIDTHS MAY VARY IN CURVED PORTION.

POURING DETAIL

DETAILS FOR SLOPE PROTECTION

PROJECT NO. U-3326B
ROCKINGHAM COUNTY
STATION: 203+04.30 -L-

STATE OF NORTH CAROLINA
DEPARTMENT OF TRANSPORTATION
RALEIGH

SLOPE PROTECTION DETAILS

— RIGHT LANE —

NORTH CAROLINA PROFESSIONAL SEAL 16301 ENGINEER TING HSIENG FANG
10/20/11

REVISIONS						SHEET NO.
NO.	BY:	DATE:	NO.	BY:	DATE:	S-87
1			3			TOTAL SHEETS
2			4			159

STR. #2

DRAWN BY : J. A. YANNACCONE DATE : 5/13/11
CHECKED BY : T. H. FANG DATE : 8/29/11

20-OCT-2011 16:54
K:\TIPProjects-U\U3326B\Structures\str02\FinalPlans\u3326b_sd_sp_02.dgn
ttfang

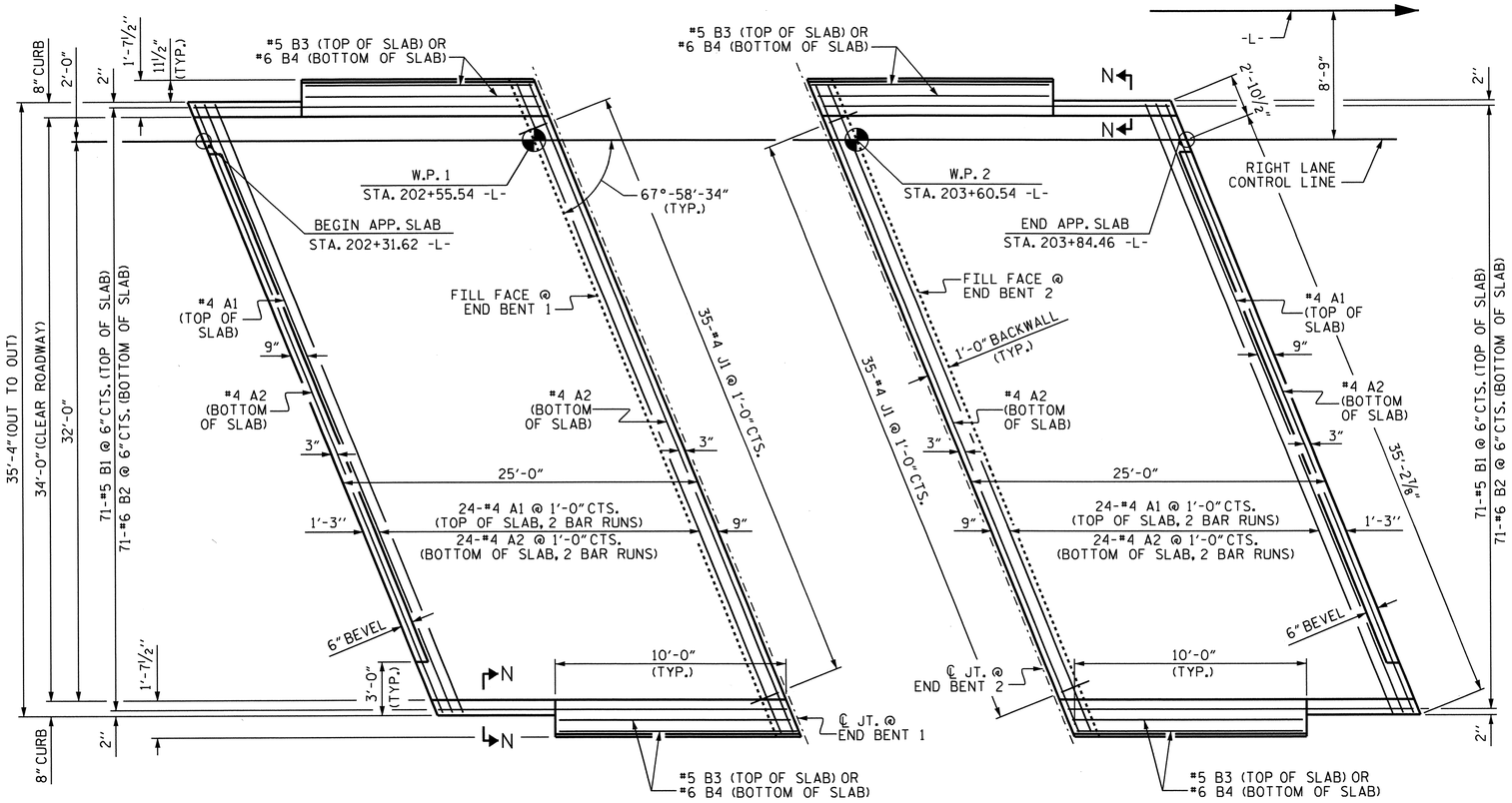

AT END BENT 1

PLAN

DIMENSIONS SHOWN ARE TYPICAL FOR BOTH APPROACH SLABS

AT END BENT 2

NOTES

APPROACH SLAB SHALL NOT BE CONSTRUCTED PRIOR TO COMPLETION OF THE BRIDGE DECK.

THE CONCRETE BARRIER RAILS ON THE APPROACH SLABS SHALL BE INCLUDED IN THE CONCRETE BARRIER RAIL QUANTITY FOR THE SUPERSTRUCTURE. FOR QUANTITIES AND DETAILS, SEE SHEET 2 OF 2.

AREA BETWEEN THE WINGWALL AND APPROACH SLAB SHALL BE GRADED TO DRAIN THE WATER AWAY FROM THE FILL FACE OF THE BRIDGE.

FOR EXPANSION JOINT SEALS, SEE SPECIAL PROVISIONS.

BILL OF MATERIAL

FOR ONE APPROACH SLAB (2 REQ'D)

BAR	NO.	SIZE	TYPE	LENGTH	WEIGHT
* A1	50	#4	STR	20'-11"	699
A2	52	#4	STR	20'-9"	721
* B1	71	#5	STR	23'-9"	1759
B2	71	#6	STR	24'-7"	2622
* B3	4	#5	STR	9'-7"	40
B4	4	#6	STR	9'-7"	58
* J1	35	#4	1	1'-5"	33
REINFORCING STEEL				LBS.	3401
* EPOXY COATED REINFORCING STEEL				LBS.	2531
CLASS AA CONCRETE				C. Y.	39.3

BAR TYPES

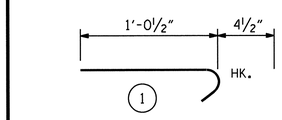

ALL BAR DIMENSIONS ARE OUT TO OUT

QUANTITIES FOR BARRIER RAIL NOT INCLUDED.

SPLICE CHART

BAR	SIZE	SPLICE
* A1	#4	2'-0"
A2	#4	1'-9"

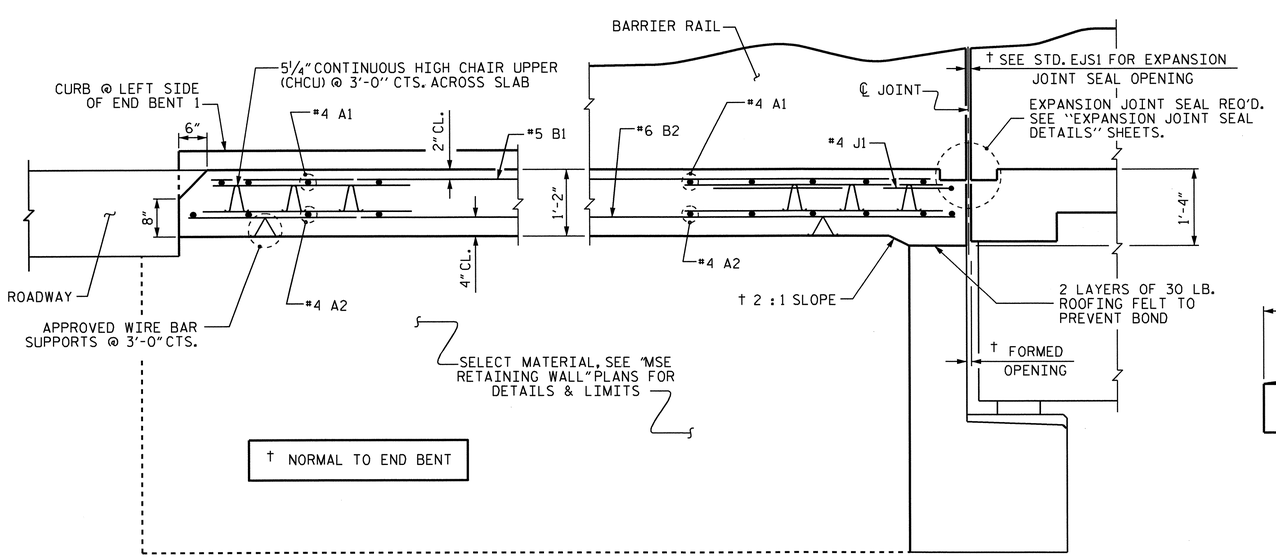

SECTION THRU SLAB

SHOWING SECTION WITHOUT CONCRETE WEARING SURFACE

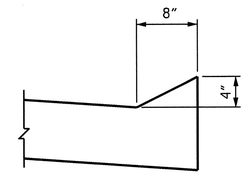

SECTION N-N

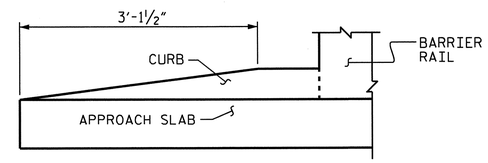

END OF CURB WITHOUT SHOULDER BERM GUTTER

CURB DETAILS

NORTH CAROLINA PROFESSIONAL SEAL 16301 ENGINEER T.H. FANG

12/05/11

PROJECT NO. U-3326B

ROCKINGHAM COUNTY

STATION: 203+04.30 -L-

SHEET 1 OF 2

STATE OF NORTH CAROLINA
DEPARTMENT OF TRANSPORTATION
RALEIGH

STANDARD

BRIDGE APPROACH SLAB FOR FLEXIBLE PAVEMENT

-RIGHT LANE-

ASSEMBLED BY : QT NGUYEN	DATE : 2-15-11
CHECKED BY : T.H. FANG	DATE : 2-15-11

DRAWN BY : EEM 3/95	REV. 7/10/01 LES/RDR
CHECKED BY : VAP 3/95	REV. 5/7/03R RWW/JTE
	REV. 5/1/06R KMM/GM

REVISIONS								SHEET NO.
NO.	BY:	DATE:	NO.	BY:	DATE:			S-88
1			3					TOTAL SHEETS
2			4					159

STR. 2

STD. NO. BAS4

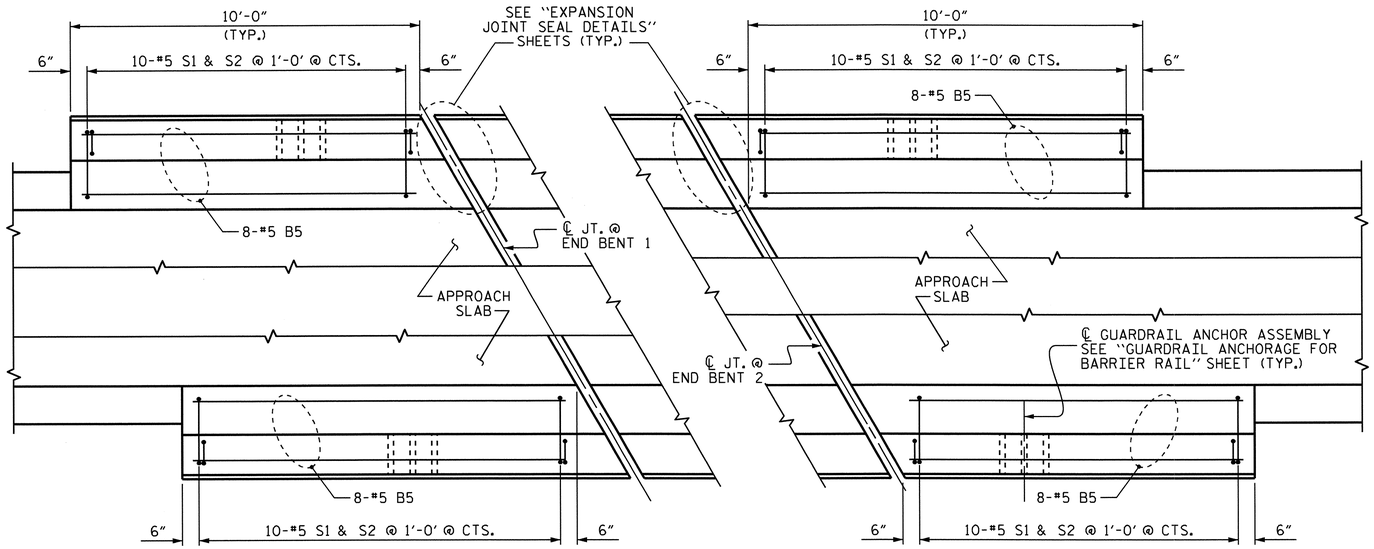

AT END BENT 1

AT END BENT 2

PLAN OF BARRIER RAIL

FOR EXPANSION JOINT SEAL, SEE "EXPANSION JOINT SEAL DETAILS" SHEET

NOTES

THE BARRIER RAIL ON EACH APPROACH SLAB SHALL NOT BE CAST UNTIL ALL APPROACH SLAB CONCRETE HAS BEEN CAST AND HAS REACHED A MINIMUM COMPRESSIVE STRENGTH OF 3,000 PSI.

ALL REINFORCING STEEL IN BARRIER RAILS SHALL BE EPOXY COATED.

BAR TYPES

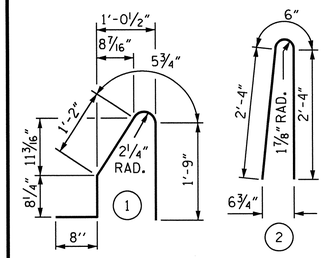

ALL BAR DIMENSIONS ARE OUT TO OUT

BILL OF MATERIAL

BARRIER RAILS ONLY

BAR	NO.	SIZE	TYPE	LENGTH	WEIGHT
* B5	32	#5	STR	9'-8"	323
* S1	40	#5	1	4'-9"	198
* S2	40	#5	2	5'-2"	216
* EPOXY COATED REINFORCING STEEL				LBS.	737
CLASS AA CONCRETE				C. Y.	4.1
CONCRETE BARRIER RAIL				** 41.31	LIN. FT.

** PAYMENT FOR CONCRETE BARRIER RAIL TO BE INCLUDED IN THE LINEAR FT. QUANTITY ON "CONCRETE BARRIER RAIL" SHEET.

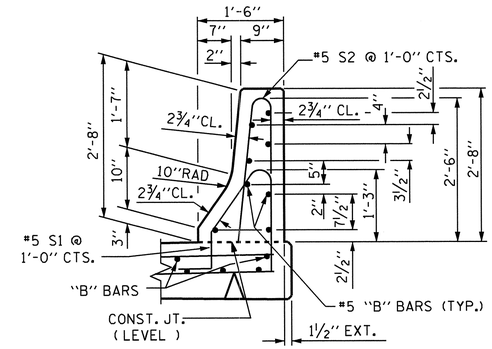

SECTION THRU RAIL

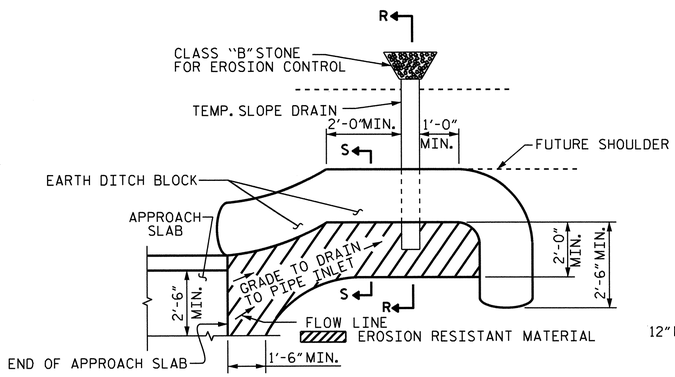

NOTE: IMMEDIATELY AFTER THE CONSTRUCTION OF THE APPROACH SLAB, THE CONTRACTOR SHALL PROVIDE TEMPORARY BERM AND SLOPE DRAIN. CONTRACTOR SHALL GRADE TO PIPE INLET AND PROVIDE EROSION RESISTANT MATERIAL AS SHOWN. THE EROSION RESISTANT MATERIAL SHALL BE EITHER 1) ASPHALT PLANT MIX, TYPE 1 OR TYPE 2, MIN. 2" DEPTH, 2) EROSION CONTROL MAT, OR 3) CONCRETE, AS DIRECTED BY THE ENGINEER. THE SLOPE DRAIN SHALL CONSIST OF A NON-PERFORATED TEMPORARY DRAINAGE PIPE, 12 INCHES IN DIAMETER.

PLAN VIEW

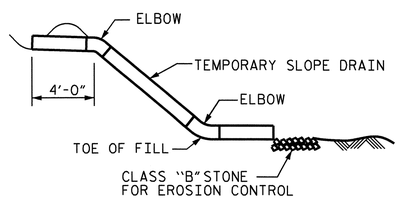

SECTION R-R

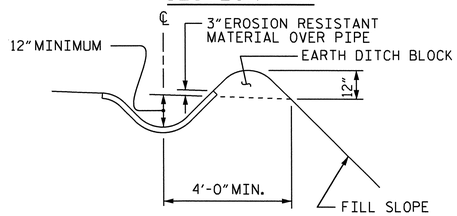

SECTION S-S

TEMPORARY BERM AND SLOPE DRAIN DETAILS

(TO BE USED WHEN SHOULDER BERM GUTTER IS REQUIRED)

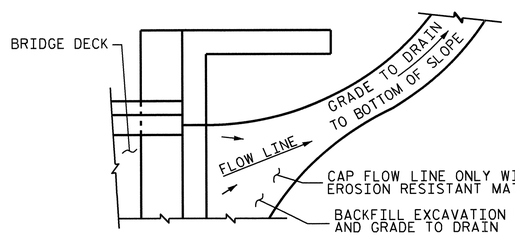

NOTE: IF THE APPROACH SLAB IS NOT CONSTRUCTED IMMEDIATELY AFTER THE BACKFILLING OF THE END BENT EXCAVATION, GRADE TO DRAIN TO THE BOTTOM OF THE SLOPE AND PROVIDE EROSION RESISTANT MATERIAL, SUCH AS FIBERGLASS ROVING OR AS DIRECTED BY THE ENGINEER TO PREVENT SOIL EROSION AND TO PROTECT THE AREA ADJACENT TO THE STRUCTURE. THE CONTRACTOR WILL BE REQUIRED TO REMOVE THESE MATERIALS PRIOR TO CONSTRUCTION OF THE APPROACH SLAB.

TEMPORARY DRAINAGE DETAIL

NORTH CAROLINA PROFESSIONAL SEAL 16301 ENGINEER TING HSILING FANG

8/29/11

PROJECT NO. U-3326B

ROCKINGHAM COUNTY

STATION: 203+04.30 -L-

SHEET 2 OF 2

STATE OF NORTH CAROLINA
DEPARTMENT OF TRANSPORTATION
RALEIGH

STANDARD

BRIDGE APPROACH SLAB DETAILS

-RIGHT LANE-

REVISIONS						SHEET NO.
NO.	BY:	DATE:	NO.	BY:	DATE:	S-89
1			3			TOTAL SHEETS
2			4			159

STR. 2 STD. NO. BAS10

ASSEMBLED BY :	OT NGUYEN	DATE :	2-15-11
CHECKED BY :	T.H. FANG	DATE :	2-15-11
DRAWN BY : FCJ	11/88	REV. 10/17/00	RWW/LES
CHECKED BY : ARB	11/88	REV. 5/7/03	RWW/JTE
		REV. 5/1/06R	MAA/KMM

29-AUG-2011 15:19
X:\TIPProjects-U\U3326B\Structures\str02\FinalPlans\u3326b_sd_as_02.dgn
OTNGUYEN

F.A. PROJ. NO. STP-29B(3)

GRADE DATA -Y17-

PI = STA. 15+68.00
EL. 754.22'
VC= 280'

+7.4702% +1.9130%

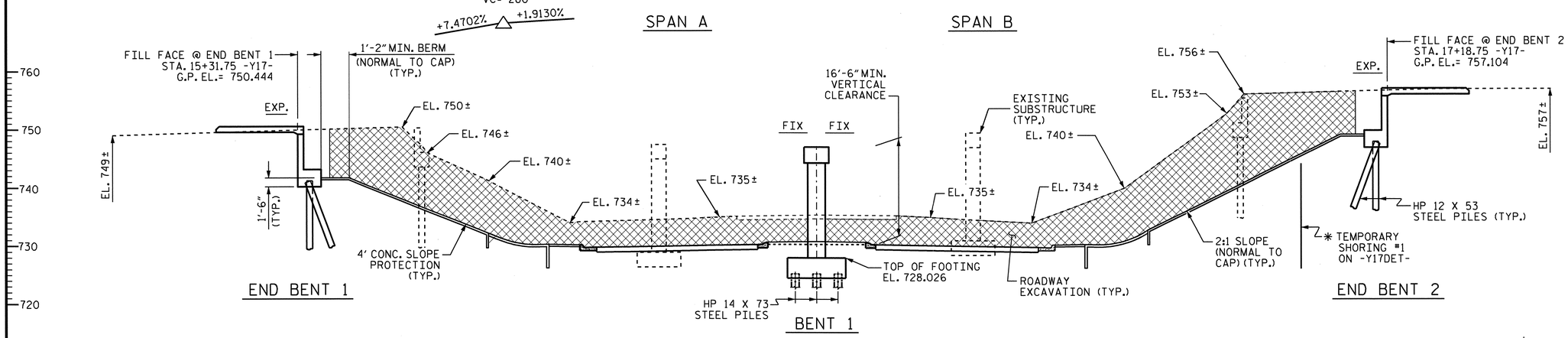

SECTION ALONG -Y17-

SECTIONS AT END BENTS AND BENT ARE TAKEN AT RIGHT ANGLES

HORIZONTAL CURVE -Y17-

PI = STA. 13+64.58 -Y17-
Δ = 18°-40'-30.5 (RT)
D = 4°-51'-20.1"
L = 384.61'
T = 194.03'
R =1180.00'

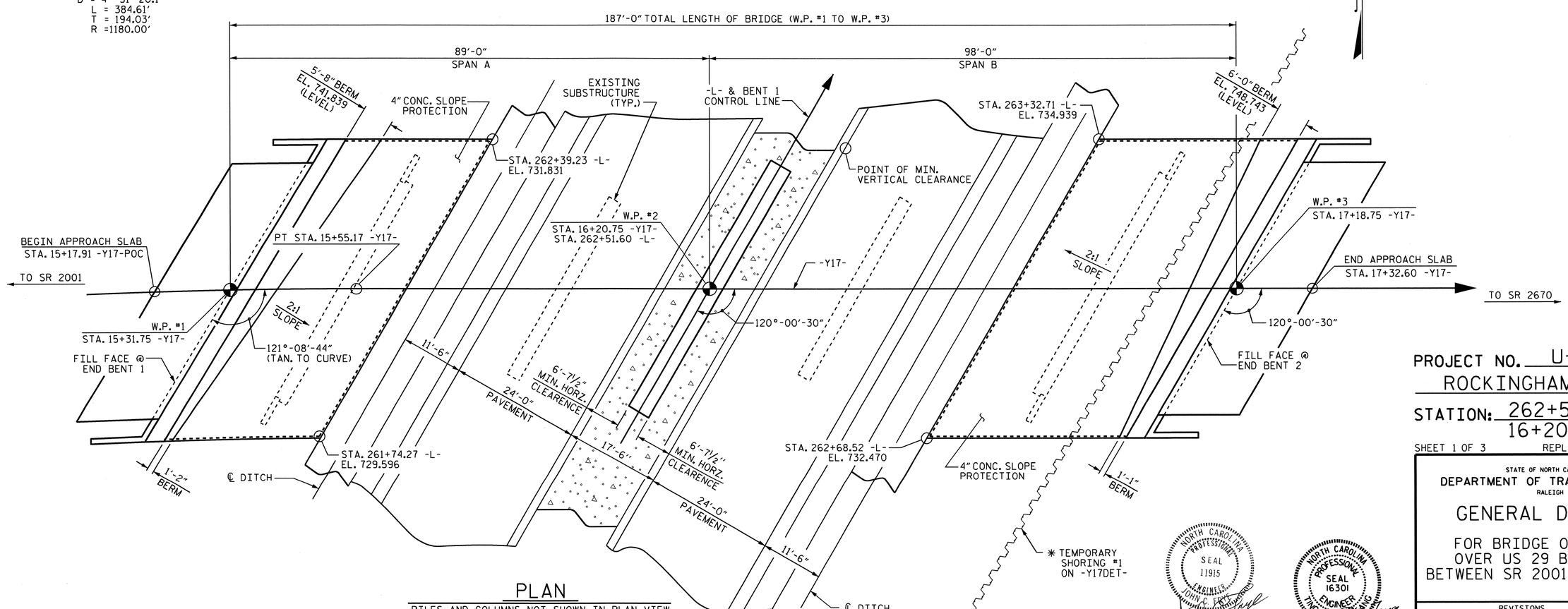

PLAN

PILES AND COLUMNS NOT SHOWN IN PLAN VIEW

* TEMPORARY SHORING FOR MAINTENANCE OF TRAFFIC, SEE ROADWAY PLANS.

PROJECT NO. U-3326B
ROCKINGHAM COUNTY
STATION: 262+51.60 -L-
16+20.75 -Y17-

SHEET 1 OF 3 REPLACES BRIDGE NO. 146

STATE OF NORTH CAROLINA
DEPARTMENT OF TRANSPORTATION
RALEIGH

GENERAL DRAWING

FOR BRIDGE ON SR 1998
OVER US 29 BUS/US 158
BETWEEN SR 2001 AND SR 2670

NORTH CAROLINA PROFESSIONAL SEAL 11915 ENGINEER JOHN C. EPPS
10/27/11

NORTH CAROLINA PROFESSIONAL SEAL 16301 ENGINEER TING HSUNG FANG
10/25/11

REVISIONS								SHEET NO.
NO.	BY:	DATE:	NO.	BY:	DATE:			S-90
1			3					TOTAL SHEETS
2			4					159

STR. #3

DRAWN BY : A.L. FIGUEROA DATE : 11-18-08
CHECKED BY : A.S. CALLAWAY DATE : 11-21-08

25-OCT-2011 16:30
K:\TIPProjects-U\U3326B\Structures\str03\FinalPlans\U3326B_sd_gd_03.dgn
ttfang

NOTE

FOR PILES, SEE SPECIAL PROVISIONS.

PILES AT END BENTS 1 AND 2 ARE DESIGNED FOR A FACTORED RESISTANCE OF 120 TONS PER PILE. DRIVE PILES TO A REQUIRED DRIVING RESISTANCE OF 200 TONS PER PILE.

PILES AT BENT 1 ARE DESIGNED FOR A FACTORED RESISTANCE OF 135 TONS PER PILE. DRIVE PILES TO A REQUIRED DRIVING RESISTANCE OF 225 TONS PER PILE.

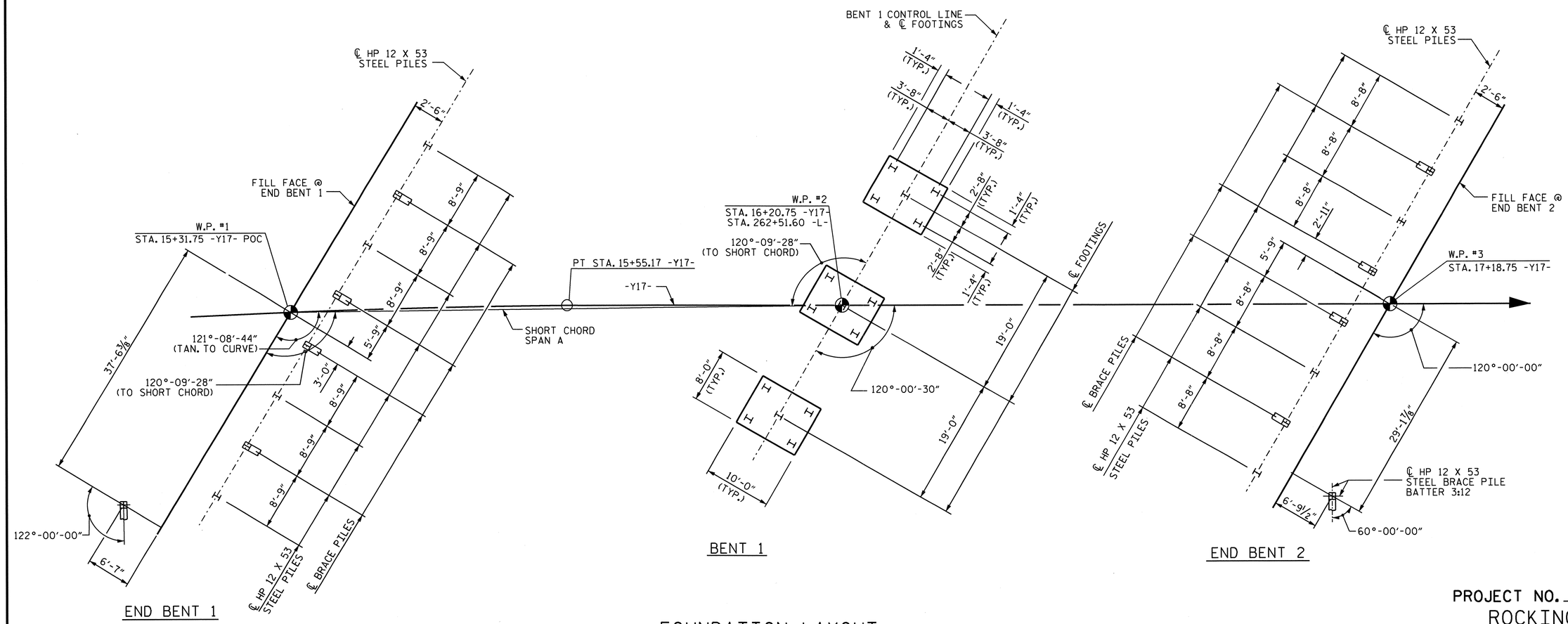

FOUNDATION LAYOUT

DIMENSIONS LOCATING PILES ARE SHOWN TO PILE CENTERLINE AT THE BOTTOM OF CAPS OR FOOTINGS.

PILES ARE HP 14 X 73 STEEL PILES FOR BENT 1.

PROJECT NO. U-3326B

ROCKINGHAM COUNTY

STATION: 262+51.60 -L-

SHEET 2 OF 3

STATE OF NORTH CAROLINA
DEPARTMENT OF TRANSPORTATION
RALEIGH

GENERAL DRAWING

BRIDGE ON SR 1998
OVER US 29 BUS/US 158
BETWEEN SR 2001 AND SR 2670

NORTH CAROLINA PROFESSIONAL SEAL 16301 ENGINEER TING H. FANG
10/26/11

REVISIONS						SHEET NO.
NO.	BY:	DATE:	NO.	BY:	DATE:	S-91
1			3			TOTAL SHEETS
2			4			159

DRAWN BY : HARISH SHAH DATE : 01/11
CHECKED BY : TING H. FANG DATE : 04/11

26-OCT-2011 11:19
X:\TIPProjects-U\U3326B\Structures\str03\FinalPlans\U3326B_sd_gd_03.dgn
rppatel

STR. #3

TOTAL BILL OF MATERIAL

	FOUNDATION EXCAVATION	REMOVAL OF EXISTING STRUCTURE	REINFORCED CONCRETE DECK SLAB	GROOVING BRIDGE FLOORS	CLASS A CONCRETE	BRIDGE APPROACH SLABS	REINFORCING STEEL	SPIRAL COLUMN REINFORCING STEEL	63" MODIFIED PRESTRESSED CONCRETE GIRDERS		HP 12 X 53 STEEL PILES		THREE BAR METAL RAIL	4" SLOPE PROTECTION	ELASTOMERIC BEARINGS	EVAZOTE JOINT SEALS
	LUMP SUM	LUMP SUM	SQ.FT.	SQ.FT.	CU.YDS.	LUMP SUM	LBS.	LBS.	NO.	LIN. FT.	NO.	LIN. FT.	LIN. FT.	SQ. YD.	LUMP SUM	LUMP SUM
SUPERSTRUCTURE			9,152	6,927					10	906.81			352.54			
END BENT 1					55.1		7,846				9	355		205		
BENT 1	LUMP SUM				81.0		11,542	1,056			15	600				
END BENT 2					51.1		7,734				9	420		265		
TOTAL	LUMP SUM	LUMP SUM	9,152	6,927	187.2	LUMP SUM	27,122	1,056	10	906.81	33	1,355	352.54	470	LUMP SUM	LUMP SUM

BM #18: RR SPIKE IN BASE OF TWIN POPLAR, 116.15 FEET RIGHT. STA. 18+55.14 -Y17-, ELEV. 754.02'

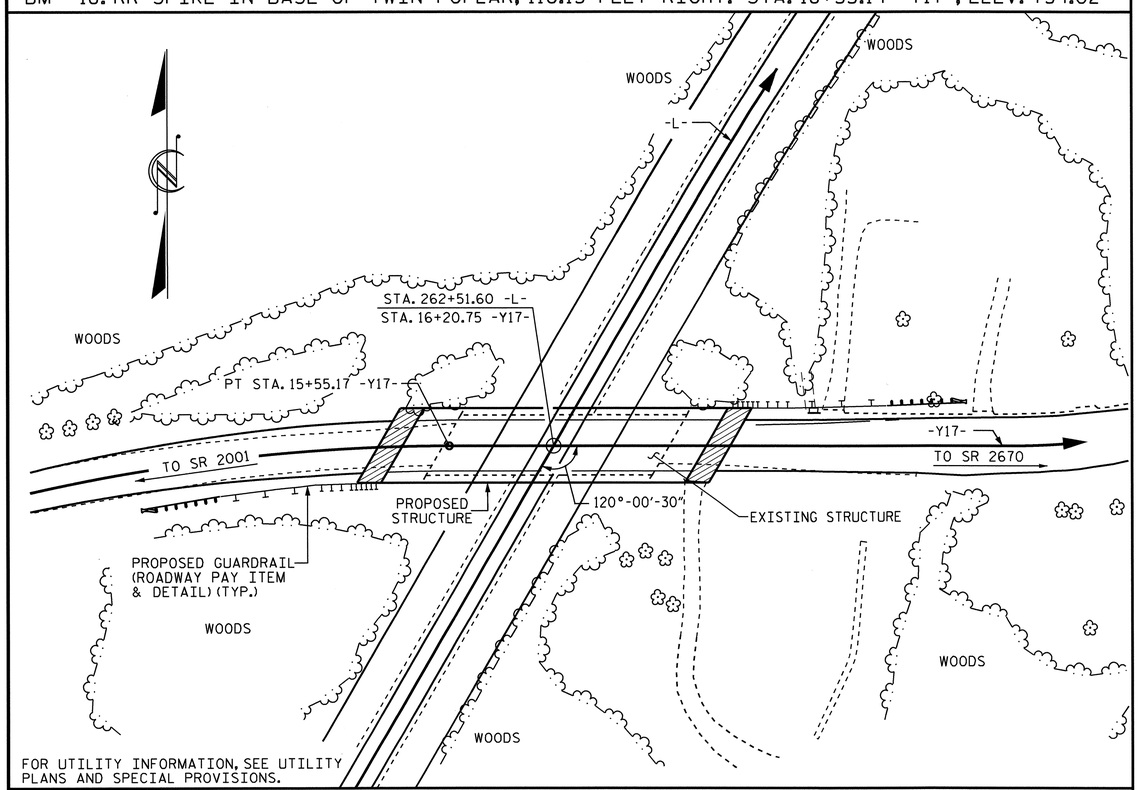

FOR UTILITY INFORMATION, SEE UTILITY PLANS AND SPECIAL PROVISIONS.

LOCATION SKETCH

NOTES

ASSUMED LIVE LOAD = HL 93 OR ALTERNATE LOADING.

FOR OTHER DESIGN DATA AND GENERAL NOTES, SEE SHEET SN.

FOR EROSION CONTROL MEASURES SEE EROSION CONTROL PLANS.

THIS BRIDGE HAS BEEN DESIGNED IN ACCORDANCE WITH THE AASHTO LRFD BRIDGE DESIGN SPECIFICATIONS.

PRESTRESSED CONCRETE DECK PANELS MAY BE USED IN LIEU OF METAL STAY-IN-PLACE FORMS IN ACCORDANCE WITH ARTICLE 420-3 OF THE STANDARD SPECIFICATIONS.

REMOVABLE FORMS MAY BE USED IN LIEU OF METAL STAY-IN-PLACE FORMS IN ACCORDANCE WITH ARTICLE 420-3 OF THE STANDARD SPECIFICATIONS.

THE CLASS AA CONCRETE IN THE BRIDGE DECK SHALL CONTAIN FLY ASH OR GROUND GRANULATED BLAST FURNACE SLAG AT THE SUBSTITUTION RATE SPECIFIED IN ARTICLE 1024-1 AND IN ACCORDANCE WITH ARTICLES 1024-5 AND 1024-6 OF THE STANDARD SPECIFICATIONS. NO PAYMENT WILL BE MADE FOR THIS SUBSTITUTION AS IT IS CONSIDERED INCIDENTAL TO THE COST OF THE REINFORCED CONCRETE DECK SLAB.

INASMUCH AS THE PAINT SYSTEM ON THE EXISTING STRUCTURAL STEEL CONTAINS LEAD, THE CONTRACTOR'S ATTENTION IS DIRECTED TO ARTICLE 107-1 OF THE STANDARD SPECIFICATIONS. ANY COSTS RESULTING FROM COMPLIANCE WITH APPLICABLE STATE OR FEDERAL REGULATIONS PERTAINING TO HANDLING OF MATERIALS CONTAINING LEAD BASED PAINT SHALL BE INCLUDED IN THE BID PRICE FOR "REMOVAL OF EXISTING STRUCTURE AT STATION 262+51.60 -L-".

THE EXISTING STRUCTURE CONSISTING OF 3 SPANS; 1 @ 42'-0", 1 @ 54'-0" AND 1 @ 47'-0"; 28'-0" CLEAR ROADWAY WIDTH AND A RC DECK ON I- BEAMS; BOTH END BENTS CONSISTING OF RC CAPS AND TIMBER PILES, INTERIOR BENT CONSISTING OF 3 COLUMNS RCP&B ON PILE FOOTINGS, AND LOCATED AT THE PROPOSED STRUCTURE SITE SHALL BE REMOVED. THE EXISTING BRIDGE IS PRESENTLY POSTED FOR LOAD LIMIT. SHOULD THE STRUCTURAL INTEGRITY OF THE BRIDGE DETERIORATE A LOAD LIMIT MAY BE POSTED AND MAY BE REDUCED AS FOUND NECESSARY DURING THE LIFE OF THE PROJECT.

THE SUBSTRUCTURE OF THE EXISTING BRIDGE INDICATED ON THE PLANS IS FROM THE BEST INFORMATION AVAILABLE. SINCE THIS INFORMATION IS SHOWN FOR THE CONVENIENCE OF THE CONTRACTOR, THE CONTRACTOR SHALL HAVE NO CLAIM WHATSOEVER AGAINST THE DEPARTMENT OF TRANSPORTATION FOR ANY DELAYS OR ADDITIONAL COST INCURRED BASED ON DIFFERENCES BETWEEN THE EXISTING BRIDGE SUBSTRUCTURE SHOWN ON THE PLANS AND THE ACTUAL CONDITIONS AT THE PROJECT SITE.

THE CONTRACTOR SHALL PROVIDE INDEPENDENT ASSURANCE SAMPLES OF REINFORCING STEEL AS FOLLOWS: FOR PROJECTS REQUIRING UP TO 400 TONS OF REINFORCING STEEL, ONE 30 INCH SAMPLE OF EACH SIZE BAR USED, AND FOR PROJECTS REQUIRING OVER 400 TONS OF REINFORCING STEEL, TWO 30 INCH SAMPLES OF EACH SIZE BAR USED. THE BARS FROM WHICH THE SAMPLES ARE TAKEN MUST THEN BE SPLICED WITH REPLACEMENT BARS OF THE SIZE AND LENGTH OF THE SAMPLE PLUS A MINIMUM LAP SPLICE OF THIRTY BAR DIAMETERS. PAYMENT FOR THE SAMPLES OF REINFORCING STEEL SHALL BE CONSIDERED INCIDENTAL TO VARIOUS PAY ITEMS.

FOR MAINTENANCE AND PROTECTION OF TRAFFIC BENEATH PROPOSED STRUCTURE, SEE SPECIAL PROVISIONS.

FOR LIMITS OF TEMPORARY SHORING FOR MAINTENANCE OF TRAFFIC, SEE TRAFFIC CONTROL PLANS. FOR PAY ITEM FOR TEMPORARY SHORING FOR MAINTENANCE OF TRAFFIC, SEE ROADWAY PLANS.

STEEL SHEET PILING REQUIRED FOR SHORING SHALL BE HOT ROLLED.

NEEDLE BEAMS WILL NOT BE ALLOWED UNLESS OTHERWISE CALLED FOR ON THE PLANS OR APPROVED BY THE ENGINEER.

FOR CURING CONCRETE, SEE SPECIAL PROVISIONS.

FOR FORMS FOR CONCRETE BRIDGE DECKS, SEE SPECIAL PROVISIONS.

FOR SUBMITTAL OF WORKING DRAWINGS, SEE SPECIAL PROVISIONS.

FOR PLACING LOAD ON STRUCTURE MEMBERS, SEE SPECIAL PROVISIONS.

FOR FALSEWORK AND FORMWORK, SEE SPECIAL PROVISIONS.

FOR CRANE SAFETY, SEE SPECIAL PROVISIONS.

FOR PRESTRESSED CONCRETE MEMBERS, SEE SPECIAL PROVISIONS.

FOR GROUT FOR STRUCTURES, SEE SPECIAL PROVISIONS.

WORK SHALL NOT BE STARTED ON THIS BRIDGE UNTIL ROADWAY SECTION HAS BEEN EXCAVATED.

NORTH CAROLINA PROFESSIONAL SEAL 16301 ENGINEER TING HSIUNG FANG

10/27/11

PROJECT NO. U-3326B
ROCKINGHAM COUNTY
STATION: 262+51.60 -L-

SHEET 3 OF 3

STATE OF NORTH CAROLINA
DEPARTMENT OF TRANSPORTATION
RALEIGH

GENERAL DRAWING

FOR BRIDGE ON SR 1998
OVER US 29 BUS./US 158
BETWEEN SR 2001 AND SR 2670

REVISIONS						SHEET NO.
NO.	BY:	DATE:	NO.	BY:	DATE:	S-92
1			3			TOTAL SHEETS
2			4			159

STR. #3

DRAWN BY : HARISH SHAH DATE : 01/11
CHECKED BY : TING H. FANG DATE : 04/11

27-OCT-2011 15:59
K:\TIPProjects-U\U3326B\Structures\str03\Final Plans\U3326B_sd_gd_03.dgn
tfang

LOAD AND RESISTANCE FACTOR RATING (LRFR) SUMMARY FOR PRESTRESSED CONCRETE GIRDERS

LEVEL		VEHICLE	WEIGHT (W) (TONS)	CONTROLLING LOAD RATING (#)	MINIMUM RATING FACTORS (RF)	TONS = W × RF	STRENGTH I LIMIT STATE											SERVICE III LIMIT STATE						COMMENT NUMBER
							LIVE-LOAD FACTORS $\gamma_{(LL)}$	MOMENT					SHEAR					LIVE-LOAD FACTORS $\gamma_{(LL)}$	MOMENT					
								DISTRIBUTION FACTORS (DF)	RATING FACTOR	SPAN	GIRDER LOCATION	DISTANCE FROM LEFT END OF SPAN (ft)	DISTRIBUTION FACTORS (DF)	RATING FACTOR	SPAN	GIRDER LOCATION	DISTANCE FROM LEFT END OF SPAN (ft)		DISTRIBUTION FACTORS (DF)	RATING FACTOR	SPAN	GIRDER LOCATION	DISTANCE FROM LEFT END OF SPAN (ft)	
DESIGN LOAD RATING		HL-93 (INVENTORY)	N/A	1	1.01	--	1.75	0.898	1.26	A	ER	42.434	1.061	1.01	A	I	25.431	0.80	1.061	1.05	A	I	42.386	
		HL-93 (OPERATING)	N/A	--	1.30	--	1.35	0.898	1.64	A	ER	42.434	1.061	1.30	A	I	25.431	N/A	--	--	--	--	--	
		HS-20 (INVENTORY)	36.000	2	1.28	46.1	1.75	0.898	1.70	A	ER	42.434	1.061	1.28	A	I	25.431	0.80	0.898	1.43	A	ER	42.434	
		HS-20 (OPERATING)	36.000	--	1.66	59.8	1.35	0.898	2.20	A	ER	42.434	1.061	1.66	A	I	25.431	N/A	--	--	--	--	--	
LEGAL LOAD RATING	SINGLE VEHICLE (SV)	SNSH	13.500	--	3.31	44.6	1.40	0.898	4.93	A	ER	42.434	1.061	3.76	A	I	25.431	0.80	0.898	3.31	A	ER	42.434	
		SNGARBS2	20.000	--	2.43	48.5	1.40	0.898	3.62	A	ER	42.434	1.061	2.69	A	I	25.431	0.80	0.898	2.43	A	ER	42.434	
		SNAGRIS2	22.000	--	2.28	50.2	1.40	0.898	3.40	A	ER	42.434	1.061	2.50	A	I	25.431	0.80	0.898	2.28	A	ER	42.434	
		SNCOTTS3	27.250	--	1.65	44.8	1.40	0.898	2.45	A	ER	42.434	1.061	1.88	A	I	25.431	0.80	0.898	1.65	A	ER	42.434	
		SNAGGRS4	34.925	--	1.36	47.5	1.40	0.898	2.03	A	ER	42.434	1.061	1.57	A	I	25.431	0.80	0.898	1.36	A	ER	42.434	
		SNS5A	35.550	--	1.33	47.3	1.40	0.898	1.98	A	ER	42.434	1.061	1.60	A	I	25.431	0.80	0.898	1.33	A	ER	42.434	
		SNS6A	39.950	--	1.22	48.5	1.40	0.898	1.81	A	ER	42.434	1.061	1.46	A	I	25.431	0.80	0.898	1.22	A	ER	42.434	
		SNS7B	42.000	--	1.16	48.5	1.40	0.898	1.72	A	ER	42.434	1.061	1.44	A	I	25.431	0.80	0.898	1.16	A	ER	42.434	
	TRUCK TRACTOR SEMI-TRAILER (TTST)	TNAGRIT3	33.000	--	1.48	48.8	1.40	0.898	2.20	A	ER	42.434	1.061	1.74	A	I	25.431	0.80	0.898	1.48	A	ER	42.434	
		TNT4A	33.075	--	1.49	49.1	1.40	0.898	2.21	A	ER	42.434	1.061	1.69	A	I	25.431	0.80	0.898	1.49	A	ER	42.434	
		TNT6A	41.600	--	1.21	50.2	1.40	0.898	1.80	A	ER	42.434	1.061	1.55	A	I	25.431	0.80	0.898	1.21	A	ER	42.434	
		TNT7A	42.000	--	1.21	50.8	1.40	0.898	1.80	A	ER	42.434	1.061	1.51	A	I	25.431	0.80	0.898	1.21	A	ER	42.434	
		TNT7B	42.000	--	1.25	52.3	1.40	0.898	1.86	A	ER	42.434	1.061	1.40	A	I	25.431	0.80	0.898	1.25	A	ER	42.434	
		TNAGRIT4	43.000	--	1.19	51.1	1.40	0.898	1.77	A	ER	42.434	1.061	1.36	A	I	25.431	0.80	0.898	1.19	A	ER	42.434	
		TNAGT5A	45.000	--	1.13	50.6	1.40	0.898	1.68	A	ER	42.434	1.061	1.36	A	I	25.431	0.80	0.898	1.13	A	ER	42.434	
		TNAGT5B	45.000	3	1.11	50.1	1.40	0.898	1.66	A	ER	42.434	1.061	1.29	A	I	25.431	0.80	0.898	1.11	A	ER	42.434	

LOAD FACTORS:

DESIGN LOAD RATING FACTORS	LIMIT STATE	γ_{DC}	γ_{DW}
	STRENGTH I	1.25	1.50
	SERVICE III	1.00	1.00

NOTES:

MINIMUM RATING FACTORS ARE BASED ON THE STRENGTH I AND SERVICE III LIMIT STATES.

ALLOWABLE STRESSES FOR SERVICE III LIMIT STATE ARE AS REQUIRED FOR DESIGN.

COMMENTS:

1.
2.
3.
4.

(#) CONTROLLING LOAD RATING

(1) DESIGN LOAD RATING (HL-93)

(2) DESIGN LOAD RATING (HS-20)

(3) LEGAL LOAD RATING **

** SEE CHART FOR VEHICLE TYPE

GIRDER LOCATION

I - INTERIOR GIRDER
EL - EXTERIOR LEFT GIRDER
ER - EXTERIOR RIGHT GIRDER

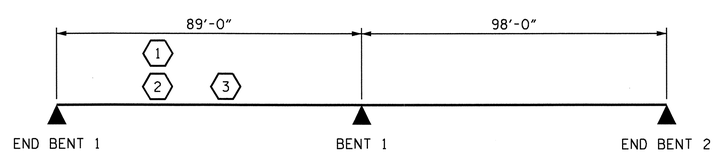

LRFR SUMMARY

PROJECT NO. U-3326B
ROCKINGHAM COUNTY
STATION: 262+51.60 -L-

STATE OF NORTH CAROLINA
DEPARTMENT OF TRANSPORTATION
RALEIGH

STANDARD
LRFR SUMMARY FOR PRESTRESSED CONCRETE GIRDERS
(NON-INTERSTATE TRAFFIC)

NORTH CAROLINA PROFESSIONAL SEAL 16301 ENGINEER TING HSIUNG FANG
10/26/11

REVISIONS						SHEET NO.
NO.	BY:	DATE:	NO.	BY:	DATE:	S-93
1			3			TOTAL SHEETS
2			4			159

ASSEMBLED BY : A.C.OUTLAW DATE : 11/05/10
CHECKED BY : J.H.CARDEN DATE : 6/8/11
DRAWN BY : MAA 1/08
CHECKED BY : GM/DI 2/08
REV. 11/12/08RR MAA/GM

26-OCT-2011 11:09
K:\TIPProjects-U\U3326B\Structures\str03\FinalPlans\U3326B_sd_lrfr_03.dgn
tfang

STR. #3 STD. NO. LRFR1

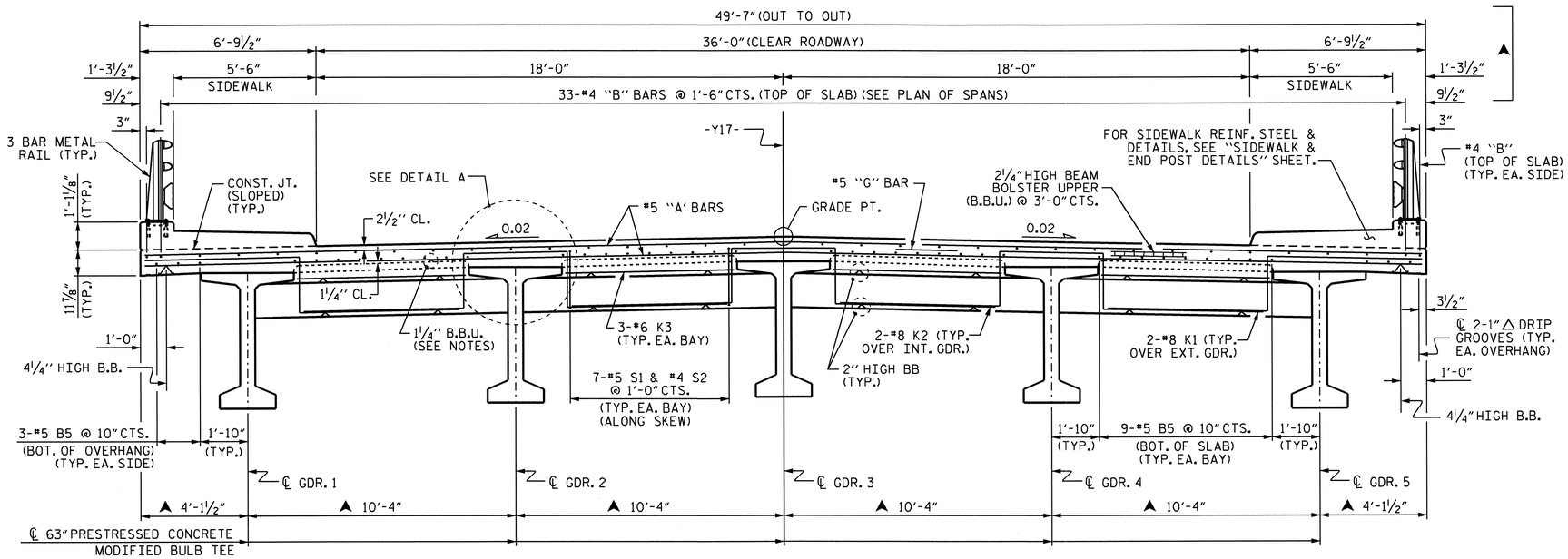

TYPICAL SECTION

SHOWING END BENT DIAPHRAGMS

▲ DIMENSIONS IN SPAN A ARE RADIAL THRU WORK POINT #1

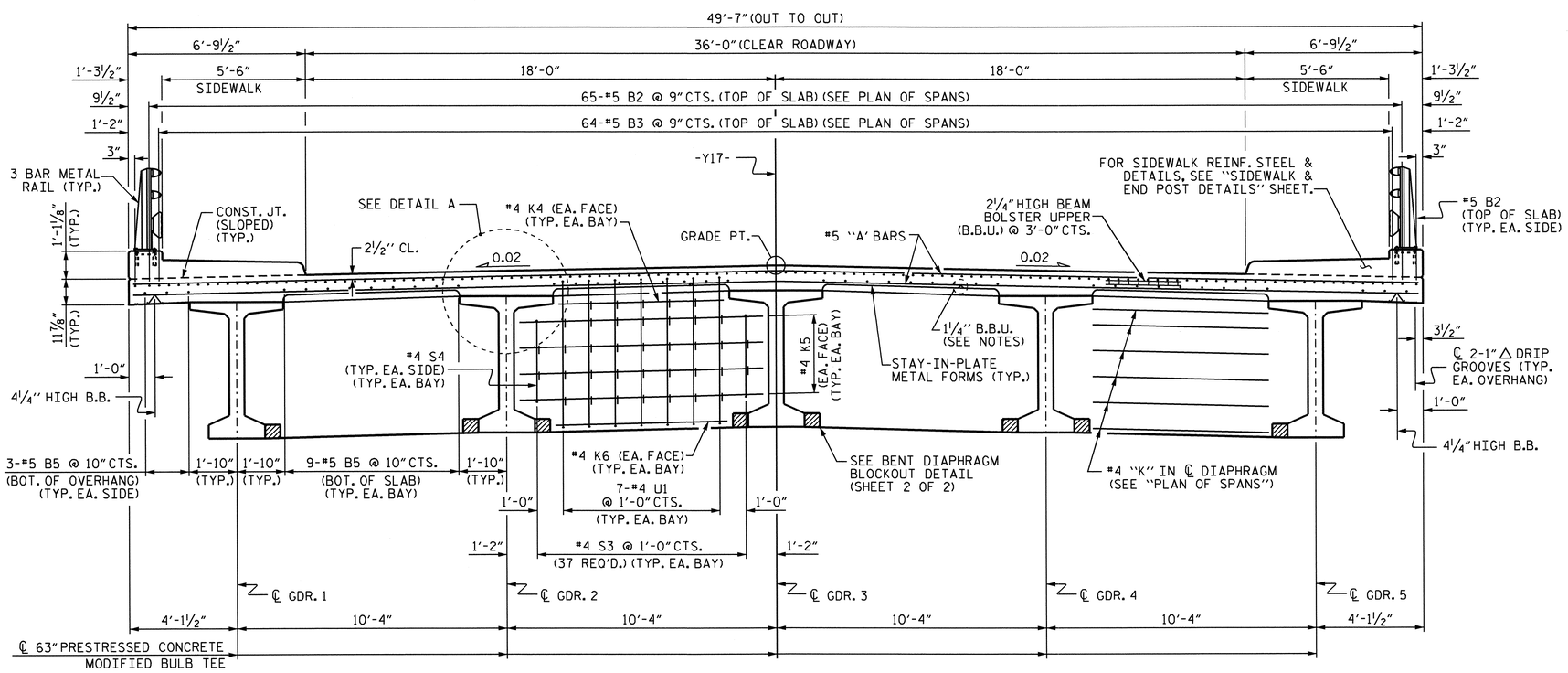

TYPICAL SECTION

SHOWING BENT DIAPHRAGMS

NOTES

PROVIDE 1¼" HIGH BEAM BOLSTERS UPPER AT 4'-0" CTS. ATOP THE METAL STAY-IN-PLACE FORMS TO SUPPORT THE BOTTOM MAT OF "A" BARS. WHEN USING REMOVABLE FORMS, PROVIDE CONTINUOUS HIGH CHAIRS FOR METAL DECK (C.H.C.M.) @ 4'-0" CTS. WITH A HEIGHT TO SUPPORT THE BOTTOM MAT OF "A" BARS A CLEAR DISTANCE OF 2½" ABOVE THE TOP OF THE REMOVABLE FORM.

LONGITUDINAL STEEL MAY BE SHIFTED SLIGHTLY, AS NECESSARY, TO AVOID INTERFERENCE WITH STIRRUPS IN PRESTRESSED CONCRETE GIRDERS.

THE JOINT IN THE DECK SHALL BE SAWED PRIOR TO THE CASTING OF THE SIDEWALK.

PREVIOUSLY CAST CONCRETE IN A CONTINUOUS UNIT SHALL HAVE ATTAINED A MINIMUM COMPRESSIVE STRENGTH OF 3,000 PSI BEFORE ADDITIONAL CONCRETE IS CAST IN THE UNIT.

SIDEWALK IN A CONTINUOUS UNIT SHALL NOT BE CAST UNTIL ALL SLAB CONCRETE IN THE UNIT HAS BEEN CAST AND HAS REACHED A MINIMUM COMPRESSIVE STRENGTH OF 3,000 PSI.

FOR INTERMEDIATE DIAPHRAGM DETAILS, SEE "INTERMEDIATE STEEL DIAPHRAGMS FOR 63" MODIFIED BULB TEE PRESTRESSED CONCRETE GIRDERS" SHEET.

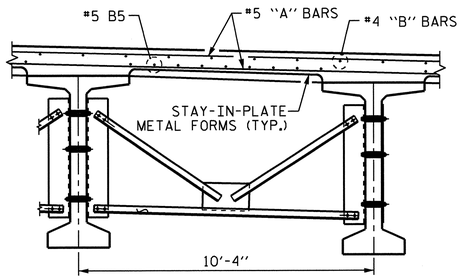

PART TYPICAL SECTION

SHOWING INTERMEDIATE DIAPHRAGMS (TYP. EA. BAY)

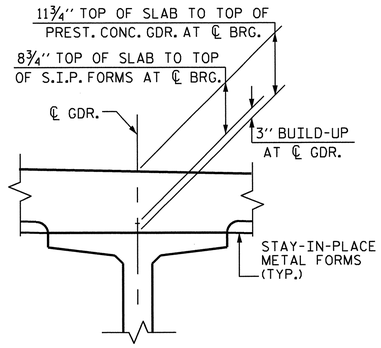

DETAIL A

PROJECT NO. U-3326B

ROCKINGHAM COUNTY

STATION: 262+51.60 -L-

SHEET 1 OF 2

STATE OF NORTH CAROLINA
DEPARTMENT OF TRANSPORTATION
RALEIGH

SUPERSTRUCTURE

TYPICAL SECTION

NORTH CAROLINA PROFESSIONAL SEAL 16301 ENGINEER TING HSIANG FANG

10/26/11

REVISIONS						SHEET NO.
NO.	BY:	DATE:	NO.	BY:	DATE:	S-94
1			3			TOTAL SHEETS
2			4			159

STR. #3

DRAWN BY : A.S. CALLAWAY DATE : 9/16/09
CHECKED BY : S.M. RASHIDI DATE : 2/24/10

26-OCT-2011 11:37
K:\TIPProjects-U\U3326B\Structures\str03\FinalPlans\U3326B_SD_TS_03.dgn
tfang

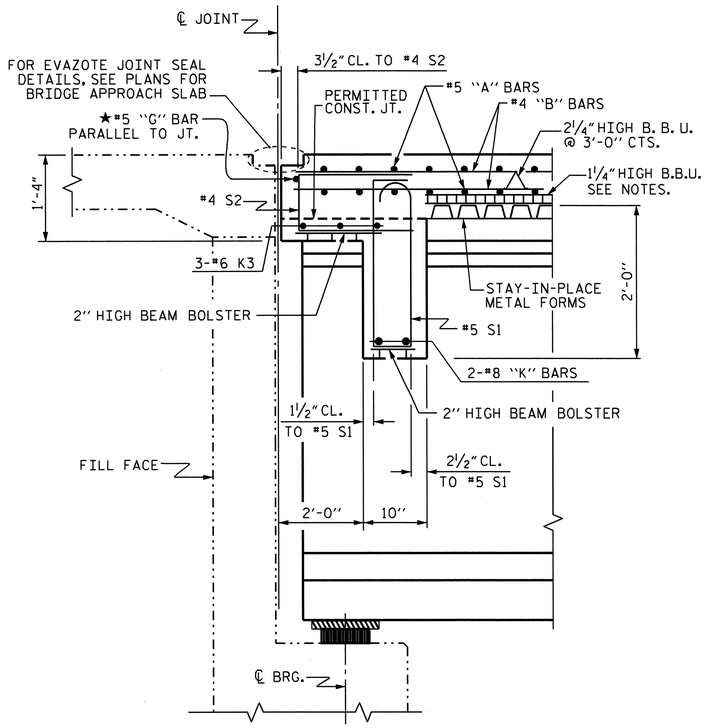

SECTION @ END BENT

★ #5 "G" BAR MAY BE SHIFTED SLIGHTLY, AS NECESSARY, TO CLEAR REINFORCING STEEL AND STIRRUPS.

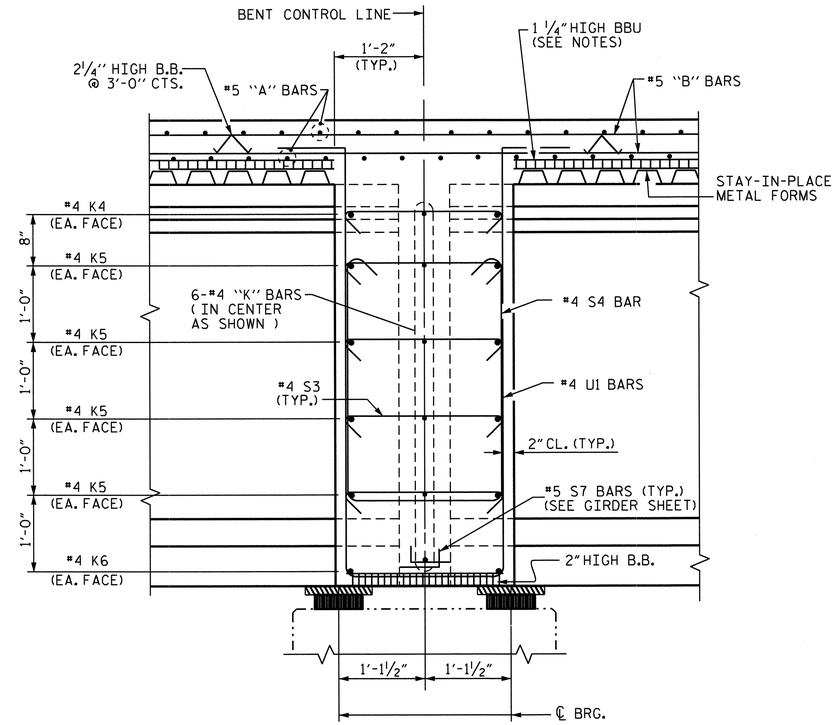

SECTION THRU BENT

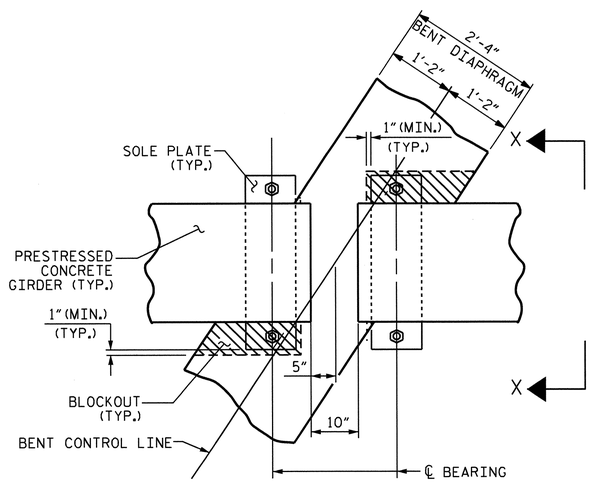

PLAN

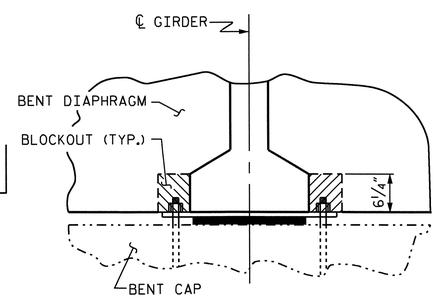

SECTION X-X

BENT DIAPHRAGM BLOCKOUT DETAIL

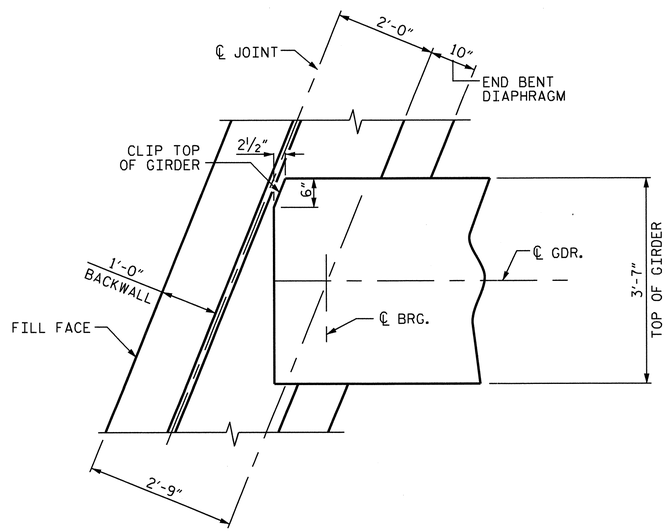

END BENT DIAPHRAGM

END BENT 1 SHOWN, END BENT 2 SIMILAR

NORTH CAROLINA PROFESSIONAL SEAL 16301 ENGINEER HSIEH-LING TANG

1/26/11

PROJECT NO. U-3326B

ROCKINGHAM COUNTY

STATION: 262+51.60 -L-

SHEET 2 OF 2

STATE OF NORTH CAROLINA
DEPARTMENT OF TRANSPORTATION
RALEIGH

SUPERSTRUCTURE

TYPICAL SECTION

REVISIONS						SHEET NO.
NO.	BY:	DATE:	NO.	BY:	DATE:	S-95
1			3			TOTAL SHEETS
2			4			159

DRAWN BY : A.S. CALLAWAY DATE : 9/9/09
CHECKED BY : S.M. RASHIDI DATE : 2/24/10

26-OCT-2011 11:38
K:\TIPProjects-U\U3326B\Structures\str03\FinalPlans\U3326B_SD_TS_03.dgn
tfang

STR. #3

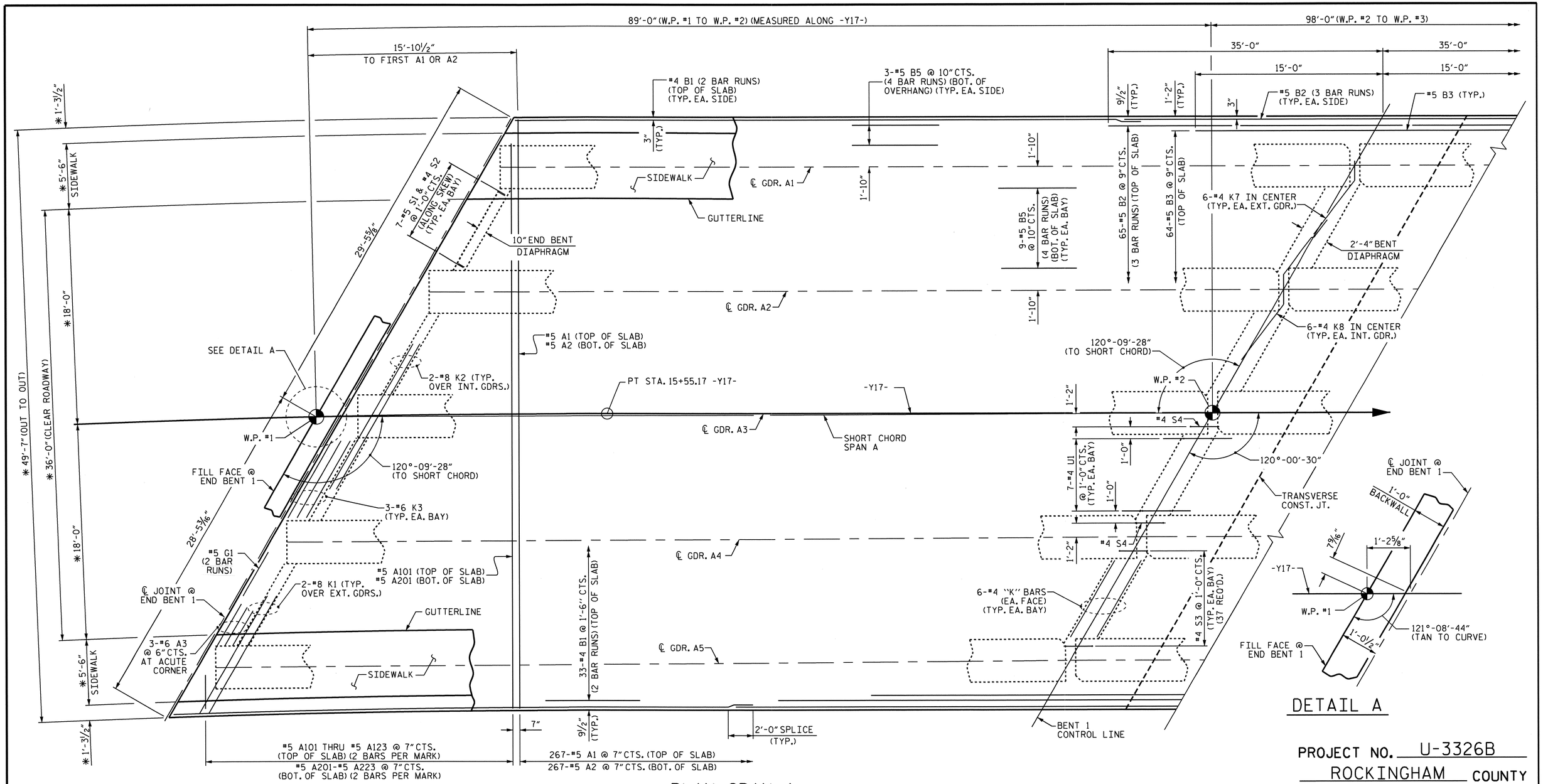

DETAIL A

PLAN SPAN A

FOR GENERAL NOTES, SEE "PLAN OF SPAN B" SHEET.

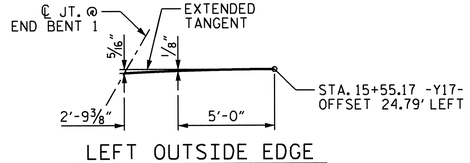

LEFT OUTSIDE EDGE

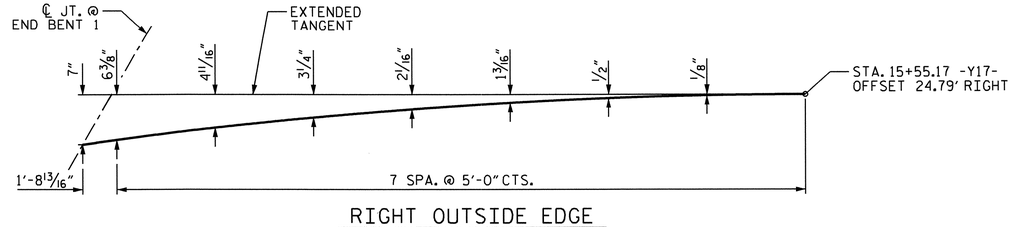

RIGHT OUTSIDE EDGE

TANGENT OFFSETS

PROJECT NO. U-3326B
ROCKINGHAM COUNTY
STATION: 262+51.60 -L-

SHEET 1 OF 2

STATE OF NORTH CAROLINA
DEPARTMENT OF TRANSPORTATION
RALEIGH

SUPERSTRUCTURE

PLAN OF SPAN A

NORTH CAROLINA PROFESSIONAL SEAL 16301 ENGINEER TING HSUNG FANG
10/26/11

REVISIONS						SHEET NO.
NO.	BY:	DATE:	NO.	BY:	DATE:	S-96
1			3			TOTAL SHEETS
2			4			159

STR. #3

DRAWN BY : A.S. CALLAWAY DATE : 9/21/09
CHECKED BY : S.M. RASHIDI DATE : 2/24/10

26-OCT-2011 11:53
K:\TIPProjects-U\U3326B\Structures\str03\FinalPlans\U3326B_SD_S*_03.dgn
tfang

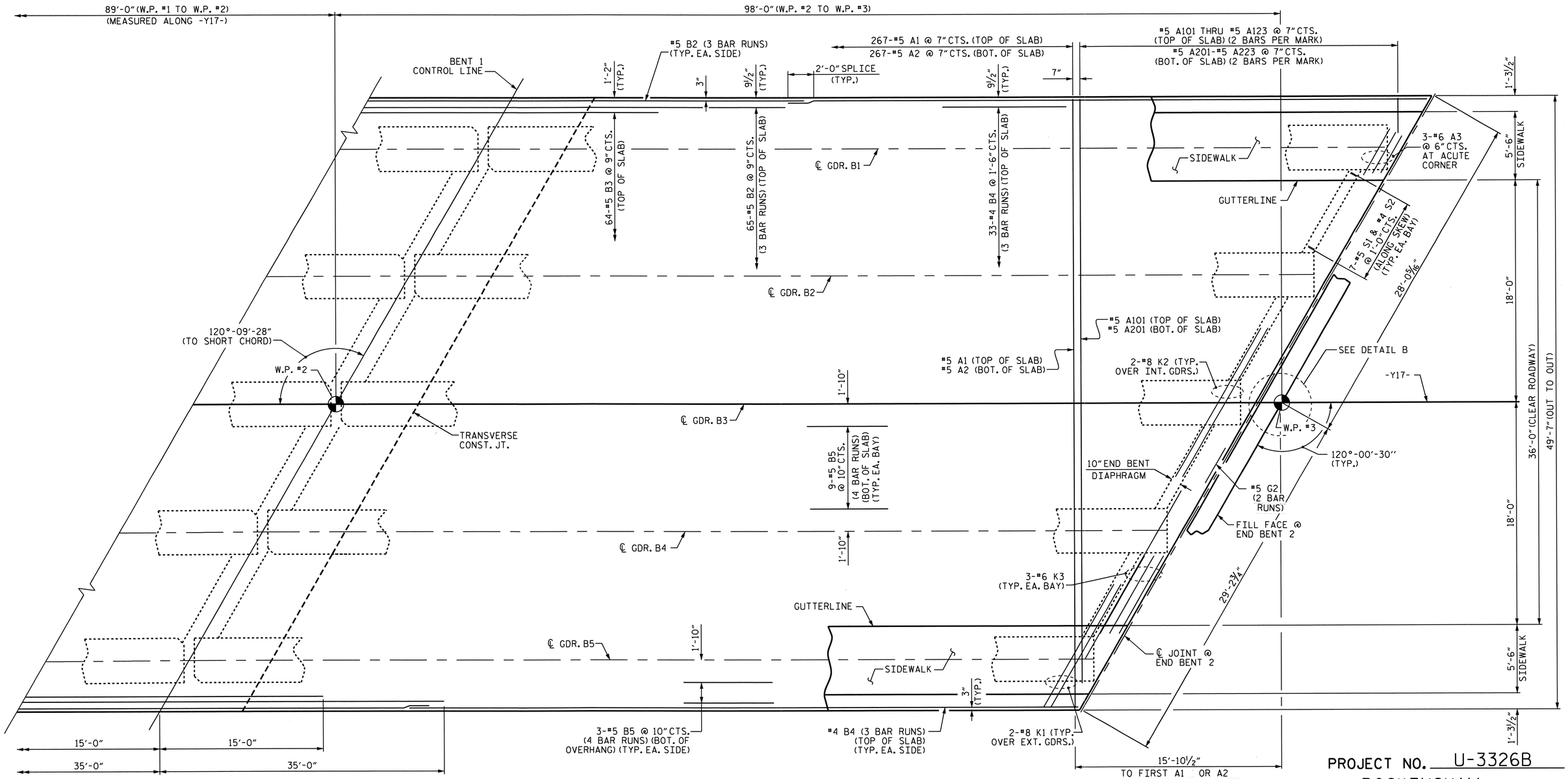

PLAN SPAN B

FOR REINFORCING STEEL IN SIDEWALK, SEE "SIDEWALK & END POST DETAILS" SHEET.

FOR TRANSVERSE CONSTRUCTION JOINT DETAIL & LOCATIONS, SEE "POURING SEQUENCE" SHEET.

FOR INTERMEDIATE STEEL DIAPHRAGM LOCATION, SEE "GIRDER LAYOUT" SHEET.

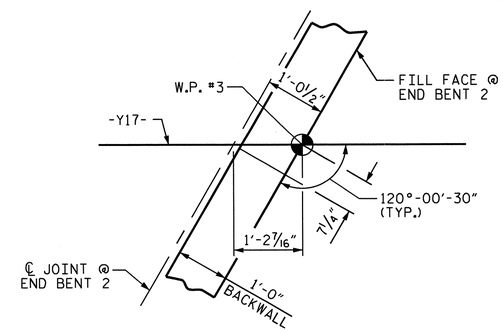

DETAIL B

PROJECT NO. U-3326B

ROCKINGHAM COUNTY

STATION: 262+51.60 -L-

SHEET 2 OF 2

STATE OF NORTH CAROLINA
DEPARTMENT OF TRANSPORTATION
RALEIGH

SUPERSTRUCTURE

PLAN OF SPAN B

REVISIONS						SHEET NO.
NO.	BY:	DATE:	NO.	BY:	DATE:	S-97
1			3			TOTAL SHEETS
2			4			159

STR. #3

NORTH CAROLINA PROFESSIONAL SEAL 16301 ENGINEER TING HSIANG FANG
9/23/11

DRAWN BY : A.S. CALLAWAY DATE : 9/21/09
CHECKED BY : S.M. RASHIDI DATE : 2/24/10

13-SEP-2011 12:34
X:\TIPProjects-U\U3326B\Structures\str03\FinalPlans\U3326B_SD_S*_03.dgn
qtnguyen

NOTES:

THE JOINT IN THE DECK SHALL BE SAWED PRIOR TO THE CASTING OF THE SIDEWALK.

THE SIDEWALK IN A CONTINUOUS UNIT SHALL NOT BE CAST UNTIL ALL CONCRETE IN THE UNIT HAS BEEN CAST AND HAS REACHED A MINIMUM COMPRESSIVE STRENGTH OF 3,000 PSI.

ALL REINFORCING STEEL IN THE SIDEWALK AND END POSTS SHALL BE EPOXY COATED.

GROOVED CONTRACTION JOINTS, 1/2" IN DEPTH, SHALL BE TOOLED IN ALL EXPOSED FACES OF THE SIDEWALK IN ACCORDANCE WITH ARTICLE 25-10(B) OF THE STANDARD SPECIFICATIONS. THE CONTRACTION JOINTS SHALL BE LOCATED AT A SPACING OF 8 FEET TO 10 FEET BETWEEN EXPANSION JOINTS. NO CONTRACTION JOINT WILL BE REQUIRED FOR SEGMENTS LESS THAN 10 FEET IN LENGTH.

FOR SIDEWALK QUANTITIES, SEE "SUPERSTRUCTURE BILL OF MATERIAL" SHEET.

FOR SIDEWALK COVER PLATE DETAILS AT END BENTS, SEE "BRIDGE APPROACH SLAB" SHEETS

THE #4 "U" BARS MAY BE PUSHED INTO GREEN CONCRETE AFTER THE SPAN HAS BEEN SCREEDED OFF, EXCEPT AS NOTED.

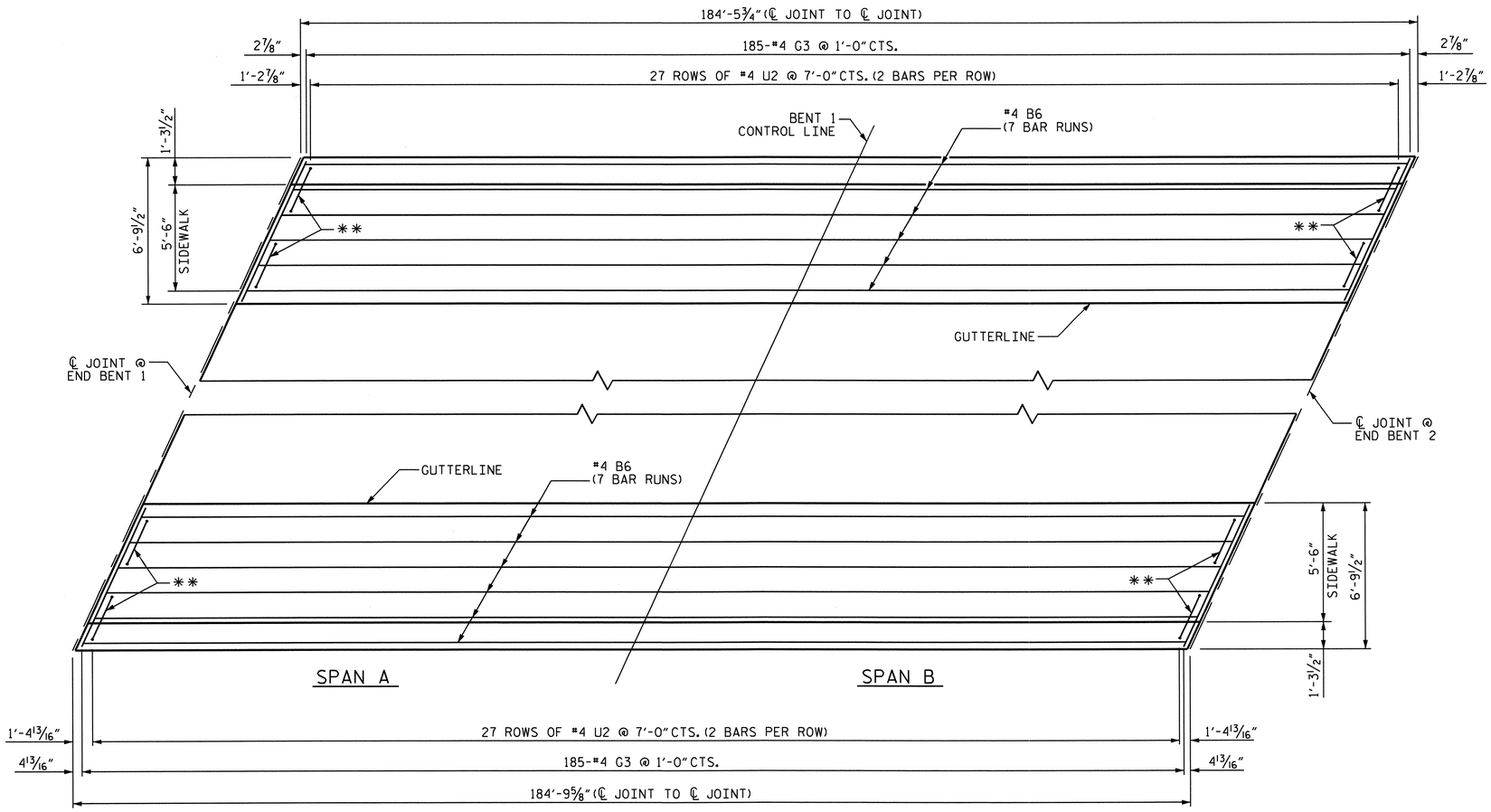

PLAN OF SIDEWALK

** THESE BARS ARE TO BE PLACED AFTER THE SAWING OF THE JOINT. THE HOLES SHALL BE DRILLED AND THE BARS GROUTED INTO PLACE.

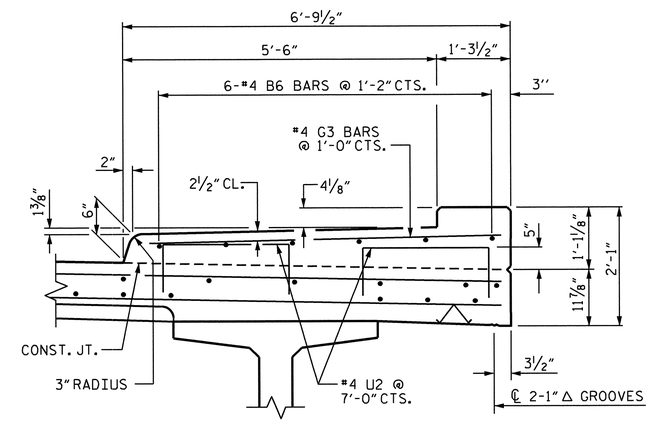

SECTION THRU SIDEWALK

PROJECT NO. U-3326B
ROCKINGHAM COUNTY
STATION: 262+51.60 -L-

STATE OF NORTH CAROLINA
DEPARTMENT OF TRANSPORTATION
RALEIGH

SUPERSTRUCTURE

SIDEWALK DETAILS

NORTH CAROLINA PROFESSIONAL SEAL 16301 ENGINEER TING HSIUNG FANG
10/3/11

REVISIONS						SHEET NO.
NO.	BY:	DATE:	NO.	BY:	DATE:	S-98
1			3			TOTAL SHEETS
2			4			159

DRAWN BY : O. T. NGUYEN DATE : 5/31/11
CHECKED BY : T. H. FANG DATE : 6/4/11

13-SEP-2011 12:34
X:\TIPProjects-U\U3326B\Structures\str03\FinalPlans\U3326B_SD_SW_03.dgn
qtnguyen

STR. #3

DEAD LOAD DEFLECTION TABLE FOR GIRDERS

0.6"Ø LOW RELAXATION	SPAN A																																
	GIRDER 1											GIRDERS 2 THRU 4											GIRDER 5										
TENTH POINTS	BRG.	0.1	0.2	0.3	0.4	0.5	0.6	0.7	0.8	0.9	BRG.	BRG.	0.1	0.2	0.3	0.4	0.5	0.6	0.7	0.8	0.9	BRG.	BRG.	0.1	0.2	0.3	0.4	0.5	0.6	0.7	0.8	0.9	BRG.
CAMBER (GIRDER ALONE IN PLACE) ↑	0	0.063	0.119	0.162	0.190	0.200	0.190	0.162	0.119	0.063	0	0	0.063	0.119	0.163	0.191	0.200	0.191	0.163	0.119	0.063	0	0	0.063	0.119	0.163	0.191	0.200	0.191	0.163	0.119	0.063	0
* DEFLECTION DUE TO SUPERIMPOSED D.L. ↓	0	0.023	0.043	0.059	0.070	0.073	0.070	0.059	0.043	0.023	0	0	0.025	0.047	0.064	0.075	0.078	0.075	0.064	0.047	0.025	0	0	0.023	0.044	0.060	0.070	0.074	0.070	0.060	0.044	0.023	0
FINAL CAMBER ↑	0	1/2"	7/8"	1 1/4"	1 7/16"	1 1/2"	1 7/16"	1 1/4"	7/8"	1/2"	0	0	7/16"	7/8"	1 3/16"	1 3/8"	1 7/16"	1 3/8"	1 3/16"	7/8"	7/16"	0	0	1/2"	7/8"	1 1/4"	1 7/16"	1 1/2"	1 7/16"	1 1/4"	7/8"	1/2"	0

0.6"Ø LOW RELAXATION	SPAN B																																
	GIRDER 1											GIRDERS 2 THRU 4											GIRDER 5										
TENTH POINTS	BRG.	0.1	0.2	0.3	0.4	0.5	0.6	0.7	0.8	0.9	BRG.	BRG.	0.1	0.2	0.3	0.4	0.5	0.6	0.7	0.8	0.9	BRG.	BRG.	0.1	0.2	0.3	0.4	0.5	0.6	0.7	0.8	0.9	BRG.
CAMBER (GIRDER ALONE IN PLACE) ↑	0	0.085	0.160	0.219	0.257	0.270	0.257	0.219	0.160	0.085	0	0	0.085	0.160	0.219	0.257	0.270	0.257	0.219	0.160	0.085	0	0	0.085	0.160	0.219	0.257	0.270	0.257	0.219	0.160	0.085	
* DEFLECTION DUE TO SUPERIMPOSED D.L. ↓	0	0.030	0.057	0.079	0.092	0.097	0.092	0.079	0.057	0.030	0	0	0.032	0.061	0.083	0.098	0.103	0.098	0.083	0.061	0.032	0	0	0.030	0.057	0.079	0.092	0.097	0.092	0.079	0.057	0.030	0
FINAL CAMBER ↑	0	5/8"	1 1/4"	1 11/16"	2"	2 1/16"	2"	1 11/16"	1 1/4"	5/8"	0	0	5/8"	1 3/16"	1 5/8"	1 15/16"	2"	1 15/16"	1 5/8"	1 3/16"	5/8"	0	0	5/8"	1 1/4"	1 11/16"	2"	2 1/16"	2"	1 11/16"	1 1/4"	5/8"	0

* INCLUDES FUTURE WEARING SURFACE
ALL VALUES ARE SHOWN IN FEET (DECIMAL FORM), EXCEPT "FINAL CAMBER", WHICH IS GIVEN IN INCHES (FRACTION FORM).

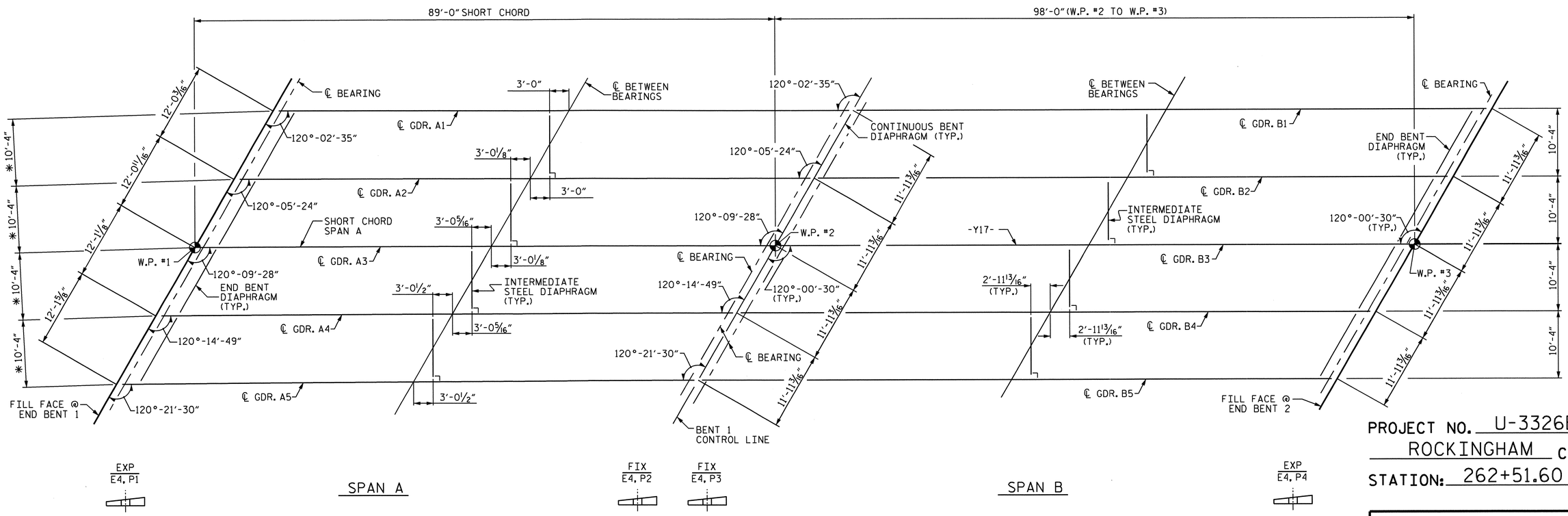

PROJECT NO. U-3326B
ROCKINGHAM COUNTY
STATION: 262+51.60 -L-

FRAMING PLAN

* RADIAL DIMENSION IN SPAN A AT END BENT 1.

NORTH CAROLINA PROFESSIONAL SEAL 16301 ENGINEER HSIUNG-TING TANG
10/26/11

STATE OF NORTH CAROLINA
DEPARTMENT OF TRANSPORTATION
RALEIGH
SUPERSTRUCTURE

FRAMING PLAN AND DEAD LOAD DEFLECTION

REVISIONS						SHEET NO.
NO.	BY:	DATE:	NO.	BY:	DATE:	S-99
1			3			TOTAL SHEETS
2			4			159

STR. #3

DRAWN BY : A.S. CALLAWAY DATE : 9/1/09
CHECKED BY : S.M. RASHIDI DATE : 2/24/10

26-OCT-2011 12:09
K:\TIPProjects-U\U3326B\Structures\str03\FinalPlans\U3326B_SD_FP_03.dgn
ttfang

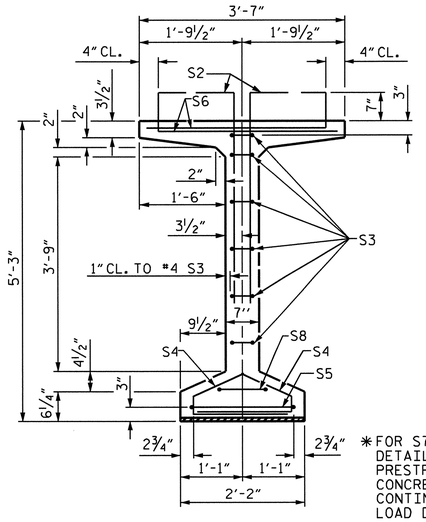

SECTION A-A

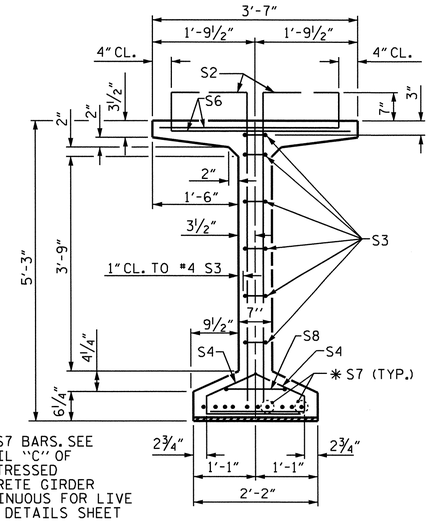

✱ FOR S7 BARS, SEE DETAIL "C" OF PRESTRESSED CONCRETE GIRDER CONTINUOUS FOR LIVE LOAD DETAILS SHEET

SECTION B-B

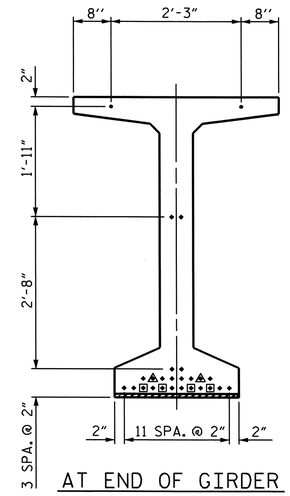

AT END OF GIRDER

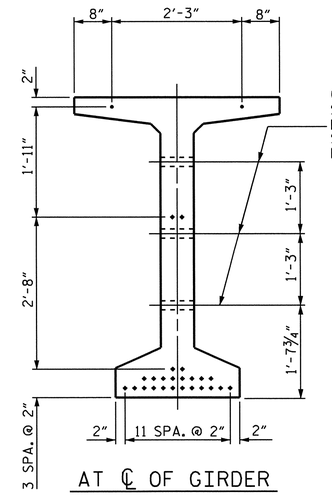

AT ℄ OF GIRDER

℄ 1½" Ø FORMED HOLE. SEE SHEET 3 OF 4 FOR LOCATION. (FOR DIAPHRAGMS SEE "INTERMEDIATE STEEL DIAPHRAGMS" SHEET.)

0.6" Ø LOW RELAXATION STRAND LAYOUT

(26 STRANDS, ALL STRAIGHT, 6 DEBONDED STRANDS)

GIRDER DIMENSIONS			
	DIM. "L"	DIM. "M"	DIM. "S"
GDR. A1	86'-1"	43'-0½"	4"
GDR. A2	86'-1⅝"	43'-0 13/16"	4 5/16"
GDR. A3	86'-2⅜"	43'-1 3/16"	4 11/16"
GDR. A4	86'-3⅜"	43'-1 11/16"	5 3/16"
GDR. A5	86'-4⅝"	43'-2 5/16"	5 13/16"

DEBONDING LEGEND	
●	FULLY BONDED STRANDS
▣	STRANDS DEBONDED FOR 12'-0" FROM END OF GIRDER
◭	STRANDS DEBONDED FOR 8'-0" FROM END OF GIRDER

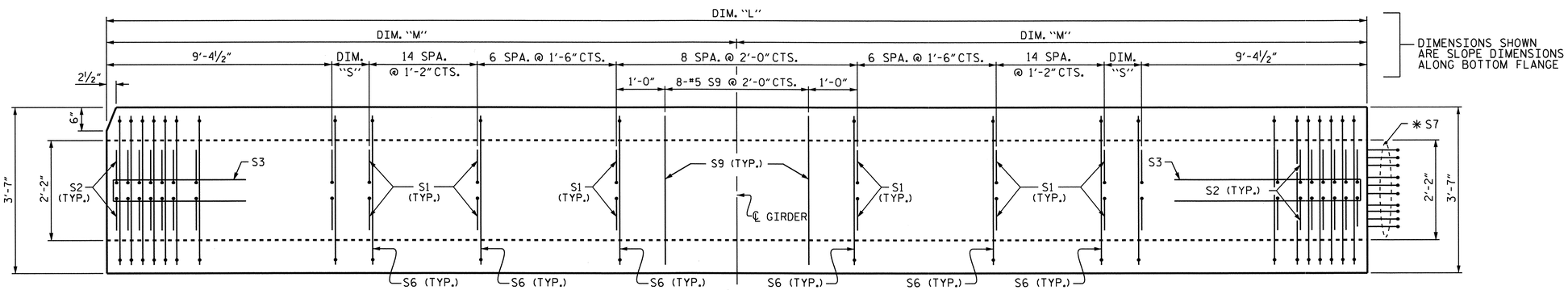

DIMENSIONS SHOWN ARE SLOPE DIMENSIONS ALONG BOTTOM FLANGE

PLAN OF GIRDER

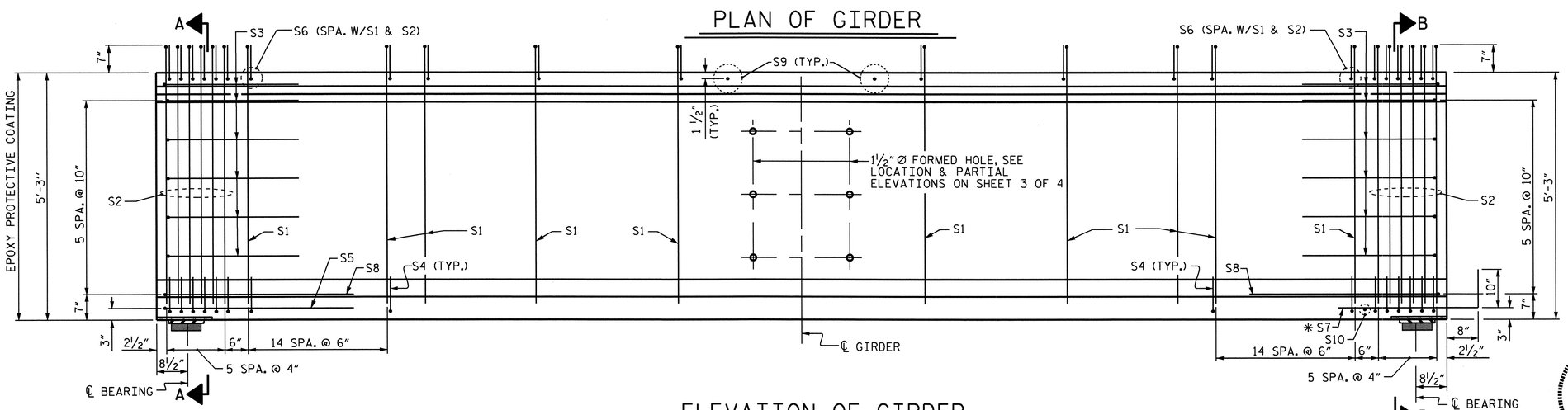

EXP.

ELEVATION OF GIRDER

FIX.

0.6" Ø L. R. GRADE 270 STRANDS		
AREA (SQUARE INCHES)	ULTIMATE STRENGTH (LBS. PER STRAND)	APPLTED PRESTRESS (LBS. PER STRAND)
0.217	58,600	43,950

REINFORCING STEEL FOR ONE GIRDER

	BAR	NUMBER	SIZE	TYPE	LENGTH	WEIGHT
	S1	158	#4	1	6'-1"	642
	S2	24	#5	1	6'-1"	152
	S3	12	#4	2	8'-5"	67
	S4	84	#4	3	3'-0"	168
	S5	1	#4	2	9'-10"	7
	S6	182	#5	4	4'-4"	823
	✱ S7	10	#5	STR	3'-8"	38
	S8	2	#5	2	9'-0"	19
	S9	8	#5	STR	3'-3"	27
	S10	1	#5	STR	1'-10"	2
EXT. GDR.	S11	4	#5	2	10'-2"	42
INT. GDR.	S11	8	#5	2	10'-2"	85
EXT. GDR.	S12	8	#4	STR	8'-0"	43
INT. GDR.	S13	8	#4	STR	14-1"	75

BAR TYPES

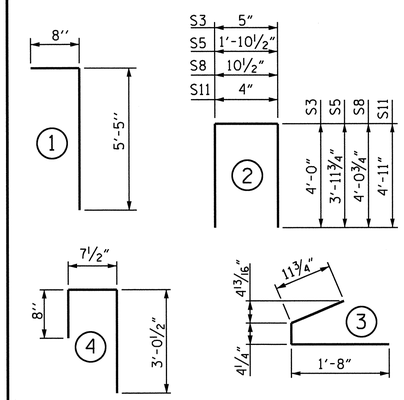

ALL BAR DIMENSIONS ARE OUT-TO-OUT.

QUANTITIES FOR ONE GIRDER

	REINFORCING STEEL	6500 PSI CONCRETE	0.6" Ø L.R. STRANDS
	LB.	C.Y.	NO.
INT. GDR.	2,105	17.1	26
EXT. GDR.	2,030	17.1	26

GIRDERS REQUIRED

NUMBER	LENGTH	TOTAL LENGTH
5	SEE DIM "L"	431.08'

PROJECT NO. U-3326B

ROCKINGHAM COUNTY

STATION: 262+51.60 -L-

SHEET 1 OF 4

STATE OF NORTH CAROLINA
DEPARTMENT OF TRANSPORTATION
RALEIGH

STANDARD

63" PRESTRESSED CONCRETE MODIFIED BULB TEE CONTINUOUS FOR LIVE LOAD SPAN A

NORTH CAROLINA PROFESSIONAL SEAL 16301 ENGINEER TING-HUANG FANG

10/25/11

REVISIONS						
NO.	BY:	DATE:	NO.	BY:	DATE:	
1			3			
2			4			

SHEET NO. S-100

TOTAL SHEETS 159

STR. #3

STD. NO. PCG9

ASSEMBLED BY : A.S. CALLAWAY	DATE : 9/16/09		
CHECKED BY : S.M. RASHIDI	DATE : 2/24/10		
DRAWN BY : EEM 2/6/97	REV. 8/16/99	RWW/LES	
CHECKED BY : VAP 2/6/97	REV. 10/17/00	RWW/LES	
	REV. 5/1/06R	TLA/GM	

13-SEP-2011 12:34
X:\TIPProjects-U\U3326B\Structures\str03\FinalPlans\U3326B_SD_G*_03.dgn
qtnguyen

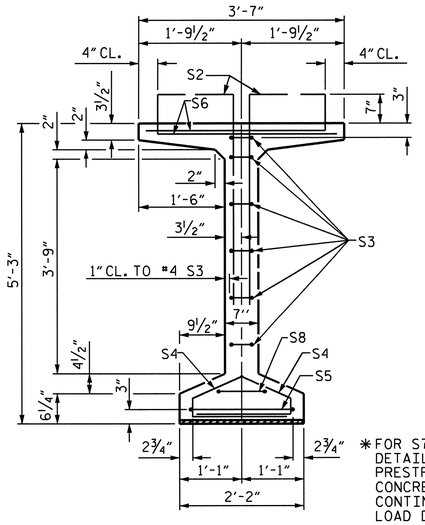

SECTION A-A

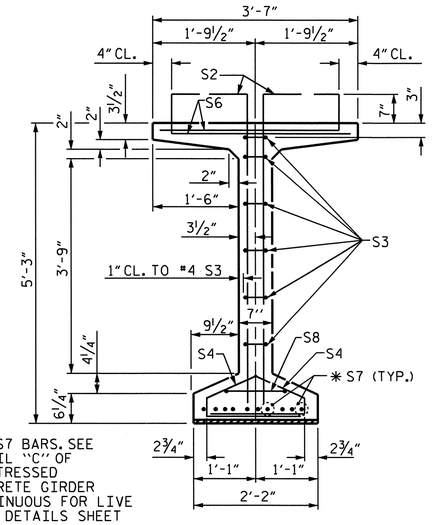

✱ FOR S7 BARS, SEE DETAIL "C" OF PRESTRESSED CONCRETE GIRDER CONTINUOUS FOR LIVE LOAD DETAILS SHEET

SECTION B-B

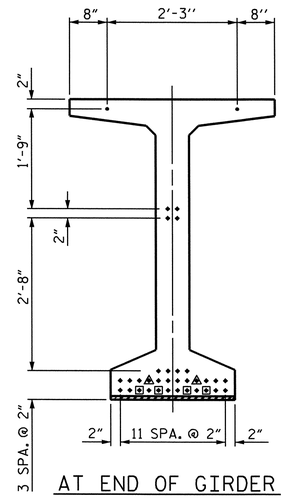

AT END OF GIRDER

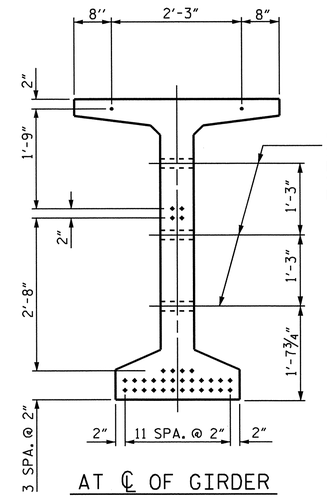

℄ 1½" Ø FORMED HOLE. SEE SHEET 3 OF 4 FOR LOCATION. (FOR DIAPHRAGMS SEE "INTERMEDIATE STEEL DIAPHRAGMS" SHEET.)

AT ℄ OF GIRDER

0.6" Ø LOW RELAXATION STRAND LAYOUT

(34 STRANDS, ALL STRAIGHT, 6 DEBONDED STRANDS)

DEBONDING LEGEND

- ● FULLY BONDED STRANDS
- ▣ STRANDS DEBONDED FOR 12'-0" FROM END OF GIRDER
- △ STRANDS DEBONDED FOR 8'-0" FROM END OF GIRDER

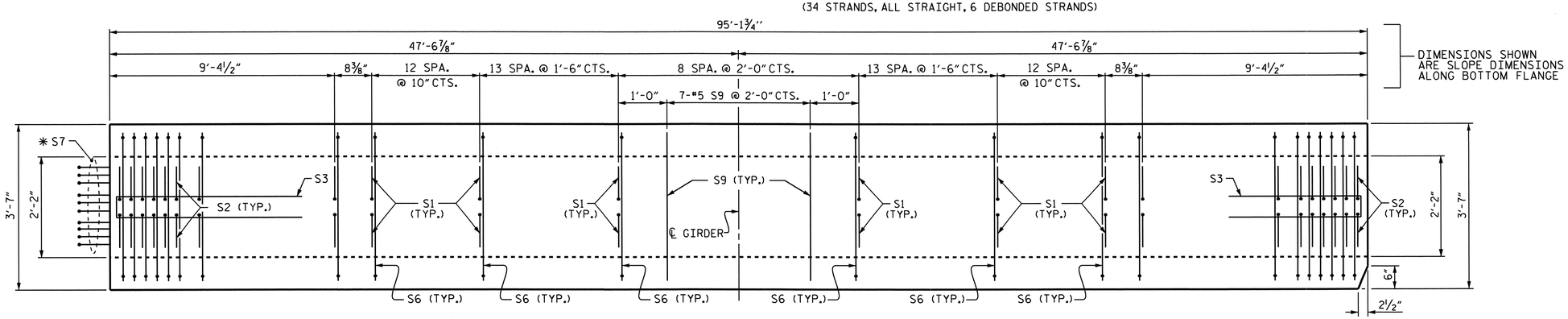

DIMENSIONS SHOWN ARE SLOPE DIMENSIONS ALONG BOTTOM FLANGE

PLAN OF GIRDER

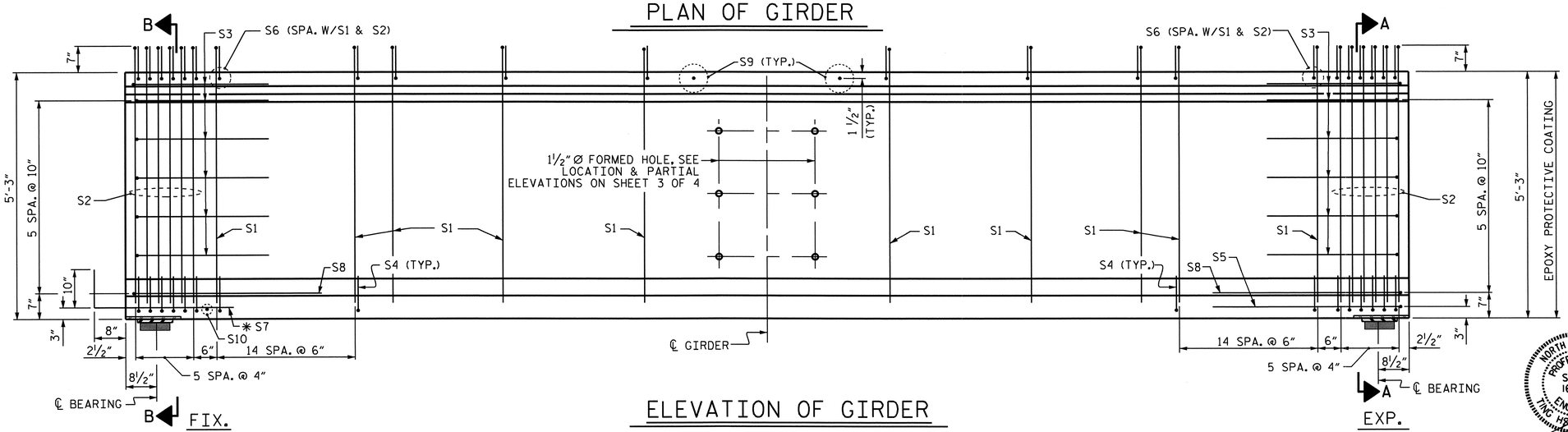

ELEVATION OF GIRDER

0.6" Ø L. R. GRADE 270 STRANDS		
AREA (SQUARE INCHES)	ULTIMATE STRENGTH (LBS. PER STRAND)	APPLTED PRESTRESS (LBS. PER STRAND)
0.217	58,600	43,950

REINFORCING STEEL FOR ONE GIRDER

	BAR	NUMBER	SIZE	TYPE	LENGTH	723
	S1	178	#4	1	6'-1"	723
	S2	24	#5	1	6'-1"	152
	S3	12	#4	2	8'-5"	67
	S4	84	#4	3	3'-0"	168
	S5	1	#5	2	9'-10"	7
	S6	202	#5	4	4'-4"	913
	✱ S7	10	#5	STR	3'-8"	38
	S8	2	#5	2	9'-0"	19
	S9	7	#5	STR	3'-3"	24
	S10	1	#3	STR	1'-10"	2
EXT. GDR.	S11	4	#5	2	10'-2"	42
INT. GDR.	S11	8	#5	2	10'-2"	85
EXT. GDR.	S12	8	#4	STR	8'-0"	43
INT. GDR.	S13	8	#4	STR	14'-1"	75

BAR TYPES

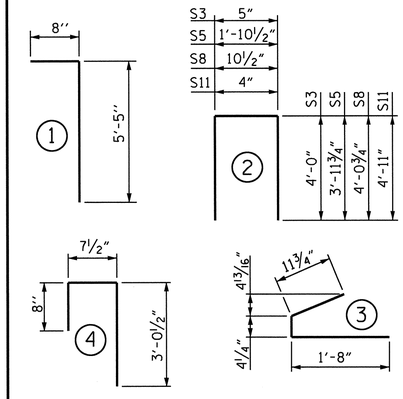

ALL BAR DIMENSIONS ARE OUT-TO-OUT.

QUANTITIES FOR ONE GIRDER

	REINFORCING STEEL	8500 PSI CONCRETE	0.6" Ø L. R. STRANDS
	LB.	C.Y.	NO.
INT. GDR.	2,273	18.8	34
EXT. GDR.	2,198	18.8	34

GIRDERS REQUIRED

NUMBER	LENGTH	TOTAL LENGTH
5	95'-1¾"	475.73'

PROJECT NO. U-3326B

ROCKINGHAM COUNTY

STATION: 262+51.60 -L-

SHEET 2 OF 4

STATE OF NORTH CAROLINA
DEPARTMENT OF TRANSPORTATION
RALEIGH

STANDARD

63" PRESTRESSED CONCRETE MODIFIED BULB TEE CONTINUOUS FOR LIVE LOAD SPAN B

NORTH CAROLINA PROFESSIONAL SEAL 16301 ENGINEER TING-HUNG LANG
10/3/11

REVISIONS						
NO.	BY:	DATE:	NO.	BY:	DATE:	
1			3			
2			4			

SHEET NO. S-101

TOTAL SHEETS 159

STR. #3

STD. NO. PCG9

ASSEMBLED BY : A.S. CALLAWAY	DATE : 9/16/09		
CHECKED BY : S.M. RASHIDI	DATE : 2/24/10		
DRAWN BY : EEM 2/6/97	REV. 8/16/99	RWW/LES	
CHECKED BY : VAP 2/6/97	REV. 10/17/00	RWW/LES	
	REV. 5/1/06R	TLA/GM	

13-SEP-2011 12:34
X:\TIPProjects-U\U3326B\Structures\str03\FinalPlans\U3326B_SD_G*_03.dgn
qtnguyen

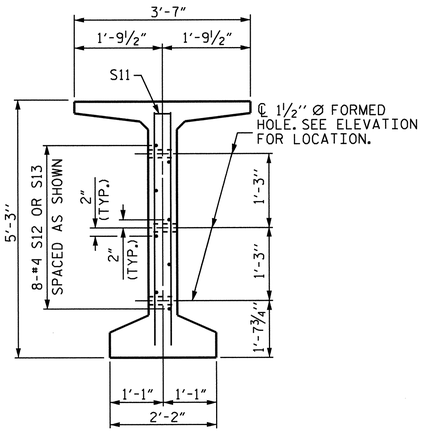

SECTION C-C

(S1, S6 AND S9 BARS NOT SHOWN)

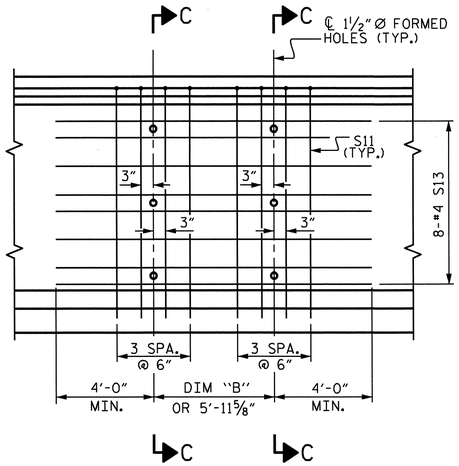

INTERIOR GIRDER

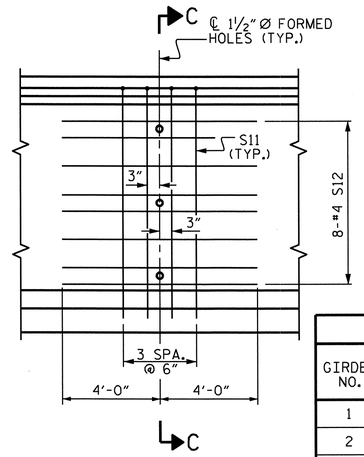

EXTERIOR GIRDER

PARTIAL ELEVATION

SHOWING INTERMEDIATE STEEL DIAPHRAGM REINFORCING STEEL FOR GIRDER

GIRDER DIMENSIONS					
GIRDER NO.	SPAN "A"				
	DIM. "A"	DIM. "B"	DIM. "C"	DIM. "H"	DIM. "L"
1	40'-0½"	——	46'-0½"	86'-0⅛"	86'-1"
2	40'-0 11/16"	6'-0⅛"	40'-0 13/16"	86'-0⅜"	86'-1⅝"
3	40'-0⅞"	6'-0 7/16"	40'-1 1/16"	86'-1¼"	86'-2⅜"
4	40'-1 3/16"	6'-0 13/16"	40'-1⅜"	86'-2¼"	86'-3⅜"
5	46'-2 13/16"	——	40'-1 13/16"	86'-3⅜"	86'-4⅝"

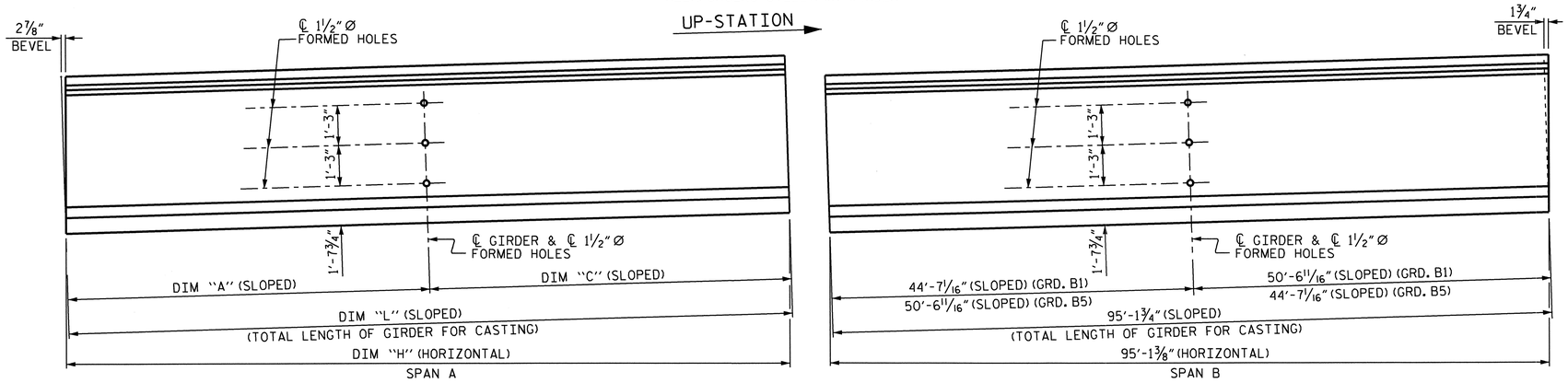

EXTERIOR GIRDER

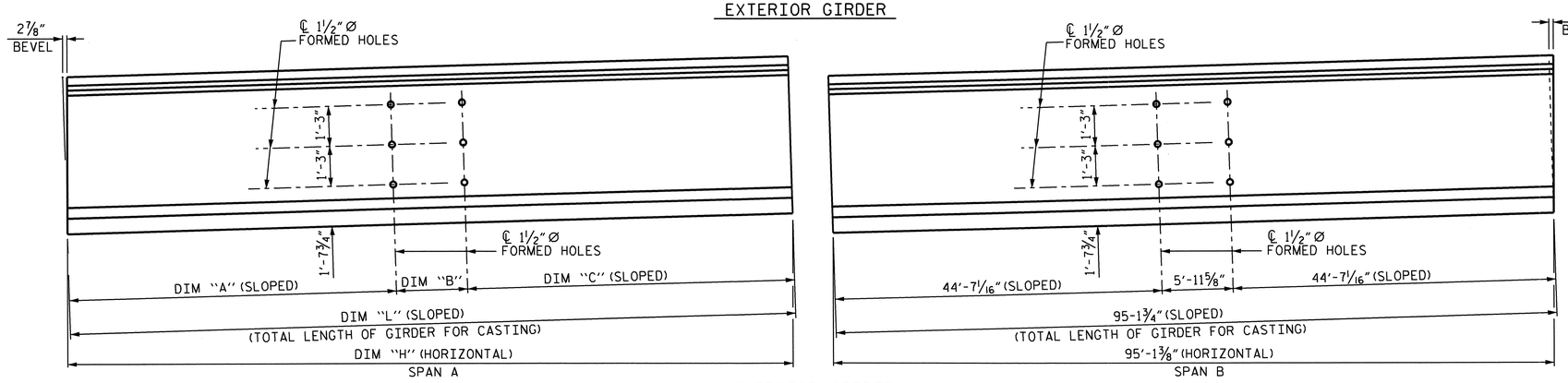

INTERIOR GIRDER

BENT 1

BEVEL IS NOT REQUIRED @ INT. BENT

END BENT 1

END BENT 2

GIRDER ELEVATION

SHOWING BOLT HOLES PLACEMENT, BEVELS, HORIZONTAL & SLOPED DIMENSIONS.

NOTES

ALL PRESTRESSING STRANDS SHALL BE 7-WIRE LOW-RELAXATION GRADE 270 STRANDS AND SHALL CONFORM TO AASHTO M203 EXCEPT FOR SAMPLING REQUIREMENTS WHICH SHALL BE IN ACCORDANCE WITH THE STANDARD SPECIFICATIONS.

ALL REINFORCING STEEL SHALL BE GRADE 60.

APPLY EPOXY PROTECTIVE COATING TO END OF GIRDER SURFACES INDICATED IN ELEVATION VIEW OF SHEETS 1 & 2 OF 4.

EMBEDDED PLATE "B-1" SHALL BE GALVANIZED IN ACCORDANCE WITH THE STANDARD SPECIFICATIONS. BEVEL EDGES OF PLATE "B-1" TO GIVE CLOSE FIT BUT NOT TIGHT FIT TO STEEL CASTING FORM.

ANCHOR STUDS SHALL CONFORM TO AASHTO M169 GRADES 1010 THROUGH 1020 OR APPROVED EQUAL, AND SHALL MEET THE TYPE "B" REQUIREMENTS OF SUBSECTION 7.3 OF THE ANSI/AASHTO/AWS D1.5 BRIDGE WELDING CODE.

AT ENDS OF GIRDERS TO BE EMBEDDED IN CONCRETE DIAPHRAGMS OR END WALLS, PRESTRESSING STRANDS MAY EXTEND A MAXIMUM OF 2" BEYOND THE GIRDER ENDS. OTHERWISE, PRESTRESSING STRANDS SHALL BE CUT FLUSH WITH THE GIRDER ENDS.

THE TRANSFER OF LOAD FROM THE ANCHORAGES TO THE GIRDER SHALL BE DONE WHEN CONCRETE HAS REACHED A COMPRESSIVE STRENGTH OF NOT LESS THAN 4700 PSI IN SPAN A, 6000 PSI IN SPAN B.

DEPENDING ON THE TYPE OF SYSTEM USED TO SUPPORT THE DECK SLAB FORMS, PRESET ANCHORS MAY BE NECESSARY IN THE PRESTRESSED CONCRETE GIRDER.

THE TOP SURFACE OF THE GIRDER, EXCLUDING THE OUTSIDE 4", SHALL BE RAKED TO A DEPTH OF ¼".

WHEN DRAPED STRANDS ARE DETAILED, THE LONGITUDINAL LOCATION OF THE HOLD DOWN DEVICES SHALL BE WITHIN 6" OF THE LOCATION SHOWN AND THE CENTER OF GRAVITY OF THE GROUP OF DRAPED STRANDS SHALL BE LOCATED WITHIN ½" OF THE THEORETICAL LOCATION SHOWN.

A 2" x 2" CHAMFER IS ALLOWED AT THE INTERSECTION OF THE WEB AND THE BOTTOM FLANGE OF THE 63" AND 72" MODIFIED BULB TEES ONLY.

THE CONTRACTOR HAS THE OPTION TO PROVIDE, AT NO ADDITIONAL COST TO THE DEPARTMENT, 2 ADDITIONAL STRANDS AT THE TOP OF THE GIRDER TO FACILITATE TYING OF THE REINFORCING STEEL. THESE STRANDS SHALL BE PULLED TO A LOAD OF 4500 lbs.

FOR PRESTRESSED CONCRETE MEMBERS, SEE SPECIAL PROVISIONS.

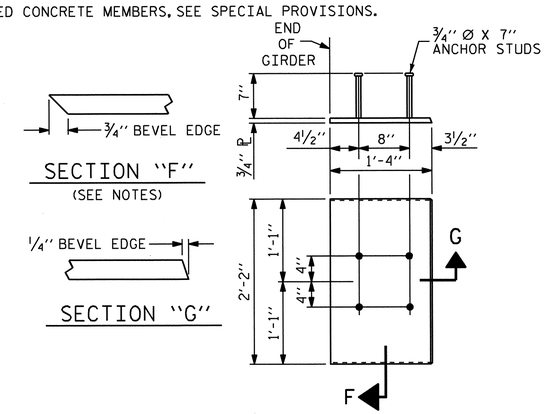

EMBEDDED PLATE "B-1" DETAILS

(2 REQ'D PER GIRDER)

PROJECT NO. U-3326B

ROCKINGHAM COUNTY

STATION: 262+51.60 -L-

SHEET 3 OF 4

NORTH CAROLINA PROFESSIONAL SEAL 16301 ENGINEER TING-HSIONG FANG

10/27/11

STATE OF NORTH CAROLINA
DEPARTMENT OF TRANSPORTATION
RALEIGH

STANDARD

PRESTRESSED CONCRETE GIRDER CONTINUOUS FOR LIVE LOAD DETAILS

REVISIONS						SHEET NO.
NO.	BY:	DATE:	NO.	BY:	DATE:	S-102
1			3			TOTAL SHEETS
2			4			159

ASSEMBLED BY : A.S.CALLAWAY	DATE : 11/5/09
CHECKED BY : L.E. SUTTON	DATE : 1/26/10
DRAWN BY : ELR 11/91	REV. 10/17/00 RWW/LES
CHECKED BY : GRP 11/91	REV. 7/10/01RR LES/RDR
	REV. 5/1/06 TLA/GM

STR. #3

STD. NO. PCG11

27-OCT-2011 17:13
K:\TIPProjects-U\U3326B\Structures\str03\FinalPlans\U3326B_SD_G*_03.dgn
ttfang

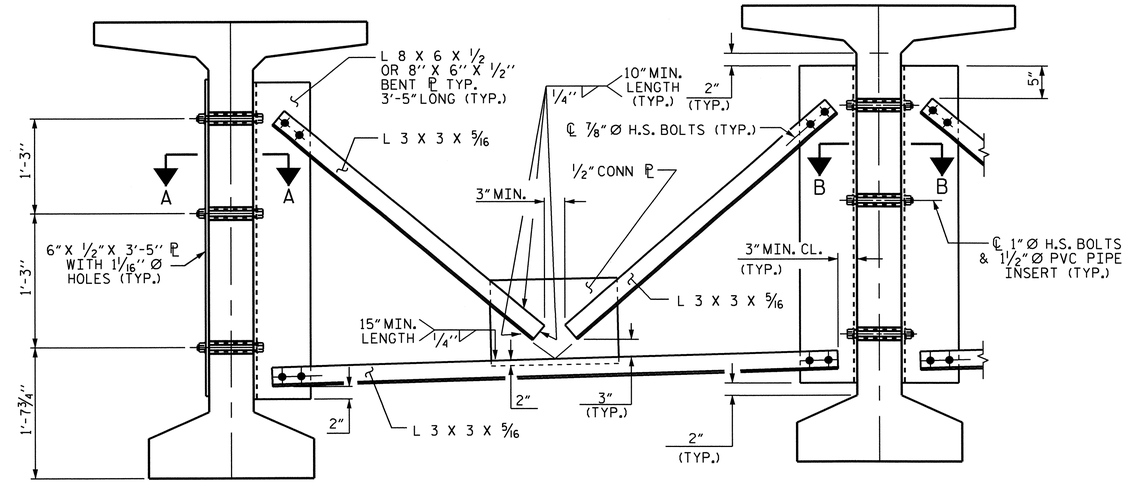

EXTERIOR GIRDER

INTERIOR GIRDER

PART SECTION AT INTERMEDIATE DIAPHRAGM

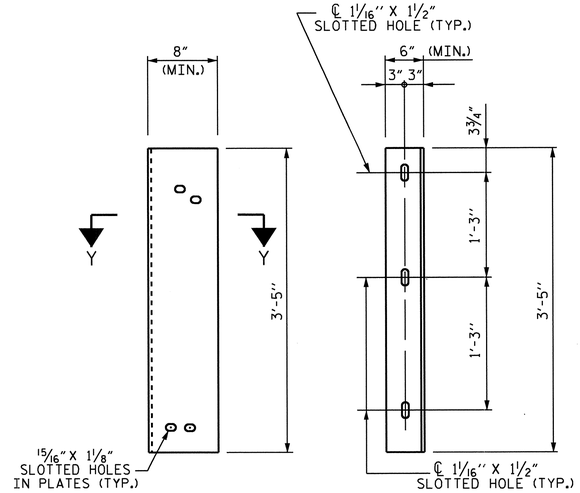

DIAPHRAGM FACE

WEB FACE

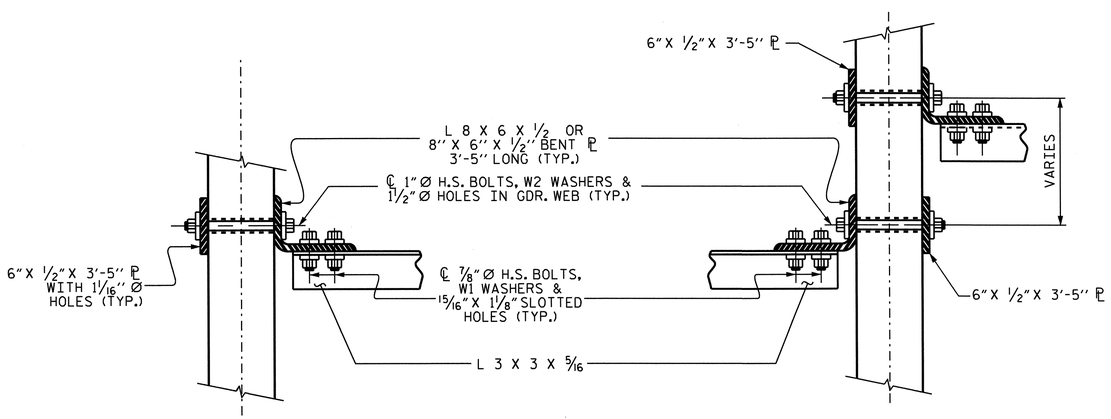

SECTION A-A

SECTION B-B

CONNECTION DETAILS

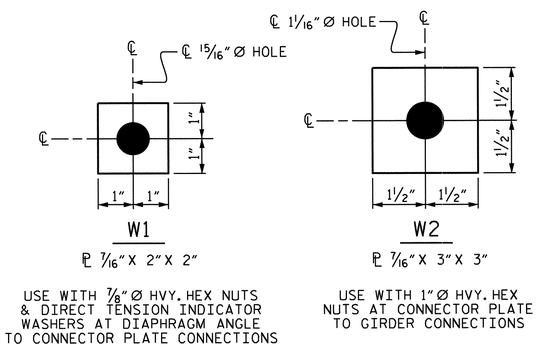

W1

ℙ 7/16" X 2" X 2"

USE WITH 7/8" Ø HVY. HEX NUTS & DIRECT TENSION INDICATOR WASHERS AT DIAPHRAGM ANGLE TO CONNECTOR PLATE CONNECTIONS

W2

ℙ 7/16" X 3" X 3"

USE WITH 1" Ø HVY. HEX NUTS AT CONNECTOR PLATE TO GIRDER CONNECTIONS

WASHER DETAILS

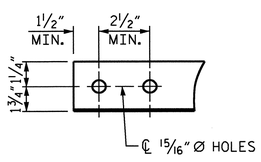

ANGLE END

(L 3 X 3 X 5/16)

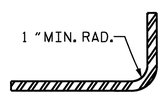

SECTION Y-Y

CONNECTOR ℙ DETAILS

STRUCTURAL STEEL NOTES

ALL INTERMEDIATE DIAPHRAGM STEEL, CONNECTOR PLATES AND PLATE WASHERS SHALL BE AASHTO M270 GRADE 50 OR APPROVED EQUAL.

TENSION ON THE AASHTO M164 BOLTS THROUGH THE ANGLE MEMBER SHALL BE CALIBRATED USING DIRECT TENSION INDICATOR WASHERS IN ACCORDANCE WITH THE STANDARD SPECIFICATIONS. FOR DIRECT TENSION INDICATORS, SEE SPECIAL PROVISION.

TENSION ON THE AASHTO M164 BOLTS THROUGH THE GIRDER WEB SHALL BE SNUG TIGHTENED FOLLOWED BY AN ADDITIONAL 1/4 TURN.

THE PLATES, BENT PLATES, ANGLES, AND PLATE WASHERS SHALL BE GALVANIZED OR METALLIZED IN ACCORDANCE WITH THE STANDARD SPECIFICATIONS. FOR THERMAL SPRAYED COATINGS (METALLIZATION), SEE SPECIAL PROVISIONS.

FOR METALLIZATION, APPLY AN 8 MIL THICK 99.99 PERCENT ZINC (W-Zn-1) THERMAL SPRAYED COATING WITH A 0.5 MIL THICK SEAL COAT TO ALL STEEL DIAPHRAGM SURFACES IN ACCORDANCE WITH THE THERMAL SPRAYED COATINGS SPECIAL PROVISIONS AND SECTION 442 OF THE STANDARD SPECIFICATIONS.

GALVANIZE THE HIGH STRENGTH BOLTS, NUTS, WASHERS AND DIRECT TENSION INDICATORS IN ACCORDANCE WITH THE STANDARD SPECIFICATIONS. FOR HIGH STRENGTH BOLTS, SEE SPECIAL PROVISIONS.

USE A MINIMUM 7/16" THICK PLATE WASHER WITH STANDARD HOLES UNDER EACH BOLT HEAD AND NUT. THE PLATE WASHERS SHALL HAVE SUFFICIENT SIZE TO COVER THE HOLES AFTER INSTALLATION. HARDENED WASHERS AND DIRECT TENSION INDICATORS ARE TO BE USED IN CONJUNCTION WITH THE PLATE WASHERS IN THE L 3 X 3 X 5/16 ANGLE MEMBER CONNECTION.

FOR BOLTS THROUGH THE GIRDER WEB, PROVIDE SUFFICIENT LENGTH OF ALL BOLTS TO ACCOMMODATE WASHERS AND THE THICKNESS OF CONNECTING MEMBER PLUS AT LEAST 1/4" PROJECTION BEYOND THE NUT.

INTERMEDIATE DIAPHRAGM ASSEMBLY SHALL COMPLY WITH SECTION 1072 OF THE STANDARD SPECIFICATIONS.

CONTRACTOR SHALL SUBMIT TWO SETS OF WORKING DRAWINGS FOR THE INTERMEDIATE DIAPHRAGM ASSEMBLY FOR REVIEW, COMMENTS AND ACCEPTANCE. AFTER REVIEW, COMMENTS, AND ACCEPTANCE, SUBMIT SEVEN SETS FOR DISTRIBUTION.

IN THE EXTERIOR BAYS, TEMPORARY STRUTS SHALL BE PLACED BETWEEN PRESTRESSED GIRDERS ADJACENT TO THE STEEL DIAPHRAGMS. STRUTS SHALL REMAIN IN PLACE 3 DAYS AFTER CONCRETE IS PLACED. ALL AASHTO M164 H.S. BOLTS SHALL BE FULLY TIGHTENED AFTER THE STRUTS HAVE BEEN REMOVED.

THE COST OF THE STEEL DIAPHRAGMS AND ASSEMBLIES SHALL BE INCLUDED IN THE UNIT PRICE BID FOR PRESTRESSED CONCRETE GIRDERS.

PROJECT NO. U-3326B

ROCKINGHAM COUNTY

STATION: 262+51.60 -L-

SHEET 4 OF 4

NORTH CAROLINA PROFESSIONAL SEAL 16301 ENGINEER TING-HSIUNG CHANG

10/3/11

STATE OF NORTH CAROLINA
DEPARTMENT OF TRANSPORTATION
RALEIGH

STANDARD

INTERMEDIATE STEEL DIAPHRAGMS FOR 63" MODIFIED BULB TEE PRESTRESSED CONCRETE GIRDER

REVISIONS						SHEET NO.
NO.	BY:	DATE:	NO.	BY:	DATE:	S-103
1			3			TOTAL SHEETS
2			4			159

STR. #3

STD. NO. PCG13

ASSEMBLED BY : A.S. CALLAWAY	DATE : 12/30/09
CHECKED BY : L.E. SUTTON	DATE : 1/26/10
DRAWN BY : RWW 11/09	ADDED 11/23/09
CHECKED BY : GM 11/09	

13-SEP-2011 12:34
X:\TIPProjects-U\U3326B\Structures\str03\FinalPlans\U3326B_SD_G*_03.dgn
qtnguyen

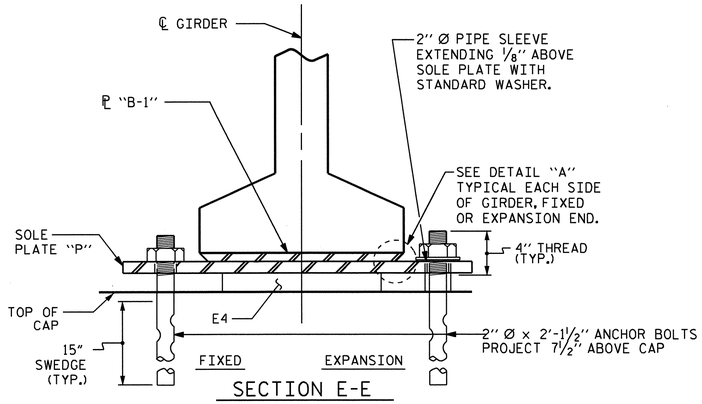

SECTION E-E

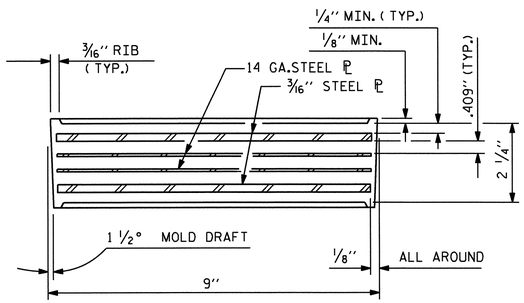

TYPICAL SECTION OF ELASTOMERIC BEARINGS

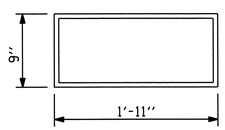

E4 (20 REQ'D)

PLAN VIEW OF ELASTOMERIC BEARING

TYPE V

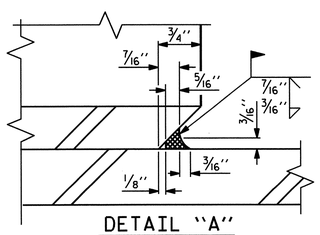

DETAIL "A"

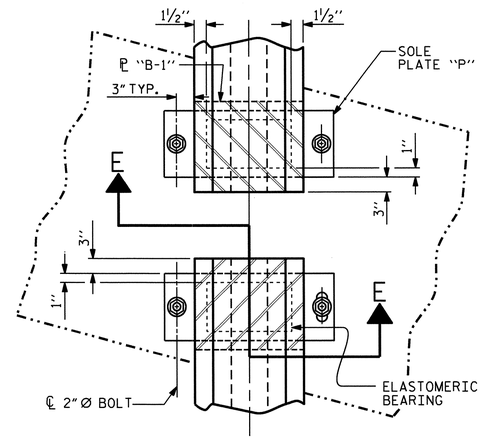

TYPICAL HALF-PLAN (SHOWING CONTINUOUS BENT)

TYPICAL HALF-PLAN (SHOWING SIMPLE SPAN BENT)

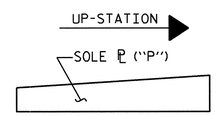

SOLE ℗ PLACEMENT DETAIL

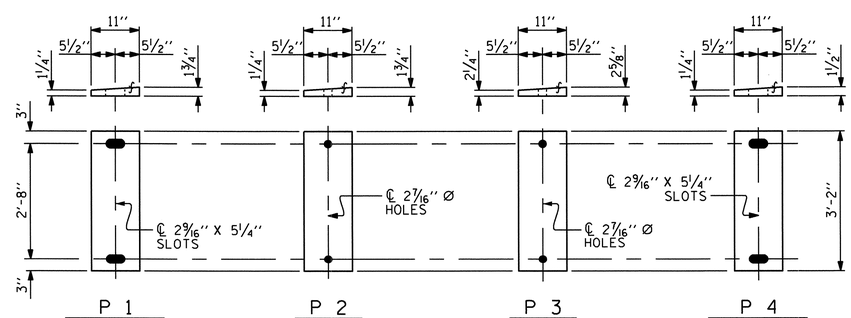

P 1 (EXPANSION) (5 REQ'D)

P 2 (FIXED) (5 REQ'D)

P 3 (FIXED) (5 REQ'D)

P 4 (EXPANSION) (5 REQ'D)

SOLE PLATE DETAILS ("P")

NOTES

AT ALL FIXED POINTS OF SUPPORT, NUTS FOR ANCHOR BOLTS ARE TO BE TIGHTENED FINGER TIGHT AND THEN BACKED OFF 1/2 TURN. THE THREAD OF THE NUT AND BOLT SHALL THEN BE BURRED WITH A SHARP POINTED TOOL.

THE 2" Ø PIPE SLEEVE SHALL BE CUT FROM SCHEDULE 40 PVC PLASTIC PIPE. THE PVC PLASTIC PIPE SHALL MEET THE REQUIREMENTS OF ASTM D1785.

STEEL SOLE PLATES, ANCHOR BOLTS, NUTS, AND WASHERS SHALL BE GALVANIZED IN ACCORDANCE WITH THE STANDARD SPECIFICATIONS.

PRIOR TO WELDING, GRIND THE GALVANIZED SURFACE OF THE PORTION OF THE EMBEDDED PLATE AND SOLE PLATE THAT ARE TO BE WELDED. AFTER WELDING, DAMAGED GALVANIZED SURFACES SHALL BE REPAIRED IN ACCORDANCE WITH THE STANDARD SPECIFICATIONS.

WHEN WELDING THE SOLE PLATE TO THE EMBEDDED PLATE IN THE GIRDER, USE TEMPERATURE INDICATING WAX PENS, OR OTHER SUITABLE MEANS, TO ENSURE THAT THE TEMPERATURE OF THE SOLE PLATE DOES NOT EXCEED 300°F. TEMPERATURES ABOVE THIS MAY DAMAGE THE ELASTOMER.

SOLE PLATE "P", BOLTS, NUTS, WASHERS, AND PIPE SLEEVE SHALL BE INCLUDED IN THE PAY ITEM FOR PRESTRESSED CONCRETE GIRDERS.

ANCHOR BOLTS SHALL MEET THE REQUIREMENTS OF ASTM A449. NUTS SHALL MEET THE REQUIREMENTS OF AASHTO M291-DH OR AASHTO M292-2H. WASHERS SHALL MEET THE REQUIREMENTS OF AASHTO M293. NO SHOP DRAWINGS ARE REQUIRED FOR ANCHOR BOLTS, NUTS AND WASHERS. SHOP INSPECTION IS REQUIRED.

ALL SURFACES OF BEARING PLATES SHALL BE SMOOTH AND STRAIGHT.

ELASTOMER IN ALL BEARINGS SHALL BE 60 DUROMETER HARDNESS.

LOAD RATINGS	
	MAX.D.L.+ L.L.
TYPE V	225 K

PROJECT NO. U-3326B
ROCKINGHAM COUNTY
STATION: 262+51.60 -L-

STATE OF NORTH CAROLINA
DEPARTMENT OF TRANSPORTATION
RALEIGH

STANDARD
ELASTOMERIC BEARING DETAILS
PRESTRESSED CONCRETE GIRDER SUPERSTRUCTURE

NORTH CAROLINA PROFESSIONAL SEAL 16301 ENGINEER
10/3/11

REVISIONS						SHEET NO.
NO.	BY:	DATE:	NO.	BY:	DATE:	S-104
1			3			TOTAL SHEETS
2			4			159

STR. #3

STD. NO. EB4

ASSEMBLED BY : A.S. CALLAWAY		DATE : 9/7/09	
CHECKED BY : S.M. RASHIDI		DATE : 2/24/10	
DRAWN BY : EEM 2/97	REV. 8/16/99	RWW/LES	
CHECKED BY : VAP 2/97	REV. 10/17/00	RWW/LES	
	REV. 5/1/06	TLA/GM	

13-SEP-2011 12:34
X:\TIPProjects-U\U3326B\Structures\str03\FinalPlans\U3326B_SD_BG_03.dgn
qtnguyen

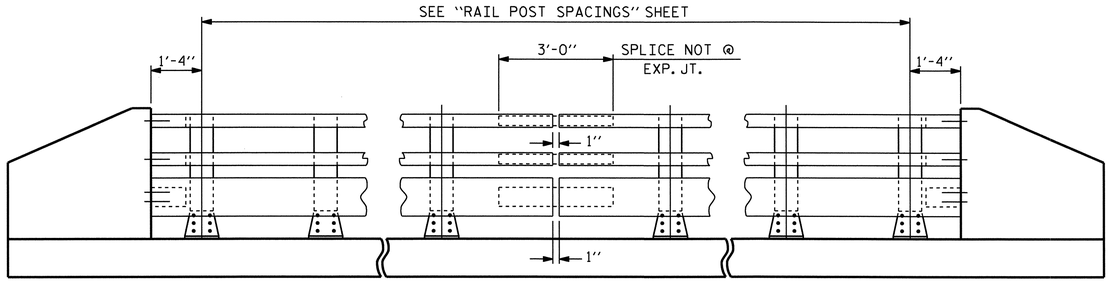

ELEVATION

NOTE: FOR ATTACHMENT OF METAL RAIL TO END POST, SEE STANDARD NO. BMR7.

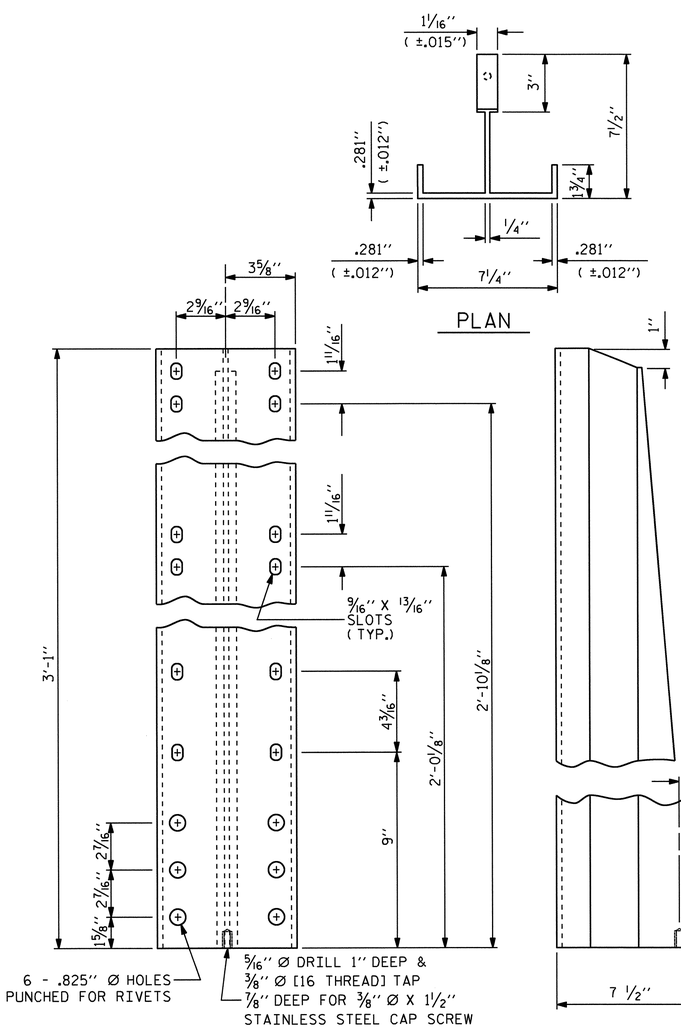

DETAILS OF POST

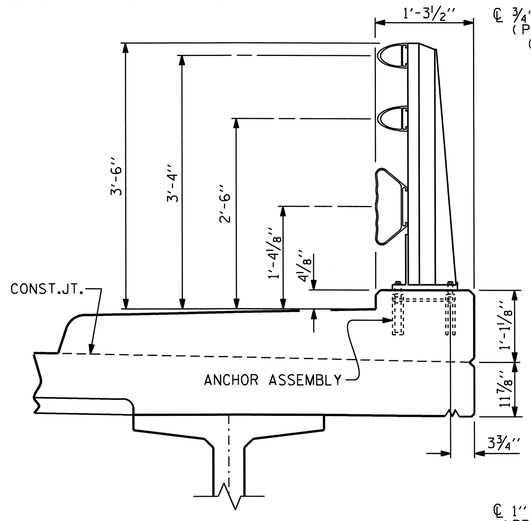

SECTION THRU RAIL

FOR ANCHOR ASSEMBLY, SEE "3 BAR METAL RAIL" STD.No.BMR6

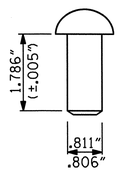

RIVET DETAIL

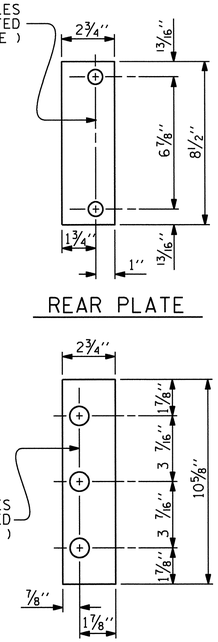

SHIM DETAILS

NOTE:
SHIMS MAY BE CUT ALONG PERMITTED CUTLINE OR SLOTTED TO EDGE OF PLATE TO FACILITATE PLACEMENT.

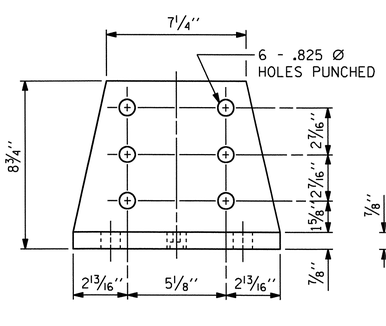

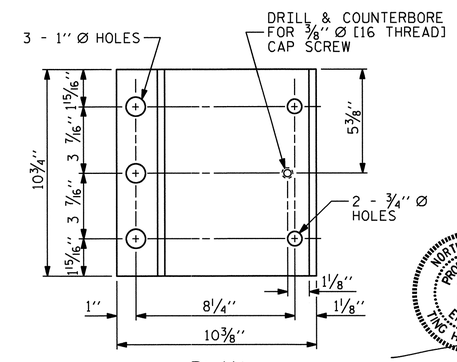

POST BASE DETAILS

NOTES

AT THE CONTRACTOR'S OPTION, METAL RAIL MAY BE EITHER ALUMINUM OR GALVANIZED STEEL IN ACCORDANCE WITH THE REQUIREMENTS OF THE GENERAL NOTES AND THE FOLLOWING SPECIFICATIONS FOR THE ALTERNATE MATERIALS; HOWEVER, THE CONTRACTOR WILL BE REQUIRED TO USE THE SAME RAIL MATERIAL ON ALL STRUCTURES ON THE PROJECT FOR WHICH METAL RAIL IS DESIGNATED.

ALUMINUM RAILS

MATERIAL FOR POSTS, BASES AND RAILS, EXPANSION BARS AND CLAMP BARS SHALL BE ASTM B221 ALLOY 6061-T6.

MATERIAL FOR RIVETS SHALL BE ASTM B316 ALLOY 6061-T6. RIVETS SHALL BE STANDARD BUTTON HEAD AND CONE POINT COLD DRIVEN AS PER DRAWING.

THE BASE OF RAIL POSTS, OR ANY OTHER ALUMINUM SURFACE IN CONTACT WITH CONCRETE SHALL BE THOROUGHLY COATED WITH AN ALUMINUM IMPREGNATED CAULKING COMPOUND OF APPROVED QUALITY.

MATERIAL FOR SHIMS TO BE ASTM B209 ALLOY 6061-T6.

GALVANIZED STEEL RAILS

MATERIAL AND GALVANIZING ARE TO CONFORM TO THE FOLLOWING SPECIFICATIONS:

POST, POST BASES, RAILS, EXPANSION BARS AND CLAMP BARS : AASHTO M270 GRADE 36 STRUCTURAL STEEL - GALVANIZED TO AASHTO M111.

RIVETS: RIVETS SHALL MEET THE REQUIREMENTS OF ASTM A502 FOR GRADE 1 RIVETS.

THE CUT ENDS OF GALVANIZED STEEL RAILING, AFTER GRINDING SMOOTH SHALL BE GIVEN TWO COATS OF ZINC RICH PAINT MEETING THE REQUIREMENTS OF FEDERAL SPECIFICATION MIL-P-26915 USAF TYPE 1, OR OF FEDERAL SPECIFICATIONS TT-P-641.

SHIMS: SHIMS SHALL MEET THE REQUIREMENTS OF ASTM A570 FOR GRADE 33 OR A611 FOR GRADE C AND SHALL BE GALVANIZED IN ACCORDANCE WITH AASHTO M111.

RAIL CAPS: RAIL CAPS SHALL MEET THE REQUIREMENTS OF ASTM A570 FOR GRADE 33 OR A611 FOR GRADE C AND SHALL BE GALVANIZED IN ACCORDANCE WITH AASHTO M111.

GENERAL NOTES

RAILING SHALL BE CONTINUOUS FROM END POST TO END POST OF BRIDGE. EACH JOINT IN RAIL LENGTH SHALL BE SPLICED AS DETAILED. PANEL LENGTHS OF RAIL SHALL BE ATTACHED TO A MINIMUM OF THREE POSTS. PLACE ONE JOINT SPLICE JUST BEYOND THE 3RD RAIL POST FROM EACH END, TYPICALLY 14' FROM THE END. PLACE OTHER JOINTS AS NEEDED.

FOR END OF RAIL TO CLEAR FACE OF CONCRETE END POST DIMENSION, SEE STANDARD NO. BMR7.

CAP SCREWS SHALL BE ASTM F593 ALLOY 305 STAINLESS STEEL. WASHERS FOR RAIL ATTACHMENT SHALL MEET THE REQUIREMENTS OF ASTM F844 EXCEPT THEY SHALL BE MADE FROM ALLOY 304 STAINLESS STEEL.

CERTIFIED MILL REPORTS ARE REQUIRED FOR RAILS AND POSTS. SHOP INSPECTION IS NOT REQUIRED.

METAL RAIL POSTS SHALL BE SET NORMAL TO CURB GRADE.

METHOD OF MEASUREMENT FOR METAL RAILS: FOR LENGTH OF METAL RAILS TO BE PAID FOR, SEE THE STANDARD SPECIFICATIONS.

CURVED RAIL USAGE: WHERE RAILS ARE TO BE USED ON BRIDGES ON HORIZONTAL AND/OR VERTICAL CURVATURE THE CONTRACTOR MAY, AT HIS OPTION, HAVE THE REQUIRED CURVATURE IN THE RAIL FORMED IN THE SHOP OR IN THE FIELD. IN EITHER EVENT, THE RAIL SHALL CONFORM WITHOUT BUCKLING OR KINKING TO THE REQUIRED CURVATURE IN A UNIFORM MANNER ACCEPTABLE TO THE ENGINEER.

TO INSURE FUTURE IDENTIFICATION OF THE FABRICATOR, A PERMANENT IDENTIFYING MARK SHALL BE PLACED ON EACH POST. THE METHOD OF MARKING AND LOCATION SHALL BE SUCH THAT IT DOES NOT DETRACT FROM THE APPEARANCE OF THE POST, BUT REMAIN VISIBLE AFTER RAIL PLACEMENT.

SHIMS SHALL BE USED AS NECESSARY FOR POST ALIGNMENT.

ALLOY 6351-T5 MAY BE SUBSTITUTED FOR ALLOY 6061-T6 WHERE APPLICABLE.

MINOR VARIATIONS IN DETAILS OF METAL RAIL WILL BE CONSIDERED. DETAILS OF SUCH VARIATIONS, IF DESIRED, SHALL BE SUBMITTED FOR APPROVAL.

PAY LENGTH = 352.54 LIN.FT.

PROJECT NO. U-3326B
ROCKINGHAM COUNTY
STATION: 262+51.60 -L-

SHEET 1 OF 4

STATE OF NORTH CAROLINA
DEPARTMENT OF TRANSPORTATION
RALEIGH

STANDARD

3 BAR METAL RAIL

NORTH CAROLINA PROFESSIONAL SEAL 16301 ENGINEER TING HSIUNG FANG
10/21/11

REVISIONS						
NO.	BY:	DATE:	NO.	BY:	DATE:	
1			3			
2			4			

SHEET NO. S-105
TOTAL SHEETS 159

STR. #3

STD. NO. BMR5

ASSEMBLED BY : A.S. CALLAWAY		DATE : 8/28/09	
CHECKED BY : S.M. RASHIDI		DATE : 2/24/10	
DRAWN BY : JMB	1/88	REV. 10/17/00	RWW/LES
CHECKED BY : GGH	1/88	REV. 5/7/03	RWW/JTE
		REV. 5/1/06	TLA/GM

13-SEP-2011 12:34
X:\TIPProjects-U\U3326B\Structures\str03\FinalPlans\U3326B_sd_3mr_03.dgn
qtnguyen

NOTES

STRUCTURAL CONCRETE ANCHOR ASSEMBLY

THE STRUCTURAL CONCRETE ANCHOR ASSEMBLY SHALL CONSIST OF THE FOLLOWING COMPONENTS:

A. FERRULES SHALL BE MADE FROM STEEL MEETING THE REQUIREMENTS OF AASHTO M169, GRADE 12L14 AND SHALL HAVE A MINIMUM LENGTH OF THREADS OF 2" FOR 3/4" FERRULES AND 1 3/4" FOR 5/8" FERRULES.

B. 3 - 3/4" Ø X 2 1/2" BOLTS WITH WASHERS. BOLTS SHALL CONFORM TO THE REQUIREMENTS OF ASTM A307. BOLTS AND WASHERS SHALL BE GALVANIZED. AT THE CONTRACTOR'S OPTION, STAINLESS STEEL BOLTS AND WASHERS MAY BE USED AS AN ALTERNATE FOR THE 3/4" Ø X 2 1/2" GALVANIZED BOLTS AND WASHERS. THEY SHALL CONFORM TO OR EXCEED THE MECHANICAL REQUIREMENTS OF ASTM A307. THE USE OF THIS ALTERNATE SHALL BE APPROVED BY THE ENGINEER.

C. 2 - 5/8" Ø X 2 1/4" BOLTS WITH WASHERS. BOLTS SHALL CONFORM TO THE REQUIREMENTS OF ASTM A307. BOLTS AND WASHERS SHALL BE GALVANIZED. AT THE CONTRACTOR'S OPTION, STAINLESS STEEL BOLTS AND WASHERS MAY BE USED AS AN ALTERNATE FOR THE 5/8" Ø X 2 1/4" GALVANIZED BOLTS AND WASHERS. THEY SHALL CONFORM TO OR EXCEED THE MECHANICAL REQUIREMENTS OF ASTM A307. THE USE OF THIS ALTERNATE SHALL BE APPROVED BY THE ENGINEER.

D. WIRE STRUT SHOWN IN THE CONCRETE ANCHOR ASSEMBLY DETAIL IS THE MINIMUM ALLOWABLE SIZE AND SHALL HAVE A MINIMUM TENSILE STRENGTH OF 100,000 PSI. AS AN OPTION, A 7/16" Ø WIRE STRUT WITH A MINIMUM TENSILE STRENGTH OF 90,000 PSI IS ACCEPTABLE.

E. THE METAL RAIL ANCHOR ASSEMBLIES TO BE HOT DIPPED GALVANIZED TO CONFORM TO REQUIREMENTS OF AASHTO M111.

F. THE COST OF THE METAL RAIL ANCHOR ASSEMBLY WITH BOLTS AND WASHERS COMPLETE IN PLACE SHALL BE INCLUDED IN THE PRICE BID FOR LINEAR FEET OF METAL RAIL.

G. BOLTS TO BE TIGHTENED ONE-HALF TURN WITH A WRENCH FROM A FINGER-TIGHT POSITION.

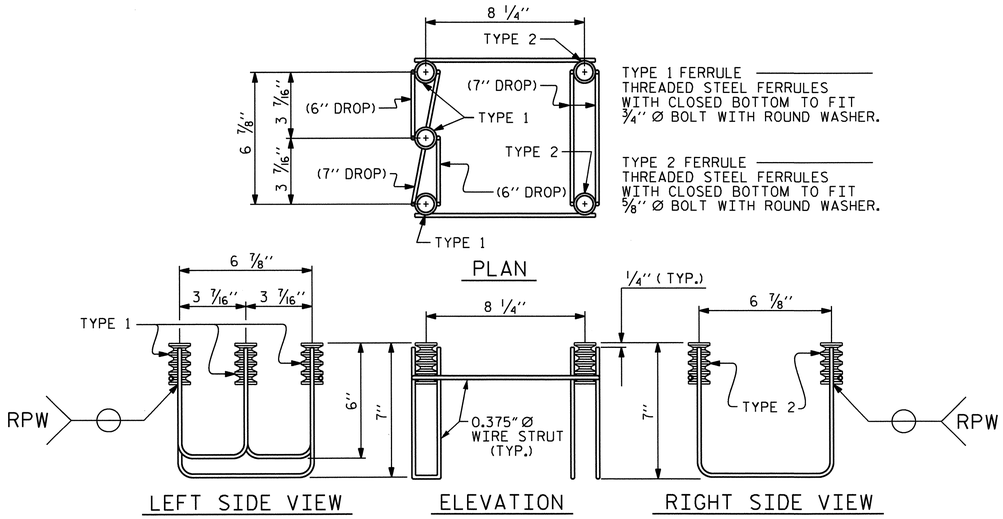

5-BOLT METAL RAIL ANCHOR ASSEMBLY

(60 ASSEMBLIES REQUIRED)

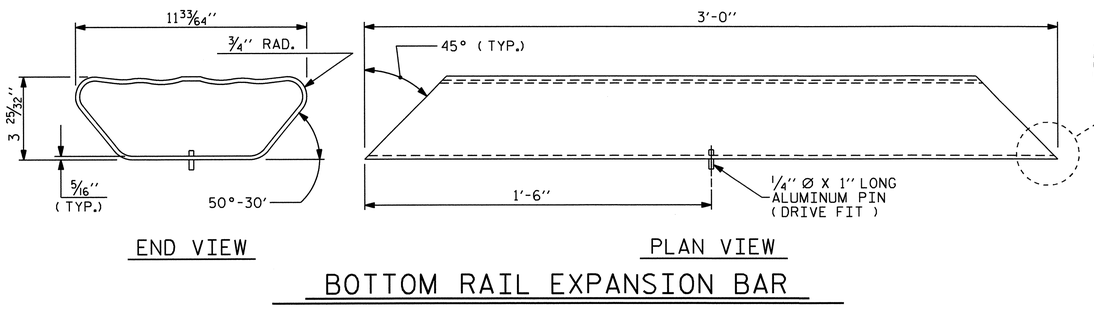

BOTTOM RAIL EXPANSION BAR

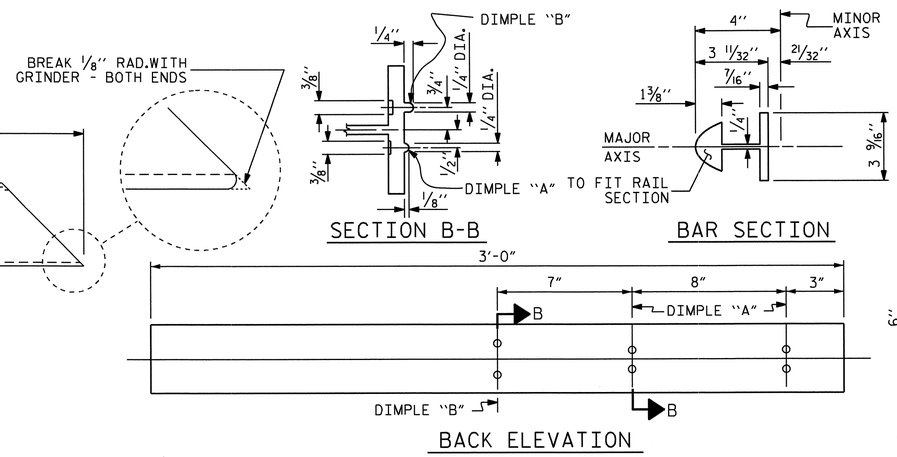

TOP & MIDDLE RAIL EXPANSION BAR

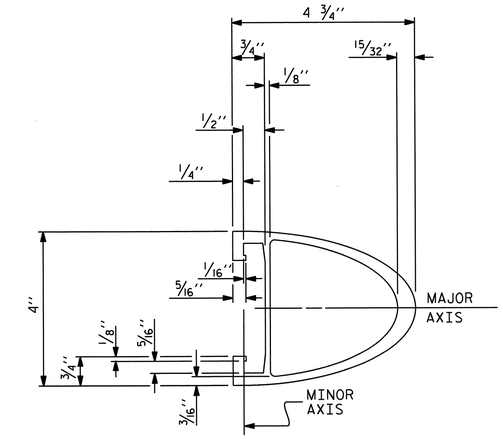

TOP & MIDDLE RAIL SECTION

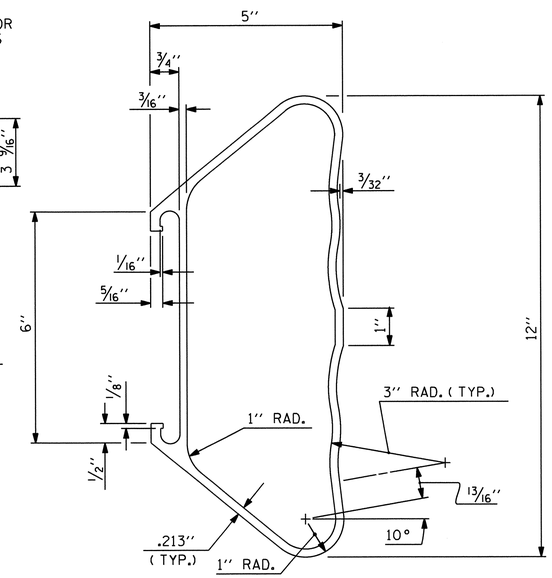

BOTTOM RAIL SECTION

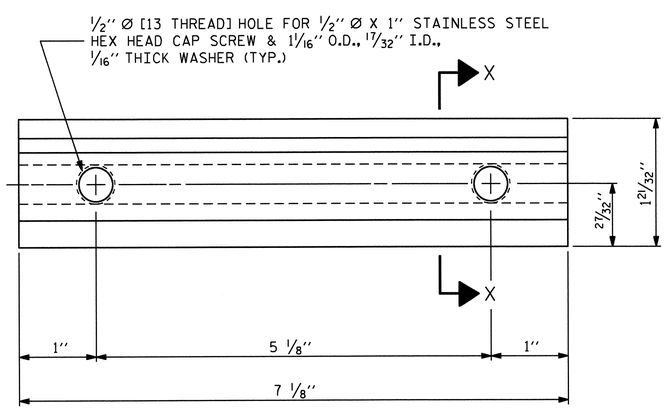

ELEVATION

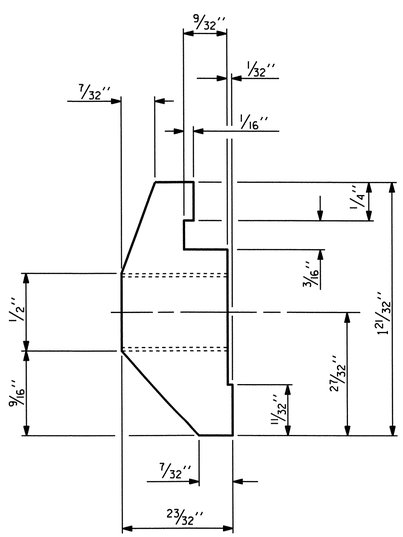

SECTION X-X

CLAMP BAR DETAIL

(6 REQUIRED PER POST)

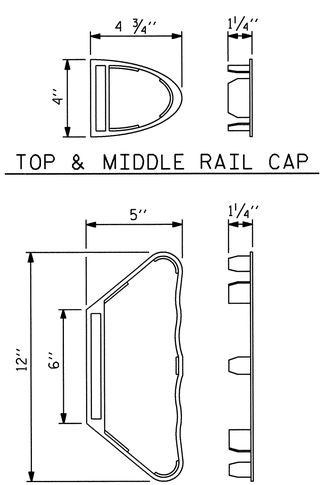

TOP & MIDDLE RAIL CAP

BOTTOM RAIL CAP

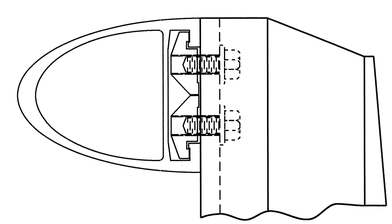

CLAMP ASSEMBLY

TOP RAIL SHOWN
(MIDDLE & BOTTOM RAIL ARE SIMILAR)

PROJECT NO. U-3326B
ROCKINGHAM COUNTY
STATION: 262+51.60 -L-

SHEET 2 OF 4

STATE OF NORTH CAROLINA
DEPARTMENT OF TRANSPORTATION
RALEIGH

STANDARD

3 BAR METAL RAIL

NORTH CAROLINA PROFESSIONAL SEAL 16301 ENGINEER
10/3/11

ASSEMBLED BY : A.S. CALLAWAY	DATE : 8/28/09		
CHECKED BY : S.M. RASHIDI	DATE : 2/24/10		
DRAWN BY : JMB 1/88	REV. 7/10/01	RWW/LES	
CHECKED BY : GGH 1/88	REV. 5/7/03	RWW/JTE	
	REV. 5/1/06	TLA/GM	

REVISIONS								SHEET NO.
NO.	BY:	DATE:	NO.	BY:	DATE:			S-106
1			3					TOTAL SHEETS
2			4					159

STR. #3

STD. NO. BMR6

13-SEP-2011 12:34
X:\TIPProjects-U\U3326B\Structures\str03\FinalPlans\U3326B_sd_3mr_03.dgn
qtnguyen

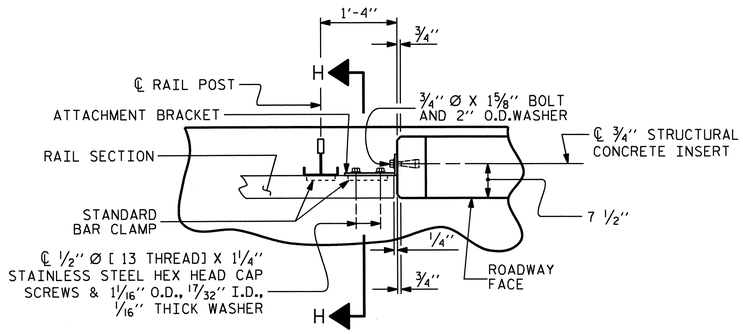

PLAN OF RAIL AND END POST

(STIFFENER ON 1/2" ℙ NOT SHOWN FOR CLARITY)

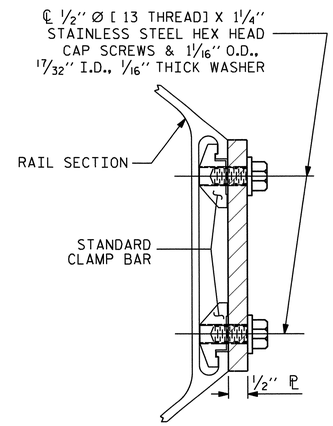

SECTION H-H

(FOR BOTTOM RAIL)

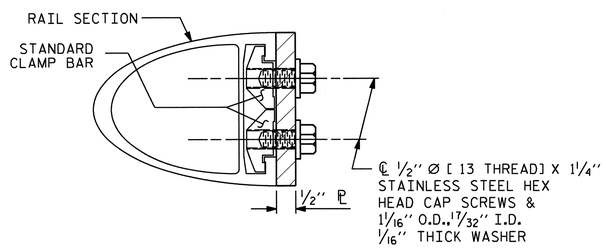

SECTION H-H

(FOR TOP & MIDDLE RAIL)

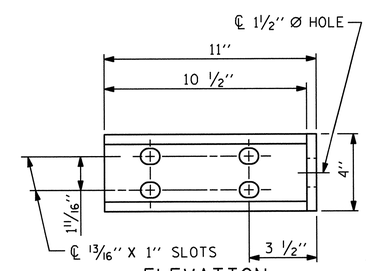

ELEVATION

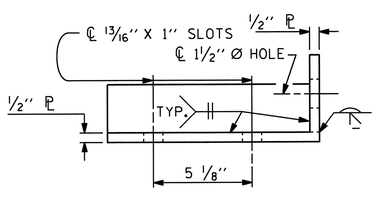

PLAN

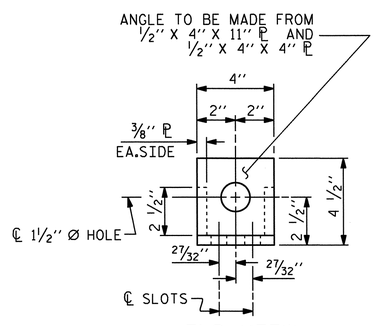

END VIEW

(FIX. AND EXP.)

DETAILS FOR ATTACHMENT BRACKET

(TOP & MIDDLE RAIL ONLY)

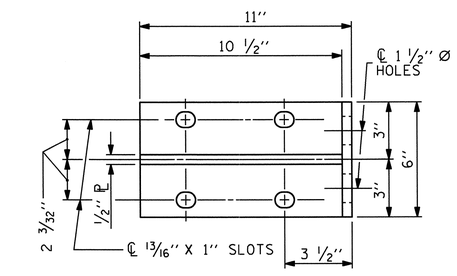

ELEVATION

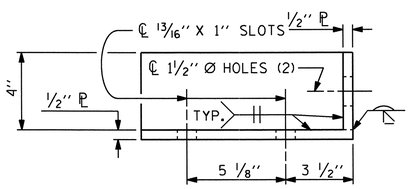

PLAN

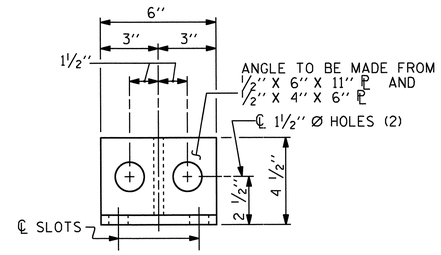

END VIEW

DETAILS FOR ATTACHMENT BRACKET

(BOTTOM RAIL ONLY)

NOTES

METAL RAIL TO END POST CONNECTION

THE METAL RAIL TO END POST CONNECTION SHALL CONSIST OF THE FOLLOWING COMPONENTS:

A. 1/2" PLATES SHALL CONFORM TO AASHTO M270 GRADE 36 AND SHALL BE GALVANIZED AFTER FABRICATION.

B. 3/4" STRUCTURAL CONCRETE INSERT SHALL HAVE A WORKING LOAD SHEAR CAPACITY OF 4800 LBS. THE FERRULES SHALL ENGAGE A 3/4" Ø X 1 5/8" BOLT WITH 2" O.D. WASHER IN PLACE. THE 3/4" Ø X 1 5/8" BOLT SHALL HAVE N. C. THREADS.

C. CAP SCREWS FOR RAIL ATTACHMENT TO ANGLE SHALL CONFORM TO THE REQUIREMENTS OF ASTM F593 ALLOY 305 STAINLESS STEEL. CAP SCREWS TO BE CENTERED IN SLOTS AT 60°F. WASHERS FOR RAIL ATTACHMENT SHALL MEET THE REQUIREMENTS OF ASTM F844 EXCEPT THEY SHALL BE MADE FROM ALLOY 304 STAINLESS STEEL.

D. STANDARD CLAMP BARS (STD. No. BMR6).

THE COST OF THE STANDARD CLAMP BARS AND CAP SCREWS USED IN THE METAL RAIL TO END POST CONNECTION SHALL BE INCLUDED IN THE UNIT CONTRACT PRICE BID FOR LINEAR FEET OF 3 BAR METAL RAIL.

THE 3/4" STRUCTURAL CONCRETE INSERT WITH BOLT SHALL BE ASSEMBLED IN THE SHOP.

THE COST OF THE 3/4" STRUCTURAL CONCRETE INSERT ASSEMBLY, AND THE 1/2" PLATES COMPLETE IN PLACE SHALL BE INCLUDED IN THE VARIOUS PAY ITEMS.

THE CONTRACTOR, AT HIS OPTION, MAY USE AN ADHESIVE BONDING SYSTEM IN LIEU OF THE STRUCTURAL CONCRETE INSERT EMBEDDED IN THE END POST. IF THE ADHESIVE BONDING SYSTEM IS USED, THE 3/4" Ø X 1 5/8" BOLT WITH WASHER SHALL BE REPLACED WITH A 3/4" Ø X 6 1/2" BOLT AND 2" O.D.WASHER. ALL SPECIFICATIONS THAT APPLY TO THE 3/4" Ø X 1 5/8" BOLT SHALL APPLY TO THE 3/4" Ø X 6 1/2" BOLT. FIELD TESTING OF THE ADHESIVE BONDING SYSTEM IS NOT REQUIRED.

NOTES

STRUCTURAL CONCRETE INSERT

THE STRUCTURAL CONCRETE INSERT ASSEMBLY SHALL CONSIST OF THE FOLLOWING COMPONENTS:

A. FERRULES SHALL BE MADE FROM STEEL MEETING THE REQUIREMENTS OF AASHTO M169, GRADE 12L14 AND SHALL HAVE A MINIMUM LENGTH OF THREADS OF 1 1/2".

B. 1 - 3/4" Ø X 1 5/8" BOLT WITH WASHER. BOLT SHALL CONFORM TO THE REQUIREMENTS OF ASTM A307. BOLT AND WASHER SHALL BE GALVANIZED. AT THE CONTRACTORS OPTION, STAINLESS STEEL BOLT AND WASHER MAY BE USED AS AN ALTERNATE FOR THE 3/4" Ø X 1 5/8" GALVANIZED BOLT AND WASHER. THEY SHALL CONFORM TO OR EXCEED THE MECHANICAL REQUIREMENTS OF ASTM A307. THE USE OF THIS ALTERNATE SHALL BE APPROVED BY THE ENGINEER.

C. WIRE STRUT SHOWN IN THE CONCRETE INSERT ASSEMBLY DETAIL IS THE MINIMUM ALLOWABLE SIZE AND SHALL HAVE A MINIMUM TENSILE STRENGTH OF 100,000 PSI. AS AN OPTION, A 7/16" Ø WIRE STRUT WITH A MINIMUM TENSILE STRENGTH OF 90,000 PSI IS ACCEPTABLE.

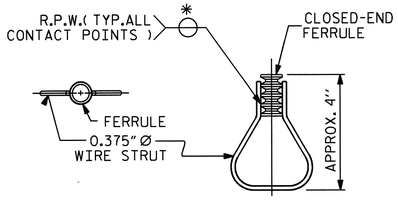

PLAN ELEVATION

STRUCTURAL CONCRETE INSERT

* EACH WELDED ATTACHMENT OF WIRE TO FERRULE SHALL DEVELOP THE TENSILE STRENGTH OF THE WIRE.

PROJECT NO. U-3326B

ROCKINGHAM COUNTY

STATION: 262+51.60 -L-

SHEET 3 OF 4

STATE OF NORTH CAROLINA
DEPARTMENT OF TRANSPORTATION
RALEIGH

STANDARD

3 BAR METAL RAIL

NORTH CAROLINA PROFESSIONAL SEAL 16301 ENGINEER TING-HSIUNG LANG

10/3/11

REVISIONS						SHEET NO.
NO.	BY:	DATE:	NO.	BY:	DATE:	S-107
1			3			TOTAL SHEETS
2			4			159

STR. #3

STD. NO. BMR7

ASSEMBLED BY : A.S. CALLAWAY	DATE : 8/28/09		
CHECKED BY : S.M. RASHIDI	DATE : 2/24/10		
DRAWN BY : JMB 1/88	REV. 7/10/01	RWW/LES	
CHECKED BY : GGH 1/88	REV. 5/7/03	RWW/JTE	
	REV. 5/1/06	TLA/GM	

13-SEP-2011 12:34
X:\TIPProjects-U\U3326B\Structures\str03\FinalPlans\U3326B_sd_3mr_03.dgn
qtnguyen

BILL OF MATERIAL					
ONE END POST (4 REQ'D)					
BAR	NO.	SIZE	TYPE	LENGTH	WEIGHT
✳E1	2	#7	1	3'-5"	14
✳E2	2	#7	1	4'-0"	16
✳E3	2	#7	1	4'-7"	19
✳E4	2	#7	1	5'-1"	21
✳E5	1	#7	1	3'-0"	6
✳F1	1	#6	STR	3'-1"	5
✳F2	2	#6	STR	3'-5"	10
✳F3	1	#6	STR	3'-4"	5
✳F4	1	#6	STR	3'-10"	6
✳F5	2	#6	STR	3'-11"	12
✳F6	1	#6	STR	3'-7"	5
✳EPOXY COATED REINFORCING STEEL = 119 LBS.					
CLASS AA CONCRETE = 0.4 C.Y.					

BAR TYPES

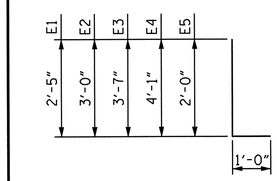

ALL BAR DIMENSIONS ARE OUT TO OUT

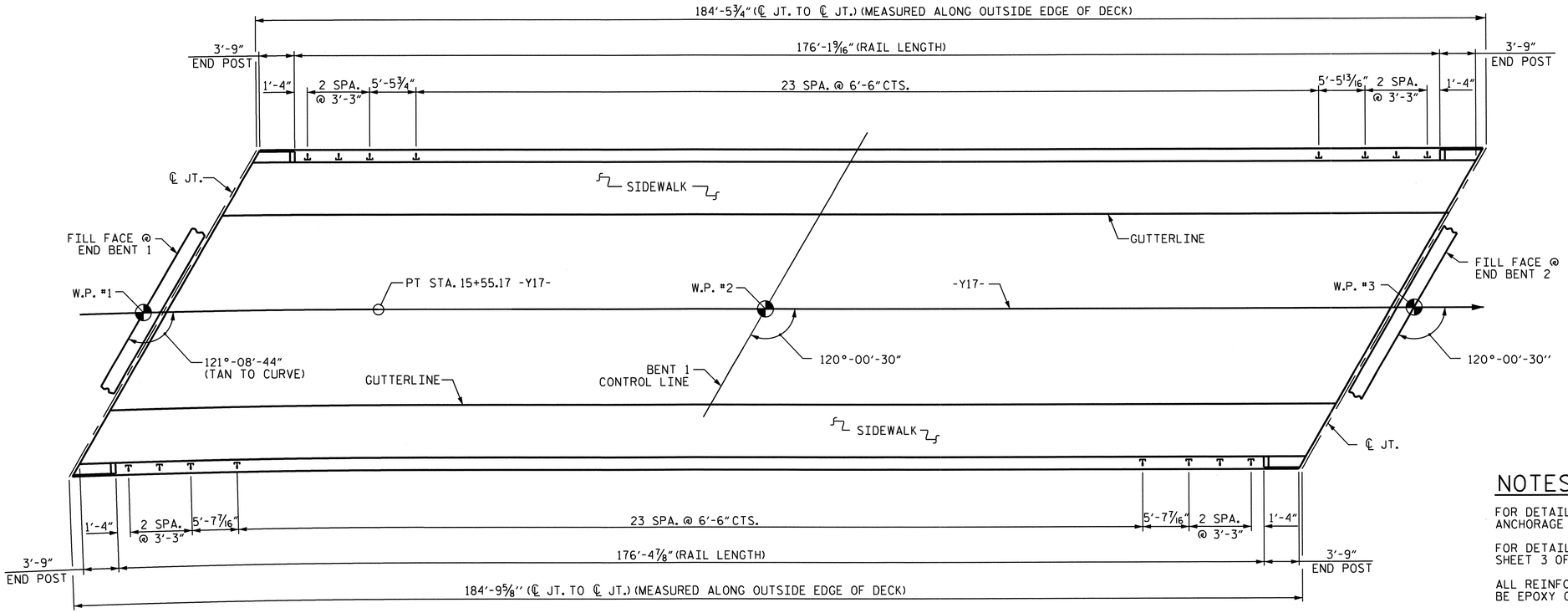

NOTES :

FOR DETAIL OF GUARDRAIL ANCHOR ASSEMBLY, SEE "GUARDRAIL ANCHORAGE DETAILS FOR METALS RAILS" SHEET.

FOR DETAILS OF CONCRETE INSERT, SEE "3 BAR METAL RAIL" SHEET 3 OF 4.

ALL REINFORCING STEEL IN SIDEWALK AND END POSTS SHALL BE EPOXY COATED.

NO ADDITIONAL PAYMENT SHALL BE MADE FOR THE CONCRETE END POSTS AS THIS IS CONSIDERED INCIDENTAL TO THE CONSTRUCTION OF THE 3 BAR METAL RAIL.

PLAN OF RAIL POST SPACING

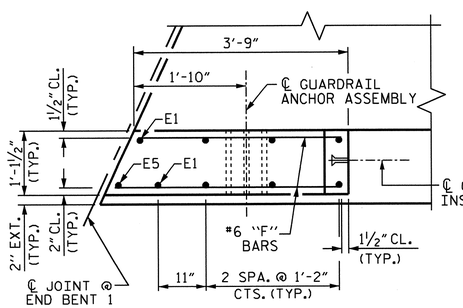

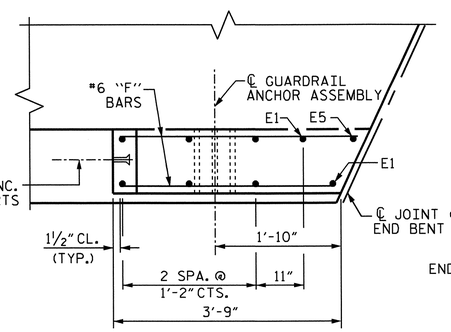

PLAN

(RIGHT SIDE SHOWN, LEFT SIDE SIMILAR)

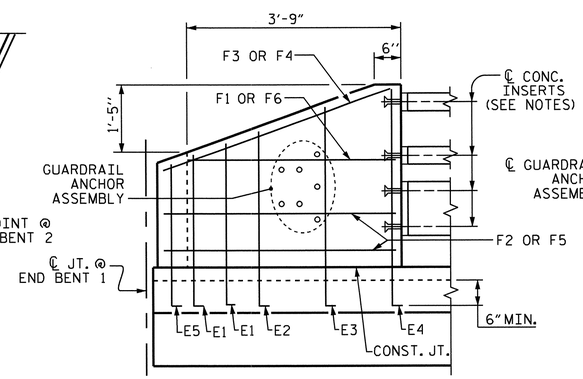

ELEVATION

END BENT 1 RIGHT SIDE SHOWN, END BENT 2 SIMILAR

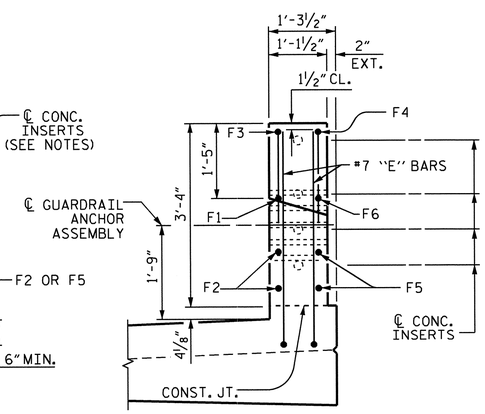

END VIEW

END BENT 1 RIGHT SIDE SHOWN, END BENT 2 SIMILAR

END POST DETAILS

PROJECT NO. U-3326B

ROCKINGHAM COUNTY

STATION: 262+51.60 -L-

SHEET 4 OF 4

STATE OF NORTH CAROLINA
DEPARTMENT OF TRANSPORTATION
RALEIGH

SUPERSTRUCTURE

RAIL POSTS SPACINGS & END POST DETAILS

NORTH CAROLINA PROFESSIONAL SEAL 16301 ENGINEER TING HSIUNG FANG

REVISIONS						SHEET NO.
NO.	BY:	DATE:	NO.	BY:	DATE:	S-108
1			3			TOTAL SHEETS
2			4			159

STR. #3

DRAWN BY : QT NGUYEN DATE : 4/28/11
CHECKED BY : T. H. FANG DATE : 4/28/11

13-SEP-2011 12:34
X:\TIPProjects-U\U3326B\Structures\str03\FinalPlans\U3326B_sd_3mr_03.dgn
qtnguyen

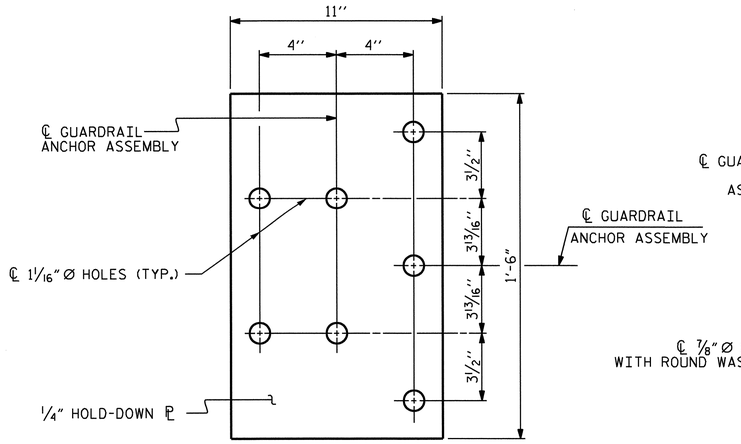

PLAN

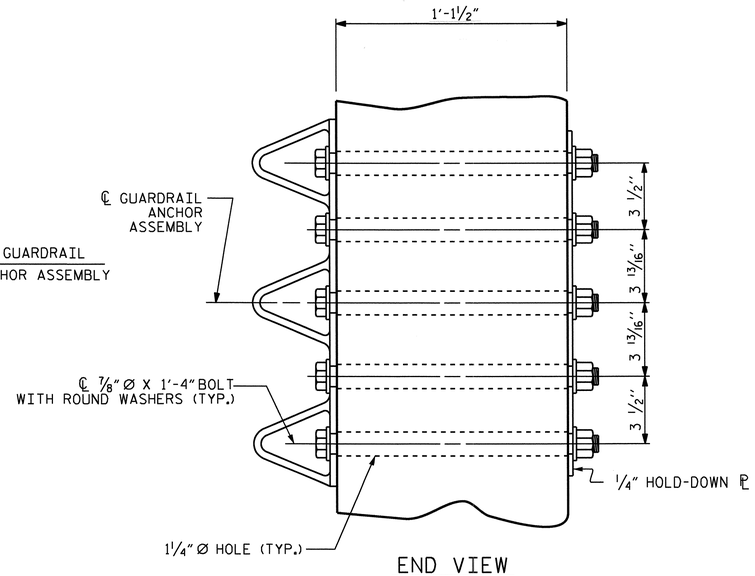

END VIEW

GUARDRAIL ANCHOR ASSEMBLY DETAILS

NOTES

THE GUARDRAIL ANCHOR ASSEMBLY SHALL CONSIST OF A 1/4'' HOLD DOWN PLATE AND 7 - 7/8'' Ø BOLTS WITH NUTS AND WASHERS.

THE HOLD-DOWN PLATE SHALL CONFORM TO AASHTO M270 GRADE 36. AFTER FABRICATION, THE HOLD-DOWN PLATE SHALL BE HOT-DIP GALVANIZED IN ACCORDANCE WITH AASHTO M111.

BOLTS SHALL CONFORM TO THE REQUIREMENTS OF ASTM A307 AND NUTS SHALL CONFORM TO THE REQUIREMENTS OF AASHTO M291. BOLTS, NUTS AND WASHERS SHALL BE GALVANIZED. AT THE CONTRACTOR'S OPTION, STAINLESS STEEL BOLTS, NUTS AND WASHERS MAY BE USED AS AN ALTERNATE FOR THE 7/8'' Ø GALVANIZED BOLTS, NUTS AND WASHERS. THEY SHALL CONFORM TO OR EXCEED THE MECHANICAL REQUIREMENTS OF ASTM A307. THE USE OF THIS ALTERNATE SHALL BE APPROVED BY THE ENGINEER.

THE GUARDRAIL ANCHOR ASSEMBLY IS REQUIRED AT ALL POINTS WHERE APPROACH GUARDRAIL IS TO BE ATTACHED TO THE END OF THE PARAPET. FOR POINTS OF ATTACHMENT, SEE SKETCH.

AFTER INSTALLATION, THE EXPOSED THREAD OF THE BOLT SHALL BE BURRED WITH A SHARP POINTED TOOL.

THE COST OF THE GUARDRAIL ANCHOR ASSEMBLIES WITH BOLTS, NUTS AND WASHERS COMPLETE IN PLACE, SHALL BE INCLUDED IN THE VARIOUS PAY ITEMS.

THE VERTICAL REINFORCING BARS MAY BE SHIFTED SLIGHTLY IN THE END POST TO CLEAR ASSEMBLY BOLTS.

THE 1 1/4'' Ø HOLES SHALL BE FORMED OR DRILLED WITH A CORE BIT. IMPACT TOOLS WILL NOT BE PERMITTED. ANY CONCRETE DAMAGED BY THIS WORK SHALL BE REPAIRED TO THE SATISFACTION OF THE ENGINEER.

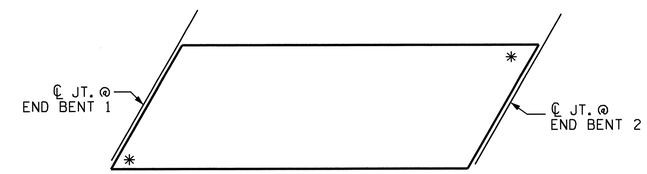

SKETCH SHOWING POINTS OF ATTACHMENT

* LOCATION OF GUARDRAIL ATTACHMENT

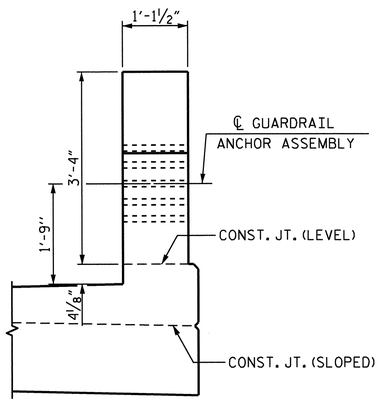

END VIEW
(THREE BAR METAL RAIL)

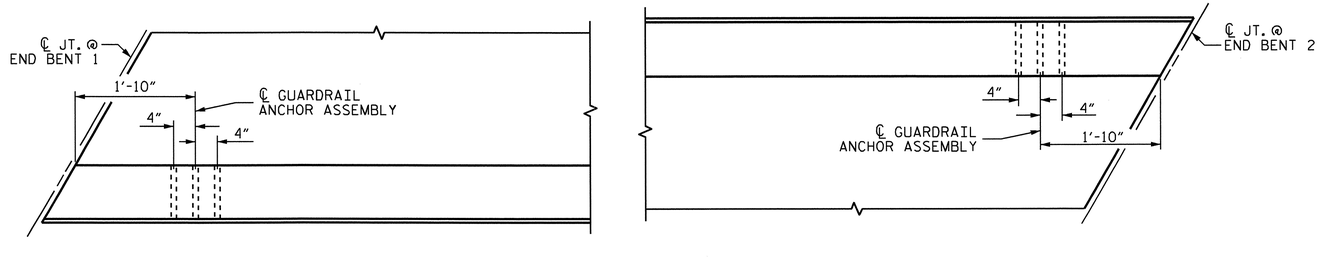

PLAN

LOCATION OF GUARDRAIL ANCHOR AT END POST

PROJECT NO. U-3326B
ROCKINGHAM COUNTY
STATION: 262+51.60 -L-

STATE OF NORTH CAROLINA
DEPARTMENT OF TRANSPORTATION
RALEIGH

STANDARD
GUARDRAIL ANCHORAGE DETAILS FOR METAL RAILS

NORTH CAROLINA PROFESSIONAL SEAL 16301 ENGINEER
10/3/11

REVISIONS						SHEET NO.
NO.	BY:	DATE:	NO.	BY:	DATE:	S-109
1			3			TOTAL SHEETS
2			4			159

ASSEMBLED BY : A.S. CALLAWAY DATE : 8/28/09
CHECKED BY : S.M. RASHIDI DATE : 2/24/10
DRAWN BY : MAA 5/10
CHECKED BY : GM 5/10
ADDED 5/6/10

13-SEP-2011 12:34
X:\TIPProjects-U\U3326B\Structures\str03\FinalPlans\U3326B_sd_3mr_03.dgn
qtnguyen

STR. #3 STD. NO. GRA3

SUPERSTRUCTURE REINFORCING STEEL LENGTHS ARE BASED ON THE FOLLOWING MINIMUM SPLICE LENGTHS					
BAR SIZE	SUPERSTRUCTURE EXCEPT APPROACH SLABS, PARAPET, AND BARRIER RAIL		APPROACH SLABS		PARAPET AND BARRIER RAIL
	EPOXY COATED	UNCOATED	EPOXY COATED	UNCOATED	
#4	2'-0"	1'-9"	2'-0"	1'-9"	2'-9"
#5	2'-6"	2'-2"	2'-6"	2'-2"	3'-5"
#6	3'-0"	2'-7"	3'-10"	2'-7"	4'-4"
#7	5'-3"	3'-6"			
#8	6'-10"	4'-7"			

GROOVING BRIDGE FLOORS		
APPROACH SLABS	888	SQ.FT.
BRIDGE DECK	6,039	SQ.FT.
TOTAL	6,927	SQ.FT.

BILL OF MATERIAL

BAR	NO.	SIZE	TYPE	LENGTH	WEIGHT	BAR	NO.	SIZE	TYPE	LENGTH	WEIGHT
* A1	267	#5	STR	49'-3"	13715	A215	4	#5	STR	19'-4"	81
A2	267	#5	STR	49'-3"	13715	A216	4	#5	STR	17'-4"	72
* A3	6	#6	STR	16'-9"	151	A217	4	#5	STR	15'-3"	64
						A218	4	#5	STR	13'-3"	55
* A101	4	#5	STR	46'-8"	195	A219	4	#5	STR	11'-3"	47
* A102	4	#5	STR	44'-8"	186	A220	4	#5	STR	9'-2"	38
* A103	4	#5	STR	42'-8"	178	A221	4	#5	STR	7'-2"	30
* A104	4	#5	STR	40'-8"	170	A222	4	#5	STR	5'-2"	22
* A105	4	#5	STR	38'-7"	161	A223	4	#5	STR	3'-1"	13
* A106	4	#5	STR	36'-7"	153						
* A107	4	#5	STR	34'-7"	144	* B1	70	#4	STR	28'-3"	1321
* A108	4	#5	STR	32'-7"	136	* B2	201	#5	STR	25'-0"	5241
* A109	4	#5	STR	30'-6"	127	* B3	64	#5	STR	30'-0"	2003
* A110	4	#5	STR	28'-6"	119	* B4	105	#4	STR	22'-6"	1578
* A111	4	#5	STR	26'-6"	111	B5	168	#5	STR	47'-9"	8367
* A112	4	#5	STR	24'-6"	102	* B6	84	#4	STR	28'-1"	1576
* A113	4	#5	STR	22'-5"	94						
* A114	4	#5	STR	20'-5"	85						
* A115	4	#5	STR	18'-5"	77	* G1	2	#5	STR	30'-1"	63
* A116	4	#5	STR	16'-5"	68	* G2	2	#5	STR	29'-9"	62
* A117	4	#5	STR	14'-4"	60	* G3	370	#4	STR	7'-3"	1792
* A118	4	#5	STR	12'-4"	51						
* A119	4	#5	STR	10'-4"	43	* K1	8	#8	1	16'-2"	345
* A120	4	#5	STR	8'-4"	35	* K2	12	#8	2	23'-3"	745
* A121	4	#5	STR	6'-3"	26	* K3	24	#6	STR	7'-6"	270
* A122	4	#5	STR	4'-3"	18	K4	8	#4	STR	7'-6"	40
* A123	4	#5	STR	2'-3"	9	K5	32	#4	STR	11'-0"	235
						K6	8	#4	STR	7'-9"	41
A201	4	#5	STR	47'-7"	199	K7	12	#4	7	7'-3"	58
A202	4	#5	STR	45'-7"	190	K8	18	#4	8	14'-2"	170
A203	4	#5	STR	43'-7"	182						
A204	4	#5	STR	41'-7"	173	* S1	56	#5	3	5'-11"	346
A205	4	#5	STR	39'-6"	165	* S2	56	#4	6	5'-6"	206
A206	4	#5	STR	37'-6"	156	S3	148	#4	4	3'-0"	297
A207	4	#5	STR	35'-6"	148	S4	8	#4	5	9'-4"	50
A208	4	#5	STR	33'-6"	140						
A209	4	#5	STR	31'-5"	131	U1	28	#4	2	17'-5"	326
A210	4	#5	STR	29'-5"	123	* U2	108	#4	9	3'-8"	265
A211	4	#5	STR	27'-5"	114						
A212	4	#5	STR	25'-5"	106						
A213	4	#5	STR	23'-4"	97	REINFORCING STEEL = 25,734 LBS					
A214	4	#5	STR	21'-4"	89	* EPOXY COATED REINF. STEEL = 32,027 LBS					

BAR TYPES

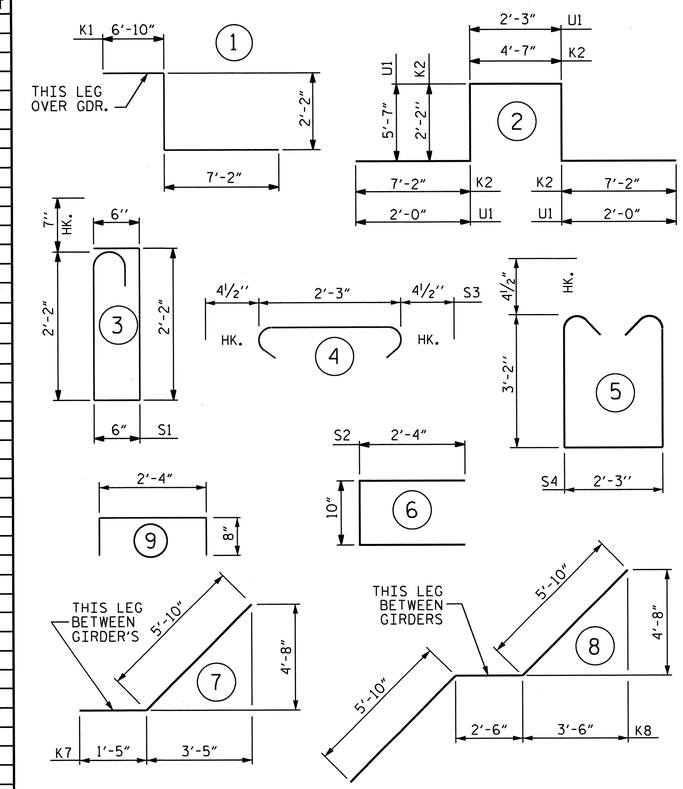

ALL BAR DIMENSIONS ARE OUT TO OUT

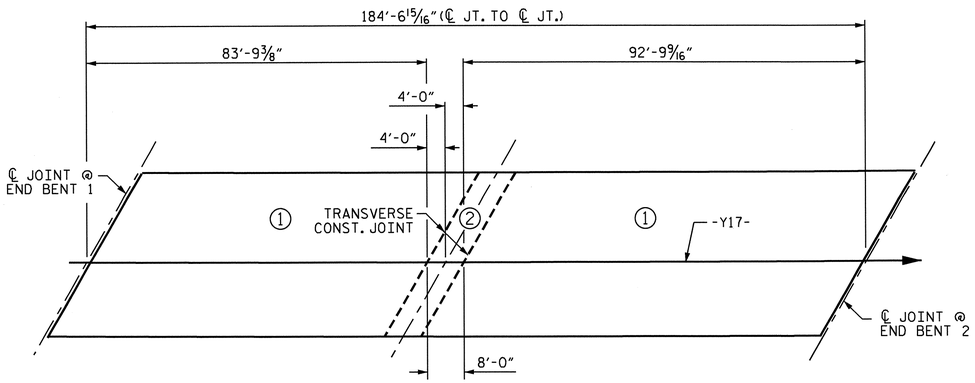

OPTIONAL POURING SEQUENCE

POUR (2) CANNOT BE STARTED UNTIL BOTH ADJACENT (1) POURS REACH A MINIMUM OF 3000 PSI.

SUPERSTRUCTURE BILL OF MATERIAL			
	CLASS AA CONCRETE	REINFORCING STEEL	* EPOXY COATED REINFORCING STEEL
	(CU. YDS.)	(LBS.)	(LBS.)
SPANS A & B		25,734	32,027
POUR 1	158.0		
POUR 2	191.0		
SIDEWALKS	60.6		**
TOTAL **	409.6	25,734	32,027

** INCLUDES QUANTITIES FOR SIDEWALKS. QUANTITIES FOR END POSTS ARE NOT INCLUDED.

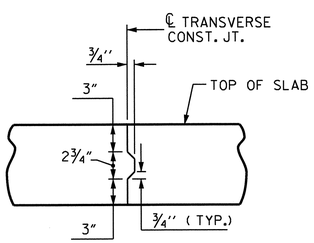

TRANSVERSE CONSTRUCTION JOINT DETAIL

NOTE: REINFORCING STEEL IN SLAB NOT SHOWN. LONGITUDINAL REINFORCING STEEL SHALL BE CONTINUOUS THRU JOINT

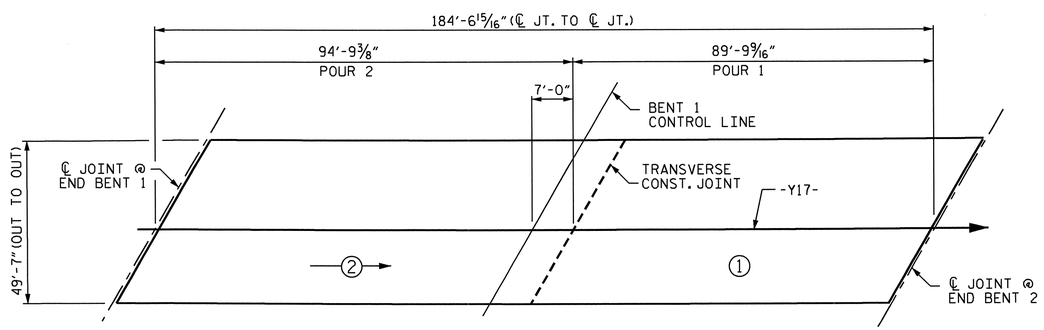

POURING SEQUENCE AND LAYOUT FOR COMPUTING AREA OF REINFORCED CONCRETE DECK SLAB

(SQ. FT. = 9,152)

(2) → DIRECTION OF POUR

PROJECT NO. U-3326B
ROCKINGHAM COUNTY
STATION: 262+51.60 -L-

STATE OF NORTH CAROLINA
DEPARTMENT OF TRANSPORTATION
RALEIGH

STANDARD

SUPERSTRUCTURE BILL OF MATERIAL

NORTH CAROLINA PROFESSIONAL SEAL 16301 ENGINEER TING HSILUNG FANG
10/26/11

ASSEMBLED BY : O.T. NGUYEN	DATE : 3/7/11
CHECKED BY : T.H. FANG	DATE : 4/28/11

DRAWN BY : JMB 5/87	REV. 6/1/94	EEM/GRP
CHECKED BY : SJD 9/87	REV. 8/16/99	RWW/LES
	REV. 5/1/06	TLA/GM

REVISIONS						SHEET NO.
NO.	BY:	DATE:	NO.	BY:	DATE:	S-110
1			3			TOTAL SHEETS
2			4			159

STR. #3

STD. NO. BOM2

NOTES

STIRRUPS IN CAP MAY BE SHIFTED AS NECESSARY TO CLEAR ANCHOR BOLTS.

BACKWALL SHALL BE PLACED BEFORE APPLYING THE EPOXY PROTECTIVE COATING.

THE TOP SURFACE AREAS OF THE END BENT CAPS SHALL BE CURED IN ACCORDANCE WITH THE STANDARD SPECIFICATIONS EXCEPT THE MEMBRANE CURING COMPOUND METHOD SHALL NOT BE USED.

* THE TOP SURFACE OF THE END BENT CAP EXCEPT THE BRIDGE SEAT BUILDUPS SHALL BE SLOPED TRANSVERSELY FROM THE FILL FACE TO THE BACK FACE AT THE RATE OF 2%.

THE CONTRACTOR SHALL PROVIDE FOR INSTALLATION OF THE 4"DIAMETER DRAIN PIPE THROUGH THE WING WALL AS REQUIRED FOR REINFORCED BRIDGE APPROACH FILLS, SEE THE ROADWAY PLANS. REINFORCING STEEL IN THE WING WALL MAY BE SHIFTED AS NECESSARY TO CLEAR THE DRAIN PIPE.

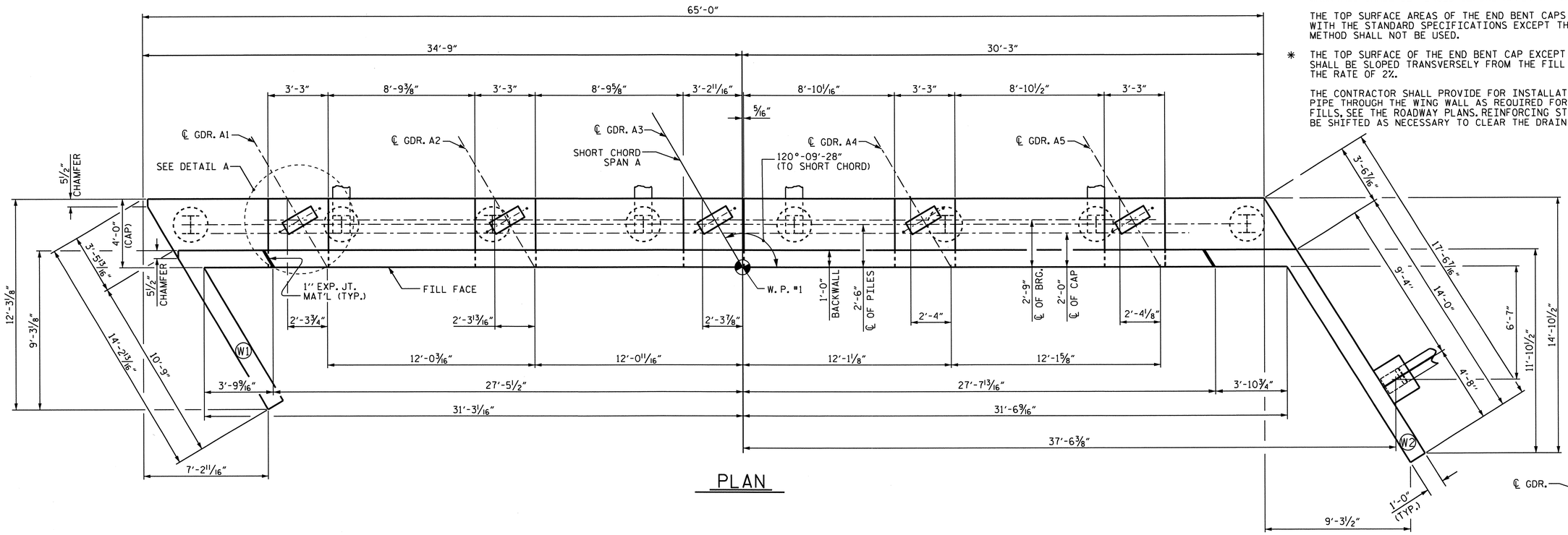

PLAN

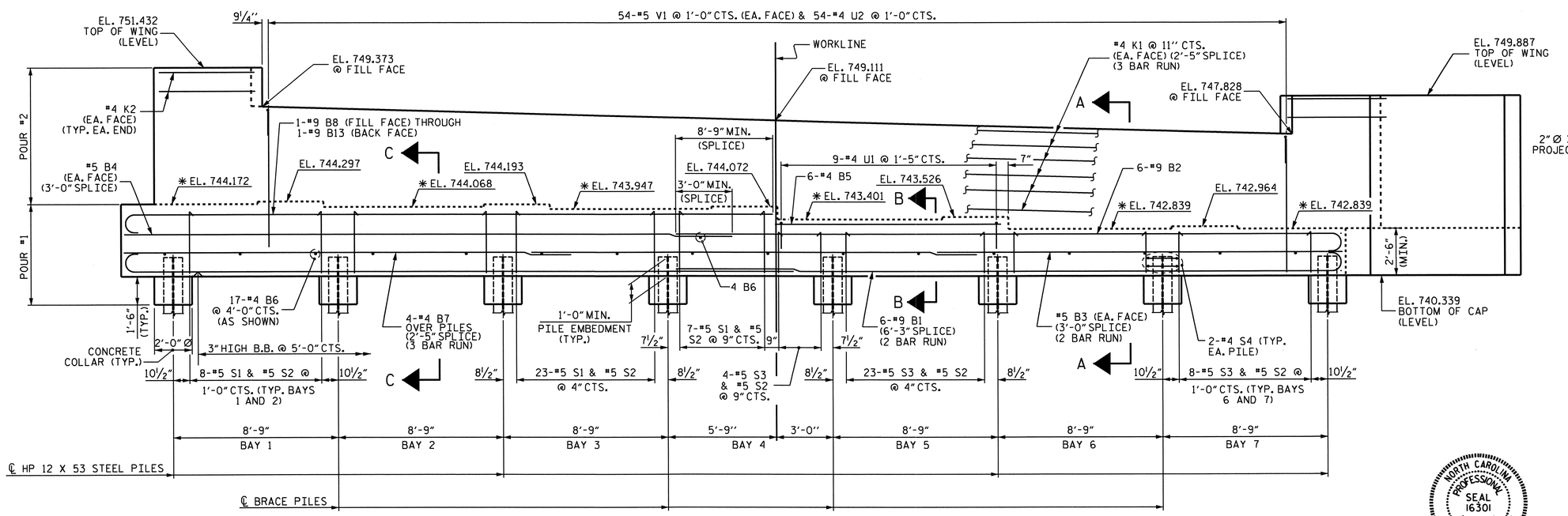

ELEVATION

(LEFT WING NOT SHOWN FOR CLARITY)

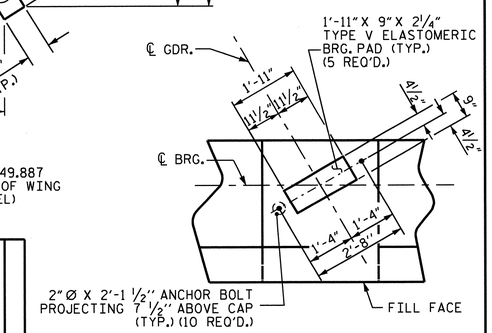

DETAIL A

PROJECT NO. U-3326B

ROCKINGHAM COUNTY

STATION: 262+51.60 -L-

SHEET 1 OF 3

STATE OF NORTH CAROLINA
DEPARTMENT OF TRANSPORTATION
RALEIGH

SUBSTRUCTURE

END BENT 1

NORTH CAROLINA PROFESSIONAL SEAL 16301 ENGINEER TING HSIUNG FANG

10/27/11

REVISIONS						SHEET NO.
NO.	BY:	DATE:	NO.	BY:	DATE:	S-111
1			3			TOTAL SHEETS
2			4			159

DRAWN BY : RAMAN PATEL DATE : 1-18-11
CHECKED BY : A. SORSENGINH DATE : 2/8/11

27-OCT-2011 14:53
K:\TIPProjects-U\U3326B\Structures\str03\FinalPlans\u-3326b_sd_eb*_03.dgn
ttfang

STR. #3

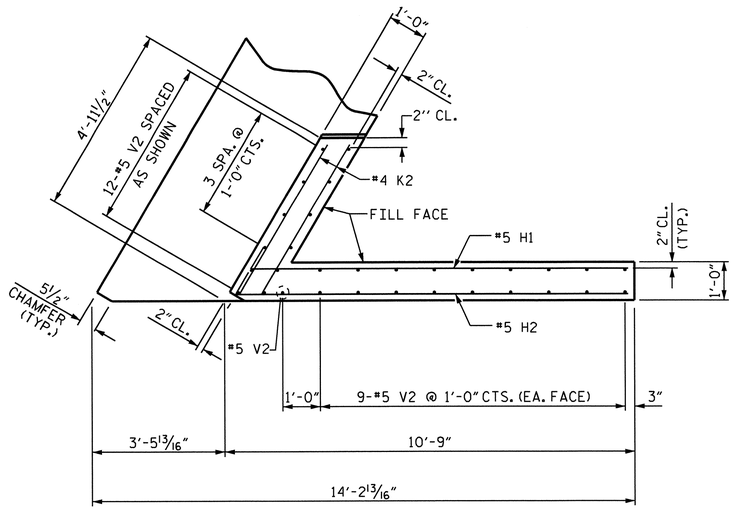

PLAN OF WING (W1)

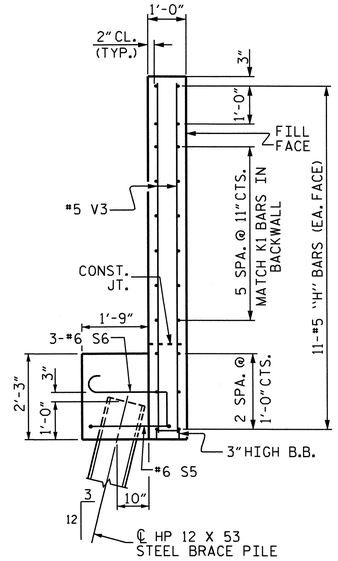

SECTION Y-Y

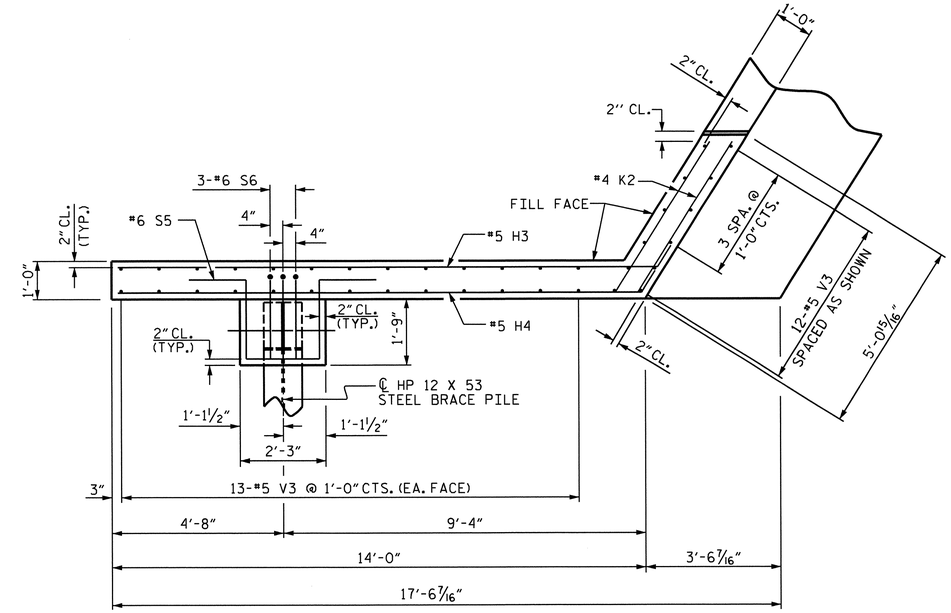

PLAN OF WING (W2)

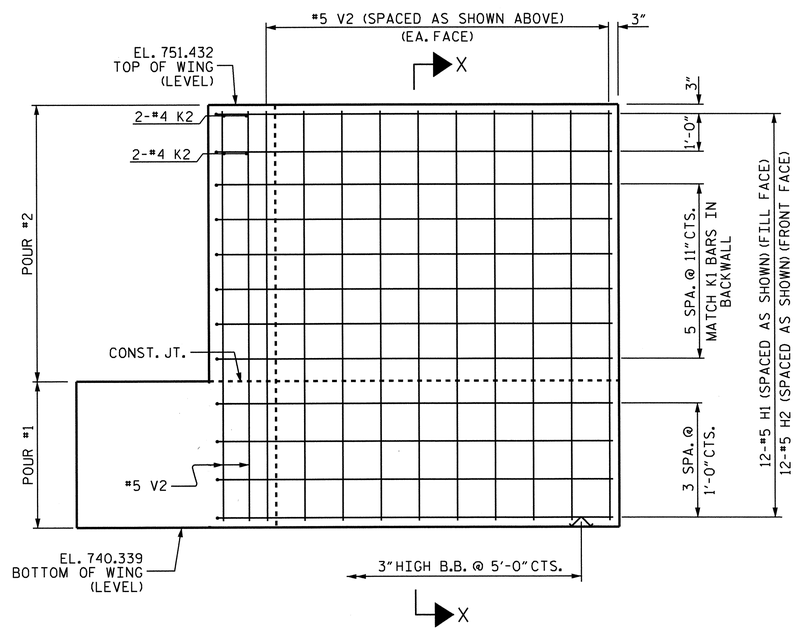

ELEVATION OF WING (W1)

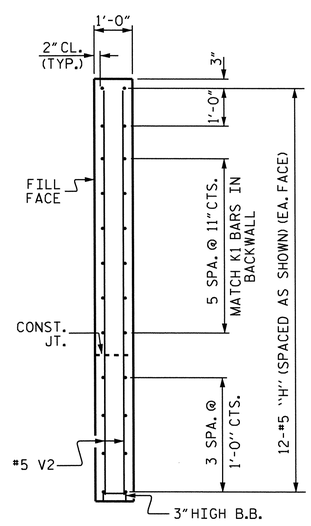

SECTION X-X

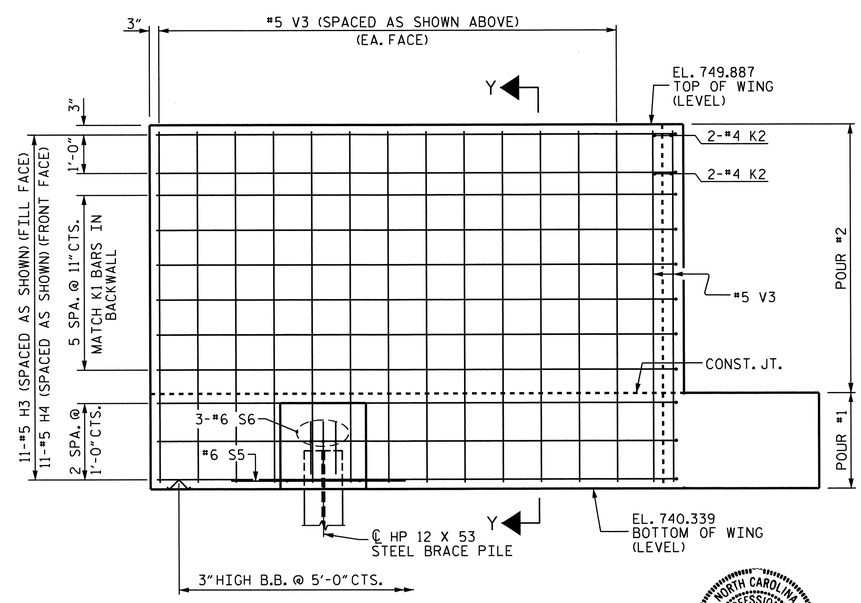

ELEVATION OF WING (W2)

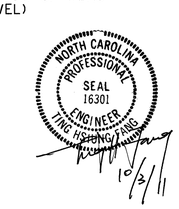

PROJECT NO. U-3326B
ROCKINGHAM COUNTY
STATION: 262+51.60-L-

SHEET 2 OF 3

STATE OF NORTH CAROLINA
DEPARTMENT OF TRANSPORTATION
RALEIGH

SUBSTRUCTURE

END BENT 1

REVISIONS						SHEET NO.
NO.	BY:	DATE:	NO.	BY:	DATE:	S-112
1			3			TOTAL SHEETS
2			4			159

STR. #3

DRAWN BY : RAMAN PATEL DATE : 01-18-11
CHECKED BY : A. SORSENGINH DATE : 2/11

13-SEP-2011 12:34
X:\TIPProjects-U\U3326B\Structures\str03\FinalPlans\u-3326b_sd_eb1.dgn
qtnguyen

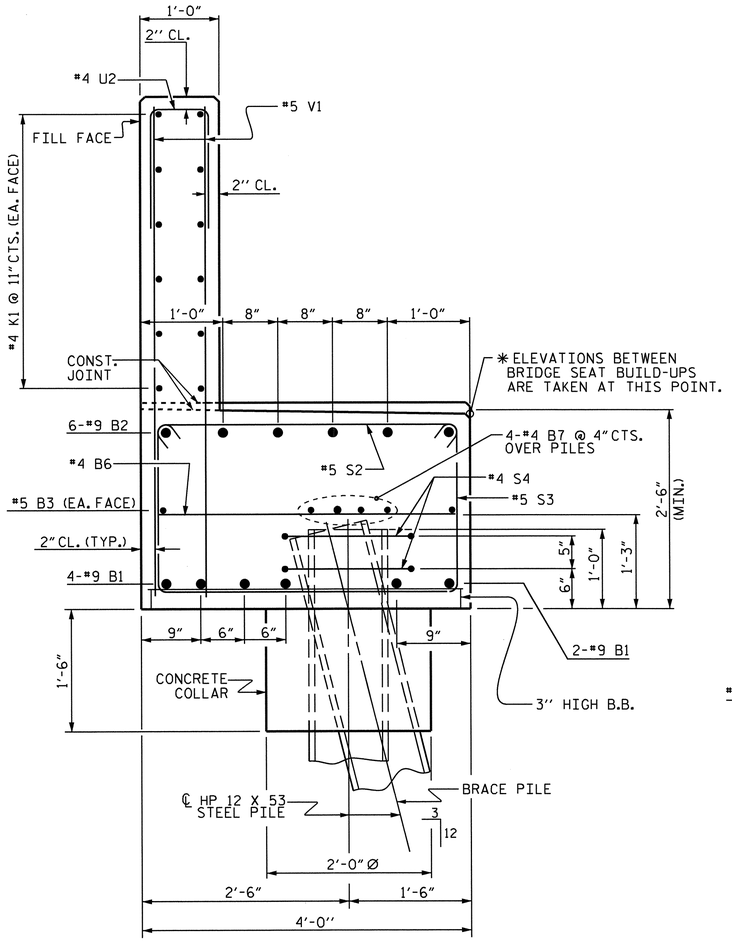

SECTION A-A

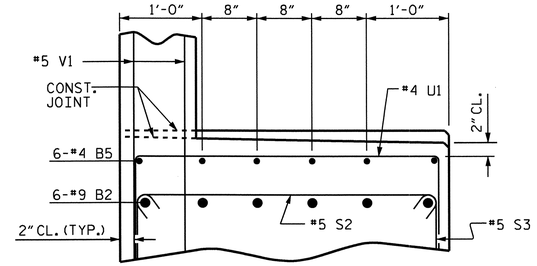

PARTIAL SECTION B-B

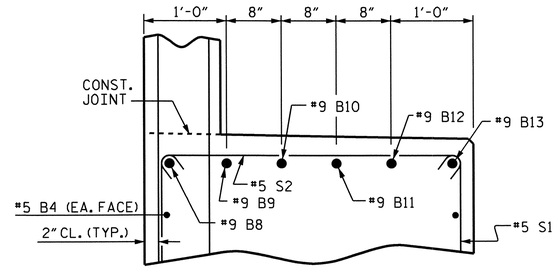

PARTIAL SECTION C-C

BAR TYPES

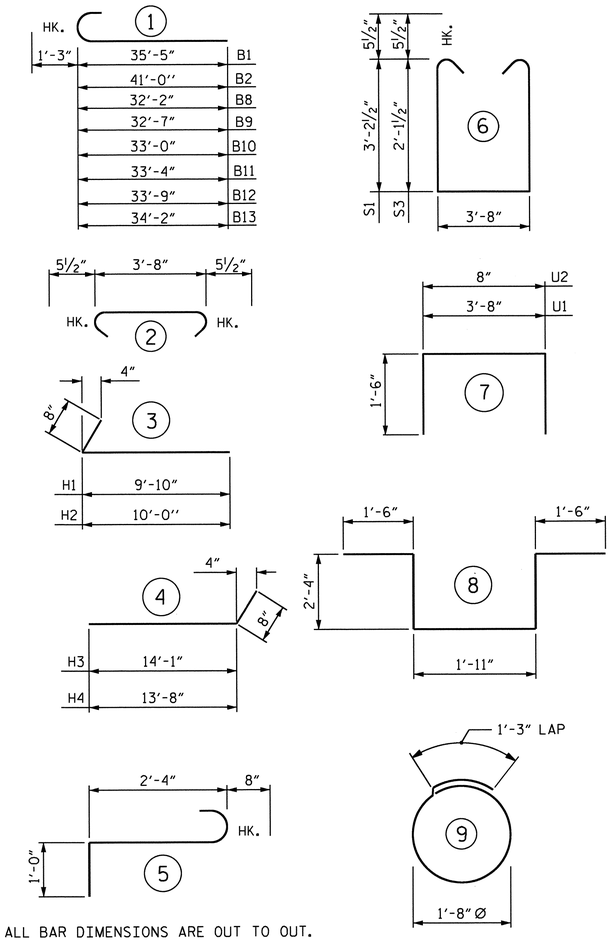

ALL BAR DIMENSIONS ARE OUT TO OUT.

BILL OF MATERIAL

END BENT 1

BAR	NO.	SIZE	TYPE	LENGTH	WEIGHT
B1	12	#9	1	36'-8"	1496
B2	6	#9	1	42'-3"	862
B3	4	#5	STR	33'-10"	141
B4	2	#5	STR	27'-0"	56
B5	6	#4	STR	12-3"	49
B6	17	#4	STR	3'-8"	42
B7	12	#4	STR	23'-2"	186
B8	1	#9	1	33'-5"	114
B9	1	#9	1	33'-10"	115
B10	1	#9	1	34-3"	116
B11	1	#9	1	34'-7"	118
B12	1	#9	1	35'-0"	119
B13	1	#9	1	35'-5"	120
H1	12	#5	3	10'-6"	131
H2	12	#5	3	10'-8"	134
H3	11	#5	4	14'-9"	169
H4	11	#5	4	14'-4"	164
K1	36	#4	STR	23'-2"	557
K2	8	#4	STR	4'-7"	24
S1	46	#5	6	11'-0"	528
S2	89	#5	2	4'-7"	425
S3	43	#5	6	8'-10"	396
S4	16	#4	9	6'-6"	69
S5	1	#6	8	9'-7"	14
S6	3	#6	5	4'-0"	18
U1	9	#4	7	6'-8"	40
U2	54	#4	7	3'-8"	132
V1	108	#5	STR	7'-1"	798
V2	31	#5	STR	10'-9"	348
V3	38	#5	STR	9'-2"	363
REINFORCING STEEL					7,846 LBS.

CLASS A CONCRETE

POUR 1:
CAP, LOWER WINGS, & COLLARS 35.6 C.Y.

POUR 2:
BACKWALL & UPPER WINGS 19.5 C.Y.
TOTAL 55.1 C.Y.

HP 12 x 53 STEEL PILES
No. 9 355 LIN. FT.

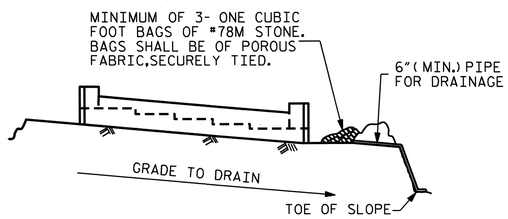

BAGGED STONE AND PIPE SHALL BE PLACED IMMEDIATELY AFTER COMPLETION OF END BENT EXCAVATION. PIPE MAY BE EITHER CONCRETE, CORRUGATED STEEL, CORRUGATED ALUMINUM ALLOY, OR CORRUGATED PLASTIC. PERFORATED PIPE WILL NOT BE ALLOWED.

BAGGED STONE SHALL REMAIN IN PLACE UNTIL THE ENGINEER DIRECTS THAT IT BE REMOVED. THE CONTRACTOR SHALL REMOVE AND DISPOSE OF SILT ACCUMULATIONS AT BAGGED STONE WHEN SO DIRECTED BY THE ENGINEER. BAGS SHALL BE REMOVED AND REPLACED WHENEVER THE ENGINEER DETERMINES THAT THEY HAVE DETERIORATED AND LOST THEIR EFFECTIVENESS.

NO SEPARATE PAYMENT WILL BE MADE FOR THIS WORK AND THE ENTIRE COST OF THIS WORK SHALL BE INCLUDED IN THE UNIT CONTRACT PRICE BID FOR THE SEVERAL PAY ITEMS.

TEMPORARY DRAINAGE AT END BENT

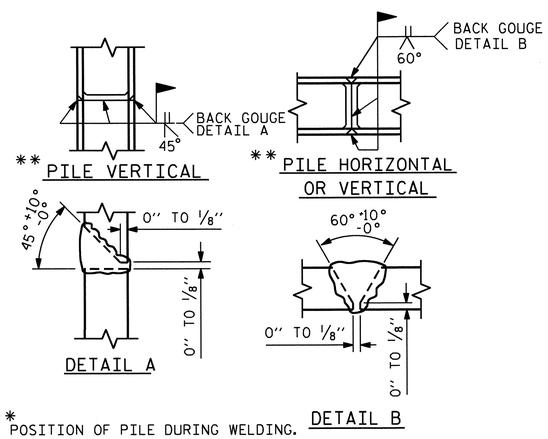

** POSITION OF PILE DURING WELDING.

PILE SPLICE DETAILS

PROJECT NO. U-3326B
ROCKINGHAM COUNTY
STATION: 262+51.60-L-

SHEET 3 OF 3

STATE OF NORTH CAROLINA
DEPARTMENT OF TRANSPORTATION
RALEIGH

SUBSTRUCTURE

END BENT 1

NORTH CAROLINA PROFESSIONAL SEAL 16301 ENGINEER H. SHANG-TING FANG
10/27/11

REVISIONS						SHEET NO.
NO.	BY:	DATE:	NO.	BY:	DATE:	S-113
1			3			TOTAL SHEETS
2			4			159

DRAWN BY : RAMAN PATEL DATE : 01-18-11
CHECKED BY : A. SORSENGINH DATE : 2/11

27-OCT-2011 14:39
K:\TIPProjects-U\U3326B\Structures\str03\FinalPlans\u-3326b_sd_eb*_03.dgn
ttfang

STR. #3

NOTES:

STIRRUPS AND U1 BARS IN CAP MAY BE SHIFTED AS NECESSARY TO CLEAR ANCHOR BOLTS.

THE CONTRACTOR SHALL ALIGN THE "V" & "M" BARS AS SHOWN IN THE PLAN OF COLUMNS. HOOKS ON "V" BARS MAY BE TURNED AS NECESSARY FOR PLACING REINFORCING STEEL.

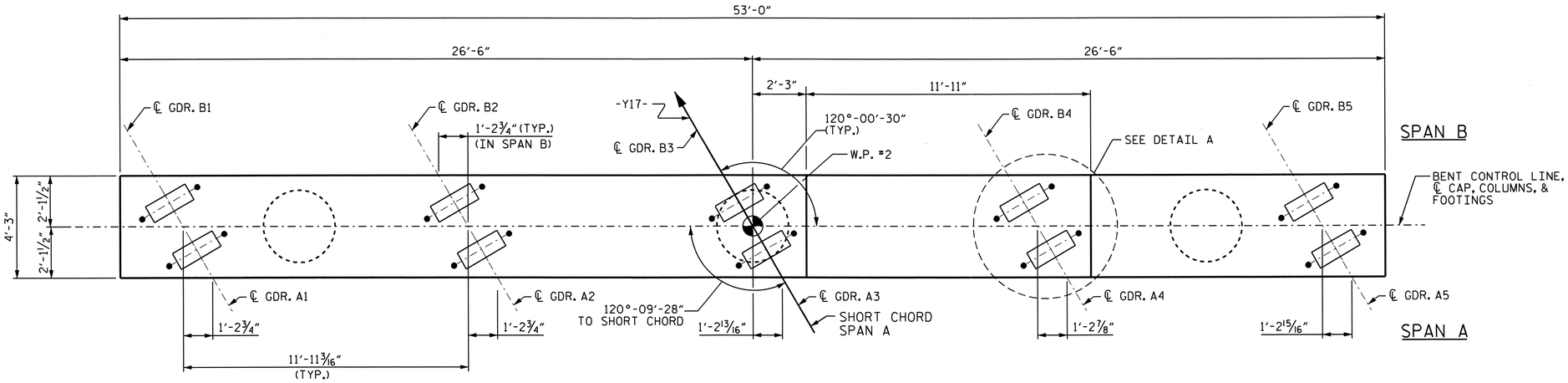

PLAN

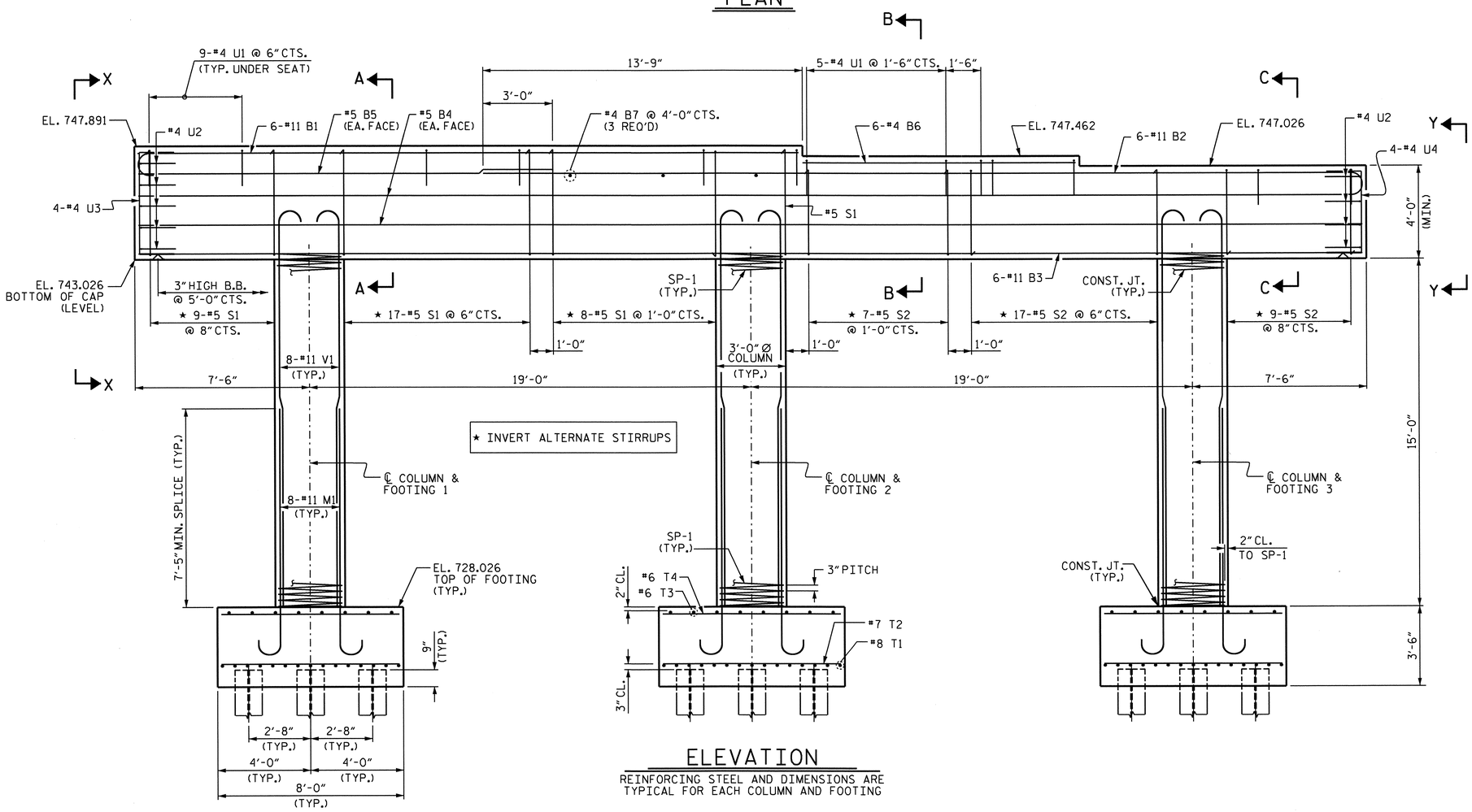

ELEVATION

REINFORCING STEEL AND DIMENSIONS ARE TYPICAL FOR EACH COLUMN AND FOOTING

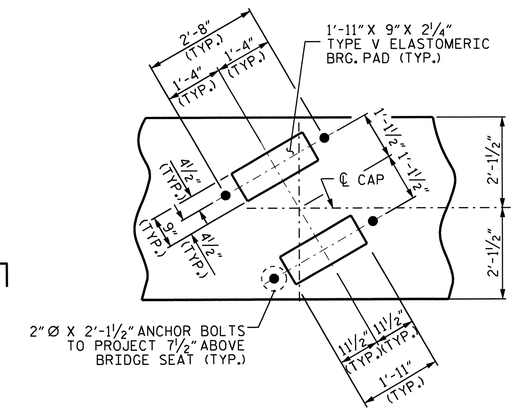

DETAIL A

(TYP. EA. GDR.)

PROJECT NO. U-3326B

ROCKINGHAM COUNTY

STATION: 262+51.60 -L-

SHEET 1 OF 2

STATE OF NORTH CAROLINA
DEPARTMENT OF TRANSPORTATION
RALEIGH

SUBSTRUCTURE

BENT 1

NORTH CAROLINA PROFESSIONAL SEAL 16301 ENGINEER TING-HSIUNG FANG

10/26/11

REVISIONS						SHEET NO.
NO.	BY:	DATE:	NO.	BY:	DATE:	S-114
1			3			TOTAL SHEETS
2			4			159

STR. #3 NC005

DRAWN BY : D.R. WITHROW DATE : 1/27/11
CHECKED BY : A. SORSENGINH DATE : 2/11

26-OCT-2011 17:34
K:\TIPProjects-U\U3326B\Structures\str03\FinalPlans\u-3326b_sd_b*_03.dgn
tfang

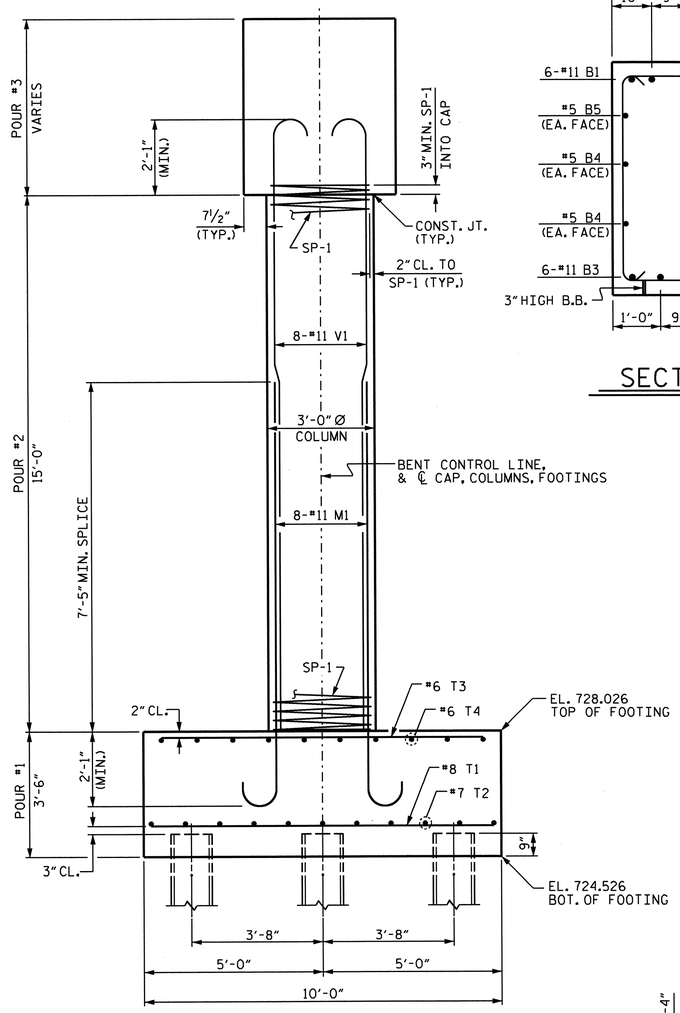

END ELEVATION

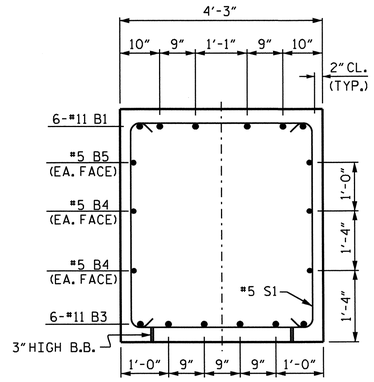

SECTION A-A

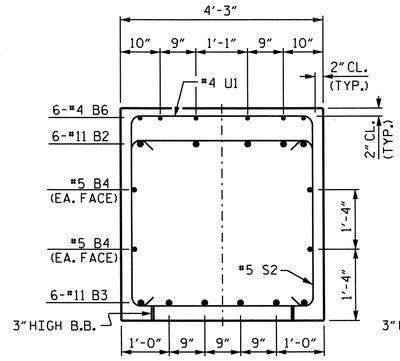

SECTION B-B

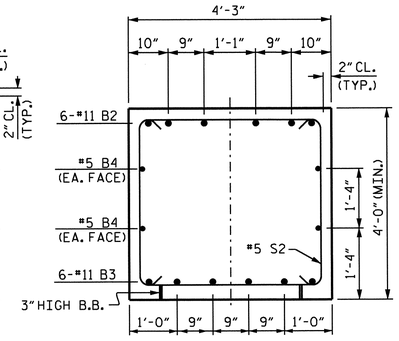

SECTION C-C

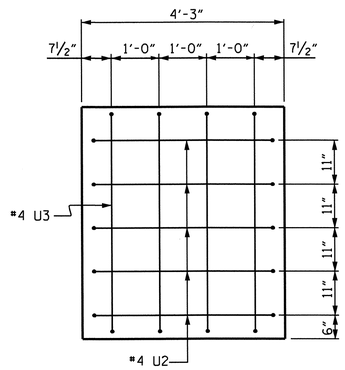

VIEW X-X

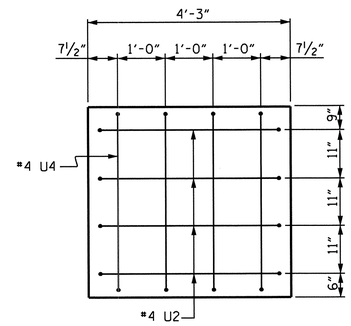

VIEW Y-Y

BAR TYPES

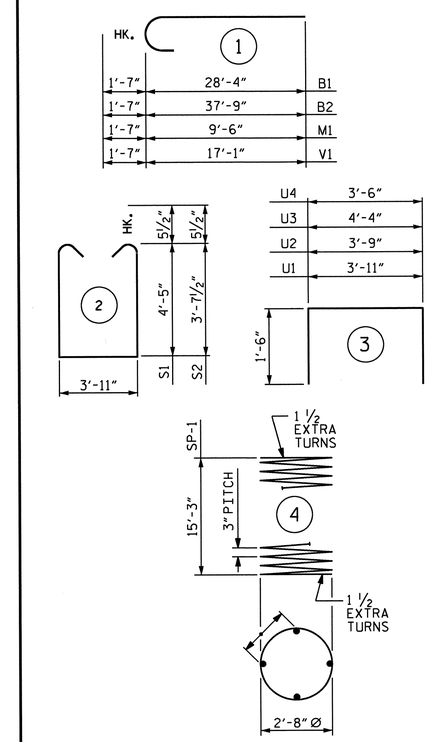

ALL BAR DIMENSIONS ARE OUT TO OUT.

BILL OF MATERIAL

BENT 1

BAR	NO.	SIZE	TYPE	LENGTH	WEIGHT
B1	6	#11	1	29'-11"	954
B2	6	#11	1	39'-4"	1254
B3	6	#11	STR	52'-8"	1679
B4	4	#5	STR	52'-8"	220
B5	2	#5	STR	17'-10"	37
B6	6	#4	STR	11'-9"	47
B7	3	#4	STR	3'-11"	8
M1	24	#11	1	11'-1"	1413
S1	35	#5	2	13'-8"	498
S2	33	#5	2	12'-1"	416
T1	45	#8	STR	9'-6"	1141
T2	33	#7	STR	7'-6"	506
T3	24	#6	STR	9'-6"	342
T4	30	#6	STR	7'-6"	338
U1	50	#4	3	6'-11"	231
U2	9	#4	3	6'-9"	41
U3	4	#4	3	7'-4"	20
U4	4	#4	3	6'-6"	17
V1	24	#11	1	18'-8"	2380
REINFORCING STEEL =					11542 LBS
SP-1	3	✱✱	4	527'-0"	1056

SPIRAL COLUMN REINFORCING STEEL = 1056 LBS

CLASS A CONCRETE (C.Y.)

POUR #1 (FOOTINGS) =	C.Y.	31.1
POUR #2 (COLUMNS) =	C.Y.	11.8
POUR #3 (CAP) =	C.Y.	38.1
TOTAL CLASS A CONCRETE	C.Y.	81.0

HP 14 X 73 STEEL PILES
No. 15 LIN. FT. 600

✱✱ THE SP-1 SPIRAL REINFORCING STEEL SHALL BE W-20 OR D-20 COLD DRAWN WIRE OR #4 PLAIN OR DEFORMED BAR.

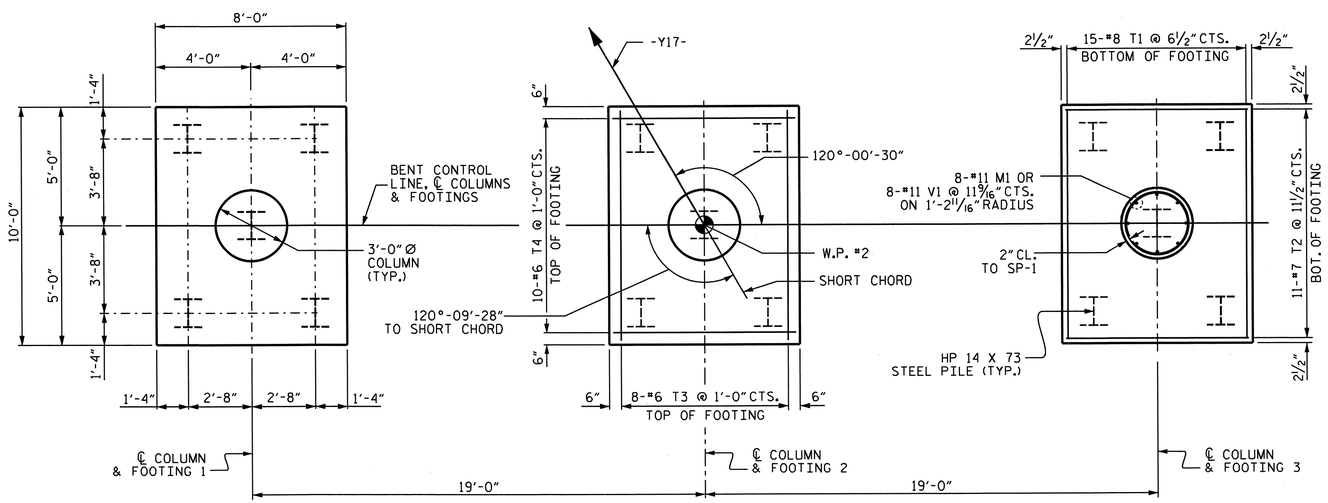

PLAN OF FOOTINGS

REINFORCING STEEL AND DIMENSIONS ARE TYPICAL FOR EACH COLUMN AND FOOTING

NORTH CAROLINA PROFESSIONAL SEAL 16301 ENGINEER HSING-FANG TING
10/27/11

PROJECT NO. U-3326B
ROCKINGHAM COUNTY
STATION: 262+51.60 -L-

SHEET 2 OF 2

STATE OF NORTH CAROLINA
DEPARTMENT OF TRANSPORTATION
RALEIGH

SUBSTRUCTURE

BENT 1

REVISIONS						SHEET NO.
NO.	BY:	DATE:	NO.	BY:	DATE:	S-115
1			3			TOTAL SHEETS
2			4			159

STR. #3

DRAWN BY : D.R. WITHROW DATE : 1/27/11
CHECKED BY : A. SORSENGINH DATE : 2/11

27-OCT-2011 10:34
K:\TIPProjects-U\U3326B\Structures\str03\FinalPlans\u-3326b_sd_b*_03.dgn
tfang

NOTES

STIRRUPS IN CAP MAY BE SHIFTED AS NECESSARY TO CLEAR ANCHOR BOLTS.

BACKWALL SHALL BE PLACED BEFORE APPLYING THE EPOXY PROTECTIVE COATING.

THE TOP SURFACE AREAS OF THE END BENT CAPS SHALL BE CURED IN ACCORDANCE WITH THE STANDARD SPECIFICATIONS EXCEPT THE MEMBRANE CURING COMPOUND METHOD SHALL NOT BE USED.

* THE TOP SURFACE OF THE END BENT CAP EXCEPT THE BRIDGE SEAT BUILDUPS SHALL BE SLOPED TRANSVERSELY FROM THE FILL FACE TO THE BACK FACE AT THE RATE OF 2%.

THE CONTRACTOR SHALL PROVIDE FOR INSTALLATION OF THE 4" DIAMETER DRAIN PIPE THROUGH THE WING WALL AS REQUIRED FOR REINFORCED BRIDGE APPROACH FILLS. SEE THE ROADWAY PLANS. REINFORCING STEEL IN THE WING WALL MAY BE SHIFTED AS NECESSARY TO CLEAR THE DRAIN PIPE.

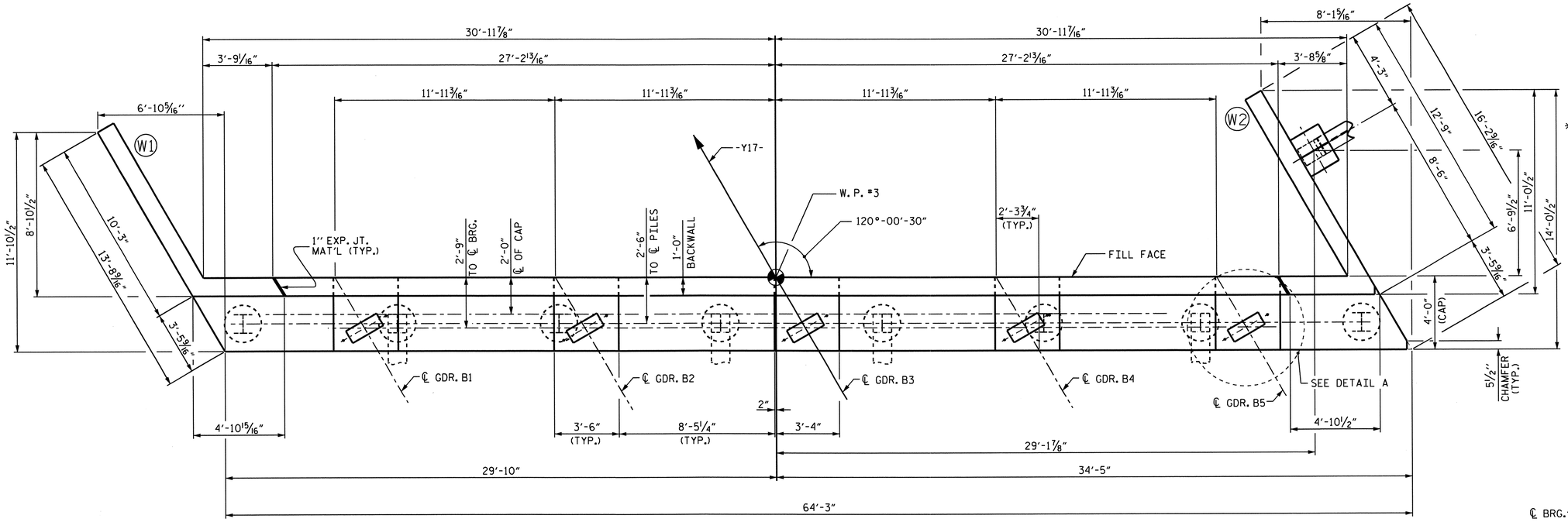

PLAN

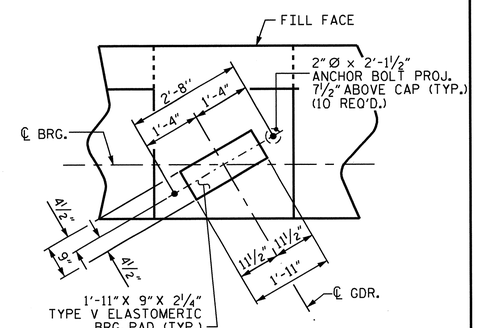

DETAIL A

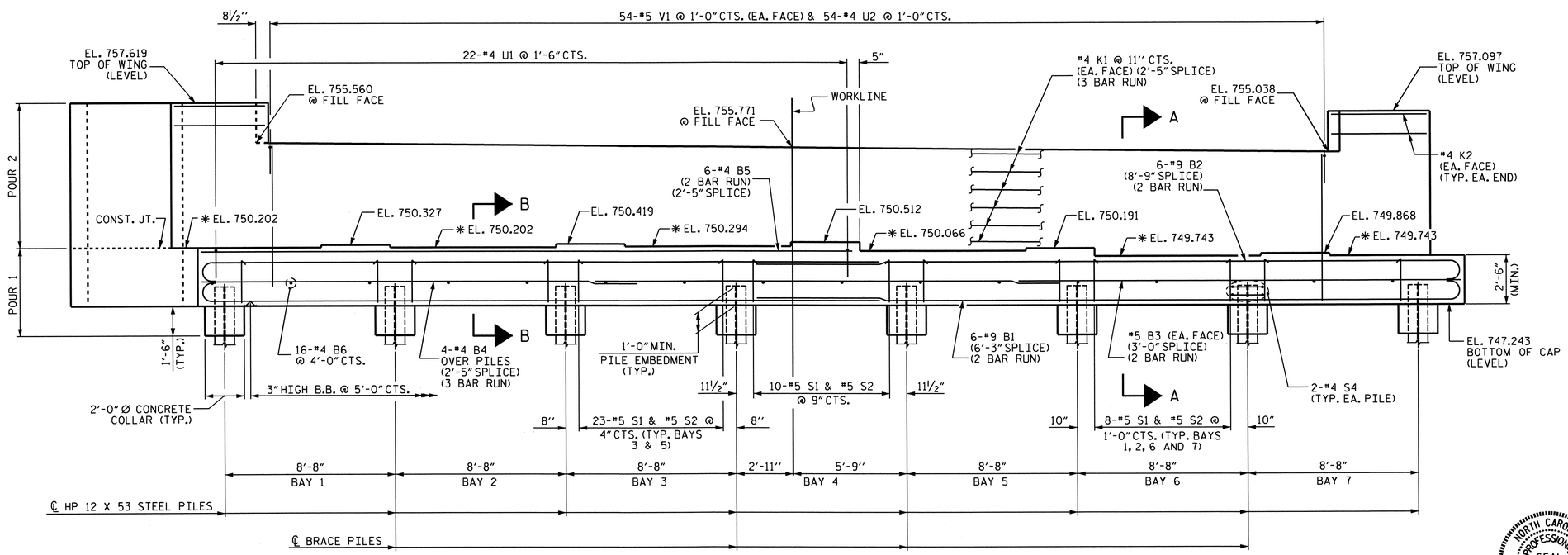

ELEVATION

(RIGHT WING NOT SHOWN FOR CLARITY)

PROJECT NO. U-3326B
ROCKINGHAM COUNTY
STATION: 262+51.60 -L-

SHEET 1 OF 3

STATE OF NORTH CAROLINA
DEPARTMENT OF TRANSPORTATION
RALEIGH

SUBSTRUCTURE

END BENT 2

NORTH CAROLINA PROFESSIONAL SEAL 16301 ENGINEER TING HSIUNG FANG
1/27/11

REVISIONS						SHEET NO.
NO.	BY:	DATE:	NO.	BY:	DATE:	S-116
1			3			TOTAL SHEETS
2			4			S-159

DRAWN BY : RAMAN PATEL DATE : 1-18-11
CHECKED BY : A. SORSENGINH DATE : 2/8/11

27-OCT-2011 12:03
K:\TIPProjects-U\U3326B\Structures\str03\FinalPlans\u-3326b_sd_eb*_03.dgn
tfang

STR. #3

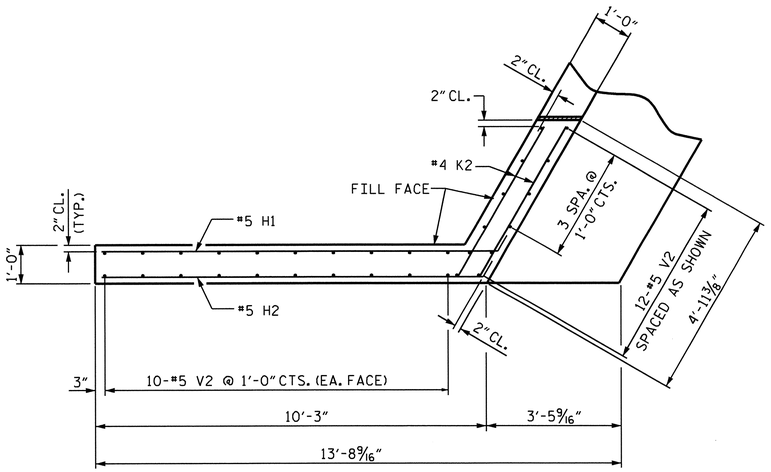

PLAN OF WING (W1)

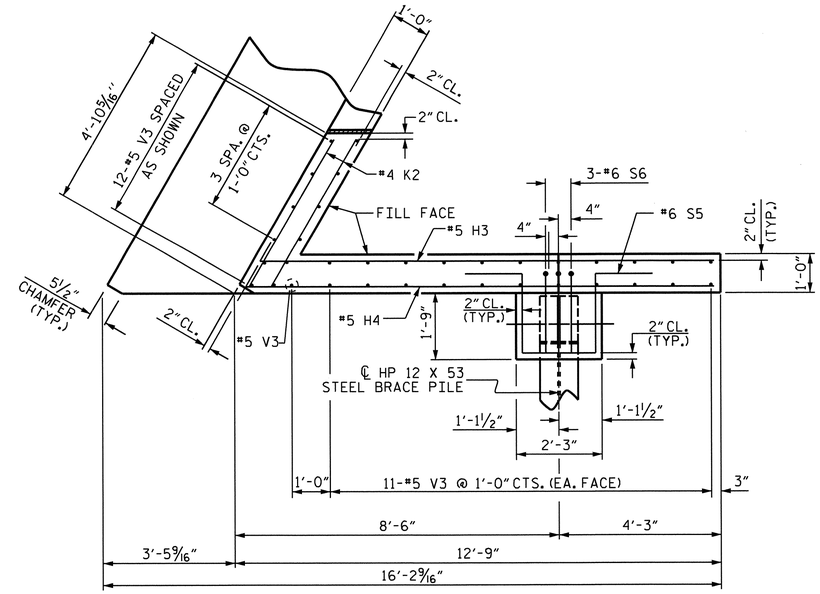

PLAN OF WING (W2)

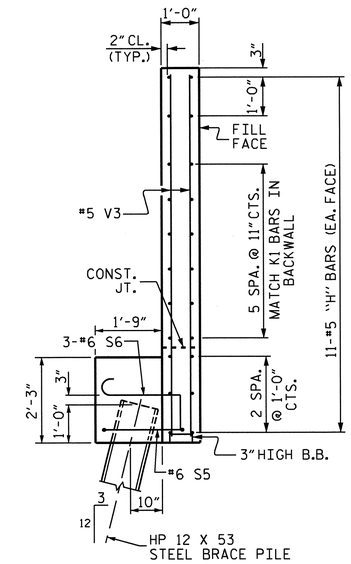

SECTION Y-Y

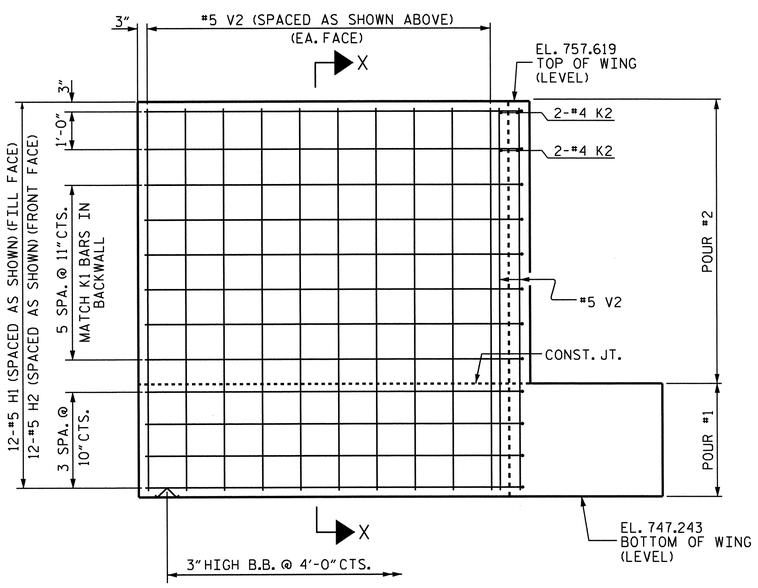

ELEVATION OF WING (W1)

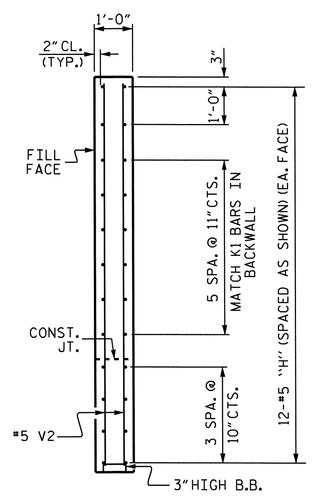

SECTION X-X

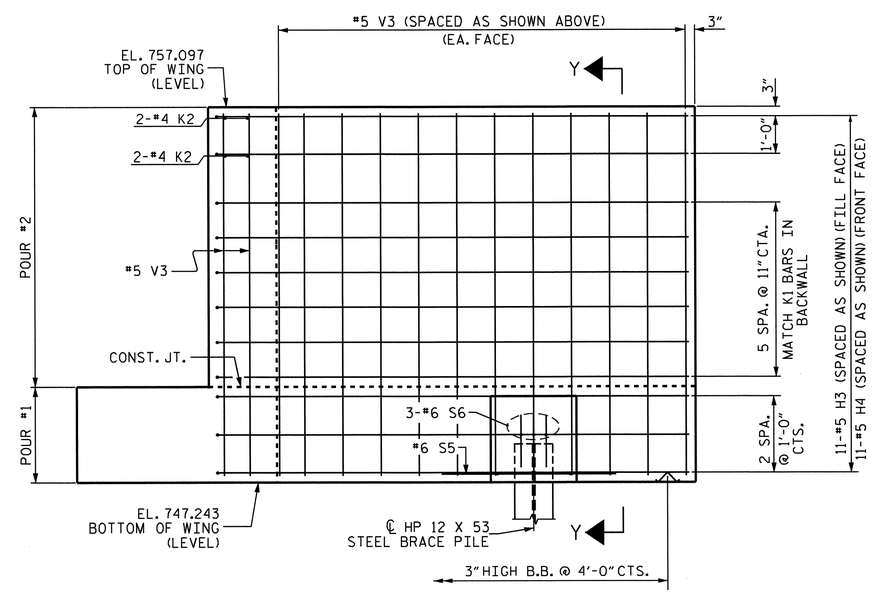

ELEVATION OF WING (W2)

PROJECT NO. U-3326B
ROCKINGHAM COUNTY
STATION: 262+51.60-L-

SHEET 2 OF 3

STATE OF NORTH CAROLINA
DEPARTMENT OF TRANSPORTATION
RALEIGH

SUBSTRUCTURE

END BENT 2

NORTH CAROLINA PROFESSIONAL SEAL 16301 ENGINEER TING-HSUNG FANG
10/3/11

REVISIONS						SHEET NO.
NO.	BY:	DATE:	NO.	BY:	DATE:	S-117
1			3			TOTAL SHEETS
2			4			159

DRAWN BY : RAMAN PATEL DATE : 01-18-11
CHECKED BY : A. SORSENGINH DATE : 2/11

13-SEP-2011 12:34
X:\TIPProjects-U\U3326B\Structures\str03\FinalPlans\u-3326b_sd_ebl.dgn
qtnguyen

STR. #3

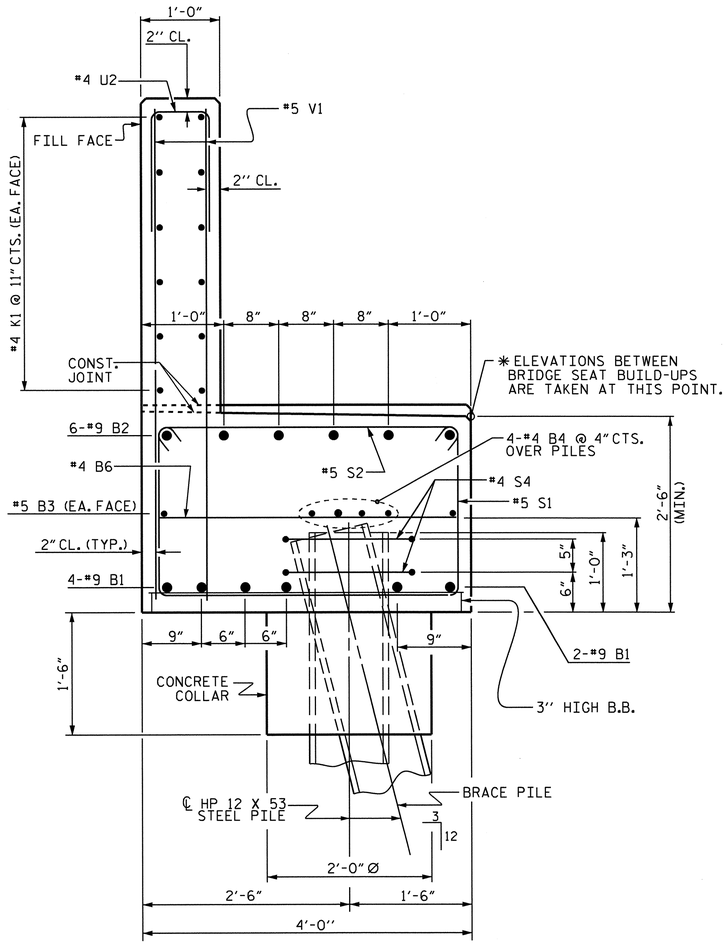

SECTION A-A

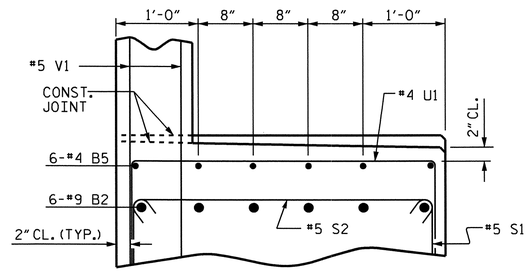

PARTIAL SECTION B-B

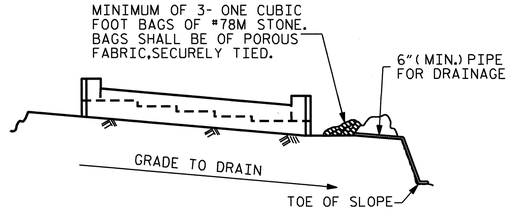

BAGGED STONE AND PIPE SHALL BE PLACED IMMEDIATELY AFTER COMPLETION OF END BENT EXCAVATION. PIPE MAY BE EITHER CONCRETE, CORRUGATED STEEL, CORRUGATED ALUMINUM ALLOY, OR CORRUGATED PLASTIC. PERFORATED PIPE WILL NOT BE ALLOWED.

BAGGED STONE SHALL REMAIN IN PLACE UNTIL THE ENGINEER DIRECTS THAT IT BE REMOVED. THE CONTRACTOR SHALL REMOVE AND DISPOSE OF SILT ACCUMULATIONS AT BAGGED STONE WHEN SO DIRECTED BY THE ENGINEER. BAGS SHALL BE REMOVED AND REPLACED WHENEVER THE ENGINEER DETERMINES THAT THEY HAVE DETERIORATED AND LOST THEIR EFFECTIVENESS.

NO SEPARATE PAYMENT WILL BE MADE FOR THIS WORK AND THE ENTIRE COST OF THIS WORK SHALL BE INCLUDED IN THE UNIT CONTRACT PRICE BID FOR THE SEVERAL PAY ITEMS.

TEMPORARY DRAINAGE AT END BENT

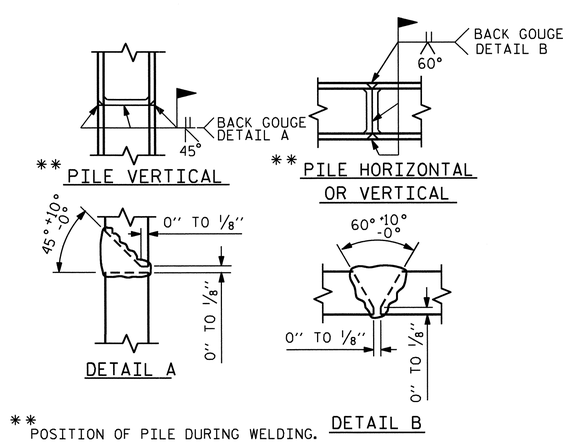

** POSITION OF PILE DURING WELDING.

PILE SPLICE DETAILS

BAR TYPES

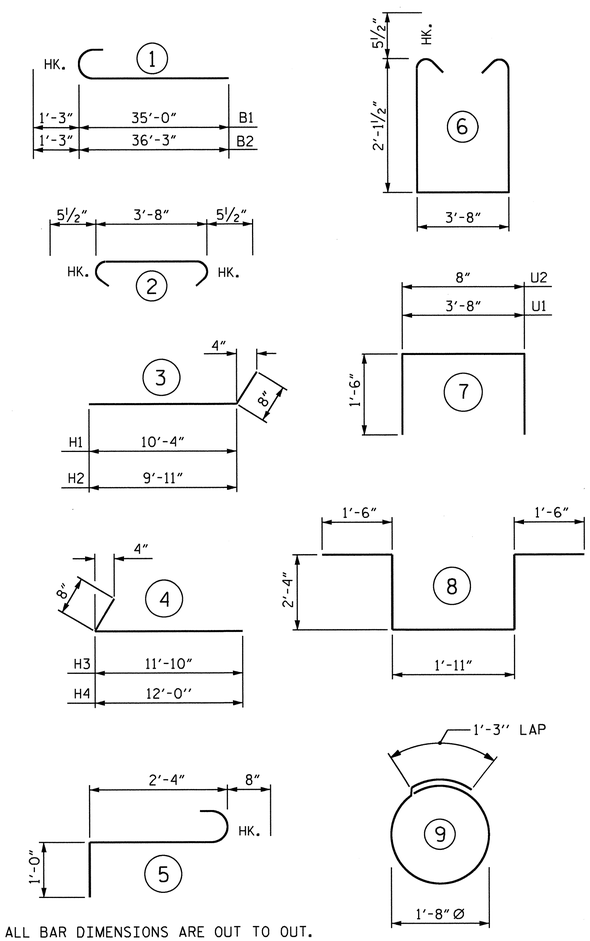

ALL BAR DIMENSIONS ARE OUT TO OUT.

BILL OF MATERIAL

END BENT 2

BAR	NO.	SIZE	TYPE	LENGTH	WEIGHT
B1	12	#9	1	36'-3"	1479
B2	12	#9	1	37'-6"	1530
B3	4	#5	STR	33'-6"	140
B4	12	#4	STR	22'-11"	184
B5	12	#4	STR	18'-8"	150
B6	16	#4	STR	3'-8"	39
H1	12	#5	3	11'-0"	138
H2	12	#5	3	10'-7"	132
H3	11	#5	4	12'-6"	143
H4	11	#5	4	12'-8"	145
K1	36	#4	STR	22'-11"	551
K2	8	#4	STR	4'-6"	24
S1	88	#5	6	8'-10"	811
S2	88	#5	2	4'-7"	421
S4	16	#4	9	6'-6"	69
S5	1	#6	8	9'-1"	14
S6	3	#6	5	3'-9"	18
U1	22	#4	7	6'-8"	98
U2	54	#4	7	3'-8"	132
V1	108	#5	STR	7'-5"	835
V2	32	#5	STR	10'-0"	334
V3	35	#5	STR	9'-6"	347
REINFORCING STEEL					7734 LBS.

CLASS A CONCRETE

POUR 1:
CAP, LOWER WINGS, & COLLARS 31.7 C.Y.

POUR 2:
BACKWALL & UPPER WINGS 19.4 C.Y.

TOTAL 51.1 C.Y.

HP 12 x 53 STEEL PILES
No. 9 420 LIN. FT.

PROJECT NO. U-3326B
ROCKINGHAM COUNTY
STATION: 262+51.60-L-

SHEET 3 OF 3

STATE OF NORTH CAROLINA
DEPARTMENT OF TRANSPORTATION
RALEIGH

SUBSTRUCTURE

END BENT 2

NORTH CAROLINA PROFESSIONAL SEAL 16301 ENGINEER T.M.C. HSIEH/T.J. WU
10/27/11

REVISIONS							SHEET NO.
NO.	BY:	DATE:	NO.	BY:	DATE:		S-118
1			3				TOTAL SHEETS
2			4				159

DRAWN BY : RAMAN PATEL DATE : 01-18-11
CHECKED BY : A. SORSENGINH DATE : 2/11

27-OCT-2011 11:16
K:\TIPProjects-U\U3326B\Structures\str03\FinalPlans\u-3326b_sd_eb*_03.dgn
ttfang

STR. #3

NOTES

SLOPE PROTECTION SHALL BE PLACED UNDER THE ENDS OF THE BRIDGE AS SHOWN IN THE DETAILS. STRAIGHT EDGING WILL NOT BE REQUIRED UNLESS, IN THE OPINION OF THE ENGINEER, VISUAL INSPECTION INDICATES A NEED FOR IT. MEASUREMENT AND PAYMENT SHALL BE AS PRESCRIBED IN SECTION 462 OF THE STANDARD SPECIFICATIONS.

SLOPE PROTECTION SHALL CONSIST OF 4" POURED-IN-PLACE CONCRETE PAVING AS SHOWN IN THE DETAILS ON THIS SHEET. CONCRETE SHALL BE CLASS "B". THE CONCRETE SURFACE SHALL BE FLOATED WITH A WOODEN FLOAT AND FINISHED. WELDED WIRE FABRIC REINFORCING SHALL BE 6 X 6 - W1.4 X W1.4, 60" WIDE. SLOPE PROTECTION SHALL BE POURED IN 5' STRIPS AS SHOWN IN THE "POURING DETAIL" WITH 2'-0" LONG #4 BARS PLACED ALONG THE SLOPE BETWEEN STRIPS AT 1'-6" MAXIMUM SPACING. SLOPE PROTECTION MAY BE POURED IN ALTERNATE 4' AND 5' STRIPS AS SHOWN IN THE "OPTIONAL POURING DETAIL" WITH ADJACENT RUNS OF WELDED WIRE FABRIC LAPPING AT LEAST 6". THE COST OF THE WELDED WIRE FABRIC AND #4 BARS, IF USED, SHALL BE INCLUDED IN THE CONTRACT UNIT PRICE BID PER SQUARE YARD FOR SLOPE PROTECTION.

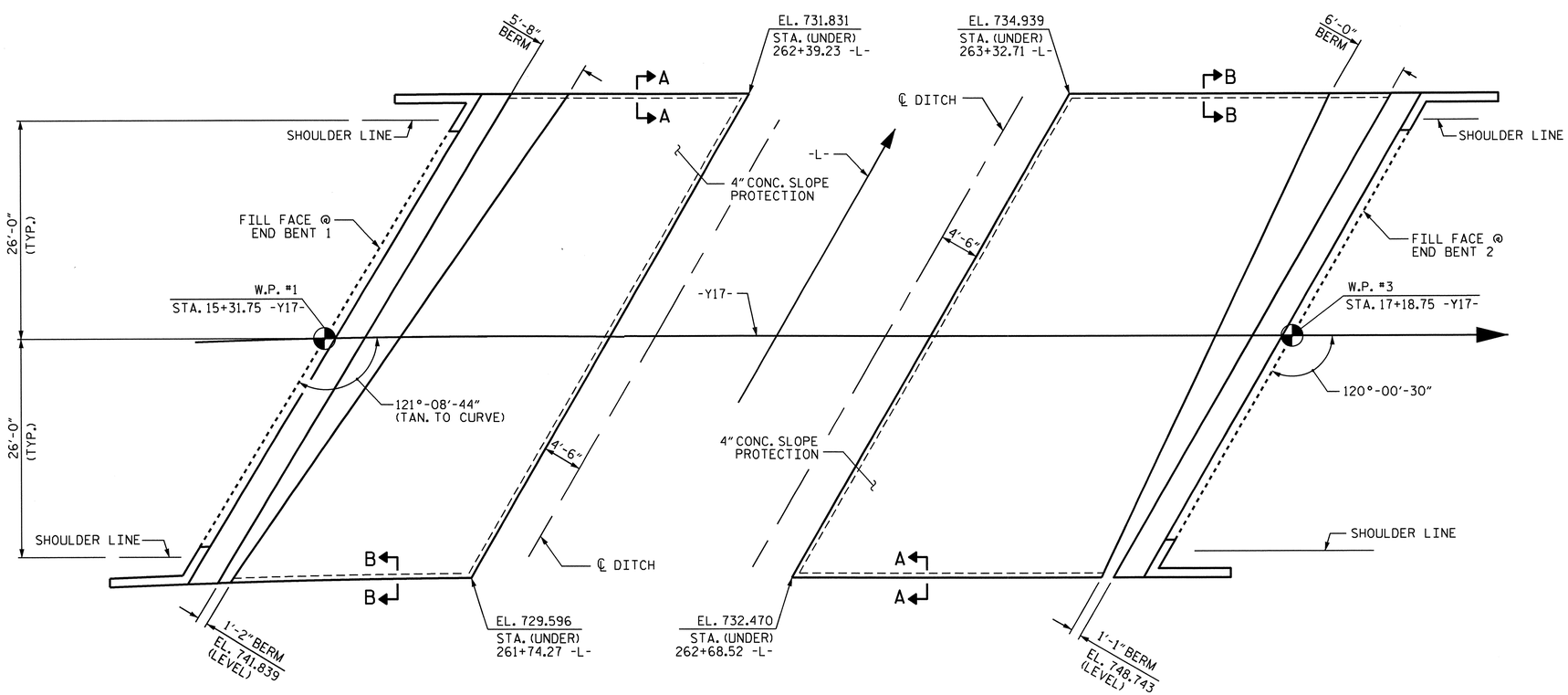

AT END BENT 1

AT END BENT 2

PLAN

BRIDGE @ STA. 262+51.60 -L-	4" INCH SLOPE PROTECTION	* WELDED WIRE FABRIC 60 INCHES WIDE
	SQUARE YARDS	APPROX. L.F.
END BENT 1	205	410
END BENT 2	265	525

* QUANTITY SHOWN IS BASED ON 5' POURS.

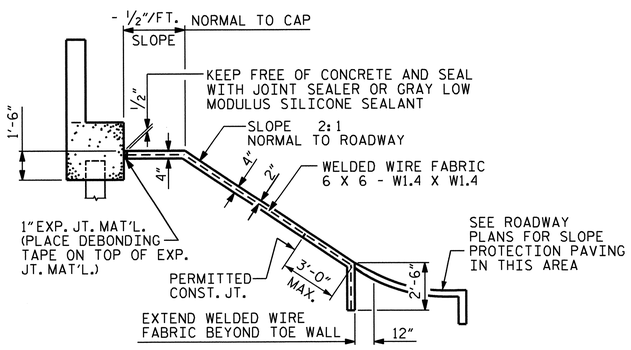

SECTION ALONG ℄ ROADWAY WHEN FILL CATCHES IN DITCH

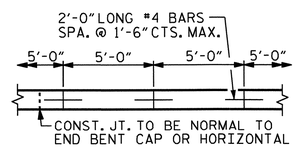

STRIP WIDTHS MAY VARY IN CURVED PORTION.

POURING DETAIL

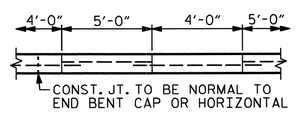

POUR A 4'-0" STRIP FIRST. STRIP WIDTHS MAY VARY IN CURVED PORTION.

OPTIONAL POURING DETAIL

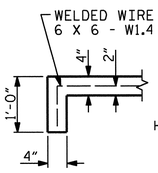

SECTION A-A

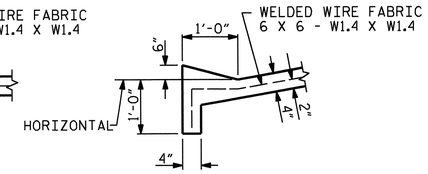

SECTION B-B

NORTH CAROLINA PROFESSIONAL SEAL 16301 ENGINEER TING HSIUNG FANG

10/3/11

PROJECT NO. U-3326B

ROCKINGHAM COUNTY

STATION: 262+51.60 -L-

STATE OF NORTH CAROLINA
DEPARTMENT OF TRANSPORTATION
RALEIGH

STANDARD

SLOPE PROTECTION DETAILS

ASSEMBLED BY : S. M. RASHIDI	DATE : 7-6-09
CHECKED BY : A. S. CALLAWAY	DATE : 7-9-09

DRAWN BY : ELR 5/92	REV. 7/10/01	LES/RDR
CHECKED BY : GRP 6/92	REV. 5/7/03	RWW/JTE
	REV. 5/1/06	TLA/GM

REVISIONS						SHEET NO.
NO.	BY:	DATE:	NO.	BY:	DATE:	S-119
1			3			TOTAL SHEETS
2			4			159

13-SEP-2011 12:34
X:\TIPProjects-U\U3326B\Structures\str03\FinalPlans\u3326b_sd_sp_03.dgn
qtnguyen

STR. #3

STD. NO. SP1

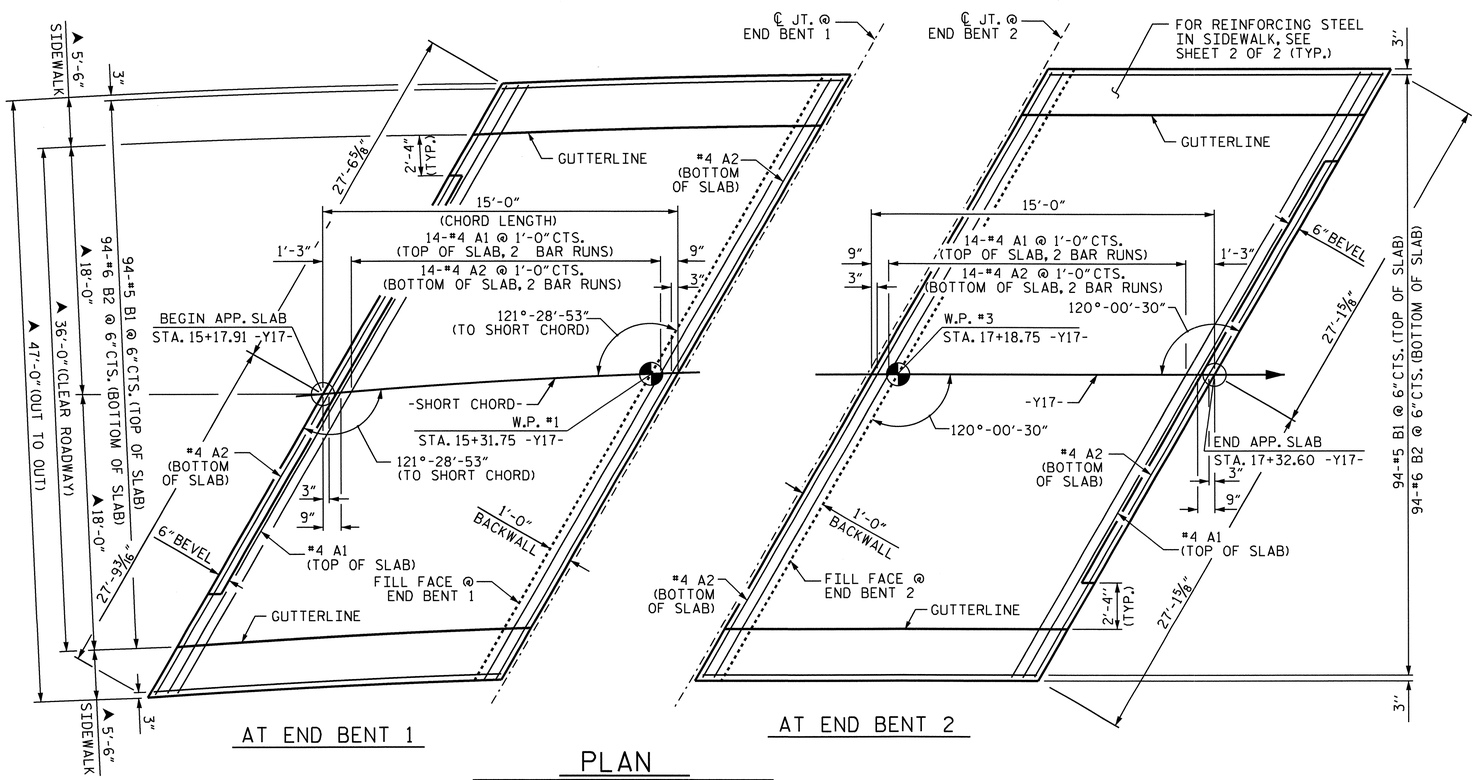

PLAN

ARC OFFSETS ARE NEGLIGIBLE FOR THE APPROACH SLAB @ END BENT 1.

▲ DIMENSIONS RADIAL AT END BENT 1. NORMAL TO -Y17- AT END BENT 2.

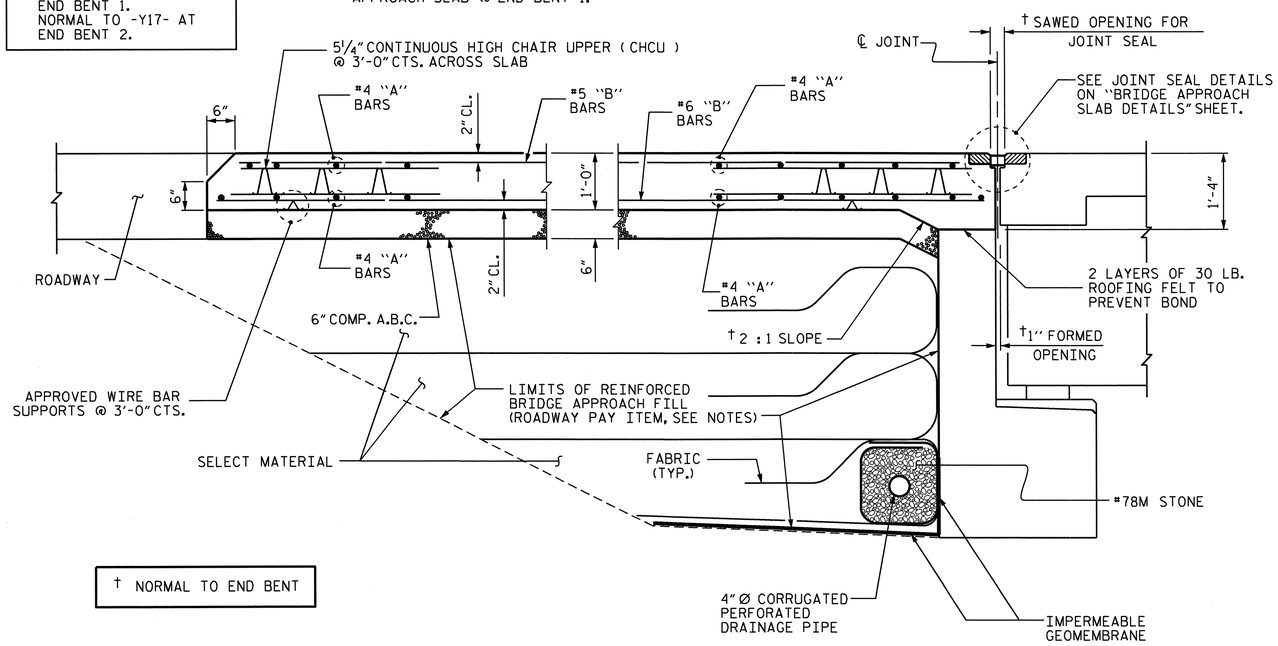

† NORMAL TO END BENT

SECTION THRU SLAB

NOTES

APPROACH SLAB SHALL NOT BE CONSTRUCTED PRIOR TO COMPLETION OF THE BRIDGE DECK.

FOR REINFORCED BRIDGE APPROACH FILL INCLUDING FABRIC, IMPERMEABLE GEOMEMBRANE, 4" Ø DRAINAGE PIPE, #78M STONE, AND SELECT MATERIAL SEE ROADWAY PLANS.

AREA BETWEEN THE WINGWALL AND APPROACH SLAB SHALL BE GRADED TO DRAIN THE WATER AWAY FROM THE FILL FACE OF THE BRIDGE AND SHALL BE PAVED. SEE ROADWAY PLANS.

THE 6" COMP. A.B.C. SHALL BE FLUSH WITH THE ROADWAY END OF THE APPROACH SLAB AND SHALL EXTEND 1'-0" OUTSIDE EACH EDGE OF THE APPROACH SLAB.

THE CONTRACTOR MAY USE 4" TYPE B-25.0B ASPHALT CONCRETE BASE COURSE IN LIEU OF 6" COMP. A.B.C. IF THIS OPTION IS USED, THE BASE COURSE SHALL BE FLUSH WITH THE ROADWAY END OF THE APPROACH SLAB, AND THE WIDTH SHALL BE THE SAME AS THAT OF THE APPROACH SLAB.

THE CONTRACTOR MAY USE 5" CLASS "A" CONCRETE BASE IN LIEU OF 6" COMP. A.B.C. IF THIS OPTION IS USED, THE CONCRETE BASE SHALL BE FLUSH WITH THE ROADWAY END OF THE APPROACH SLAB, AND THE WIDTH SHALL BE THE SAME AS THAT OF THE APPROACH SLAB. THE CONCRETE SHALL BE FINISHED TO A SMOOTH SURFACE AND A LAYER OF 30 LB ROOFING FELT SHALL BE PLACED BETWEEN THE CONCRETE BASE AND THE APPROACH SLAB TO PREVENT BOND. THE APPROACH SLAB SHALL NOT BE CAST UNTIL THE CONCRETE BASE HAS REACHED AN AGE OF THREE CURING DAYS.

THE JOINT SHALL BE SAWED PRIOR TO THE CASING OF THE SIDEWALK.

WITH EVAZOTE JOINT SEAL

FOR EVAZOTE JOINT SEALS, SEE SPECIAL PROVISIONS.

THE NOMINAL UNCOMPRESSED SEAL WIDTH OF THE EVAZOTE JOINT SEAL SHALL BE 2½".

FOR ELASTOMERIC CONCRETE, SEE SPECIAL PROVISIONS.

BILL OF MATERIAL

FOR ONE APPROACH SLAB (2 REQ'D)

BAR	NO.	SIZE	TYPE	LENGTH	WEIGHT
✱ A1	30	#4	STR	28'-3"	566
A2	32	#4	STR	28'-2"	602
✱ B1	94	#5	STR	14'-0"	1373
B2	94	#6	STR	14'-7"	2059
✱ B3	10	#4	STR	14'-7"	97
✱ G1	30	#4	STR	5'-9"	115
✱ U1	12	#4	1	3'-8"	29
REINFORCING STEEL				LBS.	2661
✱ EPOXY COATED REINFORCING STEEL				LBS.	2180
CLASS AA CONCRETE					
SLAB				C. Y.	26.8
SIDEWALK				C. Y.	3.4
TOTAL				C. Y.	30.2

BAR TYPES

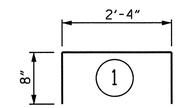

ALL BAR DIMENSIONS ARE OUT TO OUT

SPLICE CHART

BAR	SIZE	SPLICE
✱ A1	#4	2'-0"
A2	#4	1'-9"

PROJECT NO. U-3326B
ROCKINGHAM COUNTY
STATION: 262+51.60 -L-

SHEET 1 OF 2

STATE OF NORTH CAROLINA
DEPARTMENT OF TRANSPORTATION
RALEIGH

STANDARD

BRIDGE APPROACH SLAB FOR FLEXIBLE PAVEMENT

NORTH CAROLINA PROFESSIONAL SEAL 16301 ENGINEER HSIUNG-LANG LIN
10/3/11

REVISIONS						SHEET NO.
NO.	BY:	DATE:	NO.	BY:	DATE:	S-120
1			3			TOTAL SHEETS
2			4			159

STR. 3 STD. NO. BAS4

ASSEMBLED BY : S. M. RASHIDI	DATE : 7/6/09		
CHECKED BY : A. S. CALLAWAY	DATE : 7/8/09		
DRAWN BY : EEM 3/95	REV. 7/10/01	LES/RDR	
CHECKED BY : VAP 3/95	REV. 5/7/03R	RWW/JTE	
	REV. 5/1/06R	KMM/GM	

13-SEP-2011 12:34
X:\TIPProjects-U\U3326B\Structures\str03\FinalPlans\u3326b_sd_as_03.dgn
qtnguyen

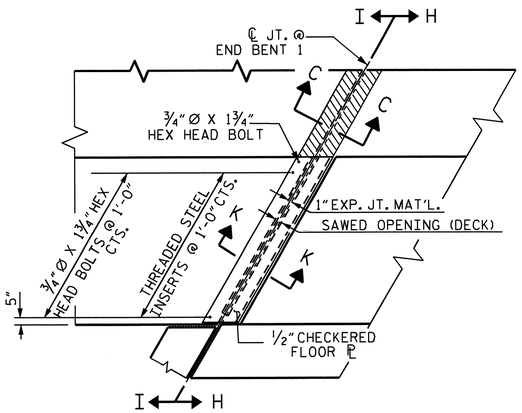

PLAN VIEW OF EVAZOTE

JOINT SEAL @ END BENT FOR SIDEWALK

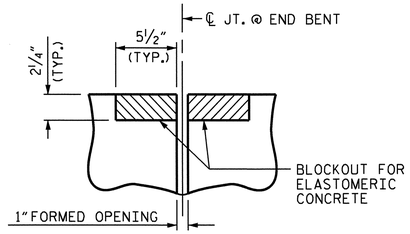

SECTION C-C

EVAZOTE JOINT SEAL
(PRE-SAWED ELASTOMERIC
CONCRETE DIMENSIONS)

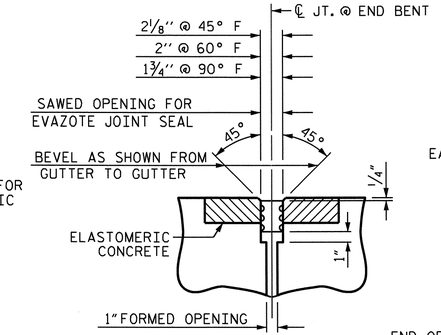

SECTION C-C

EVAZOTE JOINT SEAL
(EXPANSION)

ELASTOMERIC CONCRETE	
END BENT	ELASTOMERIC CONCRETE * (CU. FT.)
1	7.2
2	7.2
TOTAL	14.4

* BASED ON THE MINIMUM BLOCKOUT SHOWN.

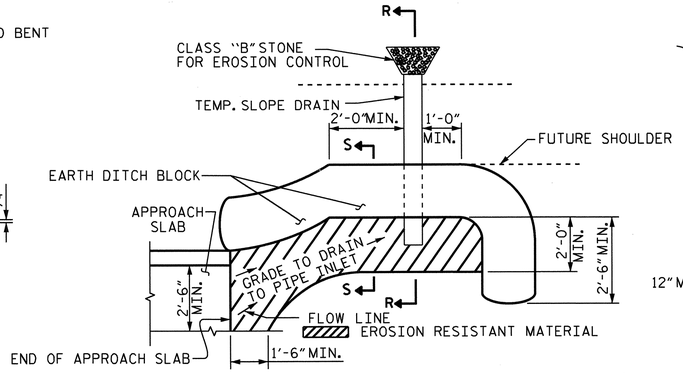

NOTE: IMMEDIATELY AFTER THE CONSTRUCTION OF THE APPROACH SLAB, THE CONTRACTOR SHALL PROVIDE TEMPORARY BERM AND SLOPE DRAIN. CONTRACTOR SHALL GRADE TO PIPE INLET AND PROVIDE EROSION RESISTANT MATERIAL AS SHOWN. THE EROSION RESISTANT MATERIAL SHALL BE EITHER 1) ASPHALT PLANT MIX, TYPE 1 OR TYPE 2, MIN. 2" DEPTH, 2) EROSION CONTROL MAT, OR 3) CONCRETE, AS DIRECTED BY THE ENGINEER. THE SLOPE DRAIN SHALL CONSIST OF A NON-PERFORATED TEMPORARY DRAINAGE PIPE, 12 INCHES IN DIAMETER.

PLAN VIEW

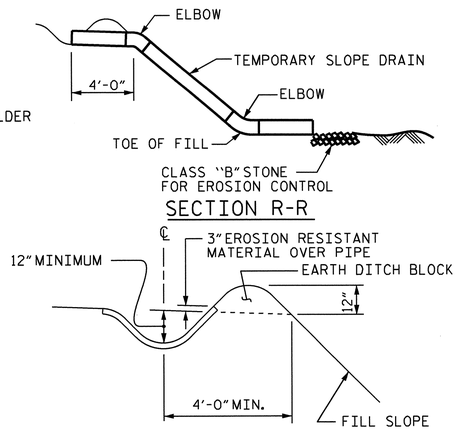

SECTION S-S

TEMPORARY BERM AND SLOPE DRAIN DETAILS.

(TO BE USED WHEN SHOULDER BERM GUTTER IS REQUIRED)

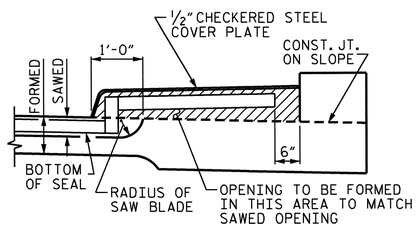

SECTION H-H

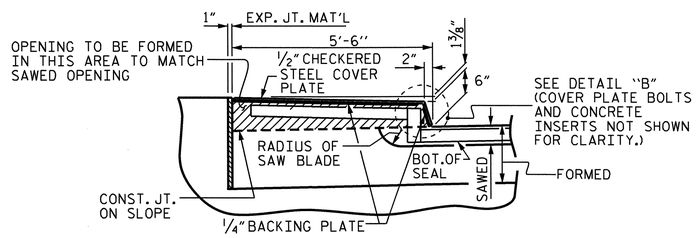

SECTION I-I

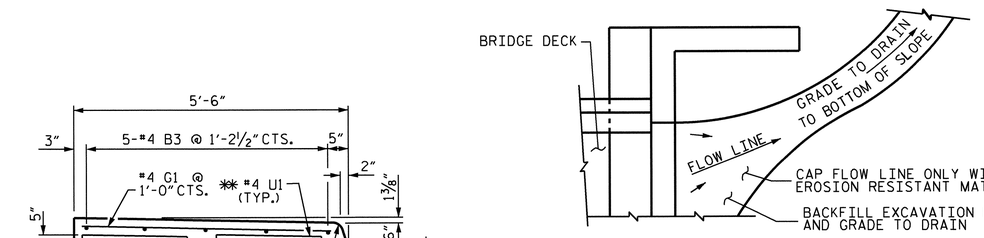

SECTION N-N

NOTE: IF THE APPROACH SLAB IS NOT CONSTRUCTED IMMEDIATELY AFTER THE BACKFILLING OF THE END BENT EXCAVATION, GRADE TO DRAIN TO THE BOTTOM OF THE SLOPE AND PROVIDE EROSION RESISTANT MATERIAL, SUCH AS FIBERGLASS ROVING OR AS DIRECTED BY THE ENGINEER TO PREVENT SOIL EROSION AND TO PROTECT THE AREA ADJACENT TO THE STRUCTURE. THE CONTRACTOR WILL BE REQUIRED TO REMOVE THESE MATERIALS PRIOR TO CONSTRUCTION OF THE APPROACH SLAB.

TEMPORARY DRAINAGE DETAIL

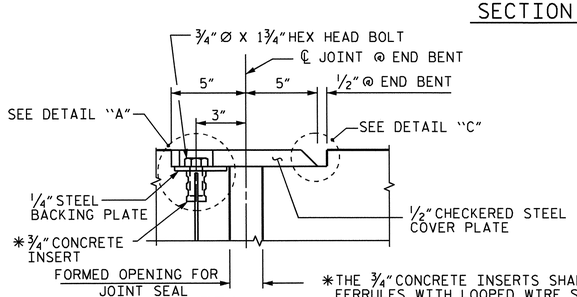

SECTION K-K

*THE 3/4" CONCRETE INSERTS SHALL BE CLOSED-END FERRULES WITH LOOPED WIRE STRUTS ATTACHED TO THEM. THE INSERTS SHALL CONFORM TO AASHTO M169, GRADE 12L14 AND SHALL HAVE A TENSILE WORKING LOAD CAPACITY OF 3000 LBS.

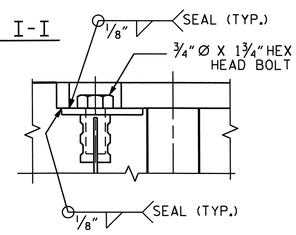

DETAIL "A"

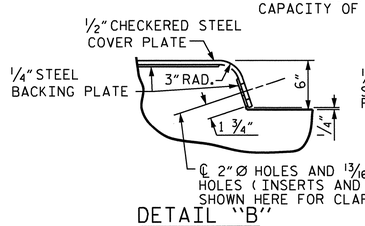

DETAIL "B"

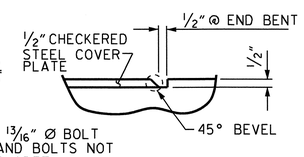

DETAIL "C"

JOINT SEAL DETAILS @ END BENT.

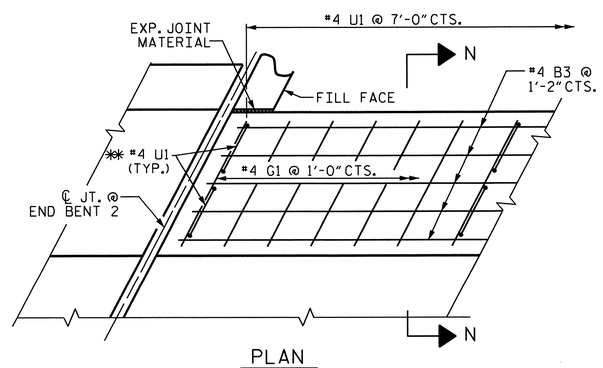

PLAN

LEFT SIDE END BENT 2 SHOWN, OTHER CORNERS ARE SIMILAR.

DETAILS OF SIDEWALK ON APPROACH SLAB

** THESE BARS ARE TO BE PLACED AFTER THE SAWING OF THE JOINT. THE HOLES SHALL BE DRILLED AND THE BARS GROUTED INTO PLACE.

PROJECT NO. U-3326B

ROCKINGHAM COUNTY

STATION: 262+51.60 -L-

SHEET 2 OF 2

STATE OF NORTH CAROLINA
DEPARTMENT OF TRANSPORTATION
RALEIGH

STANDARD

BRIDGE APPROACH SLAB DETAILS

NORTH CAROLINA PROFESSIONAL SEAL 16301 ENGINEER HSIENG LANG
10/3/11

REVISIONS							SHEET NO.
NO.	BY:	DATE:	NO.	BY:	DATE:		S-121
1			3				TOTAL SHEETS
2			4				159

STR. 3

STD. NO. BAS10

ASSEMBLED BY : S. M. RASHIDI		DATE : 7/6/09	
CHECKED BY : A. S. CALLAWAY		DATE : 7/8/09	
DRAWN BY : FCJ	11/88	REV. 10/17/00	RWW/LES
CHECKED BY : ARB	11/88	REV. 5/7/03	RWW/JTE
		REV. 5/1/06R	MAA/KMM

F.A. PROJECT NO. STP-29B(3)

GRADE DATA -Y21-

+2.3781% △ -0.5133%

PI STA. 26+00.00
EL. 781.70
VC 600.00

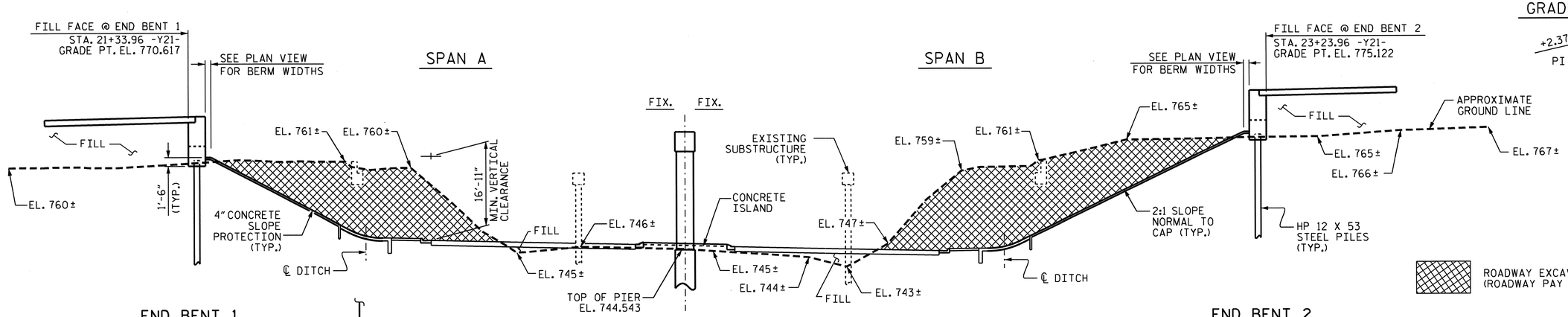

SECTION ALONG -Y21-

SECTION @ BENT & END BENTS ARE @ RIGHT ANGLES

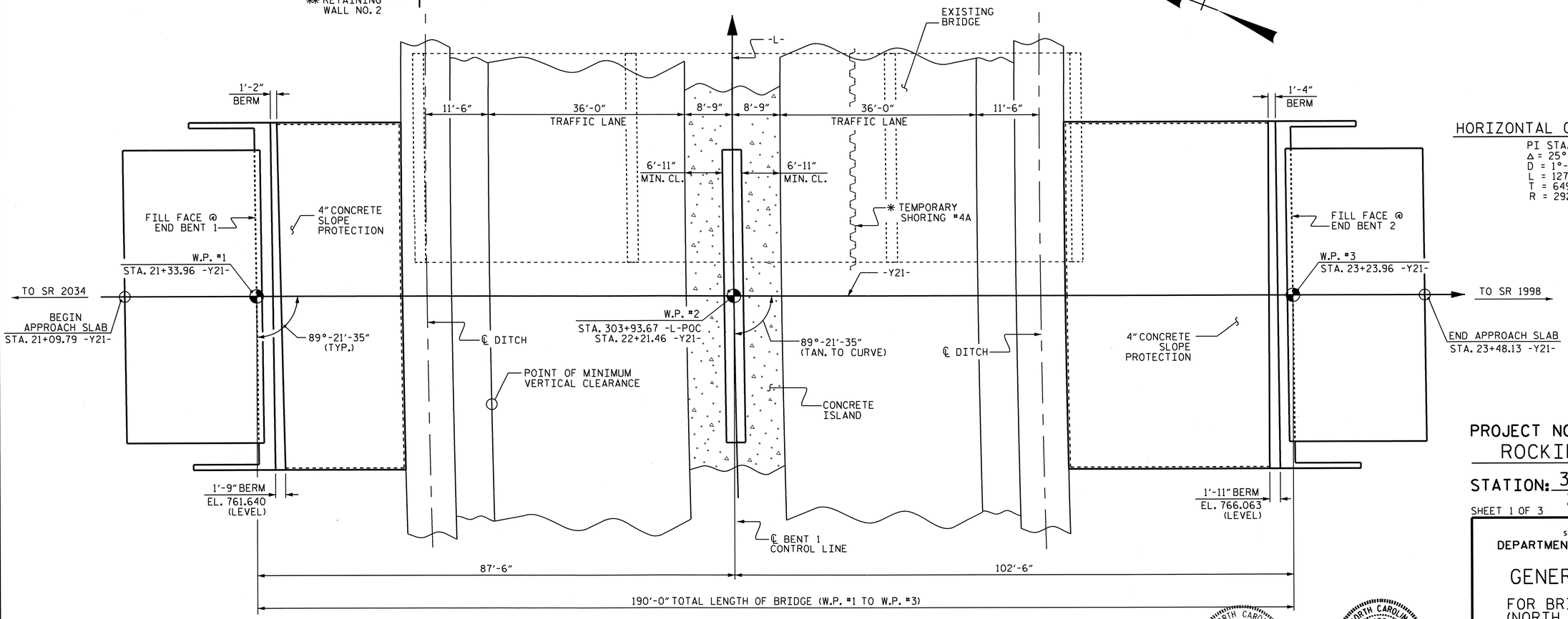

HORIZONTAL CURVE DATA -L-

PI STA. 299+65.13
Δ = 25°-05'-02.5" RT
D = 1°-57'-43.9"
L = 1278.37'
T = 649.59'
R = 2920.00'

PLAN

FOUNDATIONS NOT SHOWN FOR CLARITY

* FOR TEMPORARY SHORING FOR MAINTENANCE OF TRAFFIC (SEE ROADWAY PLANS)

** FOR DETAILS AND QUANTITIES OF RETAINING WALL NO. 2, SEE "RETAINING WALL" ON SHEETS W-3 AND W-4.

NORTH CAROLINA PROFESSIONAL SEAL 11915 ENGINEER JOHN D. FOSTER 10/27/11

NORTH CAROLINA PROFESSIONAL SEAL 16301 ENGINEER TING-FANG WANG 10/25/11

PROJECT NO. U-3326B
ROCKINGHAM COUNTY
STATION: 303+93.67 -L-POC
22+21.46 -Y21-

SHEET 1 OF 3 REPLACES BRIDGE NO. 56

STATE OF NORTH CAROLINA
DEPARTMENT OF TRANSPORTATION
RALEIGH

GENERAL DRAWING

FOR BRIDGE ON SR 2670 (NORTH SCALES ST.) OVER US 29 BUS./US 158 BETWEEN SR 2034 AND SR 1998

REVISIONS						SHEET NO.
NO.	BY:	DATE:	NO.	BY:	DATE:	S-122
1			3			TOTAL SHEETS
2			4			159

DRAWN BY : M.K. BEARD DATE : 1/7/09
CHECKED BY : A.S. CALLAWAY DATE : 1/9/09

25-OCT-2011 10:07
K:\TIPProjects-U\U3326B\Structures\str04\FinalPlans\U3326B_sd_gd_04.dgn
ttfang

STR. #4

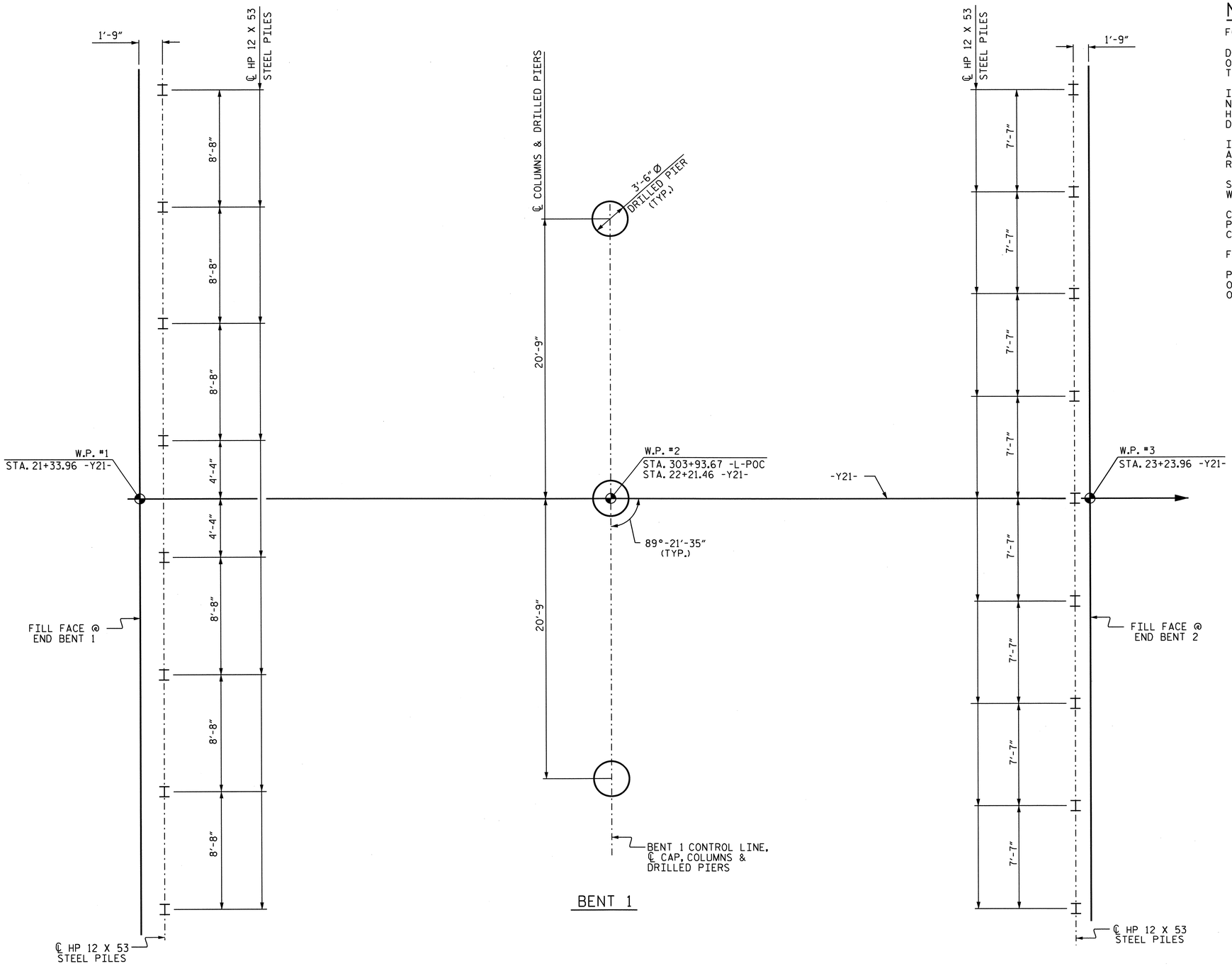

FOUNDATION LAYOUT

DIMENSIONS LOCATING PILES & DRILLED PIERS ARE SHOWN TO THE PILE AND DRILLED PIER CENTERLINE. ORIENT PILES @ END BENTS AS SHOWN.

NOTES

FOR DRILLED PIERS, SEE SPECIAL PROVISIONS.

DRILLED PIERS AT BENT 1 ARE DESIGNED FOR A FACTORED RESISTANCE OF 775 TONS PER PIER. CHECK FIELD CONDITIONS FOR THE REQUIRED TIP RESISTANCE OF 180 TSF.

INSTALL DRILLED PIERS AT BENT 1 (LEFT) THAT EXTEND TO AN ELEVATION NO HIGHER THAN 714 FT., SATISFY THE REQUIRED TIP RESISTANCE, AND HAVE A MINIMUM PENETRATION OF 5 FT. INTO ROCK AS DEFINED BY THE DRILLED PIER PROVISION.

INSTALL DRILLED PIERS AT BENT 1 (CENTER AND RIGHT) THAT EXTEND TO AN ELEVATION NO HIGHER THAN 720 FT. AND SATISFY THE REQUIRED TIP RESISTANCE.

SID INSPECTIONS MAY BE REQUIRED FOR DRILLED PIERS. THE ENGINEER WILL DETERMINE THE NEED FOR SID INSPECTIONS.

CSL TUBES ARE REQUIRED AND CSL TESTING MAY BE REQUIRED FOR DRILLED PIERS. THE ENGINEER WILL DETERMINE THE NEED FOR CSL TESTING. FOR CSL TESTING, SEE DRILLED PIER SPECIAL PROVISIONS.

FOR PILES SEE SPECIAL PROVISIONS.

PILES AT END BENTS 1 AND 2 ARE DESIGNED FOR A FACTORED RESISTANCE OF 130 TONS PER PILE. DRIVE PILES TO A REQUIRED DRIVING RESISTANCE OF 220 TONS PER PILE.

PROJECT NO. U-3326B
ROCKINGHAM COUNTY
STATION: 303+93.67 -L-

SHEET 2 OF 3

STATE OF NORTH CAROLINA
DEPARTMENT OF TRANSPORTATION
RALEIGH

GENERAL DRAWING

FOR BRIDGE ON SR 2670 (NORTH SCALES ST.) OVER US 29 BUS./US 158 BETWEEN SR 2034 AND SR 1998

NORTH CAROLINA PROFESSIONAL SEAL 16301 ENGINEER TING-HSIUNG FANG
8/30/11

REVISIONS						SHEET NO.
NO.	BY:	DATE:	NO.	BY:	DATE:	S-123
1			3			TOTAL SHEETS
2	BY:	DATE:	4	BY:	DATE:	159

DRAWN BY : HARISH SHAH DATE : 01-11
CHECKED BY : T.H. FANG DATE : 5-10-11

30-AUG-2011 16:14
X:\TIPProjects-U\U3326B\Structures\str04\FinalPlans\U3326B_sd_gd_04.dgn
qtnguyen

STR. #4

TOTAL BILL OF MATERIAL

	REMOVAL OF EXISTING STRUCTURE	3'-6" DIA. DRILLED PIERS IN SOIL	3'-6" DIA. DRILLED PIERS NOT IN SOIL	SID INSPECTION	CSL TESTING	REINFORCED CONCRETE DECK SLAB	GROOVING BRIDGE FLOORS	CLASS A CONCRETE	BRIDGE APPROACH SLABS	REINFORCING STEEL	SPIRAL COLUMN REINFORCING STEEL	MODIFIED 63" PRESTRESSED CONCRETE GIRDERS		HP 12 X 53 STEEL PILES		TWO BAR METAL RAIL	THREE BAR METAL RAIL	1'-2" X 2'-6" CONCRETE PARAPET	4" SLOPE PROTECTION	ELASTOMERIC BEARINGS	EVAZOTE JOINT SEALS
	LUMP SUM	LIN. FT.	LIN. FT.	EACH	EACH	SQ. FT.	SQ. FT.	CU. YDS.	LUMP SUM	LBS.	LBS.	NO.	LIN. FT.	NO.	LIN. FT.	LIN. FT.	LIN. FT.	LIN. FT.	SQ. YDS.	LUMP SUM	LUMP SUM
SUPERSTRUCTURE						10,941	10,898					12	1,122.50			180.83	180.83	188.33			
END BENT 1								34.7		5,607				8	320				195		
BENT 1		52.25	28.0					43.8		15,468	2,807										
END BENT 2								34.9		5,322				9	315				300		
TOTAL	LUMP SUM	52.25	28.0	1	1	10,941	10,898	113.4	LUMP SUM	26,397	2,807	12	1,122.50	17	635	180.83	180.83	188.33	495	LUMP SUM	LUMP SUM

BM #22: R/R SPIKE IN BASE OF 42" POPLAR, STA. 10+00 -Y21-, ELEV. 740.73

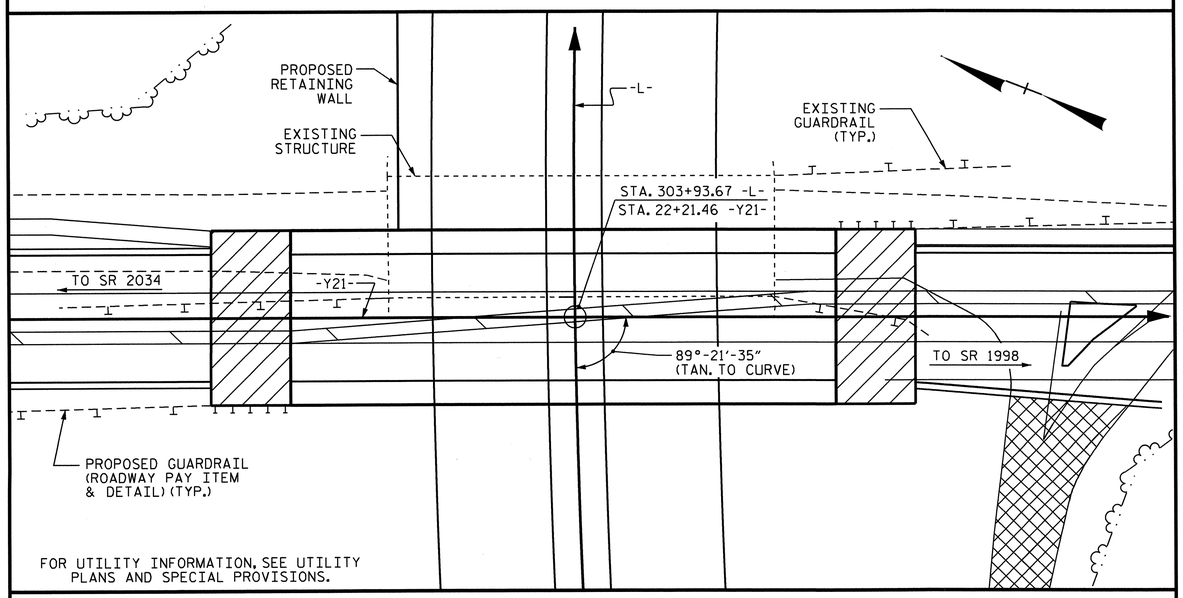

FOR UTILITY INFORMATION, SEE UTILITY PLANS AND SPECIAL PROVISIONS.

LOCATION SKETCH

NOTES

ASSUMED LIVE LOAD = HL 93 OR ALTERNATE LOADING.

FOR OTHER DESIGN DATA AND GENERAL NOTES, SEE SHEET SN.

FOR EROSION CONTROL MEASURES SEE EROSION CONTROL PLANS.

THIS BRIDGE HAS BEEN DESIGNED IN ACCORDANCE WITH THE AASHTO LRFD BRIDGE DESIGN SPECIFICATIONS.

PRESTRESSED CONCRETE DECK PANELS MAY BE USED IN LIEU OF METAL STAY-IN-PLACE FORMS IN ACCORDANCE WITH ARTICLE 420-3 OF THE STANDARD SPECIFICATIONS.

REMOVABLE FORMS MAY BE USED IN LIEU OF METAL STAY-IN-PLACE FORMS IN ACCORDANCE WITH ARTICLE 420-3 OF THE STANDARD SPECIFICATIONS.

THE CLASS AA CONCRETE IN THE BRIDGE DECK SHALL CONTAIN FLY ASH OR GROUND GRANULATED BLAST FURNACE SLAG AT THE SUBSTITUTION RATE SPECIFIED IN ARTICLE 1024-1 AND IN ACCORDANCE WITH ARTICLES 1024-5 AND 1024-6 OF THE STANDARD SPECIFICATIONS. NO PAYMENT WILL BE MADE FOR THIS SUBSTITUTION AS IT IS CONSIDERED INCIDENTAL TO THE COST OF THE REINFORCED CONCRETE DECK SLAB.

INASMUCH AS THE PAINT SYSTEM ON THE EXISTING STRUCTURAL STEEL CONTAINS LEAD, THE CONTRACTOR'S ATTENTION IS DIRECTED TO ARTICLE 107-1 OF THE STANDARD SPECIFICATIONS. ANY COSTS RESULTING FROM COMPLIANCE WITH APPLICABLE STATE OR FEDERAL REGULATIONS PERTAINING TO HANDLING OF MATERIALS CONTAINING LEAD BASED PAINT SHALL BE INCLUDED IN THE BID PRICE FOR "REMOVAL OF EXISTING STRUCTURE AT STATION 303+93.67 -L-".

THE EXISTING STRUCTURE CONSISTING OF 3 SPANS: 1 @ 40'-0", 1 @ 47'-6" AND 1 @ 35'-0"; 28'-0" CLEAR ROADWAY WIDTH AND A RC DECK ON I-BEAMS; BOTH END BENTS CONSISTING OF RC CAPS AND TIMBER PILES, INTERIOR BENT CONSISTING OF RCP&B ON PILE FOOTINGS, AND LOCATED AT THE PROPOSED STRUCTURE SITE SHALL BE REMOVED. THE EXISTING BRIDGE IS PRESENTLY POSTED FOR LOAD LIMIT. SHOULD THE STRUCTURAL INTEGRITY OF THE BRIDGE DETERIORATE A LOAD LIMIT MAY BE POSTED AND MAY BE REDUCED AS FOUND NECESSARY DURING THE LIFE OF THE PROJECT.

THE SUBSTRUCTURE OF THE EXISTING BRIDGE INDICATED ON THE PLANS IS FROM THE BEST INFORMATION AVAILABLE. SINCE THIS INFORMATION IS SHOWN FOR THE CONVENIENCE OF THE CONTRACTOR, THE CONTRACTOR SHALL HAVE NO CLAIM WHATSOEVER AGAINST THE DEPARTMENT OF TRANSPORTATION FOR ANY DELAYS OR ADDITIONAL COST INCURRED BASED ON DIFFERENCES BETWEEN THE EXISTING BRIDGE SUBSTRUCTURE SHOWN ON THE PLANS AND THE ACTUAL CONDITIONS AT THE PROJECT SITE.

THE CONTRACTOR SHALL PROVIDE INDEPENDENT ASSURANCE SAMPLES OF REINFORCING STEEL AS FOLLOWS: FOR PROJECTS REQUIRING UP TO 400 TONS OF REINFORCING STEEL, ONE 30 INCH SAMPLE OF EACH SIZE BAR USED, AND FOR PROJECTS REQUIRING OVER 400 TONS OF REINFORCING STEEL, TWO 30 INCH SAMPLES OF EACH SIZE BAR USED. THE BARS FROM WHICH THE SAMPLES ARE TAKEN MUST THEN BE SPLICED WITH REPLACEMENT BARS OF THE SIZE AND LENGTH OF THE SAMPLE PLUS A MINIMUM LAP SPLICE OF THIRTY BAR DIAMETERS. PAYMENT FOR THE SAMPLES OF REINFORCING STEEL SHALL BE CONSIDERED INCIDENTAL TO VARIOUS PAY ITEMS.

FOR MAINTENANCE AND PROTECTION OF TRAFFIC BENEATH PROPOSED STRUCTURE, SEE SPECIAL PROVISIONS.

FOR LIMITS OF TEMPORARY SHORING FOR MAINTENANCE OF TRAFFIC, SEE TRAFFIC CONTROL PLANS, FOR TEMPORARY SHORING PAY ITEM, SEE ROADWAY PLANS.

STEEL SHEET PILING REQUIRED FOR SHORING SHALL BE HOT ROLLED.

THE LOCATION OF THE CONSTRUCTION JOINT IN THE DRILLED PIERS IS BASED ON AN APPROXIMATE GROUND LINE ELEVATION. IF THE CONSTRUCTION JOINT IS ABOVE THE ACTUAL GROUND ELEVATION, THE CONTRACTOR SHALL PLACE THE CONSTRUCTION JOINT 1 FT. BELOW THE GROUND LINE.

THE EXISTING PAVEMENT WITHIN THE AREA OF THE END BENT PILES SHALL BE REMOVED AND THE ROADBED SCARIFIED TO A MINIMUM DEPTH OF 2'-0".

NEEDLE BEAMS WILL NOT BE ALLOWED UNLESS OTHERWISE CALLED FOR ON THE PLANS OR APPROVED BY THE ENGINEER.

FOR CURING CONCRETE, SEE SPECIAL PROVISIONS.

FOR FORMS FOR CONCRETE BRIDGE DECKS, SEE SPECIAL PROVISIONS.

FOR SUBMITTAL OF WORKING DRAWINGS, SEE SPECIAL PROVISIONS.

FOR PLACING LOAD ON STRUCTURE MEMBERS, SEE SPECIAL PROVISIONS.

FOR FALSEWORK AND FORMWORK, SEE SPECIAL PROVISIONS.

FOR CRANE SAFETY, SEE SPECIAL PROVISIONS.

FOR PRESTRESSED CONCRETE MEMBERS, SEE SPECIAL PROVISIONS.

FOR GROUT FOR STRUCTURES, SEE SPECIAL PROVISIONS.

NORTH CAROLINA PROFESSIONAL SEAL 16301 ENGINEER TING-HSIUNG FANG

10/26/11

PROJECT NO. U-3326B
ROCKINGHAM COUNTY
STATION: 303+93.67 -L-

SHEET 3 OF 3

STATE OF NORTH CAROLINA
DEPARTMENT OF TRANSPORTATION
RALEIGH

GENERAL DRAWING
FOR BRIDGE ON SR 2670 (NORTH SCALES ST.) OVER US 29 BUS./US 158 BETWEEN SR 2034 AND SR 1998

REVISIONS						SHEET NO.
NO.	BY:	DATE:	NO.	BY:	DATE:	S-124
1			3			TOTAL SHEETS
2			4			159

STR. #4

DRAWN BY : HARISH SHAH DATE : 12-10
CHECKED BY : T.H. FANG DATE : 5-10-11

26-OCT-2011 08:39
K:\TIPProjects-U\U3326B\Structures\str04\FinalPlans\U3326B_sd_gd_04.dgn
tfang

LOAD AND RESISTANCE FACTOR RATING (LRFR) SUMMARY FOR PRESTRESSED CONCRETE GIRDERS

LEVEL		VEHICLE	WEIGHT (W) (TONS)	CONTROLLING LOAD RATING (#)	MINIMUM RATING FACTORS (RF)	TONS = W x RF	STRENGTH I LIMIT STATE											SERVICE III LIMIT STATE						COMMENT NUMBER
							LIVE-LOAD FACTORS (γ_{LL})	MOMENT					SHEAR					LIVE-LOAD FACTORS (γ_{LL})	MOMENT					
								DISTRIBUTION FACTORS (DF)	RATING FACTOR	SPAN	GIRDER LOCATION	DISTANCE FROM LEFT END OF SPAN (ft)	DISTRIBUTION FACTORS (DF)	RATING FACTOR	SPAN	GIRDER LOCATION	DISTANCE FROM LEFT END OF SPAN (ft)		DISTRIBUTION FACTORS (DF)	RATING FACTOR	SPAN	GIRDER LOCATION	DISTANCE FROM LEFT END OF SPAN (ft)	
DESIGN LOAD RATING		HL-93 (INVENTORY)	N/A	1	1.08	--	1.75	0.946	1.56	B	EL	49.812	0.942	1.16	B	I	79.7	0.80	0.946	1.08	B	EL	49.812	
		HL-93 (OPERATING)	N/A	--	1.50	--	1.35	0.946	2.02	B	EL	49.812	0.942	1.50	B	I	79.7	N/A	--	--	--	--	--	
		HS-20 (INVENTORY)	36.000	2	1.51	54.4	1.75	0.946	2.17	B	EL	49.812	0.947	1.54	B	EL	19.925	0.80	0.946	1.51	B	EL	49.812	
		HS-20 (OPERATING)	36.000	--	1.99	71.7	1.35	0.946	2.81	B	EL	49.812	0.947	1.99	B	EL	19.925	N/A	--	--	--	--	--	
LEGAL LOAD RATING	SINGLE VEHICLE (SV)	SNSH	13.500	--	3.59	48.4	1.40	0.946	6.44	B	EL	49.812	0.947	4.67	B	EL	19.925	0.80	0.946	3.59	B	EL	49.812	
		SNGARBS2	20.000	--	2.60	51.9	1.40	0.946	4.66	B	EL	49.812	0.947	3.29	B	EL	19.925	0.80	0.946	2.60	B	EL	49.812	
		SNAGRIS2	22.000	--	2.43	53.4	1.40	0.946	4.36	B	EL	49.812	0.947	3.04	B	EL	19.925	0.80	0.946	2.43	B	EL	49.812	
		SNCOTTS3	27.250	--	1.78	48.6	1.40	0.946	3.20	B	EL	49.812	0.947	2.33	B	EL	19.925	0.80	0.946	1.78	B	EL	49.812	
		SNAGGRS4	34.925	--	1.46	51.0	1.40	0.946	2.62	B	EL	49.812	0.947	1.91	B	EL	19.925	0.80	0.946	1.46	B	EL	49.812	
		SNS5A	35.550	--	1.43	50.8	1.40	0.946	2.57	B	EL	49.812	0.947	1.92	B	EL	19.925	0.80	0.946	1.43	B	EL	49.812	
		SNS6A	39.950	--	1.30	51.9	1.40	0.946	2.33	B	EL	49.812	0.947	1.74	B	EL	19.925	0.80	0.946	1.30	B	EL	49.812	
		SNS7B	42.000	--	1.24	52.0	1.40	0.946	2.22	B	EL	49.812	0.947	1.70	B	EL	19.925	0.80	0.946	1.24	B	EL	49.812	
	TRUCK TRACTOR SEMI-TRAILER (TTST)	TNAGRIT3	33.000	--	1.58	52.2	1.40	0.946	2.84	B	EL	49.812	0.947	2.08	B	EL	19.925	0.80	0.946	1.58	B	EL	49.812	
		TNT4A	33.075	--	1.59	52.4	1.40	0.946	2.84	B	EL	49.812	0.947	2.04	B	EL	19.925	0.80	0.946	1.59	B	EL	49.812	
		TNT6A	41.600	--	1.28	53.4	1.40	0.946	2.31	B	EL	49.812	0.947	1.79	B	EL	19.925	0.80	0.946	1.28	B	EL	49.812	
		TNT7A	42.000	--	1.29	54.0	1.40	0.946	2.31	B	EL	49.812	0.947	1.76	B	EL	19.925	0.80	0.946	1.29	B	EL	49.812	
		TNT7B	42.000	--	1.32	55.2	1.40	0.946	2.36	B	EL	49.812	0.947	1.67	B	EL	19.925	0.80	0.946	1.32	B	EL	49.812	
		TNAGRIT4	43.000	--	1.26	54.2	1.40	0.946	2.26	B	EL	49.812	0.947	1.62	B	EL	19.925	0.80	0.946	1.26	B	EL	49.812	
		TNAGT5A	45.000	--	1.20	53.8	1.40	0.946	2.14	B	EL	49.812	0.947	1.60	B	EL	19.925	0.80	0.946	1.19	B	EL	49.812	
		TNAGT5B	45.000	3	1.18	53.3	1.40	0.946	2.13	B	EL	49.812	0.947	1.54	B	EL	19.925	0.80	0.946	1.18	B	EL	49.812	

LOAD FACTORS:

DESIGN LOAD RATING FACTORS	LIMIT STATE	γ_{DC}	γ_{DW}
	STRENGTH I	1.25	1.50
	SERVICE III	1.00	1.00

NOTES:

MINIMUM RATING FACTORS ARE BASED ON THE STRENGTH I AND SERVICE III LIMIT STATES.

ALLOWABLE STRESSES FOR SERVICE III LIMIT STATE ARE AS REQUIRED FOR DESIGN.

COMMENTS:

1.
2.
3.
4.

(#) CONTROLLING LOAD RATING

(1) DESIGN LOAD RATING (HL-93)
(2) DESIGN LOAD RATING (HS-20)
(3) LEGAL LOAD RATING **
** SEE CHART FOR VEHICLE TYPE

GIRDER LOCATION

I - INTERIOR GIRDER
EL - EXTERIOR LEFT GIRDER
ER - EXTERIOR RIGHT GIRDER

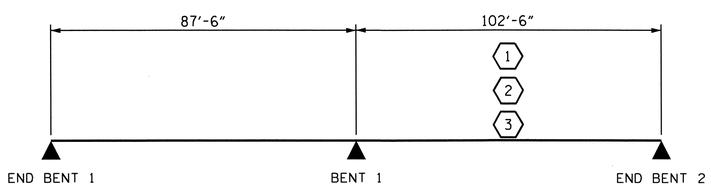

LRFR SUMMARY

PROJECT NO. U-3326B
ROCKINGHAM COUNTY
STATION: 303+93.67 -L-

NORTH CAROLINA PROFESSIONAL SEAL 16301 ENGINEER YING HSUING FANG
8/30/11

STATE OF NORTH CAROLINA
DEPARTMENT OF TRANSPORTATION
RALEIGH

STANDARD
LRFR SUMMARY FOR PRESTRESSED CONCRETE GIRDERS
(NON-INTERSTATE TRAFFIC)

REVISIONS						SHEET NO.
NO.	BY:	DATE:	NO.	BY:	DATE:	S-125
1			3			TOTAL SHEETS
2			4			159

ASSEMBLED BY : A.C.OUTLAW DATE : 12/10/10
CHECKED BY : J.H.CARDEN DATE : 6/10/11
DRAWN BY : MAA 1/08
CHECKED BY : GM/DI 2/08
REV. 11/12/08RR MAA/GM

30-AUG-2011 16:14
O:\TIPProjects-U\U3326B\Structures\str04\FinalPlans\U3326B_sd_lrfr_04.dgn
qtnguyen

STR. #4 STD. NO. LRFR1

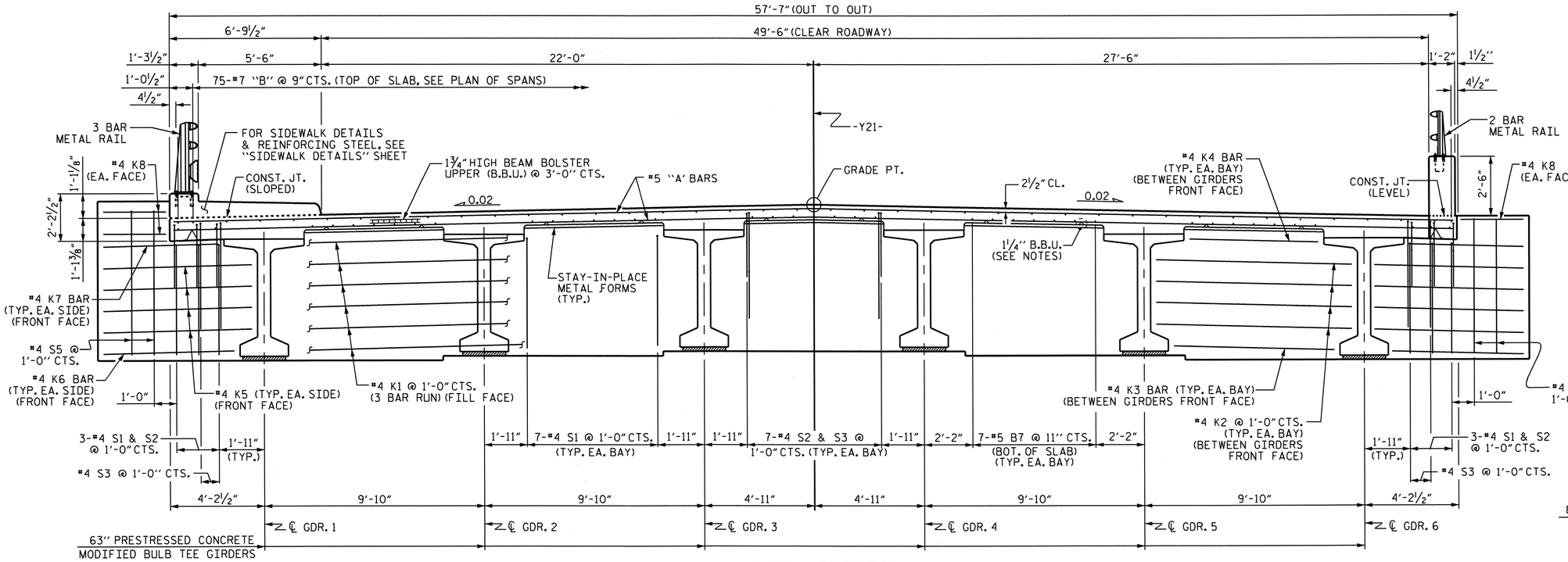

TYPICAL SECTION

APPROACH SLAB BLOCKOUT & WINGS NOT SHOWN FOR CLARITY.
SHOWING ABUTMENT WALL AT FILL FACE OF END BENTS.

NOTES

PROVIDE 1¼" HIGH BEAM BOLSTERS UPPER AT 4'-0" CTS. ATOP THE METAL STAY-IN-PLACE FORMS TO SUPPORT THE BOTTOM MAT OF "A" BARS. WHEN USING REMOVABLE FORMS, PROVIDE CONTINUOUS HIGH CHAIRS FOR METAL DECK (C.H.C.M.) @ 4'-0" CTS. WITH A HEIGHT TO SUPPORT THE BOTTOM MAT OF "A" BARS A CLEAR DISTANCE OF 2½" ABOVE THE TOP OF THE REMOVABLE FORM.

LONGITUDINAL STEEL MAY BE SHIFTED SLIGHTLY, AS NECESSARY, TO AVOID INTERFERENCE WITH STIRRUPS IN PRESTRESSED CONCRETE GIRDERS.

PREVIOUSLY CAST CONCRETE IN A CONTINUOUS UNIT SHALL HAVE ATTAINED A MINIMUM COMPRESSIVE STRENGTH OF 3,000 PSI BEFORE ADDITIONAL CONCRETE IS CAST IN THE UNIT.

SIDEWALK AND PARAPET IN A CONTINUOUS UNIT SHALL NOT BE CAST UNTIL ALL SLAB CONCRETE IN THE UNIT HAS BEEN CAST AND HAS REACHED A MINIMUM COMPRESSIVE STRENGTH OF 3,000 PSI.

FOR INTERMEDIATE STEEL DIAPHRAGMS DETAILS, SEE "INTERMEDIATE STEEL DIAPHRAGMS FOR 63" MODIFIEDBULB TEE PRESTRESSED CONCRETE GIRDERS" SHEET.

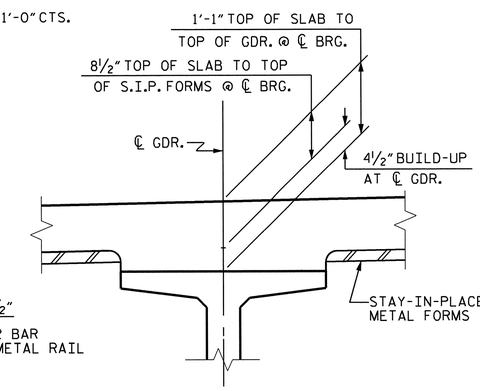

DETAIL A

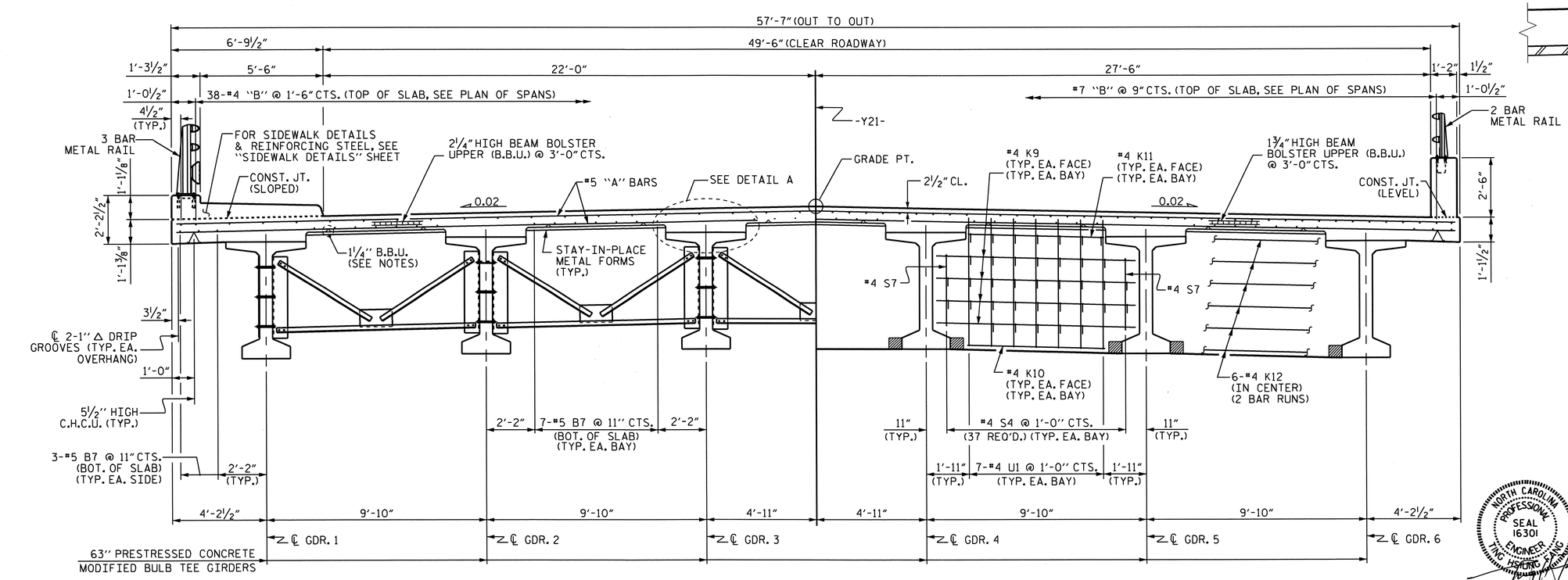

PARTIAL TYPICAL SECTION

SHOWING INTERMEDIATE DIAPHRAGMS

PARTIAL TYPICAL SECTION

SHOWING BENT DIAPHRAGMS

PROJECT NO. U-3326B
ROCKINGHAM COUNTY
STATION: 303+93.67 -L-

SHEET 1 OF 2

STATE OF NORTH CAROLINA
DEPARTMENT OF TRANSPORTATION
RALEIGH

SUPERSTRUCTURE

TYPICAL SECTION

NORTH CAROLINA PROFESSIONAL SEAL 16301 ENGINEER T.H. FANG
8/30/11

REVISIONS						SHEET NO.
NO.	BY:	DATE:	NO.	BY:	DATE:	S-126
1			3			TOTAL SHEETS
2			4			159

STR. #4

DRAWN BY : A.S. CALLAWAY DATE : 2/10/10
CHECKED BY : T.H. FANG DATE : 1/26/11

30-AUG-2011 16:14
X:\TIPProjects-U\U3326B\Structures\str04\FinalPlans\u3326b_sd_TS_04.dgn
qtnguyen

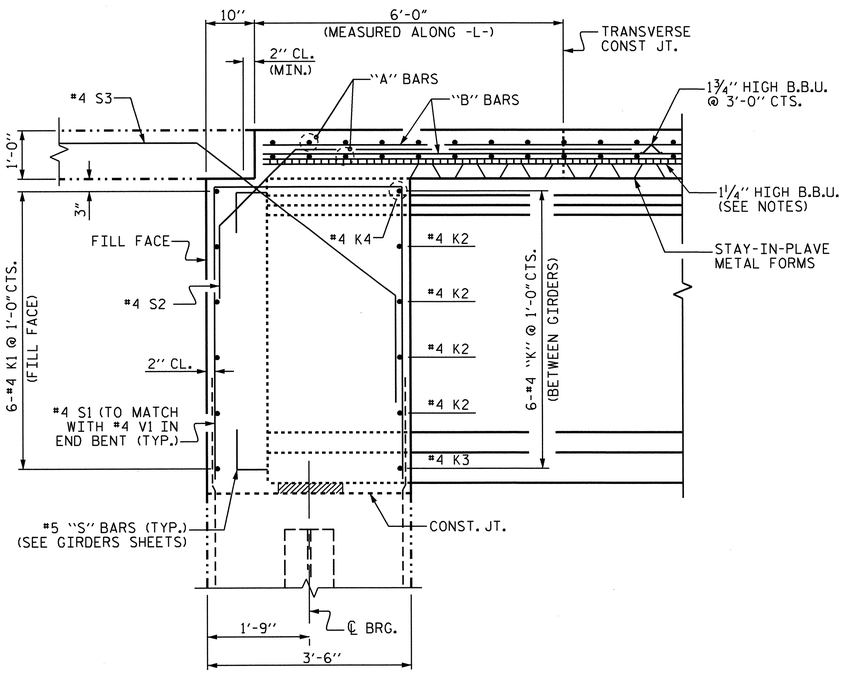

SECTION THRU ABUTMENT END BENT

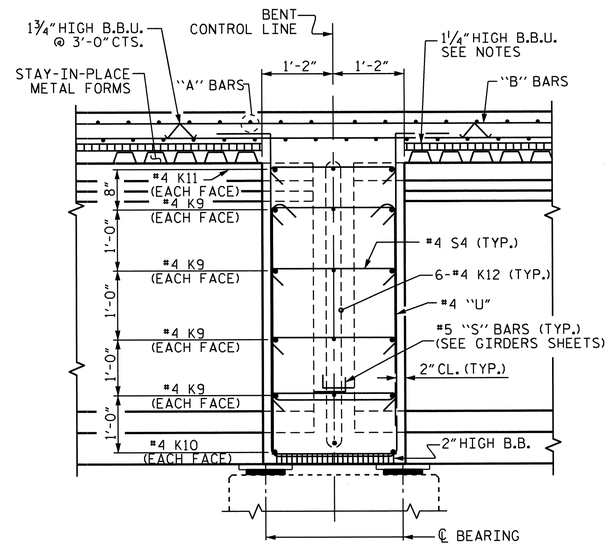

SECTION THRU BENT DIAPHRAGM

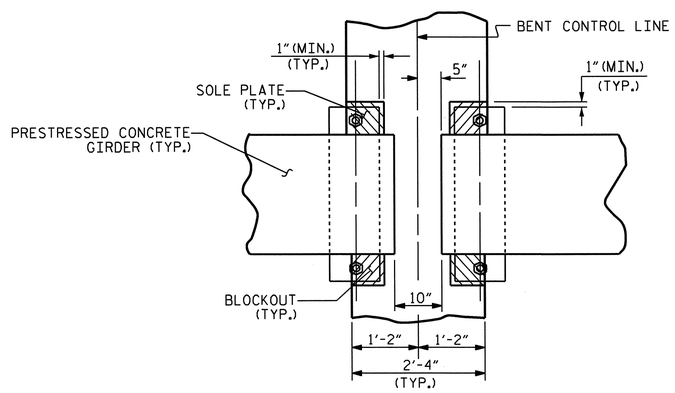

PLAN

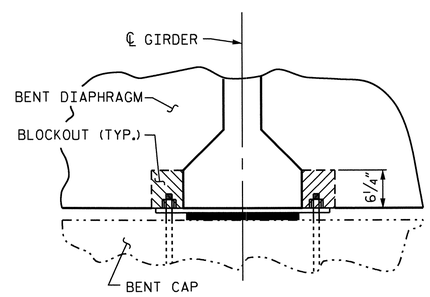

SECTION A-A

BENT DIAPHRAGM BLOCKOUT DETAIL

PROJECT NO. U-3326B
ROCKINGHAM COUNTY
STATION: 303+93.67 -L-

SHEET 2 OF 2

STATE OF NORTH CAROLINA
DEPARTMENT OF TRANSPORTATION
RALEIGH

SUPERSTRUCTURE

TYPICAL SECTION DETAILS

NORTH CAROLINA PROFESSIONAL SEAL 16301 ENGINEER TING HSIUNG FANG
8/30/11

REVISIONS						SHEET NO.
NO.	BY:	DATE:	NO.	BY:	DATE:	S-127
1			3			TOTAL SHEETS
2			4			159

STR. #4

DRAWN BY : A.S. CALLAWAY DATE : 2/10/10
CHECKED BY : T.H. FANG DATE : 1/26/11

30-AUG-2011 16:14
X:\TIPProjects-U\U3326B\Structures\str04\FinalPlans\u3326b_sd_TS_04.dgn
qtnguyen

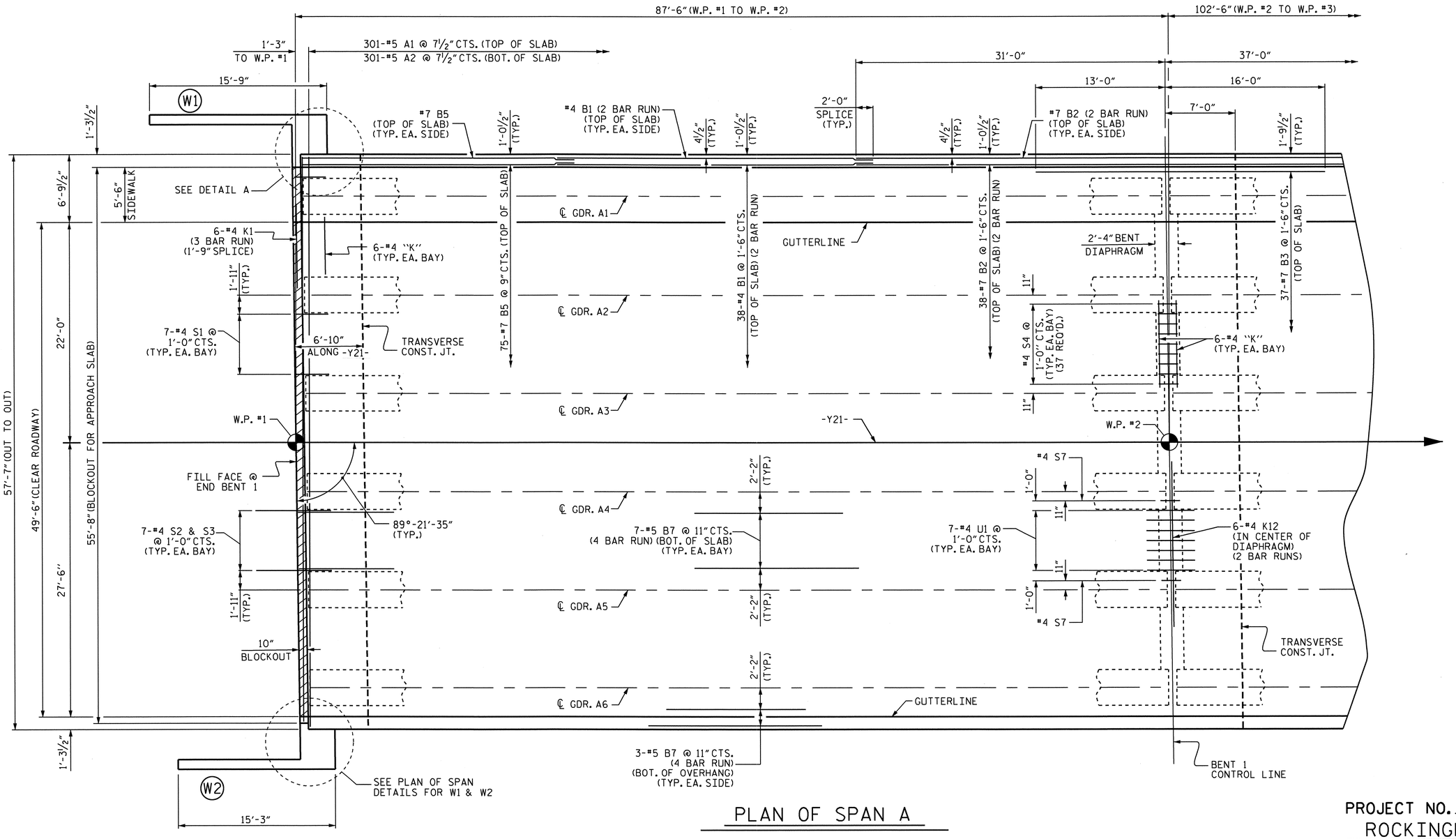

PLAN OF SPAN A

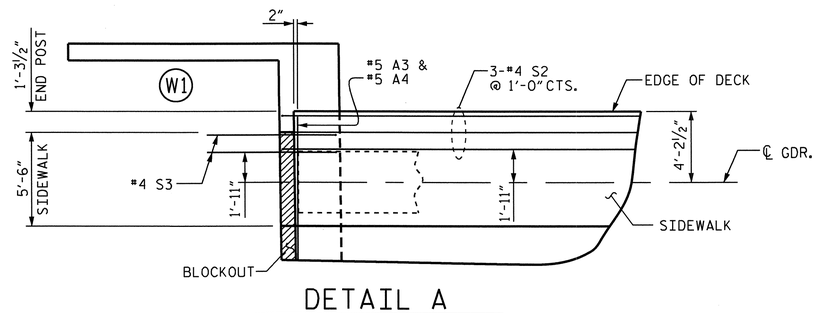

DETAIL A

#4 S5 NOT SHOWN FOR CLARITY.
W1 SHOWN W2 SIMILAR.

PROJECT NO. U-3326B
ROCKINGHAM COUNTY
STATION: 303+93.67 -L-

SHEET 1 OF 4

STATE OF NORTH CAROLINA
DEPARTMENT OF TRANSPORTATION
RALEIGH

SUPERSTRUCTURE

PLAN OF SPAN A

NORTH CAROLINA PROFESSIONAL SEAL 16301 ENGINEER HSIUNG FANG
8/30/11

REVISIONS						SHEET NO.
NO.	BY:	DATE:	NO.	BY:	DATE:	S-128
1			3			TOTAL SHEETS
2			4			159

DRAWN BY : QT NGUYEN DATE : 1-19-11
CHECKED BY : T.H. FANG DATE : 6-2-11

30-AUG-2011 16:14
X:\TIPProjects-U\U3326B\Structures\str04\FinalPlans\u3326b_sd_s*_04.dgn
qtnguyen

STR. #4

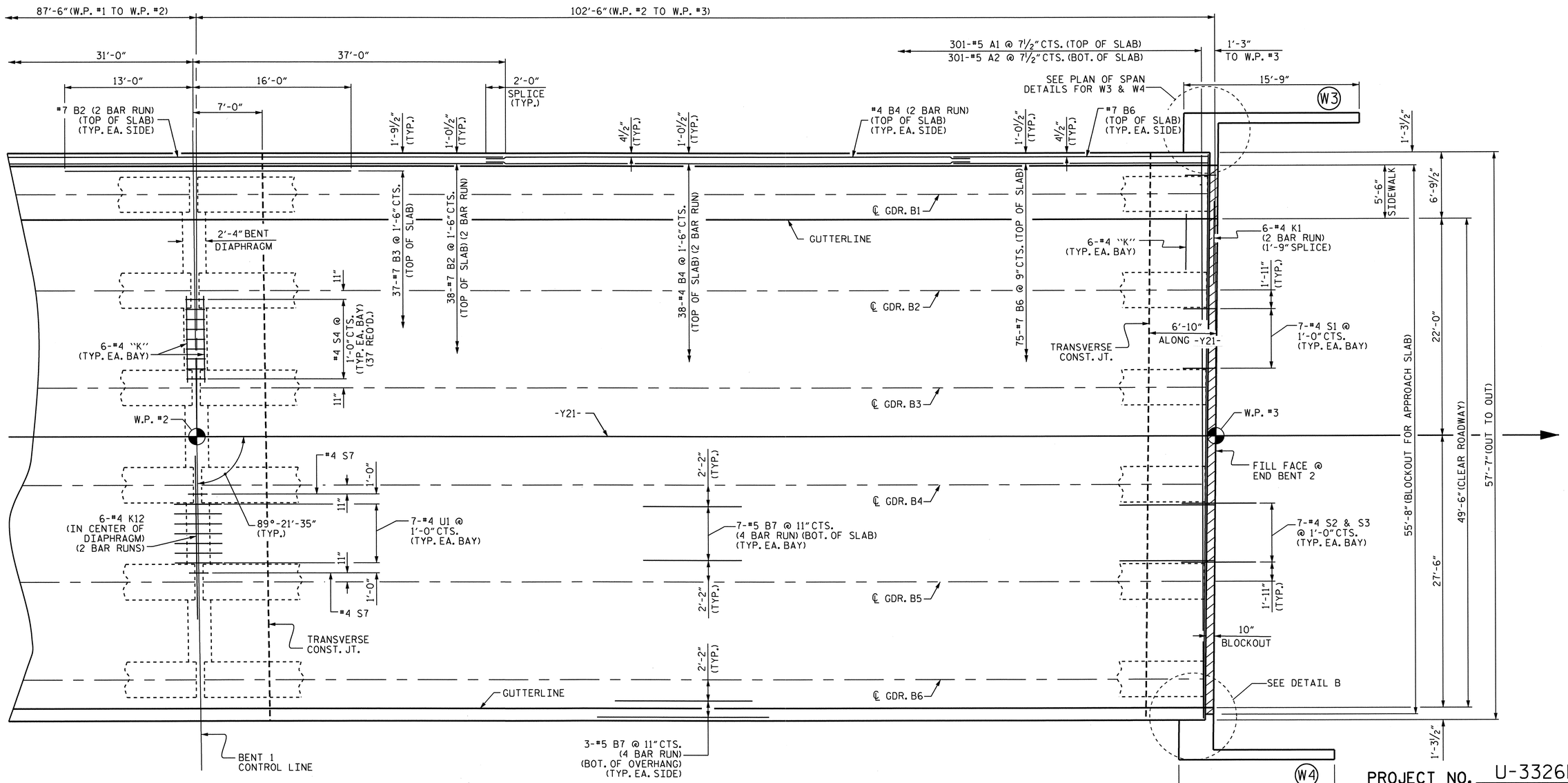

PLAN OF SPAN B

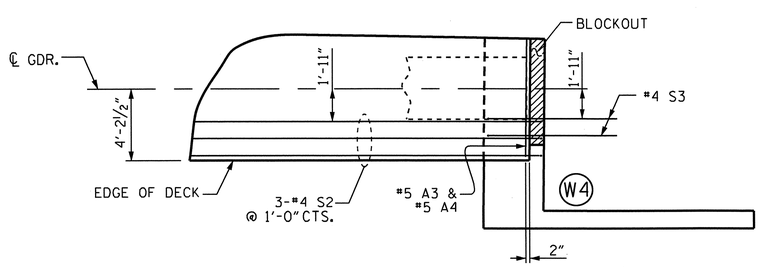

DETAIL B

#4 S6 NOT SHOWN FOR CLARITY.
W4 SHOWN W3 SIMILAR

PROJECT NO. U-3326B
ROCKINGHAM COUNTY
STATION: 303+93.67 -L-

SHEET 2 OF 4

STATE OF NORTH CAROLINA
DEPARTMENT OF TRANSPORTATION
RALEIGH

SUPERSTRUCTURE

PLAN OF SPAN B

NORTH CAROLINA PROFESSIONAL SEAL 16301 ENGINEER TING HSIUNG FANG
8/30/11

REVISIONS						SHEET NO.
NO.	BY:	DATE:	NO.	BY:	DATE:	S-129
1			3			TOTAL SHEETS
2			4			159

STR. #4

DRAWN BY : OT NGUYEN DATE : 1-19-11
CHECKED BY : T.H. FANG DATE : 6-2-11

30-AUG-2011 16:14
X:\TIPProjects-U\U3326B\Structures\str04\FinalPlans\u3326b_sd_s*_04.dgn
qtnguyen

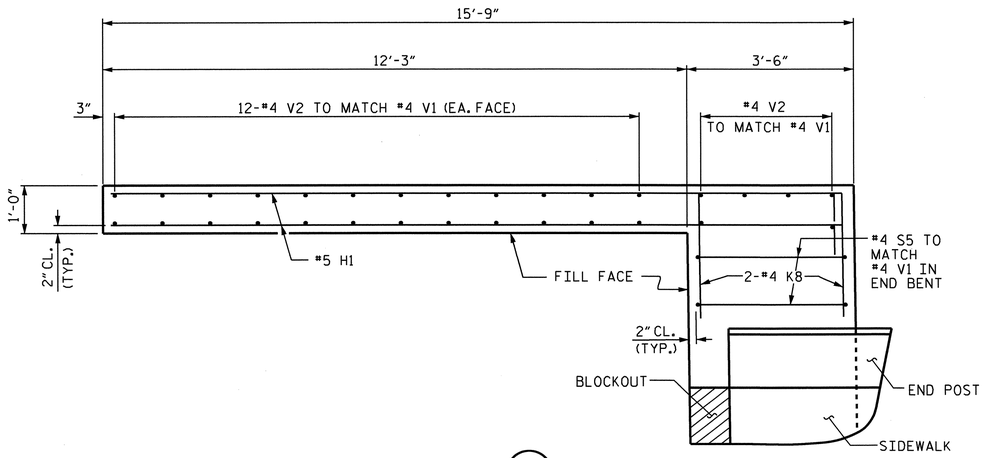

PLAN OF WING (W1)

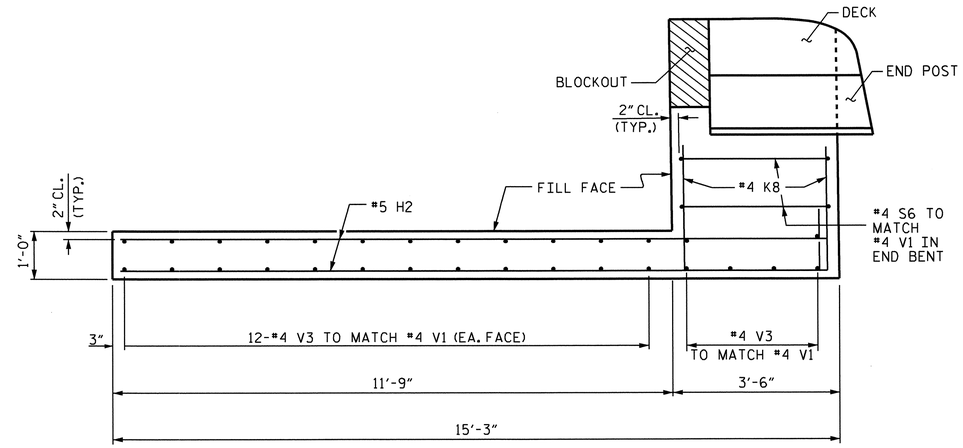

PLAN OF WING (W2)

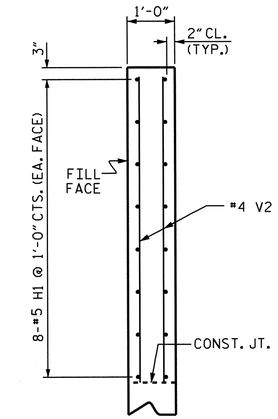

SECTION X-X

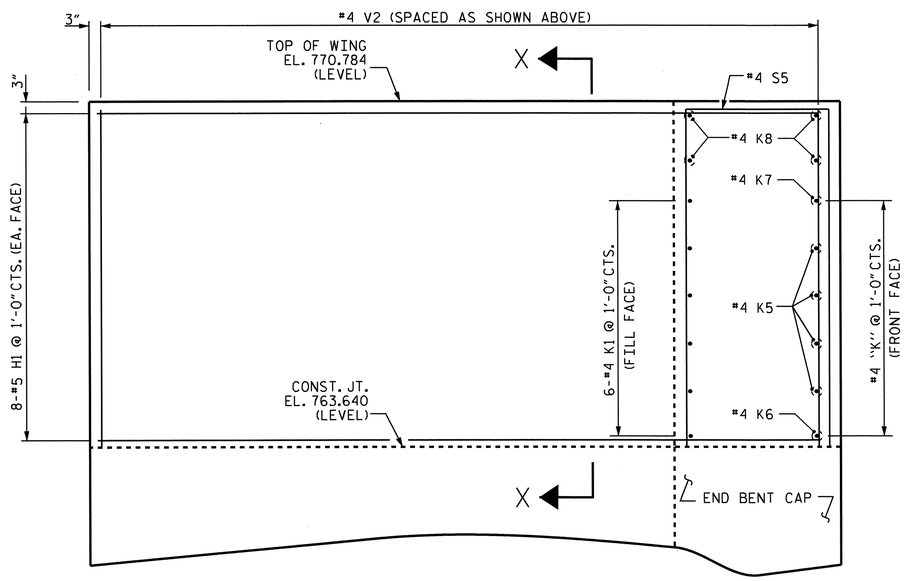

ELEVATION OF WING (W1)

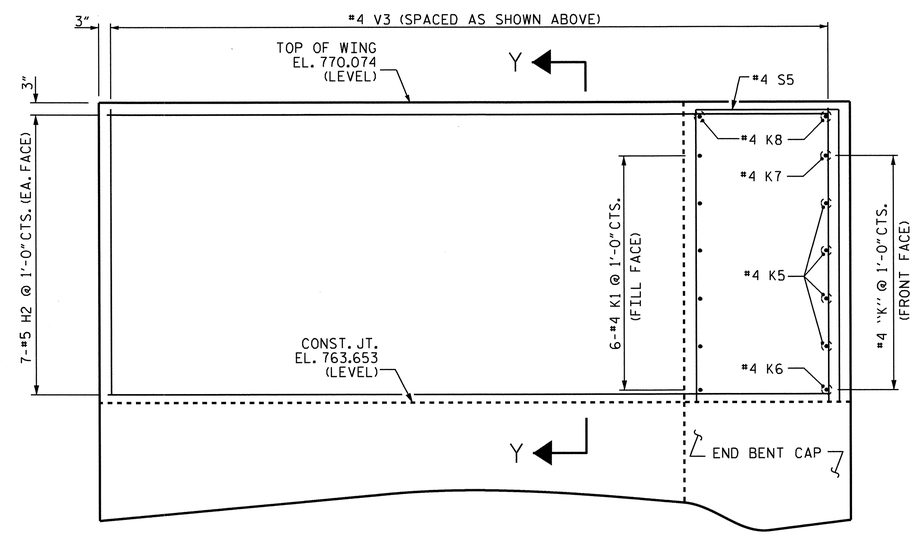

ELEVATION OF WING (W2)

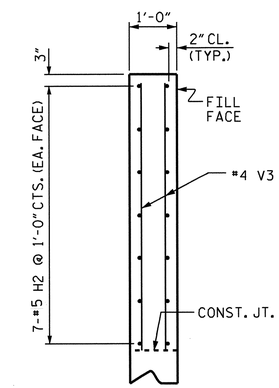

SECTION Y-Y

ABUTMENT WINGS

FOR END BENT REINFORCING STEEL AND DETAILS, SEE "END BENT 1" SHEETS
WINGS ARE PERPEDICULAR TO THE END BENT CAP.

PROJECT NO. U-3326B
ROCKINGHAM COUNTY
STATION: 303+93.67 -L-

SHEET 3 OF 4

STATE OF NORTH CAROLINA
DEPARTMENT OF TRANSPORTATION
RALEIGH

SUPERSTRUCTURE

PLAN OF SPAN DETAILS

NORTH CAROLINA PROFESSIONAL SEAL 16301 ENGINEER TING HSIANG FANG
8/30/11

REVISIONS						SHEET NO.
NO.	BY:	DATE:	NO.	BY:	DATE:	S-130
1			3			TOTAL SHEETS
2			4			159

STR. #4

DRAWN BY : QT NGUYEN DATE : 1-19-11
CHECKED BY : T.H. FANG DATE : 6-2-11

30-AUG-2011 16:14
X:\TIPProjects-U\U3326B\Structures\str04\FinalPlans\u3326b_sd_s*_04.dgn
qtnguyen

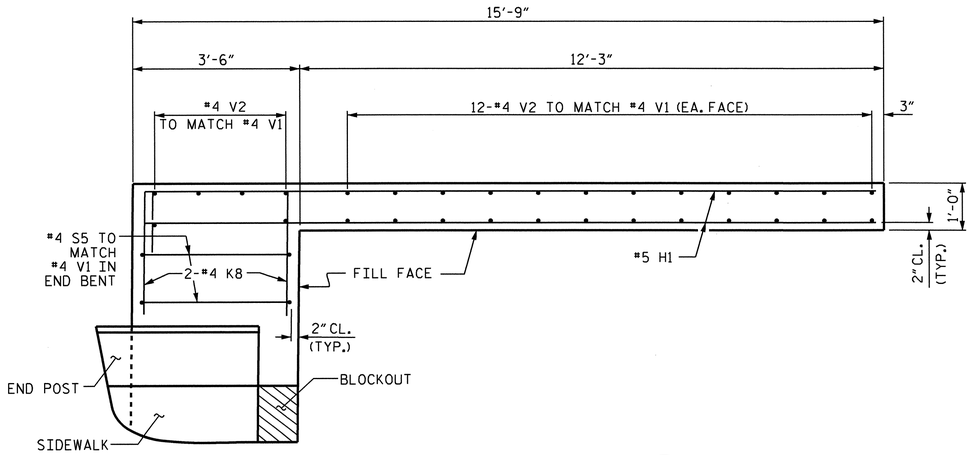

PLAN OF WING (W3)

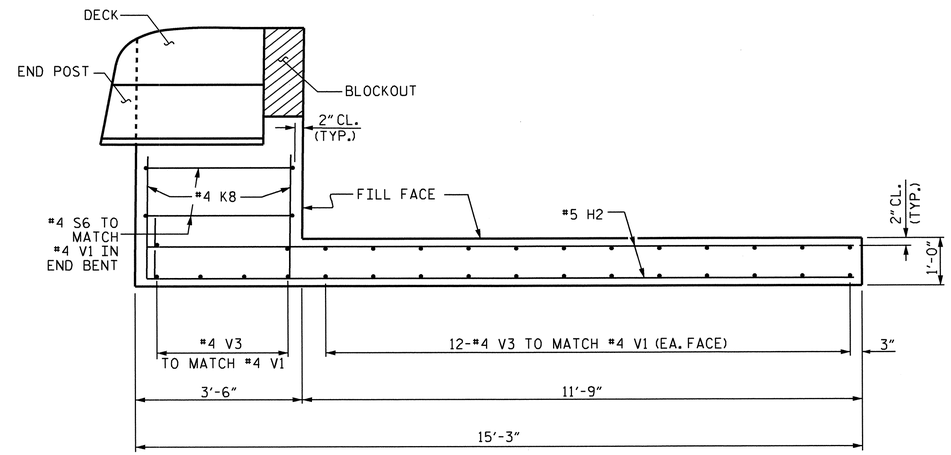

PLAN OF WING (W4)

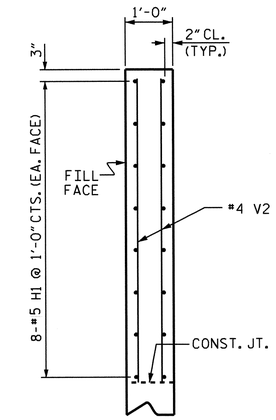

SECTION X-X

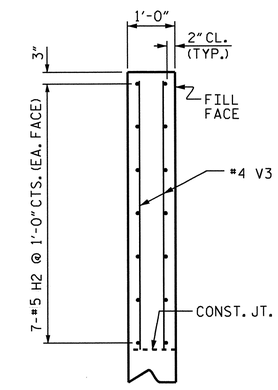

SECTION Y-Y

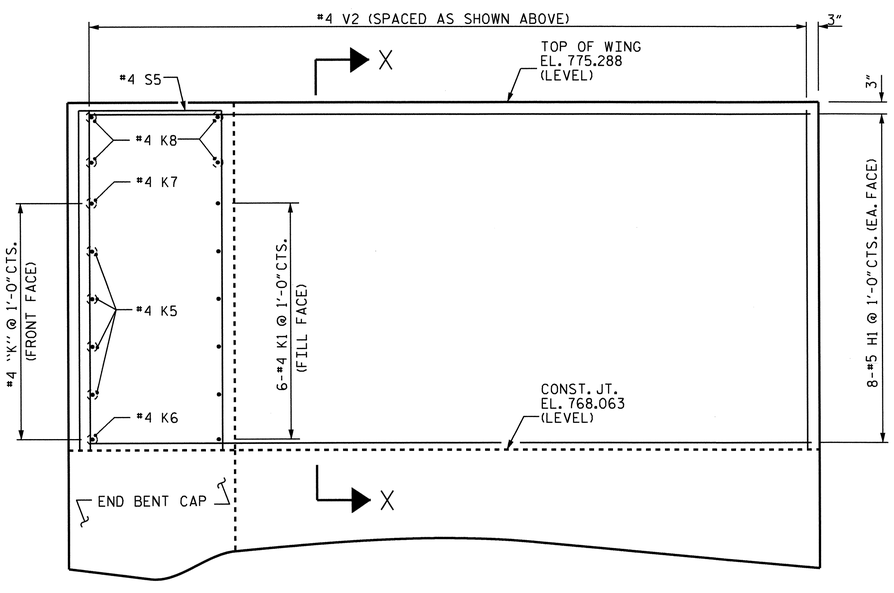

ELEVATION OF WING (W3)

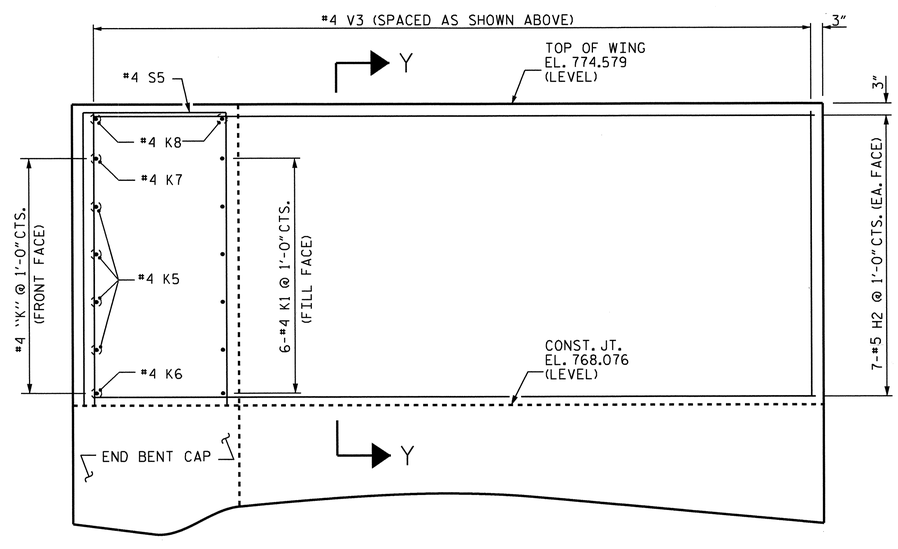

ELEVATION OF WING (W4)

ABUTMENT WINGS

FOR END BENT REINFORCING STEEL AND DETAILS, SEE "END BENT 2" SHEETS
WINGS ARE PERPEDICULAR TO THE END BENT CAP.

PROJECT NO. U-3326B
ROCKINGHAM COUNTY
STATION: 303+93.67 -L-

SHEET 4 OF 4

STATE OF NORTH CAROLINA
DEPARTMENT OF TRANSPORTATION
RALEIGH

SUPERSTRUCTURE

PLAN OF SPAN DETAILS

NORTH CAROLINA PROFESSIONAL SEAL 16301 ENGINEER T.H. FANG
8/30/11

REVISIONS						SHEET NO.
NO.	BY:	DATE:	NO.	BY:	DATE:	S-131
1			3			TOTAL SHEETS
2			4			159

STR. #4

DRAWN BY : QT NGUYEN DATE : 1-19-11
CHECKED BY : T.H. FANG DATE : 6-2-11

30-AUG-2011 16:14
X:\TIPProjects-U\U3326B\Structures\str04\FinalPlans\u3326b_sd_s*_04.dgn
qtnguyen

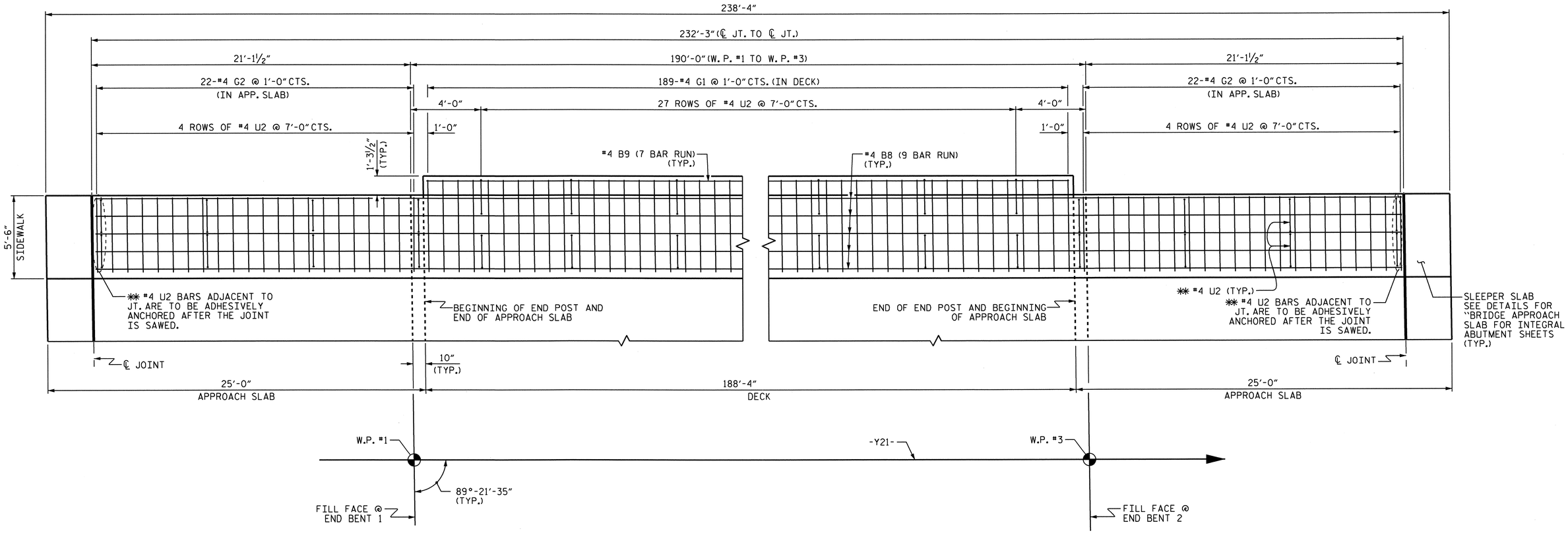

PLAN OF SIDEWALK

MINIMUM SPLICE LENGTH FOR ALL #4 "B" BARS ON THIS SHEET IS 2'-0".

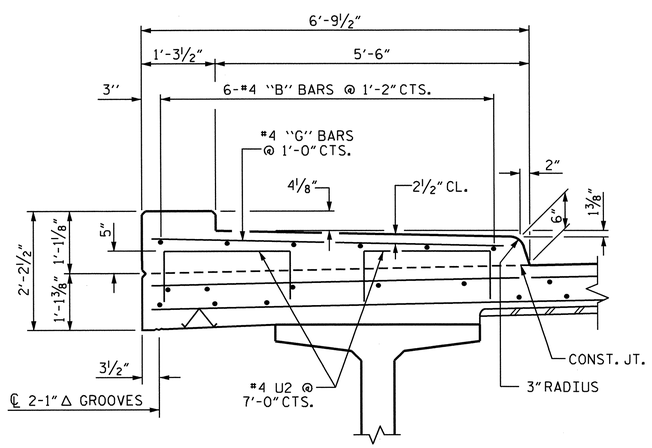

SECTION THRU SIDEWALK

FOR SECTION AND DETAILS ON APPROACH SLAB & SLEEPER SLAB SEE "BRIDGE APPROACH SLAB FOR INTEGRAL ABUTMENT" SHEET.

NOTES:

THE JOINTS IN THE APPROACH SLABS SHALL BE SAWED PRIOR TO THE CASTING OF THE SIDEWALK.

THE SIDEWALK ON A CONTINUOUS UNIT SHALL NOT BE CAST UNTIL ALL CONCRETE IN THE UNIT HAS BEEN CAST AND HAS REACHED A MINIMUM COMPRESSIVE STRENGTH OF 3,000 PSI.

ALL REINFORCING STEEL IN THE SIDEWALK AND END POSTS SHALL BE EPOXY COATED.

GROOVED CONTRACTION JOINTS, ½" IN DEPTH, SHALL BE TOOLED IN ALL EXPOSED FACES OF THE SIDEWALK IN ACCORDANCE WITH ARTICLE 825-10(B) OF THE STANDARD SPECIFICATIONS. THE CONTRACTION JOINTS SHALL BE LOCATED AT A SPACING OF 8 FEET TO 10 FEET BETWEEN EXPANSION JOINTS. NO CONTRACTION JOINT WILL BE REQUIRED FOR SEGMENTS LESS THAN 10 FEET IN LENGTH.

✱✱ THE #4 U2 MAY BE PUSHED INTO GREEN CONCRETE AFTER DECK OR APPROACH SLAB HAS BEEN SCREEDED OFF, EXCEPT AS NOTED. FIELD TESTING OF THE ADHESIVE BONDING SYSTEM IS NOT REQUIRED.

SIDEWALK ON THE BRIDGE EXTENDING TO THE EVAZOTE JOINT ON THE APPROACH SLABS IS INCLUDED IN THE SUPERSTRUCTURE BILL OF MATERIAL AND PAID FOR AS PART OF THE REINFORCED CONCRETE DECK PAY ITEM. SIDEWALK ON THE SLEEPER SLABS ONLY ARE INCLUDED IN THE APPROACH SLAB BILL OF MATERIAL AND PAID FOR AS PART OF THE BRIDGE APPROACH SLABS PAY ITEM.

NORTH CAROLINA PROFESSIONAL SEAL 16301 ENGINEER HSIUNG FANG

8/30/11

PROJECT NO. U-3326B
ROCKINGHAM COUNTY
STATION: 303+93.67 -L-

STATE OF NORTH CAROLINA
DEPARTMENT OF TRANSPORTATION
RALEIGH

SUPERSTRUCTURE

SIDEWALK DETAILS

REVISIONS						SHEET NO.
NO.	BY:	DATE:	NO.	BY:	DATE:	S-132
1			3			TOTAL SHEETS
2			4			159

STR. #4

DRAWN BY : OT NGUYEN DATE : 1-25-11
CHECKED BY : T.H. FANG DATE : 5-31-11

30-AUG-2011 16:14
X:\TIPProjects-U\U3326B\Structures\str04\FinalPlans\U3326B_SD_SW_04.dgn
qtnguyen

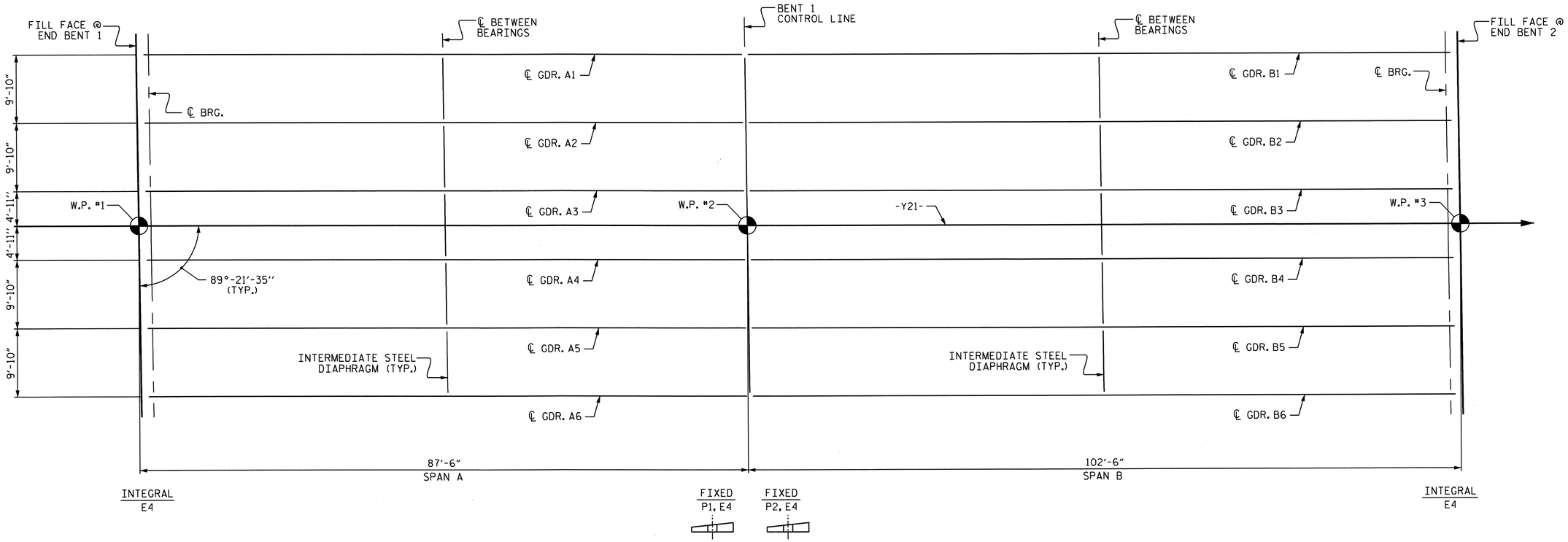

FRAMING PLAN

FOR INTERMEDIATE STEEL DIAPHRAGM DETAILS, SEE "INTERMEDIATE STEEL DIAPHRAGMS FOR 63" PRESTRESSED CONCRETE MODIFIED BULB TEE GIRDERS" SHEET.

DEAD LOAD DEFLECTION TABLE FOR GIRDERS

0.6"Ø LOW RELAXATION	SPAN A											SPAN B										
	GIRDER 1											GIRDER 1										
TENTH POINTS	BRG.	0.1	0.2	0.3	0.4	0.5	0.6	0.7	0.8	0.9	BRG.	BRG.	0.1	0.2	0.3	0.4	0.5	0.6	0.7	0.8	0.9	BRG.
CAMBER (GIRDER ALONE IN PLACE) ↑	0	0.074	0.141	0.192	0.225	0.237	0.225	0.192	0.141	0.074	0	0	0.120	0.226	0.310	0.363	0.381	0.363	0.310	0.226	0.120	0
* DEFLECTION DUE TO SUPERIMPOSED D.L. ↓	0	0.021	0.041	0.055	0.065	0.068	0.065	0.055	0.041	0.021	0	0	0.039	0.074	0.101	0.118	0.124	0.118	0.101	0.074	0.039	0
FINAL CAMBER ↑	0	5/8"	1 3/16"	1 5/8"	1 15/16"	2"	1 15/16"	1 5/8"	1 3/16"	5/8"	0	0	15/16"	1 13/16"	2 1/2"	2 15/16"	3/16"	2 15/16"	2 1/2"	1 13/16"	15/16"	0
	GIRDERS 2 THRU 5											GIRDERS 2 THRU 5										
TENTH POINTS	BRG.	0.1	0.2	0.3	0.4	0.5	0.6	0.7	0.8	0.9	BRG.	BRG.	0.1	0.2	0.3	0.4	0.5	0.6	0.7	0.8	0.9	BRG.
CAMBER (GIRDER ALONE IN PLACE) ↑	0	0.074	0.141	0.192	0.225	0.237	0.225	0.192	0.141	0.074	0	0	0.120	0.226	0.310	0.363	0.381	0.363	0.310	0.226	0.120	0
* DEFLECTION DUE TO SUPERIMPOSED D.L. ↓	0	0.021	0.040	0.055	0.065	0.068	0.065	0.055	0.040	0.021	0	0	0.039	0.074	0.101	0.118	0.124	0.118	0.101	0.074	0.039	0
FINAL CAMBER ↑	0	5/8"	1 3/16"	1 5/8"	1 15/16"	2"	1 15/16"	1 5/8"	1 3/16"	5/8"	0	0	1"	1 13/16"	2 1/2"	2 15/16"	3/16"	2 15/16"	2 1/2"	1 13/16"	1"	0
	GIRDER 6											GIRDER 6										
TENTH POINTS	BRG.	0.1	0.2	0.3	0.4	0.5	0.6	0.7	0.8	0.9	BRG.	BRG.	0.1	0.2	0.3	0.4	0.5	0.6	0.7	0.8	0.9	BRG.
CAMBER (GIRDER ALONE IN PLACE) ↑	0	0.074	0.141	0.192	0.225	0.237	0.225	0.192	0.141	0.074	0	0	0.120	0.226	0.310	0.363	0.381	0.363	0.310	0.226	0.120	0
* DEFLECTION DUE TO SUPERIMPOSED D.L. ↓	0	0.025	0.046	0.064	0.075	0.078	0.075	0.064	0.046	0.025	0	0	0.038	0.071	0.098	0.114	0.120	0.114	0.098	0.071	0.038	0
FINAL CAMBER ↑	0	5/8"	1 1/8"	1 9/16"	1 13/16"	1 7/8"	1 13/16"	1 9/16"	1 1/8"	5/8"	0	0	1"	1 7/8"	2 9/16"	3"	3 1/8"	3"	2 9/16"	1 7/8"	1"	0

* INCLUDES FUTURE WEARING SURFACE
ALL VALUES ARE SHOWN IN FEET (DECIMAL FORM), EXCEPT "FINAL CAMBER", WHICH IS GIVEN IN INCHES (FRACTION FORM).

PROJECT NO. U-3326B
ROCKINGHAM COUNTY
STATION: 303+93.67 -L-

STATE OF NORTH CAROLINA
DEPARTMENT OF TRANSPORTATION
RALEIGH

SUPERSTRUCTURE

FRAMING PLAN & DEAD LOAD DEFLECTIONS

NORTH CAROLINA PROFESSIONAL SEAL 16301 ENGINEER
10/25/11

REVISIONS								SHEET NO.
NO.	BY:	DATE:	NO.	BY:	DATE:			S-133
1			3					TOTAL SHEETS
2			4					159

STR. #4

DRAWN BY : A.S. CALLAWAY DATE : 1/13/10
CHECKED BY : S.M. RASHIDI DATE : 3/15/10

25-OCT-2011 12:39
K:\TIPProjects-U\U3326B\Structures\str04\FinalPlans\U3326B_SD_FP_04.dgn
ttfang

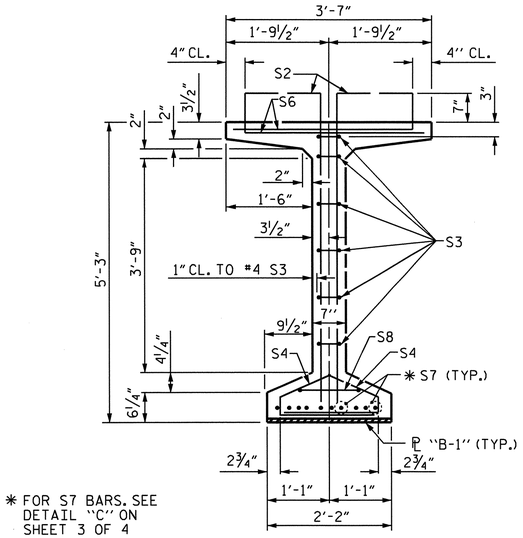

SECTION B-B

FOR EMBEDED ℄ "B-1" DETAILS, SEE SHEET 3 OF 4

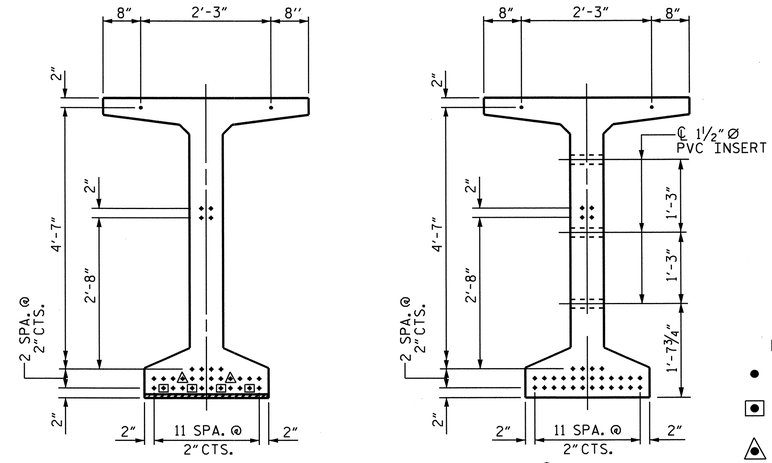

0.6" Ø LOW RELAXATION STRAND LAYOUT

(34 STRANDS, ALL STRAIGHT, 6 DEBONDED STRANDS)

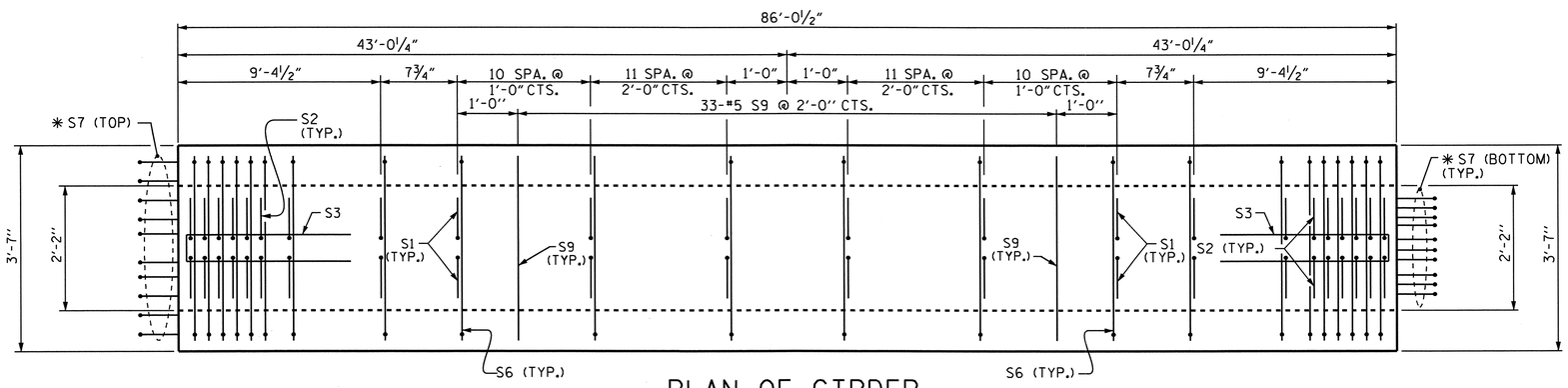

PLAN OF GIRDER

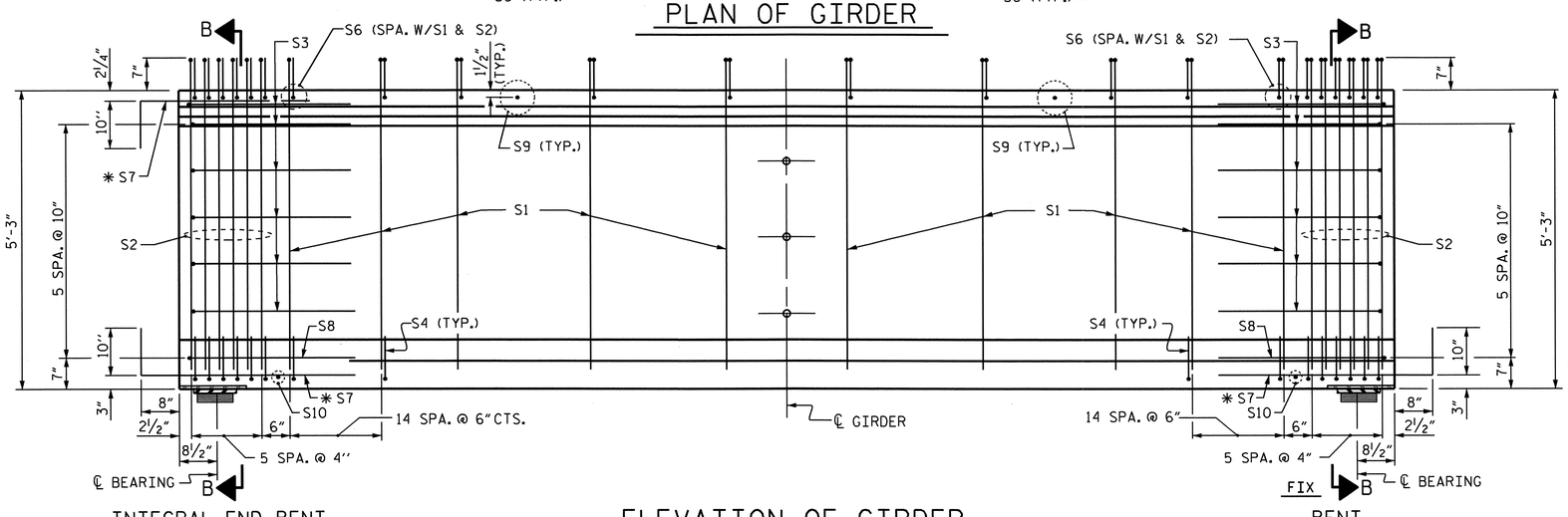

INTEGRAL END BENT

BENT

ELEVATION OF GIRDER

FOR PARTIAL ELEVATIONS AND LOCATIONS OF S11 & S12 BARS, SEE SHEET 3 OF 4.

0.6" Ø L. R. GRADE 270 STRANDS

AREA (SQUARE INCHES)	ULTIMATE STRENGTH (LBS. PER STRAND)	APPLTED PRESTRESS (LBS. PER STRAND)
0.217	58,600	43,950

REINFORCING STEEL FOR ONE GDR

BAR	NUMBER	SIZE	TYPE	LENGTH	WEIGHT
S1	148	#4	1	6'-2"	610
S2	24	#5	1	6'-2"	154
S3	12	#4	2	8'-5"	67
S4	84	#4	3	3'-0"	168
S6	172	#5	4	4'-5"	792
S7	30	#5	STR	3'-8"	115
S8	2	#5	2	9'-0"	19
S9	33	#5	STR	3'-3"	112
S10	2	#3	STR	1'-10"	1
S11	4	#5	2	10'-2"	42
S12	8	#4	STR	8'-0"	43
REINFORCING STEEL				LBS	2123

* NOTE: S7 BARS SHALL BE BENT BEFORE SHIPMENT. HEAT BENDING SHALL NOT BE ALLOWED.

BAR TYPES

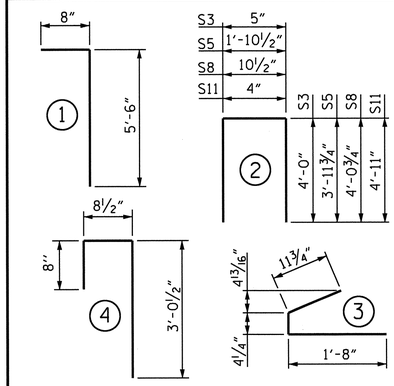

ALL BAR DIMENSIONS ARE OUT-TO-OUT.

QUANTITIES FOR ONE GIRDER

	REINFORCING STEEL	8500 PSI CONCRETE	0.6" Ø L.R. STRANDS
	LB.	C.Y.	NO.
	2,123	17.0	34

GIRDERS REQUIRED

NUMBER	LENGTH	TOTAL LENGTH
6	86'- 0½"	516.25'

PROJECT NO. U-3326B

ROCKINGHAM COUNTY

STATION: 303+93.67 -L-

SHEET 1 OF 4

STATE OF NORTH CAROLINA
DEPARTMENT OF TRANSPORTATION
RALEIGH

STANDARD
63" PRESTRESSED CONCRETE
MODIFIED BULB TEE
CONTINUOUS FOR LIVE LOAD
SPAN A

NORTH CAROLINA PROFESSIONAL SEAL 16301 ENGINEER TING HSILANG FANG
8/30/11

REVISIONS							SHEET NO.
NO.	BY:	DATE:	NO.	BY:	DATE:		S-134
1			3				TOTAL SHEETS
2			4				159

ASSEMBLED BY : A.S. CALLAWAY	DATE : 1/21/10		
CHECKED BY : S.M. RASHIDI	DATE : 3/18/10		
DRAWN BY : EEM 2/6/97	REV. 8/16/99	RWW/LES	
CHECKED BY : VAP 2/6/97	REV. 10/17/00	RWW/LES	
	REV. 5/1/06R	TLA/GM	

30-AUG-2011 16:14
X:\TIPProjects-U\U3326B\Structures\str04\FinalPlans\U3326B_SD_G*_04.dgn
qtnguyen

STR. #4

STD. NO. PCG9

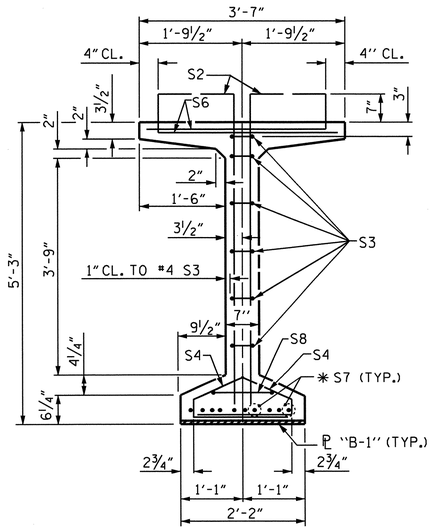

SECTION B-B

FOR EMBEDED ℄ "B-1" DETAILS, SEE SHEET 3 OF 4

* FOR S7 BARS, SEE DETAIL "C" ON SHEET 3 OF 4

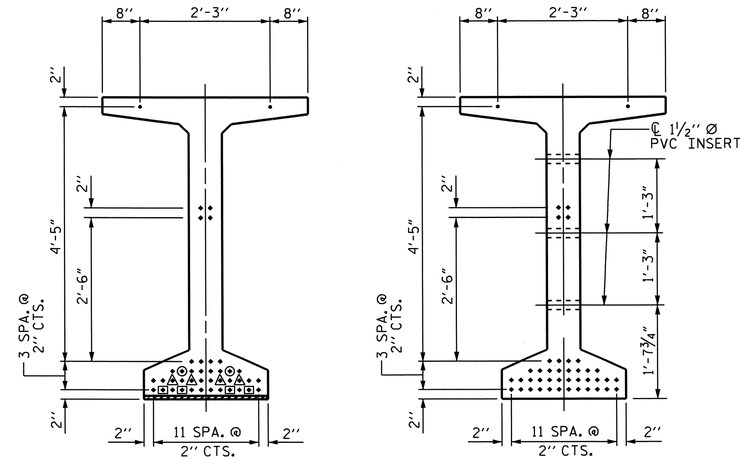

0.6" Ø LOW RELAXATION STRAND LAYOUT

(42 STRANDS, ALL STRAIGHT, 10 DEBONDED STRANDS)

DEBONDING LEGEND

- ● FULLY BONDED STRANDS
- ▣ STRANDS DEBONDED FOR 12'-0" FROM END OF GIRDER
- ◬ STRANDS DEBONDED FOR 8'-0" FROM END OF GIRDER
- ⦿ STRANDS DEBONDED FOR 4'-0" FROM END OF GIRDER

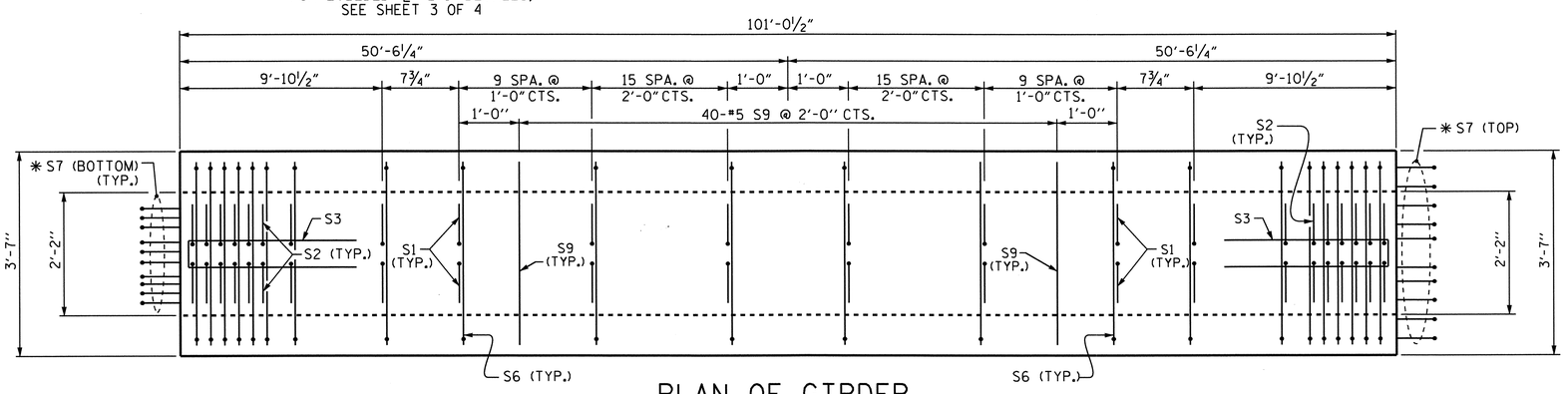

PLAN OF GIRDER

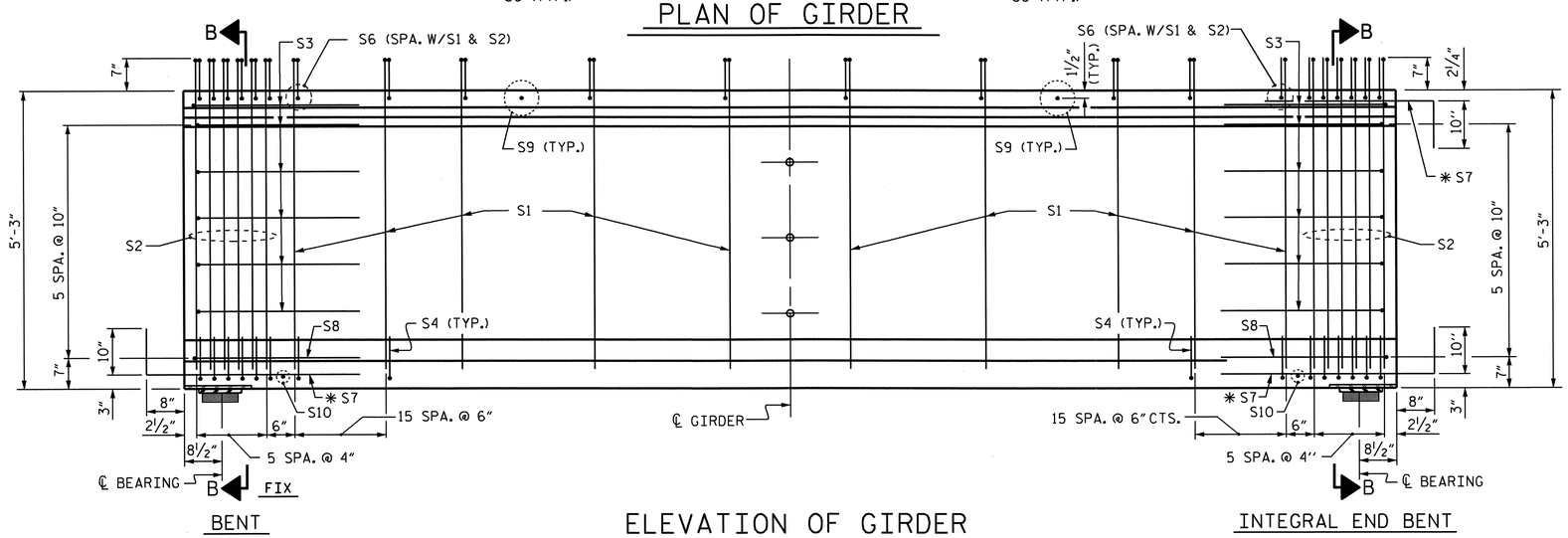

BENT

ELEVATION OF GIRDER

INTEGRAL END BENT

FOR PARTIAL ELEVATIONS AND LOCATIONS OF S11 & S12 BARS, SEE SHEET 3 OF 4.

0.6" Ø L. R. GRADE 270 STRANDS		
AREA (SQUARE INCHES)	ULTIMATE STRENGTH (LBS. PER STRAND)	APPLTED PRESTRESS (LBS. PER STRAND)
0.217	58,600	43,950

REINFORCING STEEL FOR ONE GDR

BAR	NUMBER	SIZE	TYPE	LENGTH	WEIGHT
S1	164	#4	1	6'-2"	676
S2	24	#5	1	6'-2"	154
S3	12	#4	2	8'-5"	67
S4	88	#4	3	3'-0"	176
S6	188	#5	4	4'-5"	866
S7	30	#5	STR	3'-8"	115
S8	2	#5	2	9'-0"	19
S9	40	#5	STR	3'-3"	136
S10	2	#3	STR	1'-10"	1
S11	4	#5	2	10'-2"	42
S12	8	#4	STR	8'-0"	43
REINFORCING STEEL				LBS	2295

* NOTE: S7 BARS SHALL BE BENT BEFORE SHIPMENT. HEAT BENDING SHALL NOT BE ALLOWED.

BAR TYPES

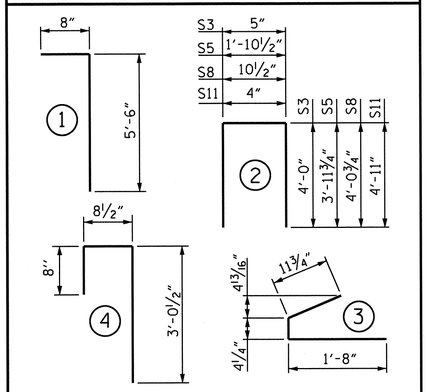

ALL BAR DIMENSIONS ARE OUT-TO-OUT.

QUANTITIES FOR ONE GIRDER

	REINFORCING STEEL	9500 PSI CONCRETE	0.6" Ø L. R. STRANDS
	LB.	C.Y.	NO.
	2,295	20.0	42

GIRDERS REQUIRED

NUMBER	LENGTH	TOTAL LENGTH
6	101'- 0½"	606.25'

PROJECT NO. U-3326B

ROCKINGHAM COUNTY

STATION: 303+93.67 -L-

SHEET 2 OF 4

STATE OF NORTH CAROLINA
DEPARTMENT OF TRANSPORTATION
RALEIGH

STANDARD

63" PRESTRESSED CONCRETE MODIFIED BULB TEE CONTINUOUS FOR LIVE LOAD

SPAN B

NORTH CAROLINA PROFESSIONAL SEAL 16301 ENGINEER TING YUNG HANG

8/30/11

REVISIONS						SHEET NO.
NO.	BY:	DATE:	NO.	BY:	DATE:	S-135
1			3			TOTAL SHEETS
2			4			159

ASSEMBLED BY : A.S. CALLAWAY DATE : 1/21/10
CHECKED BY : S.M. RASHIDI DATE : 3/18/10

DRAWN BY : EEM 2/6/97 REV. 8/16/99 RWW/LES
CHECKED BY : VAP 2/6/97 REV. 10/17/00 RWW/LES
REV. 5/1/06R TLA/GM

30-AUG-2011 16:14
X:\TIPProjects-U\U3326B\Structures\str04\FinalPlans\U3326B_SD_G*_04.dgn
qtnguyen

STR. #4

STD. NO. PCG9

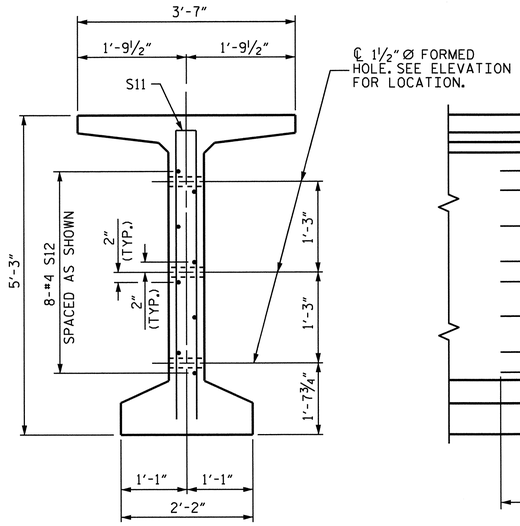

SECTION C-C

(S1, S6 AND S9 BARS NOT SHOWN)

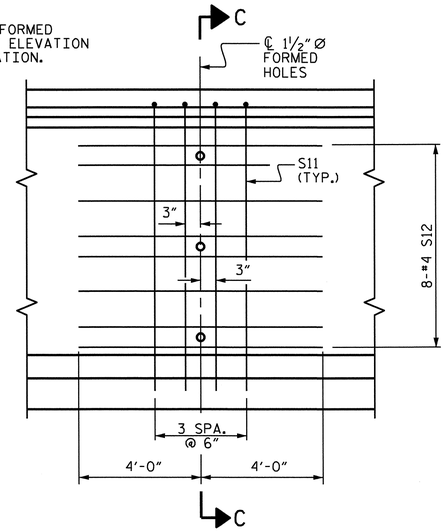

PARTIAL ELEVATION

SHOWING INTERMEDIATE DIAPHRAGM REINFORCING STEEL.

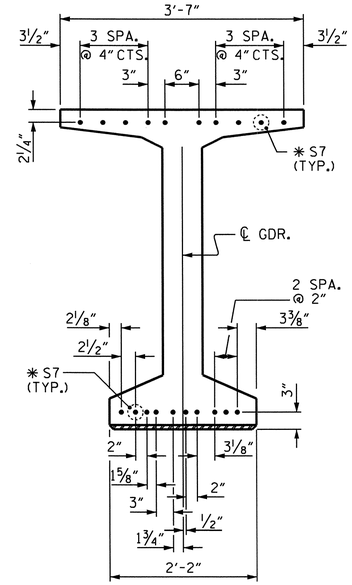

AT END BENT END

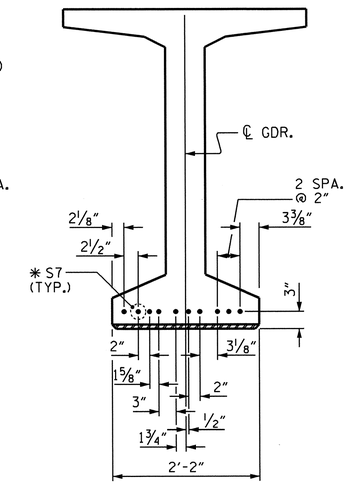

AT BENT 1 END

DETAIL "C"

NOTES

ALL PRESTRESSING STRANDS SHALL BE 7-WIRE LOW-RELAXATION GRADE 270 STRANDS AND SHALL CONFORM TO AASHTO M203 EXCEPT FOR SAMPLING REQUIREMENTS WHICH SHALL BE IN ACCORDANCE WITH THE STANDARD SPECIFICATIONS.

ALL REINFORCING STEEL SHALL BE GRADE 60.

EMBEDDED PLATE "B-1" SHALL BE GALVANIZED IN ACCORDANCE WITH THE STANDARD SPECIFICATIONS. BEVEL EDGES OF PLATE "B-1" TO GIVE CLOSE FIT BUT NOT TIGHT FIT TO STEEL CASTING FORM.

ANCHOR STUDS SHALL CONFORM TO AASHTO M169 GRADES 1010 THROUGH 1020 OR APPROVED EQUAL, AND SHALL MEET THE TYPE "B" REQUIREMENTS OF SUBSECTION 7.3 OF THE ANSI/AASHTO/AWS D1.5 BRIDGE WELDING CODE.

AT ENDS OF GIRDERS TO BE EMBEDDED IN CONCRETE DIAPHRAGMS OR END WALLS, PRESTRESSING STRANDS MAY EXTEND A MAXIMUM OF 2" BEYOND THE GIRDER ENDS. OTHERWISE, PRESTRESSING STRANDS SHALL BE CUT FLUSH WITH THE GIRDER ENDS.

THE TRANSFER OF LOAD FROM THE ANCHORAGES TO THE GIRDER SHALL BE DONE WHEN CONCRETE HAS REACHED A COMPRESSIVE STRENGTH OF NOT LESS THAN 6100 PSI IN SPAN A AND 7600 PSI IN SPAN B.

DEPENDING ON THE TYPE OF SYSTEM USED TO SUPPORT THE DECK SLAB FORMS, PRESET ANCHORS MAY BE NECESSARY IN THE PRESTRESSED CONCRETE GIRDER.

THE TOP SURFACE OF THE GIRDER, EXCLUDING THE OUTSIDE 4", SHALL BE RAKED TO A DEPTH OF ¼".

A 2" x 2" CHAMFER IS ALLOWED AT THE INTERSECTION OF THE WEB AND THE BOTTOM FLANGE OF THE 63" MODIFIED BULB TEES.

THE CONTRACTOR HAS THE OPTION TO PROVIDE, AT NO ADDITIONAL COST TO THE DEPARTMENT, 2 ADDITIONAL STRANDS AT THE TOP OF THE GIRDER TO FACILITATE TYING OF THE REINFORCING STEEL. THESE STRANDS SHALL BE PULLED TO A LOAD OF 4500 lbs.

FOR PRESTRESSED CONCRETE MEMBERS, SEE SPECIAL PROVISIONS.

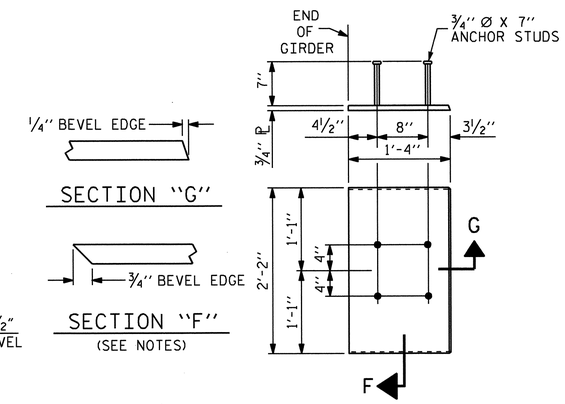

EMBEDDED PLATE "B-1" DETAILS

(2 REQ'D PER GIRDER)

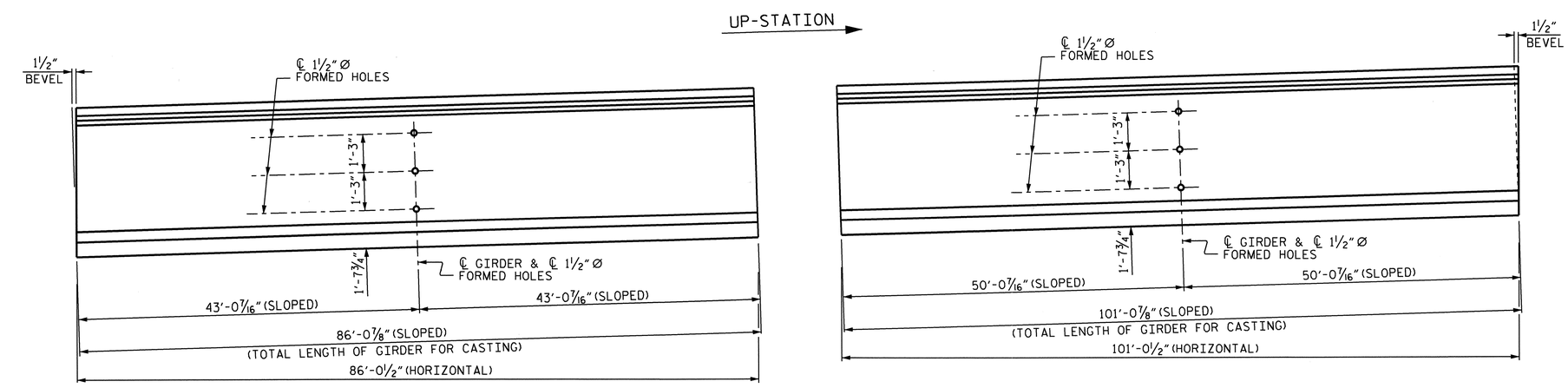

GIRDER ELEVATION

SHOWING BOLT HOLES PLACEMENT, BEVELS, HORIZONTAL & SLOPED DIMENSIONS.

PROJECT NO. U-3326B
ROCKINGHAM COUNTY
STATION: 303+94.67 -L-

SHEET 3 OF 4

STATE OF NORTH CAROLINA
DEPARTMENT OF TRANSPORTATION
RALEIGH

STANDARD

PRESTRESSED CONCRETE GIRDER CONTINUOUS FOR LIVE LOAD DETAILS

NORTH CAROLINA PROFESSIONAL SEAL 16301 ENGINEER TING HSIUNG FANG
8/30/11

REVISIONS						SHEET NO.
NO.	BY:	DATE:	NO.	BY:	DATE:	S-136
1			3			TOTAL SHEETS
2			4			159

ASSEMBLED BY : A.S. CALLAWAY DATE : 1/21/10
CHECKED BY : S.M. RASHIDI DATE : 3/15/10

DRAWN BY : ELR 11/91
CHECKED BY : GRP 11/91

REV. 10/17/00 RWW/LES
REV. 7/10/01RR LES/RDR
REV. 5/1/06 TLA/GM

30-AUG-2011 16:14
X:\TIPProjects-U\U3326B\Structures\str04\FinalPlans\U3326B_SD_G*_04.dgn
qtnguyen

STR. #4

STD. NO. PCG11

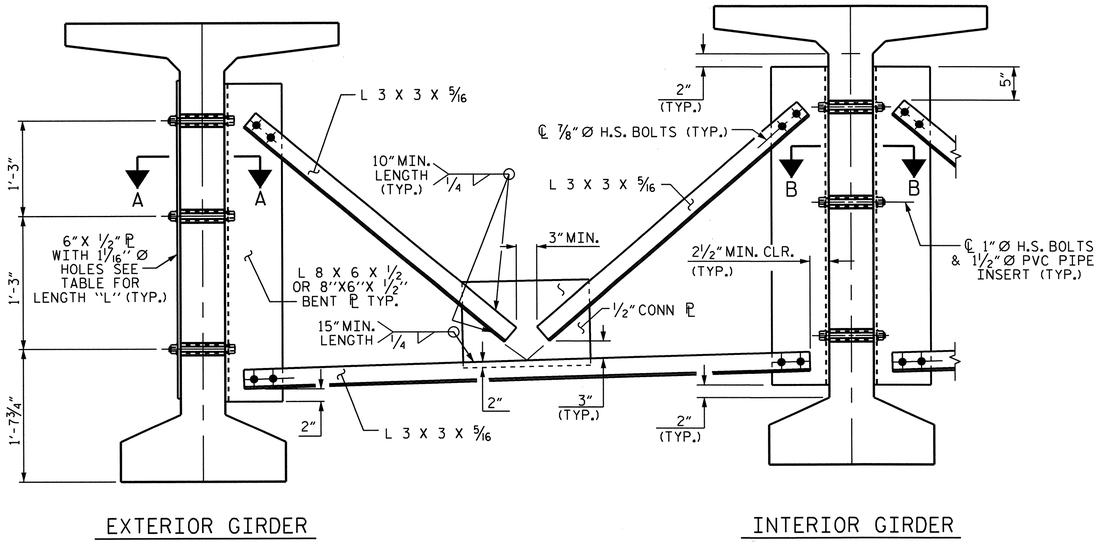

EXTERIOR GIRDER

INTERIOR GIRDER

PART SECTION AT INTERMEDIATE DIAPHRAGM

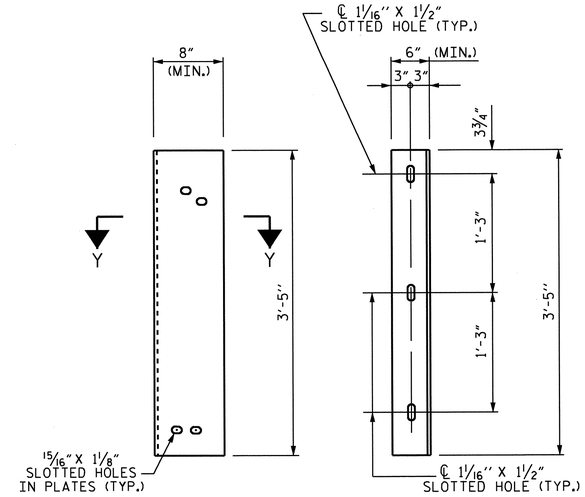

DIAPHRAGM FACE

WEB FACE

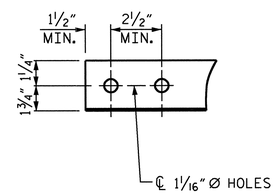

ANGLE END
(L 3 X 3 X 5/16)

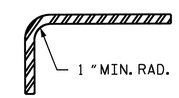

SECTION Y-Y

CONNECTOR PLATE DETAILS

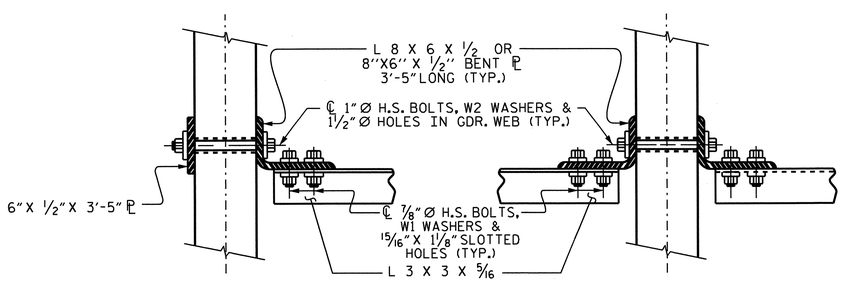

SECTION A-A

SECTION B-B

CONNECTION DETAILS

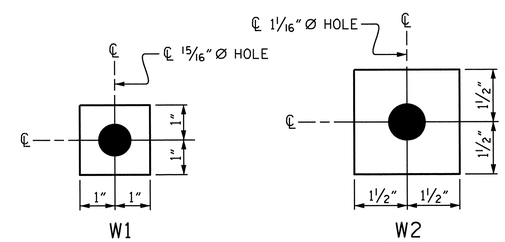

W1

ℙ 7/16" X 2" X 2"

USE WITH 7/8"Ø HVY. HEX NUTS & DIRECT TENSION INDICATOR WASHERS AT DIAPHRAGM ANGLE TO CONNECTOR PLATE CONNECTIONS

W2

ℙ 7/16" X 3" X 3"

USE WITH 1"Ø HVY. HEX NUTS AT CONNECTOR PLATE TO GIRDER CONNECTIONS

WASHER DETAILS

STRUCTURAL STEEL NOTES

ALL INTERMEDIATE DIAPHRAGM STEEL, CONNECTOR PLATES AND PLATE WASHERS SHALL BE AASHTO M270 GRADE 50 OR APPROVED EQUAL.

TENSION ON THE AASHTO M164 BOLTS THROUGH THE ANGLE MEMBER SHALL BE CALIBRATED USING DIRECT TENSION INDICATOR WASHERS IN ACCORDANCE WITH THE STANDARD SPECIFICATIONS. FOR DIRECT TENSION INDICATORS, SEE SPECIAL PROVISION.

TENSION ON THE AASHTO M164 BOLTS THROUGH THE GIRDER WEB SHALL BE SNUG TIGHTENED FOLLOWED BY AN ADDITIONAL 1/4 TURN.

THE PLATES, BENT PLATES, ANGLES, AND PLATE WASHERS SHALL BE GALVANIZED OR METALLIZED IN ACCORDANCE WITH THE STANDARD SPECIFICATIONS. FOR THERMAL SPRAYED COATINGS (METALLIZATION), SEE SPECIAL PROVISIONS.

FOR METALLIZATION, APPLY AN 8 MIL THICK 99.99 PERCENT ZINC (W-Zn-1) THERMAL SPRAYED COATING WITH A 0.5 MIL THICK SEAL COAT TO ALL STEEL DIAPHRAGM SURFACES IN ACCORDANCE WITH THE THERMAL SPRAYED COATINGS SPECIAL PROVISIONS AND SECTION 442 OF THE STANDARD SPECIFICATIONS.

GALVANIZE THE HIGH STRENGTH BOLTS, NUTS, WASHERS AND DIRECT TENSION INDICATORS IN ACCORDANCE WITH THE STANDARD SPECIFICATIONS. FOR HIGH STRENGTH BOLTS, SEE SPECIAL PROVISIONS.

USE A MINIMUM 7/16" THICK PLATE WASHER WITH STANDARD HOLES UNDER EACH BOLT HEAD AND NUT. THE PLATE WASHERS SHALL HAVE SUFFICIENT SIZE TO COVER THE HOLES AFTER INSTALLATION. HARDENED WASHERS AND DIRECT TENSION INDICATORS ARE TO BE USED IN CONJUNCTION WITH THE PLATE WASHERS IN THE L 3 X 3 X 5/16 ANGLE MEMBER CONNECTION.

FOR BOLTS THROUGH THE GIRDER WEB, PROVIDE SUFFICIENT LENGTH OF ALL BOLTS TO ACCOMMODATE WASHERS AND THE THICKNESS OF CONNECTING MEMBER PLUS AT LEAST 1/4" PROJECTION BEYOND THE NUT.

INTERMEDIATE DIAPHRAGM ASSEMBLY SHALL COMPLY WITH SECTION 1072 OF THE STANDARD SPECIFICATIONS.

CONTRACTOR SHALL SUBMIT TWO SETS OF WORKING DRAWINGS FOR THE INTERMEDIATE DIAPHRAGM ASSEMBLY FOR REVIEW, COMMENTS AND ACCEPTANCE. AFTER REVIEW, COMMENTS, AND ACCEPTANCE, SUBMIT SEVEN SETS FOR DISTRIBUTION.

IN THE EXTERIOR BAYS, TEMPORARY STRUTS SHALL BE PLACED BETWEEN PRESTRESSED GIRDERS ADJACENT TO THE STEEL DIAPHRAGMS. STRUTS SHALL REMAIN IN PLACE 3 DAYS AFTER CONCRETE IS PLACED. ALL AASHTO M164 H.S. BOLTS SHALL BE FULLY TIGHTENED AFTER THE STRUTS HAVE BEEN REMOVED.

THE COST OF THE STEEL DIAPHRAGMS AND ASSEMBLIES SHALL BE INCLUDED IN THE UNIT PRICE BID FOR PRESTRESSED CONCRETE GIRDERS.

PROJECT NO. U-3326B
ROCKINGHAM COUNTY
STATION: 303+93.67 -L-

SHEET 4 OF 4

NORTH CAROLINA PROFESSIONAL SEAL 16301 ENGINEER TING-HONG FANG
8/30/11

STATE OF NORTH CAROLINA
DEPARTMENT OF TRANSPORTATION
RALEIGH

STANDARD

INTERMEDIATE STEEL DIAPHRAGMS FOR 63" MODIFIED BULB TEE PRESTRESSED CONCRETE GIRDER

REVISIONS						SHEET NO.
NO.	BY:	DATE:	NO.	BY:	DATE:	S-137
1			3			TOTAL SHEETS
2			4			159

STR. #4

STD. NO. PCG13

ASSEMBLED BY : A.S. CALLAWAY	DATE : 1-21-10
CHECKED BY : S.M. RASHIDI	DATE : 3/15/10
DRAWN BY : RWW 11/09	ADDED 11/23/09
CHECKED BY : GM 11/09	

30-AUG-2011 16:14
X:\TIPProjects-U\U3326B\Structures\str04\Final Plans\U3326B_SD_G*_04.dgn
qtnguyen

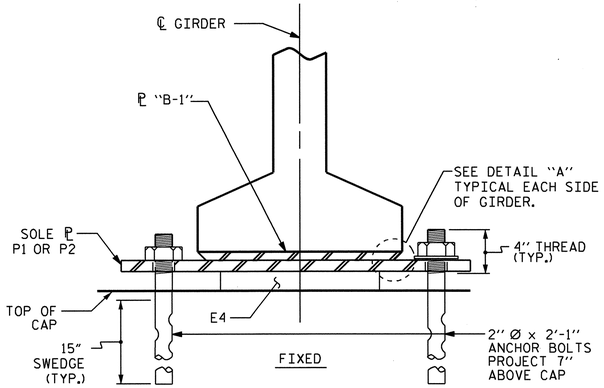

SECTION E-E

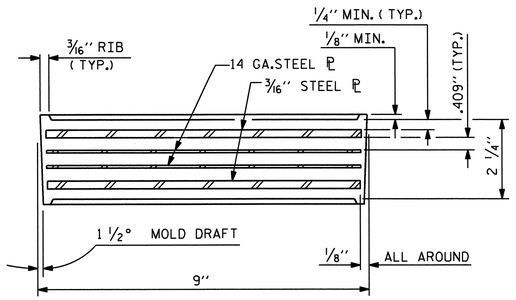

TYPICAL SECTION OF ELASTOMERIC BEARINGS

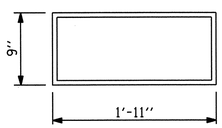

E4 (24 REQ'D.)

PLAN VIEW OF ELASTOMERIC BEARINGS

TYPE V

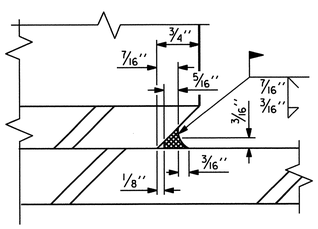

DETAIL "A"

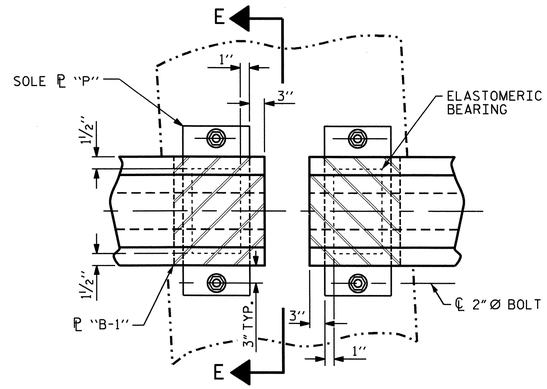

PLAN VIEW @ BENT

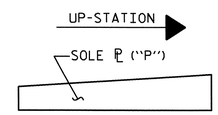

SOLE ℗ PLACEMENT DETAIL

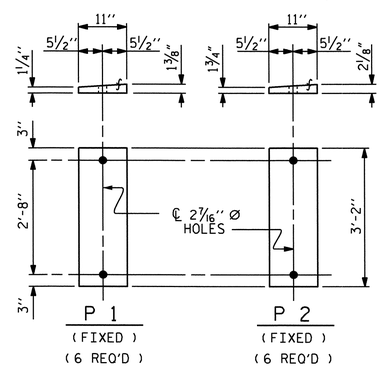

SOLE PLATE DETAILS ("P")

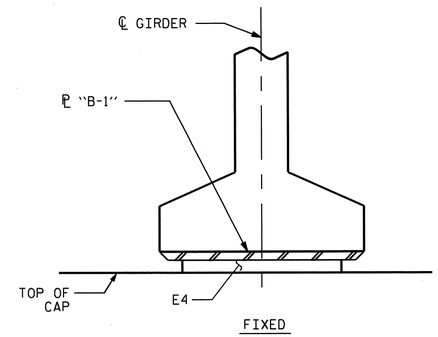

SECTION D-D

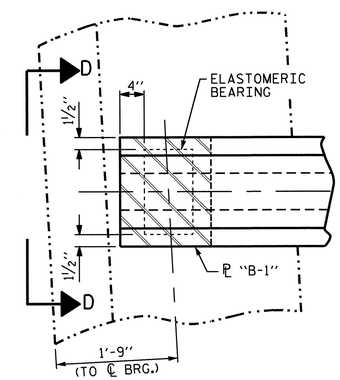

PLAN VIEW @ END BENT

(END BENT 1 SHOWN, END BENT 2 SIMILAR)

NOTES

AT ALL FIXED POINTS OF SUPPORT, NUTS FOR ANCHOR BOLTS ARE TO BE TIGHTENED FINGER TIGHT AND THEN BACKED OFF 1/2 TURN. THE THREAD OF THE NUT AND BOLT SHALL THEN BE BURRED WITH A SHARP POINTED TOOL.

STEEL SOLE PLATES, ANCHOR BOLTS, NUTS, AND WASHERS SHALL BE GALVANIZED IN ACCORDANCE WITH THE STANDARD SPECIFICATIONS.

PRIOR TO WELDING, GRIND THE GALVANIZED SURFACE OF THE PORTION OF THE EMBEDDED PLATE AND SOLE PLATE THAT ARE TO BE WELDED. AFTER WELDING, DAMAGED GALVANIZED SURFACES SHALL BE REPAIRED IN ACCORDANCE WITH THE STANDARD SPECIFICATIONS.

WHEN WELDING THE SOLE PLATE TO THE EMBEDDED PLATE IN THE GIRDER, USE TEMPERATURE INDICATING WAX PENS, OR OTHER SUITABLE MEANS, TO ENSURE THAT THE TEMPERATURE OF THE SOLE PLATE DOES NOT EXCEED 300°F. TEMPERATURES ABOVE THIS MAY DAMAGE THE ELASTOMER.

SOLE PLATE "P", BOLTS, NUTS, WASHERS, AND PIPE SLEEVE SHALL BE INCLUDED IN THE PAY ITEM FOR PRESTRESSED CONCRETE GIRDERS.

ANCHOR BOLTS SHALL MEET THE REQUIREMENTS OF ASTM A449. NUTS SHALL MEET THE REQUIREMENTS OF AASHTO M291-DH OR AASHTO M292-2H. WASHERS SHALL MEET THE REQUIREMENTS OF AASHTO M293. NO SHOP DRAWINGS ARE REQUIRED FOR ANCHOR BOLTS, NUTS AND WASHERS. SHOP INSPECTION IS REQUIRED.

ALL SURFACES OF BEARING PLATES SHALL BE SMOOTH AND STRAIGHT.

ELASTOMER IN ALL BEARINGS SHALL BE 60 DUROMETER HARDNESS

LOAD RATINGS	MAX.D.L.+ L.L.
TYPE V	259 K

PROJECT NO. U-3326B
ROCKINGHAM COUNTY
STATION: 303+93.67 -L-

STATE OF NORTH CAROLINA
DEPARTMENT OF TRANSPORTATION
RALEIGH

ELASTOMERIC BEARING DETAILS

PRESTRESSED CONCRETE GIRDER SUPERSTRUCTURE

REVISIONS						SHEET NO.
NO.	BY:	DATE:	NO.	BY:	DATE:	S-138
1			3			TOTAL SHEETS
2			4			159

STR. #4

DRAWN BY : A.S. CALLAWAY DATE : 1/21/10
CHECKED BY : S.M. RASHIDI DATE : 3/18/10

30-AUG-2011 16:14
X:\TIPProjects-U\U3326B\Structures\str04\Final Plans\U3326B_SD_BG_04.dgn
qtnguyen

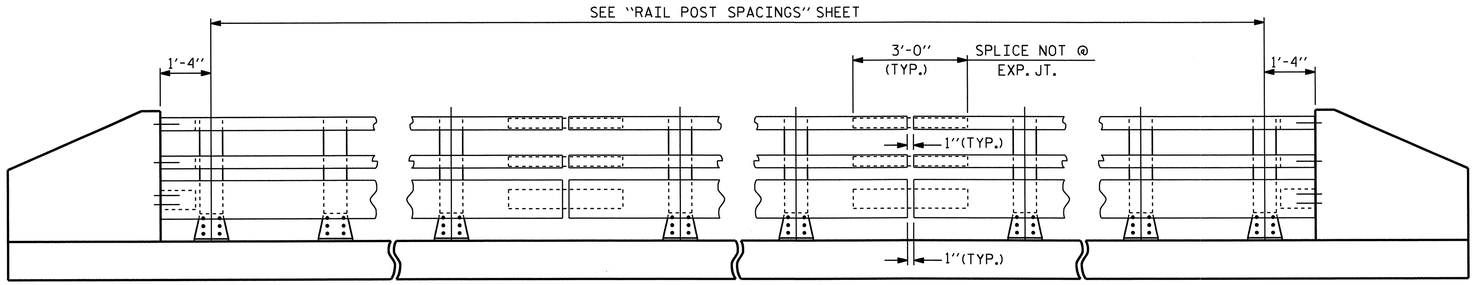

ELEVATION

NOTE:
FOR ATTACHMENT OF METAL RAIL TO END POST, SEE STANDARD NO. BMR7.

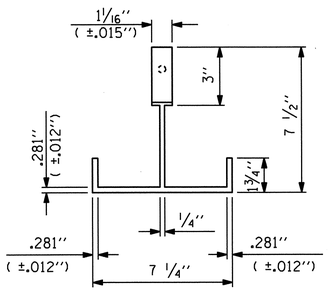

PLAN

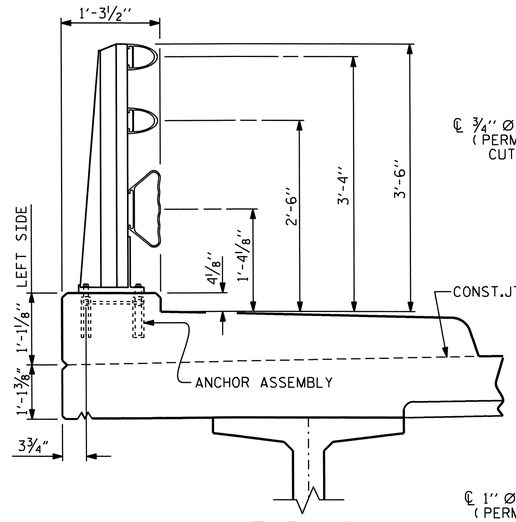

SECTION THRU RAIL

FOR ANCHOR ASSEMBLY, SEE "3 BAR METAL RAIL" STD.No.BMR6

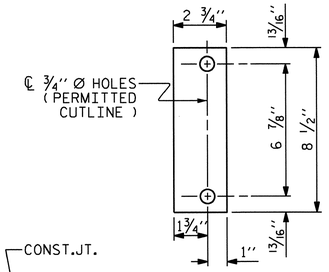

REAR PLATE

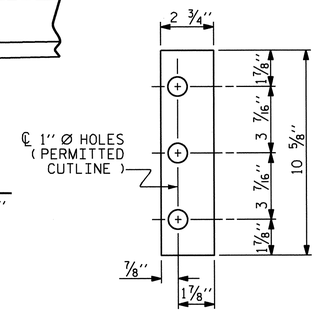

FRONT PLATE

SHIM DETAILS

NOTE :
SHIMS MAY BE CUT ALONG PERMITTED CUTLINE OR SLOTTED TO EDGE OF PLATE TO FACILITATE PLACEMENT.

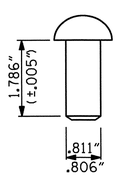

RIVET DETAIL

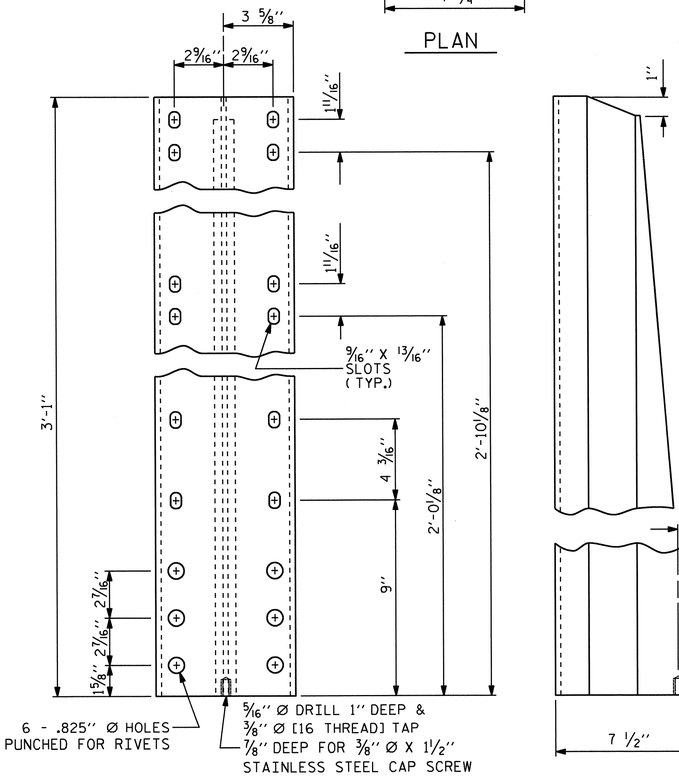

FRONT ELEVATION

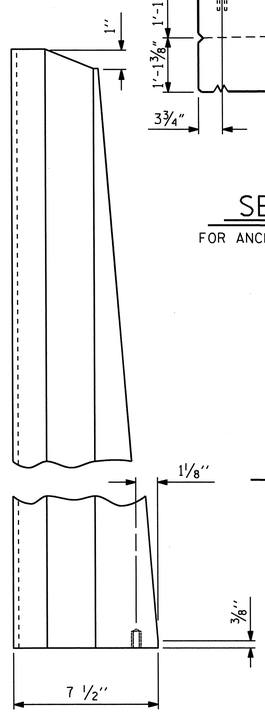

SIDE ELEVATION

DETAILS OF POST

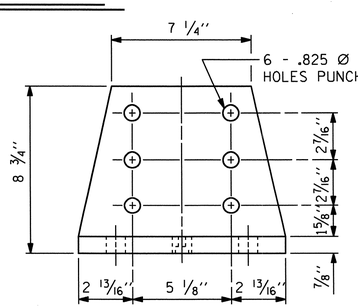

FRONT ELEVATION

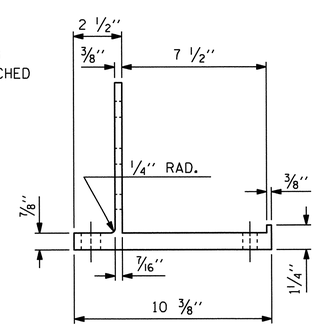

SIDE ELEVATION

POST BASE DETAILS

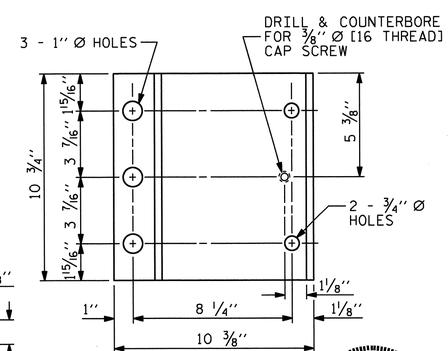

PLAN

NOTES

AT THE CONTRACTOR'S OPTION, METAL RAIL MAY BE EITHER ALUMINUM OR GALVANIZED STEEL IN ACCORDANCE WITH THE REQUIREMENTS OF THE GENERAL NOTES AND THE FOLLOWING SPECIFICATIONS FOR THE ALTERNATE MATERIALS; HOWEVER, THE CONTRACTOR WILL BE REQUIRED TO USE THE SAME RAIL MATERIAL ON ALL STRUCTURES ON THE PROJECT FOR WHICH METAL RAIL IS DESIGNATED.

ALUMINUM RAILS

MATERIAL FOR POSTS, BASES AND RAILS, EXPANSION BARS AND CLAMP BARS SHALL BE ASTM B221 ALLOY 6061-T6.

MATERIAL FOR RIVETS SHALL BE ASTM B316 ALLOY 6061-T6. RIVETS SHALL BE STANDARD BUTTON HEAD AND CONE POINT COLD DRIVEN AS PER DRAWING.

THE BASE OF RAIL POSTS, OR ANY OTHER ALUMINUM SURFACE IN CONTACT WITH CONCRETE SHALL BE THOROUGHLY COATED WITH AN ALUMINUM IMPREGNATED CAULKING COMPOUND OF APPROVED QUALITY.

MATERIAL FOR SHIMS TO BE ASTM B209 ALLOY 6061-T6.

GALVANIZED STEEL RAILS

MATERIAL AND GALVANIZING ARE TO CONFORM TO THE FOLLOWING SPECIFICATIONS:

POST, POST BASES, RAILS, EXPANSION BARS AND CLAMP BARS : AASHTO M270 GRADE 36 STRUCTURAL STEEL - GALVANIZED TO AASHTO M111.

RIVETS: RIVETS SHALL MEET THE REQUIREMENTS OF ASTM A502 FOR GRADE 1 RIVETS.

THE CUT ENDS OF GALVANIZED STEEL RAILING, AFTER GRINDING SMOOTH SHALL BE GIVEN TWO COATS OF ZINC RICH PAINT MEETING THE REQUIREMENTS OF FEDERAL SPECIFICATION MIL-P-26915 USAF TYPE 1, OR OF FEDERAL SPECIFICATIONS TT-P-641.

SHIMS: SHIMS SHALL MEET THE REQUIREMENTS OF ASTM A570 FOR GRADE 33 OR A611 FOR GRADE C AND SHALL BE GALVANIZED IN ACCORDANCE WITH AASHTO M111.

RAIL CAPS: RAIL CAPS SHALL MEET THE REQUIREMENTS OF ASTM A570 FOR GRADE 33 OR A611 FOR GRADE C AND SHALL BE GALVANIZED IN ACCORDANCE WITH AASHTO M111.

GENERAL NOTES

RAILING SHALL BE CONTINUOUS FROM END POST TO END POST OF BRIDGE. EACH JOINT IN RAIL LENGTH SHALL BE SPLICED AS DETAILED. PANEL LENGTHS OF RAIL SHALL BE ATTACHED TO A MINIMUM OF THREE POSTS. PLACE ONE JOINT SPLICE JUST BEYOND THE 3RD RAIL POST FROM EACH END, TYPICALLY 14' FROM THE END. PLACE OTHER JOINTS AS NEEDED.

FOR END OF RAIL TO CLEAR FACE OF CONCRETE END POST DIMENSION, SEE STANDARD NO. BMR7.

CAP SCREWS SHALL BE ASTM F593 ALLOY 305 STAINLESS STEEL. WASHERS FOR RAIL ATTACHMENT SHALL MEET THE REQUIREMENTS OF ASTM F844 EXCEPT THEY SHALL BE MADE FROM ALLOY 304 STAINLESS STEEL.

CERTIFIED MILL REPORTS ARE REQUIRED FOR RAILS AND POSTS. SHOP INSPECTION IS NOT REQUIRED.

METAL RAIL POSTS SHALL BE SET NORMAL TO CURB GRADE.

METHOD OF MEASUREMENT FOR METAL RAILS: FOR LENGTH OF METAL RAILS TO BE PAID FOR, SEE THE STANDARD SPECIFICATIONS.

CURVED RAIL USAGE: WHERE RAILS ARE TO BE USED ON BRIDGES ON HORIZONTAL AND/OR VERTICAL CURVATURE THE CONTRACTOR MAY, AT HIS OPTION, HAVE THE REQUIRED CURVATURE IN THE RAIL FORMED IN THE SHOP OR IN THE FIELD. IN EITHER EVENT, THE RAIL SHALL CONFORM WITHOUT BUCKLING OR KINKING TO THE REQUIRED CURVATURE IN A UNIFORM MANNER ACCEPTABLE TO THE ENGINEER.

TO INSURE FUTURE IDENTIFICATION OF THE FABRICATOR, A PERMANENT IDENTIFYING MARK SHALL BE PLACED ON EACH POST. THE METHOD OF MARKING AND LOCATION SHALL BE SUCH THAT IT DOES NOT DETRACT FROM THE APPEARANCE OF THE POST, BUT REMAIN VISIBLE AFTER RAIL PLACEMENT.

SHIMS SHALL BE USED AS NECESSARY FOR POST ALIGNMENT.

ALLOY 6351-T5 MAY BE SUBSTITUTED FOR ALLOY 6061-T6 WHERE APPLICABLE.

MINOR VARIATIONS IN DETAILS OF METAL RAIL WILL BE CONSIDERED. DETAILS OF SUCH VARIATIONS, IF DESIRED, SHALL BE SUBMITTED FOR APPROVAL.

PAY LENGTH = 180.83 LIN.FT.

PROJECT NO. U-3326B
ROCKINGHAM COUNTY
STATION: 303+93.67 -L-

SHEET 1 OF 4

STATE OF NORTH CAROLINA
DEPARTMENT OF TRANSPORTATION
RALEIGH

STANDARD

3 BAR METAL RAIL

NORTH CAROLINA PROFESSIONAL SEAL 16301 ENGINEER ING-HSIENG LIANG
8/30/11

REVISIONS						SHEET NO.
NO.	BY:	DATE:	NO.	BY:	DATE:	S-139
1			3			TOTAL SHEETS
2			4			159

STR. #4

STD. NO. BMR5

ASSEMBLED BY : A.S. CALLAWAY		DATE : 1/8/10	
CHECKED BY : S.M. RASHIDI		DATE : 3/15/10	
DRAWN BY : JMB	1/88	REV. 10/17/00	RWW/LES
CHECKED BY : GGH	1/88	REV. 5/7/03	RWW/JTE
		REV. 5/1/06	TLA/GM

30-AUG-2011 16:14
X:\TIPProjects-U\U3326B\Structures\str04\FinalPlans\U3326B_SD_3MR_04.dgn
qtnguyen

NOTES

STRUCTURAL CONCRETE ANCHOR ASSEMBLY

THE STRUCTURAL CONCRETE ANCHOR ASSEMBLY SHALL CONSIST OF THE FOLLOWING COMPONENTS:

A. FERRULES SHALL BE MADE FROM STEEL MEETING THE REQUIREMENTS OF AASHTO M169, GRADE 12L14 AND SHALL HAVE A MINIMUM LENGTH OF THREADS OF 2" FOR ¾" FERRULES AND 1¾" FOR ⅝" FERRULES.

B. 3 - ¾" Ø X 2½" BOLTS WITH WASHERS. BOLTS SHALL CONFORM TO THE REQUIREMENTS OF ASTM A307. BOLTS AND WASHERS SHALL BE GALVANIZED. AT THE CONTRACTOR'S OPTION, STAINLESS STEEL BOLTS AND WASHERS MAY BE USED AS AN ALTERNATE FOR THE ¾" Ø X 2½" GALVANIZED BOLTS AND WASHERS. THEY SHALL CONFORM TO OR EXCEED THE MECHANICAL REQUIREMENTS OF ASTM A307. THE USE OF THIS ALTERNATE SHALL BE APPROVED BY THE ENGINEER.

C. 2 - ⅝" Ø X 2¼" BOLTS WITH WASHERS. BOLTS SHALL CONFORM TO THE REQUIREMENTS OF ASTM A307. BOLTS AND WASHERS SHALL BE GALVANIZED. AT THE CONTRACTOR'S OPTION, STAINLESS STEEL BOLTS AND WASHERS MAY BE USED AS AN ALTERNATE FOR THE ⅝" Ø X 2¼" GALVANIZED BOLTS AND WASHERS. THEY SHALL CONFORM TO OR EXCEED THE MECHANICAL REQUIREMENTS OF ASTM A307. THE USE OF THIS ALTERNATE SHALL BE APPROVED BY THE ENGINEER.

D. WIRE STRUT SHOWN IN THE CONCRETE ANCHOR ASSEMBLY DETAIL IS THE MINIMUM ALLOWABLE SIZE AND SHALL HAVE A MINIMUM TENSILE STRENGTH OF 100,000 PSI. AS AN OPTION, A 7/16" Ø WIRE STRUT WITH A MINIMUM TENSILE STRENGTH OF 90,000 PSI IS ACCEPTABLE.

E. THE METAL RAIL ANCHOR ASSEMBLIES TO BE HOT DIPPED GALVANIZED TO CONFORM TO REQUIREMENTS OF AASHTO M111.

F. THE COST OF THE METAL RAIL ANCHOR ASSEMBLY WITH BOLTS AND WASHERS COMPLETE IN PLACE SHALL BE INCLUDED IN THE PRICE BID FOR LINEAR FEET OF METAL RAIL.

G. BOLTS TO BE TIGHTENED ONE-HALF TURN WITH A WRENCH FROM A FINGER-TIGHT POSITION.

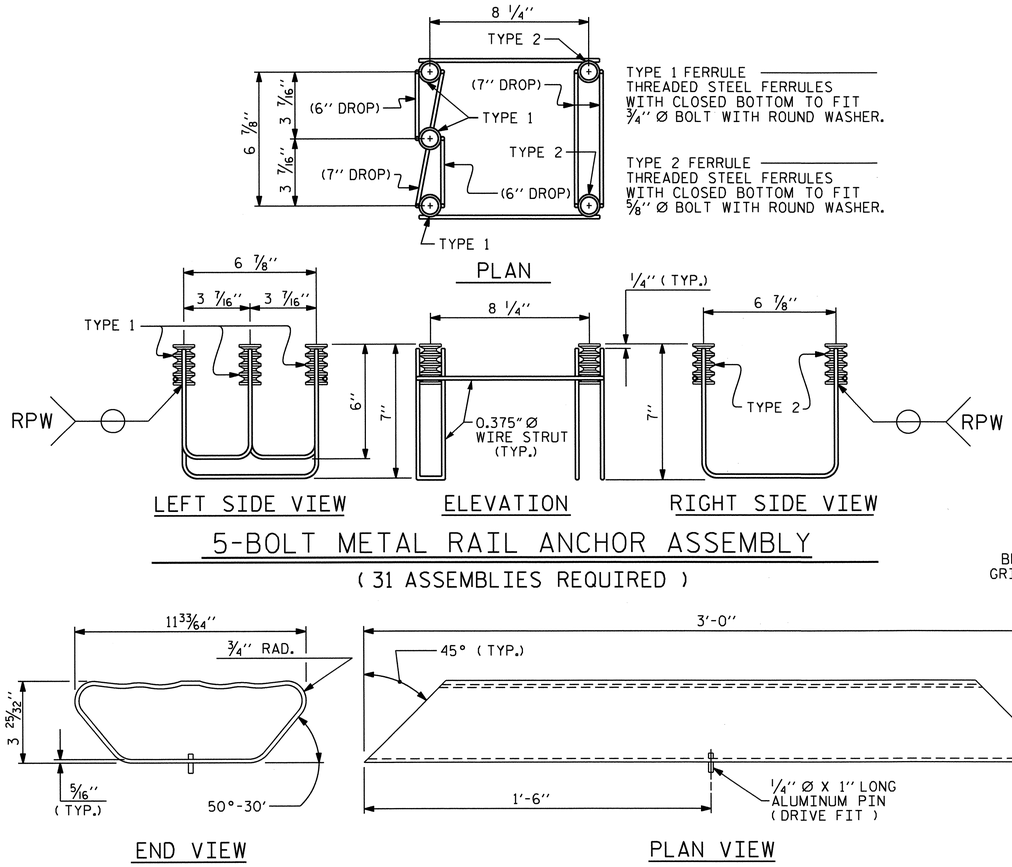

5-BOLT METAL RAIL ANCHOR ASSEMBLY

(31 ASSEMBLIES REQUIRED)

BOTTOM RAIL EXPANSION BAR

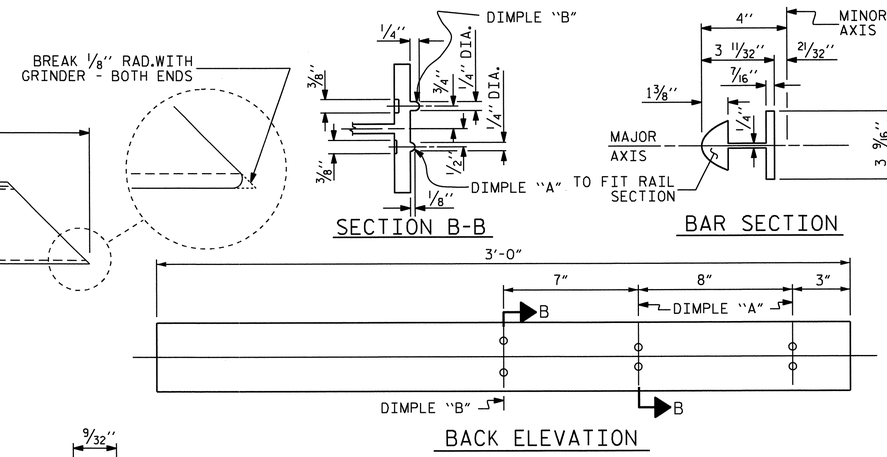

TOP & MIDDLE RAIL EXPANSION BAR

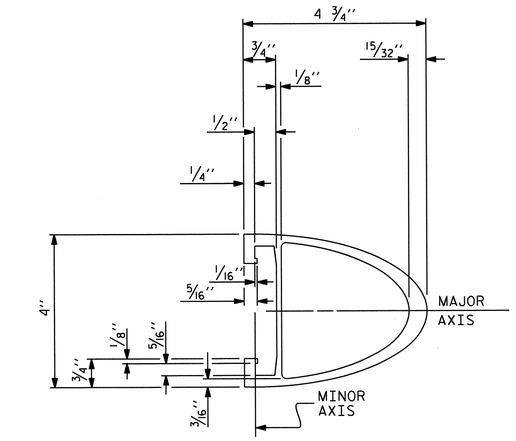

TOP & MIDDLE RAIL SECTION

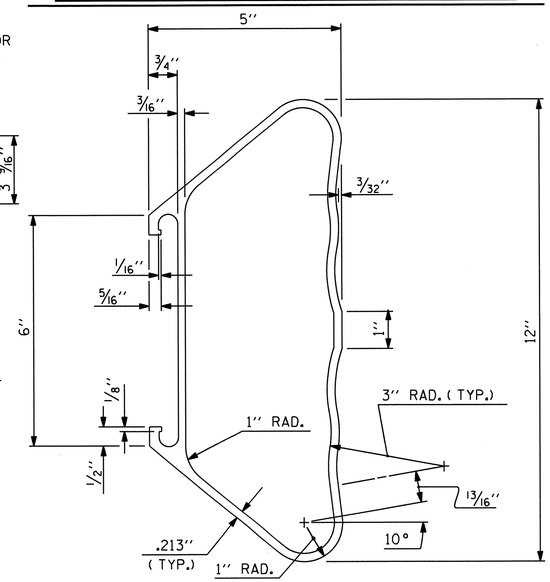

BOTTOM RAIL SECTION

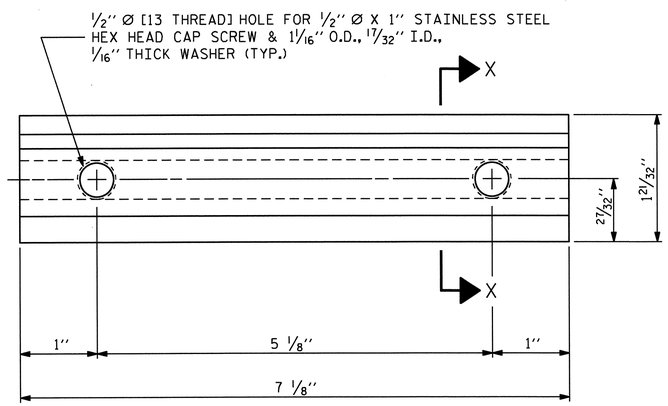

ELEVATION

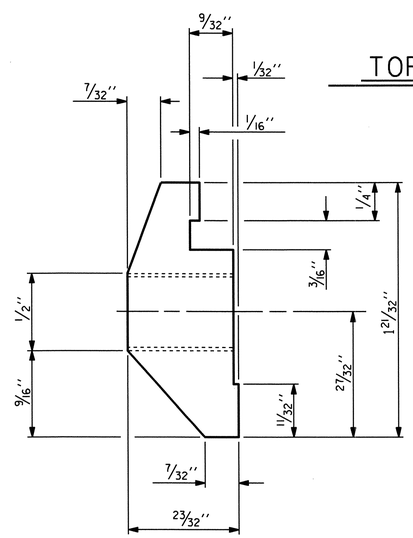

SECTION X-X

CLAMP BAR DETAIL

(6 REQUIRED PER POST)

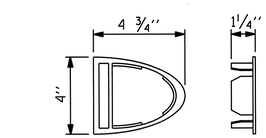

TOP & MIDDLE RAIL CAP

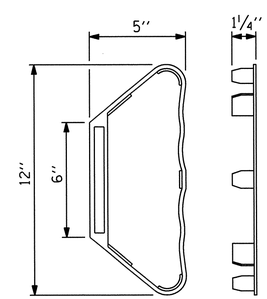

BOTTOM RAIL CAP

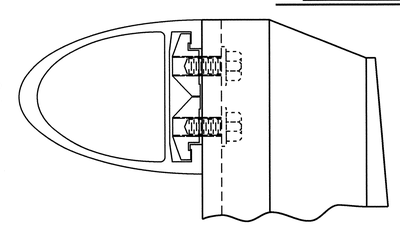

CLAMP ASSEMBLY

TOP RAIL SHOWN
(MIDDLE & BOTTOM RAIL ARE SIMILAR)

NORTH CAROLINA PROFESSIONAL SEAL 16301 ENGINEER HSIUNG FANG

8/30/11

PROJECT NO. U-3326B
ROCKINGHAM COUNTY
STATION: 303+93.67 -L-

SHEET 2 OF 4

STATE OF NORTH CAROLINA
DEPARTMENT OF TRANSPORTATION
RALEIGH

STANDARD

3 BAR METAL RAIL

ASSEMBLED BY : A.S. CALLAWAY	DATE : 1/8/10
CHECKED BY : S.M. RASHIDI	DATE : 3/15/10

DRAWN BY : JMB	1/88	REV. 7/10/01	RWW/LES
CHECKED BY : GGH	1/88	REV. 5/1/03	RWW/JTE
		REV. 5/1/06	TLA/GM

REVISIONS								SHEET NO.
NO.	BY:	DATE:	NO.	BY:	DATE:			S-140
1			3					TOTAL SHEETS
2			4					159

STR. #4

STD. NO. BMR6

30-AUG-2011 16:14
X:\TIPProjects-U\U3326B\Structures\str04\Final Plans\U3326B_SD_3MR_04.dgn
qtnguyen

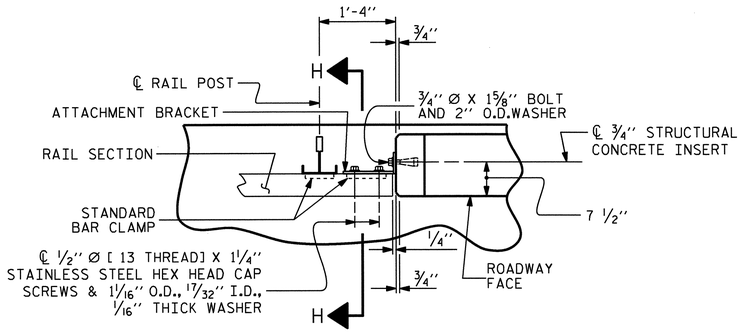

PLAN OF RAIL AND END POST

(STIFFENER ON 1/2" ℙ NOT SHOWN FOR CLARITY)

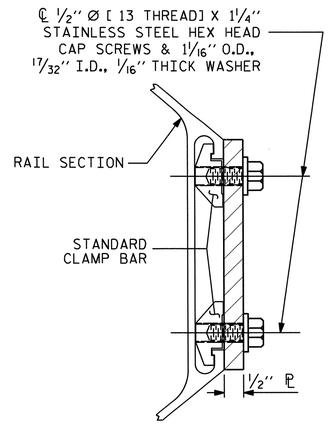

SECTION H-H

(FOR BOTTOM RAIL)

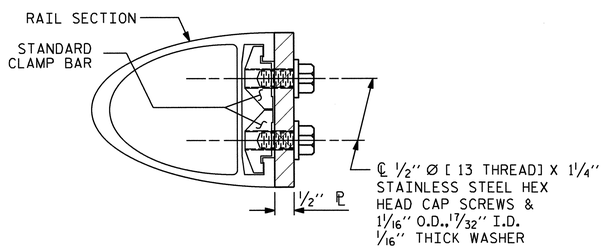

SECTION H-H

(FOR TOP & MIDDLE RAIL)

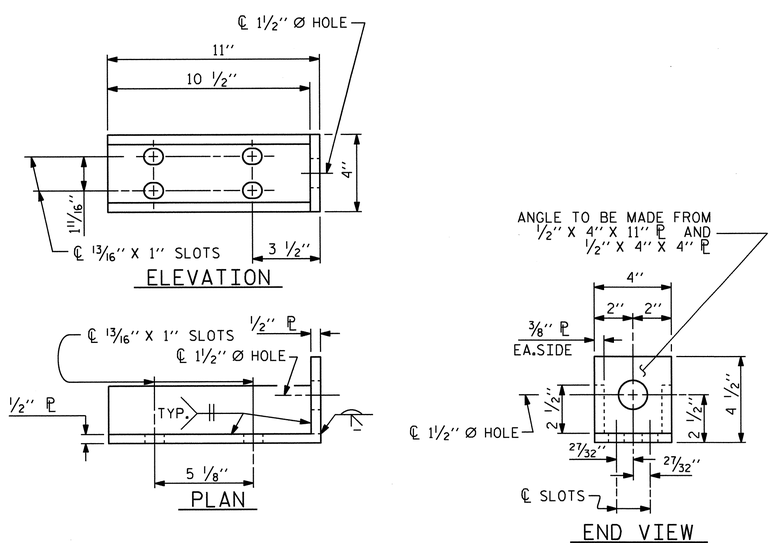

DETAILS FOR ATTACHMENT BRACKET

(TOP & MIDDLE RAIL ONLY)

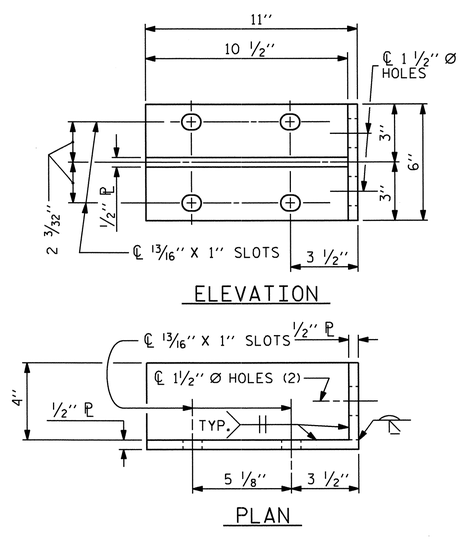

DETAILS FOR ATTACHMENT BRACKET

(BOTTOM RAIL ONLY)

NOTES

METAL RAIL TO END POST CONNECTION

THE METAL RAIL TO END POST CONNECTION SHALL CONSIST OF THE FOLLOWING COMPONENTS:

A. 1/2" PLATES SHALL CONFORM TO AASHTO M270 GRADE 36 AND SHALL BE GALVANIZED AFTER FABRICATION.

B. 3/4" STRUCTURAL CONCRETE INSERT SHALL HAVE A WORKING LOAD SHEAR CAPACITY OF 4800 LBS. THE FERRULES SHALL ENGAGE A 3/4" Ø X 1 5/8" BOLT WITH 2" O.D. WASHER IN PLACE. THE 3/4" Ø X 1 5/8" BOLT SHALL HAVE N. C. THREADS.

C. CAP SCREWS FOR RAIL ATTACHMENT TO ANGLE SHALL CONFORM TO THE REQUIREMENTS OF ASTM F593 ALLOY 305 STAINLESS STEEL. CAP SCREWS TO BE CENTERED IN SLOTS AT 60°F. WASHERS FOR RAIL ATTACHMENT SHALL MEET THE REQUIREMENTS OF ASTM F844 EXCEPT THEY SHALL BE MADE FROM ALLOY 304 STAINLESS STEEL.

D. STANDARD CLAMP BARS (STD. No. BMR6).

THE COST OF THE STANDARD CLAMP BARS AND CAP SCREWS USED IN THE METAL RAIL TO END POST CONNECTION SHALL BE INCLUDED IN THE UNIT CONTRACT PRICE BID FOR LINEAR FEET OF 3 BAR METAL RAIL.

THE 3/4" STRUCTURAL CONCRETE INSERT WITH BOLT SHALL BE ASSEMBLED IN THE SHOP.

THE COST OF THE 3/4" STRUCTURAL CONCRETE INSERT ASSEMBLY, AND THE 1/2" PLATES COMPLETE IN PLACE SHALL BE INCLUDED IN THE VARIOUS PAY ITEMS.

THE CONTRACTOR, AT HIS OPTION, MAY USE AN ADHESIVE BONDING SYSTEM IN LIEU OF THE STRUCTURAL CONCRETE INSERT EMBEDDED IN THE END POST. IF THE ADHESIVE BONDING SYSTEM IS USED, THE 3/4" Ø X 1 5/8" BOLT WITH WASHER SHALL BE REPLACED WITH A 3/4" Ø X 6 1/2" BOLT AND 2" O.D.WASHER. ALL SPECIFICATIONS THAT APPLY TO THE 3/4" Ø X 1 5/8" BOLT SHALL APPLY TO THE 3/4" Ø X 6 1/2" BOLT. FIELD TESTING OF THE ADHESIVE BONDING SYSTEM IS NOT REQUIRED.

NOTES

STRUCTURAL CONCRETE INSERT

THE STRUCTURAL CONCRETE INSERT ASSEMBLY SHALL CONSIST OF THE FOLLOWING COMPONENTS:

A. FERRULES SHALL BE MADE FROM STEEL MEETING THE REQUIREMENTS OF AASHTO M169, GRADE 12L14 AND SHALL HAVE A MINIMUM LENGTH OF THREADS OF 1 1/2".

B. 1 - 3/4" Ø X 1 5/8" BOLT WITH WASHER. BOLT SHALL CONFORM TO THE REQUIREMENTS OF ASTM A307. BOLT AND WASHER SHALL BE GALVANIZED. AT THE CONTRACTORS OPTION, STAINLESS STEEL BOLT AND WASHER MAY BE USED AS AN ALTERNATE FOR THE 3/4" Ø X 1 5/8" GALVANIZED BOLT AND WASHER. THEY SHALL CONFORM TO OR EXCEED THE MECHANICAL REQUIREMENTS OF ASTM A307. THE USE OF THIS ALTERNATE SHALL BE APPROVED BY THE ENGINEER.

C. WIRE STRUT SHOWN IN THE CONCRETE INSERT ASSEMBLY DETAIL IS THE MINIMUM ALLOWABLE SIZE AND SHALL HAVE A MINIMUM TENSILE STRENGTH OF 100,000 PSI. AS AN OPTION, A 7/16" Ø WIRE STRUT WITH A MINIMUM TENSILE STRENGTH OF 90,000 PSI IS ACCEPTABLE.

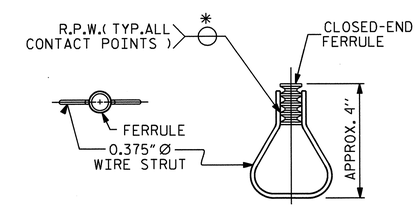

STRUCTURAL CONCRETE INSERT

* EACH WELDED ATTACHMENT OF WIRE TO FERRULE SHALL DEVELOP THE TENSILE STRENGTH OF THE WIRE.

PROJECT NO. U-3326B

ROCKINGHAM COUNTY

STATION: 303+93.67 -L-

SHEET 3 OF 4

STATE OF NORTH CAROLINA
DEPARTMENT OF TRANSPORTATION
RALEIGH

STANDARD

3 BAR METAL RAIL

NORTH CAROLINA PROFESSIONAL SEAL 16301 ENGINEER TING HSIUNG FANG

8/30/11

ASSEMBLED BY : A.S. CALLAWAY	DATE : 1/8/10
CHECKED BY : S.M. RASHIDI	DATE : 3/15/10

DRAWN BY : JMB	1/88	REV. 7/10/01	RWW/LES
CHECKED BY : GGH	1/88	REV. 5/7/03	RWW/JTE
		REV. 5/1/06	TLA/GM

REVISIONS

NO.	BY:	DATE:	NO.	BY:	DATE:
1			3		
2			4		

SHEET NO. S-141

TOTAL SHEETS 159

STR. #4

STD. NO. BMR7

30-AUG-2011 16:13
X:\TIPProjects-U\U3326B\Structures\str04\FinalPlans\U3326B_SD_3MR_04.dgn
qtnguyen

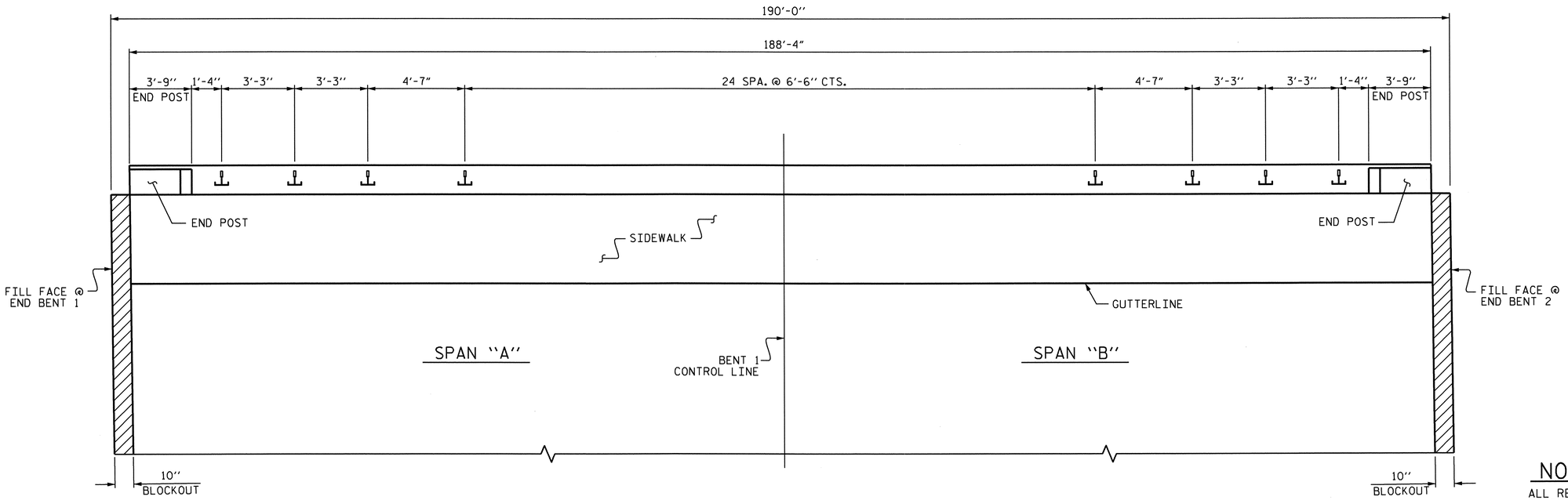

PLAN OF RAIL POST SPACING

(LEFT SIDE OF BRIDGE DECK)

BILL OF MATERIAL					
ONE END POST (2 REQ'D.)					
BAR	NO.	SIZE	TYPE	LENGTH	WEIGHT
✳E1	2	#7	1	3'-5"	14
✳E2	2	#7	1	4'-0"	16
✳E3	2	#7	1	4'-7"	19
✳E4	2	#7	1	5'-1"	21
✳F1	6	#6	STR	3'-5"	31
✳F2	2	#6	STR	3'-8"	11
✳EPOXY COATED REINFORCING STEEL				LBS.	112
CLASS "AA" CONCRETE				C.Y.	0.4

BAR TYPE

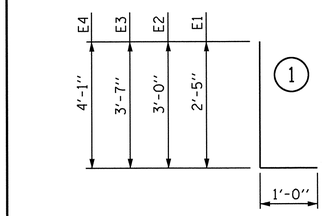

BAR DIMENSIONS IS OUT TO OUT.

NOTES

ALL REINFORCING STEEL IN END POST SHALL BE EPOXY COATED.

FOR CONCRETE INSERT DETAILS, SEE "3 BAR METAL RAIL" SHEET 3 OF 4.

FOR DETAILS OF GUARDRAIL ANCHOR ASSEMBLIES, SEE "GUARDRAIL ANCHORAGE DETAILS" SHEET.

FOR SIDEWALK DETAILS & REINFORCING STEEL, SEE "SIDEWALK DETAILS" SHEET.

NO ADDITIONAL PAYMENT SHALL BE MADE FOR THE CONCRETE END POSTS AS THIS IS CONSIDERED INCIDENTAL TO THE CONSTRUCTION OF THE 3 BAR METAL RAIL.

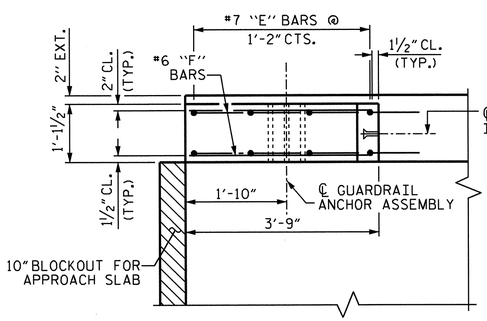

PLAN

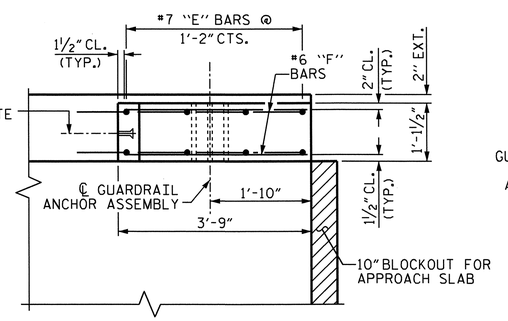

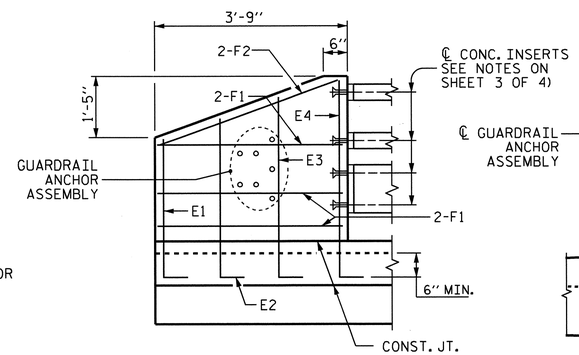

ELEVATION

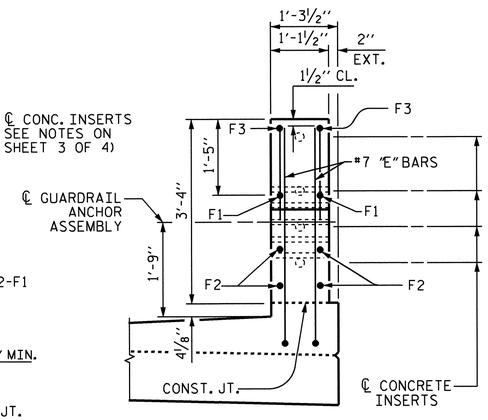

END VIEW

END POST DETAILS

(LEFT SIDE OF BRIDGE DECK)

PROJECT NO. U-3326B

ROCKINGHAM COUNTY

STATION: 303+93.67 -L-

SHEET 4 OF 4

STATE OF NORTH CAROLINA
DEPARTMENT OF TRANSPORTATION
RALEIGH

SUPERSTRUCTURE

3 BAR METAL RAIL

RAIL POST SPACING & END POST DETAILS

NORTH CAROLINA PROFESSIONAL SEAL 16301 ENGINEER TING HSIUNG FANG

8/30/11

REVISIONS						SHEET NO.
NO.	BY:	DATE:	NO.	BY:	DATE:	S-142
1			3			TOTAL SHEETS
2			4			159

STR. #4

DRAWN BY : A.S. CALLAWAY DATE : 1/12/10
CHECKED BY : S.M. RASHIDI DATE : 3/22/10

30-AUG-2011 16:13
X:\TIPProjects-U\U3326B\Structures\str04\FinalPlans\U3326B_SD_3MR_04.dgn
qtnguyen

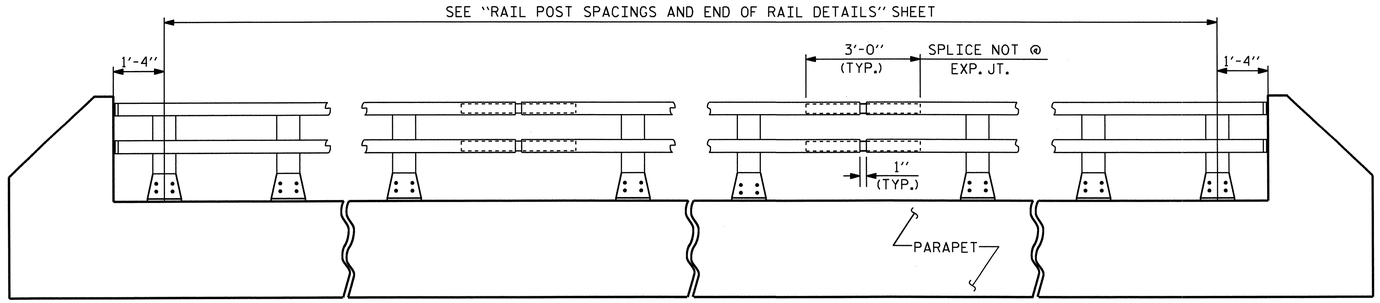

ELEVATION

NOTE : FOR ATTACHMENT OF METAL RAIL TO END POST, SEE STANDARD NO. BMR2.

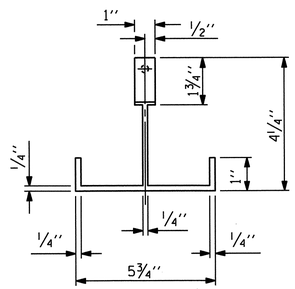

PLAN

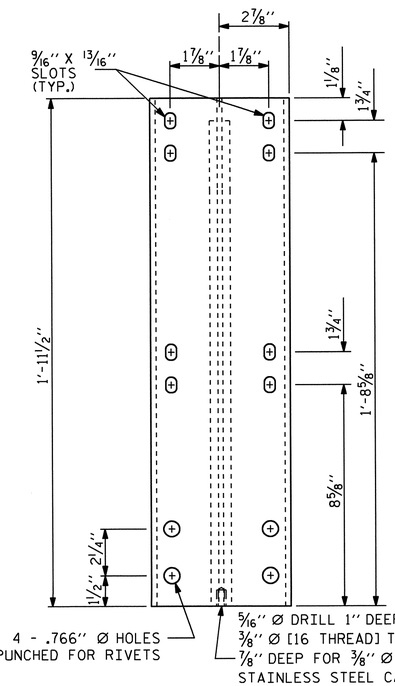

FRONT ELEVATION

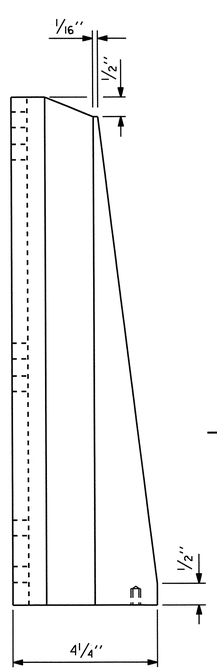

SIDE ELEVATION

DETAILS OF POST

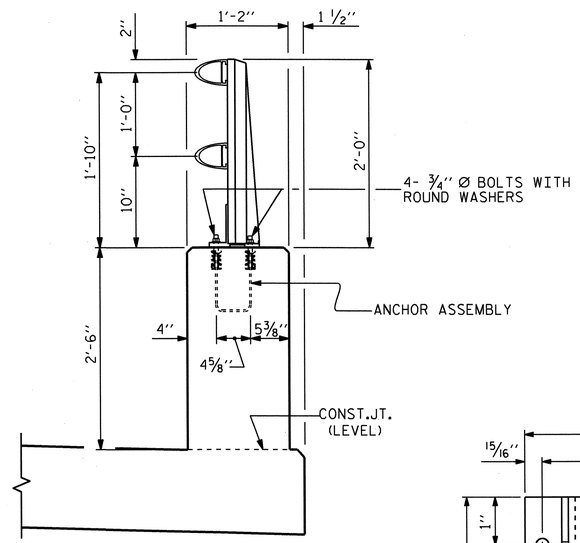

SECTION THRU PARAPET AND RAIL

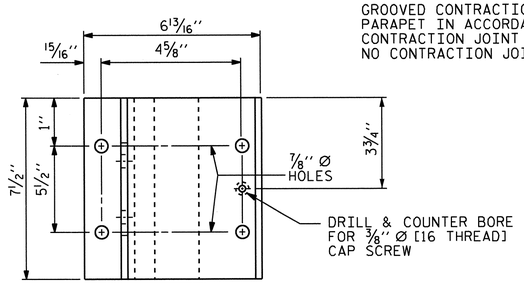

PLAN

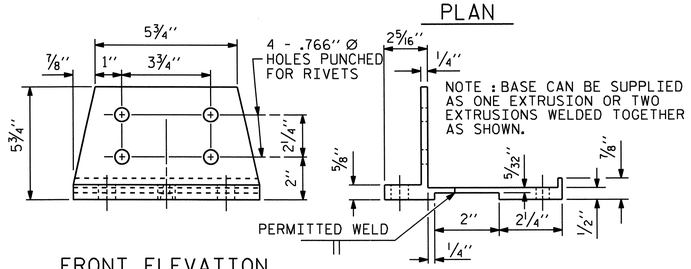

FRONT ELEVATION

SIDE ELEVATION

POST BASE DETAILS

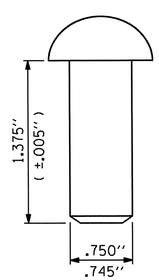

RIVET DETAIL

NOTES

AT THE CONTRACTOR'S OPTION, METAL RAIL MAY BE EITHER ALUMINUM OR GALVANIZED STEEL IN ACCORDANCE WITH THE REQUIREMENTS OF THE GENERAL NOTES AND THE FOLLOWING SPECIFICATIONS FOR THE ALTERNATE MATERIALS; HOWEVER, THE CONTRACTOR WILL BE REQUIRED TO USE THE SAME RAIL MATERIAL ON ALL STRUCTURES ON THE PROJECT FOR WHICH METAL RAIL IS DESIGNATED.

ALUMINUM RAILS

MATERIAL FOR POSTS, BASES AND RAILS, EXPANSION BARS AND CLAMP BARS SHALL BE ASTM B-221 ALLOY 6061-T6.

MATERIAL FOR RIVETS SHALL BE ASTM B316 ALLOY 6061-T6. RIVETS SHALL BE STANDARD BUTTON HEAD AND CONE POINT COLD DRIVEN AS PER DRAWING.

THE BASE OF RAIL POSTS, OR ANY OTHER ALUMINUM SURFACE IN CONTACT WITH CONCRETE SHALL BE THOROUGHLY COATED WITH AN ALUMINUM IMPREGNATED CAULKING COMPOUND OF APPROVED QUALITY.

MATERIAL FOR SHIMS TO BE ASTM B209 ALLOY 6061-T6.

GALVANIZED STEEL RAILS

MATERIAL AND GALVANIZING ARE TO CONFORM TO THE FOLLOWING SPECIFICATIONS:

POST, POST BASES, RAILS, EXPANSION BARS AND CLAMP BARS: AASHTO M270 GRADE 36 STRUCTURAL STEEL - GALVANIZED TO AASHTO M111.

RIVETS: RIVETS SHALL MEET THE REQUIREMENTS OF ASTM A502 FOR GRADE 1 RIVETS.

THE CUT ENDS OF GALVANIZED STEEL RAILING, AFTER GRINDING SMOOTH SHALL BE GIVEN TWO COATS OF ZINC RICH PAINT MEETING THE REQUIREMENTS OF FEDERAL SPECIFICATION MIL-P-26915 USAF TYPE 1, OR OF FEDERAL SPECIFICATIONS TT-P-641.

SHIMS: SHIMS SHALL MEET THE REQUIREMENTS OF ASTM A570 FOR GRADE 33 OR A611 FOR GRADE C AND SHALL BE GALVANIZED IN ACCORDANCE WITH AASHTO M111.

RAIL CAPS: RAIL CAPS SHALL MEET THE REQUIREMENTS OF ASTM A570 FOR GRADE 33 OR A611 FOR GRADE C AND SHALL BE GALVANIZED IN ACCORDANCE WITH AASHTO M111.

GENERAL NOTES

RAILING SHALL BE CONTINUOUS FROM END POST TO END POST OF BRIDGE. EACH JOINT IN RAIL LENGTH SHALL BE SPLICED AS DETAILED. PANEL LENGTHS OF RAIL SHALL BE ATTACHED TO A MINIMUM OF THREE POSTS.

FOR END OF RAIL TO CLEAR FACE OF CONCRETE END POST DIMENSION, SEE STANDARD NO. BMR2.

CAP SCREWS SHALL BE ASTM F593 ALLOY 305 STAINLESS STEEL. WASHERS SHALL MEET THE REQUIREMENTS OF ASTM F844 EXCEPT THEY SHALL BE MADE FROM ALLOY 304 STAINLESS STEEL.

CERTIFIED MILL REPORTS ARE REQUIRED FOR RAILS AND POSTS. SHOP INSPECTION IS NOT REQUIRED.

METAL RAIL POSTS SHALL BE SET NORMAL TO CURB GRADE.

METHOD OF MEASUREMENT FOR METAL RAILS: FOR LENGTH OF METAL RAILS TO BE PAID FOR, SEE THE STANDARD SPECIFICATIONS.

CURVED RAIL USAGE: WHERE RAILS ARE TO BE USED ON BRIDGES ON HORIZONTAL AND/OR VERTICAL CURVATURE THE CONTRACTOR MAY, AT HIS OPTION, HAVE THE REQUIRED CURVATURE IN THE RAIL FORMED IN THE SHOP OR IN THE FIELD. IN EITHER EVENT, THE RAIL SHALL CONFORM WITHOUT BUCKLING OR KINKING TO THE REQUIRED CURVATURE IN A UNIFORM MANNER ACCEPTABLE TO THE ENGINEER.

TO INSURE FUTURE IDENTIFICATION OF THE FABRICATOR, A PERMANENT IDENTIFYING MARK SHALL BE PLACED ON EACH POST. THE METHOD OF MARKING AND LOCATION SHALL BE SUCH THAT IT DOES NOT DETRACT FROM THE APPEARANCE OF THE POST, BUT REMAINS VISIBLE AFTER RAIL PLACEMENT.

SHIMS SHALL BE USED AS NECESSARY FOR POST ALIGNMENT.

ALLOY 6351-T5 MAY BE SUBSTITUTED FOR ALLOY 6061-T6 WHERE APPLICABLE.

MINOR VARIATIONS IN DETAILS OF METAL RAIL WILL BE CONSIDERED. DETAILS OF SUCH VARIATIONS, IF DESIRED, SHALL BE SUBMITTED FOR APPROVAL.

GROOVED CONTRACTION JOINTS, 1/2" IN DEPTH, SHALL BE TOOLED IN ALL EXPOSED FACES OF THE PARAPET IN ACCORDANCE WITH ARTICLE 825-10(B) OF THE STANDARD SPECIFICATIONS. THE CONTRACTION JOINT SHALL BE LOCATED AT A SPACING OF 8FT. TO 10FT. BETWEEN EXPANSION JOINTS. NO CONTRACTION JOINTS WILL BE REQUIRED FOR SEGMENTS LESS THAN 10 FEET IN LENGTH.

PAY LENGTH = 180.83 LIN. FT.

PROJECT NO. U-3326B
ROCKINGHAM COUNTY
STATION: 303+93.67 -L-

SHEET 1 OF 4

STATE OF NORTH CAROLINA
DEPARTMENT OF TRANSPORTATION
RALEIGH

STANDARD

2 BAR METAL RAIL

NORTH CAROLINA PROFESSIONAL SEAL 16301 ENGINEER TING HSIUNG FANG
8/30/11

ASSEMBLED BY : A.S. CALLAWAY	DATE : 1/8/10
CHECKED BY : S.M. RASHIDI	DATE : 3/15/10

DRAWN BY : EEM 6/94	REV. 10/17/00	LES/RDR
CHECKED BY : RGW 6/94	REV. 5/7/03R	RWW/JTE
	REV. 5/1/06	TLA/GM

REVISIONS								SHEET NO.
NO.	BY:	DATE:	NO.	BY:	DATE:			S-143
1			3					TOTAL SHEETS
2			4					159

STR. #4 STD. NO. BMR3

30-AUG-2011 16:13
X:\TIPProjects-U\U3326B\Structures\str04\FinalPlans\U3326B_SD_2MR_04.dgn
qtnguyen

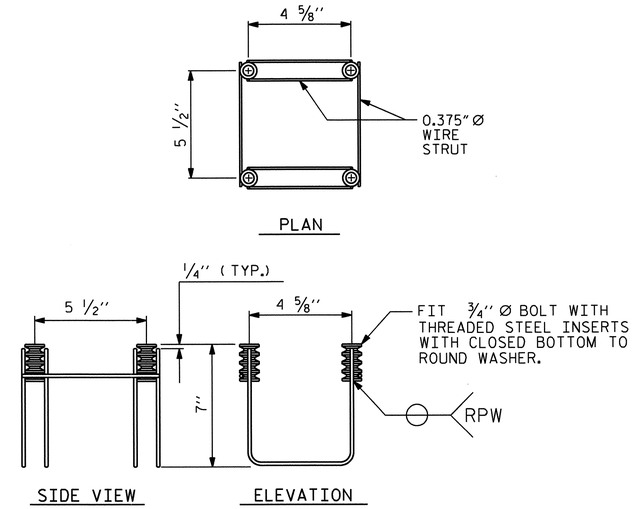

MINIMUM LENGTH OF THREADS IN INSERT (FERRULE): 1 3/4''

4-BOLT METAL RAIL ANCHOR ASSEMBLY

(31 ASSEMBLIES REQUIRED)

NOTES

STRUCTURAL CONCRETE ANCHOR ASSEMBLY

THE STRUCTURAL CONCRETE ANCHOR ASSEMBLY SHALL CONSIST OF THE FOLLOWING COMPONENTS :

A. FERRULES SHALL BE MADE FROM STEEL MEETING THE REQUIREMENTS OF AASHTO M169, GRADE 12L14 AND SHALL HAVE A MINIMUM LENGTH OF THREADS OF 2'' FOR 3/4'' FERRULES.

B. 4 - 3/4'' Ø X 2 1/2'' BOLTS WITH WASHERS. BOLTS SHALL CONFORM TO THE REQUIREMENTS OF ASTM A307. BOLTS AND WASHERS SHALL BE GALVANIZED. AT THE CONTRACTOR'S OPTION, STAINLESS STEEL BOLTS AND WASHERS MAY BE USED AS AN ALTERNATE FOR THE 3/4'' Ø X 2 1/2'' GALVANIZED BOLTS AND WASHERS. THEY SHALL CONFORM TO OR EXCEED THE MECHANICAL REQUIREMENTS OF ASTM A307. THE USE OF THIS ALTERNATE SHALL BE APPROVED BY THE ENGINEER.

C. WIRE STRUT SHOWN IN THE CONCRETE ANCHOR ASSEMBLY DETAIL IS THE MINIMUM ALLOWABLE SIZE AND SHALL HAVE A MINIMUM TENSILE STRENGTH OF 100,000 PSI. AS AN OPTION, A 7/16'' Ø WIRE STRUT WITH A MINIMUM TENSILE STRENGTH OF 90,000 PSI IS ACCEPTABLE.

D. THE METAL RAIL ANCHOR ASSEMBLIES TO BE HOT DIPPED GALVANIZED TO CONFORM TO REQUIREMENTS OF AASHTO M111.

E. THE COST OF THE METAL RAIL ANCHOR ASSEMBLY WITH BOLTS AND WASHERS COMPLETE IN PLACE SHALL BE INCLUDED IN THE PRICE BID FOR LINEAR FEET OF METAL RAIL.

F. BOLTS TO BE TIGHTENED ONE-HALF TURN WITH A WRENCH FROM A FINGER-TIGHT POSITION.

THE CONTRACTOR MAY USE ADHESIVELY ANCHORED ANCHOR BOLTS IN PLACE OF THE METAL RAIL ANCHOR ASSEMBLY. LEVEL ONE FIELD TESTING IS REQUIRED, AND THE YIELD LOAD OF THE 3/4'' Ø BOLT IS 10 KIPS. FOR ADHESIVELY ANCHORED ANCHOR BOLTS OR DOWELS, SEE SPECIAL PROVISIONS.

WHEN ADHESIVELY ANCHORED ANCHOR BOLTS ARE USED, BOLTS SHALL MEET THE REQUIREMENTS OF ASTM F593 ALLOY 304 STAINLESS STEEL WITH MINIMUM 75,000 PSI ULTIMATE STRENGTH. NUTS SHALL MEET THE REQUIREMENTS OF ASTM F594 ALLOY 304 STAINLESS STEEL AND WASHERS SHALL MEET THE REQUIREMENTS OF ASTM F844 EXCEPT THEY SHALL BE MADE FROM ALLOY 304 STAINLESS STEEL.

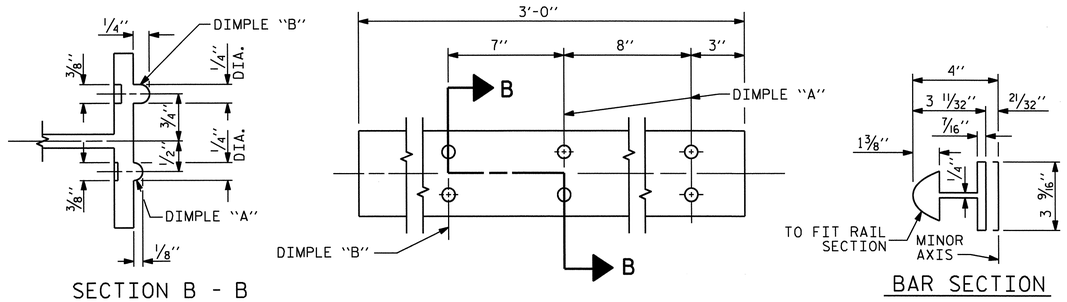

EXPANSION BAR DETAILS

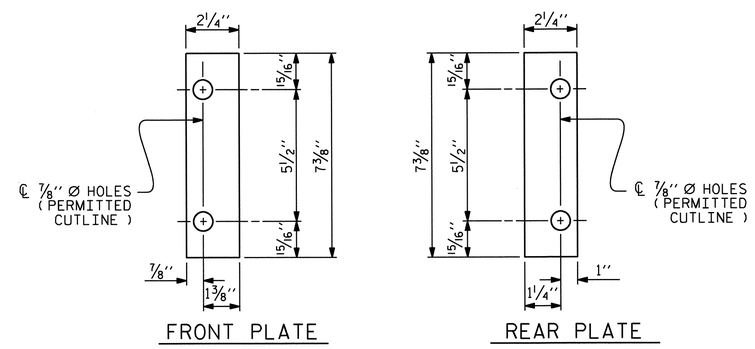

SHIM DETAILS

NOTE :
SHIMS MAY BE CUT ALONG PERMITTED CUTLINE OR SLOTTED TO EDGE OF PLATE TO FACILITATE PLACEMENT.

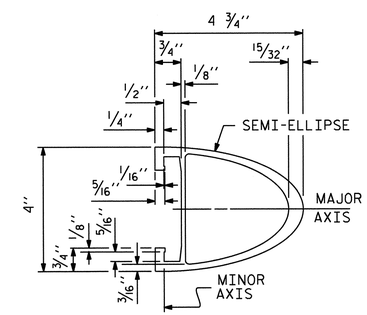

RAIL SECTION

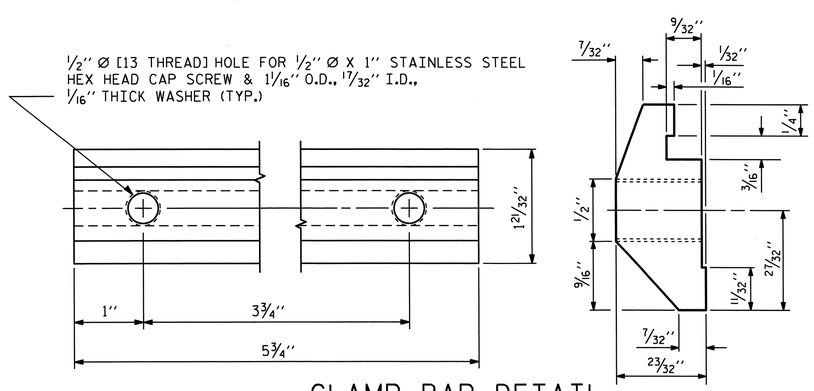

CLAMP BAR DETAIL

(4 REQUIRED PER POST)

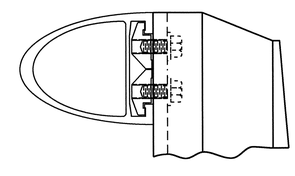

CLAMP ASSEMBLY

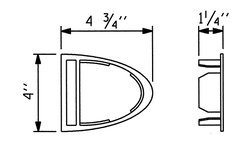

RAIL CAP

PROJECT NO. U-3326B
ROCKINGHAM COUNTY
STATION: 303+93.67 -L-

SHEET 2 OF 4

STATE OF NORTH CAROLINA
DEPARTMENT OF TRANSPORTATION
RALEIGH

STANDARD

2 BAR METAL RAIL

NORTH CAROLINA PROFESSIONAL SEAL 16301 ENGINEER TING-HSIUNG CHANG
8/30/11

REVISIONS						SHEET NO.
NO.	BY:	DATE:	NO.	BY:	DATE:	S-144
1			3			TOTAL SHEETS
2			4			159

ASSEMBLED BY : A.S. CALLAWAY DATE : 1/8/10
CHECKED BY : S.M. RASHIDI DATE : 3/15/10

DRAWN BY : EEM 6/94
CHECKED BY : RGW 6/94

REV. 2/6/97 EEM/RGW
REV. 8/16/99 MAB/LES
REV. 5/1/06R KMM/GM

30-AUG-2011 16:13
X:\TIPProjects-U\U3326B\Structures\str04\FinalPlans\U3326B_SD_2MR_04.dgn
qtnguyen

STR. #4

STD. NO. BMR4

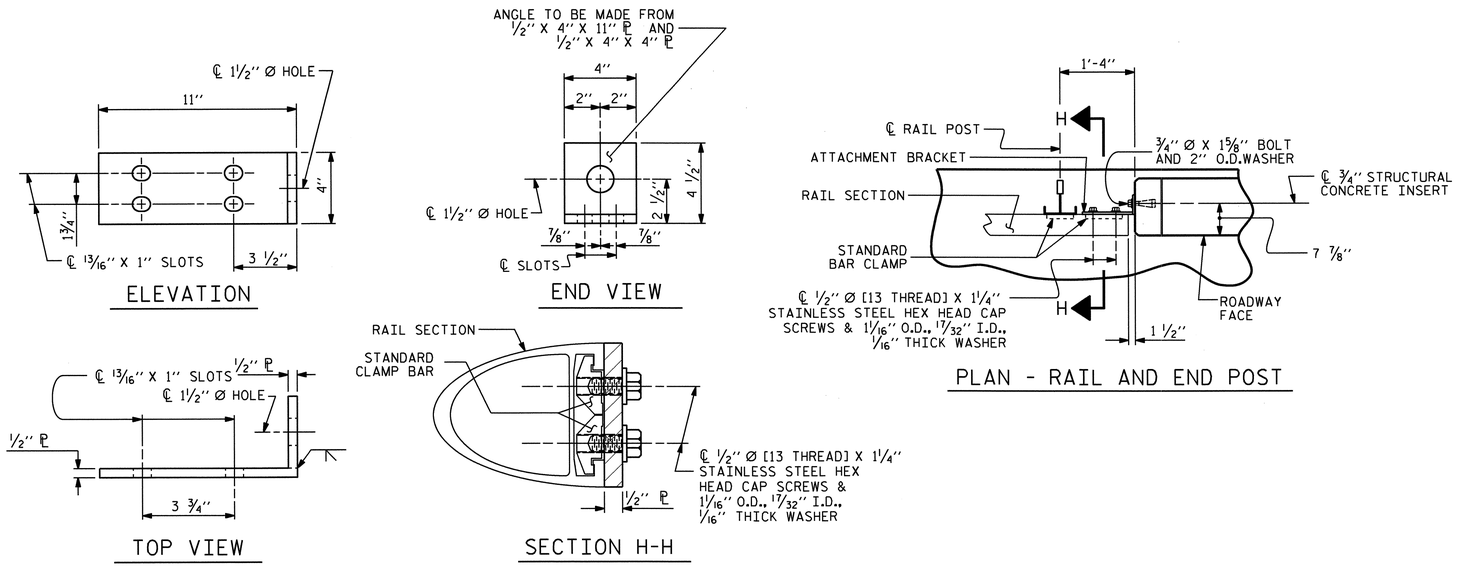

DETAILS FOR ATTACHING METAL RAIL TO END POST

NOTES

STRUCTURAL CONCRETE INSERT

THE STRUCTURAL CONCRETE INSERT ASSEMBLY SHALL CONSIST OF THE FOLLOWING COMPONENTS:

A. FERRULES SHALL BE MADE FROM STEEL MEETING THE REQUIREMENTS OF AASHTO M169, GRADE 12L14 AND SHALL HAVE A MINIMUM LENGTH OF THREADS OF 1½''.

B. 1 - ¾'' Ø X 1⅝'' BOLT WITH WASHER. BOLT SHALL CONFORM TO THE REQUIREMENTS OF ASTM A307. BOLT AND WASHER SHALL BE GALVANIZED. (AT THE CONTRACTOR'S OPTION, STAINLESS STEEL BOLT AND WASHER MAY BE USED AS AN ALTERNATE FOR THE ¾'' Ø X 1⅝'' GALVANIZED BOLT AND WASHER. THEY SHALL CONFORM TO OR EXCEED THE MECHANICAL REQUIREMENTS OF ASTM A307. THE USE OF THIS ALTERNATE SHALL BE APPROVED BY THE ENGINEER.)

C. WIRE STRUT SHOWN IN THE CONCRETE INSERT ASSEMBLY DETAIL IS THE MINIMUM ALLOWABLE SIZE AND SHALL HAVE A MINIMUM TENSILE STRENGTH OF 100,000 PSI. AS AN OPTION, A 7/16'' Ø WIRE STRUT WITH A MINIMUM TENSILE STRENGTH OF 90,000 PSI IS ACCEPTABLE.

NOTES

METAL RAIL TO END POST CONNECTION

THE METAL RAIL TO END POST CONNECTION SHALL CONSIST OF THE FOLLOWING COMPONENTS:

A. ½'' PLATES SHALL CONFORM TO AASHTO M270 GRADE 36 AND SHALL BE GALVANIZED AFTER FABRICATION.

B. ¾'' STRUCTURAL CONCRETE INSERT SHALL HAVE A WORKING LOAD SHEAR CAPACITY OF 4800 LBS. THE FERRULES SHALL ENGAGE A ¾''Ø X 1⅝'' BOLT WITH 2'' O.D. WASHER IN PLACE. THE ¾''Ø X 1⅝'' BOLT SHALL HAVE N. C. THREADS.

C. CAP SCREWS FOR RAIL ATTACHMENT TO ANGLE SHALL CONFORM TO THE REQUIREMENTS OF ASTM F593 ALLOY 305 STAINLESS STEEL. CAP SCREWS TO BE CENTERED IN SLOTS AT 60°F.

D. STANDARD CLAMP BARS (SEE METAL RAIL SHEET).

E. ½'' Ø PIPE SLEEVES (IF REQUIRED) TO BE GALVANIZED.

THE COST OF THE STANDARD CLAMP BARS AND CAP SCREWS USED IN THE METAL RAIL TO END POST CONNECTION SHALL BE INCLUDED IN THE UNIT CONTRACT PRICE BID FOR LINEAR FEET OF 1 OR 2 BAR METAL RAILS.

THE ¾'' STRUCTURAL CONCRETE INSERT WITH BOLT SHALL BE ASSEMBLED IN THE SHOP.

THE COST OF THE ¾'' STRUCTURAL CONCRETE INSERT ASSEMBLY, AND THE ½'' PLATES COMPLETE IN PLACE SHALL BE INCLUDED IN THE VARIOUS PAY ITEMS.

THE CONTRACTOR, AT HIS OPTION, MAY USE AN ADHESIVE BONDING SYSTEM IN LIEU OF THE STRUCTURAL CONCRETE INSERT EMBEDDED IN THE END POST. IF THE ADHESIVE BONDING SYSTEM IS USED, THE ¾'' Ø X 1⅝'' BOLT WITH WASHER SHALL BE REPLACED WITH A ¾''Ø X 6½'' BOLT AND 2'' O.D. WASHER. ALL SPECIFICATIONS THAT APPLY TO THE ¾'' Ø X 1⅝'' BOLT SHALL APPLY TO THE ¾''Ø X 6 ½'' BOLT. FIELD TESTING OF THE ADHESIVE BONDING SYSTEM IS NOT REQUIRED.

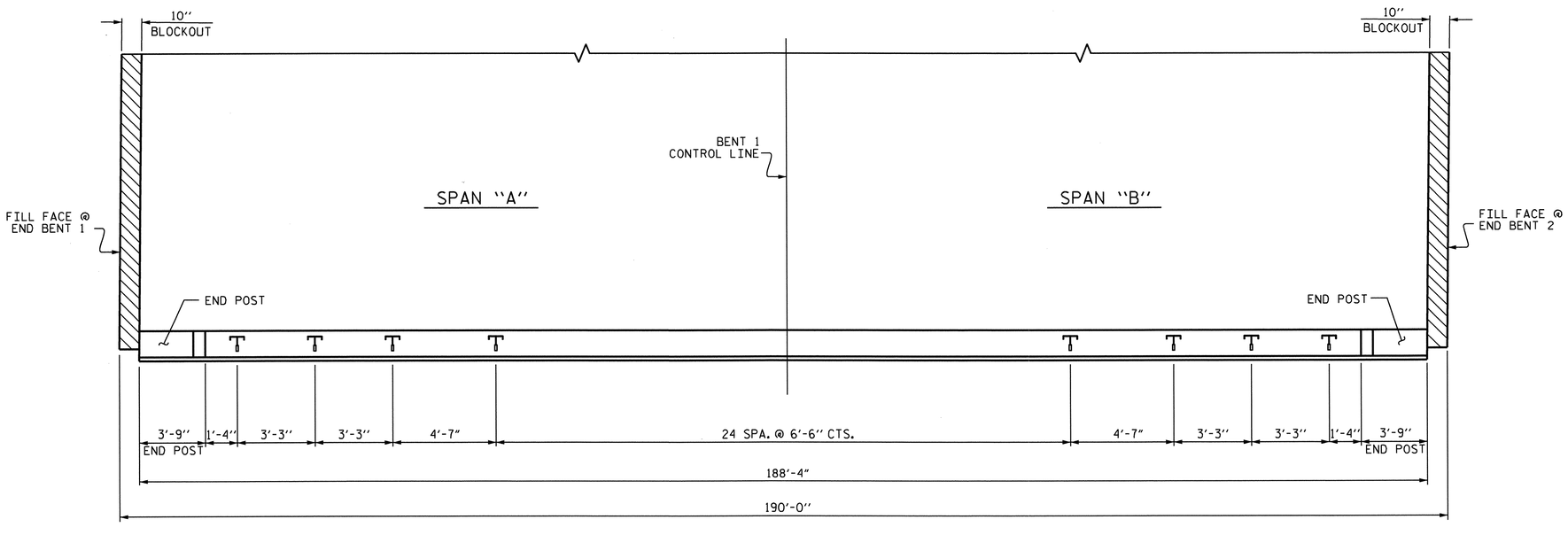

PLAN OF RAIL POST SPACING

(RIGHT SIDE OF BRIDGE DECK)

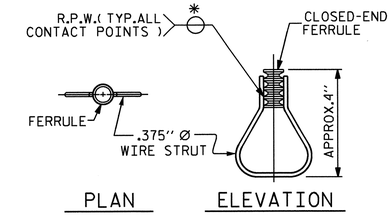

STRUCTURAL CONCRETE INSERT

* EACH WELDED ATTACHMENT OF WIRE TO FERRULE SHALL DEVELOP THE TENSILE STRENGTH OF THE WIRE.

PROJECT NO. U-3326B

ROCKINGHAM COUNTY

STATION: 303+93.67 -L-

SHEET 3 OF 4

STATE OF NORTH CAROLINA
DEPARTMENT OF TRANSPORTATION
RALEIGH

STANDARD

RAIL POST SPACINGS AND END OF RAIL DETAILS

FOR TWO BAR METAL RAILS

NORTH CAROLINA PROFESSIONAL SEAL 16301 ENGINEER YING HSIUNG FANG

8/30/11

REVISIONS						SHEET NO.
NO.	BY:	DATE:	NO.	BY:	DATE:	S-145
1			3			TOTAL SHEETS
2			4			159

ASSEMBLED BY : A.S. CALLAWAY	DATE : 1/8/10		
CHECKED BY : S.M. RASHIDI	DATE : 3/22/10		
DRAWN BY : FCJ 1/88	REV. 10/17/00	LES/RDR	
CHECKED BY : CRK 3/89	REV. 5/7/03	RWW/JTE	
	REV. 5/1/06	TLA/GM	

30-AUG-2011 16:13
X:\TIPProjects-U\U3326B\Structures\str04\FinalPlans\U3326B_SD_2MR_04.dgn
qtnguyen

STR. #4

STD. NO. BMR2

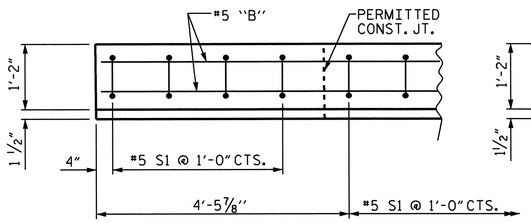

PLAN OF PARAPET

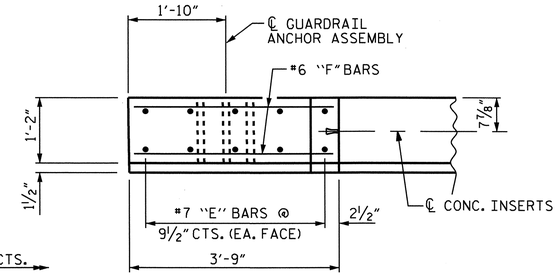

PLAN OF END POST

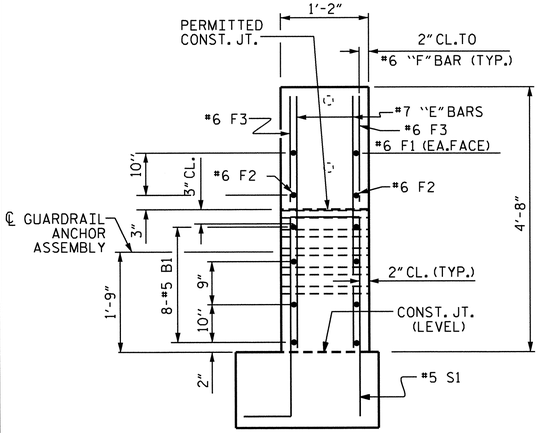

END VIEW

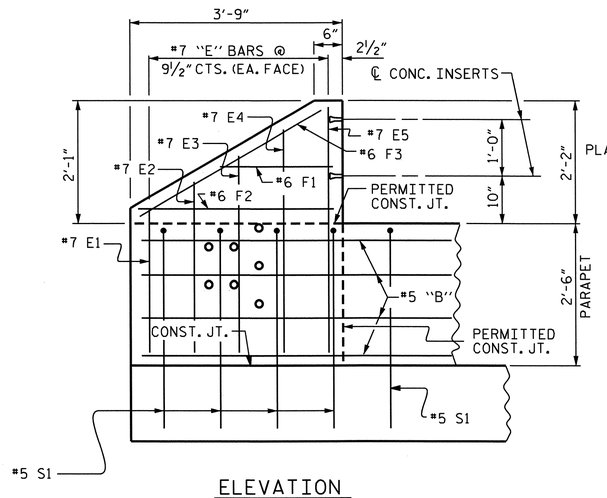

ELEVATION

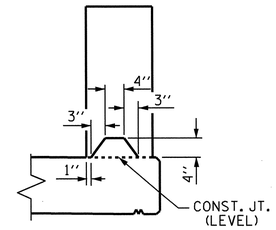

SECTION S-S

AT DAM IN OPEN JOINT (THIS IS TO BE USED ONLY WHEN SLIP FORM IS USED)

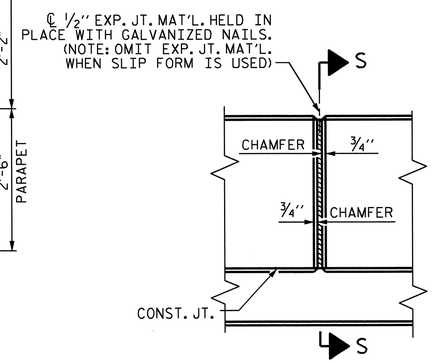

ELEVATION AT EXPANSION JOINTS

NOTES

THE PARAPET IN A CONTINUOUS UNIT SHALL NOT BE CAST UNTIL ALL SLAB CONCRETE IN THE UNIT HAS BEEN CAST AND HAS REACHED A MINIMUM COMPRESSIVE STRENGTH OF 3,000 PSI.

ALL REINFORCING STEEL IN THE PARAPET SHALL BE EPOXY COATED.

GROOVED CONTRACTION JOINTS 1/2" IN DEPTH, SHALL BE TOOLED IN ALL EXPOSED FACES OF PARAPET IN ACCORDANCE WITH ARTICLE 825-10(B) OF THE STANDARD SPECIFICATIONS. THE CONTRACTION JOINTS SHALL BE LOCATED AT A SPACING OF 8 FEET TO 10 FEET BETWEEN EXPANSION JOINTS. NO CONTRACTION JOINTS WILL BE REQUIRED FOR SEGMENTS LESS THAN 10 FEET IN LENGTH.

FOR DETAIL OF CONCRETE INSERTS, SEE "RAIL POST SPACING AND END OF RAIL DETAILS" SHEET.

FOR DETAILS OF GUARDRAIL ANCHOR ASSEMBLIES, SEE "GUARDRAIL ANCHORAGEDETAILS" SHEET.

BILL OF MATERIAL

FOR ONE PARAPET AND TWO END POSTS

BAR	NO.	SIZE	TYPE	LENGTH	WEIGHT
* B1	40	#5	STR	27'-4"	1140
* B2	16	#5	STR	24'-8"	412
* E1	4	#7	STR	2'-6"	20
* E2	4	#7	STR	3'-0"	25
* E3	4	#7	STR	3'-6"	29
* E4	4	#7	STR	4'-0"	33
* E5	4	#7	STR	4'-4"	35
* F1	4	#6	STR	1'-11"	12
* F2	4	#6	STR	3'-1"	19
* F3	4	#6	STR	3'-8"	22
* S1	189	#5	1	7'-0"	1380

* EPOXY COATED REINFORCING STEEL LBS. 3,127

CLASS "AA" CONCRETE

END POSTS	C.Y.	1.3
PARAPET	C.Y.	20.8
TOTAL	C.Y.	22.1

CONCRETE PARAPET LIN. FT. 188.33

BAR TYPE

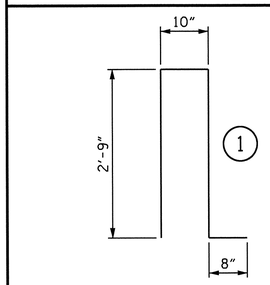

BAR DIMENSIONS IS OUT TO OUT.

PARAPET AND END POST FOR TWO BAR RAIL

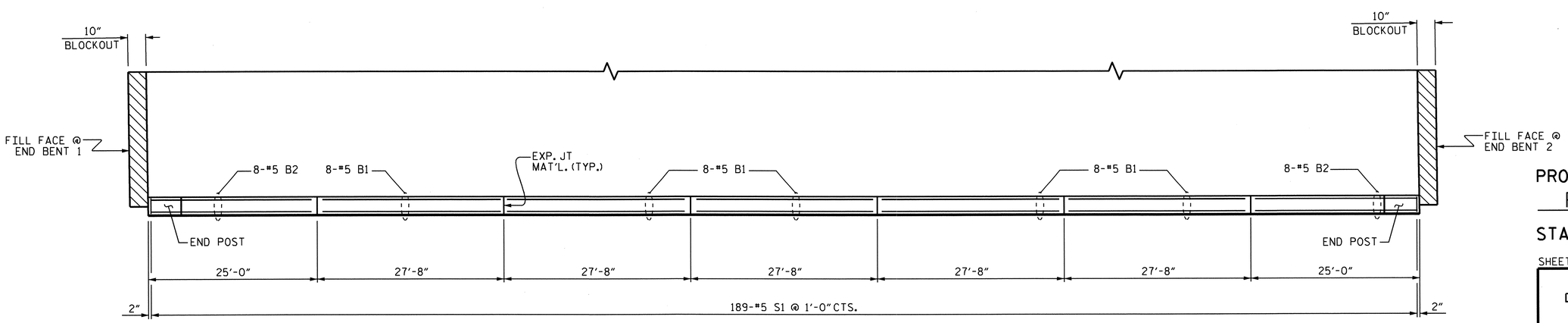

PLAN OF PARAPET

PROJECT NO. U-3326B
ROCKINGHAM COUNTY
STATION: 303+93.67 -L-

SHEET 4 OF 4

STATE OF NORTH CAROLINA
DEPARTMENT OF TRANSPORTATION
RALEIGH

SUPERSTRUCTURE

2 BAR METAL RAIL

CONCRETE PARAPET AND END POST DETAILS

NORTH CAROLINA PROFESSIONAL SEAL 16301 ENGINEER TING HSIENG FANG

8/30/11

REVISIONS						SHEET NO.
NO.	BY:	DATE:	NO.	BY:	DATE:	S-146
1			3			TOTAL SHEETS
2			4			159

DRAWN BY : A.S. CALLAWAY DATE : 1/12/10
CHECKED BY : S.M. RASHIDI DATE : 3/13/10

30-AUG-2011 16:13
X:\TIPProjects-U\U3326B\Structures\str04\FinalPlans\U3326B_SD_2MR_04.dgn
qtnguyen

STR. #4

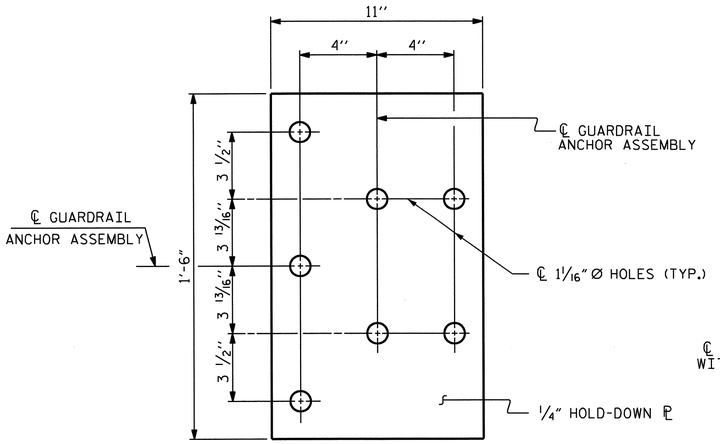

PLAN

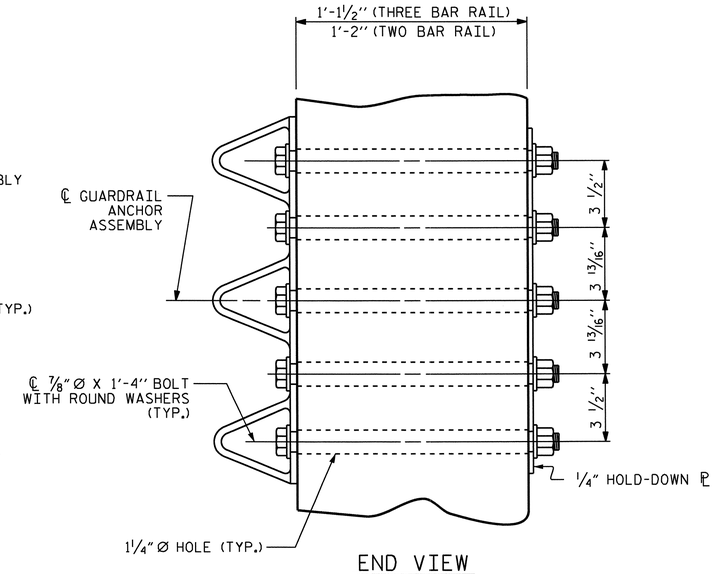

END VIEW

GUARDRAIL ANCHOR ASSEMBLY DETAILS

NOTES

THE GUARDRAIL ANCHOR ASSEMBLY SHALL CONSIST OF A 1/4'' HOLD DOWN PLATE AND 7 - 7/8'' Ø BOLTS WITH NUTS AND WASHERS.

THE HOLD-DOWN PLATE SHALL CONFORM TO AASHTO M270 GRADE 36. AFTER FABRICATION, THE HOLD-DOWN PLATE SHALL BE HOT-DIP GALVANIZED IN ACCORDANCE WITH AASHTO M111.

BOLTS SHALL CONFORM TO THE REQUIREMENTS OF ASTM A307 AND NUTS SHALL CONFORM TO THE REQUIREMENTS OF AASHTO M291. BOLTS, NUTS AND WASHERS SHALL BE GALVANIZED. AT THE CONTRACTOR'S OPTION, STAINLESS STEEL BOLTS, NUTS AND WASHERS MAY BE USED AS AN ALTERNATE FOR THE 7/8'' Ø GALVANIZED BOLTS, NUTS AND WASHERS. THEY SHALL CONFORM TO OR EXCEED THE MECHANICAL REQUIREMENTS OF ASTM A307. THE USE OF THIS ALTERNATE SHALL BE APPROVED BY THE ENGINEER.

AFTER INSTALLATION, THE EXPOSED THREAD OF THE BOLT SHALL BE BURRED WITH A SHARP POINTED TOOL.

THE COST OF THE GUARDRAIL ANCHOR ASSEMBLIES WITH BOLTS, NUTS AND WASHERS COMPLETE IN PLACE, SHALL BE INCLUDED IN THE VARIOUS PAY ITEMS.

THE VERTICAL REINFORCING BARS MAY BE SHIFTED SLIGHTLY IN THE END POST TO CLEAR ASSEMBLY BOLTS.

THE 1 1/4'' Ø HOLES SHALL BE FORMED OR DRILLED WITH A CORE BIT. IMPACT TOOLS WILL NOT BE PERMITTED. ANY CONCRETE DAMAGED BY THIS WORK SHALL BE REPAIRED TO THE SATISFACTION OF THE ENGINEER.

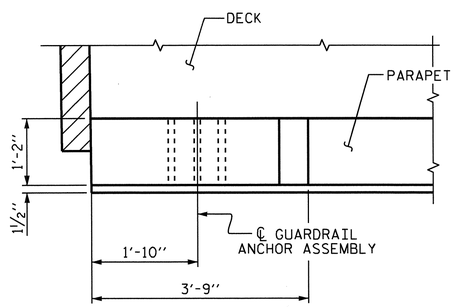

PLAN - RIGHT SIDE

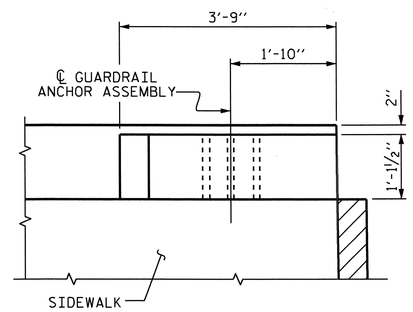

PLAN - LEFT SIDE

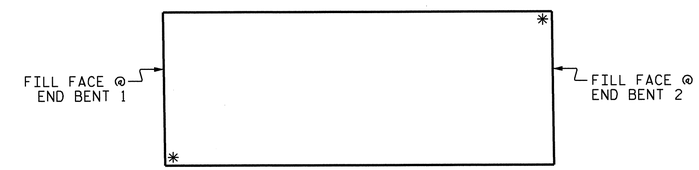

SKETCH SHOWING POINTS OF ATTACHMENT

* LOCATION OF GUARDRAIL ATTACHMENT

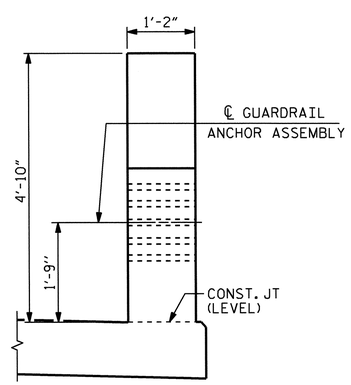

END VIEW - RIGHT SIDE
(TWO BAR METAL RAIL)

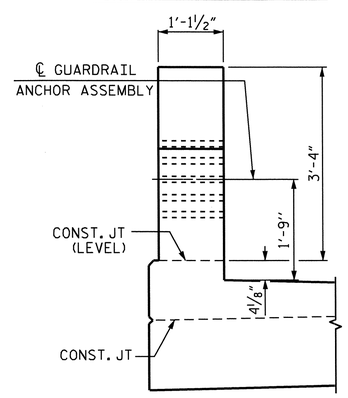

END VIEW -LEFT SIDE
(THREE BAR METAL RAIL)

LOCATION OF GUARDRAIL ANCHOR AT END POST

PROJECT NO. U-3326B
ROCKINGHAM COUNTY
STATION: 303+93.67 -L-

STATE OF NORTH CAROLINA
DEPARTMENT OF TRANSPORTATION
RALEIGH
STANDARD

GUARDRAIL ANCHORAGE DETAILS

NORTH CAROLINA PROFESSIONAL SEAL 16301 ENGINEER TING HSIUNG FANG
8/30/11

REVISIONS						SHEET NO.
NO.	BY:	DATE:	NO.	BY:	DATE:	S-147
1			3			TOTAL SHEETS
2			4			159

ASSEMBLED BY : A.S. CALLAWAY		DATE : 1/8/10	
CHECKED BY : S.M. RASHIDI		DATE : 3/23/10	
DRAWN BY : EEM 6/94	REV. 10/17/00	RWW/LES	
CHECKED BY : RGW 6/94	REV. 5/7/03	RWW/JTE	
	REV. 5/1/06	TLA/GM	

30-AUG-2011 16:13
X:\TIPProjects-U\U3326B\Structures\str04\FinalPlans\U3326B_SD_2MR_04.dgn
qtnguyen

STR. #4

STD. NO. BMR8

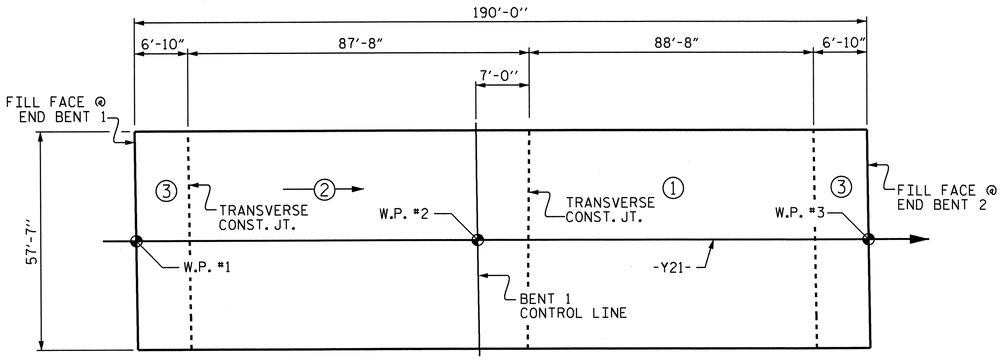

POURING SEQUENCE

DIRECTION OF POUR

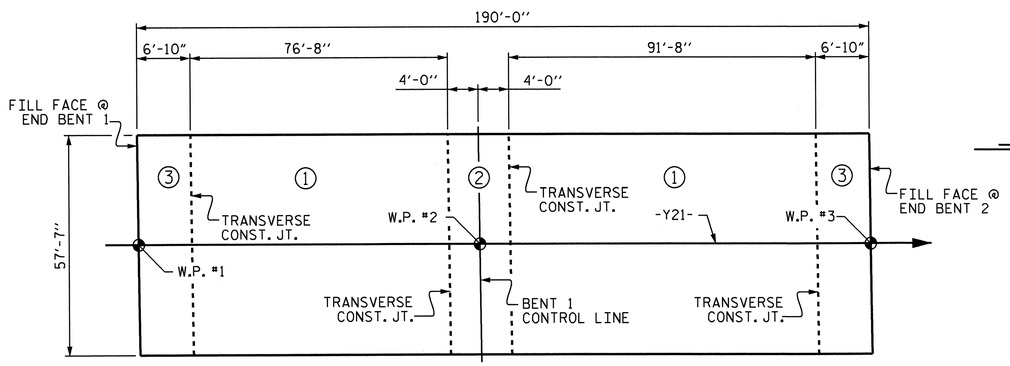

OPTIONAL POURING SEQUENCE

POUR (2) CANNOT BE STARTED UNTIL BOTH ADJACENT (1) POURS REACH A MINIMUM OF 3000 PSI.

SUPERSTRUCTURE REINFORCING STEEL LENGTHS ARE BASED ON THE FOLLOWING MINIMUM SPLICE LENGTHS					
BAR SIZE	SUPERSTRUCTURE EXCEPT APPROACH SLABS, PARAPET, AND BARRIER RAIL		APPROACH SLABS		PARAPET AND BARRIER RAIL
	EPOXY COATED	UNCOATED	EPOXY COATED	UNCOATED	
#4	2'-0"	1'-9"	2'-0"	1'-9"	2'-9"
#5	2'-6"	2'-2"	2'-6"	2'-2"	3'-5"
#6	3'-0"	2'-7"	3'-10"	2'-7"	4'-4"
#7	5'-3"	3'-6"			
#8	6'-10"	4'-7"			

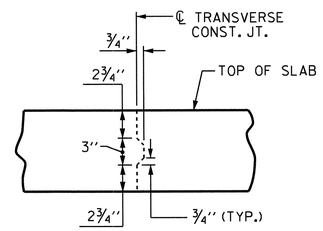

TRANSVERSE CONSTRUCTION JOINT DETAIL

NOTE: REINFORCING STEEL IN SLAB NOT SHOWN. LONGITUDINAL REINFROCING STEEL SHALL BE CONTINUOUS THRU JOINT.

NOTE: THE UPPER PORTION OF THE WINGS SHALL BE POURED WITH THE SUPERSTRUCTURE.

BILL OF MATERIAL

BAR	NO.	SIZE	TYPE	LENGTH	WEIGHT
* A1	301	#5	STR	57'-3"	17973
A2	301	#5	STR	57'-3"	17973
* A3	2	#5	STR	30'-0"	63
A4	2	#5	STR	30'-0"	63
* B1	80	#4	STR	21'-0"	1122
* B2	80	#7	STR	36'-8"	5996
* B3	37	#7	STR	29'-0"	2193
* B4	80	#4	STR	24'-0"	1283
* B5	77	#7	STR	17'-6"	2754
* B6	77	#7	STR	20'-6"	3226
B7	164	#5	STR	48'-8"	8325
* B8	45	#4	STR	27'-7"	829
* B9	7	#4	STR	28'-7"	134
* G1	189	#4	STR	6'-4"	800
* G2	44	#4	STR	5'-0"	147
H1	32	#5	4	15'-11"	531
H2	28	#5	4	15'-5"	450
K1	36	#4	STR	22'-3"	535
K2	40	#4	STR	8'-11"	238
K3	10	#4	STR	7'-4"	49
K4	10	#4	STR	5'-11"	40
K5	16	#4	STR	6'-7"	70
K6	4	#4	STR	5'-9"	15
K7	4	#4	STR	5'-1"	14
K8	12	#4	STR	2'-8"	21
K9	40	#4	STR	8'-11"	238
K10	10	#4	STR	6'-2"	41
K11	10	#4	STR	5'-11"	40
K12	12	#4	STR	25'-7"	205
S1	82	#4	1	13'-4"	730
* S2	82	#4	2	11'-4"	621
* S3	78	#4	2	10'-3"	534
S4	185	#4	3	2'-9"	340
S5	4	#4	1	16'-8"	45
S6	4	#4	1	15'-4"	41
S7	10	#4	6	11'-1"	74
* U1	35	#4	5	17'-8"	413
* U2	70	#4	1	3'-4"	156
V2	60	#4	STR	6'-11"	277
V3	60	#4	STR	6'-1"	247
REINFORCING STEEL = 30,602 LBS					
* EPOXY COATED REINF. STEEL = 38,244 LBS					

BAR TYPES

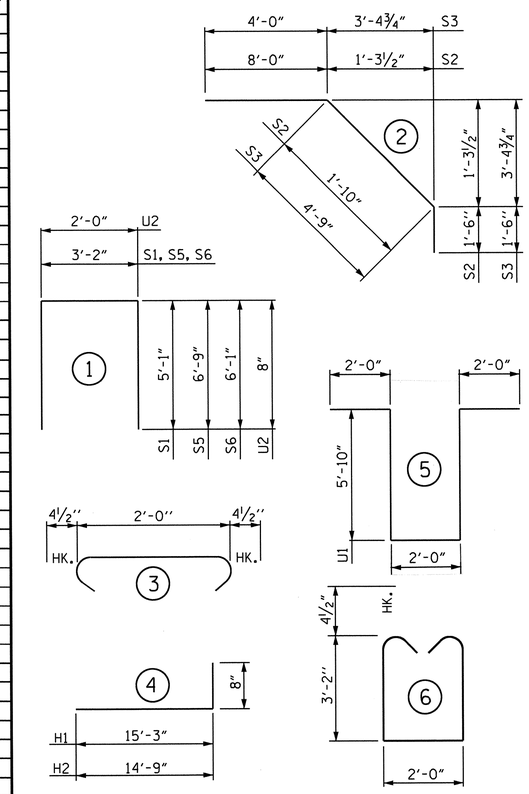

ALL BAR DIMENSIONS ARE OUT TO OUT.

SUPERSTRUCTURE BILL OF MATERIAL

	CLASS AA CONCRETE	REINFORCING STEEL	* EPOXY COATED REINFORCING STEEL
	(CU. YDS.)	(LBS.)	(LBS.)
SPAN "A" & "B"	——	30,602	38,244
POUR #1	180.2	——	——
POUR #2	199.4	——	——
POUR #3	137.7	——	——
SIDEWALK	38.6	——	**
TOTALS **	555.9	30,602	38,244

**INCLUDES QUANTITIES FOR SIDEWALK, QUANTITIES FOR END POSTS & PARPART ARE NOT INCLUDED.

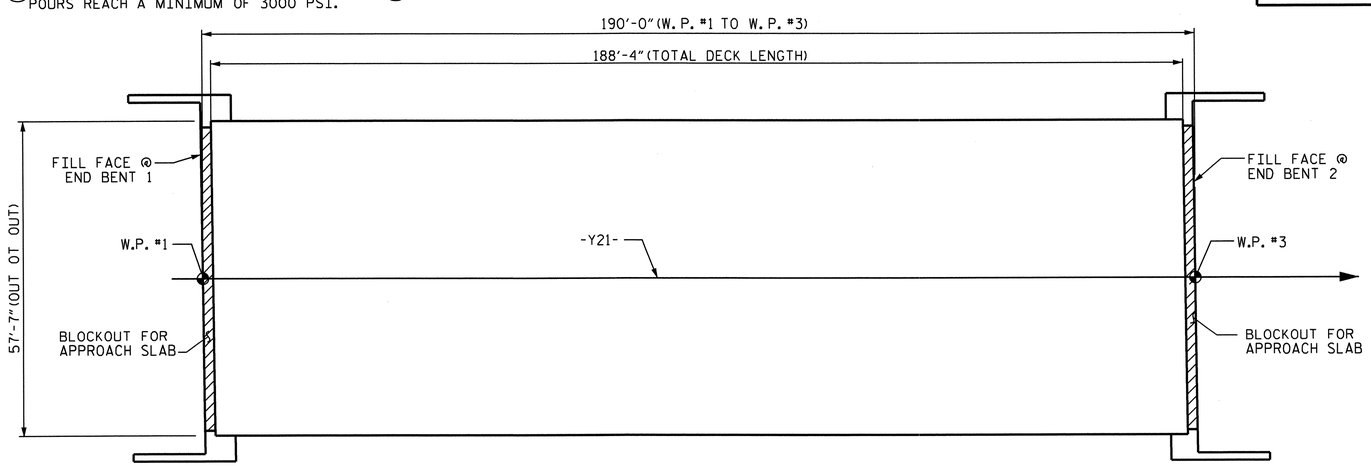

LAYOUT FOR COMPUTING AREA REINFORCED CONCRETE DECK SLAB (SQ. FT. = 10,941)

GROOVING BRIDGE FLOORS		
APPROACH SLABS	2,140	SQ.FT.
BRIDGE DECK	8,758	SQ.FT.
TOTAL	10,898	SQ.FT.

PROJECT NO. U-3326B
ROCKINGHAM COUNTY
STATION: 303+93.67 -L-

STATE OF NORTH CAROLINA
DEPARTMENT OF TRANSPORTATION
RALEIGH

STANDARD
SUPERSTRUCTURE BILL OF MATERIAL

NORTH CAROLINA PROFESSIONAL SEAL 16301 ENGINEER
10/25/11

REVISIONS						SHEET NO.
NO.	BY:	DATE:	NO.	BY:	DATE:	S-148
1			3			TOTAL SHEETS
2			4			159

STR. #4

STD. NO. BOM2

ASSEMBLED BY : A.S. CALLAWAY	DATE : 2/12/10		
CHECKED BY : S.M. RASHIDI	DATE : 3/18/10		
DRAWN BY : JMB 5/87	REV. 6/1/94	EEM/GRP	
CHECKED BY : SJD 9/87	REV. 8/16/99	RWW/LES	
	REV. 5/1/06	TLA/GM	

25-OCT-2011 17:08
K:\TIPProjects-U\U3326B\Structures\str04\FinalPlans\U3326B_SD_BM_04.dgn
ttfang

NOTES:

FOR PILE SPLICE DETAILS, SEE SHEET 3 OF 3.

THE CONTRACTOR SHALL PROVIDE FOR INSTALLATION OF THE 4" DIAMETER DRAIN PIPE THROUGH THE WING WALL AS REQUIRED FOR REINFORCED BRIDGE APPROACH FILLS, SEE THE ROADWAY PLANS. REINFORCING STEEL IN THE WING WALL MAY BE SHIFTED AS NECESSARY TO CLEAR THE DRAIN PIPE.

SEE SUPERSTRUCTURE SHEETS FOR THE ABUTMENT DETAILS.

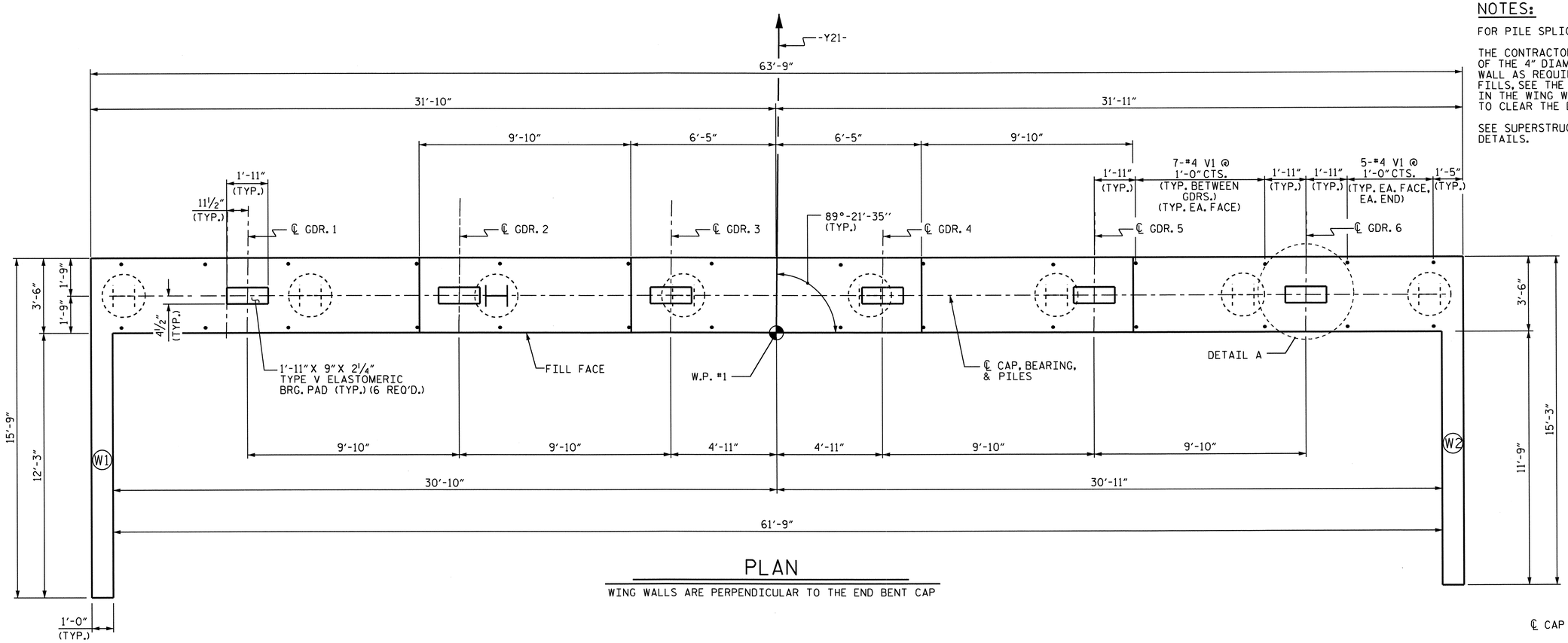

PLAN

WING WALLS ARE PERPENDICULAR TO THE END BENT CAP

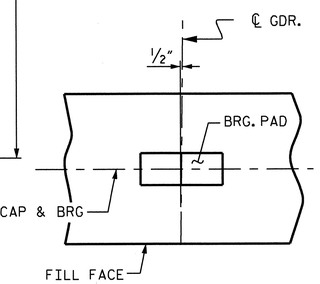

DETAIL A

(TYP. EA. GDR.)

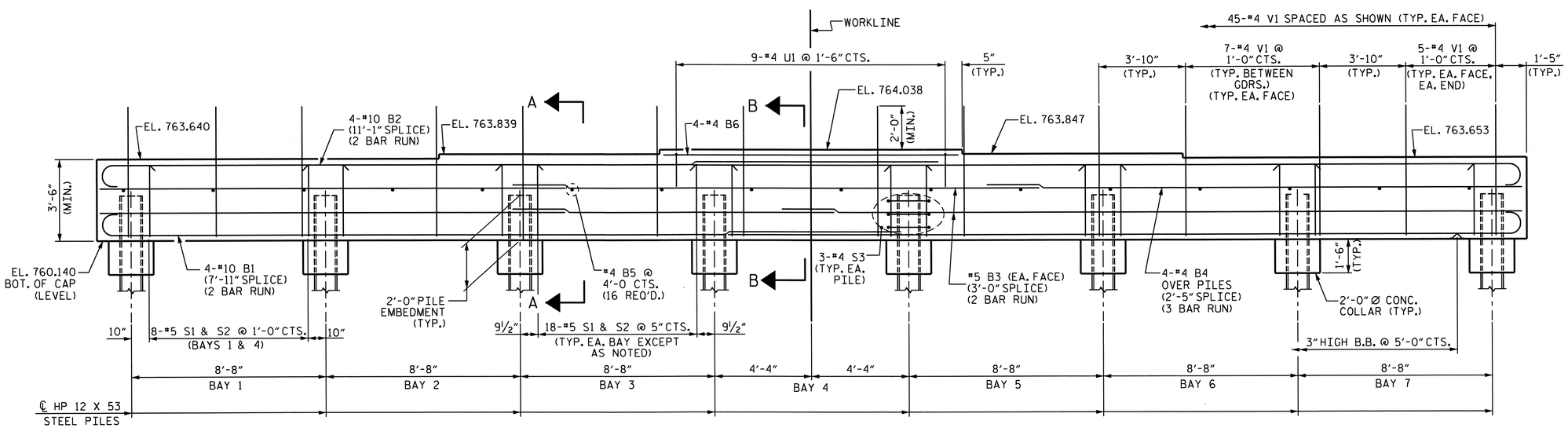

ELEVATION

WING WALLS NOT SHOWN FOR CLARITY

NORTH CAROLINA PROFESSIONAL SEAL 16301 ENGINEER TING HSIUNG FANG

10/26/11

PROJECT NO. U-3326B

ROCKINGHAM COUNTY

STATION: 303+93.67 -L-

SHEET 1 OF 3

STATE OF NORTH CAROLINA
DEPARTMENT OF TRANSPORTATION
RALEIGH

SUBSTRUCTURE

END BENT 1

(INTEGRAL)

REVISIONS						SHEET NO.
NO.	BY:	DATE:	NO.	BY:	DATE:	S-149
1			3			TOTAL SHEETS
2			4			159

STR. #4

DRAWN BY : RAMAN PATEL DATE : 11-16-10
CHECKED BY : A.SORSENGINH DATE : 2-2-11

26-OCT-2011 09:41
K:\TIPProjects-U\U3326B\Structures\str04\FinalPlans\u-3326b_sd_eb*_04.dgn
ttfang

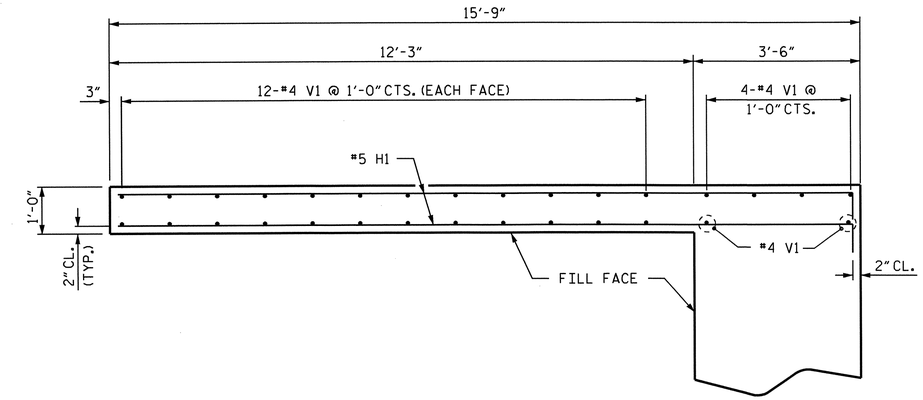

PLAN OF WING (W1)

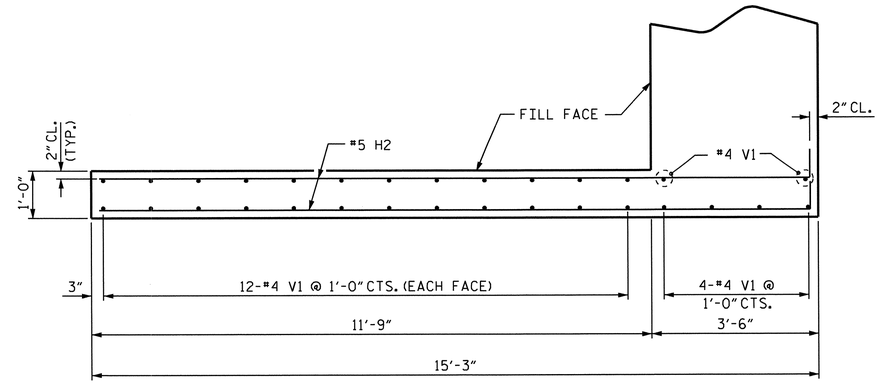

PLAN OF WING (W2)

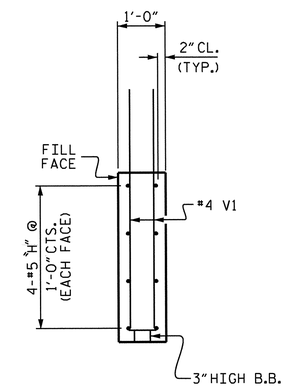

SECTION X-X

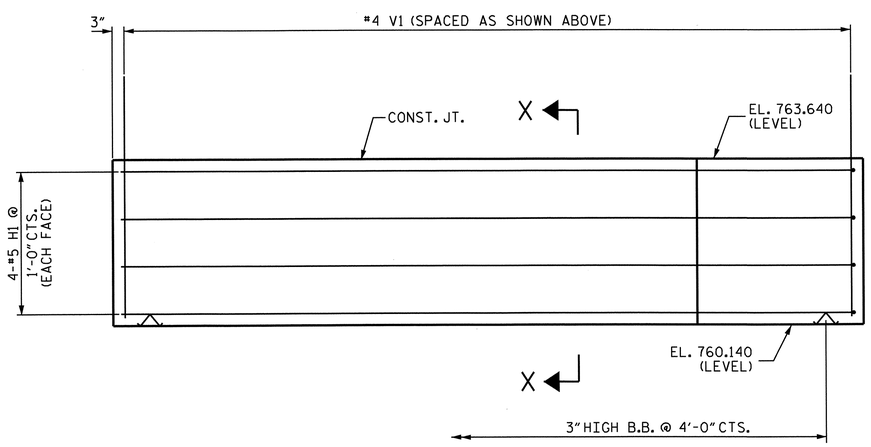

ELEVATION OF WING (W1)

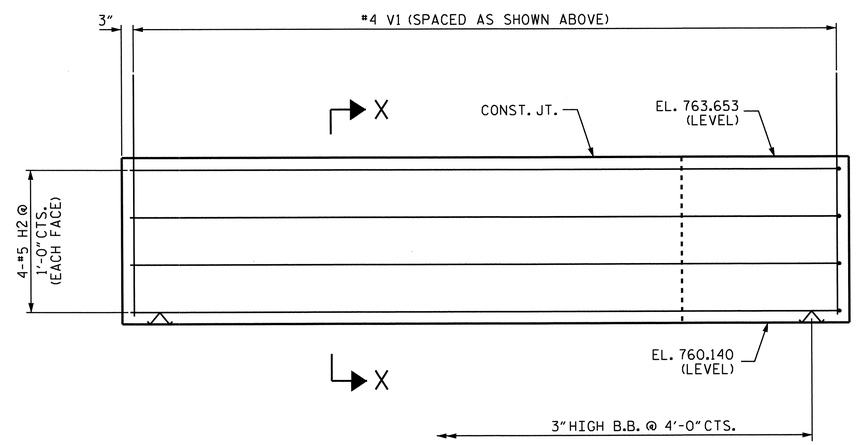

ELEVATION OF WING (W2)

PROJECT NO. U-3326B
ROCKINGHAM COUNTY
STATION: 303+93.67 -L-

SHEET 2 OF 3

STATE OF NORTH CAROLINA
DEPARTMENT OF TRANSPORTATION
RALEIGH

SUBSTRUCTURE
END BENT 1
(INTEGRAL)

NORTH CAROLINA PROFESSIONAL SEAL 16301 ENGINEER TING-HSIUNG FANG
8/30/11

REVISIONS						SHEET NO.
NO.	BY:	DATE:	NO.	BY:	DATE:	S-150
1			3			TOTAL SHEETS
2			4			159

DRAWN BY : RAMAN PATEL DATE : 11-15-10
CHECKED BY : A. SORSENGINH DATE : 2-2-11

30-AUG-2011 16:13
X:\TIPProjects-U\U3326B\Structures\str04\FinalPlans\u-3326b_sd_eb*_04.dgn
qtnguyen

STR. #4 NC005

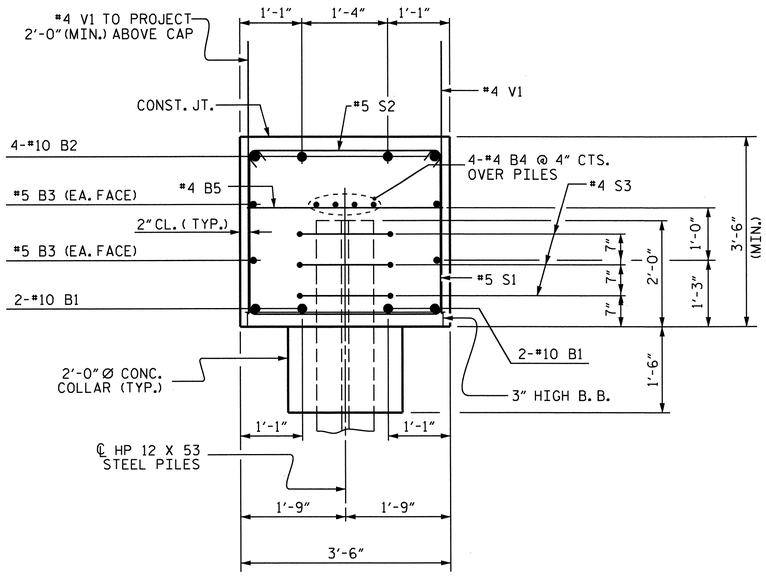

SECTION A-A

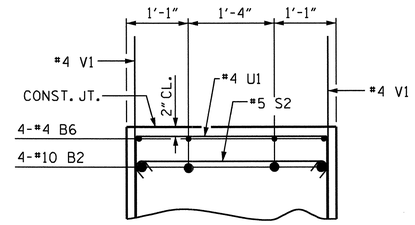

PARTIAL SECTION B-B

BILL OF MATERIAL

END BENT 1

BAR	NO.	SIZE	TYPE	LENGTH	WEIGHT
B1	8	#10	1	37'-0"	1274
B2	8	#10	1	38'-7"	1328
B3	8	#5	STR	33'-3"	277
B4	12	#4	STR	22'-9"	182
B5	16	#4	STR	3'-2"	34
B6	4	#4	STR	12'-6"	33
H1	8	#4	2	16'-1"	86
H2	8	#4	2	15'-7"	83
S1	106	#5	3	10'-4"	1142
S2	106	#5	4	4'-1"	451
S3	24	#4	5	6'-6"	104
U1	9	#4	6	6'-2"	37
V1	150	#4	STR	5'-9"	576

REINFORCING STEEL = 5607 LBS

CLASS A CONCRETE BREAKDOWN :

CAP, LOWER WINGS & COLLARS = 34.7 C.Y.

HP 12 X 53 STEEL PILES :

No. 8 LIN. FT. 320

BAR TYPES

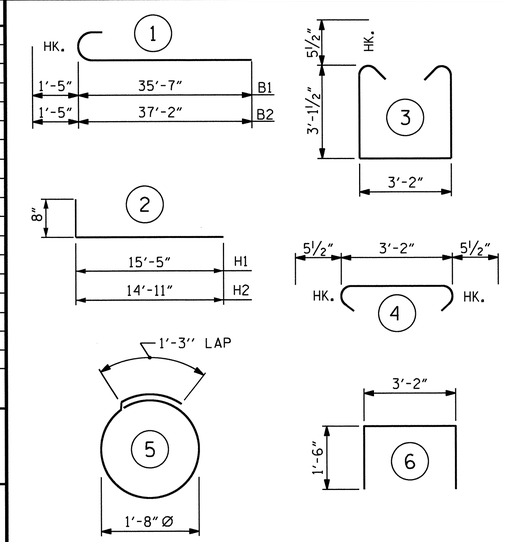

ALL BAR DIMENSIONS ARE OUT TO OUT.

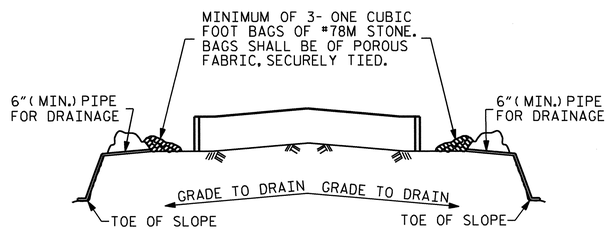

BAGGED STONE AND PIPE SHALL BE PLACED IMMEDIATELY AFTER COMPLETION OF END BENT EXCAVATION. PIPE MAY BE EITHER CONCRETE, CORRUGATED STEEL, CORRUGATED ALUMINUM ALLOY, OR CORRUGATED PLASTIC. PERFORATED PIPE WILL NOT BE ALLOWED.

BAGGED STONE SHALL REMAIN IN PLACE UNTIL THE ENGINEER DIRECTS THAT IT BE REMOVED. THE CONTRACTOR SHALL REMOVE AND DISPOSE OF SILT ACCUMULATIONS AT BAGGED STONE WHEN SO DIRECTED BY THE ENGINEER. BAGS SHALL BE REMOVED AND REPLACED WHENEVER THE ENGINEER DETERMINES THAT THEY HAVE DETERIORATED AND LOST THEIR EFFECTIVENESS.

NO SEPARATE PAYMENT WILL BE MADE FOR THIS WORK AND THE ENTIRE COST OF THIS WORK SHALL BE INCLUDED IN THE UNIT CONTRACT PRICE BID FOR THE SEVERAL PAY ITEMS.

TEMPORARY DRAINAGE AT END BENT

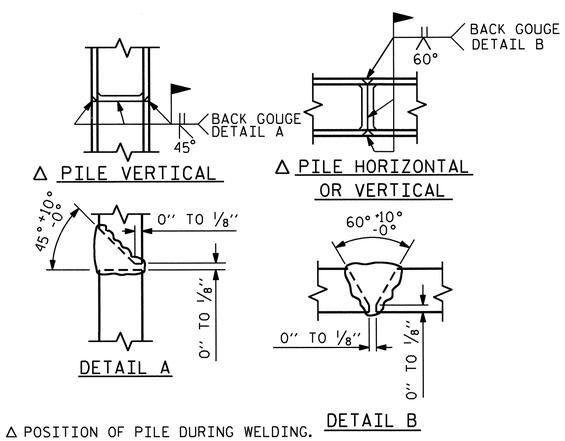

Δ POSITION OF PILE DURING WELDING.

PILE SPLICE DETAILS

PROJECT NO. U-3326B

ROCKINGHAM COUNTY

STATION: 303+93.67 -L-

SHEET 3 OF 3

STATE OF NORTH CAROLINA
DEPARTMENT OF TRANSPORTATION
RALEIGH

SUBSTRUCTURE

END BENT 1 (INTEGRAL)

NORTH CAROLINA PROFESSIONAL SEAL 16301 ENGINEER TING-HSIANG CHANG

8/30/11

REVISIONS						SHEET NO.
NO.	BY:	DATE:	NO.	BY:	DATE:	S-151
1			3			TOTAL SHEETS
2			4			159

DRAWN BY : RAMAN PATEL DATE : 11-16-10
CHECKED BY : A. SORSENGINH DATE : 2-2-11

30-AUG-2011 16:13
X:\TIPProjects-U\U3326B\Structures\str04\FinalPlans\u-3326b_sd_eb*_04.dgn
qtnguyen

STR. #4

NOTES:

STIRRUPS AND U1 BARS IN CAP MAY BE SHIFTED AS NECESSARY TO CLEAR ANCHOR BOLTS.

ALL STEEL IN THE DRILLED PIERS IS INCLUDED IN THE PAY ITEMS FOR "REINFORCING STEEL" AND "SPIRAL COLUMN REINFORCING STEEL".

THE LOCATION OF THE CONSTRUCTION JOINT IN THE DRILLED PIERS IS BASED ON AN APPROXIMATE GROUND LINE ELEVATION. IF THE CONSTRUCTION JOINT IS ABOVE THE ACTUAL GROUND LINE ELEVATION, THE CONTRACTOR SHALL PLACE THE CONSTRUCTION JOINT 1'-0" BELOW THE GROUND LINE.

THE CONTRACTOR'S ATTENTION IS CALLED TO THE FACT THAT THE LONGITUDINAL REINFORCEMENT FOR THE DRILLED PIERS IS DETAILED WITH 3 FEET OF EXTRA LENGTH.

THE CONTRACTOR SHALL ALIGN THE "V" & "M" BARS AS SHOWN IN THE PLAN OF DRILLED PIERS. HOOKS ON "V" BARS MAY BE TURNED AS NECESSARY FOR PLACING REINFORCING STEEL.

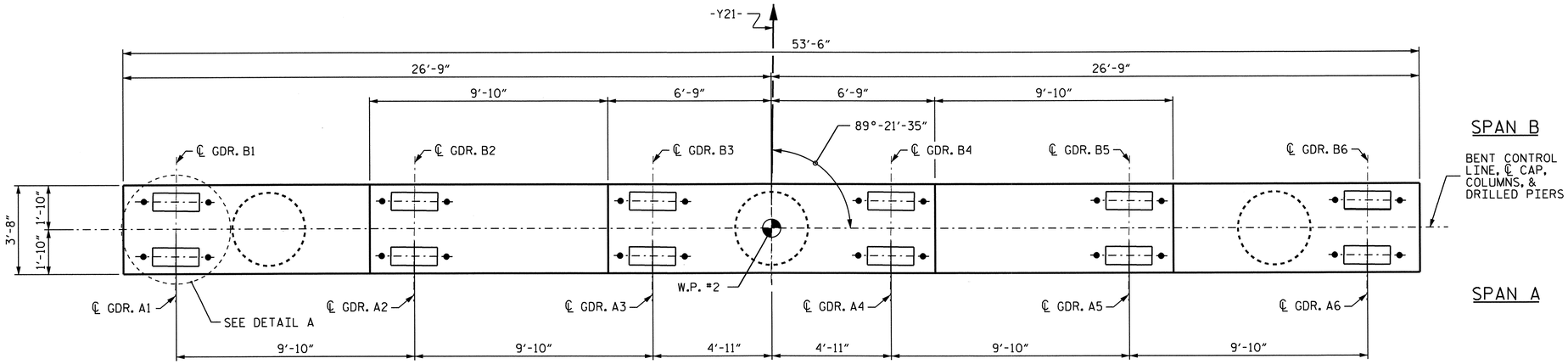

PLAN

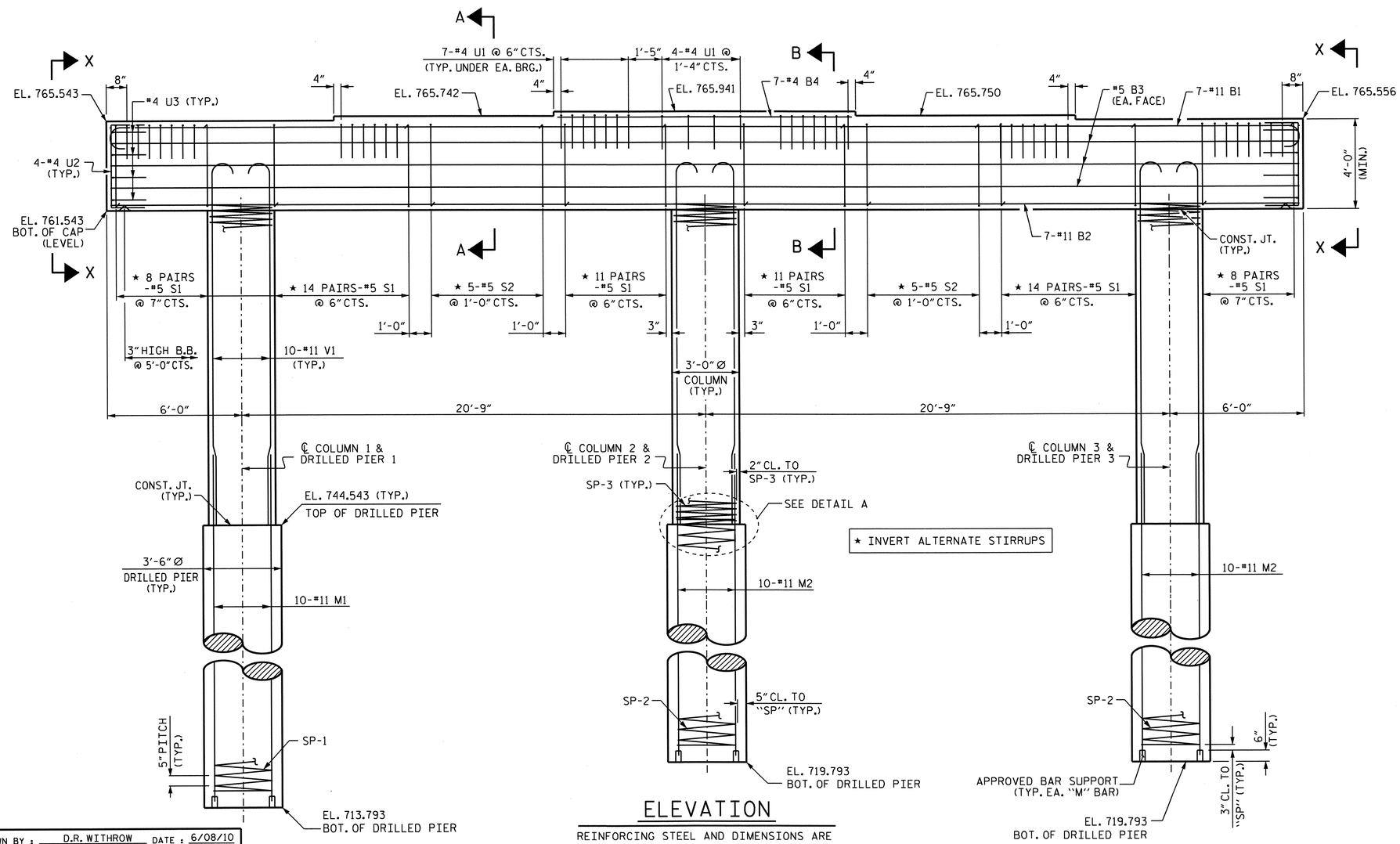

ELEVATION

REINFORCING STEEL AND DIMENSIONS ARE TYPICAL FOR EACH COLUMN.

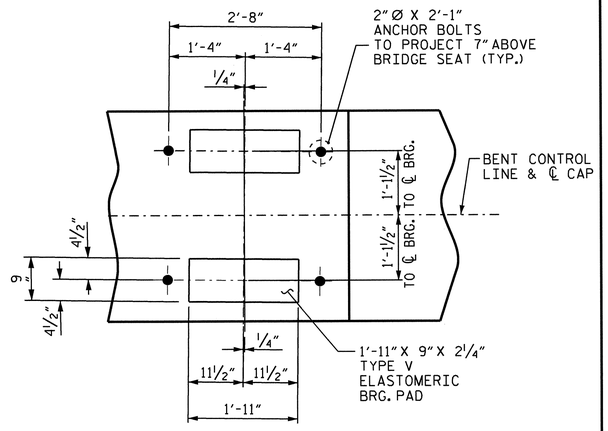

DETAIL A

(TYP. EA. GDR.)

PROJECT NO. U-3326B

ROCKINGHAM COUNTY

STATION: 303+93.67 -1-

SHEET 1 OF 2

STATE OF NORTH CAROLINA
DEPARTMENT OF TRANSPORTATION
RALEIGH

SUBSTRUCTURE

BENT 1

NORTH CAROLINA PROFESSIONAL SEAL 29048 ENGINEER RAMAN P. PATEL 02/26/11

REVISIONS						SHEET NO.
NO.	BY:	DATE:	NO.	BY:	DATE:	S-152
1			3			TOTAL SHEETS
2			4			159

DRAWN BY : D.R. WITHROW DATE : 6/08/10
CHECKED BY : R.P. PATEL DATE : 02/11

25-OCT-2011 14:53
K:\TIPProjects-U\U3326B\Structures\str04\FinalPlans\u-3326b_sd_b*_04.dgn
tfang

STR. #4 NC005

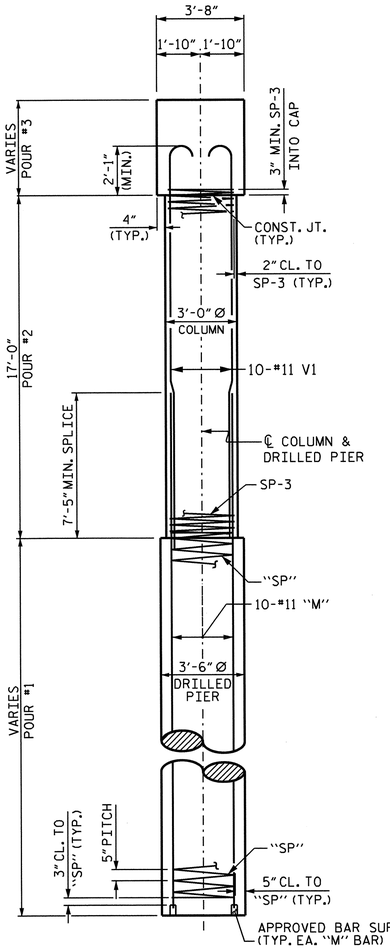

END ELEVATION

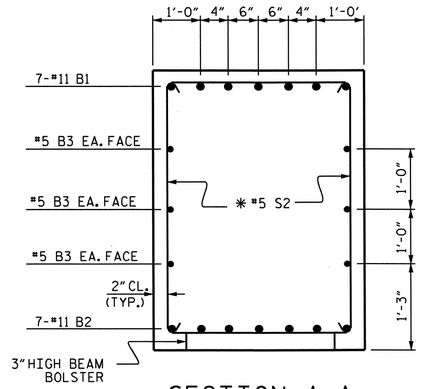

SECTION A-A

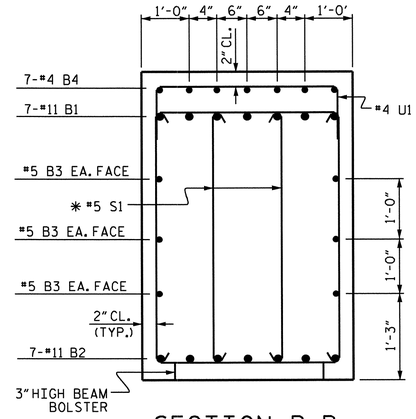

SECTION B-B

✱ INVERT ALTERNATE STIRRUPS

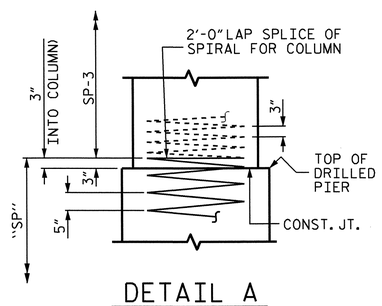

DETAIL A

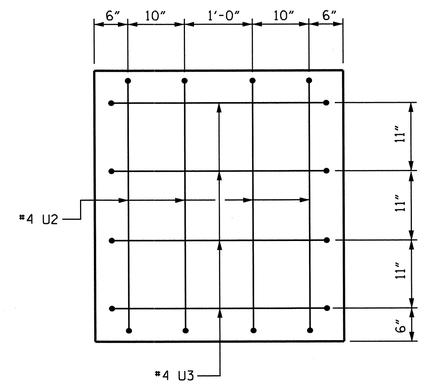

VIEW X-X

BAR TYPES

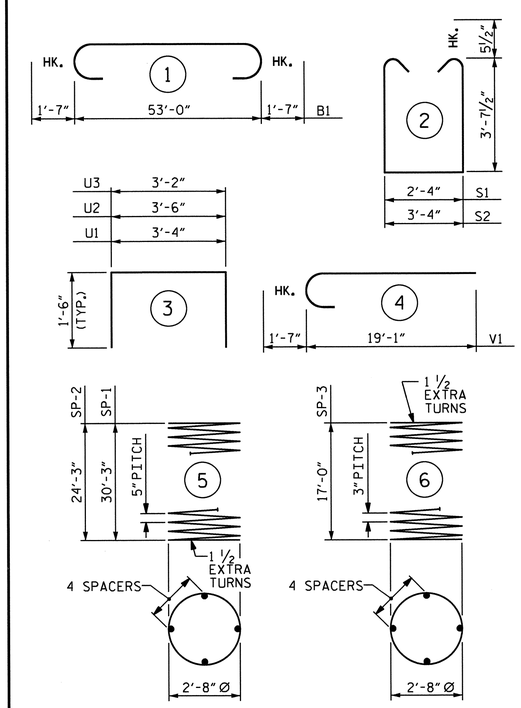

ALL BAR DIMENSIONS ARE OUT TO OUT.

BILL OF MATERIAL

BENT 1

BAR	NO.	SIZE	TYPE	LENGTH	WEIGHT
B1	7	#11	1	56'-2"	2089
B2	7	#11	STR	53'-2"	1977
B3	6	#5	STR	53'-2"	333
B4	7	#4	STR	13'-2"	62
M1	10	#11	STR	40'-11"	2174
M2	20	#11	STR	34'-11"	3710
S1	132	#5	2	10'-6"	1446
S2	10	#5	2	11'-6"	120
U1	46	#4	3	6'-4"	195
U2	8	#4	3	6'-6"	35
U3	8	#4	3	6'-2"	33
V1	30	#11	4	20'-8"	3294
REINFORCING STEEL =				LBS	15,468
SP-1	1	✱	5	608'-2"	634
SP-2	2	✱	5	490'-0"	1022
SP-3	3	✱✱	6	574'-3"	1151
SPIRAL COLUMN REINFORCING STEEL =				LBS	2807

CLASS A CONCRETE
POUR #2 (COLUMNS) = C.Y. 13.4
POUR #3 (CAP) = C.Y. 30.4
TOTAL CLASS A CONCRETE C.Y. 43.8

DRILLED PIERS:
DRILLED PIER CONCRETE (C.Y.)
POUR #1 (3-DRILLED PIERS) = C.Y. 28.6
3'-6" Ø DRILLED PIERS IN SOIL = LIN. FT. 52.25
3'-6" Ø DRILLED PIERS NOT IN SOIL = LIN. FT. 28.00
CSL TUBES = LIN. FT. 351

✱ THE SP-1 & SP-2 SPIRAL REINFORCING STEEL SHALL BE W31 OR D-31 COLD DRAWN WIRE OR #5 PLAIN OR DEFRORMED BAR.

✱✱ THE SP-3 SPIRAL REINFORCING STEEL SHALL BE W20 OR D-20 COLD DRAWN WIRE OR #4 PLAIN OR DEFRORMED BAR.

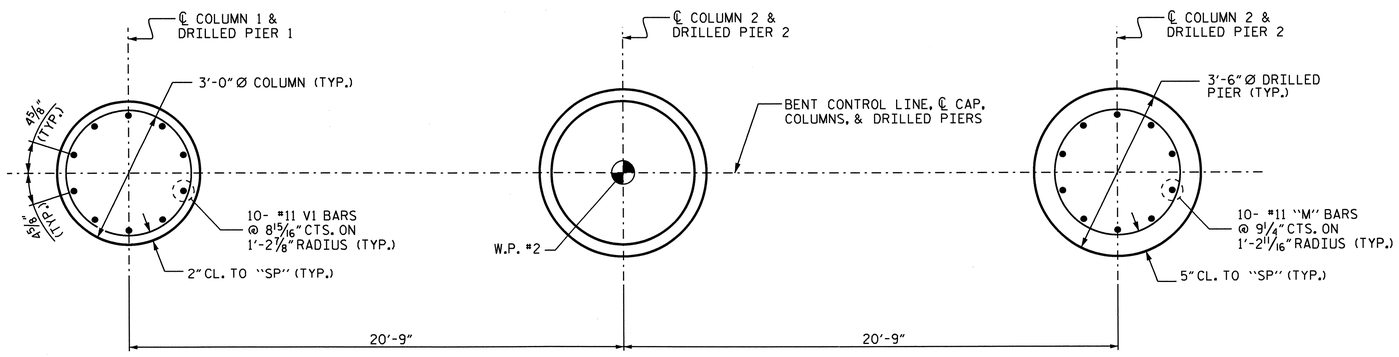

COLUMN PIER

PLAN OF DRILLED PIERS & COLUMNS

(DETAILS ARE TYPICAL EACH DRILLED PIER & COLUMN)

NORTH CAROLINA PROFESSIONAL SEAL 29048 ENGINEER RAMAN P. PATEL
R.P. Patel 10/28/11

PROJECT NO. U-3326B
ROCKINGHAM COUNTY
STATION: 303+93.67 -L-

SHEET 2 OF 2

STATE OF NORTH CAROLINA
DEPARTMENT OF TRANSPORTATION
RALEIGH

SUBSTRUCTURE

BENT 1

REVISIONS						SHEET NO.
NO.	BY:	DATE:	NO.	BY:	DATE:	S-153
1			3			TOTAL SHEETS
2			4			159

DRAWN BY : D.R. WITHROW DATE : 6/08/10
CHECKED BY : R.P. PATEL DATE : 02-10

28-OCT-2011 11:40
X:\TIPProjects-U\U3326B\Structures\str04\FinalPlans\u-3326b_sd_b*_04.dgn
rppatel

STR. #4

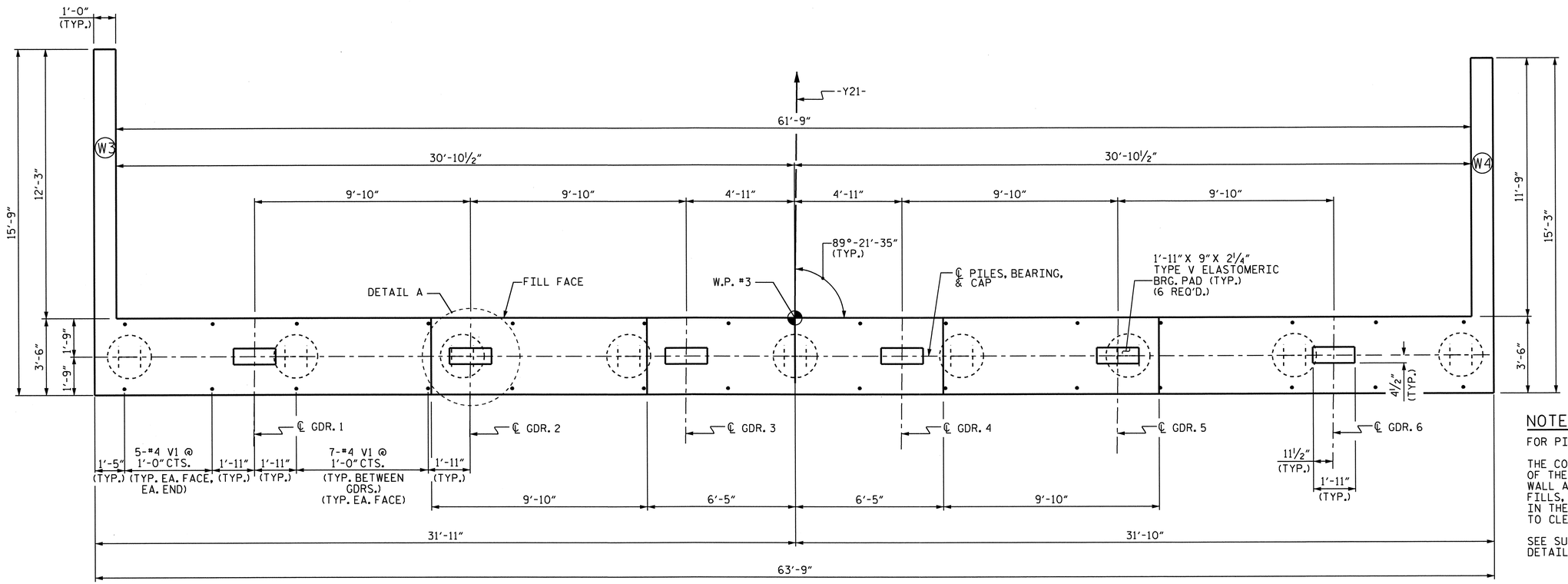

PLAN

WING WALLS ARE PERPENDICULAR TO THE END BENT CAP

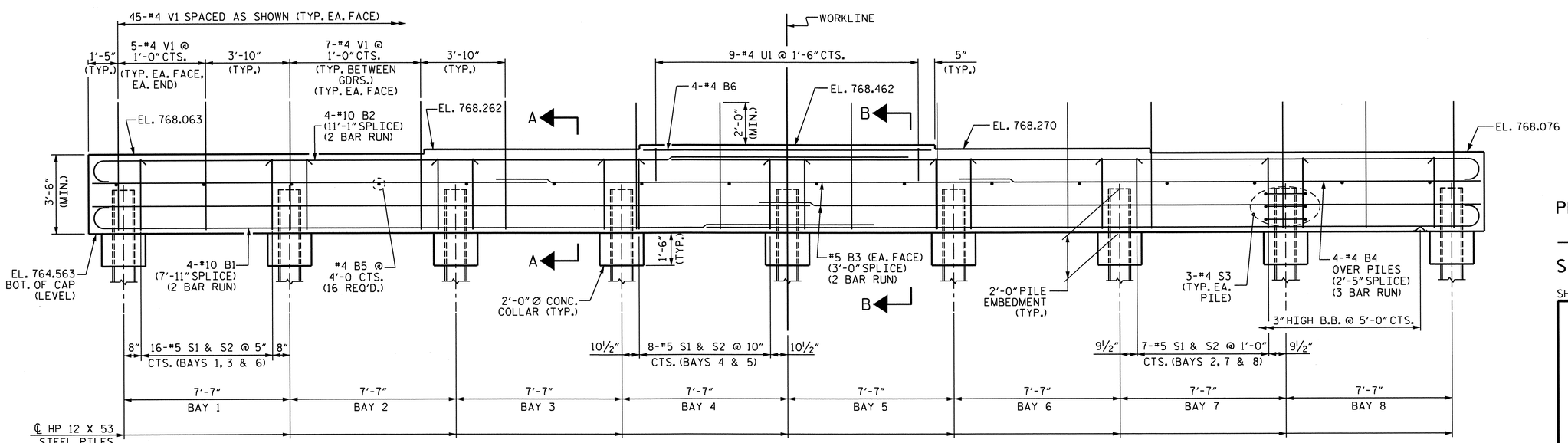

ELEVATION

WING WALLS NOT SHOWN FOR CLARITY

NOTES:

FOR PILE SPLICE DETAILS, SEE SHEET 3 OF 3.

THE CONTRACTOR SHALL PROVIDE FOR INSTALLATION OF THE 4" DIAMETER DRAIN PIPE THROUGH THE WING WALL AS REQUIRED FOR REINFORCED BRIDGE APPROACH FILLS, SEE THE ROADWAY PLANS. REINFORCING STEEL IN THE WING WALL MAY BE SHIFTED AS NECESSARY TO CLEAR THE DRAIN PIPE.

SEE SUPERSTRUCTURE SHEETS FOR THE ABUTMENT DETAILS.

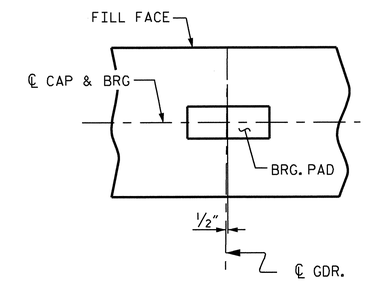

DETAIL A

(TYP. EA. GDR.)

PROJECT NO. U-3326B

ROCKINGHAM COUNTY

STATION: 303+93.67 -L-

SHEET 1 OF 3

STATE OF NORTH CAROLINA
DEPARTMENT OF TRANSPORTATION
RALEIGH

SUBSTRUCTURE

END BENT 2

(INTEGRAL)

REVISIONS						SHEET NO.
NO.	BY:	DATE:	NO.	BY:	DATE:	S-154
1			3			TOTAL SHEETS
2			4			159

STR. #4

DRAWN BY : RAMAN PATEL DATE : 11-16-10
CHECKED BY : A.SORSENGINH DATE : 2-2-11

26-OCT-2011 09:53
K:\TIPProjects-U\U3326B\Structures\str04\FinalPlans\u-3326b_sd_eb*_04.dgn
ttong

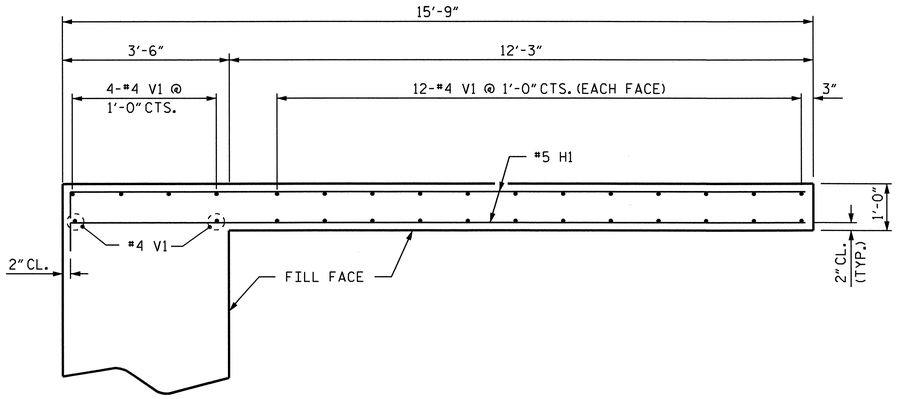

PLAN OF WING (W3)

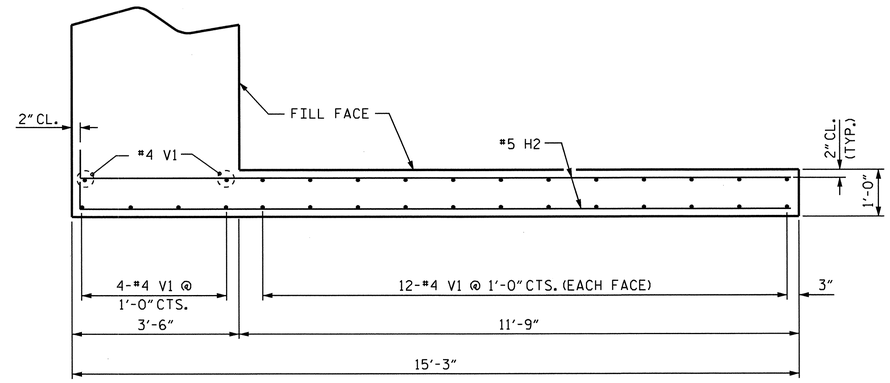

PLAN OF WING (W4)

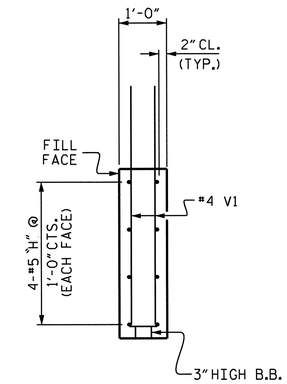

SECTION X-X

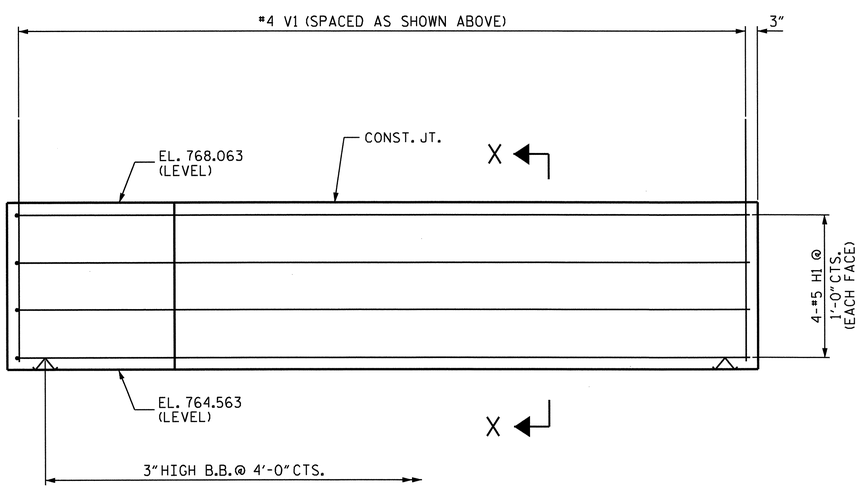

ELEVATION OF WING (W3)

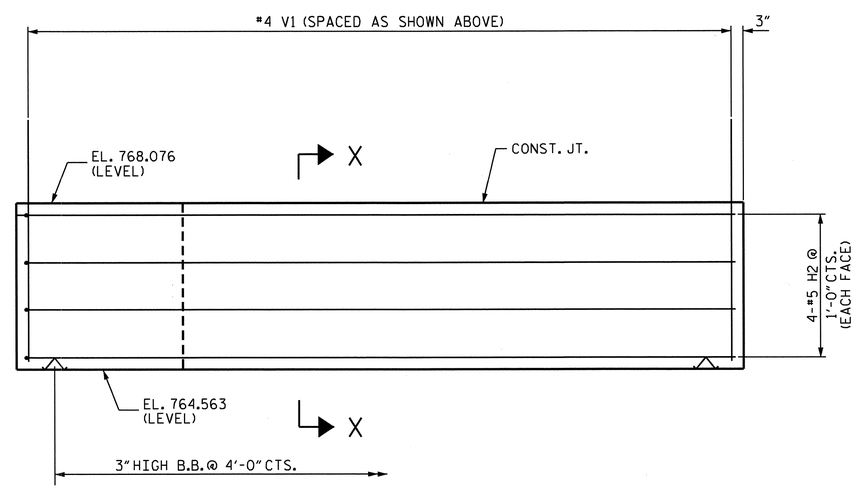

ELEVATION OF WING (W4)

PROJECT NO. U-3326B
ROCKINGHAM COUNTY
STATION: 303+93.67 -L-

SHEET 2 OF 3

STATE OF NORTH CAROLINA
DEPARTMENT OF TRANSPORTATION
RALEIGH

SUBSTRUCTURE

END BENT 2
(INTEGRAL)

NORTH CAROLINA PROFESSIONAL SEAL 16301 ENGINEER TING HSIUNG FANG
8/30/11

REVISIONS						SHEET NO.
NO.	BY:	DATE:	NO.	BY:	DATE:	S-155
1			3			TOTAL SHEETS
2			4			159

DRAWN BY : RAMAN PATEL DATE : 11-15-10
CHECKED BY : A. SORSENGINH DATE : 2-2-11

30-AUG-2011 16:13
X:\TIPProjects-U\U3326B\Structures\str04\FinalPlans\u-3326b_sd_eb*_04.dgn
qtnguyen

STR. #4 NCBDS

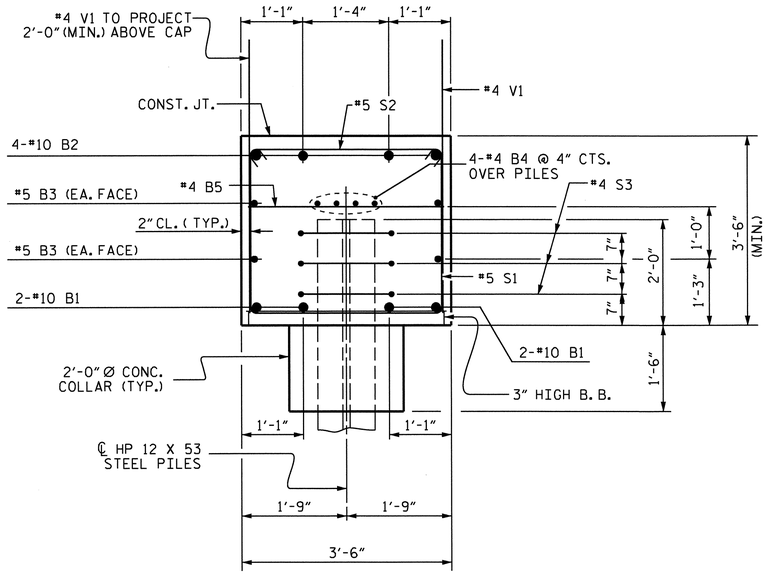

SECTION A-A

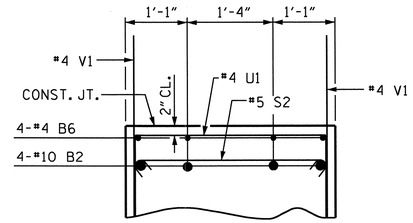

PARTIAL SECTION B-B

BILL OF MATERIAL

END BENT 2

BAR	NO.	SIZE	TYPE	LENGTH	WEIGHT
B1	8	#10	1	37'-0"	1274
B2	8	#10	1	38'-7"	1328
B3	8	#5	STR	33'-3"	277
B4	12	#4	STR	22'-9"	182
B5	16	#4	STR	3'-2"	34
B6	4	#4	STR	12'-6"	33
H1	8	#4	2	16'-1"	86
H2	8	#4	2	15'-7"	83
S1	85	#5	3	10'-4"	916
S2	85	#5	4	4'-1"	362
S3	27	#4	5	6'-6"	117
U1	9	#4	6	6'-2"	37
V1	150	#4	STR	5'-11"	593

REINFORCING STEEL = 5322 LBS

CLASS A CONCRETE BREAKDOWN :

CAP, LOWER WINGS & COLLARS = 34.9 C.Y.

HP 12 X 53 STEEL PILES :

No. 9 LIN. FT. 315

BAR TYPES

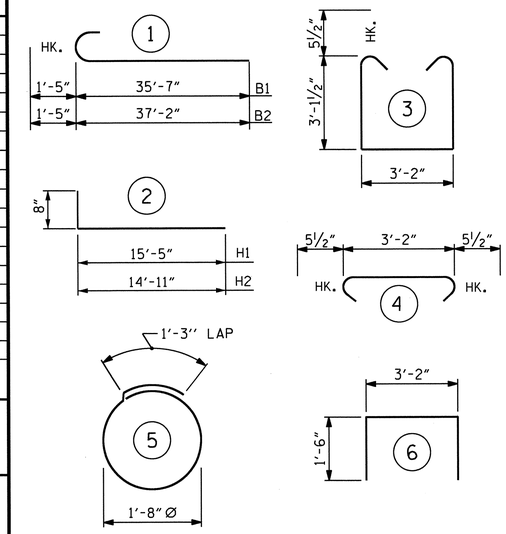

ALL BAR DIMENSIONS ARE OUT TO OUT.

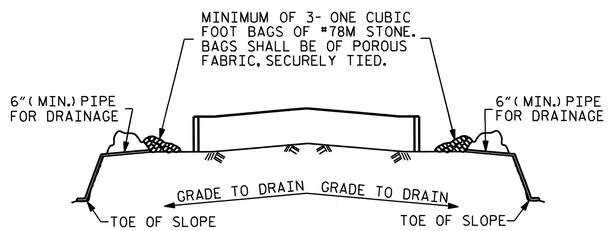

BAGGED STONE AND PIPE SHALL BE PLACED IMMEDIATELY AFTER COMPLETION OF END BENT EXCAVATION. PIPE MAY BE EITHER CONCRETE, CORRUGATED STEEL, CORRUGATED ALUMINUM ALLOY, OR CORRUGATED PLASTIC. PERFORATED PIPE WILL NOT BE ALLOWED.

BAGGED STONE SHALL REMAIN IN PLACE UNTIL THE ENGINEER DIRECTS THAT IT BE REMOVED. THE CONTRACTOR SHALL REMOVE AND DISPOSE OF SILT ACCUMULATIONS AT BAGGED STONE WHEN SO DIRECTED BY THE ENGINEER. BAGS SHALL BE REMOVED AND REPLACED WHENEVER THE ENGINEER DETERMINES THAT THEY HAVE DETERIORATED AND LOST THEIR EFFECTIVENESS.

NO SEPARATE PAYMENT WILL BE MADE FOR THIS WORK AND THE ENTIRE COST OF THIS WORK SHALL BE INCLUDED IN THE UNIT CONTRACT PRICE BID FOR THE SEVERAL PAY ITEMS.

TEMPORARY DRAINAGE AT END BENT

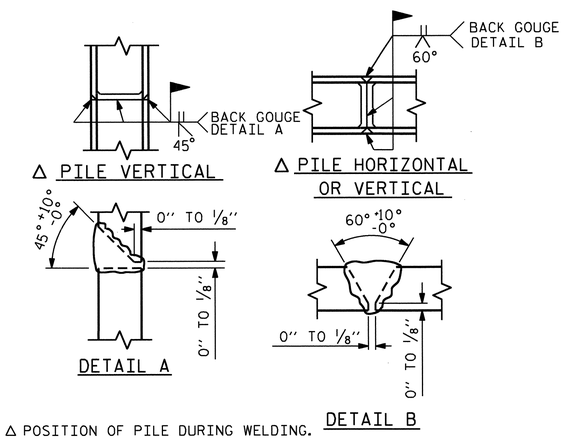

Δ POSITION OF PILE DURING WELDING.

PILE SPLICE DETAILS

PROJECT NO. U-3326B

ROCKINGHAM COUNTY

STATION: 303+93.67 -L-

SHEET 3 OF 3

STATE OF NORTH CAROLINA
DEPARTMENT OF TRANSPORTATION
RALEIGH

SUBSTRUCTURE
END BENT 2
(INTEGRAL)

NORTH CAROLINA PROFESSIONAL SEAL 16301 ENGINEER TING-HSIUNG YANG
8/30/11

REVISIONS						SHEET NO.
NO.	BY:	DATE:	NO.	BY:	DATE:	S-156
1			3			TOTAL SHEETS
2			4			159

DRAWN BY : RAMAN PATEL DATE : 11-16-10
CHECKED BY : A. SORSENGINH DATE : 2-2-11

30-AUG-2011 16:13
X:\TIPProjects-U\U3326B\Structures\str04\FinalPlans\u-3326b_sd_eb*_04.dgn
qtnguyen

STR. #4

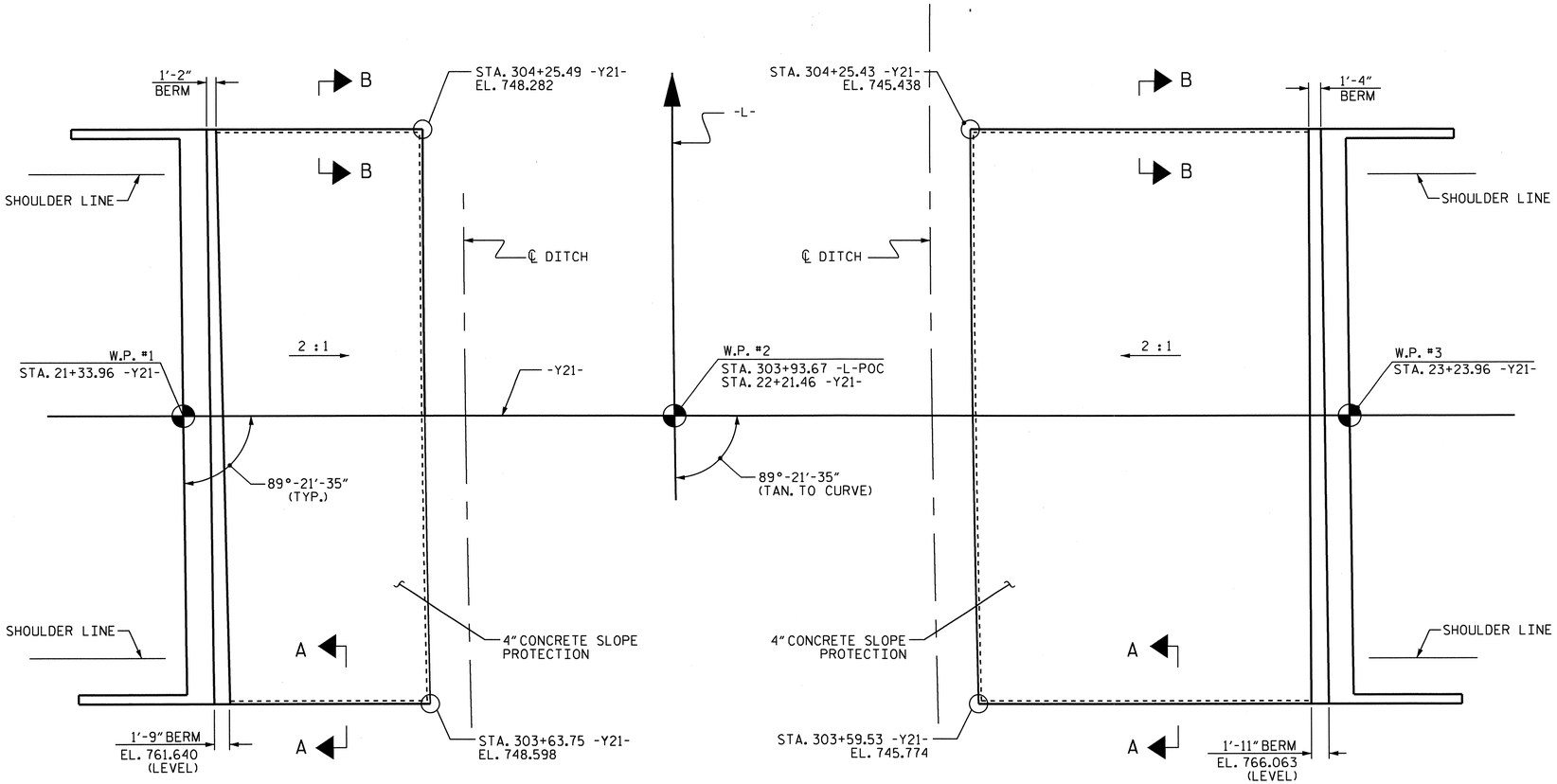

AT END BENT 1

AT END BENT 2

PLAN

GENERAL NOTES

SLOPE PROTECTION SHALL BE PLACED UNDER THE ENDS OF THE BRIDGE AS SHOWN IN THE DETAILS. STRAIGHT EDGING WILL NOT BE REQUIRED UNLESS, IN THE OPINION OF THE ENGINEER, VISUAL INSPECTION INDICATES A NEED FOR IT. MEASUREMENT AND PAYMENT SHALL BE AS PRESCRIBED IN SECTION 462 OF THE STANDARD SPECIFICATIONS.

SLOPE PROTECTION SHALL CONSIST OF 4" POURED-IN-PLACE CONCRETE PAVING AS SHOWN IN THE DETAILS ON THIS SHEET. CONCRETE SHALL BE CLASS "B". THE CONCRETE SURFACE SHALL BE FLOATED WITH A WOODEN FLOAT AND FINISHED. WELDED WIRE FABRIC REINFORCING SHALL BE 6 X 6 - W1.4 X W1.4, 60" WIDE. SLOPE PROTECTION SHALL BE POURED IN 5' STRIPS AS SHOWN IN THE "POURING DETAIL" WITH 2'-0" LONG #4 BARS PLACED ALONG THE SLOPE BETWEEN STRIPS AT 1'-6" MAXIMUM SPACING. SLOPE PROTECTION MAY BE POURED IN ALTERNATE 4' AND 5' STRIPS AS SHOWN IN THE "OPTIONAL POURING DETAIL" WITH ADJACENT RUNS OF WELDED WIRE FABRIC LAPPING AT LEAST 6". THE COST OF THE WELDED WIRE FABRIC AND #4 BARS, IF USED, SHALL BE INCLUDED IN THE CONTRACT UNIT PRICE BID PER SQUARE YARD FOR SLOPE PROTECTION.

BRIDGE @ STA. 303+93.67 -L-	4" INCH SLOPE PROTECTION	* WELDED WIRE FABRIC 60 INCHES WIDE
	SQUARE YARDS	APPROX. L.F.
END BENT 1	195	390
END BENT 2	300	600

* QUANTITY SHOWN IS BASED ON 5' POURS.

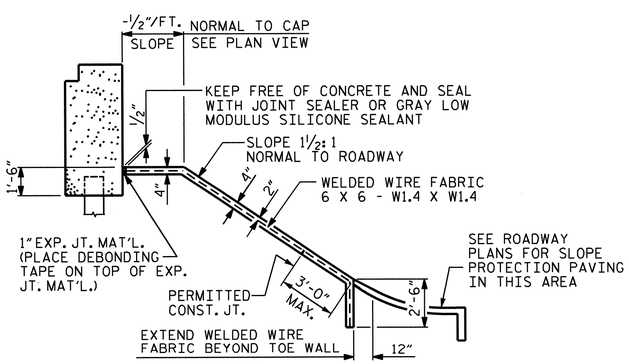

SECTION ALONG ℄ ROADWAY WHEN FILL CATCHES IN DITCH

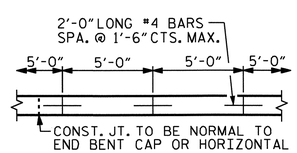

POURING DETAIL

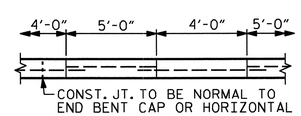

OPTIONAL POURING DETAIL

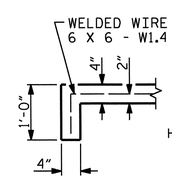

SECTION A-A

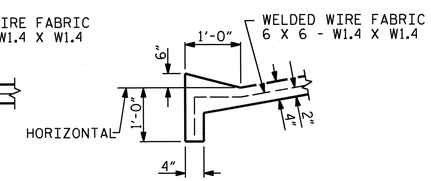

SECTION B-B

PROJECT NO. U-3326B
ROCKINGHAM COUNTY
STATION: 303+93.67 -L-

STATE OF NORTH CAROLINA
DEPARTMENT OF TRANSPORTATION
RALEIGH

STANDARD
SLOPE PROTECTION DETAILS

NORTH CAROLINA PROFESSIONAL SEAL 16301 ENGINEER TING HSIUNG FANG
8/30/11

ASSEMBLED BY :	OT NGUYEN	DATE :	5-20-11
CHECKED BY :	T.H. FANG	DATE :	8/29/11

DRAWN BY : ELR 5/92	REV. 7/10/01	LES/RDR
CHECKED BY : GRP 6/92	REV. 5/7/03	RWW/JTE
	REV. 5/1/06	TLA/GM

REVISIONS								SHEET NO.
NO.	BY:	DATE:	NO.	BY:	DATE:			S-157
1			3					TOTAL SHEETS
2			4					159

30-AUG-2011 16:13
X:\TIPProjects-U\U3326B\Structures\str04\Final Plans\U-3326B_SD_SP_04.dgn
atnguyen

STR. 4

STD. NO. SP1

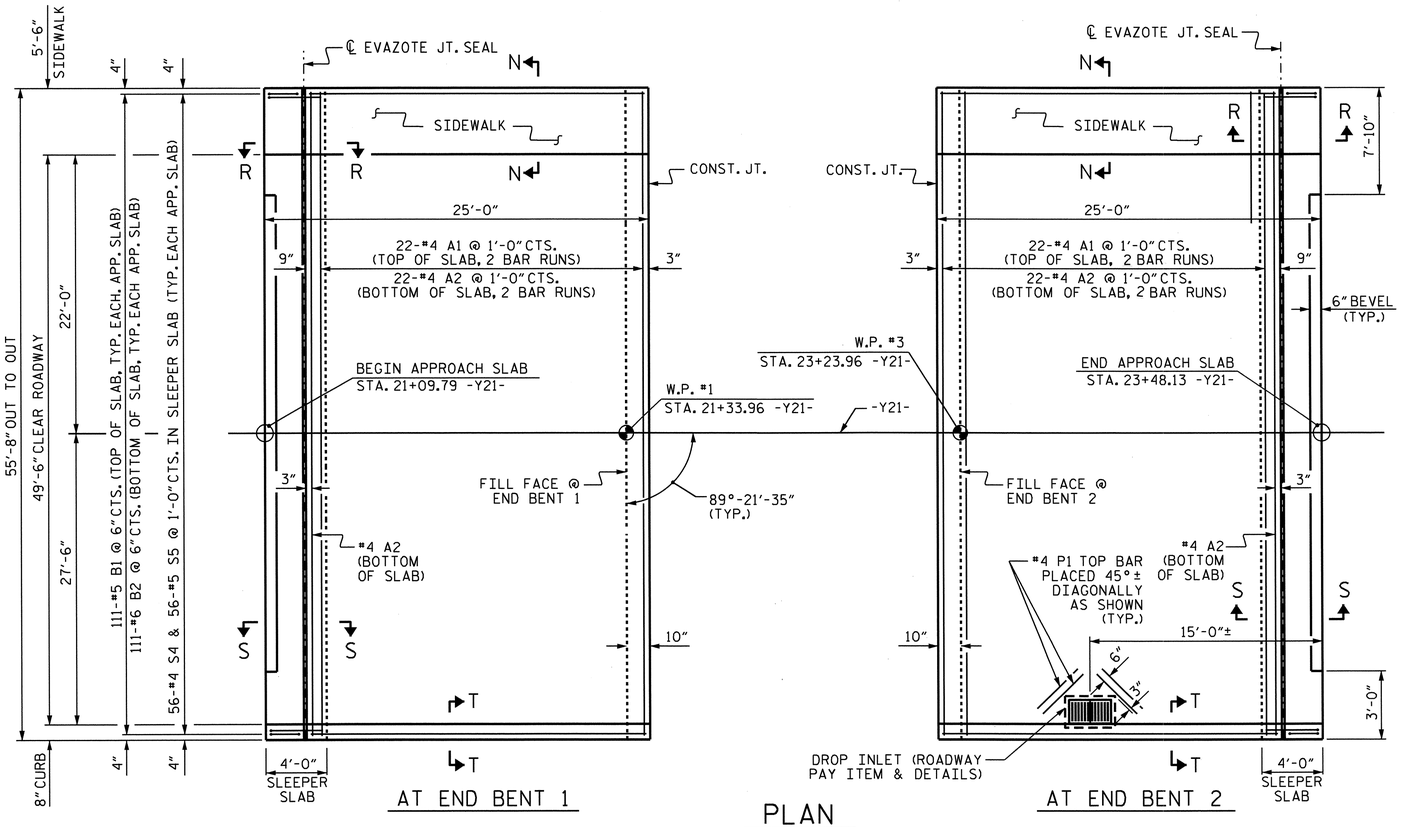

PLAN

DIMENSIONS SHOWN ARE TYPICAL FOR BOTH APPROACH SLABS.
#4 A1 BARS IN SLEEPER SLAB NOT SHOWN FOR CLARITY.

"A" & "B" BARS TO BE FIELD CUT TO MAINTAIN A 2" MIN. CLEARANCE TO THE DROP INLET. CUT ENDS OF EPOXY COATED BARS SHALL BE PATCHED PER THE STANDARD SPECIFICATIONS.

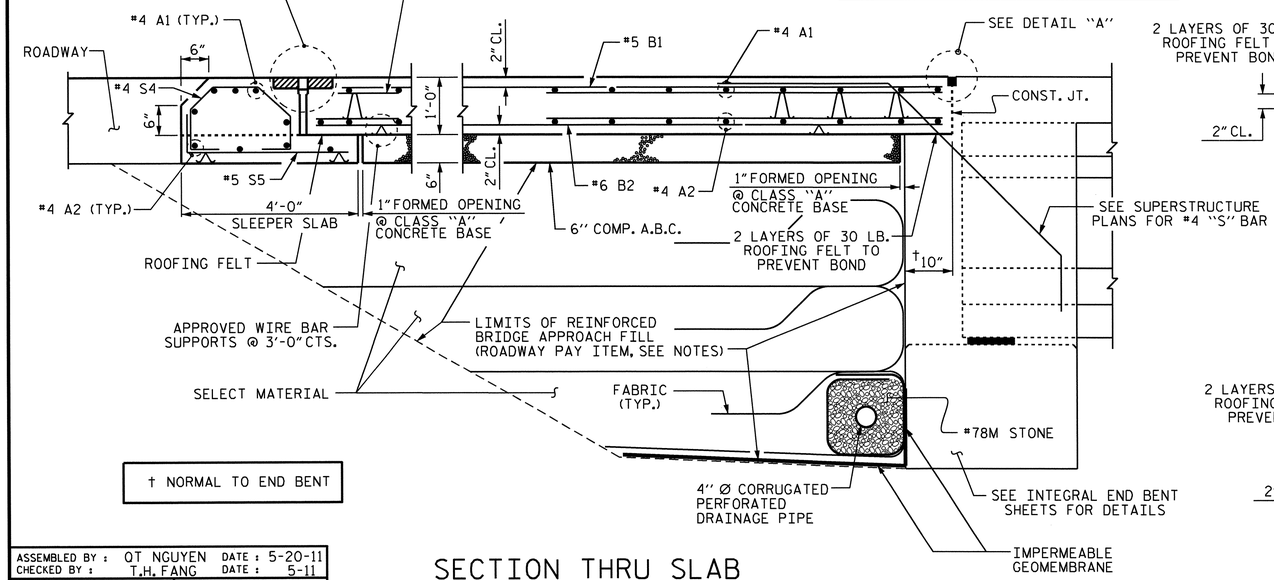

† NORMAL TO END BENT

SECTION THRU SLAB

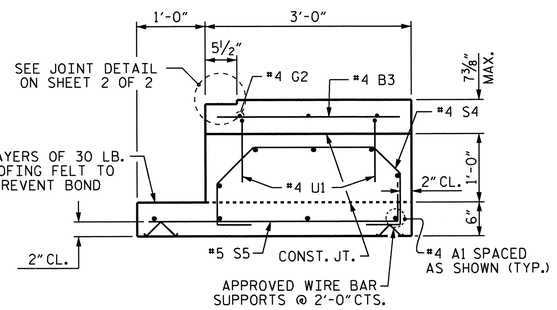

SECTION R-R

SHOWING SIDEWALK ON SLEEPER SLAB

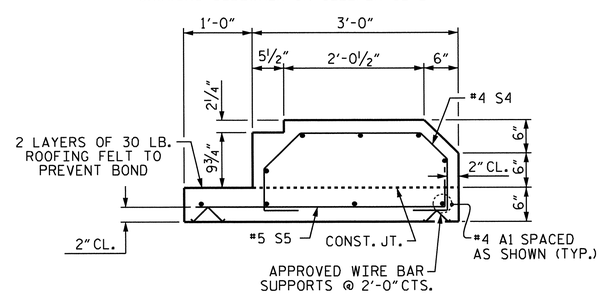

SECTION S-S

SHOWING SLEEPER SLAB

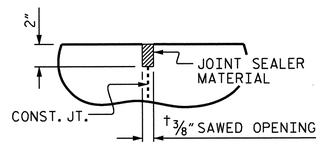

DETAIL "A"

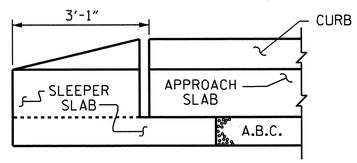

END OF CURB WITHOUT SHOULDER BERM GUTTER

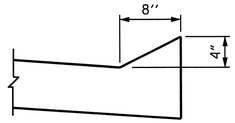

SECTION T-T

NOTES

APPROACH SLAB SHALL NOT BE CONSTRUCTED PRIOR TO COMPLETION OF THE BRIDGE DECK.

FOR REINFORCED BRIDGE APPROACH FILL INCLUDING FABRIC, IMPERMEABLE GEOMEMBRANE, 4" Ø DRAINAGE PIPE, #78M STONE, AND SELECT MATERIAL, SEE ROADWAY PLANS.

AREA BETWEEN THE WINGWALL AND APPROACH SLAB SHALL BE GRADED TO DRAIN THE WATER AWAY FROM THE FILL FACE OF THE BRIDGE AND SHALL BE PAVED. SEE ROADWAY PLANS.

THE 6" COMP. A.B.C. SHALL BE FLUSH WITH THE SLEEPER SLAB AND SHALL EXTEND 1'-0" OUTSIDE OF EACH EDGE OF THE APPROACH SLAB.

THE CONTRACTOR MAY USE 4" TYPE B-25.0B ASPHALT CONCRETE BASE COURSE IN LIEU OF 6" COMP. A.B.C. IF THIS OPTION IS USED, THE BASE COURSE SHALL BE FLUSH WITH THE SLEEPER SLAB, AND THE WIDTH SHALL BE THE SAME AS THAT OF THE APPROACH SLAB.

THE CONTRACTOR MAY USE 5" CLASS "A" CONCRETE BASE IN LIEU OF 6" COMP. A.B.C. IF THIS OPTION IS USED, THE CONCRETE BASE SHALL BE FLUSH WITH THE SLEEPER SLAB, AND THE WIDTH SHALL BE THE SAME AS THAT OF THE APPROACH SLAB. THE CONCRETE SHALL BE FINISHED TO A SMOOTH SURFACE AND A LAYER OF 30 LB ROOFING FELT SHALL BE PLACED BETWEEN THE CONCRETE BASE AND THE APPROACH SLAB TO PREVENT BOND. THE APPROACH SLAB SHALL NOT BE CAST UNTIL THE CONCRETE BASE HAS REACHED AN AGE OF THREE CURING DAYS.

THE VERTICAL JOINT ON THE RIGHT AND LEFT SIDE OF THE APPROACH SLAB AT THE ENDS OF THE EVAZOTE JOINT SHALL BE FILLED WITH SILICONE OR OTHER APPROVED MATERIAL IN ORDER TO PREVENT BACKFILL FROM ENTERING THE JOINT OPENING.

THE JOINT OPENING AT THE APPROACH SLAB/DECK INTERFACE SHALL BE SAWED NO MORE THAN 12 HOURS AFTER THE APPROACH SLAB IS CAST. THE JOINT SHALL BE CLEANED OF ALL DEBRIS BEFORE THE SEALANT IS APPLIED. THE JOINT SEALER MATERIAL SHALL CONFORM TO THE REQUIREMENTS OF TYPE SL LOW MODULUS SILICONE SEALANT.

WITH EVAZOTE JOINT SEAL

FOR EVAZOTE JOINT SEALS, SEE SPECIAL PROVISIONS.

THE NOMINAL UNCOMPRESSED SEAL WIDTH OF THE EVAZOTE JOINT SEAL SHALL BE 2½".

FOR ELASTOMERIC CONCRETE, SEE SPECIAL PROVISIONS.

BILL OF MATERIAL

FOR ONE APPROACH SLAB (2 REQ'D)

BAR	NO.	SIZE	TYPE	LENGTH	WEIGHT
* A1	62	#4	STR	28'-8"	1187
A2	46	#4	STR	28'-7"	878
* B1	111	#5	STR	21'-1"	2411
B2	111	#6	STR	21'-7"	3598
* B3	5	#4	STR	2'-6"	9
* G2	3	#4	STR	5'-0"	10
* P1	4	#4	STR	5'-0"	13
* S4	56	#4	1	5'-3"	196
S5	56	#5	2	4'-3"	248
* U1	4	#4	3	3'-4"	9
REINFORCING STEEL				LBS.	4724
* EPOXY COATED REINFORCING STEEL				LBS.	3865
CLASS AA CONCRETE					
POUR #1 - SLEEPER SLAB				C. Y.	4.1
POUR #2 - SLAB & CURB				C. Y.	48.6
TOTAL				C. Y.	52.7

BAR TYPES

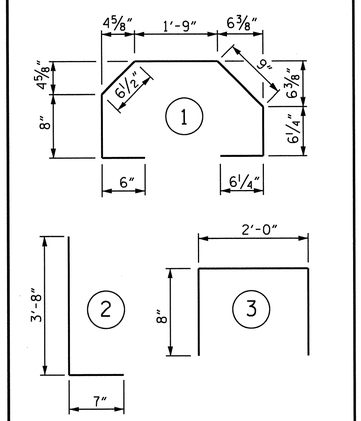

ALL BAR DIMENSIONS ARE OUT TO OUT

SPLICE CHART

BAR	SIZE	SPLICE
* A1	#4	2'-0"
A2	#4	1'-9"

PROJECT NO. U-3326B

ROCKINGHAM COUNTY

STATION: 303+93.67 -L-

SHEET 1 OF 2

STATE OF NORTH CAROLINA
DEPARTMENT OF TRANSPORTATION
RALEIGH

STANDARD

BRIDGE APPROACH SLAB FOR INTEGRAL ABUTMENT

NORTH CAROLINA PROFESSIONAL SEAL 16301 ENGINEER TING HSILING FANG

8/30/11

REVISIONS						SHEET NO.
NO.	BY:	DATE:	NO.	BY:	DATE:	S-158
1			3			TOTAL SHEETS
2			4			159

STR #4

STD. NO. BAS11 (SHT 4)

ASSEMBLED BY :	QT NGUYEN	DATE :	5-20-11
CHECKED BY :	T.H. FANG	DATE :	5-11
DRAWN BY : TLA 10/05		ADDED 5/1/06R KMM/GM	
CHECKED BY : GM 5/06			

30-AUG-2011 16:13
X:\TIPProjects-U\U3326B\Structures\str04\FinalPlans\U-3326B_SD_AS_04.dgn
qtnguyen

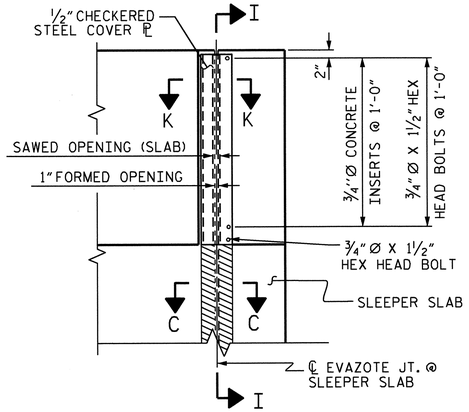

PLAN VIEW OF EVAZOTE

JOINT SEAL @ SLEEPER SLAB FOR SIDEWALK

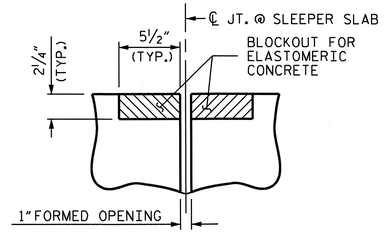

SECTION C-C

EVAZOTE JOINT SEAL (PRE-SAWED ELASTOMERIC CONCRETE DIMENSIONS)

ELASTOMERIC CONCRETE	
END BENT	ELASTOMERIC CONCRETE * (CU. FT.)
1	8.6
2	8.6
TOTAL	17.2

* BASED ON THE MINIMUM BLOCKOUT SHOWN.

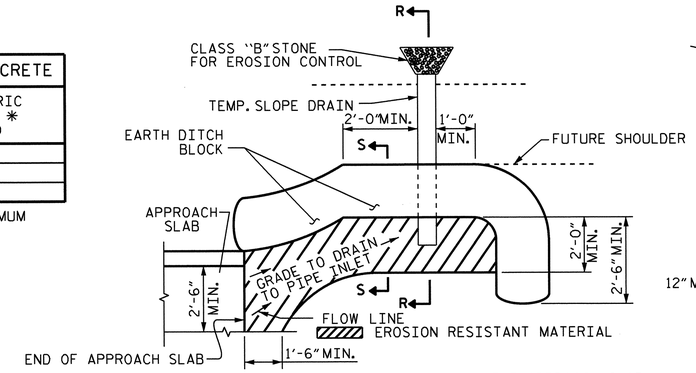

NOTE: IMMEDIATELY AFTER THE CONSTRUCTION OF THE APPROACH SLAB, THE CONTRACTOR SHALL PROVIDE TEMPORARY BERM AND SLOPE DRAIN. CONTRACTOR SHALL GRADE TO PIPE INLET AND PROVIDE EROSION RESISTANT MATERIAL AS SHOWN. THE EROSION RESISTANT MATERIAL SHALL BE EITHER 1) ASPHALT PLANT MIX, TYPE 1 OR TYPE 2, MIN. 2" DEPTH, 2) EROSION CONTROL MAT, OR 3) CONCRETE, AS DIRECTED BY THE ENGINEER. THE SLOPE DRAIN SHALL CONSIST OF A NON-PERFORATED TEMPORARY DRAINAGE PIPE, 12 INCHES IN DIAMETER.

PLAN VIEW

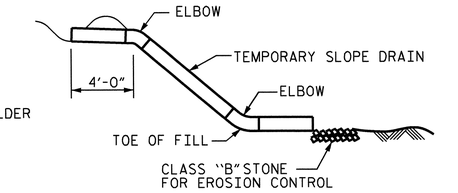

SECTION R-R

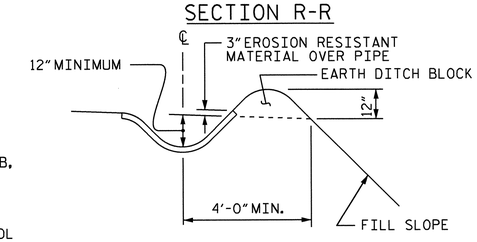

SECTION S-S

TEMPORARY BERM AND SLOPE DRAIN DETAILS

(TO BE USED WHEN SHOULDER BERM GUTTER IS REQUIRED)

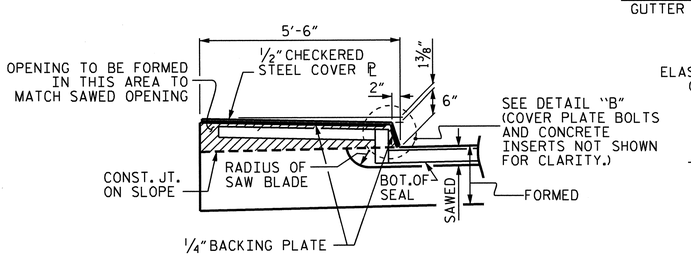

SECTION I-I

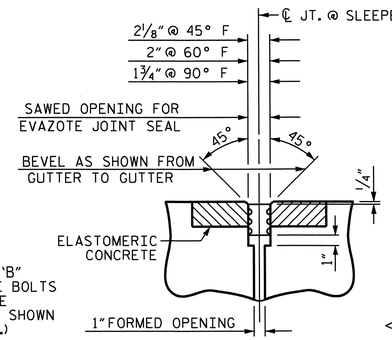

SECTION C-C

EVAZOTE JOINT SEAL (EXPANSION)

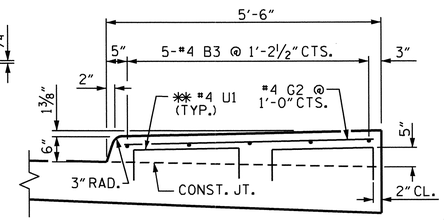

SECTION N-N

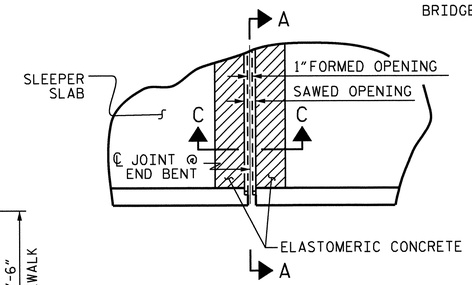

PLAN

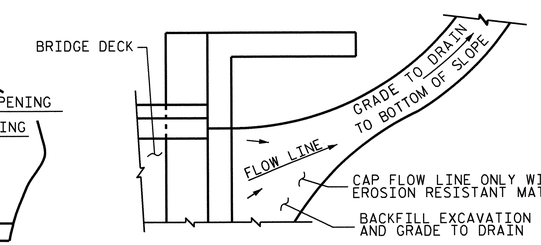

NOTE: IF THE APPROACH SLAB IS NOT CONSTRUCTED IMMEDIATELY AFTER THE BACKFILLING OF THE END BENT EXCAVATION, GRADE TO DRAIN TO THE BOTTOM OF THE SLOPE AND PROVIDE EROSION RESISTANT MATERIAL, SUCH AS FIBERGLASS ROVING OR AS DIRECTED BY THE ENGINEER TO PREVENT SOIL EROSION AND TO PROTECT THE AREA ADJACENT TO THE STRUCTURE. THE CONTRACTOR WILL BE REQUIRED TO REMOVE THESE MATERIALS PRIOR TO CONSTRUCTION OF THE APPROACH SLAB.

TEMPORARY DRAINAGE DETAIL

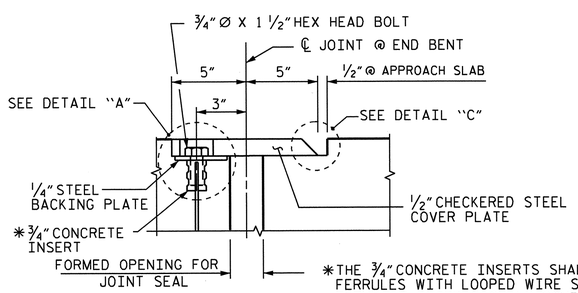

SECTION K-K

* THE 3/4" CONCRETE INSERTS SHALL BE CLOSED-END FERRULES WITH LOOPED WIRE STRUTS ATTACHED TO THEM. THE INSERTS SHALL CONFORM TO AASHTO M169, GRADE 12L14 AND SHALL HAVE A TENSILE WORKING LOAD CAPACITY OF 3000 LBS.

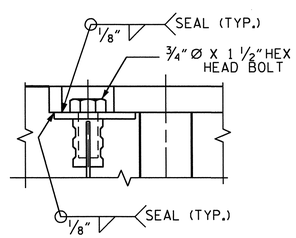

DETAIL "A"

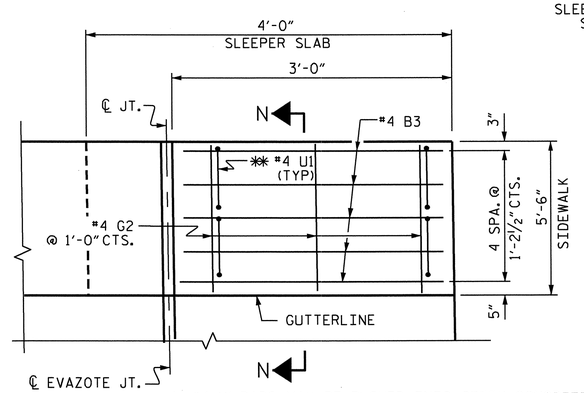

** #4 U1 BARS MAY BE PUSHED INTO GREEN CONCRETE AFTER SLEEPER SLAB HAS BEEN SCREEDED OFF.

PLAN

SIDEWALK DETAILS ON SLEEPER SLAB

(LEFT SIDE)

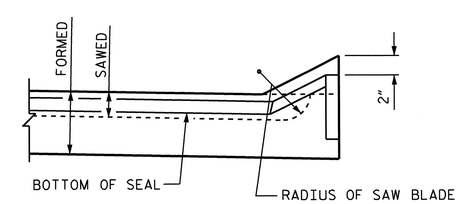

SECTION A-A

CURB DETAILS

(RIGHT SIDE)

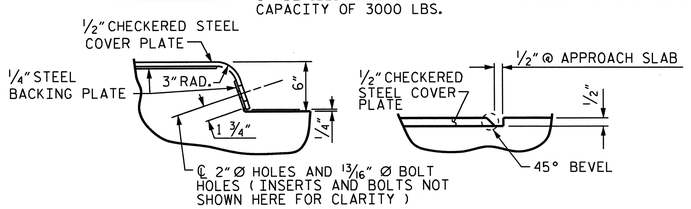

DETAIL "B" DETAIL "C"

JOINT SEAL DETAILS @ SLEEPER SLAB

(FOR SIDEWALK)

COVER PLATE NOTES

THE STEEL PLATES SHALL CONFORM TO AASHTO M270 GRADE 36 OR APPROVED EQUAL. AFTER FABRICATION, THE PLATES SHALL BE COMMERCIALLY BLAST CLEANED AND COATED WITH A MINIMUM THICKNESS OF 4 MILS (DRY) OF ZINC RICH PAINT IN ACCORDANCE WITH THE STANDARD SPECIFICATIONS. AT THE CONTRACTOR'S OPTION, THESE SURFACES MAY BE METALLIZED TO A MINIMUM THICKNESS OF 6 MILS. SEE SPECIAL PROVISIONS FOR THERMAL SPRAYED COATINGS (METALLIZATION).

THE 3/4" DIAMETER HEX HEAD BOLTS SHALL CONFORM TO ASTM F593 ALLOY 304 STAINLESS STEEL.

NO SEPARATE PAYMENT WILL BE MADE FOR FURNISHING AND INSTALLING THE COVER PLATE. THE ENTIRE COST OF THIS WORK SHALL BE INCLUDED IN THE LUMP SUM PRICE FOR "EVAZOTE JOINT SEALS".

PROJECT NO. U-3326B

ROCKINGHAM COUNTY

STATION: 303+93.67 -L-

SHEET 2 OF 2

STATE OF NORTH CAROLINA
DEPARTMENT OF TRANSPORTATION
RALEIGH

STANDARD

BRIDGE APPROACH SLAB DETAILS

NORTH CAROLINA PROFESSIONAL SEAL 16301 ENGINEER TING HSIUNG FANG
8/30/11

REVISIONS						SHEET NO.
NO.	BY:	DATE:	NO.	BY:	DATE:	S-159
1			3			TOTAL SHEETS
2			4			159

STR #4

STD. NO. BAS10 (SHT 12)

ASSEMBLED BY :	OT NGUYEN	DATE :	5-20-11
CHECKED BY :	T.H. FANG	DATE :	5-11

DRAWN BY : FCJ	11/88	REV. 10/17/00	RWW/LES
CHECKED BY : ARB	11/88	REV. 5/7/03	RWW/JTE
		REV. 5/1/06R	MAA/KMM

30-AUG-2011 16:13
X:\TIPProjects-U\U3326B\Structures\str04\FinalPlans\U-3326B_SD_AS_04.dgn
qtnguyen

BENCH MARK #13; -L- STA. 224+40, 144' RT., RR SPIKE IN BASE OF 14" POPLAR, EL. 758.660

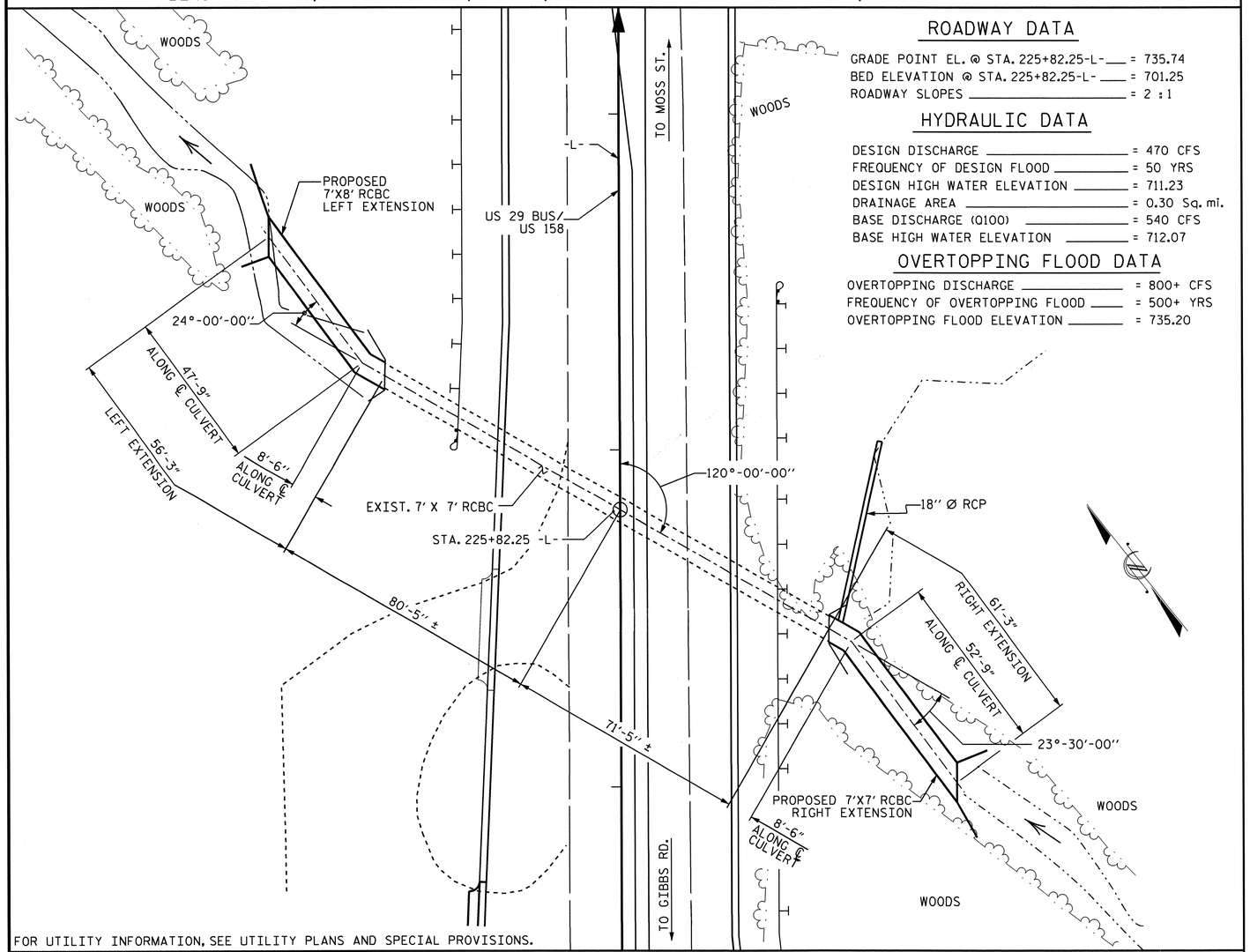

ROADWAY DATA

GRADE POINT EL. @ STA. 225+82.25-L- = 735.74
BED ELEVATION @ STA. 225+82.25-L- = 701.25
ROADWAY SLOPES = 2 : 1

HYDRAULIC DATA

DESIGN DISCHARGE = 470 CFS
FREQUENCY OF DESIGN FLOOD = 50 YRS
DESIGN HIGH WATER ELEVATION = 711.23
DRAINAGE AREA = 0.30 Sq. mi.
BASE DISCHARGE (Q100) = 540 CFS
BASE HIGH WATER ELEVATION = 712.07

OVERTOPPING FLOOD DATA

OVERTOPPING DISCHARGE = 800+ CFS
FREQUENCY OF OVERTOPPING FLOOD = 500+ YRS
OVERTOPPING FLOOD ELEVATION = 735.20

FOR UTILITY INFORMATION, SEE UTILITY PLANS AND SPECIAL PROVISIONS.

LOCATION SKETCH

NOTES

F.A. PROJECT NO. STP-29B(3)

ASSUMED LIVE LOAD ---------- HS20-44 OR ALTERNATE LOADING.

DESIGN FILL = 28.0', MAX. (LT. EXT.), AND = 28.0' MAX. (RT. EXT.)

FOR OTHER DESIGN DATA AND NOTES SEE STANDARD NOTE SHEET SN.

3" Ø WEEP HOLES INDICATED TO BE IN ACCORDANCE WITH THE SPECIFICATIONS.

CONCRETE IN CULVERTS TO BE POURED IN THE FOLLOWING ORDER:

1. WING FOOTINGS AND FLOOR SLAB INCLUDING 4" OF ALL VERTICAL WALLS.
2. THE REMAINING PORTIONS OF THE WALLS AND WINGS FULL HEIGHT. FOLLOWED BY ROOF SLAB AND HEADWALLS.

THE RESIDENT ENGINEER SHALL CHECK THE LENGTH OF CULVERT BEFORE STAKING IT OUT TO MAKE CERTAIN THAT IT WILL PROPERLY TAKE CARE OF THE FILL.

DIMENSIONS FOR WING LAYOUT AS WELL AS ADDITIONAL REINFORCING STEEL EMBEDDED IN BARREL ARE SHOWN ON WING SHEET.

AT THE CONTRACTOR'S OPTION, HE MAY SPLICE THE VERTICAL REINFORCING STEEL IN THE INTERIOR FACE OF EXTERIOR WALL ABOVE LOWER WALL CONSTRUCTION JOINT. THE SPLICE LENGTH SHALL BE AS PROVIDED IN THE SPLICE LENGTH CHART SHOWN ON THE PLANS. EXTRA WEIGHT OF STEEL DUE TO THE SPLICES SHALL BE PAID FOR BY THE CONTRACTOR.

IF APPROVED BY THE ENGINEER, THE CONTRACTOR MAY USE THE EXISTING WINGS AS TEMPORARY SHORING FOR THE CONSTRUCTION OF THE CULVERT EXTENSION. IN THIS CASE, THE BOTTOM SLAB OF THE EXTENSION SHALL BE POURED AT LEAST 72 HOURS PRIOR TO CUTTING THE WINGS. THE WINGS MAY BE CUT EARLIER PROVIDED THE SLAB CONCRETE STRENGTH HAS REACHED A MINIMUM COMPRESSIVE STRENGTH OF 1500 PSI.

DOWELS SHALL BE USED TO CONNECT THE CULVERT EXTENSION TO THE EXISTING CULVERT AS SHOWN. FOR NOTE REGARDING SETTING OF DOWELS, SEE SHEET SN.

FOR CULVERT DIVERSION DETAILS AND PAY ITEM, SEE EROSION CONTROL PLANS.

A 3 FOOT STRIP OF FILTER FABRIC SHALL BE ATTACHED TO THE FILL FACE OF THE WING COVERING THE ENTIRE LENGTH OF THE EXPANSION JOINT.

FOR FALSEWORK AND FORMWORK, SEE SPECIAL PROVISIONS.

FOR SUBMITTAL OF WORKING DRAWINGS, SEE SPECIAL PROVISIONS.

FOR CRANE SAFETY, SEE SPECIAL PROVISIONS.

THE RC PIPE THROUGH THE SIDEWALL OF THE INLET CULVERT EXTENSION SHALL BE LOCATED BY THE ENGINEER. THE REINFORCING STEEL SHALL BE FIELD BENT AS NECESSARY TO CLEAR PIPE.

FOR GROUT FOR STRUCTURES, SEE SPECIAL PROVISIONS.

THE CONTRACTOR SHALL PROVIDE INDEPENDENT ASSURANCE SAMPLES OF REINFORCING STEEL AS FOLLOWS: FOR PROJECTS REQUIRING UP TO 400 TONS OF REINFORCING STEEL, ONE 30 INCH SAMPLE OF EACH SIZE BAR USED, AND FOR PROJECTS REQUIRING OVER 400 TONS OF REINFORCING STEEL, TWO 30 INCH SAMPLES OF EACH SIZE BAR USED. THE BARS FROM WHICH THE SAMPLES ARE TAKEN MUST THEN BE SPLICED WITH REPLACEMENT BARS OF THE SIZE AND LENGTH OF THE SAMPLE, PLUS A MINIMUM LAP SPLICE OF THIRTY BAR DIAMETERS. PAYMENT FOR THE SAMPLES OF REINFORCING STEEL SHALL BE CONSIDERED INCIDENTAL TO VARIOUS PAY ITEMS.

NO PRECAST REINFORCED BOX CULVERT OPTION WILL BE ALLOWED.

FOR CONSTRUCTION SEQUENCE, SEE EROSION CONTROL PLANS.

I HEREBY CERTIFY THESE PLANS ARE THE AS-BUILT PLANS

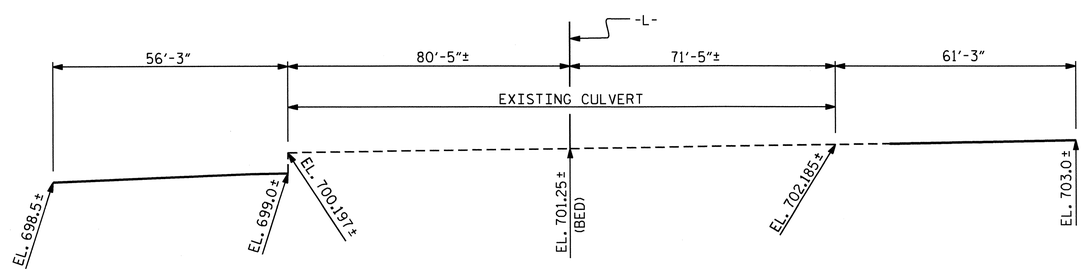

PROFILE ALONG ℄ CULVERT

TOTAL STRUCTURE QUANTITIES

CULVERT EXCAVATION		LUMP SUM
FOUNDATION COND. MAT'L		
LEFT EXTENSION	TONS	35
RIGHT EXTENSION	TONS	39
TOTAL	TONS	74
CLASS A CONCRETE		
LEFT EXTENSION	CU.YDS.	71.3
RIGHT EXTENSION	CU.YDS.	71.1
TOTAL	CU.YDS.	142.4
REINFORCING STEEL		
LEFT EXTENSION	LBS.	10,806
RIGHT EXTENSION	LBS.	10,172
TOTAL	LBS.	20,978

NORTH CAROLINA PROFESSIONAL SEAL 11915 ENGINEER JOHN C. PAYNE
10/27/11

NORTH CAROLINA PROFESSIONAL SEAL 16301 ENGINEER TING YUNG FANG
10/24/11

PROJECT NO. U-3326B
ROCKINGHAM COUNTY
STATION: 225+82.25 -L-

SHEET 1 OF 7

STATE OF NORTH CAROLINA
DEPARTMENT OF TRANSPORTATION
RALEIGH

SINGLE BARREL
CONCRETE BOX CULVERTS
120° SKEW

LEFT AND RIGHT EXTENSIONS

REVISIONS						SHEET NO.
NO.	BY:	DATE:	NO.	BY:	DATE:	C-1
1			3			TOTAL SHEETS
2			4			32

ASSEMBLED BY : N.O. TRAN DATE : 5-11-09
CHECKED BY : W. F. PARKER DATE : 6-1-09

24-OCT-2011 14:45
K:\TIPProjects-U\U3326B\Structures\str05\Finalplans\U-3326B_SD_cu_05.dgn
ttfang

STR #5

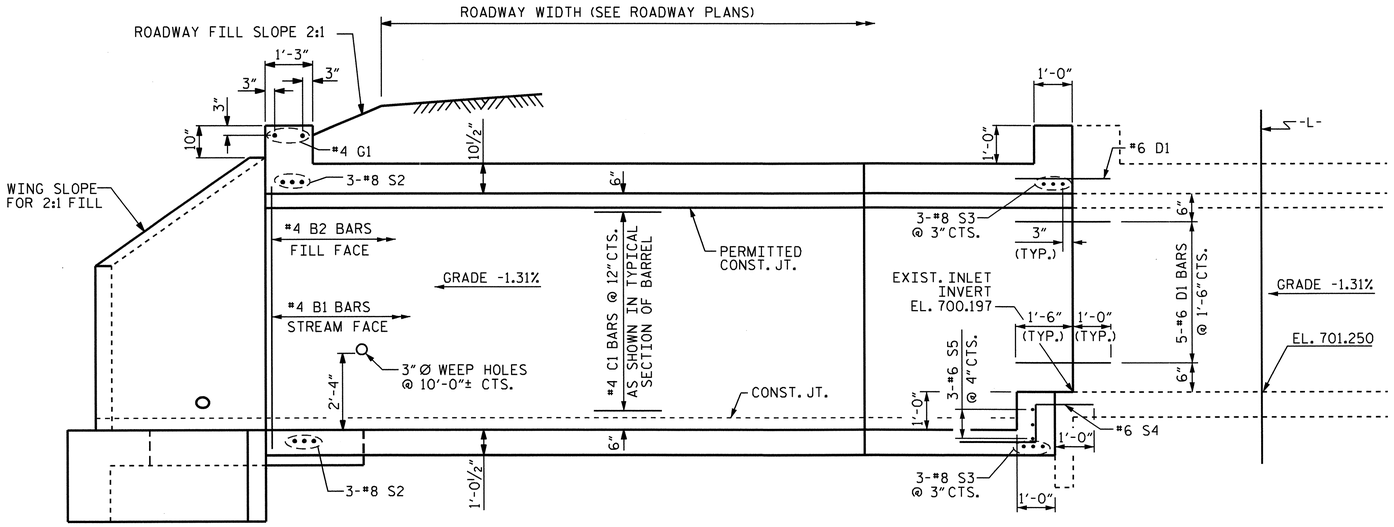

CULVERT SECTION NORMAL TO ROADWAY

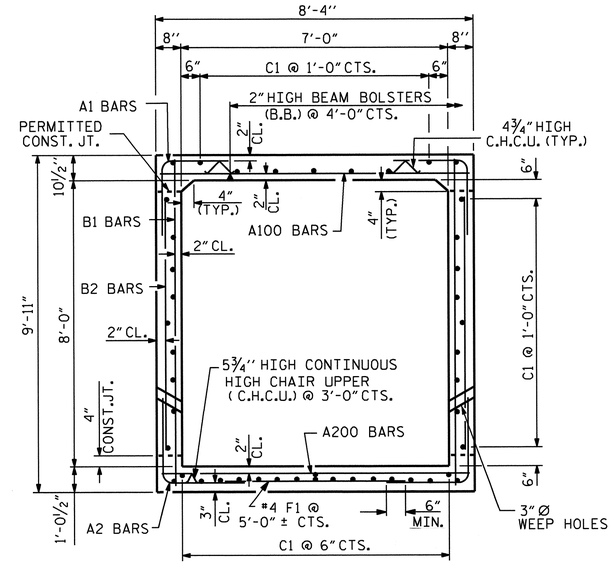

RIGHT ANGLE SECTION OF BARREL

THERE ARE 45 C1 BARS IN SECTION OF BARREL

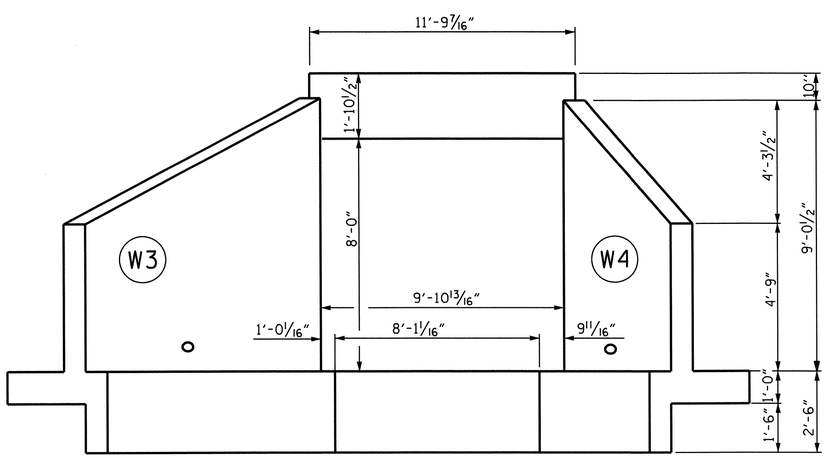

OUTLET END ELEVATION

NORMAL TO SKEW
(LEFT EXTENSION)

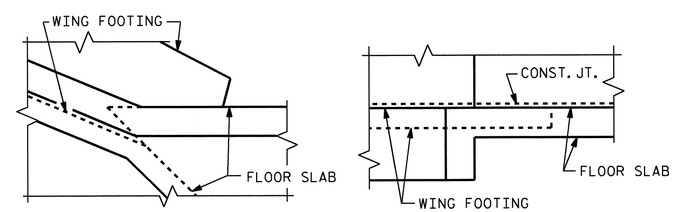

DETAIL

CONNECTION OF WING FOOTING AND FLOOR SLAB

PROJECT NO. U-3326B
ROCKINGHAM COUNTY
STATION: 225+82.25 -L-

SHEET 2 OF 7

STATE OF NORTH CAROLINA
DEPARTMENT OF TRANSPORTATION
RALEIGH

SINGLE 7 FT. X 8 FT. CONCRETE BOX CULVERT 120° SKEW LEFT EXTENSION

NORTH CAROLINA PROFESSIONAL SEAL 16301 ENGINEER HSIUNG TANG
8/26/11

REVISIONS						SHEET NO.
NO.	BY:	DATE:	NO.	BY:	DATE:	C-2
1			3			TOTAL SHEETS
2			4			32

STR #5

REVISED 8-28-92 BY E.L.R. CHECKED BY G.R.P.
REVISED 8-22-89 BY A.R.B. CHECKED BY C.R.K.
REDRAWN 8-22-89
REVISED 11-19-99 BY M.M. CHECKED BY R.W.W.

ASSEMBLED BY : N. O. TRAN DATE : 05-18-09
CHECKED BY : W. F. PARKER DATE : 6-1-09

26-AUG-2011 15:01
0:\TIPProjects-U\U3326B\Structures\str05\Finalplans\U-3326B_SD_cu_05.dgn
qtnguyen

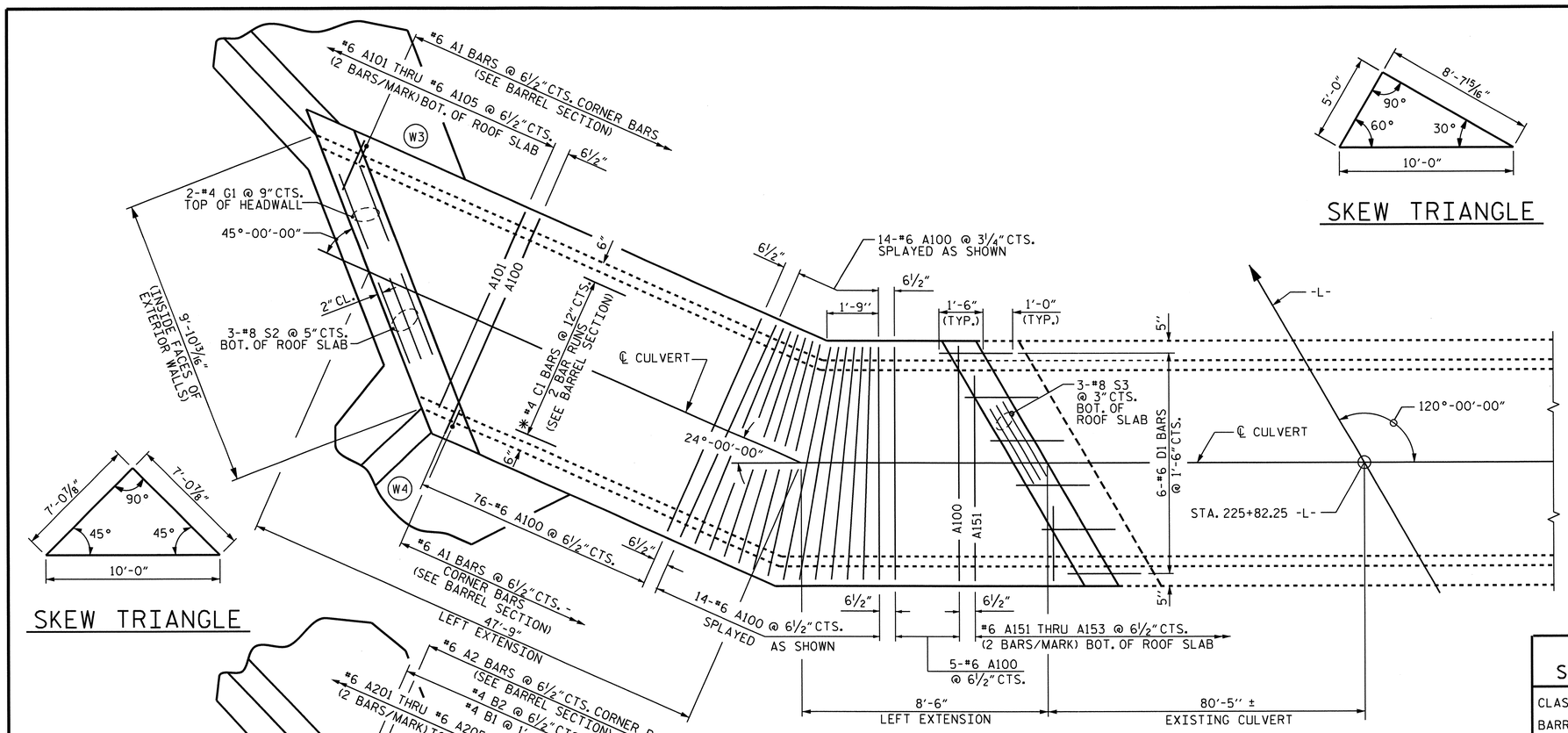

LEFT EXTENSION - PLAN OF ROOF SLAB

SKEW TRIANGLE

SKEW TRIANGLE

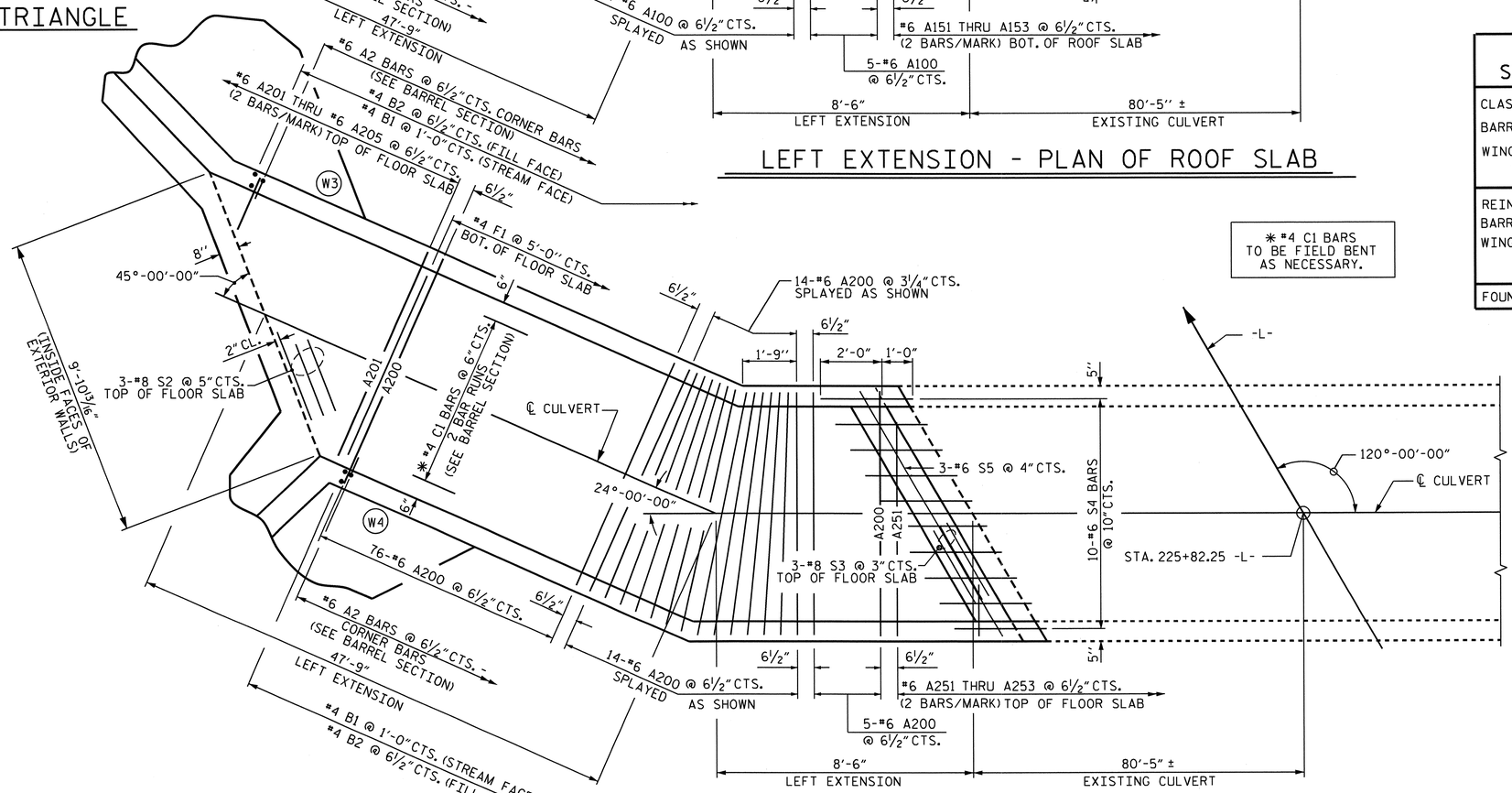

LEFT EXTENSION - PLAN OF FLOOR SLAB

✱ #4 C1 BARS TO BE FIELD BENT AS NECESSARY.

BAR TYPES

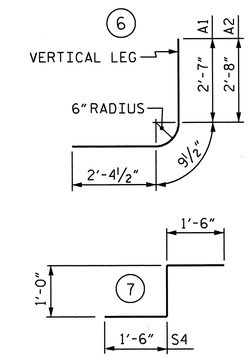

ALL BAR DIMENSIONS ARE OUT TO OUT

SPLICE LENGTHS CHART

BAR	SIZE	SPLICE LENGTH
B1	#4	1'-9"
C1	#4	1'-11"

BILL OF MATERIAL

LEFT EXTENSION

BAR	NO.	SIZE	TYPE	LENGTH	WEIGHT
A1	197	6	6	5'-9"	1701
A2	197	6	6	5'-10"	1726
A100	95	6	STR	7'-11"	1130
A101	2	6	STR	7'-2"	22
A102	2	6	STR	6'-1"	18
A103	2	6	STR	5'-0"	15
A104	2	6	STR	3'-11"	12
A105	2	6	STR	2'-10"	9
A151	2	6	STR	6'-4"	19
A152	2	6	STR	4'-6"	14
A153	2	6	STR	2'-7"	8
A200	95	6	STR	7'-11"	1130
A201	2	6	STR	7'-2"	22
A202	2	6	STR	6'-1"	18
A203	2	6	STR	5'-0"	15
A204	2	6	STR	3'-11"	12
A205	2	6	STR	2'-10"	9
A251	2	6	STR	6'-11"	21
A252	2	6	STR	5'-0"	15
A253	2	6	STR	3'-2"	10
B1	112	4	STR	9'-4"	698
B2	197	4	STR	7'-4"	965
C1	90	4	STR	28'-11"	1738
D1	16	6	STR	2'-6"	60
F1	12	4	STR	4'-3"	34
G1	2	4	STR	11'-3"	15
S2	6	8	STR	11'-3"	180
S3	6	8	STR	9'-2"	147
S4	10	6	7	4'-0"	60
S5	3	6	STR	9'-2"	41
REINFORCING STEEL					9864 LBS.

LEFT EXTENSION STRUCTURE QUANTITIES

CLASS A CONCRETE		
BARREL @ 0.978 CY/FT	55.0	C.Y.
WING ETC.	16.3	C.Y.
TOTAL	71.3	C.Y.
REINFORCING STEEL		
BARREL	9,864	LBS.
WINGS ETC.	942	LBS.
TOTAL	10,806	LBS.
FOUNDATION COND. MAT'L	35.0	TONS

PROJECT NO. U-3326B
ROCKINGHAM COUNTY
STATION: 225+82.25 -L-

SHEET 3 OF 7

STATE OF NORTH CAROLINA
DEPARTMENT OF TRANSPORTATION
RALEIGH

SINGLE 7 FT. X 8 FT. CONCRETE BOX CULVERT 120° SKEW LEFT EXTENSION

NORTH CAROLINA PROFESSIONAL SEAL 16301 ENGINEER TING HSIUNG FANG

10/24/11

REVISIONS							SHEET NO.
NO.	BY:	DATE:	NO.	BY:	DATE:		C-3
1			3				TOTAL SHEETS
2			4				32

DRAWN BY : N. Q. TRAN DATE : 05-18-09
CHECKED BY : W. F. PARKER DATE : 6-1-09

24-OCT-2011 14:49
K:\TIPProjects-U\U3326B\Structures\str05\Finalplans\U-3326B_SD_cu_05.dgn
tfong

STR #5

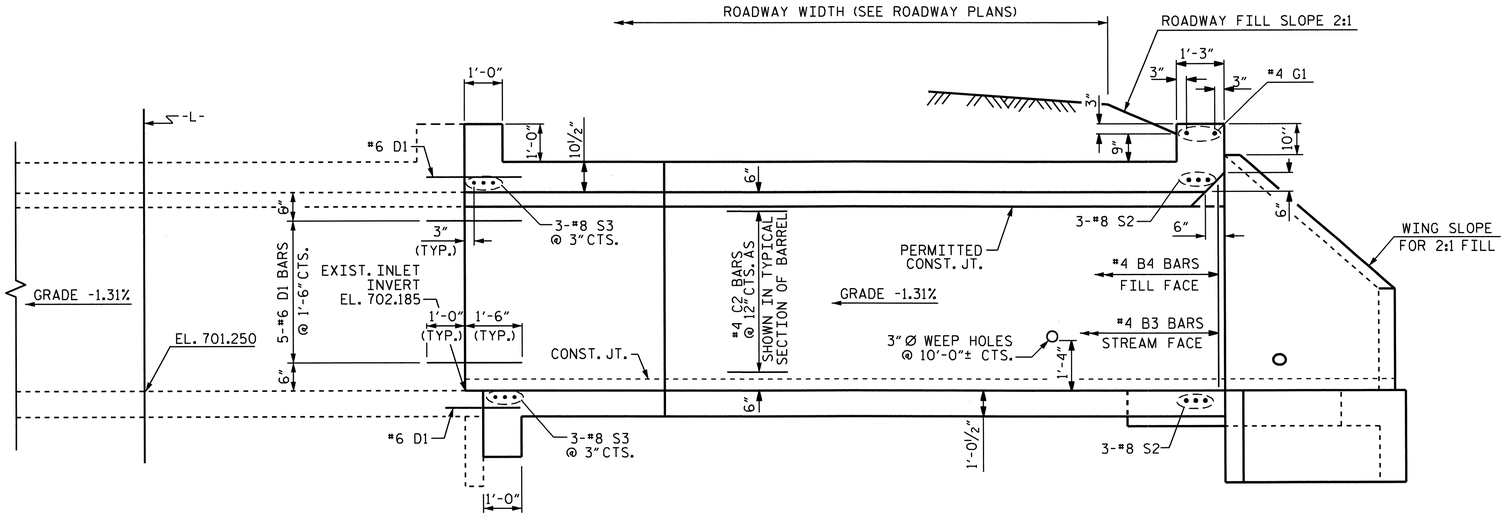

CULVERT SECTION NORMAL TO ROADWAY

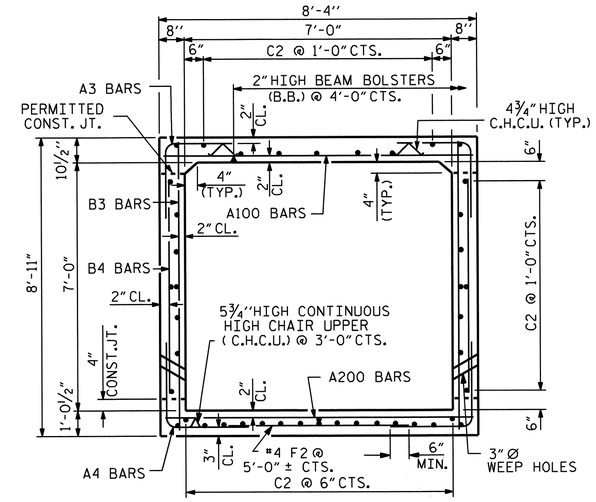

RIGHT ANGLE SECTION OF BARREL

THERE ARE 43 C1 BARS IN SECTION OF BARREL

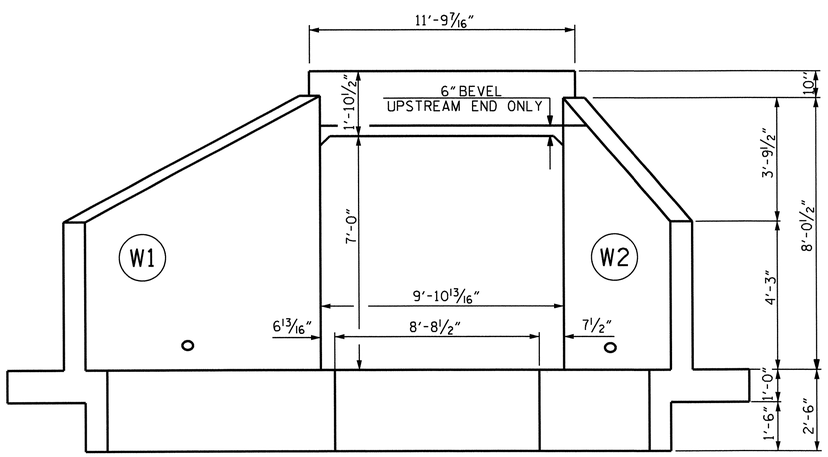

OUTLET END ELEVATION

NORMAL TO SKEW
(RIGHT EXTENSION)

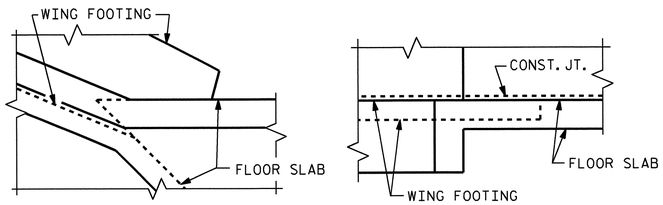

DETAIL

CONNECTION OF WING FOOTING AND FLOOR SLAB

PROJECT NO. U-3326B
ROCKINGHAM COUNTY
STATION: 225+82.25 -L-

SHEET 4 OF 7

STATE OF NORTH CAROLINA
DEPARTMENT OF TRANSPORTATION
RALEIGH

SINGLE 7 FT. X 7 FT. CONCRETE BOX CULVERT 120° SKEW RIGHT EXTENSION

NORTH CAROLINA PROFESSIONAL SEAL 16301 ENGINEER TING HSIANG FANG

8/26/11

REVISIONS						SHEET NO.
NO.	BY:	DATE:	NO.	BY:	DATE:	C-4
1			3			TOTAL SHEETS
2			4			32

STR #5

REVISED 8-28-92 BY E.L.R. CHECKED BY G.R.P.
REVISED 8-22-89 BY A.R.B. CHECKED BY C.R.K.
REDRAWN 8-22-89
REVISED 11-19-99 BY M.M. CHECKED BY R.W.W.

ASSEMBLED BY : N. O. TRAN DATE : 05-18-09
CHECKED BY : W. F. PARKER DATE : 6-1-09

26-AUG-2011 15:01
O:\TIPProjects-U\U3326B\Structures\str05\Finalplans\U-3326B_SD_cu_05.dgn
atnguyen

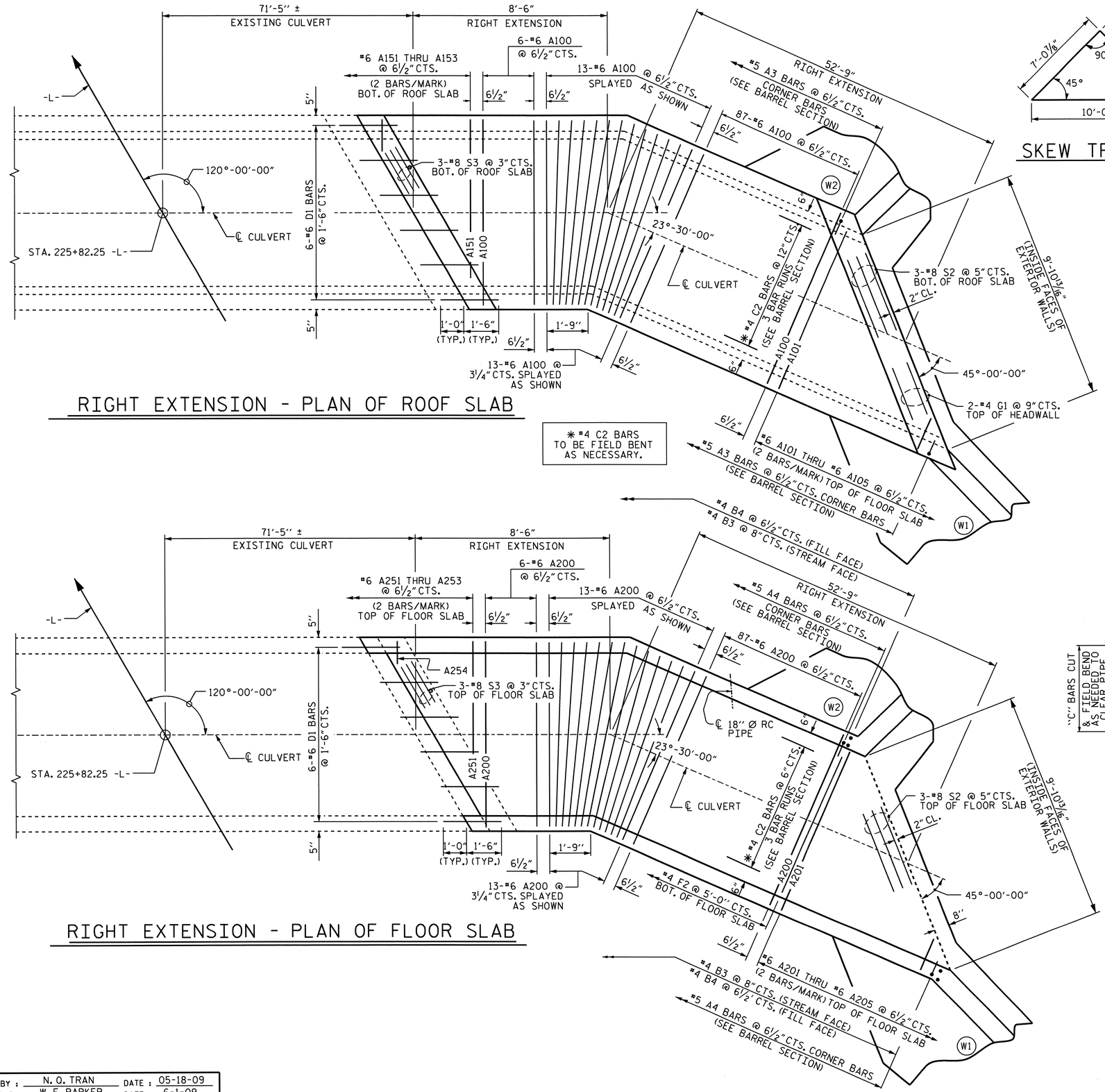

RIGHT EXTENSION - PLAN OF ROOF SLAB

RIGHT EXTENSION - PLAN OF FLOOR SLAB

✱ #4 C2 BARS TO BE FIELD BENT AS NECESSARY.

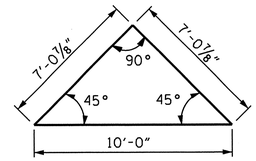

SKEW TRIANGLE

BAR TYPES

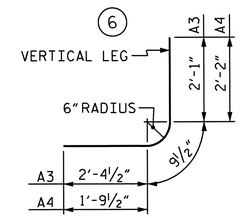

ALL BAR DIMENSIONS ARE OUT TO OUT

SPLICE LENGTHS CHART

BAR	SIZE	SPLICE LENGTH
B3	#4	1'-9"
C2	#4	1'-11"

BILL OF MATERIAL

RIGHT EXTENSION

BAR	NO.	SIZE	TYPE	LENGTH	WEIGHT
A3	221	5	6	5'-3"	1210
A4	221	5	6	4'-9"	1095
A100	106	6	STR	7'-11"	1260
A101	2	6	STR	7'-1"	21
A102	2	6	STR	6'-0"	17
A103	2	6	STR	4'-11"	15
A104	2	6	STR	3'-10"	12
A105	2	6	STR	2'-9"	8
A151	2	6	STR	6'-4"	19
A152	2	6	STR	4'-5"	13
A153	2	6	STR	2'-7"	8
A200	106	6	STR	7'-11"	1260
A201	2	6	STR	7'-1"	21
A202	2	6	STR	6'-0"	18
A203	2	6	STR	4'-11"	15
A204	2	6	STR	3'-10"	12
A205	2	6	STR	2'-9"	8
A251	2	6	STR	6'-4"	19
A252	2	6	STR	4'-5"	13
A253	2	6	STR	2'-7"	8
B3	186	4	STR	8'-5"	1046
B4	221	4	STR	6'-4"	935
C2	129	4	STR	21'-11"	1889
D1	22	6	STR	2'-6"	83
F2	12	4	STR	5'-5"	43
G1	2	4	STR	11'-3"	15
S2	6	8	STR	11'-3"	180
S3	6	8	STR	9'-2"	147
T1	16	4	STR	3'-0"	32
REINFORCING STEEL					9,423 LBS.

RIGHT EXTENSION STRUCTURE QUANTITIES

CLASS A CONCRETE

BARREL @ 0.941 CY/FT 57.6 C.Y.

WING ETC. 13.5 C.Y.

TOTAL 71.1 C.Y.

REINFORCING STEEL

BARREL 9,423 LBS.

WINGS ETC. 749 LBS.

TOTAL 10,172 LBS.

FOUNDATION COND. MAT'L 39.0 TONS

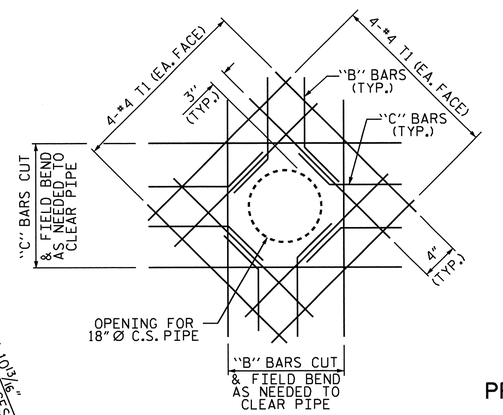

18" Ø C.S. PIPE THRU EXTERIOR WALL

FIELD BEND "B" & "C" BARS AS REQUIRED

THE R.C. PIPE THROUGH THE SIDEWALL OF THE CULVERT SHALL BE LOCATED BY THE ENGINEER. THE REINFORCING STEEL SHALL BE FIELD BENT AS NECESSARY TO CLEAR PIPES.

PROJECT NO. U-3326B

ROCKINGHAM COUNTY

STATION: 225+82.25 -L-

SHEET 5 OF 7

STATE OF NORTH CAROLINA
DEPARTMENT OF TRANSPORTATION
RALEIGH

SINGLE 7 FT. X 7 FT. CONCRETE BOX CULVERT 120° SKEW RIGHT EXTENSION

NORTH CAROLINA PROFESSIONAL SEAL 16301 ENGINEER TING HSUNG FANG

8/26/11

REVISIONS						SHEET NO.
NO.	BY:	DATE:	NO.	BY:	DATE:	C-5
1			3			TOTAL SHEETS
2			4			32

DRAWN BY : N. O. TRAN DATE : 05-18-09
CHECKED BY : W. F. PARKER DATE : 6-1-09

26-AUG-2011 16:21
0:\TIPProjects-U\U3326B\Structures\str05\Finalplans\U-3326B_SD_cu_05.dgn
qtnguyen

STR #5

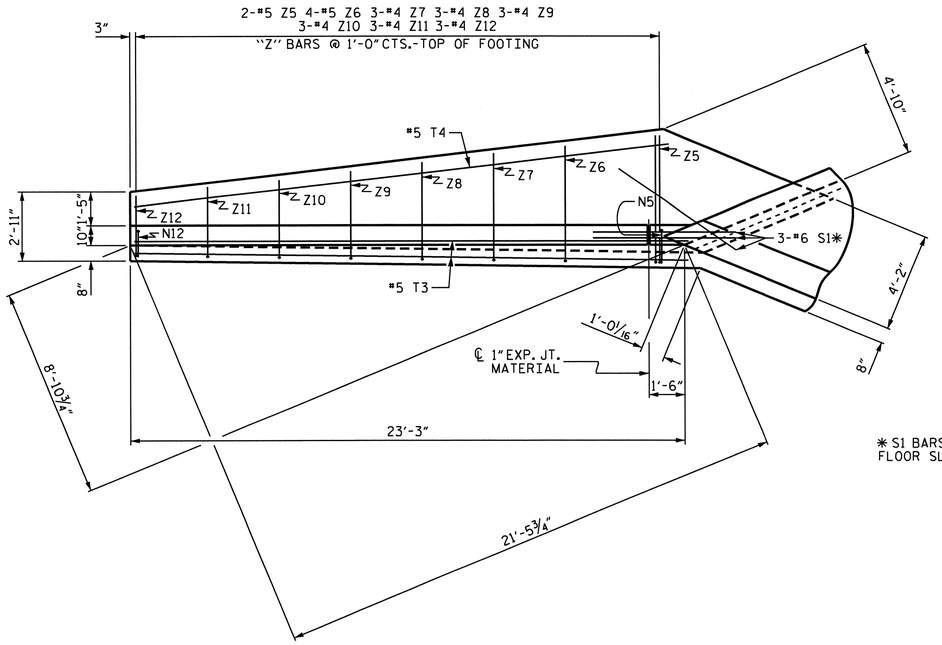

PLAN W3

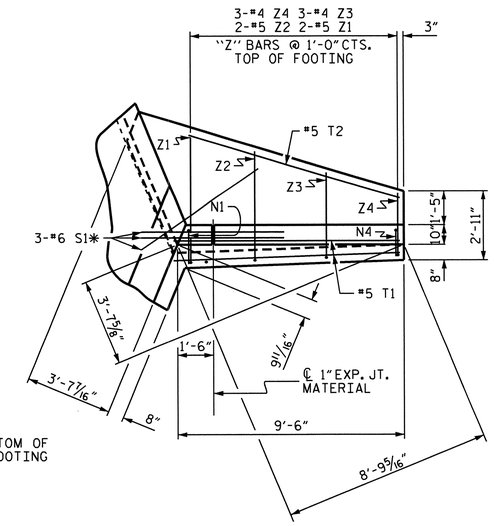

PLAN W4

* S1 BARS @ BOTTOM OF FLOOR SLAB & FOOTING

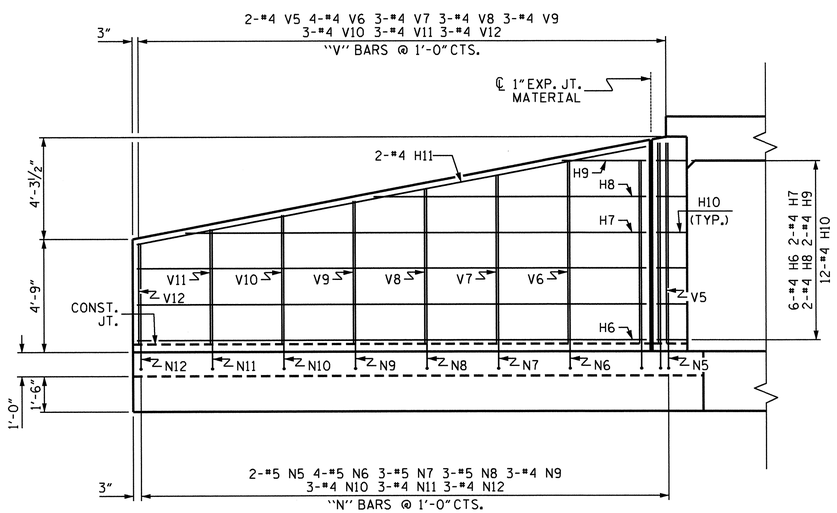

ELEVATION W3

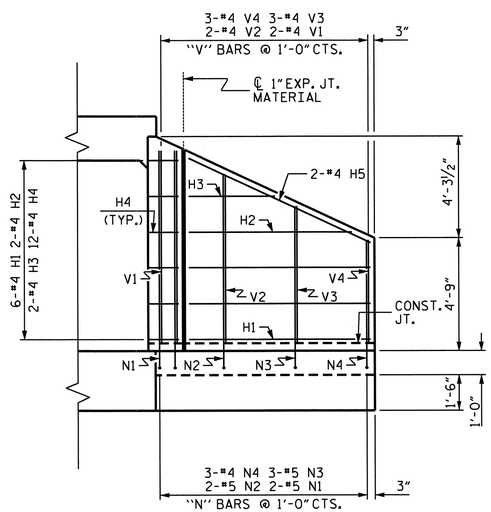

ELEVATION W4

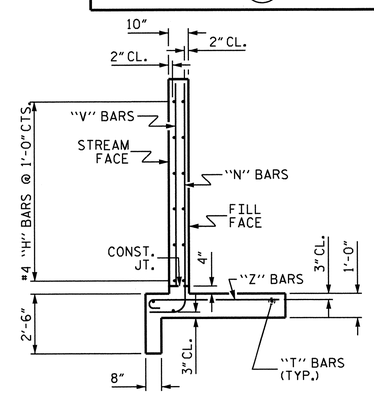

TYPICAL WING SECTION

BAR TYPES

ALL BAR DIMENSIONS ARE OUT TO OUT.

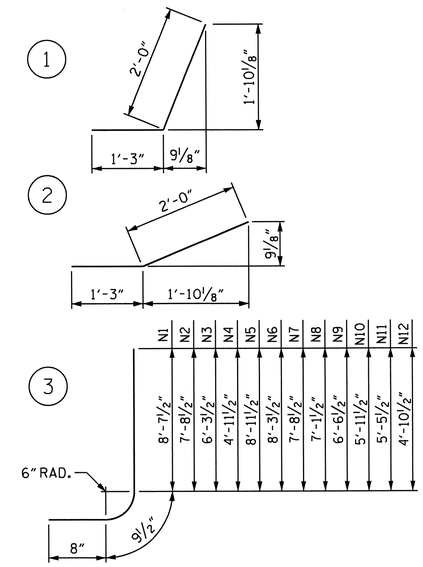

Z1	5'-4"	7"
Z2	4'-8"	7"
Z3	3'-8"	6"
Z4	2'-8"	6"
Z5	5'-5"	7"
Z6	4'-11"	7"
Z7	4'-7"	6"
Z8	4'-2"	6"
Z9	3'-9"	6"
Z10	3'-4"	6"
Z11	3'-0"	6"
Z12	2'-7"	6"

4 HK.

BILL OF MATERIAL

BAR	NO.	SIZE	TYPE	LENGTH	WEIGHT
H1	6	#4	STR	7'-7"	30
H2	2	#4	STR	6'-10"	9
H3	2	#4	STR	3'-7"	5
H4	12	#4	1	3'-3"	26
H5	2	#4	STR	8'-5"	11
H6	6	#4	STR	21'-4"	86
H7	2	#4	STR	19'-4"	26
H8	2	#4	STR	11'-5"	15
H9	2	#4	STR	3'-6"	5
H10	12	#4	2	3'-3"	26
H11	2	#4	STR	21'-9"	29
N1	2	#5	3	10'-1"	21
N2	2	#5	3	9'-2"	19
N3	3	#5	3	7'-9"	24
N4	3	#4	3	6'-5"	13
N5	2	#5	3	10'-5"	22
N6	4	#5	3	9'-9"	41
N7	3	#5	3	9'-2"	29
N8	3	#5	3	8'-7"	27
N9	3	#4	3	8'-0"	16
N10	3	#4	3	7'-5"	15
N11	3	#4	3	6'-11"	14
N12	3	#4	3	6'-4"	13
S1	6	#6	STR	6'-0"	54
T1	2	#5	STR	9'-6"	20
T2	1	#5	STR	9'-3"	10
T3	2	#5	STR	23'-3"	49
T4	1	#5	STR	22'-7"	24
V1	2	#4	STR	8'-1"	11
V2	2	#4	STR	7'-1"	9
V3	3	#4	STR	5'-9"	12
V4	3	#4	STR	4'-4"	9
V5	2	#4	STR	8'-5"	11
V6	4	#4	STR	7'-8"	20
V7	3	#4	STR	7'-1"	14
V8	3	#4	STR	6'-6"	13
V9	3	#4	STR	6'-0"	12
V10	3	#4	STR	5'-5"	11
V11	3	#4	STR	4'-10"	10
V12	3	#4	STR	4'-3"	9
Z1	2	#5	4	5'-11"	12
Z2	2	#5	4	5'-3"	11
Z3	3	#4	4	4'-2"	8
Z4	3	#4	4	3'-2"	6
Z5	2	#5	4	6'-0"	13
Z6	4	#5	4	5'-6"	23
Z7	3	#4	4	5'-1"	10
Z8	3	#4	4	4'-8"	9
Z9	3	#4	4	4'-3"	9
Z10	3	#4	4	3'-10"	8
Z11	3	#4	4	3'-6"	7
Z12	3	#4	4	3'-1"	6
REINFORCING STEEL FOR 2 WINGS				LBS	942

CLASS A CONCRETE		
2 WINGS	14.6	CY
1 HEADWALL	0.5	CY
1 END CURTAIN WALL	0.5	CY
2 EDGE BEAMS	0.7	CY
TOTAL:	16.3	CY

PROJECT NO. U-3326B

ROCKINGHAM COUNTY

STATION: 225+82.25 -L-

SHEET 6 OF 7

STATE OF NORTH CAROLINA
DEPARTMENT OF TRANSPORTATION
RALEIGH

STANDARD WINGS FOR CONCRETE BOX CULVERT

H = 8'-0" SLOPE = 2:1

45° OR 135° SKEW
(LEFT EXTENSION)

NORTH CAROLINA PROFESSIONAL SEAL 16301 ENGINEER TING-HSILING FANG
8/26/11

ASSEMBLED BY : N. O. TRAN	DATE : 5-18-09
CHECKED BY : W. F. PARKER	DATE : 6-1-09
DRAWN BY : CCJ 01/00	
CHECKED BY : RWW 03/00	

26-AUG-2011 15:01
O:\TIPProjects-U\U3326B\Structures\str05\Finalplans\U-3326B_SD_cu_05.dgn
qtnguyen

REVISIONS						SHEET NO.
NO.	BY:	DATE:	NO.	BY:	DATE:	C-6
1			3			TOTAL SHEETS
2			4			32

STR. 5

STD. NO. CW4508

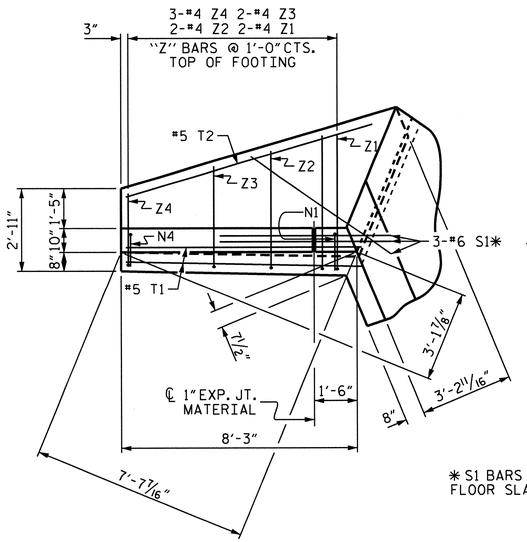

PLAN W2

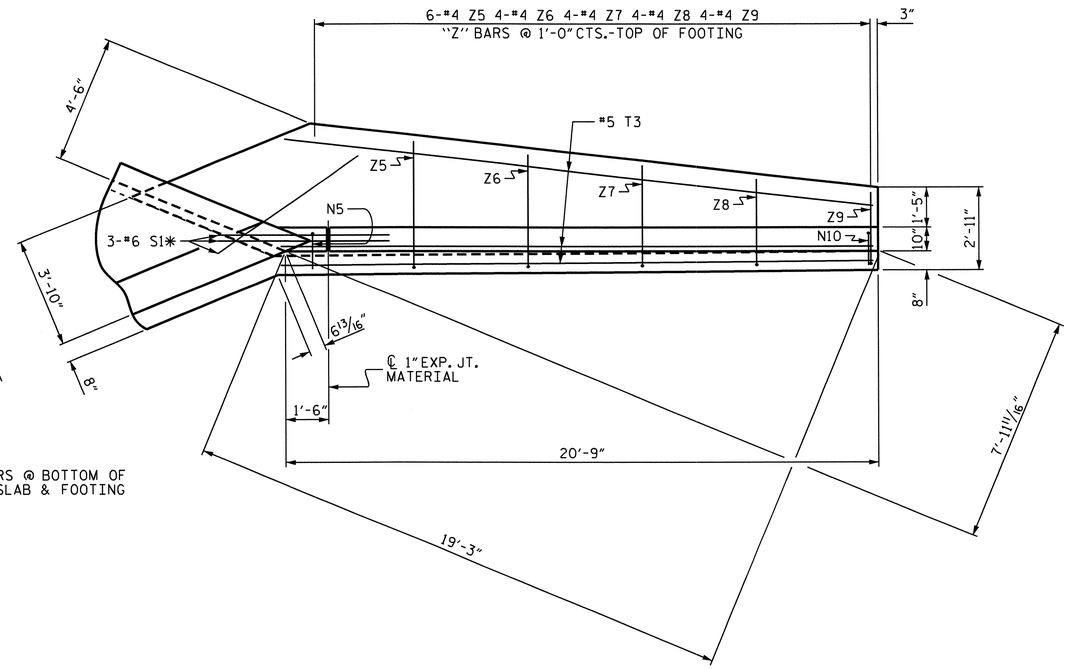

* S1 BARS @ BOTTOM OF FLOOR SLAB & FOOTING

PLAN W1

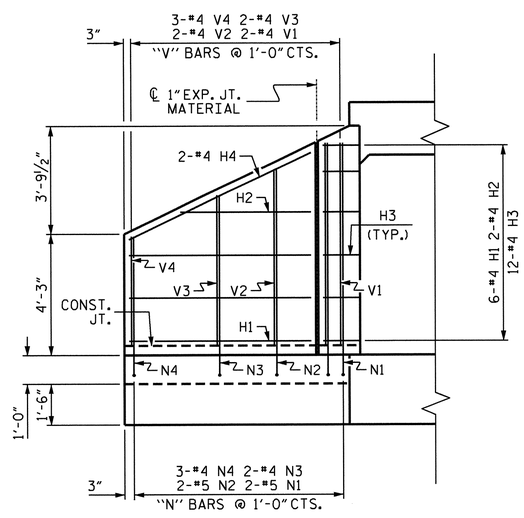

ELEVATION W2

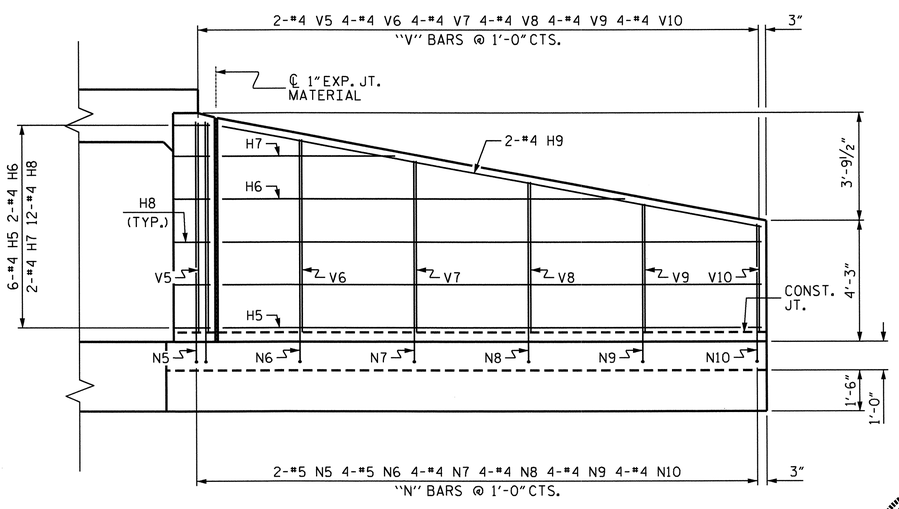

ELEVATION W1

BAR TYPES

ALL BAR DIMENSIONS ARE OUT TO OUT.

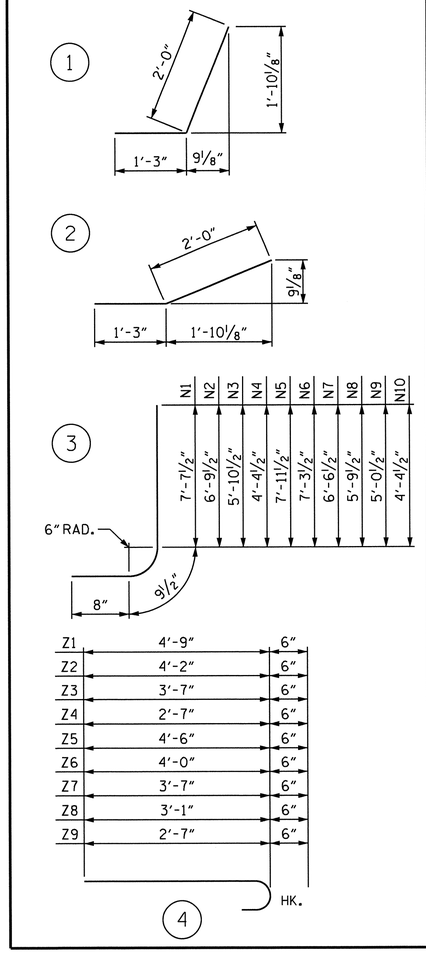

BILL OF MATERIAL

BAR	NO.	SIZE	TYPE	LENGTH	WEIGHT
H1	6	#4	STR	6'-4"	25
H2	2	#4	STR	4'-6"	6
H3	12	#4	1	3'-3"	26
H4	2	#4	STR	7'-0"	9
H5	6	#4	STR	18'-10"	75
H6	2	#4	STR	14'-1"	19
H7	2	#4	STR	6'-0"	8
H8	12	#4	2	3'-3"	26
H9	2	#4	STR	19'-2"	26
N1	2	#5	3	9'-1"	19
N2	2	#5	3	8'-3"	17
N3	2	#4	3	7'-4"	10
N4	3	#4	3	5'-7"	11
N5	2	#5	3	9'-5"	20
N6	4	#5	3	8'-9"	37
N7	4	#4	3	8'-0"	21
N8	4	#4	3	7'-3"	19
N9	4	#4	3	6'-6"	17
N10	4	#4	3	5'-10"	16
S1	6	#6	STR	6'-0"	54
T1	2	#5	STR	8'-3"	17
T2	1	#5	STR	9'-0"	9
T3	3	#5	STR	20'-9"	65
V1	2	#4	STR	7'-1"	9
V2	2	#4	STR	6'-2"	8
V3	2	#4	STR	5'-3"	7
V4	3	#4	STR	3'-9"	8
V5	2	#4	STR	7'-4"	10
V6	4	#4	STR	6'-9"	18
V7	4	#4	STR	6'-0"	16
V8	4	#4	STR	5'-3"	14
V9	4	#4	STR	4'-6"	12
V10	4	#4	STR	3'-9"	10
Z1	2	#4	4	5'-3"	7
Z2	2	#4	4	4'-8"	6
Z3	2	#4	4	4'-1"	5
Z4	3	#4	4	3'-1"	6
Z5	6	#4	4	5'-0"	20
Z6	4	#4	4	4'-6"	12
Z7	4	#4	4	4'-1"	11
Z8	4	#4	4	3'-7"	10
Z9	4	#4	4	3'-1"	8
REINFORCING STEEL FOR 2 WINGS			LBS		749

CLASS A CONCRETE		
2 WINGS	11.8	CY
1 HEADWALL	0.5	CY
1 END CURTAIN WALL	0.5	CY
2 EDGE BEAMS	0.7	CY
TOTAL:	13.5	CY

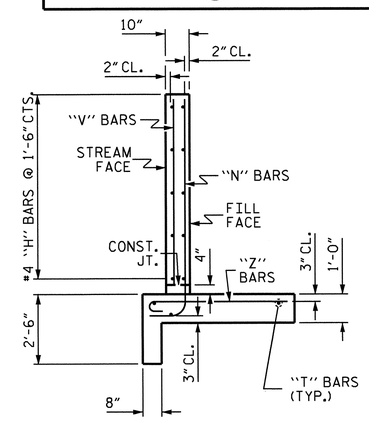

TYPICAL WING SECTION

PROJECT NO. U-3326B
ROCKINGHAM COUNTY
STATION: 225+82.25 -L-

SHEET 7 OF 7

STATE OF NORTH CAROLINA
DEPARTMENT OF TRANSPORTATION
RALEIGH

STANDARD WINGS FOR CONCRETE BOX CULVERT

H = 7'-0" SLOPE = 2:1
45° OR 135° SKEW
(RIGHT EXTENSION)

NORTH CAROLINA PROFESSIONAL SEAL 16301 ENGINEER TING HSIONG FANG
8/26/11

REVISIONS						SHEET NO.
NO.	BY:	DATE:	NO.	BY:	DATE:	C-7
1			3			TOTAL SHEETS
2			4			32

STD. NO. CW4507

ASSEMBLED BY :	N. O. TRAN	DATE :	05-18-09
CHECKED BY :	W. F. PARKER	DATE :	6-1-09
DRAWN BY :	CCJ		01/00
CHECKED BY :	RWW		03/00

26-AUG-2011 15:01
Q:\TIPProjects-U\U3326B\Structures\str05\Finalplans\U-3326B_SD_cu_05.dgn
qtnguyen

BM #16: RR SPIKE IN BASE OF 24" RED OAK 171.79' LT. OF STA. 250+74.13 -L- EL. 712.03

F. A. PROJECT NO. STP-29B(3)

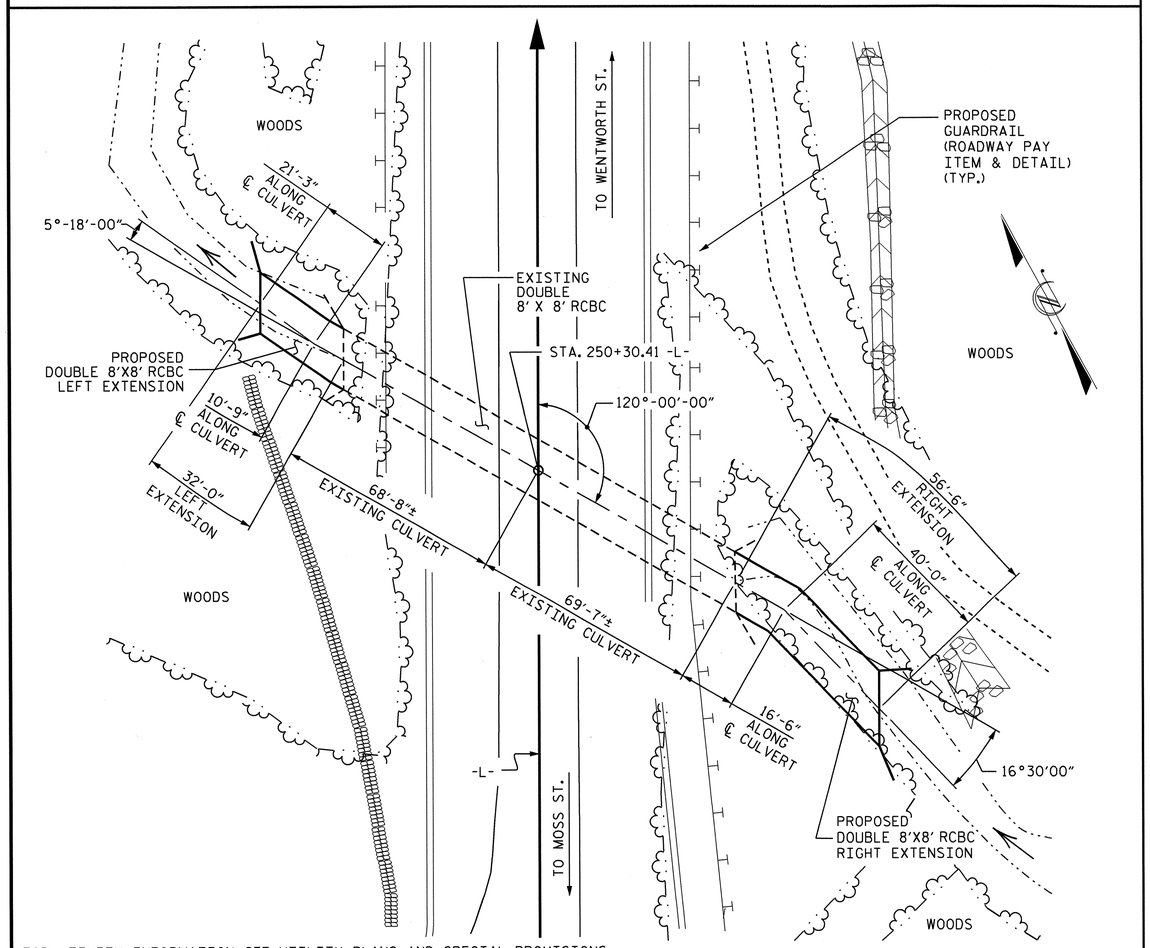

FOR UTILITY INFORMATION, SEE UTILITY PLANS AND SPECIAL PROVISIONS.

LOCATION SKETCH

ROADWAY DATA

GRADE POINT EL. @ STA. 250+30.41-L-	= 720.09
BED ELEVATION @ STA. 250+30.41-L-	= 686.54
ROADWAY SLOPES	= 1½:1 LT., 2:1 RT.

HYDRAULIC DATA

DESIGN DISCHARGE	= 1140 CFS
FREQUENCY OF DESIGN FLOOD	= 50 YRS
DESIGN HIGH WATER ELEVATION	= 696.37
DRAINAGE AREA	= 0.72 Sq. mi.
BASE DISCHARGE (Q100)	= 1350 CFS
BASE HIGH WATER ELEVATION	= 697.40

OVERTOPPING FLOOD DATA

OVERTOPPING DISCHARGE	= 1980+ CFS
FREQUENCY OF OVERTOPPING FLOOD	= 500+ YRS
OVERTOPPING FLOOD ELEVATION	= 701.12

TOTAL STRUCTURE QUANTITIES

CLASS A CONCRETE		
LEFT EXTENSION	CU. YDS.	91.0
RIGHT EXTENSION	CU. YDS.	158.0
TOTAL	CU. YDS.	249.0
REINFORCING STEEL		
LEFT EXTENSION	LBS.	11,385
RIGHT EXTENSION	LBS.	21,506
TOTAL	LBS.	32,891
FOUNDATION CONDITIONING MATERIAL		
LEFT EXTENSION	TONS	41
RIGHT EXTENSION	TONS	72
TOTAL	TONS	113

CULVERT EXCAVATION	LUMP SUM

NOTES

ASSUMED LIVE LOAD ----------HS20-44 OR ALTERNATE LOADING.

DESIGN FILL---------- 25.60'

FOR OTHER DESIGN DATA AND NOTES SEE STANDARD NOTE SHEET.

3" Ø WEEP HOLES INDICATED TO BE IN ACCORDANCE WITH THE SPECIFICATIONS.

CONCRETE IN CULVERTS TO BE POURED IN THE FOLLOWING ORDER:

1. STAGE I WING FOOTINGS AND FLOOR SLABS INCLUDING 4" OF ALL VERTICAL WALLS.
2. THE REMAINING PORTIONS OF STAGE I WALLS AND WINGS FULL HEIGHT.
3. STAGE II WING FOOTINGS AND FLOOR SLABS INCLUDING 4" OF ALL VERTICAL WALLS.
4. THE REMAINING PORTIONS OF STAGE II WALLS AND WINGS FULL HEIGHT FOLLOWED BY ROOF SLAB, EDGE BEAMS AND HEADWALLS.

THE RESIDENT ENGINEER SHALL CHECK THE LENGTH OF CULVERT BEFORE STAKING IT OUT TO MAKE CERTAIN THAT IT WILL PROPERLY TAKE CARE OF THE FILL.

DIMENSIONS FOR WING LAYOUT AS WELL AS ADDITIONAL REINFORCING STEEL EMBEDDED IN BARREL ARE SHOWN ON WING SHEET.

AT THE CONTRACTOR'S OPTION, HE MAY SPLICE THE VERTICAL REINFORCING STEEL IN THE INTERIOR FACE OF EXTERIOR WALL AND BOTH FACES OF INTERIOR WALLS ABOVE LOWER WALL CONSTRUCTION JOINT. THE SPLICE LENGTH SHALL BE AS PROVIDED IN THE SPLICE LENGTH CHART SHOWN ON THE PLANS. EXTRA WEIGHT OF STEEL DUE TO THE SPLICES SHALL BE PAID FOR BY THE CONTRACTOR.

IF APPROVED BY THE ENGINEER, THE CONTRACTOR MAY USE THE EXISTING WINGS AS TEMPORARY SHORING FOR THE CONSTRUCTION OF THE CULVERT EXTENSIONS. IN THIS CASE, THE BOTTOM SLAB OF THE EXTENSION SHALL BE POURED AT LEAST 72 HOURS PRIOR TO CUTTING THE WINGS. THE WINGS MAY BE CUT EARLIER PROVIDED THE SLAB CONCRETE STRENGTH HAS REACHED A MINIMUM COMPRESSIVE STRENGTH OF 1500 PSI.

DOWELS SHALL BE USED TO CONNECT THE CULVERT EXTENSION TO THE EXISTING CULVERT AS SHOWN. FOR NOTE REGARDING SETTING OF DOWELS, SEE SHEET SN.

FOR CULVERT DIVERSION DETAILS AND PAY ITEM, SEE EROSION CONTROL PLANS.

A 3 FOOT STRIP OF FILTER FABRIC SHALL BE ATTACHED TO THE FILL FACE OF THE WING COVERING THE ENTIRE LENGTH OF THE EXPANSION JOINT.

THE CONTRACTOR SHALL PROVIDE INDEPENDENT ASSURANCE SAMPLES OF REINFORCING STEEL AS FOLLOWS: FOR PROJECTS REQUIRING UP TO 400 TONS OF REINFORCING STEEL, ONE 30 INCH SAMPLE OF EACH SIZE BAR USED, AND FOR PROJECTS REQUIRING OVER 400 TONS OF REINFORCING STEEL, TWO 30 INCH SAMPLES OF EACH SIZE BAR USED. THE BARS FROM WHICH THE SAMPLES ARE TAKEN MUST THEN BE SPLICED WITH REPLACEMENT BARS OF THE SIZE AND LENGTH OF THE SAMPLE, PLUS A MINIMUM LAP SPLICE OF THIRTY BAR DIAMETERS. PAYMENT FOR THE SAMPLES OF REINFORCING STEEL SHALL BE CONSIDERED INCIDENTAL TO VARIOUS PAY ITEMS.

FOR SUBMITTAL OF WORKING DRAWINGS, SEE SPECIAL PROVISIONS.

FOR FALSEWORK AND FORMWORK, SEE SPECIAL PROVISIONS.

FOR CRANE SAFETY, SEE SPECIAL PROVISIONS.

NO PRECAST REINFORCED BOX CULVERT OPTION WILL BE ALLOWED.

FOR CONSTRUCTION SEQUENCE, SEE EROSION CONTROL PLAN.

FOR GROUT FOR STRUCTURES, SEE SPECIAL PROVISIONS.

I HEREBY CERTIFY THESE PLANS ARE THE AS-BUILT PLANS

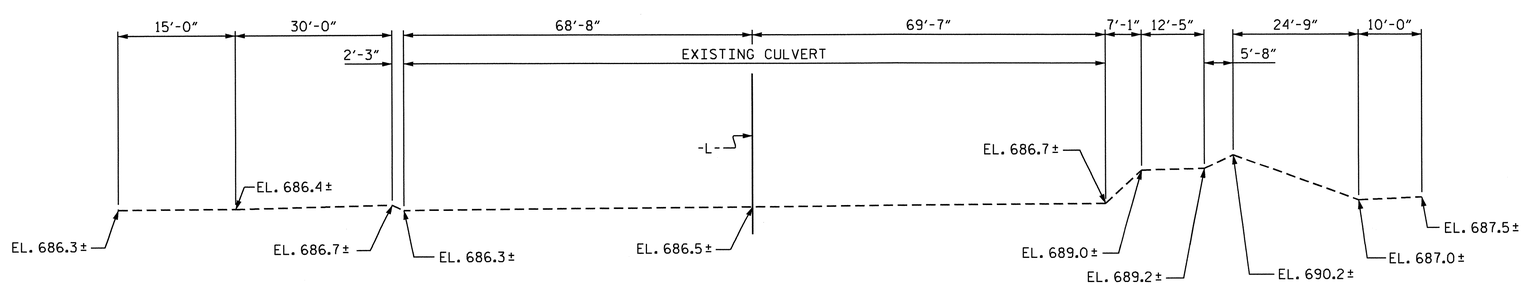

PROFILE ALONG ℄ CULVERT

PROJECT NO. U-3326B
ROCKINGHAM COUNTY
STATION: 250+30.41 -L-

SHEET 1 OF 11

STATE OF NORTH CAROLINA
DEPARTMENT OF TRANSPORTATION
RALEIGH

DOUBLE 8 FT. X 8 FT. CONCRETE BOX CULVERT EXTENSIONS 120° SKEW

NORTH CAROLINA PROFESSIONAL SEAL 11915 ENGINEER JOHN C. FRYE — 10/27/11

NORTH CAROLINA PROFESSIONAL SEAL 16301 ENGINEER HSIUNG TANG — 10/24/11

REVISIONS						SHEET NO.
NO.	BY:	DATE:	NO.	BY:	DATE:	C-8
1			3			TOTAL SHEETS
2			4			32

ASSEMBLED BY : W.F.PARKER	DATE : 2/2011	SPECIAL	
CHECKED BY : A. SORSENGINH	DATE : 2/2011		
DRAWN BY : C.O. CUEVAS	DATE : 8-20-90	STANDARD	
CHECKED BY : ELR	DATE : 10-3-90		

24-OCT-2011 15:18
K:\TIPProjects-U\U3326B\Structures\str06\FinalPlan\U-3326B_SD_cu_06.dgn
ttfang

STR.#6 STD. NO. CB552A

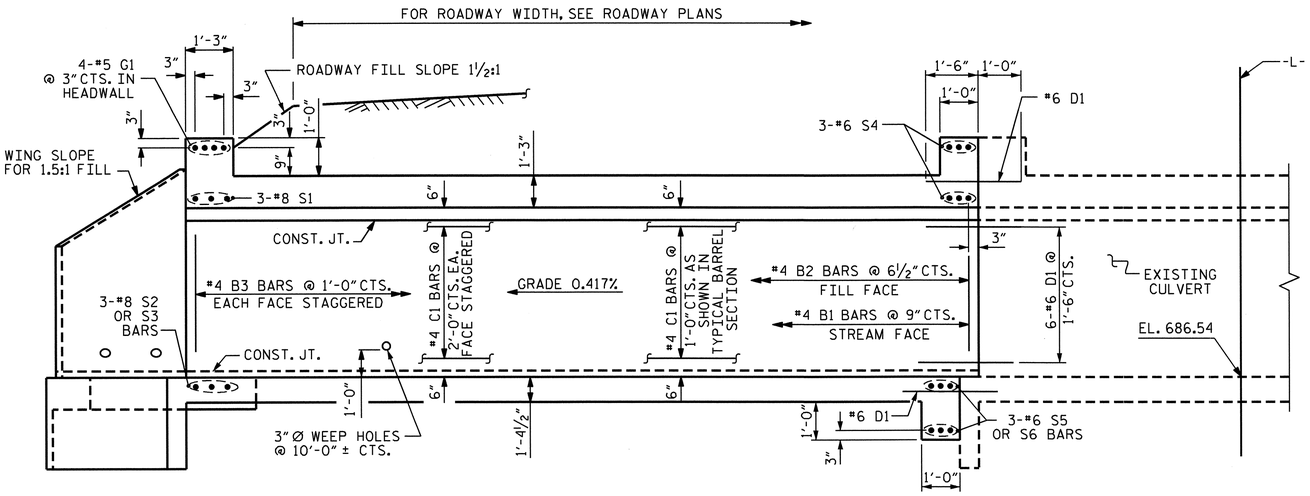

CULVERT SECTION NORMAL TO ROADWAY

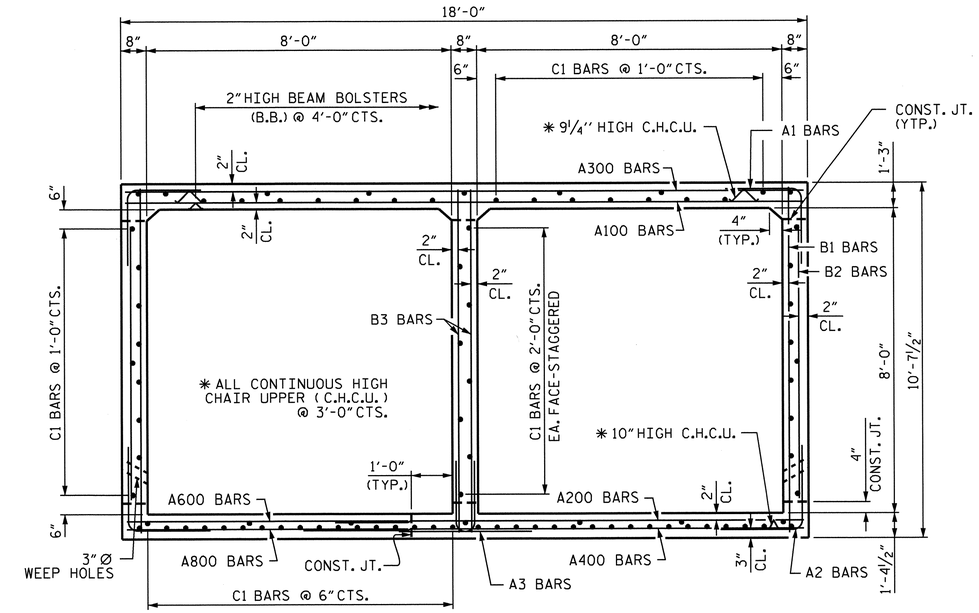

RIGHT ANGLE SECTION OF BARREL

THERE ARE 90 C1 BARS IN SECTION OF BARREL (LOOKING UPSTREAM)

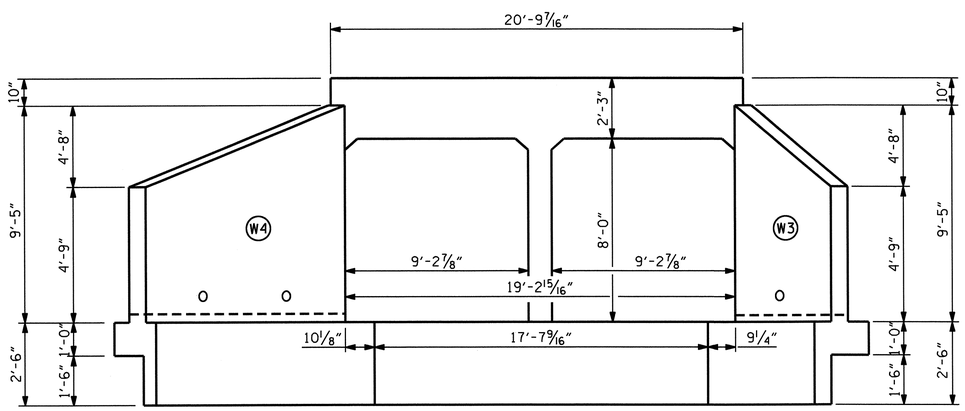

OUTLET END ELEVATION NORMAL TO SKEW

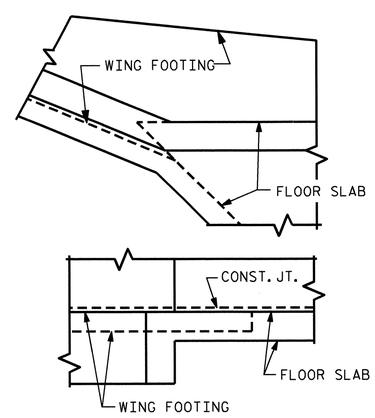

DETAIL

CONNECTION OF WING FOOTING AND FLOOR SLAB

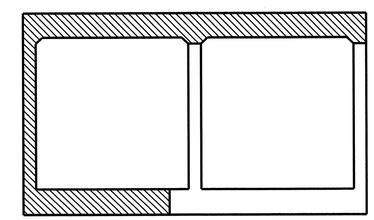

CONSTRUCTION STAGING

(LOOKING UPSTREAM)

STAGE I CONSTRUCTION

STAGE II CONSTRUCTION

PROJECT NO. U-3326B

ROCKINGHAM COUNTY

STATION: 250+30.41 -L-

SHEET 2 OF 11

STATE OF NORTH CAROLINA
DEPARTMENT OF TRANSPORTATION
RALEIGH

DOUBLE 8 FT. X 8 FT. CONCRETE BOX CULVERT 120° SKEW LEFT EXTENSION

NORTH CAROLINA PROFESSIONAL SEAL 16301 ENGINEER TING-YUSLUNG FANG

10/24/11

REVISIONS						SHEET NO.
NO.	BY:	DATE:	NO.	BY:	DATE:	C-9
1			3			TOTAL SHEETS
2			4			32

STR.#6

DRAWN BY : W.F.PARKER DATE : 2/2011
CHECKED BY : A. SORSENGINH DATE : 2/2011

24-OCT-2011 15:18
k:\TIPProjects-U\U3326B\Structures\str06\FinalPlan\U-3326B_SD_cu_06.dgn
tfang

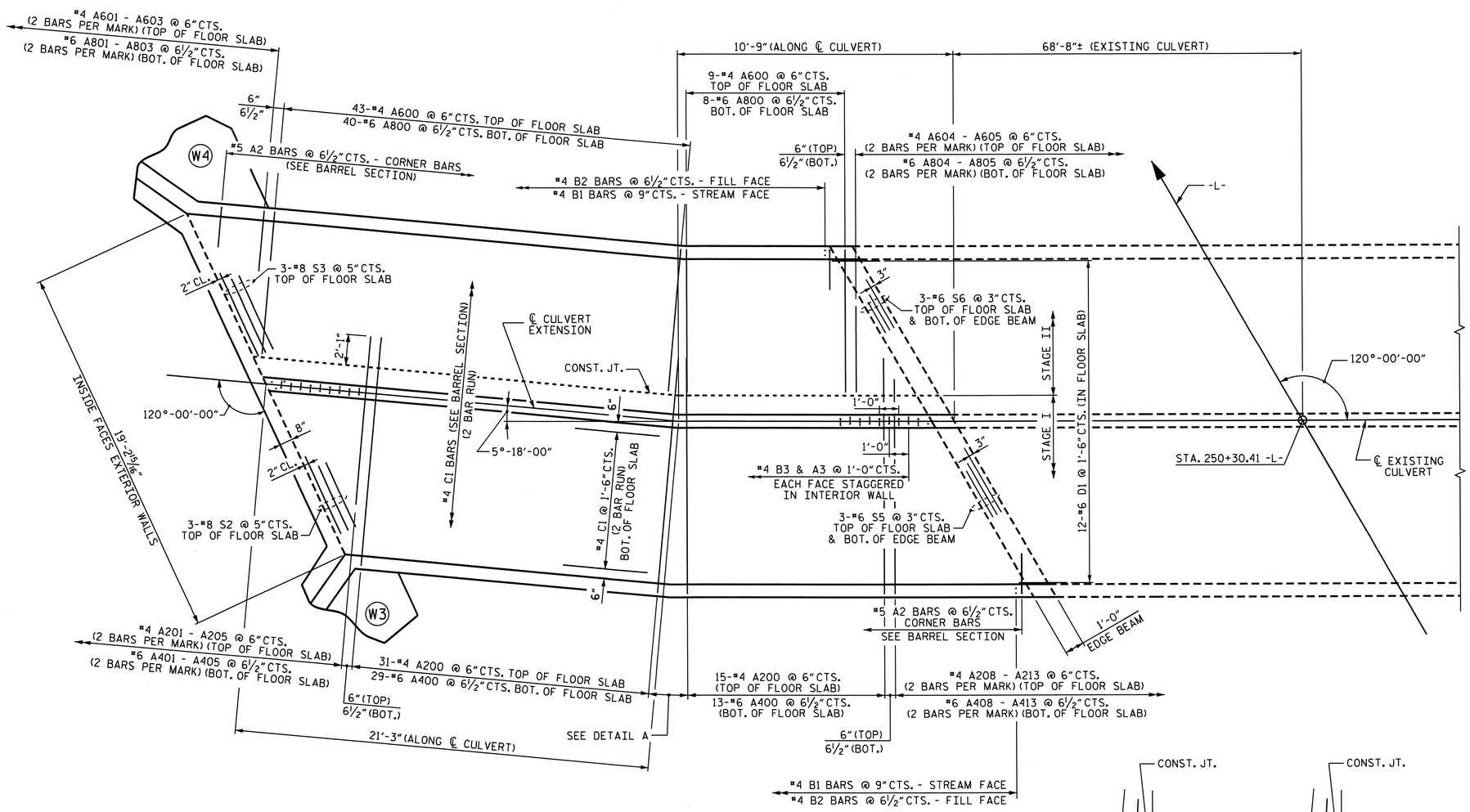

LEFT EXTENSION - PLAN OF FLOOR SLAB

FIELD BEND C1 BARS AS NEEDED

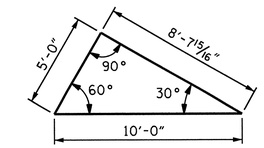

SKEW TRIANGLE

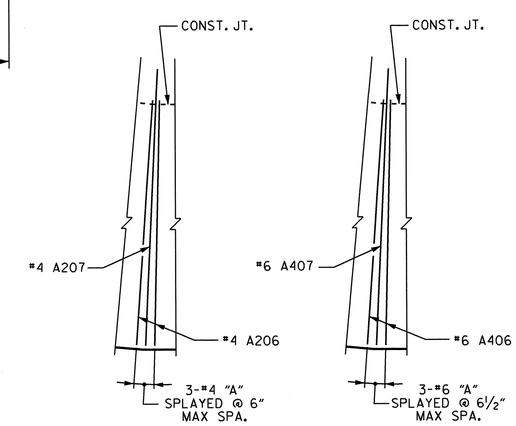

DETAIL A
TOP OF SLAB

DETAIL A
BOT. OF SLAB

PROJECT NO. U-3326B
ROCKINGHAM COUNTY
STATION: 250+30.41 -L-

SHEET 3 OF 11

STATE OF NORTH CAROLINA
DEPARTMENT OF TRANSPORTATION
RALEIGH

DOUBLE 8 FT. X 8 FT. CONCRETE BOX CULVERT 120° SKEW LEFT EXTENSION

NORTH CAROLINA PROFESSIONAL SEAL 16301 ENGINEER TING HSIUNG FANG
10/28/11

REVISIONS						SHEET NO.
NO.	BY:	DATE:	NO.	BY:	DATE:	C-10
1			3			TOTAL SHEETS
2			4			32

DRAWN BY : W.F.PARKER DATE : 2/2011
CHECKED BY : A. SORSENGINH DATE : 2/2011

28-OCT-2011 11:43
K:\TIPProjects-U\U3326B\Structures\str06\FinalPlan\U-3326B_SD_cu_06.dgn
ttfang

STR.#6 NCBDS

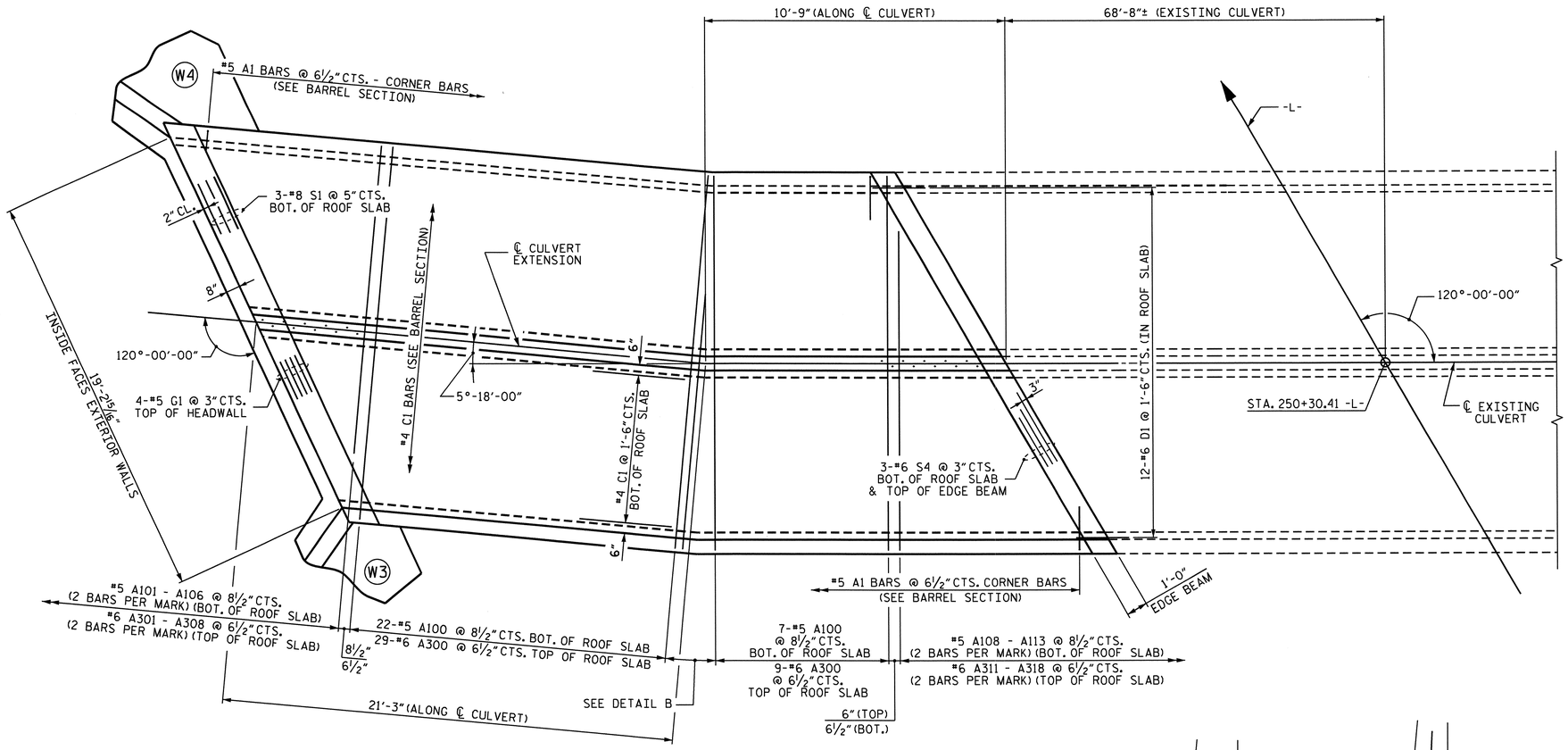

LEFT EXTENSION - PLAN OF ROOF SLAB

FIELD BEND C1 BARS AS NEEDED

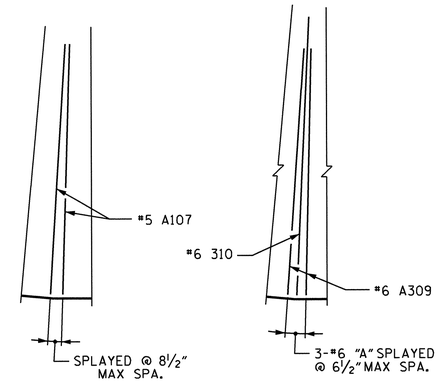

DETAIL B
TOP OF SLAB

DETAIL B
BOT. OF SLAB

NORTH CAROLINA PROFESSIONAL SEAL 16301 ENGINEER HSIENG YANG

10/24/11

PROJECT NO. U-3326B

ROCKINGHAM COUNTY

STATION: 250+30.41 -L-

SHEET 4 OF 11

STATE OF NORTH CAROLINA
DEPARTMENT OF TRANSPORTATION
RALEIGH

DOUBLE 8 FT. X 8 FT. CONCRETE BOX CULVERT 120° SKEW LEFT EXTENSION

REVISIONS						SHEET NO.
NO.	BY:	DATE:	NO.	BY:	DATE:	C-11
1			3			TOTAL SHEETS
2			4			32

DRAWN BY : W.F.PARKER DATE : 2/2011
CHECKED BY : A. SORSENGINH DATE : 2/2011

12-SEP-2011 14:17
Q:\TIPProjects-U\U3326B\Structures\str06\FinalPlan\U-3326B_SD_cu_06.dgn
rppatel

STR.#6

NCDDS

BAR TYPE

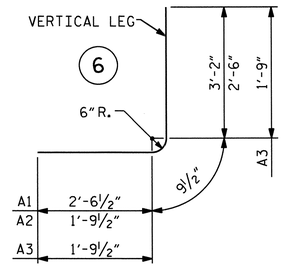

ALL BAR DIMENSIONS ARE OUT TO OUT

SPLICE LENGTHS CHART

BAR	SIZE	SPLICE LENGTH
A200	#4	1'-11"
A400	#6	2'-9"
"B"	#4	1'-9"
C1	#4	1'-11"
"G"	#5	1'-9"
"S"	#8	4'-0"
"S"	#6	2'-3"

BILL OF MATERIAL
LEFT EXTENSION

BAR	NO.	SIZE	TYPE	LENGTH	WEIGHT	BAR	NO.	SIZE	TYPE	LENGTH	WEIGHT	BAR	NO.	SIZE	TYPE	LENGTH	WEIGHT
A1	112	#5	6	6'-6"	759	A300	38	#6	STR	17'-8"	1008	A600	52	#4	STR	7'-4"	255
A2	112	#5	6	5'-1"	594	A301	2	#6	STR	15'-11"	48	A601	2	#4	STR	6'-2"	8
A3	64	#4	6	4'-4"	185	A302	2	#6	STR	14'-1"	42	A602	2	#4	STR	4'-5"	6
						A303	2	#6	STR	12'-2"	37	A603	2	#4	STR	2'-8"	4
A100	29	#5	STR	17'-8"	534	A304	2	#6	STR	10'-4"	31	A604	2	#4	STR	5'-9"	8
A101	2	#5	STR	16'-0"	33	A305	2	#6	STR	8'-5"	25	A605	2	#4	STR	4'-0"	5
A102	2	#5	STR	13'-7"	28	A306	2	#6	STR	6'-7"	20						
A103	2	#5	STR	11'-2"	23	A307	2	#6	STR	4'-8"	14	A800	48	#6	STR	7'-4"	529
A104	2	#5	STR	8'-8"	18	A308	2	#6	STR	2'-10"	9	A801	2	#6	STR	5'-8"	17
A105	2	#5	STR	6'-3"	13	A309	2	#6	STR	14'-0"	42	A802	2	#6	STR	3'-9"	11
A106	2	#5	STR	3'-9"	8	A310	1	#6	STR	17'-8"	27	A803	2	#6	STR	1'-11"	6
A107	2	#5	STR	17'-8"	37	A311	2	#6	STR	16'-6"	50	A804	2	#6	STR	5'-10"	18
A108	2	#5	STR	16'-3"	34	A312	2	#6	STR	14'-8"	44	A805	2	#6	STR	3'-11"	12
A109	2	#5	STR	13'-10"	29	A313	2	#6	STR	12'-9"	38						
A110	2	#5	STR	11'-4"	24	A314	2	#6	STR	10'-11"	33	B1	86	#4	STR	10'-1"	579
A111	2	#5	STR	8'-11"	19	A315	2	#6	STR	9'-0"	27	B2	112	#4	STR	7'-4"	549
A112	2	#5	STR	6'-5"	13	A316	2	#6	STR	7'-2"	22	B3	64	#4	STR	10'-1"	431
A113	2	#5	STR	4'-0"	8	A317	2	#6	STR	5'-3"	16						
						A318	2	#6	STR	3'-5"	10	C1	180	#4	STR	16'-11"	2034
A200	46	#4	STR	12'-3"	376												
A201	2	#4	STR	11'-1"	15	A400	42	#6	STR	12'-11"	854	D1	36	#6	STR	2'-6"	135
A202	2	#4	STR	9'-5"	13	A401	2	#6	STR	11'-4"	34						
A203	2	#4	STR	7'-8"	10	A402	2	#6	STR	9'-6"	29	G1	4	#5	STR	20'-4"	85
A204	2	#4	STR	5'-11"	8	A403	2	#6	STR	7'-7"	23						
A205	2	#4	STR	4'-11"	6	A404	2	#6	STR	5'-9"	17	S1	3	#8	STR	20'-4"	163
A206	2	#4	STR	10'-4"	14	A405	2	#6	STR	3'-10"	12	S2	3	#8	STR	15'-9"	126
A207	1	#4	STR	12'-11"	9	A406	2	#6	STR	10'-4"	31	S3	3	#8	STR	8'-7"	69
A208	2	#4	STR	10'-10"	14	A407	1	#6	STR	13'-1"	20	S4	6	#6	STR	20'-4"	183
A209	2	#4	STR	9'-2"	12	A408	2	#6	STR	11'-5"	34	S5	6	#6	STR	14'-0"	126
A210	2	#4	STR	7'-5"	10	A409	2	#6	STR	9'-7"	29	S6	6	#6	STR	8'-7"	77
A211	2	#4	STR	5'-8"	8	A410	2	#6	STR	7'-8"	23						
A212	2	#4	STR	3'-11"	5	A411	2	#6	STR	5'-7"	18						
A213	2	#4	STR	2'-2"	3	A412	2	#6	STR	3'-11"	12						
						A413	2	#6	STR	2'-1"	6	REINFORCING STEEL				10,553 LBS.	

LEFT EXTENSION STRUCTURE QUANTITIES

CLASS A CONCRETE		
BARREL @ 2.351 CY/FT	75.2	C.Y.
WING ETC.	15.8	C.Y.
TOTAL	91.0	C.Y.
REINFORCING STEEL		
BARREL	10,553	LBS.
WINGS ETC.	832	LBS.
TOTAL	11,385	LBS.
CULVERT EXCAVATION	LUMP SUM	
FOUNDATION COND. MAT'L	41.0	TONS

PROJECT NO. U-3326B
ROCKINGHAM COUNTY
STATION: 250+30.41 -L-

SHEET 5 OF 11

STATE OF NORTH CAROLINA
DEPARTMENT OF TRANSPORTATION
RALEIGH

DOUBLE 8 FT. X 8 FT. CONCRETE BOX CULVERT 120° SKEW LEFT EXTENSION

NORTH CAROLINA PROFESSIONAL SEAL 16301 ENGINEER HSIUNG-LIANG FANG
10/24/11

REVISIONS						SHEET NO.
NO.	BY:	DATE:	NO.	BY:	DATE:	C-12
1			3			TOTAL SHEETS
2			4			32

STR. #6

DRAWN BY : W.F.PARKER DATE : 2/2011
CHECKED BY : A. SORSENGINH DATE : 2/2011

24-OCT-2011 15:20
K:\TIPProjects-U\U3326B\Structures\str06\FinalPlan\U-3326B_SD_cu_06.dgn
tfang

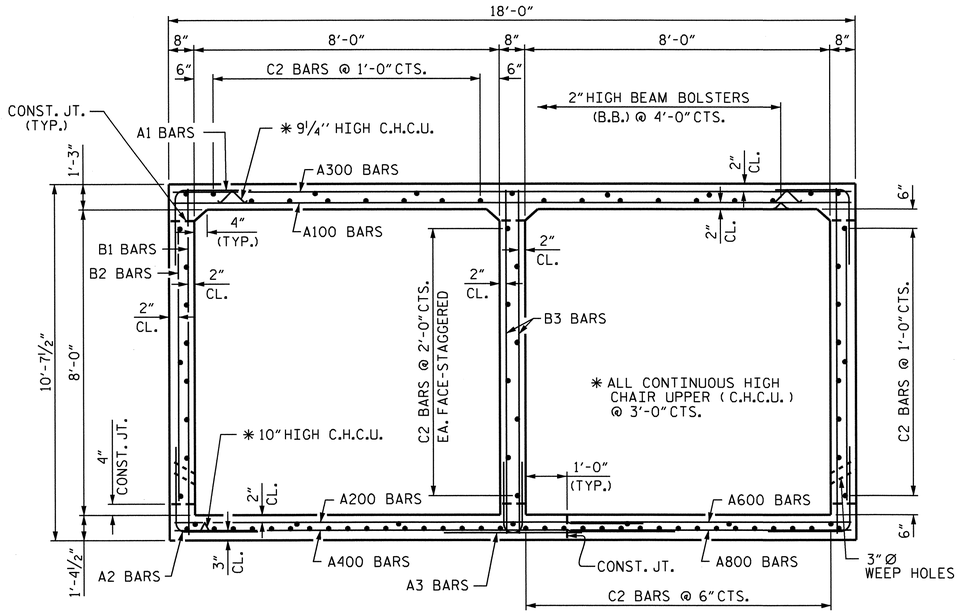

RIGHT ANGLE SECTION OF BARREL

THERE ARE 90 C2 BARS IN SECTION OF BARREL
(LOOKING DOWNSTREAM)

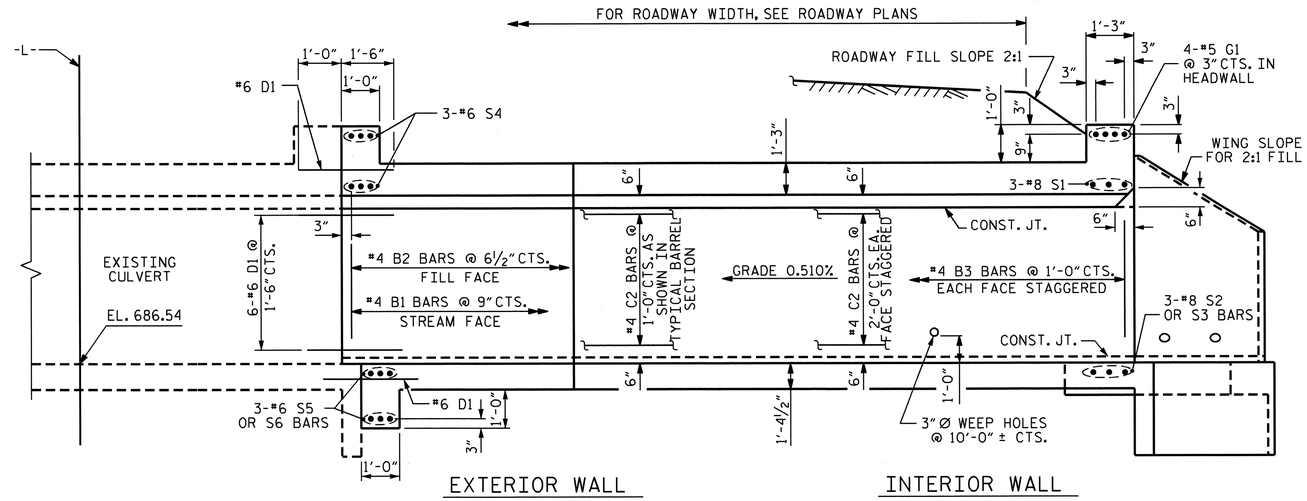

CULVERT SECTION NORMAL TO ROADWAY

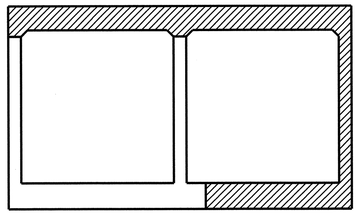

CONSTRUCTION STAGING

(LOOKING DOWNSTREAM)

STAGE I CONSTRUCTION

STAGE II CONSTRUCTION

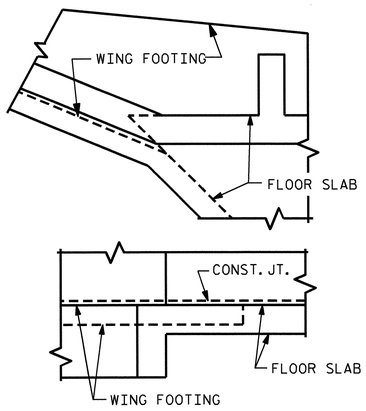

DETAIL

CONNECTION OF WING FOOTING AND FLOOR SLAB

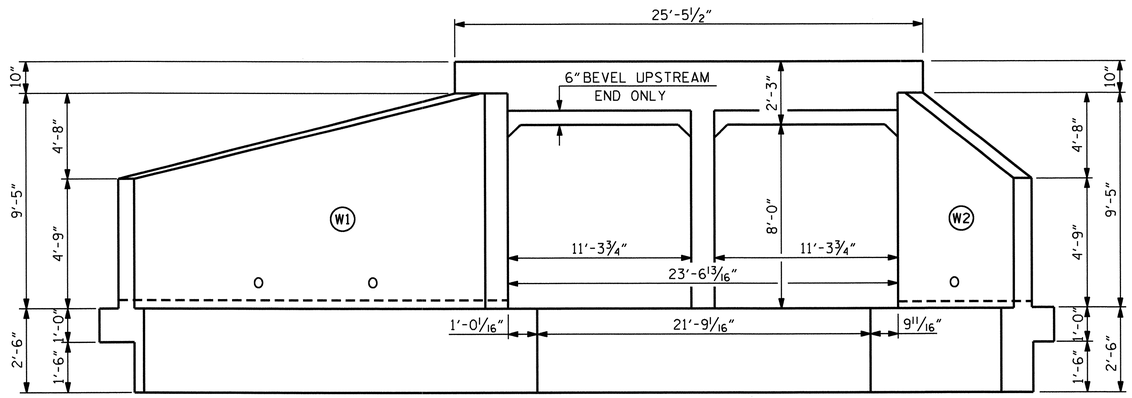

INLET END ELEVATION NORMAL TO SKEW

NORTH CAROLINA PROFESSIONAL SEAL 16301 ENGINEER TING HSIUNG FANG

10/24/11

PROJECT NO. U-3326B

ROCKINGHAM COUNTY

STATION: 250+30.41 -L-

SHEET 6 OF 11

STATE OF NORTH CAROLINA
DEPARTMENT OF TRANSPORTATION
RALEIGH

DOUBLE 8 FT. X 8 FT.
CONCRETE BOX CULVERT
120° SKEW
RIGHT EXTENSION

REVISIONS						SHEET NO.
NO.	BY:	DATE:	NO.	BY:	DATE:	C-13
1			3			TOTAL SHEETS
2			4			32

STR. #6

DRAWN BY : W.F.PARKER DATE : 2/2011
CHECKED BY : A. SORSENGINH DATE : 2/2011

24-OCT-2011 16:17
K:\TIPProjects-U\U3326B\Structures\str06\FinalPlan\U-3326B_SD_cu_06.dgn
ttfang

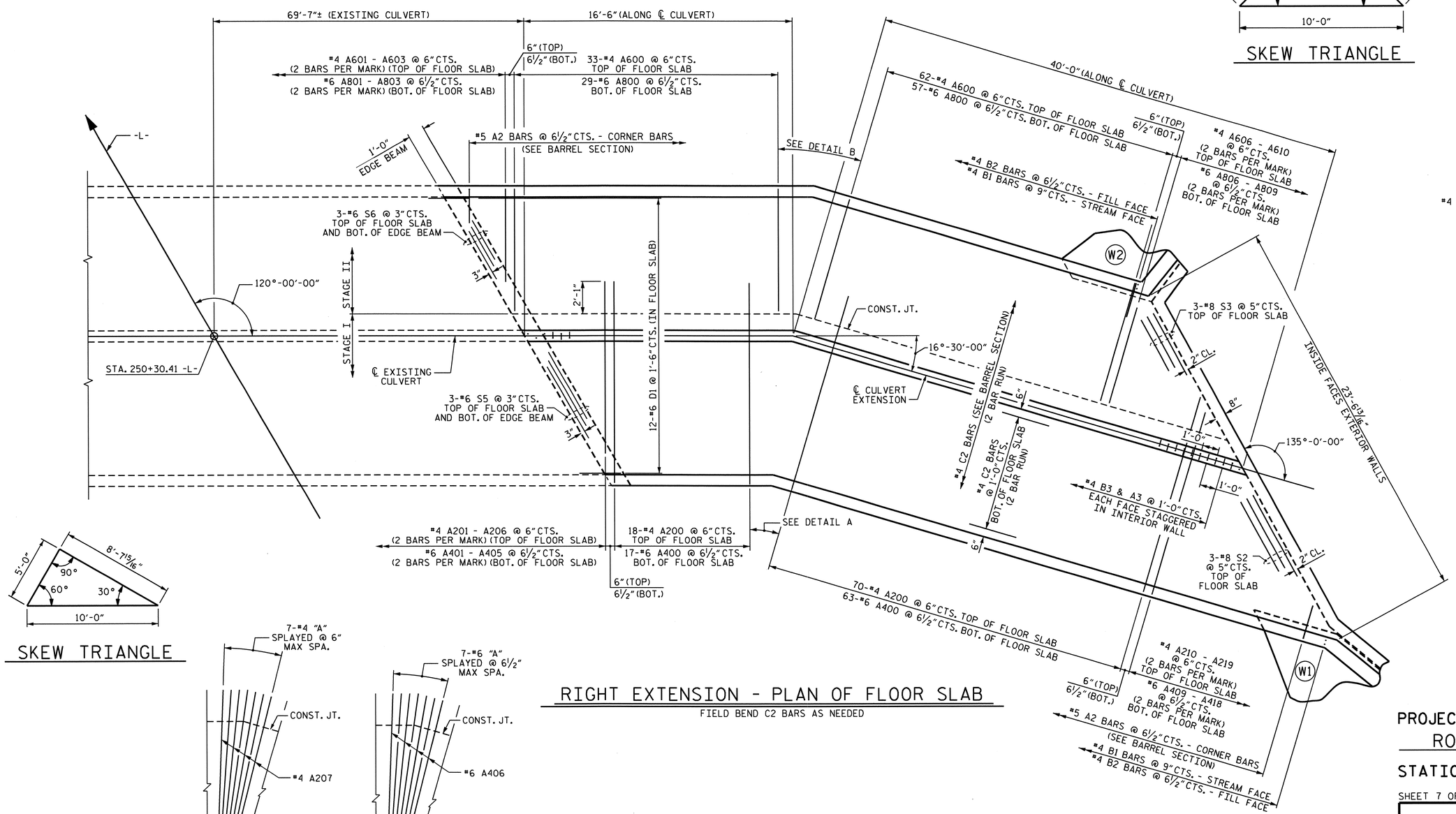

RIGHT EXTENSION - PLAN OF FLOOR SLAB

FIELD BEND C2 BARS AS NEEDED

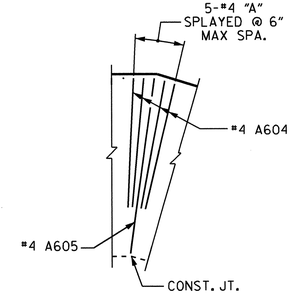

DETAIL B

TOP OF SLAB

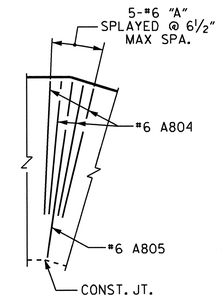

DETAIL B

BOT. OF SLAB

SKEW TRIANGLE

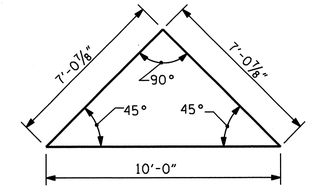

SKEW TRIANGLE

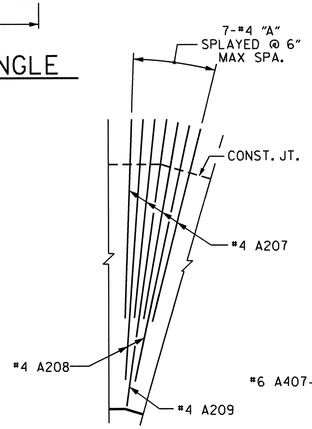

DETAIL A

TOP OF SLAB

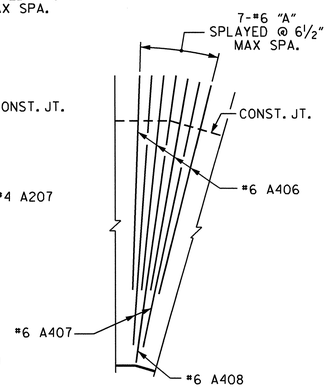

DETAIL A

BOT. OF SLAB

PROJECT NO. U-3326B

ROCKINGHAM COUNTY

STATION: 250+30.41 -L-

SHEET 7 OF 11

STATE OF NORTH CAROLINA
DEPARTMENT OF TRANSPORTATION
RALEIGH

DOUBLE 8 FT. X 8 FT.
CONCRETE BOX CULVERT
120° SKEW
RIGHT EXTENSION

NORTH CAROLINA PROFESSIONAL SEAL 16301 ENGINEER

10/28/11

REVISIONS						SHEET NO.
NO.	BY:	DATE:	NO.	BY:	DATE:	C-14
1			3			TOTAL SHEETS
2			4			32

DRAWN BY : W.F.PARKER DATE : 2/2011

CHECKED BY : A. SORSENGINH DATE : 2/2011

28-OCT-2011 11:46
K:\TIPProjects-U\U3326B\Structures\str06\FinalPlan\U-3326B_SD_cu_06.dgn
ttang

STR.#6

NC005

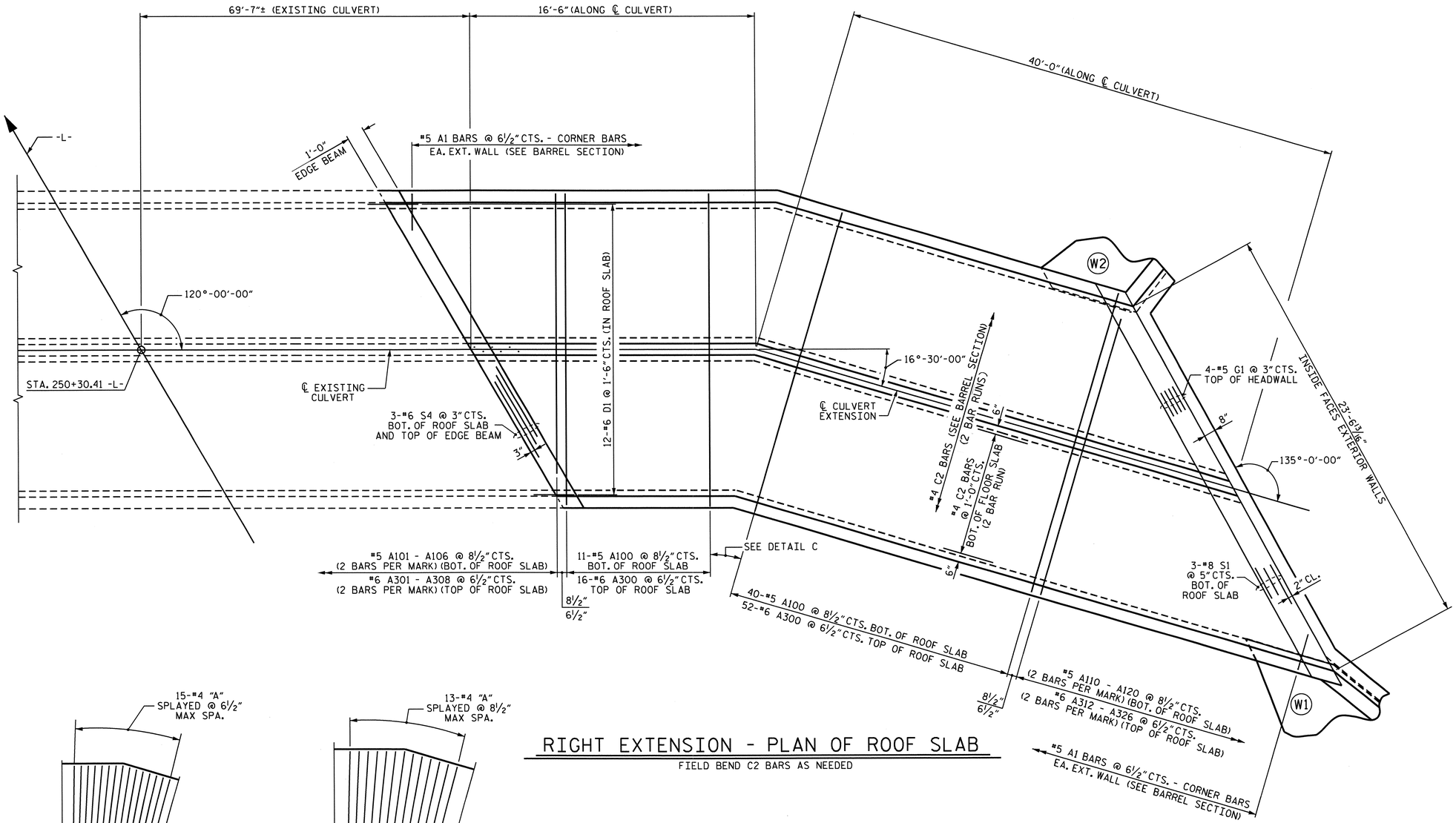

RIGHT EXTENSION - PLAN OF ROOF SLAB

FIELD BEND C2 BARS AS NEEDED

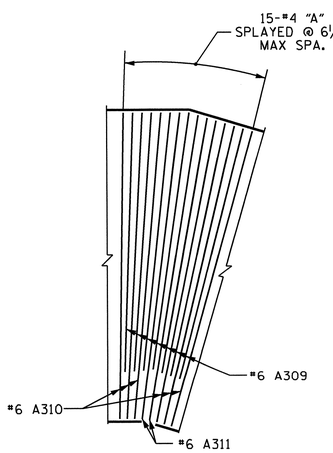

DETAIL C
TOP OF SLAB

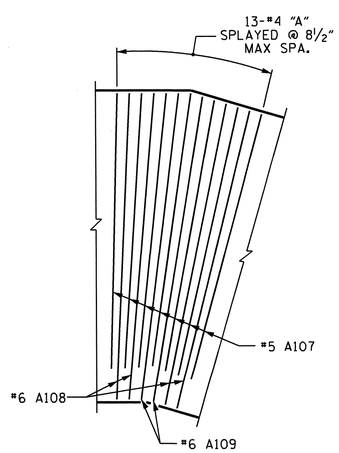

DETAIL C
BOT. OF SLAB

PROJECT NO. U-3326B
ROCKINGHAM COUNTY
STATION: 250+30.41 -L-

SHEET 8 OF 11

STATE OF NORTH CAROLINA
DEPARTMENT OF TRANSPORTATION
RALEIGH

DOUBLE 8 FT. X 8 FT. CONCRETE BOX CULVERT 120° SKEW RIGHT EXTENSION

NORTH CAROLINA PROFESSIONAL SEAL 16301 ENGINEER HSIUNG TANG
8/30/11

REVISIONS						SHEET NO.
NO.	BY:	DATE:	NO.	BY:	DATE:	C-15
1			3			TOTAL SHEETS
2			4			32

DRAWN BY : W.F.PARKER DATE : 2/2011
CHECKED BY : A. SORSENGINH DATE : 2/2011

30-AUG-2011 14:25
Q:\TIPProjects-U\U3326B\Structures\str06\FinalPlan\U-3326B_SD_cu_06.dgn
qtnguyen

STR.#6 NC005

BAR TYPE

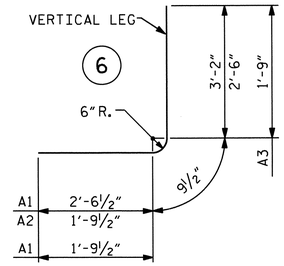

ALL BAR DIMENSIONS ARE OUT TO OUT

SPLICE LENGTHS CHART

BAR	SIZE	SPLICE LENGTH
A100	#5	2'-2"
A200	#4	1'-11"
A300	#6	3'-10"
A400	#6	2'-9"
"B"	#4	1'-9"
C1	#4	1'-11"
"G"	#5	1'-9"
"S"	#8	4'-0"
"S"	#6	2'-3"

RIGHT EXTENSION STRUCTURE QUANTITIES

CLASS A CONCRETE			
BARREL @	2.351 CY/FT	132.8	C.Y.
WING ETC.		25.2	C.Y.
TOTAL		158.0	C.Y.
REINFORCING STEEL			
BARREL		19,054	LBS.
WINGS ETC.		2,452	LBS.
TOTAL		21,506	LBS.
CULVERT EXCAVATION		LUMP SUM	
FOUNDATION COND. MAT'L		72.0	TONS

BILL OF MATERIAL
RIGHT EXTENSION

BAR	NO.	SIZE	TYPE	LENGTH	WEIGHT	BAR	NO.	SIZE	TYPE	LENGTH	WEIGHT	BAR	NO.	SIZE	TYPE	LENGTH	WEIGHT
A1	202	#5	6	6'-6"	1369	A300	68	#6	STR.	17'-8"	1804	A600	95	#4	STR.	7'-4"	465
A2	202	#5	6	5'-1"	1071	A301	2	#6	STR.	15'-10"	48	A601	2	#4	STR.	5'-10"	8
A3	102	#4	6	4'-4"	295	A302	2	#6	STR.	13'-11"	42	A602	2	#4	STR.	4'-1"	5
						A303	2	#6	STR.	12'-1"	36	A603	2	#4	STR.	2'-4"	3
A100	51	#5	STR.	17'-8"	940	A304	2	#6	STR.	10'-2"	31	A604	4	#4	STR.	5'-11"	16
A101	2	#5	STR.	15'-11"	33	A305	2	#6	STR.	8'-4"	25	A605	1	#4	STR.	7'-5"	5
A102	2	#5	STR.	13'-6"	28	A306	2	#6	STR.	6'-5"	19	A606	2	#4	STR.	6'-5"	9
A103	2	#5	STR.	11'-0"	23	A307	2	#6	STR.	4'-7"	14	A607	2	#4	STR.	5'-5"	7
A104	2	#5	STR.	8'-7"	18	A308	2	#6	STR.	2'-8"	8	A608	2	#4	STR.	4'-5"	6
A105	2	#5	STR.	6'-2"	13	A309	7	#6	STR.	14'-11"	157	A609	2	#4	STR.	3'-5"	5
A106	2	#5	STR.	3'-8"	8	A310	8	#6	STR.	17'-8"	212	A610	2	#4	STR.	2'-5"	3
A107	7	#5	STR.	15'-10"	116	A311	2	#6	STR.	17'-9"	53						
A108	4	#5	STR.	17'-8"	74	A312	2	#6	STR.	16'-10"	51	A800	86	#6	STR.	7'-4"	947
A109	2	#5	STR.	17'-9"	37	A313	2	#6	STR.	15'-9"	47	A801	2	#6	STR.	6'-11"	21
A110	2	#5	STR.	16'-7"	35	A314	2	#6	STR.	14'-8"	44	A802	2	#6	STR.	5'-1"	15
A111	2	#5	STR.	15'-2"	32	A315	2	#6	STR.	13'-7"	41	A803	2	#6	STR.	3'-2"	10
A112	2	#5	STR.	13'-9"	29	A316	2	#6	STR.	12'-6"	38	A804	4	#6	STR.	5'-0"	30
A113	2	#5	STR.	12'-4"	26	A317	2	#6	STR.	11'-5"	34	A805	1	#6	STR.	7'-5"	11
A114	2	#5	STR.	10'-11"	23	A318	2	#6	STR.	10'-4"	31	A806	2	#6	STR.	6'-5"	19
A115	2	#5	STR.	9'-6"	20	A319	2	#6	STR.	9'-3"	28	A807	2	#6	STR.	5'-4"	16
A116	2	#5	STR.	8'-1"	17	A320	2	#6	STR.	8'-2"	25	A808	2	#6	STR.	4'-3"	13
A117	2	#5	STR.	6'-8"	14	A321	2	#6	STR.	7'-1"	21	A809	2	#6	STR.	3'-2"	10
A118	2	#5	STR.	5'-3"	11	A322	2	#6	STR.	6'-0"	18						
A119	2	#5	STR.	3'-10"	8	A323	2	#6	STR.	4'-11"	15	B1	149	#4	STR.	10'-1"	1004
A120	2	#5	STR.	2'-5"	5	A324	2	#6	STR.	3'-10"	12	B2	202	#4	STR.	7'-4"	990
						A325	2	#6	STR.	2'-9"	8	B3	102	#4	STR.	10'-1"	687
A200	88	#4	STR.	12'-3"	720	A326	2	#6	STR.	1'-8"	5						
A201	2	#4	STR.	11'-2"	15							C2	180	#4	STR.	29'-8"	3567
A202	2	#4	STR.	9'-5"	13	A400	80	#6	STR.	13'-1"	1572						
A203	2	#4	STR.	7'-8"	10	A401	2	#6	STR.	11'-6"	35	D1	36	#6	STR.	2'-6"	135
A204	2	#4	STR.	6'-0"	8	A402	2	#6	STR.	9'-7"	29						
A205	2	#4	STR.	4'-3"	6	A403	2	#6	STR.	7'-9"	23	G1	4	#5	STR.	24'-11"	104
A206	2	#4	STR.	2'-6"	3	A404	2	#6	STR.	5'-11"	18						
A207	4	#4	STR.	9'-0"	24	A405	2	#6	STR.	4'-0"	12	S1	3	#8	STR.	24'-11"	200
A208	2	#4	STR.	11'-2"	15	A406	4	#6	STR.	9'-0"	54	S2	3	#8	STR.	18'-5"	148
A209	1	#4	STR.	12'-4"	8	A407	2	#6	STR.	11'-2"	34	S3	3	#8	STR.	10'-8"	85
A210	2	#4	STR.	11'-6"	15	A408	1	#6	STR.	13'-0"	20	S4	6	#6	STR.	24'-11"	225
A211	2	#4	STR.	10'-6"	14	A409	2	#6	STR.	12'-3"	37	S5	6	#6	STR.	16'-7"	149
A212	2	#4	STR.	9'-6"	13	A410	2	#6	STR.	11'-2"	34	S6	6	#6	STR.	10'-8"	96
A213	2	#4	STR.	8'-6"	11	A411	2	#6	STR.	10'-1"	30						
A214	2	#4	STR.	7'-6"	10	A412	2	#6	STR.	9'-0"	27						
A215	2	#4	STR.	6'-6"	9	A413	2	#6	STR.	7'-11"	24						
A216	2	#4	STR.	5'-6"	7	A414	2	#6	STR.	6'-10"	21						
A217	2	#4	STR.	4'-6"	6	A415	2	#6	STR.	5'-9"	17						
A218	2	#4	STR.	3'-6"	5	A416	2	#6	STR.	4'-8"	14						
A219	2	#4	STR.	2'-6"	3	A417	2	#6	STR.	3'-7"	11						
						A418	2	#6	STR.	2'-6"	8	REINFORCING STEEL				19,054	LBS.

PROJECT NO. U-3326B
ROCKINGHAM COUNTY
STATION: 250+30.41 -L-

SHEET 9 OF 11

STATE OF NORTH CAROLINA
DEPARTMENT OF TRANSPORTATION
RALEIGH

DOUBLE 8 FT. X 8 FT. CONCRETE BOX CULVERT 120° SKEW RIGHT EXTENSION

NORTH CAROLINA PROFESSIONAL SEAL 16301 ENGINEER TING-HSIANG FANG
10/24/11

REVISIONS						SHEET NO.
NO.	BY:	DATE:	NO.	BY:	DATE:	C-16
1			3			TOTAL SHEETS
2			4			32

STR.#6

DRAWN BY : W.F.PARKER DATE : 2/2011
CHECKED BY : A. SORSENGINH DATE : 2/2011

24-OCT-2011 16:25
K:\TIPProjects-U\U3326B\Structures\str06\FinalPlan\U-3326B_SD_cu_06.dgn
tfang

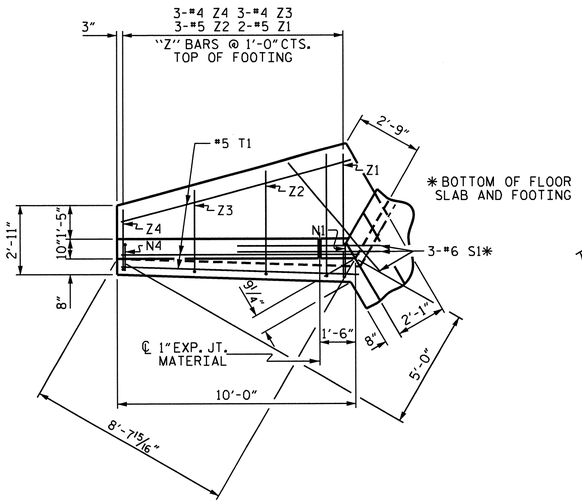

PLAN W3

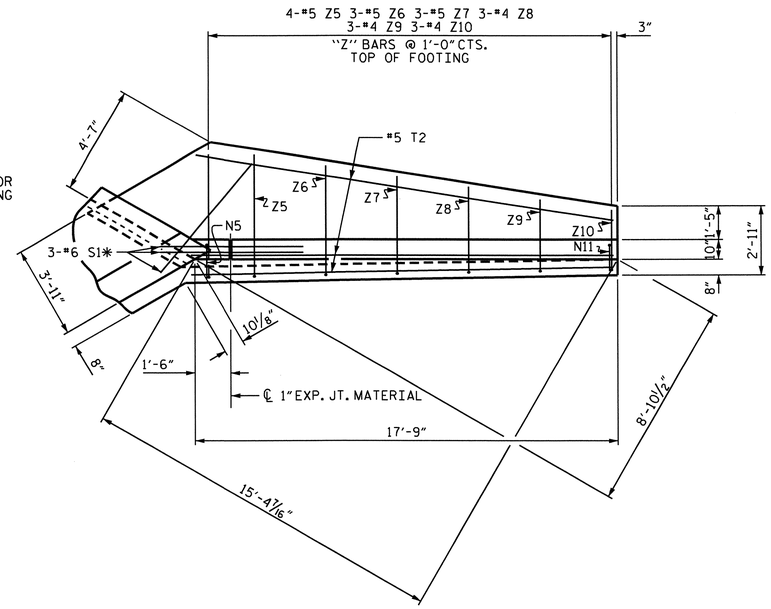

PLAN W4

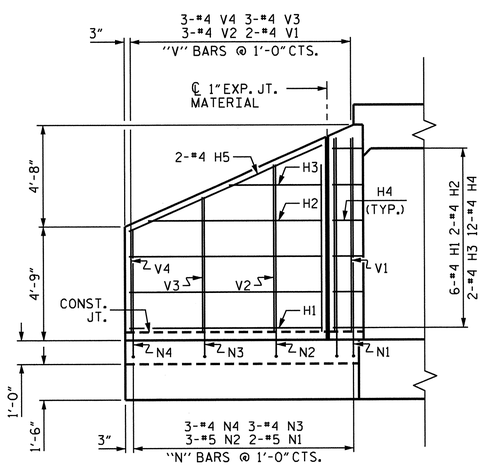

ELEVATION W3

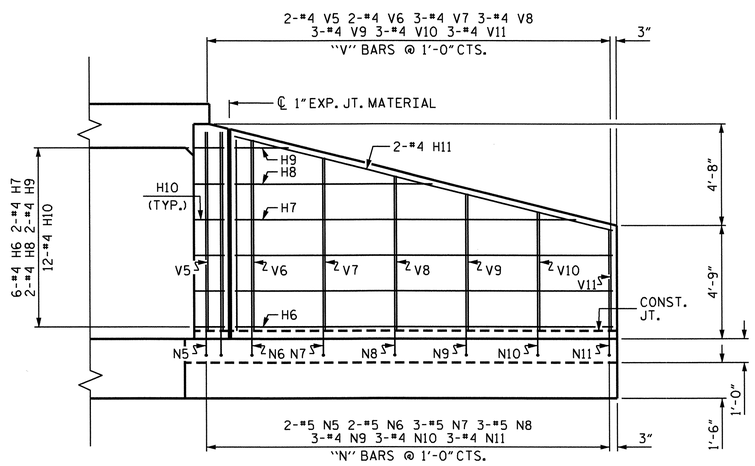

ELEVATION W4

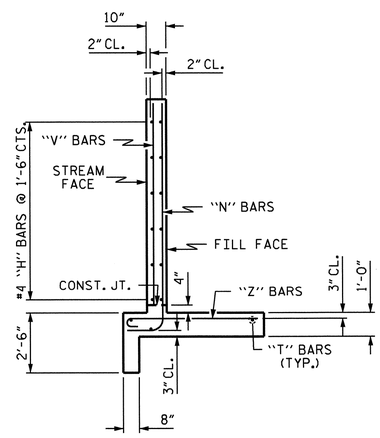

TYPICAL WING SECTION

BAR TYPES

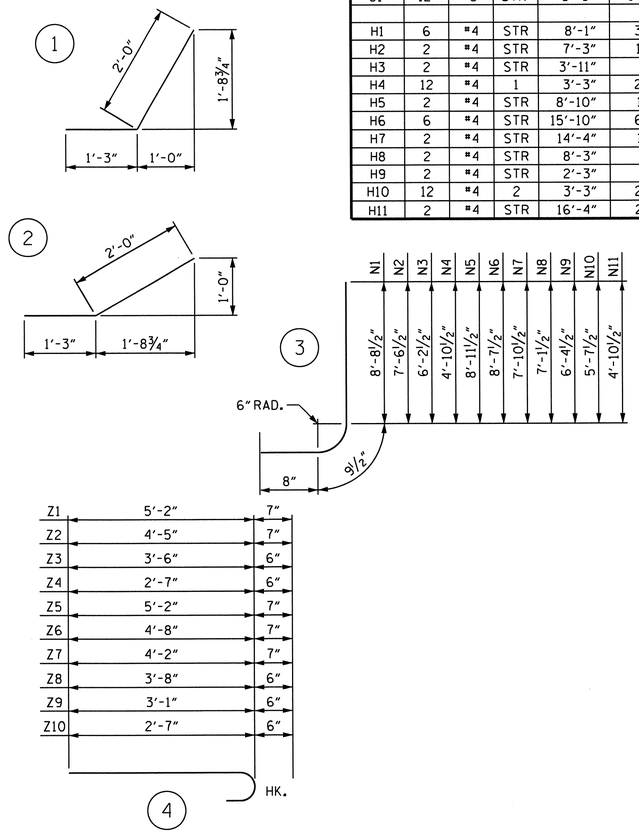

ALL BAR DIMENSIONS ARE OUT TO OUT.

BILL OF MATERIAL

BAR	NO.	SIZE	TYPE	LENGTH	WEIGHT
C1	12	#6	STR	8'-0"	144
H1	6	#4	STR	8'-1"	32
H2	2	#4	STR	7'-3"	10
H3	2	#4	STR	3'-11"	5
H4	12	#4	1	3'-3"	26
H5	2	#4	STR	8'-10"	12
H6	6	#4	STR	15'-10"	63
H7	2	#4	STR	14'-4"	19
H8	2	#4	STR	8'-3"	11
H9	2	#4	STR	2'-3"	3
H10	12	#4	2	3'-3"	26
H11	2	#4	STR	16'-4"	22

BAR	NO.	SIZE	TYPE	LENGTH	WEIGHT
N1	2	#5	3	10'-2"	21
N2	3	#5	3	9'-0"	28
N3	3	#4	3	7'-8"	15
N4	3	#4	3	6'-4"	13
N5	2	#5	3	10'-5"	14
N6	2	#5	3	10'-1"	21
N7	3	#5	3	9'-4"	29
N8	3	#5	3	8'-7"	27
N9	3	#4	3	7'-10"	16
N10	3	#4	3	7'-1"	14
N11	3	#4	3	6'-4"	13
S1	6	#6	STR	6'-0"	54
T1	3	#5	STR	10'-0"	31
T2	3	#5	STR	17'-9"	56
V1	2	#4	STR	8'-1"	11
V2	3	#4	STR	7'-0"	14
V3	3	#4	STR	5'-8"	18
V4	3	#4	STR	4'-4"	9
V5	2	#4	STR	8'-4"	11
V6	2	#4	STR	8'-0"	11
V7	3	#4	STR	7'-3"	15
V8	3	#4	STR	6'-6"	13
V9	3	#4	STR	5'-9"	12
V10	3	#4	STR	5'-0"	10
V11	3	#4	STR	4'-3"	9
Z1	2	#5	4	5'-9"	12
Z2	3	#5	4	5'-0"	16
Z3	3	#4	4	4'-0"	8
Z4	3	#4	4	3'-1"	6
Z5	4	#5	4	5'-9"	24
Z6	3	#5	4	5'-3"	16
Z7	3	#5	4	4'-9"	15
Z8	3	#4	4	4'-2"	8
Z9	3	#4	4	3'-7"	7
Z10	3	#4	4	3'-1"	6

REINFORCING STEEL
FOR 2 WINGS 832 LBS

CLASS A CONCRETE

2 WINGS	12.2	CY
1 HEADWALL	1.0	CY
1 END CURTAIN WALL	1.1	CY
2 EDGE BEAMS	1.5	CY
TOTAL	15.8	CY

PROJECT NO. U-3326B
ROCKINGHAM COUNTY
STATION: 250+30.41 -L-

SHEET 10 OF 11

STATE OF NORTH CAROLINA
DEPARTMENT OF TRANSPORTATION
RALEIGH

WINGS FOR CONCRETE BOX CULVERT LEFT EXTENSION

H = 8'-0" SLOPE = 1.5:1
60° OR 120° SKEW

NORTH CAROLINA PROFESSIONAL SEAL 16301 ENGINEER TING-HSIUNG FANG
8/30/11

REVISIONS						SHEET NO.
NO.	BY:	DATE:	NO.	BY:	DATE:	C-17
1			3			TOTAL SHEETS
2			4			32

ASSEMBLED BY : W.F.PARKER DATE : 2/2011
CHECKED BY : A. SORSENGINH DATE : 2/2011
DRAWN BY : CCJ 11/99
CHECKED BY : RWW 03/00

STD. NO. CW6008

STR.#6

BAR TYPES

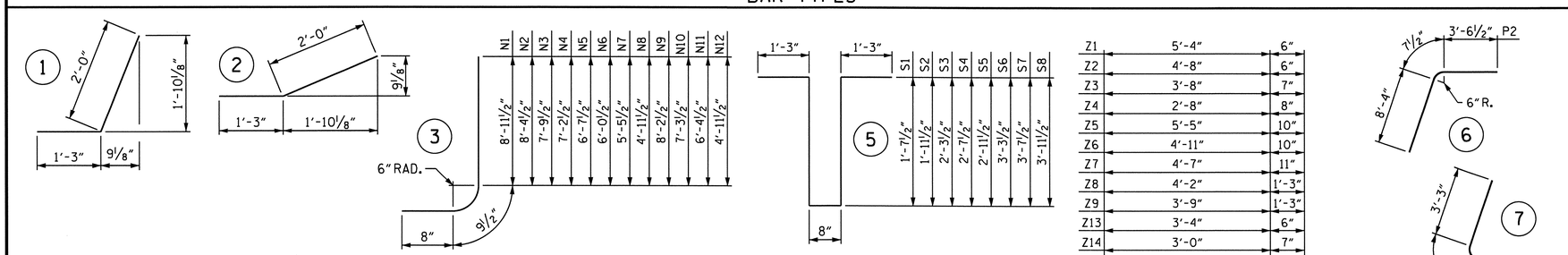

ALL BAR DIMENSIONS ARE OUT TO OUT.

BILL OF MATERIAL

BAR	NO.	SIZE	TYPE	LENGTH	WEIGHT	BAR	NO.	SIZE	TYPE	LENGTH	WEIGHT
C10	12	#6	STR	8'- 0"	144	T1	4	#4	STR	23'- 3"	62
						T2	2	#4	STR	12'- 0"	16
H1	10	#4	STR	21'- 4"	143	T3	3	#4	STR	8'- 9"	18
H2	2	#4	STR	16'- 0"	21						
H3	2	#4	STR	10'- 9"	14	V1	2	#4	STR	8'- 2"	11
H4	2	#4	STR	5'- 6"	7	V2	3	#4	STR	7'- 7"	15
H5	18	#4	2	3'- 3"	39	V3	3	#4	STR	7'- 0"	14
H6	2	#4	STR	21'- 8"	29	V4	3	#4	STR	6'- 5"	13
H7	10	#4	STR	7'- 7"	51	V5	3	#4	STR	5'-10"	12
H8	2	#4	STR	5'- 6"	7	V6	3	#4	STR	5'- 3"	11
H9	2	#4	STR	3'- 4"	4	V7	3	#4	STR	4'- 8"	9
H10	2	#4	STR	1'- 2"	2	V8	3	#4	STR	4'- 2"	8
H11	18	#4	1	3'- 3"	39	V9	2	#4	STR	7'- 5"	10
H12	2	#4	STR	8'- 4"	11	V10	2	#4	STR	6'- 6"	9
						V11	2	#4	STR	5'- 7"	7
M1	5	#8	8	16'- 0"	214	V12	3	#4	STR	4'- 2"	8
N1	2	#5	3	10'- 5"	22	Z1	4	#4	4	3'- 7"	10
N2	3	#5	3	9'-10"	31	Z2	4	#4	4	4'- 1"	11
N3	3	#5	3	9'- 3"	29	Z3	4	#5	4	4'- 8"	19
N4	3	#5	3	8'- 8"	27	Z4	4	#6	4	5'- 3"	32
N5	3	#5	3	8'- 1"	25	Z5	4	#7	4	5'-11"	48
N6	3	#5	3	7'- 6"	23	Z6	4	#7	4	6'- 5"	52
N7	3	#5	3	6'-11"	22	Z7	4	#8	4	7'- 0"	75
N8	3	#5	3	6'- 5"	20	Z8	4	#8	4	7'- 6"	80
N9	2	#5	3	9'- 8"	20	Z9	13	#8	4	8'- 0"	278
N10	2	#5	3	8'- 9"	18	Z10	5	#8	STR	8'- 6"	113
N11	2	#5	3	7'-10"	16	Z11	5	#8	STR	7'-11"	106
N12	3	#5	3	6'- 5"	20	Z12	4	#8	STR	7'- 6"	80
						Z13	4	#8	STR	7'- 1"	76
P1	2	#9	6	6'- 9"	46	Z14	3	#4	4	3'- 7"	7
P2	2	#9	7	12'- 6"	85	Z15	3	#5	4	4'- 6"	14
						Z16	3	#6	4	5'- 6"	25
S1	1	#4	5	6'- 5"	4						
S2	1	#4	5	7'- 1"	5						
S3	1	#4	5	7'- 9"	5						
S4	1	#4	5	8'- 5"	6						
S5	1	#4	5	9'- 1"	6						
S6	1	#4	5	9'- 9"	7						
S7	1	#4	5	10'- 5"	7						
S8	1	#4	5	11'- 1"	7						
S9	3	#6	STR	6'- 0"	27						

REINFORCING STEEL FOR 2 WINGS = 2452 LBS

CLASS A CONCRETE

2 WINGS	20.8 C.Y.
1 HEADWALL	1.2 C.Y.
1 END CURTAIN WALL	1.3 C.Y.
2 EDGE BEAMS	1.9 C.Y.
TOTAL	25.2 C.Y.

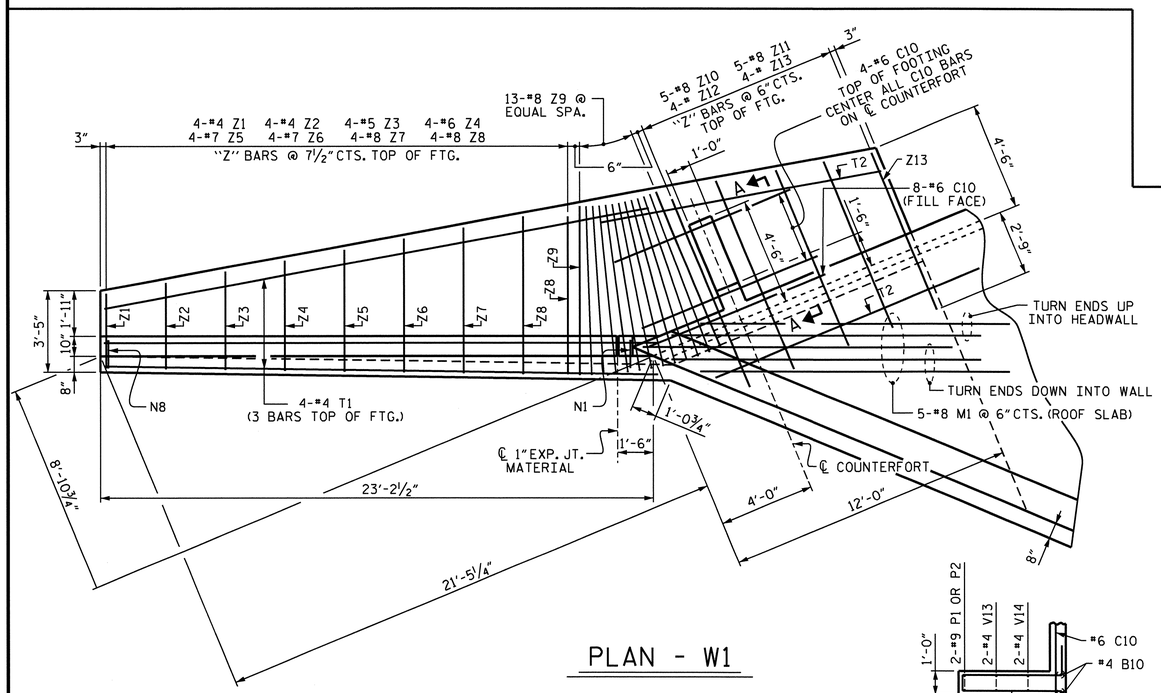

PLAN - W1

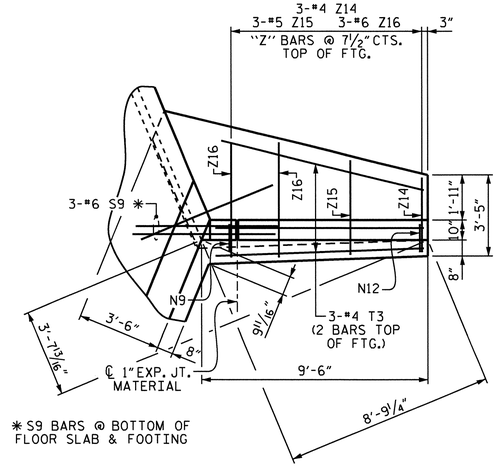

* S9 BARS @ BOTTOM OF FLOOR SLAB & FOOTING

PLAN - W2

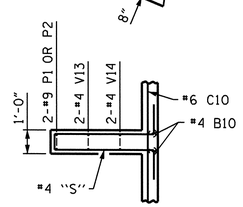

SECTION B-B

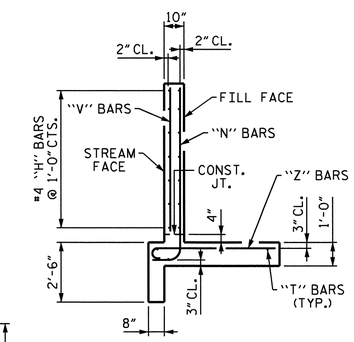

TYPICAL WING SECTION

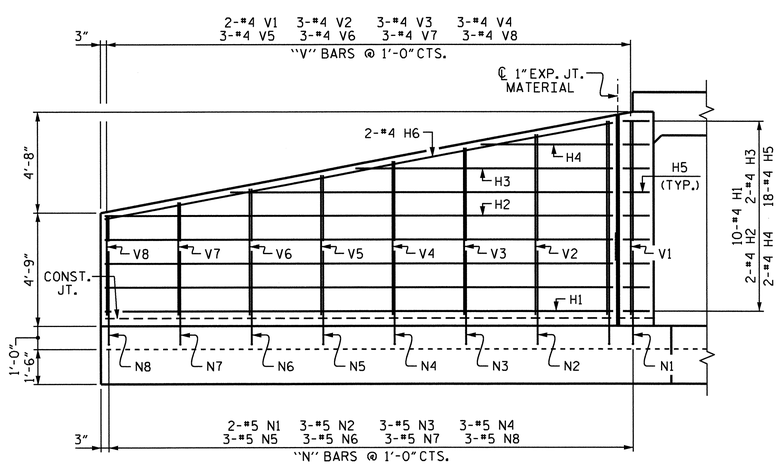

ELEVATION - W1

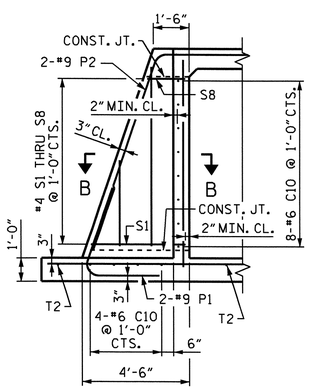

SECTION A-A

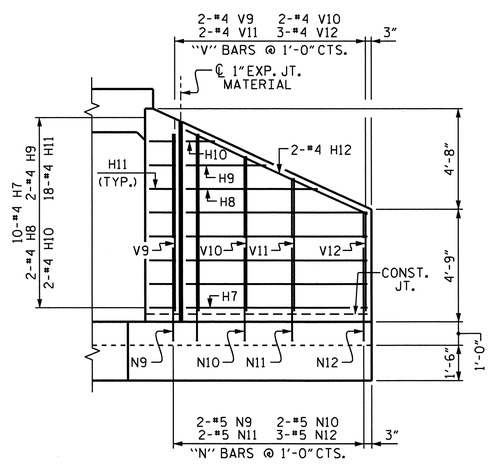

ELEVATION - W2

PROJECT NO. U-3326B

ROCKINGHAM COUNTY

STATION: 250+30.41 -L-

SHEET 11 OF 11

STATE OF NORTH CAROLINA
DEPARTMENT OF TRANSPORTATION
RALEIGH

WINGS FOR CONCRETE BOX CULVERT RIGHT EXTENSION

H = 8'-0" SLOPE = 2:1

45° OR 135° SKEW

NORTH CAROLINA PROFESSIONAL SEAL 16301 ENGINEER HSIUNG TING FANG

8/30/11

REVISIONS						SHEET NO.
NO.	BY:	DATE:	NO.	BY:	DATE:	C-18
1			3			TOTAL SHEETS
2			4			32

STR. #6

DRAWN BY : W.F.PARKER DATE : 2/2011

CHECKED BY : A. SORSENGINH DATE : 2/2011

30-AUG-2011 14:25
O:\TIPProjects-U\U3326B\Structures\str06\FinalPlan\U-3326B_SD_cu_06.dgn
qtnguyen

BM #25: RR SPIKE IN BASE OF 15'' PINE 126.66' LEFT OF STA. 327+95.81 -L-, EL. 727.23'

F.A. PROJECT NO. STP-29B(3)

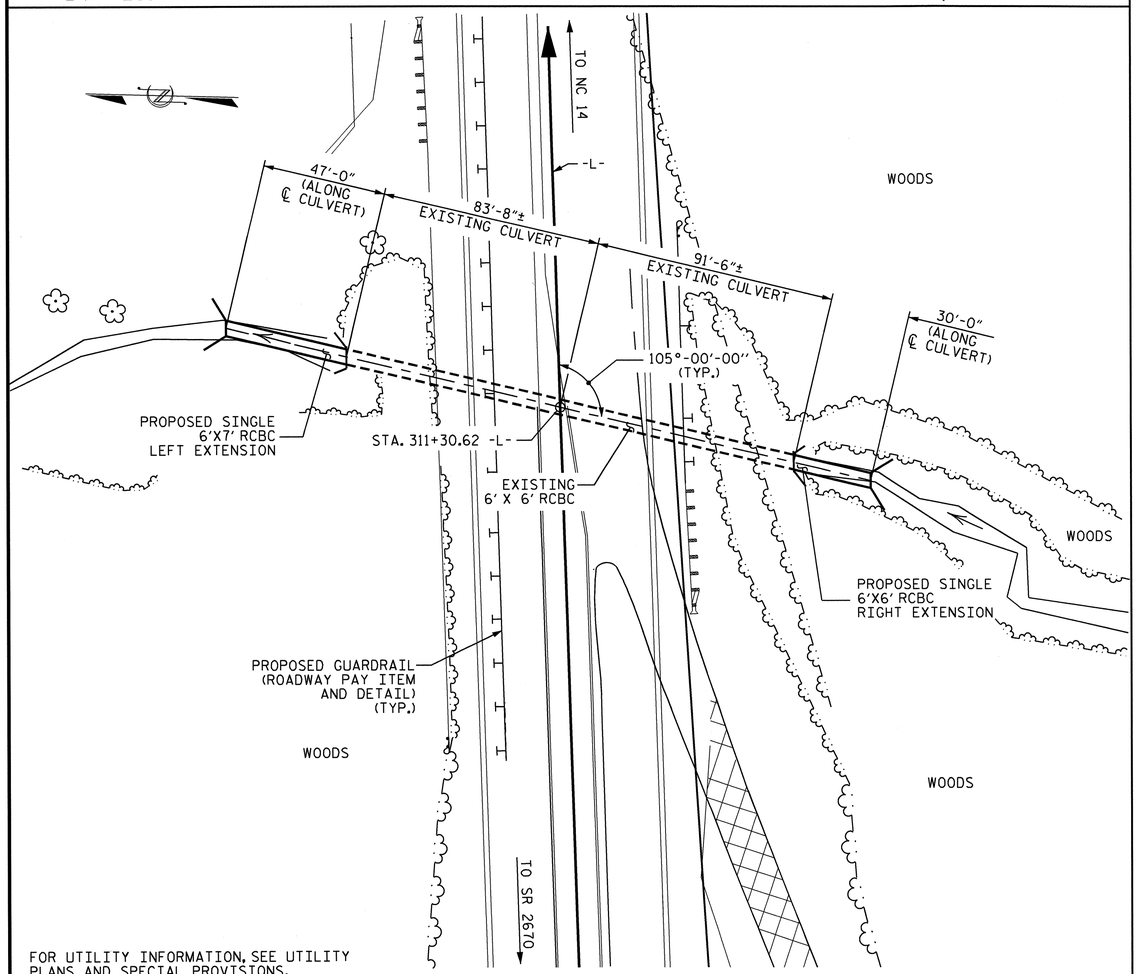

FOR UTILITY INFORMATION, SEE UTILITY PLANS AND SPECIAL PROVISIONS.

LOCATION SKETCH

ROADWAY DATA

GRADE POINT EL. @ STA. 311+30.62-L- = 741.84
BED ELEVATION @ STA. 311+30.62-L- = 698.3'
ROADWAY SLOPES = 2 : 1

HYDRAULIC DATA

DESIGN DISCHARGE = 250 C.F.S.
FREQUENCY OF DESIGN FLOOD = 50 YRS
DESIGN HIGH WATER ELEVATION = 706.73
DRAINAGE AREA = 0.13 SQ. MI.
BASE DISCHARGE (Q100) = 290 C.F.S.
BASE HIGH WATER ELEVATION = 707.51

OVERTOPPING FLOOD DATA

OVERTOPPING DISCHARGE = 450+ C.F.S.
FREQUENCY OF OVERTOPPING FLOOD = 500+ YRS
OVERTOPPING FLOOD ELEVATION = 739.60

TOTAL STRUCTURE QUANTITIES

CLASS A CONCRETE		
LEFT EXTENSION	CU. YDS.	51.8
RIGHT EXTENSION	CU. YDS.	33.1
TOTAL	CU. YDS.	84.9
REINFORCING STEEL		
LEFT EXTENSION	LBS.	7,521
RIGHT EXTENSION	LBS.	4,846
TOTAL	LBS.	12,367
FOUNDATION CONDITIONING MATERIAL		
LEFT EXTENSION	TONS	24
RIGHT EXTENSION	TONS	16
TOTAL	TONS	40

CULVERT EXCAVATION	LUMP SUM

NOTES

ASSUMED LIVE LOAD ---------- HS20-44 OR ALTERNATE LOADING.

DESIGN FILL = 39.90', MAX. (LT. EXT.), AND = 35.17' MAX. (RT. EXT.)

FOR OTHER DESIGN DATA AND NOTES SEE STANDARD NOTE SHEET.

3"Ø WEEP HOLES INDICATED TO BE IN ACCORDANCE WITH THE SPECIFICATIONS.

CONCRETE IN CULVERTS TO BE POURED IN THE FOLLOWING ORDER:

1. WING FOOTINGS AND FLOOR SLAB INCLUDING 4" OF ALL VERTICAL WALLS.
2. THE REMAINING PORTIONS OF THE WALLS AND WINGS FULL HEIGHT FOLLOWED BY ROOF SLAB AND HEADWALLS.
3. OUTLET EXTENSION FLOOR SLAB INCLUDING 4" OF ALL VERTICAL WALLS.
4. OUTLET EXTENSION REMAINING PORTIONS OF THE WALLS AND WINGS FULL HEIGHT. FOLLOWED BY EXTENSION ROOF AND HEADWALL.

THE RESIDENT ENGINEER SHALL CHECK THE LENGTH OF CULVERT BEFORE STAKING IT OUT TO MAKE CERTAIN THAT IT WILL PROPERLY TAKE CARE OF THE FILL.

DIMENSIONS FOR WING LAYOUT AS WELL AS ADDITIONAL REINFORCING STEEL EMBEDDED IN BARREL ARE SHOWN ON WING SHEET.

AT THE CONTRACTOR'S OPTION, HE MAY SPLICE THE VERTICAL REINFORCING STEEL IN THE INTERIOR FACE OF EXTERIOR WALL ABOVE LOWER WALL CONSTRUCTION JOINT. THE SPLICE LENGTH SHALL BE AS PROVIDED IN THE SPLICE LENGTH CHART SHOWN ON THE PLANS. EXTRA WEIGHT OF STEEL DUE TO THE SPLICES SHALL BE PAID FOR BY THE CONTRACTOR.

IF APPROVED BY THE ENGINEER, THE CONTRACTOR MAY USE THE EXISTING WINGS AS TEMPORARY SHORING FOR THE CONSTRUCTION OF THE CULVERT EXTENSION. IN THIS CASE, THE BOTTOM SLAB OF THE EXTENSION SHALL BE POURED AT LEAST 72 HOURS PRIOR TO CUTTING THE WINGS. THE WINGS MAY BE CUT EARLIER PROVIDED THE SLAB CONCRETE STRENGTH HAS REACHED A MINIMUM COMPRESSIVE STRENGTH OF 1500 PSI.

DOWELS SHALL BE USED TO CONNECT THE CULVERT EXTENSION TO THE EXISTING CULVERT AS SHOWN. FOR NOTE REGARDING SETTING OF DOWELS, SEE SHEET SN.

FOR CULVERT DIVERSION DETAILS AND PAY ITEM, SEE EROSION CONTROL PLANS.

A 3 FOOT STRIP OF FILTER FABRIC SHALL BE ATTACHED TO THE FILL FACE OF THE WING COVERING THE ENTIRE LENGTH OF THE EXPANSION JOINT.

THE CONTRACTOR SHALL PROVIDE INDEPENDENT ASSURANCE SAMPLES OF REINFORCING STEEL AS FOLLOWS: FOR PROJECTS REQUIRING UP TO 400 TONS OF REINFORCING STEEL, ONE 30 INCH SAMPLE OF EACH BAR SIZE USED, AND FOR PROJECTS REQUIRING OVER 400 TONS OF REINFORCING STEEL, TWO 30 INCH SAMPLES OF EACH BAR SIZE USED. THE BARS FROM WHICH THE SAMPLES ARE TAKEN MUST THEN BE SPLICED WITH REPLACEMENT BARS OF THE SIZE AND LENGTH OF THE SAMPLE, PLUS A MINIMUM LAP SPLICE OF 30 BAR DIAMETERS. PAYMENT FOR THE SAMPLES OF REINFORCING STEEL SHALL BE CONSIDERED INCIDENTAL TO VARIOUS PAY ITEMS.

FOR FALSEWORK AND FORMWORK, SEE SPECIAL PROVISIONS.

FOR SUBMITTAL OF WORKING DRAWINGS, SEE SPECIAL PROVISIONS.

FOR CRANE SAFETY, SEE SPECIAL PROVISIONS.

FOR GROUT FOR STRUCTURES, SEE SPECIAL PROVISIONS.

FOR CONSTRUCTION SEQUENCE, SEE EROSION CONTROL PLANS.

NO PRECAST REINFORCED BOX CULVERT OPTIONS WILL BE ALLOWED.

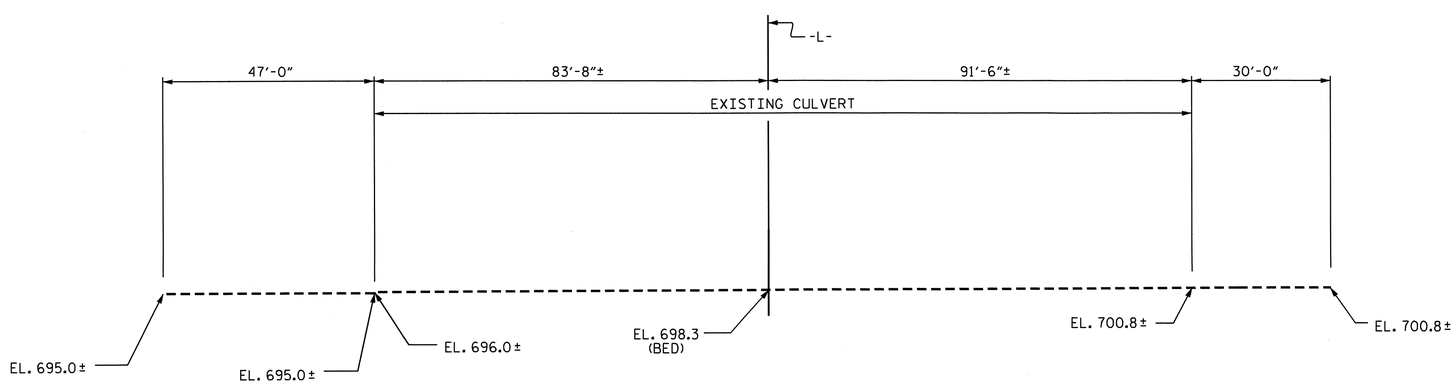

PROFILE ALONG ℄ CULVERT

PROJECT NO. U-3326B
ROCKINGHAM COUNTY
STATION: 311+30.62 -L-

SHEET 1 OF 7

STATE OF NORTH CAROLINA
DEPARTMENT OF TRANSPORTATION
RALEIGH

SINGLE BARREL
CONCRETE BOX CULVERT
105° SKEW

LEFT AND RIGHT EXTENSIONS

NORTH CAROLINA PROFESSIONAL SEAL 11915 ENGINEER JOHN C. FAYE 10/27/11

NORTH CAROLINA PROFESSIONAL SEAL 16301 ENGINEER TING HSIUNG FANG 10/24/11

REVISIONS								SHEET NO.
NO.	BY:	DATE:	NO.	BY:	DATE:			C-19
1			3					TOTAL SHEETS
2			4					32

DRAWN BY : S.M.RASHIDI DATE : 3/2011
CHECKED BY : A. SORSENGINH DATE : 3/2011

24-OCT-2011 16:56
K:\TIPProjects-U\U3326B\Structures\str07\FINAL PLAN\U-3326B_SD_cu_07.dgn
tfang

STR #7

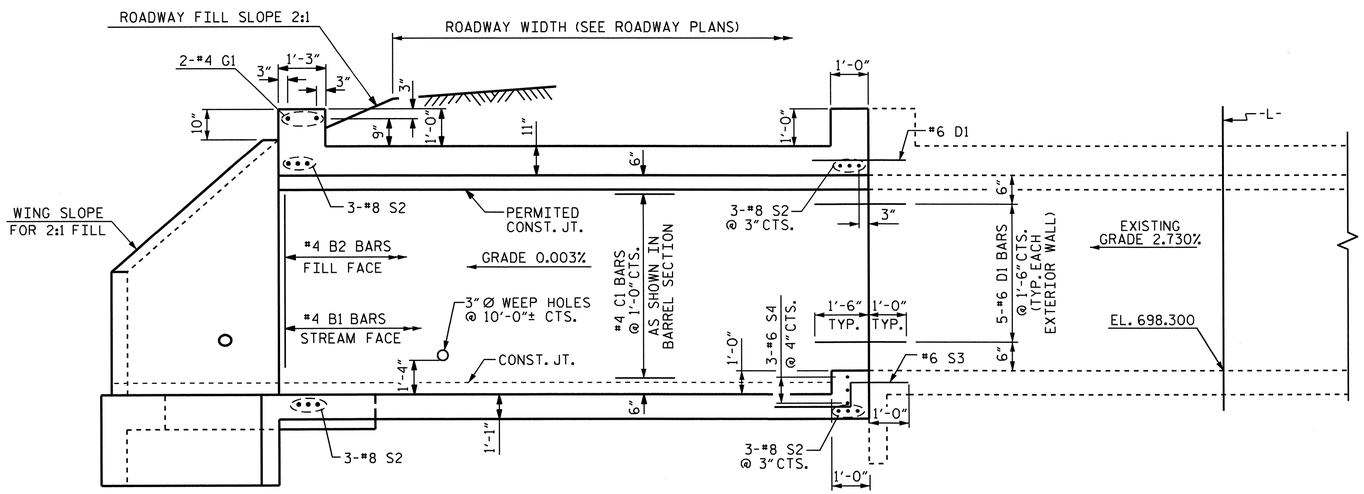

CULVERT SECTION NORMAL TO ROADWAY

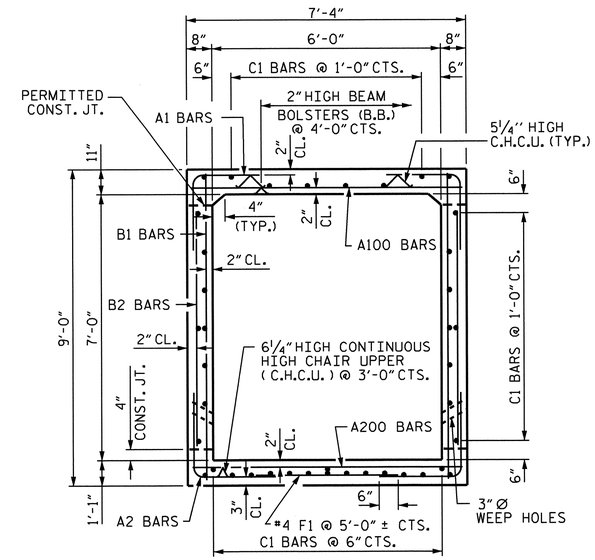

RIGHT ANGLE SECTION OF OUTLET BARREL

THERE ARE 40 C1 BARS IN SECTION OF BARREL
(LOOKING UPSTREAM)

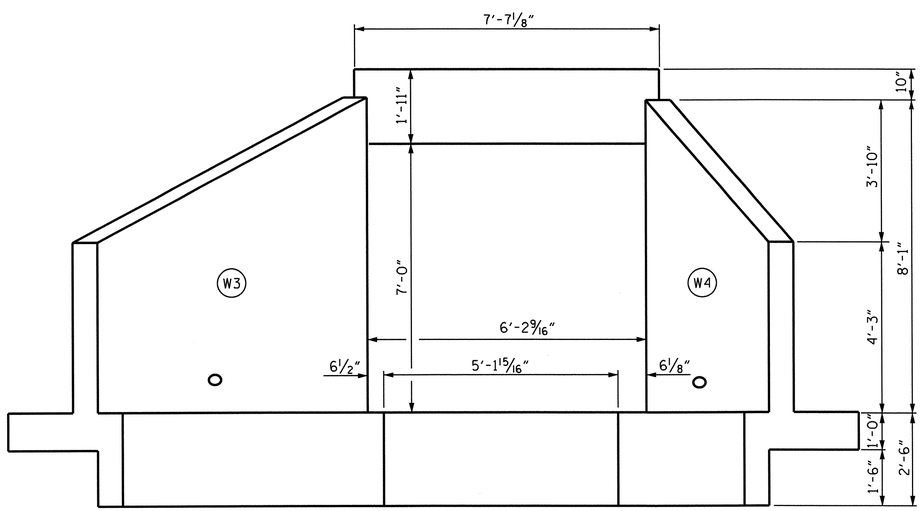

OUTLET END ELEVATION NORMAL TO SKEW

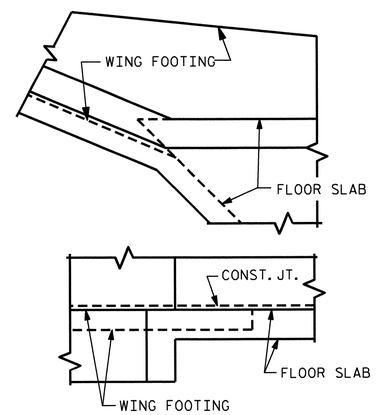

DETAIL

CONNECTION OF WING FOOTING AND FLOOR SLAB

PROJECT NO. U-3326B
ROCKINGHAM COUNTY
STATION: 311+30.62 -L-

SHEET 2 OF 7

STATE OF NORTH CAROLINA
DEPARTMENT OF TRANSPORTATION
RALEIGH

SINGLE 6 FT. X 7 FT. CONCRETE BOX CULVERT 105° SKEW LEFT EXTENSION

NORTH CAROLINA PROFESSIONAL SEAL 16301 ENGINEER HSIEHING KANG

8/29/11

REVISIONS								SHEET NO.
NO.	BY:	DATE:	NO.	BY:	DATE:			C-20
1			3					TOTAL SHEETS
2			4					32

DRAWN BY :	S.M.RASHIDI	DATE :	3/2011
CHECKED BY :	A. SORSENGINH	DATE :	3/2011

29-AUG-2011 08:59
O:\TIPProjects-U\U3326B\Structures\str07\FINAL PLAN\U-3326B_SD_cu_07.dgn
qtnguyen

STR #7

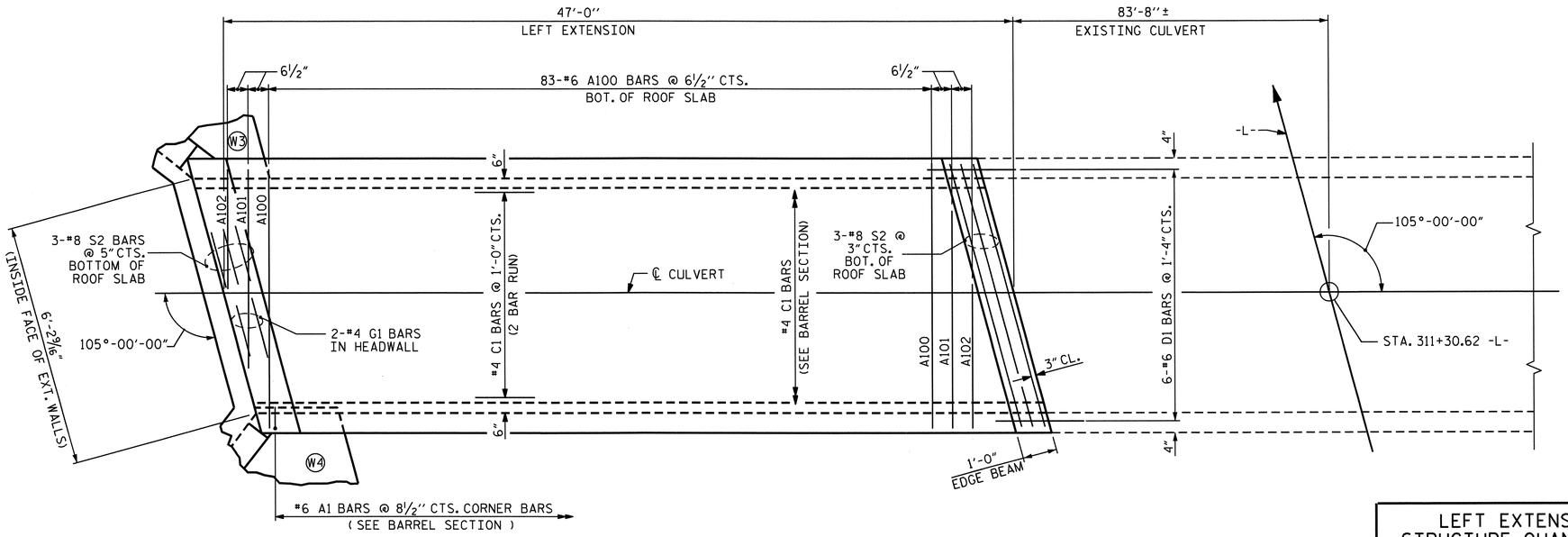

LEFT EXTENSION - PLAN OF ROOF SLAB

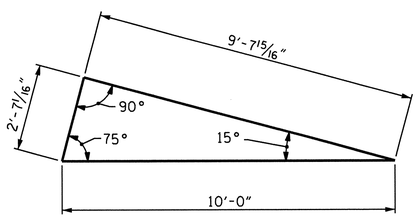

SKEW TRIANGLE

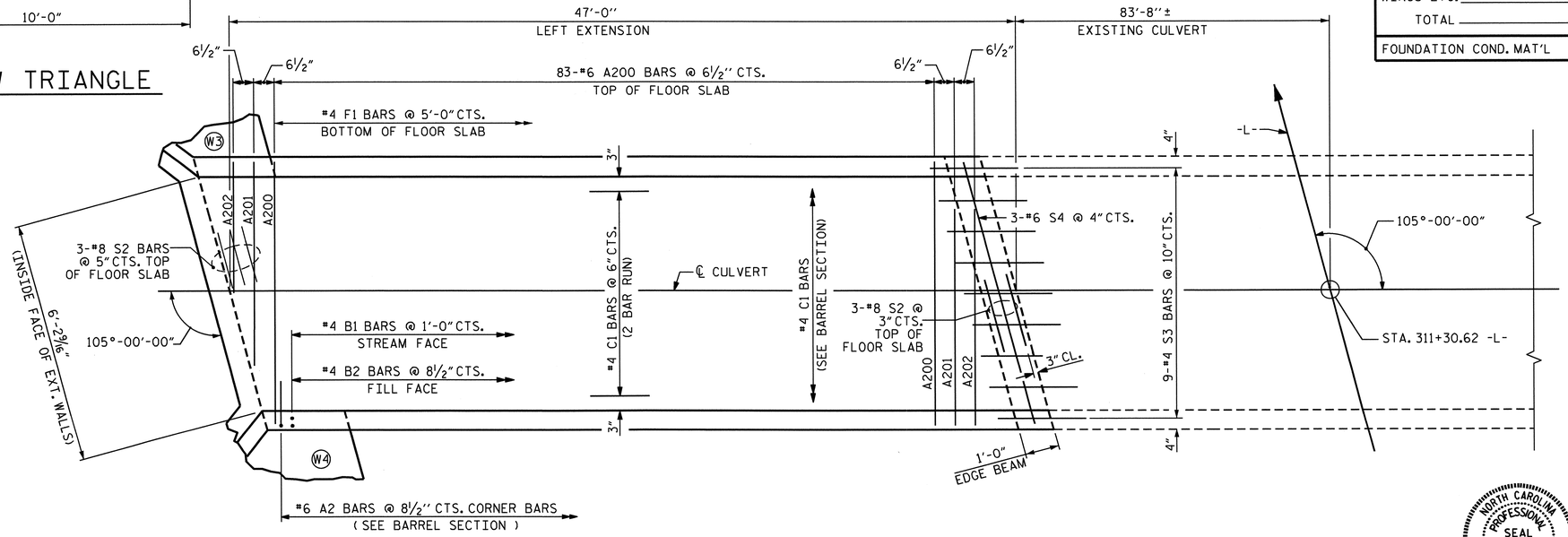

LEFT EXTENSION - PLAN OF FLOOR SLAB

LEFT EXTENSION STRUCTURE QUANTITIES

CLASS A CONCRETE			
BARREL @	0.893 CY/FT	42.0	C.Y.
WING ETC.		9.8	C.Y.
TOTAL		51.8	C.Y.
REINFORCING STEEL			
BARREL		6,883	LBS.
WINGS ETC.		638	LBS.
TOTAL		7,521	LBS.
FOUNDATION COND. MAT'L		24.0	TONS

REINFORCING STEEL

LEFT EXTENSION

BAR	NO.	SIZE	TYPE	LENGTH	WEIGHT
A1	132	6	6	5'-10"	1157
A2	132	6	6	5'-11"	1173
A100	83	6	STR	6'-11"	862
A101	2	6	STR	5'-6"	17
A102	2	6	STR	3'-6"	11
A200	83	6	STR	6'-11"	862
A201	2	6	STR	5'-6"	17
A202	2	6	STR	3'-6"	11
B1	94	4	STR	8'-6"	534
B2	132	4	STR	6'-4"	558
C1	80	4	STR	24'-5"	1305
D1	16	6	STR	2'-6"	60
F1	10	4	STR	3'-3"	22
G1	2	4	STR	7'-2"	10
S2	12	8	STR	7'-2"	230
S3	9	6	7	4'-0"	54
S4	3	6	STR	7'-2"	32

REINFORCING STEEL = 6,883 LBS

BAR TYPES

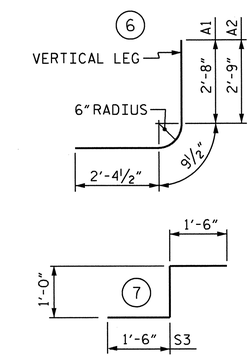

ALL BAR DIMENSIONS ARE OUT TO OUT

SPLICE LENGTHS CHART

BAR	SIZE	SPLICE LENGTH
C1	#4	1'-11"

PROJECT NO. U-3326B

ROCKINGHAM COUNTY

STATION: 311+30.62 -L-

SHEET 3 OF 7

STATE OF NORTH CAROLINA
DEPARTMENT OF TRANSPORTATION
RALEIGH

SINGLE 6 FT. X 7 FT. CONCRETE BOX CULVET 105° SKEW LEFT EXTENSION

NORTH CAROLINA PROFESSIONAL SEAL 16301 ENGINEER TING-HSIUNG FANG

8/31/11

REVISIONS						SHEET NO.
NO.	BY:	DATE:	NO.	BY:	DATE:	C-21
1			3			TOTAL SHEETS
2			4			32

DRAWN BY : S.M.RASHIDI DATE : 3/2011
CHECKED BY : A. SORSENGINH DATE : 3/2011

30-AUG-2011 15:06
K:\TIPProjects-U\U3326B\Structures\str07\FINAL PLAN\U-3326B_SD_cu_07.dgn
ttang

STR #7

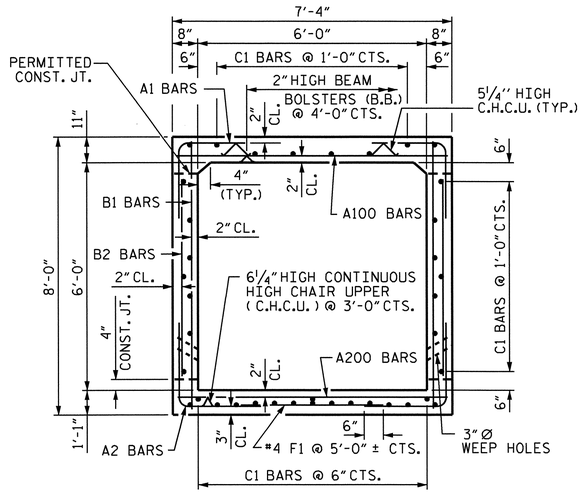

RIGHT ANGLE SECTION OF INLET BARREL

THERE ARE 38 C1 BARS IN SECTION OF BARREL (LOOKING DOWNSTREAM)

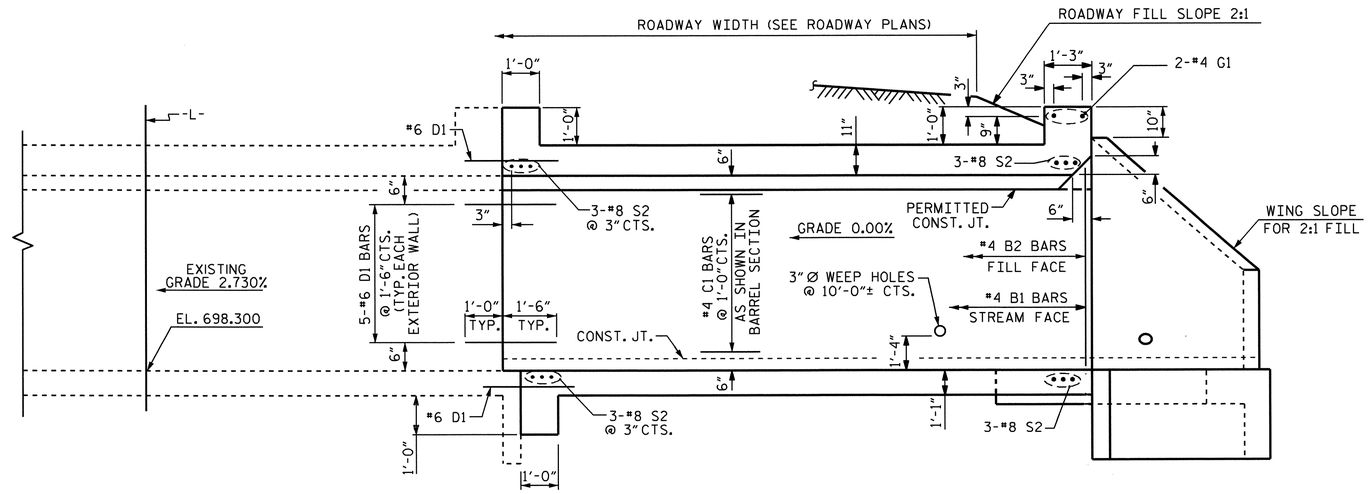

CULVERT SECTION NORMAL TO ROADWAY

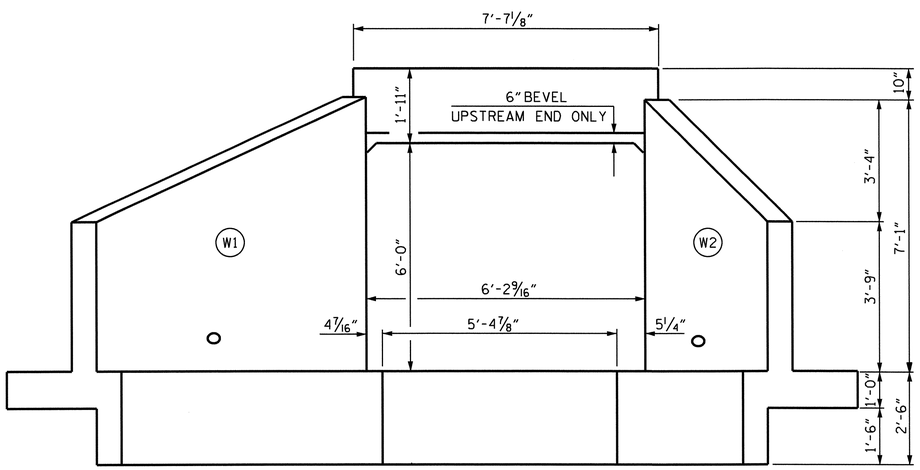

INLET END ELEVATION NORMAL TO SKEW

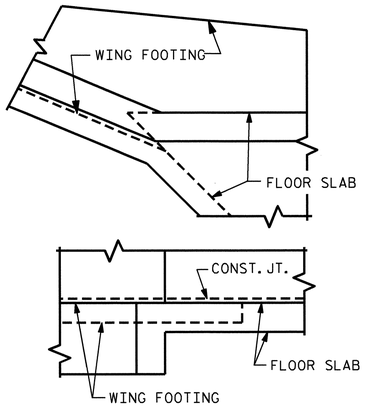

DETAIL

CONNECTION OF WING FOOTING AND FLOOR SLAB

PROJECT NO. U-3326B

ROCKINGHAM COUNTY

STATION: 311+30.62 -L-

SHEET 4 OF 7

STATE OF NORTH CAROLINA
DEPARTMENT OF TRANSPORTATION
RALEIGH

SINGLE 6 FT. X 6 FT. CONCRETE BOX CULVERT 105° SKEW RIGHT EXTENSION

NORTH CAROLINA PROFESSIONAL SEAL 16301 ENGINEER TING-BOLING FANG

8/26/11

REVISIONS						SHEET NO.
NO.	BY:	DATE:	NO.	BY:	DATE:	C-22
1			3			TOTAL SHEETS
2			4			32

DRAWN BY : S.M.RASHIDI DATE : 3/2011
CHECKED BY : A. SORSENGINH DATE : 3/2011

26-AUG-2011 16:21
O:\TIPProjects-U\U3326B\Structures\str07\FINAL PLAN\U-3326B_SD_cu_07.dgn
qtnguyen

STR #7

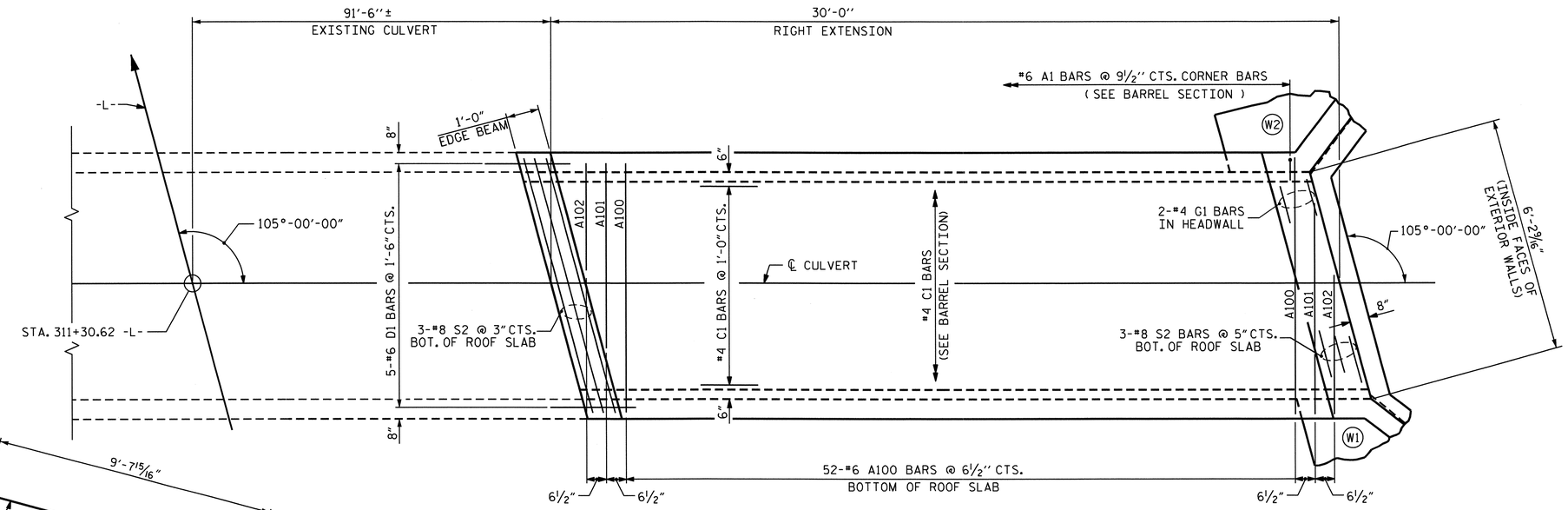

RIGHT EXTENSION - PLAN OF ROOF SLAB

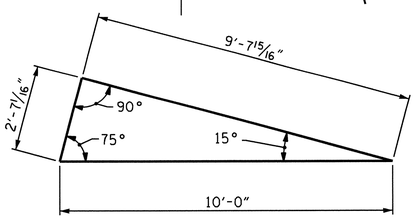

SKEW TRIANGLE

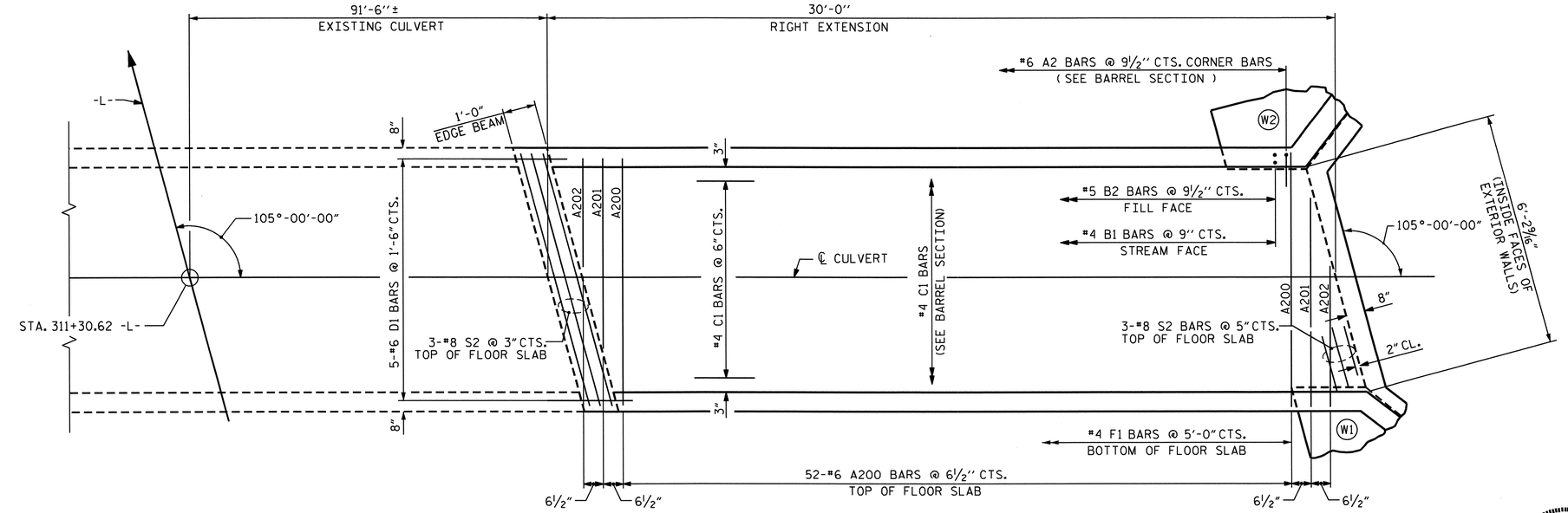

RIGHT EXTENSION - PLAN OF FLOOR SLAB

REINFORCING STEEL

RIGHT EXTENSION

BAR	NO.	SIZE	TYPE	LENGTH	WEIGHT
A1	76	6	6	5'-10"	666
A2	76	6	6	5'-11"	675
A100	52	6	STR	6'-11"	540
A101	2	6	STR	5'-3"	16
A102	2	6	STR	3'-2"	10
A200	52	6	STR	6'-11"	640
A201	2	6	STR	5'-3"	16
A202	2	6	STR	3'-2"	10
B1	80	4	STR	7'-6"	401
B2	76	5	STR	5'-4"	423
C1	38	4	STR	29'-8"	753
D1	20	6	STR	2'-6"	75
F1	7	4	STR	3'-3"	15
G1	2	4	STR	7'-2"	10
S2	12	8	STR	7'-2"	230

REINFORCING STEEL = 4,380 LBS

BAR TYPE

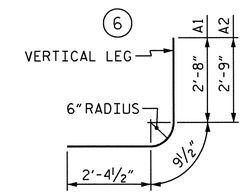

ALL BAR DIMENSIONS ARE OUT TO OUT

RIGHT EXTENSION STRUCTURE QUANTITIES

CLASS A CONCRETE				
BARREL @	0.844	CY/FT	25.3	C.Y.
WING ETC.			7.8	C.Y.
TOTAL			33.1	C.Y.
REINFORCING STEEL				
BARREL			4,380	LBS.
WINGS ETC.			466	LBS.
TOTAL			4,846	LBS.
FOUNDATION COND. MAT'L			16.0	TONS

PROJECT NO. U-3326B

ROCKINGHAM COUNTY

STATION: 311+30.62 -L-

SHEET 5 OF 7

STATE OF NORTH CAROLINA
DEPARTMENT OF TRANSPORTATION
RALEIGH

SINGLE 6 FT. X 6 FT. CONCRETE BOX CULVET 105° SKEW RIGHT EXTENSION

NORTH CAROLINA PROFESSIONAL SEAL 16301 ENGINEER TING-HSIUNG CHANG

8/29/11

REVISIONS								SHEET NO.
NO.	BY:	DATE:	NO.	BY:	DATE:			C-23
1			3					TOTAL SHEETS
2			4					32

DRAWN BY : S.M.RASHIDI DATE : 3/2011
CHECKED BY : A. SORSENGINH DATE : 3/2011

29-AUG-2011 08:58
O:\TIPProjects-U\U3326B\Structures\str07\FINAL PLAN\U-3326B_SD_cu_07.dgn
qtnguyen

STR #7

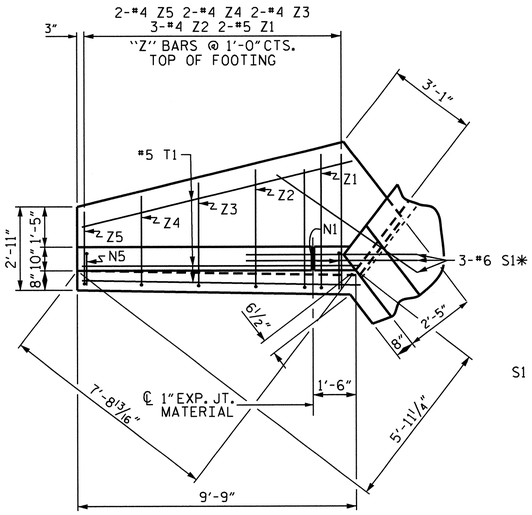

PLAN W4

S1 @ BOTTOM OF FLOOR SLAB & FOOTING

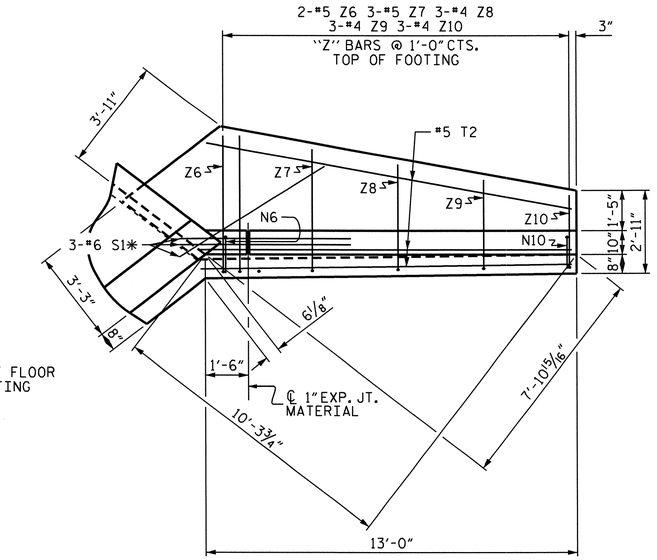

PLAN W3

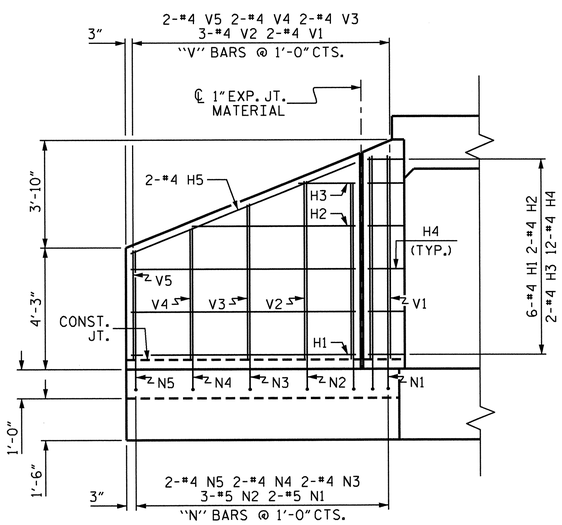

ELEVATION W4

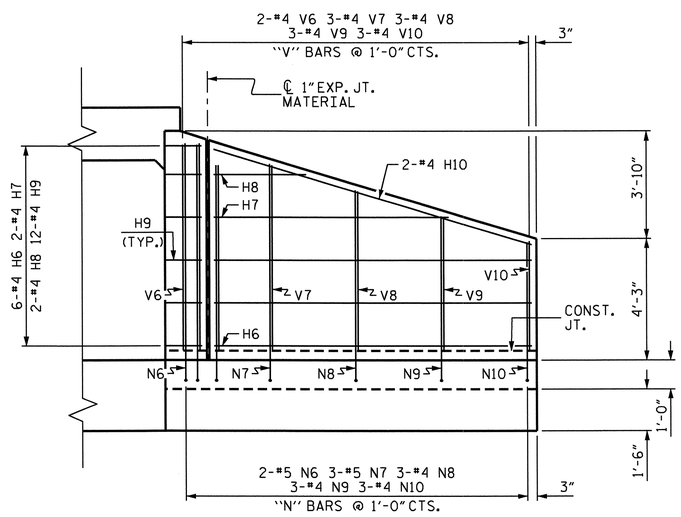

ELEVATION W3

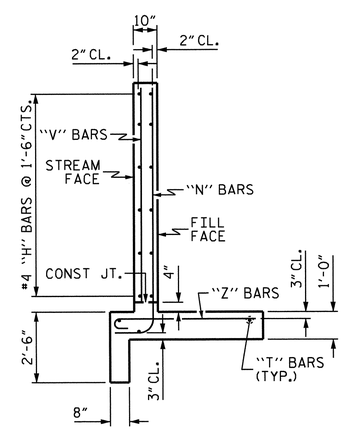

TYPICAL WING SECTION

BAR TYPES

ALL BAR DIMENSIONS ARE OUT TO OUT.

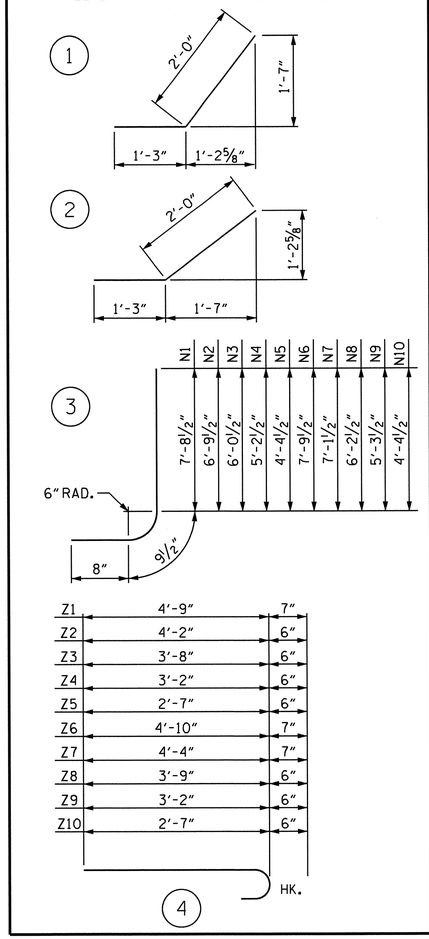

BILL OF MATERIAL

BAR	NO.	SIZE	TYPE	LENGTH	WEIGHT
H1	6	#4	STR	7'-10"	31
H2	2	#4	STR	5'-8"	8
H3	2	#4	STR	2'-0"	3
H4	12	#4	1	3'-3"	26
H5	2	#4	STR	8'-5"	11
H6	6	#4	STR	11'-1"	44
H7	2	#4	STR	8'-2"	11
H8	2	#4	STR	3'-3"	4
H9	12	#4	2	3'-3"	26
H10	2	#4	STR	11'-7"	15
N1	2	#5	3	9'-2"	19
N2	3	#5	3	8'-3"	26
N3	2	#4	3	7'-6"	10
N4	2	#4	3	6'-8"	9
N5	2	#4	3	5'-10"	8
N6	2	#5	3	9'-3"	19
N7	3	#5	3	8'-7"	27
N8	3	#4	3	7'-8"	15
N9	3	#4	3	6'-9"	14
N10	3	#4	3	5'-10"	12
S1	6	#6	STR	6'-0"	54
T1	3	#5	STR	9'-9"	31
T2	3	#5	STR	13'-0"	41
V1	2	#4	STR	7'-1"	9
V2	3	#4	STR	6'-3"	13
V3	2	#4	STR	5'-5"	7
V4	2	#4	STR	4'-7"	6
V5	2	#4	STR	3'-10"	5
V6	2	#4	STR	7'-3"	10
V7	3	#4	STR	6'-6"	13
V8	3	#4	STR	5'-7"	11
V9	3	#4	STR	4'-8"	9
V10	3	#4	STR	3'-10"	8
Z1	2	#5	4	5'-4"	11
Z2	3	#4	4	4'-8"	9
Z3	2	#4	4	4'-2"	6
Z4	2	#4	4	3'-8"	5
Z5	2	#4	4	3'-1"	4
Z6	2	#5	4	5'-5"	11
Z7	3	#5	4	4'-11"	15
Z8	3	#4	4	4'-3"	9
Z9	3	#4	4	3'-8"	7
Z10	3	#4	4	3'-1"	6

REINFORCING STEEL FOR 2 WINGS	638 LBS
CLASS A CONCRETE	
2 WINGS	9.1 CY
1 HEADWALL	0.4 CY
1 END CURTAIN WALL	0.3 CY
TOTAL	9.8 CY

PROJECT NO. U-3326B
ROCKINGHAM COUNTY
STATION: 311+30.62 -L-

SHEET 6 OF 7

STATE OF NORTH CAROLINA
DEPARTMENT OF TRANSPORTATION
RALEIGH

STANDARD WINGS FOR CONCRETE BOX CULVERT

H = 7'-0" SLOPE = 2:1
75° OR 105° SKEW
LEFT EXTENSION

NORTH CAROLINA PROFESSIONAL SEAL 16301 ENGINEER TING-HSUNG FANG
8/26/11

REVISIONS						SHEET NO.
NO.	BY:	DATE:	NO.	BY:	DATE:	C-24
1			3			TOTAL SHEETS
2			4			32

ASSEMBLED BY : S. M. RASHIDI DATE : 9/30/09
CHECKED BY : RAMAN PATEL DATE : 9/23/10
DRAWN BY : CCJ 12/99
CHECKED BY : RWW 03/00

STD. NO. CW7507 STR #7

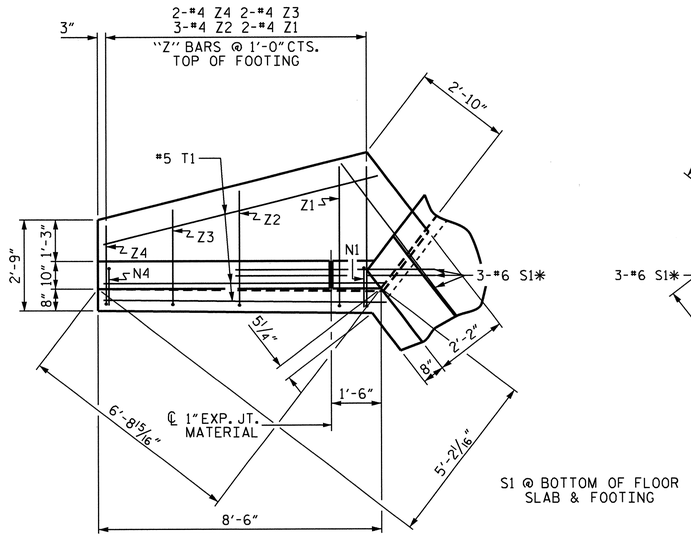

PLAN W2

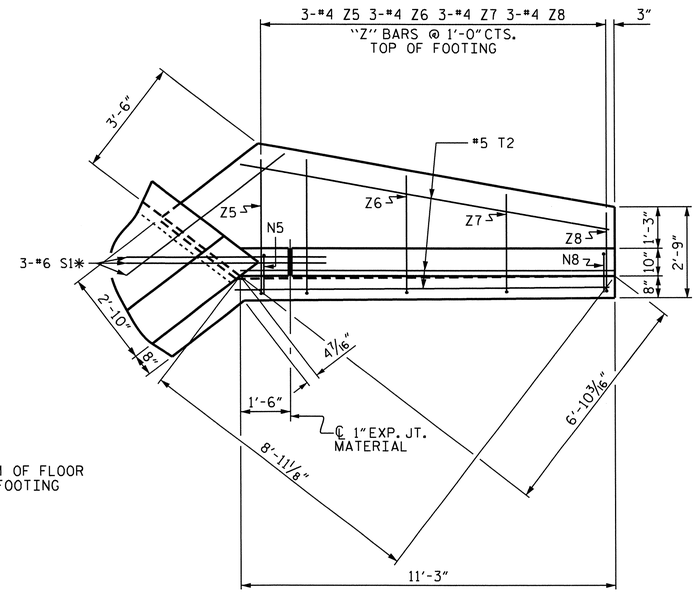

PLAN W1

S1 @ BOTTOM OF FLOOR SLAB & FOOTING

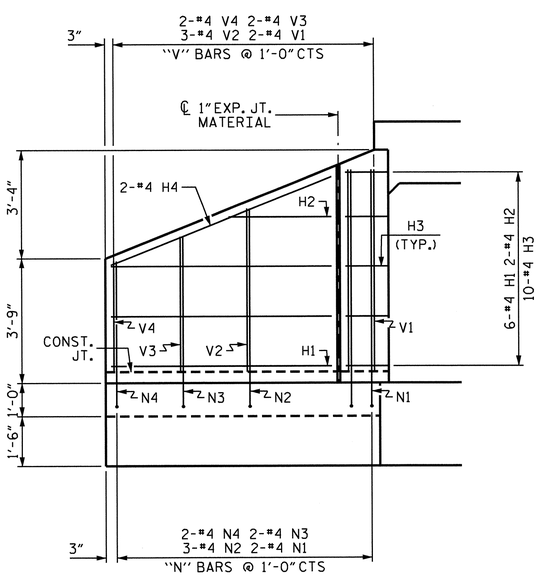

ELEVATION W2

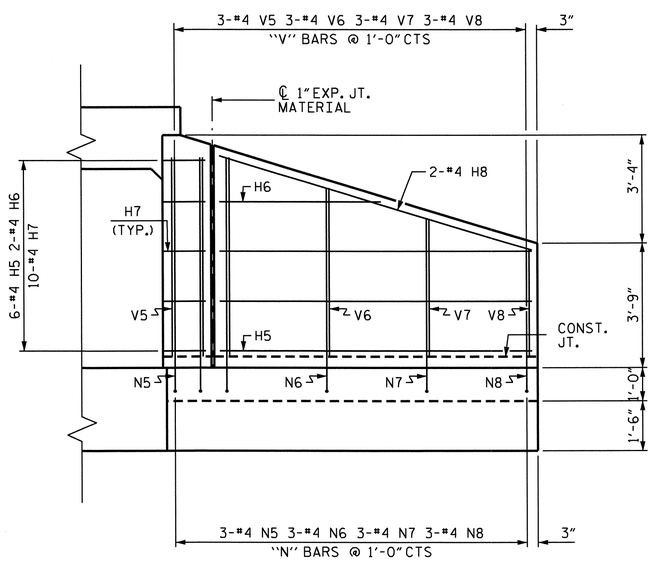

ELEVATION W1

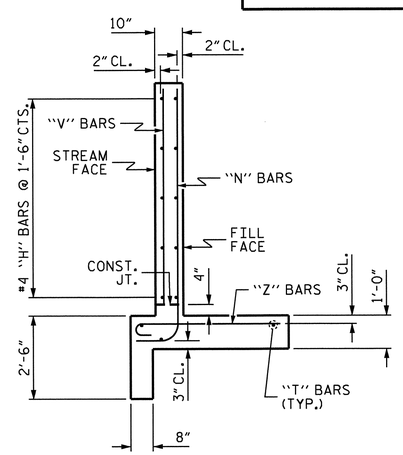

TYPICAL WING SECTION

BAR TYPES

ALL BAR DIMENSIONS ARE OUT TO OUT.

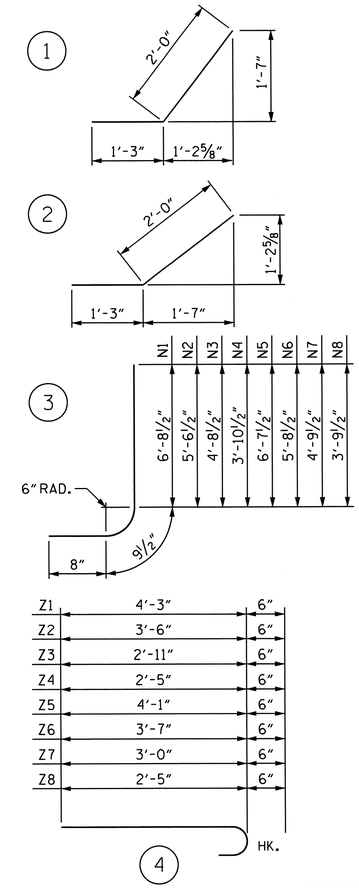

Z1	4'-3"	6"
Z2	3'-6"	6"
Z3	2'-11"	6"
Z4	2'-5"	6"
Z5	4'-1"	6"
Z6	3'-7"	6"
Z7	3'-0"	6"
Z8	2'-5"	6"

BILL OF MATERIAL

BAR	NO.	SIZE	TYPE	LENGTH	WEIGHT
H1	6	#4	STR	6'-7"	26
H2	2	#4	STR	3'-1"	4
H3	10	#4	1	3'-3"	22
H4	2	#4	STR	7'-1"	9
H5	6	#4	STR	9'-4"	37
H6	2	#4	STR	4'-10"	6
H7	10	#4	2	3'-3"	22
H8	2	#4	STR	9'-9"	13
N1	2	#4	3	8'-2"	11
N2	3	#4	3	7'-1"	14
N3	2	#4	3	6'-2"	8
N4	2	#4	3	5'-4"	7
N5	3	#4	3	8'-1"	16
N6	3	#4	3	7'-2"	14
N7	3	#4	3	6'-3"	13
N8	3	#4	3	5'-3"	11
S1	6	#6	STR	6'-0"	54
T1	3	#5	STR	8'-6"	27
T2	3	#5	STR	11'-3"	35
V1	2	#4	STR	6'-1"	8
V2	3	#4	STR	4'-11"	10
V3	2	#4	STR	4'-1"	5
V4	2	#4	STR	3'-4"	4
V5	3	#4	STR	6'-0"	12
V6	3	#4	STR	5'-1"	10
V7	3	#4	STR	4'-2"	8
V8	3	#4	STR	3'-3"	7
Z1	2	#4	4	4'-9"	6
Z2	3	#4	4	4'-0"	8
Z3	2	#4	4	3'-5"	5
Z4	2	#4	4	2'-11"	4
Z5	3	#4	4	4'-7"	9
Z6	3	#4	4	4'-1"	8
Z7	3	#4	4	3'-6"	7
Z8	3	#4	4	2'-11"	6

REINFORCING STEEL 466 LBS
FOR 2 WINGS

CLASS A CONCRETE

2 WINGS	7.1	CY
1 HEADWALL	0.4	CY
1 END CURTAIN WALL	0.3	CY
TOTAL	7.8	CY

PROJECT NO. U-3326B
ROCKINGHAM COUNTY
STATION: 311+30.62 -L-

SHEET 7 OF 7

STATE OF NORTH CAROLINA
DEPARTMENT OF TRANSPORTATION
RALEIGH

STANDARD WINGS FOR CONCRETE BOX CULVERT

H = 6'-0" SLOPE = 2:1
75° OR 105° SKEW
RIGHT EXTENSION

NORTH CAROLINA PROFESSIONAL SEAL 16301 ENGINEER TING HSIUNG FANG
8/26/11

REVISIONS						SHEET NO.
NO.	BY:	DATE:	NO.	BY:	DATE:	C-25
1			3			TOTAL SHEETS
2			4			32

ASSEMBLED BY :	S.M.RASHIDI	DATE :	3/2011
CHECKED BY :	A. SORSENGINH	DATE :	3/2011
DRAWN BY : CCJ	12/99		
CHECKED BY : RWW	03/00		

STD. NO. CW7506 STR #7

BENCH MARK #25: RR SPIKE IN BASE OF 15'' PINE 109' LEFT OF STA. 327+95.81, EL. 727.23

F.A. PROJECT NO. STP-29B(3)

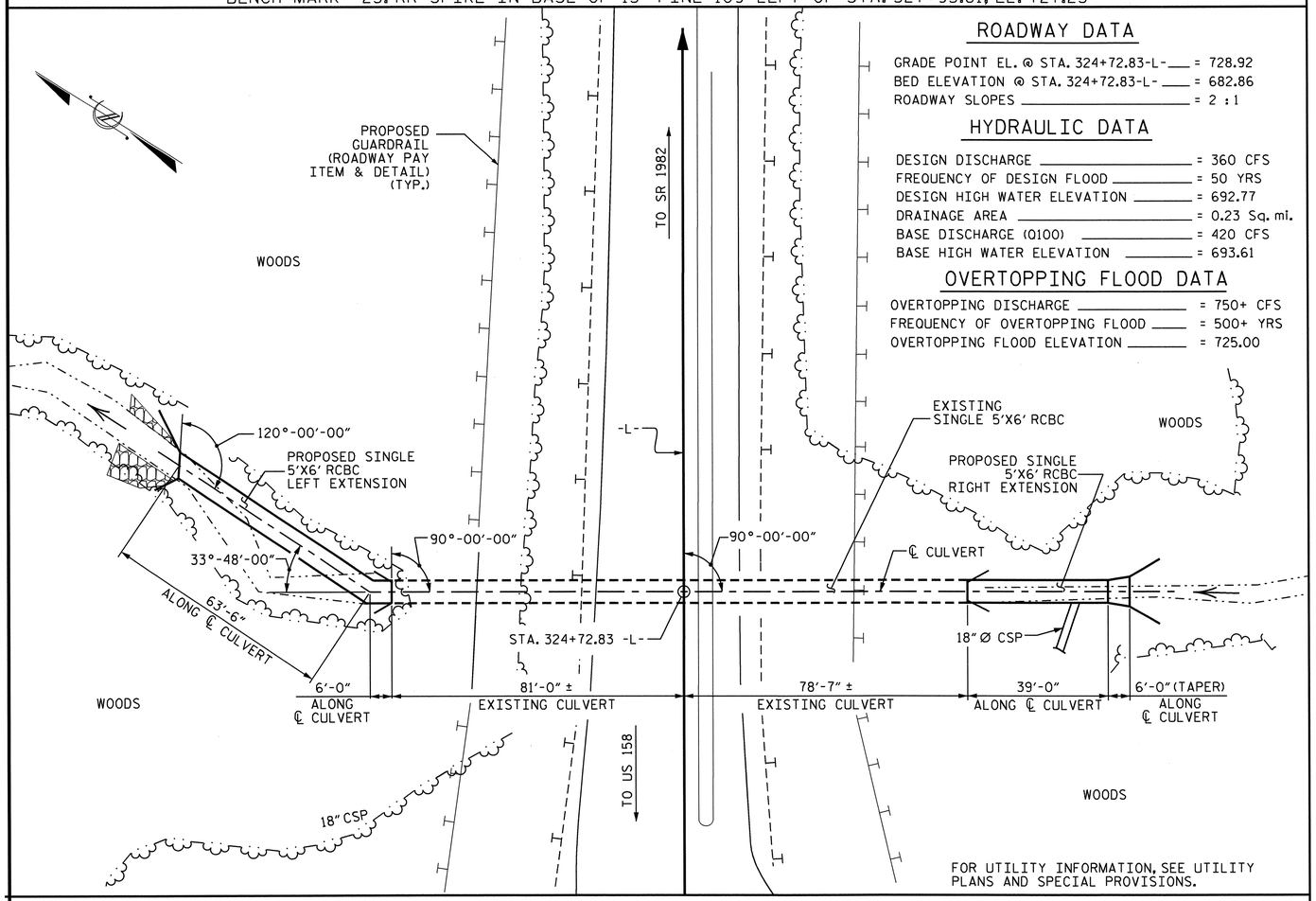

LOCATION SKETCH

ROADWAY DATA

GRADE POINT EL. @ STA. 324+72.83-L- = 728.92
BED ELEVATION @ STA. 324+72.83-L- = 682.86
ROADWAY SLOPES = 2 : 1

HYDRAULIC DATA

DESIGN DISCHARGE = 360 CFS
FREQUENCY OF DESIGN FLOOD = 50 YRS
DESIGN HIGH WATER ELEVATION = 692.77
DRAINAGE AREA = 0.23 Sq. mi.
BASE DISCHARGE (0100) = 420 CFS
BASE HIGH WATER ELEVATION = 693.61

OVERTOPPING FLOOD DATA

OVERTOPPING DISCHARGE = 750+ CFS
FREQUENCY OF OVERTOPPING FLOOD = 500+ YRS
OVERTOPPING FLOOD ELEVATION = 725.00

NOTES

ASSUMED LIVE LOAD ---------- HS20-44 OR ALTERNATE LOADING.

DESIGN FILL = 40.80', (LT. EXT.), 40.00' (RT. EXT.) AND 20.00' (TAPER. EXT.)

FOR OTHER DESIGN DATA AND NOTES SEE STANDARD NOTE SHEET SN.

3" Ø WEEP HOLES INDICATED TO BE IN ACCORDANCE WITH THE SPECIFICATIONS.

CONCRETE IN CULVERTS TO BE POURED IN THE FOLLOWING ORDER:

1. INLET EXTENSION FLOOR SLAB INCLUDING 4" OF ALL VERTICAL WALLS.
2. INLET EXTENSION REMAINING PORTIONS OF THE WALLS AND WINGS FULL HEIGHT. FOLLOWED BY EXTENSION ROOF AND HEADWALL.
3. OUTLET EXTENSION FLOOR SLAB INCLUDING 4" OF ALL VERTICAL WALLS.
4. OUTLET EXTENSION REMAINING PORTIONS OF THE WALLS AND WINGS FULL HEIGHT. FOLLOWED BY EXTENSION ROOF AND HEADWALL.

THE RESIDENT ENGINEER SHALL CHECK THE LENGTH OF CULVERT BEFORE STAKING IT OUT TO MAKE CERTAIN THAT IT WILL PROPERLY TAKE CARE OF THE FILL.

DIMENSIONS FOR WING LAYOUT AS WELL AS ADDITIONAL REINFORCING STEEL EMBEDDED IN BARREL ARE SHOWN ON WING SHEET.

AT THE CONTRACTOR'S OPTION, HE MAY SPLICE THE VERTICAL REINFORCING STEEL IN THE INTERIOR FACE OF EXTERIOR WALL ABOVE LOWER WALL CONSTRUCTION JOINT. THE SPLICE LENGTH SHALL BE AS PROVIDED IN THE SPLICE LENGTH CHART SHOWN ON THE PLANS. EXTRA WEIGHT OF STEEL DUE TO THE SPLICES SHALL BE PAID FOR BY THE CONTRACTOR.

IF APPROVED BY THE ENGINEER, THE CONTRACTOR MAY USE THE EXISTING WINGS AS TEMPORARY SHORING FOR THE CONSTRUCTION OF THE CULVERT EXTENSION. IN THIS CASE, THE BOTTOM SLAB OF THE EXTENSION SHALL BE POURED AT LEAST 72 HOURS PRIOR TO CUTTING THE WINGS. THE WINGS MAY BE CUT EARLIER PROVIDED THE SLAB CONCRETE STRENGTH HAS REACHED A MINIMUM COMPRESSIVE STRENGTH OF 1500 PSI.

THE CONTRACTOR SHALL PROVIDE INDEPENDENT ASSURANCE SAMPLES OF REINFORCING STEEL AS FOLLOWS: FOR PROJECTS REQUIRING UP TO 400 TONS OF REINFORCING STEEL, ONE 30 INCH SAMPLE OF EACH SIZE BAR USED, AND FOR PROJECTS REQUIRING OVER 400 TONS OF REINFORCING STEEL, TWO 30 INCH SAMPLES OF EACH SIZE BAR USED. THE BARS FROM WHICH THE SAMPLES ARE TAKEN MUST THEN BE SPLICED WITH REPLACEMENT BARS OF THE SIZE AND LENGTH OF THE SAMPLE, PLUS A MINIMUM LAP SPLICE OF THIRTY BAR DIAMETERS. PAYMENT FOR THE SAMPLES OF REINFORCING STEEL SHALL BE CONSIDERED INCIDENTAL TO VARIOUS PAY ITEMS.

DOWELS SHALL BE USED TO CONNECT THE CULVERT EXTENSION TO THE EXISTING CULVERT AS SHOWN. FOR NOTE REGARDING SETTING OF DOWELS, SEE SHEET SN.

FOR CULVERT DIVERSION DETAILS AND PAY ITEM, SEE EROSION CONTROL PLANS.

A 3 FOOT STRIP OF FILTER FABRIC SHALL BE ATTACHED TO THE FILL FACE OF THE WING COVERING THE ENTIRE LENGTH OF THE EXPANSION JOINT.

FOR FALSEWORK AND FORMWORK, SEE SPECIAL PROVISIONS.

FOR SUBMITTAL OF WORKING DRAWINGS, SEE SPECIAL PROVISIONS.

FOR CRANE SAFETY, SEE SPECIAL PROVISIONS.

THE 18" Ø CSP PIPE THROUGH THE SIDEWALL OF THE INLET CULVERT EXTENSION SHALL BE LOCATED BY THE ENGINEER. THE RENFORCING STEEL SHALL BE FIELD BENT AS NECESSARY TO CLEAR PIPE.

FOR GROUT FOR STRUCTURES, SEE SPECIAL PROVISIONS.

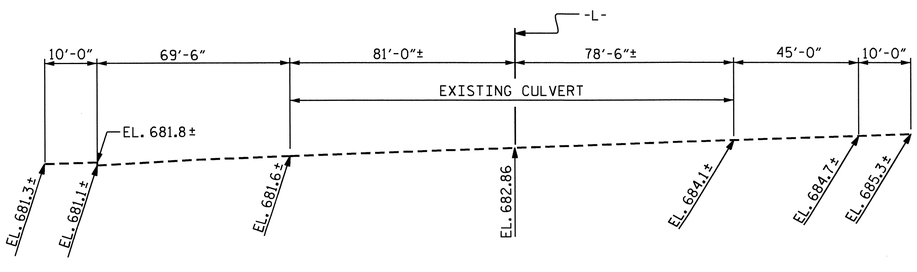

PROFILE ALONG ℄ CULVERT

TOTAL STRUCTURE QUANTITIES

CULVERT EXCAVATION	CU.YDS.	LUMP SUM
FOUNDATION COND. MAT'L		
LEFT EXTENSION	TONS	31
RIGHT EXTENSION	TONS	21
TOTAL	TONS	52
CLASS A CONCRETE		
LEFT EXTENSION	CU. YDS.	57.9
RIGHT EXTENSION	CU. YDS.	40.9
TOTAL	CU. YDS.	98.8
REINFORCING STEEL		
LEFT EXTENSION	LBS.	7,732
RIGHT EXTENSION	LBS.	5,232
TOTAL	LBS.	12,964

NORTH CAROLINA PROFESSIONAL SEAL 11915 ENGINEER JOHN C. EPPS
10/27/11

NORTH CAROLINA PROFESSIONAL SEAL 16301 ENGINEER TING HSIUNG FANG
10/24/11

PROJECT NO. U-3326B
ROCKINGHAM COUNTY
STATION: 324+72.83 -L-

SHEET 1 OF 7

STATE OF NORTH CAROLINA
DEPARTMENT OF TRANSPORTATION
RALEIGH

SINGLE 5 FT. X 6 FT. CONCRETE BOX CULVERT EXTENSIONS 90° SKEW

REVISIONS								SHEET NO.
NO.	BY:	DATE:	NO.	BY:	DATE:			C-26
1			3					TOTAL SHEETS
2			4					32

STR. 8

DRAWN BY : S.M.RASHIDI DATE : 3/2011
CHECKED BY : A. SORSENGINH DATE : 3/2011

24-OCT-2011 17:07
K:\TIPProjects-U\U3326B\Structures\str08\FINAL PLAN\U-3326B_SD_cu_08.dgn
tfang

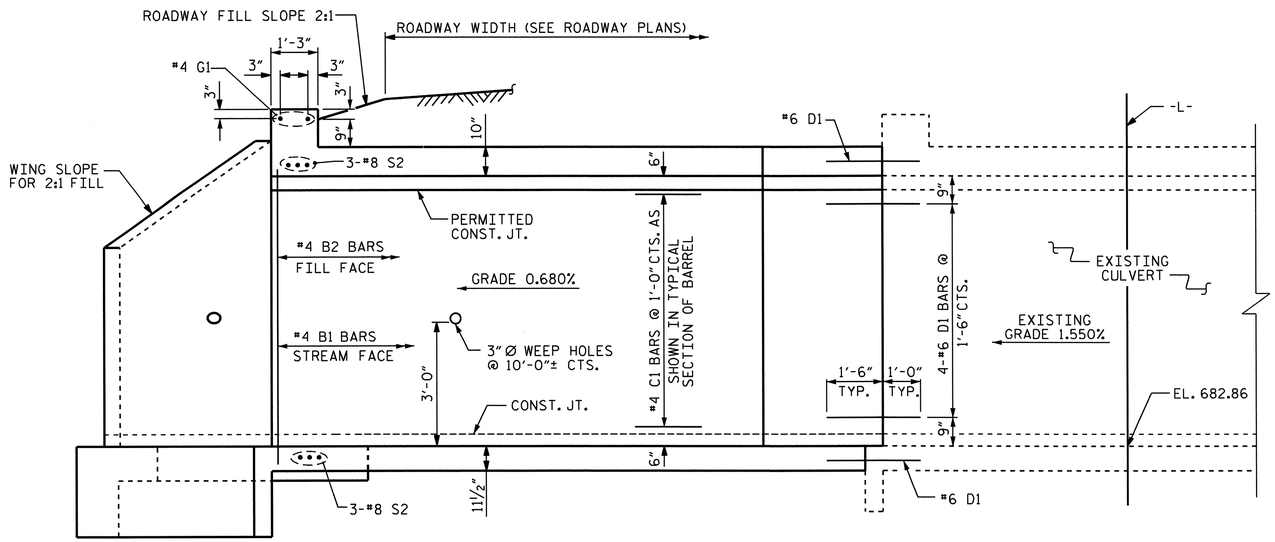

CULVERT SECTION NORMAL TO ROADWAY

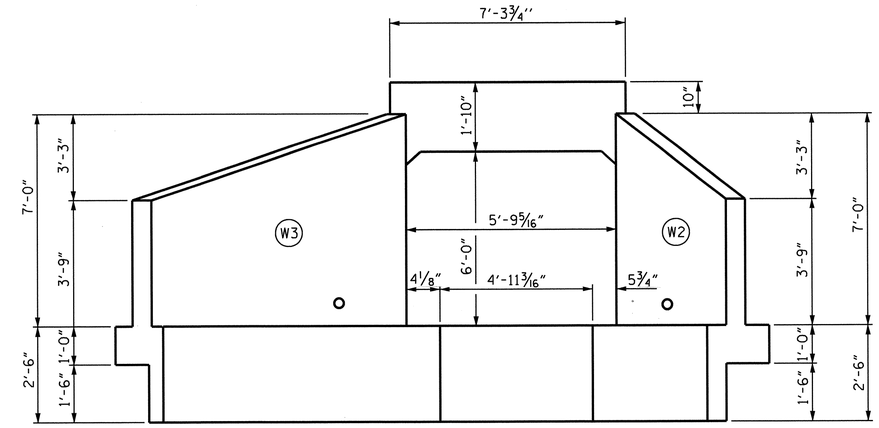

OUTLET END ELEVATION NORMAL TO SKEW

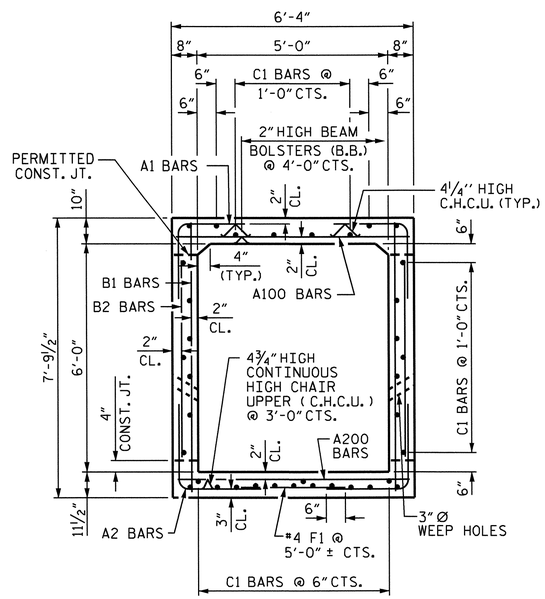

RIGHT ANGLE SECTION OF BARREL

THERE ARE 36 C1 BARS IN SECTION OF BARREL

PROJECT NO. U-3326B
ROCKINGHAM COUNTY
STATION: 324+72.83 -L-

SHEET 2 OF 7

STATE OF NORTH CAROLINA
DEPARTMENT OF TRANSPORTATION
RALEIGH

SINGLE 5 FT. X 6 FT. CONCRETE BOX CULVERT LEFT EXTENSION 90° SKEW

NORTH CAROLINA PROFESSIONAL SEAL 16301 ENGINEER TING HSIUNG FANG
8/26/11

REVISIONS						SHEET NO.
NO.	BY:	DATE:	NO.	BY:	DATE:	C-27
1			3			TOTAL SHEETS
2			4			32

DRAWN BY : S.M.RASHIDI DATE : 3/2011
CHECKED BY : A. SORSENGINH DATE : 3/2011

26-AUG-2011 15:00
O:\TIPProjects-U\U3326B\Structures\str08\FINAL PLAN\U-3326B_SD_cu_08.dgn
qtnguyen

STR #8

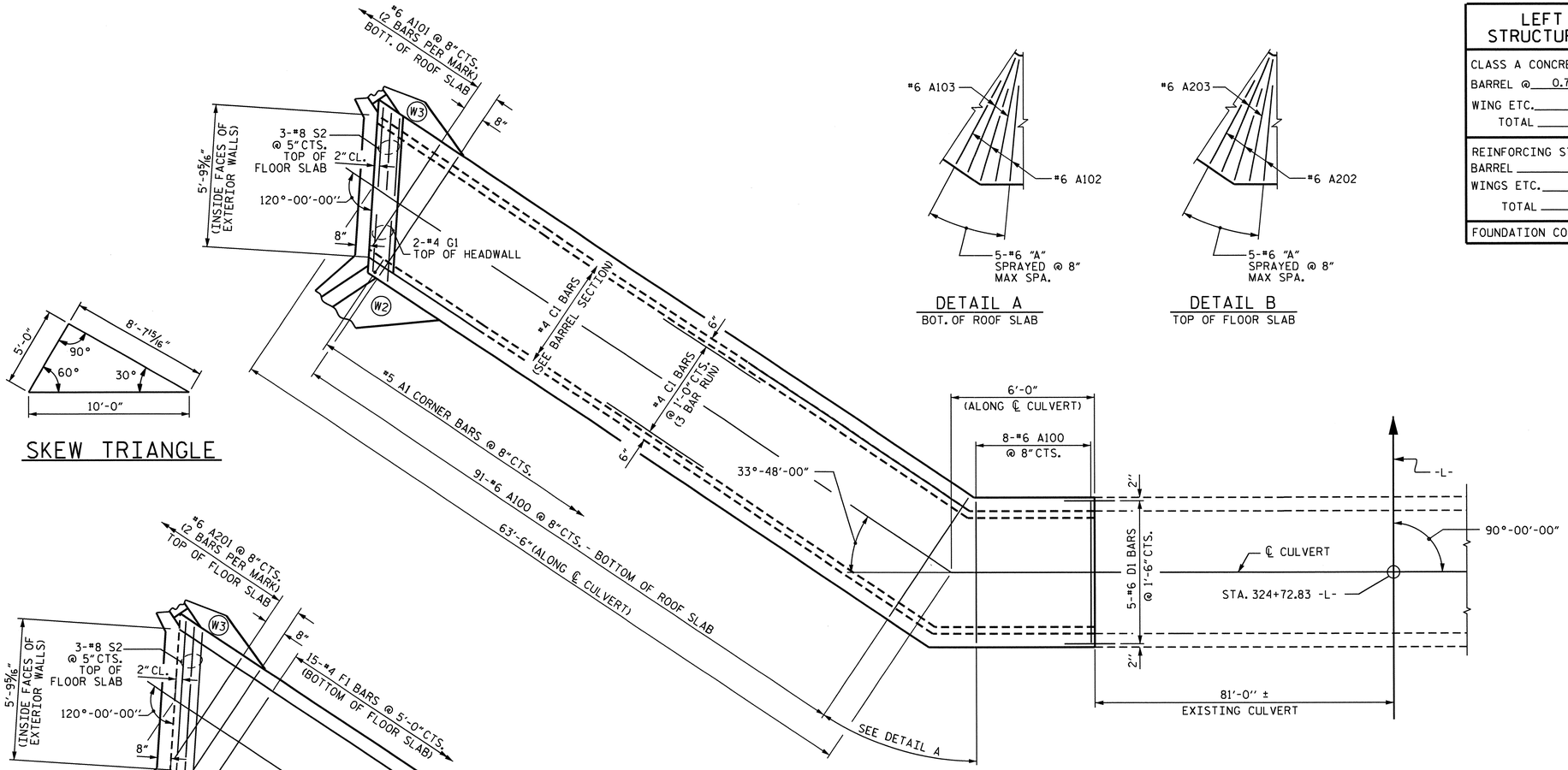

SKEW TRIANGLE

DETAIL A
BOT. OF ROOF SLAB

DETAIL B
TOP OF FLOOR SLAB

LEFT EXTENSION - PLAN OF ROOF SLAB
FIELD BEND C1 BARS AS NECESSARY

LEFT EXTENSION - PLAN OF FLOOR SLAB
FIELD BEND C1 BARS AS NECESSARY

LEFT EXTENSION STRUCTURE QUANTITIES

CLASS A CONCRETE			
BARREL @ 0.721 CY/FT	50.1	C.Y.	
WING ETC.	7.8	C.Y.	
TOTAL	57.9	C.Y.	
REINFORCING STEEL			
BARREL	7,267	LBS.	
WINGS ETC.	465	LBS.	
TOTAL	7,732	LBS.	
FOUNDATION COND. MAT'L	31.0	TONS	

REINFORCING STEEL
LEFT EXTENSION

BAR	NO.	SIZE	TYPE	LENGTH	WEIGHT
A1	208	5	6	4'-7"	994
A2	208	5	6	4'-8"	1012
A100	99	6	STR	5'-11"	880
A101	2	6	STR	4'-3"	13
A102	3	6	STR	4'-8"	21
A103	2	6	STR	6'-1"	18
A200	99	6	STR	5'-11"	880
A201	2	6	STR	4'-3"	13
A202	3	6	STR	4'-8"	21
A203	2	6	STR	6'-1"	18
B1	140	4	STR	7'-3"	678
B2	208	4	STR	5'-4"	741
C1	108	4	STR	24'-4"	1756
D1	18	6	STR	2'-6"	68
F1	15	4	STR	3'-5"	34
G1	2	4	STR	6'-11"	9
S2	6	8	STR	6'-11"	111
REINFORCING STEEL					7267 LBS.

BAR TYPE

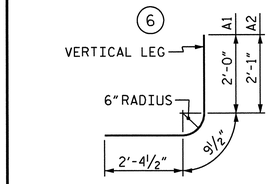

ALL BAR DIMENSIONS ARE OUT TO OUT

SPLICE LENGTHS CHART

BAR	SIZE	SPLICE LENGTH
B1	#4	1'-9"
C1	#4	1'-11"

PROJECT NO. U-3326B
ROCKINGHAM COUNTY
STATION: 324+72.83 -L-

SHEET 3 OF 7

STATE OF NORTH CAROLINA
DEPARTMENT OF TRANSPORTATION
RALEIGH

SINGLE 5 FT. X 6 FT. CONCRETE BOX CULVERT LEFT EXTENSION 90° SKEW

NORTH CAROLINA PROFESSIONAL SEAL 16301 ENGINEER T.N.G. HSIANG
8/26/11

REVISIONS						SHEET NO.
NO.	BY:	DATE:	NO.	BY:	DATE:	C-28
1			3			TOTAL SHEETS
2			4			32

STR. 8

DRAWN BY : S.M.RASHIDI DATE : 3/2011
CHECKED BY : A. SORSENGINH DATE : 3/2011

26-AUG-2011 16:20
Q:\TIPProjects-U\U3326B\Structures\str08\FINAL PLAN\U-3326B_SD_cu_08.dgn
qtnguyen

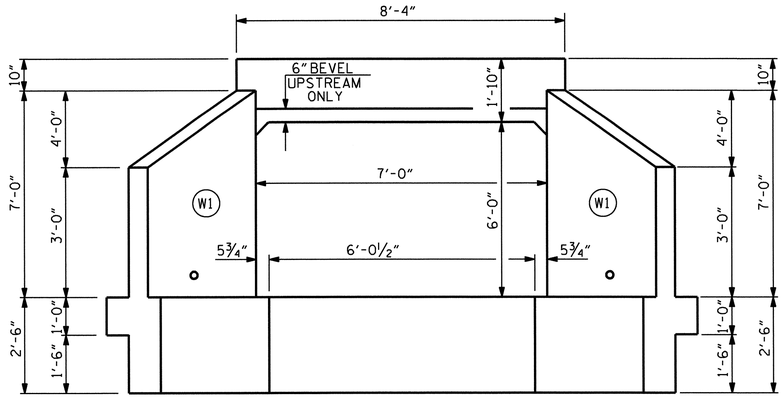

INLET END ELVATION

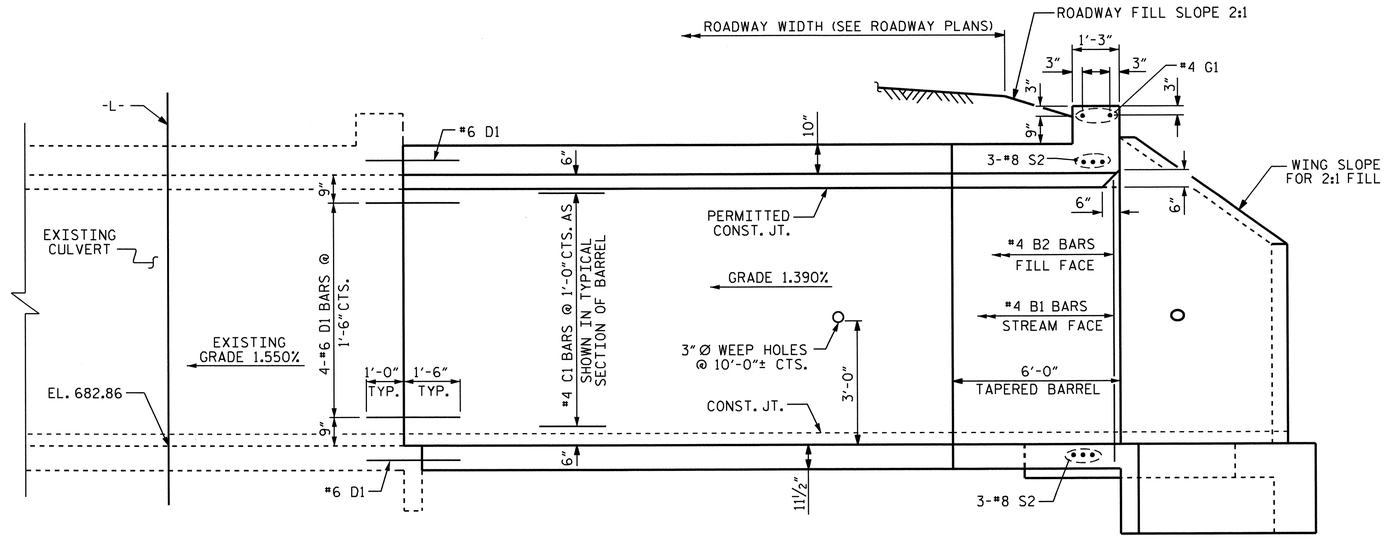

CULVERT SECTION NORMAL TO ROADWAY

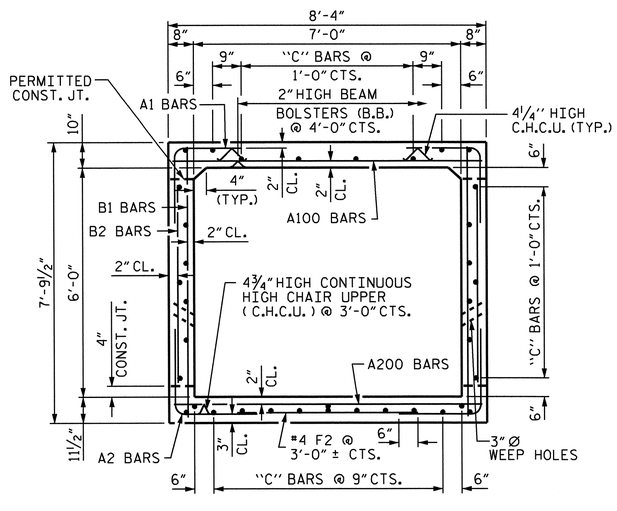

RIGHT ANGLE SECTION @ INLET

THERE ARE 36 "C" BARS IN SECTION OF BARREL

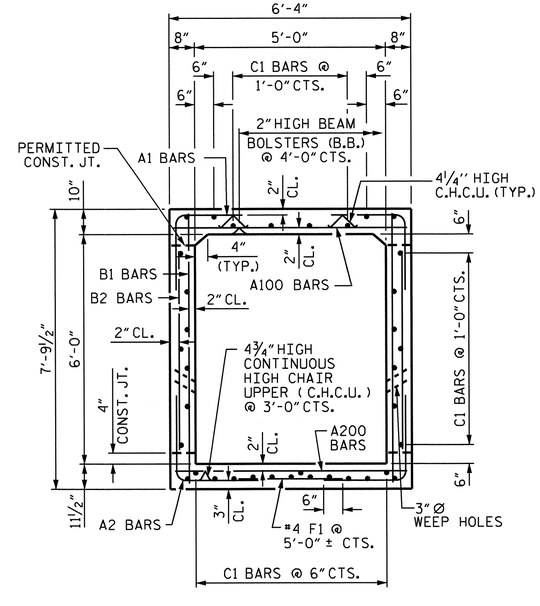

RIGHT ANGLE SECTION OF BARREL

THERE ARE 36 C1 BARS IN SECTION OF BARREL

NORTH CAROLINA PROFESSIONAL SEAL 16301 ENGINEER TING HSIUNG FANG

8/26/11

PROJECT NO. U-3326B

ROCKINGHAM COUNTY

STATION: 324+72.83 -L-

SHEET 4 OF 7

STATE OF NORTH CAROLINA
DEPARTMENT OF TRANSPORTATION
RALEIGH

SINGLE 5 FT. X 6 FT. CONCRETE BOX CULVERT RIGHT EXTENSION 90° SKEW

REVISIONS						SHEET NO.
NO.	BY:	DATE:	NO.	BY:	DATE:	C-29
1			3			TOTAL SHEETS
2			4			32

DRAWN BY : S.M.RASHIDI DATE : 3/2011
CHECKED BY : A. SORSENGINH DATE : 3/2011

26-AUG-2011 15:00
Q:\TIPProjects-U\U3326B\Structures\str08\FINAL PLAN\U-3326B_SD_cu_08.dgn
qtnguyen

STR #8

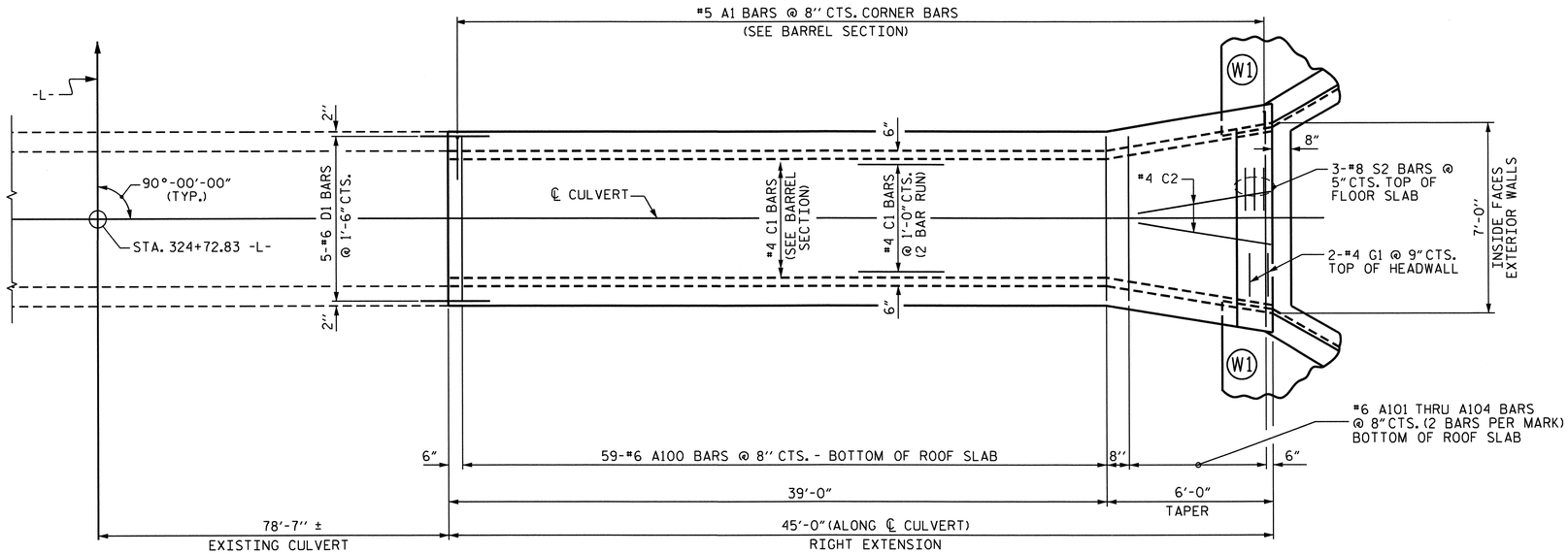

RIGHT EXTENSION - PLAN OF ROOF SLAB

FIELD BEND C1 BARS AS NECESSARY

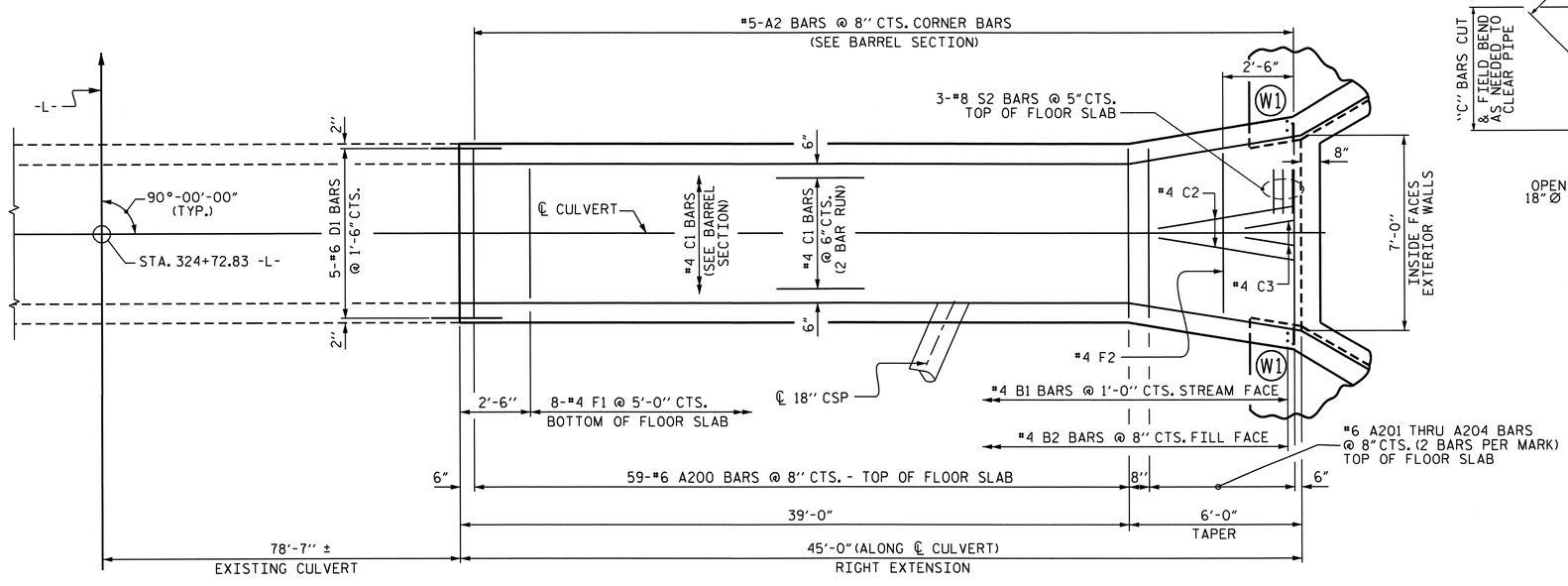

RIGHT EXTENSION - PLAN OF FLOOR SLAB

FIELD BEND C1 BARS AS NECESSARY

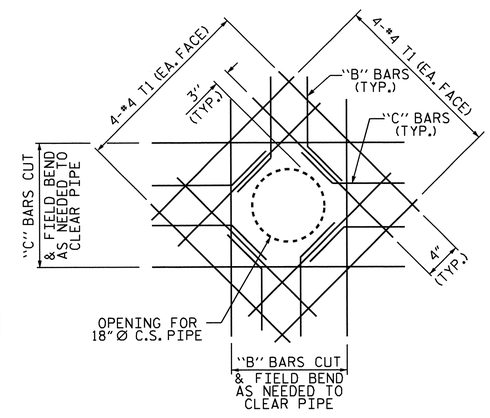

18" Ø C.S. PIPE THRU EXTERIOR WALL

RIGHT EXTENSION STRUCTURE QUANTITIES

CLASS A CONCRETE			
BARREL @	0.721	CY/FT	28.1 C.Y.
BARREL @	0.853	CY/FT	5.1 C.Y.
WING ETC.			7.7 C.Y.
TOTAL			40.9 C.Y.
REINFORCING STEEL			
BARREL			4,836 LBS.
WINGS ETC.			396 LBS.
TOTAL			5,232 LBS.
FOUNDATION COND. MAT'L			21.0 TONS

REINFORCING STEEL
RIGHT EXTENSION

BAR	NO.	SIZE	TYPE	LENGTH	WEIGHT
A1	136	5	6	4'-7"	650
A2	136	5	6	4'-8"	662
A100	59	6	STR	5'-11"	524
A101	2	6	STR	6'-3"	19
A102	2	6	STR	6'-8"	20
A103	2	6	STR	7'-1"	21
A104	2	6	STR	7'-7"	23
A200	59	6	STR	5'-11"	524
A201	2	6	STR	6'-3"	19
A202	2	6	STR	6'-8"	20
A203	2	6	STR	7'-1"	21
A204	2	6	STR	7'-7"	23
B1	90	4	STR	7'-3"	436
B2	136	4	STR	5'-4"	485
C1	72	4	STR	23'-4"	1122
C2	4	4	STR	4'-10"	13
C3	2	4	STR	1'-9"	2
D1	18	6	STR	2'-6"	68
F1	8	4	STR	3'-5"	18
F2	1	4	STR	4'-8"	3
G1	2	4	STR	7'-7"	10
S2	6	8	STR	7'-7"	121
T1	16	4	STR	3'-0"	32

REINFORCING STEEL 4,836 LBS.

BAR TYPE

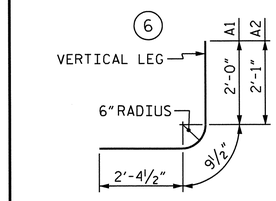

ALL BAR DIMENSIONS ARE OUT TO OUT

SPLICE LENGTHS CHART

BAR	SIZE	SPLICE LENGTH
B1	#4	1'-9"
C1	#4	1'-11"

PROJECT NO. U-3326B
ROCKINGHAM COUNTY
STATION: 324+72.83 -L-

SHEET 5 OF 7

STATE OF NORTH CAROLINA
DEPARTMENT OF TRANSPORTATION
RALEIGH

SINGLE 5 FT. X 6 FT. CONCRETE BOX CULVERT RIGHT EXTENSION 90° SKEW

NORTH CAROLINA PROFESSIONAL SEAL 16301 ENGINEER TING-HSIUNG LANG
8/26/11

REVISIONS								SHEET NO.
NO.	BY:	DATE:	NO.	BY:	DATE:			C-30
1			3					TOTAL SHEETS
2			4					32

DRAWN BY : S.M.RASHIDI DATE : 3/2011
CHECKED BY : A. SORSENGINH DATE : 3/2011

26-AUG-2011 16:20
Q:\TIPProjects-U\U3326B\Structures\str08\FINAL PLAN\U-3326B_SD_cu_08.dgn
qtnguyen

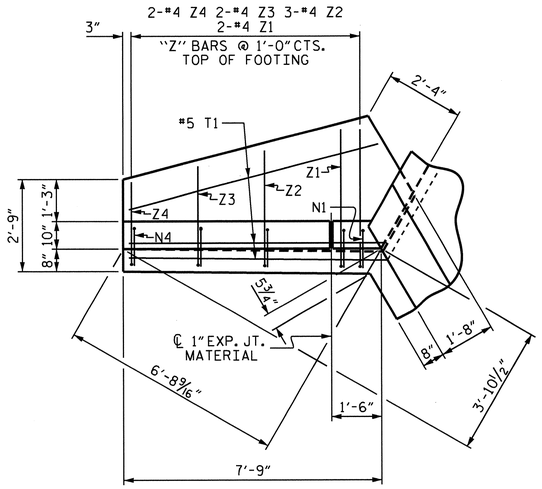

PLAN W2

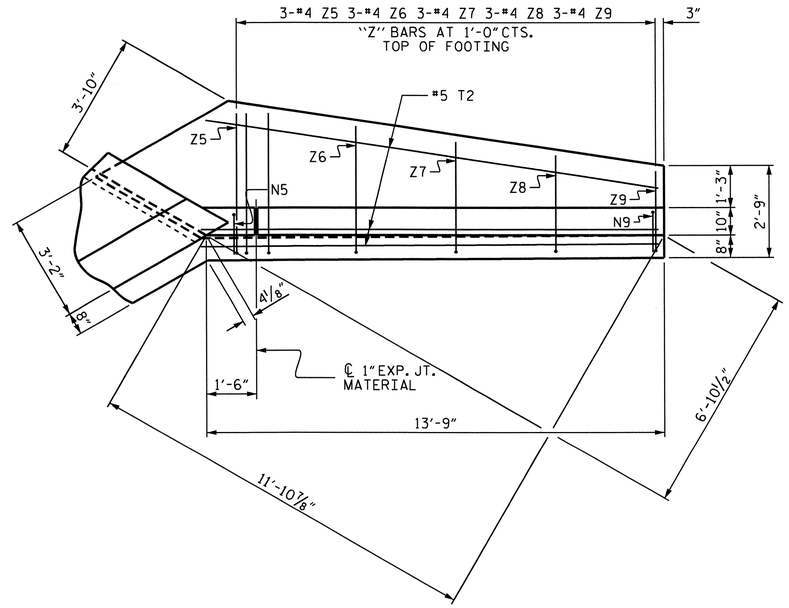

PLAN W3

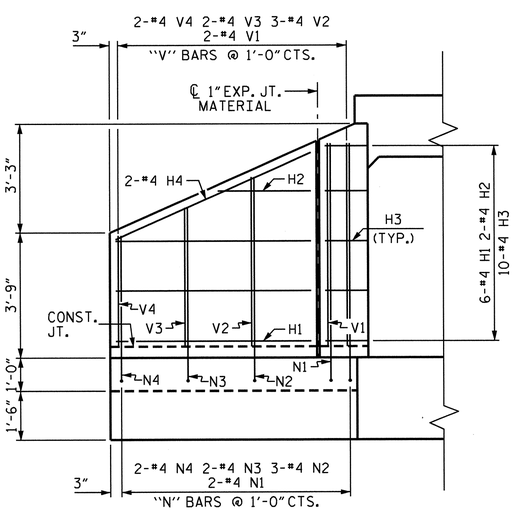

ELEVATION W2

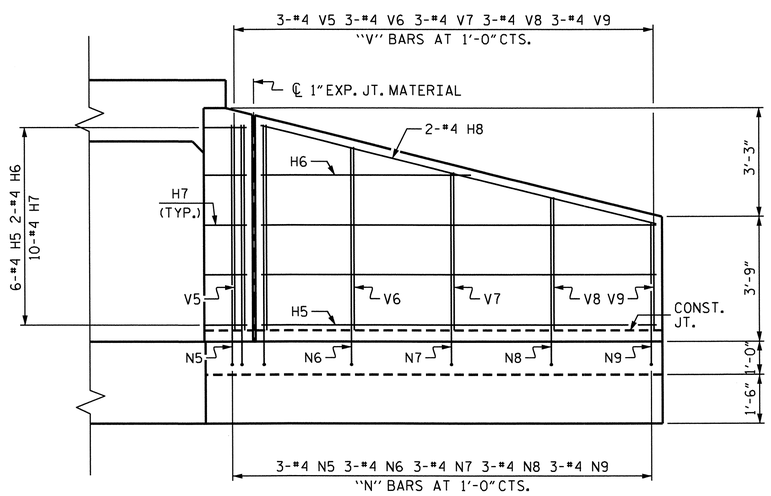

ELEVATION W3

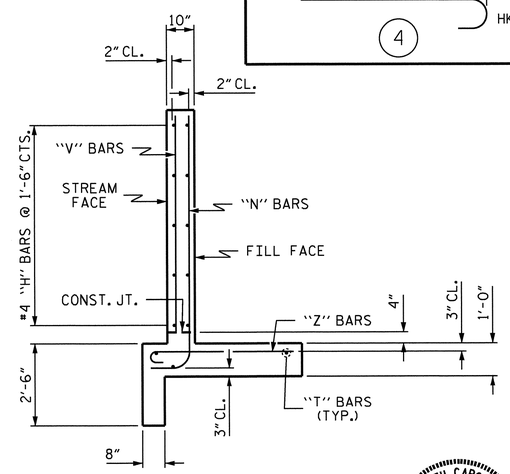

TYPICAL WING SECTION

BAR TYPES

ALL BAR DIMENSIONS ARE OUT TO OUT.

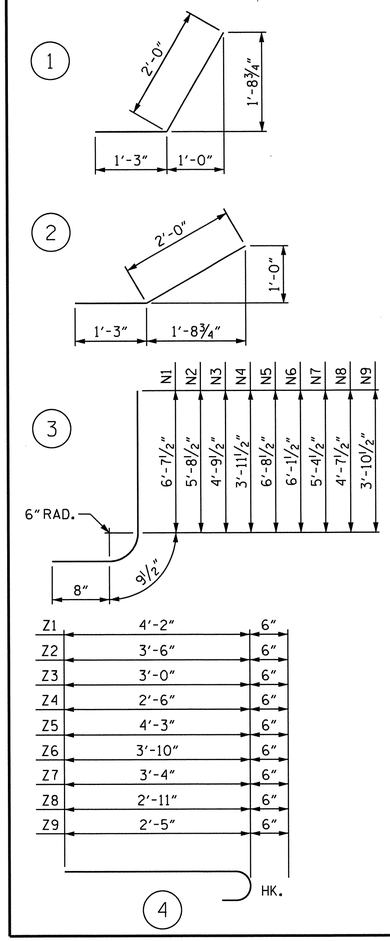

BILL OF MATERIAL

BAR	NO.	SIZE	TYPE	LENGTH	WEIGHT
H1	6	#4	STR	5'-10"	23
H2	2	#4	STR	2'-9"	4
H3	10	#4	1	3'-3"	22
H4	2	#4	STR	6'-5"	9
H5	6	#4	STR	11'-10"	47
H6	2	#4	STR	6'-3"	8
H7	10	#4	2	3'-3"	22
H8	2	#4	STR	12'-2"	16
N1	2	#4	3	8'-1"	11
N2	3	#4	3	7'-2"	14
N3	2	#4	3	6'-3"	8
N4	2	#4	3	5'-5"	7
N5	3	#4	3	8'-2"	16
N6	3	#4	3	7'-7"	15
N7	3	#4	3	6'-10"	14
N8	3	#4	3	6'-1"	12
N9	3	#4	3	5'-4"	11
T1	3	#5	STR	7'-9"	24
T2	3	#5	STR	13'-9"	43
V1	2	#4	STR	6'-1"	8
V2	3	#4	STR	5'-1"	10
V3	2	#4	STR	4'-2"	6
V4	2	#4	STR	3'-4"	4
V5	3	#4	STR	6'-2"	12
V6	3	#4	STR	5'-6"	11
V7	3	#4	STR	4'-9"	10
V8	3	#4	STR	4'-0"	8
V9	3	#4	STR	3'-3"	7
Z1	2	#4	4	4'-8"	6
Z2	3	#4	4	4'-0"	8
Z3	2	#4	4	3'-6"	5
Z4	2	#4	4	3'-0"	4
Z5	3	#4	4	4'-9"	10
Z6	3	#4	4	4'-4"	9
Z7	3	#4	4	3'-10"	8
Z8	3	#4	4	3'-5"	7
Z9	3	#4	4	2'-11"	6

REINFORCING STEEL FOR 2 WINGS 465 LBS

CLASS A CONCRETE		
2 WINGS	7.2	CY
1 HEADWALL	0.3	CY
1 END CURTAIN WALL	0.3	CY
TOTAL	7.8	CY

PROJECT NO. U-3326B
ROCKINGHAM COUNTY
STATION: 324+72.83 -L-

SHEET 6 OF 7

STATE OF NORTH CAROLINA
DEPARTMENT OF TRANSPORTATION
RALEIGH

STANDARD WINGS FOR CONCRETE BOX CULVERT

H = 6'-0" SLOPE = 2:1
60° OR 120° SKEW
LEFT EXTENSION

NORTH CAROLINA PROFESSIONAL SEAL 16301 ENGINEER TING-HSIUNG FANG
8/26/11

REVISIONS						
NO.	BY:	DATE:	NO.	BY:	DATE:	SHEET NO. C-31
1			3			TOTAL SHEETS 32
2			4			

ASSEMBLED BY :	S.W.RASHIDI	DATE :	3/2011
CHECKED BY :	A. SORSENGINH	DATE :	3/2011
DRAWN BY :	CCJ		11/99
CHECKED BY :	RWW		03/00

26-Aug-2011 15:00
D:\TIPROJECTS-U\U3326B\Structures\str08\FINAL PLAN\U-3326B_SD_cu_08.dgn
qtnguyen

STD. NO. CW6006

STR. 8

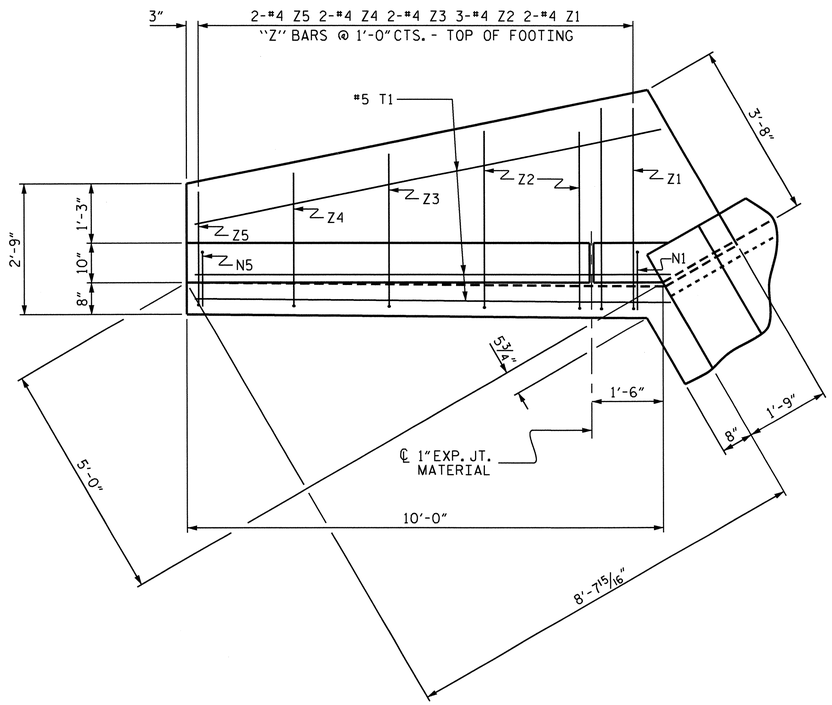

PLAN - W1

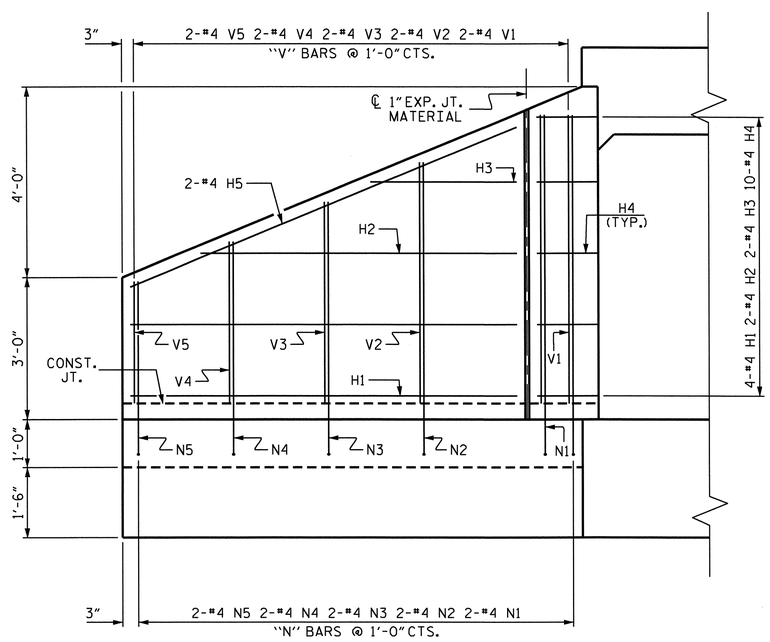

ELEVATION - W1

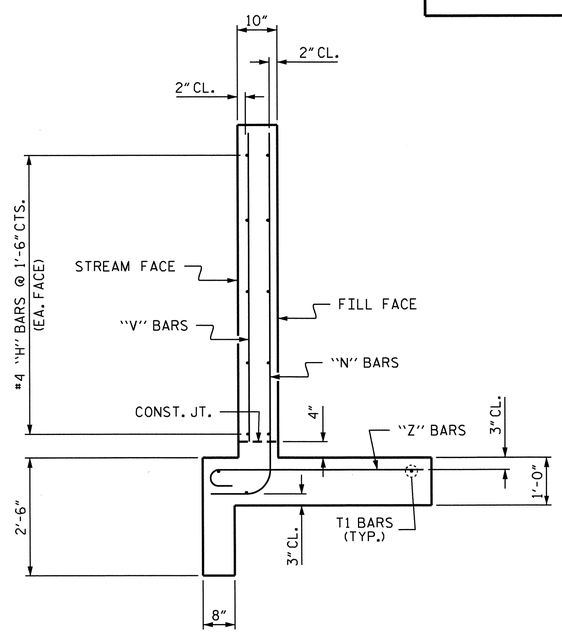

TYPICAL WING SECTION

BAR TYPES

ALL BAR DIMENSIONS ARE OUT TO OUT.

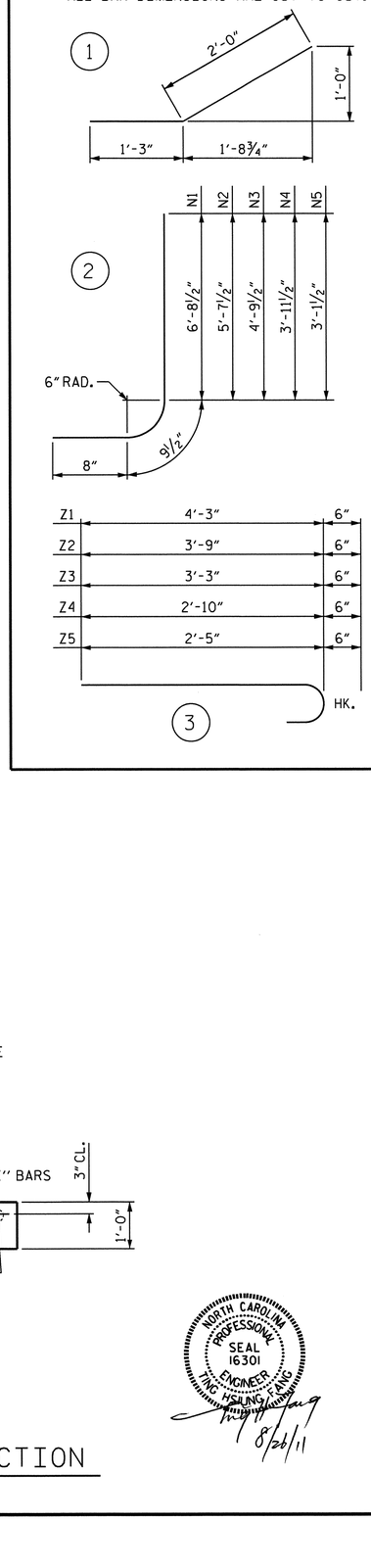

BILL OF MATERIAL

BAR	NO.	SIZE	TYPE	LENGTH	WEIGHT
H1	8	#4	STR	8'-1"	43
H2	4	#4	STR	6'-8"	18
H3	4	#4	STR	3'-1"	8
H4	20	#4	1	3'-3"	43
H5	4	#4	STR	8'-9"	23
N1	4	#4	2	8'-2"	22
N2	4	#4	2	7'-1"	19
N3	4	#4	2	6'-3"	17
N4	4	#4	2	5'-5"	14
N5	4	#4	2	4'-7"	12
T1	6	#5	STR	10'-0"	63
V1	4	#4	STR	6'-1"	16
V2	4	#4	STR	5'-1"	14
V3	4	#4	STR	4'-3"	11
V4	4	#4	STR	3'-5"	9
V5	4	#4	STR	2'-7"	7
Z1	4	#4	3	4'-9"	13
Z2	6	#4	3	4'-3"	17
Z3	4	#4	3	3'-9"	10
Z4	4	#4	3	3'-4"	9
Z5	4	#4	3	2'-11"	8

REINFORCING STEEL FOR 2 WINGS 396 LBS

CLASS A CONCRETE

2 WINGS	6.9	CY
1 HEADWALL	0.4	CY
1 END CURTAIN WALL	0.4	CY
TOTAL	7.7	CY

PROJECT NO. U-3326B

ROCKINGHAM COUNTY

STATION: 324+72.83 -L-

SHEET 7 OF 7

STATE OF NORTH CAROLINA
DEPARTMENT OF TRANSPORTATION
RALEIGH

STANDARD WINGS FOR CONCRETE BOX CULVERT

H = 6'-0" SLOPE = 2:1

90° SKEW

RIGHT EXTENSION

NORTH CAROLINA PROFESSIONAL SEAL 16301 ENGINEER TING HSUNG FANG

8/26/11

REVISIONS						SHEET NO.
NO.	BY:	DATE:	NO.	BY:	DATE:	C-32
1			3			TOTAL SHEETS
2			4			32

ASSEMBLED BY :	A.S./RASHIDI	DATE :	3/2011
CHECKED BY :	A. SORSENGINH	DATE :	3/2011
DRAWN BY :	CCJ		10/99
CHECKED BY :	RWW		03/00

26-AUG-2011 15:00
0:\TIPProjects-U\U3326B\Structures\str08\FINAL PLAN\U-3326B_SD_cu_08.dgn
qtnguyen

STD. NO. CW9006

STR. 8

GEOTECHNICAL ENGINEER	ENGINEER
NORTH CAROLINA PROFESSIONAL SEAL 8217 ENGINEER JINYOUNG PARK	
SIGNATURE DATE	SIGNATURE DATE

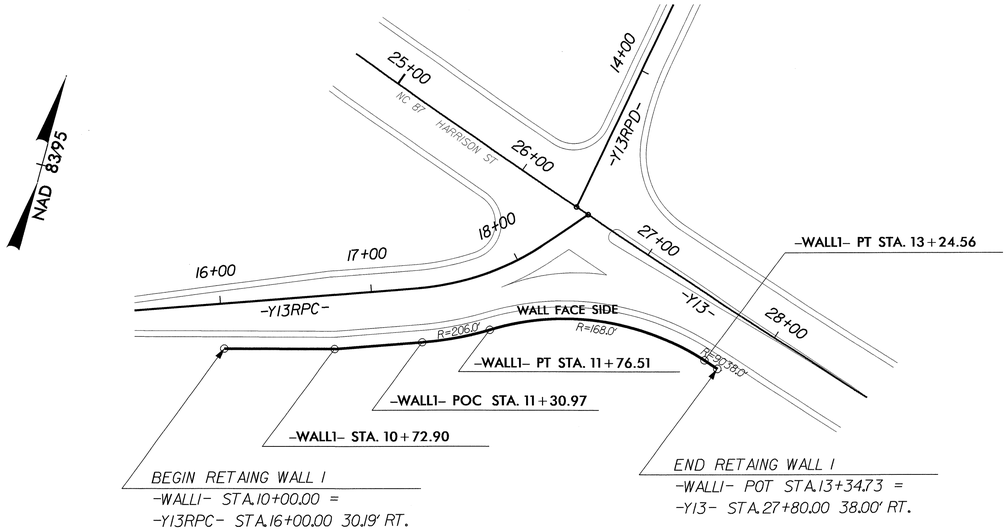

WALL NO. 1 PLAN VIEW, NTS

RETAINING WALL TYPICAL SECTION			
STATION AND OFFSET	BOTTOM OF WALL ELEV.	GRADE ELEV.	DESIGN HEIGHT
-WALL1- 10+00.00 -Y13RPC- 16+00.00 30.19' RT.	799.54'	800.40'	0.86'
-WALL1- 10+30.10 -Y13RPC- 16+30.00 32.59' RT.	797.83'	799.64'	1.81'
-WALL1- 10+80.23 -Y13RPC- 16+80.00 36.00' RT.	795.06'	798.72'	3.66'
-WALL1- 11+30.23 -Y13RPC- 17+30.00 36.00' RT.	792.37'	797.42'	5.05'
-WALL1- 11+90.74 -Y13RPC- 17+80.00 37.09' RT.	790.31'	795.76'	5.45'
-WALL1- 12+52.04 -Y13- 27+00.00 53.69' RT.	788.85'	792.67'	3.82'
-WALL1- 13+04.55 -Y13- 27+00.00 39.21' RT.	789.46'	791.32'	1.86'
-WALL1- 13+34.73 -Y13- 27+80.00 38.00' RT.	789.68'	791.30'	1.62'

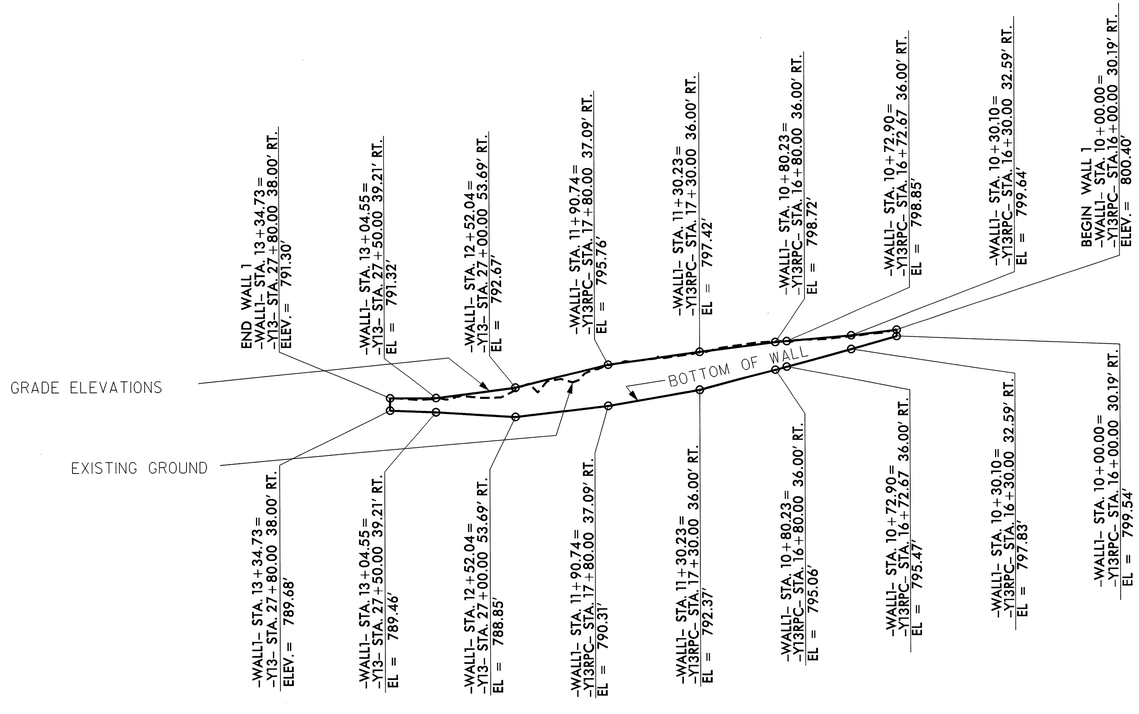

WALL NO. 1 ENVELOPE, NTS

- EXPOSED WALL FACE -

TOTAL BILL OF MATERIAL	
SOLDIER PILE RETAINING WALLS	1,410 SQUARE FEET

PROJECT NO.: 34924.1.1 (U-3326A/B)

ROCKINGHAM ***COUNTY***

STATION: -Y13RPC- STA. 16+00.00

SHEET 1 OF 4

GEOTECHNICAL ENGINEERING UNIT

☒ *EASTERN REGIONAL OFFICE*

☐ *WESTERN REGIONAL OFFICE*

☐ *CONTRACT OFFICE*

STATE OF NORTH CAROLINA
DEPARTMENT OF TRANSPORTATION
RALEIGH

RETAINING WALL NO. 1
PLAN AND ELEVATIONS

REVISIONS						SHEET NO.
NO.	BY	DATE	NO.	BY	DATE	W-1
1			3			TOTAL SHEETS
2			4			8

PREPARED BY: JINYOUNG PARK	DATE: 04/2011
REVIEWED BY: JAMES R. BATTS	DATE: 04/2011

GEOTECHNICAL ENGINEER	ENGINEER
NORTH CAROLINA PROFESSIONAL SEAL 32171 ENGINEER JINYOUNG PARK	
SIGNATURE DATE	SIGNATURE DATE

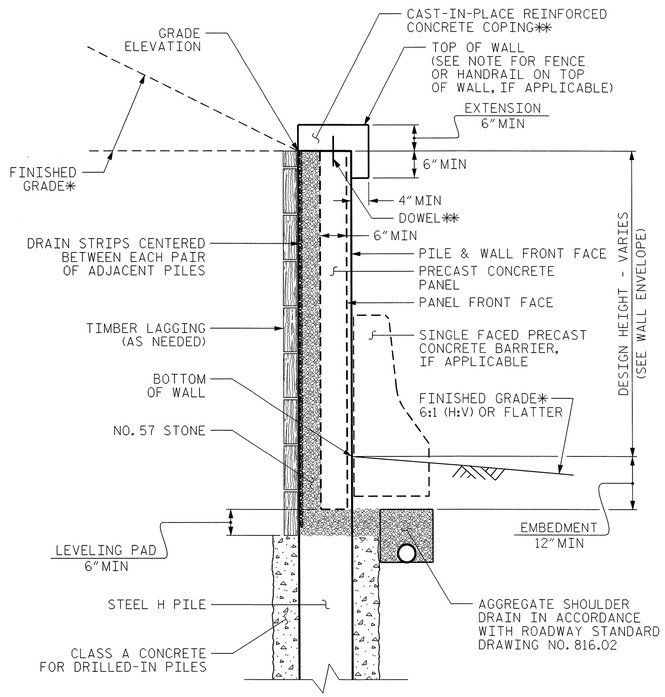

SOLDIER PILE WALL WITH PRECAST PANEL - TYPICAL SECTION

*SEE ROADWAY PLANS FOR FINISHED GRADE AND DITCH DETAILS.
**AT THE CONTRACTOR'S OPTION, EXTEND COPING DOWN BACK OF PANELS A MINIMUM OF 6" IN LIEU OF USING DOWELS.

NOTES:

FOR SOLDIER PILE RETAINING WALLS, SEE SOLDIER PILE RETAINING WALLS PROVISION.

FOR SINGLE FACED PRECAST CONCRETE BARRIER, SEE ROADWAY PLANS AND SECTION 857 OF THE STANDARD SPECIFICATIONS.

AT THE CONTRACTOR'S OPTION, USE DRIVEN PILES FOR RETAINING WALL NO. 1.

USE A SOLDIER PILE RETAINING WALL WITH PRECAST CONCRETE PANELS FOR RETAINING WALL NO. 1.

BEFORE BEGINNING SOLDIER PILE WALL DESIGN FOR RETAINING WALL NO. 1, SURVEY WALL LOCATION AND SUBMIT A REVISED WALL PROFILE VIEW (WALL ENVELOPE) FOR REVIEW. DO NOT START WALL DESIGN OR CONSTRUCTION UNTIL THE REVISED WALL ENVELOPE IS ACCEPTED.

DESIGN RETAINING WALL NO. 1 FOR WALL HEIGHTS EQUAL TO THE DESIGN HEIGHT (DIFFERENCE BETWEEN GRADE ELEVATION AND BOTTOM OF WALL ELEVATION) PLUS EMBEDMENT (DIFFERENCE BETWEEN BOTTOM OF WALL ELEVATION AND TOP OF LEVELING PAD ELEVATION).

DESIGN RETAINING WALL NO. 1 FOR THE FOLLOWING:
1) MINIMUM DESIGN LIFE = 75 YEARS
2) IN-SITU ASSUMED MATERIAL PARAMETERS
   UNIT WEIGHT, γ = 120 PCF
   FRICTION ANGLE, ϕ = 30 DEGREES
   COHESION, c = 0 PSF

DESIGN RETAINING WALL NO. 1 FOR A LIVE LOAD (TRAFFIC) SURCHARGE.

A MINIMUM EMBEDMENT OF 1 FOOT BELOW THE BOTTOM OF WALL IS REQUIRED.

PROJECT NO.: 34924.1.1 (U-3326A/B)
ROCKINGHAM ***COUNTY***
STATION: -Y13RPC- STA. 16+00.00
SHEET 2 OF 4

GEOTECHNICAL ENGINEERING UNIT
[X] *EASTERN REGIONAL OFFICE*
[ ] *WESTERN REGIONAL OFFICE*
[ ] *CONTRACT OFFICE*
STATE OF NORTH CAROLINA DEPARTMENT OF TRANSPORTATION RALEIGH

RETAINING WALL NO. 1
NOTES AND DETAILS
OF SOLDIER PILE WALLS

REVISIONS						SHEET NO.
NO.	BY	DATE	NO.	BY	DATE	W-2
1	-	-	3	-	-	TOTAL SHEETS
2	-	-	4	-	-	8

PREPARED BY: JINYOUNG PARK	DATE: 04/2011
REVIEWED BY: JAMES R. BATTS	DATE: 04/2011

GEOTECHNICAL ENGINEER	ENGINEER
NORTH CAROLINA PROFESSIONAL SEAL 32171 ENGINEER JINYOUNG PARK	
SIGNATURE DATE	SIGNATURE DATE

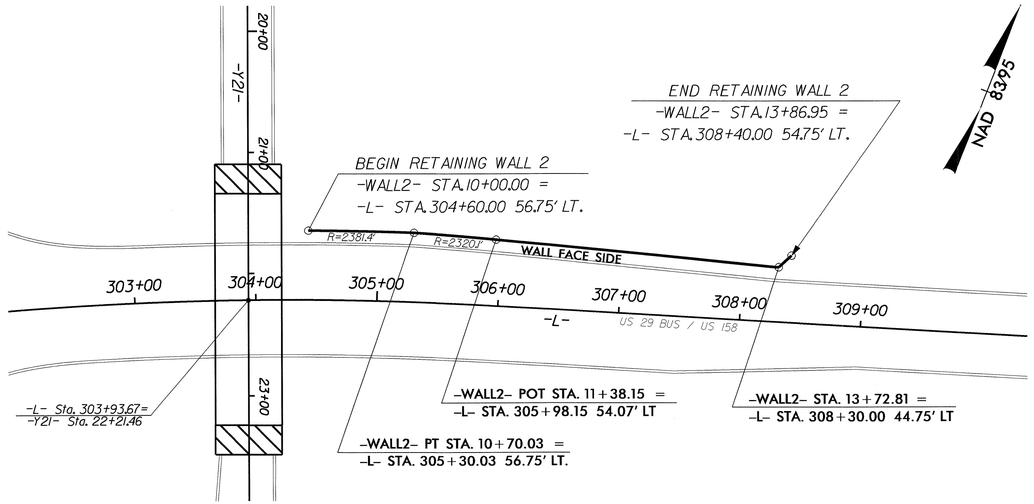

WALL NO. 2 PLAN VIEW, NTS

RETAINING WALL TYPICAL SECTION

STATION AND OFFSET	BOTTOM OF WALL ELEV.	GRADE ELEV.	DESIGN HEIGHT
-WALL2- 10+00.00 -L- 304+60.00 56.75' LT.	748.08'	748.08'	0.00'
-WALL2- 10+30.58 -L- 304+90.00 56.75' LT.	747.93'	761.55'	13.62'
-WALL2- 10+40.78 -L- 305+00.00 56.75' LT.	747.88'	762.10'	14.22'
-WALL2- 10+91.76 -L- 305+50.00 55.90' LT.	747.60'	762.75'	15.15'
-WALL2- 11+42.63 -L- 306+00.00 53.91' LT.	746.77'	764.82'	18.05'
-WALL2- 11+92.67 -L- 306+50.00 51.91' LT.	745.90'	763.85'	17.95'
-WALL2- 12+42.71 -L- 307+00.00 49.91' LT.	745.08'	760.38'	15.30'
-WALL2- 12+92.75 -L- 307+50.00 47.91' LT.	744.44'	757.87'	13.43'
-WALL2- 13+42.79 -L- 308+00.00 45.91' LT.	744.22'	751.50'	7.28'
-WALL2- 13+72.81 -L- 308+30.00 44.75' LT.	744.07''	748.41'	4.34'
-WALL2- 13+86.95 -L- 308+40.00 54.75' LT.	744.22''	746.68'	2.46'

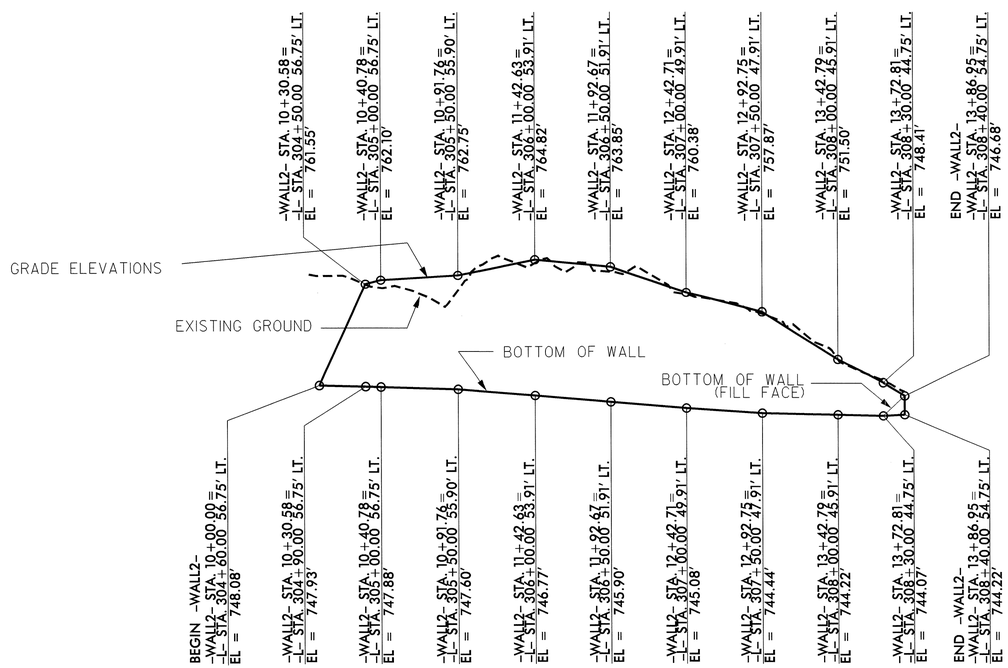

WALL NO. 2 ENVELOPE, NTS

– EXPOSED WALL FACE –

TOTAL BILL OF MATERIAL

SOIL NAIL RETAINING WALLS	5,465 SQUARE FEET
SOIL NAIL VERIFICATION TESTS	4 EACH
SOIL NAIL PROOF TESTS	12 EACH

PROJECT NO.: 34924.1.1 (U-3326A/B)

ROCKINGHAM ***COUNTY***

STATION: -L- STA. 305+00.00

SHEET 3 OF 4

GEOTECHNICAL ENGINEERING UNIT

☒ *EASTERN REGIONAL OFFICE*

☐ *WESTERN REGIONAL OFFICE*

☐ *CONTRACT OFFICE*

STATE OF NORTH CAROLINA
DEPARTMENT OF TRANSPORTATION
RALEIGH

RETAINING WALL NO. 2
PLAN AND ELEVATIONS

REVISIONS						SHEET NO.
NO.	BY	DATE	NO.	BY	DATE	W-3
1	–	–	3	–	–	TOTAL SHEETS
2	–	–	4	–	–	3

PREPARED BY: JINYOUNG PARK	DATE: 04/2011
REVIEWED BY: JAMES R. BATTS	DATE: 04/2011

GEOTECHNICAL ENGINEER	ENGINEER
NORTH CAROLINA PROFESSIONAL SEAL 32171 ENGINEER JINYOUNG PARK	
SIGNATURE DATE	SIGNATURE DATE

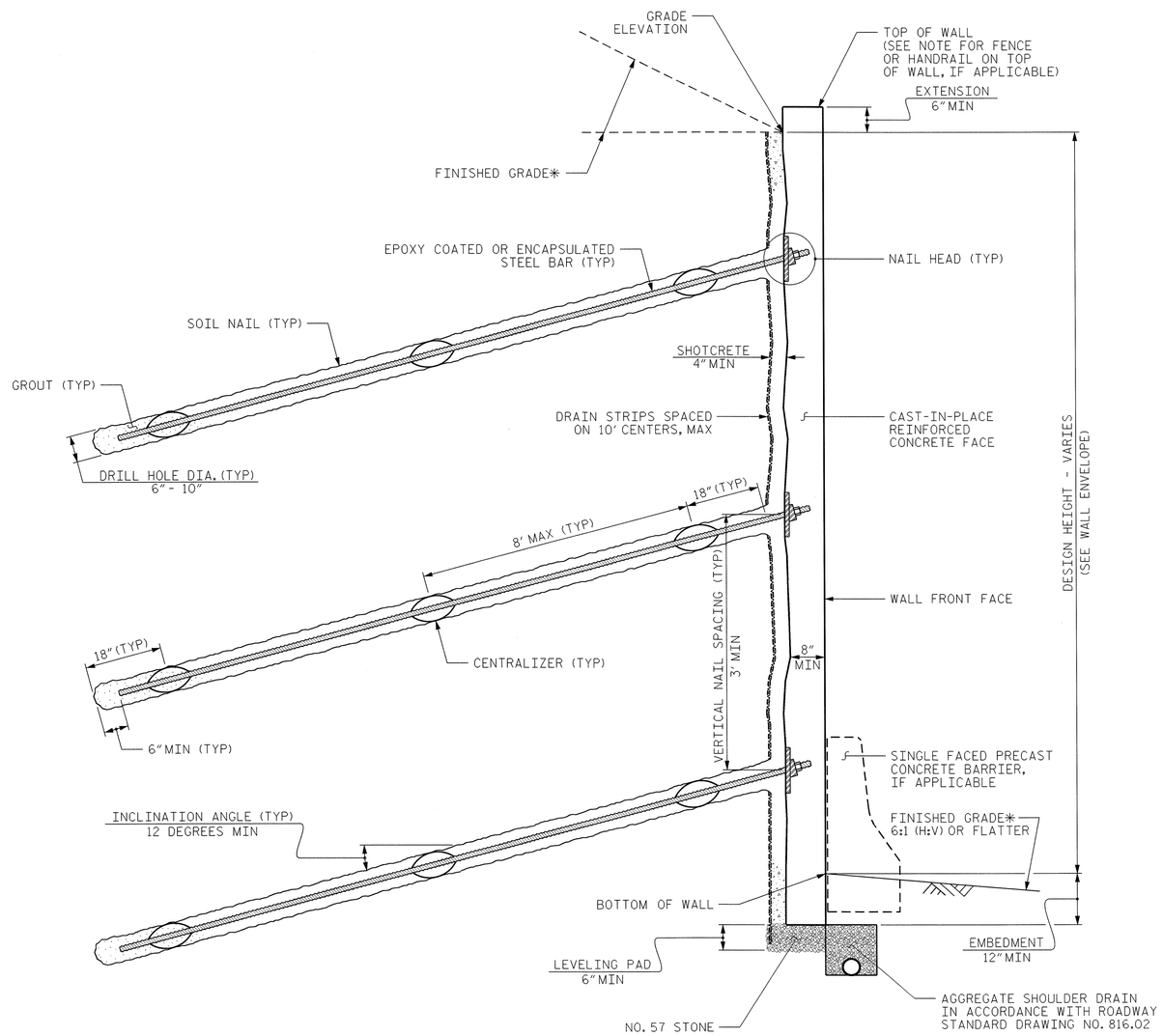

SOIL NAIL WALL - TYPICAL SECTION

*SEE ROADWAY PLANS FOR FINISHED GRADE AND DITCH DETAILS.

NOTES:

FOR SOIL NAIL RETAINING WALLS, SEE SOIL NAIL RETAINING WALLS PROVISION.

BEFORE BEGINNING SOIL NAIL WALL DESIGN FOR RETAINING WALL NO. 2, SURVEY WALL LOCATION AND SUBMIT A REVISED WALL PROFILE VIEW (WALL ENVELOPE) FOR REVIEW. DO NOT START WALL DESIGN OR CONSTRUCTION UNTIL THE REVISED WALL ENVELOPE IS ACCEPTED.

DESIGN RETAINING WALL NO. 2 FOR WALL HEIGHTS EQUAL TO THE DESIGN HEIGHT (DIFFERENCE BETWEEN GRADE ELEVATION AND BOTTOM OF WALL ELEVATION) PLUS EMBEDMENT (DIFFERENCE BETWEEN BOTTOM OF WALL ELEVATION AND TOP OF LEVELING PAD ELEVATION).

DESIGN RETAINING WALL NO. 2 FOR THE FOLLOWING:
1) MINIMUM DESIGN LIFE = 75 YEARS
2) IN-SITU ASSUMED MATERIAL PARAMETERS
   UNIT WEIGHT, γ = 120 PCF
   FRICTION ANGLE, ϕ = 30 DEGREES
   COHESION, c = 0 PSF

A MINIMUM EMBEDMENT OF 1 FOOT BELOW THE BOTTOM OF WALL IS REQUIRED.

PROJECT NO.: 34924.1.1 (U-3326A/B)
ROCKINGHAM ***COUNTY***
STATION: -L- STA. 304+50.00
SHEET 4 OF 4

GEOTECHNICAL ENGINEERING UNIT
[X] ***EASTERN REGIONAL OFFICE***
[ ] ***WESTERN REGIONAL OFFICE***
[ ] ***CONTRACT OFFICE***
STATE OF NORTH CAROLINA DEPARTMENT OF TRANSPORTATION RALEIGH

RETAINING WALL NO. 2
NOTES AND DETAILS
OF SOIL NAIL WALLS

REVISIONS						SHEET NO.
NO.	BY	DATE	NO.	BY	DATE	W-4
1	–	–	3	–	–	TOTAL SHEETS
2	–	–	4	–	–	8

PREPARED BY: JINYOUNG PARK	DATE: 04/2011
REVIEWED BY: JAMES R. BATTS	DATE: 04/2011

GEOTECHNICAL ENGINEER	ENGINEER
NORTH CAROLINA PROFESSIONAL SEAL 26962 ENGINEER ERIC N. WILLIAMS	
SIGNATURE DATE	SIGNATURE DATE

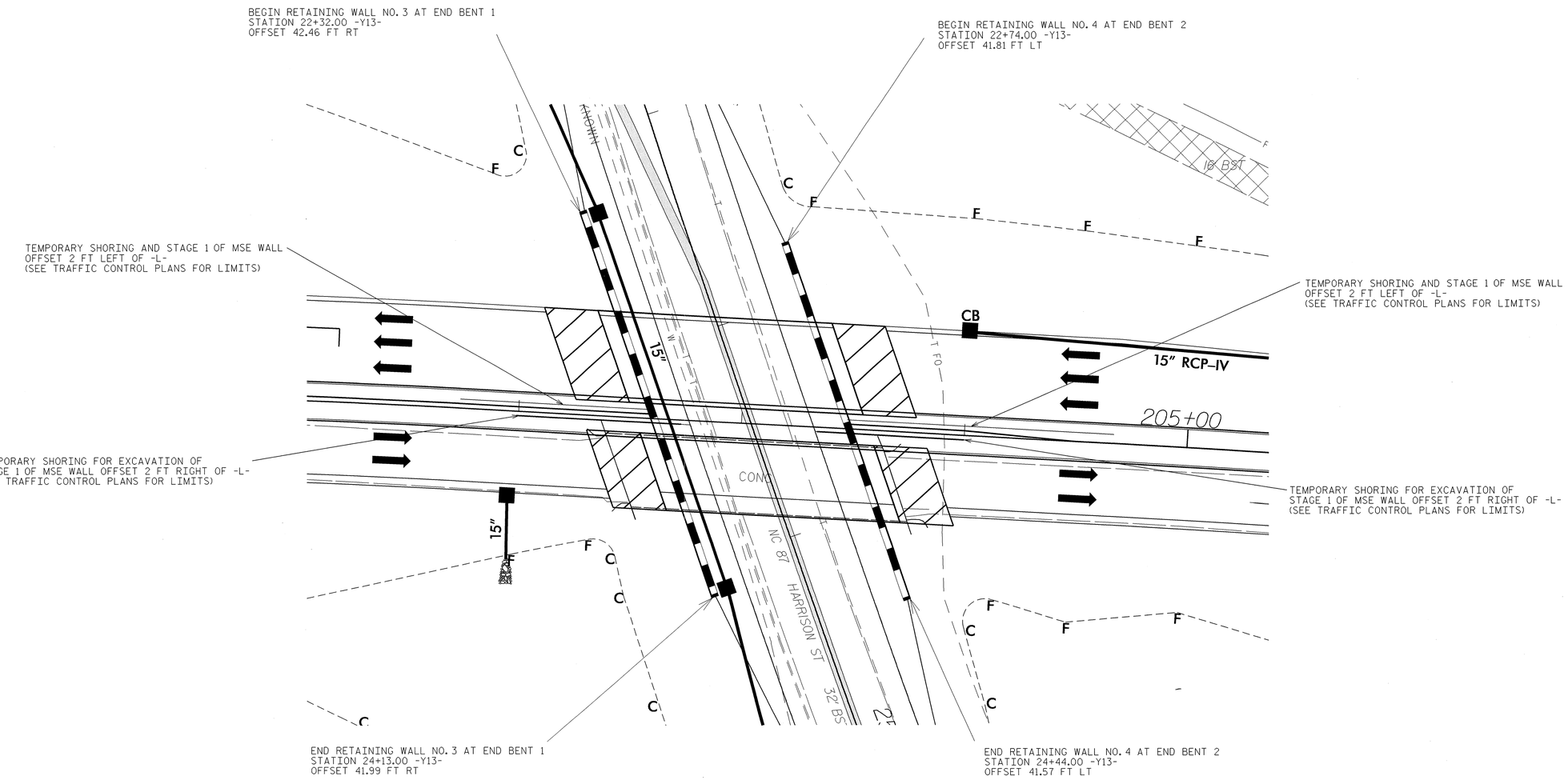

PROJECT NO.: 34924.1.1 (U-3326B)

ROCKINGHAM ***COUNTY***

STATION: 22+32 TO 24+44 -Y13-

SHEET 1 OF 4

GEOTECHNICAL ENGINEERING UNIT

☐ *EASTERN REGIONAL OFFICE*

☐ *WESTERN REGIONAL OFFICE*

☒ *CONTRACT OFFICE*

STATE OF NORTH CAROLINA
DEPARTMENT OF TRANSPORTATION
RALEIGH

MSE RETAINING WALL
PLAN VIEW FOR RETAINING
WALLS 3 AND 4

REVISIONS						SHEET NO.
NO.	BY	DATE	NO.	BY	DATE	N-5
1			3			TOTAL SHEETS
2			4			8

PREPARED BY: E. WILLIAMS	DATE: 5/11
REVIEWED BY: D. TEAGUE	DATE: 5/11

GEC242749 8/30/2011 U3326B_GEO_RWAL_REV ewilliams GEC-Oce860-34bond

GEOTECHNICAL ENGINEER	ENGINEER
NORTH CAROLINA PROFESSIONAL SEAL 26962 ENGINEER E. WILLIAMS 6/30/11	
SIGNATURE DATE	SIGNATURE DATE

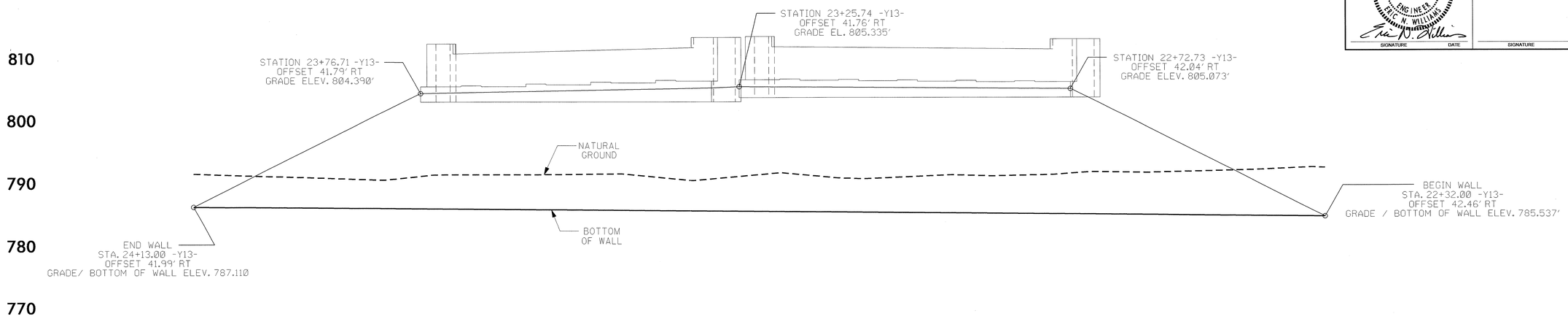

RETAINING WALL NO. 3 AT END BENT 1

MECHANICALLY STABILIZED EARTH RETAINING WALL NO. 3	2800 SF
MECHANICALLY STABILIZED EARTH RETAINING WALL NO. 4	2250 SF

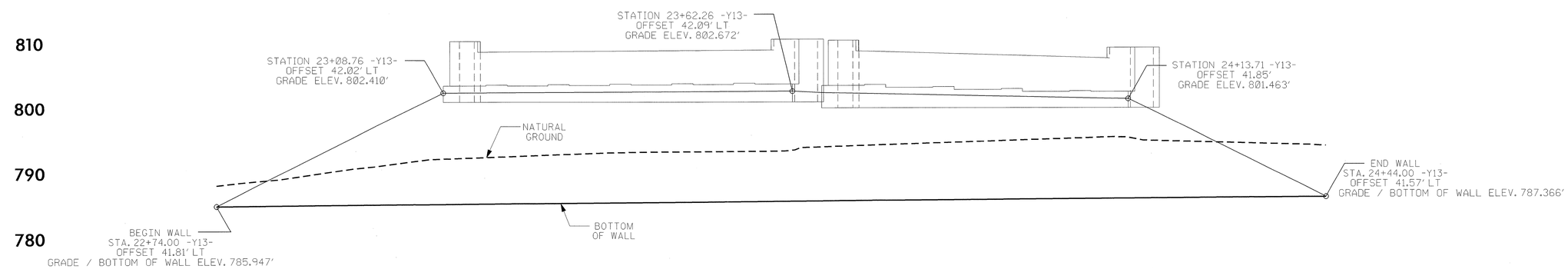

RETAINING WALL NO. 4 AT END BENT 2

PROJECT NO.: 34924.1.1 (U-3326B)

ROCKINGHAM ***COUNTY***

STATION: 22+32 TO 24+44 -Y13-

SHEET 2 OF 4

GEOTECHNICAL ENGINEERING UNIT

☐ ***EASTERN REGIONAL OFFICE***

☐ ***WESTERN REGIONAL OFFICE***

☒ ***CONTRACT OFFICE***

STATE OF NORTH CAROLINA
DEPARTMENT OF TRANSPORTATION
RALEIGH

MSE RETAINING WALL ENVELOPES FOR RETAINING WALLS 3 AND 4

REVISIONS						
NO.	BY	DATE	NO.	BY	DATE	SHEET NO. W-6
1			3			TOTAL SHEETS 8
2			4			

PREPARED BY: E. WILLIAMS	DATE: 5/11
REVIEWED BY: D. TEAGUE	DATE: 5/11

GEOTECHNICAL ENGINEER	ENGINEER
NORTH CAROLINA PROFESSIONAL SEAL 26962 ENGINEER ERIC N. WILLIAMS 8/30/11	
SIGNATURE DATE	SIGNATURE DATE

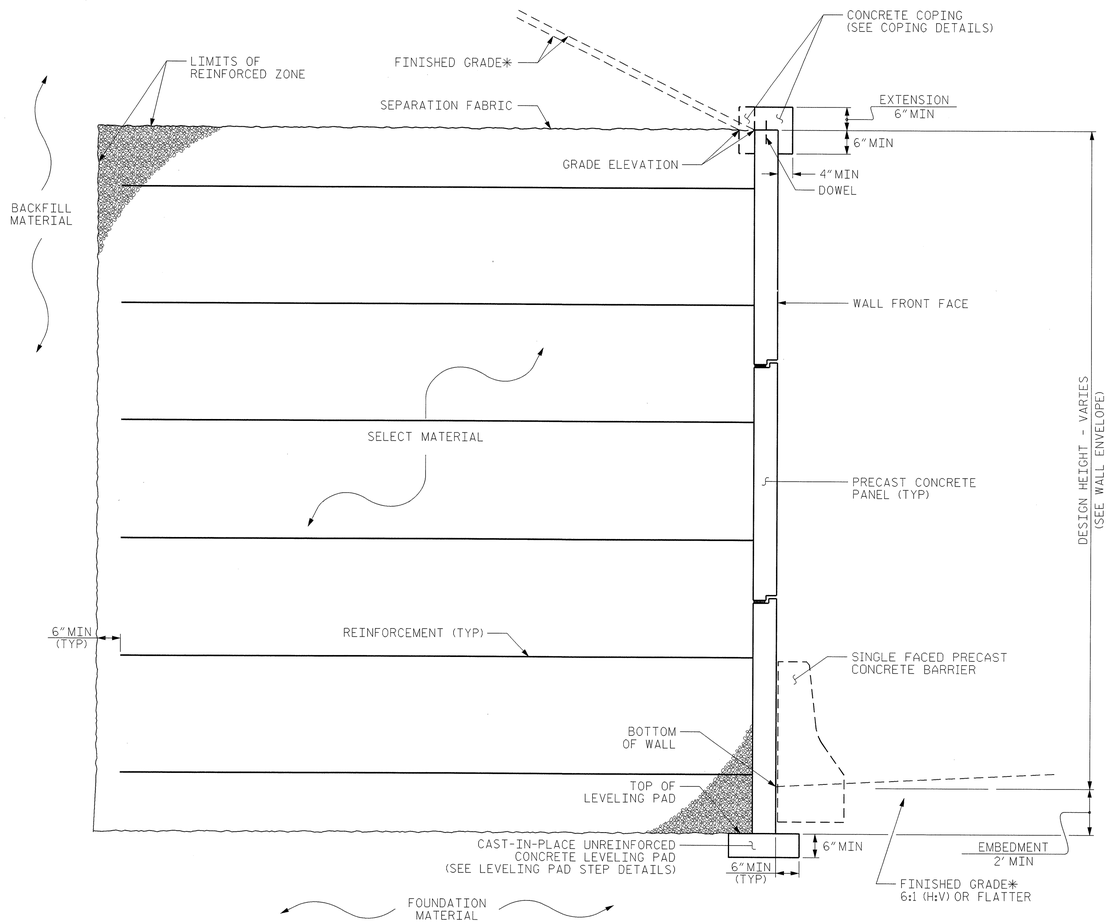

MSE WALL WITH PRECAST PANELS TYPICAL SECTION

*SEE ROADWAY PLANS FOR FINISHED GRADE DETAILS.

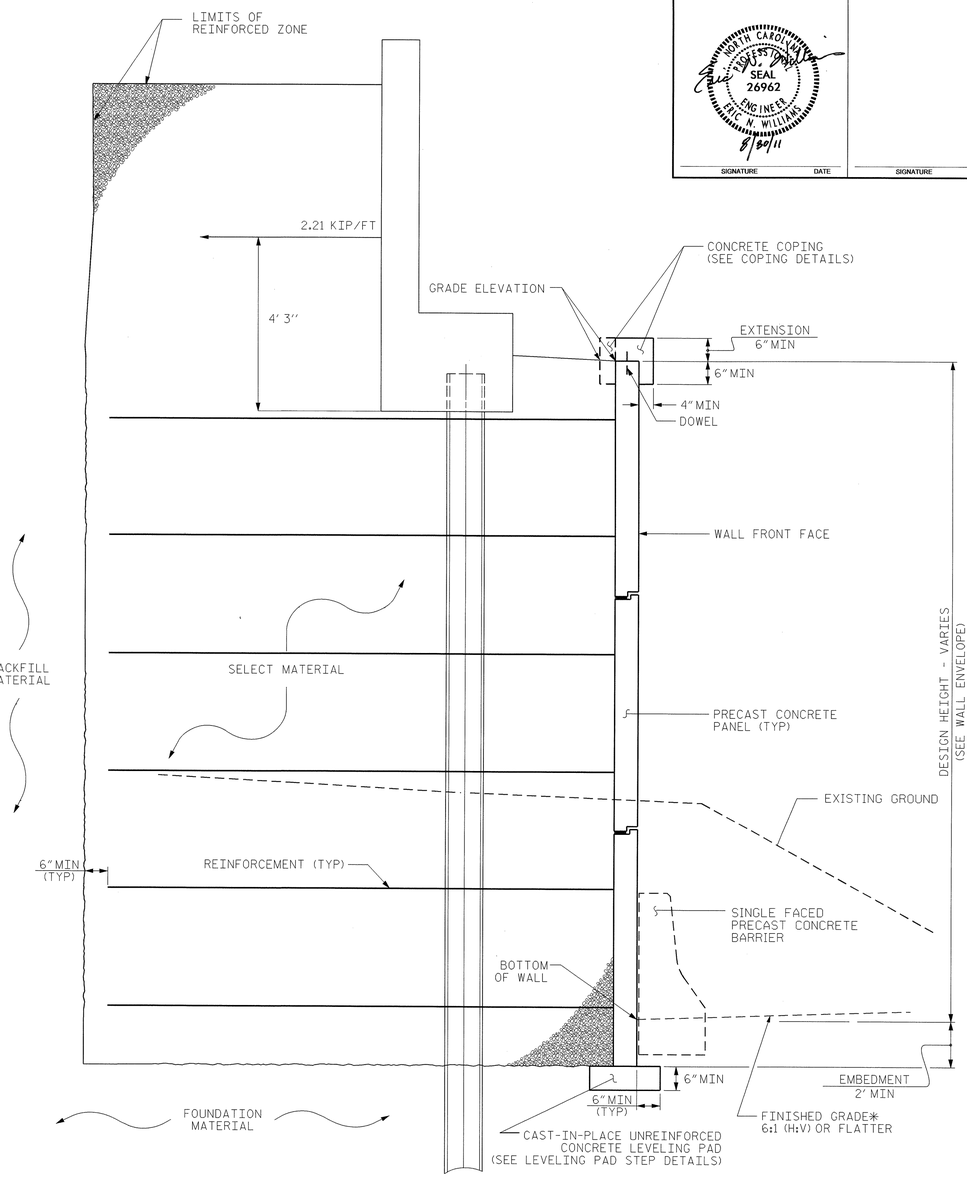

MSE WALL WITH PRECAST PANELS TYPICAL SECTION AT BRIDGE

*SEE ROADWAY PLANS FOR FINISHED GRADE DETAILS.

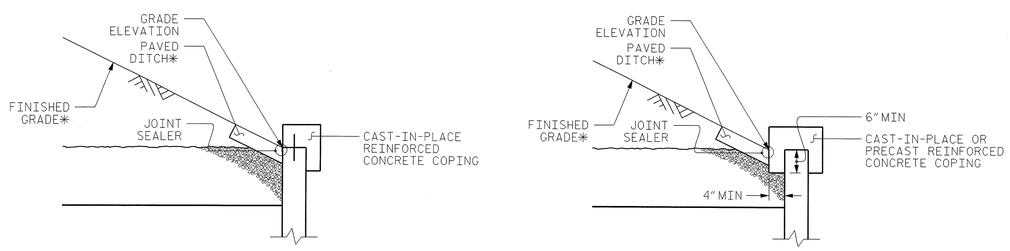

COPING DETAILS

AT THE CONTRACTOR'S OPTION, CONNECT COPING TO PANELS WITH DOWELS OR EXTEND COPING DOWN BACK OF PANELS.
*SEE ROADWAY PLANS FOR FINISHED GRADE AND/OR DITCH DETAILS.

PROJECT NO.: 34924.1.1 (U-3326B)
ROCKINGHAM **COUNTY**
STATION: 22+32 TO 24+44 -Y13-

SHEET 3 OF 4

GEOTECHNICAL ENGINEERING UNIT

☐ EASTERN REGIONAL OFFICE
☐ WESTERN REGIONAL OFFICE
☒ CONTRACT OFFICE

STATE OF NORTH CAROLINA DEPARTMENT OF TRANSPORTATION RALEIGH

MSE WALL TYPICALS FOR RETAINING WALLS 3 AND 4

REVISIONS						SHEET NO.
NO.	BY	DATE	NO.	BY	DATE	W-7
1			3			TOTAL SHEETS
2			4			8

PREPARED BY: E. WILLIAMS	DATE: 5/11
REVIEWED BY: D. TEAGUE	DATE: 5/11

GEOTECHNICAL ENGINEER	ENGINEER
NORTH CAROLINA PROFESSIONAL SEAL 26962 ENGINEER ERIC N. WILLIAMS 8/30/11	
SIGNATURE DATE	SIGNATURE DATE

NOTES

FOR MECHANICALLY STABILIZED EARTH (MSE) RETAINING WALLS, SEE MECHANICALLY STABILIZED EARTH RETAINING WALLS PROVISION.

FOR SINGLE FACED PRECAST CONCRETE BARRIER, SEE ROADWAY PLANS AND SECTION 857 OF THE STANDARD SPECIFICATIONS.

USE COARSE AGGREGATE IN THE REINFORCED ZONE FOR RETAINING WALLS NO. 3 AND 4.

USE AN MSE WALL SYSTEM WITH PRECAST CONCRETE PANELS FOR RETAINING WALLS NO. 3 AND 4.

BEFORE BEGINNING MSE WALL DESIGN FOR RETAINING WALL, SURVEY EXISTING GROUND ELEVATIONS SHOWN ON THE WALL PROFILE VIEW (WALL ENVELOPE) AND SUBMIT A REVISED WALL ENVELOPE FOR REVIEW. DO NOT START WALL DESIGN OR CONSTRUCTION UNTIL THIS ENVELOPE IS ACCEPTED.

DESIGN RETAINING WALL FOR WALL HEIGHTS EQUAL TO THE DESIGN HEIGHT (DIFFERENCE BETWEEN GRADE ELEVATION AND BOTTOM OF WALL ELEAVATION) PLUS EMBEDMENT (DIFFERENCE BETWEEN BOTTOM OF WALL ELEVATION AND TOP OF LEVELING PAD ELEVATION).

DESIGN RETAINING WALLS FOR THE FOLLOWING:
1) MINIMUM SERVICE LIFE = 100 YEARS
2) ALLOWABLE BEARING CAPACITY = 5000 PSF
3) SELECT MATERIAL PARAMETERS:

MATERIAL STANDARD SIZE NO. (IN ACCORDANCE WITH PSF SECTIONS 1005 AND 1014 OF THE STANDARD SPECIFICATIONS)	UNIT WEIGHT (gamma) PCF	FRICTION ANGLE (phi) DEGREES	COHESION (c)
57, 67 AND 78M	110	38	0

MATERIAL TYPE	UNIT WEIGHT (gamma) PCF	FRICTION ANGLE (phi) DEGREES	COHESION (c) PSF
BACKFILL	120	30	0
FOUNDATION	120	32	0

DESIGN RETAINING WALL FOR A LIVE LOAD TRAFFIC SURCHARGE.

DESIGN REINFORCEMENT CONNECTED TO END BENT CAPS FOR THE LOADING SHOWN AND CAST THE REINFORCEMENT CONNECTION HARDWARE INTO THE CAP BACKWALL FOR END BENTS MAINTAIN A MINIMUM CLEARANCE OF 3" BETWEEN THE HARDWARE AND REINFORCING STEEL IN THE CAP.

FOUNDATIONS FOR END BENTS MAY INTERFERE WITH REINFORCEMENT FOR RETAINING WALL. SEE "FOUNDATION LAYOUT" SHEET FOR FOUNDATION LOCATIONS.

DO NOT PLACE LEVELING PAD CONCRETE, SELECT MATERIAL OR REINFORCEMENT FOR RETAINING WALL UNTIL OBTAINING APPROVAL OF THE EXCAVATION DEPTH AND FOUNDATION MATERIAL.

"TEMPORARY SHORING" IS REQUIRED FOR RETAINING WALLS IN ACCORDANCE WITH THE TEMPORARY SHORING PROVISION. SEE TRAFFIC CONTROL PLANS.

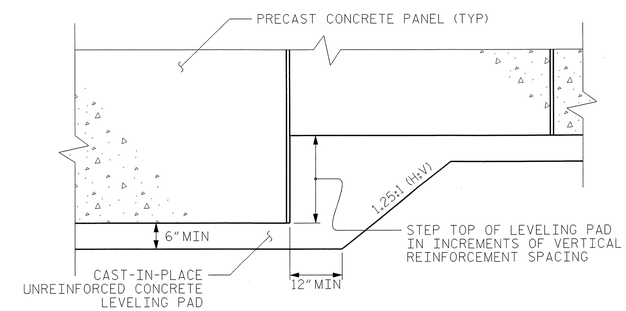

LEVELING PAD STEP DETAILS

PROJECT NO.: 34924.1.1 (U-3326B)
ROCKINGHAM **COUNTY**
STATION: 22+32 TO 24+44 -Y13-

SHEET 4 OF 4

GEOTECHNICAL ENGINEERING UNIT

☐ EASTERN REGIONAL OFFICE
☐ WESTERN REGIONAL OFFICE
☒ CONTRACT OFFICE

STATE OF NORTH CAROLINA
DEPARTMENT OF TRANSPORTATION
RALEIGH

MSE RETAINING WALL NOTES AND STEP DETAILS FOR RETAINING WALLS 3 AND 4

REVISIONS						SHEET NO.
NO.	BY	DATE	NO.	BY	DATE	W-8
1			3			TOTAL SHEETS
2			4			8

PREPARED BY: E. WILLIAMS	DATE: 5/11
REVIEWED BY: D. TEAGUE	DATE: 5/11

STANDARD NOTES

DESIGN DATA:

SPECIFICATIONS	A.A.S.H.T.O. (CURRENT)
LIVE LOAD	SEE PLANS
IMPACT ALLOWANCE	SEE A.A.S.H.T.O.
STRESS IN EXTREME FIBER OF	
STRUCTURAL STEEL - AASHTO M270 GRADE 36	20,000 LBS. PER SQ. IN.
- AASHTO M270 GRADE 50W	27,000 LBS. PER SQ. IN.
- AASHTO M270 GRADE 50	27,000 LBS. PER SQ. IN.
REINFORCING STEEL IN TENSION GRADE 60	24,000 LBS. PER SQ. IN.
CONCRETE IN COMPRESSION	1,200 LBS. PER SQ. IN.
CONCRETE IN SHEAR	SEE A.A.S.H.T.O.
STRUCTURAL TIMBER - TREATED OR UNTREATED - EXTREME FIBER STRESS	1,800 LBS. PER SQ. IN.
COMPRESSION PERPENDICULAR TO GRAIN OF TIMBER	375 LBS. PER SQ. IN.
EQUIVALENT FLUID PRESSURE OF EARTH	30 LBS. PER CU. FT. (MINIMUM)

MATERIAL AND WORKMANSHIP:

EXCEPT AS MAY OTHERWISE BE SPECIFIED ON PLANS OR IN THE SPECIAL PROVISIONS, ALL MATERIAL AND WORKMANSHIP SHALL BE IN ACCORDANCE WITH THE 2006 "STANDARD SPECIFICATIONS FOR ROADS AND STRUCTURES" OF THE N. C. DEPARTMENT OF TRANSPORTATION.

STEEL SHEET PILING FOR PERMANENT OR TEMPORARY APPLICATIONS SHALL BE HOT ROLLED.

CONCRETE:

UNLESS OTHERWISE REQUIRED ON PLANS, CLASS A CONCRETE SHALL BE USED FOR ALL PORTIONS OF ALL STRUCTURES WITH THE EXCEPTION THAT: CLASS AA CONCRETE SHALL BE USED IN BRIDGE SUPERSTRUCTURES, ABUTMENT BACKWALLS, AND APPROACH SLABS; AND CLASS B CONCRETE SHALL BE USED FOR SLOPE PROTECTION AND RIP RAP.

CONCRETE CHAMFERS:

UNLESS OTHERWISE NOTED ON THE PLANS, ALL EXPOSED CORNERS ON STRUCTURES SHALL BE CHAMFERED 3/4" WITH THE FOLLOWING EXCEPTIONS: TOP CORNERS OF CURBS MAY BE ROUNDED TO 1-1/2" RADIUS WHICH IS BUILT INTO CURB FORMS; CORNERS OF TRANSVERSE FLOOR EXPANSION JOINTS SHALL BE ROUNDED WITH A 1/4" FINISHING TOOL UNLESS OTHERWISE REQUIRED ON PLANS; AND CORNERS OF EXPANSION JOINTS IN THE ROADWAY FACES AND TOPS OF CURBS AND SIDEWALKS SHALL BE ROUNDED TO A 1/4" RADIUS WITH A FINISHING STONE OR TOOL UNLESS OTHERWISE REQUIRED ON PLANS.

DOWELS:

DOWELS WHEN INDICATED ON PLANS AS FOR CULVERT EXTENSIONS, SHALL BE EMBEDDED AT LEAST 12" INTO THE OLD CONCRETE AND GROUTED INTO PLACE WITH 1:2 CEMENT MORTAR.

ALLOWANCE FOR DEAD LOAD DEFLECTION, SETTLEMENT, ETC. IN CASTING SUPERSTRUCTURES:

BRIDGES SHALL BE BUILT ON THE GRADE OR VERTICAL CURVE SHOWN ON PLANS. SLABS, CURBS AND PARAPETS SHALL CONFORM TO THE GRADE OR CURVE.

ALL DIMENSIONS WHICH ARE GIVEN IN SECTION AND ARE AFFECTED BY DEAD LOAD DEFLECTIONS ARE DIMENSIONS AT CENTER LINE OF BEARING UNLESS OTHERWISE NOTED ON PLANS. IN SETTING FORMS FOR STEEL BEAM BRIDGES AND PRESTRESSED CONCRETE GIRDER BRIDGES, ADJUSTMENTS SHALL BE MADE DUE TO THE DEAD LOAD DEFLECTIONS FOR THE ELEVATIONS SHOWN. WHERE BLOCKS ARE SHOWN OVER BEAMS FOR BUILDING UP TO THE SLAB, THE VERTICAL DIMENSIONS OF THE BLOCKS SHALL BE ADJUSTED BETWEEN BEARINGS TO COMPENSATE FOR DEAD LOAD DEFLECTIONS, VERTICAL CURVE ORDINATE, AND ACTUAL BEAM CAMBER. WHERE BOTTOM OF SLAB IS IN LINE WITH BOTTOM OF TOP FLANGES, DEPTH OF SLAB BETWEEN BEARINGS SHALL BE ADJUSTED TO COMPENSATE FOR DEAD LOAD DEFLECTION, VERTICAL CURVE ORDINATE, AND ACTUAL BEAM CAMBER.

IN SETTING FALSEWORK AND FORMS FOR REINFORCED CONCRETE SPANS, AN ALLOWANCE SHALL BE MADE FOR DEAD LOAD DEFLECTIONS, SETTLEMENT OF FALSEWORK, AND PERMANENT CAMBER WHICH SHALL BE PROVIDED FOR IN ADDITION TO THE ELEVATIONS SHOWN. AFTER REMOVAL OF THE FALSEWORK, THE FINISHED STRUCTURES SHALL CONFORM TO THE PROFILE AND ELEVATIONS SHOWN ON THE PLANS AND CONSTRUCTION ELEVATIONS FURNISHED BY THE ENGINEER.

DETAILED DRAWINGS FOR FALSEWORK OR FORMS FOR BRIDGE SUPERSTRUCTURE AND ANY STRUCTURE OR PARTS OF A STRUCTURE AS NOTED ON THE PLANS SHALL BE SUBMITTED TO THE ENGINEER FOR APPROVAL BEFORE CONSTRUCTION OF THE FALSEWORK OR FORMS IS STARTED.

REINFORCING STEEL:

ALL REINFORCING STEEL SHALL BE DEFORMED. DIMENSIONS RELATIVE TO PLACEMENT OF REINFORCING ARE TO CENTERS OF BARS UNLESS OTHERWISE INDICATED IN THE PLANS. DIMENSIONS ON BAR DETAILS ARE TO CENTERS OF BARS OR ARE OUT TO OUT AS INDICATED ON PLANS.

WIRE BAR SUPPORTS SHALL BE PROVIDED FOR REINFORCING STEEL WHERE INDICATED ON THE PLANS. WHEN BAR SUPPORT PIECES ARE PLACED IN CONTINUOUS LINES, THEY SHALL BE SO PLACED THAT THE ENDS OF THE SUPPORTING WIRES SHALL BE LAPPED TO LOCK LEGS ON ADJOINING PIECES.

STRUCTURAL STEEL:

AT THE CONTRACTOR'S OPTION, HE MAY SUBSTITUTE 7/8" Ø SHEAR STUDS FOR THE 3/4" Ø STUDS SPECIFIED ON THE PLANS. THIS SUBSTITUTION SHALL BE MADE AT THE RATE OF 3 - 7/8" Ø STUDS FOR 4 - 3/4" Ø STUDS, AND STUD SPACING CHANGES SHALL BE MADE AS NECESSARY TO PROVIDE THE SAME EQUIVALENT NUMBER OF 7/8" Ø STUDS ALONG THE BEAM AS SHOWN FOR 3/4" Ø STUDS BASED ON THE RATIO OF 3 - 7/8" Ø STUDS FOR 4 - 3/4" Ø STUDS. STUDS OF THE LENGTH SPECIFIED ON THE PLANS MUST BE PROVIDED. THE MAXIMUM SPACING SHALL BE 2'-0".

EXCEPT AT THE INTERIOR SUPPORTS OF CONTINUOUS BEAMS WHERE THE COVER PLATE IS IN CONTACT WITH BEARING PLATE, THE CONTRACTOR MAY, AT HIS OPTION, SUBSTITUTE FOR THE COVER PLATES DESIGNATED ON THE PLANS COVER PLATES OF THE EQUIVALENT AREA PROVIDED THESE PLATES ARE AT LEAST 5/16" IN THICKNESS AND DO NOT EXCEED A WIDTH EQUAL TO THE FLANGE WIDTH LESS 2" OR A THICKNESS EQUAL TO 2 TIMES THE FLANGE THICKNESS. THE SIZE OF FILLET WELDS SHALL CONFORM TO THE REQUIREMENTS OF THE CURRENT ANSI/AASHTO/AWS "BRIDGE WELDING CODE". ELECTROSLAG WELDING WILL NOT BE PERMITTED.

WITH THE SOLE EXCEPTION OF EDGES AT SURFACES WHICH BEAR ON OTHER SURFACES, ALL SHARP EDGES AND ENDS OF SHAPES AND PLATES SHALL BE SLIGHTLY ROUNDED BY SUITABLE MEANS TO A RADIUS OF APPROXIMATELY 1/16 INCH OR EQUIVALENT FLAT SURFACE AT A SUITABLE ANGLE PRIOR TO PAINTING, GALVANIZING, OR METALLIZING.

HANDRAILS AND POSTS:

METAL STANDARDS AND FACES OF THE CONCRETE END POSTS FOR THE METAL RAIL SHALL BE SET NORMAL TO THE GRADE OF THE CURB, UNLESS OTHERWISE SHOWN ON PLANS. THE METAL RAIL AND TOPS OF CONCRETE POSTS USED WITH THE ALUMINUM RAIL SHALL BE BUILT PARALLEL TO THE GRADE OF THE CURB.

METAL HANDRAILS SHALL BE IN ACCORDANCE WITH THE PLANS. RAILS SHALL BE AS MANUFACTURED FOR BRIDGE RAILING. CASTINGS SHALL BE OF A UNIFORM APPEARANCE. FINS AND OTHER DEFORMATIONS RESULTING FROM CASTING OR OTHERWISE SHALL BE REMOVED IN A MANNER SO THAT A UNIFORM COLORING OF THE COMPLETED CASTING SHALL BE OBTAINED. CASTINGS WITH DISCOLORATIONS OR OF NON-UNIFORM COLORING WILL NOT BE ACCEPTED. CERTIFIED MILL REPORTS ARE REQUIRED FOR METAL RAILS AND POSTS.

SPECIAL NOTES:

GENERALLY, IN CASE OF DISCREPANCY, THIS STANDARD SHEET OF NOTES SHALL GOVERN OVER THE SPECIFICATIONS, BUT THE REMAINDER OF THE PLANS SHALL GOVERN OVER NOTES HEREON, AND SPECIAL PROVISIONS SHALL GOVERN OVER ALL. SEE SPECIFICATIONS ARTICLE 105-4.

ENGLISH

JANUARY, 1990

STD. NO. SN