09/08/99

TIP PROJECT: BP-5300R

CONTRACT: C202806

$$$$$$$$SYSTIME$$$$$$
$$$$$$$$$$$$$$$$$$$$DGN$$$$$$$$$$$$$$$$$$$$
$$$$$USERNAME$$$$

STATE OF NORTH CAROLINA
DIVISION OF HIGHWAYS

GUILFORD COUNTY

STATE	STATE PROJECT REFERENCE NO.	SHEET NO.	TOTAL SHEETS
N.C.	BP-5300R	1	

T.I.P. NO.	F.A. PROJ. NO.	DESCRIPTION
45438.1.1	BRSTP-2254(2)	PE
45438.3.15	BRSTP-2254(2)	CONST.

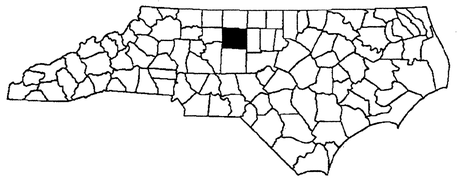

LOCATION: BRIDGE NOS. 1, 136 AND 410 ON SR 2254 (WENDOVER AVE.) AND BRIDGE NOS. 287, 217, 259 AND 274 ON US 220 (WENDOVER AVE)

TYPE OF WORK: BRIDGE DECK PRESERVATION: DECK REPAIR AND LATEX MODIFIED CONCRETE OVERLAY

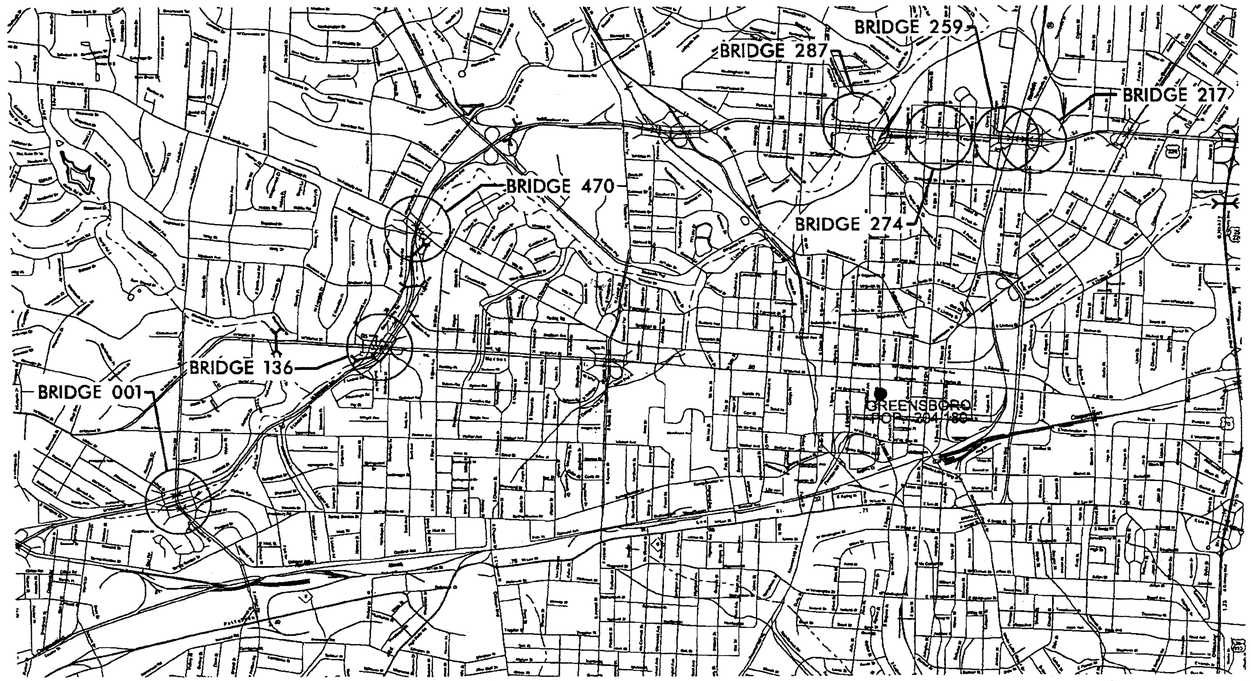

PROJECT LENGTH

PREPARED IN THE OFFICE OF:

Stantec Consulting Services Inc.
801 Jones Franklin Road
Suite 300
Raleigh, NC 27606

Tel. (919) 851-6666
Fax. (919) 851-7024
www.stantec.com
License No. F-0672

Stantec

FOR THE NORTH CAROLINA DEPARTMENT OF TRANSPORTATION

2006 STANDARD SPECIFICATIONS

RIGHT OF WAY DATE: N.A.

LETTING DATE: JANUARY 17, 2012

JOE KELVINGTON, PE
PROJECT ENGINEER

NCDOT CONTACT: ZAKI WAFA, PE
BRIDGE MANAGEMENT PROJECT MANAGER

NORTH CAROLINA PROFESSIONAL SEAL 20208 ENGINEER ERIC B. NELSON, JR. 11/14/11

ERIC B. NELSON, PE
DESIGN ENGINEER

DIVISION OF HIGHWAYS
STATE OF NORTH, CAROLINA

STATE	STATE PROJECT REFERENCE NO.	SHEET NO.	TOTAL SHEETS
N.C.	BP-5300R	1A	

WBS NO.	F.A. PROJ. NO.	DESCRIPTION
45438.1.1	BRSTP-2254(2)	PE
45438.3.15	BRSTP-2254(2)	CONST.

STATE OF NORTH CAROLINA
DIVISION OF HIGHWAYS

GUILFORD COUNTY

LOCATION: BRIDGE NOS. 1, 136 AND 410 ON SR 2254 (WENDOVER AVE.) AND BRIDGE NOS. 287, 217, 259 AND 274 ON US 220 (WENDOVER AVE)

TYPE OF WORK: BRIDGE DECK PRESERVATION: DECK REPAIR AND LATEX MODIFIED CONCRETE OVERLAY

INDEX OF SHEETS

DWG.	DESCRIPTION
1	TITLE SHEET
1A	INDEX OF SHEET
2	SUMMARY OF QUANTITIES
S-1 THRU S-50	STRUCTURE PLANS
TMP-1 THRU TMP-21A	TRAFFIC MANAGEMENT PLANS

ROADWAY STANDARD DRAWINGS

2006 ROADWAY ENGLISH STANDARD DRAWINGS

THE FOLLOWING ROADWAY STANDARDS AS APPEAR IN "ROADWAY STANDARD DRAWINGS" HIGHWAY DESIGN BRANCH -N.C. DEPARTMENT OF TRANSPORTATION - RALEIGH, N.C. DATED JULY 18,2006 ARE APPLICABLE TO THIS PROJECT AND BY REFERENCE HEREBY ARE CONSIDERED A PART OF THEESE PLANS:

STD. NO	TITLE
DIVISION 8 - INCIDENTALS	
846.01	CONCRETE CURB, GUTTER AND CURB & GUTTER

PROJECT LENGTH

PREPARED IN THE OFFICE OF:
Stantec Consulting Services Inc.
801 Jones Franklin Road
Suite 300
Raleigh, NC 27606
Tel. (919) 851-6666
Fax. (919) 851-7024
www.stantec.com
License No. F-0672
Stantec
FOR THE NORTH CAROLINA DEPARTMENT OF TRANSPORTATION

2006 STANDARD SPECIFICATIONS

RIGHT OF WAY DATE: N.A.

LETTING DATE: JANUARY 17, 2012

JOE KELVINGTON, PE
PROJECT ENGINEER

NCDOT CONTACT: ZAKI WAFA, PE
BRIDGE MANAGEMENT PROJECT MANAGER

RICK NELSON, PE
DESIGN ENGINEER

DIVISION OF HIGHWAYS
STATE OF NORTH CAROLINA

TIP PROJECT: BP-5300R

CONTRACT: C202806

$$$$$SYSTIME$$$$$
$$$$$$$$$$$$$$$$$DGN$$$$$$$$$$$$$$$$$
$$$$USERNAME$$$$

09/08/99

09/08/99

TIP PROJECT: BP-5300R

CONTRACT: C202806

STATE	STATE PROJECT REFERENCE NO.	SHEET NO.	TOTAL SHEETS
N.C.	BP-5300R	2	

STATE OF NORTH CAROLINA
DIVISION OF HIGHWAYS

SUMMARY OF QUANTITIES

	TOTAL BILL OF MATERIAL											
	SCARIFYING BRIDGE DECK **	CLASS I SURFACE PREPARATION *	CLASS II SURFACE PREPARATION *	CLASS III SURFACE PREPARATION *	HYDRO-DEMOLITION OF BRIDGE DECK	CLASS AA CONCRETE *	LATEX MODIFIED CONCRETE-VERY EARLY STRENGTH	PLACING & FINISHING LATEX MODIFIED CONCRETE-VERY EARLY STRENGTH	EVAZOTE JOINT SEALS	GROOVING BRIDGE FLOORS	ASHPHALT CONC. SURF. COURSE TYPE S9.5B	2'-6" CONC. CURB & GUTTER
	SQ.YDS.	SQ.YDS.	SQ.YDS.	SQ.YDS.	SQ.YDS.	CU.YDS.	CU.YDS.	SQ.YDS.	LUMP SUM	SQ.FT.	TON	LF
BRIDGE #001	1,210.6	697.3	38.5	13.9	749.7	1.3	32.9	749.7	LUMP SUM	6,083	49	234
BRIDGE #136	2,846.0	1,367.3	128.7	32.3	1,528.3	3.2	70.7	1,528.3	LUMP SUM	12,358	139	303
BRIDGE #470	1,980.8	663.7	87.7	4.9	736.4	0.4	41.6	736.4	LUMP SUM	5,957	131	-
BRIDGE #217	2,187.8	1,249.9	87.9	5.6	1,343.4	0.6	60.1	1,343.4	LUMP SUM	11,026	89	-
BRIDGE #259	2,512.6	1,387.9	118.0	-	1,505.9	-	57.9	1,505.9	LUMP SUM	12,401	106	-
BRIDGE #274	2,023.2	1,059.0	109.1	10.6	1,178.7	1.1	56.0	1,178.7	LUMP SUM	9,768	89	-
BRIDGE #287	968.3	425.7	94.6	3.5	523.8	0.3	29.8	523.8	LUMP SUM	4,020	47	-
												-
TOTAL QTY.	13,729.3	6,850.8	664.5	70.8	7,566.2	6.9	349.0	7,566.2	LUMP SUM	61,613	650	537

* QUANTITIES ARE SHOWN FOR INFORMATIONAL PURPOSES ONLY. NO SEPARATE PAYMENT SHALL BE MADE.

** INCLUDES MILLING OF ROADWAY PAVEMENT.

PROJECT LENGTH

PREPARED IN THE OFFICE OF:

Stantec

Stantec Consulting Services Inc.
801 Jones Franklin Road
Suite 300
Raleigh, NC 27606

Tel. (919) 851-6866
Fax. (919) 851-7024
www.stantec.com
License No. F-0672

FOR THE NORTH CAROLINA DEPARTMENT OF TRANSPORTATION

2006 STANDARD SPECIFICATIONS

RIGHT OF WAY DATE: N.A.

LETTING DATE: JANUARY 17, 2012

JOE KELVINGTON, PE
PROJECT ENGINEER

NCDOT CONTACT: ZAKI WAFA, PE
BRIDGE MANAGEMENT PROJECT MANAGER

RICK NELSON, PE
DESIGN ENGINEER

DIVISION OF HIGHWAYS
STATE OF NORTH CAROLINA

STATE OF NORTH CAROLINA DEPARTMENT OF TRANSPORTATION

$$$$$SYSTIME$$$$$
$$$$$$$$$$$DGN$$$$$$$$$$$$$$$$
$$$USERNAME$$$$

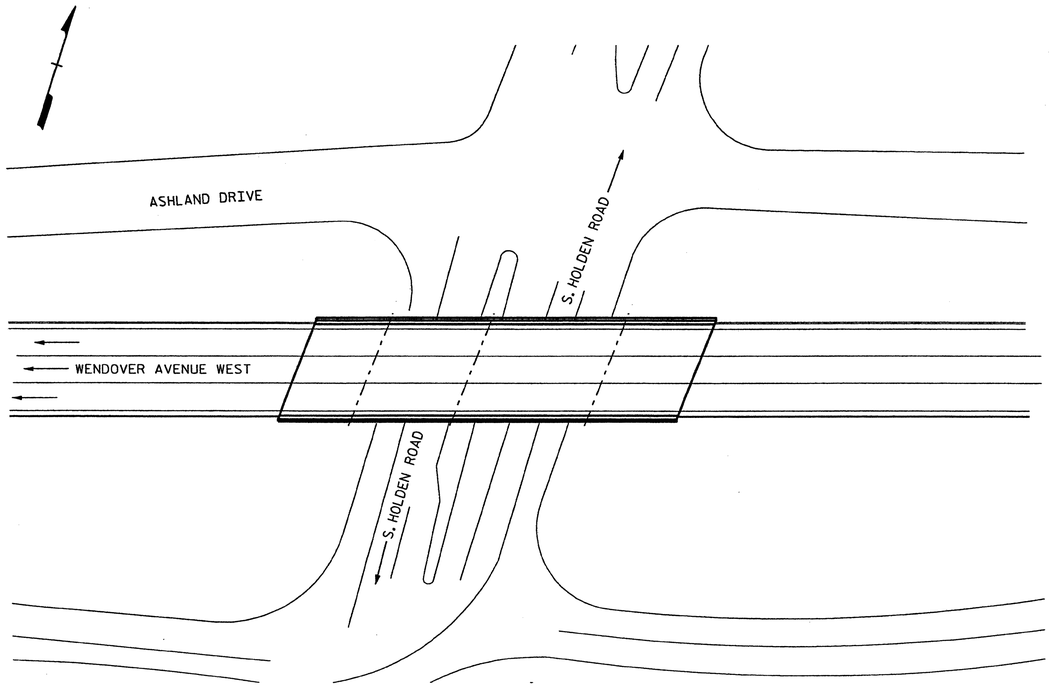

BRIDGE 001 ON WENDOVER AVE.

LOCATION: BRIDGE 001, SR 2254 (WENDOVER AVE.) OVER HOLDEN ROAD 0.1 MILES NORTH OF JUNCTION SR 1598

BRIDGE 001 ON WENDOVER AVE.

TOTAL BILL OF MATERIAL

SCARIFYING ** BRIDGE DECK	CLASS I * SURFACE PREPARATION	CLASS II * SURFACE PREPARATION	CLASS III * SURFACE PREPARATION	HYDRO-DEMOLITION OF BRIDGE DECK	CLASS AA * CONCRETE	LATEX MODIFIED CONCRETE-VERY EARLY STRENGTH	PLACING & FINISHING LATEX MODIFIED CONCRETE-VERY EARLY STRENGTH	EVAZOTE JOINT SEALS	GROOVING BRIDGE FLOORS	ASHPHALT CONC. SURF. COURSE TYPE S9.5B	2'-6" CONC. CURB & GUTTER
SQ.YDS.	SQ.YDS.	SQ.YDS.	SQ.YDS.	SQ.YDS.	CU.YDS.	CU.YDS.	SQ.YDS.	LUMP SUM	SQ.FT.	TON	LF
1,210.6	697.3	38.5	13.9	749.7	1.3	32.9	749.7	LUMP SUM	6,083	49	234

* QUANTITIES ARE SHOWN FOR INFORMATIONAL PURPOSES ONLY. IF ANY CLASS III LOCATIONS ARE ENCOUNTERED PRIOR TO OR DURING HYDRO-DEMOLITION, SEE "TYP. "BLOW THRU" CONTAINMENT AND FORMWORK" DETAIL. NO SEPARATE PAYMENT SHALL BE MADE.

** INCLUDES MILLING OF ROADWAY PAVEMENT.

Stantec
Stantec Consulting Services Inc.
801 Jones Franklin Road
Suite 300
Raleigh, NC 27606
Tel. (919) 851-6866
Fax. (919) 851-7024
www.stantec.com
License No. F-0672

DRAWN BY : J.L. HENNEKES DATE : 05-13-11
CHECKED BY : J T KELVINGTON DATE : 05-13-11

PROJECT NO. BP-5300R
GUILFORD COUNTY
STATION:

STATE OF NORTH CAROLINA
DEPARTMENT OF TRANSPORTATION
RALEIGH

LOCATION SKETCH AND TOTAL BILL OF MATERIAL

DECK REHAB. FOR BRIDGE NO. 001

REVISIONS						SHEET NO.
NO.	BY:	DATE:	NO.	BY:	DATE:	S-1
1			3			TOTAL SHEETS
2			4			50

NORTH CAROLINA PROFESSIONAL SEAL 13406 ENGINEER JOSEPH T. KELVINGTON

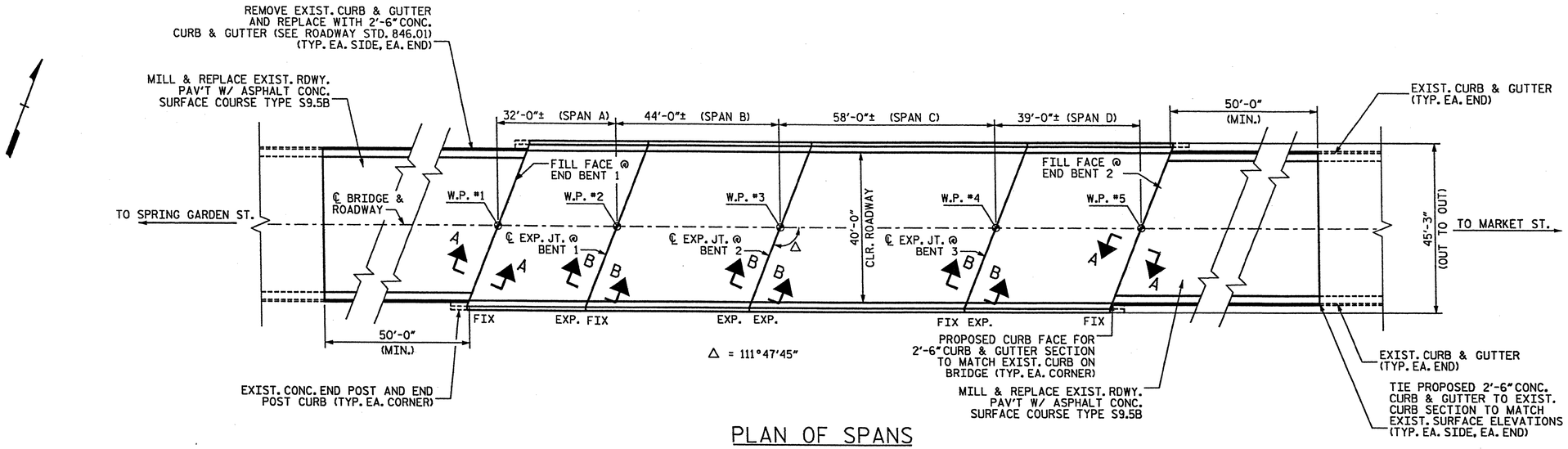

PLAN OF SPANS

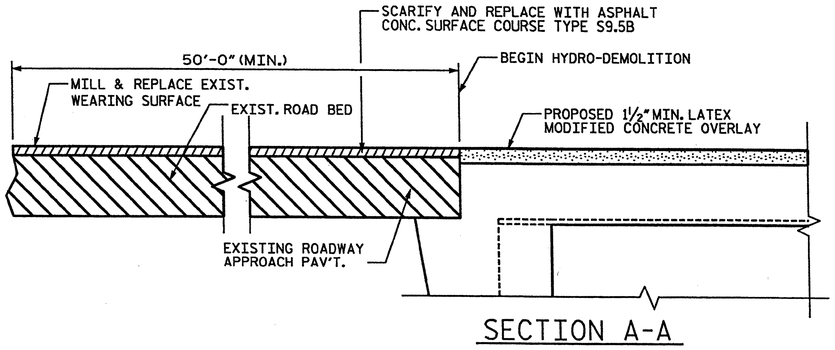

SECTION A-A

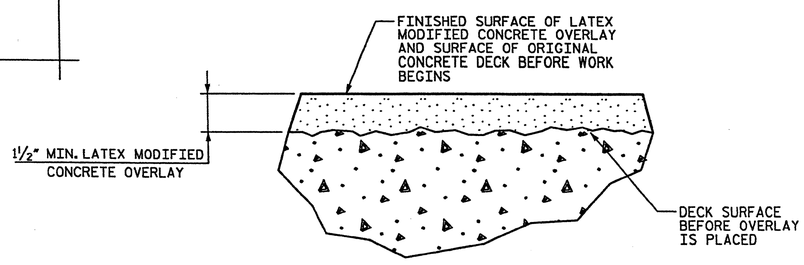

DETAIL FOR LATEX MODIFIED CONCRETE OVERLAY

NOTES:

EXISTING DECK DRAINS SHALL BE SEALED PRIOR TO BEGINNING REPAIR OF BRIDGE DECKS WITH LATEX MODIFIED CONCRETE. SEE SPECIAL PROVISIONS.

FOR HYDRO-DEMOLITION, SEE SPECIAL PROVISIONS.

THE CONTRACTOR MUST COLLECT, TREAT AND DISPOSE OF RUN-OFF WATER FROM THE HYDRO-DEMOLITION PROCESS. SEE SPECIAL PROVISIONS.

THE BOUNDARIES OF AREAS IDENTIFIED FOR CLASS III SURFACE PREPARATION ARE APPROXIMATE. THE CONTRACTOR SHALL PROVIDE A METHOD OF HANDLING UNEXPECTED BLOW THROUGH OF THE DECK. SEE DETAIL, SHT. NO. S-4.

LATEX MODIFIED CONCRETE SHALL BE LATEX MODIFIED CONCRETE - VERY EARLY STRENGTH.

FOR LATEX MODIFIED CONCRETE - VERY EARLY STRENGTH, SEE SPECIAL PROVISIONS.

FOR EVAZOTE JOINT SEALS, SEE SPECIAL PROVISIONS.

FOR SECTION B-B, SEE SHT. NO. S-8.

COSTS FOR REMOVAL OF EXISTING CURB & GUTTER SECTIONS, BACKFILL AND GRADING SUBBASE UNDER RECONSTRUCTED CURB & GUTTER SECTION WILL BE INCLUDED IN THE UNIT PRICE BID FOR 2'-6" CONCRETE CURB & GUTTER.

FOR THE TYPICAL ROADWAY APPROACH SECTION, SEE SHEET NO. S-7.

PROJECT NO. BP-5300R

GUILFORD COUNTY

STATION:

Stantec
Stantec Consulting Services Inc.
801 Jones Franklin Road
Suite 300
Raleigh, NC 27606
Tel. (919) 851-6866
Fax. (919) 851-7024
www.stantec.com
License No. F-0672

DRAWN BY : B M PALMER DATE : 05-13-11

CHECKED BY : J T KELVINGTON DATE : 05-13-11

STATE OF NORTH CAROLINA
DEPARTMENT OF TRANSPORTATION
RALEIGH

PLAN OF BRIDGE

DECK REHAB. FOR BRIDGE NO. 001

REVISIONS						SHEET NO.
NO.	BY:	DATE:	NO.	BY:	DATE:	S-2
1			3			TOTAL SHEETS
2			4			50

NORTH CAROLINA PROFESSIONAL SEAL 13406 ENGINEER JOSEPH T. KELVINGTON

8/31/11

C:\Projects\Bridge Group 20\BP5300R\Bridge 001\Drawing\BP5300R001_DeckPlan1.dgn 8/30/2011 3:35:17 PM omcullough

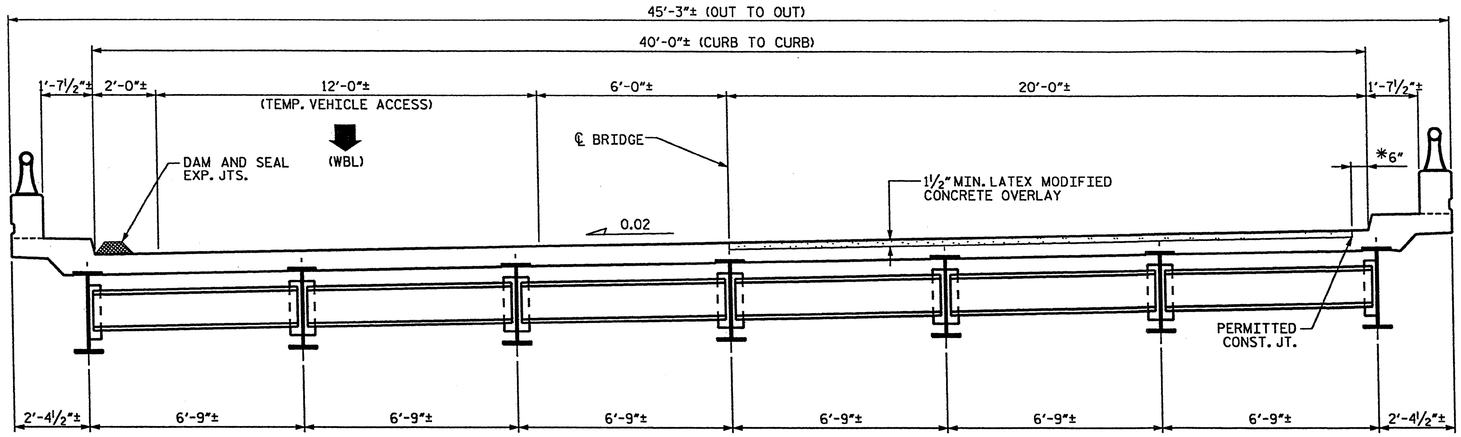

TYP. SECTION - STAGE I CONSTRUCTION

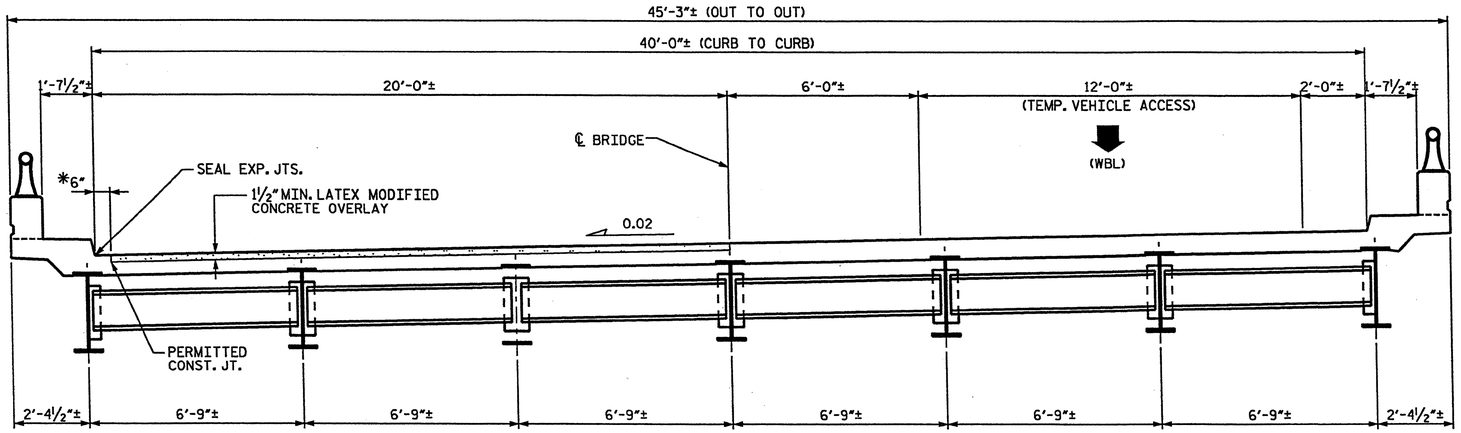

TYP. SECTION - STAGE II CONSTRUCTION

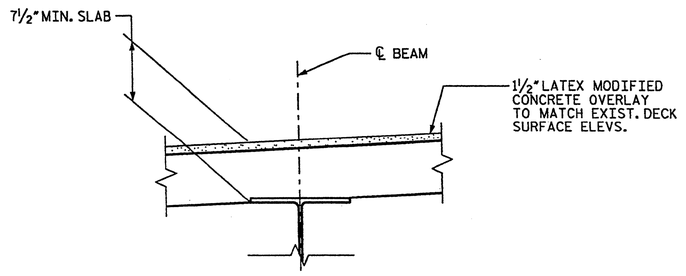

EXIST. SLAB BUILDUP

NOTES:

WATER & CONCRETE SLURRY FROM HYDRO-DEMOLITION SHALL NOT BE ALLOWED TO DRAIN ACROSS TRAVEL LANES. CONTRACTOR SHALL PROVIDE A METHOD TO CONTROL THE WATER.

FOR TRAFFIC CONTROL AND CONSTRUCTION PHASING, SEE TRANSPORTATION MANAGEMENT PLANS.

*PERMITTED WIDTH OF EXISTING CONCRETE DECK SURFACE OVER FULL LENGTH OF BRIDGE DECK THAT MAY BE LEFT INTACT FOR SCREED SUPPORT. OTHERWISE, REPAIR DECK SURFACE FROM CURB TO CURB.

PROJECT NO. BP-5300R

GUILFORD COUNTY

STATION:

STATE OF NORTH CAROLINA
DEPARTMENT OF TRANSPORTATION
RALEIGH

TYPICAL SECTION

DECK REHAB. FOR BRIDGE NO. 001

REVISIONS						SHEET NO.
NO.	BY:	DATE:	NO.	BY:	DATE:	S-3
1			3			TOTAL SHEETS
2			4			50

Stantec
Stantec Consulting Services Inc.
801 Jones Franklin Road
Suite 300
Raleigh, NC 27606
Tel. (919) 851-6866
Fax. (919) 851-7024
www.stantec.com
License No. F-0672

DRAWN BY : B M PALMER DATE : 05-13-11
CHECKED BY : J T KELVINGTON DATE : 05-13-11

NORTH CAROLINA PROFESSIONAL SEAL 13406 ENGINEER JOSEPH T. KELVINGTON
8/31

structures\Bridge Group 20\BP5300R\Bridge 001\Drawing\BP5300R001TypSect.dgn 8/30/2011 3:38:31 PM cmccullough

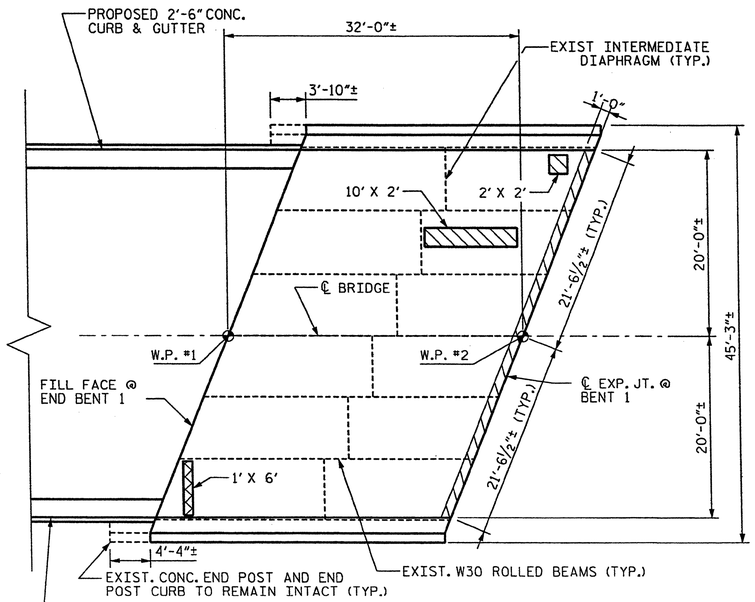

PLAN OF SPAN A - DECK REPAIRS

NOTES:

CONTRACTOR SHALL FURNISH FORMWORK TO SUPPORT SLAB OVERHANG REGIONS WITH EXTENSIVE CLASS III SURFACE PREPARATION.

SUBMIT DETAILS OF PROPOSED FORMWORK FOR APPROVAL PRIOR TO BEGINNING WORK.

COSTS FOR INSTALLING AND REMOVING FORMWORK SHALL BE INCIDENTAL TO THE PRICE BID PER SQ. YD. OF HYDRO-DEMOLITION.

SEE HYDRO-DEMOLITION SPECIAL PROVISIONS.

CLASS II SURFACE PREPARATION

CLASS III SURFACE PREPARATION

L' X W' = LENGTH OF AREA ALONG ℄ BRIDGE X WIDTH OF AREA NORMAL TO ℄ BRIDGE ±

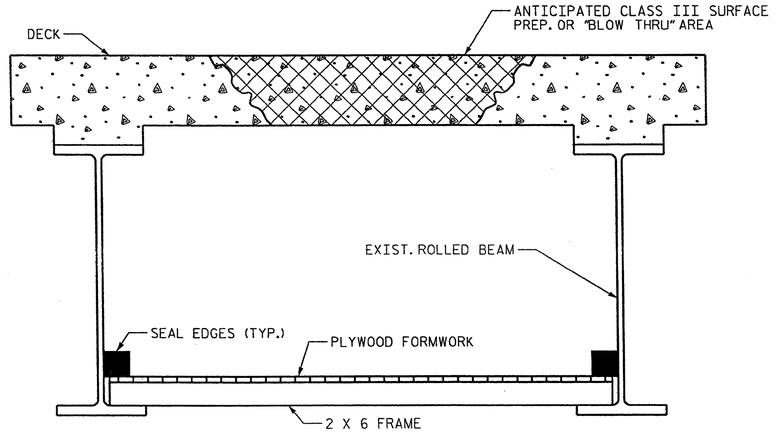

TYP. "BLOW THRU" CONTAINMENT AND FORMWORK

A METHOD TO CAPTURE WATER AND DEBRIS FROM BLOW THRU DURING HYDRO-DEMOLITION SHALL BE INSTALL IN AREAS INDICATED AS CLASS III SURFACE PREPARATION.

SUBMIT DETAILS OF PROPOSED FORMWORK FOR APPROVAL PRIOR TO BEGINNING WORK.

COSTS FOR INSTALLING AND REMOVING FORMWORK SHALL BE INCIDENTAL TO THE PRICE PER SQ. YARD OF HYDRO-DEMOLITION.

CONTRACTOR, AT HIS OPTION, MAY CHOOSE TO MONITOR HYDRO-DEMOLITION WORK AND CONTROL TRAFFIC UNDER THE BRIDGE IN LIEU OF BLOW THRU CONTAINMENT. SEE TRAFFIC CONTROL PLANS.

Stantec
Stantec Consulting Services Inc.
801 Jones Franklin Road
Suite 300
Raleigh, NC 27606
Tel. (919) 851-6866
Fax. (919) 851-7024
www.stantec.com
License No. F-0672

DRAWN BY : B M PALMER DATE : 05-13-11
CHECKED BY : J T KELVINGTON DATE : 05-13-11

NORTH CAROLINA PROFESSIONAL ENGINEER SEAL 13406 JOSEPH T. KELVINGTON

PROJECT NO. BP-5300R
GUILFORD COUNTY
STATION:

STATE OF NORTH CAROLINA
DEPARTMENT OF TRANSPORTATION
RALEIGH

DECK REPAIR DETAILS SPAN A

DECK REHAB. FOR BRIDGE NO. 001

REVISIONS						SHEET NO.
NO.	BY:	DATE:	NO.	BY:	DATE:	S-4
1			3			TOTAL SHEETS
2			4			50

$FILE$ $DATE$ $TIME$ $USER$

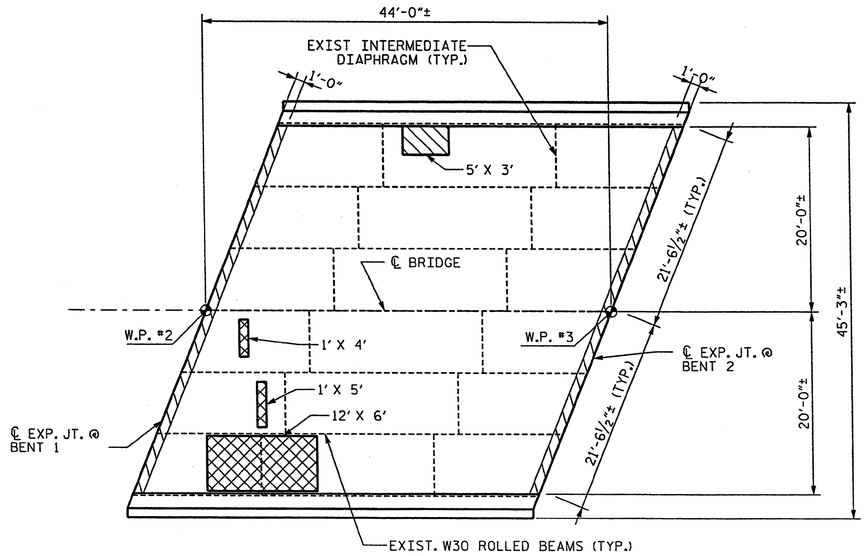

PLAN OF SPAN B - DECK REPAIRS

CLASS II SURFACE PREPARATION

CLASS III SURFACE PREPARATION

L' X W' = LENGTH OF AREA ALONG ℄ BRIDGE X
WIDTH OF AREA NORMAL TO ℄ BRIDGE ±

NOTES:

CONTRACTOR SHALL FURNISH FORMWORK TO SUPPORT SLAB OVERHANG REGIONS WITH EXTENSIVE CLASS III SURFACE PREPARATION.

SUBMIT DETAILS OF PROPOSED FORMWORK FOR APPROVAL PRIOR TO BEGINNING WORK.

COSTS FOR INSTALLING AND REMOVING FORMWORK SHALL BE INCIDENTAL TO THE PRICE BID PER SQ. YD. OF HYDRO-DEMOLITION.

SEE HYDRO-DEMOLITION SPECIAL PROVISIONS.

$FILE$ $DATE$ $TIME$ $USER$

Stantec
Stantec Consulting Services Inc.
801 Jones Franklin Road
Suite 300
Raleigh, NC 27606
Tel. (919) 851-6866
Fax. (919) 851-7024
www.stantec.com
License No. F-0672

DRAWN BY : B M PALMER DATE : 05-13-11
CHECKED BY : J T KELVINGTON DATE : 05-13-11

PROJECT NO. BP-5300R
GUILFORD COUNTY
STATION:

STATE OF NORTH CAROLINA
DEPARTMENT OF TRANSPORTATION
RALEIGH

DECK REPAIR DETAILS SPAN B

DECK REHAB. FOR BRIDGE NO. 001

REVISIONS						SHEET NO.
NO.	BY:	DATE:	NO.	BY:	DATE:	S-5
1			3			TOTAL SHEETS
2			4			50

NORTH CAROLINA PROFESSIONAL SEAL 13406 ENGINEER JOSEPH T. KELVINGTON

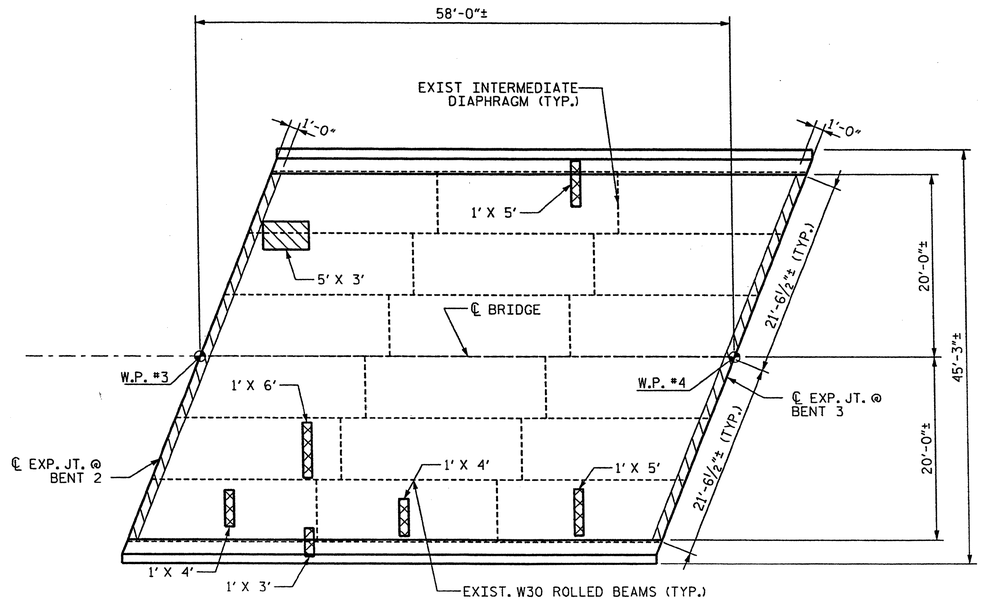

PLAN OF SPAN C - DECK REPAIRS

NOTES:

CONTRACTOR SHALL FURNISH FORMWORK TO SUPPORT SLAB OVERHANG REGIONS WITH EXTENSIVE CLASS III SURFACE PREPARATION.

SUBMIT DETAILS OF PROPOSED FORMWORK FOR APPROVAL PRIOR TO BEGINNING WORK.

COSTS FOR INSTALLING AND REMOVING FORMWORK SHALL BE INCIDENTAL TO THE PRICE BID PER SQ. YD. OF HYDRO-DEMOLITION.

SEE HYDRO-DEMOLITION SPECIAL PROVISIONS.

CLASS II SURFACE PREPARATION

CLASS III SURFACE PREPARATION

L' X W' = LENGTH OF AREA ALONG ℄ BRIDGE X
WIDTH OF AREA NORMAL TO ℄ BRIDGE ±

$FILE$ $DATE$ $TIME$ $USER$

Stantec
Stantec Consulting Services Inc.
801 Jones Franklin Road
Suite 300
Raleigh, NC 27606
Tel. (919) 851-6866
Fax. (919) 851-7024
www.stantec.com
License No. F-0672

DRAWN BY : B M PALMER DATE : 05-13-11
CHECKED BY : J T KELVINGTON DATE : 05-13-11

PROJECT NO. BP-5300R
GUILFORD COUNTY
STATION:

STATE OF NORTH CAROLINA
DEPARTMENT OF TRANSPORTATION
RALEIGH

DECK REPAIR DETAILS
SPAN C

DECK REHAB. FOR BRIDGE NO. 001

REVISIONS						SHEET NO.
NO.	BY:	DATE:	NO.	BY:	DATE:	S-6
1			3			TOTAL SHEETS
2			4			50

NORTH CAROLINA PROFESSIONAL SEAL 13406 ENGINEER JOSEPH T. KELVINGTON
5/13/11

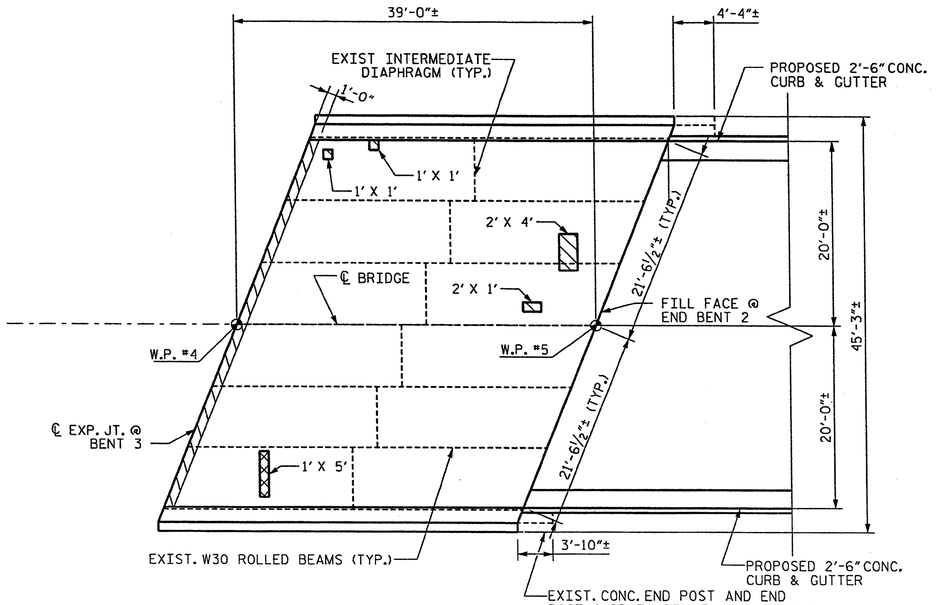

PLAN OF SPAN D - DECK REPAIRS

CLASS II SURFACE PREPARATION

CLASS III SURFACE PREPARATION

L' X W' = LENGTH OF AREA ALONG ℄ BRIDGE X
WIDTH OF AREA NORMAL TO ℄ BRIDGE ±

NOTES:

CONTRACTOR SHALL FURNISH FORMWORK TO SUPPORT SLAB OVERHANG REGIONS WITH EXTENSIVE CLASS III SURFACE PREPARATION.

SUBMIT DETAILS OF PROPOSED FORMWORK FOR APPROVAL PRIOR TO BEGINNING WORK.

COSTS FOR INSTALLING AND REMOVING FORMWORK SHALL BE INCIDENTAL TO THE PRICE BID PER SQ. YD. OF HYDRO-DEMOLITION.

SEE HYDRO-DEMOLITION SPECIAL PROVISIONS.

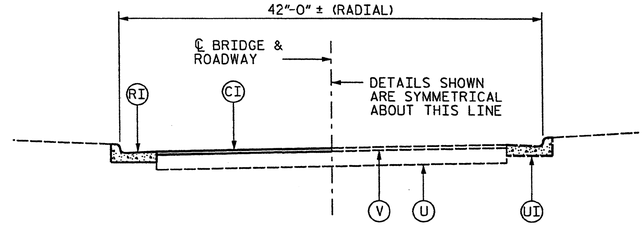

TYPICAL ROADWAY SECTION

PAVEMENT SCHEDULE

(CI) 2" MIN. ASPALT CONC. SURFACE COURSE, TYPE S9.5B @ AN AVG RATE OF 224 LBS. PER. SQ. YD.

(RI) 2'-6" CONCRETE CURB AND GUTTER

(U) EXISTING PAVEMENT

(UI) EXISTING CURB AND GUTTER TO BE REMOVED

(V) MILLING 2" MIN. THICKNESS

Stantec
Stantec Consulting Services Inc.
801 Jones Franklin Road
Suite 300
Raleigh, NC 27606
Tel. (919) 851-6866
Fax. (919) 851-7024
www.stantec.com
License No. F-0672

DRAWN BY : B M PALMER DATE : 05-13-11
CHECKED BY : J T KELVINGTON DATE : 05-13-11

$FILE$ $DATE$ $TIME$ $USER$

PROJECT NO. BP-5300R
GUILFORD COUNTY
STATION:

STATE OF NORTH CAROLINA
DEPARTMENT OF TRANSPORTATION
RALEIGH

DECK REPAIR DETAILS
SPAN D

DECK REHAB. FOR BRIDGE NO. 001

REVISIONS						SHEET NO
NO.	BY:	DATE:	NO.	BY:	DATE:	S-7
1			3			TOTAL SHEETS
2			4			50

JOSEPH T. KELVINGTON SEAL 13406 ENGINEER

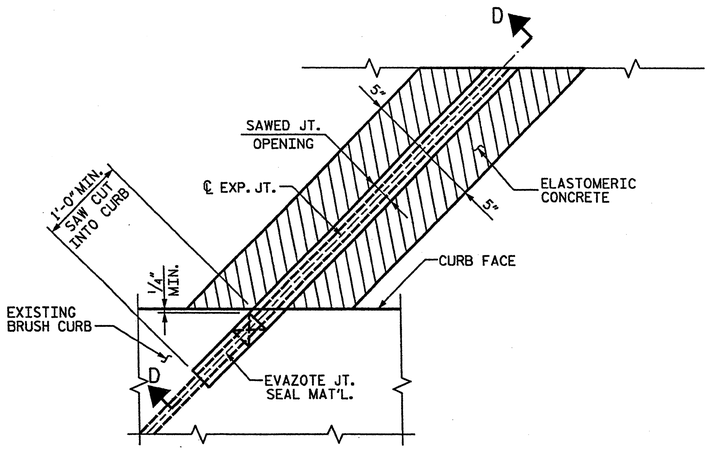

PARTIAL PLAN @ JOINT

TYPICAL EACH SIDE

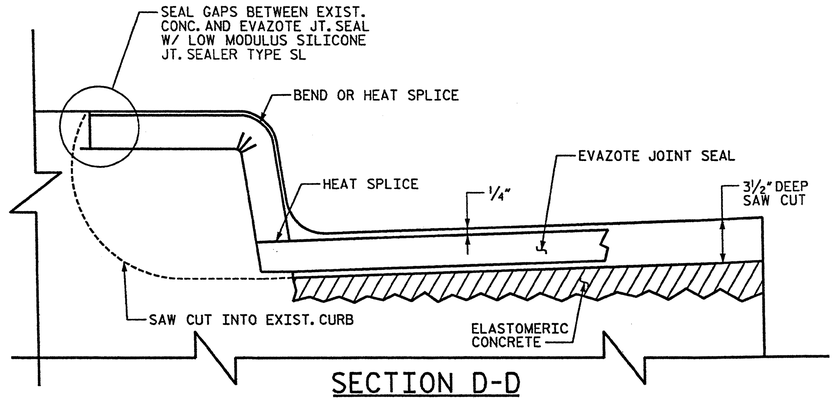

SECTION D-D

CONTRACTOR SHALL EXERCISE CARE TO AVOID CUTTING OR DAMAGING EXISTING REINF. STEEL.

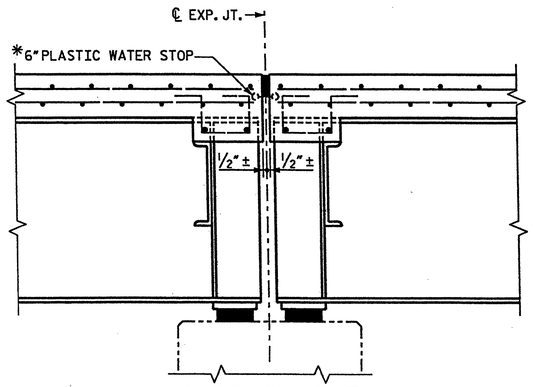

SECTION B-B

(EXISTING JOINT)

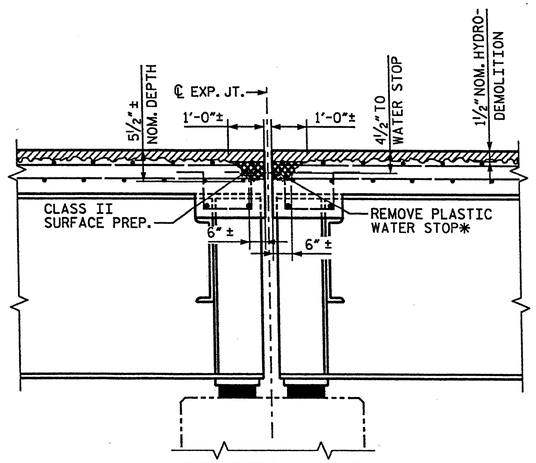

SECTION B-B

(MINIMUM EXISTING JOINT DEMOLITION)

NOTE: RETAIN ALL EXIST. REINF. STEEL. CLEAN AND REPAIR AS REQ'D.

* FROM BEST AVAILABLE INFORMATION.

ALL EXISTING JOINT SEAL MATERIALS ARE TO BE COMPLETELY REMOVED.

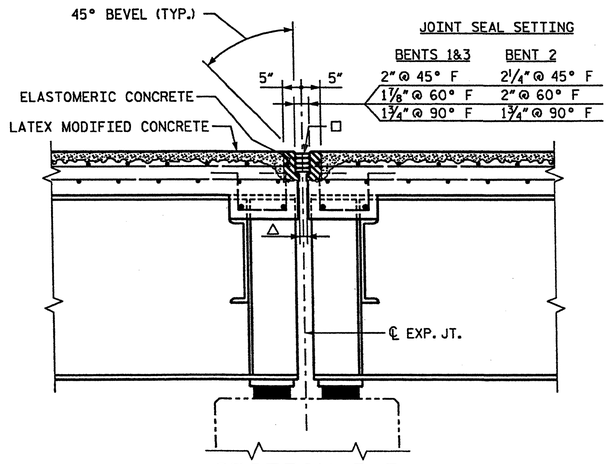

SECTION B-B

(JOINT SEAL DESIGN)

□ USE 2.8125" X 2.50" UNCOMPRESSED EVAZOTE JT. SEAL MATERIAL

△ 1" FORMED OPENING

ELASTOMERIC CONCRETE	
LOCATION	QTY
BENT 1	14.4 C.F.
BENT 2	14.4 C.F.
BENT 3	14.4 C.F.

TOTAL ELASTOMERIC CONC. = 43.2 C.F.

TOTAL ELASTOMERIC CONC. = 1.6 C.Y.

PROJECT NO. BP-5300R

GUILFORD COUNTY

STATION:

STATE OF NORTH CAROLINA
DEPARTMENT OF TRANSPORTATION
RALEIGH

EXPANSION JOINT DETAILS

DECK REHAB. FOR BRIDGE NO. 001

REVISIONS						SHEET NO.
NO.	BY:	DATE:	NO.	BY:	DATE:	S-8
1			3			TOTAL SHEETS
2			4			50

Stantec
Stantec Consulting Services Inc.
801 Jones Franklin Road
Suite 300
Raleigh, NC 27606
Tel. (919) 851-6866
Fax. (919) 851-7024
www.stantec.com
License No. F-0672

DRAWN BY : B M PALMER DATE : 05-13-11

CHECKED BY : J T KELVINGTON DATE : 05-13-11

NORTH CAROLINA PROFESSIONAL SEAL 13406 ENGINEER JOSEPH T. KELVINGTON

9/13

U:\Structures\Bridge Group 2011\BP5300R\Bridge 001\Drawing\BP5300R001_Det.dgn 8/30/2011 3:55:49 PM cmccullough

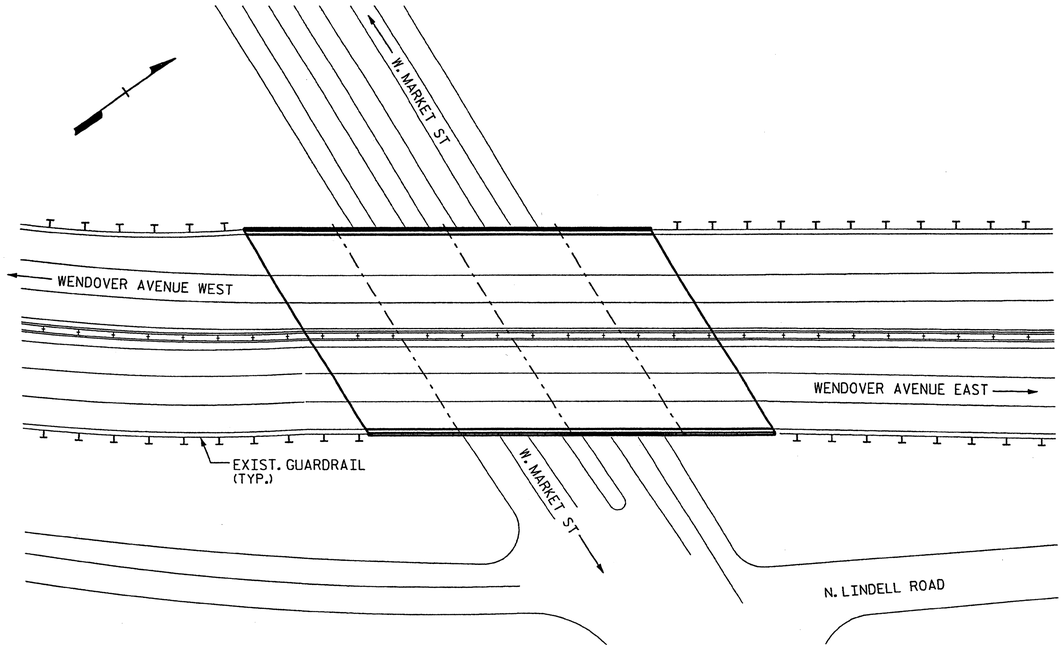

BRIDGE 136 ON WENDOVER AVE.

LOCATION: BRIDGE 136, SR 2254 (WENDOVER AVE.) OVER SR 1008 (MARKET STREET) 0.6 MILES SOUTH OF JUNCTION OF SR 2254 AND SR 2147 (FRIENDLY ROAD)

BRIDGE 136 ON WENDOVER AVE.

TOTAL BILL OF MATERIAL

SCARIFYING ** BRIDGE DECK	CLASS I * SURFACE PREPARATION	CLASS II * SURFACE PREPARATION	CLASS III * SURFACE PREPARATION	HYDRO-DEMOLITION OF BRIDGE DECK	CLASS AA * CONCRETE	LATEX MODIFIED CONCRETE-VERY EARLY STRENGTH	PLACING & FINISHING LATEX MODIFIED CONCRETE-VERY EARLY STRENGTH	EVAZOTE JOINT SEALS	GROOVING BRIDGE FLOORS	ASHPHALT CONC. SURF. COURSE TYPE S9.5B	2'-6" CONC. CURB & GUTTER
SQ.YDS.	SQ.YDS.	SQ.YDS.	SQ.YDS.	SQ.YDS.	CU.YDS.	CU.YDS.	SQ.YDS.	LUMP SUM	SQ.FT.	TON	LF
2,846.0	1,367.3	128.7	32.3	1,528.3	3.2	70.7	1,528.3	LUMP SUM	12,358	139	303

* QUANTITIES ARE SHOWN FOR INFORMATIONAL PURPOSES ONLY. IF ANY CLASS III LOCATIONS ARE ENCOUNTERED PRIOR TO OR DURING HYDRO-DEMOLITION, SEE "TYP. "BLOW THRU" CONTAINMENT AND FORMWORK" DETAIL. NO SEPARATE PAYMENT SHALL BE MADE.

** INCLUDES MILLING OF ROADWAY PAVEMENT.

Stantec
Stantec Consulting Services Inc.
801 Jones Franklin Road
Suite 300
Raleigh, NC 27606
Tel. (919) 851-6866
Fax. (919) 851-7024
www.stantec.com
License No. F-0672

DRAWN BY : J.L. HENNEKES DATE : 05-13-11
CHECKED BY : J T KELVINGTON DATE : 05-13-11

NORTH CAROLINA PROFESSIONAL SEAL 13406 ENGINEER JOSEPH T. KELVINGTON

PROJECT NO. BP-5300R
GUILFORD COUNTY
STATION:

STATE OF NORTH CAROLINA
DEPARTMENT OF TRANSPORTATION
RALEIGH

LOCATION SKETCH AND TOTAL BILL OF MATERIAL

DECK REHAB. FOR BRIDGE NO. 136

REVISIONS						SHEET NO.
NO.	BY:	DATE:	NO.	BY:	DATE:	S-9
1			3			TOTAL SHEETS
2			4			50

$FILE$ $DATE$ $TIME$ $USER$

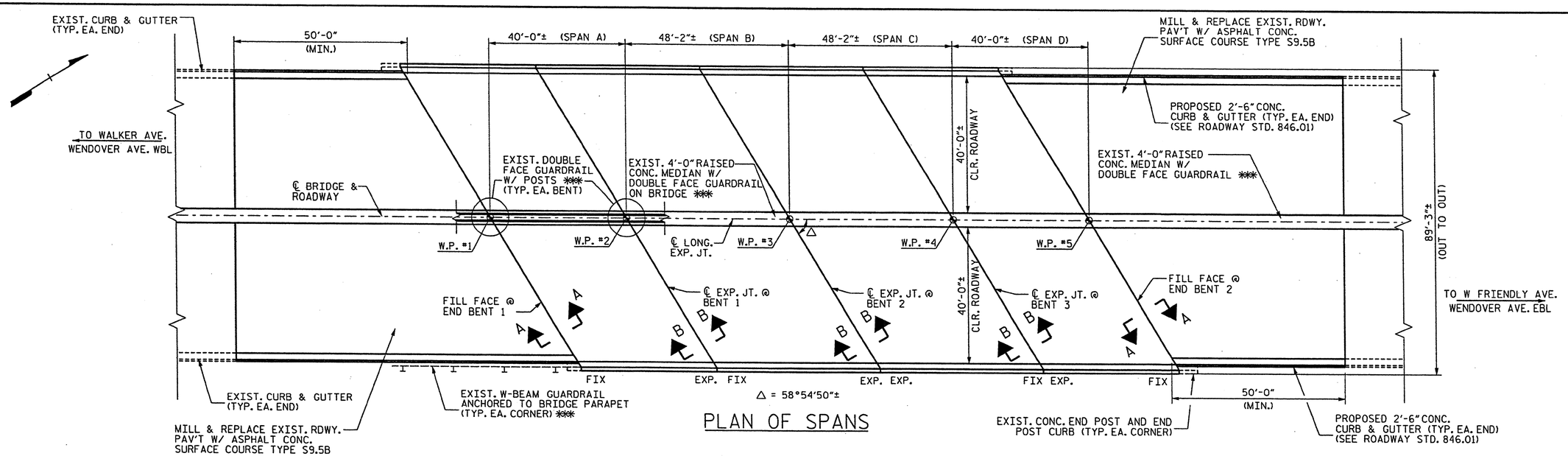

PLAN OF SPANS

NOTES:

EXISTING DECK DRAINS SHALL BE SEALED PRIOR TO BEGINNING REPAIR OF BRIDGE DECKS WITH LATEX MODIFIED CONCRETE. SEE SPECIAL PROVISIONS.

FOR HYDRO-DEMOLITION, SEE SPECIAL PROVISIONS.

THE CONTRACTOR MUST COLLECT, TREAT AND DISPOSE OF RUN-OFF WATER FROM THE HYDRO-DEMOLITION PROCESS. SEE SPECIAL PROVISIONS.

THE BOUNDARIES OF AREAS IDENTIFIED FOR CLASS III SURFACE PREPARATION ARE APPROXIMATE. THE CONTRACTOR SHALL PROVIDE A METHOD OF HANDLING UNEXPECTED BLOW THROUGH OF THE DECK. SEE DETAIL, SHT. NO. S-12.

LATEX MODIFIED CONCRETE SHALL BE LATEX MODIFIED CONCRETE - VERY EARLY STRENGTH.

FOR LATEX MODIFIED CONCRETE - VERY EARLY STRENGTH, SEE SPECIAL PROVISIONS.

FOR EVAZOTE JOINT SEALS, SEE SPECIAL PROVISIONS.

FOR SECTION B-B, SEE SHT. NO. S-16.

COSTS FOR REMOVAL OF EXISTING CURB & GUTTER SECTIONS, BACKFILL AND GRADING SUBBASE UNDER RECONSTRUCTED CURB & GUTTER SECTION WILL BE INCLUDED IN THE UNIT PRICE BID FOR 2'-6" CONCRETE CURB & GUTTER.

*** DISMANTLE AND STOCKPILE EXISTING GUARDRAIL AND GUARDRAIL POSTS AS REQUIRED TO CONSTRUCT CURB AND GUTTER PLUS JOINT SEALS. REPLACE EXISTING GUARDRAIL ONCE ALL DECK REHABILITATION IS COMPLETE. COSTS FOR THIS WORK SHALL BE CONSIDERED INCIDENTAL TO CONSTRUCTION OF EVAZOTE JOINT SEALS.

FOR TYPICAL ROADWAY APPROACH SECTION FOR BRIDGE 136, SEE S-15.

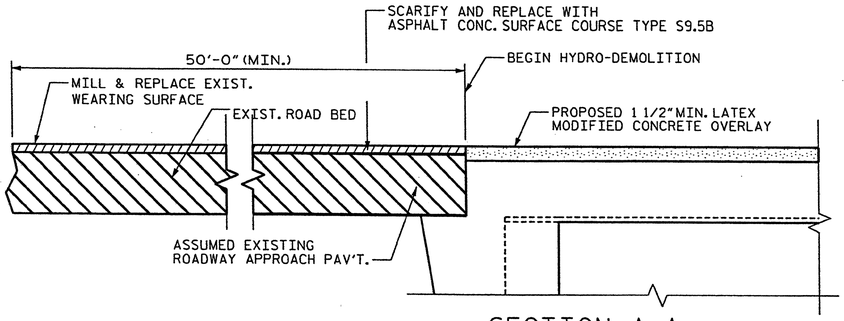

SECTION A-A

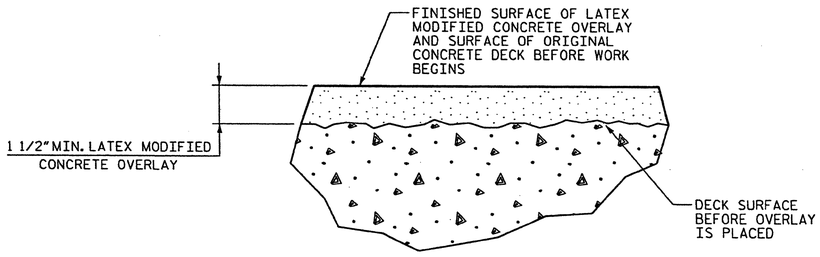

DETAIL FOR LATEX MODIFIED CONCRETE OVERLAY

PROJECT NO. BP-5300R

GUILFORD COUNTY

STATION:

STATE OF NORTH CAROLINA
DEPARTMENT OF TRANSPORTATION
RALEIGH

PLAN OF BRIDGE

DECK REHAB. FOR BRIDGE NO. 136

REVISIONS						SHEET NO.
NO.	BY:	DATE:	NO.	BY:	DATE:	S-10
1			3			TOTAL SHEETS
2			4			50

Stantec
Stantec Consulting Services Inc.
801 Jones Franklin Road
Suite 300
Raleigh, NC 27606
Tel. (919) 851-6666
Fax. (919) 851-7024
www.stantec.com
License No. F-0672

DRAWN BY : B M PALMER DATE : 05-13-11
CHECKED BY : J T KELVINGTON DATE : 05-13-11

Joseph T. Kelvington 10/31/2011

NORTH CAROLINA PROFESSIONAL SEAL 13406 ENGINEER JOSEPH T. KELVINGTON

$USER$ $TIME$ $DATE$ $FILE$

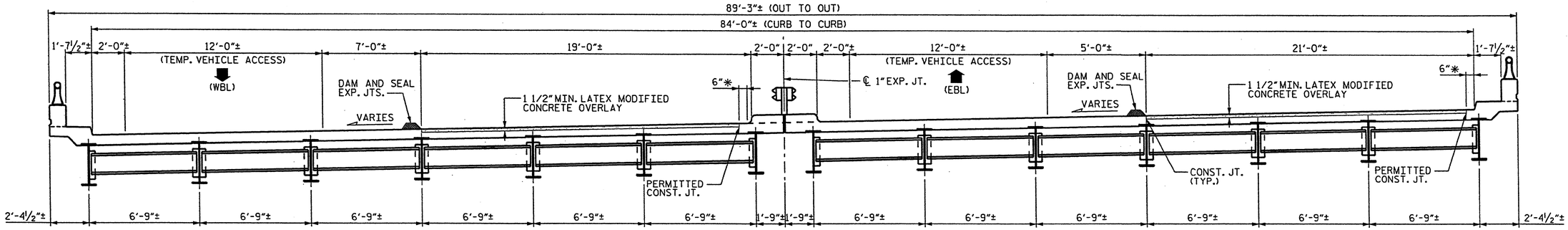

SEE TCP-5B FOR ADDITIONAL DETAILS

SEE TCP-5 FOR ADDITIONAL DETAILS

TYP. SECTION - EBL AND WBL CONSTRUCTION

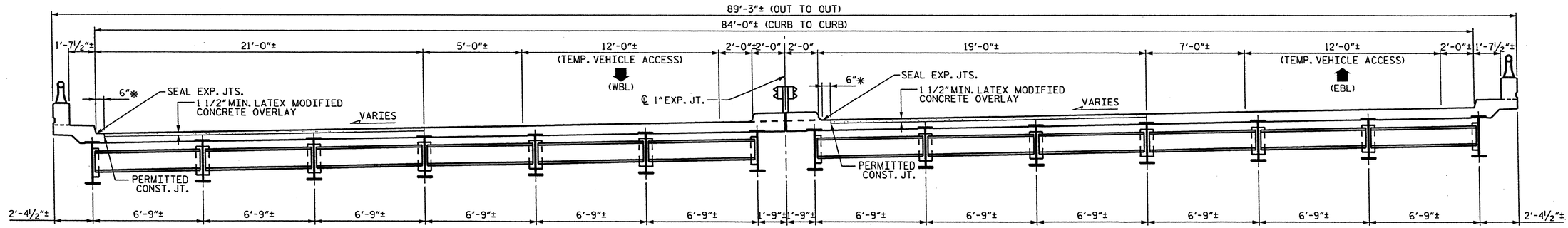

SEE TCP-5C FOR ADDITIONAL DETAILS

SEE TCP-5A FOR ADDITIONAL DETAILS

TYP. SECTION - EBL AND WBL CONSTRUCTION

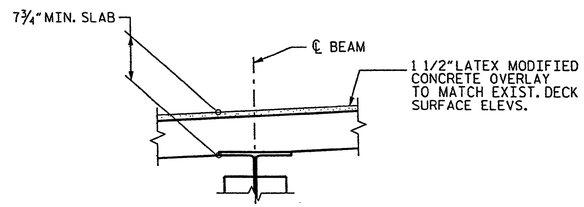

EXIST. SLAB BUILDUP

NOTES:

WATER & CONCRETE SLURRY FROM HYDRO-DEMOLITION SHALL NOT BE ALLOWED TO DRAIN ACROSS TRAVEL LANES. CONTRACTOR SHALL PROVIDE A METHOD TO CONTROL THE WATER.

ALL HORIZONTAL DIMENSIONS SHOWN ARE RADIAL.

FOR TRAFFIC CONTROL AND CONSTRUCTION PHASING, SEE TRAFFIC MANAGEMENT PLANS.

* PERMITTED WIDTH OF EXISTING CONCRETE DECK SURFACE OVER FULL LENGTH OF BRIDGE THAT MAY BE LEFT INTACT FOR SCREED SUPPORT. OTHERWISE, REPAIR DECK SURFACE FROM CURB TO CURB.

Stantec
Stantec Consulting Services Inc.
801 Jones Franklin Road
Suite 300
Raleigh, NC 27606
Tel. (919) 851-6866
Fax. (919) 651-7024
www.stantec.com
License No. F-0672

DRAWN BY : B M PALMER DATE : 05-13-11
CHECKED BY : J T KELVINGTON DATE : 05-13-11

Joseph T. Kelvington 10/12

NORTH CAROLINA PROFESSIONAL SEAL 13406 ENGINEER JOSEPH T. KELVINGTON

PROJECT NO. BP-5300R

GUILFORD COUNTY

STATION:

STATE OF NORTH CAROLINA
DEPARTMENT OF TRANSPORTATION
RALEIGH

TYPICAL SECTION

DECK REHAB. FOR BRIDGE NO. 136

REVISIONS						SHEET NO.
NO.	BY:	DATE:	NO.	BY:	DATE:	S-11
1			3			TOTAL SHEETS
2			4			50

$FILE$ $DATE$ $TIME$ $USER$

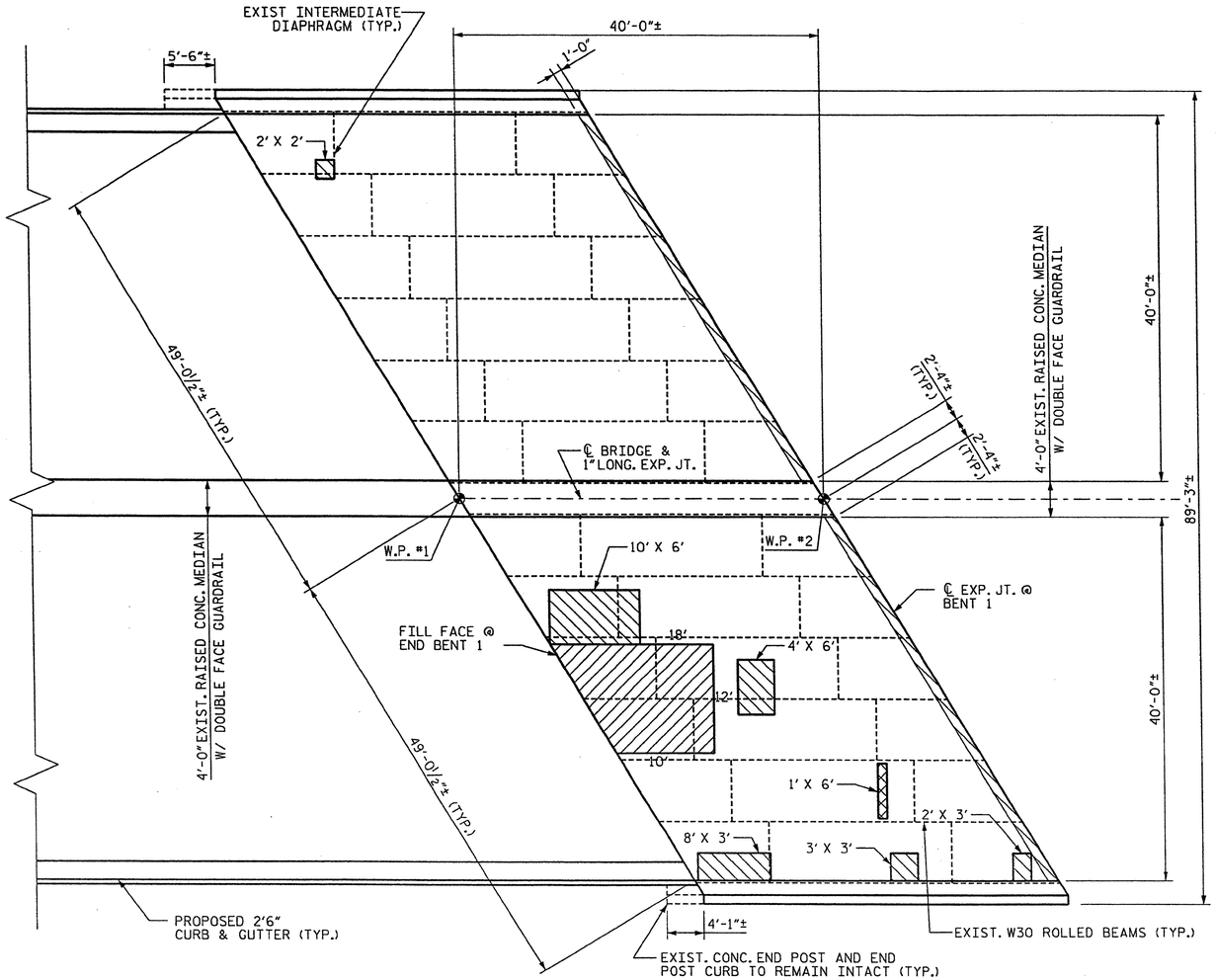

PLAN OF SPAN A - DECK REPAIRS

CLASS II SURFACE PREPARATION

CLASS III SURFACE PREPARATION

L' X W' = LENGTH OF AREA ALONG ℄ BRIDGE X WIDTH OF AREA NORMAL TO ℄ BRIDGE ±

NOTES:

CONTRACTOR SHALL FURNISH FORMWORK TO SUPPORT SLAB OVERHANG REGIONS WITH EXTENSIVE CLASS III SURFACE PREPARATION.

SUBMIT DETAILS OF PROPOSED FORMWORK FOR APPROVAL PRIOR TO BEGINNING WORK.

COSTS FOR INSTALLING AND REMOVING FORMWORK SHALL BE INCIDENTAL TO THE PRICE BID PER SQ. YD. OF HYDRO-DEMOLITION.

SEE HYDRO-DEMOLITION SPECIAL PROVISIONS.

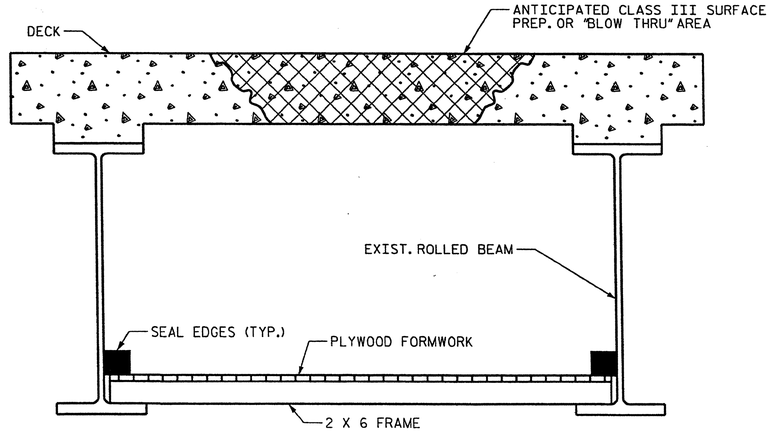

TYP. "BLOW THRU" CONTAINMENT AND FORMWORK

A METHOD TO CAPTURE WATER AND DEBRIS FROM BLOW THRU DURING HYDRO-DEMOLITION SHALL BE INSTALL IN AREAS INDICATED AS CLASS III SURFACE PREPARATION.

SUBMIT DETAILS OF PROPOSED FORMWORK FOR APPROVAL PRIOR TO BEGINNING WORK.

COSTS FOR INSTALLING AND REMOVING FORMWORK SHALL BE INCIDENTAL TO THE PRICE PER SQ. YARD OF HYDRO-DEMOLITION.

CONTRACTOR, AT HIS OPTION, MAY CHOOSE TO MONITOR HYDRO-DEMOLITION WORK AND CONTROL TRAFFIC UNDER THE BRIDGE IN LIEU OF BLOW THRU CONTAINMENT. SEE TRAFFIC CONTROL PLANS.

PROJECT NO. BP-5300R

GUILFORD COUNTY

STATION:

Stantec Consulting Services Inc.
801 Jones Franklin Road
Suite 300
Raleigh, NC 27606
Tel. (919) 851-6866
Fax. (919) 851-7024
www.stantec.com
License No. F-0672

DRAWN BY : B M PALMER DATE : 05-13-11

CHECKED BY : J I KELVINGTON DATE : 05-13-11

STATE OF NORTH CAROLINA
DEPARTMENT OF TRANSPORTATION
RALEIGH

DECK REPAIR DETAILS SPAN A

DECK REHAB. FOR BRIDGE NO. 136

REVISIONS						SHEET NO.
NO.	BY:	DATE:	NO.	BY:	DATE:	S-12
1			3			TOTAL SHEETS
2			4			50

NORTH CAROLINA PROFESSIONAL SEAL 13406 ENGINEER JOSEPH I. KELVINGTON

$FILE$ $DATE$ $TIME$ $USER$

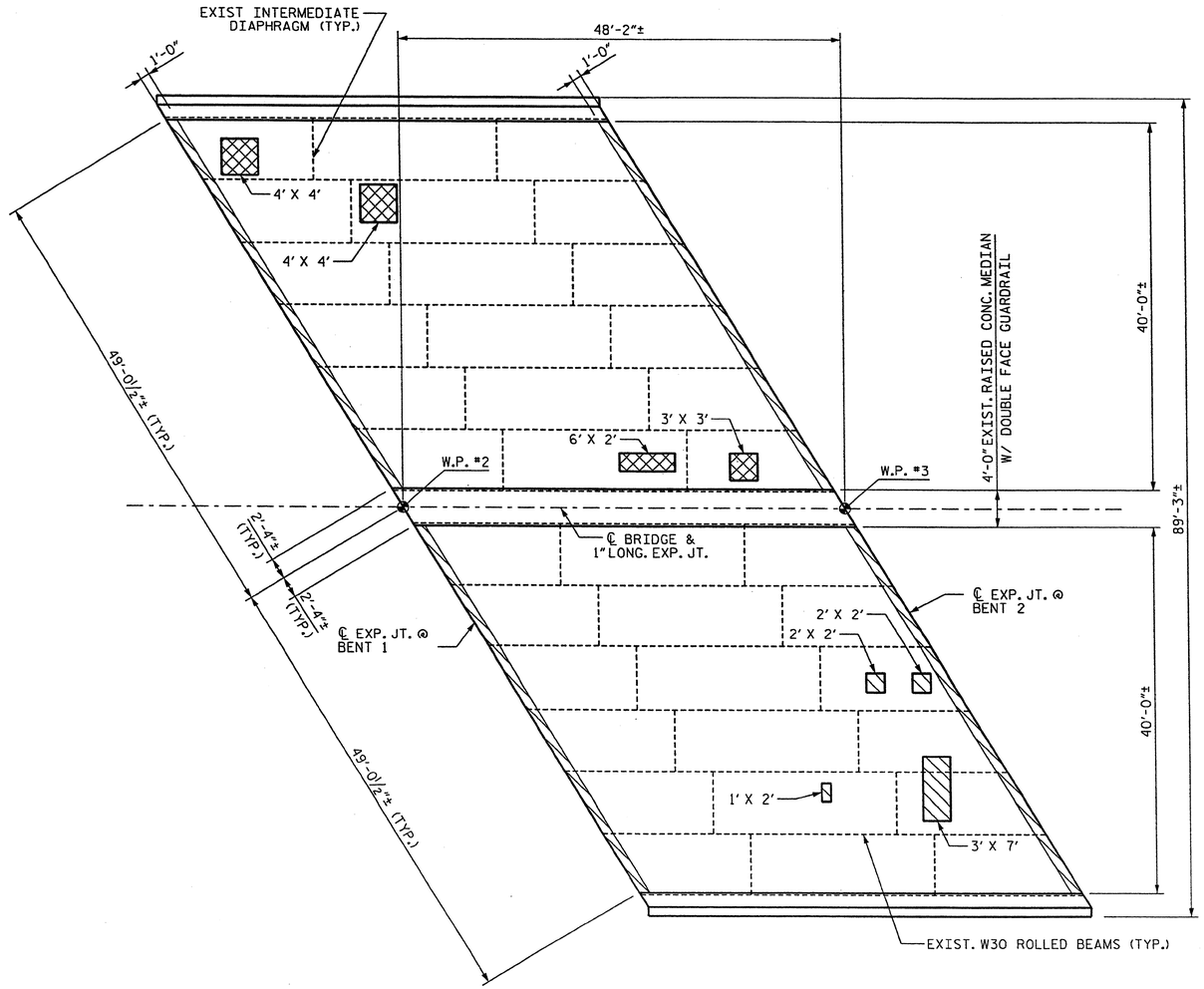

PLAN OF SPAN B - DECK REPAIRS

CLASS II SURFACE PREPARATION

CLASS III SURFACE PREPARATION

L' X W' = LENGTH OF AREA ALONG ℄ BRIDGE X
WIDTH OF AREA NORMAL TO ℄ BRIDGE ±

NOTES:

CONTRACTOR SHALL FURNISH FORMWORK TO SUPPORT SLAB OVERHANG REGIONS WITH EXTENSIVE CLASS III SURFACE PREPARATION.

SUBMIT DETAILS OF PROPOSED FORMWORK FOR APPROVAL PRIOR TO BEGINNING WORK.

COSTS FOR INSTALLING AND REMOVING FORMWORK SHALL BE INCIDENTAL TO THE PRICE BID PER SQ. YD. OF HYDRO-DEMOLITION.

SEE HYDRO-DEMOLITION SPECIAL PROVISIONS.

$FILE$ $DATE$ $TIME$ $USER$

Stantec
Stantec Consulting Services Inc.
801 Jones Franklin Road
Suite 300
Raleigh, NC 27606
Tel. (919) 851-6866
Fax. (919) 851-7024
www.stantec.com
License No. F-0672

DRAWN BY : B M PALMER DATE : 05-13-11
CHECKED BY : J T KELVINGTON DATE : 05-13-11

PROJECT NO. BP-5300R
GUILFORD COUNTY
STATION:

STATE OF NORTH CAROLINA
DEPARTMENT OF TRANSPORTATION
RALEIGH

DECK REPAIR DETAILS SPAN B

DECK REHAB. FOR BRIDGE NO. 136

REVISIONS						SHEET NO.
NO.	BY:	DATE:	NO.	BY:	DATE:	S-13
1			3			TOTAL SHEETS
2			4			50

NORTH CAROLINA PROFESSIONAL SEAL 13406 ENGINEER JOSEPH T. KELVINGTON

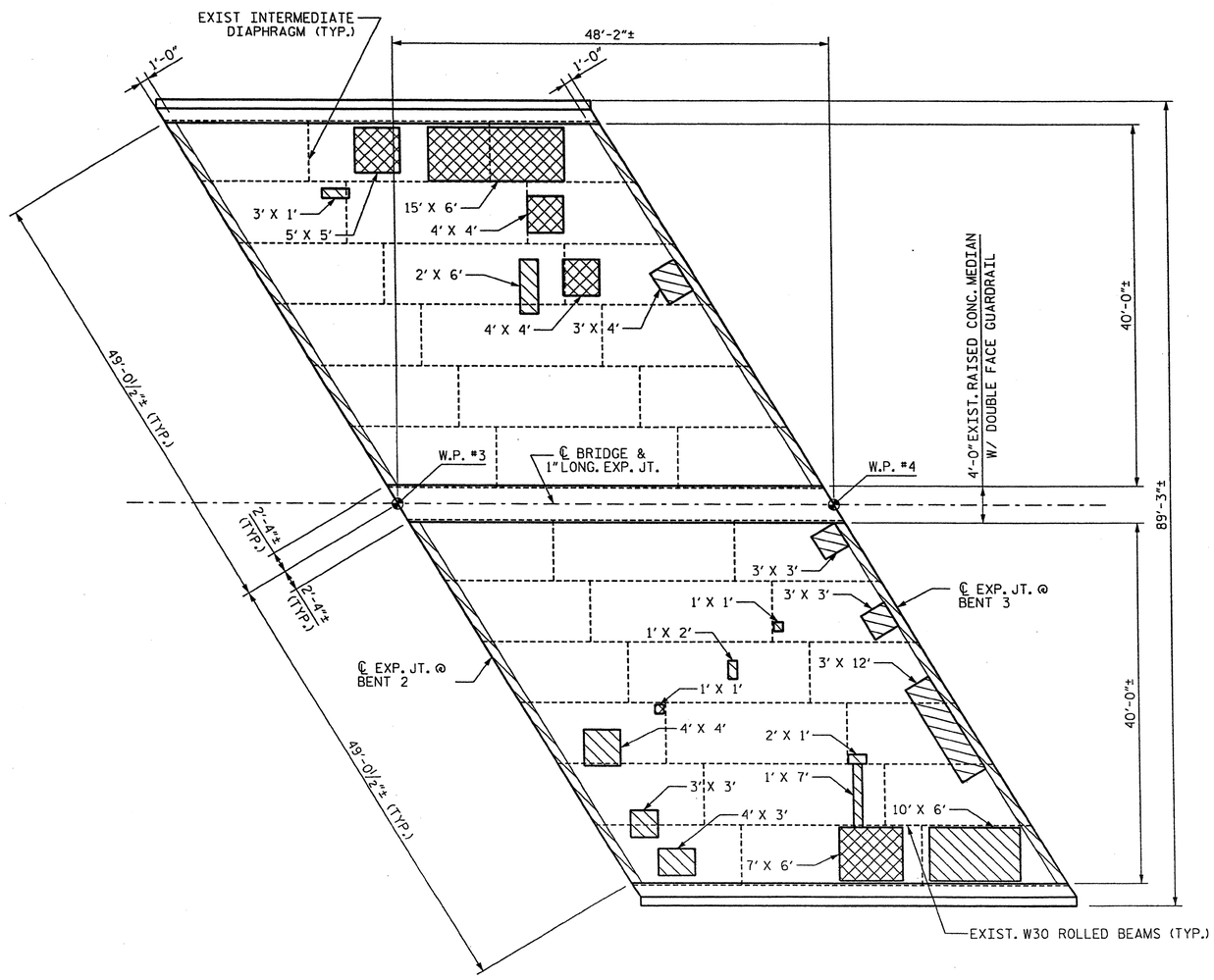

PLAN OF SPAN C - DECK REPAIRS

CLASS II SURFACE PREPARATION

CLASS III SURFACE PREPARATION

L' X W' = LENGTH OF AREA ALONG ℄ BRIDGE X
WIDTH OF AREA NORMAL TO ℄ BRIDGE ±

NOTES:

CONTRACTOR SHALL FURNISH FORMWORK TO SUPPORT SLAB OVERHANG REGIONS WITH EXTENSIVE CLASS III SURFACE PREPARATION.

SUBMIT DETAILS OF PROPOSED FORMWORK FOR APPROVAL PRIOR TO BEGINNING WORK.

COSTS FOR INSTALLING AND REMOVING FORMWORK SHALL BE INCIDENTAL TO THE PRICE BID PER SQ. YD. OF HYDRO-DEMOLITION.

SEE HYDRO-DEMOLITION SPECIAL PROVISIONS.

Stantec
Stantec Consulting Services Inc.
801 Jones Franklin Road
Suite 300
Raleigh, NC 27606
Tel. (919) 851-6866
Fax. (919) 851-7024
www.stantec.com
License No. F-0672

DRAWN BY : B M PALMER DATE : 05-13-11
CHECKED BY : J T KELVINGTON DATE : 05-13-11

$FILE$ $DATE$ $TIME$ $USER$

PROJECT NO. BP-5300R
GUILFORD COUNTY
STATION:

STATE OF NORTH CAROLINA
DEPARTMENT OF TRANSPORTATION
RALEIGH

DECK REPAIR DETAILS SPAN C

DECK REHAB. FOR BRIDGE NO. 136

REVISIONS						SHEET NO.
NO.	BY:	DATE:	NO.	BY:	DATE:	S-14
1			3			TOTAL SHEETS
2			4			50

NORTH CAROLINA PROFESSIONAL SEAL 13406 ENGINEER JOSEPH T KELVINGTON

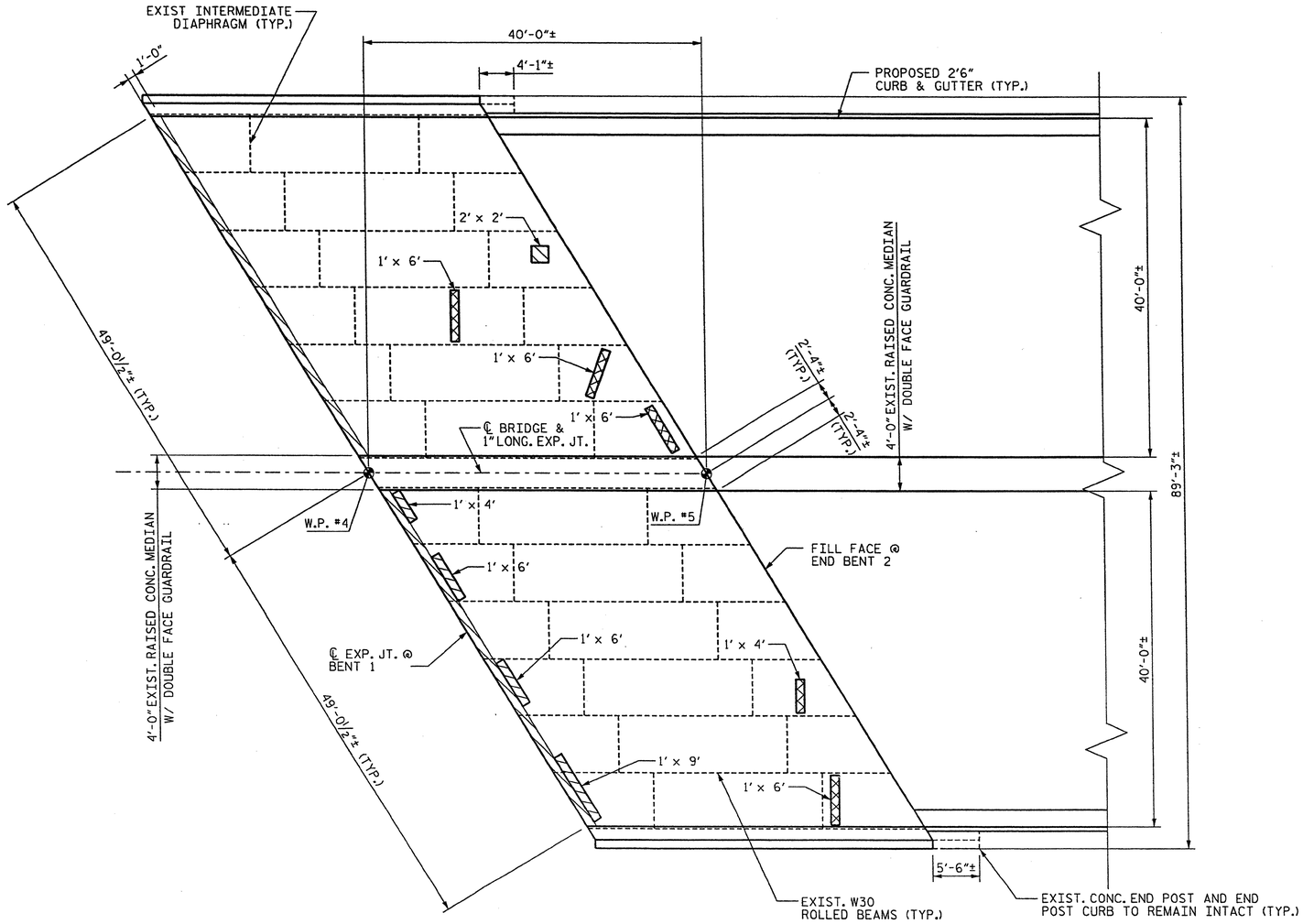

PLAN OF SPAN D - DECK REPAIRS

CLASS II SURFACE PREPARATION

CLASS III SURFACE PREPARATION

L' X W' = LENGTH OF AREA ALONG ℄ BRIDGE X
WIDTH OF AREA NORMAL TO ℄ BRIDGE ±

NOTES:

CONTRACTOR SHALL FURNISH FORMWORK TO SUPPORT SLAB OVERHANG REGIONS WITH EXTENSIVE CLASS III SURFACE PREPARATION.

SUBMIT DETAILS OF PROPOSED FORMWORK FOR APPROVAL PRIOR TO BEGINNING WORK.

COSTS FOR INSTALLING AND REMOVING FORMWORK SHALL BE INCIDENTAL TO THE PRICE BID PER SQ. YD. OF HYDRO-DEMOLITION.

SEE HYDRO-DEMOLITION SPECIAL PROVISIONS.

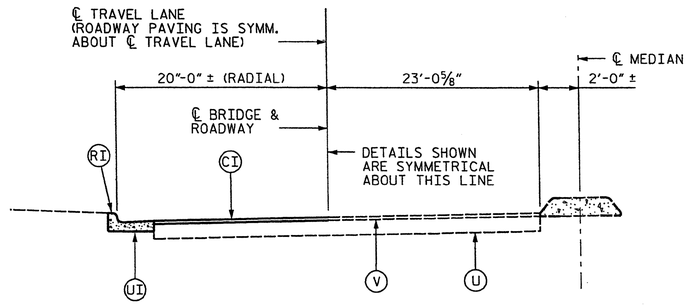

TYPICAL ROADWAY SECTION

PAVEMENT SCHEDULE

(CI) 2" MIN. ASPALT CONC. SURFACE COURSE TYPE S9.5B @ AN AVG RATE OF 224 LBS. PER. SQ. YD.

(RI) 2'-6" CONCRETE CURB AND GUTTER

(U) EXISTING PAVEMENT

(UI) EXISTING COCN. CURB AND GUTTER (TO BE REMOVED)

(U2) EXISTING CONC. ISLAND (TO BE REMOVED)

(V) MILLING 2" MIN. THICKNESS

Stantec
Stantec Consulting Services Inc.
801 Jones Franklin Road
Suite 300
Raleigh, NC 27606
Tel. (919) 851-6866
Fax. (919) 851-7024
www.stantec.com
License No. F-0672

DRAWN BY : B M PALMER DATE : 05-13-11
CHECKED BY : J T KELVINGTON DATE : 05-13-11

PROJECT NO. BP-5300R
GUILFORD COUNTY
STATION:

STATE OF NORTH CAROLINA
DEPARTMENT OF TRANSPORTATION
RALEIGH

DECK REPAIR DETAILS
SPAN D

DECK REHAB. FOR BRIDGE NO. 136

REVISIONS						SHEET NO.
NO.	BY:	DATE:	NO.	BY:	DATE:	S-15
1			3			TOTAL SHEETS
2			4			50

NORTH CAROLINA PROFESSIONAL ENGINEER SEAL 13406 JOSEPH T. KELVINGTON

$FILE$ $DATE$ $TIME$ $USER$

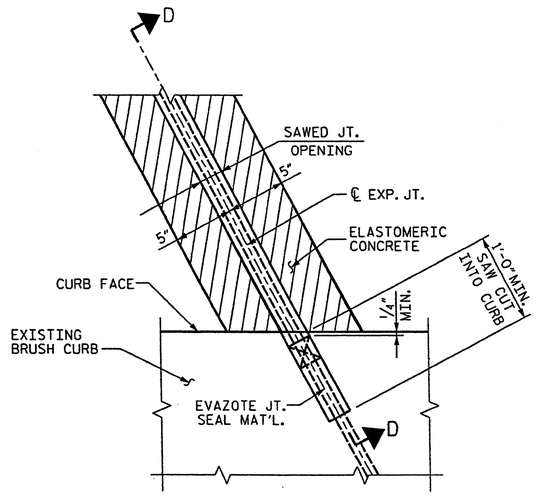

PARTIAL PLAN @ JOINT AND BRIDGE PARAPET

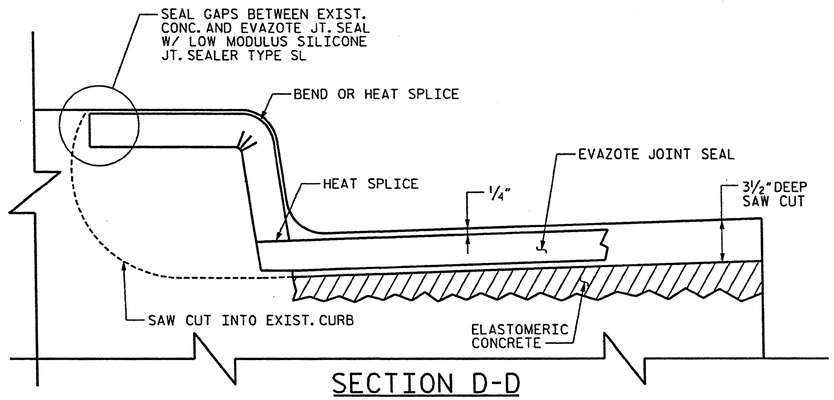

SECTION D-D

CONTRACTOR SHALL EXERCISE CARE TO AVOID CUTTING OR DAMAGING EXISTING REINF. STEEL.

ELASTOMERIC CONCRETE	
LOCATION	QTY
BENT 1	28.4 C.F.
BENT 2	28.4 C.F.
BENT 3	28.4 C.F.

TOTAL ELASTOMERIC CONC. = 85.2 C.F.
TOTAL ELASTOMERIC CONC. = 3.2 C.Y.

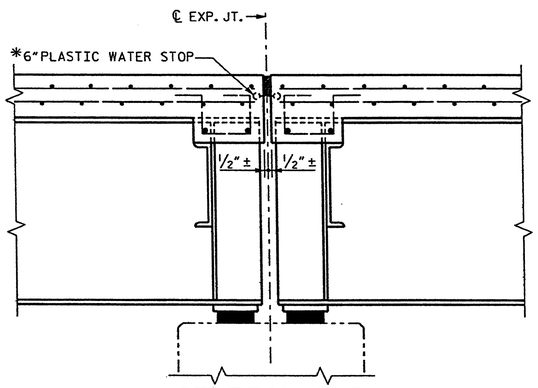

SECTION B-B

(EXISTING JOINT)

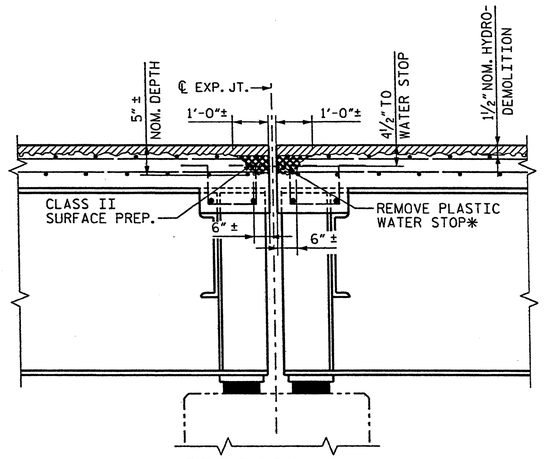

SECTION B-B

(MINIMUM EXISTING JOINT DEMOLITION)

NOTE: RETAIN ALL EXIST. REINF. STEEL. CLEAN AND REPAIR AS REQ'D.

* FROM BEST AVAILABLE INFORMATION.

ALL EXISTING JOINT SEAL MATERIALS ARE TO BE COMPLETELY REMOVED.

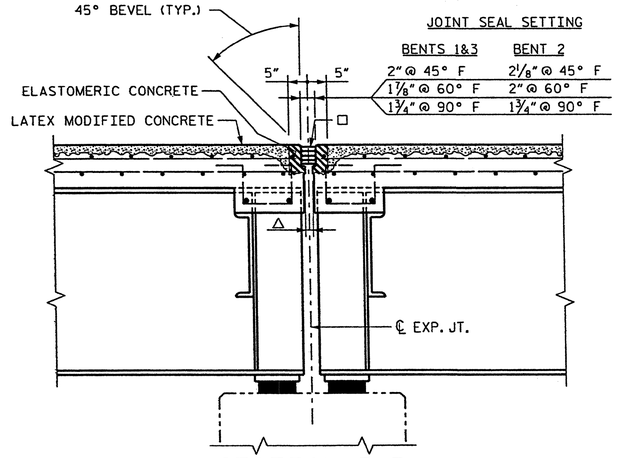

SECTION B-B

(JOINT SEAL DESIGN)

□ USE 2.8125" X 2.50" UNCOMPRESSED EVAZOTE JT. SEAL MATERIAL

△ 1" FORMED OPENING

Stantec
Stantec Consulting Services Inc.
801 Jones Franklin Road
Suite 300
Raleigh, NC 27606
Tel. (919) 851-6866
Fax. (919) 851-7024
www.stantec.com
License No. F-0672

DRAWN BY : B M PALMER DATE : 05-13-11
CHECKED BY : J T KELVINGTON DATE : 05-13-11

$FILE$ $DATE$ $TIME$ $USER$

PROJECT NO. BP-5300R
GUILFORD COUNTY
STATION:

STATE OF NORTH CAROLINA
DEPARTMENT OF TRANSPORTATION
RALEIGH

EXPANSION JOINT DETAILS

DECK REHAB. FOR BRIDGE NO. 136

REVISIONS						SHEET NO.
NO.	BY:	DATE:	NO.	BY:	DATE:	S-16
1			3			TOTAL SHEETS
2			4			50

NORTH CAROLINA PROFESSIONAL SEAL 13406 ENGINEER JOSEPH T. KELVINGTON

10/12

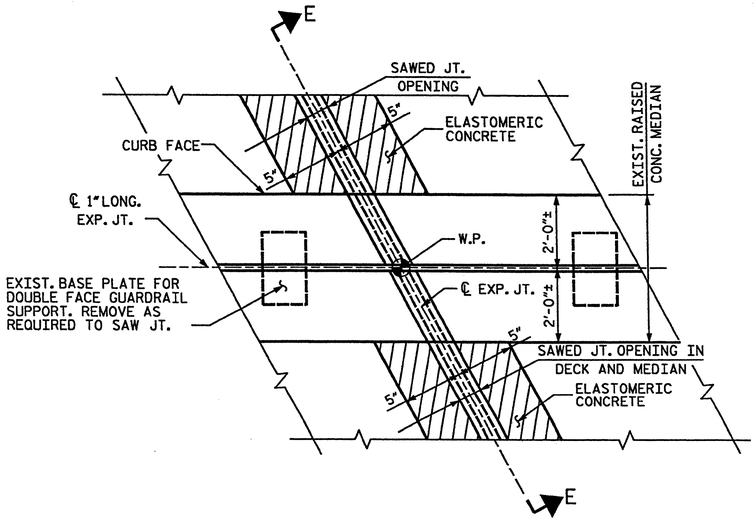

PARTIAL PLAN @ MEDIAN

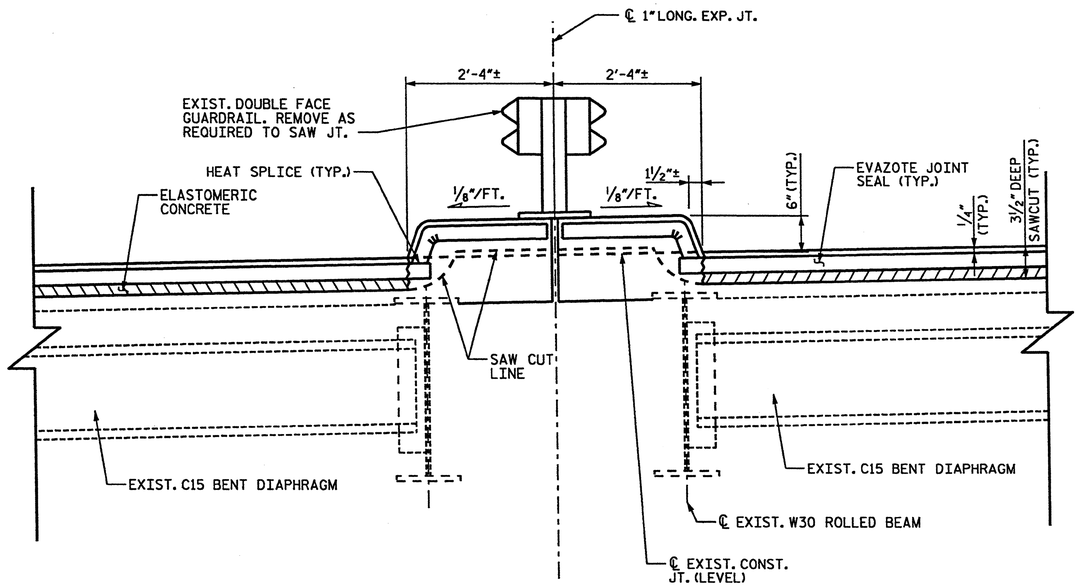

SECTION E-E

CONTRACTOR SHALL EXERCISE CARE TO AVOID CUTTING OR DAMAGING EXISTING REINF. STEEL.

PROJECT NO. BP-5300R

GUILFORD COUNTY

STATION:

STATE OF NORTH CAROLINA
DEPARTMENT OF TRANSPORTATION
RALEIGH

EXPANSION JOINT DETAILS

DECK REHAB. FOR BRIDGE NO. 136

REVISIONS						SHEET NO.
NO.	BY:	DATE:	NO.	BY:	DATE:	S-17
1			3			TOTAL SHEETS
2			4			50

Stantec
Stantec Consulting Services Inc.
801 Jones Franklin Road
Suite 300
Raleigh, NC 27606
Tel. (919) 851-6866
Fax. (919) 851-7024
www.stantec.com
License No. F-0672

DRAWN BY : B M PALMER DATE : 05-13-11
CHECKED BY : J T KELVINGTON DATE : 05-13-11

NORTH CAROLINA PROFESSIONAL SEAL 13406 ENGINEER J. T. KELVINGTON

8/31/2011

U:\Structures\Bridge Group 2011\BP5300R\Bridge 136\Drawing\BP5300R136_Det2.dgn 8/31/2011 1:48:41 PM cmccullough

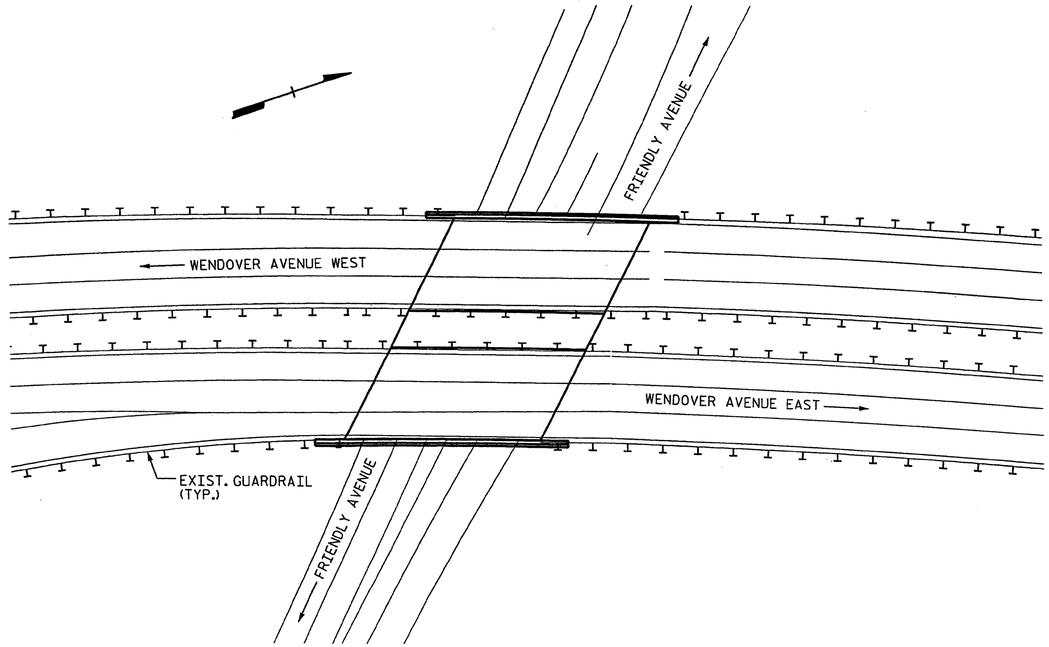

BRIDGE 470 ON WENDOVER AVE.

LOCATION: BRIDGE 470, SR 2254 (WENDOVER AVE.) OVER SR 2147 (FRIENDLY ROAD) 0.5 MILES WEST OF JUNCTION OF SR 2254 AND SR 2176

BRIDGE 470 ON WENDOVER AVE.

TOTAL BILL OF MATERIAL

SCARIFYING ** BRIDGE DECK	CLASS I * SURFACE PREPARATION	CLASS II * SURFACE PREPARATION	CLASS III * SURFACE PREPARATION	HYDRO-DEMOLITION OF BRIDGE DECK	CLASS AA * CONCRETE	LATEX MODIFIED CONCRETE-VERY EARLY STRENGTH	PLACING & FINISHING LATEX MODIFIED CONCRETE-VERY EARLY STRENGTH	EVAZOTE JOINT SEALS	GROOVING BRIDGE FLOORS	ASHPHALT CONC. SURF. COURSE TYPE S9.5B
SQ.YDS.	SQ.YDS.	SQ.YDS.	SQ.YDS.	SQ.YDS.	CU.YDS.	CU.YDS.	SQ.YDS.	LUMP SUM	SQ.FT.	TON
1,980.8	663.7	87.7	4.9	736.4	0.4	41.6	736.4	LUMP SUM	5,957	131

* QUANTITIES ARE SHOWN FOR INFORMATIONAL PURPOSES ONLY. IF ANY CLASS III LOCATIONS ARE ENCOUNTERED PRIOR TO OR DURING HYDRO-DEMOLITION, SEE "TYP. "BLOW THRU" CONTAINMENT AND FORMWORK" DETAIL. NO SEPARATE PAYMENT SHALL BE MADE.

** INCLUDES MILLING OF ROADWAY PAVEMENT.

Stantec
Stantec Consulting Services Inc.
801 Jones Franklin Road
Suite 300
Raleigh, NC 27606
Tel. (919) 851-6866
Fax. (919) 851-7024
www.stantec.com
License No. F-0672

DRAWN BY : J.L. HENNEKES DATE : 05-13-11
CHECKED BY : J T KELVINGTON DATE : 05-13-11

PROJECT NO. BP-5300R
GUILFORD COUNTY
STATION:

STATE OF NORTH CAROLINA
DEPARTMENT OF TRANSPORTATION
RALEIGH

LOCATION SKETCH
AND TOTAL
BILL OF MATERIAL

DECK REHAB. FOR BRIDGE NO. 470

REVISIONS						SHEET NO.
NO.	BY:	DATE:	NO.	BY:	DATE:	S-18
1			3			TOTAL SHEETS
2			4			50

SEAL 13406 NORTH CAROLINA PROFESSIONAL ENGINEER JOSEPH T. KELVINGTON

$FILE$ $DATE$ $TIME$ $USER$

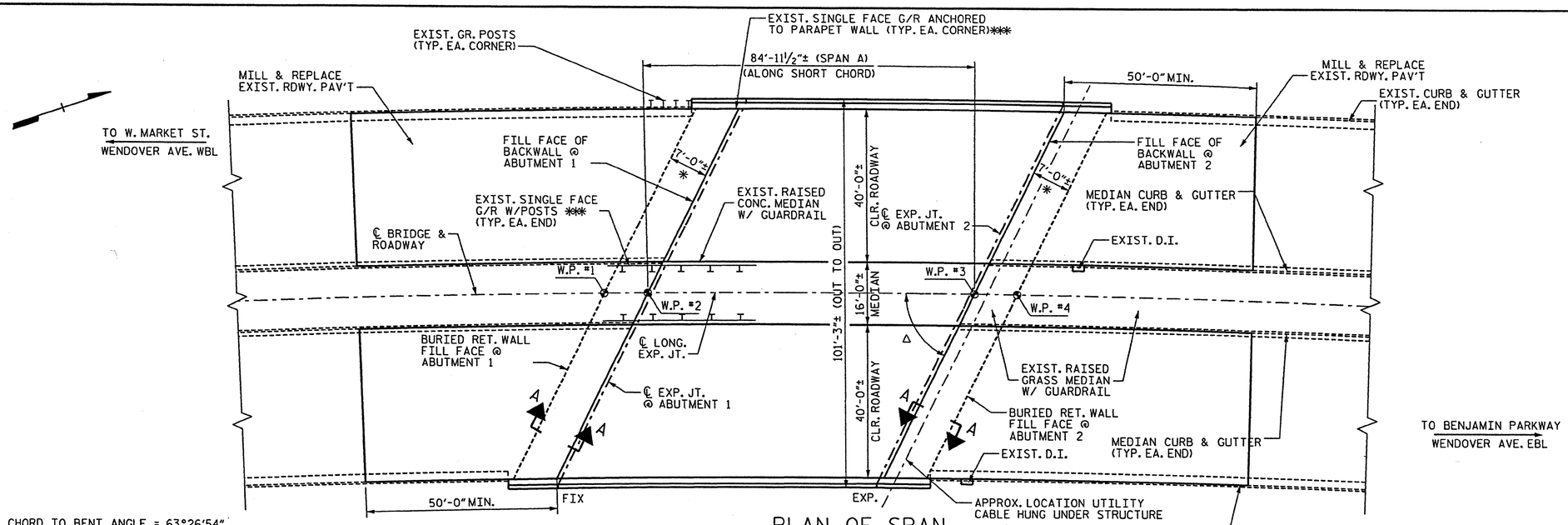

Δ = SHORT CHORD TO BENT ANGLE = 63°26'54"
ABUTMENTS ARE PARALLEL.

PLAN OF SPAN

* UNDER BRIDGE SIDEWALK BETWEEN RETAINING WALL AND PIER

NOTE: ALL HORIZONTAL DIMENSIONS ARE RADIAL OR ARC DIMENSIONS UNLESS NOTED OTHERWISE.

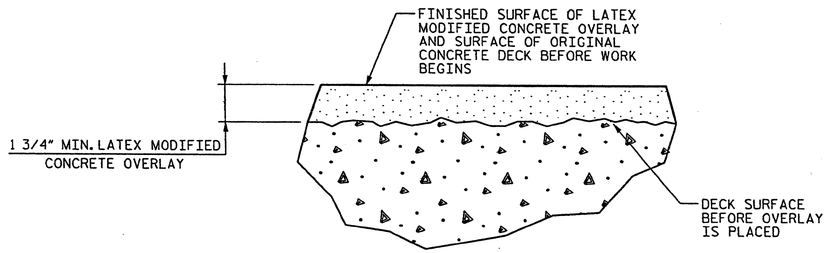

DETAIL FOR LATEX MODIFIED CONCRETE OVERLAY

NOTES:

EXISTING DECK DRAINS AND ROADWAY DRAINS SHALL BE SEALED PRIOR TO BEGINNING REPAIR OF BRIDGE DECKS WITH LATEX MODIFIED CONCRETE. SEE SPECIAL PROVISIONS.

FOR HYDRO-DEMOLITION, SEE SPECIAL PROVISIONS.

THE CONTRACTOR MUST COLLECT, TREAT AND DISPOSE OF RUN-OFF WATER FROM THE HYDRO-DEMOLITION PROCESS. SEE SPECIAL PROVISIONS.

THE BOUNDARIES OF AREAS IDENTIFIED FOR CLASS III SURFACE PREPARATION ARE APPROXIMATE. THE CONTRACTOR SHALL PROVIDE A METHOD OF HANDLING UNEXPECTED BLOW THROUGH OF THE DECK. SEE DETAIL, SHT. NO. S-22.

LATEX MODIFIED CONCRETE SHALL BE LATEX MODIFIED CONCRETE - VERY EARLY STRENGTH.

FOR LATEX MODIFIED CONCRETE - VERY EARLY STRENGTH, SEE SPECIAL PROVISIONS.

FOR EVAZOTE JOINT SEALS, SEE SPECIAL PROVISIONS.

FOR SECTION A-A, SEE SHT. NO. S-22.

*** DISMANTLE AND STOCKPILE EXISTING GUARDRAIL AND G/R POSTS AS REQ'D. TO CONSTRUCT JOINT SEALS. REPLACE EXIST. G/R ONCE ALL DECK REHABILITATION WORK IS COMPLETE. COSTS FOR THIS WORK SHALL BE CONSIDERED INCIDENTAL TO CONSTRUCTION OF EVAZOTE JOINT SEALS.

$FILE$ $DATE$ $TIME$ $USER$

Stantec
Stantec Consulting Services Inc.
801 Jones Franklin Road
Suite 300
Raleigh, NC 27606
Tel. (919) 851-6866
Fax. (919) 851-7024
www.stantec.com
License No. F-0672

DRAWN BY : B M PALMER DATE : 05-13-11
CHECKED BY : J T KELVINGTON DATE : 05-13-11

PROJECT NO. BP-5300R
GUILFORD COUNTY
STATION:

STATE OF NORTH CAROLINA
DEPARTMENT OF TRANSPORTATION
RALEIGH

PLAN OF BRIDGE

DECK REHAB. FOR BRIDGE NO. 470

REVISIONS						SHEET NO.
NO.	BY:	DATE:	NO.	BY:	DATE:	S-19
1			3			TOTAL SHEETS
2			4			50

Joseph T. Kelvington 10/12

NORTH CAROLINA PROFESSIONAL SEAL 13406 ENGINEER JOSEPH T. KELVINGTON

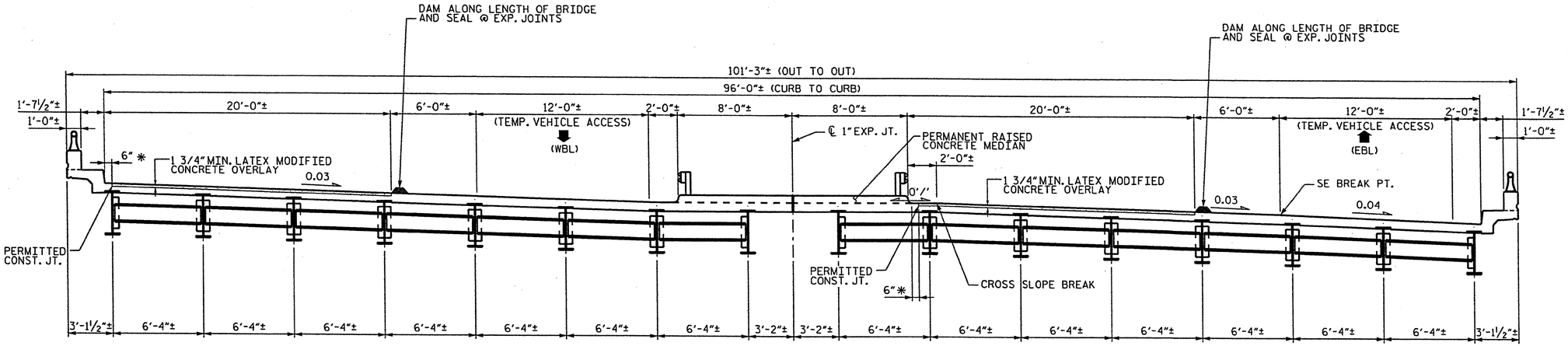

SEE TCP-6 FOR ADDITIONAL DETAILS

TYP. SECTION - EBL AND WBL CONSTRUCTION

SEE TCP-8A FOR ADDITIONAL DETAILS

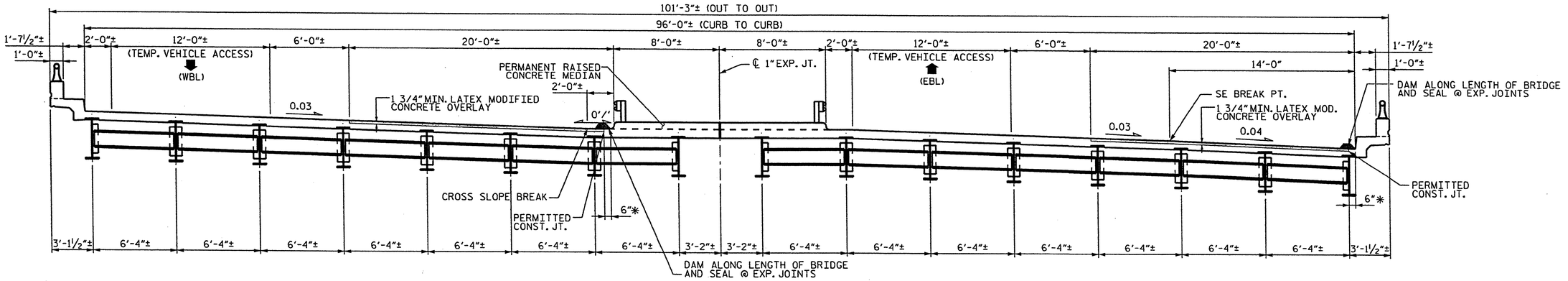

SEE TCP-7 FOR ADDITIONAL DETAILS

TYP. SECTION - EBL AND WBL CONSTRUCTION

SEE TCP-9 FOR ADDITIONAL DETAILS

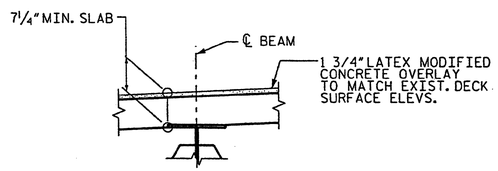

EXIST. SLAB BUILDUP

NOTES:

WATER & CONCRETE SLURRY FROM HYDRO-DEMOLITION SHALL NOT BE ALLOWED TO DRAIN ACROSS TRAVEL LANES. CONTRACTOR SHALL PROVIDE A METHOD TO CONTROL THE WATER.

ALL HORIZONTAL DIMENSIONS SHOWN ARE RADIAL UNLESS NOTED OTHERWISE.

FOR TRAFFIC CONTROL AND CONSTRUCTION PHASING, SEE TRAFFIC MANAGEMENT PLANS.

* PERMITTED WIDTH OF EXISTING CONCRETE DECK SURFACE OVER FULL LENGTH OF BRIDGE DECK THAT MAY BE LEFT INTACT FOR SCREED SUPPORT. OTHERWISE, REPAIR DECK SURFACE FROM CURB TO CURB.

PROJECT NO. BP-5300R

GUILFORD COUNTY

STATION:

STATE OF NORTH CAROLINA
DEPARTMENT OF TRANSPORTATION
RALEIGH

TYPICAL SECTION

DECK REHAB. FOR BRIDGE NO. 470

REVISIONS						SHEET NO.
NO.	BY:	DATE:	NO.	BY:	DATE:	S-20
1			3			TOTAL SHEETS
2			4			50

Stantec
Stantec Consulting Services Inc.
801 Jones Franklin Road
Suite 300
Raleigh, NC 27606
Tel. (919) 851-6866
Fax. (919) 851-7024
www.stantec.com
License No. F-0672

DRAWN BY : B M PALMER DATE : 05-13-11
CHECKED BY : J T KELVINGTON DATE : 05-13-11

NORTH CAROLINA PROFESSIONAL SEAL 13406 ENGINEER JOSEPH T. KELVINGTON

10/27/2011

$USER$ $TIME$ $DATE$ $FILE$

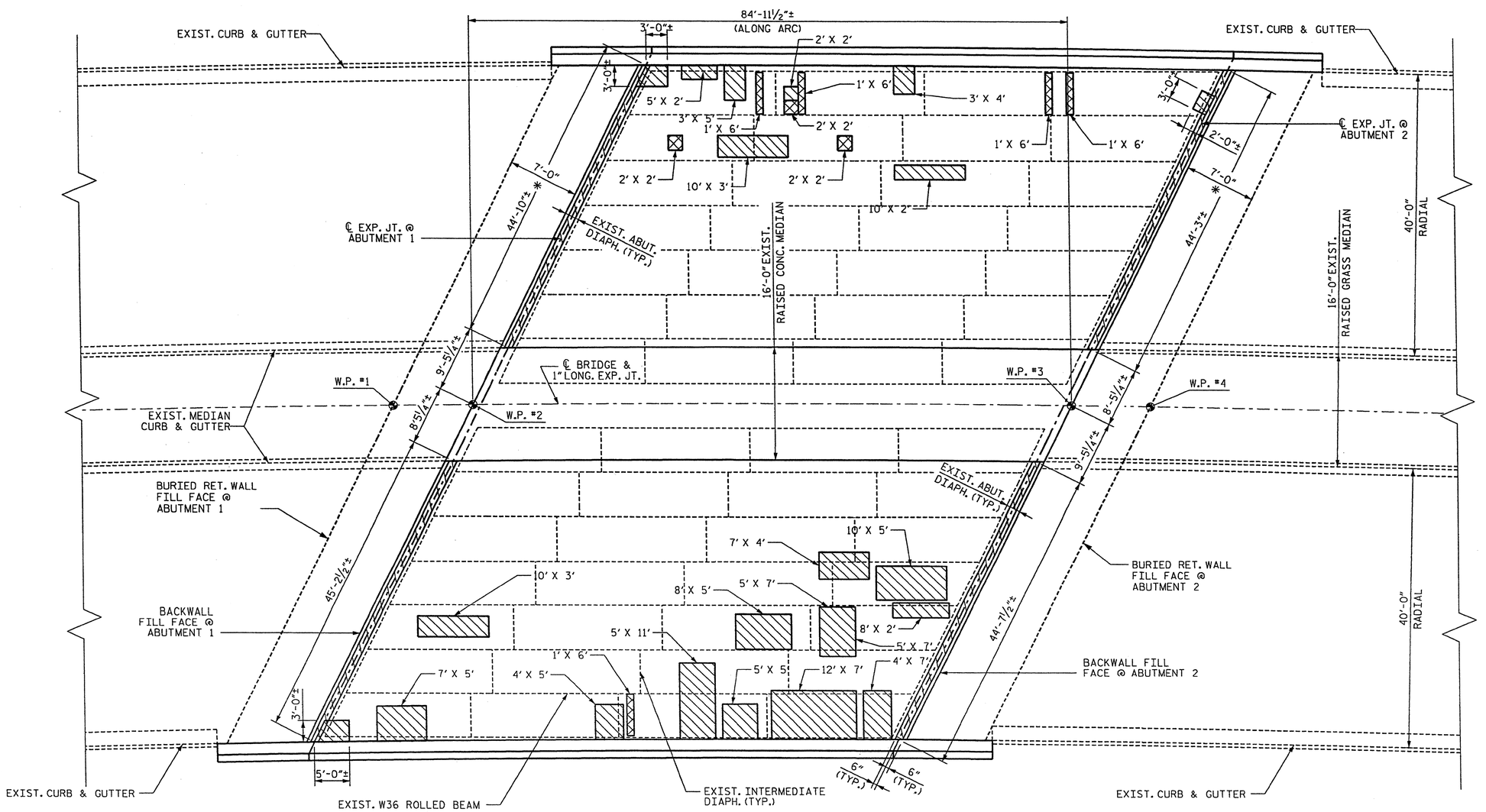

PLAN OF SPAN A - DECK REPAIRS

* UNDER BRIDGE SIDEWALK BETWEEN RETAINING WALL AND PIER

CLASS II SURFACE PREPARATION

CLASS III SURFACE PREPARATION

L' X W' = LENGTH OF AREA ALONG ℄ BRIDGE X
WIDTH OF AREA NORMAL TO ℄ BRIDGE ±

NOTES:

CONTRACTOR SHALL FURNISH FORMWORK TO SUPPORT SLAB OVERHANG REGIONS WITH EXTENSIVE CLASS III SURFACE PREPARATION.

SUBMIT DETAILS OF PROPOSED FORMWORK FOR APPROVAL PRIOR TO BEGINNING WORK.

COSTS FOR INSTALLING AND REMOVING FORMWORK SHALL BE INCIDENTAL TO THE PRICE BID PER SQ. YD. OF HYDRO-DEMOLITION.

SEE HYDRO-DEMOLITION SPECIAL PROVISIONS.

FOR "BLOW THRU" CONTAINMENT AND FORMWORK DETAIL, SEE SHT. NO S-22.

Stantec
Stantec Consulting Services Inc.
801 Jones Franklin Road
Suite 300
Raleigh, NC 27606
Tel. (919) 851-6866
Fax. (919) 851-7024
www.stantec.com
License No. F-0672

DRAWN BY : B M PALMER DATE : 05-13-11
CHECKED BY : J T KELVINGTON DATE : 05-13-11

PROJECT NO. BP-5300R
GUILFORD COUNTY
STATION:

STATE OF NORTH CAROLINA
DEPARTMENT OF TRANSPORTATION
RALEIGH

DECK REPAIR DETAILS
SPAN A

DECK REHAB. FOR BRIDGE NO. 470

REVISIONS						SHEET NO.
NO.	BY:	DATE:	NO.	BY:	DATE:	S-21
1			3			TOTAL SHEETS
2			4			50

JOSEPH T. KELVINGTON SEAL 13406 ENGINEER

$FILE$ $DATE$ $TIME$ $USER$

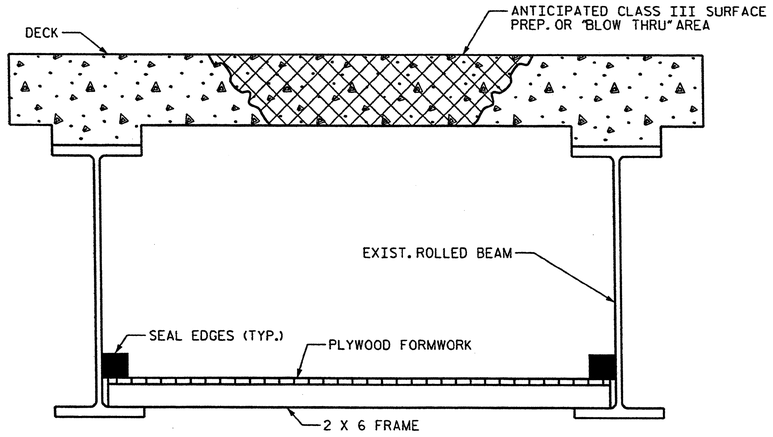

TYP. "BLOW THRU" CONTAINMENT AND FORMWORK

A METHOD TO CAPTURE WATER AND DEBRIS FROM BLOW THRU DURING HYDRO-DEMOLITION SHALL BE INSTALL IN AREAS INDICATED AS CLASS III SURFACE PREPARATION.

SUBMIT DETAILS OF PROPOSED FORMWORK FOR APPROVAL PRIOR TO BEGINNING WORK.

COSTS FOR INSTALLING AND REMOVING FORMWORK SHALL BE INCIDENTAL TO THE PRICE PER SQ. YARD OF HYDRO-DEMOLITION.

CONTRACTOR, AT HIS OPTION, MAY CHOOSE TO MONITOR HYDRO-DEMOLITION WORK AND CONTROL TRAFFIC UNDER THE BRIDGE IN LIEU OF BLOW THRU CONTAINMENT. SEE TRAFFIC CONTROL PLANS.

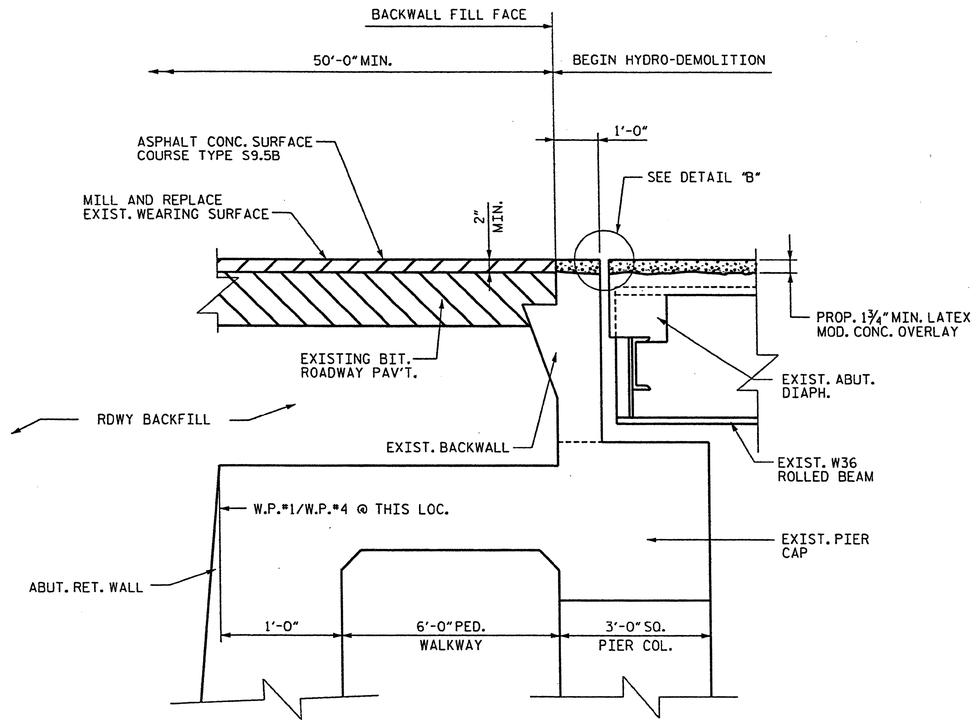

SECTION A-A
NTS

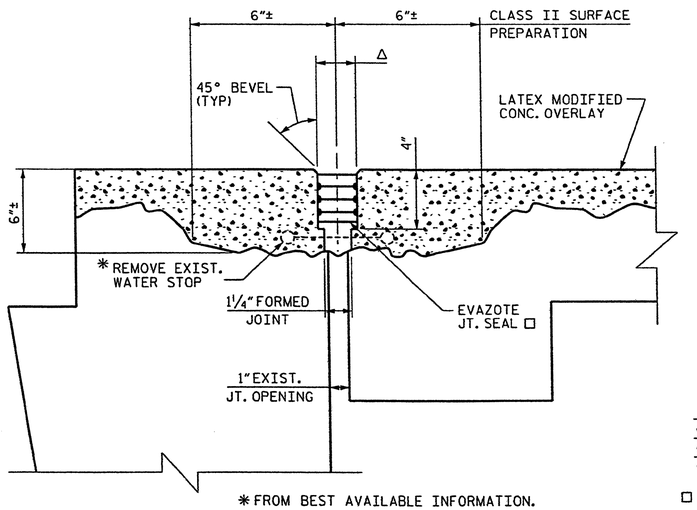

* FROM BEST AVAILABLE INFORMATION.

ALL EXISTING JOINT SEAL MATERIALS ARE TO BE COMPLETELY REMOVED.

DETAIL "B"

SAWED JT. OPENING - Δ

	ABUT. 1	ABUT. 2
@ 45°F	1⅞"	2⅛"
@ 60°F	1⅞"	2"
@ 90°F	1⅞"	1¾"

□ USE 2.50" X 2.00" UNCOMPRESSED EVAZOTE JT. SEAL MATERIAL AT ABUTMENT 1

□ USE 2.8125" X 2.50" UNCOMPRESSED EVAZOTE JT. SEAL MATERIAL AT ABUTMENT 2

Stantec
Stantec Consulting Services Inc.
801 Jones Franklin Road
Suite 300
Raleigh, NC 27606
Tel. (919) 851-6866
Fax. (919) 851-7024
www.stantec.com
License No. F-0672

DRAWN BY : B M PALMER DATE : 05-13-11
CHECKED BY : J T KELVINGTON DATE : 05-13-11

10/12

NORTH CAROLINA PROFESSIONAL SEAL 13406 ENGINEER J. T. KELVINGTON

PROJECT NO. BP-5300R
GUILFORD COUNTY
STATION:

STATE OF NORTH CAROLINA
DEPARTMENT OF TRANSPORTATION
RALEIGH

DECK REPAIR DETAILS

DECK REHAB. FOR BRIDGE NO. 470

REVISIONS						SHEET NO.
NO.	BY:	DATE:	NO.	BY:	DATE:	S-22
1			3			TOTAL SHEETS
2			4			50

$FILE$ $DATE$ $TIME$ $USER$

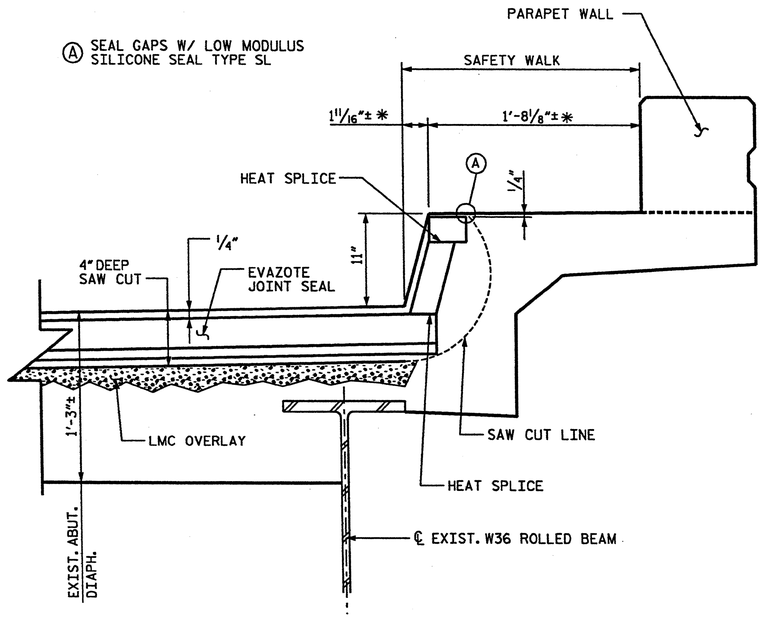

SECTION C-C

* SKEWED DIMENSIONS

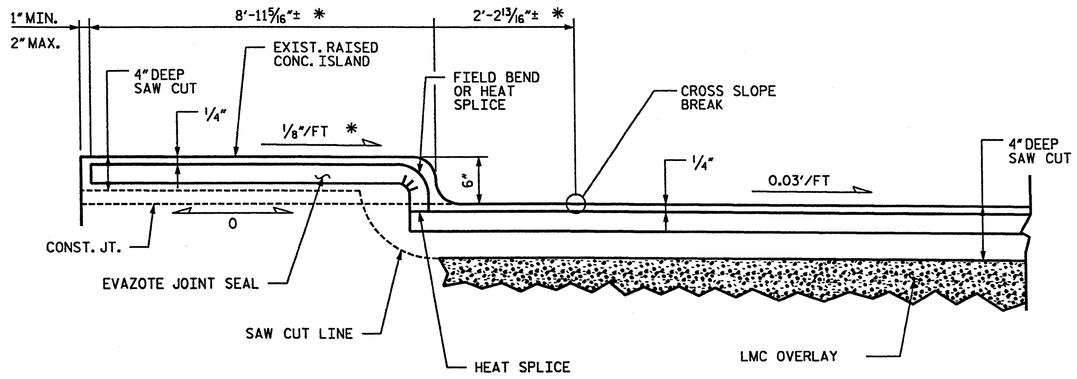

SECTION D-D

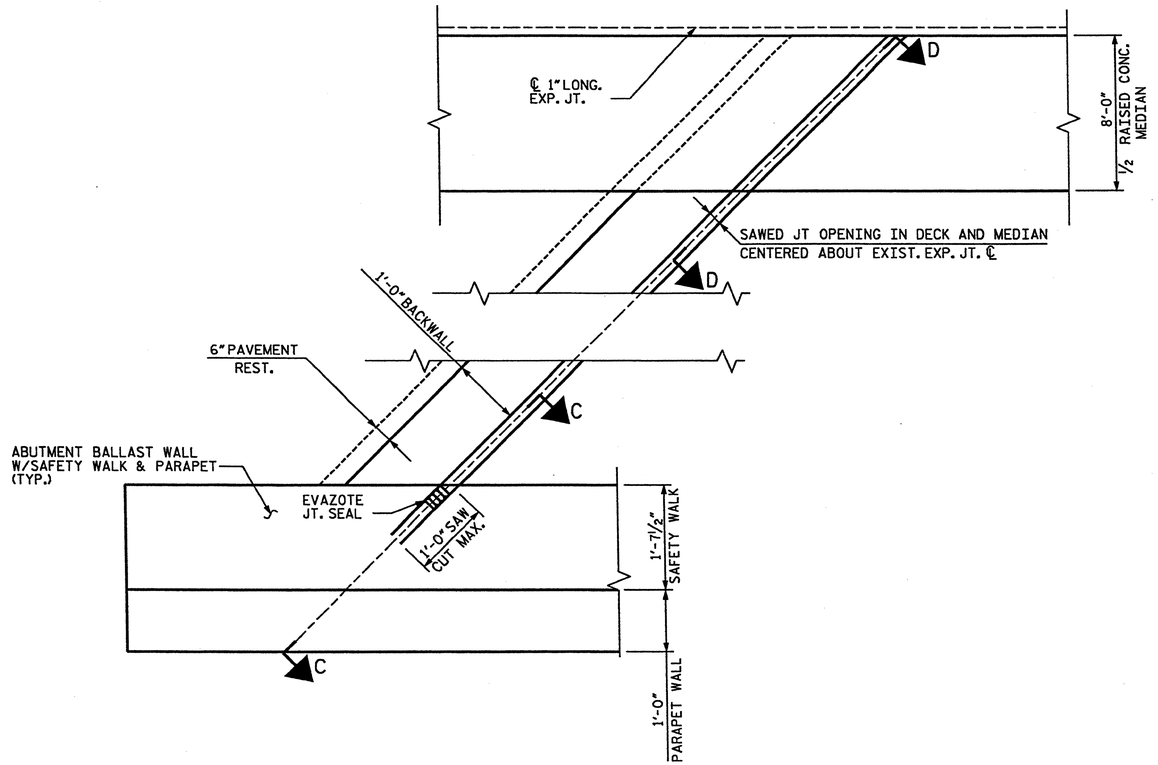

1/2 PLAN @ ABUTMENT 1 (TYPICAL)

PROJECT NO. BP-5300R

GUILFORD COUNTY

STATION:

STATE OF NORTH CAROLINA
DEPARTMENT OF TRANSPORTATION
RALEIGH

JOINT SEAL DETAILS

DECK REHAB. FOR BRIDGE NO. 470

REVISIONS						SHEET NO.
NO.	BY:	DATE:	NO.	BY:	DATE:	S-23
1			3			TOTAL SHEETS
2			4			50

NORTH CAROLINA PROFESSIONAL SEAL 13406 ENGINEER J. T. KELVINGTON

Stantec
Stantec Consulting Services Inc.
801 Jones Franklin Road
Suite 300
Raleigh, NC 27606
Tel. (919) 851-6866
Fax. (919) 851-7024
www.stantec.com
License No. F-0672

DRAWN BY : B M PALMER DATE : 05-13-11
CHECKED BY : J T KELVINGTON DATE : 05-13-11

ctures\Bridge Group 2011\BP5300R\Bridge 470\Drawing\BP5300R470_JT_DETAILS1.dgn 8/31/2011 2:21:15 PM cmccullough

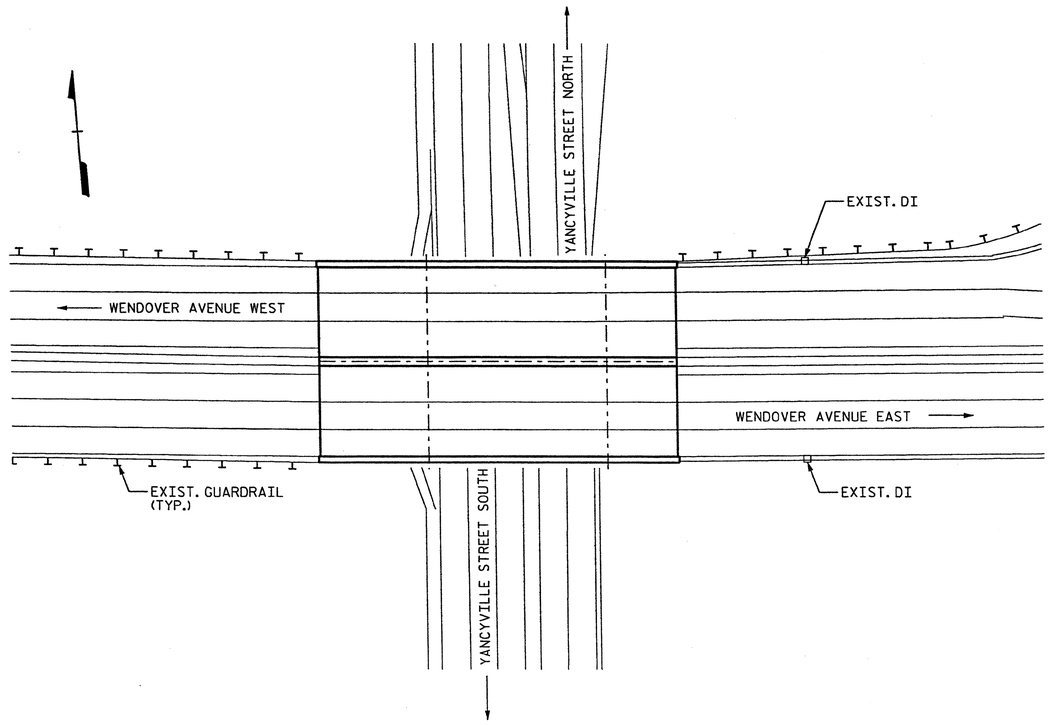

BRIDGE 217 ON WENDOVER AVE.

LOCATION: BRIDGE 217, US 220 (WENDOVER AVE.) OVER YANCYVILLE STREET 0.4 MILES WEST OF JUNCTION US 220 AND SR 2526

BRIDGE 217 ON WENDOVER AVE.

TOTAL BILL OF MATERIAL

SCARIFYING ** BRIDGE DECK	CLASS I * SURFACE PREPARATION	CLASS II * SURFACE PREPARATION	CLASS III * SURFACE PREPARATION	HYDRO-DEMOLITION OF BRIDGE DECK	CLASS AA* CONCRETE	LATEX MODIFIED CONCRETE-VERY EARLY STRENGTH	PLACING & FINISHING LATEX MODIFIED CONCRETE-VERY EARLY STRENGTH	EVAZOTE JOINT SEALS	GROOVING BRIDGE FLOORS	ASHPHALT CONC. SURF. COURSE TYPE S9.5B
SQ.YDS.	SQ.YDS.	SQ.YDS.	SQ.YDS.	SQ.YDS.	CU.YDS.	CU.YDS.	SQ.YDS.	LUMP SUM	SQ.FT.	TON
2,187.8	1,249.9	87.9	5.6	1,343.4	0.6	60.1	1,343.4	LUMP SUM	11,026	89

* QUANTITIES ARE SHOWN FOR INFORMATIONAL PURPOSES ONLY. IF ANY CLASS III LOCATIONS ARE ENCOUNTERED PRIOR TO OR DURING HYDRO-DEMOLITION, SEE "TYP. "BLOW THRU" CONTAINMENT AND FORMWORK" DETAIL. NO SEPARATE PAYMENT SHALL BE MADE.

** INCLUDES MILLING OF ROADWAY PAVEMENT.

Stantec
Stantec Consulting Services Inc.
801 Jones Franklin Road
Suite 300
Raleigh, NC 27606
Tel. (919) 851-6866
Fax. (919) 851-7024
www.stantec.com
License No. F-0672

DRAWN BY : J. L. HENNEKES DATE : 05-13-11
CHECKED BY : J. T. KELVINGTON DATE : 05-13-11

$FILE$ $DATE$ $TIME$ $USER$

PROJECT NO. BP-5300R
GUILFORD COUNTY
STATION:

Joseph T. Kelvington
NORTH CAROLINA PROFESSIONAL ENGINEER SEAL 13406 JOSEPH T. KELVINGTON

STATE OF NORTH CAROLINA
DEPARTMENT OF TRANSPORTATION
RALEIGH

LOCATION SKETCH AND TOTAL BILL OF MATERIAL

DECK REHAB. FOR BRIDGE NO. 217

REVISIONS						SHEET NO.
NO.	BY:	DATE:	NO.	BY:	DATE:	S-24
1			3			TOTAL SHEETS
2			4			50

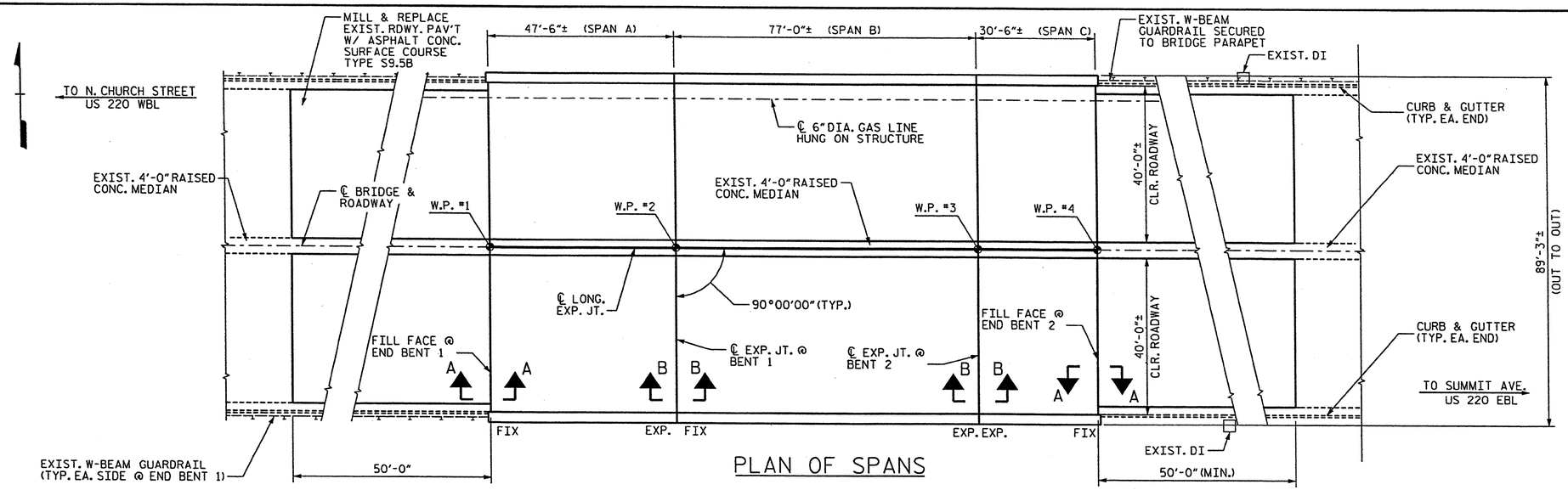

PLAN OF SPANS

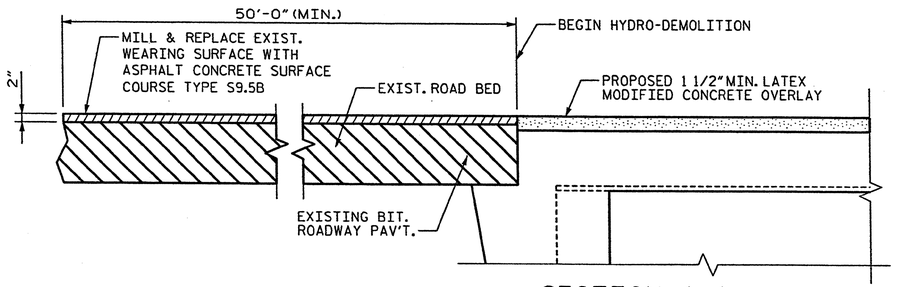

SECTION A-A

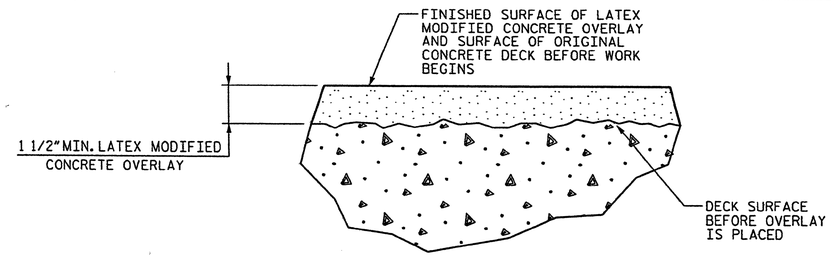

DETAIL FOR LATEX MODIFIED CONCRETE OVERLAY

NOTES:

EXISTING DECK DRAINS SHALL BE SEALED PRIOR TO BEGINNING REPAIR OF BRIDGE DECKS WITH LATEX MODIFIED CONCRETE. SEE SPECIAL PROVISIONS.

FOR HYDRO-DEMOLITION, SEE SPECIAL PROVISIONS.

THE CONTRACTOR MUST COLLECT, TREAT AND DISPOSE OF RUN-OFF WATER FROM THE HYDRO-DEMOLITION PROCESS. SEE SPECIAL PROVISIONS.

THE BOUNDARIES OF AREAS IDENTIFIED FOR CLASS III SURFACE PREPARATION ARE APPROXIMATE. THE CONTRACTOR SHALL PROVIDE A METHOD OF HANDLING UNEXPECTED BLOW THROUGH OF THE DECK. SEE DETAIL, SHT. NO. S-27.

LATEX MODIFIED CONCRETE SHALL BE LATEX MODIFIED CONCRETE - VERY EARLY STRENGTH.

FOR LATEX MODIFIED CONCRETE - VERY EARLY STRENGTH, SEE SPECIAL PROVISIONS.

FOR EVAZOTE JOINT SEALS, SEE SPECIAL PROVISIONS.

FOR SECTION B-B, SEE SHT. NO. S-30.

$FILE$ $DATE$ $TIME$ $USER$

Stantec
Stantec Consulting Services Inc.
801 Jones Franklin Road
Suite 300
Raleigh, NC 27606
Tel. (919) 851-6866
Fax. (919) 851-7024
www.stantec.com
License No. F-0672

DRAWN BY : J. L. HENNEKES DATE : 05-13-11
CHECKED BY : J. T. KELVINGTON DATE : 05-13-11

PROJECT NO. BP-5300R
GUILFORD COUNTY
STATION:

STATE OF NORTH CAROLINA
DEPARTMENT OF TRANSPORTATION
RALEIGH

PLAN OF BRIDGE

DECK REHAB. FOR BRIDGE NO. 217

REVISIONS						SHEET NO.
NO.	BY:	DATE:	NO.	BY:	DATE:	S-25
1			3			TOTAL SHEETS
2			4			50

10/17

NORTH CAROLINA PROFESSIONAL SEAL 13406 ENGINEER JOSEPH T. KELVINGTON

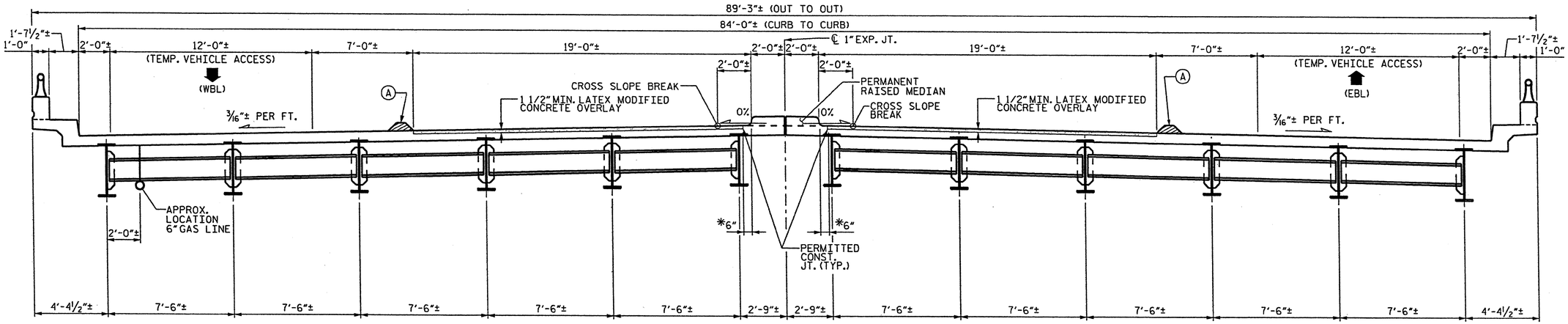

TYP. SECTION - EBL AND WBL CONSTRUCTION

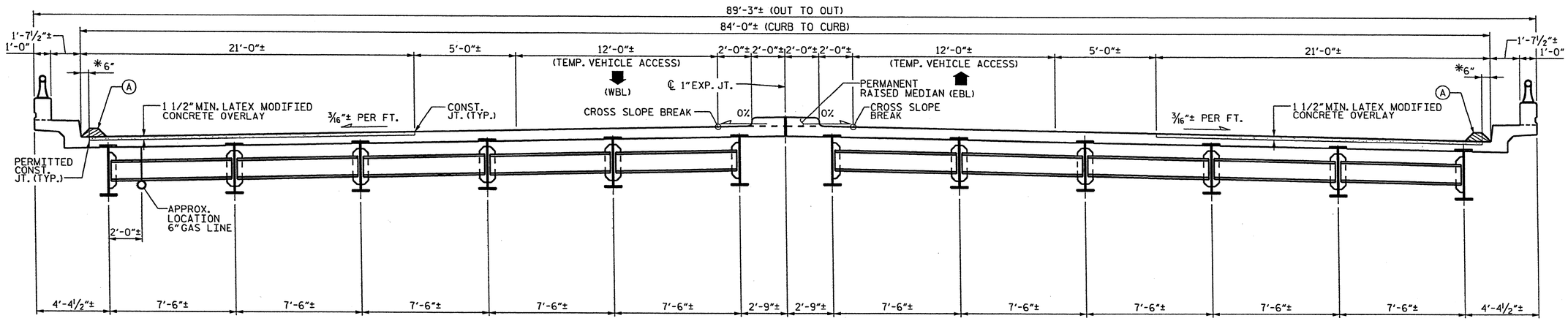

TYP. SECTION - EBL AND WBL CONSTRUCTION

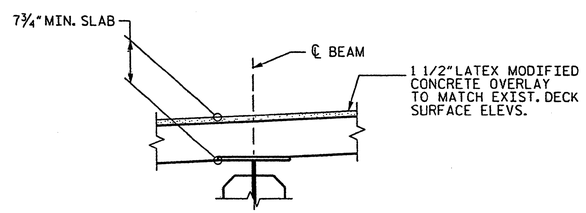

EXIST. SLAB BUILDUP

NOTES:

WATER & CONCRETE SLURRY FROM HYDRO-DEMOLITION SHALL NOT BE ALLOWED TO DRAIN ACROSS TRAVEL LANES. CONTRACTOR SHALL PROVIDE A METHOD TO CONTROL THE WATER.

FOR TRAFFIC CONTROL AND CONSTRUCTION PHASING, SEE TRANSPORTATION MANAGEMENT PLANS.

*PERMITTED WIDTH OF EXISTING CONCRETE DECK SURFACE OVER FULL LENGTH OF BRIDGE DECK THAT MAY BE LEFT INTACT FOR SCREED SUPPORT. OTHERWISE, REPAIR DECK SURFACE FROM CURB TO CURB.

Ⓐ DAM ALONG LENGTH OF BRIDGE, AND ROADWAY. SEAL EXP. JTS.

Stantec
Stantec Consulting Services Inc.
801 Jones Franklin Road
Suite 300
Raleigh, NC 27606
Tel. (919) 851-6866
Fax. (919) 851-7024
www.stantec.com
License No. F-0672

DRAWN BY : J. L. HENNEKES DATE : 05-13-11
CHECKED BY : J. T. KELVINGTON DATE : 05-13-11

PROJECT NO. BP-5300R
GUILFORD COUNTY
STATION:

STATE OF NORTH CAROLINA
DEPARTMENT OF TRANSPORTATION
RALEIGH

TYPICAL SECTION

DECK REHAB. FOR BRIDGE NO. 217

REVISIONS						SHEET NO.
NO.	BY:	DATE:	NO.	BY:	DATE:	S-26
1			3			TOTAL SHEETS
2			4			50

NORTH CAROLINA PROFESSIONAL SEAL 13406 ENGINEER JOSEPH T. KELVINGTON
10/13/11

$FILE$ $DATE$ $TIME$ $USER$

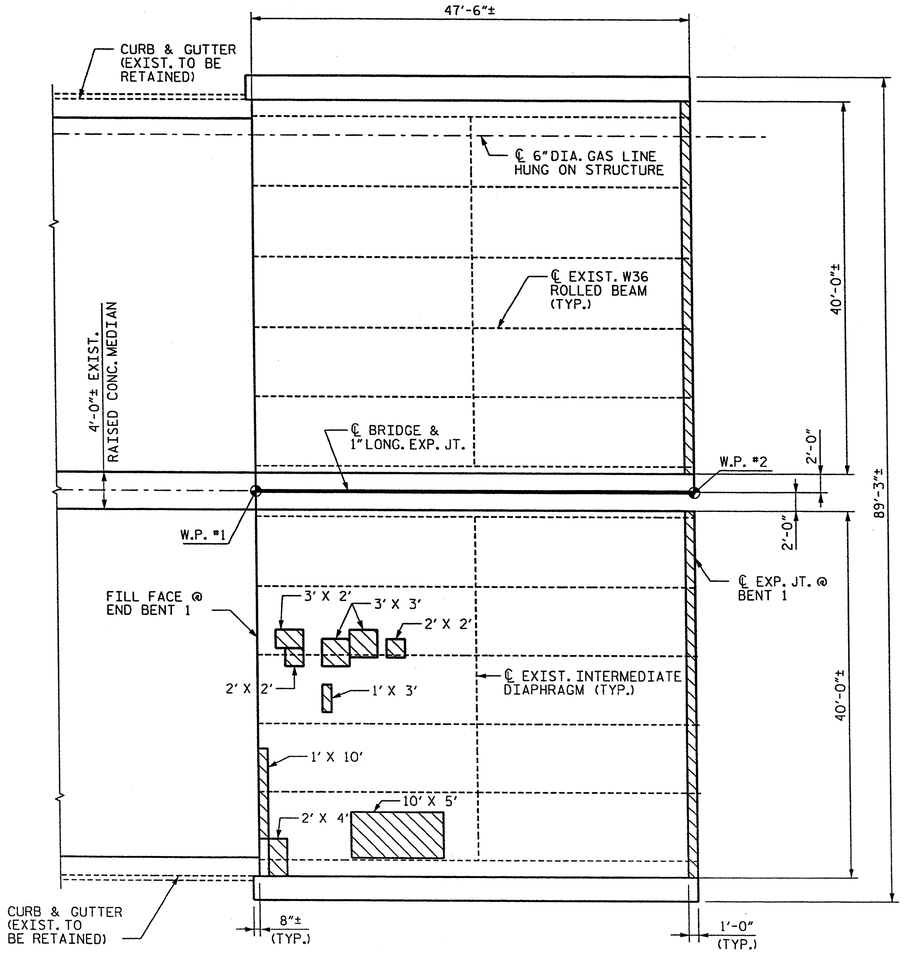

PLAN OF SPAN A - DECK REPAIRS

CLASS II SURFACE PREPARATION

CLASS III SURFACE PREPARATION

L' X W' = LENGTH OF AREA ALONG ℄ BRIDGE X WIDTH OF AREA NORMAL TO ℄ BRIDGE ±

NOTES:

CONTRACTOR SHALL FURNISH FORMWORK TO SUPPORT SLAB OVERHANG REGIONS WITH EXTENSIVE CLASS III SURFACE PREPARATION.

SUBMIT DETAILS OF PROPOSED FORMWORK FOR APPROVAL PRIOR TO BEGINNING WORK.

COSTS FOR INSTALLING AND REMOVING FORMWORK SHALL BE INCIDENTAL TO THE PRICE BID PER SQ. YD. OF HYDRO-DEMOLITION.

SEE HYDRO-DEMOLITION SPECIAL PROVISIONS.

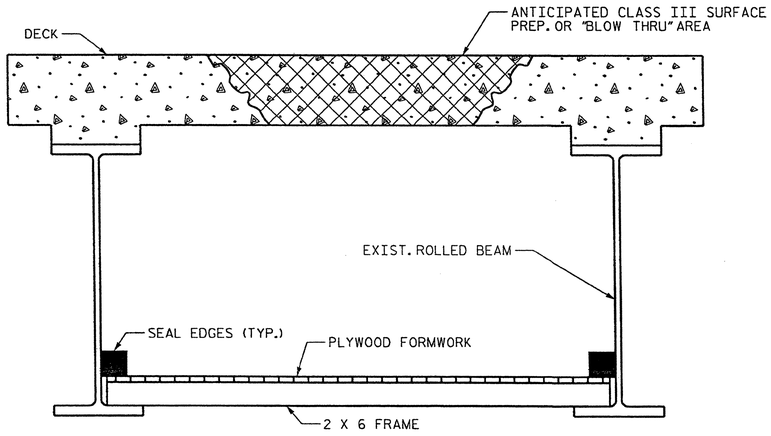

TYP. "BLOW THRU" CONTAINMENT AND FORMWORK

A METHOD TO CAPTURE WATER AND DEBRIS FROM BLOW THRU DURING HYDRO-DEMOLITION SHALL BE INSTALL IN AREAS INDICATED AS CLASS III SURFACE PREPARATION.

SUBMIT DETAILS OF PROPOSED FORMWORK FOR APPROVAL PRIOR TO BEGINNING WORK.

COSTS FOR INSTALLING AND REMOVING FORMWORK SHALL BE INCIDENTAL TO THE PRICE PER SQ. YARD OF HYDRO-DEMOLITION.

CONTRACTOR, AT HIS OPTION, MAY CHOOSE TO MONITOR HYDRO-DEMOLITION WORK AND CONTROL TRAFFIC UNDER THE BRIDGE IN LIEU OF BLOW THRU CONTAINMENT. SEE TRAFFIC CONTROL PLANS.

Stantec
Stantec Consulting Services Inc.
801 Jones Franklin Road
Suite 300
Raleigh, NC 27606
Tel. (919) 851-6866
Fax. (919) 851-7024
www.stantec.com
License No. F-0672

DRAWN BY : J. L. HENNEKES DATE : 05-13-11
CHECKED BY : J. T. KELVINGTON DATE : 05-13-11

NORTH CAROLINA PROFESSIONAL ENGINEER SEAL 13406 JOSEPH T. KELVINGTON

PROJECT NO. BP-5300R
GUILFORD COUNTY
STATION:

STATE OF NORTH CAROLINA
DEPARTMENT OF TRANSPORTATION
RALEIGH

DECK REPAIR DETAILS SPAN A

DECK REHAB. FOR BRIDGE NO. 217

REVISIONS						SHEET NO.
NO.	BY:	DATE:	NO.	BY:	DATE:	S-27
1			3			TOTAL SHEETS
2			4			50

$USER$ $TIME$ $DATE$ $FILE$

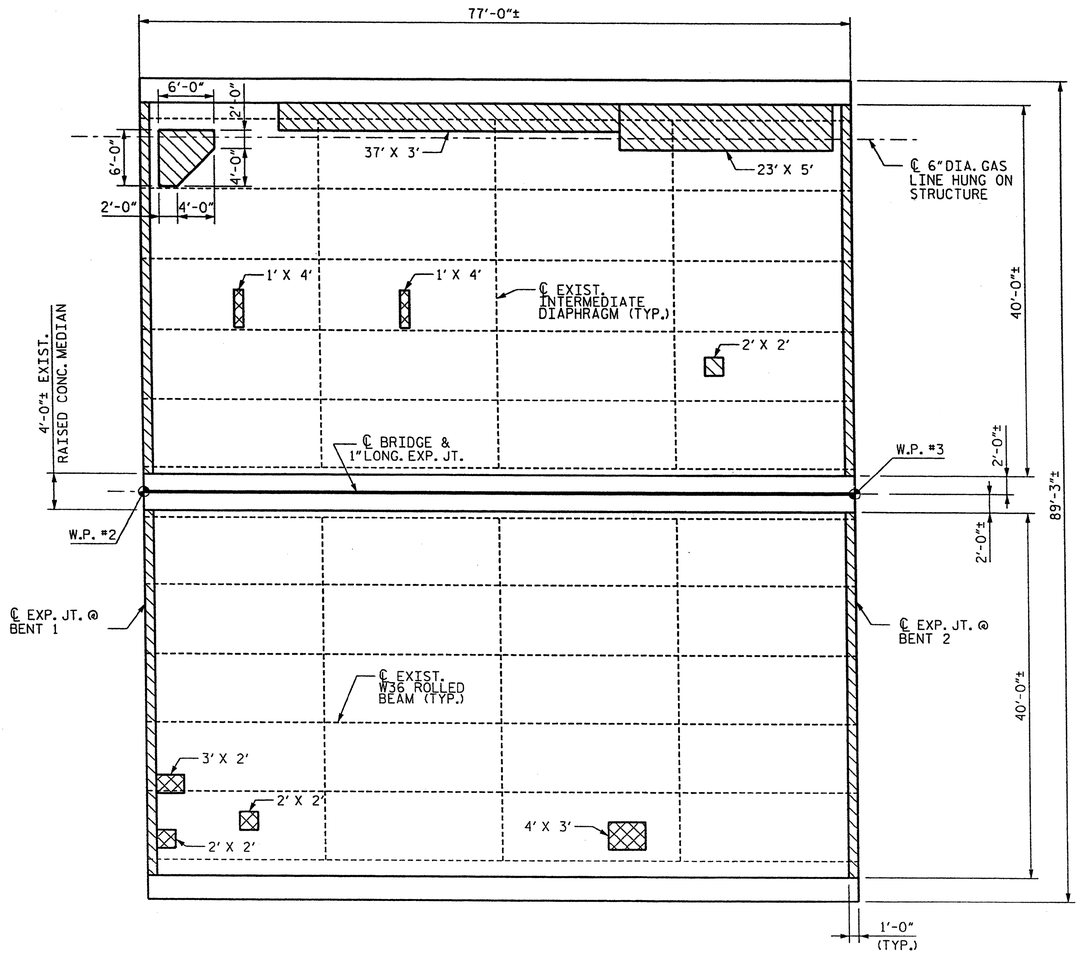

PLAN OF SPAN B - DECK REPAIRS

CLASS II SURFACE PREPARATION

CLASS III SURFACE PREPARATION

L' X W' = LENGTH OF AREA ALONG ℄ BRIDGE X
WIDTH OF AREA NORMAL TO ℄ BRIDGE ±

NOTES:

CONTRACTOR SHALL FURNISH FORMWORK TO SUPPORT SLAB OVERHANG REGIONS WITH EXTENSIVE CLASS III SURFACE PREPARATION.

SUBMIT DETAILS OF PROPOSED FORMWORK FOR APPROVAL PRIOR TO BEGINNING WORK.

COSTS FOR INSTALLING AND REMOVING FORMWORK SHALL BE INCIDENTAL TO THE PRICE BID PER SQ. YD. OF HYDRO-DEMOLITION.

SEE HYDRO-DEMOLITION SPECIAL PROVISIONS.

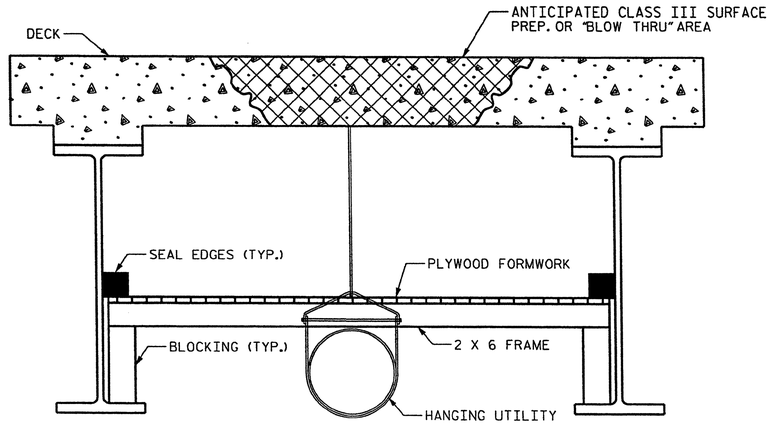

TYP. "BLOW THRU" CONTAINMENT AND FORMWORK WITH HANGING UTILITY

A METHOD TO CAPTURE WATER AND DEBRIS FROM BLOW THRU DURING HYDRO-DEMOLITION SHALL BE INSTALL IN AREAS INDICATED AS CLASS III SURFACE PREPARATION.

SUBMIT DETAILS OF PROPOSED FORMWORK FOR APPROVAL PRIOR TO BEGINNING WORK.

COSTS FOR INSTALLING AND REMOVING FORMWORK SHALL BE INCIDENTAL TO THE PRICE PER SQ. YARD OF HYDRO-DEMOLITION.

CONTRACTOR, AT HIS OPTION, MAY CHOOSE TO MONITOR HYDRO-DEMOLITION WORK AND CONTROL TRAFFIC UNDER THE BRIDGE IN LIEU OF BLOW THRU CONTAINMENT. SEE TRAFFIC CONTROL PLANS.

PLACE PLYWOOD, FORMWORK AND FRAMING TO CLEAR UTILITY HANGERS.

$FILE$ $DATE$ $TIME$ $USER$

Stantec
Stantec Consulting Services Inc.
801 Jones Franklin Road
Suite 300
Raleigh, NC 27606
Tel. (919) 851-6866
Fax. (919) 851-7024
www.stantec.com
License No. F-0672

DRAWN BY : J. L. HENNEKES DATE : 05-13-11
CHECKED BY : J. T. KELVINGTON DATE : 05-13-11

PROJECT NO. BP-5300R
GUILFORD COUNTY
STATION:

STATE OF NORTH CAROLINA
DEPARTMENT OF TRANSPORTATION
RALEIGH

Joseph T. Kelvington
NORTH CAROLINA PROFESSIONAL SEAL 13406 ENGINEER JOSEPH T. KELVINGTON

DECK REPAIR DETAILS
SPAN B

DECK REHAB. FOR BRIDGE NO. 217

REVISIONS						SHEET NO.
NO.	BY:	DATE:	NO.	BY:	DATE:	S-28
1			3			TOTAL SHEETS
2			4			50

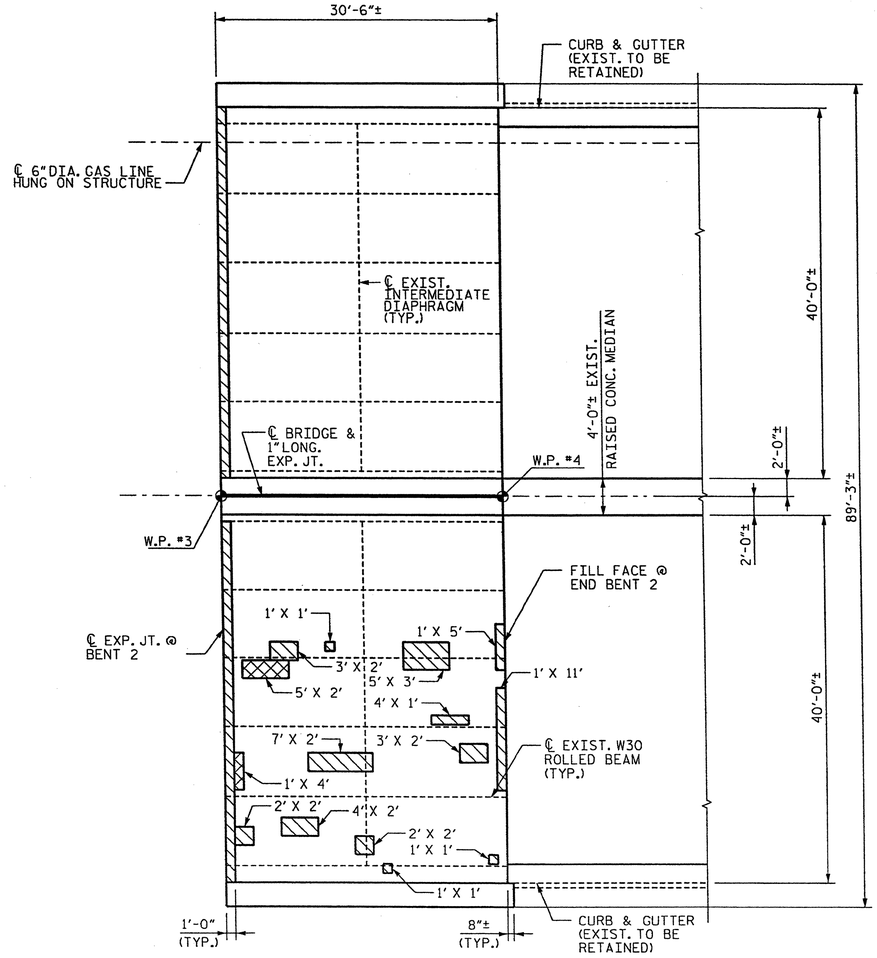

PLAN OF SPAN C - DECK REPAIRS

NOTES:

CONTRACTOR SHALL FURNISH FORMWORK TO SUPPORT SLAB OVERHANG REGIONS WITH EXTENSIVE CLASS III SURFACE PREPARATION.

SUBMIT DETAILS OF PROPOSED FORMWORK FOR APPROVAL PRIOR TO BEGINNING WORK.

COSTS FOR INSTALLING AND REMOVING FORMWORK SHALL BE INCIDENTAL TO THE PRICE BID PER SQ. YD. OF CLASS III HYDRO-DEMOLITION.

SEE HYDRO-DEMOLITION SPECIAL PROVISIONS.

CLASS II SURFACE PREPARATION

CLASS III SURFACE PREPARATION

L' X W' = LENGTH OF AREA ALONG ℄ BRIDGE X
WIDTH OF AREA NORMAL TO ℄ BRIDGE ±

PROJECT NO. BP-5300R

GUILFORD COUNTY

STATION:

STATE OF NORTH CAROLINA
DEPARTMENT OF TRANSPORTATION
RALEIGH

DECK REPAIR DETAILS
SPAN C

DECK REHAB. FOR BRIDGE NO. 217

REVISIONS						SHEET NO.
NO.	BY:	DATE:	NO.	BY:	DATE:	S-29
1			3			TOTAL SHEETS
2			4			50

Stantec
Stantec Consulting Services Inc.
801 Jones Franklin Road
Suite 300
Raleigh, NC 27606
Tel. (919) 851-6866
Fax. (919) 851-7024
www.stantec.com
License No. F-0672

DRAWN BY : J. L. HENNEKES DATE : 05-13-11
CHECKED BY : J. T. KELVINGTON DATE : 05-13-11

NORTH CAROLINA PROFESSIONAL SEAL 13406 ENGINEER JOSEPH T. KELVINGTON

$FILE$ $DATE$ $TIME$ $USER$

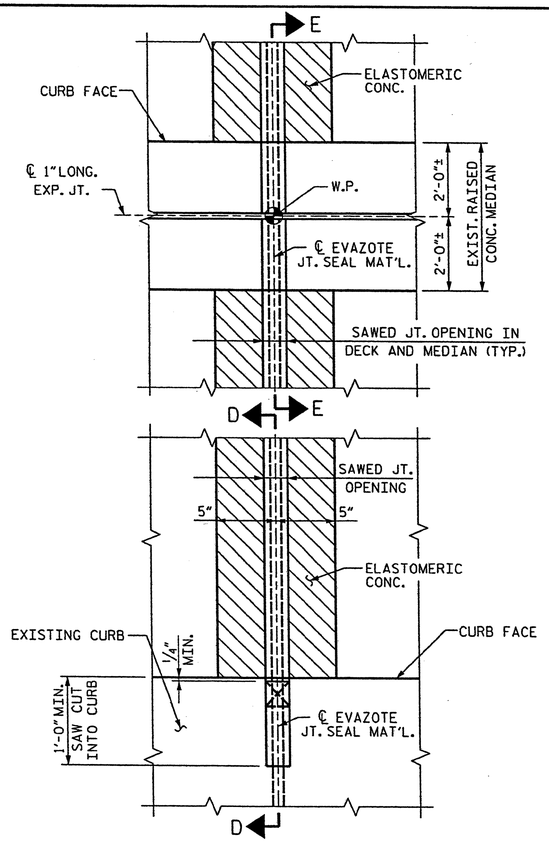

PARTIAL PLAN @ JOINT

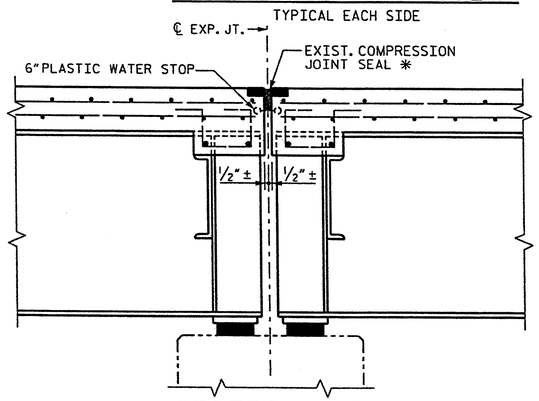

SECTION B-B

(EXISTING JOINT)

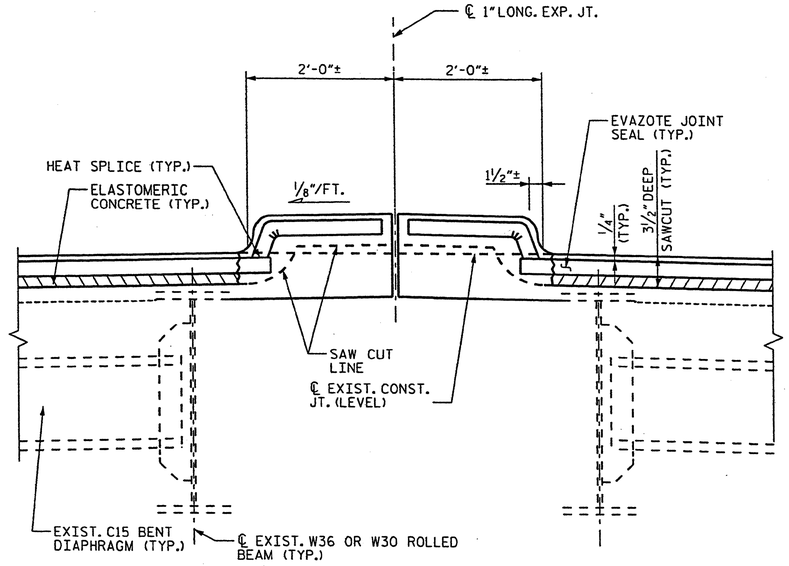

SECTION E-E

CONTRACTOR SHALL EXERCISE CARE TO AVOID CUTTING OR DAMAGING EXISTING REINF. STEEL.

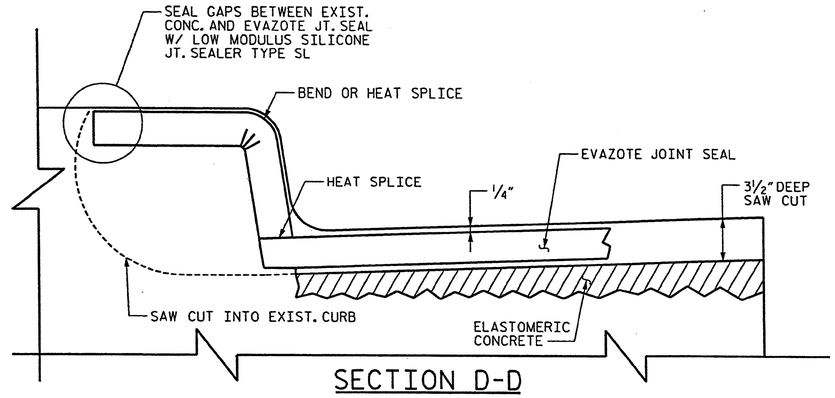

SECTION D-D

CONTRACTOR SHALL EXERCISE CARE TO AVOID CUTTING OR DAMAGING EXISTING REINF. STEEL.

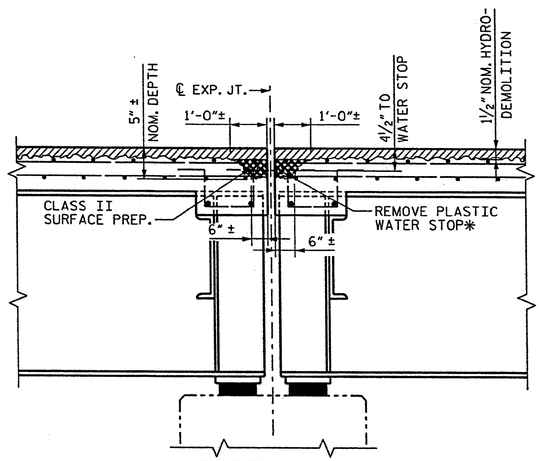

SECTION B-B

(MINIMUM EXISTING JOINT DEMOLITION)

NOTE: RETAIN ALL EXIST. REINF. STEEL. CLEAN AND REPAIR AS REQ'D.

* FROM BEST AVAILABLE INFORMATION.

ALL EXISTING JOINT SEAL MATERIALS ARE TO BE COMPLETELY REMOVED.

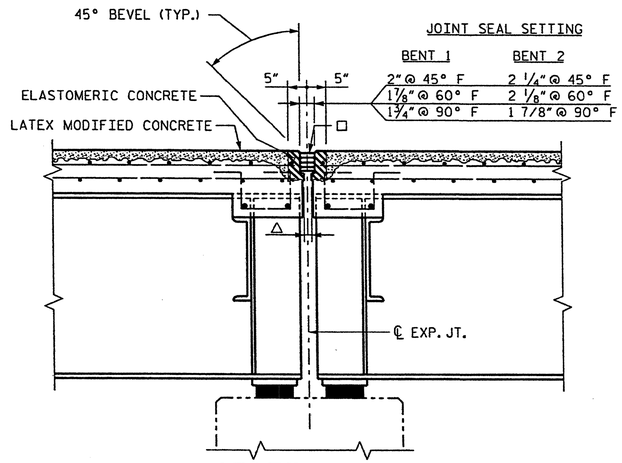

SECTION B-B

(JOINT SEAL DESIGN)

□ USE 2.8125"X 2.50" UNCOMPRESSED EVAZOTE JT. SEAL MATERIAL

△ 1" FORMED OPENING

ELASTOMERIC CONCRETE

LOCATION	QTY
BENT 1	24.3 C.F.
BENT 2	24.3 C.F.

TOTAL ELASTOMERIC CONC. = 48.6 C.F.
TOTAL ELASTOMERIC CONC. = 1.8 C.Y.

PROJECT NO. BP-5300R

GUILFORD COUNTY

STATION:

STATE OF NORTH CAROLINA
DEPARTMENT OF TRANSPORTATION
RALEIGH

EVAZOTE JOINT DETAILS

DECK REHAB. FOR BRIDGE NO. 217

REVISIONS						SHEET NO.
NO.	BY:	DATE:	NO.	BY:	DATE:	S-30
1			3			TOTAL SHEETS
2			4			50

Stantec
Stantec Consulting Services Inc.
801 Jones Franklin Road
Suite 300
Raleigh, NC 27606
Tel. (919) 851-6866
Fax. (919) 851-7024
www.stantec.com
License No. F-0672

DRAWN BY : J. L. HENNEKES DATE : 05-13-11
CHECKED BY : J. T. KELVINGTON DATE : 05-13-11

NORTH CAROLINA PROFESSIONAL SEAL 13406 ENGINEER JOSEPH T. KELVINGTON

$FILE$ $DATE$ $TIME$ $USER$

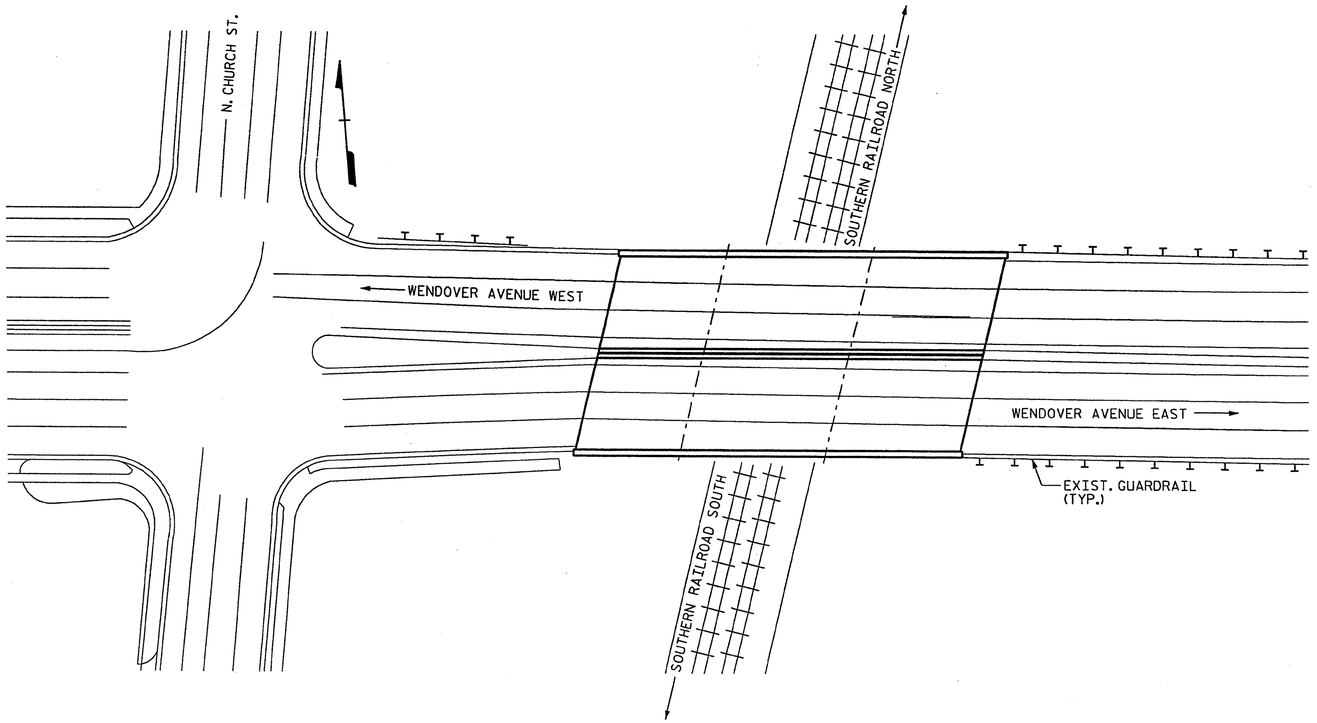

BRIDGE 259 ON WENDOVER AVE.

LOCATION: BRIDGE 259, US 220 (WENDOVER AVE.) OVER SOUTHERN RAILROAD 0.5 MILES WEST OF JUNCTION US 220 AND SR 2526

BRIDGE 259 ON WENDOVER AVE.

TOTAL BILL OF MATERIAL

SCARIFYING ** OF BRIDGE DECK	CLASS I * SURFACE PREPARATION	CLASS II * SURFACE PREPARATION	CLASS III * SURFACE PREPARATION	HYDRO-DEMOLITION OF BRIDGE DECK	CLASS AA * CONCRETE	LATEX MODIFIED CONCRETE-VERY EARLY STRENGTH	PLACING & FINISHING LATEX MODIFIED CONCRETE-VERY EARLY STRENGTH	EVAZOTE JOINT SEALS	GROOVING BRIDGE FLOORS	ASHPHALT CONC. SURF. COURSE TYPE S9.5B
SQ.YDS.	SQ.YDS.	SQ.YDS.	SQ.YDS.	SQ.YDS.	CU.YDS.	CU.YDS.	SQ.YDS.	LUMP SUM	SQ.FT.	TON
2,512.6	1,387.9	118.0	-	1,505.9	-	57.9	1,505.9	LUMP SUM	12,401	106

* QUANTITIES ARE SHOWN FOR INFORMATIONAL PURPOSES ONLY. IF ANY CLASS III LOCATIONS ARE ENCOUNTERED PRIOR TO OR DURING HYDRO-DEMOLITION, SEE "TYP. "BLOW THRU" CONTAINMENT AND FORMWORK" DETAIL. NO SEPARATE PAYMENT SHALL BE MADE.

** INCLUDES MILLING OF ROADWAY PAVEMENT.

Stantec
Stantec Consulting Services Inc.
801 Jones Franklin Road
Suite 300
Raleigh, NC 27606
Tel. (919) 851-6866
Fax. (919) 851-7024
www.stantec.com
License No. F-0672

DRAWN BY : J. L. HENNEKES DATE : 05-13-11
CHECKED BY : J. T. KELVINGTON DATE : 05-13-11

PROJECT NO. BP-5300R
GUILFORD COUNTY
STATION:

STATE OF NORTH CAROLINA
DEPARTMENT OF TRANSPORTATION
RALEIGH

LOCATION SKETCH
AND TOTAL
BILL OF MATERIAL

DECK REHAB. FOR BRIDGE NO. 259

REVISIONS						SHEET NO.
NO.	BY:	DATE:	NO.	BY:	DATE:	S-31
1			3			TOTAL SHEETS
2			4			50

$FILE$ $DATE$ $TIME$ $USER$

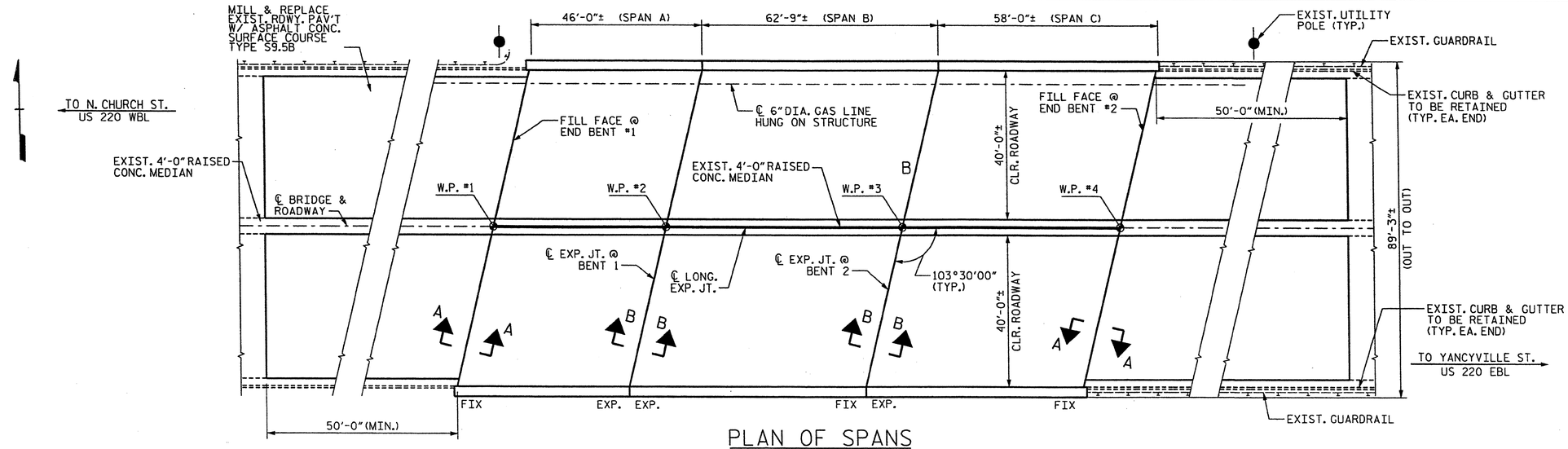

PLAN OF SPANS

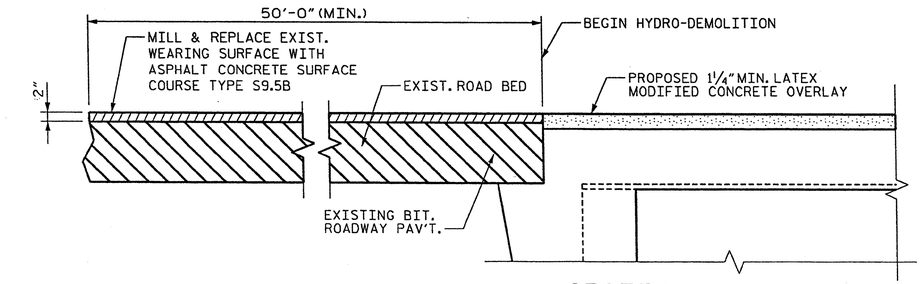

SECTION A-A

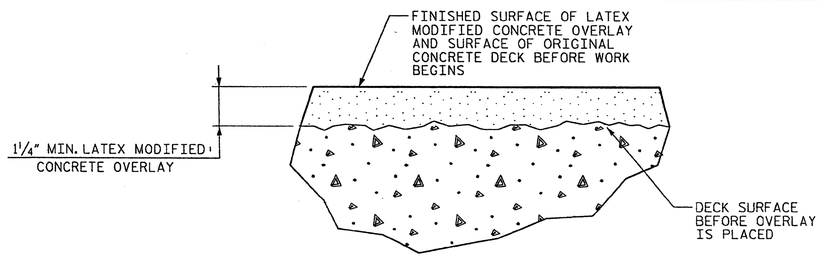

DETAIL FOR LATEX MODIFIED CONCRETE OVERLAY

NOTES:

EXISTING DECK DRAINS SHALL BE SEALED PRIOR TO BEGINNING REPAIR OF BRIDGE DECKS WITH LATEX MODIFIED CONCRETE. SEE SPECIAL PROVISIONS.

FOR HYDRO-DEMOLITION, SEE SPECIAL PROVISIONS.

THE CONTRACTOR MUST COLLECT, TREAT AND DISPOSE OF RUN-OFF WATER FROM THE HYDRO-DEMOLITION PROCESS. SEE SPECIAL PROVISIONS.

LATEX MODIFIED CONCRETE SHALL BE LATEX MODIFIED CONCRETE - VERY EARLY STRENGTH.

FOR LATEX MODIFIED CONCRETE - VERY EARLY STRENGTH, SEE SPECIAL PROVISIONS.

FOR EVAZOTE JOINT SEALS, SEE SPECIAL PROVISIONS.

FOR SECTION B-B, SEE SHT. NO. S-37.

$FILE$ $DATE$ $TIME$ $USER$

Stantec
Stantec Consulting Services Inc.
801 Jones Franklin Road
Suite 300
Raleigh, NC 27606
Tel. (919) 851-6866
Fax. (919) 851-7024
www.stantec.com
License No. F-0672

DRAWN BY : J. L. HENNEKES DATE : 05-13-11
CHECKED BY : J. T. KELVINGTON DATE : 05-13-11

PROJECT NO. BP-5300R
GUILFORD COUNTY
STATION:

STATE OF NORTH CAROLINA
DEPARTMENT OF TRANSPORTATION
RALEIGH

PLAN OF BRIDGE

DECK REHAB. FOR BRIDGE NO. 259

REVISIONS						SHEET NO.
NO.	BY:	DATE:	NO.	BY:	DATE:	S-32
1			3			TOTAL SHEETS
2			4			50

NORTH CAROLINA PROFESSIONAL ENGINEER SEAL 18406 JOSEPH T. KELVINGTON

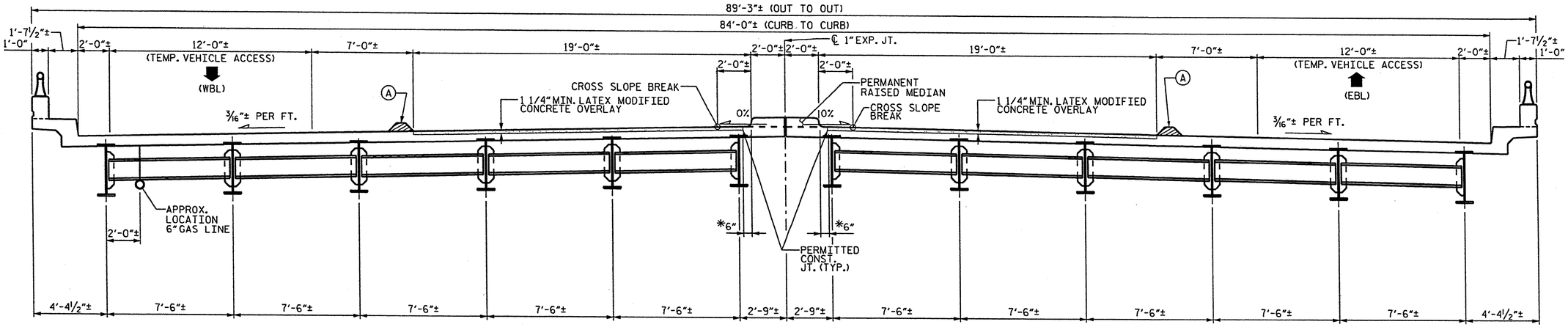

TYP. SECTION - EBL AND WBL CONSTRUCTION

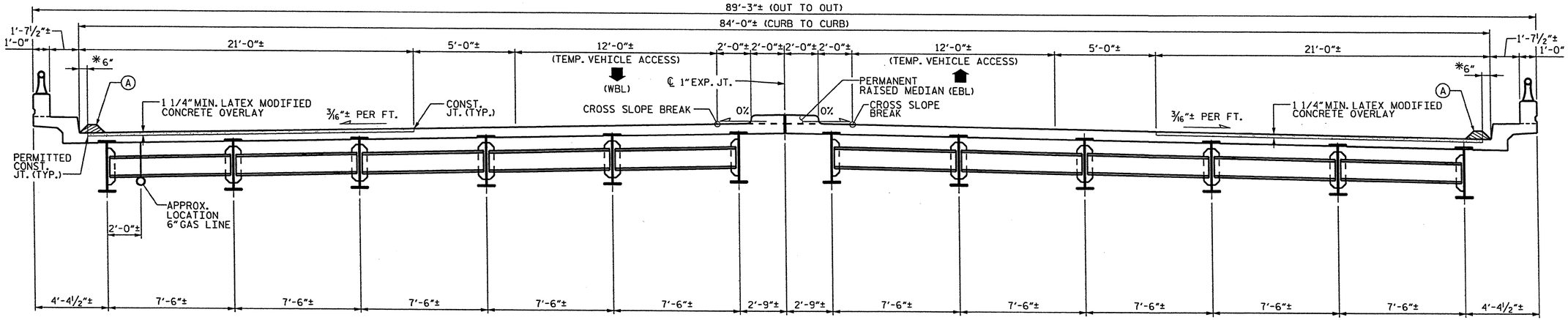

TYP. SECTION - EBL AND WBL CONSTRUCTION

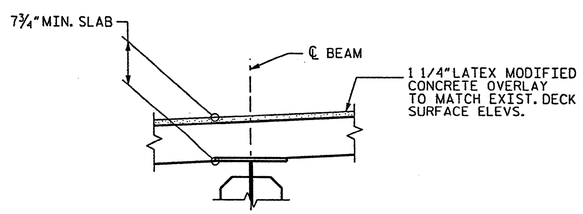

EXIST. SLAB BUILDUP

NOTES:

WATER & CONCRETE SLURRY FROM HYDRO-DEMOLITION SHALL NOT BE ALLOWED TO DRAIN ACROSS TRAVEL LANES. CONTRACTOR SHALL PROVIDE A METHOD TO CONTROL THE WATER.

FOR TRAFFIC CONTROL AND CONSTRUCTION PHASING, SEE TRANSPORTATION MANAGEMENT PLANS.

*PERMITTED WIDTH OF EXISTING CONCRETE DECK SURFACE OVER FULL LENGTH OF BRIDGE DECK THAT MAY BE LEFT INTACT FOR SCREED SUPPORT. OTHERWISE, REPAIR DECK SURFACE FROM CURB TO CURB.

Ⓐ DAM ALONG LENGTH OF BRIDGE, AND ROADWAY. SEAL EXP. JTS.

PROJECT NO. BP-5300R

GUILFORD COUNTY

STATION:

STATE OF NORTH CAROLINA
DEPARTMENT OF TRANSPORTATION
RALEIGH

TYPICAL SECTION

DECK REHAB. FOR BRIDGE NO. 259

REVISIONS						SHEET NO.
NO.	BY:	DATE:	NO.	BY:	DATE:	S-33
1			3			TOTAL SHEETS
2			4			50

Stantec
Stantec Consulting Services Inc.
801 Jones Franklin Road
Suite 300
Raleigh, NC 27606
Tel. (919) 851-6666
Fax. (919) 851-7024
www.stantec.com
License No. F-0672

DRAWN BY : J. L. HENNEKES DATE : 05-13-11
CHECKED BY : J. T. KELVINGTON DATE : 05-13-11

Joseph T. Kelvington 10/12/11
NORTH CAROLINA PROFESSIONAL SEAL 13406 ENGINEER JOSEPH T. KELVINGTON

$FILE$ $DATE$ $TIME$ $USER$

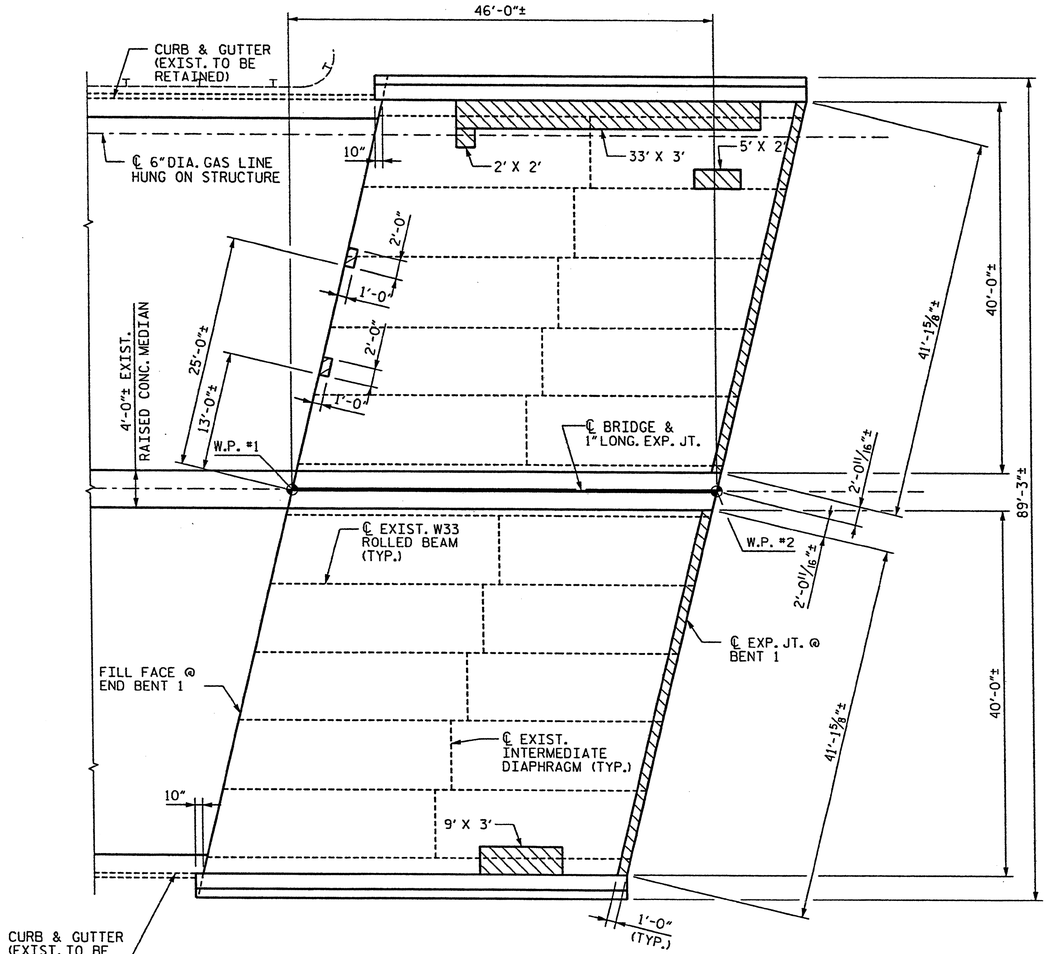

PLAN OF SPAN A - DECK REPAIRS

CLASS II SURFACE PREPARATION

CLASS III SURFACE PREPARATION

L' X W' = LENGTH OF AREA ALONG ℄ BRIDGE X
WIDTH OF AREA NORMAL TO ℄ BRIDGE ±

$FILE$ $DATE$ $TIME$ $USER$

Stantec
Stantec Consulting Services Inc.
801 Jones Franklin Road
Suite 300
Raleigh, NC 27606
Tel. (919) 851-6866
Fax. (919) 851-7024
www.stantec.com
License No. F-0672

DRAWN BY : J. L. HENNEKES DATE : 05-13-11
CHECKED BY : J. T. KELVINGTON DATE : 05-13-11

Joseph T. Kelvington 10/12/11

NORTH CAROLINA PROFESSIONAL SEAL 13406 ENGINEER JOSEPH T. KELVINGTON

PROJECT NO. BP-5300R
GUILFORD COUNTY
STATION:

STATE OF NORTH CAROLINA
DEPARTMENT OF TRANSPORTATION
RALEIGH

DECK REPAIR DETAILS SPAN A

DECK REHAB. FOR BRIDGE NO. 259

REVISIONS						SHEET NO.
NO.	BY:	DATE:	NO.	BY:	DATE:	S-34
1			3			TOTAL SHEETS
2			4			50

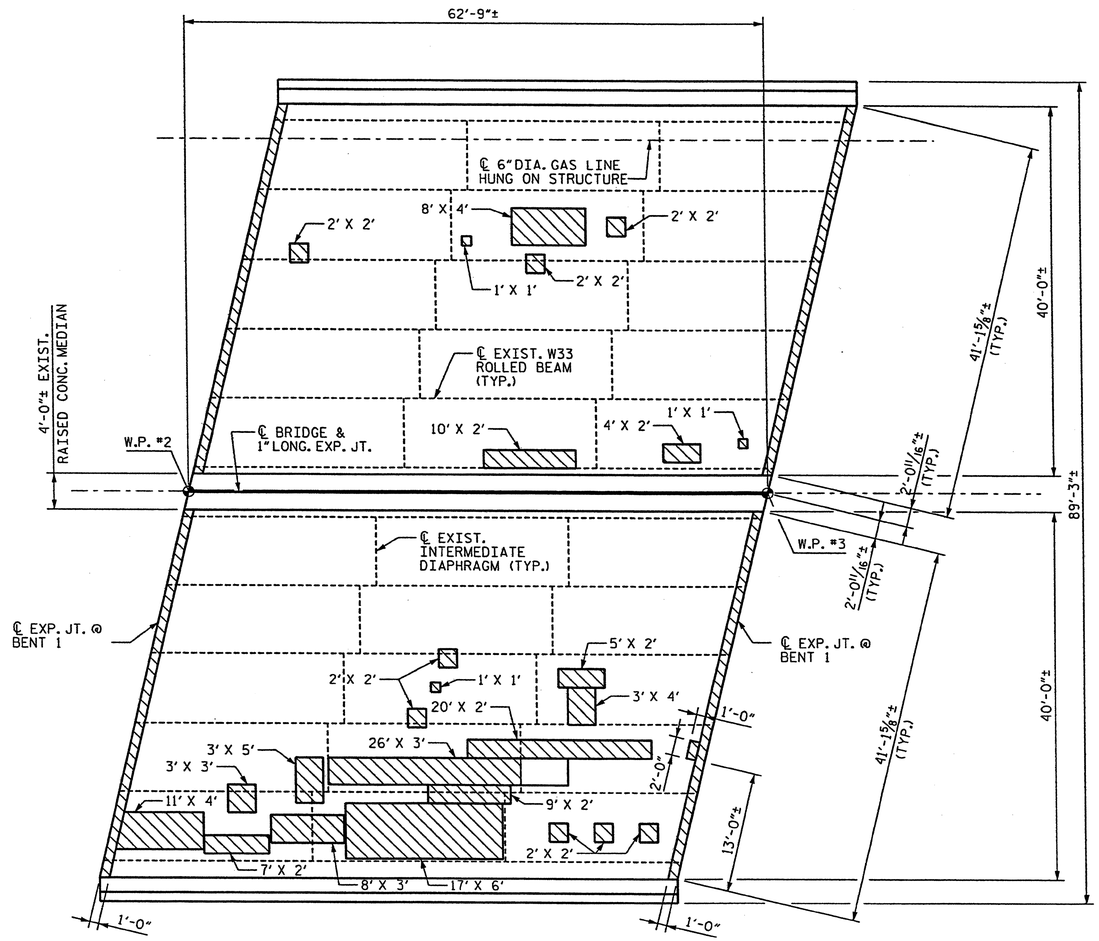

PLAN OF SPAN B - DECK REPAIRS

CLASS II SURFACE PREPARATION

CLASS III SURFACE PREPARATION

L' X W' = LENGTH OF AREA ALONG ℄ BRIDGE X
WIDTH OF AREA NORMAL TO ℄ BRIDGE ±

PROJECT NO. BP-5300R

GUILFORD COUNTY

STATION:

STATE OF NORTH CAROLINA
DEPARTMENT OF TRANSPORTATION
RALEIGH

DECK REPAIR DETAILS
SPAN B

DECK REHAB. FOR BRIDGE NO. 259

REVISIONS						SHEET NO.
NO.	BY:	DATE:	NO.	BY:	DATE:	S-35
1			3			TOTAL SHEETS
2			4			50

Stantec
Stantec Consulting Services Inc.
801 Jones Franklin Road
Suite 300
Raleigh, NC 27606
Tel. (919) 851-6866
Fax. (919) 851-7024
www.stantec.com
License No. F-0672

DRAWN BY : J. L. HENNEKES DATE : 05-13-11
CHECKED BY : J. T. KELVINGTON DATE : 05-13-11

NORTH CAROLINA PROFESSIONAL SEAL 13406 ENGINEER JOSEPH T. KELVINGTON

$FILE$ $DATE$ $TIME$ $USER$

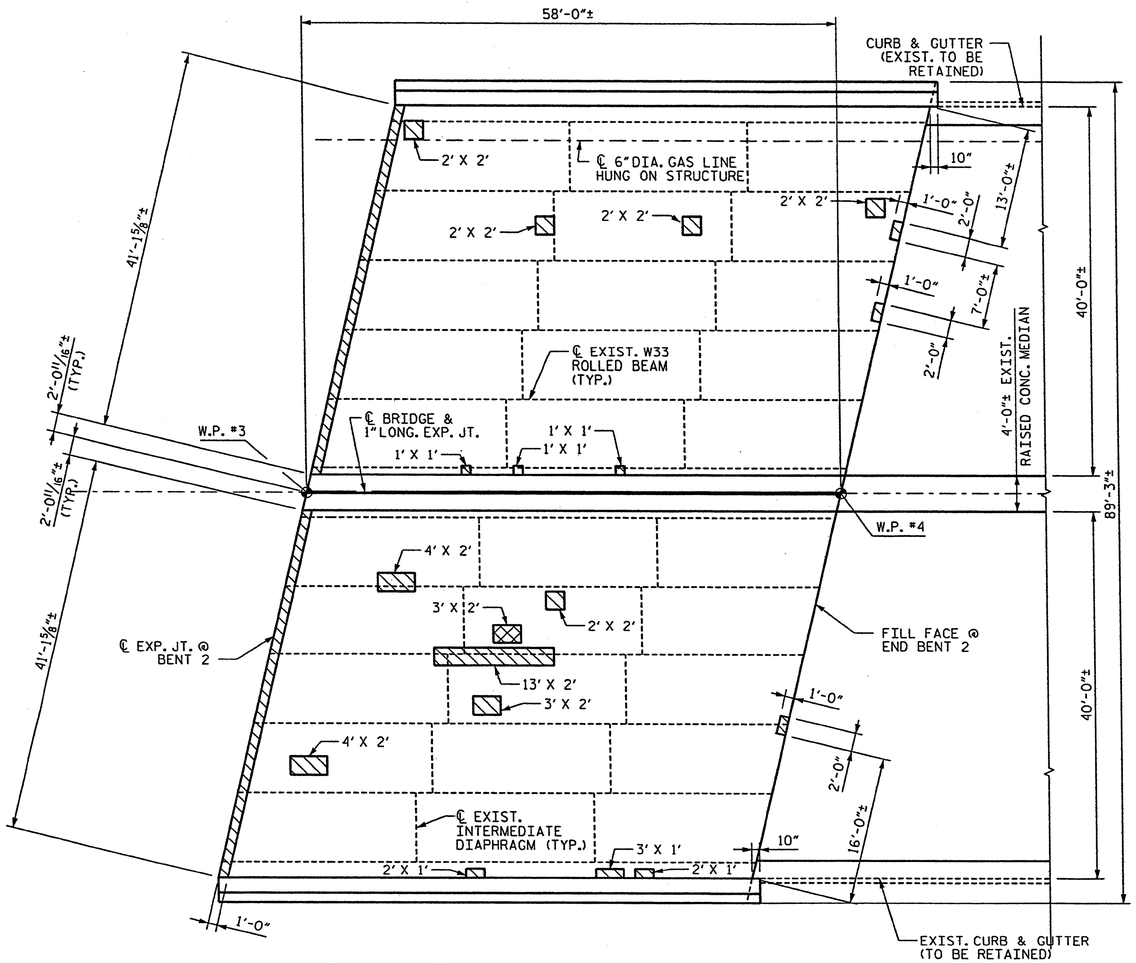

PLAN OF SPAN C - DECK REPAIRS

CLASS II SURFACE PREPARATION

CLASS III SURFACE PREPARATION

L' X W' = LENGTH OF AREA ALONG ℄ BRIDGE X
WIDTH OF AREA NORMAL TO ℄ BRIDGE ±

PROJECT NO. BP-5300R

GUILFORD COUNTY

STATION:

Stantec Consulting Services Inc.
801 Jones Franklin Road
Suite 300
Raleigh, NC 27606
Tel. (919) 851-6666
Fax. (919) 851-7024
www.stantec.com
License No. F-0672

DRAWN BY : J. L. HENNEKES DATE : 05-13-11
CHECKED BY : J. T. KELVINGTON DATE : 05-13-11

Joseph T. Kelvington 10/12

NORTH CAROLINA PROFESSIONAL SEAL 13406 ENGINEER JOSEPH TERRELL KELVINGTON

STATE OF NORTH CAROLINA
DEPARTMENT OF TRANSPORTATION
RALEIGH

DECK REPAIR DETAILS SPAN C

DECK REHAB. FOR BRIDGE NO. 259

REVISIONS						SHEET NO.
NO.	BY:	DATE:	NO.	BY:	DATE:	S-36
1			3			TOTAL SHEETS
2			4			50

$FILE$ $DATE$ $TIME$ $USER$

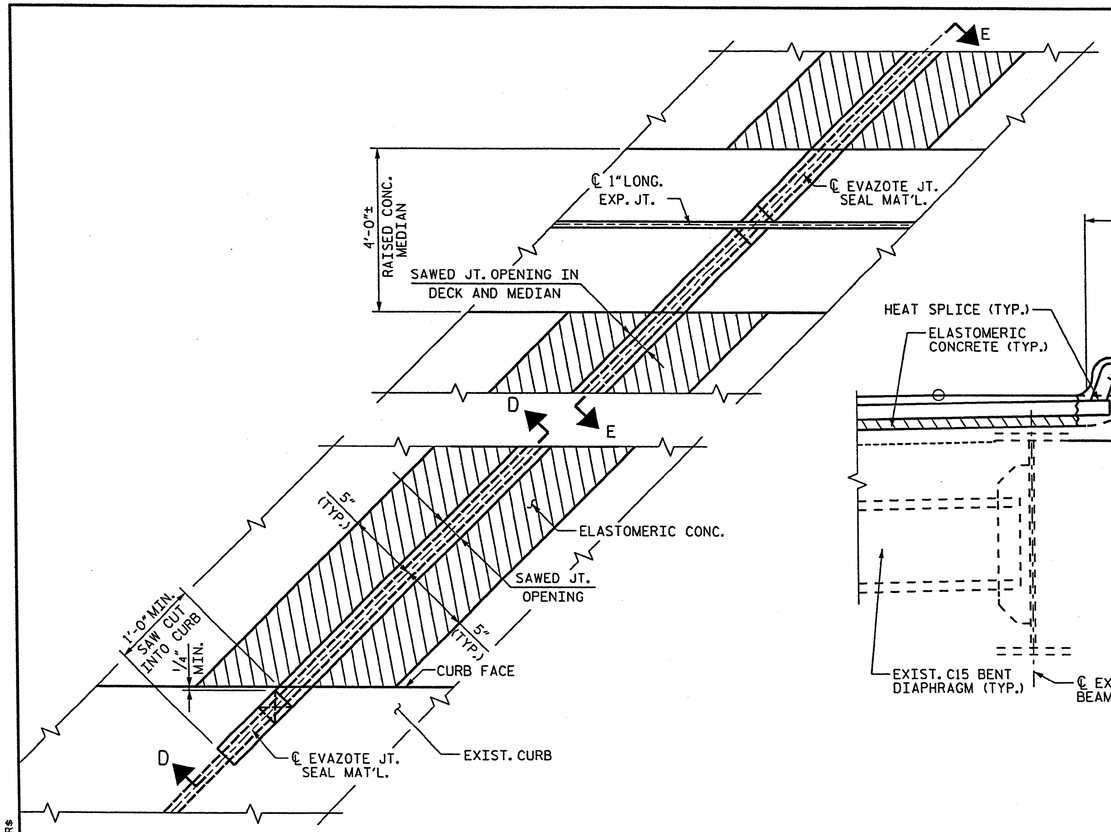

PARTIAL PLAN @ JOINT

TYPICAL EACH SIDE

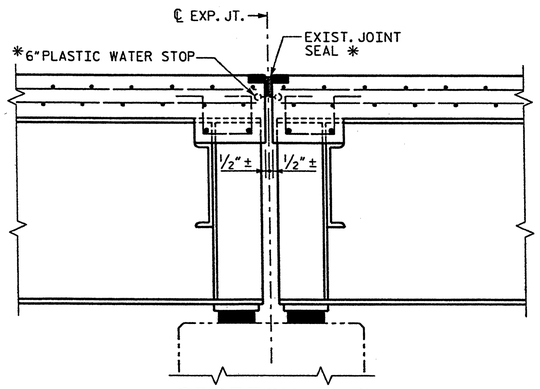

SECTION B-B

(EXISTING JOINT)

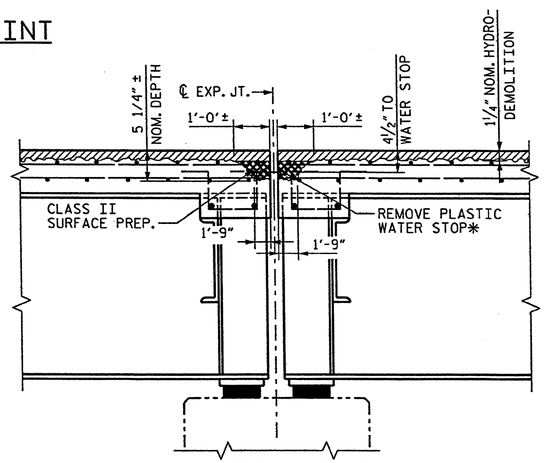

SECTION B-B

(MINIMUM EXISTING JOINT DEMOLITION)

NOTE: RETAIN ALL EXIST. REINF. STEEL. CLEAN AND REPAIR AS REQ'D.

* FROM BEST AVAILABLE INFORMATION.

REMOVE EXIST. JT. SEAL MAT'L. OR ASPHALT CONC. COMPLETELY FROM JOINT AREA.

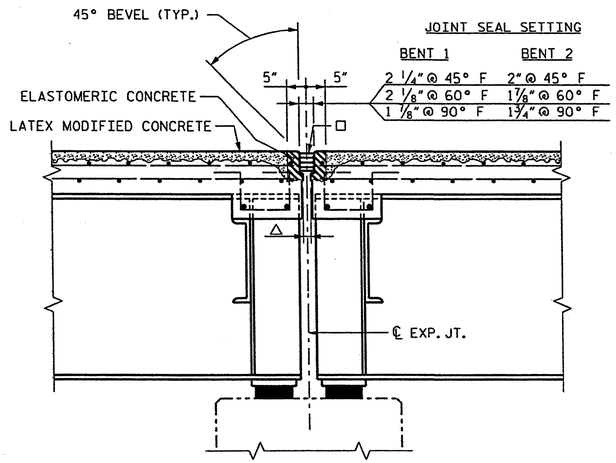

SECTION B-B

(JOINT SEAL DESIGN)

□ USE 2.8125"X 2.50"UNCOMPRESSED EVAZOTE JT. SEAL MATERIAL

△ 1"FORMED OPENING

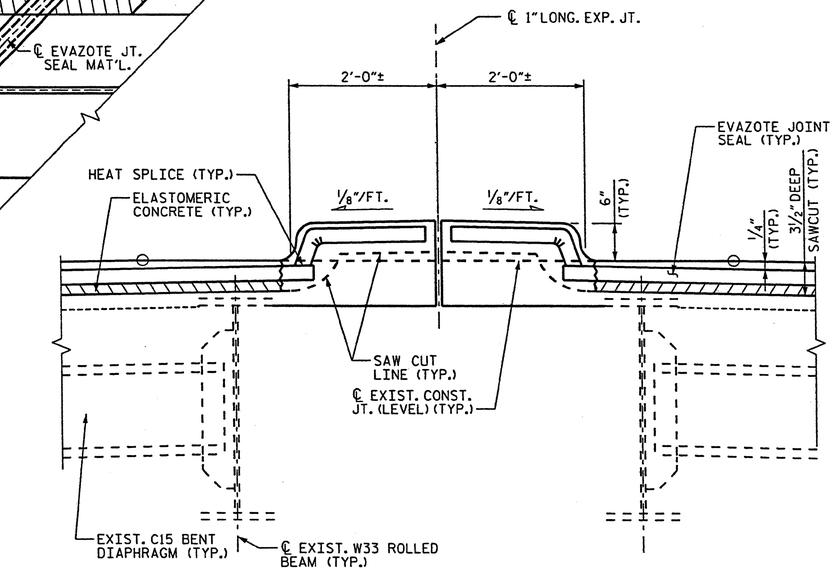

SECTION E-E

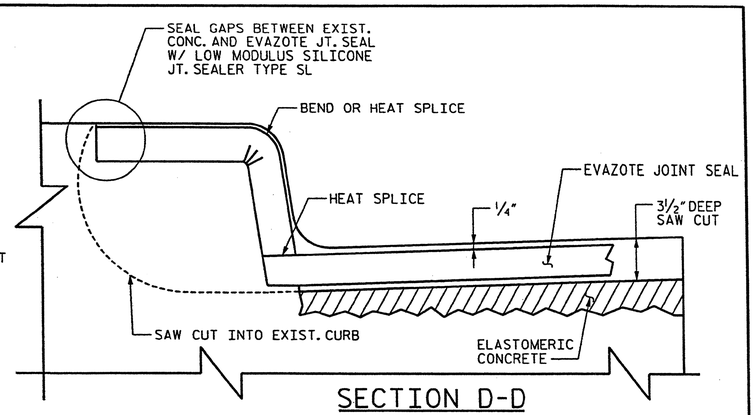

SECTION D-D

CONTRACTOR SHALL EXERCISE CARE TO AVOID CUTTING OR DAMAGING EXISTING REINF. STEEL.

ELASTOMERIC CONCRETE

LOCATION	QTY
BENT 1	26.3 C.F.
BENT 2	26.3 C.F.

TOTAL ELASTOMERIC CONC. = 52.6 C.F.
TOTAL ELASTOMERIC CONC. = 1.9 C.Y.

Stantec
Stantec Consulting Services Inc.
801 Jones Franklin Road
Suite 300
Raleigh, NC 27606
Tel. (919) 851-6866
Fax. (919) 851-7024
www.stantec.com
License No. F-0672

DRAWN BY : J. L. HENNEKES DATE : 05-13-11
CHECKED BY : J. T. KELVINGTON DATE : 05-13-11

PROJECT NO. BP-5300R
GUILFORD COUNTY
STATION:

STATE OF NORTH CAROLINA
DEPARTMENT OF TRANSPORTATION
RALEIGH

EXPANSION JOINT DETAILS

DECK REHAB. FOR BRIDGE NO. 259

REVISIONS						SHEET NO.
NO.	BY:	DATE:	NO.	BY:	DATE:	S-37
1			3			TOTAL SHEETS
2			4			50

NORTH CAROLINA PROFESSIONAL ENGINEER SEAL 13406 JOSEPH T. KELVINGTON

$USER$ $TIME$ $DATE$ $FILE$

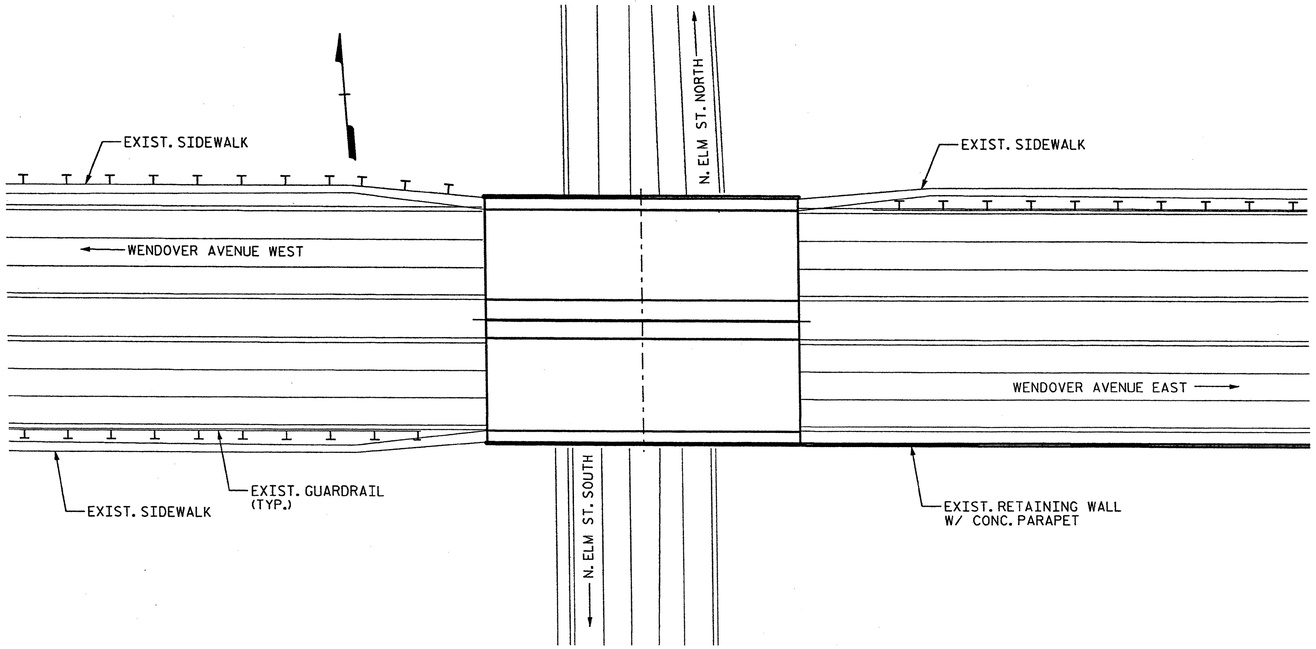

BRIDGE 274 ON WENDOVER AVE.

LOCATION: BRIDGE 274, US 220 (WENDOVER AVE.) OVER ELM STREET 0.75 MILES
WEST OF JUNCTION OF US 220 WITH SR 2526

BRIDGE 274 ON WENDOVER AVE.

TOTAL BILL OF MATERIAL

SCARIFYING ** OF BRIDGE DECK	CLASS I * SURFACE PREPARATION	CLASS II * SURFACE PREPARATION	CLASS III * SURFACE PREPARATION	HYDRO-DEMOLITION OF BRIDGE DECK	CLASS AA * CONCRETE	LATEX MODIFIED CONCRETE-VERY EARLY STRENGTH	PLACING & FINISHING LATEX MODIFIED CONCRETE-VERY EARLY STRENGTH	EVAZOTE JOINT SEALS	GROOVING BRIDGE FLOORS	ASHPHALT CONC. SURF. COURSE TYPE S9.5B
SQ.YDS.	SQ.YDS.	SQ.YDS.	SQ.YDS.	SQ.YDS.	CU.YDS.	CU.YDS.	SQ.YDS.	LUMP SUM	SQ.FT.	TON
2,023.2	1,059.0	109.1	10.6	1,178.7	1.1	56.0	1,178.7	LUMP SUM	9,768	89

* QUANTITIES ARE SHOWN FOR INFORMATIONAL PURPOSES ONLY. IF ANY CLASS III LOCATIONS ARE ENCOUNTERED PRIOR TO OR DURING HYDRO-DEMOLITION, SEE "TYP. BLOW THRU" CONTAINMENT AND FORMWORK" DETAIL. NO SEPARATE PAYMENT SHALL BE MADE.

** INCLUDES MILLING OF ROADWAY PAVEMENT.

Stantec
Stantec Consulting Services Inc.
801 Jones Franklin Road
Suite 300
Raleigh, NC 27606
Tel. (919) 851-6866
Fax. (919) 851-7024
www.stantec.com
License No. F-0672

DRAWN BY : J. L. HENNEKES DATE : 05-13-11
CHECKED BY : J. T. KELVINGTON DATE : 05-13-11

$FILE$ $DATE$ $TIME$ $USER$

PROJECT NO. BP-5300R
GUILFORD COUNTY
STATION:

STATE OF NORTH CAROLINA
DEPARTMENT OF TRANSPORTATION
RALEIGH

LOCATION SKETCH AND TOTAL BILL OF MATERIAL

DECK REHAB. FOR BRIDGE NO. 274

REVISIONS						SHEET NO.
NO.	BY:	DATE:	NO.	BY:	DATE:	S-38
1			3			TOTAL SHEETS
2			4			50

NORTH CAROLINA PROFESSIONAL SEAL 13406 ENGINEER JOSEPH T. KELVINGTON

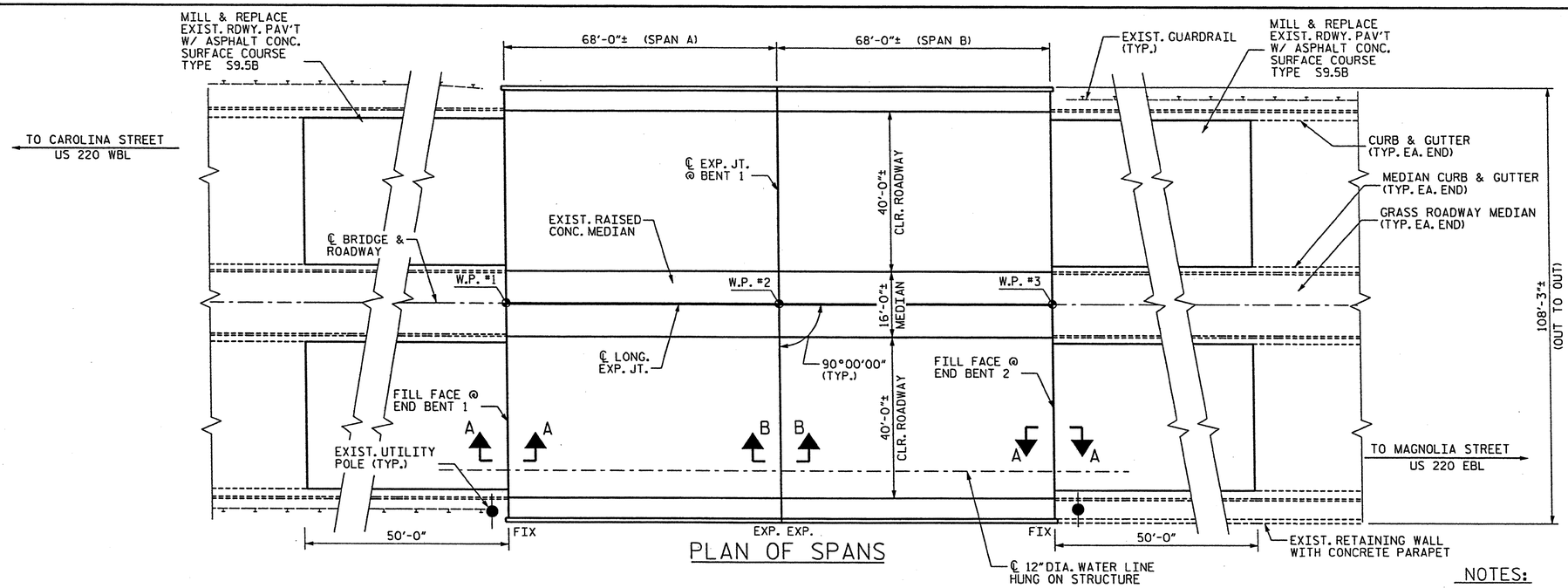

PLAN OF SPANS

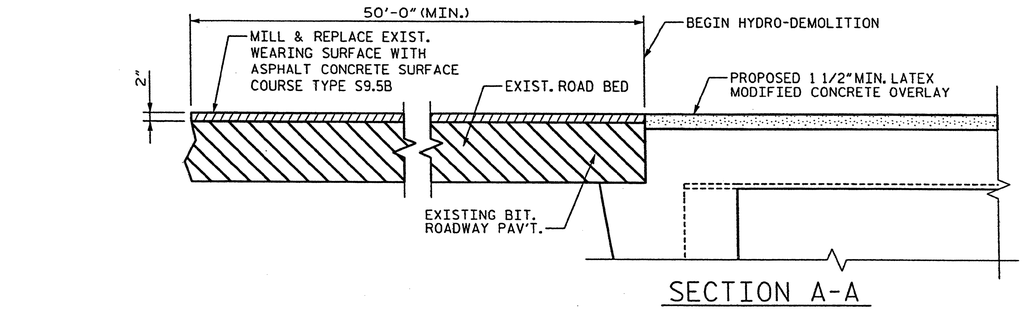

SECTION A-A

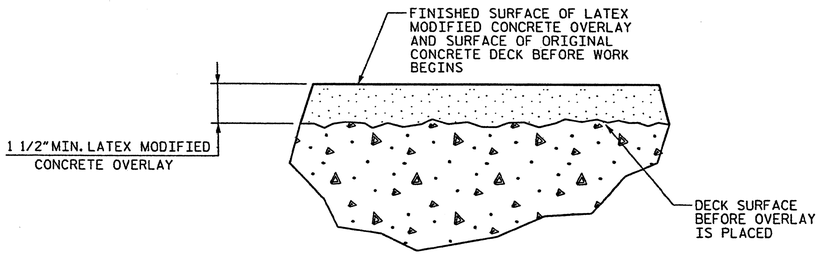

DETAIL FOR LATEX MODIFIED CONCRETE OVERLAY

NOTES:

EXISTING DECK DRAINS SHALL BE SEALED PRIOR TO BEGINNING REPAIR OF BRIDGE DECKS WITH LATEX MODIFIED CONCRETE. SEE SPECIAL PROVISIONS.

FOR HYDRO-DEMOLITION, SEE SPECIAL PROVISIONS.

THE CONTRACTOR MUST COLLECT, TREAT AND DISPOSE OF RUN-OFF WATER FROM THE HYDRO-DEMOLITION PROCESS. SEE SPECIAL PROVISIONS.

THE BOUNDARIES OF AREAS IDENTIFIED FOR CLASS III SURFACE PREPARATION ARE APPROXIMATE. THE CONTRACTOR SHALL PROVIDE A METHOD OF HANDLING UNEXPECTED BLOW THROUGH OF THE DECK. SEE DETAIL, SHT. NO. S-41.

LATEX MODIFIED CONCRETE SHALL BE LATEX MODIFIED CONCRETE - VERY EARLY STRENGTH.

FOR LATEX MODIFIED CONCRETE - VERY EARLY STRENGTH, SEE SPECIAL PROVISIONS.

FOR EVAZOTE JOINT SEALS, SEE SPECIAL PROVISIONS.

FOR SECTION B-B, SEE SHT. NO. S-43

$USER$ $TIME$ $DATE$ $FILE$

Stantec
Stantec Consulting Services Inc.
801 Jones Franklin Road
Suite 300
Raleigh, NC 27606
Tel. (919) 851-6866
Fax. (919) 851-7024
www.stantec.com
License No. F-0672

DRAWN BY : J. L. HENNEKES DATE : 05-13-11
CHECKED BY : J. T. KELVINGTON DATE : 05-13-11

PROJECT NO. BP-5300R
GUILFORD COUNTY
STATION:

STATE OF NORTH CAROLINA
DEPARTMENT OF TRANSPORTATION
RALEIGH

PLAN OF BRIDGE

DECK REHAB. FOR BRIDGE NO. 274

REVISIONS						SHEET NO.
NO.	BY:	DATE:	NO.	BY:	DATE:	S-39
1			3			TOTAL SHEETS
2			4			50

NORTH CAROLINA PROFESSIONAL SEAL 13406 ENGINEER JOSEPH T. KELVINGTON
10/15/2011

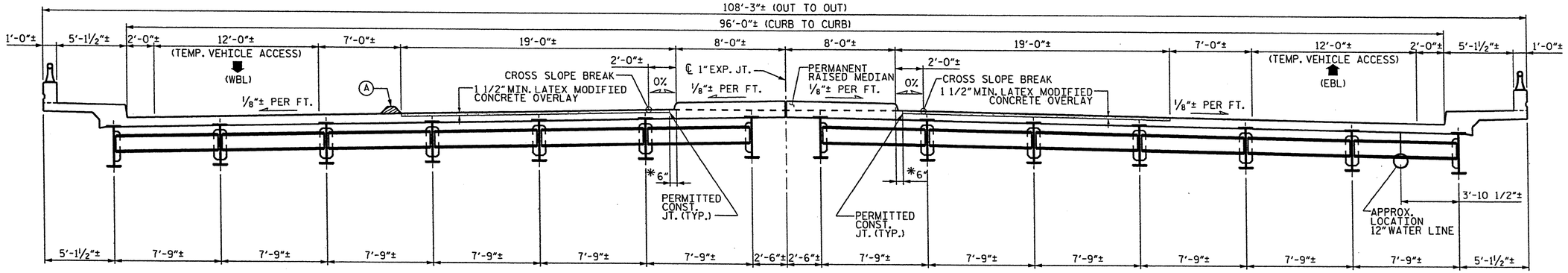

TYP. SECTION - EBL AND WBL CONSTRUCTION

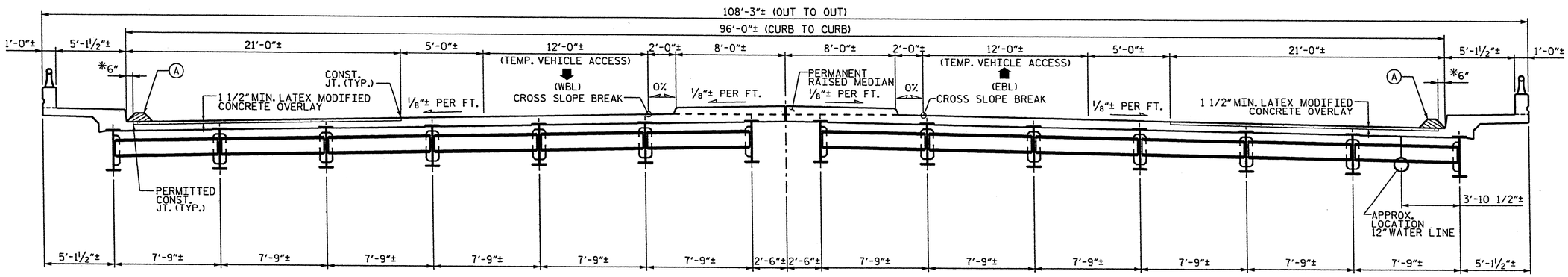

TYP. SECTION - EBL AND WBL CONSTRUCTION

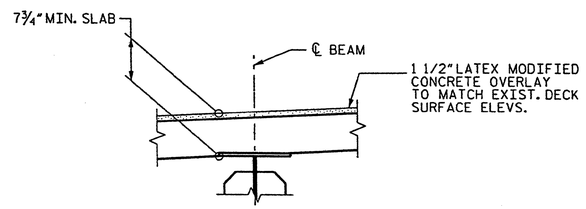

EXIST. SLAB BUILDUP

NOTES:

WATER & CONCRETE SLURRY FROM HYDRO-DEMOLITION SHALL NOT BE ALLOWED TO DRAIN ACROSS TRAVEL LANES. CONTRACTOR SHALL PROVIDE A METHOD TO CONTROL THE WATER.

FOR TRAFFIC CONTROL AND CONSTRUCTION PHASING, SEE TRANSPORTATION MANAGEMENT PLANS.

*PERMITTED WIDTH OF EXISTING CONCRETE DECK SURFACE OVER FULL LENGTH OF BRIDGE DECK THAT MAY BE LEFT INTACT FOR SCREED SUPPORT. OTHERWISE, REPAIR DECK SURFACE FROM CURB TO CURB.

(A) DAM ALONG LENGTH OF BRIDGE, AND ROADWAY. SEAL EXP. JTS.

PROJECT NO. BP-5300R

GUILFORD COUNTY

STATION:

STATE OF NORTH CAROLINA
DEPARTMENT OF TRANSPORTATION
RALEIGH

TYPICAL SECTION

DECK REHAB. FOR BRIDGE NO. 274

Stantec
Stantec Consulting Services Inc.
801 Jones Franklin Road
Suite 300
Raleigh, NC 27606
Tel. (919) 851-6666
Fax. (919) 851-7024
www.stantec.com
License No. F-0672

DRAWN BY : J. L. HENNEKES DATE : 05-13-11
CHECKED BY : J. T. KELVINGTON DATE : 05-13-11

Joseph T. Kelvington
NORTH CAROLINA PROFESSIONAL SEAL 13406 ENGINEER
JOSEPH T. KELVINGTON

REVISIONS						SHEET NO.
NO.	BY:	DATE:	NO.	BY:	DATE:	S-40
1			3			TOTAL SHEETS
2			4			50

$USER$
$TIME$
$DATE$
$FILE$

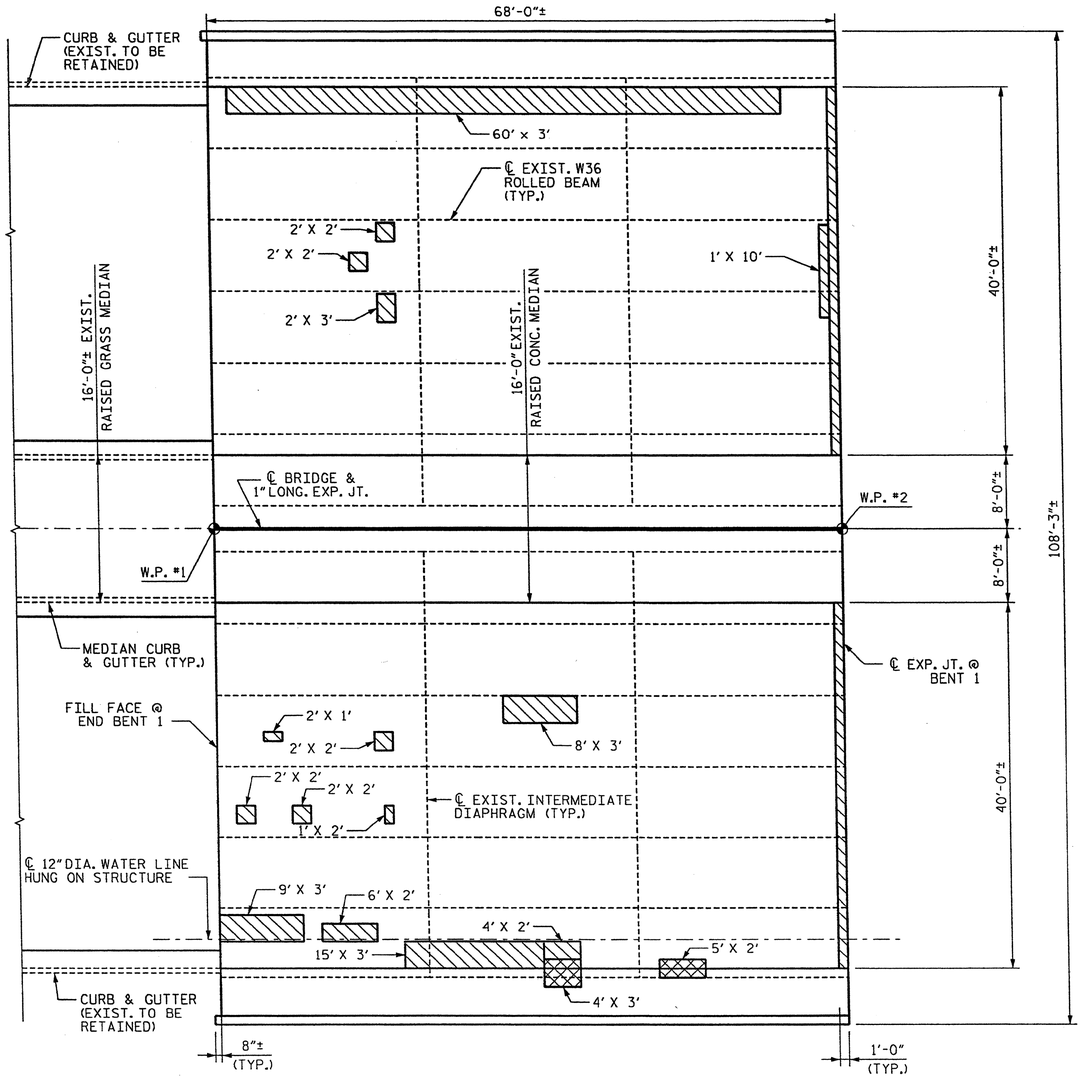

PLAN OF SPAN A - DECK REPAIRS

NOTES:

CONTRACTOR SHALL FURNISH FORMWORK TO SUPPORT SLAB OVERHANG REGIONS WITH EXTENSIVE CLASS III SURFACE PREPARATION.

SUBMIT DETAILS OF PROPOSED FORMWORK FOR APPROVAL PRIOR TO BEGINNING WORK.

COSTS FOR INSTALLING AND REMOVING FORMWORK SHALL BE INCIDENTAL TO THE PRICE BID PER SQ. YD. OF HYDRO-DEMOLITION.

SEE HYDRO-DEMOLITION SPECIAL PROVISIONS.

CLASS II SURFACE PREPARATION

CLASS III SURFACE PREPARATION

L' X W' = LENGTH OF AREA ALONG ℄ BRIDGE X
WIDTH OF AREA NORMAL TO ℄ BRIDGE ±

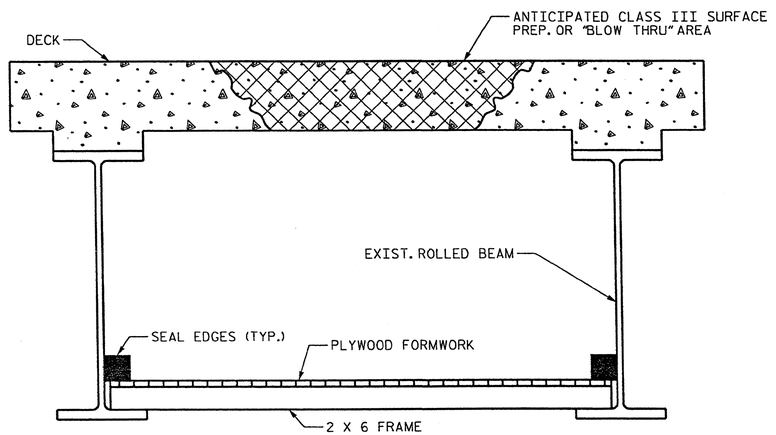

TYP. "BLOW THRU" CONTAINMENT AND FORMWORK

A METHOD TO CAPTURE WATER AND DEBRIS FROM BLOW THRU DURING HYDRO-DEMOLITION SHALL BE INSTALL IN AREAS INDICATED AS CLASS III SURFACE PREPARATION.

SUBMIT DETAILS OF PROPOSED FORMWORK FOR APPROVAL PRIOR TO BEGINNING WORK.

COSTS FOR INSTALLING AND REMOVING FORMWORK SHALL BE INCIDENTAL TO THE PRICE PER SQ. YARD OF HYDRO-DEMOLITION.

CONTRACTOR, AT HIS OPTION, MAY CHOOSE TO MONITOR HYDRO-DEMOLITION WORK AND CONTROL TRAFFIC UNDER THE BRIDGE IN LIEU OF BLOW THRU CONTAINMENT. SEE TRAFFIC CONTROL PLANS.

Stantec
Stantec Consulting Services Inc.
801 Jones Franklin Road
Suite 300
Raleigh, NC 27606
Tel. (919) 851-6866
Fax. (919) 851-7024
www.stantec.com
License No. F-0672

DRAWN BY : J. L. HENNEKES DATE : 05-13-11
CHECKED BY : J. T. KELVINGTON DATE : 05-13-11

Joseph T. Kelvington
NORTH CAROLINA PROFESSIONAL SEAL 13406 ENGINEER JOSEPH T. KELVINGTON

PROJECT NO. BP-5300R
GUILFORD COUNTY
STATION:

STATE OF NORTH CAROLINA
DEPARTMENT OF TRANSPORTATION
RALEIGH

DECK REPAIR DETAILS SPAN A

DECK REHAB. FOR BRIDGE NO. 274

REVISIONS						SHEET NO.
NO.	BY:	DATE:	NO.	BY:	DATE:	S-41
1			3			TOTAL SHEETS
2			4			50

$USER$ $TIME$ $DATE$ $FILE$

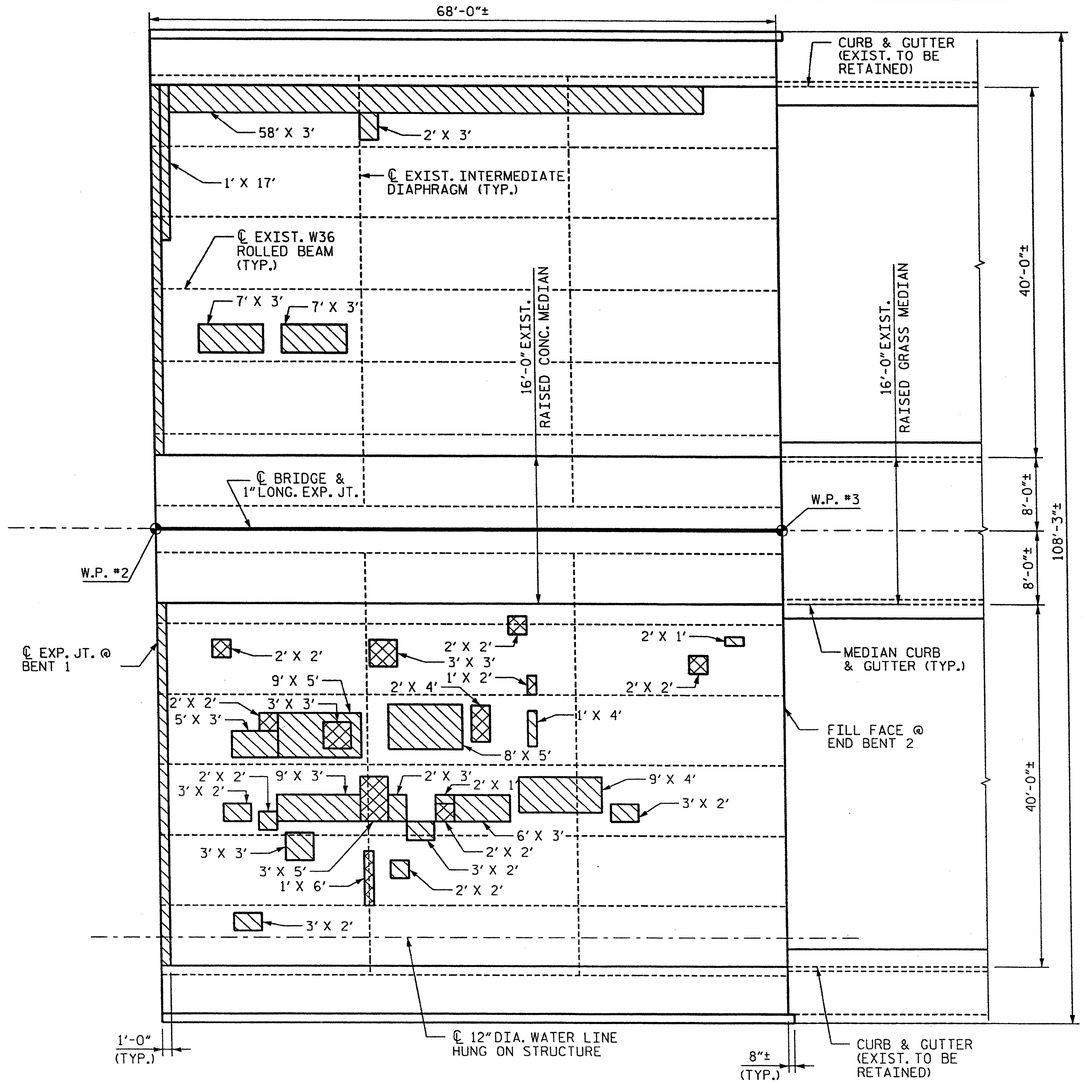

PLAN OF SPAN B - DECK REPAIRS

NOTES:

CONTRACTOR SHALL FURNISH FORMWORK TO SUPPORT SLAB OVERHANG REGIONS WITH EXTENSIVE CLASS III SURFACE PREPARATION.

SUBMIT DETAILS OF PROPOSED FORMWORK FOR APPROVAL PRIOR TO BEGINNING WORK.

COSTS FOR INSTALLING AND REMOVING FORMWORK SHALL BE INCIDENTAL TO THE PRICE BID PER SQ. YD. OF HYDRO-DEMOLITION.

SEE HYDRO-DEMOLITION SPECIAL PROVISIONS.

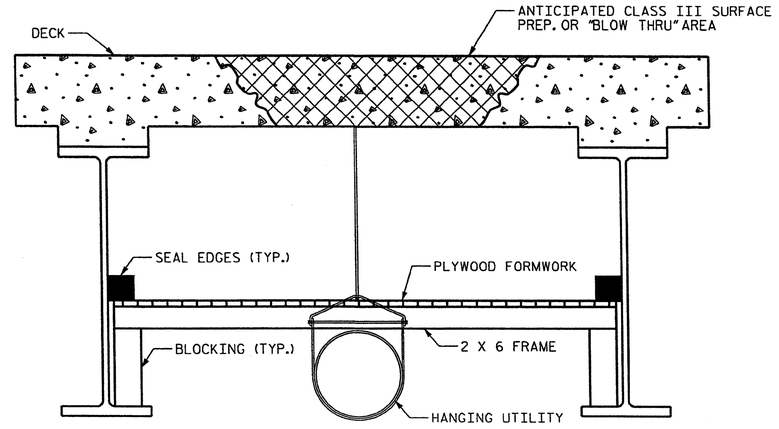

TYP. "BLOW THRU" CONTAINMENT AND FORMWORK WITH HANGING UTILITY

A METHOD TO CAPTURE WATER AND DEBRIS FROM BLOW THRU DURING HYDRO-DEMOLITION SHALL BE INSTALL IN AREAS INDICATED AS CLASS III SURFACE PREPARATION.

SUBMIT DETAILS OF PROPOSED FORMWORK FOR APPROVAL PRIOR TO BEGINNING WORK.

COSTS FOR INSTALLING AND REMOVING FORMWORK SHALL BE INCIDENTAL TO THE PRICE PER SQ. YARD OF HYDRO-DEMOLITION.

CONTRACTOR, AT HIS OPTION, MAY CHOOSE TO MONITOR HYDRO-DEMOLITION WORK AND CONTROL TRAFFIC UNDER THE BRIDGE IN LIEU OF BLOW THRU CONTAINMENT. SEE TRAFFIC CONTROL PLANS.

PLACE PLYWOOD, FORMWORK AND FRAMING TO CLEAR UTILITY HANGERS.

CLASS II SURFACE PREPARATION

CLASS III SURFACE PREPARATION

L' X W' = LENGTH OF AREA ALONG ℄ BRIDGE X
WIDTH OF AREA NORMAL TO ℄ BRIDGE ±

PROJECT NO. BP-5300R

GUILFORD COUNTY

STATION:

Stantec
Stantec Consulting Services Inc.
801 Jones Franklin Road
Suite 300
Raleigh, NC 27606
Tel. (919) 851-6866
Fax. (919) 851-7024
www.stantec.com
License No. F-0672

DRAWN BY : J. L. HENNEKES DATE : 05-13-11
CHECKED BY : J. T. KELVINGTON DATE : 05-13-11

STATE OF NORTH CAROLINA
DEPARTMENT OF TRANSPORTATION
RALEIGH

DECK REPAIR DETAILS
SPAN B

DECK REHAB. FOR BRIDGE NO. 274

REVISIONS						SHEET NO
NO.	BY:	DATE:	NO.	BY:	DATE:	S-42
1			3			TOTAL SHEETS
2			4			50

NORTH CAROLINA PROFESSIONAL ENGINEER SEAL 13406 JOSEPH T. KELVINGTON

$FILE$ $DATE$ $TIME$ $USER$

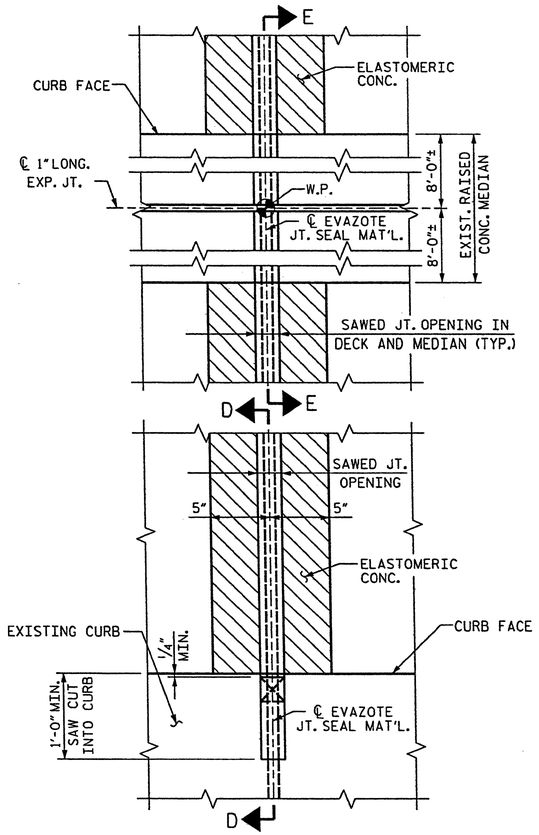

PARTIAL PLAN @ JOINT

TYPICAL EACH SIDE

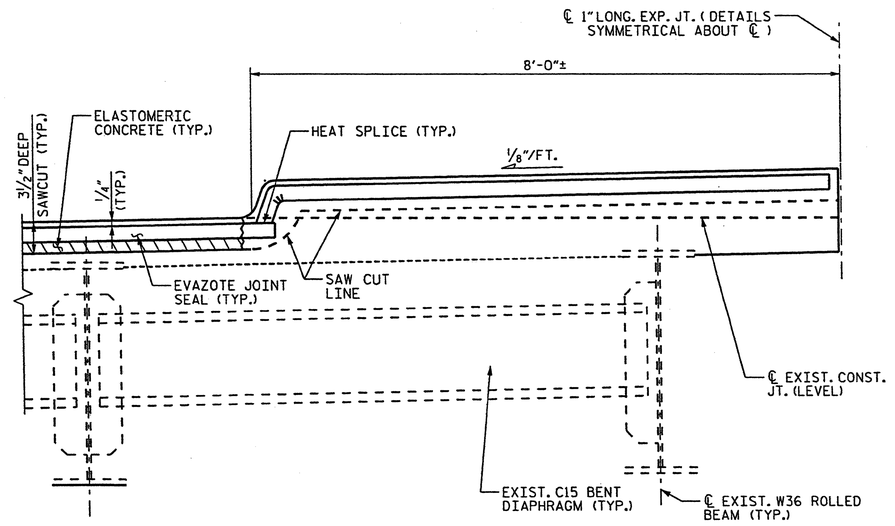

HALF SECTION E-E

CONTRACTOR SHALL EXERCISE CARE TO AVOID CUTTING OR DAMAGING EXISTING REINF. STEEL.

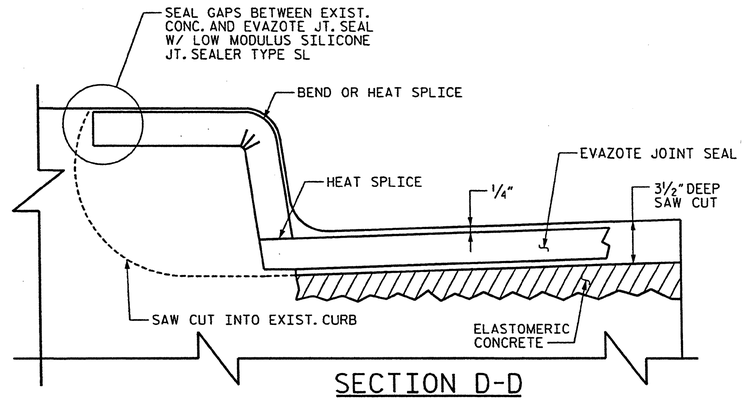

SECTION D-D

CONTRACTOR SHALL EXERCISE CARE TO AVOID CUTTING OR DAMAGING EXISTING REINF. STEEL.

ELASTOMERIC CONCRETE

LOCATION	QTY
BENT 1	24.3 C.F.

TOTAL ELASTOMERIC CONC. = 24.3 C.F.
TOTAL ELASTOMERIC CONC. = 0.9 C.Y.

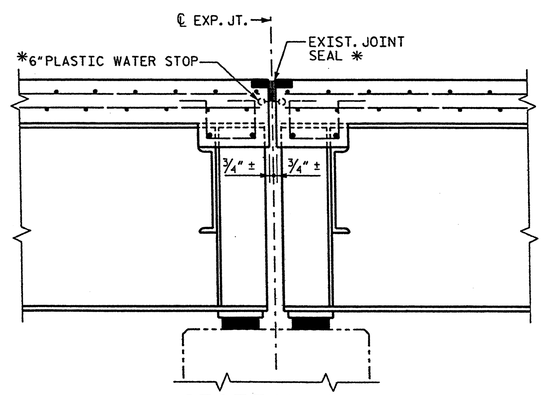

SECTION B-B

(EXISTING JOINT)

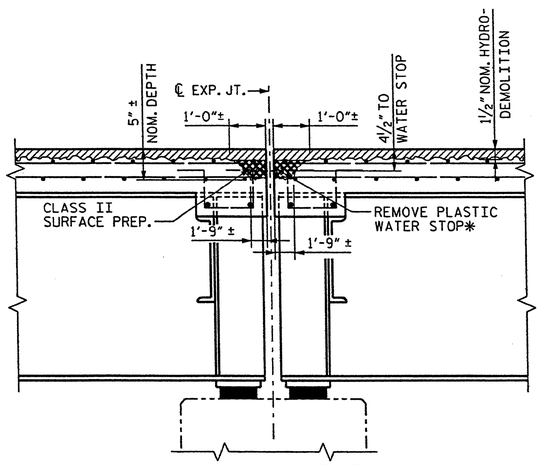

SECTION B-B

(MINIMUM EXISTING JOINT DEMOLITION)

NOTE: RETAIN ALL EXIST. REINF. STEEL. CLEAN AND REPAIR AS REQ'D.

* FROM BEST AVAILABLE INFORMATION.

REMOVE EXIST. SEAL MAT'L. OR ASPHALT CONC. COMPLETELY FROM JOINT AREA.

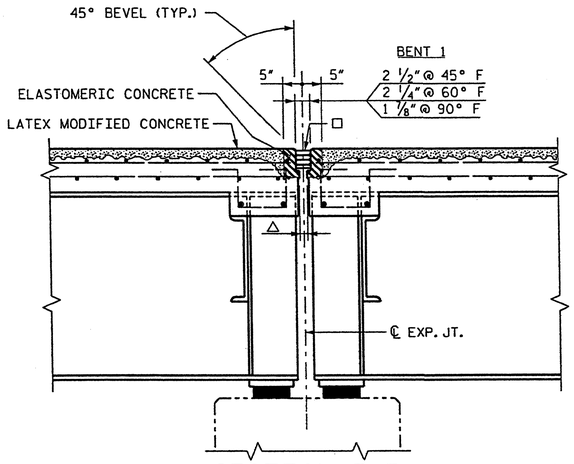

SECTION B-B

(JOINT SEAL DESIGN)

□ USE 2.8125" X 2.50" UNCOMPRESSED EVAZOTE JT. SEAL MATERIAL

△ 1" FORMED OPENING

Stantec
Stantec Consulting Services Inc.
801 Jones Franklin Road
Suite 300
Raleigh, NC 27606
Tel. (919) 851-6866
Fax. (919) 851-7024
www.stantec.com
License No. F-0672

DRAWN BY : B. J. ELLIOT DATE : 05-13-11
CHECKED BY : J. T. KELVINGTON DATE : 05-13-11

NORTH CAROLINA PROFESSIONAL SEAL 13406 ENGINEER JOSEPH T. KELVINGTON

PROJECT NO. BP-5300R
GUILFORD COUNTY
STATION:

STATE OF NORTH CAROLINA
DEPARTMENT OF TRANSPORTATION
RALEIGH

EXPANSION JOINT DETAILS

DECK REHAB. FOR BRIDGE NO. 274

REVISIONS						SHEET NO
NO.	BY:	DATE:	NO.	BY:	DATE:	S-43
1			3			TOTAL SHEETS
2			4			50

$FILE$ $DATE$ $TIME$ $USER$

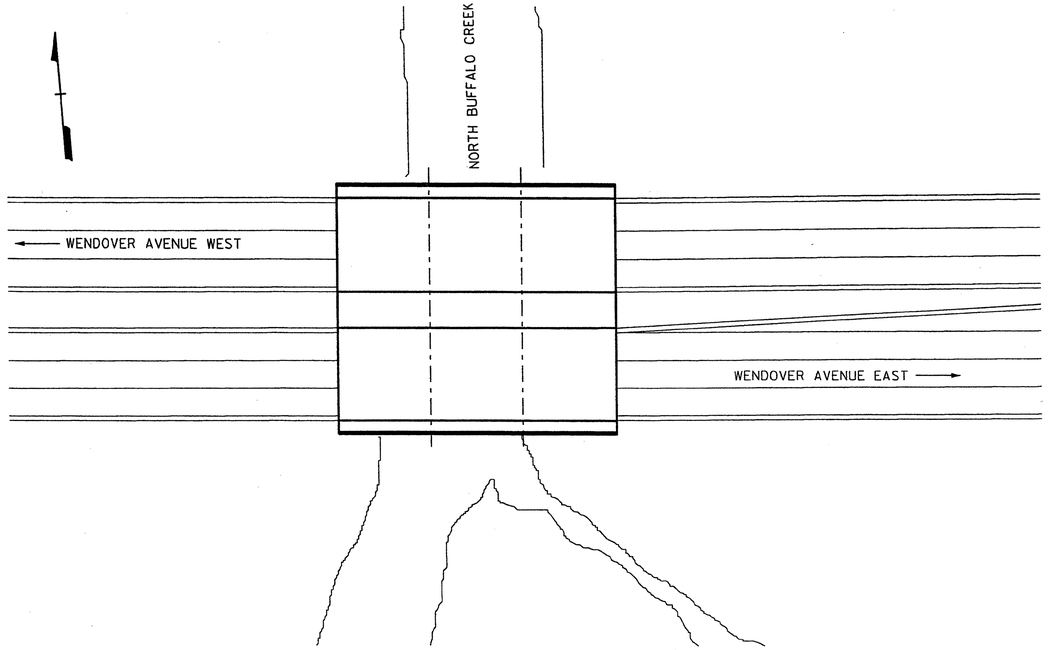

BRIDGE 287 ON WENDOVER AVE.

LOCATION: BRIDGE 287, US 220 (WENDOVER AVE.) OVER NORTH BUFFALO CREEK 1.2 MILES WEST OF JUNCTION US 220 WITH SR 2526

BRIDGE 287 ON WENDOVER AVE.

TOTAL BILL OF MATERIAL

SCARIFYING ** OF BRIDGE DECK	CLASS I * SURFACE PREPARATION	CLASS II * SURFACE PREPARATION	CLASS III * SURFACE PREPARATION	HYDRO-DEMOLITION OF BRIDGE DECK	CLASS AA * CONCRETE	LATEX MODIFIED CONCRETE-VERY EARLY STRENGTH	PLACING & FINISHING LATEX MODIFIED CONCRETE-VERY EARLY STRENGTH	EVAZOTE JOINT SEALS	GROOVING BRIDGE FLOORS	ASHPHALT CONC. SURF. COURSE TYPE S9.5B
SQ.YDS.	SQ.YDS.	SQ.YDS.	SQ.YDS.	SQ.YDS.	CU.YDS.	CU.YDS.	SQ.YDS.	LUMP SUM	SQ.FT.	TON
968.3	425.7	94.6	3.5	523.8	0.3	29.8	523.8	LUMP SUM	4,020	47

* QUANTITIES ARE SHOWN FOR INFORMATIONAL PURPOSES ONLY. IF ANY CLASS III LOCATIONS ARE ENCOUNTERED PRIOR TO OR DURING HYDRO-DEMOLITION, SEE "TYP. "BLOW THRU" CONTAINMENT AND FORMWORK" DETAIL. NO SEPARATE PAYMENT SHALL BE MADE.

** INCLUDES MILLING OF ROADWAY PAVEMENT.

Stantec
Stantec Consulting Services Inc.
801 Jones Franklin Road
Suite 300
Raleigh, NC 27606
Tel. (919) 851-6866
Fax. (919) 851-7024
www.stantec.com
License No. F-0672

DRAWN BY : J. L. HENNEKES DATE : 05-13-11
CHECKED BY : J. T. KELVINGTON DATE : 05-13-11

$FILE$ $DATE$ $TIME$ $USER$

PROJECT NO. BP-5300R
GUILFORD COUNTY
STATION:

STATE OF NORTH CAROLINA
DEPARTMENT OF TRANSPORTATION
RALEIGH

LOCATION SKETCH AND TOTAL BILL OF MATERIAL

DECK REHAB. FOR BRIDGE NO. 287

REVISIONS						SHEET NO.
NO.	BY:	DATE:	NO.	BY:	DATE:	S-44
1			3			TOTAL SHEETS
2			4			50

NORTH CAROLINA PROFESSIONAL SEAL 13406 ENGINEER JOSEPH T. KELVINGTON

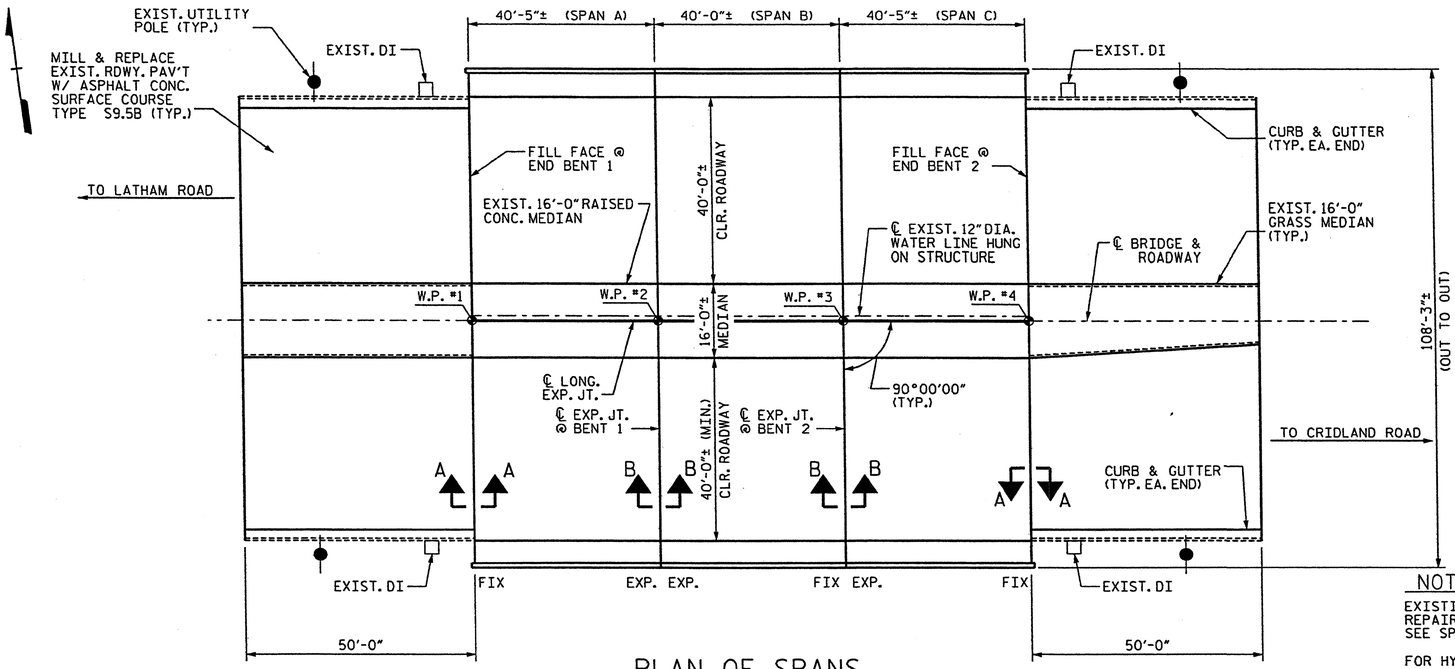

PLAN OF SPANS

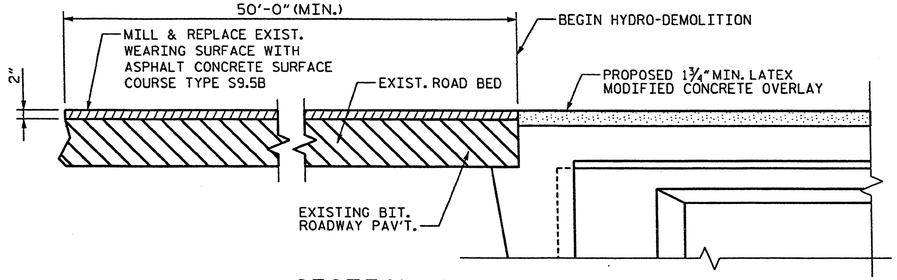

SECTION A-A

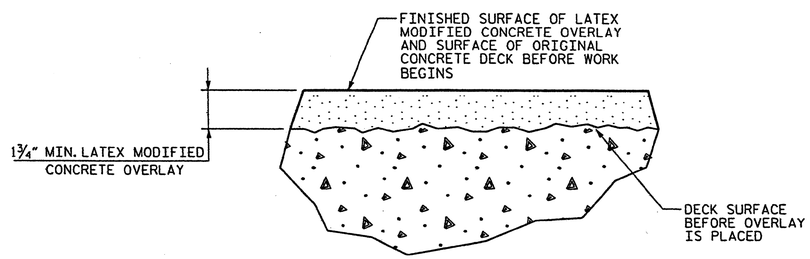

DETAIL FOR LATEX MODIFIED CONCRETE OVERLAY

NOTES:

EXISTING DECK DRAINS SHALL BE SEALED PRIOR TO BEGINNING REPAIR OF BRIDGE DECKS WITH LATEX MODIFIED CONCRETE. SEE SPECIAL PROVISIONS.

FOR HYDRO-DEMOLITION, SEE SPECIAL PROVISIONS.

THE CONTRACTOR MUST COLLECT, TREAT AND DISPOSE OF RUN-OFF WATER FROM THE HYDRO-DEMOLITION PROCESS. SEE SPECIAL PROVISIONS.

THE BOUNDARIES OF AREAS IDENTIFIED FOR CLASS III SURFACE PREPARATION ARE APPROXIMATE. THE CONTRACTOR SHALL PROVIDE A METHOD OF HANDLING UNEXPECTED BLOW THROUGH OF THE DECK. SEE DETAIL, SHT. NO. S-47.

LATEX MODIFIED CONCRETE SHALL BE LATEX MODIFIED CONCRETE - VERY EARLY STRENGTH.

FOR LATEX MODIFIED CONCRETE - VERY EARLY STRENGTH, SEE SPECIAL PROVISIONS.

FOR EVAZOTE JOINT SEALS, SEE SPECIAL PROVISIONS.

FOR SECTION B-B, SEE SHT. NO. S-50.

$FILE$ $DATE$ $TIME$ $USER$

Stantec
Stantec Consulting Services Inc.
801 Jones Franklin Road
Suite 300
Raleigh, NC 27606
Tel. (919) 851-6866
Fax. (919) 851-7024
www.stantec.com
License No. F-0672

DRAWN BY : B. J. ELLIOT DATE : 05-13-11
CHECKED BY : J. T. KELVINGTON DATE : 05-13-11

PROJECT NO. BP-5300R
GUILFORD COUNTY
STATION:

STATE OF NORTH CAROLINA
DEPARTMENT OF TRANSPORTATION
RALEIGH

PLAN OF BRIDGE

DECK REHAB. FOR BRIDGE NO. 287

REVISIONS						SHEET NO.
NO.	BY:	DATE:	NO.	BY:	DATE:	S-45
1			3			TOTAL SHEETS
2			4			50

NORTH CAROLINA PROFESSIONAL ENGINEER SEAL 13406 JOSEPH T. KELVINGTON

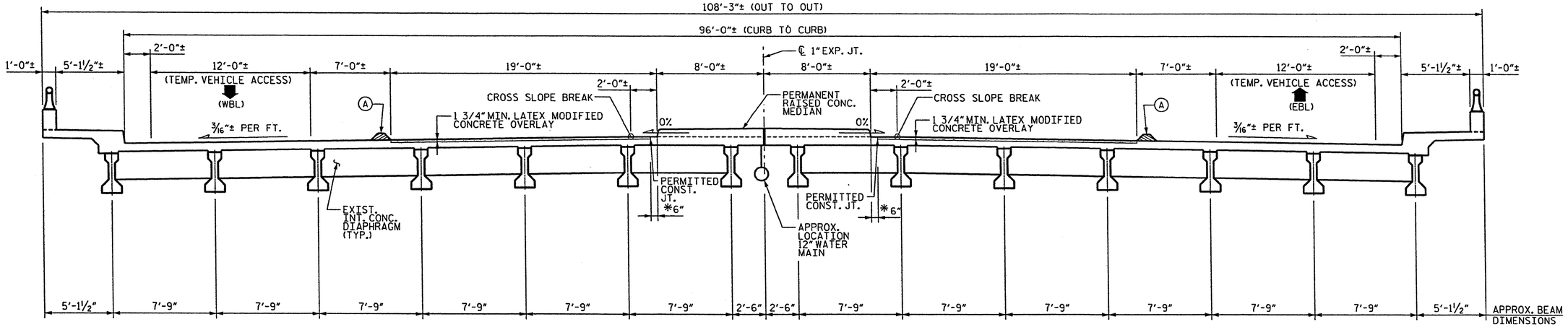

TYP. SECTION - EBL AND WBL CONSTRUCTION

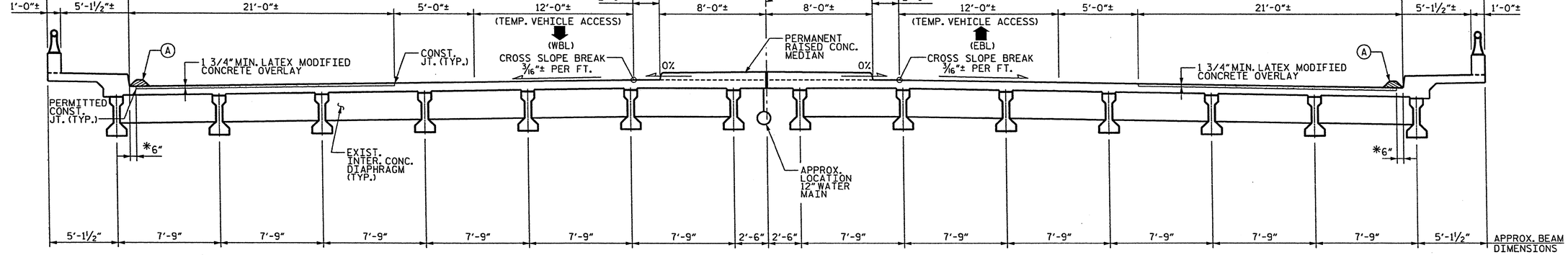

TYP. SECTION - EBL AND WBL CONSTRUCTION

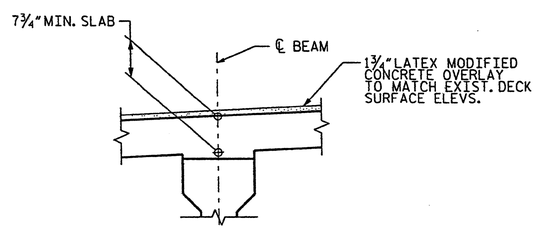

EXIST. SLAB BUILDUP

NOTES:

WATER & CONCRETE SLURRY FROM HYDRO-DEMOLITION SHALL NOT BE ALLOWED TO DRAIN ACROSS TRAVEL LANES. CONTRACTOR SHALL PROVIDE A METHOD TO CONTROL THE WATER.

FOR TRAFFIC CONTROL AND CONSTRUCTION PHASING, SEE TRANSPORTATION MANAGEMENT PLANS.

* PERMITTED WIDTH OF EXISTING CONCRETE DECK SURFACE OVER FULL LENGTH OF BRIDGE DECK THAT MAY BE LEFT INTACT FOR SCREED SUPPORT. OTHERWISE, REPAIR DECK SURFACE FROM CURB TO CURB.

Ⓐ DAM ALONG LENGTH OF BRIDGE, AND ROADWAY. SEAL EXP. JTS.

PROJECT NO. BP-5300R

GUILFORD COUNTY

STATION:

STATE OF NORTH CAROLINA
DEPARTMENT OF TRANSPORTATION
RALEIGH

TYPICAL SECTION

DECK REHAB. FOR BRIDGE NO. 287

REVISIONS						SHEET NO
NO.	BY:	DATE:	NO.	BY:	DATE:	S-46
1			3			TOTAL SHEETS
2			4			50

Stantec Consulting Services Inc.
801 Jones Franklin Road
Suite 300
Raleigh, NC 27606
Tel. (919) 851-6866
Fax. (919) 851-7024
www.stantec.com
License No. F-0672

DRAWN BY : B. J. ELLIOT DATE : 05-13-11
CHECKED BY : J. T. KELVINGTON DATE : 05-13-11

NORTH CAROLINA PROFESSIONAL SEAL 13406 ENGINEER JOSEPH T. KELVINGTON

$FILE$ $DATE$ $TIME$ $USER$

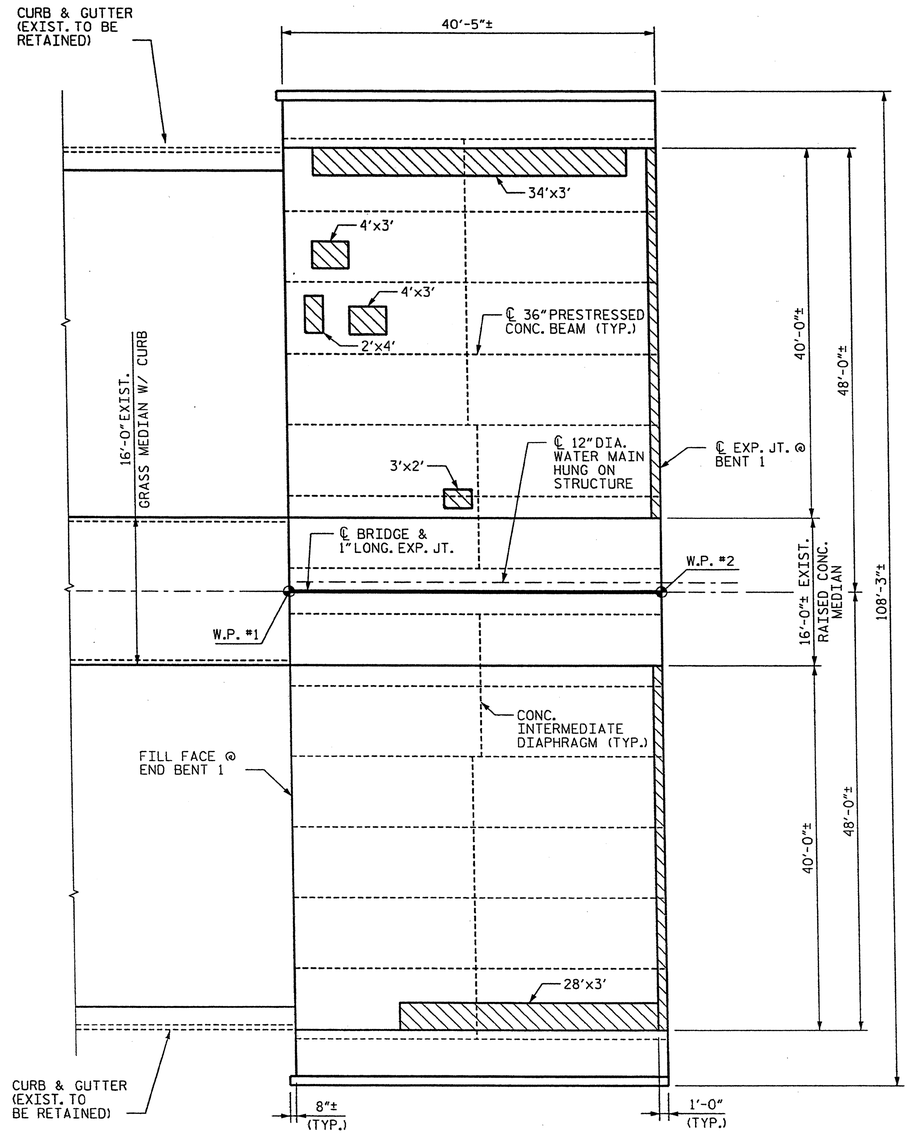

PLAN OF SPAN A - DECK REPAIRS

NOTES:

CONTRACTOR SHALL FURNISH FORMWORK TO SUPPORT SLAB OVERHANG REGIONS WITH EXTENSIVE CLASS III SURFACE PREPARATION.

SUBMIT DETAILS OF PROPOSED FORMWORK FOR APPROVAL PRIOR TO BEGINNING WORK.

COSTS FOR INSTALLING AND REMOVING FORMWORK SHALL BE INCIDENTAL TO THE PRICE BID PER SQ. YD. OF HYDRO-DEMOLITION.

SEE HYDRO-DEMOLITION SPECIAL PROVISIONS.

CLASS II SURFACE PREPARATION

CLASS III SURFACE PREPARATION

L' X W' = LENGTH OF AREA ALONG ℄ BRIDGE X
WIDTH OF AREA NORMAL TO ℄ BRIDGE ±

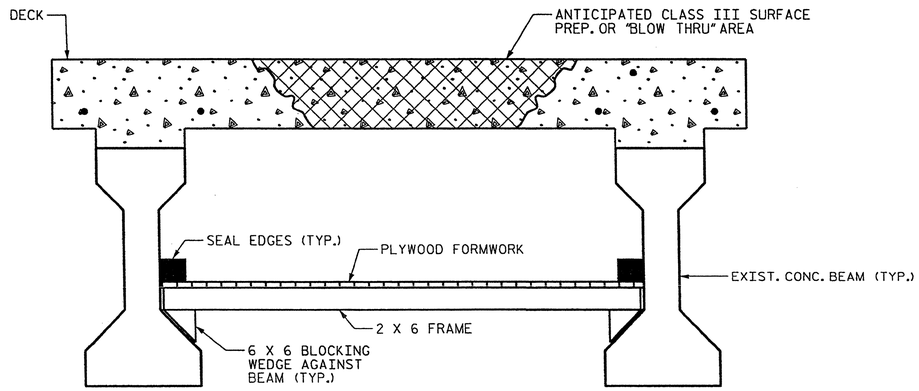

TYP. "BLOW THRU" CONTAINMENT AND FORMWORK

A METHOD TO CAPTURE WATER AND DEBRIS FROM BLOW THRU DURING HYDRO-DEMOLITION SHALL BE INSTALL IN AREAS INDICATED AS CLASS III SURFACE PREPARATION.

SUBMIT DETAILS OF PROPOSED FORMWORK FOR APPROVAL PRIOR TO BEGINNING WORK.

COSTS FOR INSTALLING AND REMOVING FORMWORK SHALL BE INCIDENTAL TO THE PRICE PER SQ. YARD OF HYDRO-DEMOLITION.

CONTRACTOR, AT HIS OPTION, MAY CHOOSE TO MONITOR HYDRO-DEMOLITION WORK AND CONTROL TRAFFIC UNDER THE BRIDGE IN LIEU OF BLOW THRU CONTAINMENT. SEE TRAFFIC CONTROL PLANS.

PLACE PLYWOOD AND FRAMING TO CLEAR INTERMEDIATE CONCRETE DIAPHRAGMS.

Stantec Consulting Services Inc.
801 Jones Franklin Road
Suite 300
Raleigh, NC 27606
Tel. (919) 851-6866
Fax. (919) 851-7024
www.stantec.com
License No. F-0672

DRAWN BY : J. L. HENNEKES DATE : 05-13-11
CHECKED BY : J. T. KELVINGTON DATE : 05-13-11

PROJECT NO. BP-5300R
GUILFORD COUNTY
STATION:

STATE OF NORTH CAROLINA
DEPARTMENT OF TRANSPORTATION
RALEIGH

DECK REPAIR DETAILS SPAN A

DECK REHAB. FOR BRIDGE NO. 287

REVISIONS						SHEET NO.
NO.	BY:	DATE:	NO.	BY:	DATE:	S-47
1			3			TOTAL SHEETS
2			4			50

NORTH CAROLINA PROFESSIONAL SEAL 13406 ENGINEER JOSEPH T. KELVINGTON

$USER$ $TIME$ $DATE$ $FILE$

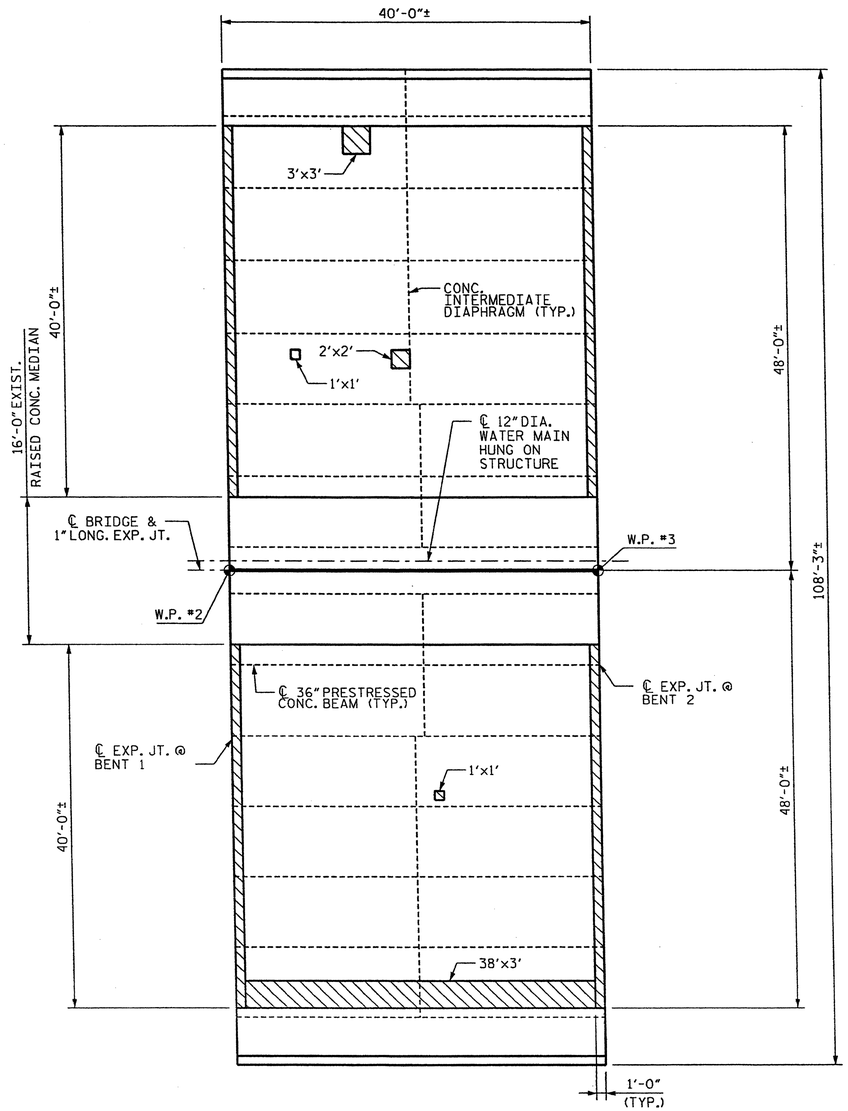

PLAN OF SPAN B - DECK REPAIRS

CLASS II SURFACE PREPARATION

CLASS III SURFACE PREPARATION

L' X W' = LENGTH OF AREA ALONG ℄ BRIDGE X
WIDTH OF AREA NORMAL TO ℄ BRIDGE ±

NOTES:

CONTRACTOR SHALL FURNISH FORMWORK TO SUPPORT SLAB OVERHANG REGIONS WITH EXTENSIVE CLASS III SURFACE PREPARATION.

SUBMIT DETAILS OF PROPOSED FORMWORK FOR APPROVAL PRIOR TO BEGINNING WORK.

COSTS FOR INSTALLING AND REMOVING FORMWORK SHALL BE INCIDENTAL TO THE PRICE BID PER SQ. YD. OF HYDRO-DEMOLITION.

SEE HYDRO-DEMOLITION SPECIAL PROVISIONS.

$FILE$ $DATE$ $TIME$ $USER$

Stantec
Stantec Consulting Services Inc.
801 Jones Franklin Road
Suite 300
Raleigh, NC 27606
Tel. (919) 851-6866
Fax. (919) 851-7024
www.stantec.com
License No. F-0672

DRAWN BY : B. J. ELLIOT DATE : 05-13-11
CHECKED BY : J. T. KELVINGTON DATE : 05-13-11

PROJECT NO. BP-5300R
GUILFORD COUNTY
STATION:

STATE OF NORTH CAROLINA
DEPARTMENT OF TRANSPORTATION
RALEIGH

DECK REPAIR DETAILS
SPAN B

DECK REHAB. FOR BRIDGE NO. 287

REVISIONS						SHEET NO
NO.	BY:	DATE:	NO.	BY:	DATE:	S-48
1			3			TOTAL SHEETS
2			4			50

NORTH CAROLINA PROFESSIONAL SEAL 23406 ENGINEER JOSEPH T. KELVINGTON

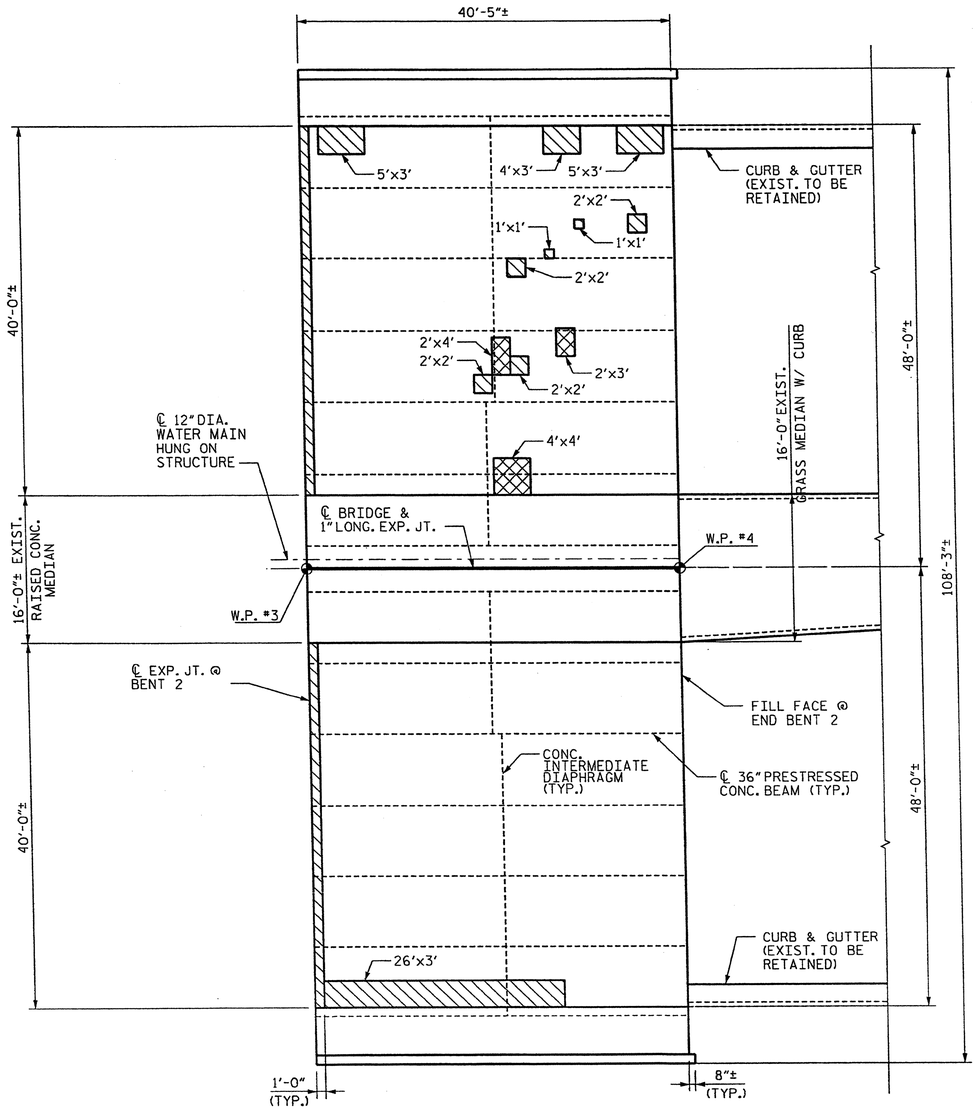

PLAN OF SPAN C - DECK REPAIRS

NOTES:

CONTRACTOR SHALL FURNISH FORMWORK TO SUPPORT SLAB OVERHANG REGIONS WITH EXTENSIVE CLASS III SURFACE PREPARATION.

SUBMIT DETAILS OF PROPOSED FORMWORK FOR APPROVAL PRIOR TO BEGINNING WORK.

COSTS FOR INSTALLING AND REMOVING FORMWORK SHALL BE INCIDENTAL TO THE PRICE BID PER SQ. YD. OF HYDRO-DEMOLITION.

SEE HYDRO-DEMOLITION SPECIAL PROVISIONS.

CLASS II SURFACE PREPARATION

CLASS III SURFACE PREPARATION

L' X W' = LENGTH OF AREA ALONG ℄ BRIDGE X
WIDTH OF AREA NORMAL TO ℄ BRIDGE ±

PROJECT NO. BP-5300R

GUILFORD COUNTY

STATION:

Stantec
Stantec Consulting Services Inc.
801 Jones Franklin Road
Suite 300
Raleigh, NC 27606
Tel. (919) 851-6866
Fax. (919) 851-7024
www.stantec.com
License No. F-0672

DRAWN BY : J. L. HENNEKES DATE : 05-13-11
CHECKED BY : J. T. KELVINGTON DATE : 05-13-11

NORTH CAROLINA PROFESSIONAL SEAL 13406 ENGINEER JOSEPH T. KELVINGTON

STATE OF NORTH CAROLINA
DEPARTMENT OF TRANSPORTATION
RALEIGH

DECK REPAIR DETAILS
SPAN C

DECK REHAB. FOR BRIDGE NO. 287

REVISIONS						SHEET NO.
NO.	BY:	DATE:	NO.	BY:	DATE:	S-49
1			3			TOTAL SHEETS
2			4			50

$FILE$ $DATE$ $TIME$ $USER$

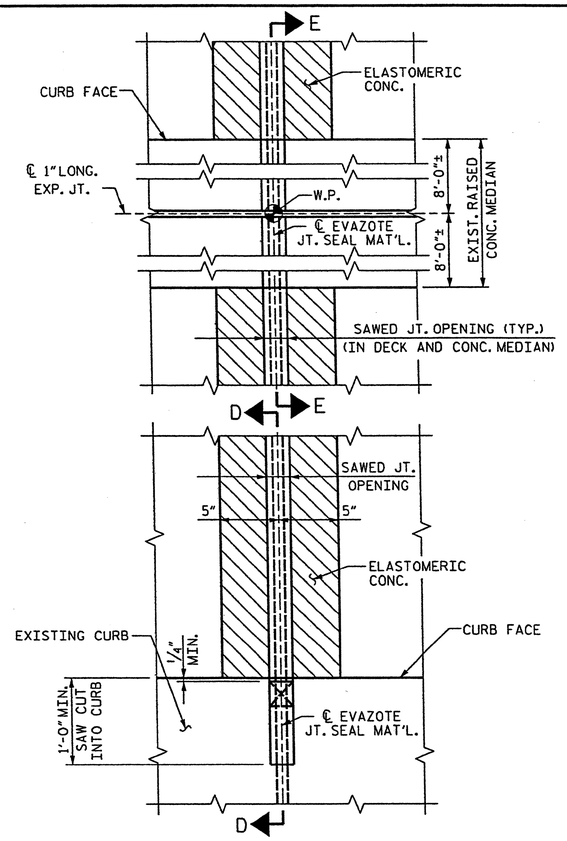

PARTIAL PLAN @ JOINT

TYPICAL EACH SIDE

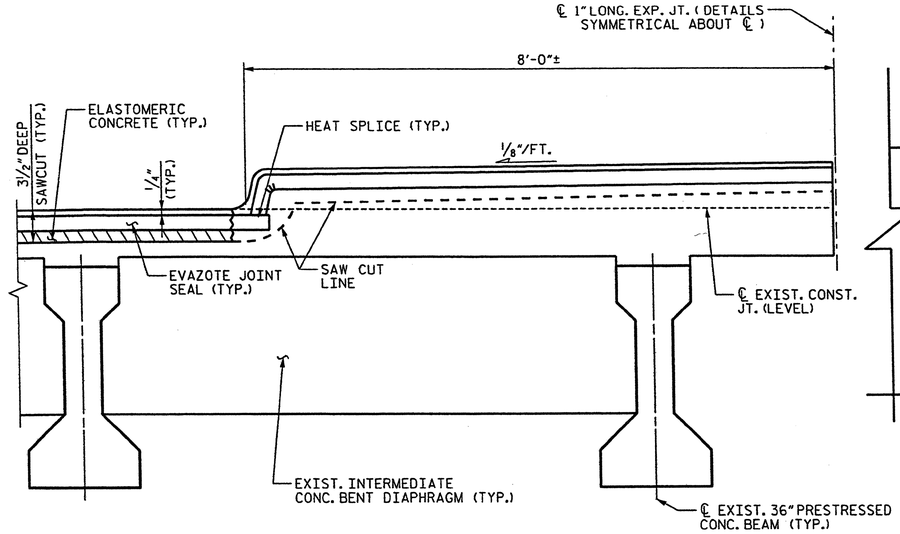

HALF SECTION E-E

CONTRACTOR SHALL EXERCISE CARE TO AVOID CUTTING OR DAMAGING EXISTING REINF. STEEL.

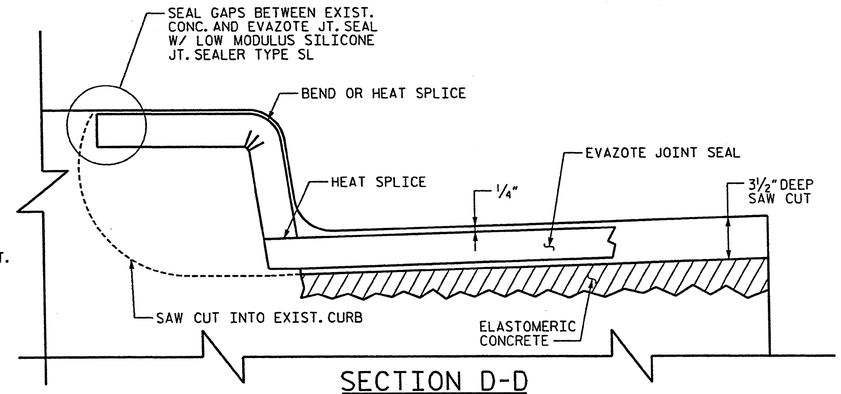

SECTION D-D

CONTRACTOR SHALL EXERCISE CARE TO AVOID CUTTING OR DAMAGING EXISTING REINF. STEEL.

ELASTOMERIC CONCRETE	
LOCATION	QTY
BENT 1	25.5 C.F.
BENT 2	25.5 C.F.

TOTAL ELASTOMERIC CONC. = 51.0 C.F.
TOTAL ELASTOMERIC CONC. = 1.9 C.Y.

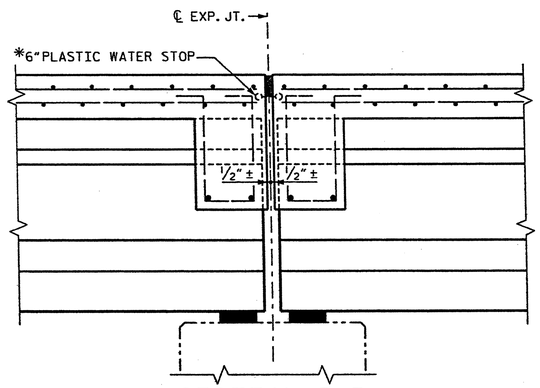

SECTION B-B

(EXISTING JOINT)

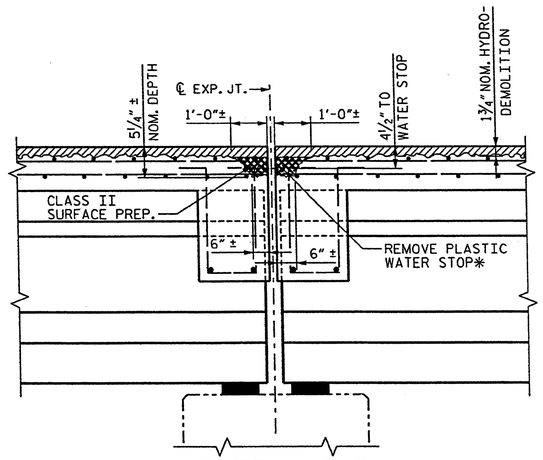

SECTION B-B

(MINIMUM EXISTING JOINT DEMOLITION)

NOTE: RETAIN ALL EXIST. REINF. STEEL. CLEAN AND REPAIR AS REQ'D.

* FROM BEST AVAILABLE INFORMATION.

ALL EXISTING JOINT SEAL MATERIALS ARE TO BE COMPLETELY REMOVED.

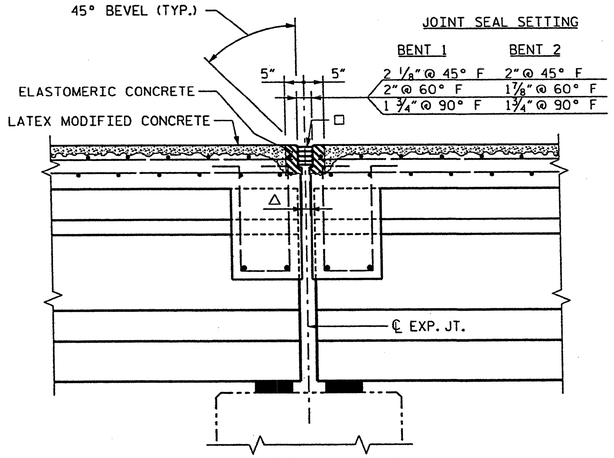

SECTION B-B

(JOINT SEAL DESIGN)

□ USE 2.8125" X 2.50" UNCOMPRESSED EVAZOTE JT. SEAL MATERIAL

△ 1" FORMED OPENING

Stantec
Stantec Consulting Services Inc.
801 Jones Franklin Road
Suite 300
Raleigh, NC 27606
Tel. (919) 851-6866
Fax. (919) 851-7024
www.stantec.com
License No. F-0672

DRAWN BY : J. L. HENNEKES DATE : 05-13-11
CHECKED BY : J. T. KELVINGTON DATE : 05-13-11

Joseph T. Kelvington 10/12

NORTH CAROLINA PROFESSIONAL SEAL 13406 ENGINEER JOSEPH T. KELVINGTON

PROJECT NO. BP-5300R
GUILFORD COUNTY
STATION:

STATE OF NORTH CAROLINA
DEPARTMENT OF TRANSPORTATION
RALEIGH

EVAZOTE JOINT DETAILS

DECK REHAB. FOR BRIDGE NO. 287

REVISIONS						SHEET NO.
NO.	BY:	DATE:	NO.	BY:	DATE:	S-50
1			3			TOTAL SHEETS
2			4			50

$USER$ $TIME$ $DATE$ $FILE$

STATE OF NORTH CAROLINA
DIVISION OF HIGHWAYS

TRANSPORTATION MANAGEMENT PLAN

GUILFORD COUNTY

DIVISION 7

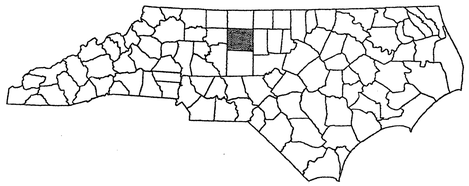

BRIDGE DECK PRESERVATION

BRIDGE NO.S 1, 136, 217, 259, 274, 287, AND 470

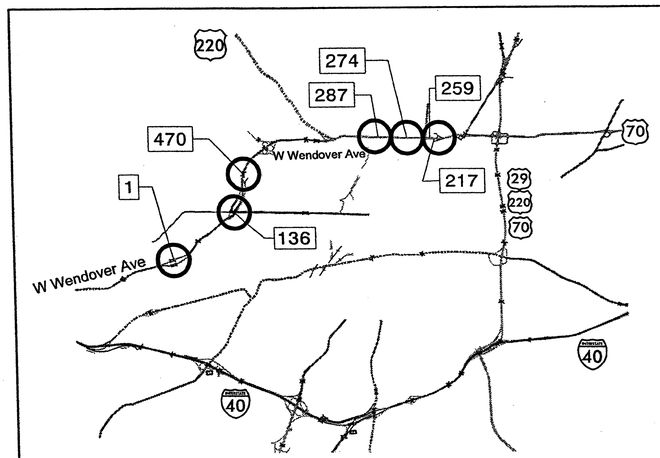

VICINITY MAP

INDEX OF SHEETS

SHEET NO.	TITLE
TMP-1	TITLE SHEET,VICINITY MAP,INDEX,TRAFFIC MGMT STRATEGY
TMP-1A	LIST OF ROADWAY STANDARD DRAWINGS, & LEGEND
TMP-2	GENERAL NOTES
TMP-3	TRAFFIC CONTROL PHASING
TMP-3A	WORK ZONE ADVANCE WARNING SIGNS
TMP-4	BRIDGE #1 WENDOVER AVE. WEST-CLOSURE OF LEFT 2 LANES
TMP-4A	BRIDGE #1 WENDOVER AVE. WEST-CLOSURE OF RIGHT 2 LANES
TMP-5	BRIDGE #136 WENDOVER AVE. EAST-CLOSURE OF RIGHT 2 LANES
TMP-5A	BRIDGE #136 WENDOVER AVE. EAST-CLOSURE OF LEFT 2 LANES
TMP-5B	BRIDGE #136 WENDOVER AVE. WEST-LEFT LANE CLOSURE W/SHIFT TO SHOULDER
TMP-5C	BRIDGE #136 WENDOVER AVE. WEST-CLOSURE OF RIGHT LANE
TMP-6	BRIDGE #470 WENDOVER AVE. WEST-CLOSURE OF RIGHT 2 LANES
TMP-7,7A	BRIDGE NO. 470 WENDOVER AVE. WEST-CLOSURE OF LEFT 2 LANES & CLOSURE OF GREEN VALLEY RD. ENTRANCE RAMP
TMP-8,8A	BRIDGE #470 WENDOVER AVE. EAST-ALL TRAFFIC EXIT
TMP-9	BRIDGE #470 WENDOVER AVE. EAST-CLOSURE OF RIGHT LANE & CLOSURE OF N. LINDELL RD. ENTRANCE RAMP
TMP-9A	BRIDGE #470 N. LINDELL RD. ENTRANCE RAMP DETOUR ROUTE
TMP-10,10A	BRIDGES #259/217 WENDOVER AVE. EAST-CLOSURE OF RIGHT 2 LANES
TMP-11,11A	BRIDGES #259/217 WENDOVER AVE. EAST-CLOSURE OF LEFT 2 LANES
TMP-12,12A	BRIDGES #259/217 WENDOVER AVE. WEST-CLOSURE OF RIGHT 2 LANES
TMP-13,13A	BRIDGES #259/217 WENDOVER AVE. WEST-CLOSURE OF LEFT 2 LANES
TMP-14,14A	BRIDGE #274 WENDOVER AVE. EAST-CLOSURE OF LEFT 2 LANES
TMP-15-15A	BRIDGE #274 WENDOVER AVE. EAST-CLOSURE OF RIGHT 2 LANES
TMP-16,16A	BRIDGE #274 WENDOVER AVE. WEST-CLOSURE OF LEFT 2 LANES
TMP-17,17A	BRIDGE #274 WENDOVER AVE. WEST-CLOSURE OF RIGHT 2 LANES
TMP-18-18A	BRIDGE #287 WENDOVER AVE. EAST-CLOSURE OF LEFT 2 LANES
TMP-19,19A	BRIDGE #287 WENDOVER AVE. EAST-CLOSURE OF RIGHT 2 LANES
TMP-20,20A	BRIDGE #287 WENDOVER AVE. WEST-CLOSURE OF RIGHT 2 LANES
TMP-21,21A	BRIDGE #287 WENDOVER AVE. WEST-CLOSURE OF LEFT 2 LANES

TRAFFIC MANAGEMENT STRATEGY

BRIDGE REHABILITATION ON THIS PROJECT WILL BE PERFORMED USING SINGLE AND DOUBLE LANE CLOSURES WITH LANE CLOSURE TIME RESTRICTIONS. REFER TO SHEET TMP-3 FOR TRAFFIC CONTROL PHASING.

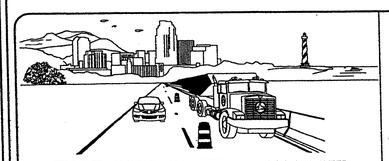

WORK ZONE SAFETY & MOBILITY
"from the MOUNTAINS to the COAST"

PLAN PREPARED FOR NCDOT BRIDGE MANAGEMENT UNIT
RALEIGH, NC

DIVISION OF HIGHWAYS STATE OF NORTH CAROLINA DEPARTMENT OF TRANSPORTATION WORK ZONE TRAFFIC CONTROL

PLAN PREPARED BY:

Stantec
Stantec Consulting Services Inc.
Suite 300, 801 Jones Franklin Road
Raleigh, NC
27606
Tel. 919.851.6866
Fax. 919.851.7024
www.stantec.com

BETSY L. WATSON, P.E.
TRAFFIC ENGINEER

GEORGE KARAGEORGE
SR. TRANSPORTATION DESIGNER

APPROVED: Betsy L Watson
DATE: 11/14/11

SEAL
NORTH CAROLINA PROFESSIONAL SEAL 29449 ENGINEER BETSY L. WATSON

SHEET NO.
TMP-1

WBS 45438.3.15

PROJECT: BP-5300R

11/14/2011
U:\Traffic\TrafficControl\TCP\BP-5300R Guilford\Plan Sheets\BP5300R_TC_TMP01.dgn
gkarageorge

PROJ. REFERENCE NO.	SHEET NO.
BP-5300R	TMP-1A

LEGEND

DIRECTION OF TRAFFIC FLOW

WORK AREA

NORTH ARROW

TYPE III BARRICADE

CONE

DRUM SKINNY DRUM TUBULAR MARKER

CHANGEABLE MESSAGE SIGN (CMS)

FLAGGER

FLASHING ARROW PANEL(TYPE C)

LAW ENFORCEMENT

TRUCK MOUNTED IMPACT ATTENUATOR (TMA)

PORTABLE CONCRETE BARRIER (PCB)

TEMPORARY CRASH CUSHION

TEMPORARY SHORING

WORK ZONE SIGN-PORTABLE

WORK ZONE SIGN-STATIONARY

WORK ZONE SIGN-STATIONARY OR PORTABLE

SIGNALS

EXISTING PROPOSED TEMPORARY

PAVEMENT MARKINGS

EXISTING PAVEMENT MARKING (GRAY)

SKIP LINES

MINI-SKIP LINES

SOLID LINES

PAVEMENT MARKING SYMBOLS

PAVEMENT MARKING SYMBOLS

EXISTING PAVEMENT MARKING SYMBOLS (HOLLOW)

ONLY PAVEMENT MARKING ALPHANUMERIC CHARACTERS

PAVEMENT MARKERS

CRYSTAL/CRYSTAL

CRYSTAL/RED

YELLOW/YELLOW

ROADWAY STANDARD DRAWINGS

THE FOLLOWING ROADWAY STANDARDS AS APPEAR IN "ROADWAY STANDARD DRAWINGS" - PROJECT SERVICES UNIT - N.C. DEPARTMENT OF TRANSPORTATION - RALEIGH, N.C., DATED JULY 2006 ARE APPLICABLE TO THIS PROJECT AND BY REFERENCE HEREBY ARE CONSIDERED A PART OF THESE PLANS:

STD. NO.	TITLE
1101.02	TEMPORARY LANE CLOSURES
1101.04	TEMPORARY SHOULDER CLOSURES
1110.01	STATIONARY WORK ZONE SIGNS
1110.02	PORTABLE WORK ZONE SIGNS
1115.01	FLASHING ARROW PANELS
1130.01	DRUMS
1145.01	BARRICADES
1165.01	TRUCK MOUNTED IMPACT ATTENUATOR
1205.01	PAVEMENT MARKINGS - LINE TYPES & OFFSETS
1205.02	PAVEMENT MARKINGS - 2 LANE & MULTILANE ROADWAYS

Stantec
Stantec Consulting Services Inc.
801 Jones Franklin Road
Suite 300
Raleigh, NC 27606
Tel. (919) 851-6866
Fax. (919) 851-7024
www.stantec.com
License No. F-0672

APPROVED:_____ DATE:_____

SEAL

NORTH CAROLINA PROFESSIONAL SEAL 29449 ENGINEER BETSY L. WATSON

11/11/11

DIVISION OF HIGHWAYS STATE OF NORTH CAROLINA DEPARTMENT OF TRANSPORTATION WORK ZONE TRAFFIC CONTROL

ROADWAY STANDARD DRAWINGS & LEGEND

11/11/2011
U:\Traffic\TrafficControl\TCP\BP-5300R Guilford\Plan Sheets\BP5300R_TC_TMP01A.dgn
gkarageorge

GENERAL NOTES

PROJ. REFERENCE NO.	SHEET NO.
BP-5300R	TMP-2

THE FOLLOWING GENERAL NOTES APPLY AT ALL TIMES FOR THE DURATION OF THE PROJECT EXCEPT WHEN OTHERWISE NOTED IN THE PLAN OR DIRECTED BY THE ENGINEER.

CHANGES MAY BE REQUIRED WHEN PHYSICAL DIMENSIONS IN THE DETAIL DRAWINGS, STANDARD DETAILS, AND ROADWAY DETAILS ARE NOT ATTAINABLE TO MEET FIELD CONDITIONS OR RESULT IN DUPLICATE OR UNDESIRED OVERLAPPING OF DEVICES. MODIFICATION MAY INCLUDE: MOVING, SUPPLEMENTING, COVERING, OR REMOVAL OF DEVICES AS DIRECTED BY THE ENGINEER.

LANE CLOSURE TIME RESTRICTIONS

A) DO NOT CLOSE OR NARROW A LANE OF TRAFFIC ON OR UNDER WENDOVER AVE., ASSOCIATED RAMPS OR LOOPS DURING THE FOLLOWING TIME RESTRICTIONS:

DAY AND TIME RESTRICTIONS

6:00 A.M.-7:00 P.M. MONDAY THRU SUNDAY

HOLIDAY & HOLIDAY WEEKEND LANE CLOSURE TIME RESTRICTIONS

B) DO NOT CLOSE OR NARROW A LANE OF TRAFFIC ON OR UNDER WENDOVER AVE., ASSOCIATED RAMPS OR LOOPS, DETAIN AND/OR ALTER THE TRAFFIC FLOW ON OR DURING HOLIDAYS, HOLIDAY WEEKENDS, SPECIAL EVENTS, OR AT ANY OTHER TIME WHEN TRAFFIC IS UNUSUALLY HEAVY, INCLUDING THE FOLLOWING SCHEDULES:

1) FOR ANY UNEXPECTED OCCURRENCE THAT CREATES UNUSUALLY HIGH TRAFFIC VOLUMES, AS DIRECTED BY THE ENGINEER.

2) FOR NEW YEAR'S, BETWEEN THE HOURS OF 6:00 A.M. DECEMBER 31st TO 7:00 P.M. JANUARY 2nd. IF NEW YEAR'S DAY IS ON A FRIDAY, SATURDAY, SUNDAY, OR MONDAY THEN UNTIL 7:00 P.M. THE FOLLOWING TUESDAY.

3) FOR EASTER, BETWEEN THE HOURS OF 6:00 A.M. THURSDAY AND 7:00 P.M. MONDAY.

4) FOR MEMORIAL DAY, BETWEEN THE HOURS OF 6:00 A.M. FRIDAY TO 7:00 P.M. TUESDAY.

5) FOR INDEPENDENCE DAY, BETWEEN THE HOURS OF 6:00 A.M. THE DAY BEFORE INDEPENDENCE DAY AND 7:00 P.M. THE DAY AFTER INDEPENDENCE DAY. IF INDEPENDENCE DAY IS ON A FRIDAY, SATURDAY, SUNDAY OR MONDAY; THEN BETWEEN THE HOURS OF 6:00 A.M. THE THURSDAY BEFORE INDEPENDENCE DAY AND 7:00 P.M. THE TUESDAY AFTER INDEPENDENCE DAY.

6) FOR LABOR DAY, BETWEEN THE HOURS OF 6:00 A.M. FRIDAY AND 7:00 P.M. TUESDAY.

7) FOR THANKSGIVING DAY, BETWEEN THE HOURS OF 6:00 A.M. TUESDAY TO 7:00 P.M. MONDAY.

8) FOR CHRISTMAS, BETWEEN THE HOURS OF 6:00 A.M. THE FRIDAY BEFORE THE WEEK OF CHRISTMAS DAY AND 7:00 P.M. THE FOLLOWING TUESDAY AFTER THE WEEK OF CHRISTMAS.

C) DO NOT CLOSE ANY ROADWAY, EXCEPT WHEN DIRECTED BY THE PLANS OR THE ENGINEER AND IN ACCORDANCE WITH THE FOLLOWING TIME RESTRICTIONS:

ROAD NAME	DAY AND TIME RESTRICTIONS
ALL ROADS	6:00 A.M.-7:00 P.M. MONDAY-SUNDAY

LANE AND SHOULDER CLOSURE REQUIREMENTS

D) LANE CLOSURES ARE REQUIRED WHEN PERSONNEL AND/OR EQUIPMENT ARE WORKING WITHIN ANY PORTION OF A TRAVEL LANE. CONDUCT THE WORK SO THAT ALL PERSONNEL AND/OR EQUIPMENT REMAIN WITHIN THE CLOSED TRAVEL LANE.

E) INSTALL ALL LANE CLOSURES ACCORDING TO THE TRAFFIC CONTROL PLAN, ROADWAY STANDARD DRAWINGS (1101.02), OR AS DIRECTED BY THE ENGINEER.

F) REMOVE LANE CLOSURE DEVICES FROM THE LANE WHEN WORK IS NOT BEING PERFORMED BEHIND THE LANE CLOSURE OR WHEN A LANE CLOSURE IS NO LONGER NEEDED OR AS DIRECTED BY THE ENGINEER.

G) INSTALL LANE CLOSURES WITH THE TRAFFIC FLOW, BEGINNING WITH DEVICES ON THE UPSTREAM SIDE OF TRAFFIC. REMOVE LANE CLOSURES AGAINST THE TRAFFIC FLOW, BEGINNING WITH DEVICES ON THE DOWNSTREAM SIDE OF TRAFFIC.

H) WHEN PERSONNEL AND/OR EQUIPMENT ARE WORKING WITHIN 15 FT OF AN OPEN TRAVEL LANE, CLOSE THE NEAREST OPEN SHOULDER USING ROADWAY STANDARD DRAWING NO. 1101.04 UNLESS THE WORK AREA IS PROTECTED BY BARRIER OR GUARDRAIL OR A LANE CLOSURE IS INSTALLED.

I) WHEN PERSONNEL AND/OR EQUIPMENT ARE WORKING ON THE SHOULDER ADJACENT TO AN UNDIVIDED FACILITY AND WITHIN 5 FT OF AN OPEN TRAVEL LANE, CLOSE THE NEAREST OPEN TRAVEL LANE UNLESS THE WORK AREA IS PROTECTED BY BARRIER OR GUARDRAIL.

J) WHEN PERSONNEL AND/OR EQUIPMENT ARE WORKING ON THE SHOULDER ADJACENT TO A DIVIDED FACILITY AND WITHIN 10 FT OF AN OPEN TRAVEL LANE, CLOSE THE NEAREST OPEN TRAVEL LANE UNLESS THE WORK AREA IS PROTECTED BY BARRIER OR GUARDRAIL.

K) UNLESS OTHERWISE SHOWN IN THE PLANS, PLACE ARROW PANELS ON THE ROADWAY SHOULDER. IF SHOULDERS DO NOT EXIST, PLACE ARROW PANELS WITHIN THE MERGE TAPER BEHIND THE CHANNELIZING DEVICES OF THE LANE CLOSURE. IF NEEDED, EXTEND LANE CLOSURES TO PROVIDE STOPPING SIGHT DISTANCE TO THE ARROW PANEL (REFER TO ROADWAY STANDARD DRAWING 1101.11 SHEET 2).

L) PLACE LANE CLOSURE DRUMS IN TAPERS AT A MAXIMUM SPACING EQUAL IN FEET TO THE POSTED SPEED LIMIT (MPH). ALONG BUFFER SPACES AND WORK AREAS SPACE DRUMS AT A MAXIMUM SPACING EQUAL IN FEET TO TWICE THE POSTED SPEED LIMIT (MPH). IN ALL CASES, CHANNELIZING DEVICES ARE TO BE SPACED IN SUCH A MANNER AS TO POSITIVELY ACHIEVE THE INTENDED VISUAL CHANNELIZATION. CHANNELIZING DEVICES SHOULD BE LATERALLY OFFSET 3 FT INSIDE THE CLOSED LANE AS ROOM PERMITS.

ROAD CLOSURES

M) PROVIDE SIGNING AND DEVICES FOR ROAD CLOSURES ACCORDING TO THE TRAFFIC CONTROL PLAN. COVER OR REMOVE ALL SIGNS AND DEVICES FOR ROAD CLOSURES WHEN NOT IN EFFECT.

N) PROVIDE OFFSITE DETOUR ROUTE SIGNING AS SHOWN IN THE TRAFFIC CONTROL PLANS. COVER OR REMOVE OFFSITE DETOUR SIGNING WHEN THE DETOUR IS NOT IN OPERATION.

O) ENSURE ALL NECESSARY SIGNING IS IN PLACE PRIOR TO ALTERING ANY TRAFFIC PATTERN.

P) WHEN CLOSING A ROADWAY OR DRIVEWAY PLACE TYPE III BARRICADES COMPLETELY ACROSS THE ROADWAY OR FROM CURB TO CURB. ATTACH BARRICADE MOUNTED "ROAD CLOSED" SIGN R11-2 AT ALL CLOSURE LOCATIONS. IF LOCAL TRAFFIC IS TO BE MAINTAINED STAGGER THE BARRICADES TO ALLOW ACCESS.

Q) INSTALL SIGNS BEFORE BARRICADES WHEN CLOSING A ROADWAY TO TRAFFIC. REMOVE BARRICADES BEFORE SIGNS WHEN OPENING A ROADWAY TO TRAFFIC. INSTALL/REMOVE ROAD CLOSURE SIGNS AND BARRICADES IN A CONTINUOUS OPERATION AND WITHIN THE SAME CALENDAR DAY.

PAVEMENT MARKINGS AND MARKERS

R) REPLACE EXISTING PAVEMENT MARKINGS WITH 2 APPLICATIONS OF PAINT.

MISCELLANEOUS

S) LAW ENFORCEMENT SHALL BE USED TO MAINTAIN TRAFFIC THROUGH THE WORK AREA AND/OR INTERSECTIONS, AS SHOWN ON THE PLANS OR AS DIRECTED BY THE ENGINEER. NCDOT WILL PROVIDE LAW ENFORCEMENT AT NO ADDITIONAL COST TO THE CONTRACTOR.

T) MAINTAIN SIDEWALK ACCESS AT ALL TIMES.

U) ALL DIMENSIONS AND STATIONS IN THE TRAFFIC CONTROL PLAN AND PHASING ARE APPROXIMATE (+/-); FIELD ADJUST AS NECESSARY OR AS DIRECTED BY THE ENGINEER.

V) MAINTAIN DRIVEWAY ACCESS AT ALL TIMES, UNLESS OTHERWISE DIRECTED BY ENGINEER.

W) ENSURE THE OVERSIZE/OVERWEIGHT PERMIT UNIT (919) 733-4740 HAS BEEN ADVISED OF THE ONGOING TRAFFIC OPERATIONS THROUGH THE DIVISION OFFICE.

Stantec
Stantec Consulting Services Inc.
801 Jones Franklin Road
Suite 300
Raleigh, NC 27606
Tel. (919) 851-6866
Fax. (919) 851-7024
www.stantec.com
License No. F-0672

APPROVED: _____ DATE: _____

SEAL
NORTH CAROLINA PROFESSIONAL ENGINEER SEAL 20449 BETSY L. WATSON
11/22/11

DIVISION OF HIGHWAYS · STATE OF NORTH CAROLINA · DEPARTMENT OF TRANSPORTATION · WORK ZONE TRAFFIC CONTROL

GENERAL NOTES

11/22/2011
U:\Traffic\TrafficControl\TCP\BP-5300R Guilford\Plan Sheets\BP5300R_TC_TMP02.dgn
gkaragiorgos

PROJ. REFERENCE NO.	SHEET NO.
BP-5300R	TMP-3

TRAFFIC CONTROL PHASING

PRIOR TO ANY WORK OPERATIONS INSTALL WORK ZONE ADVANCE SIGNS AS NECESSARY AND IF DIRECTED BY THE ENGINEER. (SEE TMP-3A)

BRIDGE #1 MAY BE WORKED ON SIMULTANEOUSLY WITH ANY OTHER BRIDGE.

DO NOT WORK ON BRIDGE #136 AND #470 SIMULTANEOUSLY IN THE SAME DIRECTION OF TRAVEL.

BRIDGE #217 AND #259 MAY BE WORKED ON SIMULTANEOUSLY IN THE SAME DIRECTION OF TRAVEL.

DO NOT WORK ON BRIDGES #287 OR #274 TOGETHER OR SIMULTANEOUSLY WITH BRIDGES #217 AND #259 IN THE SAME DIRECTION OF TRAVEL.

BRIDGE NO. 1

WHEN CONSTRUCTING THE WENDOVER AVE. WESTBOUND INSIDE LANE AND HALF OF THE CENTER LANE USE A DOUBLE LEFT LANE CLOSURE AS SHOWN ON SHEET TMP-4.

WHEN CONSTRUCTING THE WENDOVER AVE. WESTBOUND OUTSIDE LANE AND HALF OF THE CENTER LANE, USE A DOUBLE RIGHT LANE CLOSURE AS SHOWN ON SHEETS TMP-4A.

DURING HYDRO-DEMOLITION OPERATIONS, OR WHEN THERE MAY BE FALLING DEBRIS, USE LAW ENFORCEMENT WITH OR WITHOUT FLAGGERS TO DIRECT TRAFFIC ON S. HOLDEN RD. BELOW THE BRIDGE.

BRIDGE NO. 136

DURING CONSTRUCTION OF THE WENDOVER AVE. EASTBOUND OUTSIDE LANE AND HALF OF THE CENTER LANE, USE A DOUBLE RIGHT LANE CLOSURE AS SHOWN ON SHEET TMP-5.

DURING CONSTRUCTION OF THE WENDOVER AVE. EASTBOUND INSIDE LANE AND HALF OF THE CENTER LANE, USE A DOUBLE LEFT LANE CLOSURE AS SHOWN ON SHEET TMP-5A.

DURING CONSTRUCTION OF THE WENDOVER AVE. WESTBOUND INSIDE LANE AND HALF OF THE OUTSIDE LANE, USE A SINGLE LEFT LANE CLOSURE WITH A SHIFT TO THE OUTSIDE SHOULDER AS SHOWN ON SHEET TMP-5B. TRAFFIC WILL BE USING THE EXISTING OUTSIDE SHOULDER.

DURING CONSTRUCTION OF THE WENDOVER AVE. WESTBOUND HALF OF THE OUTSIDE LANE AND SHOULDER, USE A SINGLE RIGHT LANE CLOSURE AS SHOWN ON SHEET TMP-5C.

DURING HYDRO-DEMOLITION OPERATIONS, OR WHEN THERE MAY BE FALLING DEBRIS, USE LAW ENFORCEMENT WITH OR WITHOUT FLAGGERS TO DIRECT TRAFFIC ON WEST MARKET ST. BELOW THE BRIDGE.

BRIDGE NO. 470

DURING CONSTRUCTION OF THE WENDOVER AVE. WESTBOUND OUTSIDE LANE AND HALF OF THE CENTER LANE, USE A SINGLE RIGHT LANE CLOSURE AS SHOWN ON SHEETS TMP-6.

DURING CONSTRUCTION OF THE WENDOVER AVE. WESTBOUND INSIDE LANE AND HALF OF THE CENTER LANE, USE A SINGLE LEFT LANE CLOSURE WITH A SHIFT AND CLOSE THE ENTRANCE RAMP FROM GREEN VALLEY RD. AS SHOWN ON SHEETS TMP-7, 7A.

DURING CONSTRUCTION OF THE WENDOVER AVE. EASTBOUND INSIDE LANE AND HALF OF THE CENTER LANE, USE A DOUBLE LEFT LANE CLOSURE AND EXIT ALL TRAFFIC ONTO THE RAMP PRIOR TO THE BRIDGE. DETOUR TRAFFIC VIA THE LINDELL RD. EXIT AND ENTRANCE RAMPS AS SHOWN ON SHEETS TMP-8, 8A.

DURING CONSTRUCTION OF THE WENDOVER AVE. EASTBOUND OUTSIDE LANE AND HALF OF THE CENTER LANE, USE A SINGLE RIGHT LANE CLOSURE AND INSTALL DETOUR SIGNS AND CLOSE THE ENTRANCE RAMP ONTO THE BRIDGE FROM N. LINDELL RD. AS SHOWN ON SHEETS TMP-9 AND 9A.

DURING HYDRO-DEMOLITION OPERATIONS, OR WHEN THERE MAY BE FALLING DEBRIS, USE LAW ENFORCEMENT WITH OR WITHOUT FLAGGERS TO DIRECT TRAFFIC ON FRIENDLY AVE. BELOW THE BRIDGE.

BRIDGE NO. 217

DURING CONSTRUCTION OF THE WENDOVER AVE. EASTBOUND OUTSIDE LANE AND HALF OF THE CENTER LANE, USE A DOUBLE RIGHT LANE CLOSURE AS SHOWN ON SHEET TMP-10, TMP-10A.

DURING CONSTRUCTION OF THE WENDOVER AVE. EASTBOUND INSIDE LANE AND HALF OF THE CENTER LANE, USE A DOUBLE LEFT LANE CLOSURE AS SHOWN ON SHEET TMP-11, TMP-11A.

DURING CONSTRUCTION OF THE WENDOVER AVE. WESTBOUND OUTSIDE LANE AND HALF OF THE CENTER LANE, USE A DOUBLE RIGHT LANE CLOSURE AND CLOSE VINE ST. AS SHOWN ON SHEET TMP-12,12A.

DURING CONSTRUCTION OF THE WENDOVER AVE. WESTBOUND INSIDE LANE AND HALF OF THE CENTER LANE, USE A DOUBLE LEFT LANE CLOSURE AS SHOWN ON SHEET TMP-13, TMP-13A.

DURING HYDRO-DEMOLITION OPERATIONS, OR WHEN THERE MAY BE FALLING DEBRIS, USE LAW ENFORCEMENT WITH OR WITHOUT FLAGGERS TO DIRECT TRAFFIC ON YANCYVILLE ST. BELOW THE BRIDGE.

BRIDGE NO. 259

DURING CONSTRUCTION OF THE WENDOVER AVE. EASTBOUND OUTSIDE LANE AND HALF OF THE CENTER LANE, USE A DOUBLE RIGHT LANE CLOSURE AS SHOWN ON SHEET TMP-10, TMP-10A.

DURING CONSTRUCTION OF THE WENDOVER AVE. EASTBOUND INSIDE LANE AND HALF OF THE CENTER LANE, USE A DOUBLE LEFT LANE CLOSURE AS SHOWN ON SHEET TMP-11, TMP-11A.

DURING CONSTRUCTION OF THE WENDOVER AVE. WESTBOUND OUTSIDE LANE AND HALF OF THE CENTER LANE, USE A DOUBLE RIGHT LANE CLOSURE AND CLOSE VINE ST. AS SHOWN ON SHEET TMP-12,12A.

DURING CONSTRUCTION OF THE WENDOVER AVE. WESTBOUND INSIDE LANE AND HALF OF THE CENTER LANE, USE A DOUBLE LEFT LANE CLOSURE AS SHOWN ON SHEET TMP-13, TMP-13A.

DURING HYDRO-DEMOLITION OPERATIONS, OR WHEN THERE MAY BE FALLING DEBRIS, COORDINATE WITH RAILROAD BELOW THE BRIDGE.

BRIDGE NO. 274

DURING CONSTRUCTION OF THE WENDOVER AVE. EASTBOUND INSIDE LANE AND HALF OF THE CENTER LANE, USE A DOUBLE LEFT LANE CLOSURE AS SHOWN ON SHEET TMP-14, TMP-14A.

DURING CONSTRUCTION OF THE WENDOVER AVE. EASTBOUND OUTSIDE LANE AND HALF OF THE CENTER LANE, USE A DOUBLE RIGHT LANE CLOSURE AS SHOWN ON SHEET TMP-15, TMP-15A.

DURING CONSTRUCTION OF THE WENDOVER AVE. WESTBOUND INSIDE LANE AND HALF OF THE CENTER LANE, USE A DOUBLE LEFT LANE CLOSURE AS SHOWN ON SHEET TMP-16, TMP-16A.

DURING CONSTRUCTION OF THE WENDOVER AVE. WESTBOUND OUTSIDE LANE AND HALF OF THE CENTER LANE, USE A DOUBLE RIGHT LANE CLOSURE AS SHOWN ON SHEET TMP-17, TMP-17A.

DURING HYDRO-DEMOLITION OPERATIONS, OR WHEN THERE MAY BE FALLING DEBRIS, USE LAW ENFORCEMENT WITH OR WITHOUT FLAGGERS TO DIRECT TRAFFIC ON NORTH ELM ST. BELOW THE BRIDGE.

BRIDGE NO. 287

DURING CONSTRUCTION OF THE WENDOVER AVE. EASTBOUND INSIDE LANE AND HALF OF THE CENTER LANE, USE A DOUBLE LEFT LANE CLOSURE AS SHOWN ON SHEET TMP-18,18A.

DURING CONSTRUCTION OF THE WENDOVER AVE. EASTBOUND OUTSIDE LANE AND HALF OF THE CENTER LANE, USE A DOUBLE RIGHT LANE CLOSURE AS SHOWN ON SHEET TMP-19,19A.

DURING CONSTRUCTION OF THE WENDOVER AVE. WESTBOUND OUTSIDE LANE AND HALF OF THE CENTER LANE, USE A DOUBLE RIGHT LANE CLOSURE AS SHOWN ON SHEET TMP-20,20A.

DURING CONSTRUCTION OF THE WENDOVER AVE. WESTBOUND INSIDE LANE AND HALF OF THE CENTER LANE, USE A DOUBLE LEFT LANE CLOSURE AS SHOWN ON SHEET TMP-21,21A.

Stantec
Stantec Consulting Services Inc.
801 Jones Franklin Road
Suite 300
Raleigh, NC 27606
Tel. (919) 851-6866
Fax. (919) 851-7024
www.stantec.com
License No. F-0672

APPROVED:_____ DATE:_____

SEAL 23449 ENGINEER BETSY L. WATSON NORTH CAROLINA PROFESSIONAL 7/11/11

DIVISION OF HIGHWAYS STATE OF NORTH CAROLINA DEPARTMENT OF TRANSPORTATION WORK ZONE TRAFFIC CONTROL

TRAFFIC CONTROL PHASING

11/11/2011
U:\Traffic\TrafficControl\TCP\BP-5300R Guilford\Plan Sheets\BP5300R_TC_TMP03.dgn
gkaragaeorge

PROJ. REFERENCE NO.	SHEET NO.
BP-5300R	TMP-3A

STATE OF NORTH CAROLINA
DEPT. OF TRANSPORTATION
DIVISION OF HIGHWAYS
RALEIGH, N.C.

1-12

ENGLISH STANDARD DRAWING FOR

WORK ZONE ADVANCE WARNING SIGNS FOR FACILITIES ≤ 55 MPH

SHEET 2 OF 3

1101.01

DETAIL A

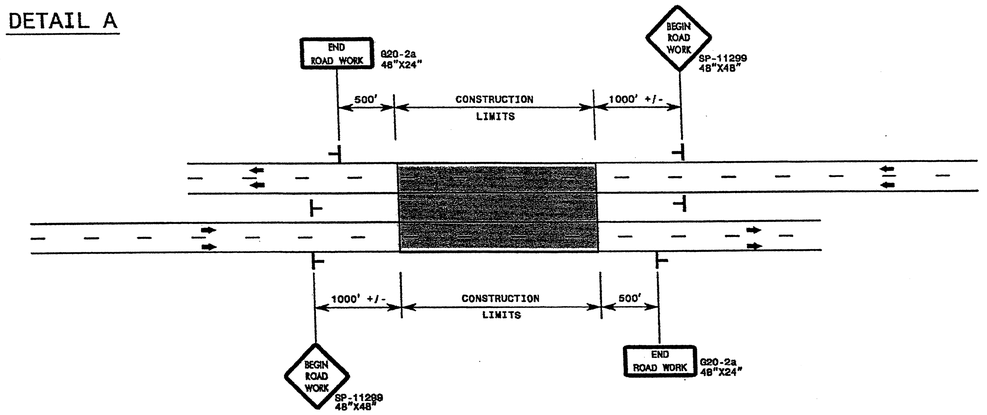

GENERAL NOTES

1- USE FLUORESCENT ORANGE SHEETING (TYPE VII OR HIGHER) ON ALL ADVANCED WORK ZONE SIGNS.

2- DO NOT INSTALL ADVANCE WARNING SIGNS MORE THAN 3 DAYS PRIOR TO BEGINNING OF WORK UNLESS COVERED.

3- SIGNS SHOWN ARE REQUIRED FOR WORK ZONES THAT WILL REMAIN IN EFFECT OVERNIGHT. FOR SHORT-TERM DAILY MAINTENANCE TYPE OPERATIONS, THIS SIGNING APPLICATION IS OPTIONAL; MAY USE ONLY APPLICABLE ROADWAY STANDARD DRAWINGS INSTEAD. HOWEVER, IF THIS SIGNING APPLICATION IS USED, SIGNS MAY BE PORTABLE MOUNTED.

4- ALL SIGN SPACING DIMENSIONS ARE APPROXIMATE, FIELD ADJUST AS NECESSARY OR AS DIRECTED.

5- USE 3LB STEEL U-CHANNEL POST OR 4" X 4" WOOD POST FOR ALL WORK ZONE SIGNS. 3LB STEEL U-CHANNEL POSTS MUST MEET THE REQUIREMENTS OF STANDARD SPECIFICATION SECTION 1094-1(B), MAY BE GALVANIZED STEEL, OR MAY BE PAINTED GREEN BY THE POST MANUFACTURER. SQUARE STEEL TUBING POSTS HAVING EQUIVALENT STRENGTH OF THE 3 LB STEEL U-CHANNEL POST ARE ALSO ACCEPTABLE FOR USE. ERECT SIGNS PER ROADWAY STANDARD DRAWING 1110.01. PAYMENT FOR WOOD POSTS, 3LB STEEL U-CHANNEL AND SQUARE STEEL TUBING POSTS WITH SIGNS WILL BE MADE ACCORDING TO STANDARD SPECIFICATION "WORK ZONE SIGNS" SECTION 1110.

6- WHEN NECESSARY, USE SPLICING IN ACCORDANCE WITH ROADWAY STANDARD DRAWING NO. 1110.01.

7- DO NOT BACK BRACE SIGN SUPPORTS.

8- TWO-WAY UNDIVIDED ADVANCE WARNING SIGN CONFIGURATION MAY BE USED ON URBAN MULTI-LANE FACILITIES WHERE CONDITIONS LIMIT THE USE OF DUAL MOUNTED SIGNS AS DETERMINED BY THE ENGINEER.

LEGEND

⊢ STATIONARY SIGN

⬅ DIRECTION OF TRAFFIC FLOW

DETAIL B

EXIT RAMPS

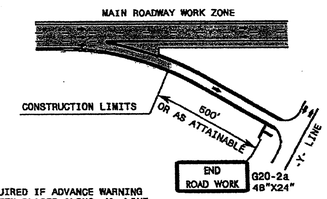

NOTE: SIGN NOT REQUIRED IF ADVANCE WARNING SIGNS HAVE BEEN PLACED ALONG -Y- LINE THAT RAMP INTERSECTS. IF CONSTRUCTION LIMITS ARE AT END OF RAMP, PLACE SIGN AT END OF RAMP.

DETAIL C

ENTRANCE RAMPS

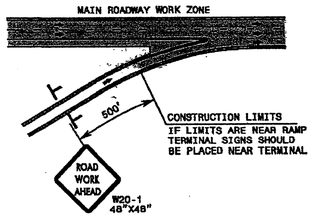

DETAIL D

-Y- LINES

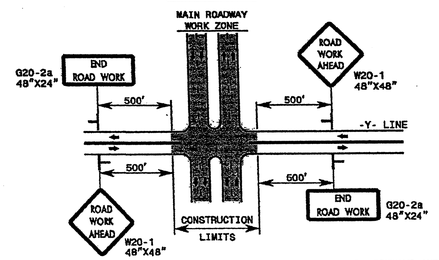

DUAL MOUNT SIGNS ON DIVIDED HIGHWAYS AND INCREASE SIGN SPACING TO 1000'+/-.

STATE OF NORTH CAROLINA
DEPT. OF TRANSPORTATION
DIVISION OF HIGHWAYS
RALEIGH, N.C.

1-12

ENGLISH STANDARD DRAWING FOR

WORK ZONE ADVANCE WARNING SIGNS FOR FACILITIES ≤ 55 MPH VI

SHEET 2 OF 3

1101.01

Stantec
Stantec Consulting Services Inc.
801 Jones Franklin Road
Suite 300
Raleigh, NC 27606
Tel. (919) 851-6866
Fax. (919) 851-7024
www.stantec.com
License No. F-0672

APPROVED: _____ DATE: _____

SEAL 29449 ENGINEER BETSY L. WATSON — 11/14/11

DIVISION OF HIGHWAYS · STATE OF NORTH CAROLINA · DEPARTMENT OF TRANSPORTATION · WORK ZONE TRAFFIC CONTROL

WORK ZONE
ADVANCE WARNING SIGNS

11/11/2011
U:\Traffic\TrafficControl\TCP\BP-5300R Guilford\Plan Sheets\BP5300R_TC_TMP03A.dgn
gkaragaorge

PROJ. REFERENCE NO.	SHEET NO.
BP-5300R	TMP-4

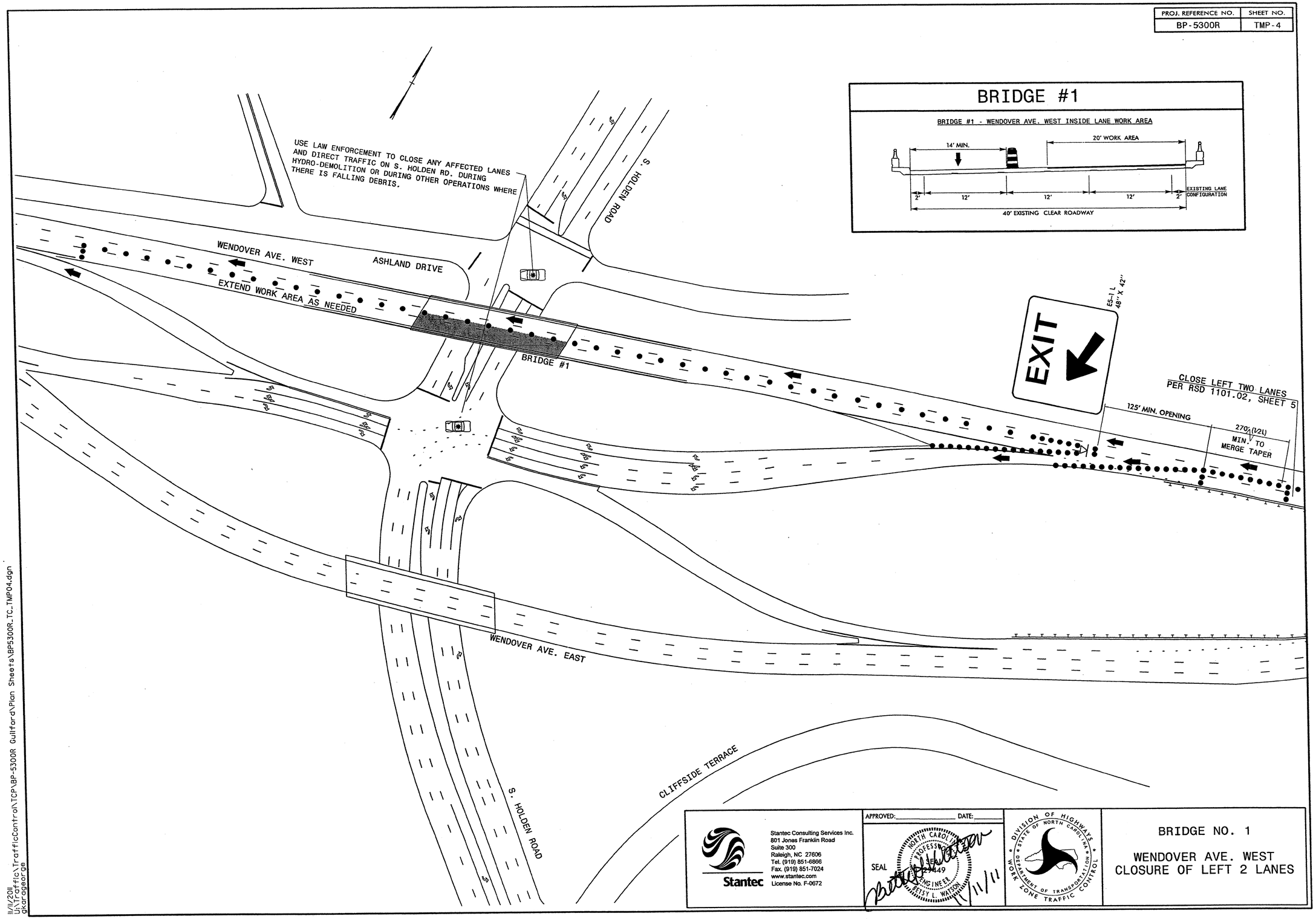

Stantec
Stantec Consulting Services Inc.
801 Jones Franklin Road
Suite 300
Raleigh, NC 27606
Tel. (919) 851-6866
Fax. (919) 851-7024
www.stantec.com
License No. F-0672

APPROVED: _____ DATE: _____

SEAL

NORTH CAROLINA PROFESSIONAL SEAL 29449 ENGINEER BETSY L. WATSON

11/11/11

DIVISION OF HIGHWAYS · STATE OF NORTH CAROLINA · DEPARTMENT OF TRANSPORTATION · WORK ZONE TRAFFIC CONTROL

BRIDGE NO. 1

WENDOVER AVE. WEST
CLOSURE OF LEFT 2 LANES

11/11/2011
U:\Traffic\TrafficControl\TCP\BP-5300R Guilford\Plan Sheets\BP5300R_TC_TMP04.dgn
gkarageorge

PROJ. REFERENCE NO.	SHEET NO.
BP-5300R	TMP-4A

USE LAW ENFORCEMENT TO CLOSE ANY AFFECTED LANES AND DIRECT TRAFFIC ON S. HOLDEN RD. DURING HYDRO-DEMOLITION OR DURING OTHER OPERATIONS WHERE THERE IS FALLING DEBRIS.

WENDOVER AVE. WEST

EXTEND WORK AREA AS NEEDED

ASHLAND DRIVE

S. HOLDEN ROAD

BRIDGE #1

CLOSE RIGHT TWO LANES PRIOR TO RAMP
PER RSD 1101.02, SHEET 5

270'(V2L) MIN. V TO MERGE TAPER

WENDOVER AVE. EAST

S. HOLDEN ROAD

CLIFFSIDE TERRACE

BRIDGE #1

BRIDGE #1 - WENDOVER AVE. WEST OUTSIDE LANE WORK AREA

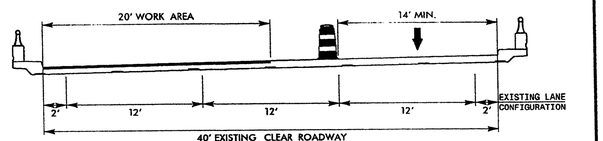

Stantec

Stantec Consulting Services Inc.
801 Jones Franklin Road
Suite 300
Raleigh, NC 27606
Tel. (919) 851-6866
Fax. (919) 851-7024
www.stantec.com
License No. F-0672

APPROVED: _____ DATE: _____

SEAL

NORTH CAROLINA PROFESSIONAL ENGINEER SEAL 24499 BETSY L. WATSON

11/11/11

DIVISION OF HIGHWAYS • STATE OF NORTH CAROLINA • DEPARTMENT OF TRANSPORTATION • WORK ZONE TRAFFIC CONTROL

BRIDGE NO. 1

WENDOVER AVE. WEST
CLOSURE OF RIGHT 2 LANES

11/11/2011
U:\Traffic\TrafficControl\TCP\BP-5300R Guilford\Plan Sheets\BP5300R_TC_TMP04A.dgn
gkarageorge

PROJ. REFERENCE NO.	SHEET NO.
BP-5300R	TMP-5

BRIDGE #136

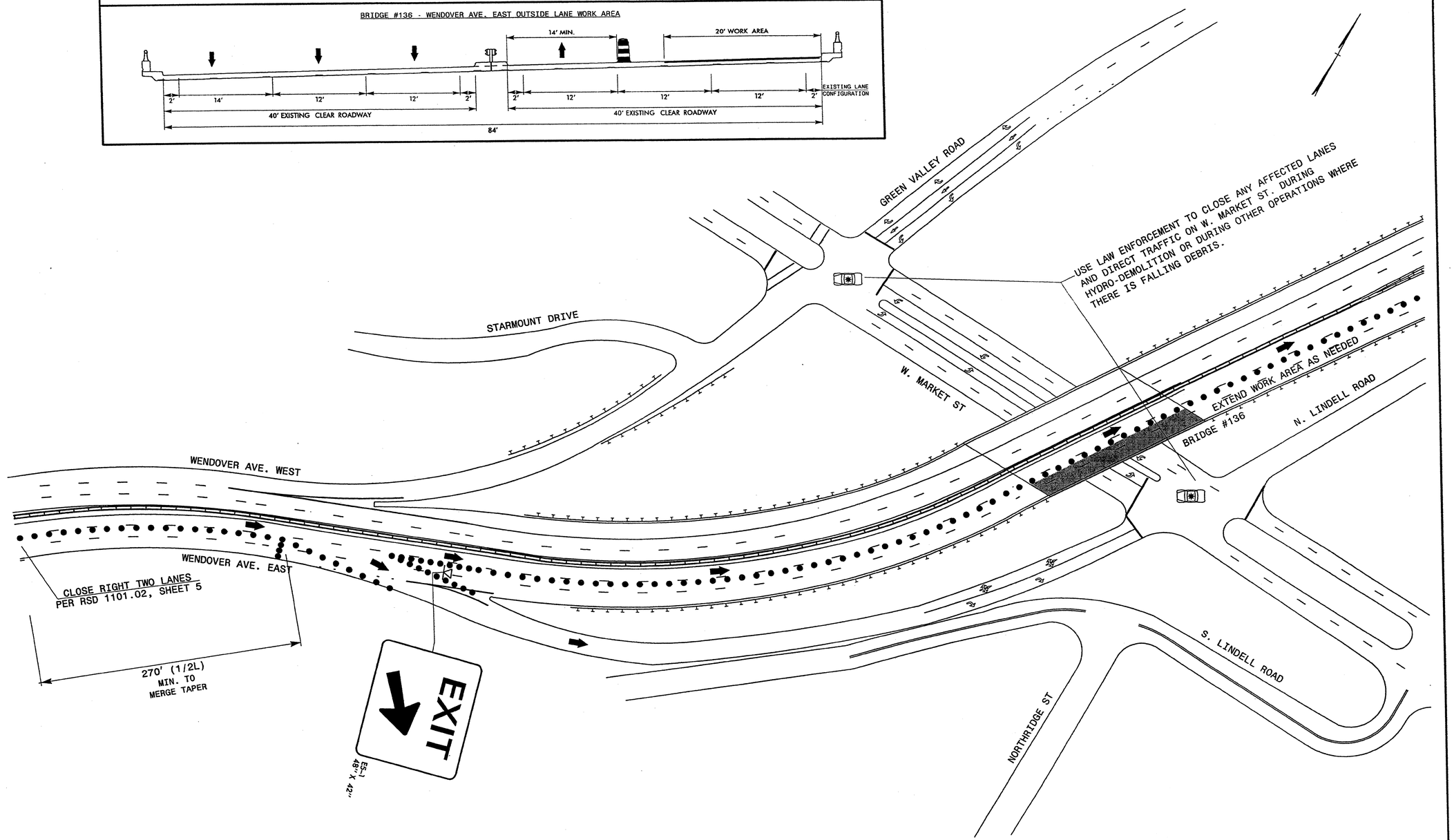

Stantec

Stantec Consulting Services Inc.
801 Jones Franklin Road
Suite 300
Raleigh, NC 27606
Tel. (919) 851-6866
Fax. (919) 851-7024
www.stantec.com
License No. F-0672

APPROVED: _____ DATE: _____

SEAL

NORTH CAROLINA PROFESSIONAL SEAL ENGINEER BETSY L. WATSON

11/11/11

DIVISION OF HIGHWAYS · STATE OF NORTH CAROLINA · DEPARTMENT OF TRANSPORTATION · WORK ZONE TRAFFIC CONTROL

BRIDGE NO. 136

WENDOVER AVE. EAST
CLOSURE OF RIGHT 2 LANES

11/11/2011
U:\Traffic\TrafficControl\TCP\BP-5300R Guilford\Plan Sheets\BP5300R_TC_TMP05.dgn
gkarageorge

PROJ. REFERENCE NO.	SHEET NO.
BP-5300R	TMP-5A

BRIDGE #136

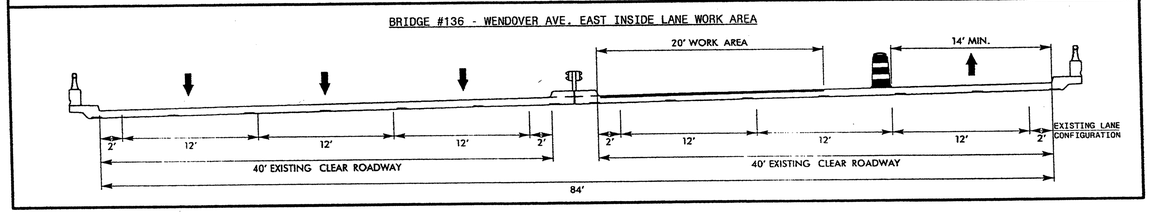

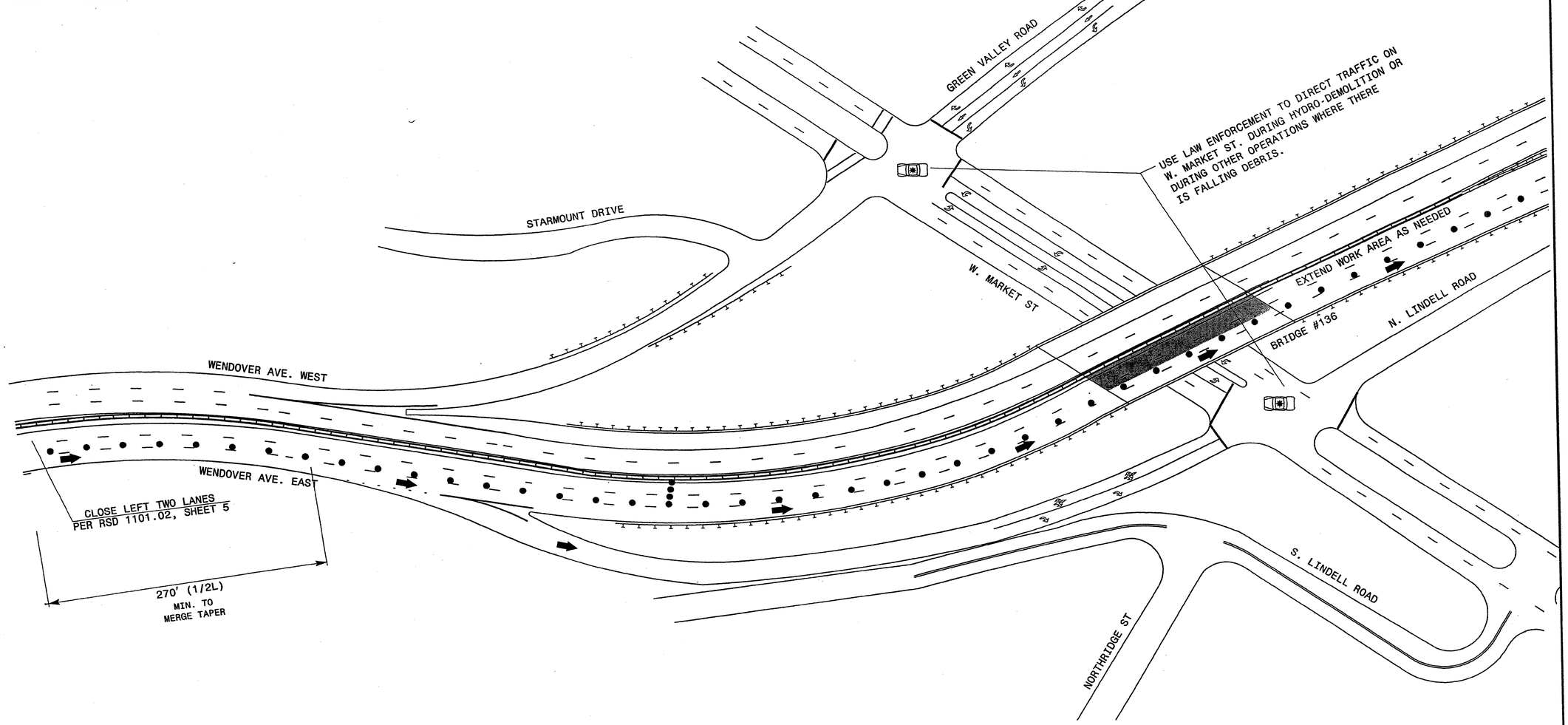

Stantec

Stantec Consulting Services Inc.
801 Jones Franklin Road
Suite 300
Raleigh, NC 27606
Tel. (919) 851-6866
Fax. (919) 851-7024
www.stantec.com
License No. F-0672

APPROVED: _____ DATE: _____

SEAL

NORTH CAROLINA PROFESSIONAL ENGINEER SEAL 29445 JESSY L. WATSON

11/11/11

DIVISION OF HIGHWAYS · STATE OF NORTH CAROLINA · DEPARTMENT OF TRANSPORTATION · WORK ZONE TRAFFIC CONTROL

BRIDGE NO. 136

WENDOVER AVE. EAST
CLOSURE OF LEFT 2 LANES

11/11/2011
U:\Traffic\TrafficControl\TCP\BP-5300R Guilford\Plan Sheets\BP5300R_TC_TMP05A.dgn
gkarageorge

PROJ. REFERENCE NO.	SHEET NO.
BP-5300R	TMP-5B

BRIDGE #136

BRIDGE #136 - WENDOVER AVE. WEST INSIDE LANE WORK AREA

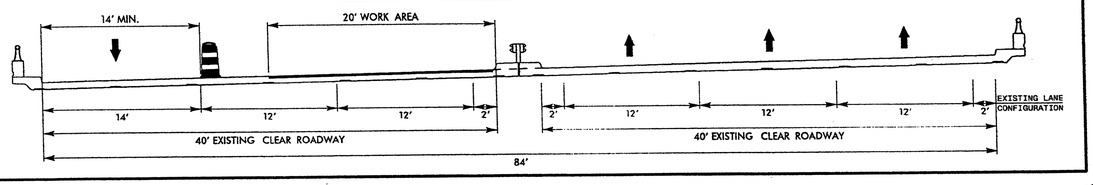

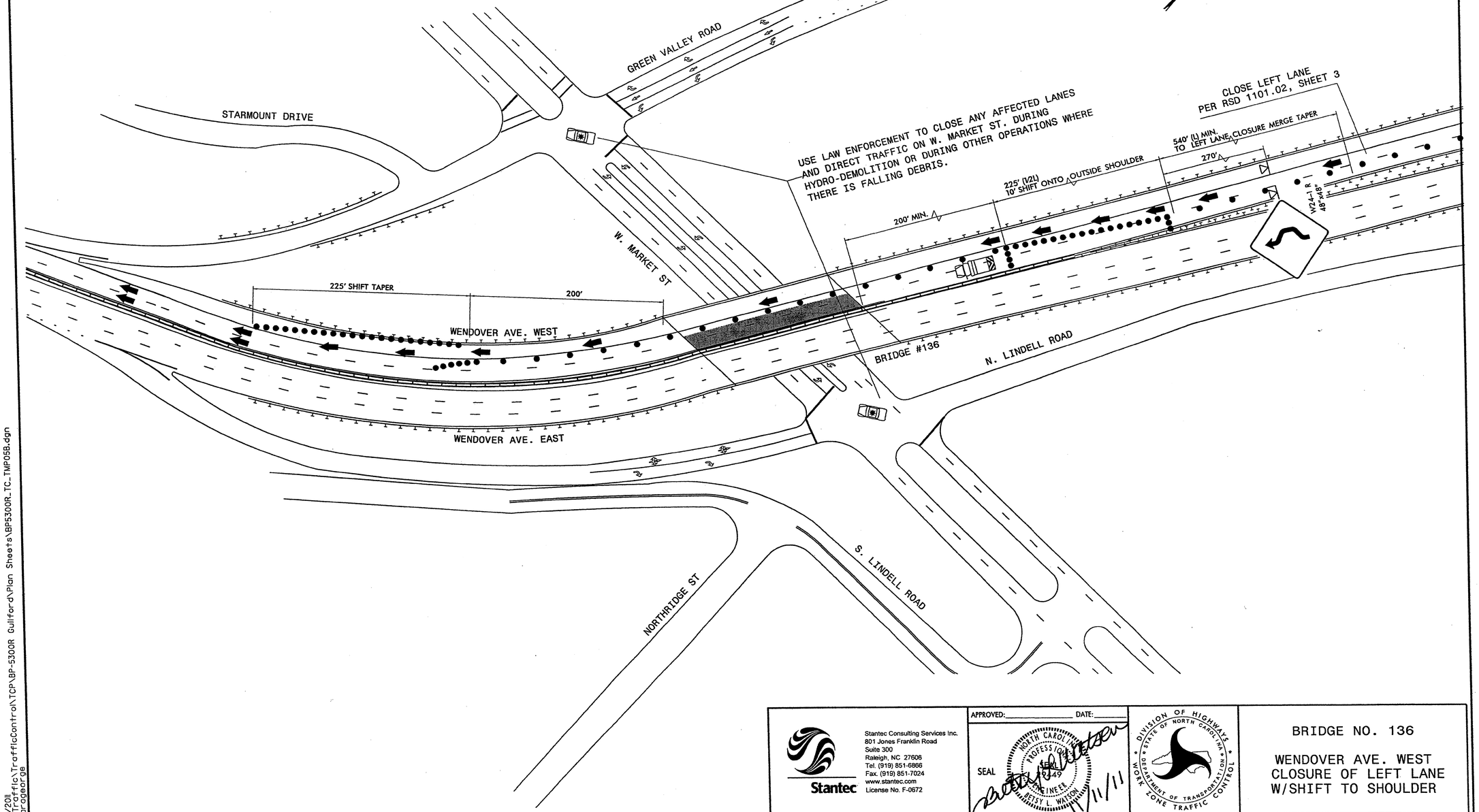

Stantec Consulting Services Inc.
801 Jones Franklin Road
Suite 300
Raleigh, NC 27606
Tel. (919) 851-6866
Fax. (919) 851-7024
www.stantec.com
License No. F-0672

APPROVED:_____ DATE:_____

SEAL

NORTH CAROLINA PROFESSIONAL SEAL 19349 ENGINEER BETSY L. WATSON

11/11/11

DIVISION OF HIGHWAYS * STATE OF NORTH CAROLINA * DEPARTMENT OF TRANSPORTATION * WORK ZONE TRAFFIC CONTROL

BRIDGE NO. 136

WENDOVER AVE. WEST
CLOSURE OF LEFT LANE
W/SHIFT TO SHOULDER

11/11/2011
U:\Traffic\TrafficControl\TCP\BP-5300R Guilford\Plan Sheets\BP5300R_TC_TMP05B.dgn
gkarageorge

PROJ. REFERENCE NO.	SHEET NO.
BP-5300R	TMP-5C

BRIDGE #136

BRIDGE #136 - WENDOVER AVE. WEST OUTSIDE LANE WORK AREA

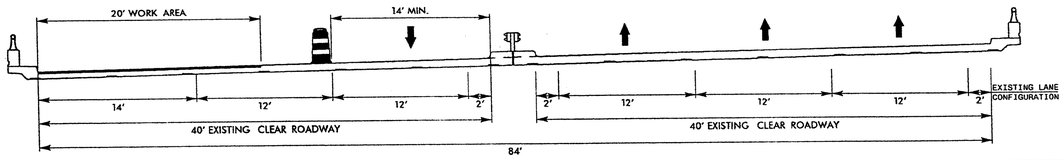

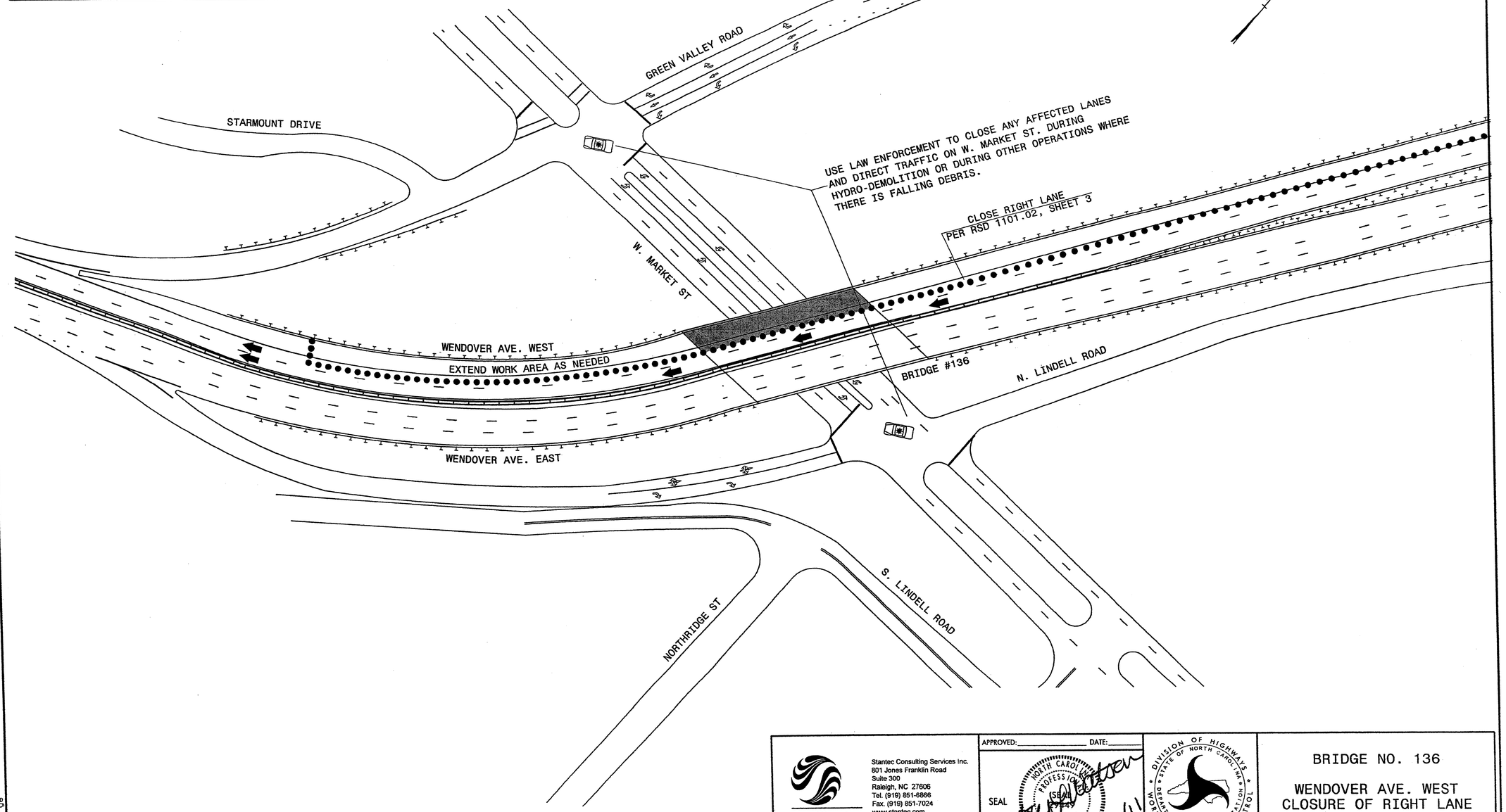

Stantec

Stantec Consulting Services Inc.
801 Jones Franklin Road
Suite 300
Raleigh, NC 27606
Tel. (919) 851-6866
Fax. (919) 851-7024
www.stantec.com
License No. F-0672

APPROVED:_____ DATE:_____

SEAL

NORTH CAROLINA PROFESSIONAL ENGINEER SEAL BETSY L. WATSON

11/11/11

DIVISION OF HIGHWAYS
STATE OF NORTH CAROLINA
DEPARTMENT OF TRANSPORTATION
WORK ZONE TRAFFIC CONTROL

BRIDGE NO. 136

WENDOVER AVE. WEST
CLOSURE OF RIGHT LANE

11/11/2011
U:\Traffic\TrafficControl\TCP\BP-5300R Guilford\Plan Sheets\BP5300R_TC_TMP05C.dgn
gkarageorge

PROJ. REFERENCE NO.	SHEET NO.
BP-5300R	TMP-6

BRIDGE #470

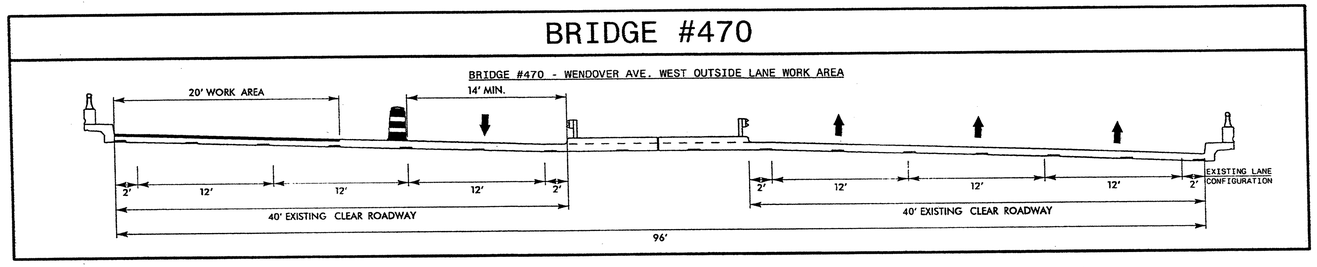

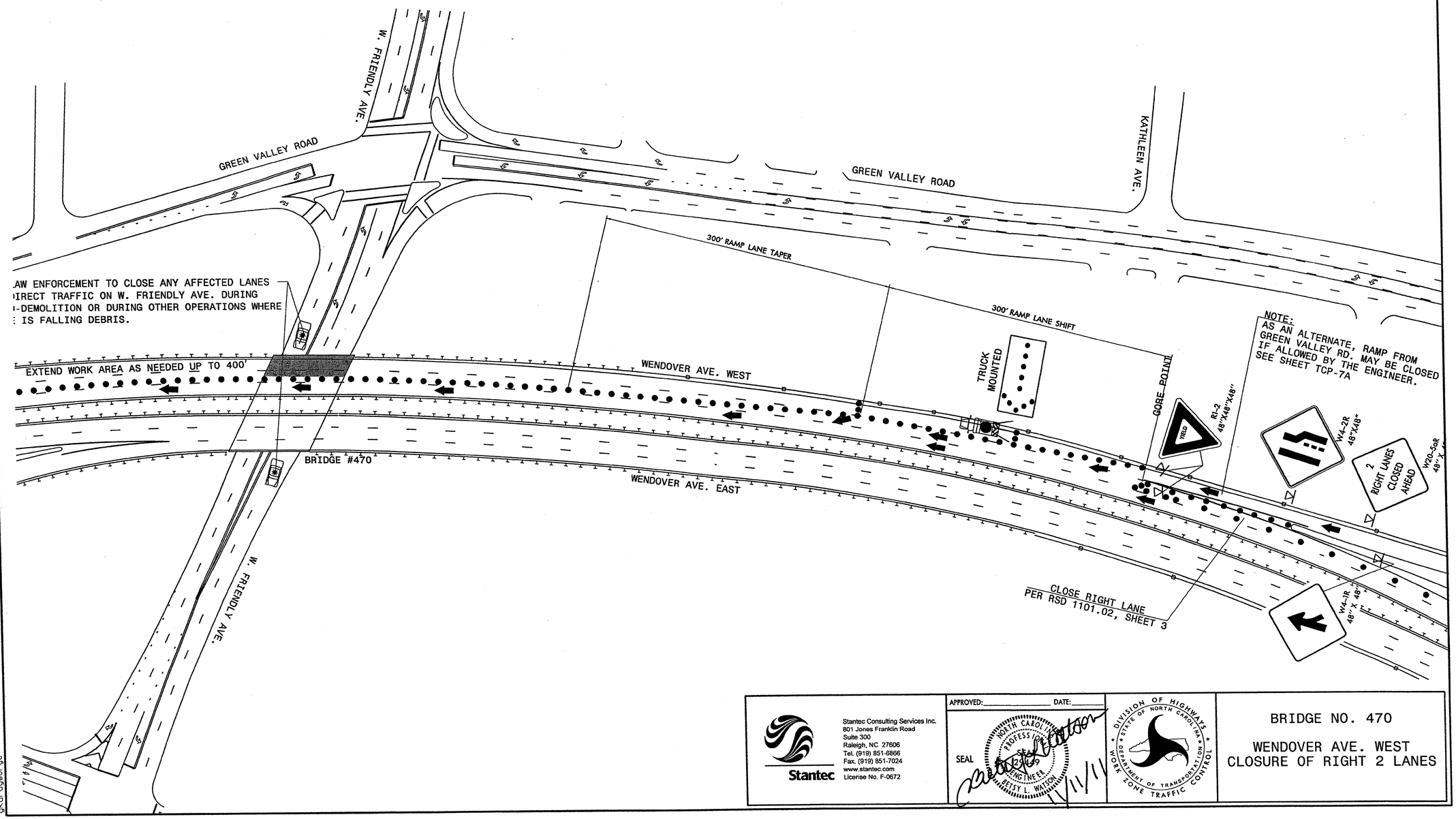

Stantec
Stantec Consulting Services Inc.
801 Jones Franklin Road
Suite 300
Raleigh, NC 27606
Tel. (919) 851-6866
Fax. (919) 851-7024
www.stantec.com
License No. F-0672

APPROVED:_____ DATE:_____

SEAL

NORTH CAROLINA PROFESSIONAL ENGINEER BETSY L. WATSON

11/11/11

DIVISION OF HIGHWAYS · STATE OF NORTH CAROLINA · DEPARTMENT OF TRANSPORTATION · WORK ZONE TRAFFIC CONTROL

BRIDGE NO. 470

WENDOVER AVE. WEST
CLOSURE OF RIGHT 2 LANES

11/11/2011
U:\Traffic\TrafficControl\TCP\BP-5300R Guilford\Plan Sheets\BP5300R_TC_TMP06.dgn
gkarageorge

PROJ. REFERENCE NO.	SHEET NO.
BP-5300R	TMP-7

BRIDGE #470

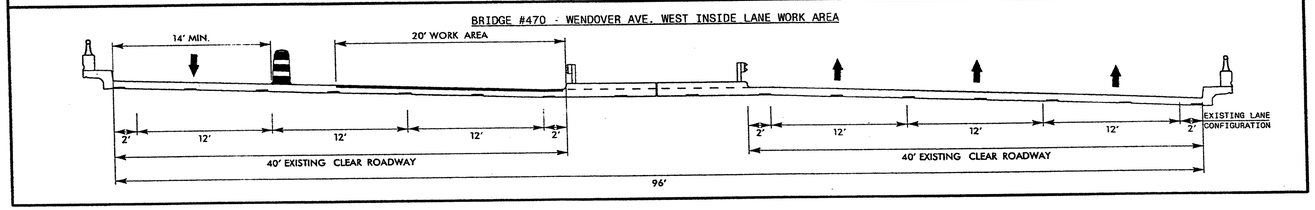

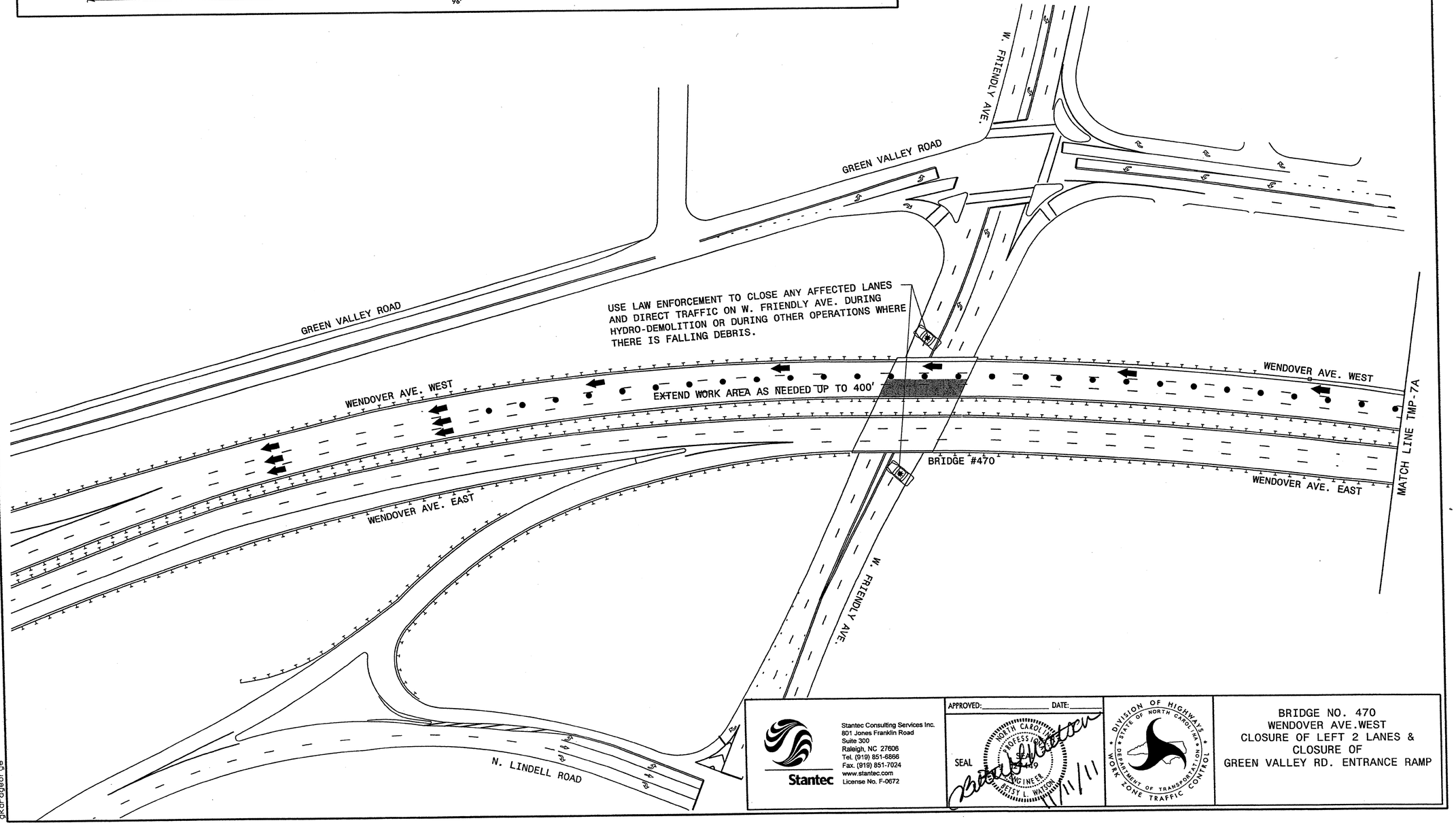

Stantec
Stantec Consulting Services Inc.
801 Jones Franklin Road
Suite 300
Raleigh, NC 27606
Tel. (919) 851-6866
Fax. (919) 851-7024
www.stantec.com
License No. F-0672

APPROVED: _____ DATE: _____

SEAL

NORTH CAROLINA PROFESSIONAL ENGINEER SEAL 24449 BETSY L. WATSON

11/11/11

DIVISION OF HIGHWAYS · STATE OF NORTH CAROLINA · DEPARTMENT OF TRANSPORTATION · WORK ZONE TRAFFIC CONTROL

BRIDGE NO. 470
WENDOVER AVE.WEST
CLOSURE OF LEFT 2 LANES &
CLOSURE OF
GREEN VALLEY RD. ENTRANCE RAMP

11/11/2011
U:\Traffic\TrafficControl\TCP\BP-5300R Guilford\Plan Sheets\BP5300R_TC_TMP07.dgn
gkarageorge

PROJ. REFERENCE NO.	SHEET NO.
BP-5300R	TMP-7A

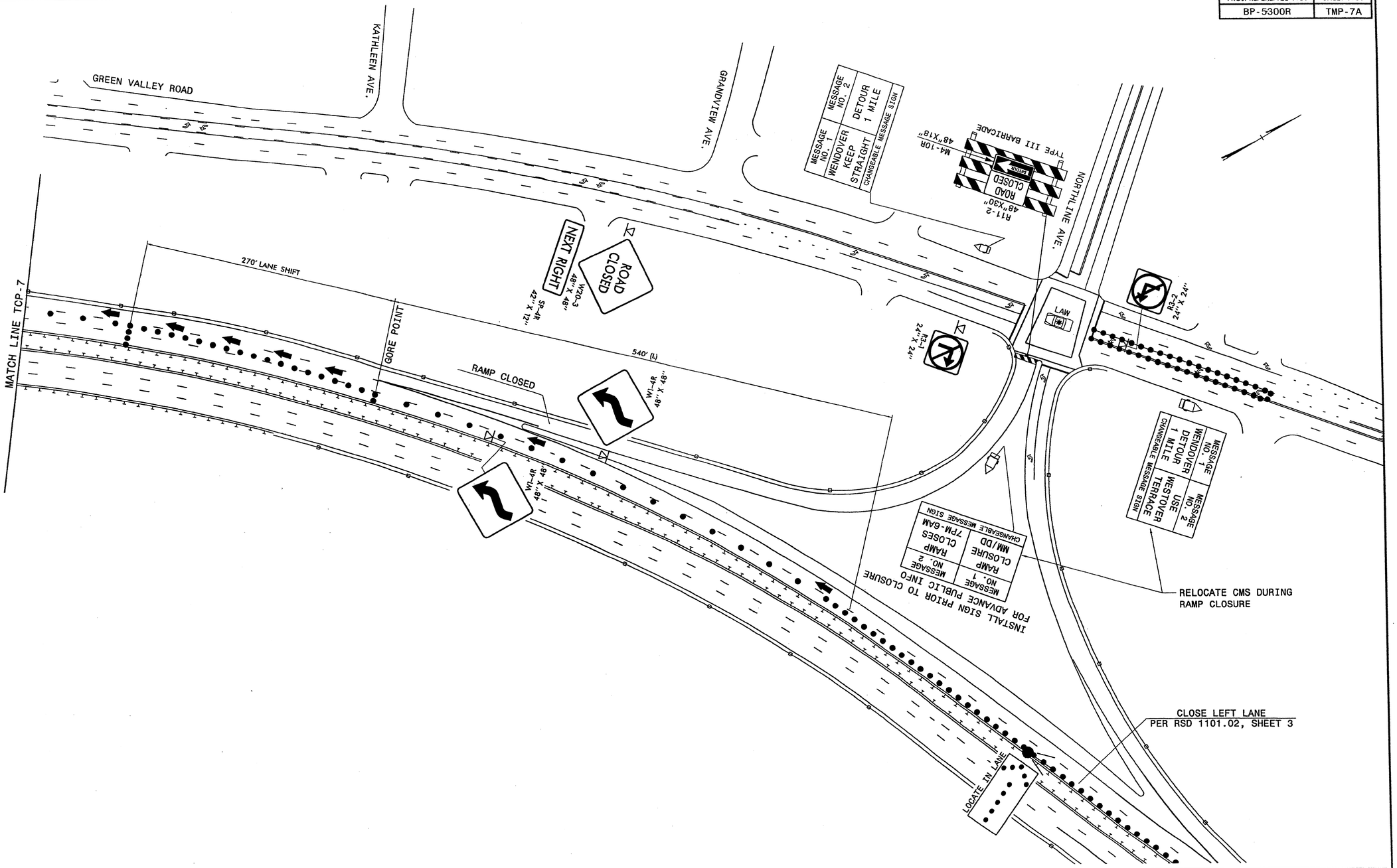

Stantec

Stantec Consulting Services Inc.
801 Jones Franklin Road
Suite 300
Raleigh, NC 27606
Tel. (919) 851-6866
Fax. (919) 851-7024
www.stantec.com
License No. F-0672

APPROVED: _____ DATE: _____

SEAL 29449 — NORTH CAROLINA PROFESSIONAL ENGINEER — BETSY L. WATSON — 11/11/11

DIVISION OF HIGHWAYS — STATE OF NORTH CAROLINA — DEPARTMENT OF TRANSPORTATION — WORK ZONE TRAFFIC CONTROL

BRIDGE NO. 470
WENDOVER AVE.WEST
CLOSURE OF LEFT 2 LANES & CLOSURE OF GREEN VALLEY RD. ENTRANCE RAMP

11/11/2011
U:\Traffic\TrafficControl\TCP\BP-5300R Guilford\Plan Sheets\BP5300R_TC_TMP07A.dgn
gkaragageorge

PROJ. REFERENCE NO.	SHEET NO.
BP-5300R	TMP-8

AT MEDIAN GUARDRAIL LOCATIONS MOUNT WHERE POSSIBLE. USE STATIONARY OR PORTABLE SIGNS AS NEEDED.

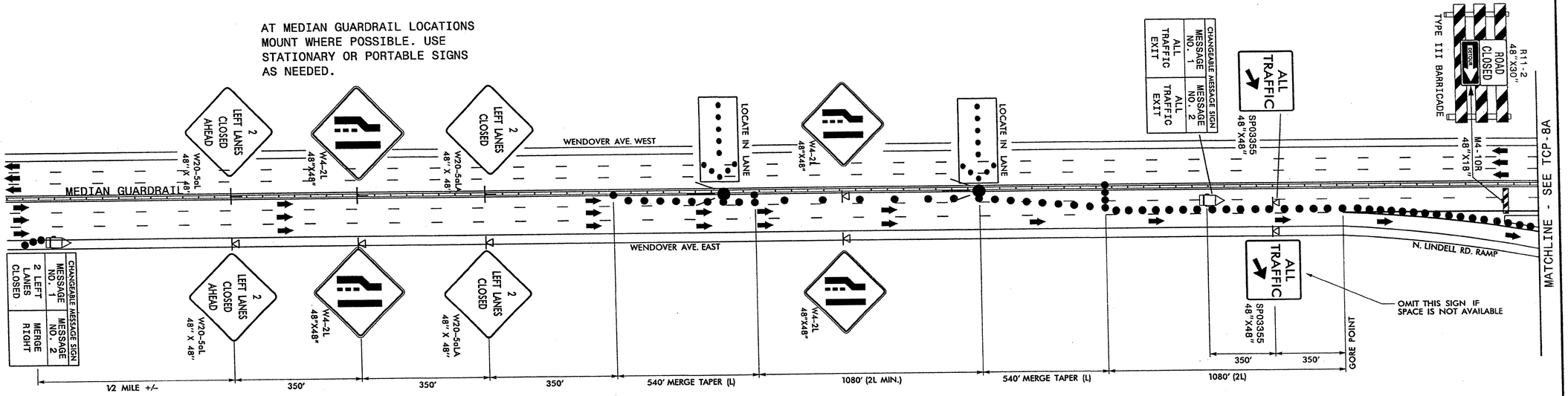

NOTES

1. INSTALL LANE CLOSURES WITH THE TRAFFIC FLOW, BEGINNING WITH DEVICES ON THE UPSTREAM SIDE OF TRAFFIC. REMOVE LANE CLOSURES AGAINST THE TRAFFIC FLOW, BEGINNING WITH DEVICES ON THE DOWNSTREAM SIDE OF TRAFFIC.

2. REMOVE LANE CLOSURE DEVICES FROM THE LANE WHEN WORK IS NOT BEING PERFORMED BEHIND THE LANE CLOSURE OR WHEN A LANE CLOSURE IS NO LONGER NEEDED OR AS DIRECTED BY THE ENGINEER.

3. PLACE ARROW PANELS ON THE ROADWAY SHOULDER. IF SHOULDERS DO NOT EXIST, PLACE ARROW PANELS WITHIN THE MERGE TAPER BEHIND THE CHANNELIZING DEVICES OF THE LANE CLOSURE. IF NEEDED, EXTEND LANE CLOSURES TO PROVIDE STOPPING SIGHT DISTANCE TO THE ARROW PANEL (REFER TO ROADWAY STANDARD DRAWING 1101.11 SHEET 2).

4. PLACE LANE CLOSURE DRUMS IN TAPERS AT A MAXIMUM SPACING EQUAL IN FEET TO THE POSTED SPEED LIMIT (MPH). ALONG BUFFER SPACES AND WORK AREAS SPACE DRUMS AT A MAXIMUM SPACING EQUAL IN FEET TO TWICE THE POSTED SPEED LIMIT (MPH). IN ALL CASES, CHANNELIZING DEVICES ARE TO BE SPACED IN SUCH A MANNER AS TO POSITIVELY ACHIEVE THE INTENDED VISUAL CHANNELIZATION. CHANNELIZING DEVICES SHOULD BE LATERALLY OFFSET 3 FT INSIDE THE CLOSED LANE AS ROOM PERMITS.

5. CHANGEABLE MESSAGE SIGN MESSAGES SHOWN ARE EXAMPLES. OTHER MESSAGES MAY BE USED AS CONDITIONS WARRANT. ALL MESSAGES AND LOCATIONS MUST BE APPROVED BY THE ENGINEER PRIOR TO INCORPORATING.

Stantec Consulting Services Inc.
801 Jones Franklin Road
Suite 300
Raleigh, NC 27606
Tel. (919) 851-6866
Fax. (919) 851-7024
www.stantec.com
License No. F-0672

APPROVED:_____ DATE:_____

SEAL 29449 PROFESSIONAL ENGINEER BETSY L. WATSON NORTH CAROLINA 11/1/11

DIVISION OF HIGHWAYS STATE OF NORTH CAROLINA DEPARTMENT OF TRANSPORTATION WORK ZONE TRAFFIC CONTROL

BRIDGE NO. 470

WENDOVER AVE. EAST
ALL TRAFFIC EXIT

11/1/2011
U:\Traffic\TrafficControl\TCP\BP-5300R Guilford\Plan Sheets\BP5300R_TC_TMP08.dgn
gkaragaorge

PROJ. REFERENCE NO.	SHEET NO.
BP-5300R	TMP-8A

BRIDGE #470

BRIDGE #470 - WENDOVER AVE. EAST INSIDE LANE WORK AREA

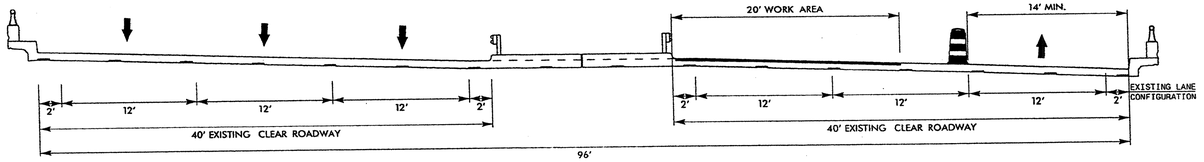

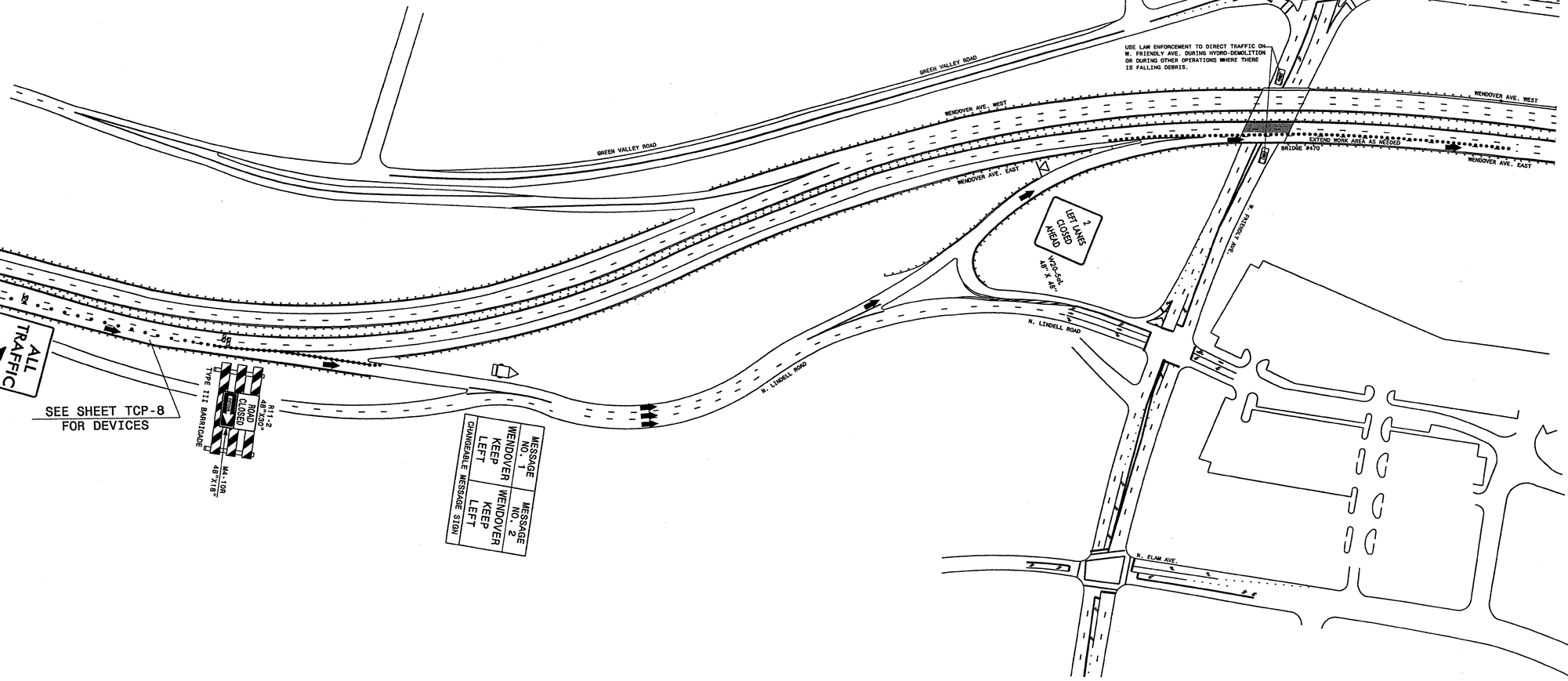

Stantec

Stantec Consulting Services Inc.
801 Jones Franklin Road
Suite 300
Raleigh, NC 27606
Tel. (919) 851-6866
Fax. (919) 851-7024
www.stantec.com
License No. F-0672

APPROVED: _____ DATE: _____

SEAL

NORTH CAROLINA PROFESSIONAL ENGINEER SEAL BETSY L. WATSON 11/11/11

DIVISION OF HIGHWAYS * STATE OF NORTH CAROLINA * DEPARTMENT OF TRANSPORTATION * WORK ZONE TRAFFIC CONTROL

BRIDGE NO. 470

WENDOVER AVE. EAST
ALL TRAFFIC EXIT

11/11/2011
U:\Traffic\TrafficControlTCP\BP-5300R Guilford\Plan Sheets\BP5300R_TC_TMP08A.dgn
gkardageorge

PROJ. REFERENCE NO.	SHEET NO.
BP-5300R	TMP-9

BRIDGE #470

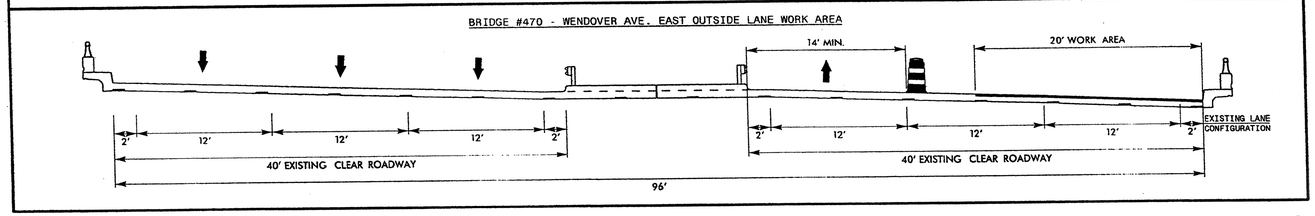

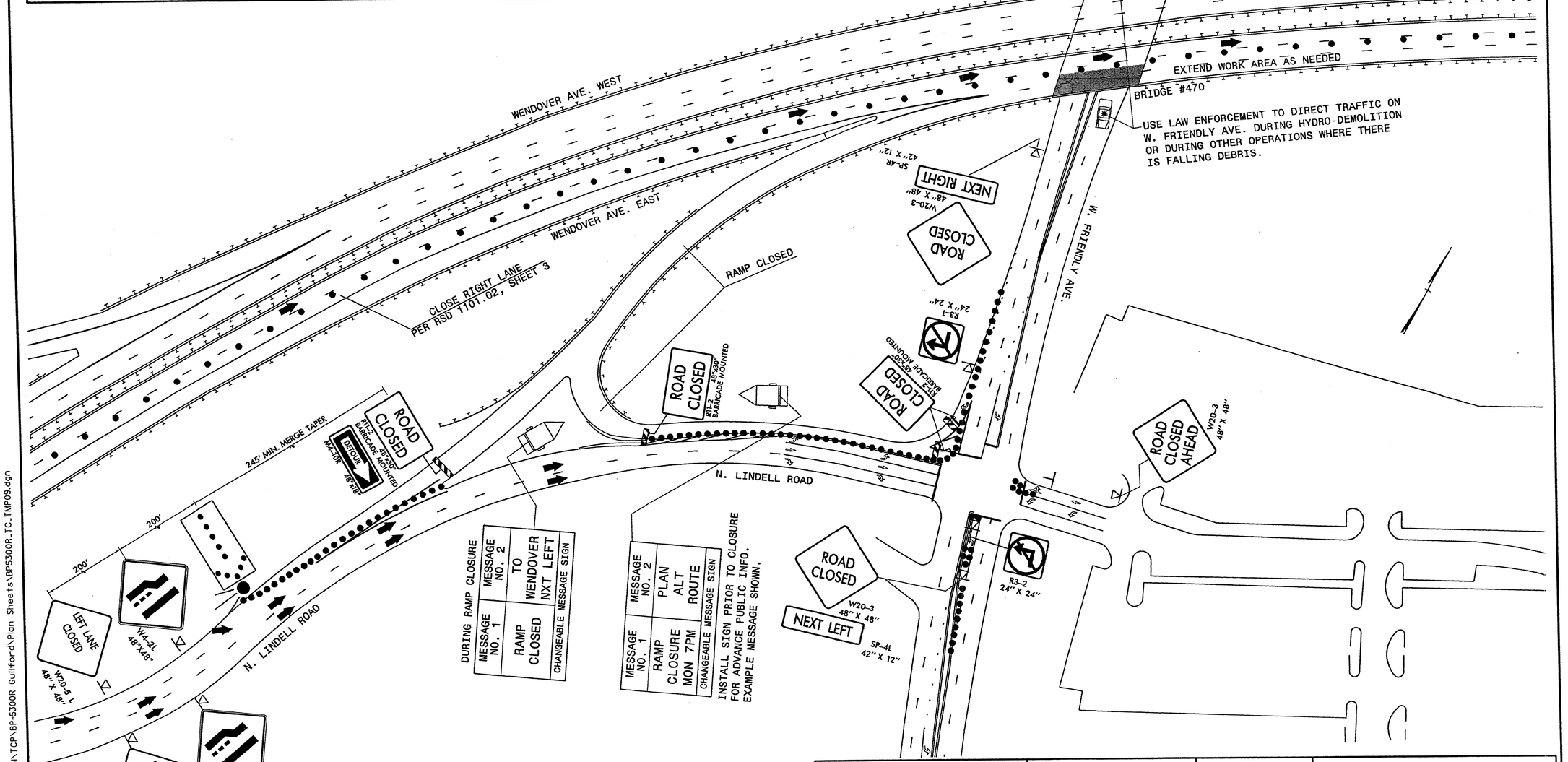

Stantec
Stantec Consulting Services Inc.
801 Jones Franklin Road
Suite 300
Raleigh, NC 27606
Tel. (919) 851-6866
Fax. (919) 851-7024
www.stantec.com
License No. F-0672

APPROVED:_____ DATE:_____

SEAL

NORTH CAROLINA PROFESSIONAL ENGINEER SEAL 11/11/11 BETSY L. WATSON

DIVISION OF HIGHWAYS STATE OF NORTH CAROLINA DEPARTMENT OF TRANSPORTATION WORK ZONE TRAFFIC CONTROL

BRIDGE NO. 470
WENDOVER AVE. EAST
CLOSURE OF RIGHT LANE
& CLOSURE OF
N. LINDELL RD. ENTRANCE RAMP

11/11/2011
U:\Traffic\TrafficControl\TCP\BP-5300R Guilford\Plan Sheets\BP5300R_TC_TMP09.dgn
gkarageorge

PROJ. REFERENCE NO.	SHEET NO.
BP-5300R	TMP-9A

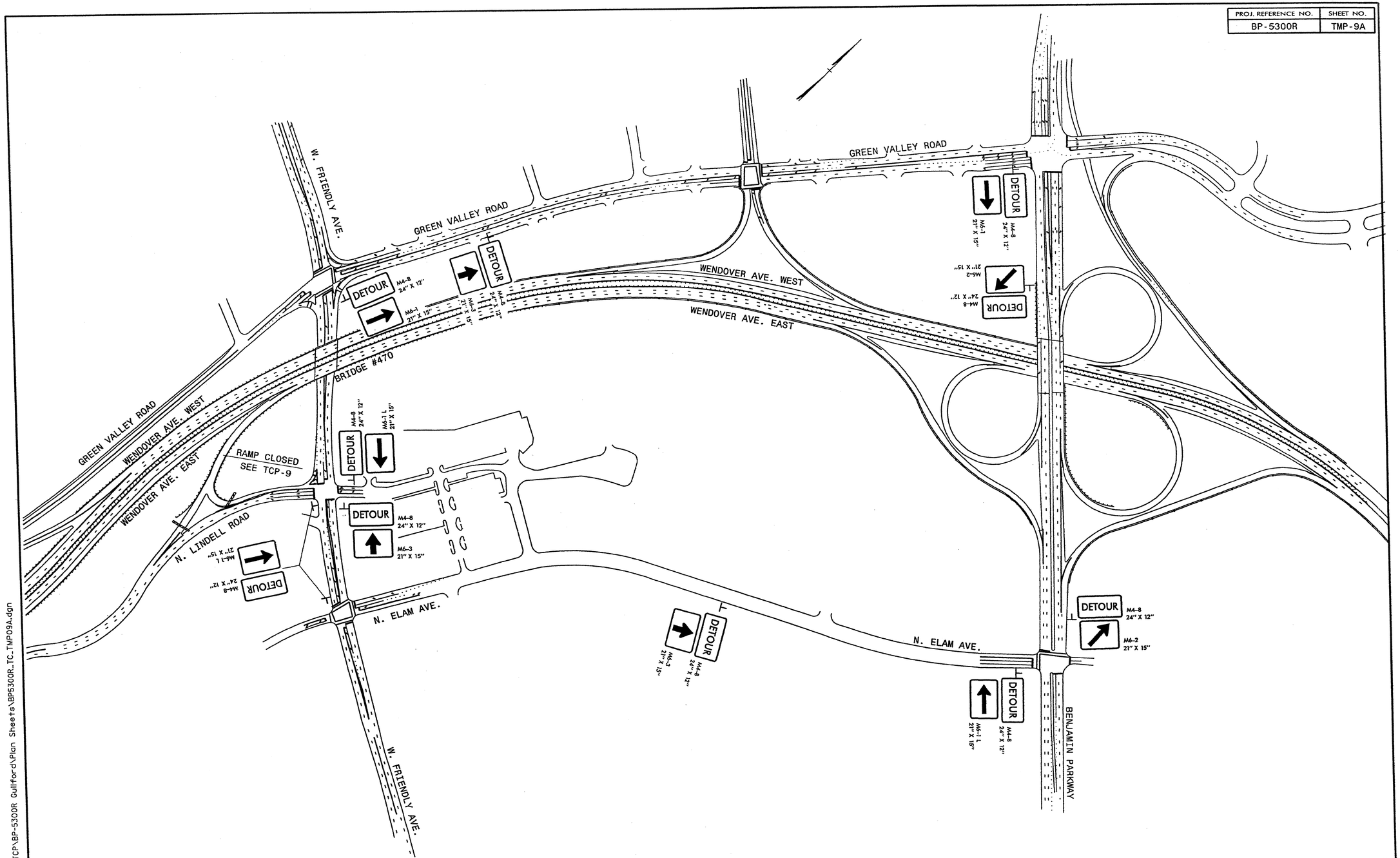

Stantec Consulting Services Inc.
801 Jones Franklin Road
Suite 300
Raleigh, NC 27606
Tel. (919) 851-6866
Fax. (919) 851-7024
www.stantec.com
License No. F-0672

APPROVED: _____ DATE: _____

SEAL 27449 NORTH CAROLINA PROFESSIONAL ENGINEER BETSY L. WATSON

11/11/11

DIVISION OF HIGHWAYS STATE OF NORTH CAROLINA DEPARTMENT OF TRANSPORTATION WORK ZONE TRAFFIC CONTROL

BRIDGE NO. 470

N. LINDELL RD. DETOUR DURING ENTRANCE RAMP CLOSURE

11/1/2011
U:\Traffic\TrafficControl\TCP\BP-5300R Guilford\Plan Sheets\BP5300R_TC_TMP09A.dgn
gkarageorge

PROJ. REFERENCE NO.	SHEET NO.
BP-5300R	TMP-10

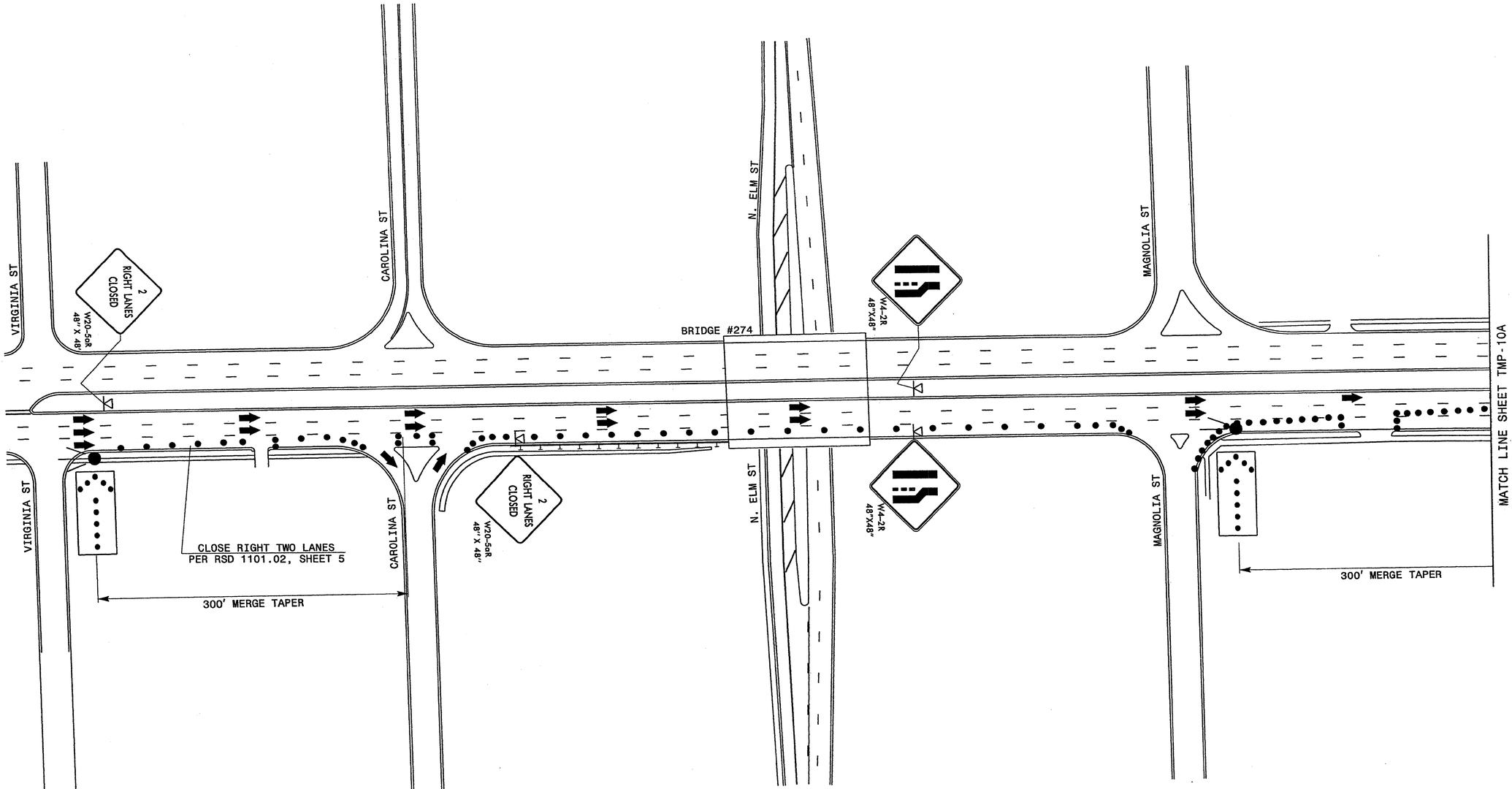

11/11/2011
U:\Traffic\TrafficControl\TCP\BP-5300R Guilford\Plan Sheets\BP5300R_TC_TMP10.dgn
gkaragaorge

Stantec
Stantec Consulting Services Inc.
801 Jones Franklin Road
Suite 300
Raleigh, NC 27606
Tel. (919) 851-6866
Fax. (919) 851-7024
www.stantec.com
License No. F-0672

APPROVED: _____ DATE: _____

SEAL

NORTH CAROLINA PROFESSIONAL ENGINEER SEAL 22449 BETSY I. WATSON

11/11/11

DIVISION OF HIGHWAYS • STATE OF NORTH CAROLINA • DEPARTMENT OF TRANSPORTATION • WORK ZONE TRAFFIC CONTROL

BRIDGE NO.s 259 AND 217

WENDOVER AVE. EAST
CLOSURE OF RIGHT 2 LANES

PROJ. REFERENCE NO.	SHEET NO.
BP-5300R	TMP-10A

BRIDGE #217

BRIDGE #217 - WENDOVER AVE. EAST OUTSIDE LANE WORK AREA

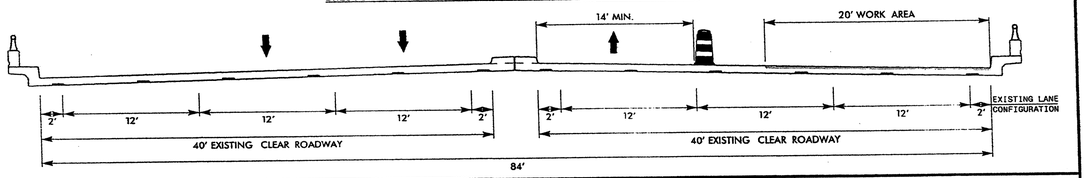

BRIDGE #259

BRIDGE #259 - WENDOVER AVE. EAST OUTSIDE LANE WORK AREA

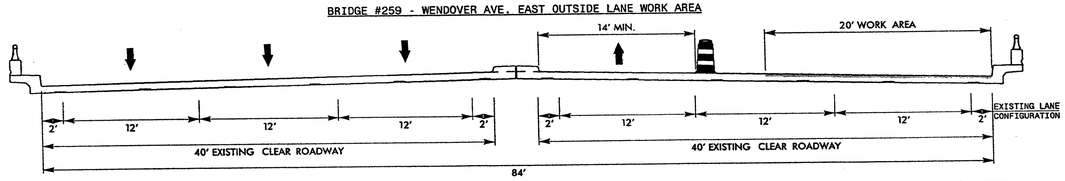

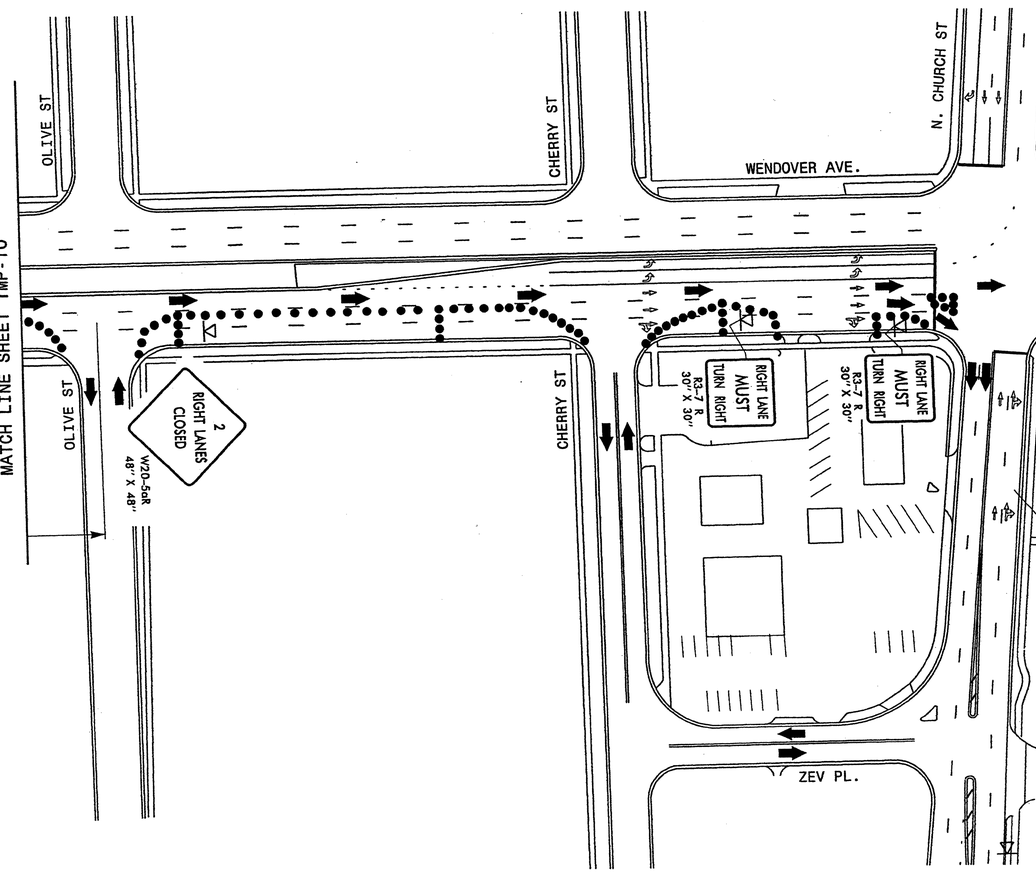

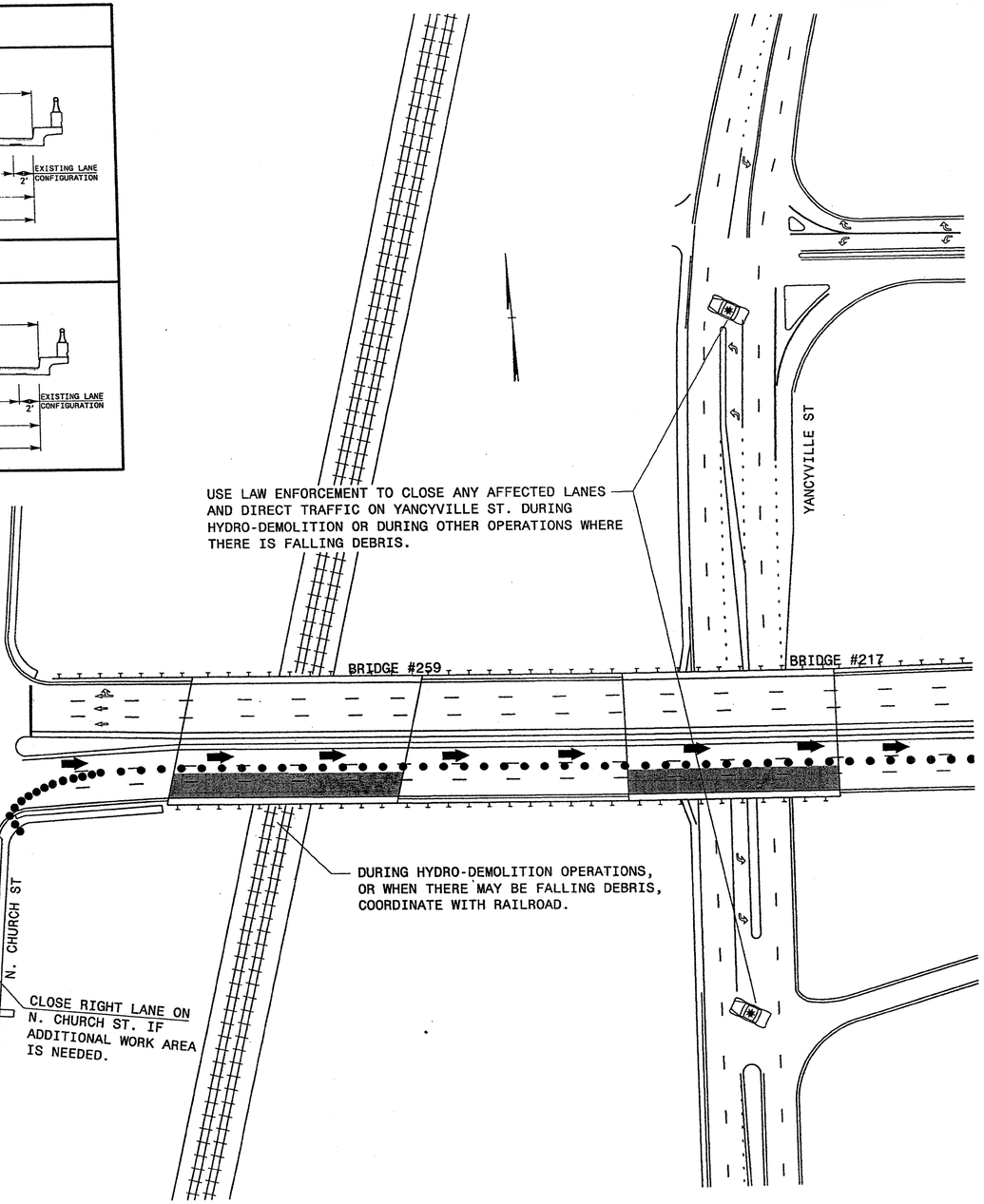

Stantec Consulting Services Inc.
801 Jones Franklin Road
Suite 300
Raleigh, NC 27606
Tel. (919) 851-6866
Fax. (919) 851-7024
www.stantec.com
License No. F-0672

APPROVED:_____ DATE:_____

SEAL

NORTH CAROLINA PROFESSIONAL ENGINEER SEAL 036 BETSY C. WATSON

11/1/11

DIVISION OF HIGHWAYS STATE OF NORTH CAROLINA DEPARTMENT OF TRANSPORTATION WORK ZONE TRAFFIC CONTROL

BRIDGE NO.s 259 AND 217

WENDOVER AVE. EAST
CLOSURE OF RIGHT 2 LANES

11/1/2011
U:\Traffic\TrafficControl\TCP\BP-5300R Guilford\Plan Sheets\BP5300R_TC_TMP10A.dgn
gkarageorge

PROJ. REFERENCE NO.	SHEET NO.
BP-5300R	TMP-11

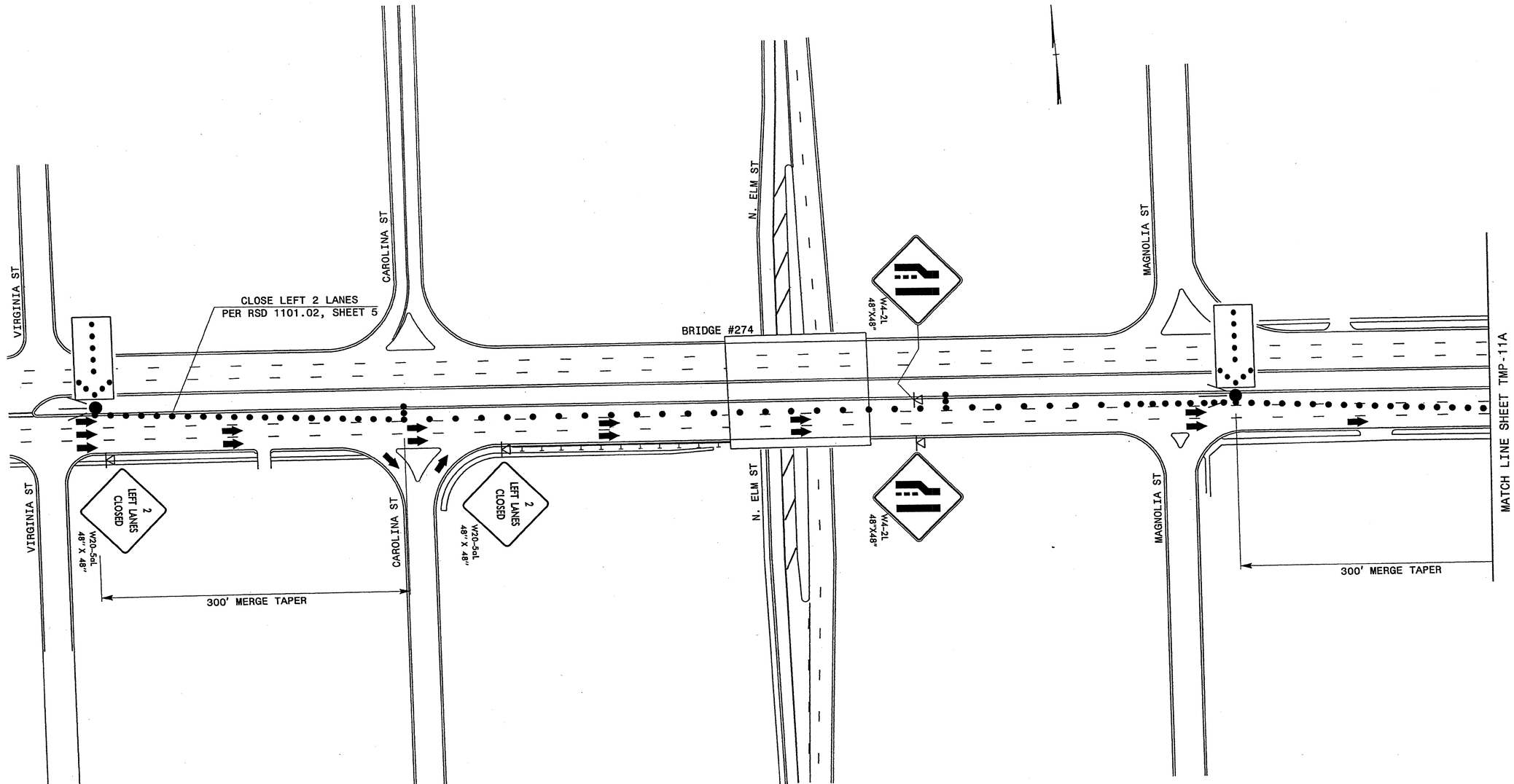

Stantec

Stantec Consulting Services Inc.
801 Jones Franklin Road
Suite 300
Raleigh, NC 27606
Tel. (919) 851-6866
Fax. (919) 851-7024
www.stantec.com
License No. F-0672

APPROVED:_____ DATE:_____

SEAL

NORTH CAROLINA PROFESSIONAL ENGINEER SEAL 11/11/11

DIVISION OF HIGHWAYS
STATE OF NORTH CAROLINA
DEPARTMENT OF TRANSPORTATION
WORK ZONE TRAFFIC CONTROL

BRIDGE NO.s 259 AND 217

WENDOVER AVE. EAST
CLOSURE OF LEFT 2 LANES

11/11/2011
U:\Traffic\TrafficControl\TCP\BP-5300R Guilford\Plan Sheets\BP5300R_TC_TMP11.dgn
gkarageorge

PROJ. REFERENCE NO.	SHEET NO.
BP-5300R	TMP-11A

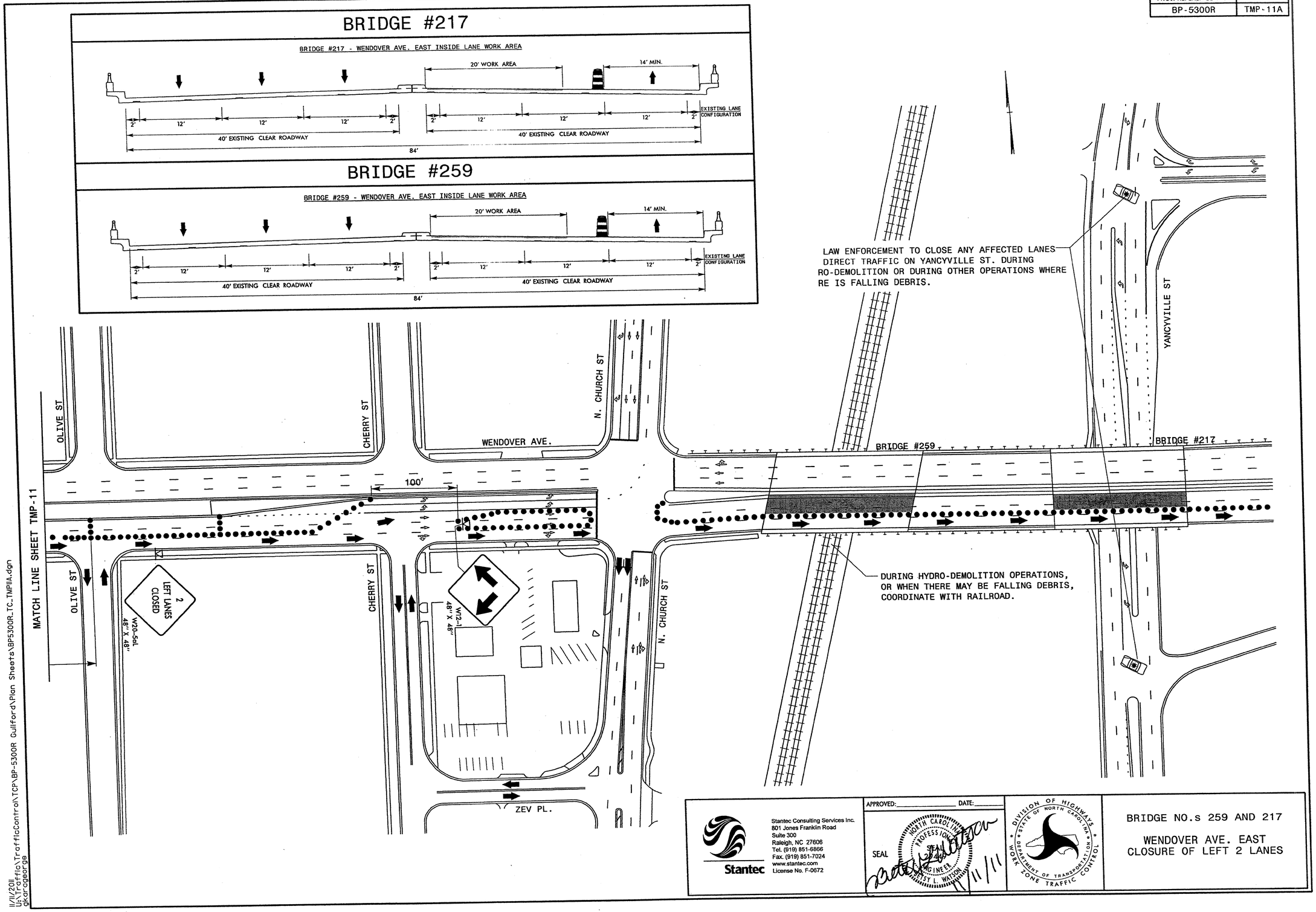

Stantec

Stantec Consulting Services Inc.
801 Jones Franklin Road
Suite 300
Raleigh, NC 27606
Tel. (919) 851-6866
Fax. (919) 851-7024
www.stantec.com
License No. F-0672

APPROVED:_____ DATE:_____

SEAL

NORTH CAROLINA PROFESSIONAL ENGINEER SEAL 29449 BETSY L. WATSON

11/11/11

DIVISION OF HIGHWAYS STATE OF NORTH CAROLINA DEPARTMENT OF TRANSPORTATION WORK ZONE TRAFFIC CONTROL

BRIDGE NO.s 259 AND 217

WENDOVER AVE. EAST
CLOSURE OF LEFT 2 LANES

11/11/2011
U:\Traffic\TrafficControl\TCP\BP-5300R Guilford\Plan Sheets\BP5300R_TC_TMP11A.dgn
gkarageorge

PROJ. REFERENCE NO.	SHEET NO.
BP-5300R	TMP-12

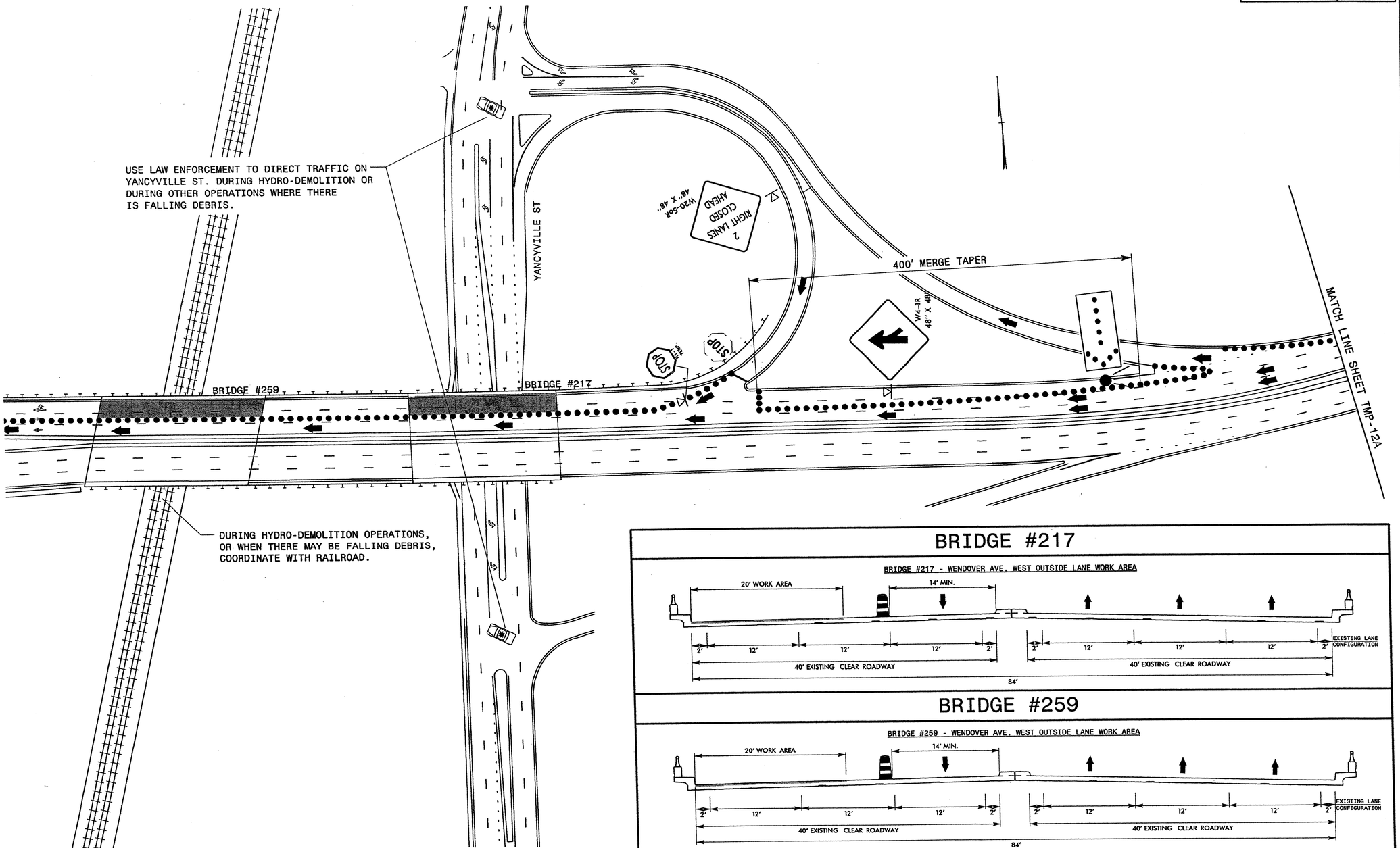

BRIDGE #217

BRIDGE #217 - WENDOVER AVE. WEST OUTSIDE LANE WORK AREA

BRIDGE #259

BRIDGE #259 - WENDOVER AVE. WEST OUTSIDE LANE WORK AREA

Stantec Consulting Services Inc.
801 Jones Franklin Road
Suite 300
Raleigh, NC 27606
Tel. (919) 851-6866
Fax. (919) 851-7024
www.stantec.com
License No. F-0672

APPROVED:_____ DATE:_____

SEAL

NORTH CAROLINA PROFESSIONAL ENGINEER SEAL 19449 BETSY L. WATSON

1/11/11

DIVISION OF HIGHWAYS * STATE OF NORTH CAROLINA * DEPARTMENT OF TRANSPORTATION * WORK ZONE TRAFFIC CONTROL

BRIDGE NO.s 259 AND 217

WENDOVER AVE. WEST
CLOSURE OF RIGHT 2 LANES

11/11/2011
U:\Traffic\TrafficControl\TCP\BP-5300R Guilford\Plan Sheets\BP5300R_TC_TMP12.dgn
gkaraggeorge

PROJ. REFERENCE NO.	SHEET NO.
BP-5300R	TMP-12A

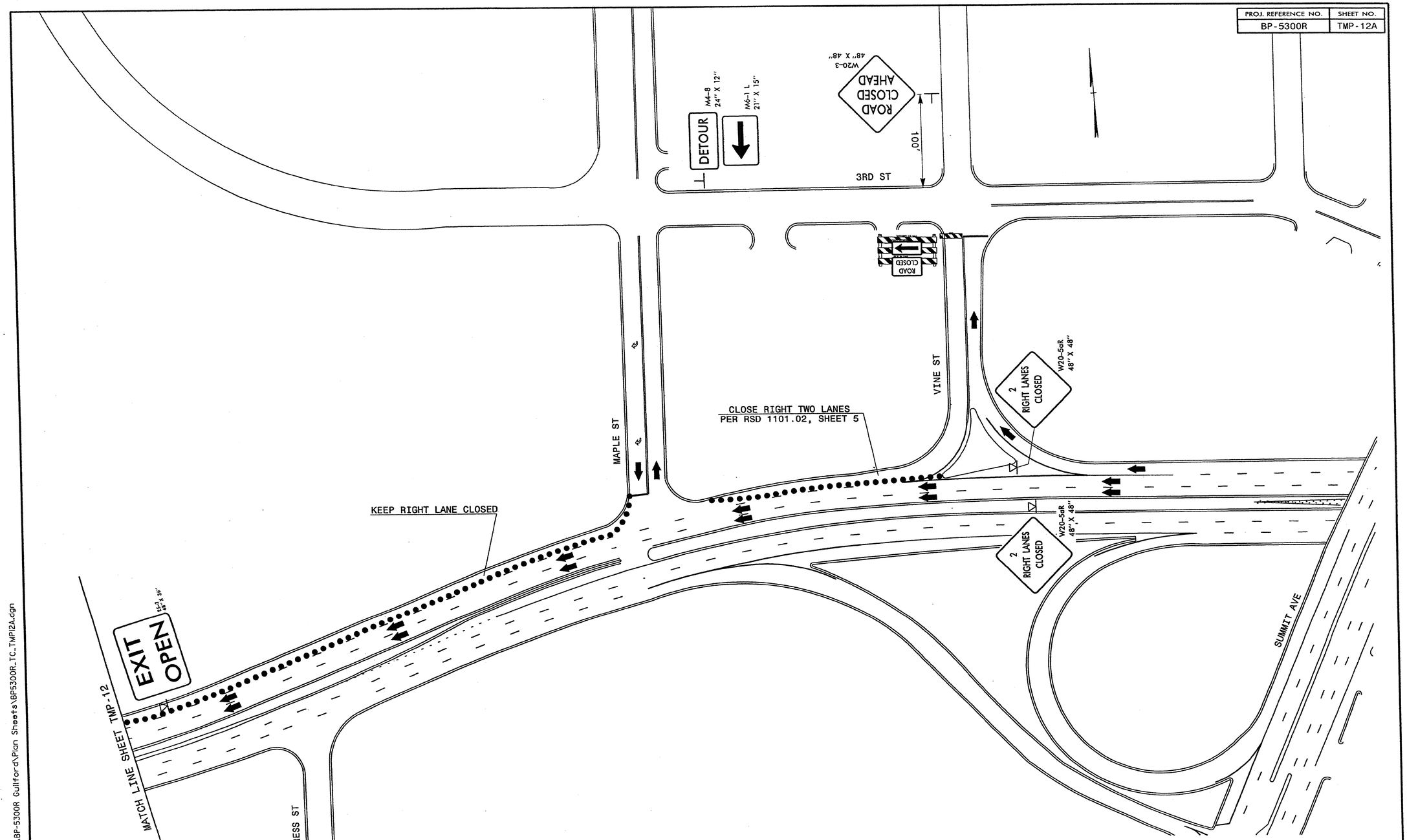

11/11/2011
U:\Traffic\TrafficControl\TCP\BP-5300R Guilford\Plan Sheets\BP5300R_TC_TMP12A.dgn
gkaraagaorge

Stantec Consulting Services Inc.
801 Jones Franklin Road
Suite 300
Raleigh, NC 27606
Tel. (919) 851-6866
Fax. (919) 851-7024
www.stantec.com
License No. F-0672

APPROVED:_____ DATE:_____

SEAL
NORTH CAROLINA PROFESSIONAL ENGINEER
BETSY L. WATSON
11/11/11

DIVISION OF HIGHWAYS
STATE OF NORTH CAROLINA
DEPARTMENT OF TRANSPORTATION
WORK ZONE TRAFFIC CONTROL

BRIDGE NO.s 259 AND 217

WENDOVER AVE. WEST
CLOSURE OF RIGHT 2 LANES

PROJ. REFERENCE NO.	SHEET NO.
BP-5300R	TMP-13

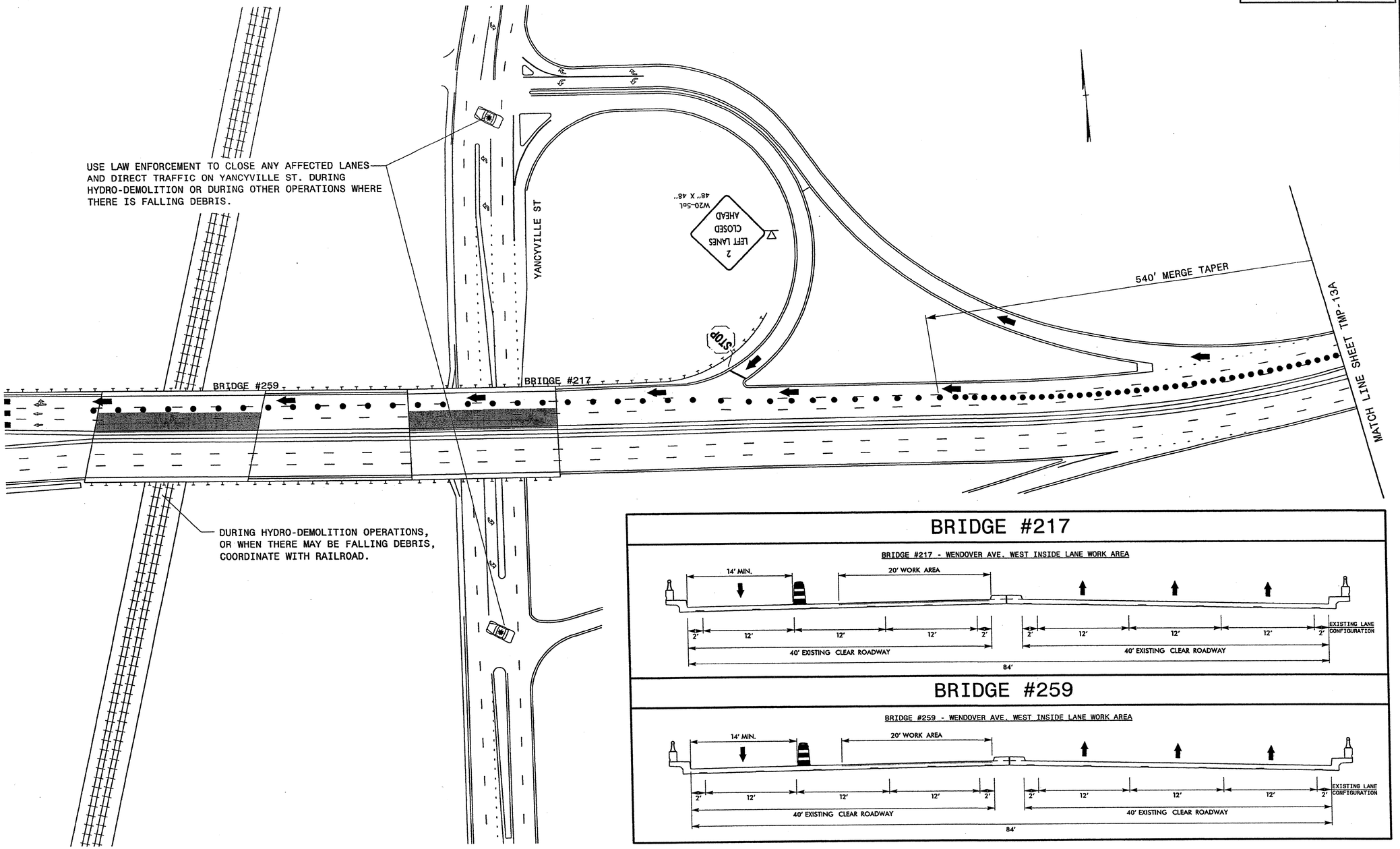

BRIDGE #217

BRIDGE #217 - WENDOVER AVE. WEST INSIDE LANE WORK AREA

BRIDGE #259

BRIDGE #259 - WENDOVER AVE. WEST INSIDE LANE WORK AREA

Stantec
Stantec Consulting Services Inc.
801 Jones Franklin Road
Suite 300
Raleigh, NC 27606
Tel. (919) 851-6866
Fax. (919) 851-7024
www.stantec.com
License No. F-0672

APPROVED:_____ DATE:_____

SEAL

NORTH CAROLINA PROFESSIONAL ENGINEER 035149 TRISTY L. WALTON 11/11/11

DIVISION OF HIGHWAYS * STATE OF NORTH CAROLINA * DEPARTMENT OF TRANSPORTATION * WORK ZONE TRAFFIC CONTROL

BRIDGE NO.s 259 AND 217

WENDOVER AVE. WEST
CLOSURE OF LEFT 2 LANES

11/11/2011
U:\Traffic\TrafficControl\TCP\BP-5300R Guilford\Plan Sheets\BP5300R_TC_TMP13.dgn
akaragiorge

PROJ. REFERENCE NO.	SHEET NO.
BP-5300R	TMP-13A

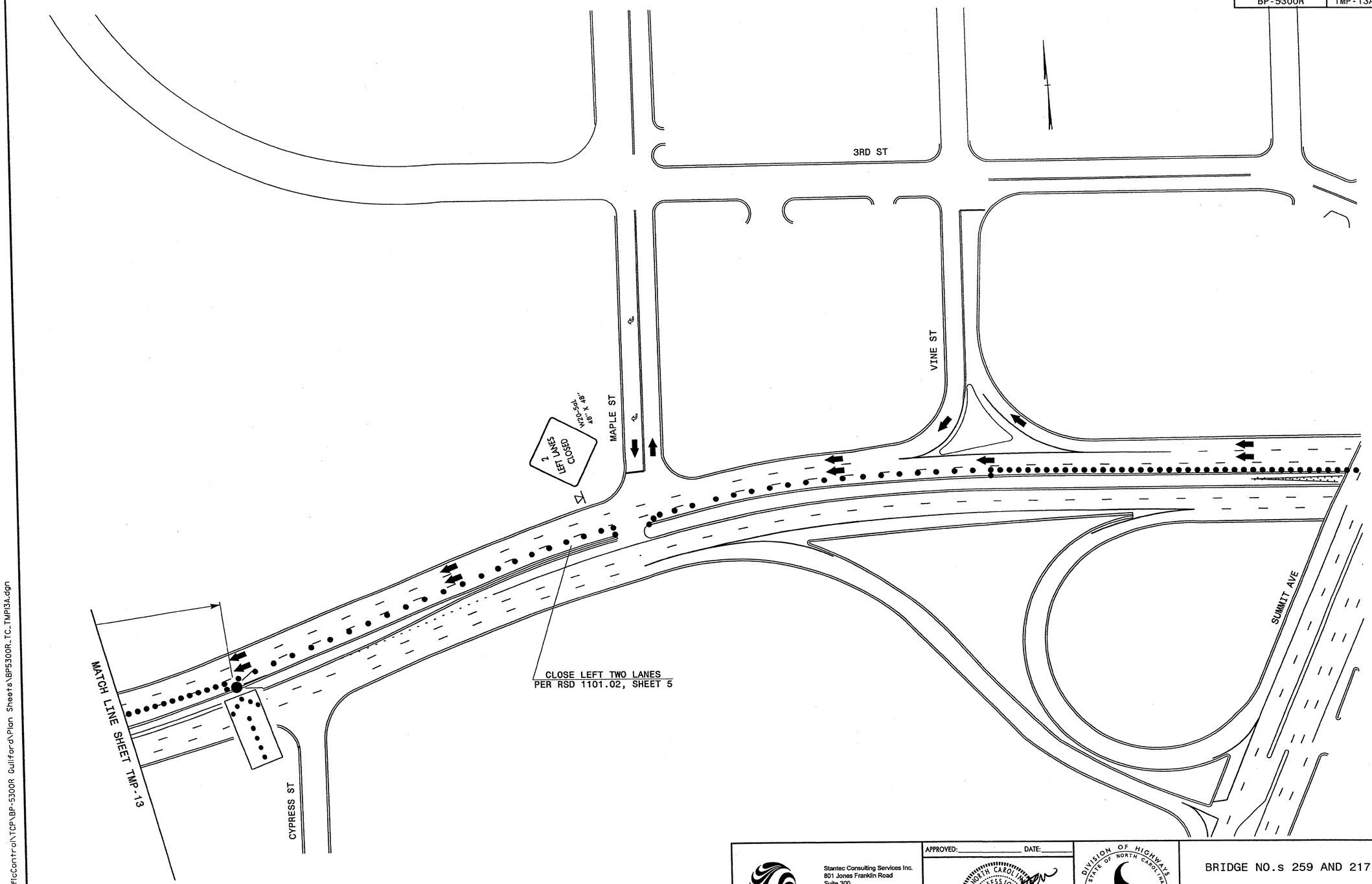

Stantec
Stantec Consulting Services Inc.
801 Jones Franklin Road
Suite 300
Raleigh, NC 27606
Tel. (919) 851-6866
Fax. (919) 851-7024
www.stantec.com
License No. F-0672

APPROVED:_____ DATE:_____

SEAL

NORTH CAROLINA PROFESSIONAL ENGINEER SEAL BETSY L. WATSON

11/11/11

DIVISION OF HIGHWAYS
STATE OF NORTH CAROLINA
DEPARTMENT OF TRANSPORTATION
WORK ZONE TRAFFIC CONTROL

BRIDGE NO.s 259 AND 217

WENDOVER AVE. WEST
CLOSURE OF LEFT 2 LANES

11/11/2011
U:\Traffic\TrafficControl\TCP\BP-5300R Guilford\Plan Sheets\BP5300R_TC_TMP13A.dgn
gkarageorge

PROJ. REFERENCE NO.	SHEET NO.
BP-5300R	TMP-14

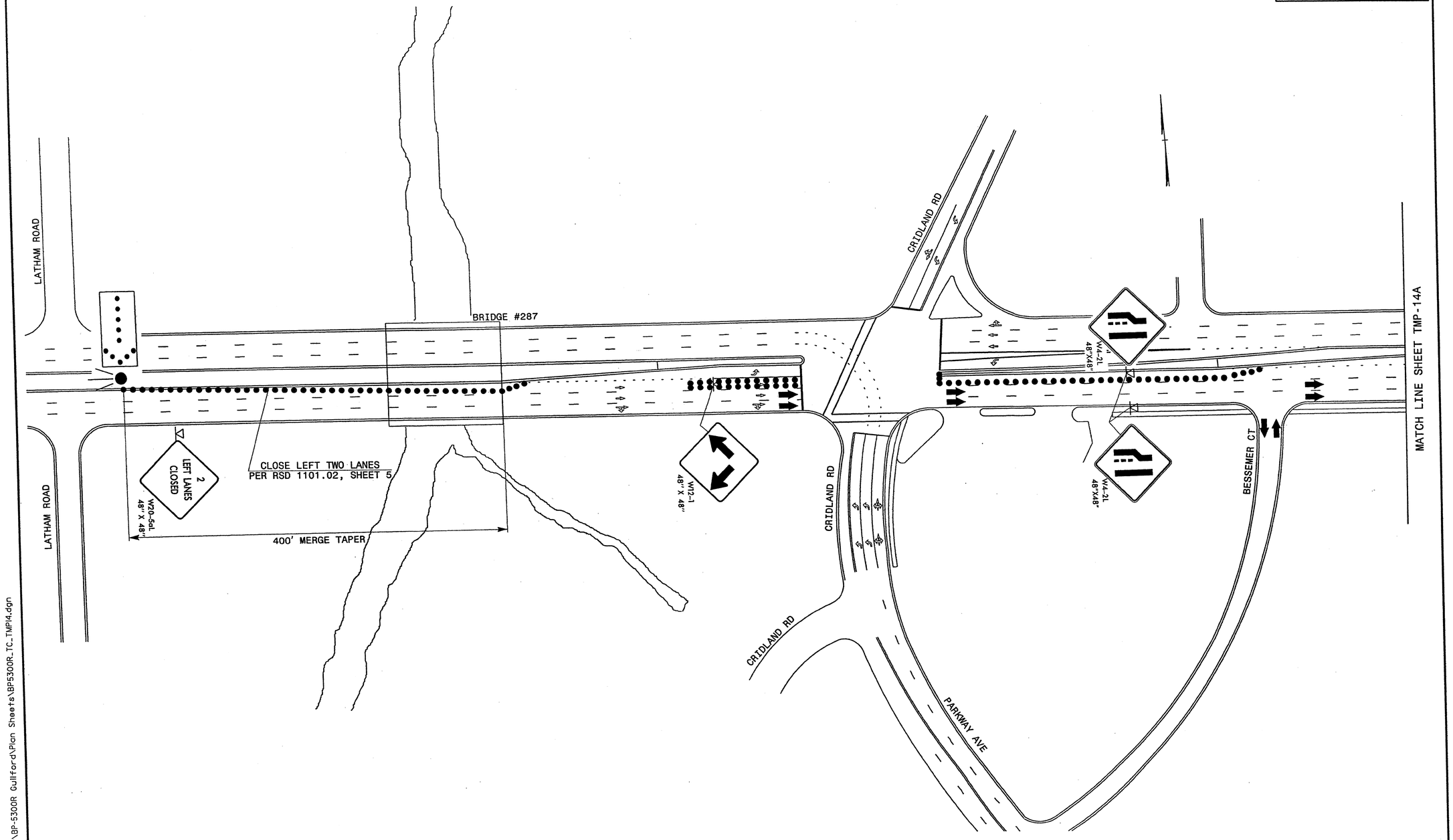

Stantec Consulting Services Inc.
801 Jones Franklin Road
Suite 300
Raleigh, NC 27606
Tel. (919) 851-6866
Fax. (919) 851-7024
www.stantec.com
License No. F-0672

APPROVED:_____ DATE:_____

SEAL

NORTH CAROLINA PROFESSIONAL ENGINEER SEAL 29439 BETSY L. WATSON

11/14/11

DIVISION OF HIGHWAYS STATE OF NORTH CAROLINA DEPARTMENT OF TRANSPORTATION WORK ZONE TRAFFIC CONTROL

BRIDGE NO. 274

WENDOVER AVE. EAST
CLOSURE OF LEFT 2 LANES

11/14/2011
U:\Traffic\TrafficControl\TCP\BP-5300R Guilford\Plan Sheets\BP5300R_TC_TMP14.dgn
gkarageorge

PROJ. REFERENCE NO.	SHEET NO.
BP-5300R	TMP-14A

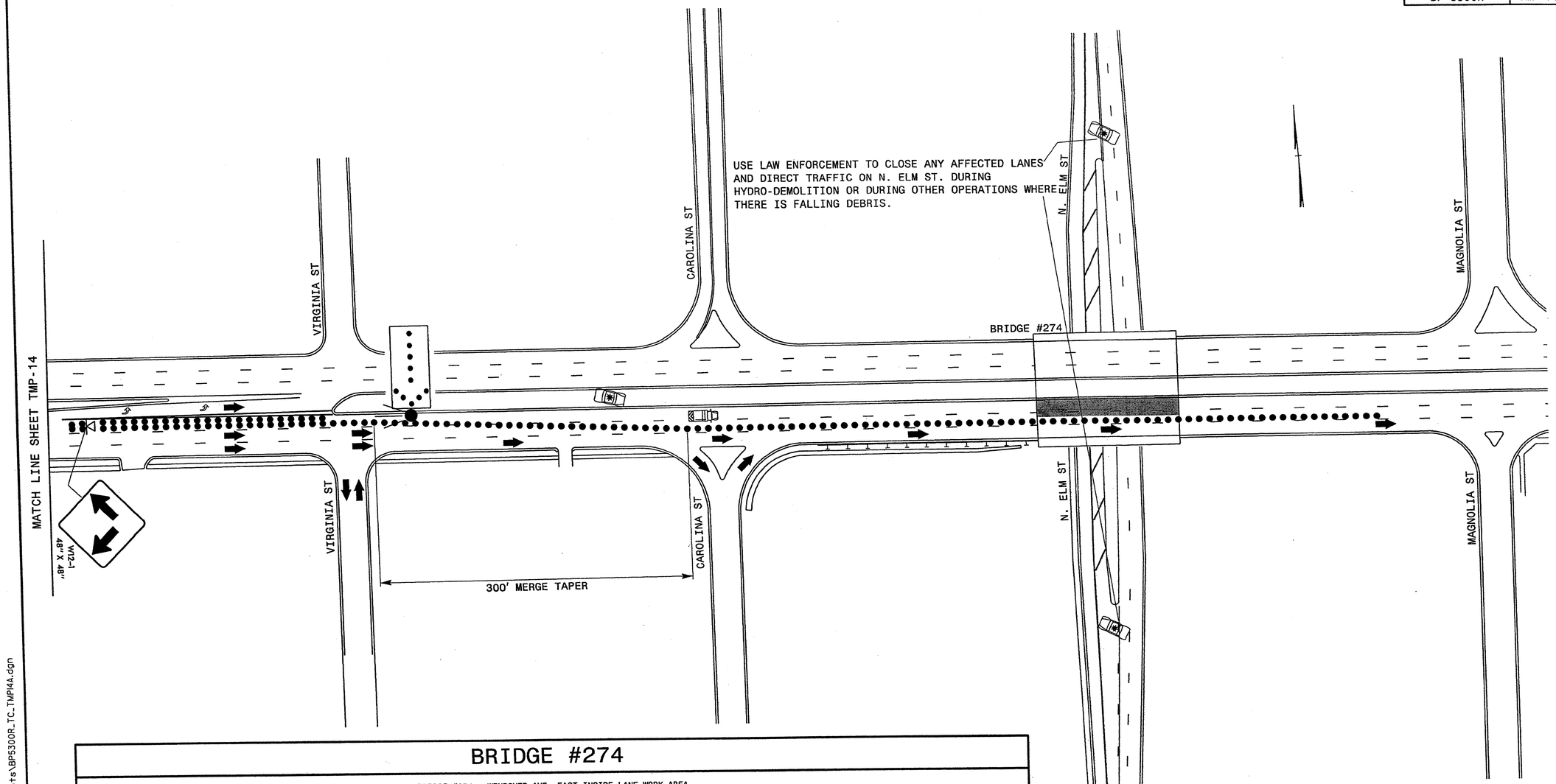

BRIDGE #274

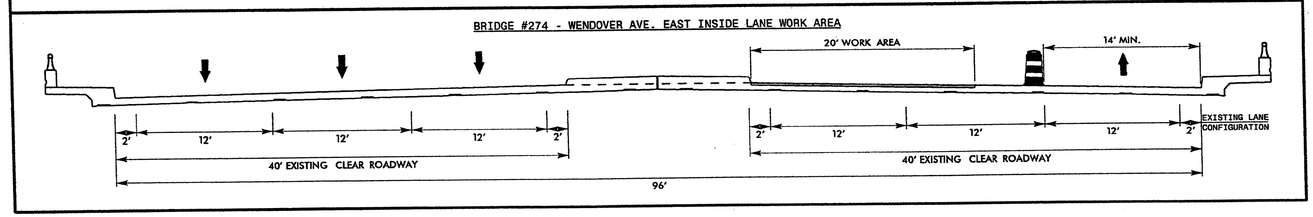

Stantec
Stantec Consulting Services Inc.
801 Jones Franklin Road
Suite 300
Raleigh, NC 27606
Tel. (919) 851-6866
Fax. (919) 851-7024
www.stantec.com
License No. F-0672

APPROVED:_____ DATE:_____

SEAL

NORTH CAROLINA PROFESSIONAL SEAL ENGINEER BETSY L. WATSON

11/11/11

DIVISION OF HIGHWAYS · STATE OF NORTH CAROLINA · DEPARTMENT OF TRANSPORTATION · WORK ZONE TRAFFIC CONTROL

BRIDGE NO. 274

WENDOVER AVE. EAST
CLOSURE OF LEFT 2 LANES

11/11/2011
U:\Traffic\TrafficControl\TCP\BP-5300R Guilford\Plan Sheets\BP5300R_TC_TMP14A.dgn
gkarageorge

PROJ. REFERENCE NO.	SHEET NO.
BP-5300R	TMP-15

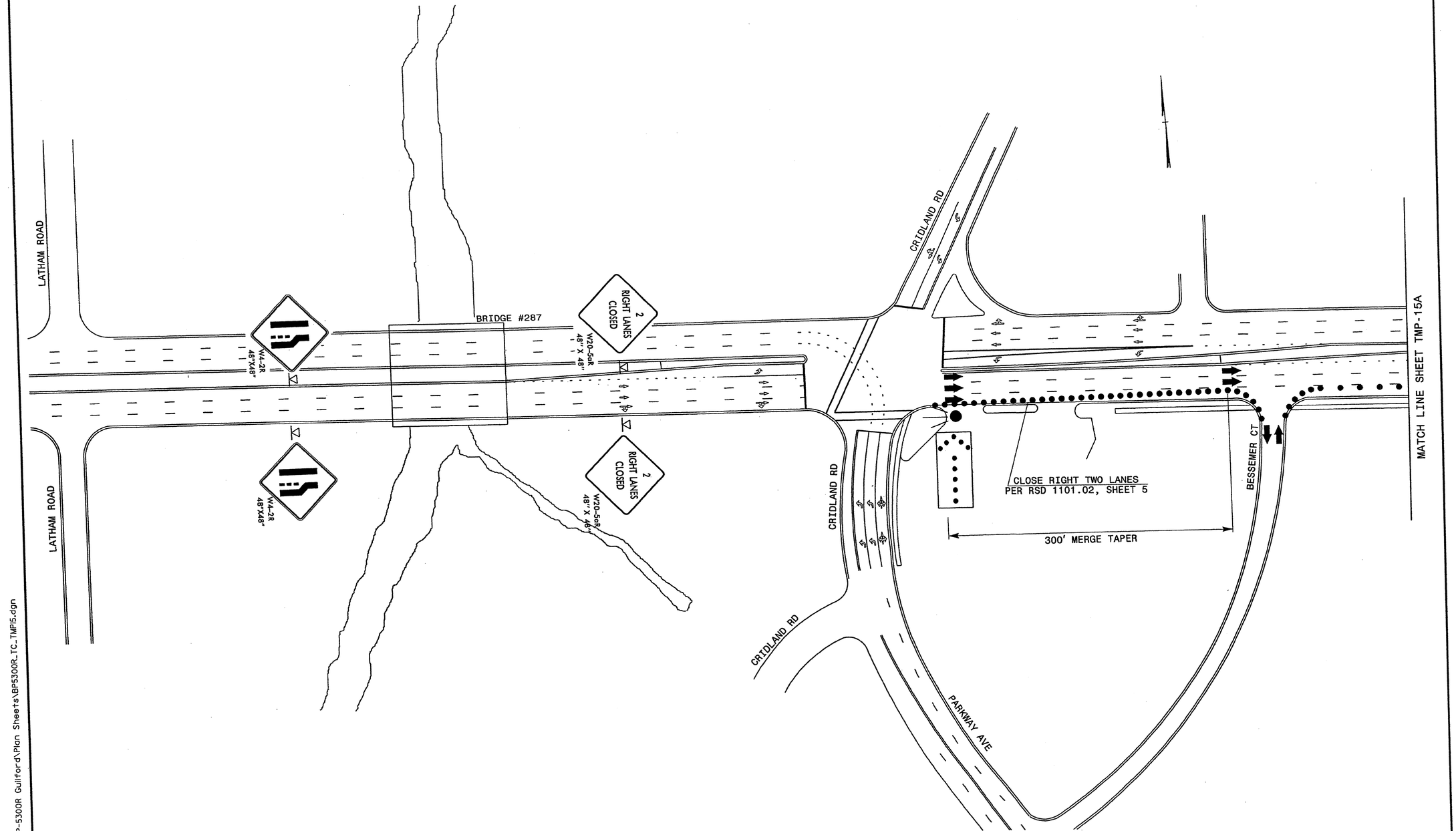

Stantec Consulting Services Inc. 801 Jones Franklin Road Suite 300 Raleigh, NC 27606 Tel. (919) 851-6866 Fax. (919) 851-7024 www.stantec.com License No. F-0672	APPROVED:_____ DATE:_____ SEAL NORTH CAROLINA PROFESSIONAL ENGINEER BETSY L. WATSON 37419 11/11/11	DIVISION OF HIGHWAYS • STATE OF NORTH CAROLINA • DEPARTMENT OF TRANSPORTATION • WORK ZONE TRAFFIC CONTROL

BRIDGE NO. 274

WENDOVER AVE. EAST
CLOSURE OF RIGHT 2 LANES

11/11/2011
U:\Traffic\TrafficControl\TCP\BP-5300R Guilford\Plan Sheets\BP5300R_TC_TMP15.dgn
gkargsgeorge

PROJ. REFERENCE NO.	SHEET NO.
BP-5300R	TMP-15A

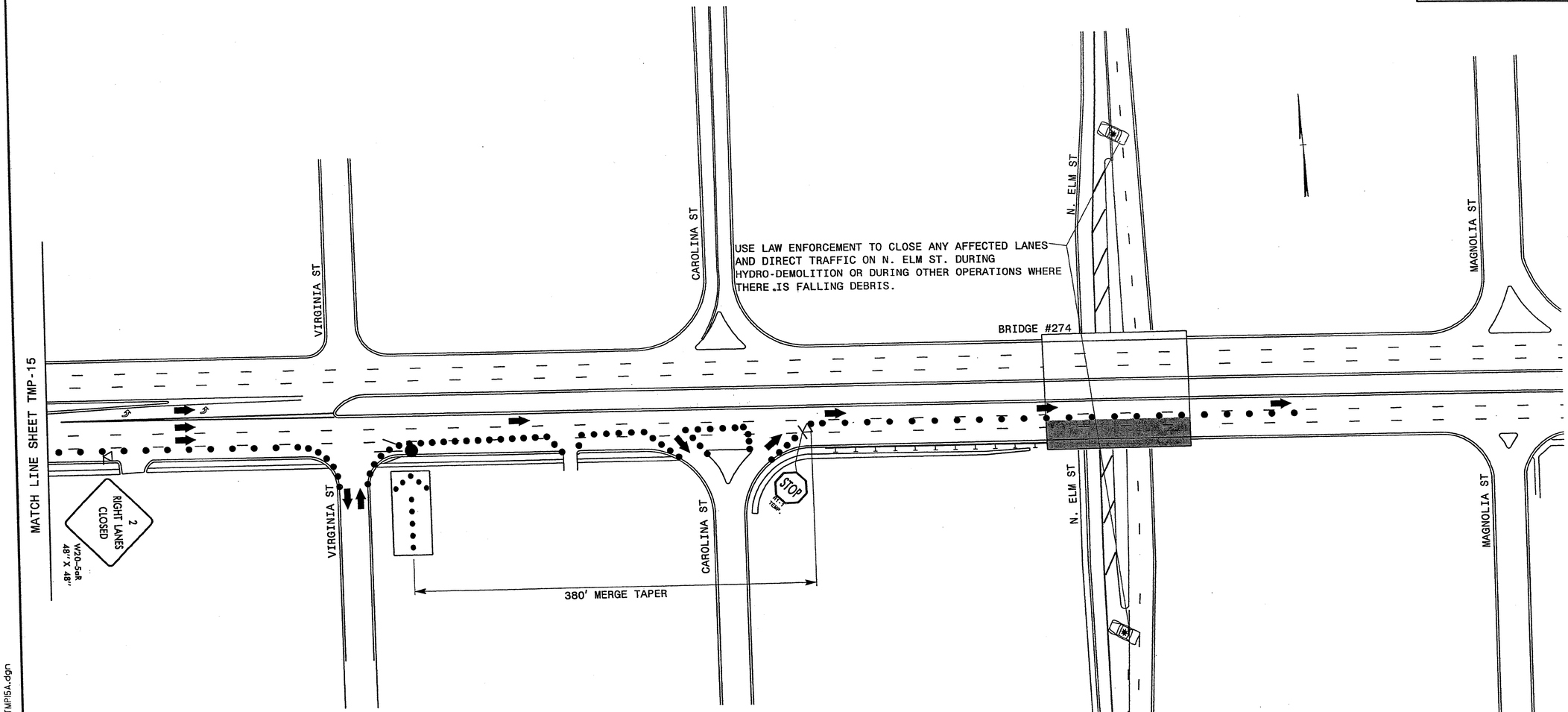

BRIDGE #274

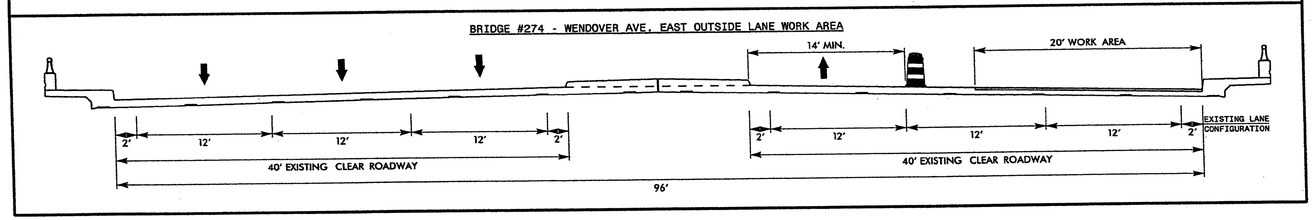

Stantec
Stantec Consulting Services Inc.
801 Jones Franklin Road
Suite 300
Raleigh, NC 27606
Tel. (919) 851-6866
Fax. (919) 851-7024
www.stantec.com
License No. F-0672

APPROVED:_____ DATE:_____

SEAL

NORTH CAROLINA PROFESSIONAL ENGINEER SEAL 29449 BETSY L. WATSON

11/11/11

DIVISION OF HIGHWAYS STATE OF NORTH CAROLINA DEPARTMENT OF TRANSPORTATION WORK ZONE TRAFFIC CONTROL

BRIDGE NO. 274

WENDOVER AVE. EAST
CLOSURE OF RIGHT 2 LANES

11/11/2011
U:\Traffic\TrafficControl\TCP\BP-5300R Guilford\Plan Sheets\BP5300R_TC_TMP15A.dgn
gkaragaorge

PROJ. REFERENCE NO.	SHEET NO.
BP-5300R	TMP-16

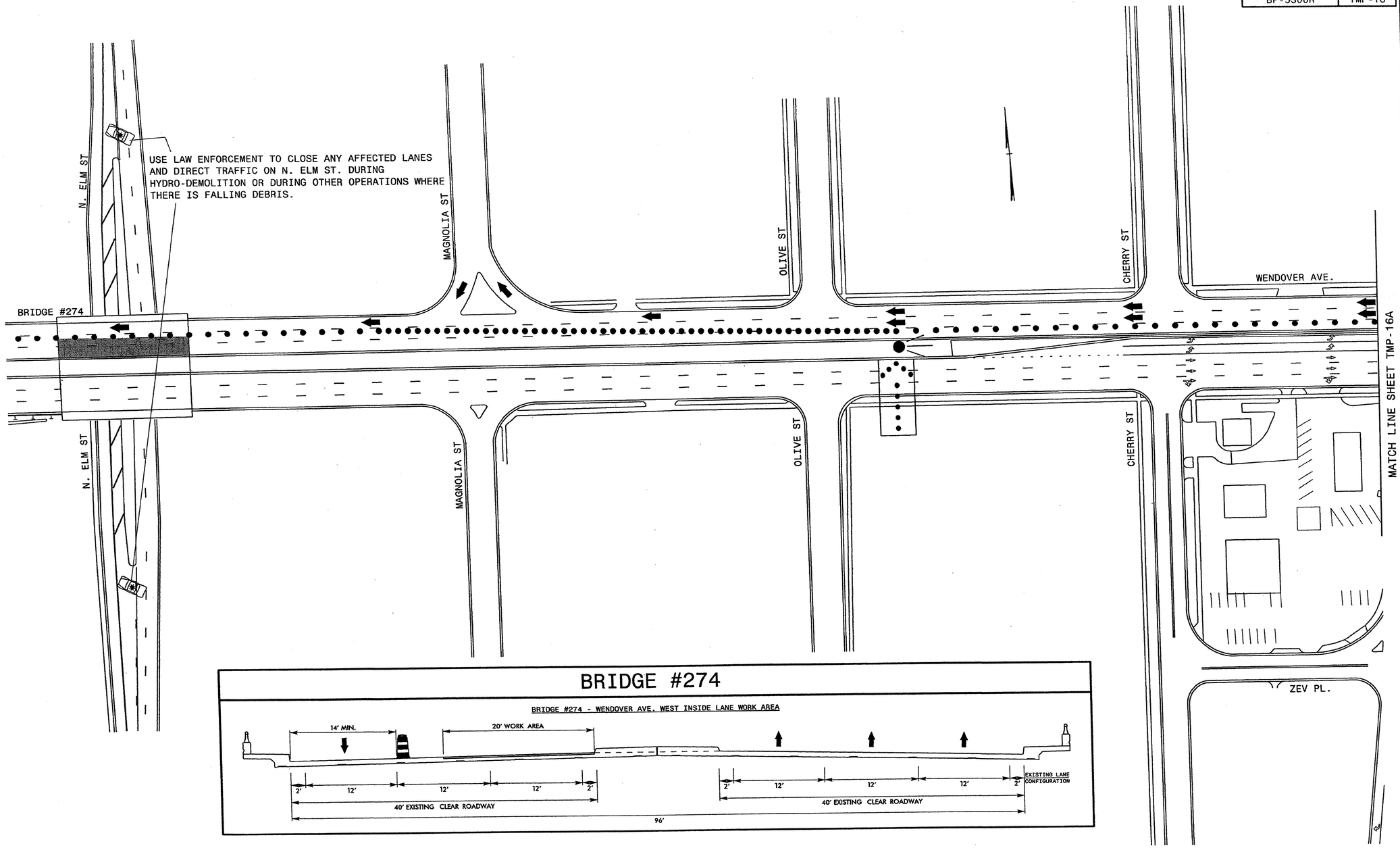

Stantec
Stantec Consulting Services Inc.
801 Jones Franklin Road
Suite 300
Raleigh, NC 27606
Tel. (919) 851-6866
Fax. (919) 851-7024
www.stantec.com
License No. F-0672

APPROVED:_____ DATE:_____

SEAL

NORTH CAROLINA PROFESSIONAL ENGINEER SEAL BETSY L. WATSON

11/11/11

DIVISION OF HIGHWAYS
STATE OF NORTH CAROLINA
DEPARTMENT OF TRANSPORTATION
WORK ZONE TRAFFIC CONTROL

BRIDGE NO. 274

WENDOVER AVE. WEST
CLOSURE OF LEFT 2 LANES

11/11/2011
U:\Traffic\TrafficControl\TCP\BP-5300R Guilford\Plan Sheets\BP5300R_TC_TMP16.dgn
gkarageorge

PROJ. REFERENCE NO.	SHEET NO.
BP-5300R	TMP-16A

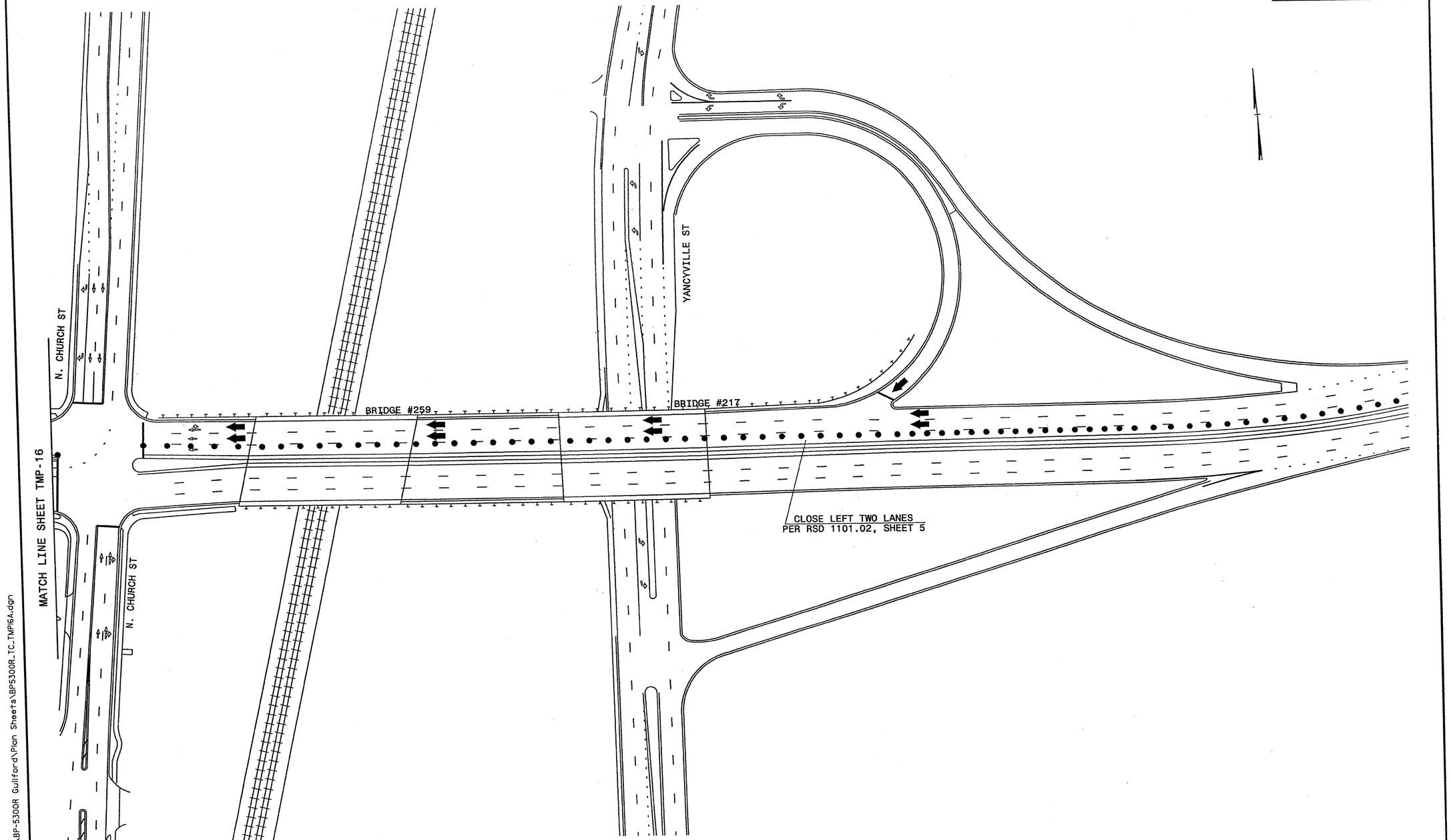

Stantec Consulting Services Inc.
801 Jones Franklin Road
Suite 300
Raleigh, NC 27606
Tel. (919) 851-6866
Fax. (919) 851-7024
www.stantec.com
License No. F-0672

APPROVED: _____ DATE: _____

SEAL
NORTH CAROLINA PROFESSIONAL ENGINEER
BETSY L. WATSON
11/11/11

DIVISION OF HIGHWAYS
STATE OF NORTH CAROLINA
DEPARTMENT OF TRANSPORTATION
WORK ZONE TRAFFIC CONTROL

BRIDGE NO. 274

WENDOVER AVE. WEST
CLOSURE OF LEFT 2 LANES

11/11/2011
I:\Traffic\TrafficControl\TCP\BP-5300R Guilford\Plan Sheets\BP5300R_TC_TMP16A.dgn
dkornegay

PROJ. REFERENCE NO.	SHEET NO.
BP-5300R	TMP-17

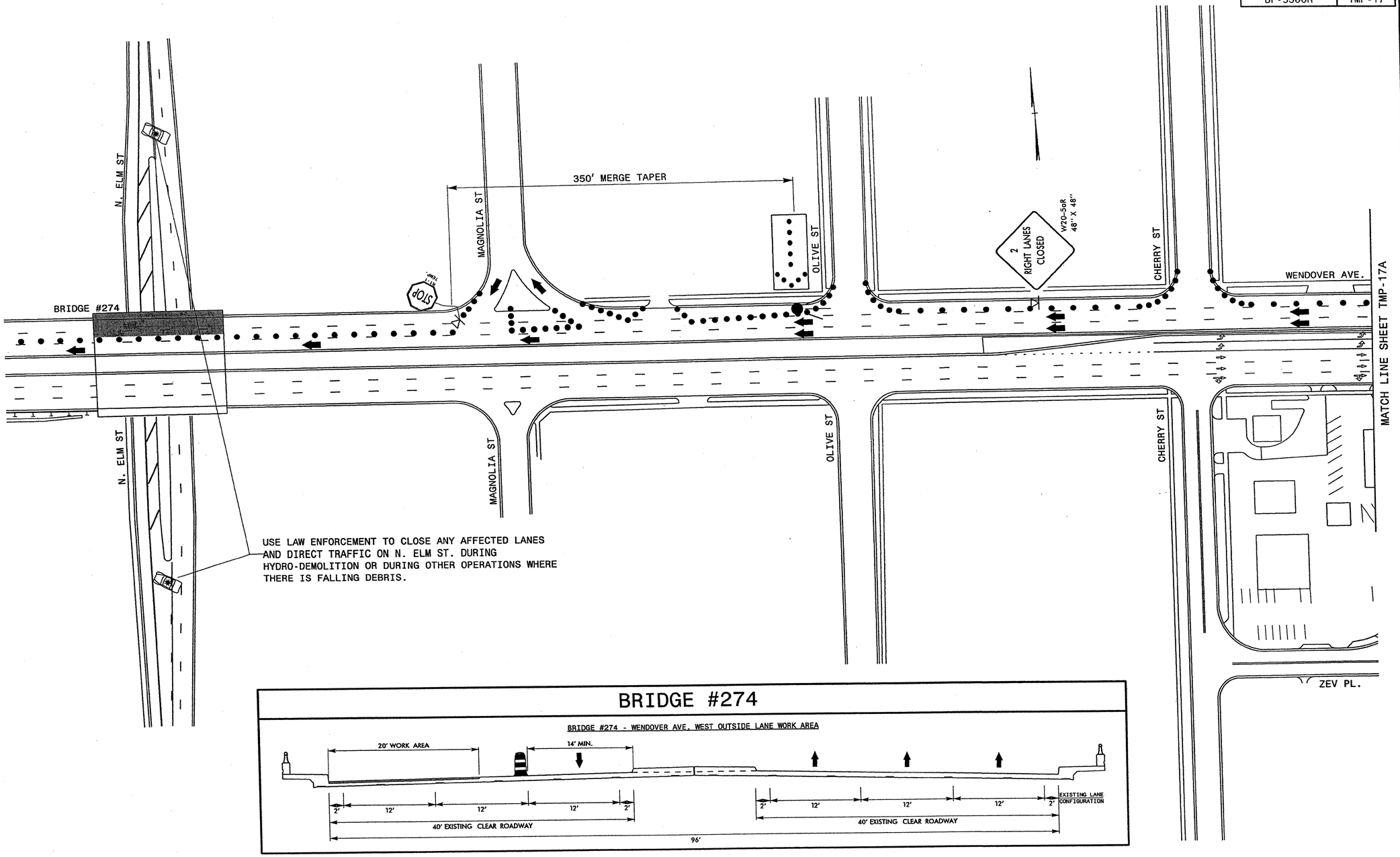

BRIDGE #274

BRIDGE #274 - WENDOVER AVE. WEST OUTSIDE LANE WORK AREA

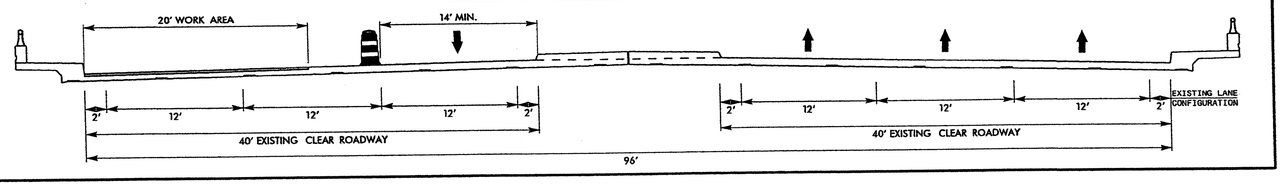

Stantec
Stantec Consulting Services Inc.
801 Jones Franklin Road
Suite 300
Raleigh, NC 27606
Tel. (919) 851-6866
Fax. (919) 851-7024
www.stantec.com
License No. F-0672

APPROVED: _____ DATE: _____

SEAL
NORTH CAROLINA PROFESSIONAL ENGINEER
BETSY L. WATSON
11/11/11

DIVISION OF HIGHWAYS
STATE OF NORTH CAROLINA
DEPARTMENT OF TRANSPORTATION
WORK ZONE TRAFFIC CONTROL

BRIDGE NO. 274

WENDOVER AVE. WEST
CLOSURE OF RIGHT 2 LANES

11/11/2011
U:\Traffic\TrafficControl\TCP\BP-5300R Guilford\Plan Sheets\BP5300R_TC_TMP17.dgn
gkaragiorga

PROJ. REFERENCE NO.	SHEET NO.
BP-5300R	TMP-17A

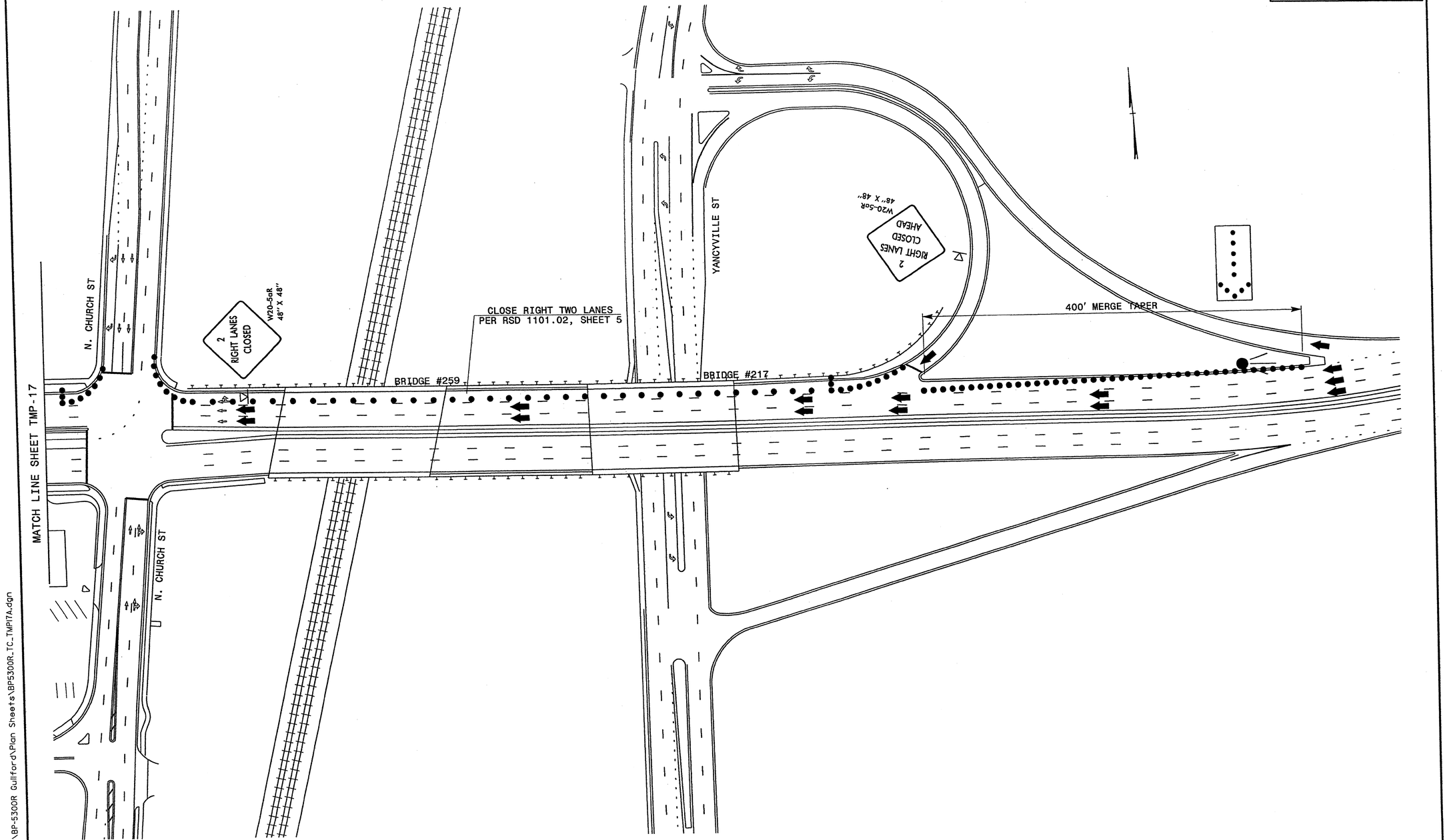

Stantec
Stantec Consulting Services Inc.
801 Jones Franklin Road
Suite 300
Raleigh, NC 27606
Tel. (919) 851-6866
Fax. (919) 851-7024
www.stantec.com
License No. F-0672

APPROVED:_____ DATE:_____

SEAL

NORTH CAROLINA PROFESSIONAL ENGINEER SEAL 29449 BETSY L. WATSON

11/11/11

DIVISION OF HIGHWAYS · STATE OF NORTH CAROLINA · DEPARTMENT OF TRANSPORTATION · WORK ZONE TRAFFIC CONTROL

BRIDGE NO. 274

WENDOVER AVE. WEST
CLOSURE OF RIGHT 2 LANES

11/11/2011
U:\Traffic\TrafficControl\TCP\BP-5300R Guilford\Plan Sheets\BP5300R_TC_TMP17A.dgn
gkarageorge

PROJ. REFERENCE NO.	SHEET NO.
BP-5300R	TMP-18

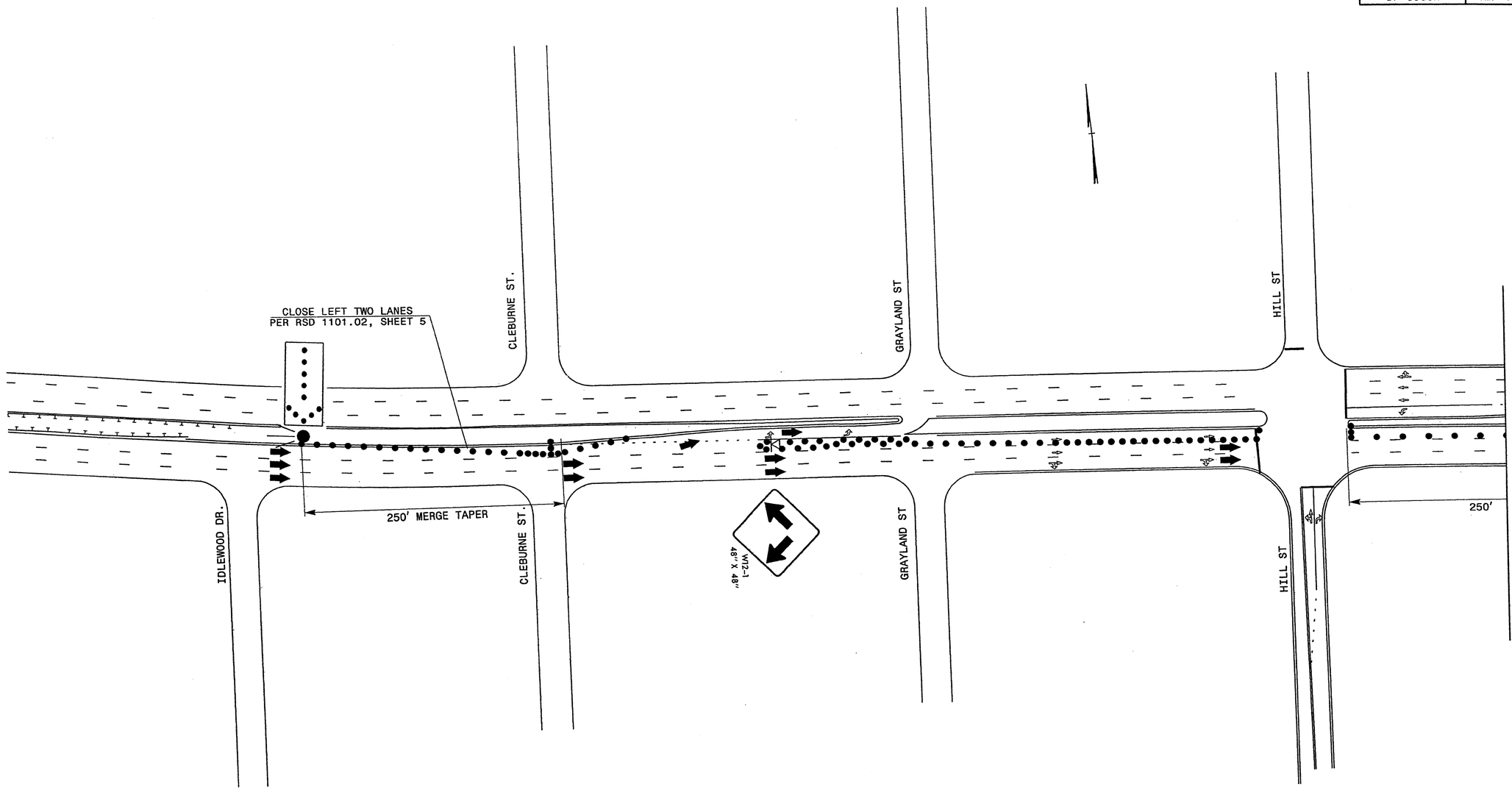

Stantec

Stantec Consulting Services Inc.
801 Jones Franklin Road
Suite 300
Raleigh, NC 27606
Tel. (919) 851-6866
Fax. (919) 851-7024
www.stantec.com
License No. F-0672

APPROVED: _____ DATE: _____

SEAL

NORTH CAROLINA PROFESSIONAL ENGINEER 036349 BETSY L. WATSON

11/1/11

DIVISION OF HIGHWAYS • STATE OF NORTH CAROLINA • DEPARTMENT OF TRANSPORTATION • WORK ZONE TRAFFIC CONTROL

BRIDGE NO. 287

WENDOVER AVE. EAST
CLOSURE OF LEFT 2 LANES

11/1/2011
U:\Traffic\TrafficControl\TCP\BP-5300R Guilford\Plan Sheets\BP5300R_TC_TMP18.dgn
gkaraggeorge

PROJ. REFERENCE NO.	SHEET NO.
BP-5300R	TMP-18A

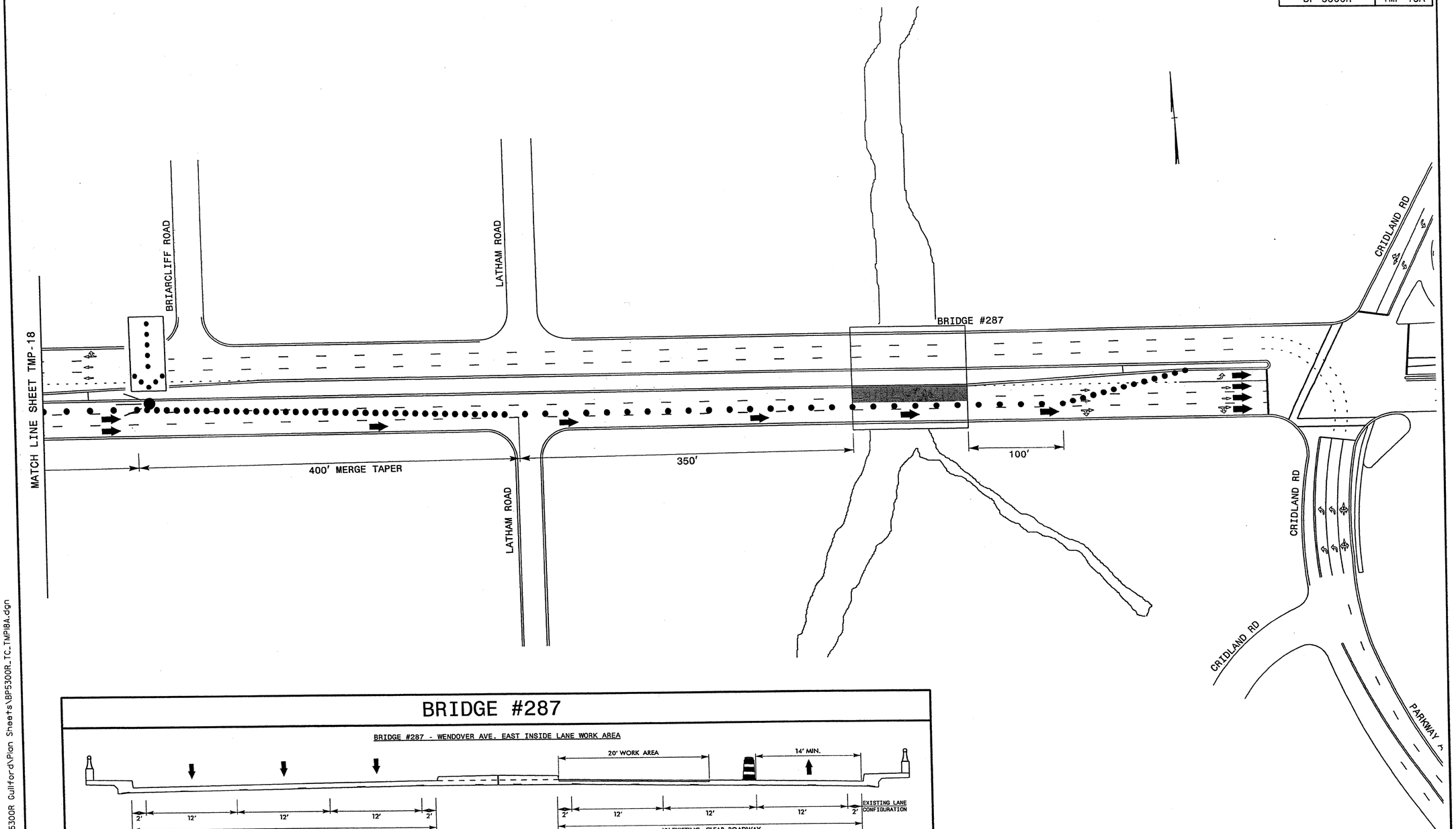

BRIDGE #287

BRIDGE #287 - WENDOVER AVE. EAST INSIDE LANE WORK AREA

Stantec

Stantec Consulting Services Inc.
801 Jones Franklin Road
Suite 300
Raleigh, NC 27606
Tel. (919) 851-6866
Fax. (919) 851-7024
www.stantec.com
License No. F-0672

APPROVED: _____ DATE: _____

SEAL

NORTH CAROLINA PROFESSIONAL ENGINEER SEAL 29449 BETSY L. WATSON

11/11/11

DIVISION OF HIGHWAYS STATE OF NORTH CAROLINA DEPARTMENT OF TRANSPORTATION WORK ZONE TRAFFIC CONTROL

BRIDGE NO. 287

WENDOVER AVE. EAST
CLOSURE OF LEFT 2 LANES

11/11/2011
U:\Traffic\TrafficControl\TCP\BP-5300R Guilford\Plan Sheets\BP5300R_TC_TMP18A.dgn
gkarageorge

PROJ. REFERENCE NO.	SHEET NO.
BP-5300R	TMP-19

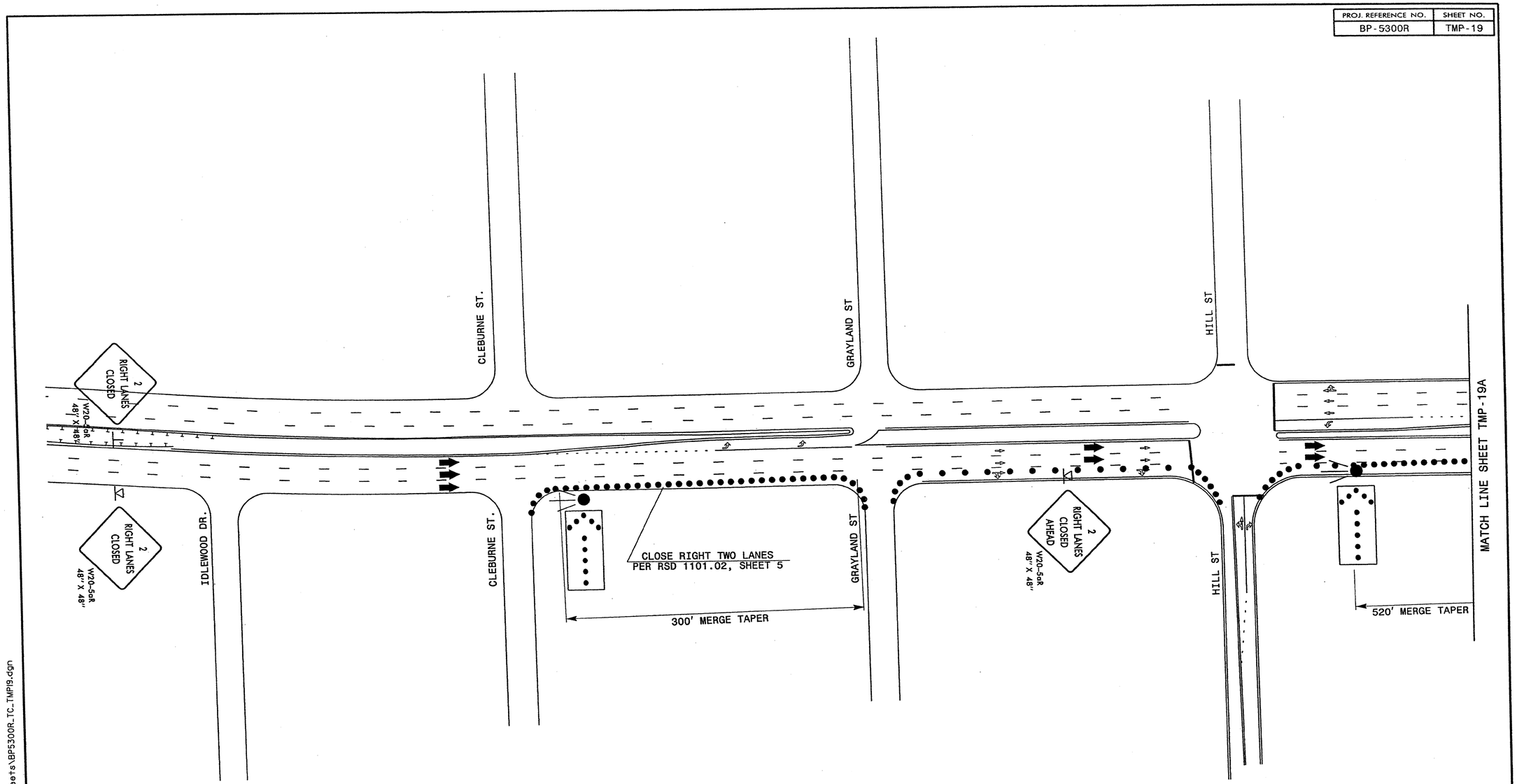

Stantec
Stantec Consulting Services Inc.
801 Jones Franklin Road
Suite 300
Raleigh, NC 27606
Tel. (919) 851-6866
Fax. (919) 851-7024
www.stantec.com
License No. F-0672

APPROVED:_____ DATE:_____

SEAL

NORTH CAROLINA PROFESSIONAL SEAL 29449 ENGINEER BETSY L. WATSON

11/11/11

DIVISION OF HIGHWAYS · STATE OF NORTH CAROLINA · DEPARTMENT OF TRANSPORTATION · WORK ZONE TRAFFIC CONTROL

BRIDGE NO. 287

WENDOVER AVE. EAST
CLOSURE OF RIGHT 2 LANES

11/11/2011
U:\Traffic\TrafficControl\TCP\BP-5300R Guilford\Plan Sheets\BP5300R_TC_TMP19.dgn
gkarageorge

PROJ. REFERENCE NO.	SHEET NO.
BP-5300R	TMP-19A

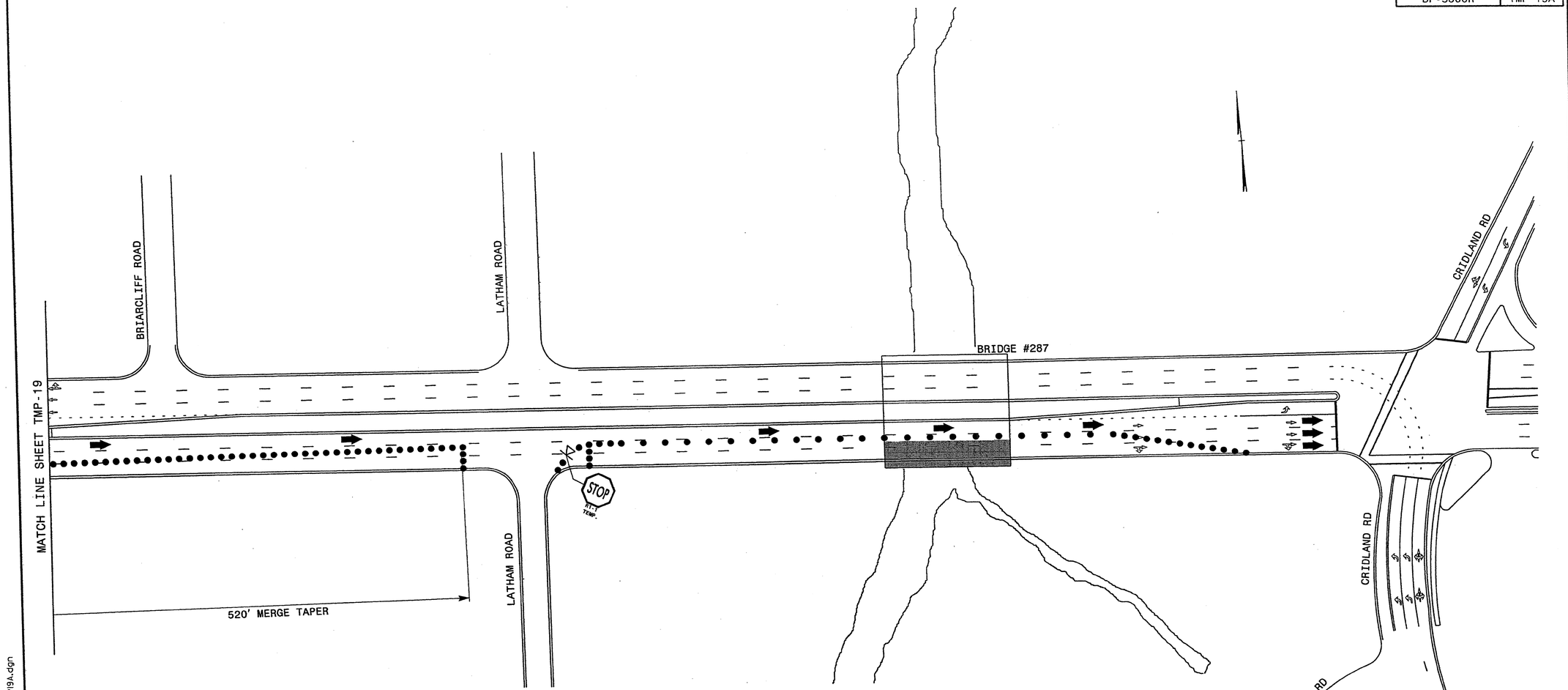

BRIDGE #287

BRIDGE #287 - WENDOVER AVE. EAST OUTSIDE LANE WORK AREA

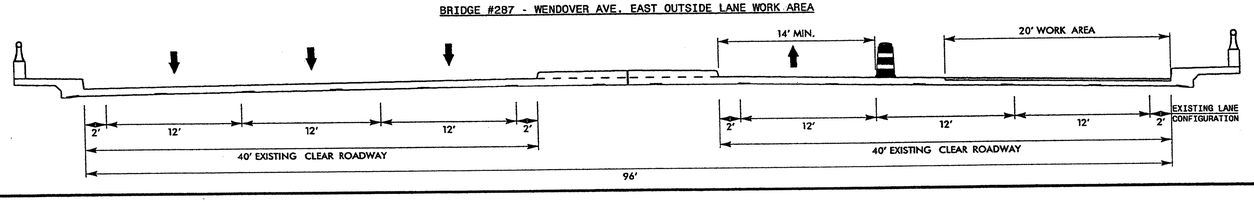

Stantec Consulting Services Inc.
801 Jones Franklin Road
Suite 300
Raleigh, NC 27606
Tel. (919) 851-8866
Fax. (919) 851-7024
www.stantec.com
License No. F-0672

APPROVED:_____ DATE:_____

SEAL

NORTH CAROLINA PROFESSIONAL ENGINEER BETSY L. WATSON

11/11/11

DIVISION OF HIGHWAYS · STATE OF NORTH CAROLINA · DEPARTMENT OF TRANSPORTATION · WORK ZONE TRAFFIC CONTROL

BRIDGE NO. 287

WENDOVER AVE. EAST
CLOSURE OF RIGHT 2 LANES

11/11/2011
U:\Traffic\TrafficControl\TCP\BP-5300R Guilford\Plan Sheets\BP5300R_TC_TMP19A.dgn
gkoraggeorge

PROJ. REFERENCE NO.	SHEET NO.
BP-5300R	TMP-20

BRIDGE #287

BRIDGE #287 - WENDOVER AVE. WEST OUTSIDE LANE WORK AREA

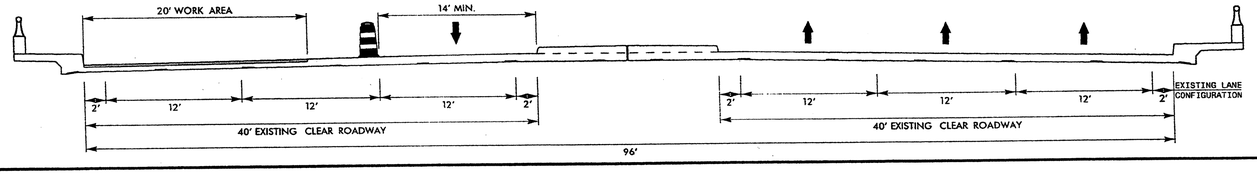

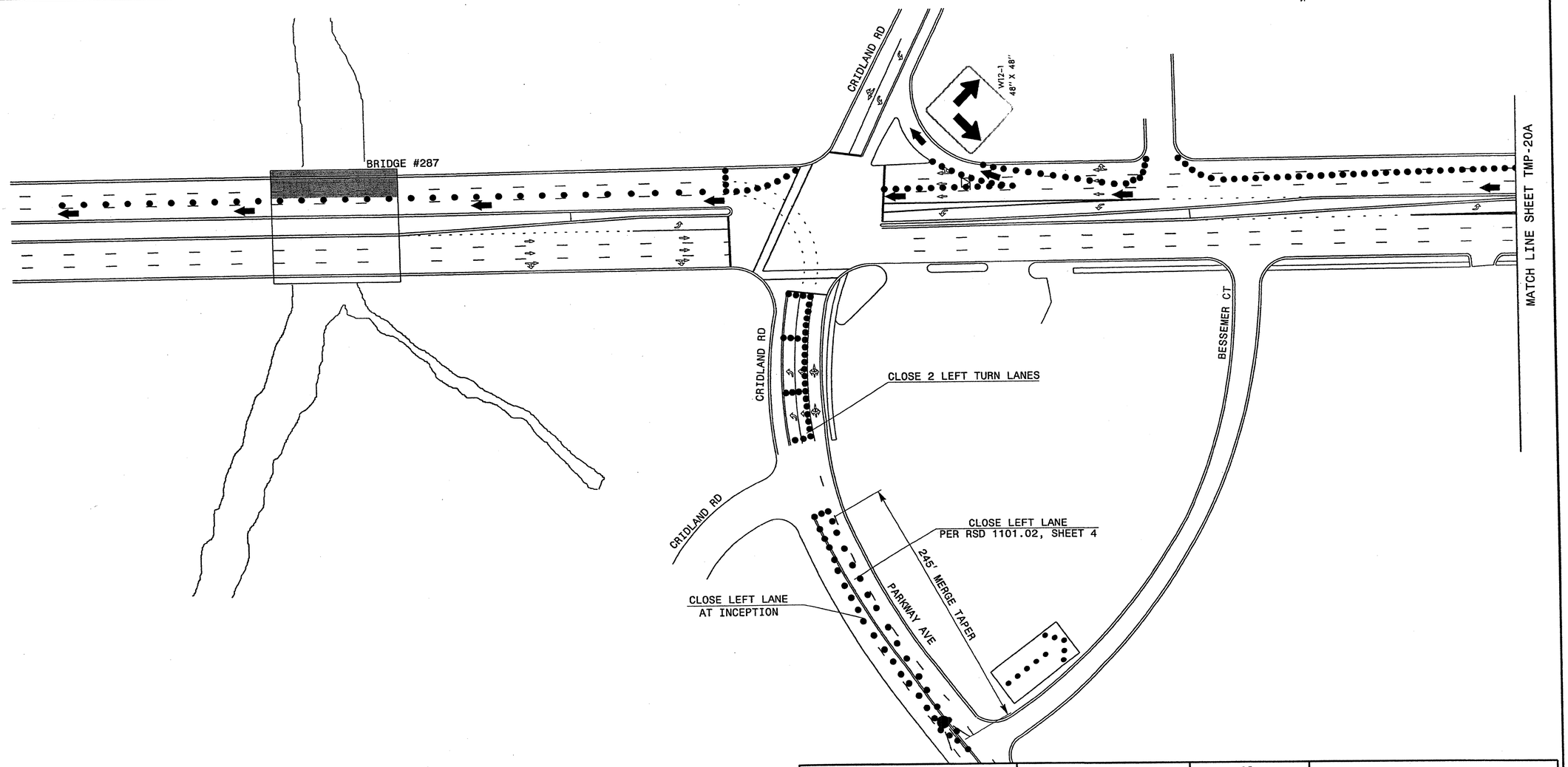

Stantec

Stantec Consulting Services Inc.
801 Jones Franklin Road
Suite 300
Raleigh, NC 27606
Tel. (919) 851-6866
Fax. (919) 851-7024
www.stantec.com
License No. F-0672

APPROVED:_____ DATE:_____

SEAL

NORTH CAROLINA PROFESSIONAL ENGINEER SEAL 29449 BETSY L. WATSON

11/11/11

DIVISION OF HIGHWAYS · STATE OF NORTH CAROLINA · DEPARTMENT OF TRANSPORTATION · WORK ZONE TRAFFIC CONTROL

BRIDGE NO. 287

WENDOVER AVE. WEST
CLOSURE OF RIGHT 2 LANES

11/11/2011
U:\Traffic\TrafficControl\TCP\BP-5300R Guilford\Plan Sheets\BP5300R_TC_TMP20.dgn
gkarageorge

PROJ. REFERENCE NO.	SHEET NO.
BP-5300R	TMP-20A

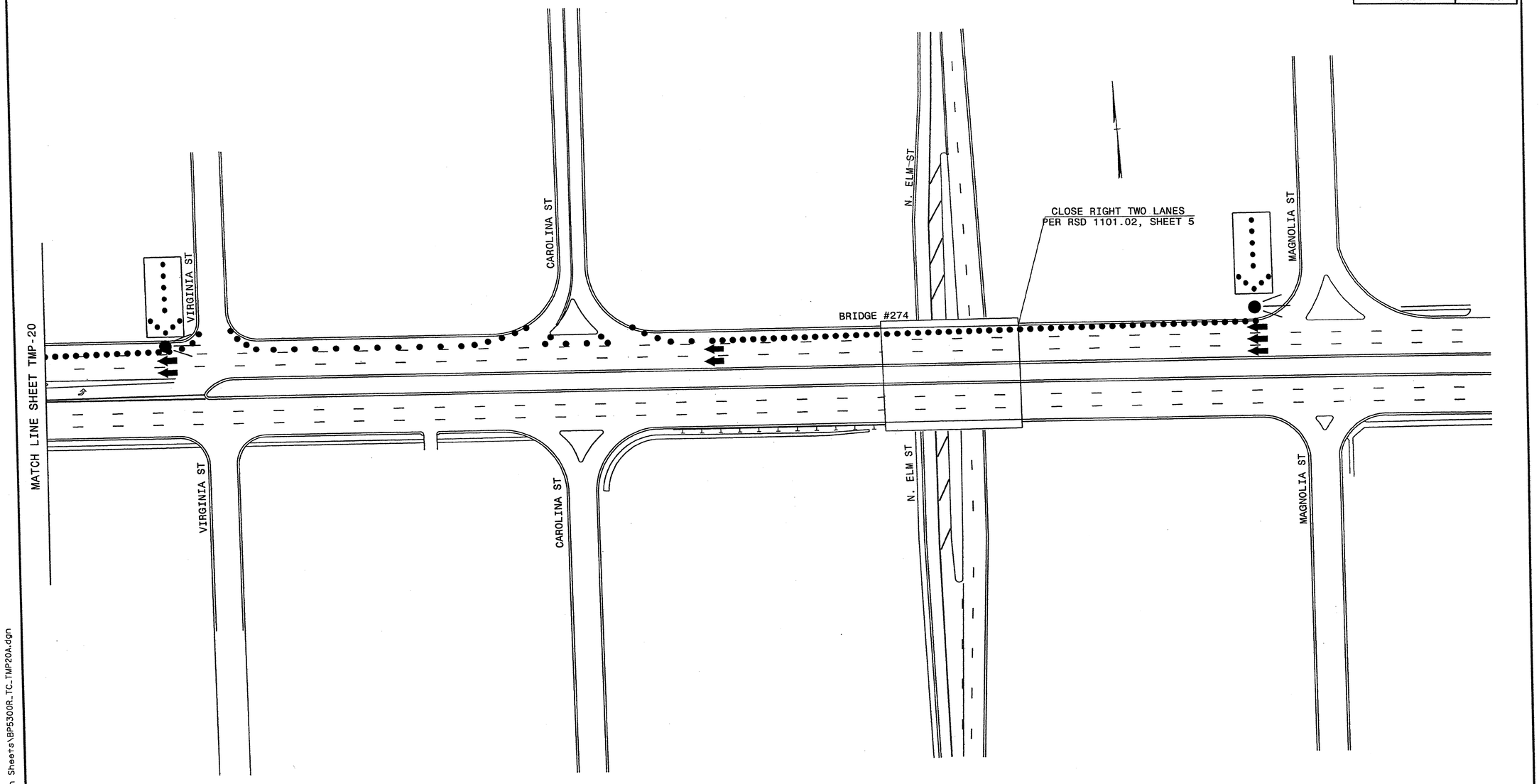

Stantec
Stantec Consulting Services Inc.
801 Jones Franklin Road
Suite 300
Raleigh, NC 27606
Tel. (919) 851-6866
Fax. (919) 851-7024
www.stantec.com
License No. F-0672

APPROVED:_____ DATE:_____

SEAL

NORTH CAROLINA PROFESSIONAL SEAL ENGINEER BETSY L. WATSON

11/11/11

DIVISION OF HIGHWAYS • STATE OF NORTH CAROLINA • DEPARTMENT OF TRANSPORTATION • WORK ZONE TRAFFIC CONTROL

BRIDGE NO. 287

WENDOVER AVE. WEST
CLOSURE OF RIGHT 2 LANES

11/11/2011
U:\Traffic\TrafficControl\TCP\BP-5300R Guilford\Plan Sheets\BP5300R_TC_TMP20A.dgn
gkarageorge

PROJ. REFERENCE NO.	SHEET NO.
BP-5300R	TMP-21

BRIDGE #287

BRIDGE #287 - WENDOVER AVE. WEST INSIDE LANE WORK AREA

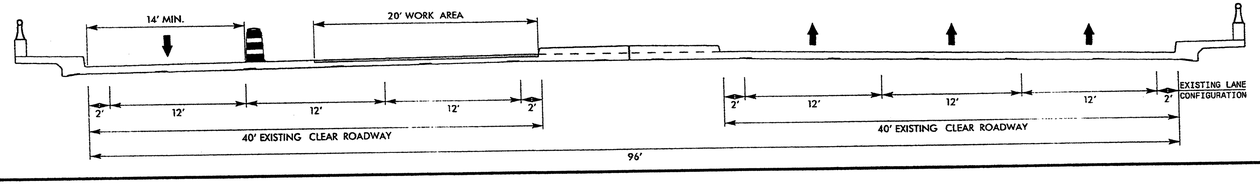

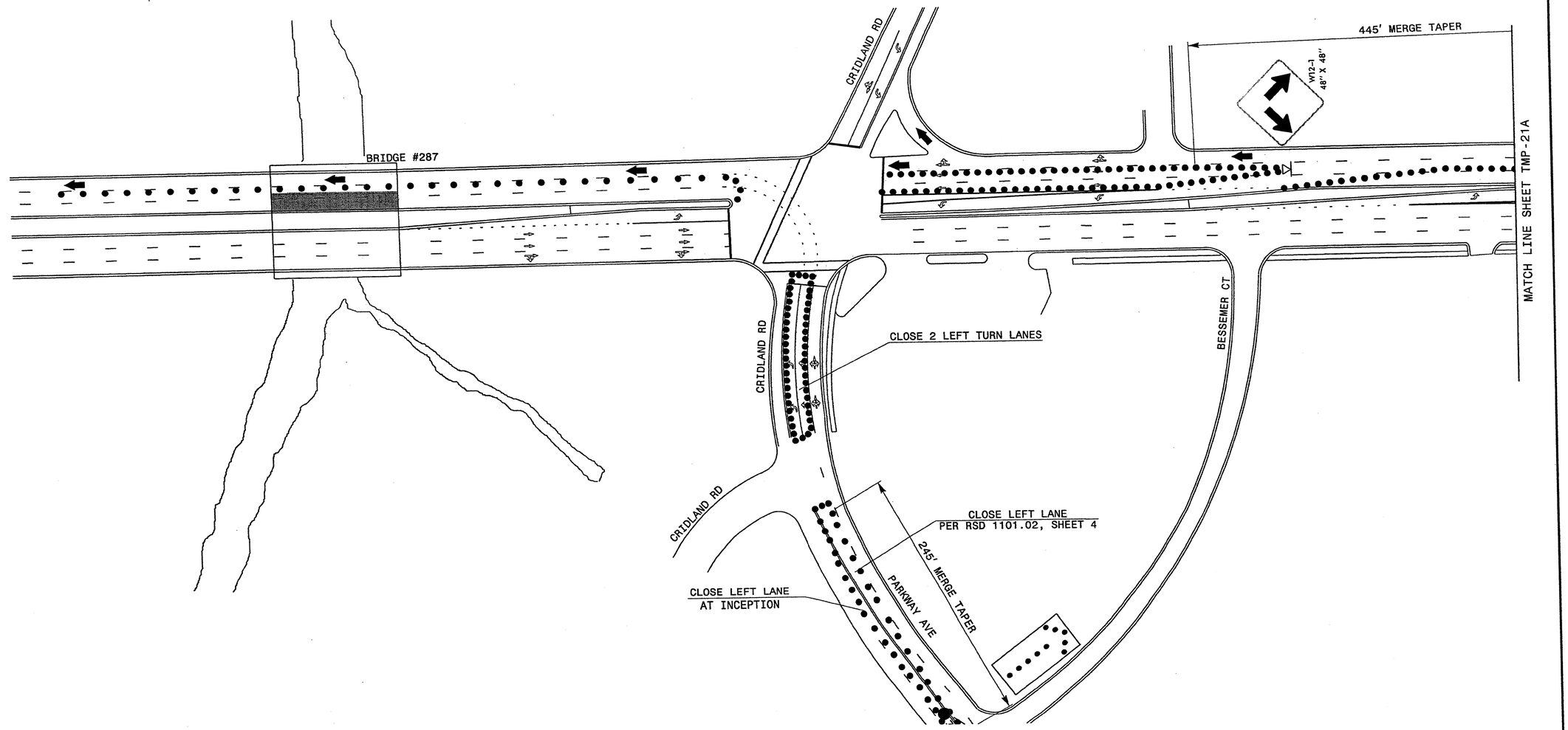

Stantec Consulting Services Inc.
801 Jones Franklin Road
Suite 300
Raleigh, NC 27606
Tel. (919) 851-6666
Fax. (919) 851-7024
www.stantec.com
License No. F-0672

APPROVED: _____ DATE: _____

SEAL
NORTH CAROLINA PROFESSIONAL ENGINEER SEAL 29449 BETSY L. WATSON
11/11/11

DIVISION OF HIGHWAYS • STATE OF NORTH CAROLINA • DEPARTMENT OF TRANSPORTATION
WORK ZONE TRAFFIC CONTROL

BRIDGE NO. 287

WENDOVER AVE. WEST
CLOSURE OF LEFT 2 LANES

11/11/2011
I:\Traffic\TrafficControl\TCP\BP-5300R Guilford\Plan Sheets\BP5300R_TC_TMP21.dgn
gkargeorge

PROJ. REFERENCE NO.	SHEET NO.
BP-5300R	TMP-21A

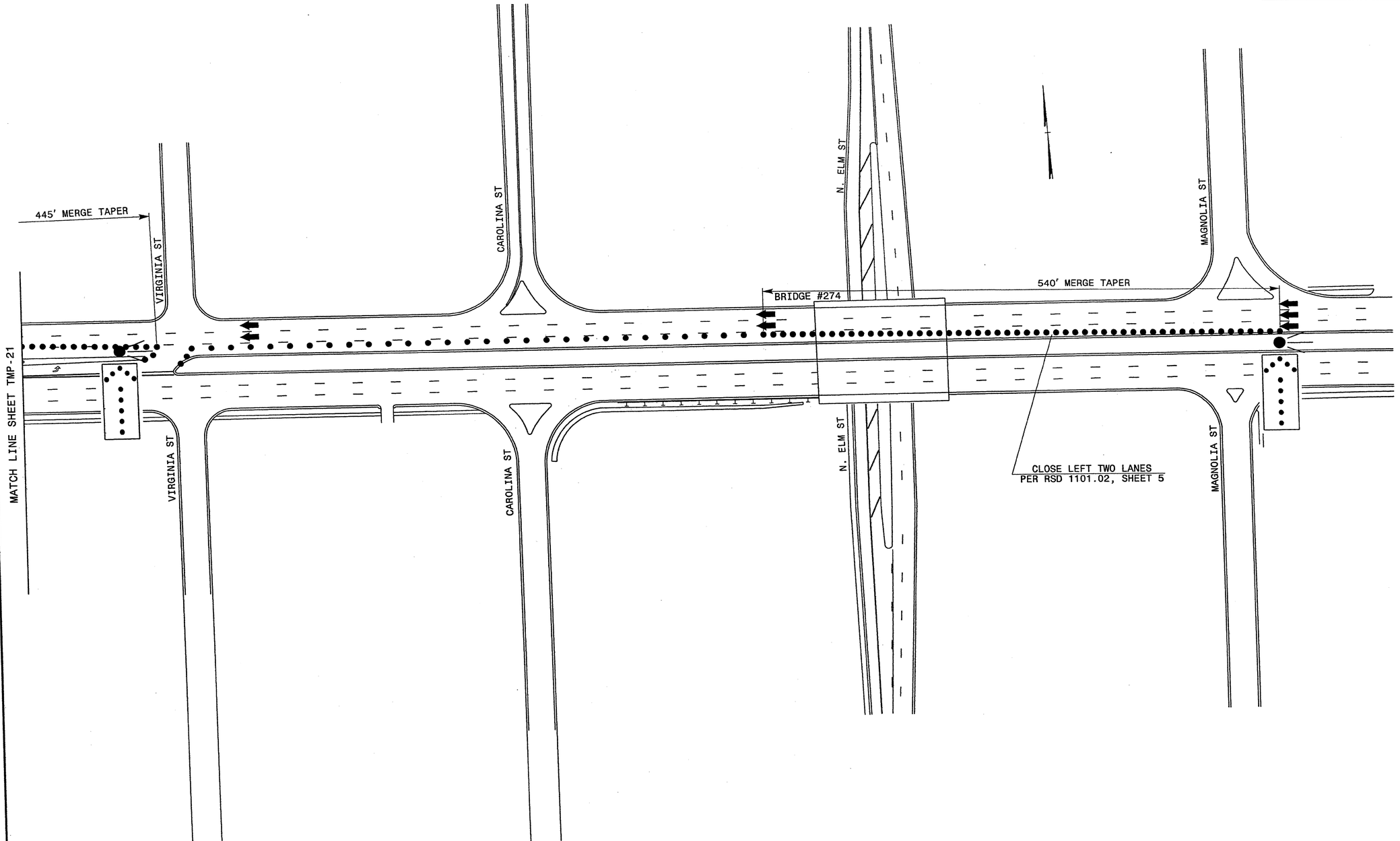

Stantec
Stantec Consulting Services Inc.
801 Jones Franklin Road
Suite 300
Raleigh, NC 27606
Tel. (919) 851-6866
Fax. (919) 851-7024
www.stantec.com
License No. F-0672

APPROVED:_____ DATE:_____

SEAL

NORTH CAROLINA PROFESSIONAL SEAL 25449 ENGINEER BETSY L. WATSON

11/11/11

DIVISION OF HIGHWAYS · STATE OF NORTH CAROLINA · DEPARTMENT OF TRANSPORTATION · WORK ZONE TRAFFIC CONTROL

BRIDGE NO. 287

WENDOVER AVE. WEST
CLOSURE OF LEFT 2 LANES

11/11/2011
U:\Traffic\TrafficControl\TCP\BP-5300R Guilford\Plan Sheets\BP5300R_TC_TMP21A.dgn
gkarageorge