TIP PROJECT: 15B.13.19

CONTRACT NO. C202836

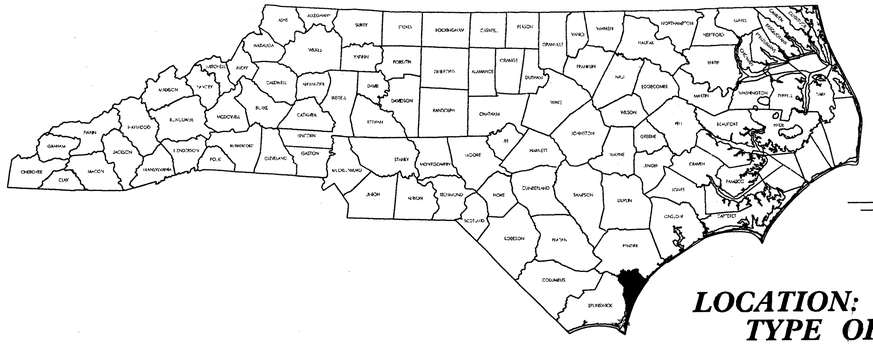

STATE OF NORTH CAROLINA
DIVISION OF HIGHWAYS

NEW HANOVER COUNTY

STATE	STATE PROJECT REFERENCE NO.	SHEET NO.	TOTAL SHEETS
N.C.	15B.13.19	1	

STATE PROJ. NO.	F. A. PROJ. NO.	DESCRIPTION
15B.13.10		P.E.
15B.13.19		CONST

LOCATION: BRIDGE #12 ON US 74 /76 ACROSS THE INTRACOASTAL WATERWAY
TYPE OF WORK: BRIDGE PRESERVATION, MECHANICAL AND ELECTRICAL REPAIRS, AND NEW CONTROL HOUSE IN NEW HANOVER COUNTY.

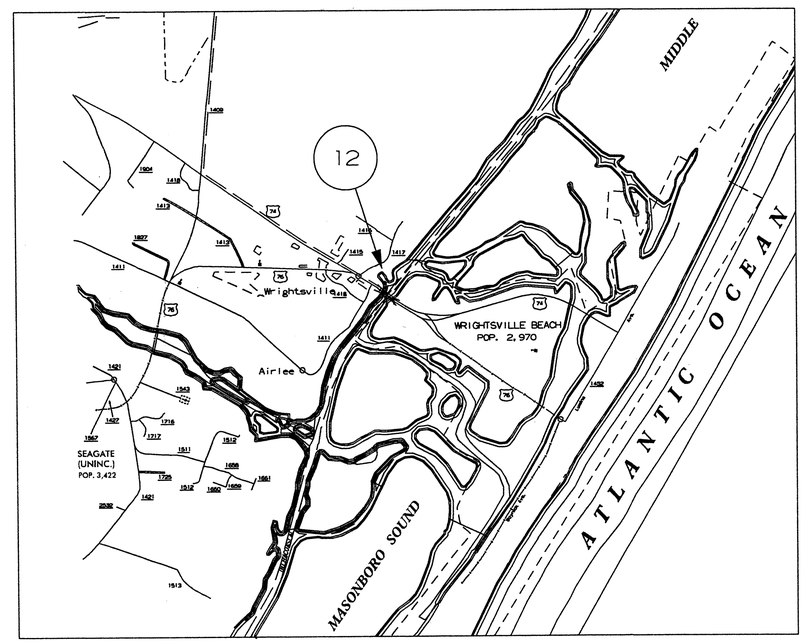

N
S

STATE OF NORTH CAROLINA DEPARTMENT OF TRANSPORTATION

DESIGN DATA

PROJECT LENGTH

Prepared in the Office of:
BRIDGE MANAGEMENT UNIT
NORTH CAROLINA DEPARTMENT OF TRANSPORTATION

2006 STANDARD SPECIFICATIONS

LETTING DATE:
OCTOBER 18, 2011

DAN HOLDERMAN, PE
STATE BRIDGE MANAGEMENT ENGINEER

MIKE SUMMERS
BRIDGE MANAGEMENT PROJECT MANAGER

NORTH CAROLINA PROFESSIONAL SEAL 20208 ENGINEER ERIC B. NELSON, JR. 07/13/11

RICK NELSON, PE
DESIGN ENGINEER

5/28/99

STATE OF NORTH CAROLINA
DIVISION OF HIGHWAYS

SUMMARY OF QUANTITIES

STATE OF NORTH CAROLINA
DIVISION OF HIGHWAYS
ROADWAY SUMMARY OF QUANTITIES FOR CONTRACT - C202836

ItemNumber	Sec #	Quantity	Unit	Description
0000100000-N	800	Lump Sum		MOBILIZATION
0022000000-E	225	19	CY	UNCLASSIFIED EXCAVATION
1297000000-E	607	136	SY	MILLING ASPHALT PAVEMENT, ***" DEPTH (1-1/2")
1693000000-E	654	12	TON	ASPHALT PLANT MIX, PAVEMENT REPAIR
2647000000-E	852	136	SY	5" MONOLITHIC CONCRETE ISLANDS (SURFACE MOUNTED)
4400000000-E	1110	272	SF	WORK ZONE SIGNS (STATIONARY)
4405000000-E	1110	264	SF	WORK ZONE SIGNS (PORTABLE)
4410000000-E	1110	24	SF	WORK ZONE SIGNS (BARRICADE MOUNTED)
4415000000-N	1115	2	EA	FLASHING ARROW PANELS, TYPE C
4420000000-N	1120	4	EA	CHANGEABLE MESSAGE SIGN
4445000000-E	1145	72	LF	BARRICADES (TYPE III)
4450000000-N	1150	400	HR	FLAGGER
4480000000-N	1165	2	EA	TMIA
4510000000-N	SP	400	HR	LAW ENFORCEMENT
4685000000-E	1205	800	LF	THERMOPLASTIC PAVEMENT MARKING LINES (4", 90 MILS)
4695000000-E	1205	590	LF	THERMOPLASTIC PAVEMENT MARKING LINES (8", 90 MILS)
4770000000-E	1205	34,908	LF	COLD APPLIED PLASTIC PAVEMENT MARKING LINES, TYPE ** (4") (IV)
4780000000-E	1205	500	LF	COLD APPLIED PLASTIC PAVEMENT MARKING LINES, TYPE ** (8") (IV)
4795000000-E	1205	28	LF	COLD APPLIED PLASTIC PAVEMENT MARKING LINES, TYPE ** (24") (I)
4795000000-E	1205	70	LF	COLD APPLIED PLASTIC PAVEMENT MARKING LINES, TYPE ** (24") (IV)
4800000000-N	1205	24	EA	COLD APPLIED PLASTIC PAVEMENT MARKING CHARACTER, TYPE ** (IV)
4805000000-N	1205	8	EA	COLD APPLIED PLASTIC PAVEMENT MARKING SYMBOL, TYPE ** (IV)
4810000000-E	1205	495	LF	PAINT PAVEMENT MARKING LINES (4")
4847000000-E	1205	975	LF	POLYUREA PAVEMENT MARKING LINES (4", **********) (STANDARD GLASS BEADS)
4850000000-E	1205	960	LF	REMOVAL OF PAVEMENT MARKING LINES (4")
4860000000-E	1205	830	LF	REMOVAL OF PAVEMENT MARKING LINES (8")
4870000000-E	1205	28	LF	REMOVAL OF PAVEMENT MARKING LINES (24")
4875000000-N	1205	2	EA	REMOVAL OF PAVEMENT MARKING SYMBOLS & CHARACTERS
4900000000-N	1251	72	EA	PERMANENT RAISED PAVEMENT MARKERS
7985000000-N	SP	Lump Sum		GENERIC SIGNAL ITEM TEMPORARY TRAFFIC SIGNAL SYSTEM
8860000000-N	SP	Lump Sum		GENERIC STRUCTURE ITEM BRIDGE ELECTRICAL WORK
8860000000-N	SP	Lump Sum		GENERIC STRUCTURE ITEM CONTROL HOUSE
8860000000-N	SP	Lump Sum		GENERIC STRUCTURE ITEM MISCELLANEOUS MECHANICAL WORK
8860000000-N	SP	Lump Sum		GENERIC STRUCTURE ITEM REPLACEMENT OF STEEL CROSS BRACING
8860000000-N	SP	Lump Sum		GENERIC STRUCTURE ITEM REPLACEMENT OF STEEL GRID DECK
8860000000-N	SP	Lump Sum		GENERIC STRUCTURE ITEM WATER & SANITARY FACILITIES
8867000000-E	SP	104	LF	GENERIC STRUCTURE ITEM BASCULE PIER CRACK REPAIRS
8889000000-E	SP	4,400	LB	GENERIC STRUCTURE ITEM ADDITIONAL BALANCING PLATES
8889000000-E	SP	13,615	LB	GENERIC STRUCTURE ITEM REPLACEMENT OF STEEL STRINGERS

$$$$$$SYSTIME$$$$$ $$$$$$$$$$$$$$$$$DGN$$$$$ $$$$USERNAME$$$$

PROJECT REFERENCE NO.	SHEET NO.
15B.13.19	2A

STATE OF NORTH CAROLINA
DEPARTMENT OF TRANSPORTATION

BRIDGE #12 – US 74–76
OVER INTRACOASTAL WATERWAY

WRIGHTSVILLE, NORTH CAROLINA
MECHANICAL AND ELECTRICAL REPAIRS

JUNE 2011

INDEX OF SHEETS

DRAWING NO.	SHEET NAME
1	TITLE SHEET
2	SUMMARY OF QUANTITIES
2A	INDEX OF SHEETS AND LIST OF DRAWINGS

LIST OF DRAWINGS

DRAWING NO.	SHEET NAME
1	GENERAL PLAN AND ELEVATION
	MECHANICAL DRAWINGS
2 (M1)	MECHANICAL REHABILITATION
3 (M2)	MECHANICAL NOTES – 1
4 (M3)	MECHANICAL NOTES – 2
5 (M4)	EQUIPMENT SCHEDULE AND SCOPE OF WORK
6 (M5)	NEW SPAN DRIVE MACHINERY DETAILS – 1
7 (M6)	NEW SPAN DRIVE MACHINERY DETAILS – 2
8 (M7)	SPAN SEATING AIR BUFFER REHABILITATION
9 (M8)	NEW TAIL LOCK DETAILS – 1
10 (M9)	NEW TAIL LOCK DETAILS – 2
11 (M10)	NEW TAIL LOCK DETAILS – 3
12 (M11)	CENTER SPAN LOCK ASSEMBLY – 1
13 (M12)	CENTER SPAN LOCK ASSEMBLY – 2
14 (M13)	NEW CENTER SPAN LOCK DRIVE MACHINERY
15 (M14)	CENTER SPAN LOCK DETAILS – 1
16 (M15)	CENTER SPAN LOCK DETAILS – 2
17 (M16)	CENTER SPAN LOCK DETAILS – 3
18 (M17)	REPLACEMENT OF DRIVE FOR SPAN OPENING LIMIT SWITCH
19 (M18)	LIMIT SWITCH MOUNTING DETAILS
DRAWING NO.	**ELECTRICAL DRAWINGS**
20 (E1)	ELECTRICAL PLAN AND ELEVATION
21 (E2)	ELECTRICAL NOTES – 1
22 (E3)	ELECTRICAL NOTES – 2
23 (E4)	THREE LINE DIAGRAM – 1
24 (E5)	THREE LINE DIAGRAM – 2
25 (E6)	THREE LINE DIAGRAM – 3
26 (E7)	THREE LINE DIAGRAM – 4
27 (E8)	VFD DRIVE POWER WIRING 1, 2, 3, AND 4
28 (E9)	AUXILIARY MOTOR STARTER PANELS, LAYOUT AND WIRING
29 (E10)	MOTOR CONTROL CENTER LAYOUT
30 (E11)	LOAD PANEL LAYOUT 110/208V, MAIN GENERATOR (EAST)
31 (E12)	LOAD PANEL CIRCUITS – 1
32 (E13)	LOAD PANEL CIRCUITS – 2
33 (E14)	LOAD PANEL CIRCUITS – 3
34 (E15)	LOAD PANEL CIRCUITS – 4
35 (E16)	MISCELLANEOUS CIRCUITS – 1
36 (E17)	CONTROL SYSTEM ARCHITECTURE LAYOUT

DRAWING NO.	ELECTRICAL DRAWINGS
37 (E18)	CONTROL CONSOLE DETAILS – 1
38 (E19)	CONTROL CONSOLE DETAILS – 2
39 (E20)	CONTROL CIRCUIT LEGEND – 1
40 (E21)	CONTROL CIRCUIT LEGEND – 2
41 (E22)	CONTROL CIRCUIT LEGEND – 3
42 (E23)	CONTROL CIRCUIT – 1
43 (E24)	CONTROL CIRCUIT – 2
44 (E25)	CONTROL CIRCUIT – 3
45 (E26)	CONTROL CIRCUIT – 4
46 (E27)	CONTROL CIRCUIT – 5
47 (E28)	CONTROL CIRCUIT – 6
48 (E29)	CONTROL CIRCUIT – 7
49 (E30)	CONTROL CIRCUIT – 8
50 (E31)	CONTROL CIRCUIT – 9
51 (E32)	CONTROL CIRCUIT – 10
52 (E33)	CONTROL CIRCUIT – 11
53 (E34)	CONTROL CIRCUIT – 12
54 (E35)	CONTROL CIRCUIT – 13
55 (E36)	CONTROL CIRCUIT – 14
56 (E37)	CONTROL CIRCUIT – 15
57 (E38)	CONTROL CIRCUIT – 16
58 (E39)	CONTROL CIRCUIT – 17
59 (E40)	CONTROL CIRCUIT – 18
60 (E41)	CONTROL CIRCUIT – 19
61 (E42)	CONTROL CIRCUIT – 20
62 (E43)	CONTROL CIRCUIT – 21
63 (E44)	CONTROL CIRCUIT – 22
64 (E45)	CONTROL CIRCUIT – 23
65 (E46)	CONTROL CIRCUIT – 24
66 (E47)	CONTROL CIRCUIT – 25
67 (E48)	CONTROL CIRCUIT – 26
68 (E49)	CONTROL CIRCUIT – 27
69 (E50)	CONTROL CIRCUIT – 28
70 (E51)	CONTROL CIRCUIT – 29
71 (E52)	CONTROL CIRCUIT – 30
72 (E53)	CONTROL CIRCUIT – 31
73 (E54)	CONTROL CIRCUIT – 32
74 (E55)	CONTROL CIRCUIT – 33
75 (E56)	CONTROL CIRCUIT – 34
76 (E57)	CONTROL CIRCUIT – 35
77 (E58)	CONTROL CIRCUIT – 36
78 (E59)	CONTROL CIRCUIT – 37
79 (E60)	CONTROL CIRCUIT – 38
80 (E61)	CONTROL CIRCUIT – 39

DRAWING NO.	ELECTRICAL DRAWINGS (CONTINUED)
81 (E62)	CONTROL CIRCUIT – 40
82 (E63)	CONTROL CIRCUIT – 41
83 (E64)	CONTROL CIRCUIT – 42
84 (E65)	CONTROL CIRCUIT – 43
85 (E66)	CONTROL CIRCUIT – 44
86 (E67)	CONTROL CIRCUIT – 45
87 (E68)	CONTROL CIRCUIT – 46
88 (E69)	LIMIT SWITCH TRIPPING CHART
89 (E70)	ELECTRICAL EQUIPMENT SCHEDULE – 1
90 (E71)	ELECTRICAL EQUIPMENT SCHEDULE – 2
91 (E72)	ELECTRICAL EQUIPMENT SCHEDULE – 3
92 (E73)	GENERATOR PAD – 1
93 (E74)	GENERATOR PAD – 2
94 (E75)	EAST MACHINERY LIGHTING LAYOUT
95 (E76)	WEST MACHINERY LIGHTING LAYOUT
96 (E77)	SOUTH EAST TRUNNION LAYOUT
97 (E78)	ELECTRICAL ROOM LAYOUT
98 (E79)	CONTROL HOUSE FIRST FLOOR
99 (E80)	CONTROL HOUSE SECOND FLOOR
100 (E81)	CLOSED CIRCUIT TV SYSTEM – 1
101 (E82)	CLOSED CIRCUIT TV SYSTEM – 2
102 (E83)	WARNING GATE DETAILS
103 (E84)	MISCELLANEOUS ELECTRICAL DETAILS – 1
104 (E85)	MISCELLANEOUS ELECTRICAL DETAILS – 2
105 (E86)	MISCELLANEOUS ELECTRICAL DETAILS – 3
106 (E87)	MISCELLANEOUS ELECTRICAL DETAILS – 4
107 (E88)	MISCELLANEOUS ELECTRICAL DETAILS – 5
108 (E89)	MISCELLANEOUS ELECTRICAL DETAILS – 6
109 (E90)	WEST BRIDGE CABLES BRIDGE WIRING LAYOUT – 1
110 (E91)	EAST BRIDGE CABLES BRIDGE WIRING LAYOUT – 2
111 (E92)	WEST MACHINERY ROOM CONDUIT LAYOUT BRIDGE WIRING LAYOUT – 3
112 (E93)	EAST MACHINERY ROOM CONDUIT LAYOUT BRIDGE WIRING LAYOUT – 4
113 (E94)	MACHINERY ROOMS (E/W) CONDUIT LEGEND BRIDGE WIRING LAYOUT – 5
114 (E95)	SUBMARINE CABLE AND EAST TRUNNION ROOM BRIDGE WIRING LAYOUT – 6
115 (E96)	ELECTRICAL ROOM 120/480V POWER BRIDGE WIRING LAYOUT – 7
116 (E97)	ELECTRICAL ROOM CONTROL AND INSTR. BRIDGE WIRING LAYOUT – 8

DRAWING NO.	STRUCTURAL DRAWINGS
117 (S1)	FRAMING PLAN
118 (S2)	TYPICAL SECTION
119 (S3)	STRINGER REPLACEMENT DETAILS
120 (S4)	BASCULE PIER CRACK REPAIR DETAILS
121 (S5)	GRID DECK LAYOUT PLAN
122 (S6)	GRID DECK DETAILS
DRAWING NO.	**ARCHITECTURAL DRAWINGS**
123 (A1)	PLANS – LAYOUT 1
124 (A2)	ELEVATIONS – LAYOUT 1
125 (A3)	BUILDING SECTIONS – LAYOUT 1
126 (A4)	WALL SECTION – LAYOUT 1
127 (A5)	WALL SECTION – LAYOUT 1
128 (A6)	STAIR AND SCHEDULES
129 (A7)	PLAN DETAILS SCALE 1.5 LAYOUT 1
130 (A8)	SECTION DETAIL LAYOUT 1
131 (A9)	SECTION DETAIL LAYOUT 1
132 (A10)	SECTION DETAIL LAYOUT 1
133 (D1)	DEMO
134 (G1)	CODE SUMMARY
DRAWING NO.	**WETHERILL DRAWINGS**
135 (S1)	GENERAL NOTES
136 (S2)	FRAMING LVL B
137 (S3)	FRAMING LVL1
138 (S4)	FRAMING LVL2
139 (S5)	FRAMING ROOF
140 (S6)	FRAMING ELEV.
DRAWING NO.	**TRAFFIC MANAGEMENT PLANS**
TMP1–TMP11A	

NORTH CAROLINA PROFESSIONAL ENGINEER SEAL 025801 LANCE V. BORDEN

MODJESKI and MASTERS
Experience great bridges.
100 Sterling Parkway
Suite 302
Mechanicsburg, PA 17050 NC License No. C–2979

0–TS.DWG

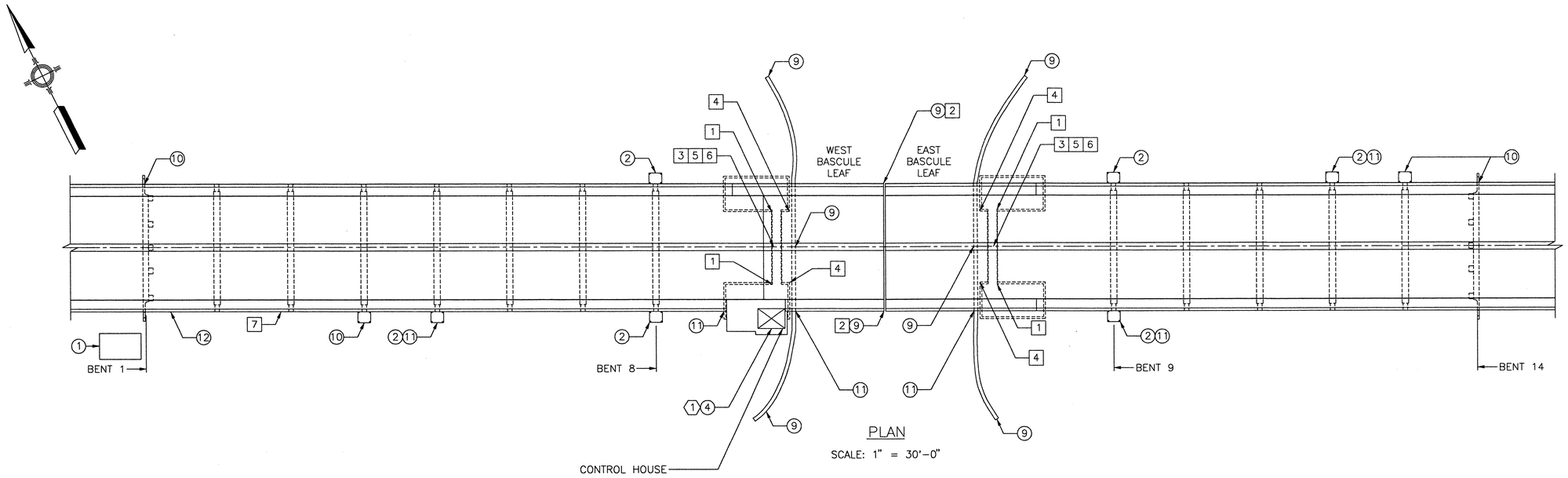

PLAN

SCALE: 1" = 30'-0"

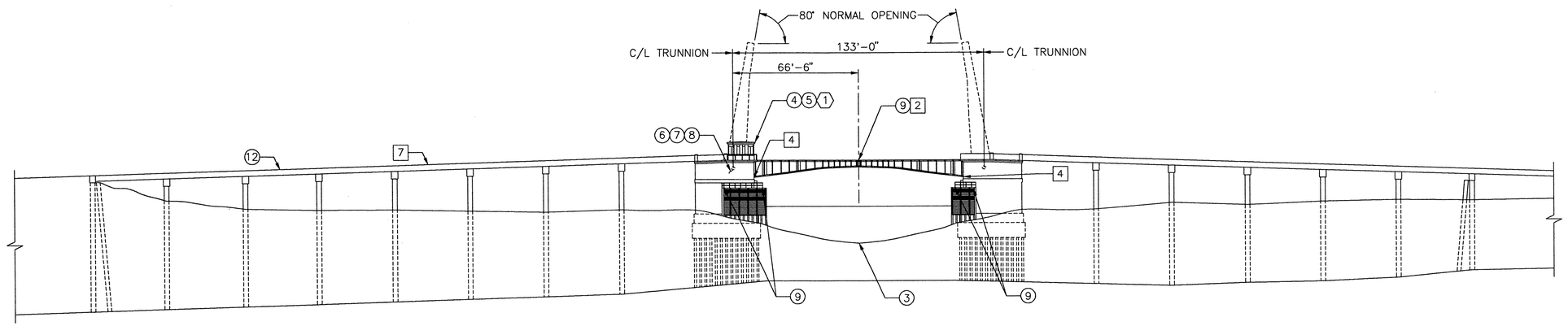

ELEVATION

SCALE: 1" = 30'-0"

ELECTRICAL SCOPE

1	NEW GENERATOR
2	NEW TRAFFIC GATE
3	NEW SUBMARINE CABLE
4	NEW CONTROL CONSOLE
5	RELOCATE NAVIGATION SIGNAL HORNS
6	NEW MCC
7	NEW MAIN DRIVE
8	NEW PLC & BRIDGE OPERATING SYSTEM
9	NEW NAVIGATION LIGHT
10	EXISTING TRAFFIC SIGNALS & ROADWAY LIGHTS
11	NEW CAMERA
12	MESSENGER CABLES

MECHANICAL SCOPE

1	NEW TAIL LOCK
2	NEW CENTER SPAN LOCK
3	REHAB OF SPAN DRIVE SYSTEM
4	AIR BUFFER REHAB
5	AUXILIARY DRIVE REPLACEMENT
6	NEW BRAKES & MOTORS
7	NEW INCOMING WATER & SEWER

ARCHITECTURAL SCOPE

1	NEW ARCHITECTURAL DESIGNED CONTROL HOUSE

NOTES:

1. THE SCOPE OF WORK ITEMS AS SHOWN REPRESENT AN ABBREVIATED SUMMARY OF THE WORK, AND IS NOT INTENDED TO BE A COMPLETE DESCRIPTION OF THE WORK.

0 1 2 3

INCHES ON FULL SIZE SHEET

NORTH CAROLINA PROFESSIONAL ENGINEER SEAL 025801 LANCE V. BORDEN 12-2-2011

MODJESKI and MASTERS
Experience great bridges.
100 Sterling Parkway
Suite 302
Mechanicsburg, PA 17050 NC License No. C-2979

STATE OF NORTH CAROLINA
DEPARTMENT OF TRANSPORTATION
RALEIGH

WRIGHTSVILLE BRIDGE REHABILITATION
WRIGHTSVILLE, NORTH CAROLINA

GENERAL PLAN AND ELEVATION

		DRAWN BY	R.L. REED
		SCALE	AS NOTED
DESIGNED D.L. MILLER	DETAILED R.L. REED	DATE	JUNE 2011
CHECKED T.J. MILLER	CHECKED T.J. MILLER	DRAWING NO.	1 OF 140

1

1-GPE.DWG

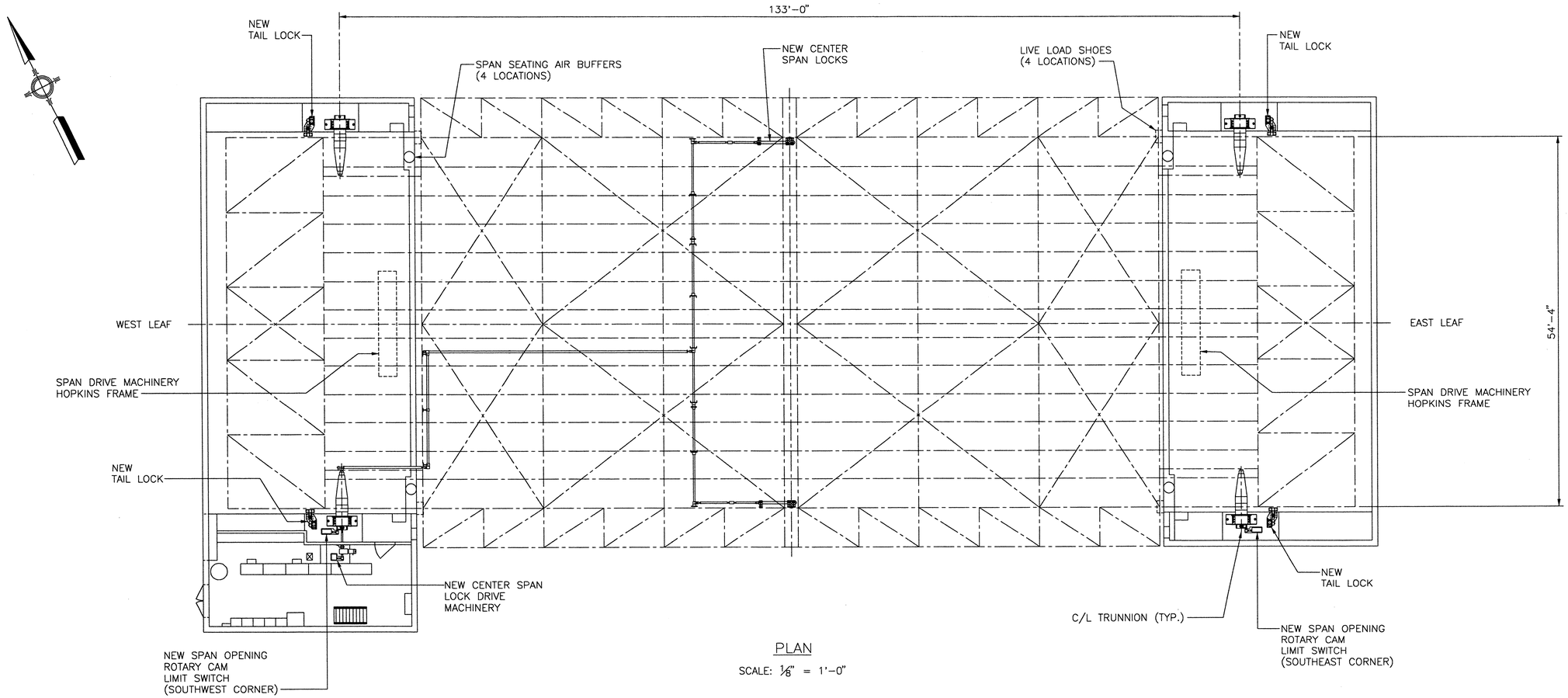

PLAN

SCALE: 1/8" = 1'-0"

0 1 2 3

INCHES ON FULL SIZE SHEET

2-MR.DWG

NORTH CAROLINA PROFESSIONAL SEAL 025801 ENGINEER LANCE V. BORDEN 6-22-2011

MODJESKI and MASTERS
Experience great bridges.

100 Sterling Parkway
Suite 302
Mechanicsburg, PA 17050 NC License No. C-2979

M1

STATE OF NORTH CAROLINA
DEPARTMENT OF TRANSPORTATION
RALEIGH

WRIGHTSVILLE BRIDGE REHABILITATION
WRIGHTSVILLE, NORTH CAROLINA
MECHANICAL REHABILITATION

DESIGNED D.L. MILLER	DETAILED R.L. REED	DRAWN BY	R.L. REED
CHECKED T.J. MILLER	CHECKED T.J. MILLER	SCALE	AS NOTED
		DATE	JUNE 2011
		DRAWING NO.	2 OF 140

MACHINERY NOTES (M1 – M18)

ALL WORK SHALL BE PERFORMED IN ACCORDANCE WITH THE 2007 2ND EDITION OF THE AASHTO LRFD "MOVABLE HIGHWAY BRIDGE DESIGN SPECIFICATIONS" AND INTERIM REVISIONS 2008 AND 2010.

ALL PARTS LISTED ON MECHANICAL SHEETS M1–MX SHALL BE INCLUDED IN MISCELLANEOUS MECHANICAL WORK, PER LUMP SUM, INCLUDING ALL NECESSARY ANCILLARY PARTS.

ALL ITEMS SPECIFIED IN THE PLANS SHALL BE CONSIDERED TO BE FOLLOWED BY THE PHASE "OR APPROVED EQUAL" UNLESS OTHERWISE SPECIFIED ON THE PLANS.

THE CONTRACTOR SHALL PROVIDE ALL MATERIAL, EQUIPMENT, TOOLS, AND LABOR TO PURCHASE/FABRICATE, TRANSPORT, REHABILITATE, INSTALL/ ERECT, ALIGN/ADJUST, PAINT, LUBRICATE, AND TEST ALL MECHANICAL MACHINERY TO PROVIDE A COMPLETE AND OPERABLE BRIDGE AND DRIVE SYSTEM AS DESCRIBED ON DRAWINGS M1–M18.

THE INFORMATION AND DIRECTIONS GIVEN IN THESE MECHANICAL NOTES COVER GENERAL SITUATIONS. EVERY ITEM IN THESE MECHANICAL NOTES CAN BE CONSIDERED TO BE FOLLOWED BY THE PHRASE "UNLESS OTHERWISE SPECIFIED ON THE PLANS."

ALL DIMENSIONS AND DETAILS SHALL BE VERIFIED AT THE SITE BEFORE PROCEEDING WITH ANY WORK TO AVOID CAUSING CONFLICTS AND ANY SUBSEQUENT DELAY IN WORK.

THE PROJECT ENGINEER SHALL BE NOTIFIED IMMEDIATELY FOR CLARIFICATION WHENEVER ANY PORTION OF THE WORK IS NOT CLEARLY OR ACCURATELY DEFINED.

SHOP WORK:

REMOVE ALL BURRS AND BREAK ALL SHARP EDGES ON FABRICATED PARTS.

FINISHED MATING SURFACES:
FINISHED MATING SURFACES SUCH AS SHAFT ENDS THAT FIT IN COUPLINGS AND BORE OF COUPLINGS SHALL HAVE A 125 MICROINCH FINISH. PLAIN BEARING JOURNALS SHALL HAVE AN 8 MICROINCH FINISH. THESE SURFACES SHALL BE PROTECTED FROM CORROSION BY A COATING OF PROTECTIVE GREASE. SUBMIT GREASE AND PROTECTIVE LAGGING/SHIPPING INFORMATION FOR APPROVAL.

FITS AND SURFACE FINISHES:
WHEN NOT INCLUDED ON THE PLANS, SHALL BE AS SHOWN BELOW, OR VENDOR'S RECOMMENDED SPECIFICATIONS, WHICHEVER IS MORE RIGOROUS.

SURFACE FINISHES ARE GIVEN AS THE ROUGHNESS HEIGHT IN MICROINCHES.

PART	FIT	FINISH
MACHINERY BASE ON STEEL	–	250
MACHINERY BASE ON MASONRY	–	500
SHAFT JOURNALS	RC6	8
JOURNAL BUSHING	RC6	16
SPLIT BUSHING IN BASE	LC1	125
SOLID BUSHING IN BASE (TO ¼ INCH WALL)	FN1	63
SOLID BUSHING IN BASE (OVER ¼ INCH WALL)	FN2	63
HUBS ON SHAFTS (TO 2 INCH BORE)	FN2	32
HUBS ON SHAFTS (OVER 2 INCH BORE)	FN2	63
HUBS ON MAIN TRUNNIONS	FN3	63
TURNED BOLTS IN FINISHED HOLES	LC6	63
SLIDING BEARINGS	RC6	32
KEYS AND KEYWAYS (TOP AND BOTTOM)	LC4	63
KEYS AND KEYWAYS (SIDES)	FN2	63
MACHINERY PARTS IN FIXED CONTACT	–	125
TEETH OF OPEN SPUR GEARS:		
UNDER 1 INCH CIRCULAR PITCH	–	32
OVER 1 INCH CIRCULAR PITCH	–	63

THE ABOVE FITS FOR CYLINDRICAL PARTS SHALL ALSO APPLY TO THE MAJOR DIMENSIONS OF NONCYLINDRICAL PARTS.
UNSPECIFIED MACHINED SURFACES (✓) SHALL BE 125 MICROINCH FINISH.

TEMPLATES:
TEMPLATES SHALL BE FABRICATED FOR ALL MACHINERY BASES SECURED BY ANCHOR BOLTS TO CONCRETE. THE TEMPLATE SHALL BE DELIVERED TO THE WORK SITE AND USED TO ASSURE PROPER POSITIONING OF NEW ANCHOR BOLTS.

TOLERANCES:
ALL TOLERANCES SHALL BE AS SHOWN ON THE PLANS. WHERE NOT SHOWN, TOLERANCES SHALL BE AS FOLLOWS:
FRACTIONS: +/– 1/32"; DECIMALS: +/– 0.010; ANGLES: +/– 0.5 DEG.

MECHANICAL PARTS/EQUIPMENT:

ALL MATERIAL FOR NEW FABRICATED PARTS AND ALL MANUFACTURED EQUIPMENT PROVIDED BY THE CONTRACTOR SHALL BE NEW AND SHALL CONFORM TO ASTM AND OTHER STANDARDS AS SHOWN ON THE PLANS OR AN APPROVED EQUAL.

THE WEIGHT OF EACH ITEM (FABRICATED OR MANUFACTURED) SHALL BE SHOWN ON THE SHOP DRAWINGS.

THE CONTRACTOR SHALL VERIFY THE FINAL DIMENSIONS OF ALL COMMERICAL PRODUCTS SUCH AS MOTORS, SPEED REDUCERS, BEARINGS, ELECTRICAL EQUIPMENT, ETC, FROM CERTIFIED DRAWINGS PROVIDED BY THE MANUFACTURER PRIOR TO PRODUCING SHOP DRAWINGS.

IF THE CONTRACTOR PROPOSES TO USE MATERIAL OR EQUIPMENT OTHER THAN DETAILED ON THE DRAWINGS, ANY REDESIGN OF THE STRUCTURE, FOUNDATION, WIRING OR ANY OTHER PART OF THE MECHANICAL OR ELECTRICAL LAYOUT, ALL SUCH REDESIGN, AND ALL NEW DRAWINGS REQUIRED, SHALL, WITH THE APPROVAL OF THE BRIDGE DESIGN ENGINEER, BE PREPARED BY THE CONTRACTOR AT NO ADDITIONAL COST TO THE NCDOT.

WELDMENTS:

UNLESS OTHERWISE SPECIFIED, THE MINIMUM WELD SIZE ALLOWED IS SHOWN BELOW:

MATERIAL THICKNESS	MINIMUM SIZE FILLET **
UP TO 5/16"	1/8" *
OVER 5/16" TO 1/2"	3/16" *
OVER 1/2" TO 3/4"	1/4" *
OVER 3/4" TO 1 1/2"	5/16" *
OVER 1 1/2" TO 2 1/4"	3/8"
OVER 2 1/4" TO 6"	1/2"

* SINGLE PASS WELD MUST BE USED
** WELD SIZE DETERMINED BY THICKER OF TWO PARTS JOINED UNLESS A LARGER SIZE IS REQUIRED BY CALCULATED STRESS. THE WELD SIZE NEED NOT EXCEED THE THICKNESS OF THE THINNEST PART JOINED.

FASTENERS:

STANDARD MECHANICAL MACHINERY BOLTS:
BOLTS FOR FASTENING MECHANICAL MACHINERY TOGETHER OR TO BASES SHALL BE HEAVY HEX HIGH STRENGTH STRUCTURAL BOLTS. BOLTS SHALL COME COMPLETE WITH ONE HEAVY HEX NUT (ASTM A563 GRADE C3), ONE HARDENED STEEL FLAT WASHER (ASTM F436, TYPE 3), AND ONE EXTRA DUTY LOCK WASHER.

MATERIAL: BOLTS UP TO AND INCLUDING 1 1/2", ASTM A325, TYPE 3; GREATER THAN 1 1/2", ASTM A449, TYPE 3.
BOLT HOLE DIA. SHALL BE 1/16" LARGER THAN THE NORMAL BOLT DIA. FOR ALL BOLTS, EXCEPT TURNED BOLTS.

TURNED BOLTS:
TURNED SHANK SHALL BE 1/16" LARGER IN DIAMETER THAN THE NORMINAL DIAMETER SPECIFIED, WHICH IS THE THREAD SIZE. SHANK SHALL BE STRAIGHT WITHIN 0.001" PER INCH OF BOLT LENGTH.

BOLTS SHALL BE MANUFACTURED TO ANSI B18.2.6, HEAVY HEX STRUCTURAL BOLTS.

THREADS SHALL BE AS SPECIFIED IN ANSI B1.1 COURSE PITCH SERIES. SURFACE DISCONTINUITIES SHALL BE IN ACCORDANCE WITH ASTM F788. BREAK SHARP EDGES 0.010" – 0.015".

MATERIAL: LESS THAN 1.5" BODY DIA., ASTM A325, TYPE 3; GREATER THAN 1.5" BODY DIA., ASTM A449, TYPE 3.
EACH BOLT SHALL BE MARKED AS PER ASTM A325 OR A449 ON TOP OF BOLT HEAD AND MAY BE RAISED OR DEPRESSED AT THE OPTION OF THE MANUFACTURER.

ALL TURNED BOLTS SHALL HAVE A HARDENED STEEL WASHER WHICH CONFORMS TO ASTM F436, TYPE 3.
THREADS OF TURNED BOLTS SHALL NOT BE IN THE SHEAR PLAIN OF THE PARTS TO BE FASTENED.

STAINLESS STEEL FOR FASTENERS:
STAINLESS STEEL FASTENERS SHALL BE TYPE 316, WITH A MINIMUM TENSILE STRENGTH OF 85,000 PSI AND SHALL MEET OR EXCEED ASTM F593, ALLOY GROUP 2, CONDITION CW.

SHIMS:

SHOP ASSEMBLED MACHINERY:
THE SHOP MAY FABRICATE A SINGLE SHIM TO PRECISE DIMENSIONS FOR ANY MACHINERY ASSEMBLED IN THE SHOP.

FIELD ASSEMBLED MACHINERY:
CONTRACTOR SHALL SUPPLY COMPLETE SHIM PACKS TO THE FIELD FOR ALL MACHINERY WHICH REQUIRES LEVELING AND ALIGNMENT IN THE FIELD. SHIMS SHALL BE PLACED TO PROVIDE FULL CONTACT BETWEEN MACHINERY AND MOUNT/SUPPORT.

SHIM PACKS SHALL BE NEATLY TRIMMED TO THE DIMENSIONS OF THE ASSEMBLED PARTS AND DRILLED FOR ALL BOLTS THAT PASS THROUGH THE THE SHIMS.
THE THICKNESS OF EACH SHIM SHALL BE MARKED ON THE SHIM WITH AN INDELIBLE MARKER.

SHIM PACKS SHALL BE INDIVIDUALLY PACKED TO PREVENT DAMAGE FROM HANDLING DURING SHIPMENT TO THE PROJECT SITE. PACKAGING SHALL BE CLEARLY MARKED WITH THE PLAN SHEET NUMBER AND ITEM NUMBER OF THE PART FOR WHICH THE SHIM PACK WAS FABRICATED.

MATERIAL: ALL SHIMS SHALL BE MADE FROM ASTM A240 OR A666, TYPE 316 STAINLESS STEEL.

IN GENERAL, TOTAL SHIM THICKNESS AVAILABLE SHALL BE NO LESS THAN EQUAL TO TWICE THE NOMINAL THICKNESS SHOWN ON THE DRAWINGS, AND SUFFICIENT VARYING THICKNESSES SHALL BE FURNISHED TO SECURE 0.005–INCH VARIATIONS OF THE SHIM ALLOWANCE INCLUDING ONE SHIM EQUAL TO THE FULL ALLOWANCE. SHIMS SHALL BE SHOWN IN DETAIL ON THE SHOP DRAWINGS.

SHOP ASSEMBLIES:

SHOP TESTING AND CALIBRATION:
TESTS AND CALIBRATIONS SHALL BE MADE IN THE PRESENCE OF NCDOT OFFICIALS OR THEIR REPRESENTATIVE(S). AFTER CALIBRATIONS ARE MADE, THE EQUIPMENT SHALL BE MATCH MARKED AND TAGGED TO SHOW SET POINTS.

NO EQUIPMENT SHALL BE SHIPPED TO THE FIELD WITHOUT BEING SUCCESSFULLY TESTED AND CALIBRATED.

ALL MACHINERY COMPONENTS, INCLUDING SPAN DRIVE CONTROL EQUIPMENT, SHALL BE SHOP ASSEMBLED TO VERIFY THEIR CORRECT FIT PRIOR TO SHIPMENT. COMPONENTS NOT MOUNTED ON A COMMON BASE SHALL THEN BE DISASSEMBLED FOR SHIPMENT. ALL COMPONENTS REQUIRING SELECTIVE ASSEMBLY SHALL BE MATCH–MARKED FOR FUTURE ASSEMBLY.

MATERIAL FOR SUPPORT WELDMENTS AND MISCELLANEOUS STEEL COMPONENTS:
MATERIAL SHALL CONFORM TO ASTM A588, HSLA STEEL UNLESS OTHERWISE SPECIFIED.

0 1 2 3
INCHES ON FULL SIZE SHEET

NORTH CAROLINA PROFESSIONAL SEAL 025801 ENGINEER LANCE V. BORDEN
12-7-2011

MODJESKI and MASTERS
Experience great bridges.
100 Sterling Parkway
Suite 302
Mechanicsburg, PA 17050 NC License No. C–2979

M2

STATE OF NORTH CAROLINA
DEPARTMENT OF TRANSPORTATION
RALEIGH

WRIGHTSVILLE BRIDGE REHABILITATION
WRIGHTSVILLE, NORTH CAROLINA

MECHANICAL NOTES – 1

		DRAWN BY	R.L. REED
		SCALE	NO SCALE
DESIGNED D.L. MILLER	DETAILED R.L. REED	DATE	JUNE 2011
CHECKED T.J. MILLER	CHECKED T.J. MILLER	DRAWING NO.	3 OF 140

3–MN1.DWG

MACHINERY NOTES (M1 – M18 CONTINUED)

BRAKES:
THE MOTOR AND MACHINERY BRAKES SHALL BE ADJUSTED AND TESTED IN THE SHOP TO DELIVER THE BRAKING TORQUE SPECIFIED AND SHOWN ON THE EXTERNAL ADJUSTABLE SCALE.

FIELD WORK:

MACHINERY INSTALLATION:

ALL MACHINERY COMPONENTS, INCLUDING ALL FABRICATED AND COMMERCIAL ITEMS, WHICH HAVE BEEN DELIVERED TO THE FIELD, BUT HAVE NOT BEEN INSTALLED, SHALL BE PROTECTED AGAINST RUST AND CORROSION BY ANY MEANS AGREED UPON BETWEEN THE CONTRACTOR AND THE PROJECT ENGINEER. MACHINERY PIECES SHALL BE FREQUENTLY INSPECTED AND IF RUST OR CORROSION IS FOUND, THE CONTRACTOR SHALL TAKE IMMEDIATE STEPS TO CLEAN AND PROTECT THE EQUIPMENT.

ALL MACHINERY SHALL BE INSTALLED BY THOSE COMPETENT AND SKILLED IN THE TYPE OF WORK INVOLVED. INSTALLERS SHALL BE PROVIDED WITH ALL THE NECESSARY MEASURING AND LEVELING INSTRUMENTS AS MAY BE REQUIRED.

ALL MACHINERY SHALL BE LAID OUT TO A TOLERANCE OF $\frac{1}{32}$".

ALL PARTS ALIGNED WITH SHIM PACKS SHALL BE PRECISELY ADJUSTED AND ALIGNED TO THE LIMITS OF THE CAPABILITY OF THE SHIM PACKS.

WHERE A PIECE OF MACHINERY OR A FABRICATED BASE FOR A PIECE OF MACHINERY IS TO BE ANCHORED TO THE CONCRETE DECK PEDESTAL OR PIER, A LEAD SHIM SHALL BE PLACED BETWEEN THE CONCRETE AND COMPONENT OR FABRICATED BASE.

AT THE TIME OF THE FIELD INSTALLATION, THE RUST INHIBITING GREASE COATING ON MECHANICAL PARTS THAT HAVE FINISHED MATING SURFACES SHALL BE COMPLETELY REMOVED BY AN APPROVED SOLVENT SUCH AS GASOLINE OR BENZENE. ONCE THE INSTALLATION OF THE ENTIRE MECH-ANISM IS COMPLETED, PAINTED SURFACES OF THE MECHANISM SHALL BE TOUCHED-UP AND PAINTED IN ACCORDANCE WITH THE PAINT SPECIFICATION. UNPAINTED, FINISHED MATING SURFACES THAT SLIDE DURING OPERATION SUCH AS OPEN GEAR TEETH SHALL THEN BE CLEANED OF ALL DIRT, RUST, AND INCIDENTAL PAINT, AND COATED WITH THE PROPER LUBRICATING GREASE FROM THE LUBRICATION DIAGRAM. UNPAINTED, FINISHED MATING SURFACES THAT DO NOT SLIDE DURING OPERATION SUCH AS SHAFT ENDS THAT FIT IN COUPLINGS/BORE OF COUPLINGS WILL BE PROTECTED FROM CORROSION BY THE TOP COAT OF THE PAINT SYSTEM.

AFTER REHABILITATION OF MACHINERY IS COMPLETE, THE CONTRACTOR SHALL MAKE A THOROUGH INSPECTION TO ENSURE THAT ALL GEARS AND RACK SEGMENTS ARE CLEAN OF CONTAMINANTS PROPERLY RE-LUBRICATED, AND FREE OF OBSTRUCTION AND ALL BOLTS ARE PROPERLY TIGHTENED.

BOLTS:
TORQUES FOR THE VARIOUS GRADES OF BOLTS SHALL BE PROPORTIONED TO THEIR STRENGTH AND SHALL BE INDICATED ON THE ERECTION DRAWINGS.

THROUGHOUT THE INSTALLATION, BOLTS AND NUTS SHALL ONLY BE ADJUSTED OR TIGHTENED WITH WRENCHES THAT FIT. TIGHTENING WITH CHISELS AND HAMMERS WILL NOT BE PERMITTED.

ANCHOR BOLTS:
DRILLED IN PLACE ANCHOR BOLTS
BOLT HOLES BLOWN FREE OF ALL DEBRIS AND BOLTS SET USING AN APPROVED NON-SHRINK EPOXY GROUT IN FULL ACCORDANCE WITH THE MANUFACTURER'S RECOMMENDATIONS.

TEMPLATES SHALL BE USED FOR ALL NEW ANCHOR BOLTS TO ASSURE PROPER PLACEMENT.

MACHINERY BOLTS:
FIELD DRILLED HOLES SHALL BE USED ONLY WHERE INDICATED ON THE PLANS. FIELD DRILLED HOLES NOT INDICATED ON THE PLANS MUST BE APPROVED BY THE BRIDGE DESIGN ENGINEER. NO BURNED HOLES WILL BE ALLOWED.

FIELD DRILLED BOLT HOLES IN STRUCTURAL STEEL FOR MOUNTING MACHINERY SHALL IN GENERAL, BE DRILLED FROM THE SOLID AFTER FINAL ALIGNMENT OF THE MACHINERY. SUFFICIENT ERECTION HOLES, SUB DRILLED ¼" UNDERSIZE FOR TEMPORARY BOLTS, MAY BE USED FOR ERECTION AND ALIGNMENT OF THE MACHINERY. WHEN THE MACHINERY IS ALIGNED IN ITS FINAL POSITION, FULL SIZE HOLES FOR PERMANENT TURNED BOLTS SHALL BE SUB DRILLED AND REAMED. FULL SIZE BOLTS INSTALLED, AND THE TEMPORARY BOLTS REMOVED.

MACHINERY REHABILITATION, ADJUSTMENTS, AND TESTING:

PRIOR TO DELIVERY OF ANY MACHINERY TO THE SITE, THE CONTRACTOR SHALL SUBMIT A DETAILED INSTALLATION AND ALIGNMENT PROCEDURE TO THE BRIDGE DESIGN ENGINEER FOR APPROVAL.

THE CONTRACTOR SHALL PROVIDE THE NECESSARY ELECTRICAL AND MECHANICAL TECHNICIANS AS WELL AS ALL THE TOOLS AND LABOR REQUIRED TO PERFORM THE INSTALLATION PROCEDURE.

INSPECTION:
AFTER THE CONTRACTOR HAS COMPLETED THE MACHINERY INSTALLATION, AN INSPECTION SHALL BE ARRANGED WITH REPRESENTATIVES FROM THE MECHANICAL AND ELECTRICAL UNITS OF BRIDGE DESIGN AND THE PROJECT ENGINEER. WRITTEN NOTICE SHALL BE PROVIDED TEN (10) DAYS PRIOR TO THE DATE OF THE INSPECTION. THE CONTRACTOR SHALL PROVIDE ELECTRICAL AND MECHANICAL TECHNICIANS AS WELL AS ALL THE TOOLS AND LABOR NECESSARY TO MAKE NECESSARY ADJUSTMENTS.

PRE-SETUP ADJUSTMENTS AND TESTS:
BEFORE ATTEMPTING TO OPERATE THE BRIDGE, THE CONTRACTOR SHALL MAKE THE FOLLOWING TESTS AND ADJUSTMENTS AS DESCRIBED BELOW.

BRAKES:
BOTH MOTOR AND MACHINERY BRAKES SHALL HAVE BEEN CALIBRATED IN THE SHOP BEFORE SHIPPING TO THE FIELD AND A CERTIFICATION TO THAT EFFECT ATTACHED. BEFORE THE ADJUSTING PROCEDURE IS BEGUN THE CONTRACTOR SHALL VERIFY THAT THE BRAKES ARE FUNCTIONING, HYDRAULIC SET DELAY ON THE MOTOR BRAKE SHALL BE SET TO TWO SECONDS. HYDRAULIC SET DELAY ON THE MACHINERY BRAKE SHALL BE SET TO FOUR SECONDS.

OTHER MECHANICAL SYSTEMS:
ALL MECHANICAL SYSTEMS SHALL BE TESTED BY OPERATING THE SPAN FOR 10 COMPLETE CYCLES DURING WHICH TIME THE MACHINERY SHALL BE MONITORED FOR LEAKS, NOISE, EXCESSIVE VIBRATION, HOT COMPONENTS, AND MISALIGNMENT.

GEARMOTOR PROTECTION:

ALL SEW-EURODRIVE GEARMOTORS SHALL BE ORDERED WITH CORROSION PROTECTION, IP66 DUST TIGHT PROTECTION AND OS4 SURFACE COATING PROTECTION.

0 1 2 3
INCHES ON FULL SIZE SHEET

4-MN2.DWG

NORTH CAROLINA PROFESSIONAL ENGINEER SEAL 025801 LANCE V. BORDEN

MODJESKI and MASTERS
Experience great bridges.
100 Sterling Parkway
Suite 302
Mechanicsburg, PA 17050 NC License No. C-2979

M3

STATE OF NORTH CAROLINA
DEPARTMENT OF TRANSPORTATION
RALEIGH

WRIGHTSVILLE BRIDGE REHABILITATION
WRIGHTSVILLE, NORTH CAROLINA

MECHANICAL NOTES – 2

		DRAWN BY	R.L. REED
		SCALE	NO SCALE
DESIGNED D.L. MILLER	DETAILED R.L. REED	DATE	JUNE 2011
CHECKED T.J. MILLER	CHECKED T.J. MILLER	DRAWING NO.	4 OF 140

MECHANICAL EQUIPMENT SCHEDULE

ITEM NO	REFERENCE DRAWING	QUANTITY	MANUFACTURER	DESCRIPTION
M101	M5	4	MAGNETEK (MONDEL)	MAIN DRIVE MOTOR; 30 HP; 900 RPM, SEE ELECTRICAL EQUIPMENT LIST ALSO
M102	M5	4	MAGNETEK (MONDEL)	MOTOR BRAKE; 8" DRUM TYPE; 300M SERIES; HEAVY DUTY DRUM BRAKE; 120 LB.-FT. RATING; OFFSET BRAKE WHEEL WITH BORE AND KEYSLOT TO MATCH MOTOR REAR SHAFT; 3R STAINLESS STEEL COVER; LOW FORCE HAND RELEASE; 3 LIMIT SWITCHES; SEE ELECTRICAL EQUIPMENT LIST ALSO
M103	M5	2	MAGNETEK (MONDEL)	MOTOR BRAKE; 8" DRUM TYPE; 300M SERIES; HEAVY DUTY DRUM BRAKE; 120 LB.-FT. RATING; SYMMETRICAL BRAKE WHEEL WITH BORE AND KEYSLOT TO MATCH MOTOR REAR SHAFT; 3R STAINLESS STEEL COVER; LOW FORCE HAND RELEASE; 3 LIMIT SWITCHES; SEE ELECTRICAL EQUIPMENT LIST ALSO
M104	M5	4	FALK MOTOR COUPLING	1025G20 DOUBLE ENGAGEMENT GEAR COUPLING; 66,150 LB.-IN. TORQUE RATING
M105	M5	2	SEW EURODRIVE GEARMOTOR AUXILIARY DRIVE	HELICAL-BEVEL GEARMOTOR; 5 HP; 34 RPM OUTPUT; SINGLE OUTPUT SHAFT; MOTOR BRAKE; 49.16.1 RATIO; 212 LB.-IN. REDUCED BRAKING TORQUE; SEE ELECTRICAL EQUIPMENT LIST ALSO
M106	M5	2	MORSE	18 TEETH, 1.25" PITCH; DRIVEN SPROCKET WITH BORE AND KEYSLOT TO MATCH GEARMOTOR OUTPUT SHAFT
M107	M5	2	MORSE	36 TEETH, 1.25" PITCH; DRIVEN SPROCKET WITH BORE AND KEYSLOT TO MATCH AUXILIARY DRIVE CLUTCHED SHAFT
M108	M5	2	MORSE	1.25" PITCH HIGH STRENGTH ROLLER CHAIN; LENGTH AS NEEDED.
M109	M6, M13	4	ZERO-MAX CD COUPLING	#6A30C-SS STAINLESS STEEL FLEXIBLE COUPLING; BORES AND KEYSLOTS TO MATCH COMPONENTS
M110	M8	4	SEW EURODRIVE GEARMOTOR TAIL LOCK	HELICAL-BEVEL GEARMOTOR; ½ HP; 8.4 RPM OUTPUT; SINGLE OUTPUT SHAFT; MOTOR BRAKE WITH HAND RELEASE, WITH PROTECTIVE CANOPY; 135.28:1 RATIO; SEE ELECTRICAL EQUIPMENT LIST ALSO
M111	M8	4	AURORA ROD END	LARGE BORE SERIES; MALE ROD END; 1½"ø BORE #AM-24T (PTFE LINED)
M112	M10	8	GARLOCK KLOZURE SEALS	MODEL 61; 8½"ø SHAFT, 9½"ø BORE; ½" WIDE; #24064-6383; 316 STAINLESS STEEL CASE
M113	M13	1	SEW EURODRIVE GEARMOTOR CENTER SPAN LOCK	HELICAL-BEVEL GEARMOTOR; 2 HP; 9.0 RPM OUTPUT; MOTOR BRAKE WITH HAND RELEASE; WITH PROTECTIVE CANOPY; 126.91:1 RATIO; SEE ELECTRICAL EQUIPMENT LIST ALSO
M114	M13	1	ANDANTEX RIGHT ANGLE GEAR REDUCER	SIZE 10; Z SERIES; 1.5:1 RATIO; USED AS A SPEED INCREASER; LOW BACKLASH OPTION
M115	M13	2	FALK COUPLING	1020G52 SINGLE ENGAGEMENT GEAR COUPLING (RIGID FLEX) WITH CENTERING DISC; 37,800 LB.-IN. TORQUE RATING
M116	M13	3	GEMCO COUPLING	¾" DIRECT DRIVE ADJUSTABLE COUPLING SERIES 3001
M117	M13	2	STAFFORD LOCKING COLLAR	STAINLESS STEEL SPLIT LOCKING COLLAR (2 PIECE); PART NO. 2S206
M118	M17	2	ANDANTEX RIGHT ANGLE GEAR REDUCER	SIZE 10; Z SERIES; 4:1 RATIO; USED AS A SPEED INCREASER; LOW BACKLASH OPTION
M119	M17	4	AURORA ROD END	FEMALE ROD END; STUD ORIENTED AT 90°; #CW-8SZ; WITH GREASE FITTING

SCOPE OF WORK

1. PERFORM STRAIN GAGE BALANCING.
2. INSTALL NEW HOPKINS FRAME BASES AND ANCHOR BOLTS. REMOVE EXISTING SUPPLEMENTARY SUPPORT FRAME AT THE NORTHEAST BASE REPAIR.
3. REFURBISH SEALS ON THE MAIN GEARBOXES.
4. INSTALL BREATHERS ON THE MAIN GEARBOXES.
5. REPLACE BUSHINGS IN THE EXTERNAL SUPPORT BEARINGS FOR THE GEARBOX OUTPUT SHAFTS.
6. REPLACE SPAN DRIVE MOTORS.
7. REPLACE MOTOR AND MACHINERY BRAKES WITH NEW BRAKE WHEELS.
8. REPLACE AUXILIARY SPAN DRIVES.
9. INSTALL NEW ENCODERS AND ENCODER DRIVE ASSEMBLIES.
10. CLEAN AND PAINT ENTIRE MACHINERY FRAMES.
11. LUBRICATE ALL BEARINGS AND GEARS.
12. REHABILITATE SPAN SEATING AIR BUFFERS AND SYSTEMS.
13. INSTALL NEW TAIL LOCKS ON BOTH LEAVES AND REMOVE EXISTING TAIL LOCK DRIVE MACHINERY INCLUDING SHAFTS, CRANKS, LINKS AND LEVERS.
14. REPLACE CENTER SPAN LOCKS AND DRIVE MACHINERY.
15. REPLACE SPAN OPENING LIMIT SWITCH DRIVE SYSTEMS.
16. ADJUST LIVE LOAD SHOES.

0 1 2 3
INCHES ON FULL SIZE SHEET

NORTH CAROLINA PROFESSIONAL SEAL 025801 ENGINEER LANCE V. BORDEN
6-22-2011

MODJESKI and MASTERS
Experience great bridges.
100 Sterling Parkway
Suite 302
Mechanicsburg, PA 17050 NC License No. C-2979

M4

STATE OF NORTH CAROLINA
DEPARTMENT OF TRANSPORTATION
RALEIGH

WRIGHTSVILLE BRIDGE REHABILITATION
WRIGHTSVILLE, NORTH CAROLINA
EQUIPMENT SCHEDULE AND SCOPE OF WORK

		DRAWN BY	R.L. REED
		SCALE	NO SCALE
DESIGNED D.L. MILLER	DETAILED R.L. REED	DATE	JUNE 2011
CHECKED T.J. MILLER	CHECKED T.J. MILLER	DRAWING NO.	5 OF 140

5-ESSOW.DWG

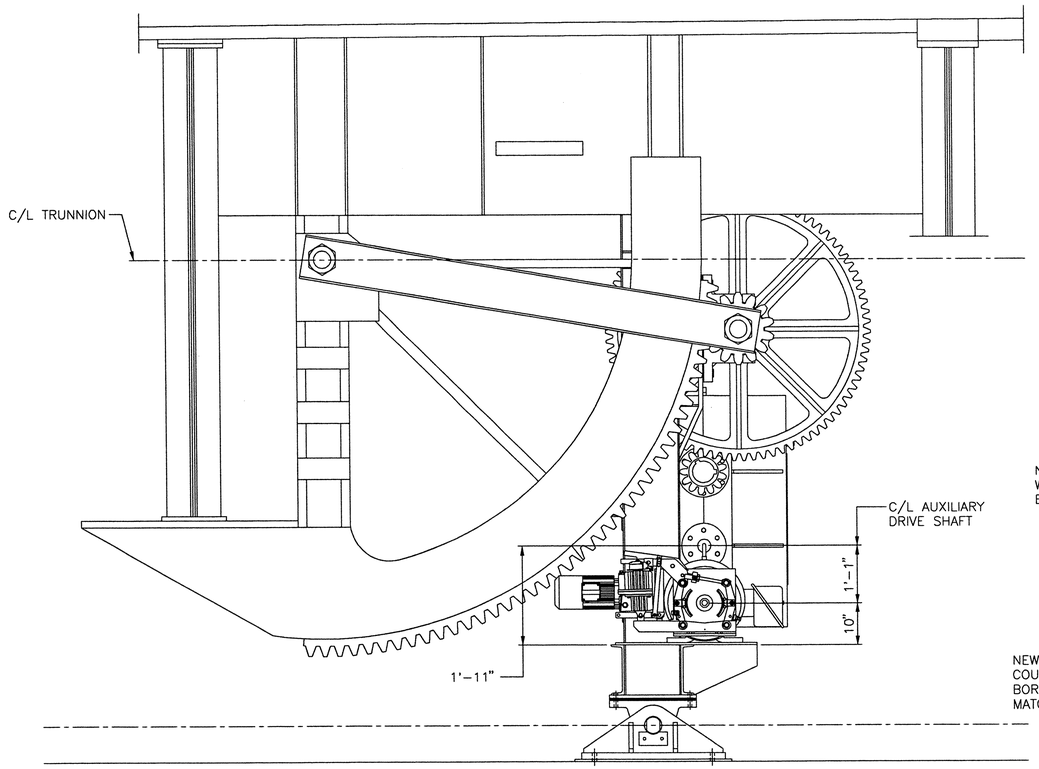

ELEVATION
MACHINERY FRAME

SCALE: ¾" = 1'-0"

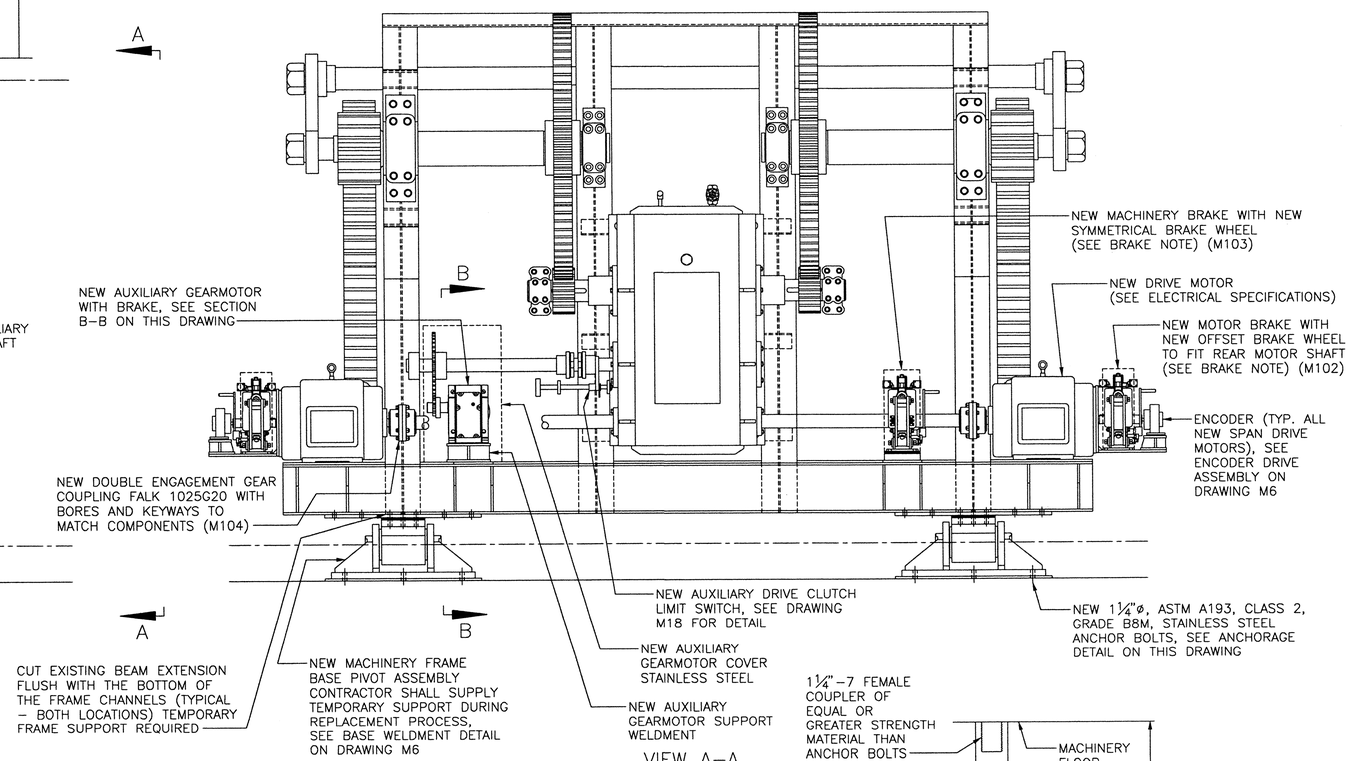

VIEW A–A

SCALE: ¾" = 1'-0"

BRAKE NOTE:

NEW BRAKES, MOTOR AND MACHINERY: MAGNETEK/MONDEL 8" MBT/E-ED23/5, 300M SERIES HEAVY DUTY DRUM BRAKE WITH BRAKE WHEEL AND TYPE 3R STAINLESS STEEL COVER. SET BRAKING TORQUE AT 120 LB.-FT., SEE SPECIFICATIONS FOR MORE DETAILS.

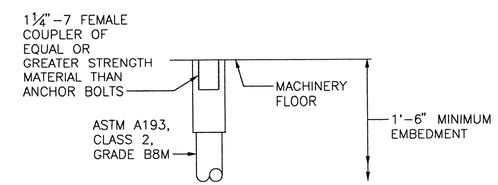

ANCHORAGE DETAIL
(TYP. NEW BASE)

NO SCALE

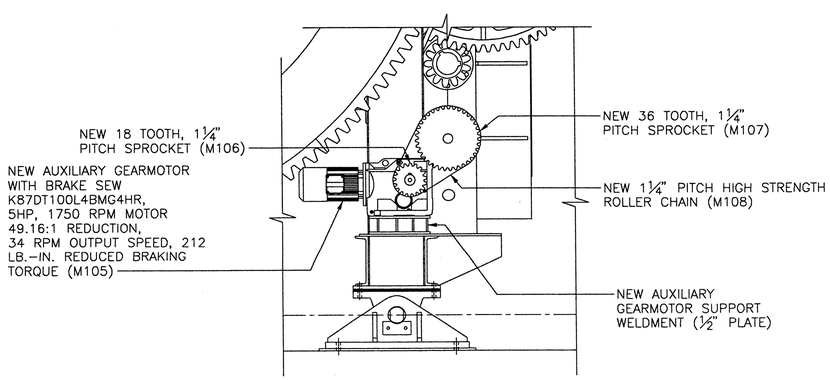

SECTION B–B

SCALE: ¾" = 1'-0"

NOTES:

1. CONTRACTOR SHALL VERIFY ALL REQUIRED DIMENSIONS IN FIELD PRIOR TO FABRICATION.
2. WELDMENTS TO BE STRESS RELIEVED BY HEAT PRIOR TO MACHINING.
3. MATERIAL: ASTM A588, HSLA STEEL, EXCEPT AS OTHERWISE NOTED.

0 1 2 3
INCHES ON FULL SIZE SHEET

NORTH CAROLINA PROFESSIONAL ENGINEER SEAL 025801 LANCE V. BORDEN

MODJESKI and MASTERS
Experience great bridges.
100 Sterling Parkway
Suite 302
Mechanicsburg, PA 17050 NC License No. C-2979

STATE OF NORTH CAROLINA
DEPARTMENT OF TRANSPORTATION
RALEIGH

WRIGHTSVILLE BRIDGE REHABILITATION
WRIGHTSVILLE, NORTH CAROLINA
NEW SPAN DRIVE
MACHINERY DETAILS – 1

		DRAWN BY	R.L. REED
		SCALE	AS NOTED
DESIGNED A.M. BRODSKY	DETAILED R.L. REED	DATE	JUNE 2011
CHECKED T.J. MILLER	CHECKED T.J. MILLER	DRAWING NO.	6 OF 140

M5

6-NSDMD1.DWG

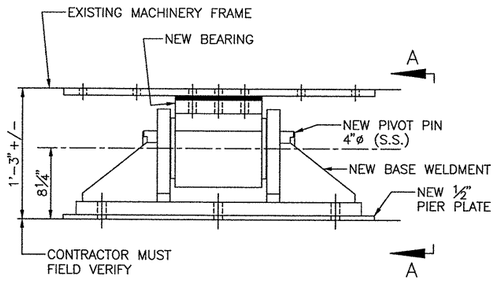

MACHINERY FRAME
BASE PIVOT ASSEMBLY

SCALE: 1½" = 1'-0"

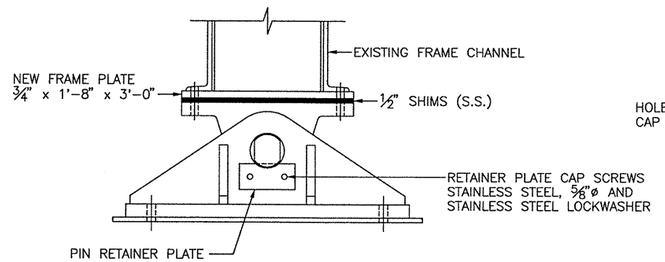

VIEW A–A

SCALE: 1½" = 1'-0"

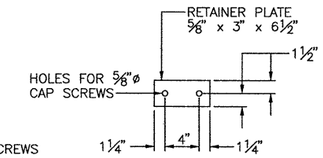

NEW
RETAINER PLATE DETAIL

SCALE: 1½" = 1'-0"
(8 REQUIRED)
MATERIAL: ASTM A276, TYPE 316 STAINLESS STEEL

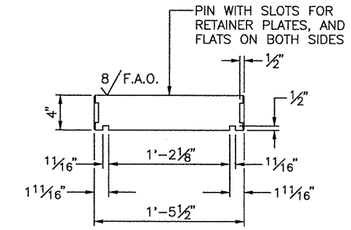

NEW PIN DETAIL

SCALE: 1½" = 1'-0"
(4 REQUIRED)
MATERIAL: ASTM A276 TYPE 316, CONDITION S, COLD FINISHED

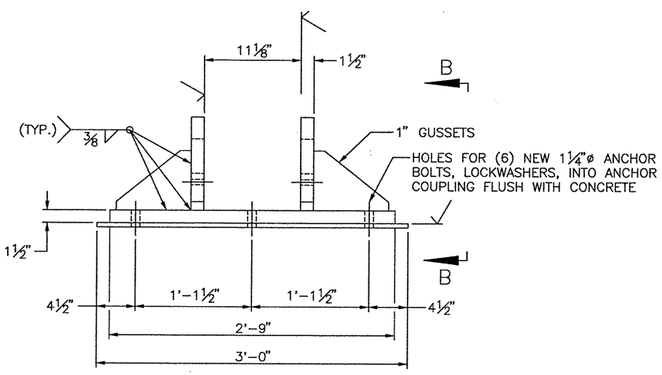

NEW BASE WELDMENT DETAIL

SCALE: 1½" = 1'-0"
(4 REQUIRED)
MATERIAL: ASTM A588 HSLA STEEL

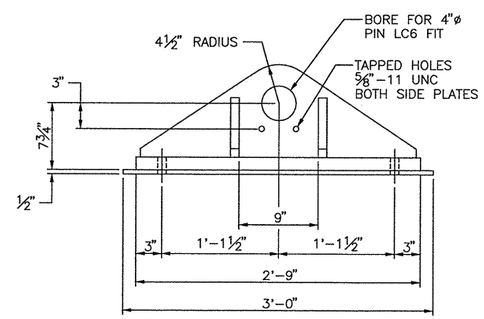

VIEW B–B

SCALE: 1½" = 1'-0"

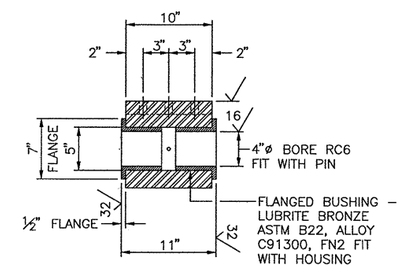

SECTION C–C

SCALE: 1½" = 1'-0"

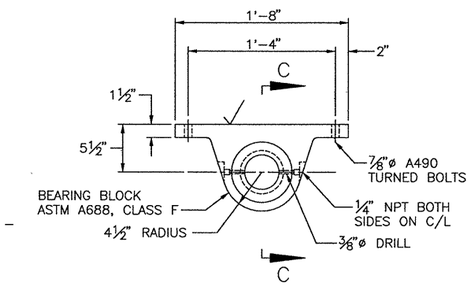

NEW MACHINERY FRAME
PIVOT BEARING

SCALE: 1½" = 1'-0"
(4 REQUIRED)

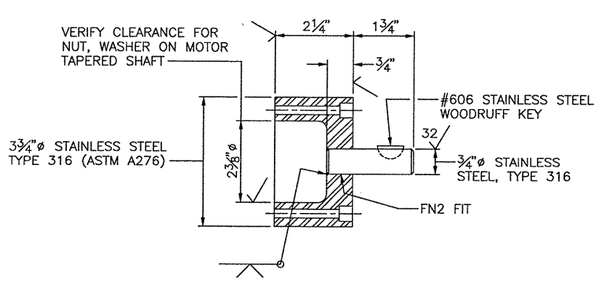

SECTION D–D

SCALE: 6" = 1'-0"

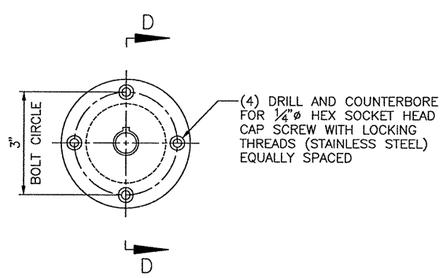

NEW ENCODER DRIVE ADAPTER SHAFT

SCALE: 6" = 1'-0"
(4 REQUIRED)

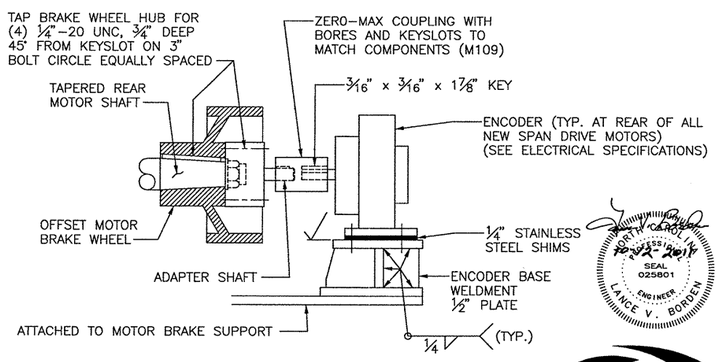

NEW ENCODER DRIVE ASSEMBLY

SCALE: 3" = 1'-0"

NOTES:

1. ALL WELDMENTS TO BE STRESS RELIEVED BY HEAT PRIOR TO MACHINING.
2. MATERIAL: ASTM A588, HSLA STEEL, EXCEPT AS OTHERWISE NOTED.
3. FINISHED SURFACES 125 / EXCEPT OTHERWISE NOTED.
4. CONTRACTOR SHALL VERIFY ALL REQUIRED DIMENSIONS IN FIELD PRIOR TO FABRICATION.
5. ALTERNATE MATERIAL FOR ASTM A276, TYPE 316, CONDITION S, COLD FINISHED STAINLESS STEEL: ASTM A276 TYPE XM-19, COLD FINISHED STAINLESS STEEL.

0 1 2 3
INCHES ON FULL SIZE SHEET

7-NSDM02.DWG

MODJESKI and MASTERS
Experience great bridges.
100 Sterling Parkway
Suite 302
Mechanicsburg, PA 17050 NC License No. C-2979

STATE OF NORTH CAROLINA
DEPARTMENT OF TRANSPORTATION
RALEIGH

WRIGHTSVILLE BRIDGE REHABILITATION
WRIGHTSVILLE, NORTH CAROLINA

NEW SPAN DRIVE
MACHINERY DETAILS – 2

		DRAWN BY	R.L. REED
		SCALE	AS NOTED
DESIGNED D.L. MILLER	DETAILED R.L. REED	DATE	JUNE 2011
CHECKED T.J. MILLER	CHECKED T.J. MILLER	DRAWING NO.	7 OF 140

M6

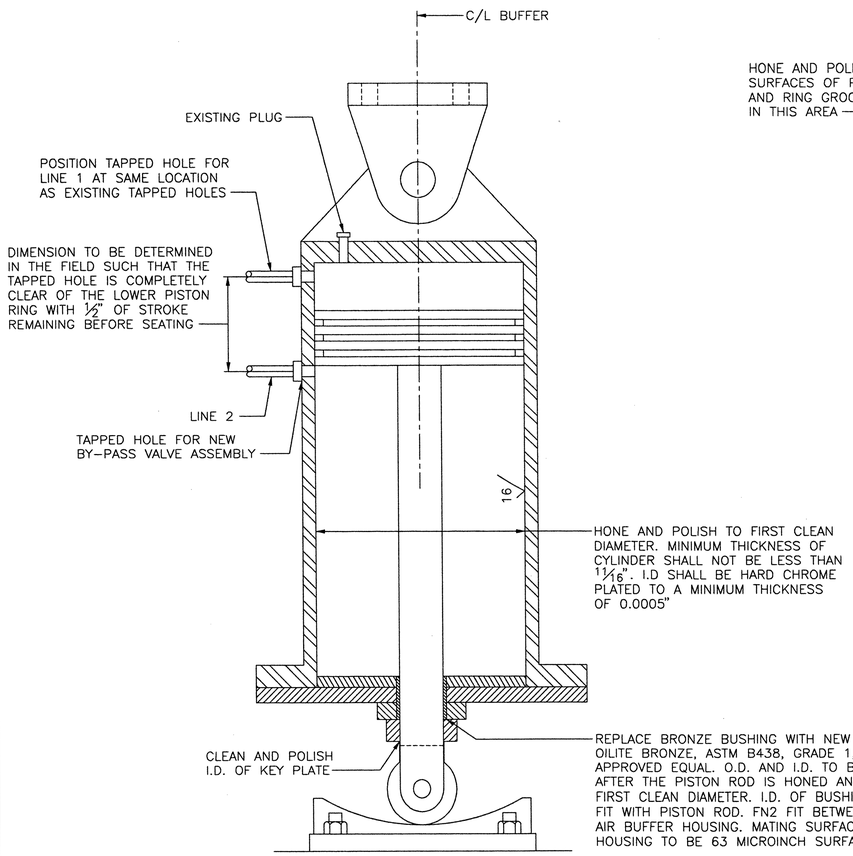

EXISTING AIR BUFFER DETAIL

SCALE: 3" = 1'-0"

NOTE:
REMOVE ALL EXISTING FITTINGS AND REPLACE WITH NEW FITTINGS OR PLUGS AS NEEDED

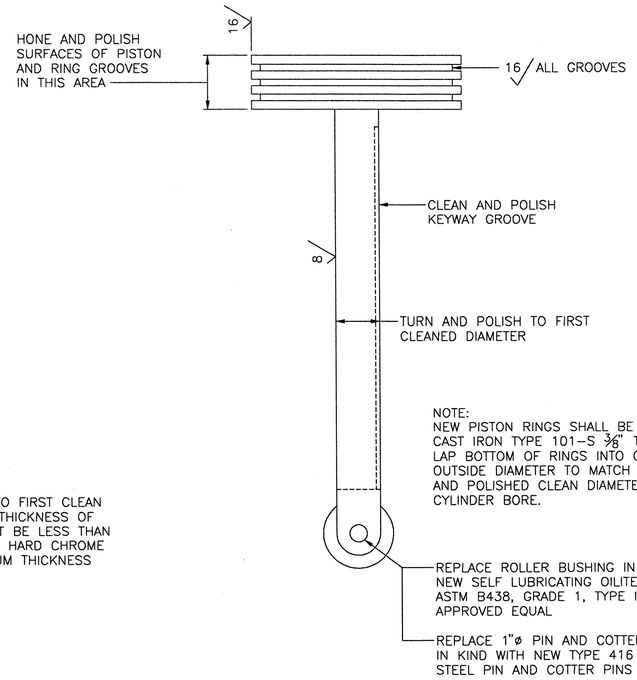

EXISTING PISTON DETAIL

SCALE: 3" = 1'-0"

NOTE:
NEW PISTON RINGS SHALL BE GRAPHITIC CAST IRON TYPE 101-S ⅜" THICK. LAP BOTTOM OF RINGS INTO GROOVES. OUTSIDE DIAMETER TO MATCH HONED AND POLISHED CLEAN DIAMETER OF CYLINDER BORE.

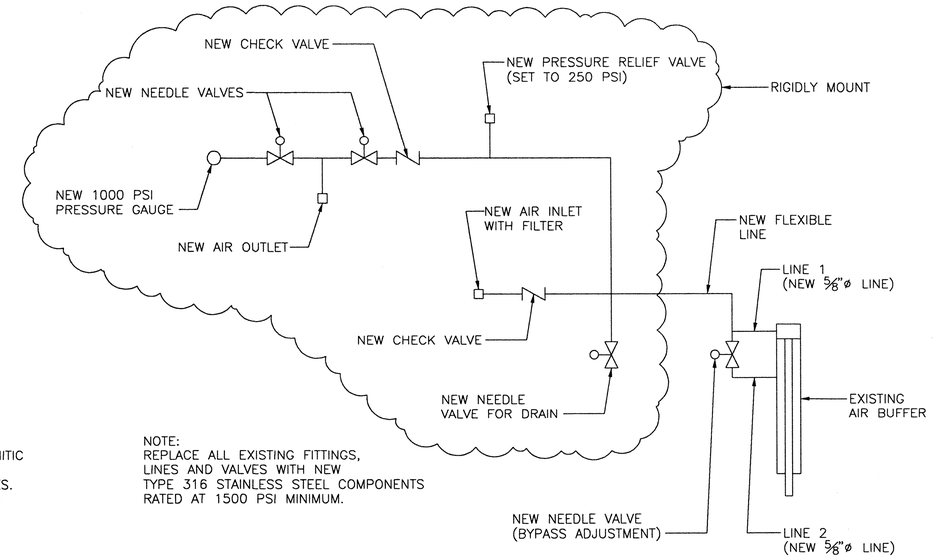

NOTE:
REPLACE ALL EXISTING FITTINGS, LINES AND VALVES WITH NEW TYPE 316 STAINLESS STEEL COMPONENTS RATED AT 1500 PSI MINIMUM.

SCHEMATIC
TYPICAL LEAF BUFFER SYSTEM

NO SCALE
(4 REQUIRED)

NOTES:

1. ALL BUSHINGS SHALL BE SECURED IN POSITION TO INSURE AGAINST DISLOGEMENT DURING OPERATION.
2. ALL EXISTING COMPONENTS TO BE REUSED SHALL BE SAND BLASTED WITH SSPC SURFACE PREP SP6 COMMERCIAL BLAST CLEANING.
3. SEE SPECIFICATIONS FOR PRIMING AND PAINTING DETAILS. ALL COMPONENTS TO BE THOROUGHLY CLEANED, PRIMED AND PAINTED EXCEPT SLIDING SURFACES.

0 1 2 3
INCHES ON FULL SIZE SHEET

NORTH CAROLINA PROFESSIONAL ENGINEER SEAL 025801 LANCE V. BORDIN

MODJESKI and MASTERS
Experience great bridges.
100 Sterling Parkway
Suite 302
Mechanicsburg, PA 17050 NC License No. C-2979

M7

STATE OF NORTH CAROLINA
DEPARTMENT OF TRANSPORTATION
RALEIGH

WRIGHTSVILLE BRIDGE REHABILITATION
WRIGHTSVILLE, NORTH CAROLINA

SPAN SEATING
AIR BUFFER REHABILITATION

		DRAWN BY	R.L. REED
		SCALE	AS NOTED
DESIGNED AM. BRODSKY	DETAILED R.L. REED	DATE	JUNE 2011
CHECKED T.J. MILLER	CHECKED T.J. MILLER	DRAWING NO.	8 OF 140

8-SSABR.DWG

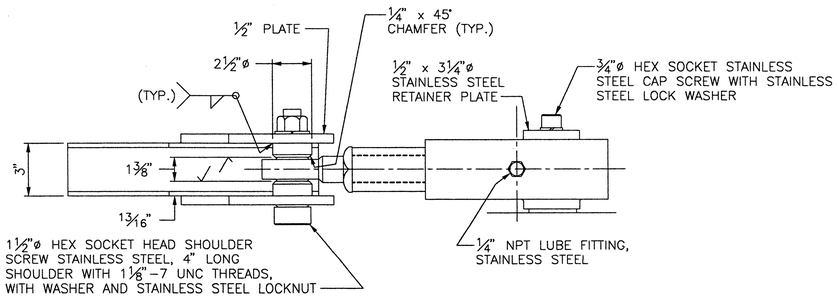

PLAN

SCALE: 3" = 1'–0"

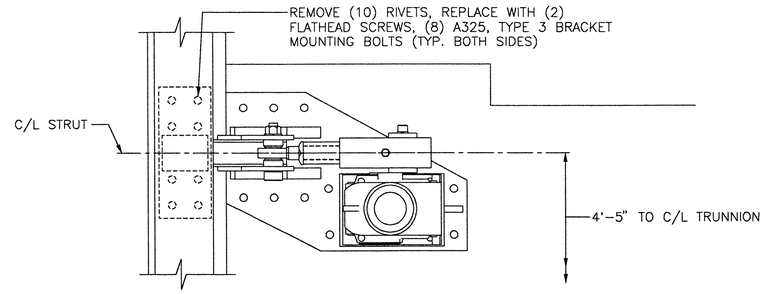

PLAN

SCALE: 1½" = 1'–0"

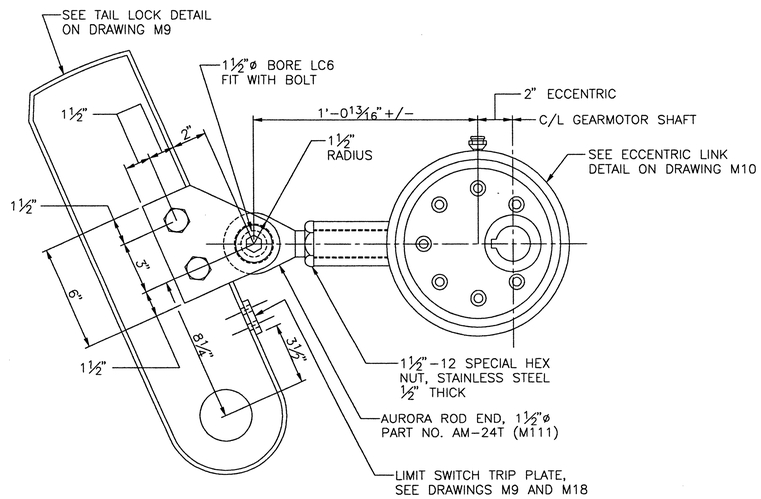

STRUT DRIVE ASSEMBLY

SCALE: 3" = 1'–0"

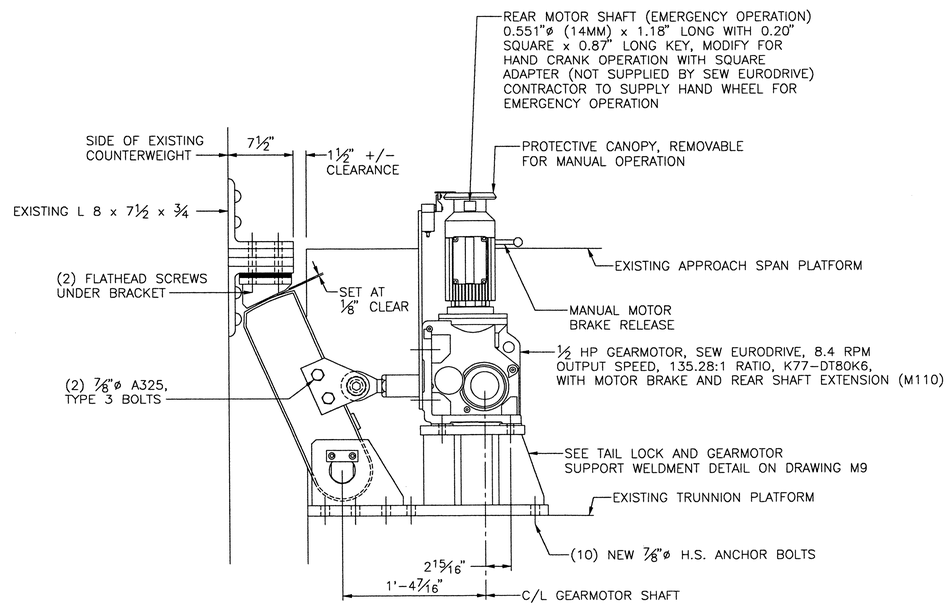

TAIL LOCK STRUT AND GEARMOTOR ASSEMBLY

SCALE: 1½" = 1'–0"
RIGHT HAND SHOWN, LEFT SYMMETRICALLY OPPOSITE
(GEARMOTOR SHAFT – OPPOSITE SIDE)

NOTES:

1. ALL WELDMENTS TO BE STRESS RELIEVED BY HEAT PRIOR TO MACHINING.
2. MATERIAL: ASTM A588, HSLA STEEL, EXCEPT AS OTHERWISE NOTED.
3. FINISHED SURFACES 125√ EXCEPT OTHERWISE NOTED.
4. CONTRACTOR SHALL VERIFY ALL REQUIRED DIMENSIONS IN FIELD PRIOR TO FABRICATION.
5. REFER TO DRAWING M18 FOR LIMIT SWITCH MOUNTING DETAILS.
6. ⅞"ø ANCHOR BOLTS SHALL BE ASTM F1554, GRADE 105 WITH HEAVY HEX NUTS AND WASHERS.

0 1 2 3
INCHES ON FULL SIZE SHEET

NORTH CAROLINA PROFESSIONAL SEAL 025801 ENGINEER LANCE V. BORDEN

MODJESKI and MASTERS
Experience great bridges.
100 Sterling Parkway
Suite 302
Mechanicsburg, PA 17050 NC License No. C–2979

STATE OF NORTH CAROLINA
DEPARTMENT OF TRANSPORTATION
RALEIGH

WRIGHTSVILLE BRIDGE REHABILITATION
WRIGHTSVILLE, NORTH CAROLINA

NEW TAIL LOCK DETAILS – 1

		DRAWN BY	R.L. REED
		SCALE	AS NOTED
DESIGNED D.L. MILLER	DETAILED R.L. REED	DATE	JUNE 2011
CHECKED T.J. MILLER	CHECKED T.J. MILLER	DRAWING NO.	9 OF 140

M8

9-MTL01.DWG

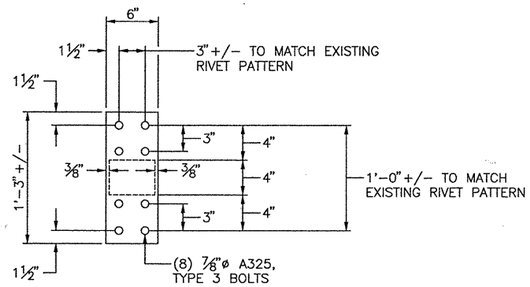

PLAN

SCALE: 1½" = 1'–0"

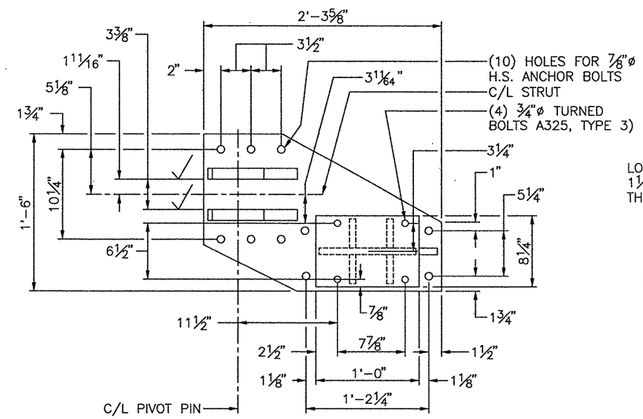

PLAN

SCALE: 1½" = 1'–0"

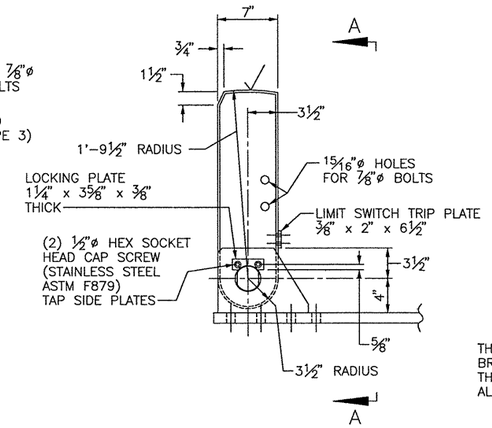

TAIL LOCK DETAIL

SCALE: 1½" = 1'–0"

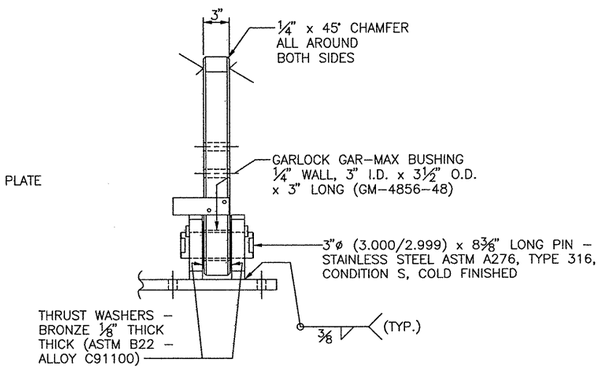

VIEW A–A

SCALE: 1½" = 1'–0"

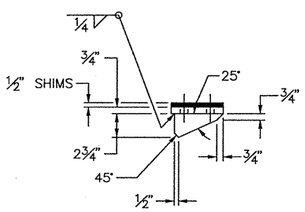

COUNTERWEIGHT BRACKET

SCALE: 1½" = 1'–0"
(4 REQUIRED)

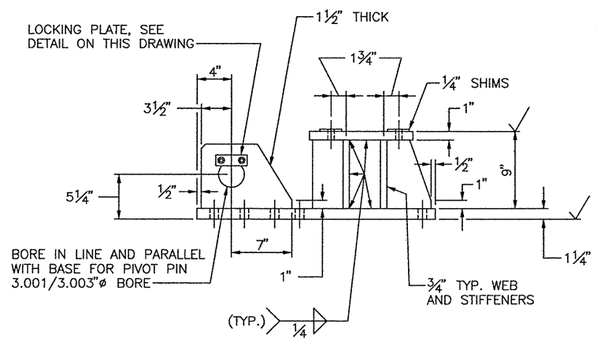

TAIL LOCK STRUT AND GEARMOTOR SUPPORT WELDMENT

SCALE: 1½" = 1'–0"
(4 TOTAL REQUIRED)
RIGHT HAND SHOWN, LEFT HAND SYMMETRICALLY OPPOSITE

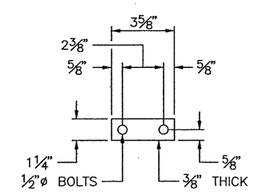

LOCKING PLATE

SCALE: 3" = 1'–0"
(8 REQUIRED)
MATERIAL: STAINLESS STEEL ASTM A276, TYPE 316

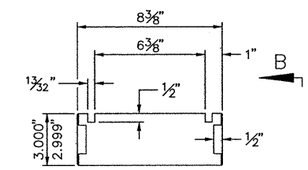

LOCKING PIN DETAIL

SCALE: 3" = 1'–0"
(4 REQUIRED)
MATERIAL: SEE VIEW A–A ON THIS SHEET
8 ✓F.A.O.

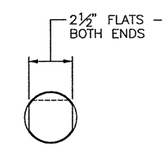

VIEW B–B

SCALE: 3" = 1'–0"

NOTES:

1. WELDMENTS TO BE STRESS RELIEVED BY HEAT PRIOR TO MACHINING.
2. MATERIAL: ASTM A588, HSLA STEEL, EXCEPT AS OTHERWISE NOTED.
3. FINISHED SURFACES 125 ✓ EXCEPT OTHERWISE NOTED.
4. CONTRACTOR SHALL VERIFY ALL REQUIRED DIMENSIONS IN FIELD PRIOR TO FABRICATION.
5. VERIFY GEAR MOTOR MOUNTING DIMENSION WITH MANUFACTURER'S CERTIFIED DRAWINGS.
6. ALTERNATE MATERIAL FOR ASTM A276, TYPE 316, CONDITION S, COLD FINISHED STAINLESS STEEL: ASTM A276 TYPE XM–19, COLD FINISHED STAINLESS STEEL.

0 1 2 3
INCHES ON FULL SIZE SHEET

NORTH CAROLINA PROFESSIONAL ENGINEER SEAL 025801 LANCE V. BORDEN 10-22-2011

MODJESKI and MASTERS
Experience great bridges.
100 Sterling Parkway
Suite 302
Mechanicsburg, PA 17050 NC License No. C–2979

STATE OF NORTH CAROLINA
DEPARTMENT OF TRANSPORTATION
RALEIGH

WRIGHTSVILLE BRIDGE REHABILITATION
WRIGHTSVILLE, NORTH CAROLINA

NEW TAIL LOCK DETAILS – 2

		DRAWN BY	R.L. REED
		SCALE	AS NOTED
DESIGNED D.L. MILLER	DETAILED R.L. REED	DATE	JUNE 2011
CHECKED T.J. MILLER	CHECKED T.J. MILLER	DRAWING NO.	10 OF 140

M9

10–HTLD2.DWG

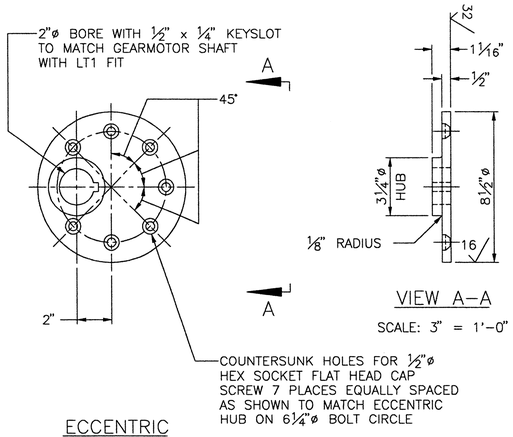

ECCENTRIC REAR PLATE

SCALE: 3" = 1'-0"
(4 REQUIRED)

VIEW A–A

SCALE: 3" = 1'-0"

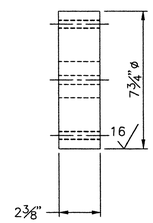

VIEW B–B

SCALE: 3" = 1'-0"

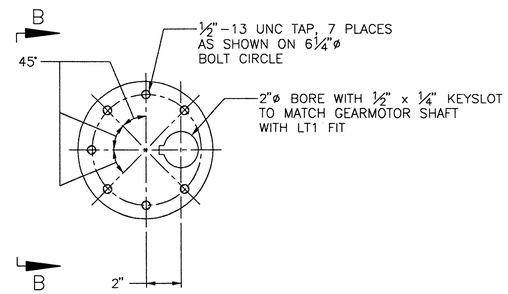

ECCENTRIC HUB

SCALE: 3" = 1'-0"
(4 REQUIRED)

ALL THREE PARTS – MATERIAL: ASTM B505, ALLOY C95400 ALUMINUM BRONZE
ALL THREE PARTS – FINISH ALL OVER 63 EXCEPT WHERE OTHERWISE NOTED.

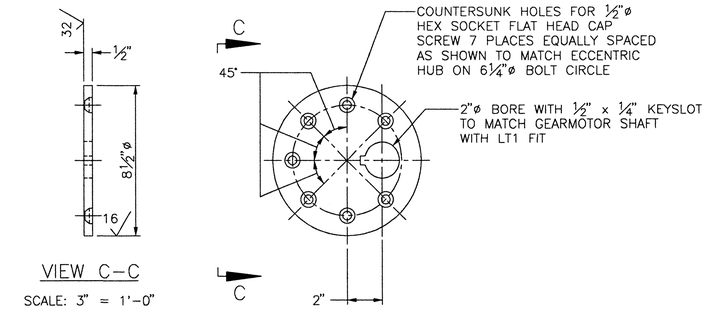

VIEW C–C

SCALE: 3" = 1'-0"

ECCENTRIC FRONT PLATE

SCALE: 3" = 1'-0"
(4 REQUIRED)

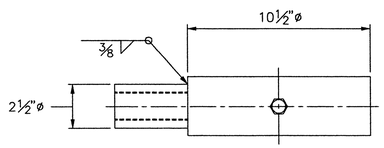

PLAN

SCALE: 3" = 1'-0"

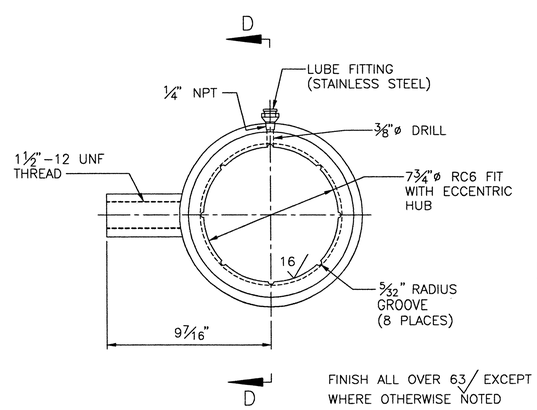

ECCENTRIC LINK

SCALE: 3" = 1'-0"
(4 REQUIRED)
MATERIAL: ASTM A564, TYPE 630, CONDITION H1150

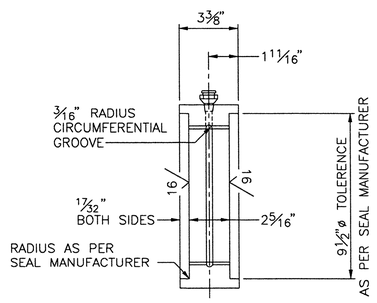

SECTION D–D

SCALE: 3" = 1'-0"

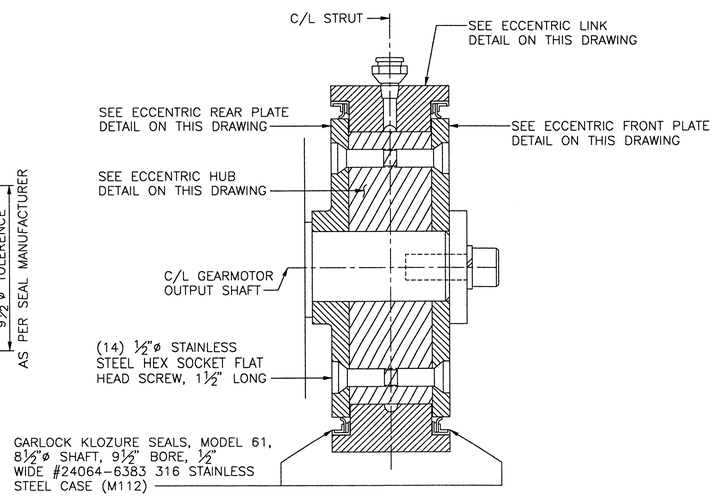

SECTION THROUGH
ECCENTRIC ASSEMBLY

SCALE: 6" = 1'-0"

NOTES:

1. ALL WELDMENTS TO BE STRESS RELIEVED BY HEAT PRIOR TO MACHINING.
2. MATERIAL: ASTM A588, HSLA STEEL, EXCEPT AS OTHERWISE NOTED.
3. FINISHED SURFACES 125 EXCEPT OTHERWISE NOTED.
4. CONTRACTOR SHALL VERIFY ALL REQUIRED DIMENSIONS IN FIELD PRIOR TO FABRICATION.

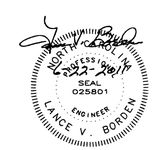

MODJESKI and MASTERS
Experience great bridges.

100 Sterling Parkway
Suite 302
Mechanicsburg, PA 17050 NC License No. C-2979

STATE OF NORTH CAROLINA
DEPARTMENT OF TRANSPORTATION
RALEIGH

WRIGHTSVILLE BRIDGE REHABILITATION
WRIGHTSVILLE, NORTH CAROLINA

NEW TAIL LOCK DETAILS – 3

				DRAWN BY	R.L. REED
				SCALE	AS NOTED
DESIGNED	D.L. MILLER	DETAILED	R.L. REED	DATE	JUNE 2011
CHECKED	T.J. MILLER	CHECKED	T.J. MILLER	DRAWING NO.	11 OF 140

M10

0 1 2 3
INCHES ON FULL SIZE SHEET

11-NTL03.DWG

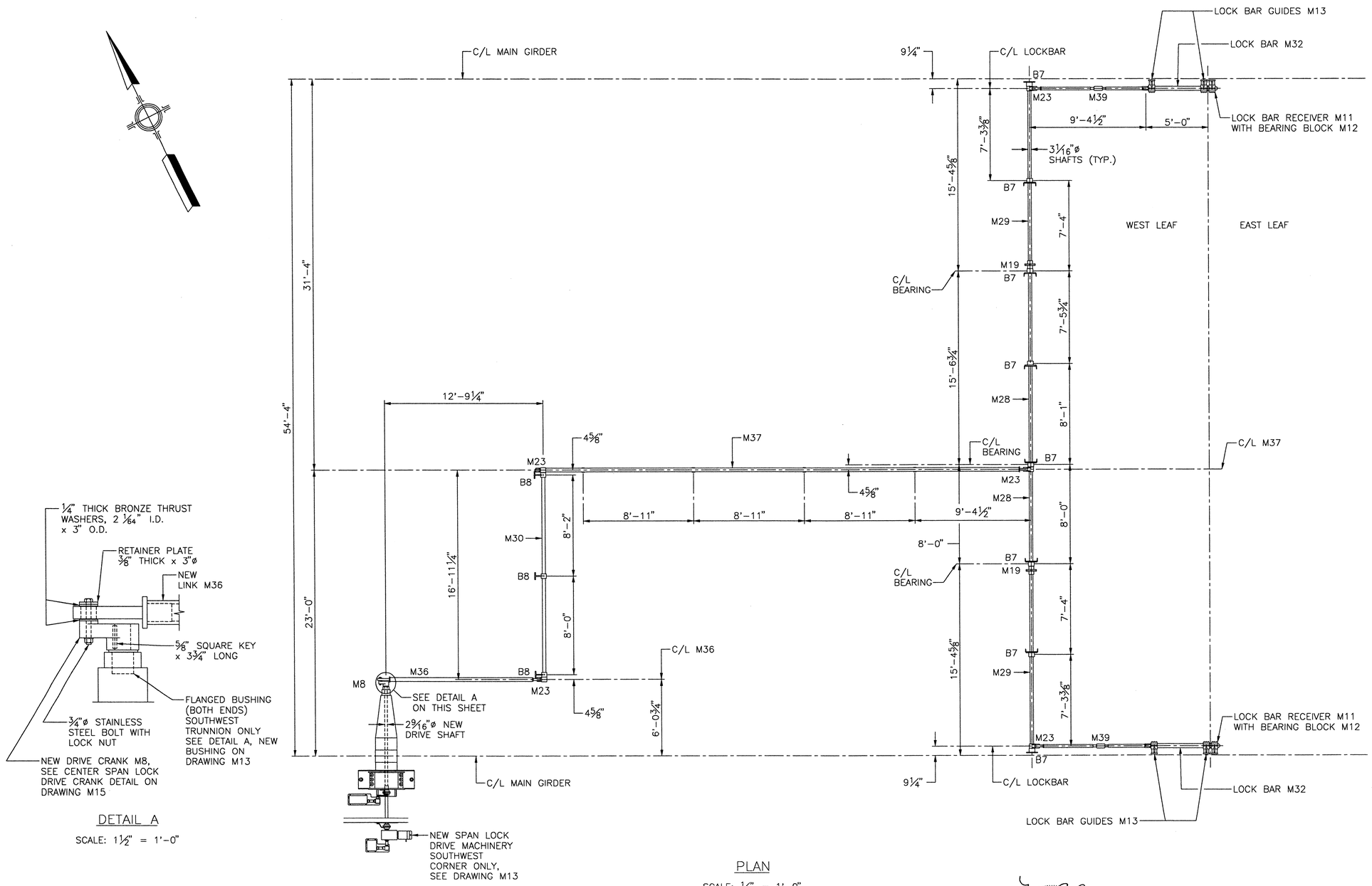

PLAN

SCALE: ¼" = 1'-0"
DIMENSIONS SHOWN WITH SPAN LOCKS IN LOCKED POSITION

DETAIL A

SCALE: 1½" = 1'-0"

NOTES:

1. ALL SHAFTS ARE NEW.
2. ALL CRANKS, LINKS AND LEVERS ARE NEW.
3. ALL HANGERS ARE NEW.
4. BEARINGS B7 AND B8 ARE BORED AND RE-BUSHED.
5. LOCKBARS, GUIDES, RECEIVERS, BEARING BLOCKS ARE NEW.
6. CONTRACTOR SHALL VERIFY ALL REQUIRED DIMENSIONS IN FIELD PRIOR TO FABRICATION.
7. RIGID COUPLING M19 IS TO BE REPLACED WITH NEW FALK 1030G82 RIGID COUPLING (2 PLACES).
8. MATERIAL: ASTM A588, HSLA STEEL, EXCEPT AS OTHERWISE NOTED.
9. CENTER SPAN LOCK ASSEMBLY GENERALLY REPLACED IN KIND EXCEPT WHERE OTHERWISE NOTED.
10. CENTRALIZED GREASE SYSTEM SHOULD BE REPLACED AT SAME LOCATIONS WITH NEW TUBING AND FITTINGS.

0 1 2 3
INCHES ON FULL SIZE SHEET

NORTH CAROLINA PROFESSIONAL SEAL 025801 ENGINEER LANCE V. BORDEN
2-22-2011

MODJESKI and MASTERS
Experience great bridges.
100 Sterling Parkway
Suite 302
Mechanicsburg, PA 17050 NC License No. C-2979

STATE OF NORTH CAROLINA
DEPARTMENT OF TRANSPORTATION
RALEIGH

WRIGHTSVILLE BRIDGE REHABILITATION
WRIGHTSVILLE, NORTH CAROLINA
CENTER SPAN LOCK
ASSEMBLY – 1

		DRAWN BY	R.L. REED
		SCALE	AS NOTED
DESIGNED D.L. MILLER	DETAILED R.L. REED	DATE	JUNE 2011
CHECKED T.J. MILLER	CHECKED T.J. MILLER	DRAWING NO.	12 OF 140

M11

12-CSLA1.DWG

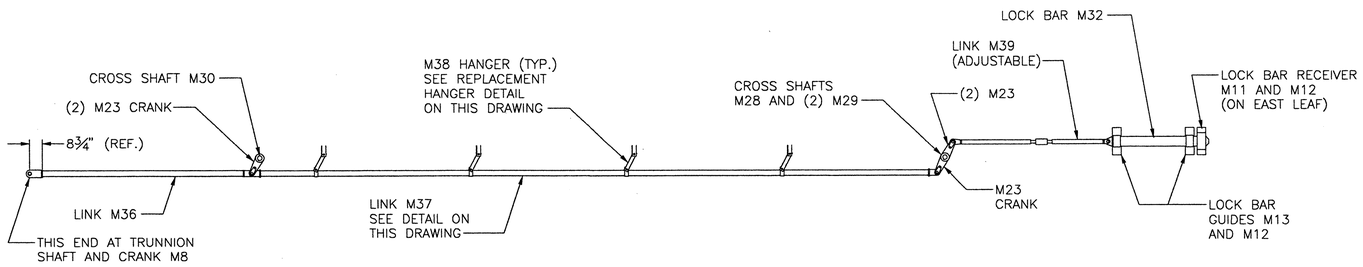

ELEVATION

SCALE: ¼" = 1'-0"

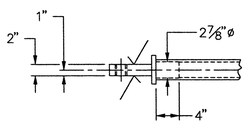

VIEW B-B

SCALE: 1" = 1'-0"

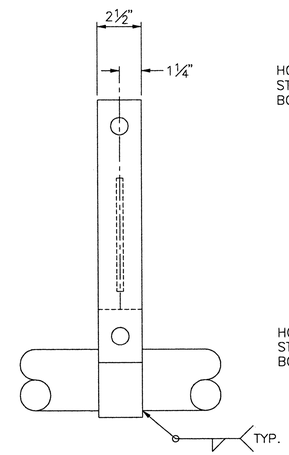

VIEW A-A

SCALE: 3" = 1'-0"

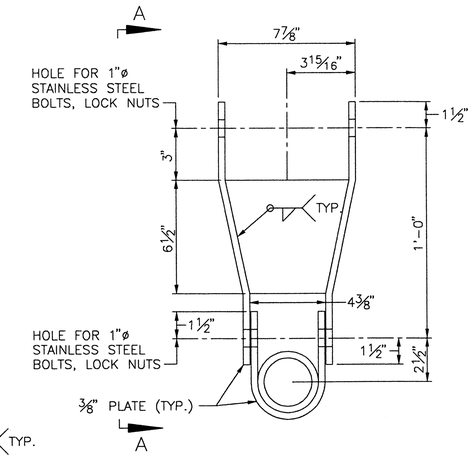

REPLACEMENT HANGER FOR M38

SCALE: 3" = 1'-0"
(4 REQUIRED)

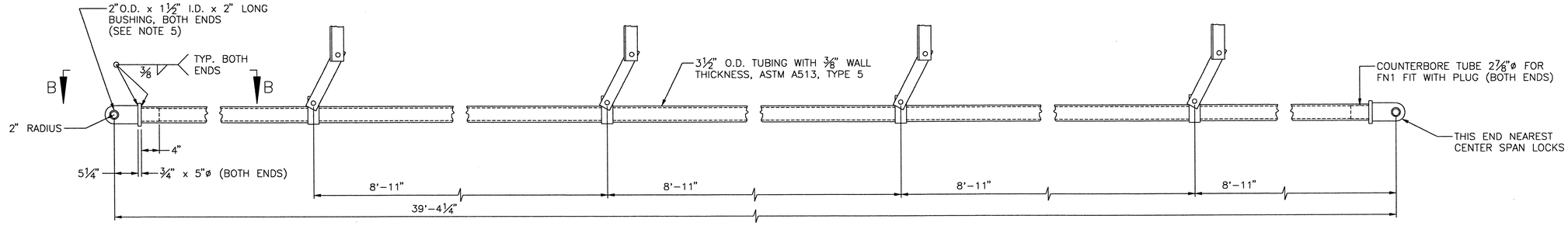

REPLACEMENT LINK M37

SCALE: 1" = 1'-0"

NOTES:

1. ALL WELDMENTS TO BE STRESS RELIEVED BY HEAT PRIOR TO MACHINING.
2. MATERIAL: ASTM A588, HSLA STEEL, EXCEPT AS OTHERWISE NOTED.
3. FINISHED SURFACES 125√ EXCEPT OTHERWISE NOTED.
4. CONTRACTOR SHALL VERIFY ALL REQUIRED DIMENSIONS IN FIELD PRIOR TO FABRICATION.
5. BUSHINGS TO BE GARLOCK BEARINGS, INC. "GAR-MAX" PTFE BUSHING 1½" I.D. PART NO. GM2432-32.

0 1 2 3
INCHES ON FULL SIZE SHEET

NORTH CAROLINA PROFESSIONAL SEAL 025801 ENGINEER LANCE V. BORDEN
2-22-2011

MODJESKI and MASTERS
Experience great bridges.
100 Sterling Parkway
Suite 302
Mechanicsburg, PA 17050 NC License No. C-2979

M12

STATE OF NORTH CAROLINA
DEPARTMENT OF TRANSPORTATION
RALEIGH

WRIGHTSVILLE BRIDGE REHABILITATION
WRIGHTSVILLE, NORTH CAROLINA

CENTER SPAN LOCK ASSEMBLY - 2

DESIGNED D.L. MILLER	DETAILED R.L. REED	DRAWN BY	R.L. REED
		SCALE	AS NOTED
CHECKED T.J. MILLER	CHECKED T.J. MILLER	DATE	JUNE 2011
		DRAWING NO.	13 OF 140

13-CSLA2.DWG

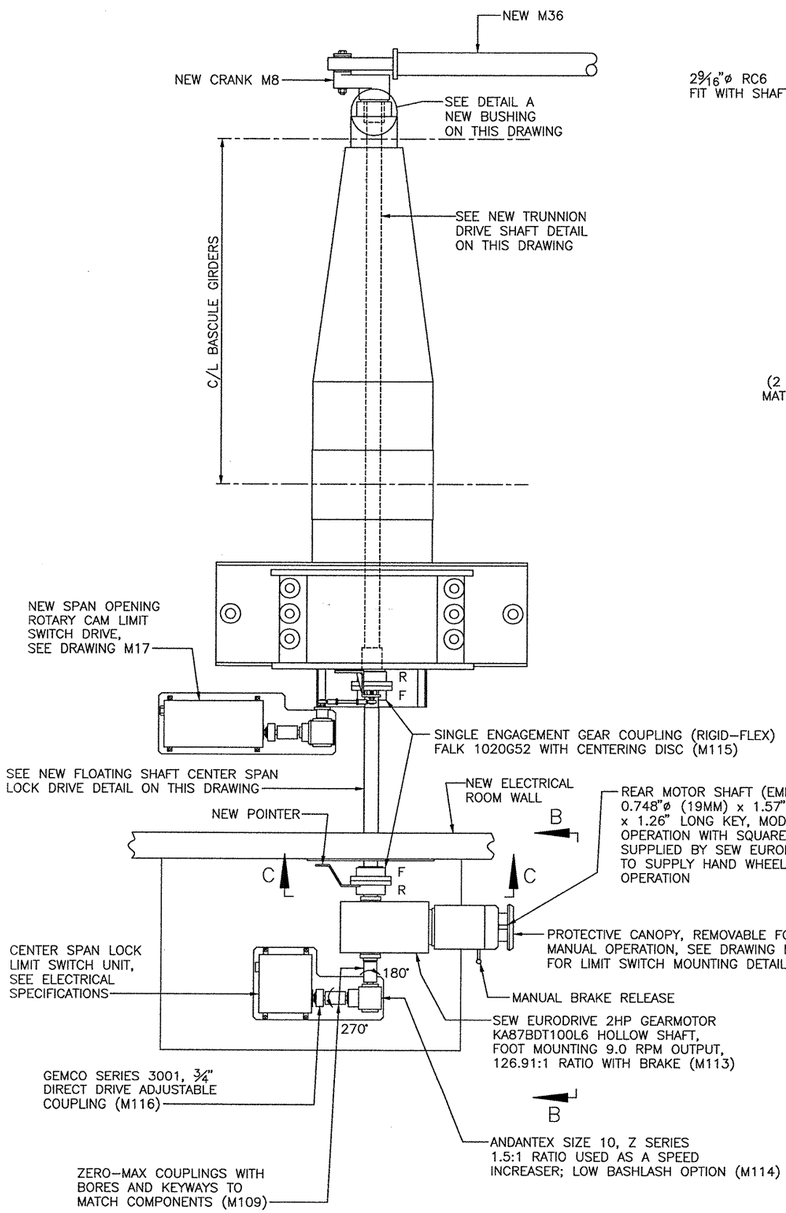

NEW CENTER LOCK
DRIVE MACHINERY

SCALE: 1" = 1'–0"

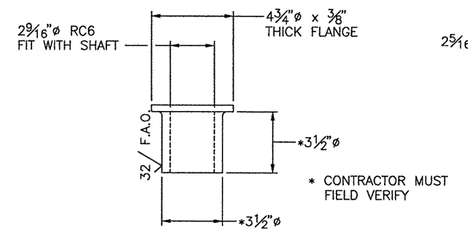

DETAIL A
NEW BUSHING

SCALE: 3" = 1'–0"
(2 REQUIRED – BOTH ENDS)
MATERIAL: LUBRITE, ASTM B22,
ALLOY C91300 BRONZE

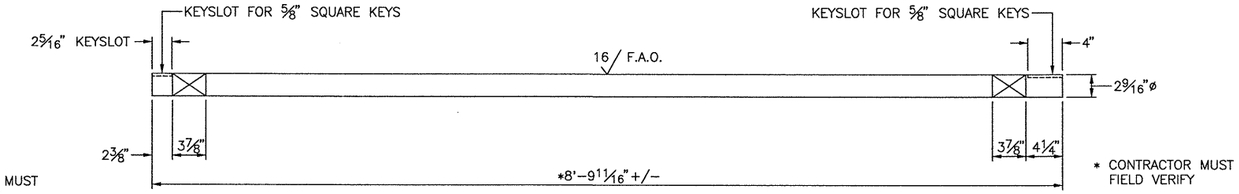

NEW TRUNNION DRIVE SHAFT

SCALE: 1½" = 1'–0"
MATERIAL: ASTM A276, TYPE 316, CONDITION S, COLD
FINISHED, STAINLESS STEEL

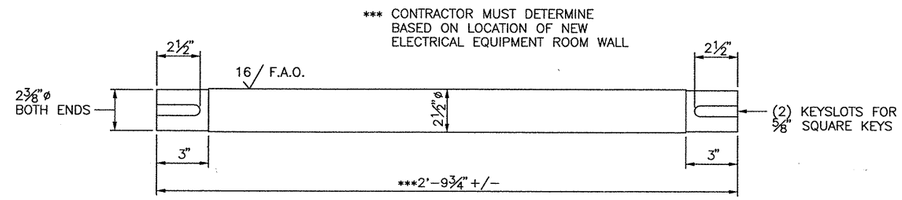

NEW FLOATING SHAFT
CENTER SPAN LOCK DRIVE

SCALE: 3" = 1'–0"
MATERIAL: ASTM A276, TYPE 316, CONDITION S, COLD
FINISHED, STAINLESS STEEL

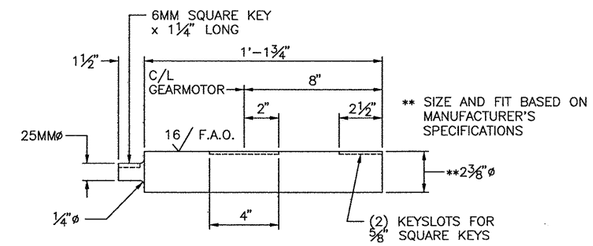

NEW GEAR BOX SHAFT

SCALE: 3" = 1'–0"
MATERIAL: ASTM A276, TYPE 316, CONDITION S, COLD
FINISHED, STAINLESS STEEL

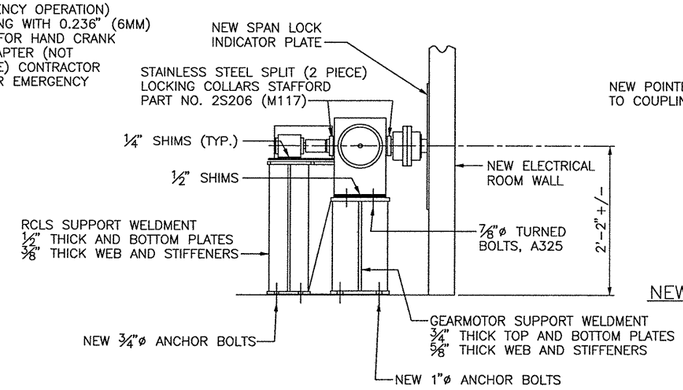

VIEW B–B

SCALE: 1" = 1'–0"

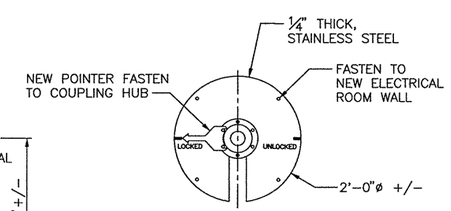

VIEW C–C
NEW SPAN LOCK INDICATOR PLATE

SCALE: 1" = 1'–0"

NOTES:

1. WELDMENTS TO BE STRESS RELIEVED BY HEAT PRIOR TO MACHINING.
2. MATERIAL: ASTM A588, HSLA STEEL, EXCEPT AS OTHERWISE NOTED.
3. CONTRACTOR SHALL VERIFY ALL REQUIRED DIMENSIONS IN FIELD PRIOR TO FABRICATION.
4. VERIFY GEAR MOTOR MOUNTING DIMENSION WITH MANUFACTURER'S CERTIFIED DRAWINGS.
5. FINISHED SURFACES 125 / EXCEPT OTHERWISE NOTED.
6. ANCHOR BOLTS SHALL BE ASTM F1554, GRADE 105 WITH HEAVY HEX NUTS AND WASHERS.
7. ALTERNATE MATERIAL FOR ASTM A276, TYPE 316, CONDITION S, COLD FINISHED STAINLESS STEEL: ASTM A276 TYPE XM–19, COLD FINISHED STAINLESS STEEL.

0 1 2 3
INCHES ON FULL SIZE SHEET

14–NCSLDM.DWG

NORTH CAROLINA PROFESSIONAL ENGINEER SEAL 025801 LANCE V. BORDEN
12-12-2011

MODJESKI and MASTERS
Experience great bridges.
100 Sterling Parkway
Suite 302
Mechanicsburg, PA 17050 NC License No. C–2979

STATE OF NORTH CAROLINA
DEPARTMENT OF TRANSPORTATION
RALEIGH

WRIGHTSVILLE BRIDGE REHABILITATION
WRIGHTSVILLE, NORTH CAROLINA

NEW CENTER SPAN LOCK
DRIVE MACHINERY

		DRAWN BY	R.L. REED
		SCALE	AS NOTED
DESIGNED D.L. MILLER	DETAILED R.L. REED	DATE	JUNE 2011
CHECKED T.J. MILLER	CHECKED T.J. MILLER	DRAWING NO.	14 OF 140

M13

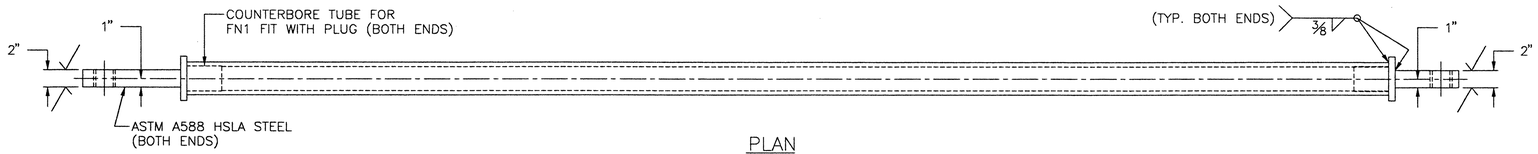

PLAN

SCALE: 1½" = 1'-0"

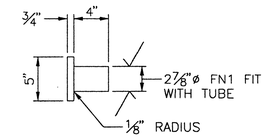

PLUG DETAIL

SCALE: 1½" = 1'-0"
(6 REQUIRED)
MATERIAL: ASTM A588 HSLA STEEL

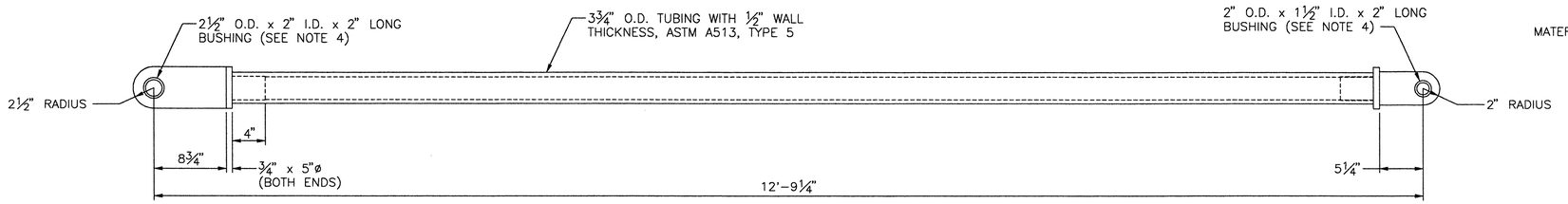

REPLACEMENT LINK M36

SCALE: 1½" = 1'-0"

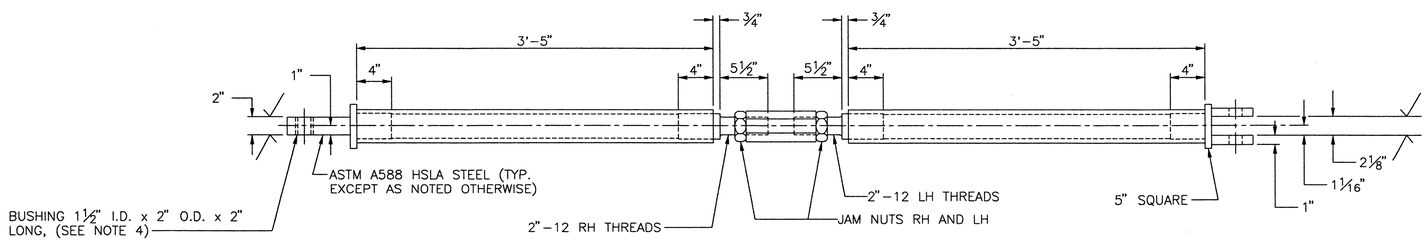

PLAN

SCALE: 1½" = 1'-0"

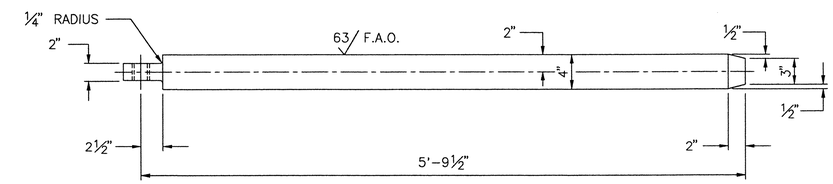

PLAN

SCALE: 1½" = 1'-0"

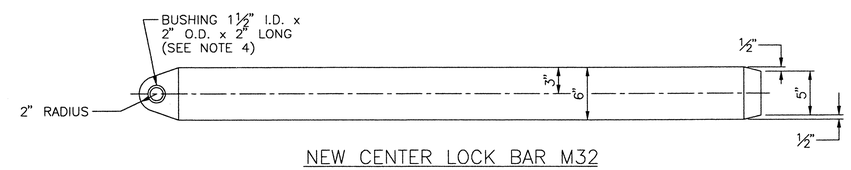

NEW CENTER LOCK BAR M32

SCALE: 1½" = 1'-0"
(2 REQUIRED)
MATERIAL: ASTM A668, CLASS M,
STEEL FORGING

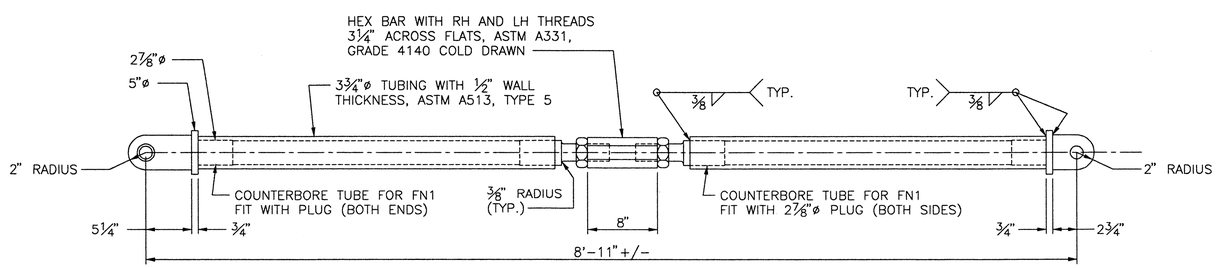

NEW ADJUSTABLE LINK AT LOCK BAR M39

SCALE: 1½" = 1'-0"
(2 REQUIRED)

NOTES:

1. WELDMENTS TO BE STRESS RELIEVED BY HEAT PRIOR TO MACHINING.
2. FINISHED SURFACES 125 EXCEPT OTHERWISE NOTED.
3. CONTRACTOR SHALL VERIFY ALL REQUIRED DIMENSIONS IN FIELD PRIOR TO FABRICATION.
4. BUSHING TO BE GARLOCK BEARINGS, INC. "GAR-MAX" PTFE BUSHINGS 2" I.D., PART NO. GM3240-32; 1½" I.D. PART NO. GM2432-32. ALL BUSHINGS: RC6 FIT ON I.D. WITH PIN, FN2 FIT ON O.D.

0 1 2 3
INCHES ON FULL SIZE SHEET

15-CSLD1.DWG

NORTH CAROLINA PROFESSIONAL SEAL 025801 ENGINEER LANCE V. BORDEN

MODJESKI and MASTERS
Experience great bridges.
100 Sterling Parkway
Suite 302
Mechanicsburg, PA 17050 NC License No. C-2979

STATE OF NORTH CAROLINA
DEPARTMENT OF TRANSPORTATION
RALEIGH

WRIGHTSVILLE BRIDGE REHABILITATION
WRIGHTSVILLE, NORTH CAROLINA

CENTER SPAN LOCK DETAILS - 1

		DRAWN BY	R.L. REED
		SCALE	AS NOTED
DESIGNED D.L. MILLER	DETAILED R.L. REED	DATE	JUNE 2011
CHECKED T.J. MILLER	CHECKED T.J. MILLER	DRAWING NO.	15 OF 140

M14

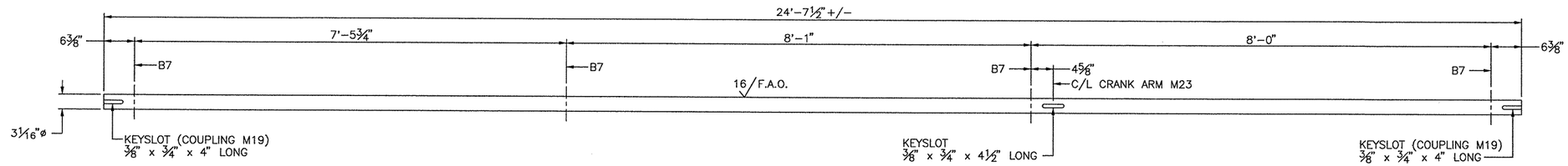

NEW MIDDLE CROSS SHAFT (M28)

SCALE: 1" = 1'-0"

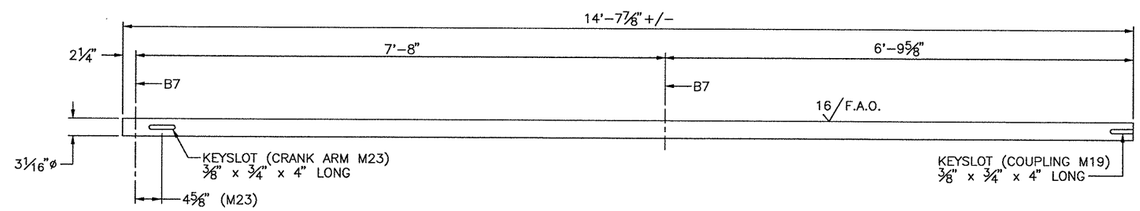

NEW SIDE CROSS SHAFT (M29)

SCALE: 1" = 1'-0"
(2 REQUIRED)
(1 SYMMETRICALLY OPPOSITE)

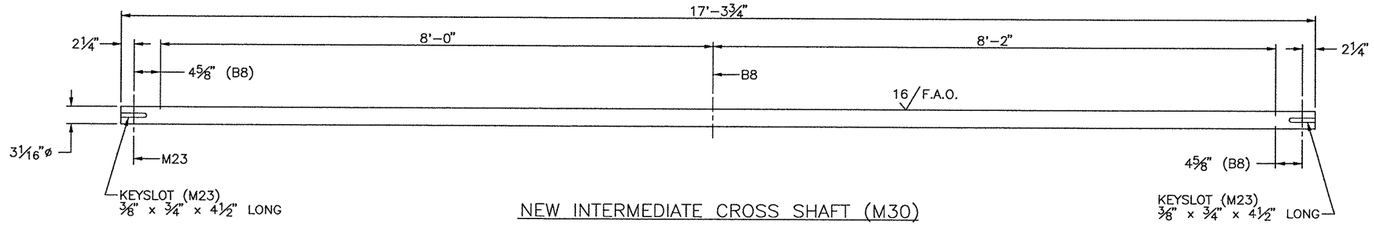

NEW INTERMEDIATE CROSS SHAFT (M30)

SCALE: 1" = 1'-0"

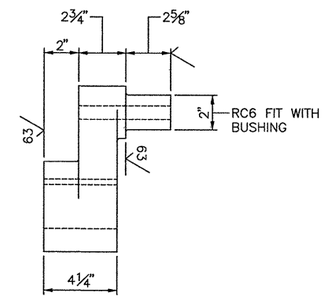

VIEW A–A

SCALE: 3" = 1'-0"

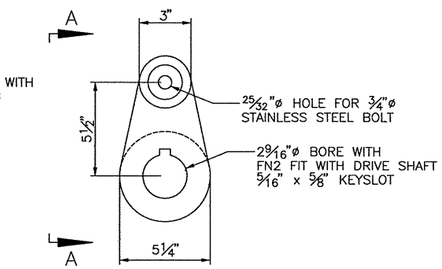

CENTER SPAN LOCK
DRIVE CRANK
REPLACEMENT FOR M8

SCALE: 3" = 1'-0"
MATERIAL: ASTM A588 HSLA STEEL

NOTES:

1. ALL SHAFTS TO BE ASTM A276, TYPE 316, CONDITION S, COLD FINISHED STAINLESS STEEL.
2. CONTRACTOR SHALL VERIFY ALL REQUIRED DIMENSIONS IN FIELD PRIOR TO FABRICATION.
3. FINISHED SURFACES 125 EXCEPT OTHERWISE NOTED.
4. ALTERNATE MATERIAL FOR ASTM A276, TYPE 316, CONDITION S, COLD FINISHED STAINLESS STEEL: ASTM A276 TYPE XM-19, COLD FINISHED STAINLESS STEEL.

0 1 2 3
INCHES ON FULL SIZE SHEET

NORTH CAROLINA PROFESSIONAL SEAL 025801 ENGINEER LANCE V. BORDEN

MODJESKI and MASTERS
Experience great bridges.
100 Sterling Parkway
Suite 302
Mechanicsburg, PA 17050 NC License No. C-2979

STATE OF NORTH CAROLINA
DEPARTMENT OF TRANSPORTATION
RALEIGH

WRIGHTSVILLE BRIDGE REHABILITATION
WRIGHTSVILLE, NORTH CAROLINA

CENTER SPAN LOCK DETAILS – 2

		DRAWN BY	R.L. REED
		SCALE	AS NOTED
DESIGNED D.L. MILLER	DETAILED R.L. REED	DATE	JUNE 2011
CHECKED T.J. MILLER	CHECKED T.J. MILLER	DRAWING NO.	16 OF 140

M15

16-CSL02.DWG

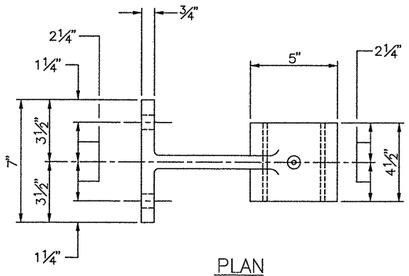

PLAN

SCALE: 3" = 1'–0"

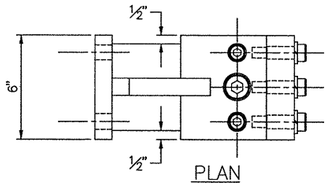

PLAN

SCALE: 1½" = 1'–0"

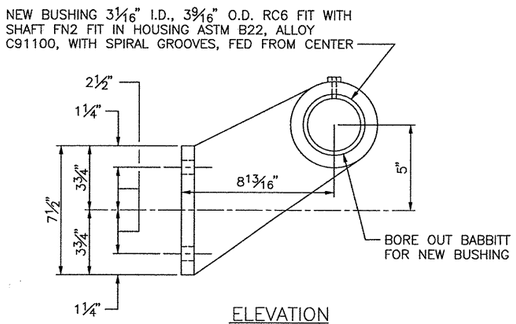

ELEVATION
EXISTING BEARING B8

SCALE: 3" = 1'–0"

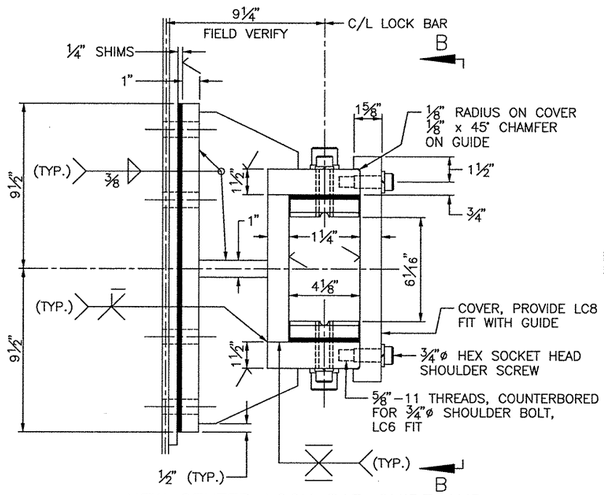

NEW CENTER LOCK BAR GUIDE AND
RECEIVER M11 AND M13

SCALE: 1½" = 1'–0"
(6 REQUIRED)

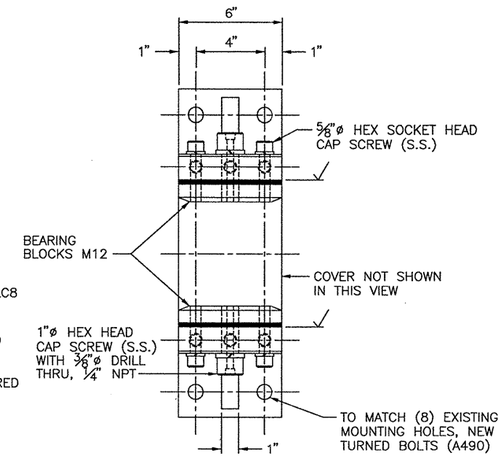

VIEW B–B

SCALE: 3" = 1'–0"

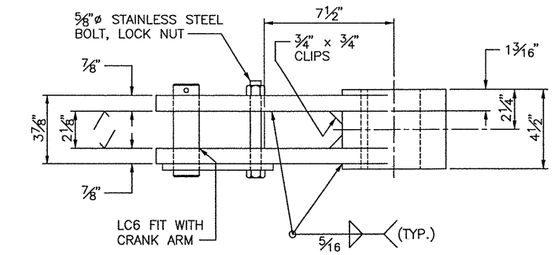

PLAN

SCALE: 3" = 1'–0"

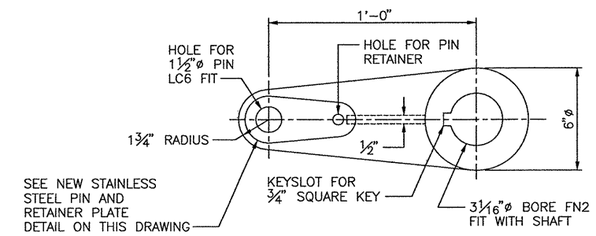

NEW CRANK ARM M23

SCALE: 3" = 1'–0"

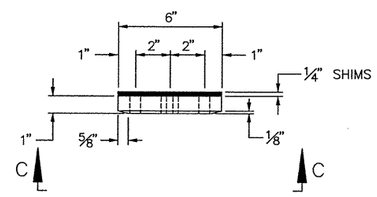

NEW BEARING BLOCKS M12

SCALE: 3" = 1'–0"
(12 REQUIRED)
MATERIAL: ASTM B22, ALLOY C86300
ALUMINUM BRONZE, FINISH ALL OVER 63

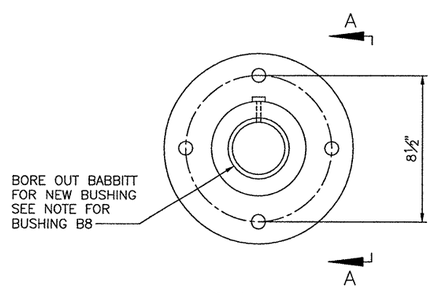

ELEVATION
EXISTING BEARING B7

SCALE: 3" = 1'–0"

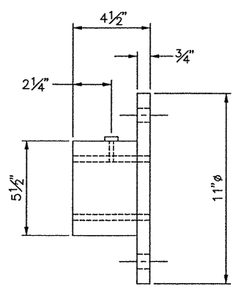

VIEW A–A

SCALE: 3" = 1'–0"

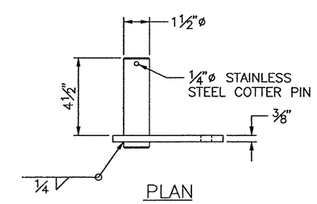

PLAN

SCALE: 3" = 1'–0"
MATERIAL: ASTM A276, TYPE 316, CONDITION S,
COLD FINISHED, STAINLESS STEEL

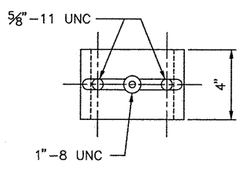

VIEW C–C

SCALE: 3" = 1'–0"
BEARING BLOCK F.A.O. 32

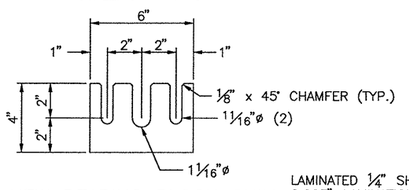

NEW BEARING BLOCK SHIM
(FOR EACH M12)

SCALE: 3" = 1'–0"
(12 REQUIRED)

LAMINATED ¼" SHIMS WITH
0.003" LAMINATIONS
MATERIAL 316 STAINLESS
STEEL

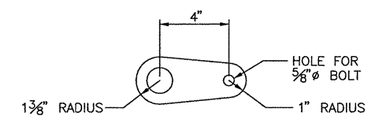

NEW STAINLESS STEEL PIN
AND RETAINER PLATE

SCALE: 3" = 1'–0"

NOTES:

1. ALL WELDMENTS TO BE STRESS RELIEVED BY HEAT PRIOR TO MACHINING.
2. MATERIAL: ASTM A588, HSLA STEEL, EXCEPT AS OTHERWISE NOTED.
3. FINISHED SURFACES 125 EXCEPT OTHERWISE NOTED.
4. CONTRACTOR SHALL VERIFY ALL REQUIRED DIMENSIONS IN FIELD PRIOR TO FABRICATION.
5. ALTERNATE MATERIAL FOR ASTM A276, TYPE 316, CONDITION S, COLD FINISHED STAINLESS STEEL: ASTM A276 TYPE XM–19, COLD FINISHED STAINLESS STEEL.

0 1 2 3
INCHES ON FULL SIZE SHEET

NORTH CAROLINA PROFESSIONAL SEAL 025801 ENGINEER LANCE V. BORDEN
12-2-2011

MODJESKI and MASTERS
Experience great bridges.
100 Sterling Parkway
Suite 302
Mechanicsburg, PA 17050 NC License No. C–2979

STATE OF NORTH CAROLINA
DEPARTMENT OF TRANSPORTATION
RALEIGH

WRIGHTSVILLE BRIDGE REHABILITATION
WRIGHTSVILLE, NORTH CAROLINA

CENTER SPAN LOCK DETAILS – 3

		DRAWN BY	R.L. REED
		SCALE	AS NOTED
DESIGNED D.L. MILLER	DETAILED R.L. REED	DATE	JUNE 2011
CHECKED T.J. MILLER	CHECKED T.J. MILLER	DRAWING NO.	17 OF 140

M16

17–CSLD3.DWG

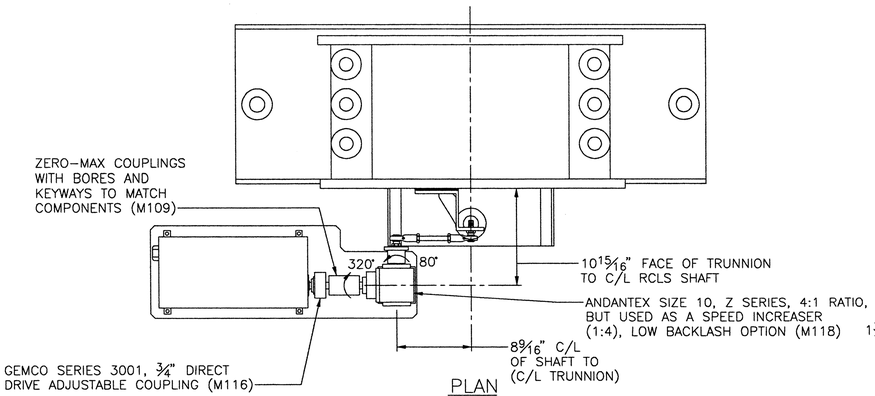

PLAN

SCALE: 1 1/2" = 1'-0"

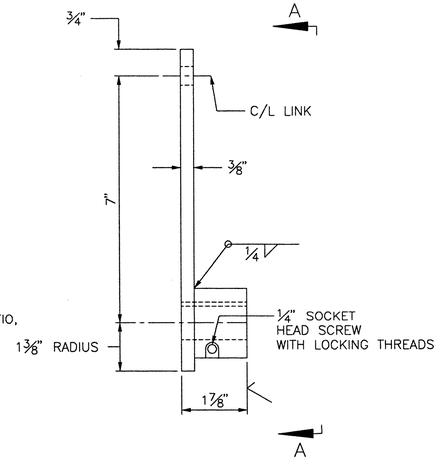

LIMIT SWITCH CRANK DETAIL

SCALE: 6" = 1'-0"
(2 REQUIRED)

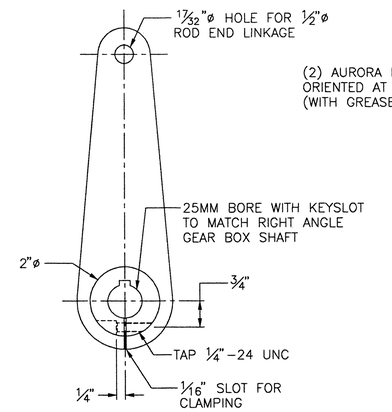

VIEW A-A

SCALE: 6" = 1'-0"

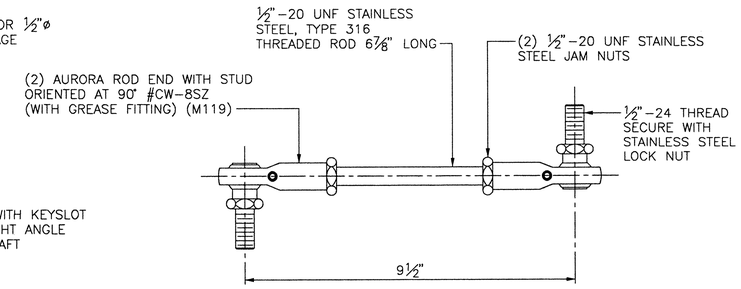

CONNECTING LINK DETAIL

SCALE: 6" = 1'-0"
(2 REQUIRED)

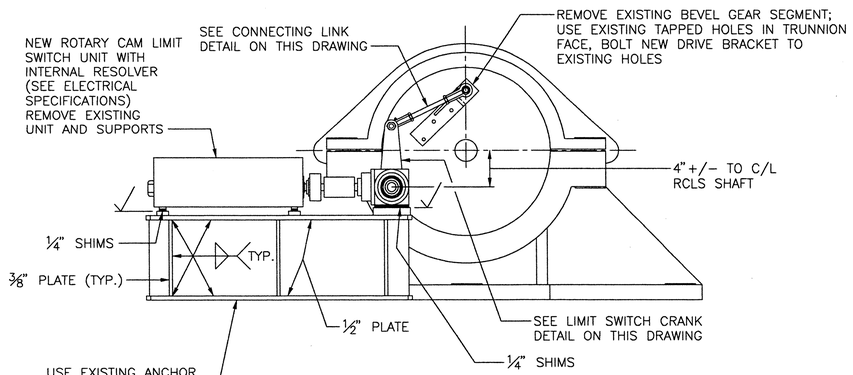

BEVEL DRIVE REPLACEMENT

SCALE: 1 1/2" = 1'-0"
SOUTHWEST CORNER SHOWN
SOUTHEAST CORNER SYMMETRICALLY OPPOSITE
LEAF IN FULLY SEATED POSITION

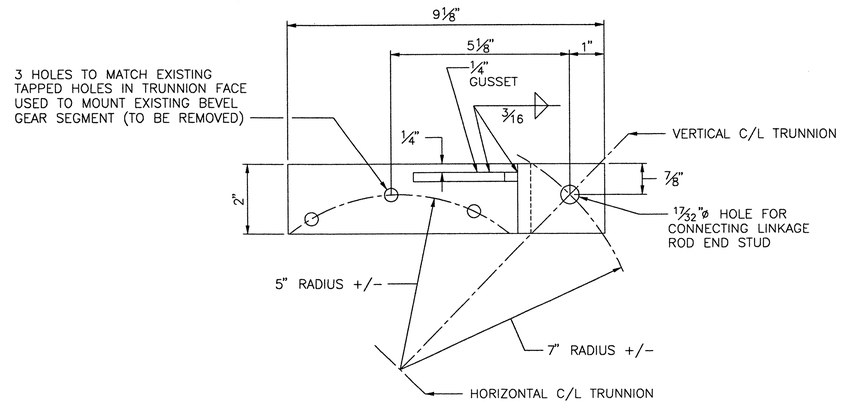

PLAN

SCALE: 6" = 1'-0"

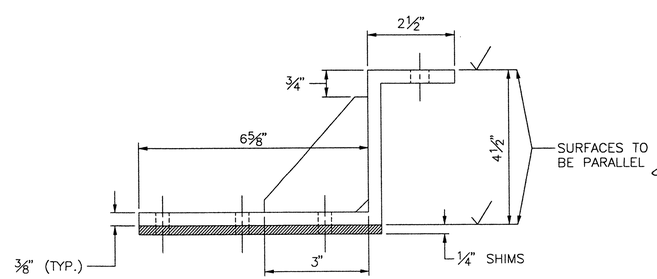

DRIVE BRACKET

SCALE: 6" = 1'-0"
SOUTHWEST CORNER SHOWN
SOUTHEAST CORNER SYMMETRICALLY OPPOSITE

NOTES:

1. ALL WELDMENTS TO BE STRESS RELIEVED BY HEAT PRIOR TO MACHINING.
2. MATERIAL: ASTM A588, HSLA STEEL, EXCEPT AS OTHERWISE NOTED.
3. FINISHED SURFACES 125 EXCEPT OTHERWISE NOTED.
4. CONTRACTOR SHALL VERIFY ALL REQUIRED DIMENSIONS IN FIELD PRIOR TO FABRICATION.

NORTH CAROLINA PROFESSIONAL ENGINEER SEAL 025801 LANCE V. BORDEN

0 1 2 3
INCHES ON FULL SIZE SHEET

18-ROSOLS.DWG

MODJESKI and MASTERS
Experience great bridges.
100 Sterling Parkway
Suite 302
Mechanicsburg, PA 17050 NC License No. C-2979

STATE OF NORTH CAROLINA
DEPARTMENT OF TRANSPORTATION
RALEIGH

WRIGHTSVILLE BRIDGE REHABILITATION
WRIGHTSVILLE, NORTH CAROLINA

REPLACEMENT OF DRIVE FOR SPAN OPENING LIMIT SWITCH

		DRAWN BY	R.L. REED
		SCALE	AS NOTED
DESIGNED D.L. MILLER	DETAILED R.L. REED	DATE	JUNE 2011
CHECKED T.J. MILLER	CHECKED T.J. MILLER	DRAWING NO.	18 OF 140

M17

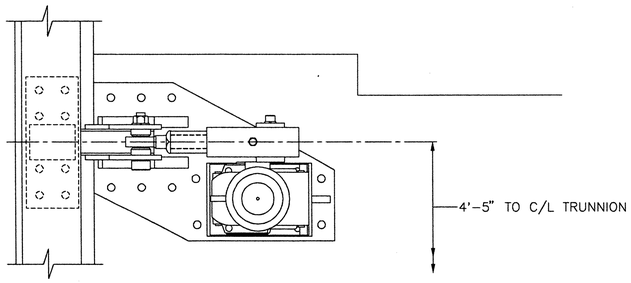

PLAN

SCALE: 1½" = 1'-0"

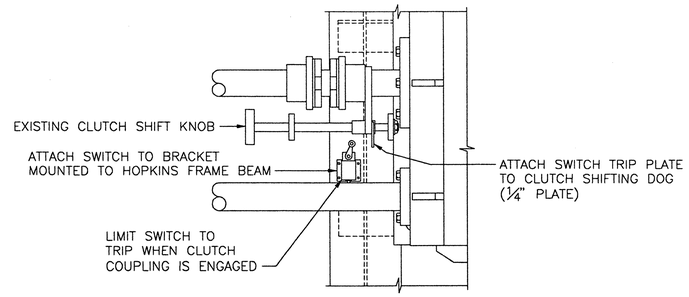

NEW AUXILIARY DRIVE CLUTCH LIMIT SWITCH

SCALE: 1½" = 1'-0"

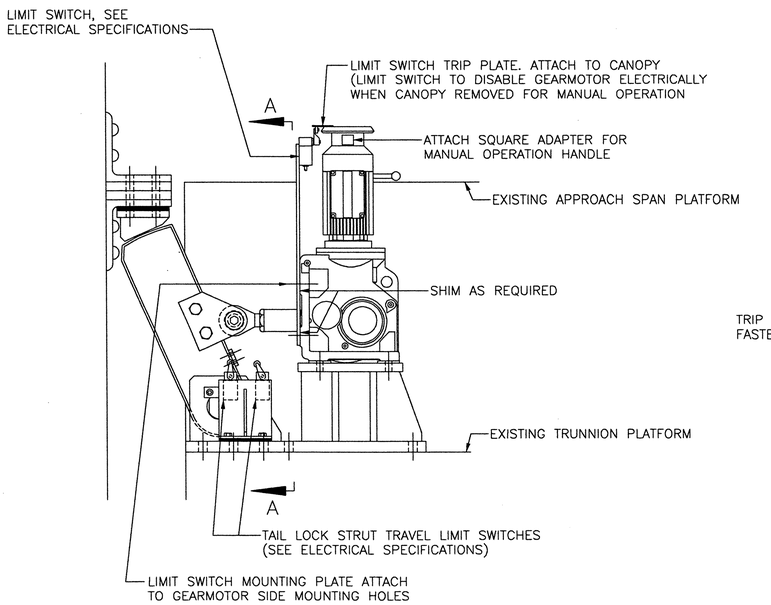

NEW TAIL LOCK LIMIT SWITCH MOUNTING

SCALE: 1½" = 1'-0"
RIGHT HAND SHOWN, LEFT SYMMETRICALLY OPPOSITE (GEARMOTOR SHAFT – OPPOSITE SIDE)

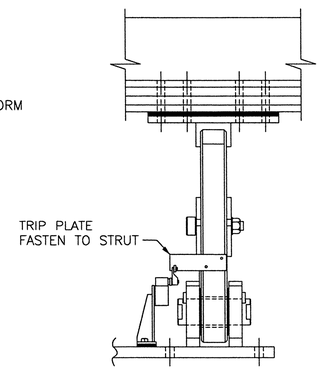

SECTION A–A

SCALE: 1½" = 1'-0"

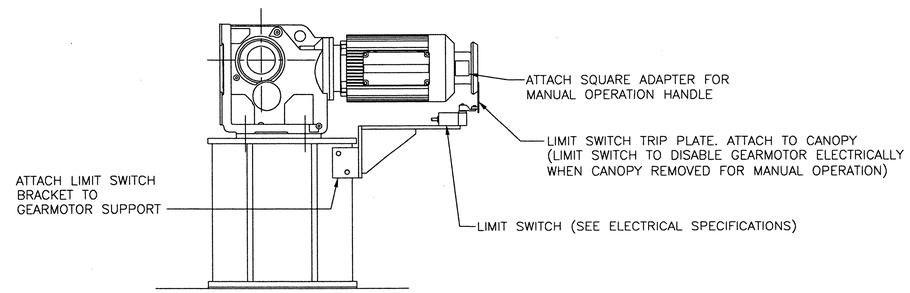

NEW CENTER LOCK DRIVE GEARMOTOR EMERGENCY MANUAL OPERATION

SCALE: 1½" = 1'-0"

NOTES:

1. SEE ELECTRICAL DRAWINGS FOR LIMIT SWITCH SPECIFICATIONS.
2. ALL WELDMENTS TO BE STRESS RELIEVED BY HEAT PRIOR TO MACHINING.
3. FINISHED SURFACES 125 EXCEPT OTHERWISE NOTED.

0 1 2 3
INCHES ON FULL SIZE SHEET

NORTH CAROLINA PROFESSIONAL SEAL 025801 ENGINEER LANCE V. BORDEN

MODJESKI and MASTERS
Experience great bridges.
100 Sterling Parkway
Suite 302
Mechanicsburg, PA 17050 NC License No. C-2979

STATE OF NORTH CAROLINA
DEPARTMENT OF TRANSPORTATION
RALEIGH

WRIGHTSVILLE BRIDGE REHABILITATION
WRIGHTSVILLE, NORTH CAROLINA

LIMIT SWITCH MOUNTING DETAILS

		DRAWN BY	R.L. REED
		SCALE	AS NOTED
M18	DESIGNED D.L. MILLER / DETAILED R.L. REED	DATE	JUNE 2011
	CHECKED T.J. MILLER / CHECKED T.J. MILLER	DRAWING NO.	19 OF 140

19-LSWD.DWG

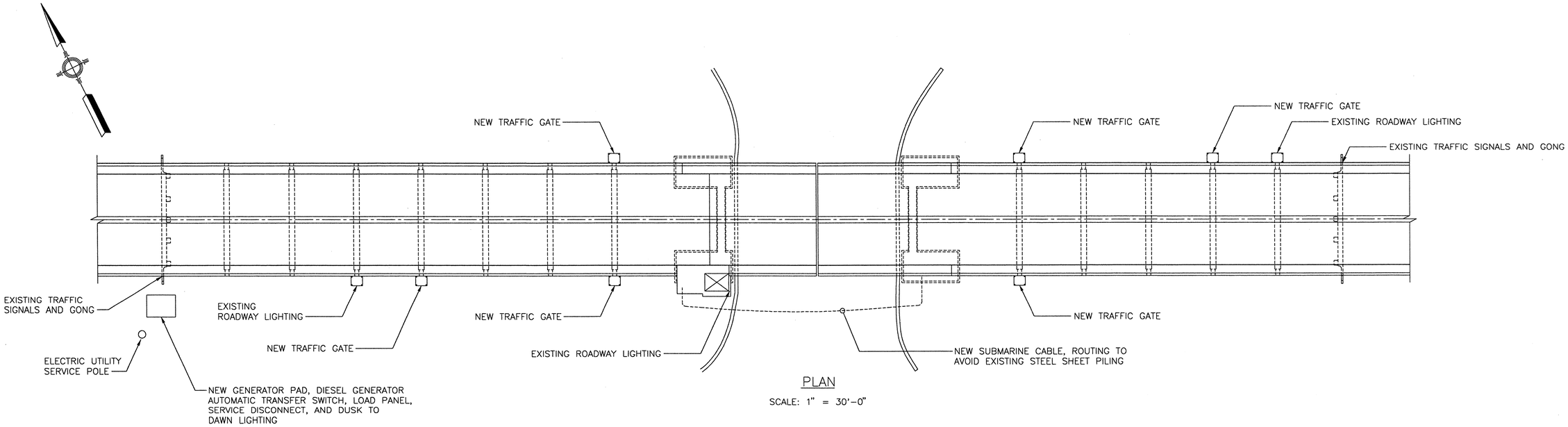

PLAN

SCALE: 1" = 30'-0"

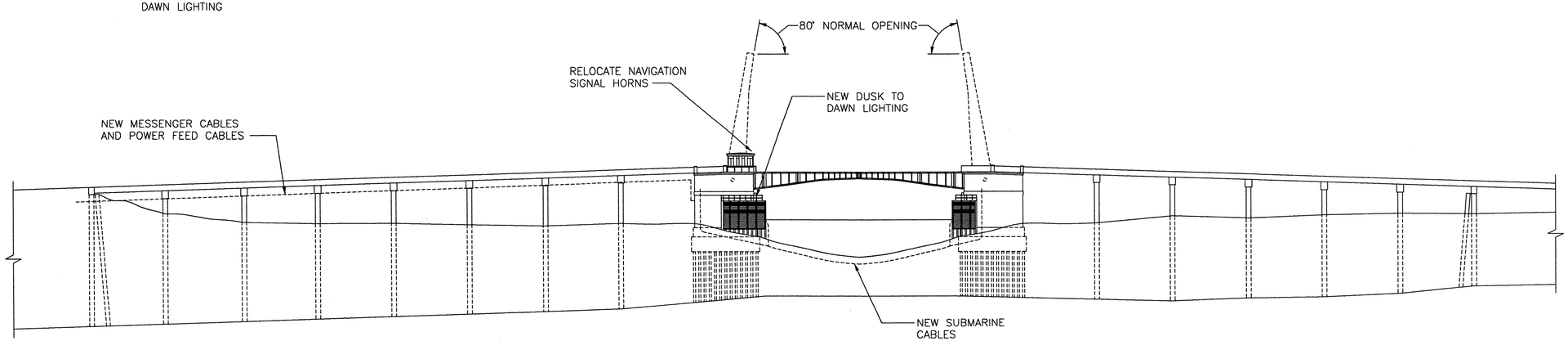

ELEVATION

SCALE: 1" = 30'-0"

0 1 2 3

INCHES ON FULL SIZE SHEET

20-EPE.DWG

NORTH CAROLINA PROFESSIONAL SEAL 025801 ENGINEER LANCE V. BORDEN

MODJESKI and MASTERS
Experience great bridges.

100 Sterling Parkway
Suite 302
Mechanicsburg, PA 17050 NC License No. C-2979

E1

STATE OF NORTH CAROLINA
DEPARTMENT OF TRANSPORTATION
RALEIGH

WRIGHTSVILLE BRIDGE REHABILITATION
WRIGHTSVILLE, NORTH CAROLINA

ELECTRICAL PLAN AND ELEVATION

		DRAWN BY	R.L. REED
		SCALE	AS NOTED
DESIGNED R.I. PETERS	DETAILED R.L. REED	DATE	JUNE 2011
CHECKED A.M. MARINO	CHECKED A.M. MARINO	DRAWING NO.	20 OF 140

ELECTRICAL NOTES

ALL WORK SHALL BE PERFORMED IN ACCORDANCE WITH THE NATIONAL ELECTRICAL CODE (2008 EDITION) AND WITH THE 2007 2ND EDITION OF THE AASHTO LRFD "MOVABLE HIGHWAY BRIDGE DESIGN SPECIFICATIONS."

ALL EQUIPMENT, RACEWAYS, WIRING, ETC. SHALL BE INSTALLED IN A NEAT AND WORKMAN LIKE MANNER IN ACCORDANCE WITH NECA 1 (STANDARD PRACTICES FOR GOOD WORKMANSHIP IN ELECTRICAL CONTRACTING) AND WITHOUT VIOLATING ANY REQUIRED CLEAR WORKING SPACE (NEC 110.26).

IN NO WAY SHALL THESE PLANS BE INTERPRETED AS REQUIRING A VIOLATION OF THE NATIONAL ELECTRICAL CODE OR ANY OTHER APPLICABLE FEDERAL, STATE, OR LOCAL CODE OR REGULATION. IN ANY CASE OF DISPUTE BETWEEN THESE PLANS AND THE NATIONAL ELECTRICAL CODE, THE MORE STRINGENT REQUIREMENT SHALL GOVERN.

THE INSTALLATION OF ALL EQUIPMENT AND MATERIALS SHALL COMPLY WITH THEIR RESPECTIVE MANUFACTURE'S RECOMMENDATIONS AND INSTALLATION PROCEDURES.

THE CONTRACTOR IS EXPECTED TO DELIVER A COMPLETE, WORKING, AND SAFE ELECTRICAL SYSTEM.

VARIATIONS FROM THESE PLANS MUST BE SUBMITTED TO THE ENGINEER FOR APPROVAL. ALL CHANGES SHALL BE REFLECTED IN THE AS-BUILT DRAWINGS.

IN ADDITION TO THE MATERIALS, COMPONENTS, AND EQUIPMENT SHOWN ON THE PLANS, PROVIDE ALL RACEWAYS, JUNCTION AND PULL BOXES, FITTINGS, CONDUCTORS, CONNNECTORS, AND OTHER ITEMS REQUIRED TO PROVIDE A COMPLETE, FUNCTIONAL, AND SAFE INSTALLATION.

THE CONTRACTOR IS REQUIRED TO COORDINATE WITH LOCAL ELECTRIC UTILITY COMPANY FOR ELECTRIC SERVICE CONNECTIONS AND INSTALLATION OF METERING EQUIPMENT.

THE CONTRACTOR IS REQUIRED TO COORDINATE WITH LOCAL TELEPHONE AND CABLE TV PROVIDERS FOR SERVICE CONNECTIONS

THE CONTRACTOR IS REQUIRED TO COORDINATE WITH SEWER AND WATER UTILITIES FOR REPLACEMENT OF EXISTING BRIDGE SERVICE PIPES.

THE CONTRACTOR SHALL INVESTIGATE AND/OR VERIFY THE LOCATIONS OF ALL EXISTING FACILITIES, ABOVE GROUND AND UNDERGROUND, PRIOR TO CONSTRUCTION. ANY DAMAGE TO EXISTING FACILITIES SHALL BE REPAIRED BY THE CONTRACTOR AS DIRECTED BY THE ENGINEER AT NO ADDITIONAL COST.

THE CONTRACTOR SHALL CAREFULLY TRACE, LOCATE, IDENTIFY, AND DOCUMENT ALL EXISTING EQUIPMENT, CONDUCTORS, RACEWAYS, AND OTHER ITEMS WHICH ARE EXISTING AND TO REMAIN IN PLACE, BE RE-ROUTED, OR BE RELOCATED. THE CONTRACTOR SHALL EXERCISE CARE NOT TO DAMAGE OR OTHERWISE DISTURB ANY ITEMS WHICH ARE EXISTING AND TO REMAIN IN PLACE.

LOCATIONS OF CONDUIT, CABLES, WIRING, AND OTHER EQUIPMENT SHOWN ON THE CONTRACT PLANS ARE DIAGRAMMATIC ONLY. EXACT LOCATIONS SHALL BE DETERMINED IN THE FIELD BY THE CONTRACTOR AND SUBJECT TO APPROVAL BY THE ENGINEER.

THE CONTRACTOR SHALL BEAR FULL RESPONSIBILITY FOR VERIFICATION OF ALL RELEVANT DIMENSIONS, EQUIPMENT SPECIFICAITONS, ELECTRICAL LOADS, CIRCUIT LOADS, SUBMARINE CABLE DESIGN, AND SIMILAR INFORMATION PRIOR TO PURCHASE AND/OR FABRICATION OF EQUIPMENT OR MATERIALS. EQUIPMENT RATINGS, AND/OR WIRE SIZES SHOWN ON THE PLANS SHALL BE INCREASED WHERE REQUIRED BY THE LOADS SERVED.

ALL EQUIPMENT, RACEWAYS, WIRING, ETC. SHOWN ON THESE PLANS, OR OTHERWISE REQUIRED, SHALL BE NEW UNLESS SPECIFICALLY NOTED OTHERWISE.

E NUMBERS IN PARENTHESES, (EXXX), ASSOCIATED WITH EQUIPMENT REFER TO ITEM NUMBERS IN THE EQUIPMENT SCHEDULE.

THE CONTRACTOR IS RESPONSIBLE FOR SUPPLYING ANY TEMPORARY POWER REQUIRED TO SUPPORT BRIDGE OPERATIONS DURING CONSTRUCTION AND TO SUPPORT THE OVERALL CONSTRUCTION EFFORT.

WHERE DETAILS ARE NOT PROVIDED OR FULLY DEVELOPED, THE CONTRACTOR SHALL PROVIDE THE ADDITIONAL DETAIL DEVELOPMENT NECESSARY TO PROVIDE AND SUBMIT LAYOUT DRAWINGS AND SHOP DRAWINGS FOR REVIEW.

SUBSTITUTION OF MATERIALS:

REFERENCE TO A SPECIFIC MANUFACTURER, BRAND, MODEL, OR CATALOG NUMBER IS INTENDED TO DESCRIBE THE QUALITY AND CHARACTERISTICS OF THE MATERIAL REFERENCED, AND SHALL NOT BE INTERPRETED AS EXCLUDING EQUIVALENT PRODUCTS BY OTHER MANUFACTURERS. ALL PROPOSED SUBSTITUTIONS SHALL BE SUBMITTED TO THE ENGINEER FOR APPROVAL.

ARC FLASH HAZARD

THE CONTRACTOR SHALL UTILIZE THE SERVICES OF A QUALIFIED ARC FLASH CONSULTANT TO PERFORM ARC FLASH ANALYSIS, DETERMINATION OF DEGREE OF ARC FLASH HAZARD LABELS FOR ALL ELECTRICAL ENCLOSURES AND TERMINAL CABINETS IN COMPLIANCE WITH THE ARC FLASH SAFETY REQUIREMENTS OF NFPA 70 AND NFPA 70E.

0 1 2 3

INCHES ON FULL SIZE SHEET

WIRING METHODS AND MATERIALS

UNLESS EXPLICITLY INDICATED OTHERWISE, ONLY THE FOLLOWING WIRING METHODS ARE PERMITTED:

(A) ALL LOCATIONS
1. PVC COATED STEEL RIGID METAL CONDUIT (RMC)
2. LIQUIDTIGHT FLEXIBLE METAL CONDUIT (LFMC)

(B) MACHINERY AREA AND BASCULE SPAN
1. ANY METHOD PERMITTED IN (A)
2. FLEXIBLE MULTI-CONDUCTOR CONTROL AND POWER CABLE (FOR FLEX CONNECTIONS TO THE SPAN AND TO DEVICES)

(C) BRIDGE APPROACHES
1. ANY METHOD PERMITTED IN (A)
2. MESSENGER CABLE SUPPORTED PVC JACKETED TYPE MC CABLES

(D) INSIDE THE CONTROL HOUSE – ELECTRICAL ROOM AND STORAGE ROOM
1. ANY METHOD PERMITTED IN (A)
2. STEEL RIGID METAL CONDUIT (RMC)
3. PVC JACKETED TYPE MC OR TC CABLES IN ALUMINUM CABLE TRAY

(E) INSIDE THE NEW CONTROL HOUSE OPERATOR'S ROOM
1. ANY METHOD PERMITTED IN (A)
2. STEEL RIGID METAL CONDUIT (RMC)
3. STEEL INTERMEDIATE METAL CONDUIT (IMC)
4. STEEL ELECTRICAL METALLIC TUBING (EMT)
5. TYPE MC CABLE FOR LIGHTS AND RECEPTACLES, CONCEALED RUNS ONLY

ALL CONDUIT CONNECTIONS TO MOTORS AND SIMILAR EQUIPMENT SHALL BE MADE WITH FLEXIBLE CONDUIT. LENGTH OF FLEXIBLE CONDUIT SHALL BE NOT LESS THAN 18 INCHES BUT NOT MORE THAN 36 INCHES.

ALUMINUM CONDUITS, BOXES, ENCLOSURES, FIXTURES, ETC. SHALL BE ISOLATED FROM CONCRETE AND/OR STRUCTURAL STEEL WITH NEOPRENE SHIMS OF ⅛ INCH MINIMUM THICKNESS. GALVANIZED CONDUITS, BOXES, ENCLOSURES, FIXTURES, ETC. SHALL BE ISOLATED FROM UNPAINTED STEEL WITH SIMILAR NEOPRENE SHIMS.

RIGID CONDUITS SHALL BE SUPPORTED WITHIN 18 INCHES OF ALL TERMINATIONS AND AT REGULAR INTERVALS NOT TO EXCEED 6 FEET.

ALL CONDUIT CONNECTIONS TO BOXES AND ENCLOSURES WHICH DO NOT HAVE INTEGRAL THREADED HUBS SHALL UTILIZE WEATHERPROOF GROUNDING TYPE HUBS OR CONNECTIONS. ALL HUBS AND CONNECTORS SHALL HAVE INSULATED THROATS OR BE PROVIDED WITH INSULATED BUSHINGS.

ANY CONDUIT ROUTINGS SHOWN ON THESE PLANS ARE CONCEPTUAL ONLY. ACTUAL ROUTINGS SHALL BE DETERMINED BY THE CONTRACTOR BASED ON ACTUAL CONDITIONS AND SUBMITTED TO THE ENGINEER FOR APPROVAL.

ALL CONDUCTORS SHALL BE STRANDED COPPER TYPE XHHW-2, EXCEPT WHERE SHOWN OTHERWISE ON THE PLANS. THE MINIMUM SIZE FOR FIELD POWER AND CONTROL WIRING SHALL BE 12AWG. INSULATION SHALL HAVE A 600V MINIMUM RATING, AND BE RATED FOR 90 DEG CELSIUS.

NEUTRAL CONDUCTORS SHALL NOT BE SHARED BETWEEN MULTIPLE BRANCH CIRCUITS, EXCEPT FOR DESIGNATED MULTIPLE LIGHTING AND RECEPTACLE CIRCUITS WHERE CLEARLY SHOWN ON THE PLANS.

CONDUCTOR FILL IN RACEWAYS SHALL NOT EXCEED 40%. MINIMUM CONDUIT SIZE SHALL BE ¾ INCH EXCEPT THAT ½ INCH SHALL BE PERMITTED FOR FLEXIBLE CONDUIT CONNECTIONS TO LUMINAIRES.

WIRING IN ENCLOSURES, CABINETS, BOXES, ETC. SHALL BE NEATLY ROUTED AND BUNDLED WITH PVC CABLE TIES OR PLACED IN NON-METALIC WIRING TROUGHS.

SPARE AND UN-TERMINATED CONDUCTORS SHALL BE CAPPED, OR CONNECTED TO SPARE TERMINAL BLOCKS WHERE AVAILABLE, AND CLEARLY IDENTIFIED. ONE FULL TURN OF SLACK FOR ALL SPARE CONDUCTORS SHALL BE PROVIDED IN ALL ENCLOSURES, CABINETS, BOXES, ETC.

RACEWAYS CROSSING EXPANSION JOINTS, OR OTHERWISE SUBJECT TO MOVEMENT, SHALL BE PROVIDED WITH EXPANSION AND/OR DEFLECTION FITTINGS OR OTHER APPROVED MEANS TO COMPENSATE FOR SUCH MOVEMENT. EACH SUCH EXPANSION AND/OR DEFLECTION MEANS SHALL BE PROVIDED WITH AN EXTERNAL COPPER BONDING JUMPER, SIZED 6 AWG MINIMUM.

CONDUCTOR SPLICES SHALL BE MADE ONLY IN JUNCTION BOXES, OUTLET OR DEVICE BOXES, TERMINAL CABINETS, AND EQUIPMENT ENCLOSURES. SPLICES SHALL BE MADE ON TERMINAL BLOCKS, EXCEPT FOR SPLICES AT LUMINAIRES AND WIRING DEVICES WHICH SHALL UTILIZE INSULATED SET-SCREW TYPE, OR SIMILAR APPROVED CONNECTIONS. TWIST-ON (WIRENUT) TYPE CONNECTIONS SHALL NOT BE USED, EXCEPT FOR LIGHTING OR OUTLET CIRCUITS OF 120 VOLTS, 20 AMPS OR LESS. TERMINAL BLOCKS SHALL NOT HAVE MORE THAN TWO CONDUCTORS PER TERMINAL.

LAYOUT OF TERMINAL BLOCKS IN JUNCTION BOXES AND TERMINAL CABINETS SHALL COMPLY WITH THE REQUIREMENTS FOR WIRE BENDING SPACE GIVEN IN NEC 312.6, EXCEPT THAT THE MINIMUM SPACE PERMITTED SHALL BE 2 INCHES. PROPOSED LAYOUTS, INCLUDING ANTICIPATED LOCATIONS AND SIZES OF KNOCKOUTS, SHALL BE SUBMITTED FOR APPROVAL PRIOR TO FABRICATION.

TERMINAL BLOCKS, POWER DISTRIBUTION BLOCKS, AND CRIMP TYPE CONNECTORS SHALL BE RATED FOR 90 DEG CELSIUS.

A CONDUIT BODY OR BOX SHALL BE PROVIDED ON AT LEAST ONE SIDE OF ALL FLEXIBLE CONDUCTORS.

ALL RACEWAYS SHALL BE ARRANGED TO DRAIN. CONDUIT DRAINS SHALL BE INSTALLED IN A CONDUIT BODY AT THE LOW POINT OF ALL RUNS.

UNLESS SPECIFICALLY INDICATED OTHERWISE, CONDUIT AND CABLE ENTRANCES IN DAMP AND WET LOCATIONS SHALL BE MADE ONLY AT THE BOTTOM OF CABINETS AND/OR ENCLOSURES.

CONDUCTORS WITH GREEN COLORED INSULATION MAY BE USED ONLY FOR GROUNDING CONDUCTORS. RE-IDENTIFICATION OF CONDUCTORS, SUCH AS WITH GREEN COLORED TAPE, IS NOT PERMITTED.

MISCELLANEOUS MATERIALS AND METHODS

ALL BOLTS, NUTS, WASHERS, CONCRETE ANCHORS, AND SIMILAR HARDWARE SHALL BE TYPE 316 STAINLESS STEEL. ALL CONCRETE ANCHORS SHALL BE EPOXY ADHESIVE TYPE.

ALL BOLTED AND SIMILAR CONNECTIONS SHALL UTILIZE LOCK WASHERS. CONNECTIONS WHICH DO NOT PERMIT THE USE OF LOCK WASHERS SHALL UTILIZE AN APPROVED MEDIUM STRENGTH THREAD-LOCKING ADHESIVE.

SUPPORTS FOR ELECTRICAL EQUIPMENT SHALL BE FABRICATED FROM TYPE 316 STAINLESS STEEL OR TYPE A36 STEEL (HOT DIPPED GALVANIZED AFTER FABRICATION.

EQUIPMENT ENCLOSURES, CABINETS, BOXES, AND SIMILAR ITEMS SHALL BE INSTALLED PLUMB AND SECURELY FASTENED IN PLACE. LARGE FREE STANDING CABINETS, MOTOR CONTROL CENTERS, ETC. SHALL BE MOUNTED ON VIBRATION ISOLATION NEOPRENE PADS.

IDENTIFICATION

THE CONTRACTOR SHALL BE RESPONSIBLE FOR DEVELOPING A COMPREHENSIVE WIRE NUMBERING SYSTEM AND SHALL LABEL ALL WIRES, CABLES, AND TERMINAL BLOCKS. IDENTIFICATION NUMBERS SHALL BE COORDINATED FOR CONSISTENCY AND ACCURACY WITH NUMBERS SHOWN ON THE CONTRACTOR'S WIRING DIAGRAMS AND SHOP DRAWINGS, FIELD WIRING DIAGRAMS, AND ANY OTHER DIAGRAMS SHOWING THE SAME ITEM.

ALL CONDUCTORS, INCLUDING SPARES, SHALL BE UNIQUELY IDENTIFIED AND CLEARLY LABELED WITH MACHINE PRINTED, WEATHERPROOF, NON-SHRINK SLEEVE TYPE LABELS. EACH CONDUCTOR SHALL BE ASSIGNED ONLY ONE IDENTIFICATION NUMBER THROUGHOUT ITS ENTIRE ROUTING FROM ORIGIN TO DESTINATION POINT(S).

ALL TERMINAL BLOCKS SHALL BE CLEARLY LABELED AT EACH TERMINAL POSITION WITH ENGRAVED PLASTIC WEATHERPROOF LABELS (WHITE TEXT ON BLACK BACKGROUND) ATTACHED WITH STAINLESS STEEL HARDWARE.

ALL ELECTRICAL EQUIPMENT ENCLOSURES, PULL BOXES, JUNCTION BOXES, LOAD PANELS, AND SIMILAR ITEMS SHALL BE CLEARLY LABELED WITH ENGRAVED PLASTIC WEATHERPROOF LABELS (WHITE TEXT ON BLACK BACKGROUND) ATTACHED WITH STAINLESS STEEL HARDWARE.

ALL CONDUIT AND CABLE RUNS SHALL BE LABELED AT EACH TERMINATION POINT. LABELS SHALL BE STAMPED 19 GAUGE BRASS TAGS. MINIMUM SIZE SHALL BE 1 INCH DIAMETER. TAGS SHALL BE FASTENED WITH UV RESISTANT PVC CABLE TIES.

GROUNDING AND BONDING

ALL CIRCUITS SHALL INCLUDE AN EQUIPMENT GROUNDING CONDUCTOR. EQUIPMENT GROUNDING CONDUCTORS SHALL BE SIZED EQUAL TO THE CIRCUIT CONDUCTORS, EXCEPT WHERE SHOWN OTHERWISE IN THE PLANS OR PERMITTED OTHERWISE BY THE NEC.

ALL GROUNDING TYPE HUBS AND CONNECTORS IN A BOX OR ENCLOSURE SHALL BE BONDED TOGETHER AND TO THE BOX OR ENCLOSURE WITH A STRANDED COPPER BONDING JUMPER SIZED EQUAL TO THE LARGEST EQUIPMENT GROUNDING CONDUCTOR IN THE BOX OR ENCLOSURE.

ALL GROUNDING CONDUCTORS WITHIN AN EQUIPMENT ENCLOSURE OR TERMINAL CABINET SHALL BE TERMINATED ON A COMMON UNINSULATED GROUNDING BAR.

REMOVALS:

PERFORM ALL REMOVALS IN SUCH A MANNER AS TO AVOID DAMAGE TO EXISTING EQUIPMENT AND/OR CONDUCTORS WHICH ARE TO REMAIN.

THE CONTRACTOR SHALL GIVE THE DEPARTMENT THE OPTION OF SALVAGING ANY ELECTRICAL EQUIPMENT WHICH IS TO BE REMOVED.

THE CONTRACTOR SHALL DELIVER ALL EQUIPMENT WHICH IS TO BE SALVAGED TO A LOCATION DESIGNATED BY THE DEPARTMENT. ALL EQUIPMENT WHICH IS TO BE SALVAGED SHALL BE HANDLED WITH CARE AT ALL TIMES TO AVOID DAMAGE.

ALL EQUIPMENT WHICH IS TO BE REMOVED AND IS NOT TO BE SALVAGED SHALL BECOME THE PROPERTY OF, AND BE REMOVED FROM THE PROJECT SITE BY THE CONTRACTOR.

THE CONTRACTOR SHALL BEAR FULL RESPONSIBILITY FOR THE PROPER DISPOSAL OF REMOVED EQUIPMENT AND/OR MATERIALS IN ACCORDANCE WITH ALL APPLICABLE REGULATIONS.

NORTH CAROLINA PROFESSIONAL SEAL 025801 ENGINEER LANCE V. BORDEN

MODJESKI and MASTERS
Experience great bridges.

100 Sterling Parkway
Suite 302
Mechanicsburg, PA 17050 NC License No. C-2979

STATE OF NORTH CAROLINA
DEPARTMENT OF TRANSPORTATION
RALEIGH

WRIGHTSVILLE BRIDGE REHABILITATION
WRIGHTSVILLE, NORTH CAROLINA

ELECTRICAL NOTES – 1

		DRAWN BY	R.L. REED
		SCALE	NONE
DESIGNED R.I. PETERS	DETAILED R.L. REED	DATE	JUNE 2011
CHECKED A.M. MARINO	CHECKED A.M. MARINO	DRAWING NO.	21 OF 140

E2

21-EN1.DWG

ELECTRICAL NOTES (CONTINUED)

REMOVAL OF EXISTING CONTROL SYSTEM AND ELECTRICAL EQUIPMENT:

THE FOLLOWING LIST OUTLINES THE ELECTRICAL ITEMS TO BE REMOVED AS PART OF THE WORK. NOT ALL ITEMS ARE LISTED. THE CONTRACTOR'S SEQUENCE OF CONSTRUCTION SHALL DETERMINE THE ACTUAL WORK SEQUENCE.

(A) REMOVE EXISTING BRIDGE ELECTRICAL SERVICE AND POWER FEED CABLE TO EXISTING MANUAL TRANSFER SWITCH IN THE ELECTRICAL ROOM.

(B) REMOVE EXISTING DIESEL GENERATOR, FUEL TANK, AND ACCESSORIES FROM THE ELECTRICAL ROOM. REMOVE THE CONCRETE BASE AND PATCH AND LEVEL THE CONCRETE FLOOR. PATCH CONCRETE WALL OUTLET FOR EXHAUST SYSTEM.

(C) REMOVE EXISTING MANUAL TRANSFER SWITCH, POWER PANELS, MOTOR STARTER PANELS, DRIVE PANELS, RESISTOR BANKS, CONTROL PANEL, WIREWAY SYSTEM, AND LOAD PANEL FROM THE ELECTRICAL ROOM. PATCH AND LEVEL THE CONCRETE FLOOR AND PATCH CEILING AS FASTENERS ARE REMOVED.

(D) REMOVE EXISTING CONTROL CONSOLE.

(E) REMOVE EXISTING CONDUIT, WIRING, AND LIGHTING WITHIN THE CONTROL HOUSE.

(F) REMOVE EXISTING TRAFFIC GATES AND CABLES.

(G) REMOVE EXISTING CABLES AND WIRING TO TRAFFIC SIGNALS, GONGS, AND ROADWAY LIGHTS. THE EXISTING TRAFFIC SIGNALS, GONGS, AND ROADWAY LIGHTS SHALL BE REUSED.

(H) REMOVE EXISTING PHONE AND CABLE TV SERVICES TO THE BRIDGE.

(I) REMOVE EXISTING MESSENGER CABLES FROM THE EAST AND WEST SIDES OF THE BRIDGE.

(J) REMOVE EXISTING CONDUIT AND WIRING FOR THE EXISTING BRIDGE CONTROL SYSTEM, MOTORS, SENSORS, UTILITY LIGHTING, AND UTILITY POWER. PATCH ABANDONED RACEWAYS IN CONCRETE PER SPECIFICATIONS.

(K) REMOVE EXISTING CONDUIT AND WIRING FOR NAVIGATION LIGHTS.

(L) REMOVE EXISTING CLOSED CIRCUIT TV WIRING AND EQUIPMENT.

(M) PROVIDE TEMPORARY MOUNTING AND WIRING FOR EXISTING NAVIGATION SIGNAL HORNS, ANEMETER, AND OTHER ITEMS AS REQUIRED TO MAINTAIN BRIDGE OPERATION DURING CONTROL HOUSE CONSTRUCTION ACTIVITIES.

(N) DISCONNECT, CUT BELOW SURFACE, AND ABANDON THE EXISTING SUBMARINE CABLES. REMOVE EXISTING SUBMARINE CABLE TERMINAL BOXES.

INSTALLATION OF NEW CONTROL SYSTEM AND ELECTRICAL EQUIPMENT:

THE FOLLOWING LIST REPRESENTS THE MAJORITY OF THE NEW WORK TO BE DONE. NOT ALL ITEMS ARE LISTED. THE CONTRACTOR'S SEQUENCE OF CONSTRUCTION SHALL DETERMINE THE ACTUAL WORK SEQUENCE

(A) PROVIDE AND INSTALL A NEW BRIDGE ELECTRICAL SERVICE, INCLUDING NEW UTILITY SERVICE, MAIN DISCONNECT, GROUNDING SYSTEM, GENERATOR PAD, FENCING, GENERATOR, TRANSFER SWITCH, AND LOAD PANEL/TRANSFORMER.

(B) PROVIDE AND INSTALL NEW MESSENGER CABLES ON THE EAST AND WEST SIDES OF THE BRIDGE FOR NEW POWER AND CONTROL CABLES.

(C) PROVIDE AND INSTALL NEW POWER FEED CONDUCTORS.

(D) PROVIDE AND INSTALL NEW MOTOR CONTROL CENTER.

(E) PROVIDE AND INSTALL NEW MAIN LOAD PANEL, TRANSFORMER, AND EAST LOAD PANEL/TRANSFORMER.

(F) PROVIDE AND INSTALL NEW TRAFFIC GATES AND CABLES.

(G) PROVIDE AND INSTALL NEW CABLES FOR THE EXISTING TRAFFIC SIGNALS, GONGS, AND ROADWAY LIGHTS.

(H) PROVIDE AND INSTALL NEW CABLE FOR TRANSFER SWITCH CONTROLS.

(I) PROVIDE AND INSTALL NEW TELEPHONE AND CABLE TV SERVICES TO THE BRIDGE. PROVIDE AND INSTALL NEW TERMINAL BOXES, OUTLETS, AND WIRING IN THE CONTROL HOUSE FOR THESE SERVICES.

(J) PROVIDE, INSTALL, AND TEST NEW BRIDGE CONTROL SYSTEM WITH NEW AUTOMATIC-SEQUENCE PROGRAMMABLE LOGIC CONTROLLER BASED CONTROL LOGIC, INCLUDING NECESSARY CABINETS, PORTABLE PROGRAMMER, BRIDGE CONTROL CONSOLE, AND ALL OTHER RELATED DEVICES AND INSTRUMENTATION AS REQUIRED.

(K) PROVIDE, INSTALL, AND TEST NEW FLUX VECTOR VARIABLE SPEED DRIVE PANELS, BRAKING RESISTORS, ENCODERS, AND MAIN DRIVE MOTORS. PROVIDE AND INSTALL AUXILIARY DRIVE MOTOR STARTERS WITH MANUAL CONTROLS.

(L) PROVIDE AND INSTALL A NEW CONDUIT, CABLE, AND WIREWAY SYSTEM FOR THE CONTROL SYSTEM AND POWER CIRCUITS AS SHOWN IN THE PLANS.

(M) PROVIDE, INSTALL, AND CONFIGURE A NEW CLOSED CIRCUIT TV SYSTEM.

(N) PROVIDE, INSTALL, AND CONFIGURE A NEW FIRE ALARM SYSTEM.

(O) PROVIDE STRUCTURE GROUNDING, LIGHTNING PROTECTION, AND ELECTRICAL GROUNDING SYSTEMS IN ACCORDANCE WITH THE PLANS AND SPECIFICATIONS, AND IN COMPLIANCE WITH THE NATIONAL ELECTRIC CODE.

(P) PROVIDE SPARE ELECTRICAL PARTS FOR NEW EQUIPMENT AS LISTED HEREIN, AND AS REQUIRED BY AASHTO FOR SPECIFIC NEW, OR REPLACED EQUIPMENT.

(Q) PROVIDE AND INSTALL NEW SUBMARINE CABLES. PROVIDE AND INSTALL NEW SUBMARINE CABLE TERMINAL BOXES.

(R) PROVIDE AND INSTALL NEW FENDER AND BASCULE SPAN NAVIGATION LIGHTS. PROVIDE AND INSTALL NEW NAVIGATION WARNING HORNS.

(S) PROVIDE AND INSTALL NEW LIGHTING FIXTURES AND UTILITY RECEPTACLES AS SHOWN IN THE PLANS. PROVIDE AND INSTALL NEW WIRING FOR MISCELLANEOUS CIRCUITS AS SHOWN IN THE PLANS.

(T) PROVIDE AND INSTALL NEW EXECTRICAL ROOM EQUIPMENT ACCESS DOORS, FRAME, AND HARDWARE

(U) RELOCATE EXISTING ROADWAY LIGHT

SPARE PARTS:

ALL SPARE PARTS SHALL BE BOXED ACCORDING TO THE ITEM IN SUCH A MANNER AS TO PROTECT FROM DAMAGE AND CLEARLY LABELED AS TO CONTENTS ON THE FRONT AND TOP OF EACH BOX. SPARE PARTS SHALL BE DELIVERED TO LOCATIONS DESIGNATED BY THE DEPARTMENT.

THE FOLLOWING SPARE PARTS SHALL BE PROVIDED:

TWO COMPLETE LEVER ARM LIMIT SWITCHES OF EACH TYPE USED

FOUR SNAP ACTION SWITCHES FOR EACH TYPE ROTARY CAM LIMIT SWITCH USED

ONE RESOLVER, WITH FLEX COUPLING

ONE COMPLETE DRIVE MOTOR ENCODER

ONE PROXIMITY SWITCH AND CABLE OF EACH TYPE USED

ONE INDICATOR LIGHT ASSEMBLY OF EACH COLOR AND TYPE USED

TEN INDICATOR LIGHT LAMPS OF EACH TYPE AND SIZE USED

ONE PUSHBUTTON OF EACH TYPE USED

ONE SELECTOR SWITCH OF EACH TYPE USED

ONE DISPLAY AND METER OF EACH TYPE USED

TEN FUSES OF EACH TYPE AND SIZE USED

TWO CONTROL RELAYS OF EACH TYPE USED

TWO ISOLATING RELAYS WITH BASES OF EACH TYPE USED

TWO COMPLETE SETS OF REPLACMENT CONTACTS FOR EACH TYPE OF RELAY WITH REPLACEABLE CONTACTS

FIVE SURGE SUPPRESSOR REPLACEMENT CARTRIDGES OF EACH TYPE USED

ONE COMPLETE SET (MOVABLE AND STATIONARY) OF CONTACTS AND ONE COIL FOR EACH TYPE AND SIZE OF CONTACTOR USED

ONE SET OF OVERLOAD RELAY HEATER ELEMENTS OF EACH TYPE AND SIZE USED

ONE COMPLETE SET OF REPLACMENT PARTS FOR THE FLUX VECTOR DRIVES AS RECOMMENDED BY THE MANUFACTURER

ONE COMPLETE AUXILIARY DRIVE GEARMOTOR

ONE COMPLETE NAVIGATION LIGHT ASSEMBLY FOR EACH TYPE USED

FOUR NAVIGATION LIGHT REPLACEMENT BULBS OF EACH TYPE AND SIZE USED.

ONE COMPLETE TRAFFIC GATE ARM INCLUDING WARNING LIGHTS

SIX GATE ARM WARNING LIGHT REPLACMENT BULBS

ONE THRUSTOR MOTOR FOR EACH SIZE BRAKE USED

ONE PLC I/O MODULE AND SPECIALTY MODULE OF EACH TYPE USED

ONE PLC POWER SUPPLY OF EACH TYPE USED

ONE DC POWER SUPPLY OF EACH TYPE AND SIZE USED

ONE SPARE PRE-CONFIGURED ALPHANUMERIC DISPLAY

ONE SPARE HARD DRIVE FOR EACH PC PROVIDED, PRE-CONFIGURED WITH DRIVE IMAGE OF THE INSTALLED DRIVE

0 1 2 3
INCHES ON FULL SIZE SHEET

22-EN2.DWG

NORTH CAROLINA PROFESSIONAL ENGINEER SEAL 025801 LANCE V. BORDEN

MODJESKI and MASTERS
Experience great bridges.
100 Sterling Parkway
Suite 302
Mechanicsburg, PA 17050 NC License No. C-2979

E3

STATE OF NORTH CAROLINA
DEPARTMENT OF TRANSPORTATION
RALEIGH

WRIGHTSVILLE BRIDGE REHABILITATION
WRIGHTSVILLE, NORTH CAROLINA

ELECTRICAL NOTES – 2

		DRAWN BY	R.L. REED
		SCALE	NONE
DESIGNED R.I. PETERS	DETAILED R.L. REED	DATE	JUNE 2011
CHECKED A.M. MARINO	CHECKED A.M. MARINO	DRAWING NO.	22 OF 140

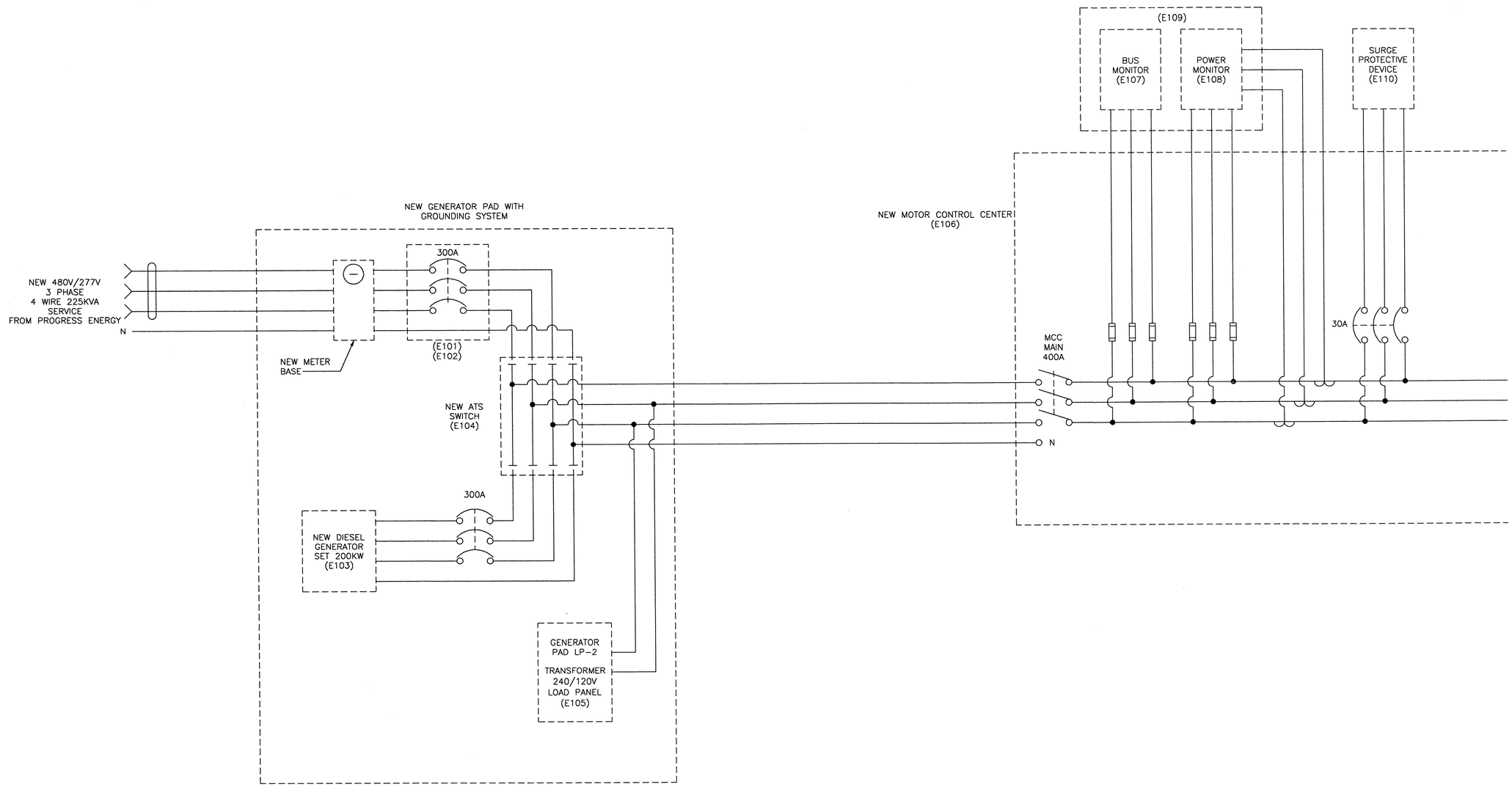

NOTES:

1. THIS LAYOUT IS INTENDED TO BE DIAGRAMMATIC AND IS NOT INTENDED TO SHOW CONTROLS, WIRING, AND EQUIPMENT IN THEIR EXACT PHYSICAL RELATIONSHIP.
2. IN ADDITION TO CONDUCTORS SHOWN, ALL CIRCUITS SHALL INCLUDE A GROUND CONDUCTOR SIZED IN ACCORDANCE WITH THE NATIONAL ELECTRICAL CODE.
3. MOTOR CIRCUIT PROTECTIVE DEVICE RATINGS SHALL BE DETERMINED BY THE CONTRACTOR. ALL OVERLOADS SHALL BE SIZED APPROPRIATELY UTILIZING ACTUAL NAME PLATE DATA OF APPROVED EQUIPMENT.
4. ALL EQUIPMENT AND WIRING IS NEW, UNLESS OTHERWISE NOTED.
5. FUSE, BREAKER, AND CONDUCTOR SIZES FOR THE BUS MONITOR, POWER MONITOR, AND SURGE PROTECTIVE DEVICE SHALL BE AS SPECIFIED BY THE EQUIPMENT MANUFACTURERS.

0 1 2 3
INCHES ON FULL SIZE SHEET

NORTH CAROLINA PROFESSIONAL SEAL 025801 ENGINEER LANCE V. BORDEN

MODJESKI and MASTERS
Experience great bridges.
100 Sterling Parkway
Suite 302
Mechanicsburg, PA 17050 NC License No. C-2979

E4

STATE OF NORTH CAROLINA
DEPARTMENT OF TRANSPORTATION
RALEIGH

WRIGHTSVILLE BRIDGE REHABILITATION
WRIGHTSVILLE, NORTH CAROLINA

THREE LINE DIAGRAM – 1

		DRAWN BY	A.M. MARINO
		SCALE	NONE
DESIGNED A.M. MARINO	DETAILED A.M. MARINO	DATE	JUNE 2011
CHECKED R.I. PETERS	CHECKED R.I. PETERS	DRAWING NO.	23 OF 140

23-TLD1.DWG

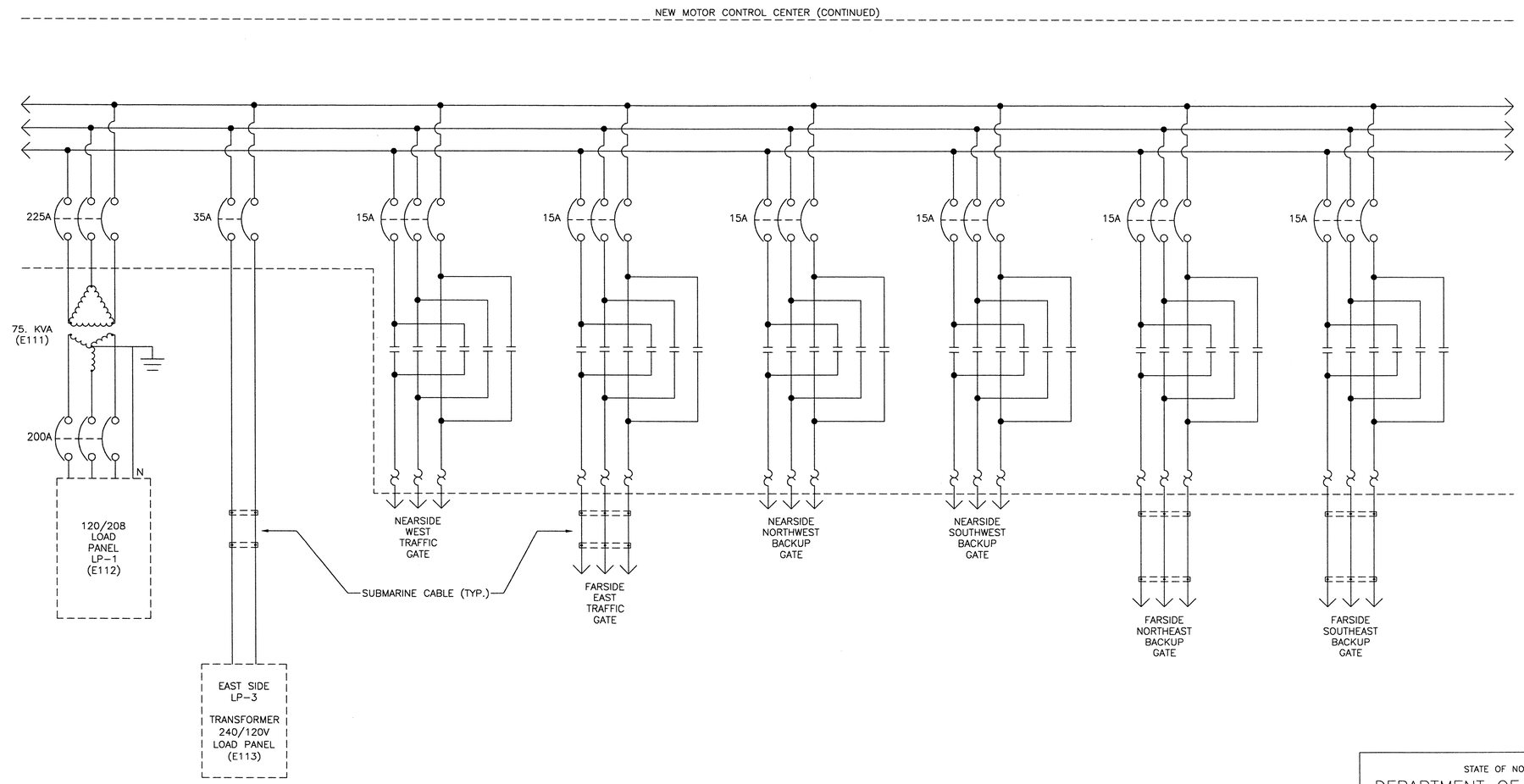

0 1 2 3
INCHES ON FULL SIZE SHEET

24-TL02.DWG

NORTH CAROLINA PROFESSIONAL ENGINEER SEAL 025801 LANCE V. BORDEN

MODJESKI and MASTERS
Experience great bridges.
100 Sterling Parkway
Suite 302
Mechanicsburg, PA 17050 NC License No. C-2979

E5

STATE OF NORTH CAROLINA
DEPARTMENT OF TRANSPORTATION
RALEIGH

WRIGHTSVILLE BRIDGE REHABILITATION
WRIGHTSVILLE, NORTH CAROLINA

THREE LINE DIAGRAM – 2

		DRAWN BY	A.M. MARINO
		SCALE	NONE
DESIGNED A.M. MARINO	DETAILED A.M. MARINO	DATE	JUNE 2011
CHECKED R.I. PETERS	CHECKED R.I. PETERS	DRAWING NO.	24 OF 140

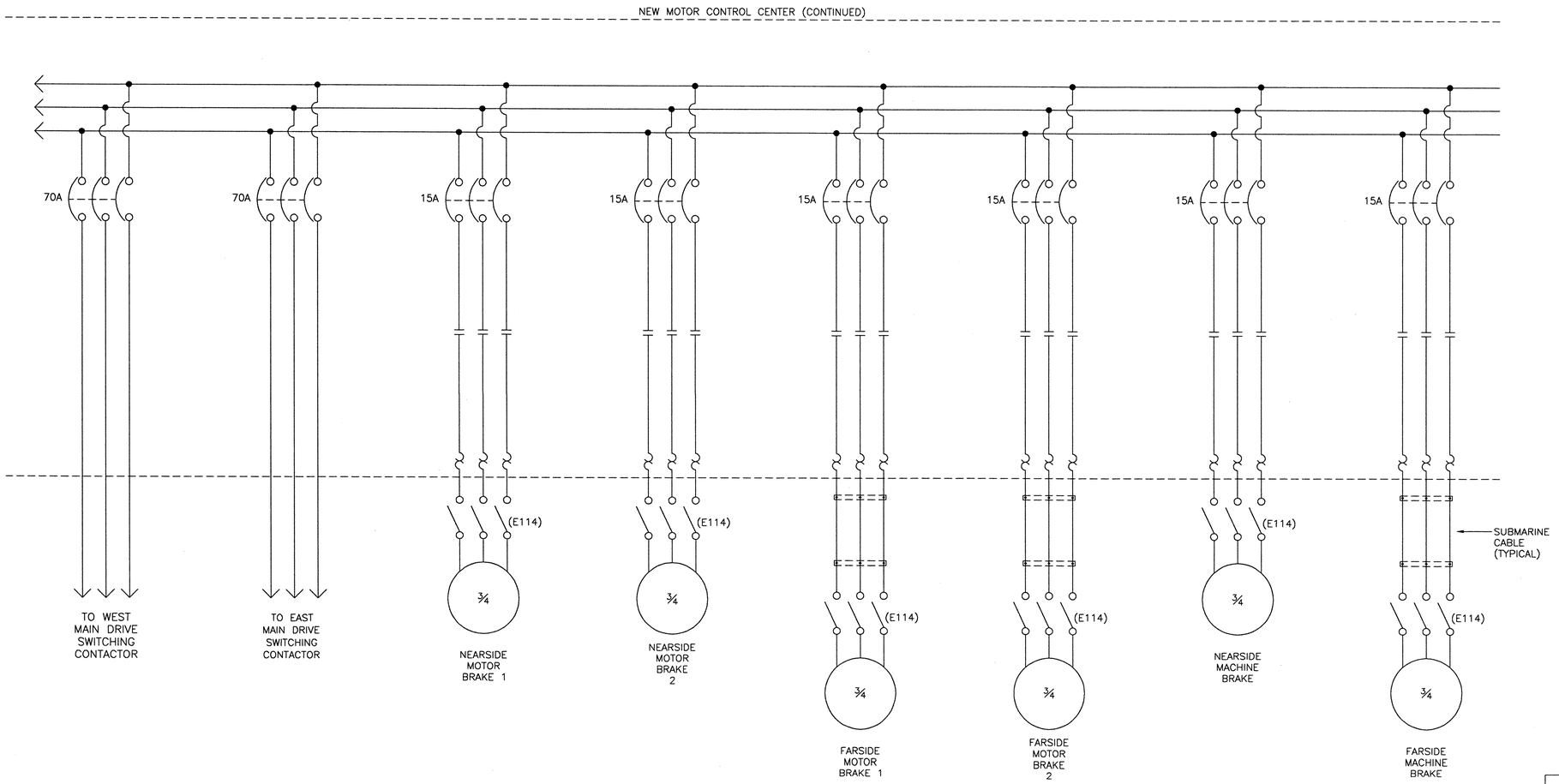

0 1 2 3
INCHES ON FULL SIZE SHEET

NORTH CAROLINA PROFESSIONAL ENGINEER SEAL 025801 LANCE V. BORDEN

MODJESKI and MASTERS
Experience great bridges.
100 Sterling Parkway
Suite 302
Mechanicsburg, PA 17050 NC License No. C-2979

E6

STATE OF NORTH CAROLINA
DEPARTMENT OF TRANSPORTATION
RALEIGH

WRIGHTSVILLE BRIDGE REHABILITATION
WRIGHTSVILLE, NORTH CAROLINA

THREE LINE DIAGRAM – 3

		DRAWN BY	A.M. MARINO
		SCALE	NONE
DESIGNED A.M. MARINO	DETAILED A.M. MARINO	DATE	JUNE 2011
CHECKED R.I. PETERS	CHECKED R.I. PETERS	DRAWING NO.	25 OF 140

25-TL03.DWG

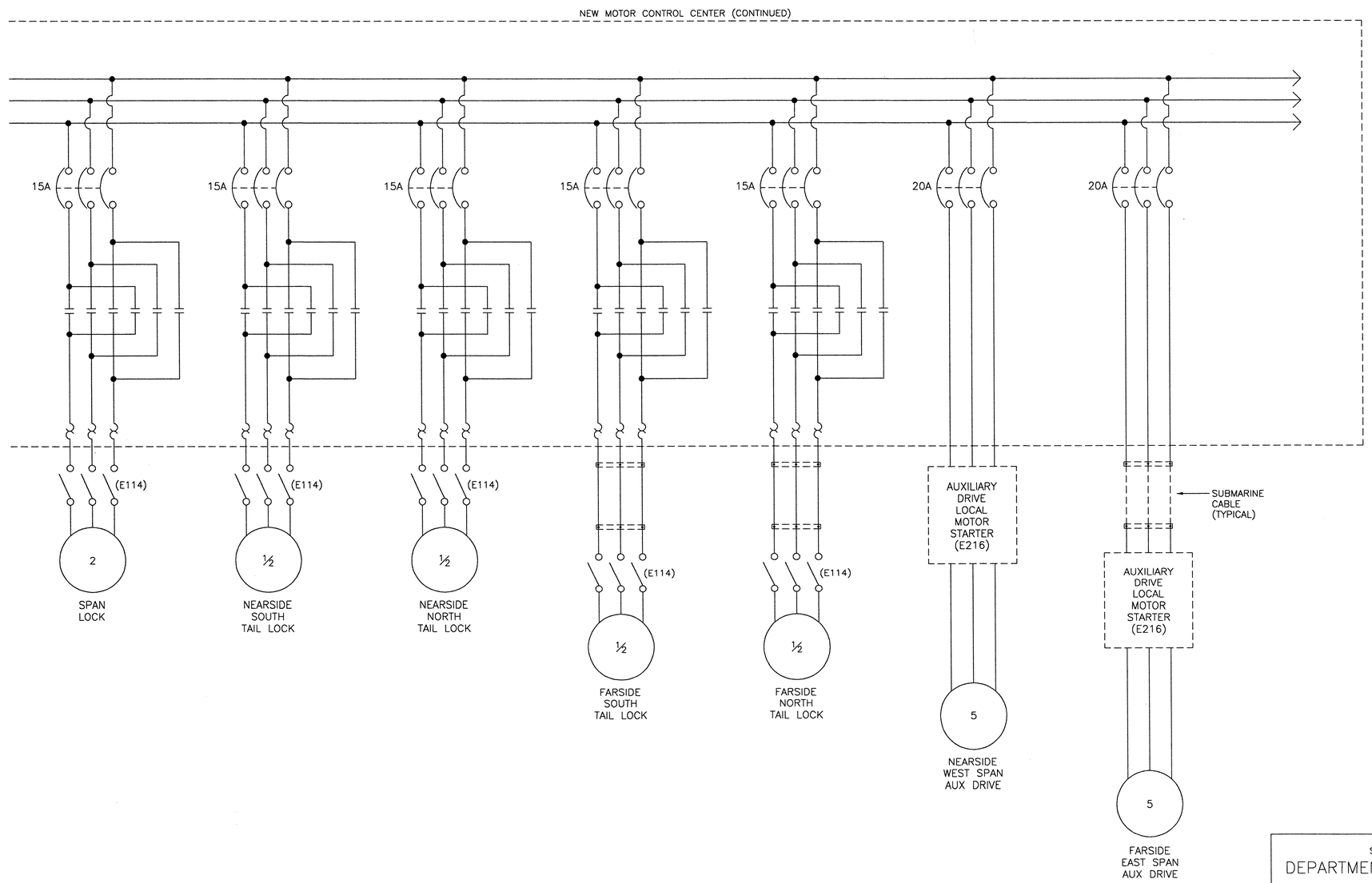

0 1 2 3
INCHES ON FULL SIZE SHEET

NORTH CAROLINA PROFESSIONAL SEAL 025801 ENGINEER LANCE V. BORDEN 2-22-2011

MODJESKI and MASTERS
Experience great bridges.
100 Sterling Parkway
Suite 302
Mechanicsburg, PA 17050 NC License No. C-2979

E7

STATE OF NORTH CAROLINA
DEPARTMENT OF TRANSPORTATION
RALEIGH

WRIGHTSVILLE BRIDGE REHABILITATION
WRIGHTSVILLE, NORTH CAROLINA

THREE LINE DIAGRAM – 4

		DRAWN BY	A.M. MARINO
		SCALE	NONE
DESIGNED A.M. MARINO	DETAILED A.M. MARINO	DATE	JUNE 2011
CHECKED R.I. PETERS	CHECKED R.I. PETERS	DRAWING NO.	26 OF 140

26-TL04.DWG

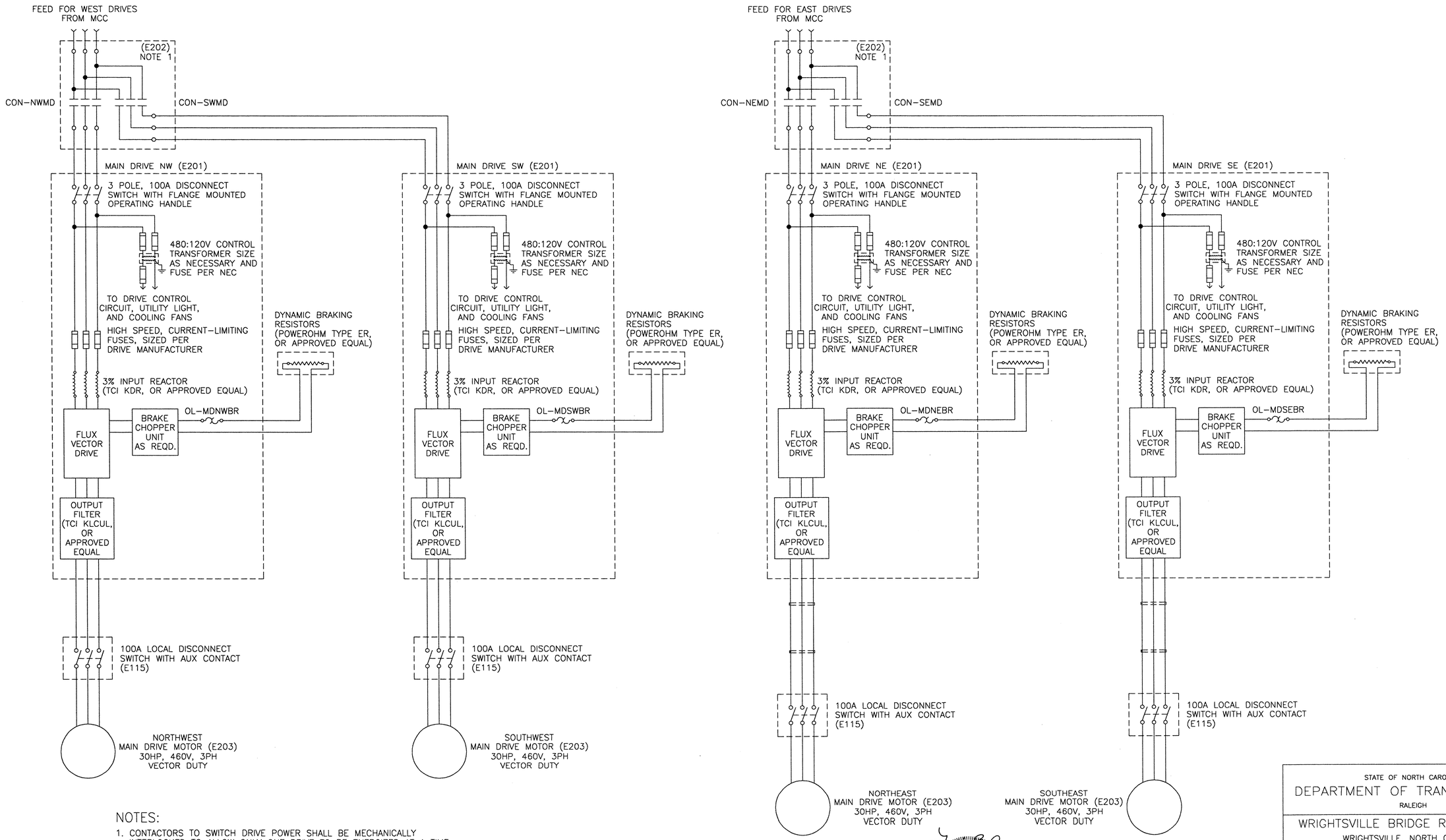

NOTES:

1. CONTACTORS TO SWITCH DRIVE POWER SHALL BE MECHANICALLY INTERLOCKED TO ALLOW ONLY ONE DRIVE TO BE ENERGIZED AT A TIME
2. THE CONTROL CIRCUITS ARE SHOWN ON CONTROL CIRCUIT DRAWINGS 40 – 43.

0 1 2 3
INCHES ON FULL SIZE SHEET

NORTH CAROLINA PROFESSIONAL ENGINEER SEAL 025801 LANCE V. BOROCN

MODJESKI and MASTERS
Experience great bridges.
100 Sterling Parkway
Suite 302
Mechanicsburg, PA 17050 NC License No. C-2979

E8

STATE OF NORTH CAROLINA
DEPARTMENT OF TRANSPORTATION
RALEIGH

WRIGHTSVILLE BRIDGE REHABILITATION
WRIGHTSVILLE, NORTH CAROLINA

VFD DRIVE POWER
WIRING 1, 2, 3, AND 4

		DRAWN BY	R.I. PETERS
		SCALE	NONE
DESIGNED R.I. PETERS	DETAILED R.I. PETERS	DATE	JUNE 2011
CHECKED A.M. MARINO	CHECKED A.M. MARINO	DRAWING NO.	27 OF 140

27-TL05.DWG

TYPICAL FOR EAST AND WEST SPAN AUX DRIVES

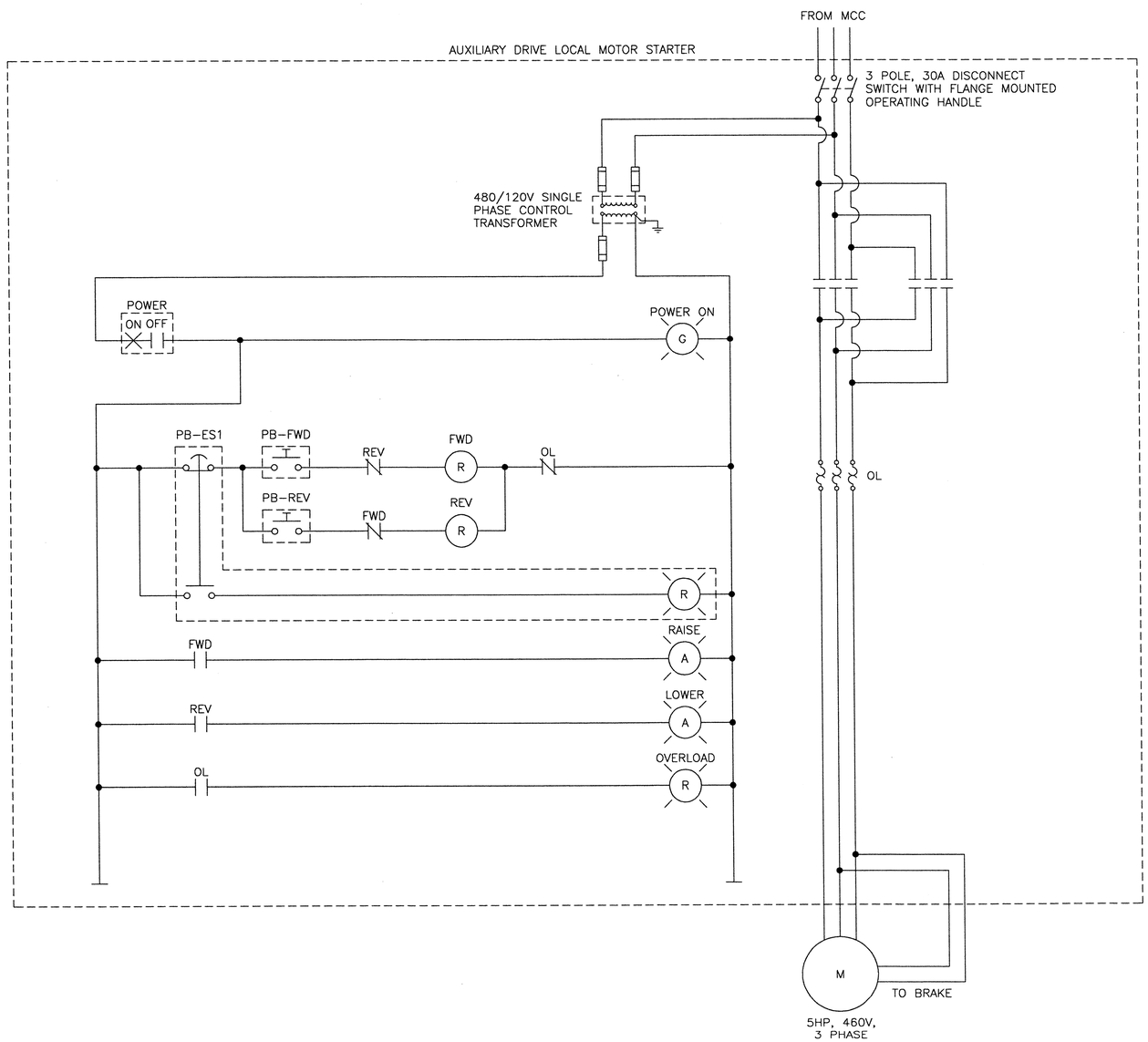

AUX DRIVE DEVICES LEGEND			
DEVICE NUMBER	DESCRIPTION	MANUFACTURER	MODEL
1	30MM MOMENTARY CONTACT ILLUMINATED PUSHBUTTON, WIRED FOR PUSH-TO-TEST PILOT LIGHT OPERATION, COLOR AS SHOWN, NEMA 4X	IDEC	TWTD
2	30MM MAINTAINED CONTACT, 2-POSITION SELECTOR SWITCH, BLACK PISTOL GRIP KNOB, NEMA 4X RATING	ALLEN-BRADLEY	800H
3	30MM MOMENTARY CONTACT PUSHBUTTON, NON-ILLUMINATED, FLUSH HEAD, COLOR AS SHOWN, NEMA 4X RATING	ALLEN-BRADLEY	800H
4	30MM ILLUM., MAINTAINED CONTACT, PULL ON, PUSH OFF MUSHROOM HEAD PUSHBUTTON RED BUTTON, RED LEGEND PLATE, NEMA 4X RATING	ALLEN-BRADLEY	800H

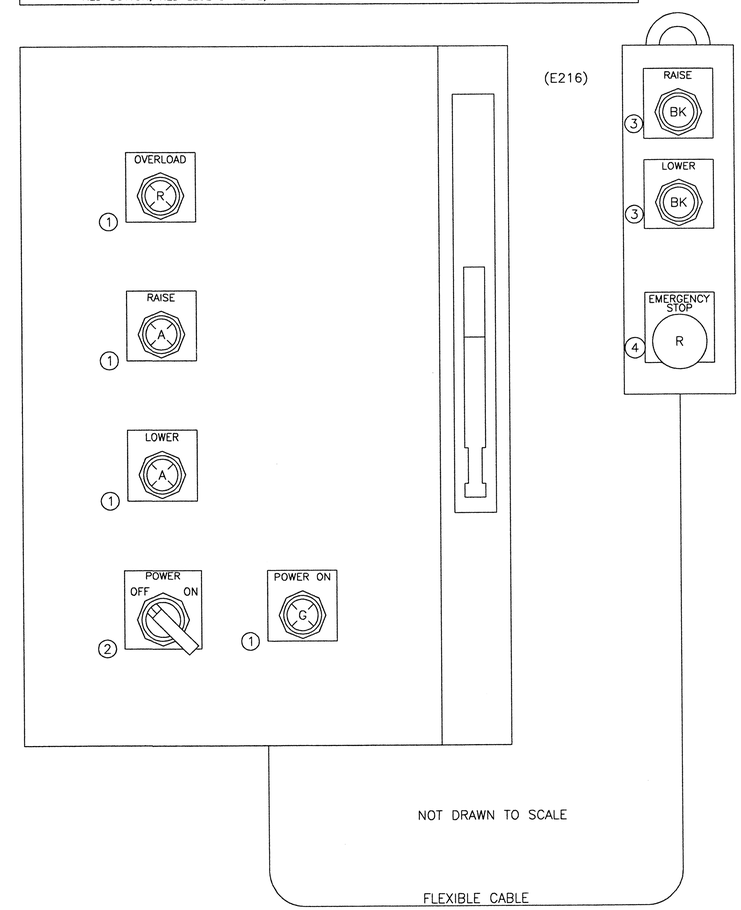

NOTES:

1. TYPICAL FOR EAST AND WEST SPAN AUXILIARY DRIVES, NEMA SIZE 1 REVERSING MOTOR STARTER MOUNTED IN A NEMA 4X STAINLESS STEEL ENCLOSURE WITH A FLANGE MOUNTED LOCKABLE DISCONNECT SWITCH. ALL SWITCHES AND PUSHBUTTONS SHALL BE NEMA 4X.
2. PB-ES (E-STOP/STOP), PB-FWD (RAISE), AND PB-REV (LOWER) SHALL BE MOUNTED ON A NEMA 4X PENDANT, THE OTHER DEVICES SHALL BE MOUNTED ON THE MOTOR STARTER ENCLOSURE.
3. SIZE CONTROL TRANSFORMER AND FUSES AS REQUIRED BY NEC.
4. PROVIDE BRAKE CONTROL MODULES AS REQUIRED.

0 1 2 3
INCHES ON FULL SIZE SHEET

NORTH CAROLINA PROFESSIONAL ENGINEER SEAL 025801 LANCE V. BORDEN

MODJESKI and MASTERS
Experience great bridges.
100 Sterling Parkway
Suite 302
Mechanicsburg, PA 17050 NC License No. C-2979

E9

STATE OF NORTH CAROLINA
DEPARTMENT OF TRANSPORTATION
RALEIGH

WRIGHTSVILLE BRIDGE REHABILITATION
WRIGHTSVILLE, NORTH CAROLINA

AUXILIARY MOTOR STARTER PANELS
LAYOUT AND WIRING

		DRAWN BY	R.I. PETERS
		SCALE	NONE
DESIGNED R.I. PETERS	DETAILED R.I. PETERS	DATE	JUNE 2011
CHECKED A.M. MARINO	CHECKED A.M. MARINO	DRAWING NO.	28 OF 140

28-TLD8.DWG

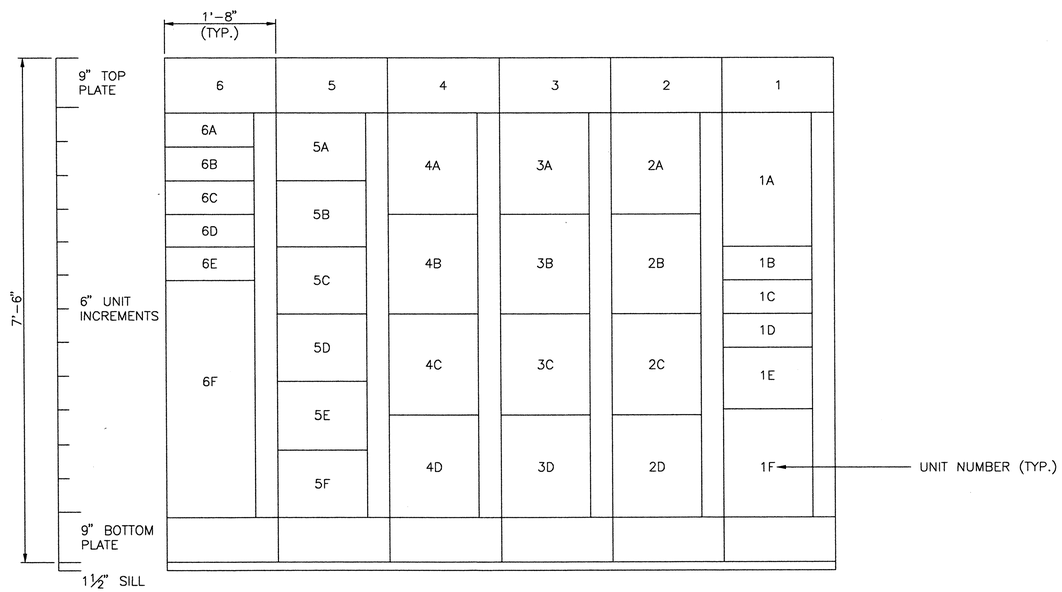

MOTOR CONTROL CENTER
FRONT VIEW
SCALE: 1" = 1'-0"
ELECTRICAL EQUIPMENT ROOM

UNIT SCHEDULE MOTOR CONTROL CENTER

SECTION	UNIT NO.	UNIT TYPE	NAME PLATE/DESCRIPTION
1	1A	MCS	MAIN BUS DISCONNECT
	1B	FFD	BUS MONITOR FUSES
	1C	FFD	POWER MONITOR FUSES
	1D	FCB	SPD DISCONNECT / BREAKER
	1E	FCB	LP-1 (MAIN) TRANSFORMER FEED
	1F	EMTY	SPARE SPACE
2	2A	FVR	WEST TRAFFIC GATE
	2B	FVR	EAST TRAFFIC GATE
	2C	FVR	SPAN LOCK
	2D	EMTY	SPARE SPACE
3	3A	FVR	NORTH WEST BACKUP GATE
	3B	FVR	SOUTH WEST BACKUP GATE
	3C	FVR	NORTH EAST BACKUP GATE
	3D	FVR	SOUTH EAST BACKUP GATE
4	4A	FVR	NORTH WEST TAIL LOCK
	4B	FVR	SOUTH WEST TAIL LOCK
	4C	FVR	NORTH EAST TAIL LOCK
	4D	FVR	SOUTH EAST TAIL LOCK
5	5A	FVNR	WEST MACHINERY BRAKE
	5B	FVNR	EAST MACHINERY BRAKE
	5C	FVNR	NORTH WEST MOTOR BRAKE
	5D	FVNR	SOUTH WEST MOTOR BRAKE
	5E	FVNR	NORTH EAST MOTOR BRAKE
	5F	FVNR	SOUTH EAST MOTOR BRAKE
6	6A	FCB	WEST MAIN DRIVE
	6B	FCB	EAST MAIN DRIVE
	6C	FCB	WEST AUXILIARY DRIVE
	6D	FCB	EAST AUXILIARY DRIVE
	6E	FCB	LP-3 (EAST) TRANSFORMER FEED
	6F	EMTY	SPARE SPACE

EMTY = EMPTY SPACE (BLANK DOOR)
FCB = FEEDER CIRCUIT BREAKER
FFD = FEEDER FUSED DISCONNECT
FVMH = FULL VOLTAGE MECHANICALLY HELD
FVNR = FULL VOLTAGE NON-REVERSING COMBINATION STARTER
FVR = FULL VOLTAGE REVERSING COMBINATION STARTER
INSR = INSTRUMENTATION SPACE (HINGED DOOR)
MCB = MAIN CIRCUIT BREAKER
MCP = MOTOR CIRCUIT PROTECTOR
MCS = MOLDED CASE SWITCH
TVSS = TRANSIENT VOLTAGE SURGE SUPPRESSOR

NOTES:

1. INSTALL LOCAL POWER MONITOR DISPLAY IN MAIN DISCONNECT DOOR AT APPROXIMATELY EYE LEVEL.
2. MOTOR CONTROL CENTER CONFIGURATION MAY BE ALTERED WITH APPROVAL OF THE ENGINEER. THE LAYOUT AND INSTALLATION PROCEDURES SHALL COMPLY WITH MANUFACTURES INSTRUCTIONS.
3. PROVIDE NAMEPLATE AT RIGHT TOP CORNER OF EACH UNIT, ATTACHED WITH STAINLESS STEEL OR BRONZE SCREWS. NAME-PLATES SHALL BE 1" x 3", LAMINATED PHENOLIC WITH BLACK BACKGROUND AND WHITE LETTERING WITH DESCRIPTION AS INDICATED IN UNIT SCHEDULE.

0 1 2 3
INCHES ON FULL SIZE SHEET

NORTH CAROLINA PROFESSIONAL SEAL 025801 ENGINEER LANCE V. BORDEN

MODJESKI and MASTERS
Experience great bridges.
100 Sterling Parkway
Suite 302
Mechanicsburg, PA 17050 NC License No. C-2979

STATE OF NORTH CAROLINA
DEPARTMENT OF TRANSPORTATION
RALEIGH

WRIGHTSVILLE BRIDGE REHABILITATION
WRIGHTSVILLE, NORTH CAROLINA

MOTOR CONTROL CENTER LAYOUT

		DRAWN BY	A.M. MARINO
		SCALE	X
DESIGNED A.M. MARINO	DETAILED A.M. MARINO	DATE	JUNE 2011
CHECKED R.J. PETERS	CHECKED R.J. PETERS	DRAWING NO.	29 OF 140

E10

29-MCC.DWG

MAIN LOAD PANEL, 208/120V, 3 PHASE (LP-1)

CIRCUIT	DESCRIPTION	BREAKER POLES	BREAKER TRIP (A)	BREAKER TRIP (A)	BREAKER POLES	DESCRIPTION	CIRCUIT
1	MACHINERY ROOM, WEST SIDE UTILITY	1	20	20	1	TRAFFIC SIGNALS, GATE LIGHTS	2
3	MACHINERY ROOM, WEST SIDE LIGHTS	1	20	20	1	WEST GATE UTILITY RECEPTACLES	4
5	WEST SIDE FLOOD LIGHTS	1	20	20	1	SECOND FLOOR UTILITY CIRCUIT 1	6
7	SPARE	1	20	20	1	SECOND FLOOR LIGHTING	8
9	NAVIGATION SIREN	1	20	20	1	SECOND FLOOR UTILITY CIRCUIT 2	10
11	WEST NAVIGATION AND FENDER LIGHTS	1	20	20	1	PLC CONTROL SYSTEM	12
13	BATHROOM	1	20	20	1	FIRE ALARM PANEL	14
15	BATHROOM WATER HEATER	1	20	20	1	CONTROL SYSTEM UTILITY	16
17	FIRST FLOOR UTILITY	1	20	20	1	PLC EAST I/O (SAME PH AS PLC)	18
19	FIRST FLOOR LIGHTS	1	20	25	2	HEAT PUMP, SECOND FLOOR	20
21	MAIN DRIVE MOTOR HEATERS	1	20	25	2	HEAT PUMP, THIRD FLOOR	24
23	ELECTRIC ROOM LIGHTS	1	20	20	1	HEAT TRACE, SEWER (GFCI) 1	28
25	ELECTRIC ROOM UTILITY CIRCUIT	1	20	20	1	HEAT TRACE, SEWER (GFCI) 2	30
27	SPARE	1	20	15	2	WEST ROADWAY LIGHTS	32
29	SPARE	1	20	20	1	SPARE	36
31	ELECTRIC ROOM HEATER 1	2	30	20	1	SPARE	38
35	ELECTRIC ROOM HEATER 2	2	30	20	1	HEAT TRACE, WATER (GFCI) 1	40
39	SEWAGE PUMP	2	20	20	1	HEAT TRACE, WATER (GFCI) 2	42

GENERATOR PAD 120/240 PANEL (LP-2)

CIRCUIT	DESCRIPTION	BREAKER POLES	BREAKER TRIP (A)	BREAKER TRIP (A)	BREAKER POLES	DESCRIPTION	CIRCUIT
1	BATTERY CHARGER	1	15	20	1	UTILITY RECEPTACLE DUSK TO DAWN LIGHT	2
3	HEATER, ALTERNATOR AND OIL	1	20	20	2	BLOCK HEATER	4
5	SPARE	1	20				

EAST SIDE 120/240 PANEL (LP-3)

CIRCUIT	DESCRIPTION	BREAKER POLES	BREAKER TRIP (A)	BREAKER TRIP (A)	BREAKER POLES	DESCRIPTION	CIRCUIT
1	MACHINERY ROOM, EAST SIDE UTILITY	1	20	20	1	EAST I/O PANEL RECEPTACLE, HEATER, AND LIGHT	2
3	MACHINERY ROOM, EAST SIDE LIGHTS	1	20	20	1	EAST TRAFFIC GATE UTILITY RECEPTACLES	4
5	EAST NAVIGATION AND FENDER LIGHTS	1	20	15	2	EAST ROADWAY LIGHTS	6
7	SPARE	1	20				

NOTES:

1. PROVIDE A NEAT TYPEWRITTEN OR COMPUTER GENERATED PRINTED CIRCUIT LABEL WITH CIRCUIT DESCRIPTIONS FOR EACH LOAD PANEL.
2. ALL PLC RELATED AND CONTROL RELATED CIRCUITS SHALL USE THE SAME PHASE.
3. PROVIDE NAMEPLATE AT TOP CENTER OF EACH LOAD PANEL ATTACHED WITH STAINLESS STEEL OR BRONZE SCREWS AND SEALED WITH SILICONE RTV SEALANT. PLATES SHALL BE 1" x 3" LAMINATED PHENOLIC WITH BLACK BACKGROUND AND WHITE LETTERING.

0 1 2 3
INCHES ON FULL SIZE SHEET

30-LP.DWG

NORTH CAROLINA PROFESSIONAL ENGINEER SEAL 025801 LANCE V. BORDEN

MODJESKI and MASTERS
Experience great bridges.
100 Sterling Parkway
Suite 302
Mechanicsburg, PA 17050 NC License No. C-2979

E11

STATE OF NORTH CAROLINA
DEPARTMENT OF TRANSPORTATION
RALEIGH

WRIGHTSVILLE BRIDGE REHABILITATION
WRIGHTSVILLE, NORTH CAROLINA
LOAD PANEL LAYOUT
110/208V, MAIN GENERATOR (EAST)

		DRAWN BY	R.I. PETERS
		SCALE	NONE
DESIGNED R.I. PETERS	DETAILED R.I. PETERS	DATE	JUNE 2011
CHECKED A.M. MARINO	CHECKED A.M. MARINO	DRAWING NO.	30 OF 140

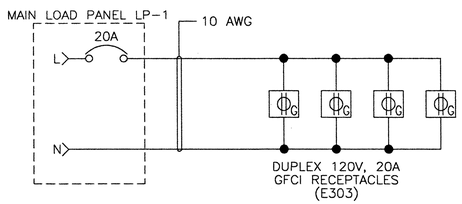

LP-1, CIRCUIT 1

MACHINE ROOM, WEST SIDE, UTILITY RECEPTACLES

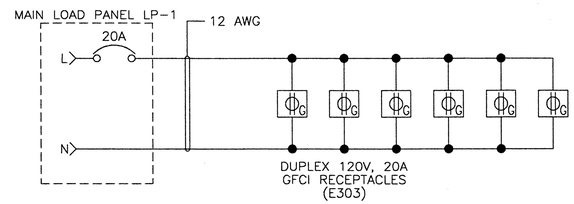

LP-1, CIRCUIT 17

FIRST FLOOR UTILITY RECEPTACLES

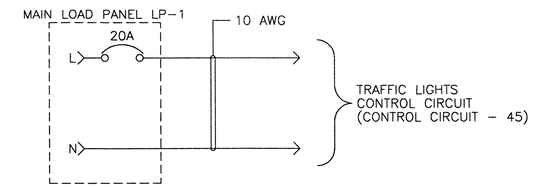

LP-1, CIRCUIT 2

TRAFFIC SIGNALS, GONGS, GATE LIGHTS CIRCUIT SUPPLY

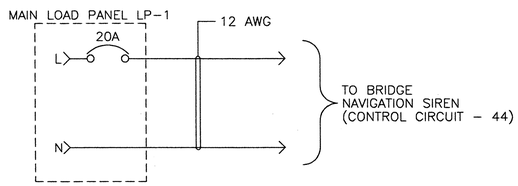

LP-1, CIRCUIT 9

NAVIGATION SIREN CIRCUIT SUPPLY

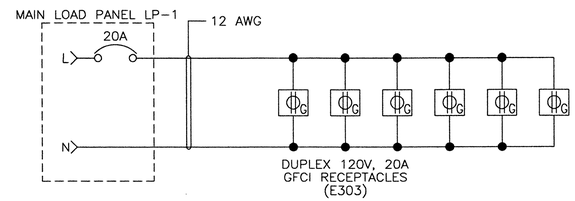

LP-1, CIRCUIT 25

ELECTRICAL ROOM UTILITY RECEPTACLES

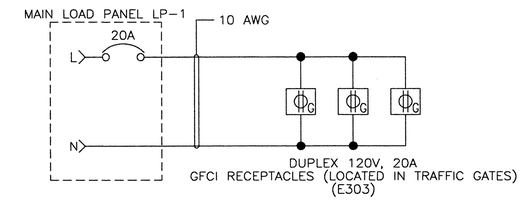

LP-1, CIRCUIT 4

WEST SIDE TRAFFIC GATES UTILITY RECEPTACLES

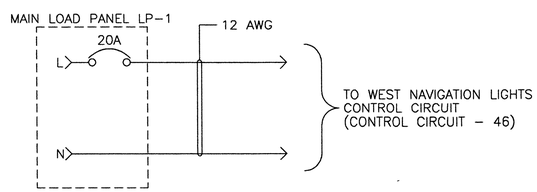

LP-1, CIRCUIT 11

WEST NAVIGATION LIGHTS CIRCUIT SUPPLY

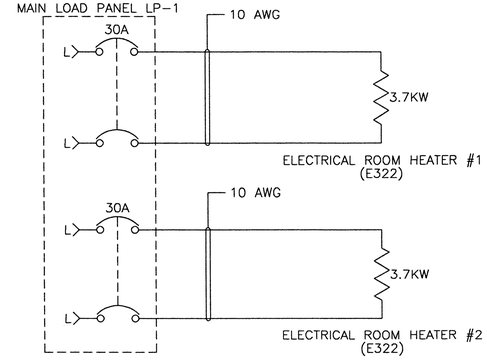

LP-1, CIRCUIT 31

LP-1, CIRCUIT 35

ELECTRICAL ROOM HEATERS

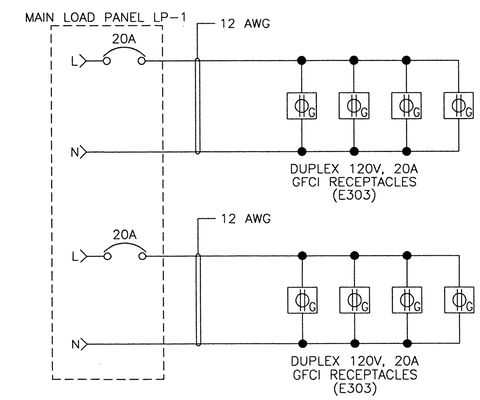

LP-1, CIRCUIT 6

LP-1, CIRCUIT 10

SECOND FLOOR UTILITY CIRCUITS

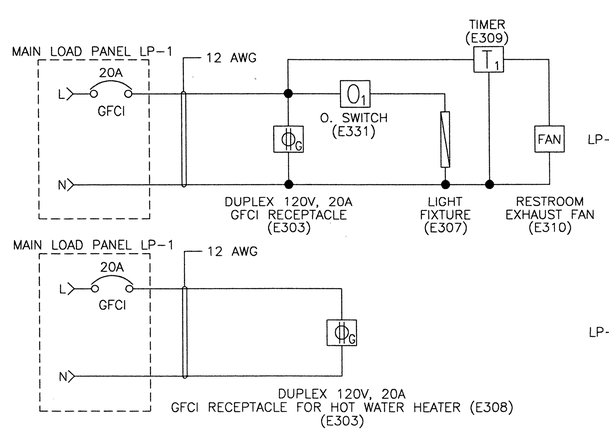

LP-1, CIRCUIT 13

LP-1, CIRCUIT 15

BATHROOM CIRCUITS

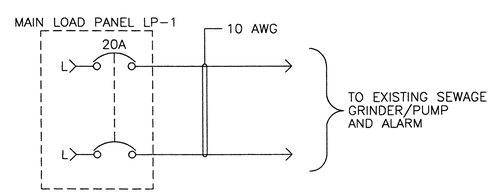

LP-1, CIRCUIT 39

SEWAGE GRINDER/PUMP CIRCUIT SUPPLY

0 1 2 3
INCHES ON FULL SIZE SHEET

NORTH CAROLINA PROFESSIONAL ENGINEER SEAL 025801 LANCE V. BORDEN 12-22-2011

MODJESKI and MASTERS
Experience great bridges.
100 Sterling Parkway
Suite 302
Mechanicsburg, PA 17050 NC License No. C-2979

STATE OF NORTH CAROLINA
DEPARTMENT OF TRANSPORTATION
RALEIGH

WRIGHTSVILLE BRIDGE REHABILITATION
WRIGHTSVILLE, NORTH CAROLINA

LOAD PANEL CIRCUITS - 1

		DRAWN BY	R.I. PETERS
		SCALE	NONE
DESIGNED R.I. PETERS	DETAILED R.I. PETERS	DATE	JUNE 2011
CHECKED A.M. MARINO	CHECKED A.M. MARINO	DRAWING NO.	31 OF 140

E12

31-LPC1.DWG

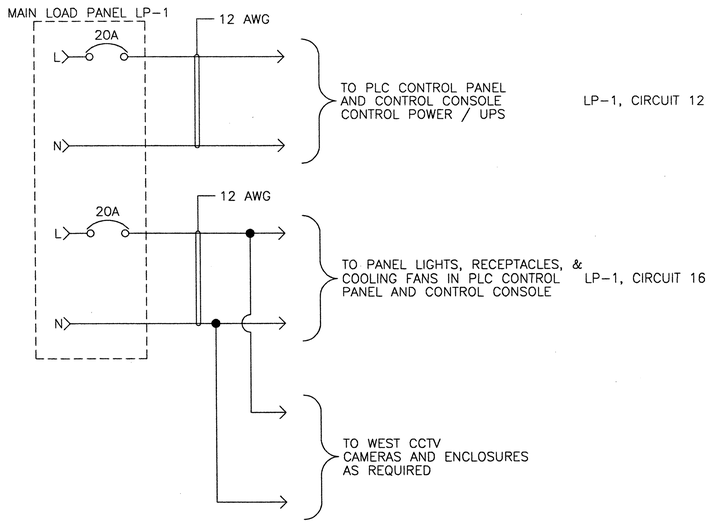

PLC CONTROL SYSTEM CIRCUIT SUPPLIES

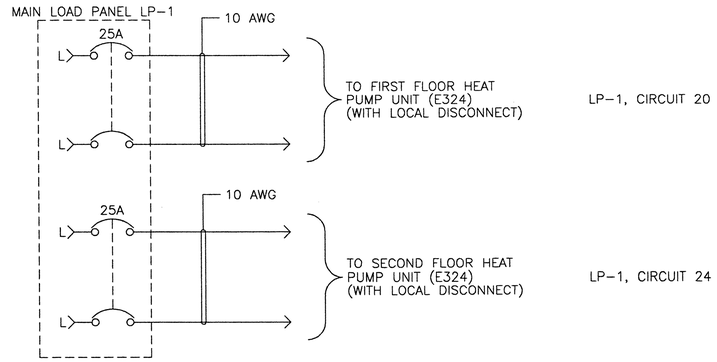

FIRST AND SECOND FLOOR HEAT PUMP SUPPLIES

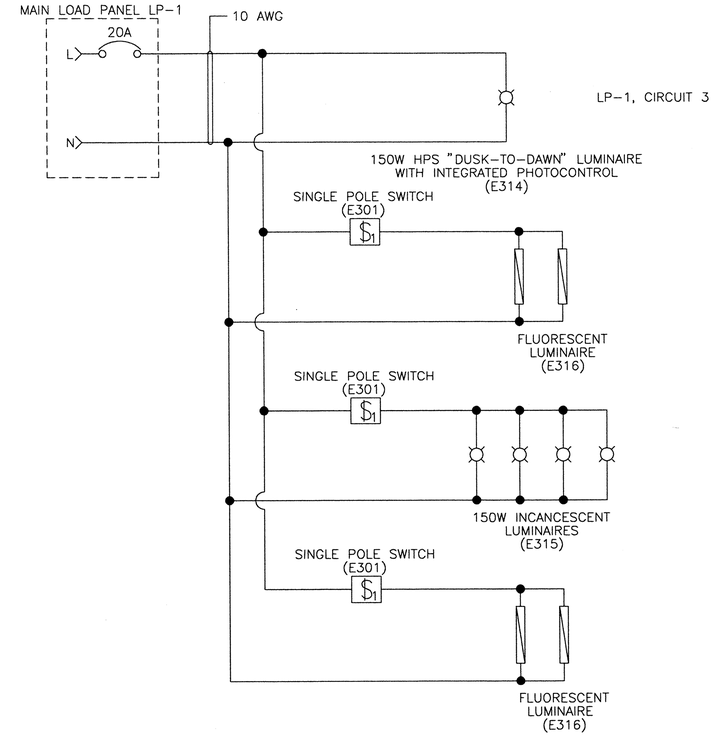

WEST MACHINE ROOM LIGHTING CIRCUIT SUPPLY

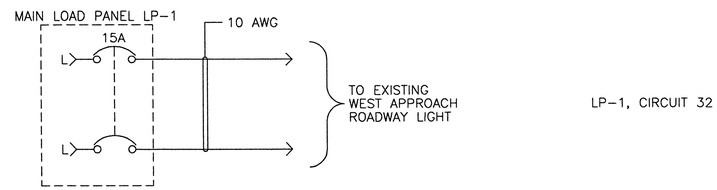

WEST ROADWAY LIGHT CIRCUIT SUPPLY

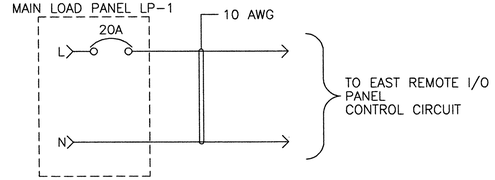

EAST REMOTE I/O PANEL SUPPLY (SAME PHASE AS CIRCUIT 12)

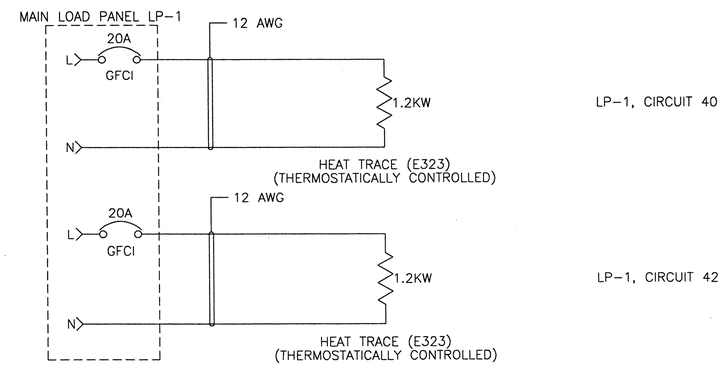

WATER LINE HEAT TRACE CIRCUIT SUPPLIES

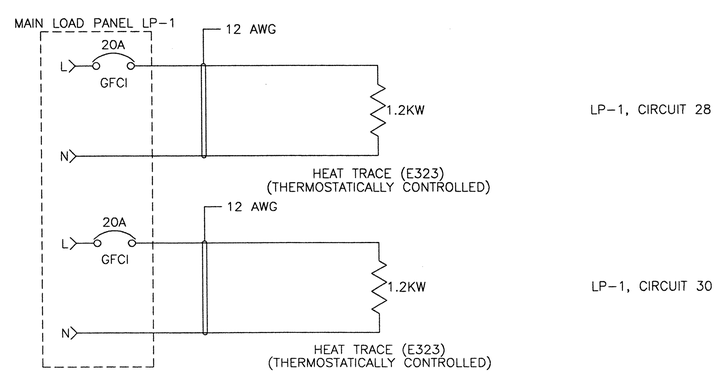

SEWER LINE HEAT TRACE CIRCUIT SUPPLIES

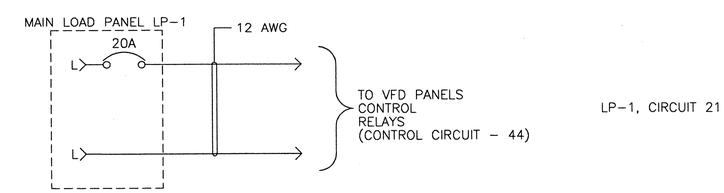

MAIN DRIVE MOTOR HEATERS

0 1 2 3
INCHES ON FULL SIZE SHEET

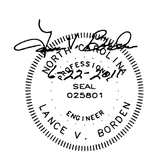

MODJESKI and MASTERS
Experience great bridges.
100 Sterling Parkway
Suite 302
Mechanicsburg, PA 17050 NC License No. C-2979

STATE OF NORTH CAROLINA
DEPARTMENT OF TRANSPORTATION
RALEIGH

WRIGHTSVILLE BRIDGE REHABILITATION
WRIGHTSVILLE, NORTH CAROLINA

LOAD PANEL CIRCUITS - 2

		DRAWN BY	R.I. PETERS
		SCALE	NONE
DESIGNED R.I. PETERS	DETAILED R.I. PETERS	DATE	JUNE 2011
CHECKED A.M. MARINO	CHECKED A.M. MARINO	DRAWING NO.	32 OF 140

E13

32-LPC2.DWG

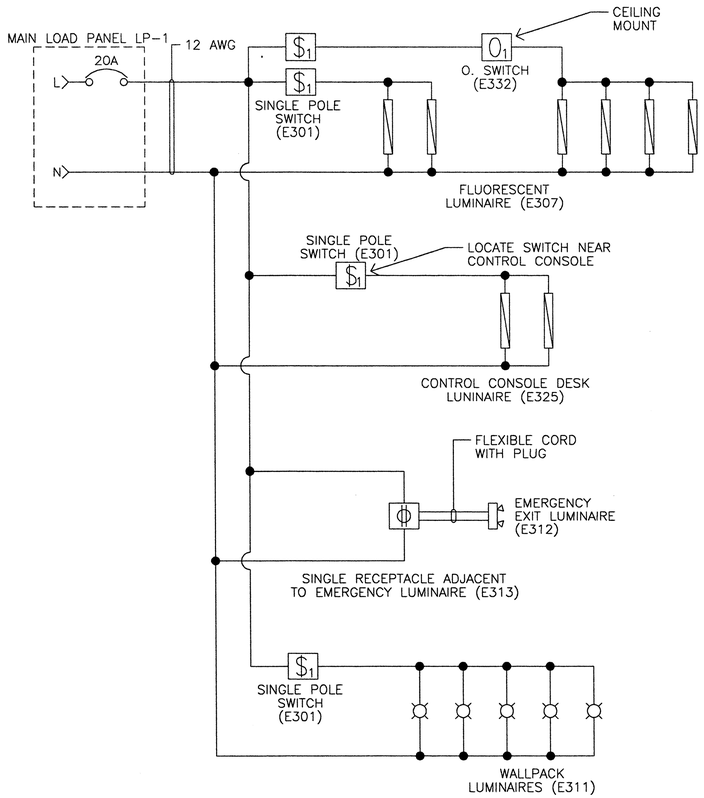

LP-1, CIRCUIT 8

SECOND FLOOR LIGHTING CIRCUIT SUPPLY

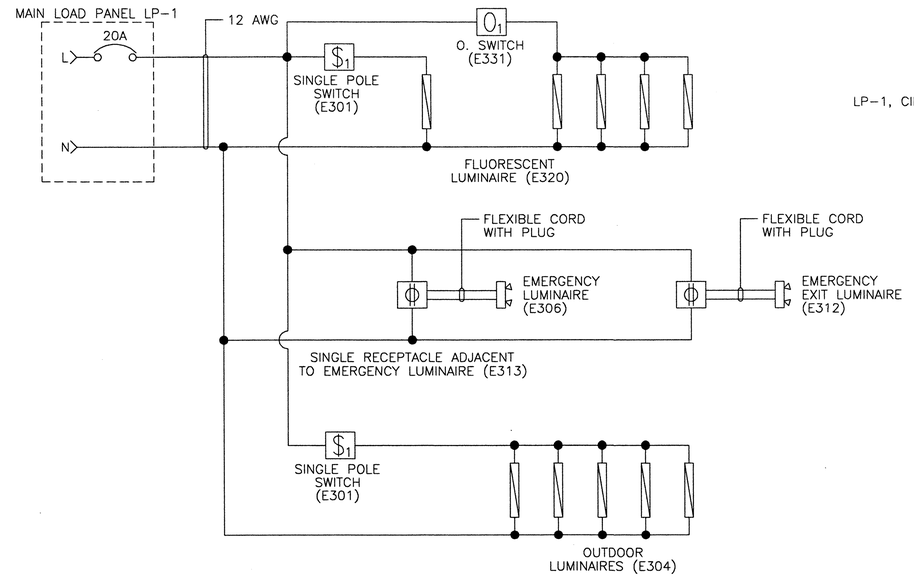

LP-1, CIRCUIT 19

FIRST FLOOR LIGHTING CIRCUIT SUPPLY

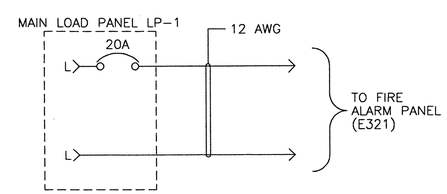

LP-1, CIRCUIT 14

FIRE ALARM PANEL

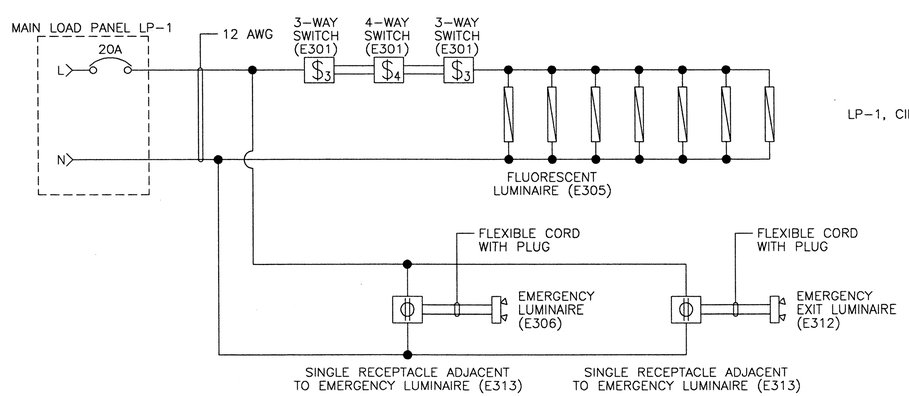

LP-1, CIRCUIT 23

ELECTRICAL ROOM LIGHTING CIRCUIT SUPPLY

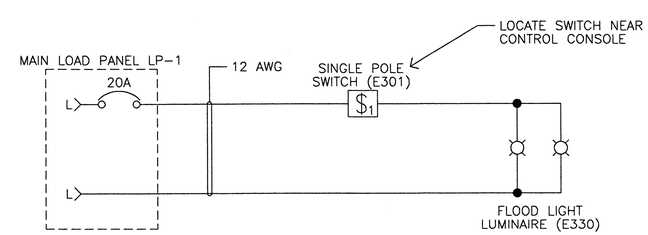

LP-1, CIRCUIT 2

WEST CONTROL HOUSE FLOOD LIGHTS

0 1 2 3
INCHES ON FULL SIZE SHEET

NORTH CAROLINA PROFESSIONAL ENGINEER SEAL 025801 LANCE V. BOROSN

MODJESKI and MASTERS
Experience great bridges.
100 Sterling Parkway
Suite 302
Mechanicsburg, PA 17050 NC License No. C-2979

E14

STATE OF NORTH CAROLINA
DEPARTMENT OF TRANSPORTATION
RALEIGH

WRIGHTSVILLE BRIDGE REHABILITATION
WRIGHTSVILLE, NORTH CAROLINA

LOAD PANEL CIRCUITS – 3

		DRAWN BY	R.I. PETERS
		SCALE	NONE
DESIGNED R.I. PETERS	DETAILED R.I. PETERS	DATE	JUNE 2011
CHECKED A.M. MARINO	CHECKED A.M. MARINO	DRAWING NO.	33 OF 140

33-LPC3.DWG

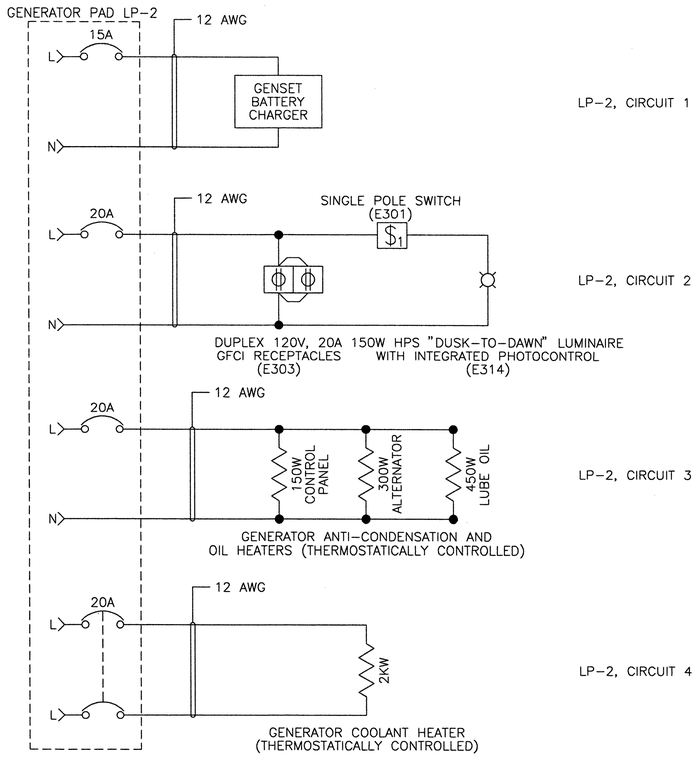

GENERATOR PAD LOAD PANEL CIRCUITS

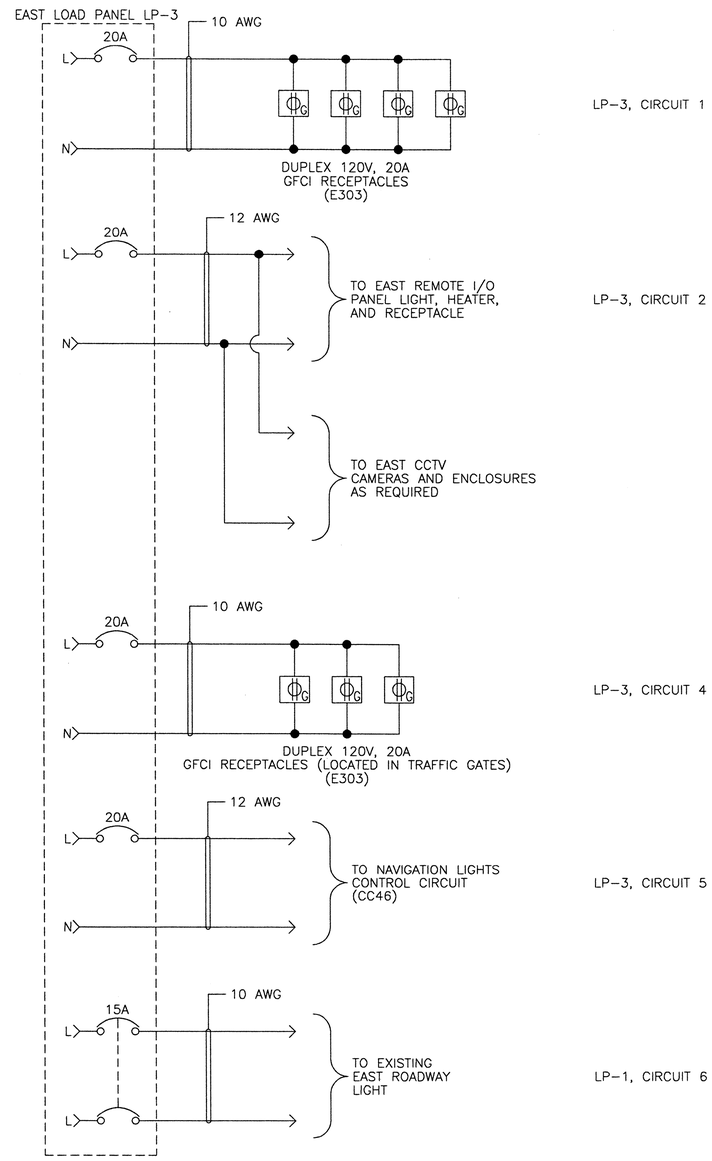

EAST LOAD PANEL CIRCUITS

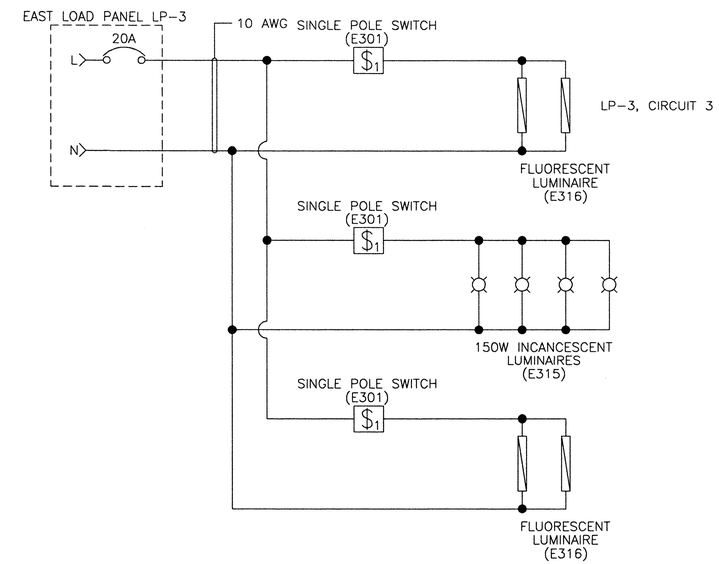

EAST MACHINE ROOM LIGHTING CIRCUIT SUPPLY

0 1 2 3
INCHES ON FULL SIZE SHEET

34-LPC4.DWG

NORTH CAROLINA PROFESSIONAL ENGINEER SEAL 025801 LANCE V. BORDEN

MODJESKI and MASTERS
Experience great bridges.
100 Sterling Parkway
Suite 302
Mechanicsburg, PA 17050 NC License No. C-2979

E15

STATE OF NORTH CAROLINA
DEPARTMENT OF TRANSPORTATION
RALEIGH

WRIGHTSVILLE BRIDGE REHABILITATION
WRIGHTSVILLE, NORTH CAROLINA

LOAD PANEL CIRCUITS – 4

		DRAWN BY	R.I. PETERS
		SCALE	NONE
DESIGNED R.I. PETERS	DETAILED R.I. PETERS	DATE	JUNE 2011
CHECKED A.M. MARINO	CHECKED A.M. MARINO	DRAWING NO.	34 OF 140

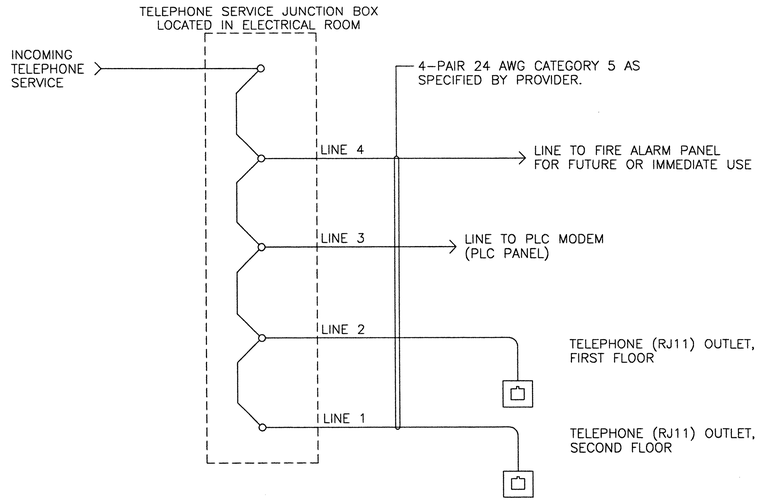

PHONE SERVICE WIRING

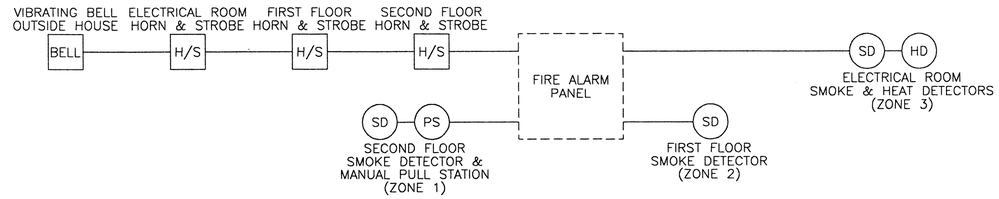

FIRE ALARM SYSTEM

(E321)

FIRE ALARM WIRING TO FOLLOW SPECIFICATIONS FROM SYSTEM MANUFACTURER

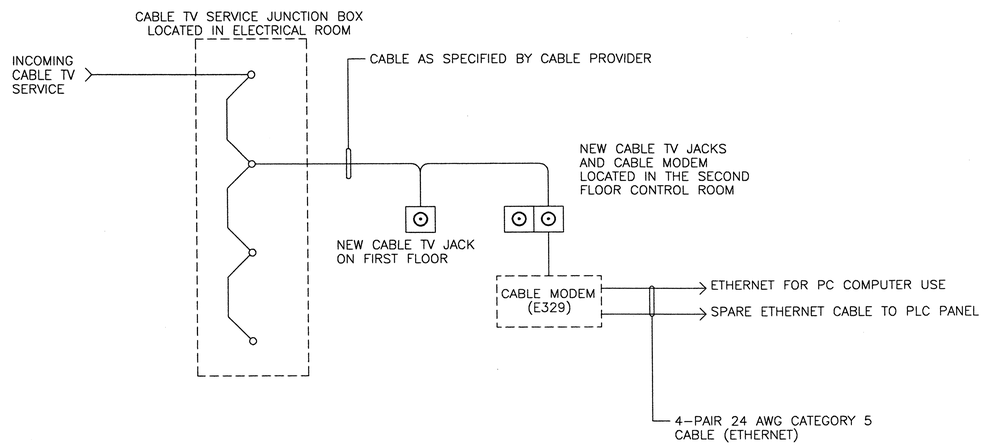

CABLE TV SERVICE WIRING

0 1 2 3
INCHES ON FULL SIZE SHEET

35-MDREC1.DWG

NORTH CAROLINA PROFESSIONAL ENGINEER SEAL 025801 LANCE V. BORDEN
6-22-2011

MODJESKI and MASTERS
Experience great bridges.
100 Sterling Parkway
Suite 302
Mechanicsburg, PA 17050 NC License No. C-2979

E16

STATE OF NORTH CAROLINA
DEPARTMENT OF TRANSPORTATION
RALEIGH

WRIGHTSVILLE BRIDGE REHABILITATION
WRIGHTSVILLE, NORTH CAROLINA

MISCELLANEOUS CIRCUITS – 1

DESIGNED R.I. PETERS	DETAILED R.I. PETERS	DRAWN BY	R.I. PETERS
		SCALE	NONE
CHECKED A.M. MARINO	CHECKED A.M. MARINO	DATE	JUNE 2011
		DRAWING NO.	35 OF 140

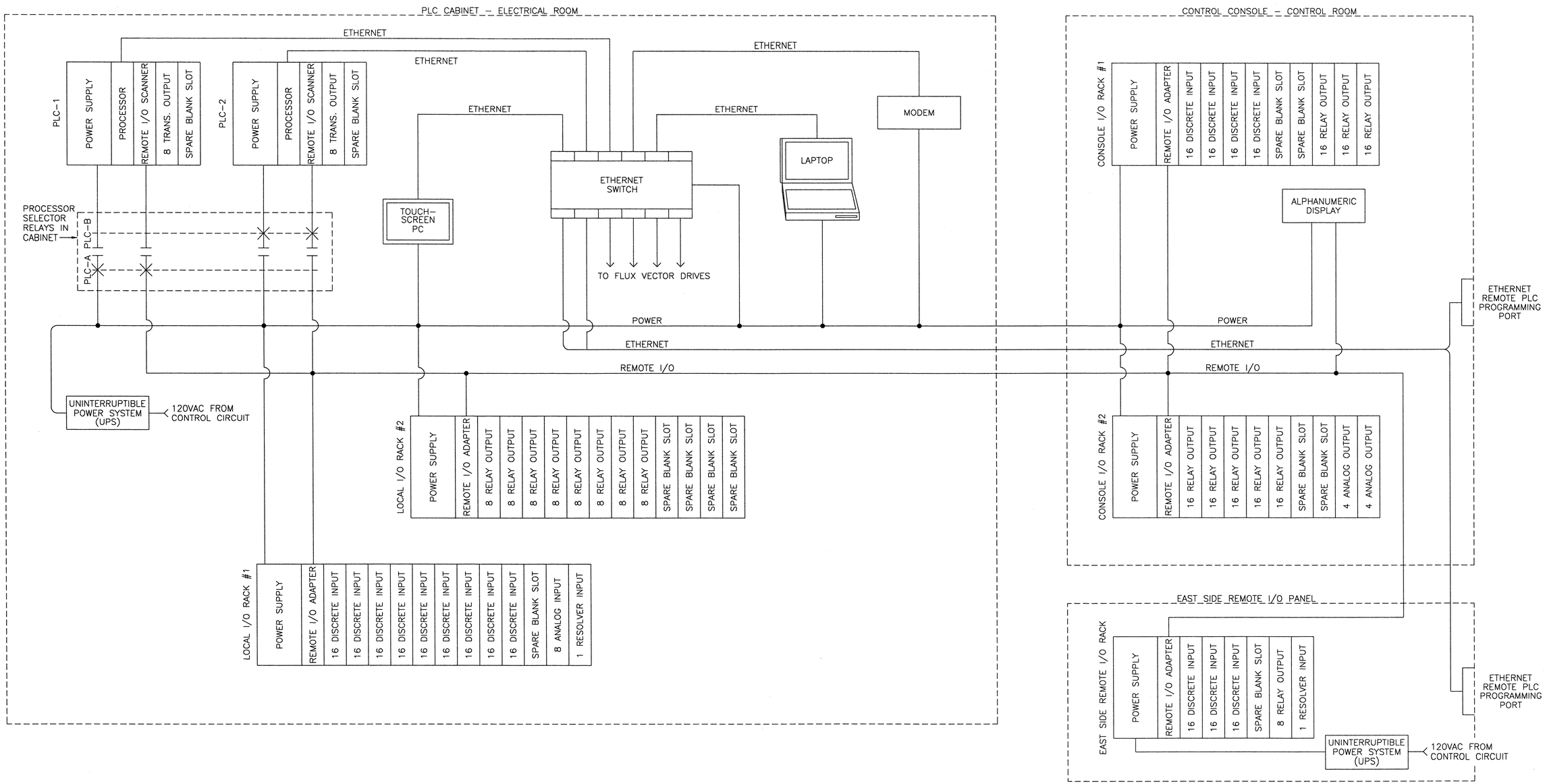

PLC LAYOUT

NOTES:

1. PROVIDE A REMOTE ETHERNET PROGRAMMING PORT ON THE OPERATOR'S CONSOLE AND THE EAST REMOTE I/O PANEL.
2. ALL DISCRETE I/O POINTS SHALL BE 120VAC.
3. ALL DISCRETE OUTPUT MODULES IN THE MAIN PLC CABINET SHALL BE AC/DC RELAY TYPE.
4. ALL ANALOG INPUT MODULES SHALL BE SELECTABLE (±10V OR ±20MA) TYPE.
5. RESOLVER INPUT MODULES SHALL PROVIDE 18 BIT RESOLUTION WITH A 64:1 MULTI-TURN DUAL RESOLVER. MODULES SHALL BE GEMCO 1746R TYPE, OR APPROVED EQUAL.
6. TOUCHSCREEN PC SHALL BE FULL COLOR TYPE, MINIMUM 15 INCH, INSTALLED IN THE ELECTRICAL ROOM PLC CABINET DOOR. TOUCHSCREEN SHALL BE WINDOWS XP COMPATABLE PC RUNNING ALLEN-BRADLEY RS-VIEW SOFTWARE, OR APPROVED EQUAL.
7. UPS SUPPLIES SHALL BE SIZED TO PROVIDE SHORT TERM (TEN MINUTE) BACKUP POWER TO THE PLC SYSTEM AND I/O RACKS. UPS SUPPLIES SHALL HAVE DRY CONTACTS FOR MONITORING AS SHOWN IN THE PLANS.

0 1 2 3
INCHES ON FULL SIZE SHEET

NORTH CAROLINA PROFESSIONAL ENGINEER SEAL 025801 LANCE V. BORDEN 2-23-2011

MODJESKI and MASTERS
Experience great bridges.
100 Sterling Parkway
Suite 302
Mechanicsburg, PA 17050 NC License No. C-2979

E17

STATE OF NORTH CAROLINA
DEPARTMENT OF TRANSPORTATION
RALEIGH

WRIGHTSVILLE BRIDGE REHABILITATION
WRIGHTSVILLE, NORTH CAROLINA

CONTROL SYSTEM ARCHITECTURE LAYOUT

		DRAWN BY	R.I. PETERS
		SCALE	NONE
DESIGNED R.I. PETERS	DETAILED R.I. PETERS	DATE	JUNE 2011
CHECKED A.M. MARINO	CHECKED A.M. MARINO	DRAWING NO.	36 OF 140

36-PLCCSL.DWG

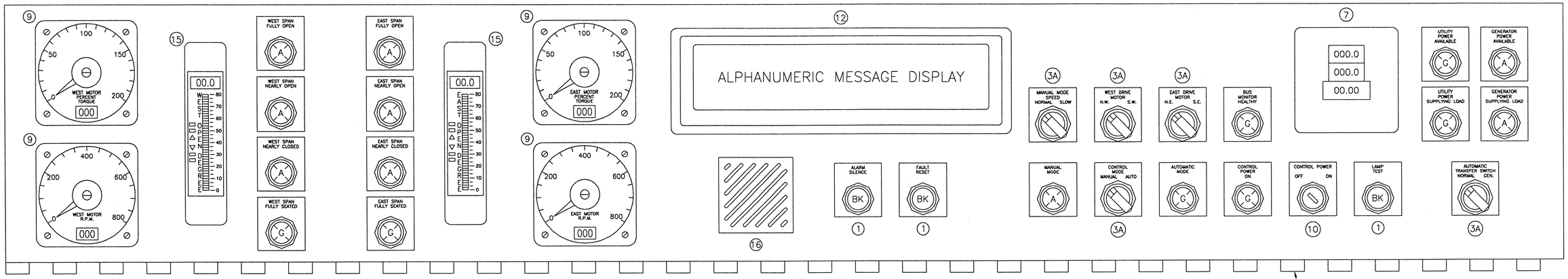

BRIDGE INDICATOR PANEL

SCALE: 6" = 1'-0"

CONTINUOUS HINGE

CONTINUOUS HINGE

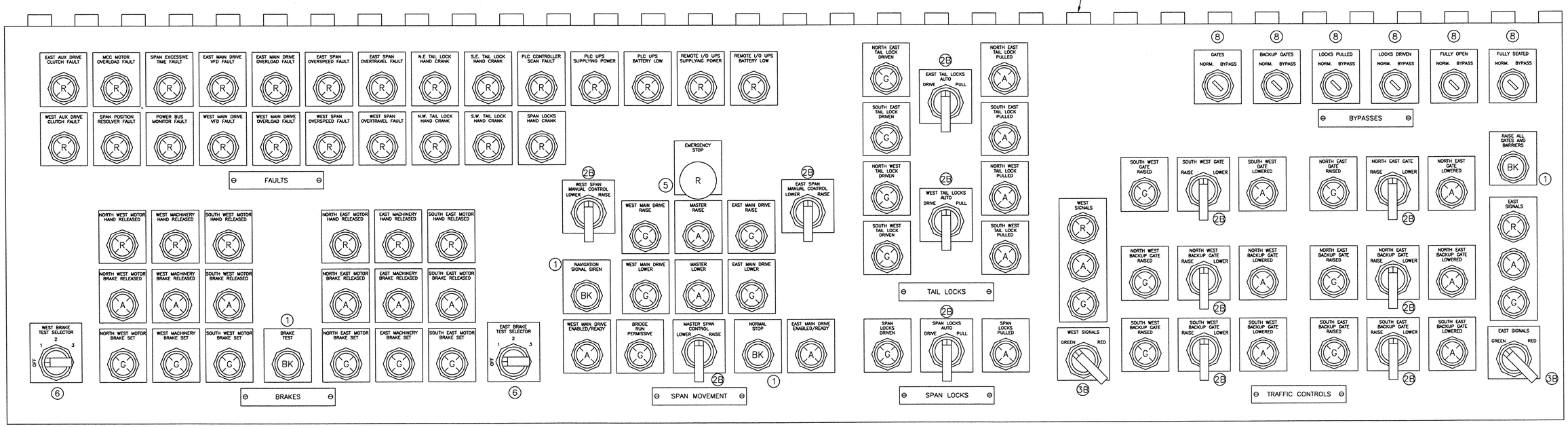

BRIDGE CONTROL PANEL

SCALE: 6" = 1'-0"

LEGEND

DEVICE COLOR CODE

A–AMBER
BK–BLACK
G–GREEN
R–RED
Y–YELLOW
SELECTOR SWITCH LEVERS–BLACK

NOTES:

1. FOR CONTROL CONSOLE DEVICES LEGEND, SEE THE NEXT DRAWING.
2. UNLESS OTHERWISE INDICATED, ALL INDICATOR LIGHTS ON THE CONTROL CONSOLE ARE TYPE 4A THE CONSOLE LIGHT TEST CIRCUIT IS PLC CONTROLLED.

0 1 2 3
INCHES ON FULL SIZE SHEET

NORTH CAROLINA PROFESSIONAL SEAL 025801 ENGINEER LANCE V. BORDEN

MODJESKI and MASTERS
Experience great bridges.
100 Sterling Parkway
Suite 302
Mechanicsburg, PA 17050 NC License No. C-2979

STATE OF NORTH CAROLINA
DEPARTMENT OF TRANSPORTATION
RALEIGH

WRIGHTSVILLE BRIDGE REHABILITATION
WRIGHTSVILLE, NORTH CAROLINA

CONTROL CONSOLE DETAILS – 1

E18	DESIGNED R.I. PETERS	DETAILED R.I. PETERS	DRAWN BY R.I. PETERS
			SCALE AS NOTED
	CHECKED A.M. MARINO	CHECKED A.M. MARINO	DATE JUNE 2011
			DRAWING NO. 37 OF 140

37-CCON1.DWG

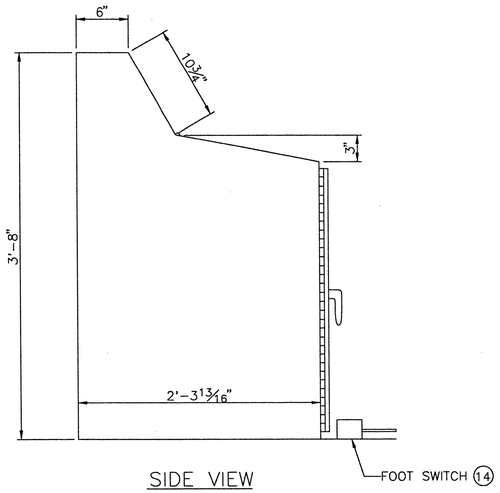

SIDE VIEW

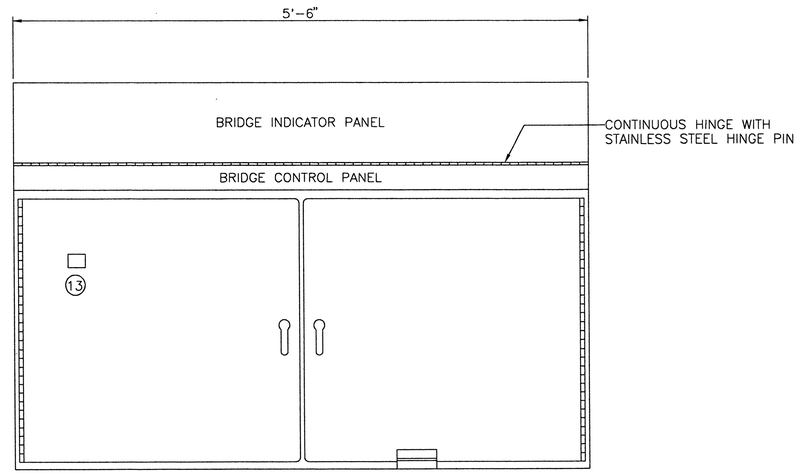

FRONT VIEW

CONTROL CONSOLE

SCALE: 1½" = 1'-0"

DEVICE COLOR CODE

A–AMBER
G–GREEN
R–RED
BK–BLACK
BL–BLUE

NOTES:

1. CONSOLE SHALL BE OF BOLT–TOGETHER CONSTRUCTION TO FACILITATE INSTALLATION IN THE NEW THIRD FLOOR CONTROL ROOM. THE TOP PUSH–BUTTON MOUNTING SURFACES SHALL BE STAINLESS STEEL.
2. PROVIDE 10 SPARE KEYS FOR THE BYPASS SWITCHES. ALL BYPASS SWITCHES SHALL BE KEYED ALIKE.
3. PROVIDE A PROTECTED ETHERNET PORT ON THE OUTSIDE OF THE CONTROL CONSOLE FOR REMOTE PLC PROGRAMMING (MATERIALS LIST, ITEM 13)

MATERIALS LIST

DEVICE NO.	DESCRIPTION	MANUFACTURER/ MODEL
1	30MM MOMENTARY CONTACT PUSHBUTTON, NON–ILLUMINATED, FLUSH HEAD, COLOR AS SHOWN	ALLEN–BRADLEY BULLETIN 800
2A	30MM MAINTAINED CONTACT, 3–POSITION SELECTOR SWITCH, SPRING RETURN TO CENTER, STANDARD BLACK KNOB OPERATOR	ALLEN–BRADLEY BULLETIN 800
2B	30MM MOMENTARY CONTACT, 3–POSITION SELECTOR SWITCH, SPRING RETURN TO CENTER, BLACK PISTOL GRIP OPERATOR	ALLEN–BRADLEY BULLETIN 800
3A	30MM MAINTAINED CONTACT, 2–POSITION SELECTOR SWITCH, STANDARD BLACK KNOB OPERATOR	ALLEN–BRADLEY BULLETIN 800
3B	30MM MAINTAINED CONTACT, 2–POSITION SELECTOR SWITCH, PISTOL GRIP KNOB OPERATOR	ALLEN–BRADLEY BULLETIN 800
4A	30MM LED PILOT LIGHT, 120 V INPUT, PLASTIC FRESNEL LENS, COLOR AS SHOWN.	IDEC TWTD SERIES
4B	30MM MOMENTARY CONTACT ILLUMINATED PUSHBUTTON, WIRED FOR PUSH–TO–TEST PILOT LIGHT OPERATION. COLOR AS SHOWN.	IDEC TWTD SERIES
5	30MM ILLUMINATED, MAINTAINED CONTACT, PULL–ON, PUSH–OFF MUSHROOM HEAD PUSHBUTTON. RED BUTTON, RED LEGEND PLATE	ALLEN–BRADLEY BULLETIN 800
6	30MM, MAINTAINED CONTACT, 4–POSITION SELECTOR SWITCH. STANDARD BLACK KNOB OPERATOR	ALLEN–BRADLEY BULLETIN 800
7	DISPLAY FOR POWER MONITOR (E108). SIMULTANEOUS 3–PHASE VOLTAGE, CURRENT, AND POWER OR FREQUENCY.	ELECTRO INDUSTRIES P34
8	2–POSITION KEY OPERATED SELECTOR SWITCH, MAINTAINED/SPRING RETURN. NEMA 4, WITH BRASS KEYS, SPARE KEYS	ALLEN–BRADLEY 800T–H48A
9	SWITCHBOARD STYLE 4–1/2" COMBINATION ANALOG AND DIGITAL METER. LEGENDS AND SCALES AS SHOWN. 4–20MA INPUT.	CROMPTON 070 SERIES
10	MAINTAINED CONTACT 2–POSITION KEY OPERATED SELECTOR SWITCH. NEMA 4 RATED WITH BRASS KEYS, SPARE KEYS	ALLEN–BRADLEY 800T–H33A
11	SPARE POSITION	SPARE
12	RED LED ALPHANUMERIC DISPLAY. 20 CHARACTERS BY 2 LINES.	ALLEN–BRADLEY INVIEW
13	PANEL MOUNT ETHERNET REMOTE PROGRAMMING PORT	GRACE ENGINEERED PRODUCTS P–R2–B3RX
14	FOOTSWITCH, ALUMINUM HOUSING SPDT, 10A, 120V MOMENTARY CONTACTS, NON–SKID BASE.	LINEMASTER 81–S
15	TRI–COLOR LED BARGRAPH AND DIGITAL DISPLAY FOR SPAN OPEN. LEGENDS AND SCALES AS SHOWN. 4–20MA INPUT.	WESCHLER BV5ATC
16	AUDIBLE ALARM. SELECTABLE SOUND AND VOLUME ADJUSTABLE TO 95DB.	SIGNAWORKS KSP

0 1 2 3
INCHES ON FULL SIZE SHEET

NORTH CAROLINA PROFESSIONAL SEAL 025801 ENGINEER LANCE V. BORDEN

MODJESKI and MASTERS
Experience great bridges.
100 Sterling Parkway
Suite 302
Mechanicsburg, PA 17050 NC License No. C–2979

STATE OF NORTH CAROLINA
DEPARTMENT OF TRANSPORTATION
RALEIGH

WRIGHTSVILLE BRIDGE REHABILITATION
WRIGHTSVILLE, NORTH CAROLINA

CONTROL CONSOLE DETAILS – 2

		DRAWN BY	R.I. PETERS
		SCALE	AS NOTED
DESIGNED R.I. PETERS	DETAILED R.I. PETERS	DATE	JUNE 2011
CHECKED A.M. MARINO	CHECKED A.M. MARINO	DRAWING NO.	38 OF 140

E19

38–CCON2.DWG

HARDWIRED SYMBOL LEGEND

COIL OF MAGNETIC CONTACTOR OR RELAY
- CR = CONTROL RELAY
- IR = INTERPOSING RELAY
- MC = MAGNETIC CONTACTOR

INDICATOR LIGHT
(LETTER INSIDE DENOTES COLOR;
R = RED, A = AMBER, G = GREEN)

LIMIT SWITCH CONTACT
(NORMALLY OPEN)

LIMIT SWITCH CONTACT
(NORMALLY CLOSED)

LIMIT SWITCH CONTACT
(NORMALLY OPEN HELD CLOSED)

LIMIT SWITCH CONTACT
(NORMALLY CLOSED HELD OPEN)

CONTACT OF MAGNETIC CONTACTOR OR RELAY
(NORMALLY OPEN INSTANTANEOUS)

CONTACT OF MAGNETIC CONTACTOR OR RELAY
(NORMALLY CLOSED INSTANTANEOUS)

FUSE

INTERNAL PLC LOGIC SYMBOL LEGEND

CONTACT OF HARDWIRED INPUT OR
INTERNAL PLC LOGIC CONTROL RELAY

BINARY RELAY

TON
TIMER INSTRUCTION
TON = TIMER ON DELAY

GEQ
COMPARE INSTRUCTION
GEQ = GREATER THAN OR EQUAL TO
LEQ = LESS THAN OR EQUAL TO
GRT = GREATER THAN

PLC I/O ADDRESS ASSIGNMENT

INPUT MODULE: (I:XXX) — XXX — INTERNAL PLC LOGIC ADDRESS

OUTPUT MODULE: (O:YYY) — YYY — PLC OUTPUT ADDRESS

ANALOG INPUT: (AI:WWW) — WWW — INTERNAL PLC LOGIC ADDRESS

ANALOG OUTPUT: (AO:ZZZ) — ZZZ — PLC OUTPUT ADDRESS

0 1 2 3
INCHES ON FULL SIZE SHEET

GENERAL LEGEND

SYMBOL	DESCRIPTION
ATS	AUTOMATIC TRANSFER SWITCH
CON	CONTACTOR
CP	CONTROL POWER
CR	CONTROL RELAY
CS	CONTROL SWITCH
ES	EMERGENCY STOP
FTS	FOOT SWITCH
HC	HAND CRANK MECHANISM
HMI	OPERATOR INTERFACE
IL	INDICATOR LIGHT
IR	INTERPOSING RELAY
LS	LIMIT SWITCH
MC	MAGNETIC CONTACTOR
MCC	MOTOR CONTROL CENTER
MDNE	MAIN DRIVE NORTH EAST
MDNW	MAIN DRIVE NORTH WEST
MDSE	MAIN DRIVE SOUTH EAST
MDSW	MAIN DRIVE SOUTH WEST
OL	MOTOR OVERLOAD RELAY
PB	PUSH BUTTON
TMR	TIMER
WDR	PLC SCAN WATCH DOG RELAY

LOGIC INPUT LEGEND

SYMBOL	DESCRIPTION	ADDRESS
ATS-G	GENERATOR POWER SOURCE SELECTED	I:191
ATS-GH	GENERATOR POWER OK	I:192
ATS-U	UTILITY POWER SOURCE SELECTED	I:193
ATS-UH	UTILITY POWER OK	I:194
BM	POWER BUS MONITOR	I:126
CR-CP	CONTROL POWER ON	I:101
CR-NEMD	EAST SIDE, NORTH MAIN DRIVE SELECTED	I:147
CR-NWMD	WEST SIDE, NORTH MAIN DRIVE SELECTED	I:148
CR-SEMD	EAST SIDE, SOUTH MAIN DRIVE SELECTED	I:149
CR-SWMD	WEST SIDE, SOUTH MAIN DRIVE SELECTED	I:150
CS-BBP	BACKUP GATE BYPASS SWITCH	I:517
CS-CM (A)	AUTO, CONTROL MODE	I:520
CS-CM (M)	MANUAL, CONTROL MODE	I:519
CS-CP	CONTROL POWER ON	I:501
CS-EBTS(1)	EAST BRAKE TEST, NORTH EAST MOTOR BRAKE	I:537
CS-EBTS(2)	EAST BRAKE TEST, SOUTH EAST MOTOR BRAKE	I:538
CS-EBTS(3)	EAST BRAKE TEST, MACHINERY BRAKE	I:539
CS-ETL(D)	EAST TAIL LOCKS, DRIVE	I:533
CS-ETL(P)	EAST TAIL LOCKS, PULL	I:534
CS-ER	EAST RESOLVER, USE FOR BACKUP SPAN POS.	I:173
CS-ETS	EAST TRAFFIC SIGNALS TO RED	I:502
CS-FOBP	SPAN FULLY OPEN BYPASS SWITCH	I:525
CS-FSBP	SPAN FULLY SEATED BYPASS SWITCH	I:526
CS-GBP	GATES BYPASS SWITCH	I:508
CS-LDBP	LOCKS DRIVEN BYPASS SWITCH	I:527
CS-LPBP	LOCKS PULLED BYPASS SWITCH	I:528
CS-NEB(L)	NORTH EAST BACKUP GATE, LOWER	I:509
CS-NEB(R)	NORTH EAST BACKUP GATE, RAISE	I:510
CS-NEG(L)	NORTH EAST GATE, LOWER	I:504
CS-NEG(R)	NORTH EAST GATE, RAISE	I:505
CS-NWB(L)	NORTH WEST BACKUP GATE, LOWER	I:511
CS-NWB(R)	NORTH WEST BACKUP GATE, RAISE	I:512
CS-MMI	MMI, CONTROL ENABLE KEYSWITCH	I:195
CS-MSCE(L)	MANUAL SPAN CONTROL, EAST, LOWER	I:544
CS-MSCE(R)	MANUAL SPAN CONTROL, EAST, RAISE	I:545
CS-MSCW(L)	MANUAL SPAN CONTROL, WEST, LOWER	I:546
CS-MSCW(R)	MANUAL SPAN CONTROL, WEST, RAISE	I:547
CS-MSP	MANUAL SPEED, SLOW	I:521
CS-SEB(L)	SOUTH EAST BACKUP GATE, LOWER	I:513
CS-SEB(R)	SOUTH EAST BACKUP GATE, RAISE	I:514
CS-SC(L)	SPAN CONTROL, MASTER LOWER	I:529
CS-SC(R)	SPAN CONTROL, MASTER RAISE	I:530
CS-SL(D)	SPAN LOCKS DRIVE	I:531
CS-SL(P)	SPAN LOCKS PULL	I:532
CS-SWB(L)	SOUTH WEST BACKUP GATE, LOWER	I:515
CS-SWB(R)	SOUTH WEST BACKUP GATE, RAISE	I:516
CS-SWG(L)	SOUTH WEST GATE, LOWER	I:506
CS-SWG(R)	SOUTH WEST GATE, RAISE	I:507
CS-WBTS(1)	WEST BRAKE TEST, NORTH WEST MOTOR BRAKE	I:540
CS-WBTS(2)	WEST BRAKE TEST, SOUTH WEST MOTOR BRAKE	I:541
CS-WBTS(3)	WEST BRAKE TEST, MACHINERY BRAKE	I:542
CS-WR	WEST RESOLVER, USE FOR BACKUP SPAN POS.	I:174
CS-WTL(D)	WEST TAIL LOCKS, DRIVE	I:535
CS-WTL(P)	WEST TAIL LOCKS, PULL	I:536
CS-WTS	WEST TRAFFIC SIGNALS TO RED	I:503
FTS	CONSOLE FOOT SWITCH	I:523
LS-EAXE	EAST AUX DRIVE CLUTCH	I:300
LS-EMAB(1)	EAST MACHINERY BRAKE SET	I:301
LS-EMAB(2)	EAST MACHINERY BRAKE RELEASED	I:302
LS-EMAB(4)	EAST MACHINERY BRAKE HAND RELEASED	I:303
LS-ESC(1)	EAST SPAN POSITION, OVERTRAVEL OPEN	I:304
LS-ESC(2)	EAST SPAN POSITION, FULLY OPEN	I:305
LS-ESC(5)	EAST SPAN POSITION, NEARLY OPEN	I:306
LS-ESC(6)	EAST SPAN POSITION, NEARLY CLOSED	I:307
LS-ESC(7)	EAST SPAN POSITION, FULLY CLOSED	I:308
LS-ESS	EAST SPAN, FULLY SEATED	I:309
LS-NEB(3)	NORTH EAST BACKUP GATE LOWERED	I:310
LS-NEB(4)	NORTH EAST BACKUP GATE RAISED	I:311
LS-NEB(5)	NORTH EAST BACKUP NOT RAISED (TRAFFIC INT)	I:312
LS-NEG(3)	NORTH EAST GATE LOWERED	I:313
LS-NEG(4)	NORTH EAST GATE RAISED	I:314
LS-NEG(5)	NORTH EAST GATE NOT RAISED (TRAFFIC INT)	I:315
LS-NEMOB(1)	NORTH EAST MOTOR BRAKE SET	I:316
LS-NEMOB(2)	NORTH EAST MOTOR BRAKE RELEASED	I:317
LS-NEMOB(4)	NORTH EAST MOTOR BRAKE HAND RELEASED	I:318
LS-NETL(3)	NORTH EAST TAIL LOCK DRIVEN	I:319
LS-NETL(4)	NORTH EAST TAIL LOCK PULLED	I:320
LS-NETLHC(2)	NORTH EAST TAIL LOCK HAND CRANK INSERTED	I:321
LS-NWB(3)	NORTH WEST BACKUP GATE LOWERED	I:108
LS-NWB(4)	NORTH WEST BACKUP GATE RAISED	I:109
LS-NWB(5)	NORTH WEST BACKUP NOT RAISED (TRAFFIC INT)	I:110
LS-NWMOB(1)	NORTH WEST MOTOR BRAKE SET	I:135
LS-NWMOB(2)	NORTH WEST MOTOR BRAKE RELEASED	I:136
LS-NWMOB(4)	NORTH WEST MOTOR BRAKE HAND RELEASED	I:137
LS-NWTL(3)	NORTH WEST TAIL LOCK DRIVEN	I:155
LS-NWTL(4)	NORTH WEST TAIL LOCK PULLED	I:156
LS-NWTLHC(2)	NORTH WEST TAIL LOCK HAND CRANK INSERTED	I:208
LS-SEB(3)	SOUTH EAST BACKUP GATE LOWERED	I:322
LS-SEB(4)	SOUTH EAST BACKUP GATE RAISED	I:323
LS-SEB(5)	SOUTH EAST BACKUP NOT RAISED (TRAFFIC INT)	I:324
LS-SEMOB(1)	SOUTH EAST MOTOR BRAKE SET	I:325
LS-SEMOB(2)	SOUTH EAST MOTOR BRAKE RELEASED	I:326
LS-SEMOB(4)	SOUTH EAST MOTOR BRAKE HAND RELEASED	I:327
LS-SETL(3)	SOUTH EAST TAIL LOCK DRIVEN	I:328
LS-SETL(4)	SOUTH EAST TAIL LOCK PULLED	I:329
LS-SETLHC(2)	SOUTH EAST TAIL LOCK HAND CRANK INSERTED	I:330
LS-SL(3)	SPAN LOCKS DRIVEN	I:151
LS-SL(4)	SPAN LOCKS PULLED	I:152
LS-SL(2)	SPAN LOCKS HAND CRANK INSERTED	I:210
LS-SWB(3)	SOUTH WEST BACKUP GATE LOWERED	I:114
LS-SWB(4)	SOUTH WEST BACKUP GATE RAISED	I:115
LS-SWB(5)	SOUTH WEST BACKUP NOT RAISED (TRAFFIC INT)	I:116
LS-SWG(3)	SOUTH WEST GATE LOWERED	I:117
LS-SWG(4)	SOUTH WEST GATE RAISED	I:118
LS-SWG(5)	SOUTH WEST GATE NOT RAISED (TRAFFIC INT)	I:119
LS-SWMOB(1)	SOUTH WEST MOTOR BRAKE SET	I:141
LS-SWMOB(2)	SOUTH WEST MOTOR BRAKE RELEASED	I:142
LS-SWMOB(4)	SOUTH WEST MOTOR BRAKE HAND RELEASED	I:143
LS-SWTL(3)	SOUTH WEST TAIL LOCK DRIVEN	I:159
LS-SWTL(4)	SOUTH WEST TAIL LOCK PULLED	I:160
LS-SWTLHC(2)	SOUTH WEST TAIL LOCK HAND CRANK INSERTED	I:211
LS-WAXE	WEST AUX DRIVE CLUTCH	I:128
LS-WMAB(1)	WEST MACHINERY BRAKE SET	I:144
LS-WMAB(2)	WEST MACHINERY BRAKE RELEASED	I:145
LS-WMAB(4)	WEST MACHINERY BRAKE HAND RELEASED	I:146
LS-WSC(1)	WEST SPAN POSITION, OVERTRAVEL OPEN	I:167
LS-WSC(2)	WEST SPAN POSITION, FULLY OPEN	I:168
LS-WSC(5)	WEST SPAN POSITION, NEARLY OPEN	I:169
LS-WSC(6)	WEST SPAN POSITION, NEARLY CLOSED	I:170
LS-WSC(7)	WEST SPAN POSITION, FULLY CLOSED	I:171
LS-WSS	WEST SPAN, FULLY SEATED	I:172
MDNE-E	MAIN DRIVE NORTH EAST, ENABLED	I:175
MDNE-F	MAIN DRIVE NORTH EAST, FAULTED	I:176
MDNE-OL	MAIN DRIVE NORTH EAST, BRAKE RESISTOR O.L.	I:177
MDNE-R	MAIN DRIVE NORTH EAST, RUNNING	I:178
MDNE-SR	MAIN DRIVE NORTH EAST, SPEED REF (ANALOG)	AI:58
MDNE-TR	MAIN DRIVE NORTH EAST, TORQUE REF (ANALOG)	AI:59
MDNW-E	MAIN DRIVE NORTH WEST, ENABLED	I:179
MDNW-F	MAIN DRIVE NORTH WEST, FAULTED	I:180
MDNW-OL	MAIN DRIVE NORTH WEST, BRAKE RESISTOR O.L.	I:181
MDNW-R	MAIN DRIVE NORTH WEST, RUNNING	I:182
MDNW-SR	MAIN DRIVE NORTH WEST, SPEED REF (ANALOG)	AI:60
MDNW-TR	MAIN DRIVE NORTH WEST, TORQUE REF (ANALOG)	AI:61
MDSE-E	MAIN DRIVE SOUTH EAST, ENABLED	I:183
MDSE-F	MAIN DRIVE SOUTH EAST, FAULTED	I:184
MDSE-OL	MAIN DRIVE SOUTH EAST, BRAKE RESISTOR O.L.	I:185
MDSE-R	MAIN DRIVE SOUTH EAST, RUNNING	I:186
MDSE-SR	MAIN DRIVE SOUTH EAST, SPEED REF (ANALOG)	AI:62
MDSE-TR	MAIN DRIVE SOUTH EAST, TORQUE REF (ANALOG)	AI:63
MDSW-E	MAIN DRIVE SOUTH WEST, ENABLED	I:187
MDSW-F	MAIN DRIVE SOUTH WEST, FAULTED	I:188
MDSW-OL	MAIN DRIVE SOUTH WEST, BRAKE RESISTOR O.L.	I:189
MDSW-R	MAIN DRIVE SOUTH WEST, RUNNING	I:190
MDSW-SR	MAIN DRIVE SOUTH WEST, SPEED REF (ANALOG)	AI:64
MDSW-TR	MAIN DRIVE SOUTH WEST, TORQUE REF (ANALOG)	AI:65

NORTH CAROLINA PROFESSIONAL SEAL 025801 ENGINEER LANCE V. BORDEN

MODJESKI and MASTERS
Experience great bridges.
100 Sterling Parkway
Suite 302
Mechanicsburg, PA 17050 NC License No. C-2979

STATE OF NORTH CAROLINA
DEPARTMENT OF TRANSPORTATION
RALEIGH

WRIGHTSVILLE BRIDGE REHABILITATION
WRIGHTSVILLE, NORTH CAROLINA

CONTROL CIRCUIT LEGEND – 1

E20

DESIGNED R.J. PETERS	DETAILED R.J. PETERS	DRAWN BY R.J. PETERS	
CHECKED A.M. MARINO	CHECKED A.M. MARINO	SCALE NONE	
		DATE JUNE 2011	
		DRAWING NO. 39 OF 140	

38-CCL1.DWG

LOGIC INPUT LEGEND (CONTINUED)

SYMBOL	DESCRIPTION	ADDRESS
OL-EMAB	EAST MACHINERY BRAKE, MOTOR OVERLOAD	I:196
OL-NEB	NORTH EAST BACKUP GATE, MOTOR OVERLOAD	I:120
OL-NEG	NORTH EAST GATE, MOTOR OVERLOAD	I:121
OL-NEMOB	NORTH EAST MOTOR BRAKE, MOTOR OVERLOAD	I:197
OL-NETL	NORTH EAST TAIL LOCK, MOTOR OVERLOAD	I:198
OL-NWB	NORTH WEST BACKUP GATE, MOTOR OVERLOAD	I:122
OL-NWMOB	NORTH WEST MOTOR BRAKE, MOTOR OVERLOAD	I:199
OL-NWTL	NORTH WEST TAIL LOCK, MOTOR OVERLOAD	I:200
OL-SEB	SOUTH EAST BACKUP GATE, MOTOR OVERLOAD	I:123
OL-SEMOB	SOUTH EAST MOTOR BRAKE, MOTOR OVERLOAD	I:201
OL-SETL	SOUTH EAST TAIL LOCK, MOTOR OVERLOAD	I:202
OL-SL	SPAN LOCKS, MOTOR OVERLOAD	I:203
OL-SWB	SOUTH WEST BACKUP GATE, MOTOR OVERLOAD	I:124
OL-SWG	SOUTH WEST GATE, MOTOR OVERLOAD	I:125
OL-SWMOB	SOUTH WEST MOTOR BRAKE, MOTOR OVERLOAD	I:204
OL-SWTL	SOUTH WEST TAIL LOCK, MOTOR OVERLOAD	I:205
OL-WMAB	WEST MACHINERY BRAKE, MOTOR OVERLOAD	I:206
PB-AS	ALARM SILENCE	I:548
PB-BT	BRAKE TEST	I:543
PB-ES1	EMERGENCY STOP, PLC PANEL	I:100
PB-ES2	EMERGENCY STOP, OPERATORS CONSOLE	I:500
PB-FR	ALARM FAULT RESET	I:522
PB-GMR	ALL TRAFFIC GATES, MASTER RAISE	I:518
PB-LT	LAMP TEST	I:549
PB-NS	NORMAL STOP	I:524
RS-SCE	RESOLVER, EAST SPAN POSITION	AI:70
RS-SCW	RESOLVER, WEST SPAN POSITION	AI:50
UPS-A	UPS, LOW BATTERY WARNING	I:212
UPS-B	UPS, ON BATTERY POWER (POWER LOST ALARM)	I:213
UPSE-A	EAST UPS, LOW BATTERY WARNING	I:331
UPSE-B	EAST UPS, ON BATTERY POWER	I:332

PLC LOGIC BINARY LEGEND

SYMBOL	DESCRIPTION
ABR	ALL BACKUP GATES RAISED
ABGL	ALL BACKUP GATES & GATES LOWERED
ABL	ALL BACKUP GATES LOWERED
ACF	AUXILIARY DRIVE CLUTCH FAULT
AETLD	ALL EAST TAIL LOCKS DRIVEN
AETLP	ALL EAST TAIL LOCKS PULLED
AGL	ALL GATES LOWERED
ALD	ALL LOCKS (SPAN & TAIL) DRIVEN
ASLD	ALL SPAN LOCKS DRIVEN
ASLP	ALL SPAN LOCKS PULLED
ATLD	ALL TAIL LOCKS DRIVEN
ATLP	ALL TAIL LOCKS PULLED
ATSR	ALL TRAFFIC SIGNALS RED
AWTLD	ALL WEST TAIL LOCKS DRIVEN
AWTLP	ALL WEST TAIL LOCKS PULLED
BBP	BACKUP GATES BYPASS
BHRS	BRAKES HAND RELEASED SHUTDOWN
BMF	BUS MONITOR FAULT
BRP	BRIDGE RUN PERMISSIVE
BYPINHIB	BYPASS INHIBIT
CMA	CONTROL MODE AUTO
CMM	CONTROL MODE MANUAL

0 1 2 3

INCHES ON FULL SIZE SHEET

DSLK	DRIVE SPAN LOCKS
EBR	EAST BACKUP GATES (N & S) RAISED
ERTE	EXCESSIVE RUN TIME EAST
ERTW	EXCESSIVE RUN TIME WEST
ETSR	EAST TRAFFIC SIGNAL RED
FCE	FULLY CLOSED, EAST SPAN
FCRE	FULLY CLOSED, EAST SPAN, RESOLVER
FCW	FULLY CLOSED, WEST SPAN
FCRW	FULLY CLOSED, WEST SPAN, RESOLVER
FOBP	BRIDGE FULLY OPEN BYPASS
FOE	FULLY OPEN, EAST SPAN
FO	FULLY OPEN, EAST & WEST
FORE	FULLY OPEN, EAST SPAN, RESOLVER
FORW	FULLY OPEN, WEST SPAN, RESOLVER
FOW	FULLY OPEN, WEST SPAN
FR	FAULT RESET
FS	BRIDGE FULLY SEATED, EAST & WEST
FSBP	FULLY SEATED BYPASS
FSE	FULLY SEATED EAST
FSW	FULLY SEATED WEST
GBP	GATE BYPASS
GBOL	GATE OR BACKUP GATE MOTOR O.L.
GMR	GATES MASTER RAISE, ALL
LDBP	LOCKS DRIVEN BYPASS
LEG	LOWER EAST GATE
LPBP	LOCKS PULLED BYPASS
LWG	LOWER WEST GATE
MAF	MAJOR FAULT PRESENT
MDEOK	MAIN DRIVE EAST OK
MDERN	MAIN DRIVE EAST RUNNING
MDF	MAIN DRIVE FAULT
MDOL	MAIN DRIVE BRAKE RESISTOR OVERLOAD
MDWOK	MAIN DRIVE WEST OK
MDWRN	MAIN DRIVE WEST RUNNING
MIF	MINOR FAULT PRESENT
ML	MASTER LOWER
MMSS	MANUAL MODE, SLOW SPEED
MR	MASTER RAISE
NCE	NEARLY CLOSED, EAST SPAN
NCRE	NEARLY CLOSED, EAST SPAN, RESOLVER
NCRW	NEARLY CLOSED, WEST SPAN, RESOLVER
NCW	NEARLY CLOSED, WEST SPAN
NOE	NEARLY OPEN, EAST SPAN
NOCL	NO CLUTCHES FOR AUX DRIVES CONN.
NOHRB	NO HAND RELEASED BRAKES
NOHC	NO HAND CRANKS INSERTED
NOOL	NO MOTOR OVERLOADS
NORE	NEARLY OPEN, EAST SPAN, RESOLVER
NORW	NEARLY OPEN, WEST SPAN, RESOLVER
NOW	NEARLY OPEN, WEST SPAN
OSE	OVER-SPEED, EAST SPAN
OSW	OVER-SPEED, WEST SPAN
OTE	OVER-TRAVEL, EAST SPAN
OTRE	OVER-TRAVEL, EAST SPAN, RESOLVER
OTRW	OVER-TRAVEL, WEST SPAN, RESOLVER
OTS	OVER-TRAVEL, SHUTDOWN
OTW	OVER-TRAVEL, WEST SPAN
PSLK	PULL SPAN LOCKS
REB	RELEASE ALL EAST BRAKES
REG	RAISE EAST GATE
RF	RESOLVER FAULT
RFE	RESOLVER FAULT, EAST SPAN

RFW	RESOLVER FAULT, WEST SPAN
ROSE	RESOLVER OVER-SPEED, EAST
ROSW	RESOLVER OVER-SPEED, WEST
RSZ	RESOLVERS, RESET ZERO
RWB	RAISE WEST BARRIERS
RWG	RAISE WEST GATE
WBR	WEST BACKUP GATES (N & S) RAISED
WTSR	WEST TRAFFIC SIGNALS RED
UPSF	UPS FAULT (RUNNING ON BATTERY)

PLC LOGIC TIMER LEGEND

SYMBOL	DESCRIPTION	ADDRESS
TMR-BMF	BUS MONITOR OFF (FAULT)	T105
TMR-CP	CONTROL POWER ON DELAY	T107
TMR-ERTE	EXCESSIVE RUN TIME, EAST MAIN DRIVE	T130
TMR-ERTW	EXCESSIVE RUN TIME, WEST MAIN DRIVE	T132
TMR-ETSY	EAST TRAFFIC SIGNAL YELLOW TIME	T100
TMR-FSE1	EAST FULLY SEATED TIMER 1	T110
TMR-FSE2	EAST FULLY SEATED TIMER 2	T112
TMR-FSW1	WEST FULLY SEATED TIMER 1	T114
TMR-FSW2	WEST FULLY SEATED TIMER 2	T116
TMR-MDE	MAIN DRIVE EAST	T118
TMR-MDEL	MAIN DRIVE EAST LOWER ON DELAY	T122
TMR-MDER	MAIN DRIVE EAST RAISE ON DELAY	T124
TMR-MDW	MAIN DRIVE WEST	T120
TMR-MDWL	MAIN DRIVE WEST LOWER ON DELAY	T126
TMR-MDWR	MAIN DRIVE WEST RAISE ON DELAY	T128
TMR-WTSY	WEST TRAFFIC SIGNAL YELLOW TIME	T103
TMR-UPS	UPS	T134

HARDWIRED DEVICES LEGEND

SYMBOL	DESCRIPTION
CON-NEMD	NORTH EAST MAIN DRIVE CONTACTOR
CON-NWMD	NORTH WEST MAIN DRIVE CONTACTOR
CON-SEMD	SOUTH EAST MAIN DRIVE CONTACTOR
CON-SWMD	SOUTH WEST MAIN DRIVE CONTACTOR
CR-EAXCL	EAST AUX DRIVE CLUTCH DISENGAGED
CR-PLCA	SELECT PLC A (PRIMARY)
CR-PLCB	SELECT PLC B (BACKUP)
CR-EFLT	EAST FENDER LIGHTS CONTROL RELAY
CR-ES	EMERGENCY STOP CONTROL RELAY
CR-WAXCL	WEST AUX DRIVE CLUTCH DISENGAGED
CS-ATS	AUTOMATIC TRANSFER SWITCH ENABLE
CS-EDS	EAST MAIN DRIVE SELECT,NORTH/SOUTH
CS-PLC	SELECT PLC A OR PLC B
CS-PNL	FENDER LIGHTS, AUTO (PHOTO) OR ON
CS-WDS	WEST MAIN DRIVE SELECT,NORTH/SOUTH
IL-PLCFT	PLC SCAN LOSS FAULT
IR-SCAN	PLC SCAN RELAY
OL-MDNEBR	NORTH EAST DRIVE BRAKE RESISTOR O.L.
OL-MDNWBR	NORTH WEST DRIVE BRAKE RESISTOR O.L.
OL-MDSEBR	SOUTH EAST DRIVE BRAKE RESISTOR O.L.
OL-MDSWBR	SOUTH WEST DRIVE BRAKE RESISTOR O.L.

NORTH CAROLINA PROFESSIONAL SEAL 025801 ENGINEER LANCE V. BORDEN 2-22-2011

MODJESKI and MASTERS
Experience great bridges.

100 Sterling Parkway
Suite 302
Mechanicsburg, PA 17050 NC License No. C-2979

STATE OF NORTH CAROLINA
DEPARTMENT OF TRANSPORTATION
RALEIGH

WRIGHTSVILLE BRIDGE REHABILITATION
WRIGHTSVILLE, NORTH CAROLINA

CONTROL CIRCUIT LEGEND – 2

		DRAWN BY	R.I. PETERS
		SCALE	NONE
DESIGNED R.I. PETERS	DETAILED R.I. PETERS	DATE	JUNE 2011
CHECKED A.M. MARINO	CHECKED A.M. MARINO	DRAWING NO.	40 OF 140

E21

40-CCL2.DWG

LOGIC OUTPUT LEGEND

SYMBOL	DESCRIPTION	ADDRESS
AL	ALARM BUZZER	O:700
AM-MDES	MAIN DRIVE EAST, SPEED, RPM	AO:952
AM-MDET	MAIN DRIVE EAST, TORQUE, (0-200%)	AO:953
AM-MDWS	MAIN DRIVE WEST, SPEED, RPM	AO:954
AM-MDWT	MAIN DRIVE WEST, TORQUE, (0-200%)	AO:955
AM-SCE	EAST BRIDGE SPAN OPEN POSITION, DEGREES	AO:950
AM-SCW	WEST BRIDGE SPAN OPEN POSITION, DEGREES	AO:951
CR-EGN	EAST GONG	O:602
CR-ETSY	EAST TRAFFIC SIGNAL YELLOW	O:600
CR-ETSR	EAST TRAFFIC SIGNAL RED	O:601
CR-HCONE	NORTH EAST MAIN DRIVE HEATER CUT-OUT	O:422
CR-HCONW	NORTH WEST MAIN DRIVE HEATER CUT-OUT	O:449
CR-HCOSE	SOUTH EAST MAIN DRIVE HEATER CUT-OUT	O:450
CR-HCOSW	SOUTH WEST MAIN DRIVE HEATER CUT-OUT	O:451
CR-WGN	WEST GONG	O:405
CR-WTSY	WEST TRAFFIC SIGNAL YELLOW	O:402
CR-WTSR	WEST TRAFFIC SIGNAL RED	O:403
IL-ATSG	ATS, GENERATOR SELECTED	O:701
IL-ATSGH	ATS, GENERATOR POWER IS HEALTHY	O:702
IL-ATSU	ATS, UTILITY SELECTED	O:703
IL-ATSUH	ATS, UTILITY POWER IS HEALTHY	O:704
IL-AUT	AUTOMATIC MODE	O:705
IL-BM	BUS MONITOR OK	O:706
IL-BMF	BUS MONITOR FAULT	O:707
IL-BRP	BRIDGE RUN PERMISSIVE	O:708
IL-CP	CONTROL POWER IS ON	O:709
IL-EAXE	EAST AUX DRIVE CLUTCH ENGAGED	O:710
IL-EMABHR	EAST MACHINERY BRAKE HAND RELEASED	O:711
IL-EMABR	EAST MACHINERY BRAKE RELEASED	O:712
IL-EMABS	EAST MACHINERY BRAKE SET	O:713
IL-ESFO	EAST SPAN FULLY OPEN	O:714
IL-ESFS	EAST SPAN FULLY SEATED	O:715
IL-ESNC	EAST SPAN NEARLY CLOSED	O:716
IL-ESNO	EAST SPAN NEARLY OPEN	O:717
IL-ESOT	EAST SPAN OVER-TRAVEL OPEN	O:718
IL-ETSG	EAST TRAFFIC SIGNAL GREEN	O:719
IL-ETSR	EAST TRAFFIC SIGNAL RED	O:720
IL-ETSY	EAST TRAFFIC SIGNAL YELLOW	O:721
IL-EXT	EXCESSIVE TIME (TO OPEN OR CLOSE BRIDGE)	O:722
IL-NEBL	NORTH EAST BACKUP GATE LOWERED	O:723
IL-NEBR	NORTH EAST BACKUP GATE RAISED	O:724
IL-NEGL	NORTH EAST GATE LOWERED	O:725
IL-NEGR	NORTH EAST GATE RAISED	O:726
IL-NEMOBHR	NORTH EAST MOTOR BRAKE HAND RELEASED	O:727
IL-NEMOBR	NORTH EAST MOTOR BRAKE RELEASED	O:728
IL-NEMOBS	NORTH EAST MOTOR BRAKE SET	O:729
IL-NETLD	NORTH EAST TAIL LOCK DRIVEN	O:730
IL-NETLHC	NORTH EAST TAIL LOCK, HAND CRANK INSERTED	O:731
IL-NETLP	NORTH EAST TAIL LOCK PULLED	O:732
IL-NWBL	NORTH WEST BACKUP GATE LOWERED	O:733
IL-NWBR	NORTH WEST BBACKUP GATE RAISED	O:734
IL-NWMOBHR	NORTH WEST MOTOR BRAKE HAND RELEASED	O:735
IL-NWMOBR	NORTH WEST MOTOR BRAKE RELEASED	O:736
IL-NWMOBS	NORTH WEST MOTOR BRAKE SET	O:737
IL-NWTLD	NORTH WEST TAIL LOCK DRIVEN	O:738
IL-NWTLHC	NORTH WEST TAIL LOCK, HAND CRANK INSERTED	O:739
IL-NWTLP	NORTH WEST TAIL LOCK PULLED	O:740
IL-MAN	MANUAL MODE	O:741

IL-MDEE	MAIN DRIVE EAST, ENABLED/READY	O:742
IL-MDEF	MAIN DRIVE EAST, FAULT	O:743
IL-MDEL	MAIN DRIVE EAST, LOWER BRIDGE	O:744
IL-MDEOL	MAIN DRIVE EAST, BRAKE RESISTOR OVERLOAD	O:745
IL-MDEOS	MAIN DRIVE EAST, OVERSPEED	O:746
IL-MDER	MAIN DRIVE EAST, RAISE BRIDGE	O:747
IL-MDWE	MAIN DRIVE WEST, ENABLED/READY	O:748
IL-MDWF	MAIN DRIVE WEST, FAULT	O:749
IL-MDWL	MAIN DRIVE WEST, LOWER BRIDGE	O:750
IL-MDWOL	MAIN DRIVE WEST, BRAKE RESISTOR OVERLOAD	O:751
IL-MDWOS	MAIN DRIVE WEST, OVERSPEED	O:752
IL-MDWR	MAIN DRIVE WEST, RAISE BRIDGE	O:753
IL-ML	MASTER LOWER	O:790
IL-MR	MASTER RAISE	O:791
IL-OL	MOTOR OVERLOAD FAULT	O:754
IL-PLCFTC	PLC SCAN FAULT (OUTPUT IS FOR LAMP TEST)	O:771
IL-RF	RESOLVER FAULT	O:755
IL-SEBL	SOUTH EAST BACKUP GATE LOWERED	O:756
IL-SEBR	SOUTH EAST BACKUP GATE RAISED	O:757
IL-SEMOBHR	SOUTH EAST MOTOR BRAKE HAND RELEASED	O:758
IL-SEMOBR	SOUTH EAST MOTOR BRAKE RELEASED	O:759
IL-SEMOBS	SOUTH EAST MOTOR BRAKE SET	O:760
IL-SETLD	SOUTH EAST TAIL LOCK DRIVEN	O:761
IL-SETLHC	SOUTH EAST TAIL LOCK, HAND CRANK INSERTED	O:762
IL-SETLP	SOUTH EAST TAIL LOCK PULLED	O:763
IL-SLD	SPAN LOCKS DRIVEN	O:764
IL-SLHC	SPAN LOCKS, HAND CRANK INSERTED	O:765
IL-SLP	SPAN LOCKS PULLED	O:766
IL-SWBL	SOUTH WEST BACKUP GATE LOWERED	O:767
IL-SWBR	SOUTH WEST BACKUP GATE RAISED	O:768
IL-SWGL	SOUTH WEST GATE LOWERED	O:769
IL-SWGR	SOUTH WEST GATE RAISED	O:770
IL-SWMOBHR	SOUTH WEST MOTOR BRAKE HAND RELEASED	O:772
IL-SWMOBR	SOUTH WEST MOTOR BRAKE RELEASED	O:773
IL-SWMOBS	SOUTH WEST MOTOR BRAKE SET	O:774
IL-SWTLD	SOUTH WEST TAIL LOCK DRIVEN	O:775
IL-SWTLHC	SOUTH WEST TAIL LOCK, HAND CRANK INSERTED	O:776
IL-SWTLP	SOUTH WEST TAIL LOCK PULLED	O:777
IL-WAXE	WEST AUX DRIVE CLUTCH ENGAGED	O:778
IL-WMABHR	WEST MACHINERY BRAKE HAND RELEASED	O:779
IL-WMABR	WEST MACHINERY BRAKE RELEASED	O:780
IL-WMABS	WEST MACHINERY BRAKE SET	O:781
IL-WSFO	WEST SPAN FULLY OPEN	O:782
IL-WSFS	WEST SPAN FULLY SEATED	O:783
IL-WSNC	WEST SPAN NEARLY CLOSED	O:784
IL-WSNO	WEST SPAN NEARLY OPEN	O:785
IL-WSOT	WEST SPAN OVER-TRAVEL OPEN	O:786
IL-WTSG	WEST TRAFFIC SIGNAL GREEN	O:787
IL-WTSR	WEST TRAFFIC SIGNAL RED	O:788
IL-WTSY	WEST TRAFFIC SIGNAL YELLOW	O:789
IL-UPSA	UPS LOW BATTERY WARNING	O:792
IL-UPSB	UPS FAULT, RUNNING ON BATTERY	O:793
IL-UPSEA	EAST UPS LOW BATTERY WARNING	O:794
IL-UPSEB	EAST UPS FAULT, RUNNING ON BATTERY	O:795
IR-DSL	DRIVE SPAN LOCKS	O:420
IR-DNETL	DRIVE NORTH EAST TAIL LOCK	O:423
IR-DNWTL	DRIVE NORTH WEST TAIL LOCK	O:424
IR-DSETL	DRIVE SOUTH EAST TAIL LOCK	O:425
IR-DSWTL	DRIVE SOUTH WEST TAIL LOCK	O:426

IR-LEG	LOWER NORTH EAST GATE	O:408
IR-LNEB	LOWER NORTH EAST BACKUP GATE	O:412
IR-LNWB	LOWER NORTH WEST BACKUP GATE	O:413
IR-LSEB	LOWER SOUTH EAST BACKUP GATE	O:414
IR-LSWB	LOWER SOUTH WEST BACKUP GATE	O:415
IR-LWG	LOWER SOUTH WEST GATE	O:409
IR-MDECS	MAIN DRIVE EAST, CREEP SPEED	O:437
IR-MDEE	MAIN DRIVE EAST, ENABLE	O:438
IR-MDEJS	MAIN DRIVE EAST, JOG SPEED	O:439
IR-MDEL	MAIN DRIVE EAST, LOWER	O:440
IR-MDER	MAIN DRIVE EAST, RAISE	O:441
IR-MDET	MAIN DRIVE EAST, REDUCED (SEATING) TORQUE	O:442
IR-MDWCS	MAIN DRIVE WEST, CREEP SPEED	O:443
IR-MDWE	MAIN DRIVE WEST, ENABLE	O:444
IR-MDWJS	MAIN DRIVE WEST, JOG SPEED	O:445
IR-MDWL	MAIN DRIVE WEST, LOWER	O:446
IR-MDWR	MAIN DRIVE WEST, RAISE	O:447
IR-MDWT	MAIN DRIVE WEST, REDUCED (SEATING) TORQUE	O:448
IR-PSL	PULL SPAN LOCKS	O:421
IR-PNETL	PULL NORTH EAST TAIL LOCK	O:427
IR-PNWTL	PULL NORTH WEST TAIL LOCK	O:428
IR-PSETL	PULL SOUTH EAST TAIL LOCK	O:429
IR-PSWTL	PULL SOUTH WEST TAIL LOCK	O:430
IR-REG	RAISE NORTH EAST GATE	O:410
IR-RMABE	RELEASE EAST MACHINERY BRAKE	O:431
IR-RMABW	RELEASE WEST MACHINERY BRAKE	O:432
IR-RMOBNE	RELEASE NORTH EAST MOTOR BRAKE	O:433
IR-RMOBNW	RELEASE NORTH WEST MOTOR BRAKE	O:434
IR-RMOBSE	RELEASE SOUTH EAST MOTOR BRAKE	O:435
IR-RMOBSW	RELEASE SOUTH WEST MOTOR BRAKE	O:436
IR-RNEB	RAISE NORTH EAST BACKUP GATE	O:416
IR-RNWB	RAISE NORTH WEST BACKUP GATE	O:417
IR-RSEB	RAISE SOUTH EAST BACKUP GATE	O:418
IR-RSWB	RAISE SOUTH WEST BACKUP GATE	O:419
IR-RWG	RAISE SOUTH WEST GATE	O:411
WDR-PULS	WATCH DOG RELAY, SCAN PULSE	O:10
WDR-RES	WATCH DOG RELAY, RESET	O:11

0 1 2 3
INCHES ON FULL SIZE SHEET

41-CD3.DWG

NORTH CAROLINA PROFESSIONAL ENGINEER SEAL 025801 LANCE V. BORDEN 2-23-2011

MODJESKI and MASTERS
Experience great bridges.
100 Sterling Parkway
Suite 302
Mechanicsburg, PA 17050 NC License No. C-2979

E22

STATE OF NORTH CAROLINA
DEPARTMENT OF TRANSPORTATION
RALEIGH

WRIGHTSVILLE BRIDGE REHABILITATION
WRIGHTSVILLE, NORTH CAROLINA

CONTROL CIRCUIT LEGEND – 3

		DRAWN BY	R.I. PETERS
		SCALE	NONE
DESIGNED R.I. PETERS	DETAILED R.I. PETERS	DATE	JUNE 2011
CHECKED A.M. MARINO	CHECKED A.M. MARINO	DRAWING NO.	41 OF 140

42-CC01.DWG

INCHES ON FULL SIZE SHEET 0 1 2 3

HARDWIRED LOGIC

CONTROL POWER CIRCUITS

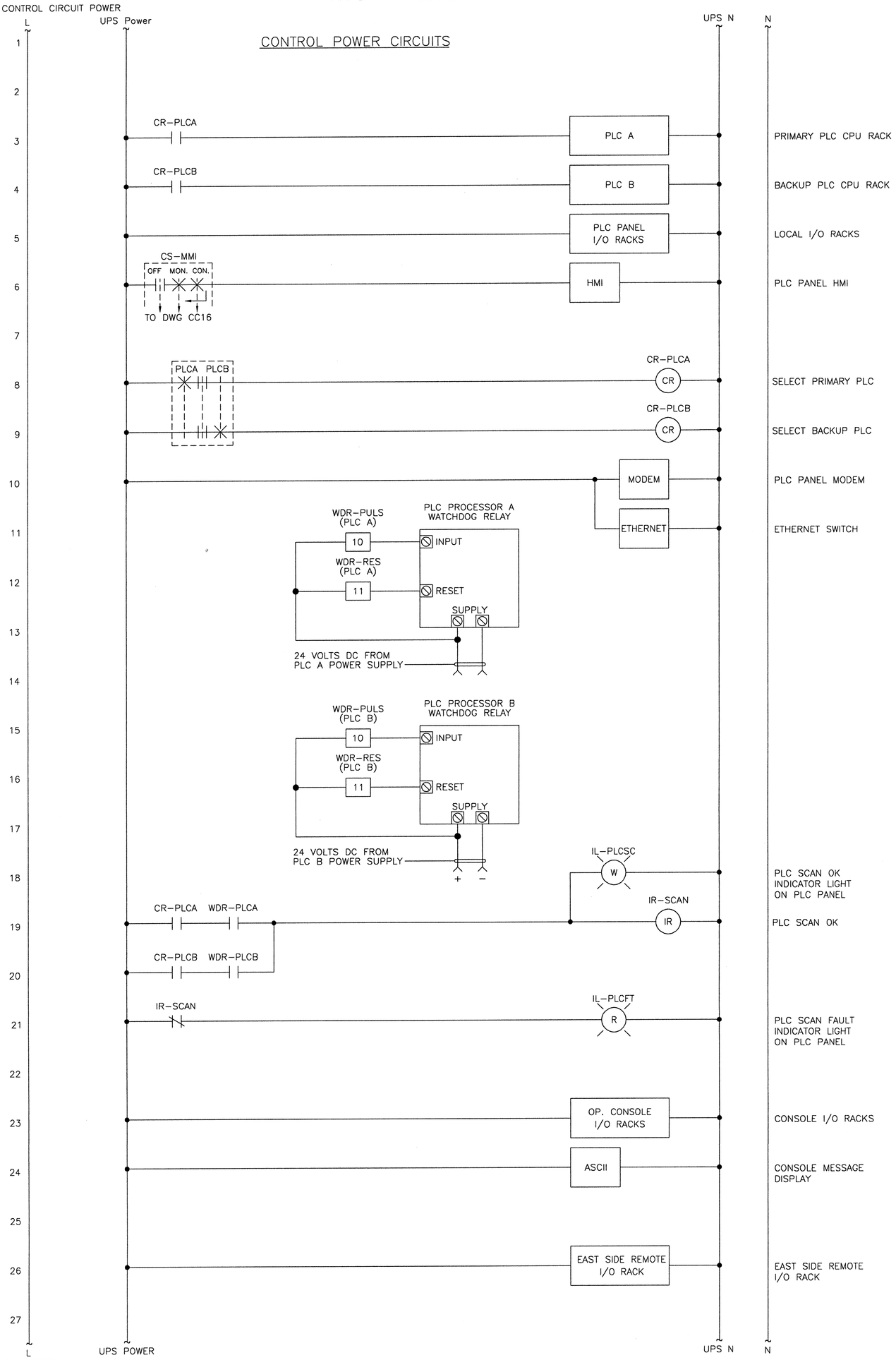

NOTES:

1. THE PLC SWITCHING CIRCUITRY SHALL ALLOW ONLY ONE PROCESSOR AT A TIME TO BE POWERED ON AND CONNECTED TO THE REMOTE I/O NETWORK.
2. THE EAST SIDE REMOTE I/O RACK HAS A SEPARATE UPS.
3. THE WATCHDOG RELAYS SHALL BE ABB CM-WDS OR EQUIVALENT.

MODJESKI and MASTERS
Experience great bridges.
100 Sterling Parkway
Suite 302
Mechanicsburg, PA 17050 NC License No. C-2979

E23

STATE OF NORTH CAROLINA
DEPARTMENT OF TRANSPORTATION
RALEIGH

WRIGHTSVILLE BRIDGE REHABILITATION
WRIGHTSVILLE, NORTH CAROLINA

CONTROL CIRCUIT - 1

DESIGNED R.J. PETERS	DETAILED R.J. PETERS	DRAWN BY R.J. PETERS	
CHECKED A.M. MARINO	CHECKED A.M. MARINO	SCALE NONE	
		DATE JUNE 2011	
		DRAWING NO. 42 OF 140	

43-CC02.DWG

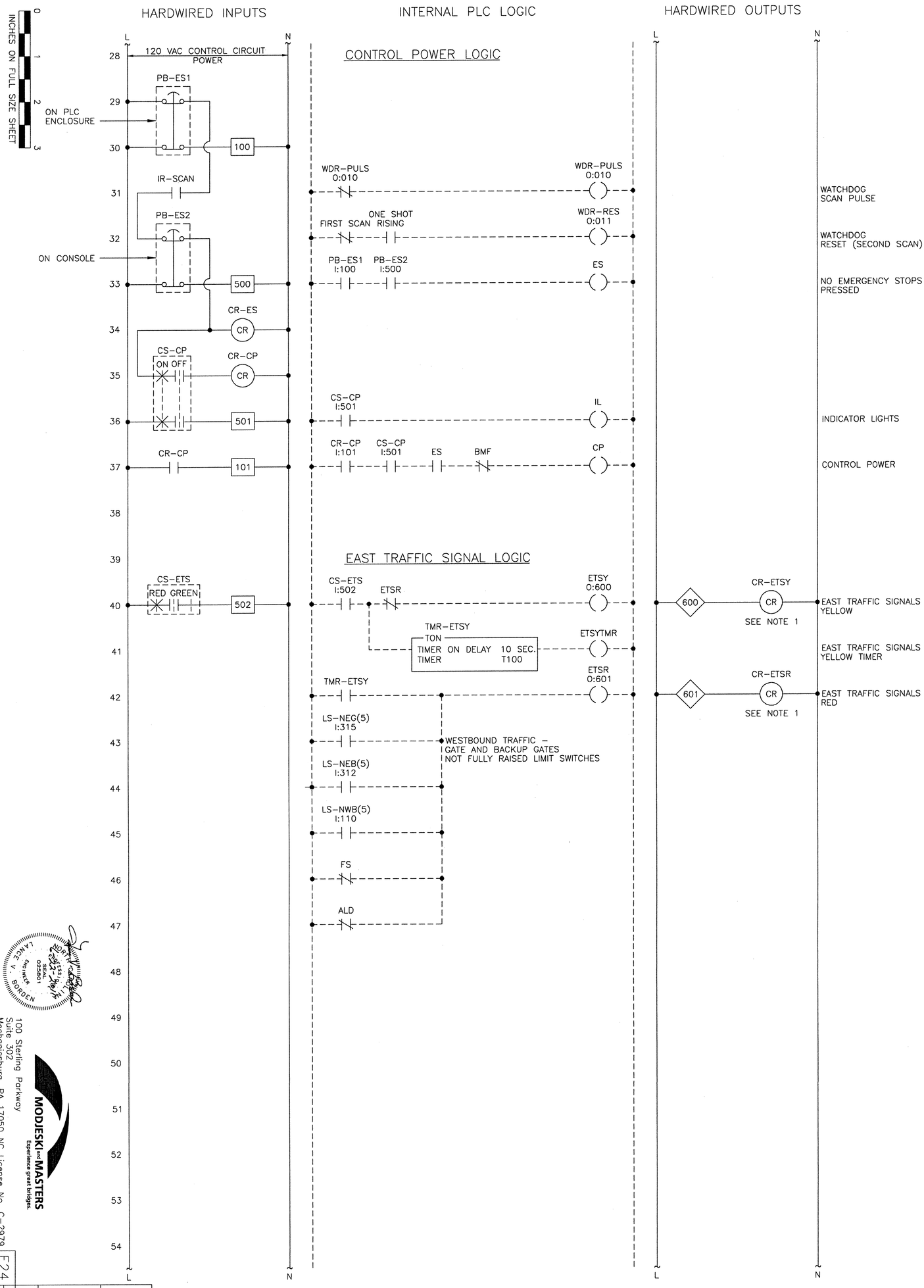

NOTES:

1. NEW CONTROL RELAYS, INTERFACE WITH EXISTING TRAFFIC SIGNAL HEADS. RELAYS ARE LOCATED IN EAST REMOTE I/O PANEL.
2. EACH EMERGENCY STOP PUSHBUTTON SHALL BE WIRED TO ILLUMINATE WHEN IT HAS BEEN PRESSED.

MODJESKI and MASTERS
Experience great bridges.
100 Sterling Parkway
Suite 302
Mechanicsburg, PA 17050 NC License No. C-2979

E24

DESIGNED R.I. PETERS	DETAILED R.I. PETERS	DRAWN BY R.I. PETERS	
CHECKED A.M. MARINO	CHECKED A.M. MARINO	SCALE NONE	DATE JUNE 2011
		DRAWING NO. 43 OF 140	

STATE OF NORTH CAROLINA
DEPARTMENT OF TRANSPORTATION
RALEIGH

WRIGHTSVILLE BRIDGE REHABILITATION
WRIGHTSVILLE, NORTH CAROLINA

CONTROL CIRCUIT - 2

44-CC03.DWG

INCHES ON FULL SIZE SHEET 0 1 2 3

HARDWIRED INPUTS | INTERNAL PLC LOGIC | HARDWIRED OUTPUTS

L N

55 120 VAC CONTROL CIRCUIT POWER

WEST TRAFFIC SIGNAL LOGIC

56 CS-WTS (RED GREEN) 503 — CS-WTS I:503, WTSR — WTSY O:402 — 402 — CR-WTSY CR — WEST TRAFFIC SIGNALS YELLOW (SEE NOTE 1)

57 TMR-WTSY TON TIMER ON DELAY 10 SEC. TIMER T103 — WTSYTMR — WEST TRAFFIC SIGNALS YELLOW TIMER

58 TMR-WTSY — WTSR O:403 — 403 — CR-WTSR CR — WEST TRAFFIC SIGNALS RED (SEE NOTE 1)

59 LS-SWG(5) I:119

60 LS-SEB(5) I:324

61 LS-SWB(5) I:116

62 FS

63 ALD

EASTBOUND TRAFFIC – GATE AND BACKUP GATES NOT FULLY RAISED LIMIT SWITCHES

64 ETSR WTSR — ATSR — ALL TRAFFIC SIGNALS RED

WARNING GATES CONTROL LOGIC

65

66 CS-NEG (LOWER RAISE) 504 — BYP CP INHIB, CS-NEG I:504, ETSR, REG — LEG O:408 — CR-CP, 408 — IR-LEG IR — NORTH EAST WARNING GATE LOWER

67 505 — CS-NEG I:505, FS, ALD, ABR, LEG — REG O:410 — 410 — IR-REG IR — NORTH EAST WARNING GATE RAISE

68 GMR, FSBP, LDBP, BBP

69 REG NEGR

70 CS-SWG (LOWER RAISE) 506 — BYP CP INHIB, CS-SWG I:506, WTSR, RWG — LWG O:409 — CR-CP, 409 — IR-LWG IR — SOUTH WEST WARNING GATE LOWER

71 507 — CS-SWG I:507, FS, ALD, ABR, LWG — RWG O:411 — 411 — IR-RWG IR — SOUTH WEST WARNING GATE RAISE

72 GMR, FSBP, LDBP, BBP

73 RWG SWGR

74 CS-GBP (BYP OFF) 508 — CS-GBP I:508, CMM — GBP — GATES BYPASS

75 LS-NEG(3) I:313 — NEGL — NORTH EAST GATE LOWERED

76 LS-NEG(4) I:314 — NEGR — NORTH EAST GATE RAISED

77 LS-SWG(3) I:117 — SWGL — SOUTH WEST GATE LOWERED

78 LS-SWG(4) I:118 — SWGR — SOUTH WEST GATE RAISED

79 PB-GMR 518 — PB-GMR I:518, CMA — GMR — GATES MASTER RAISE

80 LS-NEG(3) I:313, LS-SWG(3) I:117 — AGL — ALL GATES LOWERED

81

L N

NOTES:

1. NEW CONTROL RELAYS, INTERFACE WITH EXISTING TRAFFIC SIGNAL HEADS.

MODJESKI and MASTERS
Experience great bridges.
100 Sterling Parkway
Suite 302
Mechanicsburg, PA 17050 NC License No. C-2979

E25

STATE OF NORTH CAROLINA
DEPARTMENT OF TRANSPORTATION
RALEIGH

WRIGHTSVILLE BRIDGE REHABILITATION
WRIGHTSVILLE, NORTH CAROLINA
CONTROL CIRCUIT – 3

DESIGNED R.I. PETERS	DETAILED R.I. PETERS	DRAWN BY R.I. PETERS	
CHECKED A.M. MARING	CHECKED A.M. MARING	SCALE NONE	
		DATE JUNE 2011	
		DRAWING NO. 44 OF 140	

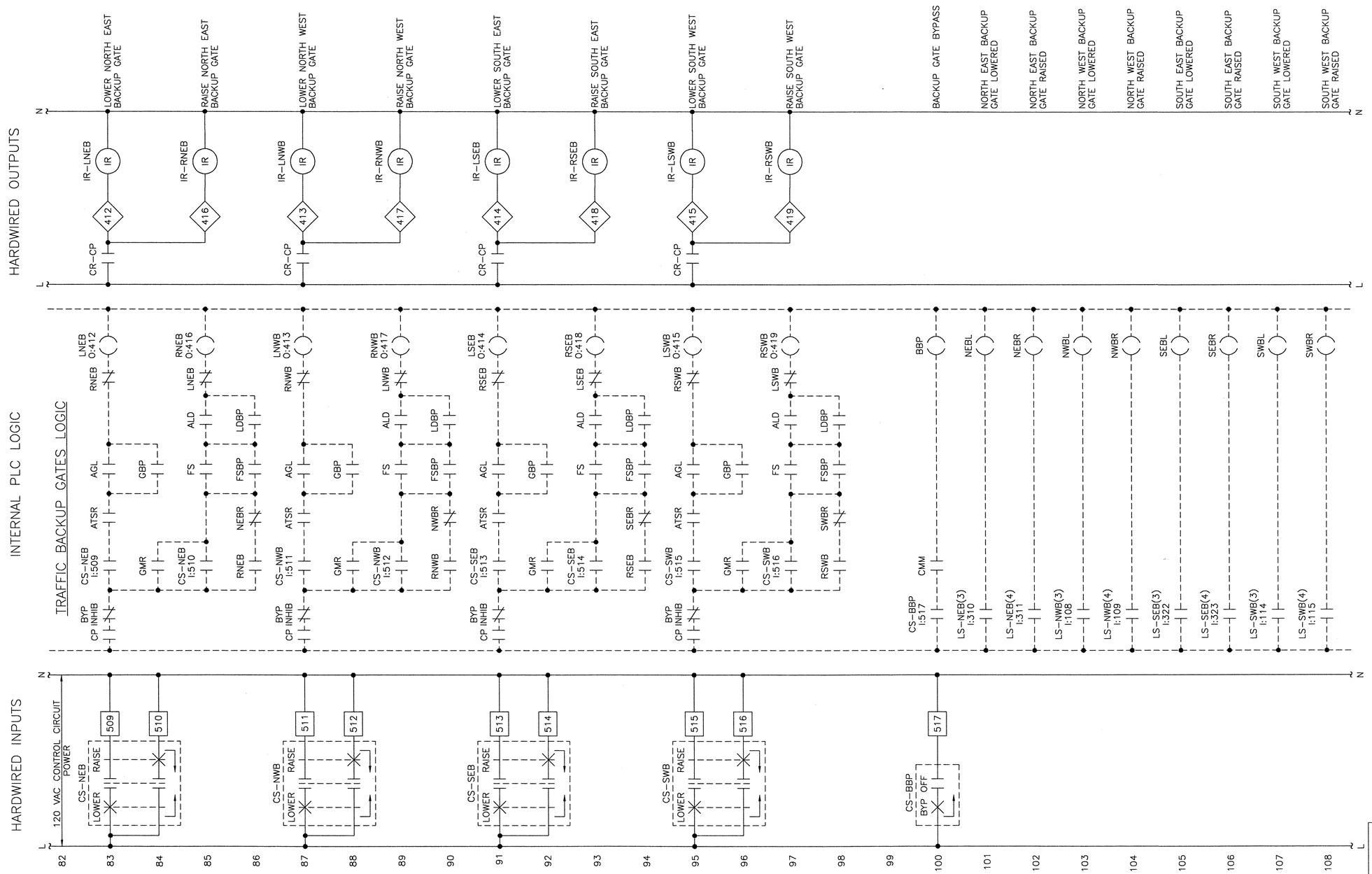

STATE OF NORTH CAROLINA
DEPARTMENT OF TRANSPORTATION
RALEIGH

WRIGHTSVILLE BRIDGE REHABILITATION
WRIGHTSVILLE, NORTH CAROLINA

CONTROL CIRCUIT – 4

MODJESKI and MASTERS
Experience great bridges.
100 Sterling Parkway
Suite 302
Mechanicsburg, PA 17050 NC License No. C-2979

DRAWN BY	R.I. PETERS		
SCALE	NONE		
DATE	JUNE 2011		
DRAWING NO.	45 OF 140		
DESIGNED R.I. PETERS	DETAILED R.I. PETERS	E26	
CHECKED A.M. MARINO	CHECKED A.M. MARINO		

45-CD04.DWG

46-CC05.DWG

INCHES ON FULL SIZE SHEET 0 1 2 3

HARDWIRED INPUTS | INTERNAL PLC LOGIC | HARDWIRED OUTPUTS

L N

109 120 VAC CONTROL CIRCUIT POWER

TRAFFIC BACKUP GATES LOGIC (CONTINUED)

110 NEBR NWBR SEBR SWBR ABR — ALL BACKUP GATES RAISED

111 NEBL NWBL SEBL SWBL ABL — ALL BACKUP GATES LOWERED

112 ABL AGL ABGL — ALL BACKUP AND TRAFFIC GATES LOWERED

GONG CONTROLS

113

114 ETSY NEGL EGN 0:602 — 602 CR-EGN CR — EAST GONG (SEE NOTE 1, SEE NOTE 3)

115 ETSR NEBL

116 NWBL

117 WTSY SWGL WGN 0:405 — 405 CR-WGN CR — WEST GONG (SEE NOTE 1)

118 WTSR SWBL

119 SEBL

AUTO/MANUAL CONTROLS

120

121 BM (CONTACT IN BUS MONITOR. CLOSED FOR NO FAULT.) 126 — BM I:126 BM — POWER BUS MONITOR

122 BM MDERN MDWRN — TMR-BMF TON TIMER ON DELAY TIMER 1 SEC. T105 (SEE NOTE 2) — BMFTMR

123 BMFTMR FR IL

124 TMR-BMF BMF — BUS MONITOR FAULT

125

126 CS-CM MAN. AUTO 519 — CS-CM(M) I:519 CMA CMM — CONTROL MODE MANUAL

127 520 — CS-CM(A) I:520 CMM NOCL NOHRB NOHC CMA — CONTROL MODE AUTOMATIC

128 CS-MSP FULL SLOW

129 521 — CS-MSP (S) I:521 CMM MMSS — MANUAL MODE SLOW BRIDGE SPEED

130 LS-EAXE(2) I:300 LS-WAXE(2) I:128 NOCL — NO AUX DRIVE CLUTCHES ENGAGED

131

132 ILS-EMAB(4) I:303 LS-NEMOB(4) I:318 LS-NWMOB(4) I:137 LS-SEMOB(4) I:327 LS-SWMOB(4) I:143 LS-WMAB(4) I:146 NOHRB — NO BRAKES HAND RELEASED

133

134 LS-NETLHC I:321 LS-NWTLHC I:208 LS-SETLHC I:330 LS-SLHC I:210 LS-SWTLHC I:211 NOHC — NO HAND CRANKS INSERTED

135

L N

NOTES:

1. INTERFACE WITH EXISTING TRAFFIC GONGS
2. ADJUST THE BUS MONITOR TIMER TO ALLOW FOR NORMAL BUS POWER FLUCTUATIONS DUE TO MAIN (FLUX VECTOR) RUNNING AND STOPPING.
3. CR-EGN IS LOCATED IN THE EAST REMOTE I/O PANEL.

MODJESKI and MASTERS
Experience great bridges.
100 Sterling Parkway
Suite 302
Mechanicsburg, PA 17050 NC License No. C-2979

E27

DESIGNED R.J. PETERS	DETAILED R.J. PETERS	DRAWN BY R.J. PETERS	
CHECKED A.M. MARINO	CHECKED A.M. MARINO	SCALE NONE	DATE JUNE 2011
		DRAWING NO. 46 OF 140	

STATE OF NORTH CAROLINA
DEPARTMENT OF TRANSPORTATION
RALEIGH

WRIGHTSVILLE BRIDGE REHABILITATION
WRIGHTSVILLE, NORTH CAROLINA

CONTROL CIRCUIT - 5

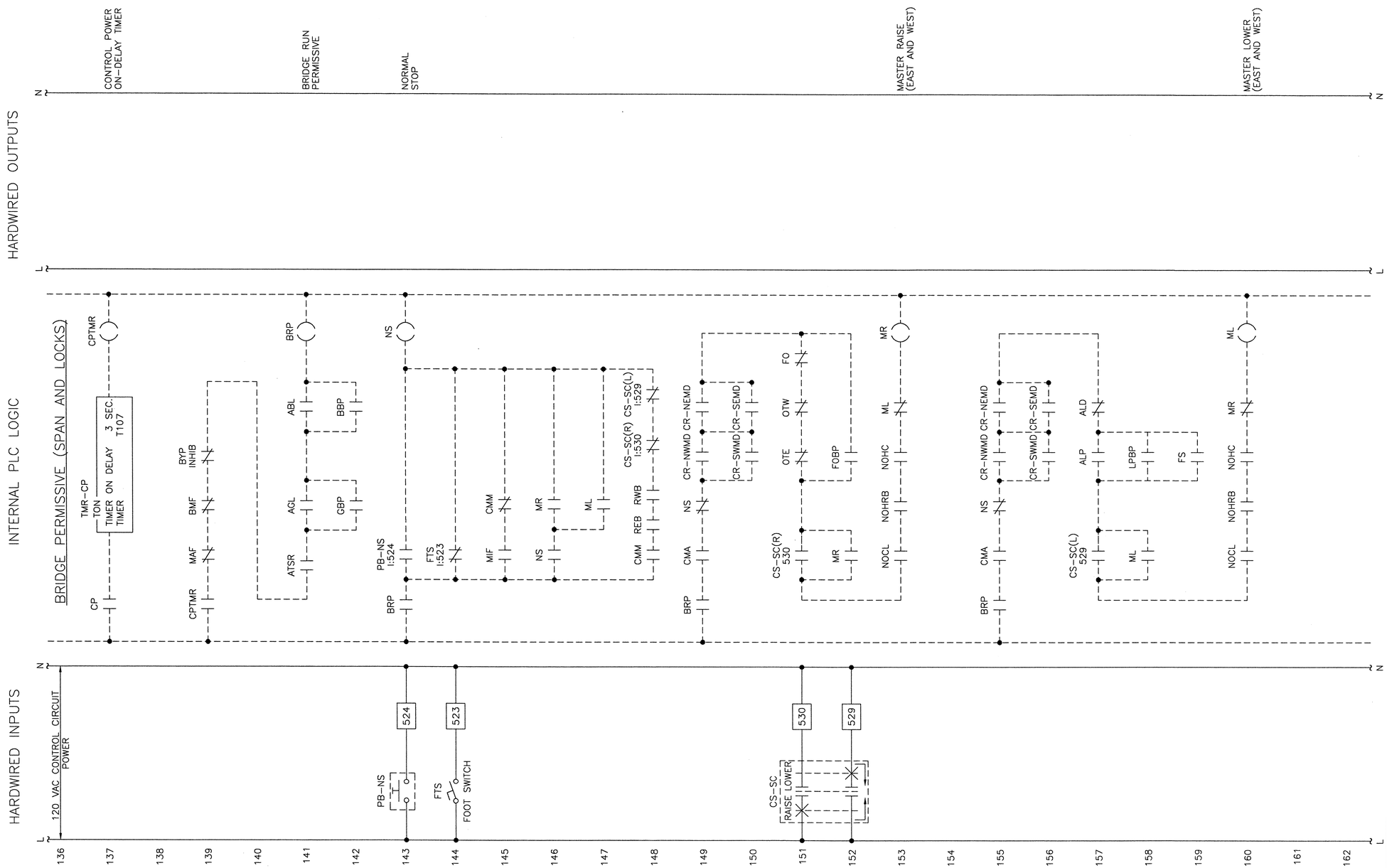

0 1 2 3
INCHES ON FULL SIZE SHEET

NORTH CAROLINA PROFESSIONAL SEAL 025801 ENGINEER LANCE V. BORDEN

MODJESKI and MASTERS
Experience great bridges.

100 Sterling Parkway
Suite 302
Mechanicsburg, PA 17050 NC License No. C-2979

E28

STATE OF NORTH CAROLINA
DEPARTMENT OF TRANSPORTATION
RALEIGH

WRIGHTSVILLE BRIDGE REHABILITATION
WRIGHTSVILLE, NORTH CAROLINA

CONTROL CIRCUIT – 6

		DRAWN BY	R.I. PETERS
		SCALE	NONE
DESIGNED R.I. PETERS	DETAILED R.I. PETERS	DATE	JUNE 2011
CHECKED A.M. MARINO	CHECKED A.M. MARINO	DRAWING NO.	47 OF 140

A7-CC06.DWG

48-CC07.DWG

INCHES ON FULL SIZE SHEET 0 1 2 3

HARDWIRED INPUTS | INTERNAL PLC LOGIC | HARDWIRED OUTPUTS

L N

163 120 VAC CONTROL CIRCUIT POWER

164 CS-SL PULL AUTO DRIVE 532

165 531

SPAN LOCKS LOGIC

166 BRP NS CMA MR ASLP — DSL — PSL O:421

CMM ML MR CS-SL(P) I:532

CMA ML ASLD FS PSL — DSL O:420

167 CMM ML MR CS-SL(D) I:531 FS

168 FSBP

169 LS-SL(3) I:151 — ASLD

170 LS-SL(4) I:152 — ASLP

171

TAIL LOCKS LOGIC

172

173 CS-ETL PULL AUTO DRIVE 534 — BRP NS CMA MR LS-NETL(4) I:320 — DNETL PNETL O:427

174 533 — CMM ML MR CS-ETL(P) I:534

175 CMA ML LS-NETL(3) I:319 TMR-FSE2 PNETL — DNETL O:423

176 CMM ML MR CS-ETL(D) I:533 TMR-FSE2

177 FSBP

178 BRP NS CMA MR LS-SETL(4) I:329 — DSETL PSETL O:429

179 CMM ML MR CS-ETL(P) I:534

180 CMA ML LS-SETL(3) I:328 TMR-FSE2 PSETL — DSETL O:425

181 CMM ML MR CS-ETL(D) I:533 TMR-FSE2

182 FSBP

183 LS-NETL(3) I:319 LS-SETL(3) I:328 — AETLD

184 LS-NETL(4) I:320 LS-SETL(4) I:329 — AETLP

185

186

187

188

189

L N

CR-CP

421 IR-PSL IR — PULL SPAN LOCK

420 IR-DSL IR — DRIVE SPAN LOCK

ALL SPAN LOCKS DRIVEN

ALL SPAN LOCKS PULLED

427 IR-PNETL IR — PULL NORTH EAST TAIL LOCK

423 IR-DNETL IR — DRIVE NORTH EAST TAIL LOCK

429 IR-PSETL IR — PULL SOUTH EAST TAIL LOCK

425 IR-DSETL IR — DRIVE SOUTH EAST TAIL LOCK

ALL EAST TAIL LOCKS DRIVEN

ALL EAST TAIL LOCKS PULLED

L N

NOTES:

1. MANUAL MODE RELIES ON THE HARDWIRED MOTOR CIRCUITS TO STOP AT END OF TRAVEL (not DRIVEN / not PULLED)

MODJESKI and MASTERS
Experience great bridges.
100 Sterling Parkway
Suite 302
Mechanicsburg, PA 17050 NC License No. C-2979

E29

DESIGNED R.I. PETERS	DETAILED R.I. PETERS	DRAWN BY R.I. PETERS	
CHECKED A.M. MARINO	CHECKED A.M. MARINO	SCALE NONE	DATE JUNE 2011

STATE OF NORTH CAROLINA
DEPARTMENT OF TRANSPORTATION
RALEIGH

WRIGHTSVILLE BRIDGE REHABILITATION
WRIGHTSVILLE, NORTH CAROLINA

CONTROL CIRCUIT - 7

DRAWING NO. 48 OF 140

49-CC08.DWG

INCHES ON FULL SIZE SHEET 0 1 2 3

HARDWIRED INPUTS | INTERNAL PLC LOGIC | HARDWIRED OUTPUTS

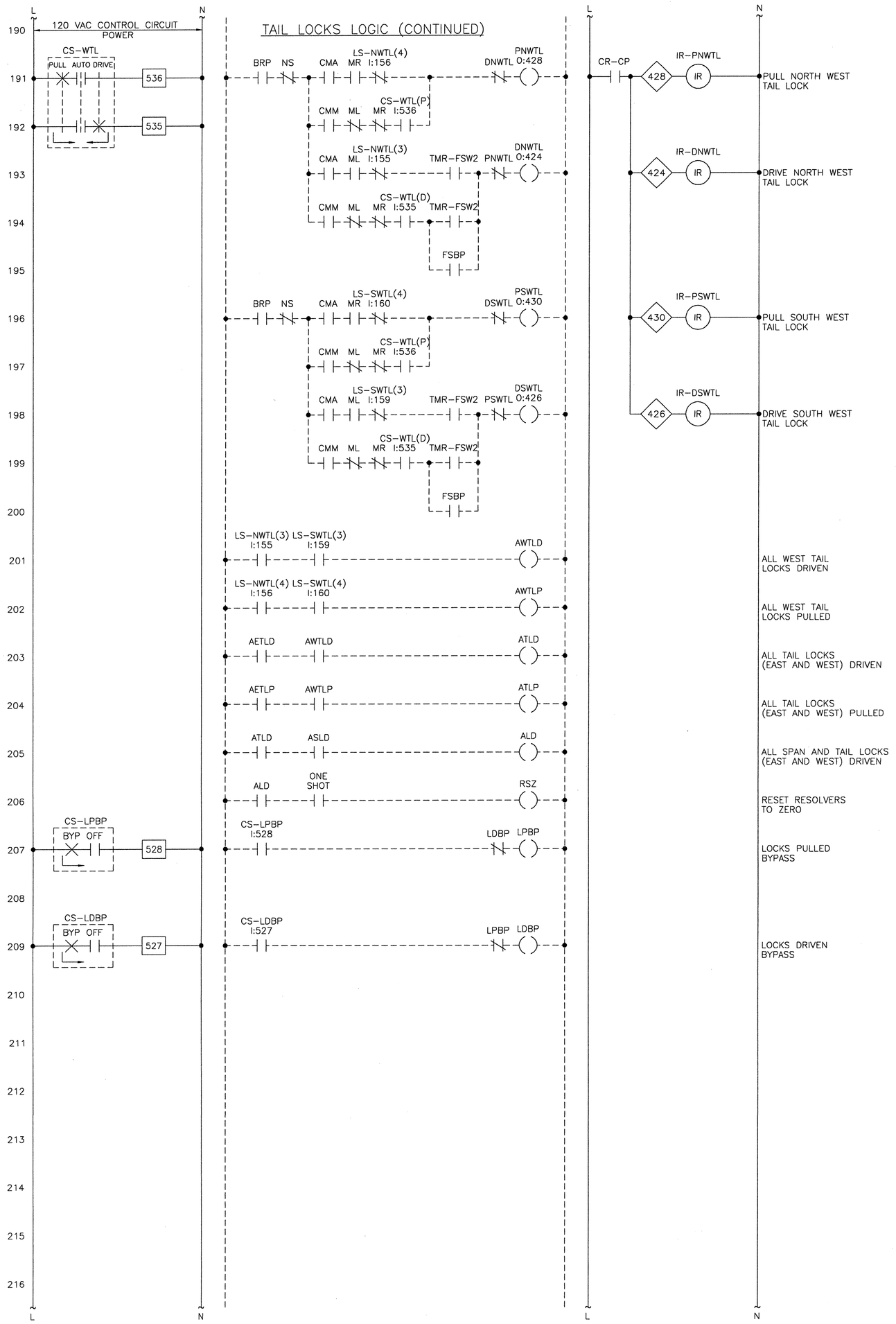

NOTES:

1. MANUAL MODE RELIES ON THE HARDWIRED MOTOR CIRCUITS TO STOP AT END OF TRAVEL (not DRIVEN / not PULLED)

MODJESKI and MASTERS
Experience great bridges.
100 Sterling Parkway
Suite 302
Mechanicsburg, PA 17050 NC License No. C-2979

E30

STATE OF NORTH CAROLINA
DEPARTMENT OF TRANSPORTATION
RALEIGH

WRIGHTSVILLE BRIDGE REHABILITATION
WRIGHTSVILLE, NORTH CAROLINA

CONTROL CIRCUIT - 8

DESIGNED	R.I. PETERS	DRAWN BY	R.I. PETERS
DETAILED	R.I. PETERS	SCALE	NONE
CHECKED	A.M. MARINO	DATE	JUNE 2011
CHECKED	A.M. MARINO	DRAWING NO.	49 OF 140

50-CC09.DWG

INCHES ON FULL SIZE SHEET 0 1 2 3

HARDWIRED INPUTS | INTERNAL PLC LOGIC | HARDWIRED OUTPUTS

L N

217 120 VAC CONTROL CIRCUIT POWER

SPAN POSITION SENSORS

218 CS-ER ON OFF — 173 — EAST RESOLVER, USE FOR EMERGENCY BACKUP POSITION CONTROL IF SPAN LIMIT SWITCHES FAIL (PLC PANEL)

219 5A

220 LS-ESC(1) I:304 CS-ER I:173 — OTE — EAST SPAN OVERTRAVEL ON OPEN

221 LS-ESC(1) — 304 — OTRE CS-ER I:173

222 LS-ESC(2) I:305 CS-ER I:173 — FOE — EAST SPAN FULLY OPEN

223 LS-ESC(2) — 305 — FORE CS-ER I:173

224 LS-ESC(5) I:306 CS-ER I:173 — NOE — EAST SPAN NEARLY OPEN

225 LS-ESC(5) — 306 — NORE CS-ER I:173

226 LS-ESC(6) I:307 CS-ER I:173 — NCE — EAST SPAN NEARLY CLOSED

227 LS-ESC(6) — 307 — NCRE CS-ER I:173

228 LS-ESC(7) I:308 CS-ER I:173 — FCE — EAST SPAN FULLY CLOSED

229 LS-ESC(7) — 308 — FCRE CS-ER I:173

230 5A LS-ESS(1) — 309 — LS-ESS(1) I:309 — FSE — EAST SPAN FULLY SEATED

231 FSE — TMR-FSE1 TON TIMER ON DELAY 10 SEC. TIMER T110 — FSETMR1 — EAST SPAN FULLY SEATED TIMER 1 – STALL DRIVE

232

233 FSE — LS-NEMOB(1) I:316 — LS-SEMOB(1) I:325 — LS-EMAB(1) I:301

234

235 TMR-FSE2 TON TIMER ON DELAY 10 SEC. TIMER T112 — FSETMR2 — EAST SPAN FULLY SEATED TIMER 2 – SPAN SEATED AND ALL BRAKES SET

236 FROM EAST RESOLVER RS-SCE — 70 — EAST SPAN POSITION FUNCTION — 950 — EAST SPAN POSITION DEGREES OPEN, CONSOLE ANALOG METER

EAST SPAN POSITION FUNCTION

CONVERT THE RESOLVER SIGNAL TO A SPAN OPEN POSITION IN DEGREES FOR PROGRAM USE AND OPERATOR DISPLAY. SET A FAULT BIT IF THERE IS AN ERROR READING THE RESOLVER. USING VFD, CALCULATE THE SPEED AND SET AN O.SPEED BIT FOR A SPEED > MAX+ 5%. DEFINE AN INPUT BIT TO RESET TO ZERO

237 RSZ — RFE — EAST RESOLVER FAULT

238 ROSE — EAST OVER-SPEED FAULT

239 GEQ E SPAN POSITION > = 80 DEGREES (SEE NOTE 1) — OTRE — EAST SPAN, OVERTRAVEL ON OPEN, RESOLVER

240 GEQ E SPAN POSITION > = 75 DEGREES (SEE NOTE 1) — FORE — EAST SPAN, FULLY OPEN, RESOLVER

241 GEQ E SPAN POSITION > = 70 DEGREES (SEE NOTE 1) — NORE — EAST SPAN, NEARLY OPEN, RESOLVER

242 LEQ E SPAN POSITION < = 5 DEGREES (SEE NOTE 1) — NCRE — EAST SPAN, NEARLY CLOSED, RESOLVER

243 LEQ E SPAN POSITION < = 2 DEGREES (SEE NOTE 1) — FCRE — EAST SPAN, FULLY CLOSED, RESOLVER

NOTES:

1. ACTUAL VALUES AND RANGES SHALL BE ADJUSTED IN THE FIELD

MODJESKI and MASTERS
Experience great bridges.
100 Sterling Parkway
Suite 302
Mechanicsburg, PA 17050 NC License No. C-2979

E31

STATE OF NORTH CAROLINA
DEPARTMENT OF TRANSPORTATION
RALEIGH

WRIGHTSVILLE BRIDGE REHABILITATION
WRIGHTSVILLE, NORTH CAROLINA

CONTROL CIRCUIT – 9

DESIGNED R.I. PETERS	DETAILED R.I. PETERS	DRAWN BY R.I. PETERS	
CHECKED A.M. MARINO	CHECKED A.M. MARINO	SCALE NONE	DATE JUNE 2011
		DRAWING NO. 50 OF 140	

51-CC10.DWG

INCHES ON FULL SIZE SHEET 0 1 2 3

HARDWIRED INPUTS | INTERNAL PLC LOGIC | HARDWIRED OUTPUTS

SPAN POSITION SENSORS (CONTINUED)

Rung	Hardwired inputs	Internal PLC logic	Hardwired outputs	Description
244	120 VAC CONTROL CIRCUIT POWER (L–N)			
245	CS-WR (ON OFF) — 174			WEST RESOLVER, USE FOR EMERGENCY BACKUP POSITION CONTROL IF SPAN LIMIT SWITCHES FAIL (PLC PANEL)
246	5A			
247		LS-WSC(1) I:167, CS-WR I:174	OTW	WEST SPAN OVERTRAVEL ON OPEN
248	LS-WSC(1) — 167	OTRW, CS-WR I:174		
249		LS-WSC(2) I:168, CS-WR I:174	FOW	WEST SPAN FULLY OPEN
250	LS-WSC(2) — 168	FORW, CS-WR I:174		
251		LS-WSC(5) I:169, CS-WR I:174	NOW	WEST SPAN NEARLY OPEN
252	LS-WSC(5) — 169	NORW, CS-WR I:174		
253		LS-WSC(6) I:170, CS-WR I:174	NCW	WEST SPAN NEARLY CLOSED
254	LS-WSC(6) — 170	NCRW, CS-WR I:174		
255		LS-WSC(7) I:171, CS-WR I:174	FCW	WEST SPAN FULLY CLOSED
256	LS-WSC(7) — 171	FCRW, CS-WR I:174		
257	5A, LS-WSS(1) — 172	LS-WSS(1) I:172	FSW	WEST SPAN FULLY SEATED
258		FSW; TMR-FSW1 TON, TIMER ON DELAY 10 SEC., TIMER T114	FSWTMR1	WEST SPAN FULLY SEATED TIMER 1 – STALL DRIVE
259				
260		FSW, LS-NWMOB(1) I:135, LS-SWMOB(1) I:141, LS-WMAB(1) I:144		
261				
262		TMR-FSW2 TON, TIMER ON DELAY 10 SEC., TIMER T116	FSWTMR2	WEST SPAN FULLY SEATED TIMER 2 – SPAN SEATED AND ALL BRAKES SET
263	FROM WEST RESOLVER RS-SCW — 50	WEST SPAN POSITION FUNCTION: CONVERT THE RESOLVER SIGNAL TO A SPAN OPEN POSITION IN DEGREES FOR PROGRAM USE AND OPERATOR DISPLAY. SET A FAULT BIT IF THERE IS AN ERROR READING THE RESOLVER. USING VFD, CALCULATE THE SPEED AND SET AN O.SPEED BIT FOR A SPEED > MAX+ 5%. DEFINE AN INPUT BIT TO RESET TO ZERO	951	WEST SPAN POSITION DEGREES OPEN, CONSOLE ANALOG METER
264		RSZ	RFW	WEST RESOLVER FAULT
265			ROSW	WEST OVER-SPEED FAULT
266		GEQ W SPAN POSITION > = 80 DEGREES (SEE NOTE 1)	OTRW	WEST SPAN, OVERTRAVEL ON OPEN, RESOLVER
267		GEQ W SPAN POSITION > = 75 DEGREES (SEE NOTE 1)	FORW	WEST SPAN, FULLY OPEN, RESOLVER
268		GEQ W SPAN POSITION > = 70 DEGREES (SEE NOTE 1)	NORW	WEST SPAN, NEARLY OPEN, RESOLVER
269		LEQ W SPAN POSITION < = 5 DEGREES (SEE NOTE 1)	NCRW	WEST SPAN, NEARLY CLOSED, RESOLVER
270		LEQ W SPAN POSITION < = 2 DEGREES (SEE NOTE 1)	FCRW	WEST SPAN, FULLY CLOSED, RESOLVER

NOTES:

1. ACTUAL VALUES AND RANGES SHALL BE ADJUSTED IN THE FIELD

MODJESKI and MASTERS
Experience great bridges.
100 Sterling Parkway
Suite 302
Mechanicsburg, PA 17050 NC License No. C-2979

E32

STATE OF NORTH CAROLINA
DEPARTMENT OF TRANSPORTATION
RALEIGH

WRIGHTSVILLE BRIDGE REHABILITATION
WRIGHTSVILLE, NORTH CAROLINA

CONTROL CIRCUIT – 10

DESIGNED R.I. PETERS	DETAILED R.I. PETERS	DRAWN BY R.I. PETERS	
CHECKED A.M. MARINO	CHECKED A.M. MARINO	SCALE NONE	DATE JUNE 2011
		DRAWING NO. 51 OF 140	

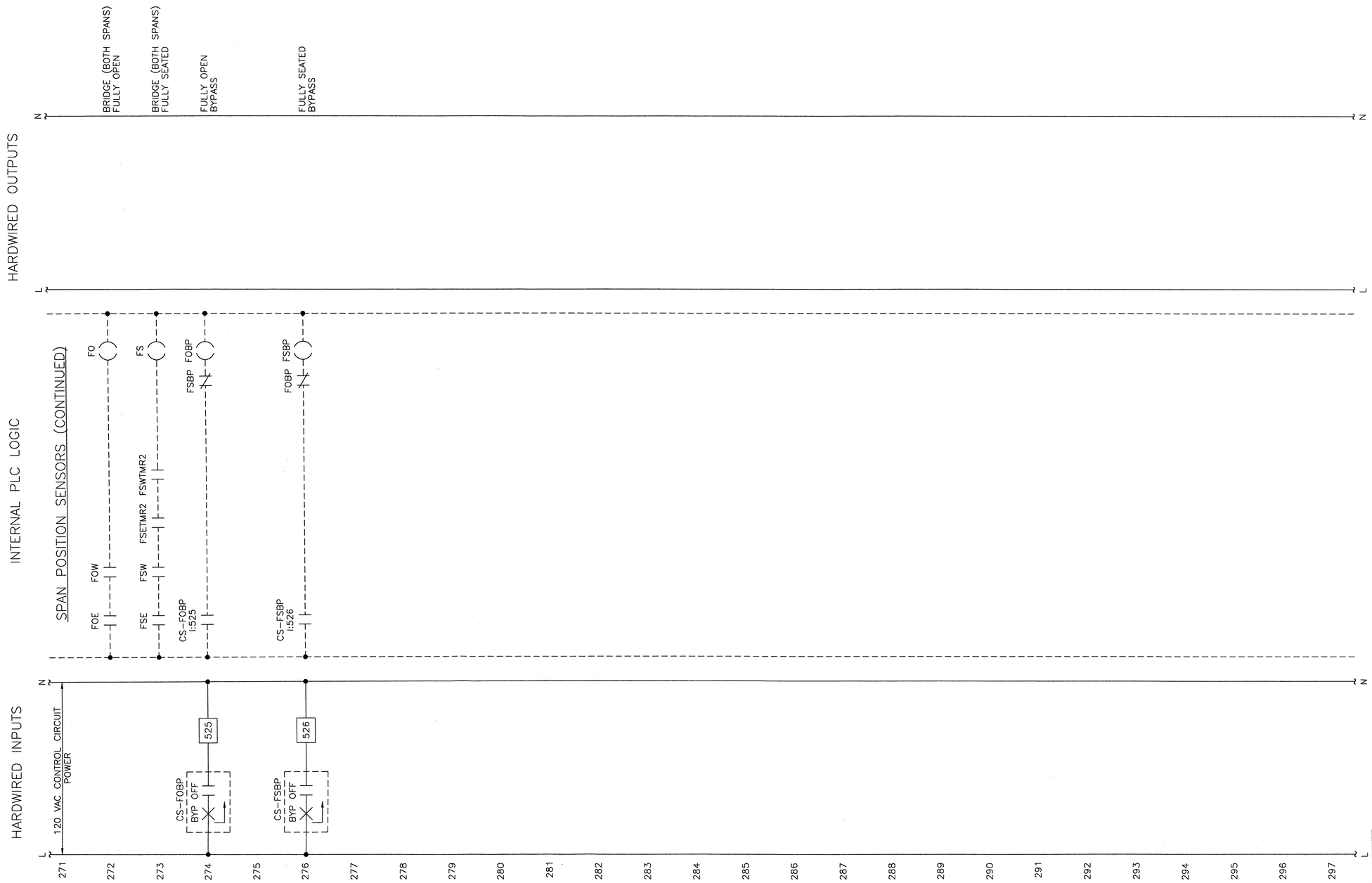

0 1 2 3
INCHES ON FULL SIZE SHEET

52-0211.DWG

NORTH CAROLINA PROFESSIONAL ENGINEER SEAL 025801 LANCE V. BORDEN 2-22-2011

MODJESKI and MASTERS
Experience great bridges.
100 Sterling Parkway
Suite 302
Mechanicsburg, PA 17050 NC License No. C-2979

E33

STATE OF NORTH CAROLINA
DEPARTMENT OF TRANSPORTATION
RALEIGH

WRIGHTSVILLE BRIDGE REHABILITATION
WRIGHTSVILLE, NORTH CAROLINA

CONTROL CIRCUIT – 11

		DRAWN BY	R.I. PETERS
		SCALE	NONE
DESIGNED R.I. PETERS	DETAILED R.I. PETERS	DATE	JUNE 2011
CHECKED A.M. MARINO	CHECKED A.M. MARINO	DRAWING NO.	52 OF 140

53-CC12.DWG

INCHES ON FULL SIZE SHEET 0 1 2 3

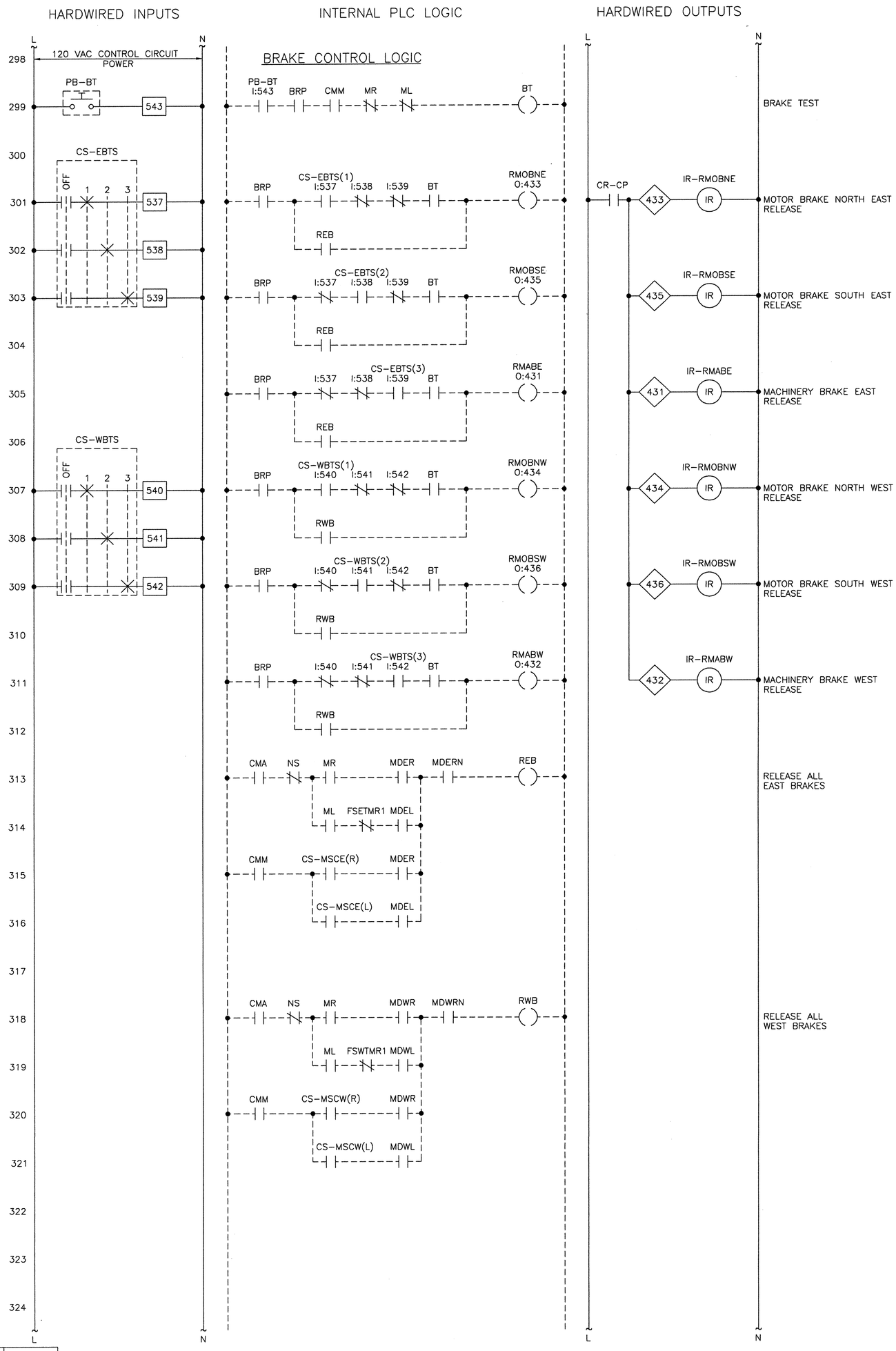

NOTES:

1. THE BRAKES SHALL BE PROGRAMMED TO RELEASE WHEN A MAIN DRIVE IS COMMANDED TO RUN AND THE FEEDBACK DRIVE RUNNING SIGNAL IS RECEIVED

MODJESKI and MASTERS
Experience great bridges.
100 Sterling Parkway
Suite 302
Mechanicsburg, PA 17050 NC License No. C-2979

E34

STATE OF NORTH CAROLINA
DEPARTMENT OF TRANSPORTATION
RALEIGH

WRIGHTSVILLE BRIDGE REHABILITATION
WRIGHTSVILLE, NORTH CAROLINA

CONTROL CIRCUIT - 12

DESIGNED	R.J. PETERS	DRAWN BY	R.J. PETERS
CHECKED	A.M. MARINO	SCALE	NONE
DETAILED	R.J. PETERS	DATE	JUNE 2011
CHECKED	A.M. MARINO	DRAWING NO.	53 OF 140

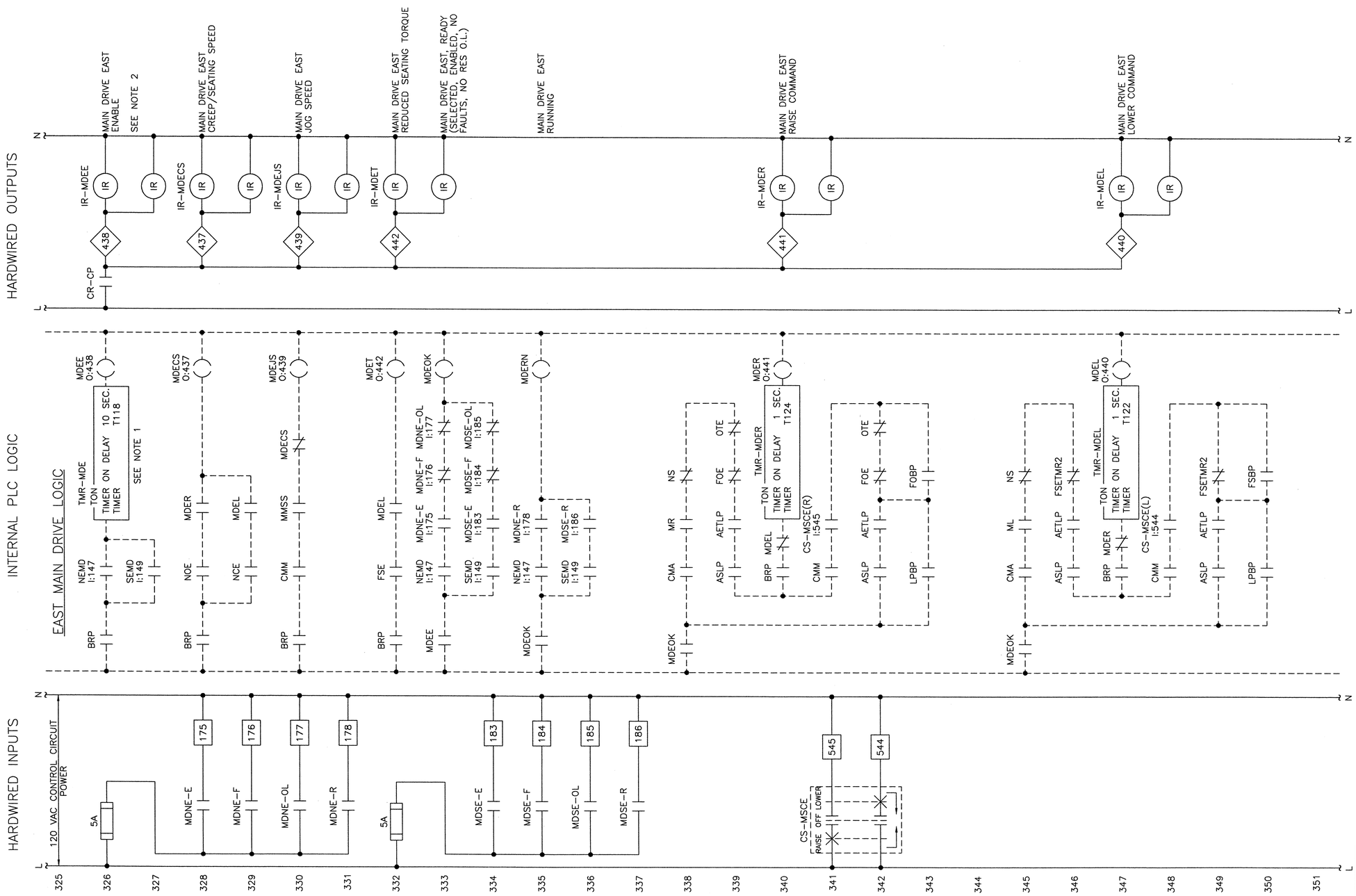

NOTES:

1. THE ENABLE LOGIC OR TIMER SHALL BE ADJUSTED IN THE FIELD. THE INTENTION IS TO ALLOW THE DRIVE TIME TO POWER UP BEFORE ANY COMMANDS ARE SENT TO IT. THIS WILL HOPEFULLY PREVENT ANY FALSE DRIVE FAULTS.
2. IR RELAYS ARE DUPLICATED IN THE NORTH AND SOUTH DRIVE PANELS

0 1 2 3
INCHES ON FULL SIZE SHEET

54-0213.DWG

NORTH CAROLINA PROFESSIONAL ENGINEER SEAL 025801 LANCE V. BORDEN

MODJESKI and MASTERS
Experience great bridges.
100 Sterling Parkway
Suite 302
Mechanicsburg, PA 17050 NC License No. C-2979

E35

STATE OF NORTH CAROLINA
DEPARTMENT OF TRANSPORTATION
RALEIGH

WRIGHTSVILLE BRIDGE REHABILITATION
WRIGHTSVILLE, NORTH CAROLINA

CONTROL CIRCUIT – 13

DESIGNED R.I. PETERS	DETAILED R.I. PETERS	DRAWN BY R.I. PETERS	
CHECKED A.M. MARINO	CHECKED A.M. MARINO	SCALE NONE	
		DATE JUNE 2011	
		DRAWING NO. 54 OF 140	

55-CC14.DWG

INCHES ON FULL SIZE SHEET 0 1 2 3

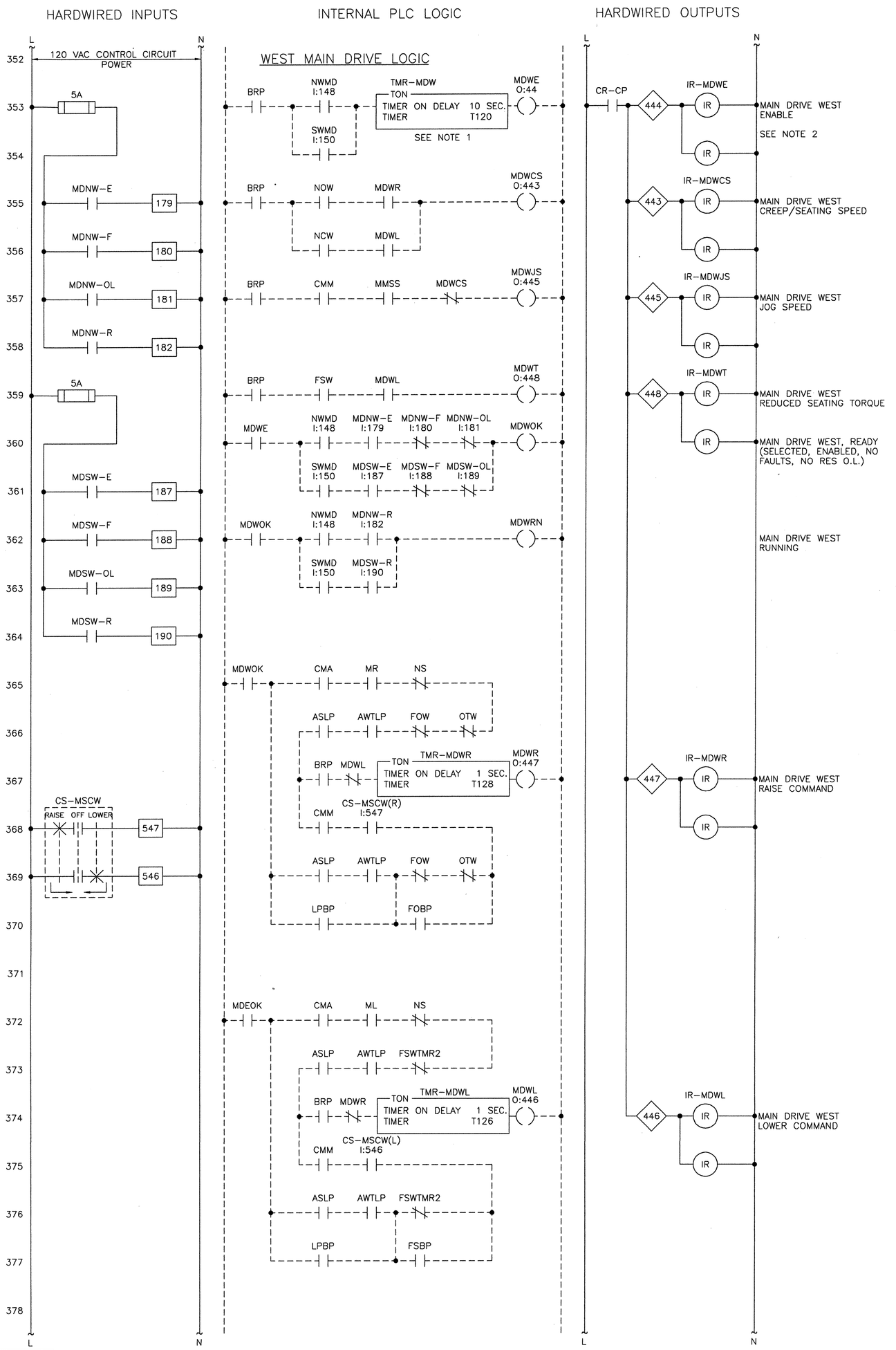

NOTES:

1. THE ENABLE LOGIC OR TIMER SHALL BE ADJUSTED IN THE FIELD. THE INTENTION IS TO ALLOW THE DRIVE TIME TO POWER UP BEFORE ANY COMMANDS ARE SENT TO IT. THIS WILL HOPEFULLY PREVENT ANY FALSE DRIVE FAULTS.
2. IR RELAYS ARE DUPLICATED IN THE NORTH AND SOUTH DRIVE PANELS

MODJESKI and MASTERS
Experience great bridges.
100 Sterling Parkway
Suite 302
Mechanicsburg, PA 17050 NC License No. C-2979

E36

STATE OF NORTH CAROLINA
DEPARTMENT OF TRANSPORTATION
RALEIGH

WRIGHTSVILLE BRIDGE REHABILITATION
WRIGHTSVILLE, NORTH CAROLINA

CONTROL CIRCUIT - 14

DESIGNED R.J. PETERS	DETAILED R.J. PETERS	DRAWN BY R.J. PETERS	
CHECKED A.M. MARINO	CHECKED A.M. MARINO	SCALE NONE	
		DATE JUNE 2011	
		DRAWING NO. 55 OF 140	

56-CC15.DWG

INCHES ON FULL SIZE SHEET 0 1 2 3

HARDWIRED INPUTS | INTERNAL PLC LOGIC | HARDWIRED OUTPUTS

L N

379 120 VAC CONTROL CIRCUIT POWER

380 FROM NE VFD, SPEED — 58

381

382 FROM SE VFD, SPEED — 62

383

384 FROM NE VFD, TORQ. — 59

385

386 FROM SE VFD, TORQ. — 63

387

388

389 FROM NW VFD, SPEED — 60

390

391 FROM SW VFD, SPEED — 64

392

393 FROM NW VFD, TORQ. — 61

394

395 FROM SW VFD, TORQ. — 65

396

397

398

399

400

401

402

403

404

405

MAIN DRIVE ANALOG SIGNALS

EAST SPAN SPEED FUNCTION

SCALE THE ANALOG SPEED SIGNALS FROM THE NORTH AND SOUTH DRIVES TO RPM. BASED ON WHICH DRIVE IS SELECTED FOR USE FROM NEMD/SEMD, USE THE SELECTED DRIVE'S DATA FOR DISPLAY ON THE MMI AND THE ANALOG OUTPUT FOR THE CONTROL CONSOLE METER

EAST SPAN TORQUE FUNCTION

SCALE THE ANALOG TORQUE SIGNALS FROM THE NORTH AND SOUTH DRIVES TO % (0-200% MOTOR RATING). BASED ON WHICH DRIVE IS SELECTED FOR USE FROM NEMD/SEMD, USE THE SELECTED DRIVE'S DATA FOR DISPLAY ON THE MMI AND THE ANALOG OUTPUT FOR THE CONTROL CONSOLE METER

WEST SPAN SPEED FUNCTION

SCALE THE ANALOG SPEED SIGNALS FROM THE NORTH AND SOUTH DRIVES TO RPM. BASED ON WHICH DRIVE IS SELECTED FOR USE FROM NWMD/SWMD, USE THE SELECTED DRIVE'S DATA FOR DISPLAY ON THE MMI AND THE ANALOG OUTPUT FOR THE CONTROL CONSOLE METER

WEST SPAN TORQUE FUNCTION

SCALE THE ANALOG TORQUE SIGNALS FROM THE NORTH AND SOUTH DRIVES TO % (0-200% MOTOR RATING). BASED ON WHICH DRIVE IS SELECTED FOR USE FROM NWMD/SWMD, USE THE SELECTED DRIVE'S DATA FOR DISPLAY ON THE MMI AND THE ANALOG OUTPUT FOR THE CONTROL CONSOLE METER

952 — EAST SPAN, DRIVE SPEED VALUE RPM TO CONSOLE METER DISPLAY

953 — EAST SPAN, DRIVE TORQUE VALUE % OF MAX SPEED TO CONSOLE METER DISPLAY

954 — WEST SPAN, DRIVE SPEED VALUE RPM TO CONSOLE METER DISPLAY

955 — WEST SPAN, DRIVE TORQUE VALUE % OF MAX SPEED TO CONSOLE METER DISPLAY

NOTES:

1. SCALING SHALL BE ADJUSTED IN THE FIELD SO THAT THE VALUES IN THE PLC, THE MMI, AND THE CONSOLE METERS CLOSELY MATCH THE CORRESPONDING VALUES ON THE SELECTED VFD LOCAL DISPLAY

MODJESKI and MASTERS
Experience great bridges.
100 Sterling Parkway
Suite 302
Mechanicsburg, PA 17050 NC License No. C-2979

E37

DESIGNED R.I. PETERS	DETAILED R.I. PETERS	DRAWN BY R.I. PETERS	STATE OF NORTH CAROLINA DEPARTMENT OF TRANSPORTATION RALEIGH
CHECKED A.M. MARINO	CHECKED A.M. MARINO	SCALE NONE	WRIGHTSVILLE BRIDGE REHABILITATION WRIGHTSVILLE, NORTH CAROLINA
		DATE JUNE 2011	CONTROL CIRCUIT - 15
		DRAWING NO. 56 OF 140	

57-CC16.DWG

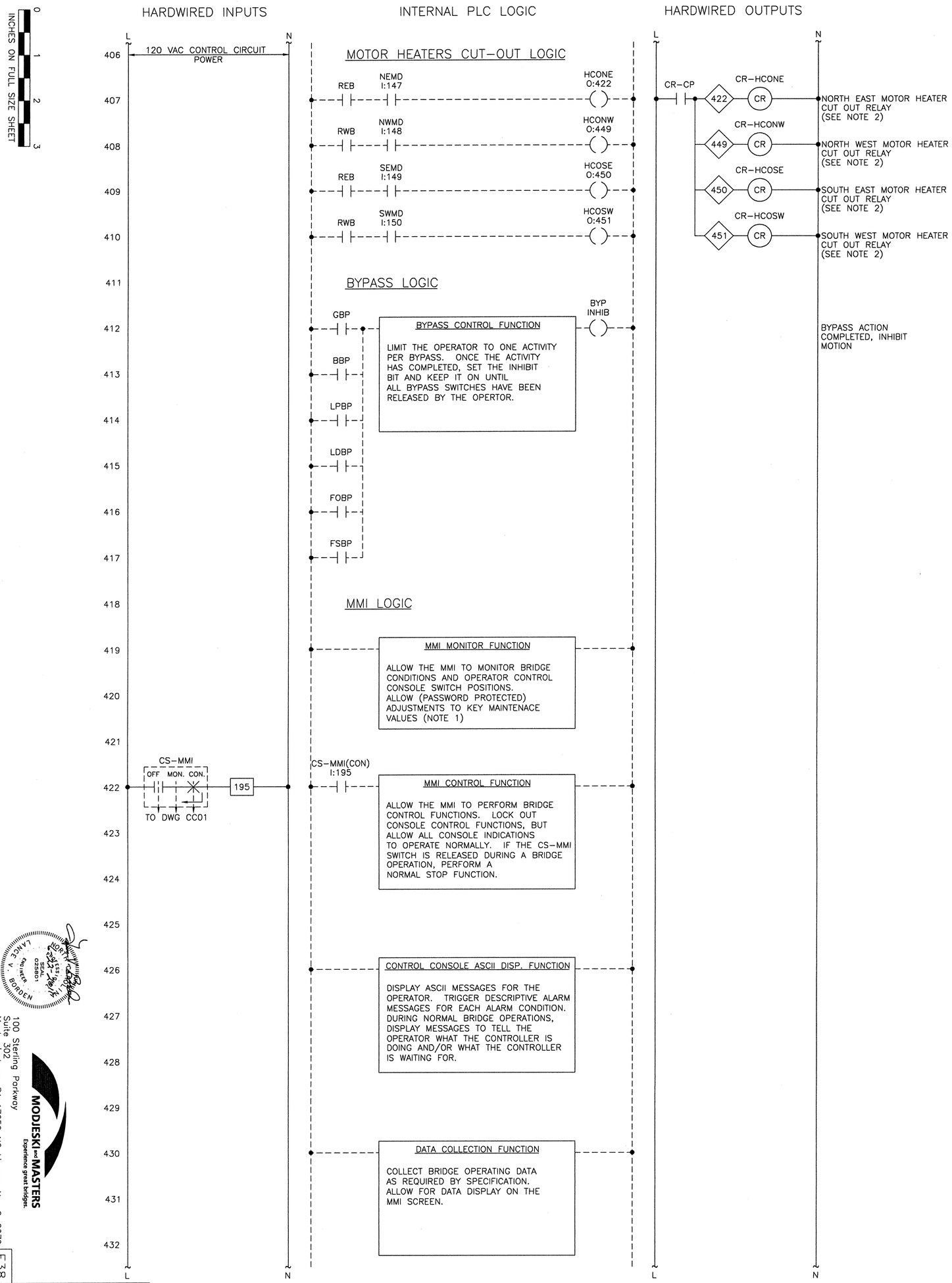

NOTES:

1. THE LIST OF ITEMS TO BE ADJUSTED MUST BE ACCESSIBLE IN THE PLC AND SHALL BE DETERMINED BY NCDOT. ALL DATA ENTRY SHALL BE CHECKED BY THE OPERATOR INTERFACE AND/OR PLC PROGRAM TO VERIFY IT IS WITHIN A SAFE OPERATING RANGE.
2. MOTOR ANTI-CONDENSATE HEATER CUT OUT RELAYS SHALL BE LOCATED IN THE RESPECTIVE DRIVE PANELS.

MODJESKI and MASTERS
Experience great bridges.
100 Sterling Parkway
Suite 302
Mechanicsburg, PA 17050 NC License No. C-2979

E38

STATE OF NORTH CAROLINA
DEPARTMENT OF TRANSPORTATION
RALEIGH

WRIGHTSVILLE BRIDGE REHABILITATION
WRIGHTSVILLE, NORTH CAROLINA

CONTROL CIRCUIT - 16

DESIGNED R.I. PETERS	DETAILED R.I. PETERS	DRAWN BY R.I. PETERS	
CHECKED A.M. MARINO	CHECKED A.M. MARINO	SCALE NONE	
		DATE JUNE 2011	
		DRAWING NO. 57 OF 140	

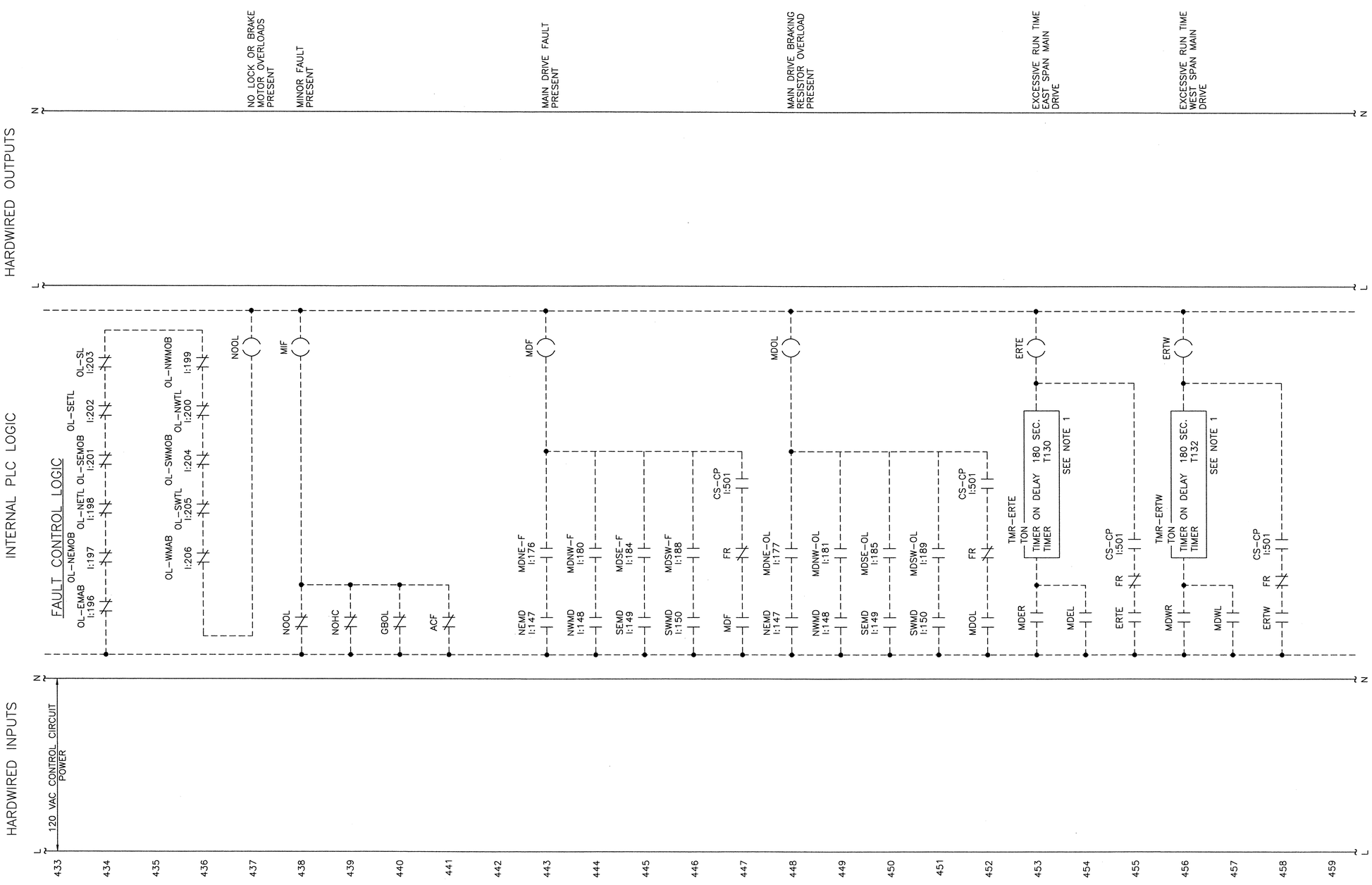

NOTES:

1. TIMERS SHALL BE ADJUSTED IN THE FIELD

0 1 2 3
INCHES ON FULL SIZE SHEET

NORTH CAROLINA PROFESSIONAL SEAL 025801 ENGINEER LANCE V. BORDEN 2012-2011

MODJESKI and MASTERS
Experience great bridges.
100 Sterling Parkway
Suite 302
Mechanicsburg, PA 17050 NC License No. C-2979

E39

STATE OF NORTH CAROLINA
DEPARTMENT OF TRANSPORTATION
RALEIGH

WRIGHTSVILLE BRIDGE REHABILITATION
WRIGHTSVILLE, NORTH CAROLINA

CONTROL CIRCUIT – 17

DESIGNED R.I. PETERS	DETAILED R.I. PETERS	DRAWN BY R.I. PETERS	
CHECKED A.M. MARINO	CHECKED A.M. MARINO	SCALE NONE	
		DATE JUNE 2011	
		DRAWING NO. 58 OF 140	

58-0217.DWG

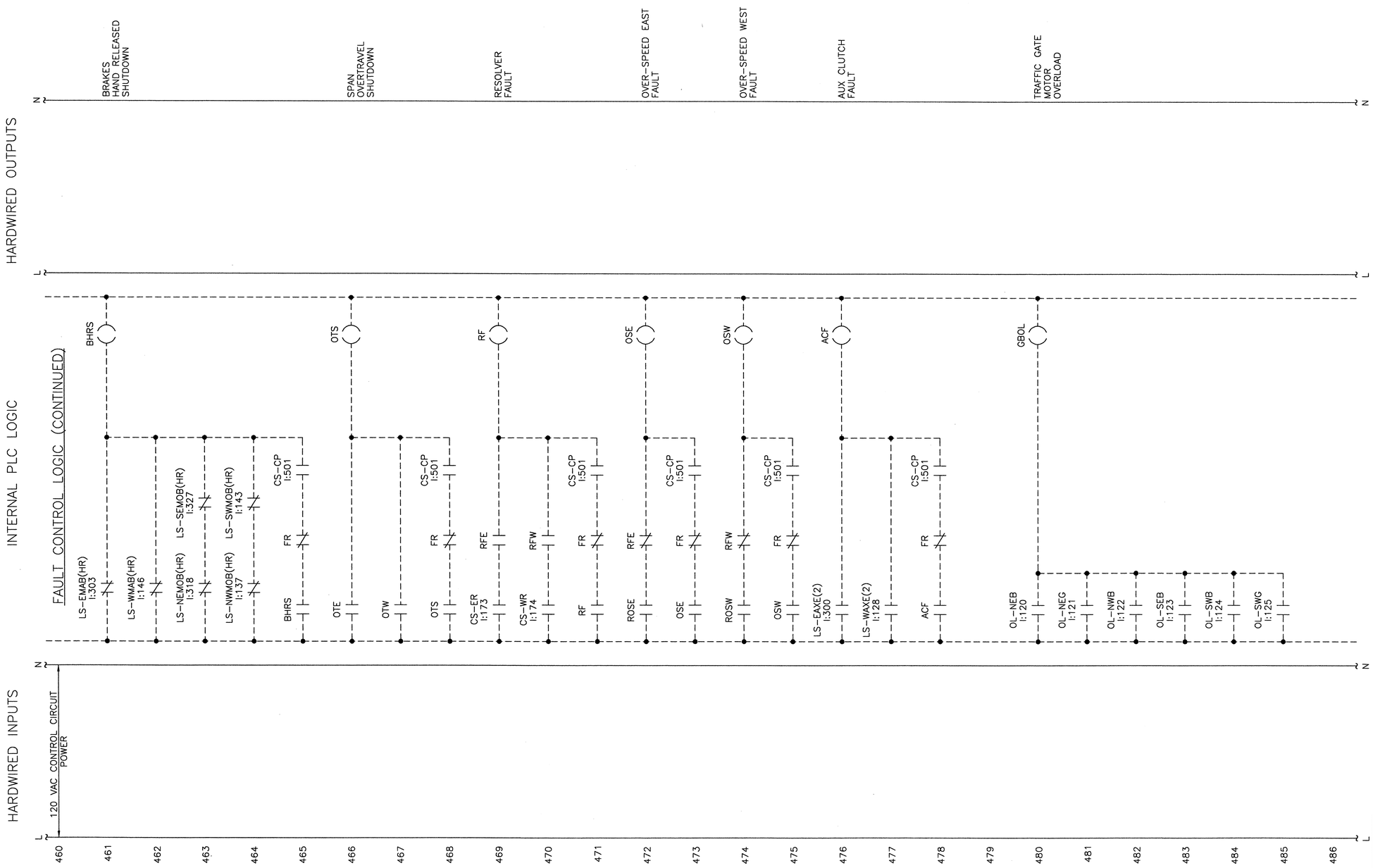

0 1 2 3
INCHES ON FULL SIZE SHEET

NORTH CAROLINA PROFESSIONAL SEAL 025801 ENGINEER LANCE V. BORDEN
2-12-2011

MODJESKI and MASTERS
Experience great bridges.
100 Sterling Parkway
Suite 302
Mechanicsburg, PA 17050 NC License No. C-2979

E40

STATE OF NORTH CAROLINA
DEPARTMENT OF TRANSPORTATION
RALEIGH

WRIGHTSVILLE BRIDGE REHABILITATION
WRIGHTSVILLE, NORTH CAROLINA

CONTROL CIRCUIT – 18

DRAWN BY	R.I. PETERS		
SCALE	NONE		
DESIGNED R.I. PETERS	DETAILED R.I. PETERS	DATE	JUNE 2011
CHECKED A.M. MARINO	CHECKED A.M. MARINO	DRAWING NO.	59 OF 140

59-CC18.DWG

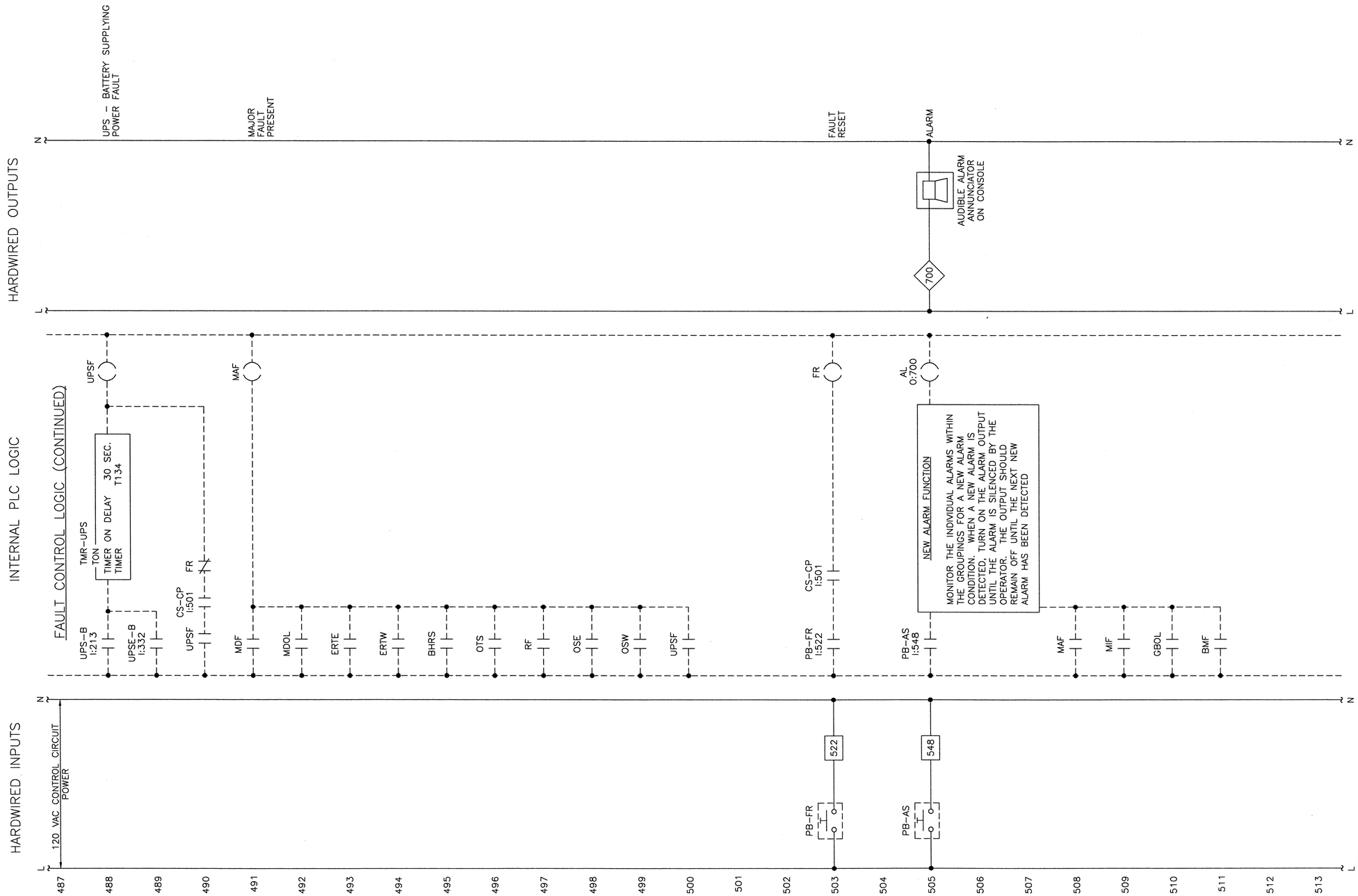

0 1 2 3
INCHES ON FULL SIZE SHEET

MODJESKI and MASTERS
Experience great bridges.
100 Sterling Parkway
Suite 302
Mechanicsburg, PA 17050 NC License No. C-2979

E41

STATE OF NORTH CAROLINA
DEPARTMENT OF TRANSPORTATION
RALEIGH

WRIGHTSVILLE BRIDGE REHABILITATION
WRIGHTSVILLE, NORTH CAROLINA

CONTROL CIRCUIT – 19

		DRAWN BY	R.I. PETERS
		SCALE	NONE
DESIGNED R.I. PETERS	DETAILED R.I. PETERS	DATE	JUNE 2011
CHECKED A.M. MARINO	CHECKED A.M. MARINO	DRAWING NO.	60 OF 140

60-0019.DWG

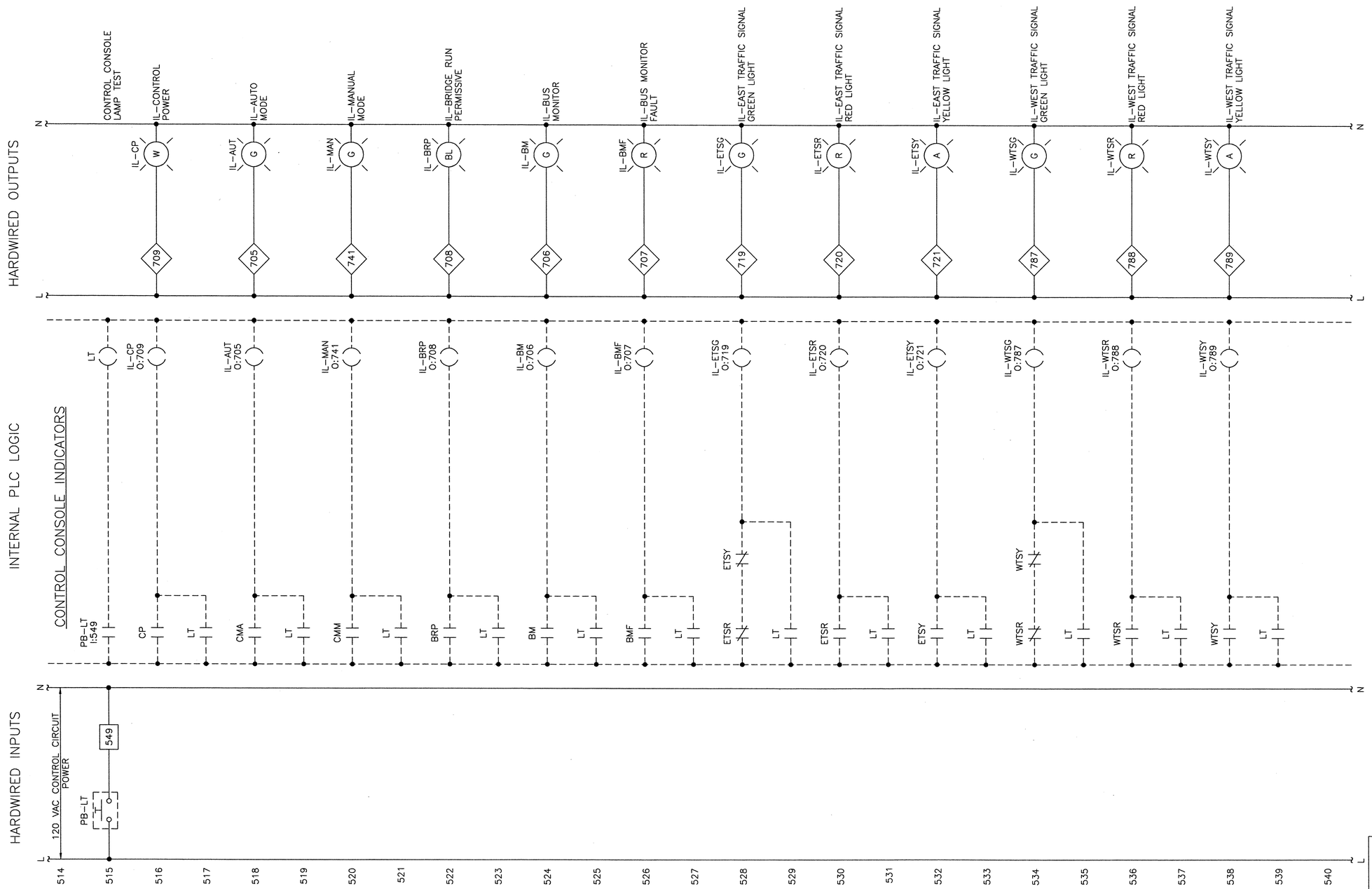

0 1 2 3
INCHES ON FULL SIZE SHEET

81-CC20.DWG

SEAL 025801 ENGINEER LANCE V. BORDEN

MODJESKI and MASTERS
Experience great bridges.
100 Sterling Parkway
Suite 302
Mechanicsburg, PA 17050 NC License No. C-2979

E42

STATE OF NORTH CAROLINA
DEPARTMENT OF TRANSPORTATION
RALEIGH

WRIGHTSVILLE BRIDGE REHABILITATION
WRIGHTSVILLE, NORTH CAROLINA

CONTROL CIRCUIT – 20

		DRAWN BY	R.I. PETERS
		SCALE	NONE
DESIGNED R.I. PETERS	DETAILED R.I. PETERS	DATE	JUNE 2011
CHECKED A.M. MARINO	CHECKED A.M. MARINO	DRAWING NO.	61 OF 140

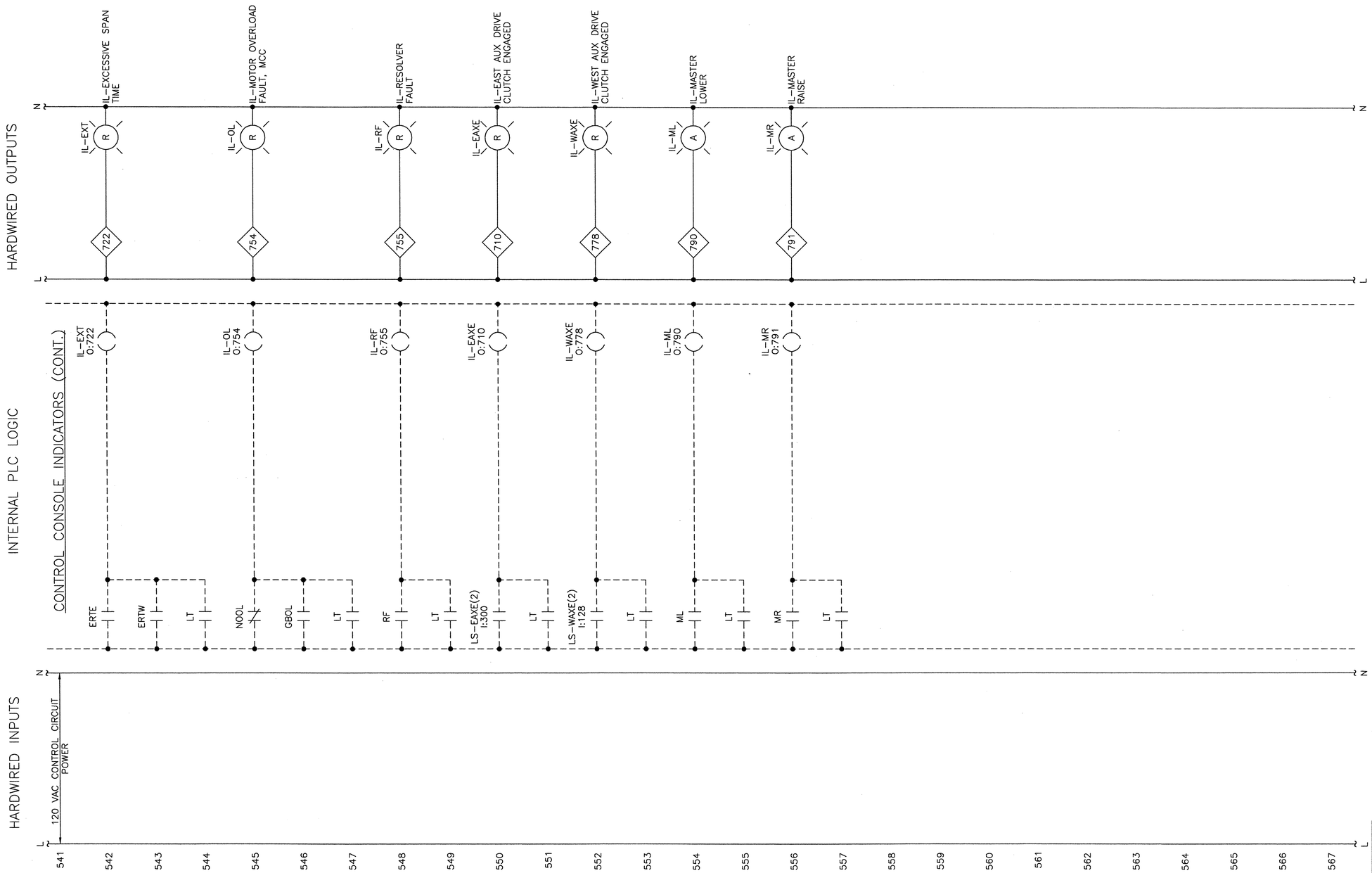

0 1 2 3
INCHES ON FULL SIZE SHEET

62-C021.DWG

MODJESKI and MASTERS
Experience great bridges.

100 Sterling Parkway
Suite 302
Mechanicsburg, PA 17050 NC License No. C-2979

E43

STATE OF NORTH CAROLINA
DEPARTMENT OF TRANSPORTATION
RALEIGH

WRIGHTSVILLE BRIDGE REHABILITATION
WRIGHTSVILLE, NORTH CAROLINA

CONTROL CIRCUIT – 21

DESIGNED R.I. PETERS	DETAILED R.I. PETERS	DRAWN BY	R.I. PETERS
		SCALE	NONE
CHECKED A.M. MARINO	CHECKED A.M. MARINO	DATE	JUNE 2011
		DRAWING NO.	62 OF 140

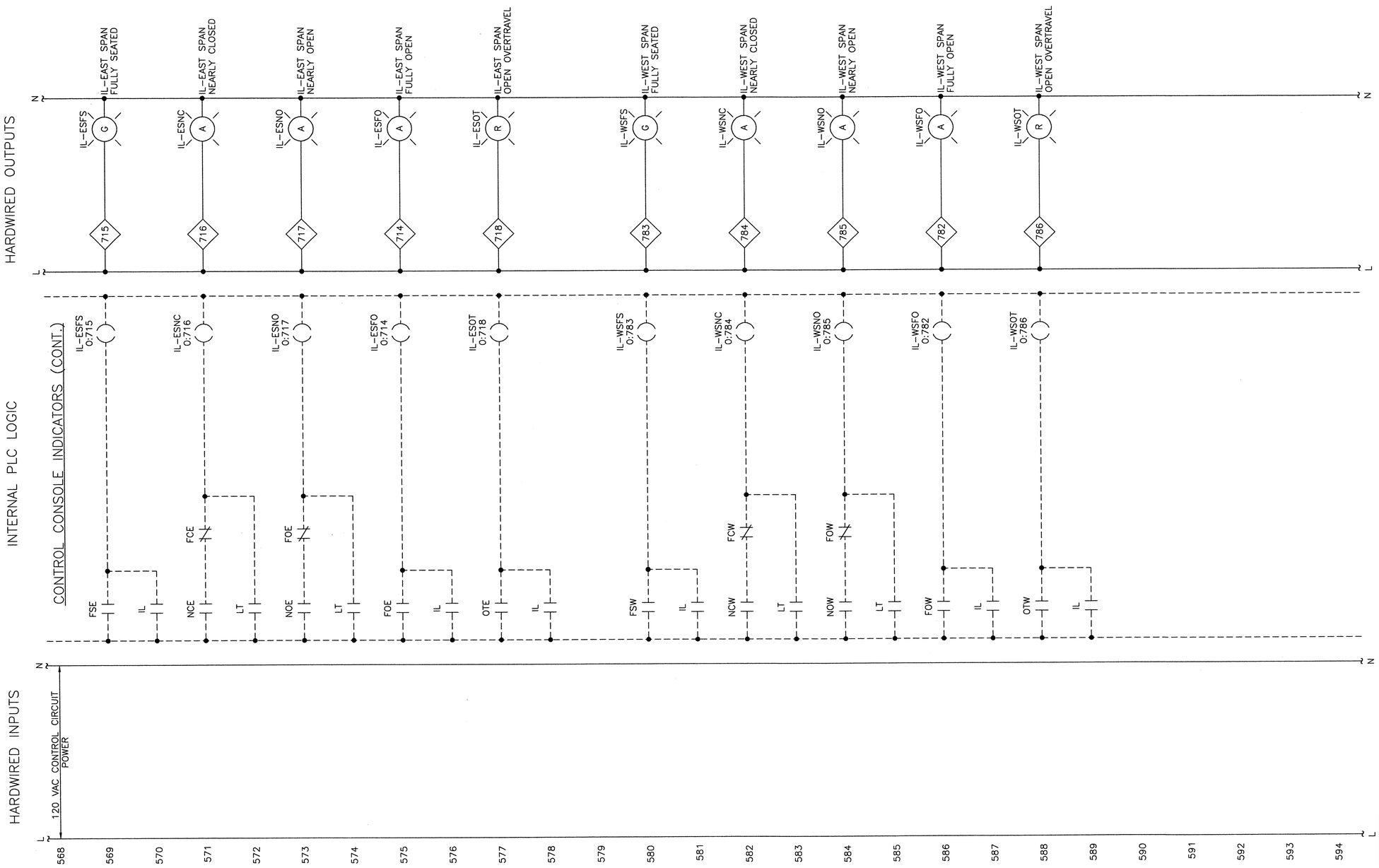

0 1 2 3
INCHES ON FULL SIZE SHEET

NORTH CAROLINA PROFESSIONAL SEAL 025801 ENGINEER LANCE V. BORDEN

MODJESKI and MASTERS
Experience great bridges.
100 Sterling Parkway
Suite 302
Mechanicsburg, PA 17050 NC License No. C-2979

E44

STATE OF NORTH CAROLINA
DEPARTMENT OF TRANSPORTATION
RALEIGH

WRIGHTSVILLE BRIDGE REHABILITATION
WRIGHTSVILLE, NORTH CAROLINA

CONTROL CIRCUIT – 22

		DRAWN BY	R.I. PETERS
		SCALE	NONE
DESIGNED R.I. PETERS	DETAILED R.I. PETERS	DATE	JUNE 2011
CHECKED A.M. MARINO	CHECKED A.M. MARINO	DRAWING NO.	63 OF 140

83-022.DWG

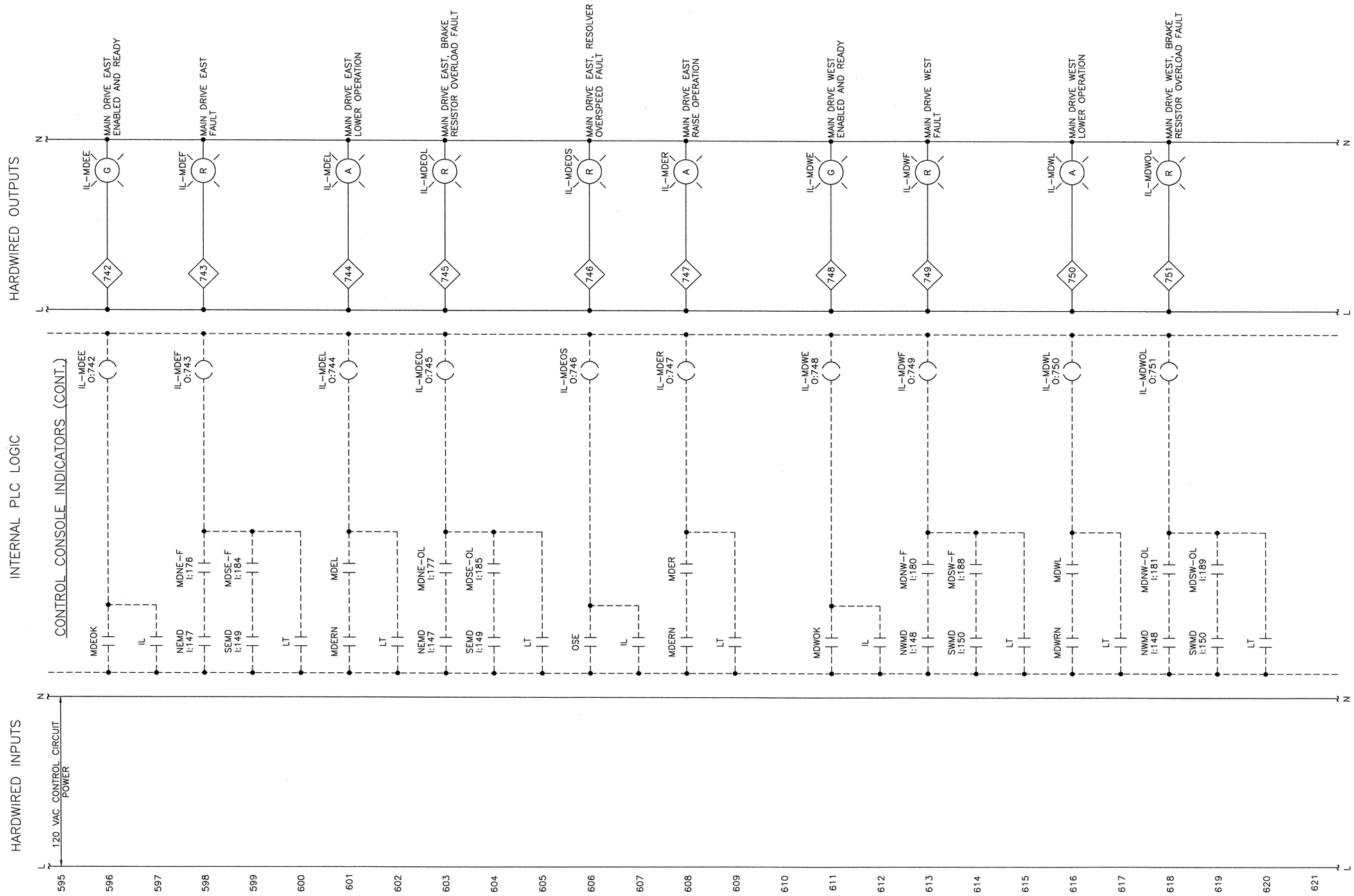

STATE OF NORTH CAROLINA
DEPARTMENT OF TRANSPORTATION
RALEIGH

WRIGHTSVILLE BRIDGE REHABILITATION
WRIGHTSVILLE, NORTH CAROLINA

CONTROL CIRCUIT – 23

NORTH CAROLINA PROFESSIONAL ENGINEER SEAL 025801 LANCE V. BORDEN

MODJESKI and MASTERS
Experience great bridges.

100 Sterling Parkway
Suite 302
Mechanicsburg, PA 17050 NC License No. C-2979

E45

		DRAWN BY	R.I. PETERS
		SCALE	NONE
DESIGNED R.I. PETERS	DETAILED R.I. PETERS	DATE	JUNE 2011
CHECKED A.M. MARINO	CHECKED A.M. MARINO	DRAWING NO.	64 OF 140

64-CC23.DWG

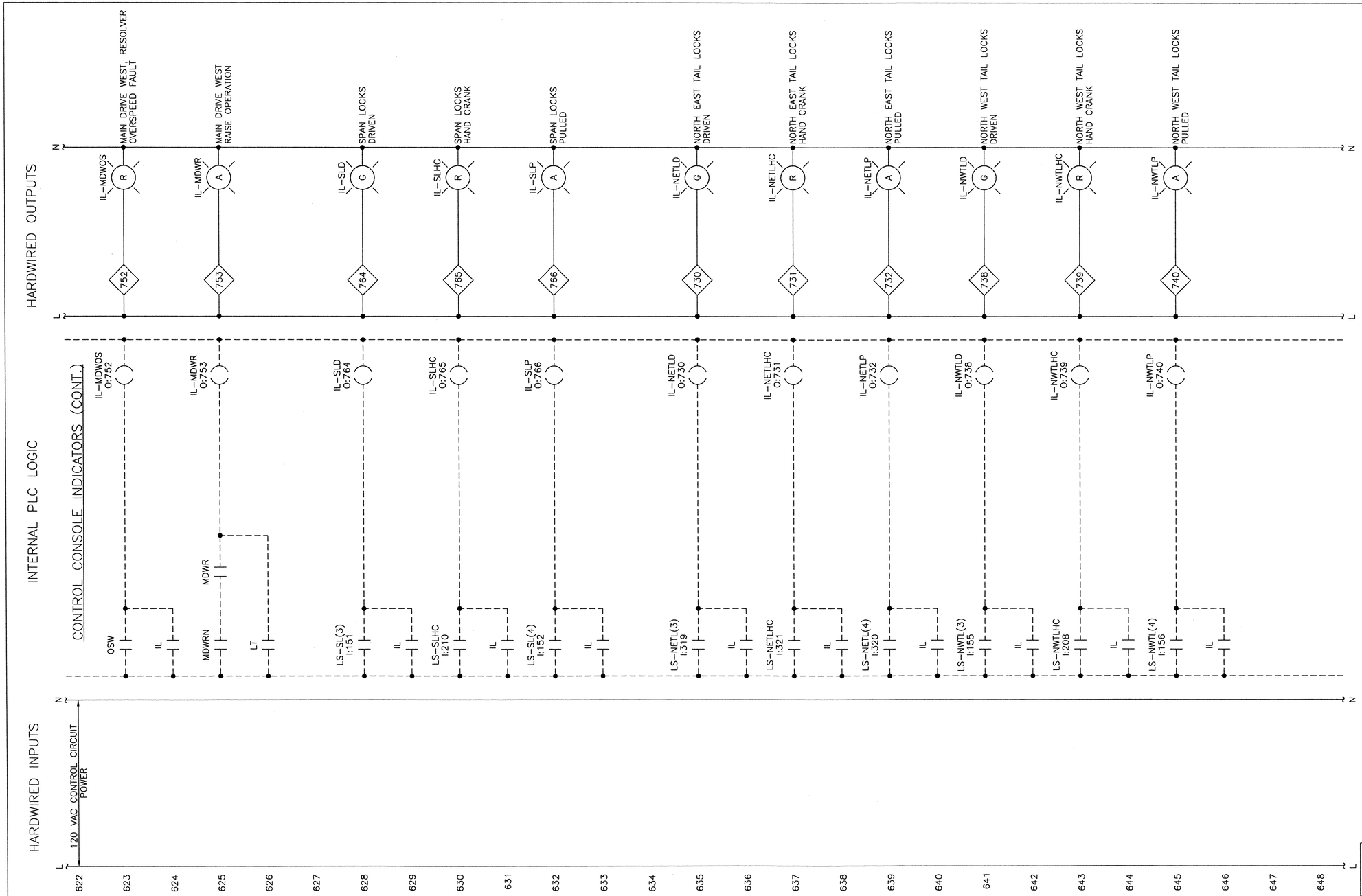

STATE OF NORTH CAROLINA
DEPARTMENT OF TRANSPORTATION
RALEIGH

WRIGHTSVILLE BRIDGE REHABILITATION
WRIGHTSVILLE, NORTH CAROLINA

CONTROL CIRCUIT – 24

NORTH CAROLINA PROFESSIONAL SEAL 025801 ENGINEER LANCE V. BORDEN

MODJESKI and MASTERS
Experience great bridges.

100 Sterling Parkway
Suite 302
Mechanicsburg, PA 17050 NC License No. C-2979

E46

		DRAWN BY	R.I. PETERS
		SCALE	NONE
DESIGNED R.I. PETERS	DETAILED R.I. PETERS	DATE	JUNE 2011
CHECKED A.M. MARINO	CHECKED A.M. MARINO	DRAWING NO.	65 OF 140

65-CC24.DWG

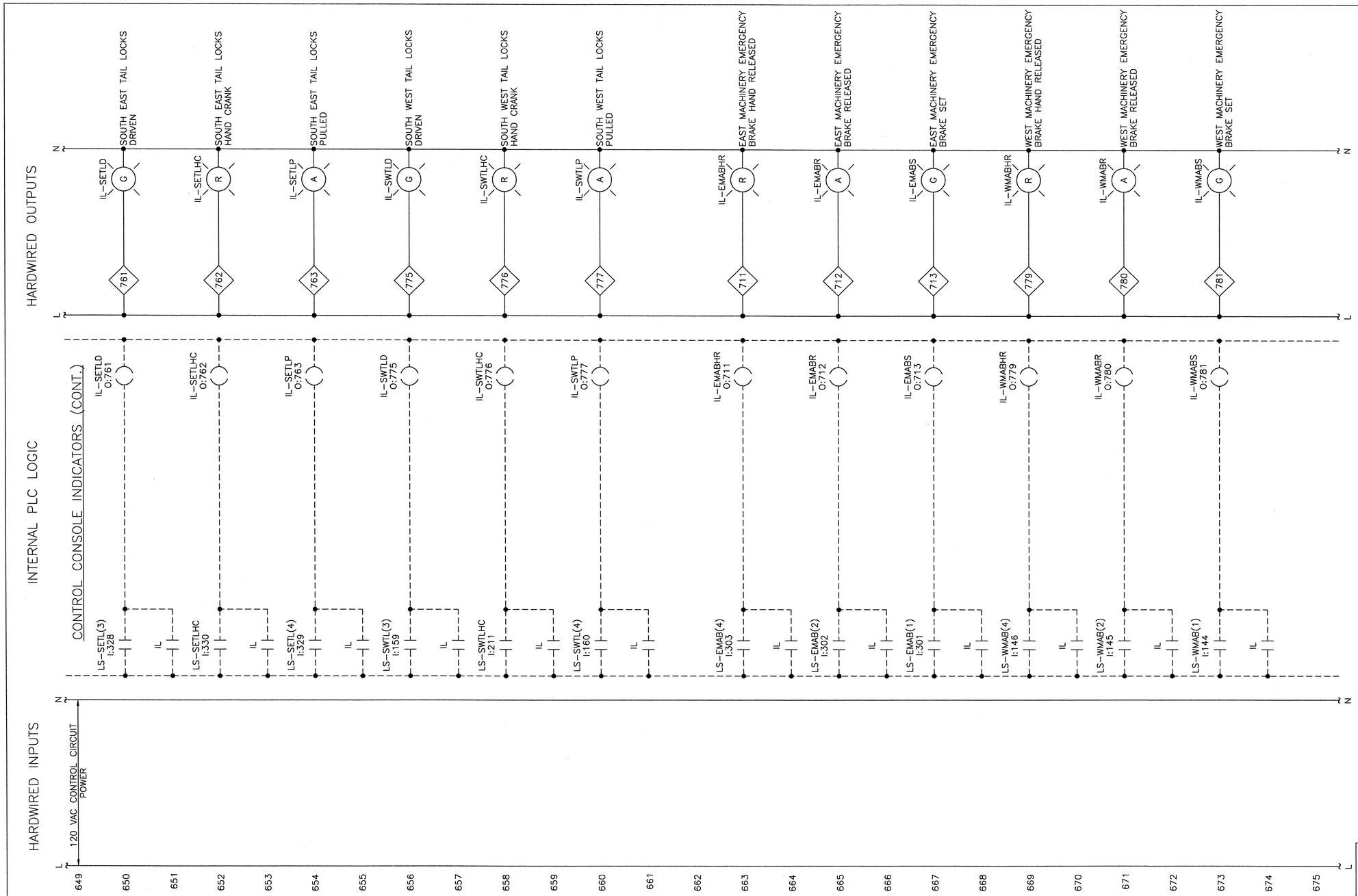

0 1 2 3
INCHES ON FULL SIZE SHEET

86-CC25.DWG

NORTH CAROLINA PROFESSIONAL ENGINEER SEAL 025801 LANCE V. BORDEN 2-22-2011

MODJESKI and MASTERS
Experience great bridges.
100 Sterling Parkway
Suite 302
Mechanicsburg, PA 17050 NC License No. C-2979

E47

STATE OF NORTH CAROLINA
DEPARTMENT OF TRANSPORTATION
RALEIGH

WRIGHTSVILLE BRIDGE REHABILITATION
WRIGHTSVILLE, NORTH CAROLINA

CONTROL CIRCUIT – 25

		DRAWN BY	R.I. PETERS
		SCALE	NONE
DESIGNED R.I. PETERS	DETAILED R.I. PETERS	DATE	JUNE 2011
CHECKED A.M. MARINO	CHECKED A.M. MARINO	DRAWING NO.	66 OF 140

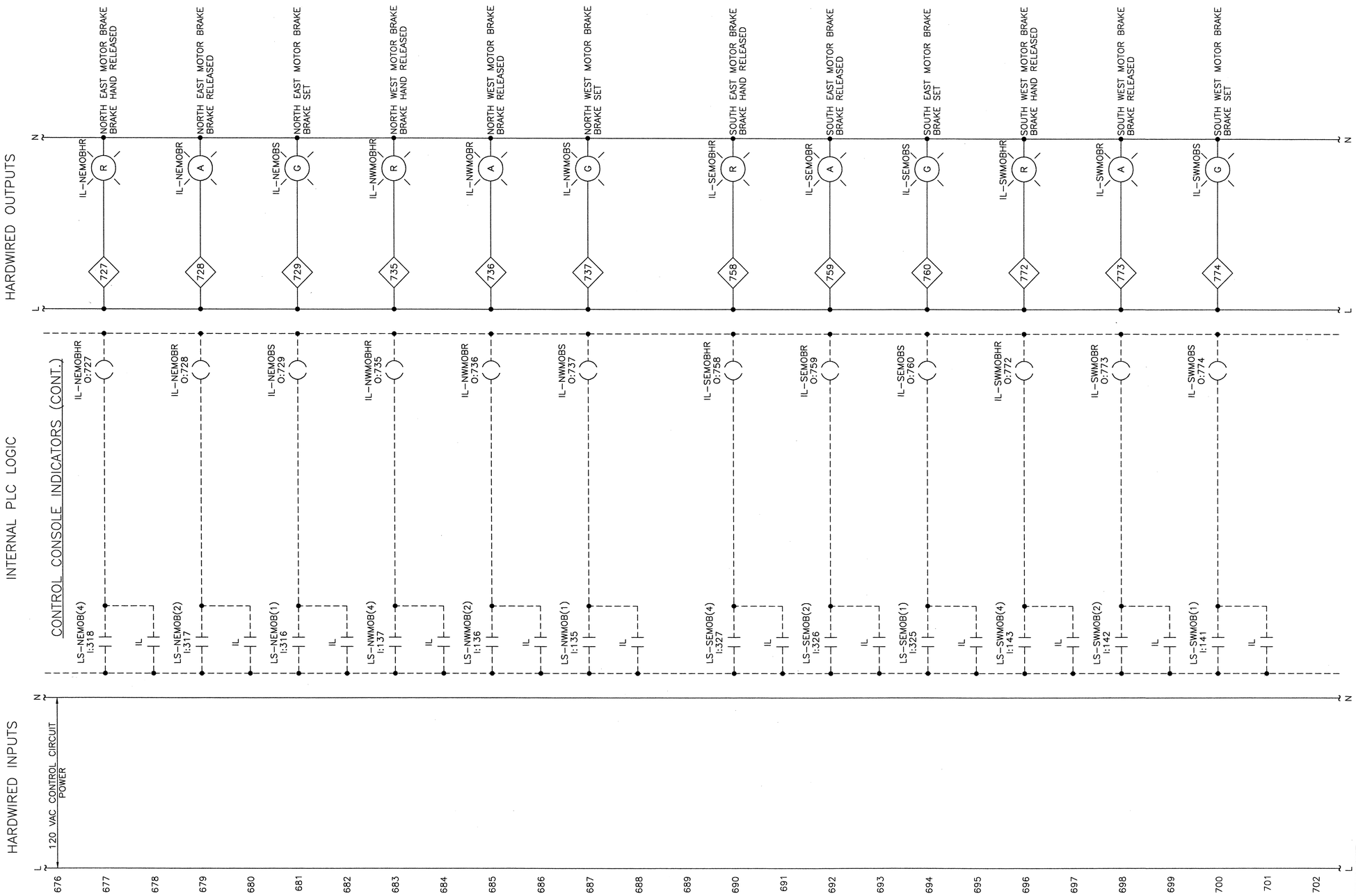

STATE OF NORTH CAROLINA
DEPARTMENT OF TRANSPORTATION
RALEIGH

WRIGHTSVILLE BRIDGE REHABILITATION
WRIGHTSVILLE, NORTH CAROLINA

CONTROL CIRCUIT – 26

NORTH CAROLINA PROFESSIONAL ENGINEER SEAL 025801 LANCE V. BORDEN

MODJESKI and MASTERS
Experience great bridges.

100 Sterling Parkway
Suite 302
Mechanicsburg, PA 17050 NC License No. C-2979

E48

		DRAWN BY	R.I. PETERS
		SCALE	NONE
DESIGNED R.I. PETERS	DETAILED R.I. PETERS	DATE	JUNE 2011
CHECKED A.M. MARINO	CHECKED A.M. MARINO	DRAWING NO.	67 OF 140

67-C026.DWG

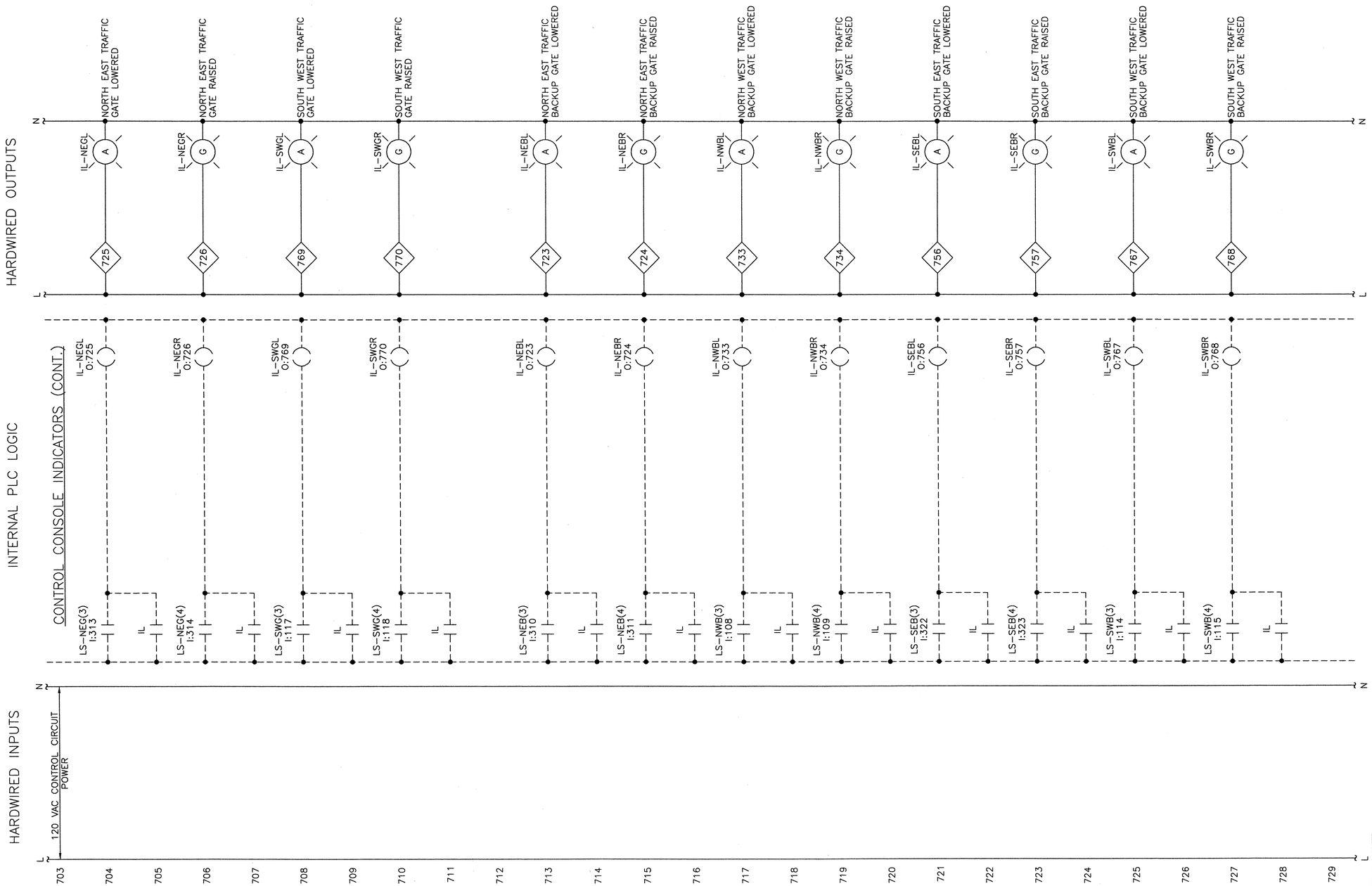

0 1 2 3
INCHES ON FULL SIZE SHEET

MODJESKI and MASTERS
Experience great bridges.
100 Sterling Parkway
Suite 302
Mechanicsburg, PA 17050 NC License No. C-2979

E49

STATE OF NORTH CAROLINA
DEPARTMENT OF TRANSPORTATION
RALEIGH

WRIGHTSVILLE BRIDGE REHABILITATION
WRIGHTSVILLE, NORTH CAROLINA

CONTROL CIRCUIT – 27

		DRAWN BY	R.I. PETERS
		SCALE	NONE
DESIGNED R.I. PETERS	DETAILED R.I. PETERS	DATE	JUNE 2011
CHECKED A.M. MARINO	CHECKED A.M. MARINO	DRAWING NO.	68 OF 140

B8-CC27.DWG

69-CC28.DWG

INCHES ON FULL SIZE SHEET 0 1 2 3

HARDWIRED INPUTS | INTERNAL PLC LOGIC | HARDWIRED OUTPUTS

L N

730 120 VAC CONTROL CIRCUIT POWER

731 5A

732 CONTACTS IN 400A TRANSFER SWITCH

733 ATS-G — GENERATOR SUPPLYING LOAD — 191
ATS-G I:191 — IL — IL-ATSG O:701 — 701 — IL-ATSG (A) — IL-ATS GENERATOR SOURCE SELECTED

734

735 ATS-GH — GENERATOR POWER AVAILABLE — 192
ATS-GH I:192 — IL — IL-ATSGH O:702 — 702 — IL-ATSGH (A) — IL-ATS GENERATOR SUPPLY HEALTHY

736

737 ATS-U — UTILITY POWER SUPPLYING LOAD — 193
ATS-U I:193 — IL — IL-ATSU O:703 — 703 — IL-ATSU (G) — IL-ATS NORMAL UTILITY SOURCE SELECTED

738

739 ATS-UH — UTILITY POWER IS AVAILABLE — 194
ATS-UH I:194 — IL — IL-ATSUH O:704 — 704 — IL-ATSUH (G) — IL-ATS UTILITY SUPPLY HEALTHY

740

741

742 CS-ATS NORM.GEN — WIRE TO AUTOMATIC TRANSFER SWITCH — ATS CONTROL SWITCH NORMAL (AUTO) OR GENERATOR (NOTE 2)

743

744 CONTACTS IN PLC PANEL UPS

745 UPS-A — UPS LOW BATTERY WARNING — 212
UPS-A I:212 — IL — IL-UPSA O:792 — 792 — IL-UPSA (R) — IL-PLC UPS, LOW BATTERY

746

747 UPS-B — UPS BATTERY SUPPLYING POWER — 213
UPS-B I:213 — IL — IL-UPSB O:793 — 793 — IL-UPSB (R) — IL-PLC UPS, BATTERY IS SUPPLYING POWER

748

749 CONTACTS IN EAST REMOTE I/O PANEL UPS

750 UPS-A — UPS LOW BATTERY WARNING — 331
UPSE-A I:331 — IL — IL-UPSEA O:794 — 794 — IL-UPSEA (R) — IL-EAST REMOTE I/O PANEL UPS, LOW BATTERY

751

752 UPS-B — UPS BATTERY SUPPLYING POWER — 332
UPSE-B I:332 — IL — IL-UPSEB O:795 — 795 — IL-UPSEB (R) — IL-EAST REMOTE I/O PANEL UPS, BATTERY IS SUPPLYING POWER

753

754

755 IL — IL O:771 — 771 — IL-PLCSCC (R) — IL-PLC SCAN LOSS CONTROL CONSOLE — NOTE 1 — IR-SCAN (CC01)

756

ATS AND GENERATOR INDICATORS

UPS INDICATORS

CONSOLE PLC SCAN LOSS INDICATOR

NOTES:

1. THIS LIGHT IS A DUPLICATE OF THE ONE ON THE PLC PANEL
2. THE CS-ATS SWITCH IS LOCATED ON THE CONTROL CONSOLE

MODJESKI and MASTERS
Experience great bridges.
100 Sterling Parkway
Suite 302
Mechanicsburg, PA 17050 NC License No. C-2979

E50

DESIGNED R.L. PETERS	DETAILED R.L. PETERS	DRAWN BY R.L. PETERS	
CHECKED A.M. MARINO	CHECKED A.M. MARINO	SCALE NONE	
		DATE JUNE 2011	
		DRAWING NO. 69 OF 140	

STATE OF NORTH CAROLINA
DEPARTMENT OF TRANSPORTATION
RALEIGH

WRIGHTSVILLE BRIDGE REHABILITATION
WRIGHTSVILLE, NORTH CAROLINA

CONTROL CIRCUIT – 28

NOTES:

1.

0 1 2 3
INCHES ON FULL SIZE SHEET

70-0028.DWG

NORTH CAROLINA PROFESSIONAL SEAL 025801 ENGINEER LANCE V. BORDEN
2-22-2011

MODJESKI and MASTERS
Experience great bridges.
100 Sterling Parkway
Suite 302
Mechanicsburg, PA 17050 NC License No. C-2979

E51

STATE OF NORTH CAROLINA
DEPARTMENT OF TRANSPORTATION
RALEIGH

WRIGHTSVILLE BRIDGE REHABILITATION
WRIGHTSVILLE, NORTH CAROLINA

CONTROL CIRCUIT – 29

		DRAWN BY	R.I. PETERS
		SCALE	NONE
DESIGNED R.I. PETERS	DETAILED R.I. PETERS	DATE	JUNE 2011
CHECKED A.M. MARINO	CHECKED A.M. MARINO	DRAWING NO.	70 OF 140

71-CC30.DWG

INCHES ON FULL SIZE SHEET 0 1 2 3

HARDWIRED LOGIC

TRAFFIC GATES CONTROL CIRCUITS

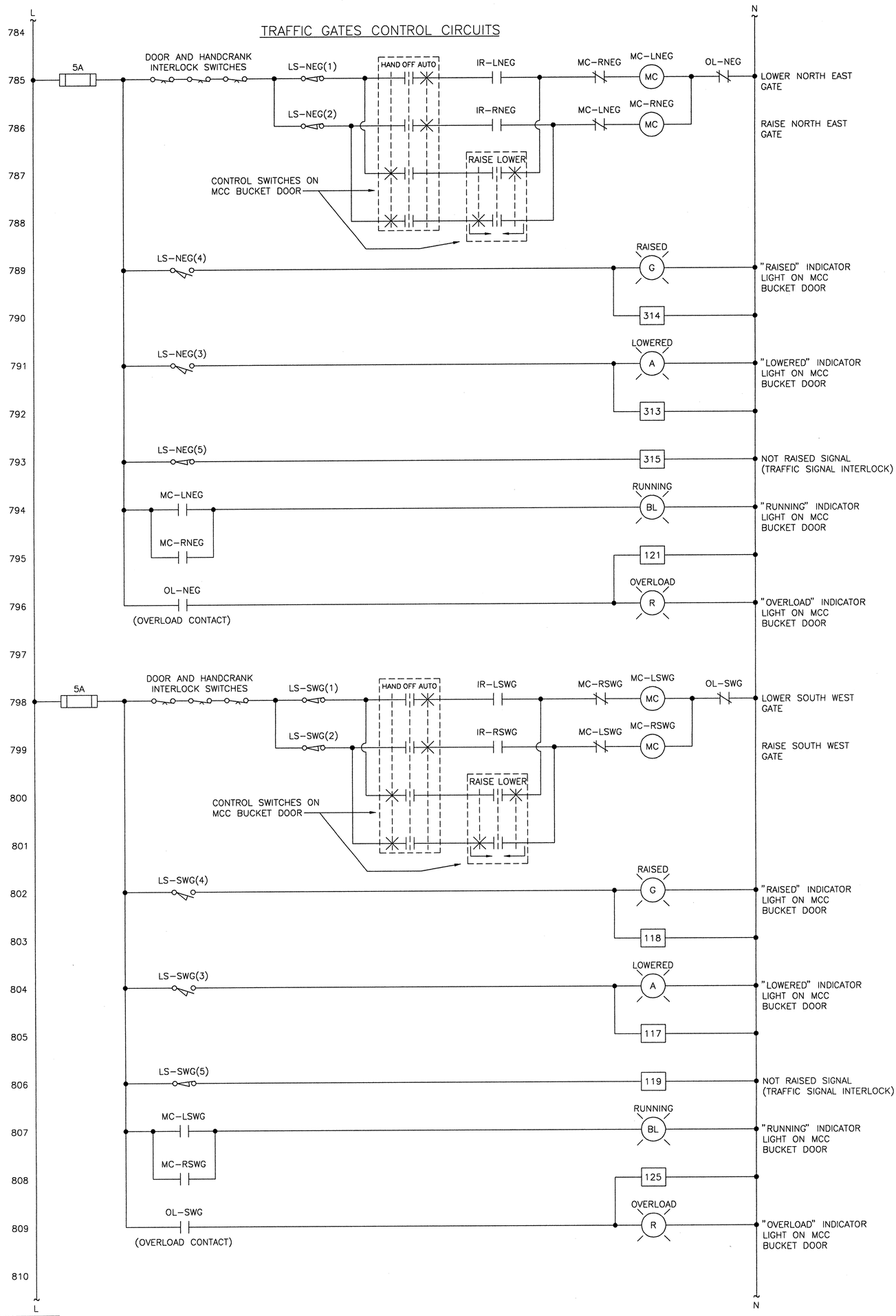

NOTES:

1. NOTE THAT THE MOTORS CAN BE RUN FROM THE MCC IN HAND MODE WITH CONTROL POWER OFF IF REQUIRED, A CP CONTACT COULD BE ADDED IN SERIES TO NOT ALLOW THIS CONDITION

MODJESKI and MASTERS
Experience great bridges.
100 Sterling Parkway
Suite 302
Mechanicsburg, PA 17050 NC License No. C-2979

E52

DESIGNED R.I. PETERS	DETAILED R.I. PETERS	DRAWN BY R.I. PETERS	STATE OF NORTH CAROLINA DEPARTMENT OF TRANSPORTATION RALEIGH
CHECKED A.M. MARINO	CHECKED A.M. MARINO	SCALE NONE	WRIGHTSVILLE BRIDGE REHABILITATION WRIGHTSVILLE, NORTH CAROLINA
		DATE JUNE 2011	CONTROL CIRCUIT - 30
		DRAWING NO. 71 OF 140	

72-CC31.DWG

INCHES ON FULL SIZE SHEET 0 1 2 3

HARDWIRED LOGIC

TRAFFIC BACKUP GATES CONTROL CIRCUITS

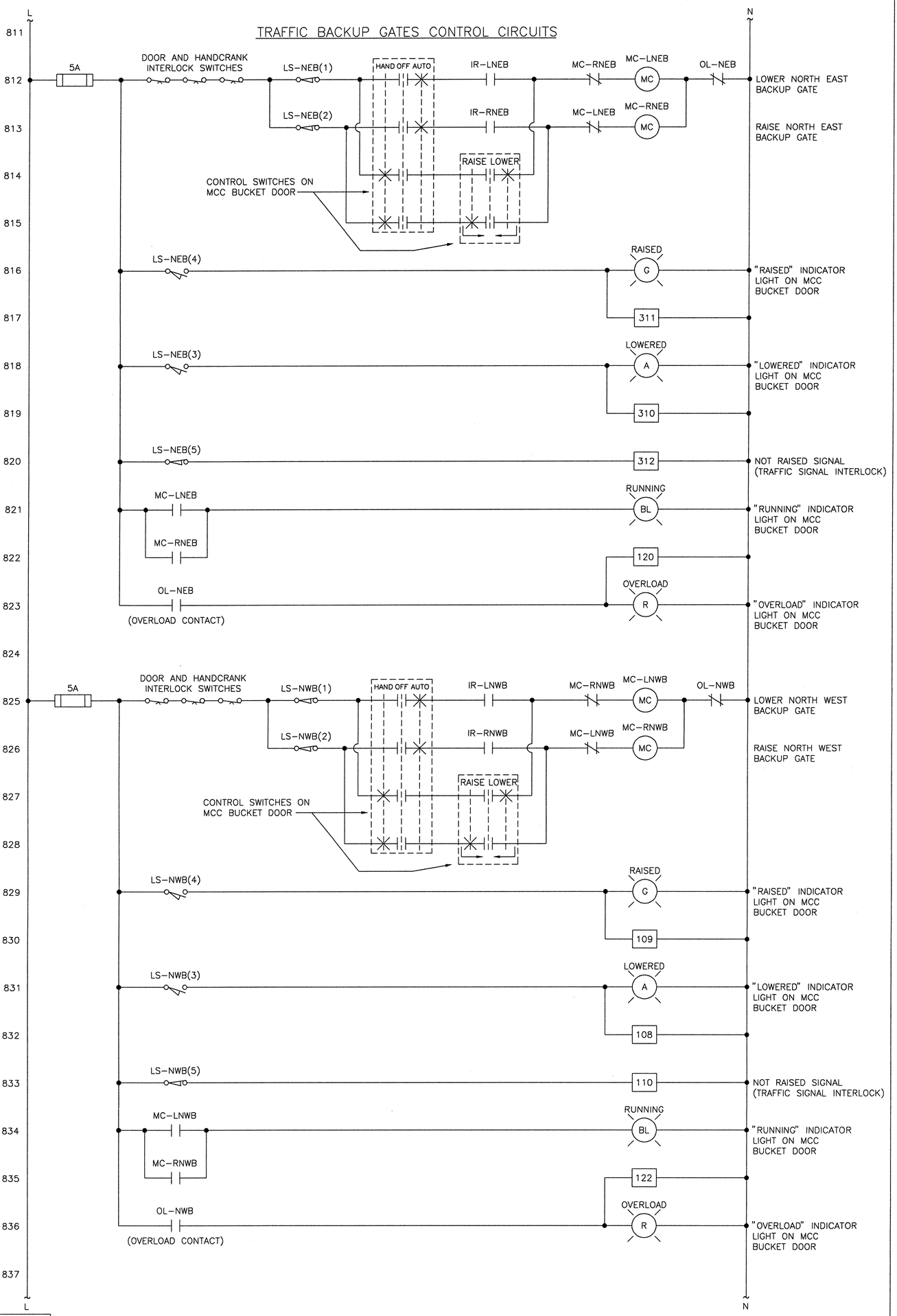

NOTES:

1. NOTE THAT THE MOTORS CAN BE RUN FROM THE MCC IN HAND MODE WITH CONTROL POWER OFF IF REQUIRED, A CP CONTACT COULD BE ADDED IN SERIES TO NOT ALLOW THIS CONDITION

MODJESKI and MASTERS
Experience great bridges.
100 Sterling Parkway
Suite 302
Mechanicsburg, PA 17050 NC License No. C-2979

E53

DESIGNED R.I. PETERS	DETAILED R.I. PETERS	DRAWN BY R.I. PETERS
CHECKED A.M. MARINO	CHECKED A.M. MARINO	SCALE NONE
		DATE JUNE 2011
		DRAWING NO. 72 OF 140

STATE OF NORTH CAROLINA
DEPARTMENT OF TRANSPORTATION
RALEIGH

WRIGHTSVILLE BRIDGE REHABILITATION
WRIGHTSVILLE, NORTH CAROLINA

CONTROL CIRCUIT - 31

73-CC32.DWG

INCHES ON FULL SIZE SHEET 0 1 2 3

HARDWIRED LOGIC

TRAFFIC BACKUP GATES CONTROL CIRCUITS (CONTINUED)

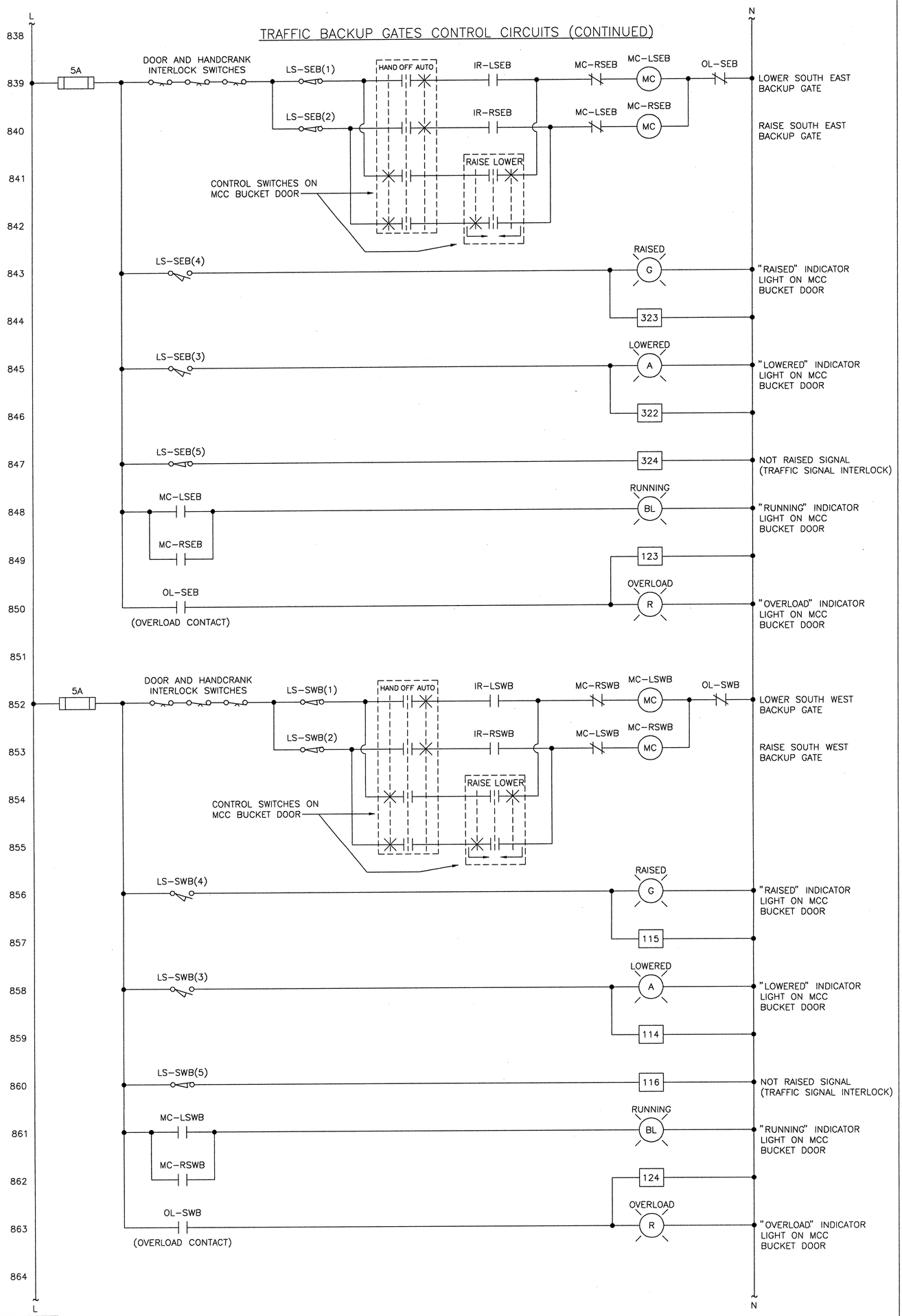

NOTES:

1. NOTE THAT THE MOTORS CAN BE RUN FROM THE MCC IN HAND MODE WITH CONTROL POWER OFF IF REQUIRED, A CP CONTACT COULD BE ADDED IN SERIES TO NOT ALLOW THIS CONDITION

MODJESKI and MASTERS
Experience great bridges.
100 Sterling Parkway
Suite 302
Mechanicsburg, PA 17050 NC License No. C-2979

E54

DESIGNED R.J. PETERS	DETAILED R.J. PETERS	DRAWN BY R.J. PETERS	STATE OF NORTH CAROLINA DEPARTMENT OF TRANSPORTATION RALEIGH
CHECKED A.M. MARINO	CHECKED A.M. MARINO	SCALE NONE	WRIGHTSVILLE BRIDGE REHABILITATION WRIGHTSVILLE, NORTH CAROLINA
		DATE JUNE 2011	CONTROL CIRCUIT - 32
		DRAWING NO. 72 OF 140	

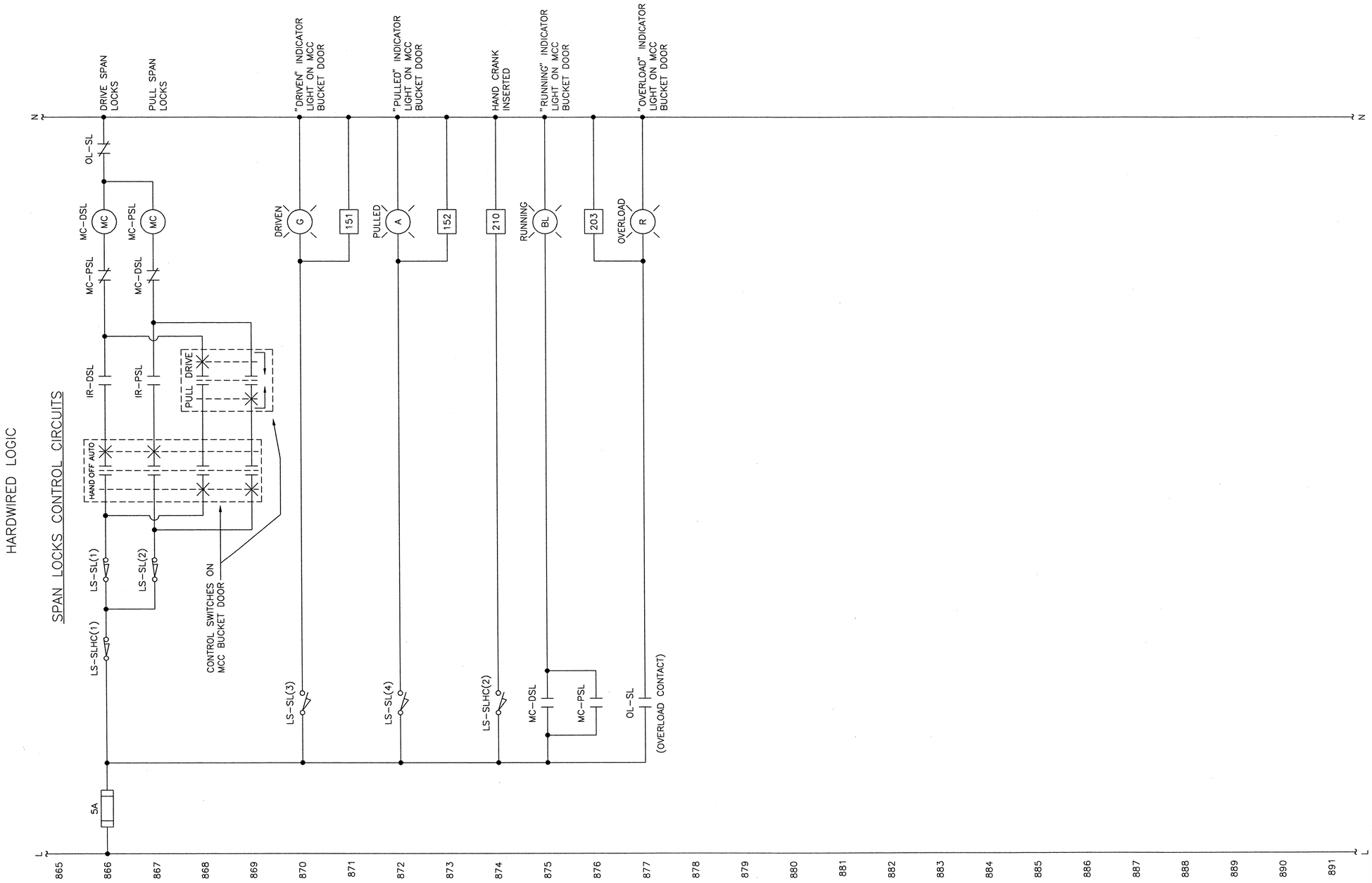

NOTES:

1. NOTE THAT THE MOTORS CAN BE RUN FROM THE MCC IN HAND MODE WITH CONTROL POWER OFF IF REQUIRED, A CP CONTACT COULD BE ADDED IN SERIES TO NOT ALLOW THIS CONDITION

0 1 2 3
INCHES ON FULL SIZE SHEET

74-0033.DWG

NORTH CAROLINA PROFESSIONAL SEAL 025801 ENGINEER LANCE V. BORDEN 2-22-2011

MODJESKI and MASTERS
Experience great bridges.
100 Sterling Parkway
Suite 302
Mechanicsburg, PA 17050 NC License No. C-2979

E55

STATE OF NORTH CAROLINA
DEPARTMENT OF TRANSPORTATION
RALEIGH

WRIGHTSVILLE BRIDGE REHABILITATION
WRIGHTSVILLE, NORTH CAROLINA

CONTROL CIRCUIT – 33

		DRAWN BY	R.I. PETERS
		SCALE	NONE
DESIGNED R.I. PETERS	DETAILED R.I. PETERS	DATE	JUNE 2011
CHECKED A.M. MARINO	CHECKED A.M. MARINO	DRAWING NO.	74 OF 140

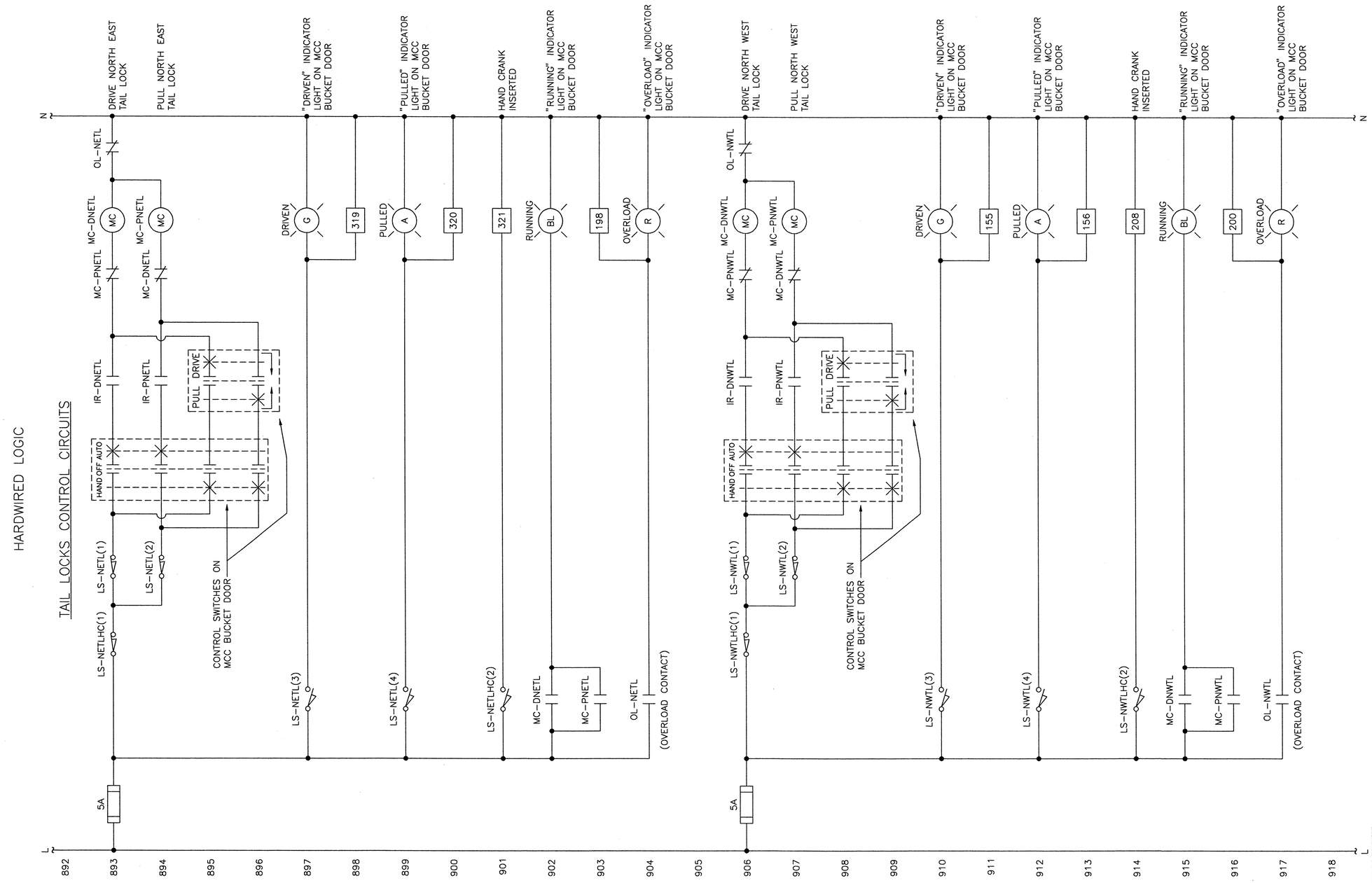

NOTES:

1. NOTE THAT THE MOTORS CAN BE RUN FROM THE MCC IN HAND MODE WITH CONTROL POWER OFF IF REQUIRED, A CP CONTACT COULD BE ADDED IN SERIES TO NOT ALLOW THIS CONDITION

0 1 2 3
INCHES ON FULL SIZE SHEET

75-0234.DWG

NORTH CAROLINA PROFESSIONAL ENGINEER SEAL 025801 LANCE V. BORDEN 2-22-2011

MODJESKI and MASTERS
Experience great bridges.
100 Sterling Parkway
Suite 302
Mechanicsburg, PA 17050 NC License No. C-2979

E56

STATE OF NORTH CAROLINA
DEPARTMENT OF TRANSPORTATION
RALEIGH

WRIGHTSVILLE BRIDGE REHABILITATION
WRIGHTSVILLE, NORTH CAROLINA

CONTROL CIRCUIT – 34

DRAWN BY	R.I. PETERS		
SCALE	NONE		
DATE	JUNE 2011		
DRAWING NO.	75 OF 140		
DESIGNED R.I. PETERS	DETAILED R.I. PETERS		
CHECKED A.M. MARINO	CHECKED A.M. MARINO		

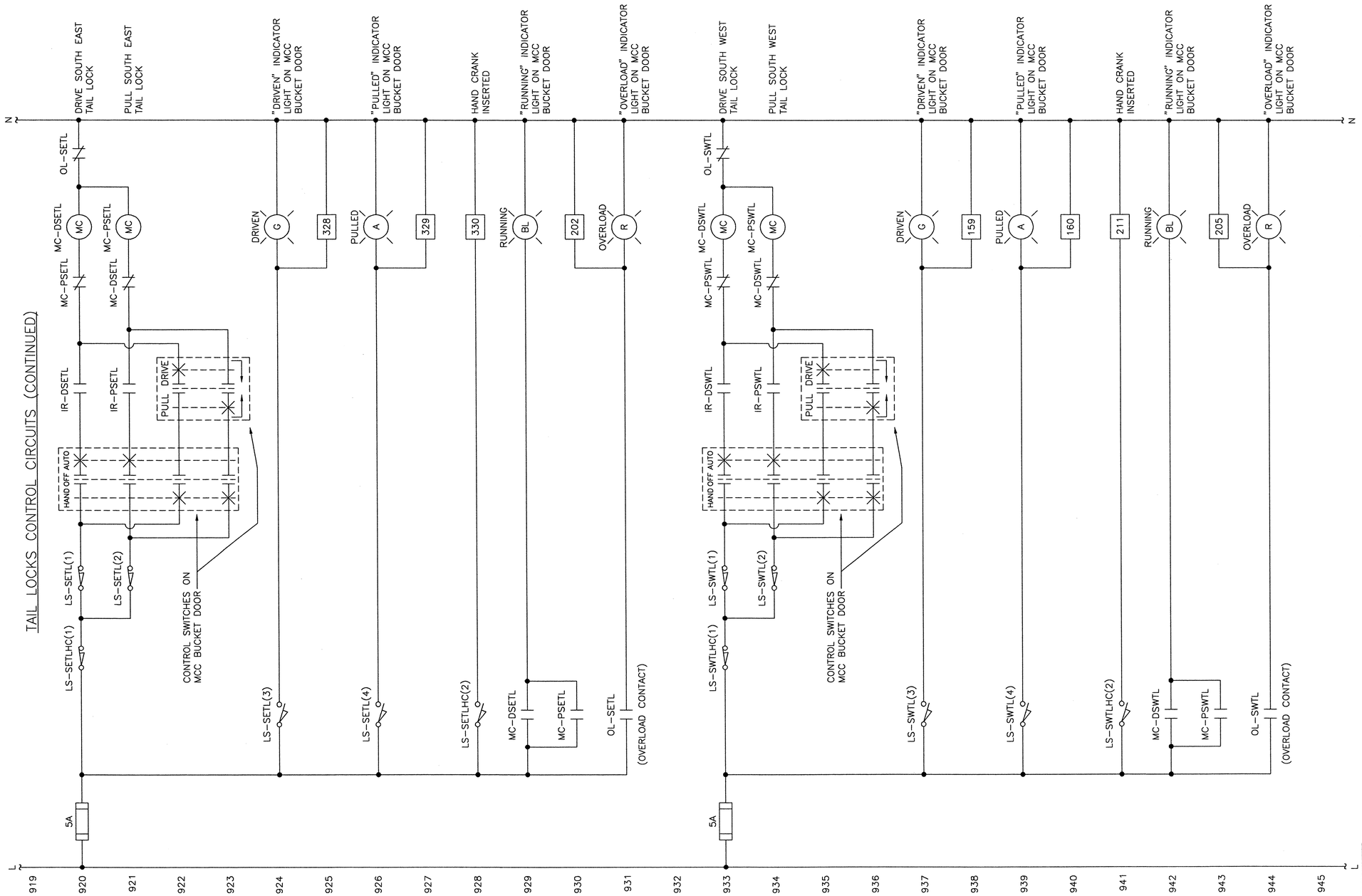

NOTES:

1. NOTE THAT THE MOTORS CAN BE RUN FROM THE MCC IN HAND MODE WITH CONTROL POWER OFF IF REQUIRED, A CP CONTACT COULD BE ADDED IN SERIES TO NOT ALLOW THIS CONDITION

0 1 2 3
INCHES ON FULL SIZE SHEET

76-0035.DWG

NORTH CAROLINA PROFESSIONAL ENGINEER SEAL 025801 LANCE V. BORDEN 2-22-2011

MODJESKI and MASTERS
Experience great bridges.
100 Sterling Parkway
Suite 302
Mechanicsburg, PA 17050 NC License No. C-2979

E57

STATE OF NORTH CAROLINA
DEPARTMENT OF TRANSPORTATION
RALEIGH

WRIGHTSVILLE BRIDGE REHABILITATION
WRIGHTSVILLE, NORTH CAROLINA

CONTROL CIRCUIT – 35

		DRAWN BY	R.I. PETERS
		SCALE	NONE
DESIGNED R.I. PETERS	DETAILED R.I. PETERS	DATE	JUNE 2011
CHECKED A.M. MARINO	CHECKED A.M. MARINO	DRAWING NO.	76 OF 140

77-CC36.DWG

INCHES ON FULL SIZE SHEET 0 1 2 3

HARDWIRED LOGIC

MACHINE BRAKES CONTROL CIRCUITS

L — N

946

947 — 5A — LS-EMAB(3) — IR-RMABE — MC-RMABE (MC) — OL-EMAB — RELEASE EAST MACHINERY EMERGENCY BRAKE

948 — MC-RMABE — RELEASED (BL) — "RELEASED" INDICATOR LIGHT ON MCC BUCKET DOOR

949 — OL-EMAB (OVERLOAD CONTACT) — OVERLOAD (R) — "OVERLOAD" INDICATOR LIGHT ON MCC BUCKET DOOR

950 — 202

951 — LS-EMAB(4) — 303 — BRAKE NOT HAND RELEASED

952 — LS-EMAB(2) — 302 — BRAKE RELEASED

953 — LS-EMAB(1) — 301 — BRAKE SET

954

955 — 5A — LS-WMAB(3) — IR-RMABW — MC-RMABW (MC) — OL-WMAB — RELEASE WEST MACHINERY EMERGENCY BRAKE

956 — MC-RMABW — RELEASED (BL) — "RELEASED" INDICATOR LIGHT ON MCC BUCKET DOOR

957 — OL-WMAB (OVERLOAD CONTACT) — OVERLOAD (R) — "OVERLOAD" INDICATOR LIGHT ON MCC BUCKET DOOR

958 — 206

959 — LS-WMAB(4) — 146 — BRAKE NOT HAND RELEASED

960 — LS-WMAB(2) — 145 — BRAKE RELEASED

961 — LS-WMAB(1) — 144 — BRAKE SET

962

963

MOTOR BRAKES CONTROL CIRCUITS

964 — 5A — LS-NEMOB(3) — IR-RMOBNE — MC-RMOBNE (MC) — OL-NEMOB — RELEASE NORTH EAST MOTOR BRAKE

965 — MC-RMOBNE — RELEASED (BL) — "RELEASED" INDICATOR LIGHT ON MCC BUCKET DOOR

966 — OL-NEMOB (OVERLOAD CONTACT) — OVERLOAD (R) — "OVERLOAD" INDICATOR LIGHT ON MCC BUCKET DOOR

967 — 197

968 — LS-NEMOB(4) — 318 — BRAKE NOT HAND RELEASED

969 — LS-NEMOB(2) — 317 — BRAKE RELEASED

970 — LS-NEMOB(1) — 316 — BRAKE SET

971

972

L — N

MODJESKI and MASTERS
Experience great bridges.
100 Sterling Parkway
Suite 302
Mechanicsburg, PA 17050 NC License No. C-2979

E58

DESIGNED R.L. PETERS	DETAILED R.L. PETERS	DRAWN BY R.L. PETERS
CHECKED A.M. MARINO	CHECKED A.M. MARINO	SCALE NONE
		DATE JUNE 2011
		DRAWING NO. 77 OF 140

STATE OF NORTH CAROLINA
DEPARTMENT OF TRANSPORTATION
RALEIGH

WRIGHTSVILLE BRIDGE REHABILITATION
WRIGHTSVILLE, NORTH CAROLINA

CONTROL CIRCUIT – 36

HARDWIRED LOGIC

MOTOR BRAKES CONTROL CIRCUITS (CONTINUED)

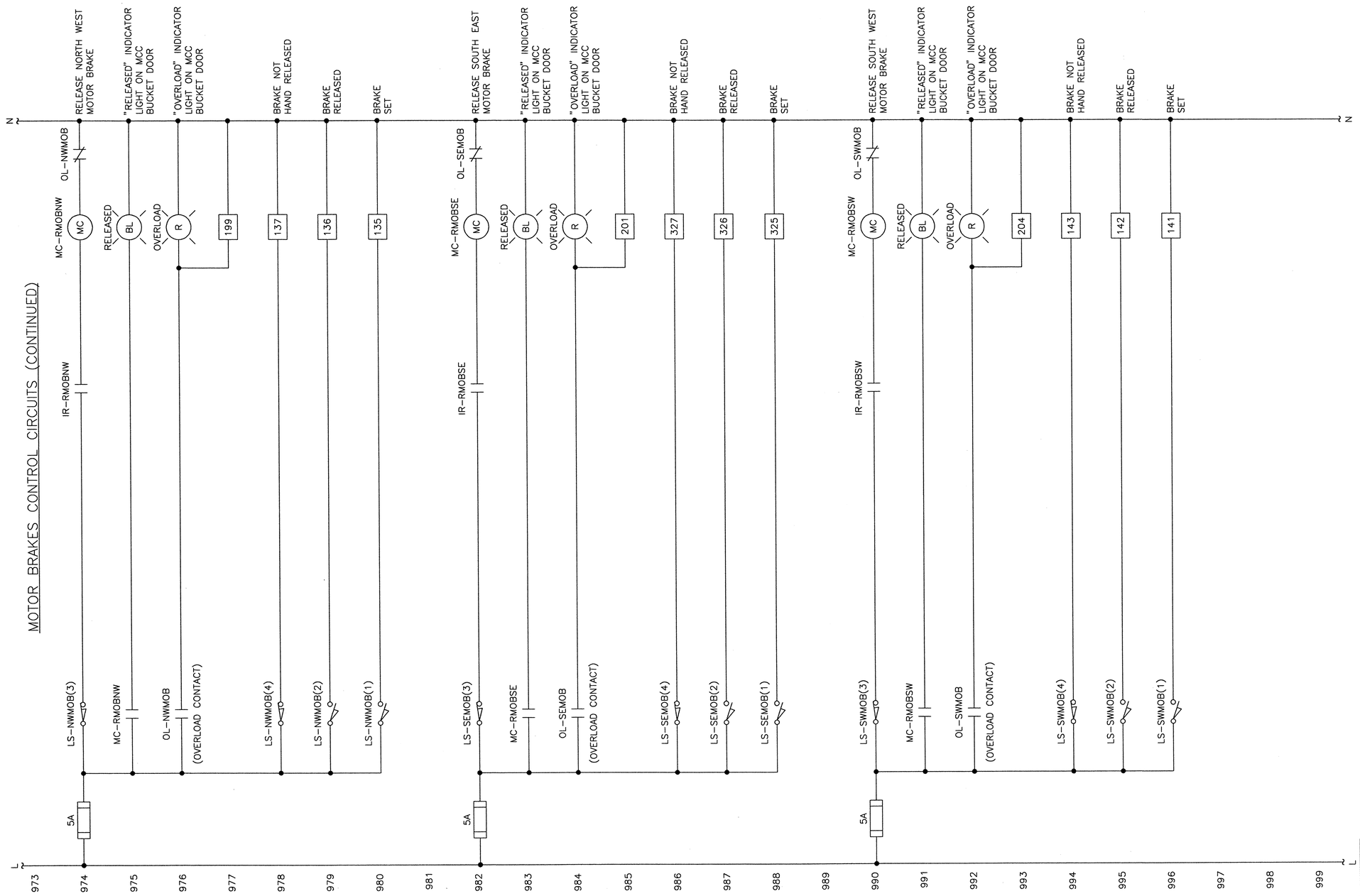

0 1 2 3
INCHES ON FULL SIZE SHEET

78-0237.DWG

MODJESKI and MASTERS
Experience great bridges.
100 Sterling Parkway
Suite 302
Mechanicsburg, PA 17050 NC License No. C-2979

E59

STATE OF NORTH CAROLINA
DEPARTMENT OF TRANSPORTATION
RALEIGH

WRIGHTSVILLE BRIDGE REHABILITATION
WRIGHTSVILLE, NORTH CAROLINA

CONTROL CIRCUIT – 37

DRAWN BY	R.I. PETERS		
SCALE	NONE		
DATE	JUNE 2011	DRAWING NO.	78 OF 140

DESIGNED	R.I. PETERS	DETAILED	R.I. PETERS
CHECKED	A.M. MARINO	CHECKED	A.M. MARINO

79-CC38.DWG

INCHES ON FULL SIZE SHEET 0 1 2 3

HARDWIRED LOGIC

120 VAC CONTROL CIRCUIT POWER

VFD SELECTION / AUX DRIVE CLUTCH LIMIT SWITCH CIRCUITS

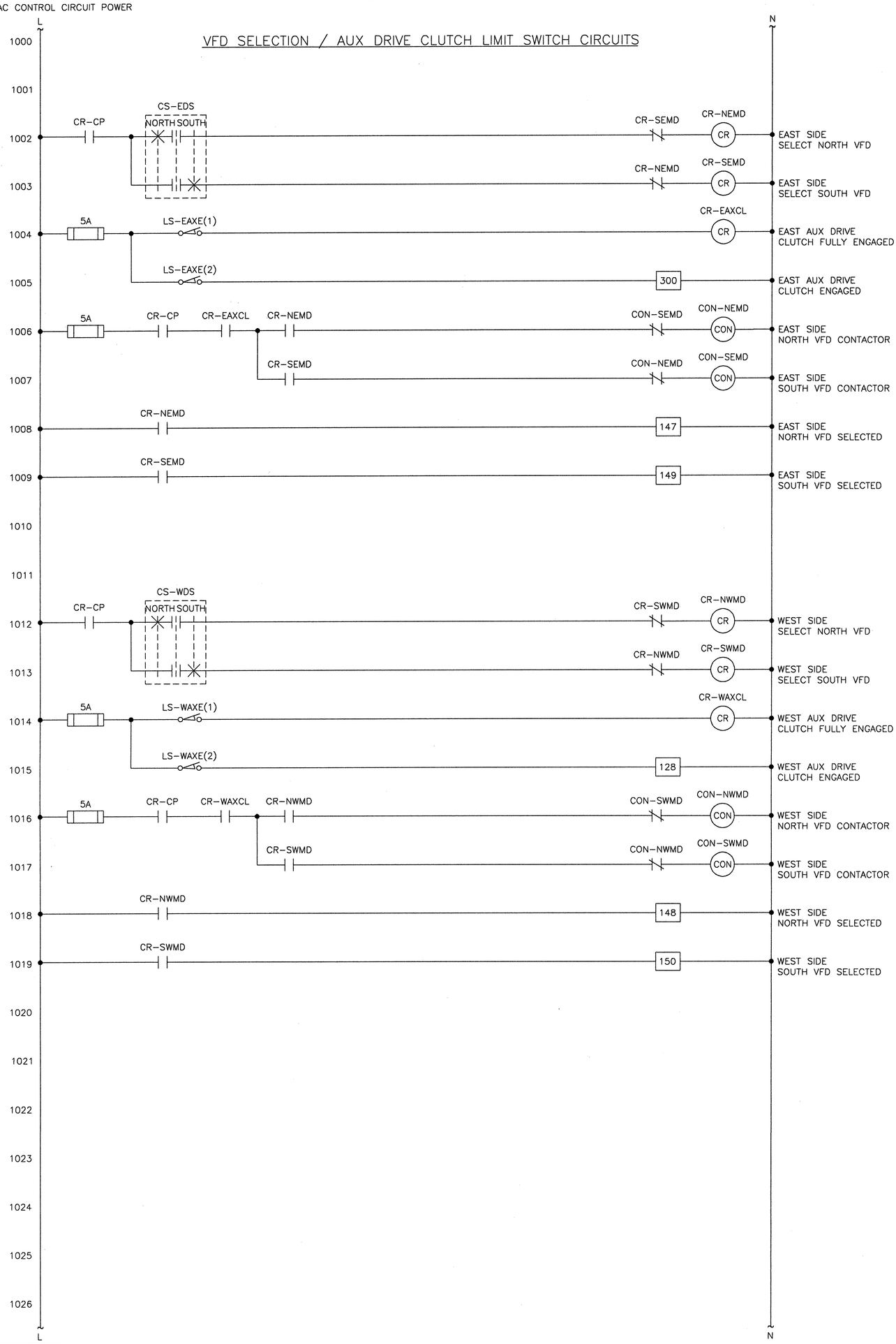

NOTES:

1. VFD SELECTION CONTACTORS ARE MECHANICALLY AND ELECTRICALLY INTERLOCKED SO THAT ONLY ONE CAN BE SELECTED AT A TIME.

MODJESKI and MASTERS
Experience great bridges.
100 Sterling Parkway
Suite 302
Mechanicsburg, PA 17050 NC License No. C-2979

E60

STATE OF NORTH CAROLINA
DEPARTMENT OF TRANSPORTATION
RALEIGH

WRIGHTSVILLE BRIDGE REHABILITATION
WRIGHTSVILLE, NORTH CAROLINA

CONTROL CIRCUIT - 38

DESIGNED R.I. PETERS	DETAILED R.I. PETERS	DRAWN BY R.I. PETERS	
CHECKED A.M. MARINO	CHECKED A.M. MARINO	SCALE NONE	
		DATE JUNE 2011	
		DRAWING NO. 79 OF 140	

HARDWIRED LOGIC

SPARE DRAWING

120 VAC CONTROL CIRCUIT POWER

1027 1028 1029 1030 1031 1032 1033 1034 1035 1036 1037 1038 1039 1040 1041 1042 1043 1044 1045 1046 1047 1048 1049 1050 1051 1052 1053

0 1 2 3
INCHES ON FULL SIZE SHEET

NORTH CAROLINA PROFESSIONAL SEAL 025801 ENGINEER LANCE V. BORDEN

MODJESKI and MASTERS
Experience great bridges.

100 Sterling Parkway
Suite 302
Mechanicsburg, PA 17050 NC License No. C-2979

E61

STATE OF NORTH CAROLINA
DEPARTMENT OF TRANSPORTATION
RALEIGH

WRIGHTSVILLE BRIDGE REHABILITATION
WRIGHTSVILLE, NORTH CAROLINA

CONTROL CIRCUIT – 39

		DRAWN BY	R.I. PETERS
		SCALE	NONE
DESIGNED R.I. PETERS	DETAILED R.I. PETERS	DATE	JUNE 2011
CHECKED A.M. MARINO	CHECKED A.M. MARINO	DRAWING NO.	80 OF 140

80-CC39.DWG

81-CC40.DWG

INCHES ON FULL SIZE SHEET 0 1 2 3

HARDWIRED LOGIC

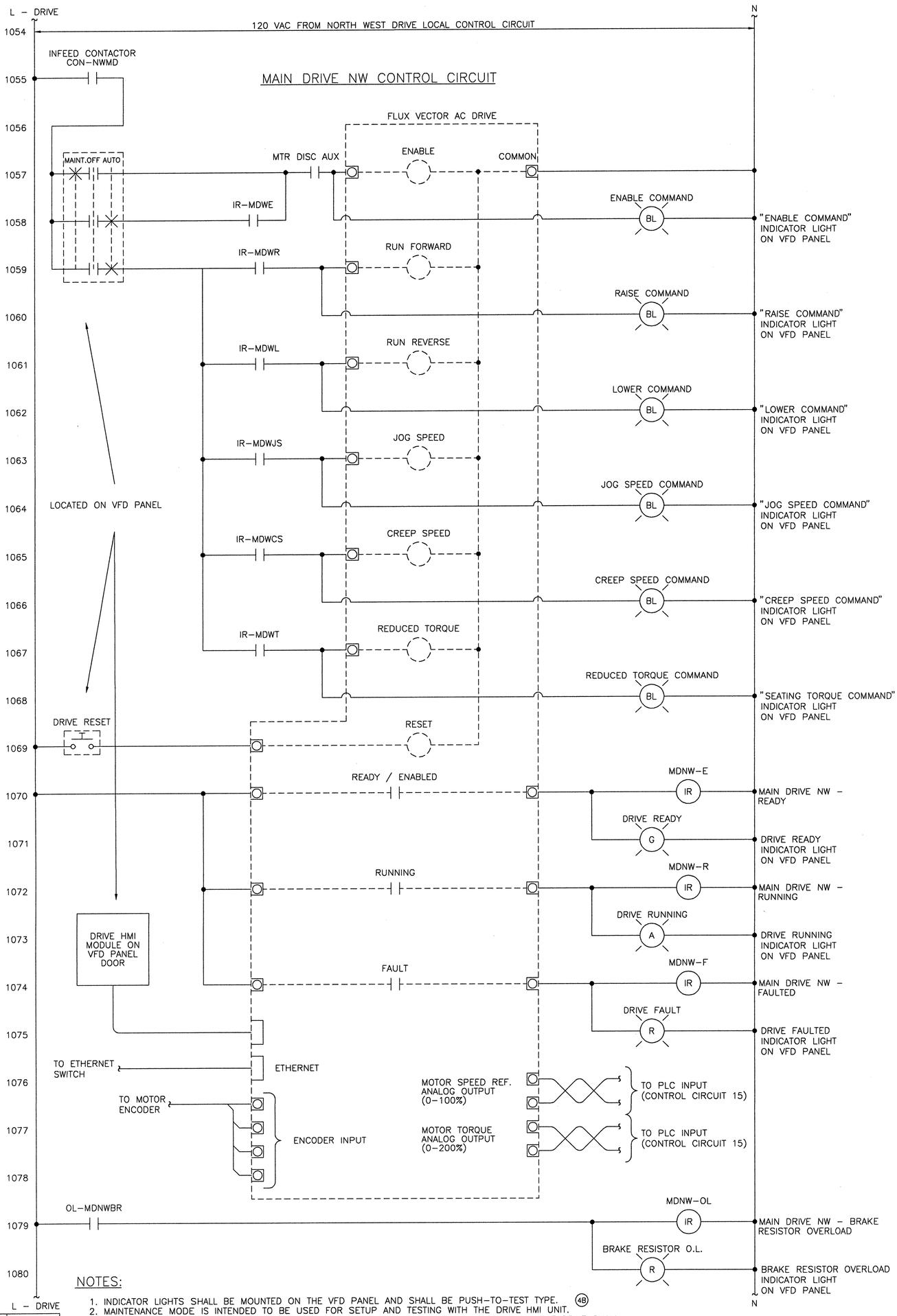

NOTES:

1. INDICATOR LIGHTS SHALL BE MOUNTED ON THE VFD PANEL AND SHALL BE PUSH-TO-TEST TYPE. (4B)
2. MAINTENANCE MODE IS INTENDED TO BE USED FOR SETUP AND TESTING WITH THE DRIVE HMI UNIT.
3. SPEED SETTINGS FOR NORMAL, JOG, AND CREEP SHALL BE PROGRAMMED INTO THE DRIVE. THE DRIVE SHALL BE PROGRAMMED OR CONFIGURED TO FAULT IF THE ENCODER FEEDBACK IS LOST DURING OPERATION.
4. THE DRIVE ETHERNET CONNECTION IS INTENDED TO ALLOW THE PLC TO ACCESS DRIVE FAULT MESSAGES AND DRIVE OPERATING CONDITIONS. NO CONTROL OPERATIONS SHALL BE PERFORMED USING THIS CONNECTION.

DRIVE SETTINGS

ACCELERATION TIME	10 SECONDS
DECELERATION TIME	10 SECONDS
STOP MODE	COAST
AUTO START	FALSE
AUTO RESTART	FALSE
MOTOR STALL TIME	20 SECONDS
MAXIMUM TORQUE LIMIT	150% MOTOR RATED

NOTE: THESE SETTINGS WILL REQUIRE ADJUSTMENT IN THE FIELD.

MODJESKI and MASTERS
Experience great bridges.
100 Sterling Parkway
Suite 302
Mechanicsburg, PA 17050 NC License No. C-2979

E62

DESIGNED R.I. PETERS	DETAILED R.I. PETERS	DRAWN BY R.I. PETERS	
CHECKED A.M. MARINO	CHECKED A.M. MARINO	SCALE NONE	
		DATE JUNE 2011	
		DRAWING NO. 81 OF 140	

STATE OF NORTH CAROLINA
DEPARTMENT OF TRANSPORTATION
RALEIGH

WRIGHTSVILLE BRIDGE REHABILITATION
WRIGHTSVILLE, NORTH CAROLINA

CONTROL CIRCUIT - 40

INCHES ON FULL SIZE SHEET 0 1 2 3

HARDWIRED LOGIC

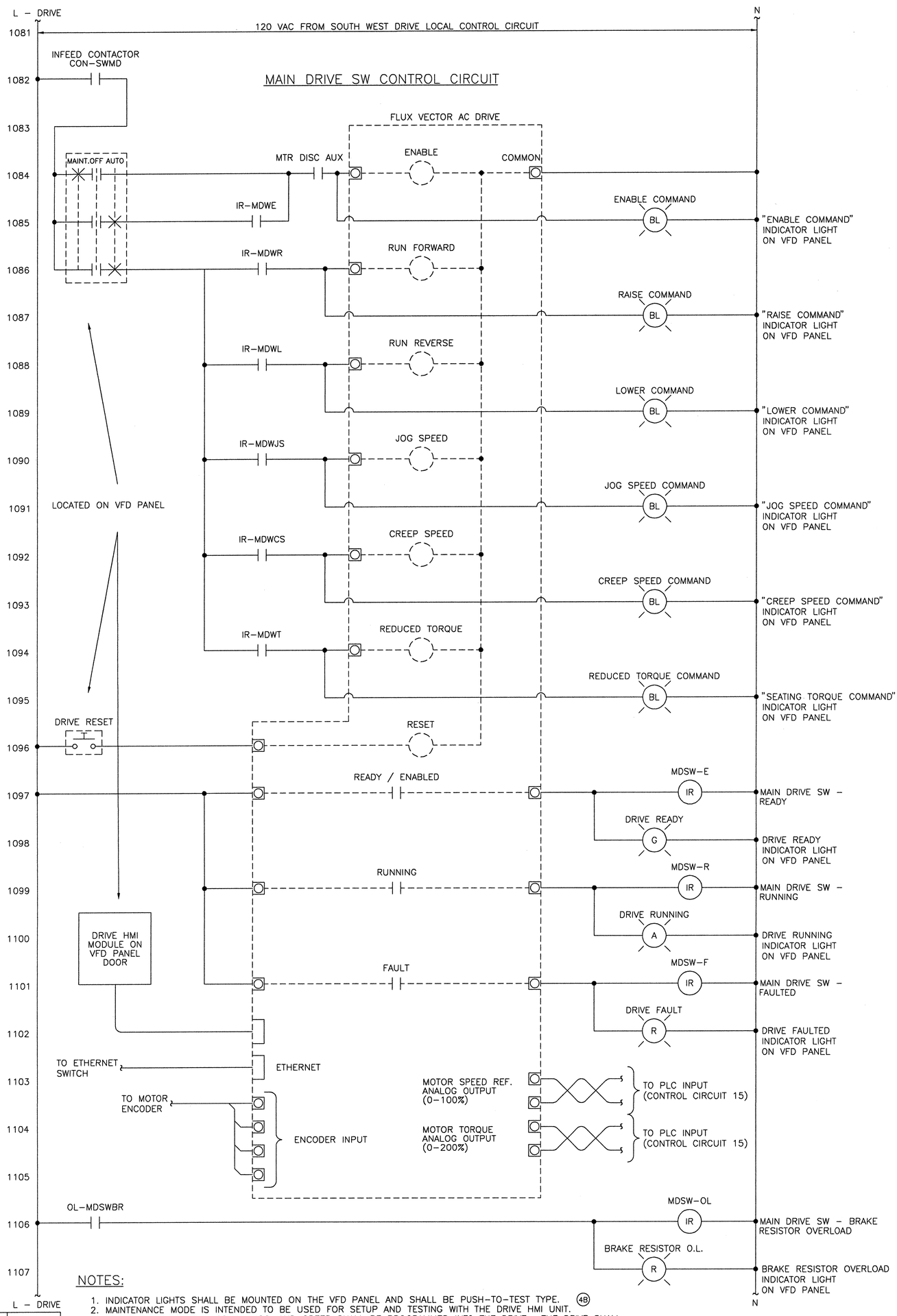

NOTES:

1. INDICATOR LIGHTS SHALL BE MOUNTED ON THE VFD PANEL AND SHALL BE PUSH-TO-TEST TYPE. (4B)
2. MAINTENANCE MODE IS INTENDED TO BE USED FOR SETUP AND TESTING WITH THE DRIVE HMI UNIT.
3. SPEED SETTINGS FOR NORMAL, JOG, AND CREEP SHALL BE PROGRAMMED INTO THE DRIVE. THE DRIVE SHALL BE PROGRAMMED OR CONFIGURED TO FAULT IF THE ENCODER FEEDBACK IS LOST DURING OPERATION.
4. THE DRIVE ETHERNET CONNECTION IS INTENDED TO ALLOW THE PLC TO ACCESS DRIVE FAULT MESSAGES AND DRIVE OPERATING CONDITIONS. NO CONTROL OPERATIONS SHALL BE PERFORMED USING THIS CONNECTION.

DRIVE SETTINGS

ACCELERATION TIME	10 SECONDS
DECELERATION TIME	10 SECONDS
STOP MODE	COAST
AUTO START	FALSE
AUTO RESTART	FALSE
MOTOR STALL TIME	20 SECONDS
MAXIMUM TORQUE LIMIT	150% MOTOR RATED

NOTE: THESE SETTINGS WILL REQUIRE ADJUSTMENT IN THE FIELD.

MODJESKI and MASTERS
Experience great bridges.
100 Sterling Parkway
Suite 302
Mechanicsburg, PA 17050 NC License No. C-2979

E63

STATE OF NORTH CAROLINA
DEPARTMENT OF TRANSPORTATION
RALEIGH

WRIGHTSVILLE BRIDGE REHABILITATION
WRIGHTSVILLE, NORTH CAROLINA

CONTROL CIRCUIT - 41

DESIGNED	R.L. PETERS	DRAWN BY	R.L. PETERS
CHECKED	A.M. MARINO	SCALE	NONE
DETAILED	R.L. PETERS	DATE	JUNE 2011
CHECKED	A.M. MARINO	DRAWING NO.	82 OF 140

83-CC42.DWG

INCHES ON FULL SIZE SHEET 0 1 2 3

HARDWIRED LOGIC

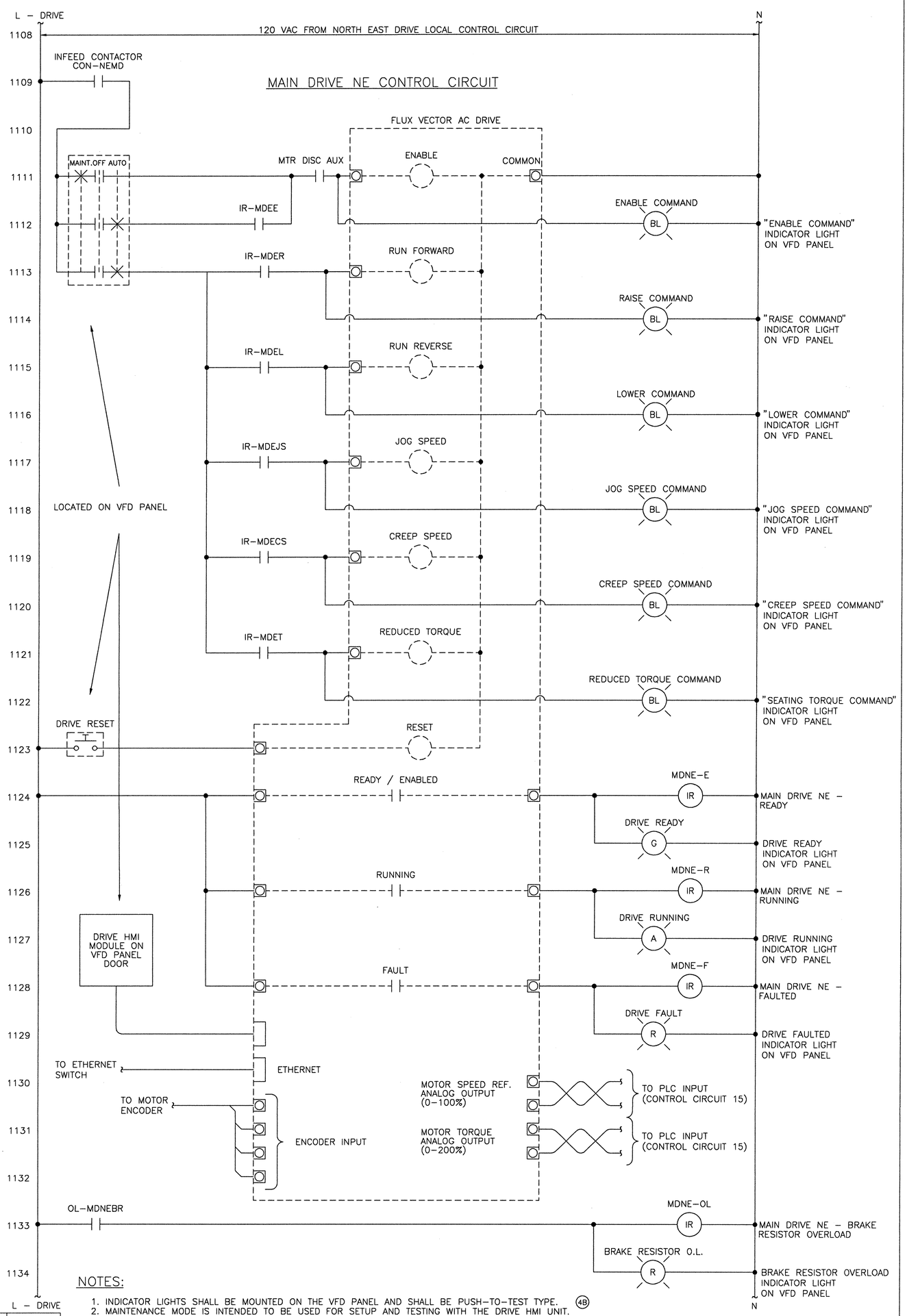

NOTES:

1. INDICATOR LIGHTS SHALL BE MOUNTED ON THE VFD PANEL AND SHALL BE PUSH-TO-TEST TYPE. (4B)
2. MAINTENANCE MODE IS INTENDED TO BE USED FOR SETUP AND TESTING WITH THE DRIVE HMI UNIT.
3. SPEED SETTINGS FOR NORMAL, JOG, AND CREEP SHALL BE PROGRAMMED INTO THE DRIVE. THE DRIVE SHALL BE PROGRAMMED OR CONFIGURED TO FAULT IF THE ENCODER FEEDBACK IS LOST DURING OPERATION.
4. THE DRIVE ETHERNET CONNECTION IS INTENDED TO ALLOW THE PLC TO ACCESS DRIVE FAULT MESSAGES AND DRIVE OPERATING CONDITIONS. NO CONTROL OPERATIONS SHALL PERFORMED USING THIS CONNECTION.

DRIVE SETTINGS

ACCELERATION TIME	10 SECONDS
DECELERATION TIME	10 SECONDS
STOP MODE	COAST
AUTO START	FALSE
AUTO RESTART	FALSE
MOTOR STALL TIME	20 SECONDS
MAXIMUM TORQUE LIMIT	150% MOTOR RATED

NOTE: THESE SETTINGS WILL REQUIRE ADJUSTMENT IN THE FIELD.

MODJESKI and MASTERS
Experience great bridges.
100 Sterling Parkway
Suite 302
Mechanicsburg, PA 17050 NC License No. C-2979

E64

DESIGNED R.I. PETERS	DETAILED R.I. PETERS	DRAWN BY R.I. PETERS	
CHECKED A.M. MARINO	CHECKED A.M. MARINO	SCALE NONE	DATE JUNE 2011

STATE OF NORTH CAROLINA
DEPARTMENT OF TRANSPORTATION
RALEIGH

WRIGHTSVILLE BRIDGE REHABILITATION
WRIGHTSVILLE, NORTH CAROLINA

CONTROL CIRCUIT – 42

DRAWING NO. 83 OF 140

INCHES ON FULL SIZE SHEET 0 1 2 3

HARDWIRED LOGIC

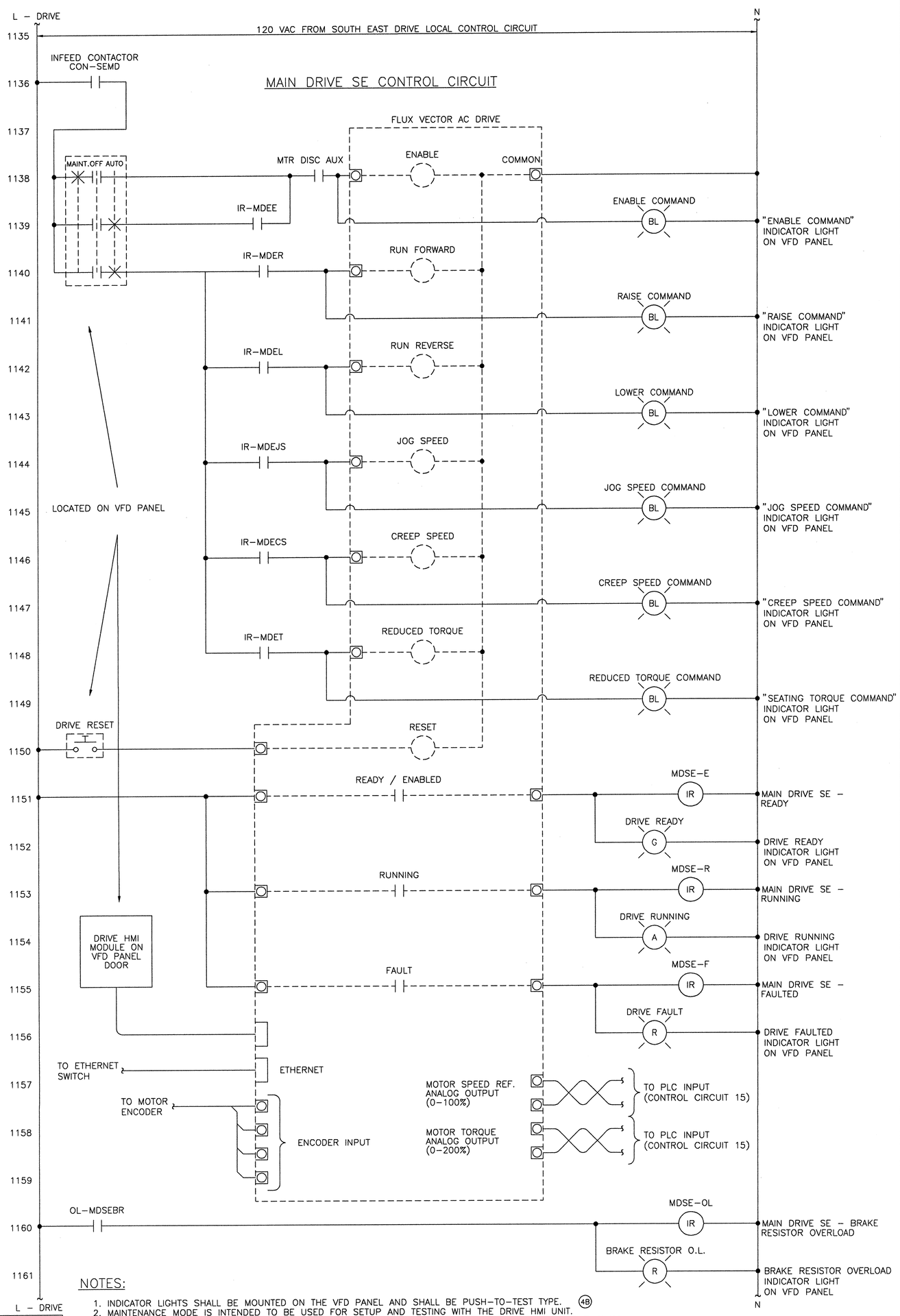

NOTES:

1. INDICATOR LIGHTS SHALL BE MOUNTED ON THE VFD PANEL AND SHALL BE PUSH–TO–TEST TYPE. (4B)
2. MAINTENANCE MODE IS INTENDED TO BE USED FOR SETUP AND TESTING WITH THE DRIVE HMI UNIT.
3. SPEED SETTINGS FOR NORMAL, JOG, AND CREEP SHALL BE PROGRAMMED INTO THE DRIVE. THE DRIVE SHALL BE PROGRAMMED OR CONFIGURED TO FAULT IF THE ENCODER FEEDBACK IS LOST DURING OPERATION.
4. THE DRIVE ETHERNET CONNECTION IS INTENDED TO ALLOW THE PLC TO ACCESS DRIVE FAULT MESSAGES AND DRIVE OPERATING CONDITIONS. NO CONTROL OPERATIONS SHALL BE PERFORMED USING THIS CONNECTION.

DRIVE SETTINGS

ACCELERATION TIME	10 SECONDS
DECELERATION TIME	10 SECONDS
STOP MODE	COAST
AUTO START	FALSE
AUTO RESTART	FALSE
MOTOR STALL TIME	20 SECONDS
MAXIMUM TORQUE LIMIT	150% MOTOR RATED

NOTE: THESE SETTINGS WILL REQUIRE ADJUSTMENT IN THE FIELD.

MODJESKI and MASTERS
Experience great bridges.
100 Sterling Parkway
Suite 302
Mechanicsburg, PA 17050 NC License No. C-2979

E65

DESIGNED R.I. PETERS	DETAILED R.I. PETERS	DRAWN BY R.I. PETERS	
CHECKED A.M. MARINO	CHECKED A.M. MARINO	SCALE NONE	DATE JUNE 2011

STATE OF NORTH CAROLINA
DEPARTMENT OF TRANSPORTATION
RALEIGH

WRIGHTSVILLE BRIDGE REHABILITATION
WRIGHTSVILLE, NORTH CAROLINA

CONTROL CIRCUIT – 43

DRAWING NO. B4 OF 140

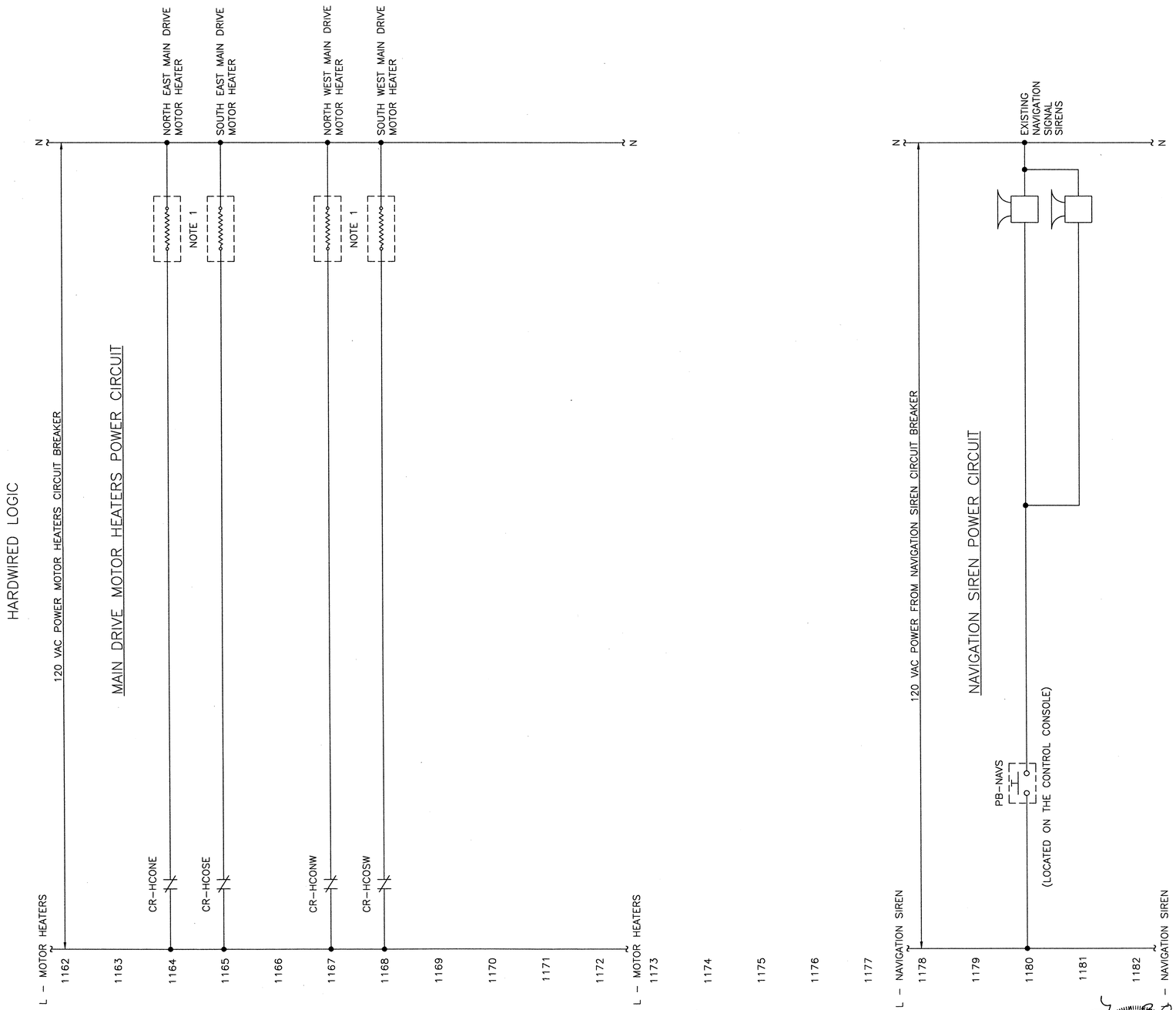

NOTES:

1. A LABEL SHALL BE PLACED AT EACH MOTOR TO INDICATE THAT THE MOTOR HEATER CIRCUIT MAY STILL BE ENGERGIZED WHEN THE POWER TO THE MOTOR IS SWITCHED OFF. THE PANEL NAME AND THE HEATER CIRCUIT NUMBER SHALL APPEAR ON THE LABEL
2. THE HEATER CUTOUT RELAYS SHALL BE LOCATED IN THE CORRESPONDING VFD PANEL.

NORTH CAROLINA PROFESSIONAL SEAL 025801 ENGINEER LANCE V. BORDEN

MODJESKI and MASTERS
Experience great bridges.

100 Sterling Parkway
Suite 302
Mechanicsburg, PA 17050 NC License No. C-2979

STATE OF NORTH CAROLINA
DEPARTMENT OF TRANSPORTATION
RALEIGH

WRIGHTSVILLE BRIDGE REHABILITATION
WRIGHTSVILLE, NORTH CAROLINA

CONTROL CIRCUIT - 44

		DRAWN BY	R.I. PETERS
		SCALE	NONE
E66	DESIGNED R.I. PETERS	DETAILED R.I. PETERS	DATE JUNE 2011
	CHECKED A.M. MARINO	CHECKED A.M. MARINO	DRAWING NO. 85 OF 140

85-CC44.DWG

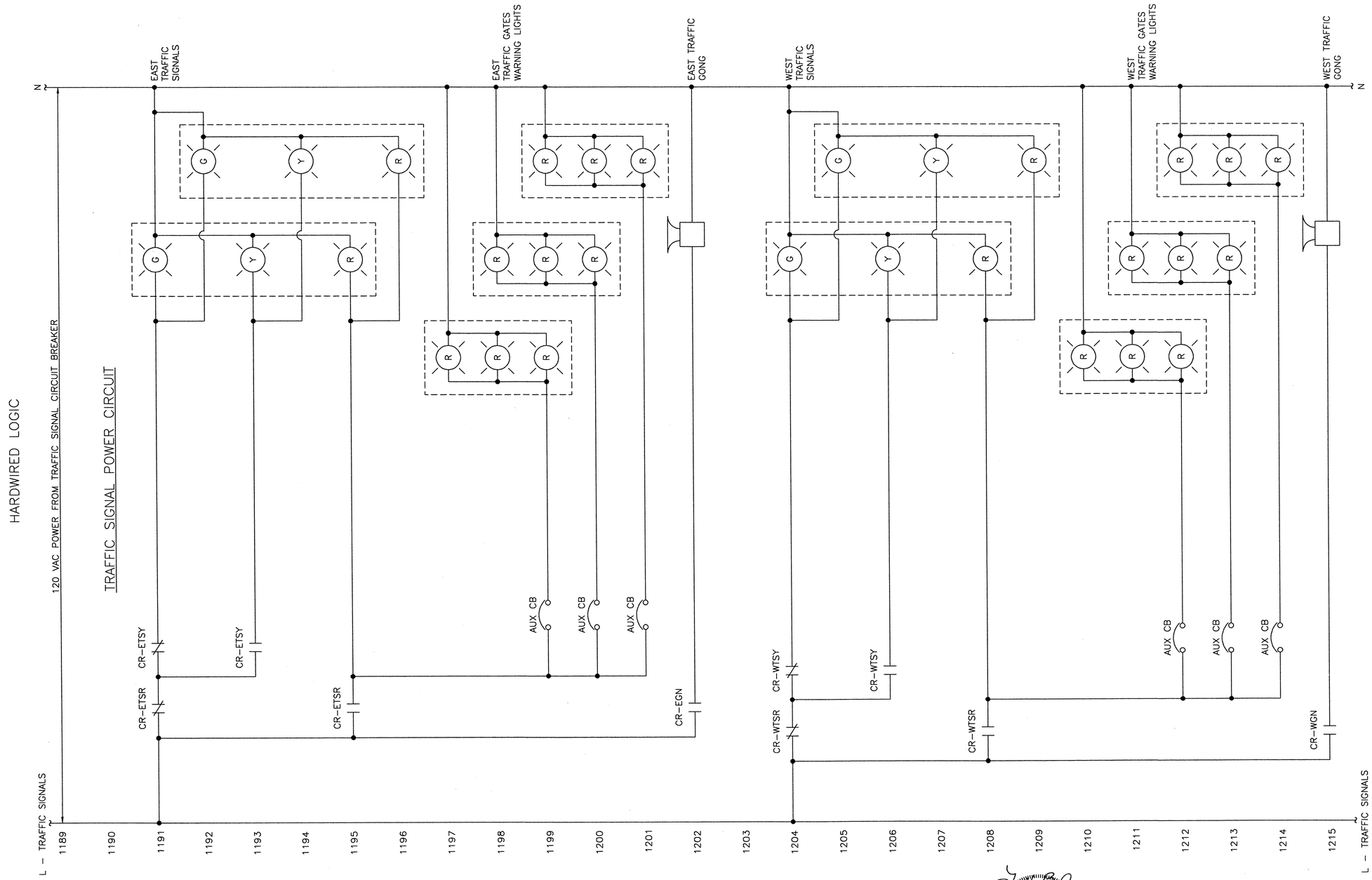

NOTES:

1. CR-ETSR, CR-ETSY, AND CR-EGN ARE LOCATED IN THE EAST REMOTE I/O PANEL.
2. AUX CIRCUIT PROTECTION SHALL BE SIZED AS REQUIRED BY DEVICES.

0 1 2 3
INCHES ON FULL SIZE SHEET

NORTH CAROLINA PROFESSIONAL ENGINEER SEAL 025801 LANCE V. BORDEN

MODJESKI and MASTERS
Experience great bridges.
100 Sterling Parkway
Suite 302
Mechanicsburg, PA 17050 NC License No. C-2979

E67

STATE OF NORTH CAROLINA
DEPARTMENT OF TRANSPORTATION
RALEIGH

WRIGHTSVILLE BRIDGE REHABILITATION
WRIGHTSVILLE, NORTH CAROLINA

CONTROL CIRCUIT – 45

		DRAWN BY	R.I. PETERS
		SCALE	NONE
DESIGNED R.I. PETERS	DETAILED R.I. PETERS	DATE	JUNE 2011
CHECKED A.M. MARINO	CHECKED A.M. MARINO	DRAWING NO.	86 OF 140

86-DC45.DWG

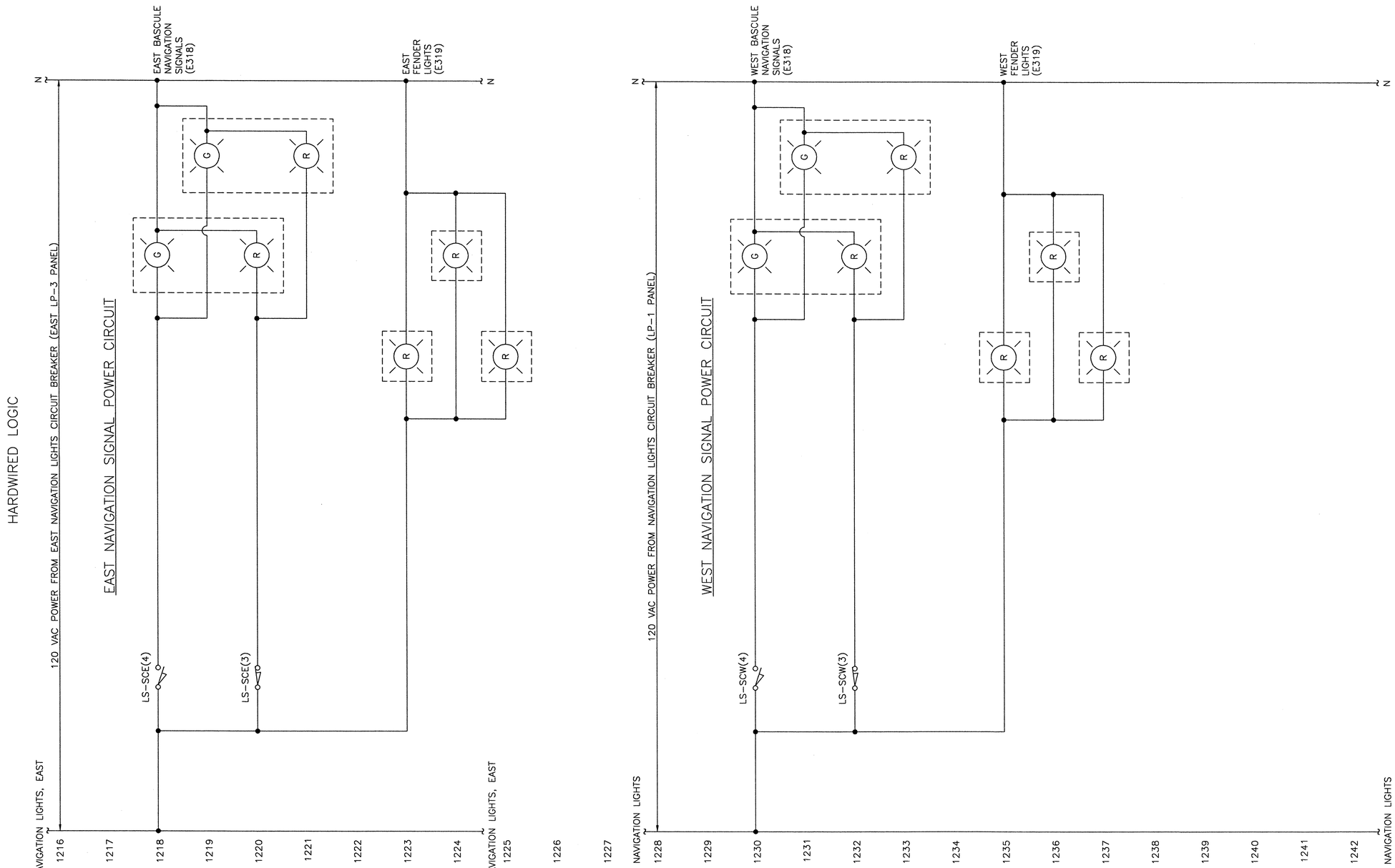

NORTH CAROLINA PROFESSIONAL SEAL 025801 ENGINEER LANCE V. BORDEN

MODJESKI and MASTERS
Experience great bridges.

100 Sterling Parkway
Suite 302
Mechanicsburg, PA 17050 NC License No. C-2979

E68

STATE OF NORTH CAROLINA
DEPARTMENT OF TRANSPORTATION
RALEIGH

WRIGHTSVILLE BRIDGE REHABILITATION
WRIGHTSVILLE, NORTH CAROLINA

CONTROL CIRCUIT – 46

		DRAWN BY	R.I. PETERS
		SCALE	NONE
DESIGNED R.I. PETERS	DETAILED R.I. PETERS	DATE	JUNE 2011
CHECKED A.M. MARINO	CHECKED A.M. MARINO	DRAWING NO.	87 OF 140

87-CC46.DWG

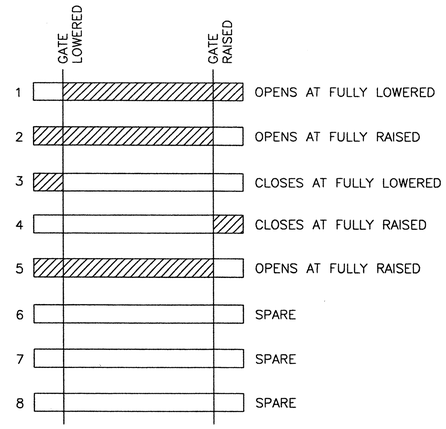

TRAFFIC GATE LIMIT SWITCHES

(PART OF NEW TRAFFIC GATE ASSEMBLY)
LS-SWG, LS-NEG, LS-NEB, LS-NWB, LS-SEB, LS-SWB

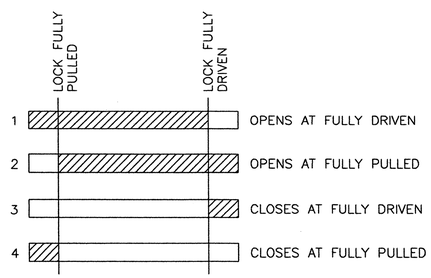

SPAN LOCK LIMIT SWITCH

LS-SL

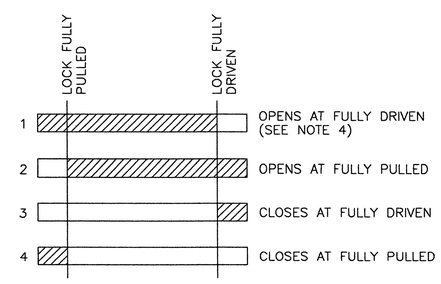

TAIL LOCK LIMIT SWITCHES

LS-NETL, LS-NWTL, LS-SETL, LS-SWTL

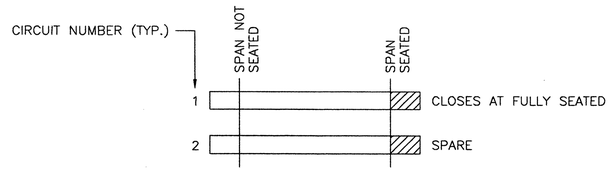

SPAN FULLY SEATED LIMIT SWITCH

LS-ESS
LS-WSS

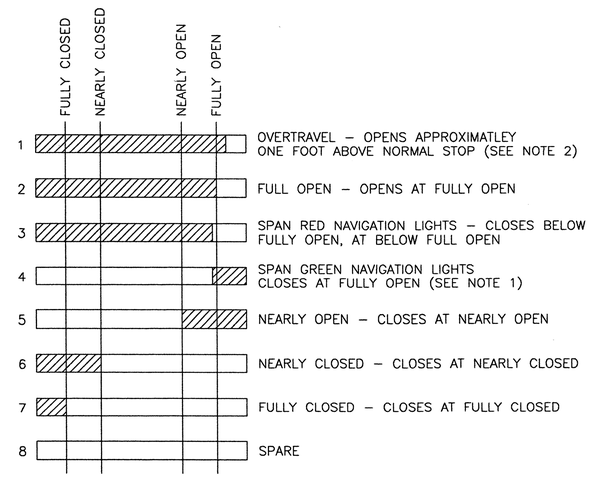

SPAN ONTROL LIMIT SWITCH

LS-SCE
LS-SCW

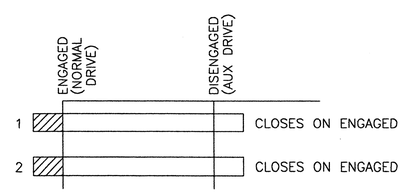

AUX DRIVE CLUTCH

LS-EAXE
LS-WAXE

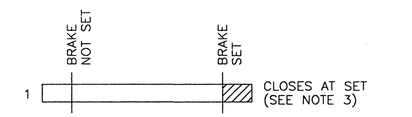

BRAKE SET LIMIT SWITCH

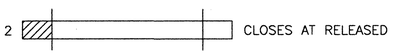

BRAKE RELEASE LIMIT SWITCH

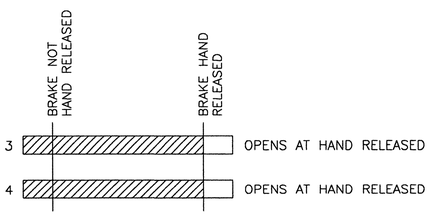

BRAKE HAND RELEASE LIMIT SWITCHES

LS-EMAB, LS-WMAB
LS-NEMOB, LS-NWMOB, LS-SEMOB, LS-SWMOB

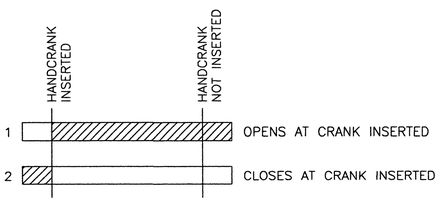

SPAN LOCKS AND TAIL LOCKS HANDCRANK

LS-SLHC, LS-NETLHC, LS-NWTLHC
LS-SETLHC, LS-SWTLHC

NOTES:

1. THE FULL OPEN SETTING OF THIS SWITCH SHALL BE FIELD DETERMINED SUCH THAT IT SENSES FULL OPEN SLIGHTLY BEFORE THE FULL OPEN SETTING (I.E. SO THAT THE SPAN NAVIGATION LIGHTS TURN GREEN BEFORE THE MASTER RAISE SEQUENCE IS DE-ENERGIZED AND THE BRIDGE COMES TO A COMPLETE STOP.
2. ACTUAL VALUE TO BE FIELD ADJUSTED.
3. SET AND RELEASE ARE SEPARATE PHYSICAL SWITCHES.
4. DRIVEN AND PULLED ARE SEPARATE PHYSICAL SWITCHES.

LEGEND

CONTACTS CLOSED

CONTACTS OPEN

0 1 2 3
INCHES ON FULL SIZE SHEET

NORTH CAROLINA PROFESSIONAL ENGINEER SEAL 025801 LANCE V. BORDEN 12-22-2011

MODJESKI and MASTERS
Experience great bridges.
100 Sterling Parkway
Suite 302
Mechanicsburg, PA 17050 NC License No. C-2979

E69

STATE OF NORTH CAROLINA
DEPARTMENT OF TRANSPORTATION
RALEIGH

WRIGHTSVILLE BRIDGE REHABILITATION
WRIGHTSVILLE, NORTH CAROLINA

LIMIT SWITCH TRIPPING SCHEDULE

		DRAWN BY	A.M. MARINO
		SCALE	NONE
DESIGNED A.M. MARINO	DETAILED A.M. MARINO	DATE	JUNE 2011
CHECKED R.I. PETERS	CHECKED R.I. PETERS	DRAWING NO.	88 OF 140

88-LSCS.DWG

GROUP 100 EQUIPMENT

PIECE NO.	QUANTITY	NAME	MANUFACTURER	TYPE – MODEL	RATING AND DESCRIPTION
E101	1	S–1	CUTLER–HAMMER	WKDN400	HEAVY DUTY, ENCLOSED CIRCUIT BREAKER, U.L. LISTED, NEMA 4X STAINLESS STEEL ENCLOSURE, FACTOR ASSEMBLED, SUITABLE FOR USE AS SERVICE ENTRANCE EQUIPMENT, PADLOCKABLE HANDLE IN THE OFF POSITION, 400A FRAME, 600VAC, BREAKER WITH INTERCHANGEABLE TRIP UNIT RATED AT 300A, MINIMUM 65KA SYMMETRICAL SHORT CIRCUIT AT 480VAC.
E102	1	SERVICE SURGE ARRESTOR	COOPER POWER SYSTEMS	STORM TRAPPER H.E.	MOV TYPE LOW VOLTAGE DISTRIBUTION CLASS SURGE ARRESTOR. U.L. LISTED. METAL ENCLOSED. FOR USE ON A 480Y/277 VAC, 3PH, 4W, SOLIDLY GROUNDED SERVICE. 400V MCOV, HIGH CURRENT RATING OF 2 DISCHARGES AT 40KA 4/10 MICROSECOND WAVE. DUTY CYCLE RATING OF 22 DISCHARGES AT 5KA 8/20 MICROSECOND WAVE.
E103	1	GENERATOR	CUMMINS POWER GENERATION	DSHAC	DIESEL GENERATOR SET, U.L. LISTED 480Y/277 VAC, 3PH, SOLIDLY GROUNDED, 200KW (250 KVA) STANDBY, 60 HZ. 105C RISE ALTERNATOR. PMG EXCITATION, NON ROAD TIER 3. 1500W COOLANT HEATER, 150W LUBE OIL HEATER 100W ALTERNATOR HEATER, BATTERY CHARGER, CONTROL SYSTEM, MAIN LINE CIRCUIT BREAKER, 24 HOUR DUAL WALL SUB–BASE FUEL TANK. 150 MPH WIND RATED ALUMINUM, SOUND ATTENUATED LEVEL 2 ENCLOSURE WITH INTEGRATED MUFFLER.
E104	1	AUTOMATIC TRANSFER SWITCH	CUMMINS POWER GENERATION	OTPC	AUTOMATIC TRANSFER SWITCH. U.L. LISTED. DELAYED TRANSITION, 480 VAC, 3PH, 60 HZ, 4 POLE, 400A. 200KA WITHSTAND AND CLOSE RATING AT 480 VAC WITH CLASS L FUSE PROTECTION. OPEN TRANSISTION/ PROGRAMMED, DIGITAL DISPLAY, RELAY SIGNAL MODULE, NEMA 4X ENCLOSURE, RETRANSFER INHIBIT TERMINAL BLOCK.
E105	1	LP–2	CUTLER–HAMMER	MINI–POWER CENTER	TRANSFORMER/PANELBOARD COMBINATION UNIT, 7.5 KVA, SINGLE PHASE, 480V PRIMARY, 240/120V SECONDARY, 12 SPACES, 316 STAINLESS STEEL ENCLOSURE. PRIMARY BREAKER AND SECONDARY MAIN BREAKERS, 65,000A RMS SYMMETRICAL SHORT CIRCUIT INTERRUPTING CAPACITY. BRANCH CIRCUIT BREAKERS AS SHOWN.
E106	1	MOTOR CONTROL CENTER	CUTLER–HAMMER	FREEDOM 2100	MOTOR CONTROL CENTER. U.L. LISTED, 600 VAC CLASS, 3PH, 600A HORIZONTAL AND 300A VERTICAL BUS, TIN PLATED COPPER BUSES. MINIMUM 65KA SYMMETRICAL SHORT CIRCUIT AT 480 VAC. NEMA 12 FREESTANDING ENCLOSURE. INDICATOR LIGHTS AND CONTROL SWITCHES ON STARTER DOORS AS SHOWN. UNITS AND LAYOUT AS SHOWN.
E107	1	BUS MONITOR	DIVERSIFIED ELECTRONICS	PBE	TRUE RMS PHASE SEQUENCE AND VOLTAGE BAND MONITOR WITH ADJUSTABLE OVERVOLTAGE, UNDERVOLTAGE AND TIME DELAY. SHALL BE SUITABLE FOR USE ON 480 VOLT, GROUNDED, 4 WIRE SYSTEMS.
E108	1	POWER MONITOR	ELECTRO INDUSTRIES	FUTURA+	THREE PHASE MULTI–FUNCTION (VOLTAGE, CURRENT, POWER, FREQUENCY, ETC.) POWER MONITOR WITH CENTRAL TRANSDUCER MODULE AND REMOTE DISPLAYS (P34). MONITOR SHALL INCLUDE ONE DISPLAY MOUNTED IN THE MCC AND ONE MOUNTED ON THE CONTROL CONSOLE, AND INCLUDE ALL CURRENT TRANSFORMERS AND OTHER HARDWARE NECESSARY TO PROVIDE PROPER OPERATION.
E109	1	POWER AND BUS MONITOR ENCLOSURE	HOFFMAN		NEMA 12 HINGED DOOR ENCLOSURE WITH BACK PANEL, WALL MOUNT, SIZE AS REQUIRED BY EQUIPMENT.
E110	1	SURGE PROTECTIVE DEVICE	MERSEN ELECTRICAL PROTECTION	SURGE TRAP STXP SERIES	SURGE PROTECTIVE DEVICE, U.L. LABELED AS TYPE 1, 1449 THIRD EDITION APPROVED. 200KA SHORT CIRCUIT CURRENT RATING, 480V 3 PHASE CONFIGURATION, NEMA 4X ENCLOSURE, U.L. 96A LIGHTNING PROTECTION, L.E.D. PHASE FAILURE INDICATORS, AND AUDIBLE ALARM.
E111	1	T–1	CUTLER–HAMMER OR EQUIVALENT	DT–3	ENERGY EFFICIENT VENTILATED DRY TYPE TRANSFORMER. U.L. LISTED. 480:208Y/120 VAC, 3PH, 75 KVA, 80C RISE.
E112	1	LP–1	CUTLER–HAMMER	PRL2A	CIRCUIT BREAKER TYPE BRANCH CIRCUIT PANELBOARD. U.L. LISTED. 480Y/277 VAC MAXIMUM, 3PH, 400A, 42 SPACES. 225A THERMAL MAGNETIC MAIN BREAKER. MINIMUM 22KA SYMMETRICAL SHORT CIRCUIT AT 240 VAC. SURFACE MOUNT ENCLOSURE. INTEGRAL 250KA PER PHASE TVSS. BRANCH CIRCUIT BREAKERS AS SHOWN.
E113	1	LP–3	CUTLER–HAMMER	MINI–POWER CENTER	TRANSFORMER/PANELBOARD COMBINATION UNIT, 7.5 KVA, SINGLE PHASE, 480V PRIMARY, 240/120V SECONDARY, 12 SPACES, 316 STAINLESS STEEL ENCLOSURE. PRIMARY BREAKER AND SECONDARY MAIN BREAKERS, 18,000A RMS SYMMETRICAL SHORT CIRCUIT INTERRUPTING CAPACITY MINIMUM, BRANCH CIRCUIT BREAKERS AS SHOWN.
E114	13	SPAN LOCK, TAIL LOCK, BRAKE, & HVAC LOCAL DISCONNECT SWITCH	CUTLER–HAMMER	DR	HEAVY DUTY, ENCLOSED ROTARY, PADLOCKABLE IN THE OFF POSITION, NON–FUSED SAFETY SWITCH. U.L. LISTED. 3 POLE, 600 VAC, 30A, 15 HP (AT 480 VAC, 3PH). NEMA 4X CORROSION RESISTANT STAINLESS STEEL ENCLOSURE.

GROUP 100 EQUIPMENT (CONTINUED)

PIECE NO.	QUANTITY	NAME	MANUFACTURER	TYPE – MODEL	RATING AND DESCRIPTION
E115	4	MAIN DRIVE LOCAL DISCONNECT SWITCH	CUTLER–HAMMER	DH	HEAVY DUTY, SINGLE THROW, NON–FUSED SAFETY SWITCH. U.L. LISTED, 3 POLE, 600 VAC, 100A, 75 HP (AT 480 VAC, 3PH). NEMA 4X CORROSION RESISTANT STAINLESS STEEL (TYPE 316) ENCLOSURE. WITH AUXILIARY CONTACT KIT (FOR PLC FEEDBACK).
E116	2	EAST AND WEST ROADWAY LIGHT TERMINAL BOX	HOFFMAN		NEMA 4X STAINLESS STEEL (TYPE 316) HINGED COVER JUNCTION BOX WITH STAINLESS STEEL BACK PANEL AND NEMA RATED TERMINALS FOR NECESSARY POWER, NEUTRAL, AND GROUND CONNECTIONS. MINIMUM SIZE 10 INCHES BY 8 INCHES BY 4 INCHES OR AS REQUIRED BY NEC.
E117	1	WEST TRAFFIC TERMINAL BOX	HOFFMAN		NEMA 12 HINGED DOOR ENCLOSURE WITH BACK PANEL. TERMINALS INSTALLED FOR POWER, CONTROL, NEUTRAL, AND GROUND CONNECTIONS TO WEST BRIDGE EQUIPMENT AS SHOWN ON PLANS, MINIMUM SIZE 30 INCHES BY 24 INCHES BY 8 INCHES.
E118	1	WEST SUBMARINE TERMINAL BOX	CUSTOM		HEAVY DUTY NEMA 4X TERMINAL BOX, STAINLESS STEEL, SIZING AND TERMINAL COUNT AS REQUIRED FOR SUBMARINE CABLE CONDUCTORS.
E119	1	EAST SUBMARINE TERMINAL BOX	CUSTOM		HEAVY DUTY NEMA 4X TERMINAL BOX, STAINLESS STEEL, SIZING AND TERMINAL COUNT AS REQUIRED FOR SUBMARINE CABLE CONDUCTORS.
E120	2	PIER NAVIGATION LIGHTS JUNCTION BOX	HOFFMAN	CHNFSS	NEMA 4X STAINLESS STEEL (TYPE 316) HINGED COVER JUNCTION BOX WITH STAINLESS STEEL BACK PANEL. 6 INCHES WIDE BY 6 INCHES LONG BY 4 INCHES DEEP
E121	1	ELECTRICAL ROOM, EQUIPMENT ACCESS DOORS	STILES OR OR FIREDOOR	FIREDOOR 07LS–CS	REPLACEMENT EQUIPMENT ACCESS DOORS FOR ELECTRICAL ROOM, DOUBLE DOORS, 316 STAINLESS STEEL CONSTRUCTION, WITH STAINLESS STEEL FRAME AND THRESHOLD SIZED TO FIT EXISTING CONCRETE OPENING, EXISTING OPENING IS APPROXIMATELY 72" WIDE BY 84" HIGH, CORROSION RESISTANT STAINLESS STEEL HARDWARE, THREE POINT CENTER LATCH WITH INSIDE PANIC RELEASE HARDWARE FOR EMERGENCY EXIT, 10 SPARE KEYS.

NOTES:

1. THESE EQUIPMENT SCHEDULES DO NOT PROVIDE AN EXHAUSTIVE LISTING OF ALL EQUIPMENT REQUIRED.
2. THE CONTRACTOR SHALL COORDINATE THE EXACT SIZES OF CIRCUIT BREAKERS, FUSES, CONTACTORS, OVERLOAD RELAYS, CONDUCTORS, AND SUPPLIERS OF THE EQUIPMENT (MOTORS, ETC.) SERVED.
3. THE CONTRACTOR SHALL CONFIRM ALL QUANTITIES AND THE AVAILABILITY OF ALL SPECIFIED ITEMS.

0 1 2 3
INCHES ON FULL SIZE SHEET

NORTH CAROLINA PROFESSIONAL SEAL 025801 ENGINEER LANCE V. BORDEN

MODJESKI and MASTERS
Experience great bridges.
100 Sterling Parkway
Suite 302
Mechanicsburg, PA 17050 NC License No. C–2979

STATE OF NORTH CAROLINA
DEPARTMENT OF TRANSPORTATION
RALEIGH

WRIGHTSVILLE BRIDGE REHABILITATION
WRIGHTSVILLE, NORTH CAROLINA

ELECTRICAL EQUIPMENT SCHEDULE – 1

DRAWN BY	R.L. REED		
SCALE	NONE		
DATE	JUNE 2011		
DRAWING NO.	89 OF 140		
DESIGNED R.I. PETERS	DETAILED R.L. REED		
CHECKED A.M. MARINO	CHECKED A.M. MARINO		

E70

89–ES1.DWG

GROUP 200 EQUIPMENT

PIECE NO.	QUANTITY	NAME	MANUFACTURER	TYPE – MODEL	RATING AND DESCRIPTION
E201	4	MAIN DRIVE SYSTEM	EMERSON	UNIDRIVE	FLUX VECTOR (CLOSED LOOP) TYPE VARIABLE FREQUENCY DRIVE. 480 VAC, 3PH, 30 HP HEAVY DUTY RATING. COMPLETE WITH NEMA 12 FREESTANDING DISCONNECT ENCLOSURES AND ALL FEATURES AND COMPONENTS AS SHOWN IN THE PLANS.
			POWEROHM RESISTORS OR EQUIVALENT		DYNAMIC BRAKING RESISTORS, SIZED ACCORDING TO THE APPLICATION, STAINLESS STEEL CONSTRUCTION, STAINLESS STEEL ENCLOSURE, 150% BRAKING TORQUE, OVERHAULING LOAD CYCLE.
E202	2	MAIN DRIVE SELECTION CONTACTORS	ALLEN–BRADLEY	BULLETIN 505	NEMA 12 ENCLOSURE WITH NEMA SIZE 3 FULL VOLTAGE REVERSING STARTER WITH MINIMUM 90 AMP CONTINUOUS RATING. STARTERS SHALL BE MECHANICALLY AND ELECTRICALLY INTERLOCKED TO ALLOW ONLY ONE TO OPERATE AT A TIME. NO OVERLOAD RELAY.
E203	4	MAIN DRIVE MOTOR	MAGNETEK	CUSTOM	VECTOR DUTY MOTOR, SEVERE DUTY, 30 HP, 460V, 3PH, 60 HZ, 900 RPM SYNCHRONOUS, 365T FRAME, TENV 60 MINUTE DUTY, CLASS H INSULATION, BUILT IN ANTI CONDENSATION HEATER. WITH PROVISIONS FOR ENCODER MOUNTING, WITH ADDITIONAL REQUIREMENTS PER MECHANICAL SPECIFICATIONS.
			NORTHSTAR	RIM TECH 6200	MILL DUTY INCREMENTAL ENCODER, FOOT MOUNT, NEMA 4, 5/8 INCH SHAFT, COUNTS PER DRIVE MANUFACTURER'S REQUIREMENTS.
E204	1	PLC SYSTEM	ALLEN–BRADLEY	SLC500	PROGRAMMABLE LOGIC CONTROLLER SYSTEM WITH ON–LINE AND SPARE PROCESSORS, LOCAL AND REMOTE RACKS, DISCRETE AND ANALOG I/O, SPECIALTY MODULES, AND ALL RELATED HARDWARE. INTERNAL AND DATA MEMORY OF EACH PROCESSOR SHALL 64K WORDS. INTERNAL RAM SHALL BE BATTERY BACKED. BUILT IN COMMUNICATIONS SHALL INCLUDE RS–232 AND 10BASE–T ETHERNET. FOR SEQUENTIAL CONTROL AND INTERLOCKING OF BRIDGE OPERATION. COMPLETE WITH ALL FEATURES AND COMPONENTS AS SHOWN.
E205	1	PLC CONTROL CABINET	CUSTOM		NEMA 12 FREESTANDING ENCLOSURE WITH BACK PANEL. INCLUDING CONTROL EQUIPMENT AND HARDWARE PER PLANS AND SPECIFICATIONS.
E206	1	EAST REMOTE I/O CABINET	CUSTOM		NEMA 4X STAINLESS STEEL HINGED DOOR WALL MOUNT ENCLOSURE WITH BACK PANEL. INCLUDING CONTROL EQUIPMENT AND HARDWARE PER PLANS AND SPECIFICATIONS.
E207	1	CONTROL CONSOLE	CUSTOM		CONTROL CONSOLE COMPLETE WITH FEATURES AND ALL COMPONENTS PER PLANS AND SPECIFICATIONS. STAINLESS STEEL TOP SURFACES, MODULAR DESIGN TO ALLOW DISASSEMBLY FOR TRANSPORT INTO THE SECOND FLOOR CONTROL ROOM.
E208	2	FULLY SEATED PROX. SWITCH	ALLEN–BRADLEY	871TM	STAINLESS STEEL 2 WIRE AC PROXIMITY SWITCH, 30MM BARREL, PLC INTERFACE STYLE, WITH MICRO QUICK DISCONNECT CORDSET.
E209	2	RESOLVER PLC INPUT CARD	GEMCO	1746–R2	PLC RESOLVER INPUT CARD, TWO CHANNEL, COMPATABLE WITH AB SLC500 PLC'S (PART OF ITEM E204).
E210	1	SPAN POSITION ROTARY CAM LIMIT SWITCH	GEMCO	1980R	ROTARY CAM LIMIT SWITCH WITH BUILT IN RESOLVER. SINGLE TURN, 7 CAMS, DPDT SWITCHES (14 TOTAL CONTACT SETS). CONTACTS RATED 10A AT 120 VAC. NEMA 4 HOUSING. INTERNAL TIMING DIAL. LEFT END SHAFT EXTENSION.
E211	1	SPAN POSITION ROTARY CAM LIMIT SWITCH	GEMCO	1980R	ROTARY CAM LIMIT SWITCH WITH BUILT IN RESOLVER. SINGLE TURN, 7 CAMS, DPDT SWITCHES (14 TOTAL CONTACT SETS). CONTACTS RATED 10A AT 120 VAC. NEMA 4 HOUSING. INTERNAL TIMING DIAL. RIGHT END SHAFT EXTENSION.
E212	8	TAIL LOCK SWITCH	ALLEN–BRADLEY	802MC	LEVER ARM LIMIT SWITCH, CORROSION RESISTANT, PRE–WIRED STYLE. TWO CIRCUITS (1 NORM. OPEN, 1 NORM. CLOSED). NEMA 4X CONSTRUCTION. EITHER CLOCKWISE OR COUNTER–CLOCKWISE OPERATING AS REQUIRED. LEVER ARM AS INDICATED.
E213	1	SPAN LOCK LIMIT SWITCH	GEMCO	1980	ROTARY CAM LIMIT SWITCH SINGLE TURN, 5 CAMS, DPDT SWITCHES (10 TOTAL CONTACT SETS). CONTACTS RATED 10A AT 120 VAC. NEMA 12 HOUSING. INTERNAL TIMING DIAL. DOUBLE SHAFT EXTENSION.
E214	2	AUXILIARY DRIVE CLUTCH LIMIT SWITCH	ALLEN–BRADLEY	802MC	LEVER ARM LIMIT SWITCH, CORROSION RESISTANT, PRE–WIRED STYLE. TWO CIRCUITS (1 NORM. OPEN, 1 NORM. CLOSED). NEMA 4X CONSTRUCTION. EITHER CLOCKWISE OR COUNTER–CLOCKWISE OPERATING AS REQUIRED. LEVER ARM AS INDICATED.
E215	5	SPAN AND TAIL LOCK HAND CRANK LIMIT SWITCH	ALLEN–BRADLEY	802MC	LEVER ARM LIMIT SWITCH, CORROSION RESISTANT, PRE–WIRED STYLE. TWO CIRCUITS (1 NORM. OPEN, 1 NORM. CLOSED). NEMA 4X CONSTRUCTION. EITHER CLOCKWISE OR COUNTER–CLOCKWISE OPERATING AS REQUIRED. LEVER ARM AS INDICATED.
E216	2	AUXILIARY DRIVE CONTROLLER	CUSTOM	CUSTOM	NEMA TYPE REVERSING COMBINATION STARTER. U.L. LISTED. 480 VAC, 3 PHASE, NEMA SIZE 1. EUTECHTIC ALLOY OVERLOADS. NEMA 4X STAINLESS STEEL DISCONNECT STYLE ENCLOSURE (TYPE 316) WITH 30A LOCKABLE DISCONNECT SWITCH. CONTROL TRANSFORMER, CONTROL SWITCHES AND PILOT LIGHTS AS SHOWN IN PLANS.
			CUSTOM	CUSTOM	PENDANT PUSHBUTTON STATION, NEMA 4X RATING. CONTROL SWITCHES AS SHOWN IN PLANS. 30 FEET LONG TYPE SOW CORD.

GROUP 200 EQUIPMENT (CONTINUED)

PIECE NO.	QUANTITY	NAME	MANUFACTURER	TYPE – MODEL	RATING AND DESCRIPTION
E217	6	TRAFFIC GATES	B & B ELECTROMATIC CORPORATION	VW–5	VERTICAL TO HORIZONTAL TYPE WARNING GATE, ELECTRO–MECHANICAL DRIVE, WITH 480V, 3 PHASE REVERSIBLE MOTOR, SOLENOID TYPE AUTO–MATIC RELEASE BRAKE, 8 INDEPENDENT SPDT CONTROL SWITCHES, ARM LENGTHS AND WARNING LIGHTS ACCORDING TO PLANS AND SPECIFICATIONS, WITH FLASHER UNIT INSTALLED, NO MOTOR STARTERS.

NOTES:

1. THESE EQUIPMENT SCHEDULES DO NOT PROVIDE AN EXHAUSTIVE LISTING OF ALL EQUIPMENT REQUIRED.
2. THE CONTRACTOR SHALL COORDINATE THE EXACT SIZES OF CIRCUIT BREAKERS, FUSES, CONTACTORS, OVERLOAD RELAYS, CONDUCTORS, AND SUPPLIERS OF THE EQUIPMENT (MOTORS, ETC.) SERVED.
3. THE CONTRACTOR SHALL CONFIRM ALL QUANTITIES AND THE AVAILABILITY OF ALL SPECIFIED ITEMS.

0 1 2 3
INCHES ON FULL SIZE SHEET

NORTH CAROLINA PROFESSIONAL SEAL 025801 ENGINEER LANCE V. BORDEN

MODJESKI and MASTERS
Experience great bridges.
100 Sterling Parkway
Suite 302
Mechanicsburg, PA 17050 NC License No. C–2979

STATE OF NORTH CAROLINA
DEPARTMENT OF TRANSPORTATION
RALEIGH

WRIGHTSVILLE BRIDGE REHABILITATION
WRIGHTSVILLE, NORTH CAROLINA

ELECTRICAL EQUIPMENT SCHEDULE – 2

		DRAWN BY	R.L. REED
		SCALE	NONE
DESIGNED R.I. PETERS	DETAILED R.L. REED	DATE	JUNE 2011
CHECKED A.M. MARINO	CHECKED A.M. MARINO	DRAWING NO.	90 OF 140

E71

90–ESS2.DWG

GROUP 300 EQUIPMENT

PIECE NO.	QUANTITY	NAME	MANUFACTURER	TYPE – MODEL	RATING AND DESCRIPTION
E301	15 (APPROX.)	LIGHT SWITCH	HUBBELL	HBL1221BLK HBL1222BLK HBL1223BLK HBL1224BLK	HEAVY DUTY SPECIFICATION GRADE, AC SWITCH. U.L. LISTED, 120/277 VAC, 20A. SINGLE POLE, DOUBLE POLE, THREE WAY, OR FOUR WAY AS REQUIRED. CORROSION RESISTANT, WEATHERPROOF, COVER CLOSED, PLATES REQUIRED FOR OUTDOOR AREAS, TRUNNION ROOMS, AND MACHINERY AREAS.
E302	10 (APPROX.)	DUPLEX RECEPTACLE	HUBBELL	HBL5362BK	HEAVY DUTY SPECIFICATION GRADE DUPLEX AC RECEPTACLE. U.L. LISTED. 120 VAC, 20A, NEMA 5–20R. CORROSION RESISTANT, WEATHERPROOF, COVER CLOSED, PLATES REQUIRED FOR OUTDOOR AREAS, TRUNNION ROOMS, AND MACHINERY AREAS.
E303	43 (APPROX.)	GFCI DUPLEX RECEPTACLE	HUBBELL	GF5362GYA	HEAVY DUTY SPECIFICATION GRADE DUPLEX AC GFCI RECEPTACLE. U.L. LISTED. 120 VAC, 20A, NEMA 5–20R. CORROSION RESISTANT, WEATHERPROOF, COVER CLOSED, PLATES REQUIRED FOR OUTDOOR AREAS, TRUNNION ROOMS, AND MACHINERY AREAS.
E304	5	OUTDOOR LED LUMINAIRE	LITHONIA	VAP LED SERIES	LED ROUGH SERVICE LUMINAIRE. U.L. LISTED FOR WET LOCATIONS, 120VAC AND BATTERY BACKUP OPTION FOR EGRESS, 39 WATT, STAINLESS STEEL LATCHES, WITH CEILING MOUNT HARDWARE AND WET LOCATION FITTINGS.
E305	7	ELECTRICAL ROOM LUMINAIRE	LITHONIA	EJS	GENERAL PURPOSE INDUSTRIAL FLUORESCENT LUMINAIRE. U.L. LISTED. 4FT, TWO BULB. 120 VAC, TWO T8 LAMPS. RAPID START, 32F BALLAST.
E306	2	CONTROL HOUSE EMERGENCY LUMINAIRE	MULE LIGHTING	NM4 SERIES	BATTERY POWERED EMERGENCY LIGHTING UNIT. U.L. LISTED. 120 VAC. TWO ADJUSTABLE LAMP HEADS WITH 12W HALOGEN LAMPS. MAINTENANCE FREE BATTERY, NEMA 4X, MINIMUM 90 MINUTE ILLUMINATION TIME.
E307	6	CONTROL HOUSE LUMINAIRE	CORONET	PS–1	DIFFUSER LENSED, SUSPENDED MOUNT DIRECT AND INDIRECT LIGHTING FLUORESCENT LUMINAIRE. U.L. LISTED 4FT, TWO BULB. 120 VAC, WITH 32W LAMPS, WHITE FINISH, WITH MOUNTING HARDWARE.
E308	1	RESTROOM HOT WATER HEATER	BOSCH ARISTON	GL2.5	POINT OF USE HOT WATER HEATER, 120VAC, 1500WATTS, U.L. LISTED, 2.75 GALLON CAPACITY.
E309	1	RESTROOM TIMER SWITCH	LEVITON	LTB15–1L	FIVE BUTTON TIMER SWITCH, RATED 20A RESISTIVE AT 120VAC, SINGLE POLE, FOUR PRESET BUTTONS (2, 5, 10, 15 MINUTES) AND OFF, WITH COVER, U.L. LISTED.
E310	1	RESTROOM EXHAUST FAN	BROAN OR EQUIVALENT		U.L. LISTED BATHROOM EXHAUST FAN WITH NECESSARY MOUNTING BRACKETS, TRIM, DUCTWORK, AND BACK DRAFT DAMPER, 120 VAC.
E311	5	CONTROL HOUSE WALLPACK LUMINAIRE	MULE LIGHTING	EMLED SERIES EOE	LED OUTDOOR WALLPACK LUMINAIRE. U.L. LISTED FOR WET LOCATIONS, HIGH POWER LED LAMPS, 50,000 HOUR LAMP LIFE, 120 VAC, DUAL LIGHTING FUNCTION WITH BATTERY BACKUP, WHITE HOUSING.
E312	3	CONTROL HOUSE EMERGENCY LUMINAIRE / EXIT SIGN	MULE LIGHTING	N4X SERIES	BATTERY POWERED EMERGENCY LIGHTING UNIT. U.L. LISTED. 120 VAC. TWO ADJUSTABLE LAMP HEADS WITH LAMPS. RED HIGH OUTPUT L.E.D. EXIT SIGN, MAINTENANCE FREE BATTERY, NEMA 4X, MINIMUM 90 MINUTE ILLUMINATION TIME.
E313	5	SINGLE RECEPTACLE FOR EMERGENCY LUMINAIRE	HUBBELL	HBL52CM61	CORROSION RESISTANT AC RECEPTACLE. U.L. LISTED 120 VAC, 15A, NEMA 5–15R.
E314	2	DUSK TO DAWN LUMINAIRE	HUBBELL	DDS	DUSK TO DAWN TYPE AREA LUMINAIRE. U.L. LISTED. 120 VAC. 150W HIGH PRESSURE SODIUM LAMP. CAST ALUMINUM HOUSING AND CURVED MOUNTING ARM, –20F BALLAST. TWISTLOCK PHOTO–CONTROL.
E315	8	MACHINERY ROOM LUMINAIRE	CROUSE–HINDS OR EQUIVALENT	VXHA45GP	ENCLOSED INDUSTRIAL INCANDESCENT LUMINAIRE. U.L. LISTED. 120 VAC, 150W, 1¼ INCH HUB SIZE, STANCHION MOUNT WITH 150W ROUGH SERVICE LAMP. SUITABLE FOR USE IN WET LOCATIONS.
E316	8	DAMP LOCATION FLUORESCENT LUMINAIRE	LITHONIA	DMW	INDUSTRIAL DAMP LOCATION FLUORESCENT LUMINAIRE, U.L. LISTED, ENCLOSED AND GASKETED, 4FT TWO BULB CONFIGURATION, 120VAC, TWO T8 HIGH OUTPUT LAMPS, RAPID START –20F BALLAST.
E317	4	BASCULE SPAN NAVIGATION LIGHT HANGER	CUSTOM		TO BE SUPPLIED BY NCDOT.
E318	4	BASCULE SPAN NAVIGATION LIGHT	PHAROS MARINE AUTOMATIC POWER	FA–143	WATERWAY NAVIGATION LIGHT FOR MARKING BASCULE SPANS. 180 DEGREE, 200MM O.D., GREEN FRESNEL LENS ABOVE 180 DEGREE, 200MM O.D. RED FRESNEL LENS. 120 VAC, MINIMUM 45 CANDLAS L.E.D. LAMPS. CAST ALUMINUM HOUSING AND SWIVEL MOUNTING BASE WITH AUTOMATIC LATCH. STAINLESS STEEL (TYPE 316) RETRIEVAL CHAIN. GALVANIZED STEEL PLATE COUNTERWEIGHT.
E319	6	FENDER NAVIGATION LIGHT	PHAROS MARINE AUTOMATIC POWER	FA–143	WATERWAY NAVIGATION LIGHT FOR MARKING FIXED OBSTRUCTIONS. 180 DEGREE, 200MM O.D., RED FRESNEL LENS. 120 VAC, MINIMUM 45 CANDELAS L.E.D. LAMP. CAST ALUMINUM HOUSING AND MOUNTING BASE. GALVANIZED SCHEDULE 40 STEEL PIPE STEM.

GROUP 300 EQUIPMENT (CONTINUED)

PIECE NO.	QUANTITY	NAME	MANUFACTURER	TYPE – MODEL	RATING AND DESCRIPTION
E320	5	CONTROL HOUSE LUMINAIRE	LITHONIA	LB	DIFFUSER LENSED, SURFACE MOUNT FLUORESCENT LUMINAIRE, U.L. LISTED, 4FT, TWO BULB. 120 VAC, WITH 32W T8 LAMPS, RAPID START BALLAST, WHITE FINISH, WITH MOUNTING HARDWARE.
E321	1	FIRE ALARM SYSTEM	EDWARDS SIGNALING/GE SECURITY OR AS REQUIRED BY LOCAL CODE	E–FSC SERIES OR AS REQUIRED BY LOCAL CODE	MULTI–ZONE FIRE ALARM SYSTEM WITH FEATURES AND COMPONENTS AS INDICATED. THE INSTALLED SYSTEM MUST MEET AND LOCAL CODE REQUIREMENTS AND NCDOT REQUIREMENTS.
E322	2	ELECTRICAL ROOM HEATER UNITS	QMARK	PH–5HW	ELECTRIC UTILITY HEATER, BUILT IN THERMOSTAT, 3.7KW, 208 VAC, SINGLE PHASE POWER.
E323	2	WATER, SEWER LINE HEAT TRACE SYSTEMS	RAYCHEM OR EQUIVALENT	WINTERGARD WET OR EQUIVALENT	PROVIDE WEATHER RESISTANT HEAT TRACE SYSTEM FOR EXISTING SEWER AND WATER LINES. INCLUDE ALL NECESSARY HARDWARE AND INSTALLATION ACCESSORIES, NEMA 4X RATED THERMOSTAT CONTROLS AND SENSORS, PIPE INSULATION RATED FOR OUTDOOR MARINE EXPOSURE, APPROXIMATELY 400 FEET FOR EACH SYSTEM.
E324	2	CONTROL AND STORAGE ROOM HEAT PUMP SYSTEM	MITSIBISHI	PCA/PUZ SERIES	DUCTLESS SPLIT SYSTEM HEAT PUMP, 208V SINGLE PHASE AND ALL NECESSARY PLUMBING, INDOOR AND OUTDOOR UNITS, MOUNTING BRACKETS, WIRING, AND REFRIGERANT FOR INSTALLATION, PROGRAMMABLE THERMOSTAT, CEILING MOUNT AS REQUIRED, 18,000 BTU OR BETTER COOLING CAPACITY, 19,000 BTU OR BETTER HEATING CAPACITY.
E325	2	CONTROL CONSOLE DESK LUMINAIRE	FOSTORIA	66–FTT26–701B	HEAVY DUTY MACHINE TOOL LIGHT, PROTECTIVE LENS COVER, ADJUSTABLE ARM WITH 38" OVERALL REACH. 26W FLUORESCENT LAMP WITH NECESSARY BRACKET TO MOUNT ON THE CONTROL CONSOLE.
E326	1	CCTV SYSTEM			PROVIDE, INSTALL, AND CONFIGURE A CLOSED CIRCUIT TV SYSTEM AS DESCRIBED IN THE PLANS.
E327	1	CONTROL HOUSE WEATHER STATION	DAVIS INSTRUMENTS	VANTAGE PRO2 SERIES	WIRELESS WEATHER STATION, SOLAR POWERED SENSOR UNIT WITH TEMPERATURE, HUMIDITY, RAIN COLLECTOR, AND ANEMOMETER. CONSOLE DISPLAY WITH 120VAC ADAPTOR, WITH REQUIRED MOUNTING POLE, BRACKETS, AND STAINLESS STEEL HARDWARE.
E328	7	FIRE EXTINGUISHER			20 LB ABC TYPE DRY CHEMICAL FIRE EXTINGUISHER, USCG APPROVED, WITH STEEL SHELL AND BRASS FITTINGS, WITH WALL MOUNTING HARDWARE.
E329	1	CABLE MODE	AS SPECIFIED BY PHONE PROVIDER		CABLE MODEM FOR INTERNET CONNECTION
E330	2	FLOOD LIGHT	HOLOPHANE	PREDITOR PF SERIES	MARINE RATED, NEMA 4X, HEAVY DUTY FLOODLIGHT, UL LISTED, SUITABLE FOR MARINE OUTSIDE AREAS, MULTI–VOLTAGE TAP, ENERGY, SAVING BALLAST, 400W HIGH PRESSURE SODIUM LAMP, WIDE HORIZONTAL AND VERTICAL BEAM, KNUCKLE MOUNT WITH HARDWARE.
E331	2	WALL SWITCH OCCUPANCY SENSOR	HUBBEL	LIGHTHAWK MULTI–TECH. LHMTS1	WALL SWITCH OCCUPANCY SENSOR UNIT, U.L. LISTED, RATED FOR 120VAC 1000W FLUORESCENT, AUTO OR MANUAL ON, AUTO OFF OPERATION, ULTRASONIC AND INFRARED SENSING, NO MINIMUM LOAD REQUIREMENT.
E332	1	CEILING MOUNT OCCUPANCY SENSOR	LITHONIA	ODCOS–I1 SERIES	CEILING MOUNTED OCCUPANCY SENSOR, U.L. LISTED, RATED FOR 120VAC 1000 VA FLUORESCENT, SELF–CONTAINED, PASSIVE INFRARED, 360 DEGREE FIELD OF VIEW, 530 SQ. FEET COVERAGE

NOTES:

1. THESE EQUIPMENT SCHEDULES DO NOT PROVIDE AN EXHAUSTIVE LISTING OF ALL EQUIPMENT REQUIRED.
2. THE CONTRACTOR SHALL COORDINATE THE EXACT SIZES OF CIRCUIT BREAKERS, FUSES, CONTACTORS, OVERLOAD RELAYS, CONDUCTORS, AND SUPPLIERS OF THE EQUIPMENT (MOTORS, ETC.) SERVED.
3. THE CONTRACTOR SHALL CONFIRM ALL QUANTITIES AND THE AVAILABILITY OF ALL SPECIFIED ITEMS.

0 1 2 3
INCHES ON FULL SIZE SHEET

NORTH CAROLINA PROFESSIONAL SEAL 025801 ENGINEER LANCE V. BORDEN 2-22-2011

MODJESKI and MASTERS
Experience great bridges.
100 Sterling Parkway
Suite 302
Mechanicsburg, PA 17050 NC License No. C–2979

E72

STATE OF NORTH CAROLINA
DEPARTMENT OF TRANSPORTATION
RALEIGH

WRIGHTSVILLE BRIDGE REHABILITATION
WRIGHTSVILLE, NORTH CAROLINA

ELECTRICAL EQUIPMENT SCHEDULE – 3

DESIGNED R.I. PETERS	DETAILED R.L. REED	DRAWN BY R.L. REED	
CHECKED A.M. MARINO	CHECKED A.M. MARINO	SCALE NONE	
		DATE JUNE 2011	
		DRAWING NO. 91 OF 140	

91–EES3.DWG

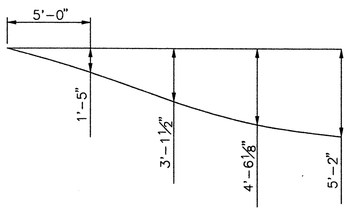

SECTION A-A

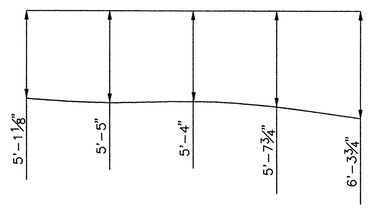

SECTION B-B

ON SITE GRADE MEASUREMENTS

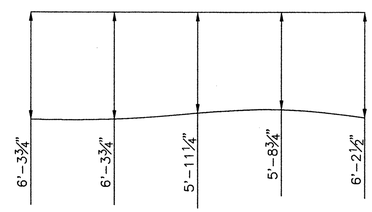

SECTION C-C

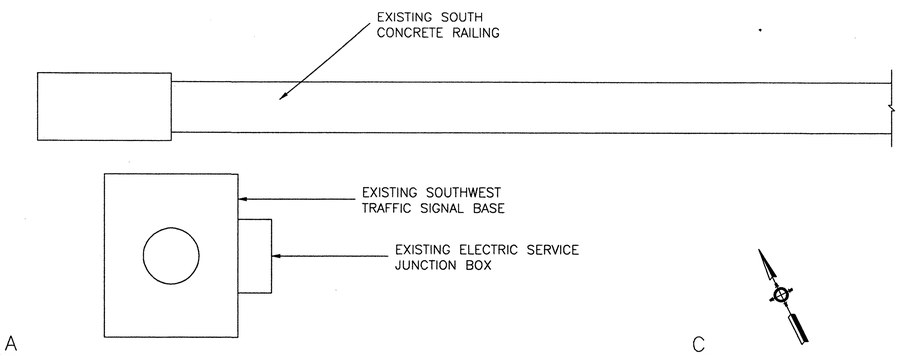

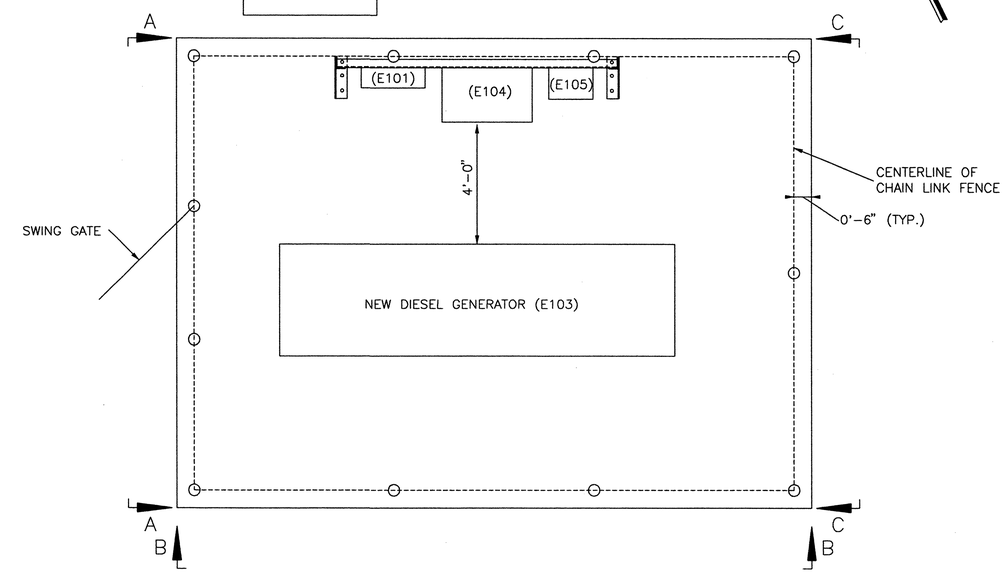

PROPOSED GENERATOR PAD LOCATION AND LAYOUT

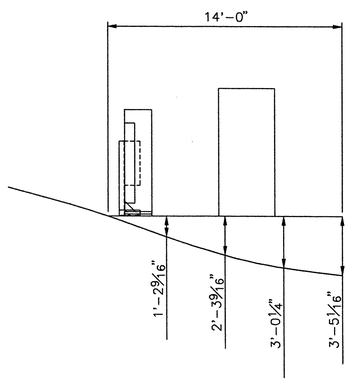

SECTION A-A

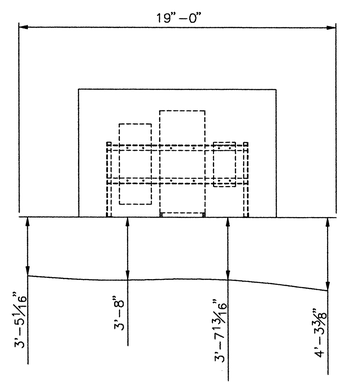

SECTION B-B

ESTIMATED GRADE REMOVAL

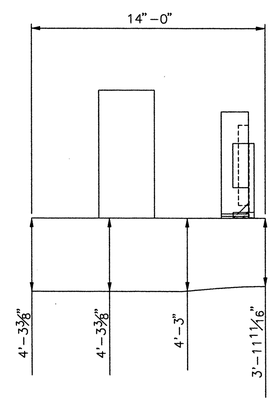

SECTION C-C

NOTES:

1. THE CONTRACTOR SHALL PROVIDE A STAINLESS STEEL FRAME FOR MOUNTING THE SERVICE DISCONNECT AND LOAD PANEL/TRANSFORMER. MATERIAL SHALL BE 3" BY 3" BY 1/4" STAINLESS STEEL ANGLE MINIMUM WITH ALL JOINTS CONTINUOUSLY WELDED ALL AROUND. DIMENSIONS AND OTHER CHARACTERISTICS SHALL BE AS REQUIRED TO ACCOMMODATE THE EQUIPMENT SUPPORTED.
2. PROVIDE AND INSTALL ANCHOR BOLTS AS RECOMMENDED BY THE GENERATOR MANUFACTURER FOR THE GENERATOR ENCLOSURE AND FUEL TANK BASE. VIBRATION ISOLATORS SHALL BE PROVIDED FOR THE GENERATOR SET.
3. THE CONTRACTOR SHALL PLAN AND INSTALL EMBEDDED CONDUITS FOR POWER AND CONTROL CONNECTIONS TO THE GENERATOR. CONCRETE EMBEDDED CONDUITS SHALL BE PVC COATED RIGID METAL CONDUIT AS DESCRIBED IN THE SPECIAL PROVISIONS.
4. MOUNT DUSK TO DAWN LIGHT ON EXTENDED FENCE POST, APPROXIMATELY 14 FT HEIGHT.
5. PRIOR TO EXCAVATION, THE CONTRACTOR SHALL LOCATE ANY EXISTING UNDERGROUND UTILITIES. THE CONTRACTOR SHALL BE RESPONSIBLE FOR COORDINATION WITH ALL INVOLVED UTILITY COMPANIES, PROVIDING TEMPORARY SERVICES DURING CONSTRUCTION, AND FOR ANY LABOR, MATERIALS, AND FEES ASSOCIATED WITH NEW OR RELOCATED UTILITIES.

0 1 2 3
INCHES ON FULL SIZE SHEET

92-GEN1.DWG

NORTH CAROLINA PROFESSIONAL ENGINEER SEAL 025801 LANCE V. BORDEN

MODJESKI and MASTERS
Experience great bridges.
100 Sterling Parkway
Suite 302
Mechanicsburg, PA 17050 NC License No. C-2979

STATE OF NORTH CAROLINA
DEPARTMENT OF TRANSPORTATION
RALEIGH

WRIGHTSVILLE BRIDGE REHABILITATION
WRIGHTSVILLE, NORTH CAROLINA

GENERATOR PAD – 1

		DRAWN BY	A.M. MARINO
		SCALE	NONE
DESIGNED A.M. MARINO	DETAILED A.M. MARINO	DATE	JUNE 2011
CHECKED R.I. PETERS	CHECKED R.I. PETERS	DRAWING NO.	92 OF 140

E73

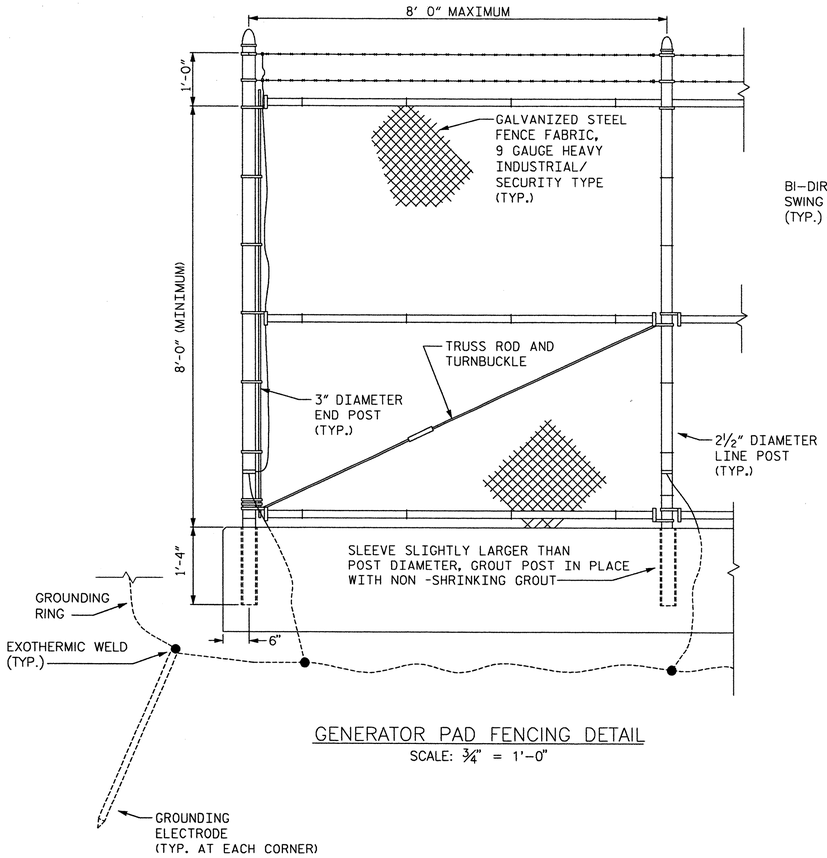

GENERATOR PAD FENCING DETAIL
SCALE: ¾" = 1'-0"

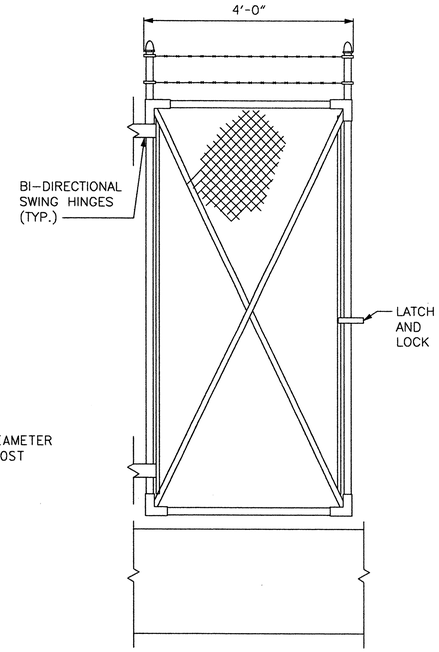

SWING GATE DETAIL
SCALE: ¾" = 1'-0"

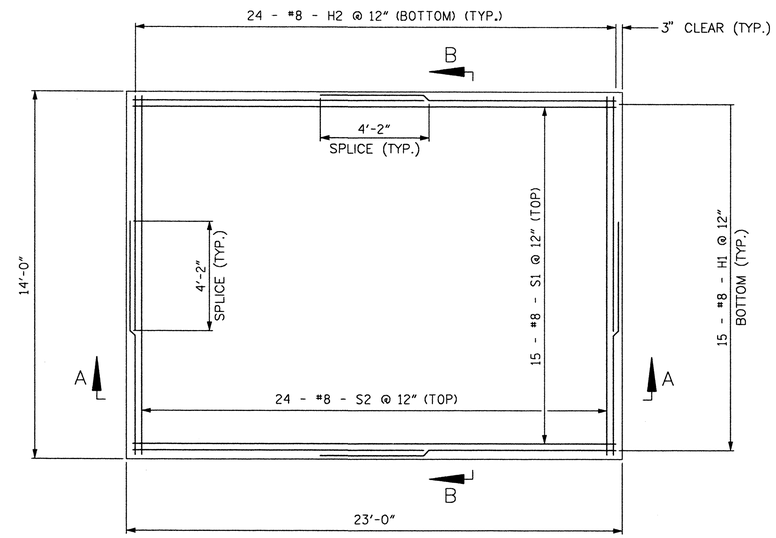

PLAN
SCALE: ⅜" = 1'-0"

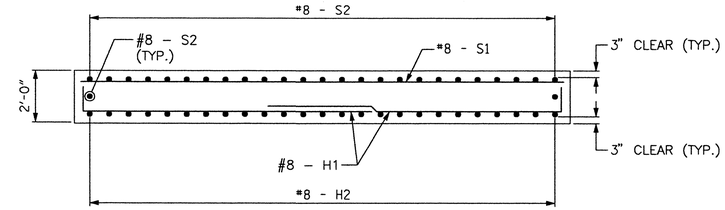

SECTION A–A
SCALE: ⅜" = 1'-0"

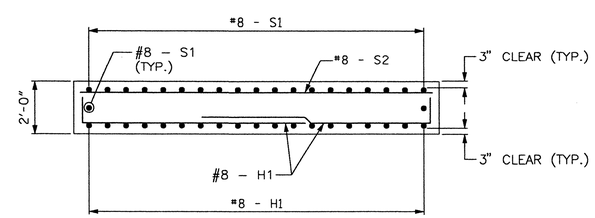

SECTION B–B
SCALE: ⅜" = 1'-0"

GENERATOR PAD
REINFORCEMENT DETAIL

NOTES:

1. CHAIN LINK FABRIC, POSTS, RAILS, GATES, AND OTHER ASSOCIATED HARDWARE SHALL BE GALVANIZED STEEL. A MOISTURE-EXCLUDING CAP IS REQUIRED FOR ALL POSTS.
2. POSTS SHALL BE HIGH STRENGTH SCHEDULE 40 PIPE. TOP RAIL, BRACE RAIL, AND BOTTOM RAIL SHALL BE 1 5/8" DIAMETER. TRUSS ROD ADJUSTING UNITS SHALL BE 3/8" DIAMETER MINIMUM.
3. THE SWING GATE SHALL HAVE LOCKABLE TYPE HARDWARE WITH CORROSION RESISTANT LOCK. LOCK TYPE AND KEYING SHALL BE AS SPECIFIED BY THE DEPARTMENT.
4. BONDING CONNECTIONS TO POSTS, FABRIC, AND BARBED WIRE SHALL BE MADE WITH UL LISTED GROUND CLAMPS. COMPRESSION TYPE CONNECTORS SHALL BE SUITABLE FOR USE WITH COPPER.
5. PROVIDE AND INSTALL FOUR GROUNDING ELECTRODES, ONE AT EACH CORNER OF THE GENERATOR PAD. GROUNDING ELECTRODES SHALL BE DRIVEN TO A DEPTH OF AT LEAST 12 INCHES BELOW FINISHED GRADE. INSTALL A GROUNDING RING AROUND THE PERIMETER OF THE PAD AT A SIMILAR DEPTH BELOW GRADE. GROUNDING RING CONDUCTOR SHALL BE AS SPECIFIED FOR STRUCTURE GROUNDING AND LIGHTNING PROTECTION.
6. GROUNDING CONDUCTORS FOR FENCE GROUNDING SHALL BE 2AWG SOLID COPPER WITH TIN PLATING. GATES SHALL BE BONDED WITH 2AWG FLEXIBLE STRANDED COPPER CONDUCTORS.
7. PROVIDE GROUNDING CONNECTIONS TO THE GROUNDING RING FOR THE GENERATOR AND LOAD PANEL AS SHOWN IN THE PLANS. PROVIDE AND INSTALL A MINIMUM 2/0 AWG CONNECTION TO THE BRIDGE SERVICE GROUND.
8. ALL COSTS FOR THE GENERATOR PAD AND ASSOCIATED EQUIPMENT SHALL BE INCIDENTAL TO BID ITEM "BRIDGE ELECTRICAL WORK."

0 1 2 3
INCHES ON FULL SIZE SHEET

NORTH CAROLINA PROFESSIONAL SEAL 025801 ENGINEER LANCE V. BORDEN
2-22-2011

MODJESKI and MASTERS
Experience great bridges.
100 Sterling Parkway
Suite 302
Mechanicsburg, PA 17050 NC License No. C-2979

STATE OF NORTH CAROLINA
DEPARTMENT OF TRANSPORTATION
RALEIGH

WRIGHTSVILLE BRIDGE REHABILITATION
WRIGHTSVILLE, NORTH CAROLINA

GENERATOR PAD – 2

		DRAWN BY	R.I. PETERS
		SCALE	NONE
DESIGNED R.I. PETERS	DETAILED R.I. PETERS	DATE	JUNE 2011
CHECKED A.M. MARINO	CHECKED A.M. MARINO	DRAWING NO.	93 OF 140

E74

SJ-0010.DWG

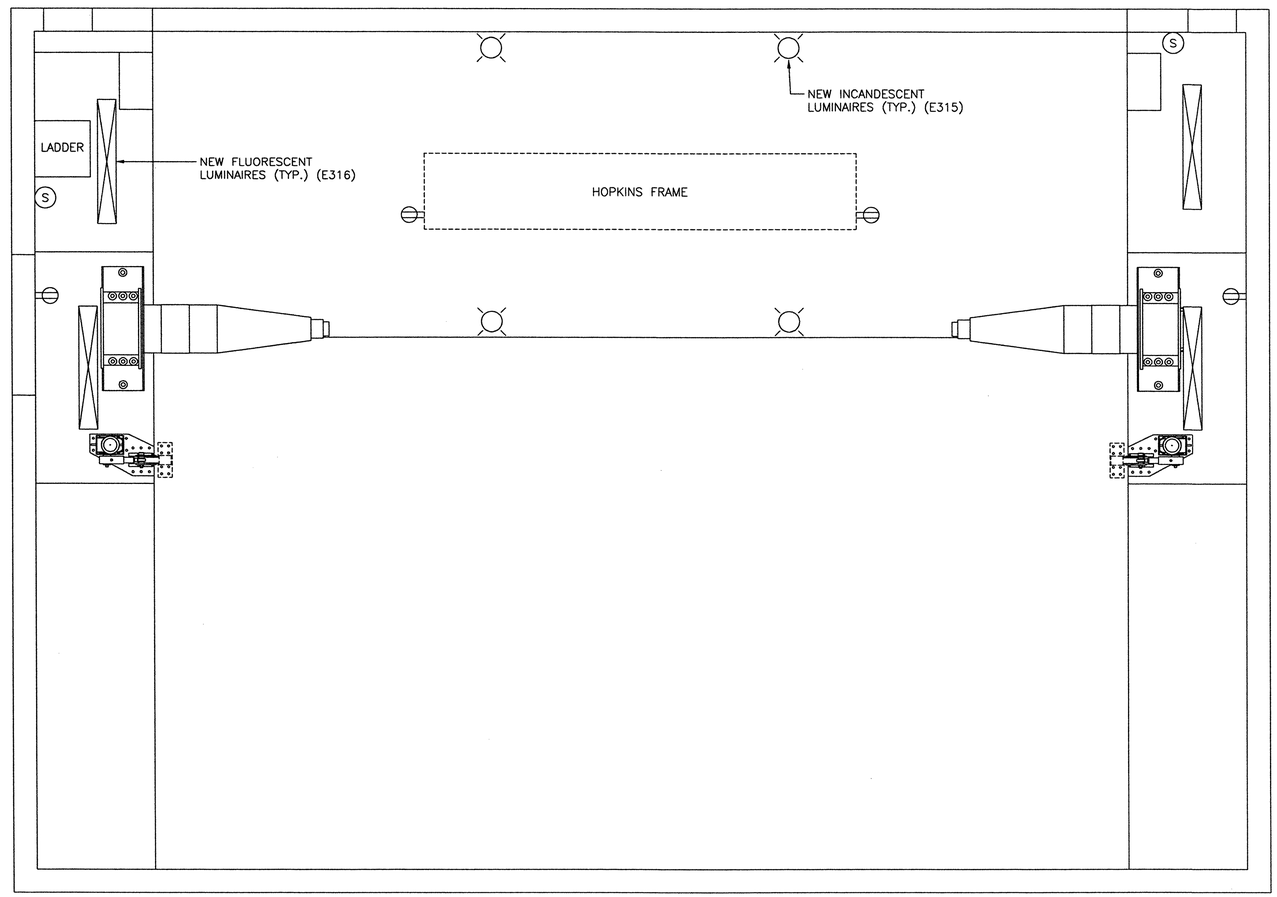

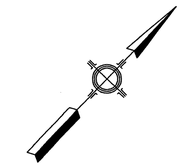

– NEW 120VAC RECEPTACLE

– NEW LIGHT SWITCH

EAST MACHINERY
LIGHTING

NOTES:

1. LOCATIONS SHOWN ARE APPROXIMATE. THE CONTRACTOR SHALL DEVELOP AN ACTUAL FLOOR PLAN APPROVAL BY THE ENGINEER. NOT ALL ITEMS ARE SHOWN.

0 1 2 3
INCHES ON FULL SIZE SHEET

94-PE_EastMachl.DWG

NORTH CAROLINA PROFESSIONAL SEAL 025801 ENGINEER LANCE V. BORDEN

MODJESKI and MASTERS
Experience great bridges.
100 Sterling Parkway
Suite 302
Mechanicsburg, PA 17050 NC License No. C-2979

E75

STATE OF NORTH CAROLINA
DEPARTMENT OF TRANSPORTATION
RALEIGH

WRIGHTSVILLE BRIDGE REHABILITATION
WRIGHTSVILLE, NORTH CAROLINA

EAST MACHINERY LIGHTING LAYOUT

		DRAWN BY	R.I. PETERS
		SCALE	NONE
DESIGNED R.I. PETERS	DETAILED R.I. PETERS	DATE	JUNE 2011
CHECKED A.M. MARINO	CHECKED A.M. MARINO	DRAWING NO.	94 OF 140

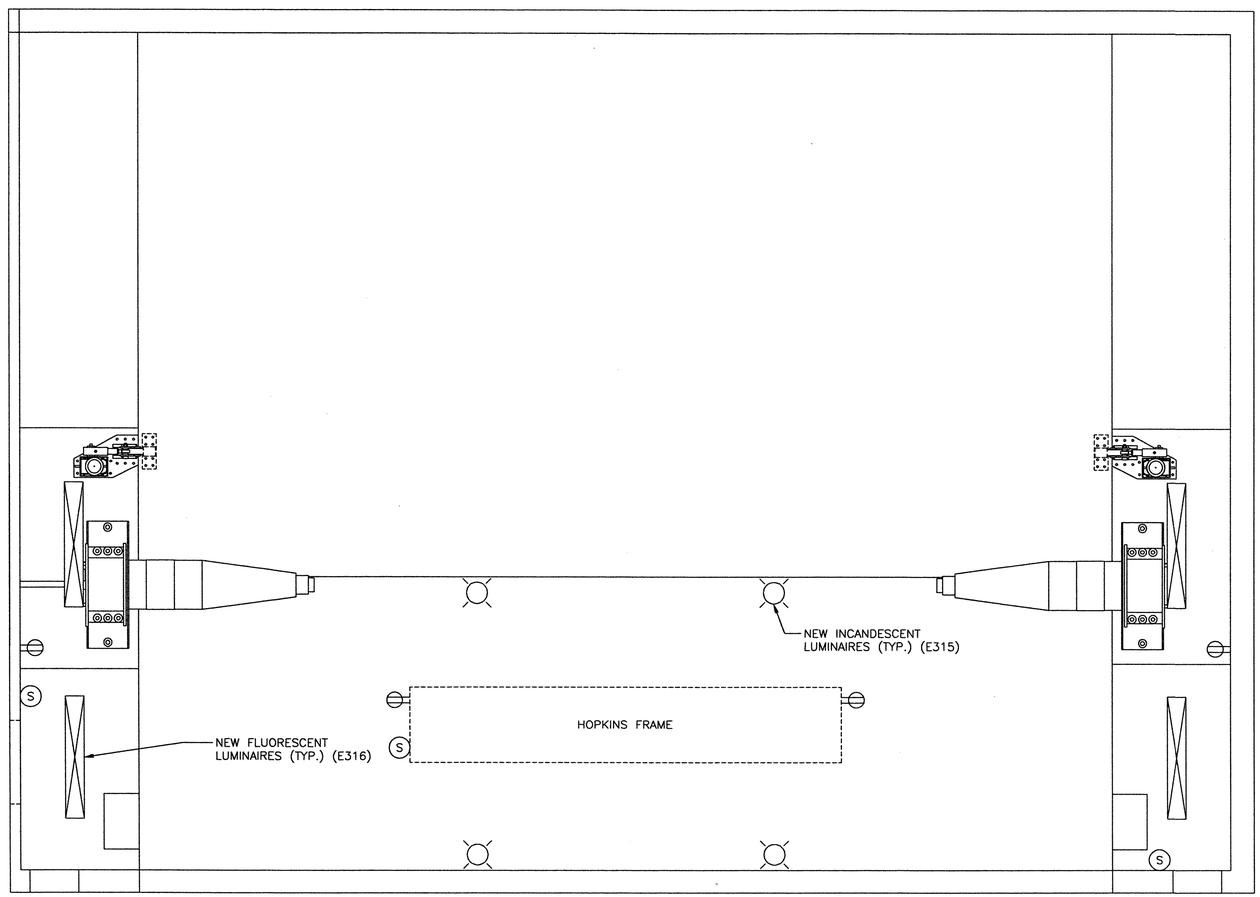

WEST MACHINERY
LIGHTING

- NEW 120VAC RECEPTACLE
- NEW LIGHT SWITCH

NOTES:

1. LOCATIONS SHOWN ARE APPROXIMATE. THE CONTRACTOR SHALL DEVELOP AN ACTUAL FLOOR PLAN APPROVAL BY THE ENGINEER. NOT ALL ITEMS ARE SHOWN.

0 1 2 3
INCHES ON FULL SIZE SHEET

95-PE_WestMachN.DWG

NORTH CAROLINA PROFESSIONAL SEAL 025801 ENGINEER LANCE V. BORDEN

MODJESKI and MASTERS
Experience great bridges.
100 Sterling Parkway
Suite 302
Mechanicsburg, PA 17050 NC License No. C-2979

E76

STATE OF NORTH CAROLINA
DEPARTMENT OF TRANSPORTATION
RALEIGH

WRIGHTSVILLE BRIDGE REHABILITATION
WRIGHTSVILLE, NORTH CAROLINA

WEST MACHINERY LIGHTING LAYOUT

		DRAWN BY	R.I. PETERS
		SCALE	NONE
DESIGNED R.I. PETERS	DETAILED R.I. PETERS	DATE	JUNE 2011
CHECKED A.M. MARINO	CHECKED A.M. MARINO	DRAWING NO.	95 OF 140

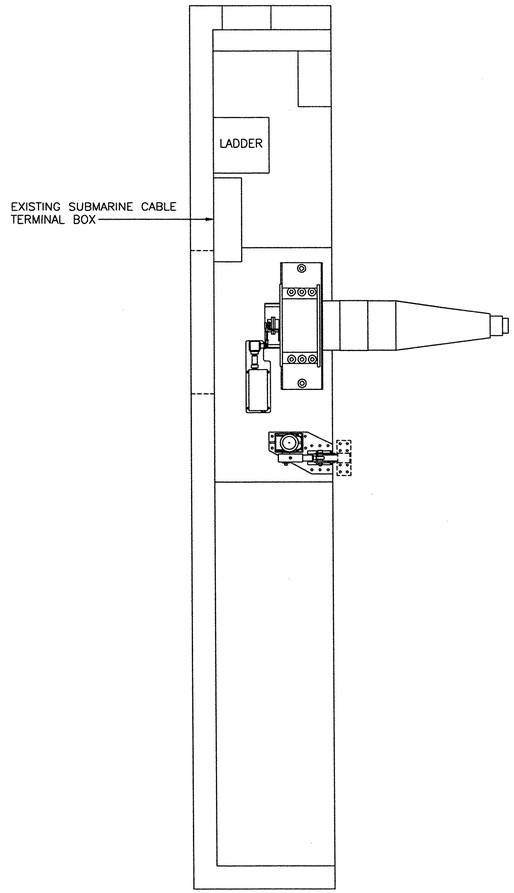

EXISTING FLOOR LAYOUT
SOUTH EAST TRUNNION AREA

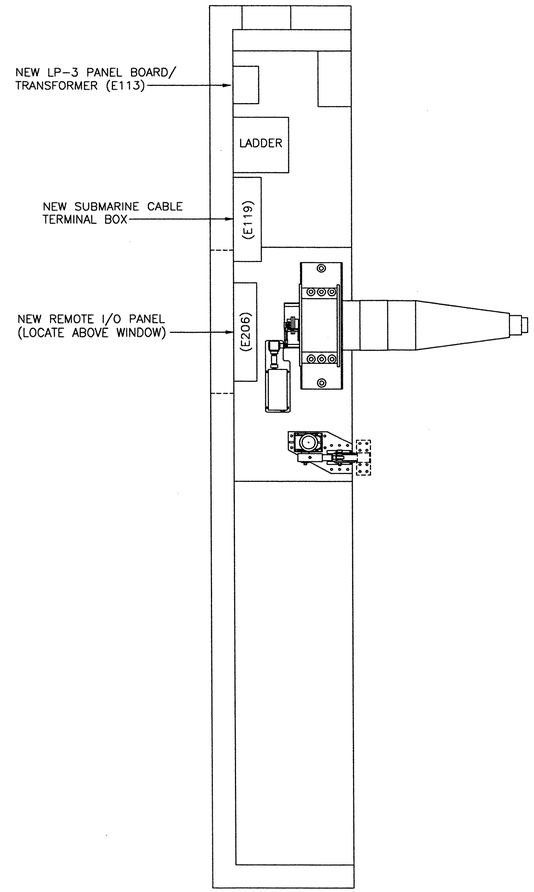

NEW FLOOR LAYOUT
SOUTH EAST TRUNNION AREA

NOTES:

1. LOCATIONS SHOWN ARE APPROXIMATE. THE CONTRACTOR SHALL DEVELOP AN ACTUAL FLOOR PLAN APPROVAL BY THE ENGINEER. NOT ALL ITEMS ARE SHOWN.

0 1 2 3
INCHES ON FULL SIZE SHEET

NORTH CAROLINA PROFESSIONAL ENGINEER SEAL 025801 LANCE V. BORDEN

MODJESKI and MASTERS
Experience great bridges.
100 Sterling Parkway
Suite 302
Mechanicsburg, PA 17050 NC License No. C-2979

E77

STATE OF NORTH CAROLINA
DEPARTMENT OF TRANSPORTATION
RALEIGH

WRIGHTSVILLE BRIDGE REHABILITATION
WRIGHTSVILLE, NORTH CAROLINA

SOUTH EAST TRUNNION – LAYOUT

		DRAWN BY	R.I. PETERS
		SCALE	NONE
DESIGNED R.I. PETERS	DETAILED R.I. PETERS	DATE	JUNE 2011
CHECKED A.M. MARINO	CHECKED A.M. MARINO	DRAWING NO.	96 OF 140

96-PE_EastTrunnion.DWG

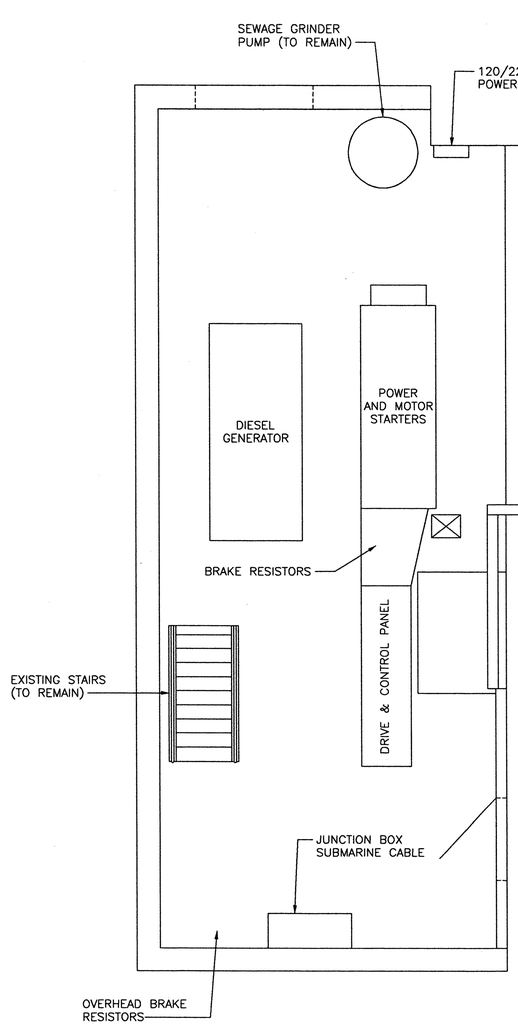

EXISTING ELECTRICAL ROOM LAYOUT

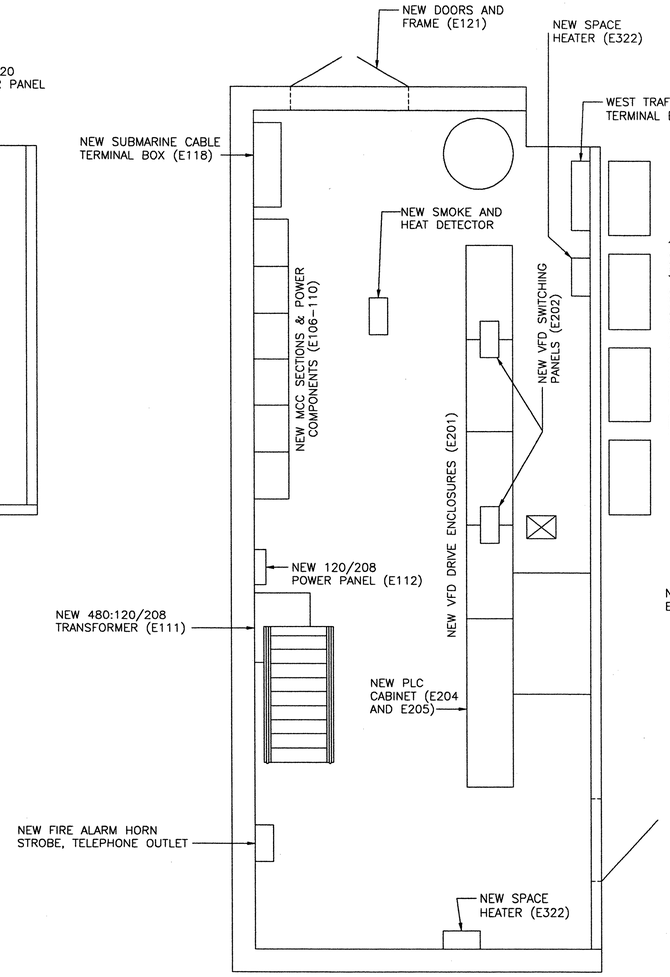

NEW ELECTRICAL ROOM LAYOUT

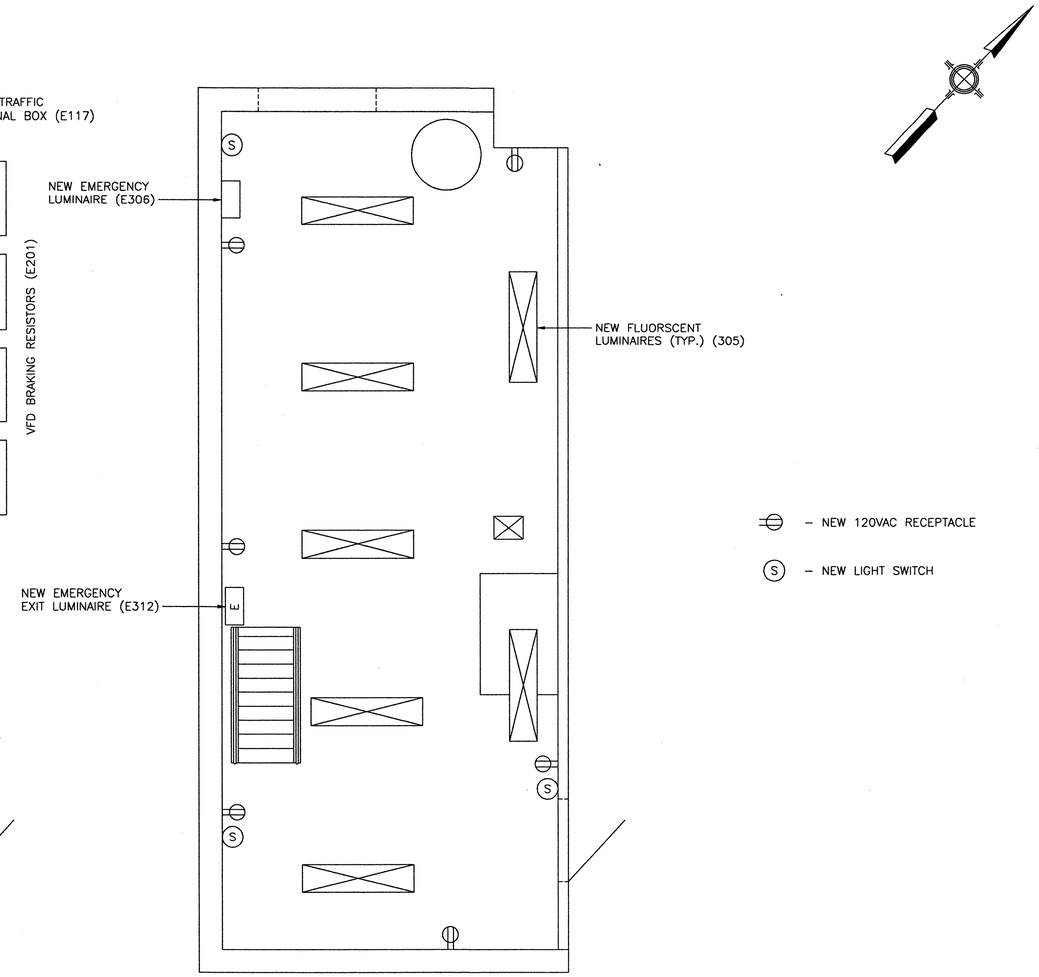

NEW ELECTRICAL ROOM LIGHTING

NOTES:

1. LOCATIONS SHOWN ARE APPROXIMATE. THE CONTRACTOR SHALL DEVELOP AN ACTUAL FLOOR PLAN APPROVAL BY THE ENGINEER. NOT ALL ITEMS ARE SHOWN.
2. THE LAYOUT SHALL RESERVE SPACE TO ADD A FUTURE ADDITIONAL SECTION TO THE NEW MCC.

0 1 2 3
INCHES ON FULL SIZE SHEET

97-PE_ELECROOM.DWG

NORTH CAROLINA PROFESSIONAL SEAL 025801 ENGINEER LANCE V. BORDEN 2-22-2011

MODJESKI and MASTERS
Experience great bridges.
100 Sterling Parkway
Suite 302
Mechanicsburg, PA 17050 NC License No. C-2979

E78

STATE OF NORTH CAROLINA
DEPARTMENT OF TRANSPORTATION
RALEIGH

WRIGHTSVILLE BRIDGE REHABILITATION
WRIGHTSVILLE, NORTH CAROLINA

ELECTRICAL ROOM LAYOUT

		DRAWN BY	A.M. MARINO
		SCALE	NONE
DESIGNED R.I. PETERS	DETAILED A.M. MARINO	DATE	JUNE 2011
CHECKED A.M. MARINO	CHECKED R.I. PETERS	DRAWING NO.	97 OF 140

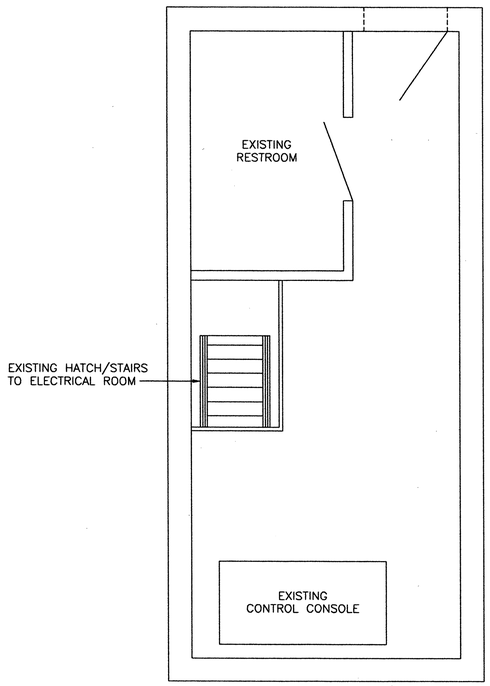

EXISTING CONTROL HOUSE FIRST FLOOR LAYOUT

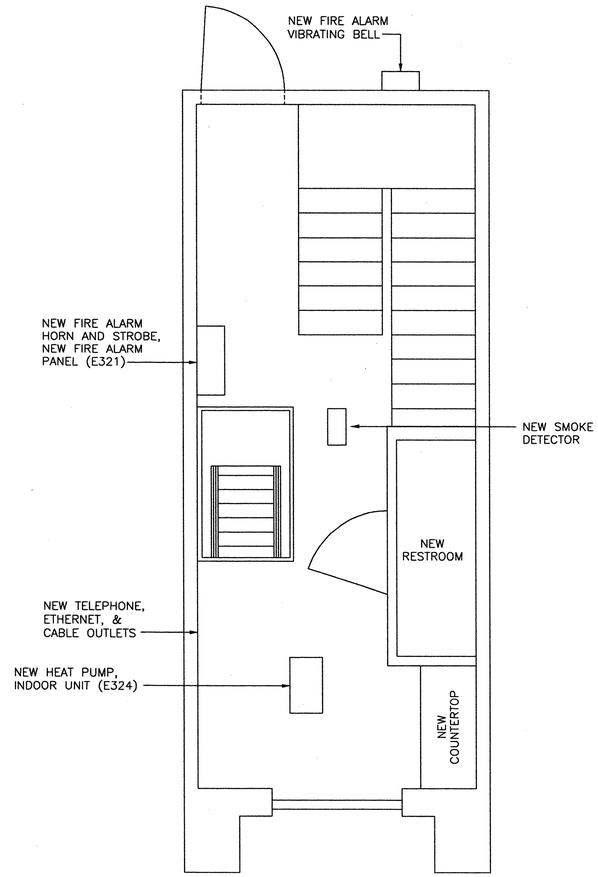

NEW CONTROL HOUSE FIRST FLOOR LAYOUT

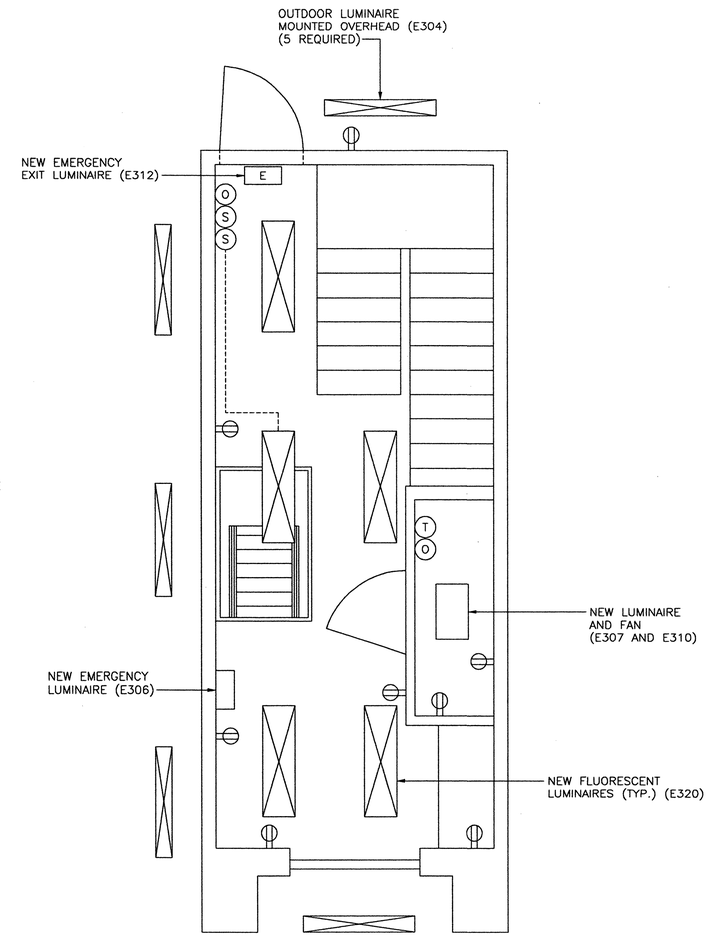

NEW CONTROL HOUSE FIRST FLOOR LIGHTING

- NEW 120VAC RECEPTACLE
- (S) – NEW LIGHT SWITCH
- (O) – NEW OCCUPANCY SENSOR/SWITCH
- (T) – NEW TIMER SWITCH

NOTES:

1. LOCATIONS SHOWN ARE APPROXIMATE. THE CONTRACTOR SHALL DEVELOP AN ACTUAL FLOOR PLAN APPROVAL BY THE ENGINEER. NOT ALL ITEMS ARE SHOWN.
2. THE CONTRACTOR SHALL COORDINATE AND PROVIDE ALL NECESSARY FLOOR, CEILING, AND WALL PENETRATIONS FOR CONDUIT AND RACEWAYS.
3. OUTLET HEIGHTS AT COUNTERTOP AND LAVATORY SHALL BE 44". CIRCUITS SHALL BE GFCI PROTECTED AS SHOWN ON THE PLANS.

0 1 2 3
INCHES ON FULL SIZE SHEET

NORTH CAROLINA PROFESSIONAL ENGINEER SEAL 025801 LANCE V. BORDEN

MODJESKI and MASTERS
Experience great bridges.
100 Sterling Parkway
Suite 302
Mechanicsburg, PA 17050 NC License No. C-2979

E79

STATE OF NORTH CAROLINA
DEPARTMENT OF TRANSPORTATION
RALEIGH

WRIGHTSVILLE BRIDGE REHABILITATION
WRIGHTSVILLE, NORTH CAROLINA

CONTROL HOUSE FIRST FLOOR

		DRAWN BY	A.M. MARINO
		SCALE	NONE
DESIGNED R.I. PETERS	DETAILED A.M. MARINO	DATE	JUNE 2011
CHECKED A.M. MARINO	CHECKED R.I. PETERS	DRAWING NO.	98 OF 140

98-PE_Opthouse1.DWG

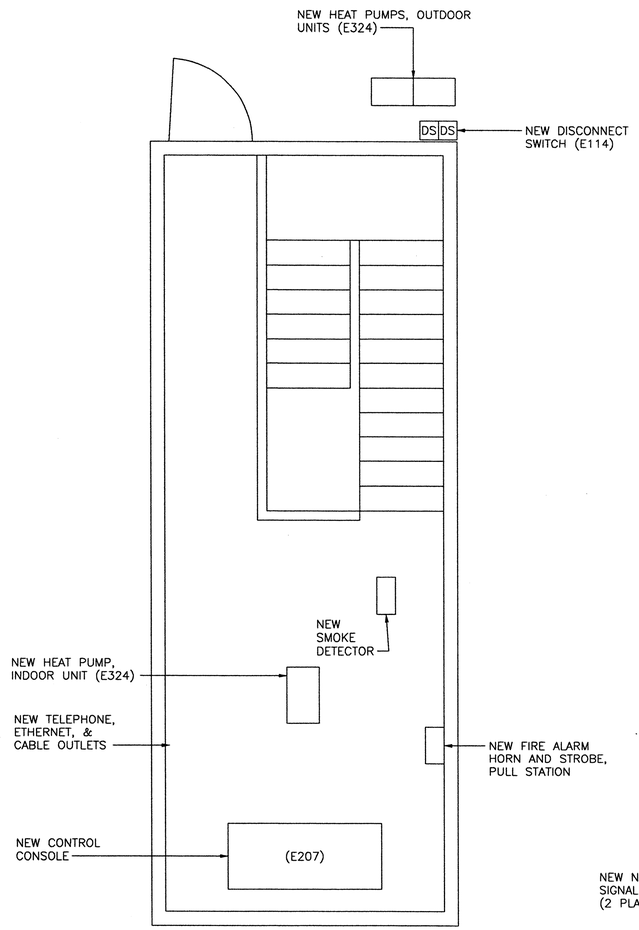

NEW CONTROL HOUSE
SECOND FLOOR LAYOUT

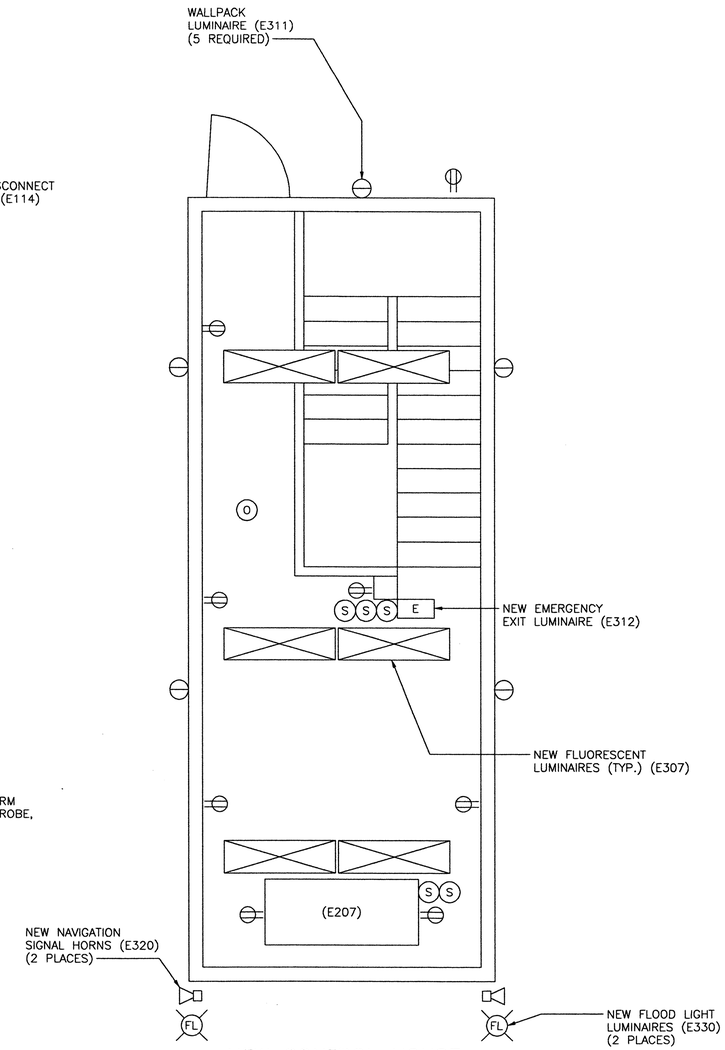

NEW CONTROL HOUSE
SECOND FLOOR LIGHTING

– NEW 120VAC RECEPTACLE

(S) – NEW LIGHT SWITCH

(O) – NEW OCCUPANCY SENSOR (CEILING MOUNT)

NOTES:

1. LOCATIONS SHOWN ARE APPROXIMATE. THE CONTRACTOR SHALL DEVELOP AN ACTUAL FLOOR PLAN APPROVAL BY THE ENGINEER. NOT ALL ITEMS ARE SHOWN.
2. THE CONTRACTOR SHALL COORDINATE AND PROVIDE ALL NECESSARY FLOOR, CEILING, AND WALL PENETRATIONS FOR CONDUIT AND RACEWAYS.

0 1 2 3
INCHES ON FULL SIZE SHEET

NORTH CAROLINA PROFESSIONAL SEAL 025801 ENGINEER LANCE V. BORDEN

MODJESKI and MASTERS
Experience great bridges.
100 Sterling Parkway
Suite 302
Mechanicsburg, PA 17050 NC License No. C-2979

STATE OF NORTH CAROLINA
DEPARTMENT OF TRANSPORTATION
RALEIGH

WRIGHTSVILLE BRIDGE REHABILITATION
WRIGHTSVILLE, NORTH CAROLINA

CONTROL HOUSE SECOND FLOOR

		DRAWN BY	A.M. MARINO
		SCALE	NONE
DESIGNED R.I. PETERS	DETAILED A.M. MARINO	DATE	JUNE 2011
CHECKED A.M. MARINO	CHECKED R.I. PETERS	DRAWING NO.	99 OF 140

E80

99-PE_Ophouse2.DWG

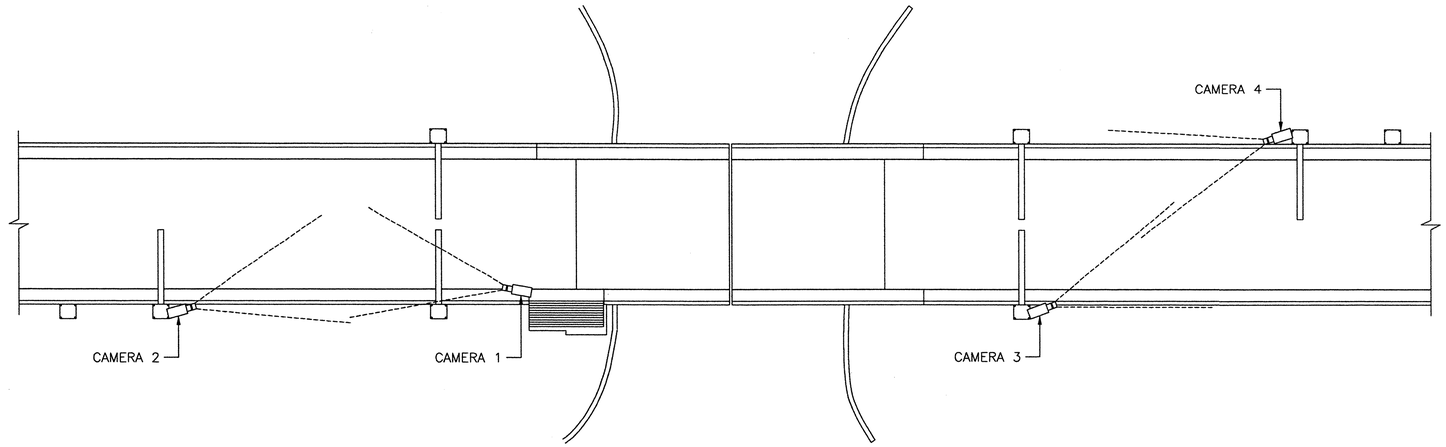

ROADWAY CAMERAS

SCALE: 1" = 30'-0"

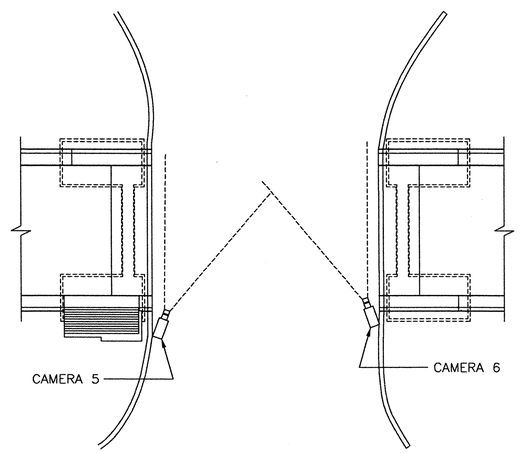

WATERWAY CAMERAS

SCALE: 1" = 30'-0"

CLOSED CIRCUIT CAMERAS – PROPOSED LOCATIONS

NOTES

1. CAMERA LOCATIONS ARE APPROXIMATE. THE CONTRACTOR SHALL DETERMINE ACTUAL CAMERA LOCATIONS SUBJECT TO APPROVAL BY THE ENGINEER. LOCATIONS SHALL BE CHOSEN TO TO OBTAIN THE BEST POSSIBLE FIELD OF VIEW WHILE MAXIMIZING ACCESSIBILITY FOR MAINTENANCE.
2. THE CONTRACTOR SHALL FOLLOW ANY APPLICABLE FEDERAL, STATE, AND/OR LOCAL REGULATIONS FOR SURVEILLANCE SYSTEM INSTALLATIONS.
3. REFER TO DRAWING 102, WARNING GATE DETAILS, FOR CAMERA 2, 3, AND 4 MOUNTING.

0 1 2 3

INCHES ON FULL SIZE SHEET

NORTH CAROLINA PROFESSIONAL ENGINEER SEAL 025801 LANCE V. BORDEN

6-22-2011

MODJESKI and MASTERS
Experience great bridges.

100 Sterling Parkway
Suite 302
Mechanicsburg, PA 17050 NC License No. C-2979

STATE OF NORTH CAROLINA
DEPARTMENT OF TRANSPORTATION
RALEIGH

WRIGHTSVILLE BRIDGE REHABILITATION
WRIGHTSVILLE, NORTH CAROLINA

CLOSED CIRCUIT TV SYSTEM – 1

		DRAWN BY	R.I. PETERS
		SCALE	AS NOTED
DESIGNED R.I. PETERS	DETAILED R.I. PETERS	DATE	JUNE 2011
CHECKED A.M. MARINO	CHECKED A.M. MARINO	DRAWING NO.	100OF 140

E81

100-CCTV1.DWG

CCTV SYSTEM PARTS LIST (ITEM E326)

PIECE NO.	QUANTITY	NAME	MANUFACTURER	TYPE – MODEL	RATING AND DESCRIPTION
E326	6	CAMERA	AXIS	P1347–E	NETWORK CCTV CAMERA, DAY AND NIGHT OPERATION, MP/HDTV 1080P, VARIFOCAL LENS, WITH NEMA 4X IMPACT RESISTANT OUTDOOR ALUMINUM ENCLOSURE, SUNSHIELD, AND WALL MOUNT BRACKET, POE (POWER OVER ETHERNET) OPERATION, IEE 802.3 AF.
	3	POLE MOUNT BRACKET	AXIS		CAMERA POLE MOUNT BRACKET, WITH CORROSION RESISTANT STAINLESS STEEL HARDWARE.
	2	ETHERNET MIDSPAN POE SUPPLY	AXIS	8 PORT	ETHERNET POE POWER SUPPLY, 120VAC 60HZ INPUT POWER. 48VDC, 15.4 WATTS PER PORT OUTPUT.
	1	ETHERNET SWITCH			ETHERNET NETWORK SWITCH, INDUSTRIAL RATING, 120VAC 60HZ POWER SUPPLY, 100MBPS, MINIMUM 6 PORT.
	1	CAMERA SERVER PC			COMPACT DESKTOP PERSONAL COMPUTER, PENTIUM 4 CPU, MINIUMUM 2GHZ. OPERATING SYSTEM SOFTWARE, SUPPORT SOFTWARE, DRIVERS SOFTWARE, MEMORY, HARD DRIVE(S), NETWORK CARD(S), AND GRAPHICS CARD(S) AS REQUIRED BY THE CCTV SOFTWARE MANUFACTURER. WITH HARDWARE AND SOFTWARE CAPABILITY TO SUPPORT MULTIPLE MONITORS, KEYBOARD, MOUSE, ORIGINAL PACKAGING, MANUALS, SOFTWARE INSTALLATION CD'S, AND ORIGINAL SOFTWARE LICENSING.
	1	PC BATTERY BACKUP			450VA MINIMUM, 250 WATT PC BATTERY BACKUP, 120VAC, 60HZ.
	2	ROADWAY AND WATERWAY MONITORS			HIGH DEFINITION LCD MONITOR, MINIUMUM 24 INCH, FULL 1920 x 1080 RESOLUTION, HIGH CONTRAST RATIO, ANTI–GLARE PANEL SURFACE, WITH VGA, DVI, S–VIDEO, BNC, AND HDMI INPUTS, 120VAC 60HZ. WITH ADJUSTABLE CEILING MOUNT AND REQUIRED HARDWARE AND POWER / VIDEO EXTENSION CABLES.
	1	CCTV SYSTEM SOFTWARE	AXIS	AXIS CAMERA STATION	PC BASED CCTV CAMERA MONITORING SOFTWARE FOR USE WITH UP TO EIGHT ETHERNET CCTV CAMERAS, WITH CAPABILITY TO SUPPORT MULTIPLE MONITORS AND DISPLAY MULTIPLE CAMERA IMAGES ON EACH MONITOR. WITH IMAGE RECORDING AND REMOTE (INTERNET) ACCESS SERVER CAPABILITIES.

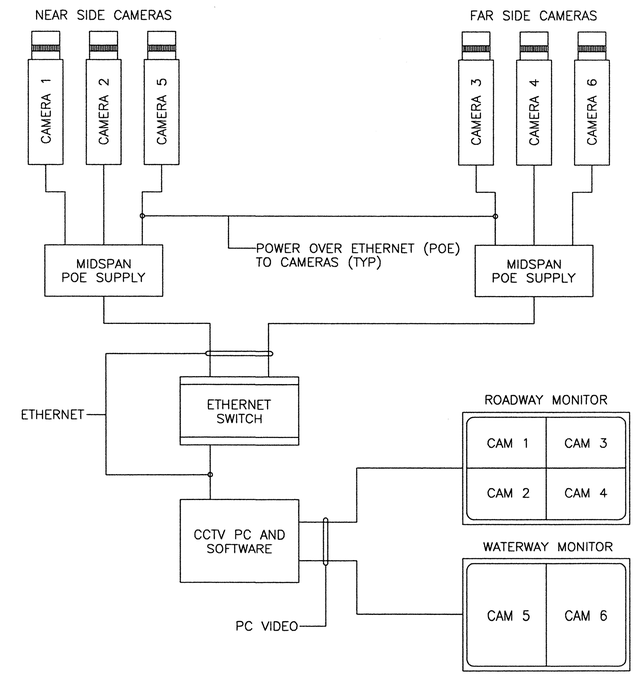

CCTV SYSTEM BLOCK DIAGRAM

NOTES:

1. NOT ALL ITEMS ARE SHOWN. THE CONTRACTOR SHALL PROVIDE ALL ITEMS REQUIRED FOR A COMPLETE FUNCTIONAL CCTV SURVEILLANCE SYSTEM.
2. CAMERAS, CAMERA MONITORING SOFTWARE, AND OTHER MAJOR SYSTEM COMPONENTS SHALL BE SUPPLIED BY THE SAME MANUFACTURER TO INSURE COMPATIBILITY.
3. MONITORS SHALL BE CEILING MOUNTED NEAR THE NEW CONTROL CONSOLE. ACTUAL MOUNTING LOCATIONS SHALL BE APPROVED BY THE ENGINEER.

0 1 2 3
INCHES ON FULL SIZE SHEET

101–CCTV2.DWG

NORTH CAROLINA PROFESSIONAL ENGINEER SEAL 025801 LANCE V. BORDEN

MODJESKI and MASTERS
Experience great bridges.
100 Sterling Parkway
Suite 302
Mechanicsburg, PA 17050 NC License No. C–2979

E82

STATE OF NORTH CAROLINA
DEPARTMENT OF TRANSPORTATION
RALEIGH

WRIGHTSVILLE BRIDGE REHABILITATION
WRIGHTSVILLE, NORTH CAROLINA

CLOSED CIRCUIT TV SYSTEM – 2

		DRAWN BY	R.I. PETERS
		SCALE	NONE
DESIGNED R.I. PETERS	DETAILED R.I. PETERS	DATE	JUNE 2011
CHECKED A.M. MARINO	CHECKED A.M. MARINO	DRAWING NO.	101OF 140

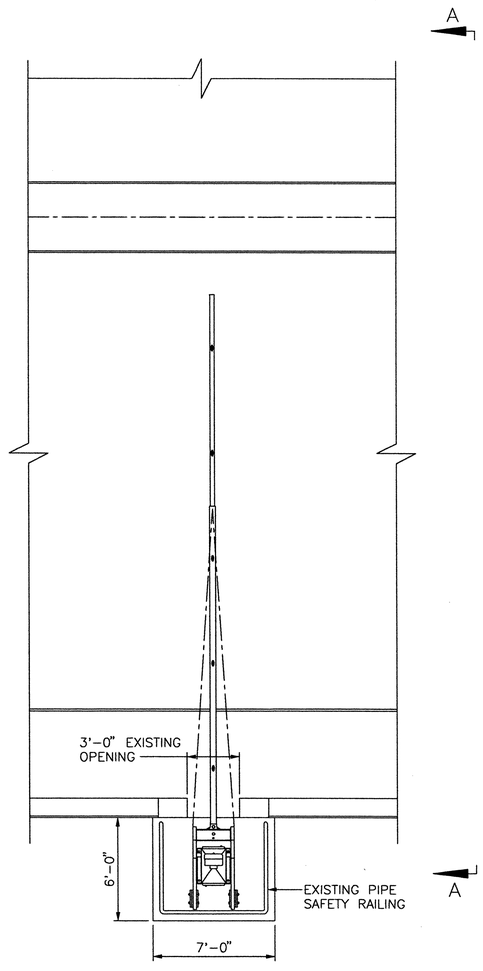

PLAN

SCALE: ¼" = 1'-0"

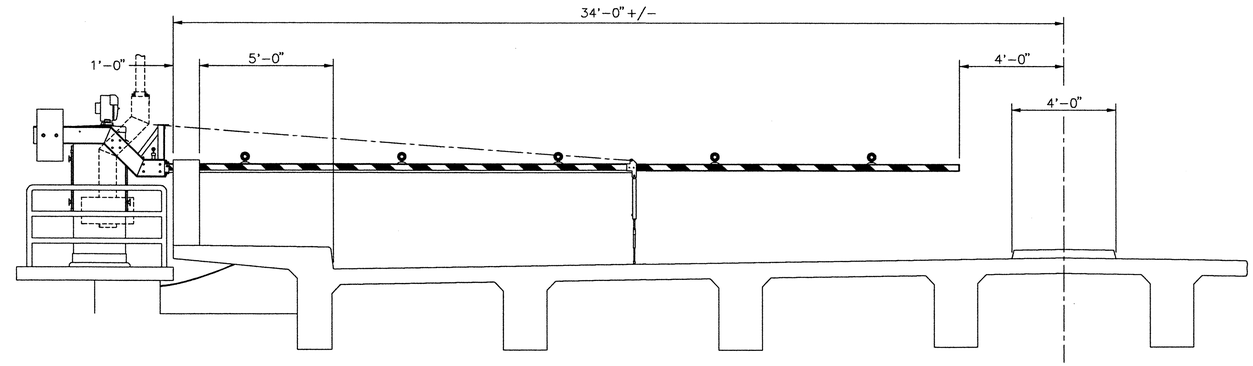

SECTION A-A

SCALE: ⅜" = 1'-0"

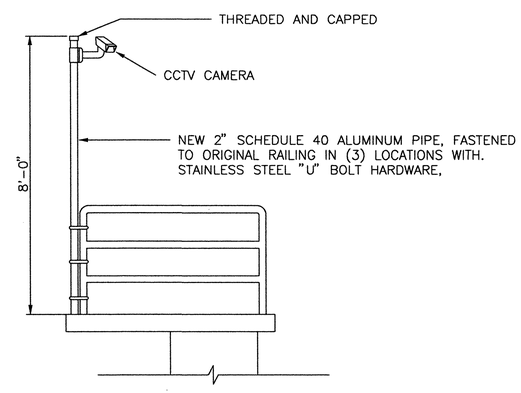

BOLT ON MODIFICATION FOR CCTV CAMERA MOUNT (3 PLACES)

SCALE: ¼" = 2'-0"

NOTES:

1. GATES SHOWN ARE TYPICAL FOR NEAR SIDE AND FAR SIDE TRAFFIC GATE INSTALLATIONS.
2. THE CONTRACTOR SHALL MODIFY THE EXISTING PIPE SAFETY RAILING AS REQUIRED TO ALLOW FOR NEW GATE OPERATION. RAILING MODIFICATIONS AND PAINTING SHALL BE PERFORMED IN THE CONTRACTORS SHOP. THE CONTRACTOR SHALL STRIP EXISTING RAILING FINISH, AND APPLY NEW CORROSION RESISTANT PRIMER AND PAINT.
3. FOR CCTV CAMERA LOCATIONS, REFER TO DRAWING 100, CLOSED CIRCUIT TV SYSTEM – 1.
4. THE CONTRACTOR SHALL VERIFY AND ADJUST ARM LENGTH, OFFSET SIDE ARM CHANNELS, AND GATE ELEVATION ACCORDING TO THE EXISTING ROAD DIMENTIONS AND RAILING CLEARANCES FOR GATE LOCATIONS. FINAL DIMENSIONS AND INSTALLATION DETAILS SHALL BE SUBMITTED IN SHOP DRAWINGS FOR APPROVAL BY THE ENGINEER.
5. THE CONTRACTOR SHALL INSTALL A LIGHTING PROTECTION GROUDING ELECTRODE AND DOWN CONDUCTOR FOR EACH GATE.
6. THE CONTRACTOR SHALL REMOVE THE EXISTING GATES, ANCHOR BOLTS, AND GROUT PADS. THE CONTRACTOR SHALL PROVIDE AND INSTALL NEW HOT DIPPED GALVANIZED ANCHOR BOLTS AND NEW CONCRETE GROUT PADS. GROUT PADS OVER 3 INCHES IN HEIGHT SHALL BE ANCHORED TO THE PLATFORMS WITH A MINIMUM OF FOUR #4 DOWELS (ONE PER CORNER) DRILLED AND EPOXIED TO THE PLATFORM AS WELL AS REINFORCED WITH EPOXY COATED #4 REBARS AT 1' 0" CENTERS MAXIMUM IN BOTH DIRECTIONS.

0 1 2 3
INCHES ON FULL SIZE SHEET

NORTH CAROLINA PROFESSIONAL ENGINEER SEAL 025801 LANCE V. BORDEN 12-22-2011

MODJESKI and MASTERS
Experience great bridges.
100 Sterling Parkway
Suite 302
Mechanicsburg, PA 17050 NC License No. C-2979

STATE OF NORTH CAROLINA
DEPARTMENT OF TRANSPORTATION
RALEIGH

WRIGHTSVILLE BRIDGE REHABILITATION
WRIGHTSVILLE, NORTH CAROLINA

WARNING GATE DETAILS

		DRAWN BY	R.L. REED
		SCALE	AS NOTED
DESIGNED R.I. PETERS	DETAILED R.L. REED	DATE	JUNE 2011
CHECKED A.M. MARINO	CHECKED A.M. MARINO	DRAWING NO.	102OF 140

E83

102-WGD.DWG

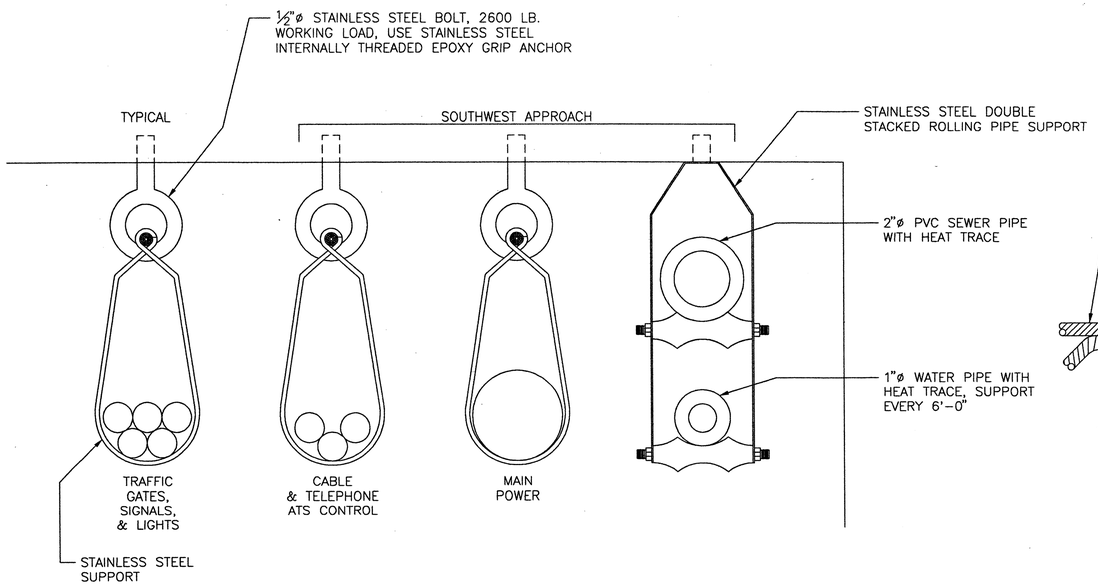

SECTION A–A

NO SCALE

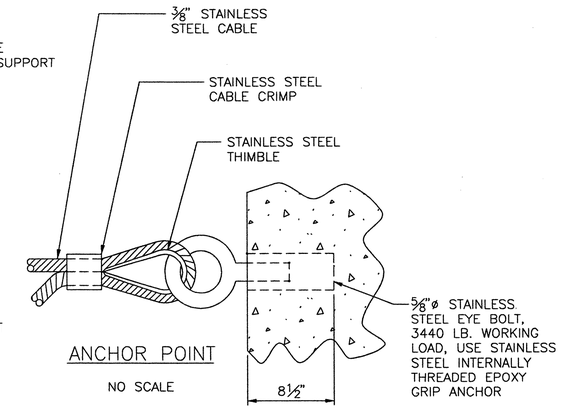

ANCHOR POINT

NO SCALE

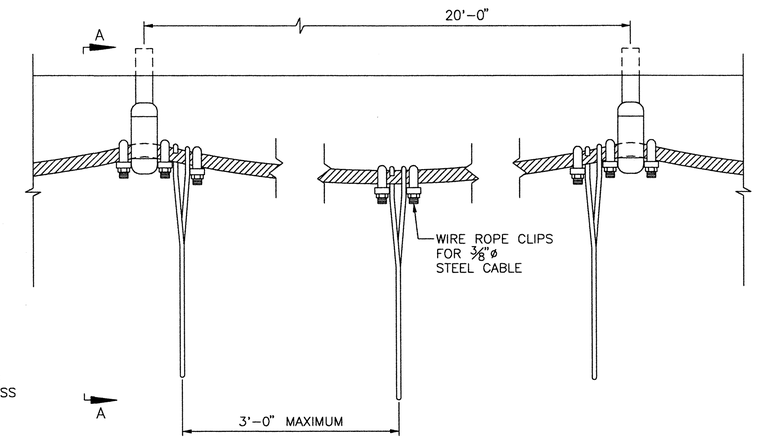

ELECTRICAL WIRE SUPPORT

NO SCALE

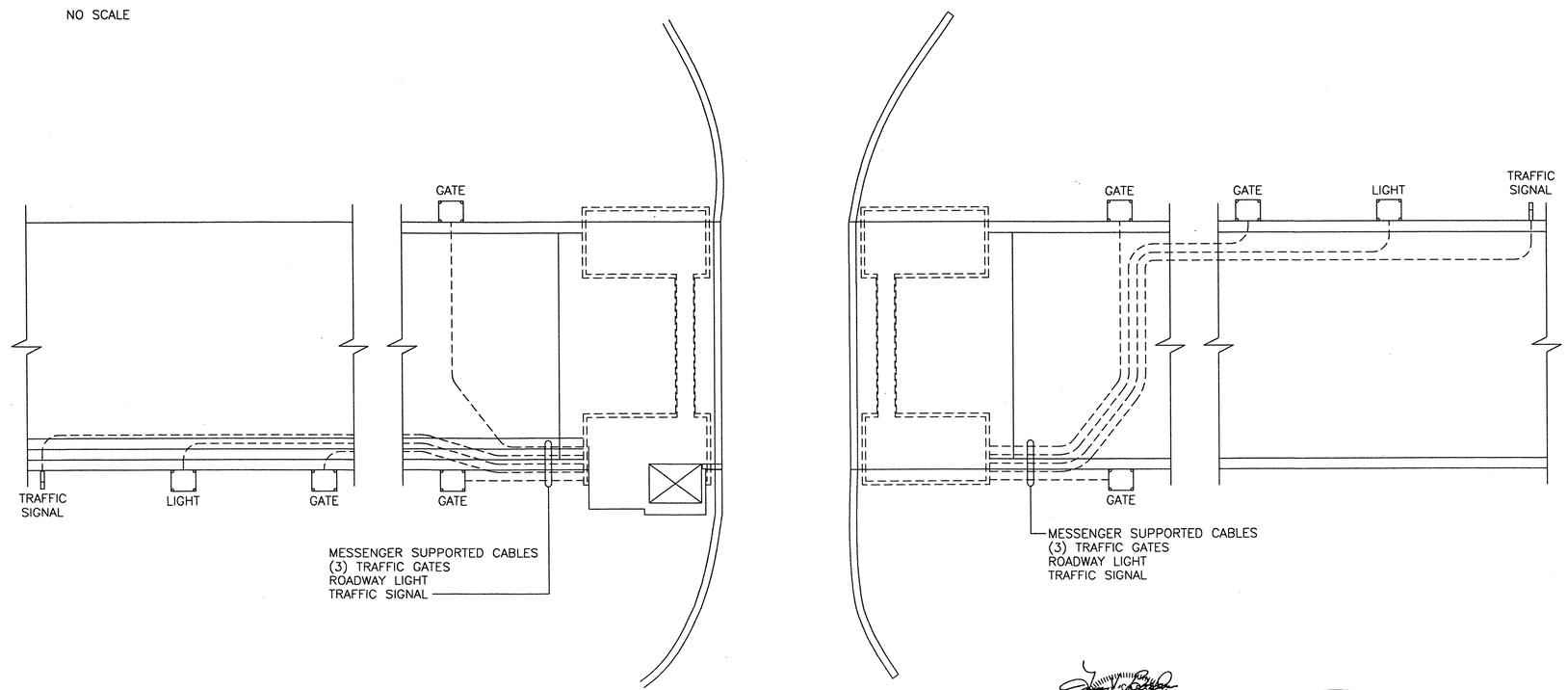

CABLE PLACEMENT

NO SCALE

0 1 2 3

INCHES ON FULL SIZE SHEET

NORTH CAROLINA PROFESSIONAL SEAL 025801 ENGINEER LANCE V. BORDEN

MODJESKI and MASTERS
Experience great bridges.

100 Sterling Parkway
Suite 302
Mechanicsburg, PA 17050 NC License No. C–2979

E84

STATE OF NORTH CAROLINA
DEPARTMENT OF TRANSPORTATION
RALEIGH

WRIGHTSVILLE BRIDGE REHABILITATION
WRIGHTSVILLE, NORTH CAROLINA

MISCELLANEOUS ELECTRICAL DETAILS – 1

		DRAWN BY	A.M. MARINO
		SCALE	NONE
DESIGNED A.M. MARINO	DETAILED A.M. MARINO	DATE	JUNE 2011
CHECKED R.I. PETERS	CHECKED R.I. PETERS	DRAWING NO.	103OF 140

103-001.DWG

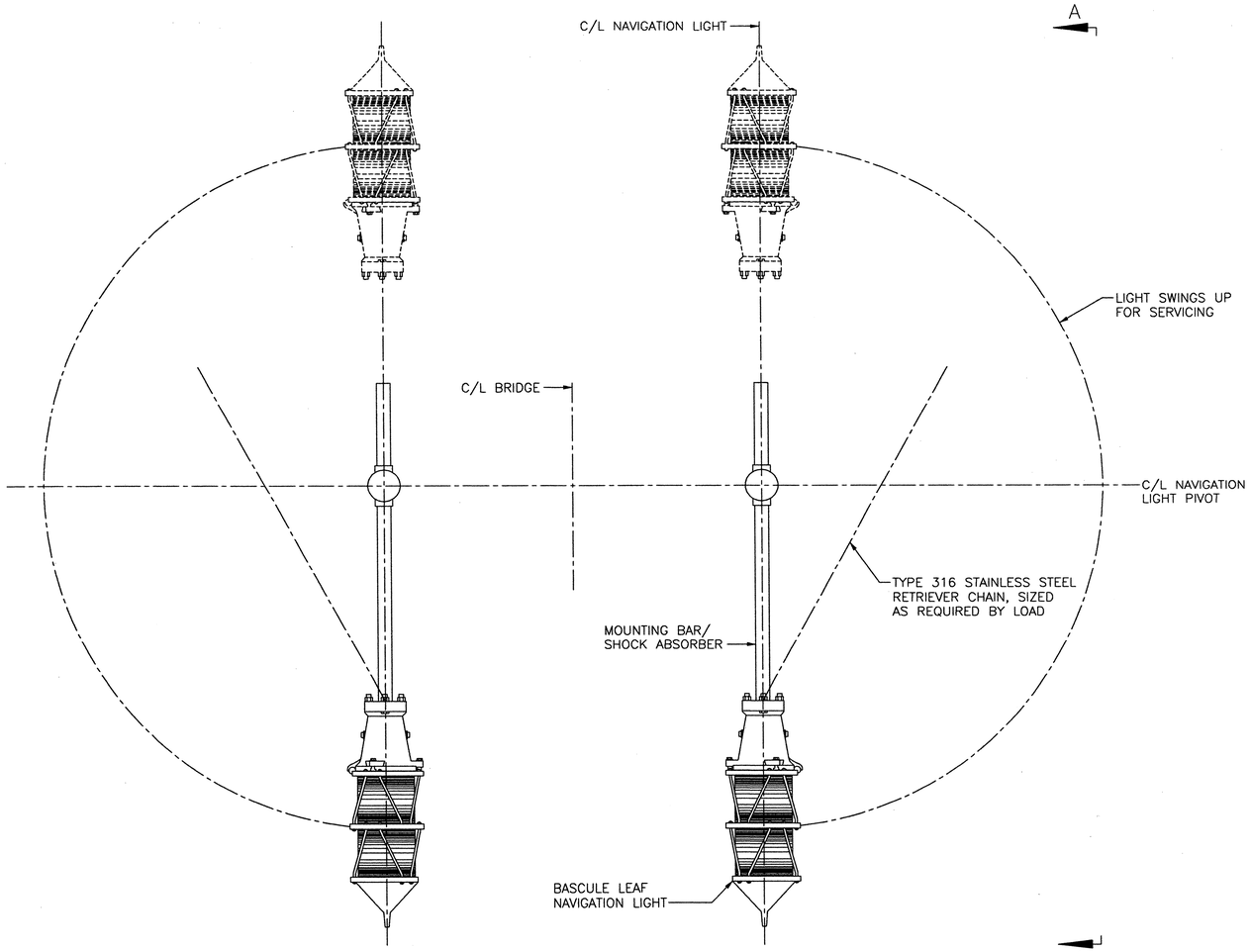

TYPICAL BASCULE SPAN MOUNTED NAVIGATION LIGHTS

SCALE: 1" = 1'-0"
TYPICAL FOR NORTH AND SOUTH SIDES OF BRIDGE

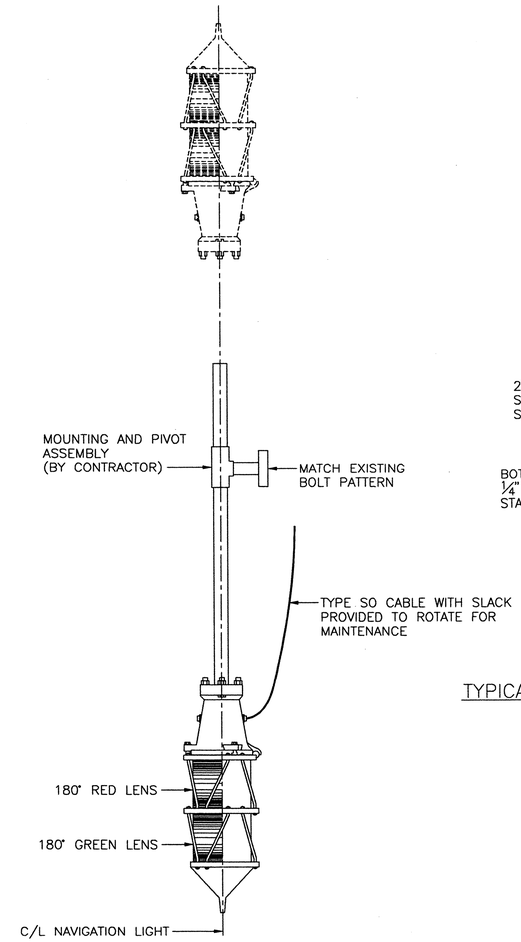

VIEW A–A

SCALE: 1" = 1'-0"

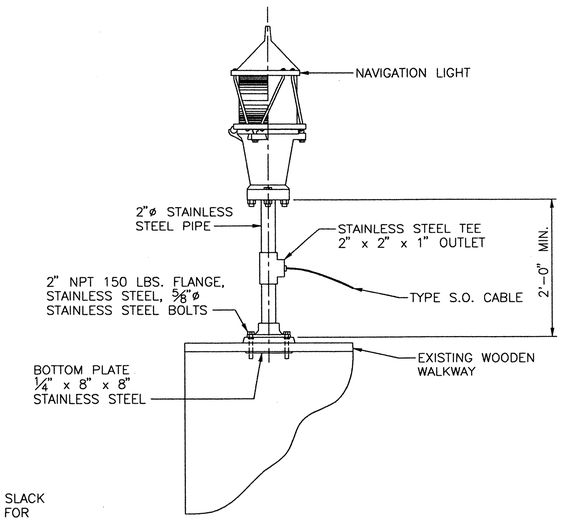

TYPICAL DETAIL – PROTECTION PIER NAVIGATION LIGHT

SCALE: 1" = 1'-0"

NOTES:

1. SEE SHEET "GENERAL DETAILS – 3" FOR REQUIRED ORIENTATION OF NAVIGATION LIGHTS.
2. BASCULE MOUNTING BAR/SHOCK ABSORBER TO BE PROVIDED BY NCDOT.
3. ALL MOUNTING HARDWARE (BOLTS, THREADED ROD, HEX NUTS, WASHERS, PIPE FASTENERS, ETC.) SHALL BE TYPE 316 STAINLESS STEEL. SIZE AND QUANTITY OF FASTENERS SHALL BE AS REQUIRED TO MATCH THE NAVIGATION LIGHTS.
4. PIER NAVIGATION S.O. CABLE SHALL BE FASTENED TO THE WOODEN WALKWAY WITH WITH NEOPRENE CUSHIONED STAINLESS STEEL LOOP TYPE CLAMPS AT 3'-0" MAXIMUM INTERVALS USING 3/8"ø MINIMUM STAINLESS STEEL LAG BOLTS.

0 1 2 3
INCHES ON FULL SIZE SHEET

NORTH CAROLINA PROFESSIONAL ENGINEER SEAL 025801 LANCE V. BORDEN 12-22-2011

MODJESKI and MASTERS
Experience great bridges.
100 Sterling Parkway
Suite 302
Mechanicsburg, PA 17050 NC License No. C-2979

STATE OF NORTH CAROLINA
DEPARTMENT OF TRANSPORTATION
RALEIGH

WRIGHTSVILLE BRIDGE REHABILITATION
WRIGHTSVILLE, NORTH CAROLINA

MISCELLANEOUS ELECTRICAL DETAILS – 2

		DRAWN BY	A.M. MARINO
		SCALE	AS NOTED
DESIGNED A.M. MARINO	DETAILED A.M. MARINO	DATE	JUNE 2011
CHECKED R.I. PETERS	CHECKED R.I. PETERS	DRAWING NO.	104 OF 140

E85

104-002.DWG

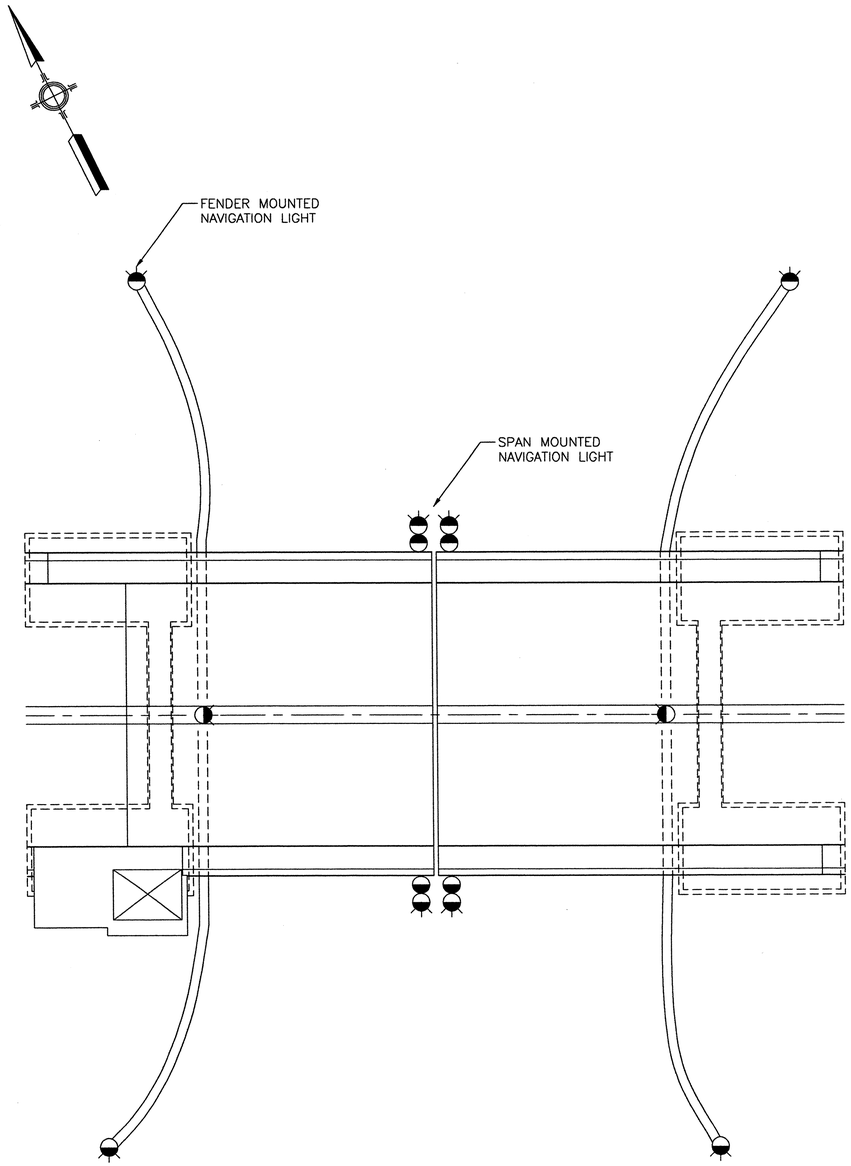

PLAN
NAVIGATION LIGHT LOCATION

NO SCALE

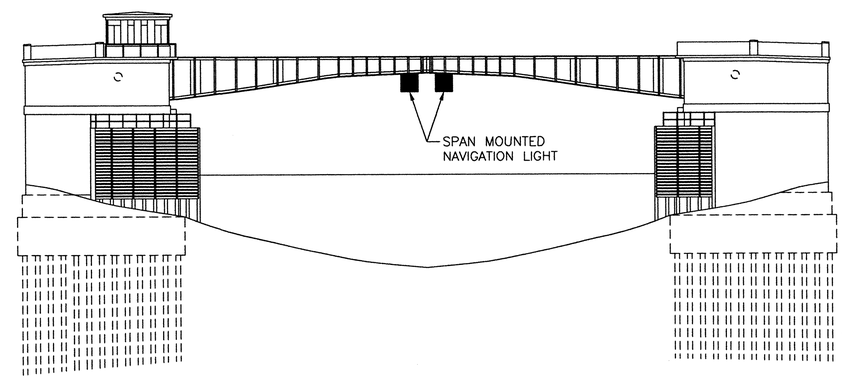

ELEVATION
NAVIGATION LIGHT LOCATION

NO SCALE

0 1 2 3
INCHES ON FULL SIZE SHEET

105-003.DWG

NORTH CAROLINA
PROFESSIONAL
ENGINEER
SEAL
025801
LANCE V. BORDEN

MODJESKI and MASTERS
Experience great bridges.

100 Sterling Parkway
Suite 302
Mechanicsburg, PA 17050 NC License No. C-2979

E86

STATE OF NORTH CAROLINA
DEPARTMENT OF TRANSPORTATION
RALEIGH

WRIGHTSVILLE BRIDGE REHABILITATION
WRIGHTSVILLE, NORTH CAROLINA

MISCELLANEOUS ELECTRICAL DETAILS – 3

		DRAWN BY	A.M. MARINO
		SCALE	NONE
DESIGNED A.M. MARINO	DETAILED A.M. MARINO	DATE	JUNE 2011
CHECKED R.I. PETERS	CHECKED R.I. PETERS	DRAWING NO.	105OF 140

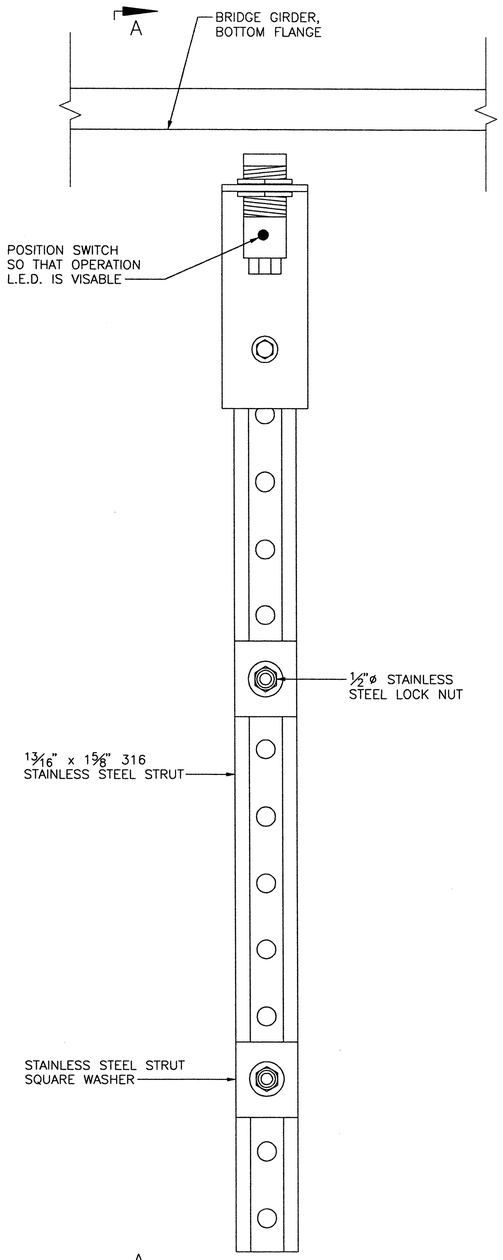

FULLY SEATED PROXIMITY SWITCH (E208) INSTALLATION DETAIL

SCALE: 6" = 1'-0"

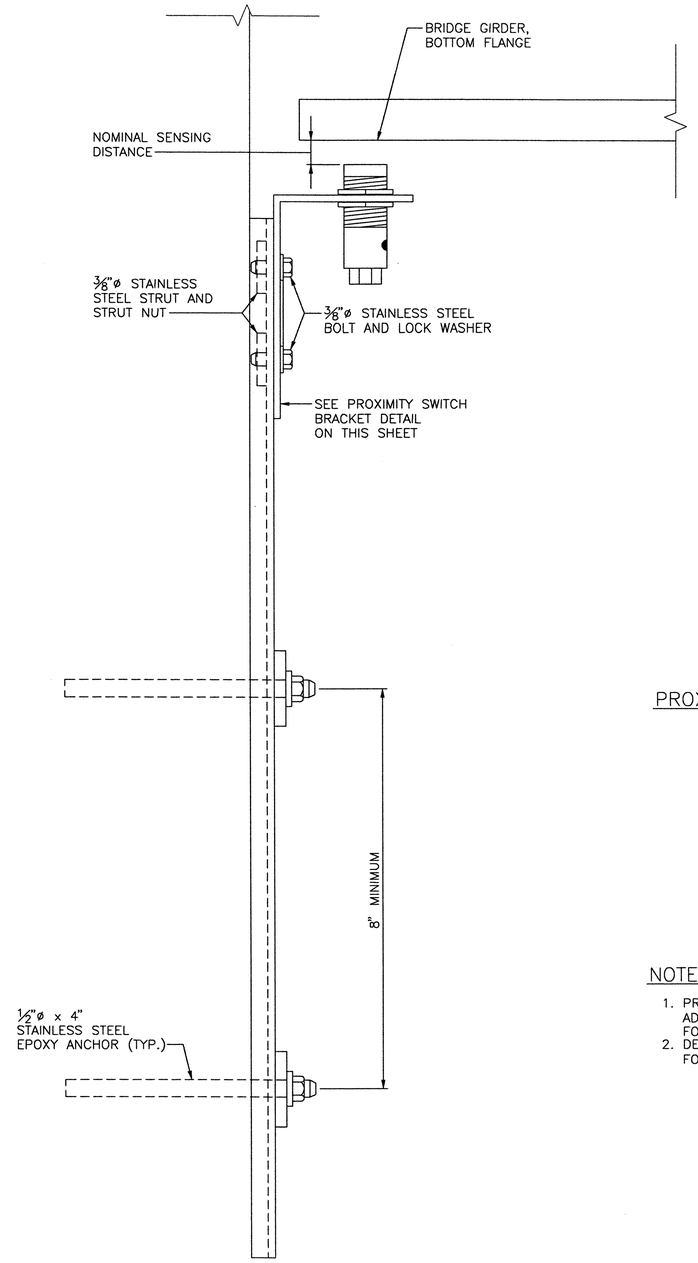

VIEW A–A

SCALE: 6" = 1'-0"

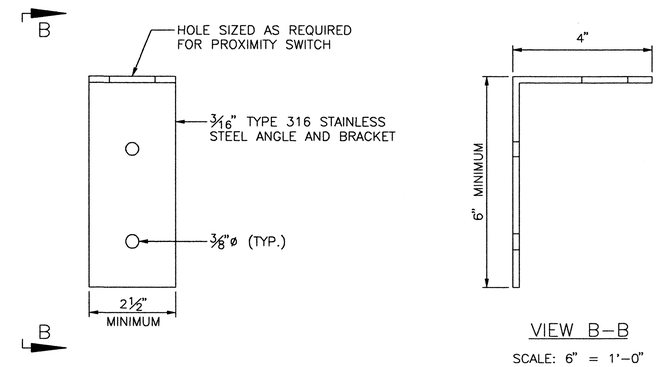

PROXIMITY SWITCH BRACKET DETAIL

SCALE: 6" = 1'-0"

VIEW B–B

SCALE: 6" = 1'-0"

NOTES:

1. PROX SWITCH BODIES SHALL BE MOUNTED IN THE BRACKET AT APPROXIMATELY MID RANGE OF THEIR THREADED ADJUSTMENT AREA. SWITCHES SHALL BE POSITIONED SO THAT THE OPERATION LED INDICATOR IS VIEWABLE FOR DIAGNOSTICS.
2. DETAILS SHOWN ARE TYPICAL FOR SWITCH INSTALLATIONS. THE CONTRACTOR SHALL PROVIDE ACTUAL DIMENSIONS FOR WITCH MOUNTING BRACKETS FOR APPROVAL.

0 1 2 3
INCHES ON FULL SIZE SHEET

NORTH CAROLINA PROFESSIONAL SEAL 025801 ENGINEER LANCE V. BORDEN 2-22-2011

MODJESKI and MASTERS
Experience great bridges.
100 Sterling Parkway
Suite 302
Mechanicsburg, PA 17050 NC License No. C-2979

STATE OF NORTH CAROLINA
DEPARTMENT OF TRANSPORTATION
RALEIGH

WRIGHTSVILLE BRIDGE REHABILITATION
WRIGHTSVILLE, NORTH CAROLINA

MISCELLANEOUS ELECTRICAL DETAILS – 4

		DRAWN BY	R.I. PETERS
		SCALE	AS NOTED
DESIGNED R.I. PETERS	DETAILED R.I. PETERS	DATE	JUNE 2011
CHECKED A.M. MARINO	CHECKED A.M. MARINO	DRAWING NO.	106OF 140

E87

106-004.DWG

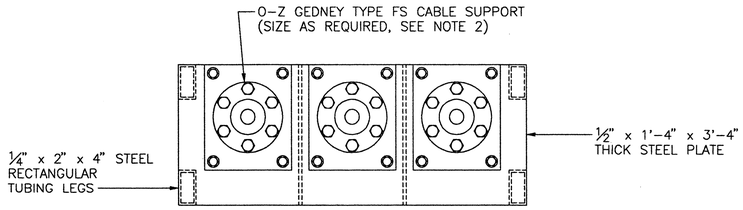

SECTION A-A

SCALE: 1 1/2" = 1'-0"

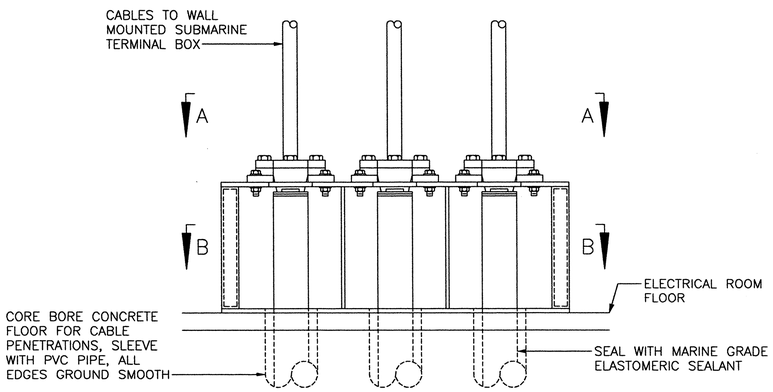

WEST SIDE SUBMARINE CABLE MOUNTING BRACKET DETAIL

SCALE: 1 1/2" = 1'-0"

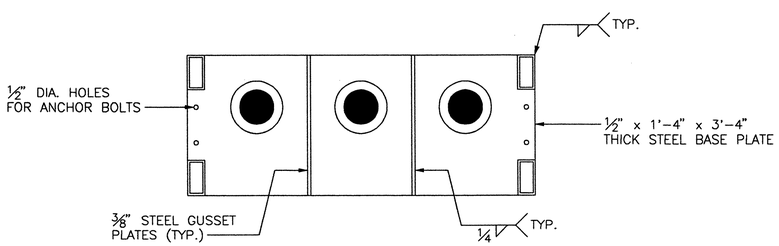

SECTION B-B

SCALE: 1 1/2" = 1'-0"

NOTES:

1. THE SUBMARINE CABLE ARMOUR WIRES SHALL BE STRIPPED AT THE POINT WHERE THEY ARE CLAMPED TO PROVIDE A GROUNDING POINT. THE MOUNTING BRACKET SHALL BE BE SOLIDLY BONDED TO THE ELECTRICAL SERVICE GROUND.
2. PROVIDE O-Z GEDNEY OR SIMILAR STYLE CUSTOM SUBMARINE CABLE SUPPORT. CUSTOM SUBMARINE CABLE SUPPORT SHALL BE CONSTRUCTED OF STAINLESS STEEL, TYPE SCCS BY FED TRANSIT SAFETY SYSTEMS OR APPROVED EQUAL.
3. THE SUBMARINE CABLE MOUNTING BRACKET SHALL BE PRIMED AND PAINTED AFTER FABRICATION. ANY DAMAGED AREAS SHALL BE REPAIRED AFTER INSTALLATION.

0 1 2 3

INCHES ON FULL SIZE SHEET

NORTH CAROLINA PROFESSIONAL ENGINEER SEAL 025801 LANCE V. BORDEN 2-22-2011

MODJESKI and MASTERS
Experience great bridges.

100 Sterling Parkway
Suite 302
Mechanicsburg, PA 17050 NC License No. C-2979

STATE OF NORTH CAROLINA
DEPARTMENT OF TRANSPORTATION
RALEIGH

WRIGHTSVILLE BRIDGE REHABILITATION
WRIGHTSVILLE, NORTH CAROLINA

MISCELLANEOUS ELECTRICAL DETAILS – 5

E88	DRAWN BY R.L. REED	SCALE AS NOTED	
	DESIGNED R.I. PETERS	DETAILED R.L. REED	DATE JUNE 2011
	CHECKED A.M. MARINO	CHECKED A.M. MARINO	DRAWING NO. 107OF 140

107-005.DWG

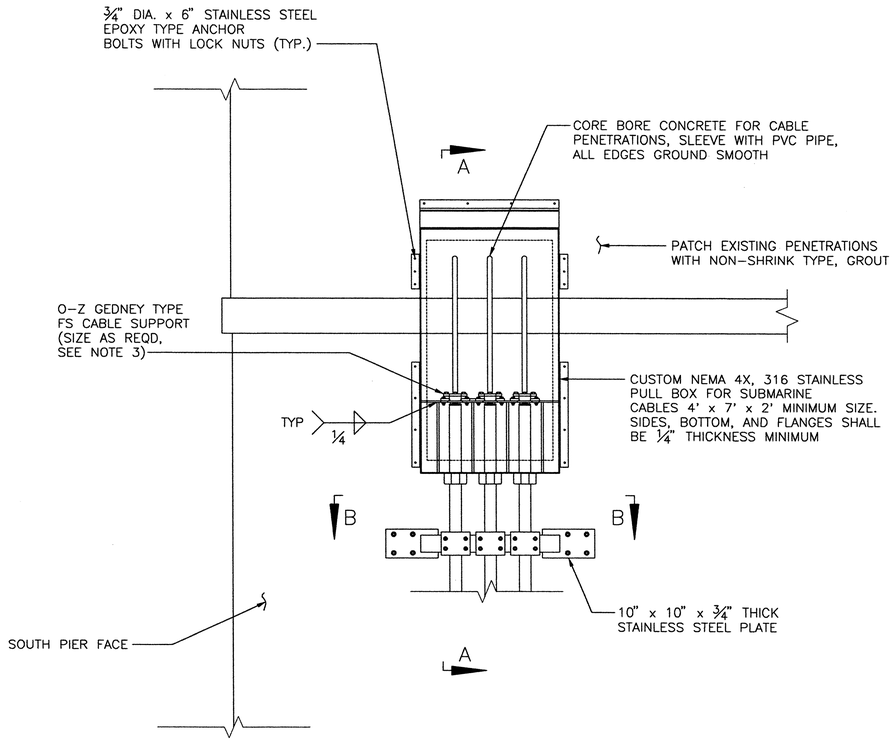

EAST SIDE SUBMARINE CABLE PIER ENTRY DETAIL

SCALE: ½" = 1'-0"

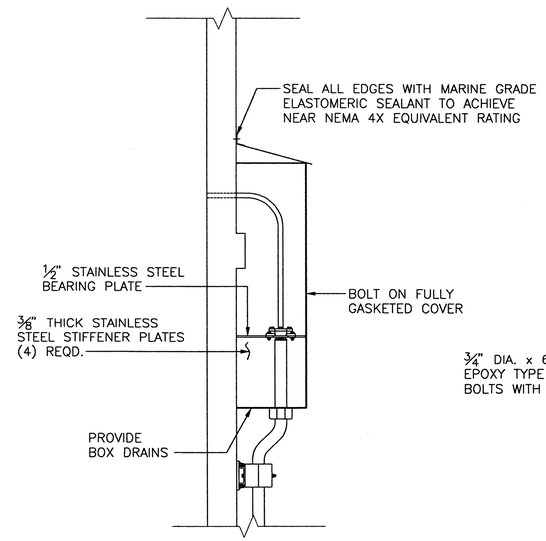

VIEW A-A

SCALE: ½" = 1'-0"

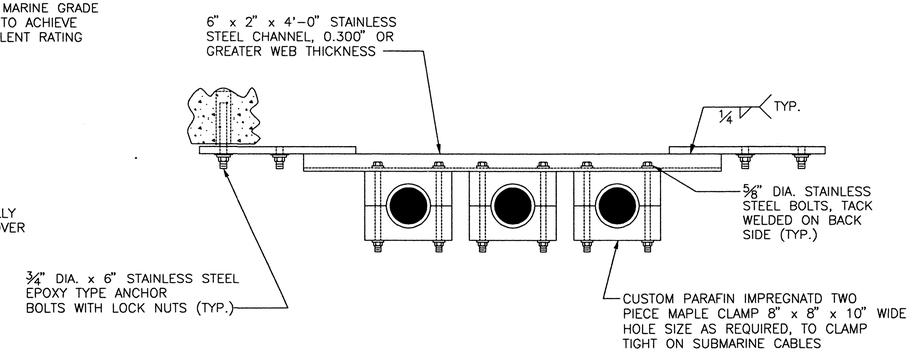

PIER MOUNT BRACKET VIEW B-B

SCALE: 1½" = 1'-0"

NOTES:

1. THE SUBMARINE CABLE ARMOUR WIRES SHALL BE STRIPPED AT THE POINT WHERE THEY ARE CLAMPED TO PROVIDE A GROUNDING POINT. THE SUBMARINE CABLE PULL BOX SHALL BE SOLIDLY BONDED TO THE ELECTRICAL SERVICE GROUND.
2. PIER MOUNT BRACKET SHALL BE CONSTRUCTED FROM STAINLESS STEEL, ASTM A276, TYPE 316.
3. PROVIDE O-Z GEDNEY OR SIMILAR STYLE CUSTOM SUBMARINE CABLE SUPPORT. CUSTOM SUBMARINE CABLE SUPPORT SHALL BE CONSTRUCTED OF STAINLESS STEEL, TYPE SCCS BY FED TRANSIT SAFETY SYSTEMS OR APPROVED EQUAL.
4. THE CONTRACTOR SHALL PROVIDE SHOP DRAWINGS FOR THE PULL BOX, PIER MOUNT BRACKET, AND INSTALLATION LOCATIONS FOR APPROVAL BY THE ENGINEER PRIOR TO ORDERING, FABRICATING, OR INSTALLING ANY COMPONENTS.

0 1 2 3
INCHES ON FULL SIZE SHEET

NORTH CAROLINA PROFESSIONAL SEAL 025801 ENGINEER LANCE V. BORDEN

MODJESKI and MASTERS
Experience great bridges.
100 Sterling Parkway
Suite 302
Mechanicsburg, PA 17050 NC License No. C-2979

E89

STATE OF NORTH CAROLINA
DEPARTMENT OF TRANSPORTATION
RALEIGH

WRIGHTSVILLE BRIDGE REHABILITATION
WRIGHTSVILLE, NORTH CAROLINA

MISCELLANEOUS ELECTRICAL DETAILS - 6

		DRAWN BY	R.I. PETERS
		SCALE	AS NOTED
DESIGNED R.I. PETERS	DETAILED R.I. PETERS	DATE	JUNE 2011
CHECKED A.M. MARINO	CHECKED A.M. MARINO	DRAWING NO.	10BOF 140

107-005.DWG

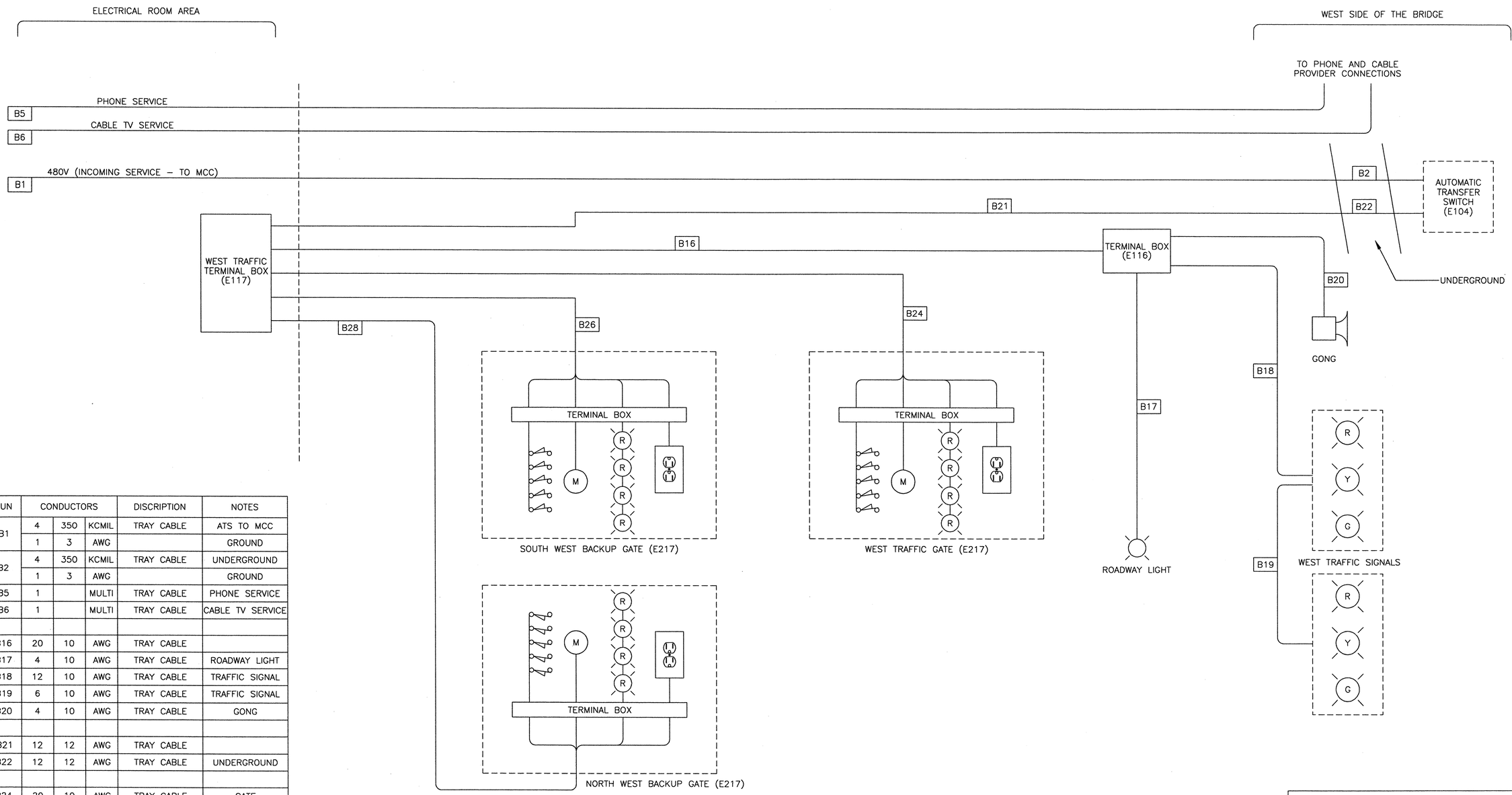

RUN	CONDUCTORS			DISCRIPTION	NOTES
B1	4	350	KCMIL	TRAY CABLE	ATS TO MCC
	1	3	AWG		GROUND
B2	4	350	KCMIL	TRAY CABLE	UNDERGROUND
	1	3	AWG		GROUND
B5	1		MULTI	TRAY CABLE	PHONE SERVICE
B6	1		MULTI	TRAY CABLE	CABLE TV SERVICE
B16	20	10	AWG	TRAY CABLE	
B17	4	10	AWG	TRAY CABLE	ROADWAY LIGHT
B18	12	10	AWG	TRAY CABLE	TRAFFIC SIGNAL
B19	6	10	AWG	TRAY CABLE	TRAFFIC SIGNAL
B20	4	10	AWG	TRAY CABLE	GONG
B21	12	12	AWG	TRAY CABLE	
B22	12	12	AWG	TRAY CABLE	UNDERGROUND
B24	20	10	AWG	TRAY CABLE	GATE
B26	20	10	AWG	TRAY CABLE	GATE
B26	20	10	AWG	TRAY CABLE	GATE

0 1 2 3
INCHES ON FULL SIZE SHEET

NOTES:

1. LAYOUT SHOWN IS DIAGRAMATIC AND IS NOT INTENDED TO SHOW EQUIPMENT AND CONDUIT/CABLES IN EXACT LOCATIONS.
2. FOR THE B16 AND B18 RUNS, THERE ARE PAIRED CONDUCTORS FOR THE TRAFFIC SIGNAL CIRCUITS TO COMPENSATE FOR VOLTAGE DROP.
3. THE TRAFFIC SIGNALS, GONGS, AND ROADWAY LIGHTS ARE EXISTING ITEMS TO BE REWIRED. THE GATES ARE NEW, AND ALL WIRING IS NEW.

NORTH CAROLINA PROFESSIONAL SEAL 025801 ENGINEER LANCE V. BORDEN 2-22-2011

MODJESKI and MASTERS
Experience great bridges.
100 Sterling Parkway
Suite 302
Mechanicsburg, PA 17050 NC License No. C-2979

STATE OF NORTH CAROLINA
DEPARTMENT OF TRANSPORTATION
RALEIGH

WRIGHTSVILLE BRIDGE REHABILITATION
WRIGHTSVILLE, NORTH CAROLINA
WEST BRIDGE CABLES
BRIDGE WIRING LAYOUT – 1

		DRAWN BY	R.I. PETERS
		SCALE	NONE
DESIGNED R.I. PETERS	DETAILED R.I. PETERS	DATE	JUNE 2011
CHECKED A.M. MARINO	CHECKED A.M. MARINO	DRAWING NO.	109OF 140

E90

109-BWL1.DWG

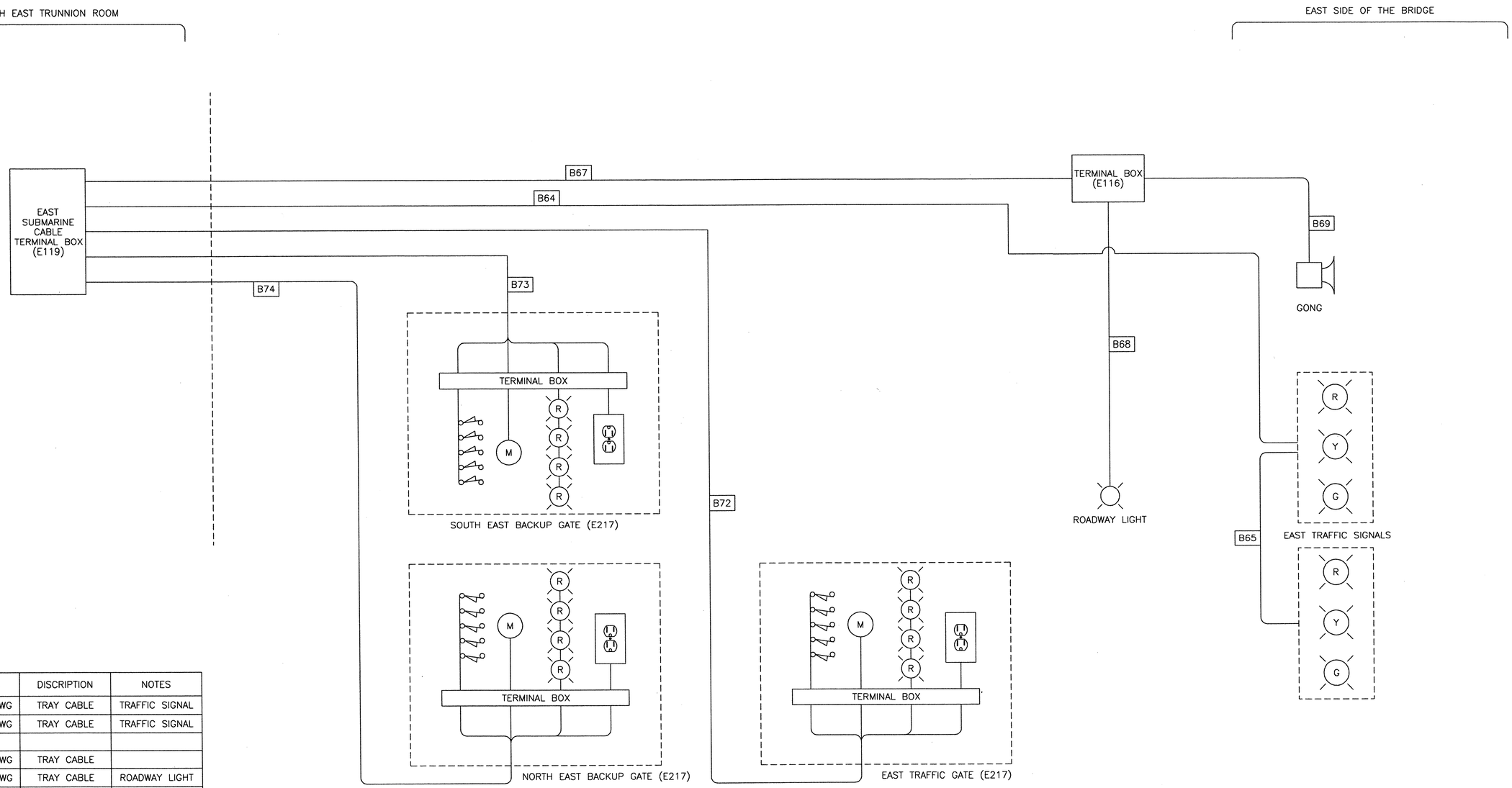

RUN	CONDUCTORS			DISCRIPTION	NOTES
B64	6	6	AWG	TRAY CABLE	TRAFFIC SIGNAL
B65	6	6	AWG	TRAY CABLE	TRAFFIC SIGNAL
B67	20	10	AWG	TRAY CABLE	
B68	4	10	AWG	TRAY CABLE	ROADWAY LIGHT
B69	4	10	AWG	TRAY CABLE	GONG
B72	20	10	AWG	TRAY CABLE	GATE
B73	20	10	AWG	TRAY CABLE	GATE
B74	20	10	AWG	TRAY CABLE	GATE

0 1 2 3
INCHES ON FULL SIZE SHEET

NOTES:

1. LAYOUT SHOWN IS DIAGRAMATIC AND IS NOT INTENDED TO SHOW EQUIPMENT AND CONDUIT/CABLES IN EXACT LOCATIONS.
2. THE TRAFFIC SIGNALS, GONGS, AND ROADWAY LIGHTS ARE EXISTING ITEMS TO BE REWIRED. THE GATES ARE NEW, AND ALL WIRING IS NEW.

NORTH CAROLINA PROFESSIONAL SEAL 025801 ENGINEER LANCE V. BOROCN

MODJESKI and MASTERS
Experience great bridges.
100 Sterling Parkway
Suite 302
Mechanicsburg, PA 17050 NC License No. C-2979

STATE OF NORTH CAROLINA
DEPARTMENT OF TRANSPORTATION
RALEIGH

WRIGHTSVILLE BRIDGE REHABILITATION
WRIGHTSVILLE, NORTH CAROLINA
EAST BRIDGE CABLES
BRIDGE WIRING LAYOUT – 2

E91

DESIGNED R.I. PETERS	DETAILED R.J. PETERS	DRAWN BY R.I. PETERS	
CHECKED A.M. MARINO	CHECKED A.M. MARINO	SCALE NONE	
		DATE JUNE 2011	
		DRAWING NO. 1100F 140	

109-3RW2.DWG

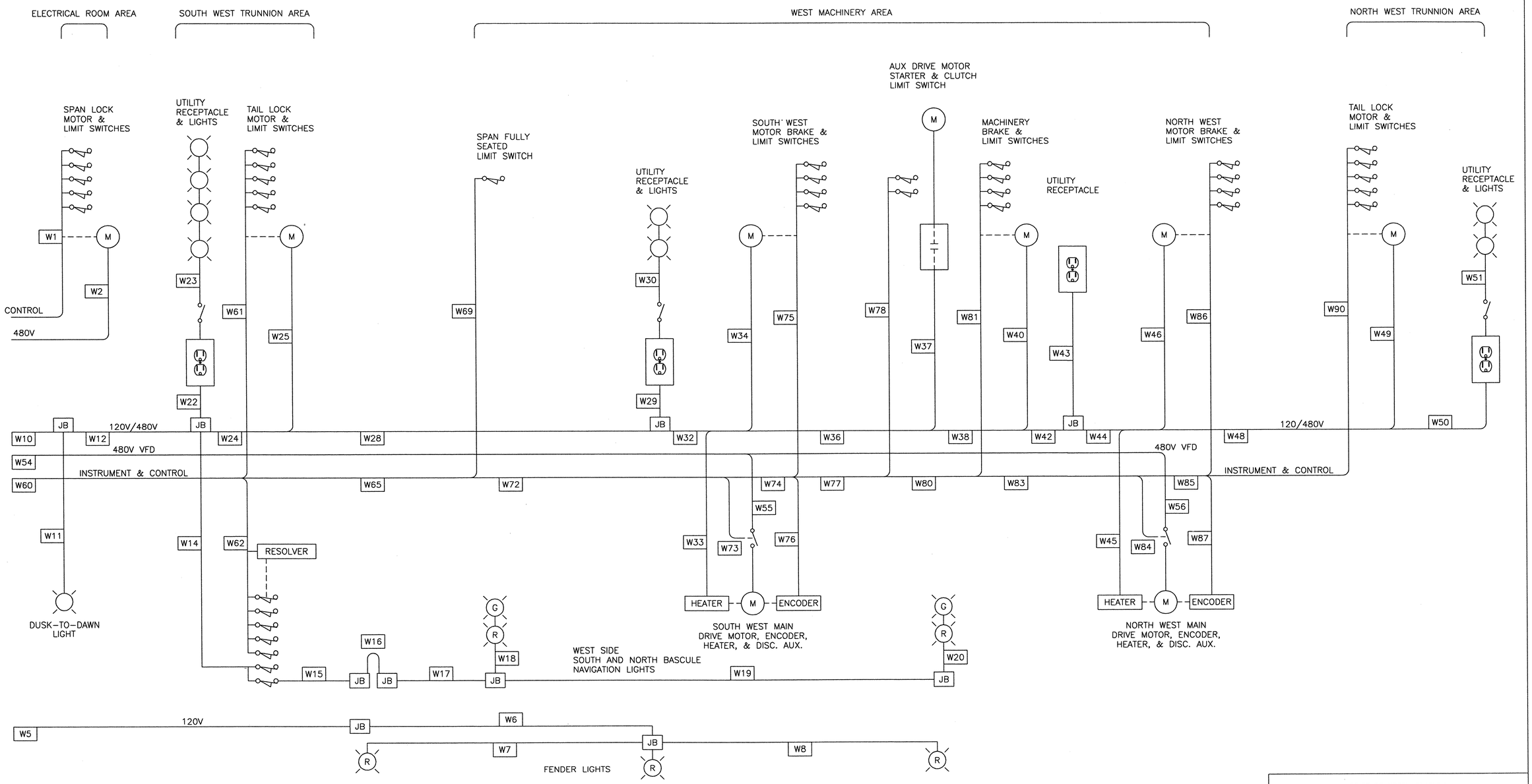

NOTES:

1. THIS DRAWING IS INTENDED TO PROVIDE THE GENERAL CONDUIT LAYOUT FOR THE PROJECT.

0 1 2 3
INCHES ON FULL SIZE SHEET

110-BWL3.DWG

NORTH CAROLINA PROFESSIONAL ENGINEER SEAL 025801 LANCE V. BORDEN

MODJESKI and MASTERS
Experience great bridges.
100 Sterling Parkway
Suite 302
Mechanicsburg, PA 17050 NC License No. C-2979

STATE OF NORTH CAROLINA
DEPARTMENT OF TRANSPORTATION
RALEIGH

WRIGHTSVILLE BRIDGE REHABILITATION
WRIGHTSVILLE, NORTH CAROLINA

WEST MACHINERY ROOM CONDUIT LAYOUT
BRIDGE WIRING LAYOUT – 3

E92

DESIGNED R.I. PETERS	DETAILED R.I. PETERS	DRAWN BY R.I. PETERS	
CHECKED A.M. MARINO	CHECKED A.M. MARINO	SCALE NONE	
		DATE JUNE 2011	
		DRAWING NO. 1110F 140	

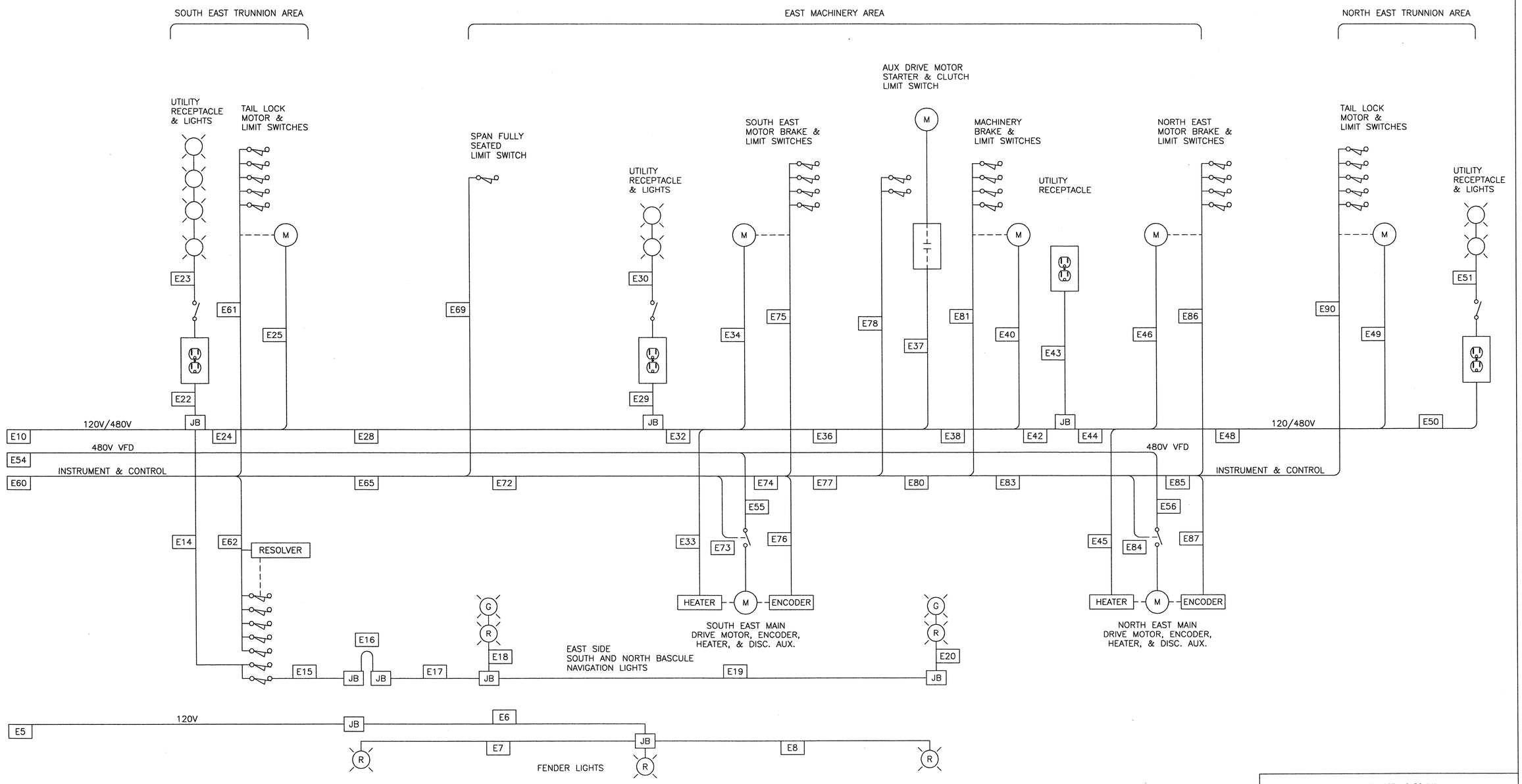

NOTES:

1. THIS DRAWING IS INTENDED TO PROVIDE THE GENERAL CONDUIT LAYOUT FOR THE PROJECT.

0 1 2 3
INCHES ON FULL SIZE SHEET

111-BW4.DWG

NORTH CAROLINA PROFESSIONAL ENGINEER SEAL 025801 LANCE V. BORDEN 2-22-2011

MODJESKI and MASTERS
Experience great bridges.
100 Sterling Parkway
Suite 302
Mechanicsburg, PA 17050 NC License No. C-2979

STATE OF NORTH CAROLINA
DEPARTMENT OF TRANSPORTATION
RALEIGH

WRIGHTSVILLE BRIDGE REHABILITATION
WRIGHTSVILLE, NORTH CAROLINA

EAST MACHINERY ROOM CONDUIT LAYOUT
BRIDGE WIRING LAYOUT 4

		DRAWN BY	R.I. PETERS
		SCALE	NONE
DESIGNED R.I. PETERS	DETAILED R.I. PETERS	DATE	JUNE 2011
CHECKED A.M. MARINO	CHECKED A.M. MARINO	DRAWING NO.	112OF 140

E93

RUN	CONDUCTORS			(TRADE SIZE) CONDUIT	NOTES
W1	8	12	AWG	¾	LIMIT SWITCH SPAN LOCK
W2	4	10	AWG	¾	SPAN LOCK MOTOR
W5	3	12	AWG	¾	FENDER LIGHTS
W6	3	12	AWG	FLEXIBLE CABLE	FENDER LIGHTS
W7	3	12	AWG	FLEXIBLE CABLE	FENDER LIGHTS
W8	3	12	AWG	FLEXIBLE CABLE	FENDER LIGHTS
W10	30	10	AWG	2	
	9	12	AWG		
W11	3	10	AWG	¾	DUSK DAWN LIGHT
W12	30	10	AWG	2	
	9	12	AWG		
W14	3	12	AWG	¾	NAVIGATION LIGHT POWER
W15	4	12	AWG	¾	NAVIGATION LIGHTS
W16	4	12	AWG	FLEXIBLE CABLE	NAVIGATION LIGHTS
W17	4	12	AWG	¾	NAVIGATION LIGHTS
W18	4	12	AWG	FLEXIBLE CABLE	NAVIGATION LIGHTS
W19	4	12	AWG	FLEXIBLE CABLE	NAVIGATION LIGHTS
W20	4	12	AWG	FLEXIBLE CABLE	NAVIGATION LIGHTS
W22	6	10	AWG	FLEXIBLE CABLE	RECEPTACLES AND LIGHTS
W23	3	10	AWG	¾	LIGHT
W24	30	10	AWG	2	
	6	12	AWG		
W25	4	10	AWG	¾	TAIL LOCK MOTOR
W28	26	10	AWG	2	
	6	12	AWG		
W29	6	10	AWG	¾	RECEPTACLES AND LIGHTS
W30	3	10	AWG	¾	LIGHT
W32	26	10	AWG	2	
	6	12	AWG		
W33	3	12	AWG	¾	MOTOR HEATER
W34	4	10	AWG	¾	BRAKE MOTOR
W36	22	10	AWG	1½	
	3	12	AWG		
W37	4	10	AWG	¾	AUXILIARY DRIVE MOTOR
W38	18	10	AWG	1¼	
	3	12	AWG		
W40	4	10	AWG	¾	BRAKE MOTOR
W42	14	10	AWG	1¼	
	3	12	AWG		
W43	3	10	AWG	¾	UTILITY RECEPTACLE
W44	14	10	AWG	1¼	
	3	12	AWG		
W45	3	12	AWG	¾	MOTOR HEATER

0 1 2 3

INCHES ON FULL SIZE SHEET

RUN	CONDUCTORS			(TRADE SIZE) CONDUIT	NOTES
W46	4	10	AWG	¾	BRAKE MOTOR
W48	10	10	AWG	1	
W49	4	10	AWG	¾	TAIL LOCK MOTOR
W50	6	10	AWG	¾	RECEPTACLES AND LIGHTS
W51	3	10	AWG	¾	LIGHT
W54	8	4	AWG	1½	
W55	4	4	AWG	1¼	MAIN DRIVE
W56	4	4	AWG	1¼	MAIN DRIVE
W60	61	12	AWG	3	
	3	4 PAIR	INSTR		
	2	1 PAIR	INSTR		
W61	8	12	AWG	¾	LIMIT SWITCH TAIL LOCK
W62	10	12	AWG	1¼	LIMIT SWITCH SPAN POSITION
	1	4 PAIR	INSTR	1¼	SPAN RESOLVER
W65	43	12	AWG	2½	
	2	4 PAIR	INSTR		
	2	1 PAIR	INSTR		
W69	4	12	AWG	¾	LIMIT SWITCH FULLY SEATED
W72	39	12	AWG	2½	
	2	4 PAIR	INSTR		
	2	1 PAIR	INSTR		
W73	3	12	AWG	¾	MOTOR DISC. AUX.
W74	36	12	AWG	2½	
	2	4 PAIR	INSTR		
	2	1 PAIR	INSTR		
W75	7	12	AWG	¾	LIMIT SWITCH BRAKE
W76	1	4 PAIR	INSTR	1¼	ENCODER
	1	1 PAIR	INSTR		THERMISTOR
W77	29	12	AWG	2	
	1	4 PAIR	INSTR		
	1	1 PAIR	INSTR		
W78	4	12	AWG	¾	LIMIT SWITCH AUX. CLUTCH
W80	25	12	AWG	2	
	1	4 PAIR	INSTR		
	1	1 PAIR	INSTR		
W81	7	12	AWG	¾	LIMIT SWITCH BRAKE
W83	18	12	AWG	2½	
	1	4 PAIR	INSTR		
	1	1 PAIR	INSTR		
W84	3	12	AWG	¾	MOTOR DISC. AUX.
W85	15	12	AWG	1½	
	1	4 PAIR	INSTR		
	1	1 PAIR	INSTR		
W86	7	12	AWG	¾	LIMIT SWITCH BRAKE

RUN	CONDUCTORS			(TRADE SIZE) CONDUIT	NOTES
W87	1	1 PAIR	INSTR	1¼	ENCODER
	1	1 PAIR	INSTR		THERMISTOR
W90	8	12	AWG	¾	LIMIT SWITCH TAIL LOCK
E5	3	12	AWG	¾	FENDER LIGHTS
E6	3	12	AWG	FLEXIBLE CABLE	FENDER LIGHTS
E7	3	12	AWG	FLEXIBLE CABLE	FENDER LIGHTS
E8	3	12	AWG	FLEXIBLE CABLE	FENDER LIGHTS
E10	30	10	AWG	2	
	9	12	AWG		
E14	3	12	AWG	¾	NAVIGATION LIGHT POWER
E15	4	12	AWG	¾	NAVIGATION LIGHTS
E16	4	12	AWG	FLEXIBLE CABLE	NAVIGATION LIGHTS
E17	4	12	AWG	¾	NAVIGATION LIGHTS
E18	4	12	AWG	FLEXIBLE CABLE	NAVIGATION LIGHTS
E19	4	12	AWG	¾	NAVIGATION LIGHTS
E20	4	12	AWG	FLEXIBLE CABLE	NAVIGATION LIGHTS
E22	6	10	AWG	FLEXIBLE CABLE	RECEPTACLES AND LIGHTS
E23	3	10	AWG	¾	LIGHT
E24	30	10	AWG	2	
	6	12	AWG		
E25	4	10	AWG	¾	TAIL LOCK MOTOR
E28	26	10	AWG	2	
	6	12	AWG		
E29	6	10	AWG	¾	RECEPTACLES AND LIGHTS
E30	3	10	AWG	¾	LIGHT
E32	26	10	AWG	2	
	6	12	AWG		
E33	3	12	AWG	¾	MOTOR HEATER
E34	4	10	AWG	¾	BRAKE MOTOR
E36	22	10	AWG	1½	
	3	12	AWG		
E37	4	10	AWG	¾	AUXILIARY DRIVE MOTOR
E38	18	10	AWG	1¼	
	3	12	AWG		
E40	4	10	AWG	¾	BRAKE MOTOR
E42	14	10	AWG	1¼	
	3	12	AWG		
E43	3	10	AWG	¾	UTILITY RECEPTACLE
E44	14	10	AWG	1¼	
	3	12	AWG		
E45	3	12	AWG	¾	MOTOR HEATER
E46	4	10	AWG	¾	BRAKE MOTOR
E48	10	10	AWG	1	
E49	4	10	AWG	¾	TAIL LOCK MOTOR
E50	6	10	AWG	¾	RECEPTACLES AND LIGHTS
E51	3	10	AWG	¾	LIGHT

RUN	CONDUCTORS			(TRADE SIZE) CONDUIT	NOTES
E54	8	2	AWG	2	
E55	4	2	AWG	1¼	MAIN DRIVE
E56	4	2	AWG	1¼	MAIN DRIVE
E60	61	12	AWG	3	
	3	4 PAIR	INSTR		
	2	1 PAIR	INSTR		
E61	8	12	AWG	¾	LIMIT SWITCH TAIL LOCK
E62	10	12	AWG	1¼	LIMIT SWITCH SPAN POSITION
	1	4 PAIR	INSTR		SPAN RESOLVER
E65	43	12	AWG	2½	
	2	4 PAIR	INSTR		
	2	1 PAIR	INSTR		
E69	4	12	AWG	¾	LIMIT SWITCH FULLY SEATED
E72	39	12	AWG	2½	
	2	4 PAIR	INSTR		
	2	1 PAIR	INSTR		
E73	3	12	AWG	¾	MOTOR DISC. AUX.
E74	36	12	AWG	2½	
	2	4 PAIR	INSTR		
	2	1 PAIR	INSTR		
E75	7	12	AWG	¾	LIMIT SWITCH DISC. AUX.
E76	1	4 PAIR	INSTR	1	ENCODER
	1	1 PAIR	INSTR	1	THERMISTOR
E77	29	12	AWG	2	
	1	4 PAIR	INSTR		
	1	1 PAIR	INSTR		
E78	4	12	AWG	¾	LIMIT SWITCH CLUTCH
E80	25	12	AWG	2	
	1	4 PAIR	INSTR		
	1	1 PAIR	INSTR		
E81	7	12	AWG	¾	LIMIT SWITCH BRAKE
E83	18	12	AWG	1½	
	1	4 PAIR	INSTR		
	1	1 PAIR	INSTR		
E84	3	12	AWG	¾	MOTOR DISC. AUX.
E85	15	12	AWG	1½	
	1	4 PAIR	INSTR		
	1	1 PAIR	INSTR		
E86	7	12	AWG	¾	LIMIT SWITCH BRAKE
E87	1	4 PAIR	INSTR	1¼	ENCODER
	1	1 PAIR	INSTR		THERMISTOR
E90	8	12	AWG	¾	LIMIT SWITCH TAIL LOCK

NOTES:

1. ALL CONDUCTOR COUNTS ARE APPROXIMATE, THE CONTRACTOR SHALL BE RESPONSIBLE FOR DETERMINING THE ACTUAL CONDUIT SCHEDULE, CONDUIT SIZES, AND CONDUCTOR COUNTS.

NORTH CAROLINA PROFESSIONAL SEAL 025801 ENGINEER LANCE V. BORDEN 6-22-2011

MODJESKI and MASTERS
Experience great bridges.

100 Sterling Parkway
Suite 302
Mechanicsburg, PA 17050 NC License No. C-2979

STATE OF NORTH CAROLINA
DEPARTMENT OF TRANSPORTATION
RALEIGH

WRIGHTSVILLE BRIDGE REHABILITATION
WRIGHTSVILLE, NORTH CAROLINA
MACHINERY ROOMS (E/W) CONDUIT
LEGEND BRIDGE WIRING LAYOUT – 5

E94

DESIGNED R.I. PETERS	DETAILED R.I. PETERS	DRAWN BY R.I. PETERS	
CHECKED A.M. MARINO	CHECKED A.M. MARINO	SCALE NONE	
		DATE JUNE 2011	
		DRAWING NO. 113OF 140	

112-BW6.DWG

RUN	CONDUCTORS			(TRADE SIZE) CONDUIT	NOTES
A70	24	10	AWG	1½	MOTORS
	6	12	AWG		HEATERS
A72	3	10	AWG	1	LP-3
	6	10	AWG		CIRCUIT TO SUBMARINE CABLE
A73	6	10	AWG	1	EAST MACHINERY CIRCUITS
	3	12	AWG		NAVIGATION LIGHTS
A74	9	10	AWG	1	PLC/TRAFFIC POWER
A75	3	12	AWG	¾	PLC AUXILIARY POWER
A76	2	12	AWG	1	VFB CABINET
	1	RIO	RIO		PLC COMMUNICATION
	1	CAT5	ENET		PLC COMMUNICATION
A77	44	12	AWG	2	EAST MACHINERY
	1	4 PAIR	INSTR		RESOLVER
A78	18	12	AWG	2	EAST MACHINERY
	2	4 PAIR	INSTR		ENCODER
	2	1 PAIR	INSTR		THERMISTOR
A80 SUB CABLES	55	10	AWG	SUBMARINE CABLE(S)	480 POWER
	10	10	AWG	|	GROUNDS
	2	10	AWG	|	120 POWER
	2	10	AWG	|	NEUTRALS
	2	10	AWG	|	GROUNDS
	7	6	AWG	|	PLC POWER
	1	6	AWG	|	NEUTRAL
	2	6	AWG	|	GROUND
	8	4	AWG	|	TRAFFIC LIGHT POWER
	1	4	AWG	|	NEUTRAL
	1	4	AWG	|	GROUND
	2	(4)-2	AWG	(SHIELDED CABLE)	VFD NORTHEAST POWER
	2	(4)-2	AWG	(SHIELDED CABLE)	VFD SOUTHEAST POWER
	65	10	AWG	|	120 CONTROL
	4	4 PAIR	INSTR	|	VFD ENCODERS
	4	1 PAIR	INSTR	|	THERMISTOR
	4	CAT5	ENET	|	REMOTE PROGRAM & CCTV
	2	RIO		|	REMOTE I/O
	2	COAX		|	COAXIAL
	2	FIBER	OPTIC	|	FIBER OPTIC
	1	DUCT		V	1" DUCT

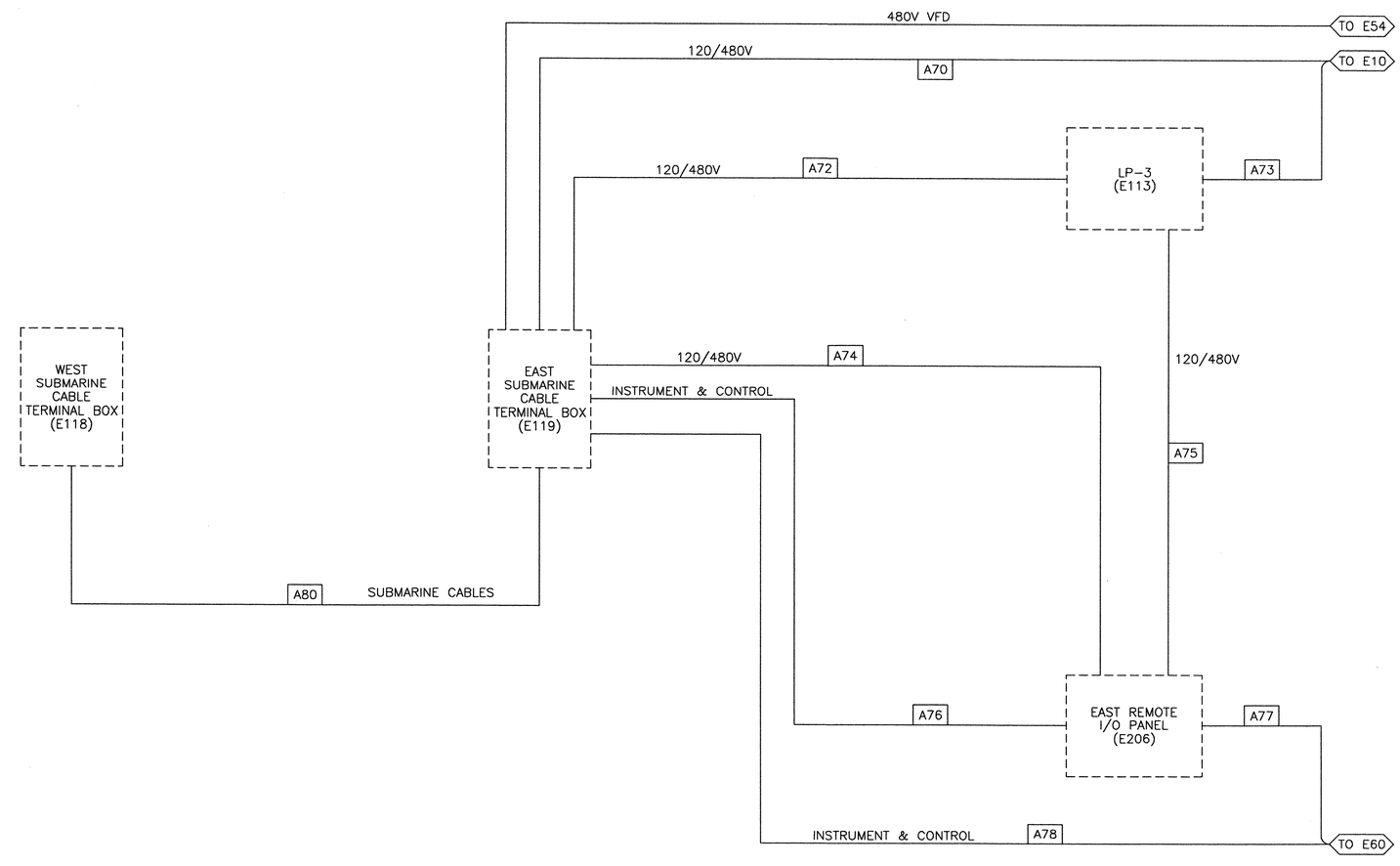

NOTES:

1. THIS DRAWING IS INTENDED TO PROVIDE THE APPROXIMATED CONDUCTOR INTERCONNECTIONS FOR THE SUBMARINE CABLE AND THE EAST TRUNNION ROOM. ALL CONDUCTOR COUNTS ARE APPROXIMATE, THE CONTRACTOR SHALL BE RESPONSIBLE FOR DETERMINING THE ACTUAL CONDUIT SCHEDULE, CONDUIT SIZES, AND CONDUCTOR COUNTS.
2. THE LAYOUT SHOWN IS DIAGRAMATIC AND IS NOT INTENDED TO SHOW EQUIPMENT IN EXACT LOCATIONS.
3. THE CONTRACTOR SHALL BE RESPONSIBLE FOR VERIFYING THE SUBMARINE CABLE CONDUCTOR REQUIREMENTS WITH THE SYSTEMS INTEGRATOR PRIOR TO ORDERING THE CABLE(S) AND PRIOR TO CONSTRUCTION.
4. INDIVIDUAL SUBMARINE CABLES SHALL CONTAIN ONLY POWER, VFD POWER, OR CONTROL CONDUCTORS TO PROVIDE ISOLATION.

0 1 2 3
INCHES ON FULL SIZE SHEET

NORTH CAROLINA PROFESSIONAL ENGINEER SEAL 025801 LANCE V. BORDEN 6-22-2011

MODJESKI and MASTERS
Experience great bridges.
100 Sterling Parkway
Suite 302
Mechanicsburg, PA 17050 NC License No. C-2979

STATE OF NORTH CAROLINA
DEPARTMENT OF TRANSPORTATION
RALEIGH

WRIGHTSVILLE BRIDGE REHABILITATION
WRIGHTSVILLE, NORTH CAROLINA

SUBMARINE CABLE AND EAST TRUNNION ROOM BRIDGE WIRING LAYOUT – 6

		DRAWN BY	R.I. PETERS
		SCALE	NONE
DESIGNED R.I. PETERS	DETAILED R.I. PETERS	DATE	JUNE 2011
CHECKED A.M. MARINO	CHECKED A.M. MARINO	DRAWING NO.	114OF 140

E95

113-SWLE.DWG

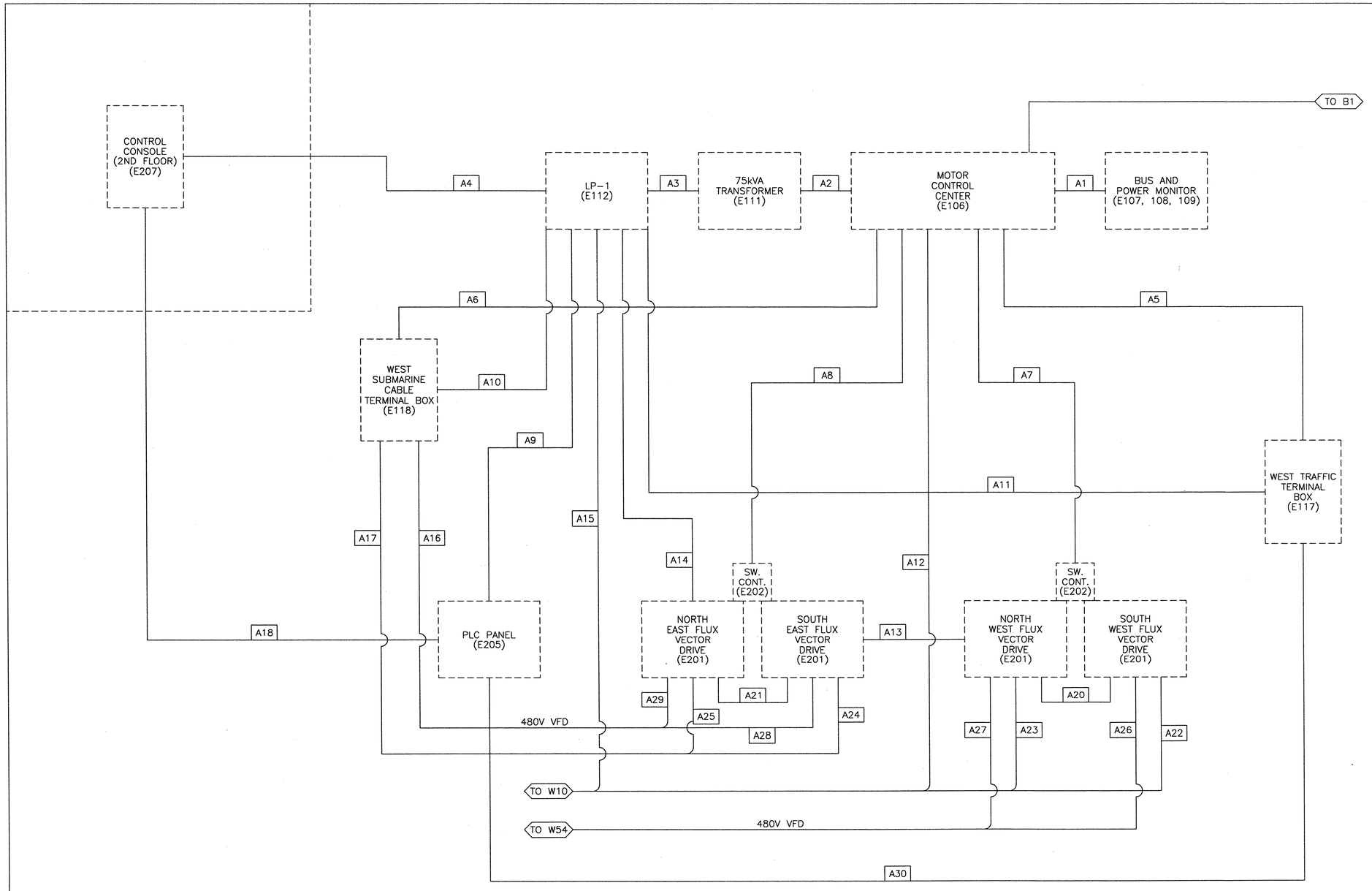

RUN	CONDUCTORS			(TRADE SIZE) CONDUIT	NOTES
A1	10	12	AWG	¾	BUS/PWR MONITOR
A2	3	3/0	AWG	2	75 KVA PRIMARY
	1	4	AWG	2½	GROUND
A3	3	300	KCMIL	2½	75 KVA SECONDARY
	1	2	AWG		GROUND
A4	12	12	AWG	1	
A5	12	10	AWG	1	WEST GATES
A6	29	10	AWG	2	SUBMARINE PANEL MOTORS
	10	10	AWG		GROUND
A7	4	4	AWG	1¼	VFD
A8	4	4	AWG	1¼	VFD
A9	6	12	AWG	¾	
	3	10	AWG		
A10	2	10	AWG	¾	EAST I/O
	2	10	AWG		NEUTRAL
	1	6	AWG		SHARED GROUND
A11	6	12	AWG	¾	WEST TRAFFIC
A12	28	10	AWG	1½	WEST MACHINERY
A13	3	12	AWG	¾	MOTOR HEATER
A14	3	12	AWG	¾	MOTOR HEATER
A15	6	10	AWG	¾	WEST MACHINERY
A16	4	2	AWG	SHIELDED CABLE	VDF POWER
	4	2	AWG	SHIELDED CABLE	VDF POWER
A17	6	12	AWG	¾	VFD HEATERS (2)
A18	6	12	AWG	¾	CONSOLE POWER
A20	3	12	AWG	¾	MOTOR HEATER
A21	3	12	AWG	¾	MOTOR HEATER
A22	3	12	AWG	¾	MOTOR HEATER
A23	3	12	AWG	¾	MOTOR HEATER
A24	3	12	AWG	¾	MOTOR HEATER
A25	3	12	AWG	¾	MOTOR HEATER
A26	4	4	AWG	1¼	VFD POWER
A27	4	4	AWG	1¼	VFD POWER
A28	4	2	AWG	SHIELED CABLE	VFD POWER
A29	4	2	AWG	SHIELED CABLE	VFD POWER
A30	8	10	AWG	1	WEST TRAFFIC

NOTES:

1. THIS DRAWING IS INTENDED TO PROVIDE THE APPROXIMATED CONDUCTOR INTERCONNECTIONS IN THE ELECTRICAL ROOM. THE CONTRACTOR WILL BE RESPONSIBLE FOR CHECKING THIS INFORMATION AND DEVELOPING AND INSTALLING A WIRE TRAY SYSTEM FOR THE REQUIRED CONDUCTORS. ALL CONDUCTOR COUNTS ARE APPROXIMATE.
2. THE LAYOUT SHOWN IS DIAGRAMATIC AND IS NOT INTENDED TO SHOW EQUIPMENT IN EXACT LOCATIONS.
3. NOT ALL CIRCUITS ARE SHOWN.

0 1 2 3
INCHES ON FULL SIZE SHEET

NORTH CAROLINA PROFESSIONAL SEAL 025801 ENGINEER LANCE V. BORDEN

MODJESKI and MASTERS
Experience great bridges.
100 Sterling Parkway
Suite 302
Mechanicsburg, PA 17050 NC License No. C-2979

STATE OF NORTH CAROLINA
DEPARTMENT OF TRANSPORTATION
RALEIGH

WRIGHTSVILLE BRIDGE REHABILITATION
WRIGHTSVILLE, NORTH CAROLINA

ELECTRICAL ROOM 120/480V POWER
BRIDGE WIRING LAYOUT – 7

E96

DESIGNED R.I. PETERS	DETAILED R.I. PETERS	DRAWN BY R.I. PETERS	
CHECKED A.M. MARINO	CHECKED A.M. MARINO	SCALE NONE	
		DATE JUNE 2011	
		DRAWING NO. 115OF 140	

114-BWL7.DWG

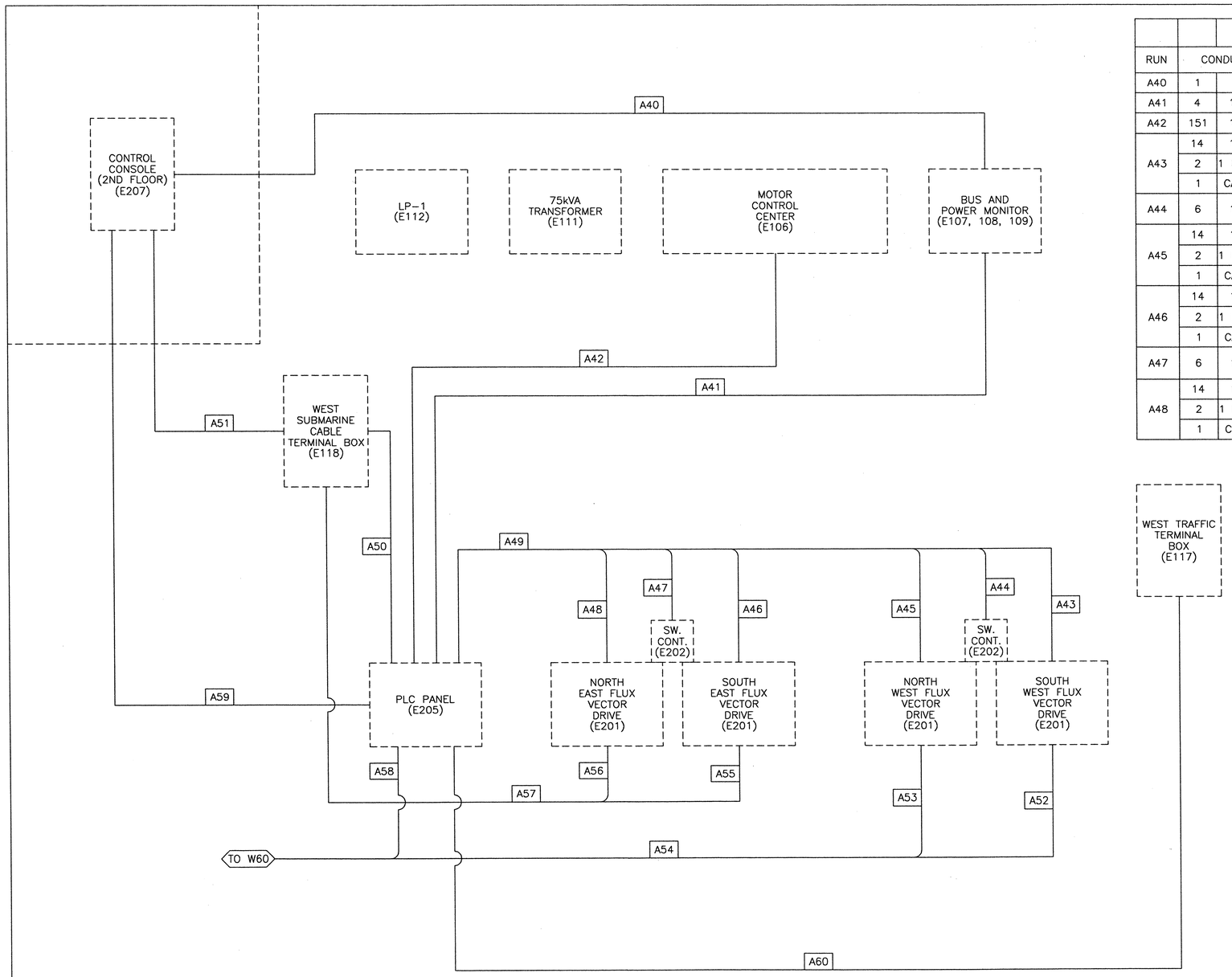

RUN	CONDUCTORS			(TRADE SIZE) CONDUIT	NOTES
A40	1		INSTR		POWER MONITOR
A41	4	12	AWG	¾	BUS MONITOR
A42	151	12	AWG	3½	MCC
A43	14	12	AWG	1¼	VFD CABINET
	2	1 PAIR	INSTR		VFD CABINET
	1	CAT5	ENET		VFD CABINET
A44	6	12	AWG	¾	VFD SWITCH CONTROL
A45	14	12	AWG	1¼	VFD CABINET
	2	1 PAIR	INSTR		VFD CABINET
	1	CAT5	ENET		VFD CABINET
A46	14	12	AWG	1¼	VFD CABINET
	2	1 PAIR	INSTR		VFD CABINET
	1	CAT5	ENET		VFD CABINET
A47	6	12	AWG	¾	VFD SWITCH CONTROL
A48	14	12	AWG	1¼	VFD CABINET
	2	1 PAIR	INSTR		VFD CABINET
	1	CAT5	ENET		VFD CABINET

RUN	CONDUCTORS			(TRADE SIZE) CONDUIT	NOTES
A49	56	12	AWG	3	VFD CABINET
	8	1 PAIR	INSTR		VFD CABINET
	4	CAT5	ENET		VFD CABINET
A50	42	12	AWG	2	WEST SUBMARINE
	2	CAT5	ENET		WEST SUBMARINE
	1	RIO	RIO		WEST SUBMARINE
A51	1	RIO	RIO	1¼	REMOTE I/O
	2	12	AWG		EAST FENDER LIGHT CIRCUIT
	3	COAX	COAX		CCTV CAMERA
A52	2	12	AWG	1¼	DISCONNECT AUXILIARY
	1	4 PAIR	INSTR		ENCODER
	1	1 PAIR	INSTR		THERMISTOR
A53	2	12	AWG	1¼	DISCONNECT AUXILIARY
	1	4 PAIR	INSTR		ENCODER
	1	1 PAIR	INSTR		THERMISTOR
A54	4	12	AWG	2	DISCONNECT AUXILIARY
	2	4 PAIR	INSTR		ENCODER
	2	1 PAIR	INSTR		THERMISTOR
A55	2	12	AWG	1¼	DISCONNECT AUXILIARY
	1	4 PAIR	INSTR		ENCODER
	1	1 PAIR	INSTR		THERMISTOR
A56	2	12	AWG	1¼	DISCONNECT AUXILIARY
	1	4 PAIR	INSTR		ENCODER
	1	1 PAIR	INSTR		THERMISTOR
A57	4	12	AWG	2	DISCONNECT AUXILIARY
	2	4 PAIR	INSTR		ENCODER
	2	1 PAIR	INSTR		THERMISTOR
A58	57	12	AWG	2½	PLC
	1	4 PAIR	INSTR	¾	RESOLVER
A59	16	12	AWG	1½	CONSOLE
	2	CAT5	ENET		REMOTE PROGRAMMABLE
	2	RIO	RIO		REMOTE I/O
A60	26	12	AWG	1¼	WEST TRAFFIC

NOTES:

1. THIS DRAWING IS INTENDED TO PROVIDE THE APPROXIMATED CONDUCTOR INTERCONNECTIONS IN THE ELECTRICAL ROOM. THE CONTRACTOR WILL BE RESPONSIBLE FOR CHECKING THIS INFORMATION AND DEVELOPING AND INSTALLING A WIRE TRAY SYSTEM FOR THE REQUIRED CONDUCTORS. ALL CONDUCTOR COUNTS ARE APPROXIMATE.
2. THE LAYOUT SHOWN IS DIAGRAMATIC AND IS NOT INTENDED TO SHOW EQUIPMENT IN EXACT LOCATIONS.
3. NOT ALL CIRCUITS ARE SHOWN.

0 1 2 3
INCHES ON FULL SIZE SHEET

NORTH CAROLINA PROFESSIONAL SEAL 025801 ENGINEER LANCE V. BORDEN 2-22-2011

MODJESKI and MASTERS
Experience great bridges.
100 Sterling Parkway
Suite 302
Mechanicsburg, PA 17050 NC License No. C-2979

E97

STATE OF NORTH CAROLINA
DEPARTMENT OF TRANSPORTATION
RALEIGH

WRIGHTSVILLE BRIDGE REHABILITATION
WRIGHTSVILLE, NORTH CAROLINA

ELECTRICAL ROOM CONTROL AND INSTR.
BRIDGE WIRING LAYOUT – 8

		DRAWN BY	R.I. PETERS
		SCALE	NONE
DESIGNED R.I. PETERS	DETAILED R.I. PETERS	DATE	JUNE 2011
CHECKED A.M. MARINO	CHECKED A.M. MARINO	DRAWING NO.	116OF 140

115-DWG.DWG

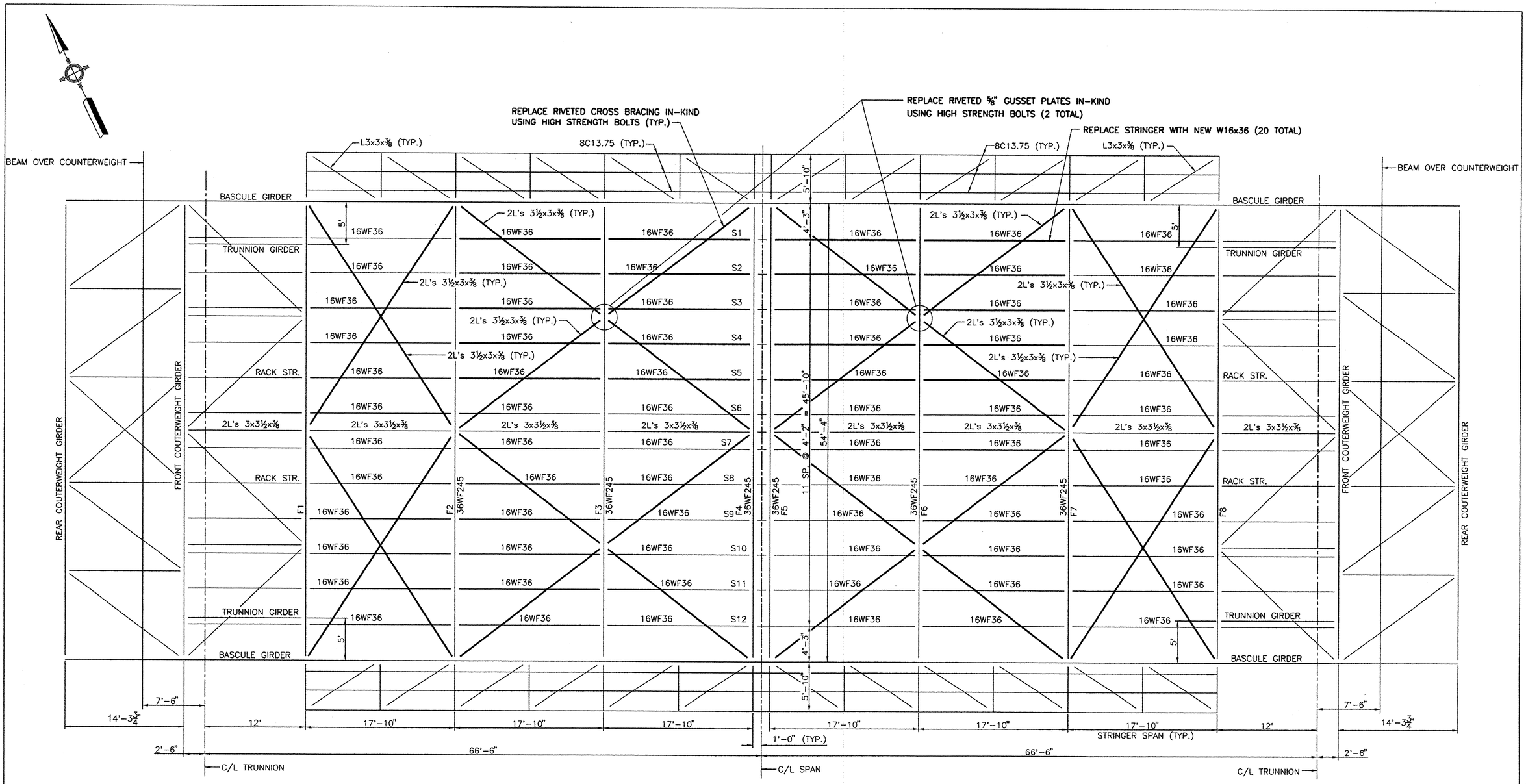

PLAN

SCALE: 3/16" = 1'-0"

0 1 2 3

INCHES ON FULL SIZE SHEET

PE.DWG

NORTH CAROLINA PROFESSIONAL SEAL 012470 ENGINEER BARNEY T. MARTIN 6/23/2011

MODJESKI and MASTERS
Experience great bridges.

100 Sterling Parkway
Suite 302
Mechanicsburg, PA 17050 NC License No. C-2979

STATE OF NORTH CAROLINA
DEPARTMENT OF TRANSPORTATION
RALEIGH

WRIGHTSVILLE BRIDGE REHABILITATION
WRIGHTSVILLE, NORTH CAROLINA

FRAMING PLAN

		DRAWN BY	R.S. JOHNSON
		SCALE	AS NOTED
DESIGNED J.A. KAPLAN	DETAILED R.S. JOHNSON	DATE	JUNE 2011
CHECKED R.E. JACKSON	CHECKED R.E. JACKSON	DRAWING NO.	117 OF 140

S1

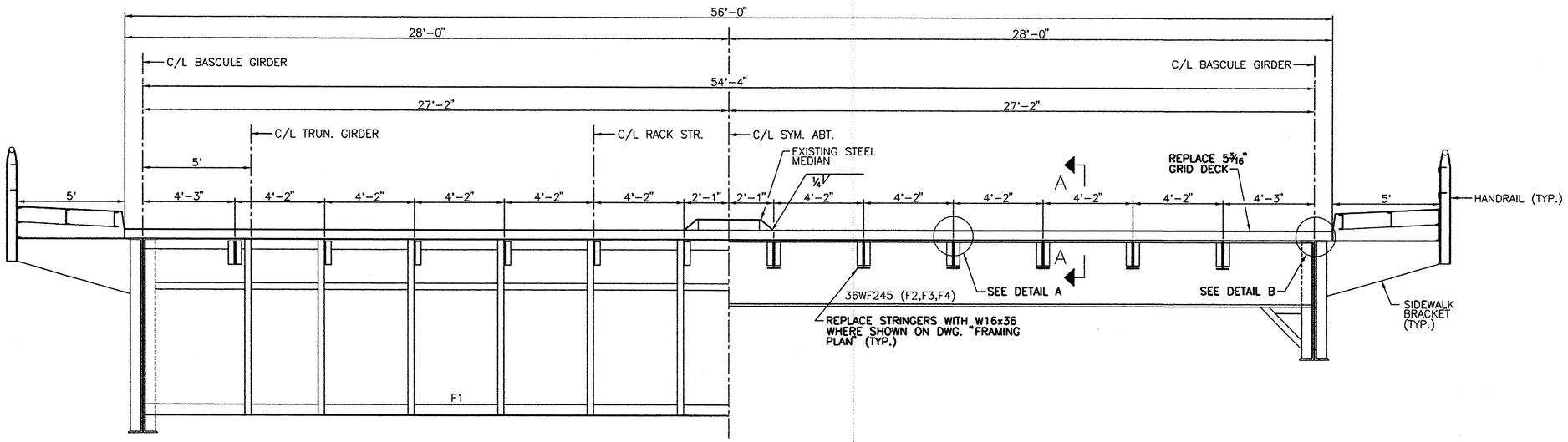

TYPICAL SECTION

SCALE: 3/8" = 1'-0"

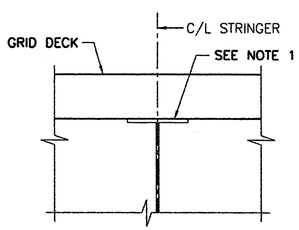

DETAIL A

(DECK DETAILS AT STRINGER)

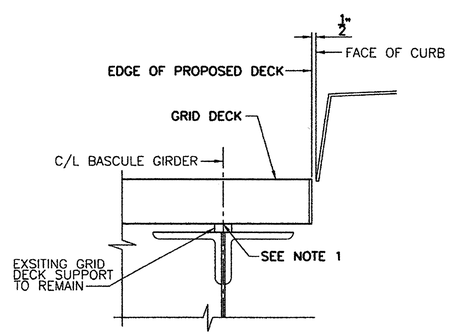

DETAIL B

(DECK DETAILS AT BASCULE GIRDER)

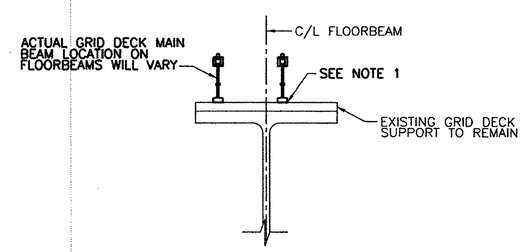

SECTION A-A

NOTES:

1. FOR GRID DECK CONNECTION TO SUPPORT DETAILS, SEE DWG. "GRID DECK DETAILS".
2. FOR GRID DECK REPLACEMENT DETAILS, SEE DWG. "GRID DECK LAYOUT PLAN" AND "GRID DECK DETAILS".
3. FOR NEW STRINGER DETAILS, SEE DWG. "STRINGER REPLACEMENT DETAILS".

0 1 2 3

INCHES ON FULL SIZE SHEET

PE.DWG

NORTH CAROLINA PROFESSIONAL SEAL 012470 ENGINEER BARNEY C. MARTIN 6/13/2011

MODJESKI and MASTERS
Experience great bridges.

100 Sterling Parkway
Suite 302
Mechanicsburg, PA 17050 NC License No. C-2979

STATE OF NORTH CAROLINA
DEPARTMENT OF TRANSPORTATION
RALEIGH

WRIGHTSVILLE BRIDGE REHABILITATION
WRIGHTSVILLE, NORTH CAROLINA

TYPICAL SECTION

		DRAWN BY	R.S. JOHNSON
		SCALE	AS NOTED
S2	DESIGNED J.A. KAPLAN	DETAILED R.S. JOHNSON	DATE JUNE 2011
	CHECKED R.E. JACKSON	CHECKED R.E. JACKSON	DRAWING NO. 118 OF 140

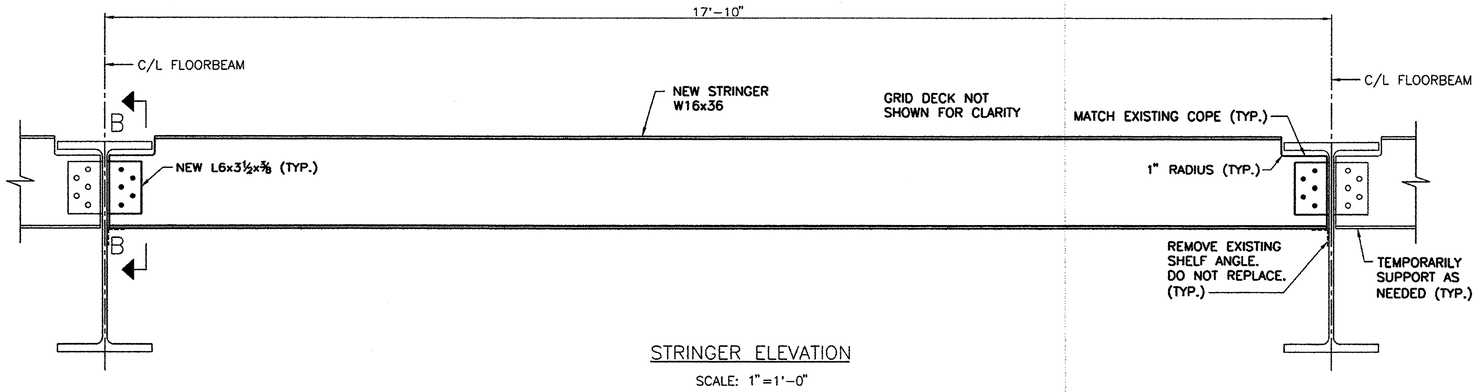

STRINGER ELEVATION

SCALE: 1"=1'-0"

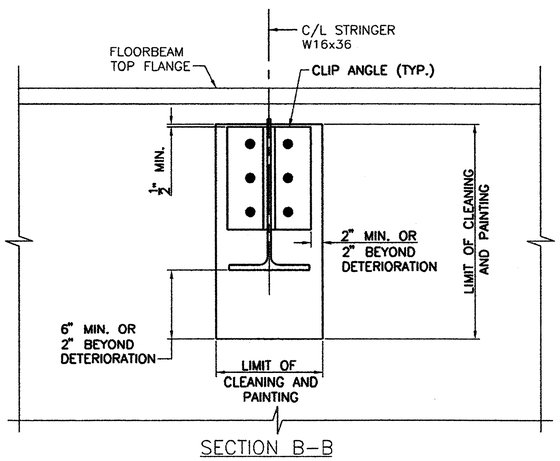

SECTION B-B

SCALE: ½"=1'-0"

0 1 2 3

INCHES ON FULL SIZE SHEET

PE.DWG

STRINGER REPLACEMENT PROCEDURE

1. REFER TO CONSTRUCTION PROCEDURE NOTE 3 ON DWG. "GRID DECK LAYOUT PLAN".
2. REMOVE EXISTING STRINGERS TO BE REPLACED AS NOTED IN THE PLANS. REMOVE EXISTING CLIP ANGLES AND SHELF ANGLES (IF PRESENT).
3. CLEAN THE FLOORBEAM (LIMITS ARE SHOWN ON THE PLANS):
   a. HAND CLEAN THE FLOORBEAM (FOR THE LIMITS SHOWN) TO REMOVE GROSS CORROSION.
   b. CLEAN THE FLOORBEAM (FOR THE LIMITS SHOWN) USING CHLOR-RID (OR AN APPROVED EQUAL) TO REMOVE ANY RESIDUAL SALTS.
   c. VACUUM BLAST CLEAN THE FLOORBEAM (FOR THE LIMITS SHOWN) PER SSPC SP 10/NACE NO. 2-NEAR-WHITE METAL BLAST CLEANING REQUIREMENTS. ACCEPTABILITY OF THE CLEANED SURFACE SHALL COMPLY WITH VISUAL STANDARD SSPC-VIS 1 RUST GRADE G_3-SP10.
4. COAT THE AREA OF THE FLOORBEAM IN CONTACT WITH THE CLIP ANGLES USING DEVCON PLASTIC STEEL PUTTY (A) (OR AN APPROVED EQUAL) TO FILL IN ANY PITTING THAT HAS OCCURED ON THIS FAYING SURFACE.
5. INSTALL THE NEW STRINGER USING NEW CLIP ANGLES AND A325 BOLTS. THE SHELF ANGLES WILL NOT BE REPLACED.
6. PAINT THE NEW STRINGERS AND CLIP ANGLES PER NCDOT SPECIFICATIONS. COLOR TO MATCH EXISTING STEEL.
7. PAINT THE FLOORBEAM (WITHIN THE LIMITS SHOWN) PER NCDOT SPECIFICATIONS. COLOR TO MATCH EXISTING STEEL.

TRAFFIC CONTROL DURING STRINGER AND GRID DECK REPLACEMENT

1. PROVIDE TEMPORARY LANE CLOSURES UTILIZING FLAGGERS FOR ALTERNATING TRAFFIC IN THE FAR OUTSIDE LANE AWAY FROM WORK AREA.
2. PROVIDE A MINIMUM OF TWO TRUCK MOUNTED IMPACT ATTENUATORS (ONE FOR EACH DIRECTION OF TRAFFIC) FOUR MAY BE REQUIRED, TO PROTECT WORK AREA ANY TIME A GRID DECK PANEL IS REMOVED OR NOT SUFFICENTLY ANCHORED.
3. PROVIDE DRUMS TO DELINEATE MEDIAN DURING NON WORKING HOURS.
4. SUBMIT TRAFFIC CONTROL PLANS FOR APPROVAL PRIOR TO BEGINNING ANY WORK.

NORTH CAROLINA PROFESSIONAL SEAL 012470 ENGINEER BRANCH K. MARTIN
6/23/2011

MODJESKI and MASTERS
Experience great bridges.

100 Sterling Parkway
Suite 302
Mechanicsburg, PA 17050 NC License No. C-2979

S3

STATE OF NORTH CAROLINA
DEPARTMENT OF TRANSPORTATION
RALEIGH

WRIGHTSVILLE BRIDGE REHABILITATION
WRIGHTSVILLE, NORTH CAROLINA

STRINGER REPLACEMENT DETAILS

		DRAWN BY	R.S. JOHNSON
		SCALE	AS NOTED
DESIGNED J.A. KAPLAN	DETAILED R.S. JOHNSON	DATE	JUNE 2011
CHECKED R.E. JACKSON	CHECKED R.E. JACKSON	DRAWING NO. 119 OF 140	

NOTES FOR EPOXY INJECTION

1. UNLESS OTHERWISE NOTED THE INTENT OF THESE REPAIRS IS FOR DESIGNATED CRACKS TO BE INJECTED THEIR FULL LENGTH AND DEPTH.

2. DESIGNATED CRACKS SHALL BE INJECTED WITH AN APPROVED EPOXY RESIN ADHESIVE, FILLING ALL VOIDS FOR THE CRACK DEPTH OR THICKNESS OF THE MEMBER. ALL CRACKS SHALL BE INJECTED USING AN ADHESIVE SUITABLE FOR THE FIELD CONDITIONS (UNDERWATER MARINE ENVIRONMENT, CRACK WIDTH, TEMPERATURE, HUMIDITY, ETC.) RECOMMENDED BY THE ADHESIVE MANUFACTURER AS SHOWN ON MATERIAL DATA SHEETS. FOLLOWING INJECTION, ALL INJECTION PORTS AND CAPPING MATERIAL SHALL BE REMOVED FROM EXPOSED SURFACES LEAVING THE SURFACE SMOOTH AND FLUSH WITH THE SURROUNDING CONCRETE SURFACES.

3. THE CONTRACTOR SHALL HAVE SUFFICIENT EXPERIENCE AND TRAINING TO PERFORM THE EPOXY INJECTION IN ACCORDANCE WITH THESE PLANS. PRIOR TO PERFORMING ANY WORK, THE CONTRACTOR SHALL SUBMIT TO THE ENGINEER A WRITTEN PROCEDURE FOR PERFORMING THE EPOXY INJECTION. THE PROCEDURE SHALL DESCRIBE IN DETAIL HOW THE WORK WILL BE PERFORMED. THE PROCEDURE SHALL INCLUDE, BUT NOT BE LIMITED TO THE FOLLOWING INFORMATION.

   A. DESCRIPTION OF EQUIPMENT.
      a. THE INJECTION EQUIPMENT SHALL BE OF THE TYPE THAT MIXES ADHESIVE COMPONENTS AT THE INJECTION HEAD.
      b. THE INJECTION EQUIPMENT SHALL BE CAPABLE OF DISCHARGING MIXED ADHESIVE AT ANY PRESSURE UP TO 300 PSI. THE INJECTION EQUIPMENT SHALL BE EQUIPPED WITH GAUGES WHICH CAN MEASURE THE INJECTION PRESSURE AND VOLUME.

   B. EQUIPMENT CALIBRATION PROCEDURES AND SCHEDULE.

   C. MATERIALS TO BE USED (INCLUDING MANUFACTURER DATA SHEETS).
      a. CAPPING MATERIAL.
      b. EPOXY ADHESIVE (TYPE TO BE APPROPRIATE FOR CRACK SIZES TO BE INJECTED).

   D. PORT SPACING.

   E. INJECTION SEQUENCE.
      a. INJECTION SHALL PROCEED FROM LOWER END OF CRACK ALONG ADJACENT PARTS.
      b. SKIPPING OF PORTS DURING INJECTION SHALL NOT BE ALLOWED.

4. THE CONTRACTOR SHALL HAVE THE MANUFACTURER'S INSTRUCTIONS FOR PROPORTIONING AND MIXING AVAILABLE AT THE JOB SITE AT ALL TIMES AND SHALL ENSURE THAT THE EQUIPMENT IS SUPPLYING THE MIXED ADHESIVE IN THE CORRECT PROPORTIONS.

5. TO ENSURE PROPER MIXING AND PROPORTIONING, SAMPLES SHALL BE TAKEN FROM THE INJECTION HEAD AT THE START OF EACH WORKDAY AND EACH TIME THE ADHESIVE RESERVOIRS ARE REFILLED. THE SAMPLES SHALL BE IN A TEST CUP. THE SAMPLE SHALL BE MONITORED TO ENSURE THAT THE CURE TIME IS IN COMPLIANCE WITH THE MANUFACTURER'S DATA SHEETS. IF THE SAMPLES DO NOT CURE IN THE SPECIFIED TIME THEN THE EQUIPMENT USED TO PRODUCE THE SAMPLE SHALL NOT BE USED UNTIL THE PROBLEM IS CORRECTED.

6. CORE SAMPLES SHALL BE TAKEN AS VERIFICATION OF THE QUALITY OF WORK. THE CONTRACTOR SHALL TAKE ONE (1) ONE (1) INCH DIAMETER (FULL DEPTH OF CONCRETE AT LOCATION FILLED) CORE SAMPLE AT THE FIRST REPAIR LOCATION. WORK SHALL NOT PROCEED UNTIL THE CORE SAMPLE IS TAKEN AND ACCEPTED. THE ENGINEER SHALL DESIGNATE ANY ADDITIONAL LOCATIONS TO BE CORED. IF ANY CORES SHOW UNACCEPTABLE RESULTS, ALL WORK SHALL BE STOPPED UNTIL THE CONTRACTOR SUBMITS A PROPOSAL FOR CORRECTING UNACCEPTABLE WORK.

7. THE CONTRACTOR, AT HIS EXPENSE, SHALL REPAIR ALL CORE HOLES WITH AN APPROVED CEMENTITIOUS NON-SHRINK PATCHING MATERIAL.

8. CORE SAMPLES SHALL BE VISUALLY INSPECTED TO CONFIRM THAT CRACKS ARE COMPLETELY FILLED WITH ADHESIVE. ANY CORE HAVING LESS THAN 95% OF THE CRACK FILLED WITH ADHESIVE SHALL BE CONSIDERED UNACCEPTABLE AND BE REJECTED.

9. CORE SAMPLES SHALL BE TESTED FOR BOND STRENGTH. SAMPLES MAY BE FRACTURED BY HAMMER BLOW TO CRACK AREA OR THROWN AT A HARD SURFACE. IF ADHESIVE FAILURE OCCURS BEFORE CONCRETE FAILURE, THE CORE SHALL BE CONSIDERED UNACCEPTABLE AND REJECTED.

10. PRICE BID SHALL INCLUDE COST OF ALL LABOR AND MATERIALS, GRINDING AND SURFACE PREPARATION, CRACK PREPARATION, CAPPING, INJECTION OF ADHESIVE, ALL SAMPLING AND TESTING, REMOVAL OF CAPPING MATERIAL AND PORTS, AND OTHER INCIDENTALS.

11. NO PAYMENT SHALL BE MADE FOR REWORK DEEMED NECESSARY BY FAILURE OF ADHESIVE SAMPLES OR CORE SAMPLES.

12. ALL WORK INCLUDING SAMPLING AND TESTING SHALL BE PERFORMED IN THE PRESENCE OF THE ENGINEER OR HIS REPRESENTATIVE OR CONTRACT INSPECTORS. ANY WORK DONE WITHOUT INSPECTORS PRESENT SHALL NOT BE PAID FOR.

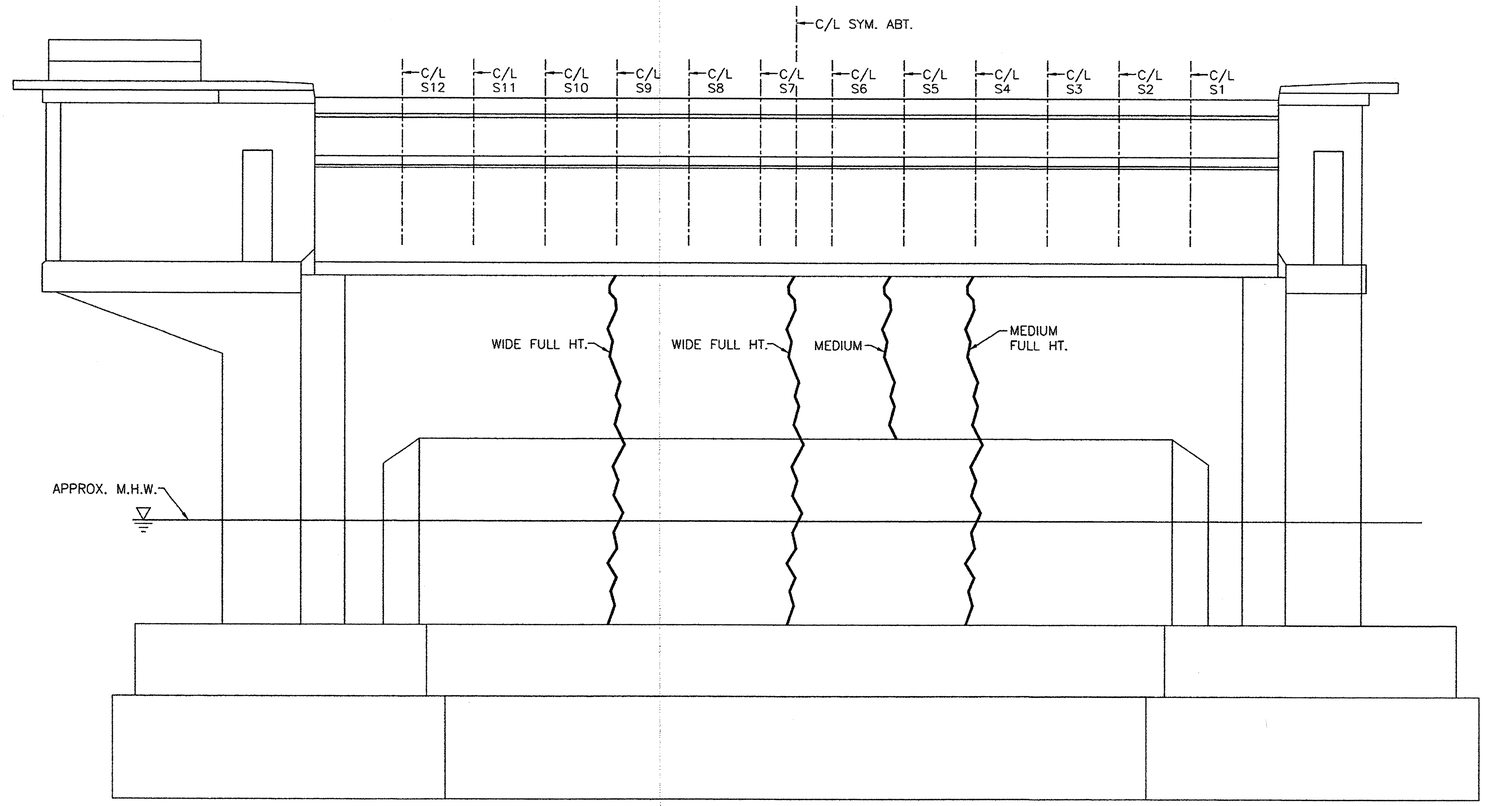

WEST PIER ELEVATION SHOWN – EAST PIER SIMILAR

SCALE: ¼" = 1'-0"

0 1 2 3
INCHES ON FULL SIZE SHEET

PE.DWG

NORTH CAROLINA PROFESSIONAL SEAL 012470 ENGINEER BARNETT T. MARTIN
6/23/2011

MODJESKI and MASTERS
Experience great bridges.
100 Sterling Parkway
Suite 302
Mechanicsburg, PA 17050 NC License No. C-2979

S4

STATE OF NORTH CAROLINA
DEPARTMENT OF TRANSPORTATION
RALEIGH

WRIGHTSVILLE BRIDGE REHABILITATION
WRIGHTSVILLE, NORTH CAROLINA

BASCULE PIER CRACK REPAIR DETAILS

		DRAWN BY	R.S. JOHNSON
		SCALE	AS NOTED
DESIGNED J.A. KAPLAN	DETAILED R.S. JOHNSON	DATE	JUNE 2011
CHECKED R.E. JACKSON	CHECKED R.E. JACKSON	DRAWING NO. 120 OF 140	

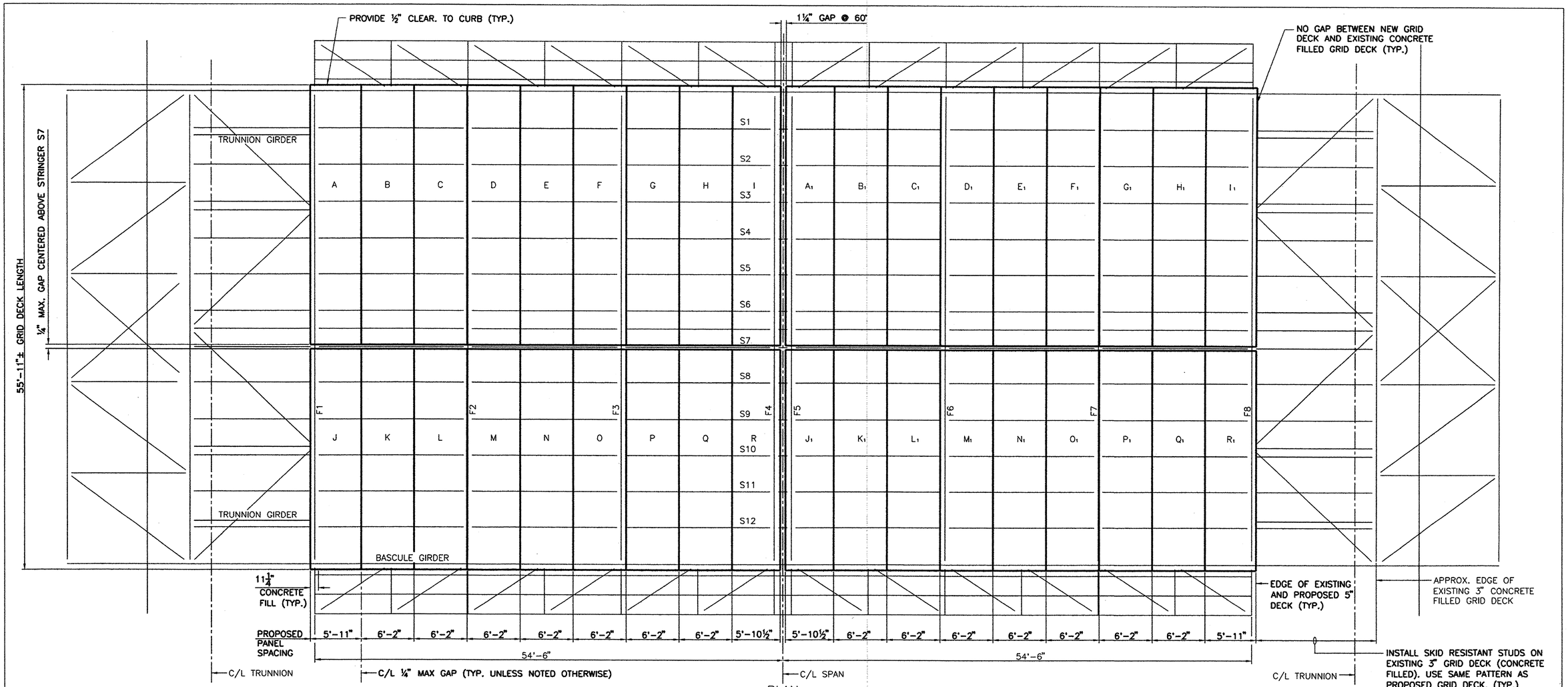

PLAN

SCALE: 3/16" = 1'-0"

CONSTRUCTION PROCEDURE

1. CAREFULLY REMOVE EXISTING MEDIAN STRIP FROM BOTH MOVEABLE SPANS BY CUTTING EXISTING ¼" WELD. BLAST CLEAN AND PAINT MEDIAN STRIP AND STORE IN SAFE DRY PLACE FOR REINSTALLATION AFTER NEW GRID DECK IS INSTALLED. TO REINSTALL, WELD MEDIAN STRIP WITH ¼" FILLET WELDS AT ALL MAIN AND SUPPLEMENTAL BARS.
2. GRID DECK REPLACEMENT IN AREAS WHERE STRINGERS ARE NOT BEING REPLACED:
   a. REMOVE THE EXISTING GRID DECK. ONLY REMOVE THE EXISTING GRID DECK THAT CAN BE REPLACED IN ONE WORK SHIFT.
   b. CLEAN AND PAINT TOP AND SIDES OF THE TOP FLANGE OF ALL EXISTING STRINGERS AND FLOOR BEAMS TO REMAIN. HAND CLEAN TO REMOVE GROSS CORROSION. USE CHLOR-RID (OR AN APPROVED EQUAL) TO REMOVE ANY RESIDUAL SALTS. VACUUM BLAST CLEAN PER SSPC SP 10/NACE NO.2-NEAR-WHITE METAL BLAST CLEANING REQUIREMENTS. ACCEPTABILITY OF THE CLEANED SURFACE SHALL COMPLY WITH VISUAL STANDARD SSPC-VIS 1 RUST GRADE G_3-SP10.
   c. INSTALL THE NEW GRID DECK AS SHOWN ON THE PLANS. THE NEW GRID DECK MUST BE SUFFICIENTLY ANCHORED TO THE STRINGERS AT THE END OF EACH WORK SHIFT. ANCHORING CAN BE DONE BY WELDING OR CLAMPING, OR A COMBINATION OF BOTH. THE GRID DECK IS SUFFICIENTLY ANCHORED WHEN, UNDER LIVE LOAD, THERE IS NO DIFFERENTIAL MOVEMENT BETWEEN THE DECK AND ITS SUPPORTS.
   d. FINISH WELDING THE GRID DECK INTO PLACE DURING SUBSEQUENT WORK SHIFTS.
3. GRID DECK REPLACEMENT IN AREAS WHERE STRINGERS ARE BEING REPLACED:
   a. REMOVE THE EXISTING GRID DECK PANELS NECESSARY TO REPLACE A STRINGER SPAN (TYPICALLY 3 PANELS). A STRINGER SPAN IS DEFINED AS THE LENGTH OF STRINGER LOCATED BETWEEN TWO ADJACENT FLOORBEAMS.
   b. INSTALL THE NEW GRID DECK PANELS AND VERIFY THAT THEY FIT. THE NEW GRID DECK MUST BE SUFFICIENTLY ANCHORED TO ITS SUPPORTS AT THE END OF EACH WORK SHIFT. TEMPORARY ANCHORING MUST BE DONE BY CLAMPING. THE GRID DECK IS SUFFICIENTLY ANCHORED WHEN, UNDER LIVE LOAD, THERE IS NO DIFFERENTIAL MOVEMENT BETWEEN THE DECK AND ITS SUPPORTS.
   c. REMOVE THE NEW GRID DECK PANELS NECESSARY TO REPLACE A STRINGER SPAN (TYPICALLY 3 PANELS).
   d. REPLACE STRINGER AS SHOWN IN THE STRINGER REPLACEMENT PROCEDURE ON DWG. "STRINGER REPLACEMENT DETAILS". IT IS ANTICIPATED THAT ONE STRINGER CAN BE REPLACED PER WORK SHIFT.
   e. SAME AS 2b.
   f. RE-INSTALL NEW GRID DECK PANELS. THE NEW GRID DECK MUST BE SUFFICIENTLY ANCHORED TO ITS SUPPORTS AT THE END OF EACH WORK SHIFT. TEMPORARY ANCHORING MUST BE DONE BY CLAMPING. THE GRID DECK IS SUFFICIENTLY ANCHORD WHEN, UNDER LIVE LOAD, THERE IS NO DIFFERENTIAL MOVEMENT BETWEEN THE DECK AND ITS SUPPORTS.
   g. REPEAT STEPS (c) THROUGH (e) UNTIL ALL OF THE 5 STRINGERS IN ONE SPAN HAVE BEEN REPLACED.
   h. FINISH CONNECTING THE NEW GRID DECK TO ITS SUPPORTS.
   i. REPEAT STEPS (a) THROUGH (g) AT THE NEXT STRINGER SPAN.
4. RE-INSTALL MEDIAN STRIP.
5. PAINT ALL GRID DECK CONNECTIONS PER NCDOT SPECIFICATIONS. COLOR TO MATCH EXISTING STEEL.

0 1 2 3
INCHES ON FULL SIZE SHEET

NORTH CAROLINA PROFESSIONAL SEAL 012470 ENGINEER BARNEY G. MARTIN 6/23/2011

MODJESKI and MASTERS
Experience great bridges.
100 Sterling Parkway
Suite 302
Mechanicsburg, PA 17050 NC License No. C-2979

STATE OF NORTH CAROLINA
DEPARTMENT OF TRANSPORTATION
RALEIGH

WRIGHTSVILLE BRIDGE REHABILITATION
WRIGHTSVILLE, NORTH CAROLINA

GRID DECK LAYOUT PLAN

		DRAWN BY	R.S. JOHNSON
		SCALE	AS NOTED
DESIGNED J.A. KAPLAN	DETAILED R.S. JOHNSON	DATE	JUNE 2011
CHECKED R.E. JACKSON	CHECKED R.E. JACKSON	DRAWING NO. 121 OF 140	

S5

PE.DWG

GRID DECK PROPERTIES

SECTION MODULUS * (IN^3/FT)		APPROX. GRID WEIGHT (LBS/SF) **
TOP STEEL	BOTTOM STEEL	18.5
4.038	4.321	

* SECTION MODULUS BASED ON 50% OF DIAGONAL BARS ACTIVE.

** THE GRID WEIGHT IS BASED ON AN UNCOATED GRID. ACTUAL WEIGHTS MAY VARY DUE TO COATING WEIGHT AND DECK ATTACHMENTS.

WELDING PROCESS

ALL WELDING TO BE DONE IN ACCORDANCE WITH AASHTO BRIDGE SPEC. AWS D1.5 LATEST VERSION.

MATERIAL SPECIFICATIONS

MAIN BEAMS (5.3#/FT.) TO BE A.S.T.M. A588
CROSS BARS (¼"x2½") TO BE A.S.T.M. A588
DIAGONAL BARS (¼"x1") TO BE A.S.T.M. A588
SUPPLEMENTAL BARS (¼"x1") TO BE A.S.T.M. A588
BOTTOM CROSS BARS (⅝"ø) TO BE A.S.T.M. A588

FINISH SPECIFICATIONS

PAINT PER NCDOT STANDARD SPECIFICATIONS.
COLOR AS DIRECTED BY NCDOT.

NOTES:

1. THIS DRAWING TO BE USED AS A REFERENCE DRAWING ONLY. REFER TO DWG. "GRID DECK LAYOUT PLAN" FOR ACTUAL PANEL CHARACTERISTICS.
2. CONTRACTOR MAY REQUEST TO MAKE MINOR CHANGES FOR PRODUCT IMPROVEMENT.
3. ALL MATERIAL SUBJECT TO MILL/SHOP TOLERENCES.
4. SERRATIONS TO BE APPROXIMATELY 3/16" DEEP BY ⅜" WIDE ON RANDOM CENTERS.
5. PROVIDE END TRIM BAR AT ALL MAIN BEAM ENDS.
6. CONTRACTOR SHALL MEASURE THE EXISTING PANEL DIMENSIONS AND VERIFY CLEAR LENGTH AND WIDTH REQUIRED PRIOR TO ANY NEW PANEL FABRICATION.

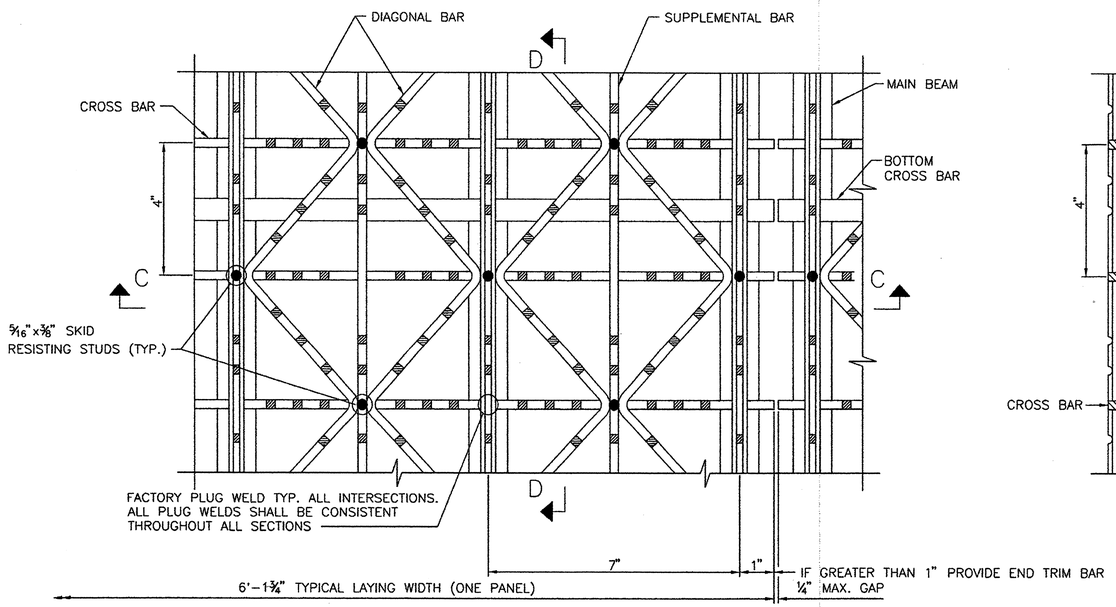

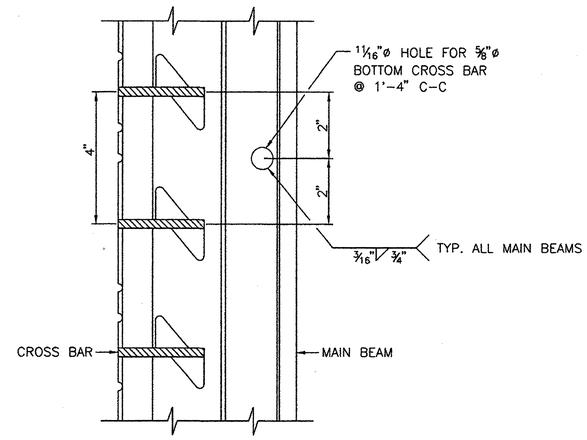

SECTION D-D

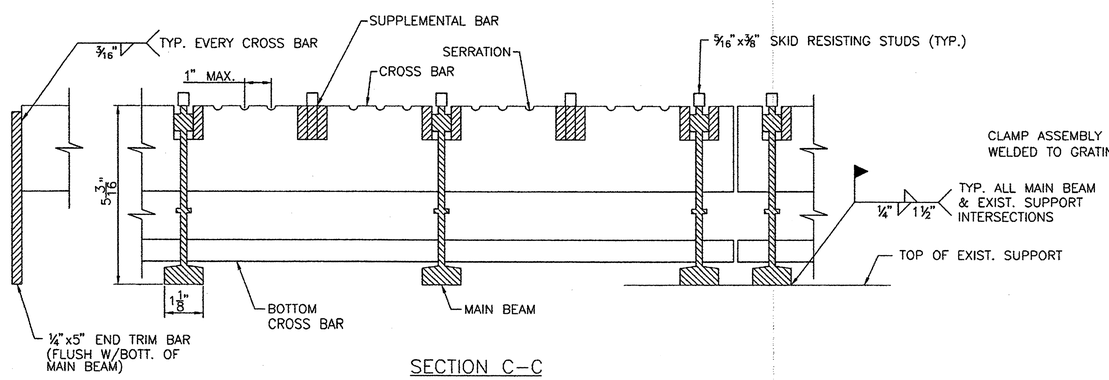

SECTION C-C

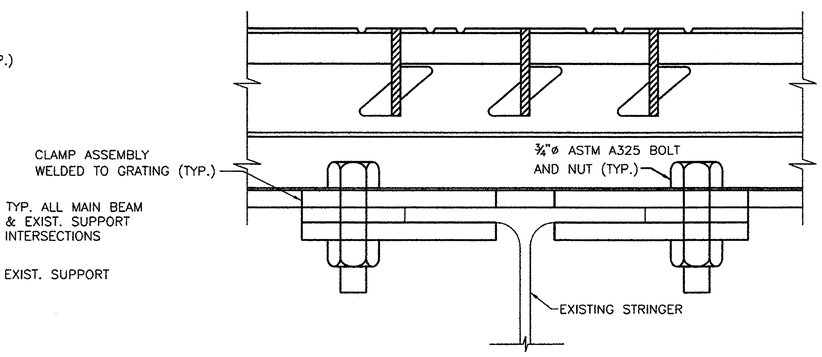

CLAMPDOWN PLATE FASTENER

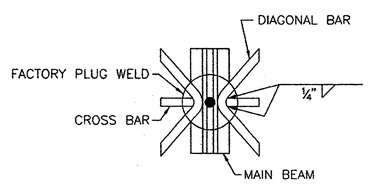

TYP. DIAG. BAR SPLICE
(WHERE REQ'D.)

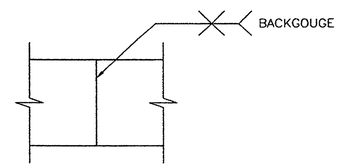

TYP. SHOP TRIM SPLICE
(WHERE REQ'D.)

0 1 2 3
INCHES ON FULL SIZE SHEET

PE.DWG

NORTH CAROLINA PROFESSIONAL SEAL 012470 ENGINEER BRIAN F. MARTIN
4/13/2011

MODJESKI and MASTERS
Experience great bridges.
100 Sterling Parkway
Suite 302
Mechanicsburg, PA 17050 NC License No. C-2979

S6

STATE OF NORTH CAROLINA
DEPARTMENT OF TRANSPORTATION
RALEIGH

WRIGHTSVILLE BRIDGE REHABILITATION
WRIGHTSVILLE, NORTH CAROLINA

GRID DECK DETAILS

		DRAWN BY	R.S. JOHNSON
		SCALE	AS NOTED
DESIGNED J.A. KAPLAN	DETAILED R.S. JOHNSON	DATE	JUNE 2011
CHECKED R.E. JACKSON	CHECKED R.E. JACKSON	DRAWING NO.	122 OF 140

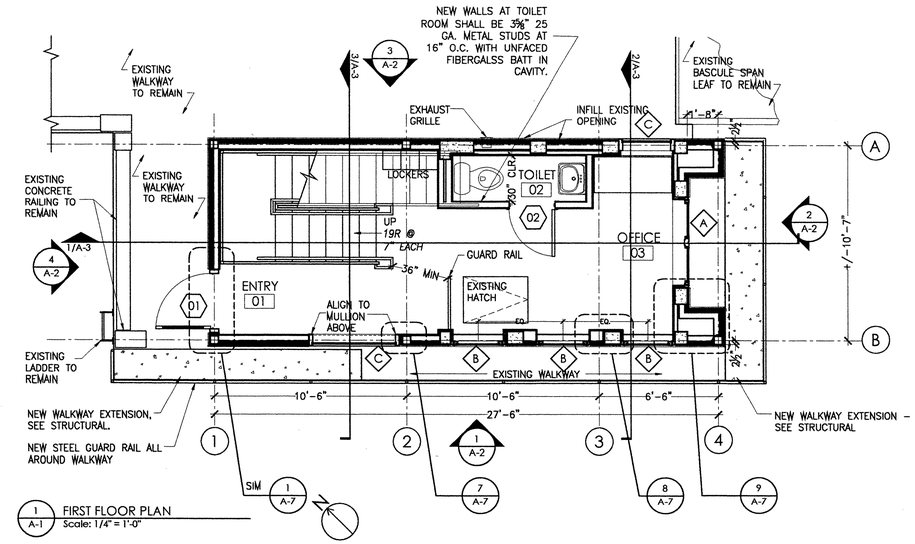

1 A-1 FIRST FLOOR PLAN
Scale: 1/4" = 1'-0"

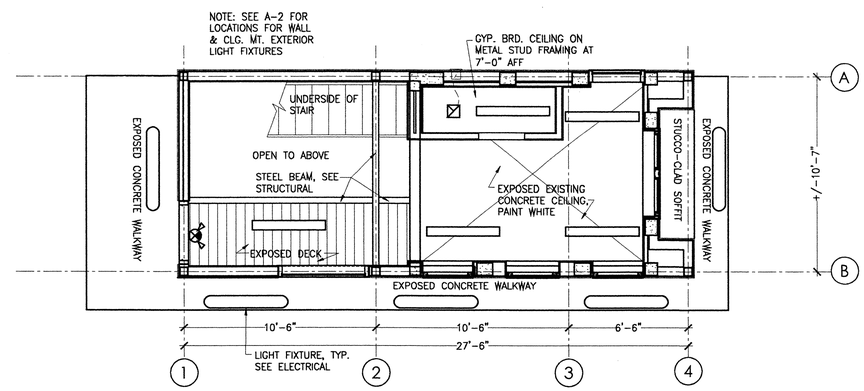

4 A-1 FIRST FLOOR REFLECTED CEILING PLAN
Scale: 1/4" = 1'-0"

CRAIG DEAN ARCHITECTURE PLLC
REGISTERED ARCHITECTURAL COMPANY
CERT. NO. 51160
NORTH CAROLINA
RALEIGH, NC

CRAIG FRANKLIN DEAN
REGISTERED ARCHITECT
8461
NORTH CAROLINA

22 JUNE 2011

CEILING NOTES

1. SEE ELECTRICAL FOR FIXTURE TYPES. SEE ARCHITECTURAL FOR FIXTURE LOCATION.

2. EXPOSED STEEL STRUCTURAL ELEMENTS (BEAMS, DECK, STAIR STRINGERS & PANS, ETC.) AND EXPOSED CONDUIT TO BE PAINTED WITH HIGH PERFORMANCE PAINT. SEE SPECIFICATION SECTION 09 91 00.

2. EXTERIOR CONCRETE WALKWAYS TO BE SEALED ON ALL SIDES (INCLUDING CEILING).

3. GYPSUM BOARD CEILINGS TO BE PAINTED.

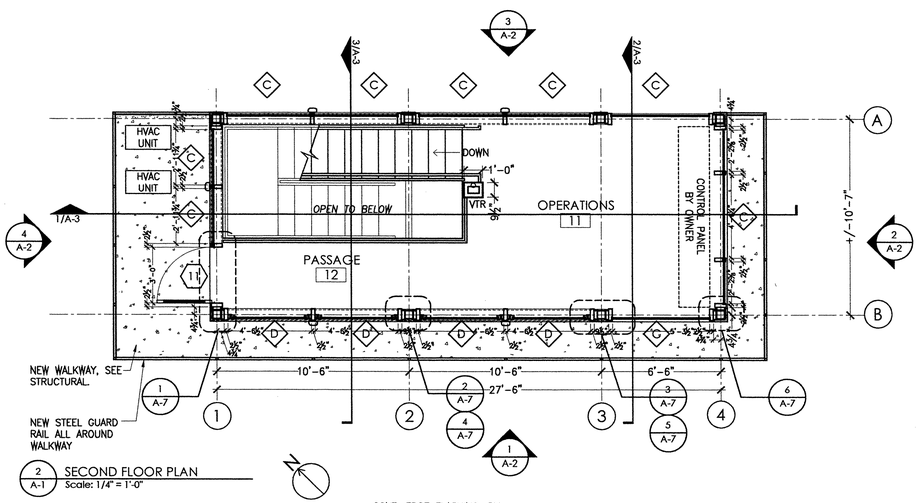

2 A-1 SECOND FLOOR PLAN
Scale: 1/4" = 1'-0"

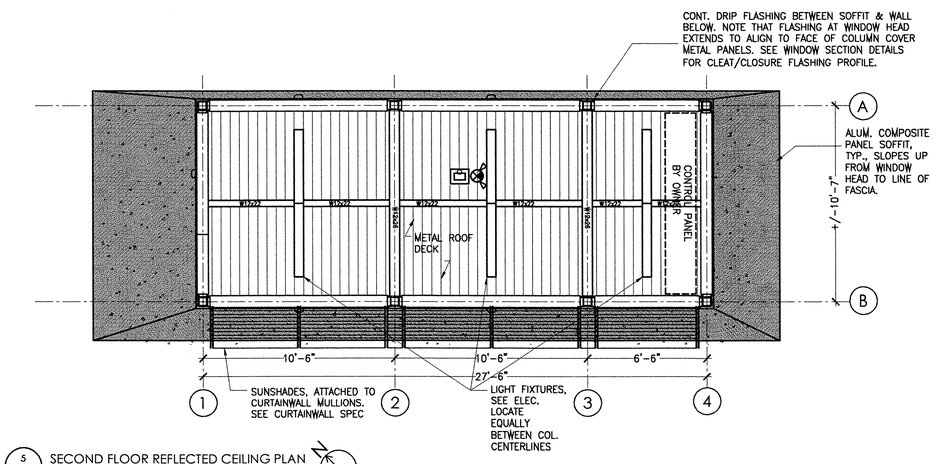

5 A-1 SECOND FLOOR REFLECTED CEILING PLAN
Scale: 1/4" = 1'-0"

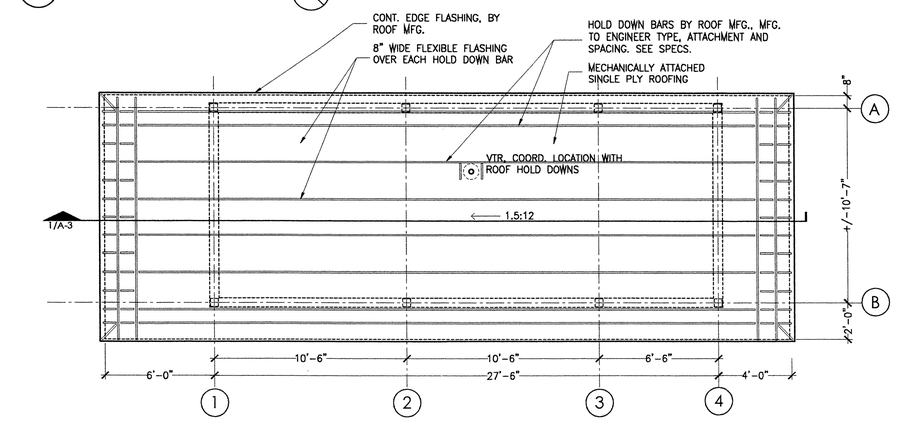

3 A-1 ROOF PLAN
Scale: 1/4" = 1'-0"

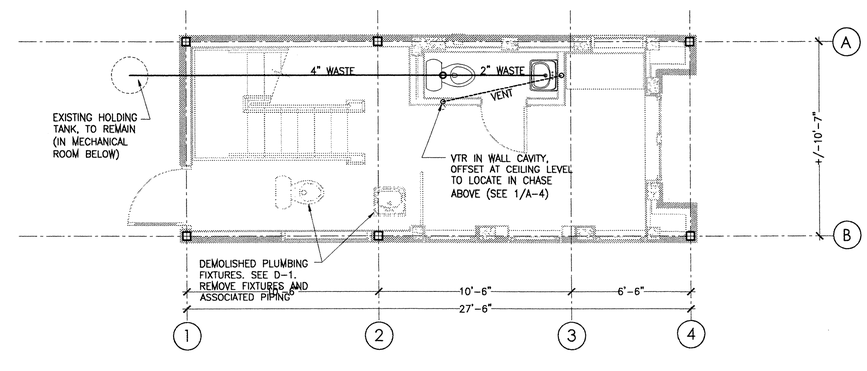

6 A-1 DIAGRAMMATIC PLUMBING PLAN
Scale: 1/4" = 1'-0"

PLUMBING NOTES

1. THIS DRAWING IS CONCEPTUAL ONLY. CONTRACTOR SHALL PROVIDE ENGINEERED DRAWINGS AS REQUIRED FOR PERMIT AND CONSTRUCTION. ALL WORK SHALL BE IN COMPLIANCE WITH NC STATE PLUMBING CODE.

2. FIELD VERIFY EXISTING CONDITIONS PRIOR TO BID. EXAMINE CONDITION OF EXISTING PIPING, PUMPS, EQUIPMENT, ETC. BASE BID PRICE SHALL INCLUDE ALL ITEMS NECESSARY TO RENDER A FULLY FUNCTIONAL SYSTEM.

3. ROUTE COLD WATER SUPPLY TO WATER CLOSET, LAVATORY, AND WATER HEATER.

4. INSTALL NEW (OR RELOCATE EXISTING) POINT-OF-USE WATER HEATER IN TOILET ROOM. SEE ELECTRICAL.

5. NEW WASTE & VENT PIPING SHALL BE SCHEDULE 40 PVC. NEW WATER SUPPLY PIPING SHALL BE CPVC.

REVISIONS

NO.	DATE	DESCRIPTION	BY

CRAIG DEAN ARCHITECTURE
305 Grand Avenue
Raleigh, North Carolina 27606
919-754.1400
info@cdarchitecture.com

559 Jones Franklin Rd.
Suite 164
Raleigh, N.C. 27606
Bus: 919 851 8077
Fax: 919 851 8107
License No. F-0377

WETHERILL ENGINEERING
TRANSPORTATION PLANNING/DESIGN - BRIDGE/STRUCTURE DESIGN
CIVIL/SITE DESIGN - GIS/GPS - CONSTRUCTION OBSERVATION

BRIDGE 12 CONTROL ROOM ADDITION

NEW HANOVER COUNTY NORTH CAROLINA

DATE:
SCALE:
DRAWN:
CHECKED:
PROJ. NO.:
SHEET: A-1

FILE: $FILE$
MODEL: $MODELNAME$
PLOT DRV: $PLTDRV$
DATE/TIME: $DATE$ $TIME$

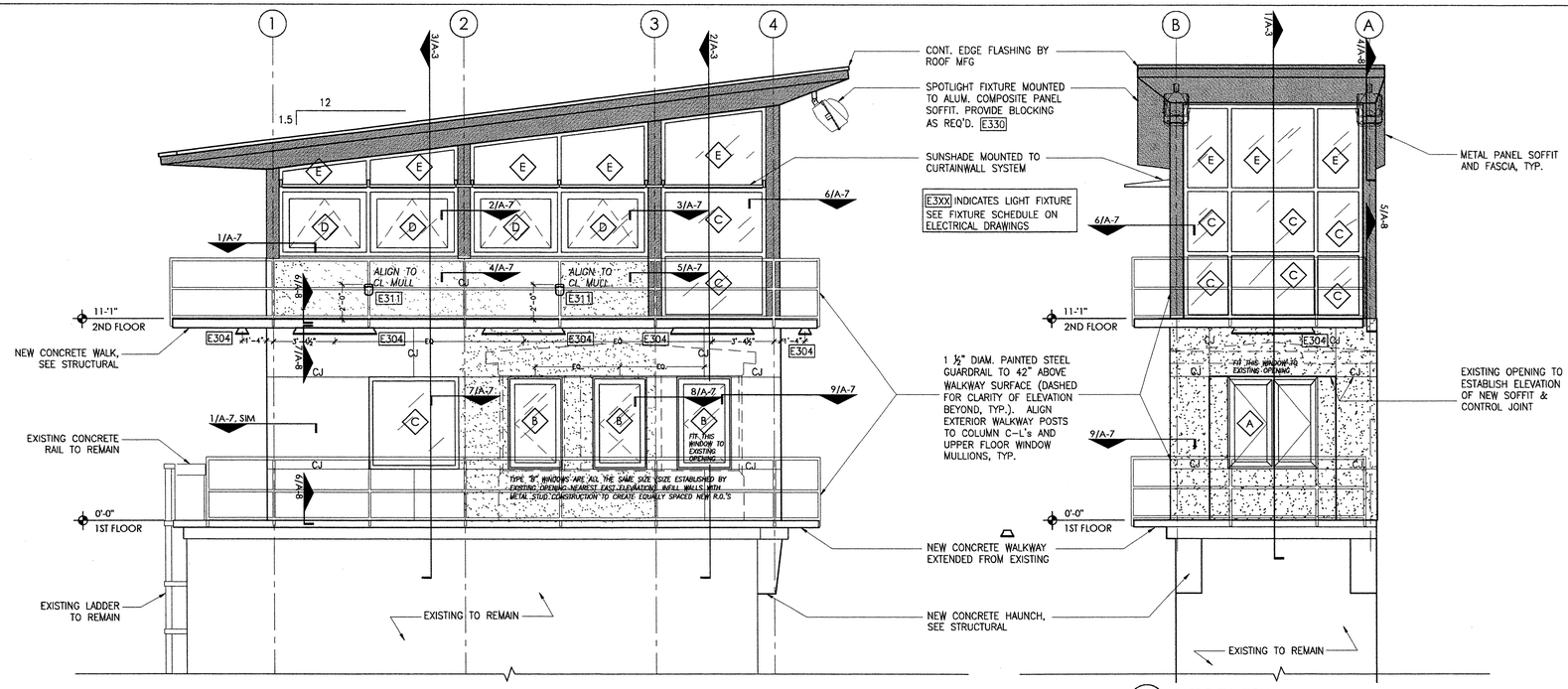

1 A-2 SOUTH ELEVATION
Scale: 1/4" = 1'-0"

2 A-2 EAST ELEVATION
Scale: 1/4" = 1'-0"

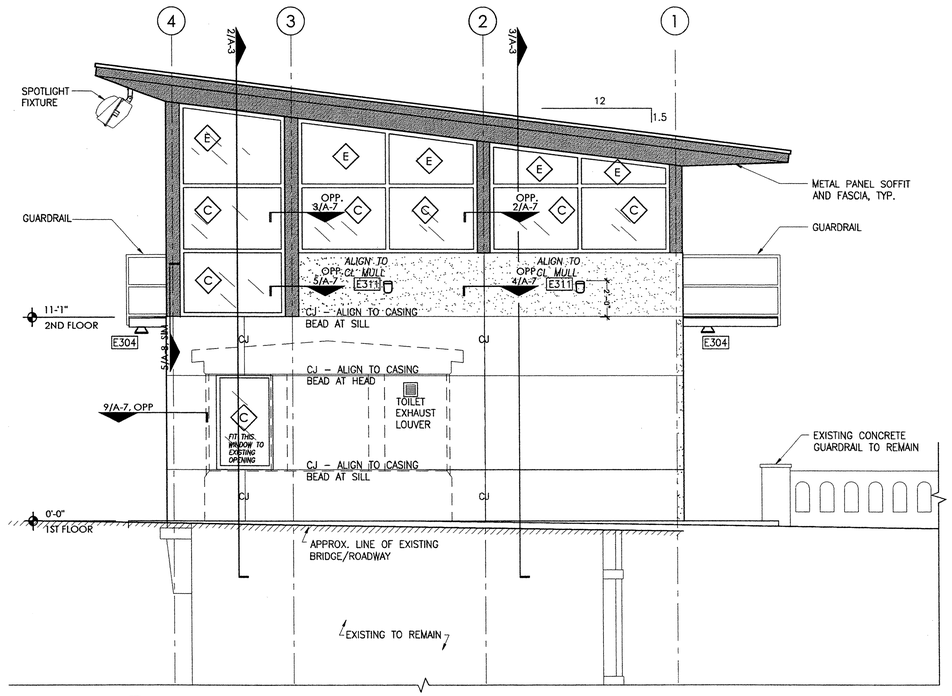

3 A-2 NORTH ELEVATION
Scale: 1/4" = 1'-0"

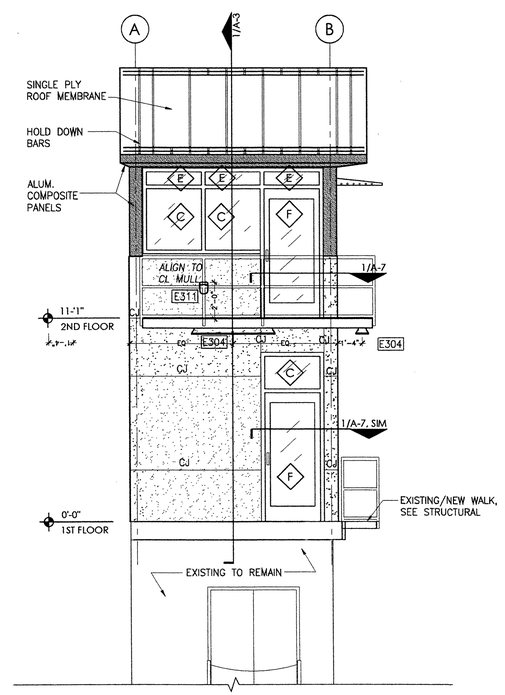

4 A-2 WEST ELEVATION
Scale: 1/4" = 1'-0"

WINDOW & GLAZING SCHEDULE		
	FRAMING	GLAZING PANEL
A	OUTSWING PAIR	CLEAR LAMINATED INSULATED
B	OUTSWING	CLEAR LAMINATED INSULATED
C	7 1/2" CURTAINWALL	CLEAR LAMINATED INSULATED
D	OUTSWING IN 7 1/2" CURTAINWALL	CLEAR LAMINATED INSULATED
E	7 1/2" CURTAINWALL	TRANSLUCENT LAMINATED INSULATED
F	ALUM. ENTRANCE DOOR	CLEAR LAMINATED MONOLITHIC

ALL PRODUCTS TO BE HURRICANE RESISTANT. SEE SPECS.

CRAIG DEAN ARCHITECTURE PLLC
REGISTERED ARCHITECTURAL COMPANY
CERT. NO. 51160
NORTH CAROLINA
RALEIGH, NC

CRAIG FRANKLIN DEAN
REGISTERED ARCHITECT
8461
NORTH CAROLINA

22 JUNE 2011

CRAIG DEAN ARCHITECTURE
305 Gorrell Avenue
Raleigh, North Carolina 27606
919.754.1400
info@cdarchitecture.com

REVISIONS

NO.	DATE	DESCRIPTION	BY

559 Jones Franklin Rd.
Suite 150
Raleigh, NC 27606
Bus: 919 851 8077
Fax: 919 851 8107
License No. F-0377

WETHERILL ENGINEERING
TRANSPORTATION PLANNING/DESIGN - BRIDGE/STRUCTURE DESIGN
CIVIL/SITE DESIGN - GIS/GPS - CONSTRUCTION OBSERVATION

BRIDGE 12 CONTROL ROOM ADDITION

NEW HANOVER COUNTY NORTH CAROLINA

DATE:
SCALE:
DRAWN:
CHECKED:
PROJ. NO.:
SHEET: A-2

FILE: $FILE$
MODEL: $MODELNAME$
PLOT DRV: $PLTDRVS$
DATE/TIME: $DATE$ $TIME$

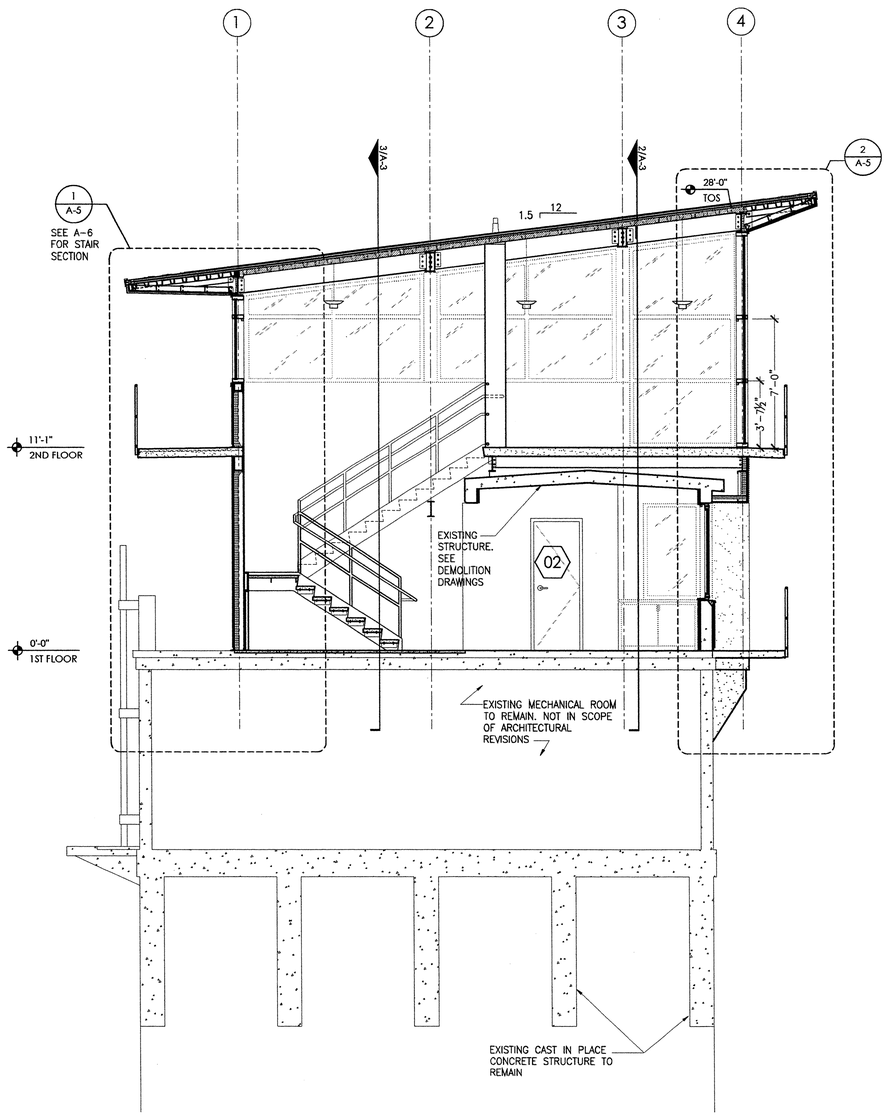

1 A-3 BUILDING SECTION EAST-WEST
Scale: 1/4" = 1'-0"

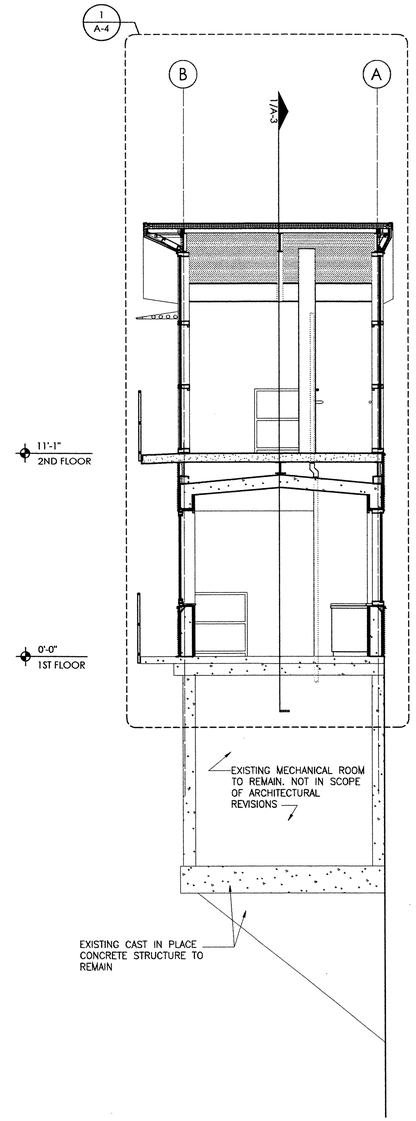

2 A-3 BUILDING SECTION NORTH-SOUTH
Scale: 1/4" = 1'-0"

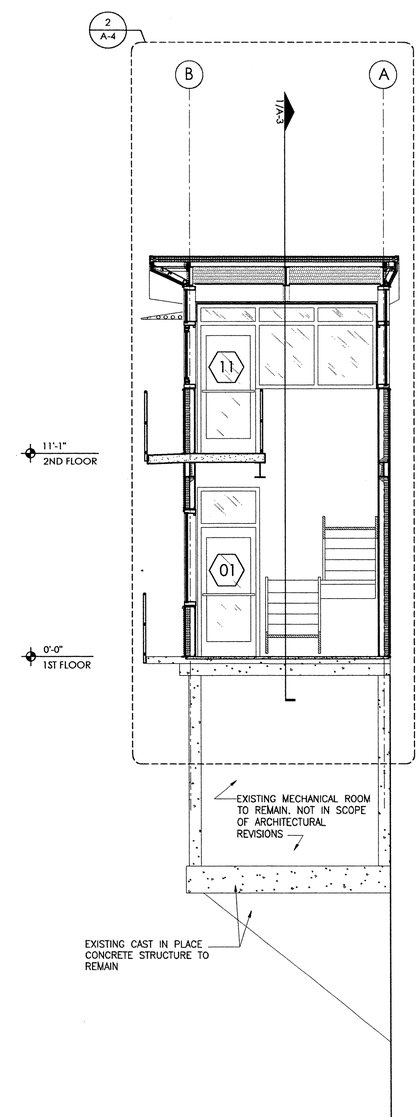

3 A-3 BUILDING SECTION NORTH-SOUTH
Scale: 1/4" = 1'-0"

CRAIG DEAN ARCHITECTURE, PLLC
REGISTERED ARCHITECTURAL COMPANY
CERT. NO. 51160
NORTH CAROLINA
RALEIGH, NC

CRAIG FRANKLIN DEAN
REGISTERED ARCHITECT
8461
NORTH CAROLINA
RALEIGH

22 JUNE 2011

CRAIG DEAN ARCHITECTURE
305 Grand Avenue
Raleigh, North Carolina 27606
919.754.1400
info@cdarchitecture.com

REVISIONS

NO.	DATE	DESCRIPTION	BY

559 Jones Franklin Rd.
Suite 164
Raleigh, NC 27606
Bus: 919 851 8077
Fax: 919 851 8107
License No. F-0377

ETHERILL ENGINEERING
TRANSPORTATION PLANNING/DESIGN - BRIDGE/STRUCTURE DESIGN
CIVIL/SITE DESIGN - GIS/GPS - CONSTRUCTION OBSERVATION

BRIDGE 12 CONTROL ROOM ADDITION

NEW HANOVER COUNTY NORTH CAROLINA

DATE:
SCALE:
DRAWN:
CHECKED:
PROJ. NO.:
SHEET: A-3

FILE: $FILE$
MODEL: $MODELNAME$
PLOT DRV: $PLTDRVS$
DATE/TIME: $DATE$ $TIME$

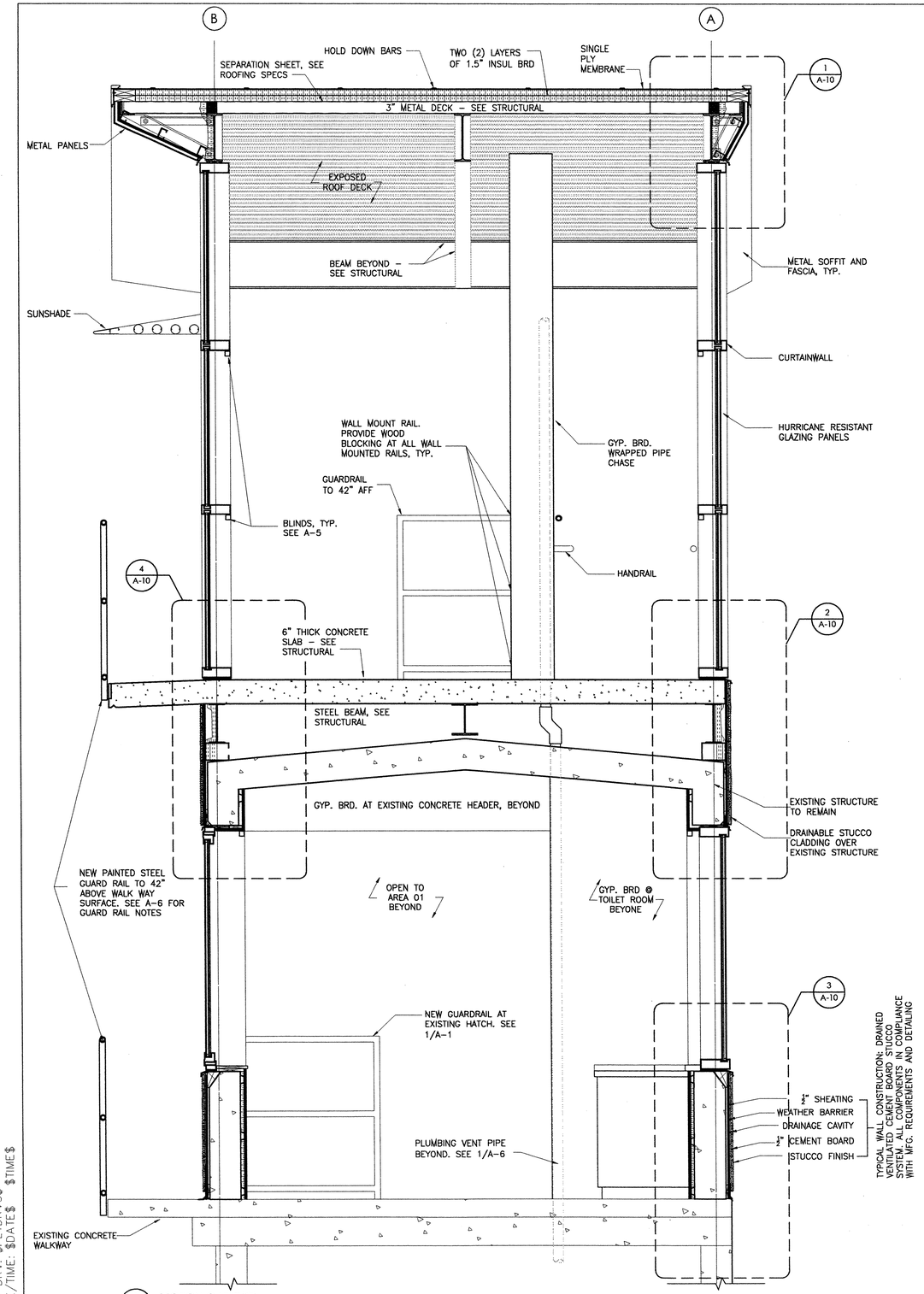

1 A-4 SECTION @ LINE "3"
Scale: 3/4" = 1'-0"

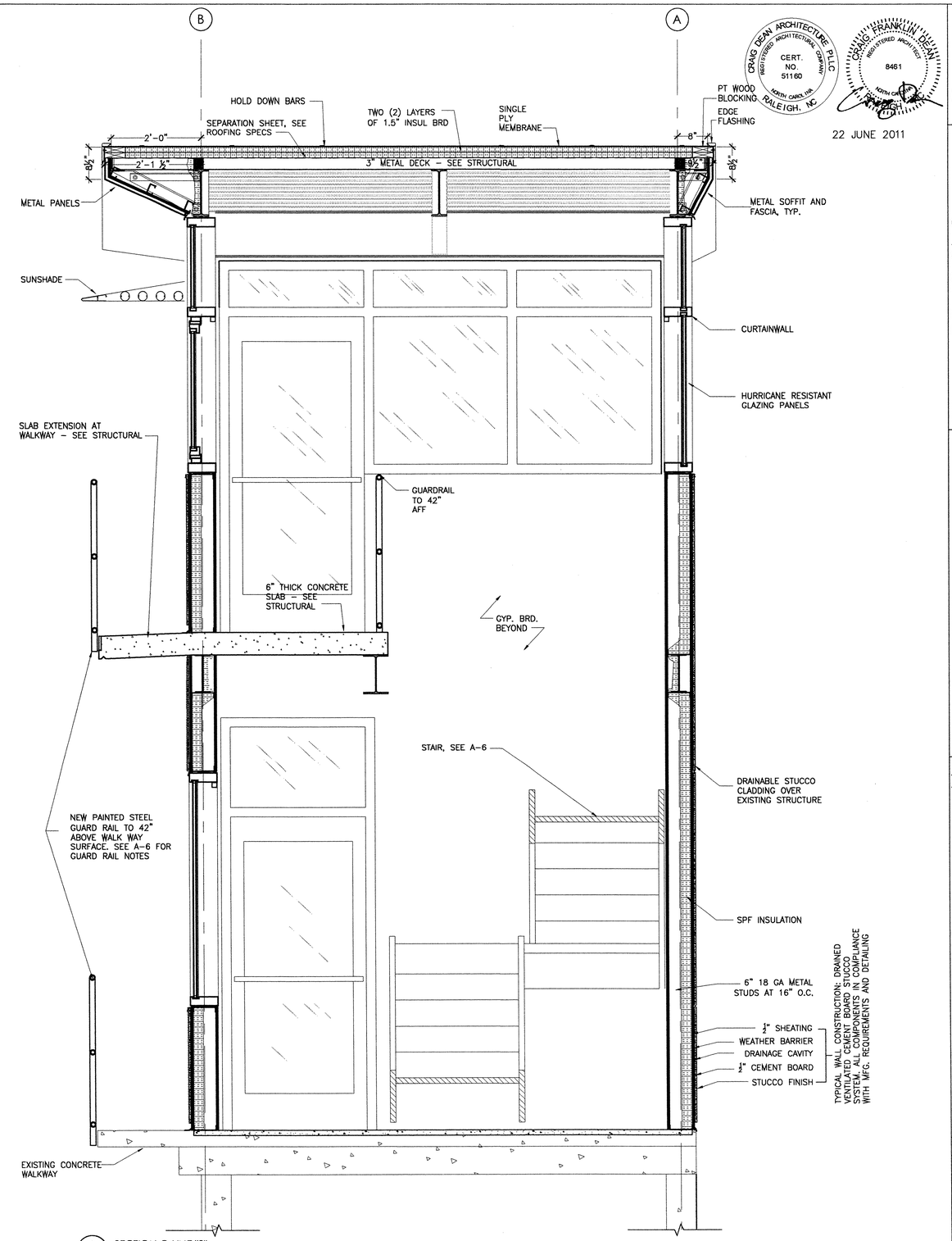

2 A-4 SECTION @ LINE "2"
Scale: 3/4" = 1'-0"

CRAIG DEAN ARCHITECTURE PLLC
REGISTERED ARCHITECTURAL COMPANY
CERT. NO. 51160
NORTH CAROLINA
RALEIGH, NC

CRAIG FRANKLIN DEAN
REGISTERED ARCHITECT
8461
NORTH CAROLINA

22 JUNE 2011

CRAIG DEAN ARCHITECTURE
305 Grand Avenue
Durham, North Carolina 27706
919.754.1400
info@cdarchitecture.com

REVISIONS

NO.	DATE	DESCRIPTION	BY

559 Jones Franklin Rd.
Suite 164
Raleigh, NC 27606
Bus: 919 851 8077
Fax: 919 851 8107
License No. F-0377

WETHERILL ENGINEERING
TRANSPORTATION PLANNING/DESIGN – BRIDGE/STRUCTURE DESIGN
CIVIL/SITE DESIGN – GIS/GPS – CONSTRUCTION OBSERVATION

BRIDGE 12 CONTROL ROOM ADDITION

NEW HANOVER COUNTY NORTH CAROLINA

DATE:
SCALE:
DRAWN:
CHECKED:
PROJ. NO.:
SHEET: A-4

FILE: $FILE$
MODEL: $MODELNAME$
PLOT DRV: $PLTDRV$
DATE/TIME: $DATE$ $TIME$

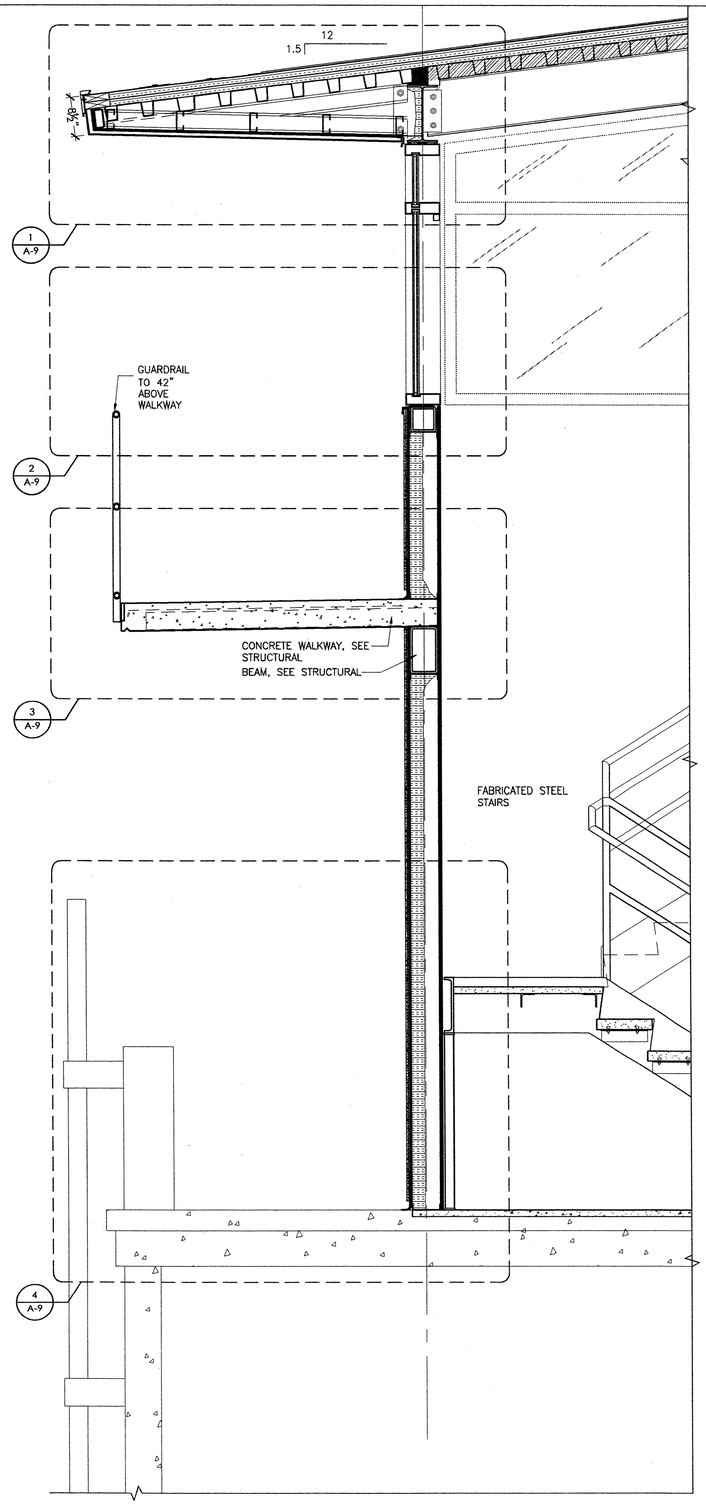

1 A-5 WALL SECTION @ LINE 1
Scale: 3/4" = 1'-0"

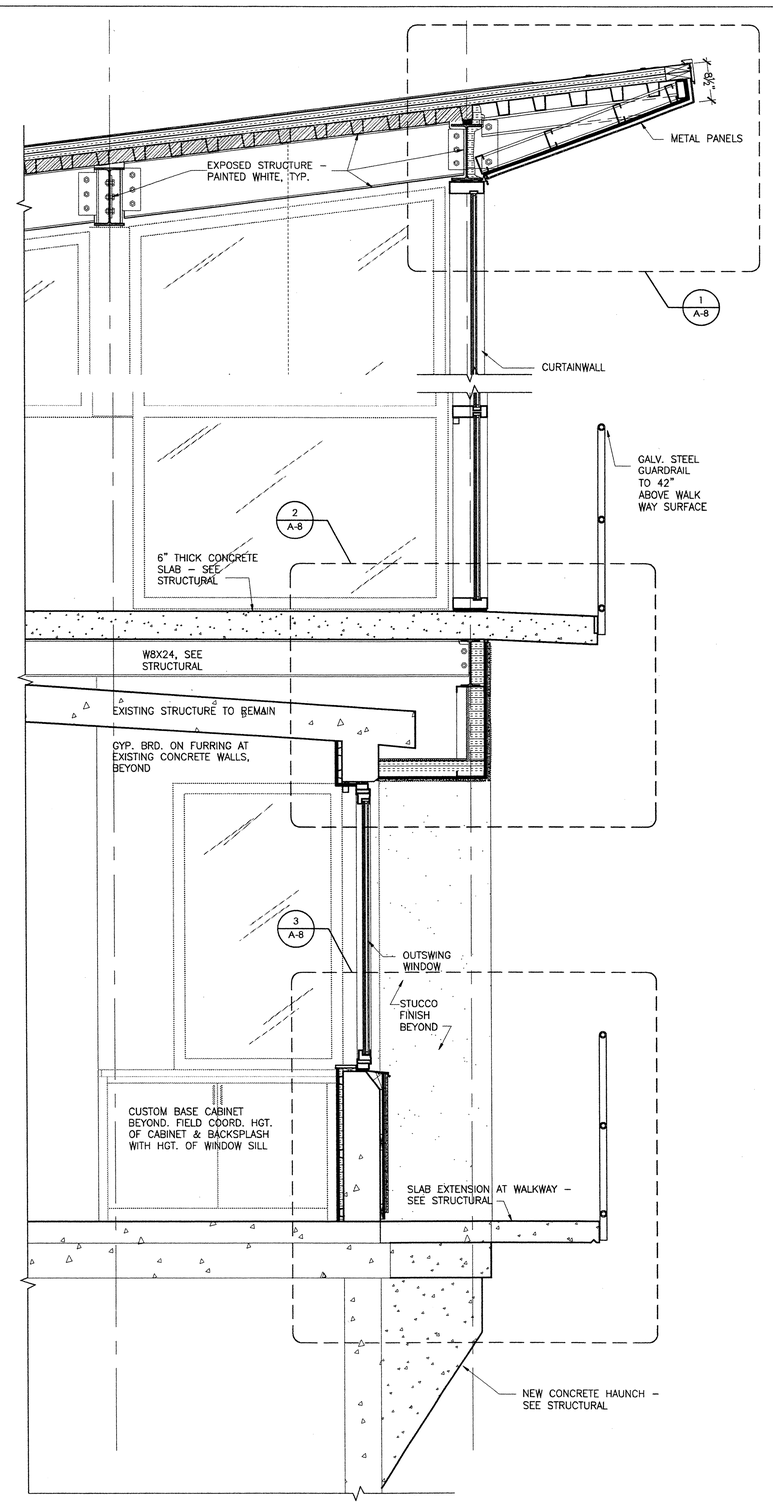

2 A-5 WALL SECTION @ LINE 4
Scale: 3/4" = 1'-0"

CRAIG DEAN ARCHITECTURE, PLLC
REGISTERED ARCHITECTURAL CORPORATION
CERT. NO. 51160
RALEIGH, NC
NORTH CAROLINA

CRAIG FRANKLIN DEAN
REGISTERED ARCHITECT
8461
NORTH CAROLINA
RALEIGH

22 JUNE 2011

STUCCO SYSTEM REFERENCE DETAILS LISTING

SEE SUPPLEMENT FOLLOWING SPECIFICATION SECTION 07 24 00 FOR REFERENCE DETAILS FOR BASIS OF DESIGN STUCCO SYSTEM. REFERENCE DETAILS DEPICT STANDARD MANUFACTURER RECOMMENDATIONS AND REQUIREMENTS THAT MUST BE CUSTOMIZED & COORDINATED WITH THE DESIGN INTENT OF THIS PROJECT.

STO DETAIL #	TITLE
16.00a	SYSTEM COMPONENTS OVER WOOD FRAME (SEE NOTE 3)
15.03a1i	STARTER TRACK ACCESSORY
15.03a1ii	STARTER TRACK ACCESSORY (ALT. DRIP CAP)
15.03a3ii	CONTROL JOINT ACCESSORY (BACK MOUNT)
15.20a	ROUGH OPENING PREPARATION OVER STEEL FRAME
15.24	COMMERCIAL WINDOW HEAD OVER STEEL FRAME
15.25a	COMMERCIAL WINDOW JAMB OVER STEEL FRAME
15.26a	COMMERCIAL WINDOW SILL OVER STEEL FRAME
15.31a	FASCIA & VENTED UNINSULATED SOFFIT OVER STEEL FRAME (SEE NOTE 4)
15.42	HORIZONTAL JOINT AT DISSIMILAR MATERIAL OVER STEEL FRAME
15.53a1	INSIDE CORNER: COMMON SUBSTRATE
15.54a1	OUTSIDE CORNER: COMMON SUBSTRATE
16.10a	SYSTEM TERMINATION AT GRADE OVER WOOD FRAME (SEE NOTE 3)
16.20a	ROUGH OPENING PREPARATION OVER WOOD FRAME (SEE NOTE 3)
16.25a	HEAD FLASHING: BROCK MOLD WINDOW OVER WOOD FRAME. (SEE NOTES 3, 5)
16.26a	SILL PAN FLASHING: BRICK MOLD WINDOW OVER WOOD FRAME (SEE NOTES 3, 5)
16.42	TERMINATION BELOW SOFFIT (SEE NOTE 3)
16.73a1	SURFACE MOUNT PENETRATION OVER WOOD FRAME (SEE NOTE 3)
16.73a2	SUBSTRATE MOUNTED ELECTRICAL BOX
16.76a	SERVICE PENETRATION.

NOTES:
1. STO IS THE BASIS OF DESIGN. ALTERNATE MANUFACTURERS WITH EQUIVALENT SYSTEMS MAY BE SUBMITTED FOR REVIEW DURING THE BID PHASE.
2. DETAIL #'S WITH "15" PREFIX INDICATE A NON–VENTILATED SYSTEM, DETAILS WITH "16" PREFIX INDICATE A VENTILATED SYSTEM. FOR THIS PROJECT, ALL VERTICAL STUCCO SHALL BE VENTILATED WITH A PVC LATH BEHIND THE CEMENT BOARD. HORIZONTAL APPLICATIONS ARE NOT VENTILATED.
3. SOME REFERENCE DETAILS SHOW WOOD FRAMING, THESE ARE SHOWN FOR STUCCO SYSTEM DETAILING THAT IS GENERALLY APPLICABLE OVER ANY FRAMING CONDITION, UNLESS OTHERWISE NOTED. ALL FRAMING ON THIS PROJECT IS METAL FRAMING OR FURRING.
4. SOFFIT ON THIS PROJECT IS INSULATED AND NOT VENTILATED. DO NOT INSTALL VENT STRIP.
5. THERE IS NO BRICK MOLD ON THIS PROJECT.

INSULATION NOTES:

SPRAY FOAM INSULATION:

WALL INSULATION SHALL BE HIGH YIELD CLOSED CELL SPRAY POLYURETHANE FOAM WITH A 180–DAY AGED R–VALUE OF 6.4 MINIMUM, JOHN MANSVILLE CORBOND III OR EQ. TYPICAL STUD CAVITIES, EXTERIOR WALL BULKHEADS, PERIMETER BEAMS, ETC. SHALL RECEIVE 2.5" THICK MIN. APPLICATION IN A SINGLE PASS. FURRED WALLS AT EXISTING STRUCTURE SHALL RECEIVE 2" APPLICATION BETWEEN FURRING CHANNELS. INSTALL IN STRICT ACCORDANCE WITH MANUFACTURER'S INSTRUCTION. PROVIDE ACCESSORIES AS NEEDED (BAFFLES, ETC.). AT EDGE OF ROOF DECK, NOTE THAT FIRE–SAFING INSULATION SERVE AS BAFFLE/CLOSURE FOR SPRAY FOAM INSULATION. INSULATION INSTALLER SHALL ATTEND STUCCO WALL SYSTEM PRE–CONSTRUCTION CONFERENCE.

FIRE SAFING INSULATION

PROVIDE 3" THICK UNFACED SAFING INSULATION, THERMAFIBER 4.0 PCF DENSIITY OR EQUIV., AT CELLS OF ROOF DECK ABOVE PERIMETER BEAMS. SAFING INSULATION SHALL BE CUT NEAT AND TIGHT TO COMPLETELY FILL CELL AND SHALL SERVE AS A BACKING FOR EXTEIOR APPLIED SPRAY FOAM INSULATION. INSTALL APPROXIMATELY 3" WIDE AND ALIGN TO OUTSIDE EDGE OF BEAM FLANGE SO THAT SAFING IS NOT VISIBLE FROM INTERIOR SPACES. INSTALL SAMPLE IN–PLACE FOR DESIGNER'S REVIEW PRIOR TO PROCEEDING WITH FULL INSTALLATION.

CUSTOM MILLWORK NOTES:
PROVIDE NEW CUSTOM CABINETS AND WINDOW SILLS. PROVIDE HIGH PRESSURE PLASTIC LAMINATE FINISH OVER MEDIUM DENSITY OVERLAY SUBSTRATE AT CABINET FACE, COUNTERTOPS, AND WINDOW SILLS. FABRICATE TO AWI CUSTOM STANDARDS. REFER TO 8th EDITION OF AWI'S QUALITY STANDARDS. CONTRACTOR SHALL FIELD VERIFY ALL DIMENSIONS FOR MILLWORK AND COORDINATE THE WORK WITH EXISTING CONDITIONS. WORK IS TO BE SCRIBED AND CUT TO FIT. COMMERCIAL DUTY HARDWARE, INCLUDING 75# FULL EXTENSION DRAWER GLIDES, 4" WIRE PULLS & EUROPEAN HINGES TO BE BY HAFELE, GRASS OR EQ. CAULK TO ADJACENT SURFACES WITH COLOR–MATCHED CAULK. ENSURE ALL HARDWARE IS FUNCTIONING PROPERLY PRIOR TO COMPLETION. LAMINATE COLOR/PATTERN TO BE SELECTED.

BLIND NOTES:
PROVIDE HEAVY DUTY COMMERCIAL 1" HORIZONTAL MINI–BLINDS WITH WAND TILT CONTROL, BY GRABER, OR EQUIV. PROVIDE AT ALL CLEAR GLAZED WINDOW PANELS (DO NOT INSTALL AT 'FROSTED' GLAZING, AT DOOR TRANSOMS, OR AT DOORS). COLOR TO BE NATURAL ALUMINUM. MOUNT INSIDE WINDOW HEAD, BETWEEN JAMBS, AND AS FAR FROM GLASS AS POSSIBLE WHILE STILL MOUNTING BETWEEN THE MULLIONS.

CRAIG DEAN ARCHITECTURE
305 Grand Avenue
Raleigh, North Carolina 27606
919.754.1400
info@cdarchitecture.com

REVISIONS

NO.	DATE	DESCRIPTION	BY

559 Jones Franklin Rd.
Suite 164
Raleigh, NC 27606
Bus: 919 851 8077
Fax: 919 851 8107
License No. F–0377

WETHERILL ENGINEERING
TRANSPORTATION PLANNING/DESIGN – BRIDGE/STRUCTURE DESIGN
CIVIL/SITE DESIGN – GIS/GPS – CONSTRUCTION OBSERVATION

BRIDGE 12 CONTROL ROOM ADDITION

NEW HANOVER COUNTY NORTH CAROLINA

DATE:
SCALE:
DRAWN:
CHECKED:
PROJ. NO.:
SHEET: A-5

FILE: $FILE$
MODEL: $MODELNAME$
PLOT DRV: $PLTDRV$
DATE/TIME: $DATE$ $TIME$

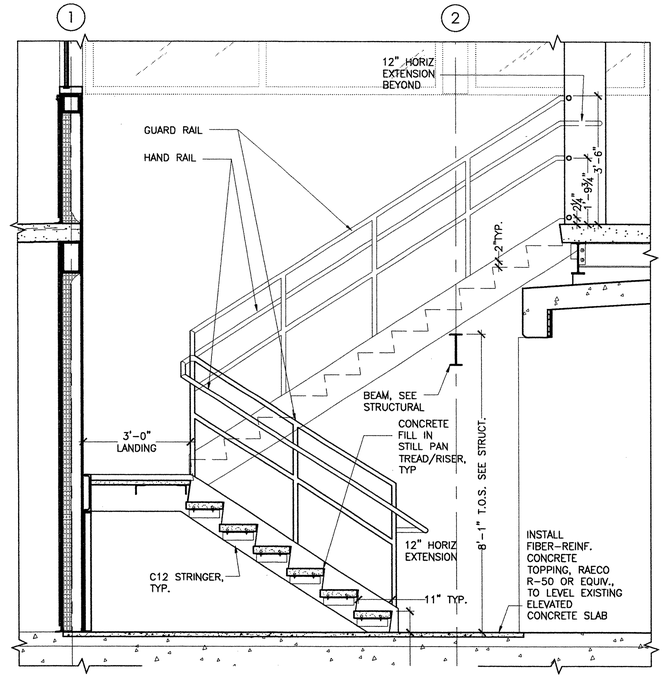

3 / A-6 PLAN DETAIL AT SECOND FLOOR
Scale: 1" = 1'-0"

STAIR & RAIL NOTES:

1. SEE SECTION 05 51 00 SPECIFICATIONS.

2. GUARD RAILS SHALL COMPLY WITH NC STATE BUILDING CODE SECTION 1013.3 EXCEPTION #3. STAIR GUARD RAILS SHALL BE MOUNTED TO STRINGER. 2nd FLOOR GUARD RAILS SHALL BE MOUNTNED ON SLAB.

3. HANDRAIL SHALL BE 34" ABOVE NOSING, WALL MOUNT OR MOUNT ON GUARD RAIL

4. ALL RAILS AND STAIR COMPONENTS TO BE PAINTED. SEE 09 91 00 SPECIFICATIONS.

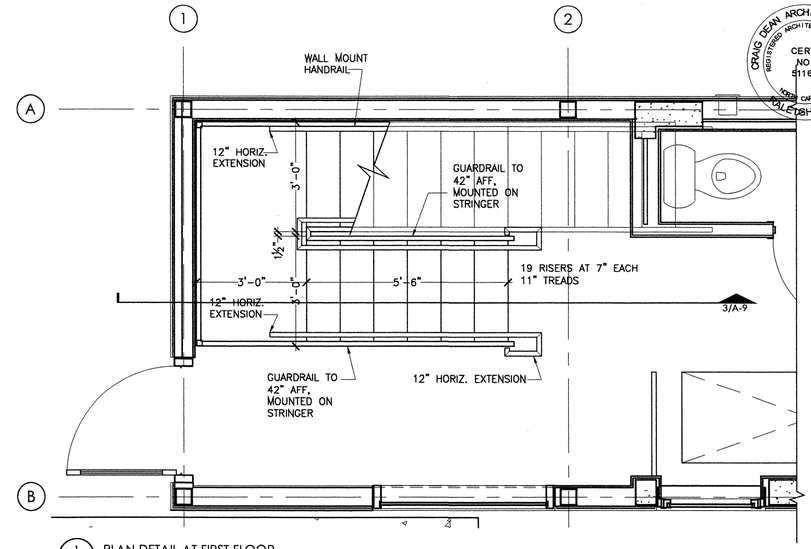

1 / A-6 PLAN DETAIL AT FIRST FLOOR
Scale: 1" = 1'-0"

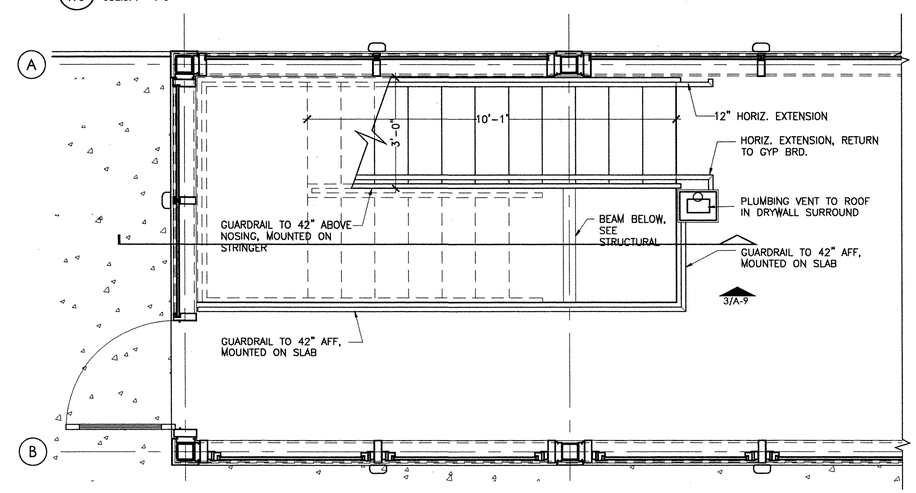

2 / A-6 PLAN DETAIL AT SECOND FLOOR
Scale: 1" = 1'-0"

CRAIG DEAN ARCHITECTURE PLLC
REGISTERED ARCHITECTURAL COMPANY
CERT. NO. 51160
NORTH CAROLINA
RALEIGH, NC

CRAIG FRANKLIN DEAN
REGISTERED ARCHITECT
8461
NORTH CAROLINA

22 JUNE 2011

DOOR & HARDWARE SCHEDULE

DOOR NUMBER	DOOR SIZE WIDTH	DOOR SIZE HGT	DOOR SIZE DOOR THCK	DOOR MAT'L	DOOR TYPE	FRAME MAT'L	FRAME TYPE	FIRE RATING	HARDWARE SET #	HARDWARE KEYSIDE ROOM #	COMMENTS
01	3'-0"	7'-0"	1.75"	ALUM	D1	ALUM	F1	NONE	1	EXTERIOR	DOOR & HARDWARE BY CURTAINWALL MFG.
02	3'-0"	7'-0"	1.75"	ALUM	D1	ALUM	F1	NONE	1	EXTERIOR	DOOR & HARDWARE BY CURTAINWALL MFG.
11	3'-0"	7'-0"	1.75"	FRP	D2	FRP	F2	NONE	2	HALL	

HARDWARE TYPES

HW-1: STOREFRONT DOORS
PIVOTS
CLOSER
THRESHOLD
WEATHERSTRIPPING SET
PUSH BAR
PULL BAR
DEADBOLT WITH THUMB TURN
ALL HARDWARE BY DOOR MFG

HW-2: TOILET ROOM DOOR
3-PLAIN BEARING 5-KNUCKLE STNLSS STL HINGES, HAGER 1191, OR EQ.
3-SILENCERS, HAGER 307D OR EQ.
1-LEVER PRIVACY LOCK, SCHLAGE D40S, OR EQ.
1-WALL STOP, HAGER 255WxUS26D, OR EQ.

DOOR & FRAME TYPES

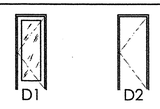

HARDWARE NOTES

1. ALL DOOR HARDWARE SHALL BE GRADE 1 HEAVY DUTY COMMERCIAL GRADE.
2. ALL INTERIOR DOOR HARDWARE SHALL BE #630 SATIN STAINLESS STEEL.
3. ALL EXTERIOR DOOR HARDWARE SHALL BE BY CURTAINWALL MFG.
4. FRP DOOR AND FRAME SHALL BE HEAVY DUTY, BY TIGER DOOR OR EQ. COLOR TO BE "MIST GRAY".

DOOR & FRAME TYPES

D1. NEW ALUMINUM STOREFRONT DOOR IN INTEGRAL CURTAINWALL FRAMING SYSTEM
D2. NEW HOLLOW METAL DOOR IN GALVANIZED HOLLOW METAL FRAME

FRAME TYPES

F1. NEW FRAME, INTEGRAL TO CURTAINWALL MULLION
F2. NEW 2" FACE STANDARD FRP FRAME WITH DRYWALL ANCHOR, TIGER OR EQ.

FINISH SCHEDULE

ROOM NUMBER	FLOOR	BASE	WALLS	CEILING	COMMENTS
01	SEALED CONCRETE	RUBBER	PAINT	PAINTED STRUCTURE	
02	SEALED CONCRETE	RUBBER	PAINT	PAINTED GYP. BRD.	
03	SEALED CONCRETE	RUBBER	PAINT	PAINTED CONCRETE	
11	SEALED CONCRETE	RUBBER	PAINT	PAINTED STRUCTURE	
12	SEALED CONCRETE	RUBBER	PAINT	PAINTED STRUCTURE	

FINISH NOTES

1. ALL CEILING ELEMENTS TO BE GLOSS WHITE. ALL RAILS AND STAIRS TO BE GLOSS SAFETY YELLOW. ALL OTHER COLORS T.B.D.
2. GYP. BRD. TO BE FINISHED TO GYPSUM ASSOCIATION LEVEL 4 CRITERIA. SEE SPECIFICATIONS.
3. ALL EXPOSED STEEL TO BE PAINTED, SEE SPECIFICATIONS.
4. SEE A-5 FOR CABINETRY NOTES.
5. ALL PRE-FINISHED METAL TO MATCH CLEAR ANODIZED ALUMINUM AT CURTAINWALL SYSTEM.
6. BASE SHALL BE 4" COVE BASE, BY JOHSONITE, ROPPE, OR EQUIV.

REVISIONS

NO.	DATE	DESCRIPTION	BY

CRAIG DEAN ARCHITECTURE
305 Grand Avenue
Raleigh, North Carolina 27606
919-754-1400
info@cdarchitecture.com

559 Jones Franklin Rd.
Suite 164
Raleigh, NC 27606
Bus: 919 851 8077
Fax: 919 851 8107
License No. F-0377

WETHERILL ENGINEERING
TRANSPORTATION PLANNING/DESIGN - BRIDGE/STRUCTURE DESIGN
CIVIL/SITE DESIGN - GIS/GPS - CONSTRUCTION OBSERVATION

BRIDGE 12 CONTROL ROOM ADDITION
NEW HANOVER COUNTY NORTH CAROLINA

DATE:
SCALE:
DRAWN:
CHECKED:
PROJ. NO.:
SHEET: A-6

FILE: $FILE$
MODEL: $MODELNAME$
PLOT DRV: $PLTDRV$$
DATE/TIME: $DATE$ $TIME$

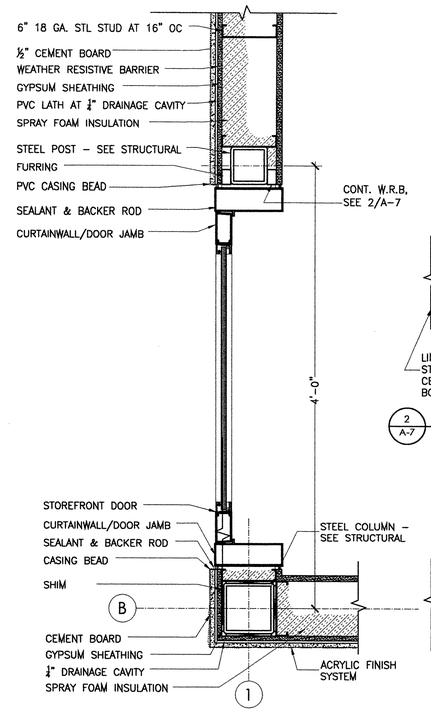

1 A-7 PLAN DETAIL AT SECOND FLOOR
Scale: 1 1/2" = 1'-0"

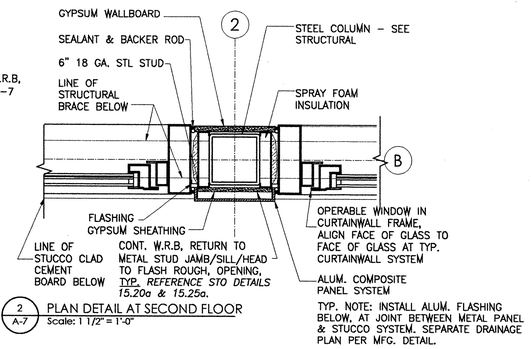

2 A-7 PLAN DETAIL AT SECOND FLOOR
Scale: 1 1/2" = 1'-0"

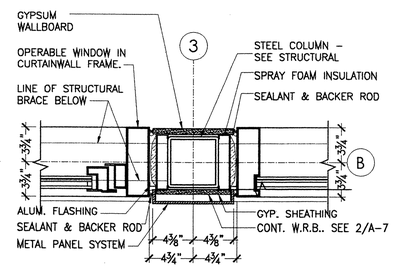

3 A-7 PLAN DETAIL AT SECOND FLOOR
Scale: 1 1/2" = 1'-0"

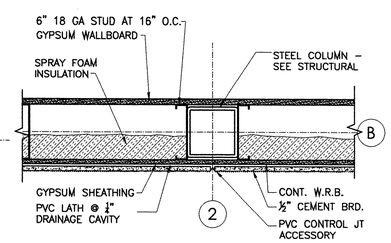

4 A-7 PLAN DETAIL AT SECOND FLOOR
Scale: 1 1/2" = 1'-0"

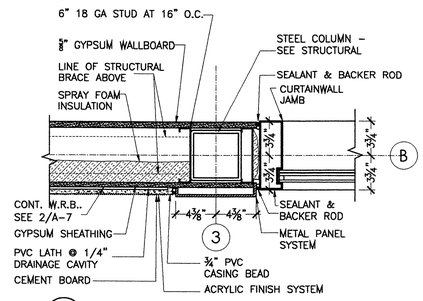

5 A-7 PLAN DETAIL AT SECOND FLOOR
Scale: 1 1/2" = 1'-0"

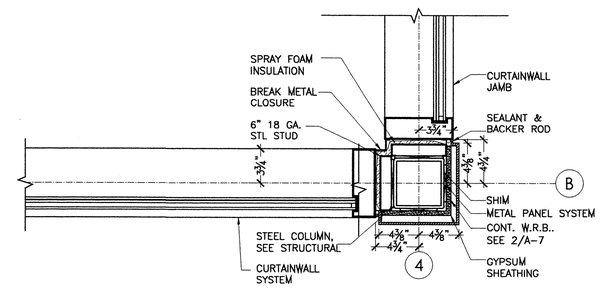

6 A-7 PLAN DETAIL AT SECOND FLOOR
Scale: 1 1/2" = 1'-0"

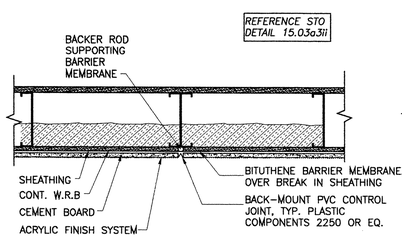

10 A-7 PLAN DETAIL AT VERT. CONTROL JT.
Scale: 1 1/2" = 1'-0"

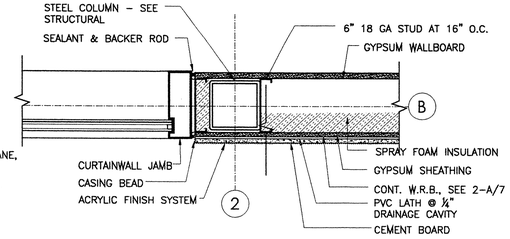

7 A-7 PLAN DETAIL AT FIRST FLOOR
Scale: 1 1/2" = 1'-0"

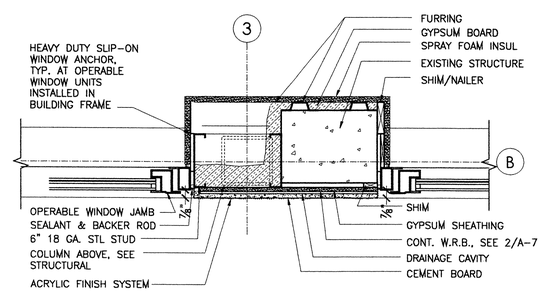

8 A-7 PLAN DETAIL AT FIRST FLOOR
Scale: 1 1/2" = 1'-0"

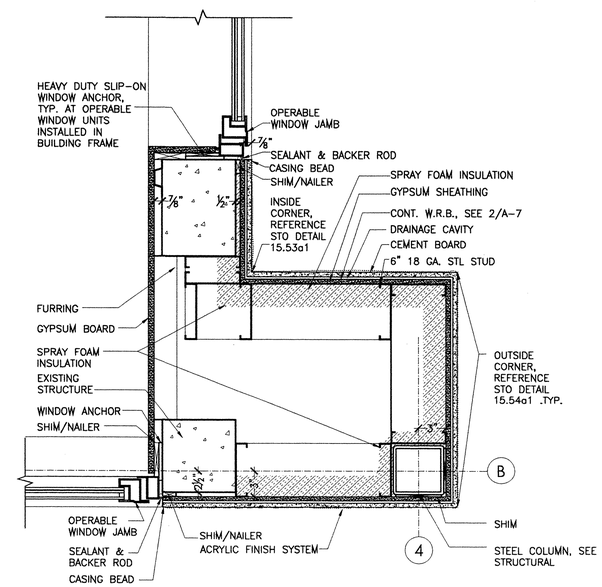

9 A-7 PLAN DETAIL AT FIRST FLOOR
Scale: 1 1/2" = 1'-0"

GENERAL NOTES:
1. INTERIOR GYP. BRD. SHALL BE ⅝" MOLD & MILDEW RESISTANT. SEE 09 29 00.
2. EXTERIOR SHEATHING SHALL BE ½" FIBERGLASS MAT FACE. SEE A-5.
3. EXTERIOR CEMENT BOARD SHALL BE ½". SEE 07 24 00.
4. "W.R.B." = WEATHER RESISTIVE BARRIER. W.R.B. SHALL BE WATERPROOF SPRAY APPLIED TYPE INSTALLED AS A CONTINUOUS MEMBRANE. PRODUCT IS SPECIFIED AS PART OF STUCCO SYSTEM AND SHALL BE APPLIED AT ALL GYPSUM SHEATHING (BEHIND METAL PANEL AND BEHIND STUCCO SYSTEM). W.R.B. ACTS AS A FLASHING AT WINDOW ROUGH OPENINGS, DUCT PENETRATIONS, ETC. APPLY TO INSIDE HEAD, JAMB & SILL AT ALL ROUGH OPENINGS. SEE 07 24 00.
5. ALL STUCCO TRIM SHALL BE PVC. CASING BEADS SHALL BE FULL DEPTH OF SHEATHING+DRAINAGE CAVITY+CEMENT BOARD (SEE DETAIL 5/A-7 FOR EXAMPLE) EXCEPT WHERE STUCCO SYSTEM MANUFACTURER ADVISES OTHERWISE.
6. SEE SUPPLEMENT TO SPECIFICATIONS FOR TYPICAL MANUFACTURER INSTALLATION DETAILS.
7. AN EXTERIOR ASSEMBLY PRE-CONSTRUCTION MEETING BETWEEN THE THE DESIGNER, THE OWNER'S REPRESENTIVE, MANUFACTURERS REPRESENTATIVES OF THE WINDOW AND STUCCO SYSTEMS, THE WINDOW AND STUCCO INSTALLERS, AND THE GENERAL CONTRACTOR SHALL REVIEW THE DESIGN INTENT, MANUFACTURER'S DETAILS AND DISCUSS COORDINATION ISSUES.

CRAIG DEAN ARCHITECTURE PLLC
REGISTERED ARCHITECTURAL COMPANY
CERT. NO. 51160
NORTH CAROLINA
RALEIGH, NC

CRAIG FRANKLIN DEAN
REGISTERED ARCHITECT
8461
NORTH CAROLINA
RALEIGH

22 JUNE 2011

CRAIG DEAN ARCHITECTURE
305 Grand Avenue
Raleigh, North Carolina 27606
919.754.1400
info@cdarchitecture.com

REVISIONS

NO.	DATE	DESCRIPTION	BY

559 Jones Franklin Rd.
Suite 100
Raleigh, N.C. 27606
Bus: 919 851 8077
Fax: 919 851 8107
License No. F-0377

WETHERILL ENGINEERING
TRANSPORTATION PLANNING/DESIGN – BRIDGE/STRUCTURE DESIGN
CIVIL/SITE DESIGN – GIS/GPS – CONSTRUCTION OBSERVATION

BRIDGE 12 CONTROL ROOM ADDITION
NEW HANOVER COUNTY NORTH CAROLINA

DATE:
SCALE:
DRAWN:
CHECKED:
PROJ. NO.:
SHEET: A-7

FILE: $FILE$
MODEL: $MODELNAME$
PLOT DRV: $PLTDRV$
DATE/TIME: $DATE$ $TIME$

22 JUNE 2011

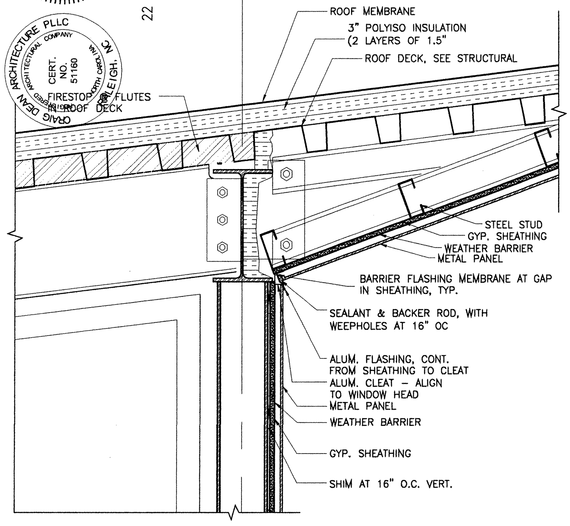

4 A-8 SECTION DETAIL
Scale: 1 1/2" = 1'-0"

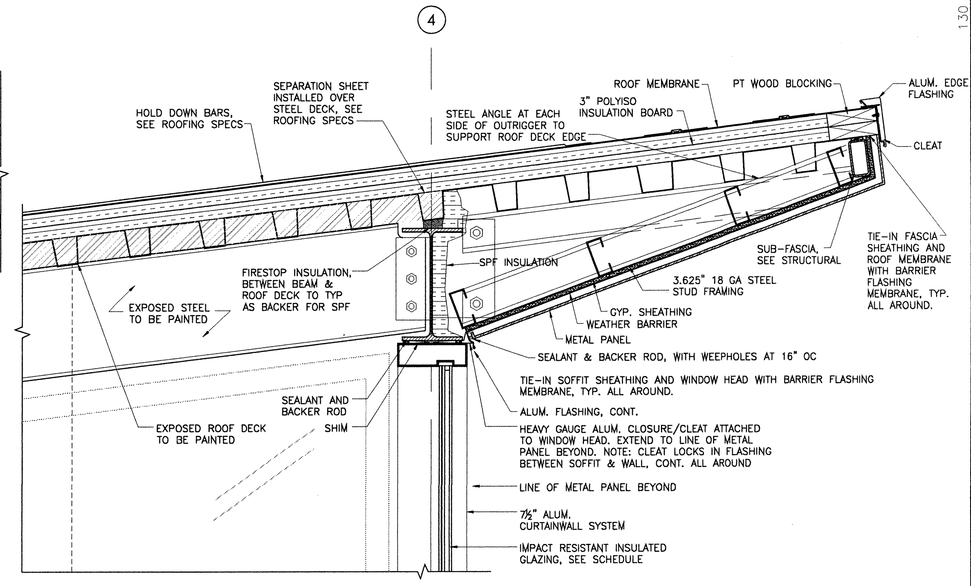

1 A-8 SECTION DETAIL
Scale: 1 1/2" = 1'-0"

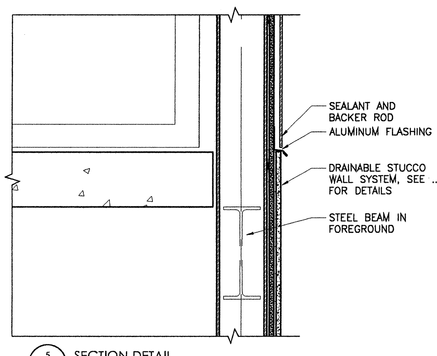

5 A-8 SECTION DETAIL
Scale: 1 1/2" = 1'-0"

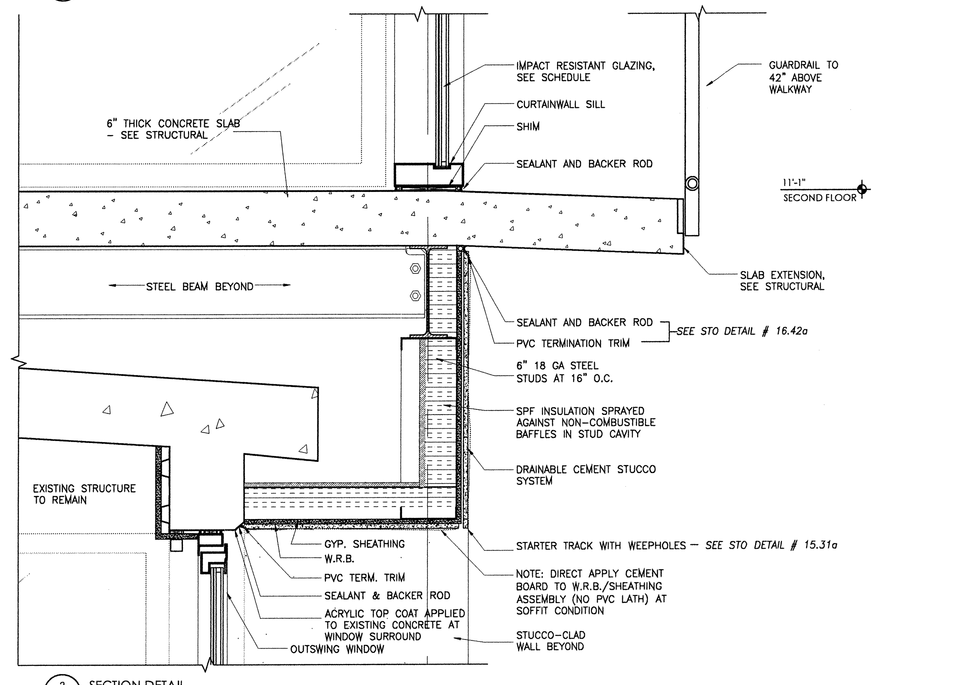

2 A-8 SECTION DETAIL
Scale: 1 1/2" = 1'-0"

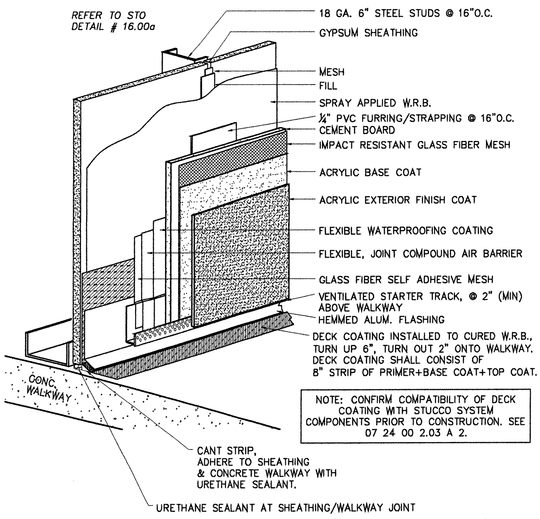

NOTE: CONFIRM COMPATIBILITY OF DECK COATING WITH STUCCO SYSTEM COMPONENTS PRIOR TO CONSTRUCTION. SEE 07 24 00 2.03 A 2.

6 A-8 SECTION DETAIL
Scale: 1 1/2" = 1'-0"

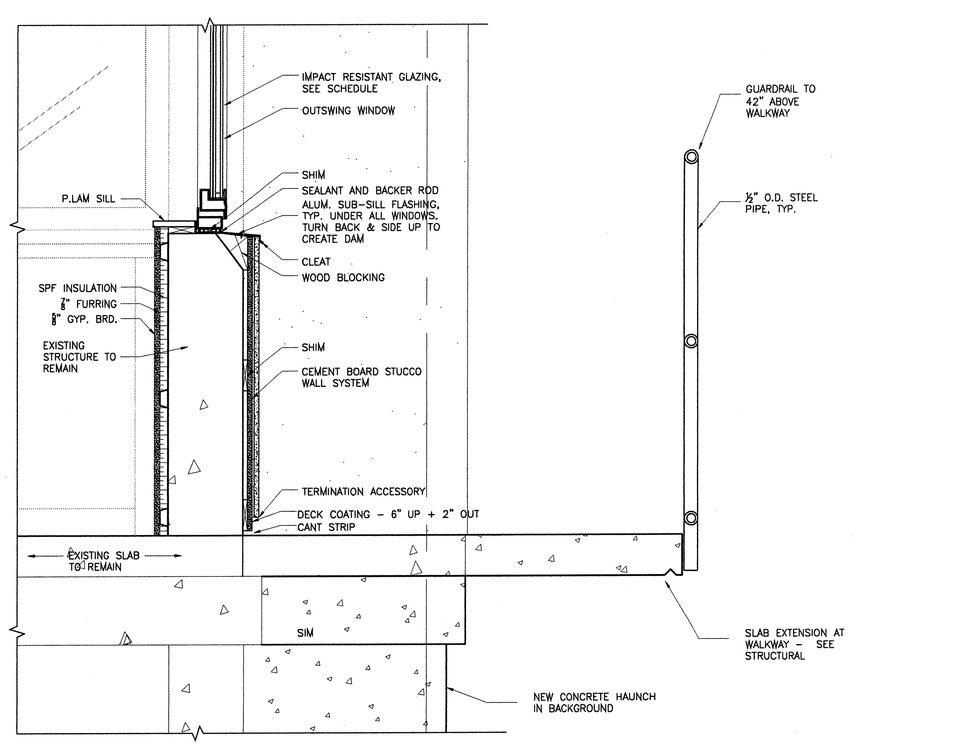

3 A-8 SECTION DETAIL
Scale: 1 1/2" = 1'-0"

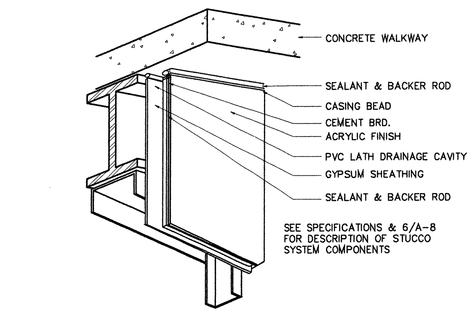

SEE SPECIFICATIONS & 6/A-8 FOR DESCRIPTION OF STUCCO SYSTEM COMPONENTS

7 A-8 SECTION DETAIL
Scale: 1 1/2" = 1'-0"

DATE:	
SCALE:	
DRAWN:	
CHECKED:	
PROJ. NO.:	
SHEET:	A-8

BRIDGE 12 CONTROL ROOM
ADDITION
NEW HANOVER COUNTY NORTH CAROLINA

ETHERIAL ENGINEERING
559 Jones Franklin Rd.
Raleigh, N.C. 27606
Bus: 919 851 8077
Fax: 919 851 8107
License No. F-0577

TRANSPORTATION PLANNING/DESIGN – BRIDGE/STRUCTURE DESIGN
CIVIL/SITE DESIGN – GIS/GPS – CONSTRUCTION OBSERVATION

REVISIONS

NO.	DATE	DESCRIPTION	BY

CRAIG DEAN ARCHITECTURE
305 Grand Avenue
Raleigh, North Carolina 27606
919.754.1400
info@cdarchitecture.com

FILE: $FILE$
MODEL: $MODELNAME$
PLOT DRV: $PLTDRV$
DATE/TIME: $DATE$ $TIME$

CRAIG DEAN ARCHITECTURE
305 Grand Avenue
Raleigh, North Carolina 27606
919.754.1400
info@cdarchitecture.com

REVISIONS			
NO.	DATE	DESCRIPTION	BY

559 Jones Franklin Rd.
Suite 164
Raleigh, N.C. 27606
Bus: 919 851 8077
Fax: 919 851 8107
License No. F-0377

WETHERILL ENGINEERING

TRANSPORTATION PLANNING/DESIGN – BRIDGE/STRUCTURE DESIGN
CIVIL/SITE DESIGN – GIS/GPS – CONSTRUCTION OBSERVATION

BRIDGE 12 CONTROL ROOM ADDITION

NEW HANOVER COUNTY NORTH CAROLINA

DATE:
SCALE:
DRAWN:
CHECKED:
PROJ. NO.:
SHEET: A-9

CRAIG FRANKLIN DEAN
REGISTERED ARCHITECT
8461
NORTH CAROLINA
RALEIGH, NC

CRAIG DEAN ARCHITECTURE PLLC
REGISTERED ARCHITECTURAL COMPANY
CERT. NO. 51160
NORTH CAROLINA
RALEIGH, NC

22 JUNE 2011

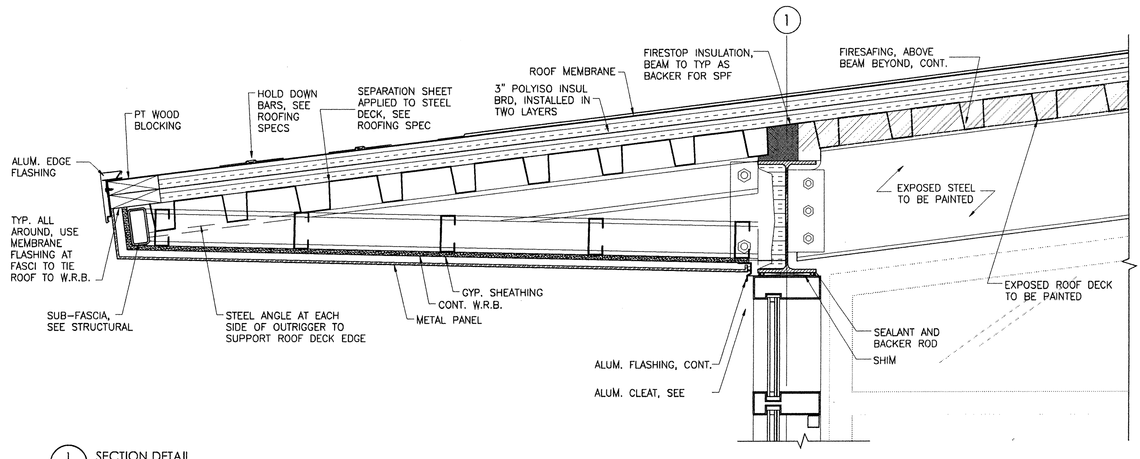

1 A-9 SECTION DETAIL
Scale: 1 1/2" = 1'-0"

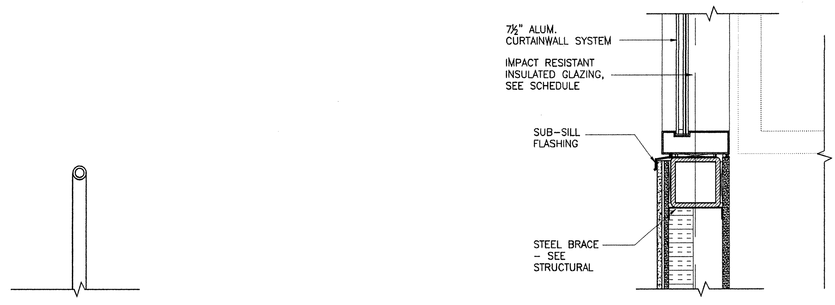

2 A-9 SECTION DETAIL
Scale: 1 1/2" = 1'-0"

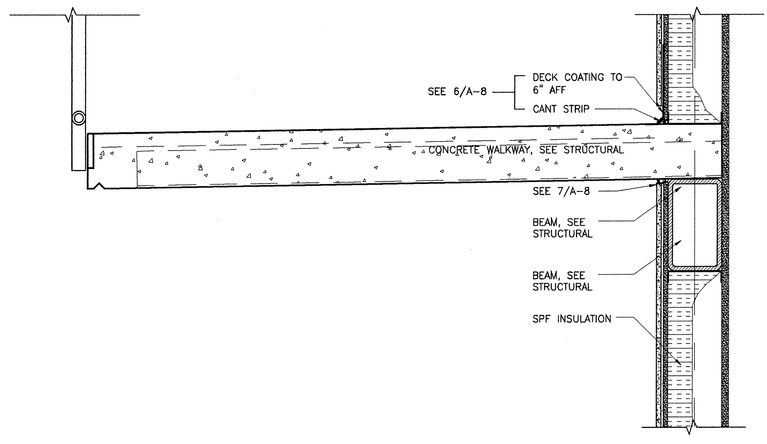

3 A-9 SECTION DETAIL
Scale: 1 1/2" = 1'-0"

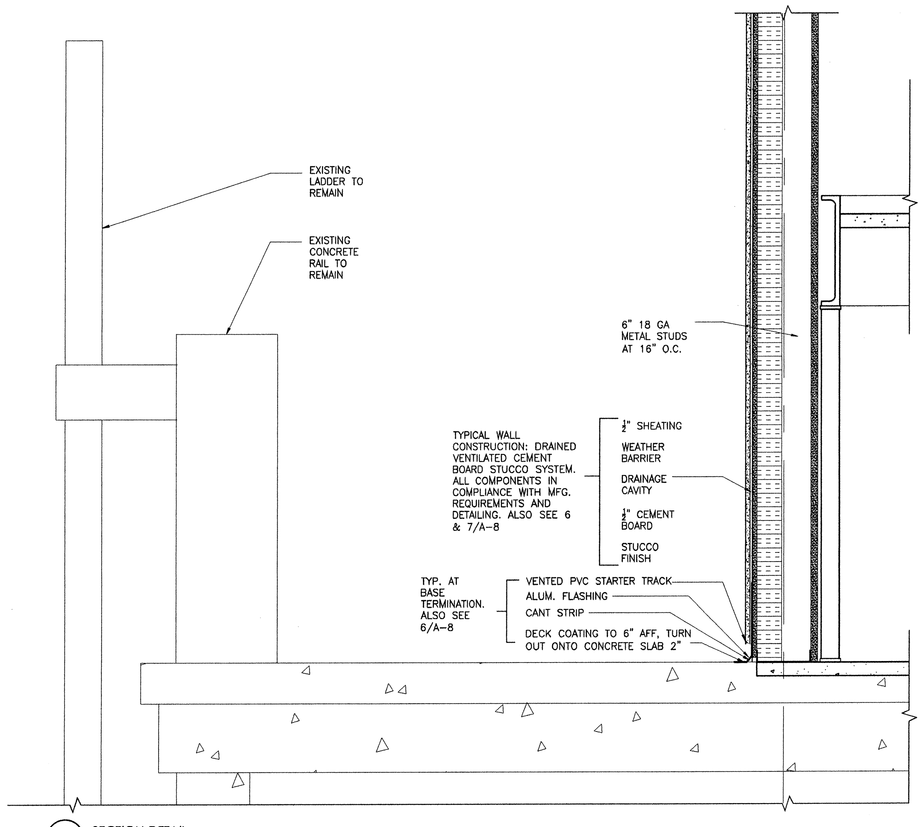

4 A-9 SECTION DETAIL
Scale: 1 1/2" = 1'-0"

FILE: $FILE$
MODEL: $MODELNAME$
PLOT DRV: $PLTDRVS$
DATE/TIME: $DATE$ $TIME$

BRIDGE 12 CONTROL ROOM ADDITION

NEW HANOVER COUNTY NORTH CAROLINA

DATE:
SCALE:
DRAWN:
CHECKED:
PROJ. NO:
SHEET: A-10

ETHERIDGE ENGINEERING
559 Jones Franklin Rd.
Suite 164
Raleigh, N.C. 27606
Bus: 919 851 8077
Fax: 919 851 8107
License No. F-0377

TRANSPORTATION PLANNING/DESIGN - BRIDGE/STRUCTURE DESIGN
CIVIL/SITE DESIGN - GIS/GPS - CONSTRUCTION OBSERVATION

REVISIONS

NO.	DATE	DESCRIPTION	BY

CRAIG DEAN ARCHITECTURE
305 Grand Avenue
Raleigh, North Carolina 27606
919.754.1400
info@cdarchitecture.com

22 JUNE 2011

CRAIG DEAN ARCHITECTURE PLLC
CERT. NO. 51160
RALEIGH, NORTH CAROLINA

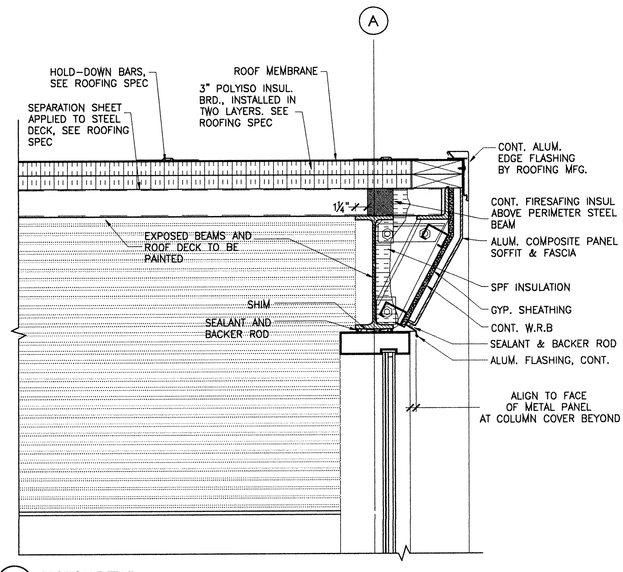

1 / A-10 SECTION DETAIL
Scale: 1 1/2" = 1'-0"

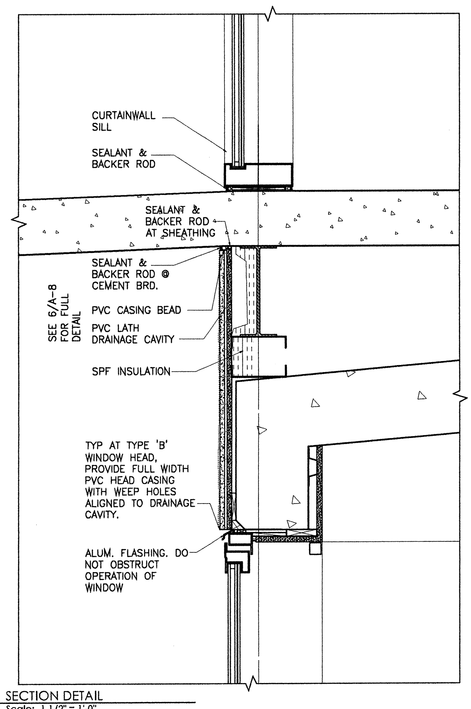

5 / A-10 SECTION DETAIL
Scale: 1 1/2" = 1'-0"

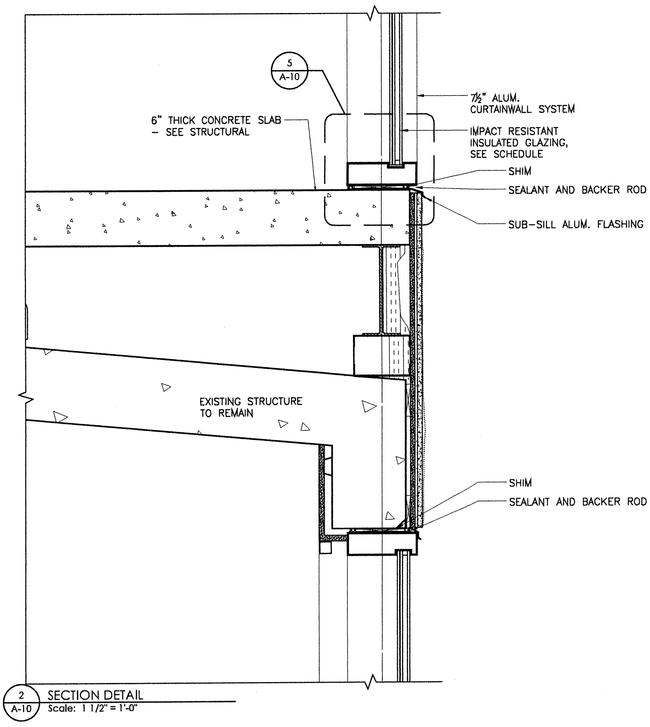

2 / A-10 SECTION DETAIL
Scale: 1 1/2" = 1'-0"

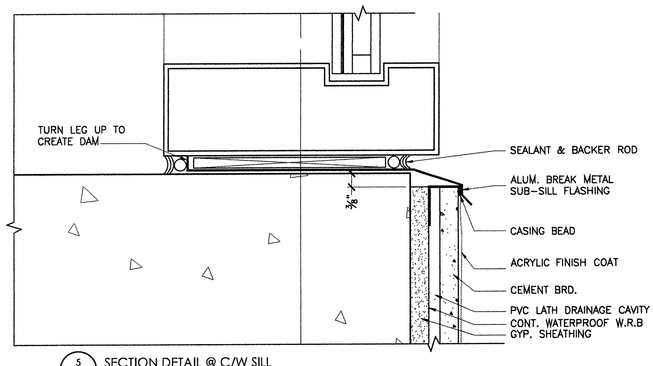

5 / A-10 SECTION DETAIL @ C/W SILL
Scale: 6" = 1'-0"

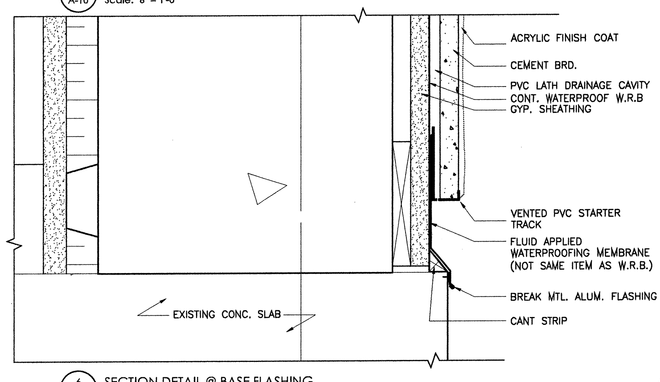

6 / A-10 SECTION DETAIL @ BASE FLASHING
Scale: 6" = 1'-0"

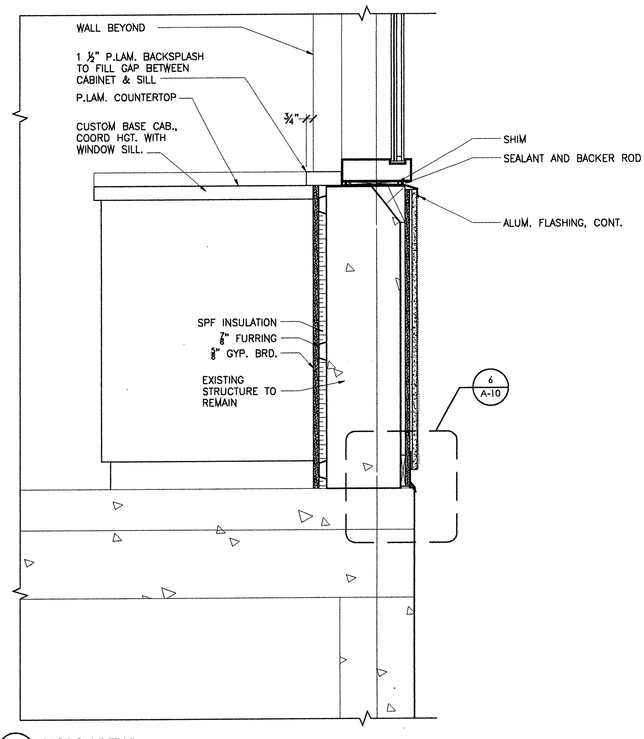

3 / A-10 SECTION DETAIL
Scale: 1 1/2" = 1'-0"

FILE: $FILE$
MODEL: $MODELNAME$
PLOT DRV: $PLTDRV$
DATE/TIME: $DATE$ $TIME$

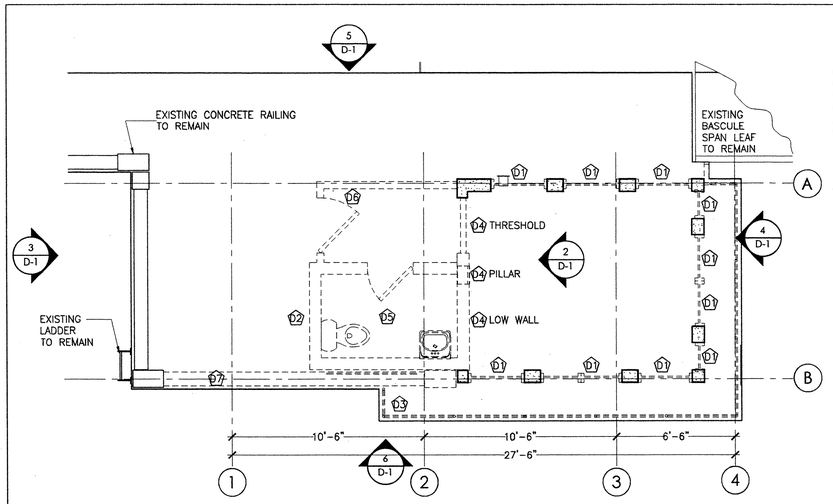

1 / D-1 DEMOLITION PLAN
Scale: 1/4" = 1'-0"

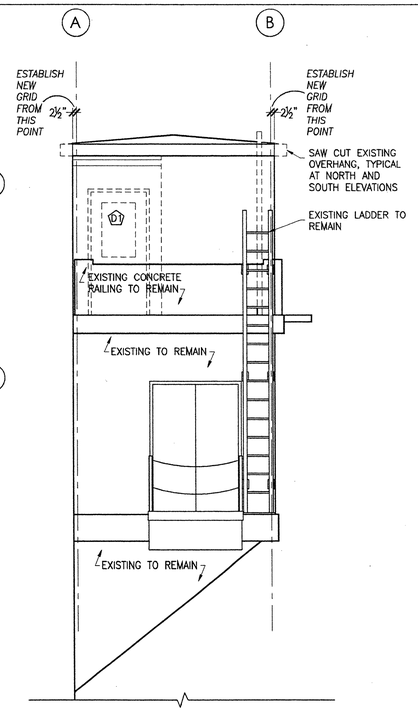

3 / D-1 EXISTING ELEVATION - WEST
Scale: 1/4" = 1'-0"

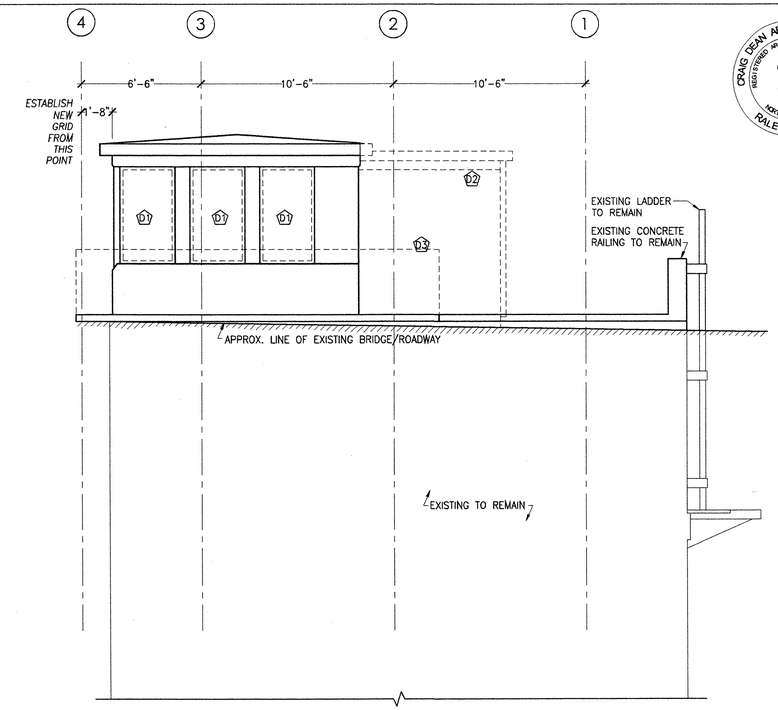

5 / D-1 EXISTING ELEVATION - NORTH
Scale: 1/4" = 1'-0"

CRAIG DEAN ARCHITECTURE, PLLC
REGISTERED ARCHITECTURAL COMPANY
CERT. NO. 51160
NORTH CAROLINA
RALEIGH, NC

CRAIG FRANKLIN DEAN
REGISTERED ARCHITECT
8461
NORTH CAROLINA
RALEIGH, NC

22 JUNE 2011

DEMOLITION NOTES
D1 REMOVE EXISTING WINDOW OR DOOR
D2 DEMOLISH EXISTING CMU ADDITION
D3 REMOVE EXISTING RAILING
D4 REMOVE EXISTING CAST IN PLACE CONCRETE BUILDING ELEMENT
D5 REMOVE EXISTING TOILET ROOM, REMOVE FIXTURES. SEE PLUMBING DRAWINGS
D6 REMOVE EXISTING FRAMED ADDITION
D7 DEMOLISH EXISTING CONCRETE RAILING
SEE STRUCTURAL DRAWINGS & SEE SPECIFICATION SECTION 01 71 39.

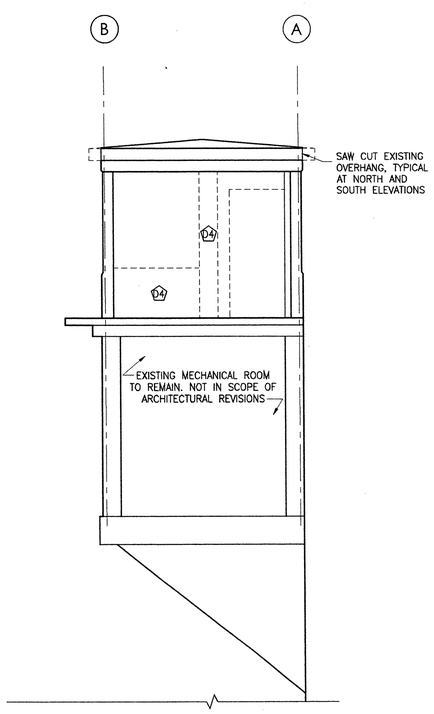

2 / D-1 EXISTING ELEVATION - EAST
Scale: 1/4" = 1'-0"

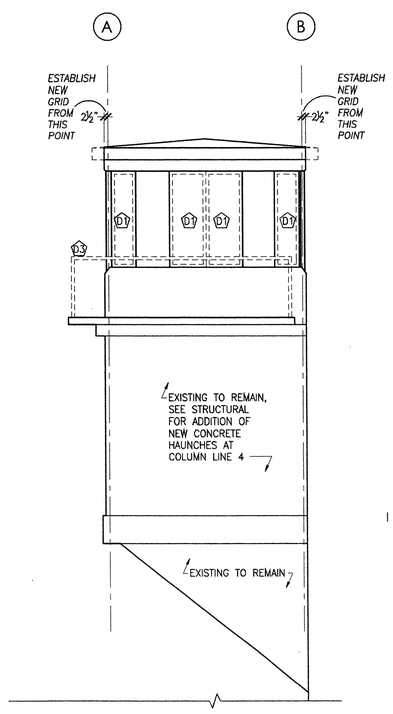

4 / D-1 EXISTING ELEVATION - EAST
Scale: 1/4" = 1'-0"

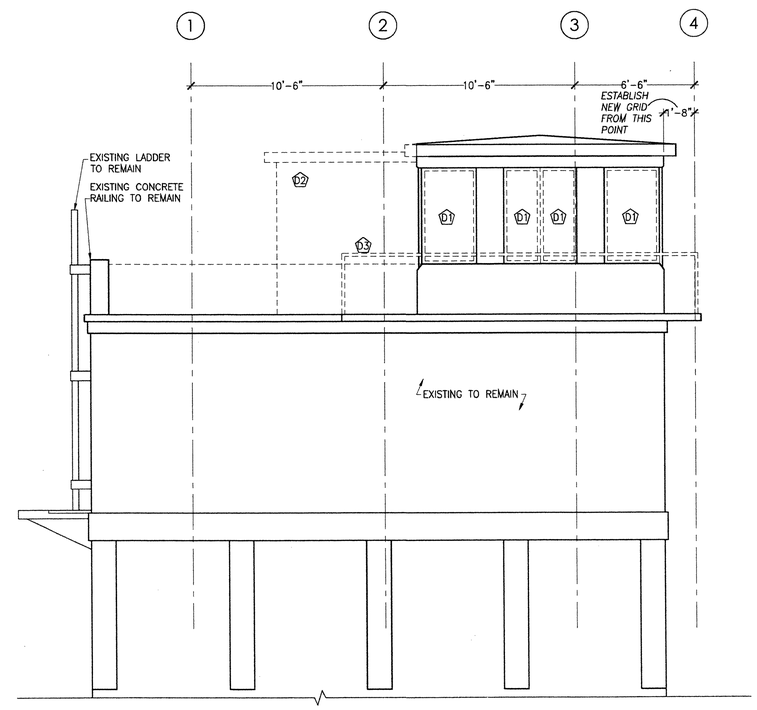

6 / D-1 EXISTING ELEVATION - SOUTH
Scale: 1/4" = 1'-0"

FILE: $FILE$
MODEL: $MODELNAME$
PLOT DRV: $PLTDRV$
DATE/TIME: $DATE$ $TIME$

CRAIG DEAN ARCHITECTURE
505 Grand Avenue
Raleigh, North Carolina 27606
919.754.1400
info@cdarchitecture.com

REVISIONS

NO.	DATE	DESCRIPTION	BY

559 Jones Franklin Rd.
Suite 64
Raleigh, NC 27606
Bus: 919 851 8077
Fax: 919 851 8107
License No. F-0377

ETHERILL ENGINEERING

TRANSPORTATION PLANNING/DESIGN – BRIDGE/STRUCTURE DESIGN
CIVIL/SITE DESIGN – GIS/GPS – CONSTRUCTION OBSERVATION

BRIDGE 12 CONTROL ROOM ADDITION

NEW HANOVER COUNTY NORTH CAROLINA

DATE:
SCALE:
DRAWN:
CHECKED:
PROJ. NO.:
SHEET: D-1

2009 APPENDIX B
BUILDING CODE SUMMARY
FOR ALL COMMERCIAL PROJECTS

(EXCEPT 1 AND 2-FAMILY DWELLINGS AND TOWNHOUSES)
(Reproduce the following data on the building plans sheet 1 or 2)

Name of Project: New Hanover 12 Bridge Operator's House
Address: Wrightsville Bridge Harbor Island; Wrightsville Beach, NC Zip Code 28480
Proposed Use: Group F-1, Moderate Hazard Factory-Industrial (Note, this occupancy is most similar to an Air Traffic Control Tower. Reference 412.1)
Owner/Authorized Agent LANCE V. BORDEN; 717.790.9565, LVBORDEN@MODJESKI.COM
Owned By: ☐ City/County ☐ Private ☒ State
Code Enforcement Jurisdiction: ☐ City_____ ☐ County_____ ☒ State

LEAD DESIGN PROFESSIONAL: LANCE V. BORDEN

DESIGNER	FIRM	NAME	LICENSE #	TELEPHONE #	E-MAIL
Architectural	Craig Dean Architecture, PLLC	Craig Dean	8461	919-754-1400	cdean@cdarchitecture.com
Civil	N/A				
Electrical	Modjeski & Masters	Lance Borden	25801	717-790-9565	lvborden@modjeski.com
Fire Alarm	Modjeski & Masters	Lance Borden	25801	717-790-9565	lvborden@modjeski.com
Plumbing	T.B.D.				
Mechanical	Modjeski & Masters	Lance Borden	25801	717-790-9565	lvborden@modjeski.com
Sprinkler-Standpipe	N/A				
Structural	Wetherill Engineering	John T. Diffee III	26691	919-851-0077	jdiffee@wetherilleng.com
Retaining Walls >5' High	N/A				
Other					

2009 EDITION OF NC CODE FOR: ☐ New Construction ☒ Addition ☐ Upfit
EXISTING: ☐ Reconstruction ☒ Alteration ☐ Repair
CONSTRUCTED 1952 **ORIGINAL USE** F-1 **RENOVATED** unknown **CURRENT USE** F-1

BUILDING DATA
Construction Type: ☐ I-A ☐ I-B ☐ II-A ☒ II-B ☐ III-A ☐ III-B ☐ IV ☐ V-A ☐ V-B
Mixed construction: ☒ No ☐ Yes Types _____
Sprinklers: ☒ No ☐ Partial ☐ Yes ☐ NFPA 13 ☐ NFPA 13R ☐ NFPA 13D
Standpipes: ☒ No ☐ Yes Class ☐ I ☐ II ☐ III ☐ Wet ☐ Dry
Fire District: ☒ No ☐ Yes **Flood Hazard Area:** ☐ No ☐ Yes
Building Height: Feet 20' Number of Stories 2_____
Mezzanine: ☐ No ☒ Yes
Gross Building Area:

FLOOR	EXISTING (SQ FT)	NEW (SQ FT)	SUB-TOTAL
6th Floor			
5th Floor			
4th Floor			
3rd Floor			
2nd Floor	0	320	320
Mezzanine			
1st Floor	230	77	307
Basement	325	0	325
TOTAL			952

ALLOWABLE HEIGHT

	ALLOWABLE (TABLE 503)	INCREASE FOR SPRINKLERS	SHOWN ON PLANS	CODE REFERENCE
Type of Construction	Type II-B		Type II-B	
Building Height in Feet	Feet 20	Feet = H + 20' = N/A	20	
Building Height in Stories	Stories 2	Stories + 1 = N/A	Stories 2	

FIRE PROTECTION REQUIREMENTS

Life Safety Plan Sheet #, if Provided _____

BUILDING ELEMENT	FIRE SEPARATION DISTANCE (FEET)	RATING REQ'D	RATING PROVIDED (W/_____* REDUCTION)	DETAIL # AND SHEET #	DESIGN # FOR RATED ASSEMBLY	DESIGN # FOR RATED PENETRATION	DESIGN # FOR RATED JOINTS
Structural Frame, including columns, girders, trusses	>30'	0	0				
Bearing Walls							
Exterior							
North	>30'	0	0				
East	>30'	0	0				
West	>30'	0	0				
South	>30'	0	0				
Interior							
Nonbearing Walls and Partitions							
Exterior walls							
North	>30'	0	0				
East	>30'	0	0				
West	>30'	0	0				
South	>30'	0	0				
Interior walls and partitions	>30'	0	0				
Floor Construction Including supporting beams and joists	>30'	0	0				
Roof Construction Including supporting beams and joists	>30'	0	0				
Shaft Enclosures - Exit	>30'	Not Required, see 1020.1 Exception 1					
Shaft Enclosures - Other	>30'	n/a	0				
Corridor Separation	>30'	None	0				
Occupancy Separation	>30'	None	0				
Party/Fire Wall Separation	>30'	None	0				
Smoke Barrier Separation	>30'	None	0				
Tenant Separation	>3	None	0				
Incidental Use Separation	>30'	None	0				

* Indicate section number permitting reduction

STRUCTURAL DESIGN

DESIGN LOADS: SEE STRUCTURAL DRAWINGS

Importance Factors: Wind (I_w) _____
Snow (I_s) _____
Seismic (I_e) _____

Live Loads: Roof _____ psf
Mezzanine _____ psf
Floor _____ psf

Ground Snow Load: _____ psf

Wind Load: Basic Wind Speed _____ mph (ASCE-7)
Exposure Category _____
Wind Base Shears (for MWFRS) Vx = _____ Vy = _____

SEISMIC DESIGN CATEGORY ☐ A ☐ B ☐ C ☐ D
Provide the following Seismic Design Parameters:
Occupancy Category (Table 1604.5) ☐ I ☐ II ☐ III ☐ IV
Spectral Response Acceleration S_s_____%g S_1_____%g
Site Classification _____ ☐ Field Test ☐ Presumptive ☐ Historical Data
Basic structural system (check one)
____ Bearing Wall ____ Dual w/Special Moment Frame
____ Building Frame ____ Dual w/Intermediate R/C or Special Steel
____ Moment Frame ____ Inverted Pendulum
Seismic base shear V_x = _____ V_y = _____
Analysis Procedure ____ Simplified ____ Equivalent Lateral Force ____ Modal
Architectural, Mechanical, Components anchored? _____

LATERAL DESIGN CONTROL: Earthquake _____ Wind _____

SOIL BEARING CAPACITIES:
Field Test (provide copy of test report) _____ psf
Presumptive Bearing capacity _____ psf
Pile size, type, and capacity _____

PLUMBING FIXTURE REQUIREMENTS

USE		WATERCLOSETS UNISEX	URINALS	LAVATORIES UNISEX	SHOWERS/ TUBS	DRINKING FOUNTAINS REGULAR	DRINKING FOUNTAINS ACCESSIBLE
SPACE	EXISTING	1 (demolished)	0	1 (demolished)	0	0	0
	NEW	1	0	1	0	0	0
	REQUIRED	1	0	1	0	0	0

ACCESSIBLE PARKING: N/A, NO PARKING

LOT OR PARKING AREA	TOTAL # OF PARKING SPACES REQUIRED	TOTAL # OF PARKING SPACES PROVIDED	# OF ACCESSIBLE SPACES PROVIDED REGULAR WITH 5' ACCESS AREA	# OF ACCESSIBLE SPACES PROVIDED VAN SPACES WITH 8' ACCESS AREA	TOTAL # ACCESSIBLE PROVIDED
TOTAL					

U-Value of total assembly
R-Value of insulation

Floors over unconditioned space (each assembly)
Description of assembly: EXISTING CONCRETE SLAB
U-Value of total assembly
R-Value of insulation 0- EXISTING TO REMAIN

Floors slab on grade NONE
Description of assembly
U-Value of total assembly
R-Value of insulation
Horizontal/vertical requirement
slab heated

ELECTRICAL SUMMARY

ELECTRICAL SYSTEM AND EQUIPMENT: SEE ELECTRICAL DRAWINGS

Method of Compliance:
☐ Prescriptive ☐ Performance ☐ Energy Cost Budget

Lighting schedule
lamp type required in fixture
number of lamps in fixture
ballast type used in the fixture
number of ballasts in fixture
total wattage per fixture
total interior wattage specified vs allowed
total exterior wattage specified vs allowed

Equipment schedules with motors (not used for mechanical systems)
motor horsepower
number of phases
minimum efficiency
motor type
# of poles

MECHANICAL SUMMARY

MECHANICAL SYSTEMS, SERVICE SYSTEMS AND EQUIPMENT: SEE MECHANICAL DRAWINGS

Method of Compliance
☐ Prescriptive ☐ Energy Cost Budget

Climate Zone ____

Thermal Zone
winter dry bulb
summer dry bulb

Interior design conditions

ALLOWABLE AREA

Primary Occupancy: Assembly ☐ A-1 ☐ A-2 ☐ A-3 ☐ A-4 ☐ A-5
☐ Business ☐ Educational Factory ☒ F-1 Moderate ☐ F-2 Low
Hazardous ☐ H-1 Detonate ☐ H-2 Deflagrate ☐ H-3 Combust ☐ H-4 Health ☐ H-5 HPM
Institutional ☐ I-1 ☐ I-2 ☐ I-3 ☐ I-4
I-3 Condition ☐ 1 ☐ 2 ☐ 3 ☐ 4 ☐ 5
☐ Mercantile Residential ☐ R-1 ☐ R-2 ☐ R-3 ☐ R-4
Storage ☐ S-1 Moderate ☐ S-2 Low ☐ High-piled
☐ Utility and Miscellaneous ☐ Parking Garage ☐ Open ☐ Enclosed ☐ Repair Garage
Secondary Occupancy:
Special Uses: ☐ 402 ☐ 403 ☐ 404 ☐ 405 ☐ 406 ☐ 407 ☐ 408 ☐ 409 ☐ 410 ☐ 411 ☐ 412 ☐ 413 ☐ 414 ☐ 415 ☐ 416 ☐ 417 ☐ 418 ☐ 419 ☐ 420 ☐ 421 ☐ 422 ☐ 423
Special Provisions: ☐ 509.2 ☐ 509.3 ☐ 509.4 ☐ 509.5 ☐ 509.6 ☐ 509.7 ☐ 509.8
Mixed Occupancy: ☐ No ☐ Yes Separation: ____ Hr. Exception: .....
☐ Incidental Use Separation (508.2)
This separation is not exempt as a Non-Separated Use (see exceptions).
☐ Non-Separated Use (508.3.2)
The required type of construction for the building shall be determined by applying the height and area limitations for each of the applicable occupancies to the entire building. The most restrictive type of construction, so determined, shall apply to the entire building.
☐ Separated Use (508.3.3) - See below for area calculations
For each story, the area of the occupancy shall be such that the sum of the ratios of the actual floor area of each use divided by the allowable floor area for each use shall not exceed 1.

$$\frac{\text{Actual Area of Occupancy A}}{\text{Allowable Area of Occupancy A}} + \frac{\text{Actual Area of Occupancy B}}{\text{Allowable Area of Occupancy B}} \leq 1$$

_____ + _____ + ____ = ____ ≤ 1.00

STORY NO.	DESCRIPTION AND USE	(A) BLDG AREA PER STORY (ACTUAL)	(B) TABLE 503[3] AREA	(C) AREA FOR FRONTAGE INCREASE[1]	(D) AREA FOR SPRINKLER INCREASE[2]	(E) ALLOWABLE AREA OR UNLIMITED[3]	(F) MAXIMUM BUILDING AREA[4]
BSMT	F-2	325	15,500	N/A	N/A	15,500	31,000
1	F-2	307	15,500	N/A	N/A	15,500	
2	F-2	320	15,500	N/A	N/A	15,500	

[1] Frontage increases from Section 506.2 are computed thus:
a. Perimeter which fronts a public way or open space having 20 feet minimum width = _____ (F)
b. Total Building Perimeter = _____ (P)
c. Ratio (F/P) = _____ (F/P)
d. W = Minimum width of public way = _____ (W)
e. Percent of frontage increase I_f = 100 [F/P - 0.25] x W/30 = _____ (%)
[2] The sprinkler increase per Section 506.3 is as follows:
a. Multi-story building I_s = 200 percent
b. Single story building I_s = 300 percent
[3] Unlimited area applicable under conditions of Sections Group B, F, M, S, A-3, A-4 (507); Group A motion picture (507.10); covered mall buildings (402.6); and H-2 aircraft paint hangers (507.8).
[4] Maximum Building Area = total number of stories in the building x E (506.4).
[5] The maximum area of open parking garages must comply with Table 406.3.5. The maximum area of air traffic control towers must comply with Table 412.1.2.

LIFE SAFETY SYSTEM REQUIREMENTS

Emergency Lighting: ☐ No ☒ Yes
Exit Signs: ☐ No ☒ Yes
Fire Alarm: ☐ No ☒ Yes
Smoke Detection Systems: ☐ No ☒ Yes ☐ Partial _____
Panic Hardware: ☒ No ☐ Yes

EXIT REQUIREMENTS

NUMBER AND ARRANGEMENT OF EXITS

FLOOR, ROOM OR SPACE DESIGNATION	MINIMUM[2] NUMBER OF EXITS REQUIRED	MINIMUM[2] NUMBER OF EXITS SHOWN ON PLANS	TRAVEL DISTANCE ALLOWABLE TRAVEL DISTANCE (TABLE 1015.1)	TRAVEL DISTANCE ACTUAL TRAVEL DISTANCE SHOWN ON PLANS	ARRANGEMENT MEANS OF EGRESS[1,2] (SECTION 1015.2) REQUIRED DISTANCE BETWEEN EXIT DOORS	ARRANGEMENT MEANS OF EGRESS[1,2] (SECTION 1015.2) ACTUAL DISTANCE SHOWN ON PLANS
GROUND FLR	1	1	75'	50' (MEASURED ALONG NOSING)	N/A	N/A
UPPER FLR	1	1	75'	25'	N/A	N/A

[1] Corridor dead ends (Section 1017.3)
[2] Buildings with single exits (Table 1019.2). Spaces with one means of egress (Table 1015.1)
[3] Common Path of Travel (Section 1014.3)

EXIT WIDTH

USE GROUP OR SPACE DESCRIPTION	(a) AREA[1] SQ. ft.	(b) AREA[1] PER OCCUPANT (TABLE 1004.1.1)	CALCULATED OCCUPANT LOAD (a÷b)	(c) EGRESS WIDTH PER OCCUPANT (TABLE 1005.1) STAIR	(c) EGRESS WIDTH PER OCCUPANT (TABLE 1005.1) LEVEL	EXIT WIDTH (in)[2,3,4,5,6] REQUIRED WIDTH (SECTION 1005.1) (a÷b) x c STAIR	EXIT WIDTH (in)[2,3,4,5,6] REQUIRED WIDTH (SECTION 1005.1) (a÷b) x c LEVEL	EXIT WIDTH (in)[2,3,4,5,6] ACTUAL WIDTH SHOWN ON PLANS STAIR	EXIT WIDTH (in)[2,3,4,5,6] ACTUAL WIDTH SHOWN ON PLANS LEVEL
GROUND FLR	307	100	4	.3	.2	1.2	.8	36"	36"
UPPER FLR	321	100	4	.3	.2	1.2	.8	36"	36"

[1] See Table 1004.1.1 to determine whether net or gross area is applicable.
See definition "Area, Gross" and "Area, Net" (Section 1002)
[2] Minimum stairway width (Section 1009.1); min. corridor width (Section 1017.2); min. door width (Section 1008.1)
[3] Minimum width of exit passageway (Section 1021.2)
[4] See Section 1004.5 for converging exits.
[5] The loss of one means of egress shall not reduce the available capacity to less than 50 percent of the total required (Section 1005.1)
[6] Assembly occupancies (Section 1025)

SPECIAL APPROVALS

Special approval: (Local Jurisdiction, Department of Insurance, OSC, DPI, DHHS, ICC, etc., describe below)
_____
_____
_____

ENERGY SUMMARY

ENERGY REQUIREMENTS:
The following data shall be considered minimum and any special attribute required to meet the energy code shall also be provided. Each Designer shall furnish the required portions of the project information for the plan data sheet. If energy cost budget method, state the annual energy cost budget vs allowable annual energy cost budget.

THERMAL ENVELOPE

Method of Compliance:
☒ Prescriptive 27.7% Glazed Wall Area
☐ Performance ☐ Energy Cost Budget

Roof/ceiling Assembly (each assembly)
Description of assembly: CONTINUOUS INSULATION BOARD OVER METAL DECKING
U-Value of total assembly
R-Value of insulation: R-15.3
Skylights in each assembly NONE
U-Value of skylight
total square footage of skylights in each assembly

Exterior Walls (each assembly)
Description of assembly 6" METAL STUD
U-Value of total assembly
R-Value of insulation R-15.5
Openings (windows or doors with glazing)
U-Value of assembly .45
shading coefficient .33 (CLEAR)/.30 (TRANSLUCENT)
projection factor .409 WEIGHTED
low e required, if applicable LOW-E PROVIDED
Door R-Values

Walls adjacent to unconditioned space (each assembly) NONE
Description of assembly
U-Value of total assembly
R-Value of insulation
Openings (windows or doors with glazing)
U-Value of assembly
Low e required, if applicable
Door R-Values

Walls below grade (each assembly) NONE
Description of assembly

winter dry bulb
summer dry bulb
relative humidity

Building heating load

Building cooling load

Mechanical Spacing Conditioning System
Unitary
description of unit
heating efficiency
cooling efficiency
heat output of unit
cooling output of unit
Boiler
total boiler output. If oversized, state reason.
Chiller
total chiller capacity. If oversized, state reason.

List equipment efficiencies

Equipment schedules with motors (mechanical systems)
motor horsepower
number of phases
minimum efficiency
motor type
# of poles

CODE SUMMARY NOTES

1. PER 302.1. THIS BUILDING IS CLASSIFIED IN THE GROUP THAT THE OCCUPANCY MOST NEARLY RESEMBLE, F-1 WITH SPECIAL USE PER 412.1 (AIR TRAFFIC CONTROL TOWERS).

2. THIS BUILDING IS NOT REQUIRED TO BE ACCESSIBLE, PER 412.1.6.

3. SINGLE EXIT STAIR PERMITTED PER 412.1.3. STAIR CONFORMS TO 1009.

CRAIG DEAN ARCHITECTURE PLLC
REGISTERED ARCHITECTURAL COMPANY
CERT. NO. 51160
NORTH CAROLINA
RALEIGH, NC

CRAIG FRANKLIN DEAN
REGISTERED ARCHITECT
8461
NORTH CAROLINA

22 JUNE 2011

REVISIONS

NO.	DATE	DESCRIPTION	BY

CRAIG DEAN ARCHITECTURE
305 Grand Avenue
Raleigh, North Carolina 27606
919.754.1400
info@cdarchitecture.com

559 Jones Franklin Rd.
Suite 154
Raleigh, N.C. 27606
Bus: 919 851 8077
Fax: 919 851 8107
License No. F-0377

WETHERILL ENGINEERING

TRANSPORTATION PLANNING/DESIGN - BRIDGE/STRUCTURE DESIGN
CIVIL/SITE DESIGN - GIS/GPS - CONSTRUCTION OBSERVATION

BRIDGE 12 CONTROL ROOM ADDITION
NEW HANOVER COUNTY NORTH CAROLINA

DATE:
SCALE:
DRAWN:
CHECKED:
PROJ. NO.:
SHEET: G-1

FILE: $FILE$
MODEL: $MODELNAME$
PLOT DRV: $PLTDRV$
DATE/TIME: $DATE$ $TIME$

NOTES

GENERAL:

1. DESIGN:
   - A) BUILDING CODE- NORTH CAROLINA BUILDING CODE - 2009 EDITION
   - B) DESIGN DEAD LOADS
     - 4½" CONC. ON STEEL DECK.....45 PSF
     - SUPERIMPOSED DEAD LOADS.....25 PSF
     - STEEL ROOF DECK.....3 PSF
     - ROOF SUPERIMPOSED DEAD LOADS.....15 PSF
   - C) DESIGN LIVE LOADS
     - FLOOR LIVE LOAD.....100 PSF
     - ROOF LIVE LOAD.....20 PSF
   - C) WIND
     - BASIC WIND SPEED.....140 MPH
   - D) SEISMIC DESIGN CATEGORY..... B
     - SEISMIC USE GROUP..... I
     - SITE CLASS .....D
     - SPECTRAL RESPONSE ACCELERATIONS: S_{MS} = 0.320, S_{M1} = 0.187

2. WORKMANSHIP AND MATERIALS SHALL CONFORM TO THE NORTH CAROLINA DEPARTMENT OF TRANSPORTATION'S "STANDARD SPECIFICATIONS FOR ROADS AND STRUCTURES", 2006 EDITION UNLESS NOTED OTHERWISE.

3. THESE PLANS ARE FOR THE FOLLOWING SITE: NEW HANOVER COUNTY BRIDGE 12 OPERATOR BUILDING.

4. IT IS THE CONTRACTOR'S RESPONSIBILITY TO APPLY OR OBSERVE ALL PERTINENT SAFETY RULES AS REGULATIONS, AND PER OSHA STANDARDS AS APPLICABLE.

5. GROUT UNDER BASE PLATES SHALL BE "EMBECO" NON-SHRINK GROUT OR APPROVED EQUAL.

6. CONTRACTOR SHALL PROVIDE TEMPORARY BRACING FOR THE BUILDING DURING CONSTRUCTION.

7. UNLESS NOTED, ALL MANUALS AND SPECIFICATIONS LISTED IN THESE PLANS SHALL REFER TO THE LATEST EDITION.

CONCRETE:

1. UNLESS NOTED OTHERWISE, CONCRETE SHALL BE CLASS AA.

2. CONCRETE FOR SLABS ON METAL DECKING SHALL BE NORMAL WEIGHT (145 PCF) WITH A MINIMUM 28-DAY COMPRESSIVE STRENGTH OF 4,000 PSI.

3. CONCRETE PLACEMENT SHALL CONFORM WITH ACI-315, ACI-318, AND ACI-301 OR LATEST EDITION.

4. CONCRETE REINFORCING STEEL SHALL CONFORM TO THE REQUIREMENTS OF ASTM 615 GRADE 60.

5. ALL DETAILING FABRICATION AND ERECTION OF REINFORCING BARS SHALL CONFORM WITH ACI MSPD LATEST EDITION. LAP ALL STEEL SPLICES 36 BAR DIAMETERS. IN-PLACE REINFORCING STEEL SHALL BE APPROVED BY THE ENGINEER PRIOR TO POURING THE CONCRETE.

6. WELDED WIRE REINFORCEMENT SHALL CONFORM TO THE REQUIREMENTS OF ASTM A185 OR A497.

7. ALL REINFORCING SHALL BE EPOXY COATED

MINIMUM CONCRETE/REINFORCEMENT CLEAR DISTANCE	
SLABS ON STEEL DECK	1" (BOTTOM)
ELEVATED SLABS	1½" (TOP)

STRUCTURAL STEEL:

1. STRUCTURAL STEEL WIDE FLANGE SHAPES SHALL CONFORM TO THE REQUIREMENTS OF ASTM A992 GR. 50, UNLESS NOTED OTHERWISE. OTHER STRUCTURAL STEEL SHAPES WITH THE EXCEPTION OF HOLLOW STRUCTURAL STEEL SECTIONS, BARS, AND PLATES SHALL BE ASTM A36.

2. HOLLOW STRUCTURAL SECTIONS (HSS) SHALL CONFORM TO THE REQUIREMENTS OF ASTM A500, GR. B (Fy=46 KSI).

3. BOLTED CONNECTIONS, UNLESS OTHERWISE NOTED, SHALL BE 8/8"Ø ASTM A325 BEARING TYPE WITH THREADS EXCLUDED FROM THE SHEAR PLANE.

4. ANCHOR BOLTS SHALL MEET THE REQUIREMENTS OF ASTM F1554 GRADE 55. NUTS AND WASHERS FOR ANCHOR BOLTS SHALL MEET THE REQUIREMENTS OF ASTM A563 GRADE A (HEAVY HEX) AND ASTM F436, RESPECTIVELY.

5. STEEL SHALL BE HOT DIPPED GALVANIZED CONFORMING TO ASTM A123.

6. SUBMIT 3 SETS OF CHECKED STEEL SHOP DRAWINGS TO BE APPROVED BY THE STRUCTURAL ENGINEER PRIOR TO FABRICATION. FABRICATOR SHALL ALLOW 10 WORKING DAYS FOR THE REVIEW OF THE SHOP DRAWINGS.

7. DESIGN, FABRICATION, ERECTION, AND WORKMANSHIP SHALL CONFORM TO AISC STEEL CONSTRUCTION MANUAL, THIRTEENTH EDITION.

8. FOR MISCELLANEOUS STEEL NOT SHOWN SEE ARCHITECTURAL DRAWINGS.

9. ALL WELDING SHALL BE IN ACCORDANCE WITH AWS D1.1. WELDING IS TO BE PERFORMED BY AN AWS CERTIFIED WELDER. ALL WELDS SHALL BE SHOP WELDS UNLESS NOTED OTHERWISE.

10. ALL BEAMS AND GIRDERS SHALL HAVE THEIR ROLLING CAMBER PLACED UP.

11. WELD ELECTRODES SHALL BE E70XX SERIES UNLESS NOTED OTHERWISE.

13. STRUCTURAL FRAME REQUIRES MOMENT CONNECTIONS AT CERTAIN LOCATIONS FOR STABILITY. MOMENT CONNECTION LOCATIONS ARE DENOTED ON THE FRAMING SECTIONS.

14. MOMENT FRAMES ARE TO BE SHOP FABRICATED AND SHIPPED TO THE SITE FOR ERECTION. CONTRACTOR IS TO VERIFY EXISTING CONDITIONS PRIOR TO FABRICATION SO AS TO ALLOW PROPER ALIGNMENT IN THE FIELD.

STEEL DECKING:

1. FABRICATION AND ERECTION OF STEEL DECKING SHALL BE IN ACCORDANCE WITH THE LATEST SPECIFICATION AND CODE OF PRACTICE OF THE STEEL DECK INSTITUTE AS WELL AS STEEL DECK FABRICATOR.

2. COMPOSITE STEEL FLOOR DECKING AT INTERIOR SHALL BE 1.5VL20 BY VULCRAFT, OR APPROVED EQUIVALENT.

3. STEEL ROOF DECKING SHALL BE TYPE 3N16 BY VULCRAFT OR APPROVED EQUAL.

4. ALL STEEL DECKING SHALL HAVE A "CLASS G-90" GALVANIZED FINISH IN ACCORDANCE WITH ASTM A653.

5. STEEL DECKING SHALL BE FULLY AND PROPERLY SECURED TO THE STEEL FRAMING AS SHOWN IN THE PLANS PRIOR TO GENERAL USE DURING CONSTRUCTION.

6. CONTRACTOR SHALL VERIFY THAT STEEL DECKING IS ADEQUATE TO SUPPORT CONSTRUCTION LOADS REQUIRED PRIOR TO PLACING THOSE LOADS ON THE DECKING. STEEL DECKING SHALL BE SHORED, BRACED AND PROTECTED AS REQUIRED DURING CONSTRUCTION.

7. POUR STOPS SHALL BE AS RECOMMENDED BY THE STEEL DECKING MANUFACTURER.

COMPONENTS AND CLADDING:

1. WINDOW PANELS AND MULLIONS SHALL BE DESIGNED TO RESIST WIND PRESSURES IN ACCORDANCE WITH COMPONENT AND CLADDING WIND LOADINGS.

2. WINDOWS, SIDING, AND LIGHT GAGE STEEL FRAMING ARE TO BE DESIGNED BY A LICENSED PROFESSIONAL ENGINEER IN THE STATE OF NORTH CAROLINA TO BE RETAINED BY THE CONTRACTOR.

EPOXY ANCHORS:

EPOXY FOR ANCHORS SHALL BE HILTI RE-500 INJECTION EPOXY ANCHOR OR APPROVED EQUIVALENT. INSTALLATION SHALL BE IN ACCORDANCE WITH MANUFACTURER'S RECOMMENDATIONS.

1. DRILL HOLES WITH ANSI B212.15 MATCHED TOLERANCE CARBIDE TIPPED DRILL BITS WITH DRILL IN ROTO-HAMMER MODE OR USE A MATCHED TOLERANCE DIAMOND CORE DRILL BIT OF DIAMETER SPECIFIED BY EPOXY MANUFACTURER.

2. DRILLED HOLE SPECIFICATIONS (DIAMETER & DEPTH) SHALL COMPLY WITH EPOXY MANUFACTURER SPECIFICATION OR ICC ESR 1562

3. ALLOWABLE LOADS MAY BE INCREASED BY 33-1/3% FOR SHORT-TERM WIND OR SEISMIC LOAD RESISTANCE IAW ICC ESR 1682 UNLESS NOT PERMITTED BY THE APPLICABLE BUILDING CODE.

4. WHEN CONDUCTED, PROOF TEST ANCHORS IN THE FIELD TO 150-200% OF HILTI PUBLISHED ALLOWABLE TENSION LOAD UNLESS NOTED OTHERWISE IN A PROOF TEST LOAD TABLE. TORQUE TESTING IS NOT PERMITTED.

5. ANCHORS SHALL BE TIGHTENED WITH A CALIBRATED TORQUE WRENCH. USE OF AN IMPACT WRENCH IS NOT PERMITTED.

6. CONTACT HILTI TECHNICAL SUPPORT AT 1-800-879-8000 FOR ADDITIONAL ASSISTANCE WITH HIT RE-500 EPOXY ANCHOR INSTALLATIONS.

7. INSTALLATION INSTRUCTIONS:

   A. FOR HIT RE-500 EPOXY WITH ALL-THREAD ROD OR REBAR DOWEL:

   1. DRILL ANCHOR HOLE USING CARBIDE-TIPPED OR DIAMOND CORE BITS, (SEE NOTE 1 ABOVE), TO SPECIFIED EMBEDMENT DEPTH.
   2. CLEAN DRY AND DAMP HOLE WITH A NYLON OR WIRE BRUSH. PROPER HOLE CLEANING IS ESSENTIAL. FOR CORE BITS, FLUSH HOLE WITH WATER THEN IMMEDIATELY REMOVE STANDING WATER.
   3. CLEAN HOLE WITH COMPRESSED AIR OR BLOW OUT PUMP. INSERT NOZZLE TO BOTTOM OF HOLE.
   4. INSERT REFILL PACK INTO HOLDER. REMOVE CAP COVERING THREADED PROJECTION.
   5. SCREW ON STATIC MIXER NOZZLE.
   6. PUT HOLDER/CARTRIDGE INTO APPROPRIATE DISPENSER AND DISCARD FIRST THREE TRIGGER PULLS OF EPOXY FROM EACH REFILL PACK/CARTRIDGE.
   7. INJECT EPOXY INTO HOLE STARTING AT THE BOTTOM UNTIL ½ TO 2/3 FULL. USE MIXER FILLER TUBE EXTENSIONS WHEN NEEDED TO REACH THE BOTTOM OF THE HOLE.
   8. UNLOCK DISPENSER.
   9. INSERT ALL-THREAD ROD OR REBAR DOWEL. TWIST DURING INSTALLATION.
   10. ANCHOR MAY BE ADJUSTED DURING SPECIFIED GEL TIME. DO NOT DISTURB ANCHOR BETWEEN SPECIFIED GEL AND CURE TIMES.
   11. AFTER FULL CURE TIME, APPLY SPECIFIED TORQUE AS REQUIRED TO SECURE FASTENED ITEM. DO NOT EXCEED SPECIFIED MAXIMUM TORQUE.
   12. REFERENCE MANUFACTURER FOR ACCEPTABLE SPECIFICATIONS.

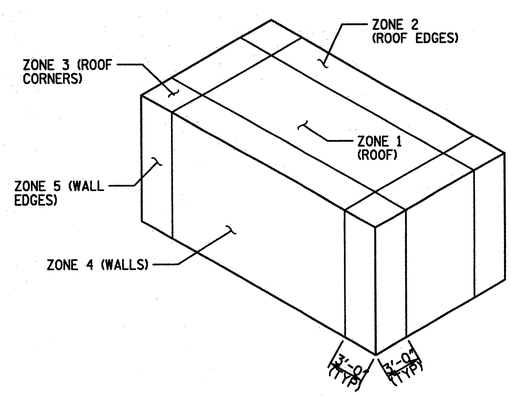

NET DESIGN PRESSURE (PSF)		
ZONE	(+)	(-)
ZONE 1	32.7	-52.0
ZONE 2	32.7	-90.5
ZONE 3	32.7	-134.0
ZONE 4	56.8	-61.5
ZONE 5	56.8	-76.0
OVERHANG ZONE 2		-106.0
OVERHANG ZONE 3		-178.0

COMPONENTS AND CLADDING DESIGN WIND PRESSURES

559 Jones Franklin Rd. Suite 164
Raleigh, N.C. 27606
Phone: 919 851 9007
Fax: 919 851 8007
License No. F-0377

WETHERILL ENGINEERING
TRANSPORTATION PLANNING/DESIGN - BRIDGE/STRUCTURE DESIGN
CIVIL/SITE DESIGN - GIS/GPS - CONSTRUCTION OBSERVATION

NORTH CAROLINA PROFESSIONAL SEAL 10773 ENGINEER EDWARD G. WETHERILL
6/23/11
SEAL

REVISIONS			
NO.	DATE	DESCRIPTION	BY

BRIDGE 12 CONTROL ROOM ADDITION
NEW HANOVER COUNTY NORTH CAROLINA

DATE:	06-07-11
SCALE:	NTS
DRAWN:	DAC
CHECKED:	EGW
PROJ. NO.:	10323
SHEET:	S-1

FILE: P:\2010\10323.06 NewHanover12\Structures\DGN\gen_notes.dgn
MODEL: BAS7 STANDARD Default
PLOT DRV: STR_Full_English_Doe.PLT
DATE/TIME: 6/23/2011 7:57:06 AM

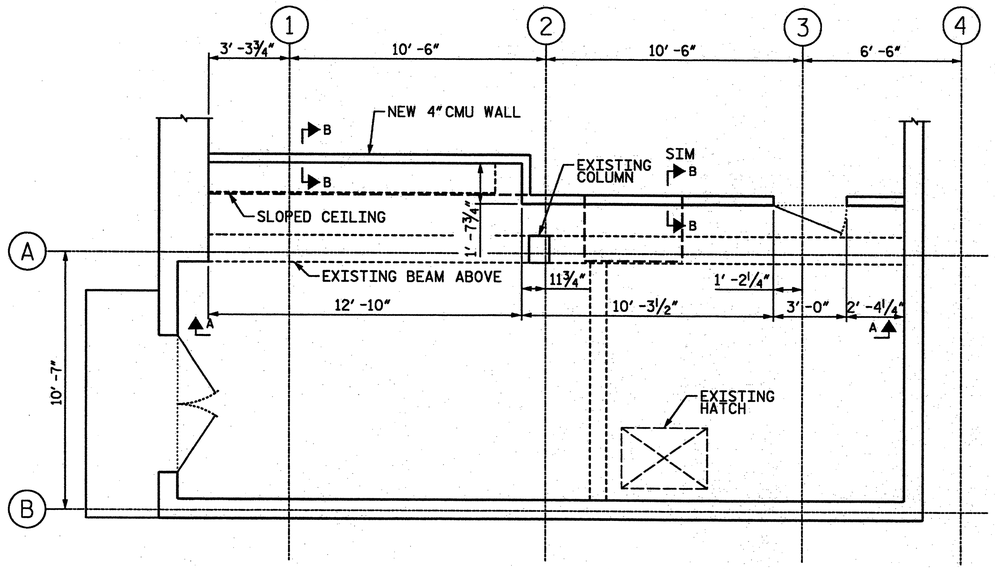

BASEMENT LEVEL WALL PLAN

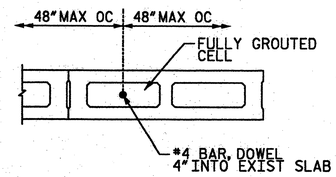

CMU DETAIL

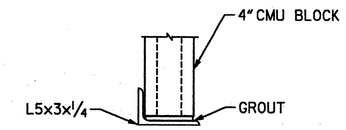

CMU LINTEL

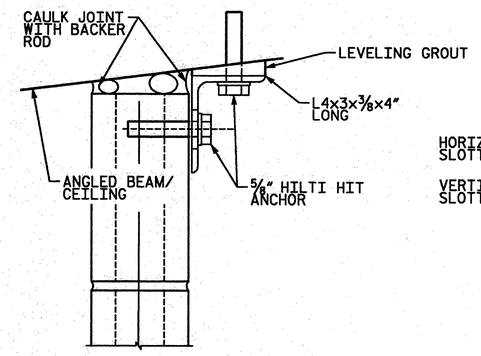

SECTION B-B

AT TOP OF WALL

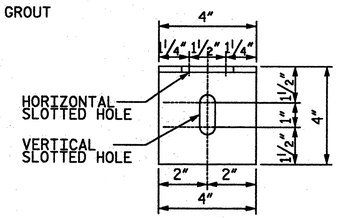

ANGLE DETAIL

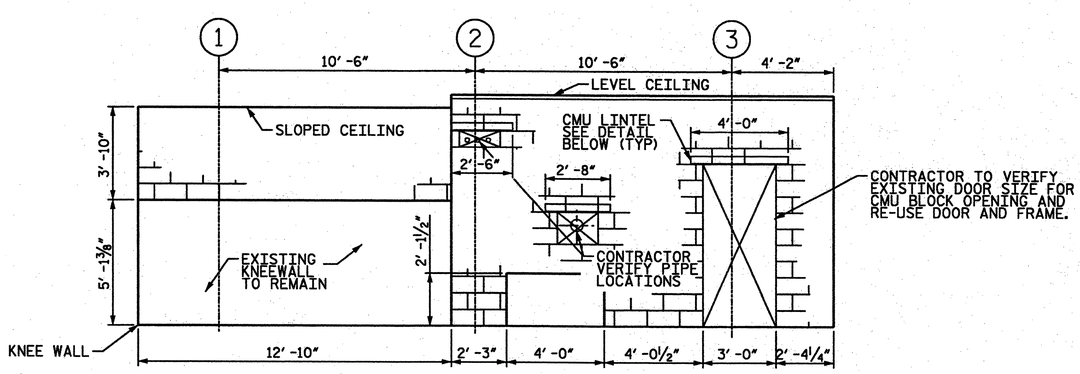

*NOTE: DIMENSIONS APPROXIMATE. CONTRACTOR TO VERIFY EXISTING CONDITIONS PRIOR TO BIDDING

ELEVATION A-A

WALL ELEVATION

SEAL

NORTH CAROLINA PROFESSIONAL SEAL 10713 ENGINEER EDWARD C. WETHERILL

6/23/11

REVISIONS

NO.	DATE	DESCRIPTION	BY

559 Jones Franklin Rd. Suite 164
Raleigh, N.C. 27606
Bus: 919 851 8077
Fax: 919 851 8107
License No. F-0377

WETHERILL ENGINEERING

TRANSPORTATION PLANNING/DESIGN - BRIDGE/STRUCTURE DESIGN
CIVIL/SITE DESIGN - GIS/GPS - CONSTRUCTION OBSERVATION

BRIDGE 12 CONTROL ROOM ADDITION

NEW HANOVER COUNTY NORTH CAROLINA

DATE:	06-07-11
SCALE:	NTS
DRAWN:	DAC
CHECKED:	EGW
PROJ. NO.:	10323
SHEET:	S-2

FILE: P:\2010\10323.06 NewHanover12\Structures\DGN\framing LVL B.dgn
MODEL: BAST STANDARD Default
PLOT DRV: STR_Full.English.Log.PLT
DATE/TIME: 6/21/2011 2:32:11 PM

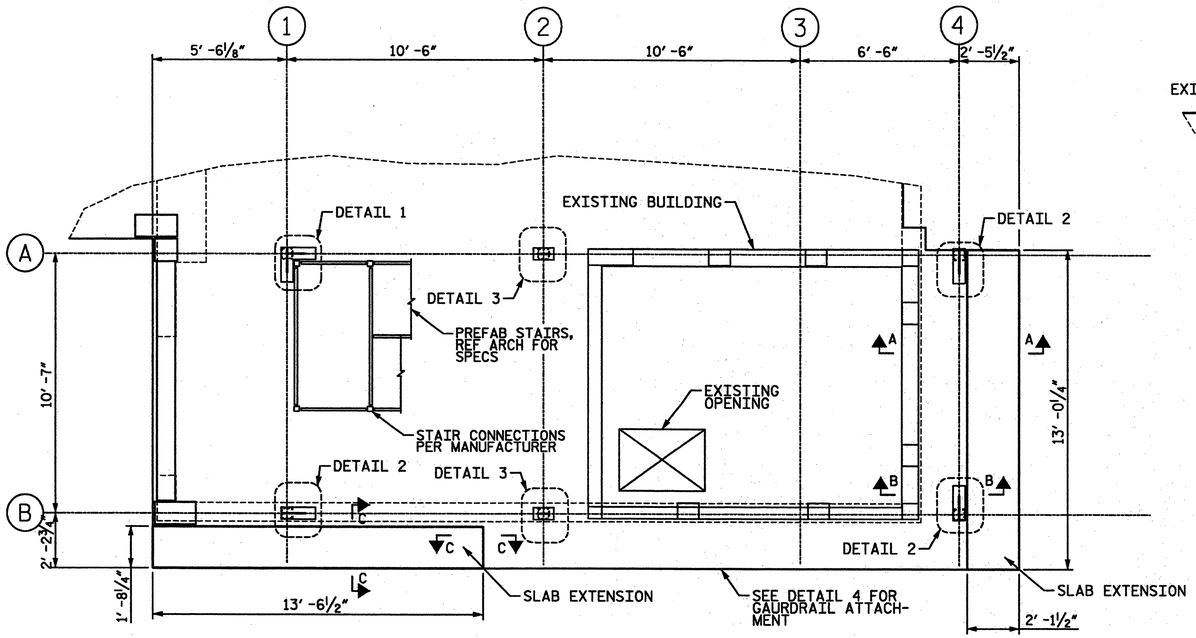

LEVEL 1 FRAMING PLAN

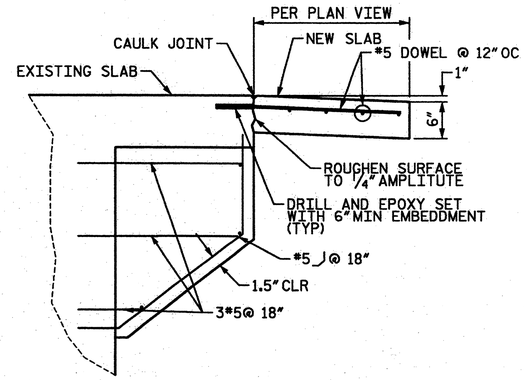

SECTION A-A

EDGE OF SLAB

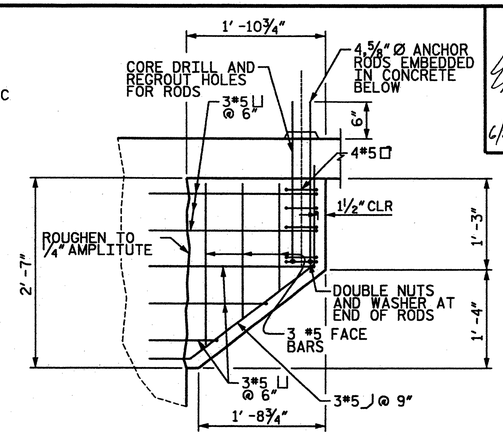

SECTION B-B

DETAIL AT COLUMNS ONLY

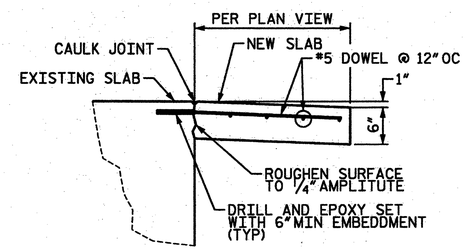

SECTION C-C

EDGE OF SLAB

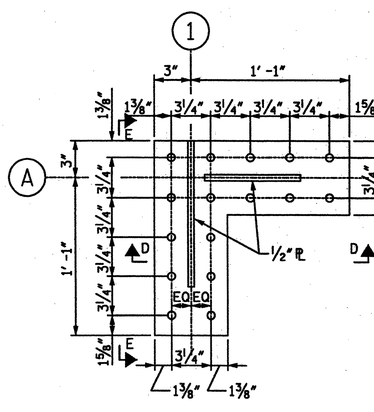

DETAIL 1

BASEPLATE DETAIL

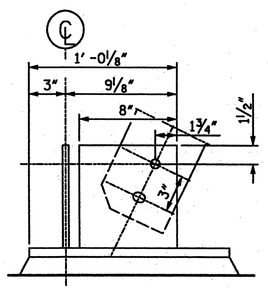

SECTION D-D

BASEPLATE SECTION

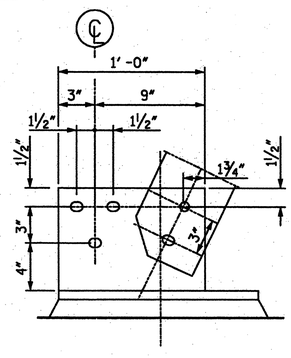

SECTION E-E

BASEPLATE SECTION

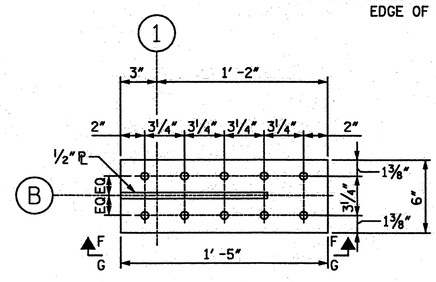

DETAIL 2

BASEPLATE DETAIL

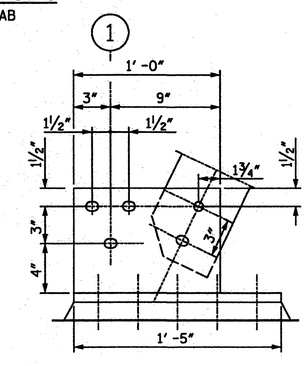

SECTION F-F

SECTION AT 1 LINE

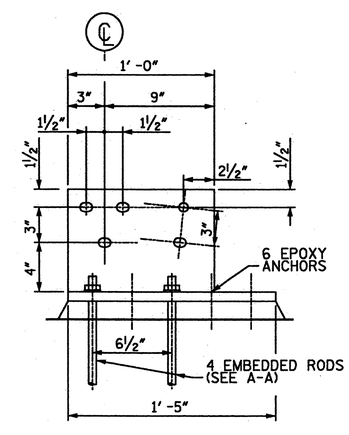

SECTION G-G

SECTION AT 4 LINE

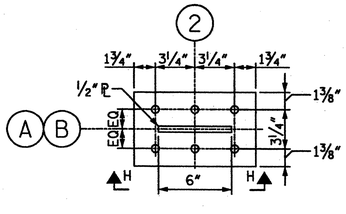

DETAIL 3

BASEPLATE DETAIL

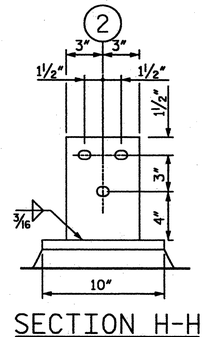

SECTION H-H

BASEPLATE SECTION

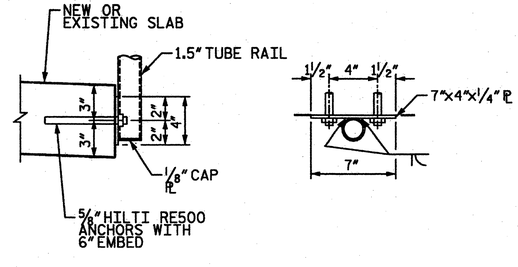

DETAIL 4

GUARDRAIL ATTACHMENT
(LEVEL 2 ATTACHMENT SIMILAR)

FILE: P:\2010\10323.06 NewHanover12\Structures\DGN\framing LVL1.dgn
MODEL: BAST STANDARD Default
PLOT DRV: STR_Full_English_Oce.PLT
DATE/TIME: 6/21/2011 2:30:30 PM

SEAL

NORTH CAROLINA PROFESSIONAL ENGINEER SEAL 10773 EDWARD G. WETHERILL
6/23/11

REVISIONS

NO.	DATE	DESCRIPTION	BY

559 Jones Franklin Rd. Suite 164
Raleigh, N.C. 27606
Bus: 919 851 8077
Fax: 919 851 8107
License No. F-0377

WETHERILL ENGINEERING

TRANSPORTATION PLANNING/DESIGN - BRIDGE/STRUCTURE DESIGN
CIVIL/SITE DESIGN - GIS/GPS - CONSTRUCTION OBSERVATION

BRIDGE 12 CONTROL ROOM ADDITION

NEW HANOVER COUNTY NORTH CAROLINA

DATE:	06-07-11
SCALE:	NTS
DRAWN:	DAC
CHECKED:	EGW
PROJ. NO.:	10323
SHEET:	S-3

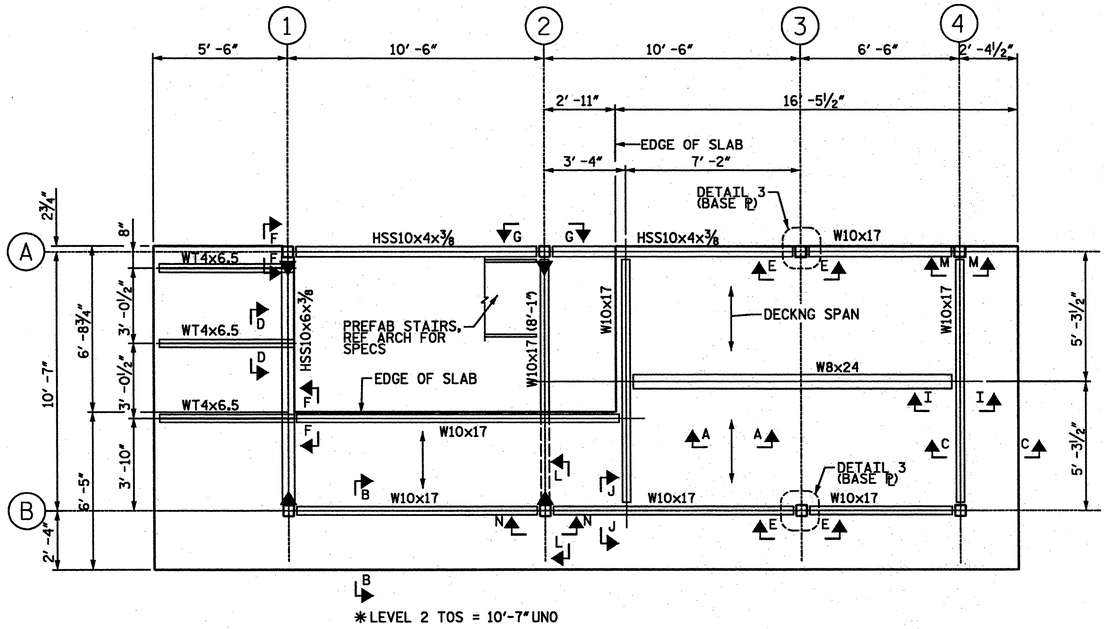

SECOND LEVEL FRAMING PLAN

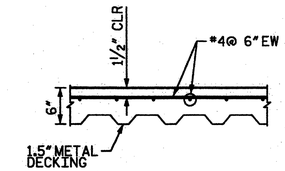

SECTION A-A
TYPICAL SLAB SECTION

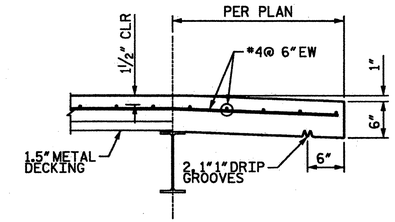

SECTION B-B
SLAB OVERHANG SECTION

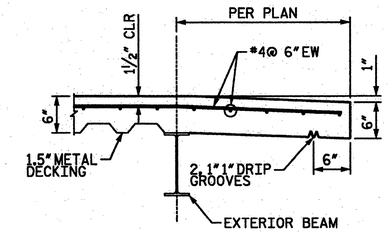

SECTION C-C
SLAB OVERHANG SECTION

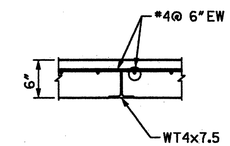

SECTION D-D
SLAB OVERHANG SECTION

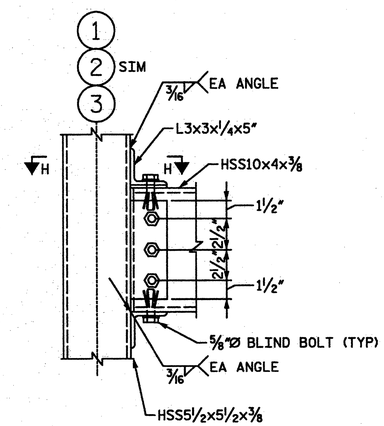

SECTION G-G
LATERAL HSS CONNECTION

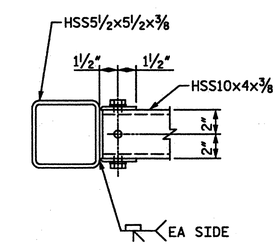

SECTION H-H
LATERAL HSS CONNECTION

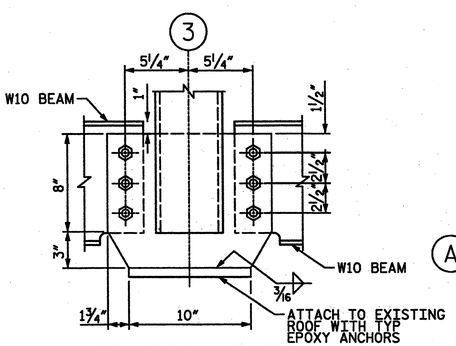

SECTION E-E
3 LINE BASEPLATE

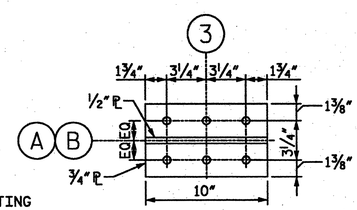

DETAIL 3
BASEPLATE DETAIL

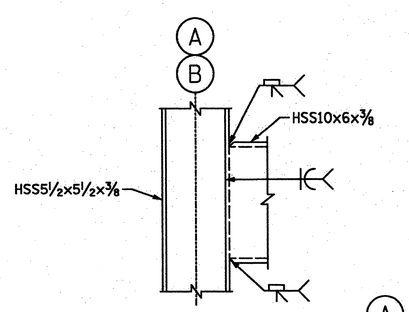

SECTION F-F
HSS MOMENT CONNECTION

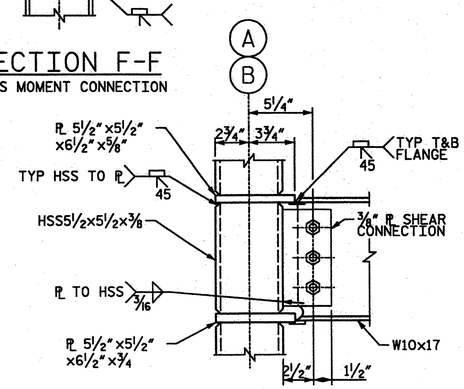

SECTION L-L
W10 MOMENT CONNECTION

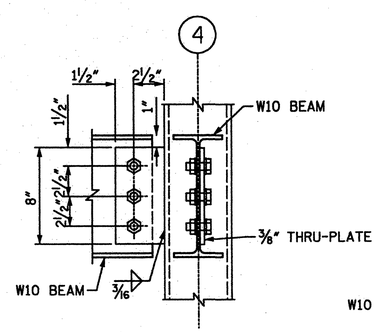

SECTION M-M
W10 TO COLUMN CONNECTION

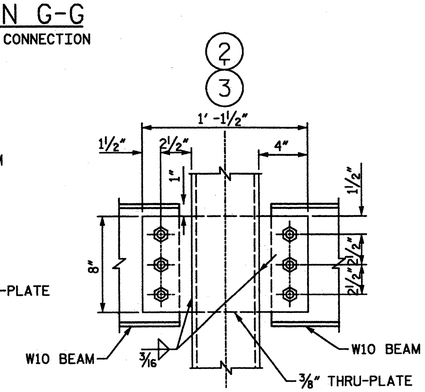

SECTION N-N
W10 TO COLUMN CONNECTION

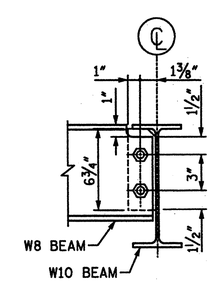

SECTION I-I
W8 TO W10 CONNECTION

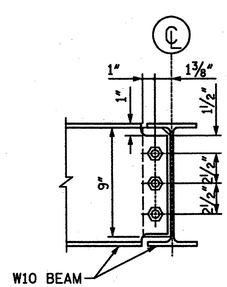

SECTION J-J
W10 TO W10 CONNECTION

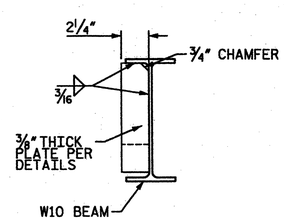

DETAIL K
TYPICAL SHEAR PLATE

FILE: P:\2010\10323.06 NewHanover12\Structures\DGN\framing LVL 2.dgn
MODEL: BAS7 STANDARD Default
PLOT DRV: STR_Full_English_Oce.PLT
DATE/TIME: 6/21/2011 2:41:08 PM

SEAL

NORTH CAROLINA PROFESSIONAL SEAL ENGINEER 6/23/11 DAVID G. WETHERILL

REVISIONS			
NO.	DATE	DESCRIPTION	BY

559 Jones Franklin Rd. Suite 164
Raleigh, N.C. 27606
Bus: 919 851 8077
Fax: 919 851 8107
License No. F-0377

WETHERILL ENGINEERING

TRANSPORTATION PLANNING/DESIGN - BRIDGE/STRUCTURE DESIGN
CIVIL/SITE DESIGN - GIS/GPS - CONSTRUCTION OBSERVATION

BRIDGE 12 CONTROL ROOM ADDITION

NEW HANOVER COUNTY NORTH CAROLINA

DATE:	06-07-11
SCALE:	NTS
DRAWN:	DAC
CHECKED:	EGW
PROJ. NO.:	10323
SHEET:	S-4

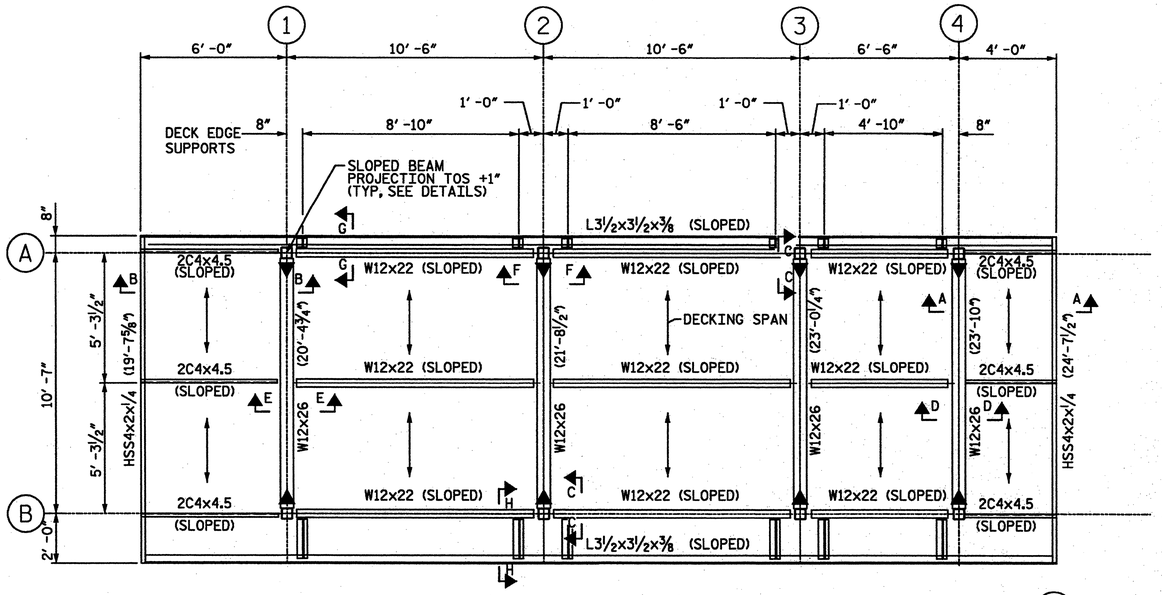

ROOF LEVEL FRAMING PLAN

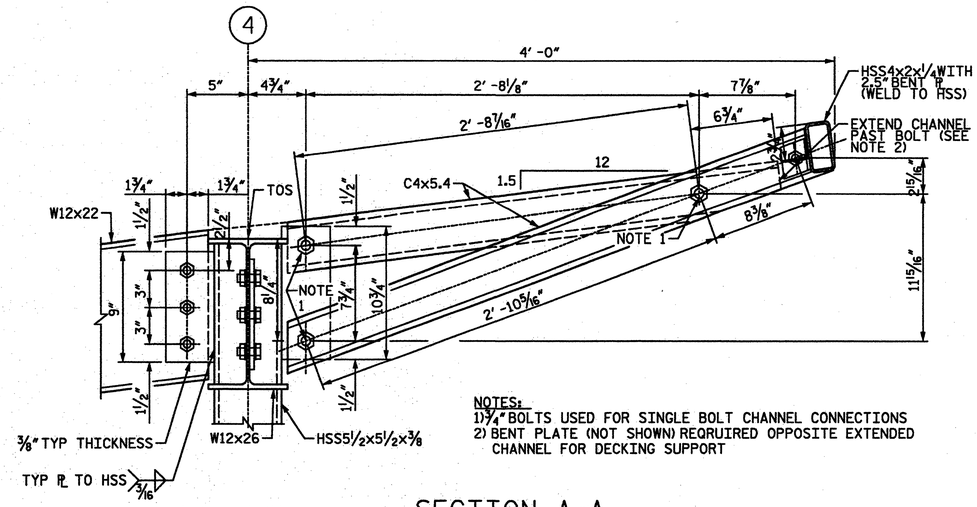

SECTION A-A
ROOF OVERHANG DETAIL

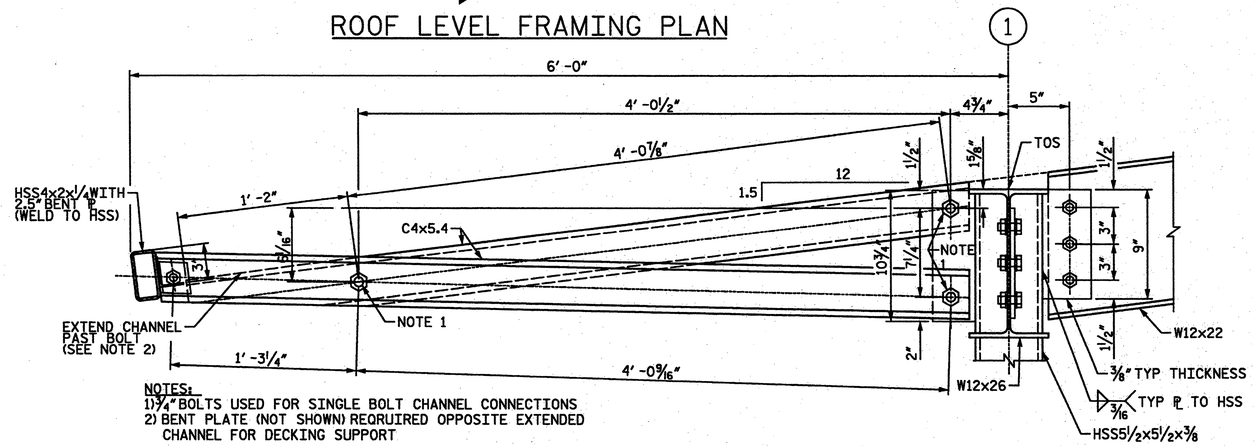

SECTION B-B
ROOF OVERHANG DETAIL

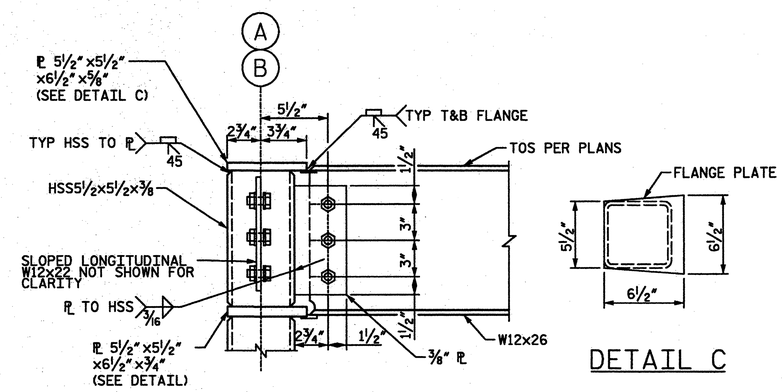

SECTION C-C
ROOF MOMENT CONNECTION

DETAIL C

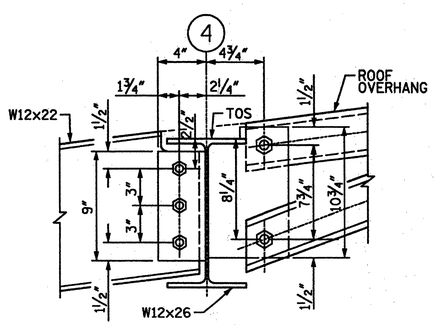

SECTION D-D
OVERHANG CONNECTION

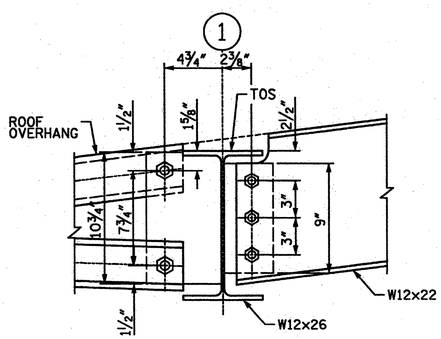

SECTION E-E
OVERHANG CONNECTION

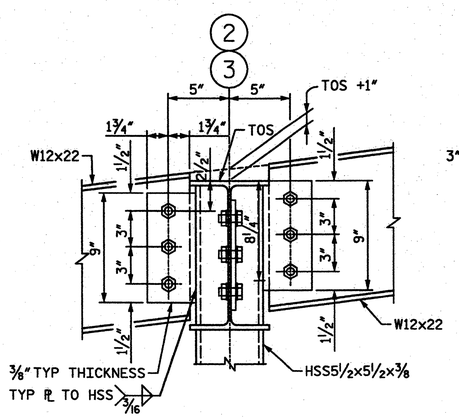

SECTION F-F
TYPICAL INTERIOR CONNECTION

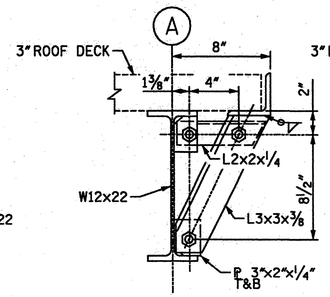

SECTION G-G
ROOF EDGE DETAIL

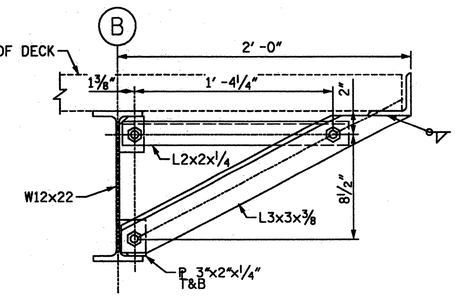

SECTION H-H
ROOF EDGE DETAIL

SEAL

REVISIONS

NO.	DATE	DESCRIPTION	BY

559 Jones Franklin Rd. Suite 164
Raleigh, N.C. 27606
Bus: 919 851 8077
Fax: 919 851 8107
License No. F-0377

ETHERILL ENGINEERING

TRANSPORTATION PLANNING/DESIGN - BRIDGE/STRUCTURE DESIGN
CIVIL/SITE DESIGN - GIS/GPS - CONSTRUCTION OBSERVATION

BRIDGE 12 CONTROL ROOM ADDITION
NEW HANOVER COUNTY NORTH CAROLINA

DATE:	06-07-11
SCALE:	NTS
DRAWN:	DAC
CHECKED:	EGW
PROJ. NO.:	10323
SHEET:	S-5

FILE: P:\2010\10323.06 NewHanover12\Structures\DGN\framing ROOF.dgn
MODEL: BAST_STANDARD_Default
PLOT DRV: STR_Full_English_Oce.PLT
DATE/TIME: 6/21/2011 2:31:21 PM

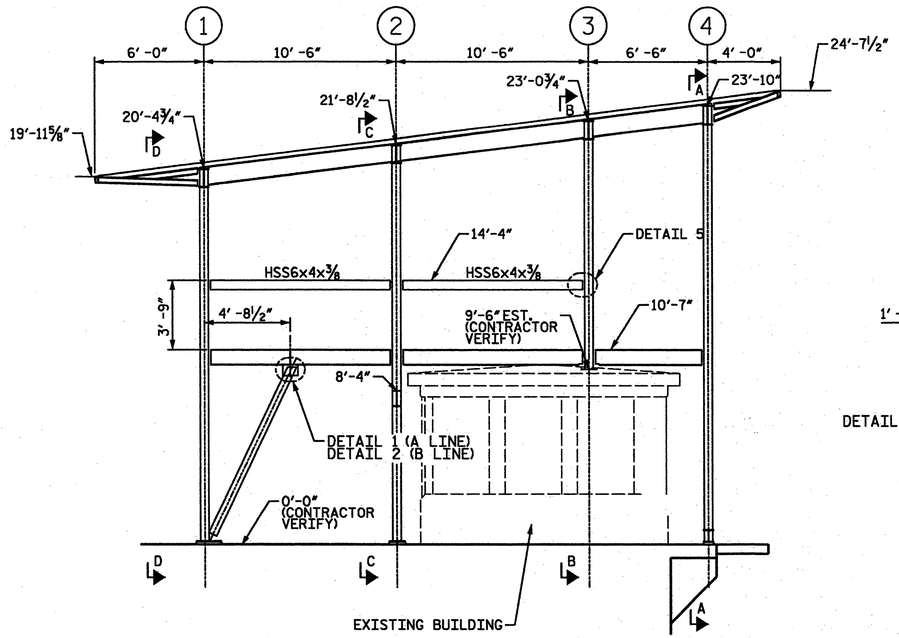

A/B LINE ELVATION

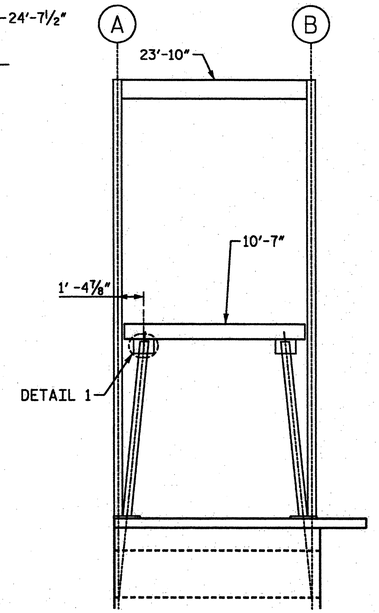

SECTION A-A
4 LINE ELEVATION

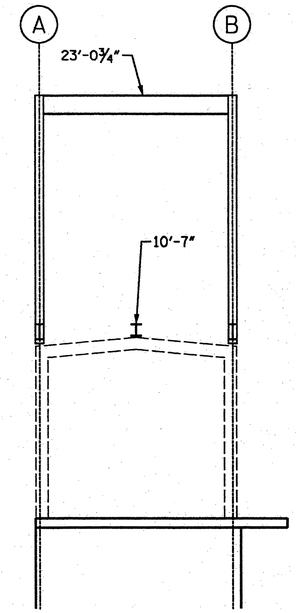

SECTION B-B
3 LINE ELEVATION

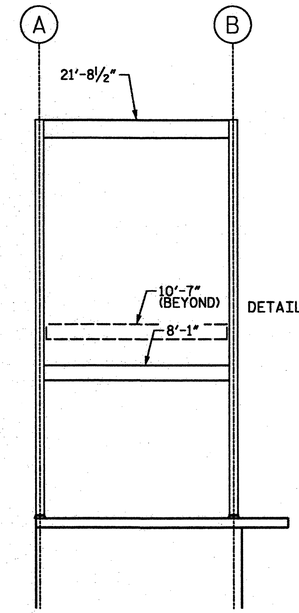

SECTION C-C
2 LINE ELEVATION

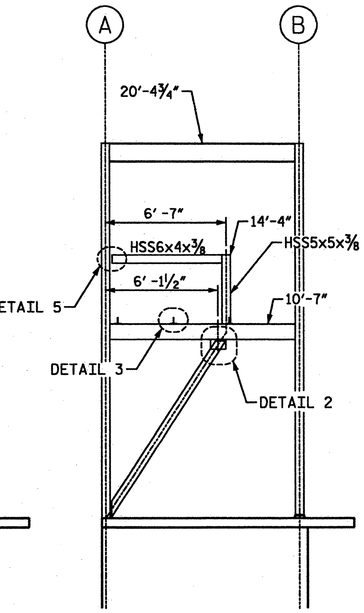

SECTION D-D
1 LINE ELEVATION

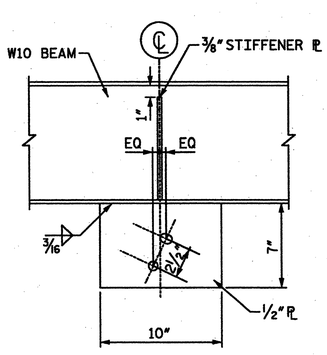

DETAIL 1
BRACE ON B/4 LINE

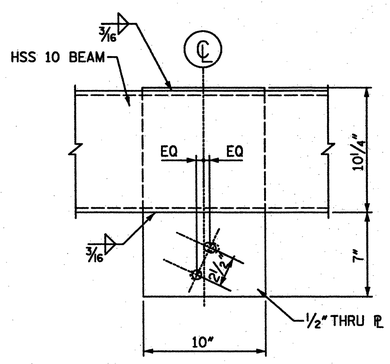

DETAIL 2
BRACE ON A/1 LINE

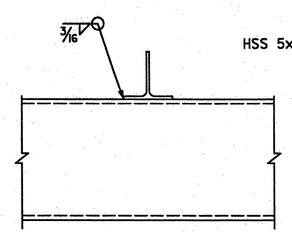

DETAIL 3
WT CONNECTION

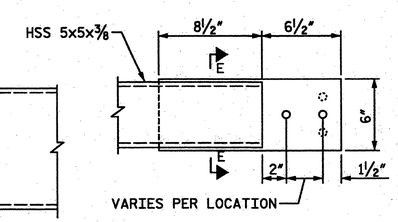

DETAIL 4
HSS END PLATE

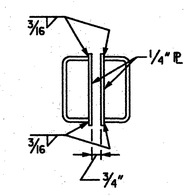

SECTION E-E
HSS END PLATE

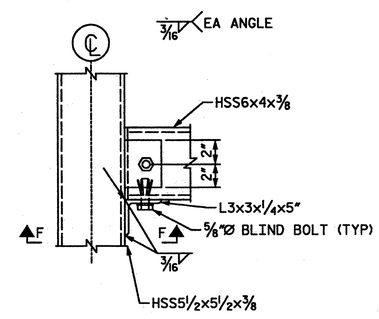

DETAIL 5
LATERAL HSS CONNECTION

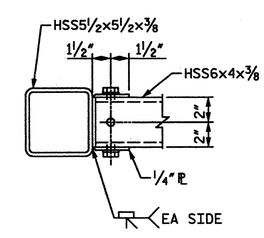

SECTION F-F
LATERAL HSS CONNECTION

NORTH CAROLINA PROFESSIONAL SEAL 10773 ENGINEER EDWARD G. WETHERILL
6/23/11
SEAL

REVISIONS

NO.	DATE	DESCRIPTION	BY

559 Jones Franklin Rd. Suite 164
Raleigh, N.C. 27606
Bus: 919 851 8077
Fax: 919 851 8107
License No. F-0377

WETHERILL ENGINEERING

TRANSPORTATION PLANNING/DESIGN - BRIDGE/STRUCTURE DESIGN
CIVIL/SITE DESIGN - GIS/GPS - CONSTRUCTION OBSERVATION

BRIDGE 12 CONTROL ROOM ADDITION

NEW HANOVER COUNTY NORTH CAROLINA

DATE:	06-07-11
SCALE:	NTS
DRAWN:	DAC
CHECKED:	EGW
PROJ. NO.:	10323
SHEET:	S-6

FILE: P:\2010\10323.06 NewHanover12\Structures\DGN\framing ELEV.dgn
MODEL: BAS7 STANDARD Default
PLOT DRV: STR_Full_English_Oce.PLT
DATE/TIME: 6/23/2011 9:33:36 AM

STATE OF NORTH CAROLINA
DIVISION OF HIGHWAYS

TRANSPORTATION MANAGEMENT PLAN

NEW HANOVER COUNTY

DIVISION 3

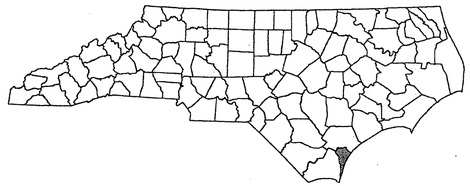

BRIDGE #12 – US 74–76 OVER INTRACOASTAL WATERWAY

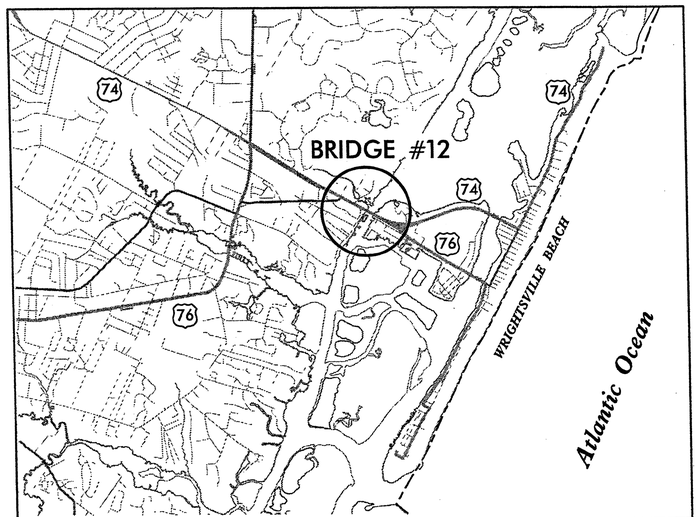

VICINITY MAP

INDEX OF SHEETS

SHEET NO.	TITLE
TMP-1	TITLE SHEET, INDEX, TRAFFIC MANAGEMENT STRATEGY
TMP-1A	LIST OF ROADWAY STANDARD DRAWINGS, LEGEND AND TEMPORARY PAVEMENT MARKING SCHEDULE
TMP-2	GENERAL NOTES
TMP-3	TRAFFIC CONTROL PHASING
TMP-4	TEMPORARY MODIFICATION OF US 74/76 INTERSECTION TO STOP SIGN CONTROL
TMP-5,5A	REMOVAL/REPLACEMENT OF EXISTING CONCRETE ISLAND
TMP-6	TEMPORARY PEDESTRIAN CROSSWALKS
TMP-7,7A	PLACEMENT OF 2-LANE, 2-WAY TRAFFIC ON US 74/76 EAST
TMP-8,8A	PLACEMENT OF 2-LANE, 2-WAY TRAFFIC ON US 74/76 WEST
TMP-9,9A	US 74-76 WESTBOUND RIGHT LANE CLOSURE DURING MODIFIED US 74-76 INTERSECTION AT SALISBURY ST.
TMP-10,10A	US 74-76 RIGHT LANE CLOSURES
TMP-11,11A	US 74-76 LEFT LANE CLOSURES

TRAFFIC MANAGEMENT STRATEGY

PROPOSED REPAIRS TO BRIDGE #12 WILL BE PERFORMED USING A COMBINATION OF DAY AND TIME RESTRICTED LANE CLOSURES, PARTIAL BRIDGE CLOSURES AND FULL BRIDGE CLOSURES. TEMPORARY SIGNALS AND TEMPORARY PEDESTRIAN DETOURS WILL BE REQUIRED. REFER TO SHEET TMP-3 FOR TRAFFIC CONTROL PHASING.

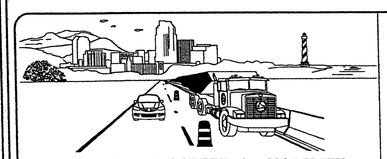

WORK ZONE SAFETY & MOBILITY
"from the MOUNTAINS to the COAST"

PLAN PREPARED FOR NCDOT BRIDGE MANAGEMENT UNIT
RALEIGH, NC

DIVISION OF HIGHWAYS · STATE OF NORTH CAROLINA · DEPARTMENT OF TRANSPORTATION · WORK ZONE TRAFFIC CONTROL

PLAN PREPARED BY:

Stantec

Stantec Consulting Services Inc.
Suite 300, 801 Jones Franklin Road
Raleigh, NC
27606
Tel. 919.851.6666
Fax. 919.851.7024
www.stantec.com

BETSY L. WATSON, P.E.
TRAFFIC ENGINEER

GEORGE KARAGEORGE
TRANSPORTATION DESIGNER

APPROVED: Betsy L. Watson
DATE: July 21, 2011

SEAL

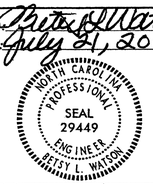

SHEET NO.
TMP-1

WBS 15B.13.19

BP-15B2

7/20/2011
U:\Traffic\TrafficControl\BP-15B2 NEW HANOVER\TCP\Plan Sheets\BP15B2_TC_TMP_01_TITLE.dgn
gkarageorge

PROJ. REFERENCE NO.	SHEET NO.
15B.13.19	TMP-1A

LEGEND

GENERAL

DIRECTION OF TRAFFIC FLOW

DIRECTION OF PEDESTRIAN TRAFFIC FLOW

WORK AREA

PAVEMENT REMOVAL

NORTH ARROW

TRAFFIC CONTROL DEVICES

BARRICADE (TYPE III)

CONE

DRUM

SKINNY DRUM

TUBULAR MARKER

FLASHING ARROW PANEL (TYPE C)

FLAGGER

LAW ENFORCEMENT

TRUCK MOUNTED IMPACT ATTENUATOR (TMIA)

CHANGEABLE MESSAGE SIGN (CMS)

PORTABLE CONCRETE BARRIER (PCB)

TEMPORARY CRASH CUSHION

TEMPORARY SIGNING

PORTABLE SIGN

STATIONARY SIGN

STATIONARY OR PORTABLE SIGN

SIGNALS

EXISTING

PROPOSED

TEMPORARY

PAVEMENT MARKINGS

EXISTING PAVEMENT MARKING (GRAY)

SKIP LINES

MINI-SKIP LINES

SOLID LINES

PAVEMENT MARKING SYMBOLS

PAVEMENT MARKING SYMBOLS

EXISTING PAVEMENT MARKING SYMBOLS (HOLLOW)

ONLY PAVEMENT MARKING ALPHANUMERIC CHARACTERS

PAVEMENT MARKERS

CRYSTAL/CRYSTAL

CRYSTAL/RED

YELLOW/YELLOW

ROADWAY STANDARD DRAWINGS

THE FOLLOWING ROADWAY STANDARDS AS APPEAR IN "ROADWAY STANDARD DRAWINGS" - PROJECT SERVICES UNIT - N.C. DEPARTMENT OF TRANSPORTATION - RALEIGH, N.C., DATED JULY 2006 ARE APPLICABLE TO THIS PROJECT AND BY REFERENCE HEREBY ARE CONSIDERED A PART OF THESE PLANS:

STD. NO.	TITLE
1101.02	TEMPORARY LANE CLOSURES
1101.04	TEMPORARY SHOULDER CLOSURES
1101.11	TRAFFIC CONTROL DESIGN TABLES
1110.01	STATIONARY WORK ZONE SIGNS
1110.02	PORTABLE WORK ZONE SIGNS
1115.01	FLASHING ARROW PANELS
1130.01	DRUMS
1135.01	CONES
1145.01	BARRICADES
1150.01	FLAGGING DEVICES
1165.01	TRUCK MOUNTED IMPACT ATTENUATOR
1180.01	SKINNY DRUMS
1205.01	PAVEMENT MARKINGS - LINE TYPES & OFFSETS
1205.02	PAVEMENT MARKINGS - 2 LANE & MULTILANE ROADWAYS
1205.04	PAVEMENT MARKINGS - INTERSECTIONS
1205.05	PAVEMENT MARKINGS - TURN LANES
1205.06	PAVEMENT MARKINGS - THRU-LANE DROPS
1205.07	PAVEMENT MARKINGS - PEDESTRIAN CROSSWALKS
1205.08	PAVEMENT MARKINGS - SYMBOLS & WORD MESSAGES
1205.09	PAVEMENT MARKINGS - PAINTED ISLANDS
1250.01	PAVEMENT MARKER SPACING
1251.01	RAISED PAVEMENT MARKERS

TEMPORARY PAVEMENT MARKING SCHEDULE

TEMPORARY PAVEMENT MARKING SCHEDULE	
SYMBOL	DESCRIPTION
COLD APPLIED PLASTIC PAVEMENT MARKING LINES, TYPE 4 (24")	
C4	WHITE STOPBAR
COLD APPLIED PLASTIC PAVEMENT MARKING LINES, TYPE 4 (4")	
CA	WHITE EDGELINE
CB	YELLOW EDGELINE
CC	10 FT. WHITE SKIP
CD	2 FT. WHITE MINISKIP
CE	WHITE SOLID LANE LINE
CI	YELLOW DOUBLE CENTER
COLD APPLIED PLASTIC PAVEMENT MARKING LINES, TYPE 4 (8")	
CR	WHITE GORELINE
CX	WHITE CROSSWALK LINE
COLD APPLIED PLASTIC PAVEMENT MARKING SYMBOLS, TYPE 4	
DB	RIGHT TURN ARROW
COLD APPLIED PLASTIC PAVEMENT MARKING CHARACTERS, TYPE 4	
DI	ALPHANUMERIC CHARACTERS
PAINT PAVEMENT MARKING LINES, (4")	
PC	10 FT. WHITE SKIP
PI	YELLOW DOUBLE CENTER
TEMPORARY PAVEMENT MARKERS	
MH	YELLOW & YELLOW, TEMPORARY RAISED PAVEMENT MARKERS
MI	CRYSTAL & RED, TEMPORARY RAISED PAVEMENT MARKERS

Stantec

Stantec Consulting Services Inc.
801 Jones Franklin Road
Suite 300
Raleigh, NC 27606
Tel. (919) 851-6866
Fax. (919) 851-7024
www.stantec.com
License No. F-0672

APPROVED: _____ DATE: _____

SEAL

NORTH CAROLINA PROFESSIONAL SEAL 024449 ENGINEER BETSY L. WATSON

7/21/11

DIVISION OF HIGHWAYS * STATE OF NORTH CAROLINA * DEPARTMENT OF TRANSPORTATION * WORK ZONE TRAFFIC CONTROL

LEGEND

ROADWAY STANDARD DRAWINGS

TEMPORARY PAVEMENT MARKING SCHEDULE

7/20/2011
U:\Traffic\TrafficControl\BP-15B2 NEW HANOVER\TCP\Plan Sheets\BP15B2_TC_TMP_01A_RDWYSTDSLEGEND.dgn
gkarggeorge

PROJ. REFERENCE NO.	SHEET NO.
15B.13.19	TMP-2

GENERAL NOTES

THE FOLLOWING GENERAL NOTES APPLY AT ALL TIMES FOR THE DURATION OF THE PROJECT EXCEPT WHEN OTHERWISE NOTED IN THE PLAN OR DIRECTED BY THE ENGINEER.

CHANGES MAY BE REQUIRED WHEN PHYSICAL DIMENSIONS IN THE DETAIL DRAWINGS, STANDARD DETAILS, AND ROADWAY DETAILS ARE NOT ATTAINABLE TO MEET FIELD CONDITIONS OR RESULT IN DUPLICATE OR UNDESIRED OVERLAPPING OF DEVICES. MODIFICATION MAY INCLUDE: MOVING, SUPPLEMENTING, COVERING, OR REMOVAL OF DEVICES AS DIRECTED BY THE ENGINEER.

LANE CLOSURE TIME RESTRICTIONS

A) DO NOT CLOSE OR NARROW TRAVEL LANES AS FOLLOWS:

BETWEEN MARCH 15 AND OCTOBER 1

ROAD NAME	DAY AND TIME RESTRICTIONS
ALL ROADS	7:00 A.M.-9:00 A.M. AND 3:00 P.M.-6:00 P.M. MON-THURS AND 7:00 A.M. FRIDAY-6:00 P.M. SUNDAY

HOLIDAY & HOLIDAY WEEKEND LANE CLOSURE TIME RESTRICTIONS

B) DO NOT CLOSE OR NARROW TRAVEL LANES DURING HOLIDAYS AND HOLIDAY WEEKENDS AS FOLLOWS:

ROAD NAME
ALL ROADS

1) FOR ANY UNEXPECTED OCCURRENCE THAT CREATES UNUSUALLY HIGH TRAFFIC VOLUMES, AS DIRECTED BY THE ENGINEER.

2) FOR EASTER, BETWEEN THE HOURS OF 6:00 A.M. THURSDAY AND 7:00 P.M. MONDAY.

3) FOR MEMORIAL DAY, BETWEEN THE HOURS OF 6:00 A.M. FRIDAY TO 7:00 P.M. TUESDAY.

4) FOR INDEPENDENCE DAY, BETWEEN THE HOURS OF 6:00 A.M. THE DAY BEFORE INDEPENDENCE DAY AND 7:00 P.M. THE DAY AFTER INDEPENDENCE DAY. IF INDEPENDENCE DAY IS ON A FRIDAY, SATURDAY, SUNDAY OR MONDAY; THEN BETWEEN THE HOURS OF 6:00 A.M. THE THURSDAY BEFORE INDEPENDENCE DAY AND 7:00 P.M. THE TUESDAY AFTER INDEPENDENCE DAY.

5) FOR LABOR DAY, BETWEEN THE HOURS OF 6:00 A.M. FRIDAY AND 7:00 P.M. TUESDAY.

C) DO NOT CLOSE ROADS AS FOLLOWS:

PARTIAL BRIDGE CLOSURES (ALLOWED OCTOBER 1 - MARCH 15)

PARTIAL BRIDGE CLOSURES ARE DEFINED AS CLOSING ONE HALF OF THE BRIDGE WHILE MAINTAINING 2-LANE, 2-WAY TRAFFIC ON THE OTHER HALF OF THE BRIDGE AS SHOWN ON SHEETS TMP-7, 7A, 8, AND 8A.

DO NOT IMPLEMENT ANY PARTIAL BRIDGE CLOSURES AND DO NOT PLACE TRAFFIC IN A 2-LANE, 2-WAY PATTERN, FROM MARCH 15 THRU OCTOBER 1.

DO NOT IMPLEMENT THE "STOP CONTROL" MODIFICATION OF US 74-76 W. SALISBURY INTERSECTION (SHEET TMP-4) FROM MARCH 15 THRU OCTOBER 1.

DO NOT PLACE TRAFFIC IN A 1-LANE, 2-WAY PATTERN, FROM MARCH 15 THRU OCTOBER 1.

FROM OCTOBER 1 THRU MARCH 15, DO NOT PLACE TRAFFIC IN A 1-LANE, 2-WAY PATTERN AS FOLLOWS:

1) 5:00 A.M.-11:30 P.M. EVERYDAY

2) FOR THANKSGIVING WEEKEND INCLUDING THE HOLIDAY FLOTILLA, BETWEEN THE HOURS OF 5:00 A.M. TUESDAY TO 11:30 P.M. MONDAY.

3) FOR CHRISTMAS, BETWEEN THE HOURS OF 5:00 A.M. THE FRIDAY BEFORE THE WEEK OF CHRISTMAS DAY AND 11:30 P.M. THE FOLLOWING TUESDAY AFTER THE WEEK OF CHRISTMAS.

4) FOR NEW YEAR'S, BETWEEN THE HOURS OF 5:00 A.M. DECEMBER 31st TO 11:30 P.M. JANUARY 2nd. IF NEW YEAR'S DAY IS ON A FRIDAY, SATURDAY, SUNDAY, OR MONDAY THEN UNTIL 11:30 P.M. THE FOLLOWING TUESDAY.

5) FOR SPECIAL EVENTS, INCLUDING THE FLOTILLA 5K RUN AND BEACH-TO-BATTLESHIP TRIATHLON, FROM 5:00 A.M. THURSDAY TO 11:30 P.M. MONDAY OR AS DIRECTED BY THE ENGINEER.

FULL BRIDGE CLOSURES (12 PERIODS ALLOWED OCTOBER 1 - MARCH 15)

FULL BRIDGE CLOSURES ARE DEFINED AS COMPLETELY CLOSING THE BRIDGE TO TRAFFIC FOR BRIDGE WORK, WITH NO TRAFFIC BEING ABLE OR ALLOWED TO CROSS THE BRIDGE.

TWELVE (12) FULL BRIDGE CLOSURE PERIODS WILL BE ALLOWED.

DO NOT IMPLEMENT ANY FULL BRIDGE CLOSURES FROM MARCH 15 THRU OCTOBER 1.

FROM OCTOBER 1 THRU MARCH 15, DO NOT IMPLEMENT FULL BRIDGE CLOSURES AS FOLLOWS:

1) 5:00 A.M.-11:30 P.M. MONDAY-WEDNESDAY

2) 5:00 A.M. THURSDAY-11:30 P.M. SUNDAY

PROVIDE A MINIMUM OF A TWO WEEK NOTICE TO THE ENGINEER AND TO THE TOWN OF WRIGHTSVILLE BEACH PRIOR TO IMPLEMENTING A FULL BRIDGE CLOSURE.

LANE AND SHOULDER CLOSURE REQUIREMENTS

D) LANE CLOSURES ARE REQUIRED WHEN PERSONNEL AND/OR EQUIPMENT ARE WORKING WITHIN ANY PORTION OF A TRAVEL LANE. CONDUCT THE WORK SO THAT ALL PERSONNEL AND/OR EQUIPMENT REMAIN WITHIN THE CLOSED TRAVEL LANE.

E) INSTALL ALL LANE CLOSURES ACCORDING TO THE PLANS, ROADWAY STANDARD DRAWINGS (1101.02), OR AS DIRECTED BY THE ENGINEER.

F) REMOVE LANE CLOSURE DEVICES FROM THE LANE WHEN WORK IS NOT BEING PERFORMED BEHIND THE LANE CLOSURE OR WHEN A LANE CLOSURE IS NO LONGER NEEDED OR AS DIRECTED BY THE ENGINEER.

G) INSTALL LANE CLOSURES WITH THE TRAFFIC FLOW, BEGINNING WITH DEVICES ON THE UPSTREAM SIDE OF TRAFFIC. REMOVE LANE CLOSURES AGAINST THE TRAFFIC FLOW, BEGINNING WITH DEVICES ON THE DOWNSTREAM SIDE OF TRAFFIC.

H) WHEN PERSONNEL AND/OR EQUIPMENT ARE WORKING WITHIN 15 FT OF AN OPEN TRAVEL LANE, CLOSE THE NEAREST OPEN SHOULDER USING ROADWAY STANDARD DRAWING NO. 1101.04 UNLESS THE WORK AREA IS PROTECTED BY BARRIER OR GUARDRAIL OR A LANE CLOSURE IS INSTALLED.

I) WHEN PERSONNEL AND/OR EQUIPMENT ARE WORKING ON THE SHOULDER AND WITHIN 5 FT OF AN OPEN TRAVEL LANE, CLOSE THE NEAREST OPEN TRAVEL LANE UNLESS THE WORK AREA IS PROTECTED BY BARRIER OR GUARDRAIL.

PAVEMENT MARKINGS AND MARKERS

J) DURING INTERIM TEMPORARY TRAFFIC PATTERNS USE REMOVABLE TAPE PAVEMENT MARKINGS AND TEMPORARY RAISED PAVEMENT MARKERS. FOR FINAL OR INTERIM PAVEMENT MARKING ON THE BRIDGE METAL GRID DECK, USE PAINT UNLESS OTHERWISE DIRECTED BY THE ENGINEER.

K) DURING INTERIM TEMPORARY TRAFFIC PATTERNS REMOVE ANY CONFLICTING PAVEMENT MARKINGS AND PAVEMENT MARKERS. NOTE ALL LOCATIONS OF EXISTING PAVEMENT MARKINGS PRIOR TO REMOVAL SUCH THAT THEY WILL BE REPLACED IN THE SAME MANNER UPON COMPLETION OF THE BRIDGE WORK.

L) UPON COMPLETION OF ALL CONSTRUCTION OPERATIONS REPLACE ALL PAVEMENT MARKINGS AND MARKERS IN THE SAME LOCATION AS WAS EXISTING PRIOR TO WORK BEGINNING. USE POLYUREA MARKINGS ON THE BRIDGE AND THERMOPLASTIC MARKINGS ON THE ASPHALT PAVEMENT.

TRAFFIC SIGNALS AND GATES

M) FURNISH AND INSTALL TEMPORARY TRAFFIC SIGNALS AS SHOWN IN THE PLANS. COORDINATE TEMPORARY TRAFFIC SIGNAL INSTALLATION AND OPERATION WITH THE NCDOT SIGNAL DESIGN UNIT AND THE ENGINEER.

N) FURNISH AND INSTALL TEMPORARY BRIDGE GATES AND ENSURE GATE LIGHTS AND REFLECTORIZATION ARE PROVIDED ON THE PROPER SIDE OF THE GATE DURING INTERIM TRAFFIC PATTERNS.

MISCELLANEOUS

O) FOR LANE CLOSURES AND TEMPORARY TRAFFIC PATTERNS FOR WHICH DRUMS ARE REQUIRED ON THE BRIDGE DECK, EITHER TEMPORARILY ATTACH (WIRE) DRUMS TO GRID DECK OR REMOVE AND LATER RESET DRUMS FOR EACH BRIDGE OPERATION.

P) LAW ENFORCEMENT MAY BE USED TO MAINTAIN TRAFFIC THROUGH THE WORK AREA AND/OR INTERSECTIONS AS DIRECTED BY THE ENGINEER.

Q) ALL DIMENSIONS AND STATIONS IN THE TRAFFIC MANAGEMENT PLAN AND PHASING ARE APPROXIMATE (+/-); FIELD ADJUST AS NECESSARY OR AS DIRECTED BY THE ENGINEER.

R) ENSURE THE OVERSIZE/OVERWEIGHT PERMIT UNIT (919) 733-4740 HAS BEEN ADVISED OF THE ONGOING TRAFFIC OPERATIONS THROUGH THE DIVISION OFFICE.

Stantec
Stantec Consulting Services Inc.
801 Jones Franklin Road
Suite 300
Raleigh, NC 27606
Tel. (919) 851-6866
Fax. (919) 851-7024
www.stantec.com
License No. F-0672

APPROVED:_____ DATE:_____

SEAL

NORTH CAROLINA PROFESSIONAL SEAL 019449 ENGINEER BETSY L. WATSON

7/21/11

DIVISION OF HIGHWAYS * STATE OF NORTH CAROLINA * DEPARTMENT OF TRANSPORTATION * WORK ZONE TRAFFIC CONTROL

GENERAL NOTES

7/21/2011
U:\Traffic\TrafficControl\BP-15B2 NEW HANOVER\TCP\Plan Sheets\BP15B2_TC_TMP_02_ GENERALNOTESMASTER.dgn
gkarcagel.ge

PROJ. REFERENCE NO.	SHEET NO.
15B.13.19	TMP-3

TRAFFIC CONTROL PHASING

MAINTAIN TRAFFIC DURING WORK ON BRIDGE #12 AS OUTLINED BELOW:

MODIFICATION OF US 74-76 WEST (W.SALISBURY ST.) INTERSECTION (TMP-4)

REVISE EXISTING GORE PAVEMENT MARKING TO MINI-SKIP MARKING. INSTALL STOP AHEAD SIGNS FIRST; THEN INSTALL STOP SIGNS AND STOP BAR AS SHOWN ON SHEET TMP-4. COVER EXISTING CONFLICTING SIGNS.

REMOVAL AND REPLACEMENT OF EXISTING CONCRETE ISLAND (TMP-5,5A)

PRIOR TO REMOVING THE SECTION OF EXISTING CONCRETE ISLAND, MODIFY THE INTERSECTION OF US 74-76 W. SALISBURY ST. TO A STOP PATTERN AS SHOWN ON SHEET TMP-4.

DURING REMOVAL OF THE CONCRETE ISLAND USE LEFT LANE CLOSURES ON US 74-76. REMOVE A SECTION OF THE EXISTING CONCRETE ISLAND AND REPAIR THE PAVEMENT WHERE THE ISLAND WAS REMOVED. PLACE DRUMS ALONG THE SECTION OF REMOVED ISLAND UNTIL IT WILL BE USED AS A TEMPORARY CROSSOVER WHEN TRAFFIC IS PLACED IN A 2-LANE, 2-WAY PATTERN DURING PARTIAL BRIDGE CLOSURES.IF ISLAND REMOVAL OCCURS MORE THAN 15 CALENDAR DAYS PRIOR TO IMPLEMENTATION OF THE CROSS OVER PATTERN, USE WATER-FILLED BARRIER INSTEAD OF DRUMS.

REPLACE THE CONCRETE ISLAND WHEN PARTIAL BRIDGE CLOSURES WILL NOT BE USED ANY MORE.

TEMPORARY PEDESTRIAN CROSSWALKS (TMP-6)

TWO TEMPORARY PEDESTRIAN CROSSWALK WILL BE USED DURING THIS PROJECT TO DETOUR PEDESTRIAN TRAFFIC FROM ONE SIDE OF THE BRIDGE TO THE OTHER DURING LANE CLOSURES AND INTERIM TRAFFIC PATTERNS WHERE THE BRIDGE SIDEWALKS REQUIRE CLOSING TO PEDESTRIANS.

THE CROSSWALKS SHOULD BE INSTALLED AS A FIRST ORDER OF WORK SINCE THEY WILL BE REQUIRED DURING LANE CLOSURES. FOR THE CROSSWALK ON THE EAST SIDE OF THE BRIDGE, REMOVE THE EXISTING CONC. ISLAND BEFORE INSTALLING THE CROSSWALK.

INSTALL PEDESTRIAN CROSSING SIGNS AND PAVEMENT MARKINGS FOR THE TEMPORARY CROSSWALKS AS SHOWN ON SHEET TMP-6. REMOVE THE EXISTING STOP BAR FOR THE WESTBOUND APPROACH AND RELOCATE ON THE APPROACH SIDE OF THE CROSSWALK AS SHOWN.

THE TEMPORARY CROSSWALKS MAY STAY IN PLACE DURING THE DURATION OF THE PROJECT AND REMOVED WHEN NO LONGER REQUIRED FOR PEDESTRIAN DETOURS.

USE RIGHT AND LEFT LANE CLOSURES AS SHOWN ON SHEETS TMP-10,10A,11,11A TO INSTALL CROSSWALK PAVEMENT MARKINGS.

PARTIAL BRIDGE CLOSURES (ALLOWED OCTOBER 1 - MARCH 15) (TMP-7,7A,8, AND 8A)

REFER TO SHEET TMP-2 FOR DAY AND TIME RESTRICTIONS FOR PARTIAL BRIDGE CLOSURES.

PRIOR TO ANY PARTIAL BRIDGE CLOSURE THE FOLLOWING MUST BE COMPLETED IN THIS ORDER:

1. MODIFICATION OF W. SALISBURY ST. INTERSECTION (TMP-4)
2. REMOVAL OF EXISTING CONCRETE ISLAND SECTION (TMP-5,5A)
3. TEMPORARY PEDESTRIAN CROSSWALKS (TMP-6)
4. TEMPORARY SIGNAL DURING CLOSURE OF WESTBOUND HALF(TMP-7, 7A)

PARTIAL CLOSURE-WESTBOUND SIDE (TMP-7,7A)

PLACE US 74-76 TRAFFIC ON EASTBOUND HALF OF BRIDGE IN A 2-LANE, 2-WAY PATTERN AND CLOSE WESTBOUND HALF OF BRIDGE.

PARTIAL CLOSURE-EASTBOUND SIDE (TMP-8,8A)

PLACE US 74-76 TRAFFIC ON WESTBOUND HALF OF BRIDGE IN A 2-LANE, 2-WAY PATTERN AND CLOSE EASTBOUND HALF OF BRIDGE.

ONCE TRAFFIC IS PLACED ON ONE SIDE OF THE BRIDGE, PURSUE AS MUCH AS POSSIBLE OF THE WORK ON THE OTHER SIDE IN ORDER TO MINIMIZE ANY ADDITIONAL TRAFFIC CONTROL MEASURES.

TEMPORARY PEDESTRIAN CROSSWALKS MAY STAY IN PLACE AT ALL TIMES DURING THE PROJECT. REMOVE CROSSWALKS WHEN NO LONGER NEEDED.

IN THE EVENT THAT PARTIAL BRIDGE CLOSURES WILL BE NEEDED IN 2011 AND 2012, THE REMOVED SECTION OF CONCRETE ISLAND SHOULD NOT BE REMOVED AND REPLACED TWICE. USE TEMPORARY PAVEMENT MARKINGS SUCH AS PAINT OR COLD APPLIED PLASTIC IN PLACE OF ISLAND WHEN TRAFFIC IS NOT BEING CROSSED OVER, UNTIL THE ISLAND IS REPLACED. A TEMPORARY CURB SYSTEM MAY ALSO BE USED UPON APPROVAL BY THE ENGINEER.

FULL BRIDGE CLOSURES (12 PERIODS ALLOWED OCTOBER 1 - MARCH 15)

REFER TO SHEET TMP-2 FOR DAY AND TIME RESTRICTIONS FOR FULL BRIDGE CLOSURES.

DURING FULL BRIDGE CLOSURES, STOP TRAFFIC ON EACH SIDE OF THE BRIDGE USING THE TRAFFIC SIGNAL AND GATE SYSTEM IN PLACE. IN ADDITION, USE LAW ENFORCEMENT ON BOTH SIDES OF THE BRIDGE DURING THE CLOSURE. PRIOR TO THE BRIDGE CLOSURE USE CHANGEABLE MESSAGE SIGNS TO GIVE THE PUBLIC ADVANCE NOTICE OF WHEN THE BRIDGE WILL BE CLOSING.

MAKE PROVISIONS FOR PASSAGE OF EMERGENCY VEHICLES.

LANE CLOSURES (TMP-9,9A,10,10A,11,11A)

FOR RIGHT LANE CLOSURES ON US 74-76 WESTBOUND DURING MODIFIED US 74-76 INTERSECTION AT SALISBURY ST., SEE SHEETS TMP-9,9A

FOR RIGHT LANE CLOSURES ON US 74-76, SEE SHEETS TMP-10,10A

FOR LEFT LANE CLOSURES ON US 74-76, SEE SHEETS TMP-11,11A

TRAFFIC SIGNAL OR GATE OUTAGES

WHEN TRAFFIC SIGNALS OR GATES ARE NOT OPERATIONAL, USE LAW ENFORCEMENT, TEMPORARY SIGNALS, OR OTHER METHODS APPROVED BY THE ENGINEER TO ENSURE TRAFFIC STOPS PROPERLY AND IN A SAFE MANNER WHEN THE BRIDGE IS RAISED.

Stantec
Stantec Consulting Services Inc.
801 Jones Franklin Road
Suite 300
Raleigh, NC 27606
Tel. (919) 851-6866
Fax. (919) 851-7024
www.stantec.com
License No. F-0672

APPROVED:_____ DATE:_____

SEAL

NORTH CAROLINA PROFESSIONAL SEAL 19449 ENGINEER BETSY L. WATSON

7/21/11

DIVISION OF HIGHWAYS STATE OF NORTH CAROLINA DEPARTMENT OF TRANSPORTATION WORK ZONE TRAFFIC CONTROL

TRAFFIC CONTROL PHASING

7/20/2011
U:\Traffic\TrafficControl\BP-1582 NEW HANOVER\TCP\Plan Sheets\BP1582_TC_TMP_03_PHASING.dgn
akarageorge

PROJ. REFERENCE NO.	SHEET NO.
15B.13.19	TMP-4

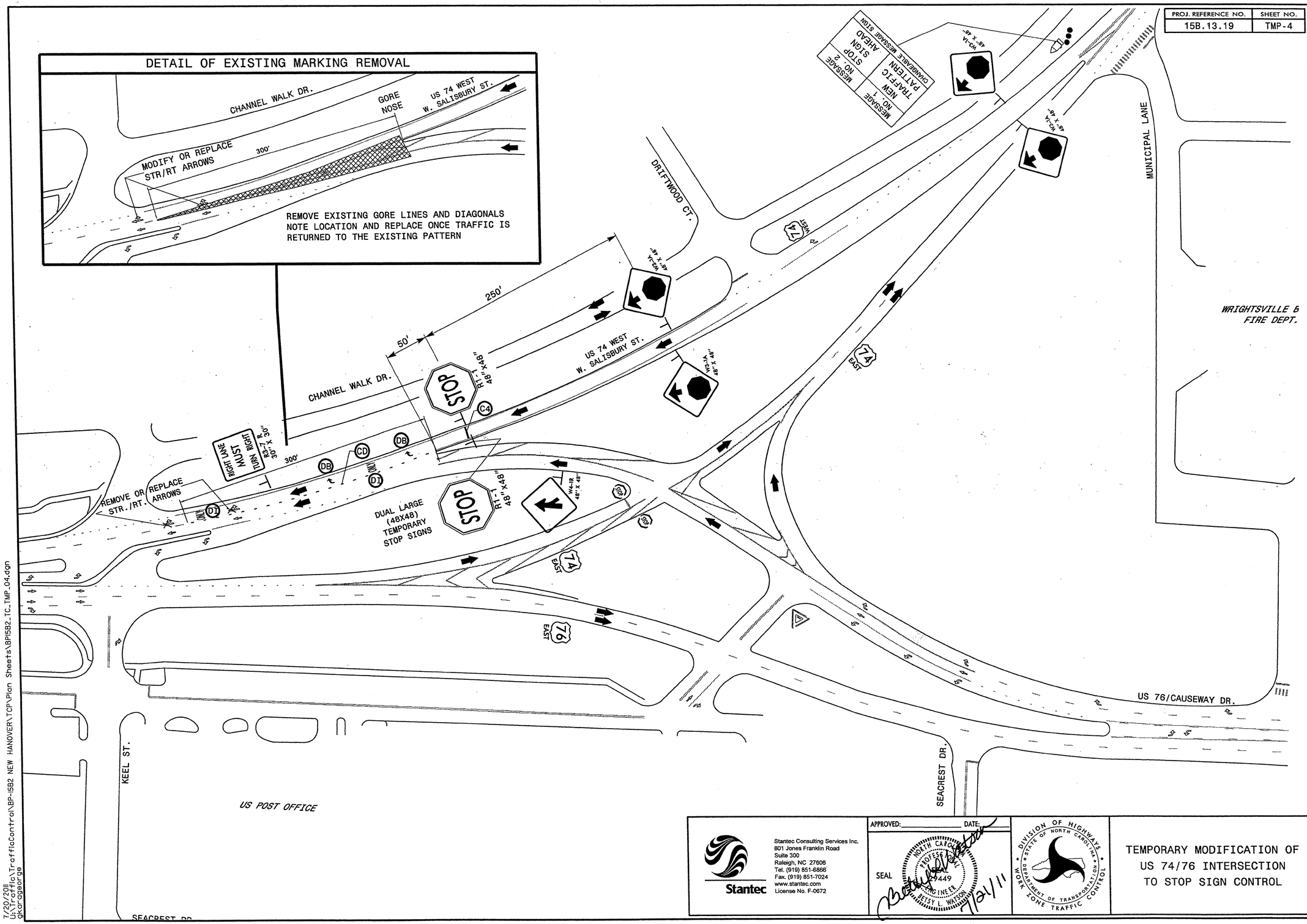

Stantec

Stantec Consulting Services Inc.
801 Jones Franklin Road
Suite 300
Raleigh, NC 27606
Tel. (919) 851-6866
Fax. (919) 851-7024
www.stantec.com
License No. F-0672

APPROVED: _____ DATE: _____

SEAL

NORTH CAROLINA PROFESSIONAL SEAL 29449 ENGINEER BETSY L. WATSON

7/21/11

DIVISION OF HIGHWAYS STATE OF NORTH CAROLINA DEPARTMENT OF TRANSPORTATION WORK ZONE TRAFFIC CONTROL

TEMPORARY MODIFICATION OF US 74/76 INTERSECTION TO STOP SIGN CONTROL

7/20/2011
U:\Traffic\TrafficControl\BP-I5B2 NEW HANOVER\TCP\Plan Sheets\BPI5B2_TC_TMP_04.dgn
gxcragsorge

PROJ. REFERENCE NO.	SHEET NO.
15B.13.19	TMP-5

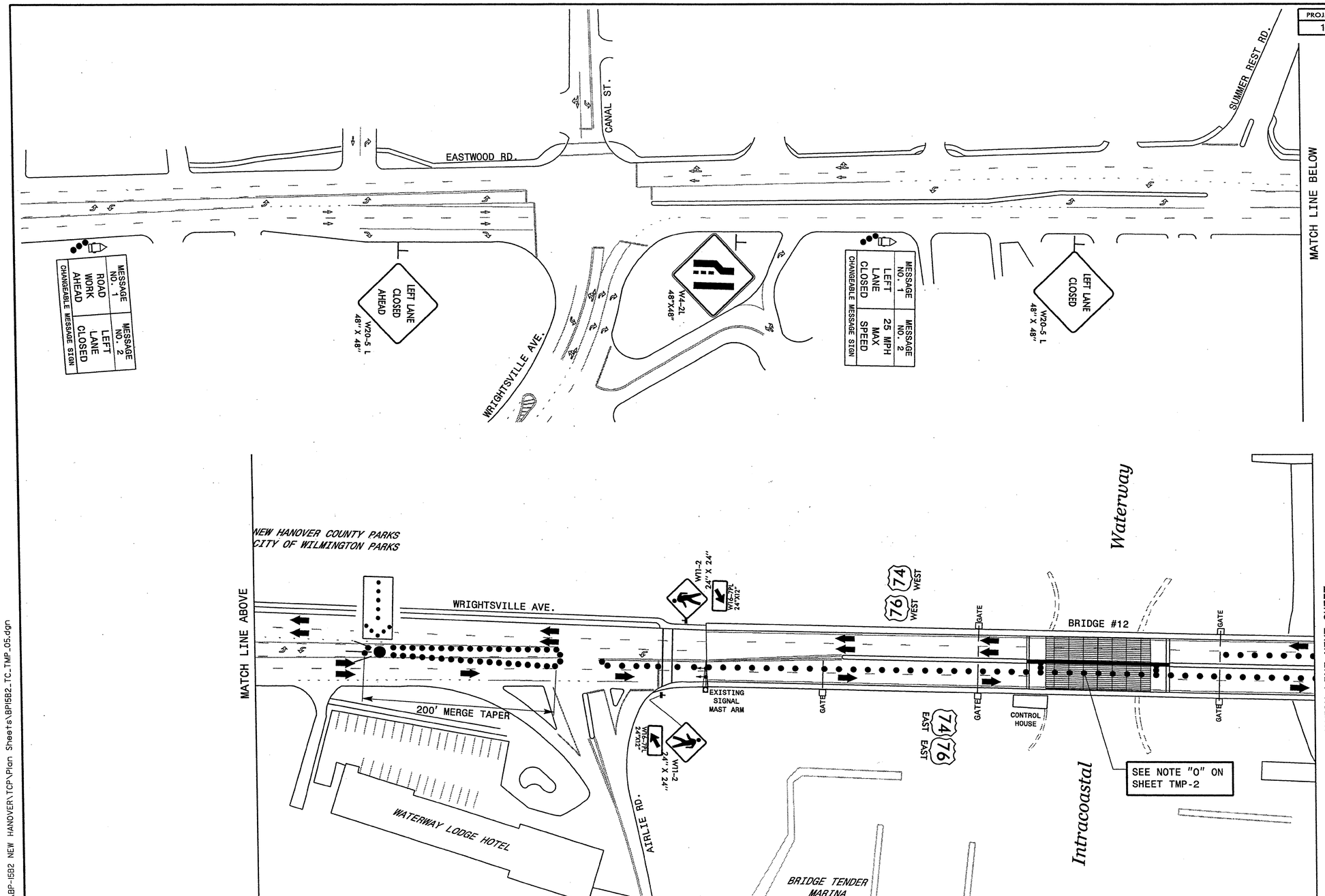

Stantec Consulting Services Inc.
801 Jones Franklin Road
Suite 300
Raleigh, NC 27606
Tel. (919) 851-6866
Fax. (919) 851-7024
www.stantec.com
License No. F-0672

APPROVED: _____ DATE: _____

SEAL

NORTH CAROLINA PROFESSIONAL SEAL 049 ENGINEER BETSY L. WATSON

7/21/11

DIVISION OF HIGHWAYS
STATE OF NORTH CAROLINA
DEPARTMENT OF TRANSPORTATION
WORK ZONE TRAFFIC CONTROL

REMOVAL/REPLACEMENT OF EXISTING CONCRETE ISLAND

7/20/2011
U:\Traffic\TrafficControl\BP-1582 NEW HANOVER\TCP\Plan Sheets\BP15B2_TC_TMP_05.dgn
gkarageorge

PROJ. REFERENCE NO.	SHEET NO.
15B.13.19	TMP-5A

PAY ITEMS FOR CONCRETE ISLAND REMOVAL AND REPLACEMENT

SECTION 225 UNCLASSIFIED EXCAVATION (REMOVE EXISTING CONC.ISLAND).... 19 CY
SECTION 607 - MILLING ASPHALT PAVEMENT 1.5" DEPTH.....136 SY
SECTION 654 - ASPHALT PLANT MIX, PAVEMENT REPAIR..... 12 TONS
SECTION 852 - 5" MONOLITHIC CONCRETE ISLAND (SURFACE MOUNTED).....136 SY

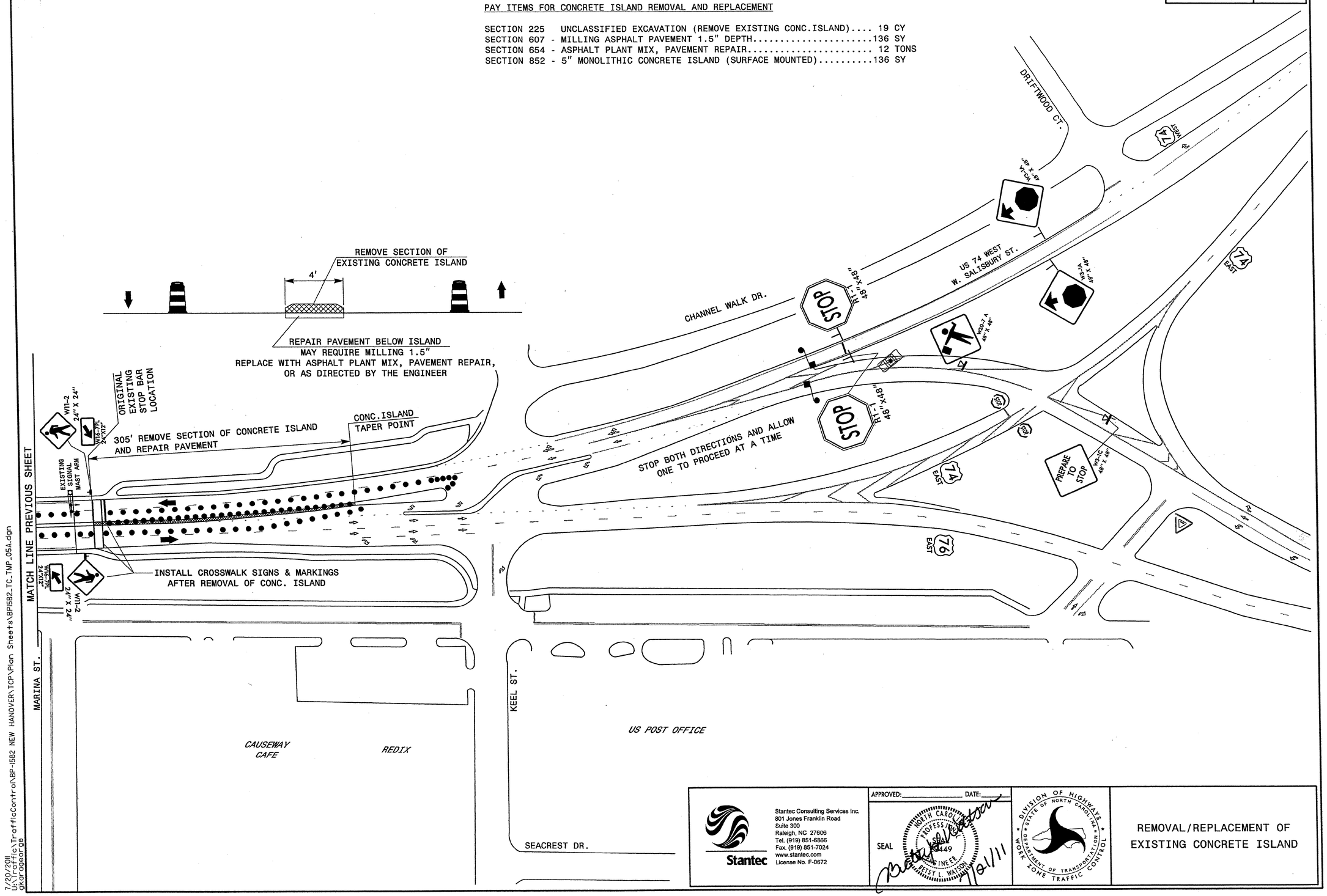

Stantec

Stantec Consulting Services Inc.
801 Jones Franklin Road
Suite 300
Raleigh, NC 27606
Tel. (919) 851-6866
Fax. (919) 851-7024
www.stantec.com
License No. F-0672

APPROVED:_____ DATE:_____

SEAL

NORTH CAROLINA PROFESSIONAL SEAL 14449 ENGINEER BETSY L. WATSON

7/21/11

DIVISION OF HIGHWAYS
STATE OF NORTH CAROLINA
DEPARTMENT OF TRANSPORTATION
WORK ZONE TRAFFIC CONTROL

REMOVAL/REPLACEMENT OF EXISTING CONCRETE ISLAND

7/20/2011
U:\Traffic\TrafficControl\BP-1582 NEW HANOVER\TCP\Plan Sheets\BP1582_TC_TMP_05A.dgn
okorageorge

PROJ. REFERENCE NO.	SHEET NO.
15B.13.19	TMP-6

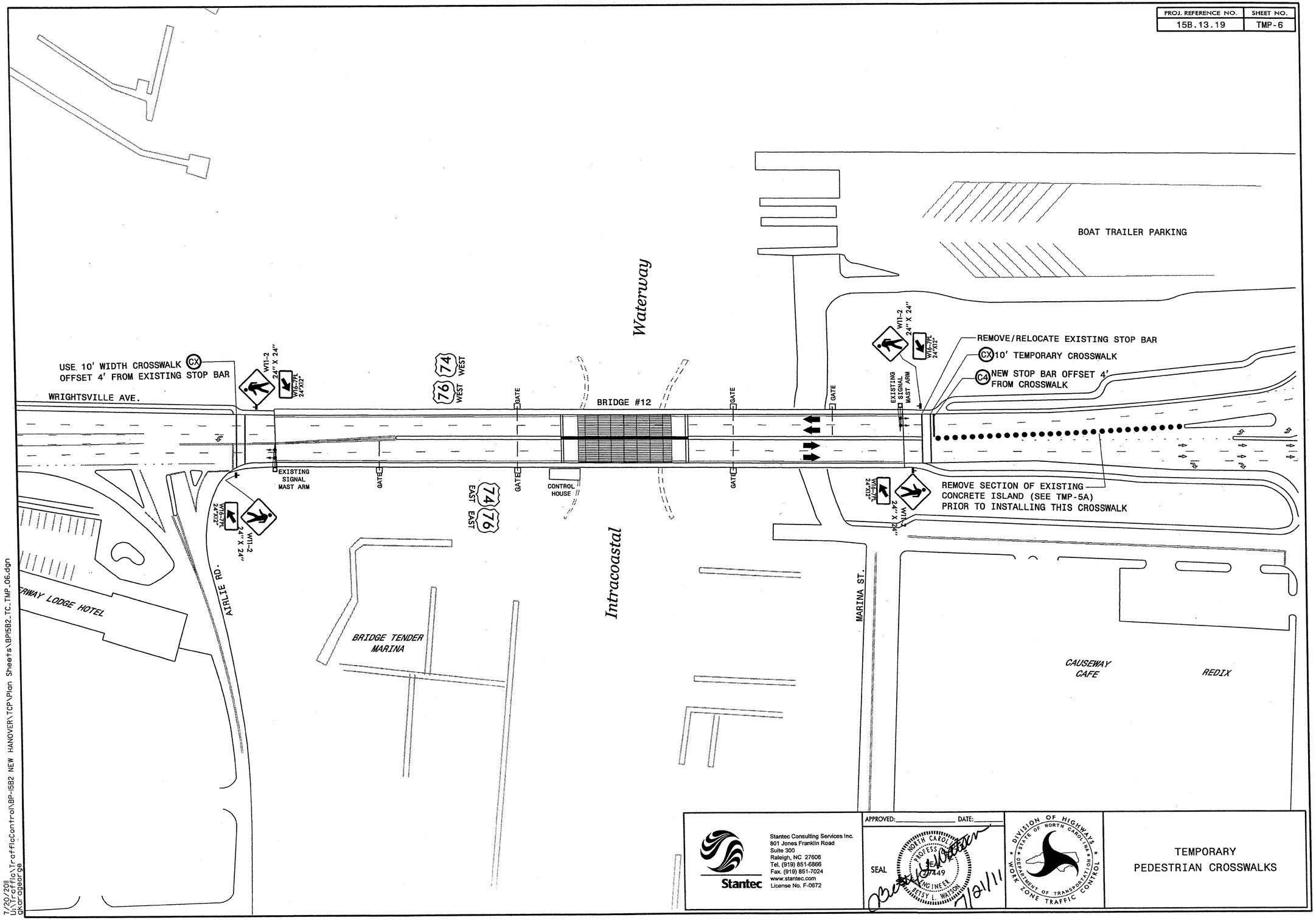

Stantec

Stantec Consulting Services Inc.
801 Jones Franklin Road
Suite 300
Raleigh, NC 27606
Tel. (919) 851-6866
Fax. (919) 851-7024
www.stantec.com
License No. F-0672

APPROVED:_____ DATE:_____

SEAL

NORTH CAROLINA PROFESSIONAL SEAL 027449 ENGINEER BETSY L. WATSON

7/21/11

DIVISION OF HIGHWAYS
STATE OF NORTH CAROLINA
DEPARTMENT OF TRANSPORTATION
WORK ZONE TRAFFIC CONTROL

TEMPORARY
PEDESTRIAN CROSSWALKS

7/20/2011
U:\Traffic\TrafficControl\BP-I5B2 NEW HANOVER\TCP\Plan Sheets\BPI5B2_TC_TMP_06.dgn
dkarageorge

PROJ. REFERENCE NO.	SHEET NO.
15B.13.19	TMP-7

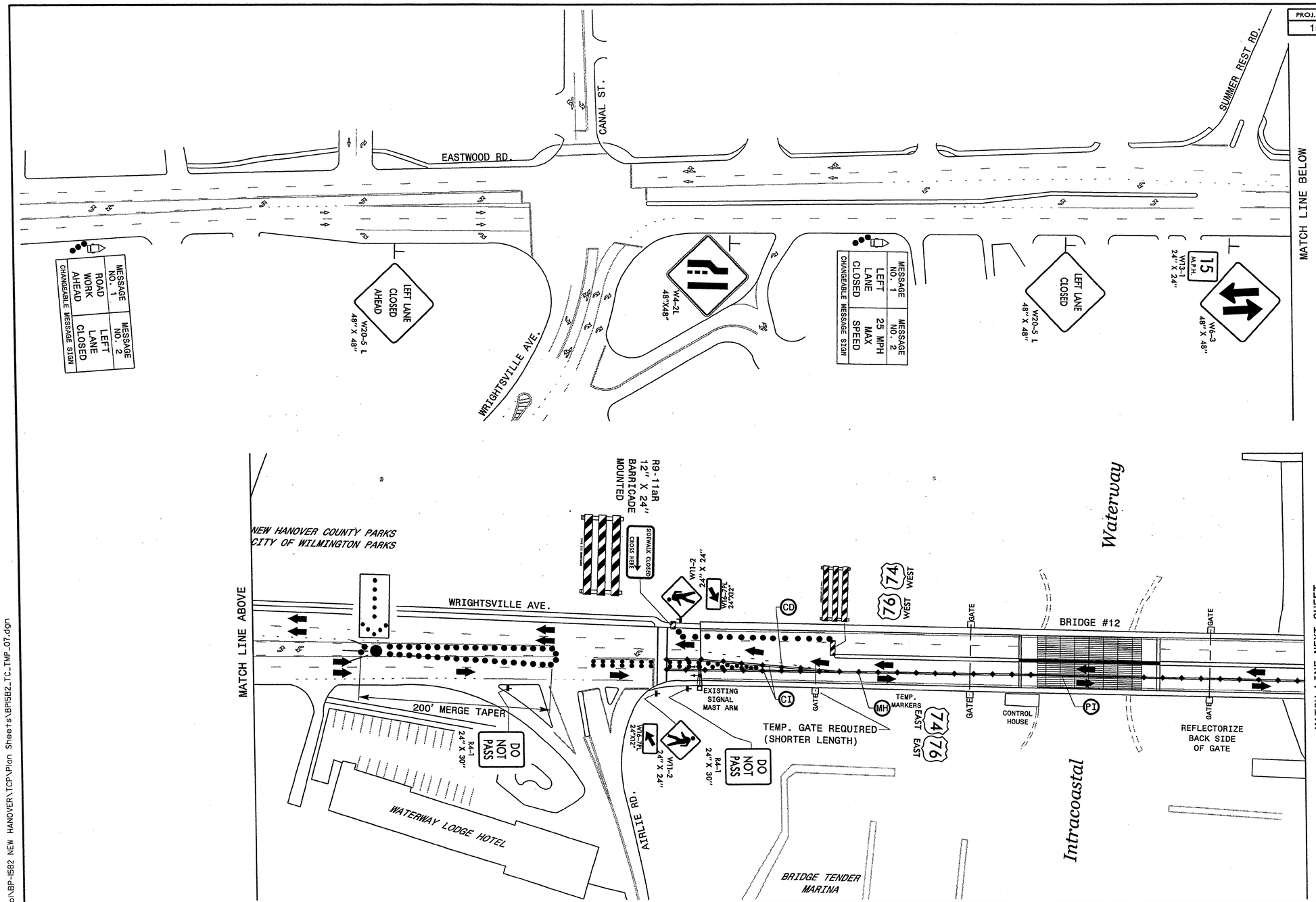

Stantec

Stantec Consulting Services Inc.
801 Jones Franklin Road
Suite 300
Raleigh, NC 27606
Tel. (919) 851-6866
Fax. (919) 851-7024
www.stantec.com
License No. F-0672

APPROVED:_____ DATE:_____

SEAL

NORTH CAROLINA PROFESSIONAL SEAL 29449 ENGINEER BETSY L. WATSON

7/21/11

DIVISION OF HIGHWAYS
STATE OF NORTH CAROLINA
DEPARTMENT OF TRANSPORTATION
WORK ZONE TRAFFIC CONTROL

TWO-LANE, TWO-WAY TRAFFIC
ON US 74-76 EASTBOUND SIDE

7/20/2011
U:\Traffic\TrafficControl\BP-1582 NEW HANOVER\TCP\Plan Sheets\BP1582_TC_TMP_07.dgn
gkargagorge

PROJ. REFERENCE NO.	SHEET NO.
15B.13.19	TMP-7A

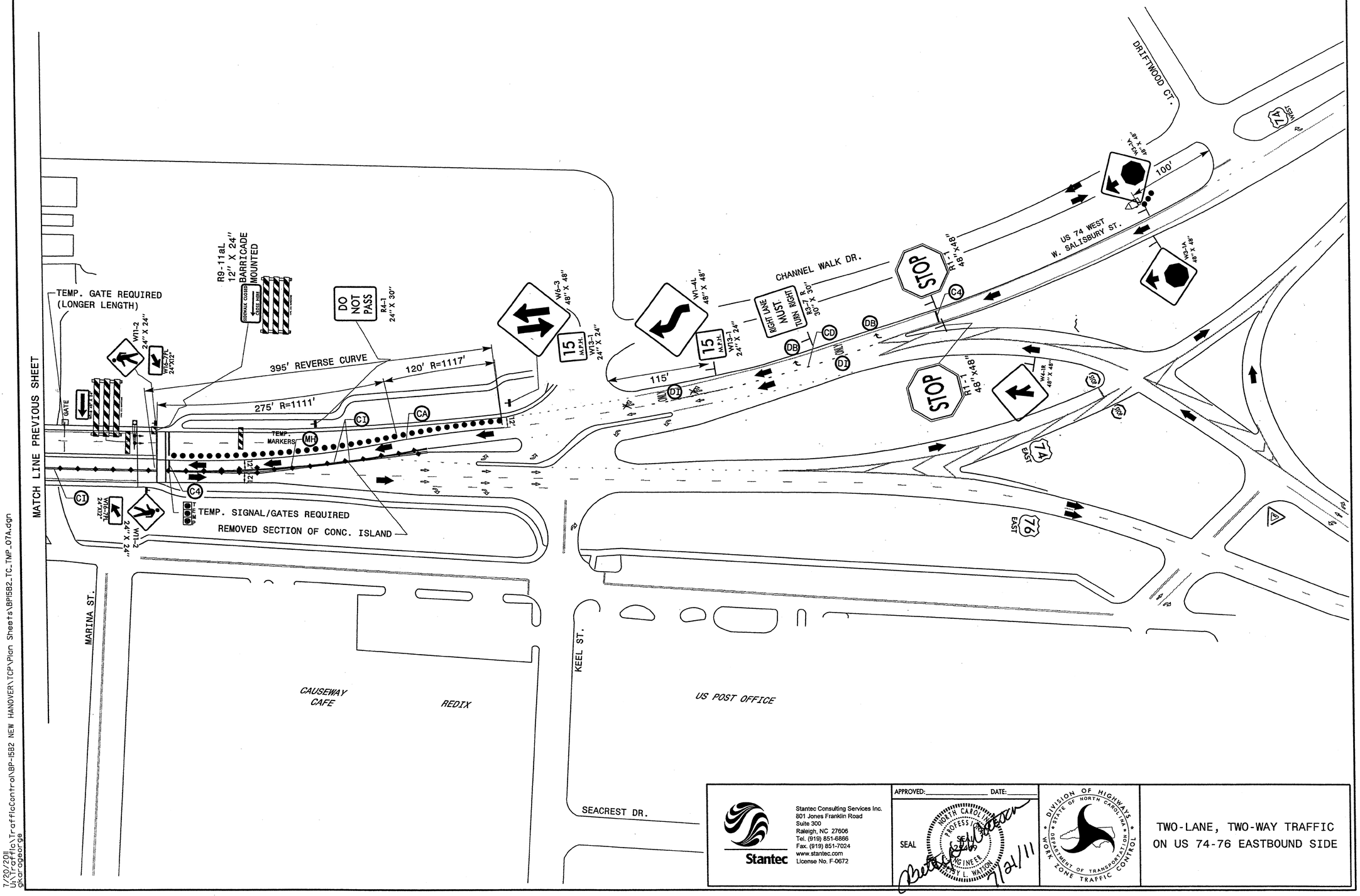

Stantec

Stantec Consulting Services Inc.
801 Jones Franklin Road
Suite 300
Raleigh, NC 27606
Tel. (919) 851-6866
Fax. (919) 851-7024
www.stantec.com
License No. F-0672

APPROVED: _____ DATE: _____

SEAL

NORTH CAROLINA PROFESSIONAL SEAL 022409 ENGINEER BETSY L. WATSON

7/21/11

DIVISION OF HIGHWAYS
STATE OF NORTH CAROLINA
DEPARTMENT OF TRANSPORTATION
WORK ZONE TRAFFIC CONTROL

TWO-LANE, TWO-WAY TRAFFIC
ON US 74-76 EASTBOUND SIDE

7/20/2011
U:\Traffic\TrafficControl\BP-1582 NEW HANOVER\TCP\Plan Sheets\BP1582_TC_TMP_07A.dgn
gkargeorge

PROJ. REFERENCE NO.	SHEET NO.
15B.13.19	TMP-8

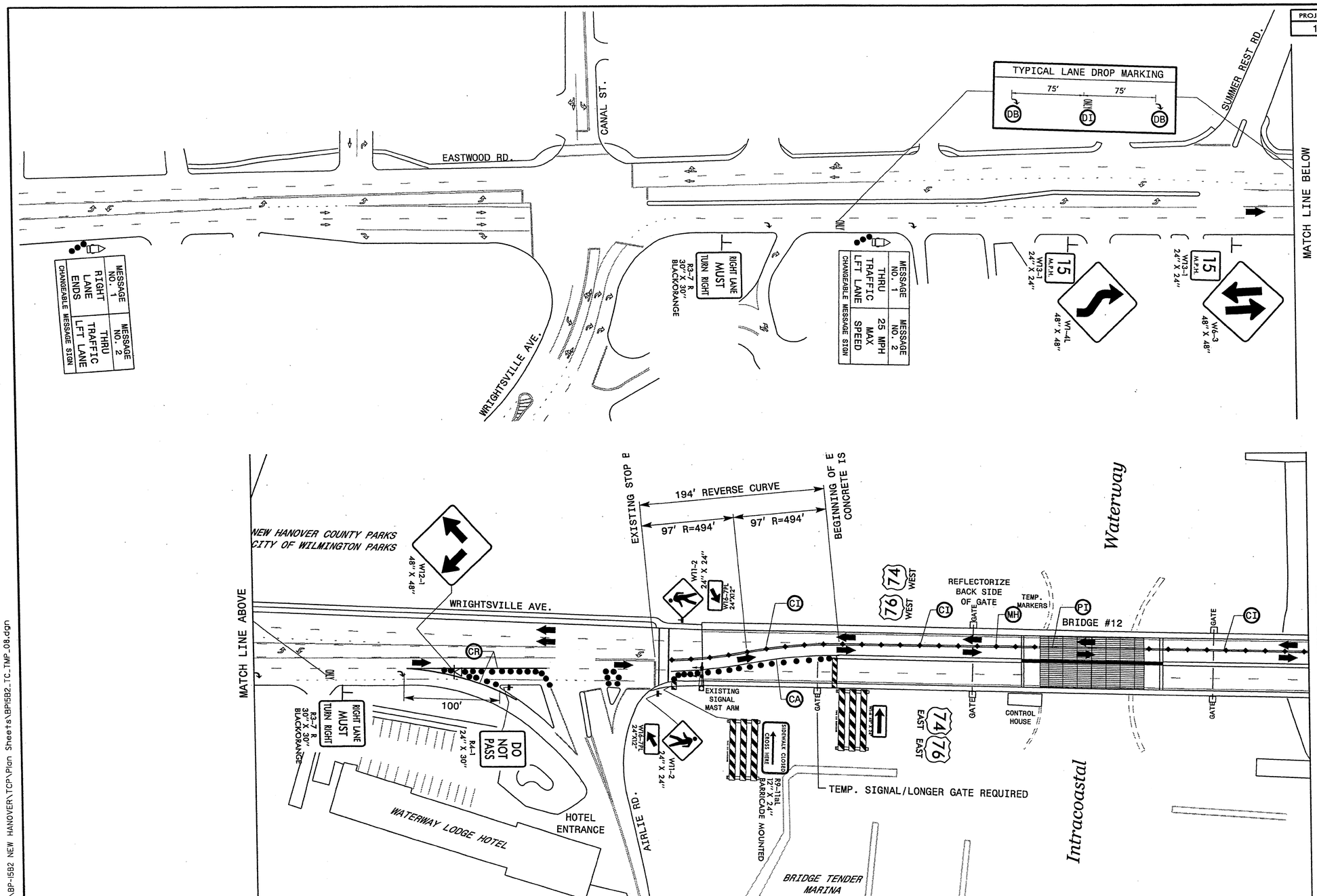

Stantec
Stantec Consulting Services Inc.
801 Jones Franklin Road
Suite 300
Raleigh, NC 27606
Tel. (919) 851-6866
Fax. (919) 851-7024
www.stantec.com
License No. F-0672

APPROVED: _____ DATE: _____

SEAL

NORTH CAROLINA PROFESSIONAL SEAL 22449 ENGINEER BETSY L. WATSON

7/21/11

DIVISION OF HIGHWAYS
STATE OF NORTH CAROLINA
DEPARTMENT OF TRANSPORTATION
WORK ZONE TRAFFIC CONTROL

TWO-LANE, TWO-WAY TRAFFIC
ON US 74-76 WESTBOUND SIDE

7/20/2011
U:\Traffic\TrafficControl\BP-1582 NEW HANOVER\TCP\Plan Sheets\BP1582_TC_TMP_08.dgn
gkaragaorge

PROJ. REFERENCE NO.	SHEET NO.
15B.13.19	TMP-8A

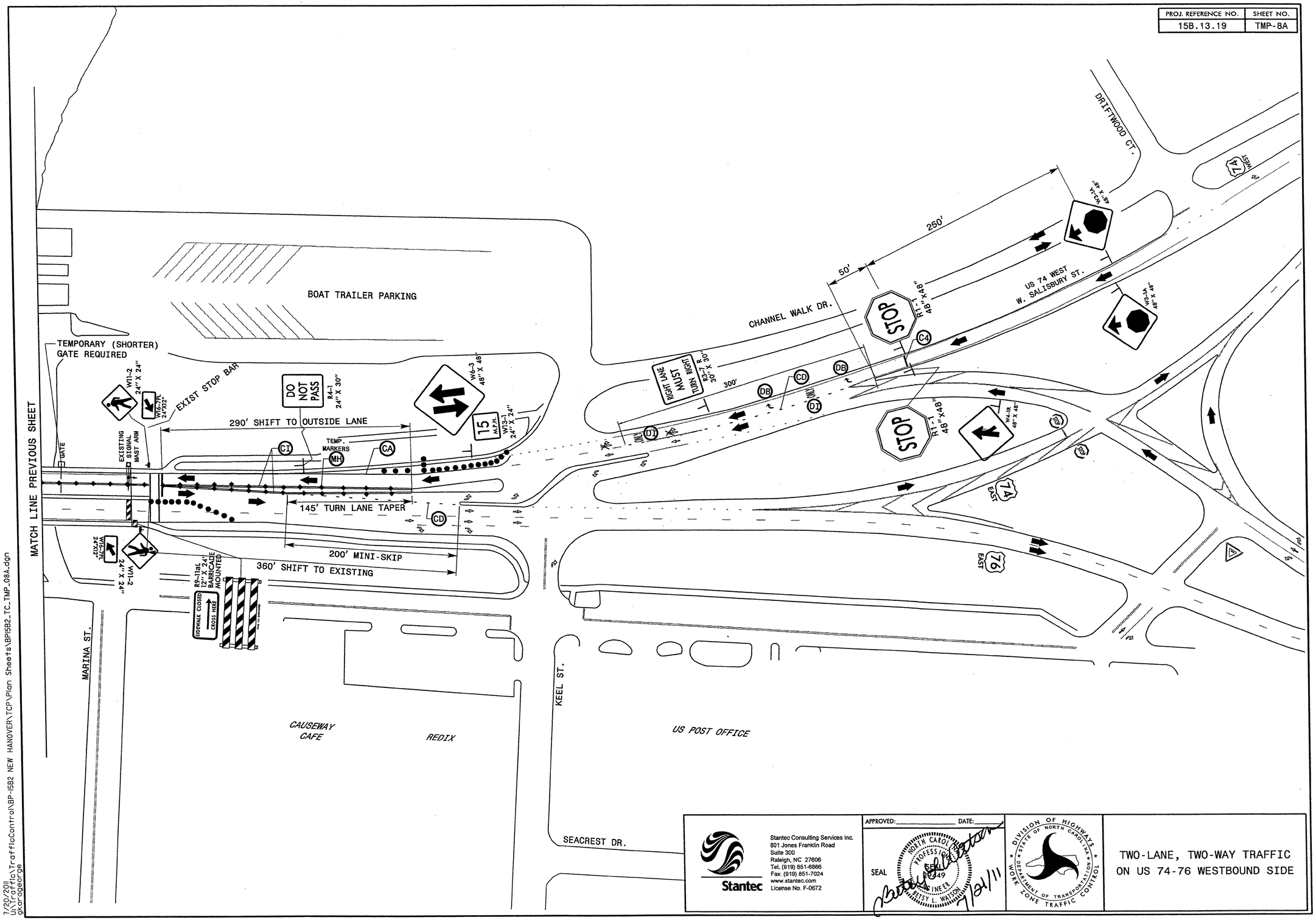

Stantec

Stantec Consulting Services Inc.
801 Jones Franklin Road
Suite 300
Raleigh, NC 27606
Tel. (919) 851-6866
Fax. (919) 851-7024
www.stantec.com
License No. F-0672

APPROVED:_____ DATE:_____

SEAL

NORTH CAROLINA PROFESSIONAL ENGINEER SEAL 20449 BETSY L. WATSON

7/21/11

DIVISION OF HIGHWAYS STATE OF NORTH CAROLINA DEPARTMENT OF TRANSPORTATION WORK ZONE TRAFFIC CONTROL

TWO-LANE, TWO-WAY TRAFFIC ON US 74-76 WESTBOUND SIDE

7/20/2011
U:\Traffic\TrafficControl\BP-15B2 NEW HANOVER\TCP\Plan Sheets\BP15B2_TC_TMP_08A.dgn
gkarageorge

PROJ. REFERENCE NO.	SHEET NO.
15B.13.19	TMP-9

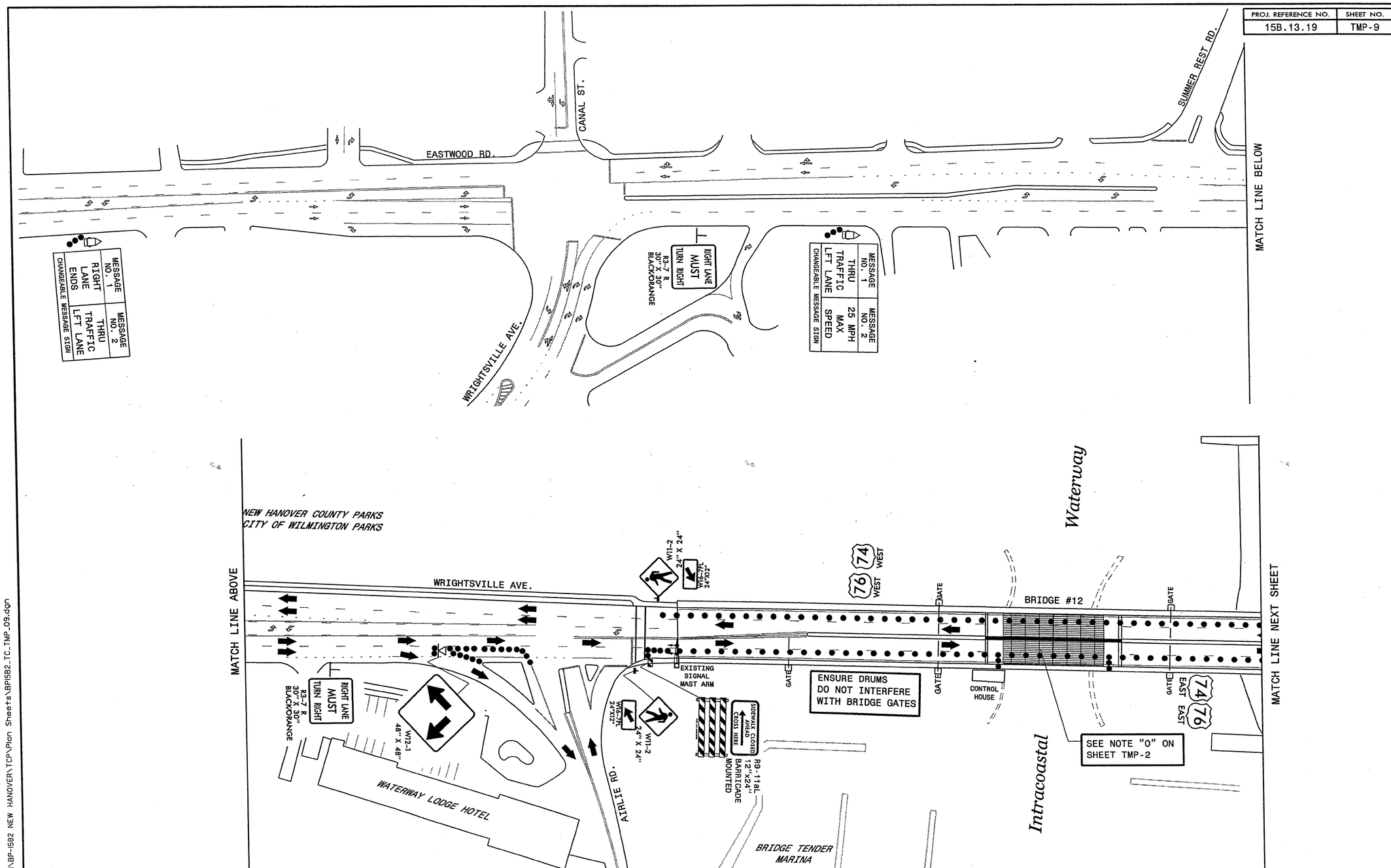

Stantec

Stantec Consulting Services Inc.
801 Jones Franklin Road
Suite 300
Raleigh, NC 27606
Tel. (919) 851-6866
Fax. (919) 851-7024
www.stantec.com
License No. F-0672

APPROVED: _____ DATE: _____

SEAL

NORTH CAROLINA PROFESSIONAL SEAL 27449 ENGINEER BETSY L. WATSON

7/21/11

DIVISION OF HIGHWAYS STATE OF NORTH CAROLINA DEPARTMENT OF TRANSPORTATION WORK ZONE TRAFFIC CONTROL

US 74-76 WESTBOUND RIGHT LANE CLOSURE DURING MODIFIED US 74-76 INTERSECTION

7/20/2011
U:\Traffic\TrafficControl\BP-1582 NEW HANOVER\TCP\Plan Sheets\BP15B2_TC_TMP_09.dgn
gkargeorge

PROJ. REFERENCE NO.	SHEET NO.
15B.13.19	TMP-9A

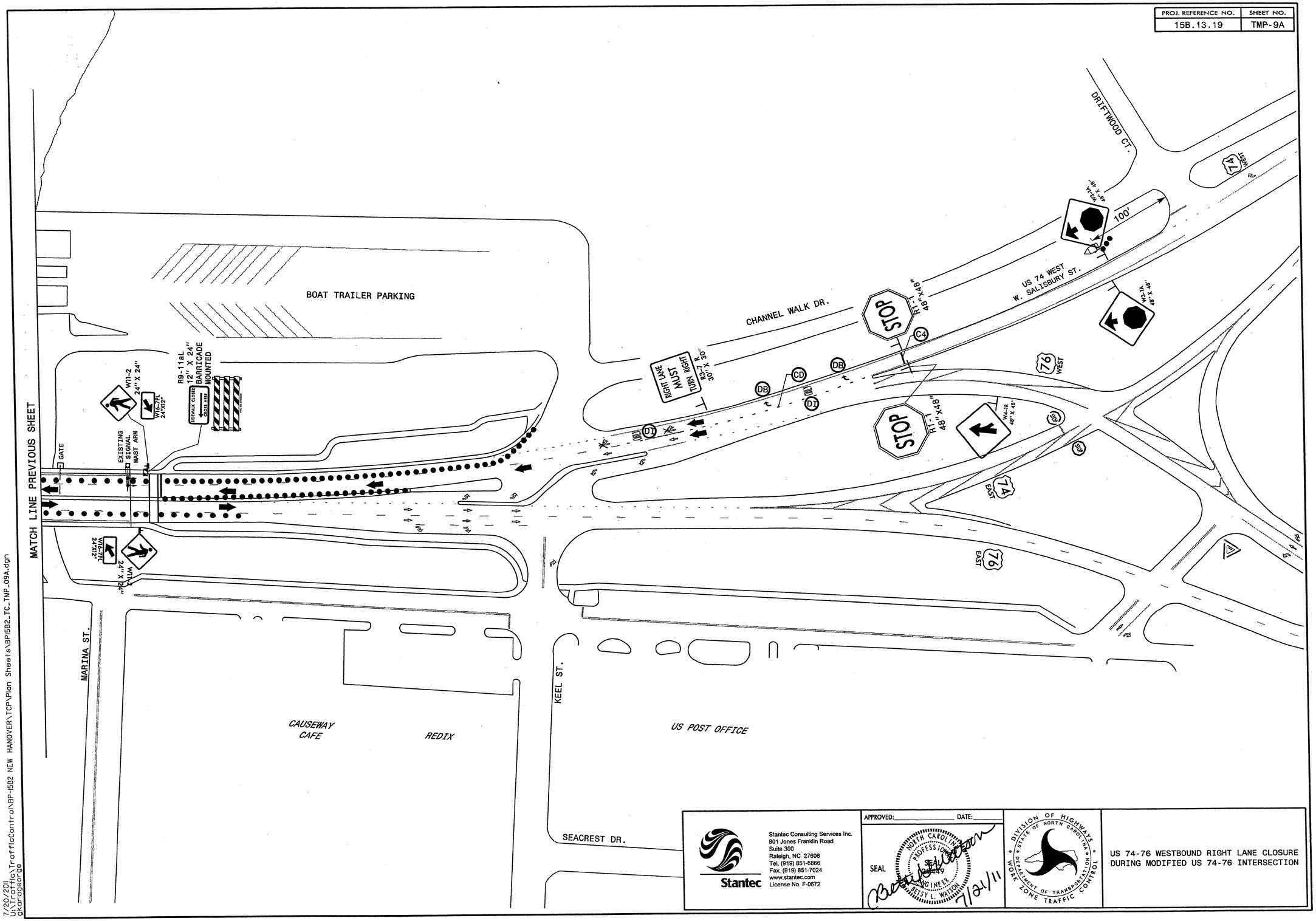

Stantec

Stantec Consulting Services Inc.
801 Jones Franklin Road
Suite 300
Raleigh, NC 27606
Tel. (919) 851-6866
Fax. (919) 851-7024
www.stantec.com
License No. F-0672

APPROVED:_____ DATE:_____

SEAL

NORTH CAROLINA PROFESSIONAL ENGINEER SEAL 024449 BETSY L. WATSON

7/21/11

DIVISION OF HIGHWAYS
STATE OF NORTH CAROLINA
DEPARTMENT OF TRANSPORTATION
WORK ZONE TRAFFIC CONTROL

US 74-76 WESTBOUND RIGHT LANE CLOSURE
DURING MODIFIED US 74-76 INTERSECTION

7/20/2011
U:\Traffic\TrafficControl\BP-1582 NEW HANOVER\TCP\Plan Sheets\BP1582_TC_TMP_09A.dgn
gcorcoran

PROJ. REFERENCE NO.	SHEET NO.
15B.13.19	TMP-10

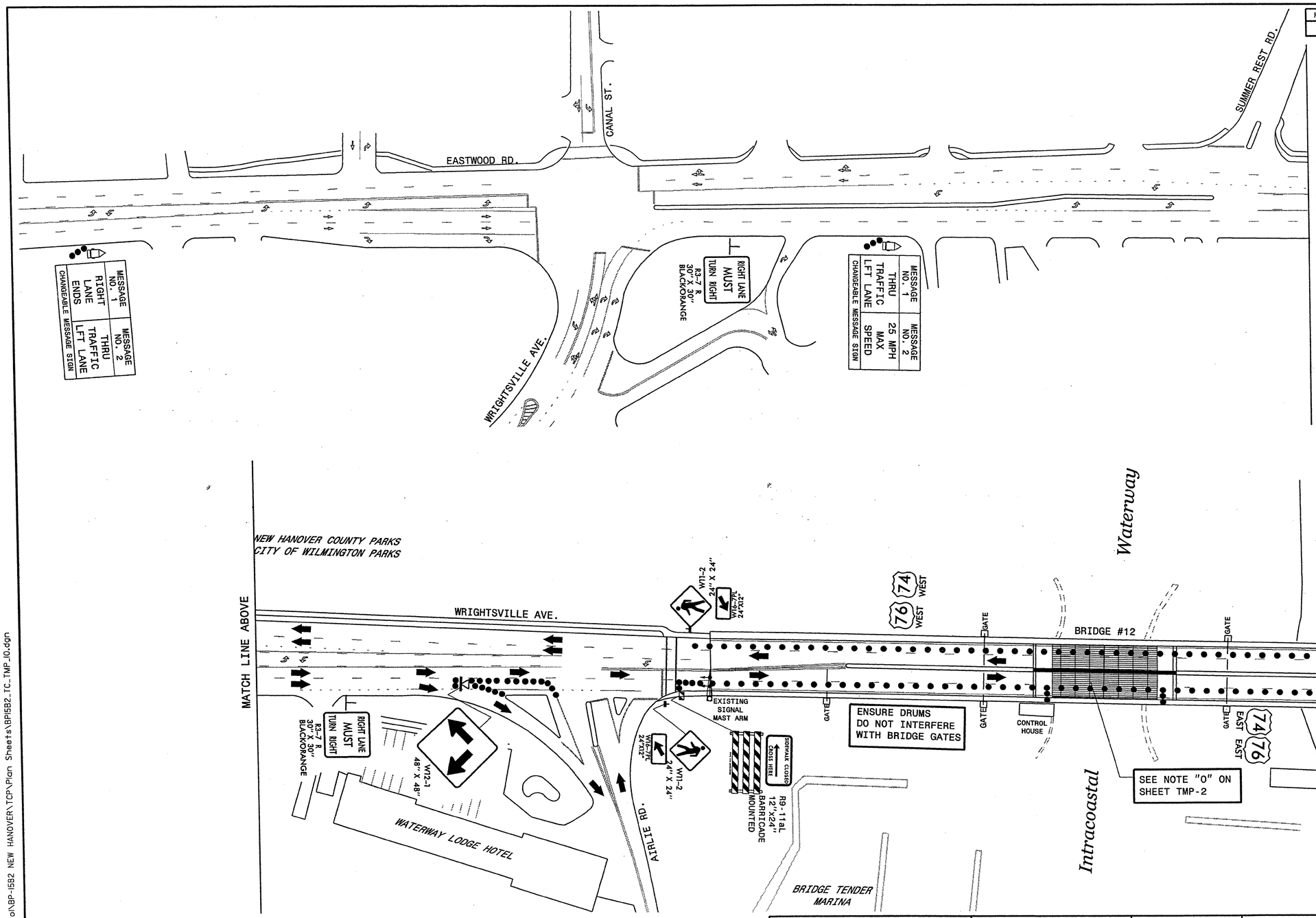

Stantec

Stantec Consulting Services Inc.
801 Jones Franklin Road
Suite 300
Raleigh, NC 27606
Tel. (919) 851-6866
Fax. (919) 851-7024
www.stantec.com
License No. F-0672

APPROVED:_____ DATE:_____

SEAL

NORTH CAROLINA PROFESSIONAL SEAL 19449 ENGINEER BETSY L. WATSON

7/21/11

DIVISION OF HIGHWAYS
STATE OF NORTH CAROLINA
DEPARTMENT OF TRANSPORTATION
WORK ZONE TRAFFIC CONTROL

RIGHT LANE CLOSURES
ON US 74-76

7/20/2011
U:\Traffic\TrafficControl\BP-1582 NEW HANOVER\TCP\Plan Sheets\BP1582_TC_TMP_10.dgn
dkarageorge

PROJ. REFERENCE NO.	SHEET NO.
15B.13.19	TMP-10A

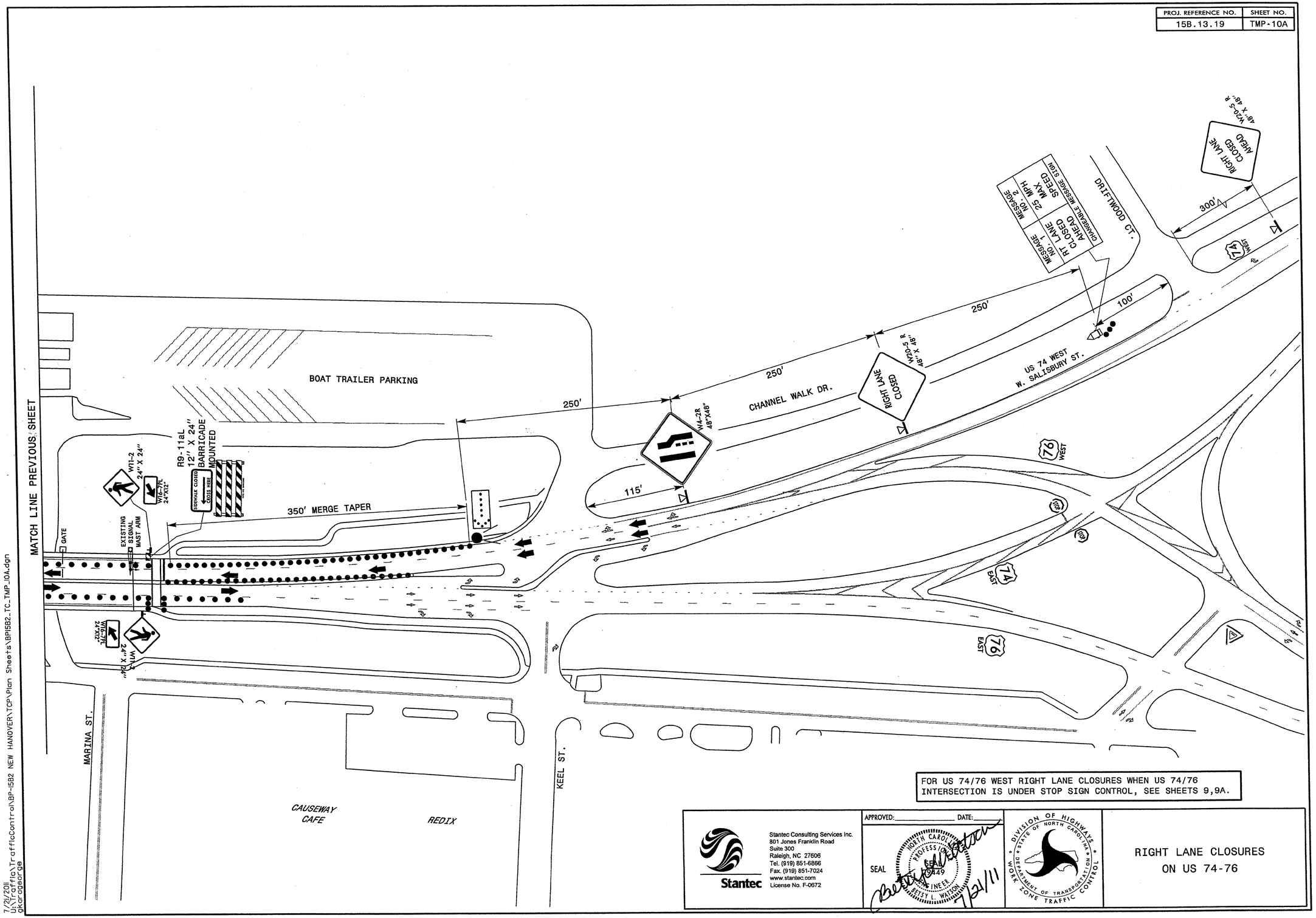

FOR US 74/76 WEST RIGHT LANE CLOSURES WHEN US 74/76 INTERSECTION IS UNDER STOP SIGN CONTROL, SEE SHEETS 9,9A.

Stantec

Stantec Consulting Services Inc.
801 Jones Franklin Road
Suite 300
Raleigh, NC 27606
Tel. (919) 851-6866
Fax. (919) 851-7024
www.stantec.com
License No. F-0672

APPROVED: _____ DATE: _____

SEAL

NORTH CAROLINA PROFESSIONAL SEAL 049449 ENGINEER BETSY L. WATSON

7/21/11

DIVISION OF HIGHWAYS
STATE OF NORTH CAROLINA
DEPARTMENT OF TRANSPORTATION
WORK ZONE TRAFFIC CONTROL

RIGHT LANE CLOSURES
ON US 74-76

7/21/2011
U:\Traffic\TrafficControl\BP-15B2 NEW HANOVER\TCP\Plan Sheets\BP15B2_TC_TMP_10A.dgn
gkarageorge

PROJ. REFERENCE NO.	SHEET NO.
15B.13.19	TMP-11

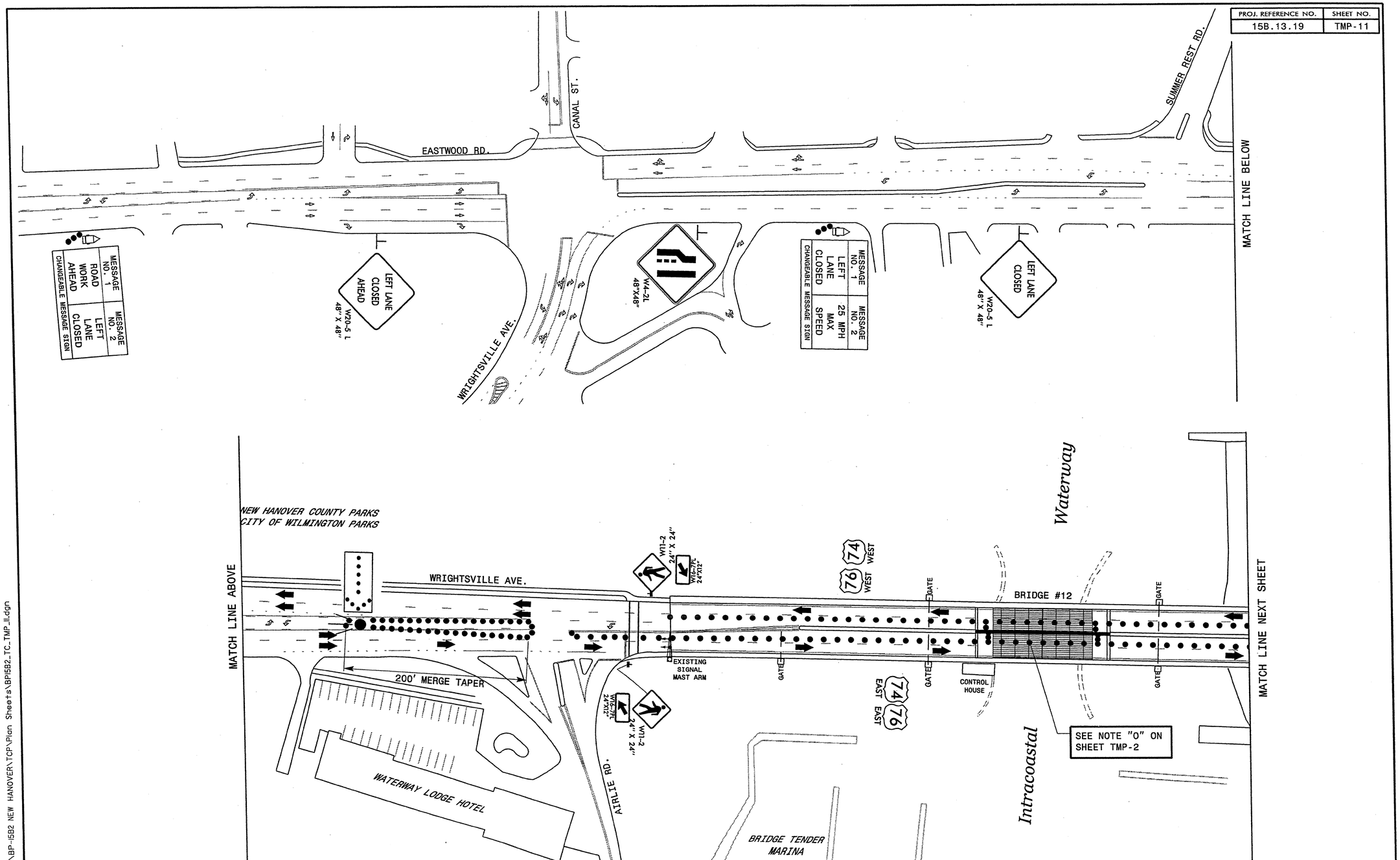

Stantec

Stantec Consulting Services Inc.
801 Jones Franklin Road
Suite 300
Raleigh, NC 27606
Tel. (919) 851-6866
Fax. (919) 851-7024
www.stantec.com
License No. F-0672

APPROVED:_____ DATE:_____

SEAL

NORTH CAROLINA PROFESSIONAL ENGINEER SEAL 29449 BETSY L. WATSON

7/21/11

DIVISION OF HIGHWAYS
STATE OF NORTH CAROLINA
DEPARTMENT OF TRANSPORTATION
WORK ZONE TRAFFIC CONTROL

LEFT LANE CLOSURES
ON US 74-76

7/21/2011
U:\Traffic\TrafficControl\BP-15B2 NEW HANOVER\TCP\Plan Sheets\BP15B2_TC_TMP_11.dgn
gkarageorge

PROJ. REFERENCE NO.	SHEET NO.
15B.13.19	TMP-11A

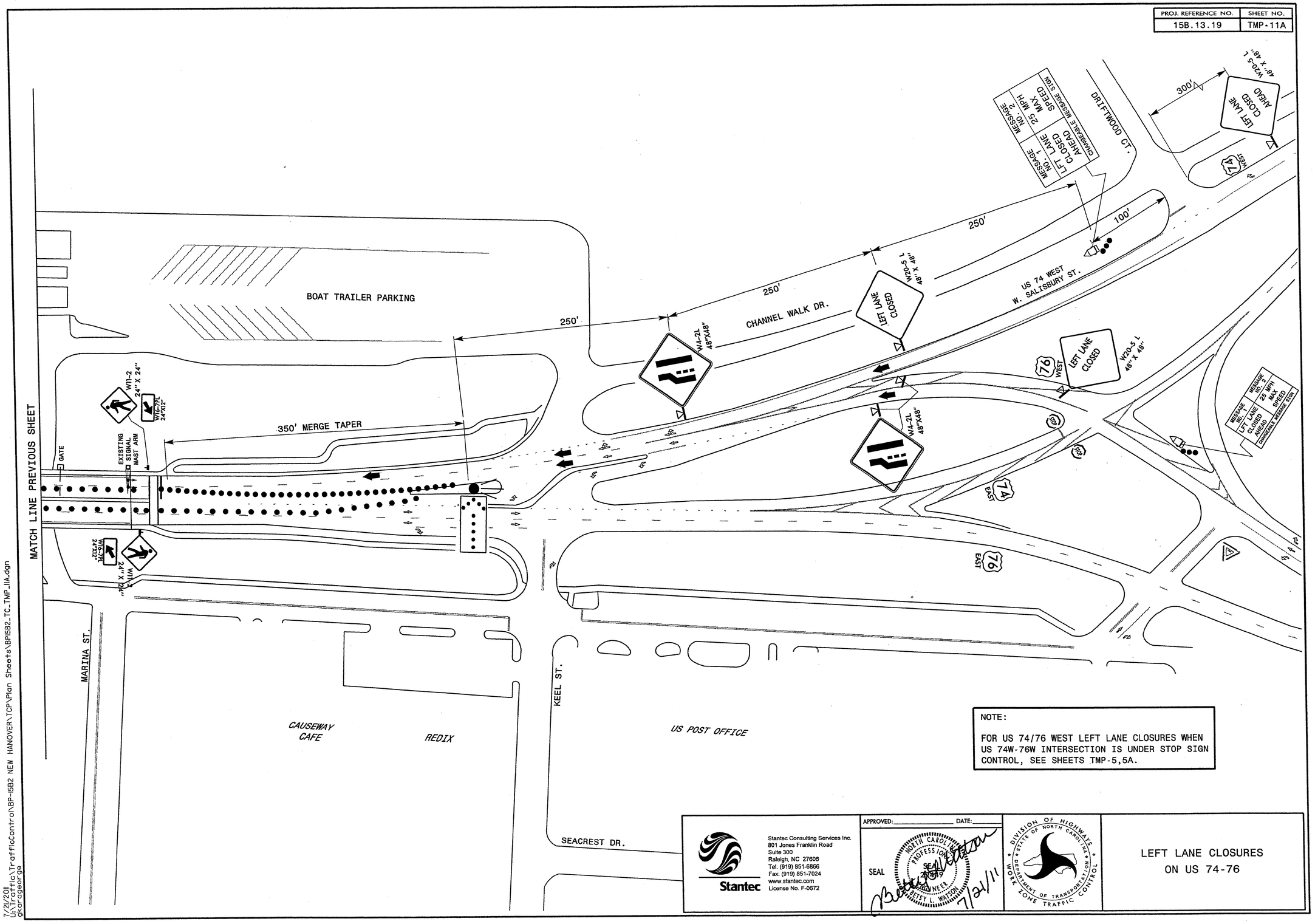

NOTE:

FOR US 74/76 WEST LEFT LANE CLOSURES WHEN US 74W-76W INTERSECTION IS UNDER STOP SIGN CONTROL, SEE SHEETS TMP-5,5A.

Stantec

Stantec Consulting Services Inc.
801 Jones Franklin Road
Suite 300
Raleigh, NC 27606
Tel. (919) 851-6866
Fax. (919) 851-7024
www.stantec.com
License No. F-0672

APPROVED: _____ DATE: _____

SEAL

NORTH CAROLINA PROFESSIONAL SEAL ENGINEER BETSY L. WATSON 7/21/11

DIVISION OF HIGHWAYS · STATE OF NORTH CAROLINA · DEPARTMENT OF TRANSPORTATION · WORK ZONE TRAFFIC CONTROL

LEFT LANE CLOSURES
ON US 74-76

7/21/2011
U:\Traffic\TrafficControl\BP-15B2 NEW HANOVER\TCP\Plan Sheets\BP15B2_TC_TMP_11A.dgn
gkarageorge