CONTRACT: C202621 TIP PROJECT: U-4019

STRUCTURES

| STATE | STATE PROJECT REFERENCE NO. | SHEET NO. | TOTAL SHEETS |
|---|---|---|---|
| N.C. | U-4019 | | |

| STATE PROJ. NO. | F. A. PROJ. NO. | DESCRIPTION |
|---|---|---|
| 35014.1.1 | STP-1613(3) | PE |
| 35014.2.1 | STP-1613(5) | UTIL. & RW |
| 35014.3.1 | STP-1613(6) | CONST. |

# STATE OF NORTH CAROLINA
# DIVISION OF HIGHWAYS

# *NASH COUNTY*

***LOCATION: ROCKY MOUNT – SR 1613 (N. WINSTEAD AVE.) FROM SR 1770 (SUNSET AVE.) TO SR 1604 (HUNTER HILL RD.)***

***TYPE OF WORK: GRADING, DRAINAGE, PAVING, SIGNALS, STRUCTURES & RETAINING WALLS.***

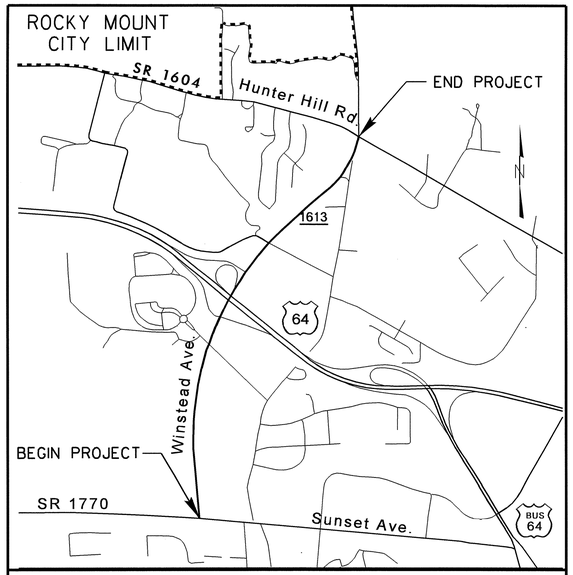


***VICINITY MAP***

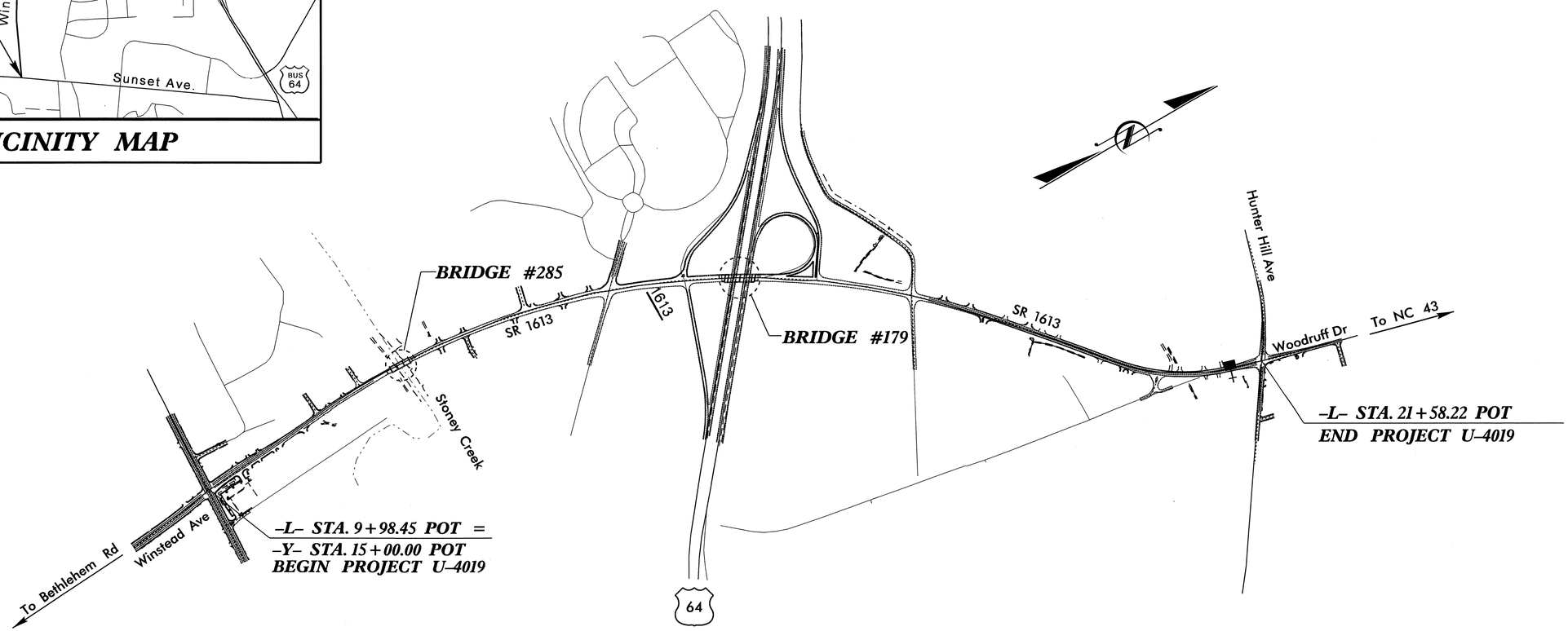


STATE OF NORTH CAROLINA DEPARTMENT OF TRANSPORTATION

## *DESIGN DATA*

*ADT 2011 = 26,200*
*ADT 2035 = 53,400*
*DHV = 9 %*
*D = 65 %*
*T = 7 % **
*V = 50 MPH*

** TTST 4% DUAL 3%*

## *PROJECT LENGTH*

*LENGTH ROADWAY TIP PROJECT U-4019 = 1.578 MI*
*LENGTH STRUCTURE TIP PROJECT U-4019 = 0.075 MI*
*TOTAL LENGTH TIP PROJECT U-4019 = 1.653 MI*

*Prepared in the Office of:*

## *DIVISION OF HIGHWAYS*

*2006 STANDARD SPECIFICATIONS*

*LETTING DATE :*

JULY 19, 2011

J. C. FRYE, P.E.
*PROJECT ENGINEER*

T. H. FANG, P.E.
*PROJECT DESIGN ENGINEER*

*STRUCTURE DESIGN UNIT*
*1000 BIRCH RIDGE DR.*
*RALEIGH, N.C. 27610*

*DIVISION OF HIGHWAYS*
*STATE OF NORTH CAROLINA*

*P.E.*
*STATE DESIGN ENGINEER*

*DEPARTMENT OF TRANSPORTATION*
*FEDERAL HIGHWAY ADMINISTRATION*

*APPROVED*
*DIVISION ADMINISTRATOR* *DATE*

**F.A. PROJ. NO. STP-1613(6)**

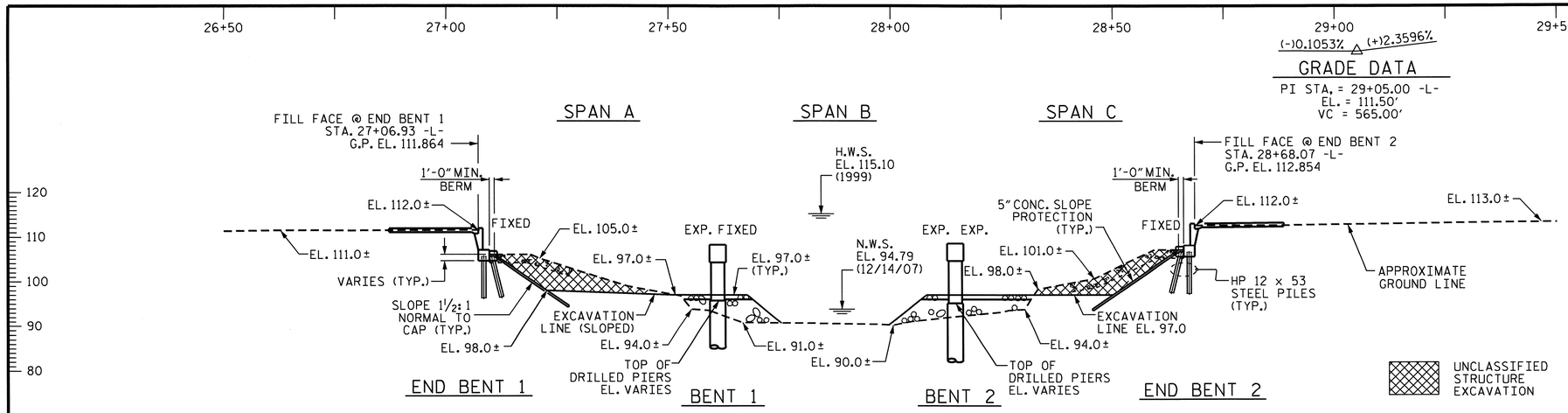


## SECTION ALONG -L-

(SECTION TAKEN @ RIGHT ANGLES TO BENTS & END BENTS)

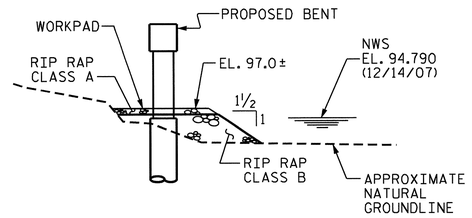


## SECTION A-A

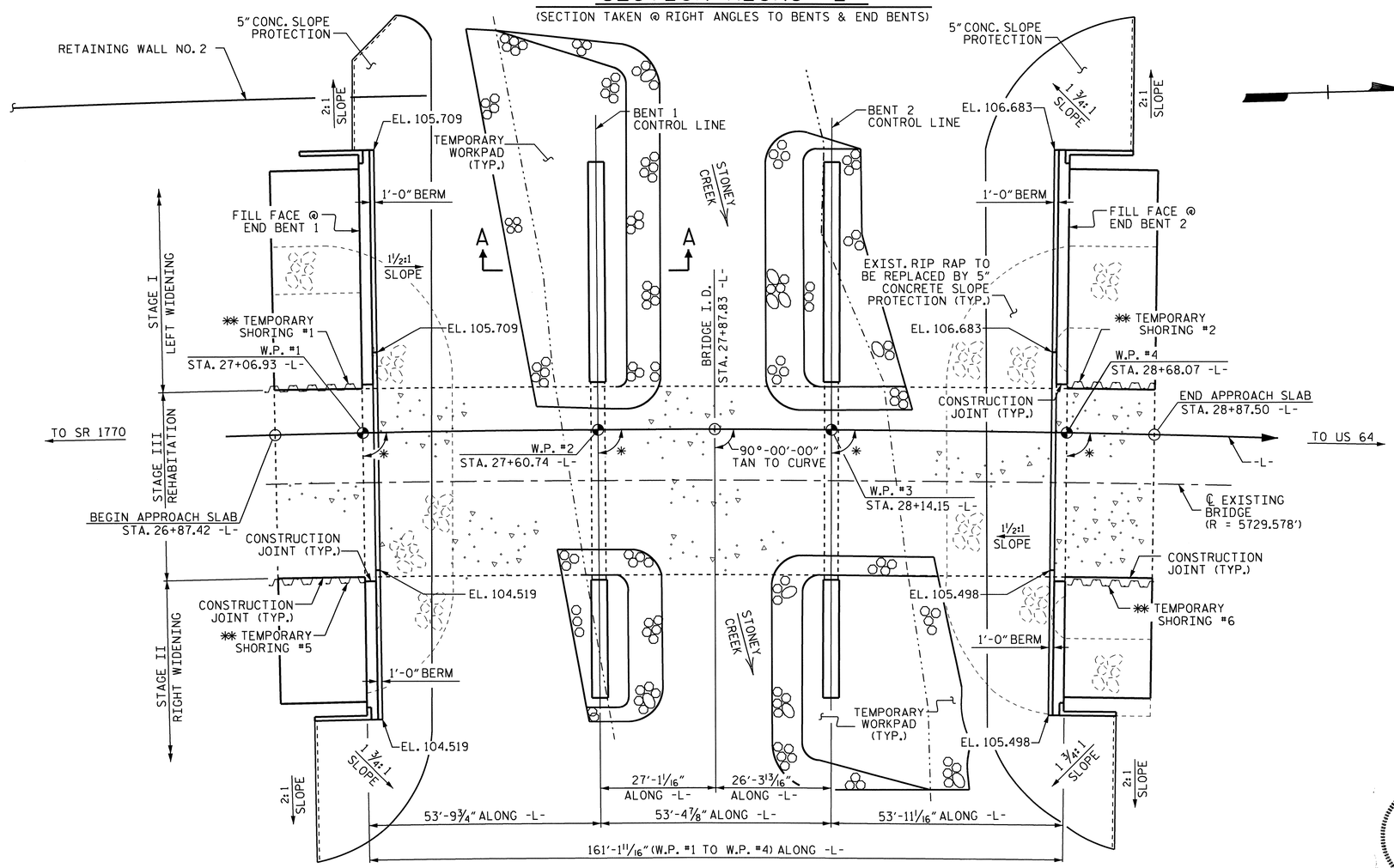


## PLAN

PILES & DRILLED PIERS NOT SHOWN FOR CLARITY.
✱ SEE TABLE FOR SKEW ANGLES AT WORK POINTS.

✱✱ TEMPORARY SHORING FOR MAINTENANCE OF TRAFFIC. (SEE ROADWAY PLANS)

FOR DETAILS AND QUANTITIES OF RETAINING WALL, SEE "MSE RETAINING WALL NO. 2" ON SHEETS NO. W-2 & NO. W-5.

### HORIZONTAL CURVE DATA -L-

PI STA.27+68.54
△ = 12°-08'-35.0" (RT)
L = 826.55'
T = 414.83'
R = 3900.00'
D = 1°-28'-08.8"

| ✱ SKEW ANGLES (TAN. TO CURVE) | |
|---|---|
| W. P. #1 | 90°-16'-24" |
| W. P. #2 | 90°-12'-53" |
| W. P. #3 | 89°-46'-30" |
| W. P. #4 | 89°-38'-36" |

NORTH CAROLINA PROFESSIONAL SEAL 11915 ENGINEER JOHN C. FRY 5/23/11

NORTH CAROLINA PROFESSIONAL SEAL 16301 ENGINEER TING HSIONG FANG 5/23/11

PROJECT NO. U-4019
NASH COUNTY
STATION: 27+87.83 -L-
WIDENING & REHABILITATION OF BRIDGE NO. 285
SHEET 1 OF 4

STATE OF NORTH CAROLINA
DEPARTMENT OF TRANSPORTATION
RALEIGH

# GENERAL DRAWING

FOR BRIDGE OVER STONEY CREEK ON SR 1613 BETWEEN SR 1770 AND US 64

| REVISIONS | | | | | | | | SHEET NO. |
|---|---|---|---|---|---|---|---|---|
| NO. | BY: | DATE: | NO. | BY: | DATE: | | | S-1 |
| 1 | | | 3 | | | | | TOTAL SHEETS |
| 2 | | | 4 | | | | | 93 |

STR. #1

DRAWN BY : A.S. CALLAWAY DATE : 7/9/09
CHECKED BY : T. H. FANG DATE : 3/31/11

23-MAY-2011 09:38
Z:\TIPProjects-U\U4019\Structures\str1\FinalPlans\u4019_sd_gd1.dgn
tfang

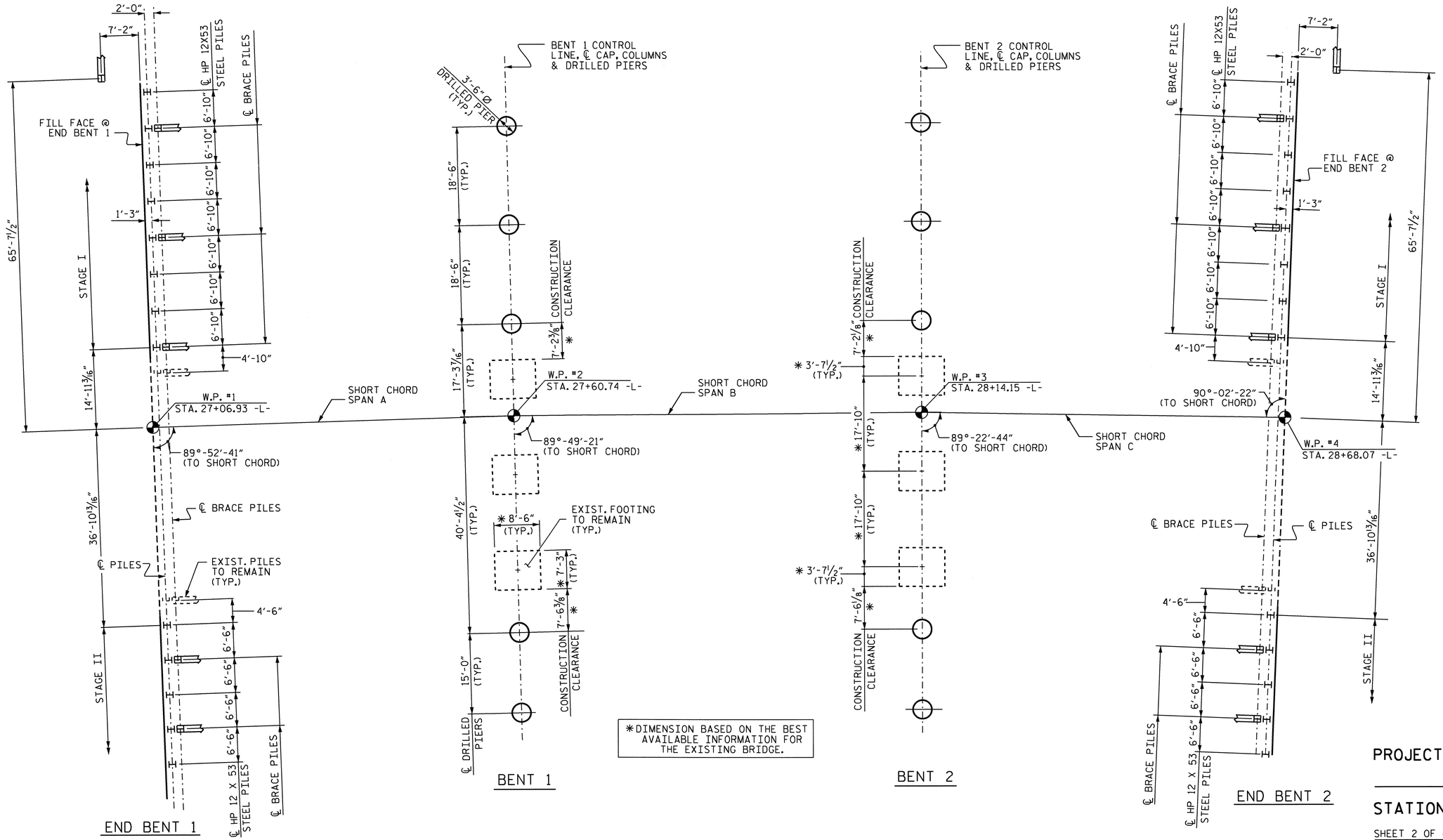


*DIMENSION BASED ON THE BEST AVAILABLE INFORMATION FOR THE EXISTING BRIDGE.

## FOUNDATION LAYOUT

DIMENSIONS LOCATING PILES & DRILLED PIERS ARE SHOWN TO CENTERLINES AT BOTTOM OF CAPS.

SEE FOUNDATION NOTES ON SHEET 3 OF 4.

NORTH CAROLINA PROFESSIONAL SEAL 16301 ENGINEER TING HSIUNG FANG 5/23/11

PROJECT NO. U-4019

NASH COUNTY

STATION: 27+87.83 -L-

SHEET 2 OF 4

STATE OF NORTH CAROLINA
DEPARTMENT OF TRANSPORTATION
RALEIGH

GENERAL DRAWING

FOR BRIDGE OVER STONEY CREEK ON SR 1613 BETWEEN SR 1770 AND US 64

| REVISIONS | | | | | | SHEET NO. |
|---|---|---|---|---|---|---|
| NO. | BY: | DATE: | NO. | BY: | DATE: | S-2 |
| 1 | | | 3 | | | TOTAL SHEETS |
| 2 | | | 4 | | | 93 |

DRAWN BY : HARISH SHAH DATE : 12/10
CHECKED BY : T. H. FANG DATE : 3/28/11

23-MAY-2011 09:38
Z:\TIPProjects-U\U4019\Structures\str1\FinalPlans\u4019_sd_gd1.dgn
tfang

STR. #1

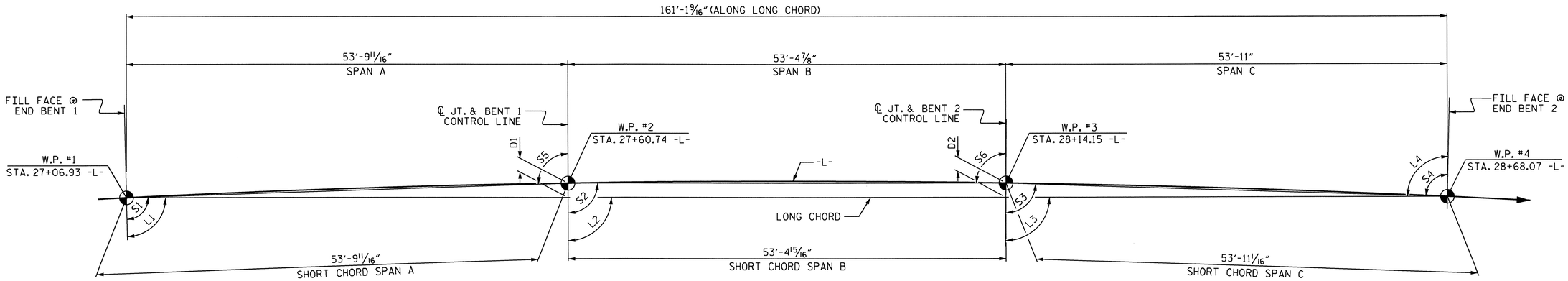


| ANGLES | | | | OFFSETS | |
|---|---|---|---|---|---|
| LONG CHORD | | SHORT CHORD | | | |
| L1 | 89°-05'-23" | S1 | 89°-52'-41" | D1 | 8 7/8" |
| L2 | 89°-49'-18" | S2 | 89°-49'-21" | D2 | 8 7/8" |
| L3 | 90°-09'-59" | S3 | 89°-22'-44" | | |
| L4 | 90°-49'-38" | S4 | 90°-02'-22" | | |
| | | S5 | 90°-36'-36" | | |
| | | S6 | 90°-10'-02" | | |

OFFSETS "D" ARE MEASURED ALONG ℄ BENT. ALL OTHER OFFSETS ARE NEGLIGIBLE (LESS THAN 1/16") AND ARE NOT SHOWN.

## LONG CHORD LAYOUT

## HORIZONTAL CURVE DATA -L-

PI STA.27+68.54
△ = 12°-08'-35.0" (RT)
D = 1°-28'-08.8"
L = 826.55'
T = 414.83'
R = 3900.00'

## FOUNDATION NOTES

FOR PILES, SEE SPECIAL PROVISIONS.

FOR DRILLED PIERS, SEE SPECIAL PROVISIONS.

DRIVE PILES AT END BENTS 1 AND 2 TO A REQUIRED BEARING CAPACITY OF 100 TONS PER PILE. THE REQUIRED BEARING CAPACITY IS EQUAL TO THE ALLOWABLE BEARING CAPACITY WITH A MINIMUM FACTOR OF SAFETY OF TWO.

THE ALLOWABLE BEARING CAPACITY FOR PILES AT END BENTS 1 AND 2 IS 50 TONS PER PILE.

DRILLED PIERS AT BENTS 1 AND 2 ARE DESIGNED FOR BOTH SKIN FRICTION AND END BEARING. CHECK FIELD CONDITIONS FOR THE REQUIRED END BEARING CAPACITY OF 75 TSF.

SID INSPECTIONS MAY BE REQUIRED FOR DRILLED PIERS. THE ENGINEER WILL DETERMINE THE NEED FOR SID INSPECTIONS.

CSL TUBES ARE REQUIRED AND CSL TESTING MAY BE REQUIRED FOR DRILLED PIERS. THE ENGINEER WILL DETERMINE THE NEED FOR CSL TESTING. FOR CROSSHOLE SONIC LOGGING, SEE SPECIAL PROVISIONS.

FOR STAGE I

PERMANENT STEEL CASINGS ARE REQUIRED FOR DRILLED PIERS AT BENT 1 (STAGE I). DO NOT EXTEND PERMANENT CASINGS BELOW ELEVATION 82 FT (LEFT), 84 FT (MIDDLE) AND 85 FT (RIGHT), RESPECTIVELY WITHOUT PRIOR APPROVAL FROM THE ENGINEER.

PERMANENT STEEL CASINGS MAY BE REQUIRED FOR DRILLED PIERS AT BENT 2 (STAGE I). IF REQUIRED, DO NOT EXTEND PERMANENT CASINGS BELOW ELEVATION 84 FT (LEFT), 85 FT (MIDDLE) AND 86 FT (RIGHT), RESPECTIVELY WITHOUT PRIOR APPROVAL FROM THE ENGINEER. THE ENGINEER WILL DETERMINE THE NEED FOR PERMANENT CASINGS.

DRILLED PIERS AT BENTS 1 AND 2 (STAGE I) ARE DESIGNED FOR AN APPLIED LOAD OF 210 TONS AT THE TOP OF COLUMNS.

INSTALL PERMANENT STEEL CASINGS AT BENT 1 (STAGE I) BY VIBRATING, SCREWING OR DRIVING PERMANENT CASING BEFORE EXCAVATING OR DISTURBING ANY MATERIAL BELOW ELEVATION 87.1 FT.

INSTALL DRILLED PIERS AT BENT 1 (STAGE I) THAT EXTEND TO AN ELEVATION NO HIGHER THAN 76 FT (LEFT), 79 FT (MIDDLE) AND 79 FT (RIGHT), RESPECTIVELY, SATISFY THE REQUIRED END BEARING CAPACITY AND HAVE A MINIMUM PENETRATION OF 6 FT INTO ROCK AS DEFINED BY THE DRILLED PIERS PROVISION.

INSTALL DRILLED PIERS AT BENT 2 (STAGE I) THAT EXTEND TO AN ELEVATION NO HIGHER THAN 78 FT, SATISFY THE REQUIRED END BEARING CAPACITY AND HAVE A MINIMUM PENETRATION OF 6 FT INTO ROCK AS DEFINED BY THE DRILLED PIERS PROVISION.

THE SCOUR CRITICAL ELEVATIONS FOR BENT 1 (STAGE I) IS ELEVATION 82 FT (LEFT), 84 FT (MIDDLE) & 85 FT (RIGHT), RESPECTIVELY. SCOUR CRITICAL ELEVATIONS ARE USED TO MONITOR POSSIBLE SCOUR PROBLEMS DURING THE LIFE OF THE STRUCTURE.

THE SCOUR CRITICAL ELEVATION FOR BENT 2 (STAGE I) IS ELEVATION 82 FT. SCOUR CRITICAL ELEVATIONS ARE USED TO MONITOR POSSIBLE SCOUR PROBLEMS DURING THE LIFE OF THE STRUCTURE.

FOR STAGE II

PERMANENT STEEL CASINGS MAY BE REQUIRED FOR DRILLED PIERS AT BENT 1 (STAGE II). IF REQUIRED, DO NOT EXTEND PERMANENT CASINGS BELOW ELEVATION 91 FT WITHOUT PRIOR APPROVAL FROM THE ENGINEER. THE ENGINEER WILL DETERMINE THE NEED FOR PERMANENT CASINGS.

PERMANENT STEEL CASINGS ARE REQUIRED FOR DRILLED PIERS AT BENT 2 (STAGE II). DO NOT EXTEND PERMANENT CASINGS BELOW ELEVATION 83 FT WITHOUT PRIOR APPROVAL FROM THE ENGINEER.

DRILLED PIERS AT BENTS 1 AND 2 (STAGE II) ARE DESIGNED FOR AN APPLIED LOAD OF 180 TONS AT THE TOP OF THE COLUMNS.

INSTALL DRILLED PIERS AT BENT 1 (STAGE II) THAT EXTEND TO AN ELEVATION NO HIGHER THAN 85 FT, SATISFY THE REQUIRED END BEARING CAPACITY AND HAVE A MINIMUM PENETRATION OF 6 FT INTO ROCK AS DEFINED BY THE DRILLED PIERS PROVISION.

INSTALL DRILLED PIERS AT BENT 2 (STAGE II) THAT EXTEND TO AN ELEVATION NO HIGHER THAN 78 FT, SATISFY THE REQUIRED END BEARING CAPACITY AND HAVE A MINIMUM PENETRATION OF 6 FT INTO ROCK AS DEFINED BY THE DRILLED PIERS PROVISION.

THE SCOUR CRITICAL ELEVATION FOR BENT 1 (STAGE II) IS ELEVATION 87 FT. SCOUR CRITICAL ELEVATIONS ARE USED TO MONITOR POSSIBLE SCOUR PROBLEMS DURING THE LIFE OF THE STRUCTURE.

THE SCOUR CRITICAL ELEVATION FOR BENT 2 (STAGE II) IS ELEVATION 82 FT. SCOUR CRITICAL ELEVATIONS ARE USED TO MONITOR POSSIBLE SCOUR PROBLEMS DURING THE LIFE OF THE STRUCTURE.

NORTH CAROLINA PROFESSIONAL SEAL 16301 ENGINEER T.H. FANG
T.H. Fang 5/23/11

PROJECT NO. U-4019
NASH COUNTY
STATION: 27+87.83 -L-

SHEET 3 OF 4

STATE OF NORTH CAROLINA
DEPARTMENT OF TRANSPORTATION
RALEIGH

GENERAL DRAWING

LONG CHORD LAYOUT

| REVISIONS | | | | | | SHEET NO. |
|---|---|---|---|---|---|---|
| NO. | BY: | DATE: | NO. | BY: | DATE: | S-3 |
| 1 | | | 3 | | | TOTAL SHEETS |
| 2 | | | 4 | | | 93 |

STR. #1

DRAWN BY : HARISH SHAH DATE : 12/10
CHECKED BY : T.H. FANG DATE : 3/11

23-MAY-2011 09:38
Z:\TIPProjects-U\U4019\Structures\str1\FinalPlans\u4019_sd_gd1.dgn
tfang

## TOTAL BILL OF MATERIAL

| | CONST., MAINT. & REMOVAL OF TEMP. ACCESS | REMOVAL OF EXISTING STRUCTURE | 3'-6" DIA. DRILLED PIERS IN SOIL | 3'-6" DIA. DRILLED PIERS NOT IN SOIL | PERMANENT STEEL CASING FOR 3'-6" DIA. DRILLED PIER | SID INSPECTION | CROSSHOLE SONIC LOGGING | UNCLASSIFIED STRUCTURE EXCAVATION | REINFORCED CONCRETE DECK SLAB | GROOVING BRIDGE FLOORS | CLASS A CONCRETE | BRIDGE APPROACH SLABS | REINFORCING STEEL | SPIRAL COLUMN REINFORCING STEEL | 45" PRESTRESSED CONCRETE GIRDERS | | HP 12 X 53 STEEL PILES | | THREE BAR METAL RAIL | CLASS I SURFACE PREPARATION | LATEX MODIFIED CONCRETE OVERLAY | PLACING & FINISHING OF LATEX MODIFIED CONC. OVERLAY | ELASTOMERIC BEARINGS | EVAZOTE JOINT SEALS | 5" CONCRETE SLOPE PROTECTION |
|---|---|---|---|---|---|---|---|---|---|---|---|---|---|---|---|---|---|---|---|---|---|---|---|---|---|
| | LUMP SUM | LUMP SUM | LIN. FT. | LIN. FT. | LIN. FT. | EACH | EACH | LUMP SUM | SQ. FT. | SQ. FT. | CU. YDS. | LUMP SUM | LBS. | LBS. | NO. | LIN. FT. | NO. | LIN. FT. | LIN. FT. | SQ. YDS. | CU. YDS. | SQ. YDS. | LUMP SUM | LUMP SUM | SQ. YDS. |
| SUPERSTRUCTURE | | | | | | | | | 13,014 | 20,766 | | | | | 27 | 1,426.93 | | | 307.29 | 900 | 35.0 | 900 | | | |
| END BENT 1 | | | | | | | | | | | 38.4 | | 4,601 | | | | 19 | 345 | | | | | | | 455 |
| BENT 1 | | | 43.0 | 33.0 | 46.14 | | | | | | 43.3 | | 15,232 | 2,548 | | | | | | | | | | | |
| BENT 2 | | | 53.0 | 37.0 | 58.11 | | | | | | 43.8 | | 16,041 | 2,858 | | | | | | | | | | | |
| END BENT 2 | | | | | | | | | | | 37.6 | | 4,601 | | | | 19 | 380 | | | | | | | 585 |
| TOTAL | LUMP SUM | LUMP SUM | 96.0 | 70.0 | 104.25 | 1 | 1 | LUMP SUM | 13,014 | 20,766 | 163.1 | LUMP SUM | 40,475 | 5,406 | 27 | 1,426.93 | 38 | 725 | 307.29 | 900 | 35.0 | 900 | LUMP SUM | LUMP SUM | 1040 |

BM#2: R.R. SPIKE IN BASE OF 24" OAK, 49.76' RIGHT OF STA. 26+54.01 -L-, ELEVATION 111.02.

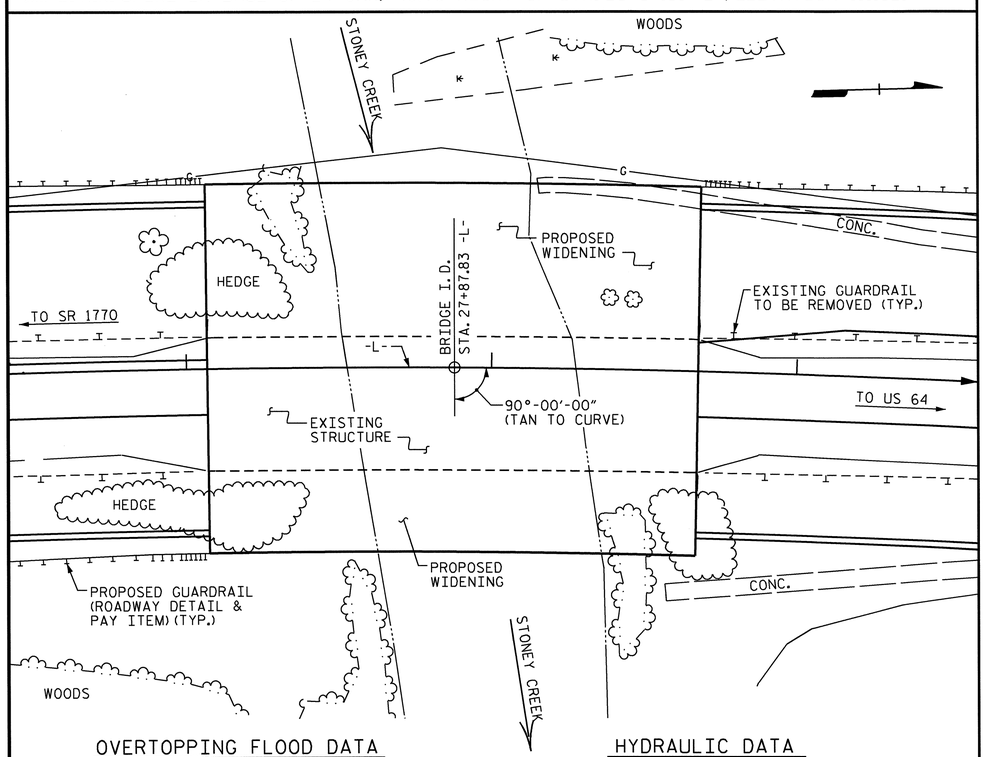


### OVERTOPPING FLOOD DATA

OVERTOPPING DISCHARGE <22,000 CFS.

FREQUENCY OF OVERTOPPING FLOOD 500 ± YRS.

OVERTOPPING FLOOD ELEVATION 115.9 ±

### HYDRAULIC DATA

DESIGN DISCHARGE 12,000 CFS.

FREQUENCY OF DESIGN FLOOD 50 YEARS

DESIGN HIGH WATER ELEVATION 108.0

DRAINAGE AREA 114 SQ. MI.

BASIC DISCHARGE (Q100) 13,900 CFS.

BASIC HIGH WATER ELEVATION 109.5

FOR UTILITY INFORMATION, SEE UTILITY PLANS AND SPECIAL PROVISIONS.

## LOCATION SKETCH

## NOTES

ASSUMED LIVE LOAD = HS-20 OR ALTERNATE LOADING.

THIS BRIDGE HAS BEEN DESIGNED BY THE STRENGTH DESIGN METHOD AS SPECIFIED IN AASHTO STANDARD SPECIFICATIONS.

FOR OTHER DESIGN DATA AND GENERAL NOTES, SEE SHEET SN.

FOR EROSION CONTROL MEASURES SEE EROSION CONTROL PLANS.

THIS STRUCTURE HAS BEEN DESIGNED IN ACCORDANCE WITH HEC 18, "EVALUATING SCOUR AT BRIDGES", MAY, 2001.

THE EXISTING BRIDGE SHALL BE PARTIALLY REMOVED BY SAWING AND/OR NON-SHATTERING METHODS, SUCH THAT DEBRIS WILL NOT FALL INTO THE WATER. THE CONTRACTOR SHALL REMOVE THE BRIDGE AND SUBMIT PLANS FOR DEMOLITION IN ACCORDANCE WITH ARTICLE 402-2 OF THE STANDARD SPECIFICATIONS. FOR REMOVAL OF EXISTING STRUCTURE, SEE SPECIAL PROVISIONS.

THE CONTRACTOR SHALL PROVIDE INDEPENDENT ASSURANCE SAMPLES OF REINFORCING STEEL AS FOLLOWS: FOR PROJECTS REQUIRING UP TO 400 TONS OF REINFORCING STEEL, ONE 30 INCH SAMPLE OF EACH SIZE BAR USED, AND FOR PROJECTS REQUIRING OVER 400 TONS OF REINFORCING STEEL, TWO 30 INCH SAMPLES OF EACH SIZE BAR USED. THE BARS FROM WHICH THE SAMPLES ARE TAKEN MUST THEN BE SPLICED WITH REPLACEMENT BARS OF THE SIZE AND LENGTH OF THE SAMPLE, PLUS A MINIMUM LAP SPLICE OF THIRTY BAR DIAMETERS. PAYMENT FOR THE SAMPLES OF REINFORCING STEEL SHALL BE CONSIDERED INCIDENTAL TO VARIOUS PAY ITEMS.

THE MATERIAL SHOWN IN THE CROSS-HATCHED AREA ON SHEET NO. S-1 SHALL BE EXCAVATED FOR A DISTANCE OF 45 FT LEFT AND 60 FT RIGHT AT END BENTS 1 AND 2 OF CENTERLINE ROADWAY AS DIRECTED BY THE ENGINEER. THIS WORK WILL BE PAID FOR AT THE CONTRACT LUMP SUM PRICE FOR UNCLASSIFIED STRUCTURE EXCAVATION.

THE SUBSTRUCTURE OF THE EXISTING BRIDGE INDICATED ON THE PLANS IS FROM THE BEST INFORMATION AVAILABLE. SINCE THIS INFORMATION IS SHOWN FOR THE CONVENIENCE OF THE CONTRACTOR, THE CONTRACTOR SHALL HAVE NO CLAIM WHATSOEVER AGAINST THE DEPARTMENT OF TRANSPORTATION FOR ANY DELAYS OR ADDITIONAL COST INCURRED BASED ON DIFFERENCES BETWEEN THE EXISTING BRIDGE SUBSTRUCTURE SHOWN ON THE PLANS AND THE ACTUAL CONDITIONS AT THE PROJECT SITE.

AT THE CONTRACTOR'S OPTION, RIP RAP ON THE EXISTING END BENT SLOPES MAY BE USED IN THE TEMPORARY WORK PADS. ANY RECYCLED RIP RAP SHALL BE CLEANED AND ALL DIRT AND DEBRIS REMOVED BEFORE PLACING RIP RAP IN THE TEMPORARY WORK PADS. NO PAYMENT WILL BE MADE FOR RECYCLED RIP RAP AS THIS IS CONSIDERED INCIDENTAL TO THE WORKPAD PLACEMENT AND REMOVAL.

THE CLASS A & B RIP RAPS USED IN THE TEMPORARY WORK PADS SHOULD BE REMOVED AFTER COMPLETION OF BENT CONSTRUCTION, SEE SPECIAL PROVISIONS FOR CONSTRUCTION, MAINTENANCE AND REMOVAL OF TEMPORARY ACCESS AT STATION 27+87.83 -L-.

REMOVABLE FORMS MAY BE USED IN LIEU OF METAL STAY-IN-PLACE FORMS IN ACCORDANCE WITH ARTICLE 420-3 OF THE STANDARD SPECIFICATIONS.

FOR LIMITS OF TEMPORARY SHORING FOR MAINTENANCE OF TRAFFIC, SEE TRAFFIC CONTROL PLANS. FOR TEMPORARY SHORING PAY ITEM, SEE ROADWAY PLANS.

NEEDLE BEAMS WILL NOT BE ALLOWED UNLESS OTHERWISE CALLED FOR ON THE PLANS OR APPROVED BY THE ENGINEER.

THE THICKNESS OF THE LATEX MODIFIED CONCRETE OVERLAY WILL VARY ALONG THE CONSTRUCTION JOINTS, ALONG THE LENGTH OF THE BRIDGE, AND ALONG THE LENGTHS OF THE APPROACH SLABS. THE AVERAGE THICKNESS ON THE LEFT SIDE OF THE BRIDGE DECK AS SHOWN IS 1 3/8" AND ON THE RIGHT SIDE AS SHOWN IS 1 1/8". THE AVERAGE THICKNESS ON THE APPROACH SLABS IS 2 1/4". THE QUANTITIES OF LATEX MODIFIED CONCRETE SHOWN IN THE BILLS OF MATERIAL ARE BASED ON THE AVERAGE THICKNESSES.

FOR LATEX MODIFIED CONCRETE, SEE SPECIAL PROVISIONS.

STEEL SHEET PILING REQUIRED FOR SHORING SHALL BE HOT ROLLED.

FOR REPAIR OF BRIDGE DECKS AND APPROACH PAVEMENTS, SEE SPECIAL PROVISIONS.

FOR FALSEWORK AND FORMWORK, SEE SPECIAL PROVISIONS.

FOR GROUT FOR STRUCTURES, SEE SPECIAL PROVISIONS.

FOR CURING CONCRETE, SEE SPECIAL PROVISIONS.

FOR SUBMITTAL OF WORKING DRAWINGS, SEE SPECIAL PROVISIONS.

FOR CRANE SAFETY, SEE SPECIAL PROVISIONS.

FOR PRESTRESSED CONCRETE MEMBERS, SEE SPECIAL PROVISIONS.

FOR PLACING LOAD ON STRUCTURE MEMBERS, SEE SPECIAL PROVISIONS.

NORTH CAROLINA PROFESSIONAL SEAL 16301 ENGINEER TING HSIANG FANG

5/23/11

PROJECT NO. U-4019

NASH COUNTY

STATION: 27+87.83 -L-

SHEET 4 OF 4

STATE OF NORTH CAROLINA
DEPARTMENT OF TRANSPORTATION
RALEIGH

GENERAL DRAWING
FOR BRIDGE OVER STONEY CREEK ON SR 1613 BETWEEN SR 1770 AND US 64

| REVISIONS | | | | | | SHEET NO. |
|---|---|---|---|---|---|---|
| NO. | BY: | DATE: | NO. | BY: | DATE: | S-4 |
| 1 | | | 3 | | | TOTAL SHEETS |
| 2 | | | 4 | | | 93 |

DRAWN BY : H. B. HSAH DATE : 1/06/11
CHECKED BY : T.H. FANG DATE : 2/15/11

23-MAY-2011 09:38
Z:\TIPProjects-U\U4019\Structures\strl\Final Plans\u4019_sd_gd1.dgn
ttfang

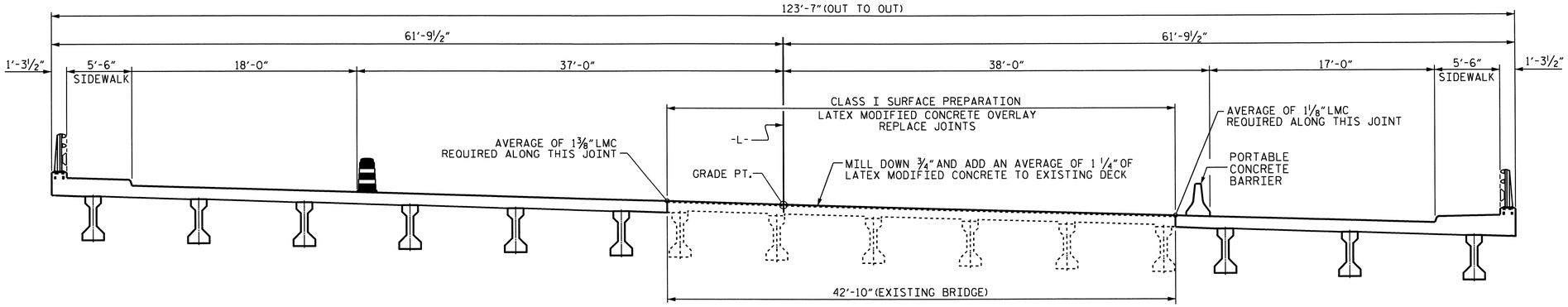


STAGE III TRAFFIC

STAGE III CONSTRUCTION

PERFORM CLASS I SURFACE PREPARATION TO EXISTING DECK AND APPROACH SLABS.
CONSTRUCT LATEX MODIFIED CONCRETE OVERLAY.
REMOVE AND REPLACE EXISTING JOINTS.

STAGE III TRAFFIC

## NOTE

FOR MAINTENANCE OF TRAFFIC, SEE TRAFFIC CONTROL PLANS.

SEE TRAFFIC CONTROL PLANS FOR LOCATION AND PAY LIMIT OF THE PORTABLE CONCRETE BARRIER.

CARE SHALL BE TAKEN DURING THE PARTIAL REMOVAL OF THE EXISTING STRUCTURE. DAMAGE TO THE REMAINING STRUCTURE SHALL BE REPAIRED BY THE CONTRACTOR AT NO ADDITIONAL COST TO THE DEPARTMENT. THE METHOD OF REPAIR SHALL BE SUBJECT TO APPROVAL BY THE ENGINEER.

ALL GIVEN DIMENSIONS ARE RADIAL.

NOTE
DIMENSIONS VARY DUE TO DIFFERENT RADII
℄ -L- R = 3900.00'.
℄ EXISTING BRIDGE R = 5719.58'

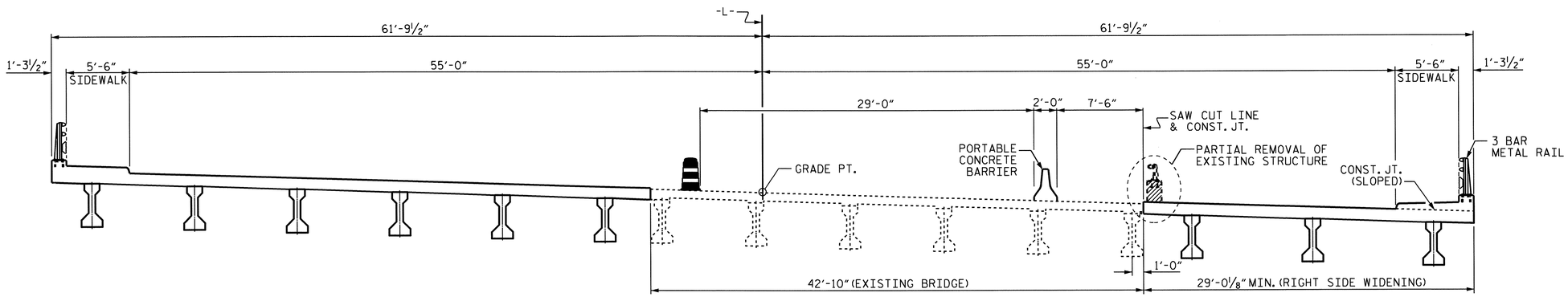


STAGE II TRAFFIC

STAGE II CONSTRUCTION

REMOVE THE RIGHT EXISTING RAIL, PARAPET, DECK, AND CURTAIN WALL.
REMOVE EXISTING RIGHT END BENT WINGS AND END BLOCKS.
CONSTRUCT PROPOSED RIGHT BRIDGE AND APPROACH SLAB WIDENING.

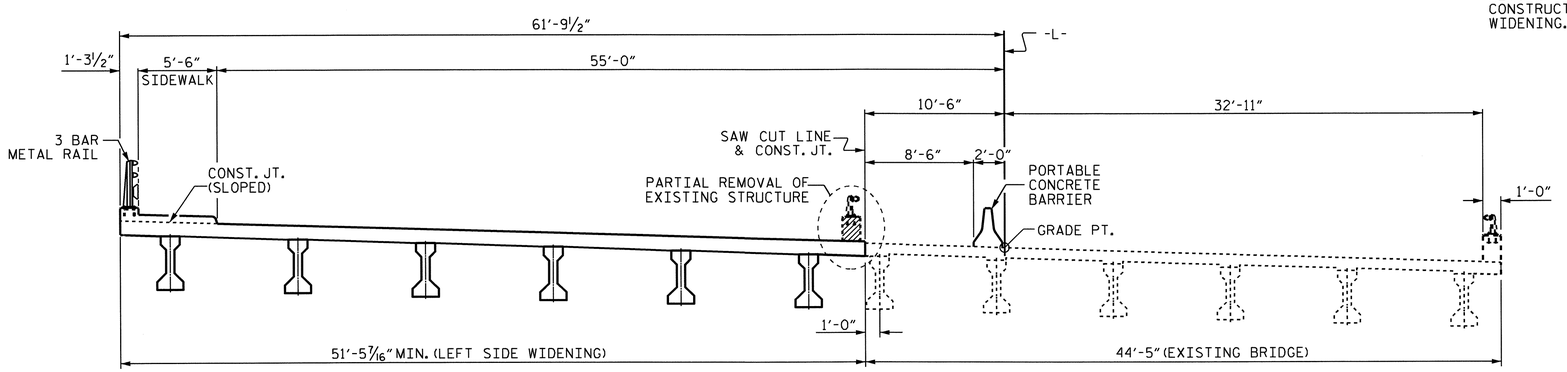


STAGE I CONSTRUCTION

REMOVE LEFT EXISTING RAIL, PARAPET, DECK, AND CURTAIN WALL.
REMOVE LEFT END BENT WINGS AND END BLOCKS.
CONSTRUCT PROPOSED LEFT BRIDGE AND APPROACH SLAB WIDENING.

STAGE I TRAFFIC

PROJECT NO. U-4019
NASH COUNTY
STATION: 27+87.83 -L-

STATE OF NORTH CAROLINA
DEPARTMENT OF TRANSPORTATION
RALEIGH

CONSTRUCTION SEQUENCE

NORTH CAROLINA PROFESSIONAL SEAL 16301 ENGINEER TING-HSIUNG FANG
5/23/11

| REVISIONS | | | | | | | | SHEET NO. |
|---|---|---|---|---|---|---|---|---|
| NO. | BY: | DATE: | NO. | BY: | DATE: | | | S-5 |
| 1 | | | 3 | | | | | TOTAL SHEETS |
| 2 | | | 4 | | | | | 93 |

DRAWN BY : S. WANCE DATE : 1-11
CHECKED BY : J. FRYE DATE : 5/11

23-MAY-2011 09:38
Z:\TIPProjects-U\U4019\Structures\str1\FinalPlans\u4019_sd_csql.dgn
tfang

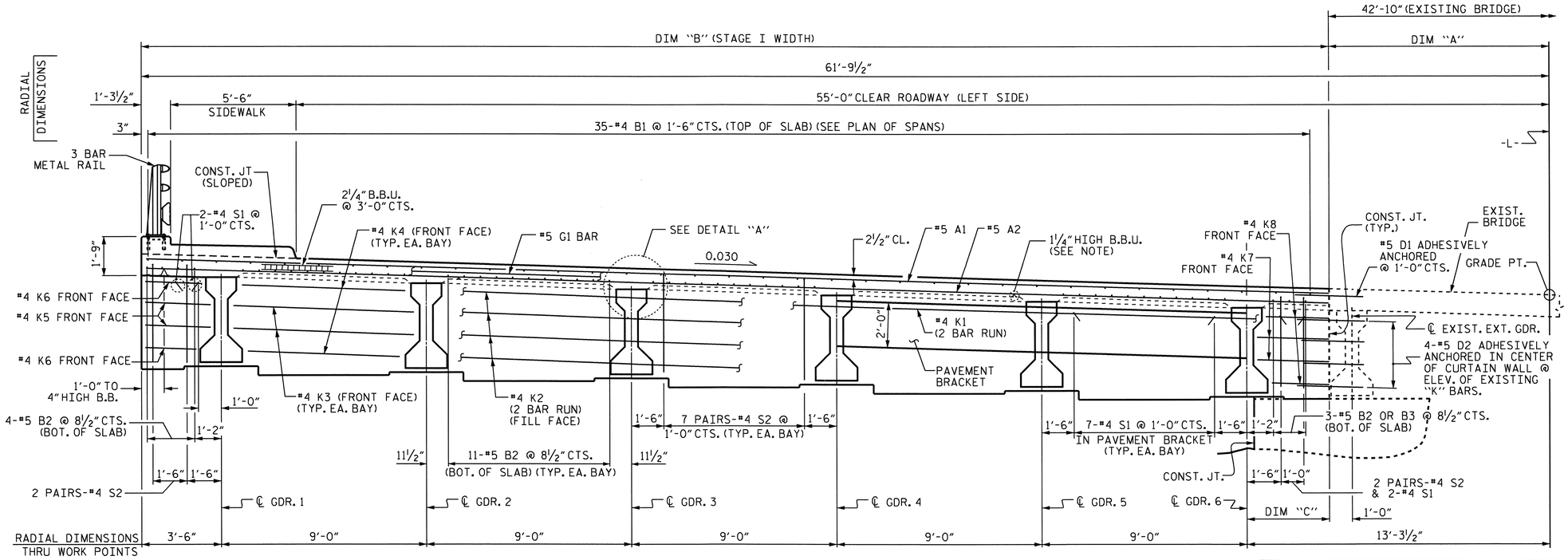


PART TYPICAL SECTION
SHOWING END BENT CURTAIN WALL

END ELEVATION

PART TYPICAL SECTION
SHOWING PAVEMENT BRACKET & CLOSURE BAY

MAINTAIN THE 2'-6" SPLICE LENGTH BETWEEN THE #5 D1 DOWELS AND THE "A" BARS IN THE PROPOSED DECK SLAB WIDENING.

## NOTES

PROVIDE 1¼" HIGH BEAM BOLSTERS UPPER AT 4'-0" CTS. ATOP THE METAL STAY-IN-PLACE FORMS TO SUPPORT THE BOTTOM MAT OF "A" BARS. WHEN USING REMOVABLE FORMS, PROVIDE CONTINUOUS HIGH CHAIRS FOR METAL DECK (C.H.C.M.) @ 4'-0" CTS. WITH A HEIGHT TO SUPPORT THE BOTTOM MAT OF "A" BARS A CLEAR DISTANCE OF 2½" ABOVE THE TOP OF THE REMOVABLE FORM.
LONGITUDINAL STEEL MAY BE SHIFTED SLIGHTLY, AS NECESSARY, TO AVOID INTERFERENCE WITH STIRRUPS IN PRESTRESSED CONCRETE GIRDERS.
D1 DOWELS SHALL BE PLACED IN THE SAME HORIZONTAL PLANE AS THE TOP SLAB REINFORCING STEEL.

INSTALL D1 AND D2 DOWELS INTO THE EXISTING DECK SLAB AND CURTAIN WALL USING AN ADHESIVE ANCHORING SYSTEM. LEVEL 1 FIELD TESTING IS REQUIRED. THE YIELD LOAD OF THE DOWELS IS 18.6 KIPS. FOR ADHESIVELY ANCHORED ANCHOR BOLTS OR DOWELS, SEE SPECIAL PROVISIONS.

INSTALL #5 K13 & K33 BARS INTO THE EXISTING DECK SLAB USING AN ADHESIVE ANCHORING SYSTEM. NO FIELD TESTING OF THE ADHESIVE BONDING SYSTEM IS REQUIRED.

PREVIOUSLY CAST CONCRETE IN EACH SPAN SHALL HAVE ATTAINED A MINIMUM COMPRESSIVE STRENGTH OF 3,000 PSI BEFORE DECK CONCRETE IS CAST IN THE SPAN.

A FULL DEPTH SAW CUT SHALL BE MADE AND EXISTING CONCRETE REMOVED IN ACCORDANCE WITH PLAN DETAILS.

DURING THE JOINT INSTALLATION PROCEDURE, THE JOINT AND SURROUNDING AREA SHALL BE KEPT CLEAN AND FREE OF DEBRIS.

| WORK PT. | DIM. "A" | DIM. "B" | DIM. "C" |
|---|---|---|---|
| #1 | 10'-3 3/16" | 51'-6 5/16" | 3'-0 5/16" |
| #2 | 10'-0 5/8" | 51'-8 7/8" | 3'-2 7/8" |
| #3 | 10'-0 15/16" | 51'-8 9/16" | 3'-2 9/16" |
| #4 | 10'-4 1/16" | 51'-5 7/16" | 2'-11 7/16" |

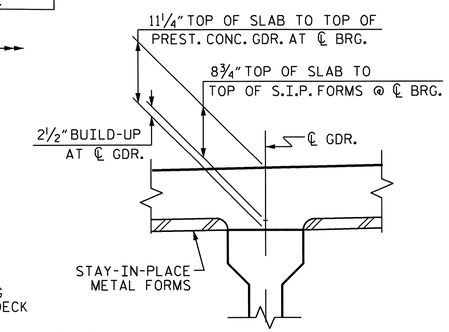


DETAIL "A"

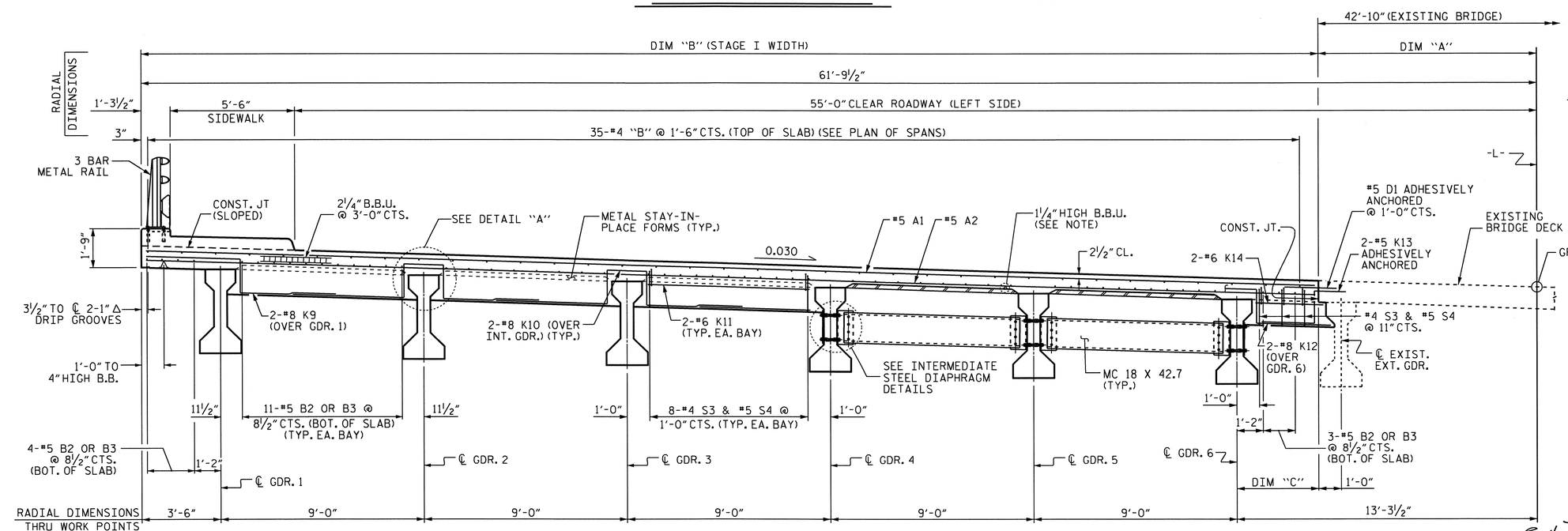


PART TYPICAL SECTION
SHOWING BENT DIAPHRAGMS

TYPICAL SECTION

PART TYPICAL SECTION
SHOWING INTERMEDIATE DIAPHRAGMS AND BENT DIAPHRAGM IN CLOSURE BAY

PROJECT NO. U-4019
NASH COUNTY
STATION: 27+87.83 -L-

SHEET 1 OF 3

STATE OF NORTH CAROLINA
DEPARTMENT OF TRANSPORTATION
RALEIGH
SUPERSTRUCTURE

TYPICAL SECTION
STAGE I
LEFT WIDENING

NORTH CAROLINA PROFESSIONAL SEAL 16301 ENGINEER TING HSIUNG FANG
5/23/11

| REVISIONS | | | | | | | | SHEET NO. |
|---|---|---|---|---|---|---|---|---|
| NO. | BY: | DATE: | NO. | BY: | DATE: | | | S-6 |
| 1 | | | 3 | | | | | TOTAL SHEETS |
| 2 | | | 4 | | | | | 93 |

STR. #1

DRAWN BY : QT NGUYEN DATE : 10-15-10
CHECKED BY : T. H. FANG DATE : 4-4-11

23-MAY-2011 09:38
Z:\TIPProjects-U\U4019\Structures\str1\FinalPlans\U4019_SD_TS1.dgn
ttfang

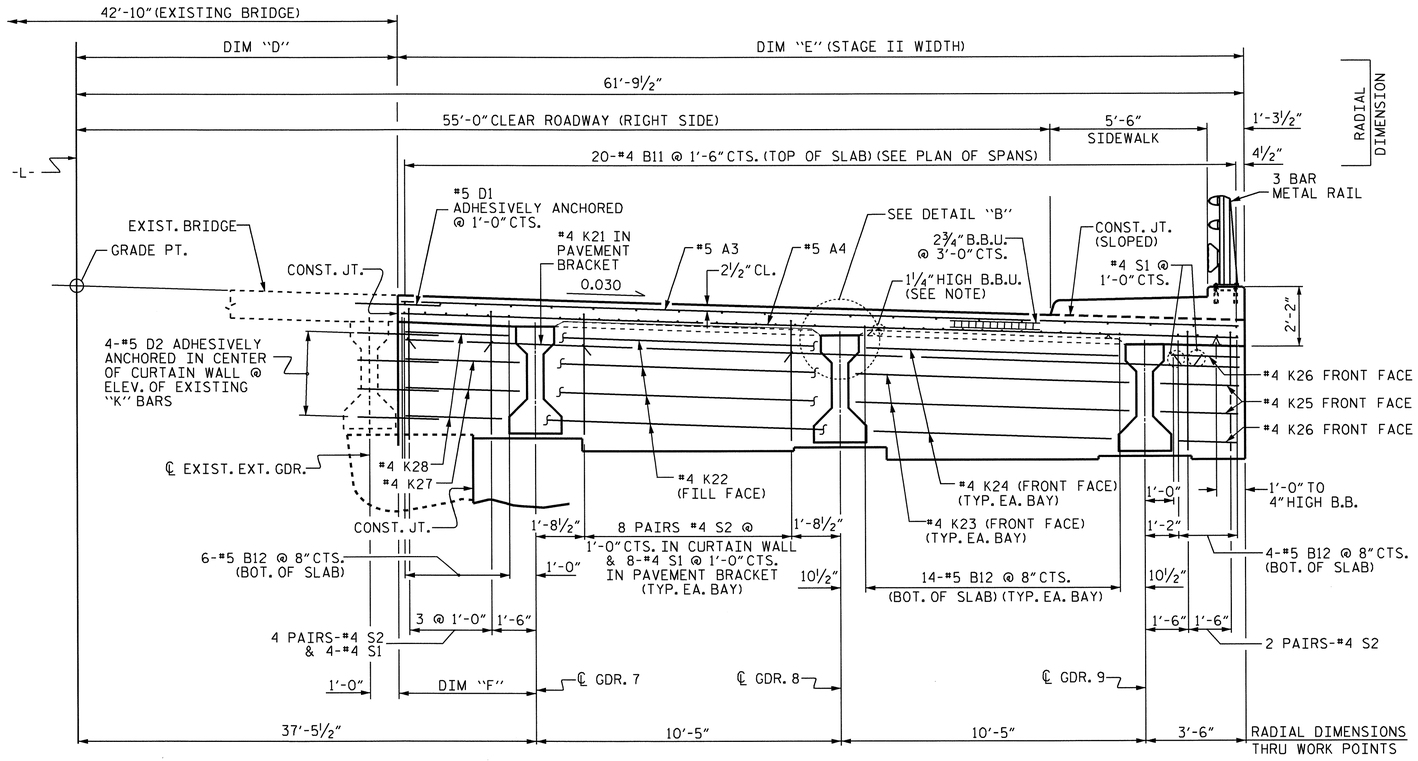


MAINTAIN THE 2'-6" SPLICE LENGTH BETWEEN THE #5 D1 DOWELS AND THE "A" BARS IN THE PROPOSED DECK SLAB WIDENING.

## END ELEVATION

PAVEMENT BRACKET NOT SHOWN FOR CLARITY.

| WORK PT. | DIM. "D" | DIM. "E" | DIM. "F" |
|---|---|---|---|
| #1 | 32'-6 13/16" | 29'-2 11/16" | 4'-10 11/16" |
| #2 | 32'-9⅜" | 29'-0⅛" | 4'-8⅛" |
| #3 | 32'-9 1/16" | 29'-0 7/16" | 4'-8 7/16" |
| #4 | 32'-5 15/16" | 29'-3 9/16" | 4'-11 9/16" |

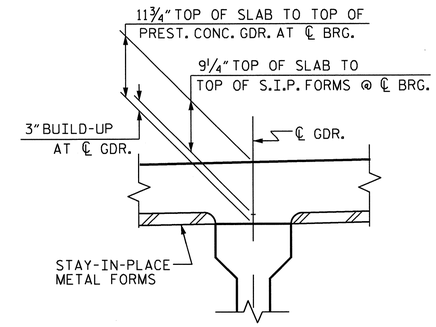


## DETAIL "B"

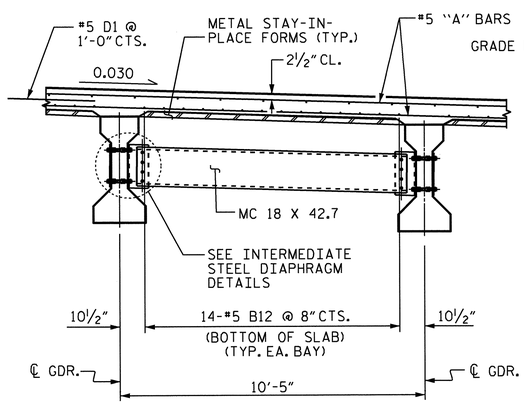


## PART TYPICAL SECTION

SHOWING INTERMEDIATE DIAPHRAGMS

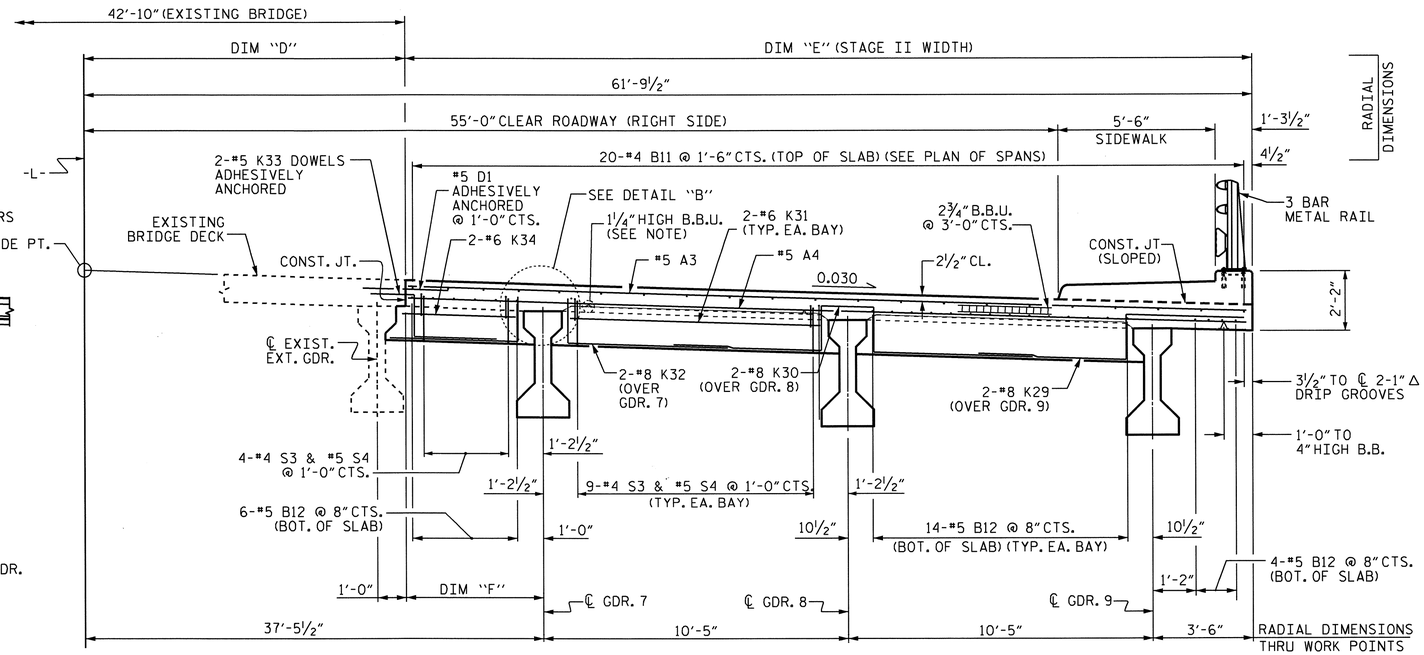


## TYPICAL SECTION

SHOWING BENT DIAPHRAGMS

NORTH CAROLINA PROFESSIONAL SEAL 16301 ENGINEER
5/23/11

PROJECT NO. U-4019

NASH COUNTY

STATION: 27+87.83 -L-

SHEET 2 OF 3

STATE OF NORTH CAROLINA
DEPARTMENT OF TRANSPORTATION
RALEIGH

SUPERSTRUCTURE

TYPICAL SECTION
STAGE II
RIGHT WIDENING

| REVISIONS | | | | | | SHEET NO. |
|---|---|---|---|---|---|---|
| NO. | BY: | DATE: | NO. | BY: | DATE: | S-7 |
| 1 | | | 3 | | | TOTAL SHEETS |
| 2 | | | 4 | | | 93 |

STR. #1

DRAWN BY : QT NGUYEN DATE : 10-15-10
CHECKED BY : E.I. OMILE DATE : 12-10-10

23-MAY-2011 09:38
Z:\TIPProjects-U\U4019\Structures\str1\Final Plans\U4019_SD_TS1.dgn
tfang

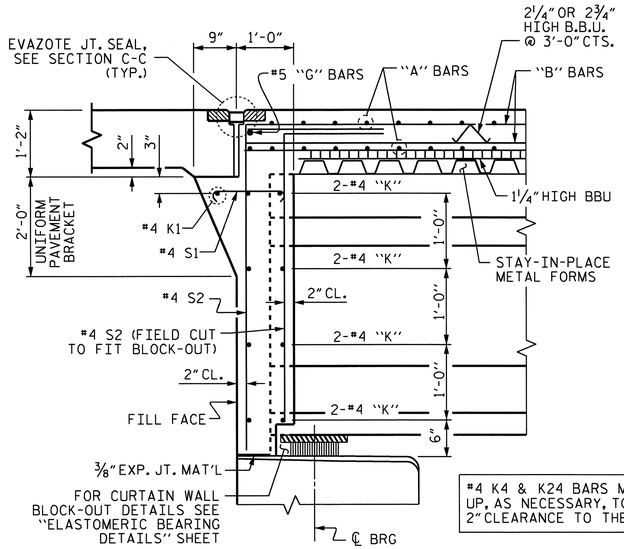


## SECTION THRU END BENT

(END BENT 1 SHOWN, END BENT 2 SIMILAR)
#5 "G" BAR MAY BE SHIFTED SLIGHTLY, AS NECESSARY, TO CLEAR REINFORCING STEEL AND STIRRUPS.

#4 K4 & K24 BARS MAY BE SHIFTED UP, AS NECESSARY, TO MAINTAIN A 2" CLEARANCE TO THE BLOCK-OUTS.

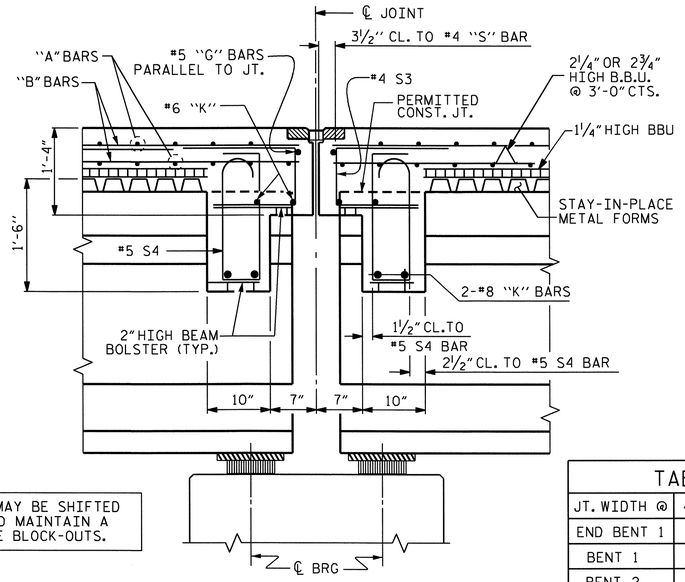


## SECTION THRU BENT DIAPHRAGM

CONCRETE IN BENT DIAPHRAGMS MAY BE CLASS A IN LIEU OF CLASS AA. PAYMENT SHALL BE MADE UNDER THE UNIT CONTRACT PRICE FOR REINFORCED CONCRETE DECK SLAB.

| TABLE W | | | |
|---|---|---|---|
| JT. WIDTH @ | 45° F | 60° F | 90° F |
| END BENT 1 | 2" | 2" | 2" |
| BENT 1 | 2 1/16" | 2" | 1 13/16" |
| BENT 2 | 2 3/16" | 2" | 1 11/16" |
| END BENT 2 | 2" | 2" | 2" |

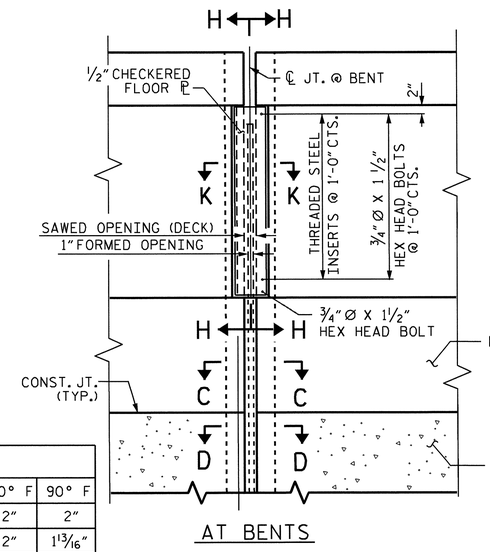


## AT BENTS

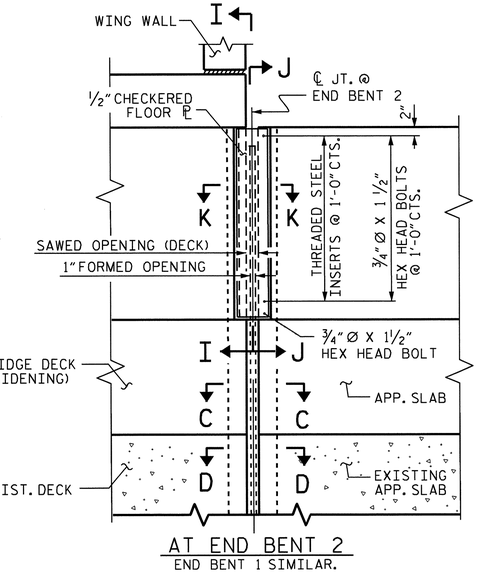


## AT END BENT 2

END BENT 1 SIMILAR.

## EVAZOTE JOINT SEAL FOR SIDEWALK

THE NOMINAL UNCOMPRESSED SEAL WIDTH OF THE EVAZOTE JOINT SEAL SHALL BE 2½".

FOR EVAZOTE JOINT SEALS, SEE SPECIAL PROVISIONS.

FOR ELASTOMERIC CONCRETE, SEE SPECIAL PROVISIONS.

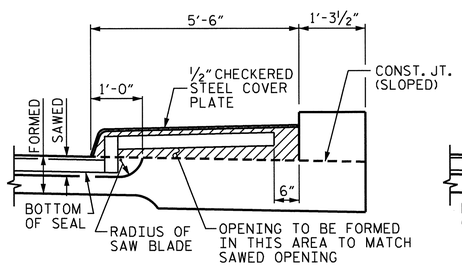


## SECTION H-H

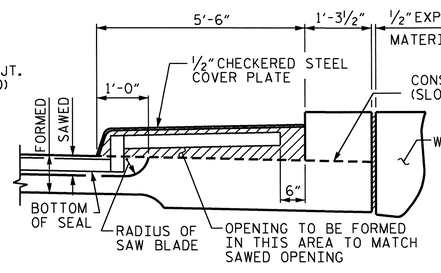


## SECTION I-I

COVER PLATE BOLTS AND CONCRETE INSERTS NOT SHOWN FOR CLARITY.

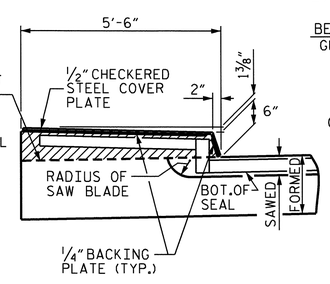


## SECTION J-J

(ON APPROACH SLAB)

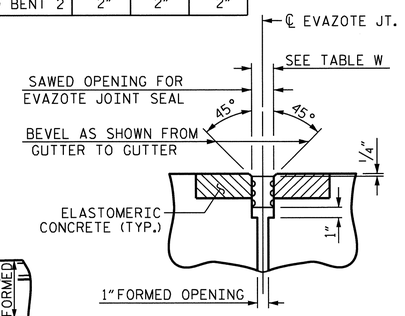


## SECTION C-C

EVAZOTE JOINT SEAL (EXPANSION)

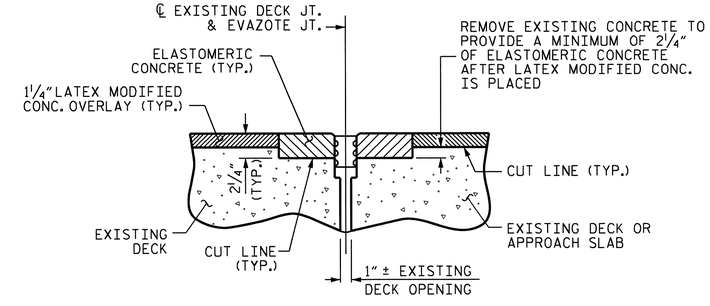


## SECTION D-D

REPAIRING EXISTING BRIDGE DECK JOINTS BY REPLACING EVAZOTE JOINT SEALS & ELASTOMERIC CONCRETE. (STAGE III CONSTRUCTION)

REMOVAL OF EXISTING CONCRETE IS INCIDENTAL TO THE UNIT PRICE BID FOR ELASTOMERIC CONC.

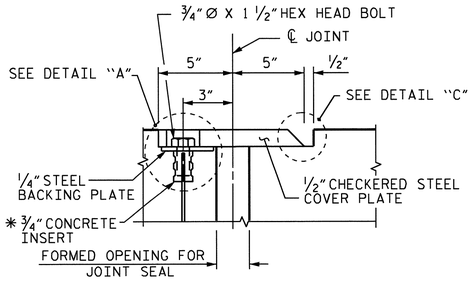


## SECTION K-K

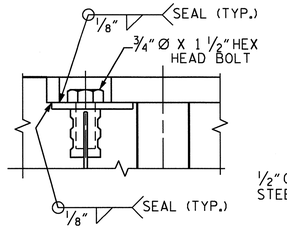


## DETAIL "A"

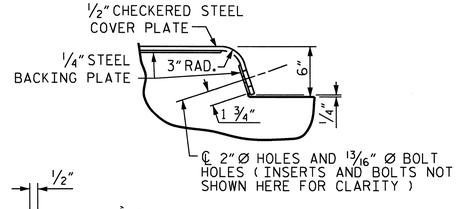


## DETAIL "B"

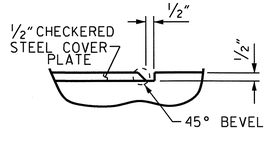


## DETAIL "C"

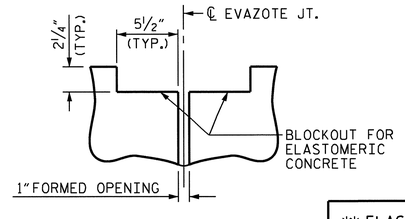


## SECTION C-C

EVAZOTE JOINT SEAL (PRE-SAWED ELASTOMERIC CONCRETE DIMENSIONS)

| ** ELASTOMERIC CONCRETE (CU. FT.) | | | |
|---|---|---|---|
| | STAGE | | |
| LOCATION | I | II | III |
| END BENT 1 | 8.9 | 5.0 | 7.4 |
| BENT 1 | 8.9 | 5.0 | 7.4 |
| BENT 2 | 8.9 | 5.0 | 7.4 |
| END BENT 2 | 8.9 | 5.0 | 7.4 |
| TOTAL | 35.6 | 20.0 | 29.6 |

** BASED ON THE MINIMUM BLOCKOUT SHOWN.

## JOINT SEAL DETAILS

* THE ¾" CONCRETE INSERTS SHALL BE CLOSED-END FERRULES WITH LOOPED WIRE STRUTS ATTACHED TO THEM. THE INSERTS SHALL CONFORM TO AASHTO M169, GRADE 12L14 AND SHALL HAVE A TENSILE WORKING LOAD CAPACITY OF 3000 LBS.

THE STEEL PLATES SHALL CONFORM TO AASHTO M270 GRADE 36 OR APPROVED EQUAL. AFTER FABRICATION, THE PLATES SHALL BE COMMERCIALLY BLAST CLEANED AND COATED WITH A MINIMUM THICKNESS OF 4 MILS (DRY) OF ZINC RICH PAINT, GALVANIZED OR METALLIZED TO A MINIMUM THICKNESS OF 6 MILS IN ACCORDANCE WITH THE STANDARD SPECIFICATIONS. FOR THERMAL SPRAYED COATINGS (METALLIZATION), SEE SPECIAL PROVISIONS.

THE 3/4" DIAMETER HEX HEAD BOLTS SHALL CONFORM TO ASTM F593 ALLOY 304 STAINLESS STEEL.

NO SEPARATE PAYMENT WILL BE MADE FOR FURNISHING AND INSTALLING THE COVER PLATES. THE ENTIRE COST OF THIS WORK SHALL BE INCLUDED IN THE LUMP SUM PRICE FOR EVAZOTE JOINT SEALS.

NORTH CAROLINA PROFESSIONAL SEAL 16301 ENGINEER TING HSIUNG FANG
5/23/11

PROJECT NO. U-4019
NASH COUNTY
STATION: 27+87.83 -L-

SHEET 3 OF 3

STATE OF NORTH CAROLINA
DEPARTMENT OF TRANSPORTATION
RALEIGH

SUPERSTRUCTURE

TYPICAL SECTION, EVAZOTE JOINT & SIDEWALK CHECKERED STEEL COVER PLATE DETAILS

| REVISIONS | | | | | | SHEET NO. |
|---|---|---|---|---|---|---|
| NO. | BY: | DATE: | NO. | BY: | DATE: | S-8 |
| 1 | | | 3 | | | TOTAL SHEETS |
| 2 | | | 4 | | | 93 |

DRAWN BY : QT NGUYEN DATE : 10-15-10
CHECKED BY : T. H. FANG DATE : 4-11-11

23-MAY-2011 09:38
Z:\TIPProjects-U\U4019\Structures\str1\FinalPlans\U4019_SD_TS1.dgn
ttfang

STR. #1

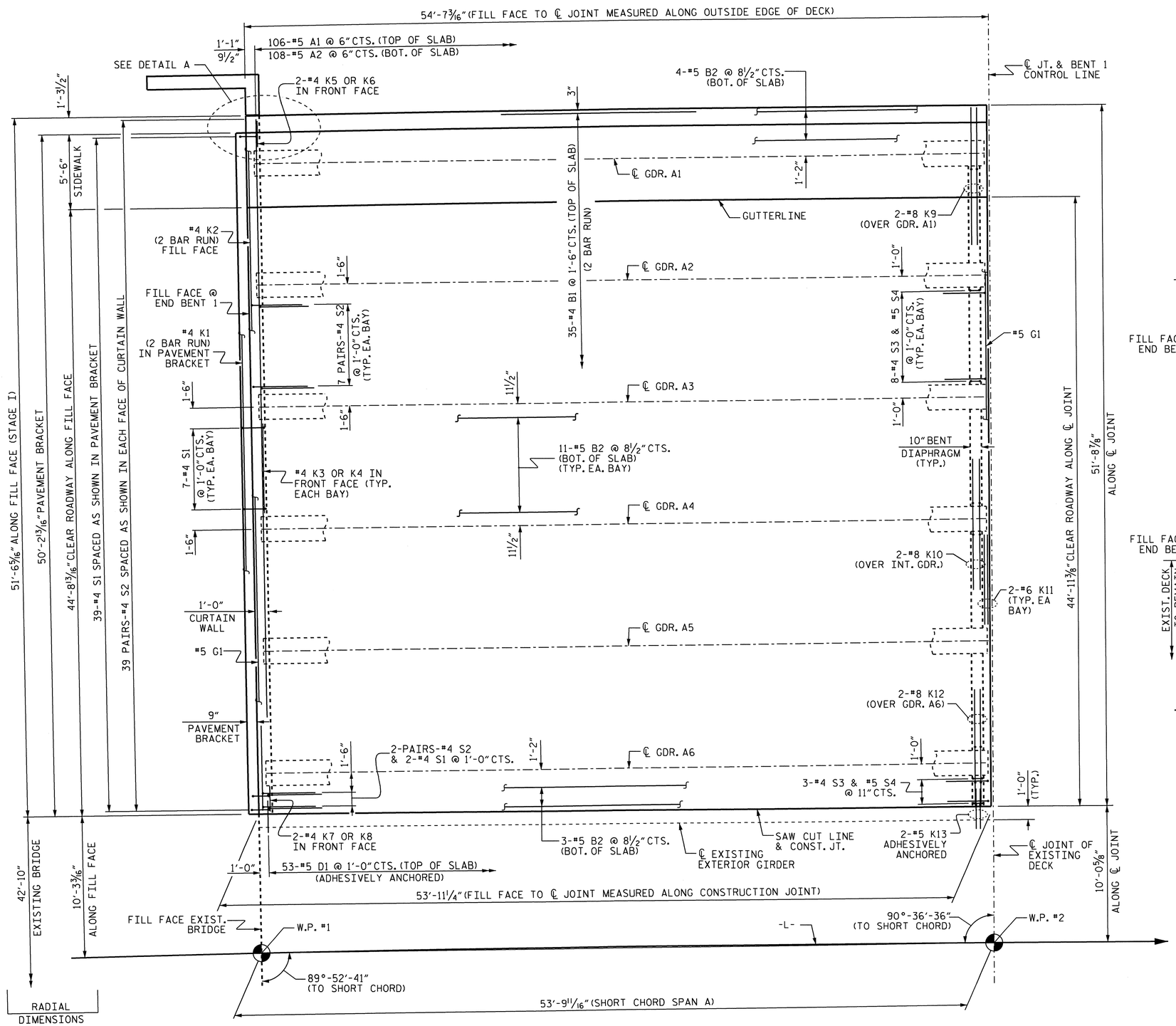


## SPAN A

℄ JOINT @ END BENT 1 AND #5 D2 BARS NOT SHOWN FOR CLARITY.
SET "A" BARS 2" CLEAR FROM OUTSIDE EDGE OF DECK.

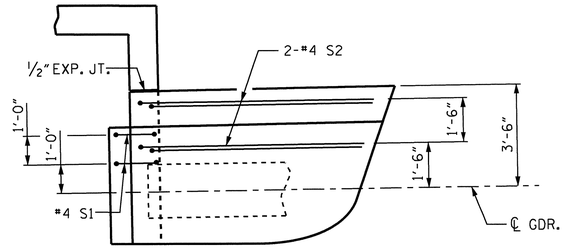


## DETAIL "A"

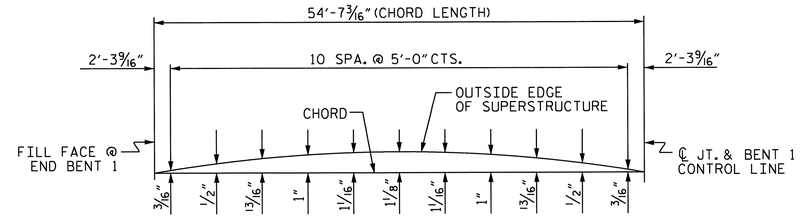


## ARC OFFSETS

LEFT OUTSIDE EDGE OF DECK WIDENING

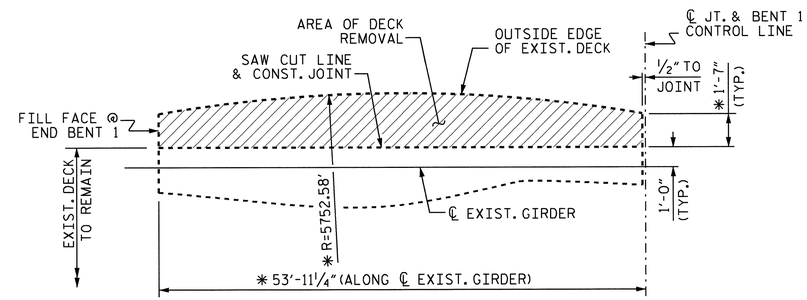


## LAYOUT OF EXISTING DECK REMOVAL

SHOWING LEFT OUTSIDE EDGE OF EXISTING DECK

* DIMENSION BASED ON THE BEST AVAILABLE INFORMATION FOR THE EXISTING BRIDGE. FIELD ADJUSTMENT MAY BE REQUIRED AS APPROVED BY THE ENGINEER.

PROJECT NO. U-4019
NASH COUNTY
STATION: 27+87.83 -L-

SHEET 1 OF 6

STATE OF NORTH CAROLINA
DEPARTMENT OF TRANSPORTATION
RALEIGH

SUPERSTRUCTURE

PLAN OF SPAN A
STAGE I

NORTH CAROLINA PROFESSIONAL SEAL 16301 ENGINEER TING HSIUNG FANG
5/23/11

| REVISIONS | | | | | | SHEET NO. |
|---|---|---|---|---|---|---|
| NO. | BY: | DATE: | NO. | BY: | DATE: | S-9 |
| 1 | | | 3 | | | TOTAL SHEETS |
| 2 | | | 4 | | | 93 |

STR. #1

DRAWN BY : QT NGUYEN DATE : 10-28-10
CHECKED BY : E.I. OMILE DATE : 12-10-10

23-MAY-2011 09:38
Z:\TIPProjects-U\U4019\Structures\str1\FinalPlans\U4019_SD_S1*.dgn
tfang

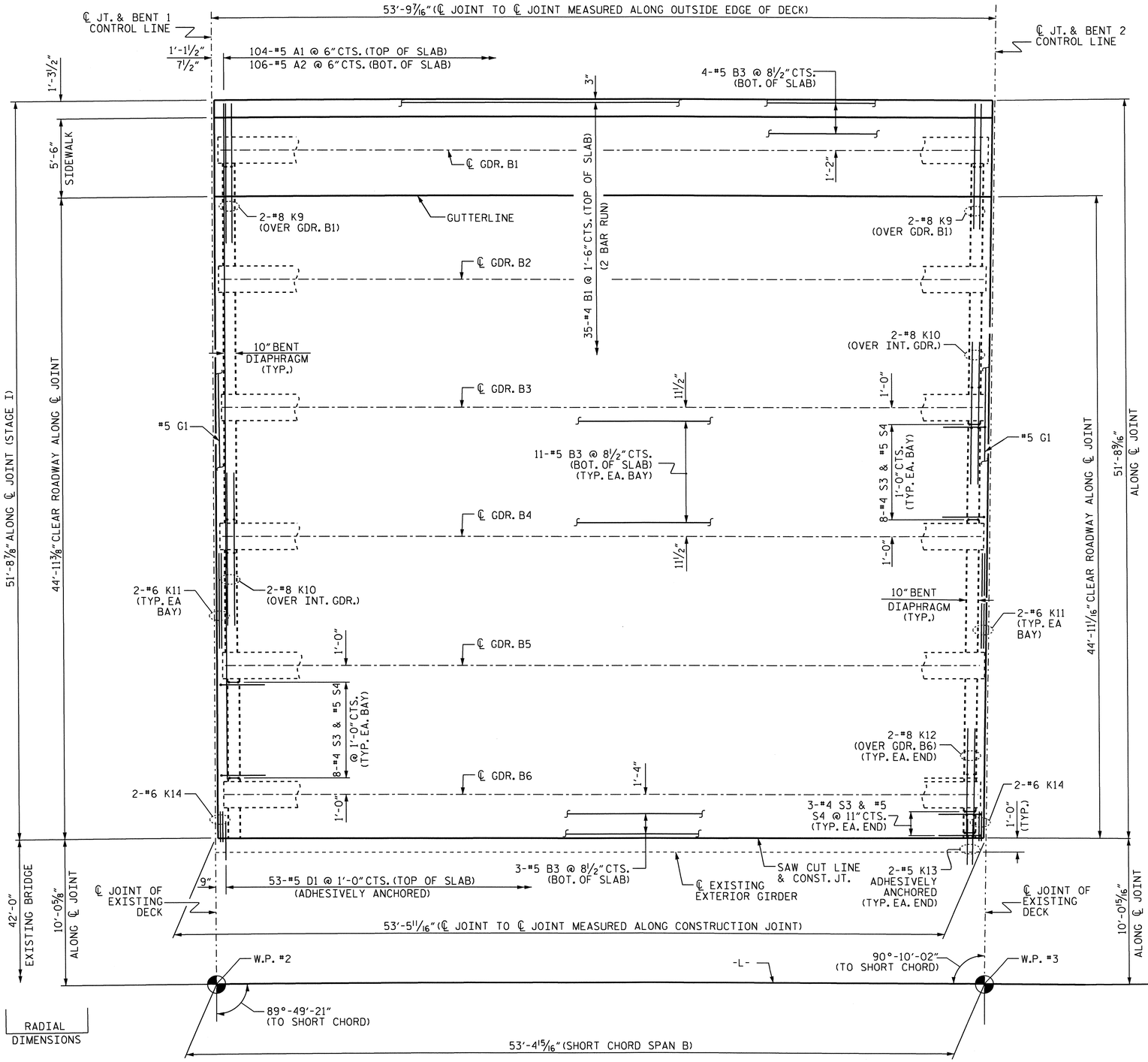


## SPAN B

SET "A" BARS 2" CLEAR FROM OUTSIDE EDGE OF DECK.

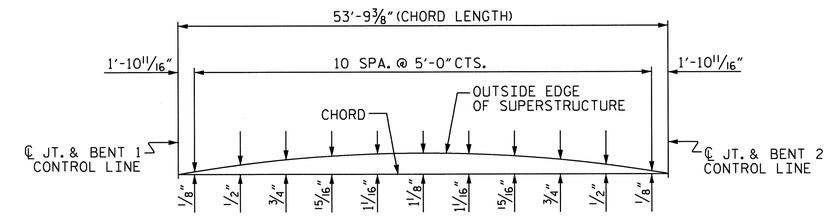


## ARC OFFSETS

LEFT OUTSIDE EDGE OF DECK WIDENING

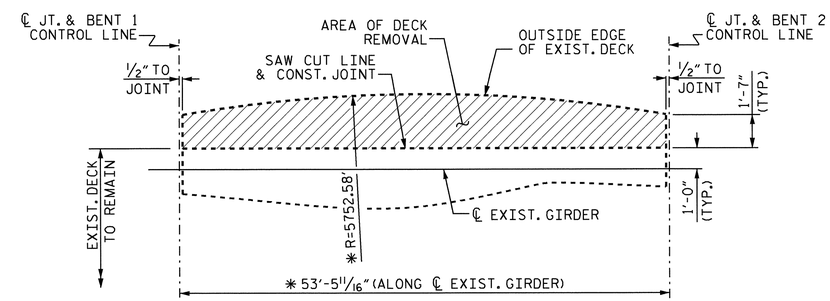


## LAYOUT OF EXISTING DECK REMOVAL

SHOWING LEFT OUTSIDE EDGE OF EXISTING DECK

* DIMENSION BASED ON THE BEST AVAILABLE INFORMATION FOR THE EXISTING BRIDGE. FIELD ADJUSTMENT MAY BE REQUIRED AS APPROVED BY THE ENGINEER.

PROJECT NO. U-4019

NASH COUNTY

STATION: 27+87.83 -L-

SHEET 2 OF 6

STATE OF NORTH CAROLINA
DEPARTMENT OF TRANSPORTATION
RALEIGH

SUPERSTRUCTURE

PLAN OF SPAN B
STAGE I

NORTH CAROLINA PROFESSIONAL SEAL 16301 ENGINEER TING HSIANG FANG

5/23/11

| REVISIONS | | | | | | SHEET NO. |
|---|---|---|---|---|---|---|
| NO. | BY: | DATE: | NO. | BY: | DATE: | S-10 |
| 1 | | | 3 | | | TOTAL SHEETS |
| 2 | | | 4 | | | 93 |

STR. #1

DRAWN BY : QT NGUYEN DATE : 10-28-10
CHECKED BY : E.I. OMILE DATE : 12-10-10

23-MAY-2011 09:38
Z:\TIPProjects-U\U4019\Structures\str1\FinalPlans\U4019_SD_S1*.dgn
tfang

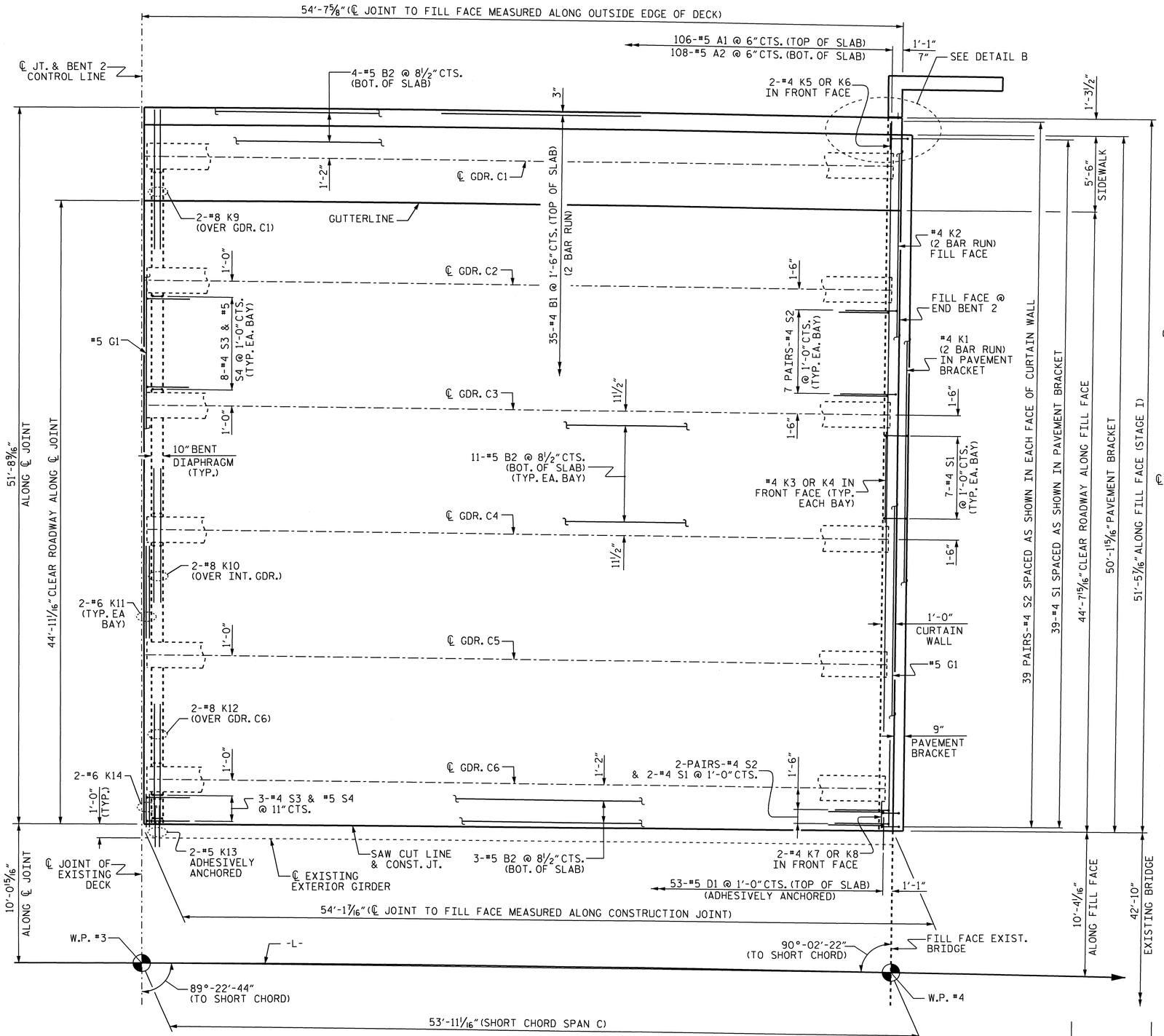


## SPAN C

℄ JOINT @ END BENT 2 AND #5 D2 BARS NOT SHOWN FOR CLARITY.
SET "A" BARS 2" CLEAR FROM OUTSIDE EDGE OF DECK.

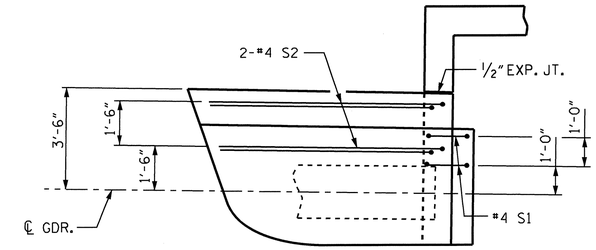


## DETAIL "B"

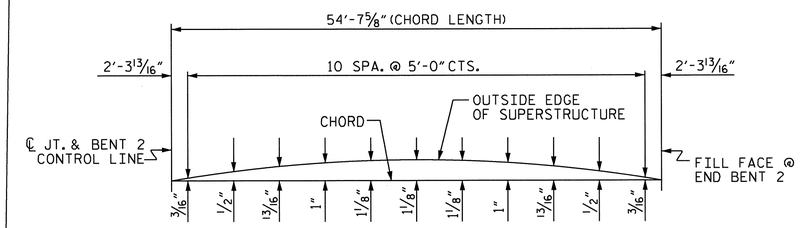


## ARC OFFSETS

LEFT OUTSIDE EDGE OF DECK WIDENING

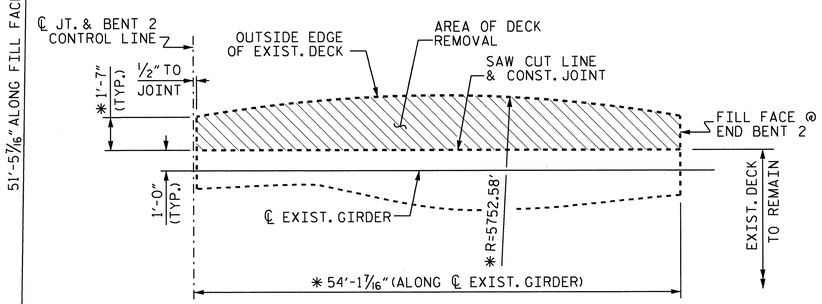


## LAYOUT OF EXISTING DECK REMOVAL

SHOWING LEFT OUTSIDE EDGE OF EXISTING DECK

* DIMENSION BASED ON THE BEST AVAILABLE INFORMATION FOR THE EXISTING BRIDGE. FIELD ADJUSTMENT MAY BE REQUIRED AS APPROVED BY THE ENGINEER.

PROJECT NO. U-4019
NASH COUNTY
STATION: 27+87.83 -L-

SHEET 3 OF 6

STATE OF NORTH CAROLINA
DEPARTMENT OF TRANSPORTATION
RALEIGH

SUPERSTRUCTURE

PLAN OF SPAN C
STAGE I

NORTH CAROLINA PROFESSIONAL SEAL 16301 ENGINEER TING-HSIUNG FANG
5/23/11

| REVISIONS | | | | | | SHEET NO. |
|---|---|---|---|---|---|---|
| NO. | BY: | DATE: | NO. | BY: | DATE: | S-11 |
| 1 | | | 3 | | | TOTAL SHEETS |
| 2 | | | 4 | | | 93 |

STR. #1

DRAWN BY : QT NGUYEN DATE : 10-28-10
CHECKED BY : E.I. OMILE DATE : 12-10-10

23-MAY-2011 09:38
Z:\TIPProjects-U\U4019\Structures\str1\Final Plans\U4019_SD_S1*.dgn
tfang

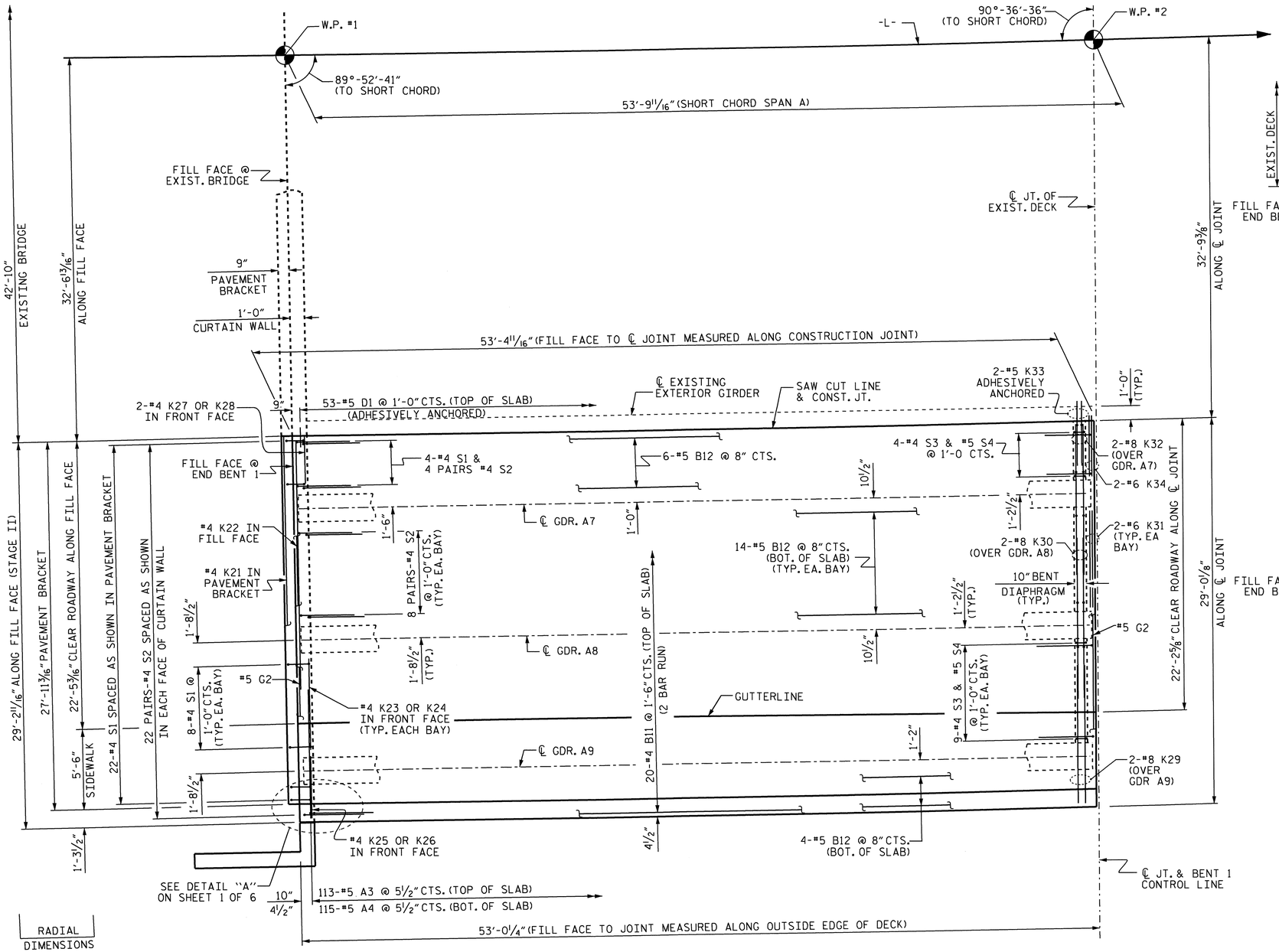


## SPAN A

℄ JOINT @ END BENT 1 AND #5 D2 BARS NOT SHOWN FOR CLARITY.
SET "A" BARS 2" CLEAR FROM OUTSIDE EDGE OF DECK.

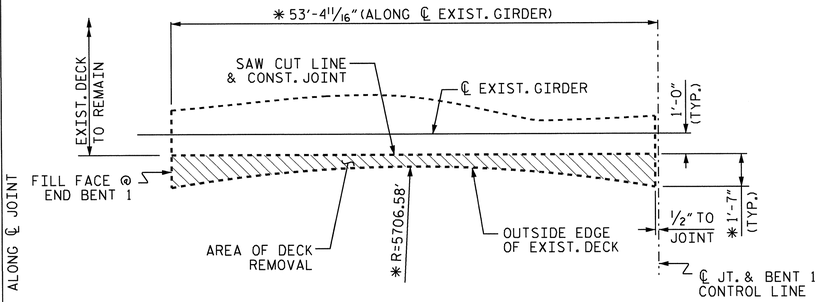


## LAYOUT OF EXISTING DECK REMOVAL

SHOWING RIGHT OUTSIDE EDGE OF EXISTING DECK

* DIMENSION BASED ON THE BEST AVAILABLE INFORMATION FOR THE EXISTING BRIDGE. FIELD ADJUSTMENT MAY BE REQUIRED AS APPROVED BY THE ENGINEER.

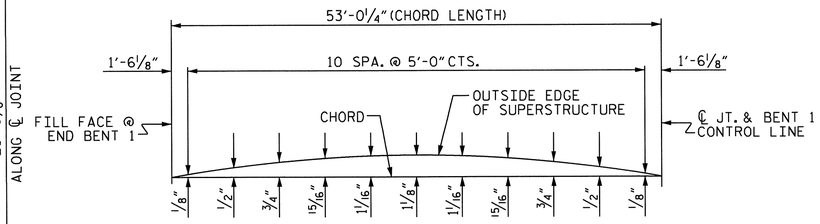


## ARC OFFSETS

RIGHT OUTSIDE EDGE OF DECK WIDENING

PROJECT NO. U-4019
NASH COUNTY
STATION: 27+87.83 -L-

SHEET 4 OF 6

STATE OF NORTH CAROLINA
DEPARTMENT OF TRANSPORTATION
RALEIGH

SUPERSTRUCTURE

PLAN OF SPAN A
STAGE II

NORTH CAROLINA PROFESSIONAL SEAL 16301 ENGINEER TING HSIANG FANG
5/23/11

| REVISIONS | | | | | | SHEET NO. |
|---|---|---|---|---|---|---|
| NO. | BY: | DATE: | NO. | BY: | DATE: | S-12 |
| 1 | | | 3 | | | TOTAL SHEETS |
| 2 | | | 4 | | | 93 |

STR. #1

DRAWN BY : QT NGUYEN DATE : 10-28-10
CHECKED BY : E.I. OMILE DATE : 12-10-10

23-MAY-2011 09:38
Z:\TIPProjects-U\U4019\Structures\str1\FinalPlans\U4019_SD_S1*.dgn
ttfang

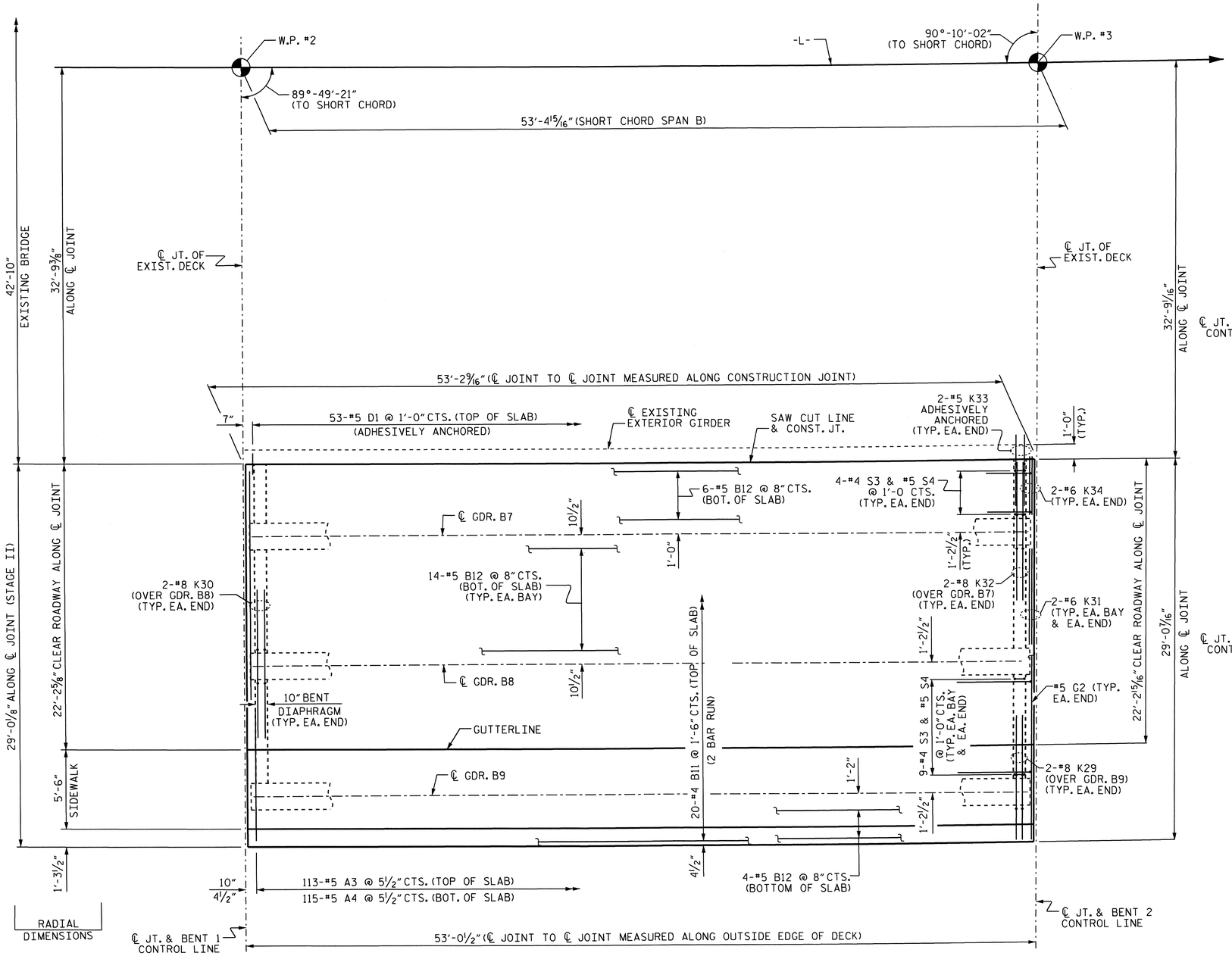


## SPAN B

SET "A" BARS 2" CLEAR FROM OUTSIDE EDGE OF DECK

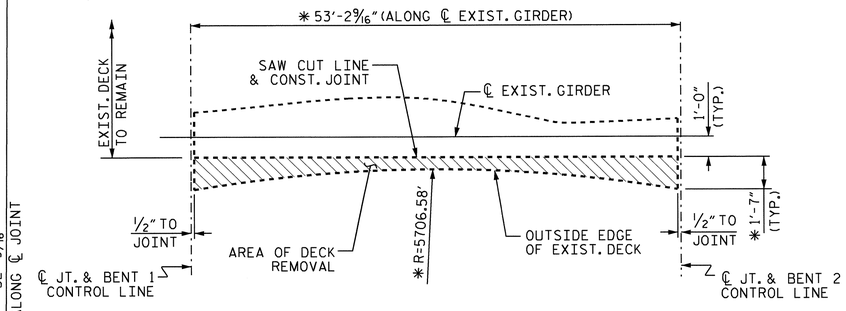


## LAYOUT OF EXISTING DECK REMOVAL

SHOWING RIGHT OUTSIDE EDGE OF EXISTING DECK

* DIMENSION BASED ON THE BEST AVAILABLE INFORMATION FOR THE EXISTING BRIDGE. FIELD ADJUSTMENT MAY BE REQUIRED AS APPROVED BY THE ENGINEER.

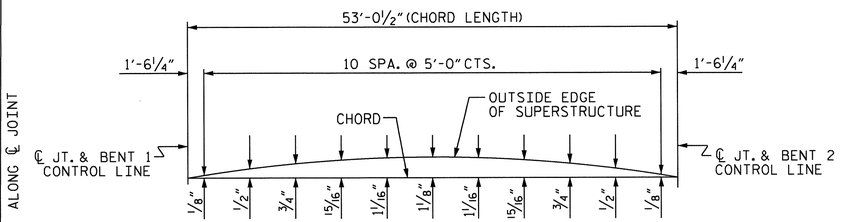


## ARC OFFSETS

RIGHT OUTSIDE EDGE OF DECK WIDENING

PROJECT NO. U-4019

NASH COUNTY

STATION: 27+87.83 -L-

SHEET 5 OF 6

STATE OF NORTH CAROLINA
DEPARTMENT OF TRANSPORTATION
RALEIGH

SUPERSTRUCTURE

PLAN OF SPAN B
STAGE II

NORTH CAROLINA PROFESSIONAL SEAL 16301 ENGINEER TING-SHANG FANG
5/23/11

| REVISIONS | | | | | | SHEET NO. |
|---|---|---|---|---|---|---|
| NO. | BY: | DATE: | NO. | BY: | DATE: | S-13 |
| 1 | | | 3 | | | TOTAL SHEETS |
| 2 | | | 4 | | | 93 |

STR. #1

DRAWN BY : QT NGUYEN DATE : 10-28-10
CHECKED BY : E.I. OMILE DATE : 12-10-10

23-MAY-2011 09:38
Z:\TIPProjects-U\U4019\Structures\str1\FinalPlans\U4019_SD_S1*.dgn
ttfang

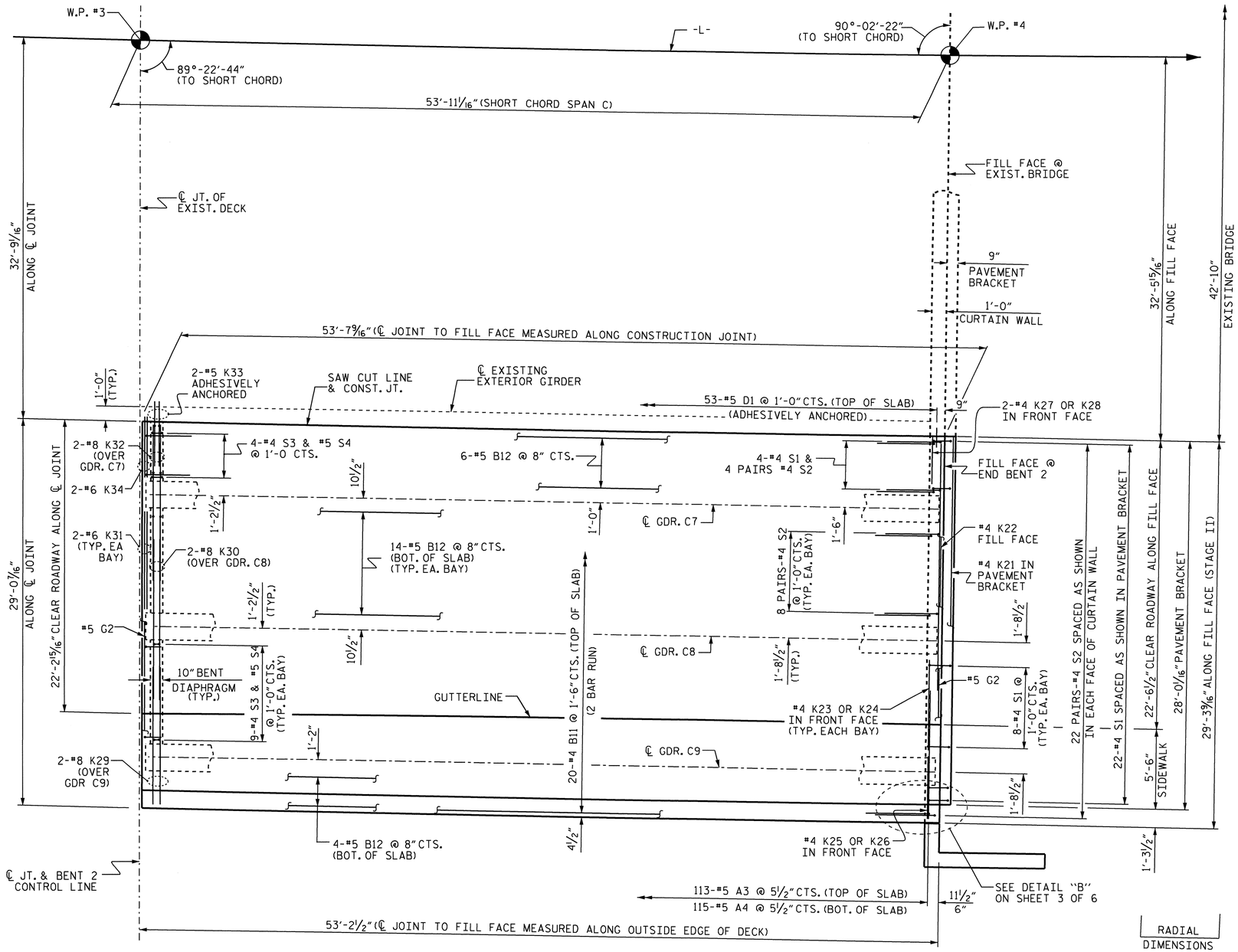


## SPAN C

℄ JOINT @ END BENT 2 AND #5 D2 BARS NOT SHOWN FOR CLARITY.
SET "A" BARS 2" CLEAR FROM OUTSIDE EDGE OF DECK.

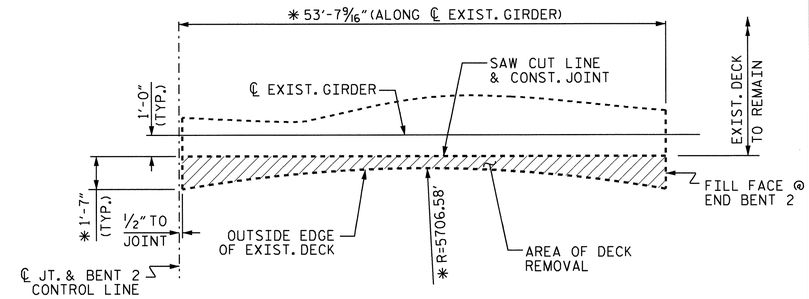


## LAYOUT OF EXISTING DECK REMOVAL

SHOWING RIGHT OUTSIDE EDGE OF EXISTING DECK

* DIMENSION BASED ON THE BEST AVAILABLE INFORMATION FOR THE EXISTING BRIDGE. FIELD ADJUSTMENT MAY BE REQUIRED AS APPROVED BY THE ENGINEER.

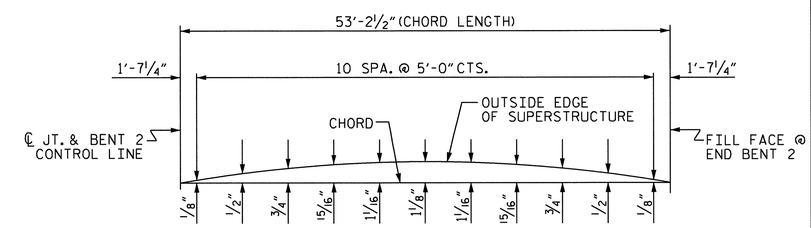


## ARC OFFSETS

RIGHT OUTSIDE EDGE OF DECK WIDENING

PROJECT NO. U-4019
NASH COUNTY
STATION: 27+87.83 -L-

SHEET 6 OF 6

STATE OF NORTH CAROLINA
DEPARTMENT OF TRANSPORTATION
RALEIGH

SUPERSTRUCTURE

PLAN OF SPAN C
STAGE II

NORTH CAROLINA PROFESSIONAL SEAL 16301 ENGINEER TING HSING FANG
5/23/11

| REVISIONS | | | | | | SHEET NO. |
|---|---|---|---|---|---|---|
| NO. | BY: | DATE: | NO. | BY: | DATE: | S-14 |
| 1 | | | 3 | | | TOTAL SHEETS |
| 2 | | | 4 | | | 93 |

STR. #1

DRAWN BY : QT NGUYEN DATE : 10-28-10
CHECKED BY : E.I. OMILE DATE : 12-10-10

23-MAY-2011 09:38
Z:\TIPProjects-U\U4019\Structures\str1\FinalPlans\U4019_SD_S1*.dgn
tfang

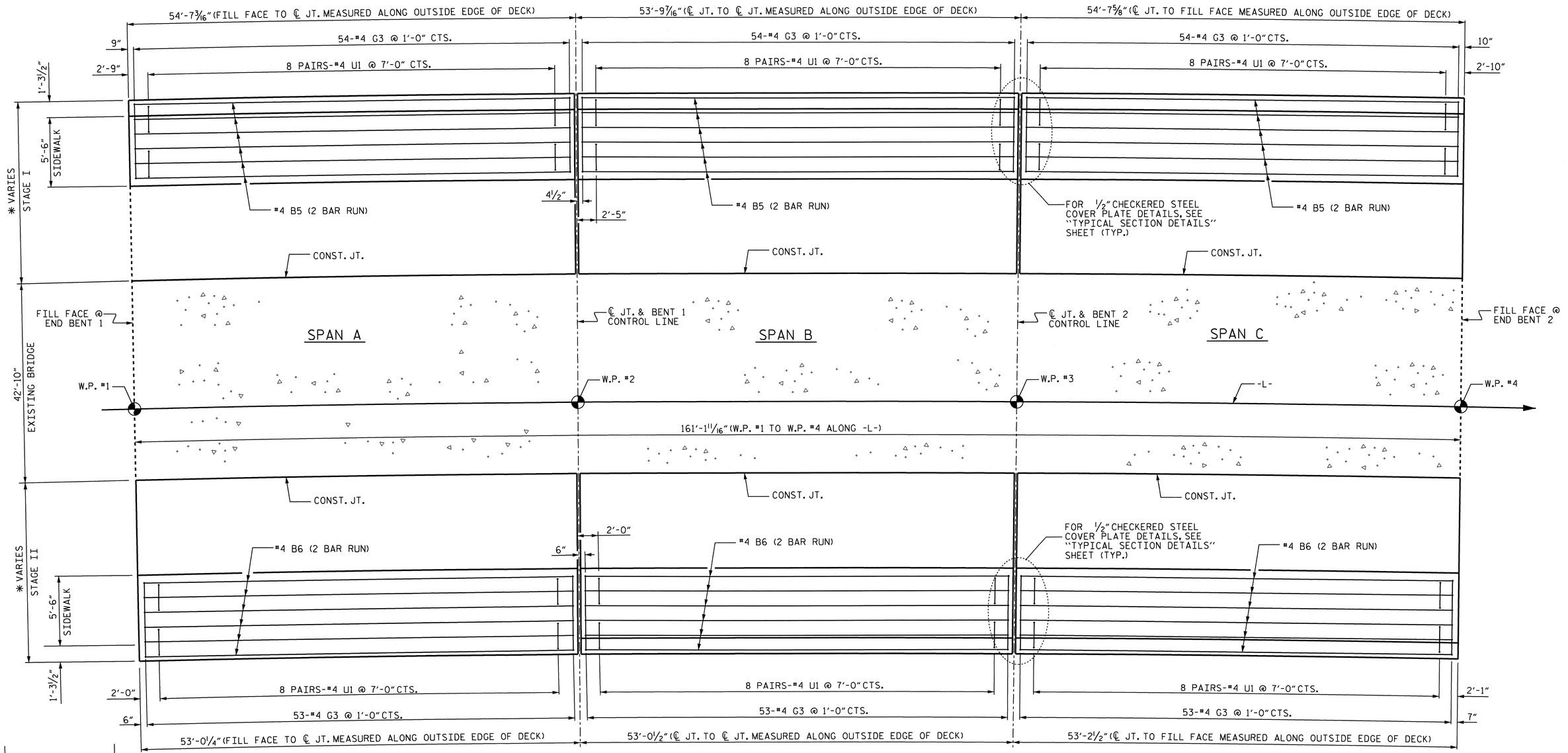


## PLAN OF SIDEWALK

* SEE DIMENSION TABLE ON "TYPICAL SECTION" SHEETS

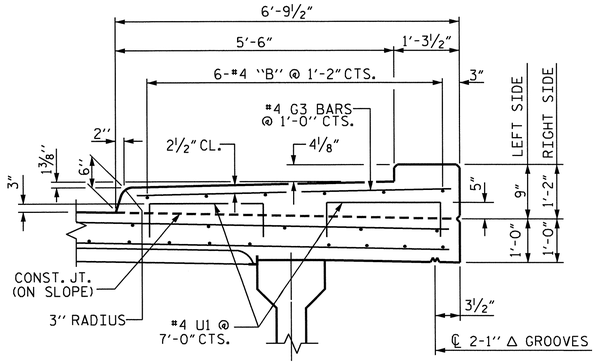


## SECTION THRU SIDEWALK

## NOTES:

GROOVED CONTRACTION JOINTS 1/2" IN DEPTH, SHALL BE TOOLED IN ALL EXPOSED FACES OF SIDEWALK IN ACCORDANCE WITH ARTICLE 825-10(B) OF THE STANDARD SPECIFICATIONS. THE CONTRACTION JOINTS SHALL BE LOCATED AT A SPACING OF 8 FT. TO 10 FT. BETWEEN EXPANSION JOINTS. NO CONTRACTION JOINTS WILL BE REQUIRED FOR SEGMENTS LESS THAN 10 FT. IN LENGTH.

THE JOINT IN THE DECK SHALL BE SAWED PRIOR TO THE CASTING OF THE SIDEWALK.

ALL REINFORCING STEEL IN SIDEWALK SHALL BE EPOXY COATED.

#4 U1 BARS MAY BE PUSHED INTO GREEN CONCRETE AFTER DECK HAS BEEN SCREEDED OFF.

FOR SIDEWALK QUANTITIES, SEE SUPERSTRUCTURE BILL OF MATERIAL SHEET.

FOR SIDEWALK COVER PLATE DETAIL AT END BENTS AND BENTS, SEE TYPICAL SECTION DETAIL SHEETS.

THE U1 BARS CLOSE TO THE JOINTS SHALL BE PLACED AFTER THE SAWING OF THE JOINTS. THE BARS MAY BE INSTALLED WITH GROUT OR WITH AN ADHESIVE ANCHORING SYSTEM. IF AN ADHESIVE ANCHORING SYSTEM IS CHOSEN, NO FIELD TESTING IS REQUIRED.

SIDEWALK IN EACH SPAN SHALL NOT BE CAST UNTIL ALL SLAB CONCRETE IN THAT SPAN HAS BEEN CAST AND HAS REACHED A MINIMUM COMPRESSIVE STRENGTH OF 3,000 PSI.

NORTH CAROLINA PROFESSIONAL SEAL 16301 ENGINEER T.H. FANG
5/23/11

PROJECT NO. U-4019
NASH COUNTY
STATION: 27+87.83 -L-

STATE OF NORTH CAROLINA
DEPARTMENT OF TRANSPORTATION
RALEIGH

SUPERSTRUCTURE

SIDEWALK DETAILS

| REVISIONS | | | | | | SHEET NO. |
|---|---|---|---|---|---|---|
| NO. | BY: | DATE: | NO. | BY: | DATE: | S-15 |
| 1 | | | 3 | | | TOTAL SHEETS |
| 2 | | | 4 | | | 93 |

STR. #1

DRAWN BY : QT NGUYEN DATE : 10-22-10
CHECKED BY : T.H. FANG DATE : 3-29-11

23-MAY-2011 09:38
Z:\TIPProjects-U\U4019\Structures\str1\FinalPlans\U4019_SD_sw1.dgn
tfang

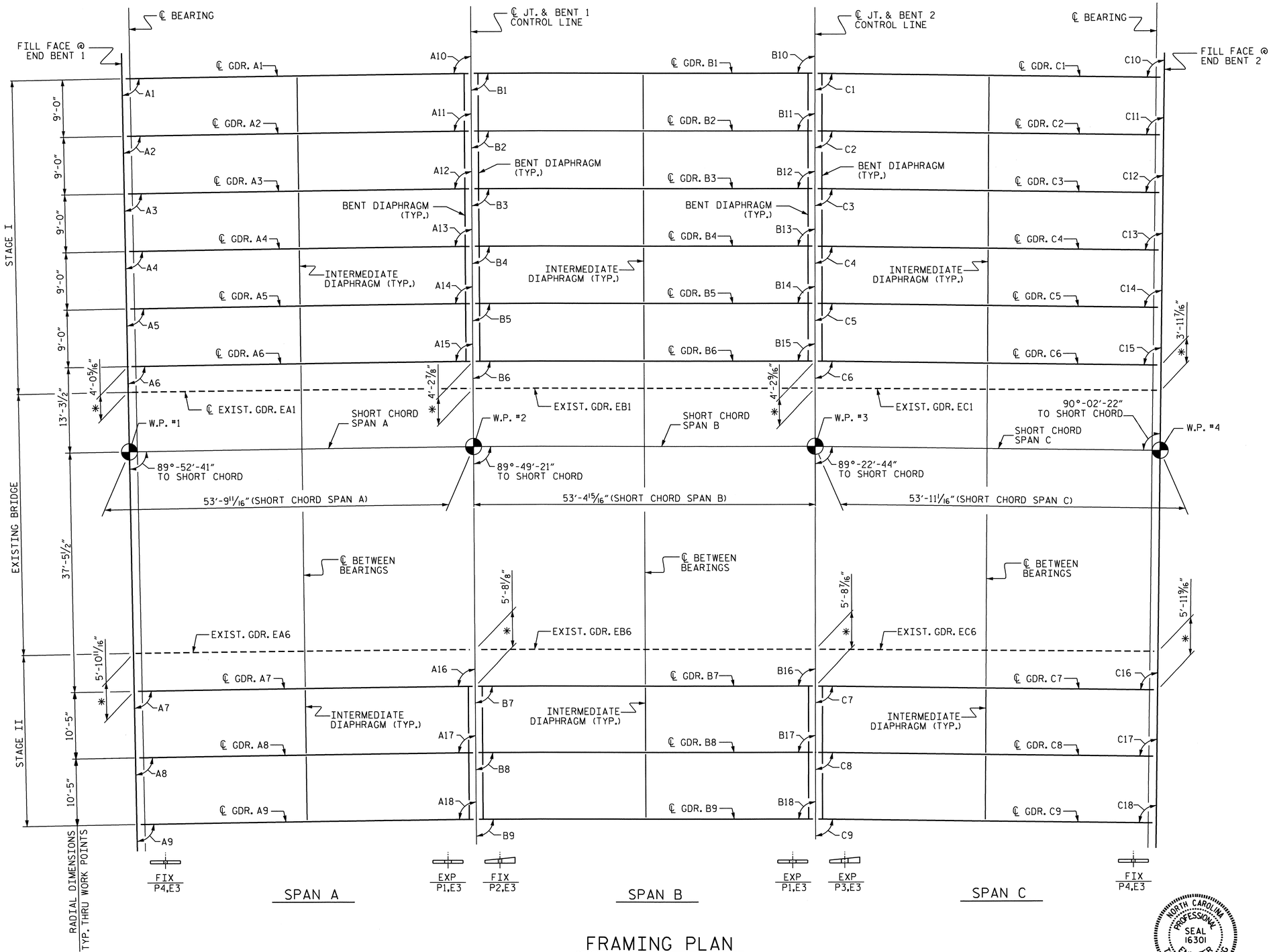


## FRAMING PLAN

* DIMENSIONS ARE MEASURED ALONG ℄ JOINTS OR FILL FACE LINES OF THE EXISTING BRIDGE.

## GIRDER SKEW ANGLES

| SPAN A | | | |
|---|---|---|---|
| NEAR | | FAR | |
| A1 | 89°-52'-28" | A10 | 90°-36'-23" |
| A2 | 89°-52'-30" | A11 | 90°-36'-25" |
| A3 | 89°-52'-32" | A12 | 90°-36'-27" |
| A4 | 89°-52'-34" | A13 | 90°-36'-29" |
| A5 | 89°-52'-36" | A14 | 90°-36'-31" |
| A6 | 89°-52'-38" | A15 | 90°-36'-33" |
| A7 | 89°-52'-50" | A16 | 90°-36'-45" |
| A8 | 89°-52'-52" | A17 | 90°-36'-47" |
| A9 | 89°-52'-55" | A18 | 90°-36'-50" |

| SPAN B | | | |
|---|---|---|---|
| NEAR | | FAR | |
| B1 | 89°-49'-21" | B10 | 90°-10'-03" |
| B2 | 89°-49'-21" | B11 | 90°-10'-03" |
| B3 | 89°-49'-21" | B12 | 90°-10'-03" |
| B4 | 89°-49'-21" | B13 | 90°-10'-03" |
| B5 | 89°-49'-21" | B14 | 90°-10'-03" |
| B6 | 89°-49'-21" | B15 | 90°-10'-02" |
| B7 | 89°-49'-21" | B16 | 90°-10'-02" |
| B8 | 89°-49'-21" | B17 | 90°-10'-02" |
| B9 | 89°-49'-21" | B18 | 90°-10'-02" |

| SPAN C | | | |
|---|---|---|---|
| NEAR | | FAR | |
| C1 | 89°-22'-59" | C10 | 90°-02'-38" |
| C2 | 89°-22'-57" | C11 | 90°-02'-35" |
| C3 | 89°-22'-55" | C12 | 90°-02'-33" |
| C4 | 89°-22'-52" | C13 | 90°-02'-31" |
| C5 | 89°-22'-50" | C14 | 90°-02'-28" |
| C6 | 89°-22'-48" | C15 | 90°-02'-26" |
| C7 | 89°-22'-34" | C16 | 90°-02'-12" |
| C8 | 89°-22'-31" | C17 | 90°-02'-09" |
| C9 | 89°-22'-28" | C18 | 90°-02'-06" |

PROJECT NO. U-4019
NASH COUNTY
STATION: 27+87.83 -L-

STATE OF NORTH CAROLINA
DEPARTMENT OF TRANSPORTATION
RALEIGH

SUPERSTRUCTURE

FRAMING PLAN

NORTH CAROLINA PROFESSIONAL SEAL 16301 ENGINEER TING HSIUNG FANG
5/23/11

| REVISIONS | | | | | | SHEET NO. |
|---|---|---|---|---|---|---|
| NO. | BY: | DATE: | NO. | BY: | DATE: | S-16 |
| 1 | | | 3 | | | TOTAL SHEETS |
| 2 | | | 4 | | | 93 |

STR. #1

DRAWN BY : QT NGUYEN DATE : 10-19-10
CHECKED BY : E.I. OMILE DATE : 12-10-10

23-MAY-2011 09:38
Z:\TIPProjects-U\U4019\Structures\str1\FinalPlans\U4019_SD_FP1.dgn
ttfang

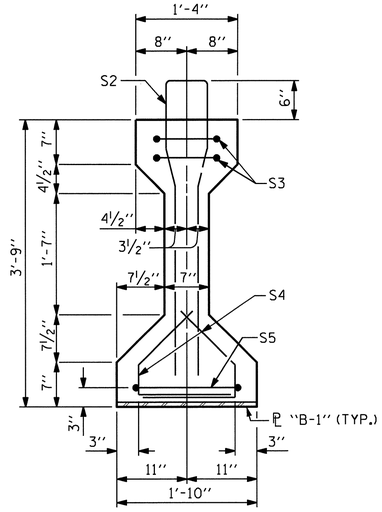


SECTION A-A

(FOR EMBEDDED ℄ "B-1" DETAILS SEE SHEET 3 OF 3)

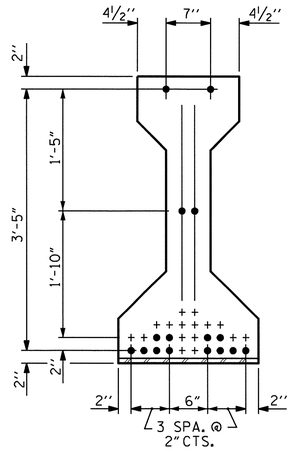


AT END OF GIRDER

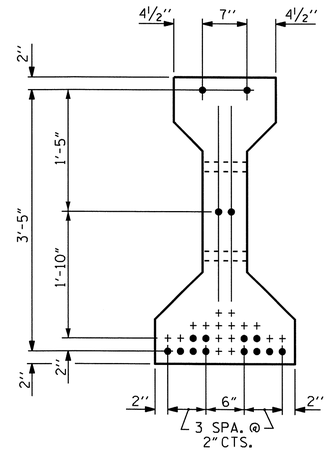


AT ℄ OF GIRDER

## 0.6"Ø LOW RELAXATION STRAND LAYOUT

(16 STRANDS, ALL STRAIGHT)

## NOTES

ALL PRESTRESSING STRANDS SHALL BE 7-WIRE LOW-RELAXATION GRADE 270 STRANDS AND SHALL CONFORM TO AASHTO M203 EXCEPT FOR SAMPLING REQUIREMENTS WHICH SHALL BE IN ACCORDANCE WITH THE STANDARD SPECIFICATIONS.

APPLY EPOXY PROTECTIVE COATING TO END OF GIRDER SURFACES INDICATED IN ELEVATION VIEW.

EMBEDDED PLATE "B-1" SHALL BE GALVANIZED IN ACCORDANCE WITH THE STANDARD SPECIFICATIONS. BEVEL EDGES OF PLATE "B-1" TO GIVE CLOSE FIT BUT NOT TIGHT FIT TO STEEL CASTING FORM.

ANCHOR STUDS SHALL CONFORM TO AASHTO M169 GRADES 1010 THROUGH 1020 OR APPROVED EQUAL, AND SHALL MEET THE TYPE "B" REQUIREMENTS OF SUBSECTION 7.3 OF THE ANSI/AASHTO/AWS D1.5 BRIDGE WELDING CODE.

AT ENDS OF GIRDERS TO BE EMBEDDED IN CURTAIN WALLS, PRESTRESSING STRANDS MAY EXTEND A MAXIMUM OF 2" BEYOND THE GIRDER ENDS. OTHERWISE, PRESTRESSING STRANDS SHALL BE CUT FLUSH WITH THE GIRDER ENDS.

THE TRANSFER OF LOAD FROM THE ANCHORAGES TO THE GIRDER SHALL BE DONE WHEN CONCRETE HAS REACHED A COMPRESSIVE STRENGTH OF NOT LESS THAN 4000 PSI FOR ALL SPAN A, B & C GIRDERS.

DEPENDING ON THE TYPE OF SYSTEM USED TO SUPPORT THE DECK SLAB FORMS, PRESET ANCHORS MAY BE NECESSARY IN THE PRESTRESSED CONCRETE GIRDER.

THE TOP SURFACE OF THE GIRDER SHALL BE RAKED TO A DEPTH OF ¼" EXCEPT IN THE AREA BETWEEN THE STIRRUP AND THE EDGE OF THE GIRDER.

FOR PRESTRESSED CONCRETE MEMBERS, SEE SPECIAL PROVISIONS.

## 0.6"Ø L. R. GRADE 270 STRANDS

| AREA (SQUARE INCHES) | ULTIMATE STRENGTH (LBS. PER STRAND) | APPLIED PRESTRESS (LBS. PER STRAND) |
|---|---|---|
| 0.217 | 58,600 | 43,950 |

## REINFORCING STEEL FOR ONE GIRDER

| BAR | NUMBER | SIZE | TYPE | LENGTH | WEIGHT |
|---|---|---|---|---|---|
| S1 | 44 | #4 | 1 | 8'-6" | 250 |
| S2 | 16 | #6 | 1 | 8'-6" | 204 |
| S3 | 4 | #4 | 3 | 8'-8" | 23 |
| S4 | 60 | #4 | 2 | 2'-9" | 110 |
| S5 | 2 | #4 | 3 | 9'-6" | 13 |
| S7 | 2 | #5 | 3 | 7'-2" | 15 |
| S8 | 5 | #4 | STR | 7'-0" | 23 |
| REINFORCING STEEL | | | | | 638 LBS. |

## BAR TYPES

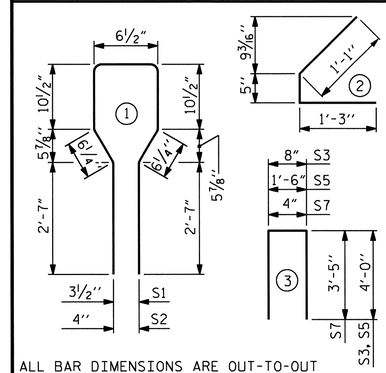


ALL BAR DIMENSIONS ARE OUT-TO-OUT

## QUANTITIES FOR ONE GIRDER

| | REINFORCING STEEL | 5000 PSI CONCRETE | 0.6"Ø L.R. STRANDS |
|---|---|---|---|
| | LB. | C.Y. | No. |
| SPAN A | 638 | * 7.7 | 16 |
| SPAN B | 638 | * 7.6 | 16 |
| SPAN C | 638 | * 7.7 | 16 |

## GIRDERS REQUIRED

| | NUMBER | LENGTH | TOTAL LENGTH |
|---|---|---|---|
| SPAN A | 6 | SEE TABLE | 319.59 |
| SPAN B | 6 | SEE TABLE | 316.77 |
| SPAN C | 6 | SEE TABLE | 320.00 |
| TOTAL | 18 | | 956.36 LIN. FT. |

REINFORCING STEEL IS IDENTICAL FOR EXTERIOR & INTERIOR GIRDERS FOR ALL SPANS.
* AVERAGE QUANTITY FOR ALL GIRDERS.

## PLAN OF GIRDER

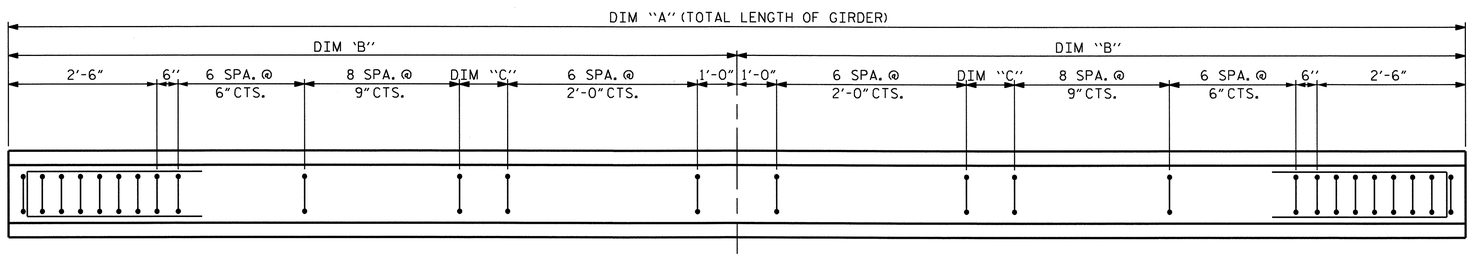


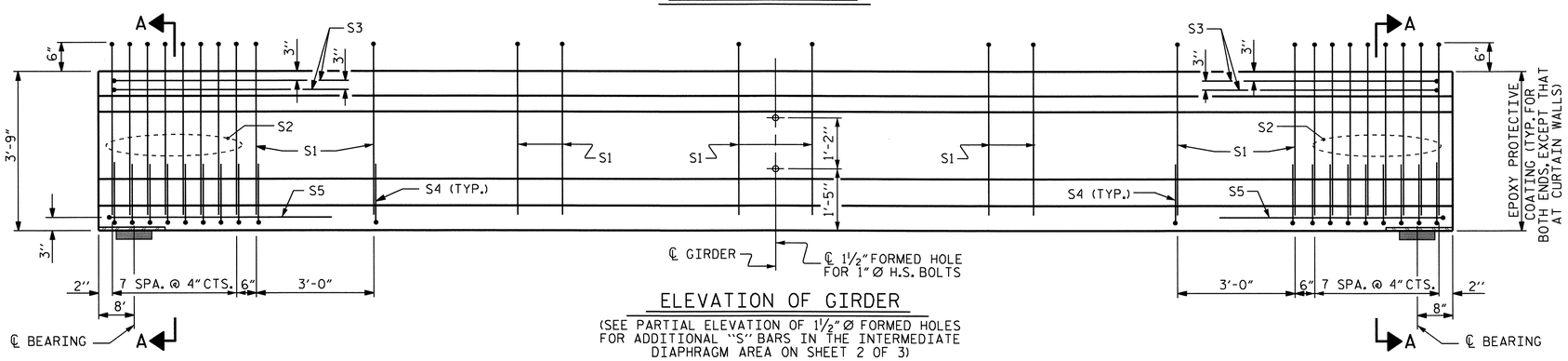


## ELEVATION OF GIRDER

(SEE PARTIAL ELEVATION OF 1½"Ø FORMED HOLES FOR ADDITIONAL "S" BARS IN THE INTERMEDIATE DIAPHRAGM AREA ON SHEET 2 OF 3)

## GIRDER DIMENSIONS TABLE

| SPAN A | | | | SPAN B | | | | SPAN C | | | |
|---|---|---|---|---|---|---|---|---|---|---|---|
| GDR. No. | DIM. "A" | DIM. "B" | DIM. "C" | GDR. No. | DIM. "A" | DIM. "B" | DIM. "C" | GDR. No. | DIM. "A" | DIM. "B" | DIM. "C" |
| A1 | 53'-6⅝" | 26'-9⁵⁄₁₆" | 1'-9⁵⁄₁₆" | B1 | 52'-11⅛" | 26'-5⁹⁄₁₆" | 1'-5⁹⁄₁₆" | C1 | 53'-7⅛" | 26'-9⁹⁄₁₆" | 1'-9⁹⁄₁₆" |
| A2 | 53'-5¼" | 26'-8⅝" | 1'-8⅝" | B2 | 52'-10½" | 26'-5¼" | 1'-5¼" | C2 | 53'-5⅞" | 26'-8¹⁵⁄₁₆" | 1'-8¹⁵⁄₁₆" |
| A3 | 53'-3⅞" | 26'-7¹⁵⁄₁₆" | 1'-7¹⁵⁄₁₆" | B3 | 52'-9⅞" | 26'-4¹⁵⁄₁₆" | 1'-4¹⁵⁄₁₆" | C3 | 53'-4⅝" | 26'-8⁵⁄₁₆" | 1'-8⁵⁄₁₆" |
| A4 | 53'-2½" | 26'-7¼" | 1'-7¼" | B4 | 52'-9¼" | 26'-4⅝" | 1'-4⅝" | C4 | 53'-3⅜" | 26'-7¹¹⁄₁₆" | 1'-7¹¹⁄₁₆" |
| A5 | 53'-1⅛" | 26'-6⁹⁄₁₆" | 1'-6⁹⁄₁₆" | B5 | 52'-8⅝" | 26'-4⁵⁄₁₆" | 1'-4⁵⁄₁₆" | C5 | 53'-2⅛" | 26'-7¹⁄₁₆" | 1'-7¹⁄₁₆" |
| A6 | 52'-11¾" | 26'-5⅞" | 1'-5⅞" | B6 | 52'-7⅞" | 26'-3¹⁵⁄₁₆" | 1'-3¹⁵⁄₁₆" | C6 | 53'-0⅞" | 26'-6⁷⁄₁₆" | 1'-6⁷⁄₁₆" |

PROJECT NO. U-4019

NASH COUNTY

STATION: 27+87.83 -L-

SHEET 1 OF 3

STATE OF NORTH CAROLINA
DEPARTMENT OF TRANSPORTATION
RALEIGH

STANDARD
AASHTO TYPE III
PRESTRESSED CONCRETE GIRDER

SPANS A, B & C
STAGE I

NORTH CAROLINA PROFESSIONAL SEAL 16301 ENGINEER TING HSIUNG FANG
5/11/11

| REVISIONS | | | | | | SHEET NO. |
|---|---|---|---|---|---|---|
| NO. | BY: | DATE: | NO. | BY: | DATE: | S-17 |
| 1 | | | 3 | | | TOTAL SHEETS |
| 2 | | | 4 | | | 93 |

| | | | |
|---|---|---|---|
| ASSEMBLED BY : | QT NGUYEN | DATE : | 10-20-10 |
| CHECKED BY : | E.I. OMILE | DATE : | 12-10-10 |
| DRAWN BY : | ELR 8/91 | REV. 7/17/98 | RWW/LES |
| CHECKED BY : | GRP 8/91 | REV. 10/17/00 | RWW/LES |
| | | REV. 5/1/06 | TLA/GM |

11-MAY-2011 10:42
R:\Structures\str1\FinalPlans\U4019_SD_G1*.dgn
tfang

STR. #1

STD. NO. PCG5 (Sht. 1)

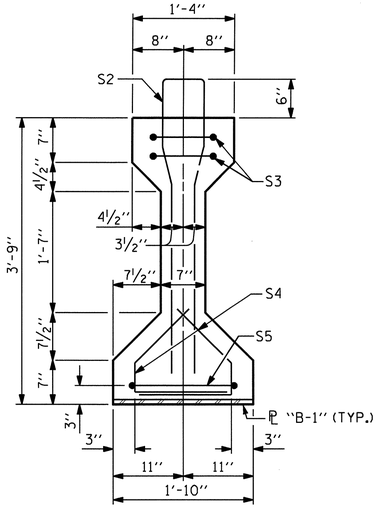


SECTION A-A

(FOR EMBEDDED ℄ "B-1" DETAILS SEE SHEET 3 OF 3)

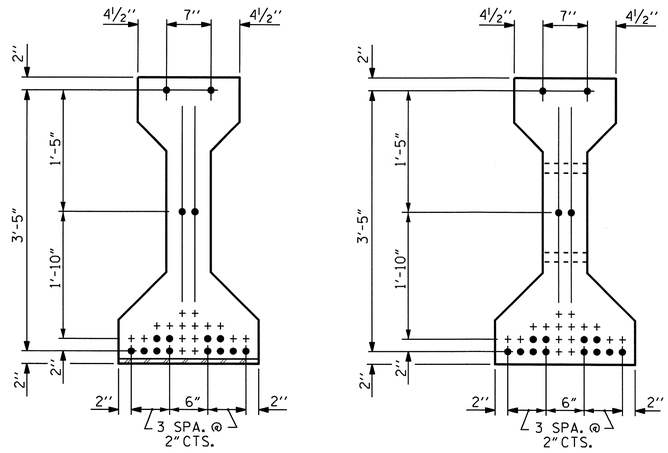


AT END OF GIRDER

AT ℄ OF GIRDER

0.6"Ø LOW RELAXATION STRAND LAYOUT

(16 STRANDS, ALL STRAIGHT)

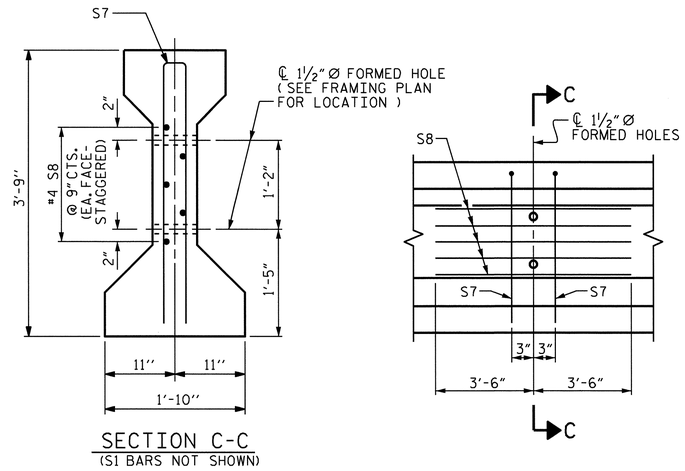


SECTION C-C

(SI BARS NOT SHOWN)

PARTIAL ELEVATION OF 1½"Ø FORMED HOLES

SHOWING INTERMEDIATE DIAPHRAGM REINFORCING STEEL FOR ALL GIRDERS.

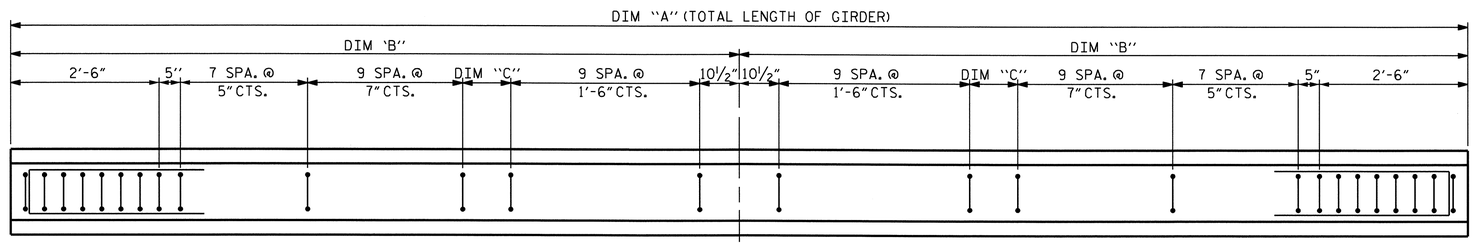


PLAN OF GIRDER

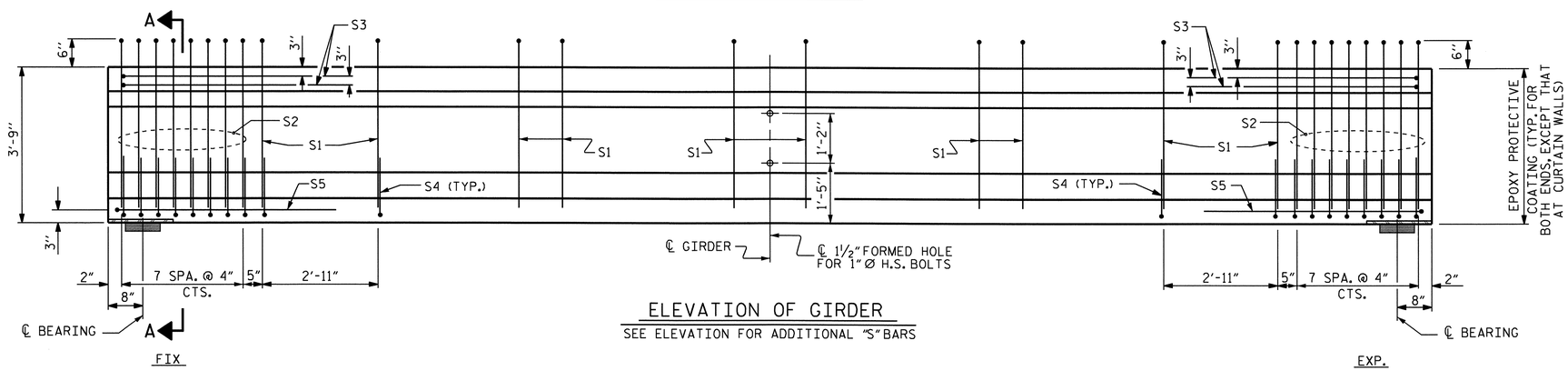


ELEVATION OF GIRDER

SEE ELEVATION FOR ADDITIONAL "S" BARS

## GIRDER DIMENSIONS TABLE

| SPAN A | | | | SPAN B | | | | SPAN C | | | |
|---|---|---|---|---|---|---|---|---|---|---|---|
| GDR. No. | DIM. "A" | DIM. "B" | DIM. "C" | GDR. No. | DIM. "A" | DIM. "B" | DIM. "C" | GDR. No. | DIM. "A" | DIM. "B" | DIM. "C" |
| A7 | 52'-4" | 26'-2" | 8½" | B7 | 52'-4¼" | 26'-2⅛" | 8⅝" | C7 | 52'-5⅞" | 26'-2 15/16" | 9 7/16" |
| A8 | 52'-2⅜" | 26'-1 3/16" | 7 11/16" | B8 | 52'-3½" | 26'-1¾" | 8¼" | C8 | 52'-4½" | 26'-2¼" | 8¾" |
| A9 | 52'-0¾" | 26'-0⅜" | 6⅞" | B9 | 52'-2¾" | 26'-1⅜" | 7⅞" | C9 | 52'-3" | 26'-1½" | 8" |

## 0.6"Ø L. R. GRADE 270 STRANDS

| AREA (SQUARE INCHES) | ULTIMATE STRENGTH (LBS. PER STRAND) | APPLIED PRESTRESS (LBS. PER STRAND) |
|---|---|---|
| 0.217 | 58,600 | 43,950 |

## REINFORCING STEEL FOR ONE GIRDER

| BAR | NUMBER | SIZE | TYPE | LENGTH | WEIGHT |
|---|---|---|---|---|---|
| S1 | 54 | #4 | 1 | 8'-6" | 307 |
| S2 | 16 | #6 | 1 | 8'-6" | 204 |
| S3 | 4 | #4 | 3 | 8'-8" | 23 |
| S4 | 64 | #4 | 2 | 2'-9" | 118 |
| S5 | 2 | #4 | 3 | 9'-6" | 13 |
| S7 | 2 | #5 | 3 | 7'-2" | 15 |
| S8 | 5 | #4 | STR | 7'-0" | 23 |
| REINFORCING STEEL | | | | | 703 LBS. |

## BAR TYPES

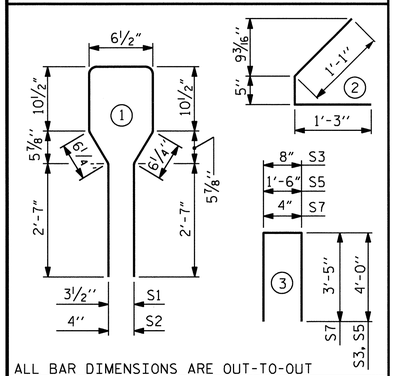


ALL BAR DIMENSIONS ARE OUT-TO-OUT

## QUANTITIES FOR ONE GIRDER

| | REINFORCING STEEL | 5000 PSI CONCRETE | 0.6"Ø L.R. STRANDS |
|---|---|---|---|
| | LB. | C.Y. | No. |
| SPAN A | 725 | ✱ 3.8 | 16 |
| SPAN B | 725 | ✱ 3.8 | 16 |
| SPAN C | 725 | ✱ 3.8 | 16 |

## GIRDERS REQUIRED

| | NUMBER | LENGTH | TOTAL LENGTH |
|---|---|---|---|
| SPAN A | 3 | SEE TABLE | 156.59 |
| SPAN B | 3 | SEE TABLE | 156.87 |
| SPAN C | 3 | SEE TABLE | 157.11 |
| TOTAL | 9 | | 470.57 LIN. FT. |

REINFORCING STEEL IS IDENTICAL FOR EXTERIOR & INTERIOR GIRDERS FOR ALL SPANS.
✱ AVERAGE QUANTITY FOR ALL GIRDERS.

PROJECT NO. U-4019

NASH COUNTY

STATION: 27+87.83 -L-

SHEET 2 OF 3

STATE OF NORTH CAROLINA
DEPARTMENT OF TRANSPORTATION
RALEIGH

STANDARD

AASHTO TYPE III
PRESTRESSED CONCRETE GIRDER

SPANS A, B & C
STAGE II

NORTH CAROLINA PROFESSIONAL SEAL 16301 ENGINEER TING HSIANG FANG
5/11/11

| REVISIONS | | | | | | SHEET NO. |
|---|---|---|---|---|---|---|
| NO. | BY: | DATE: | NO. | BY: | DATE: | S-18 |
| 1 | | | 3 | | | TOTAL SHEETS |
| 2 | | | 4 | | | 93 |

| | |
|---|---|
| ASSEMBLED BY : QT NGUYEN | DATE : 10-20-10 |
| CHECKED BY : E.I. OMILE | DATE : 12-10-10 |
| DRAWN BY : ELR 8/91 | REV. 7/17/98 RWW/LES |
| CHECKED BY : GRP 8/91 | REV. 10/17/00R RWW/LES |
| | REV. 5/1/06 TLA/GM |

11-MAY-2011 10:42
R:\Structures\str1\FinalPlans\U4019_SD_G1*.dgn
tfang

STR. #1

STD. NO. PCG5 (Sht. 1)

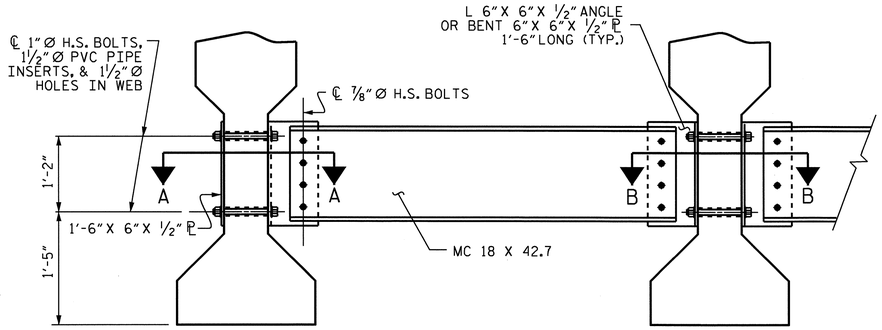


## PART SECTION AT INTERMEDIATE DIAPHRAGM

(TYPICAL FOR EACH BAY)

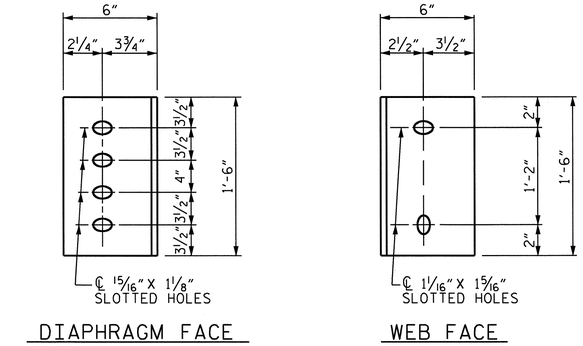


## CONNECTOR PLATE DETAILS

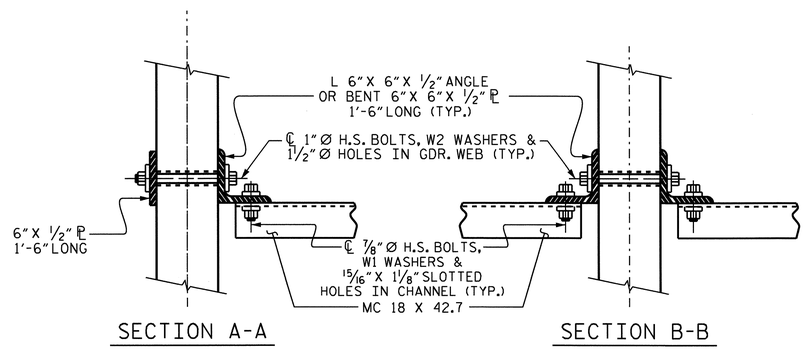


## CONNECTION DETAILS

FOR LOCATION OF INTERMEDIATE DIAPHRAGMS, SEE "FRAMING PLAN" SHEET.

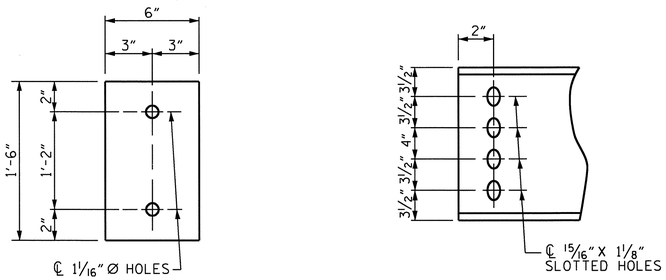


## PLATE DETAILS

## CHANNEL END

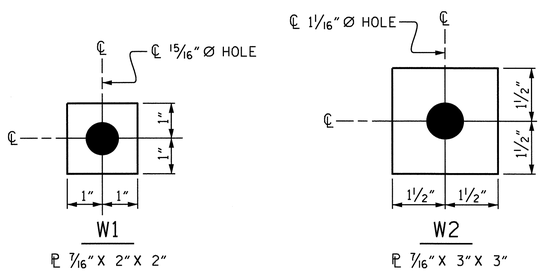


USE WITH ⅞" Ø HVY. HEX NUTS & DIRECT TENSION INDICATOR WASHERS AT DIAPHRAGM CHANNEL TO CONNECTOR PLATE CONNECTIONS

USE WITH 1" Ø HVY. HEX NUTS AT CONNECTOR PLATE TO GIRDER CONNECTIONS

## WASHER DETAILS

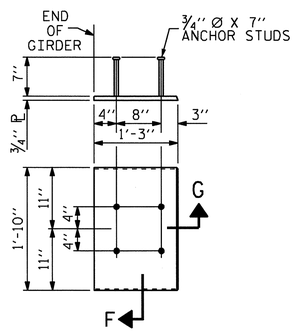


## EMBEDDED PLATE "B-1" DETAILS

(2 REQ'D PER GIRDER)

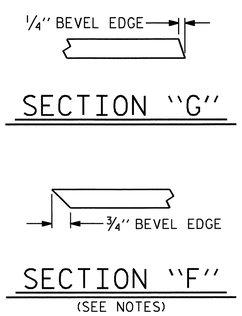


## STRUCTURAL STEEL NOTES

ALL INTERMEDIATE DIAPHRAGM STEEL, CONNECTOR PLATES AND PLATE WASHERS SHALL BE AASHTO M270 GRADE 50 OR APPROVED EQUAL.

TENSION ON THE AASHTO M164 BOLTS THROUGH THE CHANNEL MEMBER SHALL BE CALIBRATED USING DIRECT TENSION INDICATOR WASHERS IN ACCORDANCE WITH THE STANDARD SPECIFICATIONS. FOR DIRECT TENSION INDICATORS, SEE SPECIAL PROVISIONS.

TENSION ON THE AASHTO M164 BOLTS THROUGH THE GIRDER WEB SHALL BE SNUG TIGHTENED FOLLOWED BY AN ADDITIONAL ¼ TURN.

THE PLATES, BENT PLATES, CHANNELS, ANGLES, AND PLATE WASHERS SHALL BE GALVANIZED OR METALLIZED IN ACCORDANCE WITH THE STANDARD SPECIFICATIONS. FOR THERMAL SPRAYED COATINGS (METALLIZATION), SEE SPECIAL PROVISIONS.

FOR METALLIZATION, APPLY AN 8 MIL THICK 99.99 PERCENT ZINC (W-Zn-1) THERMAL SPRAYED COATING WITH A 0.5 MIL THICK SEAL COAT TO ALL STEEL DIAPHRAGM SURFACES IN ACCORDANCE WITH THE THERMAL SPRAYED COATINGS SPECIAL PROVISIONS AND SECTION 442 OF THE STANDARD SPECIFICATIONS.

GALVANIZE THE HIGH STRENGTH BOLTS, NUTS, AND WASHERS AND DIRECT TENSION INDICATORS IN ACCORDANCE WITH THE STANDARD SPECIFICATIONS. FOR HIGH STRENGTH BOLTS, SEE SPECIAL PROVISIONS.

USE A MINIMUM 7/16" THICK PLATE WASHER WITH STANDARD HOLES UNDER EACH BOLT HEAD AND NUT. THE PLATE WASHERS SHALL HAVE SUFFICIENT SIZE TO COVER THE HOLES AFTER INSTALLATION. HARDENED WASHERS AND DIRECT TENSION INDICATORS ARE TO BE USED IN CONJUNCTION WITH THE PLATE WASHERS IN THE CHANNEL MEMBER CONNECTION.

FOR BOLTS THROUGH THE GIRDER WEB, PROVIDE SUFFICIENT LENGTH OF ALL BOLTS TO ACCOMMODATE WASHERS, AND THE THICKNESS OF CONNECTING MEMBER PLUS AT LEAST ¼" PROJECTION BEYOND THE NUT.

INTERMEDIATE DIAPHRAGM ASSEMBLY SHALL COMPLY WITH SECTION 1072 OF THE STANDARD SPECIFICATIONS.

CONTRACTOR SHALL SUBMIT TWO SETS OF WORKING DRAWINGS FOR THE INTERMEDIATE DIAPHRAGM ASSEMBLY FOR REVIEW, COMMENTS AND ACCEPTANCE. AFTER REVIEW, COMMENTS, AND ACCEPTANCE, SUBMIT SEVEN SETS FOR DISTRIBUTION.

IN THE EXTERIOR BAYS, TEMPORARY STRUTS SHALL BE PLACED BETWEEN PRESTRESSED GIRDERS ADJACENT TO THE STEEL DIAPHRAGMS. STRUTS SHALL REMAIN IN PLACE 3 DAYS AFTER CONCRETE IS PLACED. ALL AASHTO M164 H.S. BOLTS SHALL BE FULLY TIGHTENED AFTER THE STRUTS HAVE BEEN REMOVED.

THE COST OF THE STEEL DIAPHRAGMS AND ASSEMBLIES SHALL BE INCLUDED IN THE UNIT PRICE BID FOR PRESTRESSED CONCRETE GIRDERS.

PROJECT NO. U-4019
NASH COUNTY
STATION: 27+87.83 -L-

SHEET 3 OF 3

STATE OF NORTH CAROLINA
DEPARTMENT OF TRANSPORTATION
RALEIGH

STANDARD

INTERMEDIATE STEEL DIAPHRAGMS FOR TYPE III PRESTRESSED CONCRETE GIRDERS

NORTH CAROLINA PROFESSIONAL SEAL 16301 ENGINEER TING HSIONG FANG
4/26/11

| ASSEMBLED BY : OT NGUYEN | DATE : 2/11 |
|---|---|
| CHECKED BY : T.H. FANG | DATE : 3/11 |
| DRAWN BY : TLA 6/05 | ADDED 10/21/05 |
| CHECKED BY : VC 6/05 | REV. 5/1/06R KMM/GM |

26-APR-2011 12:54
Z:\TIPProjects-U\U4019\Structures\str1\Final Plans\U4019_SD_G1*.dgn
qtnguyen

| REVISIONS | | | | | | SHEET NO. |
|---|---|---|---|---|---|---|
| NO. | BY: | DATE: | NO. | BY: | DATE: | S-19 |
| 1 | | | 3 | | | TOTAL SHEETS |
| 2 | | | 4 | | | 93 |

STD. NO. PCG12

# DEAD LOAD DEFLECTIONS TABLE

## STAGE I

### SPAN A

| 0.6"Ø LOW RELAXATION | GIRDER 1 | | | | | | | | | | | GIRDER 6 | | | | | | | | | | | GIRDERS 2 THRU 5 | | | | | | | | | | |
|---|---|---|---|---|---|---|---|---|---|---|---|---|---|---|---|---|---|---|---|---|---|---|---|---|---|---|---|---|---|---|---|---|---|
| TENTH POINTS | 0 | .1 | .2 | .3 | .4 | .5 | .6 | .7 | .8 | .9 | 0 | 0 | .1 | .2 | .3 | .4 | .5 | .6 | .7 | .8 | .9 | 0 | 0 | .1 | .2 | .3 | .4 | .5 | .6 | .7 | .8 | .9 | 0 |
| CAMBER (GIRDER ALONE IN PLACE) ↑ | 0 | 0.028 | 0.054 | 0.073 | 0.086 | 0.090 | 0.086 | 0.073 | 0.054 | 0.028 | 0 | 0 | 0.028 | 0.053 | 0.073 | 0.085 | 0.089 | 0.085 | 0.073 | 0.053 | 0.028 | 0 | 0 | 0.028 | 0.054 | 0.073 | 0.086 | 0.090 | 0.086 | 0.073 | 0.054 | 0.028 | 0 |
| ✱ DEFLECTION DUE TO SUPERIMPOSED D.L. ↓ | 0 | 0.012 | 0.022 | 0.030 | 0.036 | 0.037 | 0.036 | 0.030 | 0.022 | 0.012 | 0 | 0 | 0.012 | 0.022 | 0.031 | 0.036 | 0.038 | 0.036 | 0.031 | 0.022 | 0.012 | 0 | 0 | 0.012 | 0.023 | 0.031 | 0.036 | 0.038 | 0.036 | 0.031 | 0.023 | 0.012 | 0 |
| FINAL CAMBER ↑ | 0 | 3/16" | 3/8" | 1/2" | 5/8" | 5/8" | 5/8" | 1/2" | 3/8" | 3/16" | 0 | 0 | 3/16" | 3/8" | 1/2" | 9/16" | 5/8" | 9/16" | 1/2" | 3/8" | 3/16" | 0 | 0 | 3/16" | 3/8" | 1/2" | 5/8" | 5/8" | 5/8" | 1/2" | 3/8" | 3/16" | 0 |

### SPAN B

| 0.6"Ø LOW RELAXATION | GIRDER 1 | | | | | | | | | | | GIRDER 6 | | | | | | | | | | | GIRDERS 2 THRU 5 | | | | | | | | | | |
|---|---|---|---|---|---|---|---|---|---|---|---|---|---|---|---|---|---|---|---|---|---|---|---|---|---|---|---|---|---|---|---|---|---|
| TENTH POINTS | 0 | .1 | .2 | .3 | .4 | .5 | .6 | .7 | .8 | .9 | 0 | 0 | .1 | .2 | .3 | .4 | .5 | .6 | .7 | .8 | .9 | 0 | 0 | .1 | .2 | .3 | .4 | .5 | .6 | .7 | .8 | .9 | 0 |
| CAMBER (GIRDER ALONE IN PLACE) ↑ | 0 | 0.028 | 0.053 | 0.073 | 0.085 | 0.089 | 0.085 | 0.073 | 0.053 | 0.028 | 0 | 0 | 0.028 | 0.053 | 0.072 | 0.084 | 0.089 | 0.084 | 0.072 | 0.053 | 0.028 | 0 | 0 | 0.028 | 0.053 | 0.072 | 0.085 | 0.089 | 0.085 | 0.072 | 0.053 | 0.028 | 0 |
| ✱ DEFLECTION DUE TO SUPERIMPOSED D.L. ↓ | 0 | 0.011 | 0.021 | 0.029 | 0.034 | 0.036 | 0.034 | 0.029 | 0.021 | 0.011 | 0 | 0 | 0.012 | 0.022 | 0.030 | 0.035 | 0.037 | 0.035 | 0.030 | 0.022 | 0.012 | 0 | 0 | 0.011 | 0.022 | 0.030 | 0.035 | 0.037 | 0.035 | 0.030 | 0.022 | 0.011 | 0 |
| FINAL CAMBER ↑ | 0 | 3/16" | 3/8" | 1/2" | 5/8" | 5/8" | 5/8" | 1/2" | 3/8" | 3/16" | 0 | 0 | 3/16" | 3/8" | 1/2" | 9/16" | 5/8" | 9/16" | 1/2" | 3/8" | 3/16" | 0 | 0 | 3/16" | 3/8" | 1/2" | 5/8" | 5/8" | 5/8" | 1/2" | 3/8" | 3/16" | 0 |

### SPAN C

| 0.6"Ø LOW RELAXATION | GIRDER 1 | | | | | | | | | | | GIRDER 6 | | | | | | | | | | | GIRDERS 2 THRU 5 | | | | | | | | | | |
|---|---|---|---|---|---|---|---|---|---|---|---|---|---|---|---|---|---|---|---|---|---|---|---|---|---|---|---|---|---|---|---|---|---|
| TENTH POINTS | 0 | .1 | .2 | .3 | .4 | .5 | .6 | .7 | .8 | .9 | 0 | 0 | .1 | .2 | .3 | .4 | .5 | .6 | .7 | .8 | .9 | 0 | 0 | .1 | .2 | .3 | .4 | .5 | .6 | .7 | .8 | .9 | 0 |
| CAMBER (GIRDER ALONE IN PLACE) ↑ | 0 | 0.028 | 0.054 | 0.074 | 0.086 | 0.090 | 0.086 | 0.074 | 0.054 | 0.028 | 0 | 0 | 0.028 | 0.053 | 0.073 | 0.085 | 0.089 | 0.085 | 0.073 | 0.053 | 0.028 | 0 | 0 | 0.028 | 0.054 | 0.073 | 0.086 | 0.090 | 0.086 | 0.073 | 0.054 | 0.028 | 0 |
| ✱ DEFLECTION DUE TO SUPERIMPOSED D.L. ↓ | 0 | 0.012 | 0.022 | 0.030 | 0.036 | 0.037 | 0.036 | 0.030 | 0.022 | 0.012 | 0 | 0 | 0.012 | 0.022 | 0.031 | 0.036 | 0.038 | 0.036 | 0.031 | 0.022 | 0.012 | 0 | 0 | 0.012 | 0.023 | 0.031 | 0.037 | 0.038 | 0.037 | 0.031 | 0.023 | 0.012 | 0 |
| FINAL CAMBER ↑ | 0 | 3/16" | 3/8" | 1/2" | 5/8" | 5/8" | 5/8" | 1/2" | 3/8" | 3/16" | 0 | 0 | 3/16" | 3/8" | 1/2" | 9/16" | 5/8" | 9/16" | 1/2" | 3/8" | 3/16" | 0 | 0 | 3/16" | 3/8" | 1/2" | 9/16" | 5/8" | 9/16" | 1/2" | 3/8" | 3/16" | 0 |

## STAGE II

### SPAN A

| 0.6"Ø LOW RELAXATION | GIRDER 7 | | | | | | | | | | | GIRDER 9 | | | | | | | | | | | GIRDER 8 | | | | | | | | | | |
|---|---|---|---|---|---|---|---|---|---|---|---|---|---|---|---|---|---|---|---|---|---|---|---|---|---|---|---|---|---|---|---|---|---|
| TENTH POINTS | 0 | .1 | .2 | .3 | .4 | .5 | .6 | .7 | .8 | .9 | 0 | 0 | .1 | .2 | .3 | .4 | .5 | .6 | .7 | .8 | .9 | 0 | 0 | .1 | .2 | .3 | .4 | .5 | .6 | .7 | .8 | .9 | 0 |
| CAMBER (GIRDER ALONE IN PLACE) ↑ | 0 | 0.028 | 0.052 | 0.072 | 0.084 | 0.088 | 0.084 | 0.072 | 0.052 | 0.028 | 0 | 0 | 0.027 | 0.052 | 0.071 | 0.083 | 0.088 | 0.083 | 0.071 | 0.052 | 0.027 | 0 | 0 | 0.028 | 0.052 | 0.071 | 0.084 | 0.088 | 0.084 | 0.071 | 0.052 | 0.028 | 0 |
| ✱ DEFLECTION DUE TO SUPERIMPOSED D.L. ↓ | 0 | 0.014 | 0.027 | 0.037 | 0.043 | 0.045 | 0.043 | 0.037 | 0.027 | 0.014 | 0 | 0 | 0.012 | 0.022 | 0.030 | 0.035 | 0.037 | 0.035 | 0.030 | 0.022 | 0.012 | 0 | 0 | 0.013 | 0.025 | 0.034 | 0.040 | 0.042 | 0.040 | 0.034 | 0.025 | 0.013 | 0 |
| FINAL CAMBER ↑ | 0 | 3/16" | 5/16" | 7/16" | 1/2" | 1/2" | 1/2" | 7/16" | 5/16" | 3/16" | 0 | 0 | 3/16" | 3/8" | 1/2" | 9/16" | 5/8" | 9/16" | 1/2" | 3/8" | 3/16" | 0 | 0 | 3/16" | 5/16" | 7/16" | 1/2" | 9/16" | 1/2" | 7/16" | 5/16" | 3/16" | 0 |

### SPAN B

| 0.6"Ø LOW RELAXATION | GIRDER 7 | | | | | | | | | | | GIRDER 9 | | | | | | | | | | | GIRDER 8 | | | | | | | | | | |
|---|---|---|---|---|---|---|---|---|---|---|---|---|---|---|---|---|---|---|---|---|---|---|---|---|---|---|---|---|---|---|---|---|---|
| TENTH POINTS | 0 | .1 | .2 | .3 | .4 | .5 | .6 | .7 | .8 | .9 | 0 | 0 | .1 | .2 | .3 | .4 | .5 | .6 | .7 | .8 | .9 | 0 | 0 | .1 | .2 | .3 | .4 | .5 | .6 | .7 | .8 | .9 | 0 |
| CAMBER (GIRDER ALONE IN PLACE) ↑ | 0 | 0.028 | 0.052 | 0.072 | 0.084 | 0.088 | 0.084 | 0.072 | 0.052 | 0.028 | 0 | 0 | 0.028 | 0.052 | 0.071 | 0.084 | 0.088 | 0.084 | 0.071 | 0.052 | 0.028 | 0 | 0 | 0.028 | 0.052 | 0.072 | 0.084 | 0.088 | 0.084 | 0.072 | 0.052 | 0.028 | 0 |
| ✱ DEFLECTION DUE TO SUPERIMPOSED D.L. ↓ | 0 | 0.014 | 0.027 | 0.037 | 0.043 | 0.045 | 0.043 | 0.037 | 0.027 | 0.014 | 0 | 0 | 0.012 | 0.022 | 0.030 | 0.036 | 0.037 | 0.036 | 0.030 | 0.022 | 0.012 | 0 | 0 | 0.013 | 0.025 | 0.034 | 0.040 | 0.042 | 0.040 | 0.034 | 0.025 | 0.013 | 0 |
| FINAL CAMBER ↑ | 0 | 3/16" | 5/16" | 7/16" | 1/2" | 1/2" | 1/2" | 7/16" | 5/16" | 3/16" | 0 | 0 | 3/16" | 3/8" | 1/2" | 9/16" | 5/8" | 9/16" | 1/2" | 3/8" | 3/16" | 0 | 0 | 3/16" | 5/16" | 7/16" | 1/2" | 9/16" | 1/2" | 7/16" | 5/16" | 3/16" | 0 |

### SPAN C

| 0.6"Ø LOW RELAXATION | GIRDER 7 | | | | | | | | | | | GIRDER 9 | | | | | | | | | | | GIRDER 8 | | | | | | | | | | |
|---|---|---|---|---|---|---|---|---|---|---|---|---|---|---|---|---|---|---|---|---|---|---|---|---|---|---|---|---|---|---|---|---|---|
| TENTH POINTS | 0 | .1 | .2 | .3 | .4 | .5 | .6 | .7 | .8 | .9 | 0 | 0 | .1 | .2 | .3 | .4 | .5 | .6 | .7 | .8 | .9 | 0 | 0 | .1 | .2 | .3 | .4 | .5 | .6 | .7 | .8 | .9 | 0 |
| CAMBER (GIRDER ALONE IN PLACE) ↑ | 0 | 0.028 | 0.052 | 0.072 | 0.084 | 0.088 | 0.084 | 0.072 | 0.052 | 0.028 | 0 | 0 | 0.028 | 0.052 | 0.071 | 0.084 | 0.088 | 0.084 | 0.071 | 0.052 | 0.028 | 0 | 0 | 0.028 | 0.052 | 0.072 | 0.084 | 0.088 | 0.084 | 0.072 | 0.052 | 0.028 | 0 |
| ✱ DEFLECTION DUE TO SUPERIMPOSED D.L. ↓ | 0 | 0.014 | 0.027 | 0.037 | 0.044 | 0.046 | 0.044 | 0.037 | 0.027 | 0.014 | 0 | 0 | 0.012 | 0.022 | 0.030 | 0.036 | 0.037 | 0.036 | 0.030 | 0.022 | 0.012 | 0 | 0 | 0.013 | 0.025 | 0.034 | 0.040 | 0.042 | 0.040 | 0.034 | 0.025 | 0.013 | 0 |
| FINAL CAMBER ↑ | 0 | 3/16" | 5/16" | 7/16" | 1/2" | 1/2" | 1/2" | 7/16" | 5/16" | 3/16" | 0 | 0 | 3/16" | 3/8" | 1/2" | 9/16" | 5/8" | 9/16" | 1/2" | 3/8" | 3/16" | 0 | 0 | 3/16" | 5/16" | 7/16" | 1/2" | 9/16" | 1/2" | 7/16" | 5/16" | 3/16" | 0 |

✱ INCLUDES FUTURE WEARING SURFACE

ALL VALUES ARE SHOWN IN FEET (DECIMAL FORM), EXCEPT "FINAL CAMBER", WHICH IS GIVEN IN INCHES (FRACTION FORM).

PROJECT NO. U-4019

NASH COUNTY

STATION: 27+87.83 -L-

NORTH CAROLINA PROFESSIONAL SEAL 16301 ENGINEER TING HSIUNG FANG

4/26/11

STATE OF NORTH CAROLINA
DEPARTMENT OF TRANSPORTATION
RALEIGH

SUPERSTRUCTURE

PRESTRESSED CONCRETE GIRDER
DEAD LOAD DEFLECTIONS

| REVISIONS | | | | | | | | | | SHEET NO. |
|---|---|---|---|---|---|---|---|---|---|---|
| NO. | BY: | DATE: | NO. | BY: | DATE: | NO. | BY: | DATE: | NO. | S-20 |
| 1 | | | 3 | | | | | | | TOTAL SHEETS |
| 2 | | | 4 | | | | | | | 93 |

| | | | |
|---|---|---|---|
| ASSEMBLED BY : | OT NGUYEN | DATE : | 01-07-11 |
| CHECKED BY : | RAMAN PATEL | DATE : | 04-26-11 |
| DRAWN BY : ELR 11/91 | REV. 10/17/00 RWW/LES | | |
| CHECKED BY : GRP 11/91 | REV. 7/10/01RR LES/RDR | | |
| | REV. 5/1/06 TLA/GM | | |

26-APR-2011 12:54
Z:\TIPProjects-U\U4019\Structures\str1\FinalPlans\U4019_SD_G1*.dgn
qtnguyen

STR. #1

STD.No.PCG11

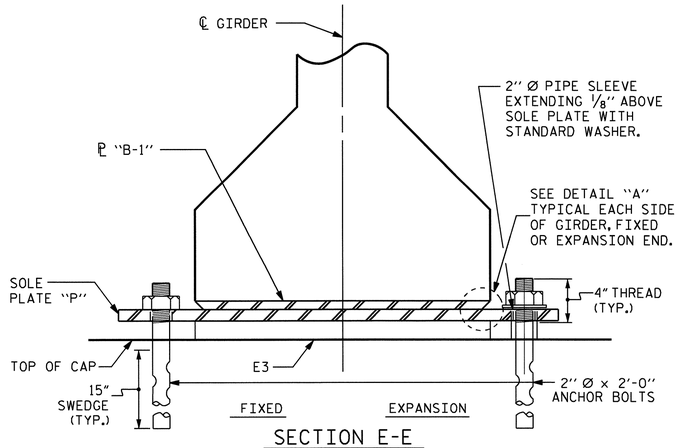


SECTION E-E
FOR INTERIOR BENTS

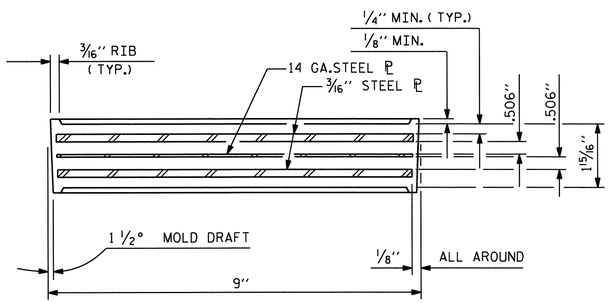


TYPICAL SECTION OF ELASTOMERIC BEARINGS

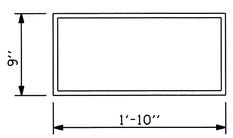


E3 ( 54 REQ'D )

PLAN VIEW OF ELASTOMERIC BEARING

TYPE IV

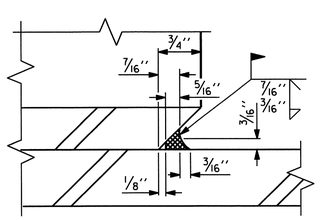


DETAIL "A"

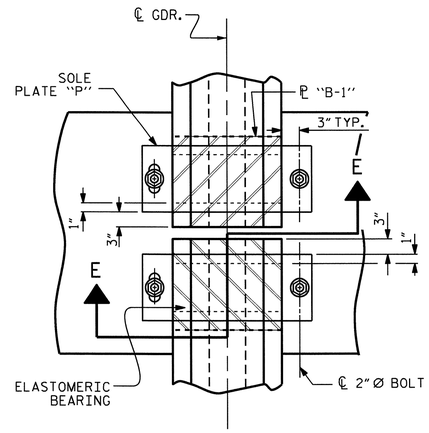


TYPICAL HALF-PLAN (EXPANSION)

TYPICAL HALF-PLAN (FIXED)

TYPICAL PLAN @ BENT

UP-STATION

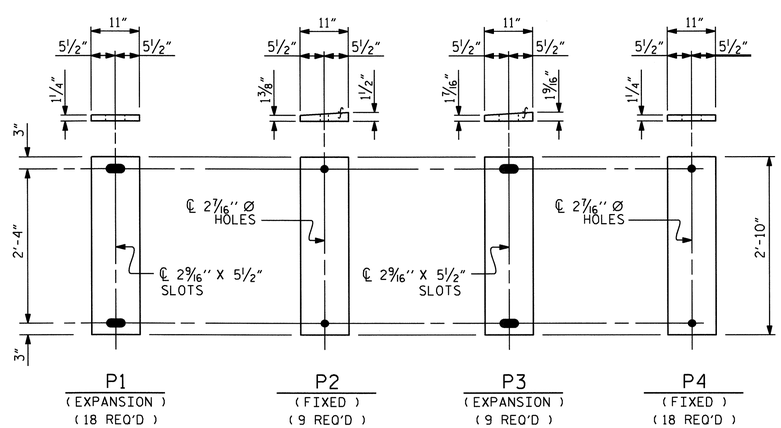


P1 (EXPANSION) (18 REQ'D)

P2 (FIXED) (9 REQ'D)

P3 (EXPANSION) (9 REQ'D)

P4 (FIXED) (18 REQ'D)

SOLE PLATE DETAILS ( "P" )

| LOAD RATINGS | |
|---|---|
| | MAX.D.L.+L.L. |
| | |
| 45" PCG -TYPE IV | 137 K |
| | |

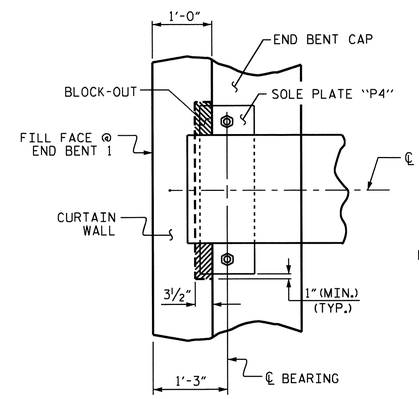


PLAN

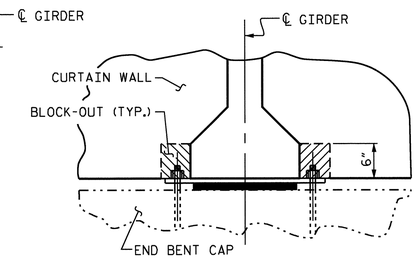


SECTION

CURTAIN WALL BLOCK-OUT DETAIL

PAVEMENT BRACKET NOT SHOWN FOR CLARITY

## NOTES

AT ALL FIXED POINTS OF SUPPORT, NUTS FOR ANCHOR BOLTS ARE TO BE TIGHTENED FINGER TIGHT AND THEN BACKED OFF 1/2 TURN. THE THREAD OF THE NUT AND BOLT SHALL THEN BE BURRED WITH A SHARP POINTED TOOL.

THE 2" Ø PIPE SLEEVE SHALL BE CUT FROM SCHEDULE 40 PVC PLASTIC PIPE. THE PVC PLASTIC PIPE SHALL MEET THE REQUIREMENTS OF ASTM D1785.

STEEL SOLE PLATES, ANCHOR BOLTS, NUTS, AND WASHERS SHALL BE GALVANIZED IN ACCORDANCE WITH THE STANDARD SPECIFICATIONS.

PRIOR TO WELDING, GRIND THE GALVANIZED SURFACE OF THE PORTION OF THE EMBEDDED PLATE AND SOLE PLATE THAT ARE TO BE WELDED. AFTER WELDING, DAMAGED GALVANIZED SURFACES SHALL BE REPAIRED IN ACCORDANCE WITH THE STANDARD SPECIFICATIONS.

WHEN WELDING THE SOLE PLATE TO THE EMBEDDED PLATE IN THE GIRDER, USE TEMPERATURE INDICATING WAX PENS, OR OTHER SUITABLE MEANS, TO ENSURE THAT THE TEMPERATURE OF THE SOLE PLATE DOES NOT EXCEED 300°F. TEMPERATURES ABOVE THIS MAY DAMAGE THE ELASTOMER.

SOLE PLATE "P", BOLTS, NUTS, WASHERS, AND PIPE SLEEVE SHALL BE INCLUDED IN THE UNIT PRICE BID FOR PRESTRESSED CONCRETE GIRDERS.

ANCHOR BOLTS SHALL MEET THE REQUIREMENTS OF ASTM A449. NUTS SHALL MEET THE REQUIREMENTS OF AASHTO M291-DH OR AASHTO M292-2H. WASHERS SHALL MEET THE REQUIREMENTS OF AASHTO M293. SHOP DRAWINGS ARE NOT REQUIRED FOR ANCHOR BOLT, NUTS AND WASHERS. SHOP INSPECTION IS REQUIRED.

ALL SURFACES OF BEARING PLATES SHALL BE SMOOTH AND STRAIGHT.

PROJECT NO. U-4019
NASH COUNTY
STATION: 27+87.83 -L-

NORTH CAROLINA PROFESSIONAL SEAL 32492 ENGINEER JOHN A. YANNACCONE
5/26/11

STATE OF NORTH CAROLINA
DEPARTMENT OF TRANSPORTATION
RALEIGH

STANDARD

ELASTOMERIC BEARING DETAILS

PRESTRESSED CONCRETE GIRDER SUPERSTRUCTURE

| REVISIONS | | | | | | SHEET NO. |
|---|---|---|---|---|---|---|
| NO. | BY: | DATE: | NO. | BY: | DATE: | S-21 |
| 1 | | | 3 | | | TOTAL SHEETS |
| 2 | | | 4 | | | 93 |

STR. #1

STD. NO. EB3

| | | | |
|---|---|---|---|
| ASSEMBLED BY : OT NGUYEN | | DATE : 10-20-10 | |
| CHECKED BY : E.I. OMILE | | DATE : 12-10-10 | |
| DRAWN BY : WJH 8/89 | REV. 10/17/00 | RWW/LES | |
| CHECKED BY : CRK 8/89 | REV. 7/10/01 | RWW/LES | |
| | REV. 5/1/06 | TLA/GM | |

23-MAY-2011 09:38
Z:\TIPProjects-U\U4019\Structures\str1\Final Plans\U4019_SD_BG1.dgn
tfang

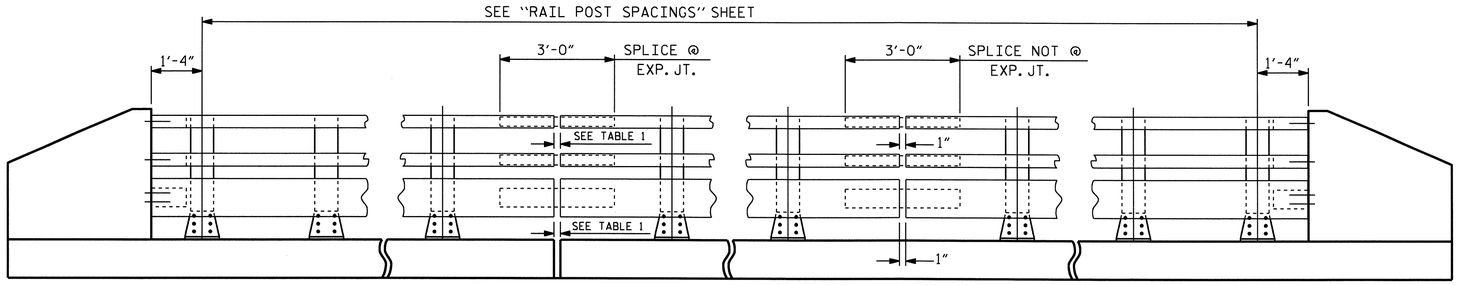


NOTE:
FOR ATTACHMENT OF METAL RAIL TO END POST, SEE STANDARD NO. BMR7 ON SHEET S-25.

## ELEVATION

| TABLE 1 | |
|---|---|
| ℄ EXP.JT. @ BENT | RAIL OPENING |
| BENT 1 | 1" |
| BENT 2 | 1" |

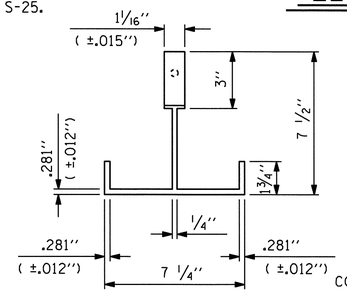


## PLAN

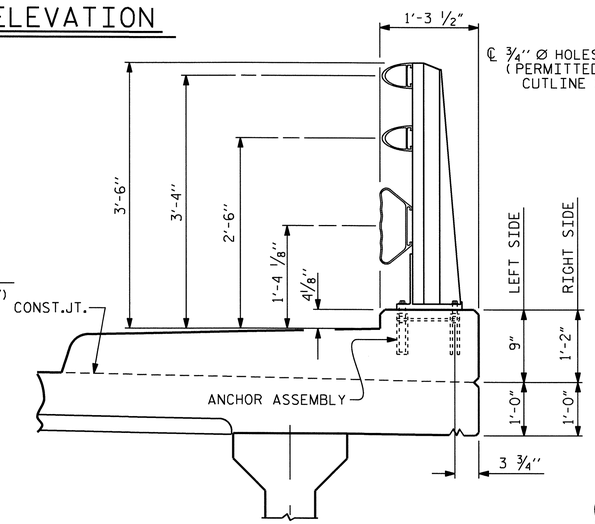


## SECTION THRU RAIL

FOR ANCHOR ASSEMBLY, SEE "3 BAR METAL RAIL" STD.No.BMR6

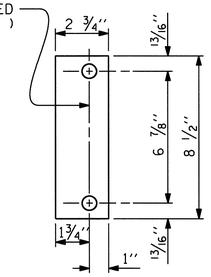


## REAR PLATE

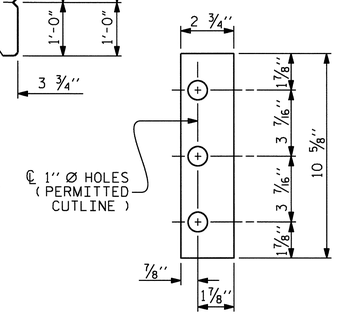


## FRONT PLATE

## SHIM DETAILS

NOTE :
SHIMS MAY BE CUT ALONG PERMITTED CUTLINE OR SLOTTED TO EDGE OF PLATE TO FACILITATE PLACEMENT.

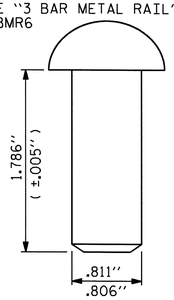


## RIVET DETAIL

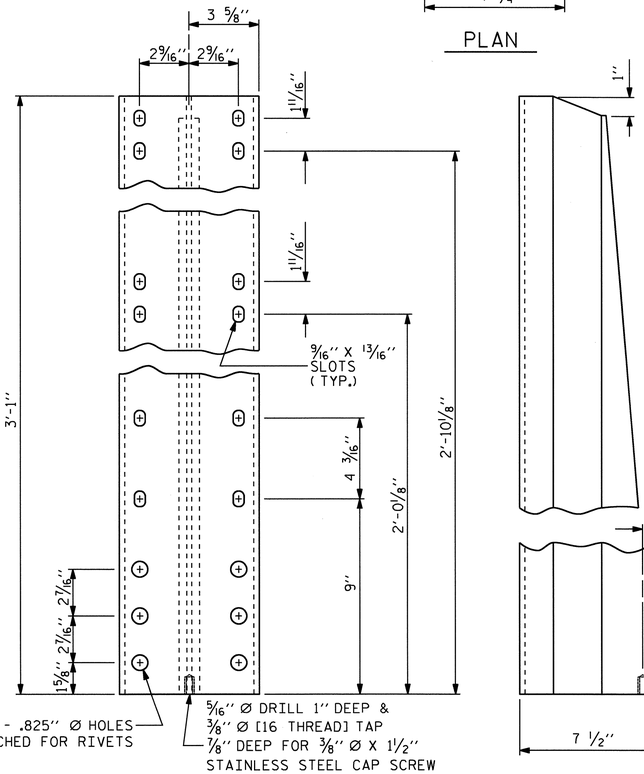


FRONT ELEVATION

SIDE ELEVATION

## DETAILS OF POST

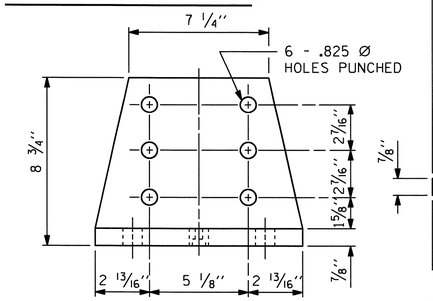


FRONT ELEVATION

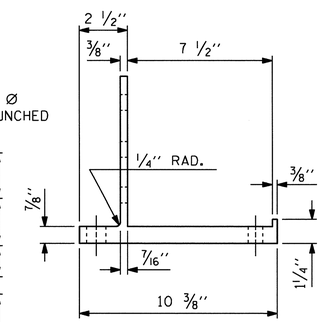


SIDE ELEVATION

## POST BASE DETAILS

## NOTES

AT THE CONTRACTOR'S OPTION, METAL RAIL MAY BE EITHER ALUMINUM OR GALVANIZED STEEL IN ACCORDANCE WITH THE REQUIREMENTS OF THE GENERAL NOTES AND THE FOLLOWING SPECIFICATIONS FOR THE ALTERNATE MATERIALS; HOWEVER, THE CONTRACTOR WILL BE REQUIRED TO USE THE SAME RAIL MATERIAL ON ALL STRUCTURES ON THE PROJECT FOR WHICH METAL RAIL IS DESIGNATED.

### ALUMINUM RAILS

MATERIAL FOR POSTS, BASES AND RAILS, EXPANSION BARS AND CLAMP BARS SHALL BE ASTM B221 ALLOY 6061-T6.

MATERIAL FOR RIVETS SHALL BE ASTM B316 ALLOY 6061-T6. RIVETS SHALL BE STANDARD BUTTON HEAD AND CONE POINT COLD DRIVEN AS PER DRAWING.

THE BASE OF RAIL POSTS, OR ANY OTHER ALUMINUM SURFACE IN CONTACT WITH CONCRETE SHALL BE THOROUGHLY COATED WITH AN ALUMINUM IMPREGNATED CAULKING COMPOUND OF APPROVED QUALITY.

MATERIAL FOR SHIMS TO BE ASTM B209 ALLOY 6061-T6.

### GALVANIZED STEEL RAILS

MATERIAL AND GALVANIZING ARE TO CONFORM TO THE FOLLOWING SPECIFICATIONS:

POST, POST BASES, RAILS, EXPANSION BARS AND CLAMP BARS : AASHTO M270 GRADE 36 STRUCTURAL STEEL - GALVANIZED TO AASHTO M111.

RIVETS: RIVETS SHALL MEET THE REQUIREMENTS OF ASTM A502 FOR GRADE 1 RIVETS.

THE CUT ENDS OF GALVANIZED STEEL RAILING, AFTER GRINDING SMOOTH SHALL BE GIVEN TWO COATS OF ZINC RICH PAINT MEETING THE REQUIREMENTS OF FEDERAL SPECIFICATION MIL-P-26915 USAF TYPE 1, OR OF FEDERAL SPECIFICATIONS TT-P-641.

SHIMS: SHIMS SHALL MEET THE REQUIREMENTS OF ASTM A570 FOR GRADE 33 OR A611 FOR GRADE C AND SHALL BE GALVANIZED IN ACCORDANCE WITH AASHTO M111.

RAIL CAPS: RAIL CAPS SHALL MEET THE REQUIREMENTS OF ASTM A570 FOR GRADE 33 OR A611 FOR GRADE C AND SHALL BE GALVANIZED IN ACCORDANCE WITH AASHTO M111.

### GENERAL NOTES

RAILING SHALL BE CONTINUOUS FROM END POST TO END POST OF BRIDGE. EACH JOINT IN RAIL LENGTH SHALL BE SPLICED AS DETAILED. PANEL LENGTHS OF RAIL SHALL BE ATTACHED TO A MINIMUM OF THREE POSTS. PLACE ONE JOINT SPLICE JUST BEYOND THE 3RD RAIL POST FROM EACH END, TYPICALLY 14' FROM THE END. PLACE OTHER JOINTS AS NEEDED.

FOR END OF RAIL TO CLEAR FACE OF CONCRETE END POST DIMENSION, SEE STANDARD NO. BMR7.

CAP SCREWS SHALL BE ASTM F593 ALLOY 305 STAINLESS STEEL. WASHERS FOR RAIL ATTACHMENT SHALL MEET THE REQUIREMENTS OF ASTM F844 EXCEPT THEY SHALL BE MADE FROM ALLOY 304 STAINLESS STEEL.

CERTIFIED MILL REPORTS ARE REQUIRED FOR RAILS AND POSTS. SHOP INSPECTION IS NOT REQUIRED.

METAL RAIL POSTS SHALL BE SET NORMAL TO CURB GRADE.

METHOD OF MEASUREMENT FOR METAL RAILS: FOR LENGTH OF METAL RAILS TO BE PAID FOR, SEE THE STANDARD SPECIFICATIONS.

CURVED RAIL USAGE: WHERE RAILS ARE TO BE USED ON BRIDGES ON HORIZONTAL AND/OR VERTICAL CURVATURE THE CONTRACTOR MAY, AT HIS OPTION, HAVE THE REQUIRED CURVATURE IN THE RAIL FORMED IN THE SHOP OR IN THE FIELD. IN EITHER EVENT, THE RAIL SHALL CONFORM WITHOUT BUCKLING OR KINKING TO THE REQUIRED CURVATURE IN A UNIFORM MANNER ACCEPTABLE TO THE ENGINEER.

TO INSURE FUTURE IDENTIFICATION OF THE FABRICATOR, A PERMANENT IDENTIFYING MARK SHALL BE PLACED ON EACH POST. THE METHOD OF MARKING AND LOCATION SHALL BE SUCH THAT IT DOES NOT DETRACT FROM THE APPEARANCE OF THE POST, BUT REMAIN VISIBLE AFTER RAIL PLACEMENT.

SHIMS SHALL BE USED AS NECESSARY FOR POST ALIGNMENT.

ALLOY 6351-T5 MAY BE SUBSTITUTED FOR ALLOY 6061-T6 WHERE APPLICABLE.

MINOR VARIATIONS IN DETAILS OF METAL RAIL WILL BE CONSIDERED. DETAILS OF SUCH VARIATIONS, IF DESIRED, SHALL BE SUBMITTED FOR APPROVAL.

PAY LENGTH = 307.29 LIN. FT.

| METAL RAIL PAY LENGTH | |
|---|---|
| STAGE I | 155.516 |
| STAGE II | 151.769 |
| TOTAL | 307.285 |

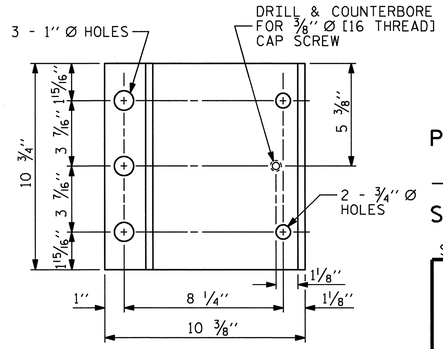


PLAN

PROJECT NO. U-4019
NASH COUNTY
STATION: 27+87.83 -L-

SHEET 1 OF 3

STATE OF NORTH CAROLINA
DEPARTMENT OF TRANSPORTATION
RALEIGH

STANDARD

3 BAR METAL RAIL

NORTH CAROLINA PROFESSIONAL SEAL 16301 ENGINEER TING HSIUNG FANG
4/26/11

| ASSEMBLED BY : | QT NGUYEN | DATE : 10-21-10 |
|---|---|---|
| CHECKED BY : | E.I. OMILE | DATE : 12-10-10 |

| | | | |
|---|---|---|---|
| DRAWN BY : JMB 1/88 | REV. 10/17/00 | RWW/LES |
| CHECKED BY : GGH 1/88 | REV. 5/7/03 | RWW/JTE |
| | REV. 5/1/06 | TLA/GM |

| REVISIONS | | | | | | SHEET NO. |
|---|---|---|---|---|---|---|
| NO. | BY: | DATE: | NO. | BY: | DATE: | S-22 |
| 1 | | | 3 | | | TOTAL SHEETS |
| 2 | | | 4 | | | 93 |

STR. #1

STD. NO. BMR5

26-APR-2011 12:54
Z:\TIPProjects-U\U4019\Structures\str1\FinalPlans\U4019_SD_3MR1.dgn
qtnguyen

## NOTES

STRUCTURAL CONCRETE ANCHOR ASSEMBLY

THE STRUCTURAL CONCRETE ANCHOR ASSEMBLY SHALL CONSIST OF THE FOLLOWING COMPONENTS:

A. FERRULES SHALL BE MADE FROM STEEL MEETING THE REQUIREMENTS OF AASHTO M169, GRADE 12L14 AND SHALL HAVE A MINIMUM LENGTH OF THREADS OF 2" FOR 3/4" FERRULES AND 1 3/4" FOR 5/8" FERRULES.

B. 3 - 3/4" Ø X 2 1/2" BOLTS WITH WASHERS. BOLTS SHALL CONFORM TO THE REQUIREMENTS OF ASTM A307. BOLTS AND WASHERS SHALL BE GALVANIZED. AT THE CONTRACTOR'S OPTION, STAINLESS STEEL BOLTS AND WASHERS MAY BE USED AS AN ALTERNATE FOR THE 3/4" Ø X 2 1/2" GALVANIZED BOLTS AND WASHERS. THEY SHALL CONFORM TO OR EXCEED THE MECHANICAL REQUIREMENTS OF ASTM A307. THE USE OF THIS ALTERNATE SHALL BE APPROVED BY THE ENGINEER.

C. 2 - 5/8" Ø X 2 1/4" BOLTS WITH WASHERS. BOLTS SHALL CONFORM TO THE REQUIREMENTS OF ASTM A307. BOLTS AND WASHERS SHALL BE GALVANIZED. AT THE CONTRACTOR'S OPTION, STAINLESS STEEL BOLTS AND WASHERS MAY BE USED AS AN ALTERNATE FOR THE 5/8" Ø X 2 1/4" GALVANIZED BOLTS AND WASHERS. THEY SHALL CONFORM TO OR EXCEED THE MECHANICAL REQUIREMENTS OF ASTM A307. THE USE OF THIS ALTERNATE SHALL BE APPROVED BY THE ENGINEER.

D. WIRE STRUT SHOWN IN THE CONCRETE ANCHOR ASSEMBLY DETAIL IS THE MINIMUM ALLOWABLE SIZE AND SHALL HAVE A MINIMUM TENSILE STRENGTH OF 100,000 PSI. AS AN OPTION, A 7/16" Ø WIRE STRUT WITH A MINIMUM TENSILE STRENGTH OF 90,000 PSI IS ACCEPTABLE.

E. THE METAL RAIL ANCHOR ASSEMBLIES TO BE HOT DIPPED GALVANIZED TO CONFORM TO REQUIREMENTS OF AASHTO M111.

F. THE COST OF THE METAL RAIL ANCHOR ASSEMBLY WITH BOLTS AND WASHERS COMPLETE IN PLACE SHALL BE INCLUDED IN THE PRICE BID FOR LINEAR FEET OF METAL RAIL.

G. BOLTS TO BE TIGHTENED ONE-HALF TURN WITH A WRENCH FROM A FINGER-TIGHT POSITION.

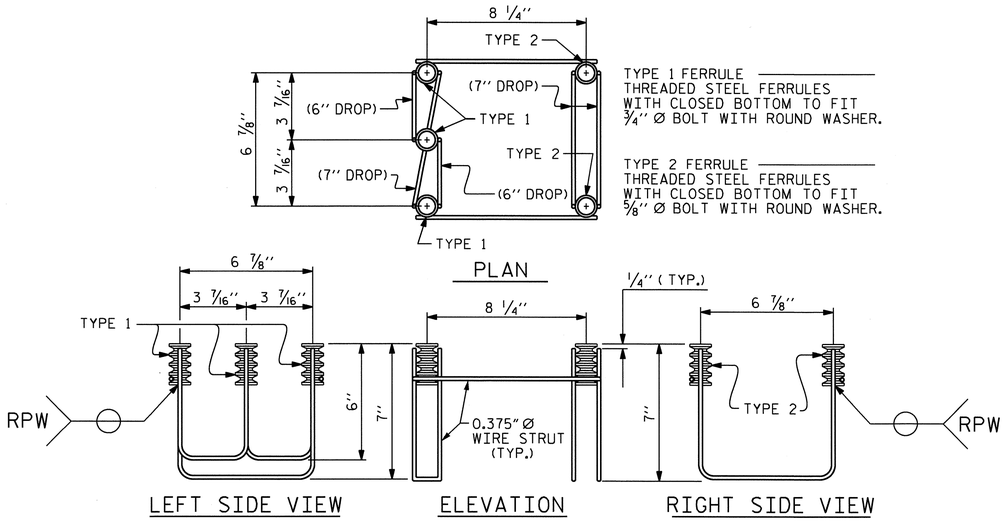


## 5-BOLT METAL RAIL ANCHOR ASSEMBLY

( 54 ASSEMBLIES REQUIRED )

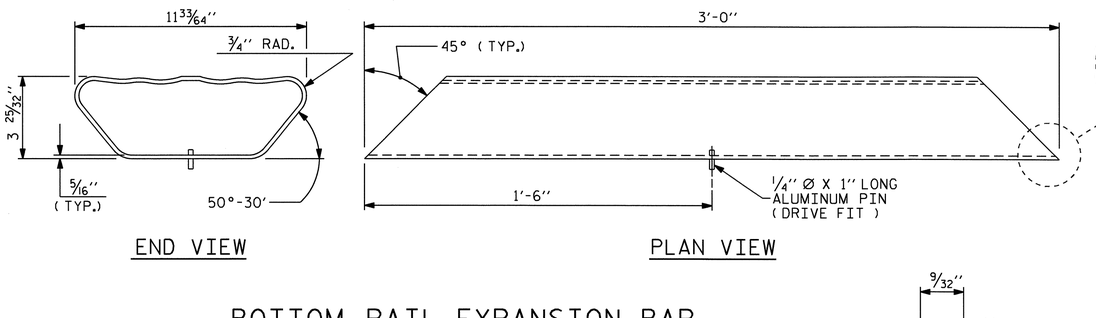


## BOTTOM RAIL EXPANSION BAR

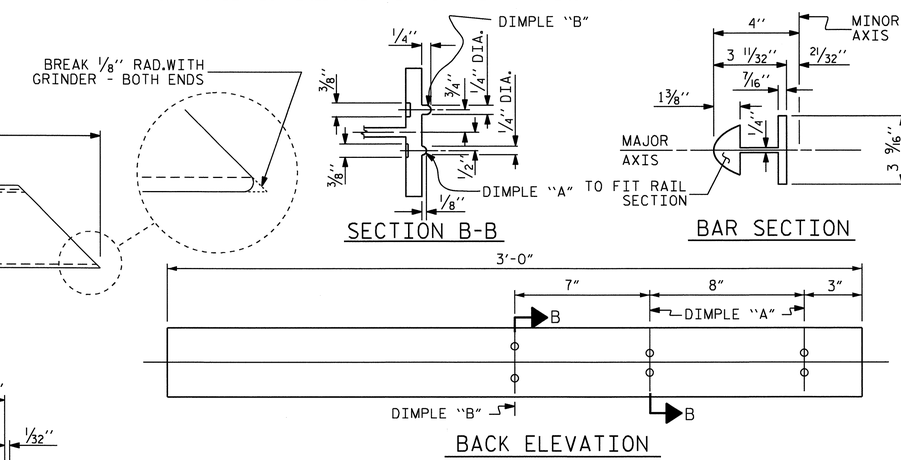


## TOP & MIDDLE RAIL EXPANSION BAR

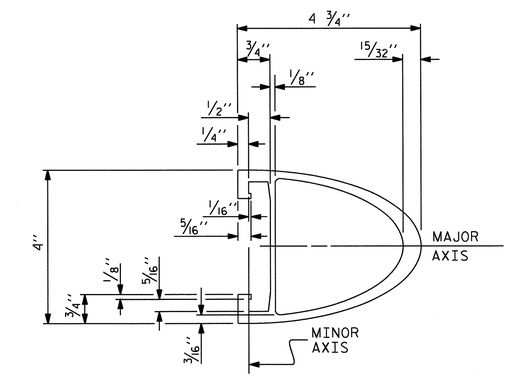


## TOP & MIDDLE RAIL SECTION

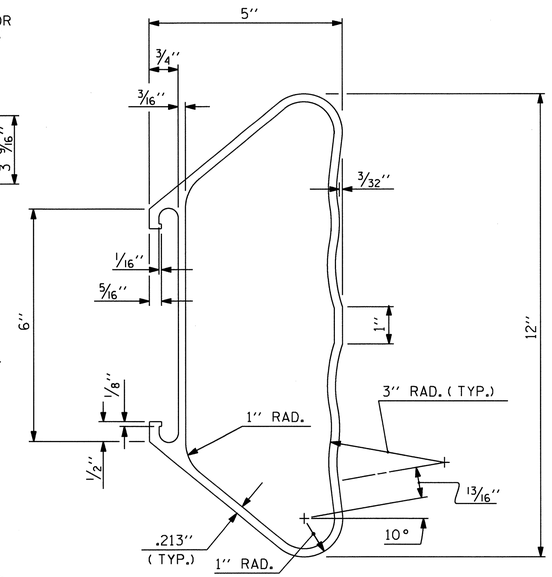


## BOTTOM RAIL SECTION

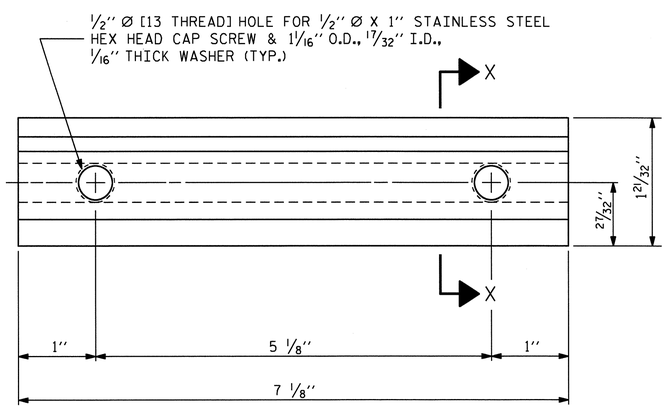


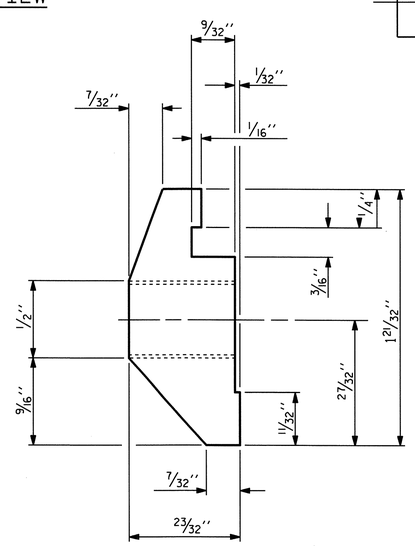


## CLAMP BAR DETAIL

( 6 REQUIRED PER POST )

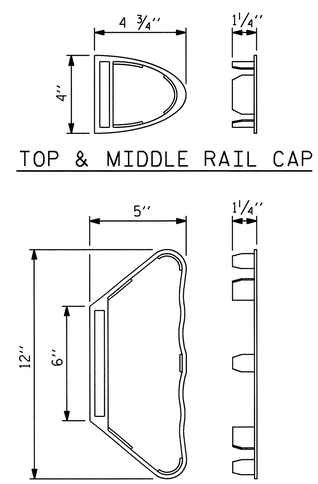


TOP & MIDDLE RAIL CAP

BOTTOM RAIL CAP

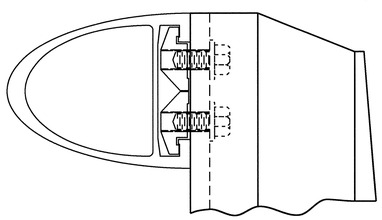

## CLAMP ASSEMBLY

TOP RAIL SHOWN
( MIDDLE & BOTTOM RAIL ARE SIMILAR )

NORTH CAROLINA PROFESSIONAL SEAL 16301 ENGINEER TING-HSIUNG FANG

4/26/11

PROJECT NO. U-4019

NASH COUNTY

STATION: 27+87.83 -L-

SHEET 2 OF 3

STATE OF NORTH CAROLINA
DEPARTMENT OF TRANSPORTATION
RALEIGH

STANDARD

3 BAR METAL RAIL

| ASSEMBLED BY : | OT NGUYEN | DATE : 10-21-10 |
|---|---|---|
| CHECKED BY : | E.I. OMILE | DATE : 12-10-10 |

| DRAWN BY : JMB 1/88 | REV. 7/10/01 RWW/LES |
|---|---|
| CHECKED BY : GGH 1/88 | REV. 5/7/03 RWW/JTE |
| | REV. 5/1/06 TLA/GM |

| REVISIONS | | | | | | SHEET NO. |
|---|---|---|---|---|---|---|
| NO. | BY: | DATE: | NO. | BY: | DATE: | S-23 |
| 1 | | | 3 | | | TOTAL SHEETS |
| 2 | | | 4 | | | 93 |

STR. #1

STD. NO. BMR6

26-APR-2011 12:54
Z:\TIPProjects-U\U4019\Structures\str1\FinalPlans\U4019_SD_3MR1.dgn
qtnguyen

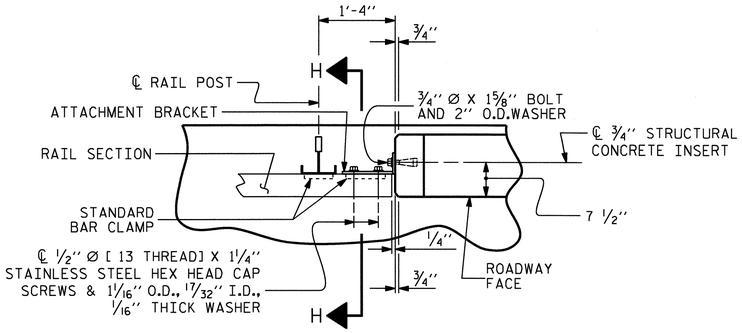


## PLAN OF RAIL AND END POST

( STIFFENER ON 1/2" ℙ NOT SHOWN FOR CLARITY )

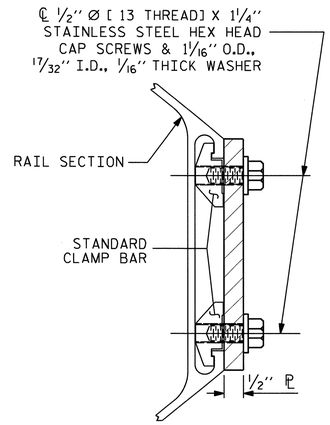


## SECTION H-H

( FOR BOTTOM RAIL )

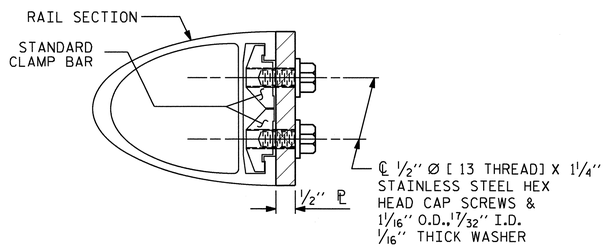


## SECTION H-H

( FOR TOP & MIDDLE RAIL )

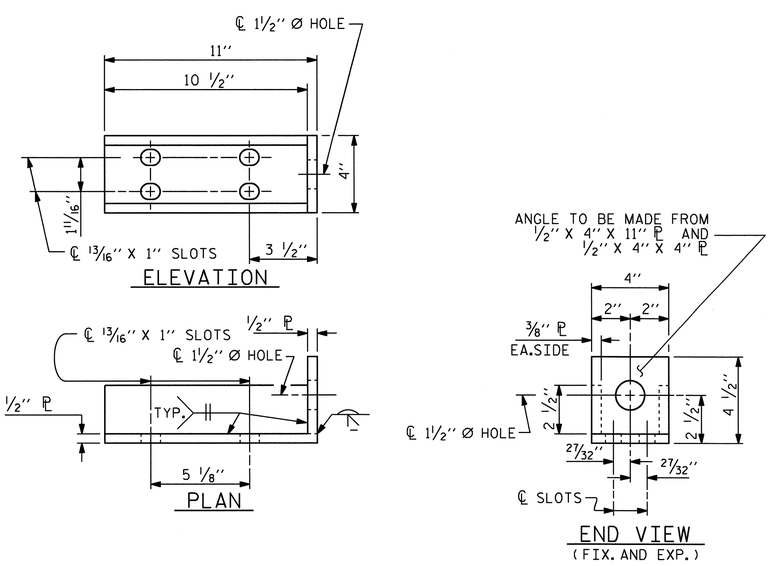


## DETAILS FOR ATTACHMENT BRACKET

( TOP & MIDDLE RAIL ONLY )

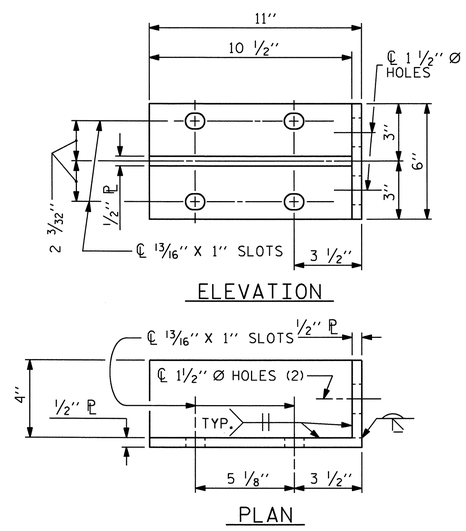


## DETAILS FOR ATTACHMENT BRACKET

( BOTTOM RAIL ONLY )

## NOTES

METAL RAIL TO END POST CONNECTION

THE METAL RAIL TO END POST CONNECTION SHALL CONSIST OF THE FOLLOWING COMPONENTS:

A. 1/2" PLATES SHALL CONFORM TO AASHTO M270 GRADE 36 AND SHALL BE GALVANIZED AFTER FABRICATION.

B. 3/4" STRUCTURAL CONCRETE INSERT SHALL HAVE A WORKING LOAD SHEAR CAPACITY OF 4800 LBS. THE FERRULES SHALL ENGAGE A 3/4" Ø X 1 5/8" BOLT WITH 2" O.D. WASHER IN PLACE. THE 3/4" Ø X 1 5/8" BOLT SHALL HAVE N. C. THREADS.

C. CAP SCREWS FOR RAIL ATTACHMENT TO ANGLE SHALL CONFORM TO THE REQUIREMENTS OF ASTM F593 ALLOY 305 STAINLESS STEEL. CAP SCREWS TO BE CENTERED IN SLOTS AT 60°F. WASHERS FOR RAIL ATTACHMENT SHALL MEET THE REQUIREMENTS OF ASTM F844 EXCEPT THEY SHALL BE MADE FROM ALLOY 304 STAINLESS STEEL.

D. STANDARD CLAMP BARS ( STD. No. BMR6 ).

THE COST OF THE STANDARD CLAMP BARS AND CAP SCREWS USED IN THE METAL RAIL TO END POST CONNECTION SHALL BE INCLUDED IN THE UNIT CONTRACT PRICE BID FOR LINEAR FEET OF 3 BAR METAL RAIL.

THE 3/4" STRUCTURAL CONCRETE INSERT WITH BOLT SHALL BE ASSEMBLED IN THE SHOP.

THE COST OF THE 3/4" STRUCTURAL CONCRETE INSERT ASSEMBLY, AND THE 1/2" PLATES COMPLETE IN PLACE SHALL BE INCLUDED IN THE VARIOUS PAY ITEMS.

THE CONTRACTOR, AT HIS OPTION, MAY USE AN ADHESIVE BONDING SYSTEM IN LIEU OF THE STRUCTURAL CONCRETE INSERT EMBEDDED IN THE END POST. IF THE ADHESIVE BONDING SYSTEM IS USED, THE 3/4" Ø X 1 5/8" BOLT WITH WASHER SHALL BE REPLACED WITH A 3/4" Ø X 6 1/2" BOLT AND 2" O.D.WASHER. ALL SPECIFICATIONS THAT APPLY TO THE 3/4" Ø X 1 5/8" BOLT SHALL APPLY TO THE 3/4" Ø X 6 1/2" BOLT. FIELD TESTING OF THE ADHESIVE BONDING SYSTEM IS NOT REQUIRED.

## NOTES

STRUCTURAL CONCRETE INSERT

THE STRUCTURAL CONCRETE INSERT ASSEMBLY SHALL CONSIST OF THE FOLLOWING COMPONENTS:

A. FERRULES SHALL BE MADE FROM STEEL MEETING THE REQUIREMENTS OF AASHTO M169, GRADE 12L14 AND SHALL HAVE A MINIMUM LENGTH OF THREADS OF 1 1/2".

B. 1 - 3/4" Ø X 1 5/8" BOLT WITH WASHER. BOLT SHALL CONFORM TO THE REQUIREMENTS OF ASTM A307. BOLT AND WASHER SHALL BE GALVANIZED. AT THE CONTRACTORS OPTION, STAINLESS STEEL BOLT AND WASHER MAY BE USED AS AN ALTERNATE FOR THE 3/4" Ø X 1 5/8" GALVANIZED BOLT AND WASHER. THEY SHALL CONFORM TO OR EXCEED THE MECHANICAL REQUIREMENTS OF ASTM A307. THE USE OF THIS ALTERNATE SHALL BE APPROVED BY THE ENGINEER.

C. WIRE STRUT SHOWN IN THE CONCRETE INSERT ASSEMBLY DETAIL IS THE MINIMUM ALLOWABLE SIZE AND SHALL HAVE A MINIMUM TENSILE STRENGTH OF 100,000 PSI. AS AN OPTION, A 1/16" Ø WIRE STRUT WITH A MINIMUM TENSILE STRENGTH OF 90,000 PSI IS ACCEPTABLE.

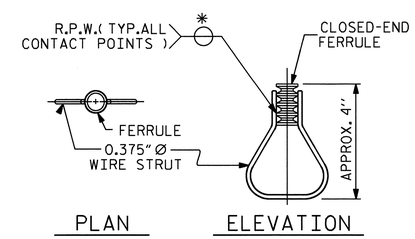


## STRUCTURAL CONCRETE INSERT

* EACH WELDED ATTACHMENT OF WIRE TO FERRULE SHALL DEVELOP THE TENSILE STRENGTH OF THE WIRE.

PROJECT NO. U-4019

NASH COUNTY

STATION: 27+87.83 -L-

SHEET 3 OF 3

STATE OF NORTH CAROLINA
DEPARTMENT OF TRANSPORTATION
RALEIGH

STANDARD

3 BAR METAL RAIL

NORTH CAROLINA PROFESSIONAL SEAL 16301 ENGINEER TING HSIUNG FANG

4/26/11

| | | | | | |
|---|---|---|---|---|---|
| ASSEMBLED BY : OT NGUYEN | DATE : 10-21-10 | | | | |
| CHECKED BY : E.I. OMILE | DATE : 12-10-10 | | | | |
| DRAWN BY : JMB 1/88 | REV. 7/10/01 RWW/LES | | | | |
| CHECKED BY : GGH 1/88 | REV. 5/7/03 RWW/JTE | | | | |
| | REV. 5/1/06 TLA/GM | | | | |

| REVISIONS | | | | | | SHEET NO. |
|---|---|---|---|---|---|---|
| NO. | BY: | DATE: | NO. | BY: | DATE: | S-24 |
| 1 | | | 3 | | | TOTAL SHEETS |
| 2 | | | 4 | | | 93 |

STR. #1

STD. NO. BMR7

26-APR-2011 12:54
Z:\TIPProjects-U\U4019\Structures\str1\FinalPlans\U4019_SD_3MR1.dgn
qtnguyen

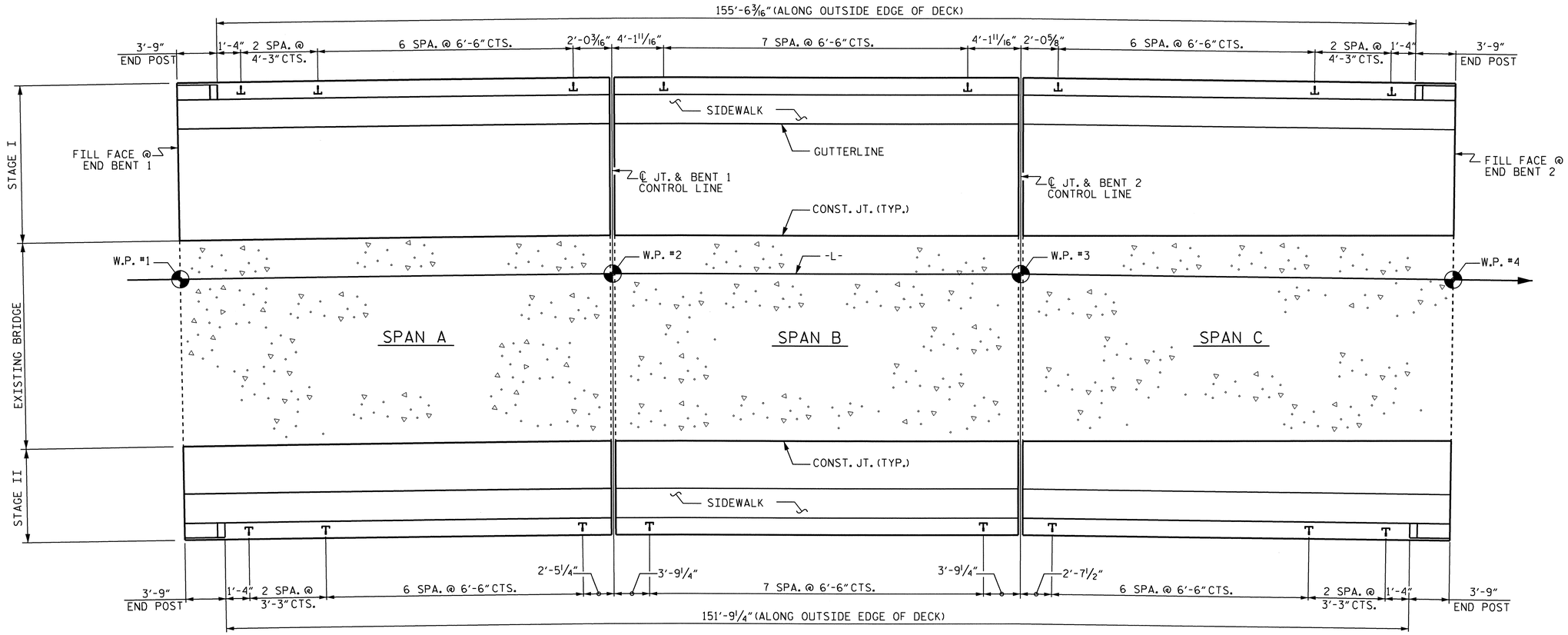


## PLAN OF RAIL POST SPACING

| BILL OF MATERIAL | | | | | |
|---|---|---|---|---|---|
| ONE END POST ( 4 REQ'D) | | | | | |
| BAR | NO. | SIZE | TYPE | LENGTH | WEIGHT |
| ✳ E1 | 2 | #7 | 1 | 3'-8" | 15 |
| ✳ E2 | 2 | #7 | 1 | 4'-2" | 17 |
| ✳ E3 | 2 | #7 | 1 | 4'-8" | 19 |
| ✳ E4 | 2 | #7 | 1 | 5'-1" | 21 |
| | | | | | |
| ✳ F1 | 8 | #6 | STR | 3'-5" | 41 |
| ✳ EPOXY COATED REINFORCING STEEL | | | | = | 113 LBS. |
| CLASS AA CONCRETE | | | | = | 0.4 C.Y. |

BAR TYPES

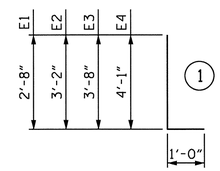


ALL BAR DIMENSIONS ARE OUT TO OUT

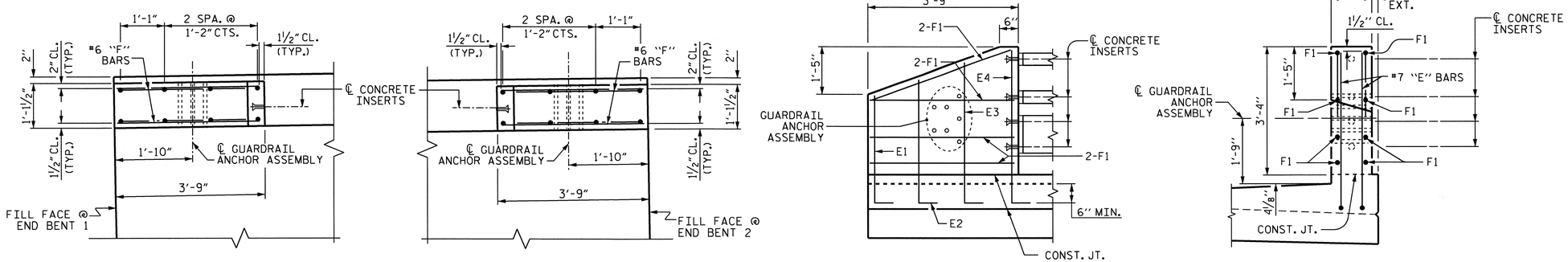


PLAN

ELEVATION

END VIEW

## END POST DETAILS

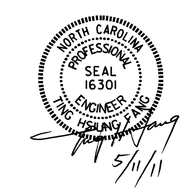


PROJECT NO. U-4019

NASH COUNTY

STATION: 27+87.83 -L-

STATE OF NORTH CAROLINA
DEPARTMENT OF TRANSPORTATION
RALEIGH

SUPERSTRUCTURE

RAIL POST SPACINGS & END POST DETAILS

| REVISIONS | | | | | | SHEET NO. |
|---|---|---|---|---|---|---|
| NO. | BY: | DATE: | NO. | BY: | DATE: | S-25 |
| 1 | | | 3 | | | TOTAL SHEETS |
| 2 | | | 4 | | | 93 |

DRAWN BY : QT NGUYEN DATE : 10-21-10
CHECKED BY : E.I. OMILE DATE : 12-10-10

11-MAY-2011 10:04
R:\Structures\str1\Final Plans\U4019_SD_3MR1.dgn
ttfang

STR. #1

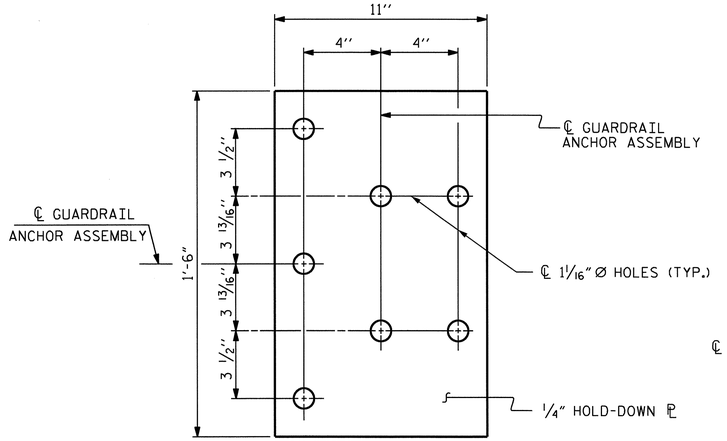


PLAN

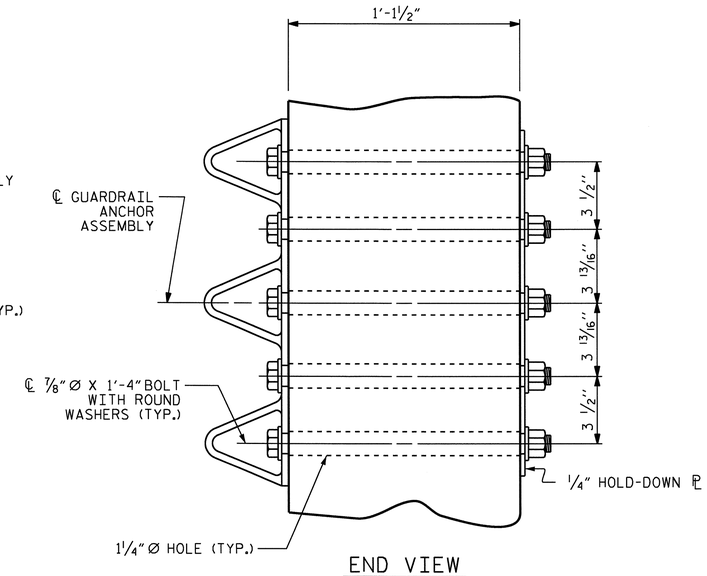


END VIEW

## GUARDRAIL ANCHOR ASSEMBLY DETAILS

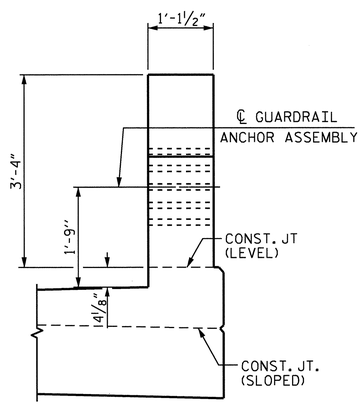


END VIEW

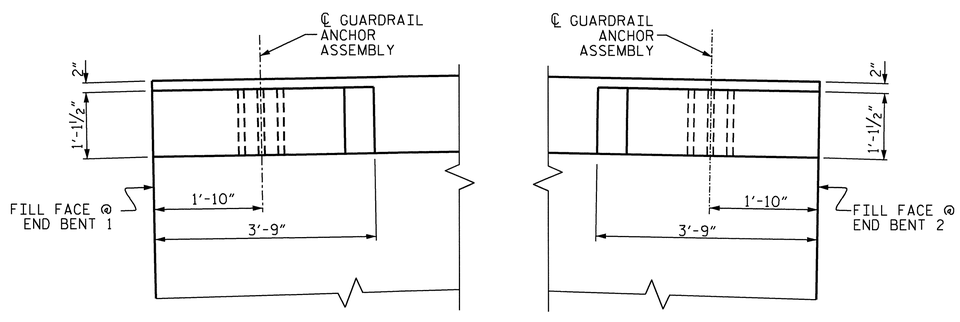


PLAN

LEFT SIDE SHOWN, RIGHT SIDE SIMILAR

## LOCATION OF GUARDRAIL ANCHOR AT END POST

## NOTES

THE GUARDRAIL ANCHOR ASSEMBLY SHALL CONSIST OF A 1/4'' HOLD DOWN PLATE AND 7 - 7/8'' Ø BOLTS WITH NUTS AND WASHERS.

THE HOLD-DOWN PLATE SHALL CONFORM TO AASHTO M270 GRADE 36. AFTER FABRICATION, THE HOLD-DOWN PLATE SHALL BE HOT-DIP GALVANIZED IN ACCORDANCE WITH AASHTO M111.

BOLTS SHALL CONFORM TO THE REQUIREMENTS OF ASTM A307 AND NUTS SHALL CONFORM TO THE REQUIREMENTS OF AASHTO M291. BOLTS, NUTS AND WASHERS SHALL BE GALVANIZED. AT THE CONTRACTOR'S OPTION, STAINLESS STEEL BOLTS, NUTS AND WASHERS MAY BE USED AS AN ALTERNATE FOR THE 7/8'' Ø GALVANIZED BOLTS, NUTS AND WASHERS. THEY SHALL CONFORM TO OR EXCEED THE MECHANICAL REQUIREMENTS OF ASTM A307. THE USE OF THIS ALTERNATE SHALL BE APPROVED BY THE ENGINEER.

AFTER INSTALLATION, THE EXPOSED THREAD OF THE BOLT SHALL BE BURRED WITH A SHARP POINTED TOOL.

THE COST OF THE GUARDRAIL ANCHOR ASSEMBLIES WITH BOLTS, NUTS AND WASHERS COMPLETE IN PLACE, SHALL BE INCLUDED IN THE VARIOUS PAY ITEMS.

THE VERTICAL REINFORCING BARS MAY BE SHIFTED SLIGHTLY IN THE END POST TO CLEAR ASSEMBLY BOLTS.

THE 1 1/4'' Ø HOLES SHALL BE FORMED OR DRILLED WITH A CORE BIT. IMPACT TOOLS WILL NOT BE PERMITTED. ANY CONCRETE DAMAGED BY THIS WORK SHALL BE REPAIRED TO THE SATISFACTION OF THE ENGINEER.

THE GUARDRAIL ANCHOR ASSEMBLY IS REQUIRED AT ALL POINTS WHERE APPROACH SLAB GUARDRAIL IS TO BE ATTACHED TO THE PARAPET. FOR POINTS OF ATTACHMENT, SEE SKETCH.

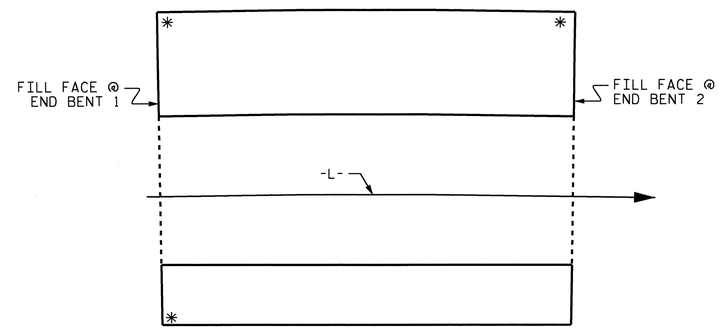


SKETCH SHOWING POINTS OF ATTACHMENT

* LOCATION OF GUARDRAIL ATTACHMENT.

PROJECT NO. U-4019

NASH COUNTY

STATION: 27+87.83 -L-

NORTH CAROLINA PROFESSIONAL SEAL 16301 ENGINEER TING HSIUNG FANG

5/11/11

STATE OF NORTH CAROLINA
DEPARTMENT OF TRANSPORTATION
RALEIGH

STANDARD

GUARDRAIL ANCHORAGE DETAILS FOR METAL RAILS

| REVISIONS | | | | | | SHEET NO. |
|---|---|---|---|---|---|---|
| NO. | BY: | DATE: | NO. | BY: | DATE: | S-26 |
| 1 | | | 3 | | | TOTAL SHEETS |
| 2 | | | 4 | | | 93 |

| | | | |
|---|---|---|---|
| ASSEMBLED BY : | QT NGUYEN | DATE : | 10-21-10 |
| CHECKED BY : | E.I. OMILE | DATE : | 12-10-10 |
| DRAWN BY : EEM 6/94 | REV. 10/17/00 | RWW/LES | |
| CHECKED BY : RGW 6/94 | REV. 5/7/03 | RWW/JTE | |
| | REV. 5/1/06 | TLA/GM | |

11-MAY-2011 13:30
R:\Structures\str1\Final Plans\U4019_SD_3MR1.dgn
ttfang

STR. #1

| SUPERSTRUCTURE REINFORCING STEEL LENGTHS ARE BASED ON THE FOLLOWING MINIMUM SPLICE LENGTHS | | | | | |
|---|---|---|---|---|---|
| BAR SIZE | SUPERSTRUCTURE EXCEPT APPROACH SLABS, PARAPET, AND BARRIER RAIL | | APPROACH SLABS | | PARAPET AND BARRIER RAIL |
| | EPOXY COATED | UNCOATED | EPOXY COATED | UNCOATED | |
| #4 | 2'-0" | 1'-9" | 2'-0" | 1'-9" | 2'-9" |
| #5 | 2'-6" | 2'-2" | 2'-6" | 2'-2" | 3'-5" |
| #6 | 3'-0" | 2'-7" | 3'-10" | 2'-7" | 4'-4" |
| #7 | 5'-3" | 3'-6" | | | |
| #8 | 6'-10" | 4'-7" | | | |

# REINFORCING STEEL

## STAGE I (LEFT WIDENING)

### SPAN A

| BAR | NO. | SIZE | TYPE | LENGTH | WEIGHT |
|---|---|---|---|---|---|
| ✱ A1 | 106 | #5 | STR | 51'-3" | 5666 |
| A2 | 108 | #5 | STR | 51'-3" | 5773 |
| ✱ B1 | 70 | #4 | STR | 28'-2" | 1317 |
| B2 | 62 | #5 | STR | 53'-6" | 3460 |
| ✱ B5 | 12 | #4 | STR | 28'-2" | 226 |
| ✱ D1 | 53 | #5 | STR | 3'-8" | 203 |
| D2 | 4 | #5 | STR | 2'-6" | 10 |
| ✱ G1 | 2 | #5 | STR | 51'-3" | 107 |
| ✱ G3 | 54 | #4 | STR | 6'-0" | 216 |
| K1 | 2 | #4 | STR | 25'-11" | 35 |
| K2 | 8 | #4 | STR | 26'-6" | 142 |
| K3 | 10 | #4 | STR | 8'-1" | 54 |
| K4 | 10 | #4 | STR | 6'-10" | 46 |
| K5 | 2 | #4 | STR | 2'-10" | 4 |
| K6 | 2 | #4 | STR | 2'-3" | 3 |
| K7 | 2 | #4 | STR | 2'-3" | 3 |
| K8 | 2 | #4 | STR | 1'-8" | 2 |
| ✱ K9 | 2 | #8 | 5 | 11'-4" | 61 |
| ✱ K10 | 8 | #8 | 6 | 17'-2" | 367 |
| K11 | 10 | #6 | STR | 7'-4" | 110 |
| ✱ K12 | 2 | #8 | 6 | 13'-11" | 74 |
| ✱ K13 | 2 | #5 | 8 | 4'-10" | 10 |
| K14 | 2 | #6 | STR | 2'-5" | 8 |
| S1 | 39 | #4 | 2 | 2'-0" | 52 |
| S2 | 78 | #4 | 1 | 7'-5" | 386 |
| S3 | 43 | #4 | 3 | 3'-8" | 105 |
| S4 | 43 | #5 | 4 | 4'-10" | 217 |
| ✱ U1 | 16 | #4 | 7 | 3'-4" | 36 |

REINFORCING STEEL = 10,407 LBS

✱ EPOXY COATED REINF. STEEL = 8,282 LBS

### SPAN B

| BAR | NO. | SIZE | TYPE | LENGTH | WEIGHT |
|---|---|---|---|---|---|
| ✱ A1 | 104 | #5 | STR | 51'-3" | 5559 |
| A2 | 106 | #5 | STR | 51'-3" | 5666 |
| ✱ B1 | 70 | #4 | STR | 28'-2" | 1317 |
| B3 | 62 | #5 | STR | 53'-0" | 3427 |
| ✱ B5 | 12 | #4 | STR | 28'-2" | 226 |
| ✱ D1 | 53 | #5 | STR | 3'-8" | 203 |
| ✱ G1 | 2 | #5 | STR | 51'-3" | 107 |
| ✱ G3 | 54 | #4 | STR | 6'-0" | 216 |
| ✱ K9 | 4 | #8 | 5 | 11'-4" | 121 |
| ✱ K10 | 16 | #8 | 6 | 17'-2" | 733 |
| K11 | 20 | #6 | STR | 7'-4" | 220 |
| ✱ K12 | 4 | #8 | 5 | 13'-11" | 149 |
| ✱ K13 | 4 | #5 | 8 | 4'-10" | 20 |
| K14 | 4 | #6 | STR | 2'-6" | 15 |
| S3 | 86 | #4 | 3 | 3'-8" | 211 |
| S4 | 86 | #5 | 4 | 4'-10" | 434 |
| ✱ U1 | 16 | #4 | 7 | 3'-4" | 36 |

REINFORCING STEEL = 9,973 LBS

✱ EPOXY COATED REINF. STEEL = 8,687 LBS

### SPAN C

| BAR | NO. | SIZE | TYPE | LENGTH | WEIGHT |
|---|---|---|---|---|---|
| ✱ A1 | 106 | #5 | STR | 51'-3" | 5666 |
| A2 | 108 | #5 | STR | 51'-3" | 5773 |
| ✱ B1 | 70 | #4 | STR | 28'-2" | 1317 |
| B2 | 62 | #5 | STR | 53'-6" | 3460 |
| ✱ B5 | 12 | #4 | STR | 28'-2" | 226 |
| ✱ D1 | 53 | #5 | STR | 3'-8" | 203 |
| D2 | 4 | #6 | STR | 2'-6" | 15 |
| ✱ G1 | 2 | #5 | STR | 51'-3" | 107 |
| ✱ G3 | 54 | #4 | STR | 6'-0" | 216 |
| K1 | 2 | #4 | STR | 25'-11" | 35 |
| K2 | 8 | #4 | STR | 26'-6" | 142 |
| K3 | 10 | #4 | STR | 8'-1" | 54 |
| K4 | 10 | #4 | STR | 6'-10" | 46 |
| K5 | 2 | #4 | STR | 2'-10" | 4 |
| K6 | 2 | #4 | STR | 2'-3" | 3 |
| K7 | 2 | #4 | STR | 2'-3" | 3 |
| K8 | 2 | #4 | STR | 1'-8" | 2 |
| ✱ K9 | 2 | #8 | 5 | 11'-4" | 61 |
| ✱ K10 | 8 | #8 | 6 | 17'-2" | 367 |
| K11 | 10 | #6 | STR | 7'-4" | 110 |
| ✱ K12 | 2 | #8 | 6 | 13'-11" | 74 |
| ✱ K13 | 2 | #5 | 8 | 4'-10" | 10 |
| K14 | 2 | #6 | STR | 2'-5" | 8 |
| S1 | 39 | #4 | 2 | 2'-0" | 52 |
| S2 | 78 | #4 | 1 | 7'-5" | 386 |
| S3 | 43 | #4 | 3 | 3'-8" | 105 |
| S4 | 43 | #5 | 4 | 4'-10" | 217 |
| ✱ U1 | 16 | #4 | 7 | 3'-4" | 36 |

REINFORCING STEEL = 10,407 LBS

✱ EPOXY COATED REINF. STEEL = 8,282 LBS

## STAGE II (RIGHT WIDENING)

### SPAN A

| BAR | NO. | SIZE | TYPE | LENGTH | WEIGHT |
|---|---|---|---|---|---|
| ✱ A3 | 113 | #5 | STR | 28'-8" | 3379 |
| A4 | 115 | #5 | STR | 28'-8" | 3438 |
| ✱ B11 | 40 | #4 | STR | 27'-8" | 739 |
| B12 | 38 | #5 | STR | 52'-7" | 2084 |
| ✱ B6 | 12 | #4 | STR | 27'-6" | 220 |
| ✱ D1 | 53 | #5 | STR | 3'-8" | 203 |
| D2 | 4 | #6 | STR | 2'-6" | 15 |
| ✱ G2 | 2 | #4 | STR | 28'-10" | 39 |
| ✱ G3 | 53 | #4 | STR | 6'-0" | 212 |
| K21 | 1 | #4 | STR | 27'-7" | 18 |
| K22 | 4 | #4 | STR | 28'-10" | 77 |
| K23 | 4 | #4 | STR | 9'-6" | 25 |
| K24 | 4 | #4 | STR | 8'-3" | 22 |
| K25 | 2 | #4 | STR | 2'-10" | 4 |
| K26 | 2 | #4 | STR | 2'-3" | 3 |
| K27 | 2 | #4 | STR | 4'-3" | 6 |
| K28 | 2 | #4 | STR | 3'-7" | 5 |
| ✱ K29 | 2 | #8 | 5 | 12'-1" | 65 |
| ✱ K30 | 2 | #8 | 6 | 18'-8" | 100 |
| K31 | 4 | #6 | STR | 8'-9" | 53 |
| ✱ K32 | 2 | #8 | 6 | 16'-4" | 87 |
| ✱ K33 | 2 | #5 | 8 | 6'-7" | 14 |
| K34 | 2 | #6 | STR | 4'-0" | 12 |
| S1 | 22 | #4 | 2 | 2'-0" | 29 |
| S2 | 44 | #4 | 1 | 7'-5" | 218 |
| S3 | 22 | #4 | 3 | 3'-8" | 54 |
| S4 | 22 | #5 | 4 | 4'-10" | 111 |
| ✱ U1 | 16 | #4 | 7 | 3'-4" | 36 |

REINFORCING STEEL = 6,170 LBS

✱ EPOXY COATED REINF. STEEL = 5,094 LBS

### SPAN B

| BAR | NO. | SIZE | TYPE | LENGTH | WEIGHT |
|---|---|---|---|---|---|
| ✱ A3 | 113 | #5 | STR | 28'-8" | 3379 |
| A4 | 115 | #5 | STR | 28'-8" | 3438 |
| ✱ B11 | 40 | #4 | STR | 27'-8" | 739 |
| B12 | 38 | #5 | STR | 52'-7" | 2084 |
| ✱ B6 | 12 | #4 | STR | 27'-6" | 220 |
| ✱ D1 | 53 | #4 | STR | 3'-8" | 203 |
| ✱ G2 | 2 | #4 | STR | 28'-10" | 39 |
| ✱ G3 | 53 | #4 | STR | 6'-0" | 212 |
| ✱ K29 | 4 | #8 | 5 | 12'-1" | 129 |
| ✱ K30 | 4 | #8 | 6 | 18'-8" | 199 |
| K31 | 8 | #6 | STR | 8'-9" | 105 |
| ✱ K32 | 4 | #8 | 5 | 16'-4" | 174 |
| ✱ K33 | 4 | #5 | 8 | 6'-7" | 27 |
| K34 | 4 | #6 | STR | 4'-0" | 24 |
| S3 | 44 | #4 | 3 | 4'-2" | 122 |
| S4 | 44 | #5 | 4 | 4'-10" | 222 |
| ✱ U1 | 16 | #4 | 7 | 3'-4" | 36 |

REINFORCING STEEL = 5,996 LBS

✱ EPOXY COATED REINF. STEEL = 5,359 LBS

### SPAN C

| BAR | NO. | SIZE | TYPE | LENGTH | WEIGHT |
|---|---|---|---|---|---|
| ✱ A3 | 113 | #5 | STR | 28'-8" | 3379 |
| A4 | 115 | #5 | STR | 28'-8" | 3438 |
| ✱ B11 | 40 | #4 | STR | 27'-8" | 739 |
| B12 | 38 | #5 | STR | 52'-7" | 2084 |
| ✱ B6 | 12 | #4 | STR | 27'-6" | 220 |
| ✱ D1 | 53 | #5 | STR | 3'-8" | 203 |
| D2 | 4 | #6 | STR | 2'-6" | 15 |
| ✱ G2 | 2 | #4 | STR | 28'-10" | 39 |
| ✱ G3 | 53 | #4 | STR | 6'-0" | 212 |
| K21 | 1 | #4 | STR | 27'-7" | 18 |
| K22 | 4 | #4 | STR | 28'-10" | 77 |
| K23 | 4 | #4 | STR | 9'-6" | 25 |
| K24 | 4 | #4 | STR | 8'-3" | 22 |
| K25 | 2 | #4 | STR | 2'-10" | 4 |
| K26 | 2 | #4 | STR | 2'-3" | 3 |
| K27 | 2 | #4 | STR | 4'-3" | 6 |
| K28 | 2 | #4 | STR | 3'-7" | 5 |
| ✱ K29 | 2 | #8 | 5 | 12'-1" | 65 |
| ✱ K30 | 2 | #8 | 6 | 18'-8" | 100 |
| K31 | 4 | #6 | STR | 8'-9" | 53 |
| ✱ K32 | 2 | #8 | 6 | 16'-4" | 87 |
| ✱ K33 | 2 | #5 | 8 | 6'-7" | 14 |
| K34 | 2 | #6 | STR | 4'-0" | 12 |
| S1 | 22 | #4 | 2 | 2'-0" | 29 |
| S2 | 44 | #4 | 1 | 7'-5" | 218 |
| S3 | 22 | #4 | 3 | 3'-8" | 54 |
| S4 | 22 | #5 | 4 | 4'-10" | 111 |
| ✱ U1 | 16 | #4 | 7 | 3'-4" | 36 |

REINFORCING STEEL = 6,170 LBS

✱ EPOXY COATED REINF. STEEL = 5,094 LBS

# BAR TYPES

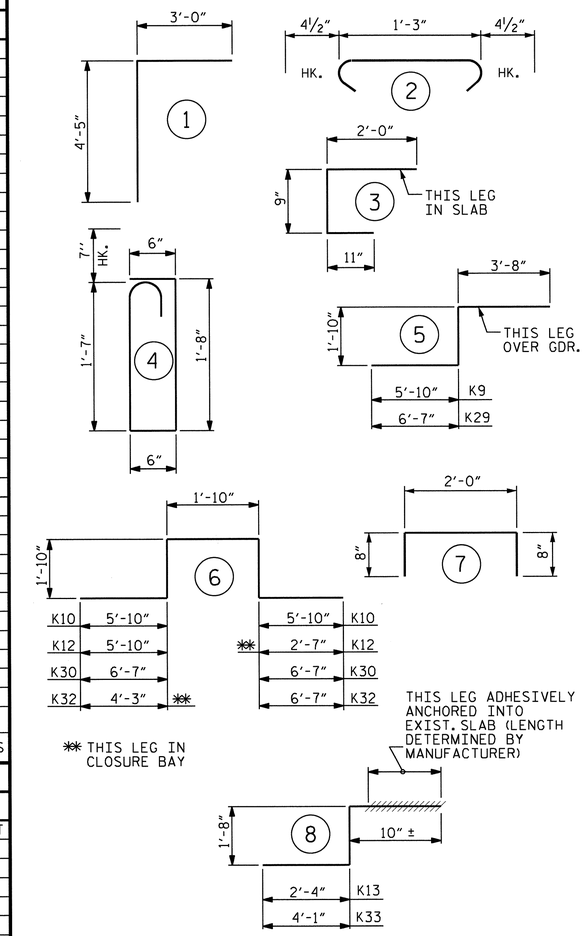


ALL BAR DIMENSIONS ARE OUT TO OUT

NORTH CAROLINA PROFESSIONAL SEAL 16301 ENGINEER TING HSIUNG FANG

5/26/11

PROJECT NO. U-4019

NASH COUNTY

STATION: 27+87.83 -L-

SHEET 1 OF 2

STATE OF NORTH CAROLINA
DEPARTMENT OF TRANSPORTATION
RALEIGH

STANDARD

SUPERSTRUCTURE BILL OF MATERIAL

| REVISIONS | | | | | | | SHEET NO. |
|---|---|---|---|---|---|---|---|
| | BY: | DATE: | NO. | BY: | DATE: | | S-27 |
| 1 | | | 3 | | | | TOTAL SHEETS |
| 2 | | | 4 | | | | 93 |

STR. #1 STD. NO. BOM1

| | | | |
|---|---|---|---|
| ASSEMBLED BY : QT NGUYEN | | DATE : 11-02-10 | |
| CHECKED BY : T.H. FANG | | DATE : 3-21-11 | |
| DRAWN BY : JMB 5/87 | REV. 6/1/94 | EEM/GRP | |
| CHECKED BY : SJD 9/87 | REV. 8/16/99 | RWW/LES | |
| | REV. 5/1/06 | TLA/GM | |

26-MAY-2011 10:59
R:\Structures\str1\FinalPlans\U4019_SD_BM1.dgn
ttfang

| GROOVING BRIDGE FLOORS | | |
|---|---|---|
| **STAGE I** | | |
| APPROACH SLABS | 1,782 | SQ.FT. |
| BRIDGE DECK | 6,897 | SQ.FT. |
| TOTAL | 8,679 | SQ.FT. |
| **STAGE II** | | |
| APPROACH SLABS | 945 | SQ.FT. |
| BRIDGE DECK | 3,249 | SQ.FT. |
| TOTAL | 4,194 | SQ.FT. |
| **STAGE III** | | |
| APPROACH SLABS | 1,145 | SQ.FT. |
| BRIDGE DECK | 6,748 | SQ.FT. |
| TOTAL | 7,893 | SQ.FT. |
| **TOTAL** | | |
| APPROACH SLABS | 3,872 | SQ.FT. |
| BRIDGE DECK | 16,894 | SQ.FT. |
| TOTAL | 20,766 | SQ.FT. |

## SUPERSTRUCTURE BILL OF MATERIAL

| | STAGE I (LEFT WIDENING) | | | | STAGE II (RIGHT WIDENING) | | | |
|---|---|---|---|---|---|---|---|---|
| | CLASS AA CONCRETE ( CU. YD.) | | | | CLASS AA CONCRETE ( CU. YD.) | | | |
| POUR NO. | SPAN A | SPAN B | SPAN C | TOTAL | SPAN A | SPAN B | SPAN C | TOTAL |
| DECK | 100.6 | 92.7 | 100.6 | 293.9 | 57.0 | 52.7 | 57.3 | 167.0 |
| SIDEWALK | 7.2 | 7.1 | 7.2 | 21.5 | 9.7 | 9.7 | 9.7 | 29.1 |
| TOTAL | | | | 315.4 | | | | 196.1 |
| | | | | | | | | |
| | REINFORCING STEEL (LBS) | | | | REINFORCING STEEL (LBS) | | | |
| | SPAN A | SPAN B | SPAN C | TOTAL | SPAN A | SPAN B | SPAN C | TOTAL |
| | 10,407 | 9,973 | 10,407 | 30,787 | 6,170 | 5,996 | 6,170 | 18,336 |
| | * EPOXY COATED REINFORCING STEEL (LBS) | | | | * EPOXY COATED REINFORCING STEEL (LBS) | | | |
| | SPAN A | SPAN B | SPAN C | TOTAL | SPAN A | SPAN B | SPAN C | TOTAL |
| | 8,282 | 8,687 | 8,282 | 25,251 | 5,094 | 5,359 | 5,094 | 15,547 |

POUR IN SPANS A AND C INCLUDES CURTAIN WALL.

## DECK REHABILITATION BILL OF MATERIAL

STAGE III CONSTRUCTION

| | CLASS I SURFACE PREPARATION | LATEX MODIFIED CONCRETE OVERLAY | PLACING AND FINISHING OF LATEX MODIFIED CONCRETE OVERLAY |
|---|---|---|---|
| | SQ. YARDS | CU. YARDS | SQ. YARDS |
| EXISTING DECK | 764 | 26.5 | 764 |
| APPROACH SLABS | 136 | 8.5 | 136 |
| TOTAL | 900 | 35.0 | 900 |

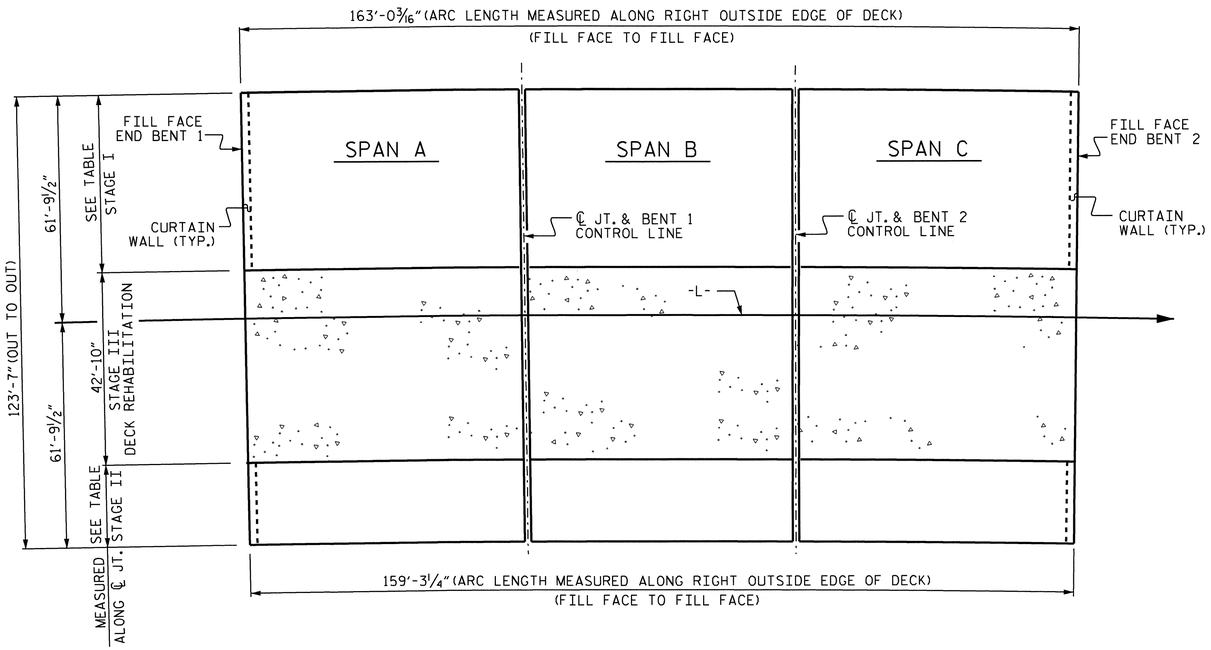


## LAYOUT FOR COMPUTING AREA OF REINFORCED CONCRETE DECK SLAB (TOTAL SQ. FT. = 13,014)

(AREA FOR STAGE I = 8,380, STAGE II = 4,634)

| DIMENSION TABLE | | |
|---|---|---|
| LOCATION | STAGE I | STAGE II |
| FILL FACE @ EBT 1 | 51'-6 5/16" | 29'-2 11/16" |
| ℄ JT. @ BENT 1 | 51'-8 7/8" | 29'-0 1/8" |
| ℄ JT. @ BENT 2 | 51'-8 9/16" | 29'-0 7/16" |
| FILL FACE @ EBT 2 | 51'-5 7/16" | 29'-2 3/4" |

PROJECT NO. U-4019

NASH COUNTY

STATION: 27+87.83 -L-

SHEET 2 OF 2

NORTH CAROLINA PROFESSIONAL SEAL 16301 ENGINEER TING HSIUNG FANG

6/1/11

STATE OF NORTH CAROLINA
DEPARTMENT OF TRANSPORTATION
RALEIGH

STANDARD

SUPERSTRUCTURE BILL OF MATERIAL

| REVISIONS | | | | | | | SHEET NO. |
|---|---|---|---|---|---|---|---|
| | BY: | DATE: | NO. | BY: | DATE: | | S-28 |
| 1 | | | 3 | | | | TOTAL SHEETS |
| 2 | | | 4 | | | | 93 |

| | | | |
|---|---|---|---|
| ASSEMBLED BY : OT NGUYEN | DATE : 11-02-10 | | |
| CHECKED BY : T.H. FANG | DATE : 3-21-11 | | |
| DRAWN BY : JMB 5/87 | REV. 6/1/94 | EEM/GRP | |
| CHECKED BY : SJD 9/87 | REV. 8/16/99 | RWW/LES | |
| | REV. 5/1/06 | TLA/GM | |

STR. #1

STD. NO. BOM1

01-JUN-2011 12:00
Z:\TIPProjects-U\U4019\Structures\str1\FinalPlans\U4019_SD_BM1.dgn
JAYannaccone

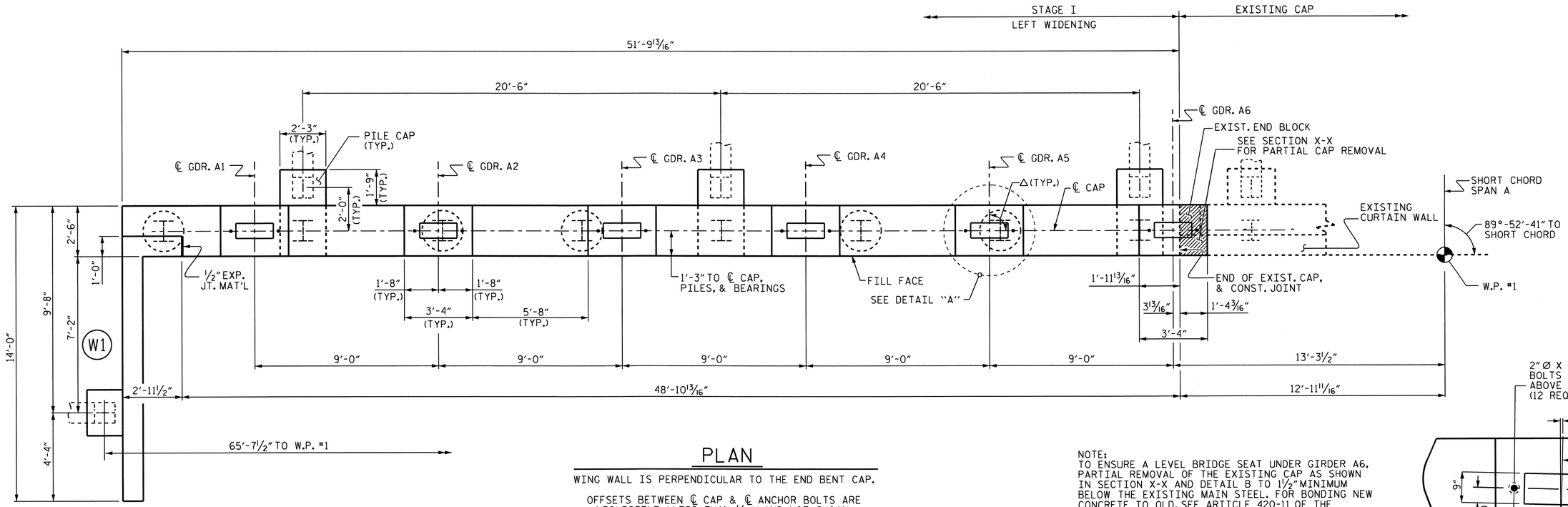


## PLAN

WING WALL IS PERPENDICULAR TO THE END BENT CAP.

OFFSETS BETWEEN ℄ CAP & ℄ ANCHOR BOLTS ARE NEGLIGIBLE (LESS THAN 1/32") AND NOT SHOWN.

FOR REINFORCING IN PILE CAP, SEE WING W1 DETAILS AND SECTION B-B.

NOTE:
TO ENSURE A LEVEL BRIDGE SEAT UNDER GIRDER A6, PARTIAL REMOVAL OF THE EXISTING CAP AS SHOWN IN SECTION X-X AND DETAIL B TO 1 1/2" MINIMUM BELOW THE EXISTING MAIN STEEL. FOR BONDING NEW CONCRETE TO OLD, SEE ARTICLE 420-11 OF THE STANDARD SPECIFICATIONS.

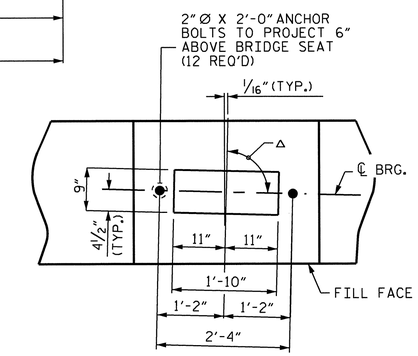


## DETAIL "A"

(TYP. EA. GIRDER)

△ SEE SHORT CHORD ANGLES ON "FRAMING PLAN" SHEET.

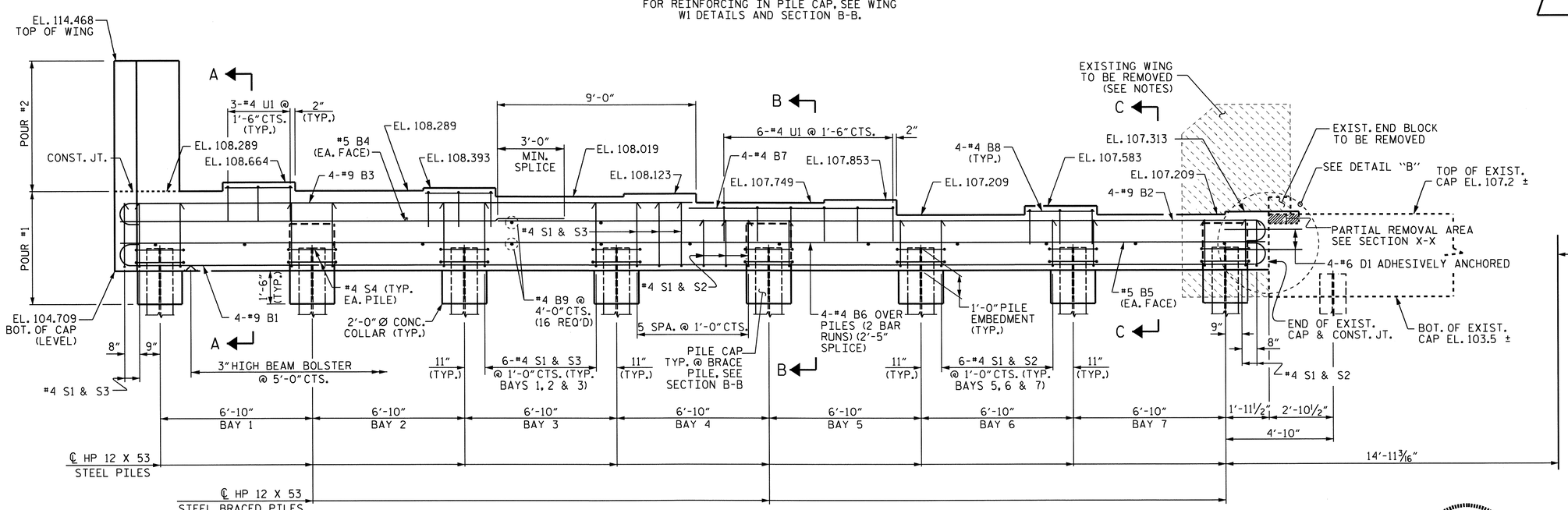


## ELEVATION

FOR SECTIONS A-A, B-B, AND C-C SEE SHEET 4 OF 4.

NORTH CAROLINA PROFESSIONAL SEAL 16301 ENGINEER T. H. FANG
5/23/11

PROJECT NO. U-4019
NASH COUNTY
STATION: 27+87.83 -L-

SHEET 1 OF 4

STATE OF NORTH CAROLINA
DEPARTMENT OF TRANSPORTATION
RALEIGH

SUBSTRUCTURE

END BENT 1

STAGE I

| REVISIONS | | | | | | SHEET NO. |
|---|---|---|---|---|---|---|
| NO. | BY: | DATE: | NO. | BY: | DATE: | S-29 |
| 1 | | | 3 | | | TOTAL SHEETS |
| 2 | | | 4 | | | 93 |

DRAWN BY : D.R. WITHROW DATE : 12/10
CHECKED BY : T. H. FANG DATE : 4/8/11

23-MAY-2011 09:38
Z:\TIPProjects-U\U4019\Structures\str1\FinalPlans\u4019_sd_eb1*.dgn
tfang

STR. #1

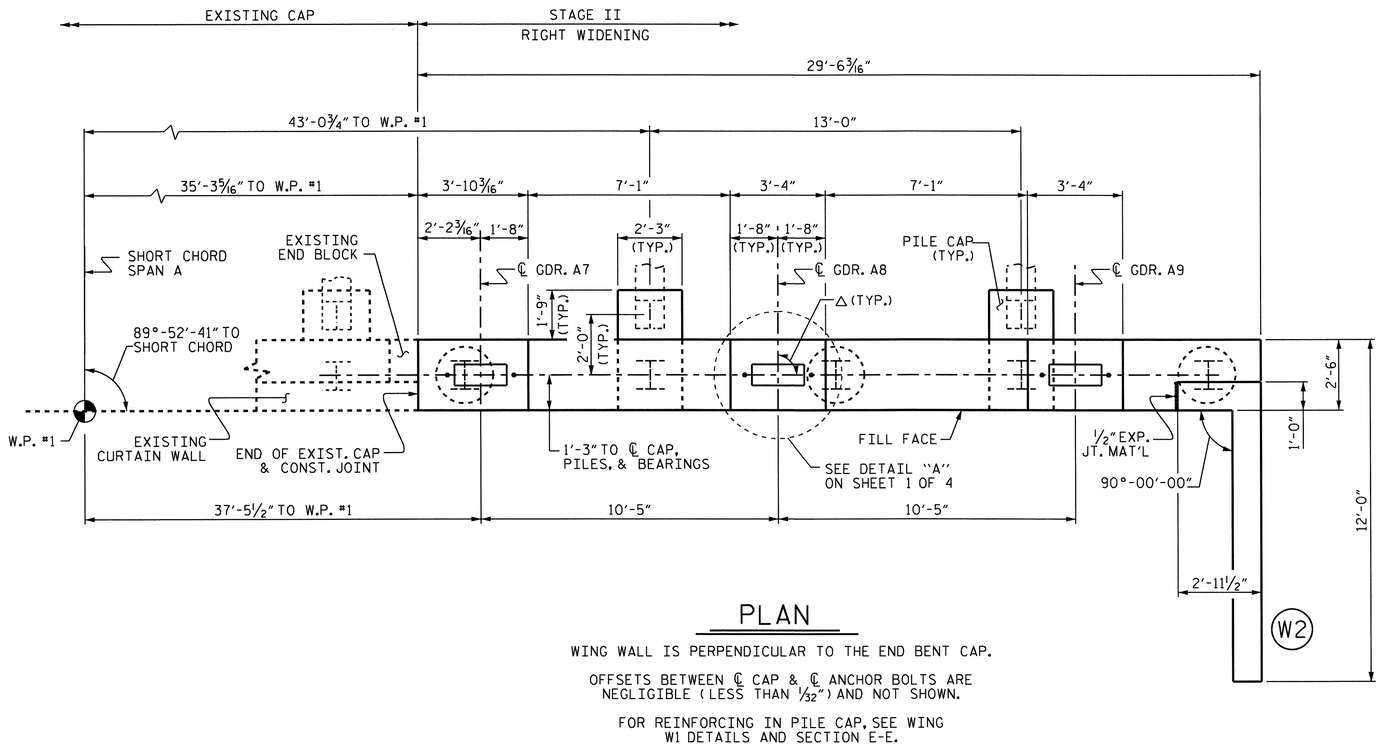


## PLAN

WING WALL IS PERPENDICULAR TO THE END BENT CAP.

OFFSETS BETWEEN ℄ CAP & ℄ ANCHOR BOLTS ARE NEGLIGIBLE (LESS THAN 1/32") AND NOT SHOWN.

FOR REINFORCING IN PILE CAP, SEE WING W1 DETAILS AND SECTION E-E.

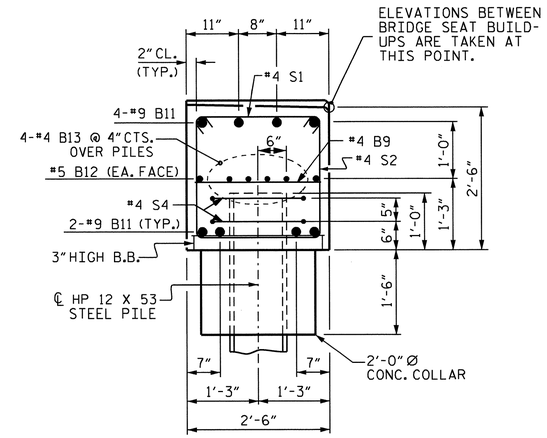


## SECTION D-D

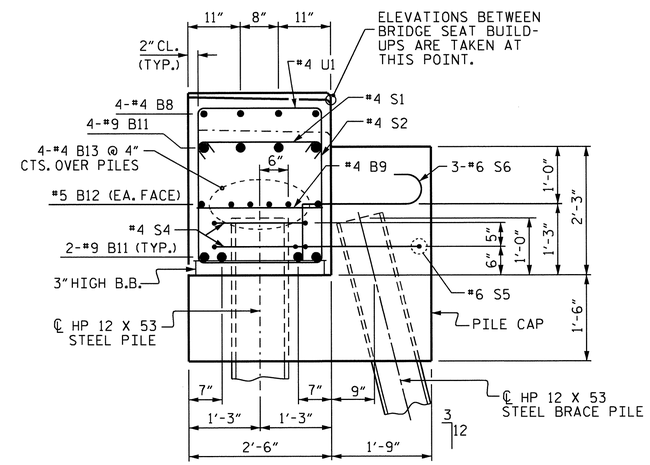


## SECTION E-E

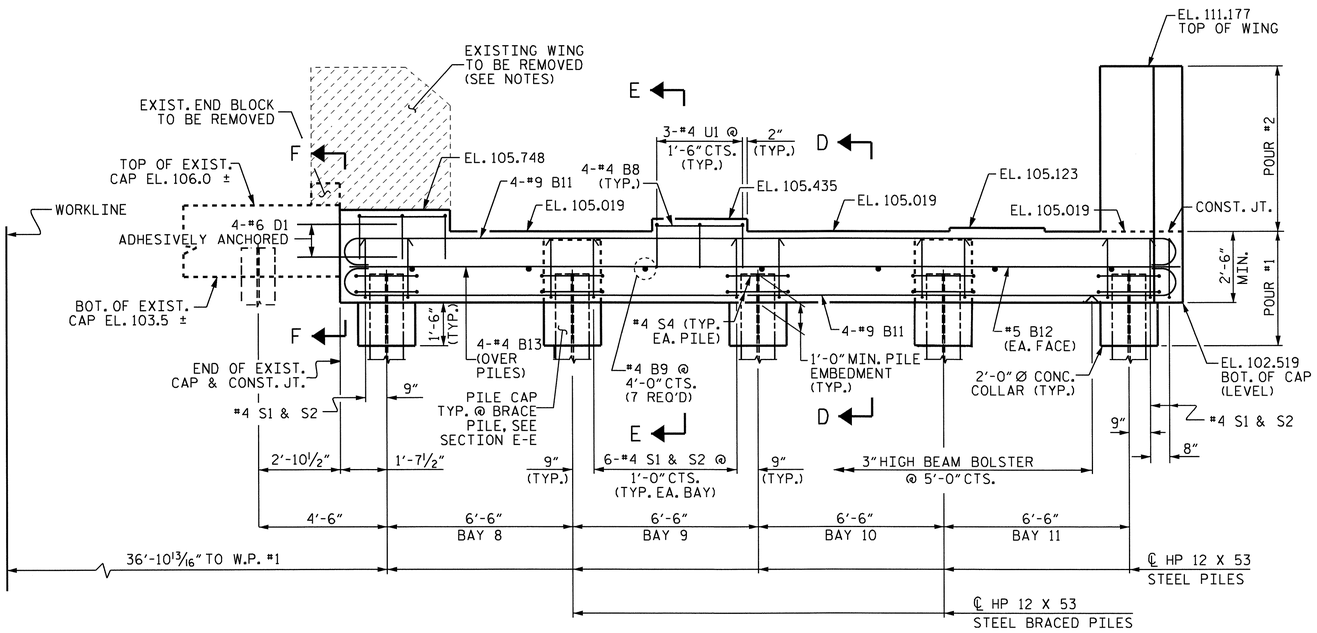


## ELEVATION

BRACE PILES AND BRACE PILE CAP NOT SHOWN FOR CLARITY.

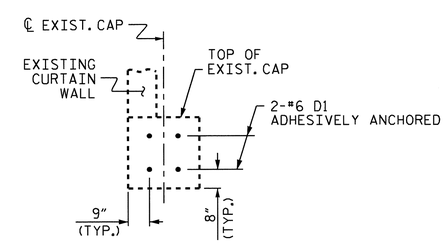


## SECTION F-F

END BLOCK NOT SHOWN FOR CLARITY

## NOTES

STIRRUPS IN CAP MAY BE SHIFTED AS NECESSARY TO CLEAR ANCHOR BOLTS.

CURTAIN WALL SHALL BE PLACED BEFORE APPLYING THE EPOXY PROTECTIVE COATING.

THE TOP SURFACE AREAS OF THE END BENT CAPS SHALL BE CURED IN ACCORDANCE WITH THE STANDARD SPECIFICATIONS EXCEPT THE MEMBRANE CURING COMPOUND METHOD SHALL NOT BE USED.

THE CONTRACTOR SHALL PROVIDE FOR INSTALLATION OF THE 4" DIAMETER DRAIN PIPE THROUGH THE WING WALL AS REQUIRED FOR REINFORCED BRIDGE APPROACH FILLS. SEE THE ROADWAY PLANS. REINFORCING STEEL IN THE WING WALL MAY BE SHIFTED AS NECESSARY TO CLEAR THE DRAIN PIPE.

USE CARE WHEN REMOVING EXISTING WINGS SO AS NOT TO DAMAGE EXISTING CAP THAT WILL REMAIN IN PLACE.

INSTALL #6 D1 DOWELS IN THE EXISTING CAP USING AN ADHESIVE ANCHORING SYSTEM. THE YIELD LOAD OF THE DOWELS IS 26.4 KIPS. LEVEL I FIELD TESTING OF THE ANCHORING SYSTEM IS REQUIRED. FOR ADHESIVELY ANCHORED ANCHOR BOLTS OR DOWELS, SEE SPECIAL PROVISIONS.

PROJECT NO. U-4019

NASH COUNTY

STATION: 27+87.83 -L-

SHEET 2 OF 4

STATE OF NORTH CAROLINA
DEPARTMENT OF TRANSPORTATION
RALEIGH

SUBSTRUCTURE

END BENT 1

STAGE II

| REVISIONS | | | | | | SHEET NO. |
|---|---|---|---|---|---|---|
| NO. | BY: | DATE: | NO. | BY: | DATE: | S-30 |
| 1 | | | 3 | | | TOTAL SHEETS |
| 2 | | | 4 | | | 93 |

DRAWN BY : D.R. WITHROW DATE : 12/10
CHECKED BY : T. H. FANG DATE : 4/8/11

23-MAY-2011 09:38
Z:\TIPProjects-U\U4019\Structures\str1\FinalPlans\u4019_sd_eb1*.dgn
ttfang

STR. #1

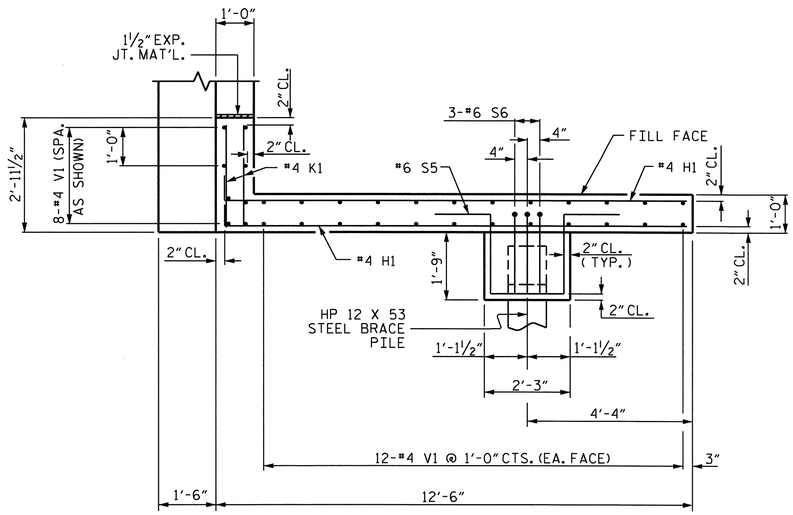


PLAN OF WING (W1)

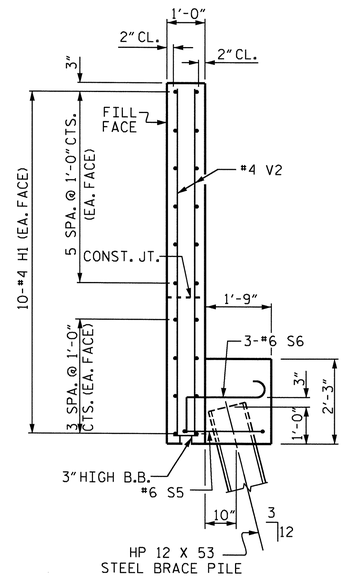


SECTION X-X

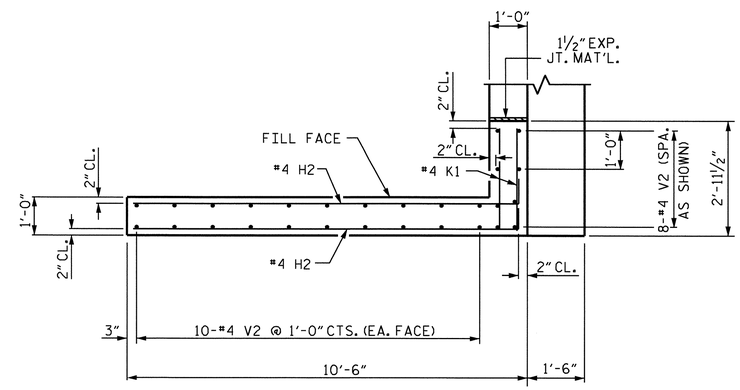


PLAN OF WING (W2)

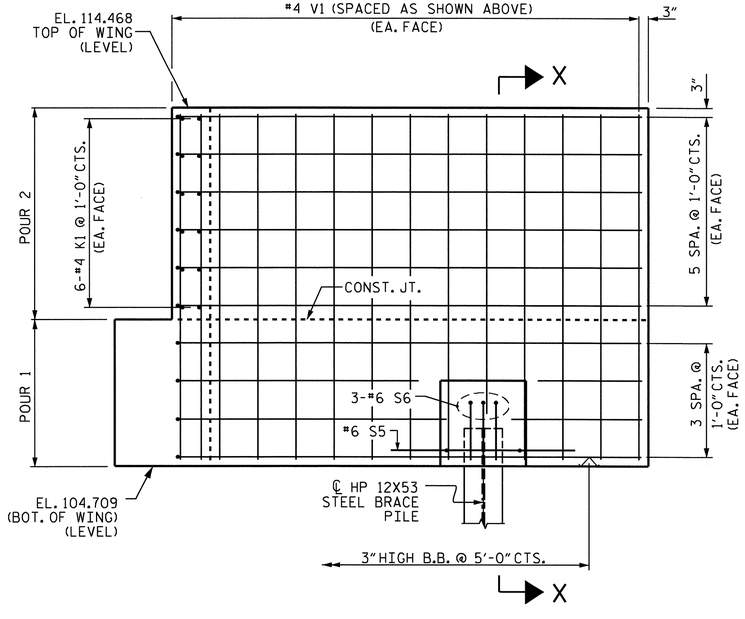


ELEVATION OF WING (W1)

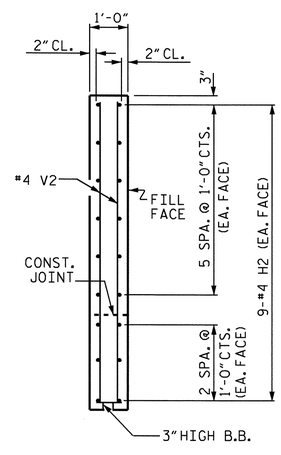


SECTION Y-Y

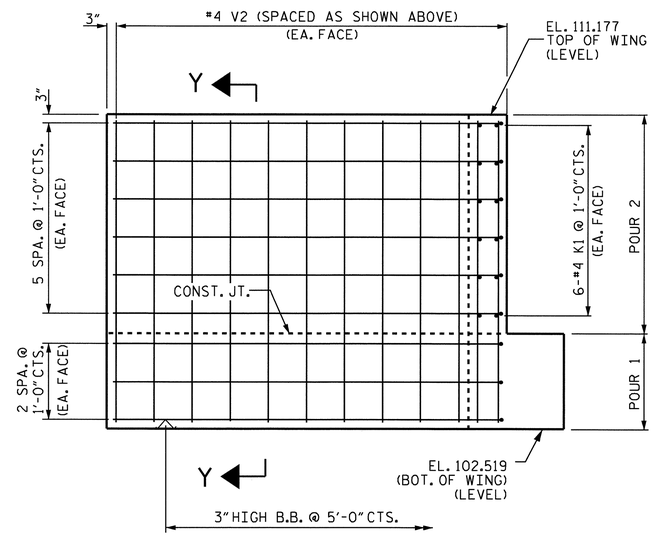


ELEVATION OF WING (W2)

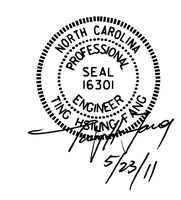


PROJECT NO. U-4019

NASH COUNTY

STATION: 27+87.83 -L-

SHEET 3 OF 4

STATE OF NORTH CAROLINA
DEPARTMENT OF TRANSPORTATION
RALEIGH

SUBSTRUCTURE

END BENT 1

| REVISIONS | | | | | | SHEET NO. |
|---|---|---|---|---|---|---|
| NO. | BY: | DATE: | NO. | BY: | DATE: | S-31 |
| 1 | | | 3 | | | TOTAL SHEETS |
| 2 | | | 4 | | | 93 |

DRAWN BY : H. S. HSAH DATE : 4/8/11
CHECKED BY : T. H. FANG DATE : 4/12/11

23-MAY-2011 09:38
Z:\TIPProjects-U\U4019\Structures\str1\FinalPlans\u4019_sd_eb1*.dgn
ttfang

STR. #1

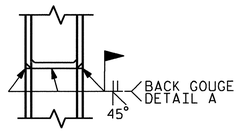


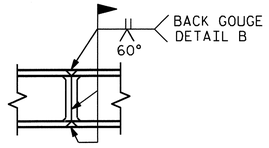


* PILE VERTICAL

* PILE HORIZONTAL OR VERTICAL

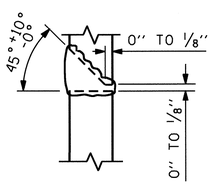


DETAIL A

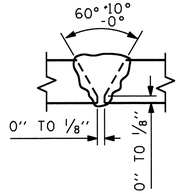


DETAIL B

## PILE SPLICE DETAILS

* POSITION OF PILE DURING WELDING.

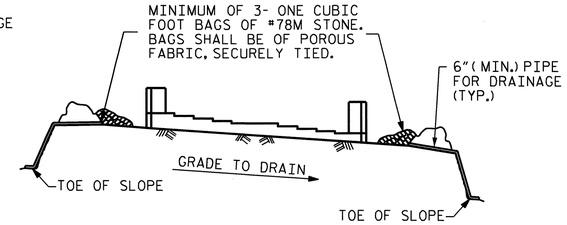


BAGGED STONE AND PIPE SHALL BE PLACED IMMEDIATELY AFTER COMPLETION OF END BENT EXCAVATION. PIPE MAY BE EITHER CONCRETE, CORRUGATED STEEL, CORRUGATED ALUMINUM ALLOY, OR CORRUGATED PLASTIC. PERFORATED PIPE WILL NOT BE ALLOWED.

BAGGED STONE SHALL REMAIN IN PLACE UNTIL THE ENGINEER DIRECTS THAT IT BE REMOVED. THE CONTRACTOR SHALL REMOVE AND DISPOSE OF SILT ACCUMULATIONS AT BAGGED STONE WHEN SO DIRECTED BY THE ENGINEER. BAGS SHALL BE REMOVED AND REPLACED WHENEVER THE ENGINEER DETERMINES THAT THEY HAVE DETERIORATED AND LOST THEIR EFFECTIVENESS.

NO SEPARATE PAYMENT WILL BE MADE FOR THIS WORK AND THE ENTIRE COST OF THIS WORK SHALL BE INCLUDED IN THE UNIT CONTRACT PRICE BID FOR THE SEVERAL PAY ITEMS.

## TEMPORARY DRAINAGE AT END BENT

## BAR TYPES

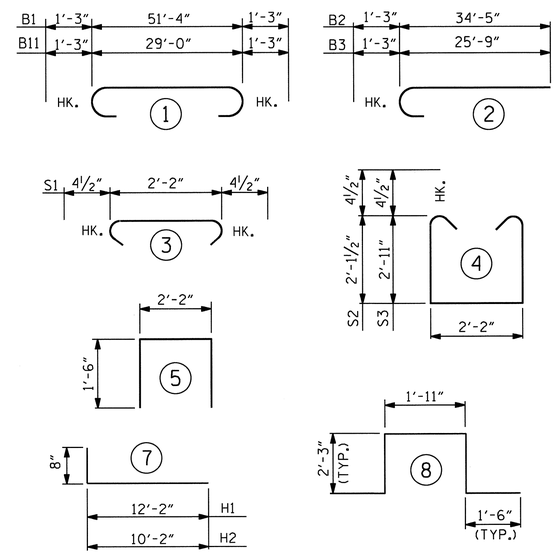


ALL BAR DIMENSIONS ARE OUT TO OUT.

## BILL OF MATERIAL

### STAGE I

| BAR | NO. | SIZE | TYPE | LENGTH | WEIGHT |
|---|---|---|---|---|---|
| B1 | 4 | #9 | 1 | 53'-10" | 732 |
| B2 | 4 | #9 | 2 | 35'-8" | 485 |
| B3 | 4 | #9 | 2 | 27'-0" | 367 |
| B4 | 2 | #5 | STR | 20'-2" | 42 |
| B5 | 2 | #5 | STR | 51'-6" | 107 |
| B6 | 8 | #4 | STR | 27'-0" | 144 |
| B7 | 4 | #4 | STR | 8'-8" | 23 |
| B8 | 12 | #4 | STR | 3'-0" | 24 |
| B9 | 16 | #4 | STR | 2'-2" | 23 |
| D1 | 4 | #6 | STR | 3'-6" | 21 |
| H1 | 20 | #4 | 7 | 12'-10" | 171 |
| K1 | 12 | #4 | STR | 2'-7" | 21 |
| S1 | 46 | #4 | 3 | 2'-11" | 90 |
| S2 | 23 | #4 | 4 | 7'-2" | 110 |
| S3 | 23 | #4 | 4 | 8'-9" | 134 |
| S4 | 16 | #4 | 6 | 6'-6" | 69 |
| S5 | 4 | #6 | 8 | 9'-5" | 57 |
| S6 | 12 | #6 | 9 | 3'-9" | 68 |
| U1 | 15 | #4 | 5 | 5'-2" | 52 |
| V1 | 32 | #4 | STR | 9'-5" | 201 |

REINFORCING STEEL 2,943 LBS

CLASS A CONCRETE BREAKDOWN

POUR 1 - CAP, LOWER WING, COLLARS & PILE CAPS 20.9 C.Y.

POUR 2 - UPPER WING 3.3 C.Y.

TOTAL 24.2 C.Y.

HP 12 x 53 STEEL PILES

NO. 12 LIN. FT. = 240

### STAGE II

| BAR | NO. | SIZE | TYPE | LENGTH | WEIGHT |
|---|---|---|---|---|---|
| B8 | 8 | #4 | STR | 3'-0" | 16 |
| B9 | 7 | #4 | STR | 2'-2" | 10 |
| B11 | 8 | #9 | 1 | 31'-6" | 857 |
| B12 | 2 | #5 | STR | 29'-2" | 61 |
| B13 | 4 | #4 | STR | 29'-2" | 78 |
| D1 | 4 | #6 | STR | 3'-6" | 21 |
| H2 | 18 | #4 | 7 | 10'-10" | 130 |
| K1 | 12 | #4 | STR | 2'-7" | 21 |
| S1 | 27 | #4 | 3 | 2'-11" | 53 |
| S2 | 27 | #4 | 4 | 7'-2" | 129 |
| S4 | 10 | #4 | 6 | 6'-6" | 43 |
| S5 | 2 | #6 | 8 | 9'-5" | 28 |
| S6 | 6 | #6 | 9 | 3'-9" | 34 |
| U1 | 6 | #4 | 5 | 5'-2" | 21 |
| V2 | 28 | #4 | STR | 8'-4" | 156 |

REINFORCING STEEL 1,658 LBS

CLASS A CONCRETE BREAKDOWN

POUR 1 - CAP, LOWER WING, COLLARS & PILE CAPS 11.3 C.Y.

POUR 2 - UPPER WING 2.9 C.Y.

TOTAL 14.2 C.Y.

HP 12 x 53 STEEL PILES

NO. 7 LIN. FT. = 105

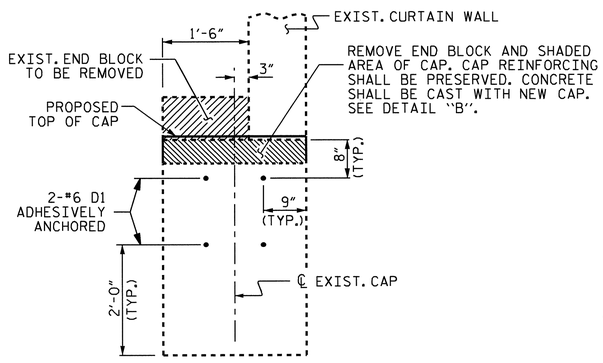


SECTION X-X

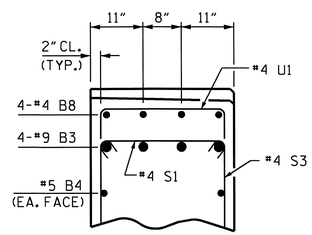


PARTIAL SECTION A-A

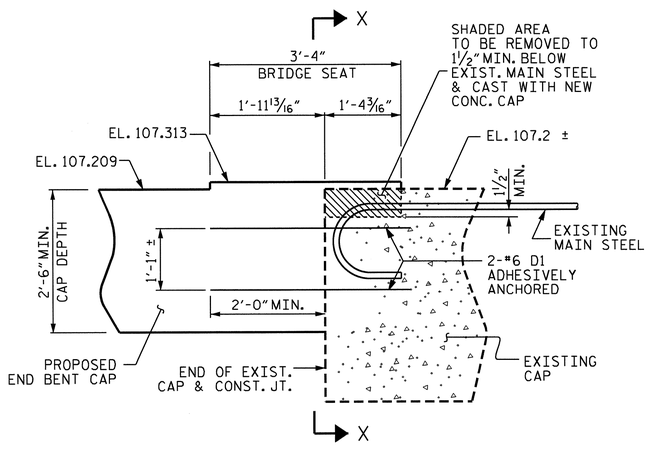


DETAIL "B"

EXIST. END BLOCK NOT SHOWN FOR CLARITY

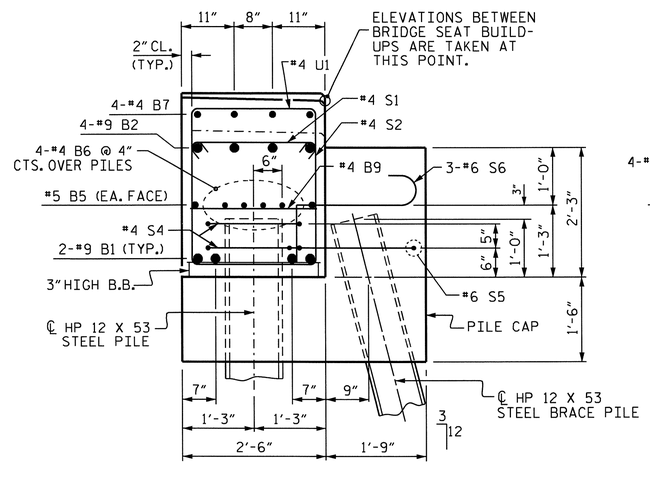


SECTION B-B

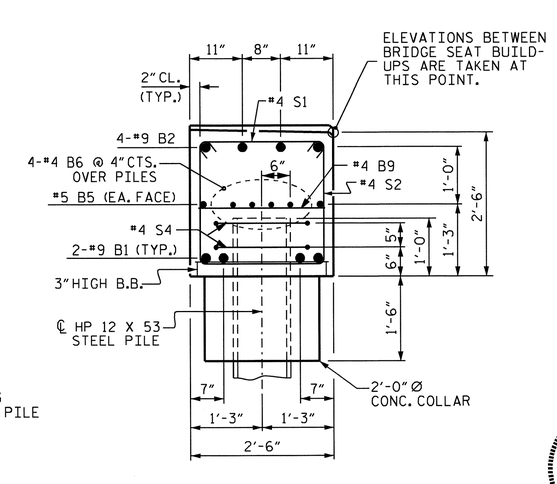


SECTION C-C

## TOTAL QUANTITIES

| | REINFORCING STEEL (LBS.) | CLASS A CONCRETE (C.Y.) |
|---|---|---|
| STAGE I | 2,943 | 24.2 |
| STAGE II | 1,658 | 14.2 |
| TOTAL | 4,601 | 38.4 |

PROJECT NO. U-4019

NASH COUNTY

STATION: 27+87.83 -L-

SHEET 4 OF 4

STATE OF NORTH CAROLINA
DEPARTMENT OF TRANSPORTATION
RALEIGH

SUBSTRUCTURE

END BENT 1

NORTH CAROLINA PROFESSIONAL SEAL 16301 ENGINEER TING HSIANG FANG

5/23/11

| REVISIONS | | | | | | SHEET NO. |
|---|---|---|---|---|---|---|
| NO. | BY: | DATE: | NO. | BY: | DATE: | S-32 |
| 1 | | | 3 | | | TOTAL SHEETS |
| 2 | | | 4 | | | 93 |

DRAWN BY : D.R. WITHROW DATE : 12/10

CHECKED BY : T. H. FANG DATE : 4/11/11

23-MAY-2011 09:38
Z:\TIPProjects-U\U4019\Structures\str1\FinalPlans\u4019_sd_ebl*.dgn
tfang

STR. #1

## NOTES

STIRRUPS AND "U" BARS IN CAP MAY BE SHIFTED AS NECESSARY TO CLEAR ANCHOR BOLTS.

HOOKS ON "V" BARS MAY BE TURNED AS NECESSARY FOR PLACING REINFORCING STEEL.

ALL STEEL IN THE DRILLED PIERS IS INCLUDED IN THE PAY ITEMS FOR "REINFORCING STEEL" AND "SPIRAL COLUMN REINFORCING STEEL".

THE CONTRACTOR'S ATTENTION IS CALLED TO THE FACT THAT THE LONGITUDINAL REINFORCEMENT FOR THE DRILLED PIERS IS DETAILED WITH 3 FEET OF EXTRA LENGTH.

THE LOCATION OF THE CONSTRUCTION JOINT IN THE DRILLED PIERS IS BASED ON AN APPROXIMATE GROUND LINE ELEVATION. IF THE CONSTRUCTION JOINT IS ABOVE THE ACTUAL GROUND LINE ELEVATION, THE CONTRACTOR SHALL PLACE THE CONSTRUCTION JOINT 1 FT. BELOW THE GROUND LINE.

SPLICING OF THE LONGITUDINAL BARS IN THE DRILLED PIER WILL NOT BE PERMITTED.

FOR DRILLED PIERS, SEE SPECIAL PROVISIONS.

FOR PERMANENT STEEL CASING, SEE SPECIAL PROVISIONS FOR DRILLED PIERS.

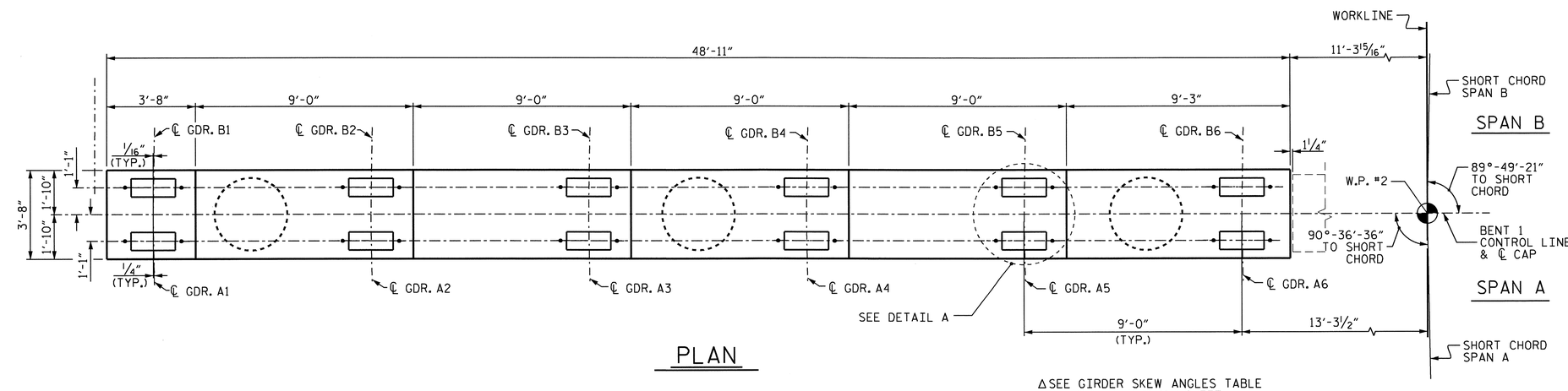


## PLAN

Δ SEE GIRDER SKEW ANGLES TABLE ON "FRAMING PLAN" SHEET.

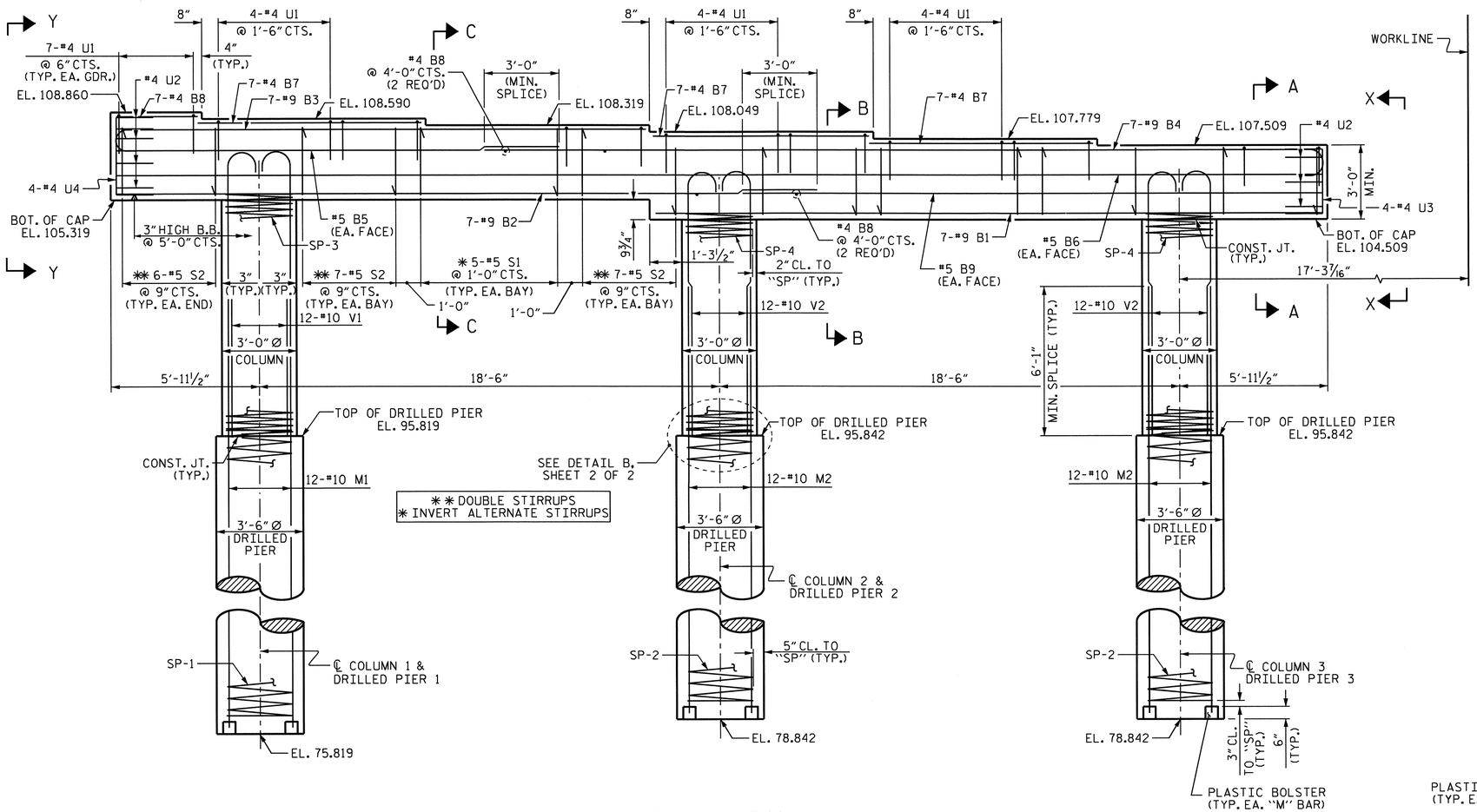


## ELEVATION

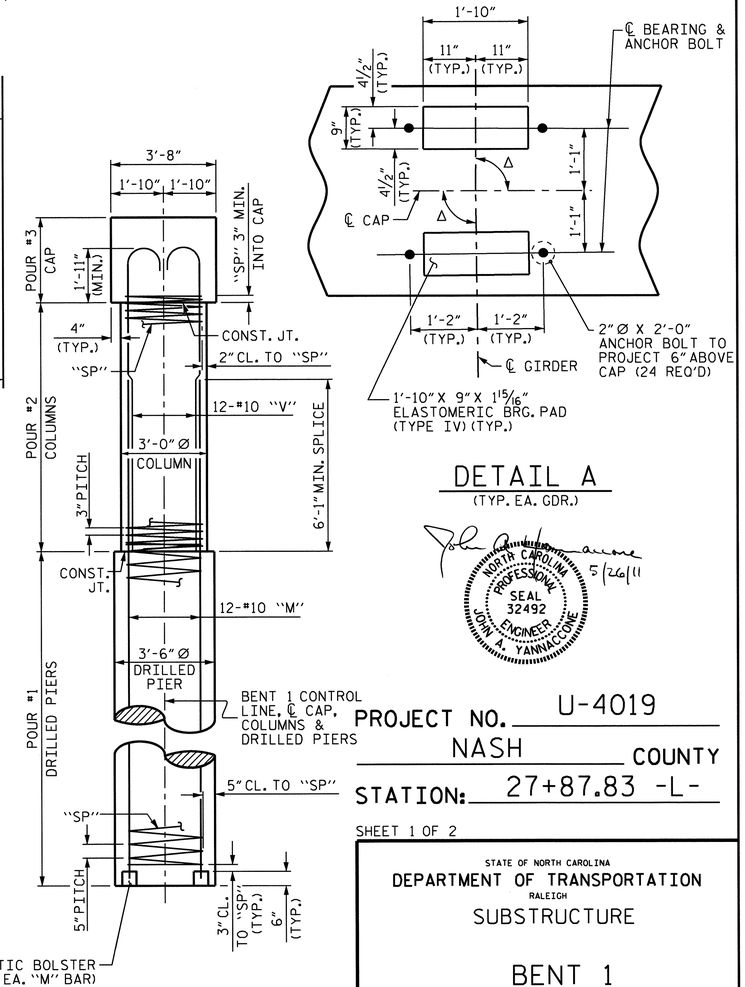


## DETAIL A

(TYP. EA. GDR.)

NORTH CAROLINA PROFESSIONAL SEAL 32492 ENGINEER JOHN A. YANNACCONE

5/26/11

PROJECT NO. U-4019

NASH COUNTY

STATION: 27+87.83 -L-

SHEET 1 OF 2

## END ELEVATION

STATE OF NORTH CAROLINA
DEPARTMENT OF TRANSPORTATION
RALEIGH

SUBSTRUCTURE

BENT 1

STAGE I

| REVISIONS | | | | | | SHEET NO. |
|---|---|---|---|---|---|---|
| NO. | BY: | DATE: | NO. | BY: | DATE: | S-33 |
| 1 | | | 3 | | | TOTAL SHEETS |
| 2 | | | 4 | | | 93 |

DRAWN BY : HARISH SHAH DATE : 02-09-11
CHECKED BY : A. SORSENGINH DATE : 02-11

23-MAY-2011 09:38
Z:\TIPProjects-U\U4019\Structures\str1\FinalPlans\u4019_sd_bt1*1.dgn
ttfong

STR. #1

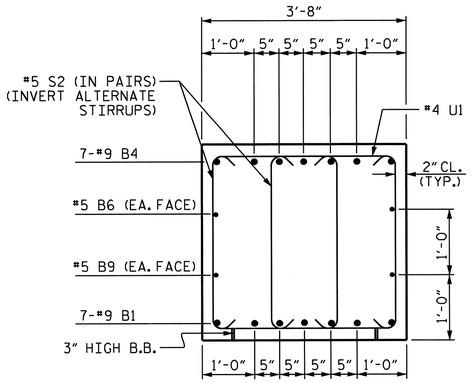


SECTION A-A

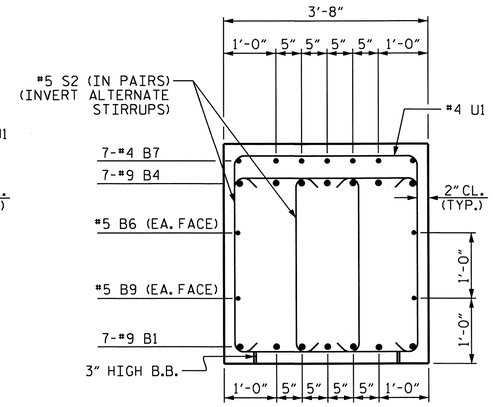


SECTION B-B

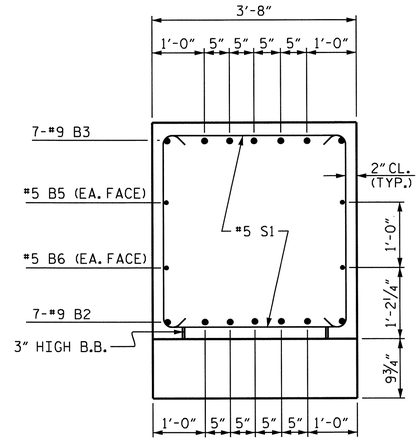


SECTION C-C

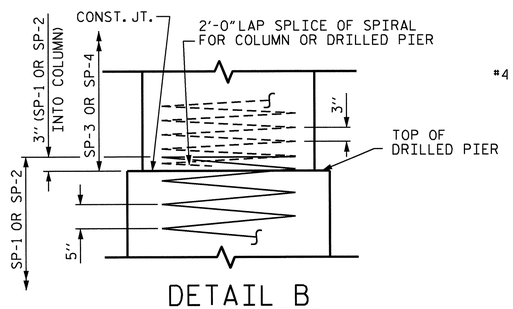


DETAIL B

(TYP. EA. DRILLED PIER)

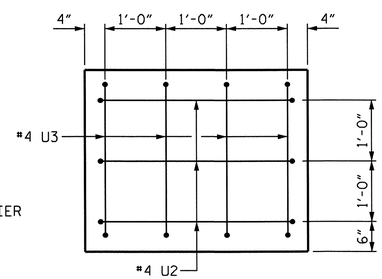


VIEW X-X

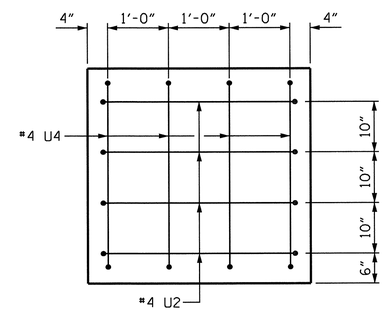


VIEW Y-Y

## BAR TYPES

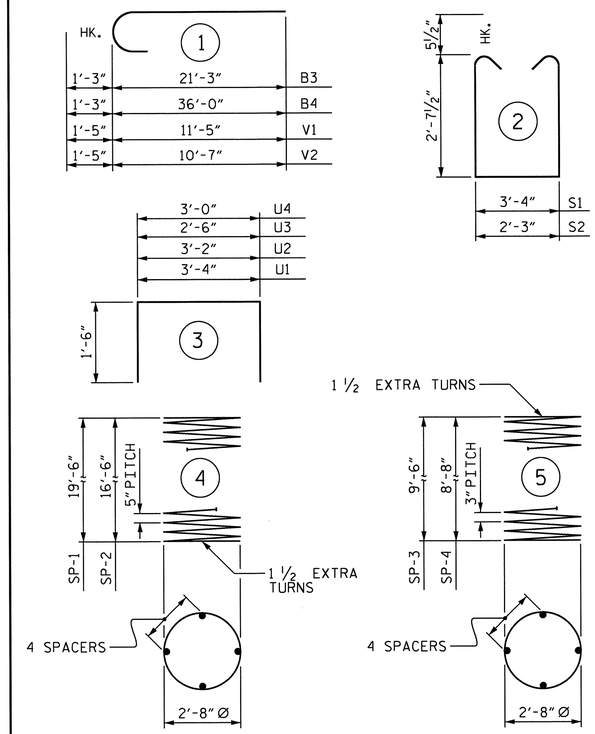


ALL BAR DIMENSIONS ARE OUT TO OUT.

✱✱ THE SP-1 & SP-2 SPIRAL REINFORCING STEEL SHALL BE W31 OR D-31 COLD DRAWN WIRE OR #5 PLAIN OR DEFORMED BAR.

✱ THE SP-3 & SP-4 SPIRAL REINFORCING STEEL SHALL BE W20 OR D-20 COLD DRAWN WIRE OR #4 PLAIN OR DEFORMED BAR.

## BILL OF MATERIAL

### BENT 1 (STAGE I)

| BAR | NO. | SIZE | TYPE | LENGTH | WEIGHT |
|---|---|---|---|---|---|
| B1 | 7 | #9 | STR | 26'-11" | 641 |
| B2 | 7 | #9 | STR | 30'-5" | 724 |
| B3 | 7 | #9 | 1 | 22'-6" | 536 |
| B4 | 7 | #9 | 1 | 37'-3" | 887 |
| B5 | 2 | #5 | STR | 15'-7" | 33 |
| B6 | 2 | #5 | STR | 48'-7" | 101 |
| B7 | 21 | #4 | STR | 9'-0" | 126 |
| B8 | 11 | #4 | STR | 3'-4" | 24 |
| B9 | 2 | #5 | STR | 21'-2" | 44 |
| | | | | | |
| M1 | 12 | #10 | STR | 28'-10" | 1489 |
| M2 | 24 | #10 | STR | 25'-10" | 2668 |
| | | | | | |
| S1 | 10 | #5 | 2 | 9'-6" | 99 |
| S2 | 80 | #5 | 2 | 8'-5" | 702 |
| | | | | | |
| U1 | 54 | #4 | 3 | 6'-4" | 228 |
| U2 | 7 | #4 | 3 | 6'-2" | 29 |
| U3 | 4 | #4 | 3 | 5'-6" | 15 |
| U4 | 4 | #4 | 3 | 6'-0" | 16 |
| | | | | | |
| V1 | 12 | #10 | 1 | 12'-10" | 663 |
| V2 | 24 | #10 | 1 | 12'-0" | 1239 |
| REINFORCING STEEL TOTAL | | | | LBS. | 10,264 |
| SP-1 | 1 | ✱✱ | 4 | 403'-0" | 420 |
| SP-2 | 2 | ✱✱ | 4 | 345'-6" | 721 |
| SP-3 | 1 | ✱ | 5 | 332'-1" | 222 |
| SP-4 | 2 | ✱ | 5 | 307'-4" | 411 |
| TOTAL SPIRAL REINFORCING REINFORCING STEEL | | | | LBS. | 1,774 |

CLASS A CONCRETE BREAKDOWN

| | | |
|---|---|---|
| POUR #2 (COLUMNS) = | C. Y. | 7.0 |
| POUR #3 (CAP) = | C. Y. | 21.5 |
| TOTAL CLASS A CONCRETE = | C. Y. | 28.5 |

### DRILLED PIER QUANITIES

| | | |
|---|---|---|
| POUR #1 (DRILLED PIERS) = | C. Y. | 19.2 |
| 3'-6" Ø DRILLED PIERS NOT IN SOIL | | 19.00 FT. |
| 3'-6" Ø DRILLED PIERS IN SOIL | | 35.00 FT. |
| 3'-6" Ø PERMANENT STEEL CASING | | 36.50 FT. |
| CSL TUBES | | 246.00 FT. |

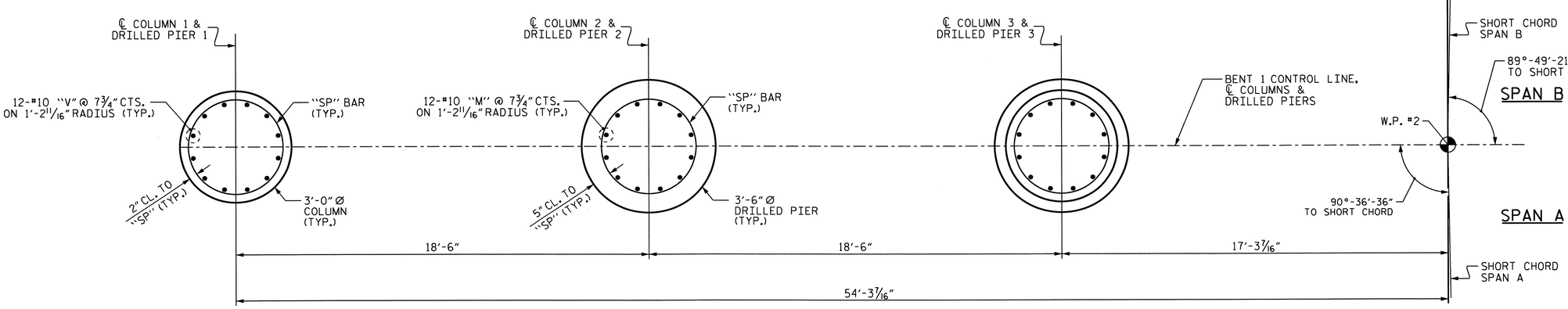


## PLAN OF COLUMNS & DRILLED PIERS

(DIMENSIONS & REINFORCING STEEL ARE TYPICAL FOR EACH COLUMN & DRILLED PIER)

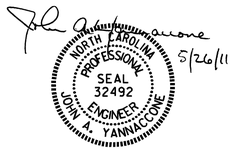


PROJECT NO. U-4019

NASH COUNTY

STATION: 27+87.83 -L-

SHEET 2 OF 2

STATE OF NORTH CAROLINA
DEPARTMENT OF TRANSPORTATION
RALEIGH

SUBSTRUCTURE

BENT 1

(STAGE I)

| REVISIONS | | | | | | SHEET NO. |
|---|---|---|---|---|---|---|
| NO. | BY: | DATE: | NO. | BY: | DATE: | S-34 |
| 1 | | | 3 | | | TOTAL SHEETS |
| 2 | | | 4 | | | 93 |

STR. #1

DRAWN BY : HARISH SHAH DATE : 02/09/11
CHECKED BY : A. SORENSINGH DATE : 02-11

23-MAY-2011 09:38
Z:\TIPProjects-U\U4019\Structures\str1\FinalPlans\u4019_sd_bt1*1.dgn
ttang

## NOTES

STIRRUPS AND "U" BARS IN CAP MAY BE SHIFTED AS NECESSARY TO CLEAR ANCHOR BOLTS.

HOOKS ON "V" BARS MAY BE TURNED AS NECESSARY FOR PLACING REINFORCING STEEL.

ALL STEEL IN THE DRILLED PIERS IS INCLUDED IN THE PAY ITEMS FOR "REINFORCING STEEL" AND "SPIRAL COLUMN REINFORCING STEEL".

THE CONTRACTOR'S ATTENTION IS CALLED TO THE FACT THAT THE LONGITUDINAL REINFORCEMENT FOR THE DRILLED PIERS IS DETAILED WITH 3 FEET OF EXTRA LENGTH.

THE LOCATION OF THE CONSTRUCTION JOINT IN THE DRILLED PIERS IS BASED ON AN APPROXIMATE GROUND LINE ELEVATION. IF THE CONSTRUCTION JOINT IS ABOVE THE ACTUAL GROUND LINE ELEVATION, THE CONTRACTOR SHALL PLACE THE CONSTRUCTION JOINT 1 FT. BELOW THE GROUND LINE.

SPLICING OF THE LONGITUDINAL BARS IN THE DRILLED PIER WILL NOT BE PERMITTED.

FOR DRILLED PIERS, SEE SPECIAL PROVISIONS.

FOR PERMANENT STEEL CASING, SEE SPECIAL PROVISIONS FOR DRILLED PIERS.

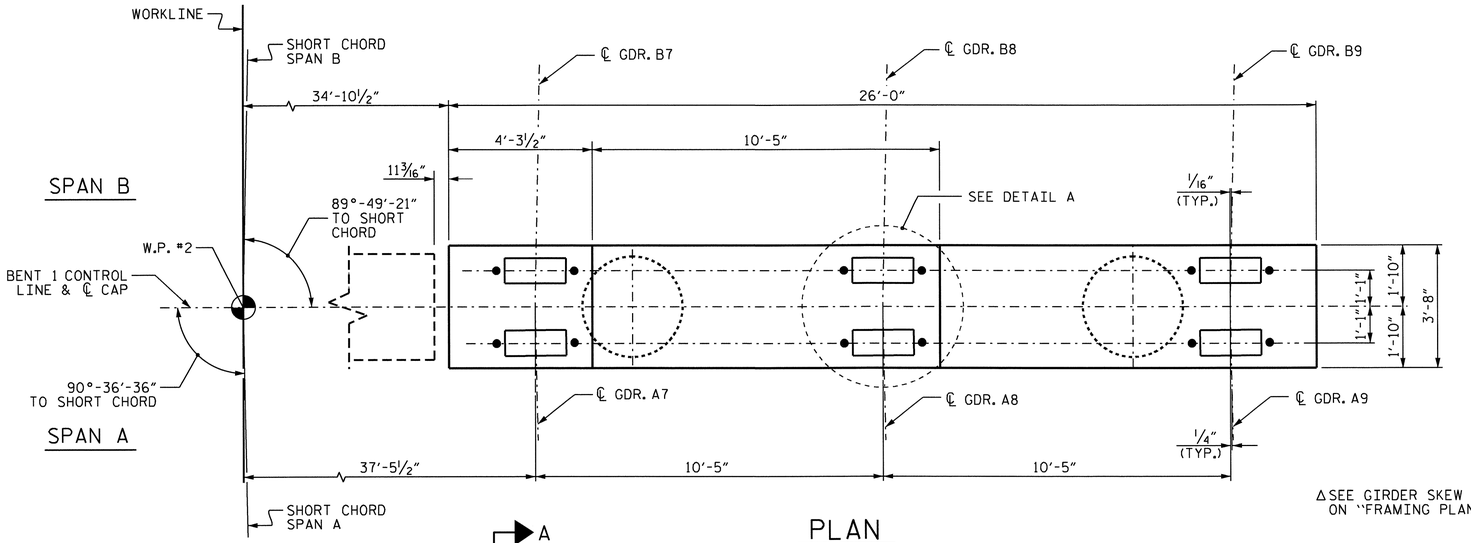


Δ SEE GIRDER SKEW ANGLES TABLE ON "FRAMING PLAN" SHEET.

## PLAN

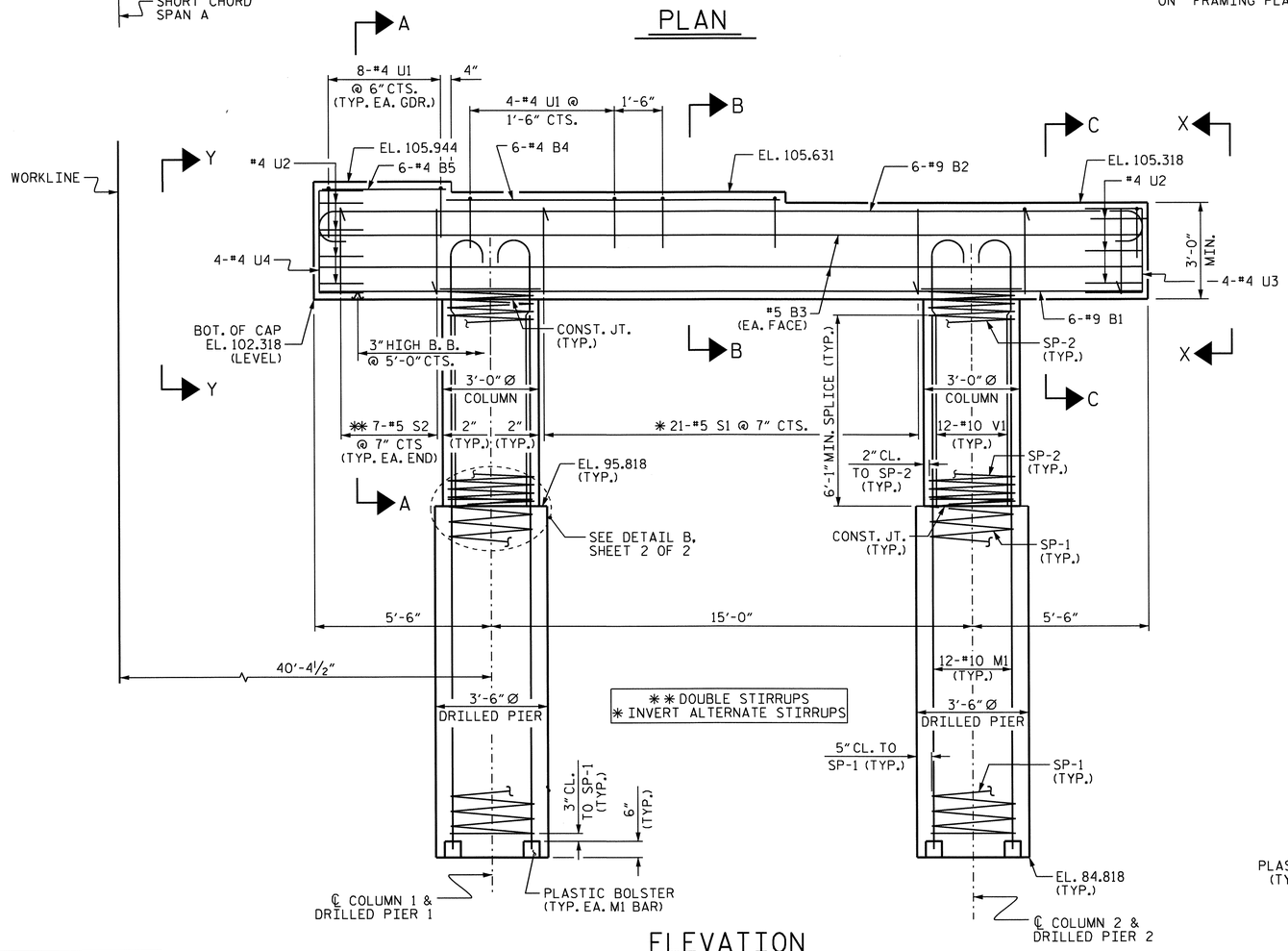


## ELEVATION

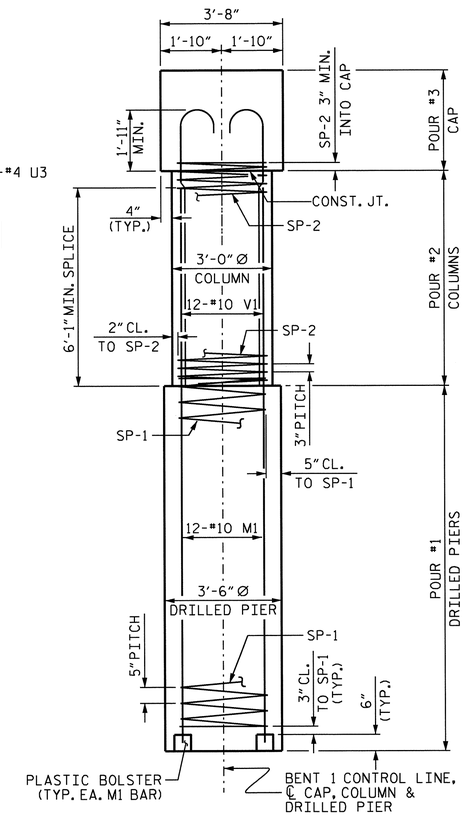


## END ELEVATION

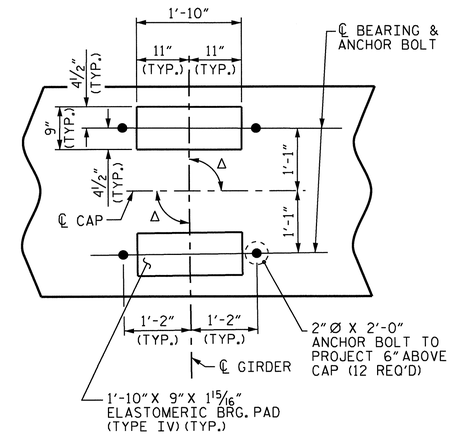


## DETAIL A

(TYP. EA. GDR.)

NORTH CAROLINA PROFESSIONAL SEAL 32492 ENGINEER JOHN A. YANNACCONE 5/26/11

PROJECT NO. U-4019

NASH COUNTY

STATION: 27+87.83 -L-

SHEET 1 OF 2

STATE OF NORTH CAROLINA
DEPARTMENT OF TRANSPORTATION
RALEIGH

SUBSTRUCTURE

BENT 1

(STAGE II)

| REVISIONS | | | | | | SHEET NO. |
|---|---|---|---|---|---|---|
| NO. | BY: | DATE: | NO. | BY: | DATE: | S-35 |
| 1 | | | 3 | | | TOTAL SHEETS |
| 2 | | | 4 | | | 93 |

DRAWN BY : HARISH SHAH DATE : 2-11-11
CHECKED BY : A. SORSENGINH DATE : 2-11

23-MAY-2011 09:38
Z:\TIPProjects-U\U4019\Structures\str1\FinalPlans\u4019_sd_bt1*1.dgn
tfang

STR. #1

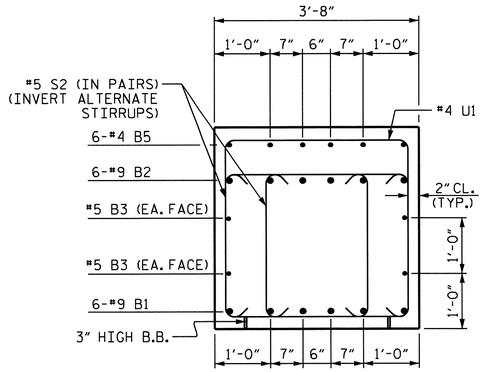


SECTION A-A

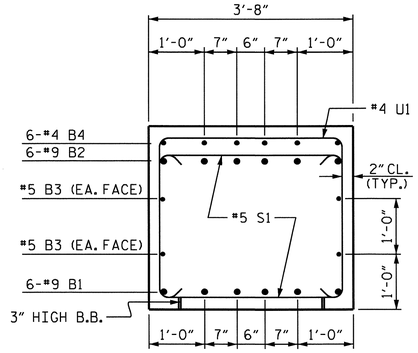


SECTION B-B

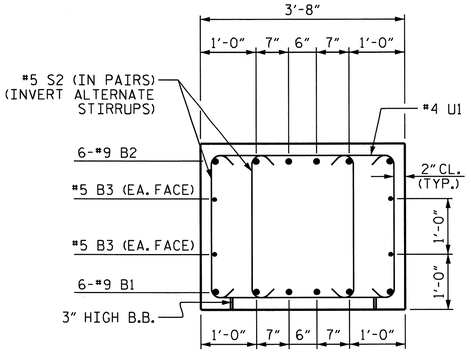


SECTION C-C

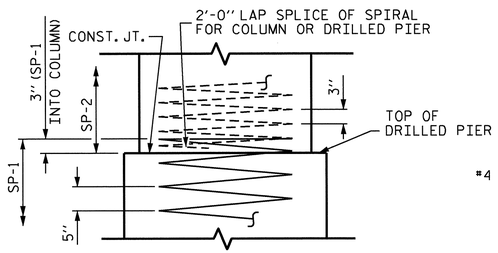


DETAIL B

(TYP. EA. DRILLED PIER)

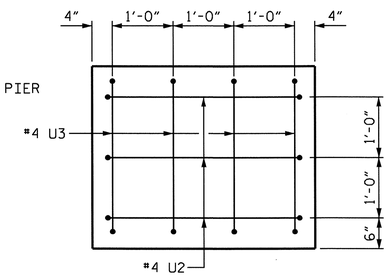


VIEW X-X

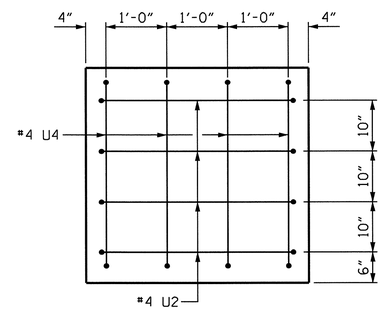


VIEW Y-Y

## BAR TYPES

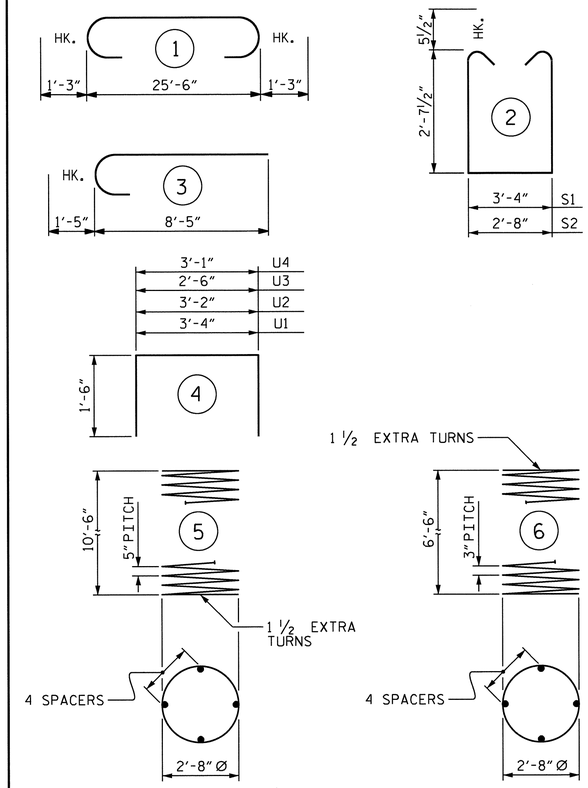


ALL BAR DIMENSIONS ARE OUT TO OUT.

## BILL OF MATERIAL

### BENT 1 (STAGE II)

| BAR | NO. | SIZE | TYPE | LENGTH | WEIGHT |
|---|---|---|---|---|---|
| B1 | 6 | #9 | STR | 25'-8" | 524 |
| B2 | 6 | #9 | 1 | 28'-0" | 571 |
| B3 | 4 | #5 | STR | 25'-8" | 107 |
| B4 | 6 | #4 | STR | 10'-5" | 42 |
| B5 | 6 | #4 | STR | 3'-11" | 16 |
| | | | | | |
| M1 | 24 | #10 | STR | 19'-10" | 2048 |
| | | | | | |
| S1 | 21 | #5 | 2 | 9'-6" | 208 |
| S2 | 28 | #5 | 2 | 8'-10" | 258 |
| | | | | | |
| U1 | 28 | #4 | 4 | 6'-4" | 118 |
| U2 | 7 | #4 | 4 | 6'-2" | 29 |
| U3 | 4 | #4 | 4 | 5'-6" | 15 |
| U4 | 4 | #4 | 4 | 6'-1" | 16 |
| | | | | | |
| V1 | 24 | #10 | 3 | 9'-10" | 1016 |
| REINFORCING STEEL TOTAL | | | | LBS. | 4,968 |
| SP-1 | 2 | ✱✱ | 5 | 222'-1" | 463 |
| SP-2 | 2 | ✱ | 6 | 233'-1" | 311 |
| TOTAL SPIRAL REINFORCING REINFORCING STEEL | | | | LBS. | 774 |

CLASS A CONCRETE BREAKDOWN

| | | |
|---|---|---|
| POUR #2 (COLUMNS) = | C. Y. | 3.4 |
| POUR #3 (CAP) = | C. Y. | 11.4 |
| TOTAL CLASS A CONCRETE = | C. Y. | 14.8 |

### DRILLED PIER QUANITIES

| | | |
|---|---|---|
| POUR #1 (DRILLED PIERS) = | C. Y. | 7.8 |
| 3'-6" Ø DRILLED PIERS NOT IN SOIL | | 14.00 FT. |
| 3'-6" Ø DRILLED PIERS IN SOIL | | 8.00 FT. |
| 3'-6" Ø PERMANENT STEEL CASING | | 9.64 FT. |
| CSL TUBES | | 108.00 FT. |

✱✱ THE SP-1 & SP-2 SPIRAL REINFORCING STEEL SHALL BE W31 OR D-31 COLD DRAWN WIRE OR #5 PLAIN OR DEFORMED BAR.

✱ THE SP-3 & SP-4 SPIRAL REINFORCING STEEL SHALL BE W20 OR D-20 COLD DRAWN WIRE OR #4 PLAIN OR DEFORMED BAR.

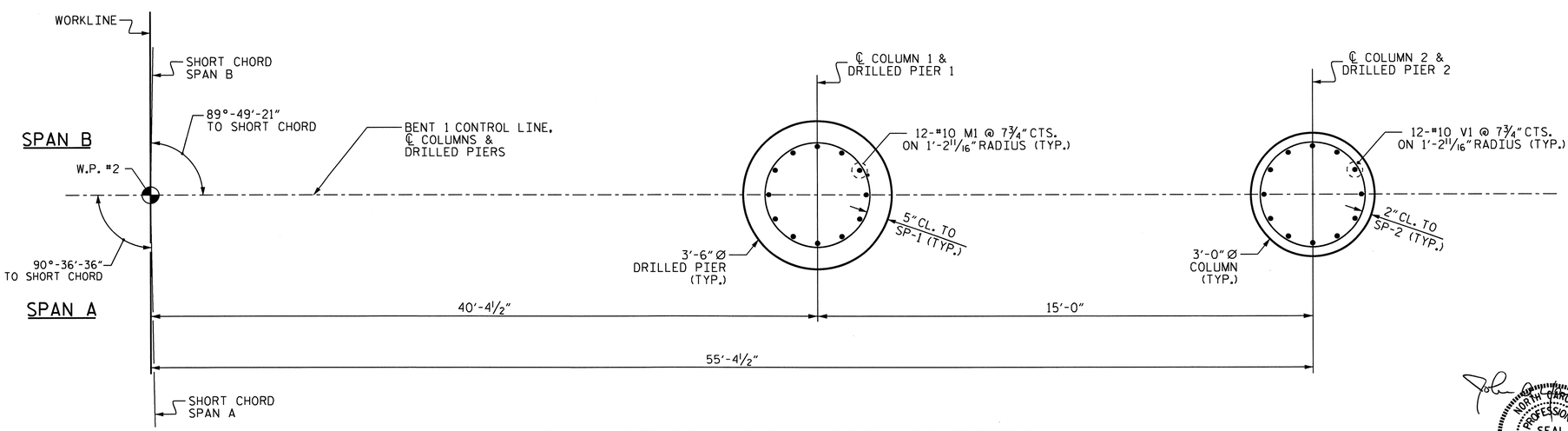


PLAN OF COLUMNS & DRILLED PIERS

(DIMENSIONS & REINFORCING STEEL ARE TYPICAL FOR EACH COLUMN & DRILLED PIER)

PROJECT NO. U-4019

NASH COUNTY

STATION: 27+87.83 -L-

SHEET 2 OF 2

STATE OF NORTH CAROLINA
DEPARTMENT OF TRANSPORTATION
RALEIGH

SUBSTRUCTURE

BENT 1

(STAGE II)

NORTH CAROLINA PROFESSIONAL SEAL 32492 ENGINEER JOHN A. YANNACCONE

| REVISIONS | | | | | | SHEET NO. |
|---|---|---|---|---|---|---|
| NO. | BY: | DATE: | NO. | BY: | DATE: | S-36 |
| 1 | | | 3 | | | TOTAL SHEETS |
| 2 | | | 4 | | | 93 |

DRAWN BY : HARISH SHAH DATE : 02-14-11
CHECKED BY : A. SORSENGINH DATE : 02-11

23-MAY-2011 09:38
Z:\TIPProjects-U\U4019\Structures\str1\FinalPlans\u4019_sd_bt1*1.dgn
ttfang

STR. #1

## NOTES

STIRRUPS AND "U" BARS IN CAP MAY BE SHIFTED AS NECESSARY TO CLEAR ANCHOR BOLTS.

HOOKS ON "V" BARS MAY BE TURNED AS NECESSARY FOR PLACING REINFORCING STEEL.

ALL STEEL IN THE DRILLED PIERS IS INCLUDED IN THE PAY ITEMS FOR "REINFORCING STEEL" AND "SPIRAL COLUMN REINFORCING STEEL".

THE CONTRACTOR'S ATTENTION IS CALLED TO THE FACT THAT THE LONGITUDINAL REINFORCEMENT FOR THE DRILLED PIERS IS DETAILED WITH 3 FEET OF EXTRA LENGTH.

THE LOCATION OF THE CONSTRUCTION JOINT IN THE DRILLED PIERS IS BASED ON AN APPROXIMATE GROUND LINE ELEVATION. IF THE CONSTRUCTION JOINT IS ABOVE THE ACTUAL GROUND LINE ELEVATION, THE CONTRACTOR SHALL PLACE THE CONSTRUCTION JOINT 1 FT. BELOW THE GROUND LINE.

SPLICING OF THE LONGITUDINAL BARS IN THE DRILLED PIER WILL NOT BE PERMITTED.

FOR DRILLED PIERS, SEE SPECIAL PROVISIONS.

FOR PERMANENT STEEL CASING, SEE SPECIAL PROVISIONS FOR DRILLED PIERS.

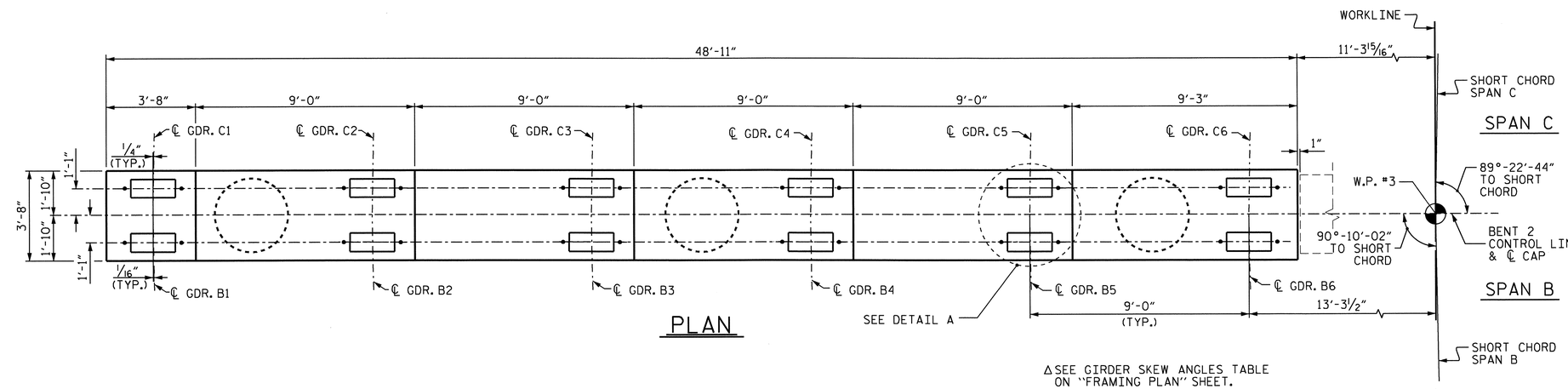


PLAN

Δ SEE GIRDER SKEW ANGLES TABLE ON "FRAMING PLAN" SHEET.

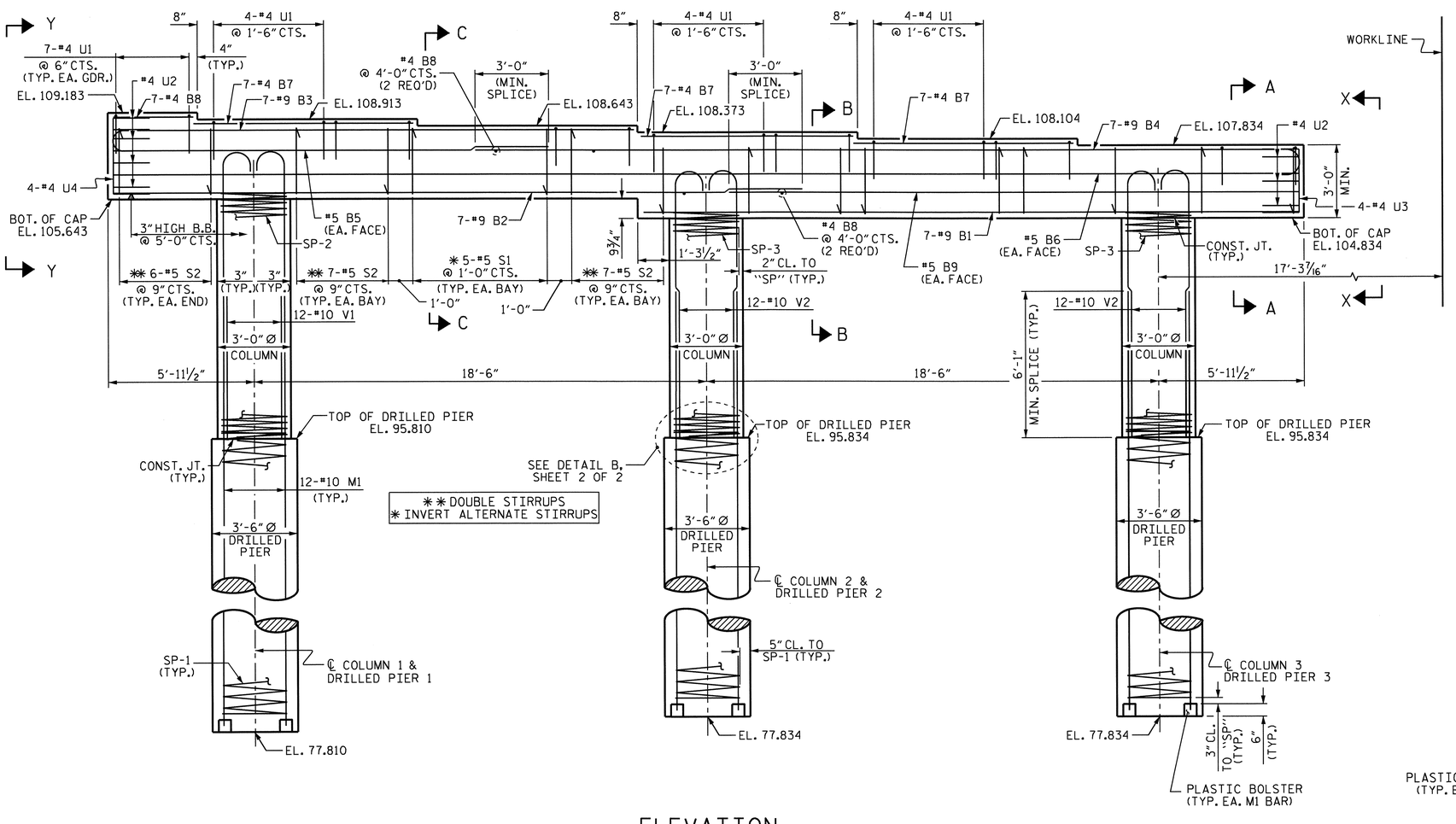


ELEVATION

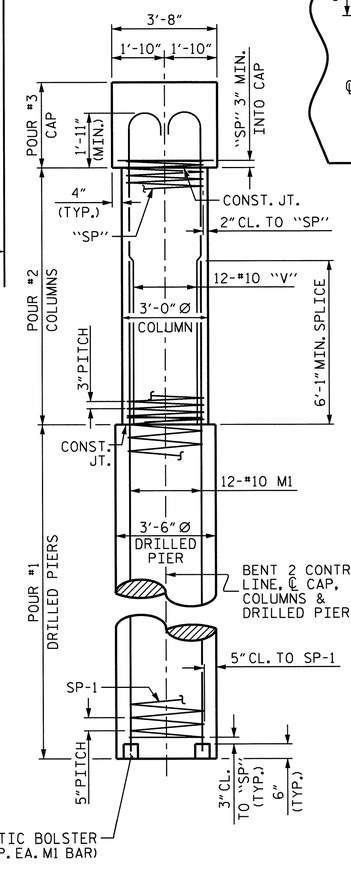


END ELEVATION

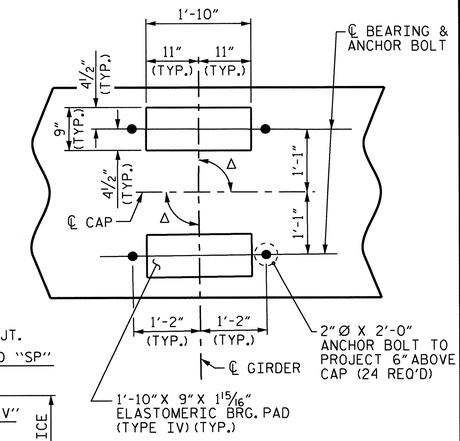


DETAIL A
(TYP. EA. GDR.)

NORTH CAROLINA PROFESSIONAL SEAL 32492 ENGINEER JOHN A. YANNACCONE
5/26/11

PROJECT NO. U-4019
NASH COUNTY
STATION: 27+87.83 -L-

SHEET 1 OF 2

STATE OF NORTH CAROLINA
DEPARTMENT OF TRANSPORTATION
RALEIGH

SUBSTRUCTURE

BENT 2

(STAGE I)

| REVISIONS | | | | | | SHEET NO. |
|---|---|---|---|---|---|---|
| NO. | BY: | DATE: | NO. | BY: | DATE: | S-37 |
| 1 | | | 3 | | | TOTAL SHEETS |
| 2 | | | 4 | | | 93 |

DRAWN BY : HARISH SHAH DATE : 2-09-11
CHECKED BY : J.A. YANNACCONE DATE : 3-28-11

23-MAY-2011 09:38
Z:\TIPProjects-U\U4019\Structures\str1\FinalPlans\u4019_sd_bt1*2.dgn
ttfang

STR. #1

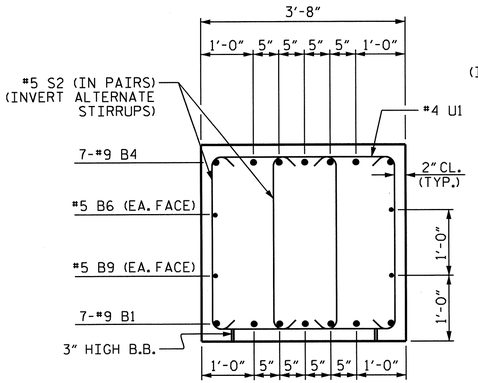


SECTION A-A

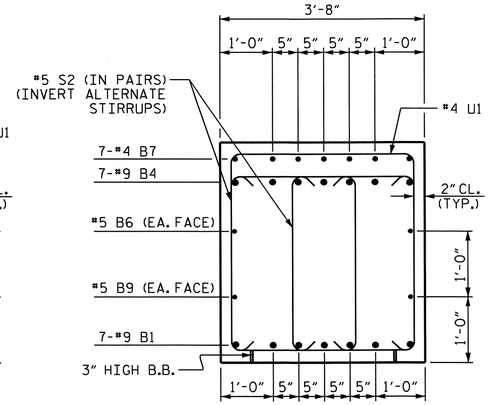


SECTION B-B

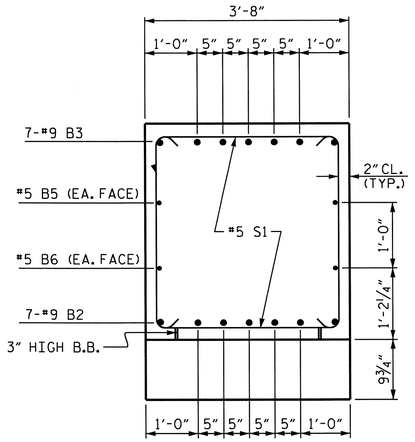


SECTION C-C

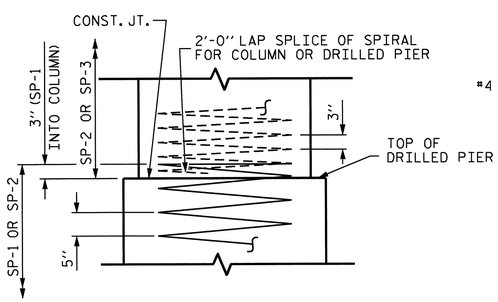


DETAIL B

(TYP. EA. DRILLED PIER)

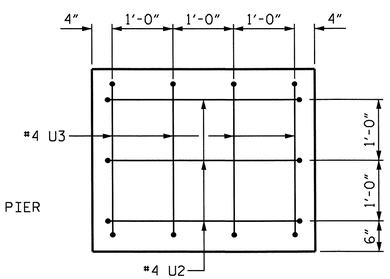


VIEW X-X

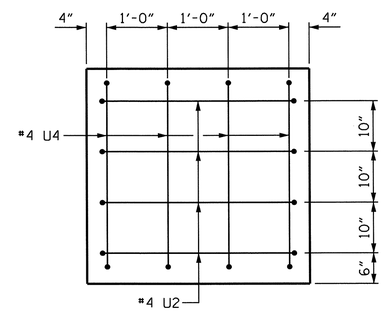


VIEW Y-Y

## BAR TYPES

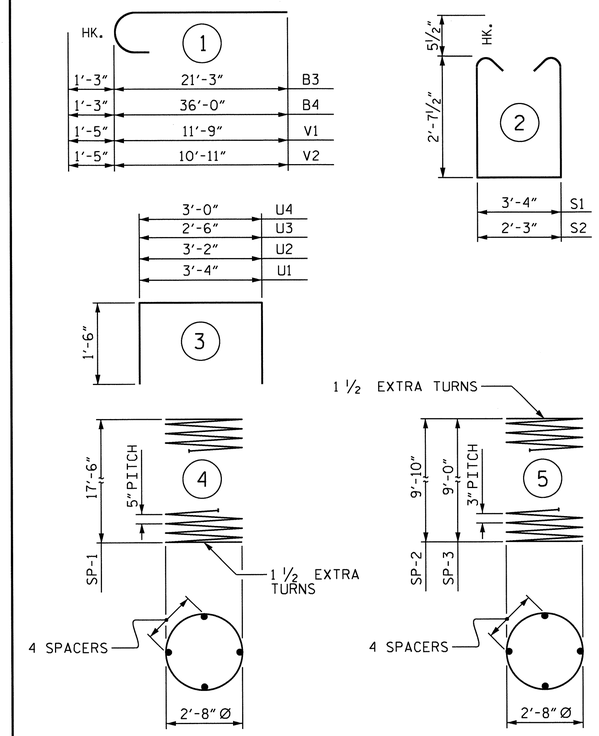


ALL BAR DIMENSIONS ARE OUT TO OUT.

✱✱ THE SP-1 & SP-2 SPIRAL REINFORCING STEEL SHALL BE W31 OR D-31 COLD DRAWN WIRE OR #5 PLAIN OR DEFORMED BAR.

✱ THE SP-3 & SP-4 SPIRAL REINFORCING STEEL SHALL BE W20 OR D-20 COLD DRAWN WIRE OR #4 PLAIN OR DEFORMED BAR.

## BILL OF MATERIAL

### BENT 2 (STAGE I)

| BAR | NO. | SIZE | TYPE | LENGTH | WEIGHT |
|---|---|---|---|---|---|
| B1 | 7 | #9 | STR | 26'-11" | 641 |
| B2 | 7 | #9 | STR | 30'-5" | 724 |
| B3 | 7 | #9 | 1 | 22'-6" | 536 |
| B4 | 7 | #9 | 1 | 37'-3" | 887 |
| B5 | 2 | #5 | STR | 15'-7" | 33 |
| B6 | 2 | #5 | STR | 48'-7" | 101 |
| B7 | 21 | #4 | STR | 9'-0" | 126 |
| B8 | 11 | #4 | STR | 3'-4" | 24 |
| B9 | 2 | #5 | STR | 21'-2" | 44 |
| | | | | | |
| M1 | 36 | #10 | STR | 26'-10" | 4157 |
| | | | | | |
| S1 | 10 | #5 | 2 | 9'-6" | 99 |
| S2 | 80 | #5 | 2 | 8'-5" | 702 |
| | | | | | |
| U1 | 54 | #4 | 3 | 6'-4" | 228 |
| U2 | 7 | #4 | 3 | 6'-2" | 29 |
| U3 | 4 | #4 | 3 | 5'-6" | 15 |
| U4 | 4 | #4 | 3 | 6'-0" | 16 |
| | | | | | |
| V1 | 12 | #10 | 1 | 13'-2" | 680 |
| V2 | 24 | #10 | 1 | 12'-4" | 1274 |
| REINFORCING STEEL TOTAL | | | | LBS. | 10,316 |
| SP-1 | 3 | ✱✱ | 4 | 361'-11" | 1132 |
| SP-2 | 1 | ✱ | 5 | 340'-4" | 227 |
| SP-3 | 2 | ✱ | 5 | 315'-7" | 422 |
| TOTAL SPIRAL REINFORCING REINFORCING STEEL | | | | LBS. | 1,781 |

CLASS A CONCRETE BREAKDOWN

| | | |
|---|---|---|
| POUR #2 (COLUMNS) = | C. Y. | 7.3 |
| POUR #3 (CAP) = | C. Y. | 21.5 |
| TOTAL CLASS A CONCRETE = | C. Y. | 28.8 |

### DRILLED PIER QUANITIES

| | | |
|---|---|---|
| POUR #1 (DRILLED PIERS) = | C. Y. | 19.2 |
| 3'-6" Ø DRILLED PIERS NOT IN SOIL | | 24.00 FT. |
| 3'-6" Ø DRILLED PIERS IN SOIL | | 30.00 FT. |
| 3'-6" Ø PERMANENT STEEL CASING (IF REQUIRED) | | 32.48 FT. |
| CSL TUBES | | 246.00 FT. |

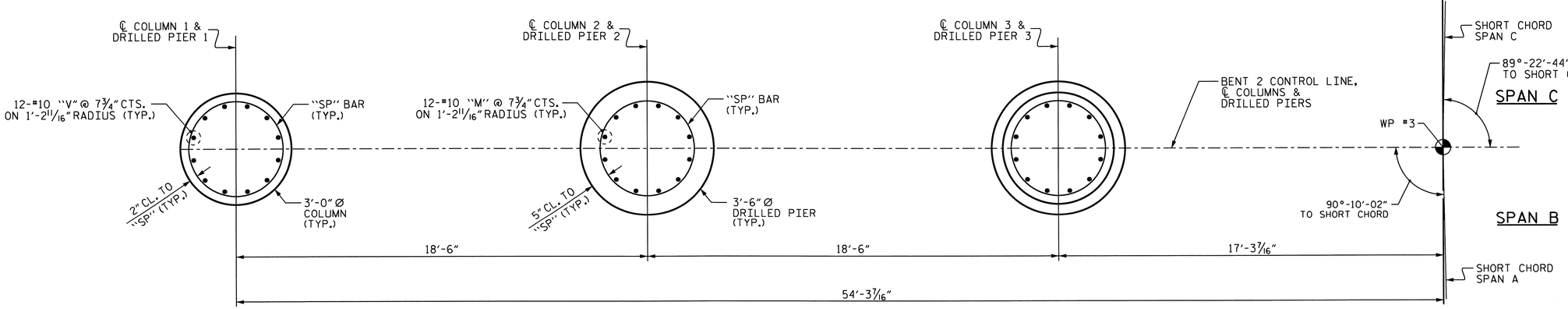


## PLAN OF COLUMNS & DRILLED PIERS

(DIMENSIONS & REINFORCING STEEL ARE TYPICAL FOR EACH COLUMN & DRILLED PIER)

NORTH CAROLINA PROFESSIONAL SEAL 32492 ENGINEER JOHN A. YANNACCONE 5/26/11

PROJECT NO. U-4019

NASH COUNTY

STATION: 27+87.83 -L-

SHEET 2 OF 2

STATE OF NORTH CAROLINA
DEPARTMENT OF TRANSPORTATION
RALEIGH

SUBSTRUCTURE

BENT 2

(STAGE I)

| REVISIONS | | | | | | SHEET NO. |
|---|---|---|---|---|---|---|
| NO. | BY: | DATE: | NO. | BY: | DATE: | S-38 |
| 1 | | | 3 | | | TOTAL SHEETS |
| 2 | | | 4 | | | 93 |

DRAWN BY : HARISH SHAH DATE : 2-09-11
CHECKED BY : J.A. YANNACCONE DATE : 3-28-11

23-MAY-2011 09:38
Z:\TIPProjects-U\U4019\Structures\str1\FinalPlans\u4019_sd_bt1#2.dgn
tfong

STR. #1

## NOTES

STIRRUPS AND "U" BARS IN CAP MAY BE SHIFTED AS NECESSARY TO CLEAR ANCHOR BOLTS.

HOOKS ON "V" BARS MAY BE TURNED AS NECESSARY FOR PLACING REINFORCING STEEL.

ALL STEEL IN THE DRILLED PIERS IS INCLUDED IN THE PAY ITEMS FOR "REINFORCING STEEL" AND "SPIRAL COLUMN REINFORCING STEEL".

THE CONTRACTOR'S ATTENTION IS CALLED TO THE FACT THAT THE LONGITUDINAL REINFORCEMENT FOR THE DRILLED PIERS IS DETAILED WITH 3 FEET OF EXTRA LENGTH.

THE LOCATION OF THE CONSTRUCTION JOINT IN THE DRILLED PIERS IS BASED ON AN APPROXIMATE GROUND LINE ELEVATION. IF THE CONSTRUCTION JOINT IS ABOVE THE ACTUAL GROUND LINE ELEVATION, THE CONTRACTOR SHALL PLACE THE CONSTRUCTION JOINT 1 FT. BELOW THE GROUND LINE.

SPLICING OF THE LONGITUDINAL BARS IN THE DRILLED PIER WILL NOT BE PERMITTED.

FOR DRILLED PIERS, SEE SPECIAL PROVISIONS.

FOR PERMANENT STEEL CASING, SEE SPECIAL PROVISIONS FOR DRILLED PIERS.

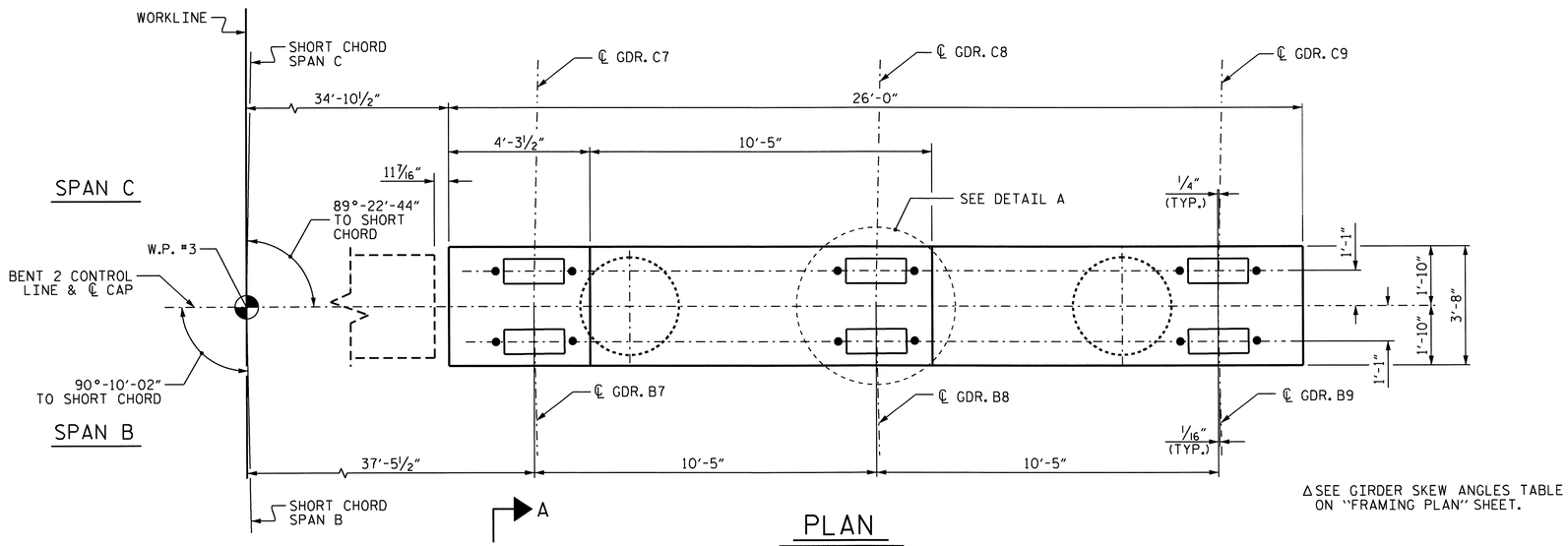


Δ SEE GIRDER SKEW ANGLES TABLE ON "FRAMING PLAN" SHEET.

## PLAN

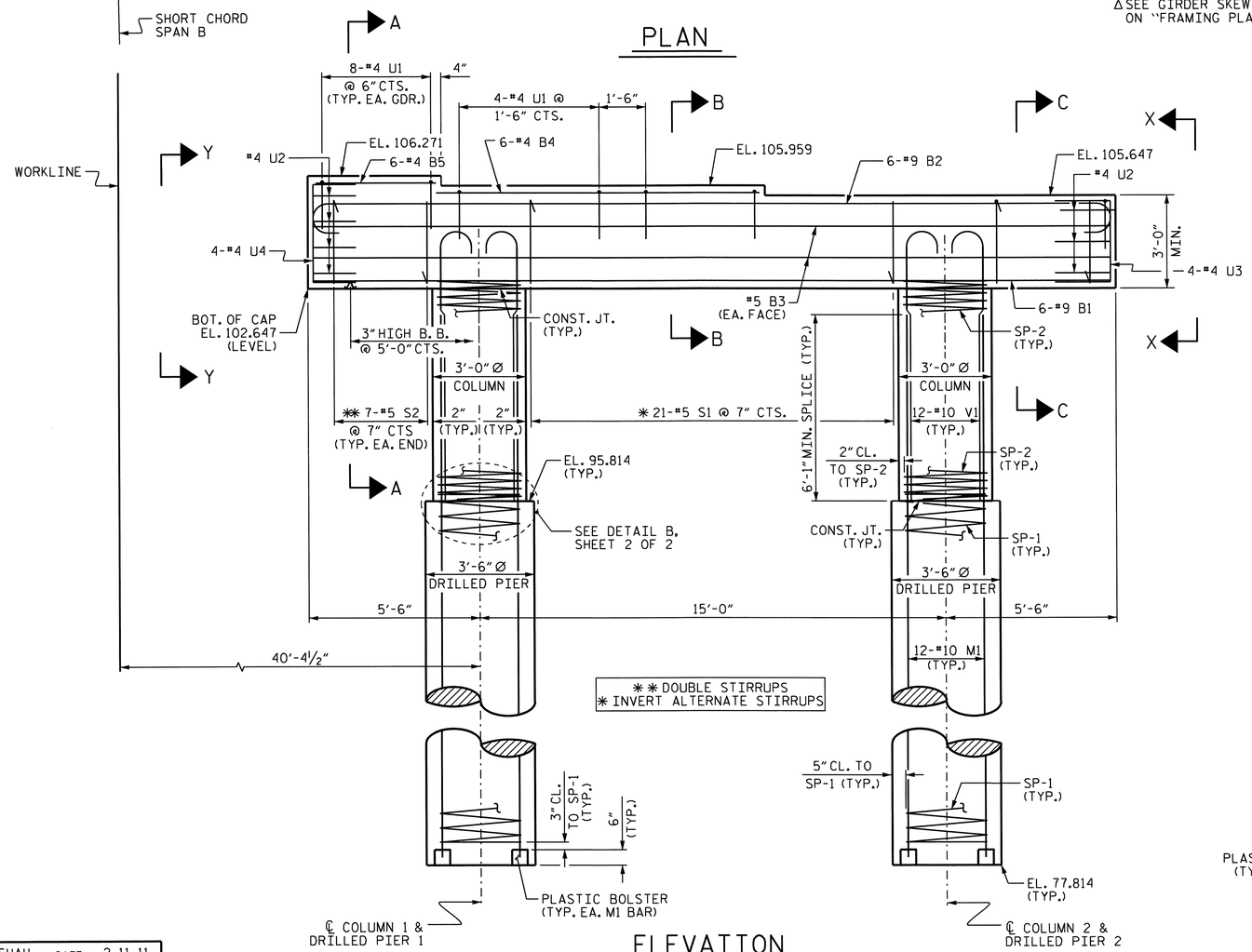


## ELEVATION

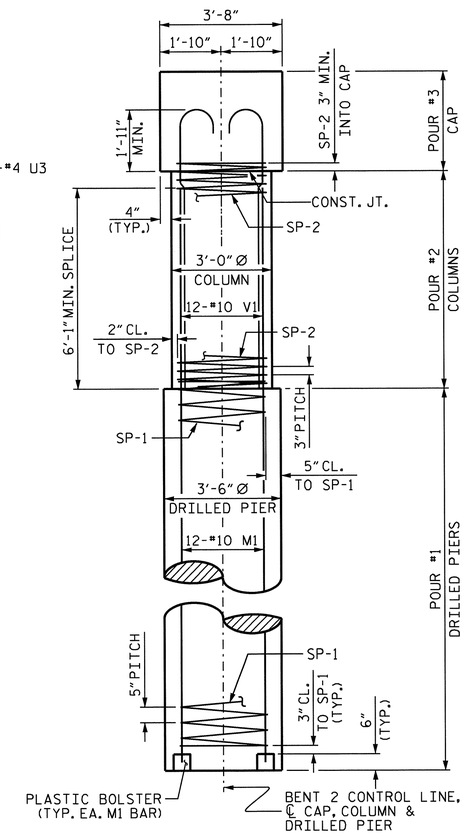


## END ELEVATION

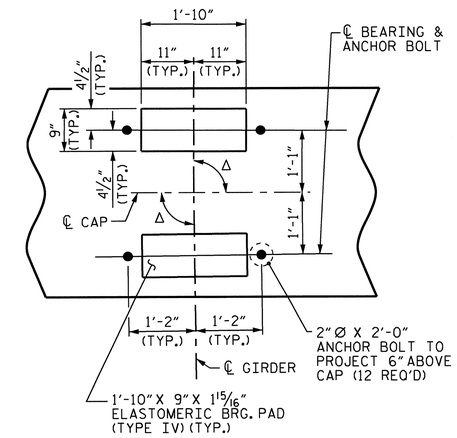


## DETAIL A

(TYP. EA. GDR.)

NORTH CAROLINA PROFESSIONAL SEAL 32492 ENGINEER JOHN A. YANNACCONE

5/26/11

PROJECT NO. U-4019

NASH COUNTY

STATION: 27+87.83 -L-

SHEET 1 OF 2

STATE OF NORTH CAROLINA
DEPARTMENT OF TRANSPORTATION
RALEIGH

SUBSTRUCTURE

BENT 2

(STAGE II)

| REVISIONS | | | | | | SHEET NO. |
|---|---|---|---|---|---|---|
| NO. | BY: | DATE: | NO. | BY: | DATE: | S-39 |
| 1 | | | 3 | | | TOTAL SHEETS |
| 2 | | | 4 | | | 93 |

DRAWN BY : HARISH SHAH DATE : 2-11-11
CHECKED BY : J.A. YANNACCONE DATE : 3-28-11

23-MAY-2011 09:38
Z:\TIPProjects-U\U4019\Structures\str1\FinalPlans\u4019_sd_bt1*2.dgn
ttfang

STR. #1

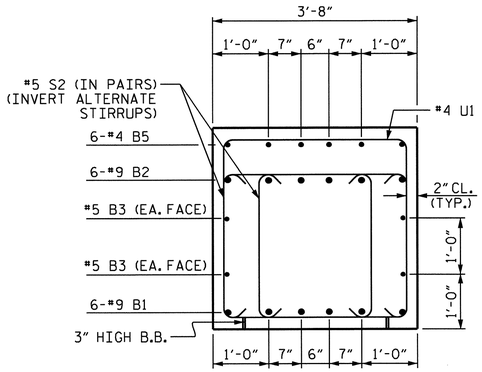


## SECTION A-A

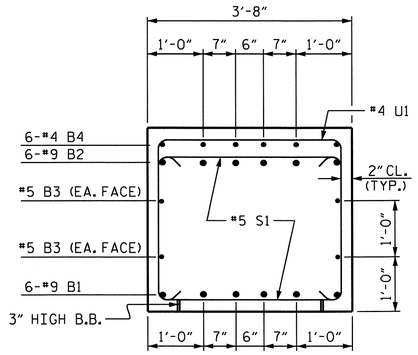


## SECTION B-B

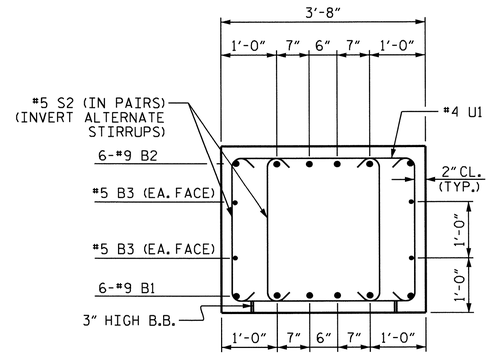


## SECTION C-C

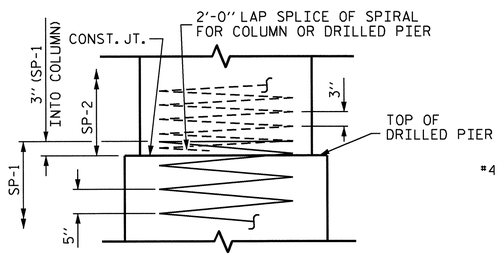


## DETAIL B

(TYP. EA. DRILLED PIER)

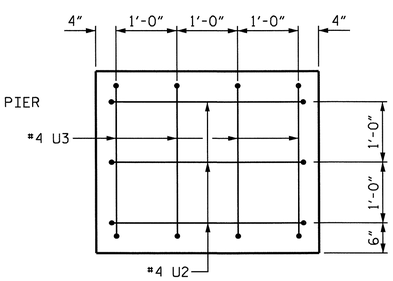


## VIEW X-X

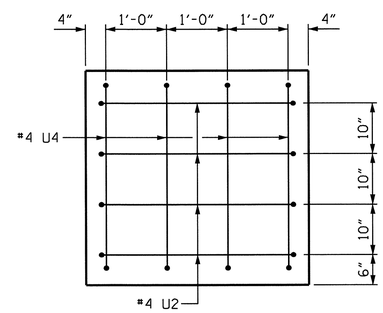


## VIEW Y-Y

## BAR TYPES

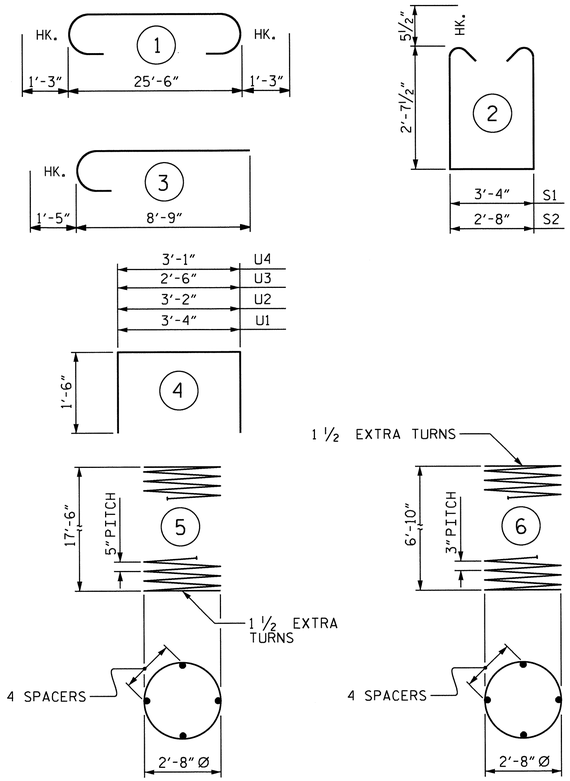


ALL BAR DIMENSIONS ARE OUT TO OUT.

## BILL OF MATERIAL

### BENT 2 (STAGE II)

| BAR | NO. | SIZE | TYPE | LENGTH | WEIGHT |
|---|---|---|---|---|---|
| B1 | 6 | #9 | STR | 25'-8" | 524 |
| B2 | 6 | #9 | 1 | 28'-0" | 571 |
| B3 | 4 | #5 | STR | 25'-8" | 107 |
| B4 | 6 | #4 | STR | 10'-5" | 42 |
| B5 | 6 | #4 | STR | 3'-11" | 16 |
| | | | | | |
| M1 | 24 | #10 | STR | 26'-10" | 2771 |
| | | | | | |
| S1 | 21 | #5 | 2 | 9'-6" | 208 |
| S2 | 28 | #5 | 2 | 8'-10" | 258 |
| | | | | | |
| U1 | 28 | #4 | 4 | 6'-4" | 118 |
| U2 | 7 | #4 | 4 | 6'-2" | 29 |
| U3 | 4 | #4 | 4 | 5'-6" | 15 |
| U4 | 4 | #4 | 4 | 6'-1" | 16 |
| | | | | | |
| V1 | 24 | #10 | 3 | 10'-2" | 1050 |
| REINFORCING STEEL TOTAL | | | | LBS. | 5,725 |
| SP-1 | 2 | ✱✱ | 5 | 361'-11" | 755 |
| SP-2 | 2 | ✱ | 6 | 241'-4" | 322 |
| TOTAL SPIRAL REINFORCING REINFORCING STEEL | | | | LBS. | 1,077 |

CLASS A CONCRETE BREAKDOWN

| | | |
|---|---|---|
| POUR #2 (COLUMNS) = | C. Y. | 3.6 |
| POUR #3 (CAP) = | C. Y. | 11.4 |
| TOTAL CLASS A CONCRETE = | C. Y. | 15.0 |

### DRILLED PIER QUANITIES

| | | |
|---|---|---|
| POUR #1 (DRILLED PIERS) = | C. Y. | 12.8 |
| 3'-6" Ø DRILLED PIERS NOT IN SOIL | | 13.00 FT. |
| 3'-6" Ø DRILLED PIERS IN SOIL | | 23.00 FT. |
| 3'-6" Ø PERMANENT STEEL CASING | | 25.63 FT. |
| CSL TUBES | | 164.00 FT. |

✱✱ THE SP-1 & SP-2 SPIRAL REINFORCING STEEL SHALL BE W31 OR D-31 COLD DRAWN WIRE OR #5 PLAIN OR DEFORMED BAR.

✱ THE SP-3 & SP-4 SPIRAL REINFORCING STEEL SHALL BE W20 OR D-20 COLD DRAWN WIRE OR #4 PLAIN OR DEFORMED BAR.

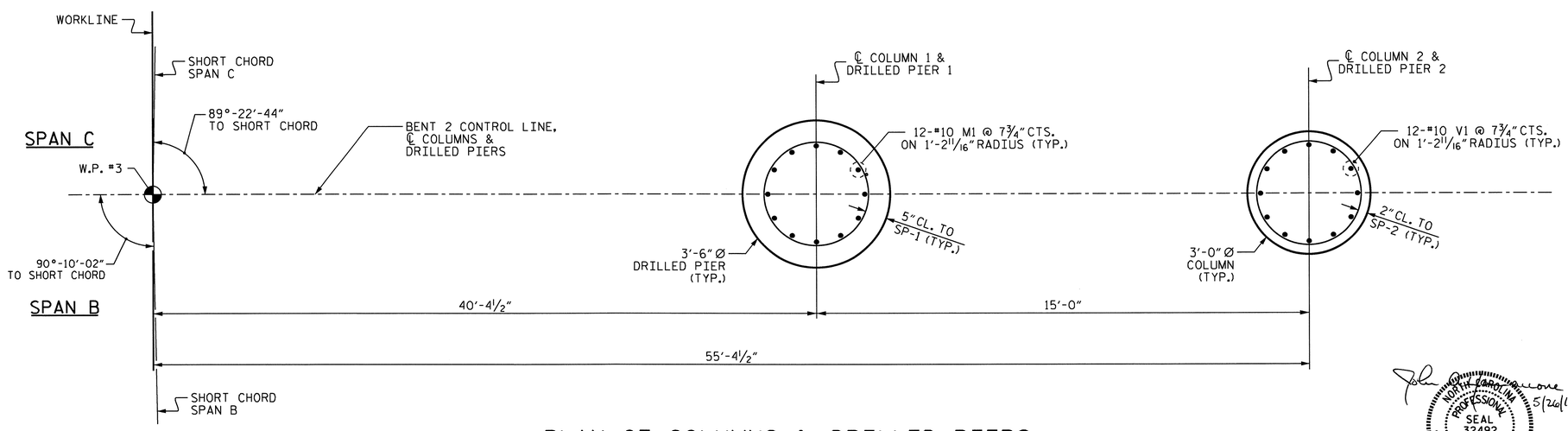


## PLAN OF COLUMNS & DRILLED PIERS

(DIMENSIONS & REINFORCING STEEL ARE TYPICAL FOR EACH COLUMN & DRILLED PIER)

PROJECT NO. U-4019

NASH COUNTY

STATION: 27+87.83 -L-

SHEET 2 OF 2

STATE OF NORTH CAROLINA
DEPARTMENT OF TRANSPORTATION
RALEIGH

SUBSTRUCTURE

BENT 2

(STAGE II)

NORTH CAROLINA PROFESSIONAL SEAL 32492 ENGINEER JOHN A. YANNACCONE

5/26/11

| REVISIONS | | | | | | | SHEET NO. |
|---|---|---|---|---|---|---|---|
| NO. | BY: | DATE: | NO. | BY: | DATE: | | S-40 |
| 1 | | | 3 | | | | TOTAL SHEETS |
| 2 | | | 4 | | | | 93 |

DRAWN BY : HARISH SHAH DATE : 2-14-11
CHECKED BY : J.A. YANNACCONE DATE : 3-28-11

23-MAY-2011 09:38
Z:\TIPProjects-U\U4019\Structures\str1\FinalPlans\u4019_sd_bt1*2.dgn
ttang

STR. #1

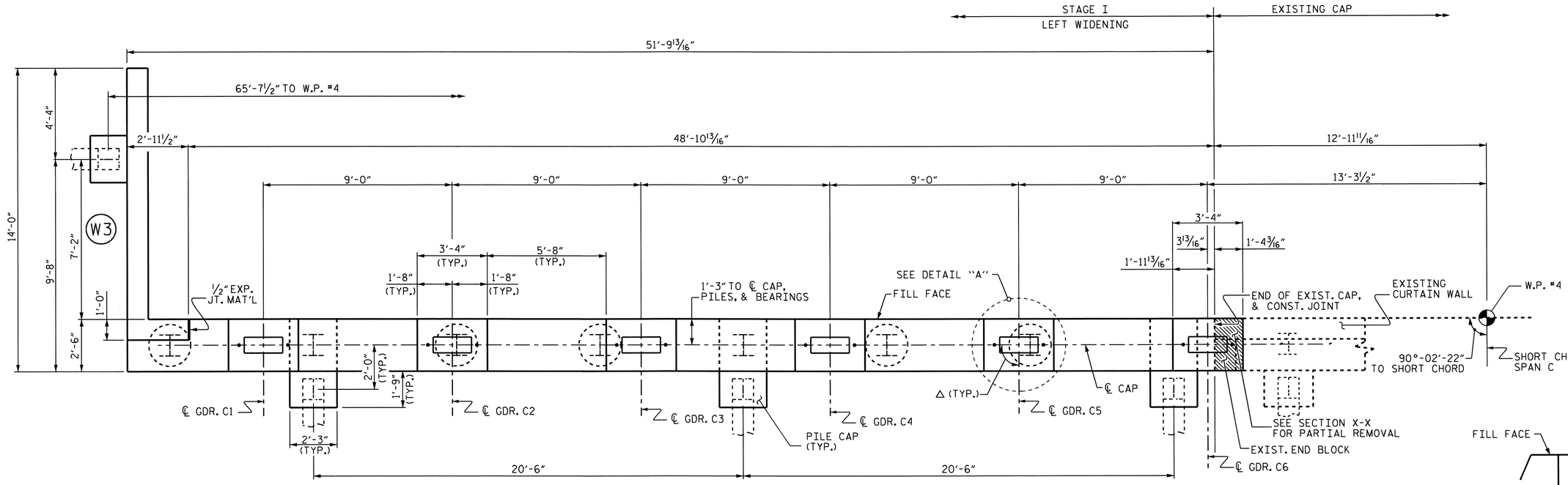


## PLAN

WING WALL IS PERPENDICULAR TO THE END BENT CAP.

OFFSETS BETWEEN ℄ CAP & ℄ ANCHOR BOLTS ARE NEGLIGIBLE (LESS THAN 1/32") AND NOT SHOWN.

FOR REINFORCING IN PILE CAP, SEE WING W3 DETAILS AND SECTION B-B.

NOTE:
TO ENSURE A LEVEL BRIDGE SEAT UNDER GIRDER C6, PARTIAL REMOVAL OF THE EXISTING CAP AS SHOWN IN SECTION X-X AND DETAIL B TO 1 1/2" MINIMUM BELOW THE EXISTING MAIN STEEL. FOR BONDING NEW CONCRETE TO OLD, SEE ARTICLE 420-11 OF THE STANDARD SPECIFICATIONS.

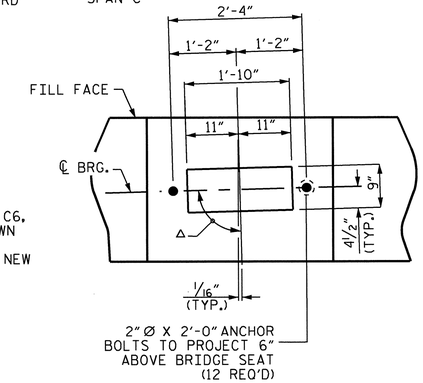


## DETAIL "A"

(TYP. EA. GIRDER)

△ SEE SHORT CHORD ANGLES ON "FRAMING PLAN" SHEET.

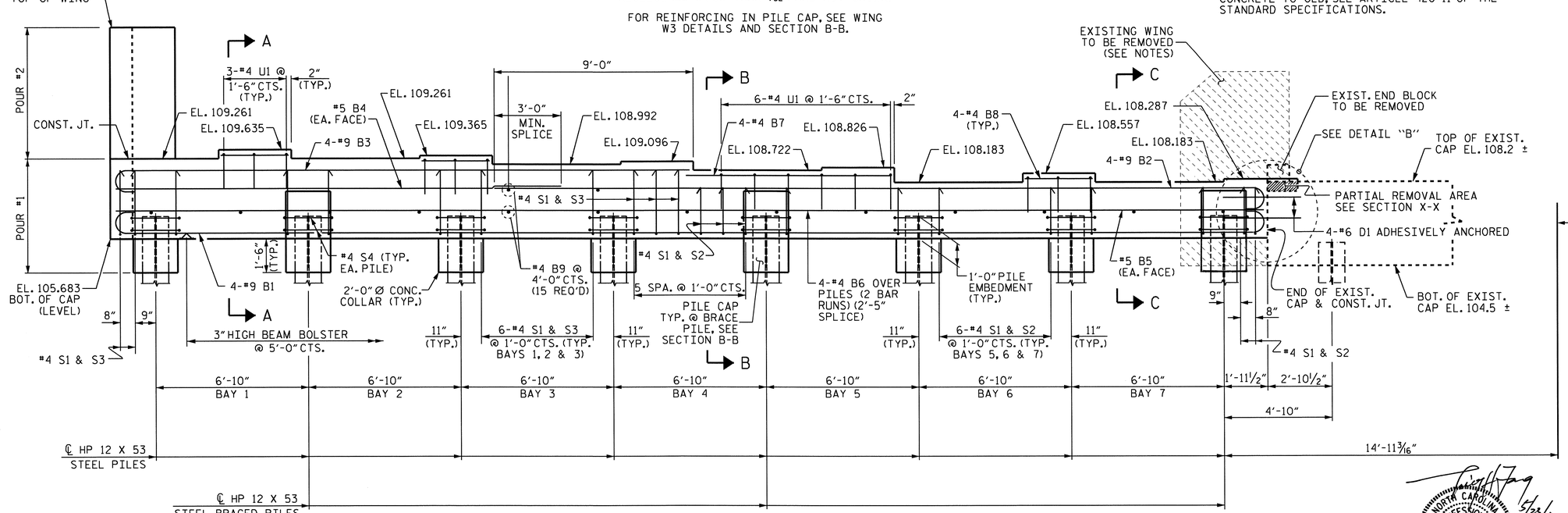


## ELEVATION

FOR SECTIONS A-A, B-B, AND C-C SEE SHEET 4 OF 4.

PROJECT NO. U-4019

NASH COUNTY

STATION: 27+87.83 -L-

SHEET 1 OF 4

STATE OF NORTH CAROLINA
DEPARTMENT OF TRANSPORTATION
RALEIGH

SUBSTRUCTURE

END BENT 2

STAGE I

NORTH CAROLINA PROFESSIONAL SEAL 16301 ENGINEER TING HSILING FANG

5/23/11

| REVISIONS | | | | | | SHEET NO. |
|---|---|---|---|---|---|---|
| NO. | BY: | DATE: | NO. | BY: | DATE: | S-41 |
| 1 | | | 3 | | | TOTAL SHEETS |
| 2 | | | 4 | | | 93 |

STR. #1

DRAWN BY : QT NGUYEN DATE : 4-20-11
CHECKED BY : T. H. FANG DATE : 4/20/11

23-MAY-2011 09:38
Z:\TIPProjects-U\U4019\Structures\str1\FinalPlans\u4019_sd.ebl*.dgn
tfang

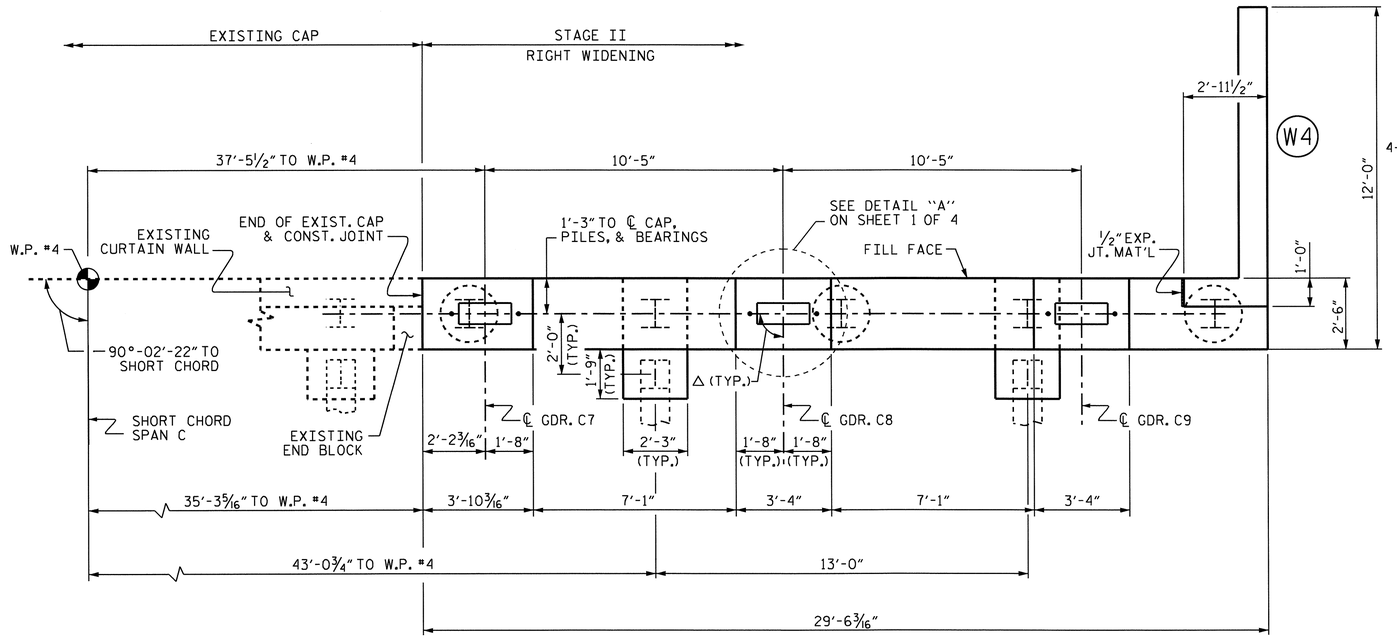


## PLAN

OFFSETS BETWEEN ℄ CAP & ℄ ANCHOR BOLTS ARE NEGLIGIBLE (LESS THAN 1⁄32") AND NOT SHOWN.

FOR REINFORCING IN PILE CAP, SEE WING W3 DETAILS AND SECTION E-E.

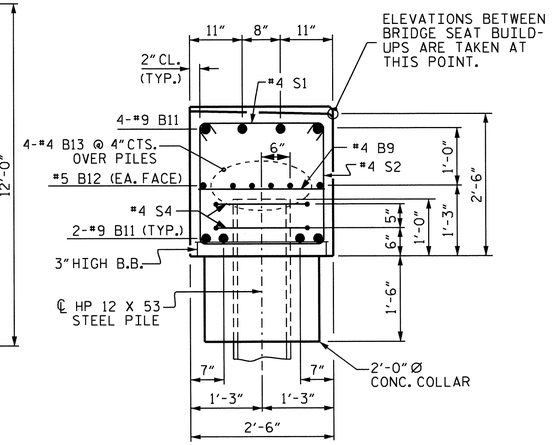


## SECTION D-D

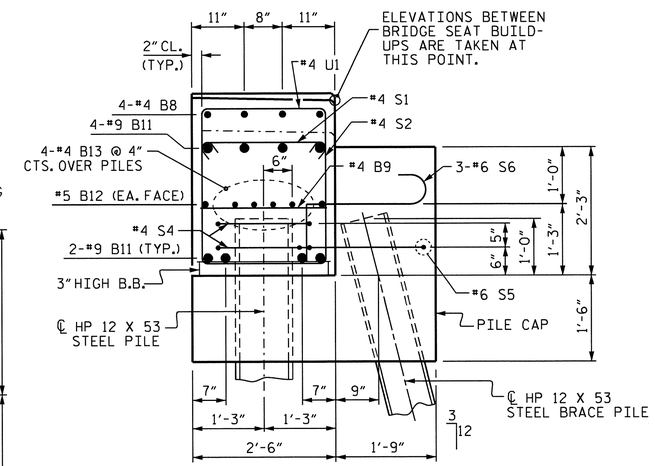


## SECTION E-E

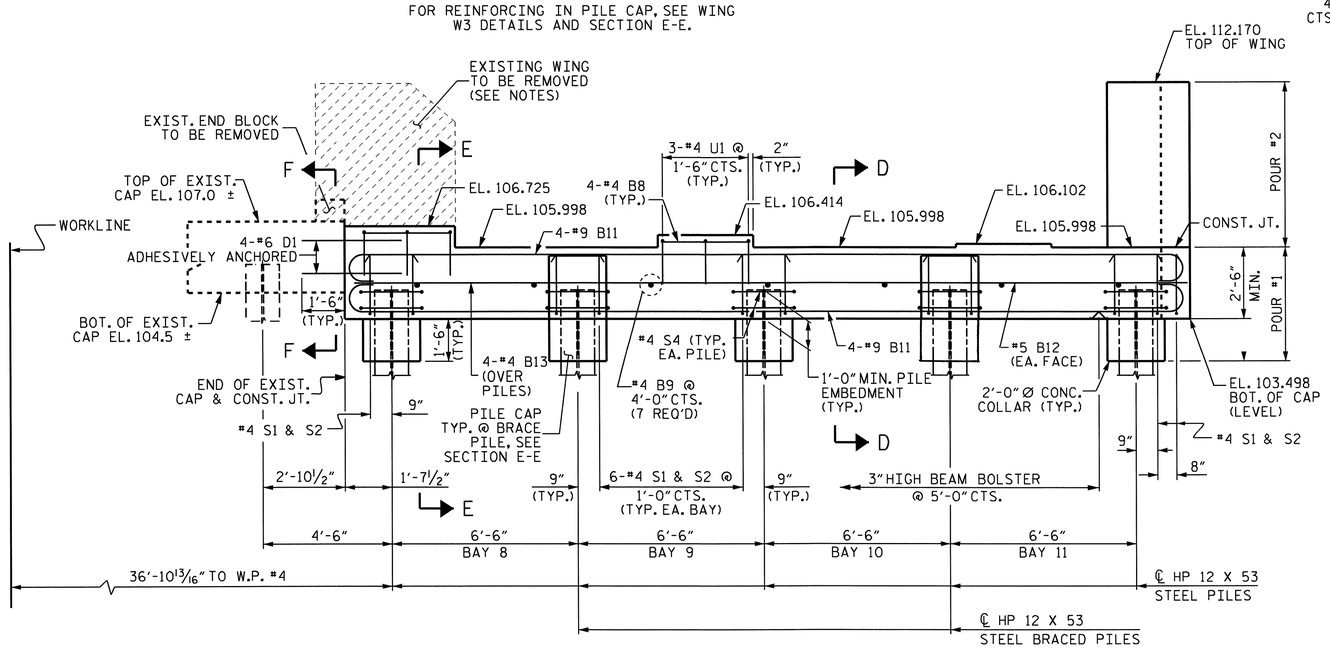


## ELEVATION

BRACE PILES AND BRACE PILE CAP NOT SHOWN FOR CLARITY.

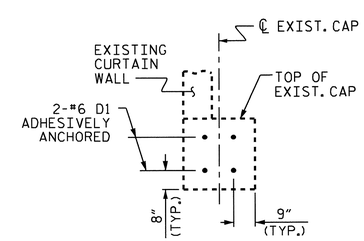


## SECTION F-F

END BLOCK NOT SHOWN FOR CLARITY

## NOTES

STIRRUPS IN CAP MAY BE SHIFTED AS NECESSARY TO CLEAR ANCHOR BOLTS.

CURTAIN WALL SHALL BE PLACED BEFORE APPLYING THE EPOXY PROTECTIVE COATING.

THE TOP SURFACE AREAS OF THE END BENT CAPS SHALL BE CURED IN ACCORDANCE WITH THE STANDARD SPECIFICATIONS EXCEPT THE MEMBRANE CURING COMPOUND METHOD SHALL NOT BE USED.

THE CONTRACTOR SHALL PROVIDE FOR INSTALLATION OF THE 4" DIAMETER DRAIN PIPE THROUGH THE WING WALL AS REQUIRED FOR REINFORCED BRIDGE APPROACH FILLS, SEE THE ROADWAY PLANS. REINFORCING STEEL IN THE WING WALL MAY BE SHIFTED AS NECESSARY TO CLEAR THE DRAIN PIPE.

USE CARE WHEN REMOVING EXISTING WINGS SO AS NOT TO DAMAGE EXISTING CAP THAT WILL REMAIN IN PLACE.

INSTALL #6 D1 DOWELS IN THE EXISTING CAP USING AN ADHESIVE ANCHORING SYSTEM. THE YIELD LOAD OF THE DOWELS IS 26.4 KIPS. LEVEL I FIELD TESTING OF THE ANCHORING SYSTEM IS REQUIRED. FOR ADHESIVELY ANCHORED ANCHOR BOLTS OR DOWELS, SEE SPECIAL PROVISIONS.

NORTH CAROLINA PROFESSIONAL SEAL 16301 ENGINEER T. H. FANG
5/23/11

PROJECT NO. U-4019
NASH COUNTY
STATION: 27+87.83 -L-

SHEET 2 OF 4

STATE OF NORTH CAROLINA
DEPARTMENT OF TRANSPORTATION
RALEIGH

SUBSTRUCTURE

END BENT 2

STAGE II

| REVISIONS | | | | | | SHEET NO. |
|---|---|---|---|---|---|---|
| NO. | BY: | DATE: | NO. | BY: | DATE: | S-42 |
| 1 | | | 3 | | | TOTAL SHEETS |
| 2 | | | 4 | | | 93 |

DRAWN BY : QT NGUYEN DATE : 4-20-11
CHECKED BY : T. H. FANG DATE : 4/20/11

23-MAY-2011 09:38
Z:\TIPProjects-U\U4019\Structures\str1\FinalPlans\u4019_sd_ebl*.dgn
tfang

STR. #1

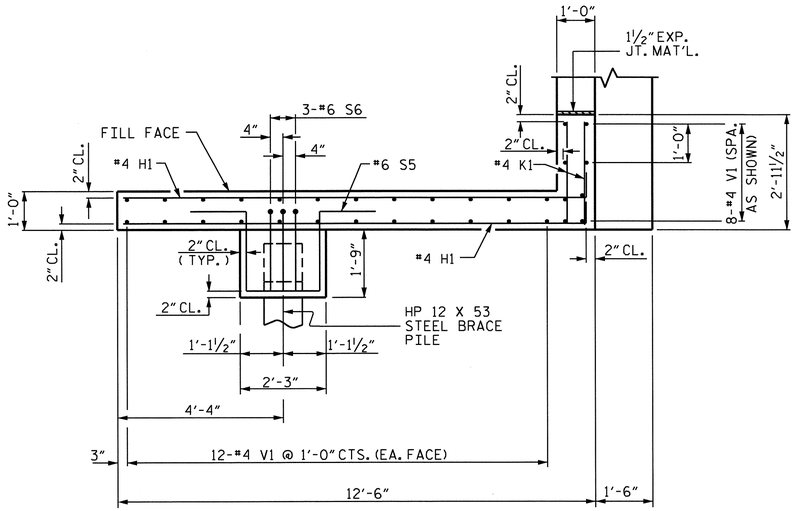


PLAN OF WING (W3)

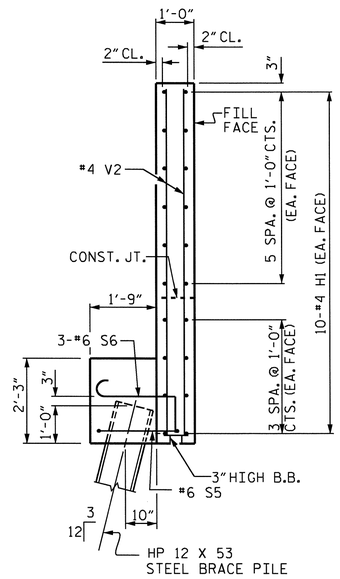


SECTION X-X

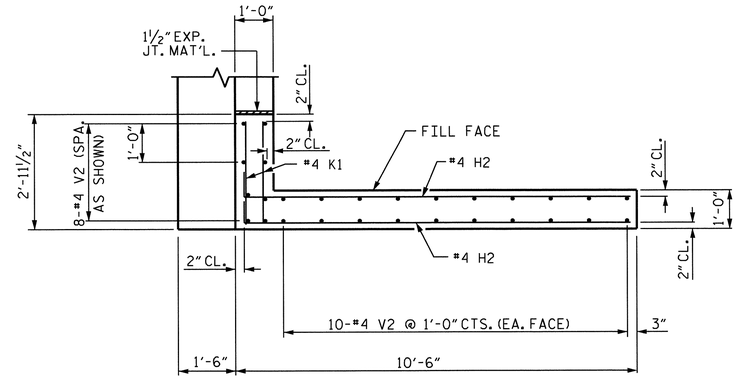


PLAN OF WING (W4)

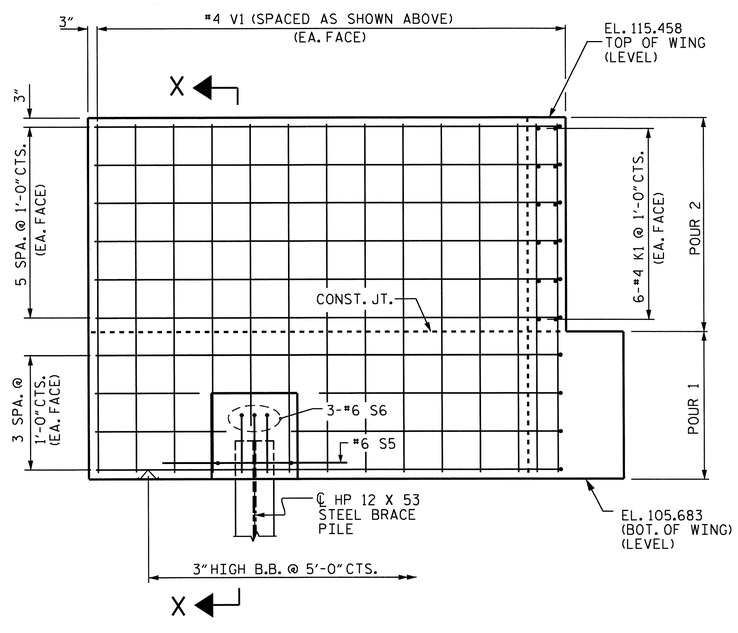


ELEVATION OF WING (W3)

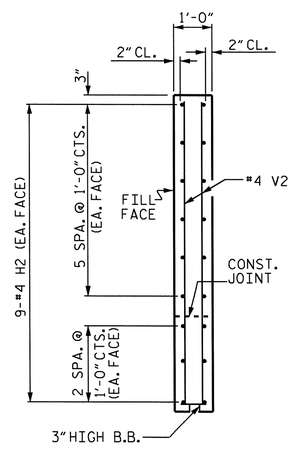


SECTION Y-Y

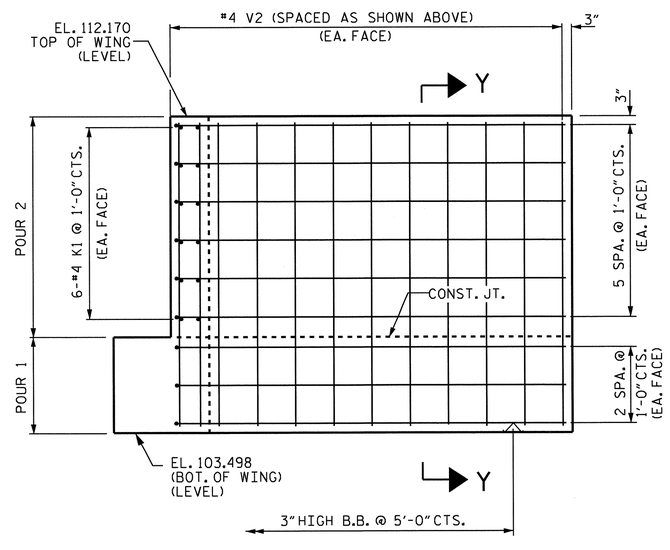


ELEVATION OF WING (W4)

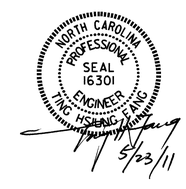


PROJECT NO. U-4019

NASH COUNTY

STATION: 27+87.83 -L-

SHEET 3 OF 4

STATE OF NORTH CAROLINA
DEPARTMENT OF TRANSPORTATION
RALEIGH

SUBSTRUCTURE

END BENT 2

| REVISIONS | | | | | | SHEET NO. |
|---|---|---|---|---|---|---|
| NO. | BY: | DATE: | NO. | BY: | DATE: | S-43 |
| 1 | | | 3 | | | TOTAL SHEETS |
| 2 | | | 4 | | | 93 |

DRAWN BY : OT NGUYEN DATE : 4-20-11
CHECKED BY : T. H. FANG DATE : 4/20/11

23-MAY-2011 09:38
Z:\TIPProjects-U\U4019\Structures\str1\FinalPlans\u4019_sd_eb1*.dgn
ttfang

STR. #1

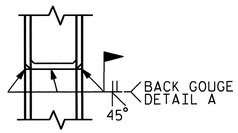


** PILE VERTICAL

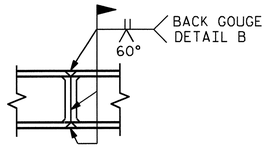


** PILE HORIZONTAL OR VERTICAL

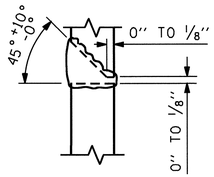


DETAIL A

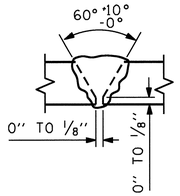


DETAIL B

## PILE SPLICE DETAILS

** POSITION OF PILE DURING WELDING.

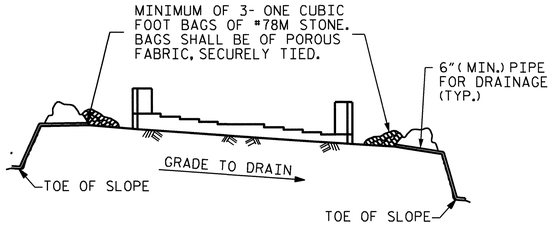


BAGGED STONE AND PIPE SHALL BE PLACED IMMEDIATELY AFTER COMPLETION OF END BENT EXCAVATION. PIPE MAY BE EITHER CONCRETE, CORRUGATED STEEL, CORRUGATED ALUMINUM ALLOY, OR CORRUGATED PLASTIC. PERFORATED PIPE WILL NOT BE ALLOWED.

BAGGED STONE SHALL REMAIN IN PLACE UNTIL THE ENGINEER DIRECTS THAT IT BE REMOVED. THE CONTRACTOR SHALL REMOVE AND DISPOSE OF SILT ACCUMULATIONS AT BAGGED STONE WHEN SO DIRECTED BY THE ENGINEER. BAGS SHALL BE REMOVED AND REPLACED WHENEVER THE ENGINEER DETERMINES THAT THEY HAVE DETERIORATED AND LOST THEIR EFFECTIVENESS.

NO SEPARATE PAYMENT WILL BE MADE FOR THIS WORK AND THE ENTIRE COST OF THIS WORK SHALL BE INCLUDED IN THE UNIT CONTRACT PRICE BID FOR THE SEVERAL PAY ITEMS.

## TEMPORARY DRAINAGE AT END BENT

## BAR TYPES

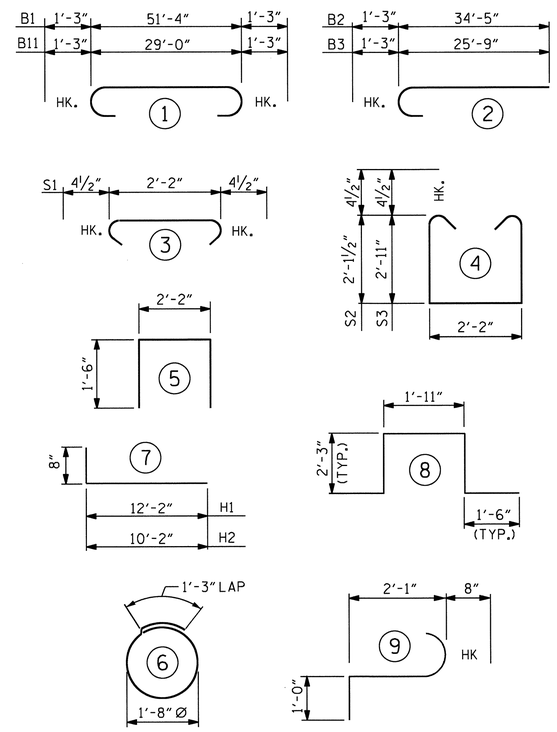


ALL BAR DIMENSIONS ARE OUT TO OUT.

## BILL OF MATERIAL

### STAGE I

| BAR | NO. | SIZE | TYPE | LENGTH | WEIGHT |
|---|---|---|---|---|---|
| B1 | 4 | #9 | 1 | 53'-10" | 732 |
| B2 | 4 | #9 | 2 | 35'-8" | 485 |
| B3 | 4 | #9 | 2 | 27'-0" | 367 |
| B4 | 2 | #5 | STR | 20'-2" | 42 |
| B5 | 2 | #5 | STR | 51'-6" | 107 |
| B6 | 8 | #4 | STR | 27'-0" | 144 |
| B7 | 4 | #4 | STR | 8'-8" | 23 |
| B8 | 12 | #4 | STR | 3'-0" | 24 |
| B9 | 16 | #4 | STR | 2'-2" | 23 |
| D1 | 4 | #6 | STR | 3'-6" | 21 |
| H1 | 20 | #4 | 7 | 12'-10" | 171 |
| K1 | 12 | #4 | STR | 2'-7" | 21 |
| S1 | 46 | #4 | 3 | 2'-11" | 90 |
| S2 | 23 | #4 | 4 | 7'-2" | 110 |
| S3 | 23 | #4 | 4 | 8'-9" | 134 |
| S4 | 16 | #4 | 6 | 6'-6" | 69 |
| S5 | 4 | #6 | 8 | 9'-5" | 57 |
| S6 | 12 | #6 | 9 | 3'-9" | 68 |
| U1 | 15 | #4 | 5 | 5'-2" | 52 |
| V1 | 32 | #4 | STR | 9'-5" | 201 |

REINFORCING STEEL 2,943 LBS

CLASS A CONCRETE BREAKDOWN

POUR 1 - CAP, LOWER WING, COLLARS & PILE CAPS 20.9 C.Y.

POUR 2 - UPPER WING 3.3 C.Y.

TOTAL 24.2 C.Y.

HP 12 x 53 STEEL PILES

NO. 12 LIN. FT. = 240

### STAGE II

| BAR | NO. | SIZE | TYPE | LENGTH | WEIGHT |
|---|---|---|---|---|---|
| B8 | 8 | #4 | STR | 3'-0" | 16 |
| B9 | 7 | #4 | STR | 2'-2" | 10 |
| B11 | 8 | #9 | 1 | 31'-6" | 857 |
| B12 | 2 | #5 | STR | 29'-2" | 61 |
| B13 | 4 | #4 | STR | 29'-2" | 78 |
| D1 | 4 | #6 | STR | 3'-6" | 21 |
| H2 | 18 | #4 | 7 | 10'-10" | 130 |
| K1 | 12 | #4 | STR | 2'-7" | 21 |
| S1 | 27 | #4 | 3 | 2'-11" | 53 |
| S2 | 27 | #4 | 4 | 7'-2" | 129 |
| S4 | 10 | #4 | 6 | 6'-6" | 43 |
| S5 | 2 | #6 | 8 | 9'-5" | 28 |
| S6 | 6 | #6 | 9 | 3'-9" | 34 |
| U1 | 6 | #4 | 5 | 5'-2" | 21 |
| V2 | 28 | #4 | STR | 8'-4" | 156 |

REINFORCING STEEL 1,658 LBS

CLASS A CONCRETE BREAKDOWN

POUR 1 - CAP, LOWER WING, COLLARS & PILE CAPS 10.5 C.Y.

POUR 2 - UPPER WING 2.9 C.Y.

TOTAL 13.4 C.Y.

HP 12 x 53 STEEL PILES

NO. 7 LIN. FT. = 140

### TOTAL QUANTITIES

| | REINFORCING STEEL (LBS.) | CLASS A CONCRETE (C.Y.) |
|---|---|---|
| STAGE I | 2,943 | 24.2 |
| STAGE II | 1,658 | 13.4 |
| TOTAL | 4,601 | 37.6 |

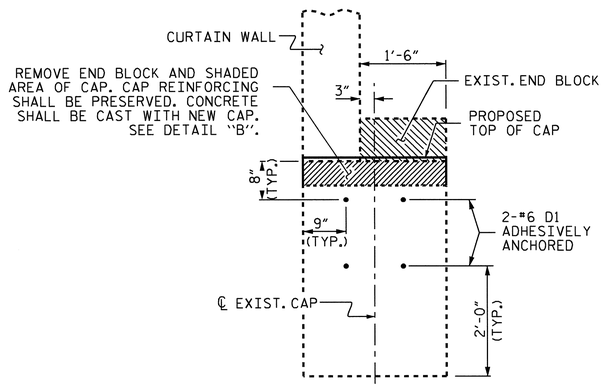


SECTION X-X

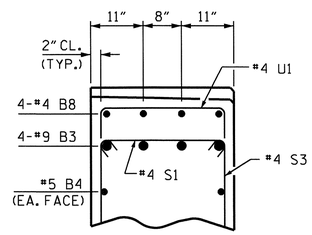


PARTIAL SECTION A-A

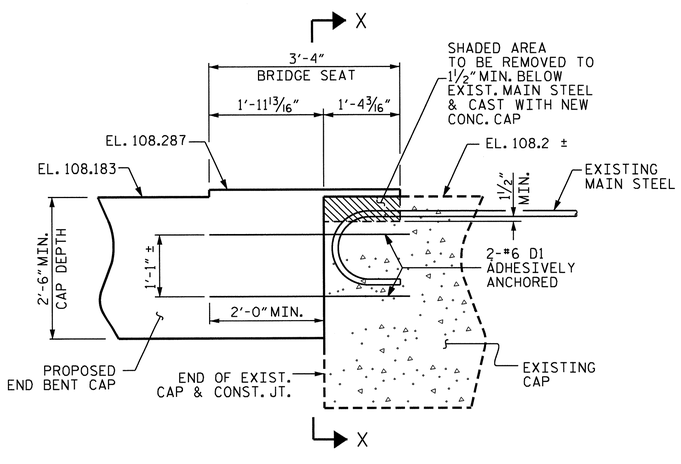


DETAIL "B"

EXIST. END BLOCK NOT SHOWN FOR CLARITY

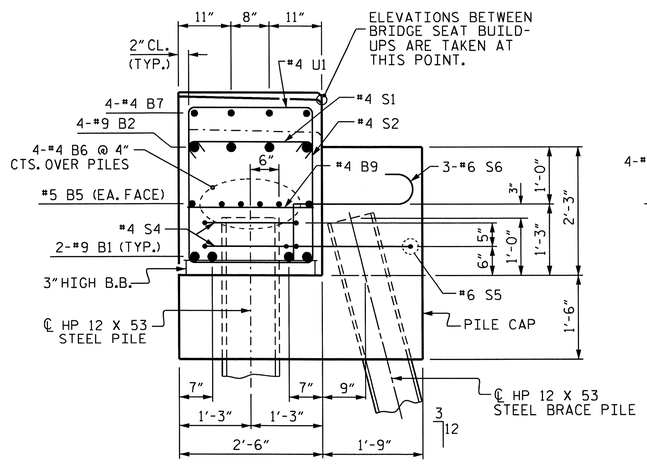


SECTION B-B

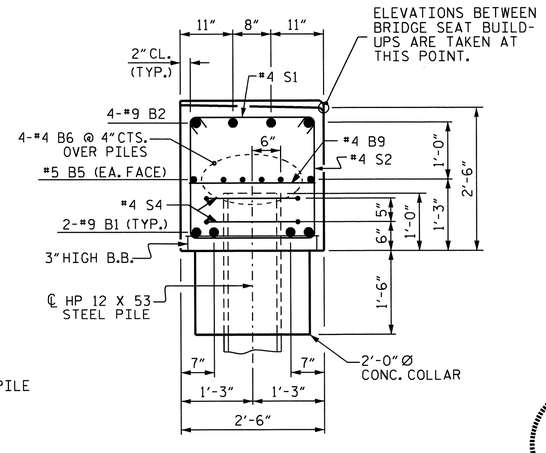


SECTION C-C

PROJECT NO. U-4019

NASH COUNTY

STATION: 27+87.83 -L-

SHEET 4 OF 4

STATE OF NORTH CAROLINA
DEPARTMENT OF TRANSPORTATION
RALEIGH

SUBSTRUCTURE

END BENT 2

NORTH CAROLINA PROFESSIONAL SEAL 16301 ENGINEER TING-HSUNG FANG
5/23/11

| REVISIONS | | | | | | SHEET NO. |
|---|---|---|---|---|---|---|
| NO. | BY: | DATE: | NO. | BY: | DATE: | S-44 |
| 1 | | | 3 | | | TOTAL SHEETS |
| 2 | | | 4 | | | 93 |

DRAWN BY : OT NGUYEN DATE : 4-20-11
CHECKED BY : T. H. FANG DATE : 4/20/11

23-MAY-2011 11:30
R:\Structures\str1\Final Plans\u4019_sd_eb1*.dgn
ttfang

STR. #1

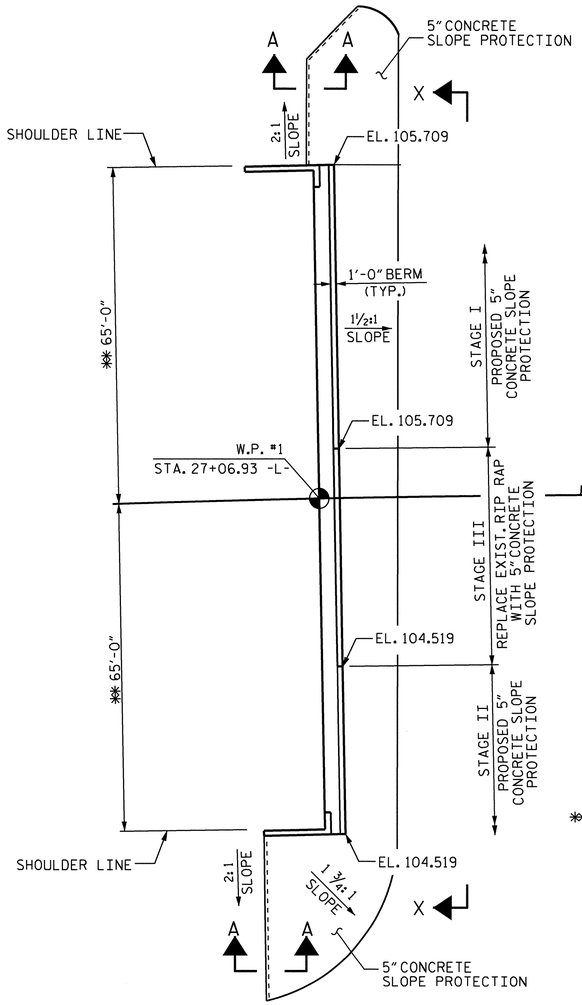


AT END BENT 1

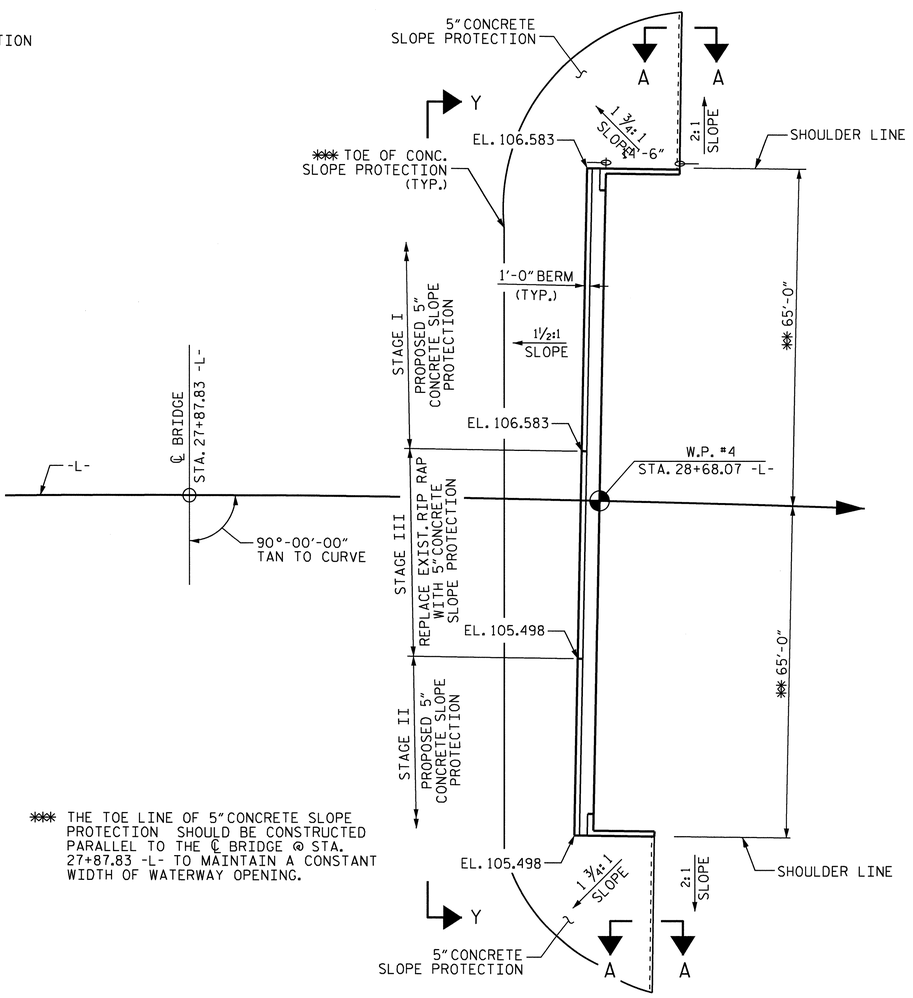


AT END BENT 2

✱✱✱ THE TOE LINE OF 5" CONCRETE SLOPE PROTECTION SHOULD BE CONSTRUCTED PARALLEL TO THE ℄ BRIDGE @ STA. 27+87.83 -L- TO MAINTAIN A CONSTANT WIDTH OF WATERWAY OPENING.

## PLAN

✱✱ RADIAL DIMENSIONS

## NOTES

5" CONCRETE SLOPE PROTECTION SHALL CONSIST OF 5" POURED-IN-PLACE CONCRETE PAVING AS SHOWN IN THE DETAILS ON THIS SHEET. CONCRETE SHALL BE CLASS "B". THE CONCRETE SURFACE SHALL BE FLOATED WITH A WOODEN FLOAT AND FINISHED. WELDED WIRE FABRIC REINFORCING SHALL BE 6X6 - W1.4XW1.4, 60" WIDE. SLOPE PROTECTION SHALL BE POURED IN 5' STRIPS AS SHOWN IN THE "POURING DETAIL" WITH 2'-0" LONG #4 BARS PLACED ALONG THE SLOPE BETWEEN STRIPS AT 1'-6" MAXIMUM SPACING. SLOPE PROTECTION MAY BE POURED IN ALTERNATE 4' AND 5' STRIPS AS SHOWN IN THE "OPTIONAL POURING DETAIL" WITH ADJACENT RUNS OF WELDED WIRE FABRIC LAPPING AT LEAST 6". THE COST OF THE WELDED WIRE FABRIC AND #4 BARS, IF USED, SHALL BE INCLUDED IN THE CONTRACT UNIT PRICE BID PER SQUARE YARD FOR SLOPE PROTECTION.

| BRIDGE @ STA. 27+87.83 -L- | 5" CONCRETE SLOPE PROTECTION (SQUARE YARDS) | | | | ✱ WELDED WIRE FABRIC 60 INCHES WIDE (APPROX. L.F.) | | | |
|---|---|---|---|---|---|---|---|---|
| | STAGES | | | TOTAL | STAGES | | | TOTAL |
| | I | II | III | | I | II | III | |
| END BENT 1 | 195 | 150 | 110 | 455 | 390 | 300 | 215 | 905 |
| END BENT 2 | 275 | 180 | 130 | 585 | 550 | 360 | 255 | 1165 |
| TOTAL | | | | 1040 | | | | 2070 |

✱ QUANTITY SHOWN IS BASED ON 5' POURS.

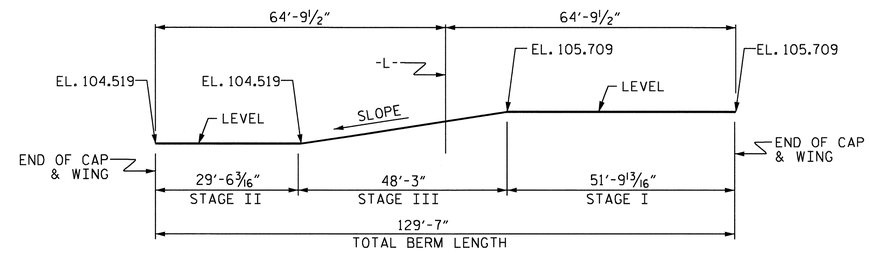


VIEW X-X

FRONT VIEW OF BERM AT END BENT 1

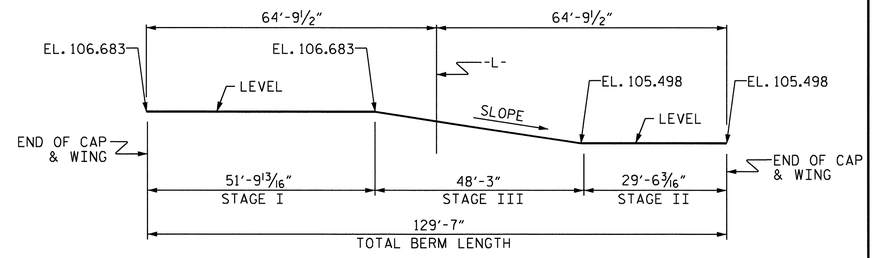


VIEW Y-Y

FRONT VIEW OF BERM AT END BENT 2

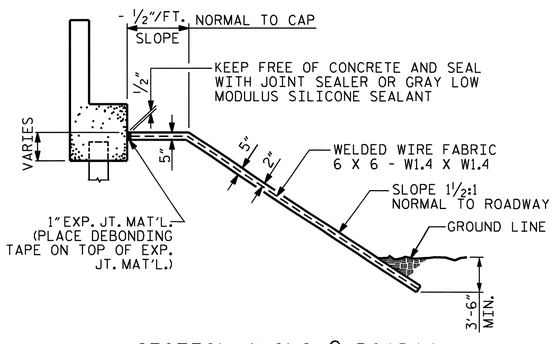


SECTION ALONG ℄ ROADWAY

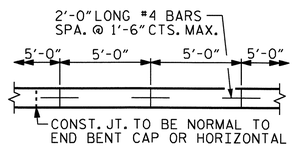


STRIP WIDTHS MAY VARY IN CURVED PORTION.

POURING DETAIL

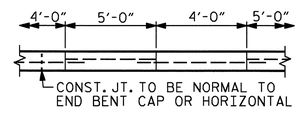


POUR A 4'-0" STRIP FIRST. STRIP WIDTHS MAY VARY IN CURVED PORTION.

OPTIONAL POURING DETAIL

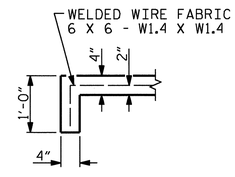


SECTION A-A

PROJECT NO. U-4019

NASH COUNTY

STATION: 27+87.83 -L-

STATE OF NORTH CAROLINA
DEPARTMENT OF TRANSPORTATION
RALEIGH

5" CONCRETE SLOPE PROTECTION

| REVISIONS | | | | | | SHEET NO. |
|---|---|---|---|---|---|---|
| NO. | BY: | DATE: | NO. | BY: | DATE: | S-45 |
| 1 | | | 3 | | | TOTAL SHEETS |
| 2 | | | 4 | | | 93 |

| | | | |
|---|---|---|---|
| ASSEMBLED BY : | OT NGUYEN | DATE : | 4-18-11 |
| CHECKED BY : | T.H. FANG | DATE : | 4-18-11 |
| DRAWN BY : ELR 5/92 | REV. 7/10/01 | LES/RDR | |
| CHECKED BY : GRP 6/92 | REV. 5/7/03 | RWW/JTE | |
| | REV. 5/1/06 | TLA/GM | |

11-MAY-2011 17:11
R:\Structures\str1\FinalPlans\u4019_sd_sp1.dgn
tfang

STD. NO. SP1

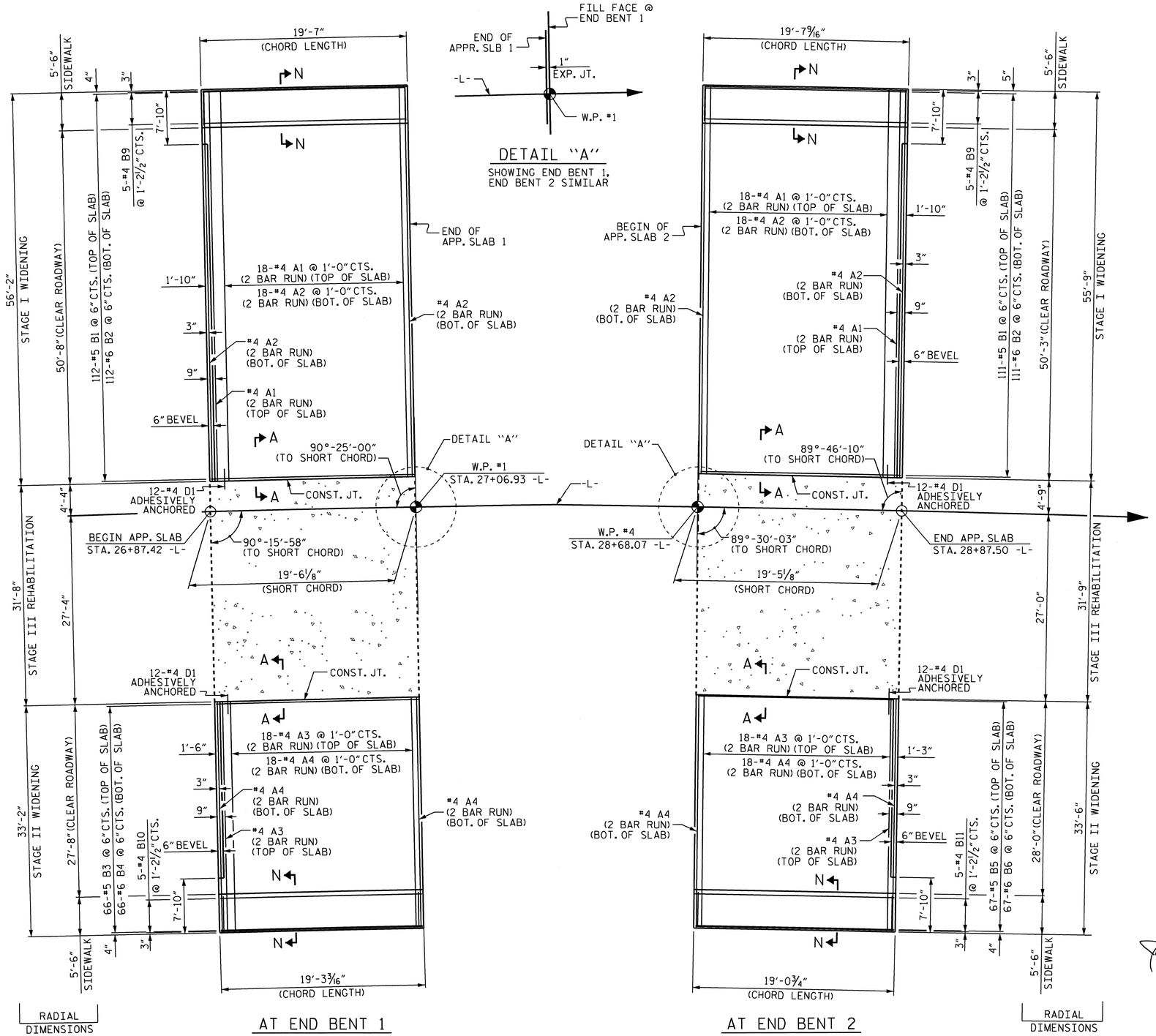


PLAN

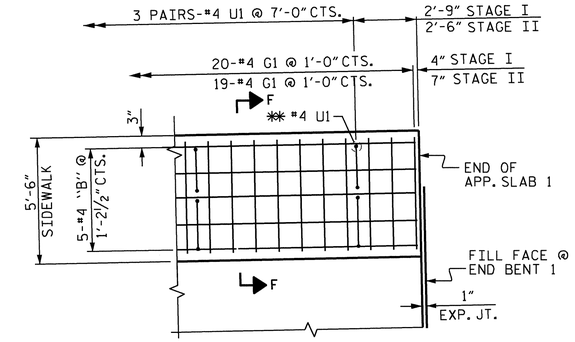


SIDEWALK DETAILS

SHOWING AT END BENT 1, STAGE I, OTHER CORNERS SIMILAR.

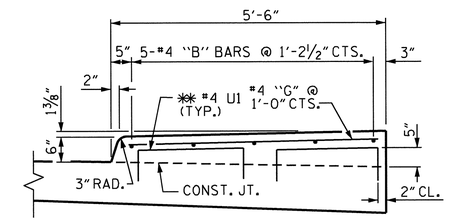


SECTION N-N

✱ #4 U1 BARS MAY BE PUSHED INTO GREEN CONCRETE AFTER APPROACH SLAB HAS BEEN SCREEDED OFF.

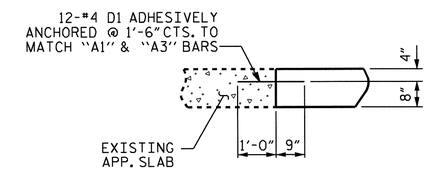


SECTION A-A

PROJECT NO. U-4019

NASH COUNTY

STATION: 27+87.83 -L-

SHEET 1 OF 2

STATE OF NORTH CAROLINA
DEPARTMENT OF TRANSPORTATION
RALEIGH

STANDARD

BRIDGE APPROACH SLAB FOR FLEXIBLE PAVEMENT

NORTH CAROLINA PROFESSIONAL SEAL 32492 ENGINEER JOHN A. YANNACCONE

5/26/11

| REVISIONS | | | | | | SHEET NO. |
|---|---|---|---|---|---|---|
| NO. | BY: | DATE: | NO. | BY: | DATE: | S-46 |
| 1 | | | 3 | | | TOTAL SHEETS |
| 2 | | | 4 | | | 93 |

DRAWN BY : J.A. YANNACCONE DATE : 4/7/11
CHECKED BY : T.H. FANG DATE : 4/23/11

23-MAY-2011 09:38
Z:\TIPProjects-U\U4019\Structures\str1\FinalPlans\u-4019_sd_as1.dgn
tfang

NCDDS

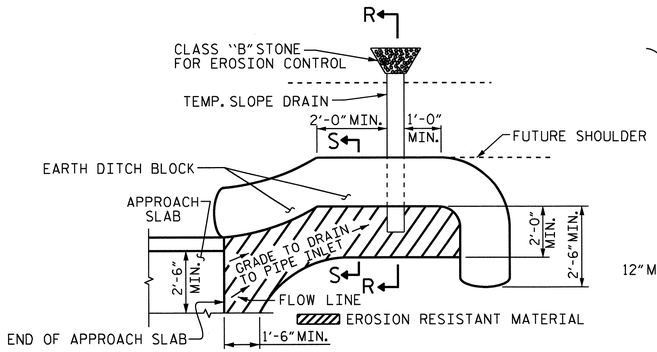


NOTE: IMMEDIATELY AFTER THE CONSTRUCTION OF THE APPROACH SLAB, THE CONTRACTOR SHALL PROVIDE TEMPORARY BERM AND SLOPE DRAIN. CONTRACTOR SHALL GRADE TO PIPE INLET AND PROVIDE EROSION RESISTANT MATERIAL AS SHOWN. THE EROSION RESISTANT MATERIAL SHALL BE EITHER 1) ASPHALT PLANT MIX, TYPE 1 OR TYPE 2, MIN. 2" DEPTH, 2) EROSION CONTROL MAT, OR 3) CONCRETE, AS DIRECTED BY THE ENGINEER. THE SLOPE DRAIN SHALL CONSIST OF A NON-PERFORATED TEMPORARY DRAINAGE PIPE, 12 INCHES IN DIAMETER.

PLAN VIEW

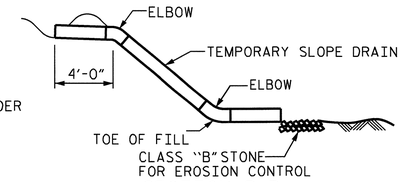


SECTION R-R

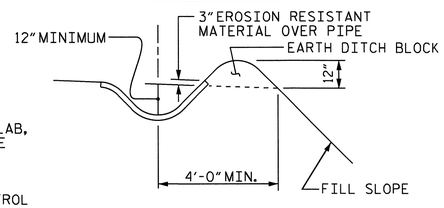


SECTION S-S

## TEMPORARY BERM AND SLOPE DRAIN DETAILS

(TO BE USED WHEN SHOULDER BERM GUTTER IS REQUIRED)

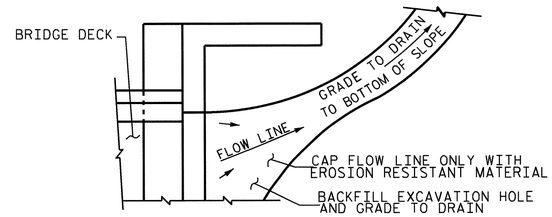


NOTE: IF THE APPROACH SLAB IS NOT CONSTRUCTED IMMEDIATELY AFTER THE BACKFILLING OF THE END BENT EXCAVATION, GRADE TO DRAIN TO THE BOTTOM OF THE SLOPE AND PROVIDE EROSION RESISTANT MATERIAL, SUCH AS FIBERGLASS ROVING OR AS DIRECTED BY THE ENGINEER TO PREVENT SOIL EROSION AND TO PROTECT THE AREA ADJACENT TO THE STRUCTURE. THE CONTRACTOR WILL BE REQUIRED TO REMOVE THESE MATERIALS PRIOR TO CONSTRUCTION OF THE APPROACH SLAB.

## TEMPORARY DRAINAGE DETAIL

FOR ONE APPROACH SLAB (2 REQ'D)

## BILL OF MATERIAL

### STAGE I — FOR BOTH APPROACH SLABS

| BAR | NO. | SIZE | TYPE | LENGTH | WEIGHT |
|---|---|---|---|---|---|
| * A1 | 76 | #4 | STR | 28'-11" | 1468 |
| A2 | 80 | #4 | STR | 28'-10" | 1540 |
| * B1 | 223 | #5 | STR | 18'-2" | 4225 |
| B2 | 223 | #6 | STR | 19'-2" | 6419 |
| * B9 | 10 | #4 | STR | 19'-3" | 128 |
| * D1 | 24 | #4 | STR | 1'-9" | 28 |
| * G1 | 40 | #4 | STR | 5'-0" | 134 |
| * U1 | 12 | #4 | 1 | 3'-4" | 26 |
| REINFORCING STEEL | | | | LBS. | 7,959 |
| * EPOXY COATED REINFORCING STEEL | | | | LBS. | 6,009 |

CLASS AA CONCRETE

| | | |
|---|---|---|
| AT END BENT 1: | | |
| POUR 1 (SLAB) | C. Y. | 40.8 |
| POUR 2 (SIDEWALK) | C. Y. | 2.2 |
| TOTAL | C. Y. | 43.0 |
| AT END BENT 2: | | |
| POUR 1 (SLAB) | C. Y. | 40.6 |
| POUR 2 (SIDEWALK) | C. Y. | 2.2 |
| TOTAL | C. Y. | 42.8 |

### STAGE II — FOR BOTH APPROACH SLABS

| BAR | NO. | SIZE | TYPE | LENGTH | WEIGHT |
|---|---|---|---|---|---|
| * A3 | 76 | #4 | STR | 17'-7" | 892 |
| A4 | 80 | #4 | STR | 17'-6" | 936 |
| * B3 | 66 | #5 | STR | 17'-11" | 1233 |
| B4 | 66 | #6 | STR | 18'-11" | 1875 |
| * B5 | 67 | #5 | STR | 18'-11" | 1240 |
| B6 | 67 | #6 | STR | 18'-9" | 1887 |
| * B10 | 5 | #4 | STR | 18'-11" | 63 |
| * B11 | 5 | #4 | STR | 18'-9" | 63 |
| * D1 | 24 | #4 | STR | 1'-9" | 28 |
| * G1 | 38 | #4 | STR | 5'-0" | 126 |
| * U1 | 12 | #4 | 1 | 3'-4" | 26 |
| REINFORCING STEEL | | | | LBS. | 4,698 |
| * EPOXY COATED REINFORCING STEEL | | | | LBS. | 3,671 |

CLASS AA CONCRETE

| | | |
|---|---|---|
| AT END BENT 1: | | |
| POUR 1 (SLAB) | C. Y. | 23.8 |
| POUR 2 (SIDEWALK) | C. Y. | 2.2 |
| TOTAL | C. Y. | 26.0 |
| AT END BENT 2: | | |
| POUR 1 (SLAB) | C. Y. | 23.8 |
| POUR 2 (SIDEWALK) | C. Y. | 2.1 |
| TOTAL | C. Y. | 25.9 |

## TOTAL QUANTITIES

| | REINFORCING STEEL (LBS.) | * EPOXY COATED REINFORCING STEEL (LBS.) | CLASS AA CONCRETE (C.Y.) |
|---|---|---|---|
| STAGE I | 7,959 | 6,009 | 85.8 |
| STAGE II | 4,698 | 3,671 | 51.9 |
| TOTAL | 12,657 | 9,680 | 137.7 |

## SPLICE LENGTH CHART

| BAR | SPLICE LENGTH |
|---|---|
| * A1, * A3 | 2'-0" |
| A2, A4 | 1'-9" |

## BAR TYPES

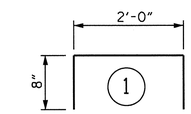


QUANTITIES FOR THE REHABILITATION OF THE APPROACH SLABS, CLASS I SURFACE PREPARATION, LATEX MODIFIED CONCRETE, AND PLACING AND FINISHING OF LATEX MODIFIED CONCRETE, ARE SHOWN ON THE SUPERSTRUCTURE BILL OF MATERIAL.

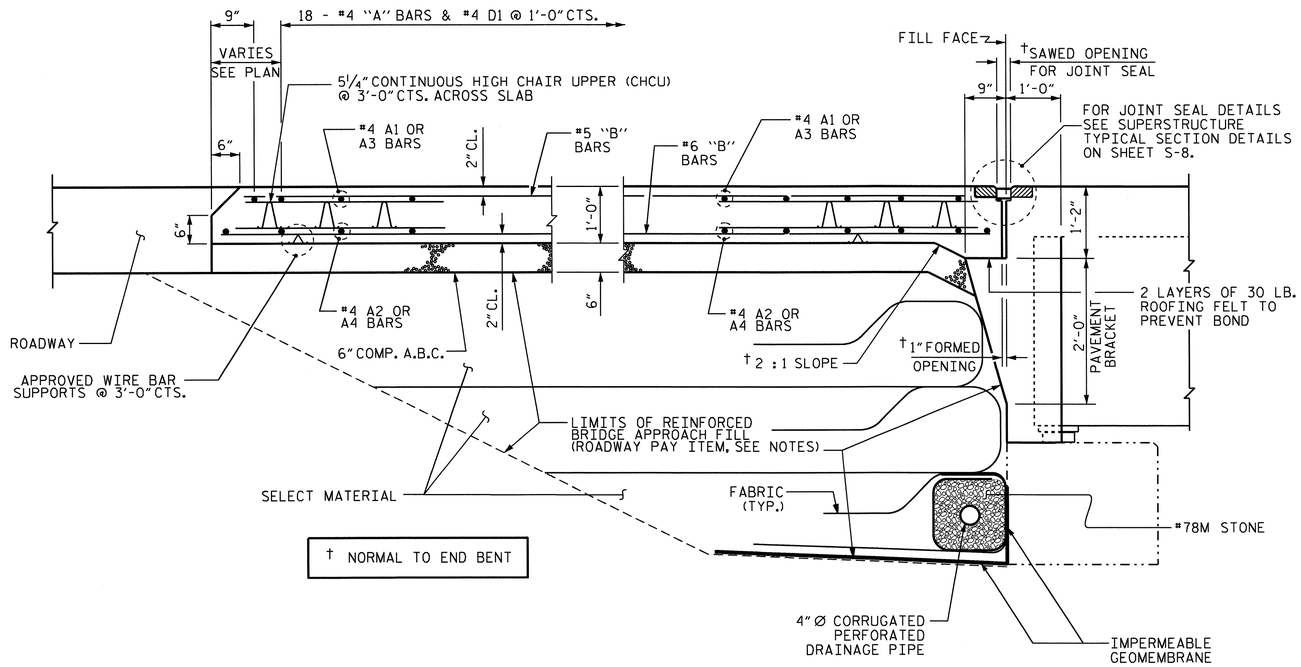


## SECTION THRU SLAB

THE CONTRACTOR'S ATTENTION IS CALLED TO THE FACT THAT IN STAGE I CONSTRUCTION, THE 4" Ø PIPE AS PART OF THE REINFORCED BRIDGE APPROACH FILL SHALL SLOPE DOWN FROM RIGHT TO LEFT, OPPOSITE THE SUPERELEVATION OF THE BRIDGE. IN STAGE II, THE 4" Ø PIPE SHALL FOLLOW THE SUPERELEVATION.

## NOTES

APPROACH SLAB SHALL NOT BE CONSTRUCTED PRIOR TO COMPLETION OF THE BRIDGE DECK.

FOR REINFORCED BRIDGE APPROACH FILL INCLUDING FABRIC, IMPERMEABLE GEOMEMBRANE, 4" Ø DRAINAGE PIPE, #78M STONE, AND SELECT MATERIAL, SEE ROADWAY PLANS.

TEMPORARY DRAINAGE AND TEMPORARY BERM AND SLOPE DRAINS WILL BE PAID FOR UNDER THE LUMP SUM PRICE FOR BRIDGE APPROACH SLAB.

AREA BETWEEN THE WINGWALL AND APPROACH SLAB SHALL BE GRADED TO DRAIN THE WATER AWAY FROM THE FILL FACE OF THE BRIDGE AND SHALL BE PAVED. SEE ROADWAY PLANS.

THE 6" COMP. A.B.C. SHALL BE FLUSH WITH THE ROADWAY END OF THE APPROACH SLAB AND SHALL EXTEND 1'-0" OUTSIDE EACH EDGE OF THE APPROACH SLAB.

THE CONTRACTOR MAY USE 4" TYPE B-25.0B ASPHALT CONCRETE BASE COURSE IN LIEU OF 6" COMP. A.B.C. IF THIS OPTION IS USED, THE BASE COURSE SHALL BE FLUSH WITH THE ROADWAY END OF THE APPROACH SLAB, AND THE WIDTH SHALL BE THE SAME AS THAT OF THE APPROACH SLAB.

THE CONTRACTOR MAY USE 5" CLASS "A" CONCRETE BASE IN LIEU OF 6" COMP. A.B.C. IF THIS OPTION IS USED, THE CONCRETE BASE SHALL BE FLUSH WITH THE ROADWAY END OF THE APPROACH SLAB, AND THE WIDTH SHALL BE THE SAME AS THAT OF THE APPROACH SLAB. THE CONCRETE SHALL BE FINISHED TO A SMOOTH SURFACE AND A LAYER OF 30 LB ROOFING FELT SHALL BE PLACED BETWEEN THE CONCRETE BASE AND THE APPROACH SLAB TO PREVENT BOND. THE APPROACH SLAB SHALL NOT BE CAST UNTIL THE CONCRETE BASE HAS REACHED AN AGE OF THREE CURING DAYS.

INSTALL #4 D1 DOWELS IN EXISTING APPROACH SLABS USING AN ADHESIVE ANCHORING SYSTEM. DOWELS SHALL BE PLACED IN THE SAME HORIZONTAL PLANE AS THE TOP MAT OF REINFORCING STEEL. NO FIELD TESTING OF THE ADHESIVE BONDING SYSTEM IS REQUIRED.

THE JOINTS SHALL BE SAWED PRIOR TO CASTING OF SIDEWALK.

NORTH CAROLINA PROFESSIONAL SEAL 32492 ENGINEER JOHN A. YANNACCONE — 5/26/11

PROJECT NO. U-4019
NASH COUNTY
STATION: 27+87.83 -L-

SHEET 2 OF 2

STATE OF NORTH CAROLINA
DEPARTMENT OF TRANSPORTATION
RALEIGH

STANDARD

BRIDGE APPROACH SLAB FOR FLEXIBLE PAVEMENT

| REVISIONS | | | | | | SHEET NO. |
|---|---|---|---|---|---|---|
| NO. | BY: | DATE: | NO. | BY: | DATE: | S-47 |
| 1 | | | 3 | | | TOTAL SHEETS |
| 2 | | | 4 | | | 93 |

STR. #1

ASSEMBLED BY : J.A. YANNACCONE DATE : 4/7/11
CHECKED BY : T.H. FANG DATE : 4/21/11

DRAWN BY : FCJ 6/87
CHECKED BY : EGA 6/87

REV. 10/17/00 RWW/LES
REV. 7/10/01 RWW/LES
REV. 5/7/03R RWW/JTE

26-MAY-2011 12:07
R:\Structures\str1\Final Plans\u-4019_sd_asl.dgn
tfang

# OVERHANG BRACKET CALCULATION INSTRUCTIONS

## AASHTO SHAPES - TYPES III, IV, V, AND VI

1. RECORD KNOWN INFORMATION ON "BRIDGE OVERHANG BRACKET SUMMARY" ON SHEET 2
2. CALCULATE THE MAXIMUM SCREED LOAD PER BRACKET (SLPB) WITH AN ESTIMATED R = 1.5. SLPB = R X W. ROUND VALUE UP TO NEAREST SLPB VALUE INDICATED ON APPROPRIATE TABLE 1-1, 1-2, 1-3, OR 1-4.
3. WITH THE ESTIMATED SLPB, OVERHANG SLAB THICKNESS, "K" VALUE, AND 45° HANGER SAFE WORKING LOAD (SWL), ENTER THE APPROPRIATE TABLE 1-1, 1-2, 1-3, OR 1-4 (BASED ON OVERHANG DIMENSION) AND DETERMINE THE BRACKET SPACING, S.
4. CALCULATE S/D1 AND S/D2, ROUNDING UP TO NEAREST VALUE IN TABLE 2. ENTER TABLE 2 AND DETERMINE R VALUE.
5. CALCULATE REVISED SLPB. ROUND VALUE UP TO NEAREST SLPB VALUE INDICATED ON APPROPRIATE TABLE 1-1, 1-2, 1-3, OR 1-4.
6. WITH THE REVISED SLPB, OVERHANG SLAB THICKNESS, "K" VALUE AND 45 HANGER SAFE WORKING LOAD (SWL), ENTER THE APPROPRIATE TABLE 1-1, 1-2, 1-3 OR 1-4 (BASED ON OVERHANG DIMENSION) AND DETERMINE REVISED BRACKET SPACING, S.
7. CONTINUE ITERATIONS OF STEPS 4-6 UNTIL THE REVISED BRACKET SPACING, S, IS THE SAME AS THE PREVIOUS S VALUE.
8. CHECK LUMBER JOIST SPACING: WITH BRACKET SPACING VALUE, S, ROUND THIS VALUE UP TO THE NEAREST VALUE OF ALLOWABLE SPAN LENGTH OF JOIST OF TABLE 3. USING THIS VALUE, ALONG WITH THE AVERAGE OVERHANG SLAB THICKNESS AND THE LUMBER JOIST SIZE, DETERMINE JOIST SPACING FROM TABLE 3. IF NECESSARY, ADJUST LUMBER JOIST SIZE AND/OR JOIST SPACING TO MEET ALLOWABLE SPAN LENGTH OF JOIST.
9. CONVERSELY, IF THE DESIRED JOIST SPACING IS KNOWN, USE THIS ALONG WITH THE AVERAGE OVERHANG SLAB THICKNESS AND THE LUMBER JOIST SIZE TO DETERMINE IF ALLOWABLE SPAN LENGTH OF JOIST IS GREATER THAN THE BRACKET SPACING, S. IF NECESSARY, ADJUST LUMBER JOIST SIZE TO MEET REQUIREMENTS OF ALLOWABLE SPAN LENGTH OF JOIST AND JOIST SPACING.
10. RECORD REMAINING INFORMATION ON "BRIDGE OVERHANG BRACKET SUMMARY" FORM.
11. SUBMIT FORM AND CALCULATIONS FOR REVIEW AND APPROVAL.

### TABLE 1-1

(FOR USE ON **UP TO 2'-0" OVERHANG (L)** & 54" HORIZONTAL LEG LENGTH OF THE OVERHANG BRACKET)

| AVG. SLAB THICKNESS (T) (in) | BRACKET (K) DIMENSION (in) | SCREED LOAD PER BRACKET | | | | | | | | | 45° HANGER SWL (lbs) |
|---|---|---|---|---|---|---|---|---|---|---|---|
| | | 2500 lbs. | 2250 lbs. | 2000 lbs. | 1750 lbs. | 1500 lbs. | 1250 lbs. | 1000 lbs. | 750 lbs. | 0 lbs. | |
| | | BRACKET SPACING | | | | | | | | | |
| 10 | 30 | | | | 2'-1" | 2'-7" | 3'-2" | 3'-8" | 4'-2" | 5'-9" | 4000 |
| | | 3'-6" | 4'-0" | 4'-5" | 4'-9" | 5'-1" | 5'-3" | 5'-5" | 5'-7" | 6'-7" | 6000 |
| | 40 | | | | 2'-1" | 2'-7" | 3'-2" | 3'-8" | 4'-2" | 5'-9" | 4000 |
| | | 3'-6" | 4'-0" | 4'-5" | 4'-9" | 5'-1" | 5'-3" | 5'-5" | 5'-7" | 6'-7" | 6000 |
| | 50 | | | | 2'-1" | 2'-7" | 3'-2" | 3'-8" | 4'-2" | 5'-9" | 4000 |
| | | 3'-6" | 4'-0" | 4'-5" | 4'-9" | 5'-1" | 5'-3" | 5'-5" | 5'-7" | 6'-7" | 6000 |
| 12 | 30 | | | | | 2'-4" | 2'-10" | 3'-4" | 3'-9" | 5'-2" | 4000 |
| | | 3'-2" | 3'-7" | 4'-1" | 4'-7" | 5'-0" | 5'-2" | 5'-4" | 5'-7" | 6'-5" | 6000 |
| | 40 | | | | | 2'-4" | 2'-10" | 3'-4" | 3'-9" | 5'-2" | 4000 |
| | | 3'-2" | 3'-7" | 4'-1" | 4'-7" | 5'-0" | 5'-2" | 5'-4" | 5'-7" | 6'-5" | 6000 |
| | 50 | | | | | 2'-4" | 2'-10" | 3'-4" | 3'-9" | 5'-2" | 4000 |
| | | 3'-2" | 3'-7" | 4'-1" | 4'-7" | 5'-0" | 5'-2" | 5'-4" | 5'-7" | 6'-5" | 6000 |
| 14 | 30 | | | | | 2'-2" | 2'-7" | 3'-0" | 3'-5" | 4'-9" | 4000 |
| | | 2'-10" | 3'-4" | 3'-9" | 4'-2" | 4'-7" | 5'-0" | 5'-4" | 5'-7" | 6'-4" | 6000 |
| | 40 | | | | | 2'-2" | 2'-7" | 3'-0" | 3'-5" | 4'-9" | 4000 |
| | | 2'-10" | 3'-4" | 3'-9" | 4'-2" | 4'-7" | 5'-0" | 5'-4" | 5'-7" | 6'-4" | 6000 |
| | 50 | | | | | 2'-2" | 2'-7" | 3'-0" | 3'-5" | 4'-9" | 4000 |
| | | 2'-10" | 3'-4" | 3'-9" | 4'-2" | 4'-7" | 5'-0" | 5'-4" | 5'-7" | 6'-4" | 6000 |
| 16 | 30 | | | | | 2'-0" | 2'-4" | 2'-9" | 3'-2" | 4'-4" | 4000 |
| | | 2'-8" | 3'-0" | 3'-5" | 3'-10" | 4'-3" | 4'-7" | 5'-0" | 5'-5" | 6'-3" | 6000 |
| | 40 | | | | | 2'-0" | 2'-4" | 2'-9" | 3'-2" | 4'-4" | 4000 |
| | | 2'-8" | 3'-0" | 3'-5" | 3'-10" | 4'-3" | 4'-7" | 5'-0" | 5'-5" | 6'-3" | 6000 |
| | 50 | | | | | 2'-0" | 2'-4" | 2'-9" | 3'-2" | 4'-4" | 4000 |
| | | 2'-8" | 3'-0" | 3'-5" | 3'-10" | 4'-3" | 4'-7" | 5'-0" | 5'-5" | 6'-3" | 6000 |

### TABLE 1-2

(FOR USE ON **OVER 2'-0" TO 2'-6" OVERHANG (L)** & 54" HORIZONTAL LEG LENGTH OF THE OVERHANG BRACKET)

| AVG. SLAB THICKNESS (T) (in) | BRACKET (K) DIMENSION (in) | SCREED LOAD PER BRACKET | | | | | | | | | 45° HANGER SWL (lbs) |
|---|---|---|---|---|---|---|---|---|---|---|---|
| | | 2500 lbs. | 2250 lbs. | 2000 lbs. | 1750 lbs. | 1500 lbs. | 1250 lbs. | 1000 lbs. | 750 lbs. | 0 lbs. | |
| | | BRACKET SPACING | | | | | | | | | |
| 10 | 30 | | | | | 2'-4" | 2'-9" | 3'-3" | 3'-8" | 5'-1" | 4000 |
| | | 3'-1" | 3'-6" | 4'-0" | 4'-5" | 4'-11" | 5'-3" | 5'-5" | 5'-7" | 6'-7" | 6000 |
| | 40 | | | | | 2'-4" | 2'-9" | 3'-3" | 3'-8" | 5'-1" | 4000 |
| | | 3'-1" | 3'-6" | 4'-0" | 4'-5" | 4'-11" | 5'-3" | 5'-5" | 5'-7" | 6'-7" | 6000 |
| | 50 | | | | | 2'-4" | 2'-9" | 3'-3" | 3'-8" | 5'-1" | 4000 |
| | | 3'-1" | 3'-6" | 4'-0" | 4'-5" | 4'-11" | 5'-3" | 5'-5" | 5'-7" | 6'-7" | 6000 |
| 12 | 30 | | | | | 2'-1" | 2'-6" | 2'-11" | 3'-4" | 4'-6" | 4000 |
| | | 2'-9" | 3'-2" | 3'-7" | 4'-0" | 4'-5" | 4'-10" | 5'-3" | 5'-7" | 6'-5" | 6000 |
| | 40 | | | | | 2'-1" | 2'-6" | 2'-11" | 3'-4" | 4'-6" | 4000 |
| | | 2'-9" | 3'-2" | 3'-7" | 4'-0" | 4'-5" | 4'-10" | 5'-3" | 5'-7" | 6'-5" | 6000 |
| | 50 | | | | | 2'-1" | 2'-6" | 2'-11" | 3'-4" | 4'-6" | 4000 |
| | | 2'-9" | 3'-2" | 3'-7" | 4'-0" | 4'-5" | 4'-10" | 5'-3" | 5'-7" | 6'-5" | 6000 |
| 14 | 30 | | | | | | 2'-3" | 2'-7" | 3'-0" | 4'-1" | 4000 |
| | | 2'-6" | 2'-10" | 3'-3" | 3'-7" | 4'-0" | 4'-4" | 4'-9" | 5'-1" | 6'-3" | 6000 |
| | 40 | | | | | | 2'-3" | 2'-7" | 3'-0" | 4'-1" | 4000 |
| | | 2'-6" | 2'-10" | 3'-3" | 3'-7" | 4'-0" | 4'-4" | 4'-9" | 5'-1" | 6'-3" | 6000 |
| | 50 | | | | | | 2'-3" | 2'-7" | 3'-0" | 4'-1" | 4000 |
| | | 2'-6" | 2'-10" | 3'-3" | 3'-7" | 4'-0" | 4'-4" | 4'-9" | 5'-1" | 6'-3" | 6000 |
| 16 | 30 | | | | | | 2'-1" | 2'-5" | 2'-9" | 3'-9" | 4000 |
| | | 2'-3" | 2'-7" | 2'-11" | 3'-4" | 3'-8" | 4'-0" | 4'-4" | 4'-8" | 5'-8" | 6000 |
| | 40 | | | | | | 2'-1" | 2'-5" | 2'-9" | 3'-9" | 4000 |
| | | 2'-3" | 2'-7" | 2'-11" | 3'-4" | 3'-8" | 4'-0" | 4'-4" | 4'-8" | 5'-8" | 6000 |
| | 50 | | | | | | 2'-1" | 2'-5" | 2'-9" | 3'-9" | 4000 |
| | | 2'-3" | 2'-7" | 2'-11" | 3'-4" | 3'-8" | 4'-0" | 4'-4" | 4'-8" | 5'-8" | 6000 |

### TABLE 1-3

(FOR USE ON **OVER 2'-6" TO 3'-0" OVERHANG (L)** & 54" HORIZONTAL LEG LENGTH OF THE OVERHANG BRACKET)

| AVG. SLAB THICKNESS (T) (in) | BRACKET (K) DIMENSION (in) | SCREED LOAD PER BRACKET | | | | | | | | | 45° HANGER SWL (lbs) |
|---|---|---|---|---|---|---|---|---|---|---|---|
| | | 2500 lbs. | 2250 lbs. | 2000 lbs. | 1750 lbs. | 1500 lbs. | 1250 lbs. | 1000 lbs. | 750 lbs. | 0 lbs. | |
| | | BRACKET SPACING | | | | | | | | | |
| 10 | 30 | | | | | 2'-1" | 2'-6" | 2'-11" | 3'-4" | 4'-6" | 4000 |
| | | | | | | 4'-5" | 4'-10" | 5'-3" | 5'-7" | 6'-7" | 6000 |
| | 40 | | | | | 2'-1" | 2'-6" | 2'-11" | 3'-4" | 4'-6" | 4000 |
| | | 2'-9" | 3'-2" | 3'-7" | 4'-0" | 4'-5" | 4'-10" | 5'-3" | 5'-7" | 6'-7" | 6000 |
| | 50 | | | | | 2'-1" | 2'-6" | 2'-11" | 3'-4" | 4'-6" | 4000 |
| | | 2'-9" | 3'-2" | 3'-7" | 4'-0" | 4'-5" | 4'-10" | 5'-3" | 5'-7" | 6'-7" | 6000 |
| 12 | 30 | | | | | | 2'-2" | 2'-7" | 2'-11" | 4'-0" | 4000 |
| | | | | | | 3'-11" | 4'-3" | 4'-8" | 5'-0" | 6'-1" | 6000 |
| | 40 | | | | | | 2'-2" | 2'-7" | 2'-11" | 4'-0" | 4000 |
| | | 2'-5" | 2'-10" | 3'-2" | 3'-6" | 3'-11" | 4'-3" | 4'-8" | 5'-0" | 6'-1" | 6000 |
| | 50 | | | | | | 2'-2" | 2'-7" | 2'-11" | 4'-0" | 4000 |
| | | 2'-5" | 2'-10" | 3'-2" | 3'-6" | 3'-11" | 4'-3" | 4'-8" | 5'-0" | 6'-1" | 6000 |
| 14 | 30 | | | | | | 2'-0" | 2'-4" | 2'-8" | 3'-8" | 4000 |
| | | | | | 3'-2" | 3'-6" | 3'-10" | 4'-2" | 4'-6" | 5'-6" | 6000 |
| | 40 | | | | | | 2'-0" | 2'-4" | 2'-8" | 3'-8" | 4000 |
| | | 2'-2" | 2'-6" | 2'-10" | 3'-2" | 3'-6" | 3'-10" | 4'-2" | 4'-6" | 5'-6" | 6000 |
| | 50 | | | | | | 2'-0" | 2'-4" | 2'-8" | 3'-8" | 4000 |
| | | 2'-2" | 2'-6" | 2'-10" | 3'-2" | 3'-6" | 3'-10" | 4'-2" | 4'-6" | 5'-6" | 6000 |
| 16 | 30 | | | | | | | 2'-1" | 2'-5" | 3'-4" | 4000 |
| | | | | | 2'-11" | 3'-2" | 3'-6" | 3'-10" | 4'-1" | 5'-0" | 6000 |
| | 40 | | | | | | | 2'-1" | 2'-5" | 3'-4" | 4000 |
| | | 2'-0" | 2'-4" | 2'-7" | 2'-11" | 3'-2" | 3'-6" | 3'-10" | 4'-1" | 5'-0" | 6000 |
| | 50 | | | | | | | 2'-1" | 2'-5" | 3'-4" | 4000 |
| | | 2'-0" | 2'-4" | 2'-7" | 2'-11" | 3'-2" | 3'-6" | 3'-10" | 4'-1" | 5'-0" | 6000 |

### TABLE 1-4

(FOR USE ON **OVER 3'-0" TO 3'-6" OVERHANG (L)** & 54" HORIZONTAL LEG LENGTH OF THE OVERHANG BRACKET)

| AVG. SLAB THICKNESS (T) (in) | BRACKET (K) DIMENSION (in) | SCREED LOAD PER BRACKET | | | | | | | | | 45° HANGER SWL (lbs) |
|---|---|---|---|---|---|---|---|---|---|---|---|
| | | 2500 lbs. | 2250 lbs. | 2000 lbs. | 1750 lbs. | 1500 lbs. | 1250 lbs. | 1000 lbs. | 750 lbs. | 0 lbs. | |
| | | BRACKET SPACING | | | | | | | | | |
| 10 | 30 | | | | | | 2'-1" | 2'-5" | 2'-9" | 3'-10" | 4000 |
| | | | | | | 2'-3" | 2'-11" | 3'-7" | 4'-3" | 5'-9" | 6000 |
| | 40 | | | | | | 2'-1" | 2'-5" | 2'-9" | 3'-10" | 4000 |
| | | | | 2'-4" | 3'-0" | 3'-7" | 4'-1" | 4'-5" | 4'-9" | 5'-9" | 6000 |
| | 50 | | | | | | 2'-1" | 2'-5" | 2'-9" | 3'-10" | 4000 |
| | | 2'-4" | 2'-8" | 3'-0" | 3'-4" | 3'-8" | 4'-1" | 4'-5" | 4'-9" | 5'-9" | 6000 |
| 12 | 30 | | | | | | | 2'-2" | 2'-6" | 3'-5" | 4000 |
| | | | | | | 2'-1" | 2'-8" | 3'-4" | 3'-11" | 5'-2" | 6000 |
| | 40 | | | | | | | 2'-2" | 2'-6" | 3'-5" | 4000 |
| | | | | 2'-2" | 2'-9" | 3'-4" | 3'-7" | 3'-11" | 4'-3" | 5'-2" | 6000 |
| | 50 | | | | | | | 2'-2" | 2'-6" | 3'-5" | 4000 |
| | | 2'-1" | 2'-4" | 2'-8" | 3'-0" | 3'-4" | 3'-7" | 3'-11" | 4'-3" | 5'-2" | 6000 |
| 14 | 30 | | | | | | | | 2'-3" | 3'-1" | 4000 |
| | | | | | | 2'-0" | 2'-6" | 3'-1" | 3'-8" | 4'-8" | 6000 |
| | 40 | | | | | | | | 2'-3" | 3'-1" | 4000 |
| | | | | 2'-0" | 2'-7" | 3'-0" | 3'-3" | 3'-6" | 3'-10" | 4'-8" | 6000 |
| | 50 | | | | | | | | 2'-3" | 3'-1" | 4000 |
| | | | 2'-2" | 2'-5" | 2'-8" | 3'-0" | 3'-3" | 3'-6" | 3'-10" | 4'-8" | 6000 |
| 16 | 30 | | | | | | | | 2'-0" | 2'-9" | 4000 |
| | | | | | | | 2'-4" | 2'-10" | 3'-5" | 4'-3" | 6000 |
| | 40 | | | | | | | | 2'-0" | 2'-9" | 4000 |
| | | | | | 2'-5" | 2'-8" | 2'-11" | 3'-3" | 3'-6" | 4'-3" | 6000 |
| | 50 | | | | | | | | 2'-0" | 2'-9" | 4000 |
| | | | | 2'-2" | 2'-5" | 2'-8" | 2'-11" | 3'-3" | 3'-6" | 4'-3" | 6000 |

DEFINITIONS

SLPB = SCREED LOAD PER BRACKET (R x W)
R = SCREED LOAD FACTOR, OBTAINED FROM TABLE 2
W = WHEEL LOAD
S = BRACKET SPACING
T = AVERAGE SLAB THICKNESS
SWL = SAFE WORKING LOAD
K = DIMENSION DEFINED ON "BRIDGE OVERHANG BRACKET SUMMARY" ON SHEET 2
L = OVERHANG MEASURED FROM EDGE OF TOP FLANGE TO EDGE OF SUPERSTRUCTURE

PROJECT NO. U-4019
NASH COUNTY
STATION: 27+87.83 -L-

SHEET 1 OF 3

STATE OF NORTH CAROLINA
DEPARTMENT OF TRANSPORTATION
RALEIGH

STANDARD OVERHANG FALSEWORK
AASHTO TYPES
III, IV, V, AND VI

STAGES I & II

NORTH CAROLINA PROFESSIONAL SEAL 18788 ENGINEER CHANG-CHUAN VICTOR CHAO
Chang-Chuan Victor Chao
4-25-2011

| REVISIONS | | | | | | SHEET NO. |
|---|---|---|---|---|---|---|
| NO. | BY: | DATE: | NO. | BY: | DATE: | S-48 |
| 1 | | | 3 | | | TOTAL SHEETS |
| 2 | | | 4 | | | 93 |

STR. #1 OF1

| | |
|---|---|
| ASSEMBLED BY: | DATE: |
| CHECKED BY: | DATE: |
| DRAWN BY: R. WRIGHT 06/04 | REV. |
| CHECKED BY: C. V. CHAO 06/04 | |

25-APR-2011 14:24
R:\Structures\str1\Final Plans\U4019_sd_oh1_stg1.dgn
ttang

## BRIDGE OVERHANG BRACKET SUMMARY

TOTAL SCREED WEIGHT = _____ LBS.
NUMBER OF SCREED WHEELS = _____
SCREED WHEEL LOAD (W) = _____ LBS.
SCREED LOAD PER BRACKET = _____ LBS.

PROJECT No. : _____
COUNTY : _____
STATION : _____
DESCRIPTION : _____

DATE : _____
DESIGN BY : _____
CHECK BY : _____

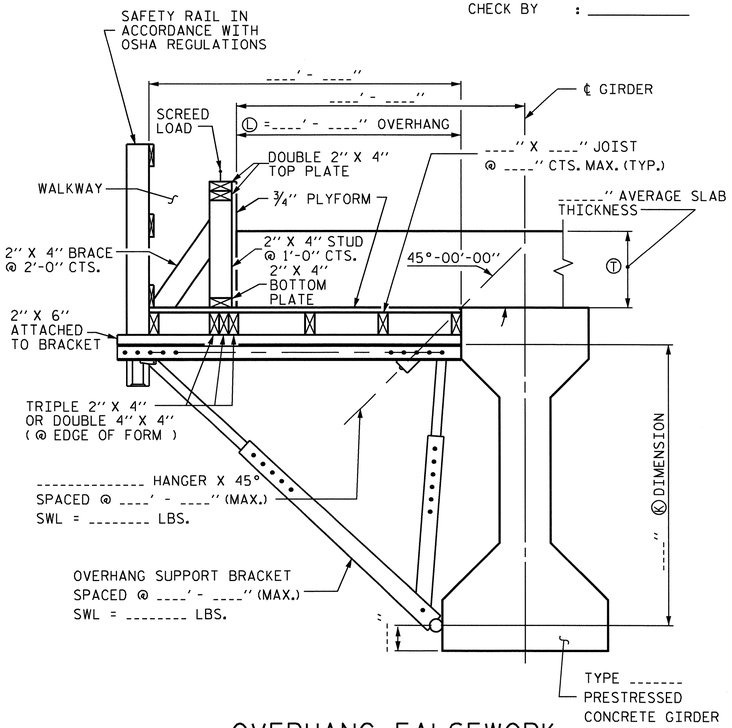


OVERHANG FALSEWORK

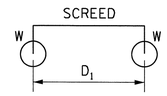


4-WHEEL MACHINE

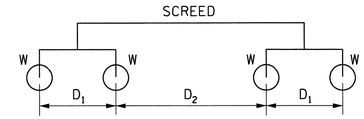


8-WHEEL MACHINE

| 4 WHEEL MACHINE | |
|---|---|
| S/D1 | R |
| <= 1.0 | 1.00 |
| 1.1 | 1.09 |
| 1.2 | 1.17 |
| 1.3 | 1.23 |
| 1.4 | 1.29 |
| 1.5 | 1.33 |
| 1.6 | 1.38 |
| 1.7 | 1.41 |
| 1.8 | 1.44 |
| 1.9 | 1.47 |
| 2.0 | 1.50 |
| 2.2 | 1.55 |
| 2.4 | 1.58 |
| 2.6 | 1.62 |
| 2.8 | 1.64 |
| 3.0 | 1.67 |
| 3.5 | 1.71 |
| 4.0 | 1.75 |

### TABLE 2: SCREED LOAD FACTOR "R"

| | | THE SCREED LOAD FACTOR R (FOR 8 WHEEL MACHINE) | | | | | | | | | | | | | | | | | |
|---|---|---|---|---|---|---|---|---|---|---|---|---|---|---|---|---|---|---|---|
| | | $S/D_2$ | | | | | | | | | | | | | | | | | |
| | | <= 1.0 | 1.1 | 1.2 | 1.3 | 1.4 | 1.5 | 1.6 | 1.7 | 1.8 | 1.9 | 2.0 | 2.2 | 2.4 | 2.6 | 2.8 | 3.0 | 3.5 | 4.0 |
| $S/D_1$ | <= 1.0 | 1.00 | 1.09 | 1.17 | 1.23 | 1.29 | 1.33 | 1.38 | 1.41 | 1.44 | 1.47 | 1.50 | 1.55 | 1.58 | 1.62 | 1.64 | 1.67 | 1.71 | 1.75 |
| | 1.1 | 1.09 | 1.18 | 1.26 | 1.32 | 1.38 | 1.42 | 1.47 | 1.50 | 1.54 | 1.56 | 1.59 | 1.64 | 1.67 | 1.71 | 1.73 | 1.76 | 1.81 | 1.84 |
| | 1.2 | 1.17 | 1.26 | 1.33 | 1.40 | 1.45 | 1.50 | 1.54 | 1.58 | 1.61 | 1.64 | 1.67 | 1.71 | 1.75 | 1.78 | 1.81 | 1.83 | 1.88 | 1.92 |
| | 1.3 | 1.23 | 1.32 | 1.40 | 1.46 | 1.52 | 1.56 | 1.61 | 1.64 | 1.68 | 1.70 | 1.73 | 1.78 | 1.81 | 1.85 | 1.87 | 1.90 | 1.95 | 1.98 |
| | 1.4 | 1.29 | 1.38 | 1.45 | 1.52 | 1.57 | 1.62 | 1.66 | 1.70 | 1.73 | 1.76 | 1.79 | 1.83 | 1.87 | 1.90 | 1.93 | 1.95 | 2.00 | 2.07 |
| | 1.5 | 1.33 | 1.42 | 1.50 | 1.56 | 1.62 | 1.67 | 1.71 | 1.75 | 1.78 | 1.81 | 1.83 | 1.88 | 1.92 | 1.95 | 1.98 | 2.00 | 2.10 | 2.17 |
| | 1.6 | 1.38 | 1.47 | 1.54 | 1.61 | 1.66 | 1.71 | 1.75 | 1.79 | 1.82 | 1.85 | 1.88 | 1.92 | 1.96 | 1.99 | 2.04 | 2.08 | 2.18 | 2.25 |
| | 1.7 | 1.41 | 1.50 | 1.58 | 1.64 | 1.70 | 1.75 | 1.79 | 1.82 | 1.86 | 1.89 | 1.91 | 1.96 | 2.00 | 2.05 | 2.11 | 2.16 | 2.25 | 2.32 |
| | 1.8 | 1.44 | 1.54 | 1.61 | 1.68 | 1.73 | 1.78 | 1.82 | 1.86 | 1.89 | 1.92 | 1.94 | 1.99 | 2.06 | 2.12 | 2.17 | 2.22 | 2.32 | 2.39 |
| | 1.9 | 1.47 | 1.56 | 1.64 | 1.70 | 1.76 | 1.81 | 1.85 | 1.89 | 1.92 | 1.95 | 1.97 | 2.04 | 2.11 | 2.18 | 2.23 | 2.28 | 2.38 | 2.45 |
| | 2.0 | 1.50 | 1.59 | 1.67 | 1.73 | 1.79 | 1.83 | 1.88 | 1.91 | 1.94 | 1.97 | 2.00 | 2.09 | 2.17 | 2.23 | 2.29 | 2.33 | 2.43 | 2.50 |
| | 2.2 | 1.55 | 1.64 | 1.71 | 1.78 | 1.83 | 1.88 | 1.92 | 1.96 | 1.99 | 2.04 | 2.09 | 2.18 | 2.26 | 2.32 | 2.38 | 2.42 | 2.52 | 2.59 |
| | 2.4 | 1.58 | 1.67 | 1.75 | 1.81 | 1.87 | 1.92 | 1.96 | 2.00 | 2.06 | 2.11 | 2.17 | 2.26 | 2.33 | 2.40 | 2.45 | 2.50 | 2.60 | 2.67 |
| | 2.6 | 1.62 | 1.71 | 1.78 | 1.85 | 1.90 | 1.95 | 1.99 | 2.05 | 2.12 | 2.18 | 2.23 | 2.32 | 2.40 | 2.46 | 2.52 | 2.56 | 2.66 | 2.73 |
| | 2.8 | 1.64 | 1.73 | 1.81 | 1.87 | 1.93 | 1.98 | 2.04 | 2.11 | 2.17 | 2.23 | 2.29 | 2.38 | 2.45 | 2.52 | 2.57 | 2.62 | 2.71 | 2.79 |
| | 3.0 | 1.67 | 1.76 | 1.83 | 1.90 | 1.95 | 2.00 | 2.08 | 2.16 | 2.22 | 2.28 | 2.33 | 2.42 | 2.50 | 2.56 | 2.62 | 2.67 | 2.76 | 2.83 |
| | 3.5 | 1.71 | 1.81 | 1.88 | 1.95 | 2.00 | 2.10 | 2.18 | 2.25 | 2.32 | 2.38 | 2.43 | 2.52 | 2.60 | 2.66 | 2.71 | 2.76 | 2.86 | 2.93 |
| | 4.0 | 1.75 | 1.84 | 1.92 | 1.98 | 2.07 | 2.17 | 2.25 | 2.32 | 2.39 | 2.45 | 2.50 | 2.59 | 2.67 | 2.73 | 2.79 | 2.83 | 2.93 | 3.00 |

### TABLE 3: ALLOWABLE SPAN LENGTH OF JOISTS & JOIST SPACINGS

| AVG. SLAB THICKNESS Ⓣ (IN) | LUMBER JOIST SIZE (IN X IN) | JOIST SPACINGS | | | |
|---|---|---|---|---|---|
| | | 15 IN | 12 IN | 10 IN | 8 IN |
| | | THE ALLOWABLE SPAN LENGTH OF JOISTS | | | |
| 10 | 2 X 4 | ——— | 4' - 6" | 4' - 9" | 5' - 0" |
| | 4 X 4 | 5' - 9" | 6' - 3" | 6' - 6" | 6' - 7" |
| 12 | 2 X 4 | ——— | 4' - 3" | 4' - 9" | 5' - 0" |
| | 4 X 4 | 5' - 3" | 6' - 0" | 6' - 3" | 6' - 5" |
| 14 | 2 X 4 | ——— | 4' - 0" | 4' - 6" | 5' - 0" |
| | 4 X 4 | ——— | 5' - 6" | 6' - 0" | 6' - 4" |
| 16 | 2 X 4 | ——— | 4' - 0" | 4' - 3" | 4' - 9" |
| | 4 X 4 | ——— | 5' - 3" | 5' - 9" | 6' - 3" |

## NOTES

DESIGN INCLUDES CONSTRUCTION LIVE LOAD 20 PSF ON THE AREA SUPPORTED AND 75 PLF AT THE OUTSIDE DECK OF OVERHANGS.

REQUIRED MINIMUM DIAGONAL LEG CAPACITY: 3600 LB WORKING LOAD

THE CONTRACTOR HAS THE OPTION OF SUBMITTING HIS OWN DESIGN FOR OVERHANG FALSEWORK IN ACCORDANCE WITH THE SPECIAL PROVISIONS.

SUBMITTALS UTILIZING THE INSTRUCTIONS AND PROCEDURES DESCRIBED ON SHEET 1 OF 3 SHALL BE IN ACCORDANCE WITH THE APPLICABLE SECTIONS OF THE SPECIFICATIONS AND SPECIAL PROVISIONS, EXCEPT THAT CALCULATIONS FOR OVERHANG FALSEWORK NEED NOT BE SEALED BY A REGISTERED ENGINEER.

FOR OVERHANG FALSEWORK BRACING DESIGN, SEE SHEET 3 OF 3.

PROJECT NO. U-4019
NASH COUNTY
STATION: 27+87.83 -L-

SHEET 2 OF 3

STATE OF NORTH CAROLINA
DEPARTMENT OF TRANSPORTATION
RALEIGH

STANDARD OVERHANG FALSEWORK
AASHTO TYPES
III, IV, V, AND VI

STAGES I & II

NORTH CAROLINA PROFESSIONAL SEAL 18788 ENGINEER CHANG-CHUAN VICTOR CHAO
Chang-Chuan Victor Chao 4-25-2011

| REVISIONS | | | | | | SHEET NO. |
|---|---|---|---|---|---|---|
| NO. | BY: | DATE: | NO. | BY: | DATE: | S-49 |
| 1 | | | 3 | | | TOTAL SHEETS |
| 2 | | | 4 | | | 93 |

| | |
|---|---|
| ASSEMBLED BY: | DATE: |
| CHECKED BY: | DATE: |
| DRAWN BY: R. WRIGHT 06/04 | REV. |
| CHECKED BY: C. V. CHAO 06/04 | |

25-APR-2011 14:24
R:\Structures\str1\FinalPlans\U4019_sd_ohl_stgl.dgn
ttfang

STR. #1

0F2

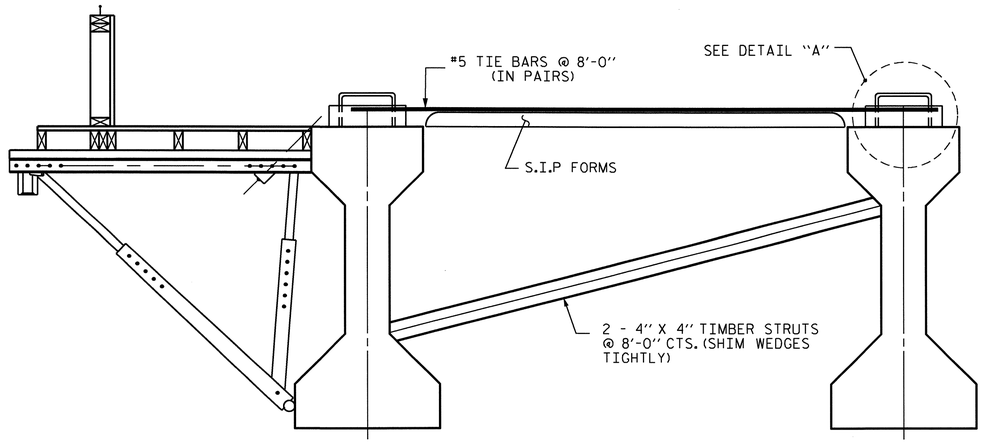


EXTERIOR GIRDER

INTERIOR GIRDER

## DETAIL OF REQUIRED OVERHANG FALSEWORK BRACING SYSTEM

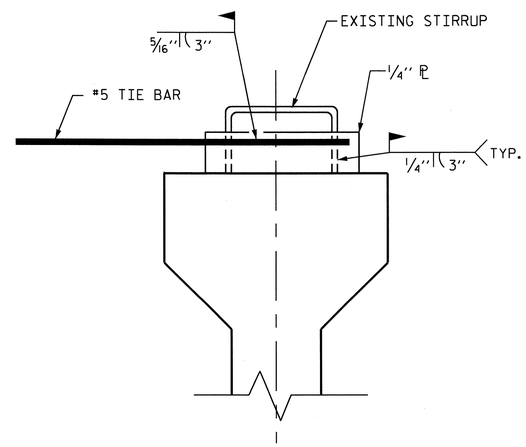


DETAIL "A"

NOTES:

EACH #5 TIE BAR SHALL BE WELDED TO ONE STIRRUP LOOP AS SHOWN IN DETAIL "A". #5 TIE BARS SHALL BE WELDED TO TWO ADJACENT STIRRUPS OF THE EXTERIOR GIRDER AND THE ADJACENT INTERIOR GIRDER BETWEEN PERMANENT DIAPHRAGMS. WELD STEEL PLATES IN BETWEEN THE TIE BARS AND THE STIRRUP LOOP. WELDING TWO TIE BARS TO THE SAME STIRRUP LOOP SHALL NOT BE PERMITTED.

MAXIMUM SPACING BETWEEN THE BRACING (TIE BARS-TIMBER STRUT) IS 8'-0" CTS. #5 TIE BARS SHALL BE LOCATED OVER A TIMBER STRUT.

INSTALL TIE BARS AND TIMBER STRUTS PRIOR TO PLACEMENT OF CONCRETE OR SCREED WEIGHT ONTO THE OVERHANG FALSEWORK.

PROJECT NO. U-4019

NASH COUNTY

STATION: 27+87.83 -L-

SHEET 3 OF 3

STATE OF NORTH CAROLINA
DEPARTMENT OF TRANSPORTATION
RALEIGH

STANDARD OVERHANG FALSEWORK
AASHTO TYPES
III, IV, V, AND VI

STAGES I & II

NORTH CAROLINA PROFESSIONAL SEAL 18788 ENGINEER CHANG-CHUAN VICTOR CHAO

Chang-Chuan Victor Chao
4-25-2011

| REVISIONS | | | | | | SHEET NO. |
|---|---|---|---|---|---|---|
| NO. | BY: | DATE: | NO. | BY: | DATE: | S-50 |
| 1 | | | 3 | | | TOTAL SHEETS |
| 2 | | | 4 | | | 93 |

DRAWN BY: R. WRIGHT 06/04 DATE :
CHECKED BY: C. V. CHAO 06/04 DATE :

25-APR-2011 14:29
R:\Structures\str1\Final Plans\U4019_sd_ohl_stgl.dgn
tfong

STR. #1 OF 3

F.A. PROJ. NO. STP-1613(6)

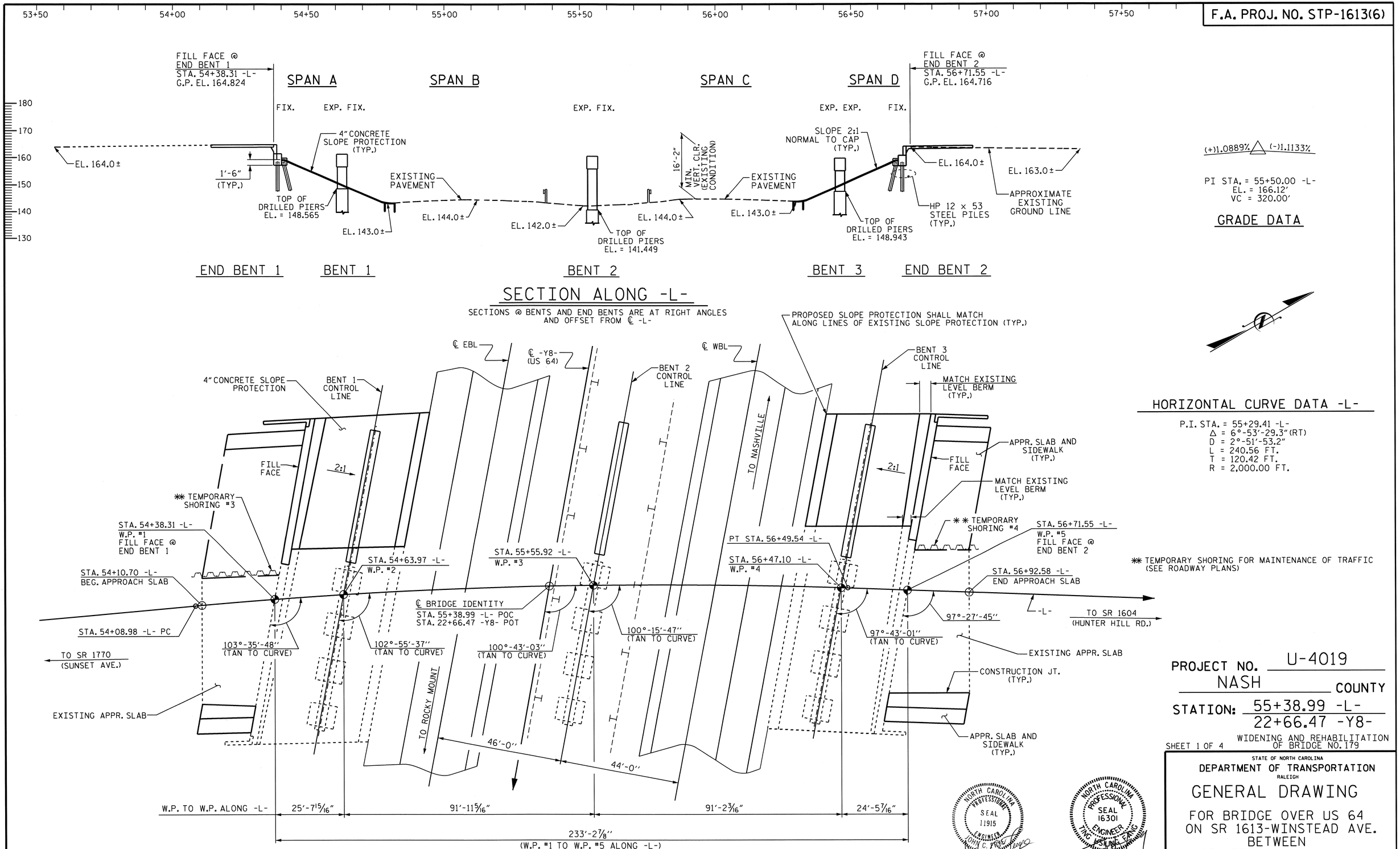


PROJECT NO. U-4019
NASH COUNTY
STATION: 55+38.99 -L-
22+66.47 -Y8-
WIDENING AND REHABILITATION OF BRIDGE NO. 179

SHEET 1 OF 4

STATE OF NORTH CAROLINA
DEPARTMENT OF TRANSPORTATION
RALEIGH

# GENERAL DRAWING

FOR BRIDGE OVER US 64 ON SR 1613-WINSTEAD AVE. BETWEEN SR 1770 AND SR 1604

| REVISIONS | | | | | | SHEET NO. |
|---|---|---|---|---|---|---|
| NO. | BY: | DATE: | NO. | BY: | DATE: | S-51 |
| 1 | | | 3 | | | TOTAL SHEETS |
| 2 | | | 4 | | | 93 |

DRAWN BY : J.H. CARDEN DATE : 02/11
CHECKED BY : S.WANCE PE DATE : 02/11

26-MAY-2011 13:10
R:\Structures\str2\FinalPlans\u4019_sd_gd2.dgn
swance

STR. #2

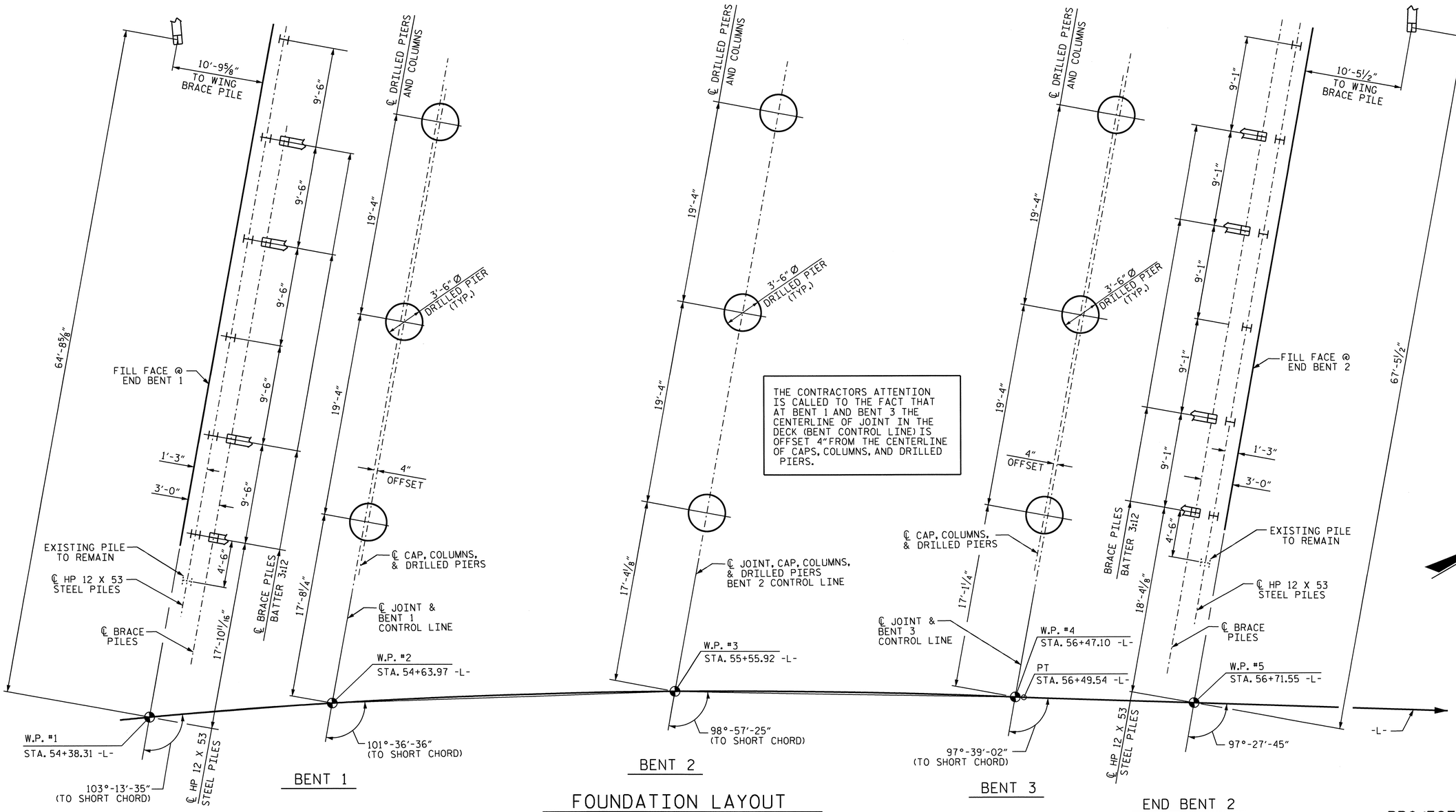


THE CONTRACTORS ATTENTION IS CALLED TO THE FACT THAT AT BENT 1 AND BENT 3 THE CENTERLINE OF JOINT IN THE DECK (BENT CONTROL LINE) IS OFFSET 4" FROM THE CENTERLINE OF CAPS, COLUMNS, AND DRILLED PIERS.

## FOUNDATION LAYOUT

DIMENSIONS LOCATING PILES ARE SHOWN TO PILE CENTERLINE.
ORIENT PILES @ END BENTS AS SHOWN.

## NOTES

FOR DRILLED PIERS, SEE SPECIAL PROVISIONS.

FOR PILES, SEE SPECIAL PROVISIONS.

DRILLED PIERS AT BENT NO. 1, BENT NO. 2 AND BENT NO. 3 ARE DESIGNED FOR BOTH SKIN FRICTION AND END BEARING. CHECK FIELD CONDITIONS FOR THE REQUIRED END BEARING CAPACITY OF 45 TSF, 75 TSF AND 75 TSF, RESPECTIVELY.

DRILLED PIERS AT BENT NO. 1 ARE DESIGNED FOR AN APPLIED LOAD OF 190 TONS EACH AT THE TOP OF THE COLUMN.

DRILLED PIERS AT BENT NO. 2 ARE DESIGNED FOR AN APPLIED LOAD OF 270 TONS EACH AT THE TOP OF THE COLUMN.

DRILLED PIERS AT BENT NO. 3 ARE DESIGNED FOR AN APPLIED LOAD OF 195 TONS EACH AT THE TOP OF THE COLUMN.

DRILLED PIERS AT BENT NO. 1 AND BENT NO. 2 MUST EXTEND TO AN ELEVATION NO HIGHER THAN 108 FT AND 107 FT, RESPECTIVELY, AND SATISFY THE REQUIRED END BEARING CAPACITY.

DRILLED PIERS AT BENT NO. 3 MUST EXTEND TO AN ELEVATION NO HIGHER THAN 116 FT (LEFT), 113 FT (MIDDLE), AND 110 FT (RIGHT), SATISFY THE REQUIRED END BEARING CAPACITY, AND HAVE A MINIMUM PENETRATION OF 6 FT INTO ROCK AS DEFINED BY THE DRILLED PIERS PROVISION.

SPT TESTING IS REQUIRED FOR THE DRILLED PIERS AT BENT NO. 1 (RIGHT).

SID INSPECTIONS MAY BE REQUIRED FOR DRILLED PIERS. THE ENGINEER WILL DETERMINE THE NEED FOR SID INSPECTIONS.

CSL TUBES ARE REQUIRED AND CSL TESTING MAY BE REQUIRED FOR DRILLED PIERS. THE ENGINEER WILL DETERMINE THE NEED FOR CSL TESTING. FOR CROSSHOLE SONIC LOGGING, SEE SPECIAL PROVISIONS.

DRIVE PILES AT END BENT NO. 1 AND END BENT NO. 2 TO A REQUIRED BEARING CAPACITY OF 100 TONS PER PILE. THE REQUIRED BEARING CAPACITY IS EQUAL TO THE ALLOWABLE BEARING CAPACITY WITH A MINIMUM FACTOR OF SAFETY OF TWO.

THE ALLOWABLE BEARING CAPACITY FOR PILES AT END BENT NO. 1 AND END BENT NO. 2 IS 50 TONS PER PILE.

NORTH CAROLINA PROFESSIONAL SEAL 21545 ENGINEER STEVEN L. WANCE
05/25/11

PROJECT NO. U-4019
NASH COUNTY
STATION: 55+38.99 -L-

SHEET 2 OF 4

STATE OF NORTH CAROLINA
DEPARTMENT OF TRANSPORTATION
RALEIGH

GENERAL DRAWING
FOR BRIDGE OVER US 64 ON SR 1613-WINSTEAD AVE. BETWEEN SR 1634 AND SR 1614

| REVISIONS | | | | | | SHEET NO. |
|---|---|---|---|---|---|---|
| NO. | BY: | DATE: | NO. | BY: | DATE: | S-52 |
| 1 | | | 3 | | | TOTAL SHEETS |
| 2 | | | 4 | | | 93 |

STR #2

DRAWN BY : J.H. CARDEN DATE : 02/11
CHECKED BY : S.WANCE PE DATE : 02/11

25-MAY-2011 12:01
Z:\TIPProjects-U\U4019\Structures\str2\FinalPlans\u4019_sd_gd2.dgn

swance

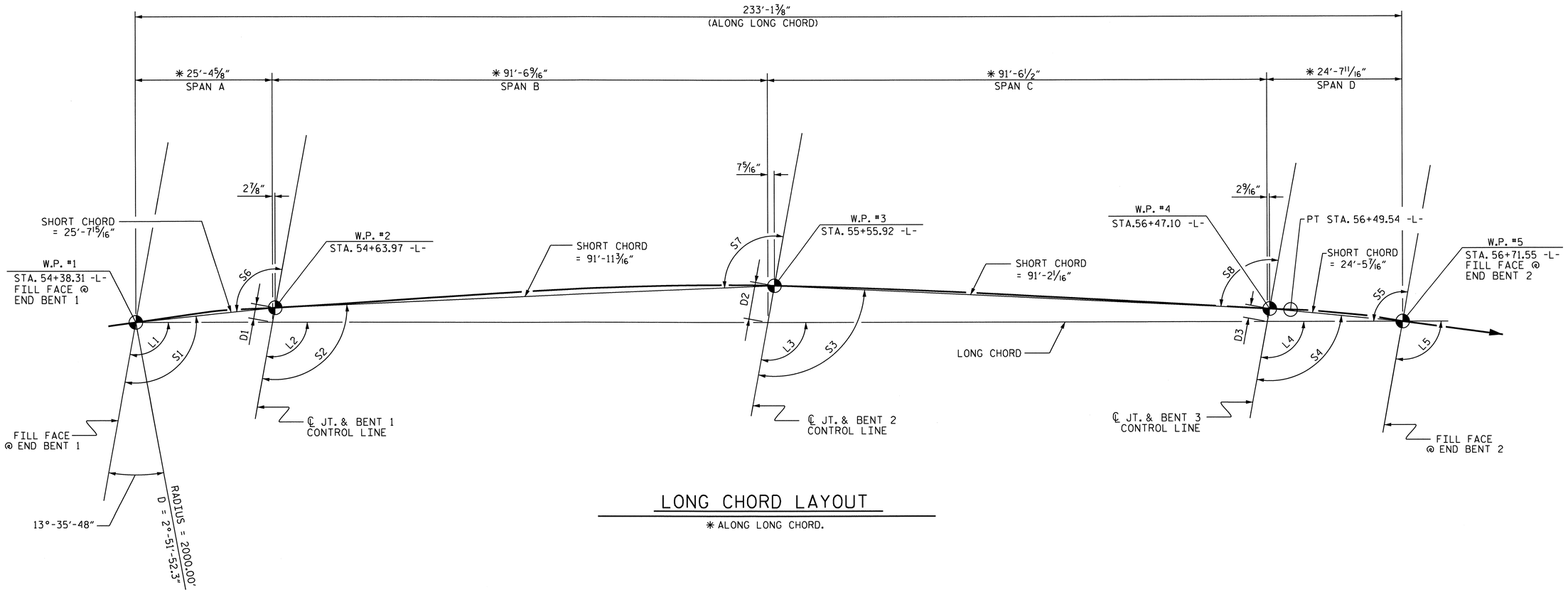


## LONG CHORD LAYOUT

* ALONG LONG CHORD.

| ANGLES | | | | OFFSETS ALONG BENT | |
|---|---|---|---|---|---|
| LONG CHORD | | SHORT CHORD | | | |
| L1 | 100°-17'-08" | S1 | 103°-13'-45" | D1 | 1'-4 1/16" |
| L2 | 100°-21'-03" | S2 | 101°-36'-36" | D2 | 3'-4 11/16" |
| L3 | 100°-19'-16" | S3 | 98°-57'-25" | D2 | 1'-2 1/4" |
| L4 | 100°-23'-13" | S4 | 97°-39'-02" | | |
| L5 | 100°-12'-09" | S5 | 97°-27'-58" | | |
| | | S6 | 103°-17'-40" | | |
| | | S7 | 101°-34'-48" | | |
| | | S8 | 99°-01'-23" | | |

## HORIZONTAL CURVE DATA -L-

P.I. STA. = 55+29.41 -L-
Δ = 6°-53'-29.3" (RT.)
D = 2°-51'-53.2"
L = 240.56 FT.
T = 120.42 FT.
R = 2000.00 FT.

PROJECT NO. U-4019
NASH COUNTY
STATION: 55+38.99 -L-

SHEET 3 OF 4

NORTH CAROLINA PROFESSIONAL SEAL 21545 ENGINEER STEVEN L. WANCE
05/25/11

STATE OF NORTH CAROLINA
DEPARTMENT OF TRANSPORTATION
RALEIGH

# GENERAL DRAWING

FOR BRIDGE OVER US 64
ON SR 1613-WINSTEAD
AVE. BETWEEN SR 1634
AND SR 1614

| REVISIONS | | | | | | SHEET NO. |
|---|---|---|---|---|---|---|
| NO. | BY: | DATE: | NO. | BY: | DATE: | S-53 |
| 1 | | | 3 | | | TOTAL SHEETS |
| 2 | | | 4 | | | 93 |

STR. #2

DRAWN BY : J.H. CARDEN DATE : 02/11
CHECKED BY : S. WANCE PE DATE : 02/11

25-MAY-2011 12:01
Z:\TIPProjects-U\U4019\Structures\str2\FinalPlans\u4019_sd_gd2.dgn
swance

## TOTAL BILL OF MATERIAL

| | REMOVAL OF EXISTING STRUCTURE | 3'-6"DIA. DRILLED PIERS IN SOIL | 3'-6"DIA. DRILLED PIERS NOT IN SOIL | SPT TESTING | SID INSPECTION | CROSSHOLE SONIC LOGGING | REINFORCED CONCRETE DECK SLAB | GROOVING BRIDGE FLOORS | CLASS A CONCRETE | BRIDGE APPROACH SLABS | REINFORCING STEEL | SPIRAL COLUMN REINFORCING STEEL | STRUCTURAL STEEL | HP 12 X 53 STEEL PILES | | CLASS I SURFACE PREPARATION | LATEX MODIFIED CONCRETE OVERLAY | PLACING & FINISHING OF LATEX MODIFIED CONC. OVERLAY | THREE BAR METAL RAIL | ELASTOMERIC BEARINGS | EVAZOTE JOINT SEALS | 4" CONCRETE SLOPE PROTECTION | |
|---|---|---|---|---|---|---|---|---|---|---|---|---|---|---|---|---|---|---|---|---|---|---|---|
| | LUMP SUM | LIN. FT. | LIN. FT. | EACH | EACH | EACH | SQ. FT. | SQ. FT. | CU. YDS. | LUMP SUM | LBS. | LBS. | LBS. | NO. | LIN. FT. | SQ. YDS. | CU. YDS. | SQ. YDS. | LIN. FT. | LUMP SUM | LUMP SUM | SQ. YDS. | |
| SUPERSTRUCTURE | | | | | | | 12,281 | 26,434 | | | | | 314,626 | | | 1,644 | 89.2 | 1,644 | 454.64 | | | | |
| END BENT 1 | | | | | | | | | 37.8 | | 3,813 | | | 11 | 605 | | | | | | | 250 | |
| BENT 1 | | 106.0 | 16.0 | 1 | | 1 | | | 33.5 | | 13,097 | 3,203 | | | | | | | | | | | |
| BENT 2 | | 80.5 | 23.0 | | | 1 | | | 39.2 | | 13,406 | 3,287 | | | | | | | | | | | |
| BENT 3 | | 86.0 | 22.0 | | | 1 | | | 33.1 | | 12,356 | 2,881 | | | | | | | | | | | |
| END BENT 2 | | | | | | | | | 34.9 | | 3,727 | | | 11 | 385 | | | | | | | 235 | |
| TOTAL | LUMP SUM | 272.5 | 61.0 | 1 | 1 | 3 | 12,281 | 26,434 | 178.5 | LUMP SUM | 46,399 | 9,371 | 314,626 | 22 | 990 | 1,644 | 89.2 | 1,644 | 454.64 | LUMP SUM | LUMP SUM | 485 | |

BM #1: R/R SPIKE IN BASE OF 6"PINE, BL STA. 60+65 103.27' RT., -L- STA. 59+65 165' RT., EL. 140.15

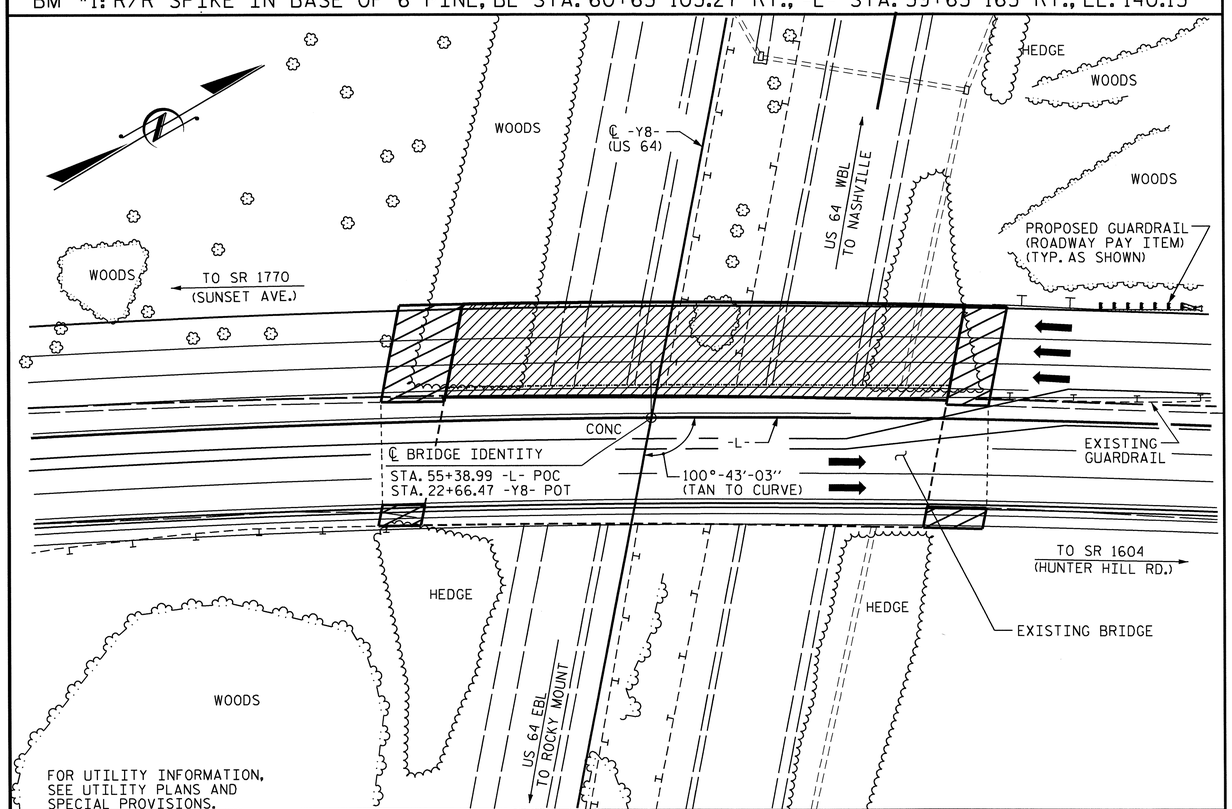


LOCATION SKETCH

## NOTES

ASSUMED LIVE LOAD = HS 20 OR ALTERNATE LOADING.

THIS BRIDGE HAS BEEN DESIGNED IN ACCORDANCE WITH THE STRENGTH DESIGN METHOD AS SPECIFIED IN THE AASHTO STANDARD DESIGN SPECIFICATIONS FOR HIGHWAY BRIDGES.

FOR OTHER DESIGN DATA AND GENERAL NOTES, SEE SHEET SN.

FOR EROSION CONTROL MEASURES, SEE EROSION CONTROL PLANS.

THE CONTRACTOR SHALL PROVIDE INDEPENDENT ASSURANCE SAMPLES OF REINFORCING STEEL AS FOLLOWS: FOR PROJECTS REQUIRING UP TO 400 TONS OF REINFORCING STEEL, ONE 30 INCH SAMPLE OF EACH SIZE BAR USED, AND FOR PROJECTS REQUIRING OVER 400 TONS OF REINFORCING STEEL, TWO 30 INCH SAMPLES OF EACH SIZE BAR USED. THE BARS FROM WHICH THE SAMPLES ARE TAKEN MUST THEN BE SPLICED WITH REPLACEMENT BARS OF THE SIZE AND LENGTH OF THE SAMPLE, PLUS A MINIMUM LAP SPLICE OF THIRTY BAR DIAMETERS. PAYMENT FOR THE SAMPLES OF REINFORCING STEEL SHALL BE CONSIDERED INCIDENTAL TO VARIOUS PAY ITEMS.

THE SUBSTRUCTURE OF THE EXISTING BRIDGE INDICATED ON THE PLANS IS FROM THE BEST INFORMATION AVAILABLE. SINCE THIS INFORMATION IS SHOWN FOR THE CONVENIENCE OF THE CONTRACTOR, THE CONTRACTOR SHALL HAVE NO CLAIM WHATSOEVER AGAINST THE DEPARTMENT OF TRANSPORTATION FOR ANY DELAYS OR ADDITIONAL COST INCURRED BASED ON DIFFERENCES BETWEEN THE EXISTING BRIDGE SUBSTRUCTURE SHOWN ON THE PLANS AND THE ACTUAL CONDITIONS AT THE PROJECT SITE.

THE EXISTING BRIDGE SHALL BE PARTIALLY REMOVED BY SAWING AND/OR NON-SHATTERING METHODS SUCH THAT DEBRIS WILL NOT FALL INTO THE TRAVEL WAY. THE CONTRACTOR SHALL REMOVE THE BRIDGE AND SUBMIT PLANS FOR DEMOLITION IN ACCORDANCE WITH ARTICLE 402-2 OF THE STANDARD SPECIFICATIONS. FOR REMOVAL OF EXISTING STRUCTURE, SEE SPECIAL PROVISIONS.

DIMENSIONS AND ELEVATIONS GIVEN FOR THE EXISTING STRUCTURE ARE FROM THE BEST INFORMATION AVAILABLE.

REMOVABLE FORMS MAY BE USED IN LIEU OF METAL STAY-IN-PLACE FORMS IN ACCORDANCE WITH ARTICLE 420-3 OF THE STANDARD SPECIFICATIONS.

FOR MAINTENANCE AND PROTECTION OF TRAFFIC BENEATH PROPOSED STRUCTURE, SEE SPECIAL PROVISIONS.

NEEDLE BEAMS WILL NOT BE ALLOWED UNLESS OTHERWISE CALLED FOR ON THE PLANS OR APPROVED BY THE ENGINEER.

ALL STRUCTURAL STEEL SHALL BE AASHTO M270 GRADE 50 AND PAINTED IN ACCORDANCE WITH SYSTEM 1 OF ARTICLE 442-7 OF THE STANDARD SPECIFICATIONS UNLESS OTHERWISE NOTED ON THE PLANS.

FOR HIGH STRENGTH BOLTS, SEE SPECIAL PROVISIONS.

STEEL SHEET PILING REQUIRED FOR SHORING SHALL BE HOT ROLLED.

FOR CRANE SAFETY, SEE SPECIAL PROVISIONS.

FOR FALSEWORK AND FORMWORK, SEE SPECIAL PROVISIONS.

FOR GROUT FOR STRUCTURES, SEE SPECIAL PROVISIONS.

FOR SUBMITTAL OF WORKING DRAWINGS, SEE SPECIAL PROVISIONS.

FOR CURING CONCRETE, SEE SPECIAL PROVISIONS.

FOR PLACING LOAD ON STRUCTURE MEMBERS, SEE SPECIAL PROVISIONS.

FOR SHIPPING STEEL STRUCTURAL MEMBERS, SEE SPECIAL PROVISIONS.

FOR DIRECT TENSION INDICATORS, SEE SPECIAL PROVISIONS.

FOR ELASTOMERIC CONCRETE, SEE SPECIAL PROVISIONS.

FOR EVAZOTE JOINT SEALS, SEE SPECIAL PROVISIONS.

IN ORDER TO FACILITATE A SMOOTH TRANSITION FROM THE EXISTING BRIDGE DECK TO THE PROPOSED DECK WIDENING, THE CONTRACTOR SHALL NOT BEGIN THE FINISHING PROCESS FOR THE DECK WIDENING UNTIL ALL CONCRETE HAS BEEN PLACED IN THAT SPAN. THIS DECK POUR PROCESS WILL BE REQUIRED FOR ALL SPANS.

FOR CLASS I SURFACE PREPARATION, SEE SPECIAL PROVISION FOR REPAIR OF BRIDGE DECKS AND APPROACH PAVEMENT WITH LATEX MODIFIED CONCRETE.

THE THICKNESS OF THE LATEX MODIFIED CONCRETE OVERLAY WILL VARY ALONG THE CONSTRUCTION JOINTS, ALONG THE LENGTH OF THE BRIDGE, AND ALONG THE LENGTHS OF THE APPROACH SLABS. THE AVERAGE THICKNESS ON THE BRIDGE DECK AS SHOWN IS 1⅛". THE AVERAGE THICKNESS ON THE APPROACH SLABS AS SHOWN IS 2⅜". THE QUANTITIES OF LATEX MODIFIED CONCRETE SHOWN IN THE BILLS OF MATERIAL ARE BASED ON THE AVERAGE THICKNESSES.

INASMUCH AS THE PAINT SYSTEM ON THE EXISTING STRUCTURAL STEEL CONTAINS LEAD, THE CONTRACTOR'S ATTENTION IS DIRECTED TO ARTICLE 107-1 OF THE STANDARD SPECIFICATIONS. ANY COSTS RESULTING FROM COMPLIANCE WITH APPLICABLE STATE OR FEDERAL REGULATIONS PERTAINING TO THE HANDLING OF MATERIALS CONTAINING LEAD BASED PAINT SHALL BE INCLUDED IN THE BID PRICE FOR "REMOVAL OF EXISTING STRUCTURE AT STATION 55+38.99 -L-."

THE LOCATION OF THE CONSTRUCTION JOINT IN THE DRILLED PIERS IS BASED ON AN APPROXIMATE GROUND LINE ELEVATION. IF THE PLAN CONSTRUCTION JOINT ELEVATION IS ABOVE THE ACTUAL GROUND ELEVATION, THE CONTRACTOR SHALL PLACE THE CONSTRUCTION JOINT 1.0 FOOT BELOW THE GROUND LINE.

IF FIELD CONDITIONS VARY FROM THE PLANS, MODIFICATIONS WILL BE MADE AS NECESSARY AND AS DIRECTED BY THE ENGINEER.

FOR LIMITS OF TEMPORARY SHORING FOR MAINTENANCE OF TRAFFIC, SEE TRAFFIC CONTROL PLANS, FOR TEMPORARY SHORING PAY ITEM, SEE ROADWAY PLANS.

THE CONTRACTORS ATTENTION IS CALLED TO THE FACT THAT AT BENT 1 AND BENT 3 THE CENTERLINE OF JOINT IN THE DECK (BENT CONTROL LINE) IS OFFSET 4" FROM THE CENTERLINE OF CAPS, COLUMNS, AND DRILLED PIERS.

PROJECT NO. U-4019
NASH COUNTY
STATION: 55+38.99 -L-

SHEET 4 OF 4

NORTH CAROLINA PROFESSIONAL SEAL 21545 ENGINEER STEVEN L. WANCE

5/25/11

STATE OF NORTH CAROLINA
DEPARTMENT OF TRANSPORTATION
RALEIGH

GENERAL DRAWING
FOR BRIDGE OVER US 64
ON SR 1613-WINSTEAD AVE.
BETWEEN SR 1634 AND SR 1614

| REVISIONS | | | | | | SHEET NO. |
|---|---|---|---|---|---|---|
| NO. | BY: | DATE: | NO. | BY: | DATE: | S-54 |
| 1 | | | 3 | | | TOTAL SHEETS |
| 2 | | | 4 | | | 93 |

DRAWN BY : J.H. CARDEN DATE : 2/11
CHECKED BY : S. WANCE PE DATE : 2/11

26-MAY-2011 11:19
R:\Structures\str2\FinalPlans\u4019_sd_gd2.dgn
swance

STR. #2 NCDDS

## NOTE

FOR MAINTENANCE OF TRAFFIC, SEE TRAFFIC CONTROL PLANS.

SEE TRAFFIC CONTROL PLANS FOR LOCATION AND PAY LIMIT OF THE ANCHORED PORTABLE CONCRETE BARRIER.

CARE SHALL BE TAKEN DURING THE PARTIAL REMOVAL OF THE EXISTING STRUCTURE. DAMAGE TO THE REMAINING STRUCTURE SHALL BE REPAIRED BY THE CONTRACTOR AT NO ADDITIONAL COST TO THE DEPARTMENT. THE METHOD OF REPAIR SHALL BE SUBJECT TO APPROVAL BY THE ENGINEER.

ALL DIMENSIONS ARE RADIAL.

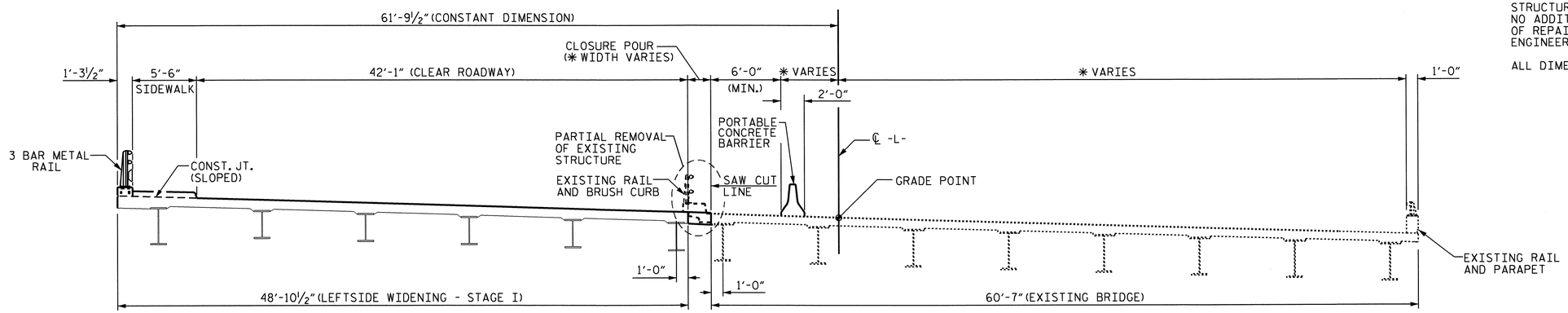


## STAGE I CONSTRUCTION

REMOVE EXISTING LEFT SIDE DECK AND RAIL.
REMOVE EXISTING LEFT SIDE END BENT WINGS, AND PORTION OF END BENT CAPS.
CONSTRUCT LEFT SIDE BRIDGE AND APPROACH SLAB WIDENING.
CONSTRUCT CLOSURE POUR.

## STAGE I TRAFFIC

✱ NOTE: DIMENSION VARIES DUE TO DIFFERENT RADII;

℄ -L- RADIUS = 2000.00'
℄ EXISTING BRIDGE RADIUS = 6013.55'

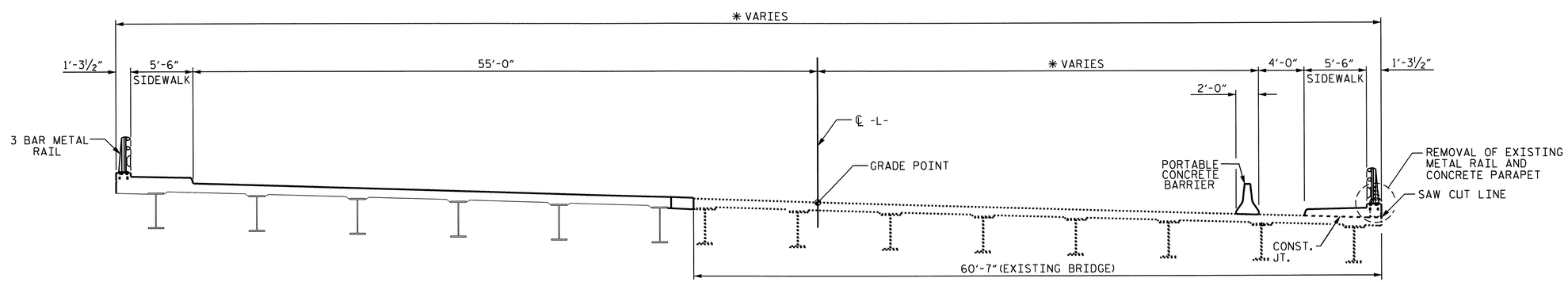


## STAGE II TRAFFIC & CONSTRUCTION

REMOVE RIGHT SIDE EXISTING RAIL AND PARAPET.
CONSTRUCT RIGHT SIDE SIDEWALK ATOP EXISTING DECK.
CONSTRUCT RIGHT SIDE APPROACH SLAB WIDENING.

PROJECT NO. U-4019
NASH COUNTY
STATION: 55+38.99 -L-

SHEET 1 OF 2

STATE OF NORTH CAROLINA
DEPARTMENT OF TRANSPORTATION
RALEIGH

NORTH CAROLINA PROFESSIONAL SEAL 21545 ENGINEER STEVEN L. WANCE
05/25/11

# CONSTRUCTION SEQUENCE

| REVISIONS | | | | | | SHEET NO. |
|---|---|---|---|---|---|---|
| NO. | BY: | DATE: | NO. | BY: | DATE: | S-55 |
| 1 | | | 3 | | | TOTAL SHEETS |
| 2 | | | 4 | | | 93 |

STR. #2 NCDDS

DRAWN BY : S.WANCE DATE : 03/11
CHECKED BY : J.C. FRYE DATE : 05/11

25-MAY-2011 12:01
Z:\TIPProjects-U\U4019\Structures\str2\FinalPlans\u4019_sd_constrSeq2.dgn
swance

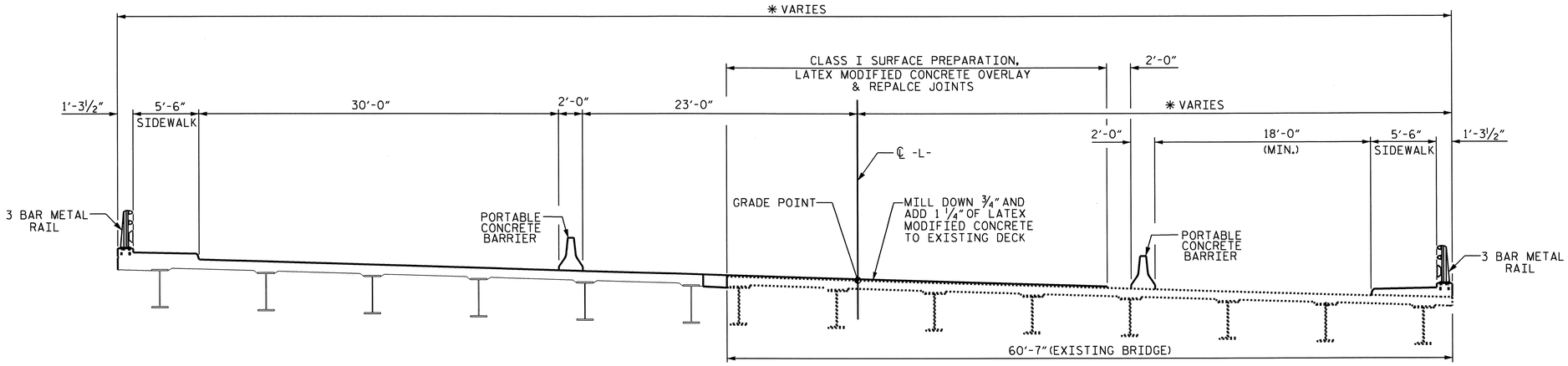


## STAGE III TRAFFIC

## STAGE III CONSTRUCTION

PERFORM CLASS I SURFACE PREPARATION TO LEFT SIDE OF EXISTING DECK AND APPROACH SLABS.
REMOVE EXISTING JOINTS ON LEFT SIDE OF EXISTING DECK.
CONSTRUCT LATEX MODIFIED CONCRETE OVERLAY ON LEFT SIDE OF EXISTING DECK AND EXISTING APPROACH SLABS.
INSTALL EVAZOTE JOINT SEALS ON LEFT SIDE OF EXISTING BRIDGE.

## STAGE III TRAFFIC

* NOTE: DIMENSION VARIES DUE TO DIFFERENT RADII;

℄ -L- RADIUS = 2000.00'
℄ EXISTING BRIDGE RADIUS = 6013.55'

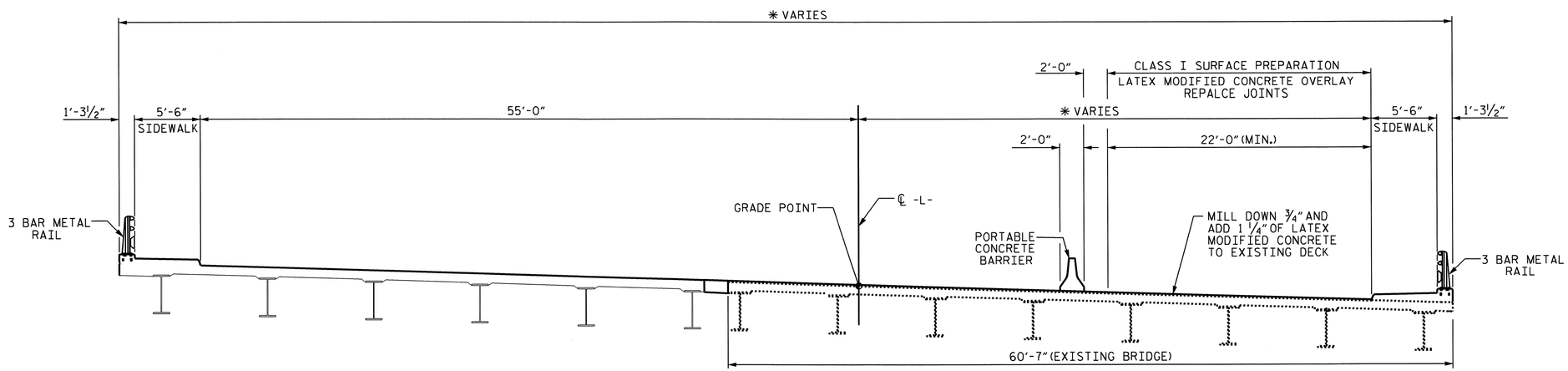


## STAGE III TRAFFIC

## STAGE III CONSTRUCTION

PERFORM CLASS I SURFACE PREPARATION TO REMAINDER OF EXISTING DECK AND EXISTING APPROACH SLABS.
REMOVE EXISTING JOINTS ON REMAINDER OF EXISTING DECK.
CONSTRUCT LATEX MODIFIED CONCRETE OVERLAY ON REMAINDER OF EXISTING DECK AND EXISTING APPROACH SLABS.
INSTALL EVAZOTE JOINT SEALS ON REMAINDER OF EXISTING BRIDGE.

NORTH CAROLINA PROFESSIONAL SEAL 21545 ENGINEER STEVEN L. WANCE
05/25/11

PROJECT NO. U-4019
NASH COUNTY
STATION: 55+38.99 -L-

SHEET 2 OF 2

STATE OF NORTH CAROLINA
DEPARTMENT OF TRANSPORTATION
RALEIGH

# CONSTRUCTION SEQUENCE

| REVISIONS | | | | | | SHEET NO. |
|---|---|---|---|---|---|---|
| NO. | BY: | DATE: | NO. | BY: | DATE: | S-56 |
| 1 | | | 3 | | | TOTAL SHEETS |
| 2 | | | 4 | | | 93 |

DRAWN BY : S.WANCE DATE : 03/11
CHECKED BY : J.C. FRYE DATE : 05/11

25-MAY-2011 12:01
Z:\TIPProjects-U\U4019\Structures\str2\FinalPlans\u4019_sd_constrSeq2.dgn
swance

STR. #2

NCBDS

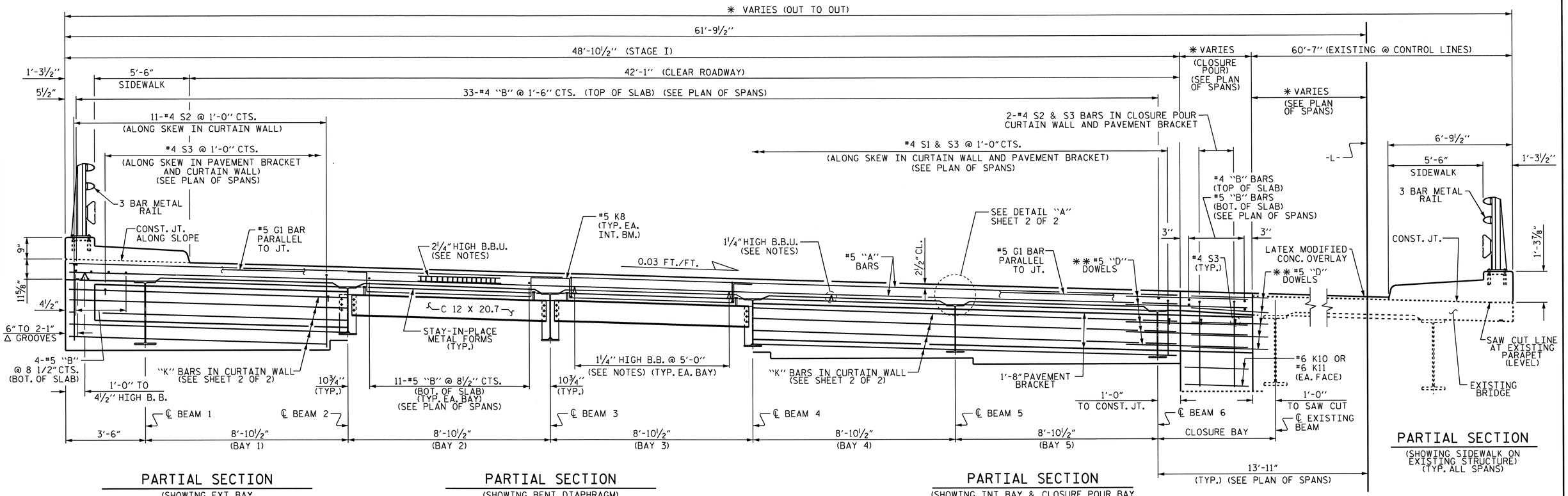


PARTIAL SECTION
(SHOWING EXT. BAY CURTAIN WALL @ END BENT)

PARTIAL SECTION
(SHOWING BENT DIAPHRAGM)

PARTIAL SECTION
(SHOWING INT. BAY & CLOSURE POUR BAY CURTAIN WALL @ END BENT)

PARTIAL SECTION
(SHOWING SIDEWALK ON EXISTING STRUCTURE) (TYP. ALL SPANS)

# TYPICAL SECTION
(SPANS A & D)

✱✱ NOTE: #5 "D" DOWELS TO MATCH "G" BAR, "A" BARS, AND "K" BARS. SEE SECTION VIEWS AND PLAN OF SPANS. EMBEDMENT INTO EXISTING STRUCTURE AS PER MANUFACTURER'S RECOMENDATIONS.

✱ NOTE: DIMENSIONS VARY DUE TO DIFFERENT RADII:
℄ -L- RADIUS = 2000.00'
℄ -L- EXIST. BRIDGE RADIUS = 6013.55'

NOTE: LATERAL DIMENSIONS ARE RADIAL.

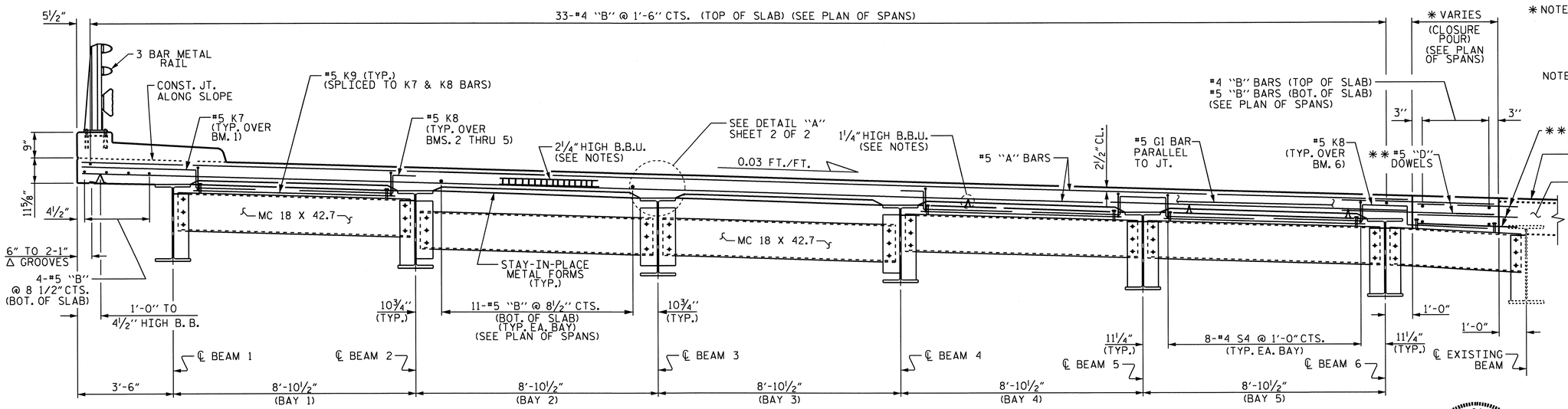


PARTIAL SECTION
(SHOWING EXT. BAY BENT DIAPHRAGM)

PARTIAL SECTION
(SHOWING INTERMEDIATE DIAPHRAGM)

PARTIAL SECTION
(SHOWING INT. & CLOSURE POUR BAY BENT DIAPHRAGM)

# TYPICAL SECTION
(SPANS B & C)

NORTH CAROLINA PROFESSIONAL SEAL 21545 ENGINEER STEVEN L. WANCE
05/25/11

PROJECT NO. U-4019
NASH COUNTY
STATION: 55+38.99 -L-

SHEET 1 OF 3

STATE OF NORTH CAROLINA
DEPARTMENT OF TRANSPORTATION
RALEIGH

SUPERSTRUCTURE
TYPICAL SECTION
(LEFT WIDENING)

| REVISIONS | | | | | | SHEET NO. |
|---|---|---|---|---|---|---|
| NO. | BY: | DATE: | NO. | BY: | DATE: | S-57 |
| 1 | | | 3 | | | TOTAL SHEETS |
| 2 | | | 4 | | | 93 |

STR. 2

DRAWN BY : J.H.CARDEN DATE : 12/10
CHECKED BY : S.WANCE DATE : 2/11

25-MAY-2011 12:01
Z:\TIPProjects-U\U4019\Structures\str2\FinalPlans\u4019_sd_ts2.dgn
swance

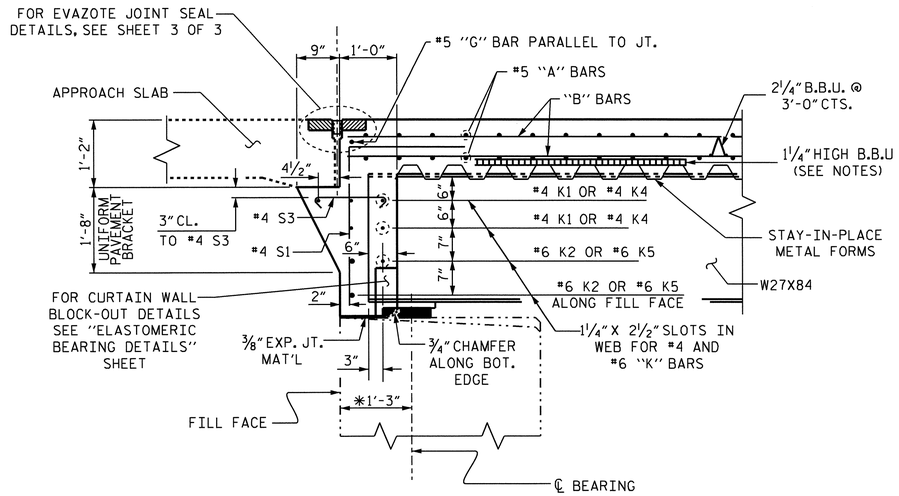


## SECTION THRU END BENT

(END BENT 1 SHOWN, END BENT 2 SIMILAR)
(INT. BM. W27X84 SHOWN)

* DISTANCE PERPENDICULAR TO THE FILL FACE

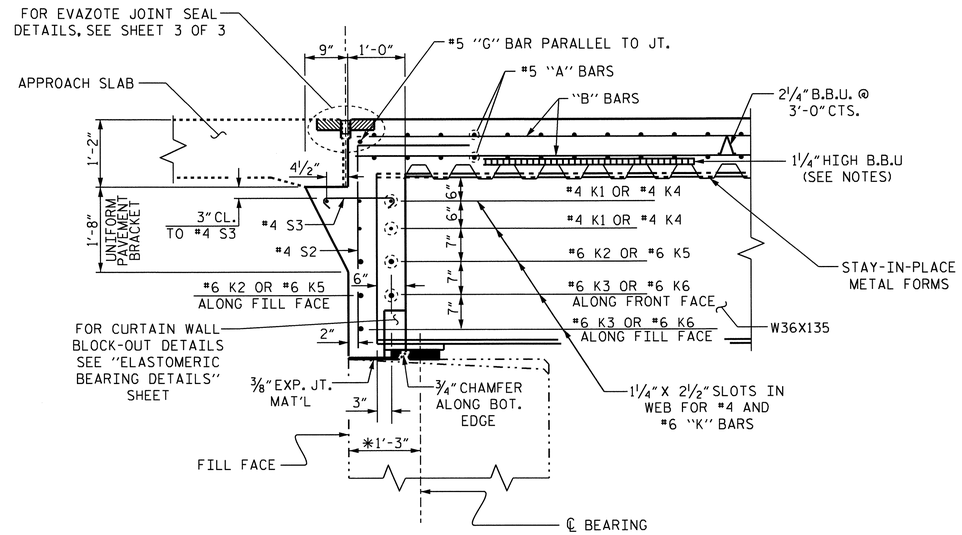


## SECTION THRU END BENT

(END BENT 1 SHOWN, END BENT 2 SIMILAR)
(EXT. BM. W36X135 SHOWN)

* DISTANCE PERPENDICULAR TO THE FILL FACE

## SECTION THRU END BENT

#5 "G" BAR MAY BE SHIFTED SLIGHTLY, AS NECESSARY, TO CLEAR REINFORCING STEEL

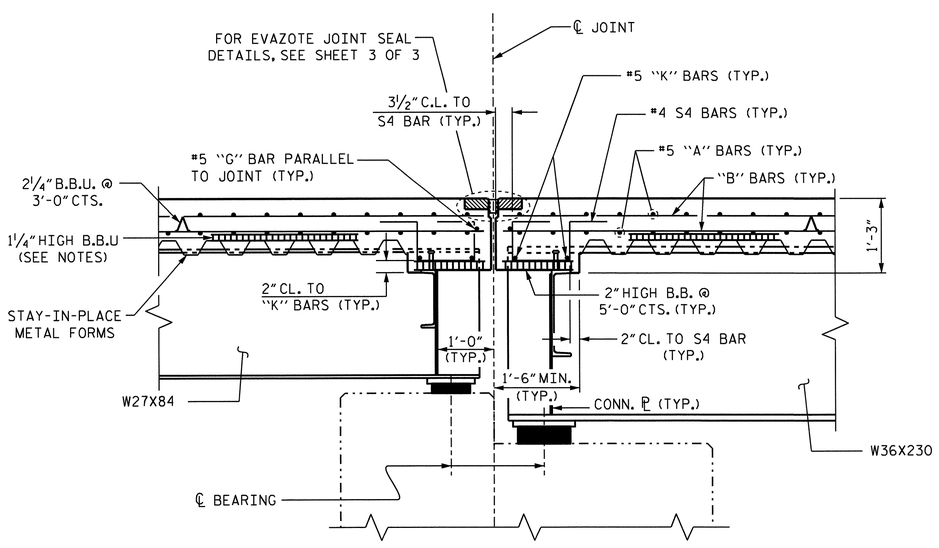


## SECTION THRU BENT 1

(BENT 3 SIMILAR)
(SPAN A INT. BM. W27X84 SHOWN, EXT. BM. W36X135 SIMILAR)

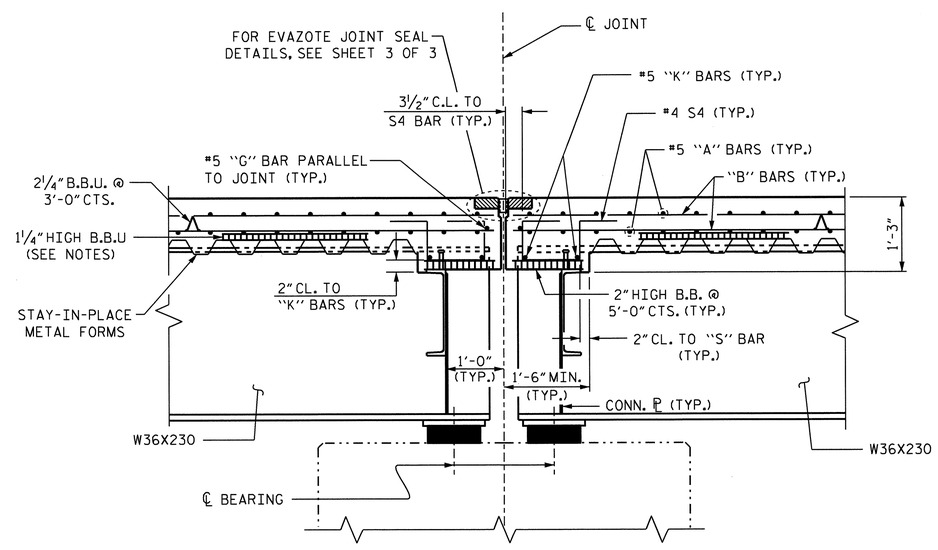


## SECTION THRU BENT 2

## SECTION THRU BENT

#5 "G" BAR MAY BE SHIFTED SLIGHTLY, AS NECESSARY, TO CLEAR REINFORCING STEEL

## NOTES

PROVIDE 1¼" HIGH BEAM BOLSTERS UPPER AT 4'-0" CTS. ATOP THE METAL STAY-IN-PLACE FORMS TO SUPPORT THE BOTTOM MAT OF 'A' BARS. WHEN USING REMOVABLE FORMS, PROVIDE CONTINUOUS HIGH CHAIRS FOR METAL DECK (C.H.C.M.) @ 4'-0" CTS. WITH A HEIGHT TO SUPPORT THE BOTTOM MAT OF 'A' BARS A CLEAR DISTANCE OF 2½" ABOVE THE TOP OF THE REMOVABLE FORM.

METAL STAY-IN-PLACE FORMS SHALL NOT BE WELDED TO BEAM OR GIRDER FLANGES IN THE ZONES REQUIRING CHARPY V-NOTCH TEST. SEE STRUCTURAL STEEL DETAIL SHEETS.

THE CONTRACTOR MAY, WHEN NECESSARY, PROPOSE A SCHEME FOR AVOIDING INTERFERENCE BETWEEN METAL STAY-IN-PLACE FORM SUPPORTS OR FORMS AND BEAM/GIRDER STIFFENERS OR CONNECTOR PLATES. THE PROPOSAL SHALL BE INDICATED, AS APPROPRIATE, ON EITHER THE STEEL WORKING DRAWINGS OR THE METAL STAY-IN-PLACE FORM WORKING DRAWINGS.

THE JOINT IN THE DECK SHALL BE SAWED PRIOR TO THE CASTING OF THE SIDEWALK.

A FULL DEPTH SAW CUT SHALL BE MADE IN THE SLAB AND EXISTING CONCRETE REMOVED IN ACCORDANCE WITH PLAN DETAILS.

DOWELS SHALL BE PLACED IN THE SAME HORIZONTAL PLANE AS THE TOP AND BOTTOM SLAB REINFORCING STEEL.

THE "D" DOWELS PLACED IN THE EXISTING DECK, CURTAIN WALLS, AND BENT DIAPHRAGMS SHALL BE INSTALLED USING AN ADHESIVE ANCHORING SYSTEM. LEVEL 1 FIELD TESTING IS REQUIRED AND THE YIELD LOAD OF THE DOWELS IS 18.6 KIPS. FOR ADHESIVELY ANCHORED BOLTS OR DOWELS SEE SPECIAL PROVISIONS.

PREVIOUSLY CAST CONCRETE IN EACH SPAN SHALL HAVE ATTAINED A MINIMUM COMPRESSIVE STRENGTH OF 3000 PSI BEFORE DECK CONCRETE IS CAST IN THE SPAN.

DURING THE JOINT INSTALLATION PRECEDURE, THE JOINT AND SURROUNDING AREA SHALL BE KEPT CLEAN AND FREE OF DEBRIS.

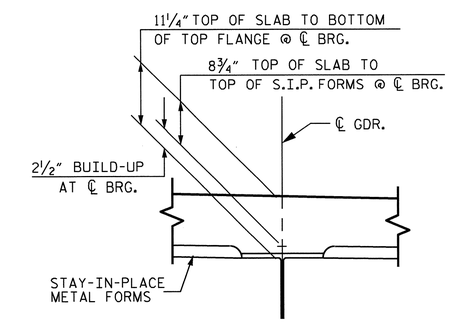


## DETAIL "A"

PROJECT NO. U-4019
NASH COUNTY
STATION: 55+38.99 -L-

SHEET 2 OF 3

STATE OF NORTH CAROLINA
DEPARTMENT OF TRANSPORTATION
RALEIGH

SUPERSTRUCTURE
TYPICAL SECTION

NORTH CAROLINA PROFESSIONAL SEAL 21545 ENGINEER STEVEN L. WANCE
05/25/11

| REVISIONS | | | | | | SHEET NO. |
|---|---|---|---|---|---|---|
| NO. | BY: | DATE: | NO. | BY: | DATE: | S-58 |
| 1 | | | 3 | | | TOTAL SHEETS |
| 2 | | | 4 | | | 93 |

STR. #2

DRAWN BY : J.H.CARDEN DATE : 12/10
CHECKED BY : S.WANCE DATE : 2/11

25-MAY-2011 12:01
Z:\TIPProjects-U\U4019\Structures\str2\FinalPlans\u4019_sd_ts2.dgn
swance

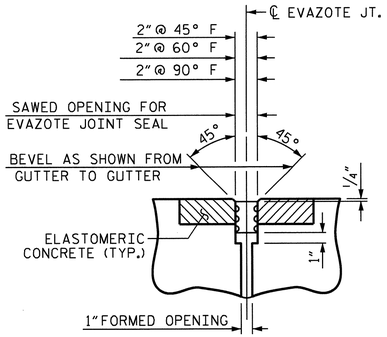


SECTION C-C
PROPOSED WIDENING EVAZOTE JOINT SEAL (END BENTS)

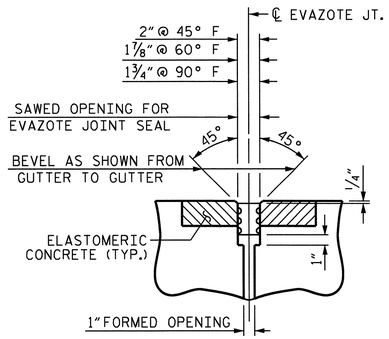


SECTION C-C
PROPOSED WIDENING EVAZOTE JOINT SEAL (INTERIOR BENTS)

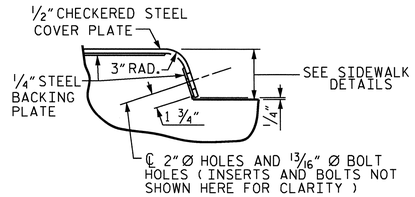


DETAIL "B"

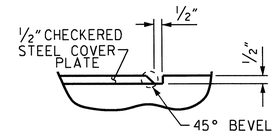


DETAIL "C"

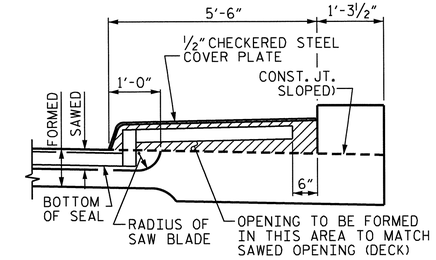


SECTION H-H

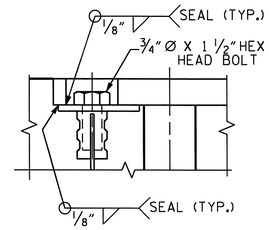


DETAIL "A"

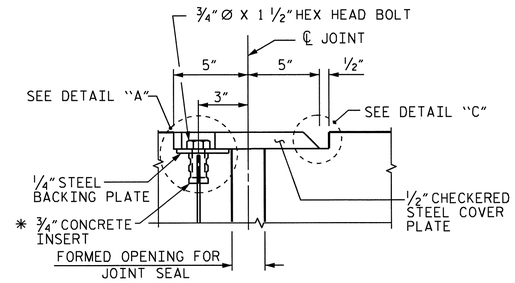


SECTION K-K

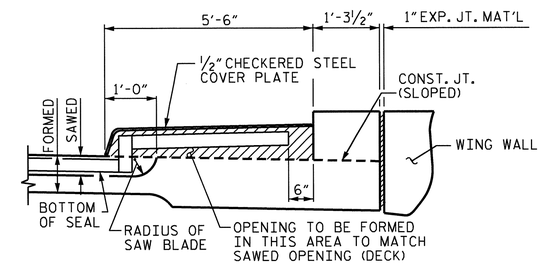


SECTION I-I
COVER PLATE BOLTS AND CONCRETE INSERTS NOT SHOWN FOR CLARITY.

# JOINT SEAL DETAILS

*THE 3/4" CONCRETE INSERTS SHALL BE CLOSED-END FERRULES WITH LOOPED WIRE STRUTS ATTACHED TO THEM. THE INSERTS SHALL CONFORM TO AASHTO M169, GRADE 12L14 AND SHALL HAVE A TENSILE WORKING LOAD CAPACITY OF 3000 LBS.

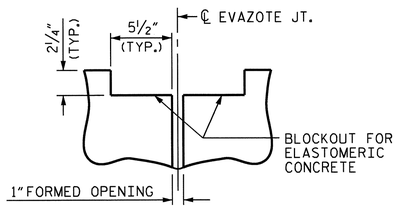


SECTION C-C
EVAZOTE JOINT SEAL (PRE-SAWED ELASTOMERIC CONCRETE DIMENSIONS)

THE STEEL PLATES SHALL CONFORM TO AASHTO M270 GRADE 36 OR APPROVED EQUAL. AFTER FABRICATION, THE PLATES SHALL BE COMMERCIALLY BLAST CLEANED AND EITHER COATED WITH A MINIMUM THICKNESS OF 4 MILS (DRY) OF ZINC-RICH PAINT, GALVANIZED OR METALLIZED TO A MINIMUM THICKNESS OF 6 MILS IN ACCORDANCE WITH THE STANDARD SPECIFICATIONS. FOR THERMAL SPRAYED COATINGS (METALLIZATION), SEE SPECIAL PROVISIONS.

THE 3/4" DIAMETER HEX HEAD BOLTS SHALL CONFORM TO ASTM F593 ALLOY 304 STAINLESS STEEL.

NO SEPARATE PAYMENT WILL BE MADE FOR FURNISHING AND INSTALLING THE COVER PLATE. THE ENTIRE COST OF THIS WORK SHALL BE INCLUDED IN THE LUMP SUM PRICE FOR "EVAZOTE JOINT SEALS".

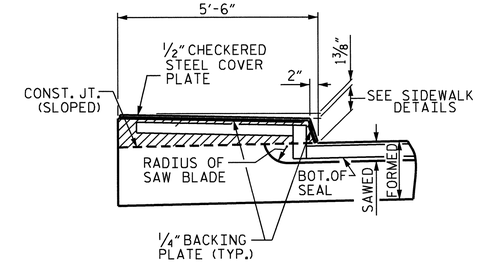


SECTION J-J
(ON APPROACH SLAB)

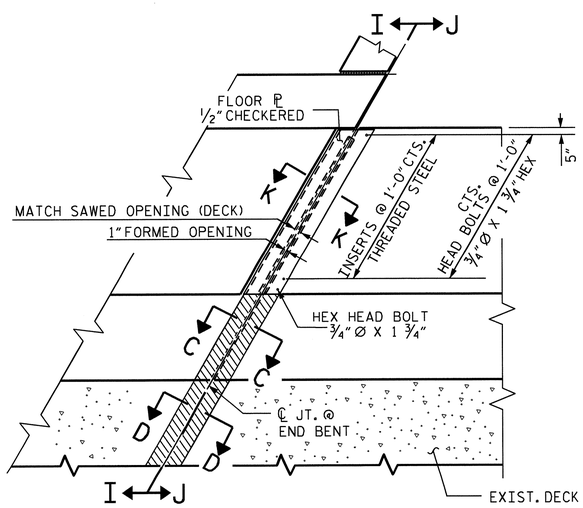


AT END BENTS
END BENT 2 SHOWN
END BENT 1 SIMILAR

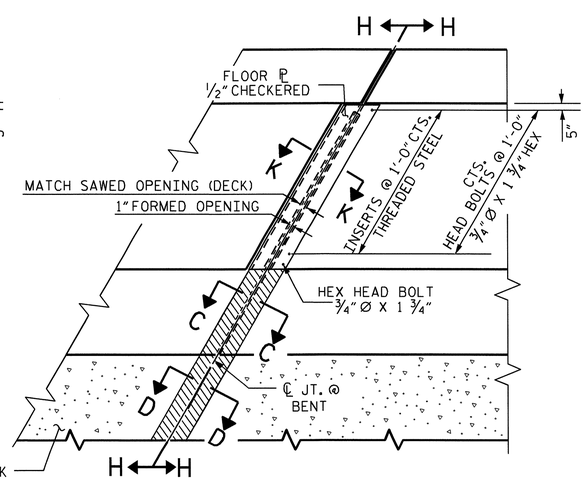


AT BENTS

# PLAN VIEW OF EVAZOTE JOINT SEAL FOR SIDEWALK

THE NOMINAL UNCOMPRESSED SEAL WIDTH OF THE EVAZOTE JOINT SEAL SHALL BE 2 1/2" AT ALL JOINTS.

FOR EVAZOTE JOINT SEALS, SEE SPECIAL PROVISIONS.

FOR ELASTOMERIC CONCRETE, SEE SPECIAL PROVISIONS.

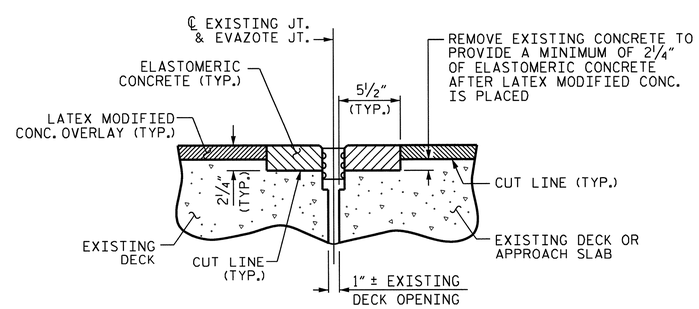


SECTION D-D
FOR JOINT REPLACEMENT ON EXISTING DECK

(STAGE III CONSTRUCTION)
REMOVAL OF EXISTING CONCRETE IS INCIDENTAL TO THE UNIT PRICE BID FOR ELASTOMERIC CONC.

FOR ELASTOMERIC CONCRETE QUANTITIES SEE SUPERSTRUCTURE BILL OF MATERIAL

NORTH CAROLINA PROFESSIONAL SEAL 21545 ENGINEER STEVEN L. WANCE
5/25/11

PROJECT NO. U-4019
NASH COUNTY
STATION: 55+38.99 -L-

SHEET 3 OF 3

STATE OF NORTH CAROLINA
DEPARTMENT OF TRANSPORTATION
RALEIGH

SUPERSTRUCTURE
TYPICAL SECTION, EVAZOTE JOINT & SIDEWALK CHECKERED STEEL COVER PLATE DETAILS

| REVISIONS | | | | | | SHEET NO. |
|---|---|---|---|---|---|---|
| NO. | BY: | DATE: | NO. | BY: | DATE: | S-59 |
| 1 | | | 3 | | | TOTAL SHEETS |
| 2 | | | 4 | | | 93 |

STR. #2

DRAWN BY : QT NGUYEN DATE : 10-15-10
CHECKED BY : S. WANCE DATE : 04-11-11

26-MAY-2011 13:25
R:\Structures\str2\FinalPlans\u4019_sd_ts2.dgn
swance

## NOTES

THE "A" BARS SHALL BE PLACED PERPENDICULAR TO THE SHORT CHORD.

MAINTAIN MINIMUM 2" CLEARANCE TO SLAB STEEL AT OUTSIDE EDGE AND JOINT EDGES OF THE PROPOSED WIDENING DECK SLAB.

MAINTAIN THE 2'-6" SPLICE LENGTH BETWEEN THE #5 D1 DOWELS AND THE "A" BARS IN THE PROPOSED DECK SLAB WIDENING.

THE D2 DOWELS PLACED INTO THE EXISTING DECK SLAB SHALL BE INSTALLED USING AN ADHESIVE ANCHORING SYSTEM. LEVEL 1 FIELD TESTING IS REQUIRED AND THE YIELD LOAD OF THE DOWELS IS 18.6 KIPS. FOR ADHESIVELY ANCHORED ANCHOR BOLTS OR DOWELS, SEE SPECIAL PROVISIONS.

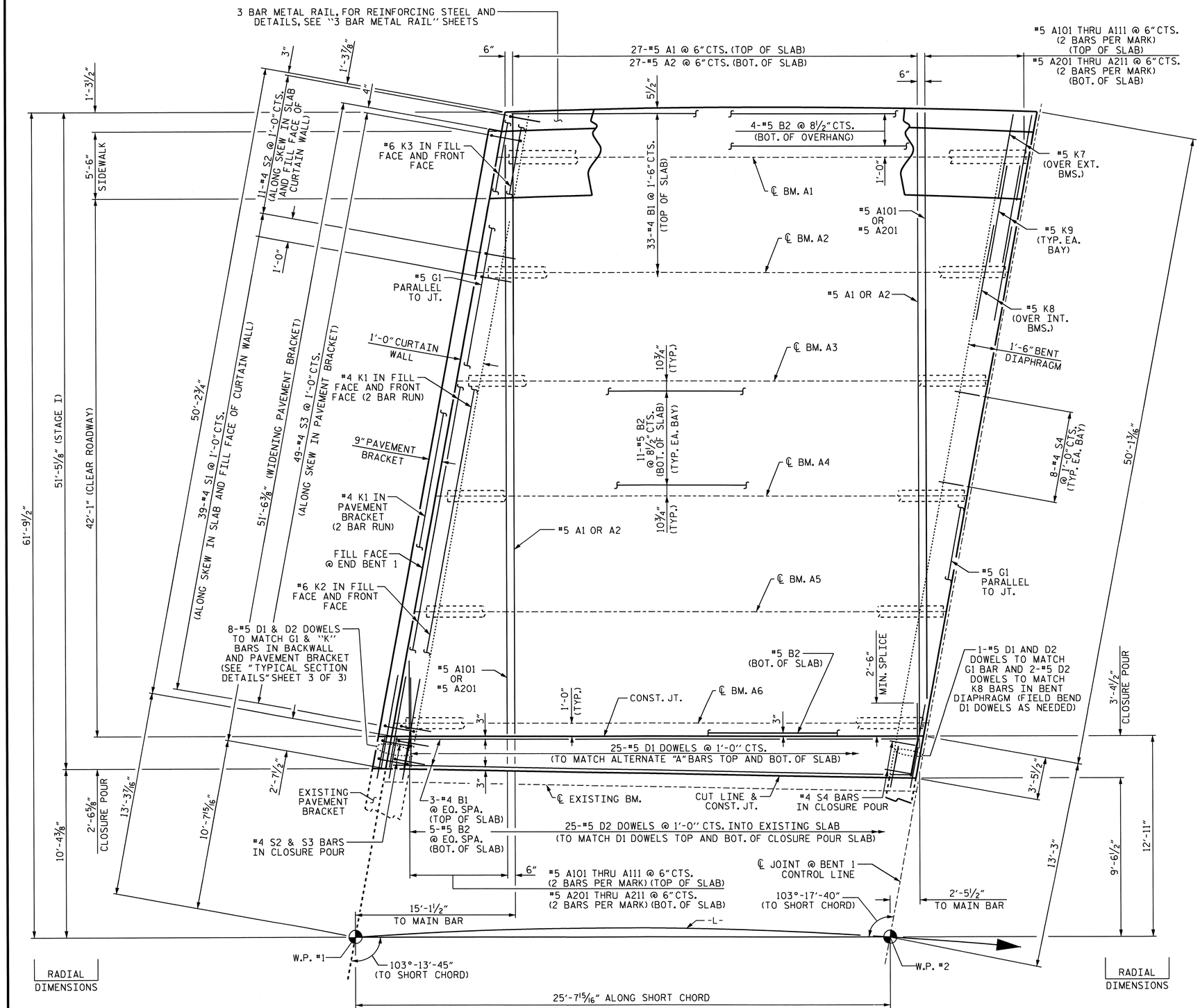


PLAN OF SPAN A

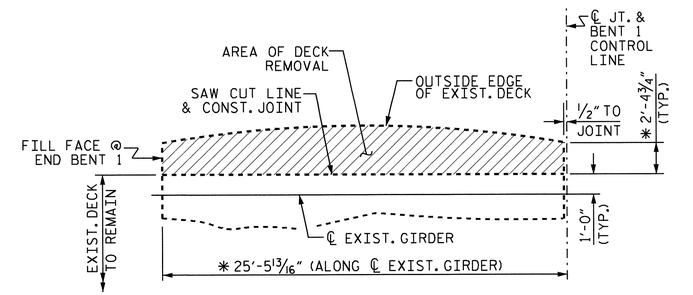


LAYOUT OF EXISTING DECK REMOVAL

SHOWING LEFT OUTSIDE EDGE OF EXISTING DECK

✱ DIMENSION BASED ON THE BEST AVAILABLE INFORMATION FOR THE EXISTING BRIDGE. FIELD ADJUSTMENT MAY BE REQUIRED AS APPROVED BY THE ENGINEER.

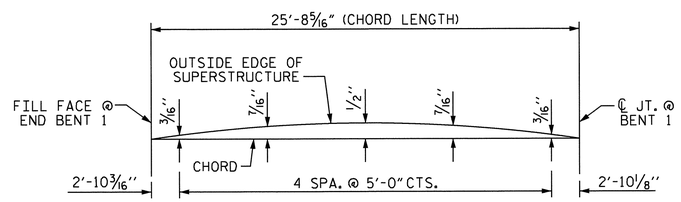


ARC OFFSETS - LEFT EDGE

PROJECT NO. U-4019

NASH COUNTY

STATION: 55+38.99 -L-

SHEET 1 OF 4

STATE OF NORTH CAROLINA
DEPARTMENT OF TRANSPORTATION
RALEIGH

SUPERSTRUCTURE

PLAN OF SPAN A

STAGE I

| REVISIONS | | | | | | SHEET NO. |
|---|---|---|---|---|---|---|
| NO. | BY: | DATE: | NO. | BY: | DATE: | S-60 |
| 1 | | | 3 | | | TOTAL SHEETS |
| 2 | | | 4 | | | 93 |

STR. #2

DRAWN BY : J.H. CARDEN DATE : 02/11
CHECKED BY : S. WANCE DATE : 03/11

25-MAY-2011 12:01
Z:\TIPProjects-U\U4019\Structures\str2\FinalPlans\u4019_sd_ps2.dgn
swance

## NOTES

THE "A" BARS SHALL BE PLACED PERPENDICULAR TO THE SHORT CHORD.

MAINTAIN MINIMUM 2" CLEARANCE TO SLAB STEEL AT OUTSIDE EDGE AND JOINT EDGES OF THE PROPOSED WIDENING DECK SLAB.

MAINTAIN THE 2'-6" SPLICE LENGTH BETWEEN THE #5 D3 DOWELS AND THE "A" BARS IN THE PROPOSED DECK SLAB WIDENING.

THE D4 DOWELS PLACED INTO THE EXISTING DECK SLAB SHALL BE INSTALLED USING AN ADHESIVE ANCHORING SYSTEM. LEVEL 1 FIELD TESTING IS REQUIRED AND THE YIELD LOAD OF THE DOWELS IS 18.6 KIPS. FOR ADHESIVELY ANCHORED ANCHOR BOLTS OR DOWELS, SEE SPECIAL PROVISIONS.

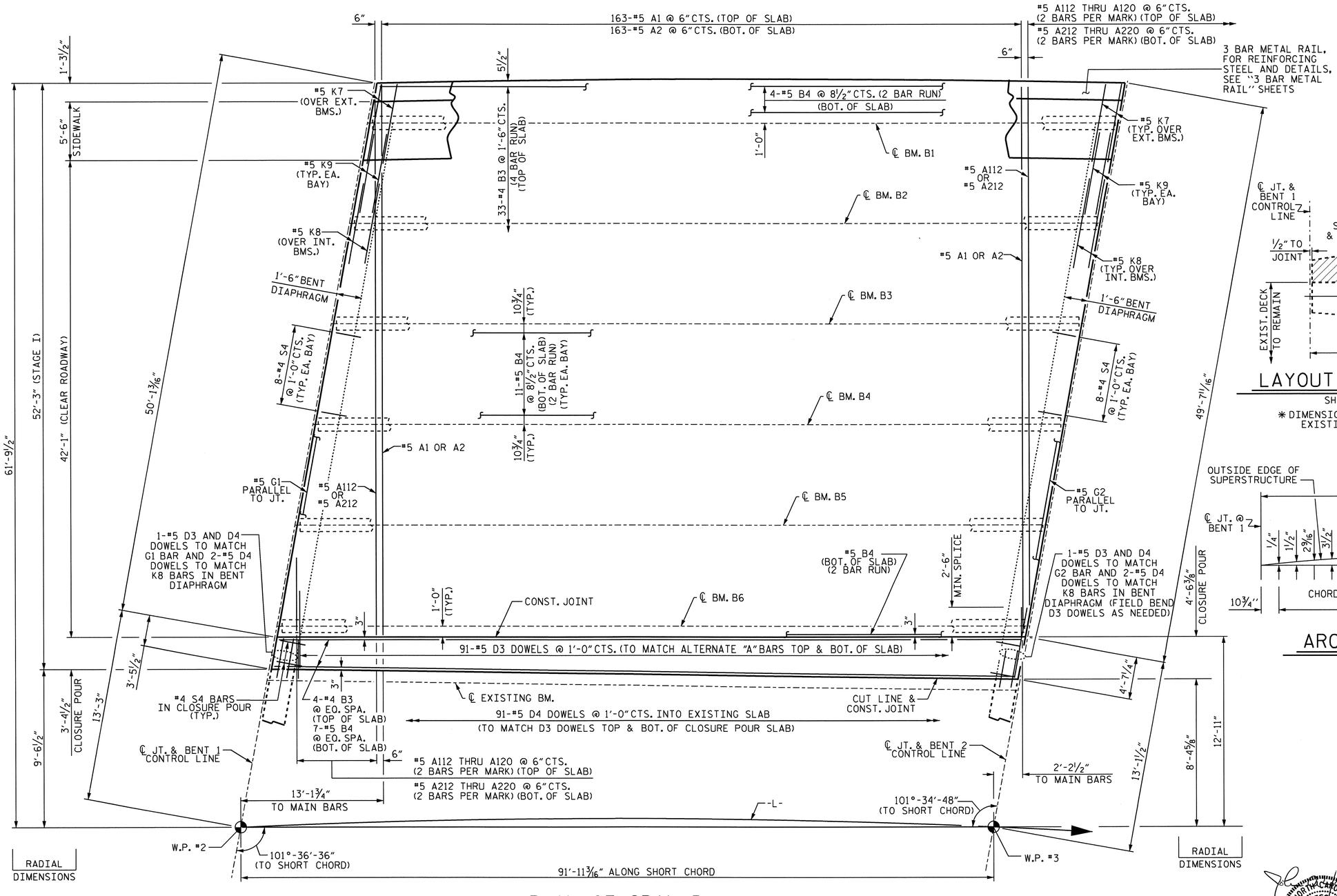


## PLAN OF SPAN B

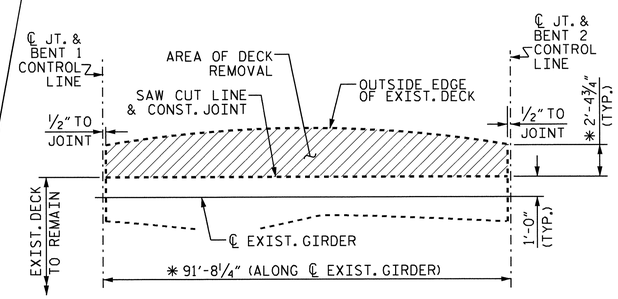


## LAYOUT OF EXISTING DECK REMOVAL

SHOWING LEFT OUTSIDE EDGE OF EXISTING DECK

* DIMENSION BASED ON THE BEST AVAILABLE INFORMATION FOR THE EXISTING BRIDGE. FIELD ADJUSTMENT MAY BE REQUIRED AS APPROVED BY THE ENGINEER.

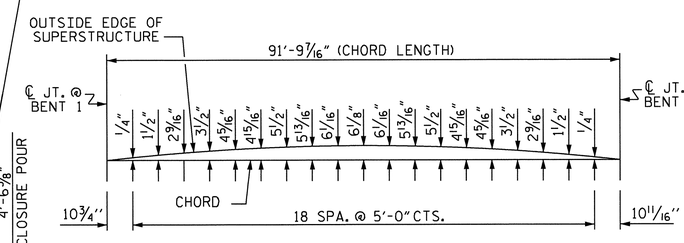


## ARC OFFSETS - LEFT EDGE

PROJECT NO. U-4019

NASH COUNTY

STATION: 55+38.99 -L-

SHEET 2 OF 4

STATE OF NORTH CAROLINA
DEPARTMENT OF TRANSPORTATION
RALEIGH

SUPERSTRUCTURE

PLAN OF SPAN B

STAGE I

NORTH CAROLINA PROFESSIONAL SEAL 32492 ENGINEER JOHN A. YANNACCONE

5/25/11

| REVISIONS | | | | | | SHEET NO. |
|---|---|---|---|---|---|---|
| NO. | BY: | DATE: | NO. | BY: | DATE: | S-61 |
| 1 | | | 3 | | | TOTAL SHEETS |
| 2 | | | 4 | | | 93 |

DRAWN BY : J.H. CARDEN DATE : 02/11
CHECKED BY : S. WANCE DATE : 03/11

25-MAY-2011 12:01
Z:\TIPProjects-U\U4019\Structures\str2\FinalPlans\u4019_sd_ps2.dgn
swance

STR. #2 NCBDS

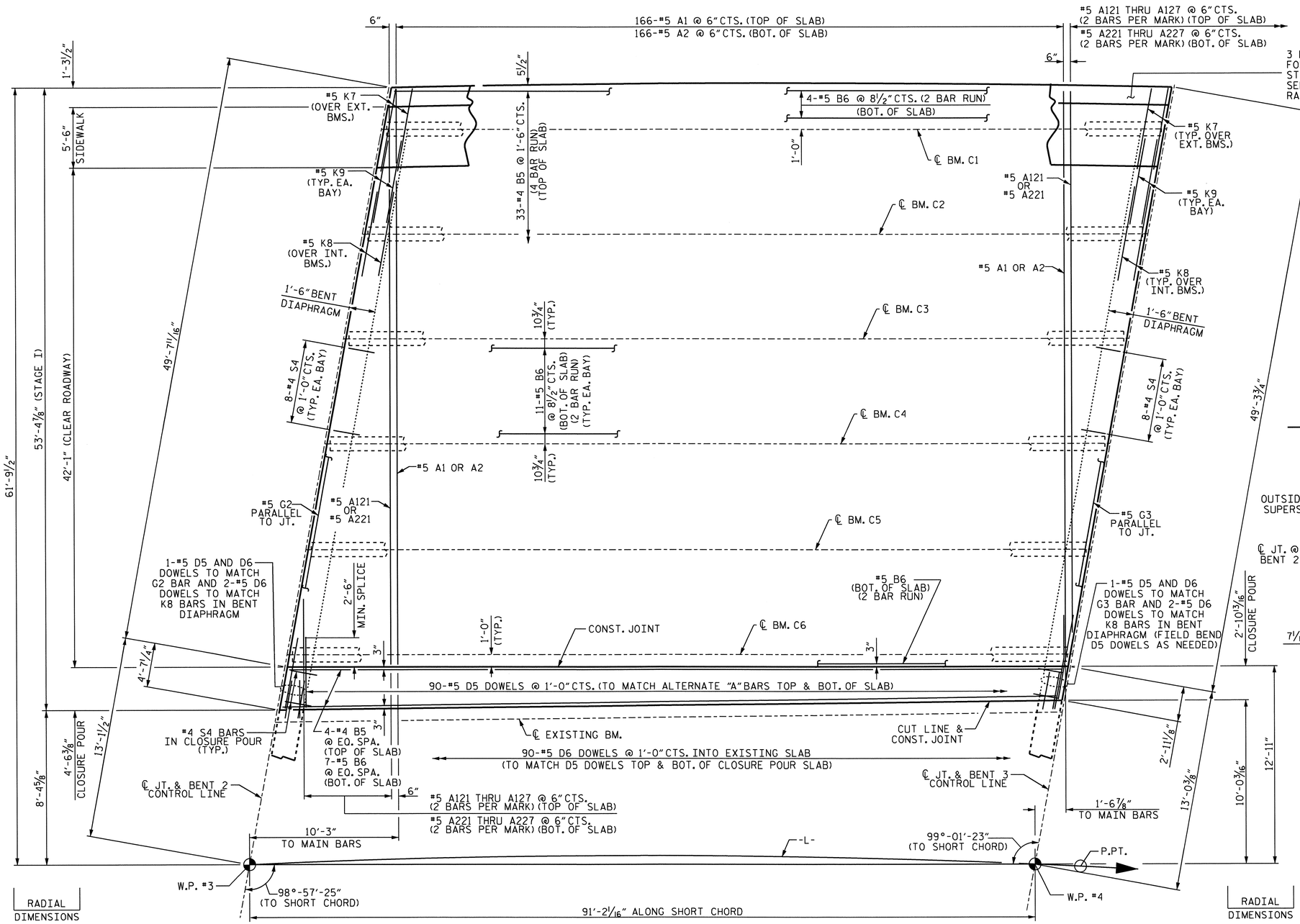


## PLAN OF SPAN C

NOTE LOCATION OF P.T. STATION NEAR W.P. #4.

## NOTES

THE "A" BARS SHALL BE PLACED PERPENDICULAR TO THE SHORT CHORD.

MAINTAIN MINIMUM 2" CLEARANCE TO SLAB STEEL AT OUTSIDE EDGE AND JOINT EDGES OF THE PROPOSED WIDENING DECK SLAB.

MAINTAIN THE 2'-6" SPLICE LENGTH BETWEEN THE #5 D5 DOWELS AND THE "A" BARS IN THE PROPOSED DECK SLAB WIDENING.

THE D6 DOWELS PLACED INTO THE EXISTING DECK SLAB SHALL BE INSTALLED USING AN ADHESIVE ANCHORING SYSTEM. LEVEL 1 FIELD TESTING IS REQUIRED AND THE YIELD LOAD OF THE DOWELS IS 18.6 KIPS. FOR ADHESIVELY ANCHORED ANCHOR BOLTS OR DOWELS, SEE SPECIAL PROVISIONS.

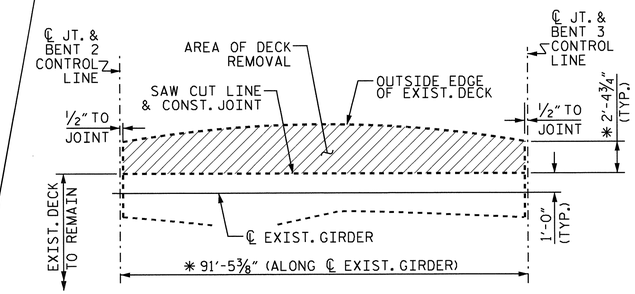


## LAYOUT OF EXISTING DECK REMOVAL

SHOWING LEFT OUTSIDE EDGE OF EXISTING DECK

* DIMENSION BASED ON THE BEST AVAILABLE INFORMATION FOR THE EXISTING BRIDGE. FIELD ADJUSTMENT MAY BE REQUIRED AS APPROVED BY THE ENGINEER.

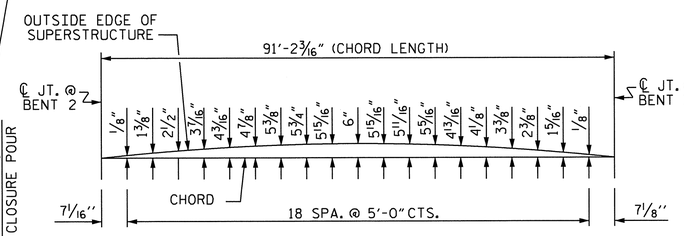


## ARC OFFSETS - LEFT EDGE

PROJECT NO. U-4019

NASH COUNTY

STATION: 55+38.99 -L-

SHEET 3 OF 4

STATE OF NORTH CAROLINA
DEPARTMENT OF TRANSPORTATION
RALEIGH

SUPERSTRUCTURE

PLAN OF SPAN C

STAGE I

NORTH CAROLINA PROFESSIONAL SEAL 32492 ENGINEER JOHN A. YANNACCONE

5/25/11

| REVISIONS | | | | | | SHEET NO. |
|---|---|---|---|---|---|---|
| NO. | BY: | DATE: | NO. | BY: | DATE: | S-62 |
| 1 | | | 3 | | | TOTAL SHEETS |
| 2 | | | 4 | | | 93 |

DRAWN BY : J.H. CARDEN DATE : 02/11
CHECKED BY : S. WANCE DATE : 03/11

25-MAY-2011 12:01
Z:\TIPProjects-U\U4019\Structures\str2\Final Plans\u4019_sd_ps2.dgn
swance

STR. #2

NCBDS

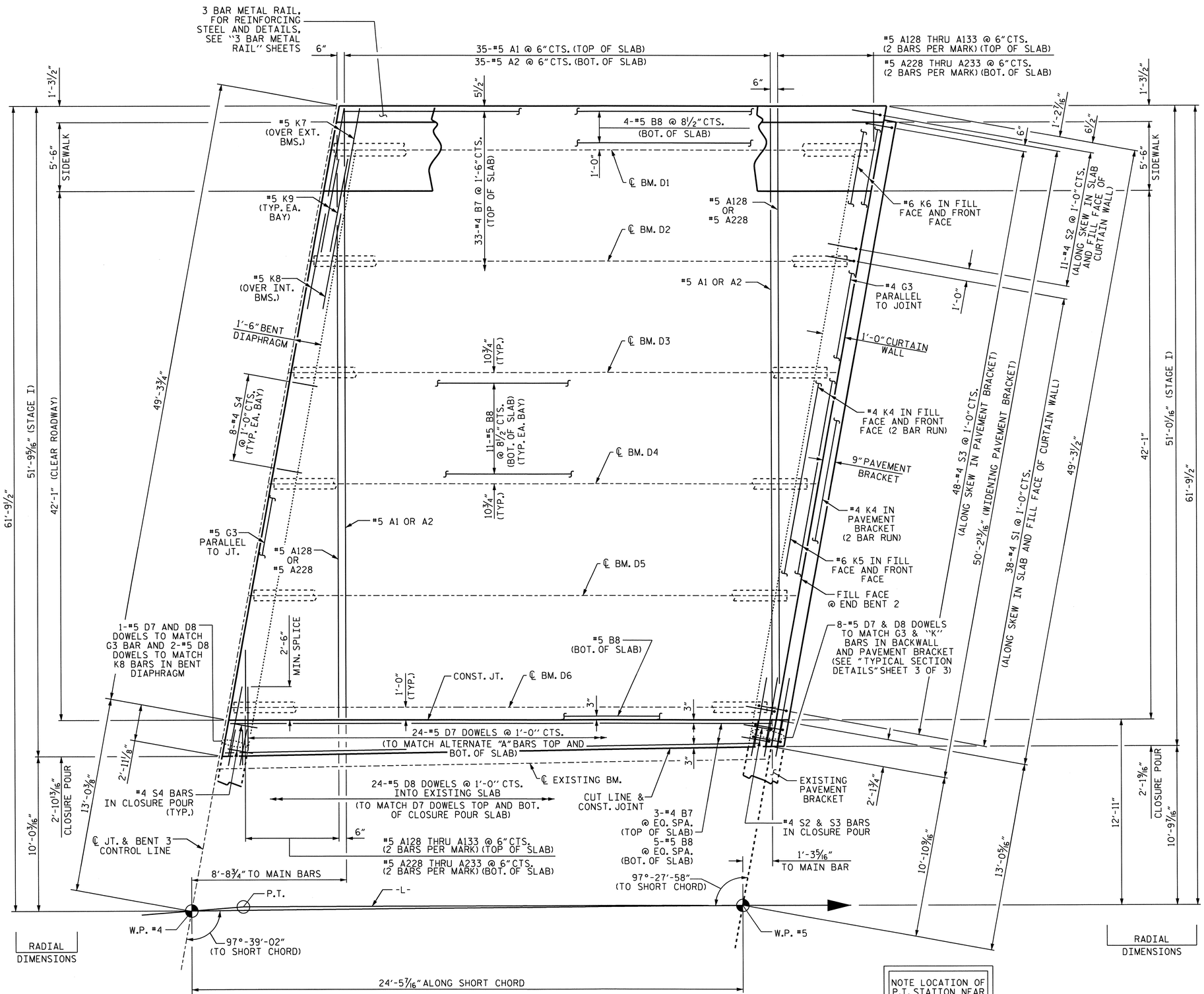


NOTE LOCATION OF P.T. STATION NEAR W.P. #4.

## PLAN OF SPAN D

ARC OFFSETS ARE NEGLIGIBLE

## NOTES

THE "A" BARS SHALL BE PLACED PERPENDICULAR TO THE SHORT CHORD.

MAINTAIN MINIMUM 2" CLEARANCE TO SLAB STEEL AT OUTSIDE EDGE AND JOINT EDGES OF THE PROPOSED WIDENING DECK SLAB.

MAINTAIN THE 2'-6" SPLICE LENGTHBETWEEN THE #5 D7 DOWELS AND THE "A" BARS IN THE PROPOSED DECK SLAB WIDENING.

THE D8 DOWELS PLACED IN THE EXISTING DECK SLAB SHALL BE INSTALLED USING AN ADHESIVE ANCHORING SYSTEM. LEVEL 1 FIELD TESTING IS REQUIRED AND THE YIELD LOAD OF THE DOWELS IS 18.6 KIPS. FOR ADHESIVELY ANCHORED ANCHOR BOLTS OR DOWELS, SEE SPECIAL PROVISIONS.

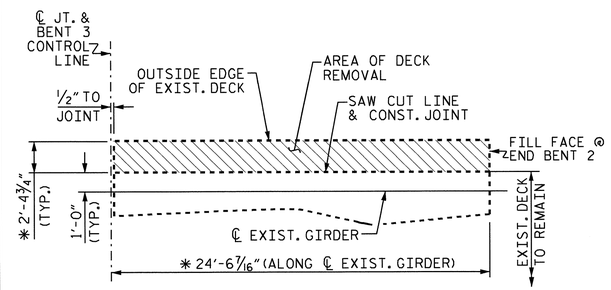


## LAYOUT OF EXISTING DECK REMOVAL

SHOWING LEFT OUTSIDE EDGE OF EXISTING DECK

* DIMENSION BASED ON THE BEST AVAILABLE INFORMATION FOR THE EXISTING BRIDGE. FIELD ADJUSTMENT MAY BE REQUIRED AS APPROVED BY THE ENGINEER.

PROJECT NO. U-4019

NASH COUNTY

STATION: 55+38.99 -L-

SHEET 4 OF 4

STATE OF NORTH CAROLINA
DEPARTMENT OF TRANSPORTATION
RALEIGH

SUPERSTRUCTURE

PLAN OF SPAN D

STAGE I

NORTH CAROLINA PROFESSIONAL SEAL 32492 ENGINEER JOHN A. YANNACCONE 10/25/11

| REVISIONS | | | | | | SHEET NO. |
|---|---|---|---|---|---|---|
| NO. | BY: | DATE: | NO. | BY: | DATE: | S-63 |
| 1 | | | 3 | | | TOTAL SHEETS |
| 2 | | | 4 | | | 93 |

DRAWN BY : J.H.CARDEN DATE : 02/11
CHECKED BY : S. WANCE DATE : 03/11

25-MAY-2011 12:01
Z:\TIPProjects-U\U4019\Structures\str2\FinalPlans\u4019_sd_ps2.dgn
swance

STR. #2

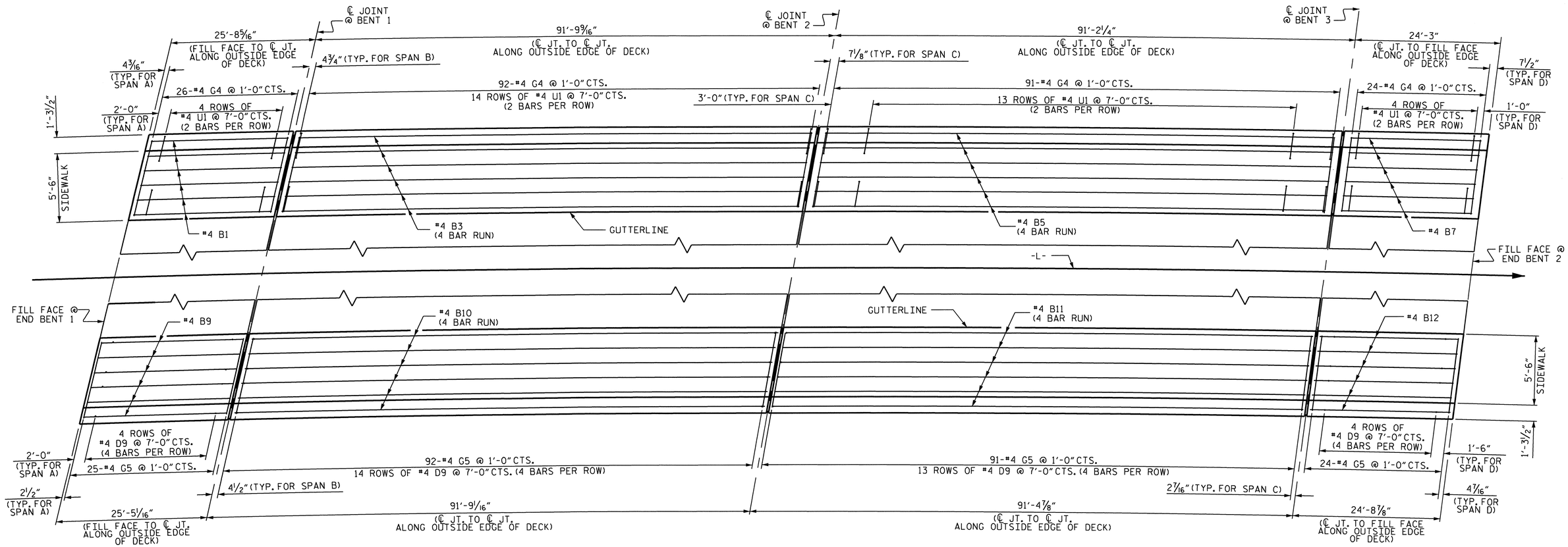


## PLAN OF SIDEWALK

✱ NOTE: ℄ -L- RADIUS = 2000.00'
EXISTING BRIDGE RADIUS = 6013.55'

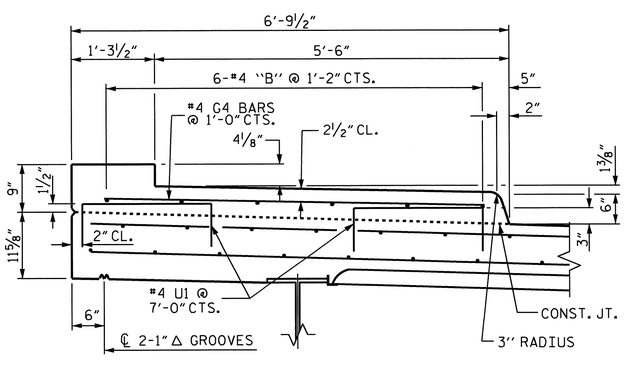


## SECTION THRU LEFT SIDEWALK

## NOTES

THE D9 DOWELS SHALL BE GROUTED OR ADHESIVELY ANCHORED. FIELD TESTING OF THE ADHESIVE BONDING SYSTEM IS NOT REQUIRED.

THE #4 G4, G5, U1, AND D9 BARS MAY BE SHIFTED SLIGHTLY IN ORDER TO MAINTAIN 2" OF CONCRETE COVER IN SIDEWALK.

THE RIGHT SIDEWALK REINFORCING STEEL AND CONCRETE SHALL BE INCLUDED IN THE PAY ITEM FOR "REINFORCED CONCRETE DECK SLAB".

THE LEFT JOINT IN THE DECK SHALL BE SAWED PRIOR TO THE CASTING OF THE SIDEWALK.

GROOVED CONTRACTION JOINTS 1/2" IN DEPTH, SHALL BE TOOLED IN ALL EXPOSED FACES OF SIDEWALK IN ACCORDANCE WITH ARTICLE 825-10(B) OF THE STANDARD SPECIFICATIONS. THE CONTRACTION JOINTS SHALL BE LOCATED AT A SPACING OF 8 FEET TO 10 FEET BETWEEN JOINTS. NO CONTRACTION JOINTS WILL BE REQUIRED FOR SEGMENTS LESS THAN 10 FEET IN LENGTH.

THE SIDEWALK ON THE LEFT SIDE WIDENING SHALL NOT BE CAST UNTIL ALL SLAB CONCRETE HAS BEEN CAST AND HAS REACHED A MINIMUM COMPRESSIVE STRENGTH OF 3000 PSI.

ALL REINFORCING STEEL IN SIDEWALK SHALL BE EPOXY COATED.

FOR SIDEWALK QUANTITIES, SEE SUPERSTRUCTURE BILL OF MATERIAL SHEET.

FOR SIDEWALK COVER PLATE DETAILS, SEE TYPICAL SECTION DETAIL SHEET.

#4 U1 BARS MAY BE PUSHED INTO GREEN CONCRETE AFTER DECK HAS BEEN SCREEDED OFF.

THE RIGHT SIDEWALK IS TO BE CAST ON THE EXISTING BRIDGE DECK. SWEEP AND POWERWASH THE EXISTING DECK TO REMOVE ALL DEBRIS, GRIT, GRIME, ROAD OIL, ETC. AS DIRECTED BY THE ENGINEER. CLEAN A WIDTH THAT EXTENDS A MINIMUM OF 1'-0" INTO THE TRAVEL WAY FROM THE CURB FACE OF THE FINISHED SIDEWALK. ROUGHEN THE EXISTING DECK WHERE THE SIDEWALK IS TO BE CAST AS DIRECTED BY THE ENGINEER.

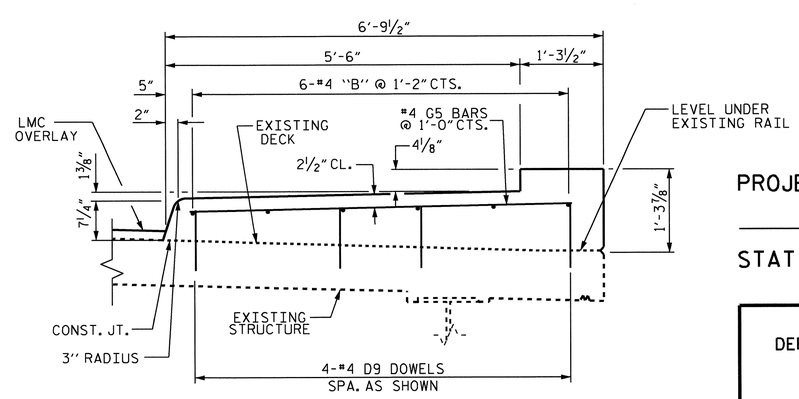


## SECTION THRU RIGHT SIDEWALK

THE JOINT OF THE RIGHT SIDEWALK MAY BE FORMED WHEN THE SIDEWALK IS CAST IN STAGE 2 CONSTRUCTION, OR MAY BE SAW CUT THROUGH THE FULL DEPTH OF THE SIDEWALK DURING STAGE 3 CONSTRUCTION.

NORTH CAROLINA PROFESSIONAL SEAL 21545 ENGINEER STEVEN L. WANCE

PROJECT NO. U-4019
NASH COUNTY
STATION: 55+38.99 -L-

DEPARTMENT OF TRANSPORTATION

SIDEWALK DETAILS

| | DATE: | NO. | BY: |
|---|---|---|---|
| 1 | | 3 | |
| 2 | | 4 | |

SHEET NO. S-64
TOTAL SHEETS 93

DRAWN BY : J. H. CARDEN DATE : 1/11
CHECKED BY : S. WANCE DATE : 3/11

25-MAY-2011 12:00
Z:\TIPProjects-U\U4019\Structures\str2\FinalPlans\u4019_sd_sw2.dgn
swance

STR. #2

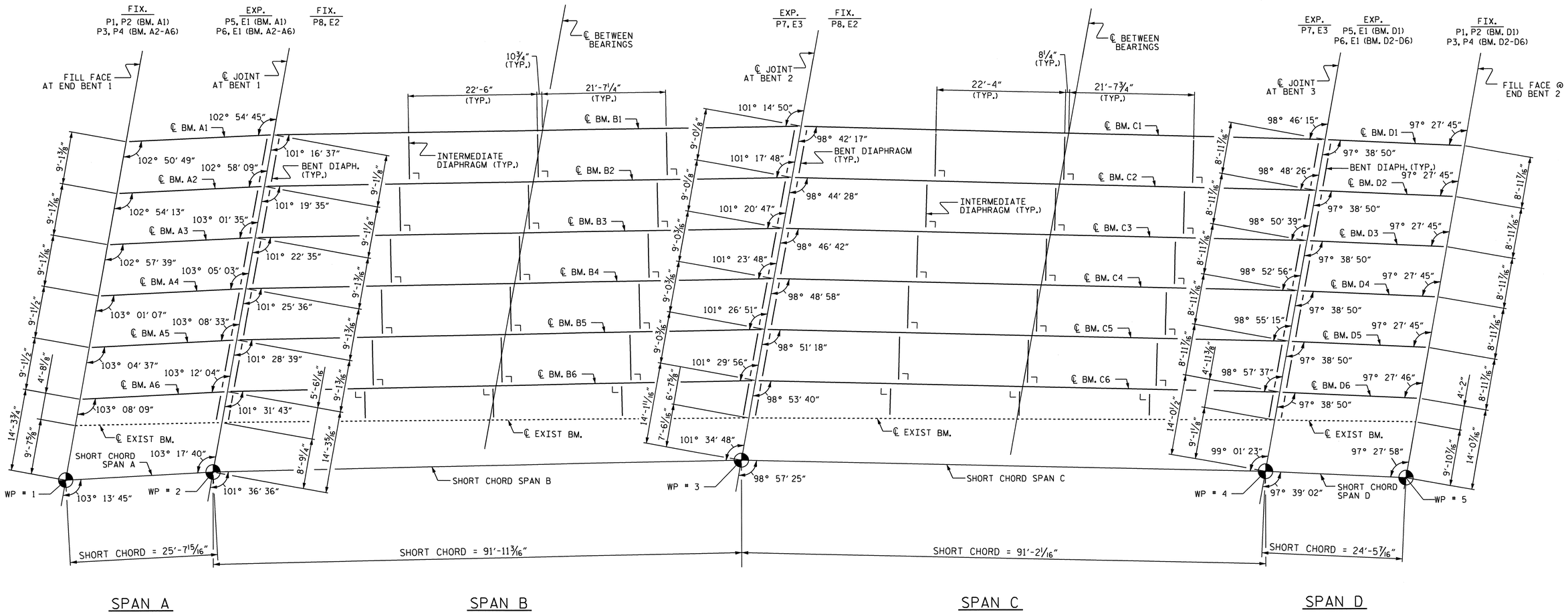


# FRAMING PLAN

PROJECT NO. U-4019
NASH COUNTY
STATION: 55+38.99-L-

NORTH CAROLINA PROFESSIONAL SEAL 21545 ENGINEER STEVEN L. WANCE
05/25/11

STATE OF NORTH CAROLINA
DEPARTMENT OF TRANSPORTATION
RALEIGH

SUPERSTRUCTURE

FRAMING PLAN

| REVISIONS | | | | | | SHEET NO. |
|---|---|---|---|---|---|---|
| NO. | BY: | DATE: | NO. | BY: | DATE: | S-65 |
| 1 | | | 3 | | | TOTAL SHEETS |
| 2 | | | 4 | | | 93 |

DRAWN BY : J.H.CARDEN DATE : 12/10
CHECKED BY : S.WANCE DATE : 02/11

25-MAY-2011 12:00
Z:\TIPProjects-U\U4019\Structures\str2\FinalPlans\u4019_sd_fp2.dgn
swance

STR #2

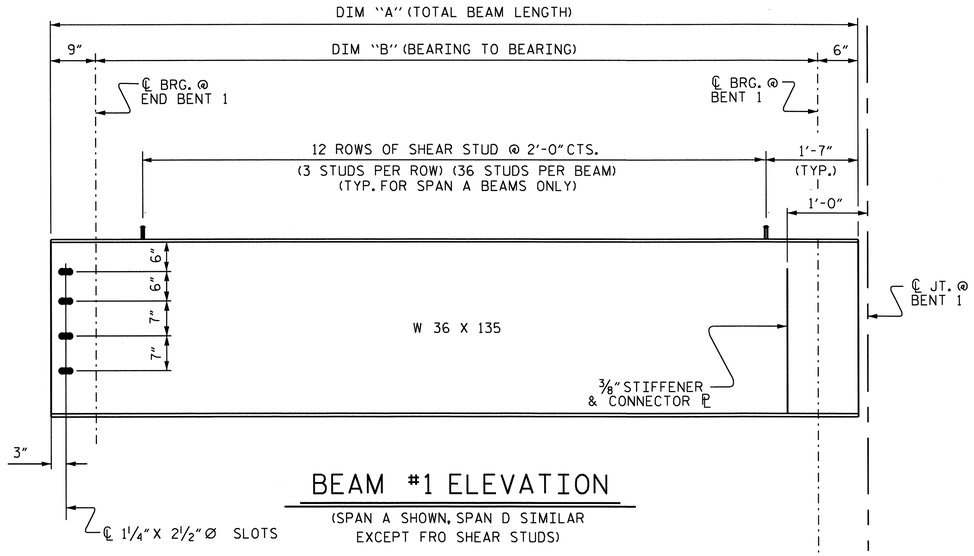


## BEAM #1 ELEVATION

(SPAN A SHOWN, SPAN D SIMILAR EXCEPT FRO SHEAR STUDS)

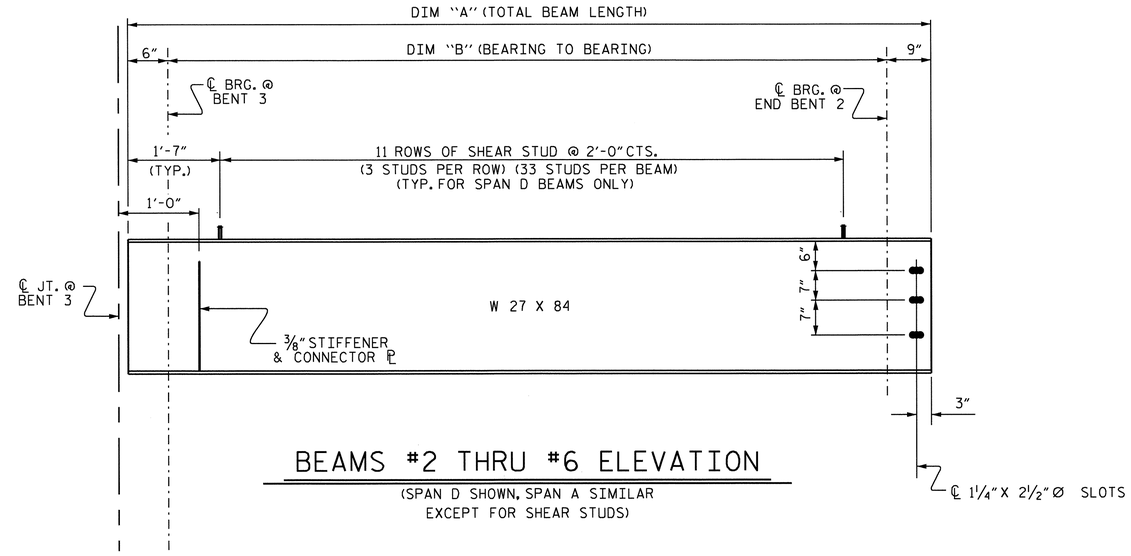


## BEAMS #2 THRU #6 ELEVATION

(SPAN D SHOWN, SPAN A SIMILAR EXCEPT FOR SHEAR STUDS)

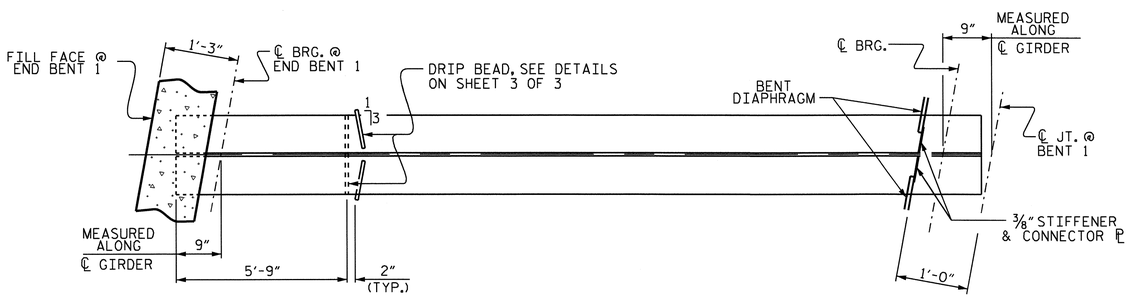


## BOTTOM FLANGE DETAIL

(SPAN A SHOWN, SPAN D SIMILAR)

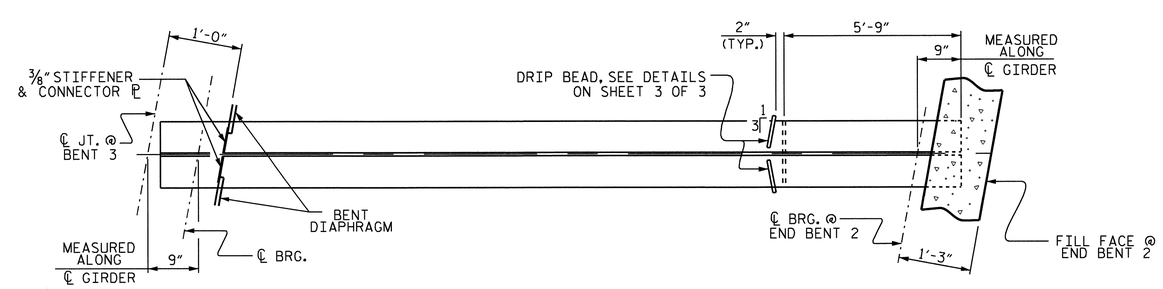


## BOTTOM FLANGE DETAIL

(SPAN D SHOWN, SPAN A SIMILAR)

| BEAM DIMENSIONS | | | | |
|---|---|---|---|---|
| BEAM NUMBER | SPAN A | | SPAN D | |
| | DIM. "A" | DIM. "B" | DIM. "A" | DIM. "B" |
| 1 | 24'-10 15/16" | 23'-7 15/16" | 23'-6" | 22'-3" |
| 2 | 24'-10 7/8" | 23'-7 7/8" | 23'-6 3/8" | 22'-3 3/8" |
| 3 | 24'-10 13/16" | 23'-7 13/16" | 23'-6 3/4" | 22'-3 11/16" |
| 4 | 24'-10 3/4" | 23'-7 3/4" | 23'-7 1/16" | 22'-4 1/16" |
| 5 | 24'-10 3/4" | 23'-7 11/16" | 23'-7 3/8" | 22'-4 7/16" |
| 6 | 24'-10 5/8" | 23'-7 5/8" | 23'-7 3/4" | 22'-4 3/4" |

PROJECT NO. U-4019

NASH COUNTY

STATION: 55+38.99 -L-

SHEET 1 OF 3

NORTH CAROLINA PROFESSIONAL SEAL 21545 ENGINEER STEVEN L. WANCE

5/25/11

STATE OF NORTH CAROLINA
DEPARTMENT OF TRANSPORTATION
RALEIGH

SUPERSTRUCTURE

# STRUCTURAL STEEL DETAILS

(SPANS A & D)

| REVISIONS | | | | | | SHEET NO. |
|---|---|---|---|---|---|---|
| NO. | BY: | DATE: | NO. | BY: | DATE: | S-66 |
| 1 | | | 3 | | | TOTAL SHEETS |
| 2 | | | 4 | | | 93 |

DRAWN BY : J.H.CARDEN DATE : 12/10

CHECKED BY : S.WANCE DATE : 2/11

26-MAY-2011 10:10
R:\Structures\str2\Final Plans\u4019_sd_ss2.dgn
swance

STR. #2

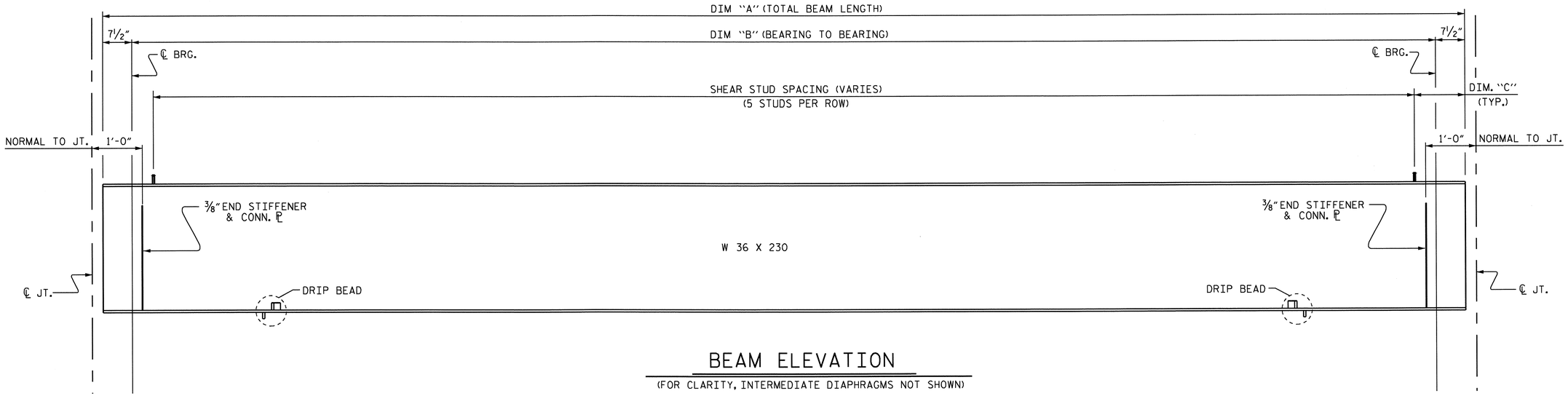


## BEAM ELEVATION

(FOR CLARITY, INTERMEDIATE DIAPHRAGMS NOT SHOWN)

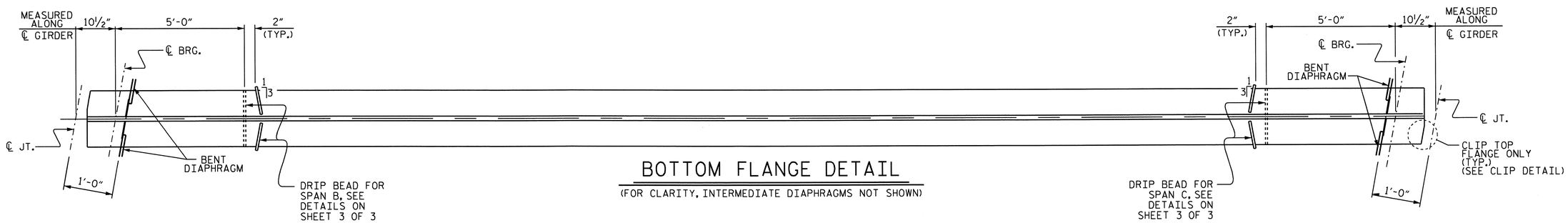


## BOTTOM FLANGE DETAIL

(FOR CLARITY, INTERMEDIATE DIAPHRAGMS NOT SHOWN)

| BEAM DIMENSIONS | | | | | | |
|---|---|---|---|---|---|---|
| BEAM NUMBER | SPAN B | | | SPAN C | | |
| | DIM. "A" | DIM. "B" | DIM. "C" | DIM. "A" | DIM. "B" | DIM. "C" |
| 1 | 91'-3 9/16" | 90'-0 9/16" | 8¾" | 90'-8 3/16" | 89'-5 3/16" | 11 3/16" |
| 2 | 91'-3 13/16" | 90'-0 13/16" | 1'-2⅛" | 90'-8⅛" | 89'-5⅛" | 10¼" |
| 3 | 91'-4 1/16" | 90'-1 1/16" | 1'-2¼" | 90'-8⅛" | 89'-5⅛" | 10¼" |
| 4 | 91'-4 5/16" | 90'-1 5/16" | 1'-2⅜" | 90'-8⅛" | 89'-5⅛" | 10¼" |
| 5 | 91'-4 9/16" | 90'-1 9/16" | 1'-2½" | 90'-8⅛" | 89'-5⅛" | 10¼" |
| 6 | 91'-4 13/16" | 90'-1 13/16" | 10⅞" | 90'-8⅛" | 89'-5⅛" | 1'-1 1/16" |

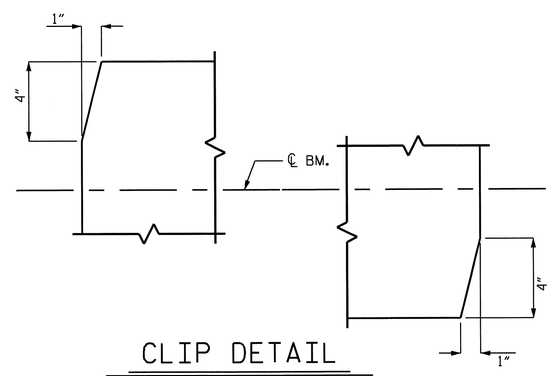


## CLIP DETAIL

SPANS B & C GIRDERS
(SEE PLAN OF FLANGE)

| SHEAR STUD SPACING FOR SPANS B & C BEAMS | | | | | | |
|---|---|---|---|---|---|---|
| | SPAN B | | | SPAN C | | |
| BEAM NUMBER | SHEAR STUDS SPACING | NO. OF STUDS PER ROW | TOTAL NO. OF SHEAR STUDS | SHEAR STUDS SPACING | NO. OF STUDS PER ROW | TOTAL NO. OF SHEAR STUDS |
| 1 | 50 ROWS @ 1'-10" CTS. | 5 | 250 | 50 ROWS @ 1'-9¾" CTS. | 5 | 250 |
| 2 THRU 5 | 74 ROWS @ 1'-2⅝" CTS. | 5 | 370 | 74 ROWS @ 1'-2⅝" CTS. | 5 | 370 |
| 6 | 62 ROWS @ 1'-5⅝" CTS. | 5 | 310 | 60 ROWS @ 1'-6" CTS. | 5 | 300 |

PROJECT NO. U-4019
NASH COUNTY
STATION: 55+38.99 -L-

SHEET 2 OF 3

STATE OF NORTH CAROLINA
DEPARTMENT OF TRANSPORTATION
RALEIGH

SUPERSTRUCTURE

STRUCTURAL STEEL DETAILS

(SPANS B & C)

NORTH CAROLINA PROFESSIONAL SEAL 21545 ENGINEER STEVEN L. WANCE
08/25/11

| REVISIONS | | | | | | SHEET NO. |
|---|---|---|---|---|---|---|
| NO. | BY: | DATE: | NO. | BY: | DATE: | S-67 |
| 1 | | | 3 | | | TOTAL SHEETS |
| 2 | | | 4 | | | 93 |

DRAWN BY : J.H.CARDEN DATE : 12/10
CHECKED BY : S.WANCE DATE : 2/11

25-MAY-2011 12:00
Z:\TIPProjects-U\U4019\Structures\str2\FinalPlans\u4019_sd_ss2.dgn
swance

STR. #2

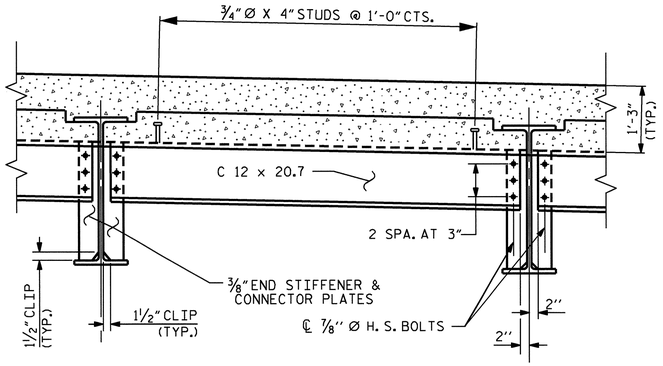


TYPICAL BENT DIAPHRAGM FOR SPANS A & D

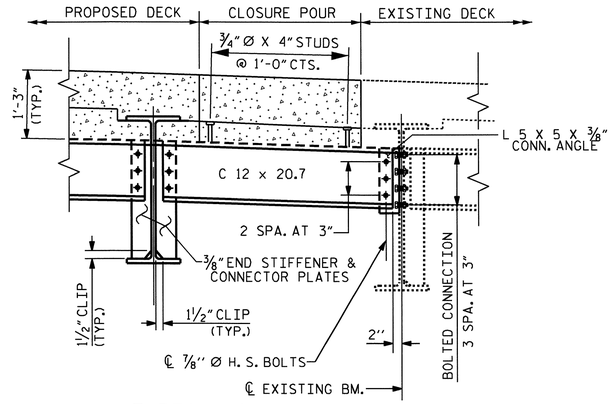


TYPICAL BENT DIAPHRAGM
FOR SPANS A & D CLOSURE POUR BAY

BOLT HOLES FOR THE BENT DIAPHRAGMS
IN THE CLOSURE POUR BAY SHALL BE FIELD DRILLED

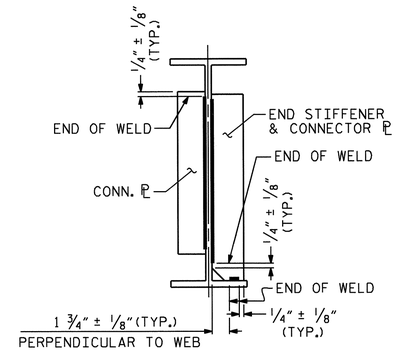


TYPICAL STIFFENER OR
CONNECTOR PLATE CONNECTIONS

WELD TERMINATION DETAILS

## NOTES

ALL STRUCTURAL STEEL SHALL BE AASHTO M270 GRADE 50 AND PAINTED IN ACCORDANCE WITH SYSTEM 1 OF ARTICLE 442-7 OF THE STANDARD SPECIFICATIONS UNLESS OTHERWISE NOTED ON THE PLANS.

ALL FIELD CONNECTIONS TO BE 7/8" DIA. HIGH STRENGTH BOLTS UNLESS OTHERWISE NOTED.

FOR HIGH STRENGTH BOLTS, SEE SPECIAL PROVISIONS.

TENSION ON THE AASHTO M164 BOLTS SHALL BE CALIBRATED USING DIRECT TENSION INDICATOR WASHERS. FOR DIRECT TENSION INDICATORS, SEE SPECIAL PROVISIONS.

ALL DIMENSIONS SHOWN ARE HORIZONTAL OR VERTICAL, UNLESS OTHERWISE NOTED.

STIFFENER AND CONNECTOR PLATES ARE NOT REQUIRED ON THE END BENT END OF SPAN A AND SPAN D BEAMS OR ON THE OUTSIDE OF EXTERIOR BEAMS.

END STIFFENER AND CONNECTOR PLATES ARE TO BE PLACED ALONG THE SKEW AND SHALL BE PLUMB.

END OF BEAMS SHALL BE PLUMB.

A CHARPY V-NOTCH TEST IS REQUIRED ON ALL BEAM SECTIONS AS SHOWN ON THE PLANS AND IN ACCORDANCE WITH ARTICLE 1072-9 OF THE STANDARD SPECIFICATIONS.

WHERE DIAPHRAGMS ARE TO BE BOLTED TO EXISTING STEEL BEAMS, DO NOT REMOVE PAINT FROM THE CONTACT SURFACE.

FOR SHIPPING OF STRUCTURAL STEEL MEMBERS, SEE SPECIAL PROVISIONS.

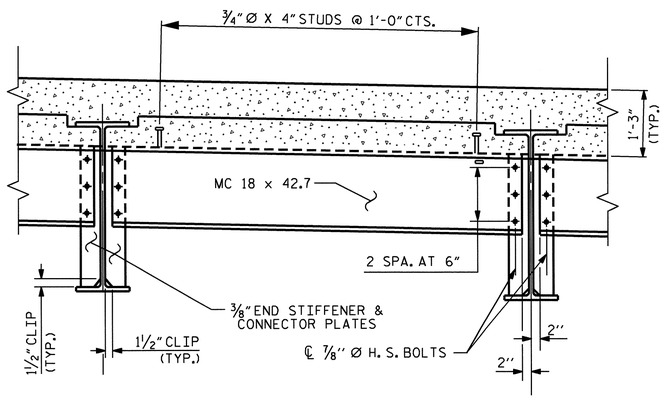


TYPICAL BENT DIAPHRAGM FOR SPANS B & C

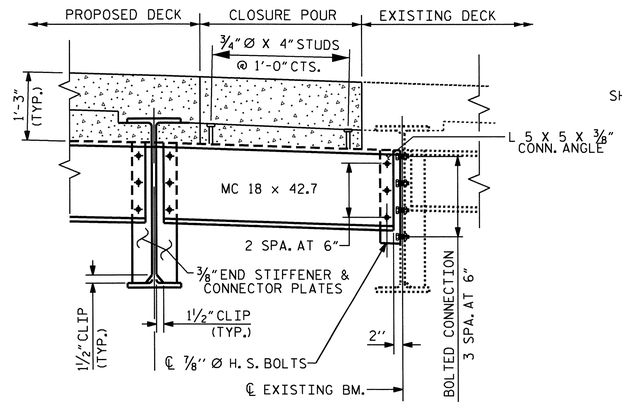


TYPICAL BENT DIAPHRAGM
FOR SPANS B & C CLOSURE POUR BAY

BOLT HOLES FOR THE BENT DIAPHRAGMS
IN THE CLOSURE POUR BAY SHALL BE FIELD DRILLED

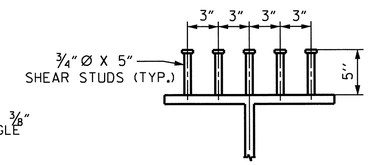


SHEAR STUD DETAILS
(SPANS B & C)

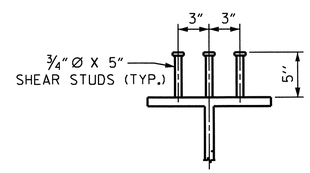


SHEAR STUD DETAILS
(SPANS A & D)

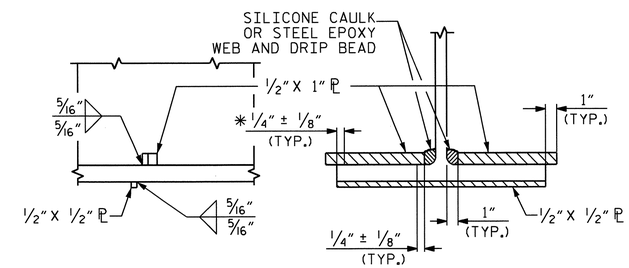


SIDE VIEW SECTION

DRIP BEAD DETAILS

* TO WELD TERMINATION

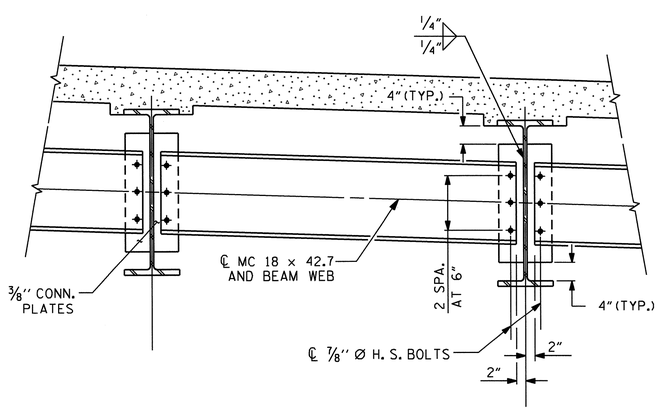


TYPICAL INTERMEDIATE DIAPHRAGM
FOR SPANS B & C

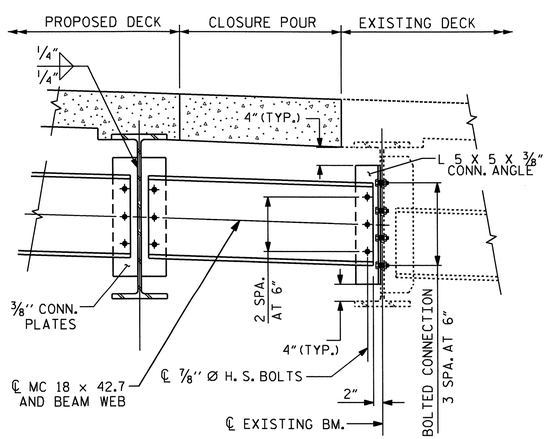


TYPICAL INTERMEDIATE DIAPHRAGM
FOR SPANS B & C CLOSURE POUR BAY

BOLT HOLES FOR THE INTERMEDIATE DIAPHRAGMS
IN THE CLOSURE POUR BAY SHALL BE FIELD DRILLED

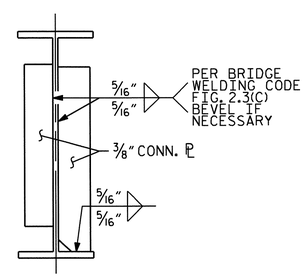


STIFFENER & CONNECTOR
PLATE DETAIL

NORTH CAROLINA PROFESSIONAL SEAL 21545 ENGINEER STEVEN L. WANCE

05/25/11

PROJECT NO. U-4019
NASH COUNTY
STATION: 55+38.99 -L-

SHEET 3 OF 3

STATE OF NORTH CAROLINA
DEPARTMENT OF TRANSPORTATION
RALEIGH

SUPERSTRUCTURE
STRUCTURAL STEEL DETAILS

| REVISIONS | | | | | | | | SHEET NO. |
|---|---|---|---|---|---|---|---|---|
| NO. | BY: | DATE: | NO. | BY: | DATE: | | | S-68 |
| 1 | | | 3 | | | | | TOTAL SHEETS |
| 2 | | | 4 | | | | | 93 |

DRAWN BY : J.H.CARDEN DATE : 1/11
CHECKED BY : S.WANCE DATE : 2/11

25-MAY-2011 12:00
Z:\TIPProjects-U\U4019\Structures\str2\Final Plans\u4019_sd_ss2.dgn
swance

STR. #2

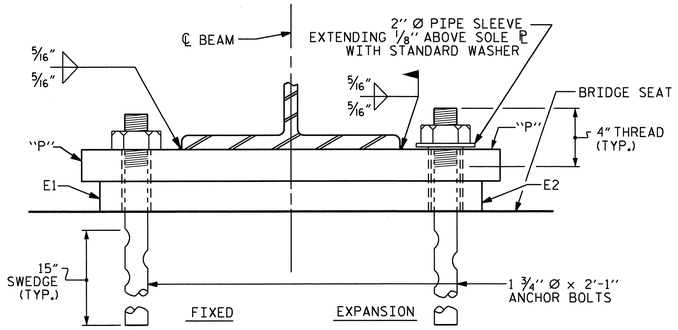


END VIEW

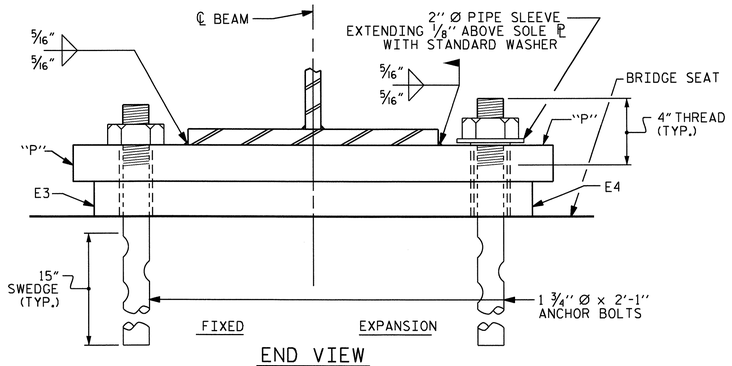


END VIEW

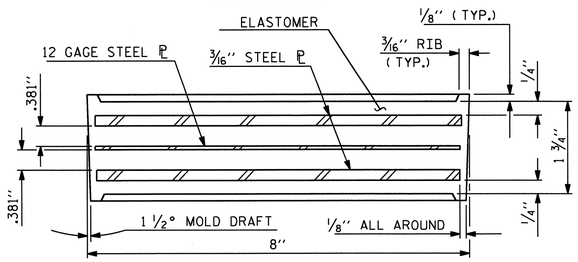


TYPICAL SECTION OF ELASTOMERIC BEARINGS

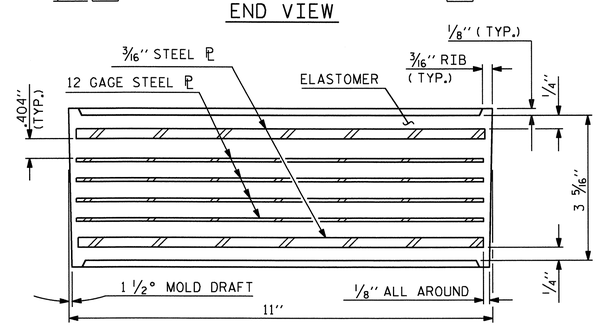


TYPICAL SECTION OF ELASTOMERIC BEARING

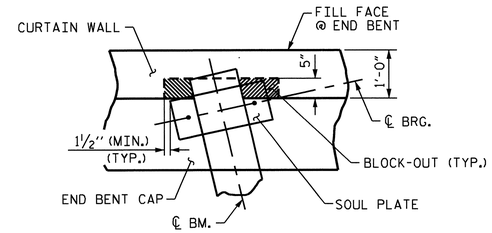


PLAN VIEW

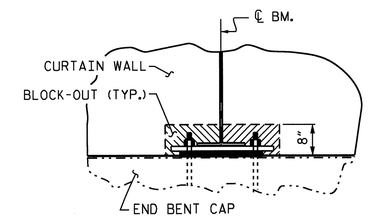


ELEVATION VIEW

CURTAIN WALL BLOCK-OUT DETAILS

## NOTES

ALL SURFACES OF BEARING PLATES SHALL BE SMOOTH AND STRAIGHT.

AT FIXED POINTS OF SUPPORT, NUTS FOR ANCHOR BOLTS SHALL BE TIGHTENED FINGER TIGHT AND THEN BACKED OFF 1/2 TURN. THE THREAD OF THE NUT AND BOLT SHALL THEN BE BURRED WITH A SHARP POINTED TOOL.

THE 2"Ø PIPE SLEEVE SHALL BE CUT FROM SCHEDULE 40 PVC PLASTIC PIPE. THE PVC PIPE SHALL MEET THE REQUIREMENTS OF ASTM D1785.

THE PAYMENT FOR THE PIPE SLEEVES SHALL BE INCLUDED IN THE SEVERAL PAY ITEMS.

SOLE PLATES, ANCHOR BOLTS, NUTS AND WASHERS SHALL BE GALVANIZED IN ACCORDANCE WITH THE STANDARD SPECIFICATIONS.

ANCHOR BOLTS SHALL MEET THE REQUIREMENTS OF ASTM A449. NUTS SHALL MEET THE REQUIREMENTS OF AASTHO M291-DH OR AASHTO M292-2H. WASHERS SHALL MEET THE REQUIREMENTS OF AASTHO M293. SHOP DRAWINGS ARE NOT REQUIRED FOR ANCHOR BOLTS, NUTS AND WASHERS. SHOP INSPECTION IS REQUIRED.

WHEN FIELD WELDING THE SOLE PLATE TO THE GIRDER FLANGE, USE TEMPERATURE INDICATING WAX PENS, OR OTHER SUITABLE MEANS, TO ENSURE THAT THE TEMPERATURE OF THE SOLE PLATE DOES NOT EXCEED 300°F. TEMPERATURES ABOVE THIS MAY DAMAGE THE ELASTOMER.

## LOAD RATINGS

| | MAX.D.L.+L.L. |
|---|---|
| TYPE I | 91 K |
| TYPE IV | 184 K |
| | |

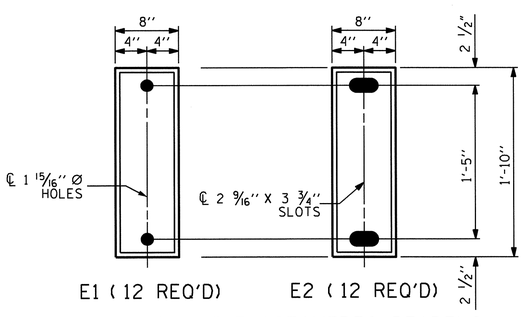


PLAN VIEW OF ELASTOMERIC BEARING

TYPE I

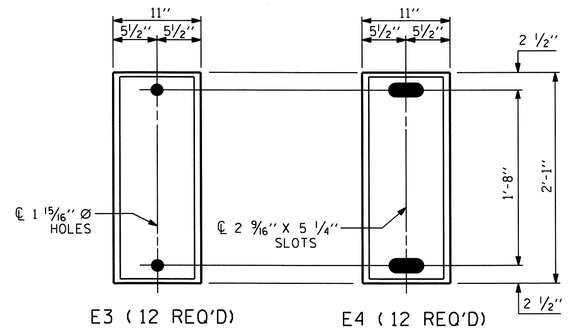


PLAN VIEW OF ELASTOMERIC BEARING

TYPE IV

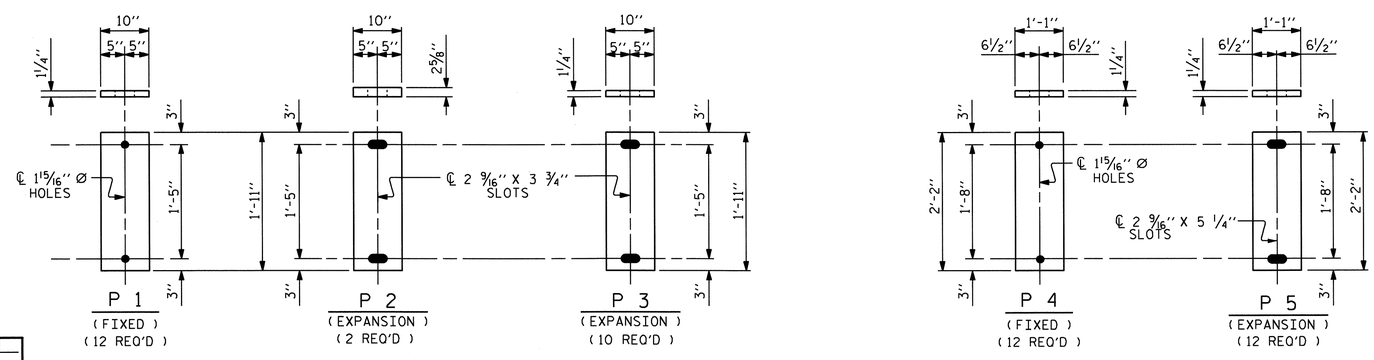


SOLE PLATE DETAILS ( "P" )

NORTH CAROLINA PROFESSIONAL SEAL 21545 ENGINEER STEVEN L. WANCE

5/25/11

PROJECT NO. U-4019

NASH COUNTY

STATION: 55+38.99 -L-

STATE OF NORTH CAROLINA
DEPARTMENT OF TRANSPORTATION
RALEIGH

STANDARD

ELASTOMERIC BEARING DETAILS

( STEEL SUPERSTRUCTURE )

| REVISIONS | | | | | | SHEET NO. |
|---|---|---|---|---|---|---|
| NO. | BY: | DATE: | NO. | BY: | DATE: | S-69 |
| 1 | | | 3 | | | TOTAL SHEETS |
| 2 | | | 4 | | | 93 |

STR #2

| | | | |
|---|---|---|---|
| ASSEMBLED BY : J.H.CARDEN | DATE : 2/11 | | |
| CHECKED BY : S.WANCE | DATE : 2/11 | | |
| DRAWN BY : JMB 11/87 | REV. 8/16/99 | MAB/LES | |
| CHECKED BY : ARB 11/87 | REV. 10/17/00 | RWW/LES | |
| | REV. 5/1/06 | TLA/GM | |

26-MAY-2011 10:36
R:\Structures\str2\Final Plans\u4019_sd_bg2.dgn
swance

## DEAD LOAD DEFLECTION TABLE
### SPANS B & C

| | BEAM #1 | | | | | | | | | | |
|---|---|---|---|---|---|---|---|---|---|---|---|
| TENTH POINTS | ℄ BRG. | .10 | .20 | .30 | .40 | .50 | .60 | .70 | .80 | .90 | ℄ BRG. |
| DEFLECTION DUE TO WEIGHT OF GIRDER | 0 | 0.021 | 0.039 | 0.052 | 0.061 | 0.064 | 0.061 | 0.052 | 0.039 | 0.021 | 0 |
| DEFLECTION DUE TO WEIGHT OF SLAB * | 0 | 0.077 | 0.142 | 0.193 | 0.225 | 0.236 | 0.225 | 0.193 | 0.142 | 0.077 | 0 |
| DEFLECTION DUE TO WEIGHT OF SW AND RAIL | 0 | 0.013 | 0.024 | 0.033 | 0.039 | 0.041 | 0.039 | 0.033 | 0.024 | 0.013 | 0 |
| TOTAL DEAD LOAD DEFLECTION | 0 | 0.111 | 0.205 | 0.278 | 0.325 | 0.341 | 0.325 | 0.278 | 0.205 | 0.111 | 0 |
| VERTICAL CURVE ORDINATE | 0 | 0.025 | 0.044 | 0.058 | 0.066 | 0.068 | 0.066 | 0.058 | 0.044 | 0.025 | 0 |
| ORDINATE DUE TO SUPERELEVATION | 0 | -0.006 | -0.010 | -0.013 | -0.015 | -0.015 | -0.015 | -0.013 | -0.010 | -0.006 | 0 |
| REQUIRED CAMBER | 0 | 1 9/16" | 2 7/8" | 3 7/8" | 4 1/2" | 4 3/4" | 4 1/2" | 3 7/8" | 2 7/8" | 1 9/16" | 0 |

| | BEAM #2 | | | | | | | | | | |
|---|---|---|---|---|---|---|---|---|---|---|---|
| TENTH POINTS | ℄ BRG. | .10 | .20 | .30 | .40 | .50 | .60 | .70 | .80 | .90 | ℄ BRG. |
| DEFLECTION DUE TO WEIGHT OF GIRDER | 0 | 0.021 | 0.039 | 0.052 | 0.061 | 0.064 | 0.061 | 0.052 | 0.039 | 0.021 | 0 |
| DEFLECTION DUE TO WEIGHT OF SLAB * | 0 | 0.049 | 0.113 | 0.162 | 0.194 | 0.205 | 0.194 | 0.162 | 0.113 | 0.049 | 0 |
| DEFLECTION DUE TO WEIGHT OF SW AND RAIL | 0 | 0.006 | 0.012 | 0.016 | 0.019 | 0.020 | 0.019 | 0.016 | 0.012 | 0.006 | 0 |
| TOTAL DEAD LOAD DEFLECTION | 0 | 0.076 | 0.164 | 0.230 | 0.274 | 0.289 | 0.274 | 0.230 | 0.164 | 0.076 | 0 |
| VERTICAL CURVE ORDINATE | 0 | 0.025 | 0.044 | 0.058 | 0.066 | 0.069 | 0.066 | 0.058 | 0.044 | 0.025 | 0 |
| ORDINATE DUE TO SUPERELEVATION | 0 | -0.006 | -0.010 | -0.013 | -0.015 | -0.015 | -0.015 | -0.013 | -0.010 | -0.006 | 0 |
| REQUIRED CAMBER | 0 | 1 1/8" | 2 3/8" | 3 5/16" | 3 7/8" | 4 1/8" | 3 7/8" | 3 5/16" | 2 3/8" | 1 1/8" | 0 |

| | BEAM #3 | | | | | | | | | | |
|---|---|---|---|---|---|---|---|---|---|---|---|
| TENTH POINTS | ℄ BRG. | .10 | .20 | .30 | .40 | .50 | .60 | .70 | .80 | .90 | ℄ BRG. |
| DEFLECTION DUE TO WEIGHT OF GIRDER | 0 | 0.024 | 0.039 | 0.052 | 0.061 | 0.064 | 0.061 | 0.052 | 0.039 | 0.024 | 0 |
| DEFLECTION DUE TO WEIGHT OF SLAB * | 0 | 0.020 | 0.083 | 0.131 | 0.162 | 0.173 | 0.162 | 0.131 | 0.083 | 0.020 | 0 |
| DEFLECTION DUE TO WEIGHT OF SW AND RAIL | 0 | 0.006 | 0.012 | 0.016 | 0.019 | 0.020 | 0.019 | 0.016 | 0.012 | 0.006 | 0 |
| TOTAL DEAD LOAD DEFLECTION | 0 | 0.047 | 0.134 | 0.199 | 0.242 | 0.257 | 0.242 | 0.199 | 0.134 | 0.047 | 0 |
| VERTICAL CURVE ORDINATE | 0 | 0.025 | 0.045 | 0.059 | 0.067 | 0.070 | 0.067 | 0.059 | 0.045 | 0.025 | 0 |
| ORDINATE DUE TO SUPERELEVATION | 0 | -0.006 | -0.010 | -0.013 | -0.015 | -0.016 | -0.015 | -0.013 | -0.010 | -0.006 | 0 |
| REQUIRED CAMBER | 0 | 13/16" | 2" | 2 15/16" | 3 1/2" | 3 3/4" | 3 1/2" | 2 15/16" | 2" | 13/16" | 0 |

| | BEAM #4 | | | | | | | | | | |
|---|---|---|---|---|---|---|---|---|---|---|---|
| TENTH POINTS | ℄ BRG. | .10 | .20 | .30 | .40 | .50 | .60 | .70 | .80 | .90 | ℄ BRG. |
| DEFLECTION DUE TO WEIGHT OF GIRDER | 0 | 0.021 | 0.039 | 0.052 | 0.061 | 0.064 | 0.061 | 0.052 | 0.039 | 0.021 | 0 |
| DEFLECTION DUE TO WEIGHT OF SLAB * | 0 | 0.000 | 0.053 | 0.101 | 0.131 | 0.141 | 0.131 | 0.101 | 0.053 | 0.000 | 0 |
| DEFLECTION DUE TO WEIGHT OF SW AND RAIL | 0 | 0.000 | 0.000 | 0.000 | 0.000 | 0.000 | 0.000 | 0.000 | 0.000 | 0.000 | 0 |
| TOTAL DEAD LOAD DEFLECTION | 0 | 0.021 | 0.092 | 0.153 | 0.192 | 0.205 | 0.192 | 0.153 | 0.092 | 0.021 | 0 |
| VERTICAL CURVE ORDINATE | 0 | 0.025 | 0.045 | 0.059 | 0.068 | 0.070 | 0.068 | 0.059 | 0.045 | 0.025 | 0 |
| ORDINATE DUE TO SUPERELEVATION | 0 | -0.006 | -0.010 | -0.013 | -0.015 | -0.016 | -0.015 | -0.013 | -0.010 | -0.006 | 0 |
| REQUIRED CAMBER | 0 | 1/2" | 1 1/2" | 2 3/8" | 2 15/16" | 3 1/8" | 2 15/16" | 2 3/8" | 1 1/2" | 1/2" | 0 |

| | BEAM #5 | | | | | | | | | | |
|---|---|---|---|---|---|---|---|---|---|---|---|
| TENTH POINTS | ℄ BRG. | .10 | .20 | .30 | .40 | .50 | .60 | .70 | .80 | .90 | ℄ BRG. |
| DEFLECTION DUE TO WEIGHT OF GIRDER | 0 | 0.021 | 0.039 | 0.052 | 0.061 | 0.064 | 0.061 | 0.052 | 0.039 | 0.021 | 0 |
| DEFLECTION DUE TO WEIGHT OF SLAB * | 0 | 0.000 | 0.023 | 0.070 | 0.100 | 0.110 | 0.100 | 0.070 | 0.023 | 0.000 | 0 |
| DEFLECTION DUE TO WEIGHT OF SW & RAIL | 0 | 0.000 | 0.000 | 0.000 | 0.000 | 0.000 | 0.000 | 0.000 | 0.000 | 0.000 | 0 |
| TOTAL DEAD LOAD DEFLECTION | 0 | 0.021 | 0.062 | 0.122 | 0.161 | 0.174 | 0.161 | 0.122 | 0.062 | 0.021 | 0 |
| VERTICAL CURVE ORDINATE | 0 | 0.023 | 0.045 | 0.060 | 0.068 | 0.071 | 0.068 | 0.060 | 0.045 | 0.023 | 0 |
| ORDINATE DUE TO SUPERELEVATION | 0 | -0.006 | -0.010 | -0.013 | -0.015 | -0.016 | -0.015 | -0.013 | -0.010 | -0.006 | 0 |
| REQUIRED CAMBER | 0 | 1/2" | 1 3/16" | 2" | 2 9/16" | 2 3/4" | 2 9/16" | 2" | 1 3/16" | 1/2" | 0 |

| | BEAM #6 | | | | | | | | | | |
|---|---|---|---|---|---|---|---|---|---|---|---|
| TENTH POINTS | ℄ BRG. | .10 | .20 | .30 | .40 | .50 | .60 | .70 | .80 | .90 | ℄ BRG. |
| DEFLECTION DUE TO WEIGHT OF GIRDER | 0 | 0.021 | 0.039 | 0.053 | 0.061 | 0.064 | 0.061 | 0.053 | 0.039 | 0.021 | 0 |
| DEFLECTION DUE TO WEIGHT OF SLAB * | 0 | 0.000 | 0.000 | 0.039 | 0.068 | 0.078 | 0.068 | 0.039 | 0.000 | 0.000 | 0 |
| DEFLECTION DUE TO WEIGHT OF SW AND RAIL | 0 | 0.000 | 0.000 | 0.000 | 0.000 | 0.000 | 0.000 | 0.000 | 0.000 | 0.000 | 0 |
| TOTAL DEAD LOAD DEFLECTION | 0 | 0.021 | 0.039 | 0.092 | 0.129 | 0.142 | 0.129 | 0.092 | 0.039 | 0.021 | 0 |
| VERTICAL CURVE ORDINATE | 0 | 0.026 | 0.046 | 0.060 | 0.069 | 0.072 | 0.069 | 0.060 | 0.046 | 0.026 | 0 |
| ORDINATE DUE TO SUPERELEVATION | 0 | -0.006 | -0.010 | -0.013 | -0.015 | -0.016 | -0.015 | -0.013 | -0.010 | -0.006 | 0 |
| REQUIRED CAMBER | 0 | 1/2" | 7/8" | 1 11/16" | 2 3/16" | 2 3/8" | 2 3/16" | 1 11/16" | 7/8" | 1/2" | 0 |

* INCLUDING SLAB, BUILDUPS, AND STAY-IN-PLACE FORMS.
ALL VALUES ARE SHOWN IN FEET (DECIMAL FORM), EXCEPT "FINAL CAMBER", WHICH IS GIVEN IN INCHES (FRACTION FORM)

## DEAD LOAD DEFLECTION TABLE
### SPANS A & D

| | BEAM #1 | | | | | | | | | | |
|---|---|---|---|---|---|---|---|---|---|---|---|
| TENTH POINTS | ℄ BRG. | .10 | .20 | .30 | .40 | .50 | .60 | .70 | .80 | .90 | ℄ BRG. |
| DEFLECTION DUE TO WEIGHT OF GIRDER | 0 | 0.000 | 0.000 | 0.000 | 0.000 | 0.000 | 0.000 | 0.000 | 0.000 | 0.000 | 0 |
| DEFLECTION DUE TO WEIGHT OF SLAB * | 0 | 0.001 | 0.002 | 0.003 | 0.003 | 0.003 | 0.003 | 0.003 | 0.002 | 0.001 | 0 |
| DEFLECTION DUE TO WEIGHT OF SW AND RAIL | 0 | 0.000 | 0.001 | 0.001 | 0.001 | 0.001 | 0.001 | 0.001 | 0.001 | 0.000 | 0 |
| TOTAL DEAD LOAD DEFLECTION | 0 | 0.001 | 0.003 | 0.004 | 0.004 | 0.004 | 0.004 | 0.004 | 0.003 | 0.001 | 0 |
| VERTICAL CURVE ORDINATE | 0 | 0.002 | 0.003 | 0.005 | 0.005 | 0.005 | 0.005 | 0.005 | 0.003 | 0.002 | 0 |
| ORDINATE DUE TO SUPERELEVATION | 0 | -0.000 | -0.001 | -0.001 | -0.001 | -0.001 | -0.001 | -0.001 | -0.001 | -0.000 | 0 |
| REQUIRED CAMBER ** | 0 | 0 | 0 | 0 | 0 | 0 | 0 | 0 | 0 | 0 | 0 |

| | BEAMS #2 THRU #5 | | | | | | | | | | |
|---|---|---|---|---|---|---|---|---|---|---|---|
| TENTH POINTS | ℄ BRG. | .10 | .20 | .30 | .40 | .50 | .60 | .70 | .80 | .90 | ℄ BRG. |
| DEFLECTION DUE TO WEIGHT OF GIRDER | 0 | 0.000 | 0.000 | 0.001 | 0.001 | 0.001 | 0.001 | 0.001 | 0.000 | 0.000 | 0 |
| DEFLECTION DUE TO WEIGHT OF SLAB * | 0 | 0.003 | 0.005 | 0.007 | 0.008 | 0.008 | 0.008 | 0.007 | 0.005 | 0.003 | 0 |
| DEFLECTION DUE TO WEIGHT OF SW AND RAIL | 0 | 0.000 | 0.001 | 0.001 | 0.001 | 0.001 | 0.001 | 0.001 | 0.001 | 0.000 | 0 |
| TOTAL DEAD LOAD DEFLECTION | 0 | 0.003 | 0.006 | 0.008 | 0.010 | 0.010 | 0.010 | 0.008 | 0.006 | 0.003 | 0 |
| VERTICAL CURVE ORDINATE | 0 | 0.002 | 0.004 | 0.005 | 0.005 | 0.006 | 0.005 | 0.005 | 0.004 | 0.002 | 0 |
| ORDINATE DUE TO SUPERELEVATION | 0 | -0.000 | -0.001 | -0.001 | -0.001 | -0.001 | -0.001 | -0.001 | -0.001 | -0.000 | 0 |
| REQUIRED CAMBER ** | 0 | 0 | 0 | 0 | 0 | 0 | 0 | 0 | 0 | 0 | 0 |

| | BEAM #6 | | | | | | | | | | |
|---|---|---|---|---|---|---|---|---|---|---|---|
| TENTH POINTS | ℄ BRG. | .10 | .20 | .30 | .40 | .50 | .60 | .70 | .80 | .90 | ℄ BRG. |
| DEFLECTION DUE TO WEIGHT OF GIRDER | 0 | 0.000 | 0.000 | 0.001 | 0.001 | 0.001 | 0.001 | 0.001 | 0.000 | 0.000 | 0 |
| DEFLECTION DUE TO WEIGHT OF SLAB * | 0 | 0.002 | 0.004 | 0.005 | 0.006 | 0.007 | 0.006 | 0.005 | 0.004 | 0.002 | 0 |
| DEFLECTION DUE TO WEIGHT OF SW AND RAIL | 0 | 0.000 | 0.000 | 0.000 | 0.000 | 0.000 | 0.000 | 0.000 | 0.000 | 0.000 | 0 |
| TOTAL DEAD LOAD DEFLECTION | 0 | 0.002 | 0.004 | 0.006 | 0.007 | 0.007 | 0.007 | 0.006 | 0.004 | 0.002 | 0 |
| VERTICAL CURVE ORDINATE | 0 | 0.002 | 0.004 | 0.005 | 0.005 | 0.006 | 0.005 | 0.005 | 0.004 | 0.002 | 0 |
| ORDINATE DUE TO SUPERELEVATION | 0 | -0.000 | -0.001 | -0.001 | -0.001 | -0.001 | -0.001 | -0.001 | -0.001 | -0.000 | 0 |
| REQUIRED CAMBER ** | 0 | 0 | 0 | 0 | 0 | 0 | 0 | 0 | 0 | 0 | 0 |

* INCLUDING SLAB, BUILDUPS, AND STAY-IN-PLACE FORMS.
ALL VALUES ARE SHOWN IN FEET (DECIMAL FORM), EXCEPT "FINAL CAMBER", WHICH IS GIVEN IN INCHES (FRACTION FORM)

** NO SHOP CAMBER EROUIRED, TURN NATURAL MILL CAMBER UP.

NORTH CAROLINA PROFESSIONAL SEAL 21545 ENGINEER STEVEN L. WANCE
05/25/11

PROJECT NO. U-4019
NASH COUNTY
STATION: 55+38.99 -L-

STATE OF NORTH CAROLINA
DEPARTMENT OF TRANSPORTATION
RALEIGH

SUPERSTRUCTURE

DEAD LOAD DEFLECTIONS

| REVISIONS | | | | | | SHEET NO. |
|---|---|---|---|---|---|---|
| NO. | BY: | DATE: | NO. | BY: | DATE: | S-70 |
| 1 | | | 3 | | | TOTAL SHEETS |
| 2 | | | 4 | | | 93 |

STR #2

DRAWN BY : J.H. CARDEN DATE : 12/10
CHECKED BY : S.WANCE DATE : 2/11

25-MAY-2011 12:00
Z:\TIPProjects-U\U4019\Structures\str2\FinalPlans\u4019_sd_dl2.dgn
swance

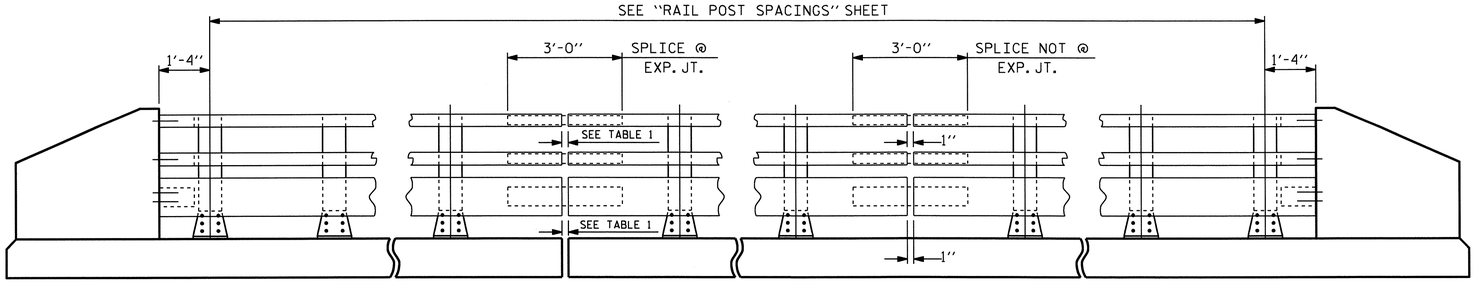


ELEVATION

NOTE:
FOR ATTACHMENT OF METAL RAIL TO END POST, SEE STANDARD NO. BMR7.

| TABLE 1 | |
|---|---|
| ℄ EXP.JT. @ BENT | RAIL OPENING |
| BENT No. 1 | 1" |
| BENT No. 2 | 1" |
| BENT No. 3 | 1" |
| | |
| | |

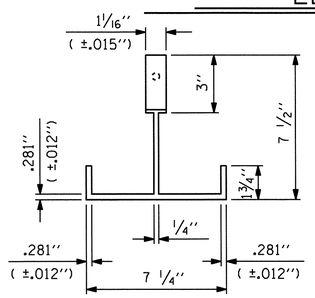


PLAN

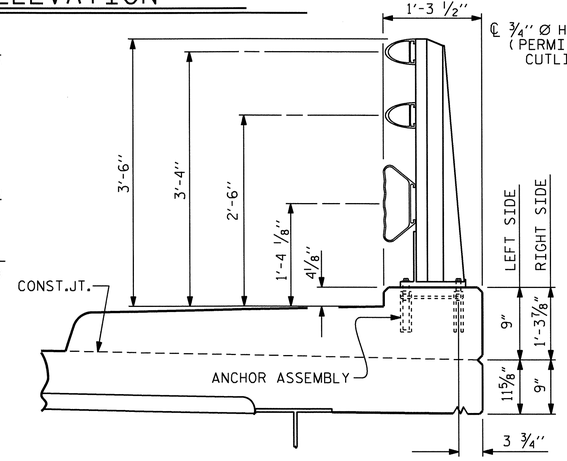


SECTION THRU RAIL

FOR ANCHOR ASSEMBLY, SEE "3 BAR METAL RAIL" STD.No.BMR7

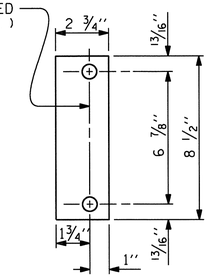


REAR PLATE

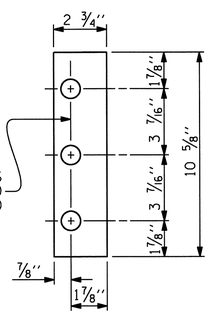


FRONT PLATE

SHIM DETAILS

NOTE:
SHIMS MAY BE CUT ALONG PERMITTED CUTLINE OR SLOTTED TO EDGE OF PLATE TO FACILITATE PLACEMENT.

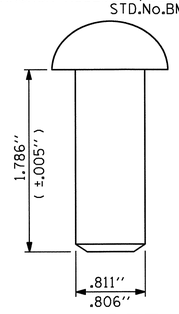


RIVET DETAIL

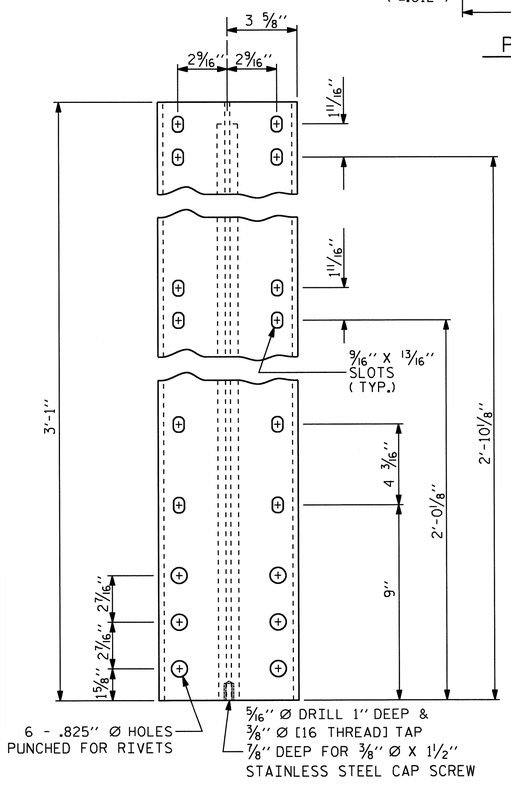


FRONT ELEVATION

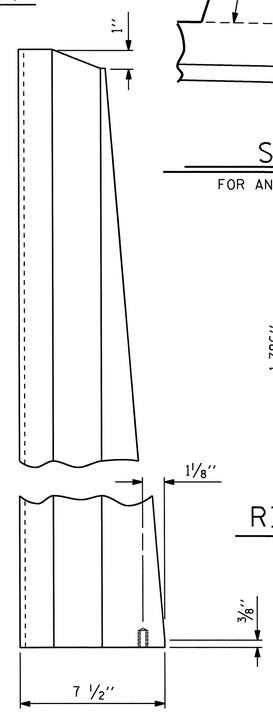


SIDE ELEVATION

DETAILS OF POST

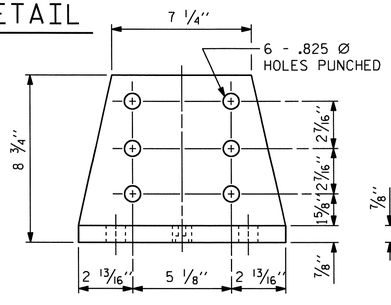


FRONT ELEVATION

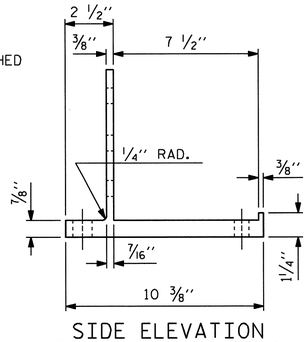


SIDE ELEVATION

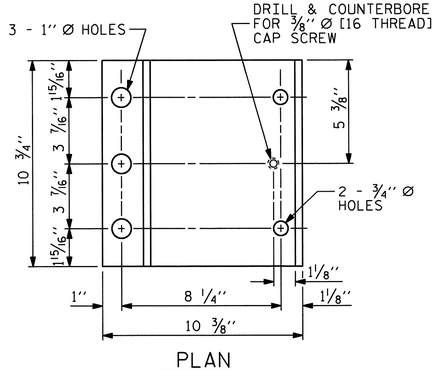


PLAN

POST BASE DETAILS

# NOTES

AT THE CONTRACTOR'S OPTION, METAL RAIL MAY BE EITHER ALUMINUM OR GALVANIZED STEEL IN ACCORDANCE WITH THE REQUIREMENTS OF THE GENERAL NOTES AND THE FOLLOWING SPECIFICATIONS FOR THE ALTERNATE MATERIALS; HOWEVER, THE CONTRACTOR WILL BE REQUIRED TO USE THE SAME RAIL MATERIAL ON ALL STRUCTURES ON THE PROJECT FOR WHICH METAL RAIL IS DESIGNATED.

## ALUMINUM RAILS

MATERIAL FOR POSTS, BASES AND RAILS, EXPANSION BARS AND CLAMP BARS SHALL BE ASTM B221 ALLOY 6061-T6.

MATERIAL FOR RIVETS SHALL BE ASTM B316 ALLOY 6061-T6. RIVETS SHALL BE STANDARD BUTTON HEAD AND CONE POINT COLD DRIVEN AS PER DRAWING.

THE BASE OF RAIL POSTS, OR ANY OTHER ALUMINUM SURFACE IN CONTACT WITH CONCRETE SHALL BE THOROUGHLY COATED WITH AN ALUMINUM IMPREGNATED CAULKING COMPOUND OF APPROVED QUALITY.

MATERIAL FOR SHIMS TO BE ASTM B209 ALLOY 6061-T6.

## GALVANIZED STEEL RAILS

MATERIAL AND GALVANIZING ARE TO CONFORM TO THE FOLLOWING SPECIFICATIONS:

POST, POST BASES, RAILS, EXPANSION BARS AND CLAMP BARS : AASHTO M270 GRADE 36 STRUCTURAL STEEL - GALVANIZED TO AASHTO M111.

RIVETS: RIVETS SHALL MEET THE REQUIREMENTS OF ASTM A502 FOR GRADE 1 RIVETS.

THE CUT ENDS OF GALVANIZED STEEL RAILING, AFTER GRINDING SMOOTH SHALL BE GIVEN TWO COATS OF ZINC RICH PAINT MEETING THE REQUIREMENTS OF FEDERAL SPECIFICATION MIL-P-26915 USAF TYPE 1, OR OF FEDERAL SPECIFICATIONS TT-P-641.

SHIMS: SHIMS SHALL MEET THE REQUIREMENTS OF ASTM A570 FOR GRADE 33 OR A611 FOR GRADE C AND SHALL BE GALVANIZED IN ACCORDANCE WITH AASHTO M111.

RAIL CAPS: RAIL CAPS SHALL MEET THE REQUIREMENTS OF ASTM A570 FOR GRADE 33 OR A611 FOR GRADE C AND SHALL BE GALVANIZED IN ACCORDANCE WITH AASHTO M111.

## GENERAL NOTES

RAILING SHALL BE CONTINUOUS FROM END POST TO END POST OF BRIDGE. EACH JOINT IN RAIL LENGTH SHALL BE SPLICED AS DETAILED. PANEL LENGTHS OF RAIL SHALL BE ATTACHED TO A MINIMUM OF THREE POSTS. PLACE ONE JOINT SPLICE JUST BEYOND THE 3RD RAIL POST FROM EACH END, TYPICALLY 14' FROM THE END. PLACE OTHER JOINTS AS NEEDED.

FOR END OF RAIL TO CLEAR FACE OF CONCRETE END POST DIMENSION, SEE STANDARD NO. BMR7.

CAP SCREWS SHALL BE ASTM F593 ALLOY 305 STAINLESS STEEL. WASHERS FOR RAIL ATTACHMENT SHALL MEET THE REQUIREMENTS OF ASTM F844 EXCEPT THEY SHALL BE MADE FROM ALLOY 304 STAINLESS STEEL.

CERTIFIED MILL REPORTS ARE REQUIRED FOR RAILS AND POSTS. SHOP INSPECTION IS NOT REQUIRED.

METAL RAIL POSTS SHALL BE SET NORMAL TO CURB GRADE.

METHOD OF MEASUREMENT FOR METAL RAILS: FOR LENGTH OF METAL RAILS TO BE PAID FOR, SEE THE STANDARD SPECIFICATIONS.

CURVED RAIL USAGE: WHERE RAILS ARE TO BE USED ON BRIDGES ON HORIZONTAL AND/OR VERTICAL CURVATURE THE CONTRACTOR MAY, AT HIS OPTION, HAVE THE REQUIRED CURVATURE IN THE RAIL FORMED IN THE SHOP OR IN THE FIELD. IN EITHER EVENT, THE RAIL SHALL CONFORM WITHOUT BUCKLING OR KINKING TO THE REQUIRED CURVATURE IN A UNIFORM MANNER ACCEPTABLE TO THE ENGINEER.

TO INSURE FUTURE IDENTIFICATION OF THE FABRICATOR, A PERMANENT IDENTIFYING MARK SHALL BE PLACED ON EACH POST. THE METHOD OF MARKING AND LOCATION SHALL BE SUCH THAT IT DOES NOT DETRACT FROM THE APPEARANCE OF THE POST, BUT REMAIN VISIBLE AFTER RAIL PLACEMENT.

SHIMS SHALL BE USED AS NECESSARY FOR POST ALIGNMENT.

ALLOY 6351-T5 MAY BE SUBSTITUTED FOR ALLOY 6061-T6 WHERE APPLICABLE.

MINOR VARIATIONS IN DETAILS OF METAL RAIL WILL BE CONSIDERED. DETAILS OF SUCH VARIATIONS, IF DESIRED, SHALL BE SUBMITTED FOR APPROVAL.

PAY LENGTH = 454.64 LIN. FT.

| METAL RAIL PAY LENGTH | |
|---|---|
| STAGE I | 225.62 LIN. FT. |
| STAGE II | 229.02 LIN. FT. |
| TOTAL | 454.64 LIN. FT. |

NORTH CAROLINA PROFESSIONAL SEAL 21545 ENGINEER STEVEN L. WANCE
05/25/11

PROJECT NO. U-4019
NASH COUNTY
STATION: 55+38.99 -L-

SHEET 1 OF 3

STATE OF NORTH CAROLINA
DEPARTMENT OF TRANSPORTATION
RALEIGH

STANDARD

3 BAR METAL RAIL

| ASSEMBLED BY : J.H. CARDEN | DATE : 02-10-11 |
|---|---|
| CHECKED BY : S. WANCE | DATE : 03-01-11 |

| | | | |
|---|---|---|---|
| DRAWN BY : JMB | 1/88 | REV. 8/16/99 | RWW/LES |
| CHECKED BY : GGH | 1/88 | REV. 10/17/00 | RWW/LES |
| | | REV. 5/7/03 | RWW/JTE |

| REVISIONS | | | | | | | | SHEET NO. |
|---|---|---|---|---|---|---|---|---|
| NO. | BY: | DATE: | NO. | BY: | DATE: | | | S-71 |
| 1 | | | 3 | | | | | TOTAL SHEETS |
| 2 | | | 4 | | | | | 93 |

STR. #2 STD. NO. BMR5



25-MAY-2011 12:00
Z:\TIPProjects-U\U4019\Structures\str2\FinalPlans\u4019_sd_3mr2.dgn
swance

## NOTES

STRUCTURAL CONCRETE ANCHOR ASSEMBLY

THE STRUCTURAL CONCRETE ANCHOR ASSEMBLY SHALL CONSIST OF THE FOLLOWING COMPONENTS:

A. FERRULES SHALL BE MADE FROM STEEL MEETING THE REQUIREMENTS OF AASHTO M169, GRADE 12L14 AND SHALL HAVE A MINIMUM LENGTH OF THREADS OF 2" FOR ¾" FERRULES AND 1¾" FOR ⅝" FERRULES.

B. 3 - ¾" Ø X 2½" BOLTS WITH WASHERS. BOLTS SHALL CONFORM TO THE REQUIREMENTS OF ASTM A307. BOLTS AND WASHERS SHALL BE GALVANIZED. AT THE CONTRACTOR'S OPTION, STAINLESS STEEL BOLTS AND WASHERS MAY BE USED AS AN ALTERNATE FOR THE ¾" Ø X 2½" GALVANIZED BOLTS AND WASHERS. THEY SHALL CONFORM TO OR EXCEED THE MECHANICAL REQUIREMENTS OF ASTM A307. THE USE OF THIS ALTERNATE SHALL BE APPROVED BY THE ENGINEER.

C. 2 - ⅝" Ø X 2¼" BOLTS WITH WASHERS. BOLTS SHALL CONFORM TO THE REQUIREMENTS OF ASTM A307. BOLTS AND WASHERS SHALL BE GALVANIZED. AT THE CONTRACTOR'S OPTION, STAINLESS STEEL BOLTS AND WASHERS MAY BE USED AS AN ALTERNATE FOR THE ⅝" Ø X 2¼" GALVANIZED BOLTS AND WASHERS. THEY SHALL CONFORM TO OR EXCEED THE MECHANICAL REQUIREMENTS OF ASTM A307. THE USE OF THIS ALTERNATE SHALL BE APPROVED BY THE ENGINEER.

D. WIRE STRUT SHOWN IN THE CONCRETE ANCHOR ASSEMBLY DETAIL IS THE MINIMUM ALLOWABLE SIZE AND SHALL HAVE A MINIMUM TENSILE STRENGTH OF 100,000 PSI. AS AN OPTION, A 7/16" Ø WIRE STRUT WITH A MINIMUM TENSILE STRENGTH OF 90,000 PSI IS ACCEPTABLE.

E. THE METAL RAIL ANCHOR ASSEMBLIES TO BE HOT DIPPED GALVANIZED TO CONFORM TO REQUIREMENTS OF AASHTO M111.

F. THE COST OF THE METAL RAIL ANCHOR ASSEMBLY WITH BOLTS AND WASHERS COMPLETE IN PLACE SHALL BE INCLUDED IN THE PRICE BID FOR LINEAR FEET OF METAL RAIL.

G. BOLTS TO BE TIGHTENED ONE-HALF TURN WITH A WRENCH FROM A FINGER-TIGHT POSITION.

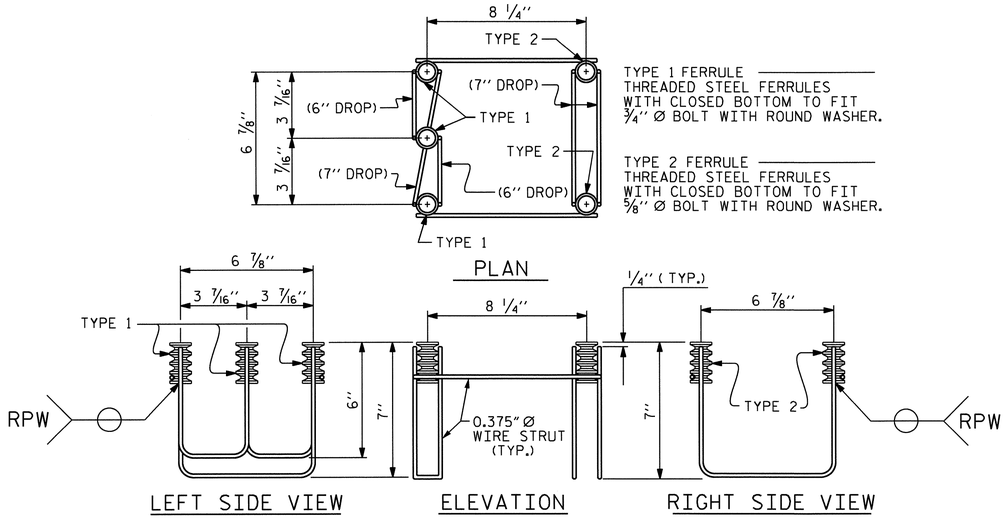


## 5-BOLT METAL RAIL ANCHOR ASSEMBLY

( 76 ASSEMBLIES REQUIRED )

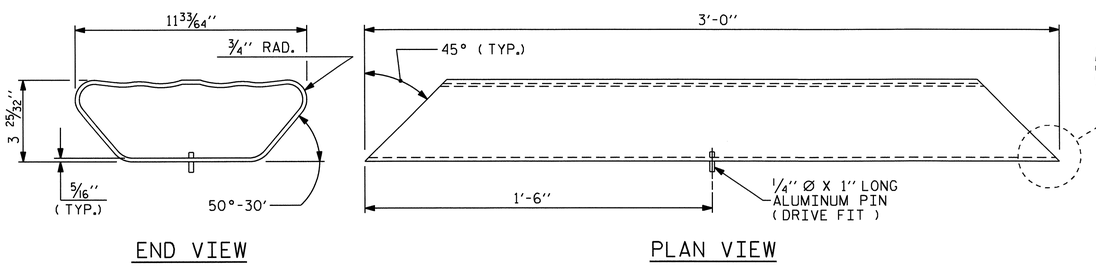


## BOTTOM RAIL EXPANSION BAR

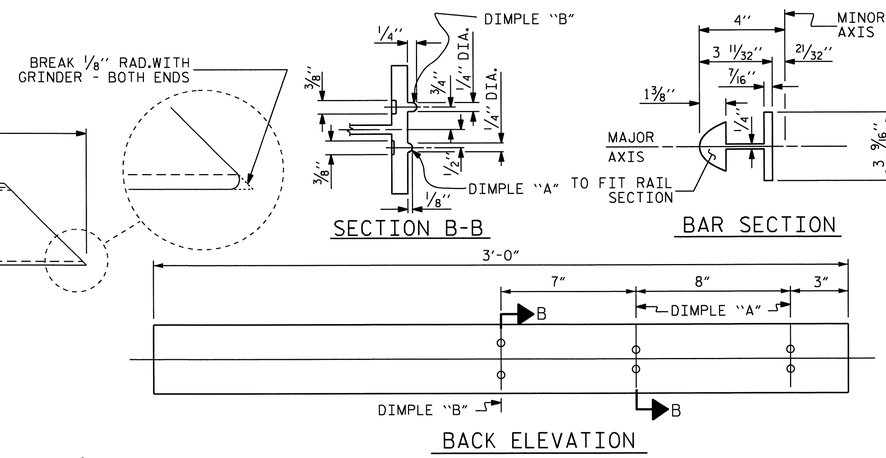


## TOP & MIDDLE RAIL EXPANSION BAR

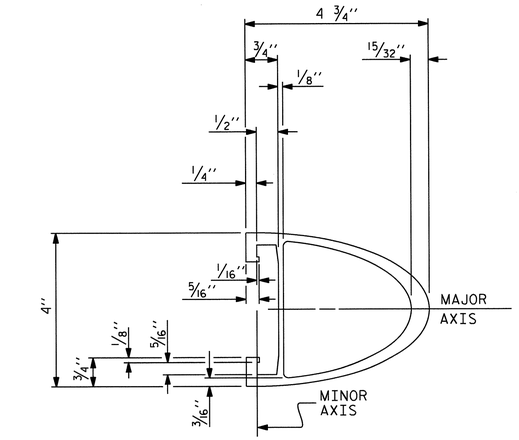


## TOP & MIDDLE RAIL SECTION

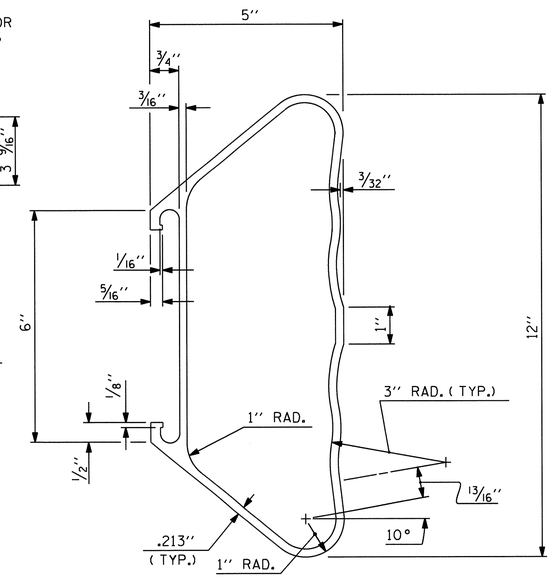


## BOTTOM RAIL SECTION

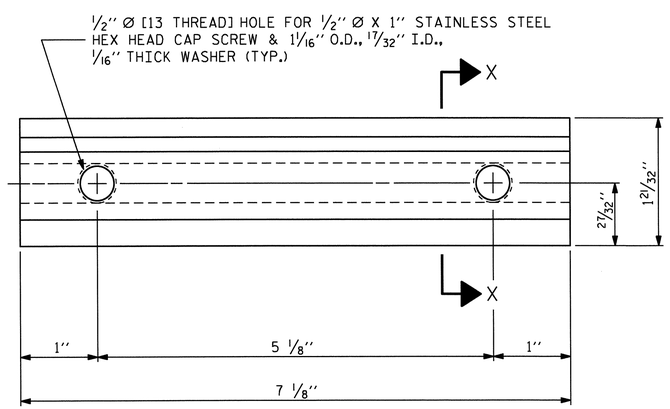


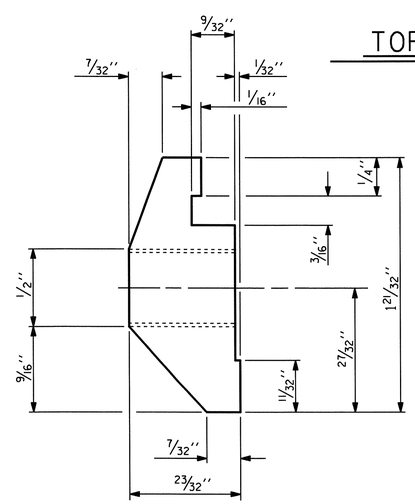


## CLAMP BAR DETAIL

( 6 REQUIRED PER POST )

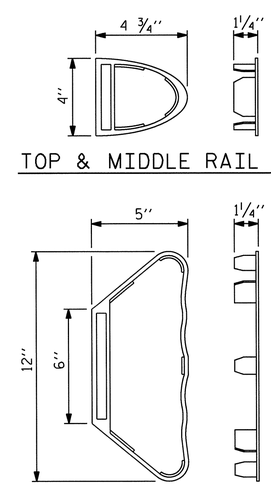


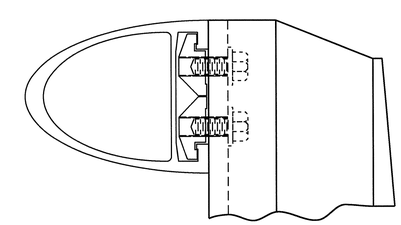

## CLAMP ASSEMBLY

TOP RAIL SHOWN
( MIDDLE & BOTTOM RAIL ARE SIMILAR )

NORTH CAROLINA PROFESSIONAL SEAL 21545 ENGINEER STEVEN L. WANCE
05/29/11

PROJECT NO. U-4019
NASH COUNTY
STATION: 55+38.99 -L-

SHEET 2 OF 3

STATE OF NORTH CAROLINA
DEPARTMENT OF TRANSPORTATION
RALEIGH
STANDARD

3 BAR METAL RAIL

| | | | |
|---|---|---|---|
| ASSEMBLED BY : J.H. CARDEN | DATE : 2-11 | | |
| CHECKED BY : S. WANCE | DATE : 03-01-11 | | |
| DRAWN BY : JMB 1/88 | REV. 7/10/01 RWW/LES | | |
| CHECKED BY : GGH 1/88 | REV. 5/7/03 RWW/JTE | | |
| | REV. 5/1/06 TLA/GM | | |

| REVISIONS | | | | | | SHEET NO. |
|---|---|---|---|---|---|---|
| NO. | BY: | DATE: | NO. | BY: | DATE: | S-72 |
| 1 | | | 3 | | | TOTAL SHEETS |
| 2 | | | 4 | | | 93 |

STR #2

STD. NO. BMR6

25-MAY-2011 12:00
Z:\TIPProjects-U\U4019\Structures\str2\FinalPlans\u4019_sd_3mr2.dgn
swance

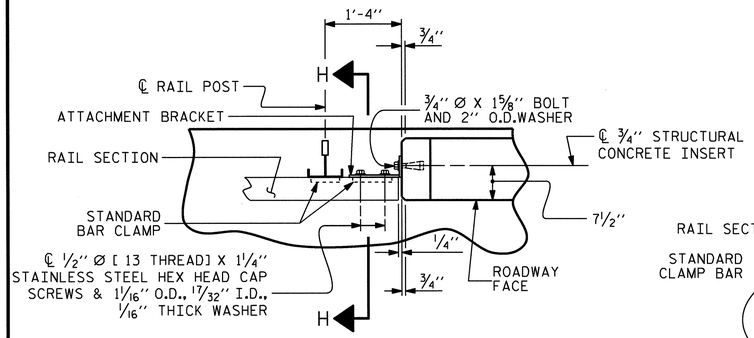


## PLAN OF RAIL AND END POST

( STIFFENER ON 1/2" ℙ NOT SHOWN FOR CLARITY )

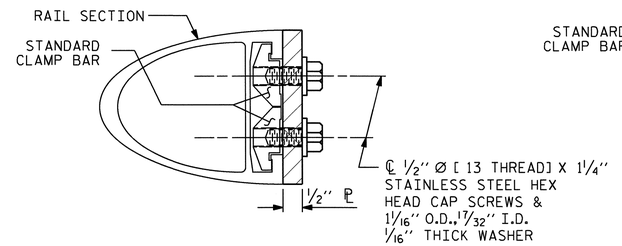


## SECTION H-H

( FOR TOP & MIDDLE RAIL )

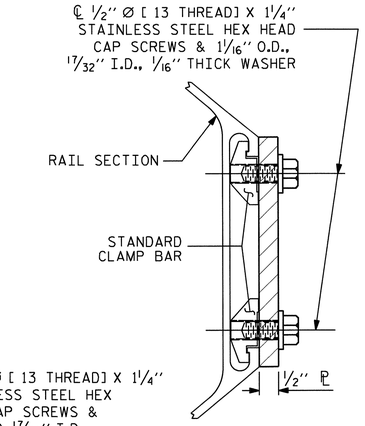


## SECTION H-H

( FOR BOTTOM RAIL )

## NOTES

METAL RAIL TO END POST CONNECTION

THE METAL RAIL TO END POST CONNECTION SHALL CONSIST OF THE FOLLOWING COMPONENTS:

A. 1/2" PLATES SHALL CONFORM TO AASHTO M270 GRADE 36 AND SHALL BE GALVANIZED AFTER FABRICATION.

B. 3/4" STRUCTURAL CONCRETE INSERT SHALL HAVE A WORKING LOAD SHEAR CAPACITY OF 4800 LBS. THE FERRULES SHALL ENGAGE A 3/4" Ø X 1 5/8" BOLT WITH 2" O.D. WASHER IN PLACE. THE 3/4" Ø X 1 5/8" BOLT SHALL HAVE N. C. THREADS.

C. CAP SCREWS FOR RAIL ATTACHMENT TO ANGLE SHALL CONFORM TO THE REQUIREMENTS OF ASTM F593 ALLOY 305 STAINLESS STEEL. CAP SCREWS TO BE CENTERED IN SLOTS AT 60°F. WASHERS FOR RAIL ATTACHMENT SHALL MEET THE REQUIREMENTS OF ASTM F844 EXCEPT THEY SHALL BE MADE FROM ALLOY 304 STAINLESS STEEL.

D. STANDARD CLAMP BARS ( STD. No. BMR6 ).

THE COST OF THE STANDARD CLAMP BARS AND CAP SCREWS USED IN THE METAL RAIL TO END POST CONNECTION SHALL BE INCLUDED IN THE UNIT CONTRACT PRICE BID FOR LINEAR FEET OF 3 BAR METAL RAIL.

THE 3/4" STRUCTURAL CONCRETE INSERT WITH BOLT SHALL BE ASSEMBLED IN THE SHOP.

THE COST OF THE 3/4" STRUCTURAL CONCRETE INSERT ASSEMBLY, AND THE 1/2" PLATES COMPLETE IN PLACE SHALL BE INCLUDED IN THE VARIOUS PAY ITEMS.

THE CONTRACTOR, AT HIS OPTION, MAY USE AN ADHESIVE BONDING SYSTEM IN LIEU OF THE STRUCTURAL CONCRETE INSERT EMBEDDED IN THE END POST. IF THE ADHESIVE BONDING SYSTEM IS USED, THE 3/4" Ø X 1 5/8" BOLT WITH WASHER SHALL BE REPLACED WITH A 3/4" Ø X 6 1/2" BOLT AND 2" O.D.WASHER. ALL SPECIFICATIONS THAT APPLY TO THE 3/4" Ø X 1 5/8" BOLT SHALL APPLY TO THE 3/4" Ø X 6 1/2" BOLT. FIELD TESTING OF THE ADHESIVE BONDING SYSTEM IS NOT REQUIRED.

## NOTES

STRUCTURAL CONCRETE INSERT

THE STRUCTURAL CONCRETE INSERT ASSEMBLY SHALL CONSIST OF THE FOLLOWING COMPONENTS:

A. FERRULES SHALL BE MADE FROM STEEL MEETING THE REQUIREMENTS OF AASHTO M169, GRADE 12L14 AND SHALL HAVE A MINIMUM LENGTH OF THREADS OF 1 1/2".

B. 1 - 3/4" Ø X 1 5/8" BOLT WITH WASHER. BOLT SHALL CONFORM TO THE REQUIREMENTS OF ASTM A307. BOLT AND WASHER SHALL BE GALVANIZED. AT THE CONTRACTORS OPTION, STAINLESS STEEL BOLT AND WASHER MAY BE USED AS AN ALTERNATE FOR THE 3/4" Ø X 1 5/8" GALVANIZED BOLT AND WASHER. THEY SHALL CONFORM TO OR EXCEED THE MECHANICAL REQUIREMENTS OF ASTM A307. THE USE OF THIS ALTERNATE SHALL BE APPROVED BY THE ENGINEER.

C. WIRE STRUT SHOWN IN THE CONCRETE INSERT ASSEMBLY DETAIL IS THE MINIMUM ALLOWABLE SIZE AND SHALL HAVE A MINIMUM TENSILE STRENGTH OF 100,000 PSI. AS AN OPTION, A 7/16" Ø WIRE STRUT WITH A MINIMUM TENSILE STRENGTH OF 90,000 PSI IS ACCEPTABLE.

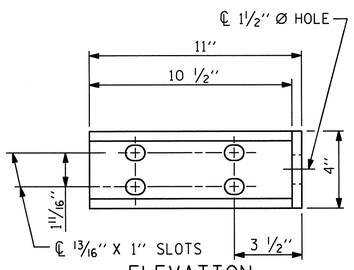


ELEVATION

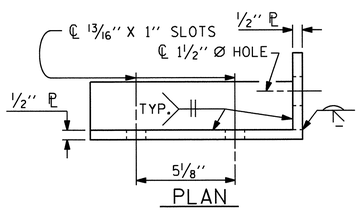


PLAN

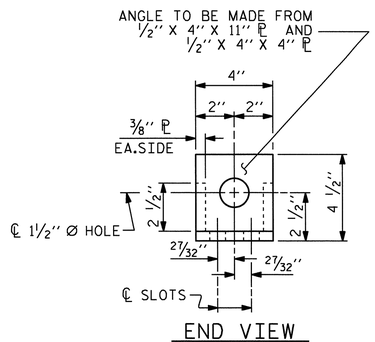


END VIEW

( FIX. )

## DETAILS FOR ATTACHMENT BRACKET

( TOP & MIDDLE RAIL ONLY )

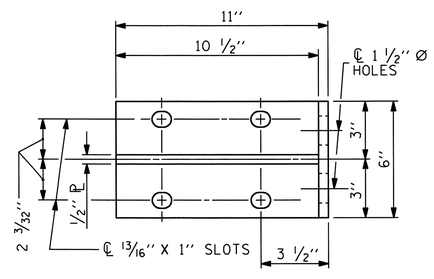


ELEVATION

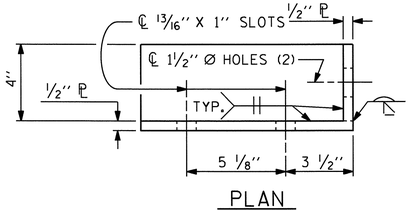


PLAN

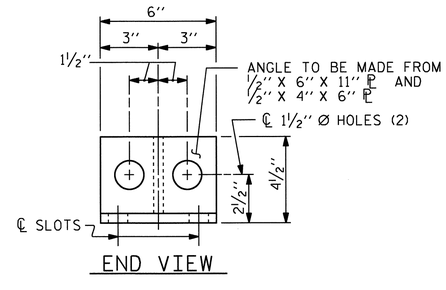


END VIEW

## DETAILS FOR ATTACHMENT BRACKET

( BOTTOM RAIL ONLY )

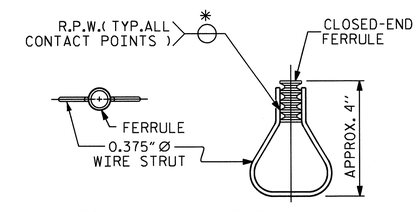


PLAN ELEVATION

## STRUCTURAL CONCRETE INSERT

* EACH WELDED ATTACHMENT OF WIRE TO FERRULE SHALL DEVELOP THE TENSILE STRENGTH OF THE WIRE.

PROJECT NO. U-4019

NASH COUNTY

STATION: 55+38.99 -L-

SHEET 3 OF 3

STATE OF NORTH CAROLINA
DEPARTMENT OF TRANSPORTATION
RALEIGH

STANDARD

3 BAR METAL RAIL

NORTH CAROLINA PROFESSIONAL SEAL 21545 ENGINEER STEVEN L. WANCE

05/25/11

| | | | |
|---|---|---|---|
| ASSEMBLED BY : HARISH SHAH | DATE : 2-11 | | |
| CHECKED BY : S. WANCE | DATE : 03-01-11 | | |
| DRAWN BY : JMB 1/88 | REV. 7/10/01 | RWW/LES | |
| CHECKED BY : GGH 1/88 | REV. 5/7/03 | RWW/JTE | |
| | REV. 5/1/06 | TLA/GM | |

| REVISIONS | | | | | | SHEET NO. |
|---|---|---|---|---|---|---|
| NO. | BY: | DATE: | NO. | BY: | DATE: | S-73 |
| 1 | | | 3 | | | TOTAL |
| 2 | | | 4 | | | 93 |

STR #2

STD. NO. BMR7

25-MAY-2011 12:00
Z:\TIPProjects-U\U4019\Structures\str2\FinalPlans\u4019_sd_3mr2.dgn
swance

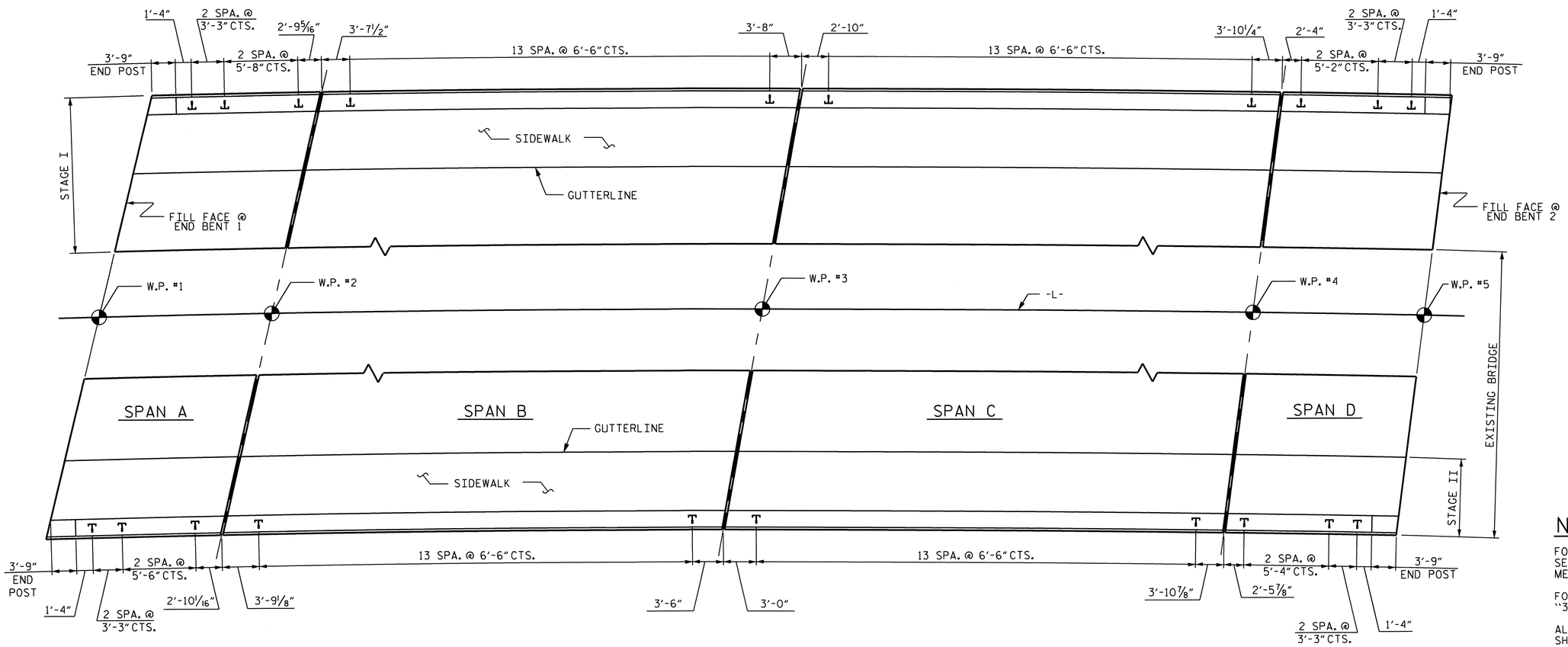


## PLAN OF RAIL POST SPACINGS

| BILL OF MATERIAL | | | | | |
|---|---|---|---|---|---|
| ONE END POST ( 4 REQ'D) | | | | | |
| BAR | NO. | SIZE | TYPE | LENGTH | WEIGHT |
| ✳E1 | 2 | #7 | 1 | 3'-5" | 14 |
| ✳E2 | 2 | #7 | 1 | 4'-0" | 16 |
| ✳E3 | 2 | #7 | 1 | 4'-7" | 19 |
| ✳E4 | 2 | #7 | 1 | 4'-0" | 16 |
| ✳E5 | 1 | #7 | 1 | 3'-3" | 7 |
| | | | | | |
| ✳F1 | 1 | #6 | STR | 4'-0" | 6 |
| ✳F2 | 2 | #6 | STR | 3'-5" | 10 |
| ✳F3 | 1 | #6 | STR | 2'-5" | 4 |
| ✳F4 | 1 | #6 | STR | 4'-3" | 6 |
| ✳F5 | 2 | #6 | STR | 3'-8" | 11 |
| ✳F6 | 1 | #6 | STR | 2'-8" | 4 |

✳EPOXY COATED REINFORCING STEEL = 113 LBS.

CLASS AA CONCRETE = 0.4 C.Y.

BAR TYPES

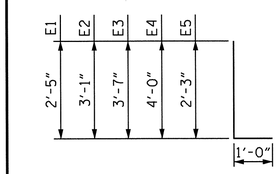


ALL BAR DIMENSIONS ARE OUT TO OUT

## NOTES :

FOR DETAIL OF GUARDRAIL ANCHOR ASSEMBLY, SEE "GUARDRAIL ANCHORAGE DETAILS FOR METALS RAILS" SHEET.

FOR DETAILS OF CONCRETE INSERT, SEE "3 BAR METAIL RAIL" SHEET 3 OF 3.

ALL REINFORCING STEEL IN THE END POSTS SHALL BE EPOXY COATED.

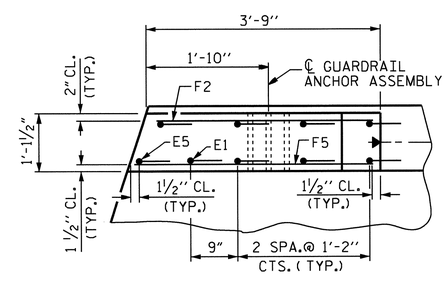


@ END BENT 1

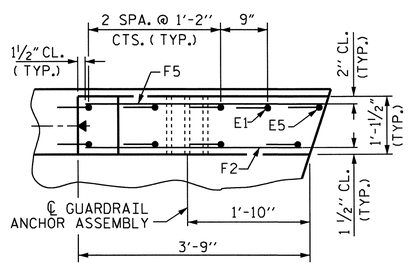


@ END BENT 2

PLAN

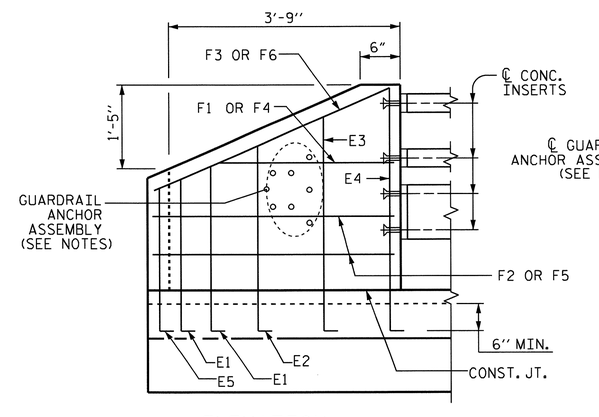


ELEVATION

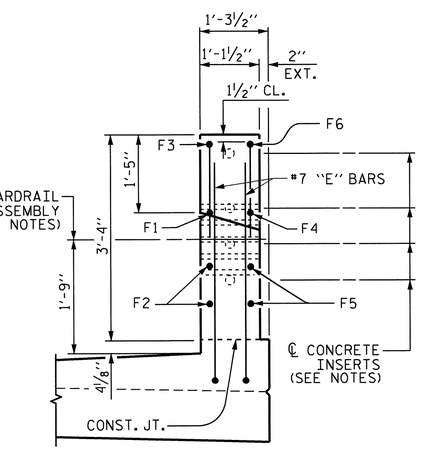


END VIEW
(AT END BENT 2)

## END POST DETAILS

NORTH CAROLINA PROFESSIONAL SEAL 21545 ENGINEER STEVEN L. WANCE

05/26/11

PROJECT NO. U-4019

NASH COUNTY

STATION: 55+38.99 -L-

STATE OF NORTH CAROLINA
DEPARTMENT OF TRANSPORTATION
RALEIGH

SUPERSTRUCTURE

RAIL POSTS SPACINGS & END POST DETAILS

| REVISIONS | | | | | | SHEET NO. |
|---|---|---|---|---|---|---|
| NO. | BY: | DATE: | NO. | BY: | DATE: | S-74 |
| 1 | | | 3 | | | TOTAL SHEETS |
| 2 | | | 4 | | | 93 |

DRAWN BY : OT NGUYEN DATE : 2-09
CHECKED BY : S. WANCE DATE : 4-10

25-MAY-2011 12:00
Z:\TIPProjects-U\U4019\Structures\str2\FinalPlans\u4019_sd_3mr2.dgn
swance

STR #2

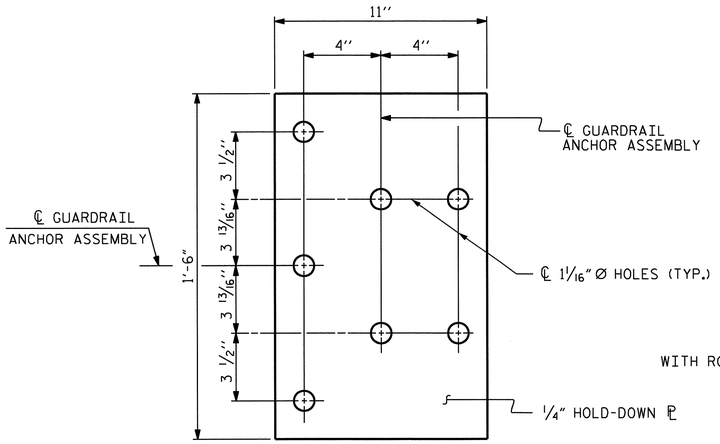


PLAN

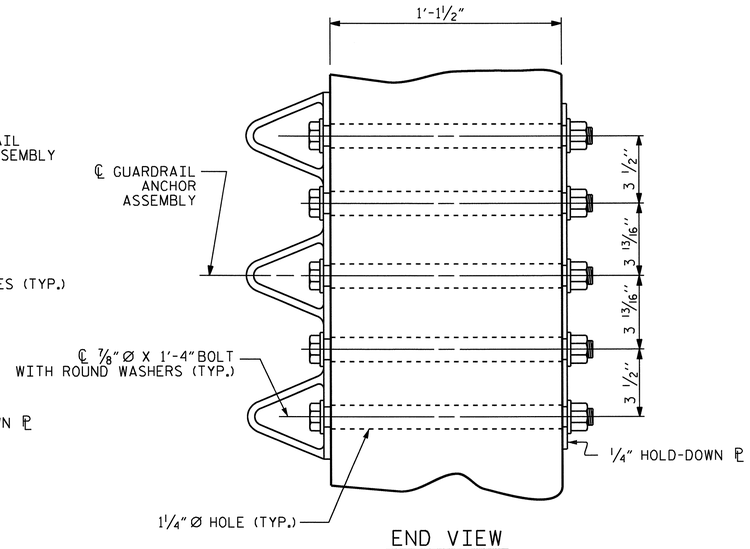


END VIEW

## GUARDRAIL ANCHOR ASSEMBLY DETAILS

## NOTES

THE GUARDRAIL ANCHOR ASSEMBLY SHALL CONSIST OF A 1/4'' HOLD DOWN PLATE AND 7 - 7/8'' Ø BOLTS WITH NUTS AND WASHERS.

THE HOLD-DOWN PLATE SHALL CONFORM TO AASHTO M270 GRADE 36. AFTER FABRICATION, THE HOLD-DOWN PLATE SHALL BE HOT-DIP GALVANIZED IN ACCORDANCE WITH AASHTO M111.

BOLTS SHALL CONFORM TO THE REQUIREMENTS OF ASTM A307 AND NUTS SHALL CONFORM TO THE REQUIREMENTS OF AASHTO M291. BOLTS, NUTS AND WASHERS SHALL BE GALVANIZED. AT THE CONTRACTOR'S OPTION, STAINLESS STEEL BOLTS, NUTS AND WASHERS MAY BE USED AS AN ALTERNATE FOR THE 7/8'' Ø GALVANIZED BOLTS, NUTS AND WASHERS. THEY SHALL CONFORM TO OR EXCEED THE MECHANICAL REQUIREMENTS OF ASTM A307. THE USE OF THIS ALTERNATE SHALL BE APPROVED BY THE ENGINEER.

THE GUARDRAIL ANCHOR ASSEMBLY IS REQUIRED AT ALL POINTS WHERE APPROACH GUARDRAIL IS TO BE ATTACHED TO THE END OF THE PARAPET. FOR POINTS OF ATTACHMENT, SEE SKETCH.

AFTER INSTALLATION, THE EXPOSED THREAD OF THE BOLT SHALL BE BURRED WITH A SHARP POINTED TOOL.

THE COST OF THE GUARDRAIL ANCHOR ASSEMBLIES WITH BOLTS, NUTS AND WASHERS COMPLETE IN PLACE, SHALL BE INCLUDED IN THE VARIOUS PAY ITEMS.

THE VERTICAL REINFORCING BARS MAY BE SHIFTED SLIGHTLY IN THE END POST TO CLEAR ASSEMBLY BOLTS.

THE 1 1/4'' Ø HOLES SHALL BE FORMED OR DRILLED WITH A CORE BIT. IMPACT TOOLS WILL NOT BE PERMITTED. ANY CONCRETE DAMAGED BY THIS WORK SHALL BE REPAIRED TO THE SATISFACTION OF THE ENGINEER.

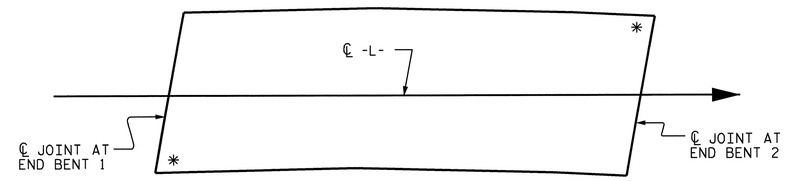


## SKETCH SHOWING POINTS OF ATTACHMENT

*LOCATION OF TYPE III GUARDRAIL ATTACHMENT

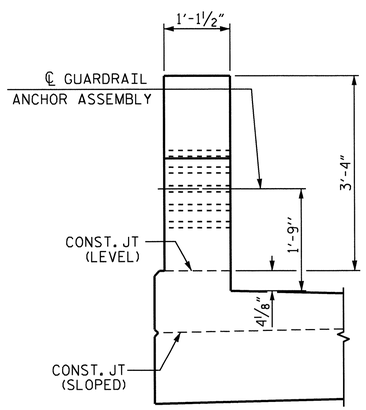


END VIEW

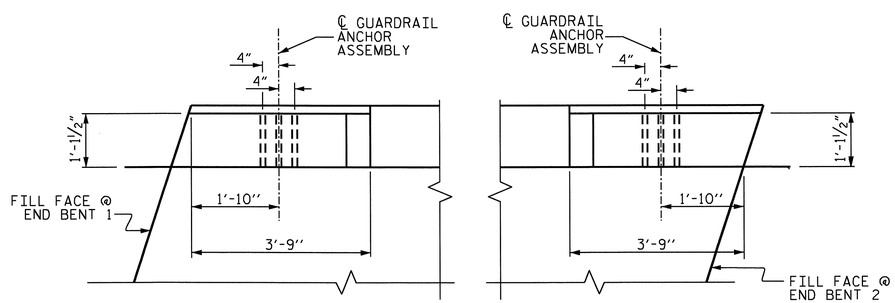


PLAN

## LOCATION OF GUARDRAIL ANCHOR AT END POST

PROJECT NO. U-4019

NASH COUNTY

STATION: 55+38.99 -L-

NORTH CAROLINA PROFESSIONAL SEAL 21545 ENGINEER STEVEN L. WANCE

05/25/11

STATE OF NORTH CAROLINA
DEPARTMENT OF TRANSPORTATION
RALEIGH

STANDARD

GUARDRAIL ANCHORAGE DETAILS FOR METAL RAILS

| REVISIONS | | | | | | | | SHEET NO. |
|---|---|---|---|---|---|---|---|---|
| NO. | BY: | DATE: | NO. | BY: | DATE: | | | S-75 |
| 1 | | | 3 | | | | | TOTAL SHEETS |
| 2 | | | 4 | | | | | 93 |

STR #2

STD. NO. BMR8

| | | | |
|---|---|---|---|
| ASSEMBLED BY : OT NGUYEN | DATE : 2-11 | | |
| CHECKED BY : S. WANCE | DATE : 4-11 | | |
| DRAWN BY : EEM 6/94 | REV. 10/17/00 | RWW/LES | |
| CHECKED BY : RGW 6/94 | REV. 5/7/03 | RWW/JTE | |
| | REV. 5/1/06 | TLA/GM | |

25-MAY-2011 12:00
Z:\TIPProjects-U\U4019\Structures\str2\Final Plans\u4019_sd_3mr2.dgn
swance

| SUPERSTRUCTURE REINFORCING STEEL LENGTHS ARE BASED ON THE FOLLOWING MINIMUM SPLICE LENGTHS | | | | | |
|---|---|---|---|---|---|
| BAR SIZE | SUPERSTRUCTURE EXCEPT APPROACH SLABS, PARAPET, AND BARRIER RAIL | | APPROACH SLABS | | PARAPET AND BARRIER RAIL |
| | EPOXY COATED | UNCOATED | EPOXY COATED | UNCOATED | |
| #4 | 2'-0" | 1'-9" | 2'-0" | 1'-9" | 2'-9" |
| #5 | 2'-6" | 2'-2" | 2'-6" | 2'-2" | 3'-5" |
| #6 | 3'-0" | 2'-7" | 3'-10" | 2'-7" | 4'-4" |
| #7 | 5'-3" | 3'-6" | | | |
| #8 | 6'-10" | 4'-7" | | | |

# BILL OF MATERIAL

## STAGE I (LEFT WIDENING)

### SPAN A

| BAR | NO. | SIZE | TYPE | LENGTH | WEIGHT |
|---|---|---|---|---|---|
| ✱ A1 | 27 | #5 | STR | 48'-6" | 1366 |
| A2 | 27 | #5 | STR | 48'-6" | 1366 |
| ✱ A101 | 4 | #5 | STR | 45'-10" | 191 |
| ✱ A102 | 4 | #5 | STR | 41'-7" | 173 |
| ✱ A103 | 4 | #5 | STR | 37'-4" | 156 |
| ✱ A104 | 4 | #5 | STR | 33'-1" | 138 |
| ✱ A105 | 4 | #5 | STR | 28'-10" | 120 |
| ✱ A106 | 4 | #5 | STR | 24'-8" | 103 |
| ✱ A107 | 4 | #5 | STR | 20'-5" | 85 |
| ✱ A108 | 4 | #5 | STR | 16'-2" | 67 |
| ✱ A109 | 4 | #5 | STR | 11'-11" | 50 |
| ✱ A110 | 4 | #5 | STR | 7'-8" | 32 |
| ✱ A111 | 4 | #5 | STR | 3'-5" | 14 |
| A201 | 4 | #5 | STR | 45'-10" | 191 |
| A202 | 4 | #5 | STR | 41'-7" | 173 |
| A203 | 4 | #5 | STR | 37'-4" | 156 |
| A204 | 4 | #5 | STR | 33'-1" | 138 |
| A205 | 4 | #5 | STR | 28'-10" | 120 |
| A206 | 4 | #5 | STR | 24'-8" | 103 |
| A207 | 4 | #5 | STR | 20'-5" | 85 |
| A208 | 4 | #5 | STR | 16'-2" | 67 |
| A209 | 4 | #5 | STR | 11'-11" | 50 |
| A210 | 4 | #5 | STR | 7'-8" | 32 |
| A211 | 4 | #5 | STR | 3'-5" | 14 |
| ✱ B1 | 42 | #4 | STR | 25'-2" | 706 |
| B2 | 65 | #5 | STR | 25'-2" | 1706 |
| ✱ D1 | 59 | #5 | STR | 6'-0" | 369 |
| ✱ D2 | 61 | #5 | STR | 3'-3" | 207 |
| ✱ G1 | 2 | #5 | STR | 49'-10" | 104 |
| ✱ G4 | 26 | #4 | STR | 5'-11" | 103 |
| K1 | 10 | #4 | STR | 26'-2" | 175 |
| K2 | 3 | #6 | STR | 49'-10" | 225 |
| K3 | 2 | #6 | STR | 11'-0" | 33 |
| K7 | 2 | #5 | 1 | 7'-6" | 16 |
| K8 | 10 | #5 | 2 | 9'-5" | 98 |
| K9 | 10 | #5 | STR | 7'-4" | 76 |
| K10 | 4 | #6 | STR | 2'-3" | 14 |
| S1 | 39 | #4 | 3 | 4'-8" | 122 |
| S2 | 13 | #4 | 3 | 5'-4" | 46 |
| S3 | 51 | #4 | 4 | 2'-1" | 71 |
| S4 | 42 | #4 | 5 | 3'-8" | 103 |
| ✱ U1 | 8 | #4 | 6 | 3'-4" | 18 |

REINFORCING STEEL LBS. = 5,180
✱ EPOXY COATED REINFORCING STEEL LBS. = 4,002

### SPAN B

| BAR | NO. | SIZE | TYPE | LENGTH | WEIGHT |
|---|---|---|---|---|---|
| ✱ A1 | 163 | #5 | STR | 48'-6" | 8245 |
| A2 | 163 | #5 | STR | 48'-6" | 8245 |
| ✱ A112 | 4 | #5 | STR | 44'-8" | 186 |
| ✱ A113 | 4 | #5 | STR | 39'-9" | 166 |
| ✱ A114 | 4 | #5 | STR | 34'-10" | 145 |
| ✱ A115 | 4 | #5 | STR | 29'-11" | 125 |
| ✱ A116 | 4 | #5 | STR | 25'-0" | 104 |
| ✱ A117 | 4 | #5 | STR | 20-2" | 84 |
| ✱ A118 | 4 | #5 | STR | 15'-3" | 64 |
| ✱ A119 | 4 | #5 | STR | 10'-4" | 43 |
| ✱ A120 | 4 | #5 | STR | 5'-5" | 23 |
| A212 | 4 | #5 | STR | 44'-8" | 186 |
| A213 | 4 | #5 | STR | 39'-9" | 166 |
| A214 | 4 | #5 | STR | 34'-10" | 145 |
| A215 | 4 | #5 | STR | 29'-11" | 125 |
| A216 | 4 | #5 | STR | 25'-0" | 104 |
| A217 | 4 | #5 | STR | 20'-2" | 84 |
| A218 | 4 | #5 | STR | 15'-3" | 64 |
| A219 | 4 | #5 | STR | 10'-4" | 43 |
| A220 | 4 | #5 | STR | 5'-5" | 23 |
| ✱ B3 | 172 | #4 | STR | 24'-4" | 2796 |
| B4 | 134 | #5 | STR | 46'-10" | 6546 |
| ✱ D3 | 184 | #5 | STR | 7'-2" | 1375 |
| ✱ D4 | 188 | #5 | STR | 4'-1" | 801 |
| ✱ G1 | 1 | #5 | STR | 49'-10" | 52 |
| ✱ G2 | 1 | #5 | STR | 49'-3" | 51 |
| ✱ G4 | 92 | #4 | STR | 5'-11" | 364 |
| K7 | 4 | #5 | 1 | 7'-6" | 31 |
| K8 | 20 | #5 | 2 | 9'-5" | 196 |
| K9 | 20 | #5 | STR | 7'-4" | 153 |
| S4 | 84 | #4 | 5 | 3'-8" | 206 |
| ✱ U1 | 28 | #4 | 6 | 3'-4" | 62 |

REINFORCING STEEL LBS. = 16,317
✱ EPOXY COATED REINFORCING STEEL LBS. = 14,686

### SPAN C

| BAR | NO. | SIZE | TYPE | LENGTH | WEIGHT |
|---|---|---|---|---|---|
| ✱ A1 | 166 | #5 | STR | 48'-6" | 8397 |
| A2 | 166 | #5 | STR | 48'-6" | 8397 |
| ✱ A121 | 4 | #5 | STR | 43'-9" | 183 |
| ✱ A122 | 4 | #5 | STR | 37'-5" | 156 |
| ✱ A123 | 4 | #5 | STR | 31'-1" | 130 |
| ✱ A124 | 4 | #5 | STR | 24'-9" | 103 |
| ✱ A125 | 4 | #5 | STR | 18'-6" | 77 |
| ✱ A126 | 4 | #5 | STR | 12'-2" | 51 |
| ✱ A127 | 4 | #5 | STR | 5'-10" | 24 |
| A221 | 4 | #5 | STR | 43'-9" | 183 |
| A222 | 4 | #5 | STR | 37'-5" | 156 |
| A223 | 4 | #5 | STR | 31'-1" | 130 |
| A224 | 4 | #5 | STR | 24'-9" | 103 |
| A225 | 4 | #5 | STR | 18'-6" | 77 |
| A226 | 4 | #5 | STR | 12'-2" | 51 |
| A227 | 4 | #5 | STR | 5'-10" | 24 |
| ✱ B5 | 172 | #4 | STR | 24'-3" | 2786 |
| B6 | 134 | #5 | STR | 46'-6" | 6499 |
| ✱ D5 | 182 | #5 | STR | 7'-3" | 1376 |
| ✱ D6 | 186 | #5 | STR | 3'-7" | 695 |
| ✱ G2 | 1 | #5 | STR | 49'-3" | 51 |
| ✱ G3 | 1 | #5 | STR | 48'-11" | 51 |
| ✱ G4 | 91 | #4 | STR | 5'-11" | 360 |
| K7 | 4 | #5 | 1 | 7'-6" | 31 |
| K8 | 20 | #5 | 2 | 9'-5" | 196 |
| K9 | 20 | #5 | STR | 7'-4" | 153 |
| S4 | 84 | #4 | 5 | 3'-8" | 206 |
| ✱ U1 | 26 | #4 | 6 | 3'-4" | 58 |

REINFORCING STEEL LBS. = 16,206
✱ EPOXY COATED REINFORCING STEEL LBS. = 14,498

### SPAN D

| BAR | NO. | SIZE | TYPE | LENGTH | WEIGHT |
|---|---|---|---|---|---|
| ✱ A1 | 35 | #5 | STR | 48'-6" | 1770 |
| A2 | 35 | #5 | STR | 48'-6" | 1770 |
| ✱ A128 | 4 | #5 | STR | 42'-7" | 178 |
| ✱ A129 | 4 | #5 | STR | 35'-0" | 146 |
| ✱ A130 | 4 | #5 | STR | 27'-4" | 114 |
| ✱ A131 | 4 | #5 | STR | 19'-9" | 82 |
| ✱ A132 | 4 | #5 | STR | 12'-1" | 50 |
| ✱ A133 | 4 | #5 | STR | 4'-5" | 18 |
| A228 | 4 | #5 | STR | 42'-7" | 178 |
| A229 | 4 | #5 | STR | 35'-0" | 146 |
| A230 | 4 | #5 | STR | 27'-4" | 114 |
| A231 | 4 | #5 | STR | 19'-9" | 82 |
| A232 | 4 | #5 | STR | 12'-1" | 50 |
| A233 | 4 | #5 | STR | 4'-5" | 18 |
| ✱ B7 | 42 | #4 | STR | 23'-9" | 666 |
| B8 | 65 | #5 | STR | 23'-9" | 1610 |
| ✱ D7 | 57 | #5 | STR | 6'-6" | 386 |
| ✱ D8 | 59 | #5 | STR | 2'-10" | 174 |
| ✱ G3 | 2 | #5 | STR | 48'-11" | 102 |
| ✱ G4 | 24 | #4 | STR | 5'-11" | 95 |
| K4 | 10 | #4 | STR | 25'-8" | 170 |
| K5 | 3 | #6 | STR | 48'-11" | 220 |
| K6 | 2 | #6 | STR | 11'-2" | 34 |
| K7 | 2 | #5 | 1 | 7'-6" | 16 |
| K8 | 10 | #5 | 2 | 9'-5" | 98 |
| K9 | 10 | #5 | STR | 7'-4" | 76 |
| K11 | 4 | #6 | STR | 1'-9" | 11 |
| S1 | 38 | #4 | 3 | 4'-8" | 118 |
| S2 | 13 | #4 | 3 | 5'-4" | 46 |
| S3 | 50 | #4 | 4 | 2'-1" | 70 |
| S4 | 42 | #4 | 5 | 3'-8" | 103 |
| ✱ U1 | 8 | #4 | 6 | 3'-4" | 18 |

REINFORCING STEEL LBS. = 4,930
✱ EPOXY COATED REINFORCING STEEL LBS. = 3,799

## STAGE II (RIGHT SIDEWALK)

### SPAN A

| BAR | NO. | SIZE | TYPE | LENGTH | WEIGHT |
|---|---|---|---|---|---|
| ✱ B9 | 6 | #4 | STR | 25'-0" | 100 |
| ✱ G5 | 25 | #4 | STR | 5'-11" | 99 |
| ✱ D9 | 16 | #4 | STR | 1'-0" | 11 |

✱ EPOXY COATED REINFORCING STEEL LBS. = 210

### SPAN B

| BAR | NO. | SIZE | TYPE | LENGTH | WEIGHT |
|---|---|---|---|---|---|
| ✱ B10 | 24 | #4 | STR | 24'-4" | 390 |
| ✱ G5 | 92 | #4 | STR | 5'-11" | 364 |
| ✱ D9 | 56 | #4 | STR | 1'-0" | 37 |

✱ EPOXY COATED REINFORCING STEEL LBS. = 791

### SPAN C

| BAR | NO. | SIZE | TYPE | LENGTH | WEIGHT |
|---|---|---|---|---|---|
| ✱ B11 | 24 | #4 | STR | 24'-3" | 397 |
| ✱ G5 | 91 | #4 | STR | 5'-11" | 360 |
| ✱ D9 | 52 | #4 | STR | 1'-0" | 35 |

✱ EPOXY COATED REINFORCING STEEL LBS. = 792

### SPAN D

| BAR | NO. | SIZE | TYPE | LENGTH | WEIGHT |
|---|---|---|---|---|---|
| ✱ B12 | 6 | #4 | STR | 24'-4" | 98 |
| ✱ G5 | 24 | #4 | STR | 5'-11" | 95 |
| ✱ D9 | 16 | #4 | STR | 1'-0" | 11 |

✱ EPOXY COATED REINFORCING STEEL LBS. = 204

## BAR TYPES

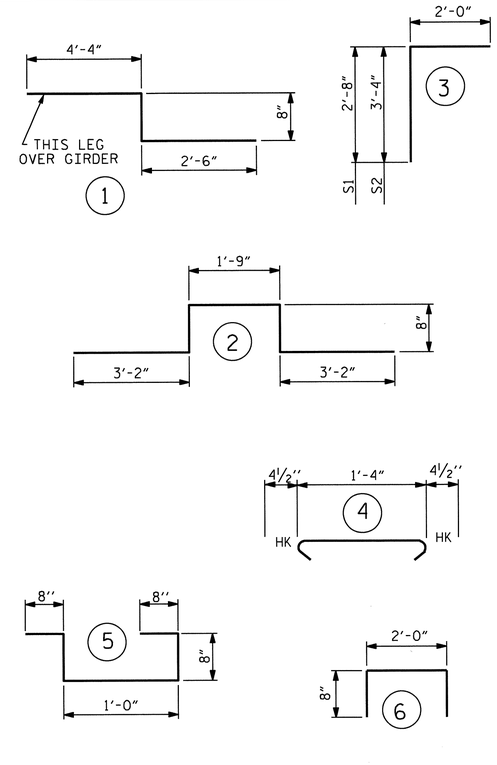


ALL BAR DIMENSIONS ARE OUT TO OUT

NORTH CAROLINA PROFESSIONAL SEAL 21545 ENGINEER STEVEN L. WANCE
05/25/11

PROJECT NO. U-4019
NASH COUNTY
STATION: 55+38.99 -L-

SHEET 1 OF 2

STATE OF NORTH CAROLINA
DEPARTMENT OF TRANSPORTATION
RALEIGH
STANDARD

SUPERSTRUCTURE BILL OF MATERIAL

| REVISIONS | | | | | | SHEET NO. |
|---|---|---|---|---|---|---|
| NO. | BY: | DATE: | NO. | BY: | DATE: | S-76 |
| 1 | | | 3 | | | TOTAL SHEETS |
| 2 | | | 4 | | | 93 |

ASSEMBLED BY : J.H.CARDEN DATE : 01/11
CHECKED BY : S.WANCE DATE : 02/11

DRAWN BY : JMB 5/87
CHECKED BY : SJD 9/87

REV. 6/1/94 EEM/GRP
REV. 8/16/99 RWW/LES
REV. 5/1/06 TLA/GM

25-MAY-2011 12:00
Z:\TIPProjects-U\U4019\Structures\str2\Final Plans\u4019_sd_bm2.dgn
swance

STR. #2 STD. NO. BOM2

## DECK REHABILITATION BILL OF MATERIAL

| STAGE III CONSTRUCTION | CLASS I SURFACE PREPARATION | LATEX MODIFIED CONCRETE OVERLAY | PLACING AND FINISHING OF LATEX MODIFIED CONCRETE OVERLAY |
|---|---|---|---|
| | SQ. YARDS | CU. YARDS | SQ. YARDS |
| EXISTING DECK | 1390 | 72.4 | 1390 |
| APPROACH SLABS | 254 | 16.8 | 254 |
| TOTAL | 1644 | 89.2 | 1644 |

## ELASTOMERIC CONCRETE

| | ✱ ELASTOMERIC CONCRETE (CU. FT.) | |
|---|---|---|
| | STAGE I | STAGE III |
| END BENT 1 | 7.9 | 9.4 |
| BENT 1 | 8.0 | 9.4 |
| BENT 2 | 8.1 | 9.4 |
| BENT 3 | 7.8 | 9.4 |
| END BENT 2 | 7.7 | 9.4 |
| TOTAL | 39.5 | 47.0 |

✱ BASED ON THE MINIMUM BLOCKOUT SHOWN.

## GROOVING BRIDGE FLOORS

| STAGE I | | |
|---|---|---|
| BRIDGE DECK | 10,129 | SQ.FT. |
| APPROACH SLABS | 2,040 | SQ.FT. |
| STAGE I TOTAL | 12,169 | SQ.FT. |
| **STAGE III** | | |
| EXISTING BRIDGE DECK | 11,896 | SQ.FT. |
| APPROACH SLABS | 2,369 | SQ.FT. |
| STAGE II TOTAL | 14,265 | SQ.FT. |
| **TOTALS** | | |
| BRIDGE DECKS | 22,025 | SQ.FT. |
| APPROACH SLABS | 4,409 | SQ.FT. |
| TOTAL | 26,434 | SQ.FT. |

## SUPERSTRUCTURE BILL OF MATERIAL

| | | CLASS AA CONCRETE (CU. YD.) | | | | |
|---|---|---|---|---|---|---|
| STAGE I | POUR | SPAN A | SPAN B | SPAN C | SPAN D | STAGE I TOTAL |
| | DECK | 46.97 | 144.17 | 143.11 | 44.73 | |
| | SIDEWALK | 3.43 | 12.26 | 12.18 | 3.26 | |
| | CLOSURE POUR | 3.08 | 12.73 | 11.89 | 2.49 | |
| | TOTALS | 53.48 | 169.16 | 167.18 | 50.48 | 440.30 |
| STAGE II | POUR | SPAN A | SPAN B | SPAN C | SPAN D | STAGE II TOTAL |
| | SIDEWALK | 5.33 | 19.24 | 19.17 | 5.18 | |
| | | | | | | |
| | TOTALS | 5.33 | 19.24 | 19.17 | 5.18 | 48.92 |
| BRIDGE TOTAL CLASS AA CONCRETE (CU. YD.) | | | | | | 489.22 |

| | REINFORCING STEEL (LBS) | | | | |
|---|---|---|---|---|---|
| STAGE I WIDENING | SPAN A | SPAN B | SPAN C | SPAN D | TOTAL |
| | 5,180 | 16,317 | 16,206 | 4,930 | 42,633 |
| | EPOXY COATED REINFORCING STEEL (LBS) ✱✱ | | | | |
| | SPAN A | SPAN B | SPAN C | SPAN D | TOTAL |
| | 4,002 | 14,686 | 14,498 | 3,799 | 36,985 |
| STAGE II RIGHT SIDE SIDEWALK | EPOXY COATED REINFORCING STEEL (LBS) ✱✱ | | | | |
| | SPAN A | SPAN B | SPAN C | SPAN D | TOTAL |
| | 210 | 791 | 792 | 204 | 1,997 |

POUR IN SPANS A AND D INCLUDES CURTAIN WALL.

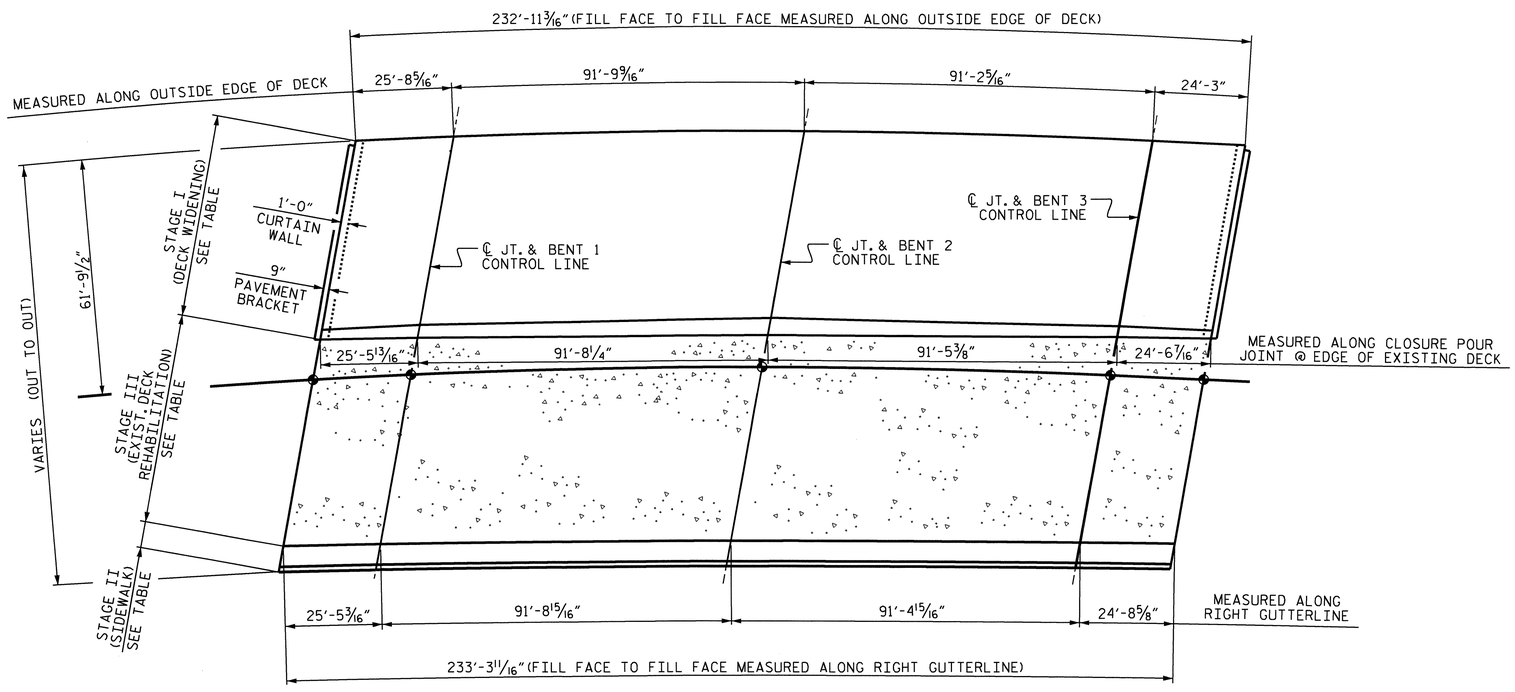


## LAYOUT FOR COMPUTING AREA OF REINFORCED CONCRETE DECK

(DECK WIDENING AREA = 12,281 SQ. FT.)

(EXISTING DECK OVERLAY AREA = 1390 SQ. YDS.)

## JOINT LENGTH TABLE (MEASURED ALONG ℄ OF JT.)

| LOCATION | STAGE I | STAGE II | STAGE III |
|---|---|---|---|
| FILL FACE @ END BENT 1 | 52'-10 5/16" | 6'-11 3/16" | 54'-10 11/16" |
| ℄ OF JT. @ BENT 1 | 53'-6 11/16" | 6'-11 1/8" | 54'-10 5/16" |
| ℄ OF JT. @ BENT 2 | 54'-2 7/8" | 6'-10 7/8" | 54'-8 5/16" |
| ℄ OF JT. @ BENT 3 | 52'-2 7/8" | 6'-10 11/16" | 54'-6 11/16" |
| FILL FACE @ END BENT 2 | 51'-5 1/4" | 6'-10 5/8" | 54'-5 7/8" |

PROJECT NO. U-4019

NASH COUNTY

STATION: 55+38.99 -L-

SHEET 2 OF 2

NORTH CAROLINA PROFESSIONAL SEAL 21545 ENGINEER STEVEN L. WANCE

05/25/11

STATE OF NORTH CAROLINA
DEPARTMENT OF TRANSPORTATION
RALEIGH

STANDARD

SUPERSTRUCTURE BILL OF MATERIAL

| REVISIONS | | | | | | |
|---|---|---|---|---|---|---|
| NO. | BY: | DATE: | NO. | BY: | DATE: | |
| 1 | | | 3 | | | |
| 2 | | | 4 | | | |

SHEET NO. S-77

TOTAL SHEETS 93

ASSEMBLED BY : J.H.CARDEN DATE : 01/11
CHECKED BY : S.WANCE DATE : 02/11

DRAWN BY : JMB 5/87
CHECKED BY : SJD 9/87

REV. 6/1/94 EEM/GRP
REV. 8/16/99 RWW/LES
REV. 5/1/06 TLA/GM

25-MAY-2011 12:00
Z:\TIPProjects-U\U4019\Structures\str2\FinalPlans\u4019_sd_bm2.dgn
swance

STR. #2

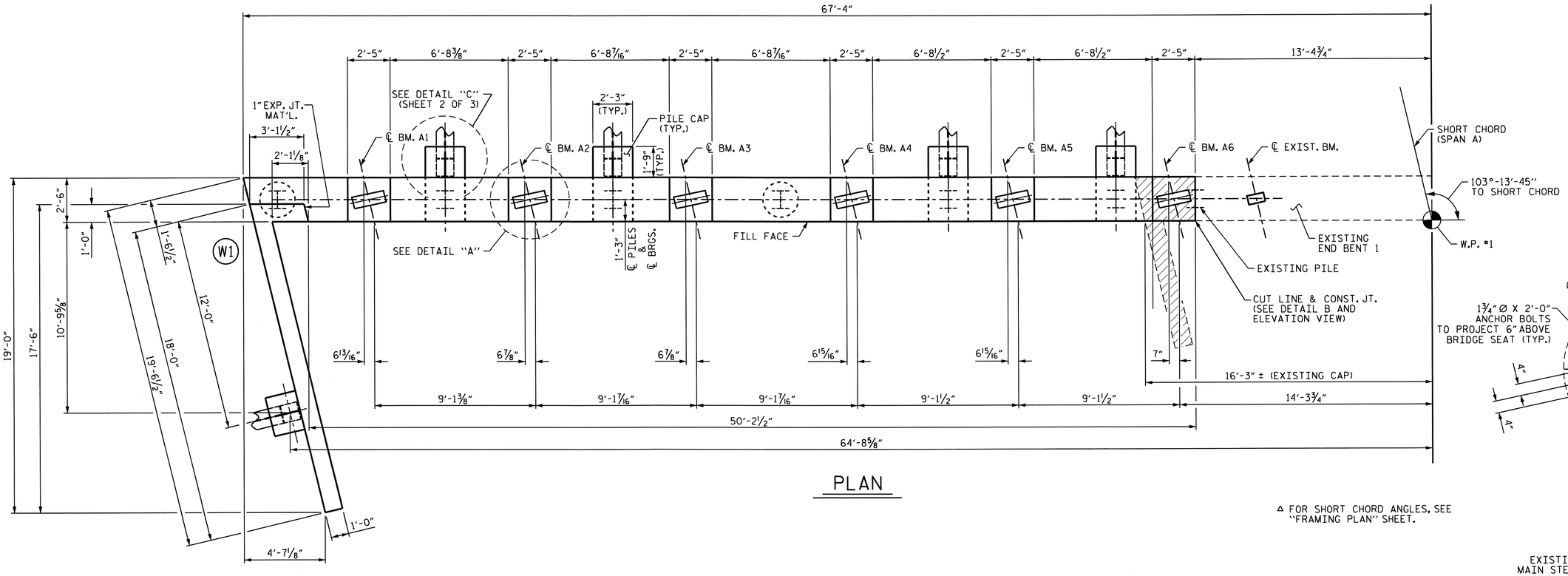


## PLAN

△ FOR SHORT CHORD ANGLES, SEE "FRAMING PLAN" SHEET.

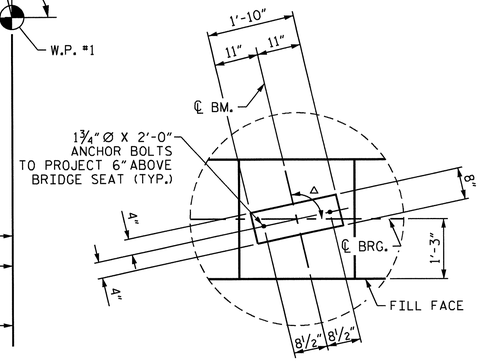


## DETAIL A

(TYP. EA. BEAM)

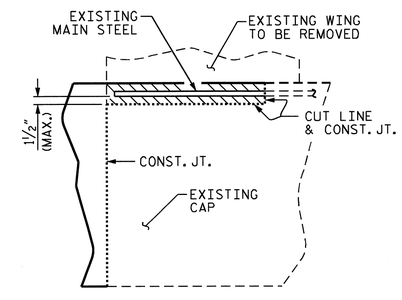


## DETAIL B

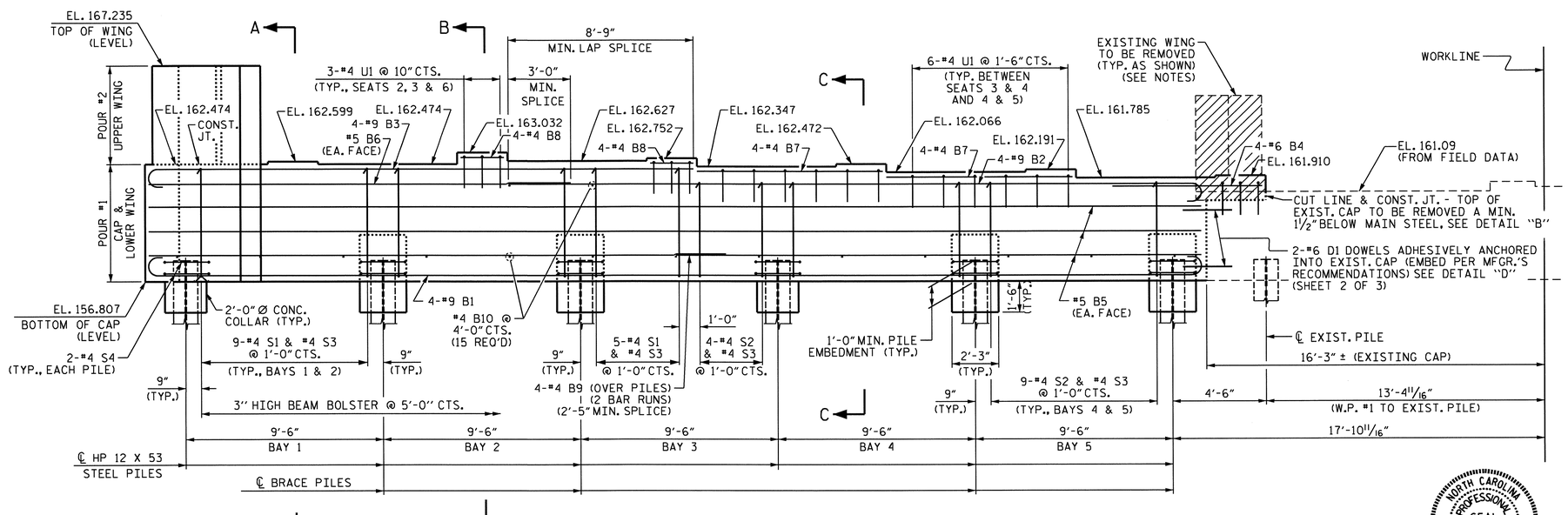


## ELEVATION

(BRACE PILE @ WING WALL NOT SHOWN FOR CLARITY)

PROJECT NO. U-4019

NASH COUNTY

STATION: 55+38.99 -L-

SHEET 1 OF 3

STATE OF NORTH CAROLINA
DEPARTMENT OF TRANSPORTATION
RALEIGH

SUBSTRUCTURE
END BENT 1
(LEFT WIDENING)

NORTH CAROLINA PROFESSIONAL SEAL 21545 ENGINEER STEVEN L. WANCE
05/25/11

| REVISIONS | | | | | | SHEET NO. |
|---|---|---|---|---|---|---|
| NO. | BY: | DATE: | NO. | BY: | DATE: | S-78 |
| 1 | | | 3 | | | TOTAL SHEETS |
| 2 | | | 4 | | | 93 |

DRAWN BY : R. WITHROW DATE : 12/07/10
CHECKED BY : K. LAYNE DATE : 3/10

25-MAY-2011 12:00
Z:\TIPProjects-U\U4019\Structures\str2\FinalPlans\U4019_sd_EB_Str2.dgn
swance

STR. 2

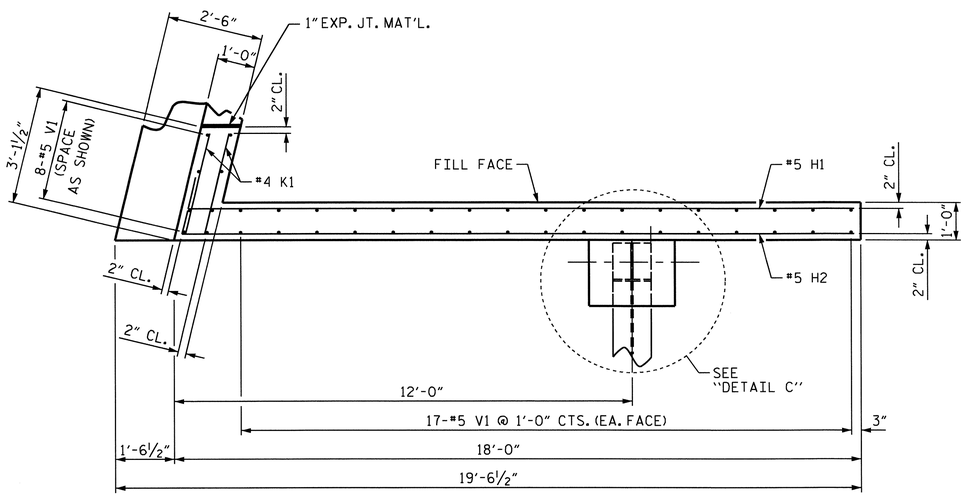


PLAN OF WING - W1

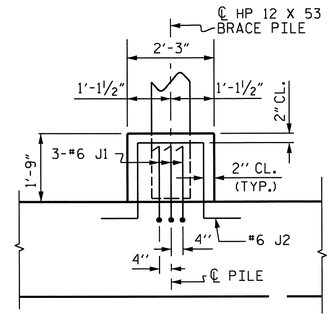


DETAIL C

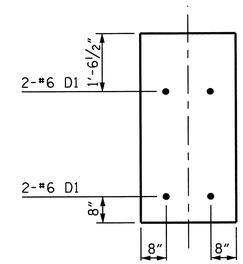


DETAIL "D"
SECTION AT
EXISTING CAP

## NOTES

STIRRUPS IN CAP MAY BE SHIFTED AS NECESSARY TO CLEAR ANCHOR BOLTS.

THE CONTRACTOR MAY, BUT IS NOT REQUIRED TO COAT THE TOP SURFACE AREA COVERED BY THE CURTAIN WALL.

THE TOP SURFACE AREAS OF THE END BENT CAPS SHALL BE CURED IN ACCORDANCE WITH THE STANDARD SPECIFICATIONS EXCEPT THE MEMBRANE CURING COMPOUND METHOD SHALL NOT BE USED.

THE CONTRACTOR SHALL PROVIDE FOR INSTALLATION OF THE 4" DIAMETER DRAIN PIPE THROUGH THE WING WALL AS REQUIRED FOR REINFORCED BRIDGE APPROACH FILLS, SEE THE ROADWAY PLANS. REINFORCING STEEL IN THE WING WALL MAY BE SHIFTED AS NECESSARY TO CLEAR THE DRAIN PIPE.

EXISTING EXTERIOR BRIDGE SEAT ELEVATIONS SHALL BE VERIFIED BY THE ENGINEER PRIOR TO FABRICATION OF THE FILL PLATES. IF THE EXISTING BRIDGE SEAT ELEVATION IS MORE THAN 6mm HIGHER OR LOWER THAN THE ELEVATION DETAILED IN THE PLANS, INCORPORATE THAT DIFFERENCE INTO THE FILL PLATE HEIGHT AND ANCHOR BOLT LENGTH.

EXISTING CAP AND WINGS SHALL BE REMOVED IN ACCORDANCE WITH PLAN DETAILS. THE CONTRACTOR MAY BUT IS NOT REQUIRED TO RETAIN EXISTING STEEL EXCEPT AS SHOWN IN DETAIL B SHEET 1 OF 3. THE REMOVAL SHALL BE INCLUDED IN THE LUMP SUM PRICE BID FOR "REMOVAL OF EXISTING STRUCTURE AT STA. 55+38.99 -L-".

USE CARE WHEN REMOVING EXISTING WINGS SO AS NOT TO DAMAGE EXISTING CAP THAT WILL REMAIN IN PLACE. TO ENSURE A LEVEL BRIDGE SEAT, REMOVE THE TOP SURFACE OF THE CAP AT THESE LOCATIONS TO 1" MINIMUM BELOW THE EXISTING MAIN STEEL. FOR BONDING NEW CONCRETE TO OLD, SEE ARTICLE 420-11 OF THE STANDARD SPECIFICATIONS.

THE D1 DOWELS PLACED INTO THE EXISTING CAP SHALL BE INSTALLED USING AN ADHESIVE ANCHORING SYSTEM. LEVEL 1 FIELD TESTING IS REQUIRED AND THE YIELD LOAD OF THE DOWELS IS 26.4 KIPS. FOR ADHESIVELY ANCHORED ANCHOR BOLTS OR DOWELS, SEE SPECIAL PROVISIONS.

THE #4 U1 BARS AT BEAM SEAT 6 ARE TO BE GROUTED INTO THE EXISTING CAP. IF INSTALLED USING AN ADHESIVE ANCHORING SYSTEM, NO FIELD TESTING WILL BE REQUIRED.

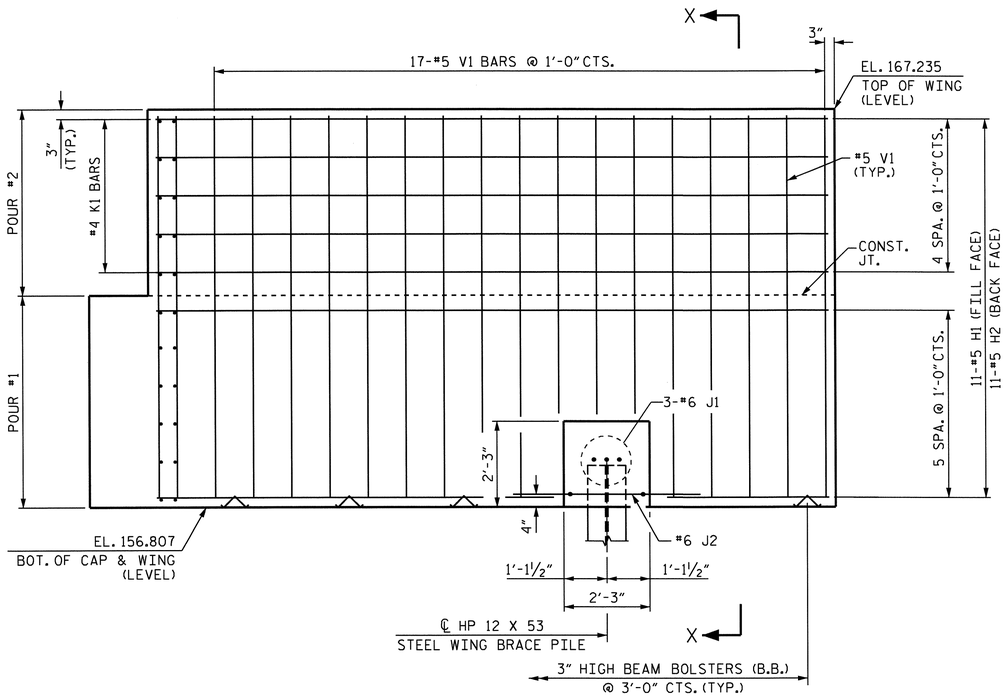


ELEVATION OF WING - W1

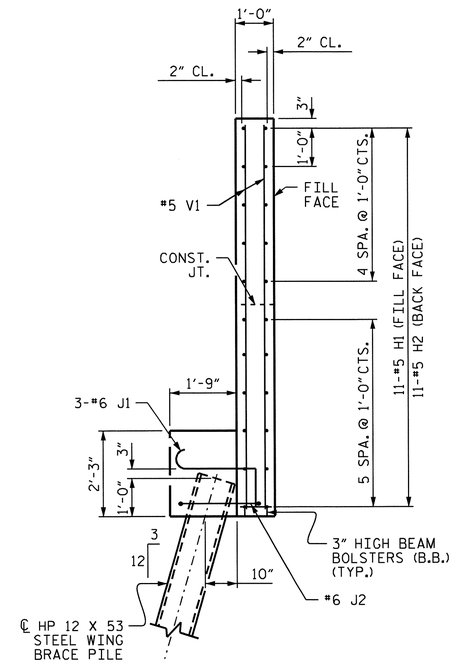


SECTION X-X

PROJECT NO. U-4019
NASH COUNTY
STATION: 55+38.99 -L-

SHEET 2 OF 3

STATE OF NORTH CAROLINA
DEPARTMENT OF TRANSPORTATION
RALEIGH

SUBSTRUCTURE
END BENT 1
(LEFT WIDENING)

NORTH CAROLINA PROFESSIONAL SEAL 21545 ENGINEER STEVEN L. LANCE
05/23/11

| REVISIONS | | | | | | SHEET NO. |
|---|---|---|---|---|---|---|
| NO. | BY: | DATE: | NO. | BY: | DATE: | S-79 |
| 1 | | | 3 | | | TOTAL SHEETS |
| 2 | | | 4 | | | 93 |

DRAWN BY : R. WITHROW DATE : 12/07/10
CHECKED BY : K. LAYNE DATE : 3/11

25-MAY-2011 12:00
Z:\TIPProjects-U\U4019\Structures\str2\FinalPlans\U4019_sd_EB_Str2.dgn
swance

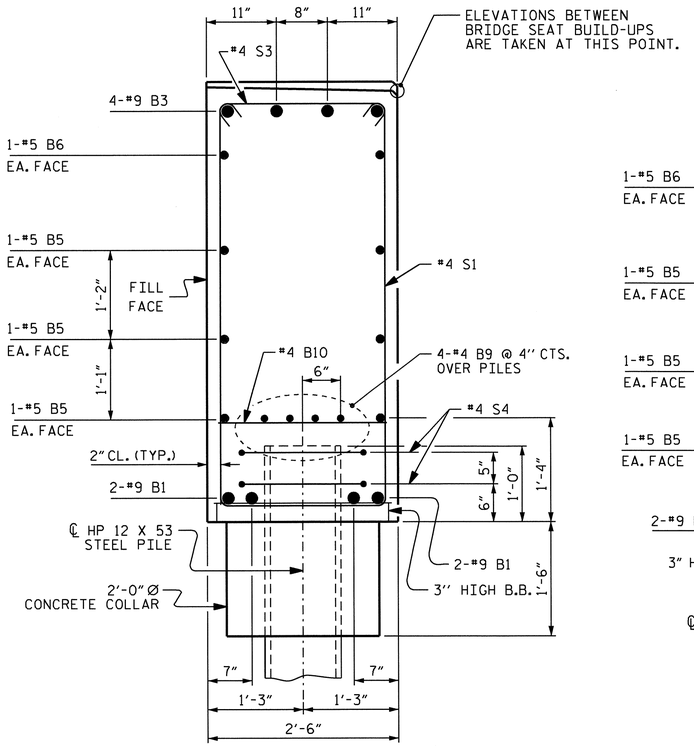


SECTION A-A

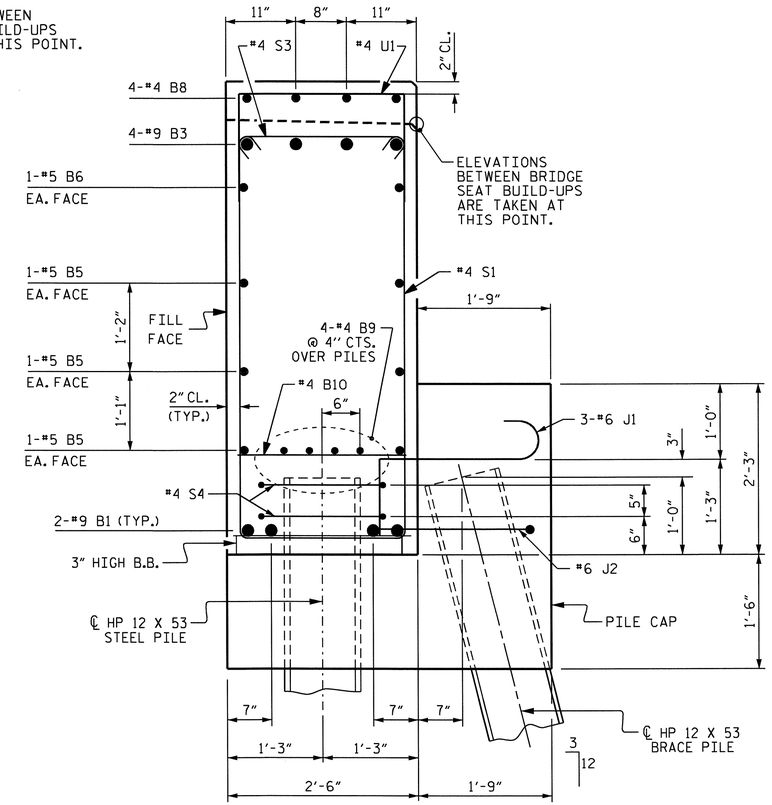


SECTION B-B

## BAR TYPES

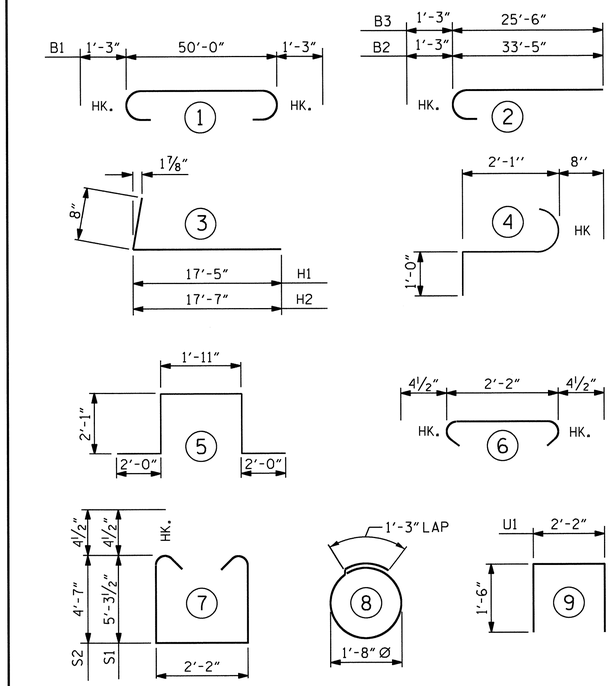


ALL BAR DIMENSIONS ARE OUT TO OUT.

## BILL OF MATERIAL
### END BENT 1

| BAR | NO. | SIZE | TYPE | LENGTH | WEIGHT |
|---|---|---|---|---|---|
| B1 | 4 | #9 | 1 | 52′-6″ | 714 |
| B2 | 4 | #9 | 2 | 34′-8″ | 471 |
| B3 | 4 | #9 | 2 | 26′-9″ | 364 |
| B4 | 4 | #6 | STR | 7′-0″ | 42 |
| B5 | 6 | #5 | STR | 50′-1″ | 313 |
| B6 | 2 | #5 | STR | 19′-9″ | 41 |
| B7 | 8 | #4 | STR | 9′-1″ | 49 |
| B8 | 8 | #4 | STR | 2′-0″ | 11 |
| B9 | 8 | #4 | STR | 26′-4″ | 141 |
| B10 | 15 | #4 | STR | 2′-2″ | 22 |
| D1 | 4 | #6 | STR | 2′-0″ | 12 |
| H1 | 11 | #5 | 3 | 18′-1″ | 207 |
| H2 | 11 | #5 | 3 | 18′-3″ | 209 |
| J1 | 15 | #6 | 4 | 3′-9″ | 84 |
| J2 | 5 | #6 | 5 | 10′-1″ | 76 |
| K1 | 10 | #4 | STR | 2′-9″ | 18 |
| S1 | 23 | #4 | 7 | 13′-6″ | 207 |
| S2 | 22 | #4 | 7 | 12′-1″ | 178 |
| S3 | 45 | #4 | 6 | 2′-11″ | 88 |
| S4 | 12 | #4 | 8 | 6′-6″ | 52 |
| U1 | 21 | #4 | 9 | 5′-2″ | 72 |
| V1 | 42 | #5 | STR | 10′-1″ | 442 |

REINFORCING STEEL = 3813 LBS

CLASS A CONCRETE BREAKDOWN

POUR 1 - CAP, LOWER WING, BRACE PILE CAPS & CONCRETE COLLARS 34.3 C.Y.

POUR 2 - UPPER PORTION OF WING 3.5 C.Y.

CLASS A CONCRETE TOTAL 37.8 C.Y.

HP 12 x 53 STEEL PILES

NO. 11 LIN. FT. = 605

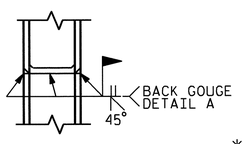


* PILE VERTICAL

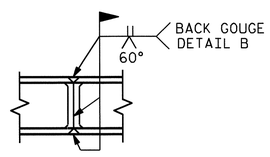


* PILE HORIZONTAL OR VERTICAL

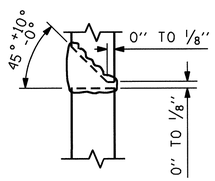


DETAIL A

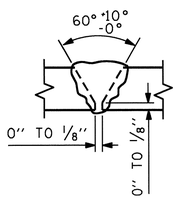


DETAIL B

* POSITION OF PILE DURING WELDING.

PILE SPLICE DETAILS

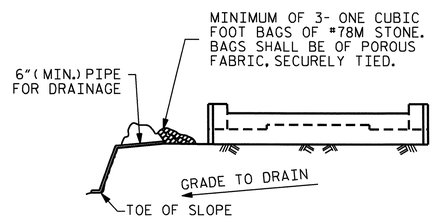


BAGGED STONE AND PIPE SHALL BE PLACED IMMEDIATELY AFTER COMPLETION OF END BENT EXCAVATION. PIPE MAY BE EITHER CONCRETE, CORRUGATED STEEL, CORRUGATED ALUMINUM ALLOY, OR CORRUGATED PLASTIC. PERFORATED PIPE WILL NOT BE ALLOWED.

BAGGED STONE SHALL REMAIN IN PLACE UNTIL THE ENGINEER DIRECTS THAT IT BE REMOVED. THE CONTRACTOR SHALL REMOVE AND DISPOSE OF SILT ACCUMULATIONS AT BAGGED STONE WHEN SO DIRECTED BY THE ENGINEER. BAGS SHALL BE REMOVED AND REPLACED WHENEVER THE ENGINEER DETERMINES THAT THEY HAVE DETERIORATED AND LOST THEIR EFFECTIVENESS.

NO SEPARATE PAYMENT WILL BE MADE FOR THIS WORK AND THE ENTIRE COST OF THIS WORK SHALL BE INCLUDED IN THE UNIT CONTRACT PRICE BID FOR THE SEVERAL PAY ITEMS.

TEMPORARY DRAINAGE AT END BENT

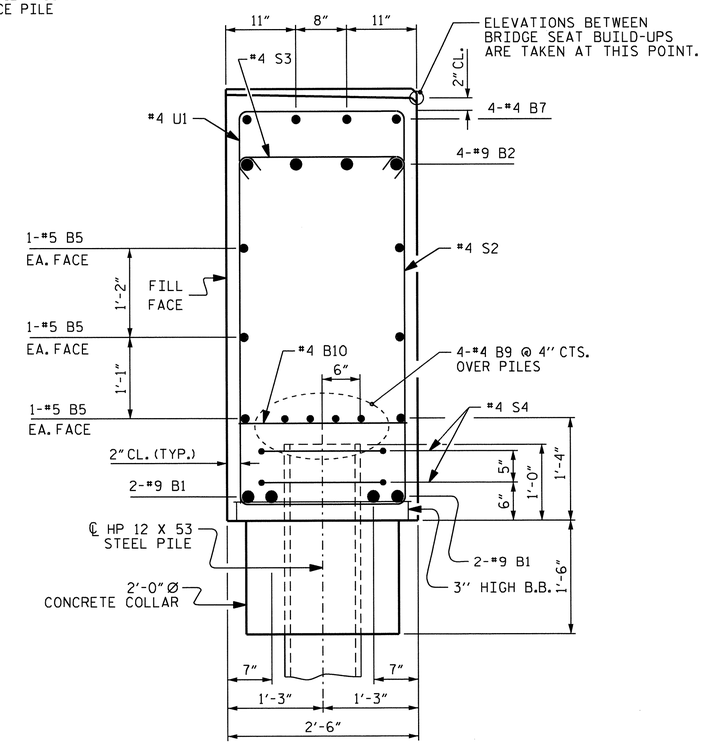


SECTION C-C

NORTH CAROLINA PROFESSIONAL SEAL 21545 ENGINEER STEVEN K. WANCE
05/25/11

PROJECT NO. U-4019

NASH COUNTY

STATION: 55+38.99 -L-

SHEET 3 OF 3

STATE OF NORTH CAROLINA
DEPARTMENT OF TRANSPORTATION
RALEIGH

SUBSTRUCTURE
END BENT 1
(LEFT WIDENING)

| REVISIONS | | | | | | SHEET NO. |
|---|---|---|---|---|---|---|
| NO. | BY: | DATE: | NO. | BY: | DATE: | S-80 |
| 1 | | | 3 | | | TOTAL SHEETS |
| 2 | | | 4 | | | 93 |

DRAWN BY : D.R. WITHROW DATE : 12/08/10
CHECKED BY : K. LAYNE DATE : 3/11

25-MAY-2011 12:00
Z:\TIPProjects-U\U4019\Structures\str2\FinalPlans\U4019_sd_EB_Str2.dgn
swance

STR. 2

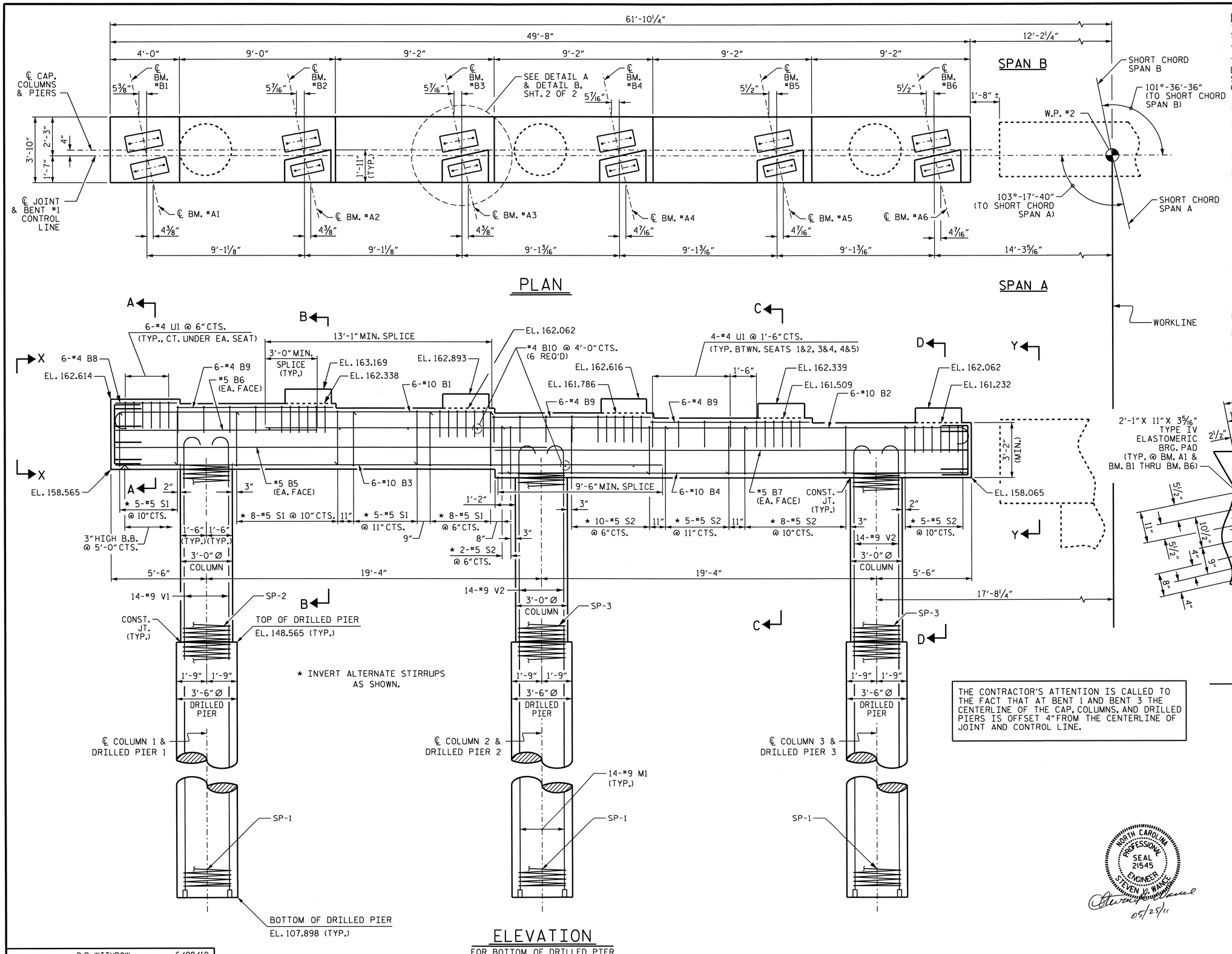


## NOTES:

STIRRUPS AND "U" BARS IN CAP MAY BE SHIFTED AS NECESSARY TO CLEAR ANCHOR BOLTS.

THE TOP SURFACE AREAS OF THE BENT CAPS SHALL BE CURED IN ACCORDANCE WITH THE STANDARD SPECIFICATIONS EXCEPT THE MEMBRANE CURING COMPOUND METHOD SHALL NOT BE USED.

ALL STEEL IN THE DRILLED PIERS IS INCLUDED IN THE PAY ITEMS FOR "REINFORCING STEEL" AND "SPIRAL COLUMN REINFORCING STEEL".

THE LOCATION OF THE CONSTRUCTION JOINT IN THE DRILLED PIERS IS BASED ON AN APPROXIMATE GROUND LINE ELEVATION. IF THE CONSTRUCTION JOINT IS ABOVE THE ACTUAL GROUND LINE ELEVATION, THE CONTRACTOR SHALL PLACE THE CONSTRUCTION JOINT 1'-0" BELOW THE GROUND LINE.

THE CONTRACTOR'S ATTENTION IS CALLED TO THE FACT THAT THE LONGITUDINAL REINFORCEMENT FOR THE DRILLED PIERS IS DETAILED WITH 3 FEET OF EXTRA LENGTH.

THE CONTRACTOR SHALL ALIGN THE "M" BARS AS SHOWN IN THE PLAN OF DRILLED PIERS. HOOKS ON "V" BARS MAY BE TURNED AS NECESSARY FOR PLACING REINFORCING STEEL.

FOR DRILLED PIERS, SEE SPECIAL PROVISIONS.

SPLICING OF THE LONGITUDINAL BARS IN THE DRILLED PIER WILL NOT BE PERMITTED.

NO SEPARATE PAYMENT SHALL BE MADE FOR ANY ADDITIONAL STEEL REQUIRED IN CONSTRUCTION OF DRILLED PIER AS THIS IS CONSIDERED INCIDENTAL TO THE LINEAR FOOT PRICE FOR DRILLED PIER.

THE CONTRACTOR'S ATTENTION IS CALLED TO THE FACT THAT AT BENT 1 AND BENT 3 THE CENTERLINE OF THE CAP, COLUMNS, AND DRILLED PIERS IS OFFSET 4" FROM THE CENTERLINE OF JOINT AND CONTROL LINE.

PROJECT NO. U-4019

NASH COUNTY

STATION: 55+38.99 -L-

SHEET 1 OF 2

STATE OF NORTH CAROLINA
DEPARTMENT OF TRANSPORTATION
RALEIGH

SUBSTRUCTURE

BENT 1

NORTH CAROLINA PROFESSIONAL SEAL 21545 ENGINEER STEVEN V. WANCE

05/25/11

| REVISIONS | | | | | | SHEET NO. |
|---|---|---|---|---|---|---|
| NO. | BY: | DATE: | NO. | BY: | DATE: | S-81 |
| 1 | | | 3 | | | TOTAL SHEETS |
| 2 | | | 4 | | | 93 |

DRAWN BY : D.R. WITHROW DATE : 6/08/10
CHECKED BY : K. LAYNE DATE : 3/11

25-MAY-2011 12:00
Z:\TIPProjects-U\U4019\Structures\str2\FinalPlans\u-4019_sd_BT_Str2.dgn
swance

STR. #2 NCBDS

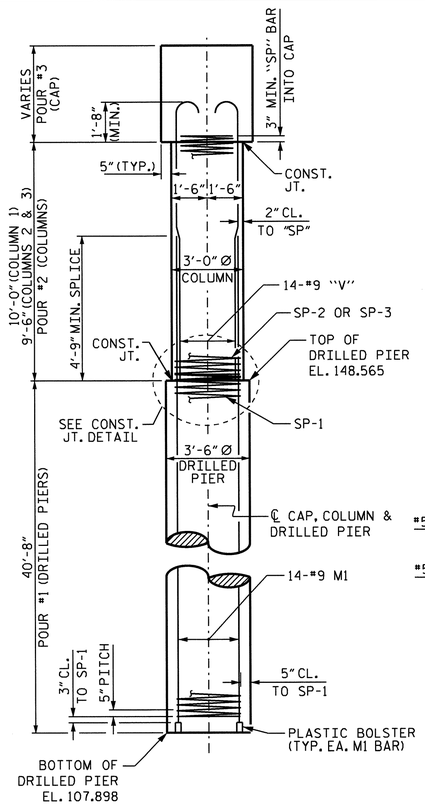


END ELEVATION

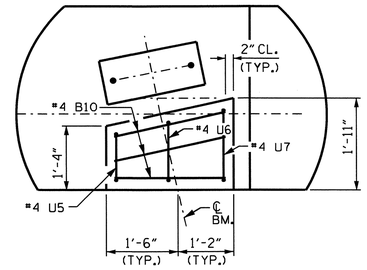


DETAIL B

(TYP. BM. 2 - BM. 6)

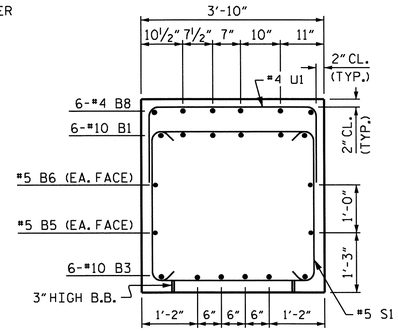


SECTION A-A

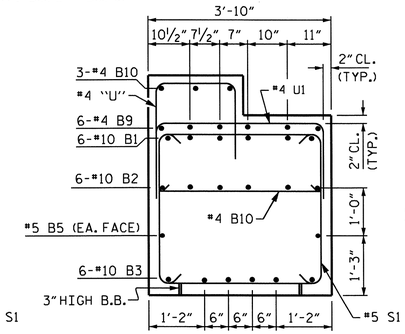


SECTION B-B

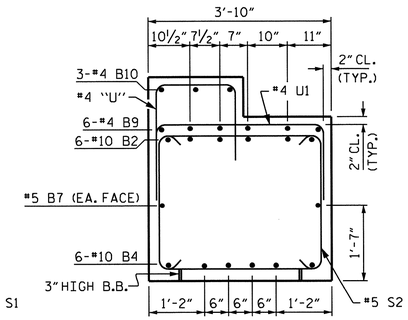


SECTION C-C

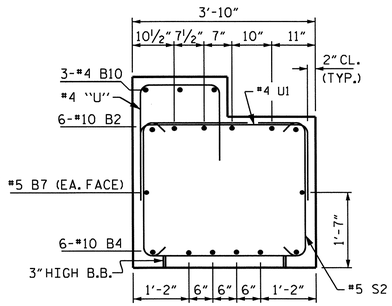


SECTION D-D

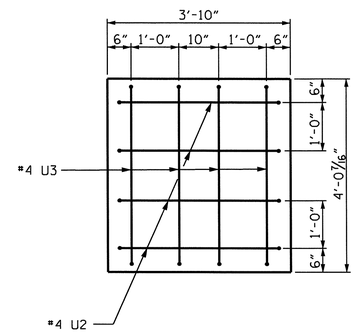


VIEW X-X

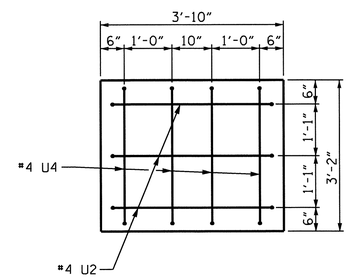


VIEW Y-Y

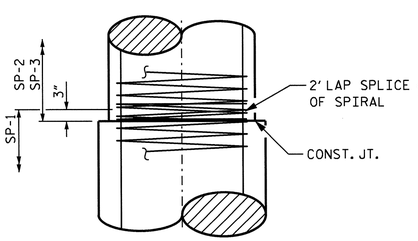


CONSTRUCTION JOINT DETAIL

(TYPICAL)

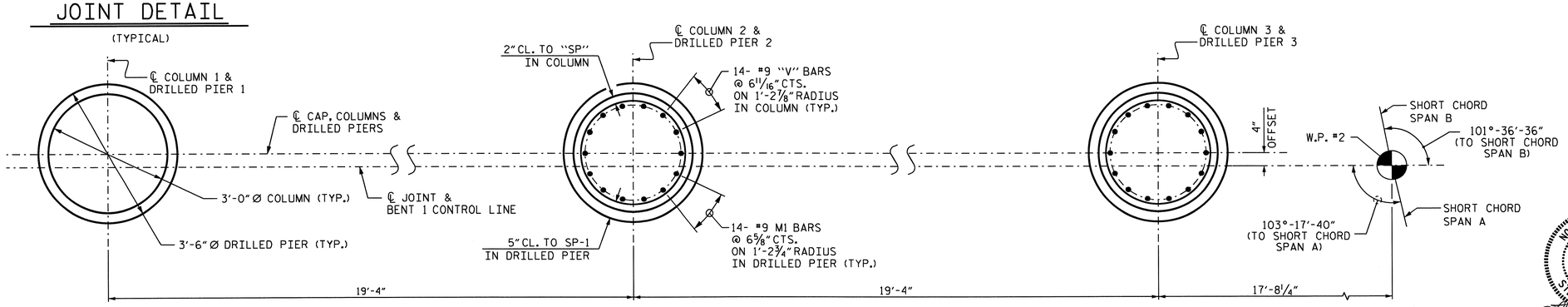


PLAN OF DRILLED PIERS & COLUMNS

(REINFORCING STEEL IS TYPICAL FOR EACH COLUMN AND DRILLED PIER)

## BAR TYPES

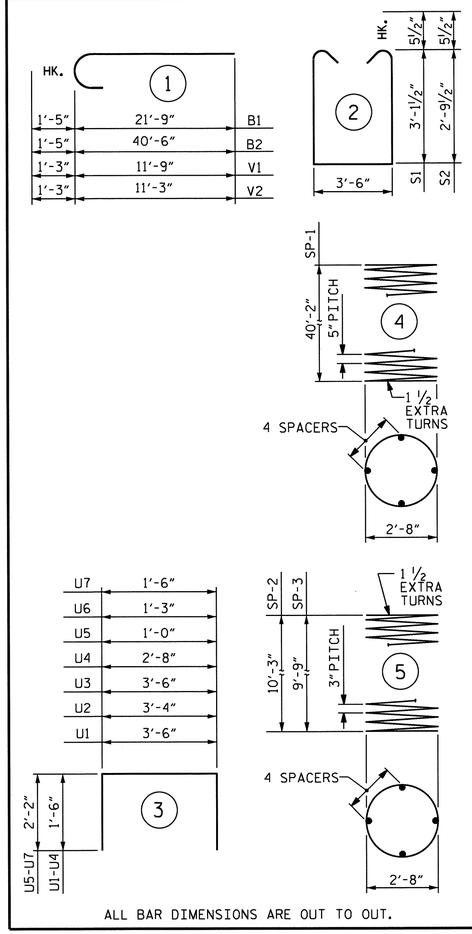


ALL BAR DIMENSIONS ARE OUT TO OUT.

✱ THE SP-1 SPIRAL REINFORCING STEEL SHALL BE W31 OR D-31 COLD DRAWN WIRE OR #5 PLAIN OR DEFORMED BAR.

✱✱ THE SP-2 AND SP-3 SPIRAL REINFORCING STEEL SHALL BE W20 OR D-20 COLD DRAWN WIRE OR #4 PLAIN OR DEFORMED BAR.

## BILL OF MATERIAL

### BENT 1

| BAR | NO. | SIZE | TYPE | LENGTH | WEIGHT |
|---|---|---|---|---|---|
| B1 | 6 | #10 | 1 | 23'-2" | 598 |
| B2 | 6 | #10 | 1 | 41'-11" | 1082 |
| B3 | 6 | #10 | STR | 31'-8" | 818 |
| B4 | 6 | #10 | STR | 27'-2" | 701 |
| B5 | 2 | #5 | STR | 25'-2" | 52 |
| B6 | 2 | #5 | STR | 11'-9" | 25 |
| B7 | 2 | #5 | STR | 27'-3" | 57 |
| B8 | 6 | #4 | STR | 3'-8" | 15 |
| B9 | 18 | #4 | STR | 9'-0" | 108 |
| B10 | 6 | #4 | STR | 3'-6" | 14 |
| | | | | | |
| M1 | 42 | #9 | STR | 48'-3" | 6890 |
| | | | | | |
| S1 | 26 | #5 | 2 | 10'-8" | 289 |
| S2 | 30 | #5 | 2 | 10'-0" | 313 |
| | | | | | |
| U1 | 48 | #4 | 3 | 6'-6" | 208 |
| U2 | 7 | #4 | 3 | 6'-4" | 30 |
| U3 | 4 | #4 | 3 | 6'-6" | 17 |
| U4 | 4 | #4 | 3 | 5'-8" | 15 |
| U5 | 5 | #4 | 3 | 5'-4" | 18 |
| U6 | 5 | #4 | 3 | 5'-7" | 19 |
| U7 | 5 | #4 | 3 | 5'-10" | 19 |
| | | | | | |
| V1 | 14 | #9 | 1 | 13'-0" | 619 |
| V2 | 28 | #9 | 1 | 12'-6" | 1190 |

REINFORCING STEEL = 13,097 LBS

| | | | | | |
|---|---|---|---|---|---|
| SP-1 | 3 | ✱ | 4 | 806'-1" | 2523 |
| SP-2 | 1 | ✱✱ | 5 | 350'-8" | 234 |
| SP-3 | 2 | ✱✱ | 5 | 334'-2" | 446 |

SPIRAL COLUMN REINFORCING STEEL = 3203 LBS

CLASS A CONCRETE (C.Y.)
POUR #3 CAP = C.Y. 25.9
POUR #2 COLUMNS = C.Y. 7.6
TOTAL CLASS A CONCRETE C.Y. 33.5

DRILLED PIERS:
DRILLED PIER CONCRETE (C.Y.)
POUR #1 (DRILLED PIERS) = C.Y. 43.5
3'-6" Ø DRILLED PIERS IN SOIL = LIN. FT. 106.0
3'-6" Ø DRILLED PIERS NOT IN SOIL = LIN. FT. 16.0
CSL TUBES = LIN. FT. 518
SPT TESTING = EA. 1

PROJECT NO. U-4019
NASH COUNTY
STATION: 55+38.99 -L-

SHEET 2 OF 2

STATE OF NORTH CAROLINA
DEPARTMENT OF TRANSPORTATION
RALEIGH

SUBSTRUCTURE

BENT 1

NORTH CAROLINA PROFESSIONAL SEAL 21545 ENGINEER STEVEN LAWRANCE
05/25/11

| REVISIONS | | | | | | SHEET NO. |
|---|---|---|---|---|---|---|
| NO. | BY: | DATE: | NO. | BY: | DATE: | S-82 |
| 1 | | | 3 | | | TOTAL SHEETS |
| 2 | | | 4 | | | 93 |

STR. #2

DRAWN BY : D.R. WITHROW DATE : 6/08/10
CHECKED BY : K. LAYNE DATE : 3/11

25-MAY-2011 12:00
Z:\TIPProjects-U\U4019\Structures\str2\FinalPlans\u-4019_sd_BT_Str2.dgn
swance

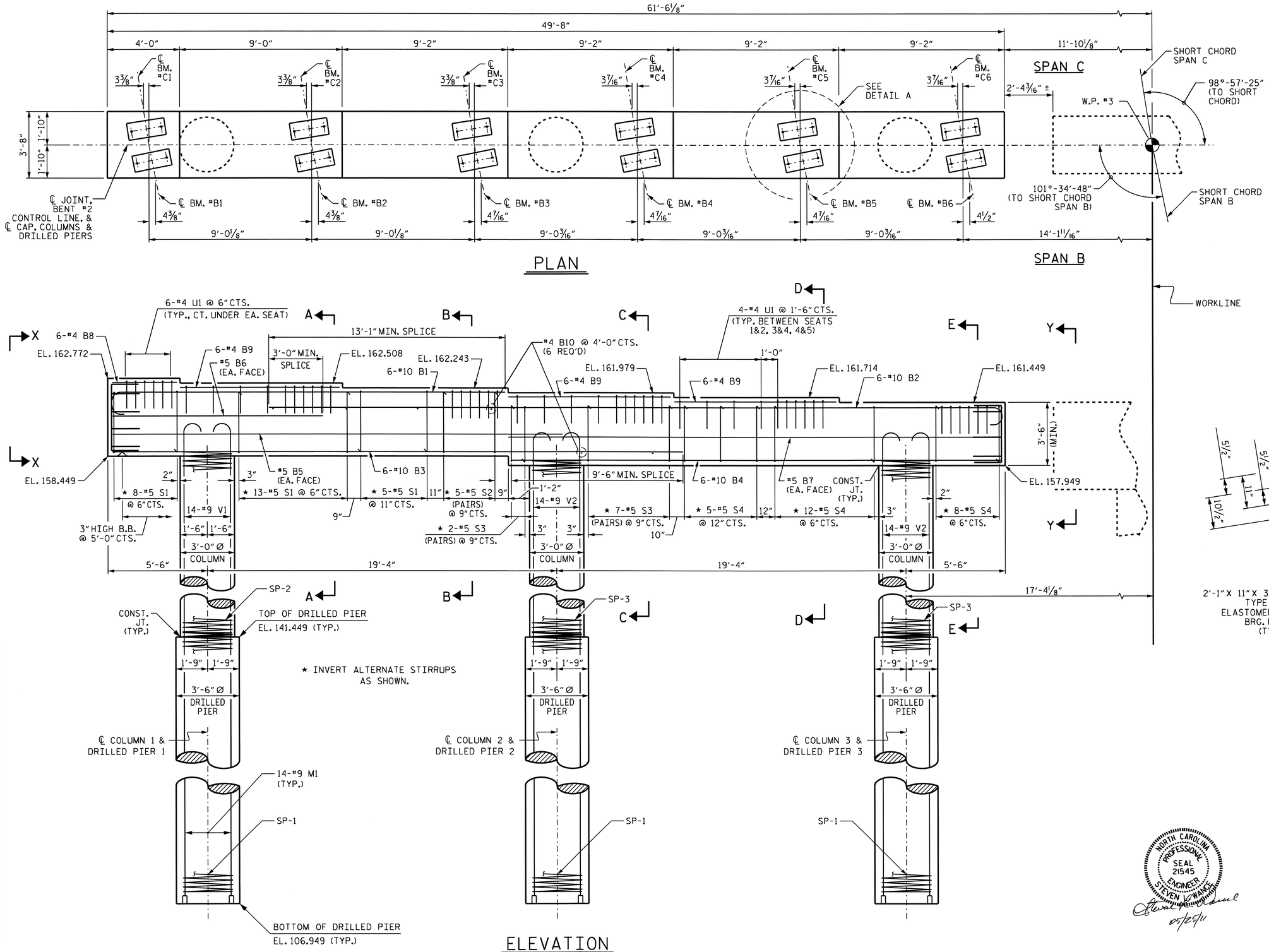


## NOTES:

STIRRUPS AND "U" BARS IN CAP MAY BE SHIFTED AS NECESSARY TO CLEAR ANCHOR BOLTS.

THE TOP SURFACE AREAS OF THE BENT CAPS SHALL BE CURED IN ACCORDANCE WITH THE STANDARD SPECIFICATIONS EXCEPT THE MEMBRANE CURING COMPOUND METHOD SHALL NOT BE USED.

ALL STEEL IN THE DRILLED PIERS IS INCLUDED IN THE PAY ITEMS FOR "REINFORCING STEEL" AND "SPIRAL COLUMN REINFORCING STEEL".

THE LOCATION OF THE CONSTRUCTION JOINT IN THE DRILLED PIERS IS BASED ON AN APPROXIMATE GROUND LINE ELEVATION. IF THE CONSTRUCTION JOINT IS ABOVE THE ACTUAL GROUND LINE ELEVATION, THE CONTRACTOR SHALL PLACE THE CONSTRUCTION JOINT 1'-0" BELOW THE GROUND LINE.

THE CONTRACTOR'S ATTENTION IS CALLED TO THE FACT THAT THE LONGITUDINAL REINFORCEMENT FOR THE DRILLED PIERS IS DETAILED WITH 3 FEET OF EXTRA LENGTH.

THE CONTRACTOR SHALL ALIGN THE "M" BARS AS SHOWN IN THE PLAN OF DRILLED PIERS. HOOKS ON "V" BARS MAY BE TURNED AS NECESSARY FOR PLACING REINFORCING STEEL.

FOR DRILLED PIERS, SEE SPECIAL PROVISIONS.

SPLICING OF THE LONGITUDINAL BARS IN THE DRILLED PIER WILL NOT BE PERMITTED.

NO SEPARATE PAYMENT SHALL BE MADE FOR ANY ADDITIONAL STEEL REQUIRED IN CONSTRUCTION OF DRILLED PIER AS THIS IS CONSIDERED INCIDENTAL TO THE LINEAR FOOT PRICE FOR DRILLED PIER.

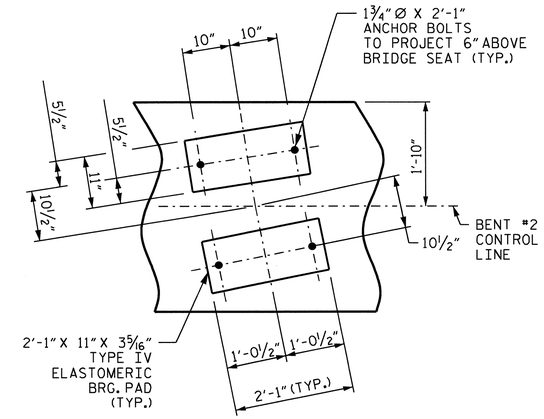


DETAIL A

(TYP. EA. SEAT)

PROJECT NO. U-4019

NASH COUNTY

STATION: 55+38.99 -L-

SHEET 1 OF 2

STATE OF NORTH CAROLINA
DEPARTMENT OF TRANSPORTATION
RALEIGH

SUBSTRUCTURE

BENT 2

NORTH CAROLINA PROFESSIONAL SEAL 21545 ENGINEER STEVEN L. WANCE

05/25/11

| REVISIONS | | | | | | SHEET NO. |
|---|---|---|---|---|---|---|
| NO. | BY: | DATE: | NO. | BY: | DATE: | S-83 |
| 1 | | | 3 | | | TOTAL SHEETS |
| 2 | | | 4 | | | 93 |

DRAWN BY : D.R. WITHROW DATE : 9/10/10
CHECKED BY : K. LAYNE DATE : 3/11

25-MAY-2011 12:00
Z:\TIPProjects-U\U4019\Structures\str2\Final Plans\u-4019_sd_BT_Str2.dgn
swance

STR. #2 NCBDS

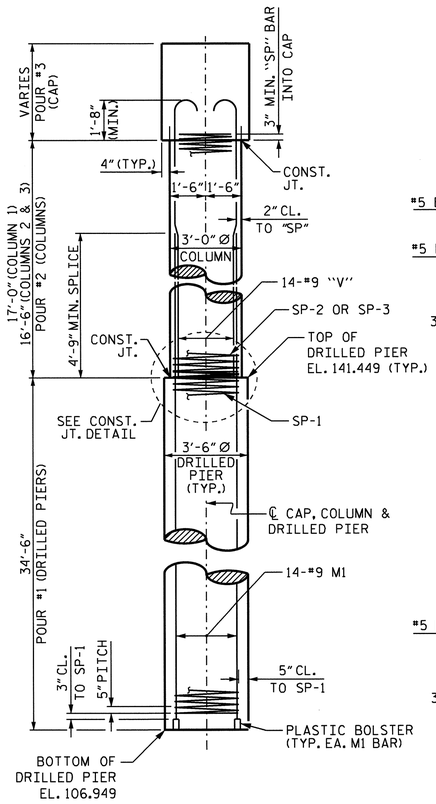


END ELEVATION

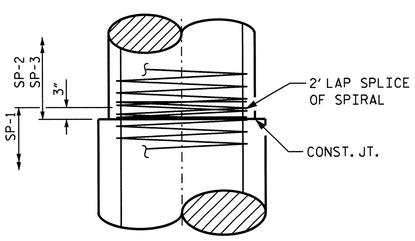


CONSTRUCTION JOINT DETAIL

(TYPICAL)

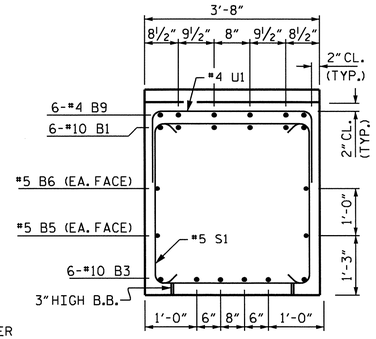


SECTION A-A

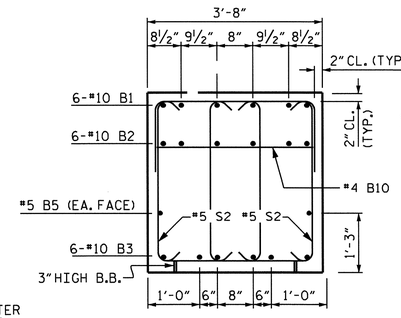


SECTION B-B

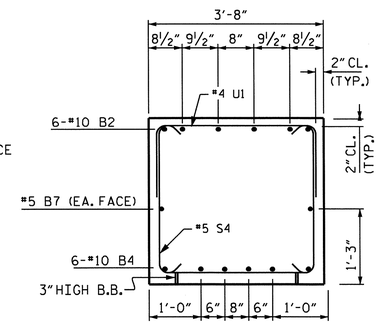


SECTION E-E

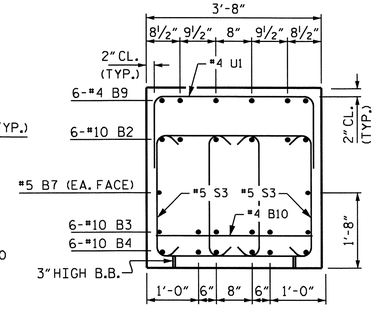


SECTION C-C

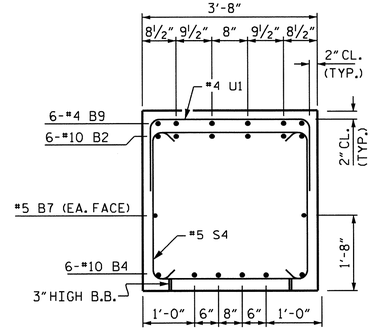


SECTION D-D

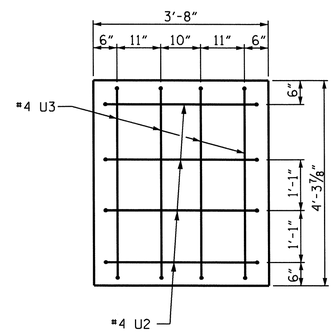


VIEW X-X

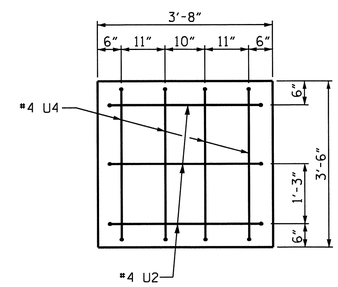


VIEW Y-Y

## BAR TYPES

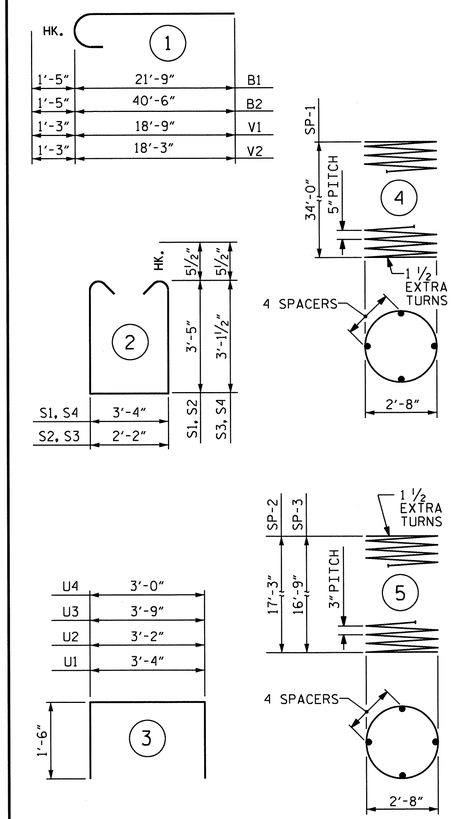


ALL BAR DIMENSIONS ARE OUT TO OUT.

## BILL OF MATERIAL

### BENT 2

| BAR | NO. | SIZE | TYPE | LENGTH | WEIGHT |
|---|---|---|---|---|---|
| B1 | 6 | #10 | 1 | 23'-2" | 598 |
| B2 | 6 | #10 | 1 | 41'-11" | 1082 |
| B3 | 6 | #10 | STR | 31'-8" | 818 |
| B4 | 6 | #10 | STR | 27'-2" | 701 |
| B5 | 2 | #5 | STR | 25'-2" | 52 |
| B6 | 2 | #5 | STR | 11'-9" | 25 |
| B7 | 2 | #5 | STR | 27'-3" | 57 |
| B8 | 6 | #4 | STR | 3'-8" | 15 |
| B9 | 18 | #4 | STR | 9'-0" | 108 |
| B10 | 6 | #4 | STR | 3'-4" | 13 |
| | | | | | |
| M1 | 42 | #9 | STR | 42'-1" | 6010 |
| | | | | | |
| S1 | 26 | #5 | 2 | 11'-1" | 301 |
| S2 | 10 | #5 | 2 | 9'-11" | 103 |
| S3 | 18 | #5 | 2 | 9'-4" | 175 |
| S4 | 25 | #5 | 2 | 10'-6" | 274 |
| | | | | | |
| U1 | 48 | #4 | 3 | 6'-4" | 203 |
| U2 | 7 | #4 | 3 | 6'-2" | 29 |
| U3 | 4 | #4 | 3 | 6'-9" | 18 |
| U4 | 4 | #4 | 3 | 6'-0" | 16 |
| | | | | | |
| V1 | 14 | #9 | 1 | 20'-0" | 952 |
| V2 | 28 | #9 | 1 | 19'-6" | 1856 |

REINFORCING STEEL = 13,406 LBS

| | | | | | |
|---|---|---|---|---|---|
| SP-1 | 3 | * | 4 | 684'-9" | 2142 |
| SP-2 | 1 | ** | 5 | 581'-8" | 389 |
| SP-3 | 2 | ** | 5 | 565'-2" | 756 |

SPIRAL COLUMN REINFORCING STEEL = 3287 LBS

CLASS A CONCRETE (C.Y.)
POUR #3 (CAP) = C.Y. 26.1
POUR #2 (COLUMNS) = C.Y. 13.1

TOTAL CLASS A CONCRETE C.Y. 39.2

DRILLED PIERS:
DRILLED PIER CONCRETE (C.Y.)
POUR #1 (DRILLED PIERS) = C.Y. 36.9
3'-6" Ø DRILLED PIERS IN SOIL = LIN. FT. 80.5
3'-6" Ø DRILLED PIERS NOT IN SOIL = LIN. FT. 23.0
CSL TUBES = LIN. FT. 444.0

* THE SP-1 SPIRAL REINFORCING STEEL SHALL BE W31 OR D-31 COLD DRAWN WIRE OR #5 PLAIN OR DEFORMED BAR.

** THE SP-2 AND SP-3 SPIRAL REINFORCING STEEL SHALL BE W20 OR D-20 COLD DRAWN WIRE OR #4 PLAIN OR DEFORMED BAR.

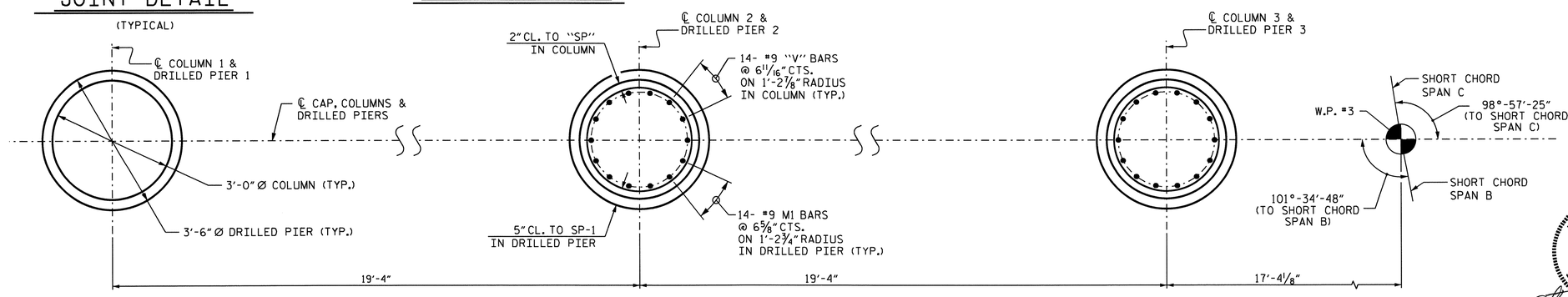


PLAN OF DRILLED PIERS & COLUMNS

(REINFORCING STEEL IS TYPICAL FOR EACH COLUMN AND DRILLED PIER)

NORTH CAROLINA PROFESSIONAL SEAL 21545 ENGINEER STEVEN L. WANCE

05/25/11

PROJECT NO. U-4019

NASH COUNTY

STATION: 55+38.99 -L-

SHEET 2 OF 2

STATE OF NORTH CAROLINA
DEPARTMENT OF TRANSPORTATION
RALEIGH

SUBSTRUCTURE

BENT 2

| REVISIONS | | | | | | SHEET NO. |
|---|---|---|---|---|---|---|
| NO. | BY: | DATE: | NO. | BY: | DATE: | S-84 |
| 1 | | | 3 | | | TOTAL SHEETS |
| 2 | | | 4 | | | 93 |

DRAWN BY : D.R. WITHROW DATE : 6/08/10
CHECKED BY : K. LAYNE DATE : 3/11

25-MAY-2011 12:00
Z:\TIPProjects-U\U4019\Structures\str2\FinalPlans\u-4019_sd_BT_Str2.dgn
swance

STR. #2

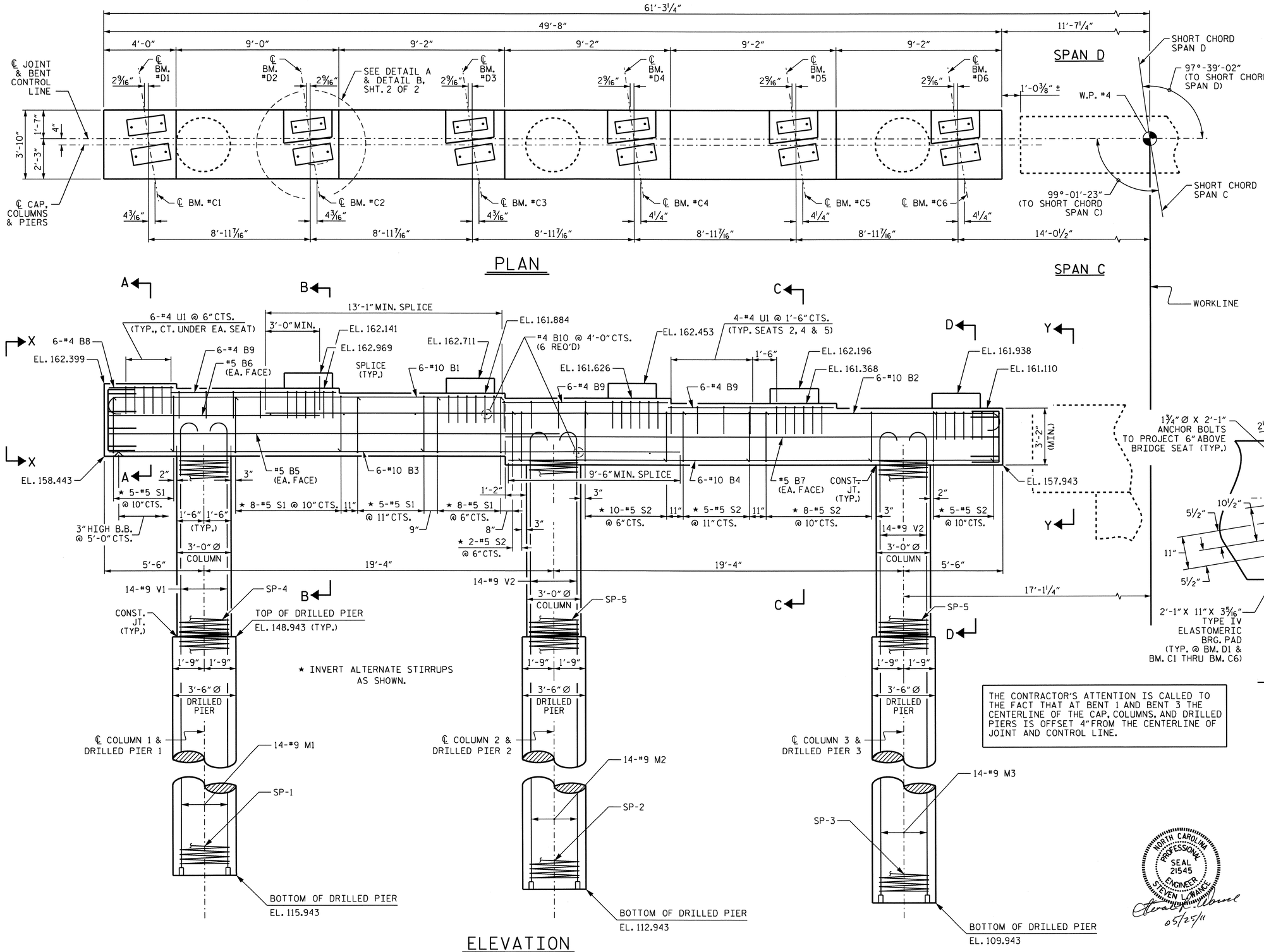


## NOTES:

STIRRUPS AND "U" BARS IN CAP MAY BE SHIFTED AS NECESSARY TO CLEAR ANCHOR BOLTS.

THE TOP SURFACE AREAS OF THE BENT CAPS SHALL BE CURED IN ACCORDANCE WITH THE STANDARD SPECIFICATIONS EXCEPT THE MEMBRANE CURING COMPOUND METHOD SHALL NOT BE USED.

ALL STEEL IN THE DRILLED PIERS IS INCLUDED IN THE PAY ITEMS FOR "REINFORCING STEEL" AND "SPIRAL COLUMN REINFORCING STEEL".

THE LOCATION OF THE CONSTRUCTION JOINT IN THE DRILLED PIERS IS BASED ON AN APPROXIMATE GROUND LINE ELEVATION. IF THE CONSTRUCTION JOINT IS ABOVE THE ACTUAL GROUND LINE ELEVATION, THE CONTRACTOR SHALL PLACE THE CONSTRUCTION JOINT 1'-0" BELOW THE GROUND LINE.

THE CONTRACTOR'S ATTENTION IS CALLED TO THE FACT THAT THE LONGITUDINAL REINFORCEMENT FOR THE DRILLED PIERS IS DETAILED WITH 3 FEET OF EXTRA LENGTH.

THE CONTRACTOR SHALL ALIGN THE "M" BARS AS SHOWN IN THE PLAN OF DRILLED PIERS. HOOKS ON "V" BARS MAY BE TURNED AS NECESSARY FOR PLACING REINFORCING STEEL.

FOR DRILLED PIERS, SEE SPECIAL PROVISIONS.

SPLICING OF THE LONGITUDINAL BARS IN THE DRILLED PIER WILL NOT BE PERMITTED.

NO SEPARATE PAYMENT SHALL BE MADE FOR ANY ADDITIONAL STEEL REQUIRED IN CONSTRUCTION OF DRILLED PIER AS THIS IS CONSIDERED INCIDENTAL TO THE LINEAR FOOT PRICE FOR DRILLED PIER.

THE CONTRACTOR'S ATTENTION IS CALLED TO THE FACT THAT AT BENT 1 AND BENT 3 THE CENTERLINE OF THE CAP, COLUMNS, AND DRILLED PIERS IS OFFSET 4" FROM THE CENTERLINE OF JOINT AND CONTROL LINE.

PROJECT NO. U-4019

NASH COUNTY

STATION: 55+38.99 -L-

SHEET 1 OF 2

STATE OF NORTH CAROLINA
DEPARTMENT OF TRANSPORTATION
RALEIGH

SUBSTRUCTURE

BENT 3

NORTH CAROLINA PROFESSIONAL SEAL 21545 ENGINEER STEVEN L. WANCE
05/25/11

| REVISIONS | | | | | | SHEET NO. |
|---|---|---|---|---|---|---|
| NO. | BY: | DATE: | NO. | BY: | DATE: | S-85 |
| 1 | | | 3 | | | TOTAL SHEETS |
| 2 | | | 4 | | | 93 |

DRAWN BY : D.R. WITHROW DATE : 6/08/10
CHECKED BY : K. LAYNE DATE : 3/11

25-MAY-2011 12:00
Z:\TIPProjects-U\U4019\Structures\str2\FinalPlans\u-4019_sd_BT_Str2.dgn
swance

STR. #2 NCBDS

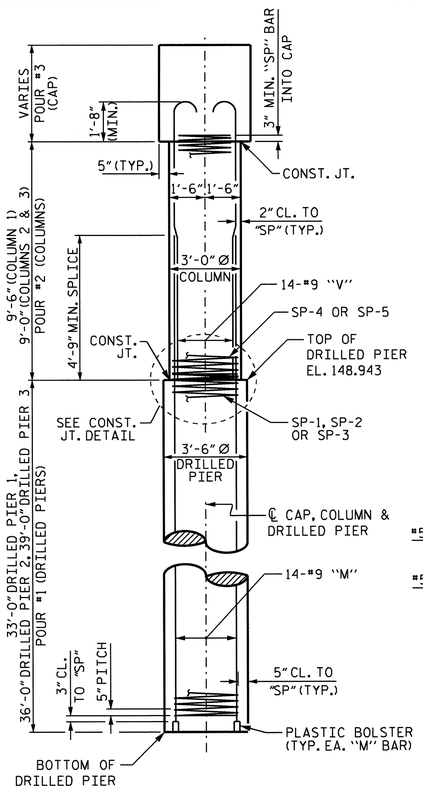


END ELEVATION

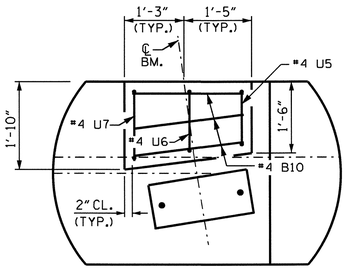


DETAIL B
(TYP. BM. 2 - BM. 6)

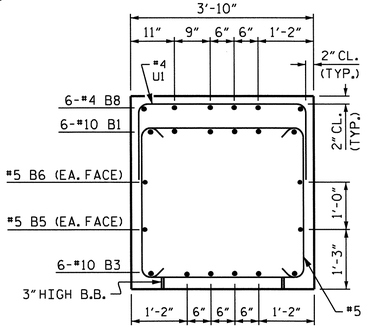


SECTION A-A

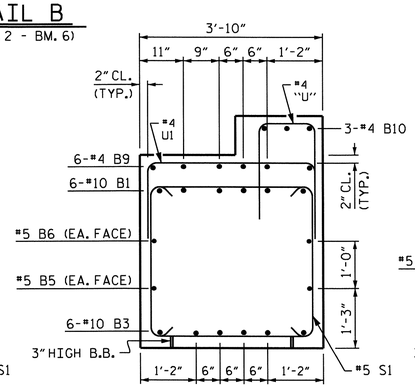


SECTION B-B

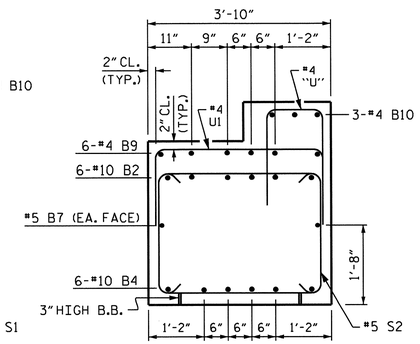


SECTION C-C

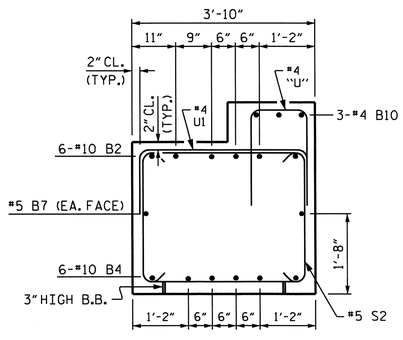


SECTION D-D

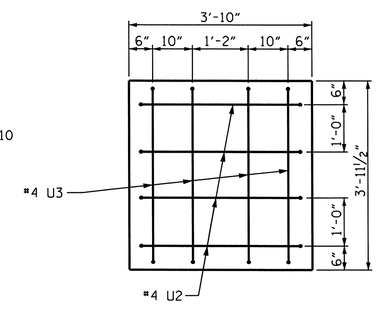


VIEW X-X

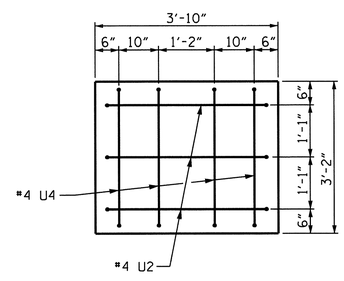


VIEW Y-Y

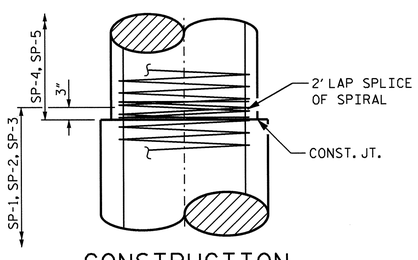


CONSTRUCTION JOINT DETAIL
(TYPICAL)

## BAR TYPES

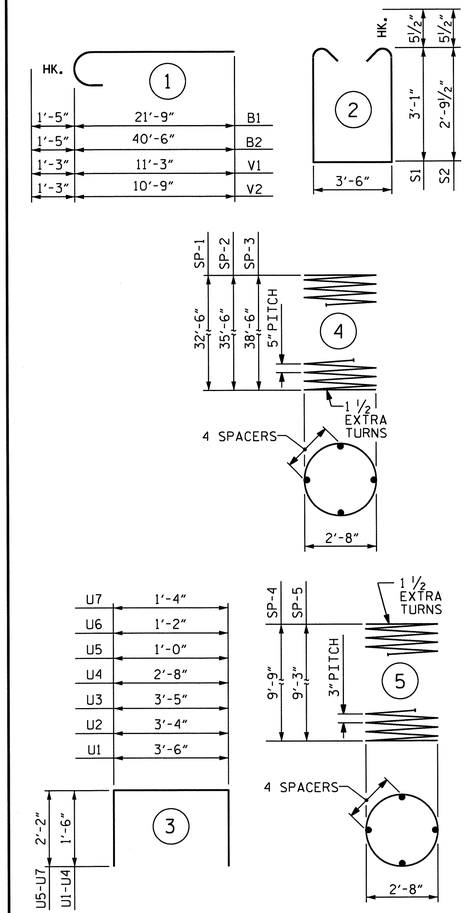


ALL BAR DIMENSIONS ARE OUT TO OUT.

## BILL OF MATERIAL

### BENT 3

| BAR | NO. | SIZE | TYPE | LENGTH | WEIGHT |
|---|---|---|---|---|---|
| B1 | 6 | #10 | 1 | 23'-2" | 598 |
| B2 | 6 | #10 | 1 | 41'-11" | 1082 |
| B3 | 6 | #10 | STR | 31'-8" | 818 |
| B4 | 6 | #10 | STR | 27'-2" | 701 |
| B5 | 2 | #5 | STR | 25'-2" | 52 |
| B6 | 2 | #5 | STR | 11'-9" | 25 |
| B7 | 2 | #5 | STR | 27'-3" | 57 |
| B8 | 6 | #4 | STR | 3'-8" | 15 |
| B9 | 18 | #4 | STR | 9'-0" | 108 |
| B10 | 6 | #4 | STR | 3'-6" | 14 |
| M1 | 14 | #9 | STR | 40'-7" | 1932 |
| M2 | 14 | #9 | STR | 43'-7" | 2075 |
| M3 | 14 | #9 | STR | 46'-7" | 2217 |
| S1 | 26 | #5 | 2 | 10'-7" | 287 |
| S2 | 30 | #5 | 2 | 10'-0" | 313 |
| U1 | 48 | #4 | 3 | 6'-6" | 208 |
| U2 | 7 | #4 | 3 | 6'-4" | 30 |
| U3 | 4 | #4 | 3 | 6'-5" | 17 |
| U4 | 4 | #4 | 3 | 5'-8" | 15 |
| U5 | 5 | #4 | 3 | 5'-4" | 18 |
| U6 | 5 | #4 | 3 | 5'-6" | 18 |
| U7 | 5 | #4 | 3 | 5'-8" | 19 |
| V1 | 14 | #9 | 1 | 12'-6" | 595 |
| V2 | 28 | #9 | 1 | 12'-0" | 1142 |

REINFORCING STEEL = 12,356 LBS

| | | | | | |
|---|---|---|---|---|---|
| SP-1 | 1 | * | 4 | 655'-11" | 684 |
| SP-2 | 1 | * | 4 | 713'-6" | 744 |
| SP-3 | 1 | * | 4 | 773'-2" | 806 |
| SP-4 | 1 | ** | 5 | 334'-2" | 223 |
| SP-5 | 2 | ** | 5 | 317'-8" | 424 |

SPIRAL COLUMN REINFORCING STEEL = 2881 LBS

CLASS A CONCRETE (C.Y.)
POUR #3 (CAP) = C.Y. 25.8
POUR #2 (COLUMNS) = C.Y. 7.3
TOTAL CLASS A CONCRETE C.Y. 33.1

DRILLED PIERS:
DRILLED PIER CONCRETE (C.Y.)
POUR #1 (DRILLED PIERS) = C.Y. 38.5
3'-6" Ø DRILLED PIERS IN SOIL = LIN. FT. 86.0
3'-6" Ø DRILLED PIERS NOT IN SOIL = LIN. FT. 22.0
CSL TUBES = LIN. FT. 426

* THE SP-1, SP-2 & SP-3 SPIRAL REINFORCING STEEL SHALL BE W31 OR D-31 COLD DRAWN WIRE OR #5 PLAIN OR DEFORMED BAR.

** THE SP-4 AND SP-5 SPIRAL REINFORCING STEEL SHALL BE W20 OR D-20 COLD DRAWN WIRE OR #4 PLAIN OR DEFORMED BAR.

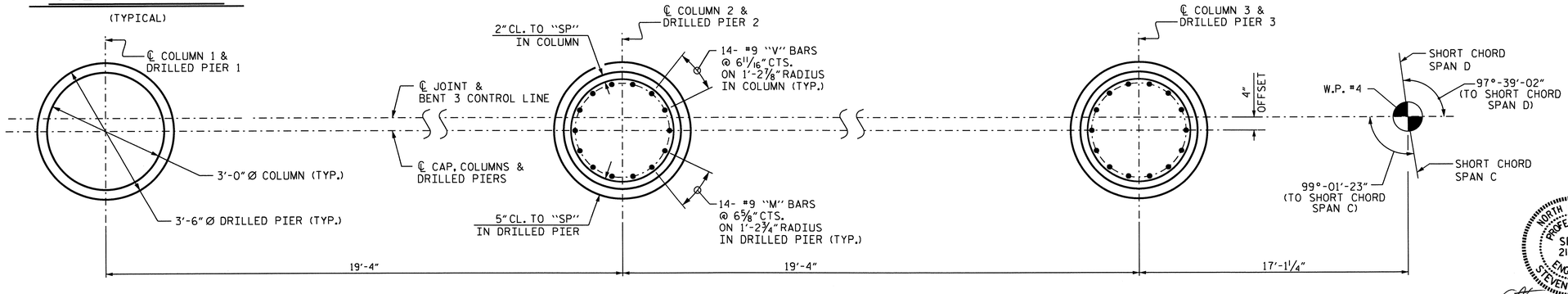


PLAN OF DRILLED PIERS & COLUMNS
(REINFORCING STEEL IS TYPICAL FOR EACH COLUMN AND DRILLED PIER)

NORTH CAROLINA PROFESSIONAL SEAL 21545 ENGINEER STEVEN K. WAICE
08/25/11

PROJECT NO. U-4019
NASH COUNTY
STATION: 55+38.99 -L-

SHEET 2 OF 2

STATE OF NORTH CAROLINA
DEPARTMENT OF TRANSPORTATION
RALEIGH

SUBSTRUCTURE

BENT 3

| REVISIONS | | | | | | SHEET NO. |
|---|---|---|---|---|---|---|
| NO. | BY: | DATE: | NO. | BY: | DATE: | S-86 |
| 1 | | | 3 | | | TOTAL SHEETS |
| 2 | | | 4 | | | 93 |

DRAWN BY : D.R. WITHROW DATE : 6/08/10
CHECKED BY : K. LAYNE DATE : 3/11

25-MAY-2011 12:00
Z:\TIPProjects-U\U4019\Structures\str2\FinalPlans\u-4019_sd_BT_Str2.dgn
swance

STR. #2

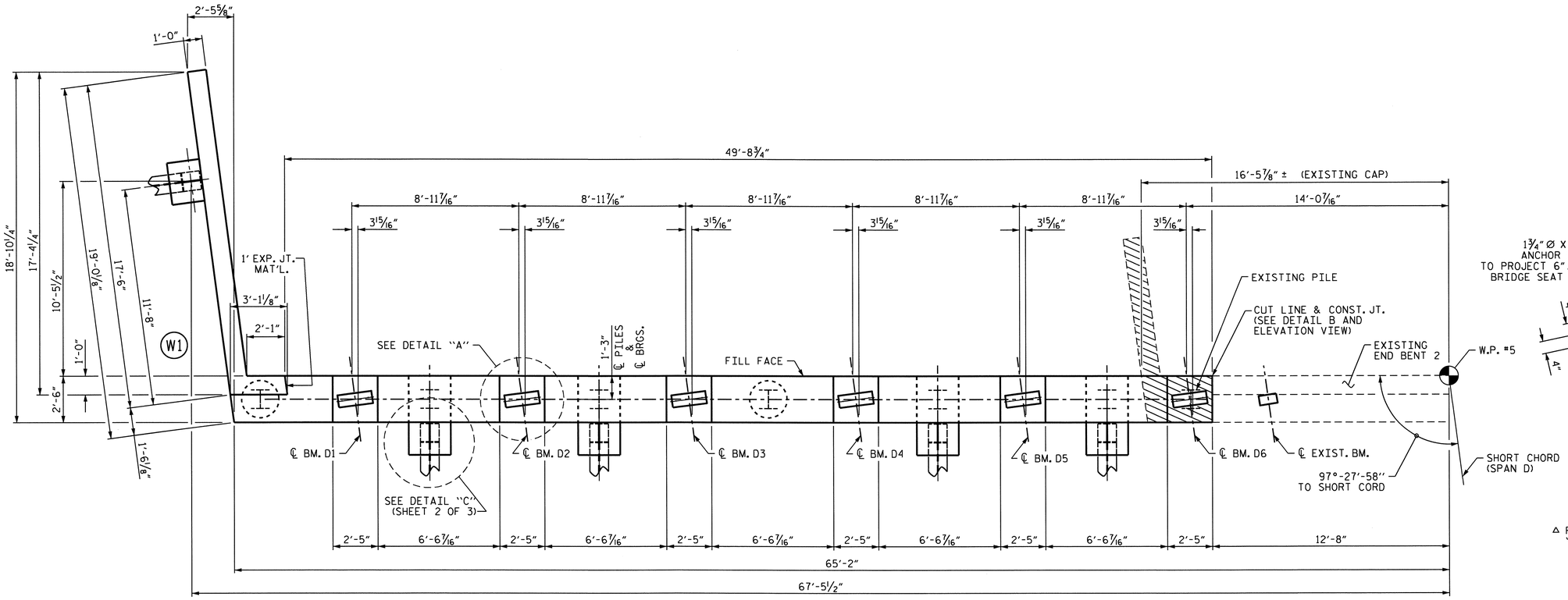


## PLAN

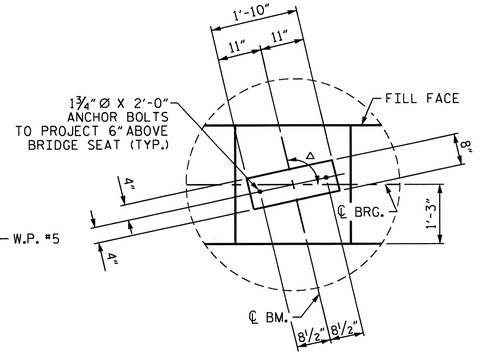


## DETAIL A

(TYP. EA. BEAM)

△ FOR SHORT CHORD ANGLES, SEE "FRAMING PLAN" SHEET.

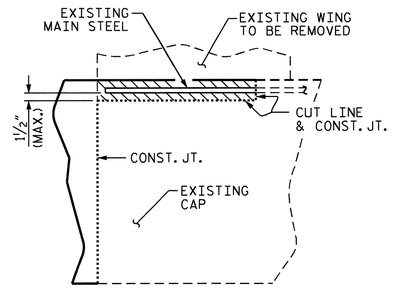


## DETAIL B

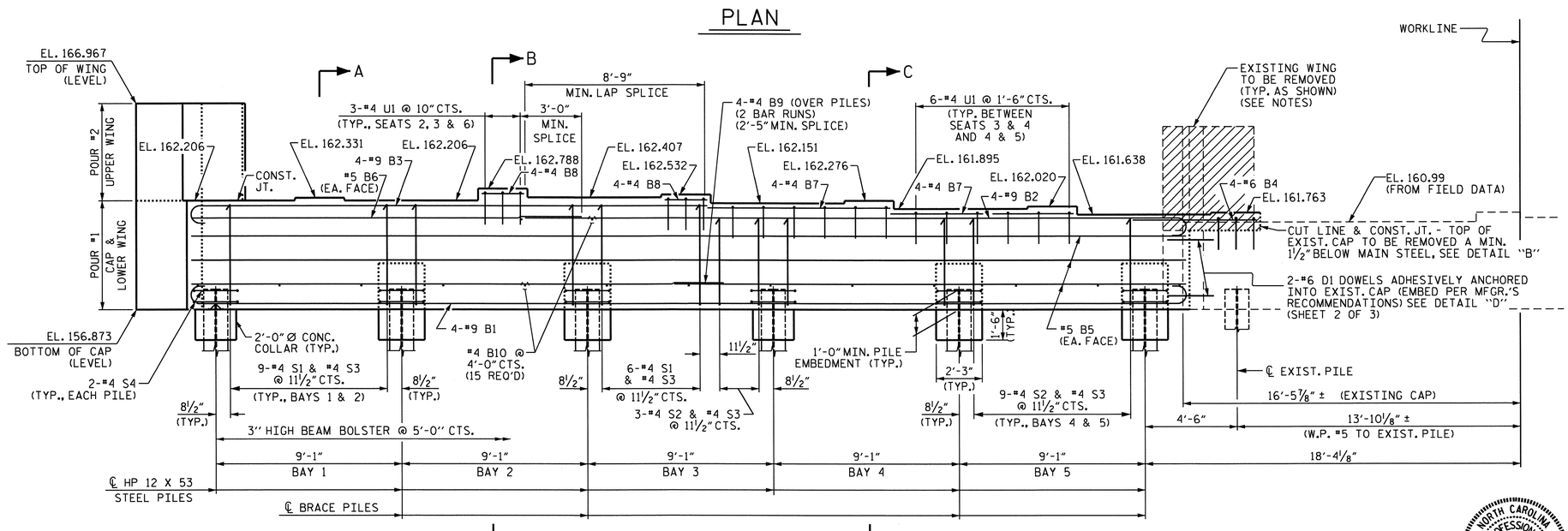


## ELEVATION

(BRACE PILE @ WING WALL NOT SHOWN FOR CLARITY)

PROJECT NO. U-4019

NASH COUNTY

STATION: 55+38.99

SHEET 1 OF 3

STATE OF NORTH CAROLINA
DEPARTMENT OF TRANSPORTATION
RALEIGH

SUBSTRUCTURE
END BENT 2
(LEFT WIDENING)

NORTH CAROLINA PROFESSIONAL SEAL 21545 ENGINEER STEVEN L. WANCE
05/25/11

| REVISIONS | | | | | | SHEET NO. |
|---|---|---|---|---|---|---|
| NO. | BY: | DATE: | NO. | BY: | DATE: | S-87 |
| 1 | | | 3 | | | TOTAL SHEETS |
| 2 | | | 4 | | | 93 |

DRAWN BY : R. WITHROW DATE : 12/07/10
CHECKED BY : K. LAYNE DATE : 3/11

25-MAY-2011 12:00
Z:\TIPProjects-U\U4019\Structures\str2\FinalPlans\U4019_sd_EB_Str2.dgn
swance

STR. 2

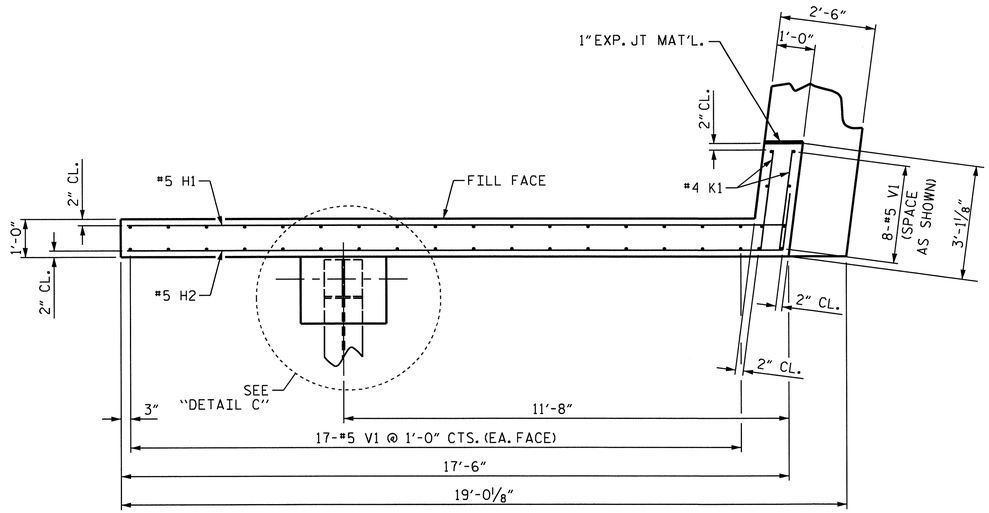


PLAN OF WING - W1

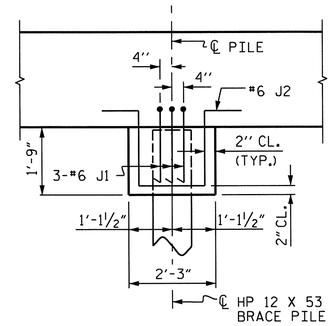


DETAIL C

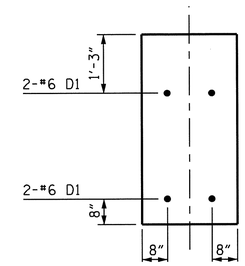


DETAIL "D"
SECTION AT
EXISTING CAP

## NOTES

STIRRUPS IN CAP MAY BE SHIFTED AS NECESSARY TO CLEAR ANCHOR BOLTS.

THE CONTRACTOR MAY, BUT IS NOT REQUIRED TO COAT THE TOP SURFACE AREA COVERED BY THE CURTAIN WALL.

THE TOP SURFACE AREAS OF THE END BENT CAPS SHALL BE CURED IN ACCORDANCE WITH THE STANDARD SPECIFICATIONS EXCEPT THE MEMBRANE CURING COMPOUND METHOD SHALL NOT BE USED.

THE CONTRACTOR SHALL PROVIDE FOR INSTALLATION OF THE 4"DIAMETER DRAIN PIPE THROUGH THE WING WALL AS REQUIRED FOR REINFORCED BRIDGE APPROACH FILLS, SEE THE ROADWAY PLANS. REINFORCING STEEL IN THE WING WALL MAY BE SHIFTED AS NECESSARY TO CLEAR THE DRAIN PIPE.

EXISTING EXTERIOR BRIDGE SEAT ELEVATIONS SHALL BE VERIFIED BY THE ENGINEER PRIOR TO FABRICATION OF THE FILL PLATES. IF THE EXISTING BRIDGE SEAT ELEVATION IS MORE THAN 6mm HIGHER OR LOWER THAN THE ELEVATION DETAILED IN THE PLANS, INCORPORATE THAT DIFFERENCE INTO THE FILL PLATE HEIGHT AND ANCHOR BOLT LENGTH.

EXISTING CAP AND WINGS SHALL BE REMOVED IN ACCORDANCE WITH PLAN DETAILS. THE CONTRACTOR MAY BUT IS NOT REQUIRED TO RETAIN EXISTING STEEL EXCEPT AS SHOWN IN DETAIL B SHEET 1 OF 3. THE REMOVAL SHALL BE INCLUDED IN THE LUMP SUM PRICE BID FOR "REMOVAL OF EXISTING STRUCTURE AT STA. 55+38.99 -L-".

USE CARE WHEN REMOVING EXISTING WINGS SO AS NOT TO DAMAGE EXISTING CAP THAT WILL REMAIN IN PLACE. TO ENSURE A LEVEL BRIDGE SEAT, REMOVE THE TOP SURFACE OF THE CAP AT THESE LOCATIONS TO 1" MINIMUM BELOW THE EXISTING MAIN STEEL. FOR BONDING NEW CONCRETE TO OLD, SEE ARTICLE 420-11 OF THE STANDARD SPECIFICATIONS.

THE D1 DOWELS PLACED INTO THE EXISTING CAP SHALL BE INSTALLED USING AN ADHESIVE ANCHORING SYSTEM. LEVEL 1 FIELD TESTING IS REQUIRED AND THE YIELD LOAD OF THE DOWELS IS 26.4 KIPS. FOR ADHESIVELY ANCHORED ANCHOR BOLTS OR DOWELS, SEE SPECIAL PROVISIONS.

THE #4 U1 BARS AT BEAM SEAT 6 ARE TO BE GROUTED INTO THE EXISTING CAP. IF INSTALLED USING AN ADHESIVE ANCHORING SYSTEM, NO FIELD TESTING WILL BE REQUIRED.

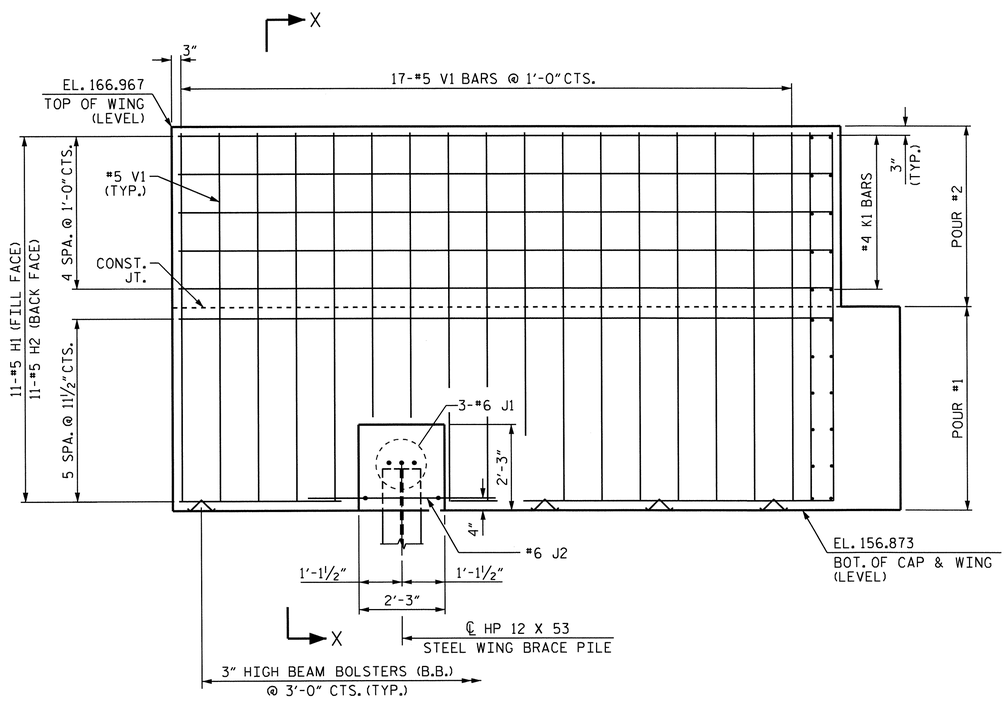


ELEVATION OF WING - W1

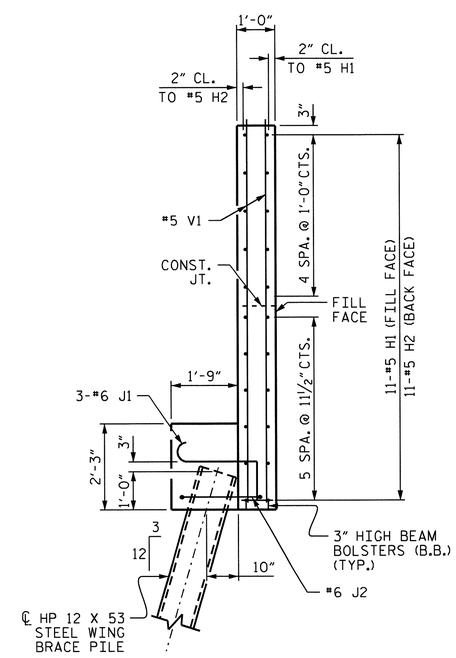


SECTION X-X

NORTH CAROLINA PROFESSIONAL SEAL 21545 ENGINEER STEVEN LAWRANCE
05/25/11

PROJECT NO. U-4019
NASH COUNTY
STATION: 55+38.99 -L-

SHEET 2 OF 3

STATE OF NORTH CAROLINA
DEPARTMENT OF TRANSPORTATION
RALEIGH

SUBSTRUCTURE
END BENT 2
(LEFT WIDENING)

| REVISIONS | | | | | | SHEET NO. |
|---|---|---|---|---|---|---|
| NO. | BY: | DATE: | NO. | BY: | DATE: | S-88 |
| 1 | | | 3 | | | TOTAL SHEETS |
| 2 | | | 4 | | | 93 |

DRAWN BY : R. WITHROW DATE : 12/07/10
CHECKED BY : K. LAYNE DATE : 3/11

25-MAY-2011 12:00
Z:\TIPProjects-U\U4019\Structures\str2\FinalPlans\U4019_sd_EB_Str2.dgn
swance

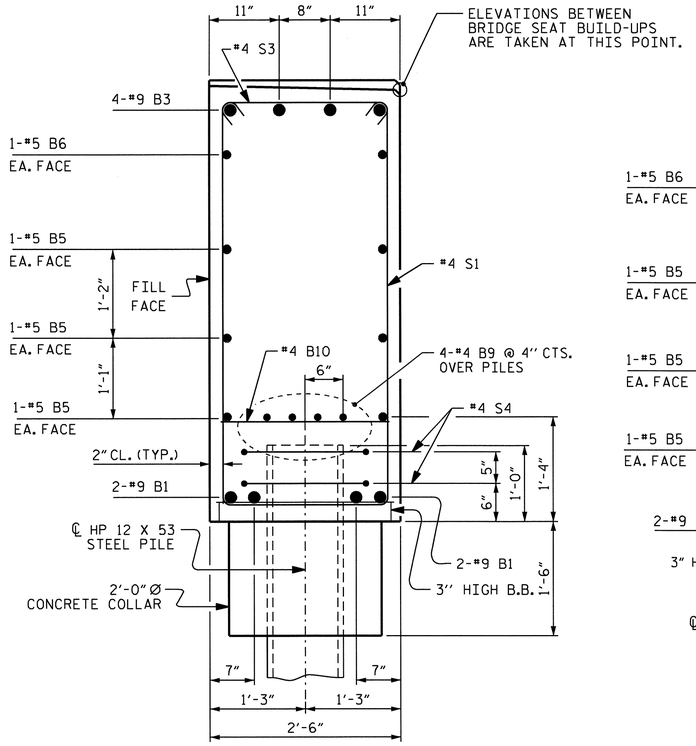


SECTION A-A

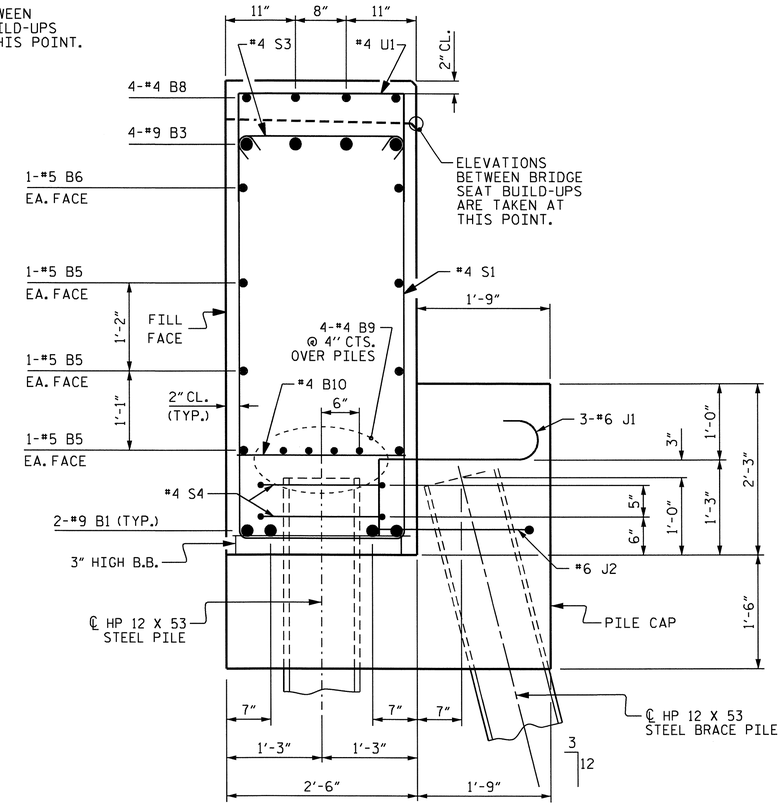


SECTION B-B

## BAR TYPES

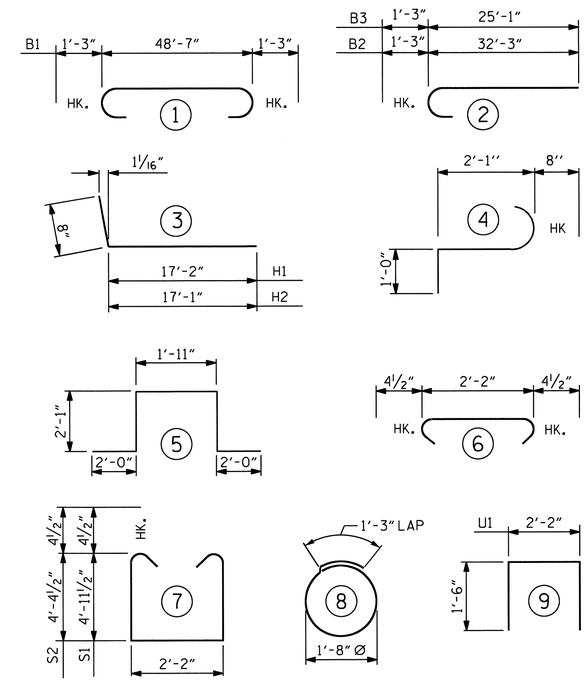


ALL BAR DIMENSIONS ARE OUT TO OUT.

## BILL OF MATERIAL
## END BENT 2

| BAR | NO. | SIZE | TYPE | LENGTH | WEIGHT |
|---|---|---|---|---|---|
| B1 | 4 | #9 | 1 | 51'-1" | 695 |
| B2 | 4 | #9 | 2 | 33'-6" | 456 |
| B3 | 4 | #9 | 2 | 26'-5" | 359 |
| B4 | 4 | #6 | STR | 7'-0" | 42 |
| B5 | 6 | #5 | STR | 48'-8" | 305 |
| B6 | 2 | #5 | STR | 19'-9" | 41 |
| B7 | 8 | #4 | STR | 8'-11" | 48 |
| B8 | 8 | #4 | STR | 2'-0" | 11 |
| B9 | 8 | #4 | STR | 25'-9" | 138 |
| B10 | 15 | #4 | STR | 2'-2" | 22 |
| | | | | | |
| D1 | 4 | #6 | STR | 2'-0" | 12 |
| | | | | | |
| H1 | 11 | #5 | 3 | 17'-11" | 206 |
| H2 | 11 | #5 | 3 | 17'-10" | 205 |
| | | | | | |
| J1 | 15 | #6 | 4 | 3'-9" | 84 |
| J2 | 5 | #6 | 5 | 10'-1" | 76 |
| | | | | | |
| K1 | 10 | #4 | STR | 2'-9" | 18 |
| | | | | | |
| S1 | 24 | #4 | 7 | 12'-10" | 206 |
| S2 | 21 | #4 | 7 | 11'-8" | 164 |
| S3 | 45 | #4 | 6 | 2'-11" | 88 |
| S4 | 12 | #4 | 8 | 6'-6" | 52 |
| | | | | | |
| U1 | 21 | #4 | 9 | 5'-2" | 72 |
| | | | | | |
| V1 | 42 | #5 | STR | 9'-9" | 427 |
| | | | | | |

REINFORCING STEEL = 3727 LBS

CLASS A CONCRETE BREAKDOWN

POUR 1 - CAP, LOWER WING, BRACE PILE CAPS & CONCRETE COLLARS 31.4 C.Y.

POUR 2 - UPPER PORTION OF WING 3.5 C.Y.

CLASS A CONCRETE TOTAL 34.9 C.Y.

HP 12 x 53 STEEL PILES

NO. 11 LIN. FT. = 385

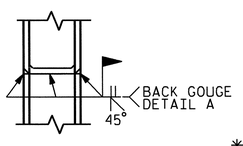


* PILE VERTICAL

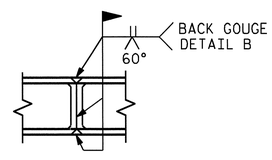


* PILE HORIZONTAL OR VERTICAL

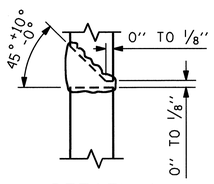


DETAIL A

* POSITION OF PILE DURING WELDING.

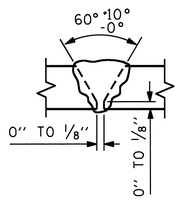


DETAIL B

PILE SPLICE DETAILS

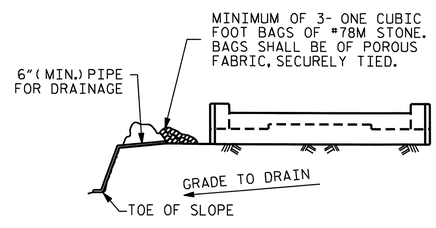


BAGGED STONE AND PIPE SHALL BE PLACED IMMEDIATELY AFTER COMPLETION OF END BENT EXCAVATION. PIPE MAY BE EITHER CONCRETE, CORRUGATED STEEL, CORRUGATED ALUMINUM ALLOY, OR CORRUGATED PLASTIC. PERFORATED PIPE WILL NOT BE ALLOWED.

BAGGED STONE SHALL REMAIN IN PLACE UNTIL THE ENGINEER DIRECTS THAT IT BE REMOVED. THE CONTRACTOR SHALL REMOVE AND DISPOSE OF SILT ACCUMULATIONS AT BAGGED STONE WHEN SO DIRECTED BY THE ENGINEER. BAGS SHALL BE REMOVED AND REPLACED WHENEVER THE ENGINEER DETERMINES THAT THEY HAVE DETERIORATED AND LOST THEIR EFFECTIVENESS.

NO SEPARATE PAYMENT WILL BE MADE FOR THIS WORK AND THE ENTIRE COST OF THIS WORK SHALL BE INCLUDED IN THE UNIT CONTRACT PRICE BID FOR THE SEVERAL PAY ITEMS.

TEMPORARY DRAINAGE AT END BENT

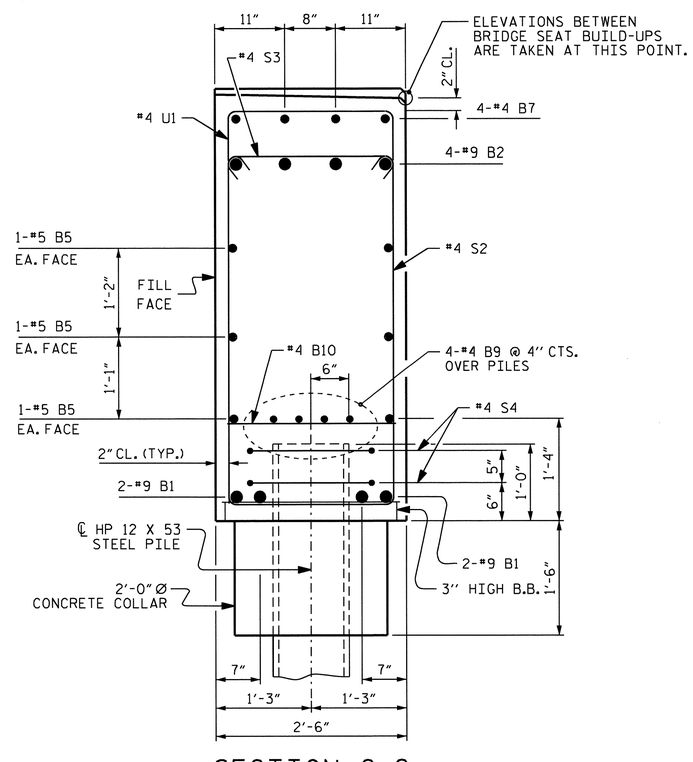


SECTION C-C

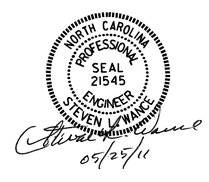


PROJECT NO. U-4019

NASH COUNTY

STATION: 55+38.99 -L-

SHEET 3 OF 3

STATE OF NORTH CAROLINA
DEPARTMENT OF TRANSPORTATION
RALEIGH

SUBSTRUCTURE
END BENT 2
(LEFT WIDENING)

| REVISIONS | | | | | | SHEET NO. |
|---|---|---|---|---|---|---|
| NO. | BY: | DATE: | NO. | BY: | DATE: | S-89 |
| 1 | | | 3 | | | TOTAL SHEETS |
| 2 | | | 4 | | | 93 |

DRAWN BY : D.R. WITHROW DATE : 12/08/10
CHECKED BY : K. LAYNE DATE : 3/11

25-MAY-2011 12:00
Z:\TIPProjects-U\U4019\Structures\str2\FinalPlans\U4019_sd_EB_Str2.dgn
swance

## GENERAL NOTES

SLOPE PROTECTION SHALL BE PLACED UNDER THE ENDS OF THE BRIDGE AS SHOWN IN THE DETAILS. MEASUREMENT AND PAYMENT SHALL BE AS PRESCRIBED IN SECTION 462 OF THE STANDARD SPECIFICATIONS. FOR BERM WIDTH, SEE GENERAL DRAWING.

SLOPE PROTECTION SHALL CONSIST OF 4" POURED-IN-PLACE CONCRETE PAVING AS SHOWN IN THE DETAILS ON THIS SHEET. CONCRETE SHALL BE CLASS "B". THE CONCRETE SURFACE SHALL BE FLOATED WITH A WOODEN FLOAT AND FINISHED. WELDED WIRE FABRIC REINFORCING SHALL BE 6 X 6 - W1.4 X W1.4, 60" WIDE. SLOPE PROTECTION SHALL BE POURED IN 5' STRIPS AS SHOWN IN THE "POURING DETAIL" WITH 2'-0" LONG #4 BARS PLACED ALONG THE SLOPE BETWEEN STRIPS AT 1'-6" MAXIMUM SPACING. SLOPE PROTECTION MAY BE POURED IN ALTERNATE 4' AND 5' STRIPS AS SHOWN IN THE "OPTIONAL POURING DETAIL" WITH ADJACENT RUNS OF WELDED WIRE FABRIC LAPPING AT LEAST 6". THE COST OF THE WELDED WIRE FABRIC AND #4 BARS, IF USED, SHALL BE INCLUDED IN THE CONTRACT UNIT PRICE BID PER SQUARE YARD FOR SLOPE PROTECTION.

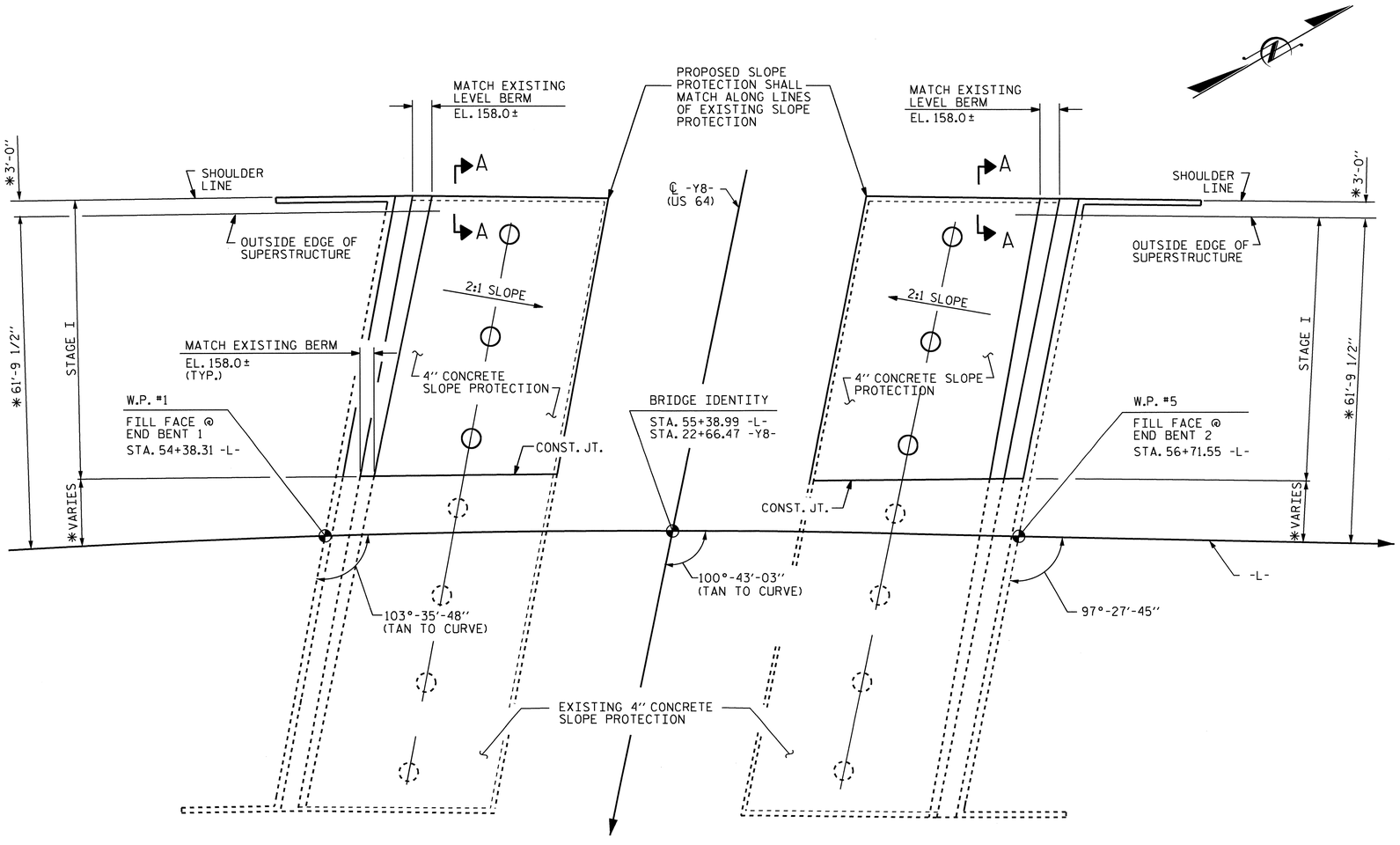


AT END BENT 1

PLAN

* RADIAL DIMENSION

AT END BENT 2

| BRIDGE @ STA. 55+38.99 -L- | 4 INCH SLOPE PROTECTION | * WELDED WIRE FABRIC 60 INCHES WIDE |
|---|---|---|
| | SQUARE YARDS | APPROX. L.F. |
| END BENT 1 | 250 | 450 |
| END BENT 2 | 235 | 430 |

* QUANTITY SHOWN IS BASED ON 5' POURS.

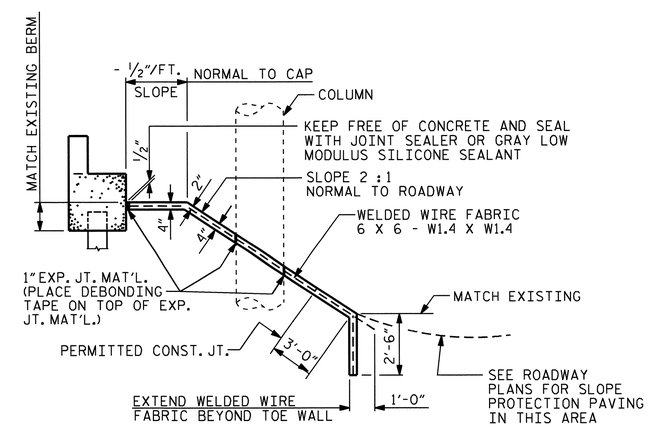


SECTION ALONG ℄ ROADWAY WITH SHOULDER PIER

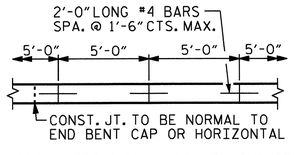


STRIP WIDTHS MAY VARY IN CURVED PORTION.

POURING DETAIL

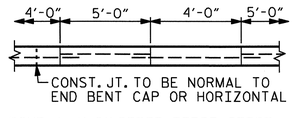


POUR A 4'-0" STRIP FIRST. STRIP WIDTHS MAY VARY IN CURVED PORTION.

OPTIONAL POURING DETAIL

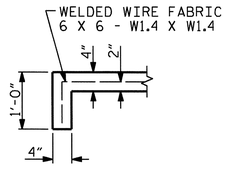


SECTION A-A

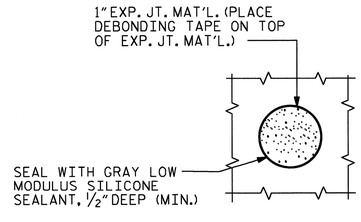


PLAN WHERE CONCRETE SLOPE PROTECTION MUST BE PLACED AROUND A BENT COLUMN

NORTH CAROLINA PROFESSIONAL SEAL 21545 ENGINEER STEVEN L. WANCE

5/25/11

PROJECT NO. U-4019

NASH COUNTY

STATION: 55+38.99 -L-

STATE OF NORTH CAROLINA
DEPARTMENT OF TRANSPORTATION
RALEIGH

SLOPE PROTECTION DETAILS

| ASSEMBLED BY : R. WITHROW | DATE : 02/11 |
|---|---|
| CHECKED BY: S. WANCE | DATE : 03/11 |

| DRAWN BY : ELR 5/92 | REV. 7/10/01 | LES/RDR |
|---|---|---|
| CHECKED BY : GRP 6/92 | REV. 5/7/03 | RWW/JTE |
| | REV. 5/1/06 | TLA/GM |

| REVISIONS | | | | | | | | SHEET NO. |
|---|---|---|---|---|---|---|---|---|
| NO. | BY: | DATE: | NO. | BY: | DATE: | | | S-90 |
| 1 | | | 3 | | | | | TOTAL SHEETS |
| 2 | | | 4 | | | | | 93 |

26-MAY-2011 11:10
R:\Structures\str2\Final Plans\u4019_sd_sp2.dgn
swance

STR. 2

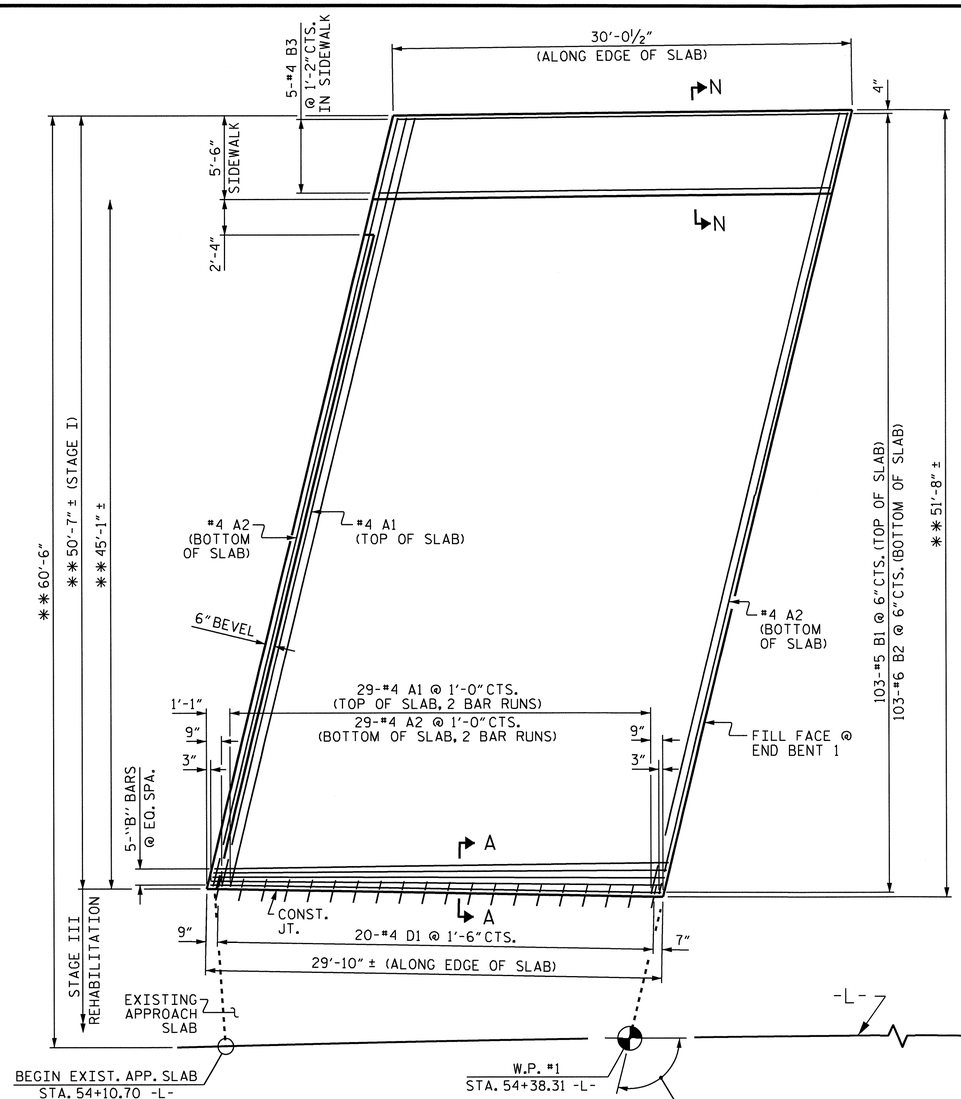


AT END BENT 1

✱✱ RADIAL DIMENSIONS

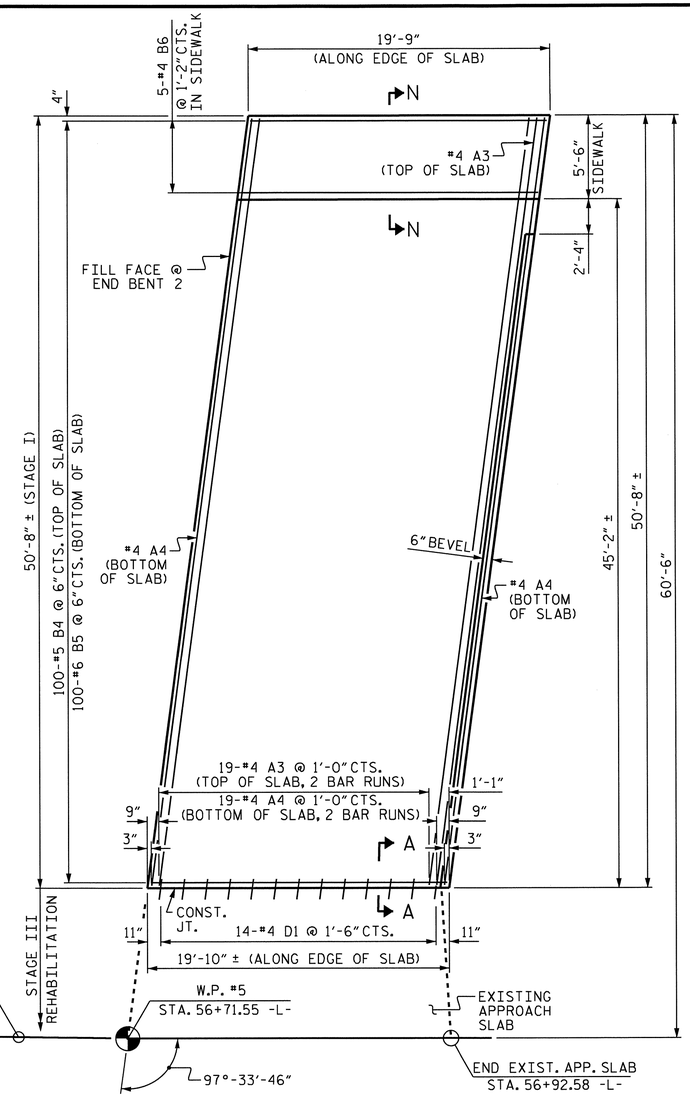


AT END BENT 2

## PLAN

FOR STAGE I APPROACH SLAB SECTION WITH REINFORCED APPROACH FILL, SEE SHEET 2 OF 3

FOR SIDEWALK DETAILS AND REINFORCING STEEL, SEE SHEET 3 OF 3

## BAR TYPES

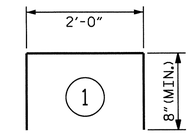


ALL BAR DIMENSIONS ARE OUT TO OUT

## SPLICE LENGTH CHART

| BAR | SIZE | SPLICE LENGTH |
|---|---|---|
| ✱ A1 & A3 | #4 | 2'-0" |
| A2 & A4 | #4 | 1'-9" |

## BILL OF MATERIAL - STAGE I

### APPROACH SLAB AT EB 1

| BAR | NO. | SIZE | TYPE | LENGTH | WEIGHT |
|---|---|---|---|---|---|
| ✱ A1 | 60 | #4 | STR | 27'-5" | 1099 |
| A2 | 62 | #4 | STR | 27'-4" | 1132 |
| ✱ B1 | 103 | #5 | STR | 28'-8" | 3080 |
| B2 | 103 | #6 | STR | 29'-6" | 4564 |
| ✱ B3 | 5 | #4 | STR | 29'-6" | 99 |
| D1 | 20 | #4 | STR | 1'-6" | 20 |
| ✱ G1 | 30 | #4 | STR | 5'-2" | 104 |
| ✱ U1 | 10 | #4 | 1 | 3'-4" | 18 |

| | | |
|---|---|---|
| REINFORCING STEEL | LBS. | 5716 |
| ✱ EPOXY COATED REINFORCING STEEL | LBS. | 4400 |
| CLASS AA CONCRETE | | |
| POUR 1 (SLAB) | C.Y. | 56.9 |
| POUR 2 (SIDEWALK) | C.Y. | 3.2 |
| TOTAL | C.Y. | 60.1 |

### APPROACH SLAB AT EB 2

| BAR | NO. | SIZE | TYPE | LENGTH | WEIGHT |
|---|---|---|---|---|---|
| ✱ A3 | 40 | #4 | STR | 26'-5" | 705 |
| A4 | 42 | #4 | STR | 26'-4" | 739 |
| ✱ B4 | 100 | #5 | STR | 18'-8" | 1947 |
| B5 | 100 | #6 | STR | 19'-4" | 2904 |
| ✱ B6 | 5 | #4 | STR | 19'-4" | 65 |
| D1 | 14 | #4 | STR | 1'-6" | 14 |
| ✱ G1 | 20 | #4 | STR | 5'-2" | 69 |
| ✱ U1 | 6 | #4 | 1 | 3'-4" | 13 |

| | | |
|---|---|---|
| REINFORCING STEEL | LBS. | 3657 |
| ✱ EPOXY COATED REINFORCING STEEL | LBS. | 2799 |
| CLASS AA CONCRETE | | |
| POUR 1 (SLAB) | C.Y. | 37.4 |
| POUR 2 (SIDEWALK) | C.Y. | 2.1 |
| TOTAL | C.Y. | 39.5 |

QUANTITIES FOR THE REHABILITATION OF THE APPROACH SLABS, CLASS I SURFACE PREPARATION, LATEX MODIFIED CONCRETE, AND PLACING AND FINISHING OF THE LATEX MODIFIED CONCRETE ARE SHOWN ON THE SUPERSTRUCTURE BILL OF MATERIAL.

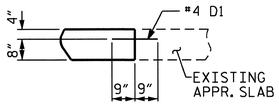


SECTION A-A

PROJECT NO. U-4019

NASH COUNTY

STATION: 55+38.99 -L-

SHEET 1 OF 3

## NOTES

LEFT APPROACH SLAB SHALL NOT BE CONSTRUCTED PRIOR TO COMPLETION OF THE BRIDGE DECK.

FOR REINFORCED BRIDGE APPROACH FILL INCLUDING FABRIC, IMPERMEABLE GEOMEMBRANE, 102mm Ø DRAINAGE PIPE, #78M STONE, AND SELECT MATERIAL, SEE ROADWAY PLANS.

TEMPORARY DRAINAGE AND TEMPORARY BERM AND SLOPE DRAINS WILL BE PAID FOR UNDER THE LUMP SUM PRICE FOR BRIDGE APPROACH SLAB.

AREA BETWEEN THE WINGWALL AND APPROACH SLAB SHALL BE GRADED TO DRAIN THE WATER AWAY FROM THE FILL FACE OF THE BRIDGE AND SHALL BE PAVED. SEE ROADWAY PLANS.

THE 6" COMP. A.B.C. SHALL EXTEND 10 FEET BEYOND THE END OF THE APPROACH SLAB AND 1'-0" OUTSIDE OF EACH EDGE OF THE SLAB.

THE CONTRACTOR MAY USE 4" TYPE B-25.0B ASPHALT CONCRETE COURSE IN LIEU OF 6" COMP. A.B.C. IF THIS OPTION IS USED, THE BASE COURSE SHALL EXTEND 1'-0" BEYOND THE END OF THE APPROACH SLAB AND THE WIDTH SHALL BE THE SAME AS THAT OF THE APPROACH SLAB.

THE CONTRACTOR MAY USE 5" CLASS "A" CONCRETE BASE IN LIEU OF 6" COMP. A.B.C. IF THIS OPTION IS USED, THE CONCRETE BASE SHALL EXTEND 1'-0" BEYOND THE END OF THE APPROACH SLAB AND THE WIDTH SHALL BE THE SAME AS THAT OF THE APPROACH SLAB. THE CONCRETE SHALL BE FINISHED TO A SMOOTH SURFACE AND A LAYER OF 30 LB ROOFING FELT SHALL BE PLACED BETWEEN THE CONCRETE BASE AND THE APPROACH SLAB TO PREVENT BOND. THE APPROACH SLAB SHALL NOT BE CAST UNTIL THE CONCRETE BASE HAS REACHED AN AGE OF THREE CURING DAYS.
INSTALL #4 D1 DOWELS IN EXISTING APPROACH SLABS USING AN ADHESIVE ANCHORING SYSTEM. DOWELS SHALL BE PLACED IN THE SAME HORIZONTAL PLANE AS THE TOP MAT OF REINFORCING STEEL. NO FIELD TESTING OF THE ADHESIVE ANCHORING SYSTEM IS REQUIRED.

FOR EVAZOTE JOINT SEAL, ELASTOMERIC CONCRETE, AND SIDEWALK COVER PLATE DETAILS, SEE SUPERSTRUCTURE TYPICAL SECTION DETAILS.

"U" BARS MAY BE PUSHED INTO GREEN CONCRETE AFTER APPROACH SLAB HAS BEEN SCREEDED OFF. AT THE CONTRACTOR'S OPTION, ALL "U" BARS MAY BE INSTALLED USING AN ADHESIVE ANCHORING SYSTEM. FOR ADHESIVELY ANCHORED ANCHOR BOLTS OR DOWELS, SEE SPECIAL PROVISIONS. NO FIELD TESTING OF THE ADHESIVE ANCHORING SYSTEM IS REQUIRED.

WITH EVAZOTE JOINT SEAL

FOR EVAZOTE JOINT SEALS, SEE SPECIAL PROVISIONS.

THE NOMINAL UNCOMPRESSED SEAL WIDTH OF THE EVAZOTE JOINT SEAL SHALL BE 2 ½".

FOR ELASTOMERIC CONCRETE, SEE SPECIAL PROVISIONS.

NORTH CAROLINA PROFESSIONAL SEAL 21545 ENGINEER STEVEN L. WANCE
05/25/11

| | | | |
|---|---|---|---|
| ASSEMBLED BY : D.R. WITHROW | DATE : 02/11 | | |
| CHECKED BY : S. WANCE | DATE : 03/11 | | |
| DRAWN BY : FCJ 6/87 | REV. 10/17/00 | RWW/LES | |
| CHECKED BY : EGA 6/87 | REV. 7/10/01 | RWW/LES | |
| | REV. 5/7/03R | RWW/JTE | |

25-MAY-2011 12:00
Z:\TIPProjects-U\U4019\Structures\str2\Final Plans\u-4019_sd_as_Str2.dgn
swance

STATE OF NORTH CAROLINA
DEPARTMENT OF TRANSPORTATION
RALEIGH

# BRIDGE APPROACH SLAB FOR FLEXIBLE PAVEMENT

| REVISIONS | | | | | | | | SHEET NO. |
|---|---|---|---|---|---|---|---|---|
| NO. | BY: | DATE: | NO. | BY: | DATE: | | | S-91 |
| 1 | | | 3 | | | | | TOTAL SHEETS |
| 2 | | | 4 | | | | | 93 |

STR. #2

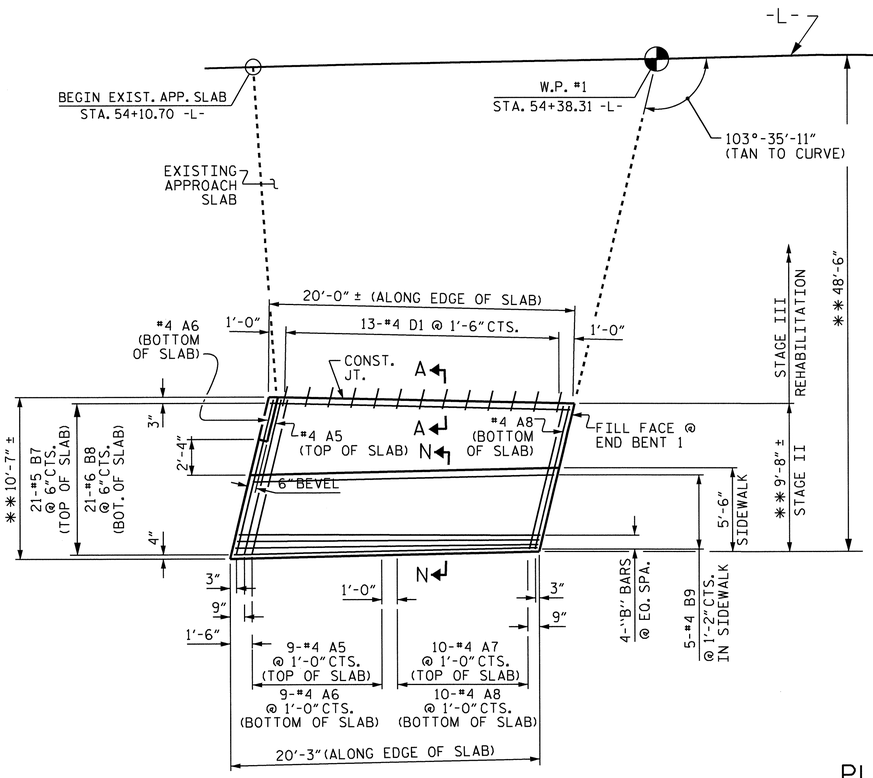


AT END BENT 1

**RADIAL DIMENSIONS

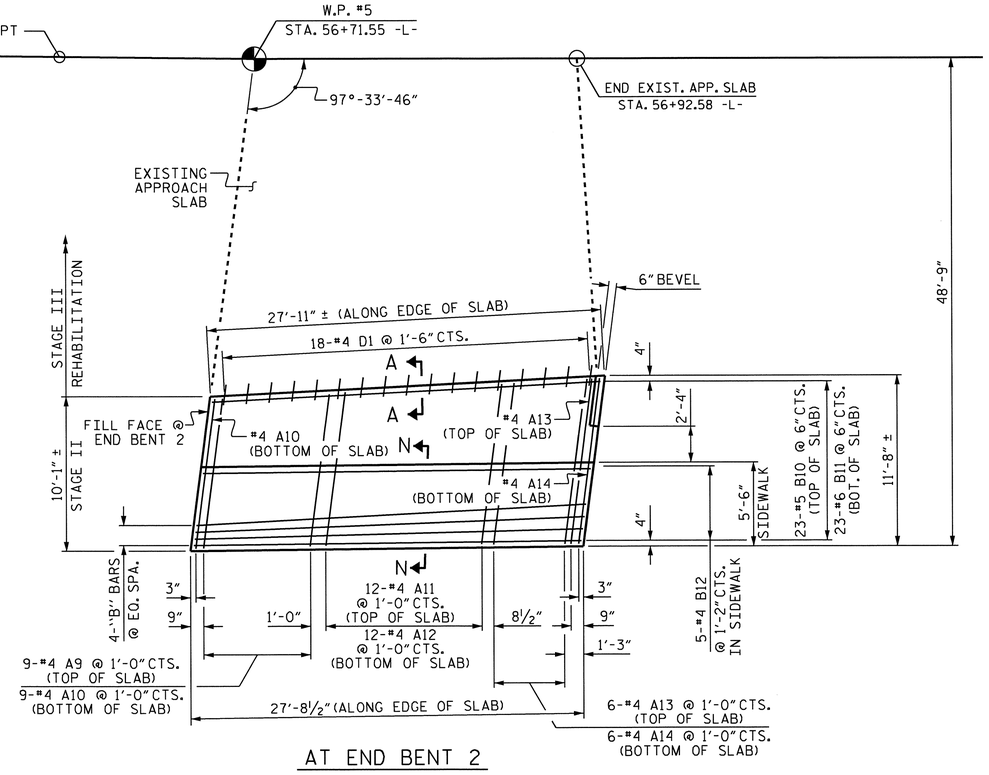


AT END BENT 2

## PLAN

FOR STAGE II APPROACH SLAB SECTION WIDENING

FOR SIDEWALK DETAILS AND REINFORCING STEEL, SEE SHEET 3 OF 3

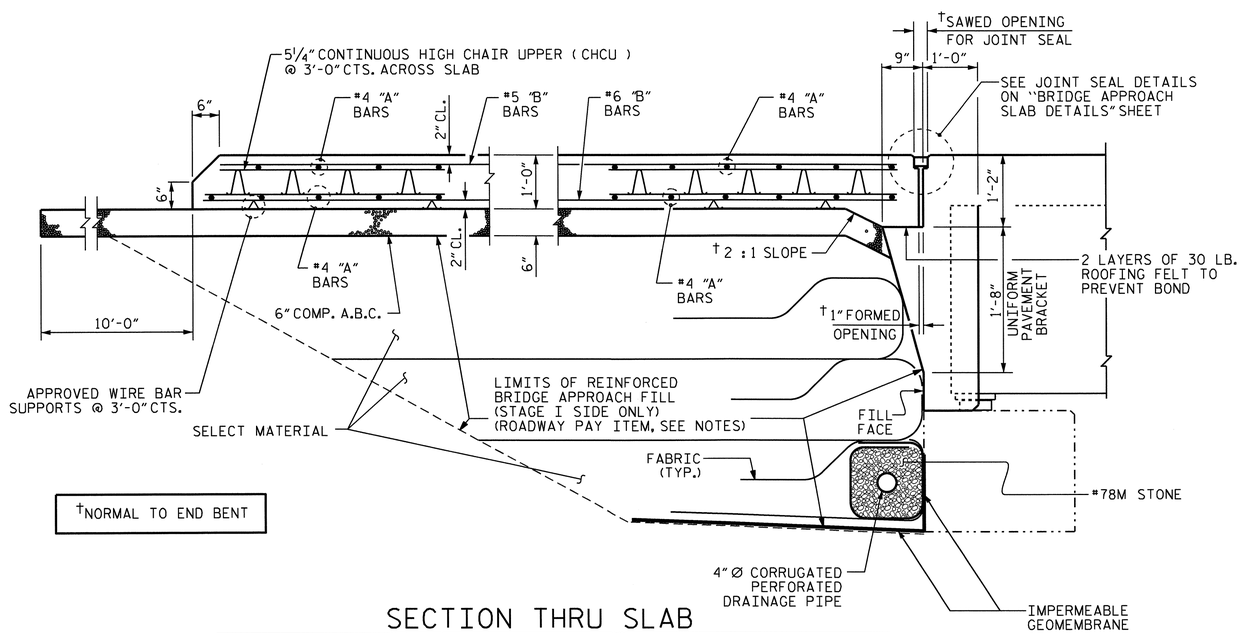


†NORMAL TO END BENT

## SECTION THRU SLAB

THE CONTRACTOR'S ATTENTION IS CALLED TO THE FACT THAT IN STAGE I CONSTRUCTION, THE 4" Ø PIPE AS PART OF THE REINFORCED BRIDGE APPROACH FILL SHALL SLOPE DOWN FROM RIGHT TO LEFT, OPPOSITE THE SUPERELEVATION OF THE BRIDGE.

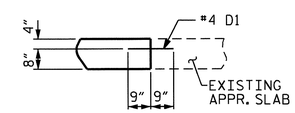


## SECTION A-A

## BAR TYPES

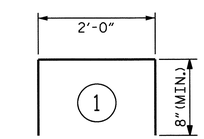


ALL BAR DIMENSIONS ARE OUT TO OUT

## BILL OF MATERIAL - STAGE II

### APPROACH SLAB AT EB 1

| BAR | NO. | SIZE | TYPE | LENGTH | WEIGHT |
|---|---|---|---|---|---|
| * A5 | 10 | #4 | STR | 10'-1" | 67 |
| A6 | 10 | #4 | STR | 10'-1" | 67 |
| * A7 | 10 | #4 | STR | 9'-6" | 63 |
| A8 | 11 | #4 | STR | 9'-6" | 70 |
| * B7 | 21 | #5 | STR | 18'-11" | 414 |
| B8 | 21 | #6 | STR | 19'-8" | 620 |
| * B9 | 5 | #4 | STR | 19'-10" | 66 |
| D1 | 13 | #4 | STR | 1'-6" | 13 |
| * G1 | 20 | #4 | STR | 5'-2" | 69 |
| * U1 | 6 | #4 | 1 | 3'-4" | 13 |
| REINFORCING STEEL | | | | LBS. | 770 |
| * EPOXY COATED REINFORCING STEEL | | | | LBS. | 692 |
| CLASS AA CONCRETE | | | | | |
| POUR 1 (SLAB) | | | | C. Y. | 7.8 |
| POUR 2 (SIDEWALK) | | | | C. Y. | 2.5 |
| TOTAL | | | | C. Y. | 10.3 |

### APPROACH SLAB AT EB 2

| BAR | NO. | SIZE | TYPE | LENGTH | WEIGHT |
|---|---|---|---|---|---|
| * A9 | 9 | #4 | STR | 9'-9" | 59 |
| A10 | 10 | #4 | STR | 9'-9" | 65 |
| * A11 | 12 | #4 | STR | 10'-3" | 82 |
| A12 | 12 | #4 | STR | 10'-3" | 82 |
| * A13 | 7 | #4 | STR | 10'-11" | 51 |
| A14 | 7 | #4 | STR | 10'-11" | 51 |
| * B10 | 23 | #5 | STR | 26'-10" | 644 |
| B11 | 23 | #6 | STR | 27'-4" | 944 |
| * B12 | 5 | #4 | STR | 27'-4" | 91 |
| D1 | 18 | #4 | STR | 1'-6" | 18 |
| * G1 | 28 | #4 | STR | 5'-2" | 97 |
| * U1 | 8 | #4 | 1 | 3'-4" | 18 |
| REINFORCING STEEL | | | | LBS. | 1160 |
| * EPOXY COATED REINFORCING STEEL | | | | LBS. | 1042 |
| CLASS AA CONCRETE | | | | | |
| POUR 1 (SLAB) | | | | C. Y. | 11.2 |
| POUR 2 (SIDEWALK) | | | | C. Y. | 3.2 |
| TOTAL | | | | C. Y. | 14.4 |

QUANTITIES FOR THE REHABILITATION OF THE APPROACH SLABS, CLASS I SURFACE PREPARATION, LATEX MODIFIED CONCRETE, AND PLACING AND FINISHING OF THE LATEX MODIFIED CONCRETE ARE SHOWN ON THE SUPERSTRUCTURE BILL OF MATERIAL.

PROJECT NO. U-4019

NASH COUNTY

STATION: 55+38.99 -L-

SHEET 2 OF 3

STATE OF NORTH CAROLINA
DEPARTMENT OF TRANSPORTATION
RALEIGH

# BRIDGE APPROACH SLAB FOR FLEXIBLE PAVEMENT

NORTH CAROLINA PROFESSIONAL SEAL 21545 ENGINEER STEVEN L. WANCE

5/25/11

| REVISIONS | | | | | | SHEET NO. |
|---|---|---|---|---|---|---|
| NO. | BY: | DATE: | NO. | BY: | DATE: | S-92 |
| 1 | | | 3 | | | TOTAL SHEETS |
| 2 | | | 4 | | | 93 |

STR. #2

| | | | |
|---|---|---|---|
| ASSEMBLED BY : D.R. WITHROW | | DATE : | 02/11 |
| CHECKED BY : S. WANCE | | DATE : | 03/11 |
| DRAWN BY : FCJ 6/87 | REV. 10/17/00 | RWW/LES | |
| CHECKED BY : EGA 6/87 | REV. 7/10/01 | RWW/LES | |
| | REV. 5/7/03R | RWW/JTE | |

26-MAY-2011 11:55
R:\Structures\str2\FinalPlans\u-4019_sd_as_Str2.dgn
swance

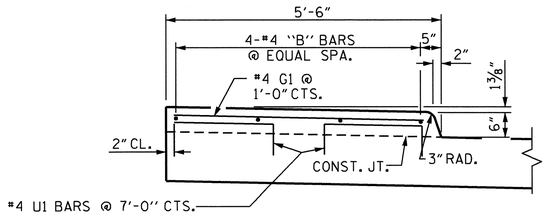


SECTION N-N

## SIDEWALK DETAILS

LEFT SIDEWALK SHOWN, RIGHT SIDEWALK SIMILAR
SEE NOTES SHEET 1 OF 3.

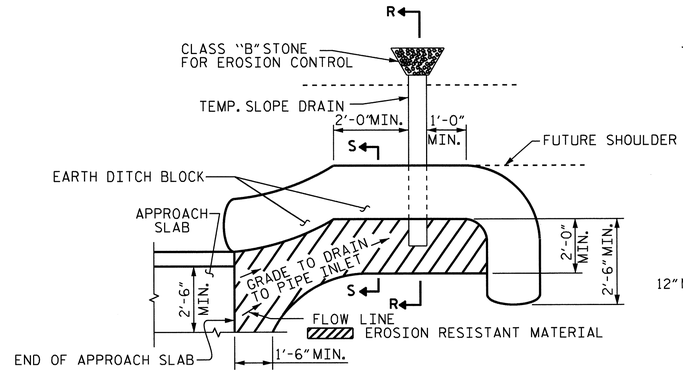


NOTE: IMMEDIATELY AFTER THE CONSTRUCTION OF THE APPROACH SLAB, THE CONTRACTOR SHALL PROVIDE TEMPORARY BERM AND SLOPE DRAIN. CONTRACTOR SHALL GRADE TO PIPE INLET AND PROVIDE EROSION RESISTANT MATERIAL AS SHOWN. THE EROSION RESISTANT MATERIAL SHALL BE EITHER 1) ASPHALT PLANT MIX, TYPE 1 OR TYPE 2, MIN. 2" DEPTH, 2) EROSION CONTROL MAT, OR 3) CONCRETE, AS DIRECTED BY THE ENGINEER. THE SLOPE DRAIN SHALL CONSIST OF A NON-PERFORATED TEMPORARY DRAINAGE PIPE, 12 INCHES IN DIAMETER.

PLAN VIEW

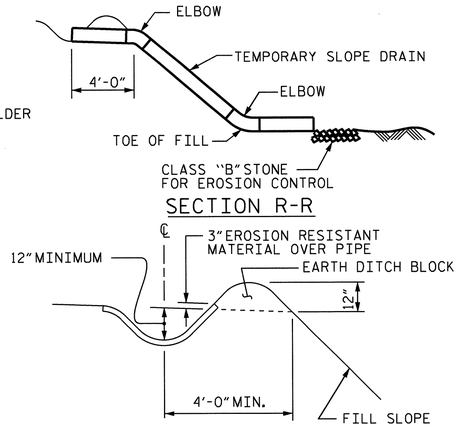


## TEMPORARY BERM AND SLOPE DRAIN DETAILS

(TO BE USED WHEN SHOULDER BERM GUTTER IS REQUIRED)

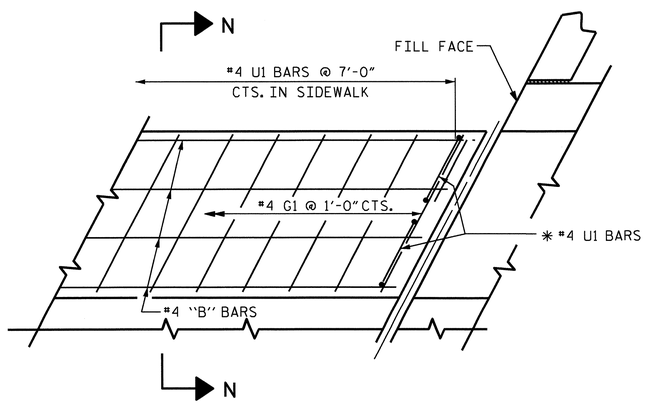


PLAN OF SIDEWALK

## DETAILS OF SIDEWALK ON APPROACH SLAB

* THESE BARS ARE TO BE PLACED AFTER THE SAWING OF THE JOINT.
LEFT SIDEWALK SHOWN, RIGHT SIDEWALK SIMILAR
SEE NOTES SHEET 1 OF 3.

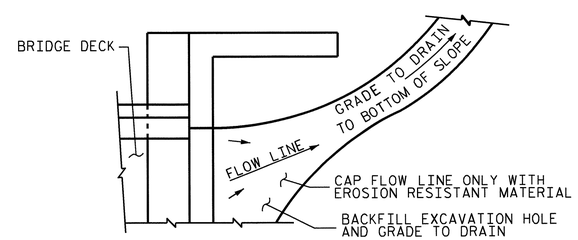


NOTE: IF THE APPROACH SLAB IS NOT CONSTRUCTED IMMEDIATELY AFTER THE BACKFILLING OF THE END BENT EXCAVATION, GRADE TO DRAIN TO THE BOTTOM OF THE SLOPE AND PROVIDE EROSION RESISTANT MATERIAL, SUCH AS FIBERGLASS ROVING OR AS DIRECTED BY THE ENGINEER TO PREVENT SOIL EROSION AND TO PROTECT THE AREA ADJACENT TO THE STRUCTURE. THE CONTRACTOR WILL BE REQUIRED TO REMOVE THESE MATERIALS PRIOR TO CONSTRUCTION OF THE APPROACH SLAB.

TEMPORARY DRAINAGE DETAIL

PROJECT NO. U-4019
NASH COUNTY
STATION: 55+38.99 -L-

SHEET 3 OF 3

NORTH CAROLINA PROFESSIONAL SEAL 21545 ENGINEER STEVEN L. WANCE
05/25/11

STATE OF NORTH CAROLINA
DEPARTMENT OF TRANSPORTATION
RALEIGH

BRIDGE APPROACH SLAB DETAILS

| | | | |
|---|---|---|---|
| ASSEMBLED BY : D.R. WITHROW | | DATE : 3-10-11 | |
| CHECKED BY : S.WANCE | | DATE : .04/11 | |
| DRAWN BY : FCJ 11/88 | REV. 10/17/00 | RWW/LES | |
| CHECKED BY : ARB 11/88 | REV. 5/7/03 | RWW/JTE | |
| | REV. 5/1/06RR | MAA/KMM | |

| REVISIONS | | | | | | | | SHEET NO. |
|---|---|---|---|---|---|---|---|---|
| NO. | BY: | DATE: | NO. | BY: | DATE: | | | S-93 |
| 1 | | | 3 | | | | | TOTAL SHEETS |
| 2 | | | 4 | | | | | 93 |

STR. #2

25-MAY-2011 12:00
Z:\TIPProjects-U\U4019\Structures\str2\FinalPlans\u-4019_sd_as_Str2.dgn
swance

| GEOTECHNICAL ENGINEER | ENGINEER |
|---|---|
| NORTH CAROLINA PROFESSIONAL SEAL 32171 ENGINEER IN YOUNG PARK 5-11-14 | |
| SIGNATURE DATE | SIGNATURE DATE |

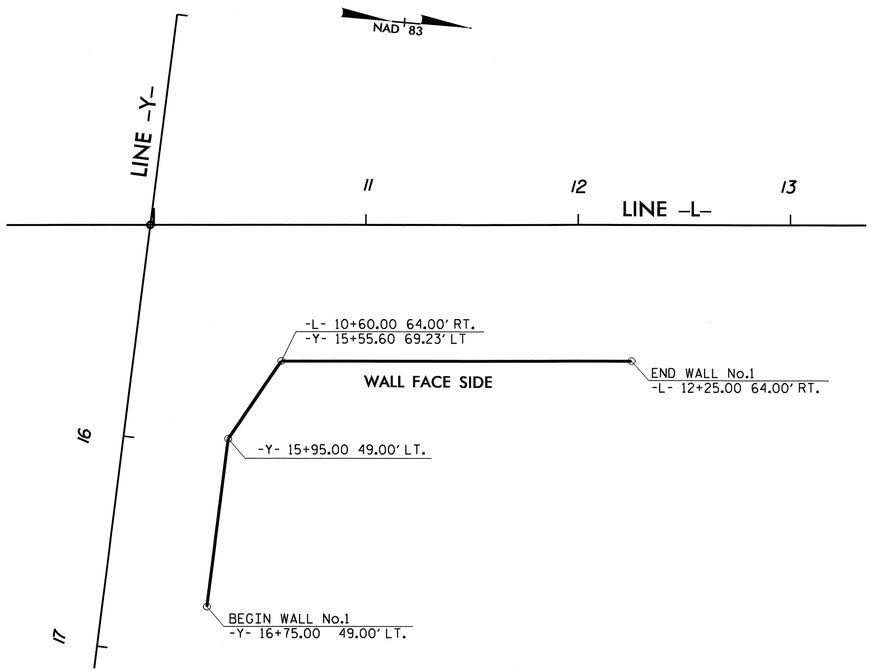


## RETAINING WALL NO. 1 PLAN

NOT TO SCALE

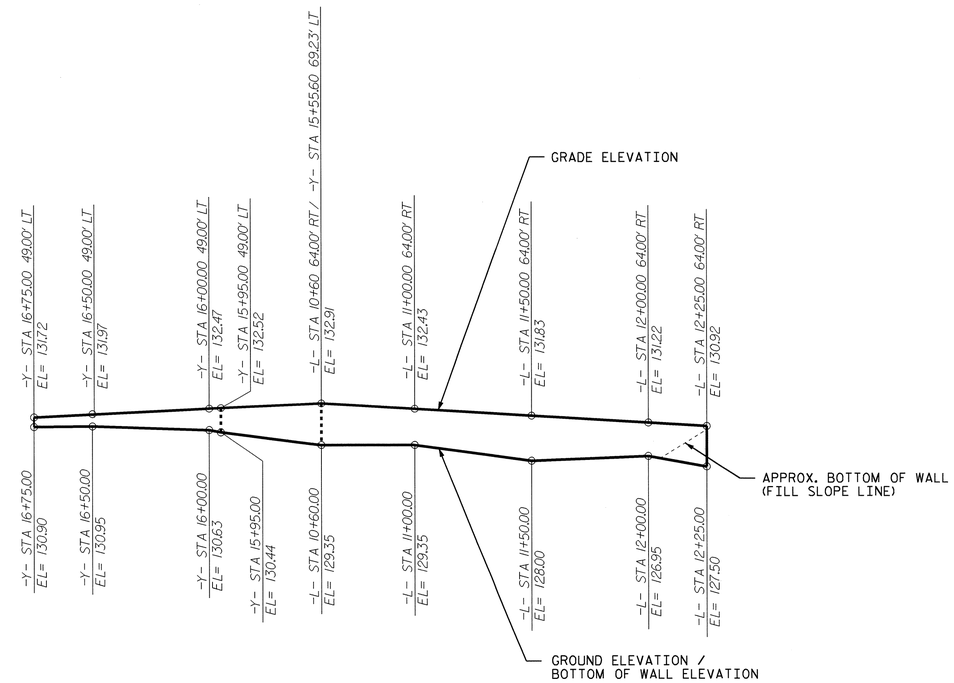


## RETAINING WALL NO. 1 ELEVATION

NOT TO SCALE

| ESTIMATED AREA FOR WALL NO.1 | |
|---|---|
| SEGMENTAL GRAVITY RETAINING WALLS | 1,000 SQ.FT. |

***PROJECT NO.:*** 35014.3.1 (U-4019)

NASH ***COUNTY***

***STATION:*** 16+50.00 -Y-

SHEET 1 OF 6

***GEOTECHNICAL ENGINEERING UNIT***

☒ *EASTERN REGIONAL OFFICE*

☐ *WESTERN REGIONAL OFFICE*

☐ *CONTRACT OFFICE*

***STATE OF NORTH CAROLINA***
***DEPARTMENT OF TRANSPORTATION***
***RALEIGH***

# SEGMENTAL GRAVITY RETAINING WALL NO. 1 PLAN AND ELEVATION

| REVISIONS | | | | | | | SHEET NO. |
|---|---|---|---|---|---|---|---|
| NO. | BY | DATE | NO. | BY | DATE | | W-1 |
| 1 | | | 3 | | | | TOTAL SHEETS |
| 2 | | | 4 | | | | 6 |

| | |
|---|---|
| PREPARED BY: J. PARK | DATE: 5/2011 |
| REVIEWED BY: J. BATTS | DATE: 5/2011 |

| GEOTECHNICAL ENGINEER | ENGINEER |
|---|---|
| NORTH CAROLINA PROFESSIONAL SEAL 32171 ENGINEER JINYOUNG PARK 5-11-11 | |
| SIGNATURE DATE | SIGNATURE DATE |

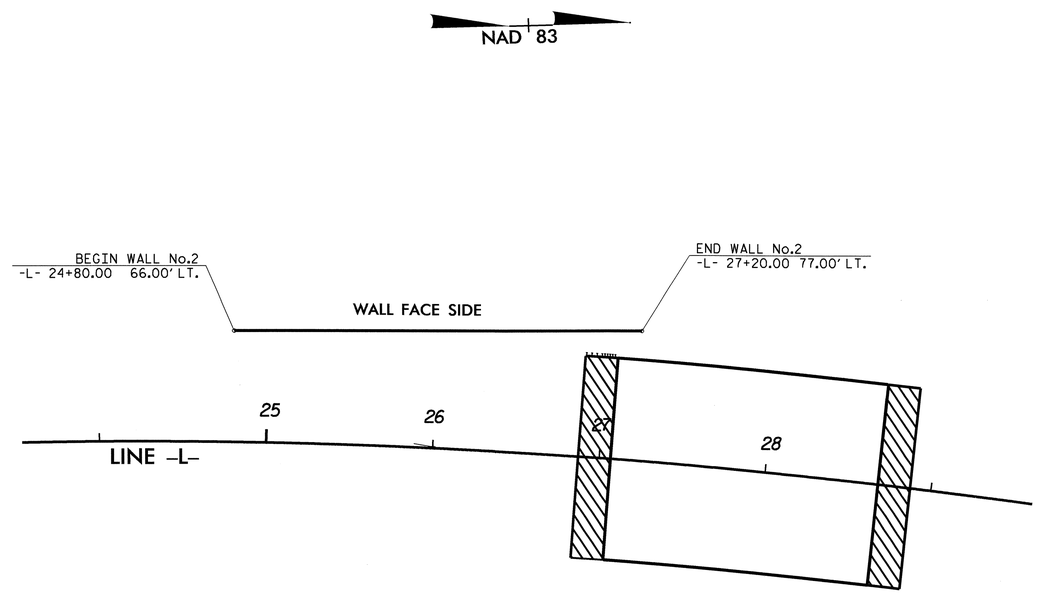


RETAINING WALL NO. 2 PLAN

NOT TO SCALE

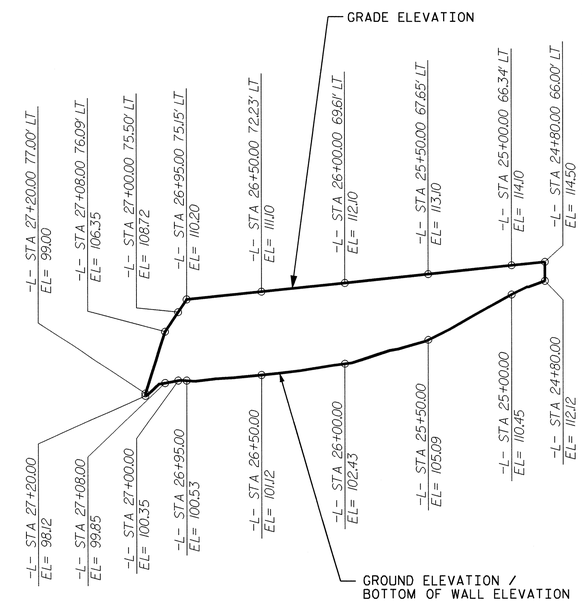


RETAINING WALL NO. 2 ELEVATION

NOT TO SCALE

| ESTIMATED AREA FOR WALL NO.2 | |
|---|---|
| MSE RETAINING WALLS | 2,100 SQ.FT. |

***PROJECT NO.:*** 35014.3.1 (U-4019)

NASH ***COUNTY***

***STATION:*** 25+00.00 -L-

SHEET 2 OF 6

***GEOTECHNICAL ENGINEERING UNIT***

☒ *EASTERN REGIONAL OFFICE*

☐ *WESTERN REGIONAL OFFICE*

☐ *CONTRACT OFFICE*

***STATE OF NORTH CAROLINA***
***DEPARTMENT OF TRANSPORTATION***
***RALEIGH***

MSE RETAINING WALL NO. 2
PLAN AND ELEVATION

| REVISIONS | | | | | | SHEET NO. |
|---|---|---|---|---|---|---|
| NO. | BY | DATE | NO. | BY | DATE | W-2 |
| 1 | | | 3 | | | TOTAL SHEETS |
| 2 | | | 4 | | | 6 |

| | |
|---|---|
| PREPARED BY: J. PARK | DATE: 5/2011 |
| REVIEWED BY: J. BATTS | DATE: 5/2011 |

| GEOTECHNICAL ENGINEER | ENGINEER |
|---|---|
| NORTH CAROLINA PROFESSIONAL SEAL 32171 ENGINEER JINYOUNG PARK | |
| SIGNATURE DATE | SIGNATURE DATE |

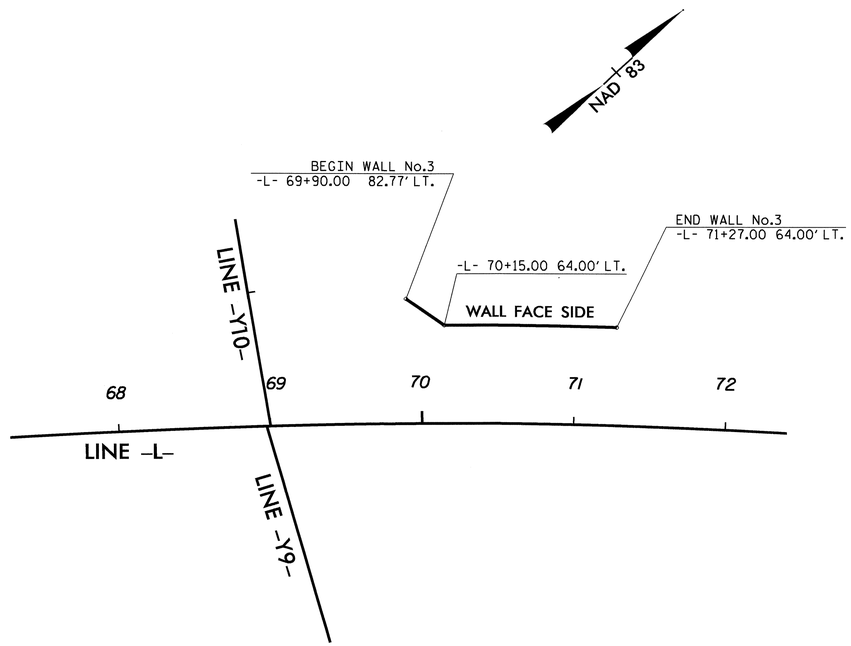


## RETAINING WALL NO. 3 PLAN

NOT TO SCALE

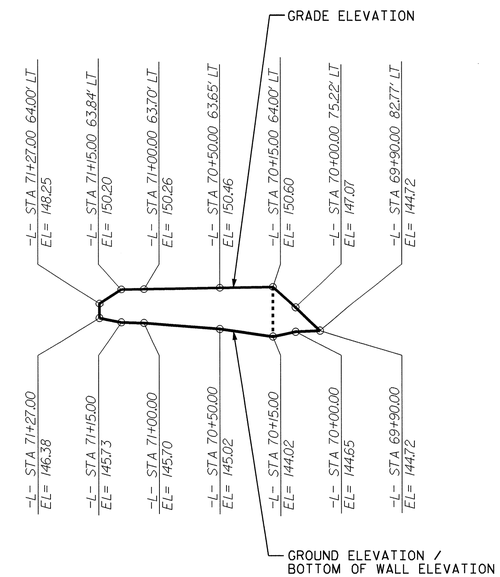


## RETAINING WALL NO. 3 ELEVATION

NOT TO SCALE

| ESTIMATED AREA FOR WALL NO.3 | |
|---|---|
| MSE RETAINING WALLS | 750 SQ.FT. |

***PROJECT NO.:*** 35014.3.1 (U-4019)

NASH ***COUNTY***

***STATION:*** 70+00.00 -L-

SHEET 3 OF 6

***GEOTECHNICAL ENGINEERING UNIT***

☒ *EASTERN REGIONAL OFFICE*

☐ *WESTERN REGIONAL OFFICE*

☐ *CONTRACT OFFICE*

***STATE OF NORTH CAROLINA***
***DEPARTMENT OF TRANSPORTATION***
***RALEIGH***

MSE RETAINING WALL NO. 3
PLAN AND ELEVATION

| REVISIONS | | | | | | SHEET NO. |
|---|---|---|---|---|---|---|
| NO. | BY | DATE | NO. | BY | DATE | W-3 |
| 1 | | | 3 | | | TOTAL SHEETS |
| 2 | | | 4 | | | 6 |

| | |
|---|---|
| PREPARED BY: J. PARK | DATE: 5/2011 |
| REVIEWED BY: J. BATTS | DATE: 5/2011 |

| GEOTECHNICAL ENGINEER | ENGINEER |
|---|---|
| SIGNATURE DATE | SIGNATURE DATE |

## NOTES:

FOR STANDARD SEGMENTAL GRAVITY RETAINING WALLS, SEE SEGMENTAL GRAVITY RETAINING WALLS PROVISION.

FOR STEEL BEAM GUARDRAIL, SEE ROADWAY PLANS AND SECTION 862 OF THE STANDARD SPECIFICATIONS.

DO NOT ATTACH FENCES OR HANDRAILS TO STANDARD SEGMENTAL GRAVITY WALLS.

DO NOT USE STANDARD SEGMENTAL GRAVITY WALLS FOR INTERSTATE HIGHWAY OR RAILROAD PROJECTS.

DO NOT USE STANDARD SEGMENTAL GRAVITY WALLS WHEN SURCHARGE LOADS WILL BE LOCATED CLOSER THAN 5'-6" FROM THE BACK OF WALLS.

DO NOT USE STANDARD SEGMENTAL GRAVITY WALLS WHEN VERY LOOSE OR SOFT SOIL OR MUCK IS PRESENT BELOW WALLS.

SRW UNITS ARE APPROVED FOR EITHER 2' OR 4' MAXIMUM DESIGN HEIGHTS. FOR DETAILS AND DIMENSIONS OF APPROVED SRW UNITS AND MAXIMUM DESIGN HEIGHTS, SEE www.ncdot.org/doh/preconstruct/highway/geotech/seggravwalls

DO NOT MIX APPROVED SRW UNITS FROM DIFFERENT VENDORS ON THE SAME STANDARD SEGMENTAL GRAVITY WALL. USE THE SAME SIZE APPROVED SRW UNITS FOR EACH WALL SECTION.

BEFORE BEGINNING STANDARD SEGMENTAL GRAVITY WALL CONSTRUCTION, SURVEY WALL LOCATIONS AND SUBMIT WALL PROFILE VIEWS (WALL ENVELOPES) FOR REVIEW. FOR WALL ENVELOPES, INCLUDE BOTTOM OF WALL, EXISTING GROUND AND GRADE ELEVATIONS AND OTHER ELEVATIONS AS NEEDED AT INTERVALS OF 25' OR LESS ALONG WALLS. DO NOT START WALL CONSTRUCTION UNTIL WALL ENVELOPES ARE ACCEPTED.

A DRAIN PIPE IS REQUIRED IF GROUNDWATER IS ABOVE BOTTOM OF FOOTINGS.

DO NOT PLACE NO. 57 STONE FOR FOOTINGS UNTIL EXCAVATION DIMENSIONS AND FOUNDATION MATERIAL ARE APPROVED.

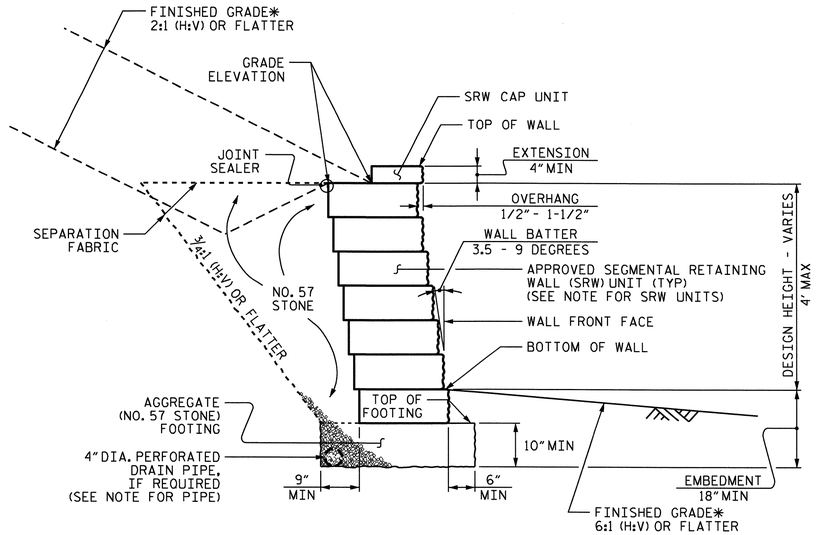


## STANDARD SEGMENTAL GRAVITY WALL WITH BACK SLOPE

*SEE ROADWAY PLANS FOR FINISHED GRADE AND DITCH DETAILS.

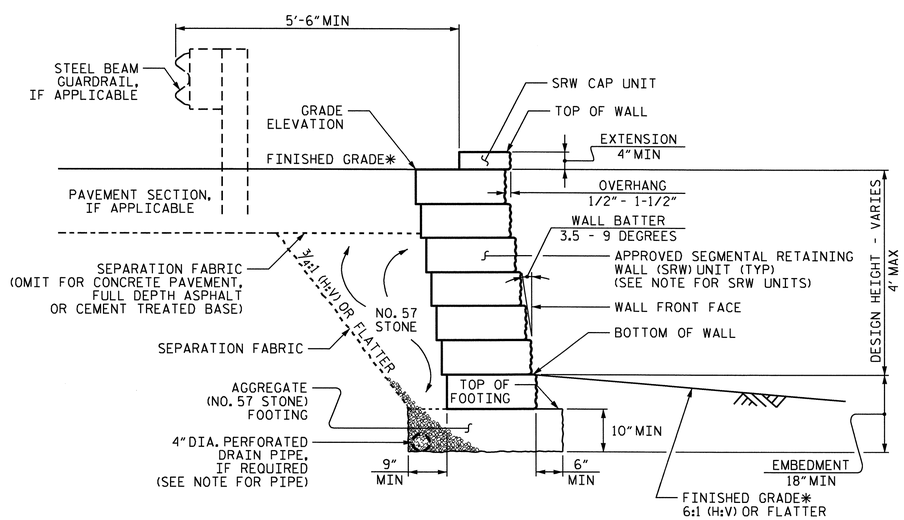


## STANDARD SEGMENTAL GRAVITY WALL WITHOUT BACK SLOPE

*SEE ROADWAY PLANS FOR FINISHED GRADE DETAILS.

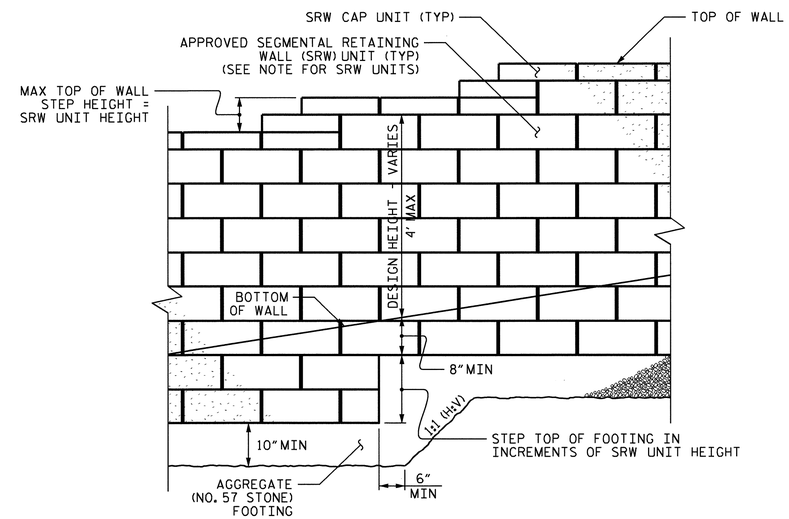


## STANDARD SEGMENTAL GRAVITY WALL - PARTIAL ELEVATION

***PROJECT NO.:*** 35014.3.1 (U-4019)

NASH ***COUNTY***

***STATION:*** 16+50.00 -Y-

SHEET 4 OF 6

| PREPARED BY: J. PARK | DATE: 5/2011 |
|---|---|
| REVIEWED BY: J. BATTS | DATE: 5/2011 |

***GEOTECHNICAL ENGINEERING UNIT***

☒ *EASTERN REGIONAL OFFICE*

☐ *WESTERN REGIONAL OFFICE*

☐ *CONTRACT OFFICE*

***STATE OF NORTH CAROLINA***
***DEPARTMENT OF TRANSPORTATION***
***RALEIGH***

RETAINING WALL NO. 1
NOTES AND DETAILS

| REVISIONS | | | | | | | SHEET NO. |
|---|---|---|---|---|---|---|---|
| NO. | BY | DATE | NO. | BY | DATE | | W-4 |
| 1 | | | 3 | | | | TOTAL SHEETS |
| 2 | | | 4 | | | | 6 |

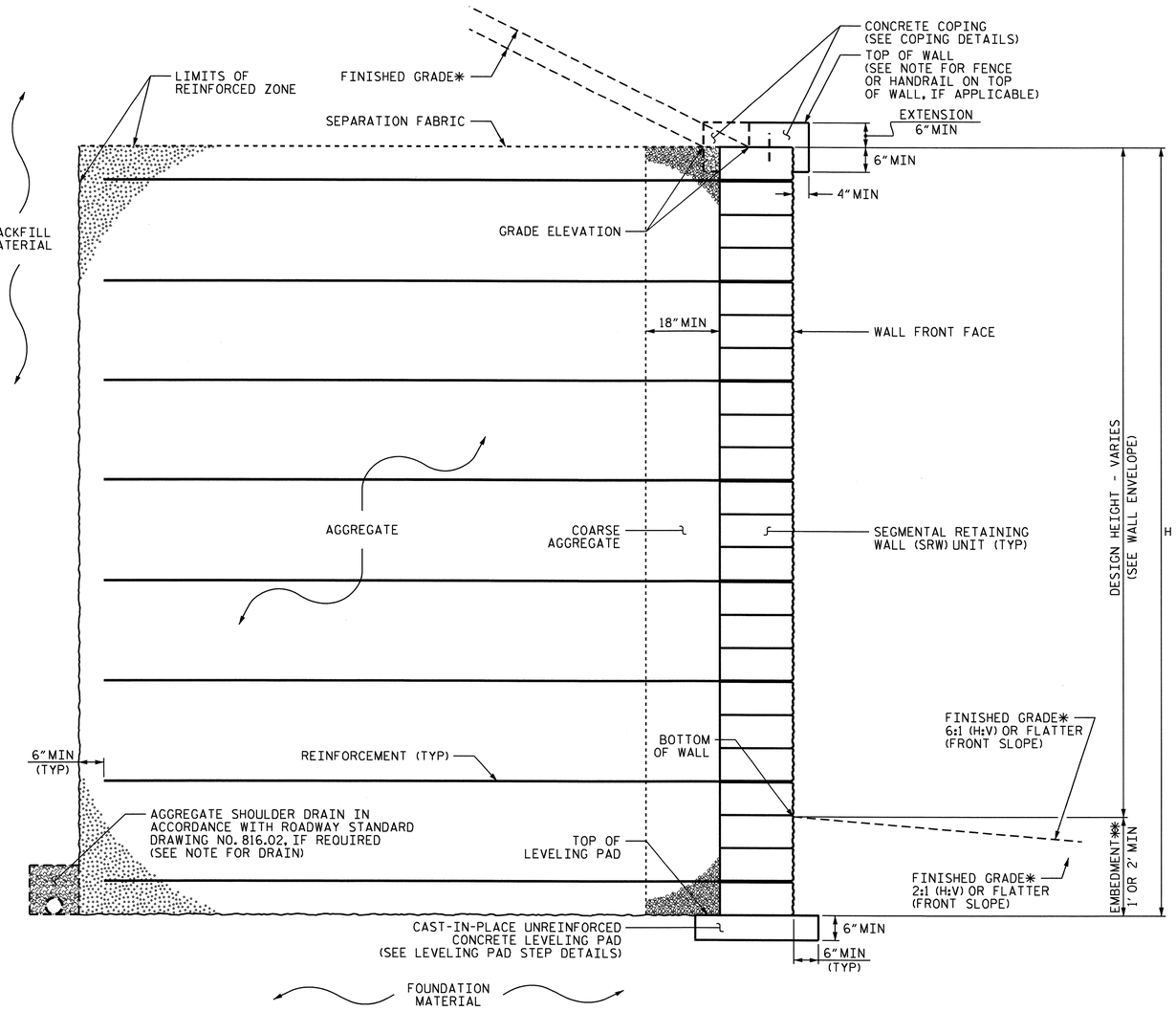


## WALL NO. 2 - TYPICAL SECTION

*SEE ROADWAY PLANS FOR FINISHED GRADE AND DITCH DETAILS.
**SEE MSE RETAINING WALLS PROVISION FOR EMBEDMENT REQUIREMENTS.

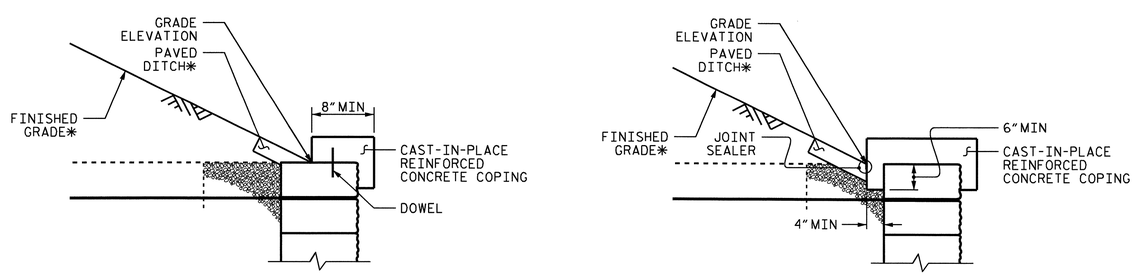


## WALL NO. 2 COPING DETAILS

AT THE CONTRACTOR'S OPTION, CONNECT COPING TO SRW UNITS WITH DOWELS OR EXTEND COPING DOWN BACK OF SRW UNITS.
*SEE ROADWAY PLANS FOR FINISHED GRADE AND DITCH DETAILS.

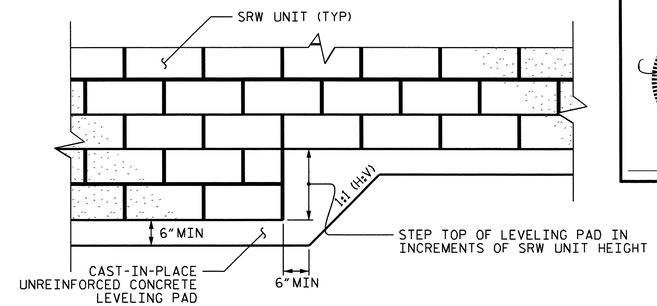


## TYPICAL LEVELING PAD STEP DETAILS

GEOTECHNICAL ENGINEER

NORTH CAROLINA PROFESSIONAL SEAL 32171 ENGINEER JINYOUNG PARK

SIGNATURE DATE

ENGINEER

SIGNATURE DATE

## NOTES:

FOR MECHANICALLY STABILIZED EARTH (MSE) RETAINING WALLS, SEE MECHANICALLY STABILIZED EARTH

FOR STEEL BEAM GUARDRAIL, SEE ROADWAY PLANS AND SECTION 862 OF THE STANDARD SPECIFICATIONS.

USE AN MSE WALL SYSTEM WITH SEGMENTAL RETAINING WALL UNITS FOR RETAINING WALL NO. 2.

BEFORE BEGINNING MSE WALL DESIGN FOR RETAINING WALL NO. 2, SURVEY WALL LOCATION AND SUBMIT A REVISED WALL PROFILE VIEW (WALL ENVELOPE) FOR REVIEW. DO NOT START WALL DESIGN OR CONSTRUCTION UNTIL THE REVISED WALL ENVELOPE IS ACCEPTED.

DESIGN RETAINING WALL NO. 2 FOR WALL HEIGHTS EQUAL TO THE DESIGN HEIGHT (DIFFERENCE BETWEEN GRADE ELEVATION AND BOTTOM OF WALL ELEAVATION) PLUS EMBEDMENT (DIFFERENCE BETWEEN BOTTOM OF WALL ELEVATION AND TOP OF LEVELING PAD ELEVATION).

DESIGN RETAINING WALL NO. 2 FOR THE FOLLOWING:

1) MINIMUM DESIGN LIFE = 75 YEARS

2) AGGREGATE PARAMETERS:

| STANDARD SIZE NO. (IN ACCORDANCE WITH SECTION 1005 OF THE STANDARD SPECIFICATIONS) | UNIT WEIGHT ($\gamma$) PCF | FRICTION ANGLE ($\phi$) DEGREES | COHESION (c) PSF |
|---|---|---|---|
| 1S, 2S, 2MS AND 4S (FINE AGGREGATE) | 125 | 34 | 0 |
| 5, 57, 57M, 6M, 67 AND 78M (COARSE AGGREGATE) | 110 | 38 | 0 |

3) IN-SITU ASSUMED MATERIAL PARAMETERS:

| MATERIAL TYPE | UNIT WEIGHT ($\gamma$) PCF | FRICTION ANGLE ($\phi$) DEGREES | COHESION (c) PSF |
|---|---|---|---|
| BACKFILL | 120 | 30 | 0 |
| FOUNDATION | 120 | 30 | 0 |

DESIGN RETAINING WALL NO. 2 FOR A LIVE LOAD (TRAFFIC) SURCHARGE.

DO NOT PLACE LEVELING PAD CONCRETE, AGGREGATE OR REINFORCEMENT FOR RETAINING WALL NO. 2 UNTIL EXCAVATION DIMENSIONS AND FOUNDATION MATERIAL ARE APPROVED.

EXISTING OR FUTURE OBSTRUCTIONS SUCH AS FOUNDATIONS, GUARDRAIL, FENCE OR HANDRAIL POSTS, PAVEMENTS, PIPES, INLETS OR UTILITIES MAY INTERFERE WITH REINFORCEMENT FOR RETAINING WALL NO. 2.

***PROJECT NO.:*** 35014.3.1 (U-4019)
NASH ***COUNTY***
***STATION:*** 25+00.00 -L-

SHEET 5 OF 6

| | |
|---|---|
| PREPARED BY: J. PARK | DATE: 5/2011 |
| REVIEWED BY: J. BATTS | DATE: 5/2011 |

***GEOTECHNICAL ENGINEERING UNIT***

☒ ***EASTERN REGIONAL OFFICE***
☐ ***WESTERN REGIONAL OFFICE***
☐ ***CONTRACT OFFICE***

***STATE OF NORTH CAROLINA***
***DEPARTMENT OF TRANSPORTATION***
***RALEIGH***

RETAINING WALL NO. 2
NOTES AND DETAILS

***REVISIONS***

| NO. | BY | DATE | NO. | BY | DATE |
|---|---|---|---|---|---|
| 1 | | | 3 | | |
| 2 | | | 4 | | |

SHEET NO. W-5
TOTAL SHEETS 6

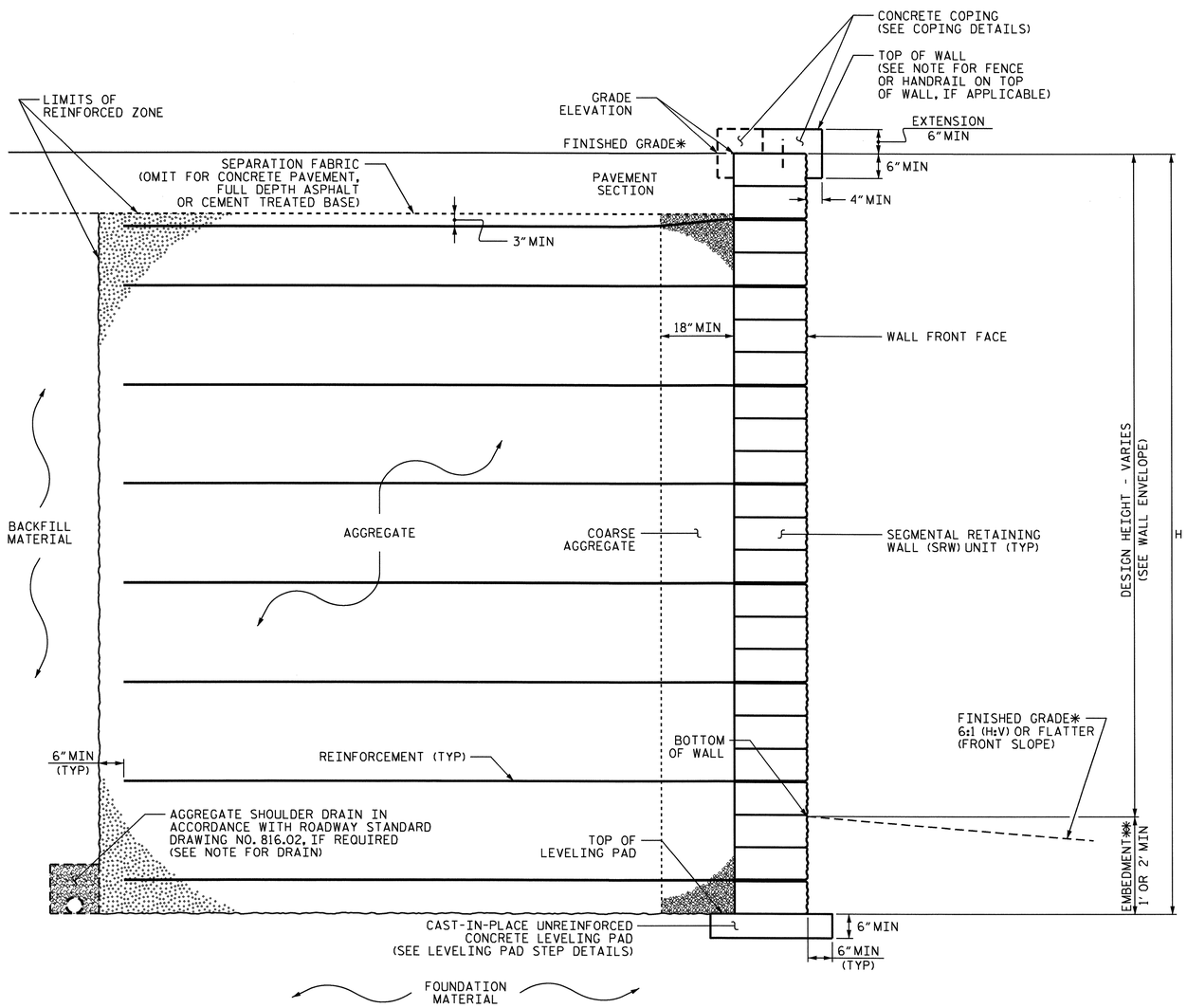


## WALL NO. 3 - TYPICAL SECTION

*SEE ROADWAY PLANS FOR FINISHED GRADE DETAILS.
**SEE MSE RETAINING WALLS PROVISION FOR EMBEDMENT REQUIREMENTS.

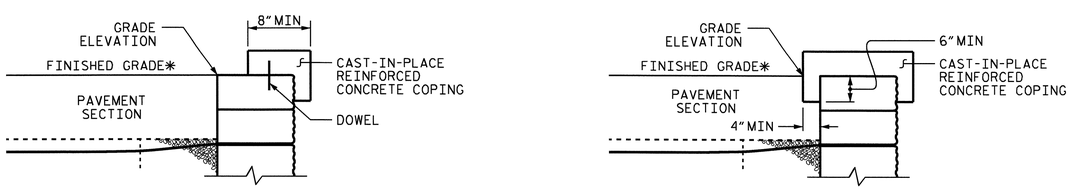


## WALL NO. 3 COPING DETAILS

AT THE CONTRACTOR'S OPTION, CONNECT COPING TO SRW UNITS WITH DOWELS OR EXTEND COPING DOWN BACK OF SRW UNITS.
*SEE ROADWAY PLANS FOR FINISHED GRADE DETAILS.

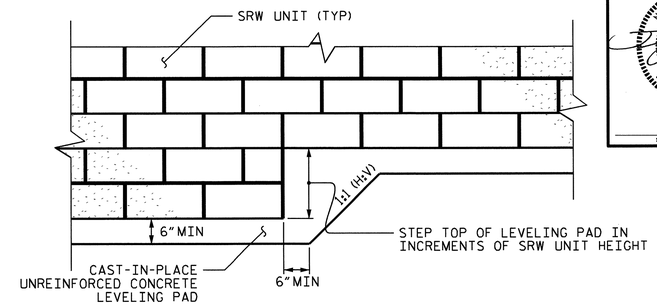


## TYPICAL LEVELING PAD STEP DETAILS

GEOTECHNICAL ENGINEER

NORTH CAROLINA PROFESSIONAL SEAL 32171 ENGINEER JIN YOUNG PARK

SIGNATURE DATE

ENGINEER

SIGNATURE DATE

## NOTES:

FOR MECHANICALLY STABILIZED EARTH (MSE) RETAINING WALLS, SEE MECHANICALLY STABILIZED EARTH RETAINING WALLS PROVISION.

USE AN MSE WALL SYSTEM WITH SEGMENTAL RETAINING WALL UNITS FOR RETAINING WALL NO. 3.

BEFORE BEGINNING MSE WALL DESIGN FOR RETAINING WALL NO. 3, SURVEY WALL LOCATION AND SUBMIT A REVISED WALL PROFILE VIEW (WALL ENVELOPE) FOR REVIEW. DO NOT START WALL DESIGN OR CONSTRUCTION UNTIL THE REVISED WALL ENVELOPE IS ACCEPTED.

DESIGN RETAINING WALL NO. 3 FOR WALL HEIGHTS EQUAL TO THE DESIGN HEIGHT (DIFFERENCE BETWEEN GRADE ELEVATION AND BOTTOM OF WALL ELEAVATION) PLUS EMBEDMENT (DIFFERENCE BETWEEN BOTTOM OF WALL ELEVATION AND TOP OF LEVELING PAD ELEVATION).

DESIGN RETAINING WALL NO. 3 FOR THE FOLLOWING:

1) MINIMUM DESIGN LIFE = 75 YEARS

2) AGGREGATE PARAMETERS:

| STANDARD SIZE NO. (IN ACCORDANCE WITH SECTION 1005 OF THE STANDARD SPECIFICATIONS) | UNIT WEIGHT ($\gamma$) PCF | FRICTION ANGLE ($\phi$) DEGREES | COHESION (c) PSF |
|---|---|---|---|
| 1S, 2S, 2MS AND 4S (FINE AGGREGATE) | 125 | 34 | 0 |
| 5, 57, 57M, 6M, 67 AND 78M (COARSE AGGREGATE) | 110 | 38 | 0 |

3) IN-SITU ASSUMED MATERIAL PARAMETERS:

| MATERIAL TYPE | UNIT WEIGHT ($\gamma$) PCF | FRICTION ANGLE ($\phi$) DEGREES | COHESION (c) PSF |
|---|---|---|---|
| BACKFILL | 120 | 30 | 0 |
| FOUNDATION | 120 | 30 | 0 |

DESIGN RETAINING WALL NO. 3 FOR A LIVE LOAD (TRAFFIC) SURCHARGE.

DO NOT PLACE LEVELING PAD CONCRETE, AGGREGATE OR REINFORCEMENT FOR RETAINING WALL NO. 3 UNTIL EXCAVATION DIMENSIONS AND FOUNDATION MATERIAL ARE APPROVED.

EXISTING OR FUTURE OBSTRUCTIONS SUCH AS FOUNDATIONS, GUARDRAIL, FENCE OR HANDRAIL POSTS, PAVEMENTS, PIPES, INLETS OR UTILITIES MAY INTERFERE WITH REINFORCEMENT FOR RETAINING WALL NO. 3.

***PROJECT NO.:*** 35014.3.1 (U-4019)
NASH ***COUNTY***
***STATION:*** 70+00.00 -L-

SHEET 6 OF 6

***GEOTECHNICAL ENGINEERING UNIT***

☒ ***EASTERN REGIONAL OFFICE***
☐ ***WESTERN REGIONAL OFFICE***
☐ ***CONTRACT OFFICE***

***STATE OF NORTH CAROLINA***
***DEPARTMENT OF TRANSPORTATION***
***RALEIGH***

RETAINING WALL NO. 3
NOTES AND DETAILS

| REVISIONS | | | | | | SHEET NO. |
|---|---|---|---|---|---|---|
| NO. | BY | DATE | NO. | BY | DATE | W-6 |
| 1 | | | 3 | | | TOTAL SHEETS |
| 2 | | | 4 | | | 6 |

| | |
|---|---|
| PREPARED BY: J. PARK | DATE: 5/2011 |
| REVIEWED BY: J. BATTS | DATE: 5/2011 |

# STANDARD NOTES

## DESIGN DATA:

| | |
|---|---|
| SPECIFICATIONS | A.A.S.H.T.O. (CURRENT) |
| LIVE LOAD | SEE PLANS |
| IMPACT ALLOWANCE | SEE A.A.S.H.T.O. |
| STRESS IN EXTREME FIBER OF | |
| STRUCTURAL STEEL - AASHTO M270 GRADE 36 | 20,000 LBS. PER SQ. IN. |
| - AASHTO M270 GRADE 50W | 27,000 LBS. PER SQ. IN. |
| - AASHTO M270 GRADE 50 | 27,000 LBS. PER SQ. IN. |
| REINFORCING STEEL IN TENSION | |
| GRADE 60 | 24,000 LBS. PER SQ. IN. |
| CONCRETE IN COMPRESSION | 1,200 LBS. PER SQ. IN. |
| CONCRETE IN SHEAR | SEE A.A.S.H.T.O. |
| STRUCTURAL TIMBER - TREATED OR | |
| UNTREATED - EXTREME FIBER STRESS | 1,800 LBS. PER SQ. IN. |
| COMPRESSION PERPENDICULAR TO GRAIN OF TIMBER | 375 LBS. PER SQ. IN. |
| EQUIVALENT FLUID PRESSURE OF EARTH | 30 LBS. PER CU. FT. (MINIMUM) |

## MATERIAL AND WORKMANSHIP:

EXCEPT AS MAY OTHERWISE BE SPECIFIED ON PLANS OR IN THE SPECIAL PROVISIONS, ALL MATERIAL AND WORKMANSHIP SHALL BE IN ACCORDANCE WITH THE 2006 "STANDARD SPECIFICATIONS FOR ROADS AND STRUCTURES" OF THE N. C. DEPARTMENT OF TRANSPORTATION.

STEEL SHEET PILING FOR PERMANENT OR TEMPORARY APPLICATIONS SHALL BE HOT ROLLED.

## CONCRETE:

UNLESS OTHERWISE REQUIRED ON PLANS, CLASS A CONCRETE SHALL BE USED FOR ALL PORTIONS OF ALL STRUCTURES WITH THE EXCEPTION THAT: CLASS AA CONCRETE SHALL BE USED IN BRIDGE SUPERSTRUCTURES, ABUTMENT BACKWALLS, AND APPROACH SLABS; AND CLASS B CONCRETE SHALL BE USED FOR SLOPE PROTECTION AND RIP RAP.

## CONCRETE CHAMFERS:

UNLESS OTHERWISE NOTED ON THE PLANS, ALL EXPOSED CORNERS ON STRUCTURES SHALL BE CHAMFERED 3/4" WITH THE FOLLOWING EXCEPTIONS: TOP CORNERS OF CURBS MAY BE ROUNDED TO 1-1/2" RADIUS WHICH IS BUILT INTO CURB FORMS; CORNERS OF TRANSVERSE FLOOR EXPANSION JOINTS SHALL BE ROUNDED WITH A 1/4" FINISHING TOOL UNLESS OTHERWISE REQUIRED ON PLANS; AND CORNERS OF EXPANSION JOINTS IN THE ROADWAY FACES AND TOPS OF CURBS AND SIDEWALKS SHALL BE ROUNDED TO A 1/4" RADIUS WITH A FINISHING STONE OR TOOL UNLESS OTHERWISE REQUIRED ON PLANS.

## DOWELS:

DOWELS WHEN INDICATED ON PLANS AS FOR CULVERT EXTENSIONS, SHALL BE EMBEDDED AT LEAST 12" INTO THE OLD CONCRETE AND GROUTED INTO PLACE WITH 1:2 CEMENT MORTAR.

## ALLOWANCE FOR DEAD LOAD DEFLECTION, SETTLEMENT, ETC. IN CASTING SUPERSTRUCTURES:

BRIDGES SHALL BE BUILT ON THE GRADE OR VERTICAL CURVE SHOWN ON PLANS. SLABS, CURBS AND PARAPETS SHALL CONFORM TO THE GRADE OR CURVE.

ALL DIMENSIONS WHICH ARE GIVEN IN SECTION AND ARE AFFECTED BY DEAD LOAD DEFLECTIONS ARE DIMENSIONS AT CENTER LINE OF BEARING UNLESS OTHERWISE NOTED ON PLANS. IN SETTING FORMS FOR STEEL BEAM BRIDGES AND PRESTRESSED CONCRETE GIRDER BRIDGES, ADJUSTMENTS SHALL BE MADE DUE TO THE DEAD LOAD DEFLECTIONS FOR THE ELEVATIONS SHOWN. WHERE BLOCKS ARE SHOWN OVER BEAMS FOR BUILDING UP TO THE SLAB, THE VERTICAL DIMENSIONS OF THE BLOCKS SHALL BE ADJUSTED BETWEEN BEARINGS TO COMPENSATE FOR DEAD LOAD DEFLECTIONS, VERTICAL CURVE ORDINATE, AND ACTUAL BEAM CAMBER. WHERE BOTTOM OF SLAB IS IN LINE WITH BOTTOM OF TOP FLANGES, DEPTH OF SLAB BETWEEN BEARINGS SHALL BE ADJUSTED TO COMPENSATE FOR DEAD LOAD DEFLECTION, VERTICAL CURVE ORDINATE, AND ACTUAL BEAM CAMBER.

IN SETTING FALSEWORK AND FORMS FOR REINFORCED CONCRETE SPANS, AN ALLOWANCE SHALL BE MADE FOR DEAD LOAD DEFLECTIONS, SETTLEMENT OF FALSEWORK, AND PERMANENT CAMBER WHICH SHALL BE PROVIDED FOR IN ADDITION TO THE ELEVATIONS SHOWN. AFTER REMOVAL OF THE FALSEWORK, THE FINISHED STRUCTURES SHALL CONFORM TO THE PROFILE AND ELEVATIONS SHOWN ON THE PLANS AND CONSTRUCTION ELEVATIONS FURNISHED BY THE ENGINEER.

DETAILED DRAWINGS FOR FALSEWORK OR FORMS FOR BRIDGE SUPERSTRUCTURE AND ANY STRUCTURE OR PARTS OF A STRUCTURE AS NOTED ON THE PLANS SHALL BE SUBMITTED TO THE ENGINEER FOR APPROVAL BEFORE CONSTRUCTION OF THE FALSEWORK OR FORMS IS STARTED.

## REINFORCING STEEL:

ALL REINFORCING STEEL SHALL BE DEFORMED. DIMENSIONS RELATIVE TO PLACEMENT OF REINFORCING ARE TO CENTERS OF BARS UNLESS OTHERWISE INDICATED IN THE PLANS. DIMENSIONS ON BAR DETAILS ARE TO CENTERS OF BARS OR ARE OUT TO OUT AS INDICATED ON PLANS.

WIRE BAR SUPPORTS SHALL BE PROVIDED FOR REINFORCING STEEL WHERE INDICATED ON THE PLANS. WHEN BAR SUPPORT PIECES ARE PLACED IN CONTINUOUS LINES, THEY SHALL BE SO PLACED THAT THE ENDS OF THE SUPPORTING WIRES SHALL BE LAPPED TO LOCK LEGS ON ADJOINING PIECES.

## STRUCTURAL STEEL:

AT THE CONTRACTOR'S OPTION, HE MAY SUBSTITUTE 7/8" Ø SHEAR STUDS FOR THE 3/4" Ø STUDS SPECIFIED ON THE PLANS. THIS SUBSTITUTION SHALL BE MADE AT THE RATE OF 3 - 7/8" Ø STUDS FOR 4 - 3/4" Ø STUDS, AND STUD SPACING CHANGES SHALL BE MADE AS NECESSARY TO PROVIDE THE SAME EQUIVALENT NUMBER OF 7/8" Ø STUDS ALONG THE BEAM AS SHOWN FOR 3/4" Ø STUDS BASED ON THE RATIO OF 3 - 7/8" Ø STUDS FOR 4 - 3/4" Ø STUDS. STUDS OF THE LENGTH SPECIFIED ON THE PLANS MUST BE PROVIDED. THE MAXIMUM SPACING SHALL BE 2'-0".

EXCEPT AT THE INTERIOR SUPPORTS OF CONTINUOUS BEAMS WHERE THE COVER PLATE IS IN CONTACT WITH BEARING PLATE, THE CONTRACTOR MAY, AT HIS OPTION, SUBSTITUTE FOR THE COVER PLATES DESIGNATED ON THE PLANS COVER PLATES OF THE EQUIVALENT AREA PROVIDED THESE PLATES ARE AT LEAST 5/16" IN THICKNESS AND DO NOT EXCEED A WIDTH EQUAL TO THE FLANGE WIDTH LESS 2" OR A THICKNESS EQUAL TO 2 TIMES THE FLANGE THICKNESS. THE SIZE OF FILLET WELDS SHALL CONFORM TO THE REQUIREMENTS OF THE CURRENT ANSI/AASHTO/AWS "BRIDGE WELDING CODE". ELECTROSLAG WELDING WILL NOT BE PERMITTED.

WITH THE SOLE EXCEPTION OF EDGES AT SURFACES WHICH BEAR ON OTHER SURFACES, ALL SHARP EDGES AND ENDS OF SHAPES AND PLATES SHALL BE SLIGHTLY ROUNDED BY SUITABLE MEANS TO A RADIUS OF APPROXIMATELY 1/16 INCH OR EQUIVALENT FLAT SURFACE AT A SUITABLE ANGLE PRIOR TO PAINTING, GALVANIZING, OR METALLIZING.

## HANDRAILS AND POSTS:

METAL STANDARDS AND FACES OF THE CONCRETE END POSTS FOR THE METAL RAIL SHALL BE SET NORMAL TO THE GRADE OF THE CURB, UNLESS OTHERWISE SHOWN ON PLANS. THE METAL RAIL AND TOPS OF CONCRETE POSTS USED WITH THE ALUMINUM RAIL SHALL BE BUILT PARALLEL TO THE GRADE OF THE CURB.

METAL HANDRAILS SHALL BE IN ACCORDANCE WITH THE PLANS. RAILS SHALL BE AS MANUFACTURED FOR BRIDGE RAILING. CASTINGS SHALL BE OF A UNIFORM APPEARANCE. FINS AND OTHER DEFORMATIONS RESULTING FROM CASTING OR OTHERWISE SHALL BE REMOVED IN A MANNER SO THAT A UNIFORM COLORING OF THE COMPLETED CASTING SHALL BE OBTAINED. CASTINGS WITH DISCOLORATIONS OR OF NON-UNIFORM COLORING WILL NOT BE ACCEPTED. CERTIFIED MILL REPORTS ARE REQUIRED FOR METAL RAILS AND POSTS.

## SPECIAL NOTES:

GENERALLY, IN CASE OF DISCREPANCY, THIS STANDARD SHEET OF NOTES SHALL GOVERN OVER THE SPECIFICATIONS, BUT THE REMAINDER OF THE PLANS SHALL GOVERN OVER NOTES HEREON, AND SPECIAL PROVISIONS SHALL GOVERN OVER ALL. SEE SPECIFICATIONS ARTICLE 105-4.

ENGLISH

JANUARY, 1990



REV. 6-16-95 EEM (/) RGW REV. 5-7-03 RWW (/) JTE
REV. 8-16-99 RWW (/) LES REV. 5-1-06 TLA (/) GM

30-NOV-2006 15:26
S:\Share\Structures Standards\Standards english 2006\sn_06.std
rblissette