09/08/99

TIP PROJECT: U-2550B

CONTRACT: C202622

STATE	STATE PROJECT REFERENCE NO.		SHEET NO.	TOTAL SHEETS
N.C.	U-2550B			
STATE PROJ. NO.	F.A. PROJ. NO.	DESCRIPTION		
34831.1.1	STPNHF-M-8165(1)	P.E.		
34831.2.4	STPNHF-0018(13)	RW, UTIL.		
34831.3.4	STPNHF-0018(11)	CONST.		

STATE OF NORTH CAROLINA
DIVISION OF HIGHWAYS

BURKE COUNTY

LOCATION: MORGANTON – NC 18 (STERLING STREET) AND I-40 INTERCHANGE

TYPE OF WORK: GRADING, PAVING, WIDENING, DRAINAGE, STRUCTURES, CULVERT EXTENSIONS, WALLS, AND SIGNALS

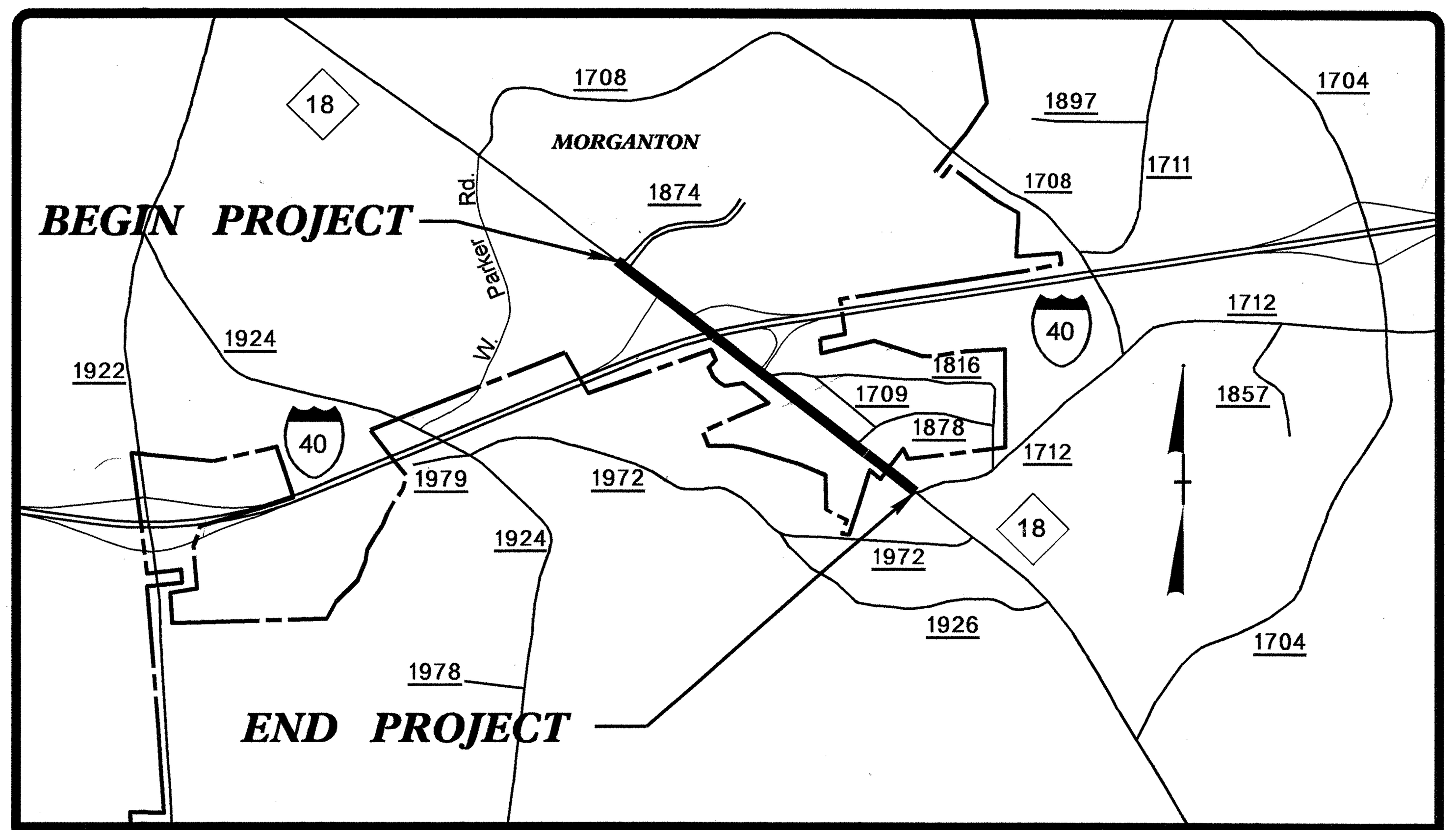

VICINITY MAP

NAD 83/95

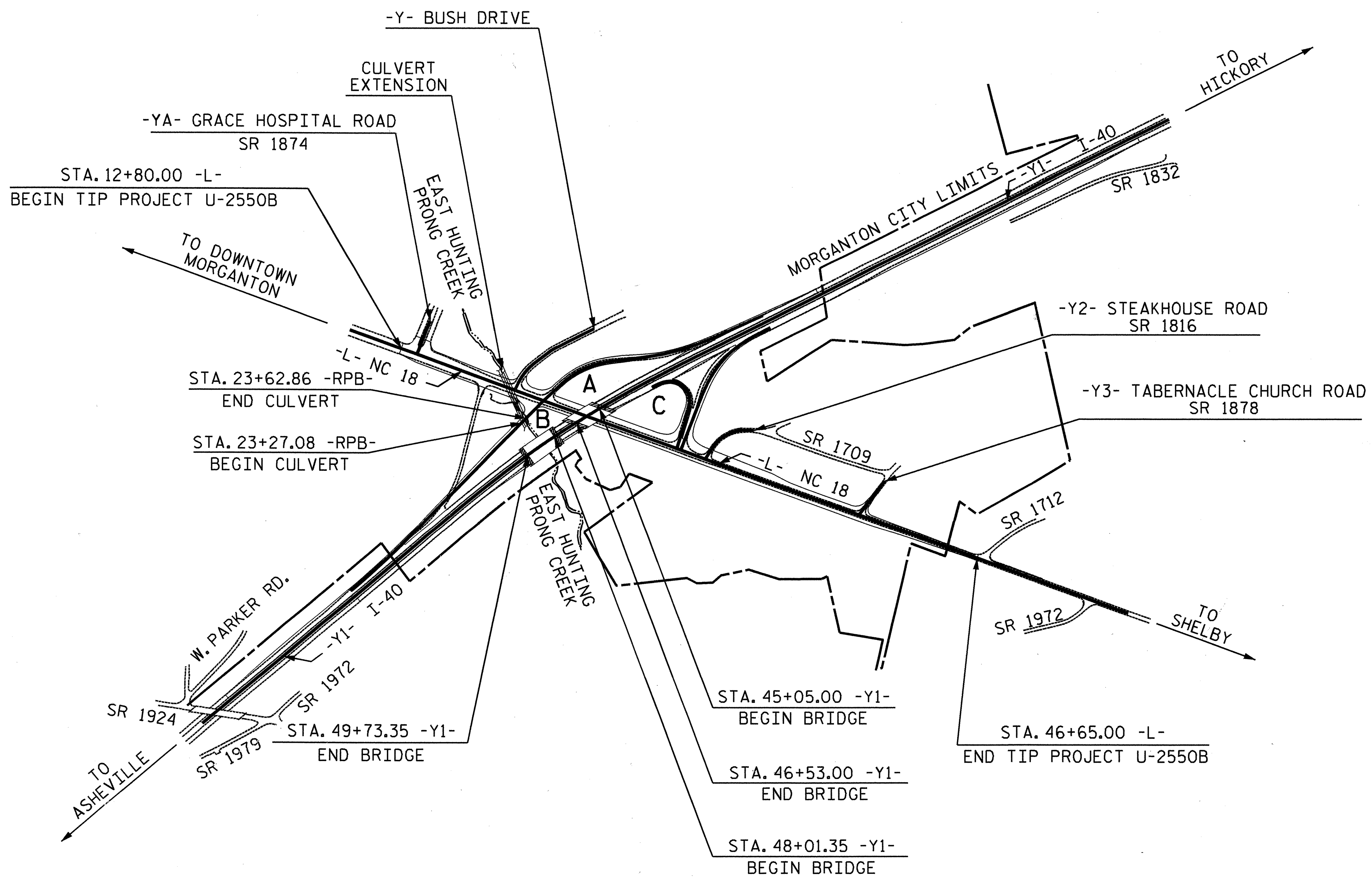

STRUCTURES

STATE OF NORTH CAROLINA DEPARTMENT OF TRANSPORTATION

DESIGN DATA

ADT 2011 = 24459
ADT 2031 = 40607
DHV = 11 %
D ≐ 60 %
T = 4 % *
V = 50 MPH
FUNC. CLASS = URBAN ARTERIAL
* TTST 1% DUAL 3%
STATEWIDE TIER

PROJECT LENGTH

LENGTH ROADWAY TIP PROJECT U-2550B = 0.641 MI
TOTAL LENGTH OF TIP PROJECT U-2550B = 0.641 MI

Prepared In the Office of:

DIVISION OF HIGHWAYS

1000 Birch Ridge Dr., Raleigh NC, 27610

2006 STANDARD SPECIFICATIONS

LETTING DATE:

JUNE 21, 2011

J. M. BAILEY, P.E.
PROJECT ENGINEER

B. D. KLAPPENBACH, P.E.
PROJECT DESIGN ENGINEER

STRUCTURE DESIGN UNIT
1000 Birch Ridge Dr.,
Raleigh NC, 27610

DIVISION OF HIGHWAYS
STATE OF NORTH CAROLINA

P.E.
STATE HIGHWAY DESIGN ENGINEER

APPROVED
DIVISION ADMINISTRATOR *DATE*

05-APR-2011 20:34
$$$$$$$$$$$$$$DGN$$$$$$$$$$$$$$$$$$
bklappenbach

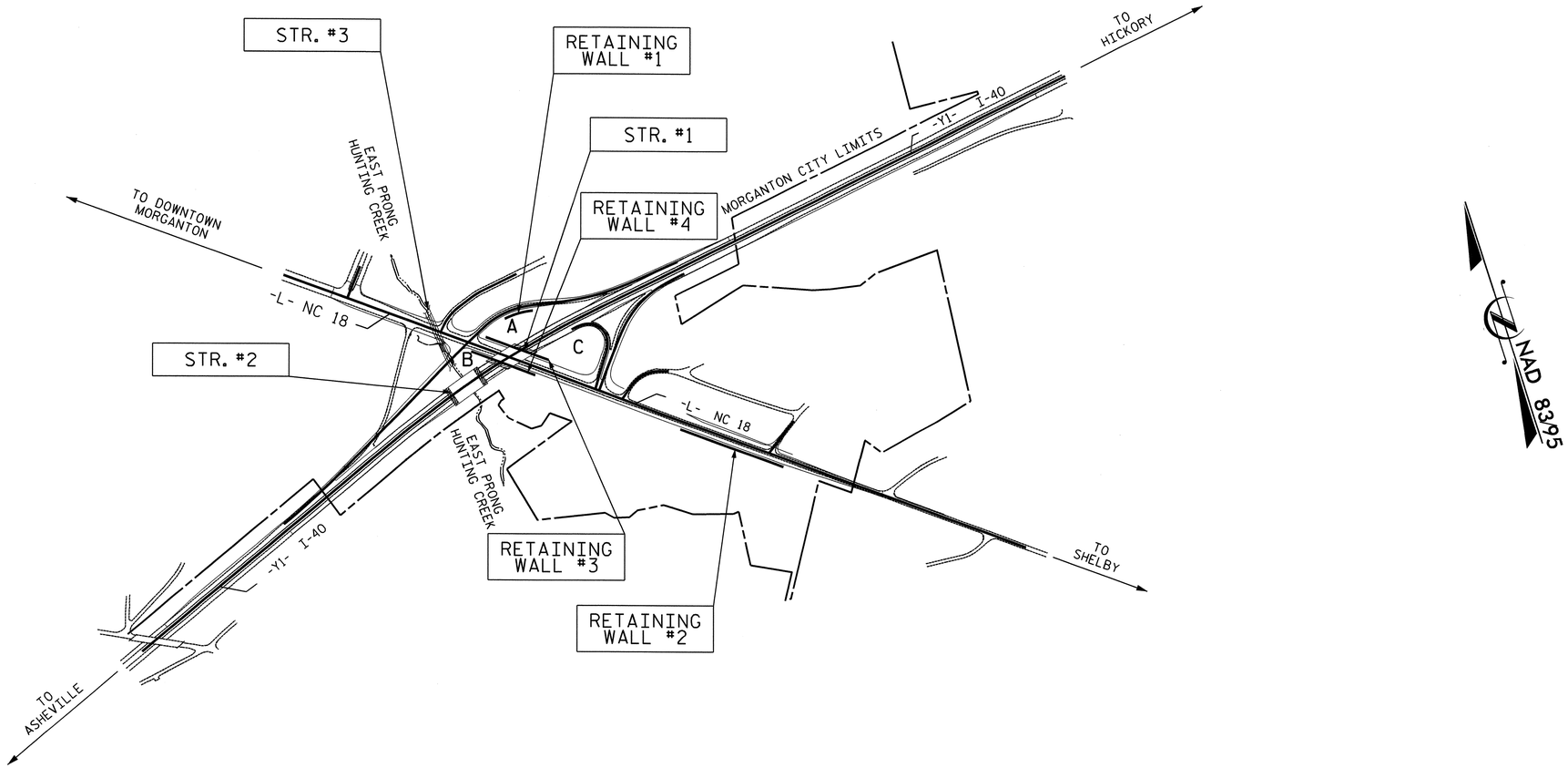

INDEX

NO.	STATION	DESCRIPTION	SHEET NUMBERS
STR #1	STA. 23+83.10 -L-	BRIDGE ON I-40 OVER NC 18	S-1 THRU S-49
STR. #2	STA. 48+87.35 -Y1-	BRIDGE ON I-40 OVER EAST PRONG HUNTING CREEK	S-50 THRU S-93
STR. #3	STA. 19+31.37 -L-	TRIPLE 10'-0" X 11'-0" RCBC LEFT AND RIGHT EXTENSION	C-1 THRU C-13
WALL #1	STA. 18+50.00 -RPA-	SOIL NAIL RETAINING WALL	W-1 THRU W-2
WALL #2	STA. 37+00.00 -L-	MSE RETAINING WALL	W-3 THRU W-4
WALLS #3 & #4	STA. 23+83.10 -L-	ANCHORED RETAINING WALL	W-5 THRU W-8

PROJECT NO. U-2550B
BURKE COUNTY
STATION:

STATE OF NORTH CAROLINA
DEPARTMENT OF TRANSPORTATION
RALEIGH

INDEX

REVISIONS					
NO.	BY:	DATE:	NO.	BY:	DATE:
1			3		
2			4		

DRAWN BY : H. T. BARBOUR DATE : 3-14-11
CHECKED BY : B. D. KLAPPENBACH DATE : 3-11

02-MAY-2011 09:36
R:\Structures\Bailey\Str1\tbarbour\Microstation\U2550B_SD_IS.dgn
bklappenbach

F.A. PROJECT NO. STPNHF-0018(11)

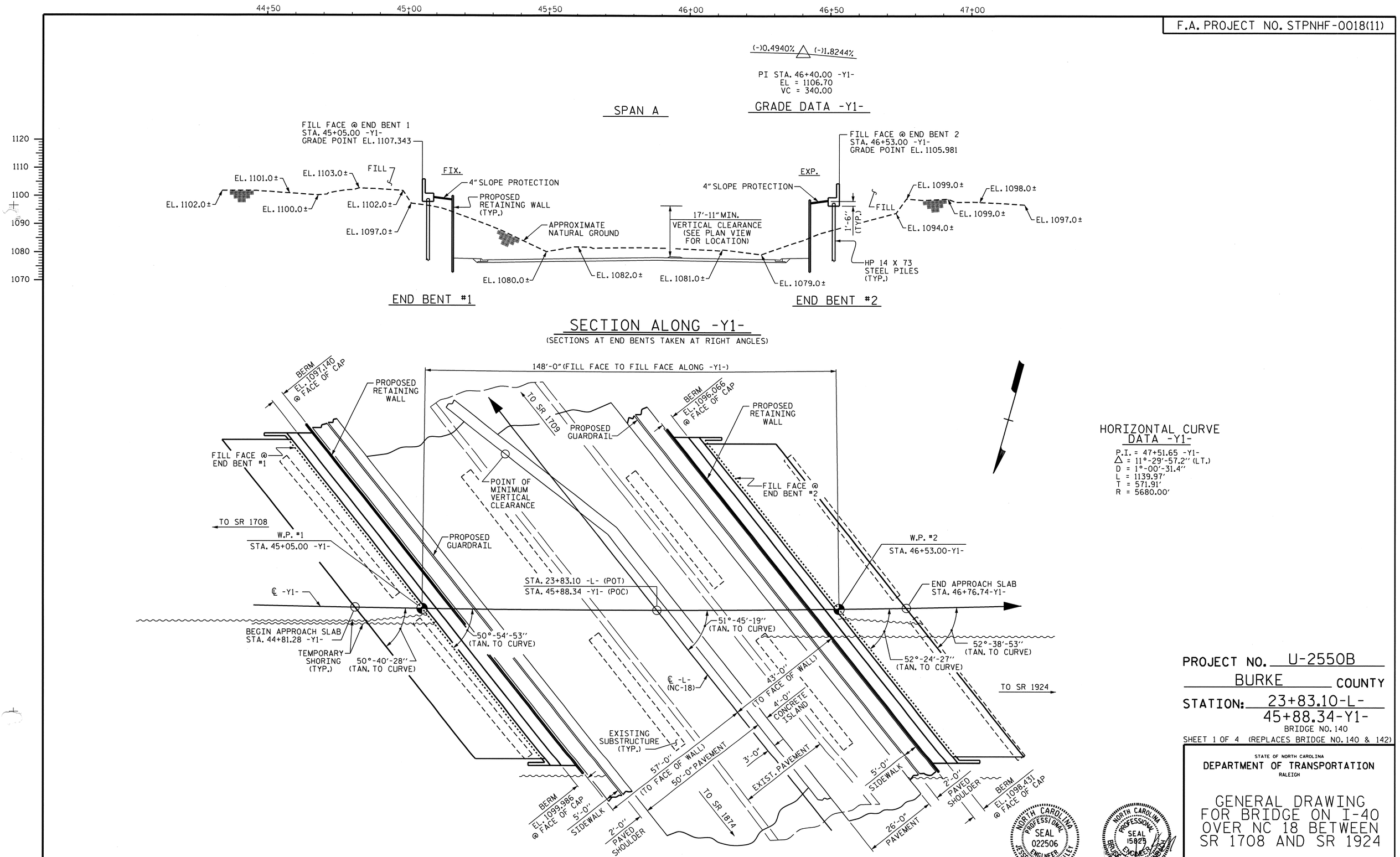

HORIZONTAL CURVE DATA -Y1-

P.I. = 47+51.65 -Y1-
△ = 11°-29'-57.2" (LT.)
D = 1°-00'-31.4"
L = 1139.97'
T = 571.91'
R = 5680.00'

PROJECT NO. U-2550B
BURKE COUNTY
STATION: 23+83.10-L-
45+88.34-Y1-
BRIDGE NO. 140
SHEET 1 OF 4 (REPLACES BRIDGE NO. 140 & 142)

STATE OF NORTH CAROLINA
DEPARTMENT OF TRANSPORTATION
RALEIGH

GENERAL DRAWING FOR BRIDGE ON I-40 OVER NC 18 BETWEEN SR 1708 AND SR 1924

NORTH CAROLINA PROFESSIONAL SEAL 022506 ENGINEER JESSE McARTHUR BAILEY
Jesse McArthur Bailey 5/2/11

NORTH CAROLINA PROFESSIONAL SEAL 15825 ENGINEER BRUCE D. KLAPPENBACH
5-2-2011

REVISIONS								SHEET NO.
NO.	BY:	DATE:	NO.	BY:	DATE:			S-1
1			3					TOTAL SHEETS
2			4					93

DRAWN BY : H. T. BARBOUR DATE : 12-15-10
CHECKED BY : C. R. YARBROUGH DATE : 3-11

02-MAY-2011 09:36
R:\Structures\Bailey\Str1\tbarbour\Microstation\U2550B_SD_GD.dgn
bklappenbach

STR. #1

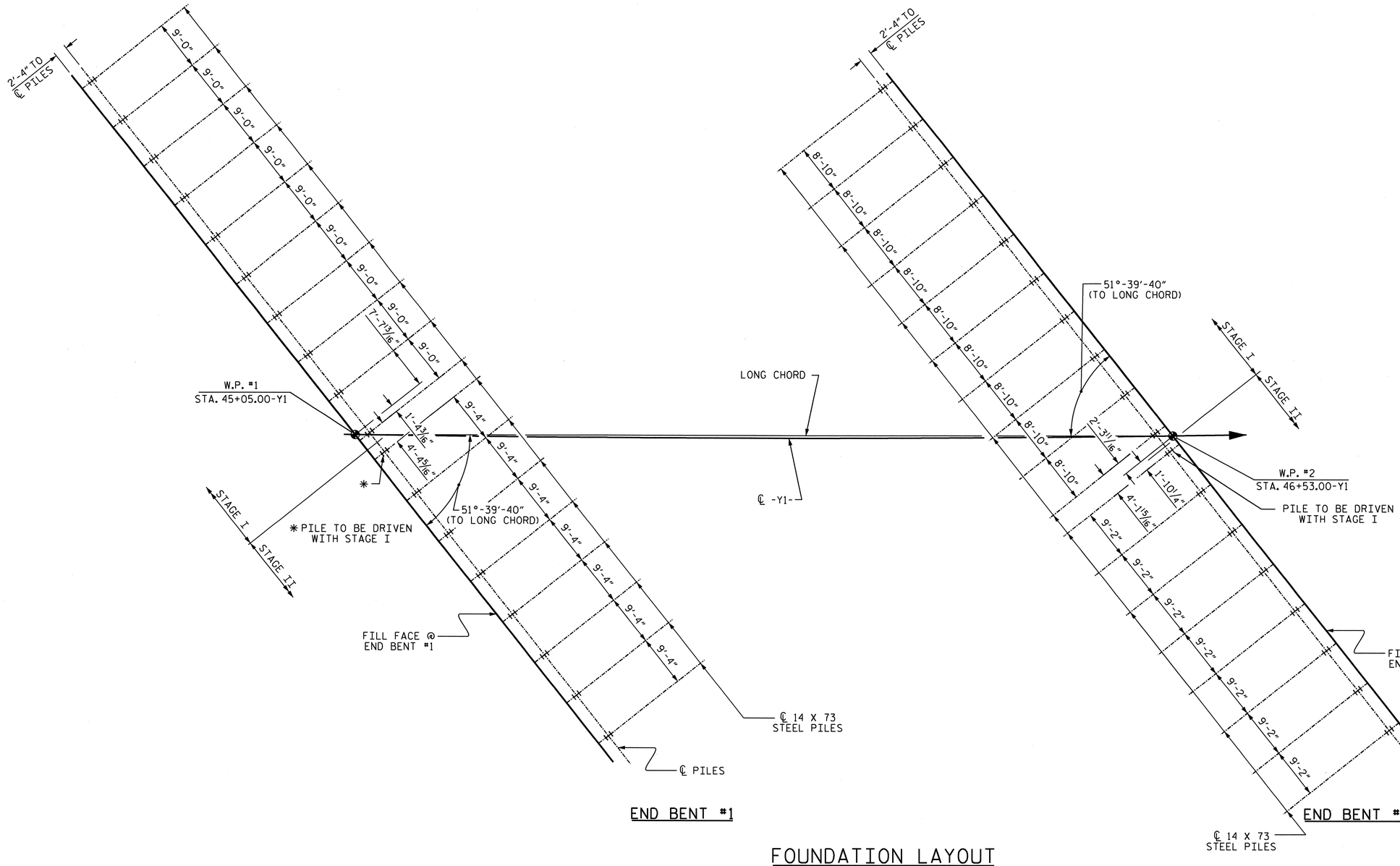

FOUNDATION LAYOUT

DIMENSIONS LOCATING PILES ARE TO THE PILE ℄

NOTES

FOR PILES, SEE SPECIAL PROVISIONS.

PILE EXCAVATION IS REQUIRED TO INSTALL PILES AT END BENT NO.1. EXCAVATE HOLES AT PILE LOCATIONS TO ELEVATION 1071 FT FOR STAGE 1 CONSTRUCTION AND TO ELEVATION 1072.5 FOR STAGE 2 CONSTRUCTION. FOR PILE EXCAVATION, SEE PILES PROVISION.

PILES AT END BENT NO. 1 ARE DESIGNED FOR A FACTORED RESISTANCE OF 130 TONS PER PILE.

DRIVE PILES AT END BENT NO. 1 TO A REQUIRED DRIVING RESISTANCE OF 217 TONS PER PILE.

PILES AT END BENT NO. 2 ARE DESIGNED FOR A FACTORED RESISTANCE OF 130 TONS PER PILE.

DRIVE PILES AT END BENT NO. 2 TO A REQUIRED DRIVING RESISTANCE OF 217 TONS PER PILE.

PROJECT NO. U-2550B

BURKE COUNTY

STATION: 23+83.10 -L-

SHEET 2 OF 4

STATE OF NORTH CAROLINA
DEPARTMENT OF TRANSPORTATION
RALEIGH

GENERAL DRAWING FOR BRIDGE ON I-40 OVER NC 18 BETWEEN SR 1708 AND SR 1924

NORTH CAROLINA PROFESSIONAL SEAL 15825 ENGINEER BRIAN D. KLAPPENBACH
4-25-2011

REVISIONS						SHEET NO.
NO.	BY:	DATE:	NO.	BY:	DATE:	S-2
1			3			TOTAL SHEETS
2			4			93

DRAWN BY : H. T. BARBOUR DATE : 12-15-10
CHECKED BY : C. R. YARBROUGH DATE : 3-11

25-APR-2011 15:08
R:\Structures\Bailey\Str1\tbarbour\Microstation\U2550B_SD_GD.dgn
tbarbour

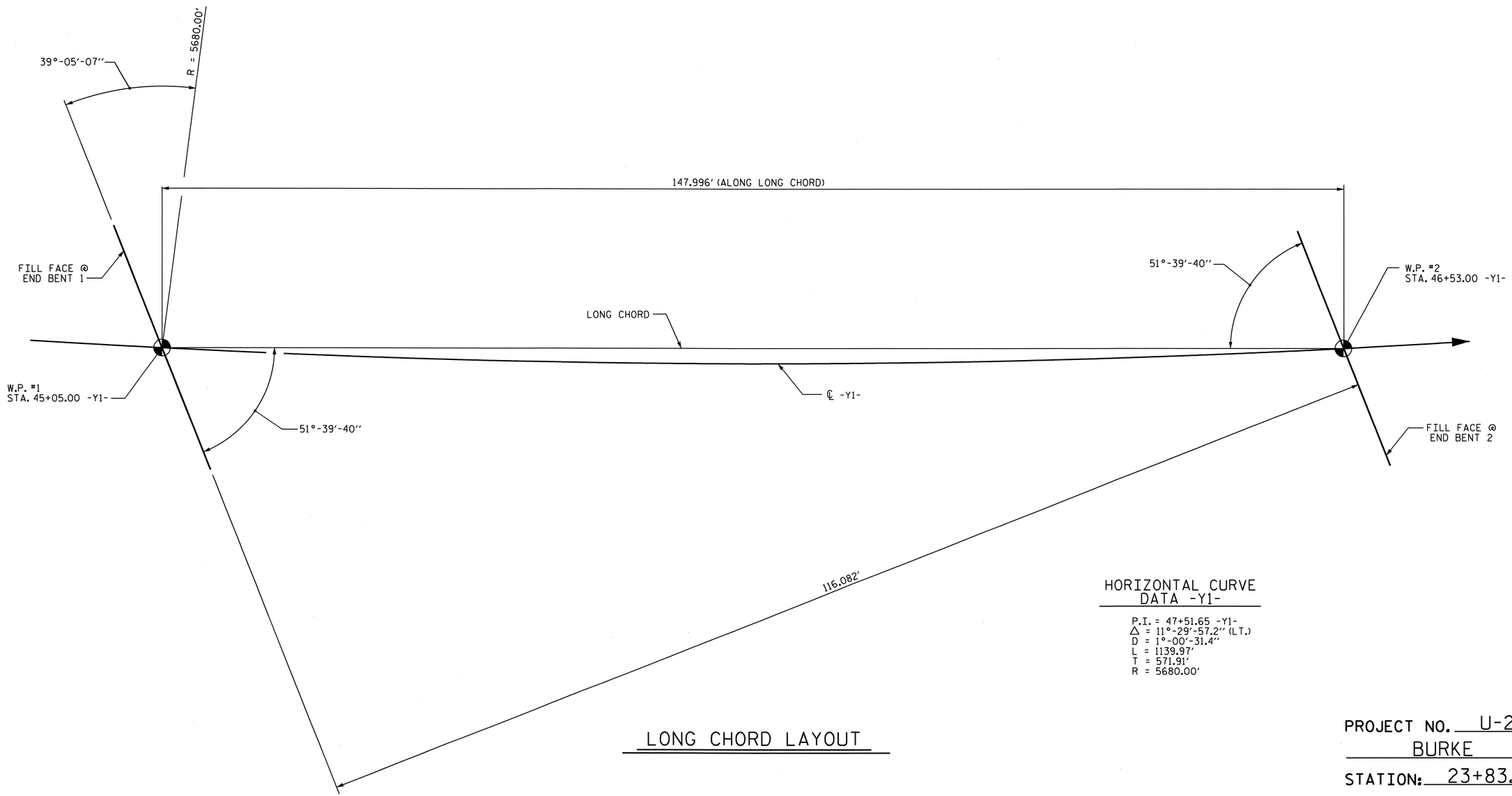

LONG CHORD LAYOUT

HORIZONTAL CURVE DATA -Y1-

P.I. = 47+51.65 -Y1-
△ = 11°-29'-57.2'' (L.T.)
D = 1°-00'-31.4''
L = 1139.97'
T = 571.91'
R = 5680.00'

PROJECT NO. U-2550B
BURKE COUNTY
STATION: 23+83.10 -L-

SHEET 3 OF 4

STATE OF NORTH CAROLINA
DEPARTMENT OF TRANSPORTATION
RALEIGH

GENERAL DRAWING FOR BRIDGE ON I-40 OVER NC 18 BETWEEN SR 1708 AND SR 1924

NORTH CAROLINA PROFESSIONAL SEAL 15825 BRIDGE ENGINEER O. KL APPENGRAD
4-26-2011

REVISIONS						SHEET NO.
NO.	BY:	DATE:	NO.	BY:	DATE:	S-3
1			3			TOTAL SHEETS
2			4			93

DRAWN BY : H. T. BARBOUR DATE : 12-16-10
CHECKED BY : C. R. YARBROUGH DATE : 3-11

25-APR-2011 15:41
R:\Structures\Bailey\Str1\tbarbour\Microstation\U2550B_SD_GD.dgn
tbarbour

STR. #1

BM #5: RAILROAD SPIKE IN BASE OF 8" DOGWOOD, 139' RIGHT, STATION 44+55.00 -BY1-, ELEVATION 1113.12'.

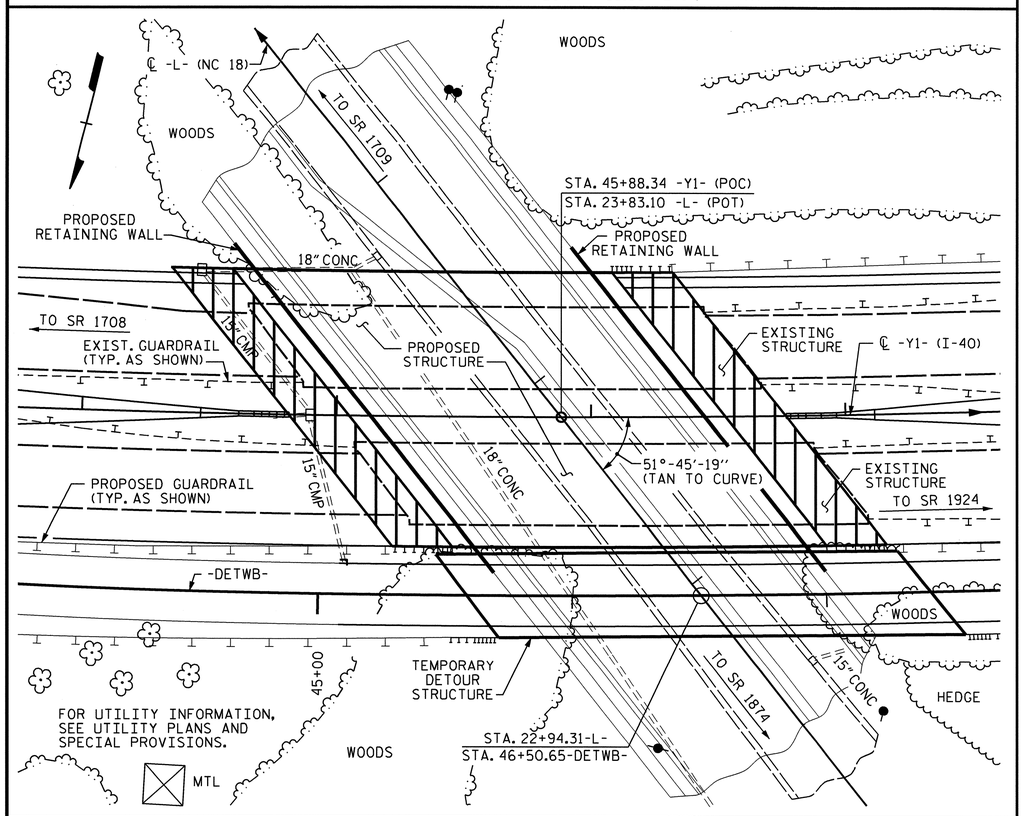

LOCATION SKETCH

NOTES

ASSUMED LIVE LOAD = HL 93 OR ALTERNATE LOADING.

FOR OTHER DESIGN DATA AND GENERAL NOTES, SEE SHEET SN.

FOR EROSION CONTROL MEASURES SEE EROSION CONTROL PLANS.

THIS BRIDGE HAS BEEN DESIGNED IN ACCORDANCE WITH THE AASHTO LRFD BRIDGE DESIGN SPECIFICATIONS.

REMOVABLE FORMS MAY BE USED IN LIEU OF METAL STAY-IN-PLACE FORMS IN ACCORDANCE WITH ARTICLE 420-3 OF THE STANDARD SPECIFICATIONS.

STRUCTURAL STEEL SHALL BE AASHTO M270 GRADE 50W AND PAINTED IN ACCORDANCE WITH SYSTEM 4 OF ARTICLE 442-7 OF THE STANDARD SPECIFICATIONS UNLESS OTHERWISE NOTED ON THE PLANS.

FOR MAINTENANCE AND PROTECTION OF TRAFFIC BENEATH PROPOSED STRUCTURE, SEE SPECIAL PROVISIONS.

THE SUBSTRUCTURE OF THE EXISTING BRIDGE INDICATED ON THE PLANS IS FROM THE BEST INFORMATION AVAILABLE. SINCE THIS INFORMATION IS SHOWN FOR THE CONVENIENCE OF THE CONTRACTOR, THE CONTRACTOR SHALL HAVE NO CLAIM WHATSOEVER AGAINST THE DEPARTMENT OF TRANSPORTATION FOR ANY DELAYS OR ADDITIONAL COST INCURRED BASED ON DIFFERENCES BETWEEN THE EXISTING BRIDGE SUBSTRUCTURE SHOWN ON THE PLANS AND THE ACTUAL CONDITIONS AT THE PROJECT SITE.

THE CLASS AA CONCRETE IN THE BRIDGE DECK SHALL CONTAIN FLY ASH OR GROUND GRANULATED BLAST FURNACE SLAG AT THE SUBSTITUTION RATE SPECIFIED IN ARTICLE 1024-1 AND IN ACCORDANCE WITH ARTICLES 1024-5 AND 1024-6 OF THE STANDARD SPECIFICATIONS. NO PAYMENT WILL BE MADE FOR THIS SUBSTITUTION AS IT IS CONSIDERED INCIDENTAL TO THE COST OF THE REINFORCED CONCRETE DECK SLAB.

AFTER SERVING AS A TEMPORARY STRUCTURE, THE EXISTING WEST BOUND LANE STRUCTURE (BRIDGE NO. 142) CONSISTING OF 3 SPANS @ 60 FT EACH WITH A 3" ASPHALT WEARING SURFACE ON A 7.25" REINFORCED CONCRETE DECK ON 4 LINES OF 36" I-BEAMS AND A CLEAR ROADWAY WIDTH OF 28.0' ON REINFORCED CONCRETE CAPS ON CONCRETE PILES AT THE END BENTS AND REINFORCED CONCRETE CAP AND COLUMNS AT THE INTERIOR BENTS, LOCATED AT THE SAME LOCATION OF THE EXISTING BRIDGE, SHALL BE REMOVED. THE EXISTING BRIDGE IS PRESENTLY NOT POSTED FOR LOAD LIMIT. SHOULD THE STRUCTURAL INTEGRITY OF THE BRIDGE DETERIORATE DURING CONSTRUCTION OF THE PROPOSED STRUCTURE, A LOAD LIMIT MAY BE POSTED AND MAY BE REDUCED AS FOUND NECESSARY DURING THE LIFE OF THE PROJECT. SEE SPECIAL PROVISION FOR REMOVAL OF EXISTING STRUCTURES AT STATION 23+83.10 -L-.

AFTER SERVING AS A TEMPORARY STRUCTURE, THE EXISTING EAST BOUND LANE STRUCTURE (BRIDGE NO. 140) CONSISTING OF 3 SPANS @ 60 FT EACH WITH A 3" ASPHALT WEARING SURFACE ON A 7.25" REINFORCED CONCRETE DECK ON 4 LINES OF 36" I-BEAMS AND A CLEAR ROADWAY WIDTH OF 28.0' ON REINFORCED CONCRETE CAPS ON CONCRETE PILES AT THE END BENTS AND REINFORCED CONCRETE CAP AND COLUMNS AT THE INTERIOR BENTS, LOCATED AT THE SAME LOCATION OF THE EXISTING BRIDGE, SHALL BE REMOVED. THE EXISTING BRIDGE IS PRESENTLY NOT POSTED FOR LOAD LIMIT. SHOULD THE STRUCTURAL INTEGRITY OF THE BRIDGE DETERIORATE DURING CONSTRUCTION OF THE PROPOSED STRUCTURE, A LOAD LIMIT MAY BE POSTED AND MAY BE REDUCED AS FOUND NECESSARY DURING THE LIFE OF THE PROJECT. SEE SPECIAL PROVISION FOR REMOVAL OF EXISTING STRUCTURES AT STATION 23+83.10 -L-.

THE USE OF NEEDLE BEAMS TO SUPPORT THE DECK SLAB WILL BE ALLOWED IN THE ACUTE CORNERS OF THE SLAB.

THE CONTRACTOR SHALL PROVIDE INDEPENDENT ASSURANCE SAMPLES OF REINFORCING STEEL AS FOLLOWS: FOR PROJECTS REQUIRING UP TO 400 TONS OF REINFORCING STEEL, ONE 30 INCH SAMPLE OF EACH SIZE BAR USED, AND FOR PROJECTS REQUIRING OVER 400 TONS OF REINFORCING STEEL, TWO 30 INCH SAMPLES OF EACH SIZE BAR USED. THE BARS FROM WHICH THE SAMPLES ARE TAKEN MUST THEN BE SPLICED WITH REPLACEMENT BARS OF THE SIZE AND LENGTH OF THE SAMPLE, PLUS A MINIMUM LAP SPLICE OF THIRTY BAR DIAMETERS. PAYMENT FOR THE SAMPLES OF REINFORCING STEEL SHALL BE CONSIDERED INCIDENTAL TO VARIOUS PAY ITEMS.

INASMUCH AS THE PAINT SYSTEM ON THE EXISTING STRUCTURAL STEEL CONTAINS LEAD, THE CONTRACTOR'S ATTENTION IS DIRECTED TO ARTICLE 107-1 OF THE STANDARD SPECIFICATIONS. ANY COSTS RESULTING FROM COMPLIANCE WITH APPLICABLE STATE OR FEDERAL REGULATIONS PERTAINING TO HANDLING OF MATERIALS CONTAINING LEAD BASED PAINT SHALL BE INCLUDED IN THE BID PRICE FOR "REMOVAL OF EXISTING STRUCTURES AT STATION 23+83.10 -L-."

FOR SUBMITTAL OF WORKING DRAWINGS, SEE SPECIAL PROVISIONS.

FOR FALSEWORK AND FORMWORK, SEE SPECIAL PROVISIONS.

FOR CRANE SAFETY, SEE SPECIAL PROVISIONS.

FOR GROUT FOR STRUCTURES, SEE SPECIAL PROVISIONS.

FOR CURING CONCRETE, SEE SPECIAL PROVISIONS.

FOR PLACING LOAD ON STRUCTURE MEMBERS, SEE SPECIAL PROVISIONS.

FOR SHIPPING STEEL STRUCTURE MEMBERS, SEE SPECIAL PROVISIONS.

FOR FORMS FOR CONCRETE BRIDGE DECKS, SEE SPECIAL PROVISIONS.

FOR ADHESIVELY ANCHORED ANCHOR BOLTS OR DOWELS, SEE SPECIAL PROVISIONS.

FOR ARCHITECTURAL CONCRETE SURFACE TREATMENT (CONCRETE BARRIER RAIL), SEE SPECIAL PROVISIONS.

FOR STEEL REINFORCED BRIDGE APPROACH FILL, SEE SPECIAL PROVISIONS.

THE CONTRACTOR WILL BE REQUIRED TO CONSTRUCT, MAINTAIN AND AFTERWARDS REMOVE A TEMPORARY STRUCTURE AT STATION 23+83.10 -L- FOR USE DURING CONSTRUCTION OF THE PROPOSED STRUCTURE. FOR CONSTRUCTION, MAINTENANCE AND REMOVAL OF TEMPORARY STRUCTURE, SEE SPECIAL PROVISIONS.

THE BRIDGE RAILS ON THE TEMPORARY STRUCTURE SHALL BE DESIGNED FOR THE AASHTO LRFD TEST LEVEL 3 (TL-3) CRASH TEST CRITERIA. FOR CONSTRUCTION, MAINTENANCE AND REMOVAL OF TEMPORARY STRUCTURE, SEE SPECIAL PROVISIONS.

FOR LIMITS OF TEMPORARY SHORING FOR MAINTENANCE OF TRAFFIC, SEE TRAFFIC CONTROL PLANS. FOR PAY ITEM FOR TEMPORARY SHORING FOR MAINTENANCE OF TRAFFIC, SEE ROADWAY PLANS.

NORTH CAROLINA PROFESSIONAL SEAL 15625 ENGINEER BRUCE D. KLAPPENBACH
4-29-2011

PROJECT NO. U-2550B
BURKE COUNTY
STATION: 23+83.10 -L-

SHEET 4 OF 4

TOTAL BILL OF MATERIAL

	CONSTRUCTION MAINTENANCE, & REMOVAL OF TEMP. STRUCTURE	REMOVAL OF EXISTING STRUCTURES	PILE EXCAVATION IN SOIL	PILE EXCAVATION NOT IN SOIL	REINFORCED CONCRETE DECK SLAB	GROOVING BRIDGE FLOORS	CLASS A CONCRETE	BRIDGE APPROACH SLABS	REINFORCING STEEL	STRUCTURAL STEEL	HP 14 X 73 STEEL PILES		CONCRETE BARRIER RAIL	CONCRETE MEDIAN BARRIER	4" SLOPE PROTECTION	ELASTOMERIC BEARINGS	EXPANSION JOINT SEALS	STEEL REINFORCED BRIDGE APPROACH FILL	ARCHITECTURAL CONCRETE SURFACE TREATMENT (CONCRETE BARRIER RAIL)
	LUMP SUM	LUMP SUM	LIN. FT.	LIN. FT.	SQ. FT.	SQ. FT.	CU. YDS.	LUMP SUM	LBS.	APPROX. LBS.	NO.	LIN. FT.	LIN. FT.	LIN. FT.	SQ. YD.	LUMP SUM	LUMP SUM	LUMP SUM	SQ. FEET
SUPERSTRUCTURE					16,616	19,403		LUMP SUM		726,000			333.23	197.48		LUMP SUM	LUMP SUM	LUMP SUM	666.5
END BENT NO. 1			220	210			114.1		19,713		18	540			52				
END BENT NO. 2							112.6		19,211		18	900			51				
TOTAL	LUMP SUM	LUMP SUM	220	210	16,616	19,403	226.7	LUMP SUM	38,924	726,000	36	1440	333.23	197.48	103	LUMP SUM	LUMP SUM	LUMP SUM	666.5

STATE OF NORTH CAROLINA
DEPARTMENT OF TRANSPORTATION
RALEIGH

GENERAL DRAWING FOR BRIDGE ON I-40 OVER NC 18 BETWEEN SR 1708 AND SR 1924

REVISIONS						SHEET NO. S-4
NO.	BY:	DATE:	NO.	BY:	DATE:	TOTAL SHEETS 93
1			3			
2			4			

DRAWN BY : H. T. BARBOUR DATE : 12-15-10
CHECKED BY : C. R. YARBROUGH DATE : 3-11

29-APR-2011 12:55
R:\Structures\Bailey\Str1\tbarbour\Microstation\U2550B_SD_GD.dgn
bklappenbach

STR. #1

LOAD AND RESISTANCE FACTOR RATING (LRFR) SUMMARY FOR STEEL GIRDERS

LEVEL		VEHICLE	WEIGHT (W) (TONS)	CONTROLLING LOAD RATING (#)	MINIMUM RATING FACTORS (RF)	TONS = W × RF	STRENGTH I LIMIT STATE											SERVICE II LIMIT STATE						COMMENT NUMBER
								MOMENT					SHEAR						MOMENT					
							LIVE-LOAD FACTORS (γ_{LL})	DISTRIBUTION FACTORS (DF)	RATING FACTOR	SPAN	GIRDER LOCATION	DISTANCE FROM LEFT END OF SPAN (ft)	DISTRIBUTION FACTORS (DF)	RATING FACTOR	SPAN	GIRDER LOCATION	DISTANCE FROM LEFT END OF SPAN (ft)	LIVE-LOAD FACTORS (γ_{LL})	DISTRIBUTION FACTORS (DF)	RATING FACTOR	SPAN	GIRDER LOCATION	DISTANCE FROM LEFT END OF SPAN (ft)	
DESIGN LOAD RATING		HL-93 (INVENTORY)	N/A	1	1.26	--	1.75	0.784	1.35	A	EL	71.28	1.061	1.36	A	I	0.00	1.30	0.784	1.26	A	EL	71.28	
		HL-93 (OPERATING)	N/A		1.64	--	1.35	0.784	1.75	A	EL	71.28	1.061	1.76	A	I	0.00	1.00	0.784	1.64	A	EL	71.28	
		HS-20 (INVENTORY)	36.000	2	1.93	69.5	1.75	0.784	2.07	A	EL	71.28	1.061	2.05	A	I	0.00	1.30	0.784	1.93	A	EL	71.28	
		HS-20 (OPERATING)	36.000		2.51	90.4	1.35	0.784	2.69	A	EL	71.28	1.061	2.65	A	I	0.00	1.00	0.784	2.51	A	EL	71.28	
LEGAL LOAD RATING	SINGLE VEHICLE (SV)	SH	12.500		5.16	64.5	1.40	0.784	6.92	A	EL	71.28	1.061	7.03	A	I	0.00	1.30	0.784	5.16	A	EL	71.28	
		S3C	21.500		3.01	64.7	1.40	0.784	4.04	A	EL	71.28	1.061	4.11	A	I	0.00	1.30	0.784	3.01	A	EL	71.28	
		S3A	22.750		3.04	69.2	1.40	0.784	4.07	A	EL	71.28	1.061	4.06	A	I	0.00	1.30	0.784	3.04	A	EL	71.28	
		S4A	26.750		2.47	66.1	1.40	0.784	3.32	A	EL	71.28	1.061	3.35	A	I	0.00	1.30	0.784	2.47	A	EL	71.28	
		S5A	30.500		2.18	66.5	1.40	0.784	2.92	A	EL	71.28	1.061	3.01	A	I	0.00	1.30	0.784	2.18	A	EL	71.28	
		S6A	34.500		1.95	67.3	1.40	0.784	2.62	A	EL	71.28	1.061	2.69	A	I	0.00	1.30	0.784	1.95	A	EL	71.28	
		S7B	38.500		1.77	68.1	1.40	0.784	2.37	A	EL	71.28	1.061	2.46	A	I	0.00	1.30	0.784	1.77	A	EL	71.28	
		S7A	40.000	3	1.73	69.2	1.40	0.784	2.31	A	EL	71.28	1.061	2.43	A	I	0.00	1.30	0.784	1.73	A	EL	71.28	
	TRUCK TRACTOR SEMI-TRAILER (TTST)	T4A	28.250		2.40	67.8	1.40	0.784	3.21	A	EL	71.28	1.061	3.22	A	I	0.00	1.30	0.784	2.40	A	EL	71.28	
		T5B	32.000		2.11	67.5	1.40	0.784	2.83	A	EL	71.28	1.061	2.94	A	I	0.00	1.30	0.784	2.11	A	EL	71.28	
		T6A	36.000		1.91	68.8	1.40	0.784	2.56	A	EL	71.28	1.061	2.66	A	I	0.00	1.30	0.784	1.91	A	EL	71.28	
		T7A	40.000		1.75	70.0	1.40	0.784	2.34	A	EL	71.28	1.061	2.43	A	I	0.00	1.30	0.784	1.75	A	EL	71.28	
		T7B	40.000		1.81	72.4	1.40	0.784	2.43	A	EL	71.28	1.061	2.36	A	I	0.00	1.30	0.784	1.81	A	EL	71.28	
FATIGUE		HL-93 (INVENTORY)	γ_{LL}=0.75																					

LOAD FACTORS:

DESIGN LOAD RATING FACTORS	LIMIT STATE	γ_{DC}	γ_{DW}
	STRENGTH I	1.25	1.50
	SERVICE II	1.00	1.00

NOTES:

MINIMUM RATING FACTORS ARE BASED ON THE STRENGTH I AND SERVICE II LIMIT STATES.

ALLOWABLE STRESS FOR SERVICE II LIMIT STATE ARE AS REQUIRED FOR DESIGN.

COMMENTS:

1.
2.
3.
4.

(#) CONTROLLING LOAD RATING

(1) DESIGN LOAD RATING (HL-93)
(2) DESIGN LOAD RATING (HS-20)
(3) LEGAL LOAD RATING **
** SEE CHART FOR VEHICLE TYPE

GIRDER LOCATION

I - INTERIOR GIRDER
EL - EXTERIOR LEFT GIRDER
ER - EXTERIOR RIGHT GIRDER

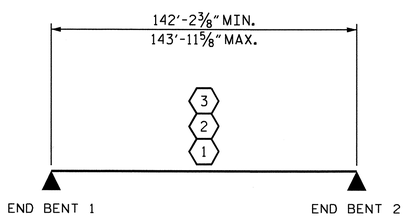

LRFR SUMMARY

PROJECT NO. U-2550B
BURKE COUNTY
STATION: 23+83.10 -L-

STATE OF NORTH CAROLINA
DEPARTMENT OF TRANSPORTATION
RALEIGH

STANDARD

LRFR SUMMARY FOR STEEL GIRDERS
(INTERSTATE TRAFFIC)

NORTH CAROLINA PROFESSIONAL SEAL 16828 ENGINEER BRADLEY D. KLAPPENBACH
4-28-2011

REVISIONS						SHEET NO.
NO.	BY:	DATE:	NO.	BY:	DATE:	S-5
1			3			TOTAL SHEETS
2			4			93

ASSEMBLED BY : H. T. BARBOUR DATE : 3-15-11
CHECKED BY : B. D. KLAPPENBACH DATE : 3-11
DRAWN BY : MAA 1/08
CHECKED BY : GM/DI 2/08
REV. 11/12/08RR MAA/GM

25-APR-2011 15:51
R:\Structures\Bailey\Str1\tbarbour\Microstation\U2550B_SD_LRFR.dgn
tbarbour

STR. #1

STD. NO. LRFR4

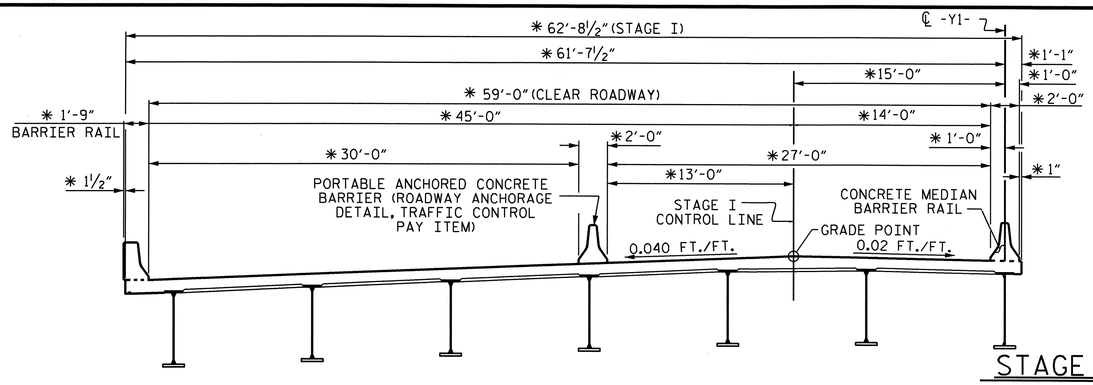

STAGE I

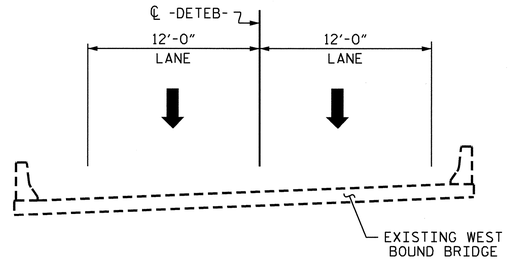

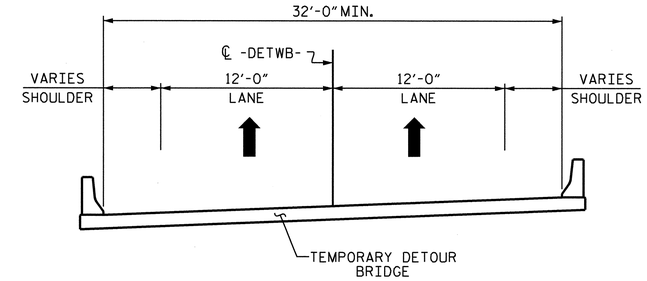

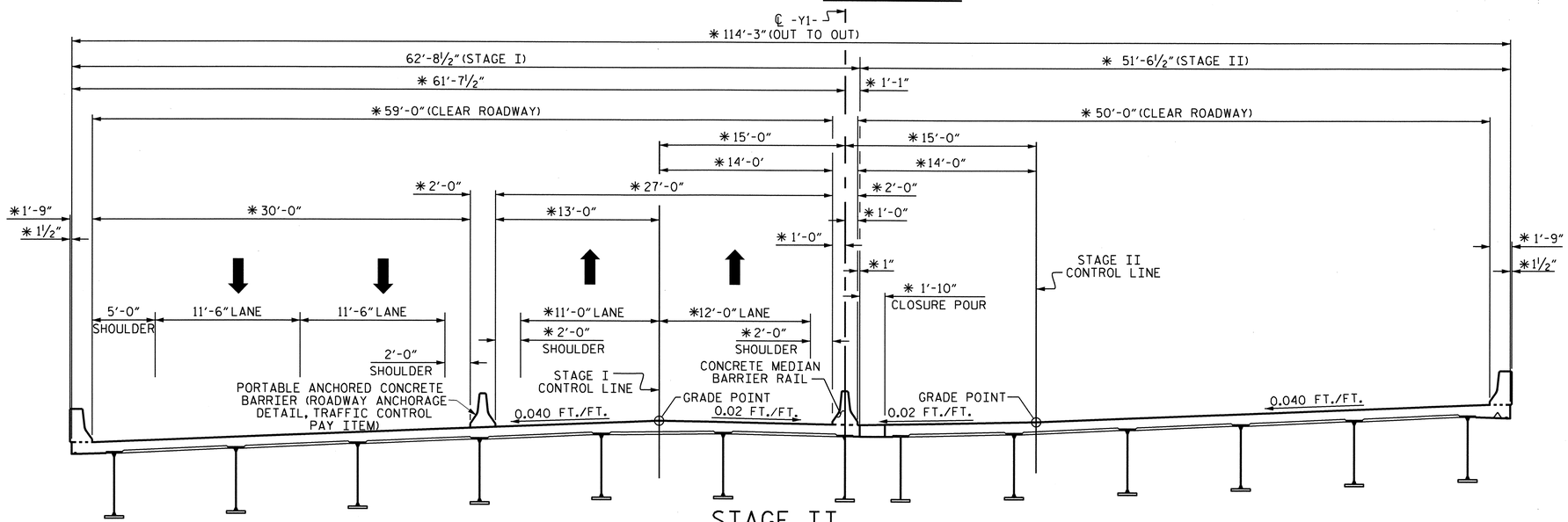

STAGE II

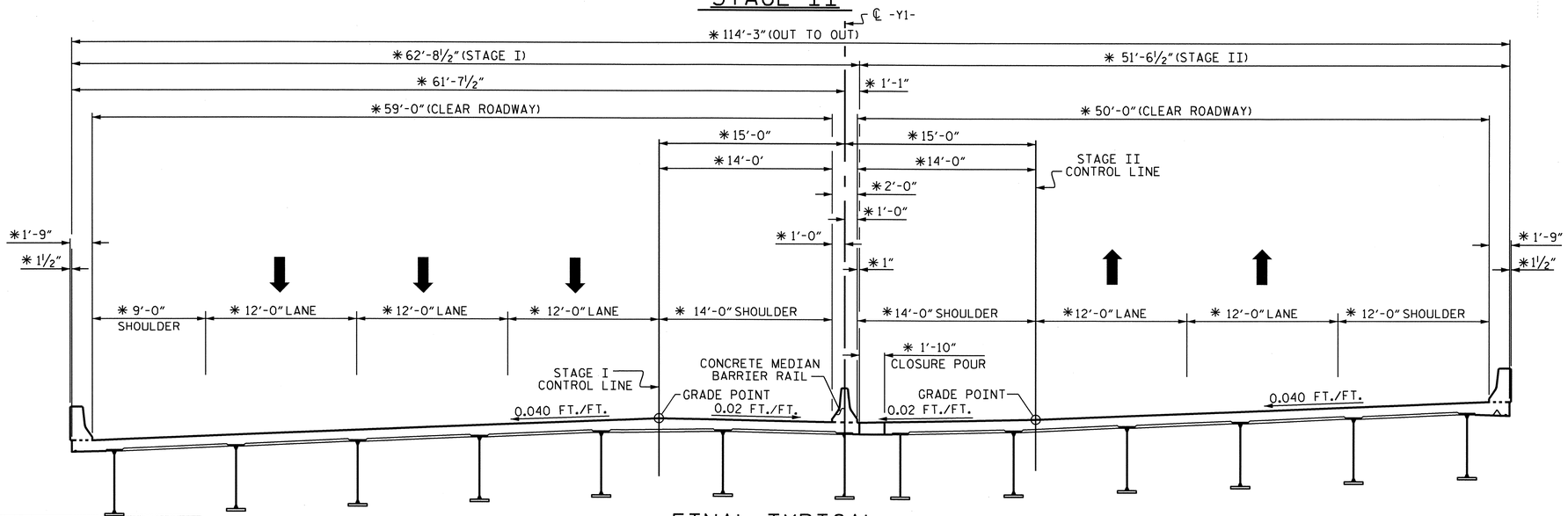

FINAL TYPICAL

NOTES

SEE TRAFFIC CONTROL PLANS FOR LOCATION AND PAY LIMITS OF THE TEMPORARY PRECAST CONCRETE BRIDGE BARRIER, ANCHORED TEMPORARY BARRIER RAIL, AND TEMPORARY SHORING FOR MAINTENANCE OF TRAFFIC.

* DIMENSIONS ARE TO CONCENTRIC CIRCLES WITH ℄ SURVEY. GIRDERS ARE ON THE CHORDS OF THESE CONCENTRIC CIRCLES.

PROJECT NO. U-2550B
BURKE COUNTY
STATION: 23+83.10-L-

STATE OF NORTH CAROLINA
DEPARTMENT OF TRANSPORTATION
RALEIGH

SUPERSTRUCTURE STAGING SEQUENCE

NORTH CAROLINA PROFESSIONAL SEAL 15825 ENGINEER BRADLEY D. KLAPPENBACH
4-28-2011

REVISIONS						SHEET NO.
NO.	BY:	DATE:	NO.	BY:	DATE:	S-6
1			3			TOTAL SHEETS
2			4			93

DRAWN BY : H. T. BARBOUR DATE : 3-18-11
CHECKED BY : B. D. KLAPPENBACH DATE : 3-11

25-APR-2011 15:59
R:\Structures\Bailey\Str1\tbarbour\Microstation\U2550B_SD_STAGSEQ.dgn
tbarbour

STR. #1

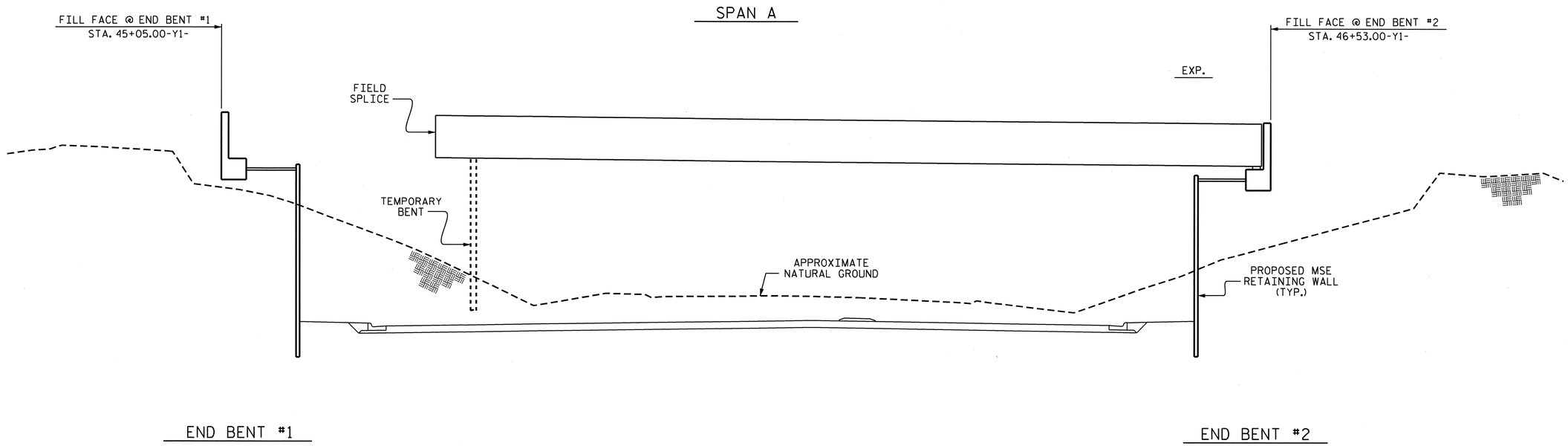

GIRDER ERECTION

(SECTIONS AT END BENTS TAKEN AT RIGHT ANGLES)

ERECTION NOTES

ERECT A MINIMUM OF TWO GIRDERS WITH ALL DIAPHRAGMS/CROSSFRAMES BETWEEN THE GIRDERS IN PLACE AND THE BOLTS TIGHTENED PRIOR TO RELEASING THE GIRDERS.

ERECT EACH SUBSEQUENT GIRDER WITH DIAPHRAGMS/CROSSFRAMES CONNECTING TO THE ADJACENT PREVIOUSLY ERECTED GIRDER AND TIGHTEN ALL BOLTS BEFORE RELEASING THE GIRDERS.

THE STRUCTURAL STEEL SHALL BE SUPPORTED DURING ERECTION IN ITS CAMBERED POSITION. A MINIMUM OF ONE TEMPORARY BENT SHALL BE USED IN SPAN A.

TEMPORARY BENTS SHALL REMAIN IN PLACE UNTIL ALL GIRDERS, DIAPHRAGMS, AND CROSSFRAMES ARE IN PLACE AND ALL HIGH STRENGTH BOLTS ARE TIGHTENED.

TEMPORARY BENTS SHALL PROVIDE BEARING AT CONNECTOR PLATE LOCATIONS. WHEN CONNECTOR PLATES ARE USED AS TEMPORARY BEARING STIFFENERS, DIAPHRAGMS MUST BE ATTACHED.

THE CONTRACTOR'S ERECTION PLANS SHALL INCLUDE A METHOD OF TEMPORARY BENT REMOVAL THAT WILL UNIFORMLY TRANSFER THE STRUCTURAL WEIGHT TO THE DIAPHRAGMS/CROSSFRAMES AND THE GIRDERS WILL REMAIN IN THE CAMBERED POSITIONS.

PLANS FOR TEMPORARY BENT ERECTION AND REMOVAL SHALL BE SUBMITTED TO THE ENGINEER FOR REVIEW.

THE CONTRACTOR IS RESPONSIBLE FOR DESIGNING THE TEMPORARY BENTS. THE DESIGNS SHALL BE COMPLETED BY A PROFESSIONAL ENGINEER REGISTERED IN THE STATE OF NORTH CAROLINA. THE CONTRACTOR SHALL SUBMIT SIGNED AND SEALED WORKING DRAWINGS AND CALCULATIONS FOR APPROVAL BY THE ENGINEER.

DURING THE GIRDER ERECTION PROCEDURE, THE CONTRACTOR IS RESPONSIBLE FOR PROVIDING TEMPORARY LATERAL BRACING AND OTHER MEANS OF SUPPORT, AS REQUIRED, TO ENSURE STABILITY OF THE GIRDERS, AVOID UPLIFT OF THE GIRDERS AT THE TEMPORARY BENTS AND TO ENSURE PLUMBNESS OF THE GIRDERS IN THE FINAL CONDITION.

NO SEPARATE MEASUREMENT OR PAYMENT WILL BE MADE FOR PROVIDING THE TEMPORARY BENT. THE COST FOR ALL MATERIALS, EQUIPMENT, TOOLS, LABOR AND ANY INCIDENTALS NECESSARY TO PROVIDE THE TEMPORARY BENT SHALL BE CONSIDERED INCIDENTAL TO THE LUMP SUM BID PRICE FOR STRUCTURAL STEEL.

THE CONTRACTOR MAY SUBMIT AN ALTERNATE ERECTION METHOD TO THE ENGINEER FOR REVIEW AND APPROVAL.

PROJECT NO. U-2550B
BURKE COUNTY
STATION: 23+83.10-L-

STATE OF NORTH CAROLINA
DEPARTMENT OF TRANSPORTATION
RALEIGH

GIRDER ERECTION DETAILS

NORTH CAROLINA PROFESSIONAL SEAL 15825 ENGINEER BRYAN D. KLAPPENBACH 4-28-2011

REVISIONS						SHEET NO.
NO.	BY:	DATE:	NO.	BY:	DATE:	S-7
1			3			TOTAL SHEETS
2			4			93

STR. #1

DRAWN BY : S.H. SOCKWELL DATE : 02/04/11
CHECKED BY : B. KLAPPENBACH DATE : 03/17/11

25-APR-2011 16:13
R:\Structures\Bailey\Str1\ssockwell\U2550B_SD_GED.dgn
bklappenbach

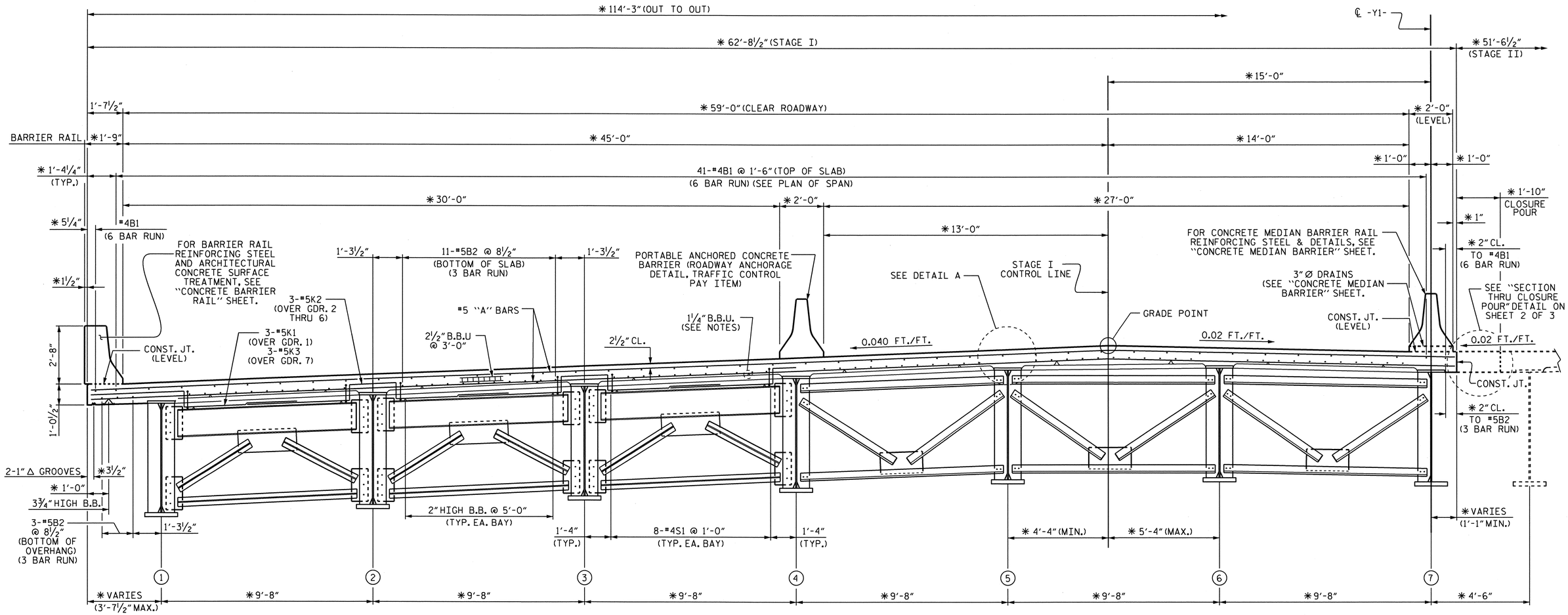

TYPICAL SECTION AT END BENT

TYPICAL SECTION AT INTERMEDIATE DIAPHRAGMS

✱ DIMENSIONS ARE TO CONCENTRIC CIRCLES WITH ℄ SURVEY. GIRDERS ARE ON THE CHORDS OF THESE CONCENTRIC CIRCLES

"A" BARS ARE TO BE PLACED AT RIGHT ANGLES TO LONG CHORD.

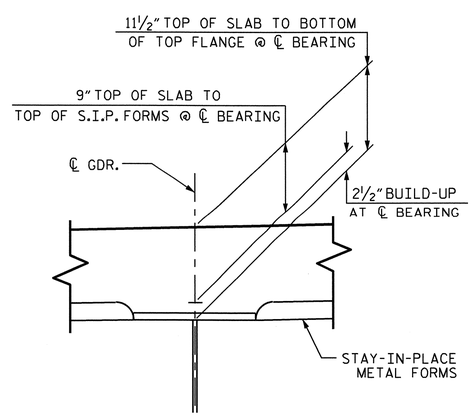

DETAIL A

PROJECT NO. U-2550B
BURKE COUNTY
STATION: 23+83.10 -L-

SHEET 1 OF 3

STATE OF NORTH CAROLINA
DEPARTMENT OF TRANSPORTATION
RALEIGH

SUPERSTRUCTURE
TYPICAL SECTIONS
(STAGE I)

NORTH CAROLINA PROFESSIONAL SEAL 15829 ENGINEER BRUCE D. KLAPPENBACH
4-28-2011

REVISIONS						SHEET NO.
NO.	BY:	DATE:	NO.	BY:	DATE:	S-8
1			3			TOTAL SHEETS
2			4			93

STR. #1

DRAWN BY : M. G. SHAIKH DATE : 10-18-10
CHECKED BY : H. T. BARBOUR DATE : 03-17-11

25-APR-2011 12:30
P:\Structures\Bailey\Str1\mshaikh\Microstation\U-2550B_SD_TS.dgn
mshaikh

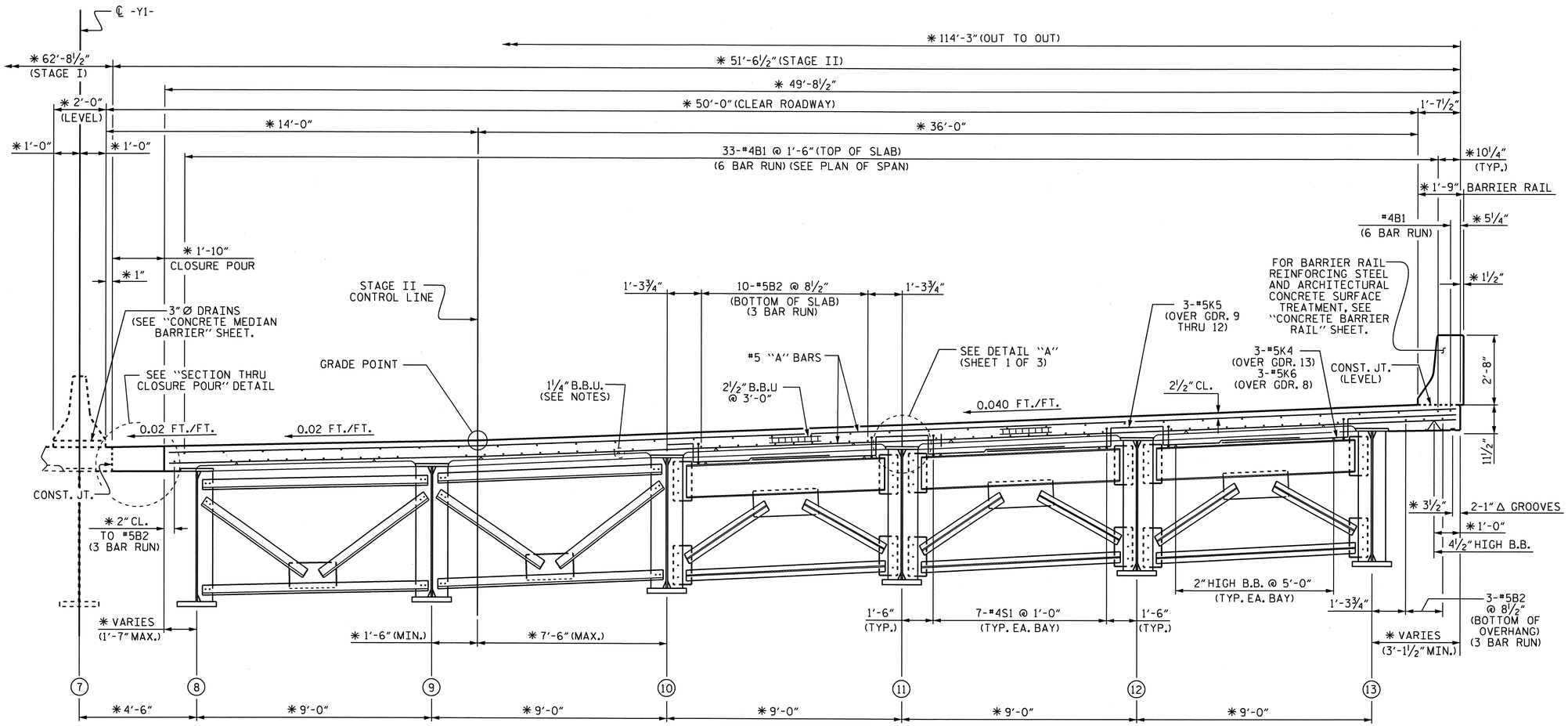

TYPICAL SECTION AT INTERMEDIATE DIAPHRAGMS

TYPICAL SECTION AT END BENT

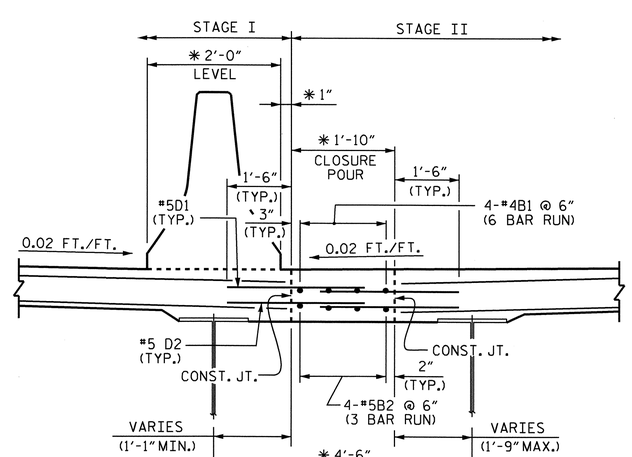

SECTION THRU CLOSURE POUR

NOTE : #5 D1 & D2 SHALL EXTEND 1'-6" INTO CLOSURE POUR.

NOTES

PROVIDE 1¼" HIGH BEAM BOLSTERS UPPER AT 4'-0" CTS. ATOP THE METAL STAY-IN-PLACE FORMS TO SUPPORT THE BOTTOM MAT OF 'A' BARS. WHEN USING REMOVABLE FORMS, PROVIDE CONTINUOUS HIGH CHAIRS FOR METAL DECK (C.H.C.M.) @ 4'-0" CTS. WITH A HEIGHT TO SUPPORT THE BOTTOM MAT OF 'A' BARS A CLEAR DISTANCE OF 2½" ABOVE THE TOP OF THE REMOVABLE FORM.

DOWELS SHALL BE PLACED IN THE SAME HORIZONTAL PLANE AS THE TOP AND BOTTOM SLAB REINFORCING STEEL.

METAL STAY-IN-PLACE FORMS SHALL NOT BE WELDED TO BEAM OR GIRDER FLANGES IN THE ZONES REQUIRING CHARPY V-NOTCH TEST. SEE STRUCTURAL STEEL DETAIL SHEETS.

STRUCTURAL STEEL ERECTION IN A CONTINUOUS UNIT SHALL BE COMPLETE BEFORE FALSEWORK OR FORMS ARE PLACED ON THE UNIT.

PREVIOUSLY CAST CONCRETE IN A CONTINUOUS UNIT SHALL HAVE ATTAINED A MINIMUM COMPRESSIVE STRENGTH OF 3,000 PSI BEFORE ADDITIONAL CONCRETE IS CAST IN THE UNIT.

SEE TRAFFIC CONTROL PLANS FOR LOCATION AND PAY LIMITS OF THE ANCHORED PORTABLE CONCRETE BARRIER.

#5 "G" BAR MAY BE SHIFTED SLIGHTLY, AS NECESSARY, TO CLEAR REINFORCING STEEL AND STIRRUPS.

BARRIER RAIL IN A CONTINUOUS UNIT SHALL NOT BE CAST UNTIL ALL SLAB CONCRETE IN THE UNIT HAS BEEN CAST AND HAS REACHED A MINIMUM COMPRESSIVE STRENGTH OF 3,000 PSI.

THE CONTRACTOR'S ATTENTION IS CALLED TO THE FACT THAT THE 3" DIAMETER DRAINS ARE TO BE INSTALLED IN THE CONCRETE MEDIAN BARRIER AT 6' CENTERS. REINFORCING STEEL MAY BE SHIFTED AS NECESSARY TO AVOID INTERFERENCE WITH THE DRAINS. THE CONTRACTOR IS DIRECTED TO PLUG AND OPEN THE DRAINS AS NEEDED TO MAXIMIZE THE DRAINAGE AND AVOID THE WATER DRAINING DIRECTLY ONTO TRAFFIC ON NC 18. THE COST IS CONSIDERED INCIDENTAL TO THE COST OF CONCRETE MEDIAN BARRIER.

✱ DIMENSIONS ARE TO CONCENTRIC CIRCLES WITH ℄ SURVEY. GIRDERS ARE ON THE CHORDS OF THESE CONCENTRIC CIRCLES

"A" BARS ARE TO BE PLACED AT RIGHT ANGLES TO LONG CHORD.

PROJECT NO. U-2550B
BURKE COUNTY
STATION: 23+83.10 -L-

SHEET 2 OF 3

STATE OF NORTH CAROLINA
DEPARTMENT OF TRANSPORTATION
RALEIGH

SUPERSTRUCTURE
TYPICAL SECTIONS
(STAGE II)

NORTH CAROLINA PROFESSIONAL SEAL 15825 ENGINEER BRUCE D. KLAPPENBACH
4-28-2011

REVISIONS						SHEET NO.
NO.	BY:	DATE:	NO.	BY:	DATE:	S-9
1			3			TOTAL SHEETS
2			4			93

STR. #1

DRAWN BY : M. G. SHAIKH DATE : 10-18-10
CHECKED BY : H. T. BARBOUR DATE : 03-17-11

25-APR-2011 12:30
P:\Structures\Bolley\Str1\mshaikh\Microstation\U-2550B_SD_TS.dgn
mshaikh

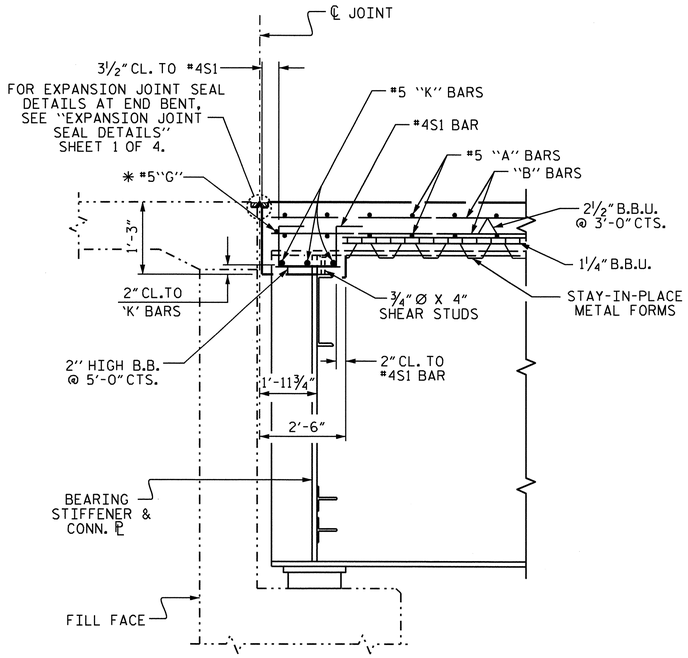

SECTION THRU END BENT

✱ #5 'G' BAR MAY BE SHIFTED SLIGHTLY, AS NECESSARY, TO CLEAR DIAPHRAGM AND REINFORCING STEEL.

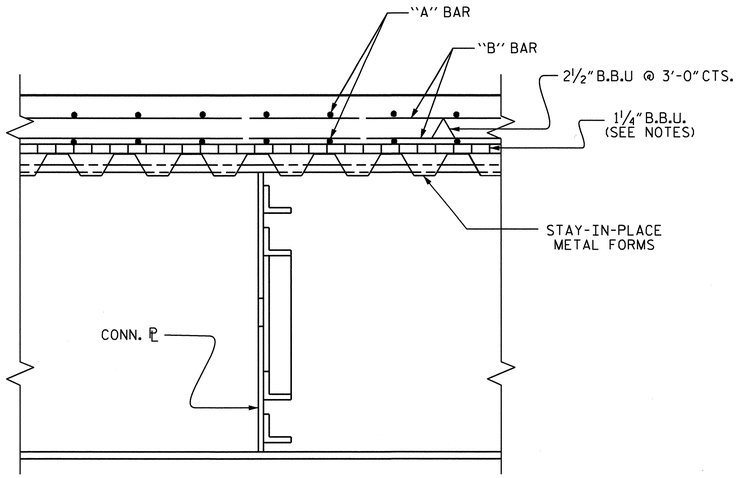

SECTION THRU INTERMEDIATE DIAPHRAGM

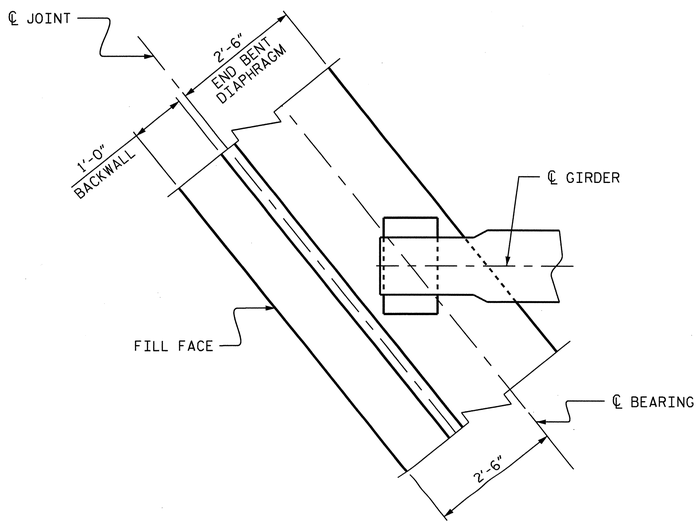

PLAN
END BENT DIAPHRAGM

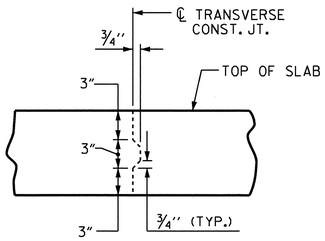

TRANSVERSE CONSTRUCTION JOINT DETAIL

NOTE: REINFORCING STEEL IN SLAB NOT SHOWN. LONGITUDINAL REINFORCING STEEL SHALL BE CONTINUOUS THRU JOINT

PROJECT NO. U-2550B
BURKE COUNTY
STATION: 23+83.10 -L-

SHEET 3 OF 3

STATE OF NORTH CAROLINA
DEPARTMENT OF TRANSPORTATION
RALEIGH

SUPERSTRUCTURE TYPICAL SECTION DETAILS

NORTH CAROLINA PROFESSIONAL SEAL 15825 ENGINEER BRYAN D. KLAPPENBACH
4-28-2011

REVISIONS						SHEET NO.
NO.	BY:	DATE:	NO.	BY:	DATE:	S-10
1			3			TOTAL SHEETS
2			4			93

DRAWN BY : M. G. SHAIKH DATE : 10-19-10
CHECKED BY : H. T. BARBOUR DATE : 03-17-11

25-APR-2011 12:30
P:\Structures\Bailey\Str1\mshaikh\Microstation\U-2550B_SD_TS.dgn
mshaikh

STR #1

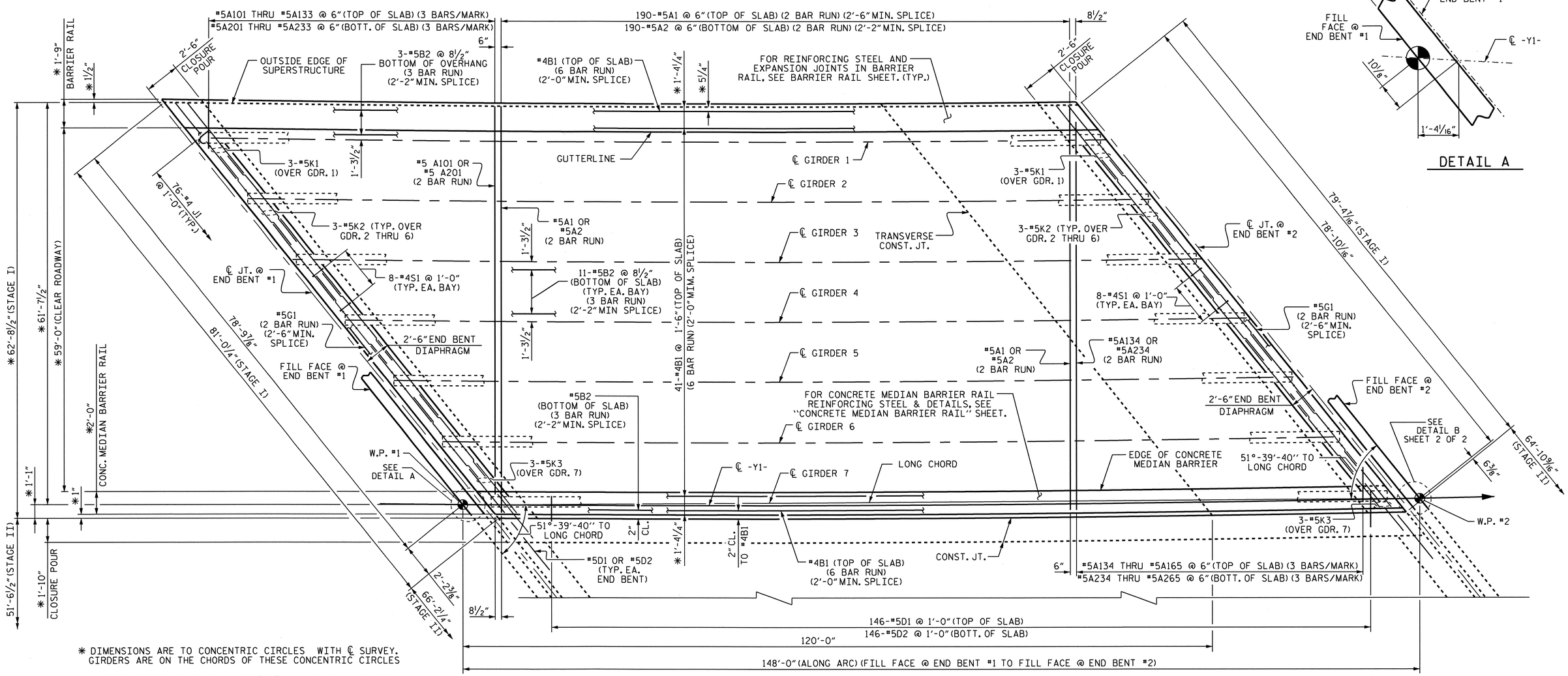

DETAIL A

* DIMENSIONS ARE TO CONCENTRIC CIRCLES WITH ℄ SURVEY. GIRDERS ARE ON THE CHORDS OF THESE CONCENTRIC CIRCLES

"A" BARS ARE TO BE PLACED AT RIGHT ANGLES TO LONG CHORD.

PLAN OF SPAN

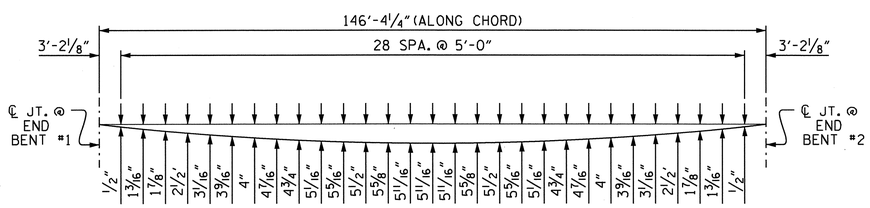

LEFT SIDE

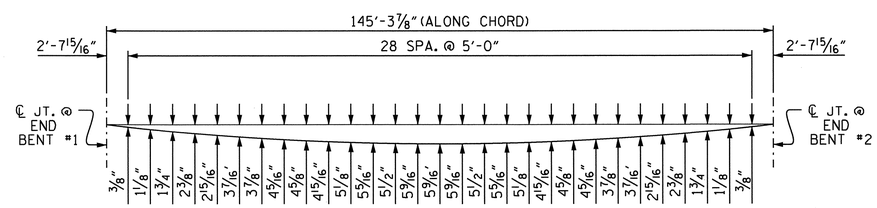

RIGHT SIDE
(EDGE OF CLOSURE POUR)

ARC OFFSETS

PROJECT NO. U-2550B
BURKE COUNTY
STATION: 23+83.10 -L-

SHEET 1 OF 2

STATE OF NORTH CAROLINA
DEPARTMENT OF TRANSPORTATION
RALEIGH

SUPERSTRUCTURE PLAN OF SPAN (STAGE I)

NORTH CAROLINA PROFESSIONAL SEAL 15825 ENGINEER BRUCE D. KLAPPENBACH
4-25-2011

REVISIONS						SHEET NO.
NO.	BY:	DATE:	NO.	BY:	DATE:	S-11
1			3			TOTAL SHEETS
2			4			93

DRAWN BY : M. G. SHAIKH DATE : 10-28-10
CHECKED BY : H. T. BARBOUR DATE : 03-17-11

25-APR-2011 12:29
P:\Structures\Bailey\Str1\mshaikh\Microstation\U-2550B_SD_TS.dgn
mshaikh

STR #1

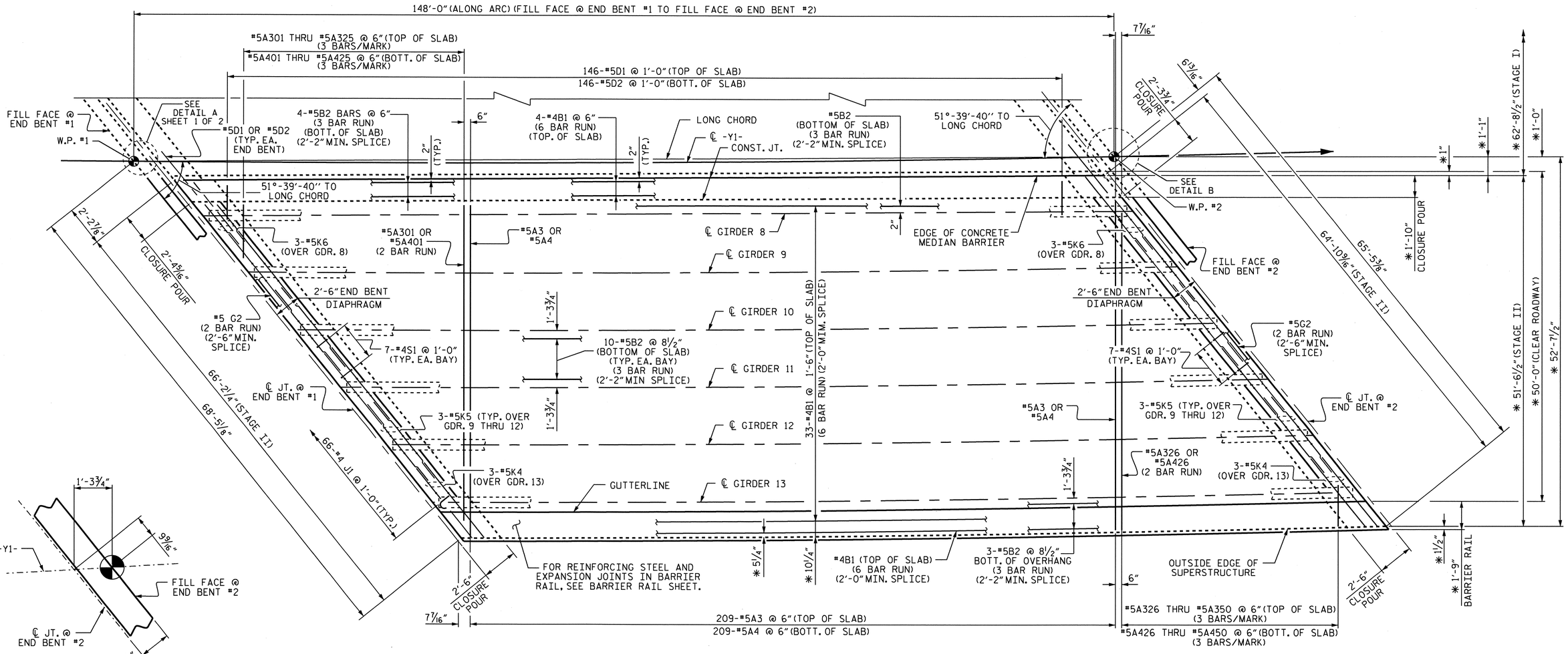

PLAN OF SPAN

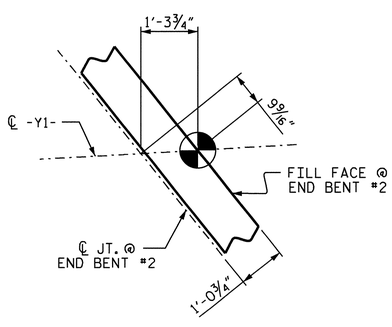

DETAIL B

* DIMENSIONS ARE TO CONCENTRIC CIRCLES WITH ℄ SURVEY. GIRDERS ARE ON THE CHORDS OF THESE CONCENTRIC CIRCLES

"A" BARS ARE TO BE PLACED AT RIGHT ANGLES TO LONG CHORD.

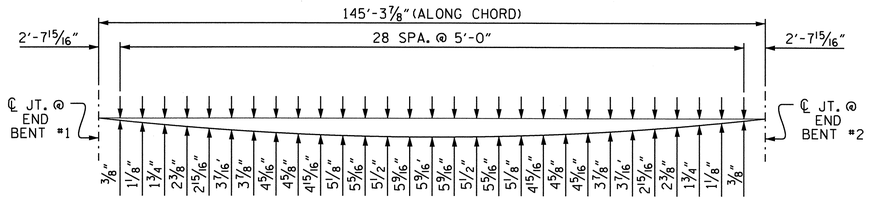

LEFT SIDE
(EDGE OF CLOSURE POUR)

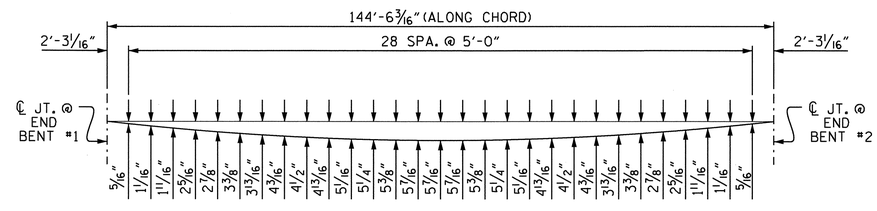

RIGHT SIDE

ARC OFFSETS

PROJECT NO. U-2550B
BURKE COUNTY
STATION: 23+83.10 -L-

SHEET 2 OF 2

STATE OF NORTH CAROLINA
DEPARTMENT OF TRANSPORTATION
RALEIGH

SUPERSTRUCTURE PLAN OF SPAN (STAGE II)

NORTH CAROLINA PROFESSIONAL SEAL 15825 ENGINEER D. KLAPPENBACH
4-25-2011

REVISIONS						SHEET NO.
NO.	BY:	DATE:	NO.	BY:	DATE:	S-12
1			3			TOTAL SHEETS
2			4			93

DRAWN BY : M. G. SHAIKH DATE : 10-28-10
CHECKED BY : H. T. BARBOUR DATE : 03-17-11

25-APR-2011 12:28
P:\Structures\Bailey\Str1\mshaikh\Microstation\U-2550B_SD_TS.dgn
mshaikh

STR #1

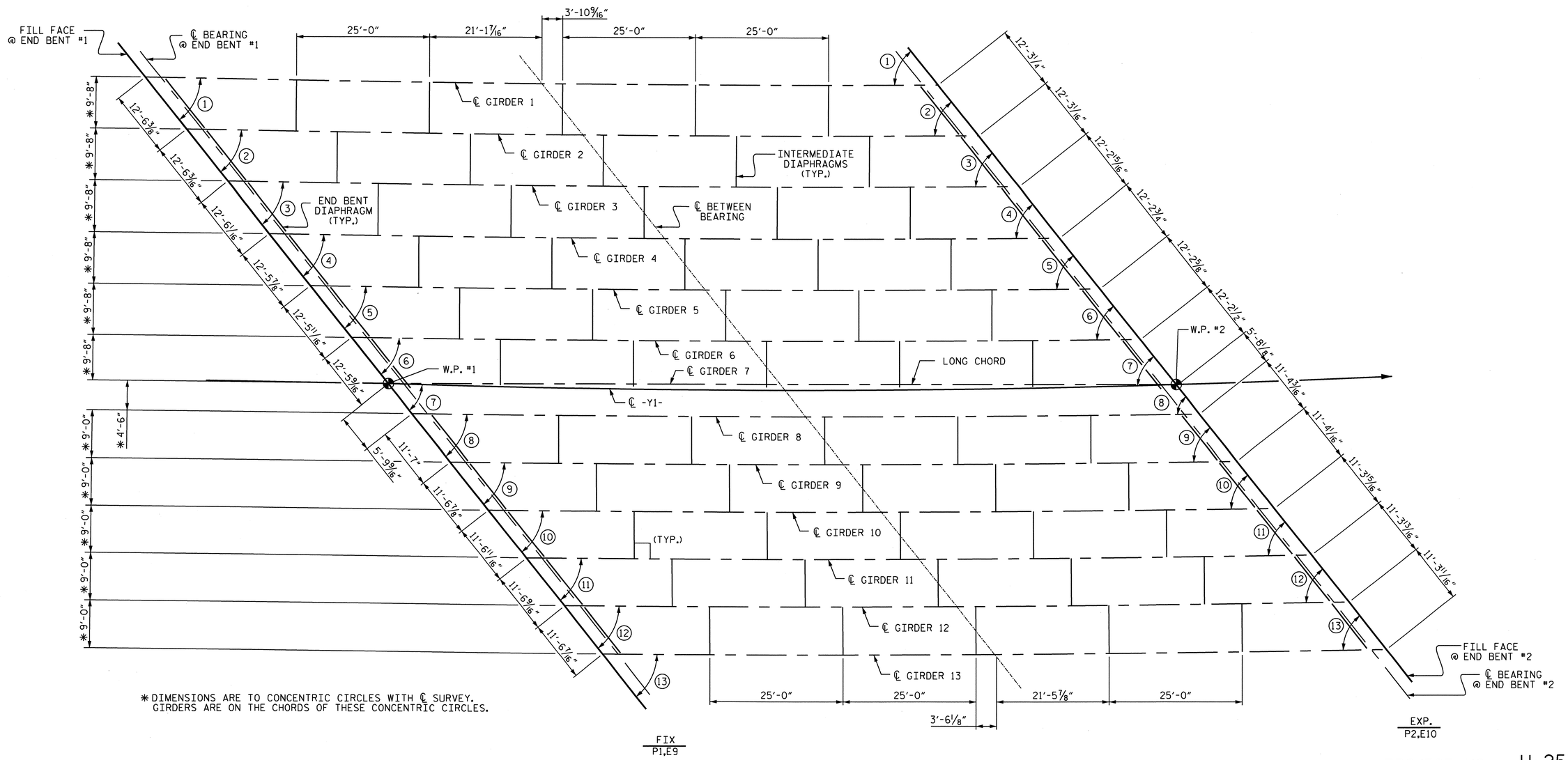

* DIMENSIONS ARE TO CONCENTRIC CIRCLES WITH ℄ SURVEY. GIRDERS ARE ON THE CHORDS OF THESE CONCENTRIC CIRCLES.

PLAN

ANGLES

1	51°-11'-31"	8	51°-41'-49"
2	51°-16'-16"	9	51°-46'-07"
3	51°-20'-59"	10	51°-50'-23"
4	51°-25'-41"	11	51°-54'-38"
5	51°-30'-22"	12	51°-58'-53"
6	51°-35'-02"	13	52°-03'-06"
7	51°-39'-40"		

PROJECT NO. U-2550B
BURKE COUNTY
STATION: 23+83.10 -L-

STATE OF NORTH CAROLINA
DEPARTMENT OF TRANSPORTATION
RALEIGH

SUPERSTRUCTURE FRAMING PLAN

NORTH CAROLINA PROFESSIONAL SEAL 15825 PROJECT ENGINEER D. KL APPENBRINK
4-28-2011

REVISIONS						SHEET NO.
NO.	BY:	DATE:	NO.	BY:	DATE:	S-13
1			3			TOTAL SHEETS
2			4			93

DRAWN BY : M. G. SHAIKH DATE : 10-03-10
CHECKED BY : D.A. DAVENPORT DATE : 03-04-11

25-APR-2011 12:28
P:\Structures\Bailey\Str1\mshaikh\Microstation\U-2550B_SD_TS.dgn
mshaikh

STR #1

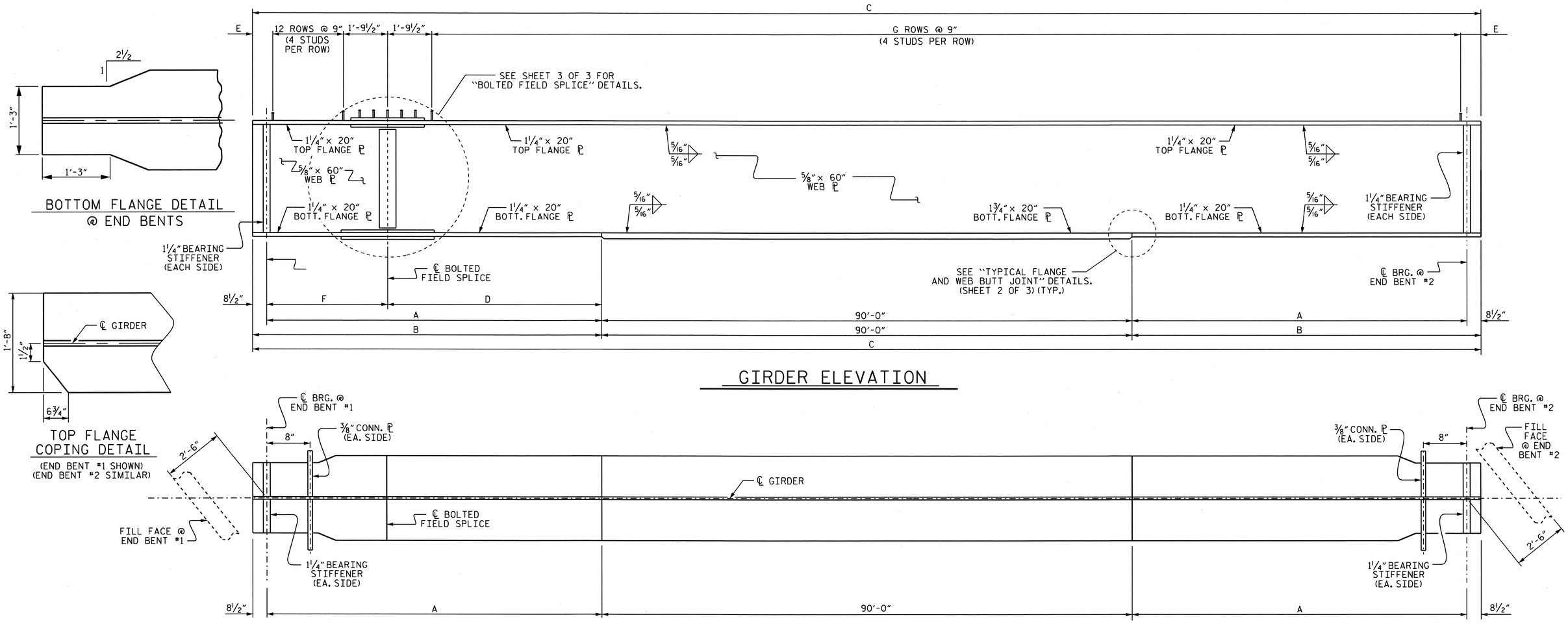

DIMENSION TABLE

GDR.	DIM 'A'	DIM 'B'	DIM 'C'	DIM 'D'	DIM 'E'	DIM 'F'	'G'
1	26'-3 5/16"	26'-11 13/16"	143'-11 5/8"	16'-6"	5 5/16"	9'-9 5/16"	176
2	26'-2 3/8"	26'-10 7/8"	143'-9 3/4"	16'-6"	4 3/8"	9'-8 3/8"	176
3	26'-1 7/16"	26'-9 15/16"	143'-7 7/8"	16'-6"	3 7/16"	9'-7 7/16"	176
4	26'-0 1/2"	26'-9"	143'-6"	16'-1 1/2"	7"	9'-11"	175
5	25'-11 9/16"	26'-8 1/16"	143'-4 1/8"	16'-1 1/2"	6 1/16"	9'-10 1/16"	175
6	25'-10 5/8"	26'-7 1/8"	143'-2 1/4"	16'-1 1/2"	5 1/8"	9'-9 1/8"	175
7	25'-9 3/4"	26'-6 1/4"	143'-0 1/2"	16'-1 1/2"	4 1/4"	9'-8 1/4"	175
8	25'-9 5/16"	26'-5 13/16"	142'-11 5/8"	16'-1 1/2"	3 13/16"	9'-7 13/16"	175
9	25'-8 1/2"	26'-5"	142'-10"	16'-1 1/2"	3"	9'-7"	175
10	25'-7 5/8"	26'-4 1/8"	142'-8 1/4"	16'-1 1/2"	2 1/8"	9'-6 1/8"	175
11	25'-6 13/16"	26'-3 5/16"	142'-6 5/8"	15'-9"	5 13/16"	9'-9 13/16"	174
12	25'-6"	26'-2 1/2"	142'-5"	15'-9"	5"	9'-9"	174
13	25'-5 3/16"	26'-1 11/16"	142'-3 3/8"	15'-9"	4 3/16"	9'-8 3/16"	174

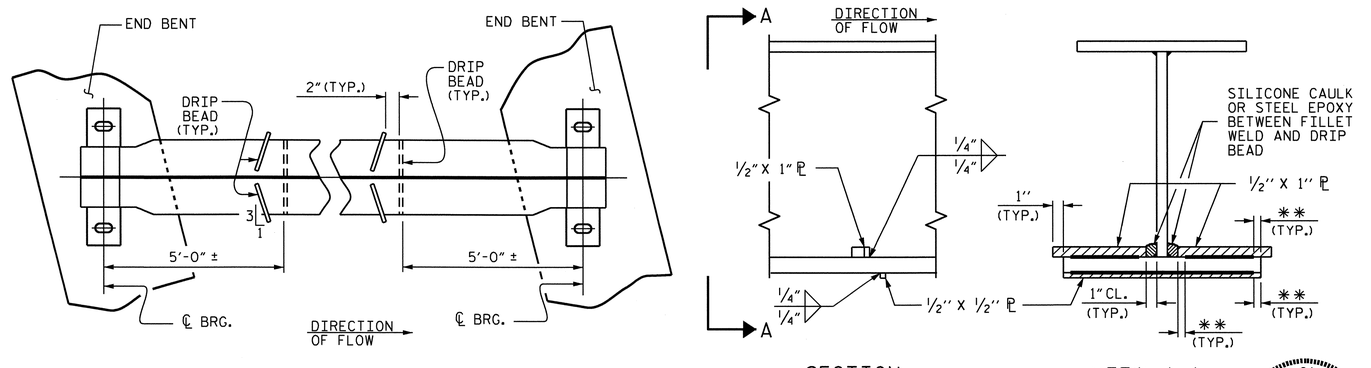

PROJECT NO. U-2550B
BURKE COUNTY
STATION: 23+83.10 -L-

SHEET 1 OF 3

STATE OF NORTH CAROLINA
DEPARTMENT OF TRANSPORTATION
RALEIGH

SUPERSTURCTURE STRUCTURAL STEEL DETAILS

NORTH CAROLINA PROFESSIONAL SEAL 19826 ENGINEER BRUCE D. KLAPPENBACH 4-26-2011

REVISIONS						SHEET NO.
NO.	BY:	DATE:	NO.	BY:	DATE:	S-14
1			3			TOTAL SHEETS
2			4			93

DRAWN BY : M. G. SHAIKH DATE : 02-09-11
CHECKED BY : D.A. DAVENPORT DATE : 03-04-11

26-APR-2011 14:19
R:\Structures\Bailey\Str1\mshaikh\Microstation\U-2550B_SD_TS.dgn
bklappenbach

STR #1 NCBDS

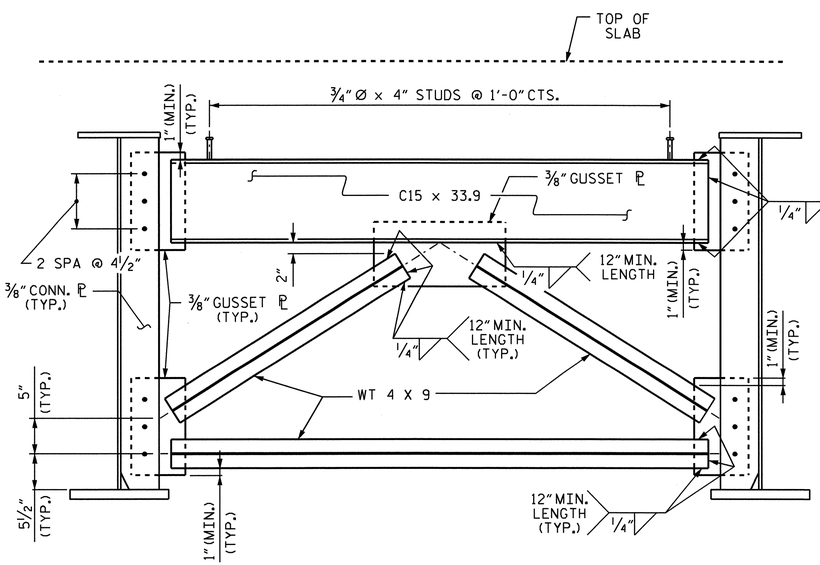

END BENT DIAPHRAGM

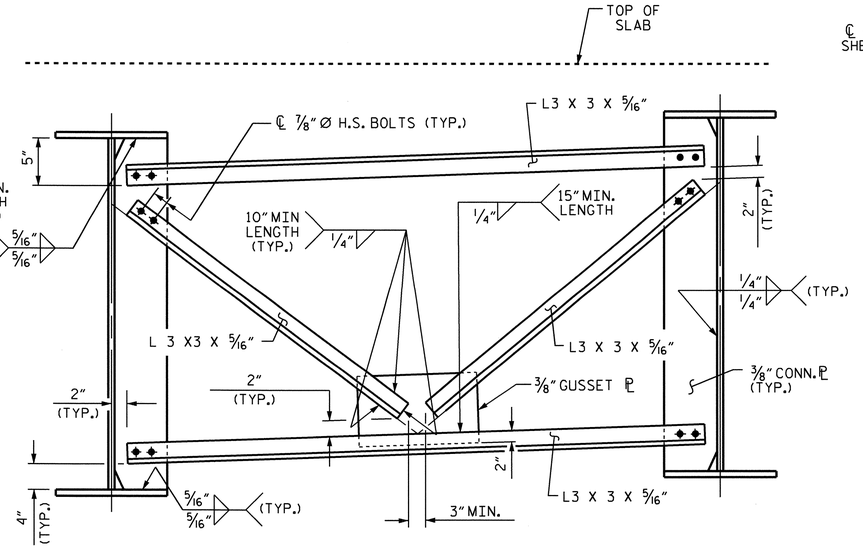

INTERMEDIATE DIAPHRAGM

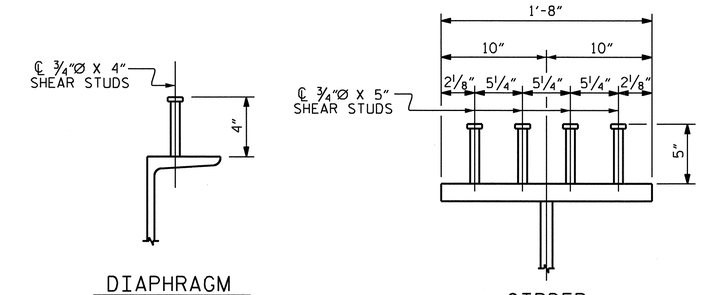

SHEAR STUD DETAILS

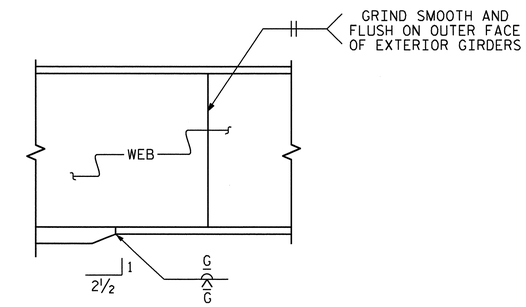

ELEVATION

TYPICAL FLANGE AND WEB BUTT JOINTS

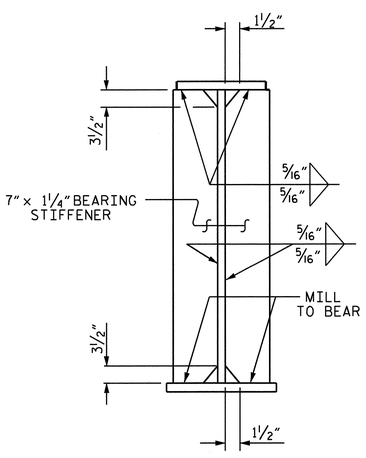

BEARING STIFFENER

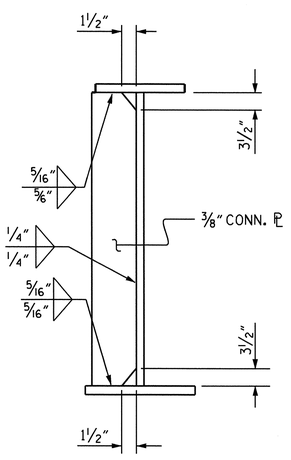

CONNECTOR PLATE

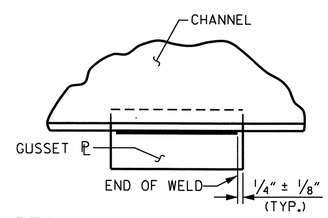

TYPICAL GUSSET PLATE CONNECTION

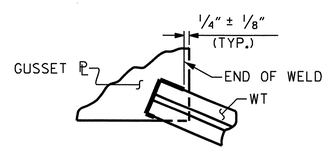

TYPICAL "TEE" TO GUSSET PLATE CONNECTION

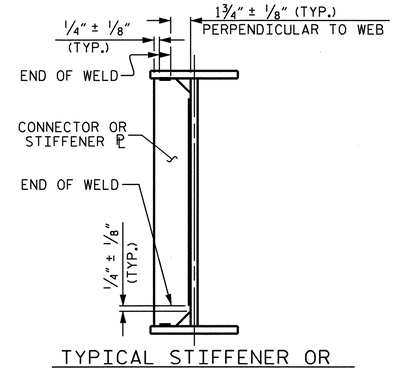

TYPICAL STIFFENER OR CONNECTOR PLATE CONNECTIONS

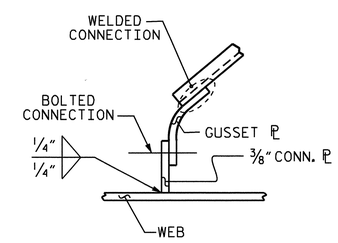

GUSSET PLATE DETAIL

WELD TERMINATION DETAILS

PROJECT NO. U-2550B

BURKE COUNTY

STATION: 23+83.10 -L-

SHEET 2 OF 3

STATE OF NORTH CAROLINA
DEPARTMENT OF TRANSPORTATION
RALEIGH

SUPERSTURCTURE STRUCTURAL STEEL DETAILS

NORTH CAROLINA PROFESSIONAL SEAL 15825 ENGINEER BRUCE D. KLAPPENBACH
4-28-2011

REVISIONS						SHEET NO.
NO.	BY:	DATE:	NO.	BY:	DATE:	S-15
1			3			TOTAL SHEETS
2			4			93

DRAWN BY : M. G. SHAIKH DATE : 09-23-10
CHECKED BY : D.A. DAVENPORT DATE : 03-07-11

26-APR-2011 11:11
P:\Structures\Bailey\Str1\mshaikh\Microstation\U-2550B_SD_TS.dgn
mshaikh

STR #1

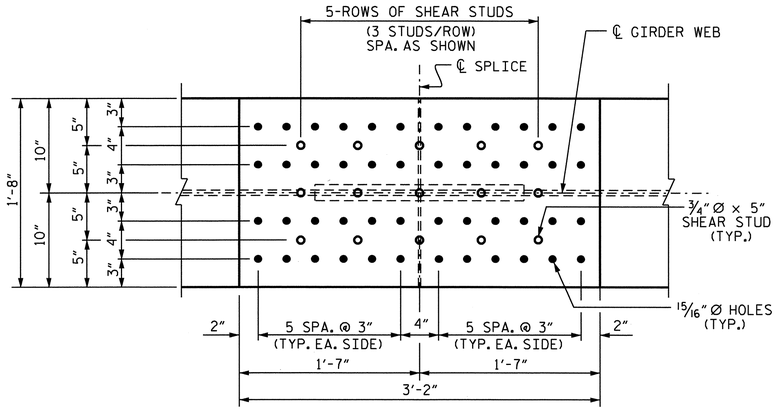

PLAN (TOP OF TOP FLANGE)

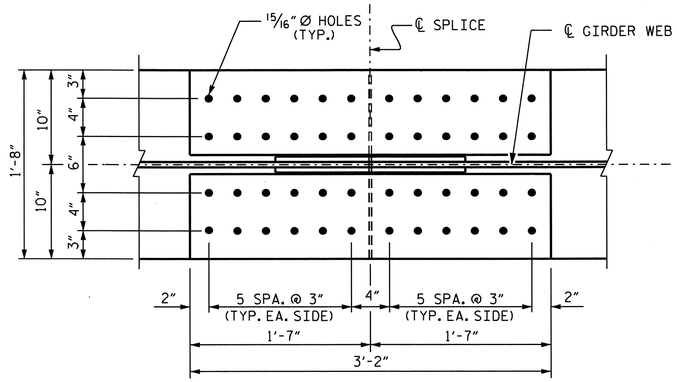

PLAN (TOP OF BOTTOM FLANGE)

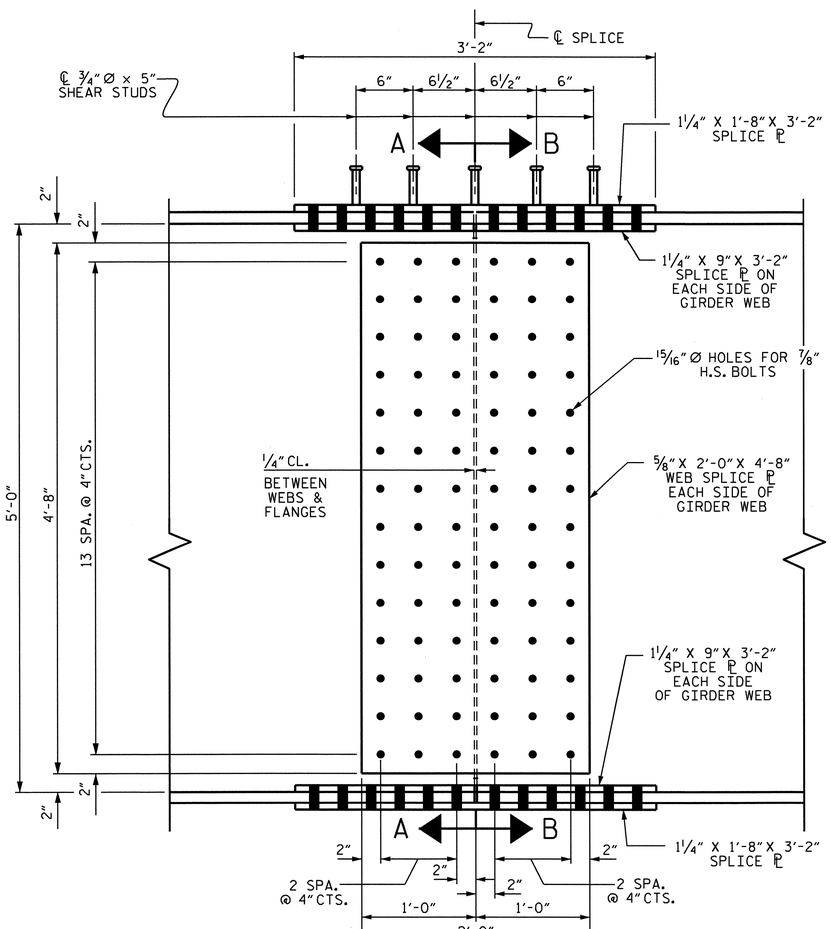

ELEVATION

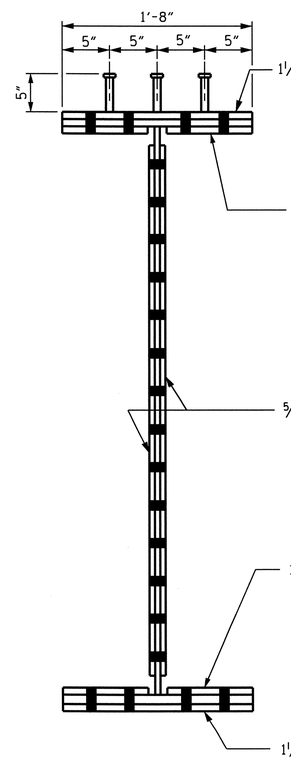

SECTION A-A

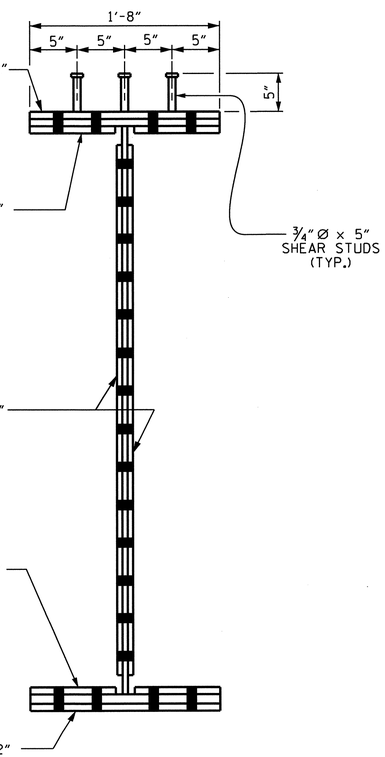

SECTION B-B

NOTES

ALL STRUCTURAL STEEL SHALL BE AASHTO M270 GRADE 50W AND PAINTED IN ACCORDANCE WITH SYSTEM 4 OF ARTICLE 442-7 OF THE STANDARD SPECIFICATIONS UNLESS OTHERWISE NOTED ON THE PLANS.

ALL DIMENSIONS SHOWN ARE HORIZONTAL OR VERTICAL, UNLESS OTHERWISE NOTED.

ALL FIELD CONNECTIONS TO BE 7/8" DIA. HIGH STRENGTH BOLTS UNLESS OTHERWISE NOTED. FOR HIGH STRENGTH BOLTS, SEE SPECIAL PROVISIONS.

BEARING STIFFENERS ARE TO BE PLACED NORMAL TO THE WEB OF THE GIRDER AND SHALL BE PLUMB.

A CHARPY V-NOTCH TEST IS REQUIRED FOR WEB PLATES, BOTTOM FLANGE PLATES, BOTTOM FLANGE SPLICE PLATES AND WEB SPLICE PLATES FOR ALL GIRDERS AND IN ACCORDANCE WITH ARTICLE 1072-9 OF THE STANDARD SPECIFICATIONS.

SHOP SPLICES ARE PERMITTED TO LIMIT THE MAXIMUM REQUIRED FLANGE PIECE LENGTHS TO 60 FEET AND WEB PIECE LENGTHS TO 45 FEET. PERMITTED FLANGE AND WEB SHOP SPLICES SHALL NOT BE LOCATED WITHIN 15 FEET OF MAXIMUM DEAD LOAD DEFLECTION. KEEP 2 FEET MINIMUM BETWEEN WEB AND FLANGE SHOP SPLICES. KEEP 6" MINIMUM BETWEEN CONNECTOR PLATE OR TRANSVERSE STIFFENER WELDS AND WEB OR FLANGE SHOP SPLICES.

STUDS ON GIRDERS MAY BE SHIFTED UP TO 1" IF NECESSARY TO CLEAR FLANGE SPLICE WELD.

TENSION ON THE AASHTO M164 BOLTS SHALL BE CALIBRATED USING DIRECT TENSION INDICATOR WASHERS. FOR DIRECT TENSION INDICATORS, SEE SPECIAL PROVISIONS.

ENDS OF GIRDERS SHALL BE PLUMB.

FOR SHIPPING STEEL STRUCTURAL MEMBERS, SEE SPECIAL PROVISIONS.

PROJECT NO. U-2550B
BURKE COUNTY
STATION: 23+83.10 -L-

SHEET 3 OF 3

STATE OF NORTH CAROLINA
DEPARTMENT OF TRANSPORTATION
RALEIGH

SUPERSTRUCTURE

BOLTED FIELD SPLICE

NORTH CAROLINA PROFESSIONAL SEAL 15825 ENGINEER BRUCE O. KLAPPENBACH
4-25-2011

REVISIONS						SHEET NO.
NO.	BY:	DATE:	NO.	BY:	DATE:	S-16
1			3			TOTAL SHEETS
2			4			93

STR #1 NCDDS

DRAWN BY : M. G. SHAIKH DATE : 10-04-10
CHECKED BY : D.A. DAVENPORT DATE : 03-04-11

25-APR-2011 12:26
P:\Structures\Bailey\Str1\mshaikh\Microstation\U-2550B_SD_TS.dgn
mshaikh

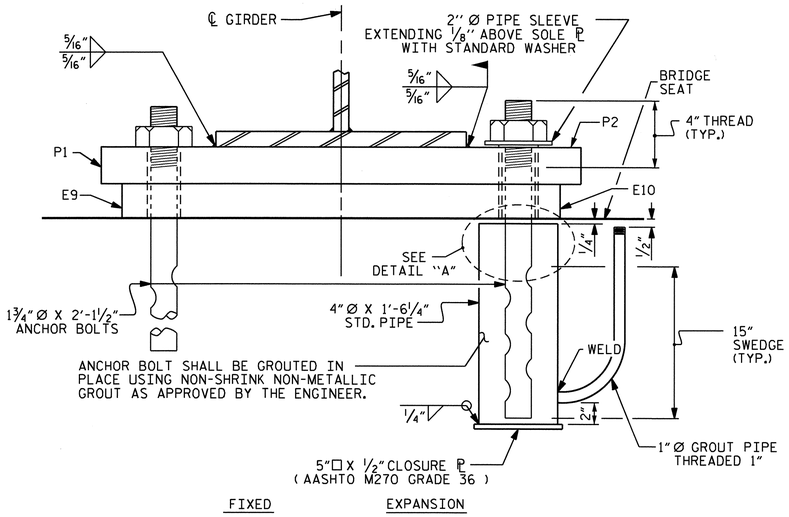

END VIEW

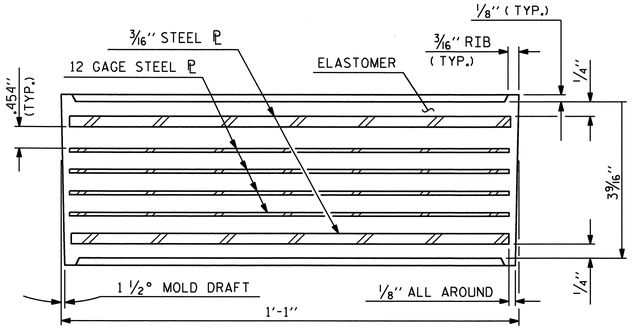

TYPICAL SECTION OF ELASTOMERIC BEARING

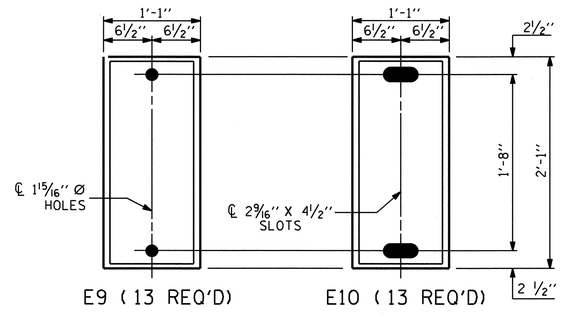

PLAN VIEW OF ELASTOMERIC BEARING

TYPE V

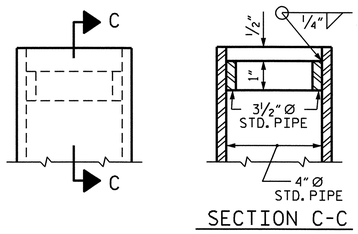

SECTION C-C

DETAIL A

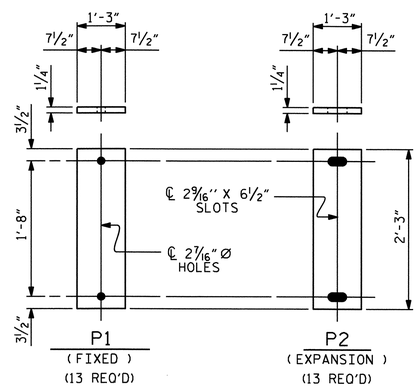

SOLE PLATE DETAILS ("P")

NOTES

AT ALL FIXED POINTS OF SUPPORT, NUTS FOR ANCHOR BOLTS ARE TO BE TIGHTENED FINGER TIGHT AND THEN BACKED OFF 1/2 TURN. THE THREAD OF THE NUT AND BOLT SHALL THEN BE BURRED WITH A SHARP POINTED TOOL.

THE 2" Ø PIPE SLEEVE SHALL BE CUT FROM SCHEDULE 40 PVC PLASTIC PIPE. THE PVC PLASTIC PIPE SHALL MEET THE REQUIREMENTS OF ASTM D1785.

THE PAYMENT FOR THE PIPE SLEEVES SHALL BE INCLUDED IN THE SEVERAL PAY ITEMS.

FOR AASHTO M270 GRADE 50W STRUCTURAL STEEL, SOLE PLATE SHALL BE AASHTO M270 GRADE 50W AND SHALL NOT BE GALVANIZED. ANCHOR BOLTS, NUTS AND WASHERS SHALL BE GALVANIZED IN ACCORDANCE WITH THE STANDARD SPECIFICATIONS.

ANCHOR BOLTS SHALL MEET THE REQUIREMENTS OF ASTM A449. NUTS SHALL MEET THE REQUIREMENTS OF AASHTO M291-DH OR AASHTO M292-2H. WASHERS SHALL MEET THE REQUIREMENTS OF AASHTO M293. SHOP DRAWINGS ARE NOT REQUIRED FOR ANCHOR BOLTS, NUTS AND WASHERS. SHOP INSPECTION IS REQUIRED.

WHEN FIELD WELDING THE SOLE PLATE TO THE GIRDER FLANGE, USE TEMPERATURE INDICATING WAX PENS, OR OTHER SUITABLE MEANS, TO ENSURE THAT THE TEMPERATURE OF THE SOLE PLATE DOES NOT EXCEED 300°F. TEMPERATURES ABOVE THIS MAY DAMAGE THE ELASTOMER.

ALL SURFACES OF BEARING PLATES SHALL BE SMOOTH AND STRAIGHT.

THE CLOSURE PLATE, GROUT PIPE AND STANDARD PIPE FOR THE EXPANSION ASSEMBLY NEED NOT BE GALVANIZED.

THE CONTRACTOR'S ATTENTION IS CALLED TO THE FOLLOWING PROCEDURES TO ACCOMODATE GIRDER TRANSLATION AND END ROTATION:

1. ONCE THE DECK HAS CURED, THE GIRDERS SHALL BE JACKED AND THE ANCHOR BOLTS, SOLE PLATE, AND ELASTOMERIC BEARING SLOTS SHALL BE CENTERED AS NEARLY AS PRACTICAL ABOUT THE BEARING STIFFENER. THIS OPERATION SHALL BE PERFORMED AT APPROXIMATELY 60° F.

2. AFTER CENTERING THE SLOTS AND ANCHOR BOLTS, THE SOLE PLATES SHALL BE FIELD WELDED TO THE GIRDER FLANGES AND ANCHOR BOLTS GROUTED.

   THE CONTRACTOR MAY PROPOSE ALTERNATE METHODS, PROVIDED DETAILS ARE SUBMITTED TO THE ENGINEER FOR REVIEW AND APPROVAL.

ELASTOMER IN ALL BEARINGS SHALL BE 60 DUROMETER HARDNESS.

—LOAD RATINGS—	
	MAX.D.L.+ L.L.
TYPE V	282 K

PROJECT NO. U-2550B
BURKE COUNTY
STATION: 23+83.10 -L-

STATE OF NORTH CAROLINA
DEPARTMENT OF TRANSPORTATION
RALEIGH

ELASTOMERIC BEARING DETAILS
(STEEL SUPERSTRUCTURE)

NORTH CAROLINA PROFESSIONAL SEAL 15826 ENGINEER BRUCE D. KLAPPENBACH 4-28-2011

REVISIONS						SHEET NO.
NO.	BY:	DATE:	NO.	BY:	DATE:	S-17
1			3			TOTAL SHEETS
2			4			93

ASSEMBLED BY : M. G. SHAIKH DATE : 02-02-11		
CHECKED BY : D.A. DAVENPORT DATE : 03-04-11		
DRAWN BY : EEM 10/95	REV. 10/17/00	RWW/LES
CHECKED BY : PEK 10/95	REV. 7/10/01	LES/RDR
	REV. 5/1/06	TLA/GM

25-APR-2011 12:25
P:\Structures\Bailey\Str1\mshaikh\Microstation\U-2550B_SD_TS.dgn
mshaikh

STR #1

STD. NO. EB2 (SHT 2b)

DEAD LOAD DEFLECTION TABLE FOR GIRDERS

	STAGE I																				
	GIRDER 1																				
TWENTIETH POINTS	0	.05	.10	.15	.20	.25	.30	.35	.40	.45	.50	.55	.60	.65	.70	.75	.80	.85	.90	.95	0
DEFLECTION DUE TO WEIGHT OF GIRDER ↓	0.000	0.022	0.044	0.064	0.082	0.098	0.112	0.123	0.131	0.136	0.138	0.136	0.131	0.123	0.112	0.098	0.082	0.064	0.044	0.022	0.000
DEFLECTION DUE TO WEIGHT OF SLAB ✳ ↓	0.000	0.071	0.143	0.210	0.271	0.325	0.371	0.408	0.435	0.451	0.456	0.451	0.435	0.408	0.371	0.325	0.271	0.210	0.143	0.071	0.000
DEFLECTION DUE TO WEIGHT OF RAIL ↓	0.000	0.005	0.011	0.015	0.020	0.024	0.027	0.029	0.031	0.033	0.033	0.033	0.031	0.029	0.027	0.024	0.020	0.015	0.011	0.005	0.000
TOTAL DEAD LOAD DEFLECTION ↓	0.000	0.098	0.198	0.289	0.373	0.447	0.510	0.560	0.597	0.620	0.627	0.620	0.597	0.560	0.510	0.447	0.373	0.289	0.198	0.098	0.000
VERTICAL CURVE ORDINATE	0.000	0.018	0.035	0.050	0.064	0.075	0.084	0.091	0.096	0.100	0.101	0.100	0.096	0.091	0.084	0.075	0.064	0.050	0.035	0.018	0.000
ORDINATE DUE TO SUPERELEVATION	0.000	-0.003	-0.007	-0.009	-0.012	-0.014	-0.015	-0.016	-0.017	-0.018	-0.018	-0.018	-0.017	-0.016	-0.015	-0.014	-0.012	-0.009	-0.007	-0.003	0.000
REQUIRED CAMBER	0	1 3/8"	2 11/16"	3 15/16"	5 1/8"	6 1/8"	6 15/16"	7 5/8"	8 1/8"	8 7/16"	8 1/2"	8 7/16"	8 1/8"	7 5/8"	6 15/16"	6 1/8"	5 1/8"	3 15/16"	2 11/16"	1 3/8"	0

✳ INCLUDES SLAB, BUILDUPS & STAY-IN-PLACE FORMS.
ALL VALUES ARE SHOWN IN FEET (DECIMAL FORM), EXCEPT "FINAL CAMBER", WHICH IS GIVEN IN INCHES (FRACTION FORM).
EFFECT OF CAMBER DISSIPATION IS NEGLIGIBLE.

DEAD LOAD DEFLECTION TABLE FOR GIRDERS

	STAGE I																				
	GIRDER 2																				
TWENTIETH POINTS	0	.05	.10	.15	.20	.25	.30	.35	.40	.45	.50	.55	.60	.65	.70	.75	.80	.85	.90	.95	0
DEFLECTION DUE TO WEIGHT OF GIRDER ↓	0.000	0.023	0.045	0.065	0.084	0.100	0.114	0.125	0.133	0.138	0.140	0.138	0.133	0.125	0.114	0.100	0.084	0.065	0.045	0.023	0.000
DEFLECTION DUE TO WEIGHT OF SLAB ✳ ↓	0.000	0.068	0.139	0.206	0.267	0.321	0.366	0.402	0.429	0.445	0.451	0.445	0.429	0.402	0.366	0.321	0.267	0.206	0.139	0.068	0.000
DEFLECTION DUE TO WEIGHT OF RAIL ↓	0.000	0.020	0.039	0.057	0.073	0.088	0.100	0.109	0.116	0.121	0.122	0.121	0.116	0.109	0.100	0.088	0.073	0.057	0.039	0.020	0.000
TOTAL DEAD LOAD DEFLECTION ↓	0.000	0.111	0.223	0.328	0.424	0.509	0.580	0.636	0.678	0.704	0.713	0.704	0.678	0.636	0.580	0.509	0.424	0.328	0.223	0.111	0.000
VERTICAL CURVE ORDINATE	0.000	0.019	0.036	0.051	0.065	0.076	0.085	0.092	0.097	0.100	0.101	0.100	0.097	0.092	0.085	0.076	0.065	0.051	0.036	0.019	0.000
ORDINATE DUE TO SUPERELEVATION	0.000	-0.003	-0.007	-0.019	-0.012	-0.014	-0.015	-0.016	-0.017	-0.018	-0.018	-0.018	-0.017	-0.016	-0.015	-0.014	-0.012	-0.019	-0.007	-0.003	0.000
REQUIRED CAMBER	0	1 1/2"	3 1/16"	4 7/16"	5 3/4"	6 7/8"	7 13/16"	8 9/16"	9 1/16"	9 7/16"	9 9/16"	9 7/16"	9 1/16"	8 9/16"	7 13/16"	6 7/8"	5 3/4"	4 7/16"	3 1/16"	1 1/2"	0

✳ INCLUDES SLAB, BUILDUPS & STAY-IN-PLACE FORMS.
ALL VALUES ARE SHOWN IN FEET (DECIMAL FORM), EXCEPT "FINAL CAMBER", WHICH IS GIVEN IN INCHES (FRACTION FORM).
EFFECT OF CAMBER DISSIPATION IS NEGLIGIBLE.

DEAD LOAD DEFLECTION TABLE FOR GIRDERS

	STAGE I																				
	GIRDER 3																				
TWENTIETH POINTS	0	.05	.10	.15	.20	.25	.30	.35	.40	.45	.50	.55	.60	.65	.70	.75	.80	.85	.90	.95	0
DEFLECTION DUE TO WEIGHT OF GIRDER ↓	0.000	0.023	0.045	0.065	0.084	0.100	0.114	0.125	0.133	0.138	0.140	0.138	0.133	0.125	0.114	0.100	0.084	0.065	0.045	0.023	0.000
DEFLECTION DUE TO WEIGHT OF SLAB ✳ ↓	0.000	0.065	0.136	0.203	0.263	0.316	0.361	0.397	0.423	0.439	0.445	0.439	0.423	0.397	0.361	0.316	0.263	0.203	0.136	0.065	0.000
DEFLECTION DUE TO WEIGHT OF RAIL ↓	0.000	0.020	0.039	0.067	0.073	0.088	0.100	0.109	0.116	0.121	0.122	0.121	0.116	0.109	0.100	0.088	0.073	0.067	0.039	0.020	0.000
TOTAL DEAD LOAD DEFLECTION ↓	0.000	0.108	0.220	0.325	0.420	0.504	0.575	0.631	0.672	0.698	0.707	0.698	0.672	0.631	0.575	0.504	0.420	0.325	0.220	0.108	0.000
VERTICAL CURVE ORDINATE	0.000	0.019	0.036	0.051	0.064	0.075	0.084	0.091	0.096	0.099	0.100	0.099	0.096	0.091	0.084	0.075	0.064	0.051	0.036	0.019	0.000
ORDINATE DUE TO SUPERELEVATION	0.000	-0.003	-0.007	-0.009	-0.012	-0.013	-0.015	-0.016	-0.017	-0.018	-0.018	-0.018	-0.017	-0.016	-0.015	-0.013	-0.012	-0.009	-0.007	-0.003	0.000
REQUIRED CAMBER	0	1 1/2"	3"	4 3/8"	5 11/16"	6 13/16"	7 3/4"	8 1/2"	9"	9 3/8"	9 1/2"	9 3/8"	9"	8 1/2"	7 3/4"	6 13/16"	5 11/16"	4 3/8"	3"	1 1/2"	0

✳ INCLUDES SLAB, BUILDUPS & STAY-IN-PLACE FORMS.
ALL VALUES ARE SHOWN IN FEET (DECIMAL FORM), EXCEPT "FINAL CAMBER", WHICH IS GIVEN IN INCHES (FRACTION FORM).
EFFECT OF CAMBER DISSIPATION IS NEGLIGIBLE.

PROJECT NO. U-2550B
BURKE COUNTY
STATION: 23+83.10 -L-

SHEET 1 OF 5

STATE OF NORTH CAROLINA
DEPARTMENT OF TRANSPORTATION
RALEIGH

DEAD LOAD DEFLECTION (STAGE I)

NORTH CAROLINA PROFESSIONAL SEAL 15825 ENGINEER BRUCE D. KLAPPENBACH
4-26-2011

REVISIONS						SHEET NO.
NO.	BY:	DATE:	NO.	BY:	DATE:	S-18
1			3			TOTAL SHEETS
2			4			93

STR #1

DRAWN BY : M. G. SHAIKH DATE : 02-08-11
CHECKED BY : H.T. BARBOUR DATE : 03-11

25-APR-2011 12:24
P:\Structures\Bailey\Str1\mshaikh\Microstation\U-2550B_SD_TS.dgn
mshaikh

DEAD LOAD DEFLECTION TABLE FOR GIRDERS

	STAGE I																				
	GIRDER 4																				
TWENTIETH POINTS	0	.05	.10	.15	.20	.25	.30	.35	.40	.45	.50	.55	.60	.65	.70	.75	.80	.85	.90	.95	0
DEFLECTION DUE TO WEIGHT OF GIRDER ↓	0.000	0.023	0.044	0.065	0.083	0.100	0.114	0.125	0.133	0.138	0.140	0.138	0.133	0.125	0.114	0.100	0.083	0.065	0.044	0.023	0.000
DEFLECTION DUE TO WEIGHT OF SLAB * ↓	0.000	0.063	0.133	0.199	0.258	0.311	0.356	0.392	0.418	0.434	0.439	0.434	0.418	0.392	0.356	0.311	0.258	0.199	0.133	0.063	0.000
DEFLECTION DUE TO WEIGHT OF RAIL ↓	0.000	0.000	0.000	0.000	0.000	0.000	0.000	0.000	0.000	0.000	0.000	0.000	0.000	0.000	0.000	0.000	0.000	0.000	0.000	0.000	0.000
TOTAL DEAD LOAD DEFLECTION ↓	0.000	0.086	0.117	0.264	0.341	0.411	0.470	0.517	0.551	0.572	0.579	0.572	0.551	0.517	0.470	0.411	0.341	0.264	0.117	0.086	0.000
VERTICAL CURVE ORDINATE	0.000	0.019	0.036	0.051	0.064	0.075	0.084	0.091	0.096	0.099	0.100	0.099	0.096	0.091	0.084	0.075	0.064	0.051	0.036	0.019	0.000
ORDINATE DUE TO SUPERELEVATION	0.000	-0.003	-0.006	-0.009	-0.011	-0.013	-0.015	-0.016	-0.017	-0.018	-0.018	-0.018	-0.017	-0.016	-0.015	-0.013	-0.011	-0.009	-0.006	-0.003	0.000
REQUIRED CAMBER	0	1 3/16"	2 1/2"	3 11/16"	4 3/4"	5 11/16"	6 7/16"	7 1/16"	7 9/16"	7 13/16"	7 15/16"	7 13/16"	7 9/16"	7 1/16"	6 7/16"	5 11/16"	4 3/4"	3 11/16"	2 1/2"	1 3/16"	0

* INCLUDES SLAB, BUILDUPS & STAY-IN-PLACE FORMS.
ALL VALUES ARE SHOWN IN FEET (DECIMAL FORM), EXCEPT "FINAL CAMBER", WHICH IS GIVEN IN INCHES (FRACTION FORM).
EFFECT OF CAMBER DISSIPATION IS NEGLIGIBLE.

DEAD LOAD DEFLECTION TABLE FOR GIRDERS

	STAGE I																				
	GIRDER 5																				
TWENTIETH POINTS	0	.05	.10	.15	.20	.25	.30	.35	.40	.45	.50	.55	.60	.65	.70	.75	.80	.85	.90	.95	0
DEFLECTION DUE TO WEIGHT OF GIRDER ↓	0.000	0.023	0.044	0.065	0.083	0.100	0.114	0.125	0.133	0.138	0.140	0.138	0.133	0.125	0.114	0.100	0.083	0.065	0.044	0.023	0.000
DEFLECTION DUE TO WEIGHT OF SLAB * ↓	0.000	0.060	0.129	0.195	0.254	0.306	0.351	0.386	0412	0.428	0.433	0.428	0412	0.386	0.351	0.306	0.254	0.195	0.129	0.060	0.000
DEFLECTION DUE TO WEIGHT OF RAIL ↓	0.000	0.000	0.000	0.000	0.000	0.000	0.000	0.000	0.000	0.000	0.000	0.000	0.000	0.000	0.000	0.000	0.000	0.000	0.000	0.000	0.000
TOTAL DEAD LOAD DEFLECTION ↓	0.000	0.083	0.173	0.260	0.337	0.406	0.465	0.511	0.545	0.566	0.573	0.566	0.545	0.511	0.465	0.406	0.337	0.260	0.173	0.083	0.000
VERTICAL CURVE ORDINATE	0.000	0.019	0.036	0.051	0.064	0.074	0.083	0.090	0.095	0.098	0.099	0.098	0.095	0.090	0.083	0.074	0.064	0.051	0.036	0.019	0.000
ORDINATE DUE TO SUPERELEVATION	0.000	-0.003	-0.006	-0.009	-0.011	-0.013	-0.015	-0.016	-0.017	-0.018	-0.018	-0.018	-0.017	-0.016	-0.015	-0.013	-0.011	-0.009	-0.006	-0.003	0.000
REQUIRED CAMBER	0	1 3/16"	2 7/16"	3 5/8"	4 11/16"	5 5/8"	6 3/8"	7"	7 1/2"	7 3/4"	7 7/8"	7 3/4"	7 1/2"	7"	6 3/8"	5 5/8"	4 11/16"	3 5/8"	2 7/16"	1 3/16"	0

* INCLUDES SLAB, BUILDUPS & STAY-IN-PLACE FORMS.
ALL VALUES ARE SHOWN IN FEET (DECIMAL FORM), EXCEPT "FINAL CAMBER", WHICH IS GIVEN IN INCHES (FRACTION FORM).
EFFECT OF CAMBER DISSIPATION IS NEGLIGIBLE.

PROJECT NO. U-2550B
BURKE COUNTY
STATION: 23+83.10 -L-

SHEET 2 OF 5

STATE OF NORTH CAROLINA
DEPARTMENT OF TRANSPORTATION
RALEIGH

DEAD LOAD DEFLECTION (STAGE I)

NORTH CAROLINA PROFESSIONAL SEAL 15825 ENGINEER BRUCE D. KLAPPERICH
4-28-2011

REVISIONS						SHEET NO.
NO.	BY:	DATE:	NO.	BY:	DATE:	S-19
1			3			TOTAL SHEETS
2			4			93

STR #1

DRAWN BY : M. G. SHAIKH DATE : 02-08-11
CHECKED BY : H.T. BARBOUR DATE : 03-11

26-APR-2011 11:12
P:\Structures\Bailey\Str1\mshaikh\Microstation\U-2550B_SD_TS.dgn
mshaikh

DEAD LOAD DEFLECTION TABLE FOR GIRDERS

	STAGE I																				
	GIRDER 6																				
TWENTIETH POINTS	0	.05	.10	.15	.20	.25	.30	.35	.40	.45	.50	.55	.60	.65	.70	.75	.80	.85	.90	.95	0
DEFLECTION DUE TO WEIGHT OF GIRDER ↓	0.000	0.022	0.044	0.064	0.083	0.099	0.113	0.124	0.132	0.137	0.138	0.137	0.132	0.124	0.113	0.099	0.083	0.064	0.044	0.022	0.000
DEFLECTION DUE TO WEIGHT OF SLAB * ↓	0.000	0.057	0.126	0.191	0.250	0.302	0.346	0.381	0.407	0.422	0.428	0.422	0.407	0.381	0.346	0.302	0.250	0.191	0.126	0.057	0.000
DEFLECTION DUE TO WEIGHT OF RAIL ↓	0.000	0.005	0.010	0.015	0.019	0.023	0.026	0.028	0.030	0.031	0.032	0.031	0.030	0.028	0.026	0.023	0.019	0.015	0.010	0.005	0.000
TOTAL DEAD LOAD DEFLECTION ↓	0.000	0.084	0.180	0.270	0.352	0.424	0.485	0.533	0.569	0.590	0.598	0.590	0.569	0.533	0.485	0.424	0.352	0.270	0.180	0.084	0.000
VERTICAL CURVE ORDINATE	0.000	0.019	0.036	0.050	0.063	0.074	0.083	0.090	0.095	0.098	0.099	0.098	0.095	0.090	0.083	0.074	0.063	0.050	0.036	0.019	0.000
ORDINATE DUE TO SUPERELEVATION	0.000	0.002	0.003	0.005	0.006	0.007	0.007	0.008	0.009	0.009	0.009	0.009	0.009	0.008	0.007	0.007	0.006	0.005	0.003	0.002	0.000
REQUIRED CAMBER	0	1 1/4"	2 5/8"	3 7/8"	5 1/16"	6 1/16"	6 7/8"	7 9/16"	8 1/16"	8 3/8"	8 7/16"	8 3/8"	8 1/16"	7 9/16"	6 7/8"	6 1/16"	5 1/16"	3 7/8"	2 5/8"	1 1/4"	0

* INCLUDES SLAB, BUILDUPS & STAY-IN-PLACE FORMS.
ALL VALUES ARE SHOWN IN FEET (DECIMAL FORM), EXCEPT "FINAL CAMBER", WHICH IS GIVEN IN INCHES (FRACTION FORM).
EFFECT OF CAMBER DISSIPATION IS NEGLIGIBLE.

DEAD LOAD DEFLECTION TABLE FOR GIRDERS

	STAGE I																				
	GIRDER 7																				
TWENTIETH POINTS	0	.05	.10	.15	.20	.25	.30	.35	.40	.45	.50	.55	.60	.65	.70	.75	.80	.85	.90	.95	0
DEFLECTION DUE TO WEIGHT OF GIRDER ↓	0.000	0.022	0.044	0.064	0.082	0.099	0.112	0.123	0.131	0.136	0.138	0.136	0.131	0.123	0.112	0.099	0.082	0.064	0.044	0.022	0.000
DEFLECTION DUE TO WEIGHT OF SLAB * ↓	0.000	0.054	0.123	0.187	0.245	0.297	0.341	0.375	0.401	0.417	0.422	0.417	0.401	0.375	0.341	0.297	0.245	0.187	0.123	0.054	0.000
DEFLECTION DUE TO WEIGHT OF RAIL ↓	0.000	0.012	0.023	0.033	0.042	0.051	0.058	0.063	0.067	0.070	0.071	0.070	0.067	0.063	0.058	0.051	0.042	0.033	0.023	0.012	0.000
TOTAL DEAD LOAD DEFLECTION ↓	0.000	0.088	0.190	0.284	0.369	0.447	0.511	0.561	0.599	0.623	0.631	0.623	0.599	0.561	0.511	0.447	0.369	0.284	0.190	0.088	0.000
VERTICAL CURVE ORDINATE	0.000	0.019	0.035	0.050	0.063	0.074	0.082	0.089	0.094	0.097	0.098	0.097	0.094	0.089	0.082	0.074	0.063	0.050	0.035	0.019	0.000
ORDINATE DUE TO SUPERELEVATION	0.000	0.002	0.003	0.005	0.006	0.007	0.007	0.008	0.009	0.009	0.009	0.009	0.009	0.008	0.007	0.007	0.006	0.005	0.003	0.002	0.000
REQUIRED CAMBER	0	1 5/16"	2 3/4"	4 1/16"	5 1/4"	6 5/16"	7 3/16"	7 7/8"	8 7/16"	8 3/4"	8 7/8"	8 3/4"	8 7/16"	7 7/8"	7 3/16"	6 5/16"	5 1/4"	4 1/16"	2 3/4"	1 5/16"	0

* INCLUDES SLAB, BUILDUPS & STAY-IN-PLACE FORMS.
ALL VALUES ARE SHOWN IN FEET (DECIMAL FORM), EXCEPT "FINAL CAMBER", WHICH IS GIVEN IN INCHES (FRACTION FORM).
EFFECT OF CAMBER DISSIPATION IS NEGLIGIBLE.

PROJECT NO. U-2550B
BURKE COUNTY
STATION: 23+83.10 -L-

SHEET 3 OF 5

STATE OF NORTH CAROLINA
DEPARTMENT OF TRANSPORTATION
RALEIGH

DEAD LOAD DEFLECTION (STAGE I)

NORTH CAROLINA PROFESSIONAL SEAL 15825 ENGINEER BRUCE D. KLAPPENBACH
4-28-2011

REVISIONS						SHEET NO.
NO.	BY:	DATE:	NO.	BY:	DATE:	S-20
1			3			TOTAL SHEETS
2			4			93

STR #1

DRAWN BY : M. G. SHAIKH DATE : 02-08-11
CHECKED BY : H.T. BARBOUR DATE : 03-11

25-APR-2011 12:23
P:\Structures\Bailey\Str1\mshaikh\Microstation\U-2550B_SD_TS.dgn
mshaikh

DEAD LOAD DEFLECTION TABLE FOR GIRDERS

	STAGE II																				
	GIRDER 8																				
TWENTIETH POINTS	0	.05	.10	.15	.20	.25	.30	.35	.40	.45	.50	.55	.60	.65	.70	.75	.80	.85	.90	.95	0
DEFLECTION DUE TO WEIGHT OF GIRDER ↓	0.000	0.022	0.044	0.064	0.082	0.098	0.112	0.123	0.131	0.136	0.137	0.136	0.131	0.123	0.112	0.098	0.082	0.064	0.044	0.022	0.000
DEFLECTION DUE TO WEIGHT OF SLAB * ↓	0.000	0.023	0.087	0.146	0.200	0.247	0.288	0.320	0.344	0.358	0.363	0.358	0.344	0.320	0.288	0.247	0.200	0.146	0.087	0.023	0.000
DEFLECTION DUE TO WEIGHT OF RAIL ↓	0.000	0.006	0.011	0.016	0.021	0.025	0.029	0.031	0.033	0.035	0.035	0.035	0.033	0.031	0.029	0.025	0.021	0.016	0.011	0.006	0.000
TOTAL DEAD LOAD DEFLECTION ↓	0.000	0.051	0.142	0.226	0.303	0.370	0.429	0.474	0.508	0.529	0.535	0.529	0.508	0.474	0.429	0.370	0.303	0.226	0.142	0.051	0.000
VERTICAL CURVE ORDINATE	0.000	0.019	0.035	0.050	0.063	0.073	0.082	0.089	0.094	0.097	0.098	0.097	0.094	0.089	0.082	0.073	0.063	0.050	0.035	0.019	0.000
ORDINATE DUE TO SUPERELEVATION	0.000	-0.002	-0.003	-0.005	-0.006	-0.007	-0.007	-0.008	-0.009	-0.009	-0.009	-0.009	-0.009	-0.008	-0.007	-0.007	-0.006	-0.005	-0.003	-0.002	0.000
REQUIRED CAMBER	0	13/16"	2 1/16"	3 1/4"	4 5/16"	5 1/4"	6 1/16"	6 11/16"	7 1/8"	7 3/8"	7 1/2"	7 3/8"	7 1/8"	6 11/16"	6 1/16"	5 1/4"	4 5/16"	3 1/4"	2 1/16"	13/16"	0

* INCLUDES SLAB, BUILDUPS & STAY-IN-PLACE FORMS.
ALL VALUES ARE SHOWN IN FEET (DECIMAL FORM), EXCEPT "FINAL CAMBER", WHICH IS GIVEN IN INCHES (FRACTION FORM).
EFFECT OF CAMBER DISSIPATION IS NEGLIGIBLE.

DEAD LOAD DEFLECTION TABLE FOR GIRDERS

	STAGE II																				
	GIRDER 9																				
TWENTIETH POINTS	0	.05	.10	.15	.20	.25	.30	.35	.40	.45	.50	.55	.60	.65	.70	.75	.80	.85	.90	.95	0
DEFLECTION DUE TO WEIGHT OF GIRDER ↓	0.000	0.022	0.044	0.064	0.082	0.098	0.112	0.123	0.130	0.135	0.137	0.135	0.130	0.123	0.112	0.098	0.082	0.064	0.044	0.022	0.000
DEFLECTION DUE TO WEIGHT OF SLAB * ↓	0.000	0.031	0.095	0.155	0.209	0.257	0.297	0.330	0.354	0.368	0.373	0.368	0.354	0.330	0.297	0.257	0.209	0.155	0.095	0.031	0.000
DEFLECTION DUE TO WEIGHT OF RAIL ↓	0.000	0.000	0.000	0.000	0.000	0.000	0.000	0.000	0.000	0.000	0.000	0.000	0.000	0.000	0.000	0.000	0.000	0.000	0.000	0.000	0.000
TOTAL DEAD LOAD DEFLECTION ↓	0.000	0.053	0.139	0.219	0.291	0.355	0.409	0.453	0.484	0.503	0.510	0.503	0.484	0.453	0.409	0.355	0.291	0.219	0.139	0.053	0.000
VERTICAL CURVE ORDINATE	0.000	0.019	0.035	0.049	0.062	0.073	0.081	0.089	0.093	0.096	0.097	0.096	0.093	0.089	0.081	0.073	0.062	0.049	0.035	0.019	0.000
ORDINATE DUE TO SUPERELEVATION	0.000	-0.002	-0.003	-0.005	-0.005	-0.006	-0.007	-0.008	-0.008	-0.009	-0.009	-0.009	-0.008	-0.008	-0.007	-0.006	-0.005	-0.005	-0.003	-0.002	0.000
REQUIRED CAMBER	0	13/16"	2 1/16"	3 1/8"	4 3/16"	5 1/16"	5 13/16"	6 7/16"	6 13/16"	7 1/16"	7 3/16"	7 1/16"	6 13/16"	6 7/16"	5 13/16"	5 1/16"	4 3/16"	3 1/8"	2 1/16"	13/16"	0

* INCLUDES SLAB, BUILDUPS & STAY-IN-PLACE FORMS.
ALL VALUES ARE SHOWN IN FEET (DECIMAL FORM), EXCEPT "FINAL CAMBER", WHICH IS GIVEN IN INCHES (FRACTION FORM).
EFFECT OF CAMBER DISSIPATION IS NEGLIGIBLE.

DEAD LOAD DEFLECTION TABLE FOR GIRDERS

	STAGE II																				
	GIRDER 10																				
TWENTIETH POINTS	0	.05	.10	.15	.20	.25	.30	.35	.40	.45	.50	.55	.60	.65	.70	.75	.80	.85	.90	.95	0
DEFLECTION DUE TO WEIGHT OF GIRDER ↓	0.000	0.022	0.044	0.064	0.082	0.098	0.112	0.123	0.130	0.135	0.137	0.135	0.130	0.123	0.112	0.098	0.082	0.064	0.044	0.022	0.000
DEFLECTION DUE TO WEIGHT OF SLAB * ↓	0.000	0.039	0.103	0.163	0.218	0.266	0.307	0.340	0.364	0.378	0.383	0.378	0.364	0.340	0.307	0.266	0.218	0.163	0.103	0.039	0.000
DEFLECTION DUE TO WEIGHT OF RAIL ↓	0.000	0.000	0.000	0.000	0.000	0.000	0.000	0.000	0.000	0.000	0.000	0.000	0.000	0.000	0.000	0.000	0.000	0.000	0.000	0.000	0.000
TOTAL DEAD LOAD DEFLECTION ↓	0.000	0.061	0.147	0.227	0.300	0.364	0.419	0.463	0.494	0.513	0.520	0.513	0.494	0.463	0.419	0.364	0.300	0.227	0.147	0.061	0.000
VERTICAL CURVE ORDINATE	0.000	0.018	0.035	0.049	0.062	0.073	0.081	0.088	0.093	0.096	0.097	0.096	0.093	0.088	0.081	0.073	0.062	0.049	0.035	0.018	0.000
ORDINATE DUE TO SUPERELEVATION	0.000	-0.003	-0.006	-0.009	-0.011	-0.013	-0.015	-0.016	-0.017	-0.017	-0.018	-0.017	-0.017	-0.016	-0.015	-0.013	-0.011	-0.009	-0.006	-0.003	0.000
REQUIRED CAMBER	0	15/16"	2 1/8"	3 3/16"	4 3/16"	5 1/16"	5 13/16"	6 7/16"	6 13/16"	7 1/8"	7 3/16"	7 1/8"	6 13/16"	6 7/16"	5 13/16"	5 1/16"	4 3/16"	3 3/16"	2 1/8"	15/16"	0

* INCLUDES SLAB, BUILDUPS & STAY-IN-PLACE FORMS.
ALL VALUES ARE SHOWN IN FEET (DECIMAL FORM), EXCEPT "FINAL CAMBER", WHICH IS GIVEN IN INCHES (FRACTION FORM).
EFFECT OF CAMBER DISSIPATION IS NEGLIGIBLE.

PROJECT NO. U-2550B
BURKE COUNTY
STATION: 23+83.10 -L-

SHEET 4 OF 5

STATE OF NORTH CAROLINA
DEPARTMENT OF TRANSPORTATION
RALEIGH

DEAD LOAD DEFLECTION (STAGE II)

NORTH CAROLINA PROFESSIONAL SEAL 15825 ENGINEER BRUCE D. KLAPPENBACH
4-28-2011

REVISIONS						SHEET NO.
NO.	BY:	DATE:	NO.	BY:	DATE:	S-21
1			3			TOTAL SHEETS
2			4			93

STR #1

DRAWN BY : M. G. SHAIKH DATE : 02-08-11
CHECKED BY : H.T. BARBOUR DATE : 03-11

25-APR-2011 12:22
P:\Structures\Bailey\Str1\mshaikh\Microstation\U-2550B_SD_TS.dgn
mshaikh

DEAD LOAD DEFLECTION TABLE FOR GIRDERS

	STAGE II																				
	GIRDER 11																				
TWENTIETH POINTS	0	.05	.10	.15	.20	.25	.30	.35	.40	.45	.50	.55	.60	.65	.70	.75	.80	.85	.90	.95	0
DEFLECTION DUE TO WEIGHT OF GIRDER ↓	0.000	0.022	0.043	0.063	0.081	0.097	0.111	0.122	0.129	0.134	0.136	0.134	0.129	0.122	0.111	0.097	0.081	0.063	0.043	0.022	0.000
DEFLECTION DUE TO WEIGHT OF SLAB * ↓	0.000	0.047	0.112	0.172	0.227	0.276	0.317	0.350	0.374	0.389	0.393	0.389	0.374	0.350	0.317	0.276	0.227	0.172	0.112	0.047	0.000
DEFLECTION DUE TO WEIGHT OF RAIL ↓	0.000	0.005	0.010	0.014	0.019	0.022	0.025	0.028	0.030	0.031	0.031	0.031	0.030	0.028	0.025	0.022	0.019	0.014	0.010	0.005	0.000
TOTAL DEAD LOAD DEFLECTION ↓	0.000	0.074	0.165	0.249	0.327	0.395	0.453	0.500	0.533	0.554	0.560	0.554	0.533	0.500	0.453	0.395	0.327	0.249	0.165	0.074	0.000
VERTICAL CURVE ORDINATE	0.000	0.018	0.035	0.049	0.062	0.072	0.081	0.088	0.093	0.095	0.096	0.095	0.093	0.088	0.081	0.072	0.062	0.049	0.035	0.018	0.000
ORDINATE DUE TO SUPERELEVATION	0.000	-0.003	-0.006	-0.009	-0.011	-0.013	-0.015	-0.016	-0.017	-0.017	-0.017	-0.017	-0.017	-0.016	-0.015	-0.013	-0.011	-0.009	-0.006	-0.003	0.000
REQUIRED CAMBER	0	1 1/16"	2 5/16"	3 1/2"	4 1/2"	5 7/16"	6 1/4"	6 7/8"	7 5/16"	7 9/16"	7 11/16"	7 9/16"	7 5/16"	6 7/8"	6 1/4"	5 7/16"	4 1/2"	3 1/2"	2 5/16"	1 1/16"	0

* INCLUDES SLAB, BUILDUPS & STAY-IN-PLACE FORMS.
ALL VALUES ARE SHOWN IN FEET (DECIMAL FORM), EXCEPT "FINAL CAMBER", WHICH IS GIVEN IN INCHES (FRACTION FORM).
EFFECT OF CAMBER DISSIPATION IS NEGLIGIBLE.

DEAD LOAD DEFLECTION TABLE FOR GIRDERS

	STAGE II																				
	GIRDER 12																				
TWENTIETH POINTS	0	.05	.10	.15	.20	.25	.30	.35	.40	.45	.50	.55	.60	.65	.70	.75	.80	.85	.90	.95	0
DEFLECTION DUE TO WEIGHT OF GIRDER ↓	0.000	0.022	0.043	0.063	0.081	0.097	0.111	0.122	0.129	0.134	0.136	0.134	0.129	0.122	0.111	0.097	0.081	0.063	0.043	0.022	0.000
DEFLECTION DUE TO WEIGHT OF SLAB * ↓	0.000	0.055	0.120	0.181	0.236	0.285	0.326	0.360	0.384	0.399	0.403	0.399	0.384	0.360	0.326	0.285	0.236	0.181	0.120	0.055	0.000
DEFLECTION DUE TO WEIGHT OF RAIL ↓	0.000	0.005	0.010	0.014	0.019	0.022	0.025	0.028	0.030	0.031	0.031	0.031	0.030	0.028	0.025	0.022	0.019	0.014	0.010	0.005	0.000
TOTAL DEAD LOAD DEFLECTION ↓	0.000	0.082	0.173	0.258	0.336	0.404	0.462	0.510	0.543	0.564	0.570	0.564	0.543	0.510	0.462	0.404	0.336	0.258	0.173	0.082	0.000
VERTICAL CURVE ORDINATE	0.000	0.018	0.035	0.049	0.061	0.072	0.081	0.087	0.092	0.095	0.096	0.095	0.092	0.087	0.081	0.072	0.061	0.049	0.035	0.018	0.000
ORDINATE DUE TO SUPERELEVATION	0.000	-0.003	-0.006	-0.009	-0.011	-0.013	-0.015	-0.016	-0.017	-0.017	-0.017	-0.017	-0.017	-0.016	-0.015	-0.013	-0.011	-0.009	-0.006	-0.003	0.000
REQUIRED CAMBER	0	1 3/16"	2 7/16"	3 9/16"	4 5/8"	5 9/16"	6 5/16"	7"	7 7/16"	7 11/16"	7 13/16"	7 11/16"	7 7/16"	7"	6 5/16"	5 9/16"	4 5/8"	3 9/16"	2 7/16"	1 3/16"	0

* INCLUDES SLAB, BUILDUPS & STAY-IN-PLACE FORMS.
ALL VALUES ARE SHOWN IN FEET (DECIMAL FORM), EXCEPT "FINAL CAMBER", WHICH IS GIVEN IN INCHES (FRACTION FORM).
EFFECT OF CAMBER DISSIPATION IS NEGLIGIBLE.

DEAD LOAD DEFLECTION TABLE FOR GIRDERS

	STAGE II																				
	GIRDER 13																				
TWENTIETH POINTS	0	.05	.10	.15	.20	.25	.30	.35	.40	.45	.50	.55	.60	.65	.70	.75	.80	.85	.90	.95	0
DEFLECTION DUE TO WEIGHT OF GIRDER ↓	0.000	0.021	0.042	0.061	0.078	0.094	0.107	0.117	0.125	0.130	0.131	0.130	0.125	0.117	0.107	0.094	0.078	0.061	0.042	0.021	0.000
DEFLECTION DUE TO WEIGHT OF SLAB * ↓	0.000	0.063	0.128	0.190	0.245	0.294	0.336	0.370	0.394	0.409	0.414	0.409	0.394	0.370	0.336	0.294	0.245	0.190	0.128	0.063	0.000
DEFLECTION DUE TO WEIGHT OF RAIL ↓	0.000	0.005	0.010	0.015	0.019	0.023	0.026	0.028	0.030	0.031	0.031	0.031	0.030	0.028	0.026	0.023	0.019	0.015	0.010	0.005	0.000
TOTAL DEAD LOAD DEFLECTION ↓	0.000	0.089	0.180	0.266	0.342	0.411	0.469	0.515	0.549	0.570	0.576	0.570	0.549	0.515	0.469	0.411	0.342	0.266	0.180	0.089	0.000
VERTICAL CURVE ORDINATE	0.000	0.018	0.034	0.049	0.061	0.072	0.080	0.087	0.092	0.094	0.095	0.094	0.092	0.087	0.080	0.072	0.061	0.049	0.034	0.018	0.000
ORDINATE DUE TO SUPERELEVATION	0.000	-0.003	-0.006	-0.009	-0.011	-0.013	-0.015	-0.016	-0.017	-0.017	-0.017	-0.017	-0.017	-0.016	-0.015	-0.013	-0.011	-0.009	-0.006	-0.003	0.000
REQUIRED CAMBER	0	1 1/4"	2 1/2"	3 11/16"	4 11/16"	5 5/8"	6 7/16"	7"	7 1/2"	7 3/4"	7 7/8"	7 3/4"	7 1/2"	7"	6 7/16"	5 5/8"	4 11/16"	3 11/16"	2 1/2"	1 1/4"	0

* INCLUDES SLAB, BUILDUPS & STAY-IN-PLACE FORMS.
ALL VALUES ARE SHOWN IN FEET (DECIMAL FORM), EXCEPT "FINAL CAMBER", WHICH IS GIVEN IN INCHES (FRACTION FORM).
EFFECT OF CAMBER DISSIPATION IS NEGLIGIBLE.

PROJECT NO. U-2550B
BURKE COUNTY
STATION: 23+83.10 -L-

SHEET 5 OF 5

STATE OF NORTH CAROLINA
DEPARTMENT OF TRANSPORTATION
RALEIGH

DEAD LOAD DEFLECTION (STAGE II)

NORTH CAROLINA PROFESSIONAL SEAL 15825 ENGINEER O. KL APPENZELLER
4-28-2011

REVISIONS						SHEET NO.
NO.	BY:	DATE:	NO.	BY:	DATE:	S-22
1			3			TOTAL SHEETS
2			4			93

STR #1

DRAWN BY : M. G. SHAIKH DATE : 02-09-11
CHECKED BY : H.T. BARBOUR DATE : 03-11

25-APR-2011 12:22
P:\Structures\Bailey\Str1\mshaikh\Microstation\U-2550B_SD_TS.dgn
mshaikh

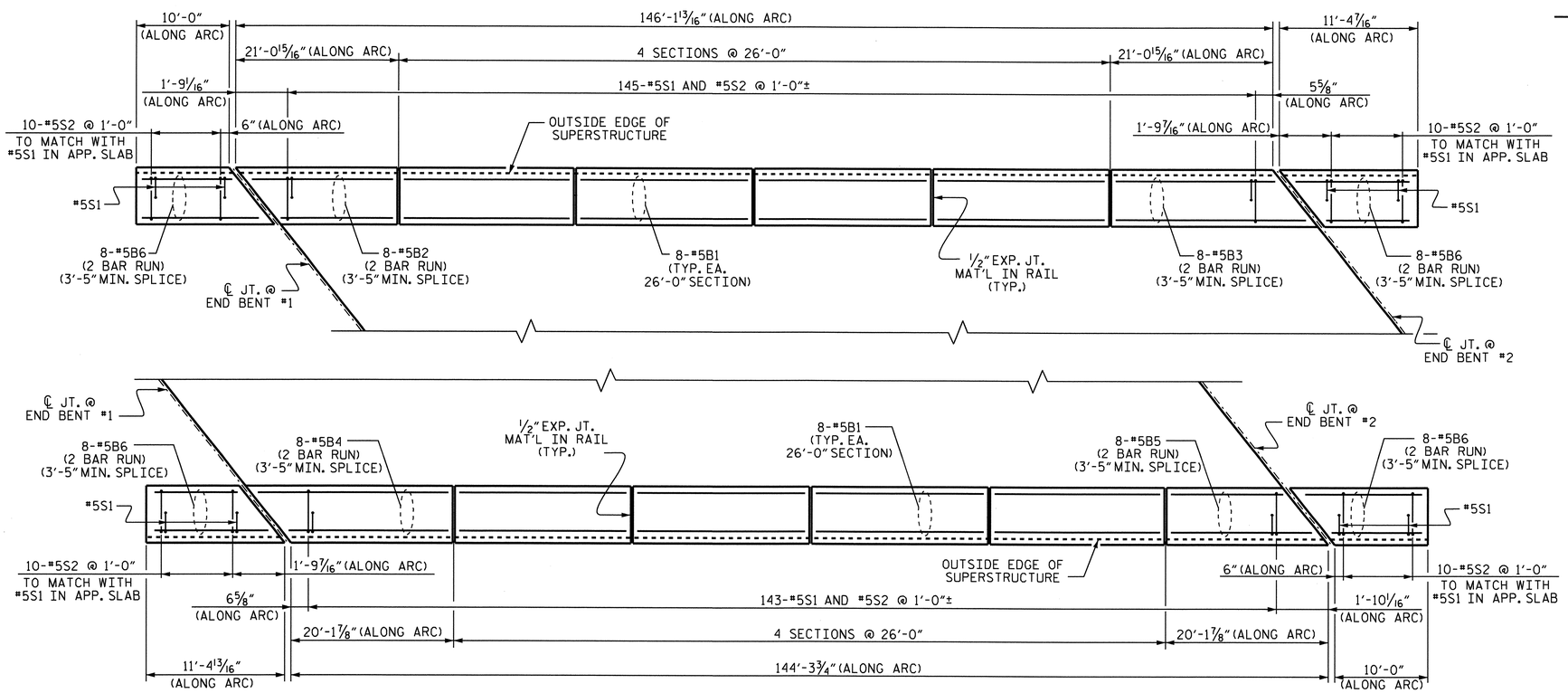

PLAN

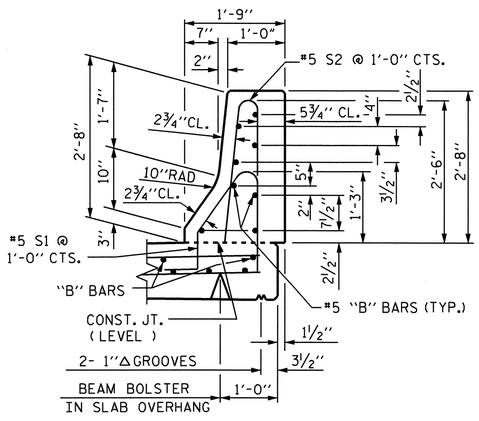

SECTION THRU RAIL

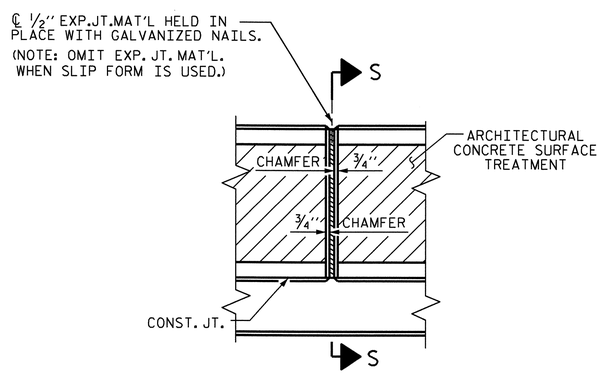

ELEVATION AT EXPANSION JOINTS

BARRIER RAIL DETAILS

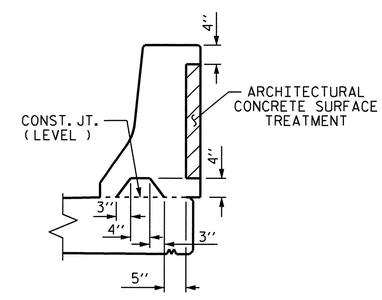

SECTION S-S

AT DAM IN OPEN JOINT
(THIS IS TO BE USED ONLY WHEN SLIP FORM IS USED)

NOTES

THE BARRIER RAIL IN A CONTINUOUS UNIT SHALL NOT BE CAST UNTIL ALL SLAB CONCRETE IN THE UNIT HAS BEEN CAST AND HAS REACHED A MINIMUM COMPRESSIVE STRENGTH OF 3,000 PSI.

ALL REINFORCING STEEL IN BARRIER RAILS SHALL BE EPOXY COATED.

VERTICAL GROOVED CONTRACTION JOINTS, 1/2" IN DEPTH, SHALL BE TOOLED IN ALL EXPOSED FACES OF THE BARRIER RAIL AND IN ACCORDANCE WITH ARTICLE 825-10(B) OF THE STANDARD SPECIFICATIONS. THE CONTRACTION JOINT SHALL BE LOCATED AT EACH THIRD POINT BETWEEN BARRIER RAIL EXPANSION JOINTS. ONLY ONE CONTRACTION JOINT IS REQUIRED AT MIDPOINT OF BARRIER RAIL SEGMENTS LESS THAN 20 FEET IN LENGTH AND NO CONTRACTION JOINTS ARE REQUIRED FOR THOSE SEGMENTS LESS THAN 10 FEET IN LENGTH.

THE #5 S1 & S2 BARS MAY BE SHIFTED SLIGHTLY IN THE AREA OF THE GUARDRAIL ANCHOR ASSEMBLY TO CLEAR ASSEMBLY BOLTS.

S1 BARS IN THE APPROACH SLAB ARE INCLUDED IN THE APPROACH SLAB BILL OF MATERIAL.

FOR ARCHITECTURAL CONCRETE SURFACE TREATMENT (CONCRETE BARRIER RAIL), SEE SPECIAL PROVISIONS.

BAR TYPES

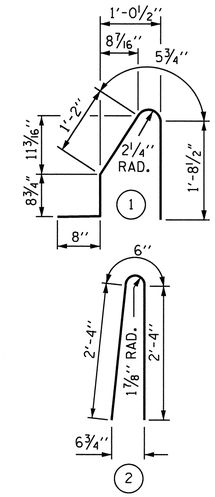

ALL BAR DIMENSIONS ARE OUT TO OUT

BILL OF MATERIAL

FOR CONCRETE BARRIER RAIL ONLY

BAR	NO.	SIZE	TYPE	LENGTH	WEIGHT
✱ S1	288	#5	1	4'-9"	1427
✱ S2	328	#5	2	5'-2"	1768
✱ B1	64	#5	STR	25'-7"	1708
✱ B2	16	#5	STR	12'-0"	200
✱ B3	16	#5	STR	12'-8"	211
✱ B4	16	#5	STR	12'-3"	204
✱ B5	16	#5	STR	11'-6"	192
✱ B6	64	#5	STR	7'-1"	473

✱ EPOXY COATED REINFORCING STEEL	6183 LBS.
CLASS AA CONCRETE	41.6 CU. YDS.
CONCRETE BARRIER RAIL	333.23 LIN. FT.
ARCHITECTURAL CONCRETE SURFACE TREATMENT	666.5 SQ. FT.

PROJECT NO. U-2550B
BURKE COUNTY
STATION: 23+83.10 -L-

STATE OF NORTH CAROLINA
DEPARTMENT OF TRANSPORTATION
RALEIGH

CONCRETE BARRIER RAIL

NORTH CAROLINA PROFESSIONAL SEAL 15625 ENGINEER BRYAN D. KLAPPENBACH
4-29-2011

REVISIONS						SHEET NO.
NO.	BY:	DATE:	NO.	BY:	DATE:	S-23
1			3			TOTAL SHEETS
2			4			93

DRAWN BY : M. G. SHAIKH DATE : 02-02-11
CHECKED BY : G. W. DICKEY DATE : 03-14-11

29-APR-2011 12:53
R:\Structures\Bailey\Str1\mshaikh\Microstation\U-2550B_SD_TS.dgn
bklappenbach

STR #1

STD. NO. CBRI

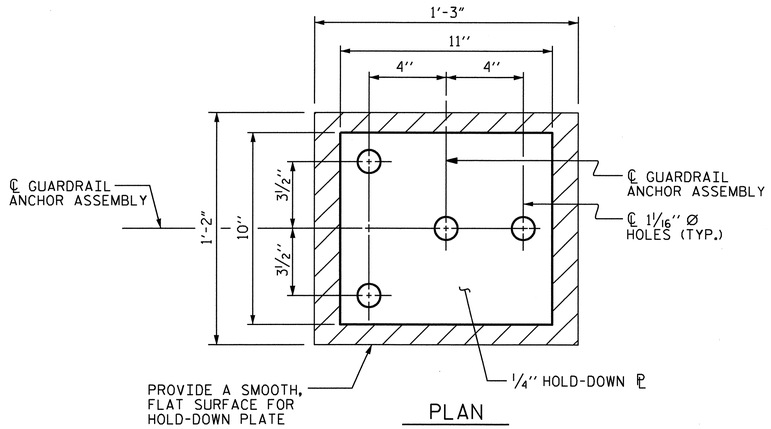

PLAN

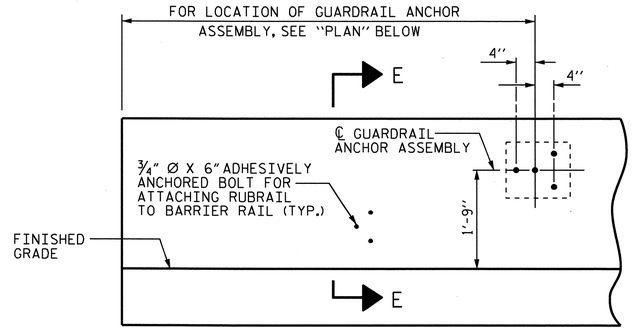

ELEVATION

FOR LOCATION OF RUBRAIL, SEE ROADWAY STD. 862.03

NOTES

THE GUARDRAIL ANCHOR ASSEMBLY SHALL CONSIST OF A 1/4" HOLD DOWN PLATE AND 4 - 7/8" Ø BOLTS WITH NUTS AND WASHERS, RUBRAIL, AND ADHESIVELY ANCHORED BOLTS.

THE HOLD-DOWN PLATE SHALL CONFORM TO AASHTO M270 GRADE 36. AFTER FABRICATION, THE HOLD-DOWN PLATE SHALL BE HOT-DIP GALVANIZED IN ACCORDANCE WITH AASHTO M111.

BOLTS SHALL CONFORM TO THE REQUIREMENTS OF ASTM A307 AND NUTS SHALL CONFORM TO THE REQUIREMENTS OF AASHTO M291. BOLTS, NUTS AND WASHERS SHALL BE GALVANIZED. (AT THE CONTRACTOR'S OPTION, STAINLESS STEEL BOLTS, NUTS AND WASHERS MAY BE USED AS AN ALTERNATE FOR THE 7/8" Ø GALVANIZED BOLTS, NUTS AND WASHERS. THEY SHALL CONFORM TO OR EXCEED THE MECHANICAL REQUIREMENTS OF ASTM A307. THE USE OF THIS ALTERNATE SHALL BE APPROVED BY THE ENGINEER.)

THE GUARDRAIL ANCHOR ASSEMBLY IS REQUIRED AT ALL POINTS WHERE APPROACH GUARDRAIL IS TO BE ATTACHED TO THE END OF BARRIER RAIL. FOR POINTS OF ATTACHMENT, SEE SKETCH.

AFTER INSTALLATION, THE EXPOSED THREAD OF THE BOLT SHALL BE BURRED WITH A SHARP POINTED TOOL.

THE COST OF THE GUARDRAIL ANCHOR ASSEMBLY SHALL BE INCLUDED IN THE UNIT CONTRACT PRICE BID FOR CONCRETE BARRIER RAIL.

THE 1 1/4" Ø HOLES SHALL BE FORMED OR DRILLED WITH A CORE BIT. IMPACT TOOLS WILL NOT BE PERMITTED. ANY CONCRETE DAMAGED BY THIS WORK SHALL BE REPAIRED TO THE SATISFACTION OF THE ENGINEER.

THE C6 X 8.2 RUBRAIL IS TO BE ADHESIVELY ANCHORED TO THE RAIL USING THREE 3/4" Ø X 6" BOLTS WITH WASHERS. LEVEL ONE FIELD TESTING IS REQUIRED, AND THE YIELD LOAD OF THE 3/4" Ø BOLT IS 12 KIPS. FOR ADHESIVELY ANCHORED ANCHOR BOLTS OR DOWELS, SEE SPECIAL PROVISIONS. SEE ROADWAY STANDARD 862.03 FOR DETAILS AND LOCATION OF THE RUBRAIL.

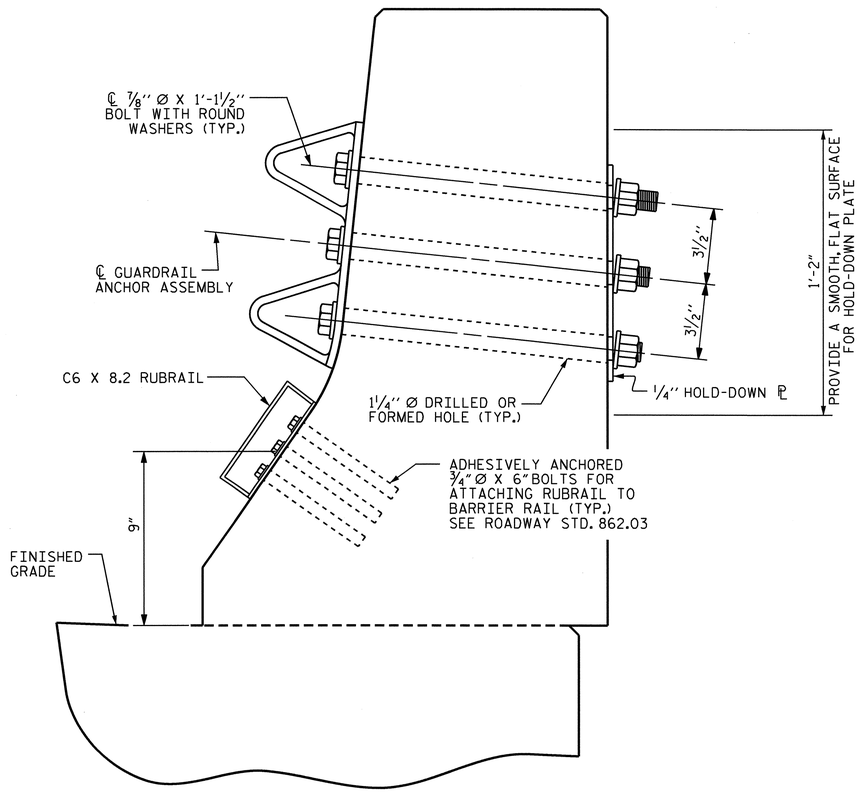

SECTION E-E

GUARDRAIL ANCHOR ASSEMBLY DETAILS

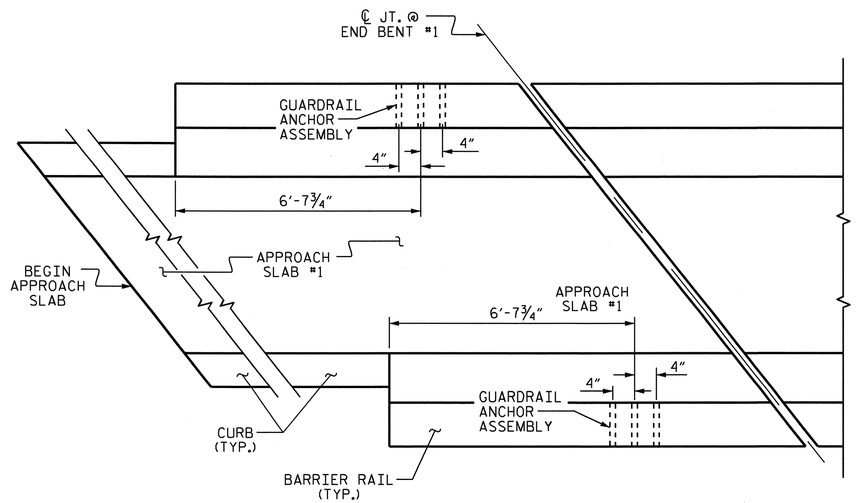

PLAN

LOCATION OF ANCHORS FOR GUARDRAIL

END BENT #1 SHOWN, END BENT #2 SIMILAR.

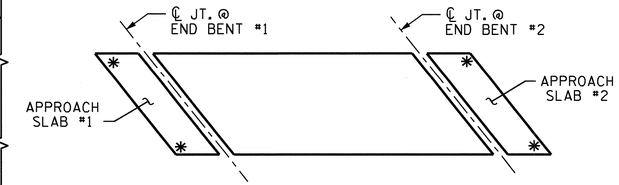

SKETCH SHOWING POINTS OF ATTACHMENTS

✳ DENOTES GUARDRAIL ANCHOR ASSEMBLY

PROJECT NO. U-2550B
BURKE COUNTY
STATION: 23+83.10 -L-

STATE OF NORTH CAROLINA
DEPARTMENT OF TRANSPORTATION
RALEIGH

STANDARD

GUARDRAIL ANCHORAGE FOR BARRIER RAIL

NORTH CAROLINA PROFESSIONAL SEAL 15825 ENGINEER BRUCE D. KLAPPENBACH
4-29-2011

REVISIONS						SHEET NO.
NO.	BY:	DATE:	NO.	BY:	DATE:	S-24
1			3			TOTAL SHEETS
2			4			93

STR #1 STD. NO. GRA2

ASSEMBLED BY : M. G. SHAIKH	DATE : 02-03-11
CHECKED BY : G. W. DICKEY	DATE : 03-14-11
DRAWN BY : TLA 5/06	ADDED 5/1/06R KMM/GM
CHECKED BY : GM 5/06	

25-APR-2011 12:21
P:\Structures\Bailey\Str1\mshaikh\Microstation\U-2550B_SD_TS.dgn
mshaikh

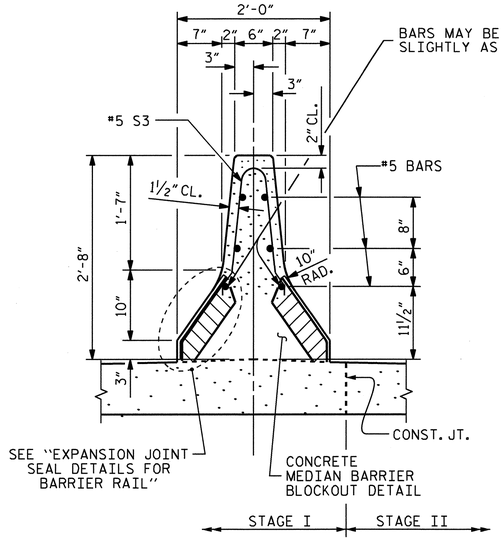

SECTION A-A

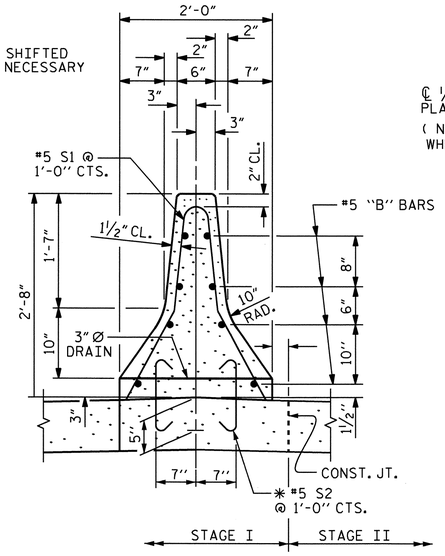

SECTION C-C

* #5 S2 (MAY BE PUSHED INTO GREEN CONCRETE AFTER SCREEDING)

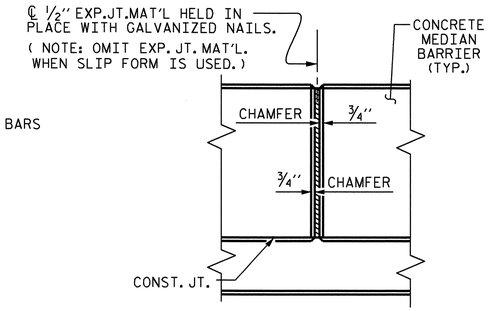

ELEVATION @ JT.

CONCRETE MEDIAN BARRIER

NOTES

THE MEDIAN BARRIER IN EACH SPAN SHALL NOT BE CAST UNTIL ALL SLAB CONCRETE IN THAT SPAN HAS BEEN CAST AND HAS REACHED A MINIMUM COMPRESSIVE STRENGTH OF 3,000 PSI

THE JOINT IN THE DECK SHALL BE FORMED PRIOR TO THE CASTING OF MEDIAN BARRIER.

ALL REINFORCING STEEL IN MEDIAN BARRIER SHALL BE EPOXY COATED.

VERTICAL GROOVED CONTRACTION JOINTS, ½" IN DEPTH, SHALL BE TOOLED IN ALL EXPOSED FACES OF THE MEDIAN BARRIER AND IN ACCORDANCE WITH ARTICLE 825-10(B) OF THE STANDARD SPECIFICATIONS. THE CONTRACTION JOINT SHALL BE LOCATED AT EACH THIRD POINT BETWEEN MEDIAN BARRIER EXPANSION JOINTS. ONLY ONE CONTRACTION JOINT IS REQUIRED AT MIDPOINT OF MEDIAN BARRIER SEGMENTS LESS THAN 20 FEET IN LENGTH AND NO CONTRACTION JOINTS ARE REQUIRED FOR THOSE SEGMENTS LESS THAN 10 FEET IN LENGTH.

ALL DIMENSIONS TAKEN ALONG ARC AT EDGE OF DECK AND FACE OF MEDIAN BARRIER.

THE STEEL PLATES SHALL CONFORM TO AASHTO M270 GRADE 36 OR APPROVED EQUAL. AFTER FABRICATION, THE PLATES SHALL BE COMMERCIALLY BLAST CLEANED AND COATED WITH A MINIMUM THICKNESS OF 4 DRY MILS OF ZINC- RICH PAINT IN ACCORDANCE WITH THE SPECIFICATIONS. AT THE CONTRACTORS OPTION, THESE SURFACES MAY BE METALLIZED TO A MINIMUM THICKNESS OF 6 MILS. SEE SPECIAL PROVISIONS FOR THERMAL SPRAYED COATINGS (METALLIZATION).

THE ¾" Ø HEX HEAD BOLTS SHALL CONFORM TO ASTM F593 TYPE 304 STAINLESS STEEL.

THE ¾" CONCRETE INSERTS SHALL BE CLOSED-END FERRULES WITH LOOPED WIRE STRUTS ATTACHED TO THEM. THE INSERTS SHALL CONFORM TO AASHTO M169, GRADE 12L14, AND SHALL HAVE A TENSILE WORKING LOAD CAPACITY OF 3000 LBS.

NO SEPARATE PAYMENT WILL BE MADE FOR FURNISHING AND INSTALLING THE COVER PLATE. THE ENTIRE COST OF THIS WORK SHALL BE INCLUDED IN THE LUMP SUM PRICE FOR "EXPANSION JOINT SEAL."

S2 BARS ON THE APPROACH SLAB ARE INCLUDED IN THE APPROACH SLAB BILL OF MATERIAL.

THE CONTRACTOR'S ATTENTION IS CALLED TO THE FACT THAT THE 3" DIAMETER DRAINS ARE TO BE INSTALLED IN THE CONCRETE MEDIAN BARRIER AT 6' CENTERS. REINFORCING STEEL MAY BE SHIFTED AS NECESSARY TO AVOID INTERFERENCE WITH THE DRAINS. THE CONTRACTOR IS DIRECTED TO PLUG AND OPEN THE DRAINS AS NEEDED TO MAXIMIZE THE DRAINAGE AND AVOID THE WATER DRAINING DIRECTLY ONTO TRAFFIC ON NC 18. THE COST IS CONSIDERED INCIDENTAL TO THE COST OF CONCRETE MEDIAN BARRIER.

BILL OF MATERIAL

STAGE I

BAR	NO.	SIZE	TYPE	LENGTH	WEIGHT
* B1	32	#5	STR	25'-7"	854
* B2	16	#5	STR	12'-7"	210
* B3	16	#5	STR	11'-9"	196
* B4	32	#5	STR	14'-11"	498
* S1	190	#5	1	5'-6"	1090
* S2	284	#5	2	1'-10"	543
* S3	4	#5	3	3'-9"	16

* EPOXY COATED REINFORCING STEEL	LBS. 3407
CLASS AA CONCRETE	CU. YDS. 20.1
CONCRETE MEDIAN BARRIER	LIN. FT. 197.48

BAR TYPES

ALL BAR DIMENSIONS ARE OUT TO OUT.

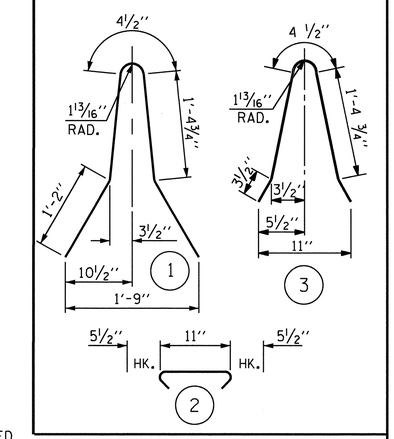

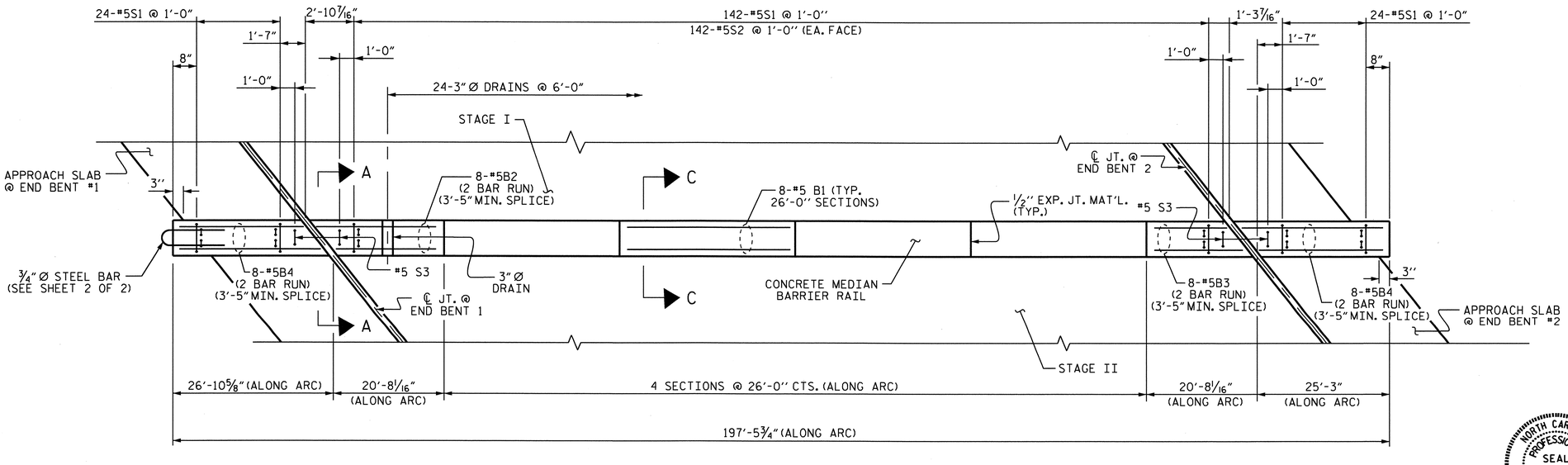

PLAN

PROJECT NO. U-2550B
BURKE COUNTY
STATION: 23+83.10 -L-

SHEET 1 OF 2

STATE OF NORTH CAROLINA
DEPARTMENT OF TRANSPORTATION
RALEIGH

SUPERSTRUCTURE
CONCRETE MEDIAN BARRIER

NORTH CAROLINA PROFESSIONAL SEAL 15825 ENGINEER BRUCE D. KLAPPENBACH
4-28-2011

REVISIONS						SHEET NO.
NO.	BY:	DATE:	NO.	BY:	DATE:	S-25
1			3			TOTAL SHEETS
2			4			93

STR. #1

DRAWN BY : M. G. SHAIKH DATE : 02-08-11
CHECKED BY : G. W. DICKEY DATE : 03-14-11

26-APR-2011 11:13
P:\Structures\Bailey\Str1\mshaikh\Microstation\U-2550B_SD_TS.dgn
mshaikh

NOTES

INSTALL LOOPS AND ATTACH TO CONCRETE MEDIAN BARRIER RAIL REBAR PRIOR TO POURING CONCRETE.

THE COST OF THE ¾"DIA. STEEL BAR AND 1¼"GALVANIZED PIN SHALL BE INCLUDED IN THE CONTRACT BID PRICE FOR CONCRETE MEDIAN BARRIER RAIL.

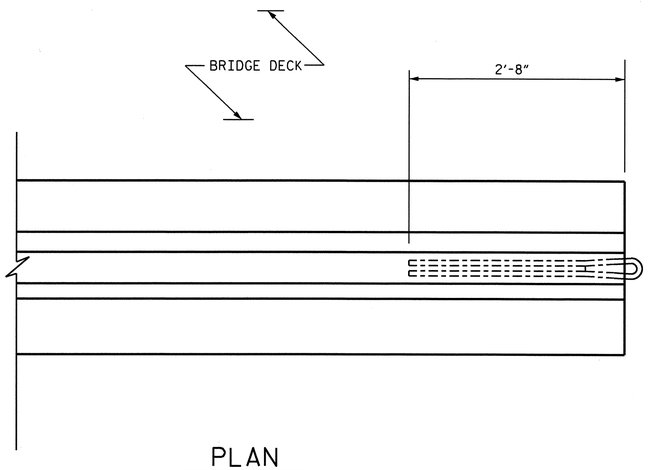

PLAN

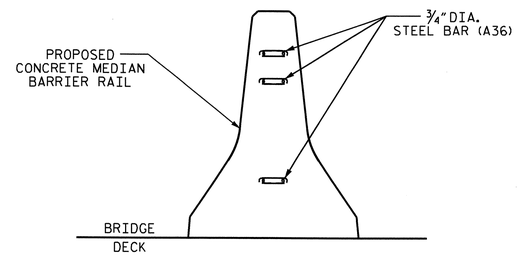

END VIEW A-A

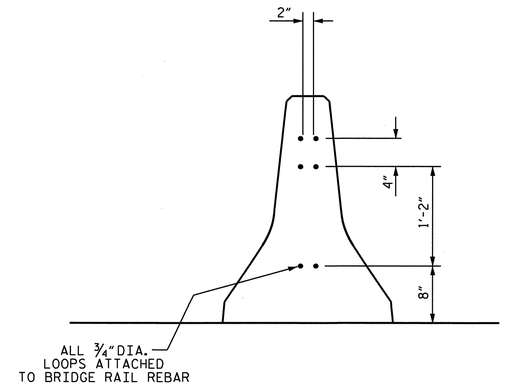

SECTION B-B

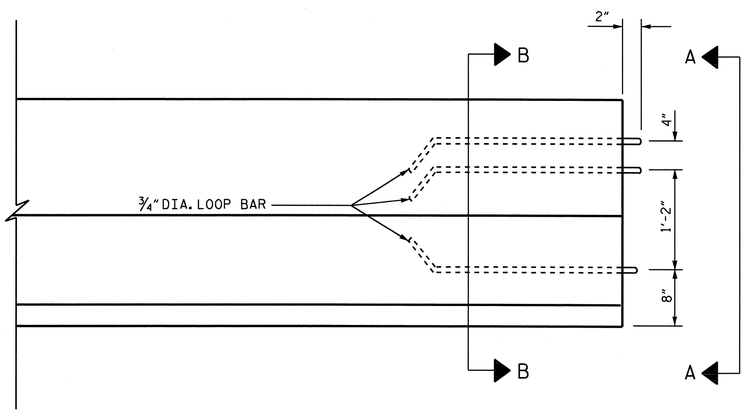

ELEVATION

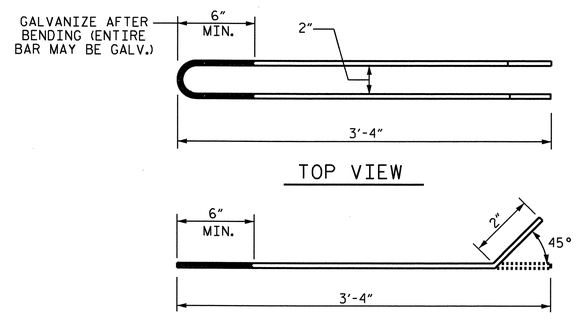

TOP VIEW

SIDE VIEW

LOOP BAR
¾"DIA. (A36M)

LOOP DETAIL

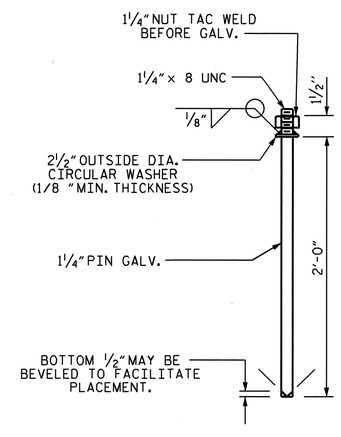

CONNECTOR PIN ASSEMBLY

PROJECT NO. U-2550B
BURKE COUNTY
STATION: 23+83.10 -L-

SHEET 2 OF 2

STATE OF NORTH CAROLINA
DEPARTMENT OF TRANSPORTATION
RALEIGH

SUPERSTRUCTURE
CONCRETE MEDIAN BARRIER

NORTH CAROLINA PROFESSIONAL SEAL 15825 ENGINEER BRUCE D. KLAPPENBACH
4-28-2011

REVISIONS						SHEET NO.
NO.	BY:	DATE:	NO.	BY:	DATE:	S-26
1			3			TOTAL SHEETS
2			4			93

ASSEMBLED BY : M. G. SHAIKH		DATE : 02-17-11	
CHECKED BY : B. D. KLAPPENBACH		DATE : 03-09-11	
DRAWN BY : EEM 10/95	REV. 10/17/00	RWW/LES	
CHECKED BY : PEK 10/95	REV. 7/10/01	LES/RDR	
	REV. 5/1/06	TLA/GM	

STR #1

STD. NO. EB2 (SHT 2b)

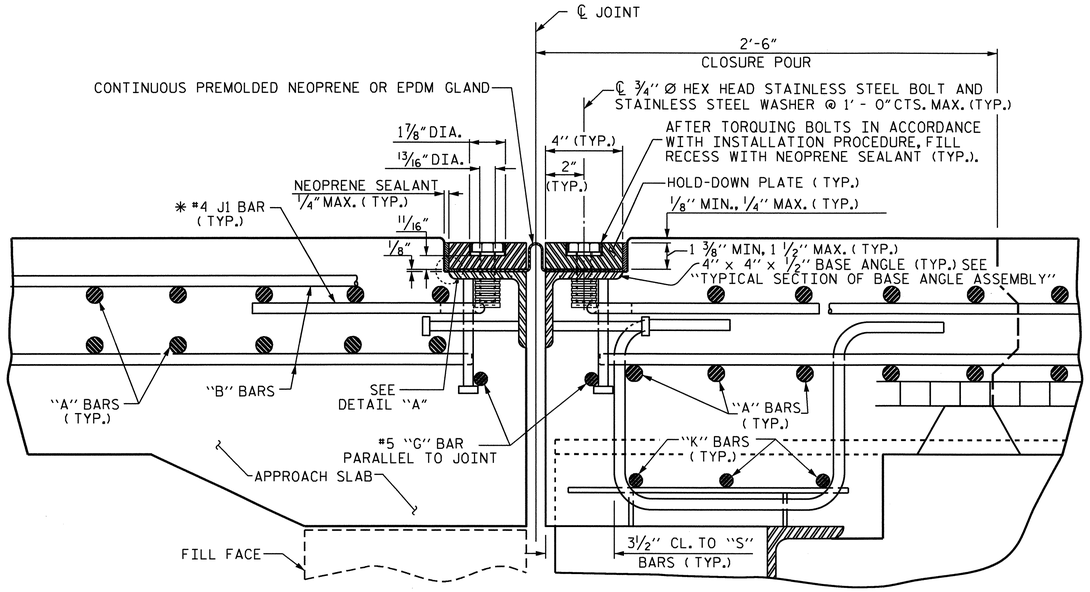

EXPANSION JOINT DETAILS

SECTION NORMAL TO JOINT -- STEEL SUPERSTRUCTURE

⁎ THE QUANTITY OF #4 J1 BARS ON THE BILL OF MATERIAL IS BASED ON 1'-0" CENTERS. J1 BARS SHALL BE PLACED AT EACH VERTICAL STUD ANCHOR BOLT. IN THE EVENT THAT THE NUMBER OF VERTICAL STUD ANCHORS EXCEEDS THE NUMBER OF J1 BARS SPECIFIED, ADDITIONAL J1 BARS WILL NOT BE REQUIRED.

INSTALLATION PROCEDURE

1. A TEMPLATE OR OTHER SUITABLE DEVICE SHALL BE USED TO FORM THE TOP OF THE EXPANSION JOINT SEAL BLOCKOUT TO THE PROPER DEPTH AND WIDTH. THE TEMPLATE SHALL BE 4⅛" TO 4¼" WIDE AND OF SUCH THICKNESS AS TO PROVIDE FOR CORRECT FINAL ELEVATION OF TOP OF HOLD-DOWN PLATES. THE TEMPLATE SHALL BE ATTACHED TO THE BASE ANGLE ASSEMBLY WITH THE ¾" Ø HEX HEAD BOLTS PROVIDED FOR THE HOLD-DOWN PLATES. A 1" Ø HOLE SHALL BE PROVIDED IN THE TEMPLATE CENTERED OVER EACH WEEP HOLE IN THE 4" X 4" X ½" BASE ANGLE. OTHER METHODS OF INSURING DRAINAGE THROUGH WEEP HOLES MAY BE EMPLOYED SUBJECT TO ENGINEER'S APPROVAL.
2. AFTER THE CONCRETE HAS BEEN CAST ON BOTH SIDES OF THE JOINT, REMOVE THE TEMPLATE. THOROUGHLY CLEAN THE BOLT HOLES AND THE ANGLE PLATE. REMOVE ANY EXCESS CONCRETE THAT COMES OUT OF THE WEEP HOLES. ANY DAMAGED STEEL SHALL BE COATED WITH A MINIMUM THICKNESS OF 4 DRY MILS OF ZINC-RICH PAINT IN ACCORDANCE WITH THE STANDARD SPECIFICATIONS.
3. LAY THE GLAND ON THE BASE ANGLE AND FIELD MARK THE GLAND FOR THE BOLT HOLES. HOLES IN THE GLAND SHALL BE PUNCHED ⅞" IN DIAMETER WITH A HAND PUNCH.
4. IN ORDER TO CHECK FOR PROPER ALIGNMENT, PLACE THE GLAND AND HOLD-DOWN PLATES ON THE BASE ANGLE. DO NOT APPLY NEOPRENE SEALANT. BOLT THE HOLD-DOWN PLATES TO THE BASE ANGLE BUT DO NOT TIGHTEN. THE ENGINEER SHALL INSPECT THE JOINT SEAL DEVICE FOR PROPER ALIGNMENT.
5. AFTER INSPECTION, REMOVE THE HOLD-DOWN PLATES AND GLAND. APPLY NEOPRENE SEALANT TO THE BASE ANGLE IN ACCORDANCE WITH THE "INSTALLATION SKETCH". PLACE GLAND AND HOLD-DOWN PLATES ON THE BASE ANGLE. BOLT THE HOLD-DOWN PLATES TO THE BASE ANGLE ASSEMBLY AND TOROUE THE BOLTS TO 88 FT-LBS WITH A TOROUE WRENCH. THE TOROUE WRENCH SHALL BE CALIBRATED IN ACCORDANCE WITH THE STANDARD SPECIFICATIONS. CHECK THE TOROUE AFTER THREE (3) HOURS AND, IF NECESSARY, RETIGHTEN TO 88 FT-LBS. A FINAL CHECK SHALL BE MADE AT SEVEN (7) DAYS. TOROUE SHALL NOT BE LESS THAN 80 FT-LBS AFTER SEVEN (7) DAYS.
6. AFTER PROPER TOROUING, CLEAN THE BOLT HOLE RECESSES AND THE RECESS BETWEEN THE JOINT SEAL DEVICE AND CONCRETE, COMPLETELY FILL THESE RECESSES WITH NEOPRENE SEALANT.

GENERAL NOTES

1. FOR EXPANSION JOINT SEALS, SEE SPECIAL PROVISIONS.
2. ALL PLATES AND ANGLES SHALL CONFORM TO AASHTO M270 GRADE 36 STEEL OR APPROVED EQUAL. ALL HOLD-DOWN BOLTS SHALL CONFORM TO ASTM F593 ALLOY 304 STAINLESS STEEL AND WASHERS SHALL CONFORM TO ASTM F844 EXCEPT THEY SHALL BE MADE FROM ALLOY 304 STAINLESS STEEL. ALL STUD ANCHORS SHALL CONFORM TO AASHTO M169, GRADES 1010 THRU 1020 OR APPROVED EQUAL. ALL CONCRETE INSERTS SHALL BE CLOSED END AND SHALL CONFORM TO AASHTO M169, GRADE 12L14. TENSILE CAPACITY SHALL BE 3000 LBS. MIN.
3. A PREMOLDED CORRUGATED OR NON-CORRUGATED GLAND SHALL BE USED FOR JOINTS SKEWED BETWEEN 50° THRU 130°. FOR JOINTS SKEWED LESS THAN 50° OR MORE THAN 130°, ONLY A CORRUGATED GLAND SHALL BE USED.
4. CLOSED END FERRULES AND STUD ANCHORS SHALL BE SHOP WELDED AND ALL HOLES SHALL BE SHOP DRILLED AS SHOWN ON PLANS. STUD ANCHORS SHALL BE ELECTRIC ARC END WELDED WITH COMPLETE FUSION.
5. SURFACES COMING IN CONTACT WITH NEOPRENE SHALL BE GROUND SMOOTH PRIOR TO METALLIZING.
6. UPON COMPLETION OF SHOP FABRICATION, THE HOLD DOWN PLATE AND BASE ANGLE ASSEMBLY, AS SHOWN IN THE "TYPICAL SECTION OF BASE ANGLE ASSEMBLY", SHALL BE METALLIZED. SEE SPECIAL PROVISION FOR THERMAL SPRAYED COATINGS (METALLIZATION).
7. BASE ANGLE ASSEMBLY SHALL BE CONTINUOUS FOR THE LENGTH OF THE JOINT. AT CROWN BREAKS, THE ENDS OF THE BASE ANGLE ASSEMBLY SHALL BE CUT PARALLEL TO THE BRIDGE CENTERLINE FOR SKEWS LESS THAN 80° AND GREATER THAN 100°. FINISHED WELD SHALL BE GROUND SMOOTH AND COATED WITH A MINIMUM THICKNESS OF 4 DRY MILS OF ZINC-RICH PAINT IN ACCORDANCE WITH THE STANDARD SPECIFICATIONS.
8. FIELD SPLICES OF HOLD-DOWN PLATES SHALL BE KEPT TO A MINIMUM. CONTRACTOR SHALL FURNISH DETAILED PLANS SHOWING PROPOSED SPLICE LOCATIONS FOR APPROVAL. HOLD-DOWN PLATES SHALL NOT EXCEED 20' LENGTHS UNLESS APPROVED BY THE ENGINEER.
9. NO ALTERNATE JOINT DETAILS SHALL BE PERMITTED IN LIEU OF THOSE SHOWN ON THESE PLANS.
10. THE CONTRACTOR MAY, AT HIS OPTION, USE ADHESIVELY ANCHORED ANCHOR BOLTS IN PLACE OF CONCRETE INSERTS FOR COVER PLATES. THE YIELD LOAD OF THE ¾" Ø BOLT IS 10 KIPS. FIELD TESTING OF THE ADHESIVE BONDING SYSTEM IS NOT REQUIRED.

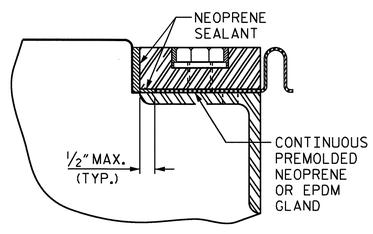

DETAIL A

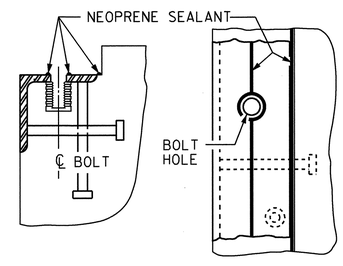

CROSS SECTION PLAN VIEW

INSTALLATION SKETCH

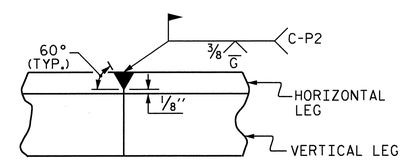

DETAIL- FIELD WELD SPLICE OF BASE ANGLE

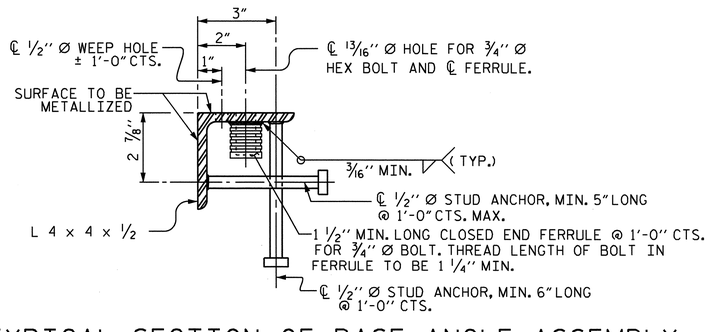

TYPICAL SECTION OF BASE ANGLE ASSEMBLY

MOVEMENT AND SETTING AT JOINT					
END BENT NO.	SKEW ANGLE	TOTAL MOVEMENT (ALONG ℄ RDWY)	PERPENDICULAR JOINT OPENING AT 45° F	PERPENDICULAR JOINT OPENING AT 60° F	PERPENDICULAR JOINT OPENING AT 90° F
1	51°-39'-40"	0	1⅜"	1⅜"	1⅜"
2	51°-39'-40"	1½"	1¾"	1 9/16"	1¼"

PROJECT NO. U-2550B
BURKE COUNTY
STATION: 23+83.10 -L-

SHEET 1 OF 4

STATE OF NORTH CAROLINA
DEPARTMENT OF TRANSPORTATION
RALEIGH

EXPANSION JOINT SEAL DETAILS

NORTH CAROLINA PROFESSIONAL SEAL 16825 ENGINEER BRUCE D. KLAPPENBACH
4-28-2011

REVISIONS						SHEET NO.
NO.	BY:	DATE:	NO.	BY:	DATE:	S-27
1			3			TOTAL SHEETS
2			4			93

ASSEMBLED BY : M. G. SHAIKH DATE : 01-27-11
CHECKED BY : C. R. YARBROUGH DATE : 03-08-11
DRAWN BY : REK 9/87
CHECKED BY : CRK 10/87
REV. 10/17/00 RWW/LES
REV. 5/7/03R RWW/JTE
REV. 5/1/06 TLA/GM

25-APR-2011 12:19
P:\Structures\Bailey\Str1\mshaikh\Microstation\U-2550B_SD_TS.dgn
mshaikh

STR #1

STD. NO. EJS1 (SHT 4)

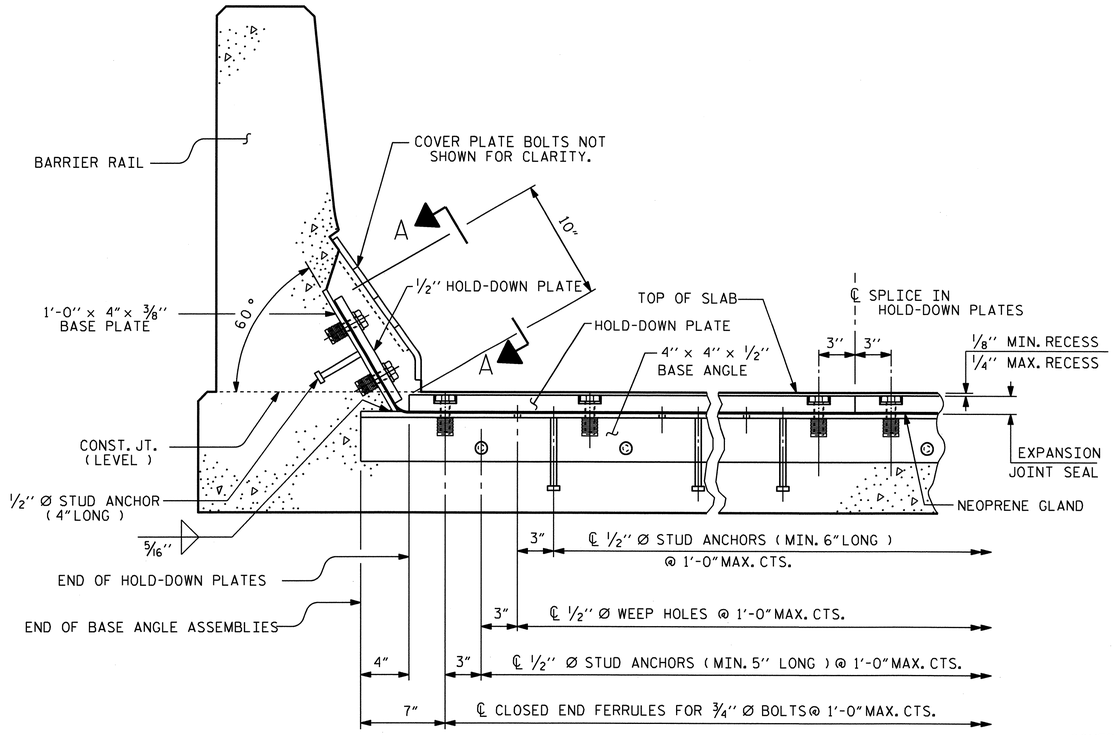

SECTION THRU RAIL NORMAL TO JOINT

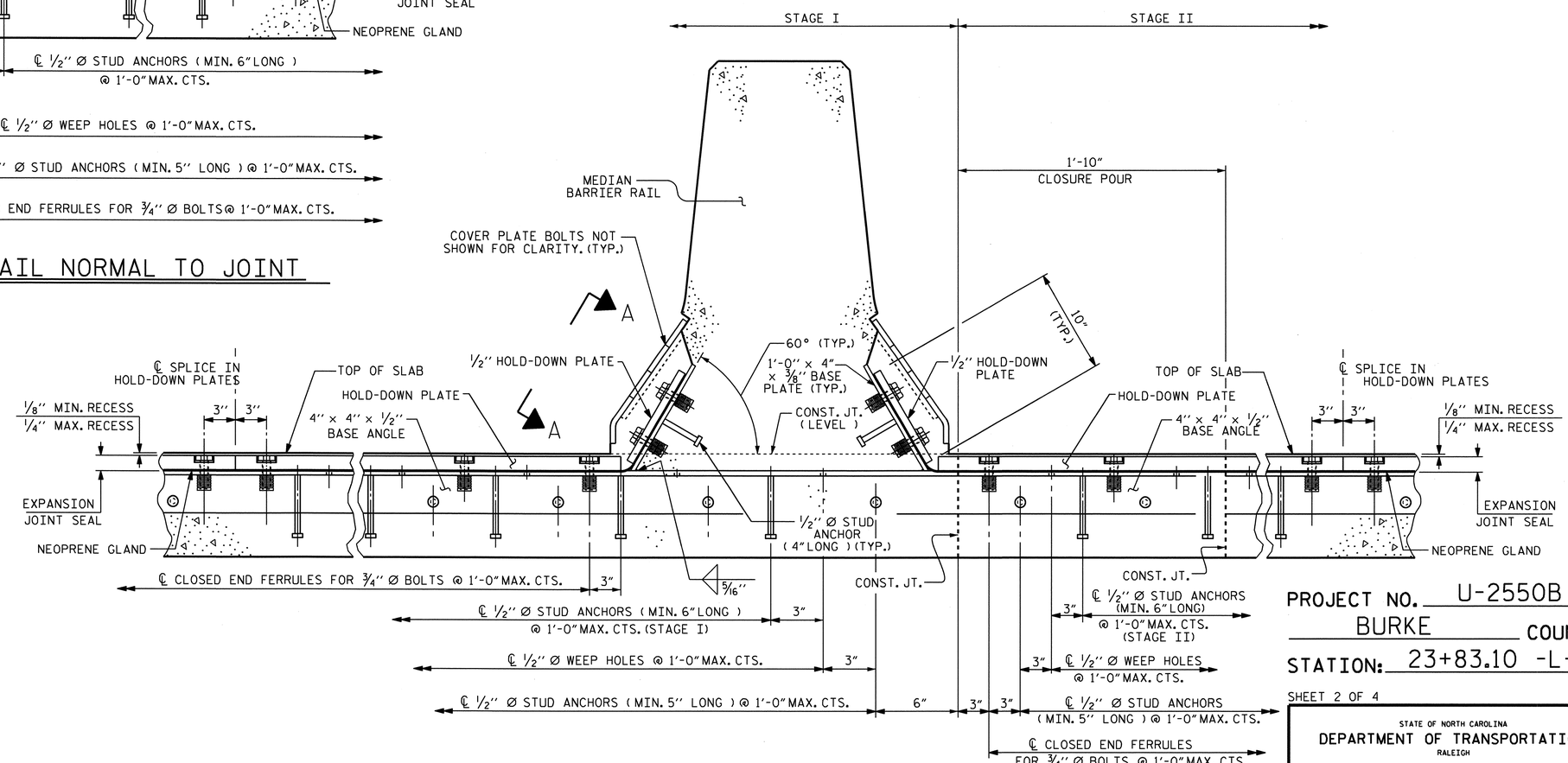

SECTION THRU MEDIAN RAIL NORMAL TO JOINT

PROJECT NO. U-2550B
BURKE COUNTY
STATION: 23+83.10 -L-

SHEET 2 OF 4

STATE OF NORTH CAROLINA
DEPARTMENT OF TRANSPORTATION
RALEIGH

EXPANSION JOINT SEAL DETAILS FOR BARRIER RAIL

NORTH CAROLINA PROFESSIONAL SEAL 15826 ENGINEER D. KL APPENBROCK
4-28-2011

ASSEMBLED BY : M. G. SHAIKH	DATE : 01-13-11
CHECKED BY : C. R. YARBROUGH	DATE : 03-08-11

DRAWN BY : REK 9/87	REV. 7/17/98	RWW/LES	
CHECKED BY : CRK 10/87	REV. 10/17/00	RWW/LES	
	REV. 5/1/06	TLA/GM	

REVISIONS								SHEET NO.
NO.	BY:	DATE:	NO.	BY:	DATE:			S-28
1			3					TOTAL SHEETS
2			4					93

STR #1 STD. NO. EJS2

25-APR-2011 12:19
P:\Structures\Bolley\Str1\mshaikh\Microstation\U-2550B_SD_TS.dgn
mshaikh

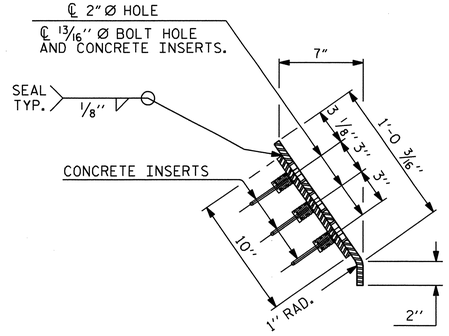

END VIEW

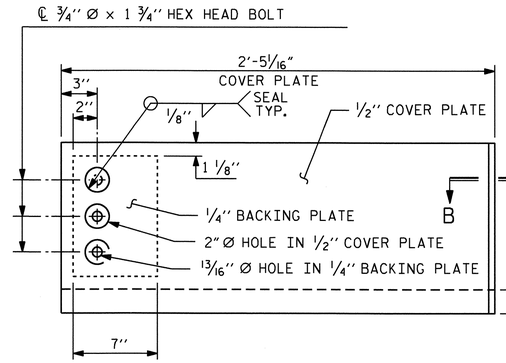

TYPE I - ELEVATION VIEW

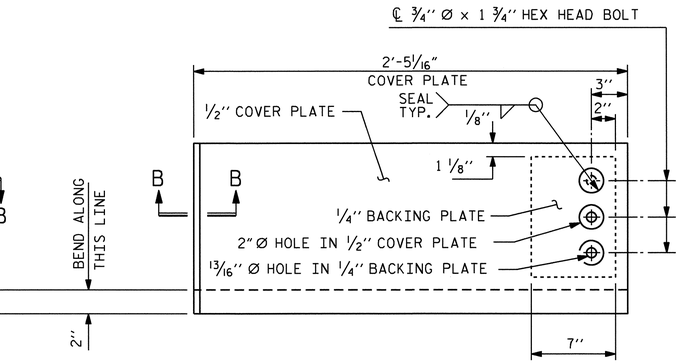

TYPE II - ELEVATION VIEW

COVER PLATE DETAILS

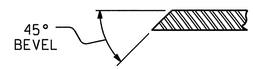

SECTION B - B

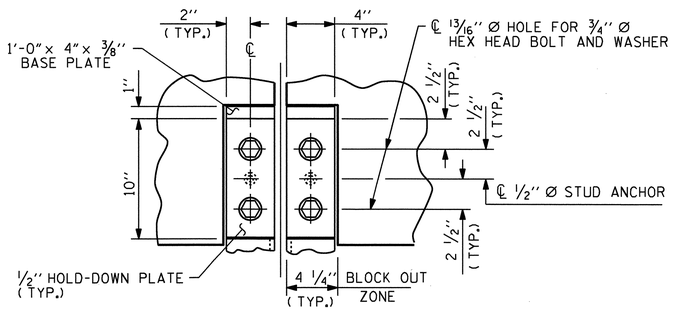

SECTION A - A

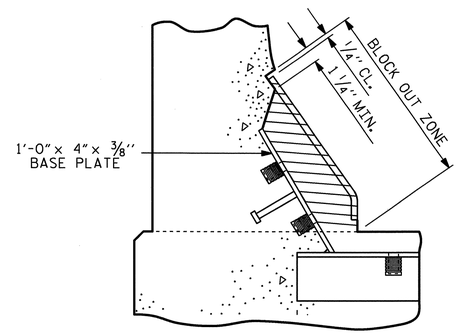

BLOCK OUT DETAIL

SEE "SECTION A - A" FOR OTHER DETAILS.

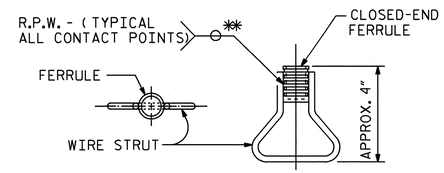

PLAN ELEVATION

CONCRETE INSERT

** EACH WELDED ATTACHMENT OF WIRE TO FERRULE SHALL DEVELOP THE TENSILE STRENGTH OF THE WIRE.

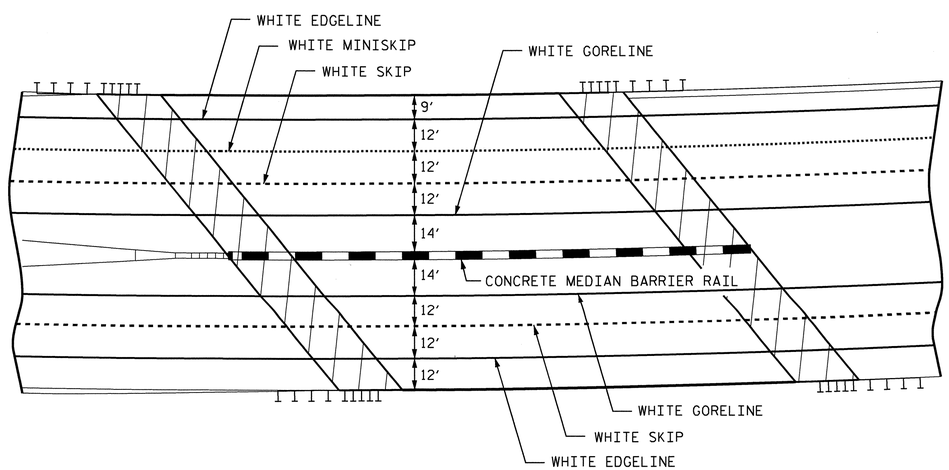

PAVEMENT MARKING ALIGNMENT

PROJECT NO. U-2550B
BURKE COUNTY
STATION: 23+83.10 -L-

SHEET 3 OF 4

STATE OF NORTH CAROLINA
DEPARTMENT OF TRANSPORTATION
RALEIGH

EXPANSION JOINT SEAL DETAILS FOR BARRIER RAIL

NORTH CAROLINA PROFESSIONAL SEAL 15929 ENGINEER BRUCE D. KLAPPENBACH
4-28-2011

REVISIONS						SHEET NO.
NO.	BY:	DATE:	NO.	BY:	DATE:	S-29
1			3			TOTAL SHEETS
2			4			93

ASSEMBLED BY :	M. G. SHAIKH	DATE :	02-01-11
CHECKED BY :	C. R. YARBROUGH	DATE :	03-08-11
DRAWN BY : REK 9/87	REV. 7/17/98 RWW/LES		
CHECKED BY : CRK 10/87	REV. 10/17/00 RWW/LES		
	REV. 5/1/06 TLA/GM		

STR #1

STD. NO. EJS2

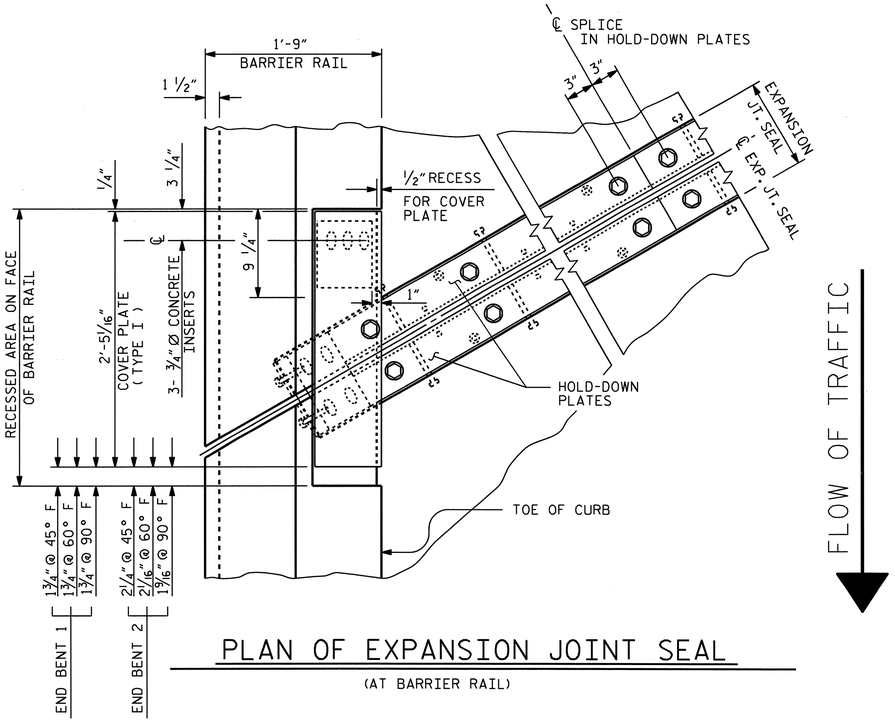

PLAN OF EXPANSION JOINT SEAL

(AT BARRIER RAIL)

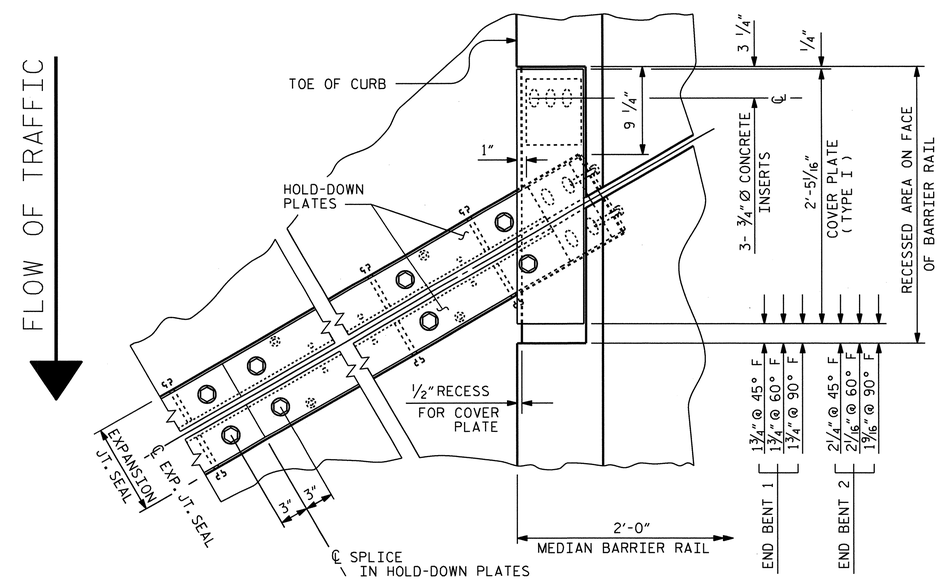

PLAN OF EXPANSION JOINT SEAL

(AT MEDIAN BARRIER RAIL)

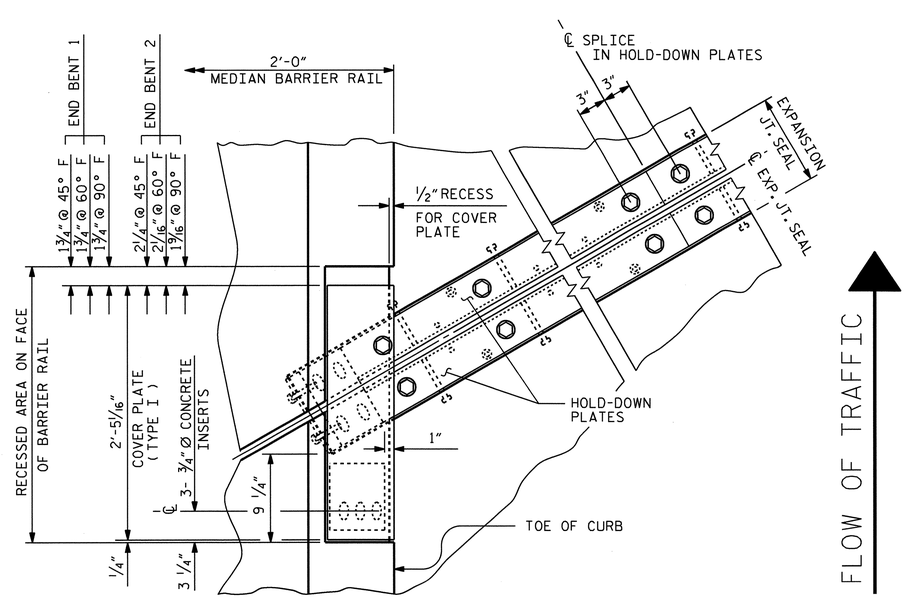

PLAN OF EXPANSION JOINT SEAL

(AT MEDIAN BARRIER RAIL)

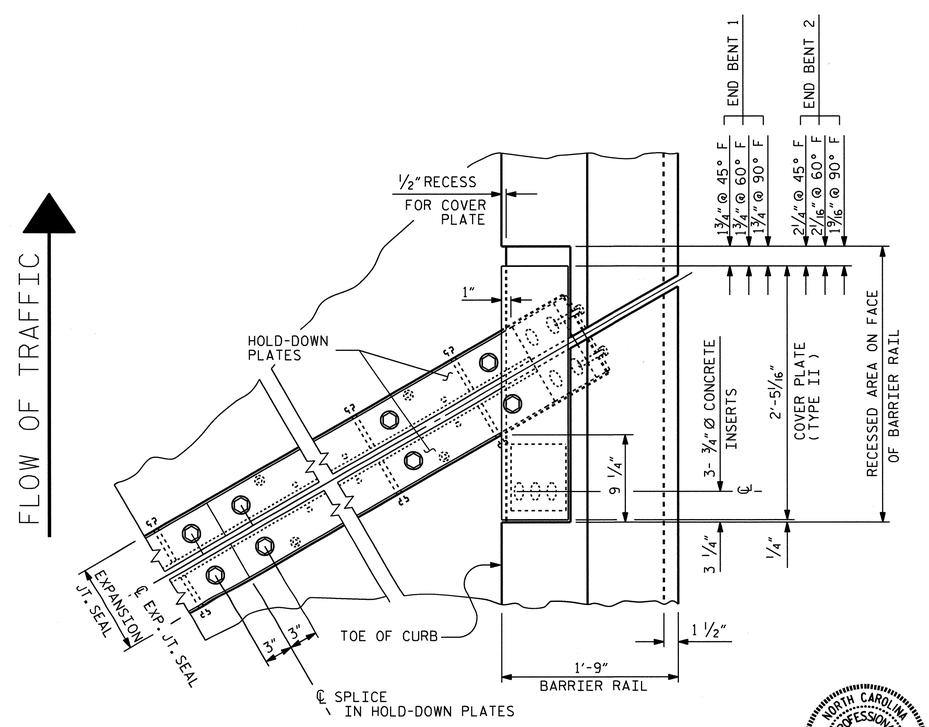

PLAN OF EXPANSION JOINT SEAL

(AT BARRIER RAIL)

PROJECT NO. U-2550B

BURKE COUNTY

STATION: 23+83.10 -L-

SHEET 4 OF 4

STATE OF NORTH CAROLINA
DEPARTMENT OF TRANSPORTATION
RALEIGH

EXPANSION JOINT SEAL DETAILS FOR BARRIER RAIL

REVISIONS						SHEET NO.
NO.	BY:	DATE:	NO.	BY:	DATE:	S-30
1			3			TOTAL SHEETS
2			4			93

NORTH CAROLINA PROFESSIONAL SEAL 15825 ENGINEER BRUCE D. KLAPPENBACH
4-28-2011

ASSEMBLED BY : M. G. SHAIKH		DATE : 02-02-11	
CHECKED BY : C. R. YARBROUGH		DATE : 03-08-11	
DRAWN BY : REK 9/87	REV. 7/17/98	RWW/LES	
CHECKED BY : CRK 10/87	REV. 10/17/00	RWW/LES	
	REV. 5/1/06	TLA/GM	

STR #1

STD. NO. EJS2

TOTAL SUPERSTRUCTURE BILL OF MATERIAL

	CLASS AA CONCRETE (CU. YDS.)							REINFORCING STEEL	EPOXY COATED REINFORCING STEEL
	POUR #1	POUR #2	POUR #3	POUR #4	POUR #5	POUR #6 (CLOSURE POUR)	TOTAL	(LBS.)	(LBS.)
STAGE I	234.2	49.2	15.6				299.0	30585	25380
STAGE II				222.4	13.4	9.5	245.3	24207	20035
TOTALS							544.3	54792	45415

GROOVING BRIDGE FLOORS

BRIDGE DECK (STAGE I)	=	8054 SQ. FT.
APPROACH SLABS (STAGE I)	=	2495 SQ. FT.
BRIDGE DECK (STAGE II)	=	6760 SQ. FT.
APPROACH SLABS (STAGE II)	=	2094 SQ. FT.
TOTAL	=	19403 SQ. FT.

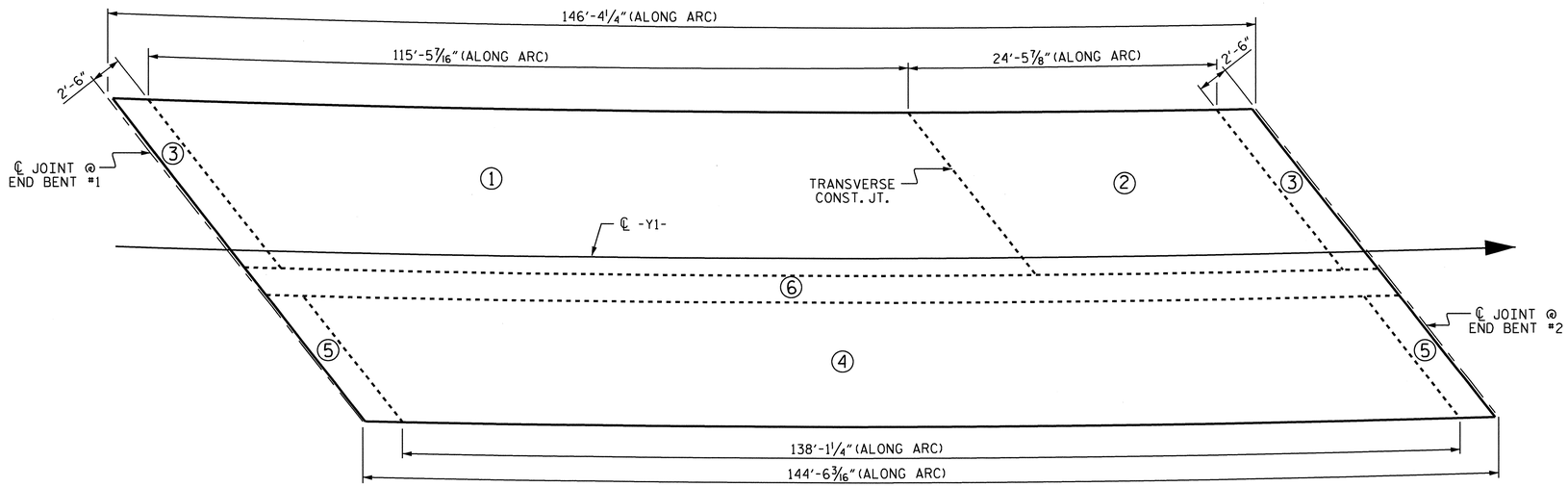

POURING SEQUENCE

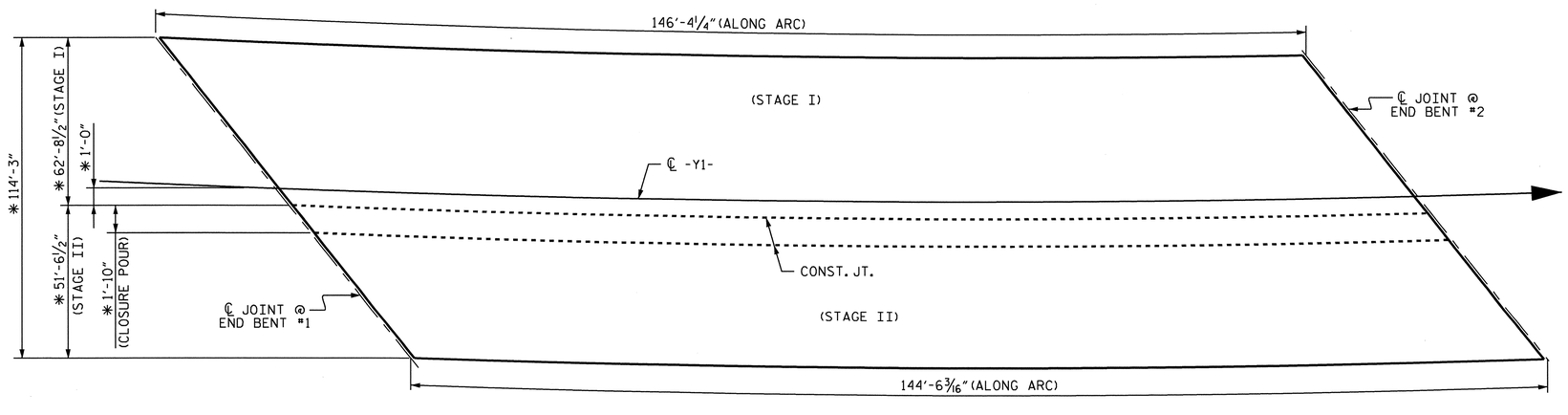

* DIMENSIONS ARE TO CONCENTRIC CIRCLES WITH ℄ SURVEY. GIRDERS ARE ON THE CHORDS OF THESE CONCENTRIC CIRCLES

LAYOUT FOR COMPUTING AREA
REINFORCED CONCRETE DECK SLAB
SQ. FT. = 16616 (TOTAL)

PROJECT NO. U-2550B
BURKE COUNTY
STATION: 23+83.10 -L-

SHEET 1 OF 2

STATE OF NORTH CAROLINA
DEPARTMENT OF TRANSPORTATION
RALEIGH

SUPERSTRUCTURE
BILL OF MATERIAL

NORTH CAROLINA PROFESSIONAL SEAL 15825 ENGINEER BRUCE D. KLAPPENBACH
4-29-2011

REVISIONS						SHEET NO.
NO.	BY:	DATE:	NO.	BY:	DATE:	S-31
1			3			TOTAL SHEETS
2			4			93

DRAWN BY : M. G. SHAIKH DATE : 02-16-11
CHECKED BY : H. T. BARBOUR DATE : 03-17-11

28-APR-2011 16:29
R:\Structures\Bailey\Str1\mshaikh\Microstation\U-2550B_SD_TS.dgn
bklappenbach

STR #1

REINFORCING STEEL BAR SCHEDULE (STAGE I)

BAR	NO.	SIZE	TYPE	LENGTH	WEIGHT	BAR	NO.	SIZE	TYPE	LENGTH	WEIGHT	BAR	NO.	SIZE	TYPE	LENGTH	WEIGHT
✱ A1	380	#5	STR	32'-5"	12848	✱ A149	3	#5	STR	32'-5"	101	A234	6	#5	STR	31'-5"	197
A2	380	#5	STR	32'-3"	12782	✱ A150	3	#5	STR	30'-6"	95	A235	3	#5	STR	58'-9"	184
						✱ A151	3	#5	STR	28'-7"	89	A236	3	#5	STR	56'-10"	178
✱ A101	6	#5	STR	31'-7"	198	✱ A152	3	#5	STR	26'-9"	84	A237	3	#5	STR	55'-0"	172
✱ A102	3	#5	STR	58'-9"	184	✱ A153	3	#5	STR	24'-10"	78	A238	3	#5	STR	53'-1"	166
✱ A103	3	#5	STR	56'-11"	178	✱ A154	3	#5	STR	23'-0"	72	A239	3	#5	STR	51'-3"	160
✱ A104	3	#5	STR	55'-1"	172	✱ A155	3	#5	STR	21'-1"	66	A240	3	#5	STR	49'-4"	154
✱ A105	3	#5	STR	53'-3"	167	✱ A156	3	#5	STR	19'-2"	60	A241	3	#5	STR	47'-5"	148
✱ A106	3	#5	STR	51'-4"	161	✱ A157	3	#5	STR	17'-4"	54	A242	3	#5	STR	45'-7"	143
✱ A107	3	#5	STR	49'-6"	155	✱ A158	3	#5	STR	15'-5"	48	A243	3	#5	STR	43'-8"	137
✱ A108	3	#5	STR	47'-8"	149	✱ A159	3	#5	STR	13'-6"	42	A244	3	#5	STR	41'-10"	131
✱ A109	3	#5	STR	45'-10"	143	✱ A160	3	#5	STR	11'-8"	37	A245	3	#5	STR	39'-11"	125
✱ A110	3	#5	STR	44'-0"	138	✱ A161	3	#5	STR	9'-9"	31	A246	3	#5	STR	38'-1"	119
✱ A111	3	#5	STR	42'-1"	132	✱ A162	3	#5	STR	7'-10"	25	A247	3	#5	STR	36'-2"	113
✱ A112	3	#5	STR	40'-3"	126	✱ A163	3	#5	STR	6'-0"	19	A248	3	#5	STR	34'-3"	107
✱ A113	3	#5	STR	38'-5"	120	✱ A164	3	#5	STR	4'-1"	13	A249	3	#5	STR	32'-5"	101
✱ A114	3	#5	STR	36'-7"	114	✱ A165	3	#5	STR	2'-2"	7	A250	3	#5	STR	30'-6"	95
✱ A115	3	#5	STR	34'-9"	109							A251	3	#5	STR	28'-7"	89
✱ A116	3	#5	STR	32'-11"	103	A201	6	#5	STR	31'-5"	197	A252	3	#5	STR	26'-9"	84
✱ A117	3	#5	STR	31'-0"	97	A202	3	#5	STR	58'-9"	184	A253	3	#5	STR	24'-10"	78
✱ A118	3	#5	STR	29'-2"	91	A203	3	#5	STR	56'-11"	178	A254	3	#5	STR	23'-0"	72
✱ A119	3	#5	STR	27'-4"	86	A204	3	#5	STR	55'-1"	172	A255	3	#5	STR	21'-1"	66
✱ A120	3	#5	STR	25'-6"	80	A205	3	#5	STR	53'-3"	167	A256	3	#5	STR	19'-2"	60
✱ A121	3	#5	STR	23'-8"	74	A206	3	#5	STR	51'-4"	161	A257	3	#5	STR	17'-4"	54
✱ A122	3	#5	STR	21'-10"	68	A207	3	#5	STR	49'-6"	155	A258	3	#5	STR	15'-5"	48
✱ A123	3	#5	STR	20'-0"	63	A208	3	#5	STR	47'-8"	149	A259	3	#5	STR	13'-6"	42
✱ A124	3	#5	STR	18'-1"	57	A209	3	#5	STR	45'-10"	143	A260	3	#5	STR	11'-8"	37
✱ A125	3	#5	STR	16'-3"	51	A210	3	#5	STR	44'-0"	138	A261	3	#5	STR	9'-9"	31
✱ A126	3	#5	STR	14'-5"	45	A211	3	#5	STR	42'-1"	132	A262	3	#5	STR	7'-10"	25
✱ A127	3	#5	STR	12'-7"	39	A212	3	#5	STR	40'-3"	126	A263	3	#5	STR	6'-0"	19
✱ A128	3	#5	STR	10'-9"	34	A213	3	#5	STR	38'-5"	120	A264	3	#5	STR	4'-1"	13
✱ A129	3	#5	STR	8'-11"	28	A214	3	#5	STR	36'-7"	114	A265	3	#5	STR	2'-2"	7
✱ A130	3	#5	STR	7'-1"	22	A215	3	#5	STR	34'-9"	109						
✱ A131	3	#5	STR	5'-3"	16	A216	3	#5	STR	32'-11"	103	✱ B1	258	#4	STR	25'-10"	4452
✱ A132	3	#5	STR	3'-5"	11	A217	3	#5	STR	31'-0"	97	B2	210	#5	STR	50'-1"	10970
✱ A133	3	#5	STR	1'-7"	5	A218	3	#5	STR	29'-2"	91						
						A219	3	#5	STR	27'-4"	86	✱ D1	148	#5	STR	3'-0"	463
✱ A134	6	#5	STR	31'-7"	198	A220	3	#5	STR	25'-6"	80	D2	148	#5	STR	3'-0"	463
✱ A135	3	#5	STR	58'-9"	184	A221	3	#5	STR	23'-8"	74						
✱ A136	3	#5	STR	56'-10"	178	A222	3	#5	STR	21'-10"	68	✱ G1	4	#5	STR	41'-7"	173
✱ A137	3	#5	STR	55'-0"	172	A223	3	#5	STR	20'-0"	63						
✱ A138	3	#5	STR	53'-1"	166	A224	3	#5	STR	18'-1"	57	✱ J1	152	#4	4	1'-5"	144
✱ A139	3	#5	STR	51'-3"	160	A225	3	#5	STR	16'-3"	51						
✱ A140	3	#5	STR	49'-4"	154	A226	3	#5	STR	14'-5"	45	✱ K1	6	#5	1	11'-11"	75
✱ A141	3	#5	STR	47'-5"	148	A227	3	#5	STR	12'-7"	39	✱ K2	30	#5	2	16'-3"	508
✱ A142	3	#5	STR	45'-7"	143	A228	3	#5	STR	10'-9"	34	✱ K3	6	#5	1	9'-11"	62
✱ A143	3	#5	STR	43'-8"	137	A229	3	#5	STR	8'-11"	28						
✱ A144	3	#5	STR	41'-10"	131	A230	3	#5	STR	7'-1"	22	✱ S1	96	#4	3	4'-5"	283
✱ A145	3	#5	STR	39'-11"	125	A231	3	#5	STR	5'-3"	16						
✱ A146	3	#5	STR	38'-1"	119	A232	3	#5	STR	3'-5"	11						
✱ A147	3	#5	STR	36'-2"	113	A233	3	#5	STR	1'-7"	5						
✱ A148	3	#5	STR	34'-3"	107												

REINFORCING STEEL = 30585 LBS

EPOXY COATED REINF. STEEL = 25380 LBS

REINFORCING STEEL BAR SCHEDULE (STAGE II)

BAR	NO.	SIZE	TYPE	LENGTH	WEIGHT	BAR	NO.	SIZE	TYPE	LENGTH	WEIGHT	BAR	NO.	SIZE	TYPE	LENGTH	WEIGHT
✱ A3	209	#5	STR	49'-4"	10754	✱ A349	3	#5	STR	3'-11"	12	A449	3	#5	STR	3'-11"	12
A4	209	#5	STR	49'-4"	10754	✱ A350	3	#5	STR	2'-0"	6	A450	3	#5	STR	1'-11"	6
✱ A301	3	#5	STR	47'-5"	148	A401	3	#5	STR	47'-5"	148	✱ B1	228	#4	STR	25'-10"	3935
✱ A302	3	#5	STR	45'-7"	143	A402	3	#5	STR	45'-7"	143	B2	174	#5	STR	50'-1"	9089
✱ A303	3	#5	STR	43'-8"	137	A403	3	#5	STR	43'-8"	137						
✱ A304	3	#5	STR	41'-10"	131	A404	3	#5	STR	41'-10"	137	✱ D1	148	#5	STR	3'-0"	463
✱ A305	3	#5	STR	40'-0"	125	A405	3	#5	STR	40'-0"	125	D2	148	#5	STR	3'-0"	463
✱ A306	3	#5	STR	38'-1"	119	A406	3	#5	STR	38'-1"	119						
✱ A307	3	#5	STR	36'-3"	113	A407	3	#5	STR	36'-3"	113	✱ G2	4	#5	STR	32'-9"	137
✱ A308	3	#5	STR	34'-5"	108	A408	3	#5	STR	34'-5"	108						
✱ A309	3	#5	STR	32'-6"	102	A409	3	#5	STR	32'-6"	102						
✱ A310	3	#5	STR	30'-8"	96	A410	3	#5	STR	30'-8"	96	✱ J1	132	#4	4	1'-5"	125
✱ A311	3	#5	STR	28'-10"	90	A411	3	#5	STR	28'-10"	90						
✱ A312	3	#5	STR	26'-11"	84	A412	3	#5	STR	26'-11"	84	✱ K4	6	#5	1	11'-6"	72
✱ A313	3	#5	STR	25'-1"	78	A413	3	#5	STR	25'-1"	78	✱ K5	24	#5	2	15'-5"	386
✱ A314	3	#5	STR	23'-3"	73	A414	3	#5	STR	23'-3"	73	✱ K6	6	#5	1	8'-10"	64
✱ A315	3	#5	STR	21'-5"	67	A415	3	#5	STR	21'-5"	67						
✱ A316	3	#5	STR	19'-6"	61	A416	3	#5	STR	19'-6"	61	✱ S1	70	#4	3	4'-5"	207
✱ A317	3	#5	STR	17'-8"	55	A417	3	#5	STR	17'-8"	55						
✱ A318	3	#5	STR	15'-10"	50	A418	3	#5	STR	15'-10"	50						
✱ A319	3	#5	STR	13'-11"	44	A419	3	#5	STR	13'-11"	44						
✱ A320	3	#5	STR	12'-1"	38	A420	3	#5	STR	12'-1"	38						
✱ A321	3	#5	STR	10'-3"	32	A421	3	#5	STR	10'-3"	32						
✱ A322	3	#5	STR	8'-5"	26	A422	3	#5	STR	8'-5"	26						
✱ A323	3	#5	STR	6'-6"	20	A423	3	#5	STR	6'-6"	20						
✱ A324	3	#5	STR	4'-8"	15	A424	3	#5	STR	4'-8"	15						
✱ A325	3	#5	STR	2'-10"	9	A425	3	#5	STR	2'-10"	9						
✱ A326	3	#5	STR	47'-6"	149	A426	3	#5	STR	47'-6"	149						
✱ A327	3	#5	STR	45'-7"	143	A427	3	#5	STR	45'-7"	143						
✱ A328	3	#5	STR	43'-9"	137	A428	3	#5	STR	43'-9"	137						
✱ A329	3	#5	STR	41'-10"	131	A429	3	#5	STR	41'-10"	131						
✱ A330	3	#5	STR	39'-11"	125	A430	3	#5	STR	39'-11"	125						
✱ A331	3	#5	STR	38'-1"	119	A431	3	#5	STR	38'-1"	119						
✱ A332	3	#5	STR	36'-2"	113	A432	3	#5	STR	36'-2"	113						
✱ A333	3	#5	STR	34'-3"	107	A433	3	#5	STR	34'-3"	107						
✱ A334	3	#5	STR	32'-4"	101	A434	3	#5	STR	32'-4"	101						
✱ A335	3	#5	STR	30'-6"	95	A435	3	#5	STR	30'-6"	95						
✱ A336	3	#5	STR	28'-7"	89	A436	3	#5	STR	28'-7"	89						
✱ A337	3	#5	STR	26'-8"	83	A437	3	#5	STR	26'-8"	83						
✱ A338	3	#5	STR	24'-9"	77	A438	3	#5	STR	24'-9"	78						
✱ A339	3	#5	STR	22'-11"	72	A439	3	#5	STR	22'-11"	77						
✱ A340	3	#5	STR	21'-0"	66	A440	3	#5	STR	21'-0"	66						
✱ A341	3	#5	STR	19'-1"	60	A441	3	#5	STR	19'-1"	60						
✱ A342	3	#5	STR	17'-2"	54	A442	3	#5	STR	17'-2"	54						
✱ A343	3	#5	STR	15'-3"	48	A443	3	#5	STR	15'-3"	48						
✱ A344	3	#5	STR	13'-5"	42	A444	3	#5	STR	13'-5"	42						
✱ A345	3	#5	STR	11'-6"	36	A445	3	#5	STR	11'-6"	36						
✱ A346	3	#5	STR	9'-7"	30	A446	3	#5	STR	9'-7"	30						
✱ A347	3	#5	STR	7'-8"	24	A447	3	#5	STR	7'-8"	24						
✱ A348	3	#5	STR	5'-10"	18	A448	3	#5	STR	5'-10"	18						

REINFORCING STEEL = 24207 LBS

EPOXY COATED REINF. STEEL = 20035 LBS

BAR TYPES

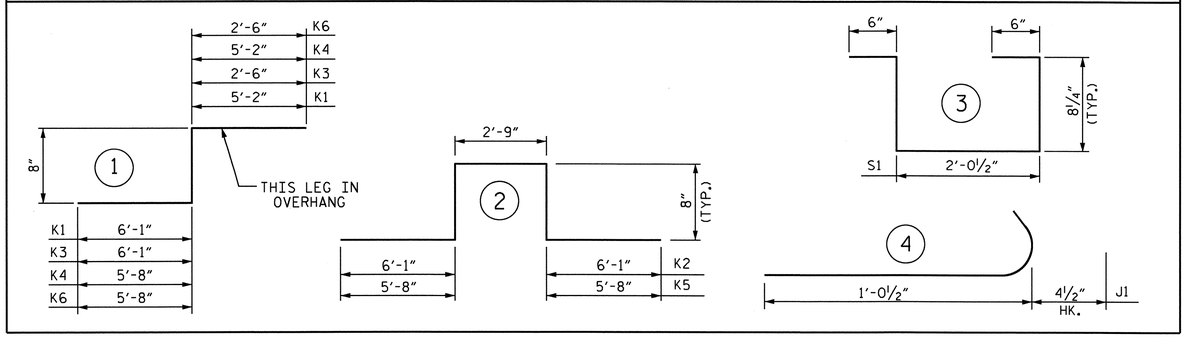

SUPERSTRUCTURE REINFORCING STEEL LENGTHS ARE BASED ON THE FOLLOWING MINIMUM SPLICE LENGTHS					
BAR SIZE	SUPERSTRUCTURE EXCEPT APPROACH SLABS, PARAPET, AND BARRIER RAIL		APPROACH SLABS		PARAPET AND BARRIER RAIL
	EPOXY COATED	UNCOATED	EPOXY COATED	UNCOATED	
#4	2'-0"	1'-9"	2'-0"	1'-9"	2'-9"
#5	2'-6"	2'-2"	2'-6"	2'-2"	3'-5"
#6	3'-0"	2'-7"	3'-10"	2'-7"	4'-4"
#7	5'-3"	3'-6"			
#8	6'-10"	4'-7"			

NORTH CAROLINA PROFESSIONAL SEAL 15825 ENGINEER BRUCE D. KLAPPENBACH 4-29-2011

PROJECT NO. U-2550B

BURKE COUNTY

STATION: 23+83.10 -L-

SHEET 2 OF 2

STATE OF NORTH CAROLINA
DEPARTMENT OF TRANSPORTATION
RALEIGH

SUPERSTRUCTURE BILL OF MATERIAL

REVISIONS						SHEET NO.
NO.	BY:	DATE:	NO.	BY:	DATE:	S-32
1			3			TOTAL SHEETS
2			4			93

DRAWN BY : M. G. SHAIKH DATE : 02-17-11
CHECKED BY : H. T. BARBOUR DATE : 03-17-11

25-APR-2011 12:16
P:\Structures\Bailey\Str1\mshaikh\Microstation\U-2550B_SD_TS.dgn
mshaikh

STR #1

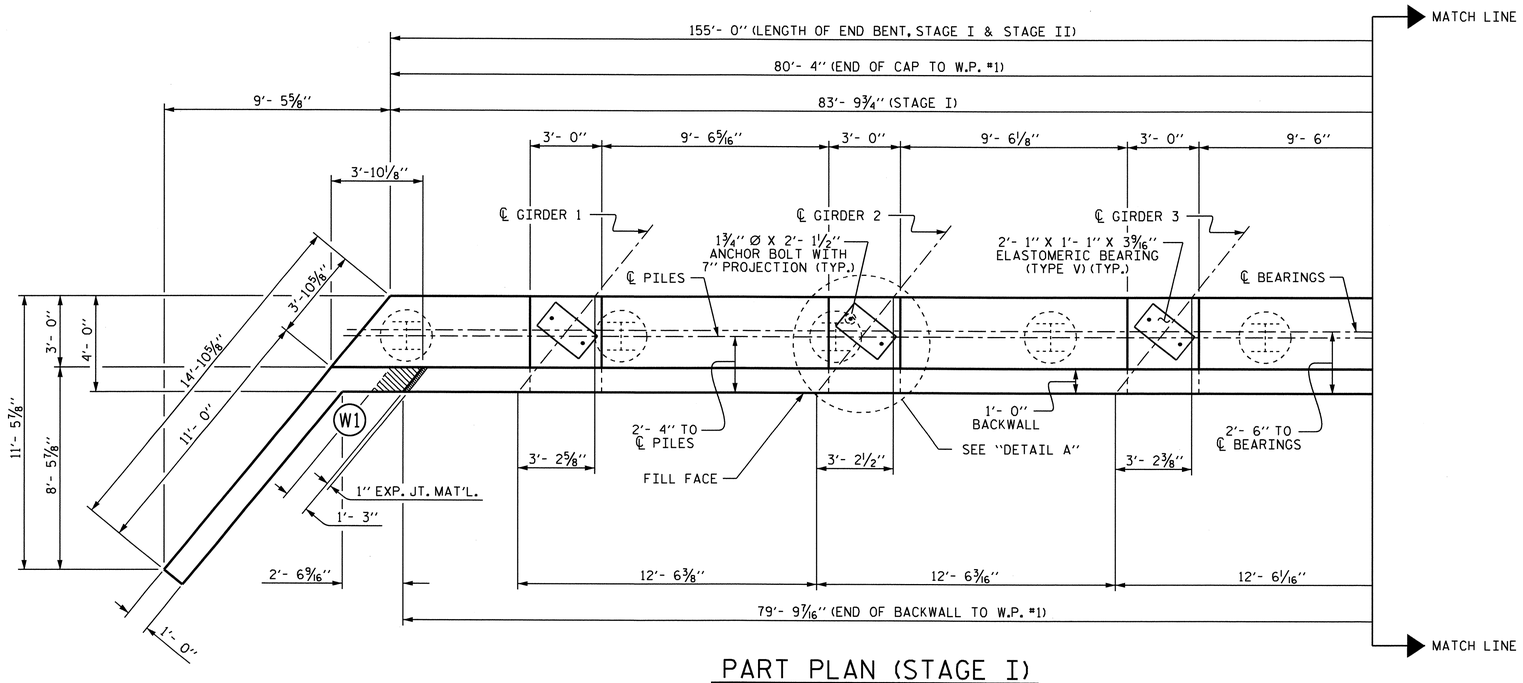

PART PLAN (STAGE I)

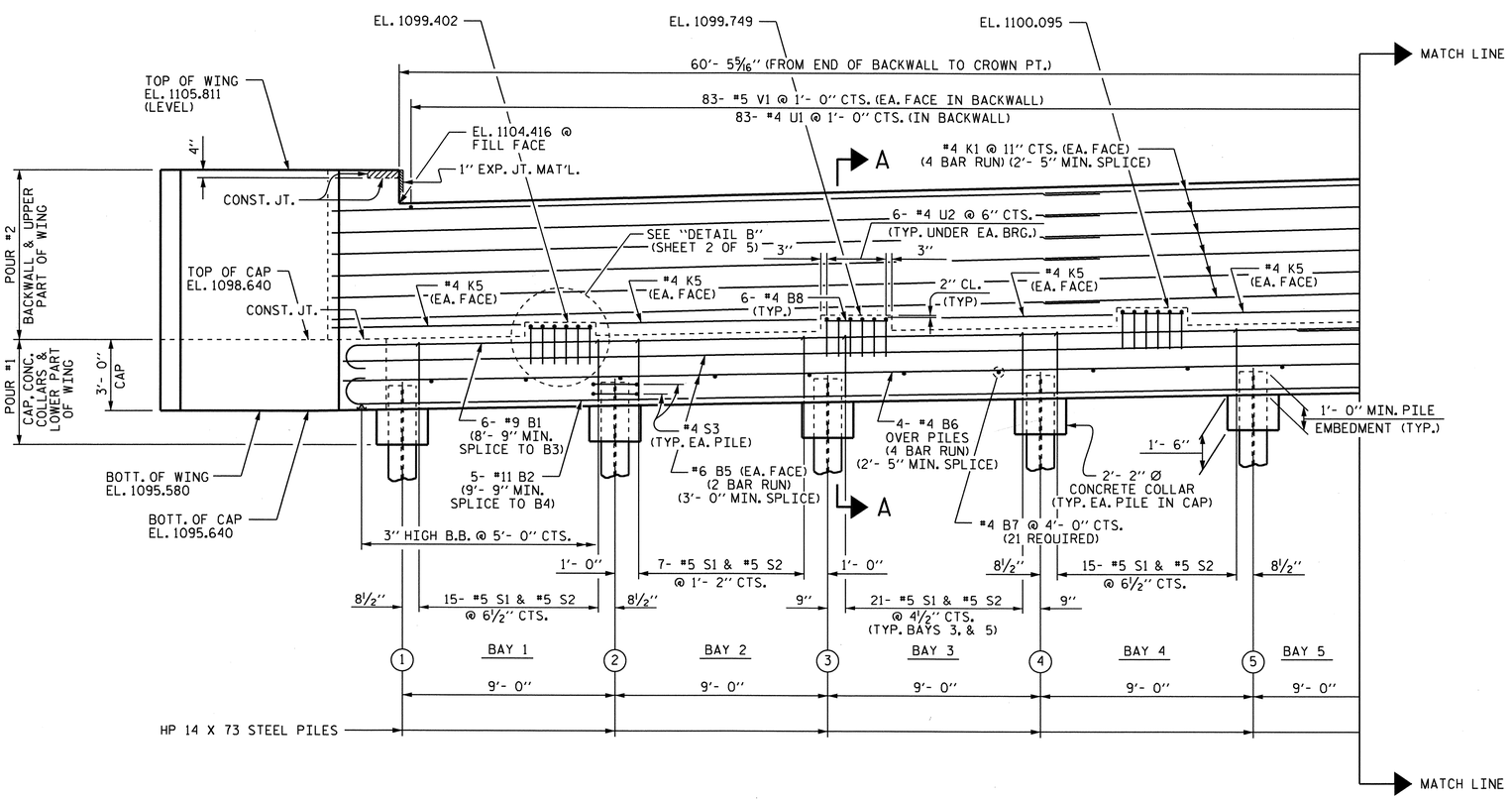

PART ELEVATION (STAGE I)

NOTES

STIRRUPS IN CAP MAY BE SHIFTED AS NECESSARY TO CLEAR ANCHOR BOLTS.

BACKWALL SHALL BE PLACED BEFORE APPLYING THE EPOXY PROTECTIVE COATING.

THE TOP SURFACE OF THE END BENT CAP EXCEPT THE BRIDGE SEAT BUILDUPS SHALL BE SLOPED TRANSVERSELY FROM THE FILL FACE TO THE BACK FACE AT THE RATE OF 2%.

THE TOP SURFACE AREAS OF THE END BENT CAPS SHALL BE CURED IN ACCORDANCE WITH THE STANDARD SPECIFICATIONS EXCEPT THE MEMBRANE CURING COMPOUND METHOD SHALL NOT BE USED.

THE CONTRACTOR SHALL PROVIDE FOR INSTALLATION OF THE 4" DIAMETER DRAIN PIPE THROUGH THE WING WALL AS REQUIRED FOR REINFORCED BRIDGE APPROACH FILLS. SEE THE ROADWAY PLANS. REINFORCING STEEL IN THE WING WALL MAY BE SHIFTED AS NECESSARY TO CLEAR THE DRAIN PIPE.

MECHANICAL BUTT SPLICES SHALL BE USED IN ACCORDANCE WITH THE STANDARD SPECIFICATIONS. NO SEPARATE PAYMENT SHALL BE MADE FOR THE MECHANICAL BUTT SPLICES.

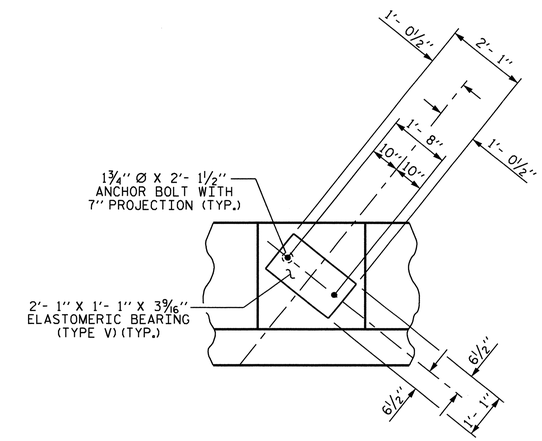

DETAIL A

(TYP. EACH GIRDER)

PROJECT NO. U-2550B

BURKE COUNTY

STATION: STA. 23+83.10 -L-

SHEET 1 OF 5

STATE OF NORTH CAROLINA
DEPARTMENT OF TRANSPORTATION
RALEIGH

SUBSTRUCTURE END BENT #1 (STAGE I)

NORTH CAROLINA PROFESSIONAL SEAL 15825 ENGINEER D. KLAPPENBACH
6-29-2011

REVISIONS						SHEET NO.
NO.	BY:	DATE:	NO.	BY:	DATE:	S-33
1			3			TOTAL SHEETS
2			4			93

DRAWN BY : D. A. GLADDEN DATE : 1-2-11
CHECKED BY : M. G. SHAIKH DATE : 3-31-11

26-APR-2011 12:11
R:\Structures\Bailey\Str1\dgladden\Microstation\U2550B_SD_EBTS.dgn
dgladden

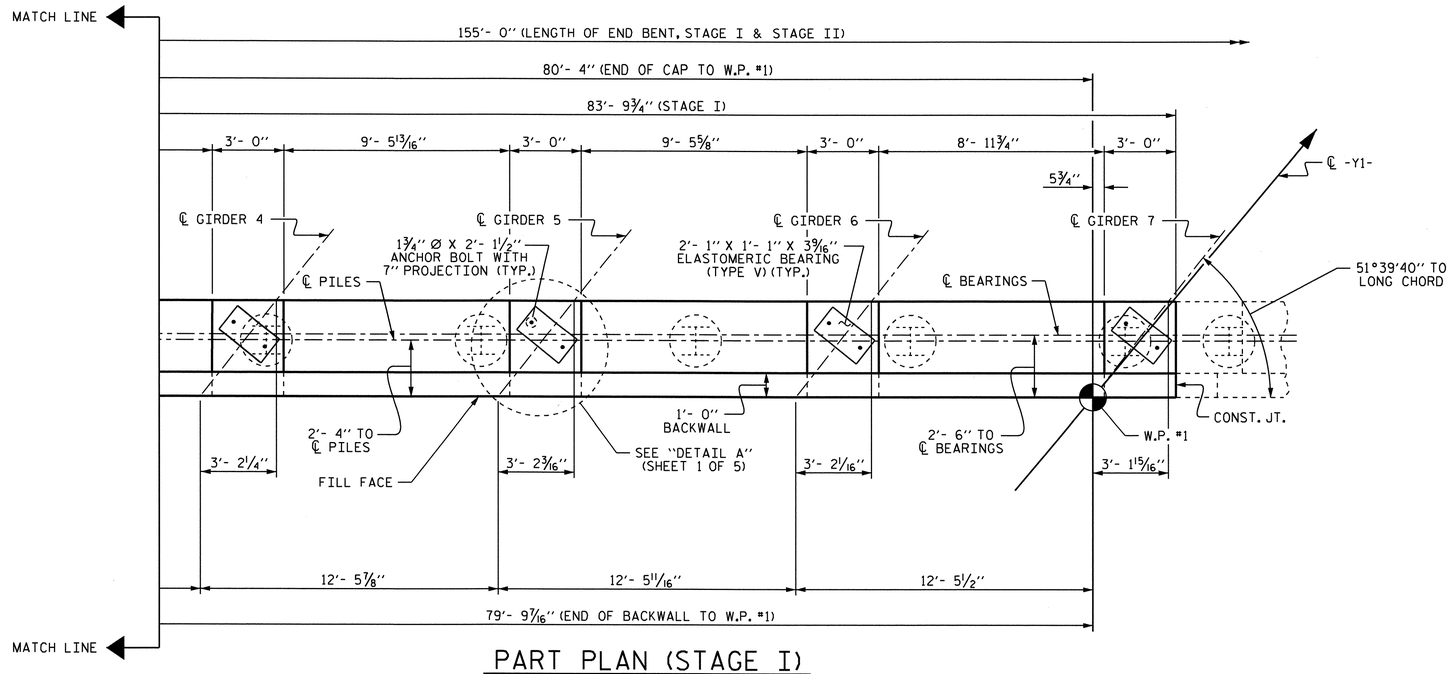

PART PLAN (STAGE I)

ELEVATIONS BETWEEN BRIDGE SEATS (STAGE I)		
LOCATION	EL. "A"	EL. "B"
GDR. #1	1098.748	1098.804
GDR. #2	1098.979	1099.034
GDR. #3	1099.209	1099.264
GDR. #4	1099.439	1099.494
GDR. #5	1099.669	1099.724
GDR. #6	1099.898	1099.954
GDR. #7	1100.128	1100.183

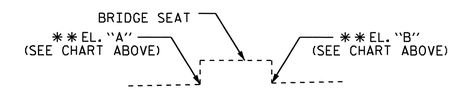

DETAIL B

** FOR ELEVATION BETWEEN BRIDGE SEATS, SEE "SECTION A-A (SHEET 5 OF 5)

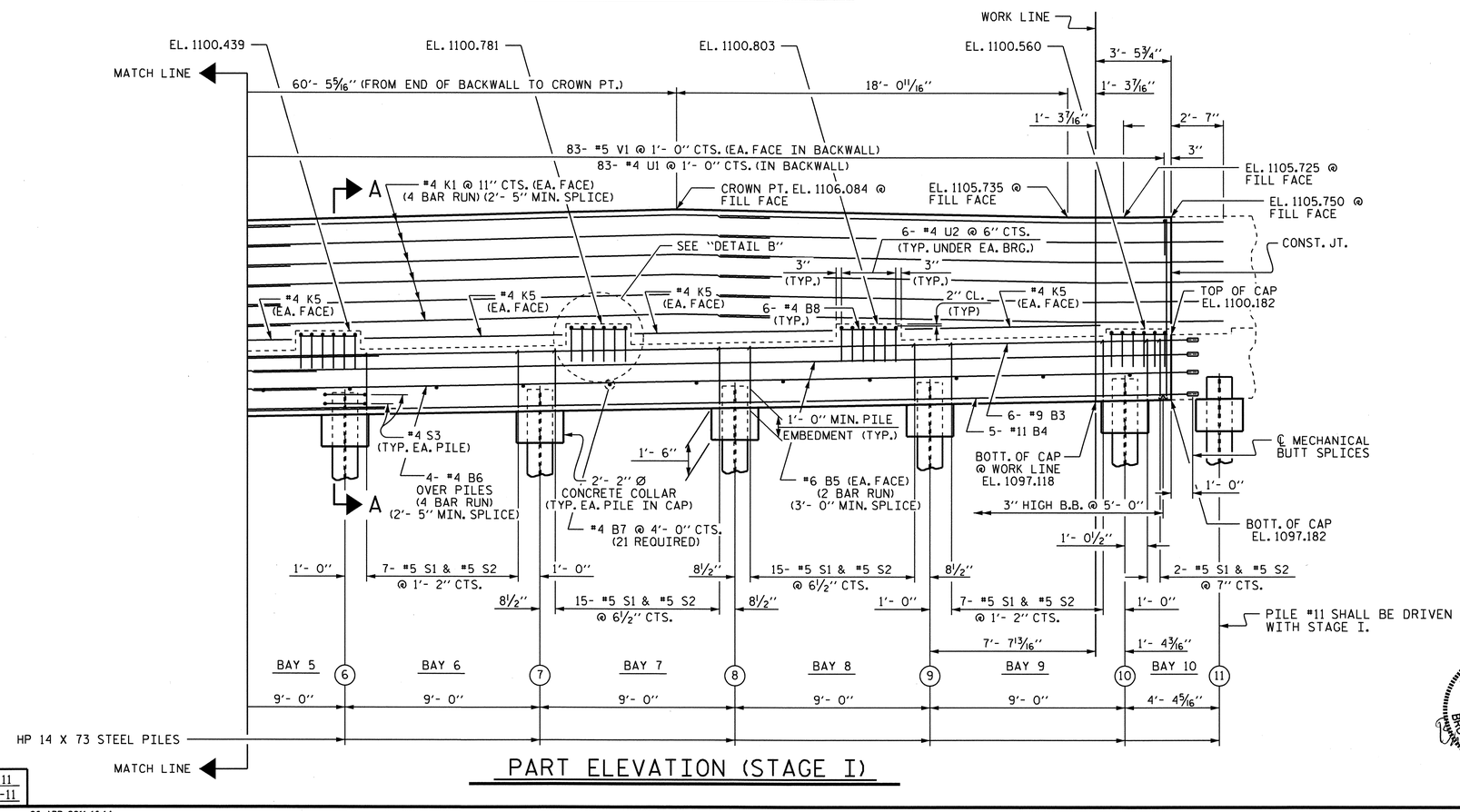

PART ELEVATION (STAGE I)

TOP OF PILE ELEVATIONS (STAGE I)			
1	EL. 1096.688	7	EL. 1097.679
2	EL. 1096.853	8	EL. 1097.845
3	EL. 1097.019	9	EL. 1098.010
4	EL. 1097.184	10	EL. 1098.175
5	EL. 1097.349	11	EL. 1098.255
6	EL. 1097.514		

PROJECT NO. U-2550B

BURKE COUNTY

STATION: STA. 23+83.10 -L-

SHEET 2 OF 5

STATE OF NORTH CAROLINA
DEPARTMENT OF TRANSPORTATION
RALEIGH

SUBSTRUCTURE END BENT #1 (STAGE I)

NORTH CAROLINA PROFESSIONAL SEAL 15825 ENGINEER D. KLAPPENBACH 4-29-2011

REVISIONS						SHEET NO.
NO.	BY:	DATE:	NO.	BY:	DATE:	S-34
1			3			TOTAL SHEETS
2			4			93

DRAWN BY : D. A. GLADDEN DATE : 1-2-11
CHECKED BY : M. G. SHAIKH DATE : 3-31-11

26-APR-2011 16:14
R:\Structures\Bailey\Str1\dgladden\Microstation\U255B_SD_EBTS.dgn
dgladden

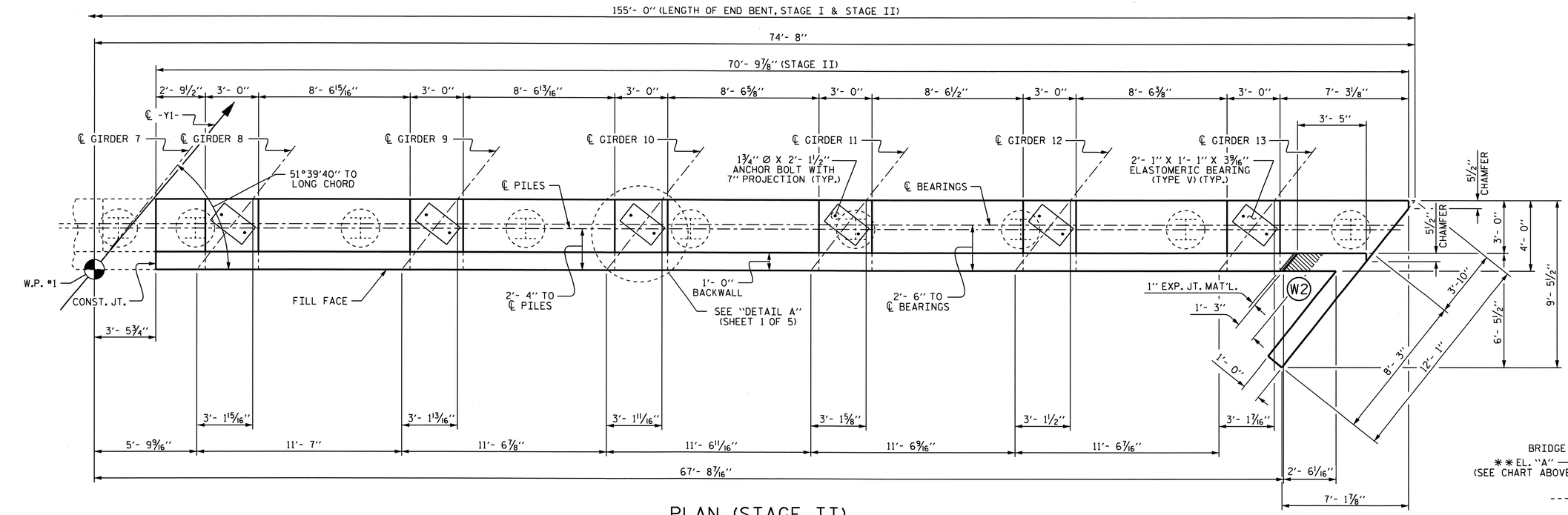

PLAN (STAGE II)

ELEVATIONS BETWEEN BRIDGE SEATS (STAGE II)		
LOCATION	EL. "A"	EL. "B"
GDR. #8	1100.234	1100.290
GDR. #9	1100.447	1100.503
GDR. #10	1100.660	1100.715
GDR. #11	1100.873	1100.928
GDR. #12	1101.085	1101.140
GDR. #13	1101.297	1101.353

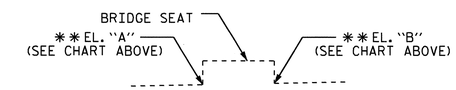

DETAIL B

** FOR ELEVATION BETWEEN BRIDGE SEATS, SEE "SECTION A-A (SHEET 5 OF 5)

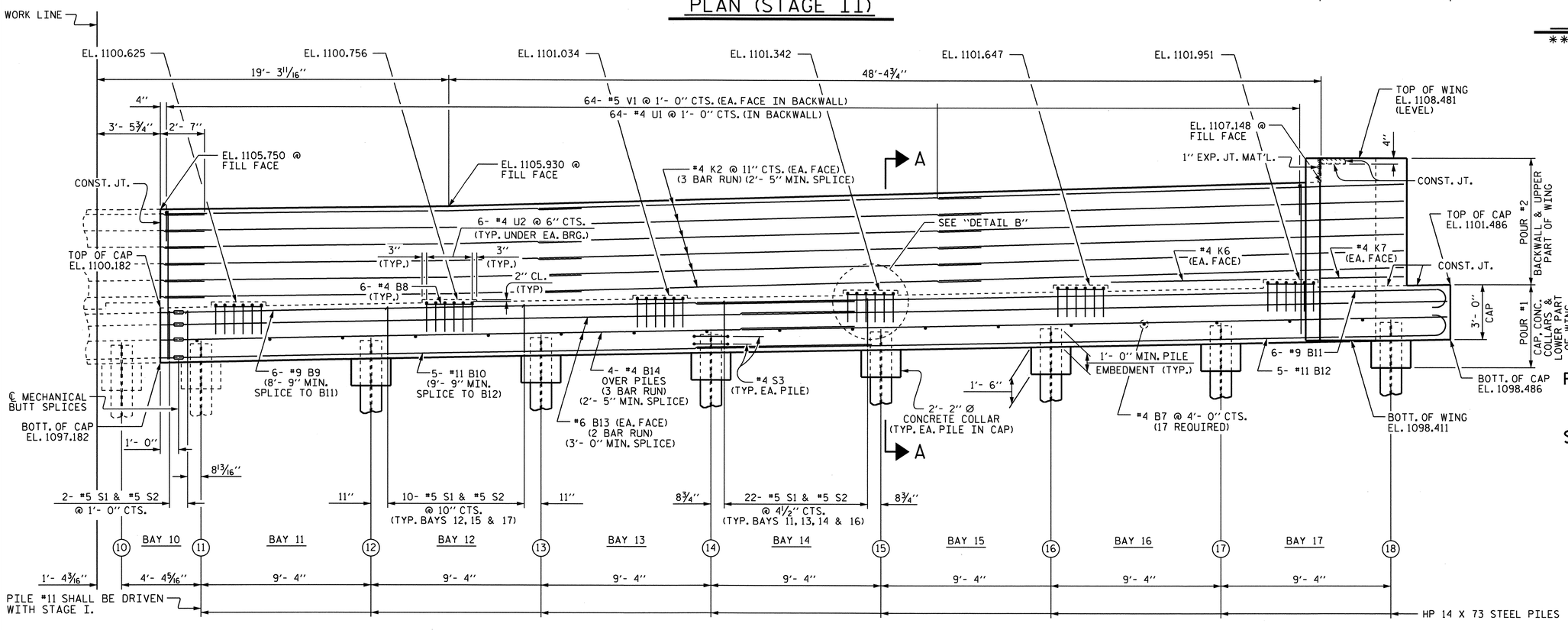

ELEVATION (STAGE II)

TOP OF PILE ELEVATIONS (STAGE II)			
12	EL. 1098.426	16	EL. 1099.112
13	EL. 1098.598	17	EL. 1099.283
14	EL. 1098.769	18	EL. 1099.454
15	EL. 1098.940		

NORTH CAROLINA PROFESSIONAL SEAL 15879 ENGINEER D. KL APPENGARD 4-29-2011

PROJECT NO. U-2550B

BURKE COUNTY

STATION: STA. 23+83.10 -L-

SHEET 3 OF 5

STATE OF NORTH CAROLINA
DEPARTMENT OF TRANSPORTATION
RALEIGH

SUBSTRUCTURE
END BENT #1
(STAGE II)

REVISIONS						SHEET NO.
NO.	BY:	DATE:	NO.	BY:	DATE:	S-35
1			3			TOTAL SHEETS
2			4			93

DRAWN BY : D. A. GLADDEN DATE : 1-2-11
CHECKED BY : M. G. SHAIKH DATE : 3-31-11

26-APR-2011 16:15
R:\Structures\Bailey\Str1\dgladden\Microstation\U2550B_SD_EBTS.dgn
dgladden

STR. #1

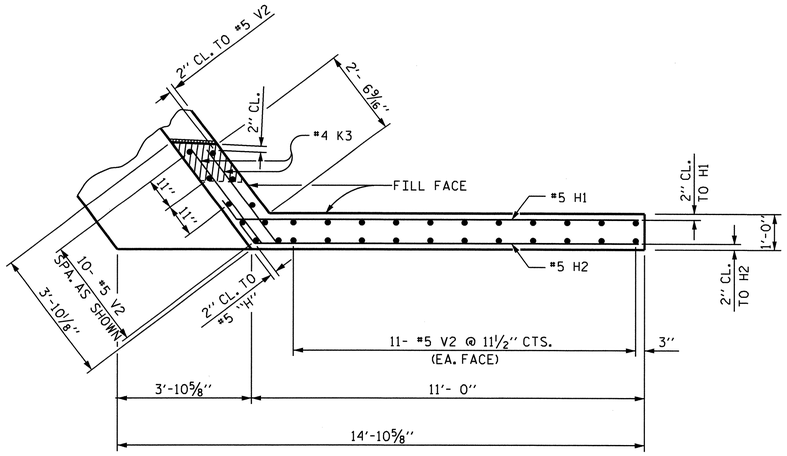

PLAN OF LEFT WING (STAGE I) (W1)

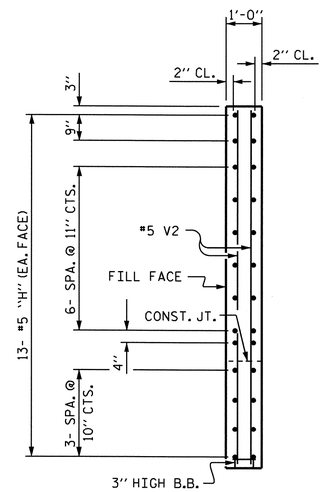

SECTION X-X

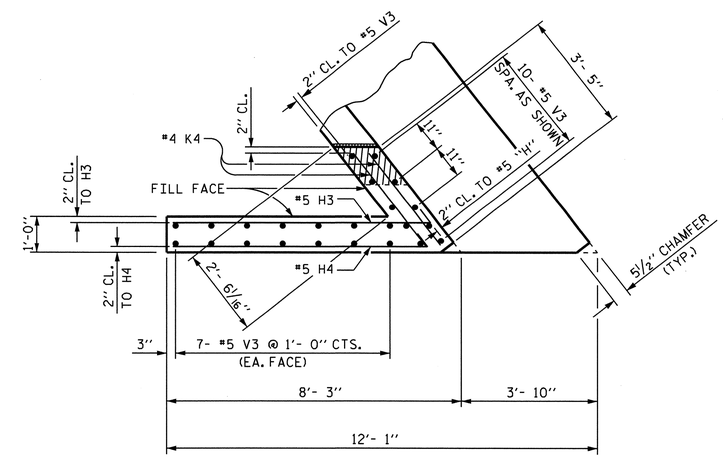

PLAN OF RIGHT WING (STAGE II) (W2)

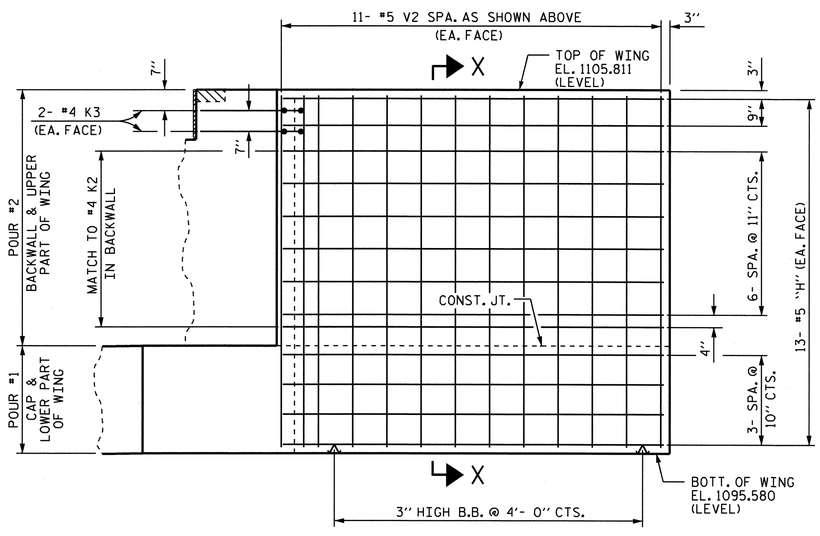

ELEVATION OF LEFT WING (STAGE I) (W1)

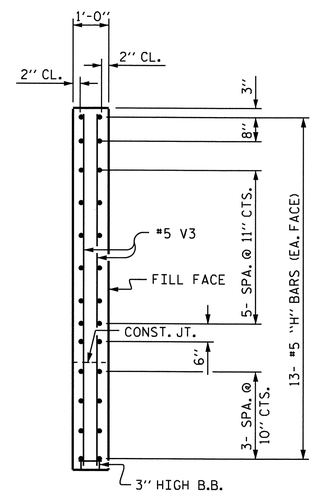

SECTION Y-Y

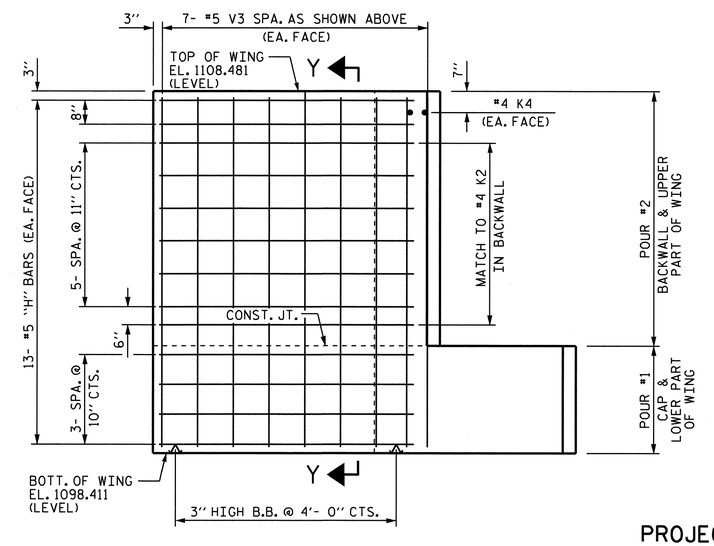

ELEVATION OF RIGHT WING (STAGE II) (W2)

PROJECT NO. U-2550B

BURKE COUNTY

STATION: STA. 23+83.10 -L-

SHEET 4 OF 5

STATE OF NORTH CAROLINA
DEPARTMENT OF TRANSPORTATION
RALEIGH

SUBSTRUCTURE
END BENT #1

NORTH CAROLINA PROFESSIONAL SEAL 15825 ENGINEER BRIAN D. KLAPPENBACH
4-29-2011

REVISIONS						SHEET NO.
NO.	BY:	DATE:	NO.	BY:	DATE:	S-36
1			3			TOTAL SHEETS
2			4			93

DRAWN BY : D. A. GLADDEN DATE : 1-2-11
CHECKED BY : M. G. SHAIKH DATE : 3-31-11

26-APR-2011 08:29
R:\Structures\Bailey\Str1\dgladden\Microstation\U2550B_SD_EBTS.dgn
dgladden

STR. #1

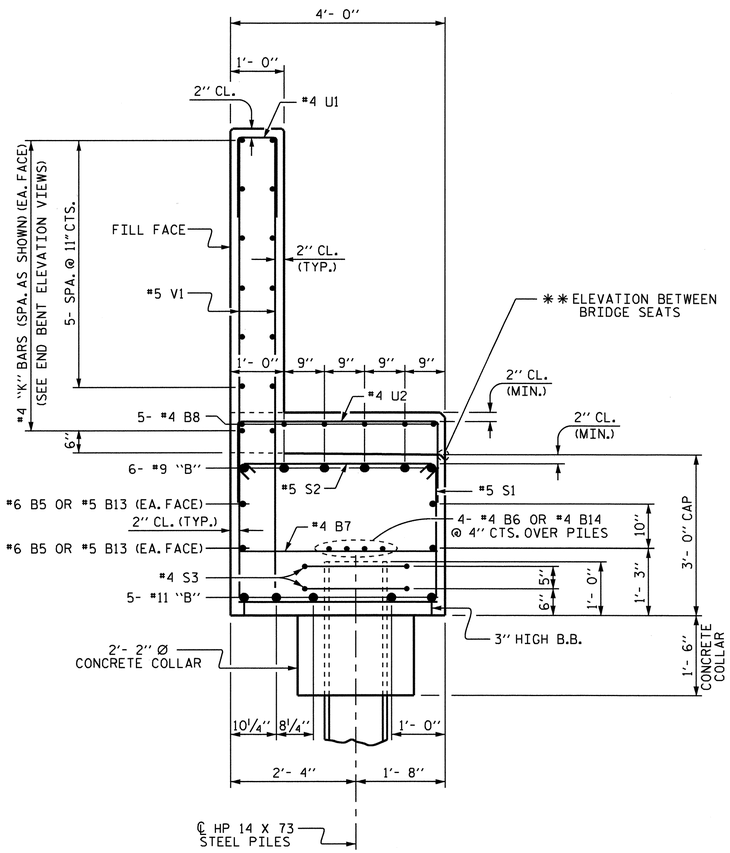

SECTION A-A

BAR TYPES

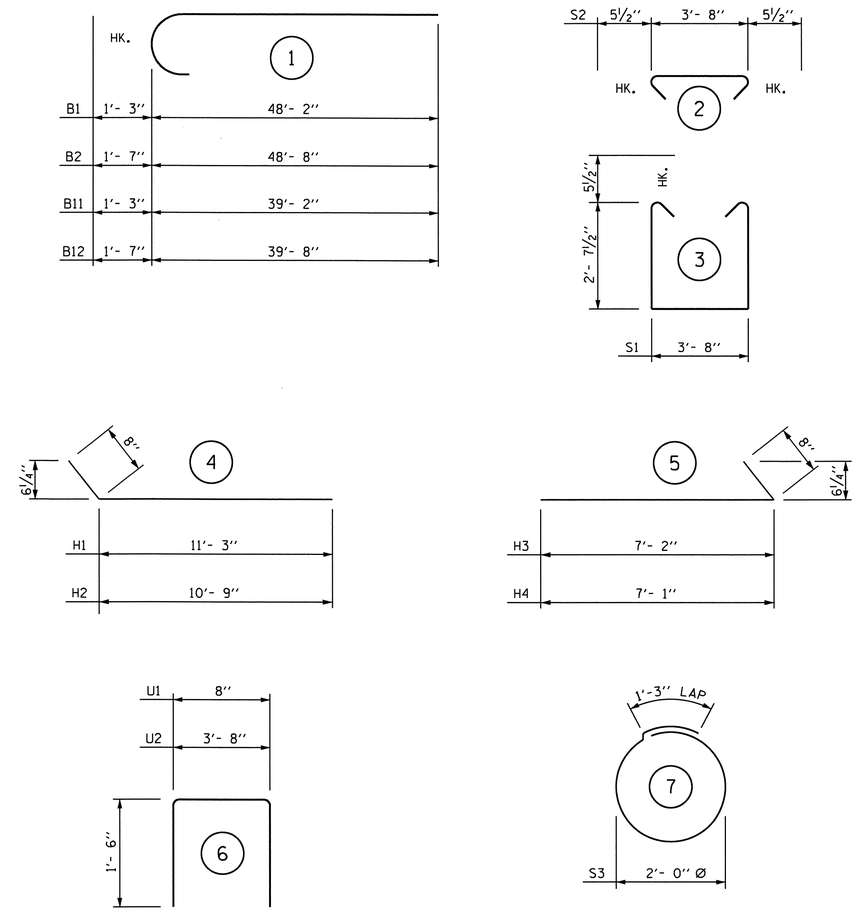

ALL BAR DIMENSIONS ARE OUT TO OUT.

BILL OF MATERIAL

STAGE I

BAR	NO.	SIZE	TYPE	LENGTH	WEIGHT
B1	6	#9	1	49'- 5"	1008
B2	5	#11	1	50'- 3"	1335
B3	6	#9	STR	48'- 2"	983
B4	5	#11	STR	48'- 8"	1293
B5	8	#6	STR	45'- 5"	546
B6	16	#4	STR	23'-10"	255
B7	21	#4	STR	3'- 8"	51
B8	42	#4	STR	2'- 8"	75
H1	13	#5	4	11'-11"	162
H2	13	#5	4	11'- 5"	155
K1	48	#4	STR	24'- 2"	775
K3	4	#4	STR	3'- 4"	9
K5	14	#4	STR	9'- 2"	86
S1	125	#5	3	9'-10"	1282
S2	125	#5	2	4'- 7"	598
S3	20	#4	7	7'- 7"	101
U1	83	#4	6	3'- 8"	203
U2	42	#4	6	6'- 8"	187
V1	166	#5	STR	8'- 2"	1414
V2	32	#5	STR	9'-10"	328

REINFORCING STEEL = 10846 LBS

CLASS A CONCRETE BREAKDOWN

POUR #1 (CAP, CONCRETE COLLAR & LOWER PART OF WINGS) = 43.6 C.Y.

POUR #2 BACKWALL & UPPER PART OF WINGS = 21.4 C.Y.

TOTAL CLASS A CONCRETE = 65.0 C.Y.

HP 14 X 73 STEEL PILES
NO. 11 LIN. FT. 330

PILE EXCAVATION IN SOIL = 134 LIN. FT.

PILE EXCAVATION NOT IN SOIL = 128 LIN. FT.

STAGE II

BAR	NO.	SIZE	TYPE	LENGTH	WEIGHT
B7	17	#4	STR	3'- 8"	42
B8	36	#4	STR	2'- 8"	64
B9	6	#9	STR	39'- 2"	799
B10	5	#11	STR	39'- 8"	1054
B11	6	#9	1	40'- 5"	824
B12	5	#11	1	41'- 3"	1096
B13	8	#6	STR	36'- 4"	437
B14	12	#4	STR	24'-10"	199
H3	13	#5	5	7'-10"	106
H4	13	#5	5	7'- 9"	105
K2	36	#4	STR	24'- 4"	585
K4	2	#4	STR	3'- 3"	4
K6	2	#4	STR	8'- 2"	11
K7	2	#4	STR	4'- 6"	6
S1	120	#5	3	9'-10"	1231
S2	120	#5	2	4'- 7"	574
S3	16	#4	7	7'- 7"	81
U1	64	#4	6	3'- 8"	157
U2	36	#4	6	6'- 8"	160
V1	128	#5	STR	8'- 2"	1090
V3	24	#5	STR	9'- 8"	242

REINFORCING STEEL = 8867 LBS

CLASS A CONCRETE BREAKDOWN

POUR #1 (CAP, CONCRETE COLLAR & LOWER PART OF WINGS) = 33.8 C.Y.

POUR #2 BACKWALL & UPPER PART OF WINGS = 15.3 C.Y.

TOTAL CLASS A CONCRETE = 49.1 C.Y.

HP 14 X 73 STEEL PILES
NO. 7 LIN. FT. 210

PILE EXCAVATION IN SOIL = 86 LIN. FT.

PILE EXCAVATION NOT IN SOIL = 82 LIN. FT.

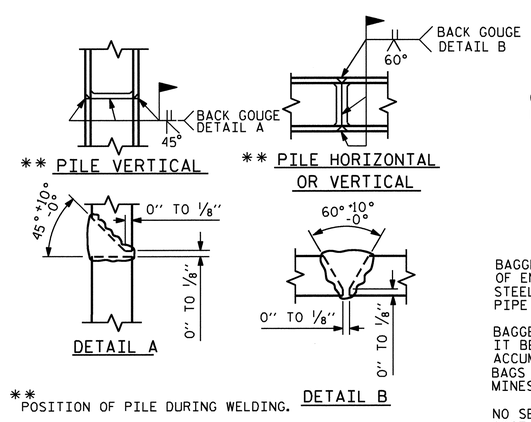

** POSITION OF PILE DURING WELDING.

PILE SPLICE DETAILS

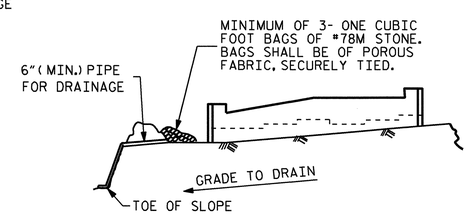

BAGGED STONE AND PIPE SHALL BE PLACED IMMEDIATELY AFTER COMPLETION OF END BENT EXCAVATION. PIPE MAY BE EITHER CONCRETE, CORRUGATED STEEL, CORRUGATED ALUMINUM ALLOY, OR CORRUGATED PLASTIC. PERFORATED PIPE WILL NOT BE ALLOWED.

BAGGED STONE SHALL REMAIN IN PLACE UNTIL THE ENGINEER DIRECTS THAT IT BE REMOVED. THE CONTRACTOR SHALL REMOVE AND DISPOSE OF SILT ACCUMULATIONS AT BAGGED STONE WHEN SO DIRECTED BY THE ENGINEER. BAGS SHALL BE REMOVED AND REPLACED WHENEVER THE ENGINEER DETERMINES THAT THEY HAVE DETERIORATED AND LOST THEIR EFFECTIVENESS.

NO SEPARATE PAYMENT WILL BE MADE FOR THIS WORK AND THE ENTIRE COST OF THIS WORK SHALL BE INCLUDED IN THE UNIT CONTRACT PRICE BID FOR THE SEVERAL PAY ITEMS.

TEMPORARY DRAINAGE AT END BENT

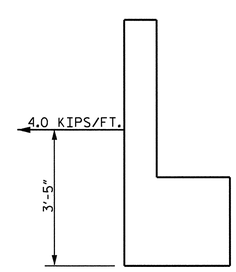

STEEL REINFORCEMENT LOAD DETAIL

A MINIMUM OF TWO LAYERS OF STEEL REINFORCEMENT IS REQUIRED BEHIND THE END BENT BACKWALL. THE STEEL REINFORCEMENT IS REQUIRED TO RESIST A FACTORED LOAD NO LESS THAN 4 KIPS PER FOOT APPLIED TO THE END BENT CAP 3'-5" FROM BOTTOM OF CAP. SEE "STEEL REINFORCED APPROACH FILL" SHEETS.

END BENT #1 BILL OF MATERIAL

		STAGE I	STAGE II	TOTAL
REINFORCING STEEL	(LBS)	10846	8867	19713
CLASS A CONCRETE	(C.Y.)	65.0	49.1	114.1
HP 14 X 73 PILES	(LIN. FT.)	330	210	540
PILE EXCAVATION IN SOIL	(LIN. FT.)	134	86	220
PILE EXCAVATION NOT IN SOIL	(LIN. FT.)	128	82	210

PROJECT NO. U-2550B
BURKE COUNTY
STATION: STA. 23+83.10 -L-

SHEET 5 OF 5

STATE OF NORTH CAROLINA
DEPARTMENT OF TRANSPORTATION
RALEIGH

SUBSTRUCTURE
END BENT #1

NORTH CAROLINA PROFESSIONAL SEAL 15835 ENGINEER BRUCE D. KLAPPENBACH
5-2-2011

REVISIONS						SHEET NO.
NO.	BY:	DATE:	NO.	BY:	DATE:	S-37
1			3			TOTAL SHEETS
2			4			93

DRAWN BY : D. A. GLADDEN DATE : 1-10-11
CHECKED BY : M. G. SHAIKH DATE : 3-31-11

02-MAY-2011 15:49
R:\Structures\Bailey\Str1\dgladden\Microstation\U2550B_SD_EBTS.dgn
bklappenbach

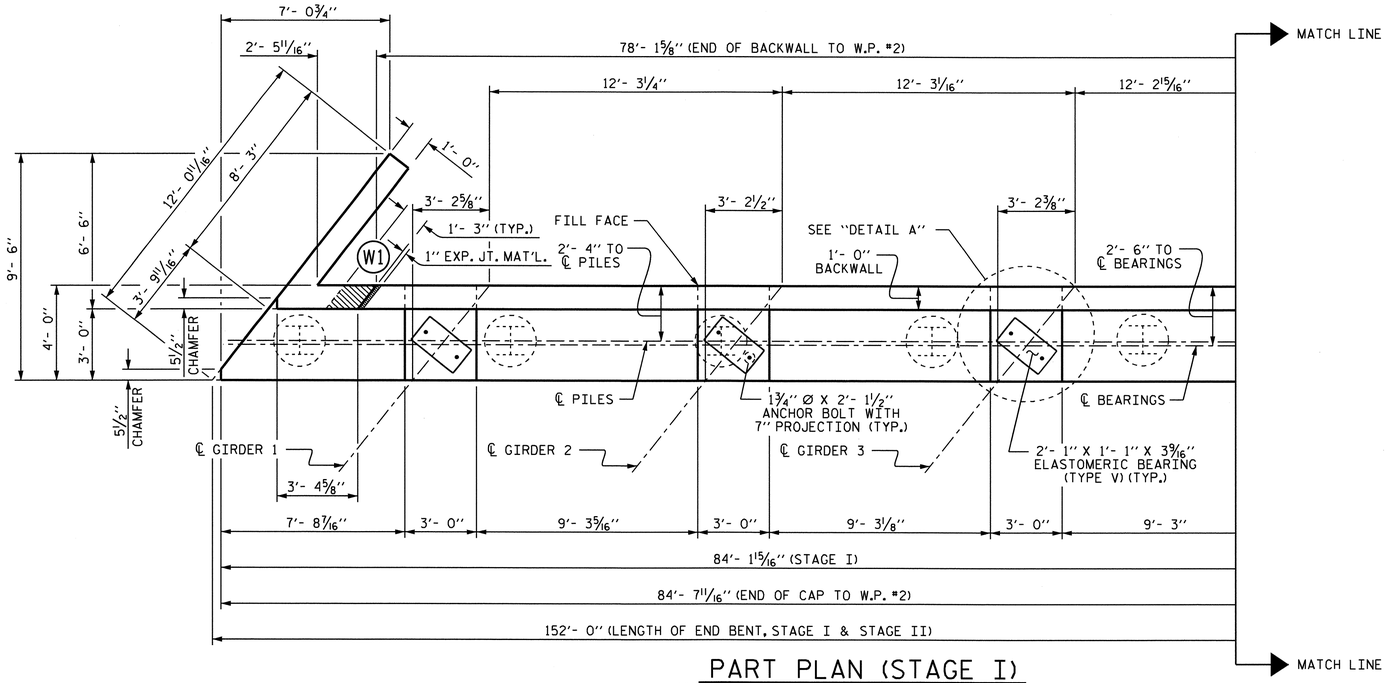

PART PLAN (STAGE I)

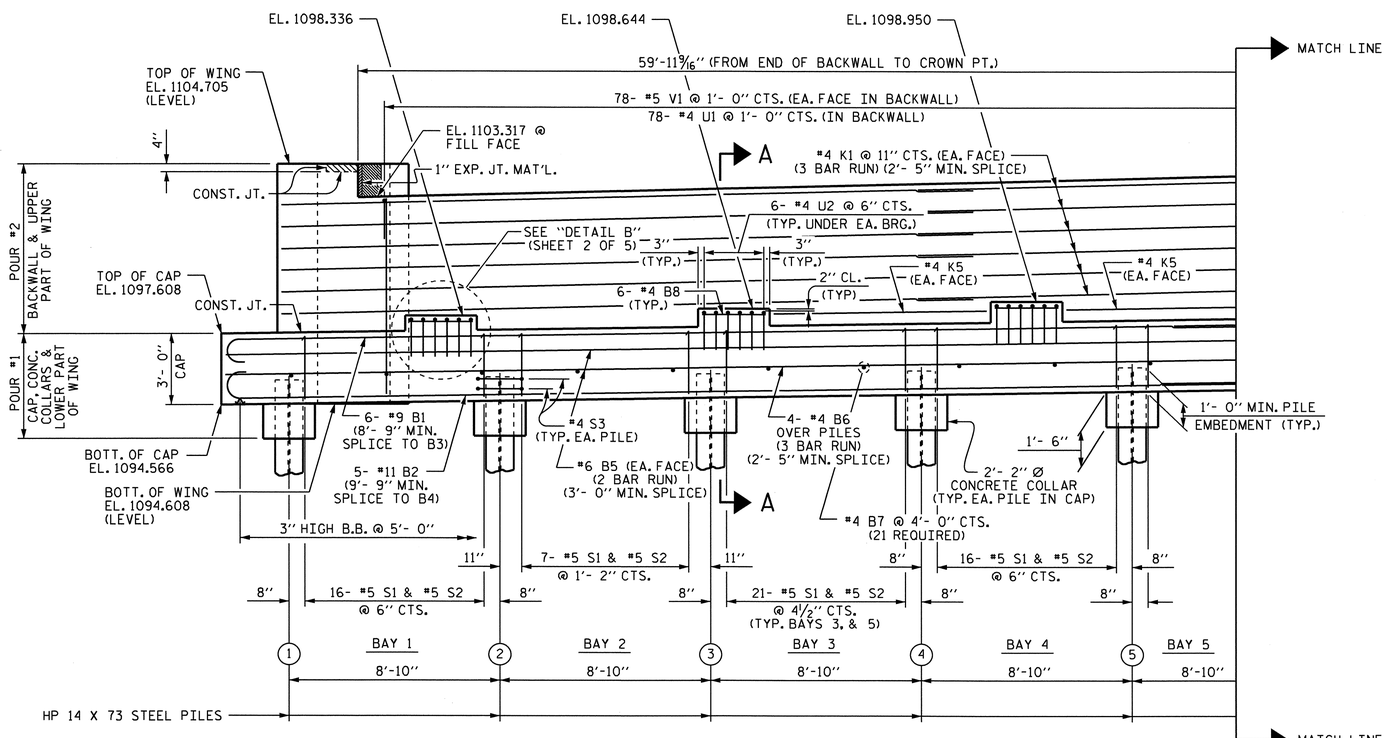

PART ELEVATION (STAGE I)

NOTES

STIRRUPS IN CAP MAY BE SHIFTED AS NECESSARY TO CLEAR ANCHOR BOLTS.

BACKWALL SHALL BE PLACED BEFORE APPLYING THE EPOXY PROTECTIVE COATING.

THE TOP SURFACE OF THE END BENT CAP EXCEPT THE BRIDGE SEAT BUILDUPS SHALL BE SLOPED TRANSVERSELY FROM THE FILL FACE TO THE BACK FACE AT THE RATE OF 2%.

THE TOP SURFACE AREAS OF THE END BENT CAPS SHALL BE CURED IN ACCORDANCE WITH THE STANDARD SPECIFICATIONS EXCEPT THE MEMBRANE CURING COMPOUND METHOD SHALL NOT BE USED.

THE CONTRACTOR SHALL PROVIDE FOR INSTALLATION OF THE 4" DIAMETER DRAIN PIPE THROUGH THE WING WALL AS REQUIRED FOR REINFORCED BRIDGE APPROACH FILLS. SEE THE ROADWAY PLANS. REINFORCING STEEL IN THE WING WALL MAY BE SHIFTED AS NECESSARY TO CLEAR THE DRAIN PIPE.

MECHANICAL BUTT SPLICES SHALL BE USED IN ACCORDANCE WITH THE STANDARD SPECIFICATIONS. NO SEPARATE PAYMENT SHALL BE MADE FOR THE MECHANICAL BUTT SPLICES.

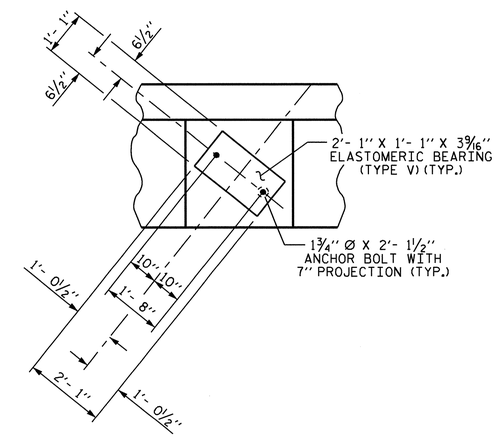

DETAIL A

(TYP. EACH GIRDER)

PROJECT NO. U-2550B

BURKE COUNTY

STATION: STA. 23+83.10 -L-

SHEET 1 OF 5

STATE OF NORTH CAROLINA
DEPARTMENT OF TRANSPORTATION
RALEIGH

SUBSTRUCTURE END BENT #2 (STAGE I)

NORTH CAROLINA PROFESSIONAL SEAL 15825 ENGINEER D. KL APPELBAUM
4-29-2011

REVISIONS						SHEET NO.
NO.	BY:	DATE:	NO.	BY:	DATE:	S-38
1			3			TOTAL SHEETS
2			4			93

DRAWN BY : D. A. GLADDEN DATE : 1-2-11
CHECKED BY : M. G. SHAIKH DATE : 3-31-11

26-APR-2011 12:14
R:\Structures\Bailey\Str1\dgladden\Microstation\U2550B_SD_EBTS.dgn
dgladden

STR. #1

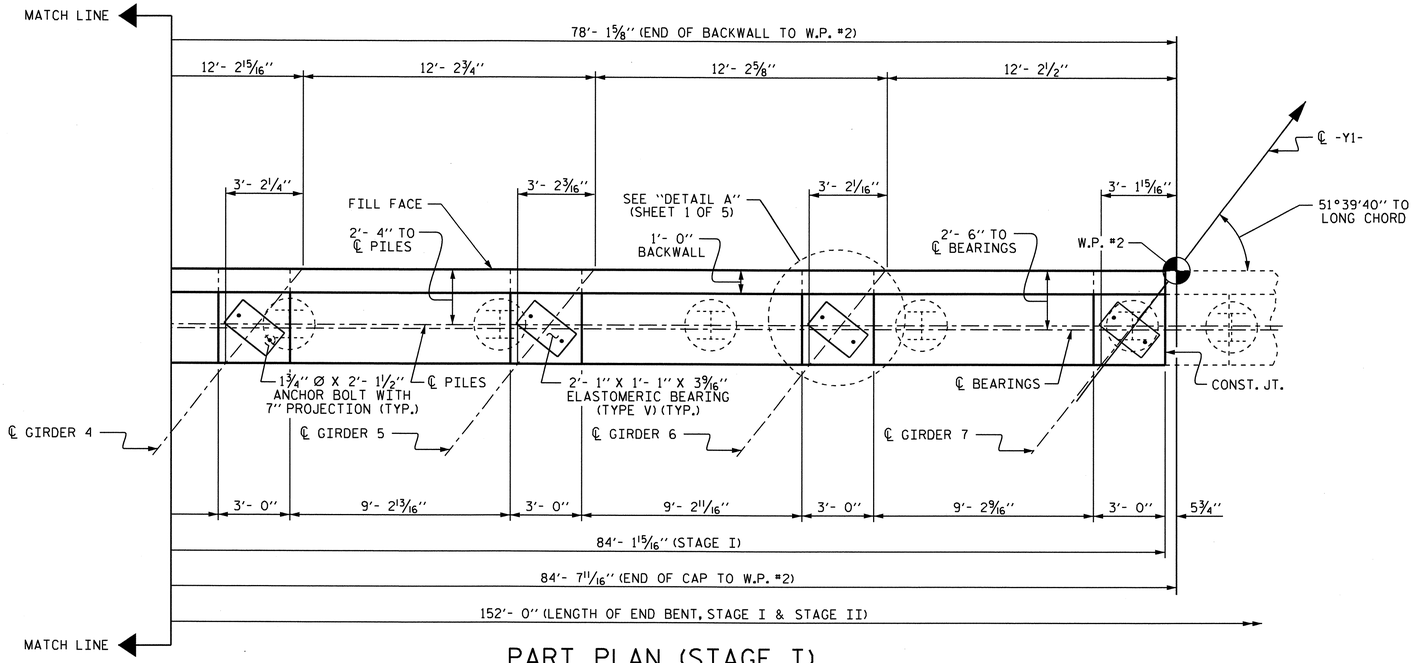

PART PLAN (STAGE I)

ELEVATIONS BETWEEN BRIDGE SEATS (STAGE I)		
LOCATION	EL. "A"	EL. "B"
GDR. #1	1097.689	1097.733
GDR. #2	1097.877	1097.924
GDR. #3	1098.069	1098.115
GDR. #4	1098.260	1098.307
GDR. #5	1098.451	1098.497
GDR. #6	1098.641	1098.688
GDR. #7	1098.832	1098.879

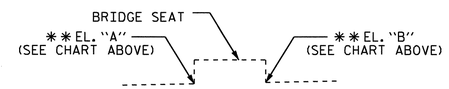

DETAIL B

** FOR ELEVATION BETWEEN BRIDGE SEATS, SEE "SECTION A-A (SHEET 5 OF 5)

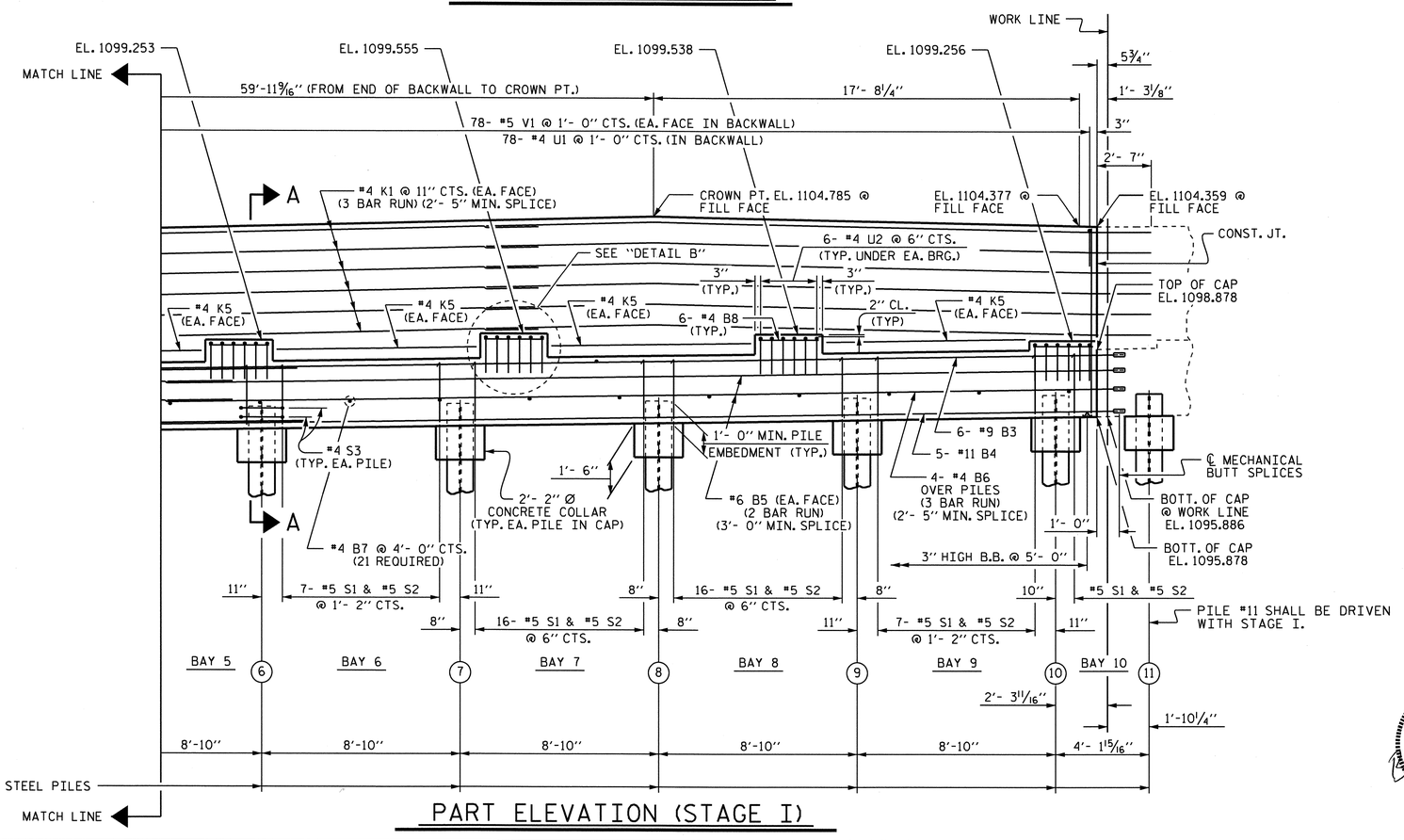

PART ELEVATION (STAGE I)

TOP OF PILE ELEVATIONS (STAGE I)			
1	EL. 1095.602	7	EL. 1096.427
2	EL. 1095.740	8	EL. 1096.564
3	EL. 1095.877	9	EL. 1096.702
4	EL. 1096.015	10	EL. 1096.839
5	EL. 1096.152	11	EL. 1096.904
6	EL. 1096.290		

PROJECT NO. U-2550B

BURKE COUNTY

STATION: STA. 23+83.10 -L-

SHEET 2 OF 5

STATE OF NORTH CAROLINA
DEPARTMENT OF TRANSPORTATION
RALEIGH

SUBSTRUCTURE END BENT #2 (STAGE I)

NORTH CAROLINA PROFESSIONAL SEAL 15825 ENGINEER BRUCE O. KLAPPENBACH
4-29-2011

REVISIONS						SHEET NO.
NO.	BY:	DATE:	NO.	BY:	DATE:	S-39
1			3			TOTAL SHEETS
2			4			93

DRAWN BY : D. A. GLADDEN DATE : 1-2-11
CHECKED BY : M. G. SHAIKH DATE : 3-31-11

26-APR-2011 12:15
R:\Structures\Bailey\Str1\dgladden\Microstation\U255B_SD_EBTS.dgn
dgladden

STR. #1

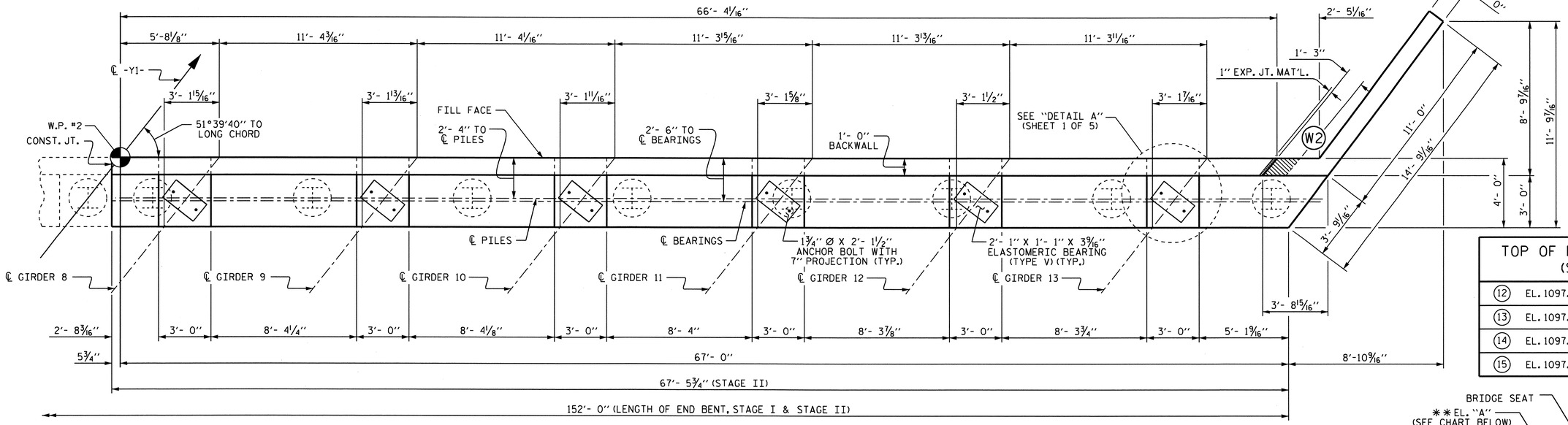

PLAN (STAGE II)

TOP OF PILE ELEVATIONS (STAGE II)			
12	EL. 1097.047	16	EL. 1097.617
13	EL. 1097.189	17	EL. 1097.760
14	EL. 1097.332	18	EL. 1097.903
15	EL. 1097.475		

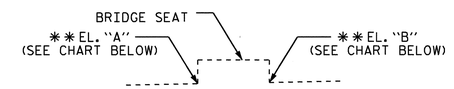

DETAIL B

** FOR ELEVATION BETWEEN BRIDGE SEATS, SEE "SECTION A-A (SHEET 5 OF 5)

ELEVATIONS BETWEEN BRIDGE SEATS (STAGE II)		
LOCATION	EL. "A"	EL. "B"
GDR. #8	1098.921	1098.967
GDR. #9	1099.098	1099.145
GDR. #10	1099.275	1099.321
GDR. #11	1099.452	1099.498
GDR. #12	1099.628	1099.675
GDR. #13	1099.805	1099.851

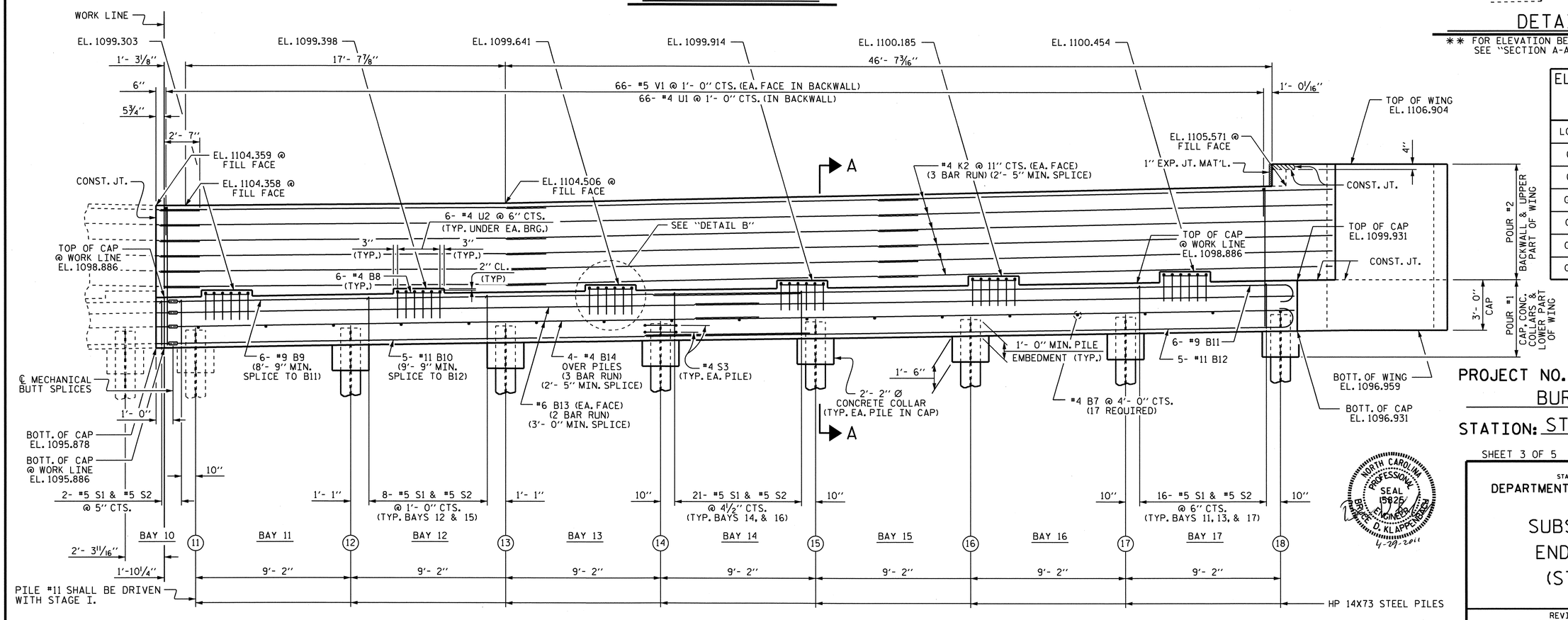

ELEVATION (STAGE II)

PROJECT NO. U-2550B

BURKE COUNTY

STATION: STA. 23+83.10 -L-

SHEET 3 OF 5

STATE OF NORTH CAROLINA
DEPARTMENT OF TRANSPORTATION
RALEIGH

SUBSTRUCTURE END BENT #2 (STAGE II)

NORTH CAROLINA PROFESSIONAL SEAL 19826 ENGINEER BRYCE D. KLAPPENBACH 4-29-2011

REVISIONS						SHEET NO.
NO.	BY:	DATE:	NO.	BY:	DATE:	S-40
1			3			TOTAL SHEETS
2			4			93

DRAWN BY : D. A. GLADDEN DATE : 1-2-11
CHECKED BY : M. G. SHAIKH DATE : 3-31-11

26-APR-2011 12:15
R:\Structures\Bailey\Str1\dgladden\Microstation\U255B_SD_EBTS.dgn
dgladden

STR. #1

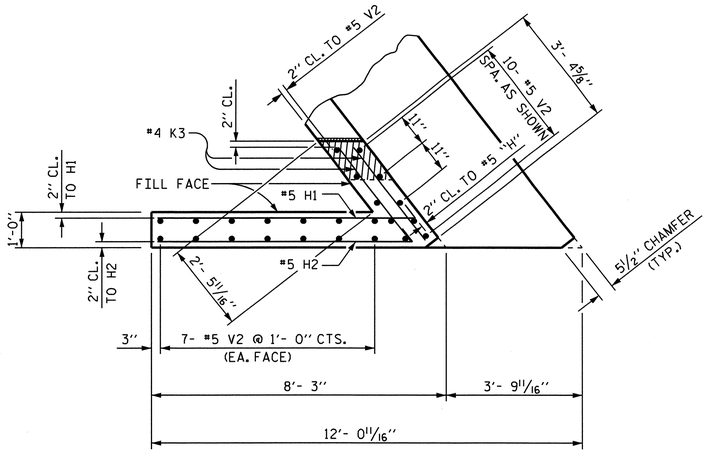

PLAN OF LEFT WING (STAGE I) (W1)

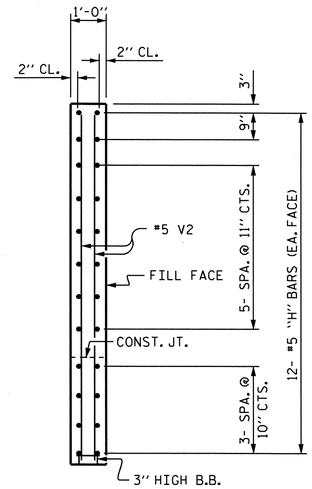

SECTION X-X

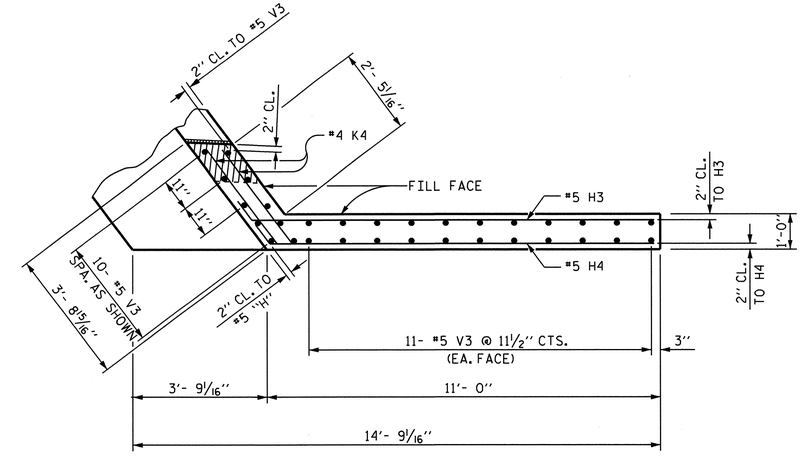

PLAN OF RIGHT WING (STAGE II) (W2)

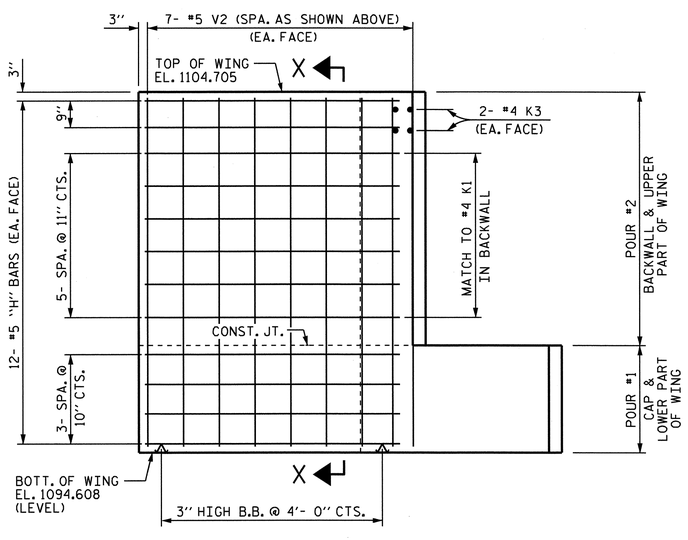

ELEVATION OF LEFT WING (STAGE I) (W1)

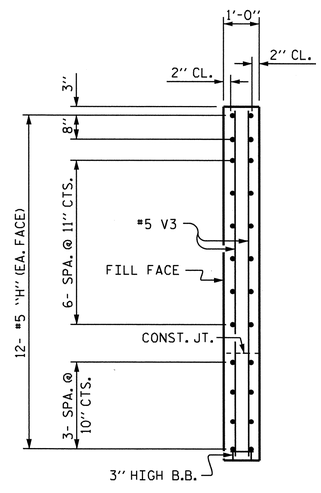

SECTION Y-Y

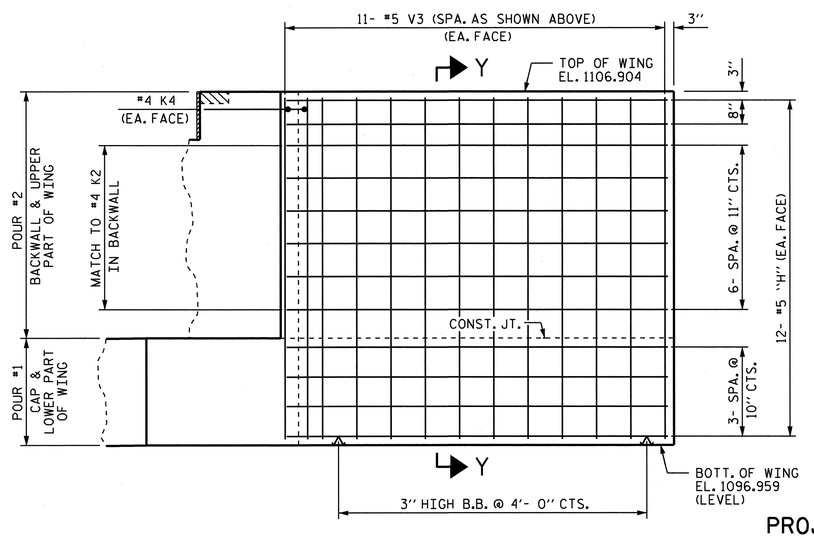

ELEVATION OF RIGHT WING (STAGE II) (W2)

PROJECT NO. U-2550B

BURKE COUNTY

STATION: STA. 23+83.10 -L-

SHEET 4 OF 5

STATE OF NORTH CAROLINA
DEPARTMENT OF TRANSPORTATION
RALEIGH

SUBSTRUCTURE
END BENT #2

NORTH CAROLINA PROFESSIONAL SEAL 15825 ENGINEER BRUCE O. KLAPPENBACH
4-29-2011

REVISIONS						SHEET NO.
NO.	BY:	DATE:	NO.	BY:	DATE:	S-41
1			3			TOTAL SHEETS
2			4			93

DRAWN BY : D. A. GLADDEN DATE : 1-2-11
CHECKED BY : M. G. SHAIKH DATE : 3-31-11

26-APR-2011 08:31
R:\Structures\Bailey\Str1\dgladden\Microstation\U2550B_SD_EBTS.dgn
dgladden

STR. #1

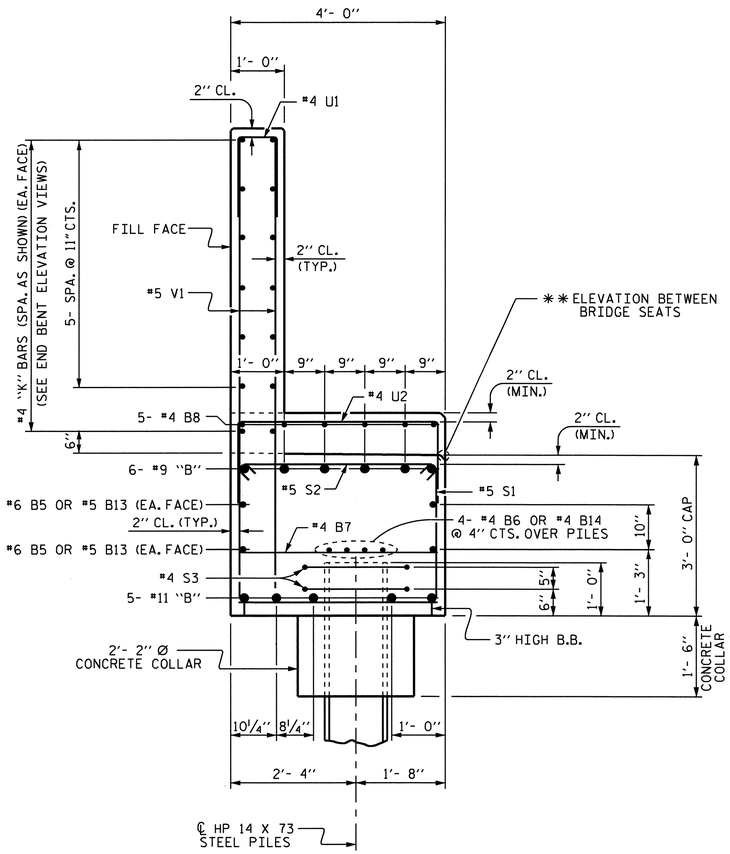

SECTION A-A

BAR TYPES

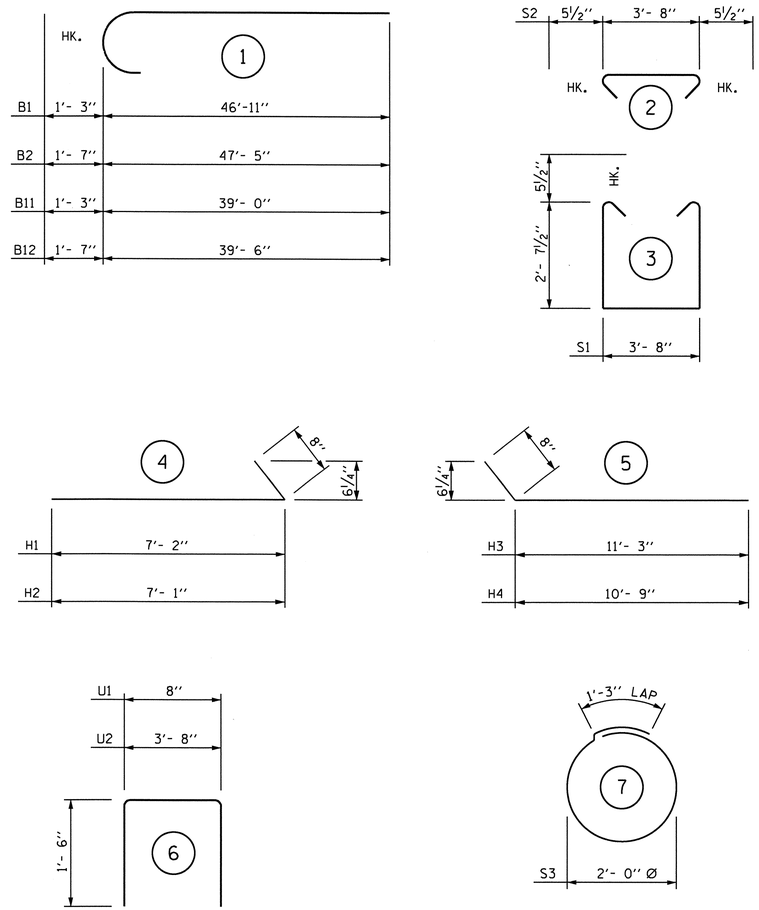

ALL BAR DIMENSIONS ARE OUT TO OUT.

BILL OF MATERIAL

STAGE I

BAR	NO.	SIZE	TYPE	LENGTH	WEIGHT
B1	6	#9	1	48'- 2"	983
B2	5	#11	1	49'- 0"	1302
B3	6	#9	STR	46'-11"	957
B4	5	#11	STR	47'- 5"	1260
B5	8	#6	STR	44'- 1"	530
B6	12	#4	STR	30'- 0"	240
B7	21	#4	STR	3'- 8"	51
B8	42	#4	STR	2'- 8"	75
H1	12	#5	4	7'-10"	98
H2	12	#5	4	7'- 9"	97
K1	36	#4	STR	29'- 7"	711
K3	4	#4	STR	3'- 3"	9
K5	10	#4	STR	8'-10"	59
S1	128	#5	3	9'-10"	1313
S2	128	#5	2	4'- 7"	612
S3	20	#4	7	7'- 7"	101
U1	78	#4	6	3'- 8"	191
U2	42	#4	6	6'- 8"	187
V1	156	#5	STR	8'- 2"	1329
V2	24	#5	STR	9'- 9"	244

REINFORCING STEEL = 10349 LBS

CLASS A CONCRETE BREAKDOWN

POUR #1 (CAP, CONCRETE COLLARS & LOWER PART OF WING) = 42.3 C.Y.

POUR #2 BACKWALL & UPPER PART OF WING = 19.2 C.Y.

TOTAL CLASS A CONCRETE = 61.5 C.Y.

HP 14 X 73 STEEL PILES

NO. 11 LIN. FT. 550

STAGE II

BAR	NO.	SIZE	TYPE	LENGTH	WEIGHT
B7	17	#4	STR	3'- 8"	42
B8	36	#4	STR	2'- 8"	64
B9	6	#9	STR	39'- 0"	796
B10	5	#11	STR	39'- 6"	1049
B11	6	#9	1	40'- 3"	821
B12	5	#11	1	41'- 1"	1091
B13	8	#6	STR	36'- 1"	434
B14	12	#4	STR	24'- 8"	198
H3	12	#5	5	11'-11"	149
H4	12	#5	5	11'- 5"	143
K2	36	#4	STR	25'- 1"	603
K4	2	#4	STR	3'- 3"	4
S1	108	#5	3	9'- 10"	1108
S2	108	#5	2	4'- 7"	516
S3	16	#4	7	7'- 7"	81
U1	66	#4	6	3'- 8"	162
U2	36	#4	6	6'- 8"	160
V1	132	#5	STR	8'- 2"	1124
V3	32	#5	STR	9'- 6"	317

REINFORCING STEEL = 8862 LBS

CLASS A CONCRETE BREAKDOWN

POUR #1 (CAP, CONCRETE COLLARS & LOWER PART OF WING) = 34.4 C.Y.

POUR #2 BACKWALL & UPPER PART OF WING = 16.7 C.Y.

TOTAL CLASS A CONCRETE = 51.1 C.Y.

HP 14 X 73 STEEL PILES

NO. 7 LIN. FT. 350

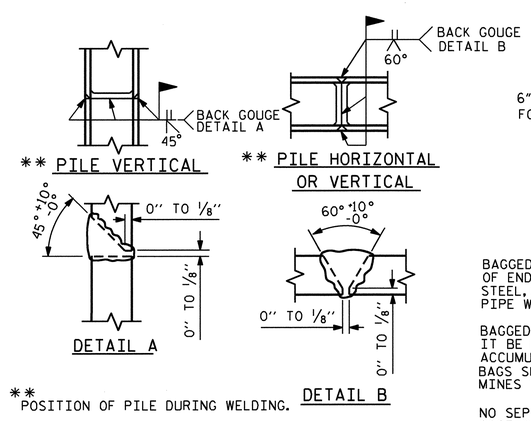

** POSITION OF PILE DURING WELDING.

PILE SPLICE DETAILS

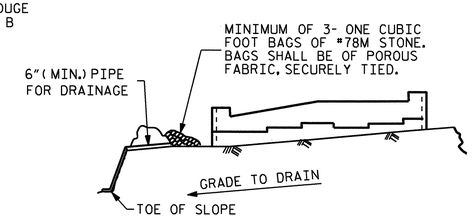

BAGGED STONE AND PIPE SHALL BE PLACED IMMEDIATELY AFTER COMPLETION OF END BENT EXCAVATION. PIPE MAY BE EITHER CONCRETE, CORRUGATED STEEL, CORRUGATED ALUMINUM ALLOY, OR CORRUGATED PLASTIC. PERFORATED PIPE WILL NOT BE ALLOWED.

BAGGED STONE SHALL REMAIN IN PLACE UNTIL THE ENGINEER DIRECTS THAT IT BE REMOVED. THE CONTRACTOR SHALL REMOVE AND DISPOSE OF SILT ACCUMULATIONS AT BAGGED STONE WHEN SO DIRECTED BY THE ENGINEER. BAGS SHALL BE REMOVED AND REPLACED WHENEVER THE ENGINEER DETERMINES THAT THEY HAVE DETERIORATED AND LOST THEIR EFFECTIVENESS.

NO SEPARATE PAYMENT WILL BE MADE FOR THIS WORK AND THE ENTIRE COST OF THIS WORK SHALL BE INCLUDED IN THE UNIT CONTRACT PRICE BID FOR THE SEVERAL PAY ITEMS.

TEMPORARY DRAINAGE AT END BENT

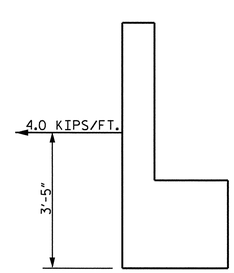

STEEL REINFORCEMENT LOAD DETAIL

A MINIMUM OF TWO LAYERS OF STEEL REINFORCEMENT IS REQUIRED BEHIND THE END BENT BACKWALL. THE STEEL REINFORCEMENT IS REQUIRED TO RESIST A FACTORED LOAD NO LESS THAN 4 KIPS PER FOOT APPLIED TO THE END BENT CAP 3'-5" FROM BOTTOM OF CAP. SEE "STEEL REINFORCED APPROACH FILL" SHEETS.

END BENT #1 BILL OF MATERIAL

		STAGE I	STAGE II	TOTAL
REINFORCING STEEL	(LBS)	10349	8862	19211
CLASS A CONCRETE	(C.Y.)	61.5	51.1	112.6
HP 14 X 73 PILES	(LIN. FT.)	550	350	900

PROJECT NO. U-2550B

BURKE COUNTY

STATION: STA. 23+83.10 -L-

SHEET 5 OF 5

STATE OF NORTH CAROLINA
DEPARTMENT OF TRANSPORTATION
RALEIGH

SUBSTRUCTURE
END BENT #2

NORTH CAROLINA PROFESSIONAL SEAL 15825 ENGINEER BRUCE W. KLAPPENBACH
5-2-2011

REVISIONS							SHEET NO.
NO.	BY:	DATE:	NO.	BY:	DATE:		S-42
1			3				TOTAL SHEETS
2			4				93

DRAWN BY : D. A. GLADDEN DATE : 1-10-11
CHECKED BY : M. G. SHAIKH DATE : 3-31-11

02-MAY-2011 15:49
R:\Structures\Bailey\Str1\dgladden\Microstation\U255B_SD_EBTS.dgn
bklappenbach

STR. #1

GEOTECHNICAL ENGINEER	ENGINEER
NORTH CAROLINA PROFESSIONAL SEAL 029869 ENGINEER SHANE C. CLARK — SIGNATURE 4/25/11 DATE	SIGNATURE DATE

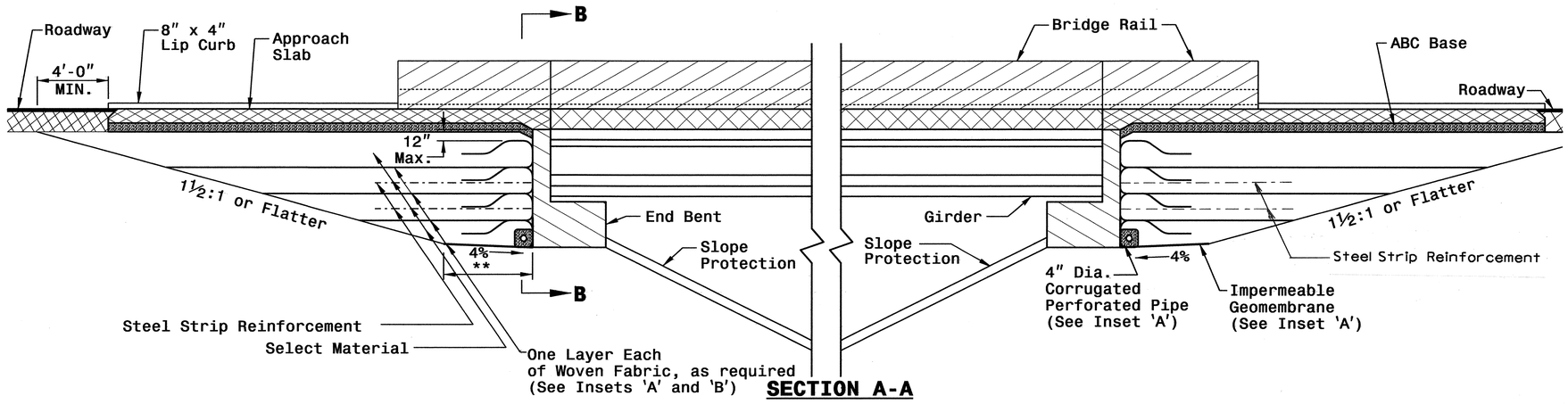

SECTION A-A

The Wraps along the Backwall and Edges are optional but may be needed for Temporary Shoring, See Temporary Shoring Plans.

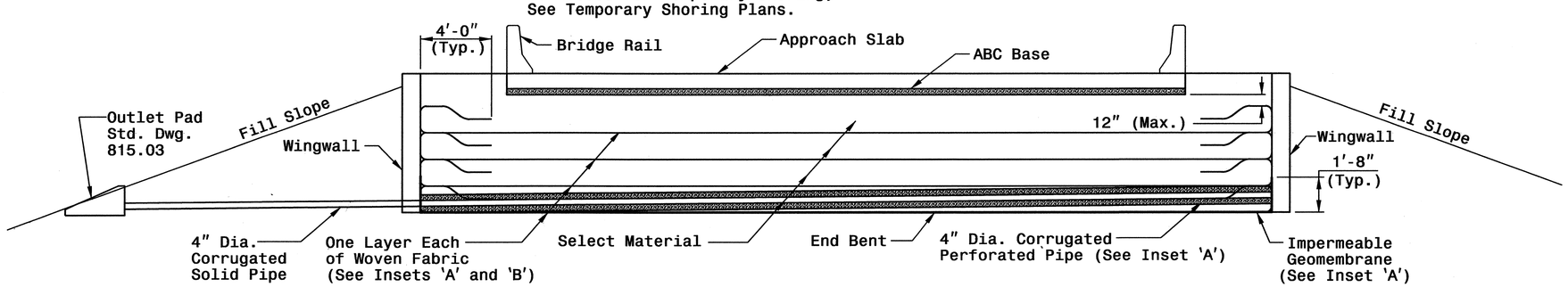

SECTION B-B
SEE TRAFFIC CONTROL PLANS

25' MINIMUM APPROACH SLAB

** THIS DISTANCE IS TO BE DETERMINED BY THE REINFORCEMENT DESIGNER

TOTAL BILL OF MATERIAL	
STEEL REINFORCED BRIDGE APPROACH FILL AT STA. 45+88.34-Y1-, 23+83.10-L-	LUMP SUM

PROJECT NO.: U-2550B
BURKE *COUNTY*
STATION: 45+88.34 -Y1-, 23+83.10 -L-
SHEET 1 OF 2

GEOTECHNICAL ENGINEERING UNIT

☐ *EASTERN REGIONAL OFFICE*
☒ *WESTERN REGIONAL OFFICE*
☐ *CONTRACT OFFICE*

STATE OF NORTH CAROLINA
DEPARTMENT OF TRANSPORTATION
RALEIGH

STEEL REINFORCED BRIDGE APPROACH FILLS

REVISIONS						SHEET NO.
NO.	BY	DATE	NO.	BY	DATE	S-43
1			3			TOTAL SHEETS
2			4			93

PREPARED BY: JTW	DATE: 4/4/11
REVIEWED BY: SCC	DATE: 4/7/11

GEOTECHNICAL ENGINEER

NORTH CAROLINA PROFESSIONAL SEAL 029869 ENGINEER SHANE C. CLARK

SIGNATURE DATE 4/25/11

ENGINEER

SIGNATURE DATE

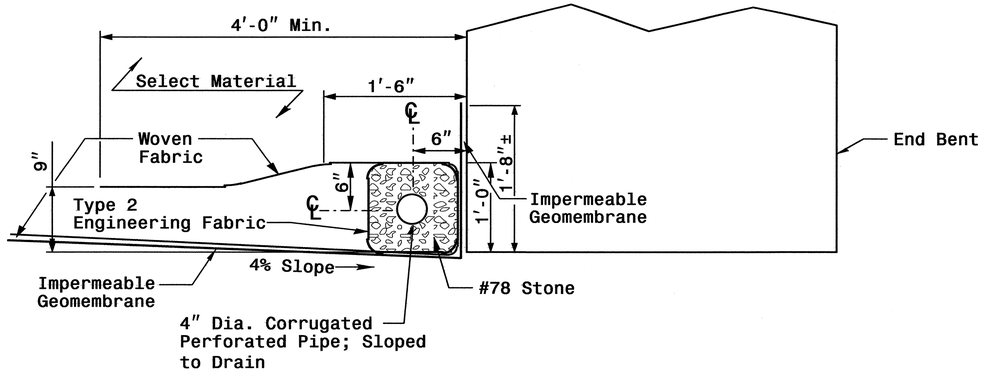

Cored Slab Bridge

Showing First Lift and Drains

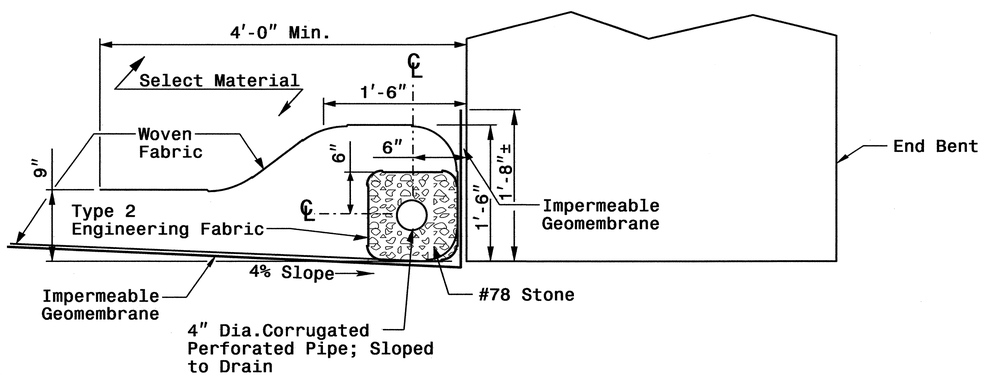

Girder Bridge

Showing First Lift and Drains

Inset 'A'

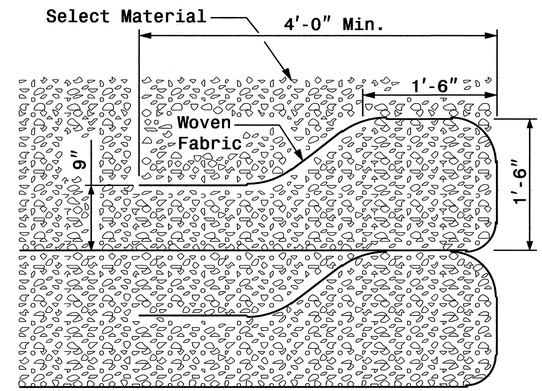

Typical Fabric Lift and Wrap

Showing Second and Above Lifts

Inset 'B'

Height of Backwall	Number of Fabric Layers
4'-6" - 5'-9"	3
5'-10" - 7'-2"	4
7'-3" - 8'-8"	5
8'-9" - 10'-1"	6
10'-2" - 11'-8"	7

Note: Cored Slab Structures Require 2 Fabric Layers.

Length of Bridge End Bent Inside Wingwalls
If Bridge Skew is Less Than or Equal to 90°: $\frac{\text{(Roadway Width + 7'-0")}}{\text{Sin (Bridge Skew Angle)}}$ = Dis. Between Wingwalls
If Bridge Skew is Greater Than 90°: $\frac{\text{(Roadway Width + 7'-0")}}{\text{Cos (Bridge Skew Angle - 90°)}}$ = Dis. Between Wingwalls

PROJECT NO.: U-2550B

BURKE COUNTY

STATION: 45+88.34 -Y1-, 23+83.10 -L-

SHEET 2 OF 2

GEOTECHNICAL ENGINEERING UNIT

☐ EASTERN REGIONAL OFFICE

☒ WESTERN REGIONAL OFFICE

☐ CONTRACT OFFICE

STATE OF NORTH CAROLINA DEPARTMENT OF TRANSPORTATION RALEIGH

STEEL REINFORCED BRIDGE APPROACH FILLS

REVISIONS						SHEET NO.
NO.	BY	DATE	NO.	BY	DATE	S-44
1	-	-	3	-	-	TOTAL SHEETS
2	-	-	4	-	-	93

PREPARED BY: JTW	DATE: 4/4/11
REVIEWED BY: SCC	DATE: 4/7/11

GENERAL NOTES

SLOPE PROTECTION SHALL BE PLACED UNDER THE ENDS OF THE BRIDGE AS SHOWN IN THE DETAILS. MEASUREMENT AND PAYMENT SHALL BE AS PRESCRIBED IN SECTION 462 OF THE STANDARD SPECIFICATIONS.

ALTERNATE "A"

ALTERNATE "A" SHALL CONSIST OF 4" POURED-IN-PLACE CONCRETE PAVING AS SHOWN IN THE DETAILS ON THIS SHEET. CONCRETE SHALL BE CLASS "B". THE CONCRETE SURFACE SHALL BE FLOATED WITH A WOODEN FLOAT AND FINISHED. WELDED WIRE FABRIC REINFORCING SHALL BE 6 X 6 - W1.4 X W1.4, 60" WIDE. SLOPE PROTECTION SHALL BE POURED IN 5' STRIPS AS SHOWN IN THE "POURING DETAIL" WITH 2'-0" LONG #4 BARS PLACED ALONG THE SLOPE BETWEEN STRIPS AT 1'-6" MAXIMUM SPACING. SLOPE PROTECTION MAY BE POURED IN ALTERNATE 4' AND 5' STRIPS AS SHOWN IN THE "OPTIONAL POURING DETAIL" WITH ADJACENT RUNS OF WELDED WIRE FABRIC LAPPING AT LEAST 6". THE COST OF THE WELDED WIRE FABRIC AND #4 BARS, IF USED, SHALL BE INCLUDED IN THE CONTRACT UNIT PRICE BID PER SQUARE YARD FOR SLOPE PROTECTION.

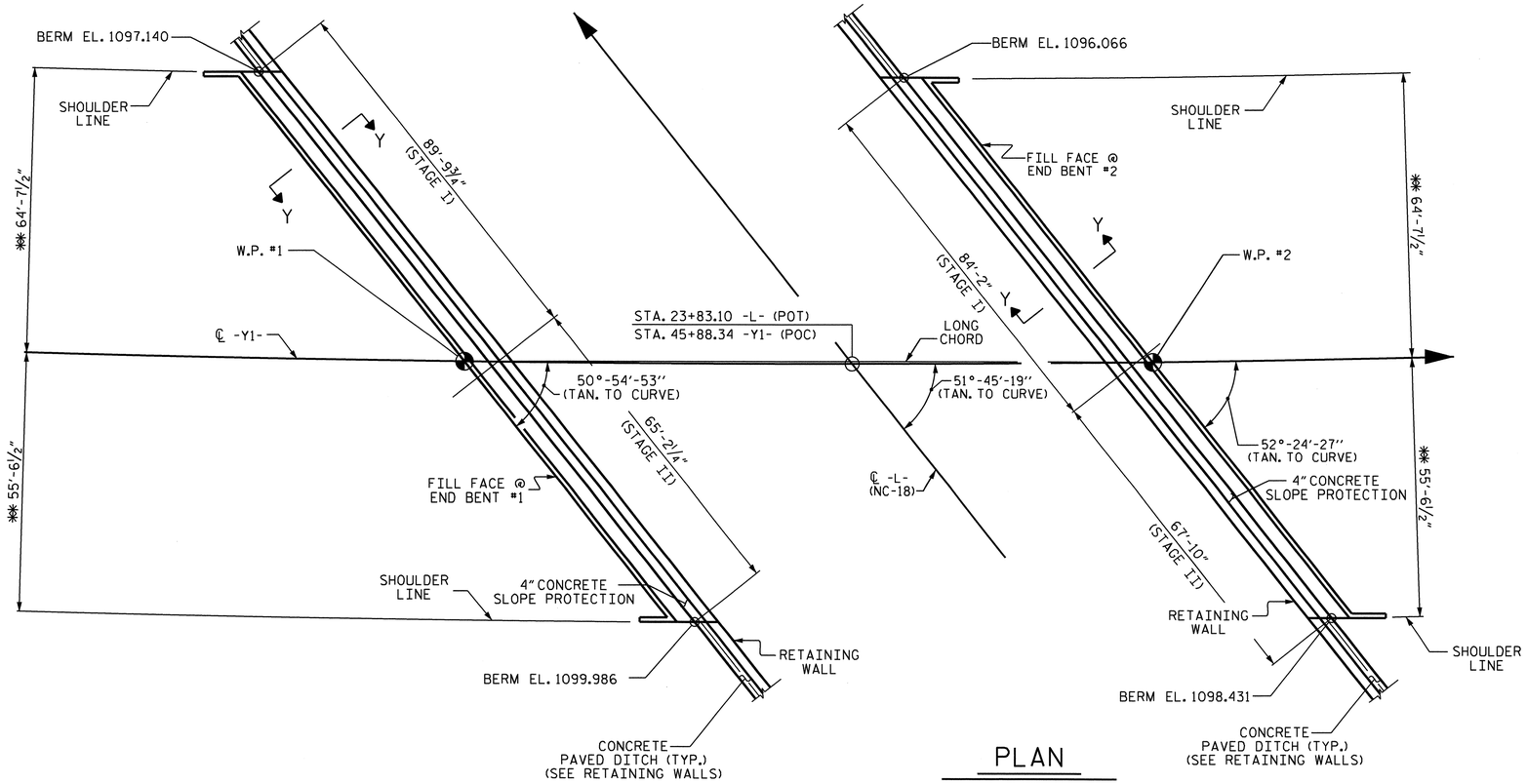

END BENT #1

PLAN

END BENT #2

✱✱ DIMENSIONS ARE TO CONCENTRIC CIRCLES WITH ℄ SURVEY. GIRDERS ARE ON THE CHORDS OF THESE CONCENTRIC CIRCLES

BRIDGE @ STATION 23+83.10-L-	4" SLOPE PROTECTION	✱ WELDED WIRE FABRIC 60 INCHES WIDE
	SQUARE YARDS	APPROX. L.F.
END BENT 1 (STAGE I)	30	52
END BENT 1 (STAGE II)	22	38
END BENT 1 (TOTAL)	52	90
END BENT 2 (STAGE I)	28	51
END BENT 2 (STAGE II)	23	39
END BENT 2 (TOTAL)	51	90

✱ QUANTITY SHOWN IS BASED ON 5' POURS.

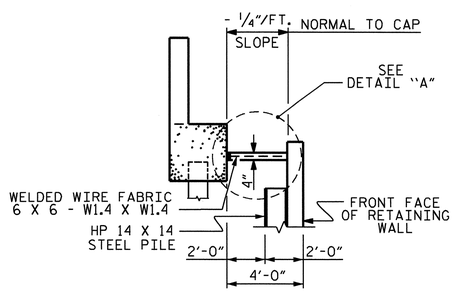

SECTION Y-Y

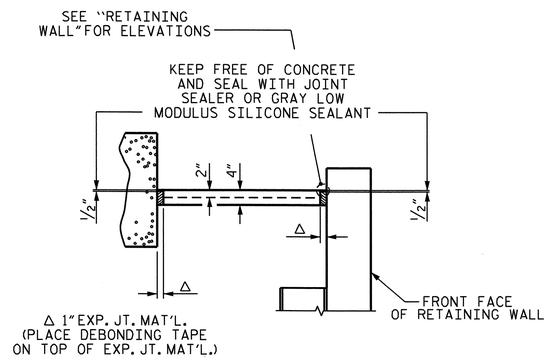

DETAIL A

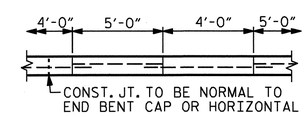

POUR A 4'-0" STRIP FIRST. STRIP WIDTHS MAY VARY IN CURVED PORTION.

OPTIONAL POURING DETAIL

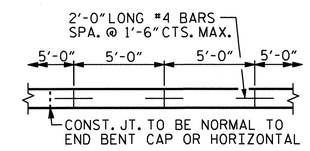

STRIP WIDTHS MAY VARY IN CURVED PORTION.

POURING DETAIL

PROJECT NO. U-2550B
BURKE COUNTY
STATION: 23+83.10-L-

STATE OF NORTH CAROLINA
DEPARTMENT OF TRANSPORTATION
RALEIGH

SLOPE PROTECTION DETAILS

NORTH CAROLINA PROFESSIONAL SEAL 15825 ENGINEER BRUCE D. KLAPPENBACH 5-2-2011

REVISIONS							SHEET NO.
NO.	BY:	DATE:	NO.	BY:	DATE:		S-45
1			3				TOTAL SHEETS
2			4				93

ASSEMBLED BY : H. T. BARBOUR	DATE : 3-29-11	
CHECKED BY : B. D. KLAPPENBACH	DATE : 3-29-11	
DRAWN BY : ELR 5/92	REV. 7/10/01	LES/RDR
CHECKED BY : GRP 6/92	REV. 5/7/03	RWW/JTE
	REV. 5/1/06	TLA/GM

02-MAY-2011 13:04
R:\Structures\Bailey\Str1\tbarbour\Microstation\U2550B_SD_SP.dgn
bklappenbach

STR. #1

NOTES

APPROACH SLAB SHALL NOT BE CONSTRUCTED PRIOR TO COMPLETION OF THE BRIDGE DECK.

FOR REINFORCED BRIDGE APPROACH FILL INCLUDING FABRIC, IMPERMEABLE GEOMEMBRANE, 4" Ø DRAINAGE PIPE, #78M STONE, AND SELECT MATERIAL, SEE "STEEL REINFORCED BRIDGE APPROACH FILL" SHEET.

AREA BETWEEN THE WINGWALL AND APPROACH SLAB SHALL BE GRADED TO DRAIN THE WATER AWAY FROM THE FILL FACE OF THE BRIDGE AND SHALL BE PAVED. SEE ROADWAY PLANS.

THE 6" COMP. A.B.C. SHALL BE FLUSH WITH THE ROADWAY END OF THE APPROACH SLAB AND SHALL EXTEND 1'-0" OUTSIDE EACH EDGE OF THE APPROACH SLAB.

THE CONTRACTOR MAY USE 4" TYPE B-25.0B ASPHALT CONCRETE BASE COURSE IN LIEU OF 6" COMP. A.B.C. IF THIS OPTION IS USED, THE BASE COURSE SHALL BE FLUSH WITH THE ROADWAY END OF THE APPROACH SLAB, AND THE WIDTH SHALL BE THE SAME AS THAT OF THE APPROACH SLAB.

THE CONTRACTOR MAY USE 5" CLASS "A" CONCRETE BASE IN LIEU OF 6" COMP. A.B.C. IF THIS OPTION IS USED, THE CONCRETE BASE SHALL BE FLUSH WITH THE ROADWAY END OF THE APPROACH SLAB, AND THE WIDTH SHALL BE THE SAME AS THAT OF THE APPROACH SLAB. THE CONCRETE SHALL BE FINISHED TO A SMOOTH SURFACE AND A LAYER OF 30 LB ROOFING FELT SHALL BE PLACED BETWEEN THE CONCRETE BASE AND THE APPROACH SLAB TO PREVENT BOND. THE APPROACH SLAB SHALL NOT BE CAST UNTIL THE CONCRETE BASE HAS REACHED AN AGE OF THREE CURING DAYS.

FOR EXPANSION JOINT SEALS, SEE SPECIAL PROVISIONS.

THE LENGTH OF BARRIER RAIL ON THE APPROACH SLAB IS INCLUDED IN THE LINEAR FEET QUANTITY FOR THE CONCRETE BARRIER RAIL PAY ITEM. THE COST OF THE REINFORCING STEEL (EXCEPT FOR #5S1 BARS) AND CLASS AA CONCRETE IN THE BARRIER RAIL ON THE APPROACH SLAB SHALL NOT BE INCLUDED IN THE LUMP SUM CONTRACT PRICE BID FOR BRIDGE APPROACH SLABS.

THE LENGTH OF THE CONCRETE MEDIAN BARRIER RAIL ON THE APPROACH SLAB IS INCLUDED IN THE LINEAR FEET QUANTITY FOR THE CONCRETE MEDIAN BARRIER RAIL PAY ITEM. THE COST OF THE REINFORCING STEEL (EXCEPT FOR #5S2 BARS) AND CLASS AA CONCRETE IN THE CONCRETE MEDIAN BARRIER RAIL ON THE APPROACH SLAB SHALL NOT BE INCLUDED IN THE LUMP SUM CONTRACT PRICE BID FOR BRIDGE APPROACH SLABS.

BAR TYPES

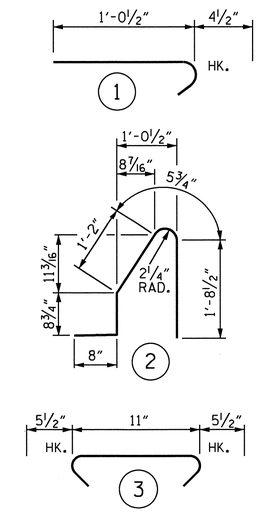

ALL BAR DIMENSIONS ARE OUT TO OUT

BILL OF MATERIAL

STAGE I

APPROACH SLAB AT EB #1						APPROACH SLAB AT EB #2					
BAR	NO.	SIZE	TYPE	LENGTH	WEIGHT	BAR	NO.	SIZE	TYPE	LENGTH	WEIGHT
* A1	75	#4	STR	29'-1"	1457	* A1	75	#4	STR	29'-1"	1457
A2	78	#4	STR	28'-10"	1502	A2	78	#4	STR	28'-10"	1502
* B1	123	#5	STR	23'-9"	3047	* B1	123	#5	STR	23'-9"	3047
B2	123	#6	STR	24'-8"	4557	B2	123	#6	STR	24'-8"	4557
* B3	4	#5	STR	6'-2"	26	* B5	4	#5	STR	6'-8"	28
B4	4	#6	STR	6'-5"	39	B6	4	#6	STR	6'-9"	41
* G1	2	#5	STR	42'-7"	89	* G1	2	#5	STR	42'-7"	89
* J1	79	#4	1	1'-5"	75	* J1	79	#4	1	1'-5"	75
* S1	10	#5	2	4'-9"	50	* S1	10	#5	2	4'-9"	50
* S2	48	#5	3	1'-10"	92	* S2	48	#5	3	1'-10"	92
REINFORCING STEEL				LBS.	6098	REINFORCING STEEL				LBS.	6100
* EPOXY COATED REINFORCING STEEL				LBS.	4836	* EPOXY COATED REINFORCING STEEL				LBS.	4838
CLASS AA CONCRETE				C. Y.	58.9	CLASS AA CONCRETE				C. Y.	58.9

STAGE II

APPROACH SLAB AT EB #1						APPROACH SLAB AT EB #2					
BAR	NO.	SIZE	TYPE	LENGTH	WEIGHT	BAR	NO.	SIZE	TYPE	LENGTH	WEIGHT
* A3	75	#4	STR	23'-4"	1169	* A3	75	#4	STR	23'-4"	1169
A4	78	#4	STR	23'-2"	1207	A4	78	#4	STR	23'-2"	1207
* B1	101	#5	STR	23'-9"	2502	* B1	101	#5	STR	23'-9"	2502
B2	101	#6	STR	24'-8"	3742	B2	101	#6	STR	24'-8"	3742
* B5	4	#5	STR	6'-8"	28	* B3	4	#5	STR	6'-2"	26
B6	4	#6	STR	6'-9"	41	B4	4	#6	STR	6'-5"	39
* G2	2	#5	STR	34'-1"	71	* G2	2	#5	STR	34'-1"	71
* J1	64	#4	1	1'-5"	61	* J1	64	#4	1	1'-5"	61
* S1	10	#5	2	4'-9"	50	* S1	10	#5	2	4'-9"	50
REINFORCING STEEL				LBS.	4990	REINFORCING STEEL				LBS.	4988
* EPOXY COATED REINFORCING STEEL				LBS.	3881	* EPOXY COATED REINFORCING STEEL				LBS.	3879
CLASS AA CONCRETE				C. Y.	48.0	CLASS AA CONCRETE				C. Y.	48.0

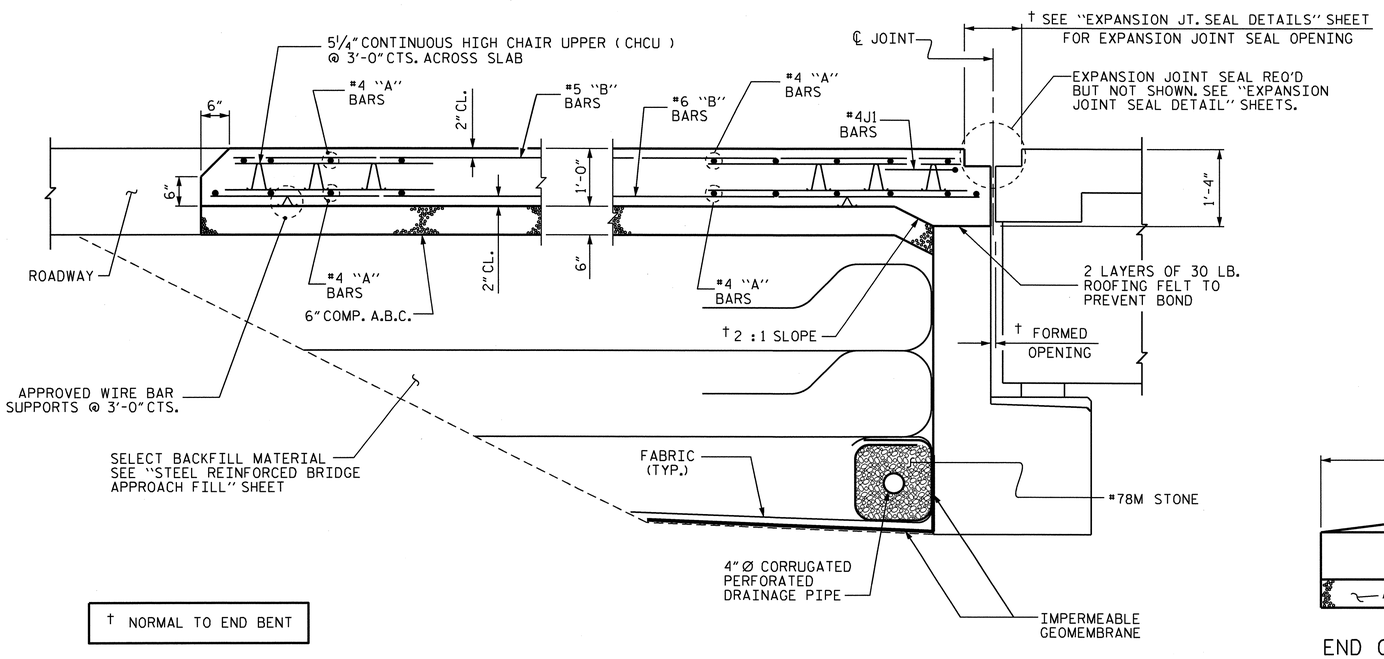

† NORMAL TO END BENT

SECTION THRU SLAB

SHOWING SECTION WITHOUT CONCRETE WEARING SURFACE

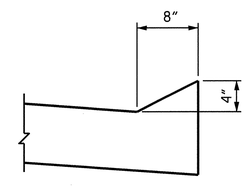

SECTION N-N

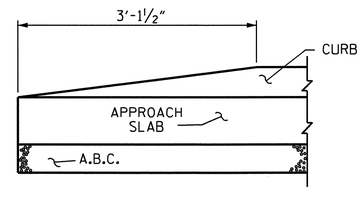

END OF CURB WITHOUT SHOULDER BERM GUTTER

CURB DETAILS

PROJECT NO. U-2550B

BURKE COUNTY

STATION: 23+83.10 -L-

SHEET 1 OF 4

STATE OF NORTH CAROLINA
DEPARTMENT OF TRANSPORTATION
RALEIGH

STANDARD

BRIDGE APPROACH SLAB FOR FLEXIBLE PAVEMENT

NORTH CAROLINA PROFESSIONAL SEAL 15825 ENGINEER BRUCE D. KLAPPENBACH 4-29-2011

REVISIONS								SHEET NO.
NO.	BY:	DATE:	NO.	BY:	DATE:			S-46
1			3					TOTAL SHEETS
2			4					93

STR. #1

STD. NO. BAS4 (SHT 4)

ASSEMBLED BY : C.R. YARBROUGH	DATE : 01/11		
CHECKED BY : D.A. GLADDEN	DATE : 03/11		
DRAWN BY : EEM 3/95	REV. 7/10/01	LES/RDR	
CHECKED BY : VAP 3/95	REV. 5/7/03R	RWW/JTE	
	REV. 5/1/06R	KMM/GM	

25-APR-2011 11:30
R:\Structures\Bailey\Str1\cyarbrough\U-2550B_SD_AS.dgn
cyarbrough

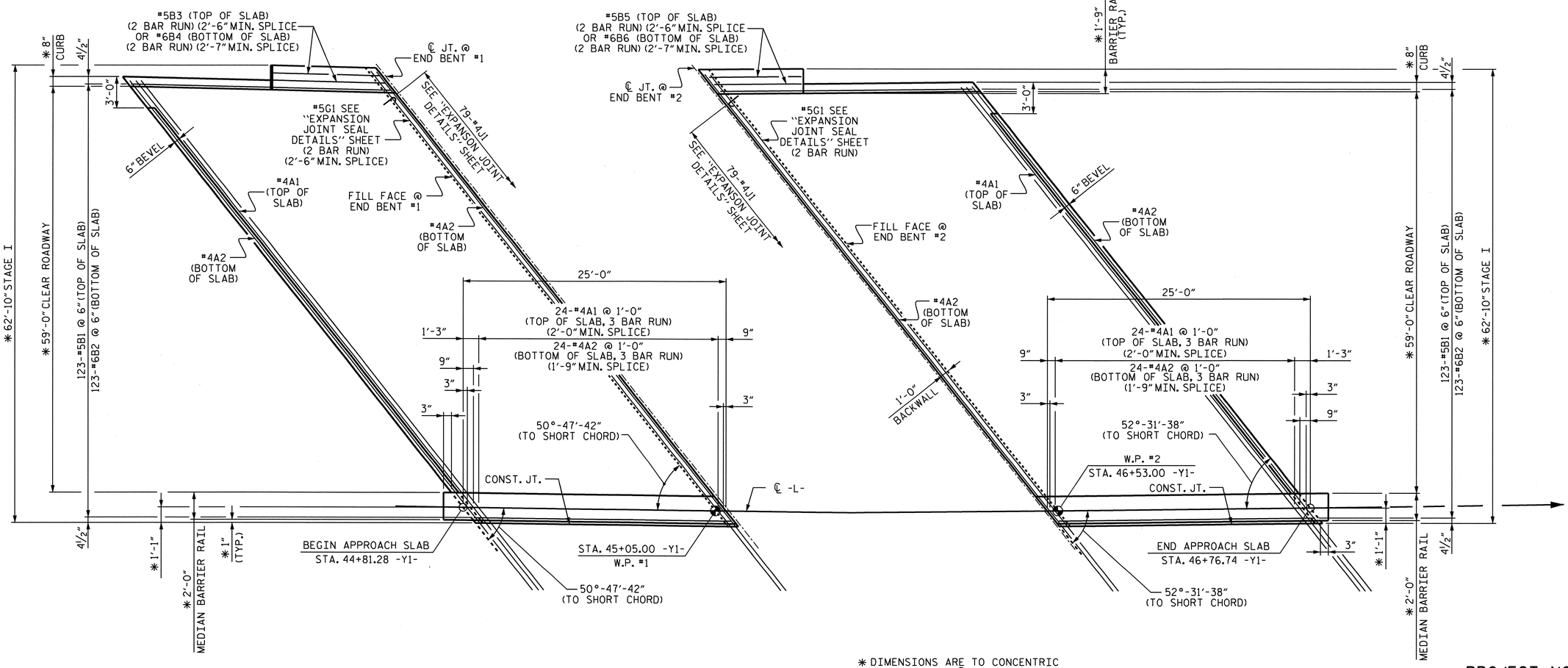

* DIMENSIONS ARE TO CONCENTRIC CIRCLES WITH ℄ SURVEY.

ARC OFFSETS ARE NEGLIGIBLE, THEREFORE NOT SHOWN.

PLAN @ END BENT #1

PLAN @ END BENT #2

PROJECT NO. U-2550B

BURKE COUNTY

STATION: 23+83.10 -L-

SHEET 2 OF 4

STATE OF NORTH CAROLINA
DEPARTMENT OF TRANSPORTATION
RALEIGH

BRIDGE APPROACH SLAB
FOR FLEXIBLE PAVEMENT

STAGE I

NORTH CAROLINA PROFESSIONAL SEAL 15828 ENGINEER D. KL APPELGATE
4-29-2011

REVISIONS						SHEET NO.
NO.	BY:	DATE:	NO.	BY:	DATE:	S-47
1			3			TOTAL SHEETS
2			4			93

DRAWN BY : C.R. YARBROUGH DATE : 01/11
CHECKED BY : D.A. GLADDEN DATE : 03/11

25-APR-2011 11:30
R:\Structures\Bailey\Str1\cyarbrough\U-2550B_SD_AS.dgn
cyarbrough

STR. #1

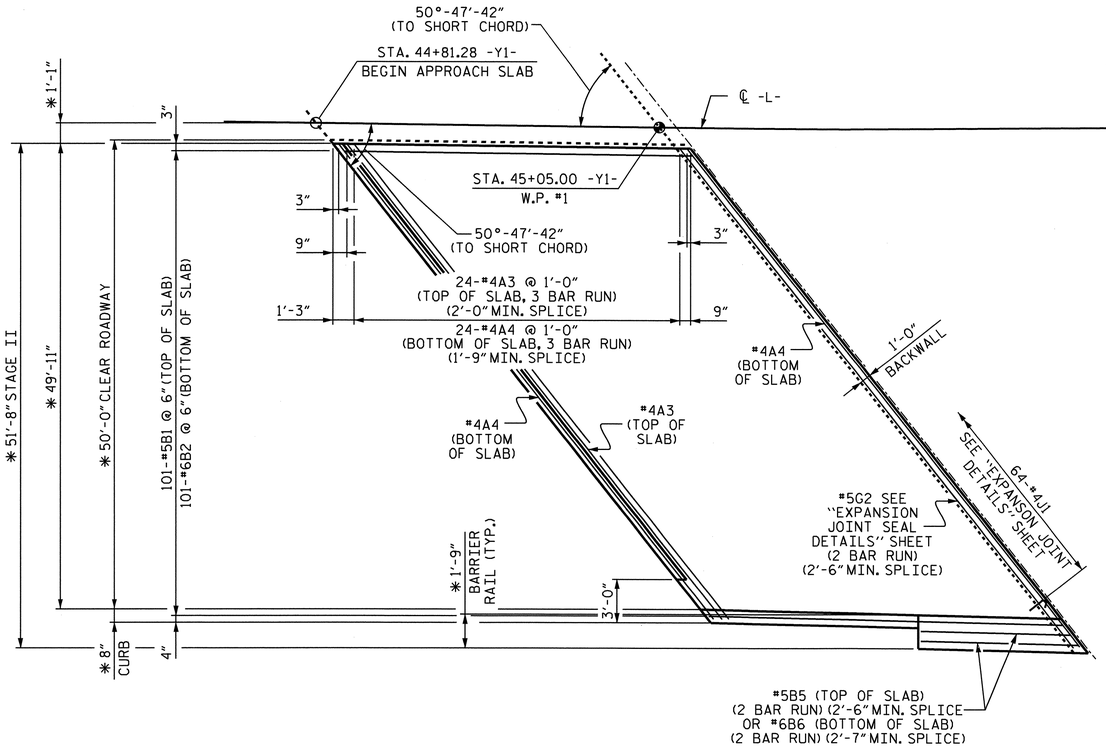

PLAN @ END BENT #1

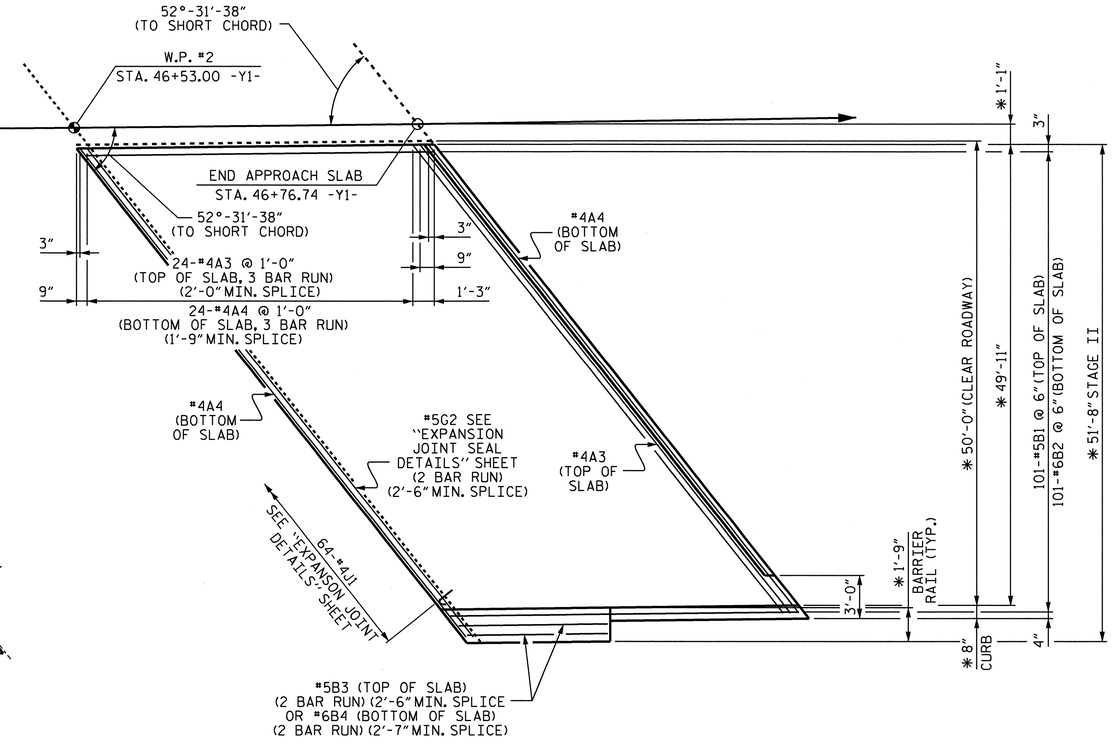

PLAN @ END BENT #2

✱ DIMENSIONS ARE TO CONCENTRIC CIRCLES WITH ℄ SURVEY.

ARC OFFSETS ARE NEGLIGIBLE, THEREFORE NOT SHOWN.

PROJECT NO. U-2550B
BURKE COUNTY
STATION: 23+83.10 -L-

SHEET 3 OF 4

STATE OF NORTH CAROLINA
DEPARTMENT OF TRANSPORTATION
RALEIGH

BRIDGE APPROACH SLAB
FOR FLEXIBLE PAVEMENT

STAGE II

NORTH CAROLINA PROFESSIONAL SEAL 15825 ENGINEER BRUCE C. KLAPPENBERG
4-29-2011

REVISIONS						SHEET NO.
NO.	BY:	DATE:	NO.	BY:	DATE:	S-48
1			3			TOTAL SHEETS
2			4			93

STR. #1

DRAWN BY : C.R. YARBROUGH DATE : 01/11
CHECKED BY : D.A. GLADDEN DATE : 03/11

25-APR-2011 11:30
R:\Structures\Bailey\Str1\cyarbrough\U-2550B_SD_AS.dgn
cyarbrough

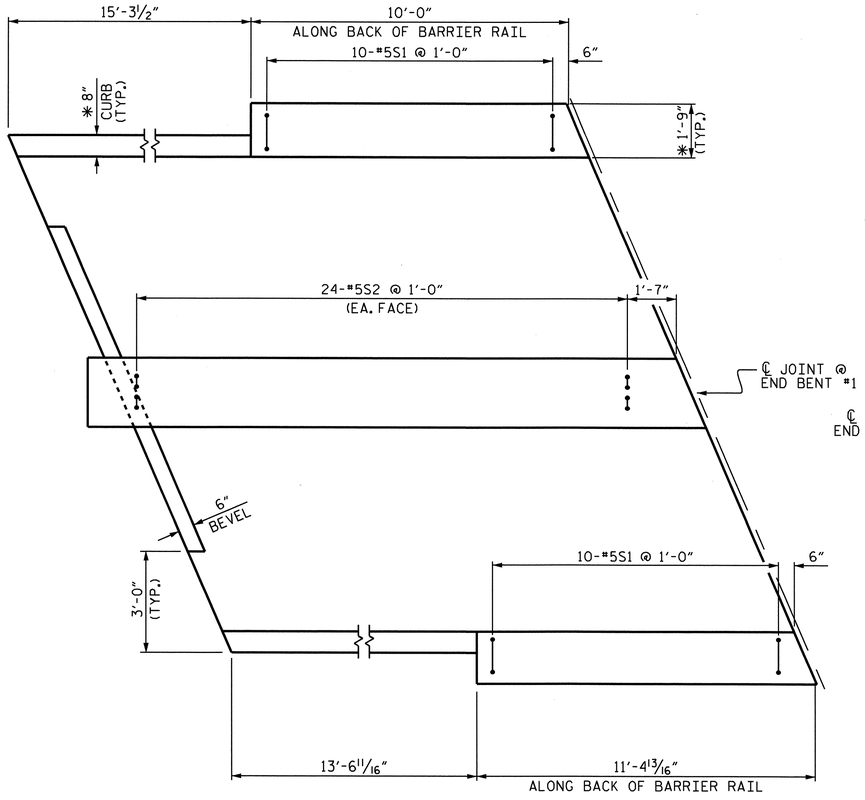

PLAN @ END BENT #1

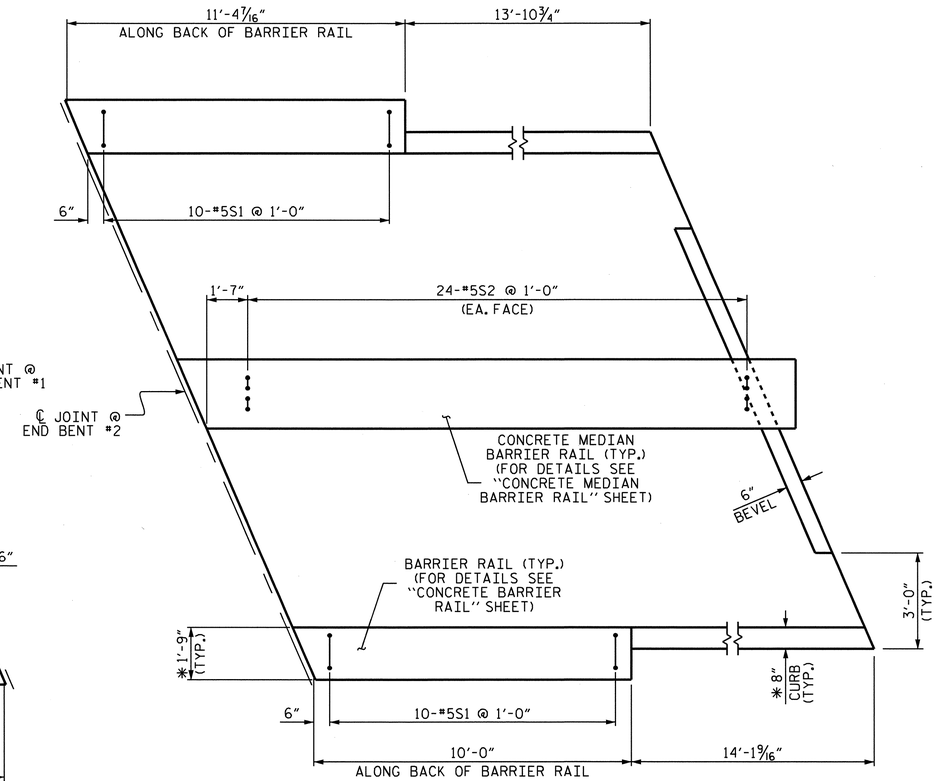

PLAN @ END BENT #2

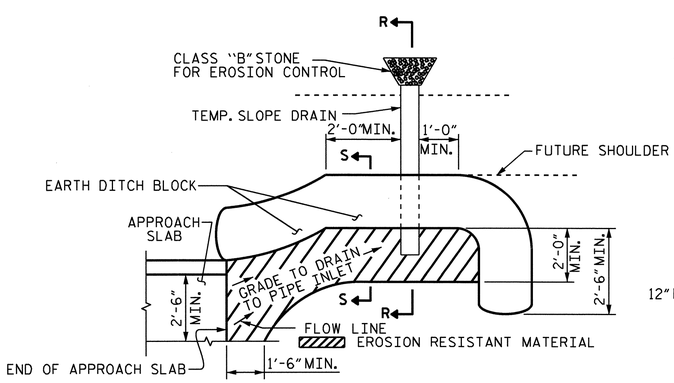

NOTE: IMMEDIATELY AFTER THE CONSTRUCTION OF THE APPROACH SLAB, THE CONTRACTOR SHALL PROVIDE TEMPORARY BERM AND SLOPE DRAIN. CONTRACTOR SHALL GRADE TO PIPE INLET AND PROVIDE EROSION RESISTANT MATERIAL AS SHOWN. THE EROSION RESISTANT MATERIAL SHALL BE EITHER 1) ASPHALT PLANT MIX, TYPE 1 OR TYPE 2, MIN. 2" DEPTH, 2) EROSION CONTROL MAT, OR 3) CONCRETE, AS DIRECTED BY THE ENGINEER. THE SLOPE DRAIN SHALL CONSIST OF A NON-PERFORATED TEMPORARY DRAINAGE PIPE, 12 INCHES IN DIAMETER.

PLAN VIEW

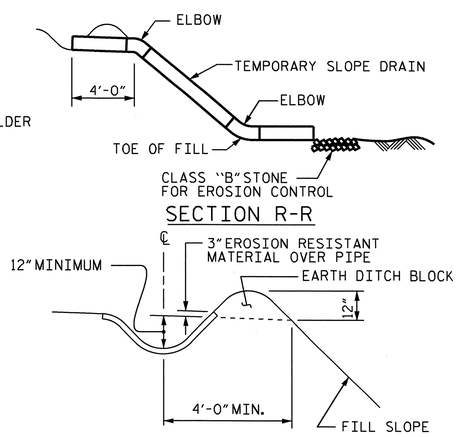

SECTION S-S

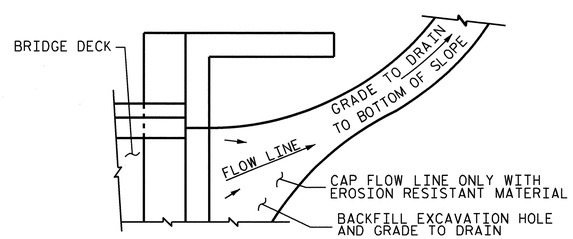

NOTE: IF THE APPROACH SLAB IS NOT CONSTRUCTED IMMEDIATELY AFTER THE BACKFILLING OF THE END BENT EXCAVATION, GRADE TO DRAIN TO THE BOTTOM OF THE SLOPE AND PROVIDE EROSION RESISTANT MATERIAL, SUCH AS FIBERGLASS ROVING OR AS DIRECTED BY THE ENGINEER TO PREVENT SOIL EROSION AND TO PROTECT THE AREA ADJACENT TO THE STRUCTURE. THE CONTRACTOR WILL BE REQUIRED TO REMOVE THESE MATERIALS PRIOR TO CONSTRUCTION OF THE APPROACH SLAB.

TEMPORARY DRAINAGE DETAIL

PROJECT NO. U-2550B
BURKE COUNTY
STATION: 23+83.10 -L-

SHEET 4 OF 4

STATE OF NORTH CAROLINA
DEPARTMENT OF TRANSPORTATION
RALEIGH

STANDARD

BRIDGE APPROACH SLAB DETAILS

ASSEMBLED BY : C.R. YARBROUGH	DATE : 01/11
CHECKED BY : D.A. GLADDEN	DATE : 03/11

DRAWN BY : FCJ	11/88	REV. 10/17/00	RWW/LES
CHECKED BY : ARB	11/88	REV. 5/7/03	RWW/JTE
		REV. 5/1/06RR	MAA/KMM

TEMPORARY BERM AND SLOPE DRAIN DETAILS

(TO BE USED WHEN SHOULDER BERM GUTTER IS REQUIRED)

REVISIONS						SHEET NO.
NO.	BY:	DATE:	NO.	BY:	DATE:	S-49
1			3			TOTAL SHEETS
2			4			93

STR. #1 STD. NO. BAS10 (SHT 6)

25-APR-2011 11:30
R:\Structures\Bailey\Strl\cyarbrough\U-2550B_SD_AS.dgn
cyarbrough

F.A. PROJECT NO. STPNHF-0018(11)

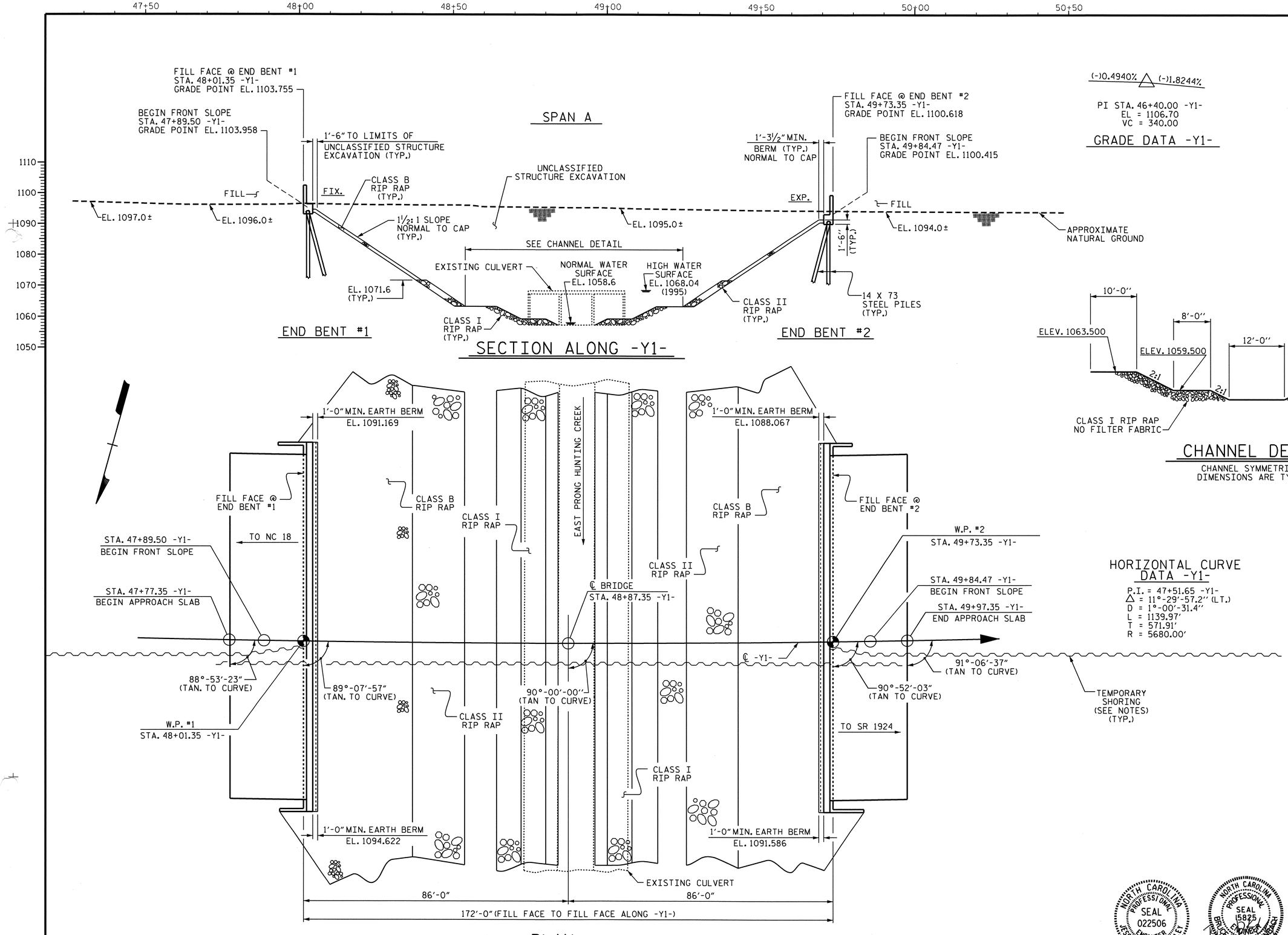

PLAN

(FOR CLARITY, PILES ARE NOT SHOWN IN PLAN VIEW)

DRAWN BY : H. T. BARBOUR DATE : 12-20-10
CHECKED BY : C. R. YARBROUGH DATE : 3-11

02-MAY-2011 10:18
R:\Structures\Bailey\Str2\tbarbour\Microstation\U2550B_SD_GD.dgn
bklappenbach

PROJECT NO. U-2550B
BURKE COUNTY
STATION: 48+87.35-Y1-

SHEET 1 OF 4 REPLACES CULVERT No. C139

STATE OF NORTH CAROLINA
DEPARTMENT OF TRANSPORTATION
RALEIGH

GENERAL DRAWING
FOR BRIDGE OVER EAST
PRONG HUNTING CREEK
ON I-40 BETWEEN
NC 18 AND SR 1924

NORTH CAROLINA PROFESSIONAL SEAL 022506 ENGINEER JESSE McARTHUR BAILEY
5/2/11

NORTH CAROLINA PROFESSIONAL SEAL 15825 ENGINEER BRUCE E. D. KLAPPENBACH
5-2-2011

REVISIONS						SHEET NO.
NO.	BY:	DATE:	NO.	BY:	DATE:	S-50
1			3			TOTAL SHEETS
2			4			93

STR. #2

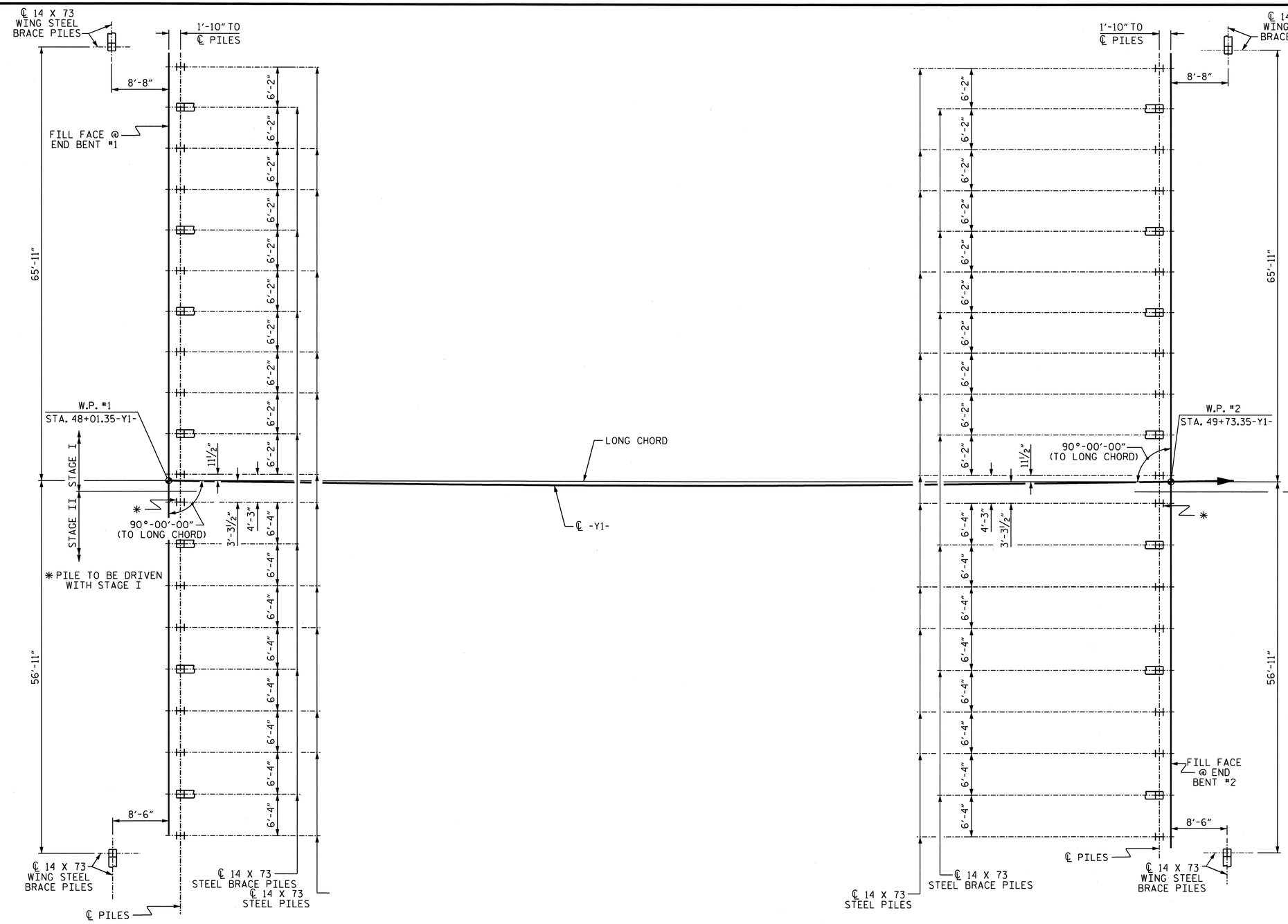

END BENT #1

END BENT #2

FOUNDATION LAYOUT

DIMENSIONS LOCATING PILES ARE TO THE PILE ℄.
BRACE PILES BATTERED 3:12.

NOTES

FOR PILES, SEE SPECIAL PROVISIONS.

PILES AT END BENT NO. 1 ARE DESIGNED FOR A FACTORED RESISTANCE OF 125 TONS PER PILE.

DRIVE PILES AT END BENT NO. 1 TO A REQUIRED DRIVING RESISTANCE OF 208 TONS PER PILE.

PILES AT END BENT NO. 2 ARE DESIGNED FOR A FACTORED RESISTANCE OF 125 TONS PER PILE.

DRIVE PILES AT END BENT NO. 2 TO A REQUIRED DRIVING RESISTANCE OF 208 TONS PER PILE.

* PILE TO BE DRIVEN WITH STAGE I

PROJECT NO. U-2550B
BURKE COUNTY
STATION: 48+87.35-Y1-

SHEET 2 OF 4

STATE OF NORTH CAROLINA
DEPARTMENT OF TRANSPORTATION
RALEIGH

GENERAL DRAWING FOR BRIDGE OVER EAST PRONG HUNTING CREEK ON I-40 BETWEEN NC 18 AND SR 1924

NORTH CAROLINA PROFESSIONAL SEAL 15825 ENGINEER BRUCE D. KLAPPENBACH
4-29-2011

REVISIONS						SHEET NO.
NO.	BY:	DATE:	NO.	BY:	DATE:	S-51
1			3			TOTAL SHEETS
2			4			93

STR. #2

DRAWN BY : H. T. BARBOUR DATE : 12-22-10
CHECKED BY : C. R. YARBROUGH DATE : 3-11

26-APR-2011 10:07
R:\Structures\Bailey\Str2\tbarbour\Microstation\U2550B_SD_GD.dgn
bklappenbach

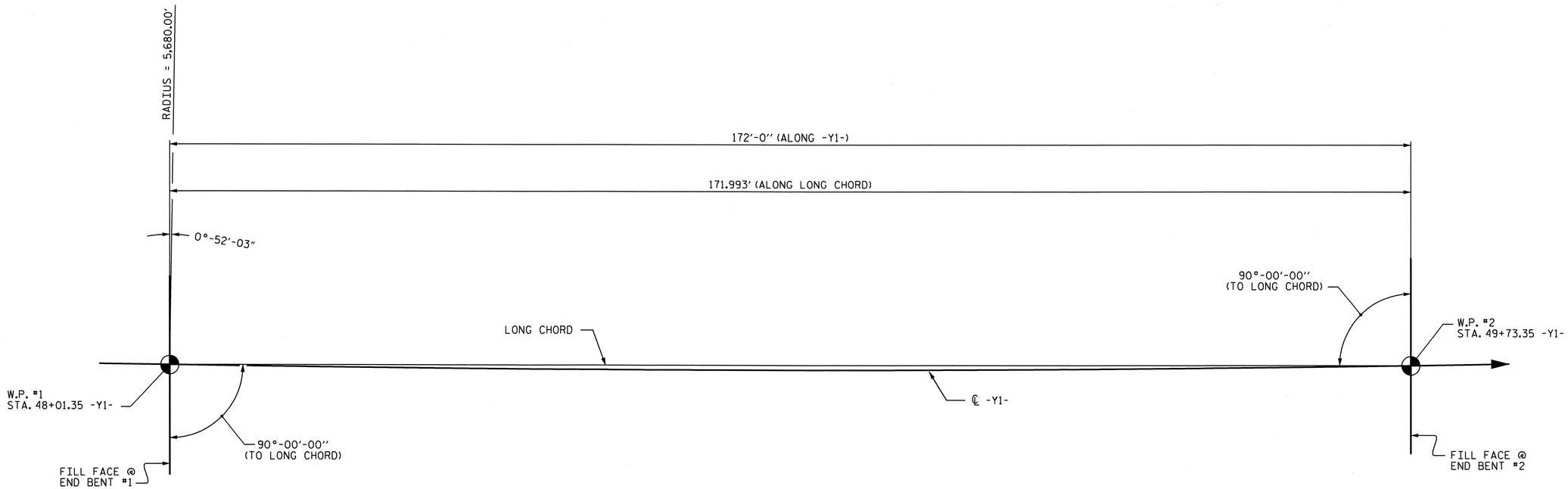

LONG CHORD LAYOUT

HORIZONTAL CURVE DATA -Y1-

P.I. = 47+51.65 -Y1-
Δ = 11°-29'-57.2" (LT.)
D = 1°-00'-31.4"
L = 1139.97'
T = 571.91'
R = 5680.00'

PROJECT NO. U-2550B
BURKE COUNTY
STATION: 48+87.35 -Y1-

SHEET 3 OF 4

STATE OF NORTH CAROLINA
DEPARTMENT OF TRANSPORTATION
RALEIGH

GENERAL DRAWING FOR BRIDGE OVER EAST PRONG HUNTING CREEK ON I-40 BETWEEN NC 18 AND SR 1924

NORTH CAROLINA PROFESSIONAL SEAL 15825 ENGINEER BRUCE D. KLAPPENBACH
4-29-2011

REVISIONS						SHEET NO.
NO.	BY:	DATE:	NO.	BY:	DATE:	S-52
1			3			TOTAL SHEETS
2			4			93

STR. #2

DRAWN BY : H. T. BARBOUR DATE : 12-20-10
CHECKED BY : C. R. YARBROUGH DATE : 3-11

26-APR-2011 08:44
R:\Structures\Bailey\Str2\tbarbour\Microstation\U2550B_SD_GD.dgn
tbarbour

BM #5: RAILROAD SPIKE IN BASE OF 8" DOGWOOD, 139' RIGHT STA. 44+55 -Y1-, EL. 1113.12'.

HYDRAULIC DATA

DESIGN DISCHARGE	= 2120 CFS
FREQUENCY OF DESIGN FLOOD	= 50 YEARS
DESIGN HIGH WATER ELEVATION	= 1068.4
DRAINAGE AREA	= 5.0 SQ. MI.
BASIC DISCHARGE (Q100)	= 2510 CFS
BASIC HIGH WATER ELEVATION	= 1069.5

OVERTOPPING FLOOD DATA

OVERTOPPING DISCHARGE	= 6800 CFS
FREQUENCY OF OVERTOPPING FLOOD	= 500+ YEARS
OVERTOPPING FLOOD ELEVATION	= 1079.8

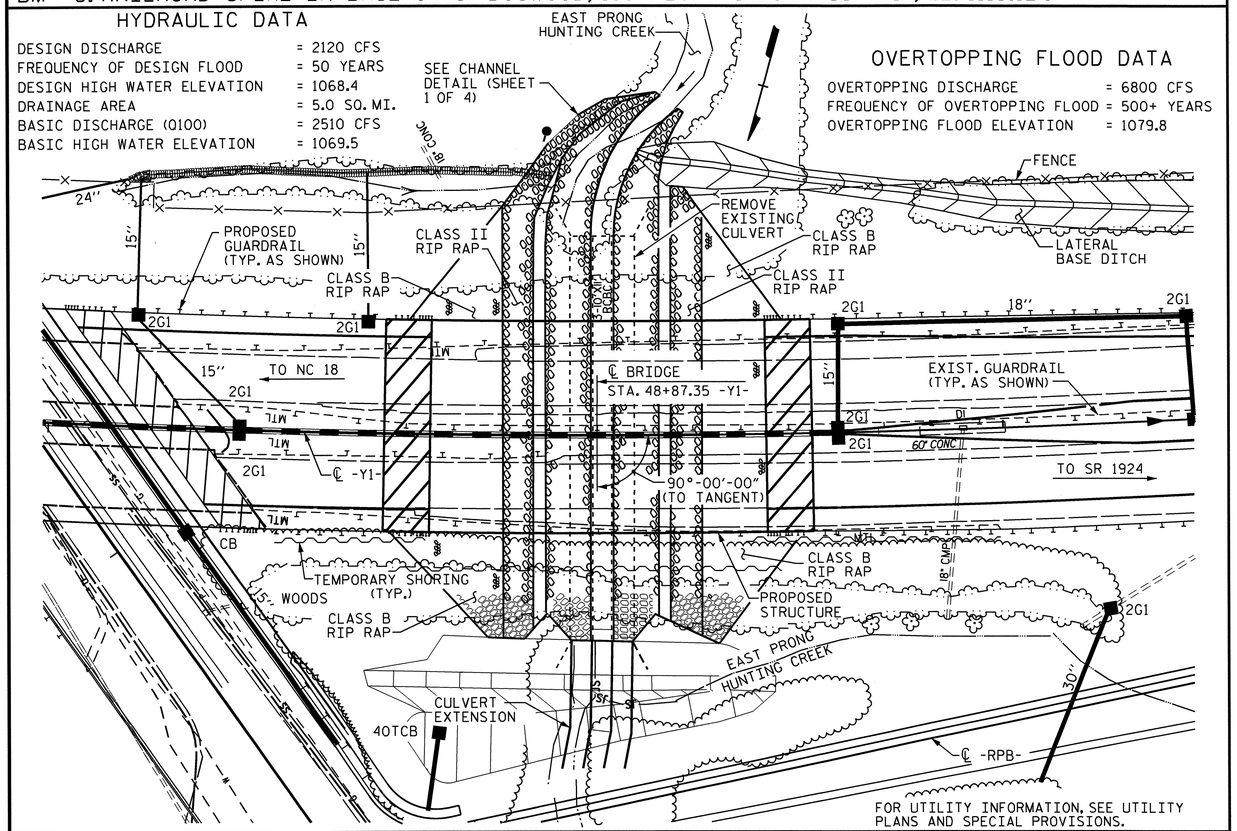

LOCATION SKETCH

NOTES

ASSUMED LIVE LOAD = HL 93 OR ALTERNATE LOADING.

FOR OTHER DESIGN DATA AND GENERAL NOTES, SEE SHEET SN.

THIS BRIDGE HAS BEEN DESIGNED IN ACCORDANCE WITH THE AASHTO LRFD BRIDGE DESIGN SPECIFICATIONS.

FOR EROSION CONTROL MEASURES SEE EROSION CONTROL PLANS.

REMOVABLE FORMS MAY BE USED IN LIEU OF METAL STAY-IN-PLACE FORMS IN ACCORDANCE WITH ARTICLE 420-3 OF THE STANDARD SPECIFICATIONS.

STRUCTURAL STEEL SHALL BE AASHTO M270 GRADE 50W AND PAINTED IN ACCORDANCE WITH SYSTEM 4 OF ARTICLE 442-7 OF THE STANDARD SPECIFICATIONS UNLESS OTHERWISE NOTED ON THE PLANS.

THE CLASS AA CONCRETE IN THE BRIDGE DECK SHALL CONTAIN FLY ASH OR GROUND GRANULATED BLAST FURNACE SLAG AT THE SUBSTITUTION RATE SPECIFIED IN ARTICLE 1024-1 AND IN ACCORDANCE WITH ARTICLES 1024-5 AND 1024-6 OF THE STANDARD SPECIFICATIONS. NO PAYMENT WILL BE MADE FOR THIS SUBSTITUTION AS IT IS CONSIDERED INCIDENTAL TO THE COST OF THE REINFORCED CONCRETE DECK SLAB.

THE EXISTING 10'-0" X 11'-0" TRIPLE BARREL REINFORCED CONCRETE BOX CULVERT WITH AN APPROXIMATE LENGTH OF 212 FT. LOCATED AT THE PROPOSED SITE SHALL BE REMOVED.

FOR LIMITS OF TEMPORARY SHORING FOR MAINTENANCE OF TRAFFIC, SEE TRAFFIC CONTROL PLANS. FOR PAY ITEM FOR TEMPORARY SHORING FOR MAINTENANCE OF TRAFFIC, SEE ROADWAY PLANS.

THE CONTRACTOR SHALL PROVIDE INDEPENDENT ASSURANCE SAMPLES OF REINFORCING STEEL AS FOLLOWS: FOR PROJECTS REQUIRING UP TO 400 TONS OF REINFORCING STEEL, ONE 30 INCH SAMPLE OF EACH SIZE BAR USED, AND FOR PROJECTS REQUIRING OVER 400 TONS OF REINFORCING STEEL, TWO 30 INCH SAMPLES OF EACH SIZE BAR USED. THE BARS FROM WHICH THE SAMPLES ARE TAKEN MUST THEN BE SPLICED WITH REPLACEMENT BARS OF THE SIZE AND LENGTH OF THE SAMPLE, PLUS A MINIMUM LAP SPLICE OF THIRTY BAR DIAMETERS. PAYMENT FOR THE SAMPLES OF REINFORCING STEEL SHALL BE CONSIDERED INCIDENTAL TO VARIOUS PAY ITEMS.

NEEDLE BEAMS WILL NOT BE ALLOWED UNLESS OTHERWISE CALLED FOR ON THE PLANS OR APPROVED BY THE ENGINEER.

FOR SUBMITTAL OF WORKING DRAWINGS, SEE SPECIAL PROVISIONS.

FOR FALSEWORK AND FORMWORK, SEE SPECIAL PROVISIONS.

FOR CRANE SAFETY, SEE SPECIAL PROVISIONS.

FOR GROUT FOR STRUCTURES, SEE SPECIAL PROVISIONS.

FOR CURING CONCRETE, SEE SPECIAL PROVISIONS.

FOR PLACING LOAD ON STRUCTURE MEMBERS, SEE SPECIAL PROVISIONS.

FOR SHIPPING STEEL STRUCTURE MEMBERS, SEE SPECIAL PROVISIONS.

THE MATERIAL DESIGNATED AS UNCLASSIFIED STRUCTURE EXCAVATION SHALL BE EXCAVATED FOR A DISTANCE OF 120 FT. EACH SIDE OF CENTERLINE ROADWAY AS DIRECTED BY THE ENGINEER. THIS WORK WILL BE PAID FOR AT THE CONTRACT LUMP SUM PRICE FOR UNCLASSIFIED STRUCTURE EXCAVATION. SEE SECTION 412 OF THE STANDARD SPECIFICATIONS.

THIS STRUCTURE HAS BEEN DESIGNED IN ACCORDANCE WITH HEC 18, "EVALUATING SCOUR AT BRIDGES", MAY, 2001.

FOR FORMS FOR CONCRETE BRIDGE DECKS, SEE SPECIAL PROVISIONS.

TOTAL BILL OF MATERIAL

	REMOVAL OF EXISTING STRUCTURE	UNCLASSFIED STRUCTURE EXCAVATION	REINFORCED CONCRETE DECK SLAB	GROOVING BRIDGE FLOORS	CLASS A CONCRETE	BRIDGE APPROACH SLABS	REINFORCING STEEL	STRUCTURAL STEEL	HP 14 X 73 STEEL PILES		CONCRETE BARRIER RAIL	CONCRETE MEDIAN BARRIER	RIP RAP CLASS I	RIP RAP CLASS B	RIP RAP CLASS II (2'-0" THICK)	FILTER FABRIC FOR DRAINAGE	ELASTOMERIC BEARINGS	EXPANSION JOINT SEALS
	LUMP SUM	LUMP SUM	SQ. FT.	SQ. FT.	CU. YDS.	LUMP SUM	LBS.	APPROX. LBS.	NO.	LIN. FT.	LIN. FT.	LIN. FT.	TON	TON	TON	SQ. YDS.	LUMP SUM	LUMP SUM
SUPERSTRUCTURE			19410	22071		LUMP SUM		1,014,400			379.51	220.54					LUMP SUM	LUMP SUM
END BENT NO. 1					96.6		15,230		22	1050			555	440	345	1355		
END BENT NO. 2					96.4		14,761		22	1380			495	415	345	1294		
TOTAL	LUMP SUM	LUMP SUM	19410	22071	193.0	LUMP SUM	29,991	1,014,400	44	2430	379.51	220.54	1050	855	690	2649	LUMP SUM	LUMP SUM

PROJECT NO. U-2550B
BURKE COUNTY
STATION: 48+87.35 -Y1-

SHEET 4 OF 4

STATE OF NORTH CAROLINA
DEPARTMENT OF TRANSPORTATION
RALEIGH

GENERAL DRAWING FOR BRIDGE OVER EAST PRONG HUNTING CREEK ON I-40 BETWEEN NC 18 AND SR 1924

NORTH CAROLINA PROFESSIONAL SEAL 15825 ENGINEER BRUCE D. KLAPPENBACH
6-08-2011

REVISIONS						SHEET NO.
NO.	BY:	DATE:	NO.	BY:	DATE:	S-53
1			3			TOTAL SHEETS
2			4			93

STR. #2

DRAWN BY : H. T. BARBOUR DATE : 12-16-10
CHECKED BY : C. R. YARBROUGH DATE : 3-11

08-JUN-2011 15:17
R:\Structures\Bailey\Str2\tbarbour\Microstation\U2550B_SD_GD.dgn
bklappenbach

LOAD AND RESISTANCE FACTOR RATING (LRFR) SUMMARY FOR STEEL GIRDERS

LEVEL		VEHICLE	WEIGHT (W) (TONS)	CONTROLLING LOAD RATING (#)	MINIMUM RATING FACTORS (RF)	TONS = W × RF	STRENGTH I LIMIT STATE											SERVICE II LIMIT STATE						COMMENT NUMBER
								MOMENT					SHEAR						MOMENT					
							LIVE-LOAD FACTORS (γ_{LL})	DISTRIBUTION FACTORS (DF)	RATING FACTOR	SPAN	GIRDER LOCATION	DISTANCE FROM LEFT END OF SPAN (ft)	DISTRIBUTION FACTORS (DF)	RATING FACTOR	SPAN	GIRDER LOCATION	DISTANCE FROM LEFT END OF SPAN (ft)	LIVE-LOAD FACTORS (γ_{LL})	DISTRIBUTION FACTORS (DF)	RATING FACTOR	SPAN	GIRDER LOCATION	DISTANCE FROM LEFT END OF SPAN (ft)	
DESIGN LOAD RATING		HL-93 (INVENTORY)	N/A	1	1.06	--	1.75	0.828	1.59	A	EL	84.00	0.932	1.06	A	I	8.40	1.30	0.828	1.65	A	EL	84.00	
		HL-93 (OPERATING)	N/A		1.37	--	1.35	0.828	2.06	A	EL	84.00	0.932	1.37	A	I	8.40	1.00	0.828	2.14	A	EL	84.00	
		HS-20 (INVENTORY)	36.000	2	1.66	59.8	1.75	0.828	2.57	A	EL	84.00	0.932	1.66	A	I	8.40	1.30	0.828	2.67	A	EL	84.00	
		HS-20 (OPERATING)	36.000		2.15	77.4	1.35	0.828	3.33	A	EL	84.00	0.932	2.15	A	I	8.40	1.00	0.828	3.47	A	EL	84.00	
LEGAL LOAD RATING	SINGLE VEHICLE (SV)	SH	12.500		5.70	71.3	1.40	0.828	8.68	A	EL	84.00	0.932	5.70	A	I	8.40	1.30	0.828	7.21	A	EL	84.00	
		S3C	21.500		3.33	71.6	1.40	0.828	5.06	A	EL	84.00	0.932	3.33	A	I	8.40	1.30	0.828	4.20	A	EL	84.00	
		S3A	22.750		3.28	74.6	1.40	0.828	5.05	A	EL	84.00	0.932	3.28	A	I	8.40	1.30	0.828	4.19	A	EL	84.00	
		S4A	26.750		2.71	72.5	1.40	0.828	4.15	A	EL	84.00	0.932	2.71	A	I	8.40	1.30	0.828	3.44	A	EL	84.00	
		S5A	30.500		2.43	74.1	1.40	0.828	3.65	A	EL	84.00	0.932	2.43	A	I	8.40	1.30	0.828	3.03	A	EL	84.00	
		S6A	34.500		2.17	74.9	1.40	0.828	3.26	A	EL	84.00	0.932	2.17	A	I	8.40	1.30	0.828	2.71	A	EL	84.00	
		S7B	38.500		1.98	76.2	1.40	0.828	2.95	A	EL	84.00	0.932	1.98	A	I	8.40	1.30	0.828	2.45	A	EL	84.00	
		S7A	40.000		1.95	78.0	1.40	0.828	2.87	A	EL	84.00	0.932	1.95	A	I	8.40	1.30	0.828	2.38	A	EL	84.00	
	TRUCK TRACTOR SEMI-TRAILER (TTST)	T4A	28.250		2.60	73.5	1.40	0.828	4.00	A	EL	84.00	0.932	2.60	A	I	8.40	1.30	0.828	3.32	A	EL	84.00	
		T5B	32.000		2.37	75.8	1.40	0.828	3.52	A	EL	84.00	0.932	2.37	A	I	8.40	1.30	0.828	2.93	A	EL	84.00	
		T6A	36.000		2.13	76.7	1.40	0.828	3.18	A	EL	84.00	0.932	2.13	A	I	8.40	1.30	0.828	2.64	A	EL	84.00	
		T7A	40.000		1.95	78.0	1.40	0.828	2.90	A	EL	84.00	0.932	1.95	A	I	8.40	1.30	0.828	2.41	A	EL	84.00	
		T7B	40.000	3	1.90	76.0	1.40	0.828	2.99	A	EL	84.00	0.932	1.90	A	I	8.40	1.30	0.828	2.48	A	EL	84.00	
FATIGUE		HL-93 (INVENTORY)	γ_{LL}=0.75																					

LOAD FACTORS:

DESIGN LOAD RATING FACTORS	LIMIT STATE	γ_{DC}	γ_{DW}
	STRENGTH I	1.25	1.50
	SERVICE II	1.00	1.00

NOTES:

MINIMUM RATING FACTORS ARE BASED ON THE STRENGTH I AND SERVICE II LIMIT STATES.

ALLOWABLE STRESS FOR SERVICE II LIMIT STATE ARE AS REQUIRED FOR DESIGN.

COMMENTS:

1.
2.
3.
4.

(#) CONTROLLING LOAD RATING

(1) DESIGN LOAD RATING (HL-93)

(2) DESIGN LOAD RATING (HS-20)

(3) LEGAL LOAD RATING **

** SEE CHART FOR VEHICLE TYPE

GIRDER LOCATION

I - INTERIOR GIRDER
EL - EXTERIOR LEFT GIRDER
ER - EXTERIOR RIGHT GIRDER

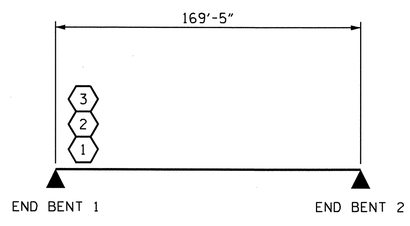

LRFR SUMMARY

PROJECT NO. U-2550B
BURKE COUNTY
STATION: 48+87.35 -Y1-

STATE OF NORTH CAROLINA
DEPARTMENT OF TRANSPORTATION
RALEIGH

STANDARD

LRFR SUMMARY FOR STEEL GIRDERS
(INTERSTATE TRAFFIC)

NORTH CAROLINA PROFESSIONAL SEAL 19879 ENGINEER BRUCE D. KLAPPENBACH 4-29-2011

REVISIONS						SHEET NO.
NO.	BY:	DATE:	NO.	BY:	DATE:	S-54
1			3			TOTAL SHEETS
2			4			93

ASSEMBLED BY : H. T. BARBOUR DATE : 3-15-11
CHECKED BY : B. D. KLAPPENBACH DATE : 3-11
DRAWN BY : MAA 1/08
CHECKED BY : GM/DI 2/08
REV. 11/12/08RR MAA/GM

26-APR-2011 08:57
R:\Structures\Bailey\Str2\tbarbour\Microstation\U2550B_SD_LRFR.dgn
tbarbour

STR. #2

STD. NO. LRFR4

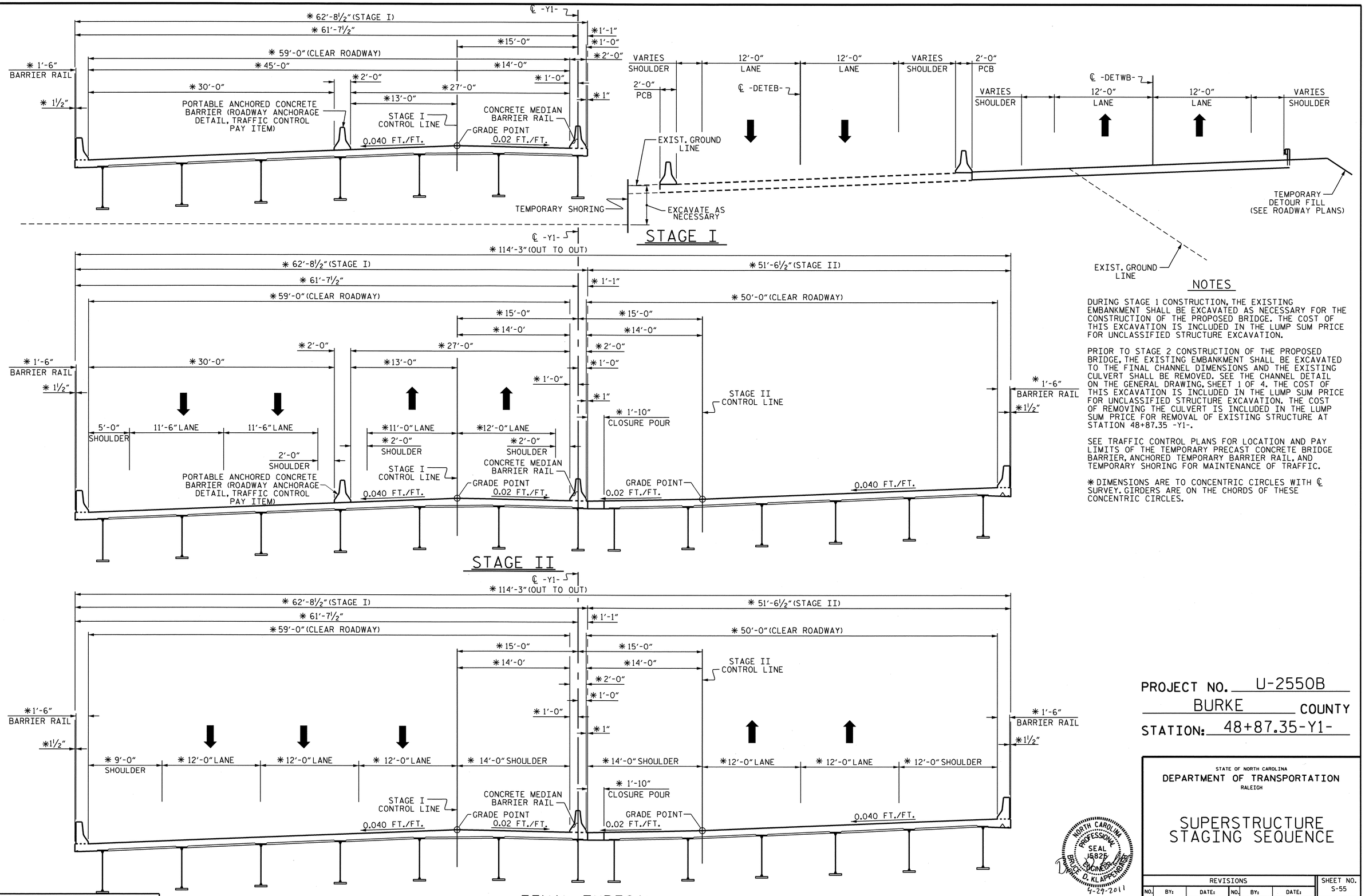

NOTES

DURING STAGE 1 CONSTRUCTION, THE EXISTING EMBANKMENT SHALL BE EXCAVATED AS NECESSARY FOR THE CONSTRUCTION OF THE PROPOSED BRIDGE. THE COST OF THIS EXCAVATION IS INCLUDED IN THE LUMP SUM PRICE FOR UNCLASSIFIED STRUCTURE EXCAVATION.

PRIOR TO STAGE 2 CONSTRUCTION OF THE PROPOSED BRIDGE, THE EXISTING EMBANKMENT SHALL BE EXCAVATED TO THE FINAL CHANNEL DIMENSIONS AND THE EXISTING CULVERT SHALL BE REMOVED. SEE THE CHANNEL DETAIL ON THE GENERAL DRAWING, SHEET 1 OF 4. THE COST OF THIS EXCAVATION IS INCLUDED IN THE LUMP SUM PRICE FOR UNCLASSIFIED STRUCTURE EXCAVATION. THE COST OF REMOVING THE CULVERT IS INCLUDED IN THE LUMP SUM PRICE FOR REMOVAL OF EXISTING STRUCTURE AT STATION 48+87.35 -Y1-.

SEE TRAFFIC CONTROL PLANS FOR LOCATION AND PAY LIMITS OF THE TEMPORARY PRECAST CONCRETE BRIDGE BARRIER, ANCHORED TEMPORARY BARRIER RAIL, AND TEMPORARY SHORING FOR MAINTENANCE OF TRAFFIC.

✱ DIMENSIONS ARE TO CONCENTRIC CIRCLES WITH ℄ SURVEY. GIRDERS ARE ON THE CHORDS OF THESE CONCENTRIC CIRCLES.

PROJECT NO. U-2550B
BURKE COUNTY
STATION: 48+87.35-Y1-

STATE OF NORTH CAROLINA
DEPARTMENT OF TRANSPORTATION
RALEIGH

SUPERSTRUCTURE STAGING SEQUENCE

NORTH CAROLINA PROFESSIONAL SEAL 15826 ENGINEER BRIAN D. KLAPPENBACH
4-29-2011

REVISIONS						SHEET NO.
NO.	BY:	DATE:	NO.	BY:	DATE:	S-55
1			3			TOTAL SHEETS
2			4			93

DRAWN BY : H. T. BARBOUR DATE : 3-18-11
CHECKED BY : B. D. KLAPPENBACH DATE : 3-11

26-APR-2011 10:49
R:\Structures\Bailey\Str2\tbarbour\Microstation\U2550B_SD_STAGSEQ.dgn
bklappenbach

STR. #2

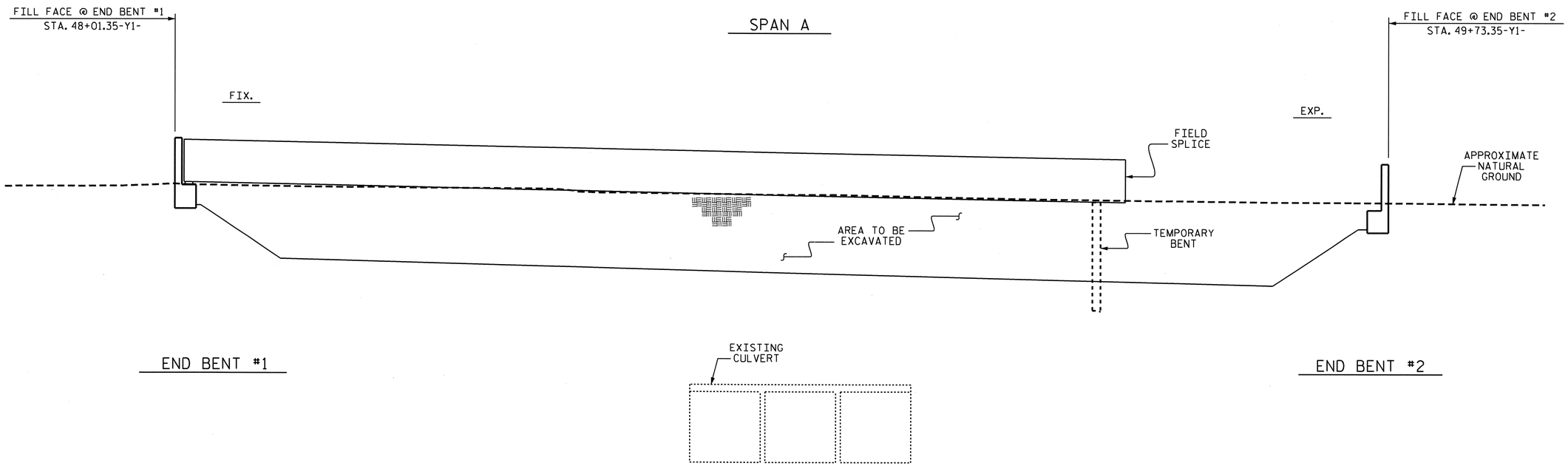

GIRDER ERECTION

(SECTIONS AT END BENTS TAKEN AT RIGHT ANGLES)

ERECTION NOTES

ERECT A MINIMUM OF TWO GIRDERS WITH ALL DIAPHRAGMS/CROSSFRAMES BETWEEN THE GIRDERS IN PLACE AND THE BOLTS TIGHTENED PRIOR TO RELEASING THE GIRDERS.

ERECT EACH SUBSEQUENT GIRDER WITH DIAPHRAGMS/CROSSFRAMES CONNECTING TO THE ADJACENT PREVIOUSLY ERECTED GIRDER AND TIGHTEN ALL BOLTS BEFORE RELEASING THE GIRDERS.

THE STRUCTURAL STEEL SHALL BE SUPPORTED DURING ERECTION IN ITS CAMBERED POSITION. A MINIMUM OF ONE TEMPORARY BENT SHALL BE USED IN SPAN A.

TEMPORARY BENTS SHALL REMAIN IN PLACE UNTIL ALL GIRDERS, DIAPHRAGMS, AND CROSSFRAMES ARE IN PLACE AND ALL HIGH STRENGTH BOLTS ARE TIGHTENED.

TEMPORARY BENTS SHALL PROVIDE BEARING AT CONNECTOR PLATE LOCATIONS. WHEN CONNECTOR PLATES ARE USED AS TEMPORARY BEARING STIFFENERS, DIAPHRAGMS MUST BE ATTACHED.

THE CONTRACTOR'S ERECTION PLANS SHALL INCLUDE A METHOD OF TEMPORARY BENT REMOVAL THAT WILL UNIFORMLY TRANSFER THE STRUCTURAL WEIGHT TO THE DIAPHRAGMS/CROSSFRAMES AND THE GIRDERS WILL REMAIN IN THE CAMBERED POSITIONS.

PLANS FOR TEMPORARY BENT ERECTION AND REMOVAL SHALL BE SUBMITTED TO THE ENGINEER FOR REVIEW.

THE CONTRACTOR IS RESPONSIBLE FOR DESIGNING THE TEMPORARY BENTS. THE DESIGNS SHALL BE COMPLETED BY A PROFESSIONAL ENGINEER REGISTERED IN THE STATE OF NORTH CAROLINA. THE CONTRACTOR SHALL SUBMIT SIGNED AND SEALED WORKING DRAWINGS AND CALCULATIONS FOR APPROVAL BY THE ENGINEER.

DURING THE GIRDER ERECTION PROCEDURE, THE CONTRACTOR IS RESPONSIBLE FOR PROVIDING TEMPORARY LATERAL BRACING AND OTHER MEANS OF SUPPORT, AS REQUIRED, TO ENSURE STABILITY OF THE GIRDERS, AVOID UPLIFT OF THE GIRDERS AT THE TEMPORARY BENTS AND TO ENSURE PLUMBNESS OF THE GIRDERS IN THE FINAL CONDITION.

NO SEPARATE MEASUREMENT OR PAYMENT WILL BE MADE FOR PROVIDING THE TEMPORARY BENT. THE COST FOR ALL MATERIALS, EQUIPMENT, TOOLS, LABOR AND ANY INCIDENTALS NECESSARY TO PROVIDE THE TEMPORARY BENT SHALL BE CONSIDERED INCIDENTAL TO THE LUMP SUM BID PRICE FOR STRUCTURAL STEEL.

THE CONTRACTOR MAY SUBMIT AN ALTERNATE ERECTION METHOD TO THE ENGINEER FOR REVIEW AND APPROVAL.

PROJECT NO. U-2550B
BURKE COUNTY
STATION: 48+87.35-Y1-

STATE OF NORTH CAROLINA
DEPARTMENT OF TRANSPORTATION
RALEIGH

GIRDER ERECTION DETAILS (STAGE I)

NORTH CAROLINA PROFESSIONAL SEAL 15825 ENGINEER BRUCE O. KLAPPENBACH
4-29-2011

REVISIONS						SHEET NO.
NO.	BY:	DATE:	NO.	BY:	DATE:	S-56
1			3			TOTAL SHEETS
2			4			93

STR. #2

DRAWN BY : S.H. SOCKWELL DATE : 02/04/11
CHECKED BY : B. KLAPPENBACH DATE : 03/17/11

25-APR-2011 16:21
R:\Structures\Bailey\Str2\ssockwell\U2550B_SD_GED.dgn
bklappenbach

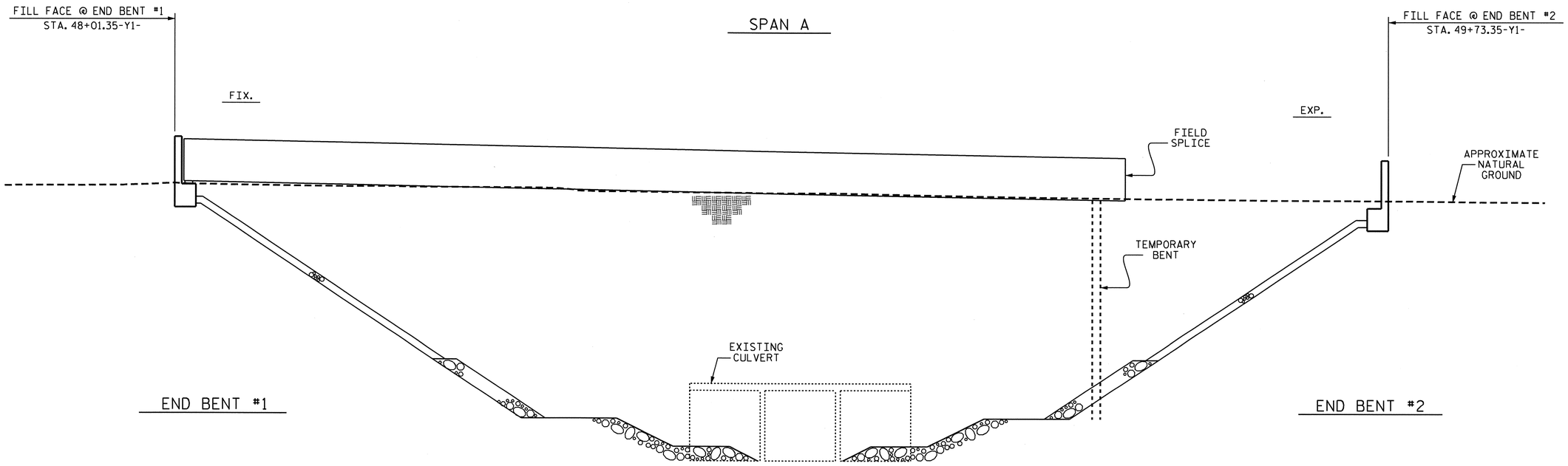

GIRDER ERECTION

(SECTIONS AT END BENTS TAKEN AT RIGHT ANGLES)

ERECTION NOTES

ERECT A MINIMUM OF TWO GIRDERS WITH ALL DIAPHRAGMS/CROSSFRAMES BETWEEN THE GIRDERS IN PLACE AND THE BOLTS TIGHTENED PRIOR TO RELEASING THE GIRDERS.

ERECT EACH SUBSEQUENT GIRDER WITH DIAPHRAGMS/CROSSFRAMES CONNECTING TO THE ADJACENT PREVIOUSLY ERECTED GIRDER AND TIGHTEN ALL BOLTS BEFORE RELEASING THE GIRDERS.

THE STRUCTURAL STEEL SHALL BE SUPPORTED DURING ERECTION IN ITS CAMBERED POSITION. A MINIMUM OF ONE TEMPORARY BENT SHALL BE USED IN SPAN A.

TEMPORARY BENTS SHALL REMAIN IN PLACE UNTIL ALL GIRDERS, DIAPHRAGMS, AND CROSSFRAMES ARE IN PLACE AND ALL HIGH STRENGTH BOLTS ARE TIGHTENED.

TEMPORARY BENTS SHALL PROVIDE BEARING AT CONNECTOR PLATE LOCATIONS. WHEN CONNECTOR PLATES ARE USED AS TEMPORARY BEARING STIFFENERS, DIAPHRAGMS MUST BE ATTACHED.

THE CONTRACTOR'S ERECTION PLANS SHALL INCLUDE A METHOD OF TEMPORARY BENT REMOVAL THAT WILL UNIFORMLY TRANSFER THE STRUCTURAL WEIGHT TO THE DIAPHRAGMS/CROSSFRAMES AND THE GIRDERS WILL REMAIN IN THE CAMBERED POSITIONS.

PLANS FOR TEMPORARY BENT ERECTION AND REMOVAL SHALL BE SUBMITTED TO THE ENGINEER FOR REVIEW.

THE CONTRACTOR IS RESPONSIBLE FOR DESIGNING THE TEMPORARY BENTS. THE DESIGNS SHALL BE COMPLETED BY A PROFESSIONAL ENGINEER REGISTERED IN THE STATE OF NORTH CAROLINA. THE CONTRACTOR SHALL SUBMIT SIGNED AND SEALED WORKING DRAWINGS AND CALCULATIONS FOR APPROVAL BY THE ENGINEER.

DURING THE GIRDER ERECTION PROCEDURE, THE CONTRACTOR IS RESPONSIBLE FOR PROVIDING TEMPORARY LATERAL BRACING AND OTHER MEANS OF SUPPORT, AS REQUIRED, TO ENSURE STABILITY OF THE GIRDERS, AVOID UPLIFT OF THE GIRDERS AT THE TEMPORARY BENTS AND TO ENSURE PLUMBNESS OF THE GIRDERS IN THE FINAL CONDITION.

NO SEPARATE MEASUREMENT OR PAYMENT WILL BE MADE FOR PROVIDING THE TEMPORARY BENT. THE COST FOR ALL MATERIALS, EQUIPMENT, TOOLS, LABOR AND ANY INCIDENTALS NECESSARY TO PROVIDE THE TEMPORARY BENT SHALL BE CONSIDERED INCIDENTAL TO THE LUMP SUM BID PRICE FOR STRUCTURAL STEEL.

THE CONTRACTOR MAY SUBMIT AN ALTERNATE ERECTION METHOD TO THE ENGINEER FOR REVIEW AND APPROVAL.

PROJECT NO. U-2550B
BURKE COUNTY
STATION: 48+87.35-Y1-

NORTH CAROLINA PROFESSIONAL SEAL 15825 ENGINEER BRUCE D. KLAPPENBACH
4-29-2011

STATE OF NORTH CAROLINA
DEPARTMENT OF TRANSPORTATION
RALEIGH

GIRDER ERECTION DETAILS (STAGE II)

REVISIONS						SHEET NO.
NO.	BY:	DATE:	NO.	BY:	DATE:	S-57
1			3			TOTAL SHEETS
2			4			93

STR. #2

DRAWN BY : S.H. SOCKWELL DATE : 02/04/11
CHECKED BY : B. KLAPPENBACH DATE : 03/17/11

25-APR-2011 16:21
R:\Structures\Bailey\Str2\ssockwell\U2550B_SD_GED.dgn
bklappenbach

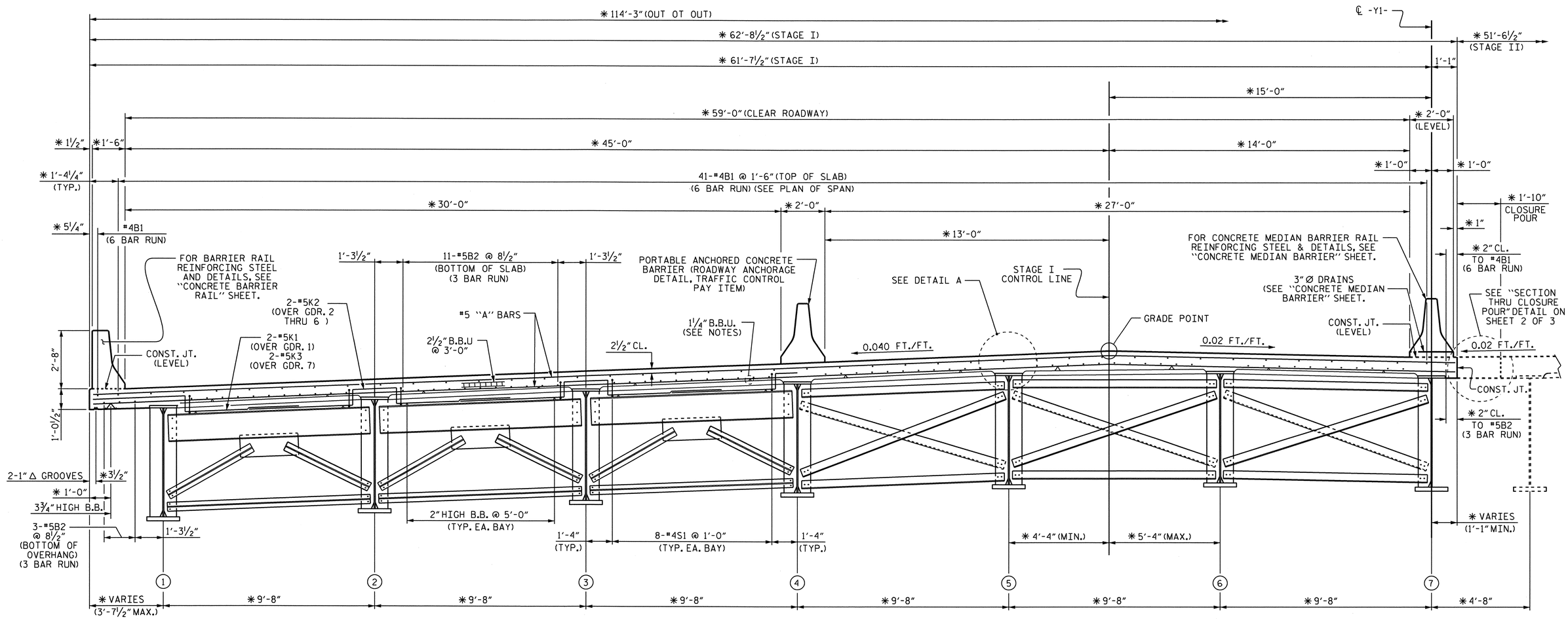

TYPICAL SECTION AT END BENT

TYPICAL SECTION AT INTERMEDIATE DIAPHRAGMS

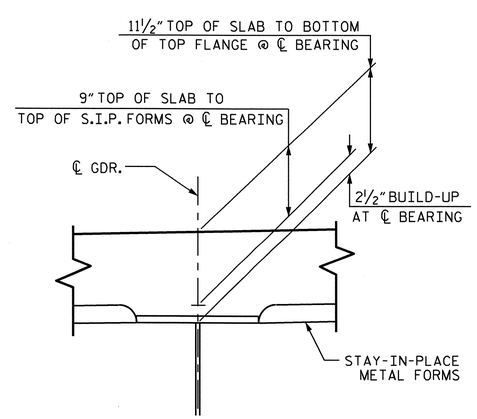

DETAIL A

✱ DIMENSIONS ARE TO CONCENTRIC CIRCLES WITH ℄ SURVEY. GIRDERS ARE ON THE CHORDS OF THESE CONCENTRIC CIRCLES

"A" BARS ARE TO BE PLACED AT RIGHT ANGLES TO LONG CHORD.

PROJECT NO. U-2550B
BURKE COUNTY
STATION: 48+87.35 -Y1-

SHEET 1 OF 3

STATE OF NORTH CAROLINA
DEPARTMENT OF TRANSPORTATION
RALEIGH

SUPERSTRUCTURE
TYPICAL SECTIONS
(STAGE I)

NORTH CAROLINA PROFESSIONAL SEAL 5924 ENGINEER BRUCE D. KLAPPENBACH 9-24-2011

REVISIONS						SHEET NO.
NO.	BY:	DATE:	NO.	BY:	DATE:	S-58
1			3			TOTAL SHEETS
2			4			93

STR. #2

DRAWN BY : M. G. SHAIKH DATE : 09-16-10
CHECKED BY : H. T. BARBOUR DATE : 01-24-11

25-APR-2011 17:10
P:\Structures\Bailey\Str2\mshaikh\Microstation\U-2550B_SD_TS.dgn
mshaikh

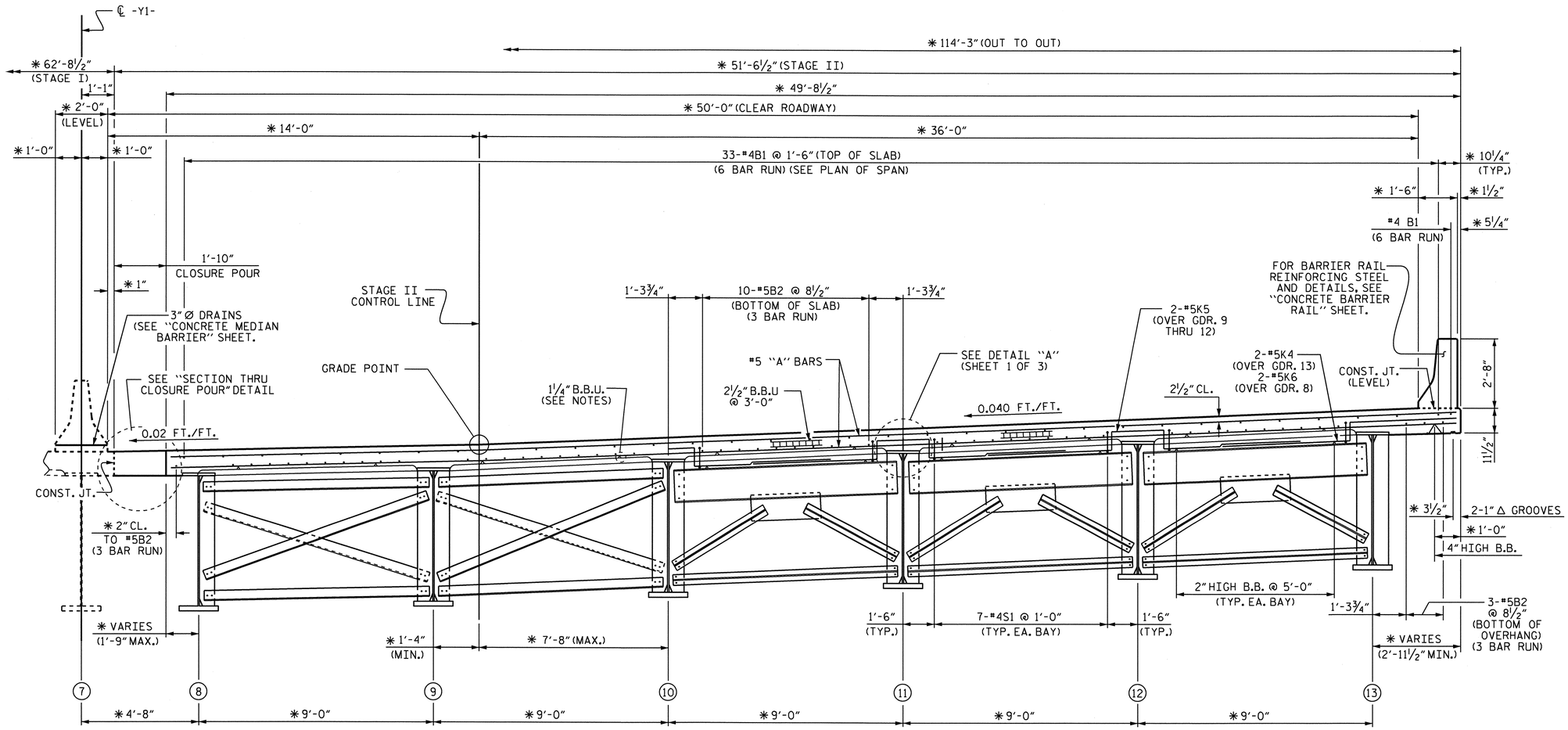

TYPICAL SECTION AT INTERMEDIATE DIAPHRAGMS

TYPICAL SECTION AT END BENT

NOTES

PROVIDE 1¼" HIGH BEAM BOLSTERS UPPER AT 4'-0" CTS. ATOP THE METAL STAY-IN-PLACE FORMS TO SUPPORT THE BOTTOM MAT OF 'A' BARS. WHEN USING REMOVABLE FORMS, PROVIDE CONTINUOUS HIGH CHAIRS FOR METAL DECK (C.H.C.M.) @ 4'-0" CTS. WITH A HEIGHT TO SUPPORT THE BOTTOM MAT OF 'A' BARS A CLEAR DISTANCE OF 2 1/2" ABOVE THE TOP OF THE REMOVABLE FORM.

DOWELS SHALL BE PLACED IN THE SAME HORIZONTAL PLANE AS THE TOP AND BOTTOM SLAB REINFORCING STEEL.

METAL STAY-IN-PLACE FORMS SHALL NOT BE WELDED TO BEAM OR GIRDER FLANGES IN THE ZONES REQUIRING CHARPY V-NOTCH TEST. SEE STRUCTURAL STEEL DETAIL SHEETS.

STRUCTURAL STEEL ERECTION IN A CONTINUOUS UNIT SHALL BE COMPLETE BEFORE FALSEWORK OR FORMS ARE PLACED ON THE UNIT.

PREVIOUSLY CAST CONCRETE IN A CONTINUOUS UNIT SHALL HAVE ATTAINED A MINIMUM COMPRESSIVE STRENGTH OF 3,000 PSI BEFORE ADDITIONAL CONCRETE IS CAST IN THE UNIT.

SEE TRAFFIC CONTROL PLANS FOR LOCATION AND PAY LIMITS OF THE ANCHORED PORTABLE CONCRETE BARRIER.

#5 "G" BAR MAY BE SHIFTED SLIGHTLY, AS NECESSARY, TO CLEAR REINFORCING STEEL AND STIRRUPS.

BARRIER RAIL IN A CONTINUOUS UNIT SHALL NOT BE CAST UNTIL ALL SLAB CONCRETE IN THE UNIT HAS BEEN CAST AND HAS REACHED A MINIMUM COMPRESSIVE STRENGTH OF 3,000 PSI.

THE CONTRACTOR'S ATTENTION IS CALLED TO THE FACT THAT THE 3" DIAMETER DRAINS ARE TO BE INSTALLED IN THE CONCRETE MEDIAN BARRIER AT 6' CENTERS. REINFORCING STEEL MAY BE SHIFTED AS NECESSARY TO AVOID INTERFERENCE WITH THE DRAINS. THE COST IS CONSIDERED INCIDENTAL TO THE COST OF CONCRETE MEDIAN BARRIER.

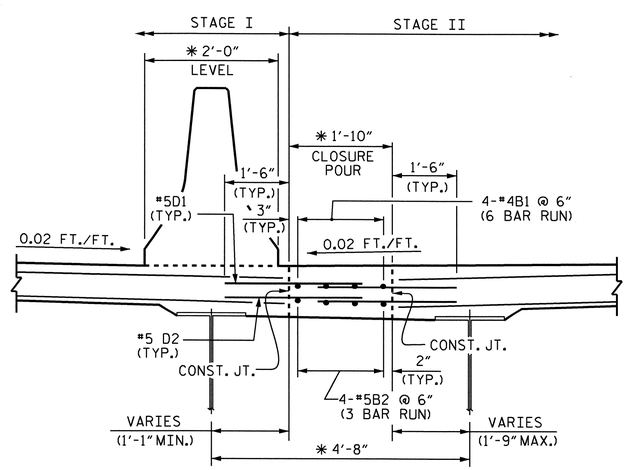

SECTION THRU CLOSURE POUR

NOTE : #5 D1 & D2 SHALL EXTEND 1'-6" INTO CLOSURE POUR.

✱ DIMENSIONS ARE TO CONCENTRIC CIRCLES WITH ℄ SURVEY. GIRDERS ARE ON THE CHORDS OF THESE CONCENTRIC CIRCLES

"A" BARS ARE TO BE PLACED AT RIGHT ANGLES TO LONG CHORD.

PROJECT NO. U-2550B
BURKE COUNTY
STATION: 48+87.35 -Y1-

SHEET 2 OF 3

STATE OF NORTH CAROLINA
DEPARTMENT OF TRANSPORTATION
RALEIGH

SUPERSTRUCTURE
TYPICAL SECTIONS
(STAGE II)

NORTH CAROLINA PROFESSIONAL SEAL 15826 ENGINEER BRUCE D. KLAPPENBACH 4-29-2011

REVISIONS							SHEET NO.
NO.	BY:	DATE:	NO.	BY:	DATE:		S-59
1			3				TOTAL SHEETS
2			4				93

STR. #2

DRAWN BY : M. G. SHAIKH DATE : 09-16-10
CHECKED BY : H. T. BARBOUR DATE : 01-24-11

25-APR-2011 17:09
P:\Structures\Bailey\Str2\mshaikh\Microstation\U-2550B_SD_TS.dgn
mshaikh

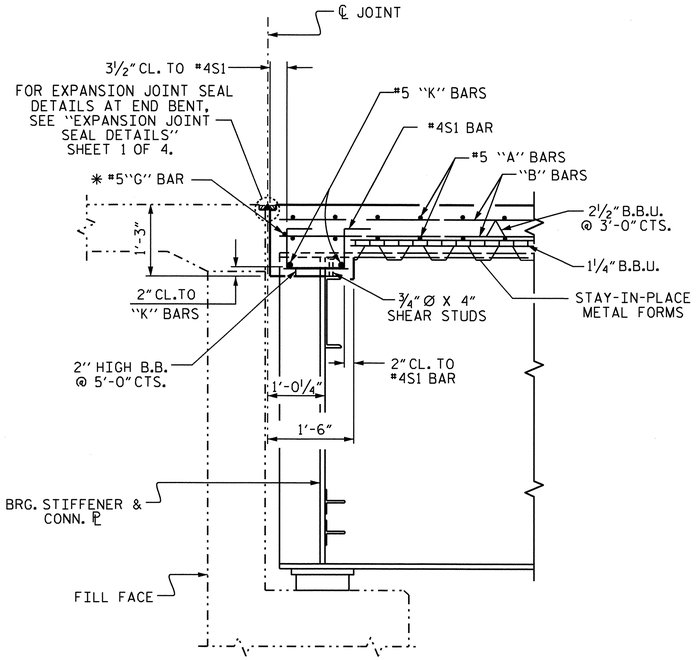

SECTION THRU END BENT

✱ #5 'G' BAR MAY BE SHIFTED SLIGHTLY, AS NECESSARY, TO CLEAR DIAPHRAGM AND REINFORCING STEEL.

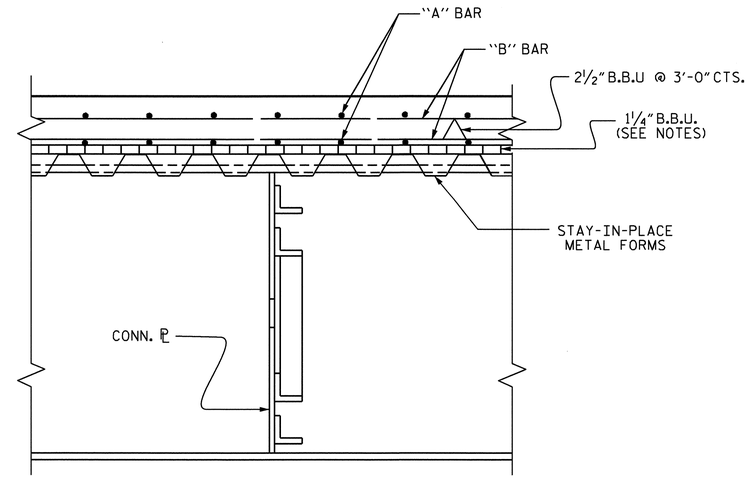

SECTION THRU INTERMEDIATE DIAPHRAGM

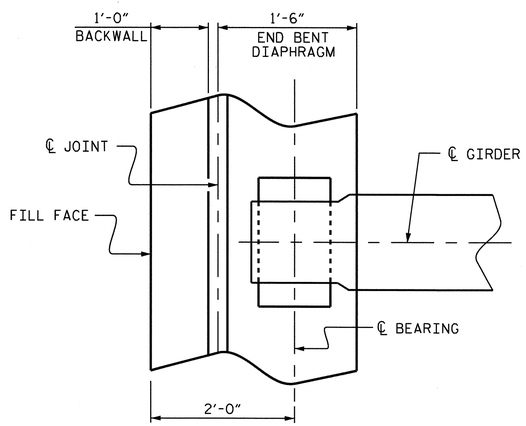

PLAN

END BENT DIAPHRAGM

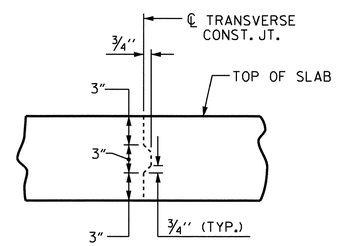

TRANSVERSE CONSTRUCTION JOINT DETAIL

NOTE: REINFORCING STEEL IN SLAB NOT SHOWN. LONGITUDINAL REINFORCING STEEL SHALL BE CONTINUOUS THRU JOINT

PROJECT NO. U-2550B
BURKE COUNTY
STATION: 48+87.35 -Y1-

SHEET 3 OF 3

STATE OF NORTH CAROLINA
DEPARTMENT OF TRANSPORTATION
RALEIGH

SUPERSTRUCTURE TYPICAL SECTION DETAILS

NORTH CAROLINA PROFESSIONAL SEAL 15825 ENGINEER BRUCE D. KLAPPENBACH
4-29-2011

REVISIONS						SHEET NO.
NO.	BY:	DATE:	NO.	BY:	DATE:	S-60
1			3			TOTAL SHEETS
2			4			93

DRAWN BY : M. G. SHAIKH DATE : 09-20-10
CHECKED BY : H. T. BARBOUR DATE : 01-24-11

25-APR-2011 17:09
P:\Structures\Bailey\Str2\mshaikh\Microstation\U-2550B_SD_TS.dgn
mshaikh

STR #2

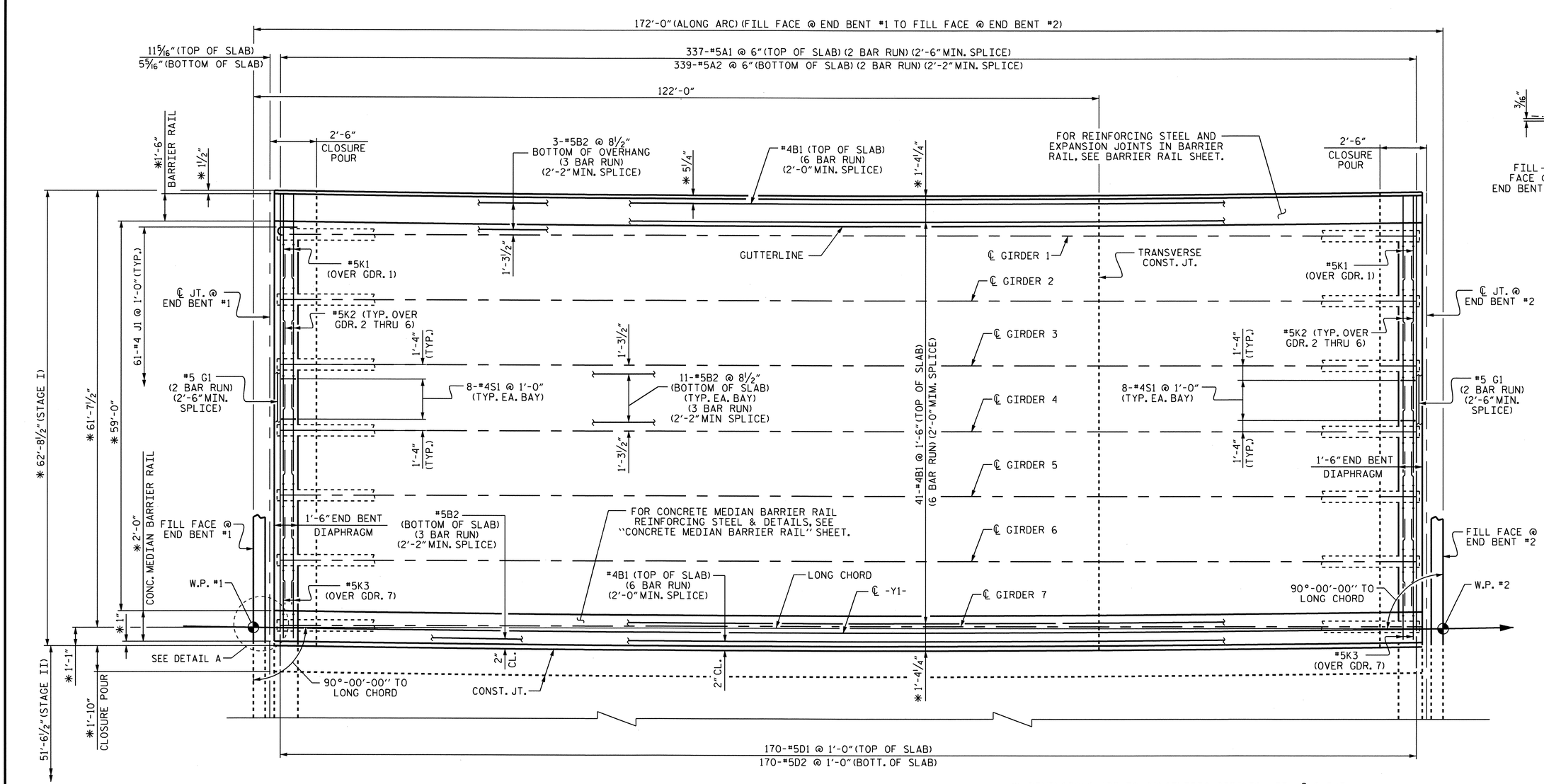

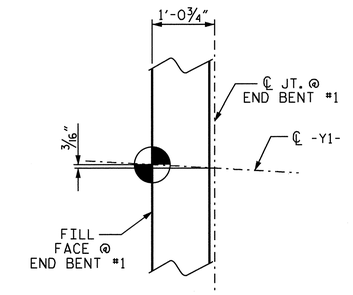

DETAIL A

PLAN OF SPAN

* DIMENSIONS ARE TO CONCENTRIC CIRCLES WITH ℄ SURVEY. GIRDERS ARE ON THE CHORDS OF THESE CONCENTRIC CIRCLES

"A" BARS ARE TO BE PLACED AT RIGHT ANGLES TO LONG CHORD.

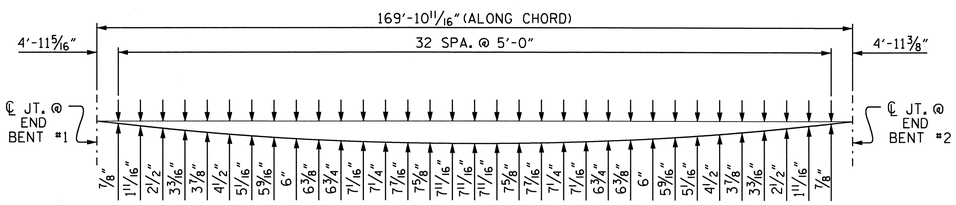

LEFT SIDE

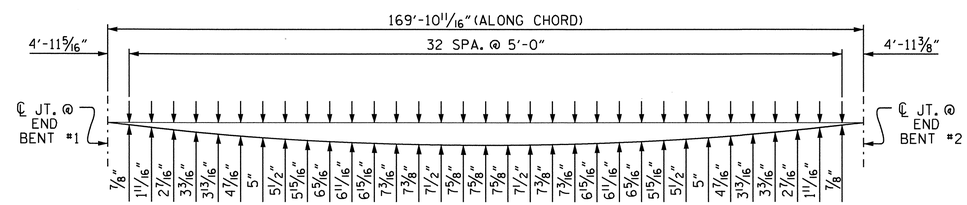

RIGHT SIDE
(EDGE OF CLOSURE POUR)

ARC OFFSETS

PROJECT NO. U-2550B
BURKE COUNTY
STATION: 48+87.35 -Y1-

SHEET 1 OF 2

STATE OF NORTH CAROLINA
DEPARTMENT OF TRANSPORTATION
RALEIGH

SUPERSTRUCTURE PLAN OF SPAN (STAGE I)

NORTH CAROLINA PROFESSIONAL SEAL 15825 ENGINEER BRUCE D. KLAPPENBACH
4-29-2011

REVISIONS						SHEET NO.
NO.	BY:	DATE:	NO.	BY:	DATE:	S-61
1			3			TOTAL SHEETS
2			4			93

DRAWN BY : M. G. SHAIKH DATE : 09-21-10
CHECKED BY : H. T. BARBOUR DATE : 01-24-11

25-APR-2011 17:08
P:\Structures\Bailey\Str2\mshaikh\Microstation\U-2550B_SD_S*.dgn
mshaikh

STR #2

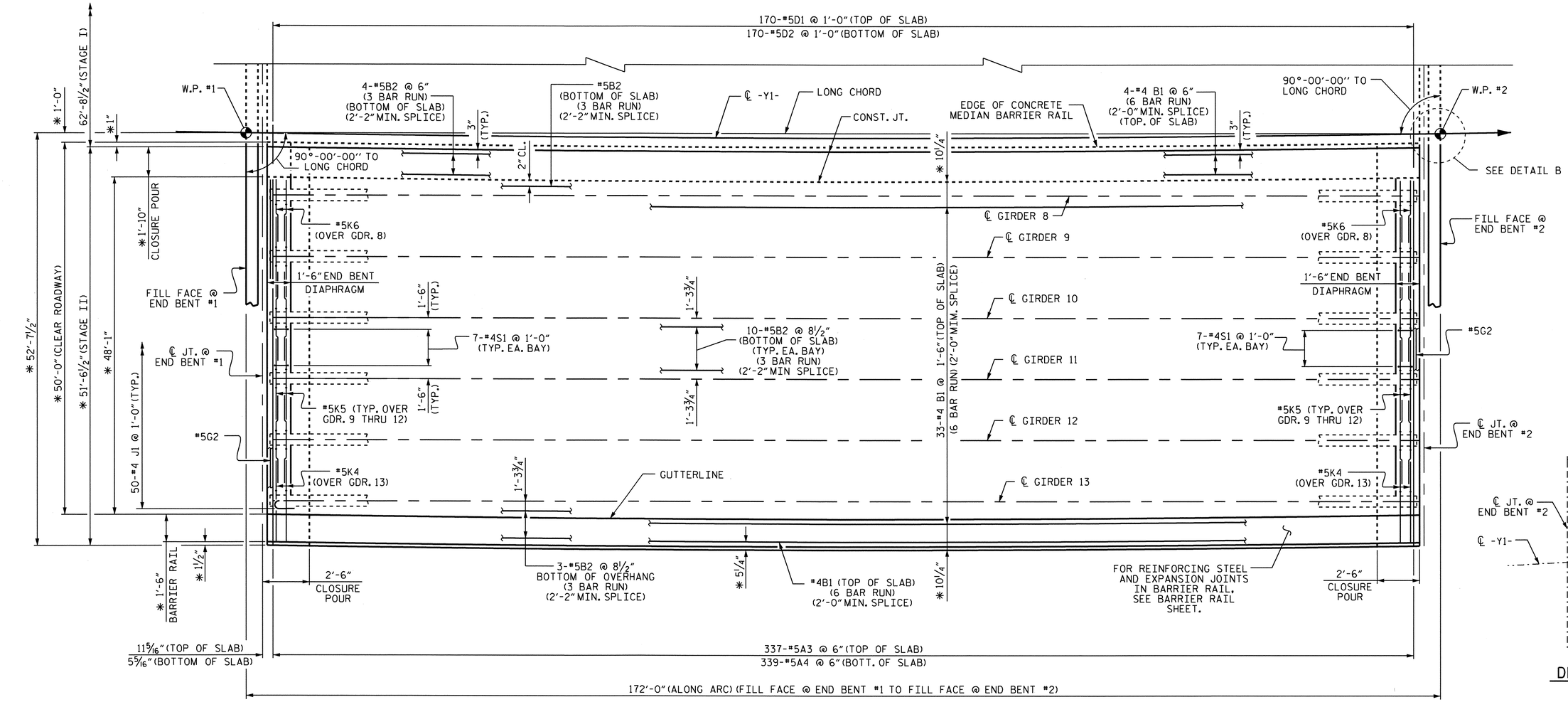

PLAN OF SPAN

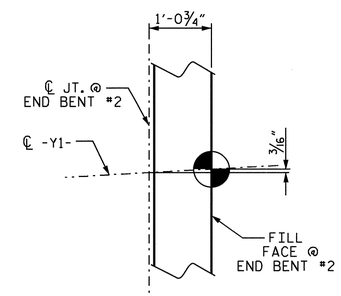

DETAIL B

✱ DIMENSIONS ARE TO CONCENTRIC CIRCLES WITH ℄ SURVEY. GIRDERS ARE ON THE CHORDS OF THESE CONCENTRIC CIRCLES

"A" BARS ARE TO BE PLACED AT RIGHT ANGLES TO LONG CHORD.

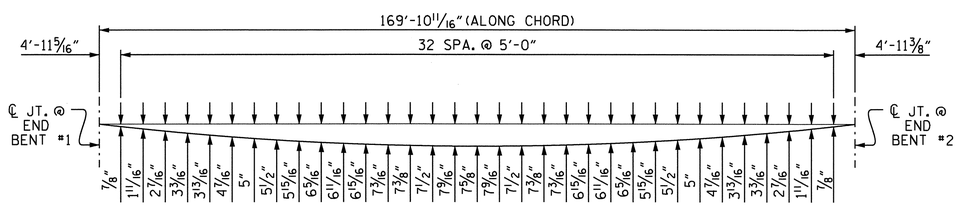

LEFT SIDE
(EDGE OF CLOSURE POUR)

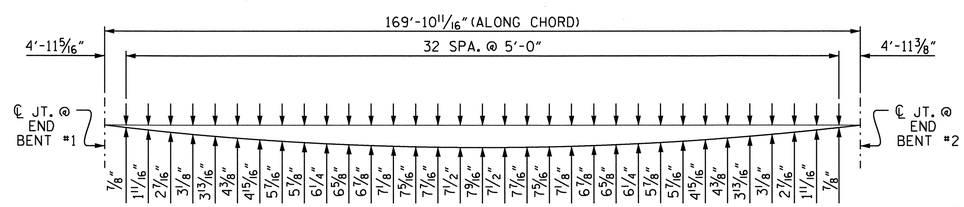

RIGHT SIDE

ARC OFFSETS

PROJECT NO. U-2550B
BURKE COUNTY
STATION: 48+87.35 -Y1-

SHEET 2 OF 2

STATE OF NORTH CAROLINA
DEPARTMENT OF TRANSPORTATION
RALEIGH

SUPERSTRUCTURE PLAN OF SPAN (STAGE II)

NORTH CAROLINA PROFESSIONAL SEAL 15825 ENGINEER D. KLAPPENBACH
BRYAN E. TOLLEY
4-29-2011

REVISIONS						SHEET NO.
NO.	BY:	DATE:	NO.	BY:	DATE:	S-62
1			3			TOTAL SHEETS
2			4			93

DRAWN BY : M. G. SHAIKH DATE : 09-21-10
CHECKED BY : H. T. BARBOUR DATE : 01-24-11

25-APR-2011 17:08
P:\Structures\Bailey\Str2\mshaikh\Microstation\U-2550B_SD_S*.dgn
mshaikh

STR #2

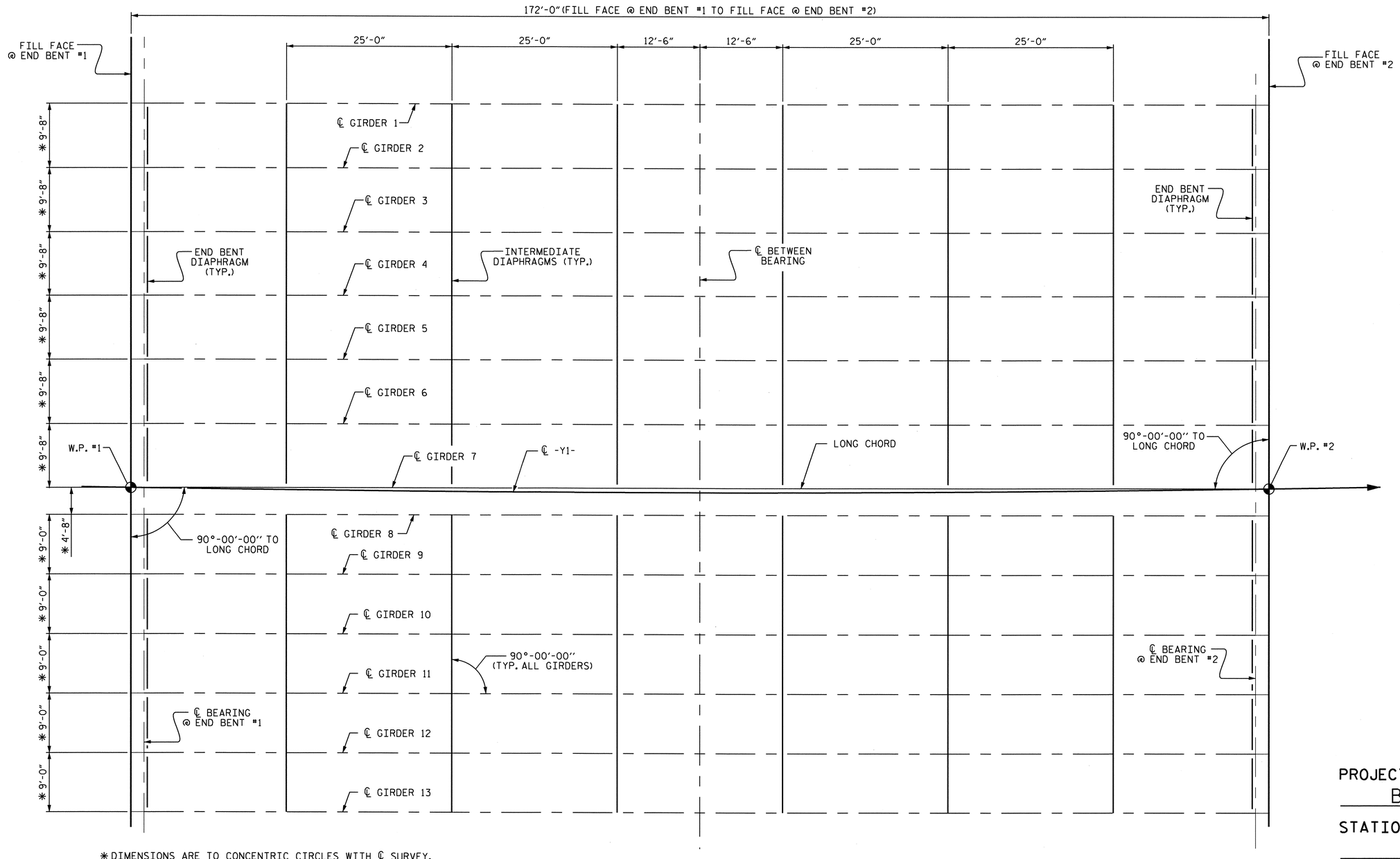

*DIMENSIONS ARE TO CONCENTRIC CIRCLES WITH ℄ SURVEY.
GIRDERS ARE ON THE CHORDS OF THESE CONCENTRIC CIRCLES.

FIX
P1,E9

PLAN

EXP.
P2,E10

PROJECT NO. U-2550B
BURKE COUNTY
STATION: 48+87.35 -Y1-

STATE OF NORTH CAROLINA
DEPARTMENT OF TRANSPORTATION
RALEIGH

SUPERSTRUCTURE FRAMING PLAN

NORTH CAROLINA PROFESSIONAL SEAL 19825 ENGINEER BRUCE O. KLAPPENBACH 4-29-2011

REVISIONS							SHEET NO.
NO.	BY:	DATE:	NO.	BY:	DATE:		S-63
1			3				TOTAL SHEETS
2			4				93

DRAWN BY : M. G. SHAIKH DATE : 09-21-10
CHECKED BY : H. T. BARBOUR DATE : 01-24-11

25-APR-2011 17:06
P:\Structures\Bailey\Str2\mshaikh\Microstation\U-2550B_SD_FP.dgn
mshaikh

STR #2

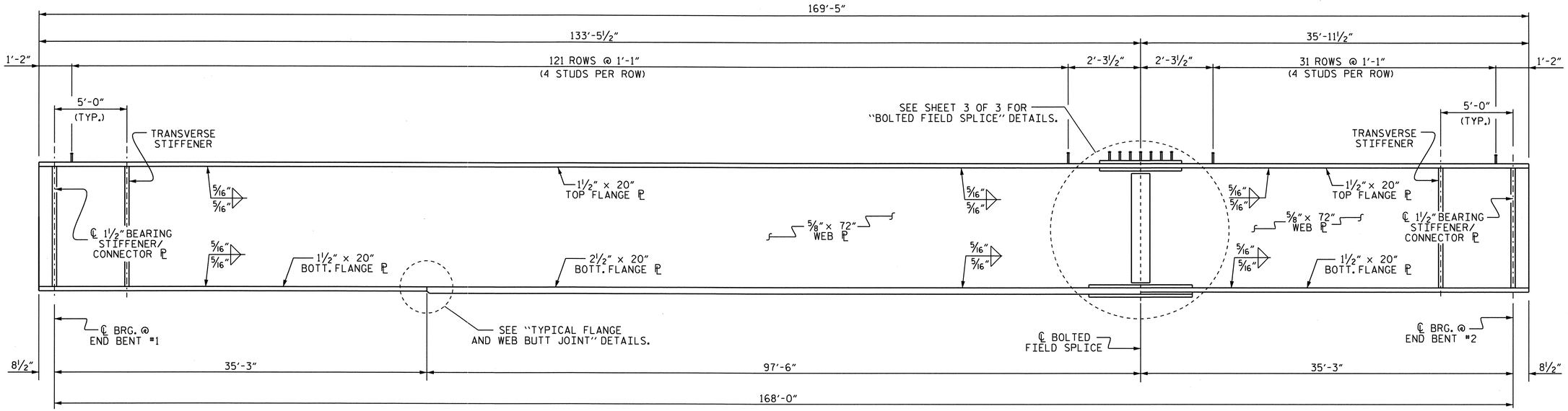

GIRDER ELEVATION

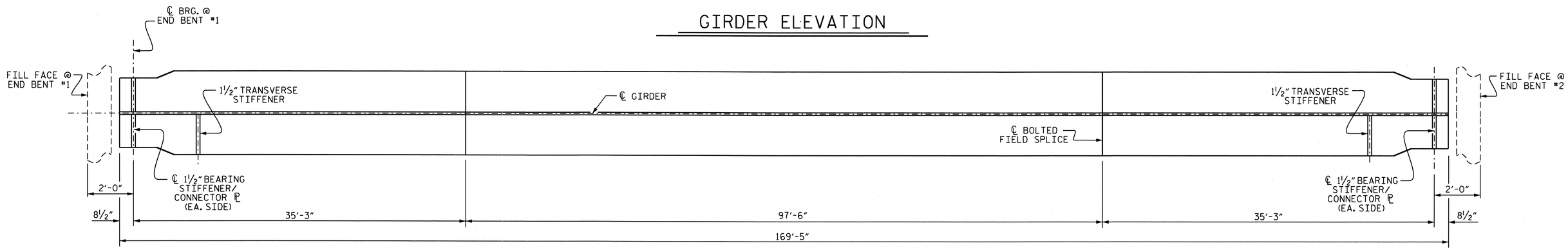

BOTTOM FLANGE DETAIL

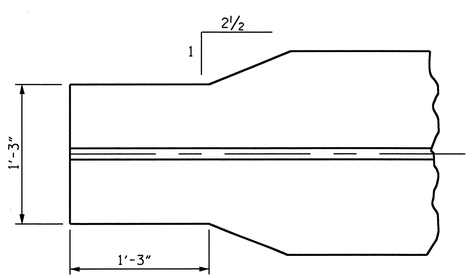

BOTTOM FLANGE DETAIL
@ END BENTS

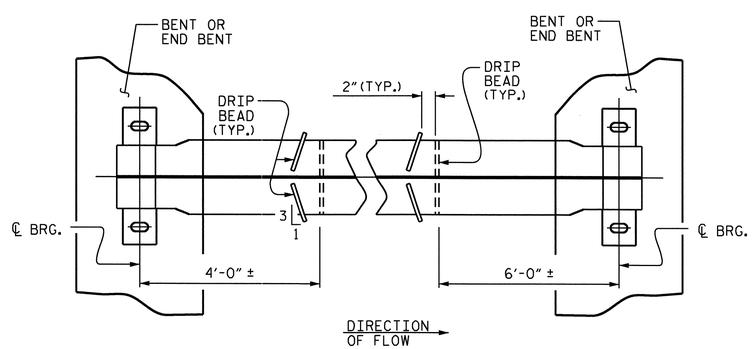

PART PLAN - BOTTOM FLANGE

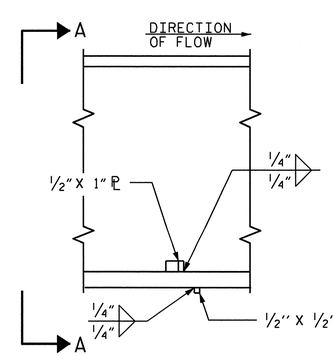

SECTION

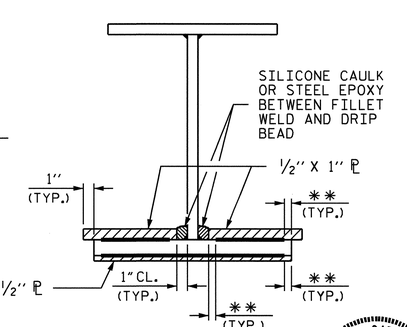

VIEW A-A

** ¼" ± ⅛"

DRIP BEAD DETAILS

PROJECT NO. U-2550B

BURKE COUNTY

STATION: 48+87.35 -Y1-

SHEET 1 OF 3

STATE OF NORTH CAROLINA
DEPARTMENT OF TRANSPORTATION
RALEIGH

SUPERSTURCTURE STRUCTURAL STEEL DETAILS

NORTH CAROLINA PROFESSIONAL SEAL 15825 ENGINEER BRADLEY D. KLAPPENBACH
4-29-2011

REVISIONS								SHEET NO.
NO.	BY:	DATE:	NO.	BY:	DATE:			S-64
1			3					TOTAL SHEETS
2			4					93

DRAWN BY : M. G. SHAIKH DATE : 09-23-10
CHECKED BY : H. T. BARBOUR DATE : 01-24-11

25-APR-2011 17:05
P:\Structures\Bailey\Str2\mshaikh\Microstation\U-2550B_SD_SS.dgn
mshaikh

STR #2

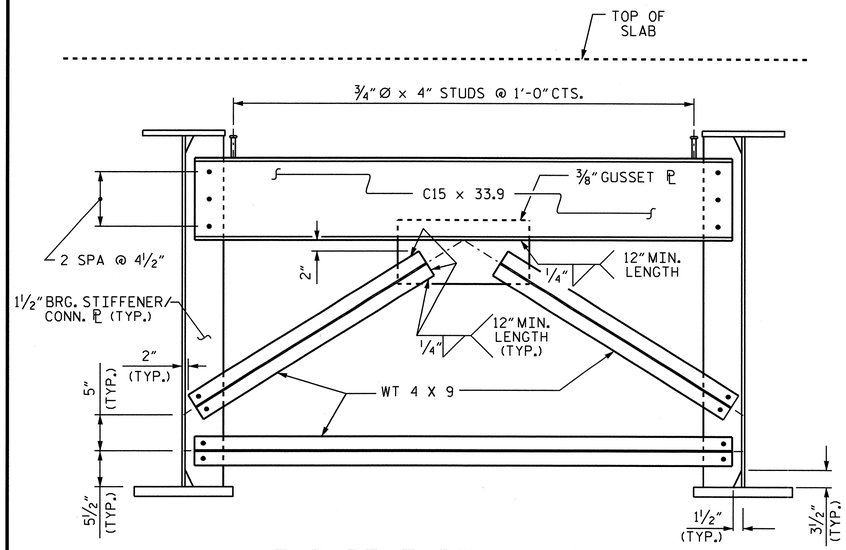

END BENT DIAPHRAGM

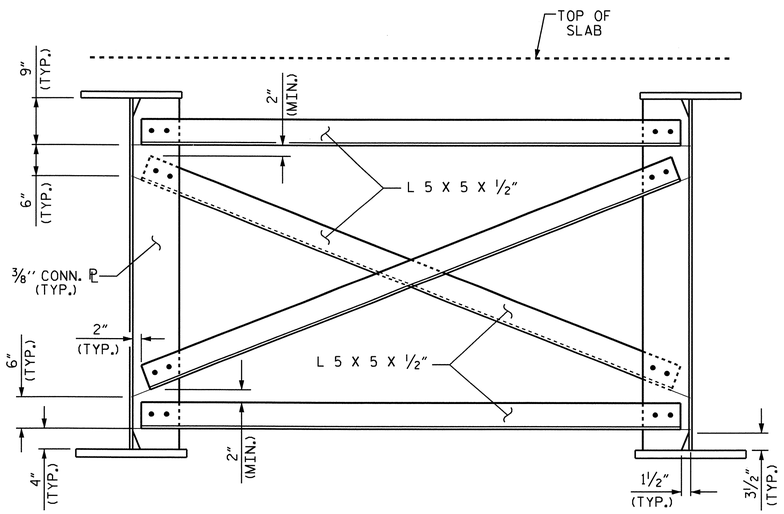

INTERMEDIATE DIAPHRAGM

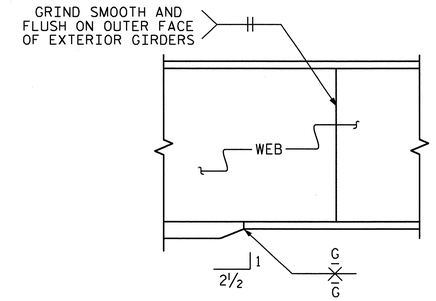

ELEVATION

TYPICAL FLANGE AND WEB BUTT JOINTS

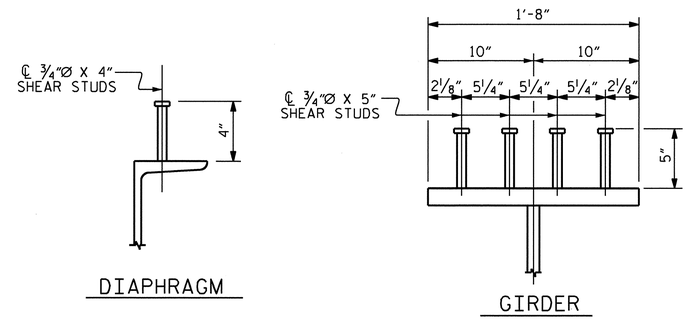

DIAPHRAGM

GIRDER

SHEAR STUD DETAILS

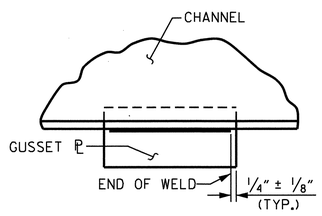

TYPICAL GUSSET PLATE CONNECTION

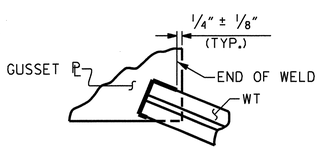

TYPICAL "TEE" TO GUSSET PLATE CONNECTION

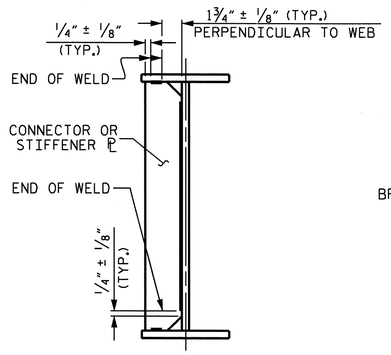

TYPICAL STIFFENER OR CONNECTOR PLATE CONNECTIONS

WELD TERMINATION DETAILS

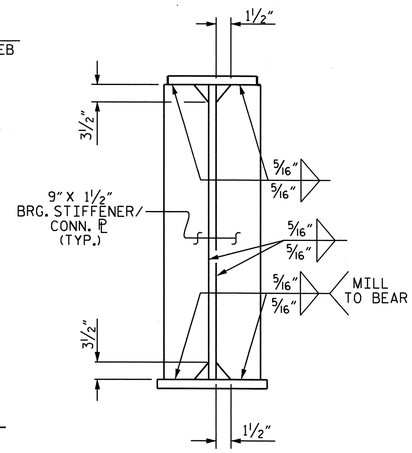

BEARING STIFFENER/ CONNECTOR PLATE

BEARING STIFFENER MAY REQUIRE COPING IF WIDER THAN BOTTOM FLANGE.

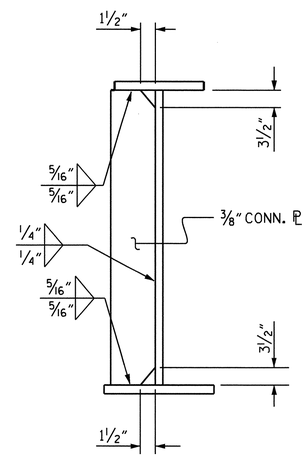

CONNECTOR PLATE

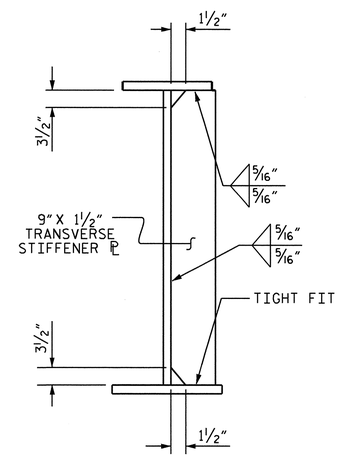

TRANSVERSE STIFFENER PLATE

PROJECT NO. U-2550B
BURKE COUNTY
STATION: 48+87.35 -Y1-

SHEET 2 OF 3

STATE OF NORTH CAROLINA
DEPARTMENT OF TRANSPORTATION
RALEIGH

SUPERSTURCTURE STRUCTURAL STEEL DETAILS

NORTH CAROLINA PROFESSIONAL SEAL 15825 ENGINEER BRIAN K. KLAPPENBACH
4-29-2011

REVISIONS						SHEET NO.
NO.	BY:	DATE:	NO.	BY:	DATE:	S-65
1			3			TOTAL SHEETS
2			4			93

DRAWN BY : M. G. SHAIKH DATE : 09-20-10
CHECKED BY : H. T. BARBOUR DATE : 01-24-11

26-APR-2011 11:44
R:\Structures\Bailey\Str2\mshaikh\Microstation\U-2550B_SD_SS.dgn
bklappenbach

STR #2

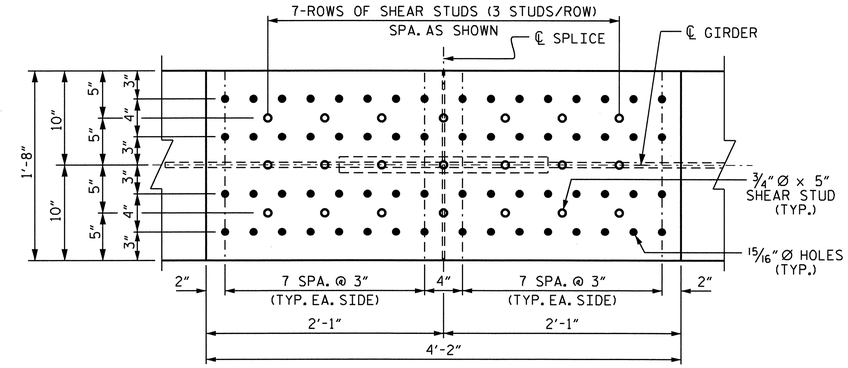

PLAN (TOP OF TOP FLANGE)

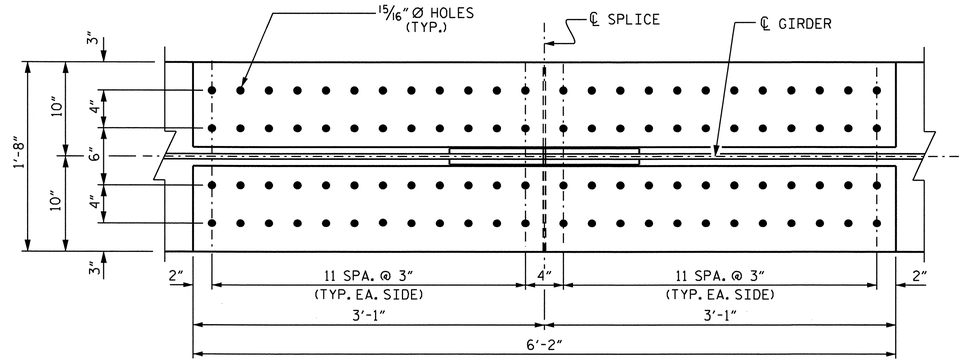

PLAN (TOP OF BOTTOM FLANGE)

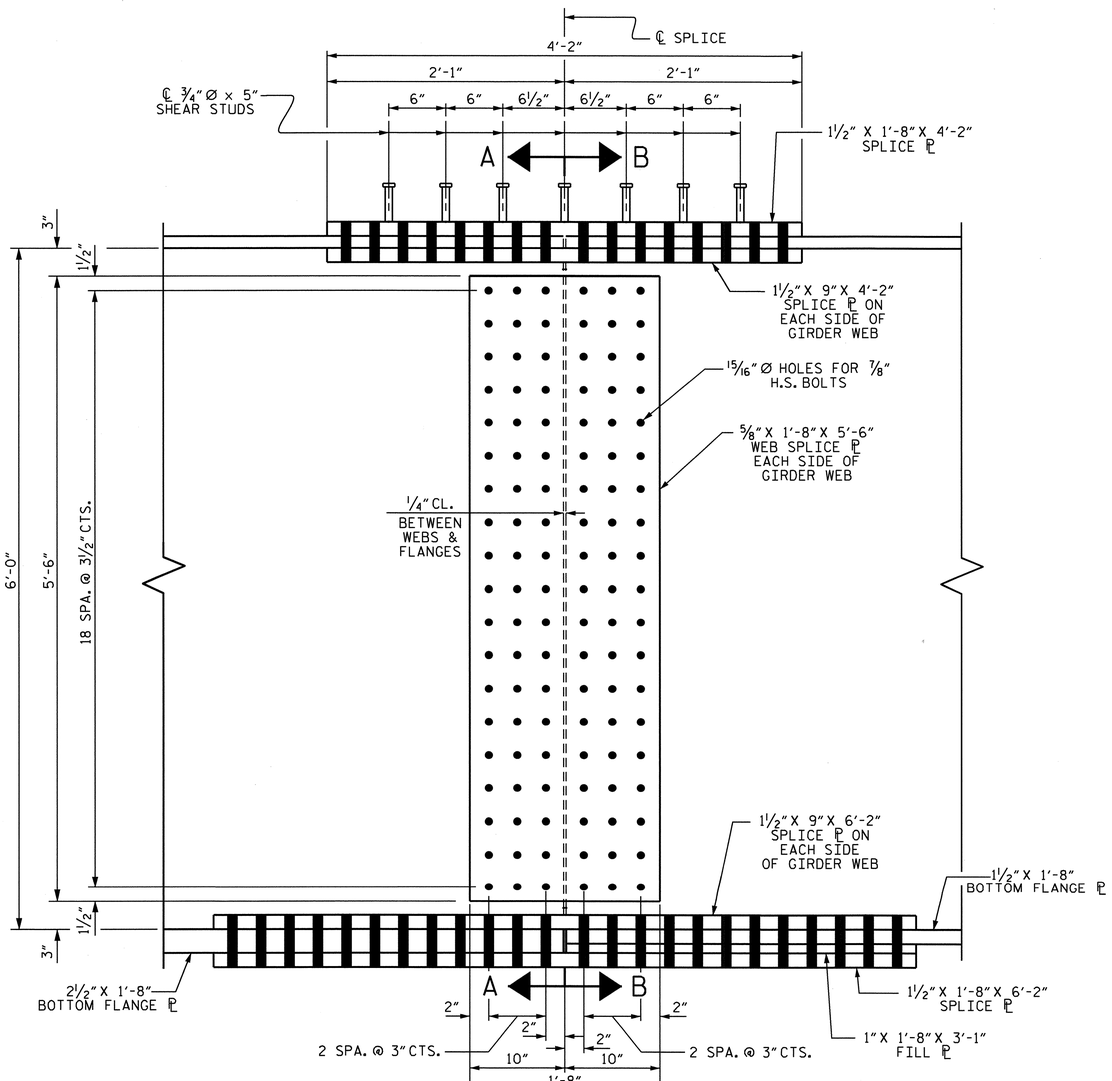

ELEVATION

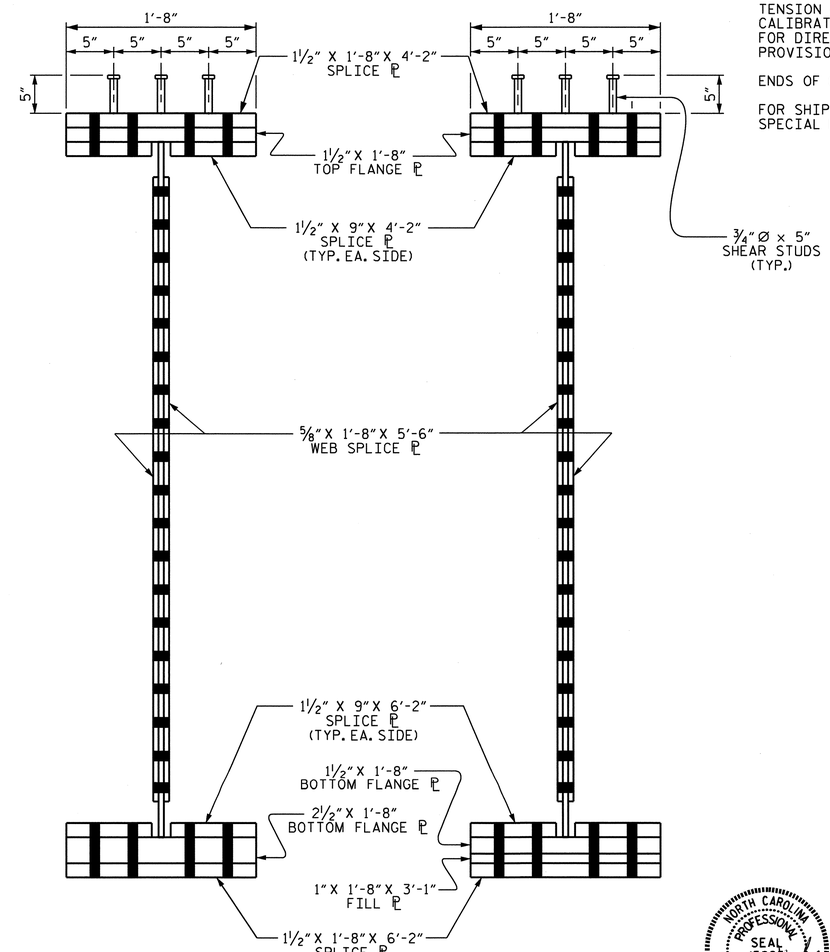

SECTION A-A

SECTION B-B

NOTES

ALL STRUCTURAL STEEL SHALL BE AASHTO M270 GRADE 50W AND PAINTED IN ACCORDANCE WITH SYSTEM 4 OF ARTICLE 442-7 OF THE STANDARD SPECIFICATIONS UNLESS OTHERWISE NOTED ON THE PLANS.

ALL DIMENSIONS SHOWN ARE HORIZONTAL OR VERTICAL, UNLESS OTHERWISE NOTED.

ALL FIELD CONNECTIONS TO BE 7/8" DIA. HIGH STRENGTH BOLTS UNLESS OTHERWISE NOTED. FOR HIGH STRENGTH BOLTS, SEE SPECIAL PROVISIONS.

BEARING STIFFENERS ARE TO BE PLACED NORMAL TO THE WEB OF THE GIRDER AND SHALL BE PLUMB.

A CHARPY V-NOTCH TEST IS REQUIRED FOR WEB PLATES, BOTTOM FLANGE PLATES, BOTTOM FLANGE SPLICE PLATES AND WEB SPLICE PLATES FOR ALL GIRDERS AND IN ACCORDANCE WITH ARTICLE 1072-9 OF THE STANDARD SPECIFICATIONS.

SHOP SPLICES ARE PERMITTED TO LIMIT THE MAXIMUM REQUIRED FLANGE PIECE LENGTHS TO 60 FEET AND WEB PIECE LENGTHS TO 45 FEET. PERMITTED FLANGE AND WEB SHOP SPLICES SHALL NOT BE LOCATED WITHIN 15 FEET OF MAXIMUM DEAD LOAD DEFLECTION. KEEP 2 FEET MINIMUM BETWEEN WEB AND FLANGE SHOP SPLICES. KEEP 6" MINIMUM BETWEEN CONNECTOR PLATE OR TRANSVERSE STIFFENER WELDS AND WEB OR FLANGE SHOP SPLICES.

STUDS ON GIRDERS MAY BE SHIFTED UP TO 1" IF NECESSARY TO CLEAR FLANGE SPLICE WELD.

TENSION ON THE AASHTO M164 BOLTS SHALL BE CALIBRATED USING DIRECT TENSION INDICATOR WASHERS. FOR DIRECT TENSION INDICATORS, SEE SPECIAL PROVISIONS.

ENDS OF GIRDERS SHALL BE PLUMB.

FOR SHIPPING STEEL STRUCTURAL MEMBERS, SEE SPECIAL PROVISIONS.

PROJECT NO. U-2550B
BURKE COUNTY
STATION: 48+87.35 -Y1-

SHEET 3 OF 3

STATE OF NORTH CAROLINA
DEPARTMENT OF TRANSPORTATION
RALEIGH

SUPERSTRUCTURE
STRUCTURE STEEL
BOLTED FIELD SPLICE

NORTH CAROLINA PROFESSIONAL SEAL 15825 ENGINEER BRUCE D. KLAPPENBACH
4-29-2011

REVISIONS							SHEET NO.
NO.	BY:	DATE:	NO.	BY:	DATE:		S-66
1			3				TOTAL SHEETS
2			4				93

DRAWN BY : M. C. SHAIKH DATE : 09-27-10
CHECKED BY : H. T. BARBOUR DATE : 01-24-11

25-APR-2011 17:05
P:\Structures\Bailey\Str2\mshaikh\Microstation\U-2550B_SD_SS.dgn
mshaikh

STR #2

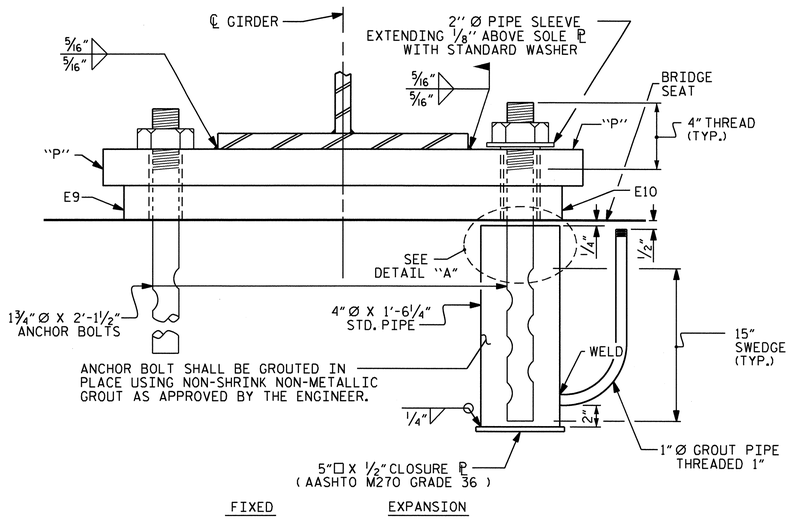

END VIEW

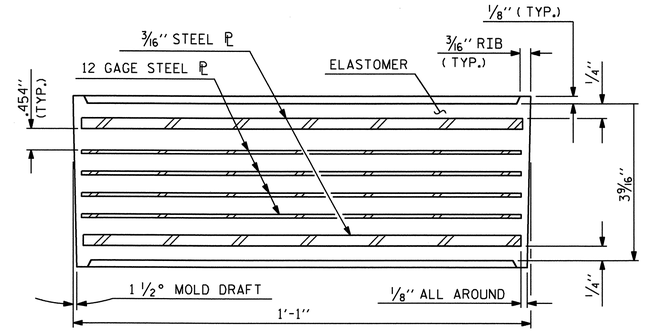

TYPICAL SECTION OF ELASTOMERIC BEARING

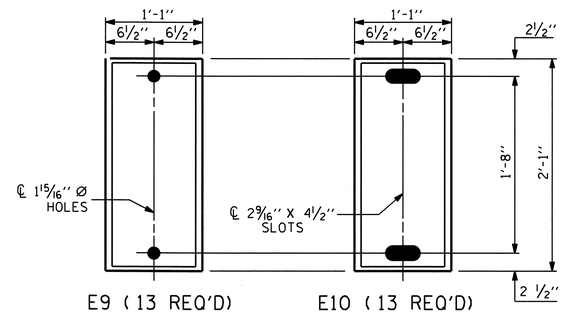

PLAN VIEW OF ELASTOMERIC BEARING

TYPE V

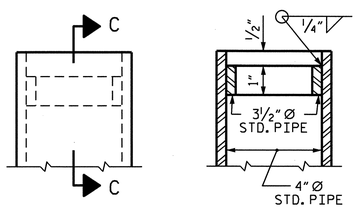

SECTION C-C

DETAIL A

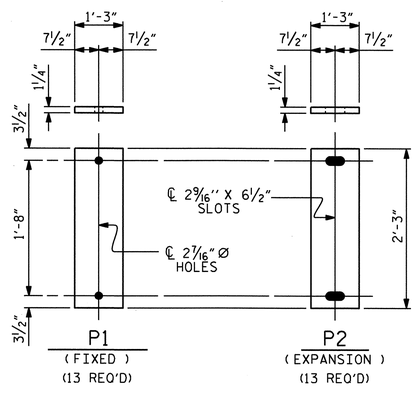

SOLE PLATE DETAILS ("P")

NOTES

AT ALL FIXED POINTS OF SUPPORT, NUTS FOR ANCHOR BOLTS ARE TO BE TIGHTENED FINGER TIGHT AND THEN BACKED OFF ½ TURN. THE THREAD OF THE NUT AND BOLT SHALL THEN BE BURRED WITH A SHARP POINTED TOOL.

THE 2" Ø PIPE SLEEVE SHALL BE CUT FROM SCHEDULE 40 PVC PLASTIC PIPE. THE PVC PLASTIC PIPE SHALL MEET THE REQUIREMENTS OF ASTM D1785.

THE PAYMENT FOR THE PIPE SLEEVES SHALL BE INCLUDED IN THE SEVERAL PAY ITEMS.

FOR AASHTO M270 GRADE 50W STRUCTURAL STEEL, SOLE PLATE SHALL BE AASHTO M270 GRADE 50W AND SHALL NOT BE GALVANIZED. ANCHOR BOLTS, NUTS AND WASHERS SHALL BE GALVANIZED IN ACCORDANCE WITH THE STANDARD SPECIFICATIONS.

ANCHOR BOLTS SHALL MEET THE REQUIREMENTS OF ASTM A449. NUTS SHALL MEET THE REQUIREMENTS OF AASHTO M291-DH OR AASHTO M292-2H. WASHERS SHALL MEET THE REQUIREMENTS OF AASHTO M293. SHOP DRAWINGS ARE NOT REQUIRED FOR ANCHOR BOLTS, NUTS AND WASHERS. SHOP INSPECTION IS REQUIRED.

WHEN FIELD WELDING THE SOLE PLATE TO THE GIRDER FLANGE, USE TEMPERATURE INDICATING WAX PENS, OR OTHER SUITABLE MEANS, TO ENSURE THAT THE TEMPERATURE OF THE SOLE PLATE DOES NOT EXCEED 300°F. TEMPERATURES ABOVE THIS MAY DAMAGE THE ELASTOMER.

ALL SURFACES OF BEARING PLATES SHALL BE SMOOTH AND STRAIGHT.

THE CLOSURE PLATE, GROUT PIPE AND STANDARD PIPE FOR THE EXPANSION ASSEMBLY NEED NOT BE GALVANIZED.

THE CONTRACTOR'S ATTENTION IS CALLED TO THE FOLLOWING PROCEDURES TO ACCOMODATE GIRDER TRANSLATION AND END ROTATION:

1. ONCE THE DECK HAS CURED, THE GIRDERS SHALL BE JACKED AND THE ANCHOR BOLTS, SOLE PLATE, AND ELASTOMERIC BEARING SLOTS SHALL BE CENTERED AS NEARLY AS PRACTICAL ABOUT THE BEARING STIFFENER. THIS OPERATION SHALL BE PERFORMED AT APPROXIMATELY 60° F.
2. AFTER CENTERING THE SLOTS AND ANCHOR BOLTS, THE SOLE PLATES SHALL BE FIELD WELDED TO THE GIRDER FLANGES AND ANCHOR BOLTS GROUTED.

   THE CONTRACTOR MAY PROPOSE ALTERNATE METHODS, PROVIDED DETAILS ARE SUBMITTED TO THE ENGINEER FOR REVIEW AND APPROVAL.

ELASTOMER IN ALL BEARINGS SHALL BE 60 DUROMETER HARDNESS.

—LOAD RATINGS—	
	MAX.D.L.+ L.L.
TYPE V	381 K

PROJECT NO. U-2550B
BURKE COUNTY
STATION: 48+87.35 -Y1-

STATE OF NORTH CAROLINA
DEPARTMENT OF TRANSPORTATION
RALEIGH

STANDARD

ELASTOMERIC BEARING DETAILS

(STEEL SUPERSTRUCTURE)

NORTH CAROLINA PROFESSIONAL SEAL 15825 ENGINEER D. K. LAPPENBUSCH
4-29-2011

REVISIONS							
NO.	BY:	DATE:	NO.	BY:	DATE:		
1			3				
2			4				

SHEET NO. S-67
TOTAL SHEETS 93

STR #2

STD. NO. EB2 (SHT 2b)

ASSEMBLED BY : M. G. SHAIKH		DATE : 09-27-10	
CHECKED BY : H. T. BARBOUR		DATE : 01-24-11	
DRAWN BY : EEM 10/95	REV. 10/17/00	RWW/LES	
CHECKED BY : PEK 10/95	REV. 7/10/01	LES/RDR	
	REV. 5/1/06	TLA/GM	

25-APR-2011 17:00
P:\Structures\Bailey\Str2\mshaikh\Microstation\U-2550B_SD_BG.dgn
mshaikh

DEAD LOAD DEFLECTION TABLE FOR GIRDERS

	STAGE I																				
	GIRDER 1																				
TWENTIETH POINTS	0	.05	.10	.15	.20	.25	.30	.35	.40	.45	.50	.55	.60	.65	.70	.75	.80	.85	.90	.95	0
DEFLECTION DUE TO WEIGHT OF GIRDER ↓	0.000	0.030	0.060	0.087	0.111	0.133	0.151	0.165	0.176	0.182	0.185	0.182	0.176	0.165	0.151	0.133	0.111	0.087	0.060	0.030	0.000
DEFLECTION DUE TO WEIGHT OF SLAB * ↓	0.000	0.066	0.152	0.233	0.305	0.368	0.422	0.464	0.495	0.514	0.521	0.514	0.495	0.464	0.422	0.368	0.305	0.233	0.152	0.066	0.000
DEFLECTION DUE TO WEIGHT OF RAIL ↓	0.000	0.006	0.012	0.017	0.022	0.027	0.030	0.033	0.035	0.036	0.037	0.036	0.035	0.033	0.030	0.027	0.022	0.017	0.012	0.006	0.000
TOTAL DEAD LOAD DEFLECTION ↓	0.000	0.102	0.224	0.337	0.438	0.528	0.603	0.662	0.706	0.732	0.743	0.732	0.706	0.662	0.603	0.528	0.438	0.337	0.224	0.102	0.000
VERTICAL CURVE ORDINATE	0.000	0.000	0.000	0.000	0.000	0.000	0.000	0.000	0.000	0.000	0.000	0.000	0.000	0.000	0.000	0.000	0.000	0.000	0.000	0.000	0.000
ORDINATE DUE TO SUPERELEVATION	0.000	-0.005	-0.009	-0.013	-0.016	-0.019	-0.021	-0.023	-0.024	-0.025	-0.025	-0.025	-0.024	-0.023	-0.021	-0.019	-0.016	-0.013	-0.009	-0.005	0.000
REQUIRED CAMBER	0	1 3/16"	2 9/16"	3 7/8"	5 1/16"	6 1/8"	7"	7 11/16"	8 3/16"	8 1/2"	8 5/8"	8 1/2"	8 3/16"	7 11/16"	7"	6 1/8"	5 1/16"	3 7/8"	2 9/16"	1 3/16"	0

* INCLUDES SLAB, BUILDUPS & STAY-IN-PLACE FORMS.
ALL VALUES ARE SHOWN IN FEET (DECIMAL FORM), EXCEPT "FINAL CAMBER", WHICH IS GIVEN IN INCHES (FRACTION FORM).
EFFECT OF CAMBER DISSIPATION IS NEGLIGIBLE.

DEAD LOAD DEFLECTION TABLE FOR GIRDERS

	STAGE I																				
	GIRDER 2																				
TWENTIETH POINTS	0	.05	.10	.15	.20	.25	.30	.35	.40	.45	.50	.55	.60	.65	.70	.75	.80	.85	.90	.95	0
DEFLECTION DUE TO WEIGHT OF GIRDER ↓	0.000	0.030	0.060	0.087	0.111	0.133	0.151	0.165	0.176	0.182	0.185	0.182	0.176	0.165	0.151	0.133	0.111	0.087	0.060	0.030	0.000
DEFLECTION DUE TO WEIGHT OF SLAB * ↓	0.000	0.053	0.140	0.221	0.293	0.357	0.410	0.453	0.485	0.504	0.510	0.504	0.485	0.453	0.410	0.357	0.293	0.221	0.140	0.053	0.000
DEFLECTION DUE TO WEIGHT OF RAIL ↓	0.000	0.006	0.012	0.017	0.022	0.026	0.029	0.032	0.034	0.035	0.036	0.035	0.034	0.032	0.029	0.026	0.022	0.017	0.012	0.006	0.000
TOTAL DEAD LOAD DEFLECTION ↓	0.000	0.089	0.212	0.325	0.426	0.516	0.590	0.650	0.695	0.721	0.731	0.721	0.695	0.650	0.590	0.516	0.426	0.325	0.212	0.089	0.000
VERTICAL CURVE ORDINATE	0.000	0.000	0.000	0.000	0.000	0.000	0.000	0.000	0.000	0.000	0.000	0.000	0.000	0.000	0.000	0.000	0.000	0.000	0.000	0.000	0.000
ORDINATE DUE TO SUPERELEVATION	0.000	-0.005	-0.009	-0.013	-0.016	-0.019	-0.021	-0.023	-0.024	-0.025	-0.025	-0.025	-0.024	-0.023	-0.021	-0.019	-0.016	-0.013	-0.009	-0.005	0.000
REQUIRED CAMBER	0	1"	2 7/16"	3 3/4'	4 15/16"	5 15/16"	6 13/16"	7 9/16"	8 1/16"	8 3/8"	8 1/2"	8 3/8"	8 1/16"	7 9/16"	6 13/16"	5 15/16"	4 15/16"	3 3/4'	2 7/16"	1"	0

* INCLUDES SLAB, BUILDUPS & STAY-IN-PLACE FORMS.
ALL VALUES ARE SHOWN IN FEET (DECIMAL FORM), EXCEPT "FINAL CAMBER", WHICH IS GIVEN IN INCHES (FRACTION FORM).
EFFECT OF CAMBER DISSIPATION IS NEGLIGIBLE.

DEAD LOAD DEFLECTION TABLE FOR GIRDERS

	STAGE I																				
	GIRDER 3																				
TWENTIETH POINTS	0	.05	.10	.15	.20	.25	.30	.35	.40	.45	.50	.55	.60	.65	.70	.75	.80	.85	.90	.95	0
DEFLECTION DUE TO WEIGHT OF GIRDER ↓	0.000	0.030	0.060	0.087	0.111	0.133	0.151	0.165	0.176	0.182	0.185	0.182	0.176	0.165	0.151	0.133	0.111	0.087	0.060	0.030	0.000
DEFLECTION DUE TO WEIGHT OF SLAB * ↓	0.000	0.040	0.127	0.209	0.282	0.345	0.399	0.443	0.474	0.493	0.500	0.493	0.474	0.443	0.399	0.345	0.282	0.209	0.129	0.040	0.000
DEFLECTION DUE TO WEIGHT OF RAIL ↓	0.000	0.006	0.012	0.017	0.022	0.026	0.029	0.032	0.034	0.035	0.036	0.035	0.034	0.032	0.029	0.026	0.022	0.017	0.012	0.006	0.000
TOTAL DEAD LOAD DEFLECTION ↓	0.000	0.076	0.199	0.313	0.415	0.504	0.579	0.640	0.684	0.710	0.721	0.710	0.684	0.640	0.579	0.504	0.415	0.313	0.199	0.076	0.000
VERTICAL CURVE ORDINATE	0.000	0.000	0.000	0.000	0.000	0.000	0.000	0.000	0.000	0.000	0.000	0.000	0.000	0.000	0.000	0.000	0.000	0.000	0.000	0.000	0.000
ORDINATE DUE TO SUPERELEVATION	0.000	-0.005	-0.009	-0.013	-0.016	-0.019	-0.021	-0.023	-0.024	-0.025	-0.025	-0.025	-0.024	-0.023	-0.021	-0.019	-0.016	-0.013	-0.009	-0.005	0.000
REQUIRED CAMBER	0	7/8"	2 1/4"	3 5/8"	4 13/16"	5 13/16"	6 11/16"	7 3/8"	7 15/16"	8 1/4"	8 3/8"	8 1/4"	7 15/16"	7 3/8"	6 11/16"	5 13/16"	4 13/16"	3 5/8"	2 1/4"	7/8"	0

* INCLUDES SLAB, BUILDUPS & STAY-IN-PLACE FORMS.
ALL VALUES ARE SHOWN IN FEET (DECIMAL FORM), EXCEPT "FINAL CAMBER", WHICH IS GIVEN IN INCHES (FRACTION FORM).
EFFECT OF CAMBER DISSIPATION IS NEGLIGIBLE.

PROJECT NO. U-2550B
BURKE COUNTY
STATION: 48+87.35 -Y1-

SHEET 1 OF 5

STATE OF NORTH CAROLINA
DEPARTMENT OF TRANSPORTATION
RALEIGH

DEAD LOAD DEFLECTION (STAGE II)

NORTH CAROLINA PROFESSIONAL SEAL 13825 ENGINEER BRUCE D. KLAPPENBACH
4-29-2011

REVISIONS						SHEET NO.
NO.	BY:	DATE:	NO.	BY:	DATE:	S-68
1			3			TOTAL SHEETS
2			4			93

STR #2

DRAWN BY : M. G. SHAIKH DATE : 09-29-10
CHECKED BY : H. T. BARBOUR DATE : 01-24-11

25-APR-2011 16:59
P:\Structures\Bailey\Str2\mshaikh\Microstation\U-2550B_SD_DL.dgn
mshaikh

DEAD LOAD DEFLECTION TABLE FOR GIRDERS

	STAGE I																				
	GIRDER 4																				
TWENTIETH POINTS	0	.05	.10	.15	.20	.25	.30	.35	.40	.45	.50	.55	.60	.65	.70	.75	.80	.85	.90	.95	0
DEFLECTION DUE TO WEIGHT OF GIRDER ↓	0.000	0.030	0.060	0.087	0.111	0.133	0.151	0.165	0.176	0.182	0.185	0.182	0.176	0.165	0.151	0.133	0.111	0.087	0.060	0.030	0.000
DEFLECTION DUE TO WEIGHT OF SLAB * ↓	0.000	0.027	0.115	0.196	0.270	0.334	0.388	0.432	0.463	0.483	0.489	0.483	0.463	0.432	0.388	0.334	0.270	0.196	0.115	0.027	0.000
DEFLECTION DUE TO WEIGHT OF RAIL ↓	0.000	0.000	0.000	0.000	0.000	0.000	0.000	0.000	0.000	0.000	0.000	0.000	0.000	0.000	0.000	0.000	0.000	0.000	0.000	0.000	0.000
TOTAL DEAD LOAD DEFLECTION ↓	0.000	0.057	0.175	0.283	0.381	0.467	0.539	0.597	0.639	0.665	0.674	0.665	0.639	0.597	0.539	0.467	0.381	0.283	0.175	0.057	0.000
VERTICAL CURVE ORDINATE	0.000	0.000	0.000	0.000	0.000	0.000	0.000	0.000	0.000	0.000	0.000	0.000	0.000	0.000	0.000	0.000	0.000	0.000	0.000	0.000	0.000
ORDINATE DUE TO SUPERELEVATION	0.000	-0.005	-0.009	-0.013	-0.016	-0.019	-0.021	-0.023	-0.024	-0.025	-0.025	-0.025	-0.024	-0.023	-0.021	-0.019	-0.016	-0.013	-0.009	-0.005	0.000
REQUIRED CAMBER	0	5/8"	2"	3 1/4"	4 3/8"	5 3/8"	6 1/4"	6 7/8"	7 3/8"	7 11/16"	7 13/16"	7 11/16"	7 3/8"	6 7/8"	6 1/4"	5 3/8"	4 3/8"	3 1/4"	2"	5/8"	0

* INCLUDES SLAB, BUILDUPS & STAY-IN-PLACE FORMS.
ALL VALUES ARE SHOWN IN FEET (DECIMAL FORM), EXCEPT "FINAL CAMBER", WHICH IS GIVEN IN INCHES (FRACTION FORM).
EFFECT OF CAMBER DISSIPATION IS NEGLIGIBLE.

DEAD LOAD DEFLECTION TABLE FOR GIRDERS

	STAGE I																				
	GIRDER 5																				
TWENTIETH POINTS	0	.05	.10	.15	.20	.25	.30	.35	.40	.45	.50	.55	.60	.65	.70	.75	.80	.85	.90	.95	0
DEFLECTION DUE TO WEIGHT OF GIRDER ↓	0.000	0.030	0.060	0.087	0.111	0.133	0.151	0.165	0.176	0.182	0.185	0.182	0.176	0.165	0.151	0.133	0.111	0.087	0.060	0.030	0.000
DEFLECTION DUE TO WEIGHT OF SLAB * ↓	0.000	0.014	0.102	0.184	0.258	0.322	0.377	0.421	0.453	0.472	0.478	0.472	0.453	0.421	0.377	0.322	0.258	0.184	0.102	0.014	0.000
DEFLECTION DUE TO WEIGHT OF RAIL ↓	0.000	0.000	0.000	0.000	0.000	0.000	0.000	0.000	0.000	0.000	0.000	0.000	0.000	0.000	0.000	0.000	0.000	0.000	0.000	0.000	0.000
TOTAL DEAD LOAD DEFLECTION ↓	0.000	0.044	0.162	0.271	0.369	0.455	0.528	0.586	0.629	0.654	0.663	0.654	0.629	0.586	0.528	0.455	0.369	0.271	0.162	0.044	0.000
VERTICAL CURVE ORDINATE	0.000	0.000	0.000	0.000	0.000	0.000	0.000	0.000	0.000	0.000	0.000	0.000	0.000	0.000	0.000	0.000	0.000	0.000	0.000	0.000	0.000
ORDINATE DUE TO SUPERELEVATION	0.000	-0.005	-0.009	-0.013	-0.016	-0.019	-0.021	-0.023	-0.024	-0.025	-0.025	-0.025	-0.024	-0.023	-0.021	-0.019	-0.016	-0.013	-0.009	-0.005	0.000
REQUIRED CAMBER	0	1/2"	1 13/16"	3 1/8"	4 1/4"	5 1/4"	6 1/16"	6 3/4"	7 1/4"	7 9/16"	7 11/16"	7 9/16"	7 1/4"	6 3/4"	6 1/16"	5 1/4"	4 1/4"	3 1/8"	1 13/16"	1/2"	0

* INCLUDES SLAB, BUILDUPS & STAY-IN-PLACE FORMS.
ALL VALUES ARE SHOWN IN FEET (DECIMAL FORM), EXCEPT "FINAL CAMBER", WHICH IS GIVEN IN INCHES (FRACTION FORM).
EFFECT OF CAMBER DISSIPATION IS NEGLIGIBLE.

PROJECT NO. U-2550B
BURKE COUNTY
STATION: 48+87.35 -Y1-

SHEET 2 OF 5

STATE OF NORTH CAROLINA
DEPARTMENT OF TRANSPORTATION
RALEIGH

DEAD LOAD DEFLECTION (STAGE II)

NORTH CAROLINA PROFESSIONAL SEAL 16825 ENGINEER BRUCE D. KLAPPENBACH
4-27-2011

REVISIONS						SHEET NO.
NO.	BY:	DATE:	NO.	BY:	DATE:	S-69
1			3			TOTAL SHEETS
2			4			93

STR #2

DRAWN BY : M. G. SHAIKH DATE : 09-29-10
CHECKED BY : H. T. BARBOUR DATE : 01-24-11

25-APR-2011 16:59
P:\Structures\Bailey\Str2\mshaikh\Microstation\U-2550B_SD_DL.dgn
mshaikh

DEAD LOAD DEFLECTION TABLE FOR GIRDERS

	STAGE I																				
	GIRDER 6																				
TWENTIETH POINTS	0	.05	.10	.15	.20	.25	.30	.35	.40	.45	.50	.55	.60	.65	.70	.75	.80	.85	.90	.95	0
DEFLECTION DUE TO WEIGHT OF GIRDER ↓	0.000	0.030	0.060	0.087	0.111	0.133	0.151	0.165	0.176	0.182	0.185	0.182	0.176	0.165	0.151	0.133	0.111	0.087	0.060	0.030	0.000
DEFLECTION DUE TO WEIGHT OF SLAB * ↓	0.000	0.001	0.089	0.172	0.246	0.311	0.366	0.410	0.442	0.461	0.468	0.461	0.442	0.410	0.366	0.311	0.246	0.172	0.089	0.001	0.000
DEFLECTION DUE TO WEIGHT OF RAIL ↓	0.000	0.006	0.012	0.017	0.022	0.026	0.030	0.033	0.035	0.036	0.036	0.036	0.035	0.033	0.030	0.026	0.022	0.017	0.012	0.006	0.000
TOTAL DEAD LOAD DEFLECTION ↓	0.000	0.037	0.161	0.276	0.379	0.470	0.547	0.608	0.653	0.679	0.689	0.679	0.653	0.608	0.547	0.470	0.379	0.276	0.161	0.037	0.000
VERTICAL CURVE ORDINATE	0.000	0.000	0.000	0.000	0.000	0.000	0.000	0.000	0.000	0.000	0.000	0.000	0.000	0.000	0.000	0.000	0.000	0.000	0.000	0.000	0.000
ORDINATE DUE TO SUPERELEVATION	0.000	0.002	0.005	0.006	0.008	0.009	0.011	0.011	0.012	0.012	0.012	0.012	0.012	0.011	0.011	0.009	0.008	0.006	0.005	0.002	0.000
REQUIRED CAMBER	0	1/2"	2"	3 3/8"	4 5/8"	5 3/4"	6 11/16"	7 7/16"	8"	8 5/16"	8 7/16"	8 5/16"	8"	7 7/16"	6 11/16"	5 3/4"	4 5/8"	3 3/8"	2"	1/2"	0

* INCLUDES SLAB, BUILDUPS & STAY-IN-PLACE FORMS.
ALL VALUES ARE SHOWN IN FEET (DECIMAL FORM), EXCEPT "FINAL CAMBER", WHICH IS GIVEN IN INCHES (FRACTION FORM).
EFFECT OF CAMBER DISSIPATION IS NEGLIGIBLE.

DEAD LOAD DEFLECTION TABLE FOR GIRDERS

	STAGE I																				
	GIRDER 7																				
TWENTIETH POINTS	0	.05	.10	.15	.20	.25	.30	.35	.40	.45	.50	.55	.60	.65	.70	.75	.80	.85	.90	.95	0
DEFLECTION DUE TO WEIGHT OF GIRDER ↓	0.000	0.030	0.060	0.087	0.111	0.133	0.151	0.165	0.176	0.182	0.185	0.182	0.176	0.165	0.151	0.133	0.111	0.087	0.060	0.030	0.000
DEFLECTION DUE TO WEIGHT OF SLAB * ↓	0.000	-0.012	0.077	0.160	0.235	0.300	0.355	0.399	0.431	0.451	0.457	0.451	0.431	0.399	0.355	0.300	0.235	0.160	0.077	-0.012	0.000
DEFLECTION DUE TO WEIGHT OF RAIL ↓	0.000	0.012	0.024	0.034	0.044	0.052	0.059	0.065	0.069	0.072	0.073	0.072	0.069	0.065	0.059	0.052	0.044	0.034	0.024	0.012	0.000
TOTAL DEAD LOAD DEFLECTION ↓	0.000	0.030	0.161	0.281	0.390	0.485	0.565	0.629	0.676	0.705	0.715	0.705	0.676	0.629	0.565	0.485	0.390	0.281	0.161	0.030	0.000
VERTICAL CURVE ORDINATE	0.000	0.000	0.000	0.000	0.000	0.000	0.000	0.000	0.000	0.000	0.000	0.000	0.000	0.000	0.000	0.000	0.000	0.000	0.000	0.000	0.000
ORDINATE DUE TO SUPERELEVATION	0.000	0.002	0.005	0.006	0.008	0.009	0.010	0.011	0.012	0.012	0.012	0.012	0.012	0.011	0.010	0.009	0.008	0.006	0.005	0.002	0.000
REQUIRED CAMBER	0	3/8"	2"	3 7/16"	4 3/4"	5 15/16"	6 7/8"	7 11/16"	8 1/4"	8 5/8"	8 3/4"	8 5/8"	8 1/4"	7 11/16"	6 7/8"	5 15/16"	4 3/4"	3 7/16"	2"	3/8"	0

* INCLUDES SLAB, BUILDUPS & STAY-IN-PLACE FORMS.
ALL VALUES ARE SHOWN IN FEET (DECIMAL FORM), EXCEPT "FINAL CAMBER", WHICH IS GIVEN IN INCHES (FRACTION FORM).
EFFECT OF CAMBER DISSIPATION IS NEGLIGIBLE.

PROJECT NO. U-2550B
BURKE COUNTY
STATION: 48+87.35 -Y1-

SHEET 3 OF 5

STATE OF NORTH CAROLINA
DEPARTMENT OF TRANSPORTATION
RALEIGH

DEAD LOAD DEFLECTION (STAGE II)

NORTH CAROLINA PROFESSIONAL SEAL 15825 ENGINEER BRUCE D. KLAPPENBACH
4-29-2011

REVISIONS						SHEET NO.
NO.	BY:	DATE:	NO.	BY:	DATE:	S-70
1			3			TOTAL SHEETS
2			4			93

STR #2

DRAWN BY : M. G. SHAIKH DATE : 09-29-10
CHECKED BY : H. T. BARBOUR DATE : 01-24-11

25-APR-2011 16:58
P:\Structures\Bailey\Str2\mshaikh\Microstation\U-2550B_SD_DL.dgn
mshaikh

DEAD LOAD DEFLECTION TABLE FOR GIRDERS

	STAGE II																				
	GIRDER 8																				
TWENTIETH POINTS	0	.05	.10	.15	.20	.25	.30	.35	.40	.45	.50	.55	.60	.65	.70	.75	.80	.85	.90	.95	0
DEFLECTION DUE TO WEIGHT OF GIRDER ↓	0.000	0.030	0.060	0.087	0.111	0.133	0.151	0.165	0.176	0.182	0.185	0.182	0.176	0.165	0.151	0.133	0.111	0.087	0.060	0.030	0.000
DEFLECTION DUE TO WEIGHT OF SLAB * ↓	0.000	-0.020	0.063	0.139	0.209	0.269	0.320	0.361	0.391	0.409	0.415	0.409	0.391	0.361	0.320	0.269	0.209	0.139	0.063	-0.020	0.000
DEFLECTION DUE TO WEIGHT OF RAIL ↓	0.000	0.007	0.013	0.019	0.024	0.029	0.033	0.036	0.038	0.039	0.040	0.039	0.038	0.036	0.033	0.029	0.024	0.019	0.013	0.007	0.000
TOTAL DEAD LOAD DEFLECTION ↓	0.000	0.017	0.136	0.245	0.344	0.431	0.504	0.562	0.605	0.630	0.640	0.630	0.605	0.562	0.504	0.431	0.344	0.245	0.136	0.017	0.000
VERTICAL CURVE ORDINATE	0.000	0.000	0.000	0.000	0.000	0.000	0.000	0.000	0.000	0.000	0.000	0.000	0.000	0.000	0.000	0.000	0.000	0.000	0.000	0.000	0.000
ORDINATE DUE TO SUPERELEVATION	0.000	-0.005	-0.009	-0.013	-0.016	-0.019	-0.021	-0.023	-0.024	-0.025	-0.025	-0.025	-0.024	-0.023	-0.021	-0.019	-0.016	-0.013	-0.009	-0.005	0.000
REQUIRED CAMBER	0	1/8"	1 1/2"	2 13/16"	3 15/16"	4 15/16"	5 13/16"	6 7/16"	7"	7 1/4"	7 3/8"	7 1/4"	7"	6 7/16"	5 13/16"	4 15/16"	3 15/16"	2 13/16"	1 1/2"	1/8"	0

* INCLUDES SLAB, BUILDUPS & STAY-IN-PLACE FORMS.
ALL VALUES ARE SHOWN IN FEET (DECIMAL FORM), EXCEPT " FINAL CAMBER ", WHICH IS GIVEN IN INCHES (FRACTION FORM).
EFFECT OF CAMBER DISSIPATION IS NEGLIGIBLE.

DEAD LOAD DEFLECTION TABLE FOR GIRDERS

	STAGE II																				
	GIRDER 9																				
TWENTIETH POINTS	0	.05	.10	.15	.20	.25	.30	.35	.40	.45	.50	.55	.60	.65	.70	.75	.80	.85	.90	.95	0
DEFLECTION DUE TO WEIGHT OF GIRDER ↓	0.000	0.030	0.060	0.087	0.111	0.133	0.151	0.165	0.176	0.182	0.185	0.182	0.176	0.165	0.151	0.133	0.111	0.087	0.060	0.030	0.000
DEFLECTION DUE TO WEIGHT OF SLAB * ↓	0.000	-0.002	0.080	0.156	0.225	0.285	0.336	0.377	0.407	0.424	0.430	0.424	0.407	0.377	0.336	0.285	0.225	0.156	0.080	-0.002	0.000
DEFLECTION DUE TO WEIGHT OF RAIL ↓	0.000	0.000	0.000	0.000	0.000	0.000	0.000	0.000	0.000	0.000	0.000	0.000	0.000	0.000	0.000	0.000	0.000	0.000	0.000	0.000	0.000
TOTAL DEAD LOAD DEFLECTION ↓	0.000	0.028	0.140	0.243	0.336	0.418	0.487	0.542	0.583	0.606	0.615	0.606	0.583	0.542	0.487	0.418	0.336	0.243	0.140	0.028	0.000
VERTICAL CURVE ORDINATE	0.000	0.000	0.000	0.000	0.000	0.000	0.000	0.000	0.000	0.000	0.000	0.000	0.000	0.000	0.000	0.000	0.000	0.000	0.000	0.000	0.000
ORDINATE DUE TO SUPERELEVATION	0.000	-0.005	-0.009	-0.013	-0.016	-0.019	-0.021	-0.023	-0.024	-0.025	-0.025	-0.025	-0.024	-0.023	-0.021	-0.019	-0.016	-0.013	-0.009	-0.005	0.000
REQUIRED CAMBER	0	1/4"	1 9/16"	2 3/4"	3 7/8"	4 13/16"	5 5/8"	6 1/4"	6 11/16"	7"	7 1/16"	7"	6 11/16'	6 1/4"	5 5/8"	4 13/16"	3 7/8"	2 3/4"	1 9/16"	1/4"	0

* INCLUDES SLAB, BUILDUPS & STAY-IN-PLACE FORMS.
ALL VALUES ARE SHOWN IN FEET (DECIMAL FORM), EXCEPT " FINAL CAMBER ", WHICH IS GIVEN IN INCHES (FRACTION FORM).
EFFECT OF CAMBER DISSIPATION IS NEGLIGIBLE.

DEAD LOAD DEFLECTION TABLE FOR GIRDERS

	STAGE II																				
	GIRDER 10																				
TWENTIETH POINTS	0	.05	.10	.15	.20	.25	.30	.35	.40	.45	.50	.55	.60	.65	.70	.75	.80	.85	.90	.95	0
DEFLECTION DUE TO WEIGHT OF GIRDER ↓	0.000	0.030	0.060	0.087	0.111	0.133	0.151	0.165	0.176	0.182	0.185	0.182	0.176	0.165	0.151	0.133	0.111	0.087	0.060	0.030	0.000
DEFLECTION DUE TO WEIGHT OF SLAB * ↓	0.000	0.016	0.098	0.174	0.242	0.302	0.352	0.393	0.423	0.440	0.446	0.440	0.423	0.393	0.352	0.302	0.242	0.174	0.098	0.016	0.000
DEFLECTION DUE TO WEIGHT OF RAIL ↓	0.000	0.000	0.000	0.000	0.000	0.000	0.000	0.000	0.000	0.000	0.000	0.000	0.000	0.000	0.000	0.000	0.000	0.000	0.000	0.000	0.000
TOTAL DEAD LOAD DEFLECTION ↓	0.000	0.046	0.158	0.261	0.353	0.435	0.503	0.558	0.599	0.622	0.631	0.622	0.599	0.558	0.503	0.435	0.353	0.261	0.158	0.046	0.000
VERTICAL CURVE ORDINATE	0.000	0.000	0.000	0.000	0.000	0.000	0.000	0.000	0.000	0.000	0.000	0.000	0.000	0.000	0.000	0.000	0.000	0.000	0.000	0.000	0.000
ORDINATE DUE TO SUPERELEVATION	0.000	-0.005	-0.009	-0.013	-0.016	-0.019	-0.021	-0.023	-0.024	-0.025	-0.025	-0.025	-0.024	-0.023	-0.021	-0.019	-0.016	-0.013	-0.009	-0.005	0.000
REQUIRED CAMBER	0	1/2"	1 13/16"	3"	4 1/16"	5"	5 13/16"	6 7/16"	6 7/8"	7 3/16"	7 1/4"	7 3/16"	6 7/8"	6 7/16"	5 13/16"	5"	4 1/16"	3"	1 13/16"	1/2"	0

* INCLUDES SLAB, BUILDUPS & STAY-IN-PLACE FORMS.
ALL VALUES ARE SHOWN IN FEET (DECIMAL FORM), EXCEPT " FINAL CAMBER ", WHICH IS GIVEN IN INCHES (FRACTION FORM).
EFFECT OF CAMBER DISSIPATION IS NEGLIGIBLE.

PROJECT NO. U-2550B
BURKE COUNTY
STATION: 48+87.35 -Y1-

SHEET 4 OF 5

STATE OF NORTH CAROLINA
DEPARTMENT OF TRANSPORTATION
RALEIGH

DEAD LOAD DEFLECTION (STAGE II)

NORTH CAROLINA PROFESSIONAL SEAL 15825 ENGINEER BRUCE D. KLAPPENBACH
4-29-2011

REVISIONS						SHEET NO.
NO.	BY:	DATE:	NO.	BY:	DATE:	S-71
1			3			TOTAL SHEETS
2			4			93

STR #2

DRAWN BY : M. G. SHAIKH DATE : 09-29-10
CHECKED BY : H. T. BARBOUR DATE : 01-24-11

25-APR-2011 16:58
P:\Structures\Bailey\Str2\mshaikh\Microstation\U-2550B_SD_DL.dgn
mshaikh

DEAD LOAD DEFLECTION TABLE FOR GIRDERS

	STAGE II																				
	GIRDER 11																				
TWENTIETH POINTS	0	.05	.10	.15	.20	.25	.30	.35	.40	.45	.50	.55	.60	.65	.70	.75	.80	.85	.90	.95	0
DEFLECTION DUE TO WEIGHT OF GIRDER ↓	0.000	0.030	0.060	0.087	0.111	0.133	0.151	0.165	0.176	0.182	0.185	0.182	0.176	0.165	0.151	0.133	0.111	0.087	0.060	0.030	0.000
DEFLECTION DUE TO WEIGHT OF SLAB * ↓	0.000	0.034	0.115	0.191	0.259	0.318	0.369	0.409	0.438	0.459	0.462	0.459	0.438	0.409	0.369	0.318	0.259	0.191	0.115	0.034	0.000
DEFLECTION DUE TO WEIGHT OF RAIL ↓	0.000	0.006	0.012	0.017	0.022	0.026	0.030	0.032	0.035	0.036	0.036	0.036	0.035	0.032	0.030	0.026	0.022	0.017	0.012	0.006	0.000
TOTAL DEAD LOAD DEFLECTION ↓	0.000	0.070	0.187	0.295	0.392	0.477	0.550	0.606	0.649	0.674	0.683	0.674	0.649	0.606	0.550	0.477	0.392	0.295	0.187	0.070	0.000
VERTICAL CURVE ORDINATE	0.000	0.000	0.000	0.000	0.000	0.000	0.000	0.000	0.000	0.000	0.000	0.000	0.000	0.000	0.000	0.000	0.000	0.000	0.000	0.000	0.000
ORDINATE DUE TO SUPERELEVATION	0.000	-0.005	-0.009	-0.013	-0.016	-0.019	-0.021	-0.023	-0.024	-0.025	-0.025	-0.025	-0.024	-0.023	-0.021	-0.019	-0.016	-0.013	-0.009	-0.005	0.000
REQUIRED CAMBER	0	13/16"	2 1/8"	3 3/8"	4 1/2"	5 1/2"	6 3/8"	7"	7 1/2"	7 13/16"	7 7/8"	7 13/16"	7 1/2"	7"	6 3/8"	5 1/2"	4 1/2"	3 3/8"	2 1/8"	13/16"	0

* INCLUDES SLAB, BUILDUPS & STAY-IN-PLACE FORMS.
ALL VALUES ARE SHOWN IN FEET (DECIMAL FORM), EXCEPT " FINAL CAMBER ", WHICH IS GIVEN IN INCHES (FRACTION FORM).
EFFECT OF CAMBER DISSIPATION IS NEGLIGIBLE.

DEAD LOAD DEFLECTION TABLE FOR GIRDERS

	STAGE II																				
	GIRDER 12																				
TWENTIETH POINTS	0	.05	.10	.15	.20	.25	.30	.35	.40	.45	.50	.55	.60	.65	.70	.75	.80	.85	.90	.95	0
DEFLECTION DUE TO WEIGHT OF GIRDER ↓	0.000	0.030	0.060	0.087	0.111	0.133	0.151	0.165	0.176	0.182	0.185	0.182	0.176	0.165	0.151	0.133	0.111	0.087	0.060	0.030	0.000
DEFLECTION DUE TO WEIGHT OF SLAB * ↓	0.000	0.052	0.133	0.208	0.276	0.335	0.385	0.425	0.454	0.472	0.478	0.472	0.454	0.425	0.385	0.335	0.276	0.208	0.133	0.052	0.000
DEFLECTION DUE TO WEIGHT OF RAIL ↓	0.000	0.006	0.012	0.017	0.022	0.026	0.030	0.032	0.035	0.036	0.036	0.036	0.035	0.032	0.030	0.026	0.022	0.017	0.012	0.006	0.000
TOTAL DEAD LOAD DEFLECTION ↓	0.000	0.088	0.205	0.312	0.409	0.494	0.566	0.622	0.665	0.690	0.699	0.690	0.665	0.622	0.566	0.494	0.409	0.312	0.205	0.088	0.000
VERTICAL CURVE ORDINATE	0.000	0.000	0.000	0.000	0.000	0.000	0.000	0.000	0.000	0.000	0.000	0.000	0.000	0.000	0.000	0.000	0.000	0.000	0.000	0.000	0.000
ORDINATE DUE TO SUPERELEVATION	0.000	-0.005	-0.009	-0.013	-0.016	-0.019	-0.021	-0.022	-0.024	-0.024	-0.025	-0.024	-0.024	-0.022	-0.021	-0.019	-0.016	-0.013	-0.009	-0.005	0.000
REQUIRED CAMBER	0	1"	2 3/8"	3 9/16"	4 11/16"	5 11/16'	6 9/16"	7 3/16"	7 11/16"	8"	8 1/16"	8"	7 11/16"	7 3/16"	6 9/16"	5 11/16'	4 11/16"	3 9/16"	2 3/8"	1"	0

* INCLUDES SLAB, BUILDUPS & STAY-IN-PLACE FORMS.
ALL VALUES ARE SHOWN IN FEET (DECIMAL FORM), EXCEPT " FINAL CAMBER ", WHICH IS GIVEN IN INCHES (FRACTION FORM).
EFFECT OF CAMBER DISSIPATION IS NEGLIGIBLE.

DEAD LOAD DEFLECTION TABLE FOR GIRDERS

	STAGE II																				
	GIRDER 13																				
TWENTIETH POINTS	0	.05	.10	.15	.20	.25	.30	.35	.40	.45	.50	.55	.60	.65	.70	.75	.80	.85	.90	.95	0
DEFLECTION DUE TO WEIGHT OF GIRDER ↓	0.000	0.030	0.060	0.087	0.111	0.133	0.151	0.165	0.176	0.182	0.185	0.182	0.176	0.165	0.151	0.133	0.111	0.087	0.060	0.030	0.000
DEFLECTION DUE TO WEIGHT OF SLAB * ↓	0.000	0.070	0.150	0.225	0.293	0.351	0.401	0.441	0.470	0.488	0.494	0.488	0.470	0.441	0.401	0.351	0.293	0.225	0.150	0.070	0.000
DEFLECTION DUE TO WEIGHT OF RAIL ↓	0.000	0.006	0.012	0.018	0.023	0.027	0.030	0.033	0.035	0.037	0.037	0.037	0.035	0.033	0.030	0.027	0.023	0.018	0.012	0.006	0.000
TOTAL DEAD LOAD DEFLECTION ↓	0.000	0.106	0.222	0.330	0.427	0.511	0.582	0.639	0.681	0.707	0.716	0.707	0.681	0.639	0.582	0.511	0.427	0.330	0.222	0.106	0.000
VERTICAL CURVE ORDINATE	0.000	0.000	0.000	0.000	0.000	0.000	0.000	0.000	0.000	0.000	0.000	0.000	0.000	0.000	0.000	0.000	0.000	0.000	0.000	0.000	0.000
ORDINATE DUE TO SUPERELEVATION	0.000	-0.005	-0.009	-0.013	-0.016	-0.019	-0.021	-0.022	-0.024	-0.024	-0.025	-0.024	-0.024	-0.022	-0.021	-0.019	-0.016	-0.013	-0.009	-0.005	0.000
REQUIRED CAMBER	0	1 3/16"	2 9/16"	3 13/16"	4 15/16"	5 15/16"	6 3/4"	7 3/8"	7 7/8"	8 3/16"	8 5/16"	8 3/16"	7 7/8"	7 3/8"	6 3/4"	5 15/16"	4 15/16"	3 13/16"	2 9/16"	1 3/16"	0

* INCLUDES SLAB, BUILDUPS & STAY-IN-PLACE FORMS.
ALL VALUES ARE SHOWN IN FEET (DECIMAL FORM), EXCEPT " FINAL CAMBER ", WHICH IS GIVEN IN INCHES (FRACTION FORM).
EFFECT OF CAMBER DISSIPATION IS NEGLIGIBLE.

PROJECT NO. U-2550B
BURKE COUNTY
STATION: 48+87.35 -Y1-

SHEET 5 OF 5

STATE OF NORTH CAROLINA
DEPARTMENT OF TRANSPORTATION
RALEIGH

DEAD LOAD DEFLECTION (STAGE II)

NORTH CAROLINA PROFESSIONAL SEAL 15825 ENGINEER BRUCE D. KLAPPENBACH
6-29-2011

REVISIONS						SHEET NO.
NO.	BY:	DATE:	NO.	BY:	DATE:	S-72
1			3			TOTAL SHEETS
2			4			93

STR #2

DRAWN BY : M. G. SHAIKH DATE : 09-29-10
CHECKED BY : H. T. BARBOUR DATE : 01-24-11

25-APR-2011 16:58
P:\Structures\Bailey\Str2\mshaikh\Microstation\U-2550B_SD_DL.dgn
mshaikh

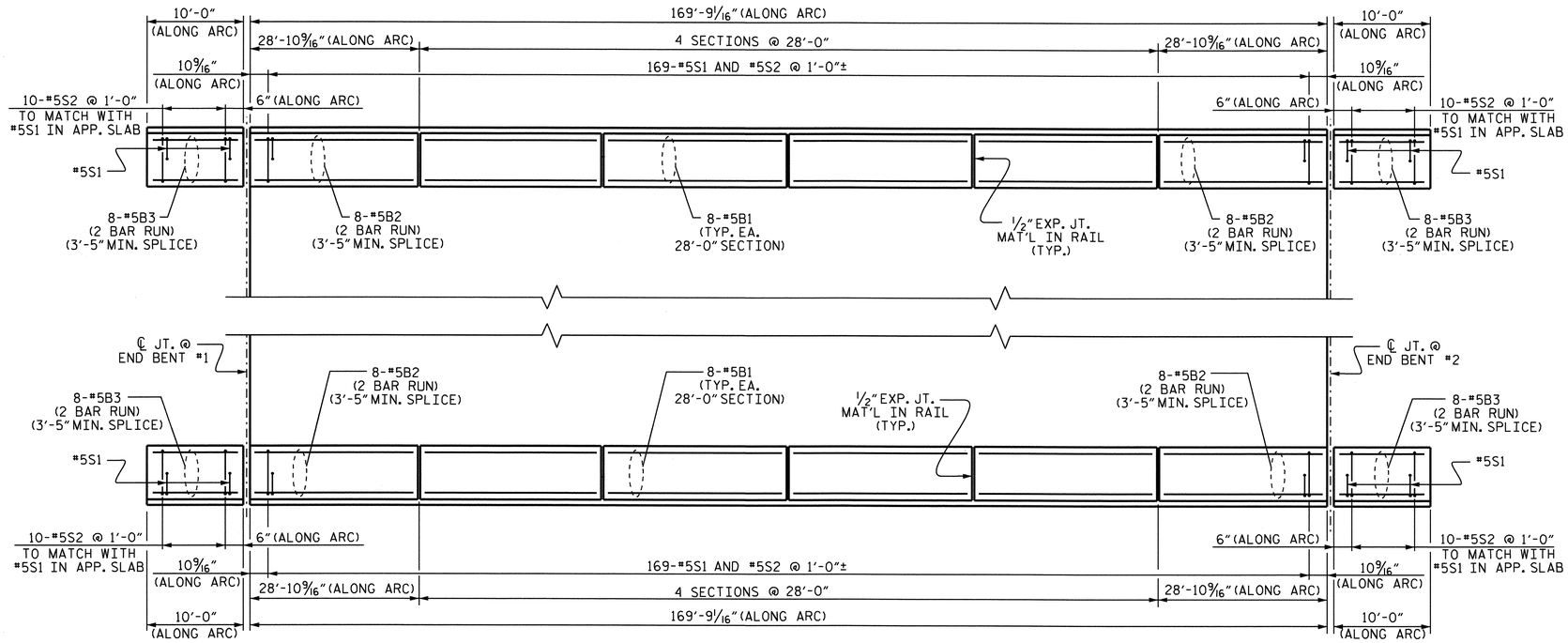

PLAN

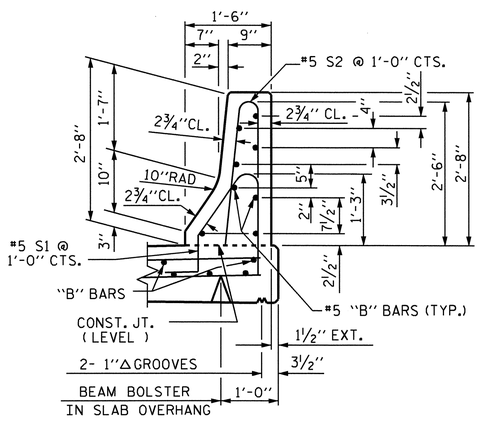

SECTION THRU RAIL

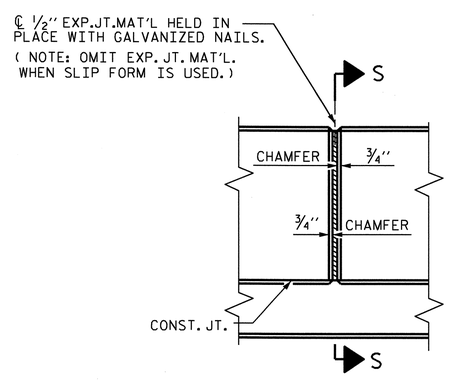

ELEVATION AT EXPANSION JOINTS

BARRIER RAIL DETAILS

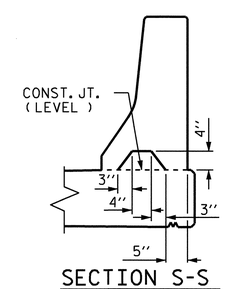

SECTION S-S

AT DAM IN OPEN JOINT
(THIS IS TO BE USED ONLY WHEN SLIP FORM IS USED)

NOTES

THE BARRIER RAIL IN A CONTINUOUS UNIT SHALL NOT BE CAST UNTIL ALL SLAB CONCRETE IN THE UNIT HAS BEEN CAST AND HAS REACHED A MINIMUM COMPRESSIVE STRENGTH OF 3,000 PSI.

ALL REINFORCING STEEL IN BARRIER RAILS SHALL BE EPOXY COATED.

VERTICAL GROOVED CONTRACTION JOINTS, 1/2" IN DEPTH, SHALL BE TOOLED IN ALL EXPOSED FACES OF THE BARRIER RAIL AND IN ACCORDANCE WITH ARTICLE 825-10(B) OF THE STANDARD SPECIFICATIONS. THE CONTRACTION JOINT SHALL BE LOCATED AT EACH THIRD POINT BETWEEN BARRIER RAIL EXPANSION JOINTS. ONLY ONE CONTRACTION JOINT IS REQUIRED AT MIDPOINT OF BARRIER RAIL SEGMENTS LESS THAN 20 FEET IN LENGTH AND NO CONTRACTION JOINTS ARE REQUIRED FOR THOSE SEGMENTS LESS THAN 10 FEET IN LENGTH.

THE #5 S1 & S2 BARS MAY BE SHIFTED SLIGHTLY IN THE AREA OF THE GUARDRAIL ANCHOR ASSEMBLY TO CLEAR ASSEMBLY BOLTS.

S1 BARS ON THE APPROACH SLAB ARE INCLUDED IN THE APPROACH SLAB BILL OF MATERIAL.

BAR TYPES

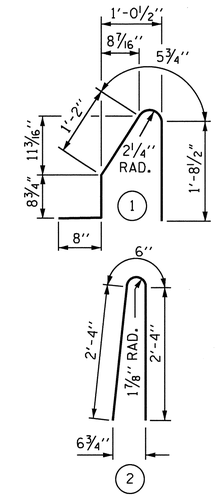

ALL BAR DIMENSIONS ARE OUT TO OUT

BILL OF MATERIAL

FOR CONCRETE BARRIER RAIL ONLY

BAR	NO.	SIZE	TYPE	LENGTH	WEIGHT
* S1	338	#5	1	4'-9"	1675
* S2	378	#5	2	5'-2"	2037
* B1	64	#5	STR	27'-7"	1841
* B2	64	#5	STR	16'-0"	1068
* B3	64	#5	STR	6'-7"	439

* EPOXY COATED REINFORCING STEEL	7060 LBS.
CLASS AA CONCRETE	38.5 CU. YDS.
CONCRETE BARRIER RAIL	379.51 LIN. FT.

PROJECT NO. U-2550B
BURKE COUNTY
STATION: 48+87.35 -Y1-

STATE OF NORTH CAROLINA
DEPARTMENT OF TRANSPORTATION
RALEIGH

CONCRETE BARRIER RAIL

NORTH CAROLINA PROFESSIONAL SEAL 15825 ENGINEER BRYCE D. KLAPPENBACH
4-29-2011

REVISIONS							SHEET NO.
NO.	BY:	DATE:	NO.	BY:	DATE:		S-73
1			3				TOTAL SHEETS
2			4				93

DRAWN BY : M. G. SHAIKH DATE : 09-28-10
CHECKED BY : H. T. BARBOUR DATE : 01-24-11

25-APR-2011 16:57
P:\Structures\Bailey\Str2\mshaikh\Microstation\U-2550B_SD_BR.dgn
mshaikh

STR #2

STD. NO. CBRI

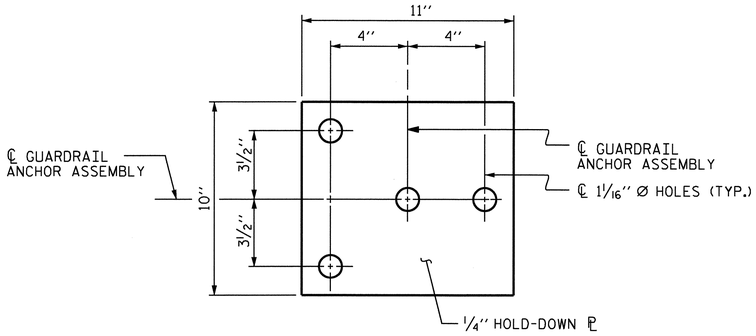

PLAN

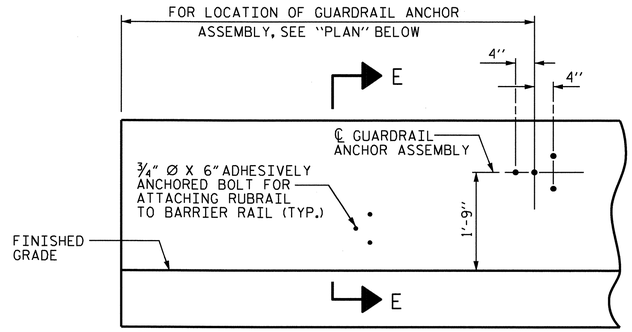

ELEVATION

FOR LOCATION OF RUBRAIL, SEE ROADWAY STD. 862.03

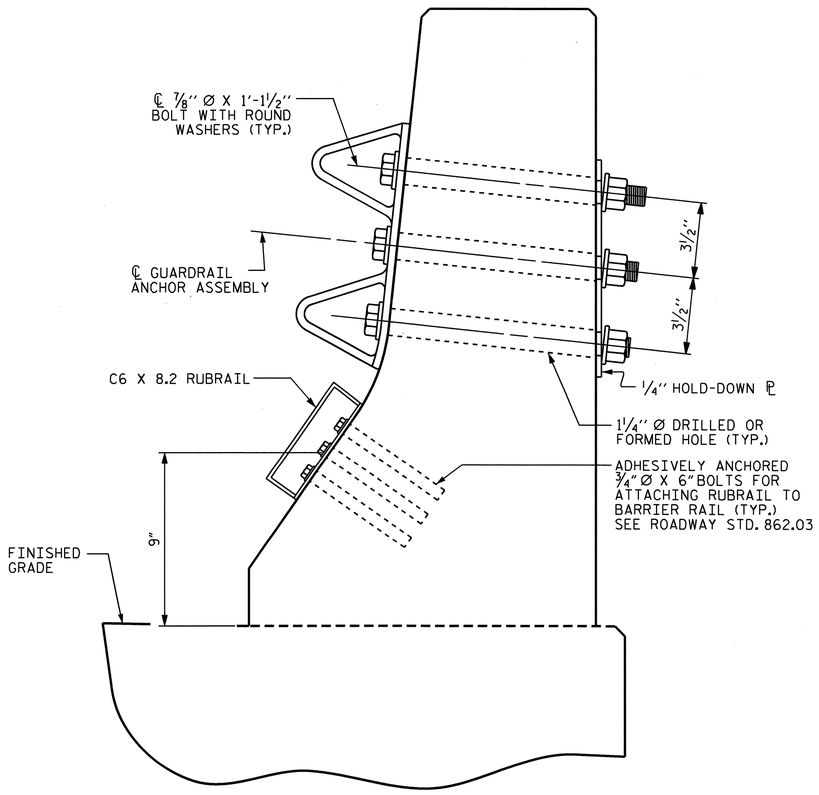

SECTION E-E

GUARDRAIL ANCHOR ASSEMBLY DETAILS

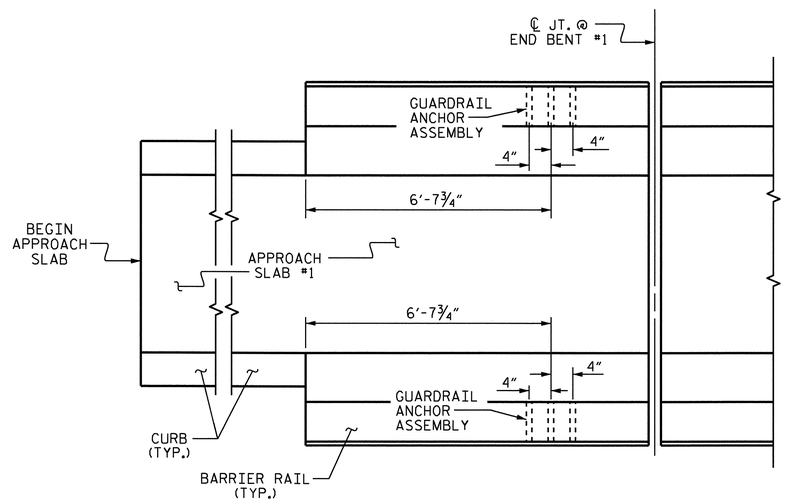

PLAN

LOCATION OF ANCHORS FOR GUARDRAIL

END BENT #1 SHOWN, END BENT #2 SIMILAR.

NOTES

THE GUARDRAIL ANCHOR ASSEMBLY SHALL CONSIST OF A 1/4'' HOLD DOWN PLATE AND 4 - 7/8'' Ø BOLTS WITH NUTS AND WASHERS, RUBRAIL, AND ADHESIVELY ANCHORED BOLTS.

THE HOLD-DOWN PLATE SHALL CONFORM TO AASHTO M270 GRADE 36. AFTER FABRICATION, THE HOLD-DOWN PLATE SHALL BE HOT-DIP GALVANIZED IN ACCORDANCE WITH AASHTO M111.

BOLTS SHALL CONFORM TO THE REQUIREMENTS OF ASTM A307 AND NUTS SHALL CONFORM TO THE REQUIREMENTS OF AASHTO M291. BOLTS, NUTS AND WASHERS SHALL BE GALVANIZED. (AT THE CONTRACTOR'S OPTION, STAINLESS STEEL BOLTS, NUTS AND WASHERS MAY BE USED AS AN ALTERNATE FOR THE 7/8'' Ø GALVANIZED BOLTS, NUTS AND WASHERS. THEY SHALL CONFORM TO OR EXCEED THE MECHANICAL REQUIREMENTS OF ASTM A307. THE USE OF THIS ALTERNATE SHALL BE APPROVED BY THE ENGINEER.)

THE GUARDRAIL ANCHOR ASSEMBLY IS REQUIRED AT ALL POINTS WHERE APPROACH GUARDRAIL IS TO BE ATTACHED TO THE END OF BARRIER RAIL. FOR POINTS OF ATTACHMENT, SEE SKETCH.

AFTER INSTALLATION, THE EXPOSED THREAD OF THE BOLT SHALL BE BURRED WITH A SHARP POINTED TOOL.

THE COST OF THE GUARDRAIL ANCHOR ASSEMBLY SHALL BE INCLUDED IN THE UNIT CONTRACT PRICE BID FOR CONCRETE BARRIER RAIL.

THE 1 1/4'' Ø HOLES SHALL BE FORMED OR DRILLED WITH A CORE BIT. IMPACT TOOLS WILL NOT BE PERMITTED. ANY CONCRETE DAMAGED BY THIS WORK SHALL BE REPAIRED TO THE SATISFACTION OF THE ENGINEER.

THE C6 X 8.2 RUBRAIL IS TO BE ADHESIVELY ANCHORED TO THE RAIL USING THREE 3/4"Ø X 6" BOLTS WITH WASHERS. LEVEL ONE FIELD TESTING IS REQUIRED, AND THE YIELD LOAD OF THE 3/4"Ø BOLT IS 12 KIPS. FOR ADHESIVELY ANCHORED ANCHOR BOLTS OR DOWELS, SEE SPECIAL PROVISIONS. SEE ROADWAY STANDARD 862.03 FOR DETAILS AND LOCATION OF THE RUBRAIL.

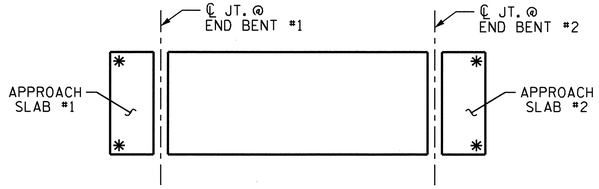

SKETCH SHOWING POINTS OF ATTACHMENTS

✳ DENOTES GUARDRAIL ANCHOR ASSEMBLY

PROJECT NO. U-2550B
BURKE COUNTY
STATION: 48+87.35 -Y1-

STATE OF NORTH CAROLINA
DEPARTMENT OF TRANSPORTATION
RALEIGH

STANDARD
GUARDRAIL ANCHORAGE FOR BARRIER RAIL

NORTH CAROLINA PROFESSIONAL SEAL 15825 ENGINEER BRUCE D. KLAPPENBACH
4-29-2011

REVISIONS						SHEET NO.
NO.	BY:	DATE:	NO.	BY:	DATE:	S-74
1			3			TOTAL SHEETS
2			4			93

STR #2

STD. NO. GRA2

ASSEMBLED BY : M. G. SHAIKH DATE : 09-29-10
CHECKED BY : H. T. BARBOUR DATE : 01-24-11
DRAWN BY : TLA 5/06
CHECKED BY : GM 5/06
ADDED 5/1/06R KMM/GM

25-APR-2011 16:46
P:\Structures\Bailey\Str2\mshaikh\Microstation\U-2550B_SD_GR.dgn
mshaikh

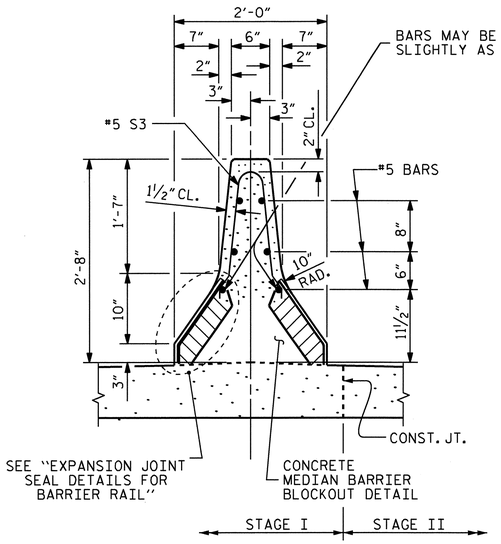

SECTION A-A

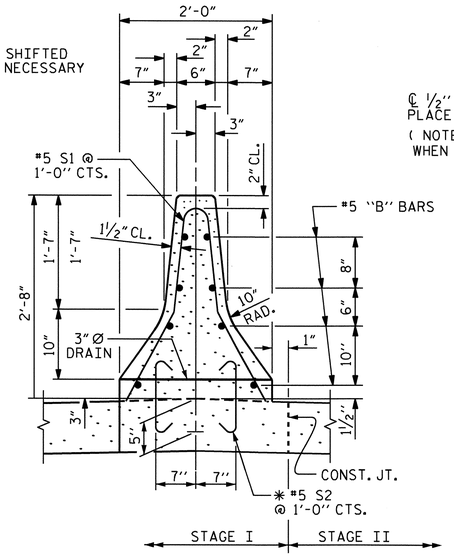

SECTION C-C

* #5 S2 (MAY BE PUSHED INTO GREEN CONCRETE AFTER SCREEDING)

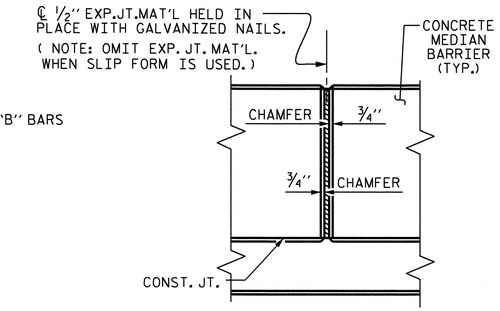

ELEVATION @ JT.

CONCRETE MEDIAN BARRIER

NOTES

THE MEDIAN BARRIER IN EACH SPAN SHALL NOT BE CAST UNTIL ALL SLAB CONCRETE IN THAT SPAN HAS BEEN CAST AND HAS REACHED A MINIMUM COMPRESSIVE STRENGTH OF 3,000 PSI

THE JOINT IN THE DECK SHALL BE FORMED PRIOR TO THE CASTING OF MEDIAN BARRIER.

ALL REINFORCING STEEL IN MEDIAN BARRIER SHALL BE EPOXY COATED.

VERTICAL GROOVED CONTRACTION JOINTS, ½" IN DEPTH, SHALL BE TOOLED IN ALL EXPOSED FACES OF THE MEDIAN BARRIER AND IN ACCORDANCE WITH ARTICLE 825-10(B) OF THE STANDARD SPECIFICATIONS. THE CONTRACTION JOINT SHALL BE LOCATED AT EACH THIRD POINT BETWEEN MEDIAN BARRIER EXPANSION JOINTS. ONLY ONE CONTRACTION JOINT IS REQUIRED AT MIDPOINT OF MEDIAN BARRIER SEGMENTS LESS THAN 20 FEET IN LENGTH AND NO CONTRACTION JOINTS ARE REQUIRED FOR THOSE SEGMENTS LESS THAN 10 FEET IN LENGTH.

ALL DIMENSIONS TAKEN ALONG ARC AT EDGE OF DECK AND FACE OF MEDIAN BARRIER.

THE STEEL PLATES SHALL CONFORM TO AASHTO M270 GRADE 36 OR APPROVED EQUAL. AFTER FABRICATION, THE PLATES SHALL BE COMMERCIALLY BLAST CLEANED AND COATED WITH A MINIMUM THICKNESS OF 4 DRY MILS OF ZINC- RICH PAINT IN ACCORDANCE WITH THE SPECIFICATIONS. AT THE CONTRACTORS OPTION, THESE SURFACES MAY BE METALLIZED TO A MINIMUM THICKNESS OF 6 MILS. SEE SPECIAL PROVISIONS FOR THERMAL SPRAYED COATINGS (METALLIZATION).

THE ¾" Ø HEX HEAD BOLTS SHALL CONFORM TO ASTM F593 TYPE 304 STAINLESS STEEL.

THE ¾" CONCRETE INSERTS SHALL BE CLOSED-END FERRULES WITH LOOPED WIRE STRUTS ATTACHED TO THEM. THE INSERTS SHALL CONFORM TO AASHTO M169, GRADE 12L14, AND SHALL HAVE A TENSILE WORKING LOAD CAPACITY OF 3000 LBS.

NO SEPARATE PAYMENT WILL BE MADE FOR FURNISHING AND INSTALLING THE COVER PLATE. THE ENTIRE COST OF THIS WORK SHALL BE INCLUDED IN THE LUMP SUM PRICE FOR "EXPANSION JOINT SEAL."

S2 BARS ON THE APPROACH SLAB ARE INCLUDED IN THE APPROACH SLAB BILL OF MATERIAL.

THE CONTRACTOR'S ATTENTION IS CALLED TO THE FACT THAT THE 3" DIAMETER DRAINS ARE TO BE INSTALLED IN THE CONCRETE MEDIAN BARRIER AT 6' CENTERS. REINFORCING STEEL MAY BE SHIFTED AS NECESSARY TO AVOID INTERFERENCE WITH THE DRAINS. THE COST IS CONSIDERED INCIDENTAL TO THE COST OF CONCRETE MEDIAN BARRIER.

BILL OF MATERIAL

STAGE I

BAR	NO.	SIZE	TYPE	LENGTH	WEIGHT
* B1	32	#5	STR	27'-7"	921
* B2	32	#5	STR	16'-0"	534
* B3	32	#5	STR	14'-3"	476
* S1	216	#5	1	5'-6"	1239
* S2	336	#5	2	1'-10"	642
* S3	4	#5	3	3'-9"	16

* EPOXY COATED REINFORCING STEEL	LBS. 3828
CLASS AA CONCRETE	CU. YDS. 22.4
CONCRETE MEDIAN BARRIER RAIL	LIN. FT. 220.54

BAR TYPES

ALL BAR DIMENSIONS ARE OUT TO OUT.

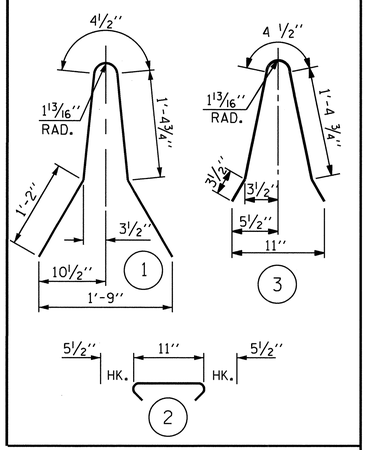

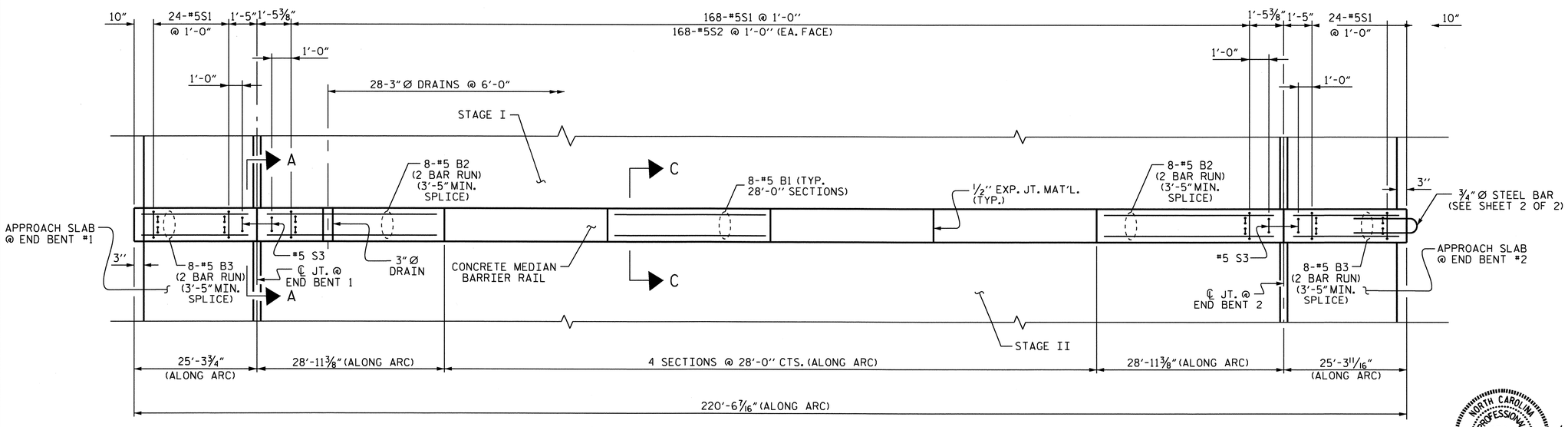

PLAN

PROJECT NO. U-2550B
BURKE COUNTY
STATION: 48+87.35 -Y1-

SHEET 1 OF 2

STATE OF NORTH CAROLINA
DEPARTMENT OF TRANSPORTATION
RALEIGH

SUPERSTRUCTURE
CONCRETE MEDIAN BARRIER

NORTH CAROLINA PROFESSIONAL SEAL 15828 ENGINEER BRADLEY D. KLAPPENBACH
4-29-2011

REVISIONS						SHEET NO.
NO.	BY:	DATE:	NO.	BY:	DATE:	S-75
1			3			TOTAL SHEETS
2			4			93

STR. #2

DRAWN BY : M. G. SHAIKH DATE : 10-04-10
CHECKED BY : H. T. BARBOUR DATE : 01-21-11

26-APR-2011 11:39
R:\Structures\Bailey\Str2\mshaikh\Microstation\U-2550B_SD_MD.dgn
bklappenbach

NOTES

INSTALL LOOPS AND ATTACH TO CONCRETE MEDIAN BARRIER RAIL REBAR PRIOR TO POURING CONCRETE.

THE COST OF THE ¾"DIA. STEEL BAR AND 1¼"GALVANIZED PIN SHALL BE INCLUDED IN THE CONTRACT BID PRICE FOR CONCRETE MEDIAN BARRIER RAIL.

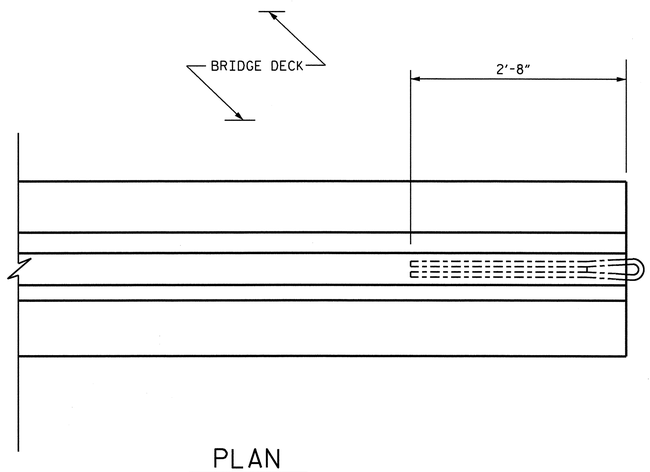

PLAN

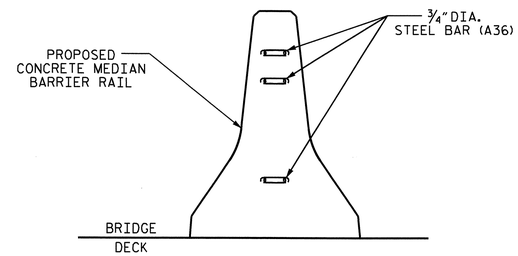

END VIEW A-A

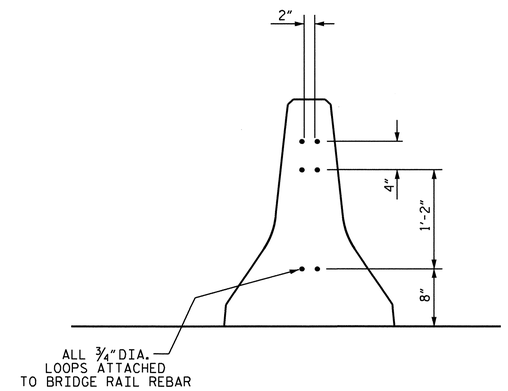

SECTION B-B

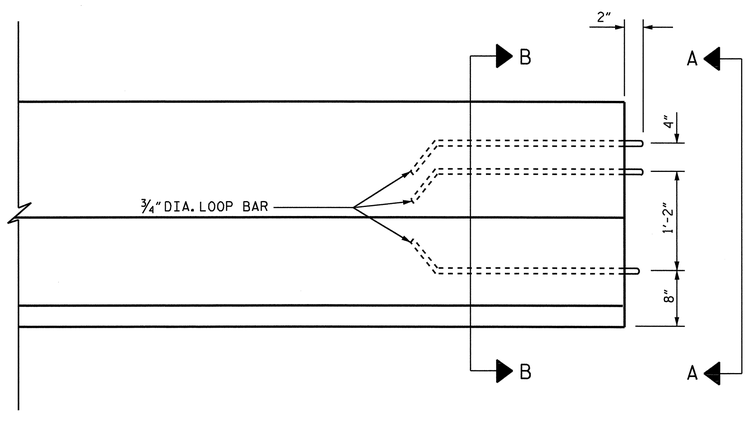

ELEVATION

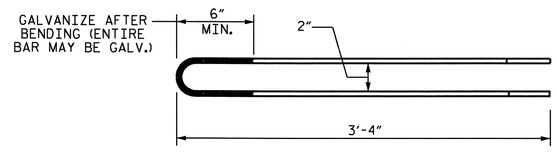

TOP VIEW

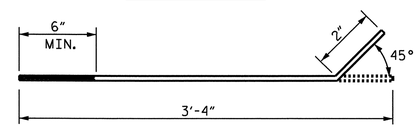

SIDE VIEW

LOOP BAR
¾"DIA. (A36M)

LOOP DETAIL

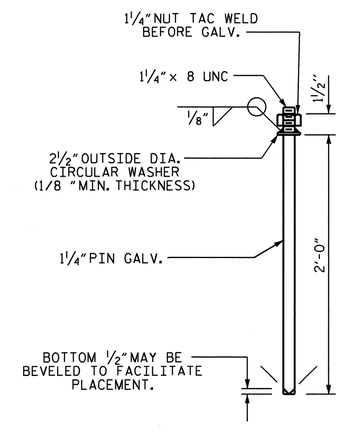

CONNECTOR PIN ASSEMBLY

PROJECT NO. U-2550B
BURKE COUNTY
STATION: 48+87.35 -Y1-

SHEET 2 OF 2

STATE OF NORTH CAROLINA
DEPARTMENT OF TRANSPORTATION
RALEIGH

SUPERSTRUCTURE
CONCRETE MEDIAN BARRIER

NORTH CAROLINA PROFESSIONAL SEAL 15826 ENGINEER B. D. KLAPPENBACH
4-29-2011

REVISIONS						SHEET NO.
NO.	BY:	DATE:	NO.	BY:	DATE:	S-76
1			3			TOTAL SHEETS
2			4			93

ASSEMBLED BY : M. G. SHAIKH	DATE : 02-17-11		
CHECKED BY : B. D. KLAPPENBACH	DATE : 03-09-11		
DRAWN BY : EEM 10/95	REV. 10/17/00	RWW/LES	
CHECKED BY : PEK 10/95	REV. 7/10/01	LES/RDR	
	REV. 5/1/06	TLA/GM	

STR #2

STD. NO. EB2 (SHT 2b)

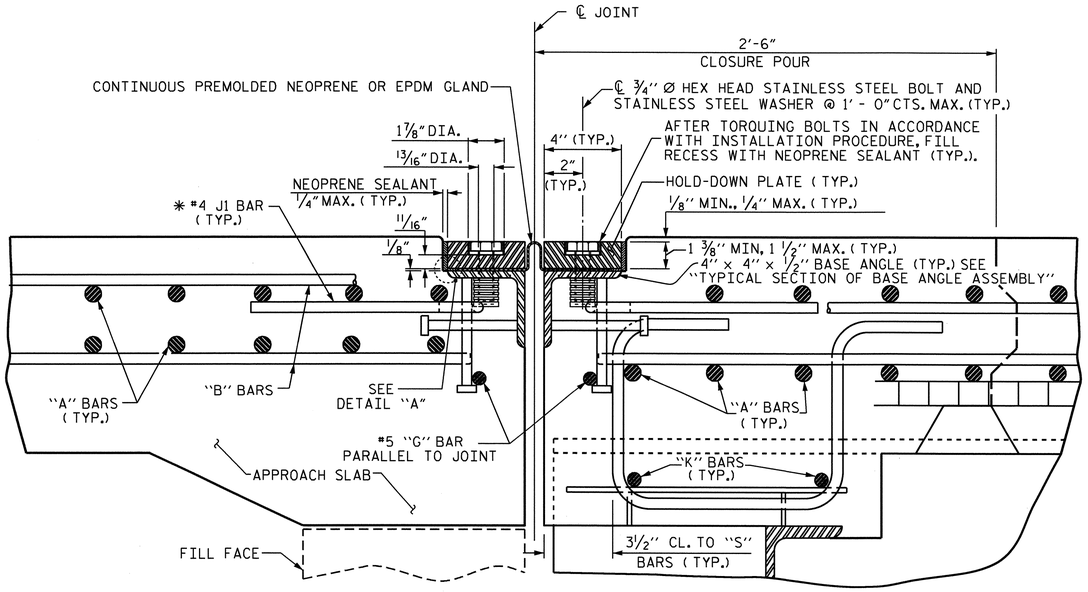

EXPANSION JOINT DETAILS

SECTION NORMAL TO JOINT -- STEEL SUPERSTRUCTURE

* THE QUANTITY OF #4 J1 BARS ON THE BILL OF MATERIAL IS BASED ON 1'-0" CENTERS. J1 BARS SHALL BE PLACED AT EACH VERTICAL STUD ANCHOR BOLT. IN THE EVENT THAT THE NUMBER OF VERTICAL STUD ANCHORS EXCEEDS THE NUMBER OF J1 BARS SPECIFIED, ADDITIONAL J1 BARS WILL NOT BE REQUIRED.

INSTALLATION PROCEDURE

1. A TEMPLATE OR OTHER SUITABLE DEVICE SHALL BE USED TO FORM THE TOP OF THE EXPANSION JOINT SEAL BLOCKOUT TO THE PROPER DEPTH AND WIDTH. THE TEMPLATE SHALL BE 4 1/8" TO 4 1/4" WIDE AND OF SUCH THICKNESS AS TO PROVIDE FOR CORRECT FINAL ELEVATION OF TOP OF HOLD-DOWN PLATES. THE TEMPLATE SHALL BE ATTACHED TO THE BASE ANGLE ASSEMBLY WITH THE 3/4" Ø HEX HEAD BOLTS PROVIDED FOR THE HOLD-DOWN PLATES. A 1" Ø HOLE SHALL BE PROVIDED IN THE TEMPLATE CENTERED OVER EACH WEEP HOLE IN THE 4" X 4" X 1/2" BASE ANGLE. OTHER METHODS OF INSURING DRAINAGE THROUGH WEEP HOLES MAY BE EMPLOYED SUBJECT TO ENGINEER'S APPROVAL.
2. AFTER THE CONCRETE HAS BEEN CAST ON BOTH SIDES OF THE JOINT, REMOVE THE TEMPLATE. THOROUGHLY CLEAN THE BOLT HOLES AND THE ANGLE PLATE. REMOVE ANY EXCESS CONCRETE THAT COMES OUT OF THE WEEP HOLES. ANY DAMAGED STEEL SHALL BE COATED WITH A MINIMUM THICKNESS OF 4 DRY MILS OF ZINC-RICH PAINT IN ACCORDANCE WITH THE STANDARD SPECIFICATIONS.
3. LAY THE GLAND ON THE BASE ANGLE AND FIELD MARK THE GLAND FOR THE BOLT HOLES. HOLES IN THE GLAND SHALL BE PUNCHED 7/8" IN DIAMETER WITH A HAND PUNCH.
4. IN ORDER TO CHECK FOR PROPER ALIGNMENT, PLACE THE GLAND AND HOLD-DOWN PLATES ON THE BASE ANGLE. DO NOT APPLY NEOPRENE SEALANT. BOLT THE HOLD-DOWN PLATES TO THE BASE ANGLE BUT DO NOT TIGHTEN. THE ENGINEER SHALL INSPECT THE JOINT SEAL DEVICE FOR PROPER ALIGNMENT.
5. AFTER INSPECTION, REMOVE THE HOLD-DOWN PLATES AND GLAND. APPLY NEOPRENE SEALANT TO THE BASE ANGLE IN ACCORDANCE WITH THE "INSTALLATION SKETCH". PLACE GLAND AND HOLD-DOWN PLATES ON THE BASE ANGLE. BOLT THE HOLD-DOWN PLATES TO THE BASE ANGLE ASSEMBLY AND TOROUE THE BOLTS TO 88 FT-LBS WITH A TOROUE WRENCH. THE TOROUE WRENCH SHALL BE CALIBRATED IN ACCORDANCE WITH SECTION 440-10 (D) OF THE STANDARD SPECIFICATIONS. CHECK THE TOROUE AFTER THREE (3) HOURS AND, IF NECESSARY, RETIGHTEN TO 88 FT-LBS. A FINAL CHECK SHALL BE MADE AT SEVEN (7) DAYS. TOROUE SHALL NOT BE LESS THAN 80 FT-LBS AFTER SEVEN (7) DAYS.
6. AFTER PROPER TOROUING, CLEAN THE BOLT HOLE RECESSES AND THE RECESS BETWEEN THE JOINT SEAL DEVICE AND CONCRETE, COMPLETELY FILL THESE RECESSES WITH NEOPRENE SEALANT.

GENERAL NOTES

1. FOR EXPANSION JOINT SEALS, SEE SPECIAL PROVISIONS.
2. ALL PLATES AND ANGLES SHALL CONFORM TO AASHTO M270 GRADE 36 STEEL OR APPROVED EQUAL. ALL HOLD-DOWN BOLTS SHALL CONFORM TO ASTM F593 ALLOY 304 STAINLESS STEEL AND WASHERS SHALL CONFORM TO ASTM F844 EXCEPT THEY SHALL BE MADE FROM ALLOY 304 STAINLESS STEEL. ALL STUD ANCHORS SHALL CONFORM TO AASHTO M169, GRADES 1010 THRU 1020 OR APPROVED EQUAL. ALL CONCRETE INSERTS SHALL BE CLOSED END AND SHALL CONFORM TO AASHTO M169, GRADE 12L14. TENSILE CAPACITY SHALL BE 3000 LBS. MIN.
3. A PREMOLDED CORRUGATED OR NON-CORRUGATED GLAND SHALL BE USED FOR JOINTS SKEWED BETWEEN 50° THRU 130°. FOR JOINTS SKEWED LESS THAN 50° OR MORE THAN 130°, ONLY A CORRUGATED GLAND SHALL BE USED.
4. CLOSED END FERRULES AND STUD ANCHORS SHALL BE SHOP WELDED AND ALL HOLES SHALL BE SHOP DRILLED AS SHOWN ON PLANS. STUD ANCHORS SHALL BE ELECTRIC ARC END WELDED WITH COMPLETE FUSION.
5. SURFACES COMING IN CONTACT WITH NEOPRENE SHALL BE GROUND SMOOTH PRIOR TO METALLIZING.
6. UPON COMPLETION OF SHOP FABRICATION, THE HOLD DOWN PLATE AND BASE ANGLE ASSEMBLY, AS SHOWN IN THE "TYPICAL SECTION OF BASE ANGLE ASSEMBLY", SHALL BE METALLIZED. SEE SPECIAL PROVISION FOR THERMAL SPRAYED COATINGS (METALLIZATION).
7. BASE ANGLE ASSEMBLY SHALL BE CONTINUOUS FOR THE LENGTH OF THE JOINT. AT CROWN BREAKS, THE ENDS OF THE BASE ANGLE ASSEMBLY SHALL BE CUT PARALLEL TO THE BRIDGE CENTERLINE FOR SKEWS LESS THAN 80° AND GREATER THAN 100°. FINISHED WELD SHALL BE GROUND SMOOTH AND COATED WITH A MINIMUM THICKNESS OF 4 DRY MILS OF ZINC-RICH PAINT IN ACCORDANCE WITH THE STANDARD SPECIFICATIONS.
8. FIELD SPLICES OF HOLD-DOWN PLATES SHALL BE KEPT TO A MINIMUM. CONTRACTOR SHALL FURNISH DETAILED PLANS SHOWING PROPOSED SPLICE LOCATIONS FOR APPROVAL. HOLD-DOWN PLATES SHALL NOT EXCEED 20' LENGTHS UNLESS APPROVED BY THE ENGINEER.
9. NO ALTERNATE JOINT DETAILS SHALL BE PERMITTED IN LIEU OF THOSE SHOWN ON THESE PLANS.
10. THE CONTRACTOR MAY, AT HIS OPTION, USE ADHESIVELY ANCHORED ANCHOR BOLTS IN PLACE OF CONCRETE INSERTS FOR COVER PLATES. THE YIELD LOAD OF THE 3/4" Ø BOLT IS 10 KIPS. FIELD TESTING OF THE ADHESIVE BONDING SYSTEM IS NOT REQUIRED.

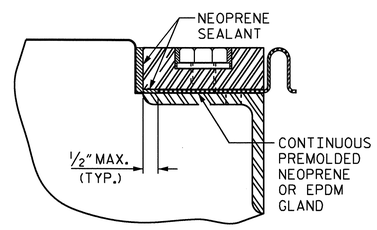

DETAIL A

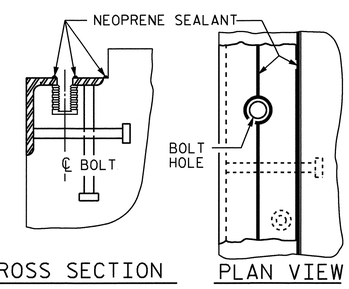

CROSS SECTION PLAN VIEW

INSTALLATION SKETCH

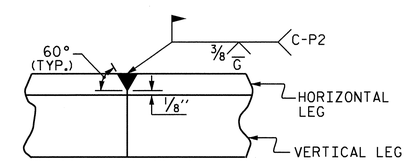

DETAIL- FIELD WELD SPLICE OF BASE ANGLE

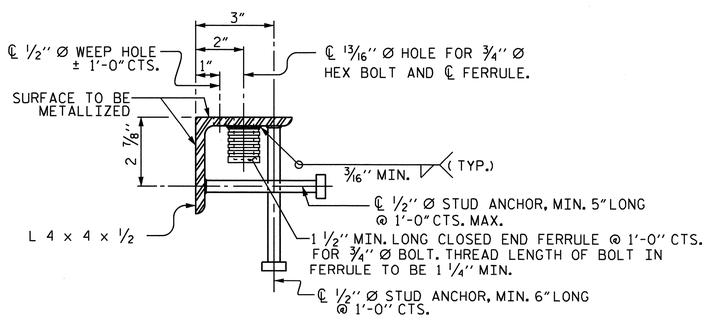

TYPICAL SECTION OF BASE ANGLE ASSEMBLY

MOVEMENT AND SETTING AT JOINT					
END BENT NO.	SKEW ANGLE	TOTAL MOVEMENT (ALONG ℄ RDWY)	PERPENDICULAR JOINT OPENING AT 45° F	PERPENDICULAR JOINT OPENING AT 60° F	PERPENDICULAR JOINT OPENING AT 90° F
1	90°-00'-00"	0	1 1/2"	1 1/2"	1 1/2"
2	90°-00'-00"	1 3/4"	2 1/8"	1 7/8"	1 3/8"

PROJECT NO. U-2550B
BURKE COUNTY
STATION: 48+87.35 -Y1-

SHEET 1 OF 4

STATE OF NORTH CAROLINA
DEPARTMENT OF TRANSPORTATION
RALEIGH

EXPANSION JOINT SEAL DETAILS

NORTH CAROLINA PROFESSIONAL SEAL 15825 ENGINEER BRUCE D. KLAPPENBACH 4-29-2011

REVISIONS						SHEET NO.
NO.	BY:	DATE:	NO.	BY:	DATE:	S-77
1			3			TOTAL SHEETS
2			4			93

ASSEMBLED BY : M. G. SHAIKH	DATE : 01-13-11		
CHECKED BY : H. T. BARBOUR	DATE : 01-24-11		
DRAWN BY : REK 9/87	REV. 10/17/00	RWW/LES	
CHECKED BY : CRK 10/87	REV. 5/7/03R	RWW/JTE	
	REV. 5/1/06	TLA/GM	

25-APR-2011 16:54
P:\Structures\Bailey\Str2\mshaikh\Microstation\U-2550B_SD_JS.dgn
mshaikh

STR #2

STD. NO. EJS1 (SHT 4)

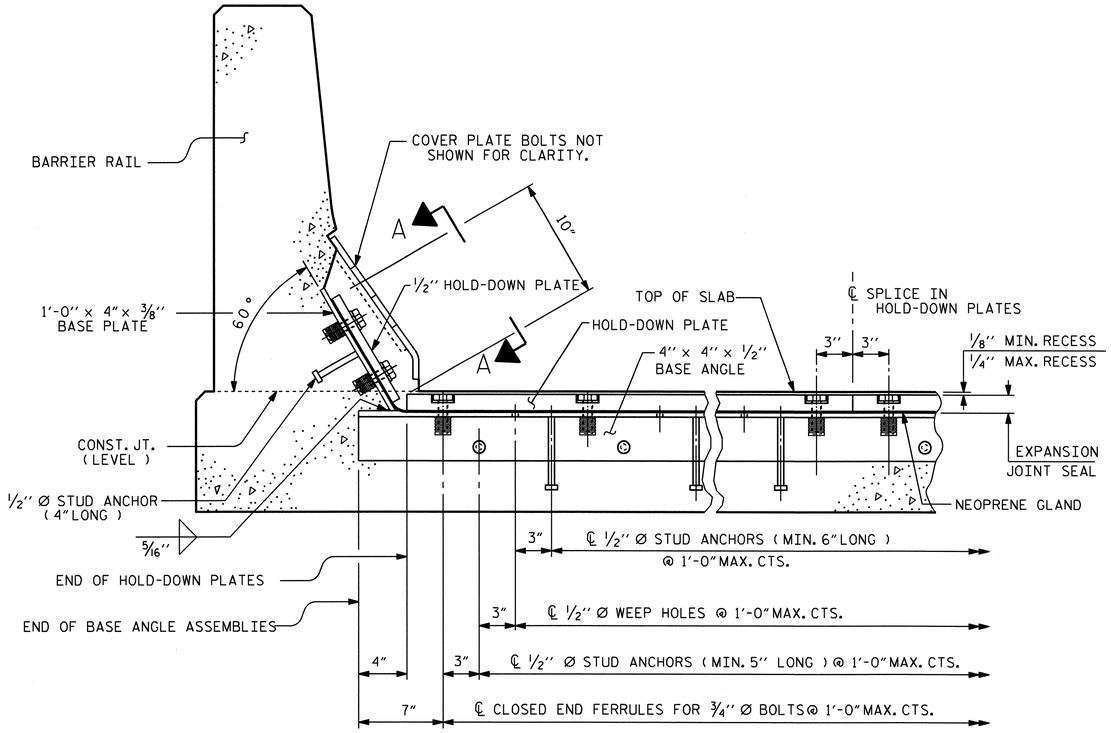

SECTION THRU RAIL NORMAL TO JOINT

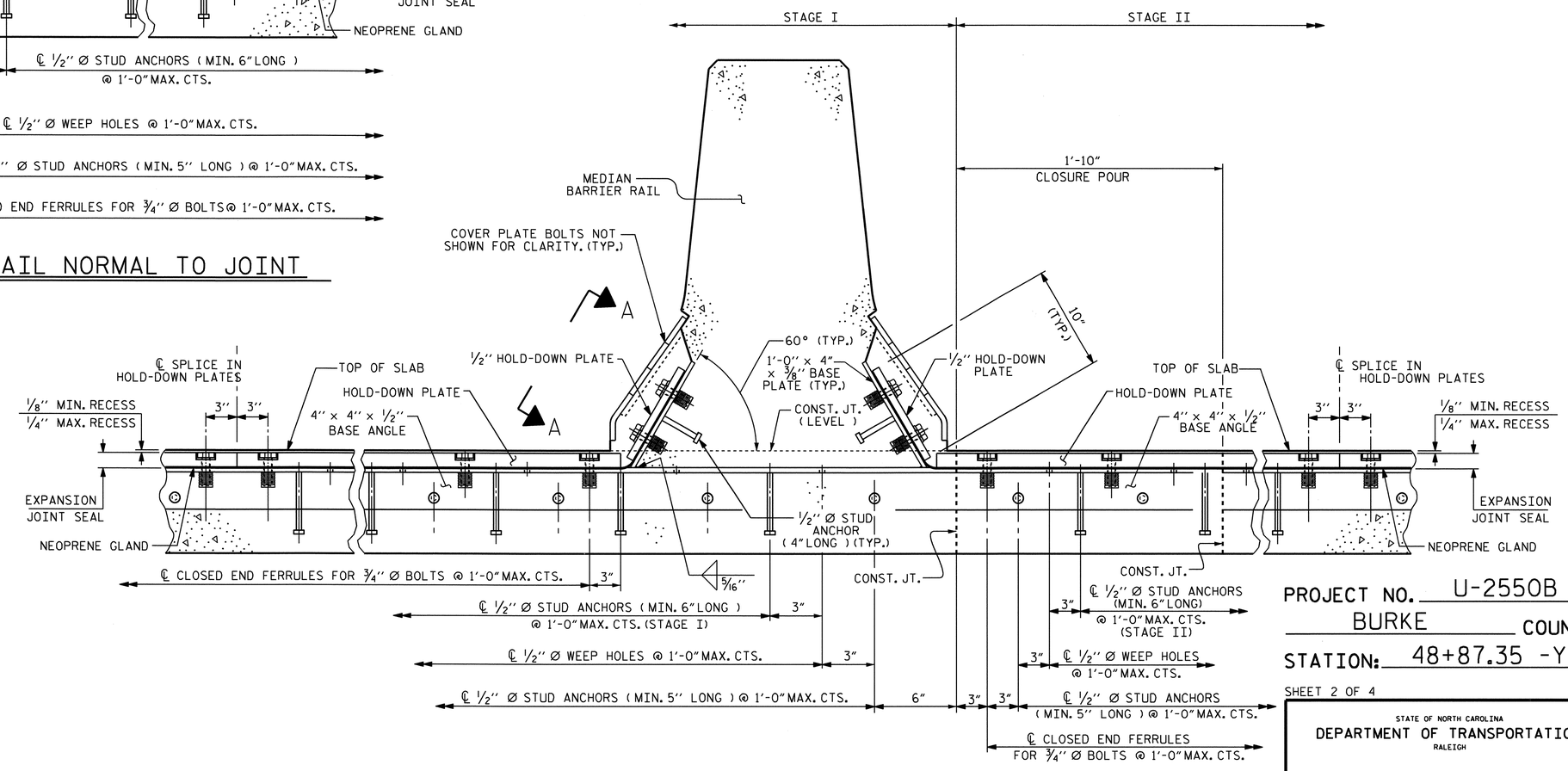

SECTION THRU MEDIAN RAIL NORMAL TO JOINT

PROJECT NO. U-2550B

BURKE COUNTY

STATION: 48+87.35 -Y1-

SHEET 2 OF 4

STATE OF NORTH CAROLINA
DEPARTMENT OF TRANSPORTATION
RALEIGH

EXPANSION JOINT SEAL DETAILS FOR BARRIER RAIL

NORTH CAROLINA PROFESSIONAL SEAL 15825 ENGINEER BRYCE D. KLAPPENBACH 4-29-2011

REVISIONS								SHEET NO.
NO.	BY:	DATE:	NO.	BY:	DATE:			S-78
1			3					TOTAL SHEETS
2			4					93

ASSEMBLED BY :	M. G. SHAIKH	DATE :	01-13-11
CHECKED BY :	H. T. BARBOUR	DATE :	01-24-11
DRAWN BY : REK 9/87	REV. 7/17/98	RWW/LES	
CHECKED BY : CRK 10/87	REV. 10/17/00	RWW/LES	
	REV. 5/1/06	TLA/GM	

29-APR-2011 09:14
R:\Structures\Bailey\Str2\mshaikh\Microstation\U-2550B_SD_JS.dgn
bklappenbach

STR #2

STD. NO. EJS2

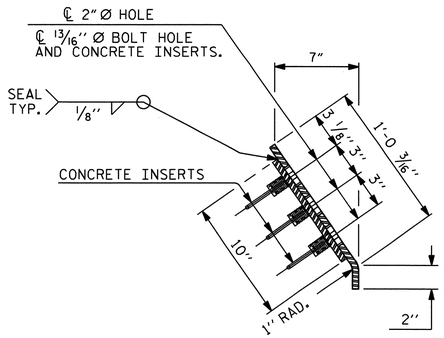

END VIEW

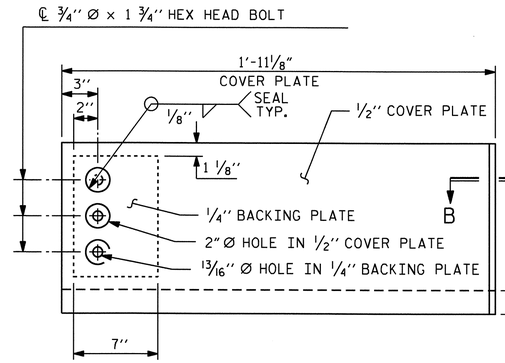

TYPE I - ELEVATION VIEW

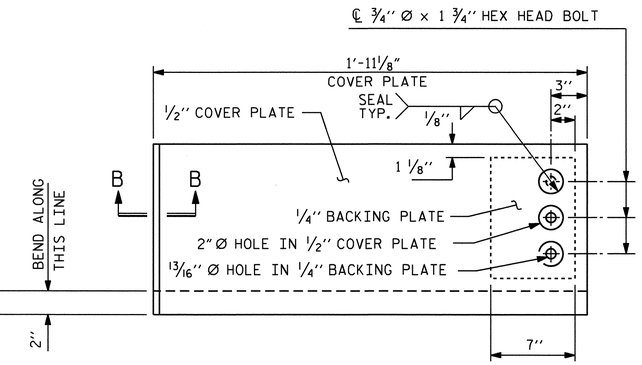

TYPE II - ELEVATION VIEW

COVER PLATE DETAILS

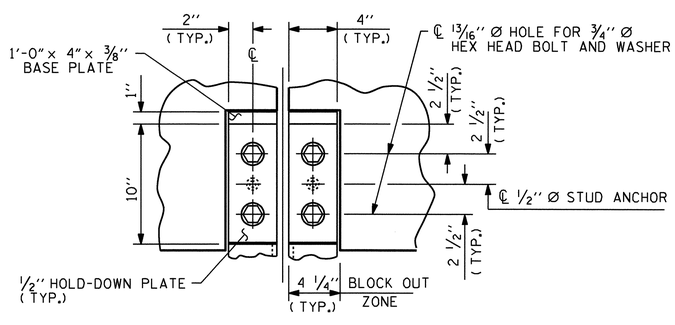

SECTION A - A

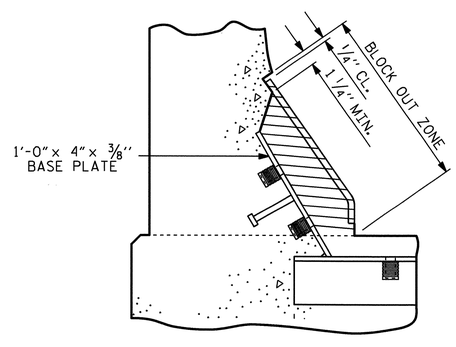

BLOCK OUT DETAIL

SEE " SECTION A - A " FOR OTHER DETAILS.

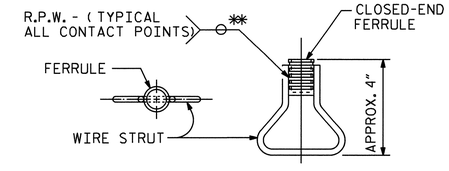

PLAN ELEVATION

CONCRETE INSERT

** EACH WELDED ATTACHMENT OF WIRE TO FERRULE SHALL DEVELOP THE TENSILE STRENGTH OF THE WIRE.

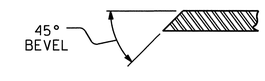

SECTION B - B

PROJECT NO. U-2550B
BURKE COUNTY
STATION: 48+87.35 -Y1-

SHEET 3 OF 4

STATE OF NORTH CAROLINA
DEPARTMENT OF TRANSPORTATION
RALEIGH

EXPANSION JOINT SEAL DETAILS FOR BARRIER RAIL

NORTH CAROLINA PROFESSIONAL SEAL 15629 ENGINEER D. KL APPENBAUGH
4-29-2011

REVISIONS						SHEET NO.
NO.	BY:	DATE:	NO.	BY:	DATE:	S-79
1			3			TOTAL SHEETS
2			4			93

ASSEMBLED BY : M. G. SHAIKH	DATE : 01-13-11	
CHECKED BY : H. T. BARBOUR	DATE : 01-24-11	
DRAWN BY : REK 9/87	REV. 7/17/98	RWW/LES
CHECKED BY : CRK 10/87	REV. 10/17/00	RWW/LES
	REV. 5/1/06	TLA/GM

STR #2

STD. NO. EJS2

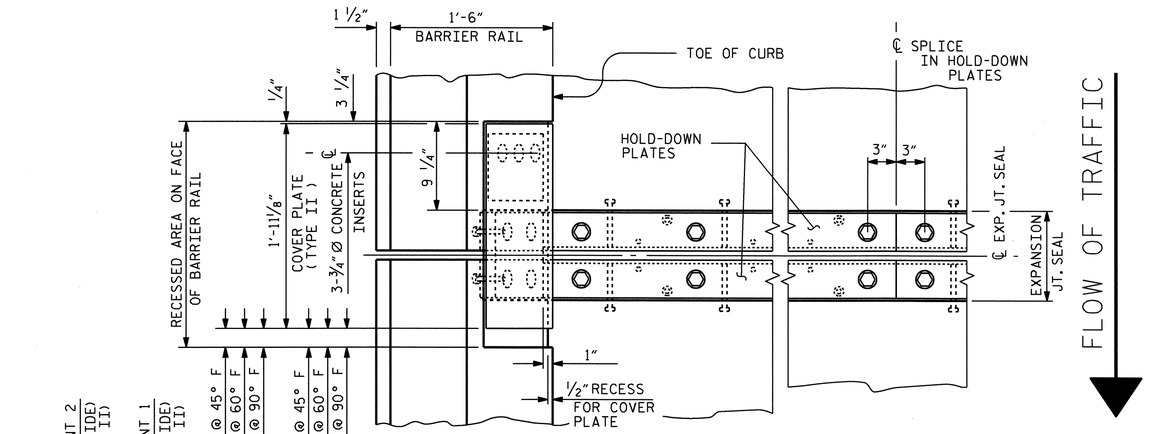

PLAN OF EXPANSION JOINT SEAL

(AT BARRIER RAIL)

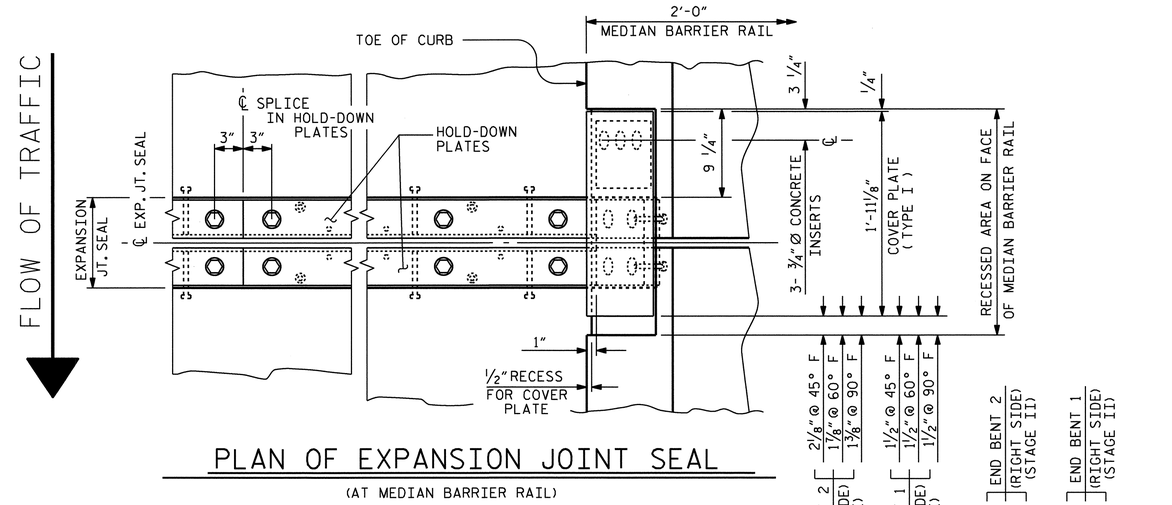

PLAN OF EXPANSION JOINT SEAL

(AT MEDIAN BARRIER RAIL)

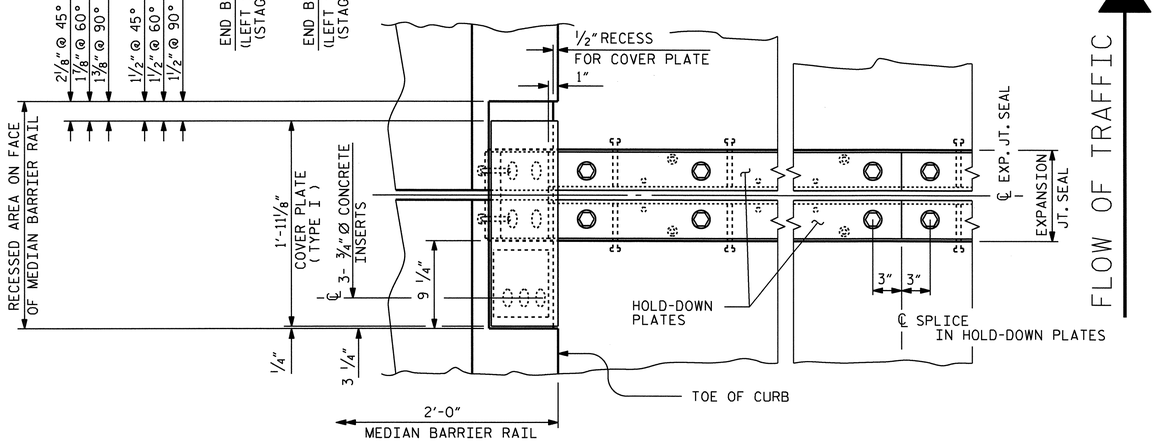

PLAN OF EXPANSION JOINT SEAL

(AT MEDIAN BARRIER RAIL)

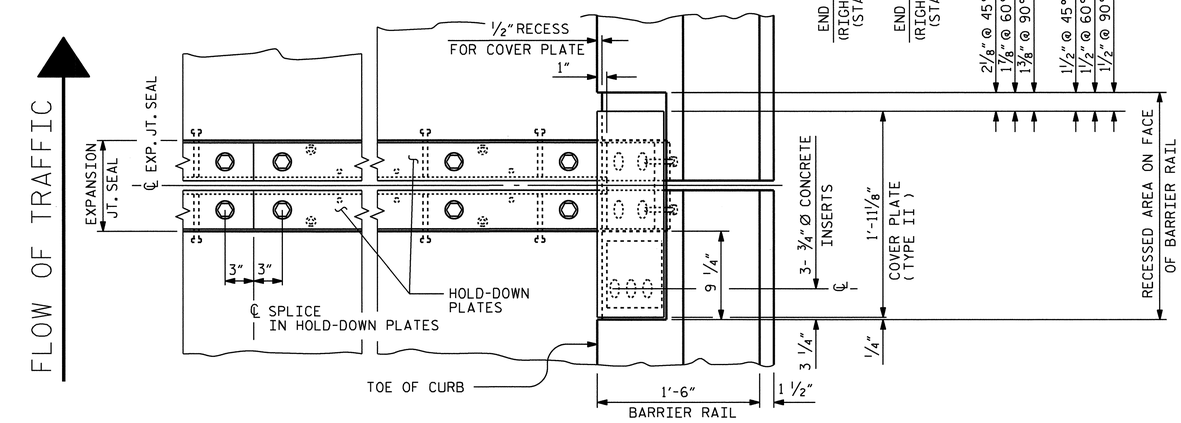

PLAN OF EXPANSION JOINT SEAL

(AT BARRIER RAIL)

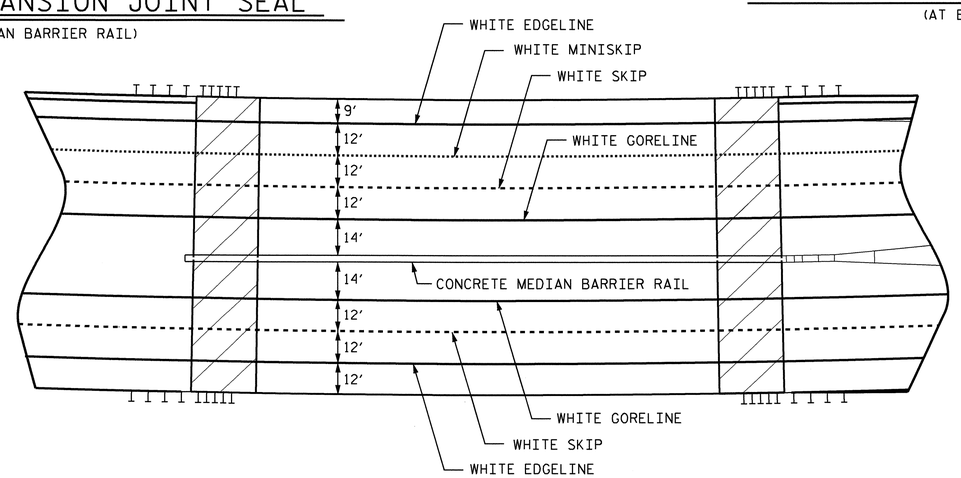

PAVEMENT MARKING ALIGNMENT

PROJECT NO. U-2550B

BURKE COUNTY

STATION: 48+87.35 -Y1-

SHEET 4 OF 4

STATE OF NORTH CAROLINA
DEPARTMENT OF TRANSPORTATION
RALEIGH

EXPANSION JOINT SEAL DETAILS FOR BARRIER RAIL

NORTH CAROLINA PROFESSIONAL SEAL 15825 ENGINEER BRUCE D. KLAPPENBACH 4-29-2011

ASSEMBLED BY : M. G. SHAIKH	DATE : 01-13-11		
CHECKED BY : H. T. BARBOUR	DATE : 01-24-11		
DRAWN BY : REK 9/87	REV. 7/17/98	RWW/LES	
CHECKED BY : CRK 10/87	REV. 10/17/00	RWW/LES	
	REV. 5/1/06	TLA/GM	

REVISIONS						SHEET NO.
NO.	BY:	DATE:	NO.	BY:	DATE:	S-80
1			3			TOTAL SHEETS
2			4			93

STR #2

STD. NO. EJS2

TOTAL SUPERSTRUCTURE BILL OF MATERIAL

	CLASS AA CONCRETE (CU. YDS.)							REINFORCING STEEL	EPOXY COATED REINFORCING STEEL
	POUR #1	POUR #2	POUR #3	POUR #4	POUR #5	POUR #6 (CLOSURE POUR)	TOTAL	(LBS.)	(LBS.)
STAGE I	239.4	94.0	12.6				346.0	36119	29471
STAGE II				265.9	9.4	11.1	286.4	28487	23133
TOTALS							632.4	64606	52604

REINFORCING BAR SCHEDULE

STAGE I						STAGE II					
BAR	NO.	SIZE	TYPE	LENGTH	WEIGHT	BAR	NO.	SIZE	TYPE	LENGTH	WEIGHT
✱A1	674	#5	STR	32'-6"	22847	✱A3	337	#5	STR	49'-3"	17311
A2	678	#5	STR	32'-4"	22865	A4	339	#5	STR	49'-3"	17414
✱B1	258	#4	STR	29'-10"	5142	✱B1	228	#4	STR	29'-10"	4544
B2	210	#5	STR	58'-1"	12722	B2	174	#5	STR	58'-1"	10541
✱D1	170	#5	STR	3'-0"	532	✱D1	170	#5	STR	3'-0"	532
D2	170	#5	STR	3'-0"	532	D2	170	#5	STR	3'-0"	532
✱G1	4	#5	STR	32'-6"	136	✱G2	2	#5	STR	51'-2"	107
✱J1	122	#4	4	1'-5"	115	✱J1	100	#4	4	1'-5"	95
✱K1	4	#5	1	9'-5"	25	✱K4	4	#5	1	9'-1"	38
✱K2	20	#5	2	13'-6"	282	✱K5	16	#5	2	12'-10"	214
✱K3	4	#5	1	7'-10"	33	✱K6	4	#5	1	7'-1"	30
✱S1	96	#5	3	3'-7"	359	✱S1	70	#5	3	3'-7"	262
REINFORCING STEEL = 36119 LBS.						REINFORCING STEEL = 28487 LBS.					
✱EPOXY COATED REINF. STEEL = 29471 LBS.						✱EPOXY COATED REINF. STEEL = 23133 LBS.					

BAR TYPES

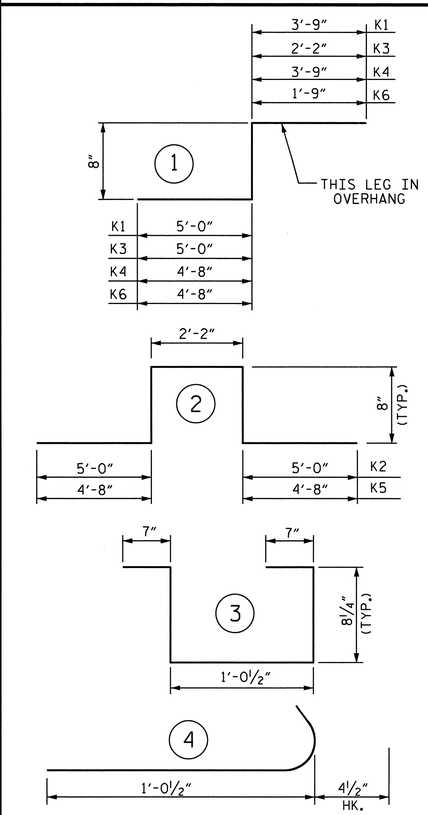

SUPERSTRUCTURE REINFORCING STEEL LENGTHS ARE BASED ON THE FOLLOWING MINIMUM SPLICE LENGTHS

BAR SIZE	SUPERSTRUCTURE EXCEPT APPROACH SLABS, PARAPET, AND BARRIER RAIL		APPROACH SLABS		PARAPET AND BARRIER RAIL
	EPOXY COATED	UNCOATED	EPOXY COATED	UNCOATED	
#4	2'-0"	1'-9"	2'-0"	1'-9"	2'-9"
#5	2'-6"	2'-2"	2'-6"	2'-2"	3'-5"
#6	3'-0"	2'-7"	3'-10"	2'-7"	4'-4"
#7	5'-3"	3'-6"			
#8	6'-10"	4'-7"			

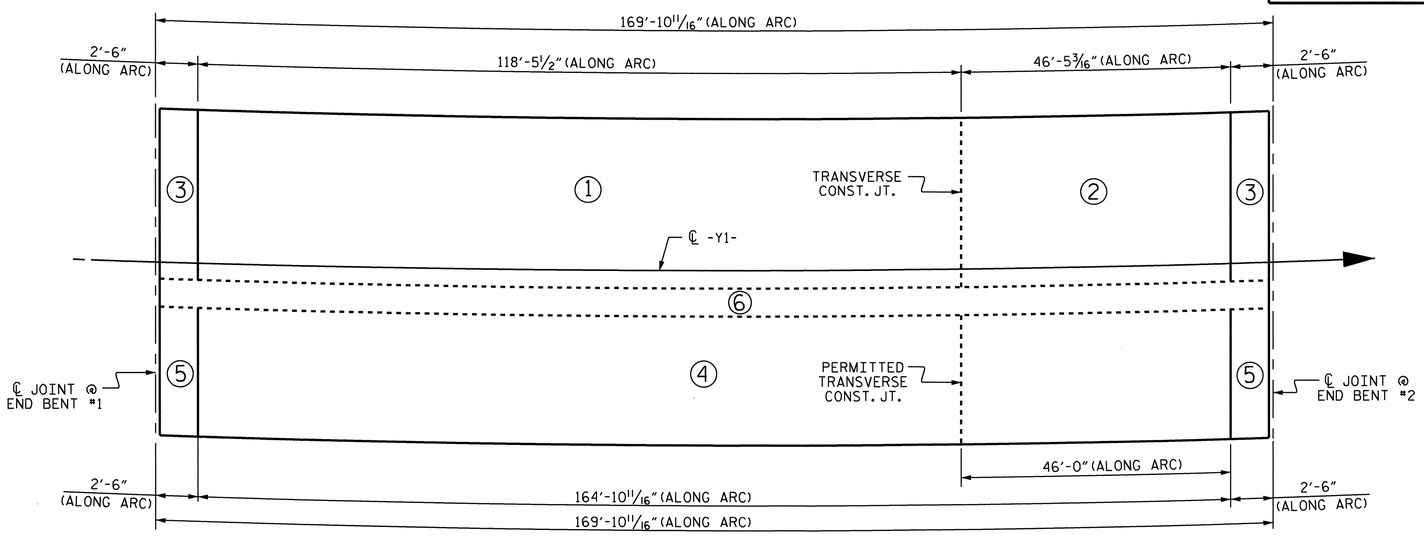

POURING SEQUENCE

GROOVING BRIDGE FLOORS

BRIDGE DECK (STAGE I)	=	9444 SQ. FT.
APPROACH SLABS (STAGE I)	=	2556 SQ. FT.
BRIDGE DECK (STAGE II)	=	7926 SQ. FT.
APPROACH SLABS (STAGE II)	=	2145 SQ. FT.
TOTAL	=	22071 SQ. FT.

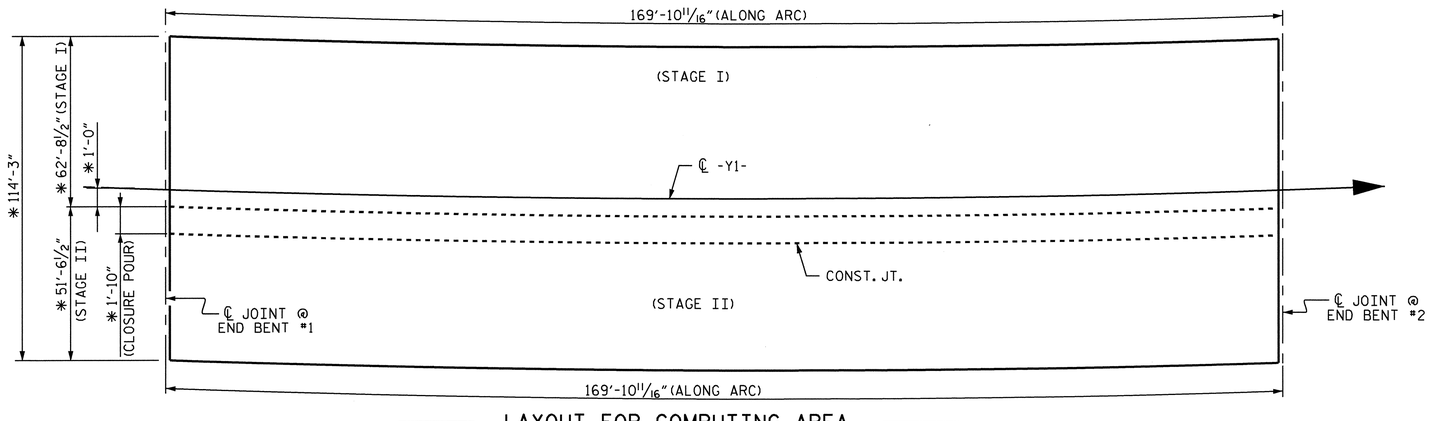

LAYOUT FOR COMPUTING AREA
REINFORCED CONCRETE DECK SLAB
SQ. FT. = 19410 (TOTAL)

✱DIMENSIONS ARE TO CONCENTRIC CIRCLES WITH ℄ SURVEY.

PROJECT NO. U-2550B
BURKE COUNTY
STATION: 48+87.35 -Y1-

STATE OF NORTH CAROLINA
DEPARTMENT OF TRANSPORTATION
RALEIGH

SUPERSTRUCTURE BILL OF MATERIAL

NORTH CAROLINA PROFESSIONAL SEAL 15825 ENGINEER BRUCE C. KLAPPENBACH 4-29-2011

REVISIONS						SHEET NO.
NO.	BY:	DATE:	NO.	BY:	DATE:	S-81
1			3			TOTAL SHEETS
2			4			93

STR #2

DRAWN BY : M. G. SHAIKH DATE : 10-11-10
CHECKED BY : H. T. BARBOUR DATE : 01-24-11

29-APR-2011 10:57
R:\Structures\Bailey\Str2\mshaikh\Microstation\U-2550B_SD_BM.dgn
bklappenbach

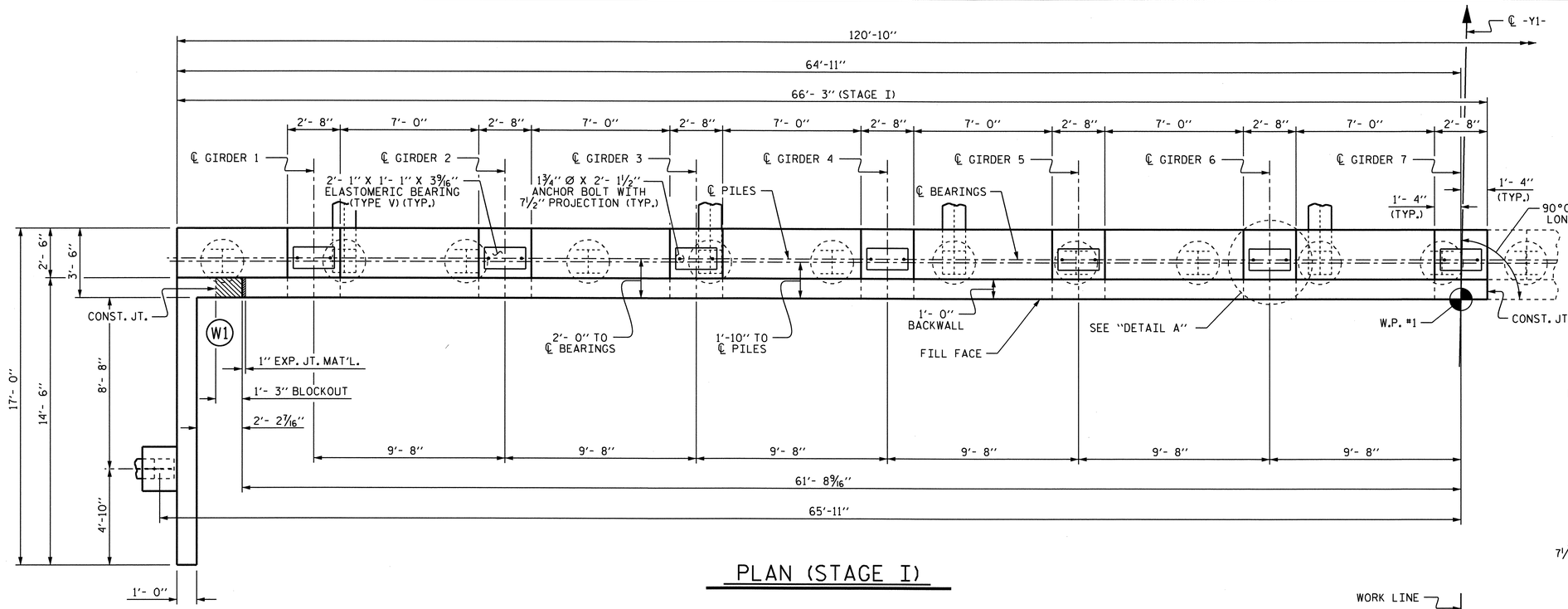

PLAN (STAGE I)

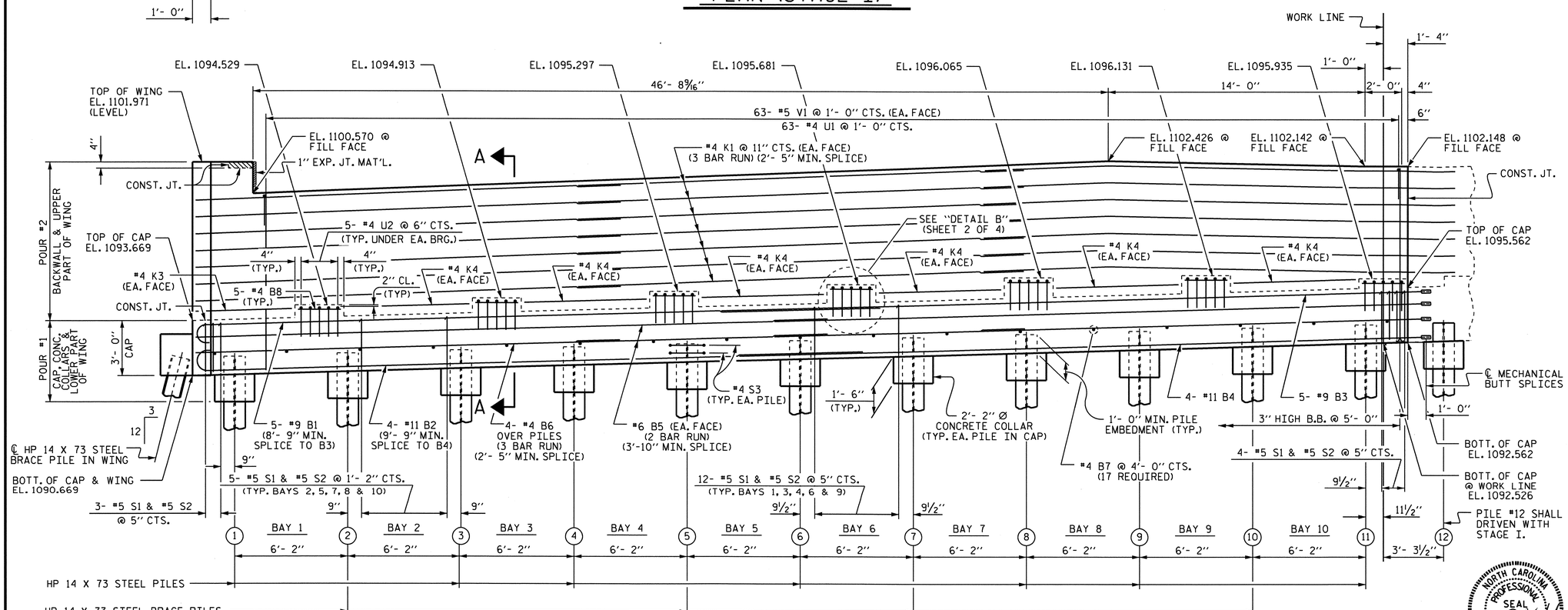

ELEVATION (STAGE I)

NOTES

STIRRUPS IN CAP MAY BE SHIFTED AS NECESSARY TO CLEAR ANCHOR BOLTS.

BACKWALL SHALL BE PLACED BEFORE APPLYING THE EPOXY PROTECTIVE COATING.

THE TOP SURFACE OF THE END BENT CAP EXCEPT THE BRIDGE SEAT BUILDUPS SHALL BE SLOPED TRANSVERSELY FROM THE FILL FACE TO THE BACK FACE AT THE RATE OF 2%.

THE TOP SURFACE AREAS OF THE END BENT CAPS SHALL BE CURED IN ACCORDANCE WITH THE STANDARD SPECIFICATIONS EXCEPT THE MEMBRANE CURING COMPOUND METHOD SHALL NOT BE USED.

THE CONTRACTOR SHALL PROVIDE FOR INSTALLATION OF THE 4" DIAMETER DRAIN PIPE THROUGH THE WING WALL AS REQUIRED FOR REINFORCED BRIDGE APPROACH FILLS, SEE THE ROADWAY PLANS. REINFORCING STEEL IN THE WING WALL MAY BE SHIFTED AS NECESSARY TO CLEAR THE DRAIN PIPE.

MECHANICAL BUTT SPLICES SHALL BE USED IN ACCORDANCE WITH THE STANDARD SPECIFICATIONS. NO SEPARATE PAYMENT SHALL BE MADE FOR THE MECHANICAL BUTT SPLICES.

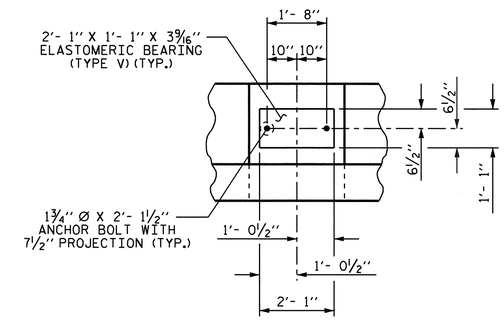

DETAIL A

(TYP. EACH GIRDER)

TOP OF PILE ELEVATIONS (STAGE I)			
1	EL. 1091.749	7	EL. 1092.806
2	EL. 1091.925	8	EL. 1092.982
3	EL. 1092.101	9	EL. 1093.159
4	EL. 1092.277	10	EL. 1093.335
5	EL. 1092.454	11	EL. 1093.511
6	EL. 1092.630	12	EL. 1093.632

PROJECT NO. U-2550B

BURKE COUNTY

STATION: STA. 48+87.35 -Y1-

SHEET 1 OF 4

STATE OF NORTH CAROLINA
DEPARTMENT OF TRANSPORTATION
RALEIGH

SUBSTRUCTURE END BENT #1 (STAGE I)

NORTH CAROLINA PROFESSIONAL SEAL 15825 ENGINEER BRYAN D. KLAPPENBACH
4-29-2011

REVISIONS								SHEET NO.
NO.	BY:	DATE:	NO.	BY:	DATE:			S-82
1			3					TOTAL SHEETS
2			4					93

DRAWN BY : D. A. GLADDEN DATE : 12-6-10
CHECKED BY : E. C. LOCKLEAR DATE : 2-11

27-APR-2011 09:18
R:\Structures\Bailey\Str2\dgladden\Microstation\U255B_SD_EBTS.dgn
dgladden

STR. #2

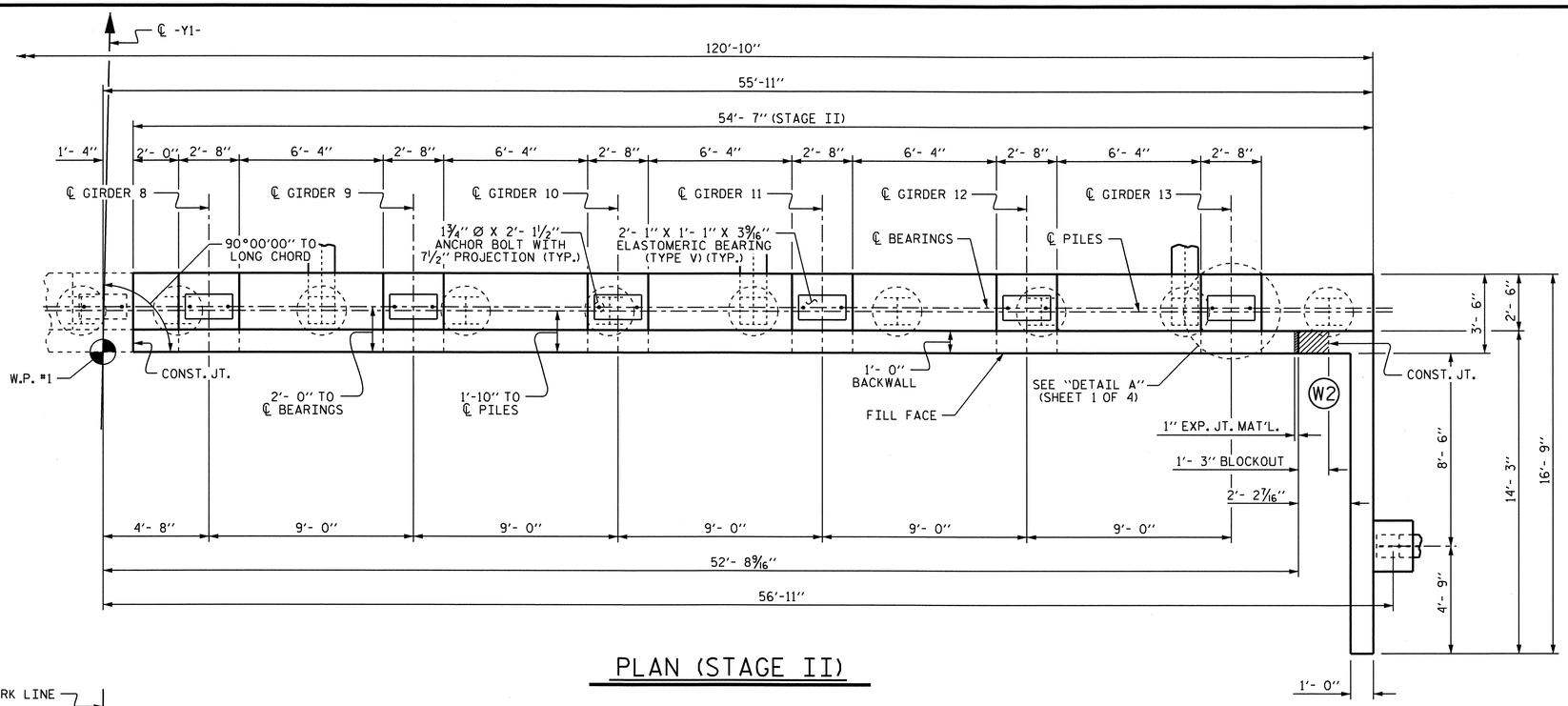

PLAN (STAGE II)

ELEVATIONS BETWEEN BRIDGE SEATS		
STAGE I		
LOCATION	EL. "A"	EL. "B"
GDR. #1	1093.828	1093.904
GDR. #2	1094.104	1094.180
GDR. #3	1094.380	1094.457
GDR. #4	1094.657	1094.733
GDR. #5	1094.933	1095.009
GDR. #6	1095.209	1095.286
GDR. #7	1095.486	1095.562
STAGE II		
LOCATION	EL. "A"	EL. "B"
GDR. #8	1095.619	1095.695
GDR. #9	1095.876	1095.952
GDR. #10	1096.134	1096.210
GDR. #11	1096.391	1096.467
GDR. #12	1096.648	1096.724
GDR. #13	1096.905	1096.981

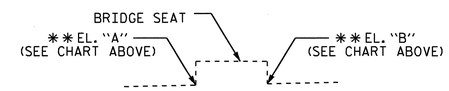

DETAIL B

** FOR ELEVATION BETWEEN BRIDGE SEATS, SEE "SECTION A-A (SHEET 4 OF 4)

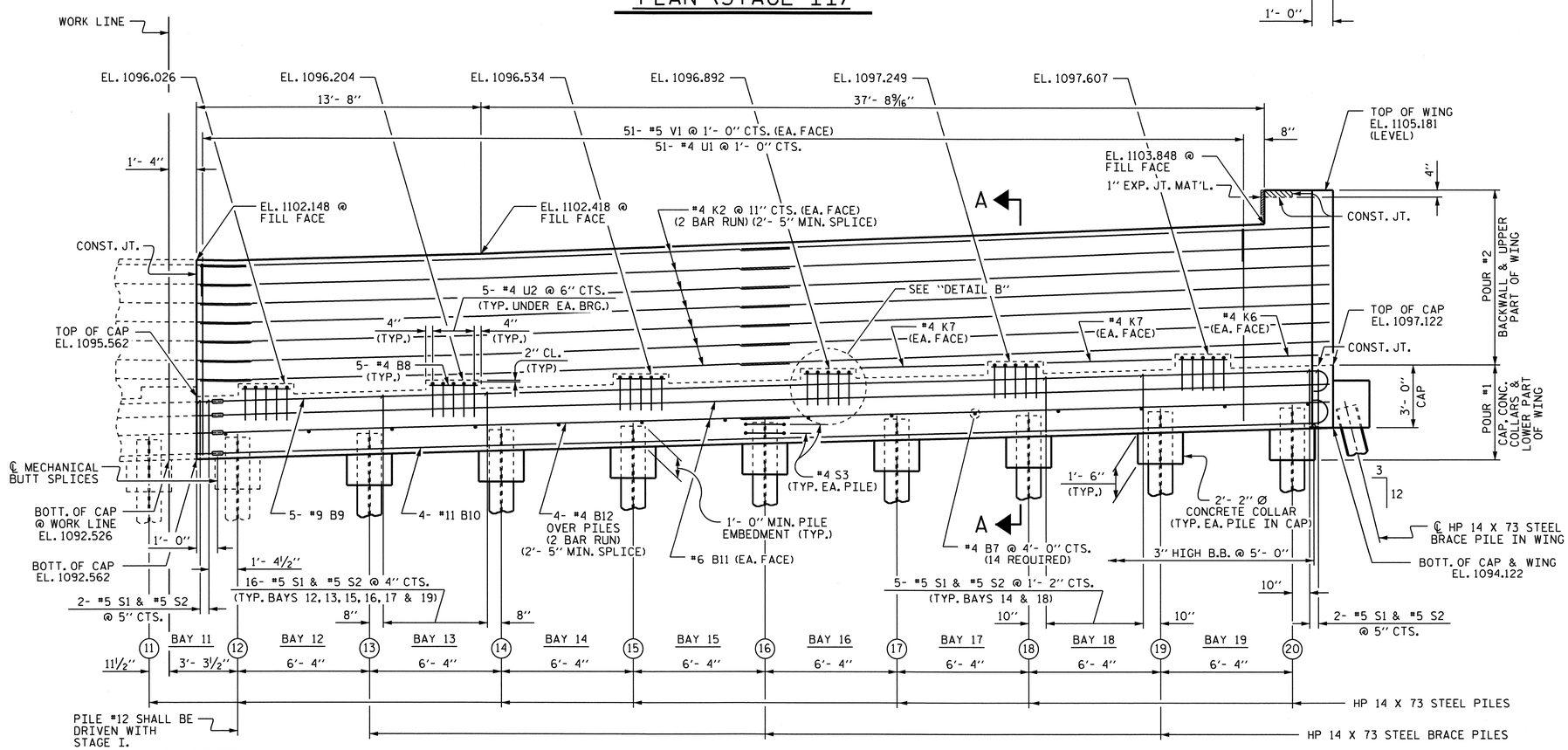

ELEVATION (STAGE II)

TOP OF PILE ELEVATIONS (STAGE II)			
13	EL. 1093.813	17	EL. 1094.537
14	EL. 1093.994	18	EL. 1094.718
15	EL. 1094.175	19	EL. 1094.899
16	EL. 1094.356	20	EL. 1095.080

PROJECT NO. U-2550B

BURKE COUNTY

STATION: STA. 48+87.35 -Y1-

SHEET 2 OF 4

STATE OF NORTH CAROLINA
DEPARTMENT OF TRANSPORTATION
RALEIGH

SUBSTRUCTURE END BENT #1 (STAGE II)

NORTH CAROLINA PROFESSIONAL SEAL 15825 ENGINEER BRUCE D. KLAPPENBACH
4-29-2011

REVISIONS							SHEET NO.
NO.	BY:	DATE:	NO.	BY:	DATE:		S-83
1			3				TOTAL SHEETS
2			4				93

STR. #2

DRAWN BY : D. A. GLADDEN DATE : 12-6-10
CHECKED BY : E. C. LOCKLEAR DATE : 2-11

27-APR-2011 09:17
R:\Structures\Bailey\Str2\dgladden\Microstation\U255B_SD_EBTS.dgn
dgladden

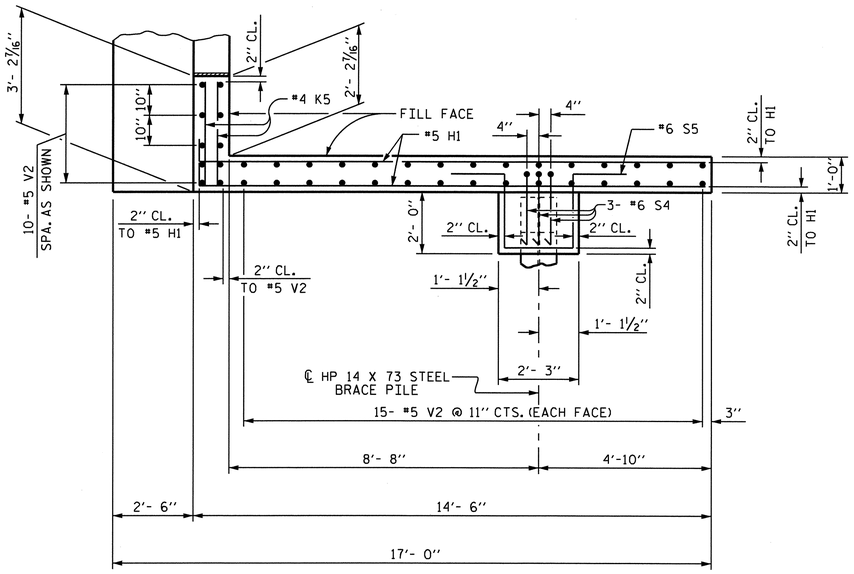

PLAN OF LEFT WING (STAGE I) (W1)

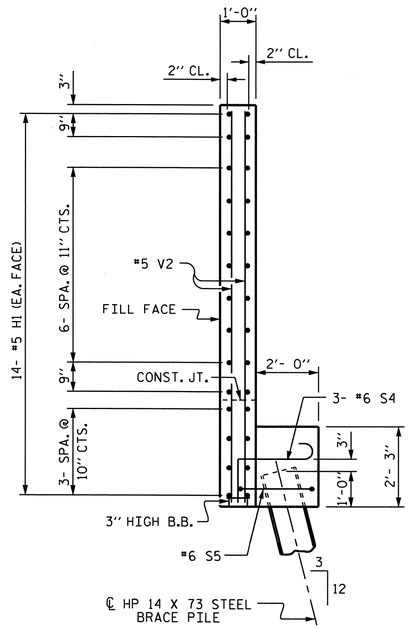

SECTION X-X

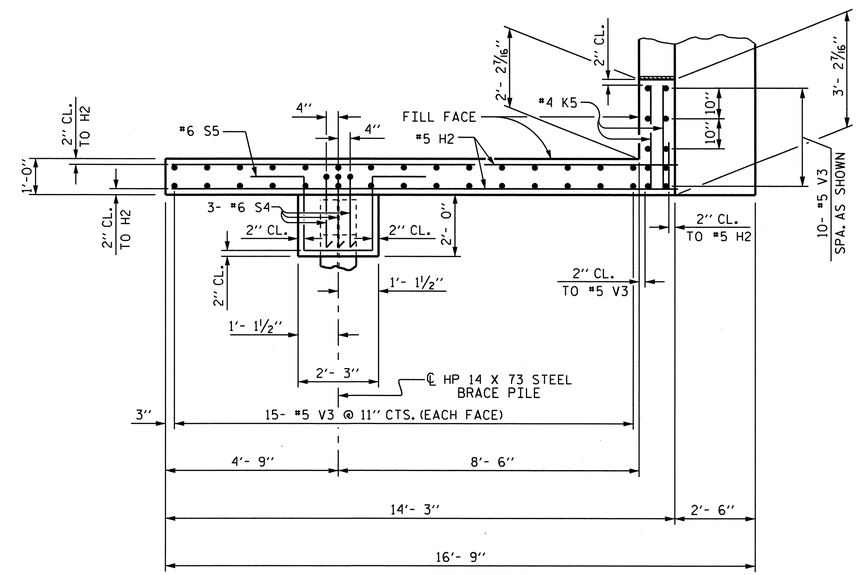

PLAN OF RIGHT WING (STAGE II) (W2)

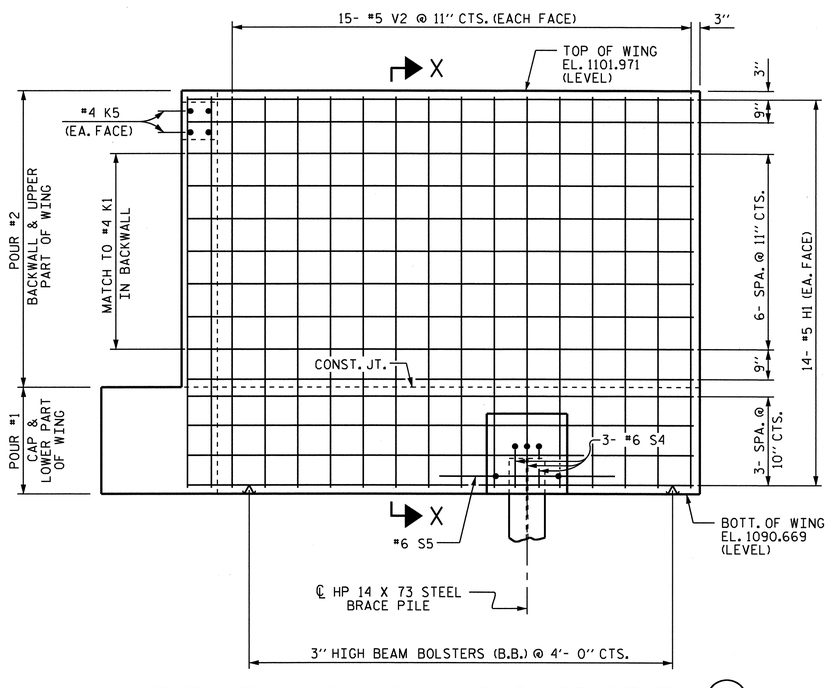

ELEVATION OF LEFT WING (STAGE I) (W1)

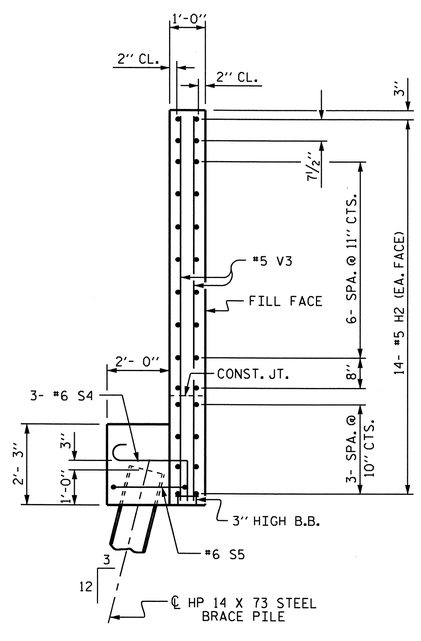

SECTION Y-Y

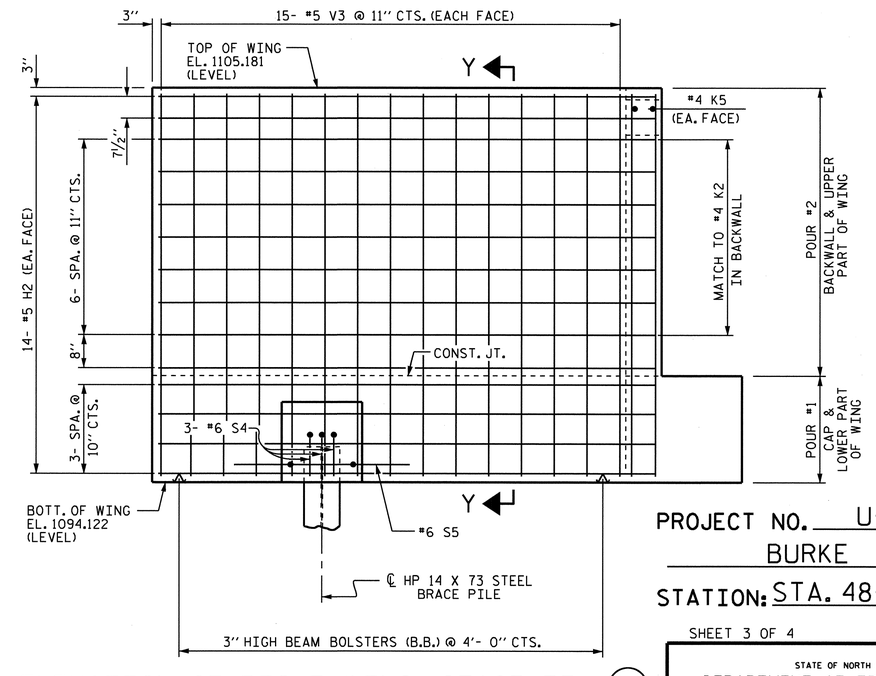

ELEVATION OF RIGHT WING (STAGE II) (W2)

PROJECT NO. U-2550B

BURKE COUNTY

STATION: STA. 48+87.35 -Y1-

SHEET 3 OF 4

STATE OF NORTH CAROLINA
DEPARTMENT OF TRANSPORTATION
RALEIGH

SUBSTRUCTURE
END BENT #1

NORTH CAROLINA PROFESSIONAL SEAL 15825 ENGINEER BRUCE D. KLAPPENBACH
4-29-2011

REVISIONS						SHEET NO.
NO.	BY:	DATE:	NO.	BY:	DATE:	S-84
1			3			TOTAL SHEETS
2			4			93

DRAWN BY : D. A. GLADDEN DATE : 12-6-10
CHECKED BY : E. C. LOCKLEAR DATE : 2-11

27-APR-2011 06:52
R:\Structures\Bailey\Str2\dgladden\Microstation\U2550B_SD_EBTS.dgn
dgladden

STR. #2

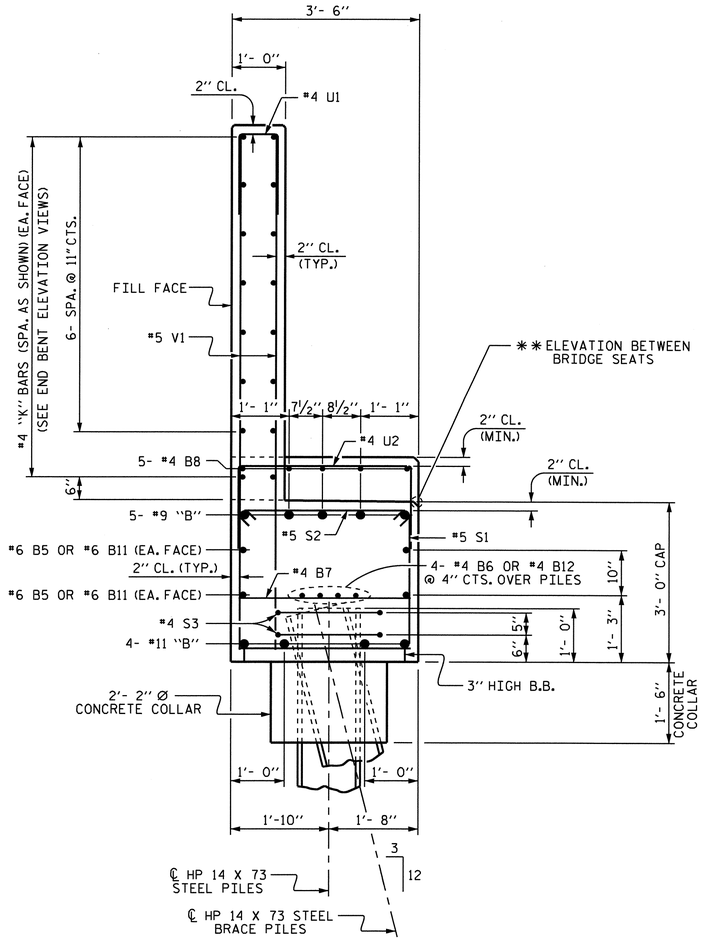

SECTION A-A

BAR TYPES

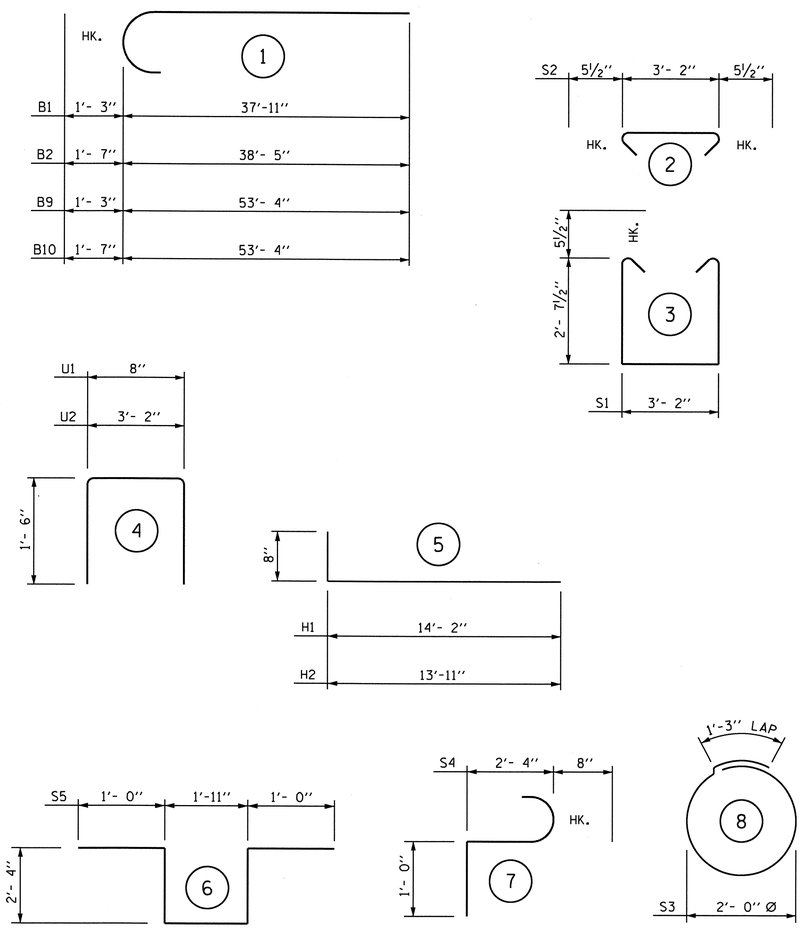

ALL BAR DIMENSIONS ARE OUT TO OUT.

BILL OF MATERIAL

STAGE I

BAR	NO.	SIZE	TYPE	LENGTH	WEIGHT
B1	5	#9	1	39'- 2"	666
B2	4	#11	1	40'- 0"	850
B3	5	#9	STR	37'-11"	645
B4	4	#11	STR	38'- 5"	816
B5	8	#6	STR	35'- 6"	427
B6	12	#4	STR	24'- 7"	197
B7	17	#4	STR	3'- 2"	36
B8	35	#4	STR	2'- 4"	55
H1	28	#5	5	14'-10"	433
K1	42	#4	STR	24'- 7"	690
K3	2	#4	STR	5'- 3"	7
K4	12	#4	STR	6'- 8"	53
K5	4	#4	STR	2'-10"	8
S1	92	#5	3	9'- 4"	896
S2	92	#5	2	4'- 1"	392
S3	22	#4	8	7'- 7"	111
S4	3	#6	7	4'- 0"	18
S5	1	#6	6	8'- 7"	13
U1	63	#4	4	3'- 8"	154
U2	35	#4	4	6'- 2"	144
V1	126	#5	STR	9'- 2"	1205
V2	40	#5	STR	10'-11"	455

REINFORCING STEEL = 8271 LBS

CLASS A CONCRETE BREAKDOWN

POUR #1 (CAP, CONCRETE COLLAR & LOWER PART OF WING)	=	31.9 C.Y.
POUR #2 BACKWALL & UPPER PART OF WING	=	21.3 C.Y.
TOTAL CLASS A CONCRETE	=	53.2 C.Y.

HP 14 X 73 STEEL PILES
NO. 13 LIN. FT. 645

STAGE II

BAR	NO.	SIZE	TYPE	LENGTH	WEIGHT
B7	14	#4	STR	3'- 2"	30
B8	30	#4	STR	2'- 4"	47
B9	5	#9	1	54'- 7"	928
B10	4	#11	1	54'-11"	1167
B11	4	#6	STR	53'- 5"	321
B12	8	#4	STR	28'- 5"	152
H2	28	#5	5	14'- 7"	426
K2	28	#4	STR	28'- 5"	532
K5	2	#4	STR	2'-10"	4
K6	2	#4	STR	4'- 7"	6
K7	4	#4	STR	6'- 0"	16
S1	110	#5	3	9'- 4"	1071
S2	110	#5	2	4'- 1"	468
S3	18	#4	8	7'- 7"	91
S4	3	#6	7	4'- 0"	18
S5	1	#6	6	8'- 7"	13
U1	51	#4	4	3'- 8"	125
U2	30	#4	4	6'- 2"	124
V1	102	#5	STR	9'- 2"	975
V3	40	#5	STR	10'- 8"	445

REINFORCING STEEL = 6959 LBS

CLASS A CONCRETE BREAKDOWN

POUR #1 (CAP, CONCRETE COLLAR & LOWER PART OF WING)	=	25.9 C.Y.
POUR #2 BACKWALL & UPPER PART OF WING	=	17.5 C.Y.
TOTAL CLASS A CONCRETE	=	43.4 C.Y.

HP 14 X 73 STEEL PILES
NO. 9 LIN. FT. 405

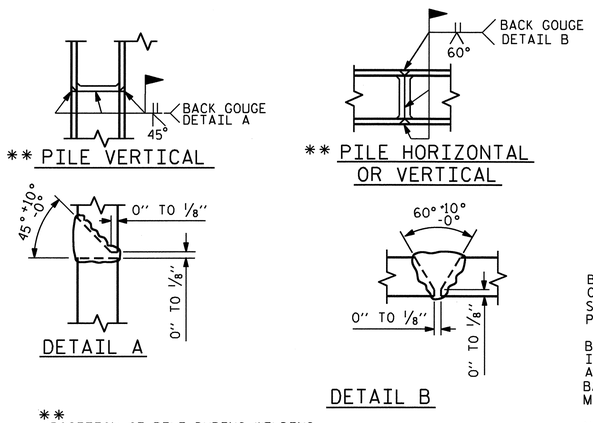

** POSITION OF PILE DURING WELDING.

PILE SPLICE DETAILS

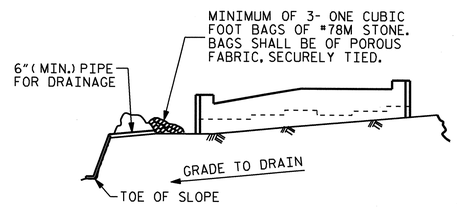

BAGGED STONE AND PIPE SHALL BE PLACED IMMEDIATELY AFTER COMPLETION OF END BENT EXCAVATION. PIPE MAY BE EITHER CONCRETE, CORRUGATED STEEL, CORRUGATED ALUMINUM ALLOY, OR CORRUGATED PLASTIC. PERFORATED PIPE WILL NOT BE ALLOWED.

BAGGED STONE SHALL REMAIN IN PLACE UNTIL THE ENGINEER DIRECTS THAT IT BE REMOVED. THE CONTRACTOR SHALL REMOVE AND DISPOSE OF SILT ACCUMULATIONS AT BAGGED STONE WHEN SO DIRECTED BY THE ENGINEER. BAGS SHALL BE REMOVED AND REPLACED WHENEVER THE ENGINEER DETERMINES THAT THEY HAVE DETERIORATED AND LOST THEIR EFFECTIVENESS.

NO SEPARATE PAYMENT WILL BE MADE FOR THIS WORK AND THE ENTIRE COST OF THIS WORK SHALL BE INCLUDED IN THE UNIT CONTRACT PRICE BID FOR THE SEVERAL PAY ITEMS.

TEMPORARY DRAINAGE AT END BENT

END BENT #1 BILL OF MATERIAL

		STAGE I	STAGE II	TOTAL
REINFORCING STEEL	(LBS)	8271	6959	15230
CLASS A CONCRETE	(C.Y.)	53.2	43.4	96.6
HP 14 X 73 PILES	(LIN. FT.)	645	405	1050

PROJECT NO. U-2550B
BURKE COUNTY
STATION: STA. 48+87.35 -Y1-

SHEET 4 OF 4

STATE OF NORTH CAROLINA
DEPARTMENT OF TRANSPORTATION
RALEIGH

SUBSTRUCTURE
END BENT #1

NORTH CAROLINA PROFESSIONAL SEAL 15825 ENGINEER BRUCE D. KLAPPENBERGER
4-27-2011

REVISIONS							SHEET NO.
NO.	BY:	DATE:	NO.	BY:	DATE:		S-85
1			3				TOTAL SHEETS
2			4				93

DRAWN BY : D. A. GLADDEN DATE : 12-6-10
CHECKED BY : E. C. LOCKLEAR DATE : 2-11

27-APR-2011 06:53
R:\Structures\Bailey\Str2\dgladden\Microstation\U255B_SD_EBTS.dgn
dgladden

STR. #2

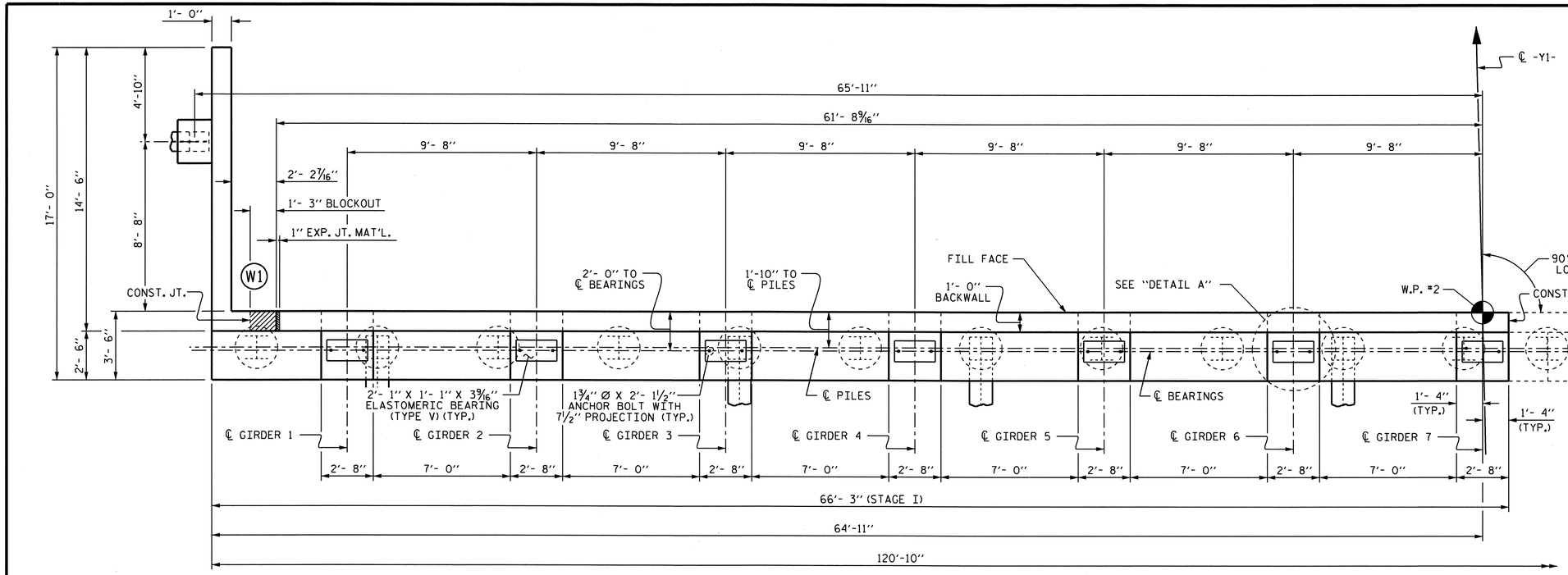

PLAN (STAGE I)

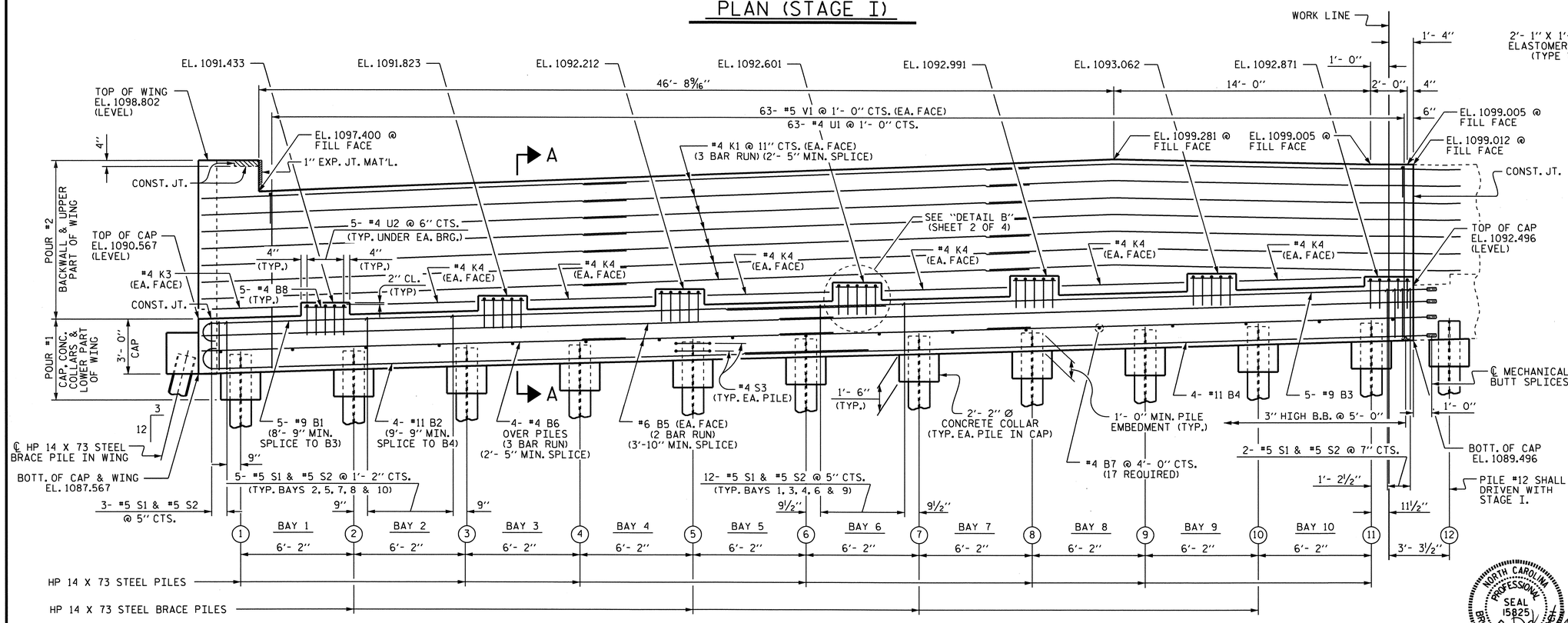

ELEVATION (STAGE I)

NOTES

STIRRUPS IN CAP MAY BE SHIFTED AS NECESSARY TO CLEAR ANCHOR BOLTS.

BACKWALL SHALL BE PLACED BEFORE APPLYING THE EPOXY PROTECTIVE COATING.

THE TOP SURFACE OF THE END BENT CAP EXCEPT THE BRIDGE SEAT BUILDUPS SHALL BE SLOPED TRANSVERSELY FROM THE FILL FACE TO THE BACK FACE AT THE RATE OF 2%.

THE TOP SURFACE AREAS OF THE END BENT CAPS SHALL BE CURED IN ACCORDANCE WITH THE STANDARD SPECIFICATIONS EXCEPT THE MEMBRANE CURING COMPOUND METHOD SHALL NOT BE USED.

THE CONTRACTOR SHALL PROVIDE FOR INSTALLATION OF THE 4" DIAMETER DRAIN PIPE THROUGH THE WING WALL AS REQUIRED FOR REINFORCED BRIDGE APPROACH FILLS. SEE THE ROADWAY PLANS. REINFORCING STEEL IN THE WING WALL MAY BE SHIFTED AS NECESSARY TO CLEAR THE DRAIN PIPE.

MECHANICAL BUTT SPLICES SHALL BE USED IN ACCORDANCE WITH THE STANDARD SPECIFICATIONS. NO SEPARATE PAYMENT SHALL BE MADE FOR THE MECHANICAL BUTT SPLICES.

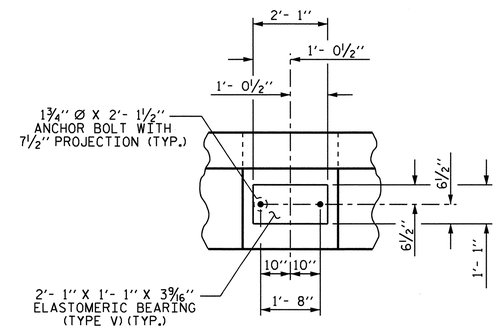

DETAIL A

(TYP. EACH GIRDER)

TOP OF PILE ELEVATIONS (STAGE I)			
1	EL. 1088.648	7	EL. 1089.726
2	EL. 1088.828	8	EL. 1089.905
3	EL. 1089.007	9	EL. 1090.085
4	EL. 1089.187	10	EL. 1090.265
5	EL. 1089.367	11	EL. 1090.444
6	EL. 1089.546	12	EL. 1090.568

PROJECT NO. U-2550B

BURKE COUNTY

STATION: STA. 48+87.35 -Y1-

SHEET 1 OF 4

STATE OF NORTH CAROLINA
DEPARTMENT OF TRANSPORTATION
RALEIGH

SUBSTRUCTURE END BENT #2 (STAGE I)

NORTH CAROLINA PROFESSIONAL SEAL 15825 ENGINEER BRUCE O. KLAPPENBACH

4-11-2011

REVISIONS								SHEET NO. S-86
NO.	BY:	DATE:	NO.	BY:	DATE:			TOTAL SHEETS 93
1			3					
2			4					

DRAWN BY : D. A. GLADDEN DATE : 12-6-10
CHECKED BY : E. C. LOCKLEAR DATE : 2-11

27-APR-2011 09:18
R:\Structures\Bailey\Str2\dgladden\Microstation\U2550B_SD_EBTS.dgn
dgladden

STR. #2

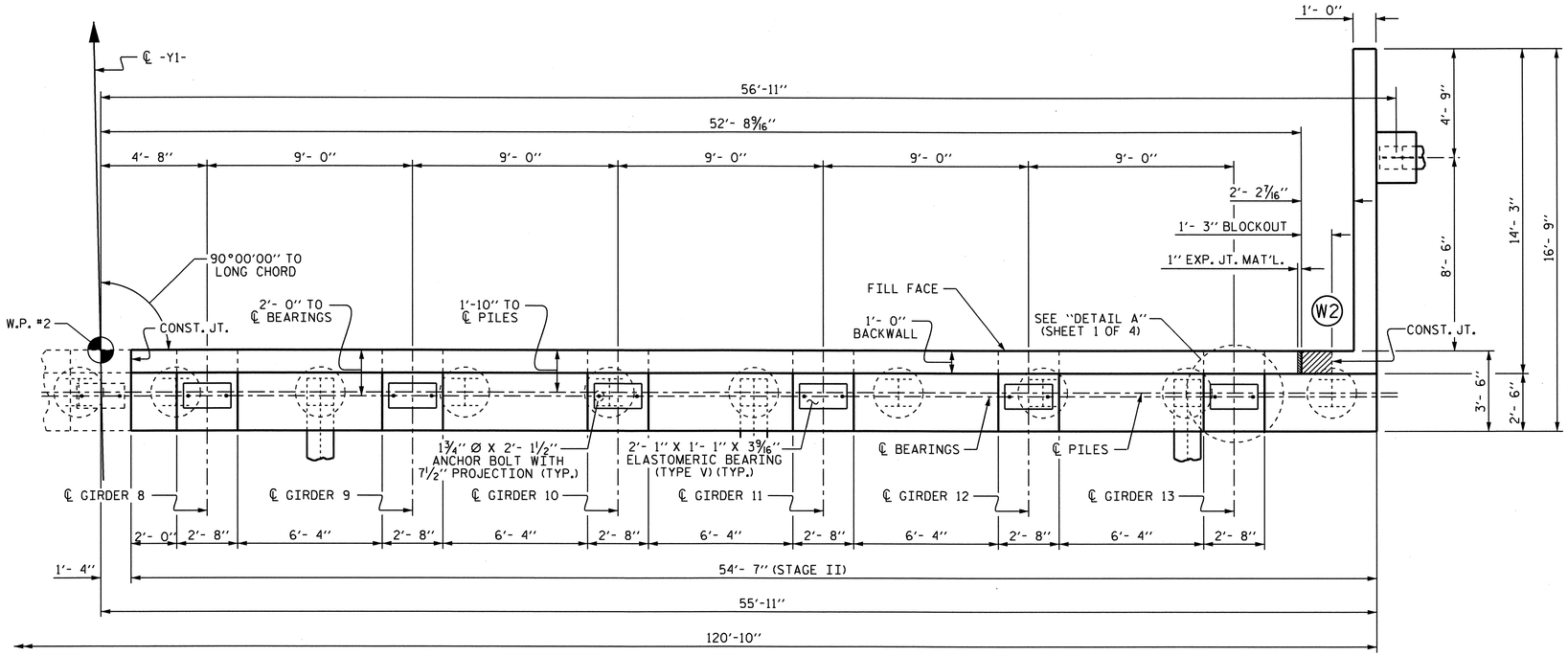

PLAN (STAGE II)

ELEVATIONS BETWEEN BRIDGE SEATS		
STAGE I		
LOCATION	EL. "A"	EL. "B"
GDR. #1	1090.730	1090.807
GDR. #2	1091.011	1091.089
GDR. #3	1091.293	1091.370
GDR. #4	1091.574	1091.652
GDR. #5	1091.856	1091.933
GDR. #6	1092.137	1092.215
GDR. #7	1092.419	1092.496
STAGE II		
LOCATION	EL. "A"	EL. "B"
GDR. #8	1092.555	1092.632
GDR. #9	1092.817	1092.895
GDR. #10	1093.079	1093.157
GDR. #11	1093.341	1093.419
GDR. #12	1093.603	1093.681
GDR. #13	1093.865	1093.943

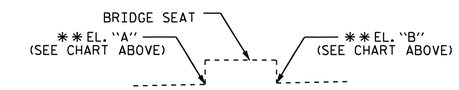

DETAIL B

** FOR ELEVATION BETWEEN BRIDGE SEATS, SEE "SECTION A-A (SHEET 4 OF 4)

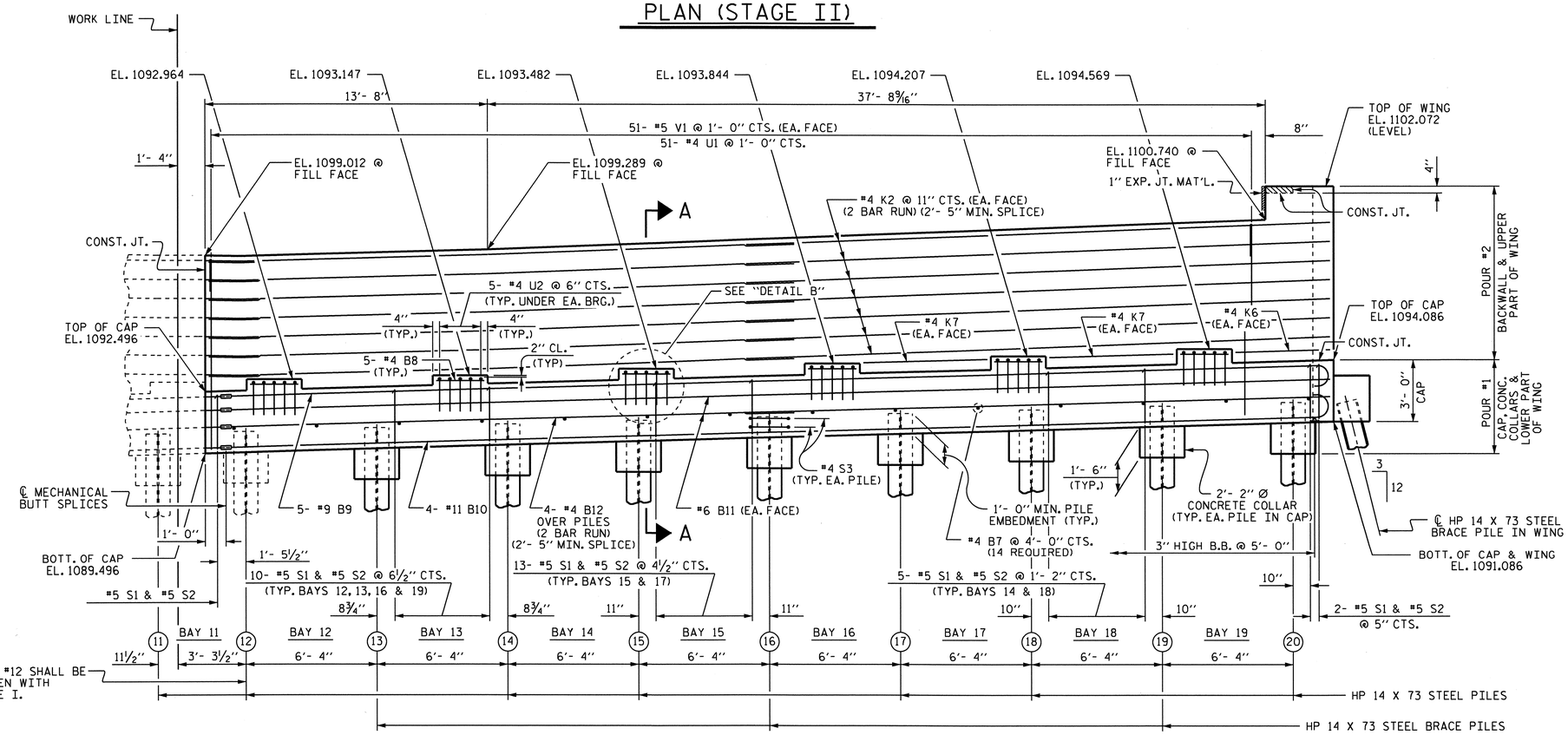

ELEVATION (STAGE II)

TOP OF PILE ELEVATIONS (STAGE II)			
13	EL. 1090.752	17	EL. 1091.490
14	EL. 1090.937	18	EL. 1091.675
15	EL. 1091.121	19	EL. 1091.859
16	EL. 1091.306	20	EL. 1092.044

PROJECT NO. U-2550B

BURKE COUNTY

STATION: STA. 48+87.35 -Y1-

SHEET 2 OF 4

STATE OF NORTH CAROLINA
DEPARTMENT OF TRANSPORTATION
RALEIGH

SUBSTRUCTURE
END BENT #2
(STAGE II)

NORTH CAROLINA PROFESSIONAL SEAL 15825 ENGINEER BRUCE D. KLAPPENBACH 4-29-2011

REVISIONS						
NO.	BY:	DATE:	NO.	BY:	DATE:	
1			3			
2			4			

SHEET NO. S-87

TOTAL SHEETS 93

STR. #2

DRAWN BY : D. A. GLADDEN DATE : 12-6-10
CHECKED BY : E. C. LOCKLEAR DATE : 2-11

27-APR-2011 08:04
R:\Structures\Bolley\Str2\dgladden\Microstation\U2550B_SD_EBTS.dgn
dgladden

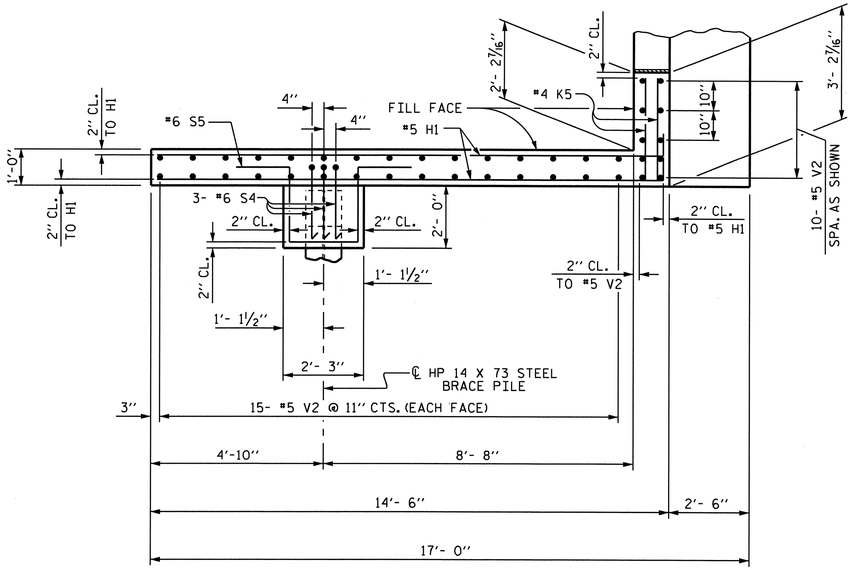

PLAN OF LEFT WING (STAGE I) (W1)

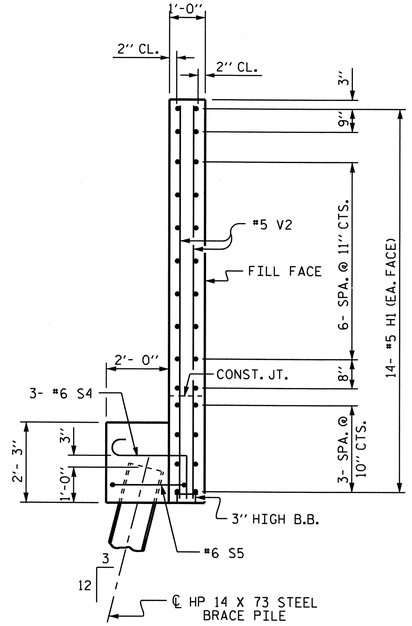

SECTION X-X

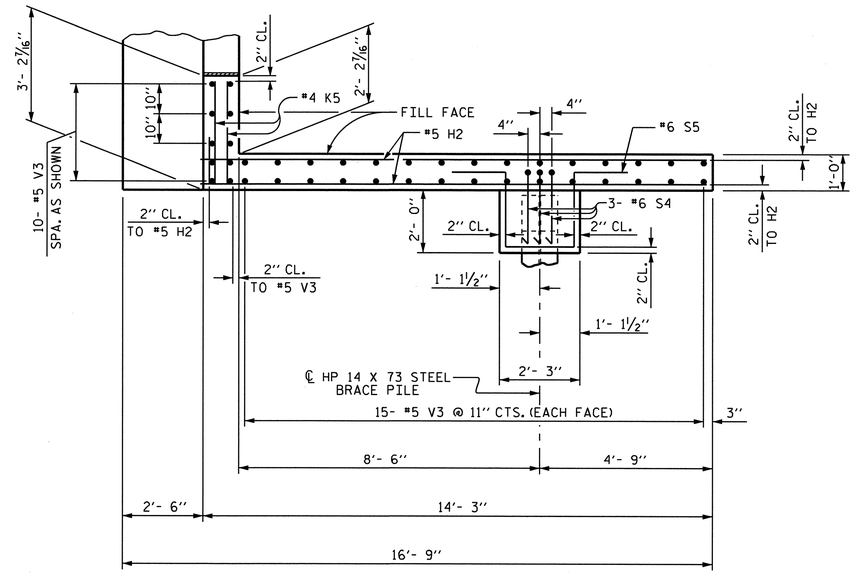

PLAN OF RIGHT WING (STAGE II) (W2)

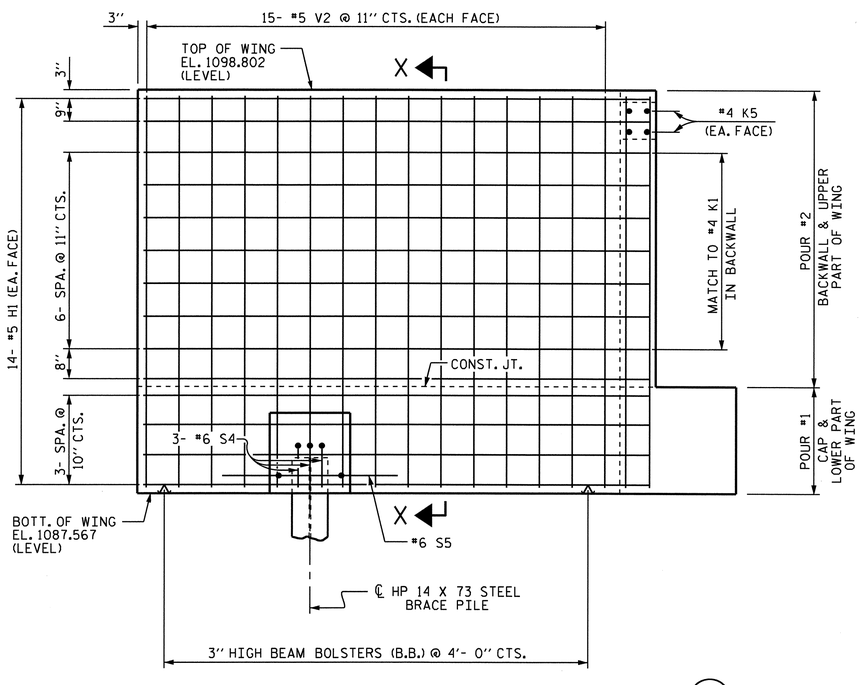

ELEVATION OF LEFT WING (STAGE I) (W1)

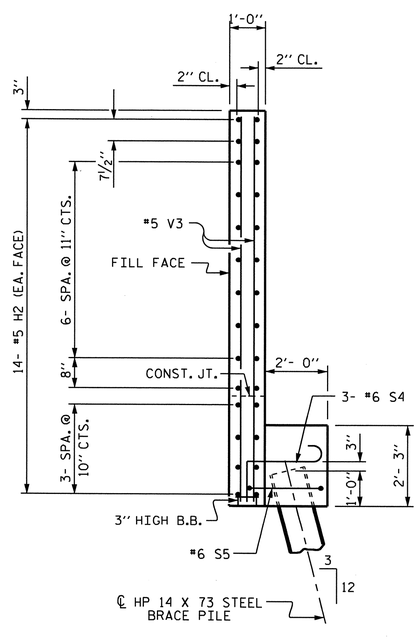

SECTION Y-Y

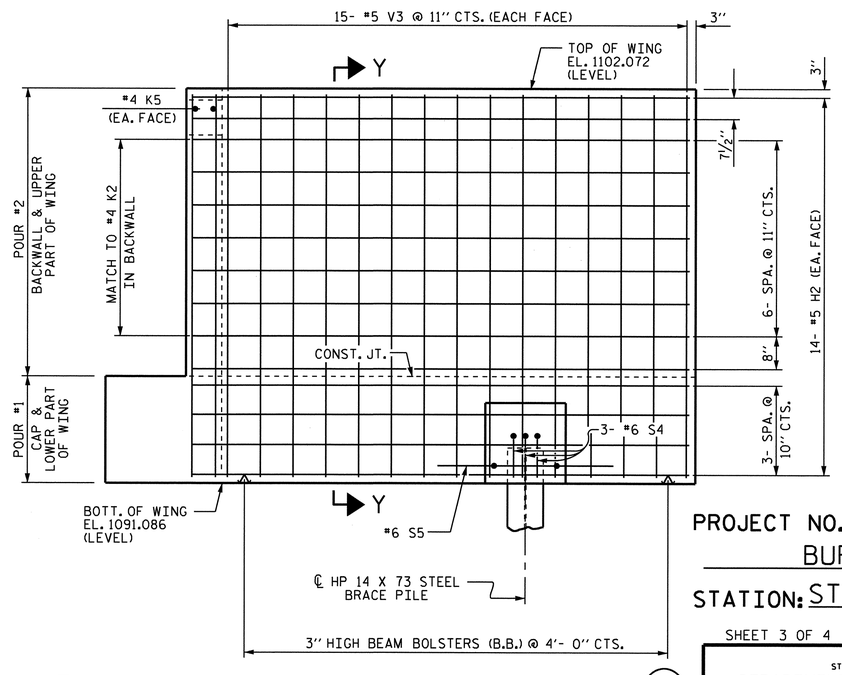

ELEVATION OF RIGHT WING (STAGE II) (W2)

PROJECT NO. U-2550B

BURKE COUNTY

STATION: STA. 48+87.35 -Y1-

SHEET 3 OF 4

STATE OF NORTH CAROLINA
DEPARTMENT OF TRANSPORTATION
RALEIGH

SUBSTRUCTURE
END BENT #2

NORTH CAROLINA PROFESSIONAL SEAL (5825) ENGINEER BRUCE D. KLAPPENBACH 4-29-2011

REVISIONS						SHEET NO.
NO.	BY:	DATE:	NO.	BY:	DATE:	S-88
1			3			TOTAL SHEETS
2			4			93

DRAWN BY : D. A. GLADDEN DATE : 12-6-10
CHECKED BY : E. C. LOCKLEAR DATE : 2-11

27-APR-2011 06:54
R:\Structures\Bailey\Str2\dgladden\Microstation\U2550B_SD_EBTS.dgn
dgladden

STR. #2

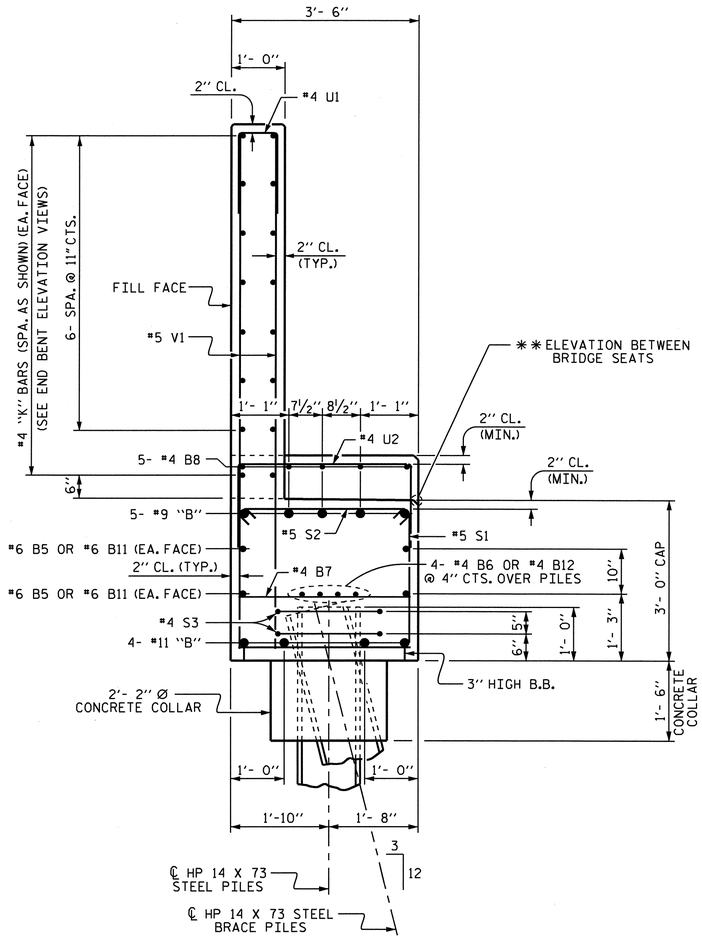

SECTION A-A

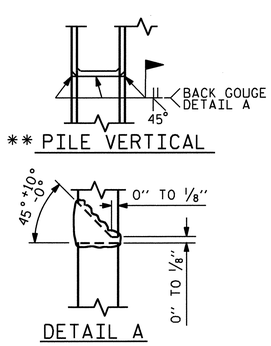

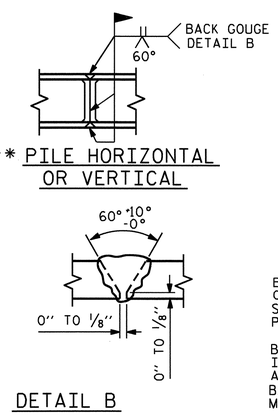

** POSITION OF PILE DURING WELDING.

PILE SPLICE DETAILS

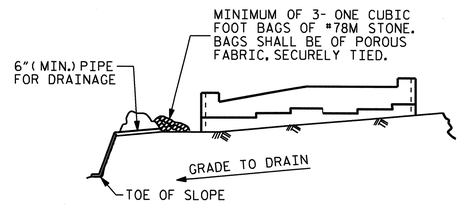

BAGGED STONE AND PIPE SHALL BE PLACED IMMEDIATELY AFTER COMPLETION OF END BENT EXCAVATION. PIPE MAY BE EITHER CONCRETE, CORRUGATED STEEL, CORRUGATED ALUMINUM ALLOY, OR CORRUGATED PLASTIC. PERFORATED PIPE WILL NOT BE ALLOWED.

BAGGED STONE SHALL REMAIN IN PLACE UNTIL THE ENGINEER DIRECTS THAT IT BE REMOVED. THE CONTRACTOR SHALL REMOVE AND DISPOSE OF SILT ACCUMULATIONS AT BAGGED STONE WHEN SO DIRECTED BY THE ENGINEER. BAGS SHALL BE REMOVED AND REPLACED WHENEVER THE ENGINEER DETERMINES THAT THEY HAVE DETERIORATED AND LOST THEIR EFFECTIVENESS.

NO SEPARATE PAYMENT WILL BE MADE FOR THIS WORK AND THE ENTIRE COST OF THIS WORK SHALL BE INCLUDED IN THE UNIT CONTRACT PRICE BID FOR THE SEVERAL PAY ITEMS.

TEMPORARY DRAINAGE AT END BENT

BAR TYPES

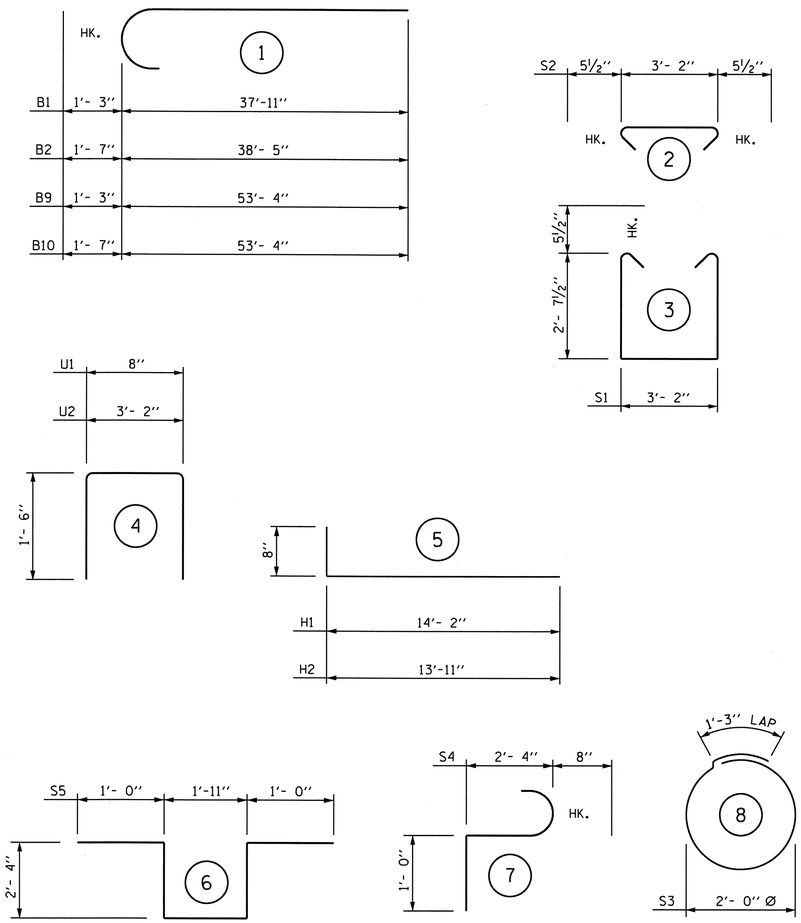

ALL BAR DIMENSIONS ARE OUT TO OUT.

BILL OF MATERIAL

STAGE I

BAR	NO.	SIZE	TYPE	LENGTH	WEIGHT
B1	5	#9	1	39'- 2"	666
B2	4	#11	1	40'- 0"	850
B3	5	#9	STR	37'-11"	645
B4	4	#11	STR	38'- 5"	816
B5	8	#6	STR	35'- 6"	427
B6	12	#4	STR	24'- 7"	197
B7	17	#4	STR	3'- 2"	36
B8	35	#4	STR	2'- 4"	55
H1	28	#5	5	14'-10"	433
K1	42	#4	STR	24'- 7"	690
K3	2	#4	STR	5'- 3"	7
K4	12	#4	STR	6'- 8"	53
K5	4	#4	STR	2'-10"	8
S1	90	#5	3	9'- 4"	876
S2	90	#5	2	4'- 1"	383
S3	22	#4	8	7'- 7"	111
S4	3	#6	7	4'- 0"	18
S5	1	#6	6	8'- 7"	13
U1	63	#4	4	3'- 8"	154
U2	35	#4	4	6'- 2"	144
V1	126	#5	STR	9'- 2"	1205
V2	40	#5	STR	10'-10"	452

REINFORCING STEEL = 8239 LBS

CLASS A CONCRETE BREAKDOWN

POUR #1 (CAP, CONCRETE COLLAR & LOWER PART OF WING) = 31.9 C.Y.

POUR #2 BACKWALL & UPPER PART OF WING = 21.2 C.Y.

TOTAL CLASS A CONCRETE = 53.1 C.Y.

HP 14 X 73 STEEL PILES

NO. 13 LIN. FT. 840

STAGE II

BAR	NO.	SIZE	TYPE	LENGTH	WEIGHT
B7	14	#4	STR	3'- 2"	30
B8	30	#4	STR	2'- 4"	47
B9	5	#9	1	54'- 7"	928
B10	4	#11	1	54'-11"	1167
B11	4	#6	STR	53'- 5"	321
B12	8	#4	STR	28'- 5"	152
H2	28	#5	5	14'- 7"	426
K2	28	#4	STR	28'- 5"	532
K5	2	#4	STR	2'-10"	4
K6	2	#4	STR	4'- 7"	6
K7	4	#4	STR	6'- 0"	16
S1	79	#5	3	9'- 4"	769
S2	79	#5	2	4'- 1"	336
S3	18	#4	8	7'- 7"	91
S4	3	#6	7	4'- 0"	18
S5	1	#6	6	8'- 7"	13
U1	51	#4	4	3'- 8"	125
U2	30	#4	4	6'- 2"	124
V1	102	#5	STR	9'- 2"	975
V3	40	#5	STR	10'- 7"	442

REINFORCING STEEL = 6522 LBS

CLASS A CONCRETE BREAKDOWN

POUR #1 (CAP, CONCRETE COLLAR & LOWER PART OF WING) = 25.9 C.Y.

POUR #2 BACKWALL & UPPER PART OF WING = 17.4 C.Y.

TOTAL CLASS A CONCRETE = 43.3 C.Y.

HP 14 X 73 STEEL PILES

NO. 9 LIN. FT. 540

END BENT #1 BILL OF MATERIAL

		STAGE I	STAGE II	TOTAL
REINFORCING STEEL	(LBS)	8239	6522	14761
CLASS A CONCRETE	(C.Y.)	53.1	43.3	96.4
HP 14 X 73 PILES	(LIN. FT.)	840	540	1380

PROJECT NO. U-2550B

BURKE COUNTY

STATION: STA. 48+87.35 -Y1-

SHEET 4 OF 4

STATE OF NORTH CAROLINA
DEPARTMENT OF TRANSPORTATION
RALEIGH

SUBSTRUCTURE
END BENT #2

NORTH CAROLINA PROFESSIONAL SEAL 15825 ENGINEER BRUCE C. KLAPPENBACH 4-20-2011

REVISIONS							SHEET NO.
NO.	BY:	DATE:	NO.	BY:	DATE:		S-89
1			3				TOTAL SHEETS
2			4				93

STR. #2

DRAWN BY : D. A. GLADDEN DATE : 12-6-10
CHECKED BY : E. C. LOCKLEAR DATE : 2-11

27-APR-2011 06:55
R:\Structures\Bailey\Str2\dgladden\Microstation\U2550B_SD_EBTS.dgn
dgladden

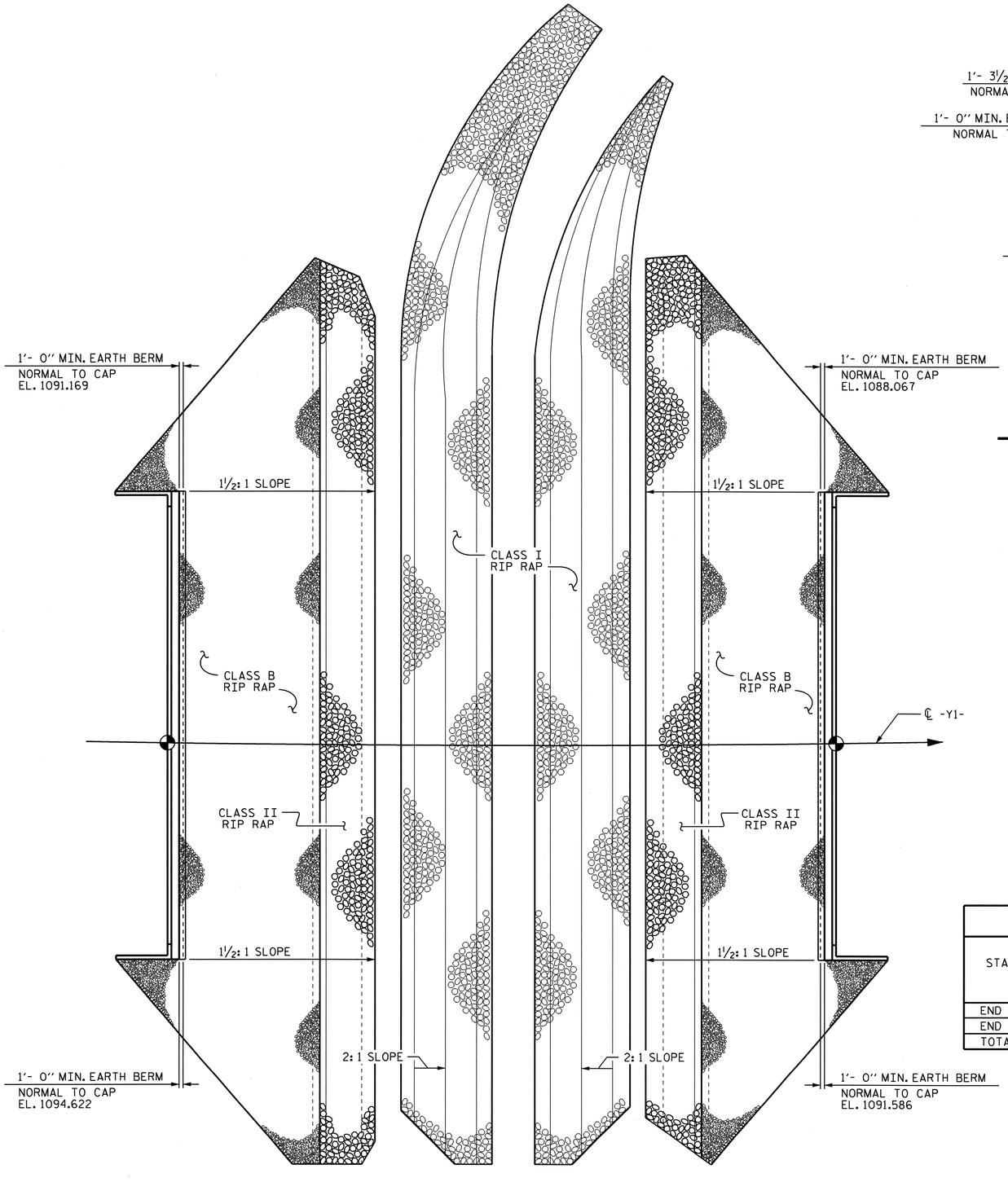

PLAN AT END BENT #1

PLAN AT END BENT #2

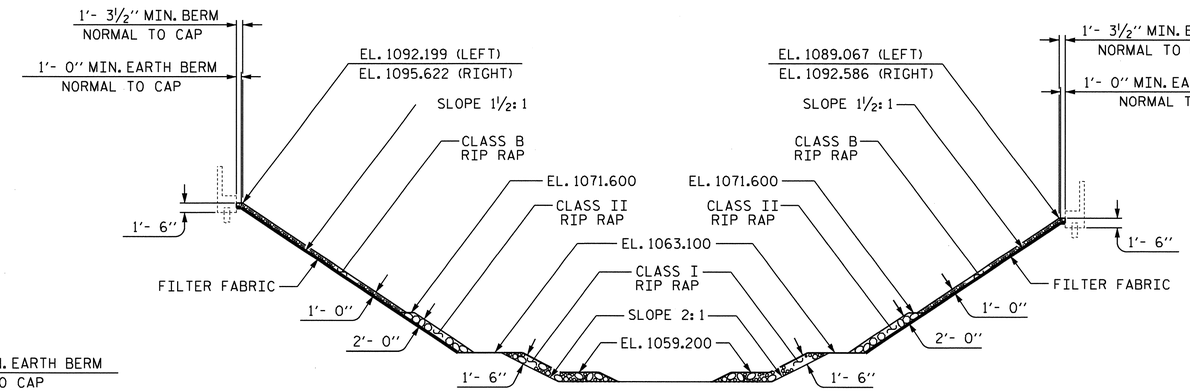

SECTION AT END BENT #1

SECTION AT END BENT #2

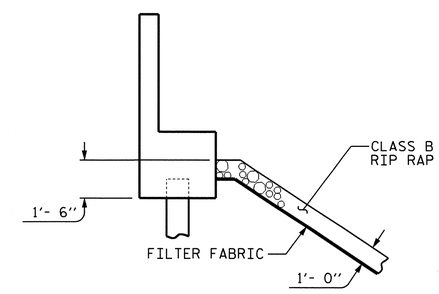

SECTION AT END BENT CAP

ESTIMATED QUANTITIES				
BRIDGE @ STA. 48+87.35 -Y1-	RIP RAP CLASS B	RIP RAP CLASS I	RIP RAP CLASS II (2'- 0" THICK)	FILTER FABRIC FOR DRAINAGE
	TONS	TONS	TONS	SQUARE YARDS
END BENT 1	440	555	345	1355
END BENT 2	415	495	345	1294
TOTAL	855	1050	690	2649

PROJECT NO. U-2550B
BURKE COUNTY
STATION: 48+87.35 -Y1-

STATE OF NORTH CAROLINA
DEPARTMENT OF TRANSPORTATION
RALEIGH

RIP RAP DETAILS

NORTH CAROLINA PROFESSIONAL SEAL 15825 ENGINEER BRUCE D. KLAPPENBACH
4-29-2011

REVISIONS						SHEET NO.
NO.	BY:	DATE:	NO.	BY:	DATE:	S-90
1			3			TOTAL SHEETS
2			4			93

DRAWN BY : D. A. GLADDEN DATE : 3-7-11
CHECKED BY : H. T. BARBOUR DATE : 3-11

26-APR-2011 10:13
R:\Structures\Bailey\Str2\dgladden\Microstation\U2550B_SD_slope.dgn
bklappenbach

STR. #2

NOTES

APPROACH SLAB SHALL NOT BE CONSTRUCTED PRIOR TO COMPLETION OF THE BRIDGE DECK.

FOR REINFORCED BRIDGE APPROACH FILL INCLUDING FABRIC, IMPERMEABLE GEOMEMBRANE, 4" Ø DRAINAGE PIPE, #78M STONE, AND SELECT MATERIAL, SEE ROADWAY PLANS.

AREA BETWEEN THE WINGWALL AND APPROACH SLAB SHALL BE GRADED TO DRAIN THE WATER AWAY FROM THE FILL FACE OF THE BRIDGE AND SHALL BE PAVED. SEE ROADWAY PLANS.

THE 6" COMP. A.B.C. SHALL BE FLUSH WITH THE ROADWAY END OF THE APPROACH SLAB AND SHALL EXTEND 1'-0" OUTSIDE EACH EDGE OF THE APPROACH SLAB.

THE CONTRACTOR MAY USE 4" TYPE B-25.0B ASPHALT CONCRETE BASE COURSE IN LIEU OF 6" COMP. A.B.C. IF THIS OPTION IS USED, THE BASE COURSE SHALL BE FLUSH WITH THE ROADWAY END OF THE APPROACH SLAB, AND THE WIDTH SHALL BE THE SAME AS THAT OF THE APPROACH SLAB.

THE CONTRACTOR MAY USE 5" CLASS "A" CONCRETE BASE IN LIEU OF 6" COMP. A.B.C. IF THIS OPTION IS USED, THE CONCRETE BASE SHALL BE FLUSH WITH THE ROADWAY END OF THE APPROACH SLAB, AND THE WIDTH SHALL BE THE SAME AS THAT OF THE APPROACH SLAB. THE CONCRETE SHALL BE FINISHED TO A SMOOTH SURFACE AND A LAYER OF 30 LB ROOFING FELT SHALL BE PLACED BETWEEN THE CONCRETE BASE AND THE APPROACH SLAB TO PREVENT BOND. THE APPROACH SLAB SHALL NOT BE CAST UNTIL THE CONCRETE BASE HAS REACHED AN AGE OF THREE CURING DAYS.

FOR EXPANSION JOINT SEALS, SEE SPECIAL PROVISIONS.

THE LENGTH OF BARRIER RAIL ON THE APPROACH SLAB IS INCLUDED IN THE LINEAR FOOT QUANTITY FOR THE CONCRETE BARRIER RAIL PAY ITEM. THE COST OF THE REINFORCING STEEL (EXCEPT FOR #5S1 BARS) AND CLASS AA CONCRETE IN THE BARRIER RAIL ON THE APPROACH SLAB SHALL NOT BE INCLUDED IN THE LUMP SUM CONTRACT PRICE BID FOR BRIDGE APPROACH SLABS.

THE LENGTH OF THE CONCRETE MEDIAN BARRIER RAIL ON THE APPROACH SLAB IS INCLUDED IN THE LINEAR FOOT QUANTITY FOR THE CONCRETE MEDIAN BARRIER RAIL PAY ITEM. THE COST OF THE REINFORCING STEEL (EXCEPT FOR #5S2 BARS) AND CLASS AA CONCRETE IN THE MEDIAN CONCRETE BARRIER RAIL ON THE APPROACH SLAB SHALL NOT BE INCLUDED IN THE LUMP SUM CONTRACT PRICE BID FOR BRIDGE APPROACH SLABS.

BAR TYPES

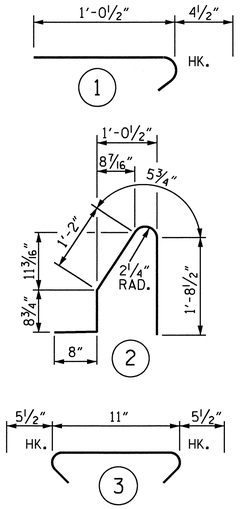

ALL BAR DIMENSIONS ARE OUT TO OUT

BILL OF MATERIAL

STAGE I

APPROACH SLAB AT EB #1						APPROACH SLAB AT EB #2					
BAR	NO.	SIZE	TYPE	LENGTH	WEIGHT	BAR	NO.	SIZE	TYPE	LENGTH	WEIGHT
✳ A1	75	#4	STR	22'-11"	1148	✳ A1	75	#4	STR	22'-11"	1148
A2	78	#4	STR	22'-8"	1181	A2	78	#4	STR	22'-8"	1181
✳ B1	123	#5	STR	23'-9"	3047	✳ B1	123	#5	STR	23'-9"	3047
B2	123	#6	STR	24'-8"	4557	B2	123	#6	STR	24'-8"	4557
✳ B3	2	#5	STR	9'-3"	19	✳ B3	2	#5	STR	9'-3"	19
B4	2	#6	STR	9'-8"	29	B4	2	#6	STR	9'-8"	29
✳ G1	2	#5	STR	33'-6"	70	✳ G1	2	#5	STR	33'-6"	70
✳ J1	61	#4	1	1'-5"	58	✳ J1	61	#4	1	1'-5"	58
✳ S1	10	#5	2	4'-9"	50	✳ S1	10	#5	2	4'-9"	50
✳ S2	48	#5	3	1'-10"	92	✳ S2	48	#5	3	1'-10"	92
REINFORCING STEEL				LBS.	5767	REINFORCING STEEL				LBS.	5767
✳ EPOXY COATED REINFORCING STEEL				LBS.	4484	✳ EPOXY COATED REINFORCING STEEL				LBS.	4484
CLASS AA CONCRETE				C. Y.	58.9	CLASS AA CONCRETE				C. Y.	58.9

STAGE II

APPROACH SLAB AT EB #1						APPROACH SLAB AT EB #2					
BAR	NO.	SIZE	TYPE	LENGTH	WEIGHT	BAR	NO.	SIZE	TYPE	LENGTH	WEIGHT
✳ A3	50	#4	STR	26'-9"	893	✳ A3	50	#4	STR	26'-9"	893
A4	52	#4	STR	26'-7"	923	A4	52	#4	STR	26'-7"	923
✳ B1	101	#5	STR	23'-9"	2502	✳ B1	101	#5	STR	23'-9"	2502
B2	101	#6	STR	24'-8"	3742	B2	101	#6	STR	24'-8"	3742
✳ B3	2	#5	STR	9'-3"	19	✳ B3	2	#5	STR	9'-3"	19
B4	2	#6	STR	9'-8"	29	B4	2	#6	STR	9'-8"	29
✳ G2	1	#5	STR	51'-4"	54	✳ G2	1	#5	STR	51'-4"	54
✳ J1	50	#4	1	1'-5"	47	✳ J1	50	#4	1	1'-5"	47
✳ S1	10	#5	2	4'-9"	50	✳ S1	10	#5	2	4'-9"	50
REINFORCING STEEL				LBS.	4694	REINFORCING STEEL				LBS.	4694
✳ EPOXY COATED REINFORCING STEEL				LBS.	3565	✳ EPOXY COATED REINFORCING STEEL				LBS.	3565
CLASS AA CONCRETE				C. Y.	48.4	CLASS AA CONCRETE				C. Y.	48.4

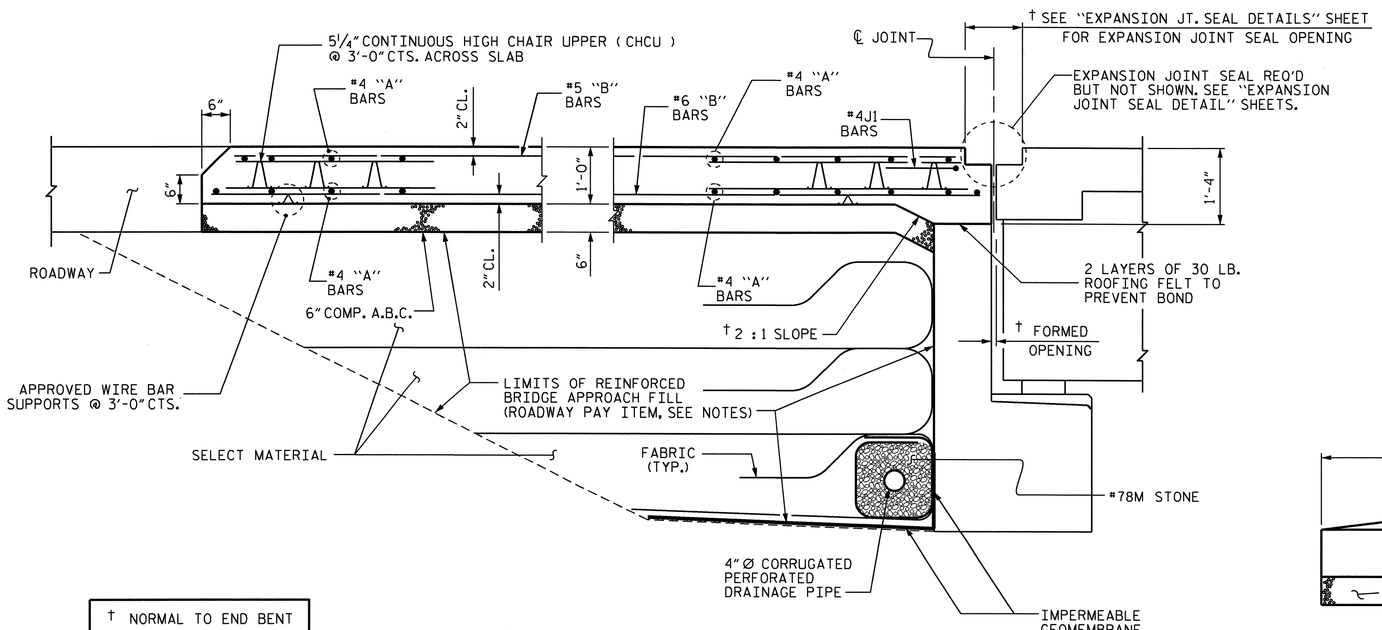

† NORMAL TO END BENT

SECTION THRU SLAB

SHOWING SECTION WITHOUT CONCRETE WEARING SURFACE

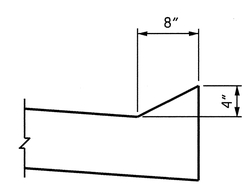

SECTION N-N

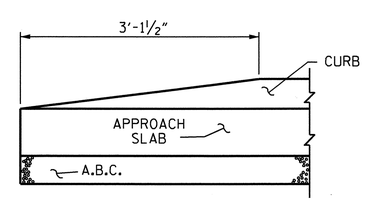

END OF CURB WITHOUT SHOULDER BERM GUTTER

CURB DETAILS

PROJECT NO. U-2550B

BURKE COUNTY

STATION: 48+87.35 -Y1-

SHEET 1 OF 3

STATE OF NORTH CAROLINA
DEPARTMENT OF TRANSPORTATION
RALEIGH

STANDARD

BRIDGE APPROACH SLAB FOR FLEXIBLE PAVEMENT

NORTH CAROLINA PROFESSIONAL SEAL 15825 ENGINEER BRUCE D. KLAPPENBACH 4-29-2011

REVISIONS						SHEET NO.
NO.	BY:	DATE:	NO.	BY:	DATE:	S-91
1			3			TOTAL SHEETS
2			4			93

ASSEMBLED BY : C.R. YARBROUGH	DATE : 01/11		
CHECKED BY : D.A. GLADDEN	DATE : 03/11		
DRAWN BY : EEM 3/95	REV. 7/10/01	LES/RDR	
CHECKED BY : VAP 3/95	REV. 5/7/03R	RWW/JTE	
	REV. 5/1/06R	KMM/GM	

25-APR-2011 15:40
R:\Structures\Bailey\Str2\cyarbrough\U-2550B_SD_AS.dgn
cyarbrough

STR. #2 STD. NO. BAS4 (SHT 4)

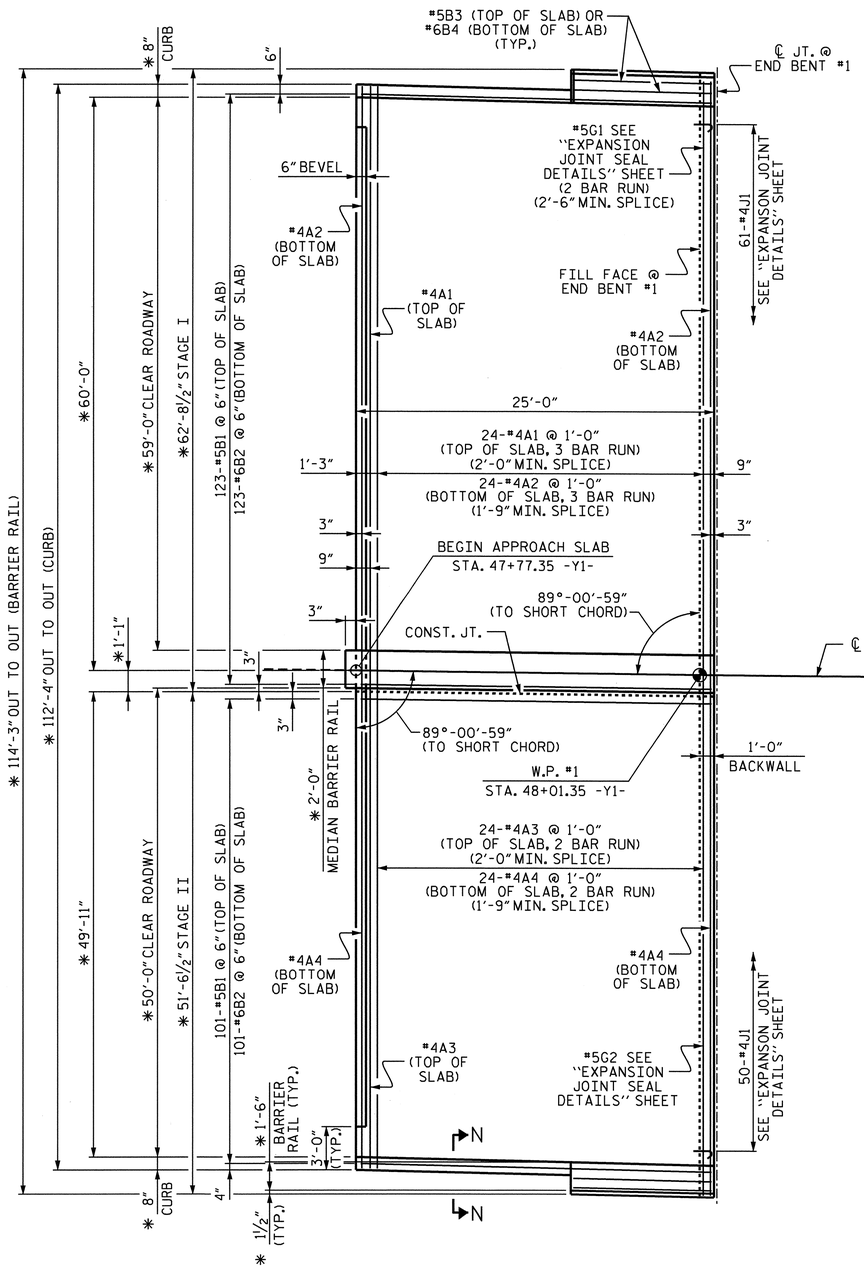

PLAN @ END BENT #1

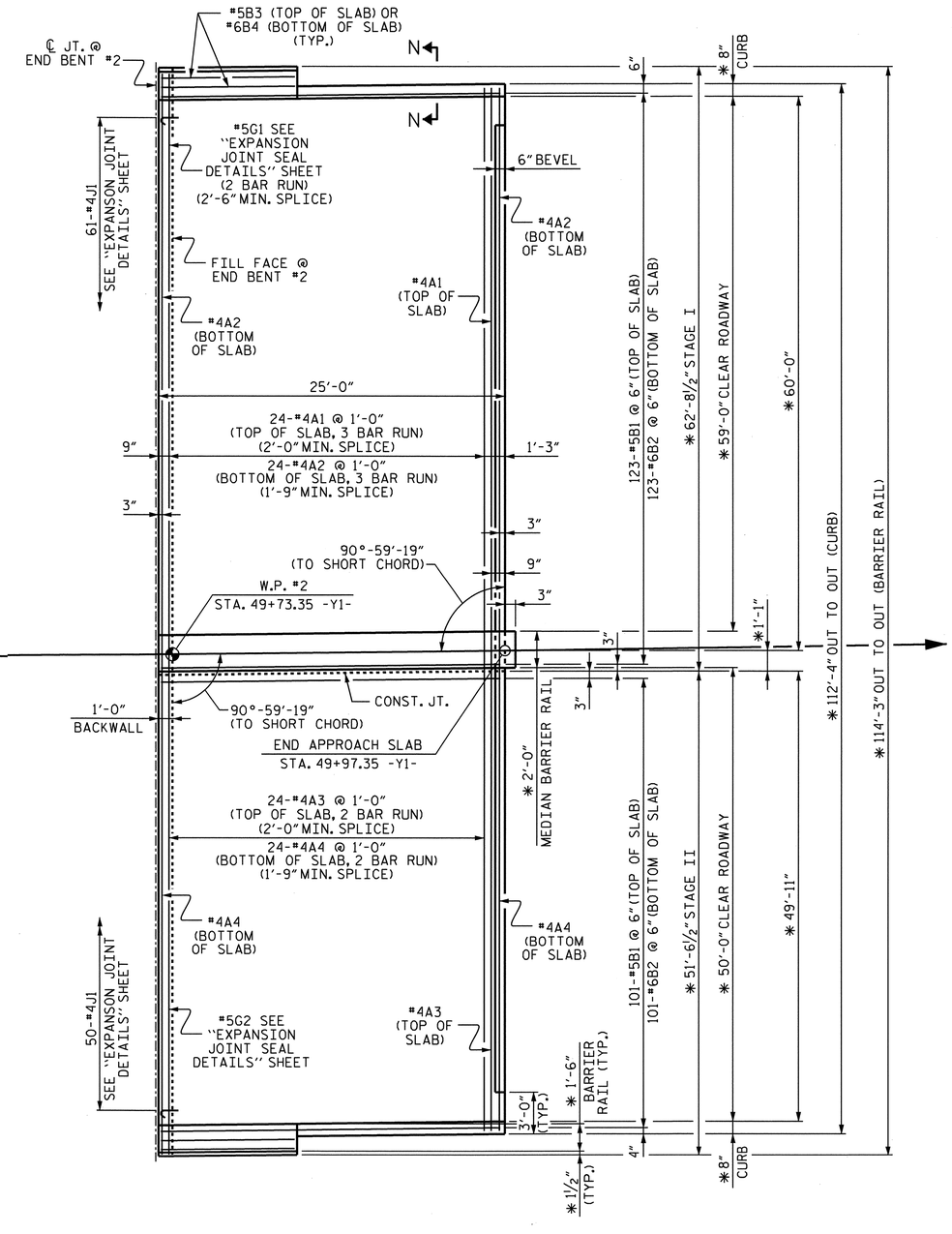

PLAN @ END BENT #2

* DIMENSIONS ARE TO CONCENTRIC CIRCLES WITH ℄ SURVEY.

"A" BARS ARE TO BE PLACED AT RIGHT ANGLES TO SHORT CHORD.

ARC OFFSETS ARE NEGLIGIBLE, THEREFORE NOT SHOWN.

PROJECT NO. U-2550B
BURKE COUNTY
STATION: 48+87.35 -Y1-

SHEET 2 OF 3

STATE OF NORTH CAROLINA
DEPARTMENT OF TRANSPORTATION
RALEIGH

BRIDGE APPROACH SLAB
FOR FLEXIBLE PAVEMENT

NORTH CAROLINA PROFESSIONAL SEAL 15825 ENGINEER BRIDGE MANAGEMENT UNIT MICHAEL D. KLAPPENBACH
4-29-2011

REVISIONS						SHEET NO.
NO.	BY:	DATE:	NO.	BY:	DATE:	S-92
1			3			TOTAL SHEETS
2			4			93

STR. #2

DRAWN BY : C.R. YARBROUGH DATE : 01/11
CHECKED BY : D.A. GLADDEN DATE : 03/11

25-APR-2011 15:39
R:\Structures\Bailey\Str2\cyarbrough\U-2550B_SD_AS.dgn
cyarbrough

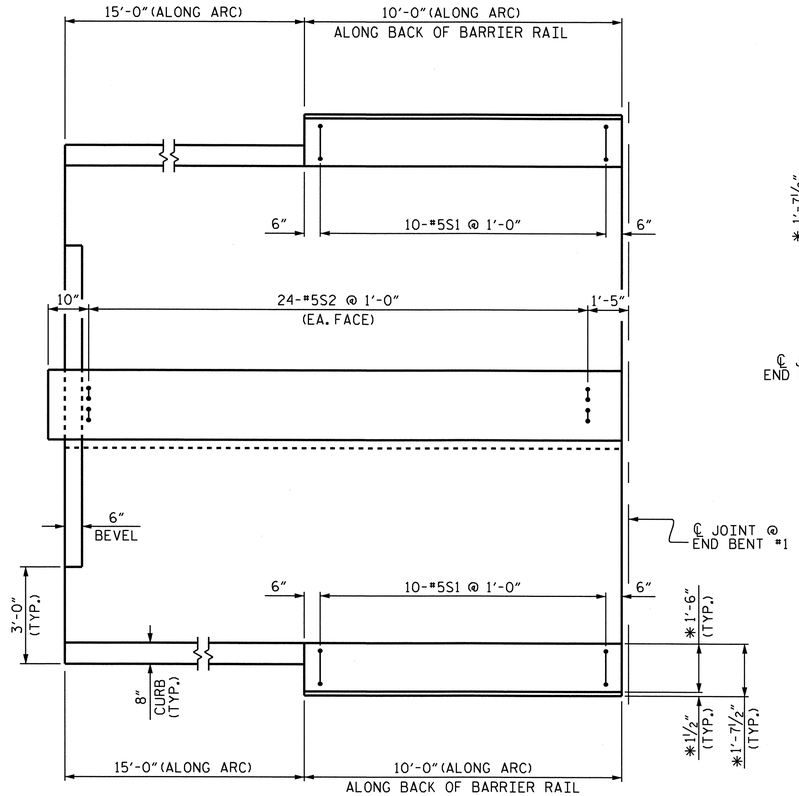

PLAN @ END BENT #1

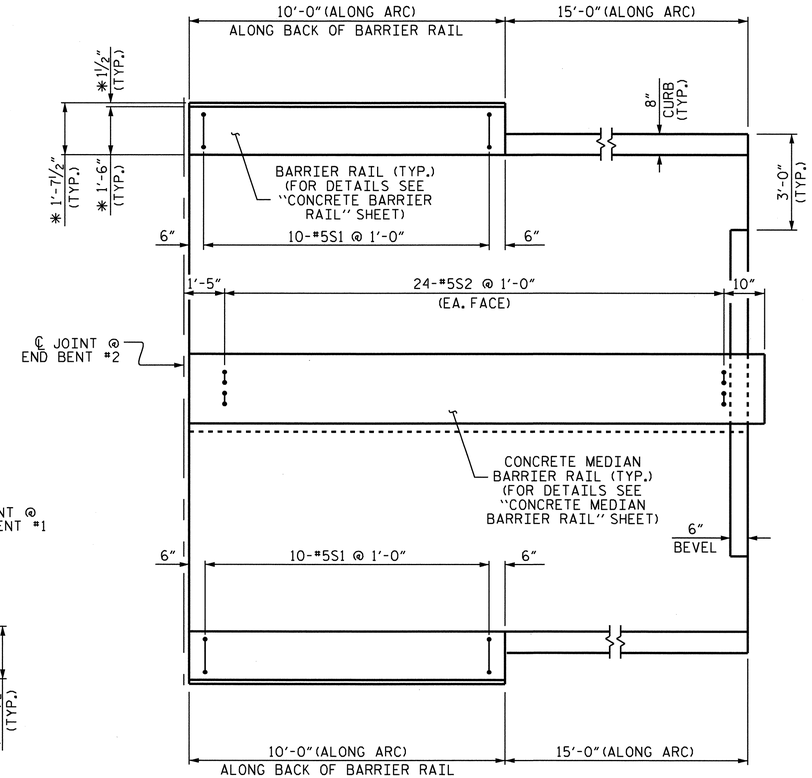

PLAN @ END BENT #2

* DIMENSIONS ARE TO CONCENTRIC CIRCLES WITH ℄ SURVEY.

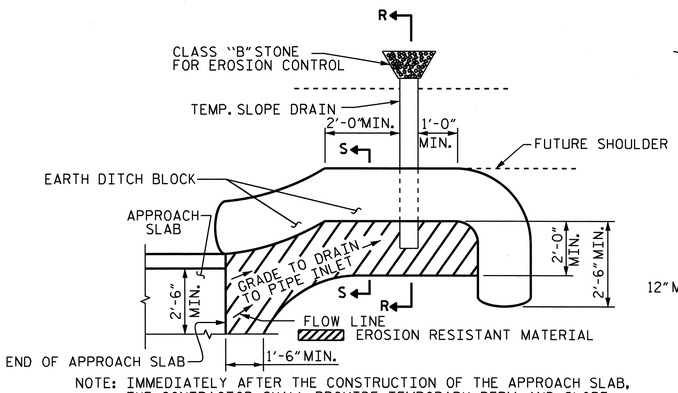

NOTE: IMMEDIATELY AFTER THE CONSTRUCTION OF THE APPROACH SLAB, THE CONTRACTOR SHALL PROVIDE TEMPORARY BERM AND SLOPE DRAIN. CONTRACTOR SHALL GRADE TO PIPE INLET AND PROVIDE EROSION RESISTANT MATERIAL AS SHOWN. THE EROSION RESISTANT MATERIAL SHALL BE EITHER 1) ASPHALT PLANT MIX, TYPE 1 OR TYPE 2, MIN. 2" DEPTH, 2) EROSION CONTROL MAT, OR 3) CONCRETE, AS DIRECTED BY THE ENGINEER. THE SLOPE DRAIN SHALL CONSIST OF A NON-PERFORATED TEMPORARY DRAINAGE PIPE, 12 INCHES IN DIAMETER.

PLAN VIEW

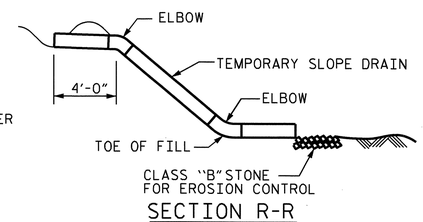

SECTION R-R

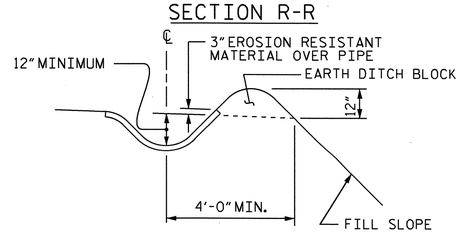

SECTION S-S

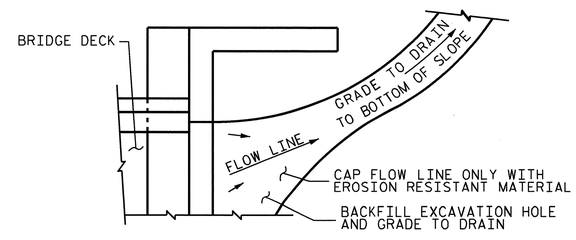

NOTE: IF THE APPROACH SLAB IS NOT CONSTRUCTED IMMEDIATELY AFTER THE BACKFILLING OF THE END BENT EXCAVATION, GRADE TO DRAIN TO THE BOTTOM OF THE SLOPE AND PROVIDE EROSION RESISTANT MATERIAL, SUCH AS FIBERGLASS ROVING OR AS DIRECTED BY THE ENGINEER TO PREVENT SOIL EROSION AND TO PROTECT THE AREA ADJACENT TO THE STRUCTURE. THE CONTRACTOR WILL BE REQUIRED TO REMOVE THESE MATERIALS PRIOR TO CONSTRUCTION OF THE APPROACH SLAB.

TEMPORARY DRAINAGE DETAIL

NORTH CAROLINA PROFESSIONAL SEAL 15825 ENGINEER BRUCE D. KLAPPENBACH 4-29-2011

PROJECT NO. U-2550B
BURKE COUNTY
STATION: 48+87.35 -Y1-

SHEET 3 OF 3

STATE OF NORTH CAROLINA
DEPARTMENT OF TRANSPORTATION
RALEIGH

STANDARD

BRIDGE APPROACH SLAB DETAILS

REVISIONS						SHEET NO.
NO.	BY:	DATE:	NO.	BY:	DATE:	S-93
1			3			TOTAL SHEETS
2			4			93

ASSEMBLED BY : C.R. YARBROUGH		DATE :	01/11
CHECKED BY : D.A. GLADDEN		DATE :	03/11
DRAWN BY : FCJ	11/88	REV. 10/17/00	RWW/LES
CHECKED BY : ARB	11/88	REV. 5/7/03	RWW/JTE
		REV. 5/1/06RR	MAA/KMM

TEMPORARY BERM AND SLOPE DRAIN DETAILS

(TO BE USED WHEN SHOULDER BERM GUTTER IS REQUIRED)

25-APR-2011 15:39
R:\Structures\Bolley\Str2\cyarbrough\U-2550B_SD_AS.dgn
cyarbrough

STR. #2 STD. NO. BAS10 (SHT 6)

BM #1: SPIKE IN BASE OF 30" SYCAMORE TREE, -YA- STA. 10+72.00, 51'-0" RIGHT, ELEV. 1073.31'

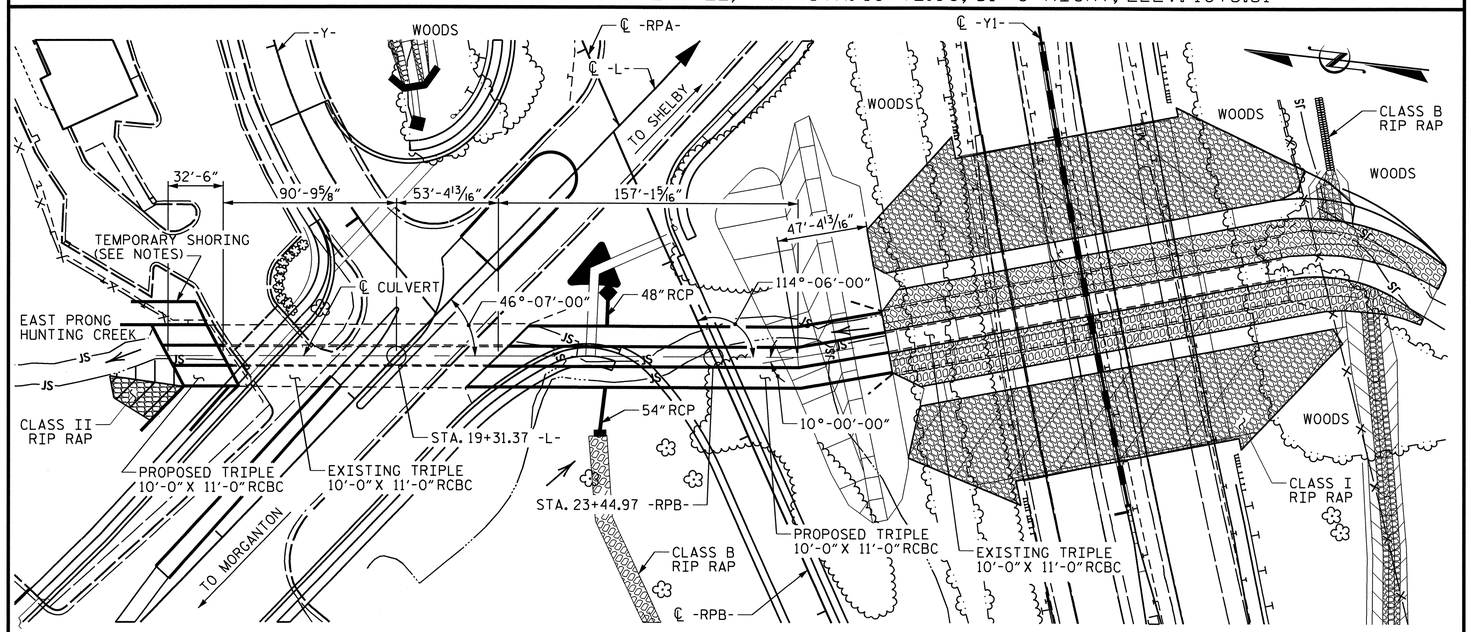

FOR UTILITY INFORMATION, SEE UTILITY PLANS AND SPECIAL PROVISIONS.

LOCATION SKETCH

TOTAL STRUCTURE QUANTITIES

LEFT EXTENSION

STAGE I CLASS A CONCRETE		
BARREL	49.9	C.Y.
WINGS ETC.	28.5	C.Y.
SUBTOTAL	78.4	C.Y.
STAGE II CLASS A CONCRETE		
BARREL	51.3	C.Y.
WINGS ETC.	23.3	C.Y.
SUBTOTAL	74.6	C.Y.
TOTAL CLASS A CONCRETE	153.0	C.Y.

STAGE I REINFORCING STEEL		
BARREL	8742	LBS.
WINGS ETC.	2084	LBS.
SUBTOTAL	10826	LBS.
STAGE II REINFORCING STEEL		
BARREL	11761	LBS.
WINGS ETC.	1271	LBS.
SUBTOTAL	13032	LBS.
TOTAL REINFORCING STEEL	23858	LBS.
CULVERT EXCAVATION	LUMP SUM	
FOUNDATION COND. MAT'L		TONS
STAGE I	53.0	TONS
STAGE II	22.0	TONS
TOTAL	75.0	TONS

RIGHT EXTENSION

STAGE I CLASS A CONCRETE		
BARREL	290.4	C.Y.
EDGE BEAM	1.2	C.Y.
SUBTOTAL	291.6	C.Y.
STAGE II CLASS A CONCRETE		
BARREL	85.4	C.Y.
CURTAIN WALL	0.7	C.Y.
SUBTOTAL	86.1	C.Y.
STAGE III CLASS A CONCRETE		
BARREL	385.3	C.Y.
EDGE BEAM	2.2	C.Y.
CURTAIN WALL	0.3	C.Y.
HEADWALL	1.5	C.Y.
SUBTOTAL	389.3	C.Y.
STAGE IV CLASS A CONCRETE		
WINGS	20.4	C.Y.
TOTAL CLASS A CONCRETE	787.4	C.Y.

STAGE I REINFORCING STEEL		
BARREL	42797	LBS.
STAGE II REINFORCING STEEL		
BARREL	12357	LBS.
STAGE III REINFORCING STEEL		
BARREL	74156	LBS.
STAGE IV REINFORCING STEEL		
WINGS	1394	LBS.
TOTAL REINFORCING STEEL	130704	LBS.
CULVERT EXCAVATION	LUMP SUM	
FOUNDATION COND. MAT'L		TONS
STAGE I	263.0	TONS
STAGE II	78.0	TONS
STAGE III	130.0	TONS
TOTAL	471.0	TONS

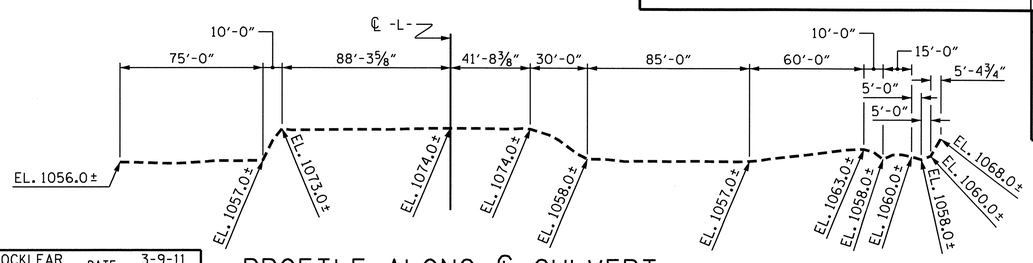

PROFILE ALONG ℄ CULVERT

DRAWN BY : E.C. LOCKLEAR DATE : 3-9-11
CHECKED BY : C. YARBROUGH DATE : 3-11

02-MAY-2011 10:11
R:\Structures\Bailey\Str3\elocklear\Microstation\U-2550B_SD_CU_03.dgn
bklappenbach

F.A. PROJECT NO. STPNHF-0018(11)

NOTES

ASSUMED LIVE LOAD HS20 OR ALTERNATE LOADING.

FOR CULVERT DIVERSION DETAILS AND PAY ITEM, SEE EROSION CONTROL PLANS.

DESIGN FILL
INLET = 14.5 FEET, OUTLET = 6.33 FEET.

FOR OTHER DESIGN DATA AND NOTES, SEE SHEET SN.

3" DIA. WEEP HOLES INDICATED TO BE IN ACCORDANCE WITH THE SPECIFICATIONS.

THE RESIDENT ENGINEER SHALL CHECK THE LENGTH OF CULVERT BEFORE STAKING IT OUT TO MAKE CERTAIN THAT IT WILL PROPERLY TAKE CARE OF THE FILL.

DIMENSIONS FOR WING LAYOUT AS WELL AS ADDITIONAL REINFORCING STEEL EMBEDDED IN BARREL ARE SHOWN ON WING SHEET.

AT THE CONTRACTORS OPTION, HE MAY SPLICE THE VERTICAL REINFORCING STEEL IN THE INTERIOR FACE OF EXTERIOR WALLS AND BOTH FACES OF INTERIOR WALLS ABOVE LOWER WALL CONSTRUCTION JOINT. THE SPLICE LENGTH SHALL BE AS PROVIDED IN THE SPLICE LENGTH CHART SHOWN ON THE PLANS. EXTRA WEIGHT OF STEEL DUE TO THE SPLICES SHALL BE PAID FOR BY THE CONTRACTOR.

THE 54" Ø & 48" Ø RCP THROUGH THE SIDEWALL OF THE CULVERT SHALL BE LOCATED BY THE ENGINEER. THE REINFORCING STEEL SHALL BE FIELD BENT AS NECESSARY TO CLEAR PIPE.

TRANSVERSE CONSTRUCTION JOINTS SHALL BE USED IN THE BARREL, SPACED TO LIMIT THE POURS TO A MAXIMUM OF 70 FEET. LOCATION OF JOINTS SHALL BE SUBJECT TO APPROVAL OF THE ENGINEER.

A 3 FOOT STRIP OF FILTER FABRIC SHALL BE ATTACHED TO THE FILL FACE OF THE WING COVERING THE ENTIRE LENGTH OF THE EXPANSION JOINT.

FOR LIMITS OF TEMPORARY SHORING FOR MAINTENANCE OF TRAFFIC, SEE TRAFFIC CONTROL PLANS. FOR PAY ITEM FOR TEMPORARY SHORING FOR MAINTENANCE OF TRAFFIC, SEE ROADWAY PLANS.

IF APPROVED BY THE ENGINEER, THE CONTRACTOR MAY USE THE EXISTING WINGS AS TEMPORARY SHORING FOR THE CONSTRUCTION OF THE CULVERT EXTENSIONS. IN THIS CASE, THE BOTTOM SLAB OF THE EXTENSION SHALL BE POURED AT LEAST 72 HOURS PRIOR TO CUTTING THE WINGS. THE WINGS MAY BE CUT EARLIER PROVIDED THE SLAB CONCRETE STRENGTH HAS REACHED A MINIMUM COMPRESSIVE STRENGTH OF 1500 PSI.

DOWELS SHALL BE USED TO CONNECT THE CULVERT EXTENSION TO THE EXISTING CULVERT AS SHOWN. FOR NOTE REGARDING SETTING OF DOWELS, SEE SHEET SN.

AT THE CONTRACTOR'S OPTION HE MAY SUBMIT, TO THE ENGINEER FOR APPROVAL, DESIGN AND DETAIL DRAWINGS FOR A PRECAST REINFORCED CONCRETE BOX CULVERT IN LIEU OF THE CAST-IN-PLACE CULVERT SHOWN ON THE PLANS. THE DESIGN SHALL PROVIDE THE SAME SIZE AND NUMBER OF BARRELS AS USED ON THE CAST-IN-PLACE DESIGN. FOR OPTIONAL PRECAST REINFORCED CONCRETE BOX CULVERT, SEE SPECIAL PROVISIONS.

THE CONTRACTOR SHALL PROVIDE INDEPENDENT ASSURANCE SAMPLES OF REINFORCING STEEL AS FOLLOWS: FOR PROJECTS REQUIRING UP TO 400 TONS OF REINFORCING STEEL, ONE 30 INCH SAMPLE OF EACH SIZE BAR USED, AND FOR PROJECTS REQUIRING OVER 400 TONS OF REINFORCING STEEL, TWO 30 INCH SAMPLES OF EACH SIZE BAR USED. THE BARS FROM WHICH THE SAMPLES ARE TAKEN MUST THEN BE SPLICED WITH REPLACEMENT BARS OF THE SIZE AND LENGTH OF THE SAMPLE, PLUS A MINIMUM LAP SPLICE OF THIRTY BAR DIAMETERS. PAYMENT FOR THE SAMPLES OF REINFORCING STEEL SHALL BE CONSIDERED INCIDENTAL TO VARIOUS PAY ITEMS.

FOR FALSEWORK AND FORMWORK, SEE SPECIAL PROVISIONS.

FOR SUBMITTAL OF WORKING DRAWINGS, SEE SPECIAL PROVISIONS.

FOR CRANE SAFETY, SEE SPECIAL PROVISIONS.

FOR GROUT FOR STRUCTURES, SEE SPECIAL PROVISIONS.

FOR REMOVAL OF EXISTING CULVERT, SEE STRUCTURE @ STA. 48+87.35 -Y1- FOR PAY ITEM.

FOR CURING CONCRETE, SEE SPECIAL PROVISIONS.

CONCRETE IN CULVERT TO BE POURED IN THE FOLLOWING ORDER:

LEFT EXTENSION

STAGE I
1. FLOOR SLAB AND WING FOOTING INCLUDING 4" OF ALL VERTICAL WALLS FOR BARRELS 2 AND 3.
2. THE REMAINING PORTIONS OF THE WALLS AND WING.

STAGE II
1. FLOOR SLAB AND WING FOOTING INCLUDING 4" OF THE EXTERIOR VERTICAL WALL OF BARREL 1.
2. THE REMAINING PORTION OF THE EXTERIOR WALL AND WING.
3. THE ROOF SLAB FOR ALL BARRELS INCLUDING HEADWALL.

RIGHT EXTENSION

STAGE I
1. FLOOR SLAB INCLUDING 4" OF ALL VERTICAL WALLS FOR APPROXIMATELY 157.1 FEET OF BARRELS 2 AND 3.
2. THE REMAINING PORTIONS OF THE WALLS FOR BARRELS 2 AND 3.

STAGE II
1. FLOOR SLAB INCLUDING 4" OF ALL VERTICAL WALLS FOR APPROXIMATELY 47.4 FEET OF BARRELS 2 AND 3.
2. THE REMAINING PORTIONS OF THE WALLS FOR BARRELS 2 AND 3.

STAGE III
1. FLOOR SLAB INCLUDING 4" OF THE EXTERIOR VERTICAL WALL OF BARREL 1.
2. THE REMAINING PORTION OF THE EXTERIOR WALL OF BARREL 1.
3. THE ROOF SLAB FOR ALL BARRELS INCLUDING HEADWALL.

STAGE IV
1. WING FOOTINGS INCLUDING 4" OF WING WALL.
2. THE REMAINING PORTION OF THE WING WALL.

HYDRAULIC DATA

DESIGN DISCHARGE	= 2065 CFS
FREQUENCY OF DESIGN FLOOD	= 50 YEARS
DESIGN HIGH WATER ELEVATION	= 1067.6
DRAINAGE AREA	= 5.0 SQ. MI.
BASIC DISCHARGE (Q100)	= 2445 CFS
BASIC HIGH WATER ELEVATION	= 1068.8

OVERTOPPING FLOOD DATA

OVERTOPPING DISCHARGE	= 4700 CFS
FREQUENCY OF OVERTOPPING FLOOD	= 500+ YEARS
OVERTOPPING FLOOD ELEVATION	= 1075.0

ROADWAY DATA

GRADE POINT ELEV. @ STA. 19+31.37 -L-	= 1074.44
BED ELEV. @ STA. 19+31.37 -L-	= 1056.23
ROADWAY SLOPES	= VARIES

NORTH CAROLINA PROFESSIONAL SEAL 022506 ENGINEER JEAN-MARTHUR BAILEY
5/2/11

NORTH CAROLINA PROFESSIONAL SEAL 15825 ENGINEER BRUCE D. KLAPPENBACH
5-2-2011

PROJECT NO. U-2550B
BURKE COUNTY
STATION: 19+31.37 -L-

SHEET 1 OF 13 CULVERT NO. C41

STATE OF NORTH CAROLINA
DEPARTMENT OF TRANSPORTATION
RALEIGH

TRIPLE BARREL 10 FT. X 11 FT. CONCRETE BOX CULVERT 118° & 90° SKEW

REVISIONS								SHEET NO.
NO.	BY:	DATE:	NO.	BY:	DATE:			C-1
1			3					TOTAL SHEETS
2			4					13

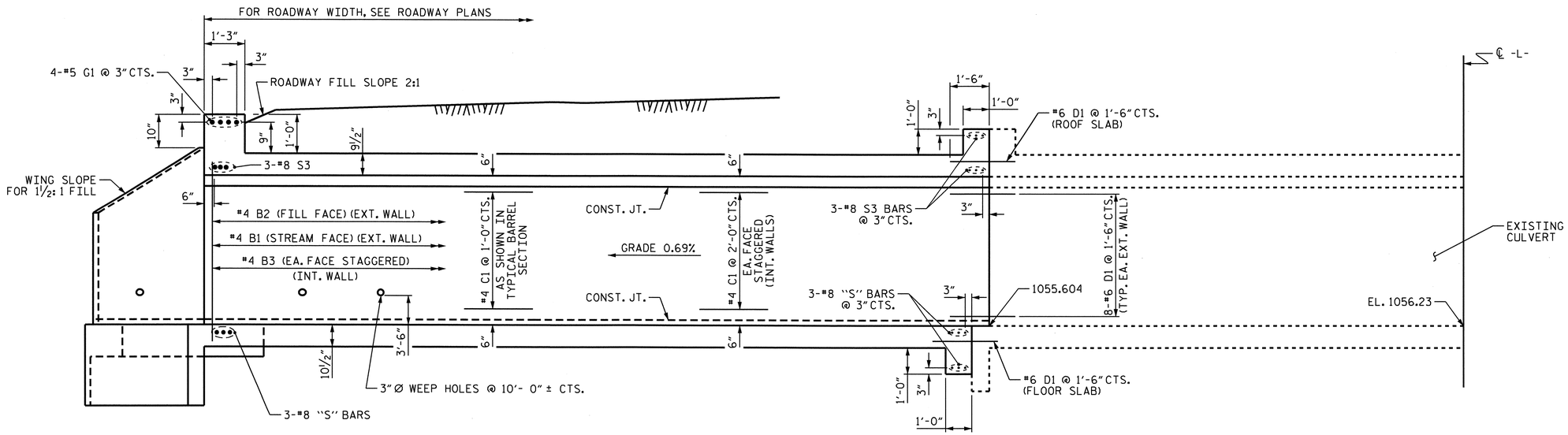

LEFT EXTENSION

CULVERT SECTION NORMAL TO ROADWAY

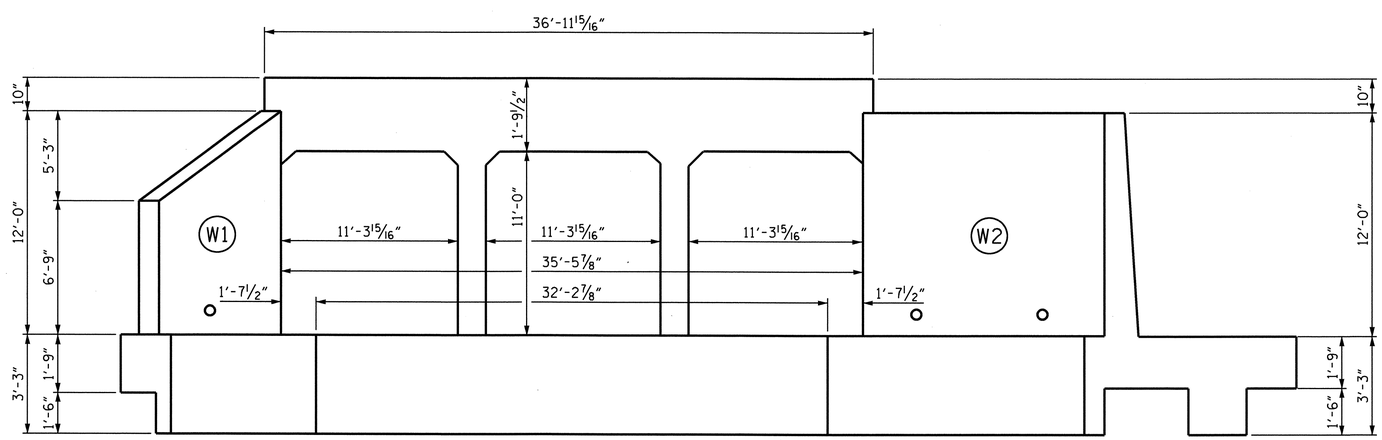

END ELEVATION NORMAL TO SKEW

PROJECT NO. U-2550B
BURKE COUNTY
STATION: 19+31.37 -L-

SHEET 2 OF 13

STATE OF NORTH CAROLINA
DEPARTMENT OF TRANSPORTATION
RALEIGH

TRIPLE 10 FT. X 11 FT.
CONCRETE BOX CULVERT
118° SKEW
LEFT EXTENSION

NORTH CAROLINA PROFESSIONAL SEAL 15825 BRIDGE ENGINEER D. KLAPPENBACH 4-29-2011

REVISIONS						SHEET NO.
NO.	BY:	DATE:	NO.	BY:	DATE:	C-2
1			3			TOTAL SHEETS
2			4			13

DRAWN BY : E.C. LOCKLEAR DATE : 2-23-11
CHECKED BY : C. YARBROUGH DATE : 3-11

05-APR-2011 12:13
L:\Structures\Bailey\Str3\elocklear\Microstation\U-2550B_SD_CU_03.dgn
ELOCKLEAR

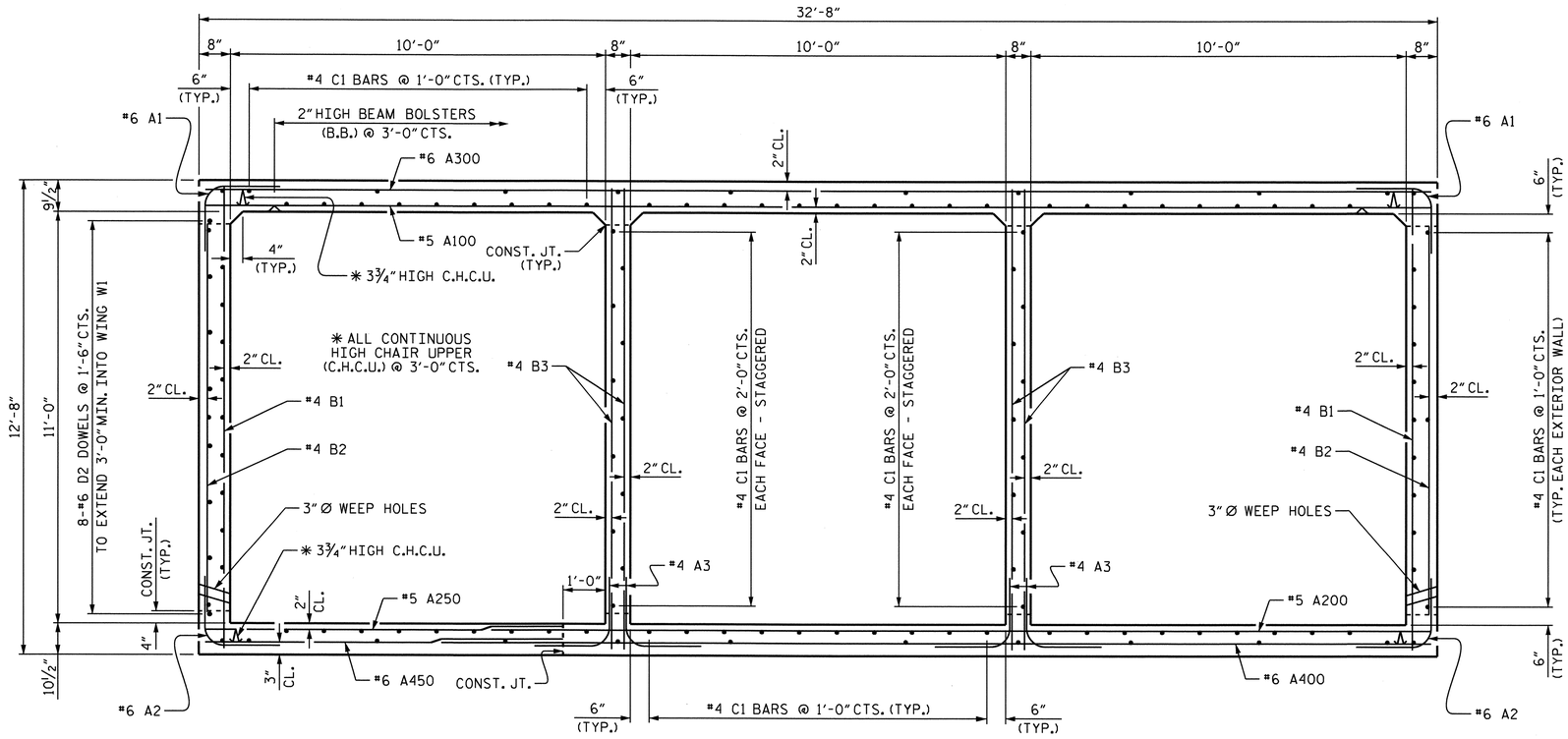

RIGHT ANGLE SECTION OF BARREL

THERE ARE 126 C1 BARS IN SECTION OF BARREL.

PROJECT NO. U-2550B

BURKE COUNTY

STATION: 19+31.37 -L-

SHEET 3 OF 13

STATE OF NORTH CAROLINA
DEPARTMENT OF TRANSPORTATION
RALEIGH

TRIPLE 10 FT. X 11 FT. CONCRETE BOX CULVERT 118° SKEW LEFT EXTENSION

NORTH CAROLINA PROFESSIONAL SEAL 15825 ENGINEER BRUCE D. KLAPPENBACH
4-27-2011

REVISIONS						SHEET NO.
NO.	BY:	DATE:	NO.	BY:	DATE:	C-3
1			3			TOTAL SHEETS
2			4			13

DRAWN BY : E.C. LOCKLEAR DATE : 3-2-11
CHECKED BY : C. YARBROUGH DATE : 3-11

27-APR-2011 11:41
R:\Structures\Bailey\Str3\elocklear\Microstation\U-2550B_SD_CU_03.dgn
bklappenbach

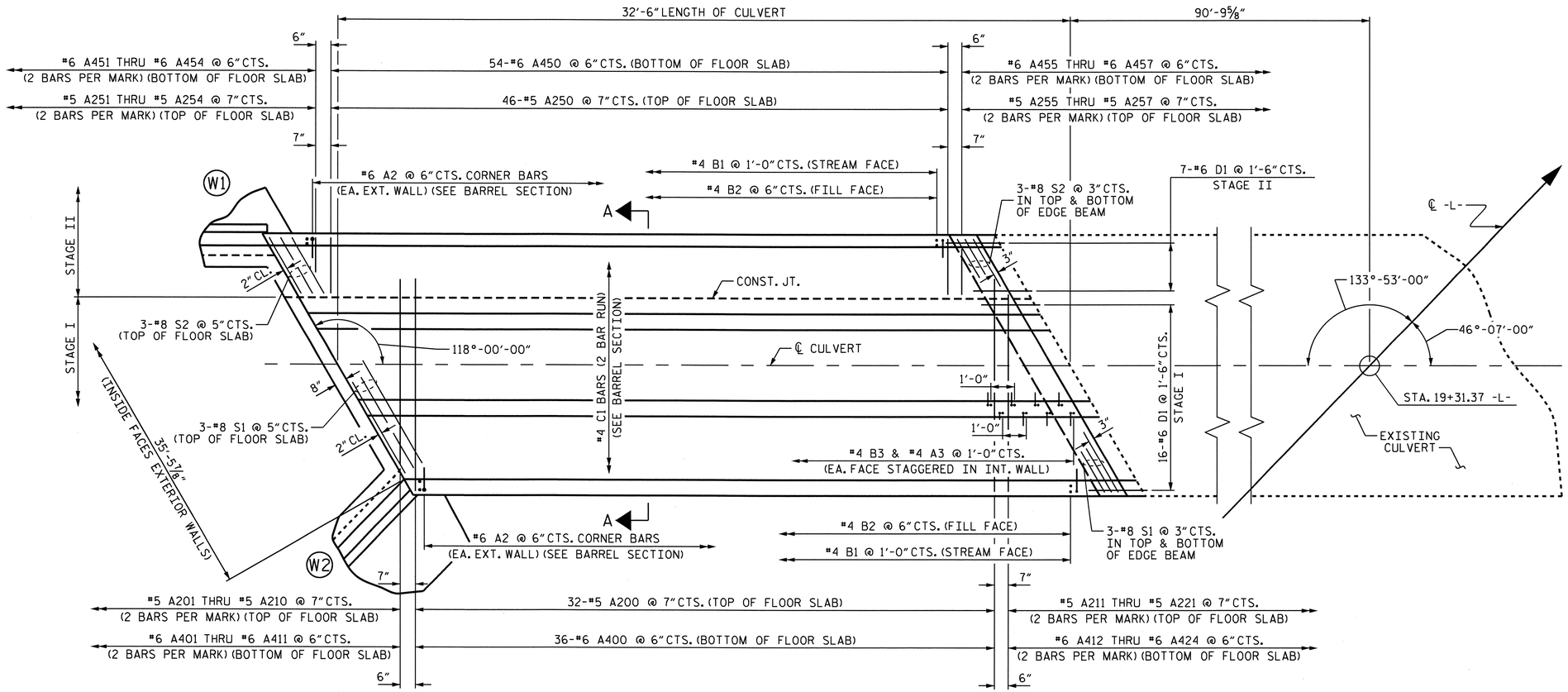

LEFT EXTENSION - PLAN OF FLOOR SLAB - STAGE I & STAGE II

PROJECT NO. U-2550B
BURKE COUNTY
STATION: 19+31.37 -L-

SHEET 4 OF 13

STATE OF NORTH CAROLINA
DEPARTMENT OF TRANSPORTATION
RALEIGH

TRIPLE 10 FT. X 11 FT.
CONCRETE BOX CULVERT
LEFT EXTENSION

NORTH CAROLINA PROFESSIONAL SEAL 15828 ENGINEER BRIAN D. KLAPPENBACH
4-29-2011

REVISIONS						SHEET NO.
NO.	BY:	DATE:	NO.	BY:	DATE:	C-4
1			3			TOTAL SHEETS
2			4			13

DRAWN BY : E.C. LOCKLEAR DATE : 3-7-11
CHECKED BY : C. YARBROUGH DATE : 3-11

05-APR-2011 12:14
L:\Structures\Bailey\Str3\elocklear\Microstation\U-2550B_SD_CU_03.dgn
ELOCKLEAR

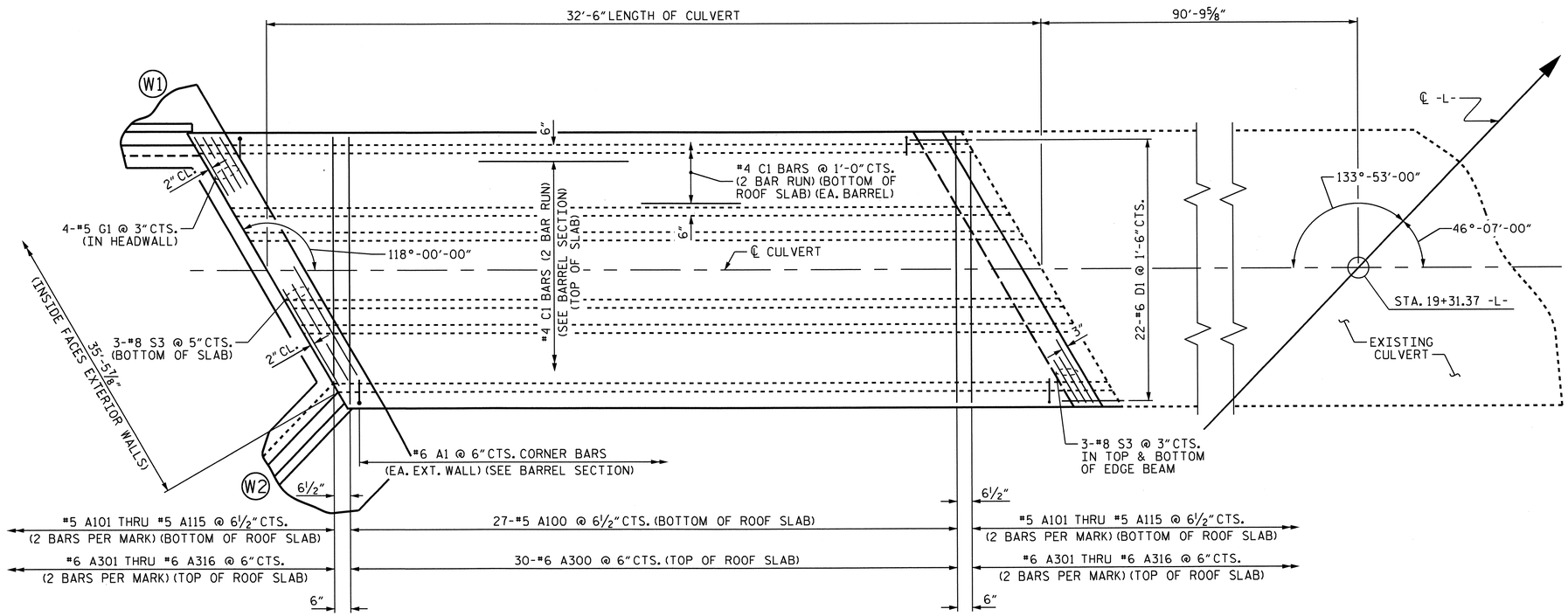

LEFT EXTENSION - PLAN OF ROOF SLAB - STAGE II

PROJECT NO. U-2550B

BURKE COUNTY

STATION: 19+31.37 -L-

SHEET 5 OF 13

STATE OF NORTH CAROLINA
DEPARTMENT OF TRANSPORTATION
RALEIGH

TRIPLE 10 FT. X 11 FT. CONCRETE BOX CULVERT LEFT EXTENSION

NORTH CAROLINA PROFESSIONAL SEAL 15825 ENGINEER BRADLEY D. KLAPPENBACH
4-28-2011

REVISIONS						SHEET NO.
NO.	BY:	DATE:	NO.	BY:	DATE:	C-5
1			3			TOTAL SHEETS
2			4			13

DRAWN BY : E.C. LOCKLEAR DATE : 3-7-11
CHECKED BY : C. YARBROUGH DATE : 3-11

05-APR-2011 12:14
L:\Structures\Bailey\Str3\elocklear\Microstation\U-2550B_SD_CU_03.dgn
ELOCKLEAR

SPLICE LENGTH CHART

BAR	SIZE	SPLICE LENGTH
A200	5	1'-9"
A400	6	2'-4"
C1	4	1'-11"
S1	8	4'-11"

BAR TYPE

DIMENSIONS ARE OUT TO OUT

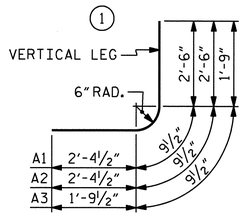

BILL OF MATERIAL

STAGE I

BAR	NO.	SIZE	TYPE	LENGTH	WEIGHT
A2	65	#6	1	5'-8"	553
A3	130	#4	1	4'-4"	376
A200	32	#5	STR	24'-9"	826
A201	2	#5	STR	22'-11"	48
A202	2	#5	STR	20'-9"	43
A203	2	#5	STR	18'-6"	39
A204	2	#5	STR	16'-4"	34
A205	2	#5	STR	14'-2"	30
A206	2	#5	STR	11'-11"	25
A207	2	#5	STR	9'-9"	20
A208	2	#5	STR	7'-7"	16
A209	2	#5	STR	5'-4"	11
A210	2	#5	STR	3'-2"	7
A211	2	#5	STR	23'-10"	50
A212	2	#5	STR	21'-8"	45
A213	2	#5	STR	19'-5"	41
A214	2	#5	STR	17'-3"	36
A215	2	#5	STR	15'-1"	31
A216	2	#5	STR	12'-10"	27
A217	2	#5	STR	10'-8"	22
A218	2	#5	STR	8'-6"	18
A219	2	#5	STR	6'-3"	13
A220	2	#5	STR	4'-1"	9
A221	2	#5	STR	1'-11"	4
A400	36	#6	STR	25'-4"	1370
A401	2	#6	STR	23'-11"	72
A402	2	#6	STR	22'-0"	66
A403	2	#6	STR	20'-2"	61
A404	2	#6	STR	18'-3"	55
A405	2	#6	STR	16'-4"	49
A406	2	#6	STR	14'-6"	44
A407	2	#6	STR	12'-7"	38
A408	2	#6	STR	10'-9"	32
A409	2	#6	STR	8'-10"	27
A410	2	#6	STR	7'-0"	21
A411	2	#6	STR	5'-1"	15
A412	2	#6	STR	25'-2"	76
A413	2	#6	STR	23'-4"	70
A414	2	#6	STR	21'-5"	64
A415	2	#6	STR	19'-6"	59
A416	2	#6	STR	17'-8"	53

BAR	NO.	SIZE	TYPE	LENGTH	WEIGHT
A417	2	#6	STR	15'-9"	47
A418	2	#6	STR	13'-11"	42
A419	2	#6	STR	12'-0"	36
A420	2	#6	STR	10'-2"	31
A421	2	#6	STR	8'-3"	25
A422	2	#6	STR	6'-4"	19
A423	2	#6	STR	4'-6"	14
A424	2	#6	STR	2'-7"	8
B1	33	#4	STR	12'-2"	268
B2	65	#4	STR	10'-4"	449
B3	130	#4	STR	12'-2"	1057
C1	124	#4	STR	17'-1"	1415
D1	24	#6	STR	2'-6"	90
S1	9	#8	STR	31'-0"	745

REINFORCING STEEL = 8,742 LBS.

STAGE II

BAR	NO.	SIZE	TYPE	LENGTH	WEIGHT
A1	130	#6	1	5'-8"	1106
A2	65	#6	1	5'-8"	553
A100	27	#5	STR	32'-4"	911
A101	4	#5	STR	31'-1"	130
A102	4	#5	STR	29'-0"	121
A103	4	#5	STR	27'-0"	113
A104	4	#5	STR	24'-11"	104
A105	4	#5	STR	22'-11"	96
A106	4	#5	STR	20'-10"	87
A107	4	#5	STR	18'-10"	79
A108	4	#5	STR	16'-9"	70
A109	4	#5	STR	14'-9"	62
A110	4	#5	STR	12'-9"	53
A111	4	#5	STR	10'-8"	45
A112	4	#5	STR	8'-8"	36
A113	4	#5	STR	6'-7"	27
A114	4	#5	STR	4'-7"	19
A115	4	#5	STR	2'-6"	10
A250	46	#5	STR	9'-4"	448
A251	2	#5	STR	8'-6"	18
A252	2	#5	STR	6'-3"	13
A253	2	#5	STR	4'-1"	9
A254	2	#5	STR	1'-11"	4
A255	2	#5	STR	7'-5"	15
A256	2	#5	STR	5'-3"	11
A257	2	#5	STR	3'-0"	6
A300	30	#6	STR	32'-4"	1457
A301	4	#6	STR	30'-10"	185
A302	4	#6	STR	28'-11"	174
A303	4	#6	STR	27'-1"	163
A304	4	#6	STR	25'-2"	151
A305	4	#6	STR	23'-4"	140
A306	4	#6	STR	21'-5"	129
A307	4	#6	STR	19'-6"	117
A308	4	#6	STR	17'-8"	106
A309	4	#6	STR	15'-9"	95
A310	4	#6	STR	13'-11"	84
A311	4	#6	STR	12'-0"	72
A312	4	#6	STR	10'-2"	61
A313	4	#6	STR	8'-3"	50

BAR	NO.	SIZE	TYPE	LENGTH	WEIGHT
A314	4	#6	STR	6'-4"	38
A315	4	#6	STR	4'-6"	27
A316	4	#6	STR	2'-7"	16
A450	54	#6	STR	9'-4"	757
A451	2	#6	STR	8'-3"	25
A452	2	#6	STR	6'-4"	19
A453	2	#6	STR	4'-6"	14
A454	2	#6	STR	2'-7"	8
A455	2	#6	STR	7'-10"	24
A456	2	#6	STR	5'-11"	18
A457	2	#6	STR	4'-1"	12
B1	33	#4	STR	12'-2"	268
B2	65	#4	STR	10'-4"	449
C1	128	#4	STR	17'-1"	1461
D1	37	#6	STR	2'-6"	139
D2	8	#6	STR	6'-0"	72
G1	4	#5	STR	36'-7"	153
S2	9	#8	STR	10'-6"	252
S3	9	#8	STR	36'-7"	879

REINFORCING STEEL = 11,761 LBS.

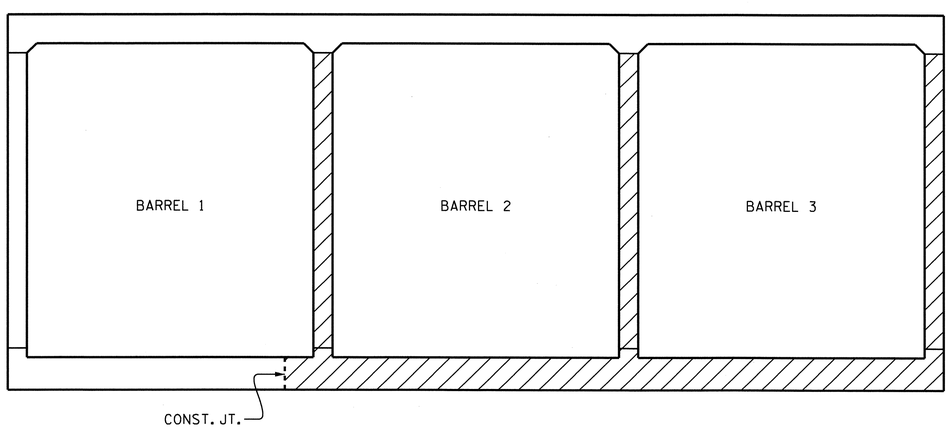

STAGING @ SECTION A-A

FLOOR & WALLS ROOF, FLOOR AND WALL

PROJECT NO. U-2550B
BURKE COUNTY
STATION: 19+31.37 -L-

SHEET 6 OF 13

STATE OF NORTH CAROLINA
DEPARTMENT OF TRANSPORTATION
RALEIGH

BILL OF MATERIAL
STAGES I & II
LEFT EXTENSION

NORTH CAROLINA PROFESSIONAL SEAL 15825 ENGINEER BRUCE D. KLAPPENBACH
4-29-2011

REVISIONS								SHEET NO.
NO.	BY:	DATE:	NO.	BY:	DATE:			C-6
1			3					TOTAL SHEETS
2			4					13

DRAWN BY : E.C. LOCKLEAR DATE : 3-4-11
CHECKED BY : C. YARBROUGH DATE : 3-11

05-APR-2011 12:15
L:\Structures\Bailey\Str3\elocklear\Microstation\U-2550B_SD_CU_03.dgn
ELOCKLEAR

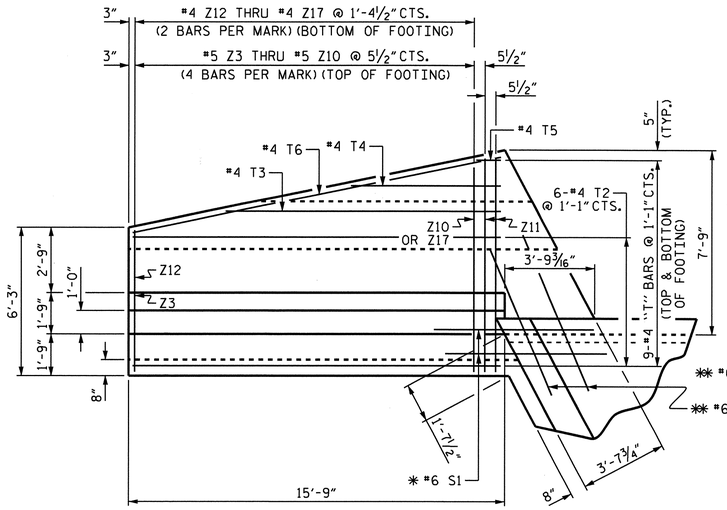

✱✱ 2-#6 S1 TOP OF FLOOR SLAB & FOOTING

✱✱ 2-#6 S1 BOTTOM OF FLOOR SLAB & FOOTING

PLAN W1

STAGE II

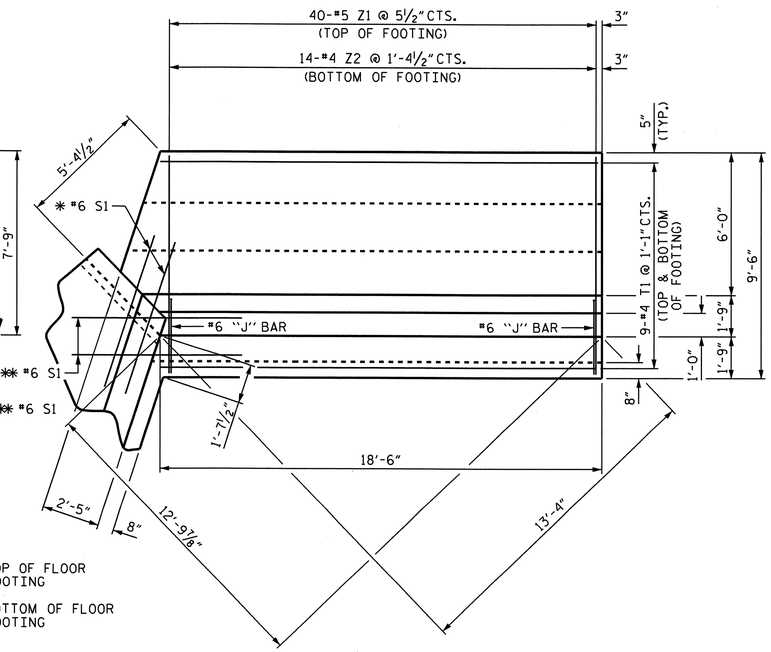

PLAN W2

STAGE I

BILL OF MATERIAL

STAGE I

BAR	NO.	SIZE	TYPE	LENGTH	WEIGHT
H1	20	#4	STR	18'-2"	243
J1	25	#6	1	6'-0"	225
J2	24	#6	1	9'-1"	327
N1	25	#6	STR	11'-8"	438
S1	4	#6	STR	6'-0"	36
T1	18	#4	STR	18'-3"	219
V1	13	#4	STR	3'-4"	29
V2	13	#4	STR	11'-5"	99
Z1	40	#5	STR	9'-2"	382
Z2	14	#4	STR	9'-2"	86

REINFORCING STEEL 2084 LBS

CLASS A CONCRETE
- 1 WING 25.7 CY
- STAGE I END CURTAIN WALL 1.9 CY
- STAGE I EDGE BEAM 0.9 CY

TOTAL 28.5 CY

STAGE II

BAR	NO.	SIZE	TYPE	LENGTH	WEIGHT
H2	10	#4	STR	15'-5"	103
H3	4	#4	STR	15'-3"	41
H4	2	#4	STR	11'-10"	16
H5	2	#4	STR	8'-5"	11
H6	2	#4	STR	5'-1"	7
H7	2	#4	STR	1'-8"	2
J1	21	#6	1	6'-0"	189
N2	2	#6	STR	6'-5"	19
N3	2	#6	STR	6'-11"	21
N4	2	#6	STR	7'-6"	23
N5	2	#6	STR	8'-0"	24
N6	2	#6	STR	8'-7"	26
N7	2	#6	STR	9'-2"	28
N8	2	#6	STR	9'-8"	29
N9	2	#6	STR	10'-3"	31
N10	3	#6	STR	10'-10"	49
N11	2	#6	STR	11'-6"	35
S1	4	#6	STR	6'-0"	36
T2	12	#4	STR	15'-5"	124
T3	2	#4	STR	11'-6"	15
T4	2	#4	STR	6'-3"	8
T5	2	#4	STR	1'-0"	1
T6	2	#4	STR	15'-7"	21
V1	11	#4	STR	3'-4"	24
V3	1	#4	STR	6'-5"	4
V4	1	#4	STR	6'-11"	5
V5	1	#4	STR	7'-6"	5
V6	1	#4	STR	8'-0"	5
V7	1	#4	STR	8'-7"	6
V8	1	#4	STR	9'-2"	6
V9	1	#4	STR	9'-8"	6
V10	1	#4	STR	10'-3"	7
V11	1	#4	STR	10'-10"	7
V12	1	#4	STR	11'-4"	8
V13	1	#4	STR	11'-6"	8
Z3	4	#5	STR	5'-11"	25
Z4	4	#5	STR	6'-4"	26
Z5	4	#5	STR	6'-8"	28
Z6	4	#5	STR	7'-1"	30
Z7	4	#5	STR	7'-5"	31
Z8	4	#5	STR	7'-10"	33
Z9	4	#5	STR	8'-2"	34
Z10	4	#5	STR	8'-7"	36
Z11	2	#5	STR	8'-11"	19
Z12	2	#4	STR	5'-11"	8
Z13	2	#4	STR	6'-6"	9
Z14	2	#4	STR	7'-1"	9
Z15	2	#4	STR	7'-8"	10
Z16	2	#4	STR	8'-2"	11
Z17	2	#4	STR	8'-9"	12

REINFORCING STEEL 1271 LBS

CLASS A CONCRETE
- 1 WING 19.2 CY
- 1 HEADWALL 1.7 CY
- STAGE II END CURTAIN WALL 0.7 CY
- STAGE II EDGE BEAM 1.7 CY

TOTAL 23.3 CY

BAR TYPES

ALL BAR DIMENSIONS ARE OUT TO OUT.

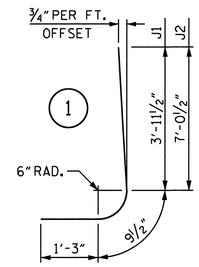

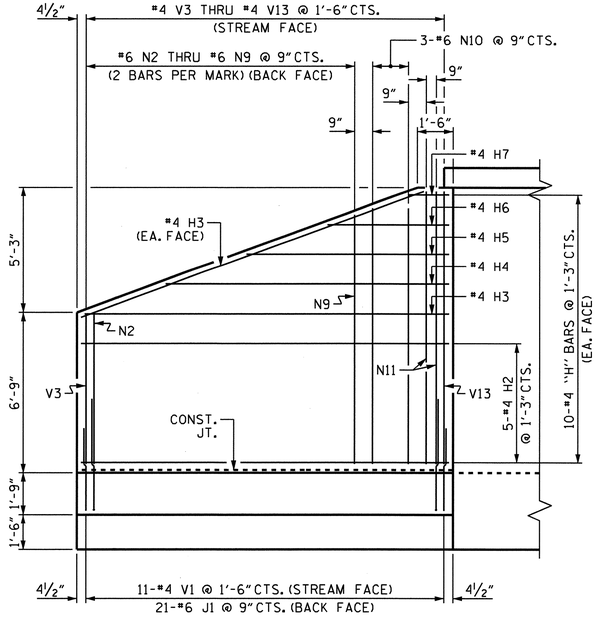

ELEVATION W1

STAGE II

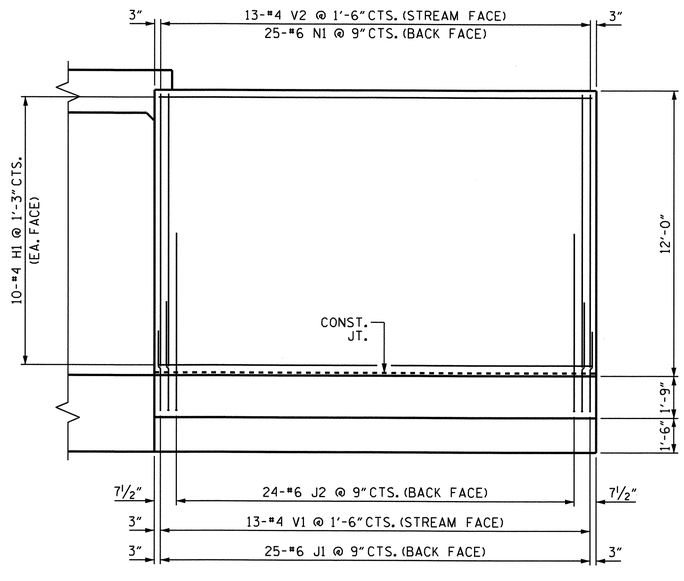

ELEVATION W2

STAGE I

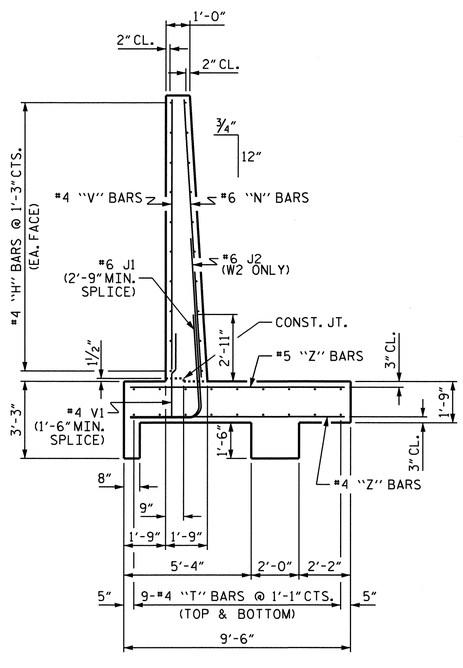

TYPICAL WING SECTION

PROJECT NO. U-2550B

BURKE COUNTY

STATION: 19+31.37 -L-

SHEET 7 OF 13

STATE OF NORTH CAROLINA
DEPARTMENT OF TRANSPORTATION
RALEIGH

TRIPLE 10 FT. X 11 FT. CONCRETE BOX CULVERT WINGS LEFT EXTENSION

NORTH CAROLINA PROFESSIONAL SEAL 15821 ENGINEER BRUCE D. KLAPPENBACH 6-24-2011

REVISIONS						SHEET NO.
NO.	BY:	DATE:	NO.	BY:	DATE:	C-7
1			3			TOTAL SHEETS
2			4			13

DRAWN BY : E.C. LOCKLEAR DATE : 3-16-11
CHECKED BY : H.T. BARBOUR DATE : 3-11

05-APR-2011 12:15
L:\Structures\Bailey\Str3\elocklear\Microstation\U-2550B_SD_CU_03.dgn
ELOCKLEAR

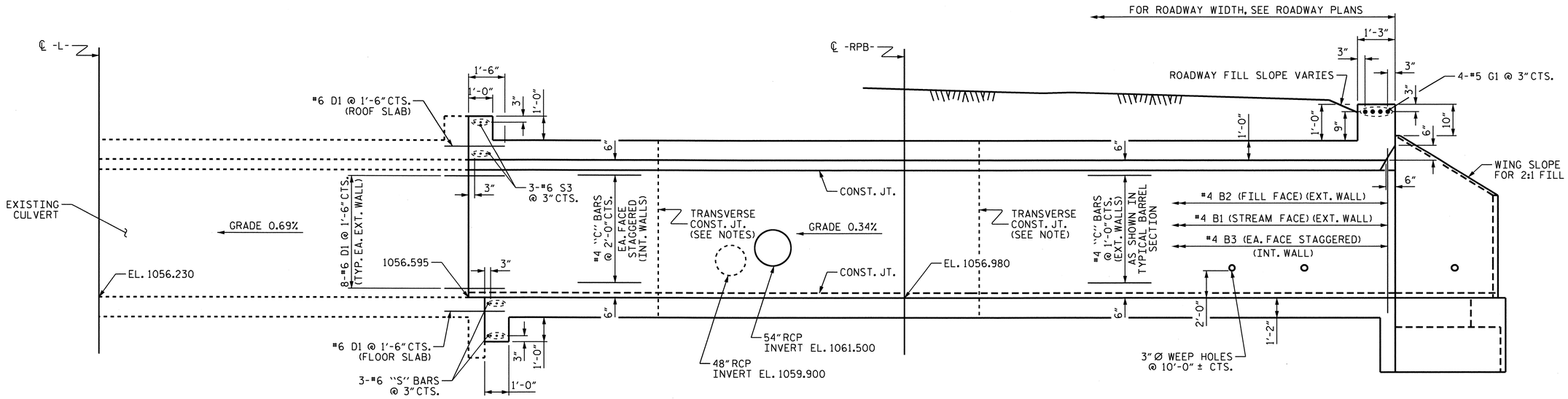

RIGHT EXTENSION

CULVERT SECTION NORMAL TO ROADWAY

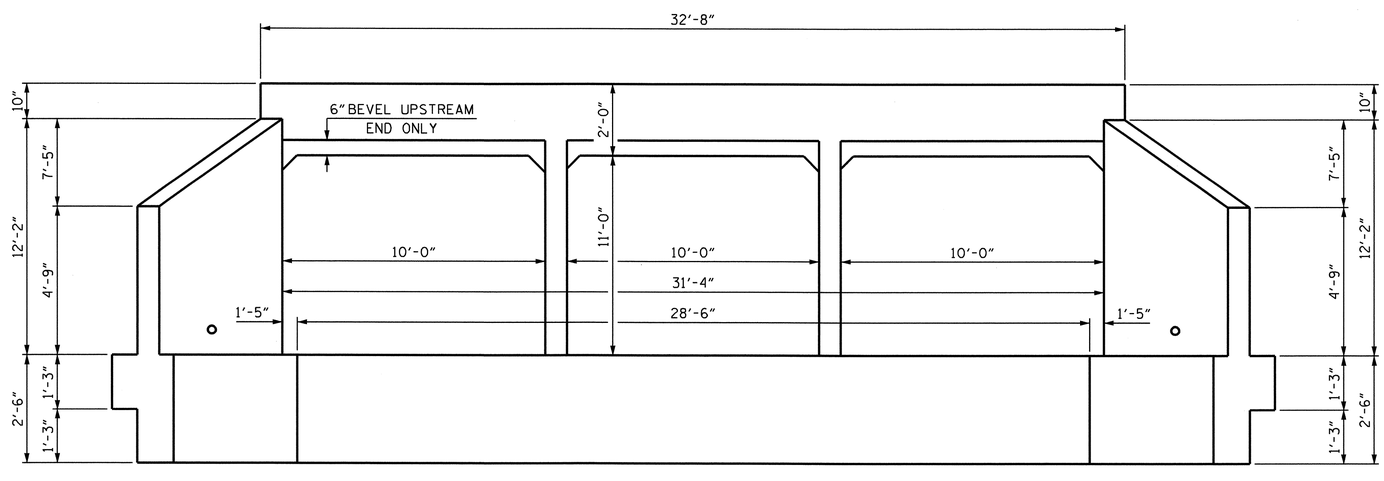

END ELEVATION

PROJECT NO. U-2550B
BURKE COUNTY
STATION: 19+31.37 -L-

SHEET 8 OF 13

STATE OF NORTH CAROLINA
DEPARTMENT OF TRANSPORTATION
RALEIGH

TRIPLE 10 FT. X 11 FT.
CONCRETE BOX CULVERT
90° SKEW
RIGHT EXTENSION

NORTH CAROLINA PROFESSIONAL SEAL 15825 ENGINEER BRUCE D. KLAPPENBACH
4-29-2011

REVISIONS						SHEET NO.
NO.	BY:	DATE:	NO.	BY:	DATE:	C-8
1			3			TOTAL SHEETS
2			4			13

DRAWN BY : E.C. LOCKLEAR DATE : 3-2-11
CHECKED BY : C. YARBROUGH DATE : 3-11

05-APR-2011 12:21
L:\Structures\Bailey\Str3\elocklear\Microstation\U-2550B_SD_CU_03.dgn
ELOCKLEAR

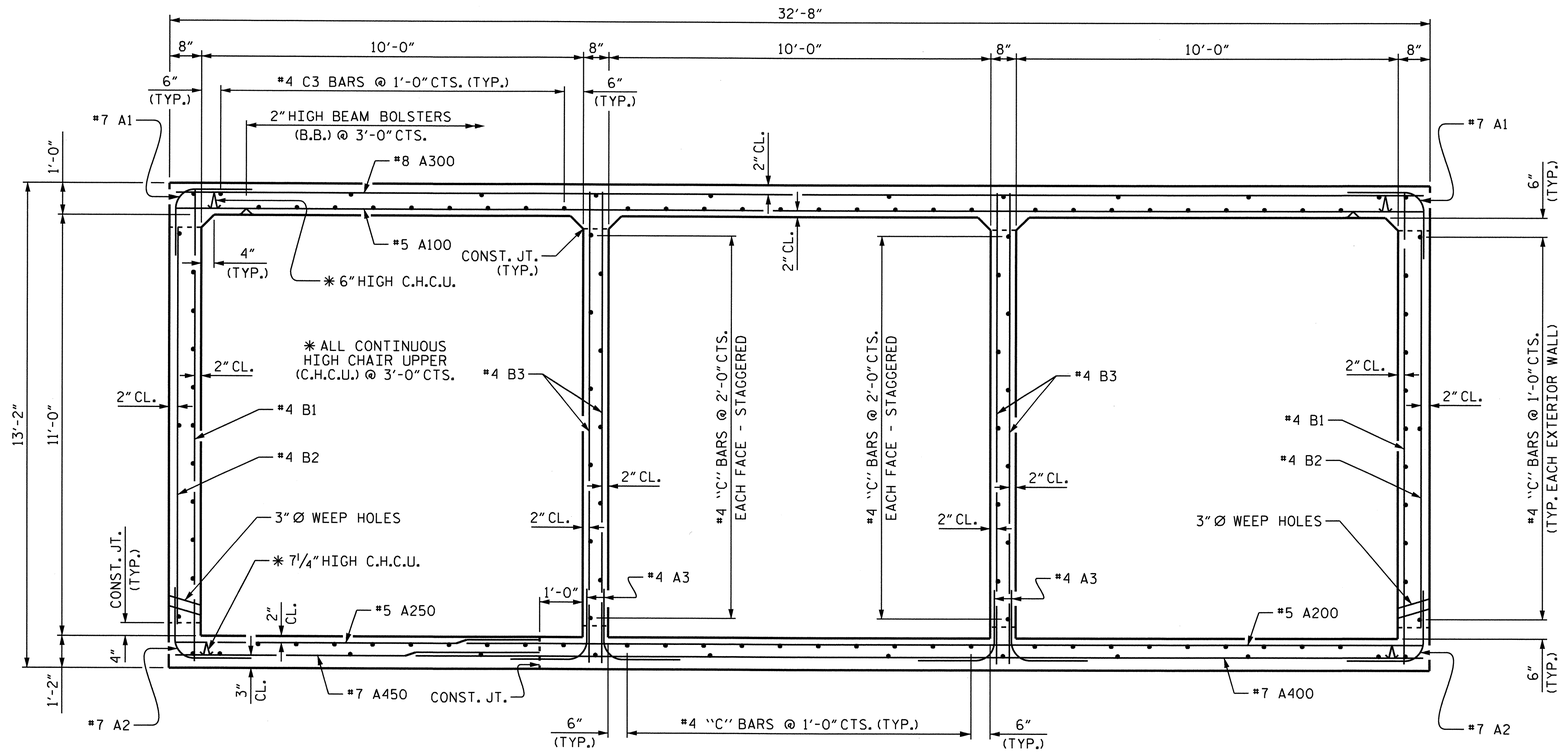

RIGHT ANGLE SECTION OF BARREL

THERE ARE 126 C1 BARS IN SECTION OF BARREL.

PROJECT NO. U-2550B

BURKE COUNTY

STATION: 19+31.37 -L-

SHEET 9 OF 13

STATE OF NORTH CAROLINA
DEPARTMENT OF TRANSPORTATION
RALEIGH

TRIPLE 10 FT. X 11 FT. CONCRETE BOX CULVERT 90° SKEW RIGHT EXTENSION

NORTH CAROLINA PROFESSIONAL SEAL #5829 ENGINEER BRUCE D. KLAPPENBACH 4-29-2011

REVISIONS						SHEET NO.
NO.	BY:	DATE:	NO.	BY:	DATE:	C-9
1			3			TOTAL SHEETS
2			4			13

DRAWN BY : E.C. LOCKLEAR DATE : 3-2-11
CHECKED BY : C. YARBROUGH DATE : 3-11

05-APR-2011 12:21
L:\Structures\Bailey\Str3\elocklear\Microstation\U-2550B_SD_CU_03.dgn
ELOCKLEAR

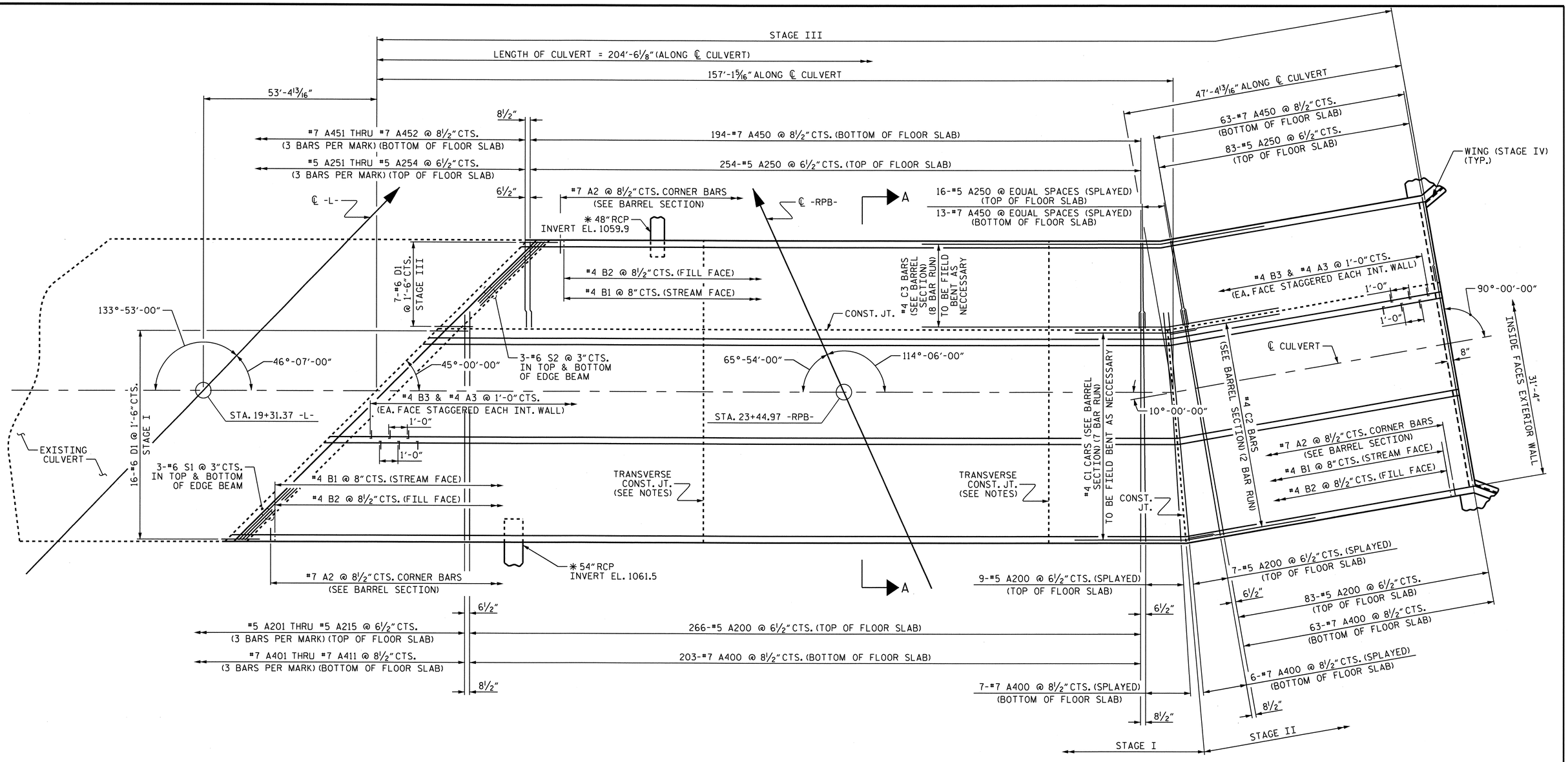

RIGHT EXTENSION - PLAN OF FLOOR SLAB - STAGE I, STAGE II & STAGE III

✱ THE 54" & 48" R.C. PIPE THROUGH THE SIDEWALL OF THE CULVERT WILL BE LOCATED BY THE ENGINEER.
THE REINFORCING STEEL WILL BE FIELD BENT AS NECESSARY TO CLEAR PIPES.

PROJECT NO. U-2550B
BURKE COUNTY
STATION: 19+31.37 -L-

SHEET 10 OF 13

STATE OF NORTH CAROLINA
DEPARTMENT OF TRANSPORTATION
RALEIGH

TRIPLE 10 FT. X 11 FT. CONCRETE BOX CULVERT RIGHT EXTENSION

NORTH CAROLINA PROFESSIONAL SEAL 15825 ENGINEER BRUCE D. KLAPPENBACH
4-29-2011

REVISIONS						SHEET NO.
NO.	BY:	DATE:	NO.	BY:	DATE:	C-10
1			3			TOTAL SHEETS
2			4			13

DRAWN BY : E.C. LOCKLEAR DATE : 3-3-11
CHECKED BY : C. YARBROUGH DATE : 3-11

05-APR-2011 15:55
L:\Structures\Bolley\Str3\elocklear\Microstation\U-2550B_SD_CU_03.dgn
ELOCKLEAR

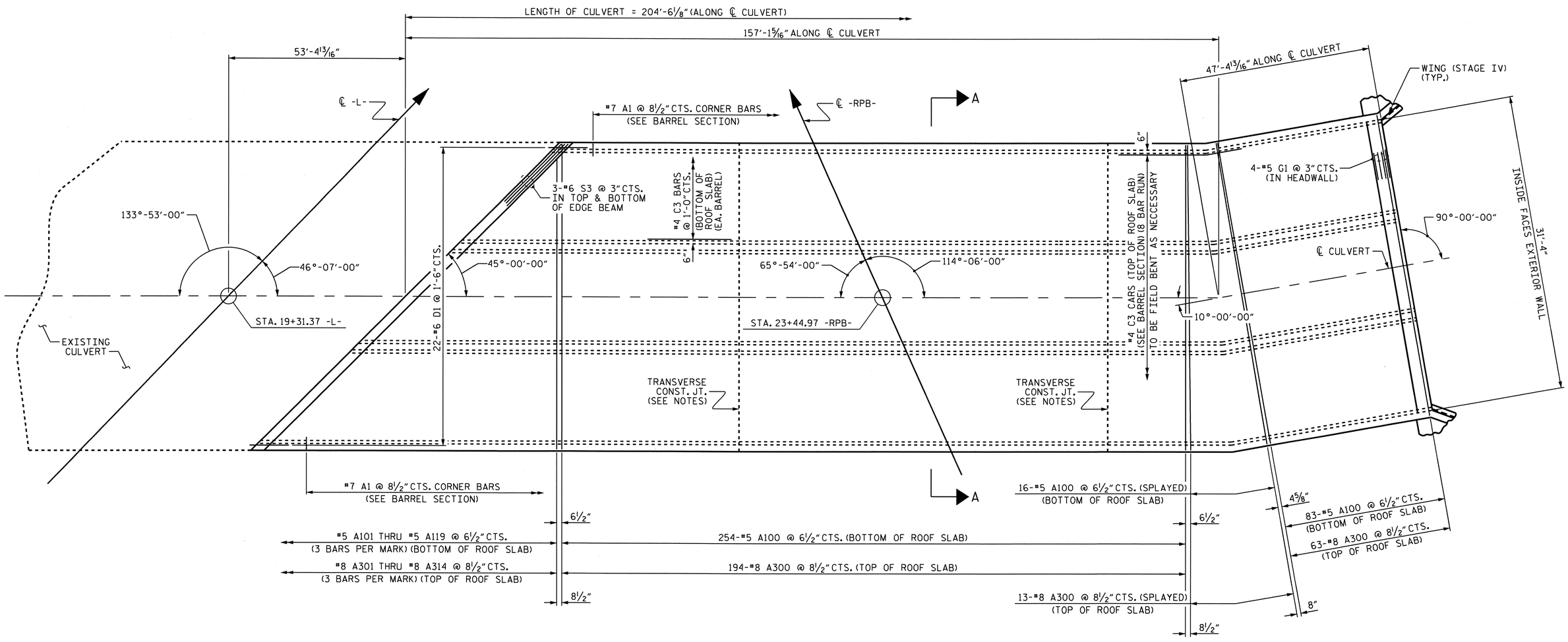

RIGHT EXTENSION - PLAN OF ROOF SLAB - STAGE III

PROJECT NO. U-2550B

BURKE COUNTY

STATION: 19+31.37 -L-

SHEET 11 OF 13

STATE OF NORTH CAROLINA
DEPARTMENT OF TRANSPORTATION
RALEIGH

TRIPLE 10 FT. X 11 FT. CONCRETE BOX CULVERT RIGHT EXTENSION

NORTH CAROLINA PROFESSIONAL SEAL 15825 ENGINEER BRUCE D. KLAPPENBACH
4-29-2011

REVISIONS						SHEET NO.
NO.	BY:	DATE:	NO.	BY:	DATE:	C-11
1			3			TOTAL SHEETS
2			4			13

DRAWN BY : E.C. LOCKLEAR DATE : 3-3-11
CHECKED BY : C. YARBROUGH DATE : 3-11

05-APR-2011 15:55
L:\Structures\Bailey\Str3\elocklear\Microstation\U-2550B_SD_CU_03.dgn
ELOCKLEAR

SPLICE LENGTH CHART

BAR	SIZE	SPLICE LENGTH
A200	5	1'-9"
A400	7	3'-1"
B1	4	1'-9"
B3	4	1'-9"
C1	4	1'-11"
S1	6	2'-9"

BAR TYPE

DIMENSIONS ARE OUT TO OUT

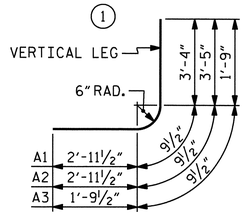

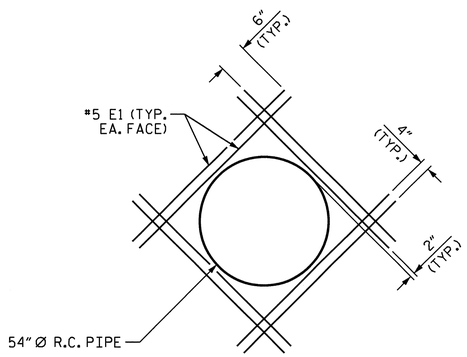

54" Ø RCP THROUGH EXTERIOR WALL

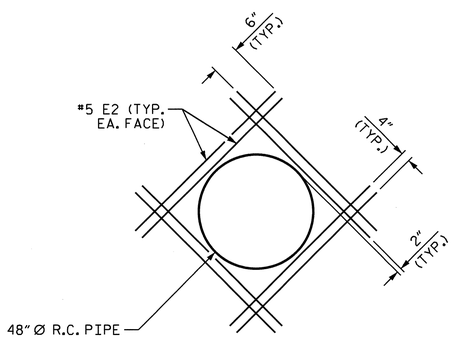

48" Ø RCP THROUGH EXTERIOR WALL

BILL OF MATERIAL

STAGE I

BAR	NO.	SIZE	TYPE	LENGTH	WEIGHT
A2	246	#7	1	7'-2"	3604
A3	627	#4	1	4'-4"	1815
A200	275	#5	STR	24'-9"	7099
A201	3	#5	STR	24'-4"	76
A202	3	#5	STR	22'-9"	71
A203	3	#5	STR	21'-1"	66
A204	3	#5	STR	19'-6"	61
A205	3	#5	STR	17'-10"	56
A206	3	#5	STR	16'-3"	51
A207	3	#5	STR	14'-7"	46
A208	3	#5	STR	13'-0"	41
A209	3	#5	STR	11'-4"	35
A210	3	#5	STR	9'-9"	31
A211	3	#5	STR	8'-1"	25
A212	3	#5	STR	6'-6"	20
A213	3	#5	STR	4'-10"	15
A214	3	#5	STR	3'-3"	10
A215	3	#5	STR	1'-7"	5
A400	210	#7	STR	26'-1"	11196
A401	3	#7	STR	24'-0"	147
A402	3	#7	STR	21'-10"	134
A403	3	#7	STR	19'-9"	121
A404	3	#7	STR	17'-7"	108
A405	3	#7	STR	15'-6"	95
A406	3	#7	STR	13'-4"	82
A407	3	#7	STR	11'-3"	69
A408	3	#7	STR	9'-1"	56
A409	3	#7	STR	7'-0"	43
A410	3	#7	STR	4'-10"	30
A411	3	#7	STR	2'-9"	17
B1	262	#4	STR	12'-8"	2217
B2	247	#4	STR	10'-4"	1705
B3	628	#4	STR	12'-8"	5314
C1	434	#4	STR	26'-11"	7803
D1	24	#6	STR	2'-6"	90
E1	16	#5	STR	7'-6"	125
S1	6	#6	STR	35'-4"	318
REINFORCING STEEL				= 42,797	LBS.

STAGE II

BAR	NO.	SIZE	TYPE	LENGTH	WEIGHT
A2	69	#7	1	7'-2"	1011
A3	190	#4	1	4'-4"	550
A200	90	#5	STR	24'-9"	2323
A400	69	#7	STR	26'-1"	3679
B1	73	#4	STR	12'-8"	618
B2	69	#4	STR	10'-4"	476
B3	190	#4	STR	12'-8"	1608
C2	124	#4	STR	25'-3"	2092
REINFORCING STEEL				= 12,357	LBS.

STAGE III

BAR	NO.	SIZE	TYPE	LENGTH	WEIGHT
A1	577	#7	1	7'-1"	8354
A2	262	#7	1	7'-2"	3838
A100	353	#5	STR	32'-4"	11904
A101	3	#5	STR	30'-10"	96
A102	3	#5	STR	29'-3"	92
A103	3	#5	STR	27'-7"	86
A104	3	#5	STR	26'-0"	81
A105	3	#5	STR	24'-4"	76
A106	3	#5	STR	22'-9"	71
A107	3	#5	STR	21'-1"	66
A108	3	#5	STR	19'-6"	61
A109	3	#5	STR	17'-10"	56
A110	3	#5	STR	16'-3"	51
A111	3	#5	STR	14'-7"	46
A112	3	#5	STR	13'-0"	41
A113	3	#5	STR	11'-4"	35
A114	3	#5	STR	9'-9"	31
A115	3	#5	STR	8'-1"	25
A116	3	#5	STR	6'-6"	20
A117	3	#5	STR	4'-10"	15
A118	3	#5	STR	3'-3"	10
A119	3	#5	STR	1'-7"	5
A250	353	#5	STR	9'-4"	3436
A251	3	#5	STR	7'-10"	25
A252	3	#5	STR	6'-3"	20
A253	3	#5	STR	4'-7"	14
A254	3	#5	STR	3'-0"	9
A300	270	#8	STR	32'-4"	23309
A301	3	#8	STR	30'-4"	243
A302	3	#8	STR	28'-3"	226
A303	3	#8	STR	26'-1"	209
A304	3	#8	STR	24'-0"	192
A305	3	#8	STR	21'-10"	175
A306	3	#8	STR	19'-9"	158
A307	3	#8	STR	17'-7"	141
A308	3	#8	STR	15'-6"	124
A309	3	#8	STR	13'-4"	107
A310	3	#8	STR	11'-3"	90
A311	3	#8	STR	9'-1"	73

BAR	NO.	SIZE	TYPE	LENGTH	WEIGHT
A312	3	#8	STR	7'-0"	56
A313	3	#8	STR	4'-10"	39
A314	3	#8	STR	2'-9"	22
A450	270	#7	STR	9'-4"	5151
A451	3	#7	STR	7'-4"	45
A452	3	#7	STR	5'-3"	32
B1	278	#4	STR	12'-8"	2352
B2	262	#4	STR	10'-4"	1808
C3	512	#4	STR	29'-7"	10118
D1	37	#6	STR	2'-6"	139
E2	16	#5	STR	6'-11"	115
G1	4	#5	STR	32'-4"	135
S2	6	#6	STR	13'-4"	120
S3	6	#6	STR	45'-10"	413
REINFORCING STEEL				= 74,156	LBS.

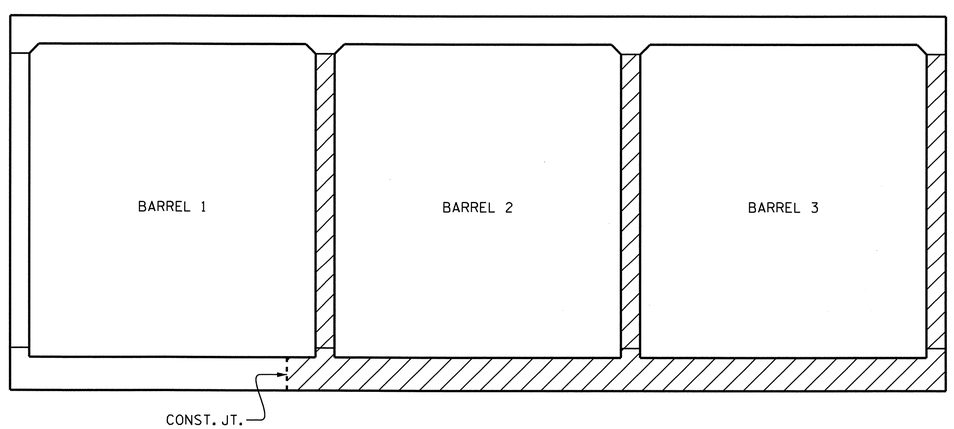

STAGING @ SECTION A-A

FLOOR & WALLS ROOF, FLOOR AND WALL

PROJECT NO. U-2550B
BURKE COUNTY
STATION: 19+31.37 -L-

SHEET 12 OF 13

STATE OF NORTH CAROLINA
DEPARTMENT OF TRANSPORTATION
RALEIGH

BILL OF MATERIAL
STAGES I, II & III
RIGHT EXTENSION

NORTH CAROLINA PROFESSIONAL SEAL 15825 ENGINEER BRUCE D. KLAPPENBACH 4-29-2011

REVISIONS						SHEET NO.
NO.	BY:	DATE:	NO.	BY:	DATE:	C-12
1			3			TOTAL SHEETS
2			4			13

DRAWN BY : E.C. LOCKLEAR DATE : 3-4-11
CHECKED BY : C. YARBROUGH DATE : 3-11

05-APR-2011 12:20
L:\Structures\Bailey\Str3\elocklear\Microstation\U-2550B_SD_CU_03.dgn
ELOCKLEAR

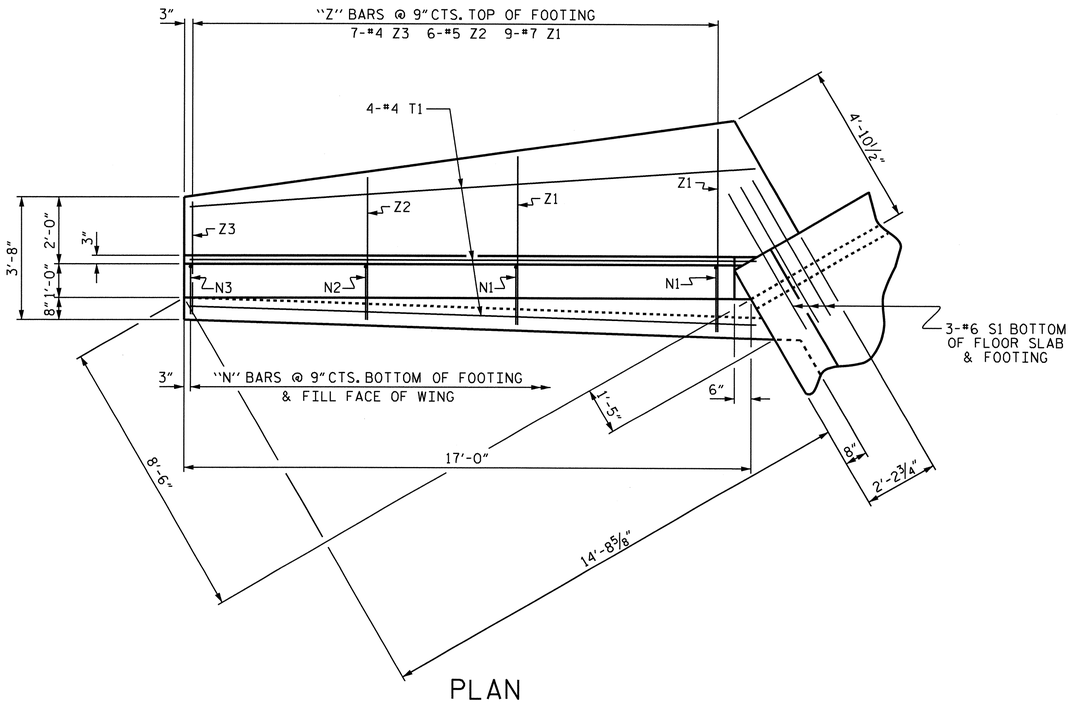

PLAN

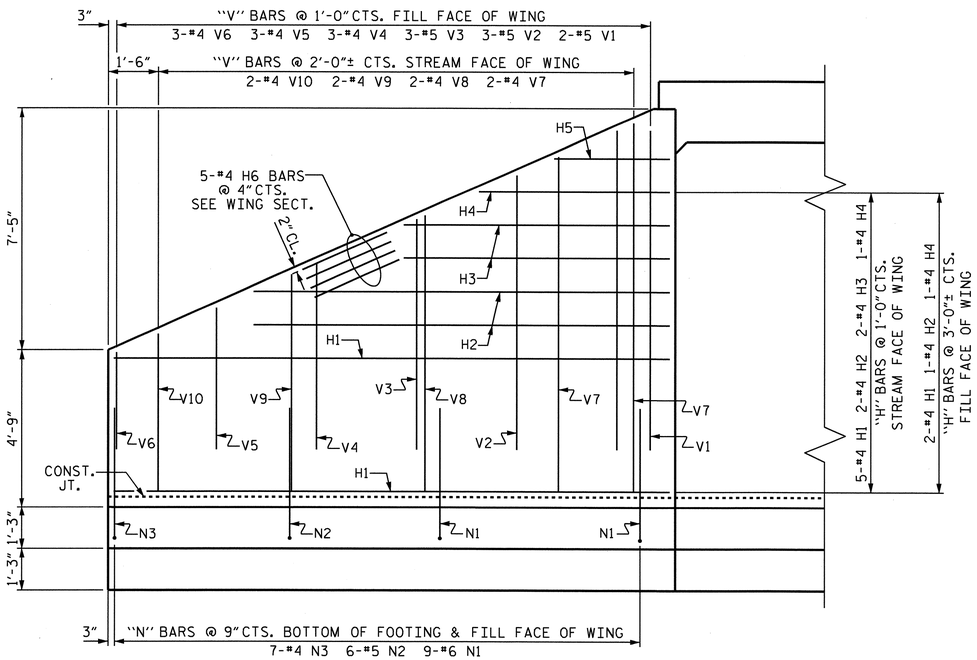

ELEVATION

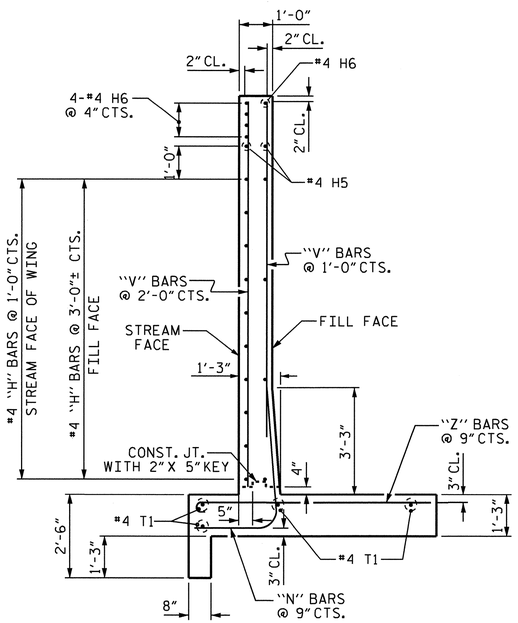

TYPICAL WING SECTION

BAR TYPES

ALL BAR DIMENSIONS ARE OUT TO OUT.

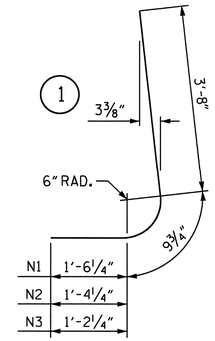

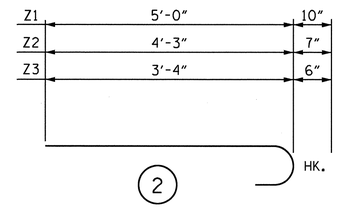

BILL OF MATERIAL

STAGE IV

BAR	NO.	SIZE	TYPE	LENGTH	WEIGHT
H1	14	#4	STR	16'-8"	156
H2	6	#4	STR	12'-5"	50
H3	4	#4	STR	7'-11"	21
H4	4	#4	STR	5'-8"	15
H5	4	#4	STR	3'-5"	9
H6	10	#4	STR	17'-8"	118
N1	18	#6	1	6'-0"	162
N2	12	#5	1	5'-10"	73
N3	14	#4	1	5'-8"	53
S1	6	#6	STR	6'-0"	54
T1	8	#4	STR	17'-0"	91
V1	4	#5	STR	10'-3"	43
V2	6	#5	STR	8'-9"	55
V3	6	#5	STR	7'-6"	47
V4	6	#4	STR	6'-0"	24
V5	6	#4	STR	4'-9"	19
V6	6	#4	STR	3'-6"	14
V7	4	#4	STR	10'-0"	27
V8	4	#4	STR	8'-3"	22
V9	4	#4	STR	6'-6"	17
V10	4	#4	STR	4'-9"	13
Z1	18	#7	2	5'-10"	215
Z2	12	#5	2	4'-10"	60
Z3	14	#4	2	3'-10"	36

REINFORCING STEEL FOR 2 WINGS 1394 LBS

CLASS A CONCRETE 2 WINGS 20.4 CY

PROJECT NO. U-2550B

BURKE COUNTY

STATION: 19+31.37 -L-

SHEET 13 OF 13

STATE OF NORTH CAROLINA
DEPARTMENT OF TRANSPORTATION
RALEIGH

STANDARD WINGS FOR CONCRETE BOX CULVERT

H = 11'-0" SLOPE = 2:1

90° SKEW

STAGE IV

REVISIONS						SHEET NO.
NO.	BY:	DATE:	NO.	BY:	DATE:	C-13
1			3			TOTAL SHEETS
2			4			13

STD. NO. CW9011

NORTH CAROLINA PROFESSIONAL SEAL 15825 ENGINEER BRUCE D. KLAPPENBACH 4-29-2011

ASSEMBLED BY :	E.C. LOCKLEAR	DATE :	3-7-11
CHECKED BY :	C. YARBROUGH	DATE :	3-11
DRAWN BY :	A.K.PATEL	DATE :	11/04
CHECKED BY :	M. K. BEARD	DATE :	12/04

05-APR-2011 15:55
L:\Structures\Bailey\Str3\elocklear\Microstation\U-2550B_SD_CU_03.dgn
ELOCKLEAR

GEOTECHNICAL ENGINEER	ENGINEER
NORTH CAROLINA PROFESSIONAL SEAL 029869 ENGINEER SHANE C. CLARK	
SIGNATURE: S. C. Clark DATE: 4/23/11	SIGNATURE DATE

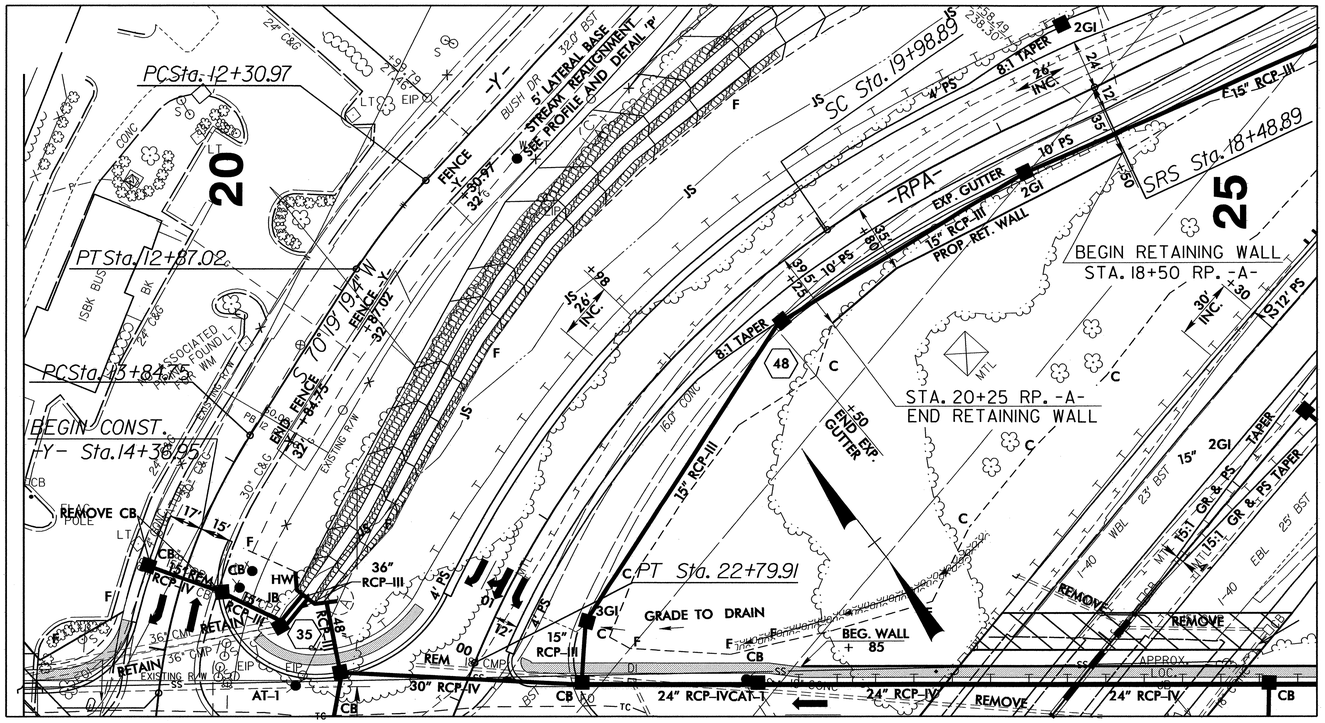

LOCATION SKETCH

TOTAL BILL OF MATERIAL	
SOIL NAIL RETAINING WALL	860 SQ. FT.
ARCHITECTURAL CONCRETE SURFACE TREATMENT	860 SQ. FT.
SOIL NAIL VERIFICATION TEST	2 EA.
SOIL NAIL PROOF TEST	5 EA.

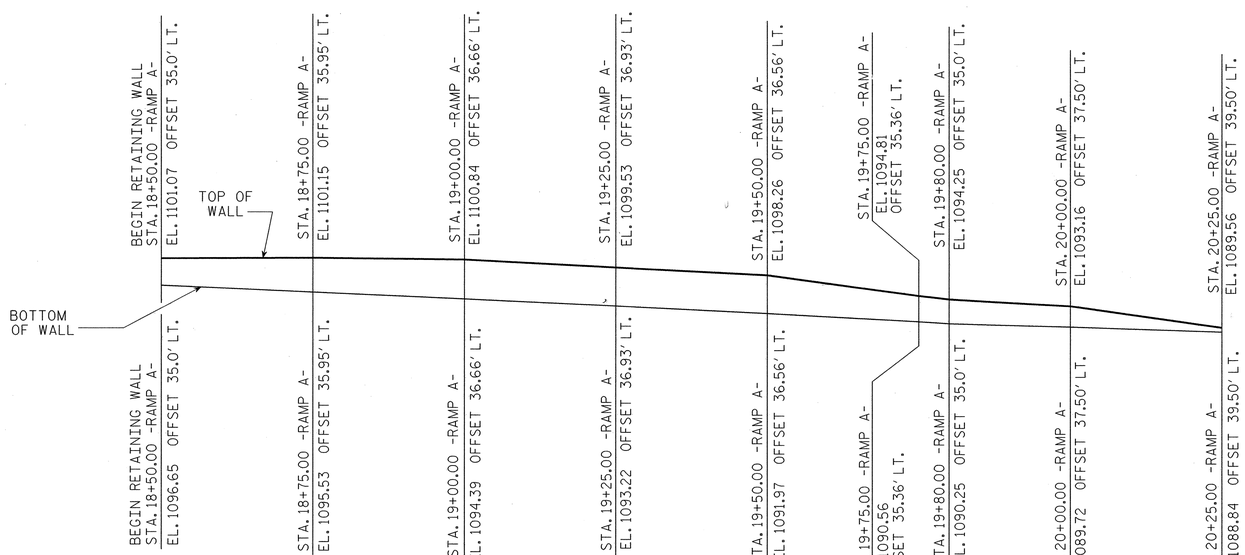

WALL PROFILE

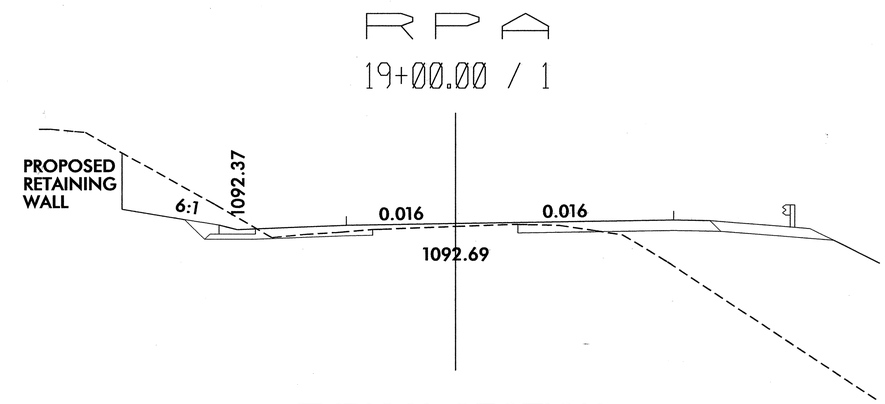

TYPICAL SECTION

PREPARED BY: E.J. SALVO	DATE: 12/10
REVIEWED BY: S.C. CLARK	DATE: 4/20/11

PROJECT NO.: U-2550B

BURKE **COUNTY**

STATION: 18+50.00 -RPA- TO 20+25.00 -RPA-

SHEET 1 OF 2

GEOTECHNICAL ENGINEERING UNIT

☐ EASTERN REGIONAL OFFICE
☒ WESTERN REGIONAL OFFICE
☐ CONTRACT OFFICE

STATE OF NORTH CAROLINA
DEPARTMENT OF TRANSPORTATION
RALEIGH

RETAINING WALL #1
SOIL NAIL RETAINING
WALL DETAILS

REVISIONS						SHEET NO.
NO.	BY	DATE	NO.	BY	DATE	W-1
1			3			TOTAL SHEETS
2			4			8

GEOTECHNICAL ENGINEER	ENGINEER
NORTH CAROLINA PROFESSIONAL SEAL 029869 ENGINEER SHANE C. CLARK	
SIGNATURE / DATE 4/25/11	SIGNATURE / DATE

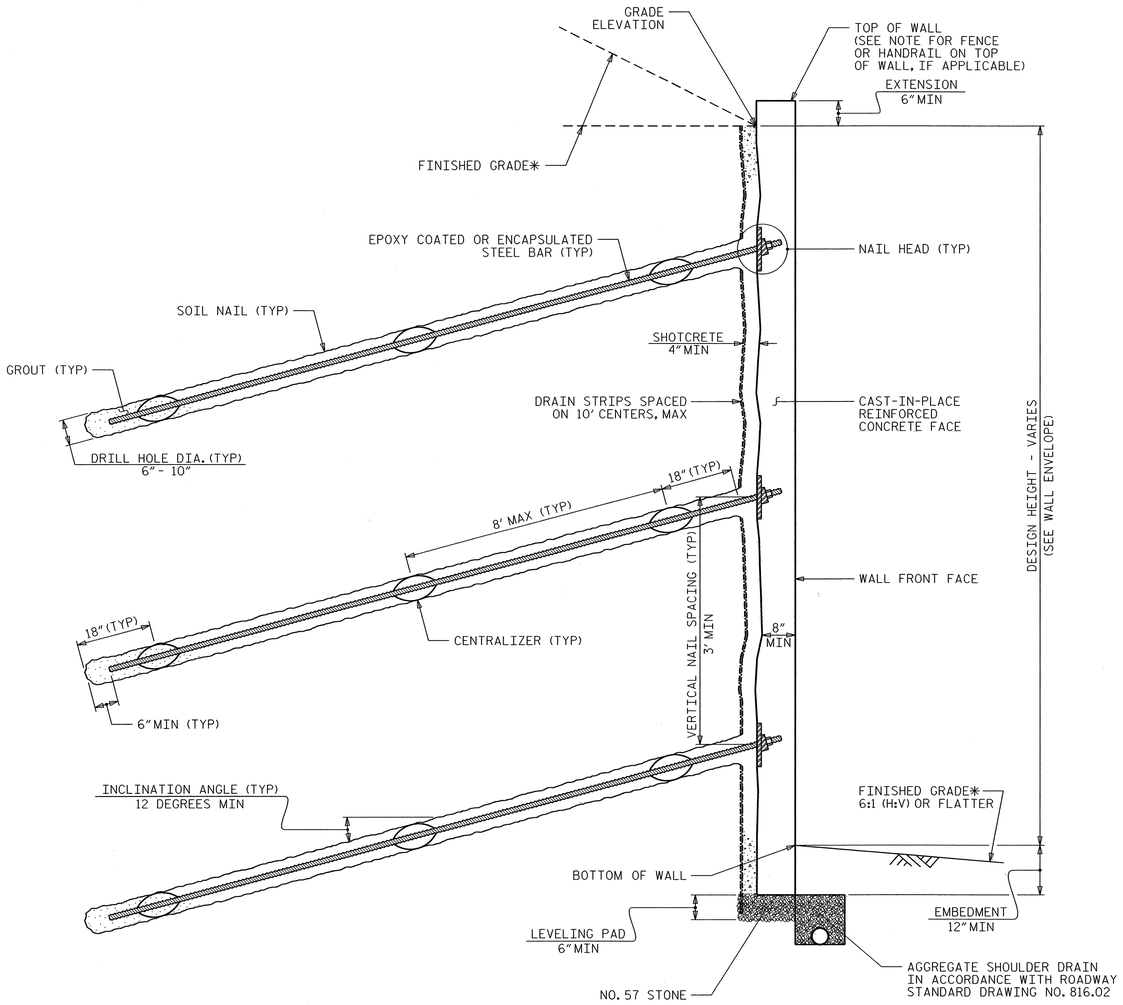

SOIL NAIL WALL - TYPICAL SECTION

*SEE ROADWAY PLANS FOR FINISHED GRADE AND DITCH DETAILS.

NOTES:

FOR SOIL NAIL RETAINING WALLS, SEE SOIL NAIL RETAINING WALLS PROVISION.

A VISTA DRYSTACK ARCHITECTURAL FINISH IS REQUIRED FOR THE CAST-IN-PLACE REINFORCED CONCRETE FACE FOR RETAINING WALL NO. 1. THIS RETAINING WALL. SEE THE ARCHITECTURAL CONCRETE SURFACE TREATMENT PROJECT SPECIAL PROVISIONS FOR ADDITIONAL INFORMAITON.

BEFORE BEGINNING SOIL NAIL WALL DESIGN FOR RETAINING WALL NO. _, SURVEY WALL LOCATION AND SUBMIT A REVISED WALL PROFILE VIEW (WALL ENVELOPE) FOR REVIEW. DO NOT START WALL DESIGN OR CONSTRUCTION UNTIL THE REVISED WALL ENVELOPE IS ACCEPTED.

DESIGN RETAINING WALL NO. _ FOR WALL HEIGHTS EQUAL TO THE DESIGN HEIGHT (DIFFERENCE BETWEEN GRADE ELEVATION AND BOTTOM OF WALL ELEVATION) PLUS EMBEDMENT (DIFFERENCE BETWEEN BOTTOM OF WALL ELEVATION AND TOP OF LEVELING PAD ELEVATION).

DESIGN RETAINING WALL NO. 1 FOR THE FOLLOWING:
1) MINIMUM DESIGN LIFE = 100 YEARS
2) MINIMUM EMBEDMENT ELEVATION = 2 FT
3) IN-SITU ASSUMED MATERIAL PARAMETERS:
   UNIT WEIGHT, γ = 120 PCF
   FRICTION ANGLE, ϕ = 30 DEGREES
   COHESION, c = 0 PSF

EXISTING OR FUTURE OBSTRUCTIONS SUCH AS FOUNDATIONS, GUARDRAIL, FENCE OR HANDRAIL POSTS, PAVEMENTS, PIPES, INLETS OR UTILITIES MAY INTERFERE WITH SOIL NAILS FOR RETAINING WALL NO. 1.

"TEMPORARY SHORING FOR WALL CONSTRUCTION" MAY BE REQUIRED FOR THIS RETAINING WALL. FOR TEMPORARY SHORING FOR WALL CONSTRUCTION, SUBMIT WORKING DRAWINGS AND DESIGN CALCULATIONS WITH THE SOIL NAIL WALL DESIGN SUBMITTAL AND DESIGN AND CONSTRUCT THE SHORING IN ACCORDANCE WITH THE TEMPORARY SHORING PROVISION. NO SEPARATE PAYMENT WILL BE MADE FOR TEMPORARY SHORING FOR WALL CONSTRUCTION. PAYMENT WILL BE CONSIDERED INCIDENTAL TO THE COST OF THE SOIL NAIL RETAINING WALL.

PROJECT NO.: U-2550B
BURKE ***COUNTY***
STATION: 18+50.00 -RPA- TO 20+25.00 -RPA-
SHEET 2 OF 2

PREPARED BY: J.T.W.	DATE: 10.28.10
REVIEWED BY: S.C.C.	DATE: 4/20/11

GEOTECHNICAL ENGINEERING UNIT
☐ ***EASTERN REGIONAL OFFICE***
☒ ***WESTERN REGIONAL OFFICE***
☐ ***CONTRACT OFFICE***
STATE OF NORTH CAROLINA
DEPARTMENT OF TRANSPORTATION
RALEIGH

RETAINING WALL #1
SOIL NAIL RETAINING
WALL DETAILS

REVISIONS						SHEET NO.
NO.	BY	DATE	NO.	BY	DATE	W-2
1	_	_	3	_	_	TOTAL SHEETS
2	_	_	4	_	_	8

GEOTECHNICAL ENGINEER	ENGINEER
NORTH CAROLINA PROFESSIONAL SEAL 029969 ENGINEER SHANE C. CLARK — SIGNATURE DATE 4/20/11	SIGNATURE DATE

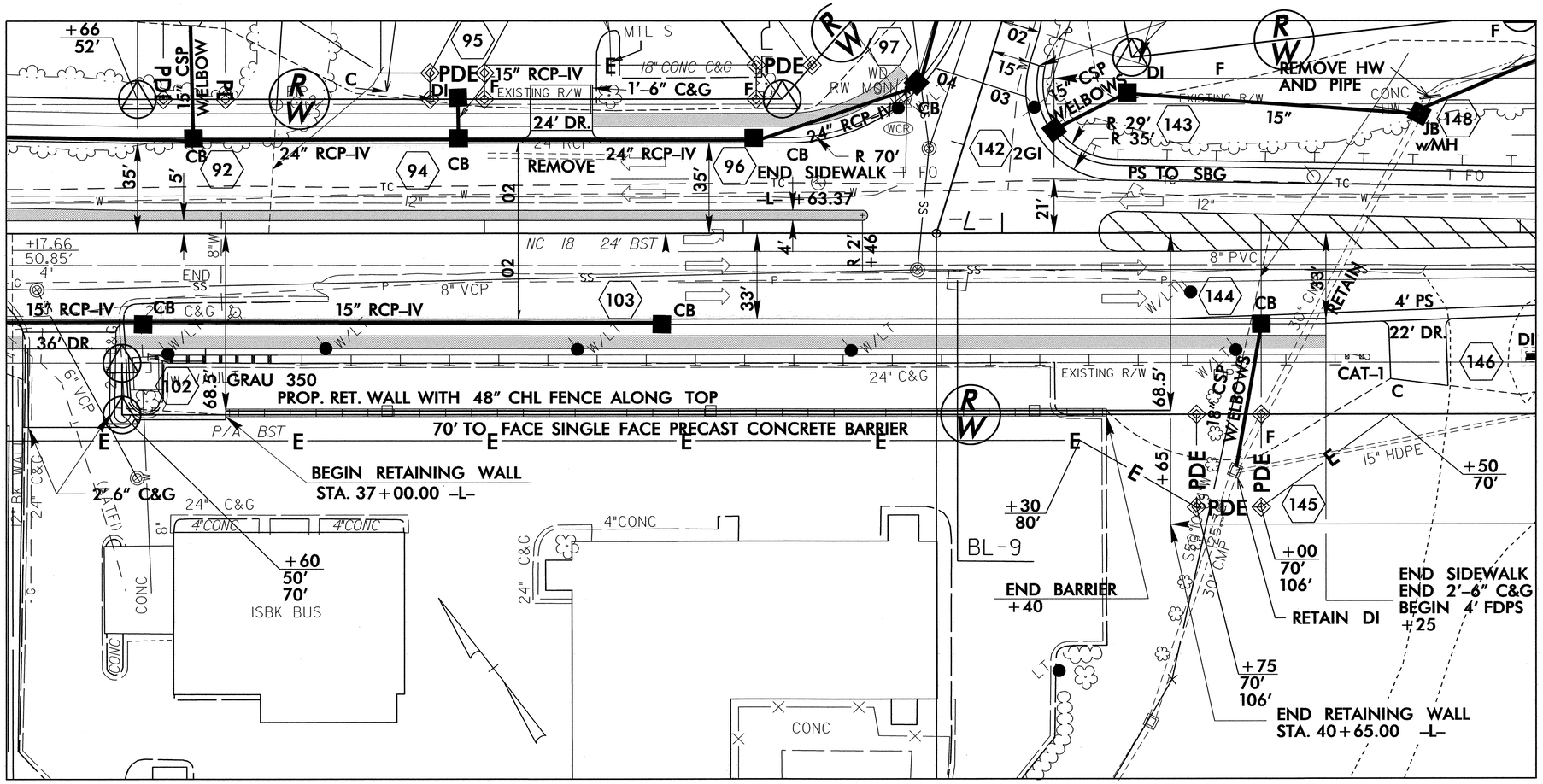

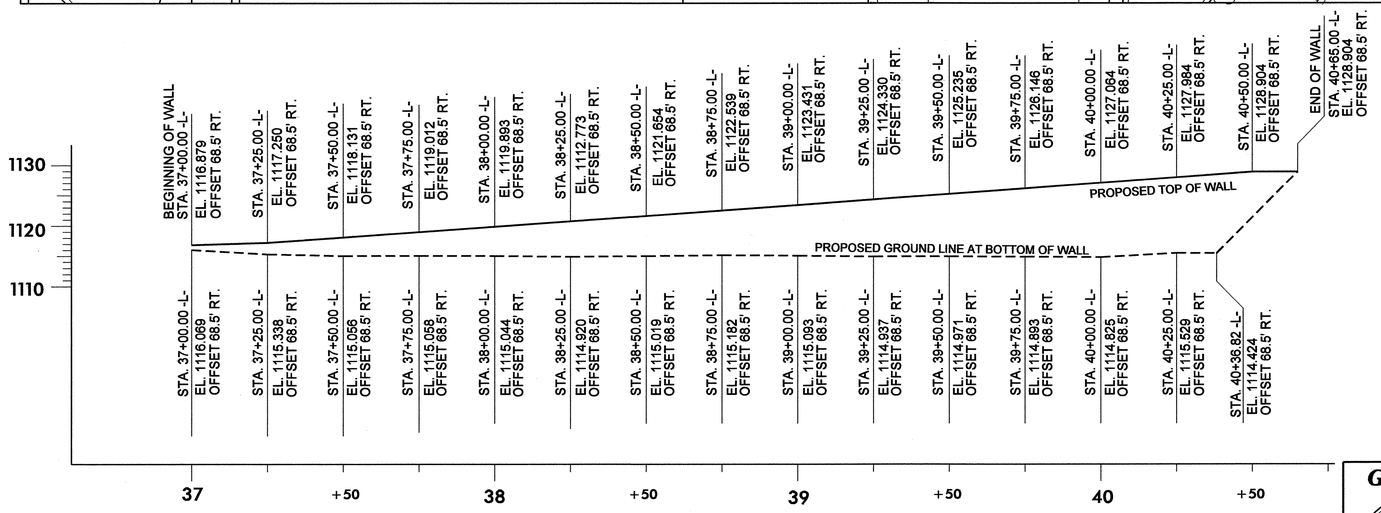

WALL PROFILE

TOTAL BILL OF MATERIAL	
MSE RETAINING WALLS	2,640 SQ. FT.

PROJECT NO.: U-2550B

BURKE ***COUNTY***

STATION: 37+00.00 -L- TO 40+65.00 -L-

SHEET 1 OF 2

PREPARED BY: E.J. SALVO	DATE: 12/10
REVIEWED BY: S.C. CLARK	DATE: 4/20/11

GEOTECHNICAL ENGINEERING UNIT

- ☐ *EASTERN REGIONAL OFFICE*
- ☒ *WESTERN REGIONAL OFFICE*
- ☐ *CONTRACT OFFICE*

STATE OF NORTH CAROLINA
DEPARTMENT OF TRANSPORTATION
RALEIGH

RETAINING WALL #2
MSE RETAINING
WALL DETAILS

REVISIONS

NO.	BY	DATE	NO.	BY	DATE
1	-	-	3	-	-
2	-	-	4	-	-

SHEET NO. W-3

TOTAL SHEETS 8

GEOTECHNICAL ENGINEER	ENGINEER
NORTH CAROLINA PROFESSIONAL SEAL 029869 ENGINEER SHANE C. CLARK — SIGNATURE 4/25/11 DATE	SIGNATURE DATE

NOTES:

FOR MECHANICALLY STABILIZED EARTH (MSE) RETAINING WALLS, SEE MECHANICALLY STABILIZED EARTH RETAINING WALLS PROVISION.

FOR STEEL BEAM GUARDRAIL, SEE ROADWAY PLANS AND SECTION 862 OF THE STANDARD SPECIFICATIONS.

A 4 FT CHAINLINK FENCE IS REQUIRED ALONG THE TOP OF RETAINING WALL NO. 2. SEE ROADWAY STANDARD DRAWING NUMBER 866.01 FOR INSTALLATION DETAILS. CAST SLEEVES INTO THE CAST-IN-PLACE COPING ALONG THE TOP OF THE WALL. AFTER COPING HAS CURED, INSTALL THE FENCE POSTS INTO THE SLEEVES AND FILL VOIDS WITH NON-SHRINK GROUT. THE FABRICATION AND INSTALLATION OF THE SLEEVES WILL BE CONSIDERED INCIDENTAL TO THE COPING CONSTRUCTION, AND NO ADDITIONAL COMPENSATION WILL BE MADE. SEE COPING DETAILS FOR ADDITIONAL INFORMATION.

USE COARSE AGGREGATE IN THE REINFORCED ZONE FOR RETAINING WALL NO. 2.

USE AN MSE WALL SYSTEM WITH SEGMENTAL RETAINING WALL UNITS FOR RETAINING WALL NO. 2.

WHEN USING AN MSE WALL SYSTEM WITH SEGMENTAL RETAINING WALL UNITS FOR RETAINING WALL NO. 2, FREEZE-THAW DURABLE SRW UNITS ARE REQUIRED IN ACCORDANCE WITH THE MSE RETAINING WALLS PROVISION.

USE SEGMENTAL RETAINING WALL UNITS WITH A WEATHERED FACE FOR RETAINING WALL NO. 2.

USE SEGMENTAL RETAINING WALL UNITS WITH A TAN OR GRAY COLOR FOR RETAINING WALL NO. 2.

A DRAIN IS NOT REQUIRED FOR RETAINING WALL NO. 2.

BEFORE BEGINNING MSE WALL DESIGN FOR RETAINING WALL NO. 2, SURVEY WALL LOCATION AND SUBMIT A REVISED WALL PROFILE VIEW (WALL ENVELOPE) FOR REVIEW. DO NOT START WALL DESIGN OR CONSTRUCTION UNTIL THE REVISED WALL ENVELOPE IS ACCEPTED.

DESIGN RETAINING WALL NO. 2 FOR WALL HEIGHTS EQUAL TO THE DESIGN HEIGHT (DIFFERENCE BETWEEN GRADE ELEVATION AND BOTTOM OF WALL ELEAVATION) PLUS EMBEDMENT (DIFFERENCE BETWEEN BOTTOM OF WALL ELEVATION AND TOP OF LEVELING PAD ELEVATION).

DESIGN RETAINING WALL NO. 2 FOR THE FOLLOWING:
1) MINIMUM DESIGN LIFE = 100 YEARS
2) MAXIMUM FACTORED RESISTANCE = 2500 PSF
3) MINIMUM EMBEDMENT ELEVATION = 1.5 FT
4) AGGREGATE PARAMETERS:

STANDARD SIZE NO. (IN ACCORDANCE WITH SECTION 1005 OF THE STANDARD SPECIFICATIONS)	UNIT WEIGHT (γ) PCF	FRICTION ANGLE (ϕ) DEGREES	COHESION (c) PSF
5, 57, 57M, 6M, 67 AND 78M (COARSE AGGREGATE)	125	38	0

5) IN-SITU ASSUMED MATERIAL PARAMETERS:

MATERIAL TYPE	UNIT WEIGHT (γ) PCF	FRICTION ANGLE (ϕ) DEGREES	COHESION (c) PSF
BACKFILL	120	30	0
FOUNDATION	120	30	0

DESIGN RETAINING WALL NO. 2 FOR A LIVE LOAD (TRAFFIC) SURCHARGE.

DO NOT PLACE LEVELING PAD CONCRETE, AGGREGATE OR REINFORCEMENT FOR RETAINING WALL NO. 2 UNTIL OBTAINING APPROVAL OF THE EXCAVATION DEPTH AND FOUNDATION MATERIAL.

AT THE CONTRACTOR'S OPTION, "TEMPORARY SHORING FOR WALL CONSTRUCTION" MAY BE USED TO CONSTRUCT RETAINING WALL NO. 2. SEE MSE RETAINING WALLS PROVISION FOR TEMPORARY SHORING FOR WALL CONSTRUCTION.

WRAP FILL SLOPE AROUND THE END OF THE WALL AS DIRECTED BY THE ENGINEER. THE SLOPE WILL BE A 2:1, OR AS DIRECTED BY THE ENGINEER.

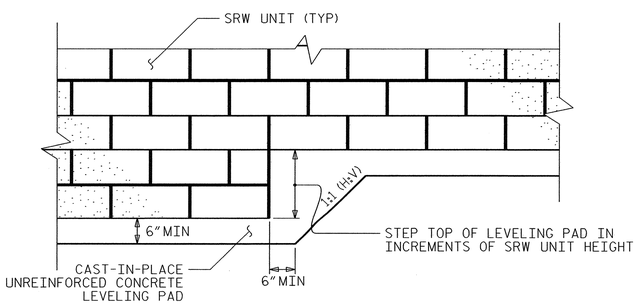

SEGMENTAL RETAINING WALL (SRW) UNITS

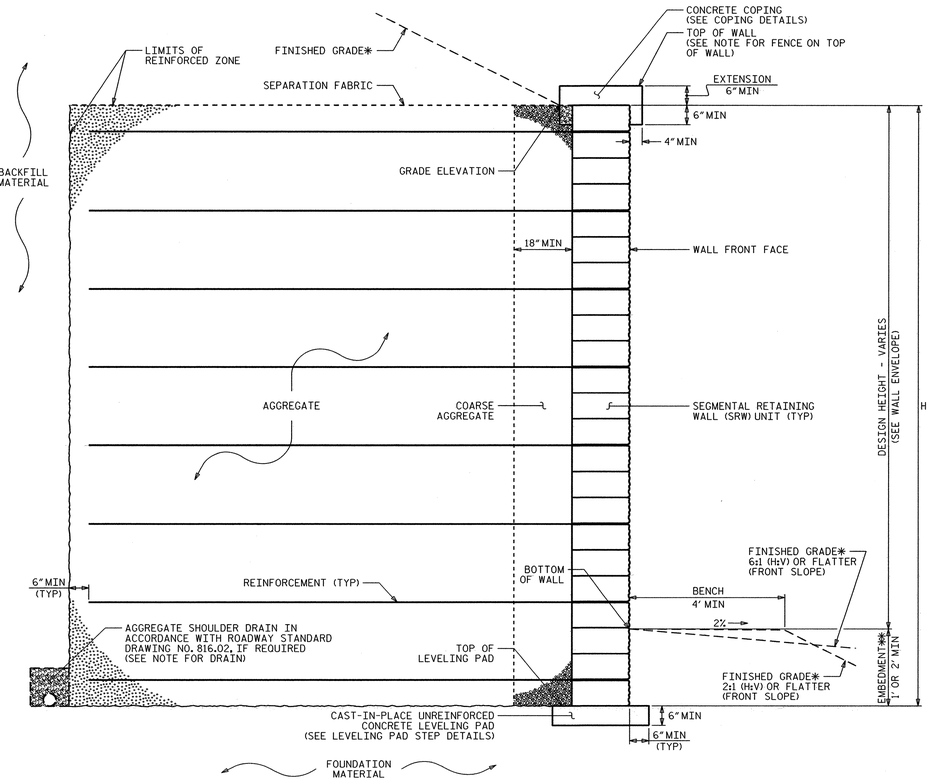

MSE WALL WITH SRW UNITS - TYPICAL SECTION

*SEE ROADWAY PLANS FOR FINISHED GRADE AND DITCH DETAILS.
**SEE MSE RETAINING WALLS PROVISION FOR EMBEDMENT REQUIREMENTS.

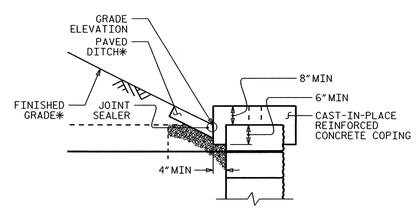

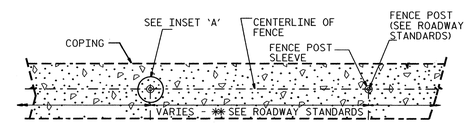

PLAN VIEW

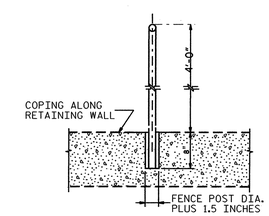

INSET 'A'

COPING AND FENCE ATTACHMENT DETAILS

* SEE ROADWAY PLANS FOR FINISHED GRADE AND DITCH DETAILS.
** SEE ROADWAY STANDARD DRAWING 866.01 FOR ADDITIONAL DETAILS.

PROJECT NO.: U-2550B
BURKE ***COUNTY***
STATION: 37+00.00 -L- TO 40+65.00 -L-
SHEET 2 OF 2

PREPARED BY: J.T.W.	DATE: 10/28/10
REVIEWED BY: S.C.C.	DATE: 4/20/11

GEOTECHNICAL ENGINEERING UNIT
_ ***EASTERN REGIONAL OFFICE***
X ***WESTERN REGIONAL OFFICE***
_ ***CONTRACT OFFICE***
STATE OF NORTH CAROLINA DEPARTMENT OF TRANSPORTATION RALEIGH

RETAINING WALL #2
MSE RETAINING WALL DETAILS

REVISIONS						SHEET NO.
NO.	BY	DATE	NO.	BY	DATE	W-4
1	-	-	3	-	-	TOTAL SHEETS
2	-	-	4	-	-	8

GEOTECHNICAL ENGINEER	ENGINEER
NORTH CAROLINA PROFESSIONAL SEAL 029869 ENGINEER SHANE C. CLARK — SIGNATURE: Shane Clark — DATE: 4/25/11	SIGNATURE — DATE

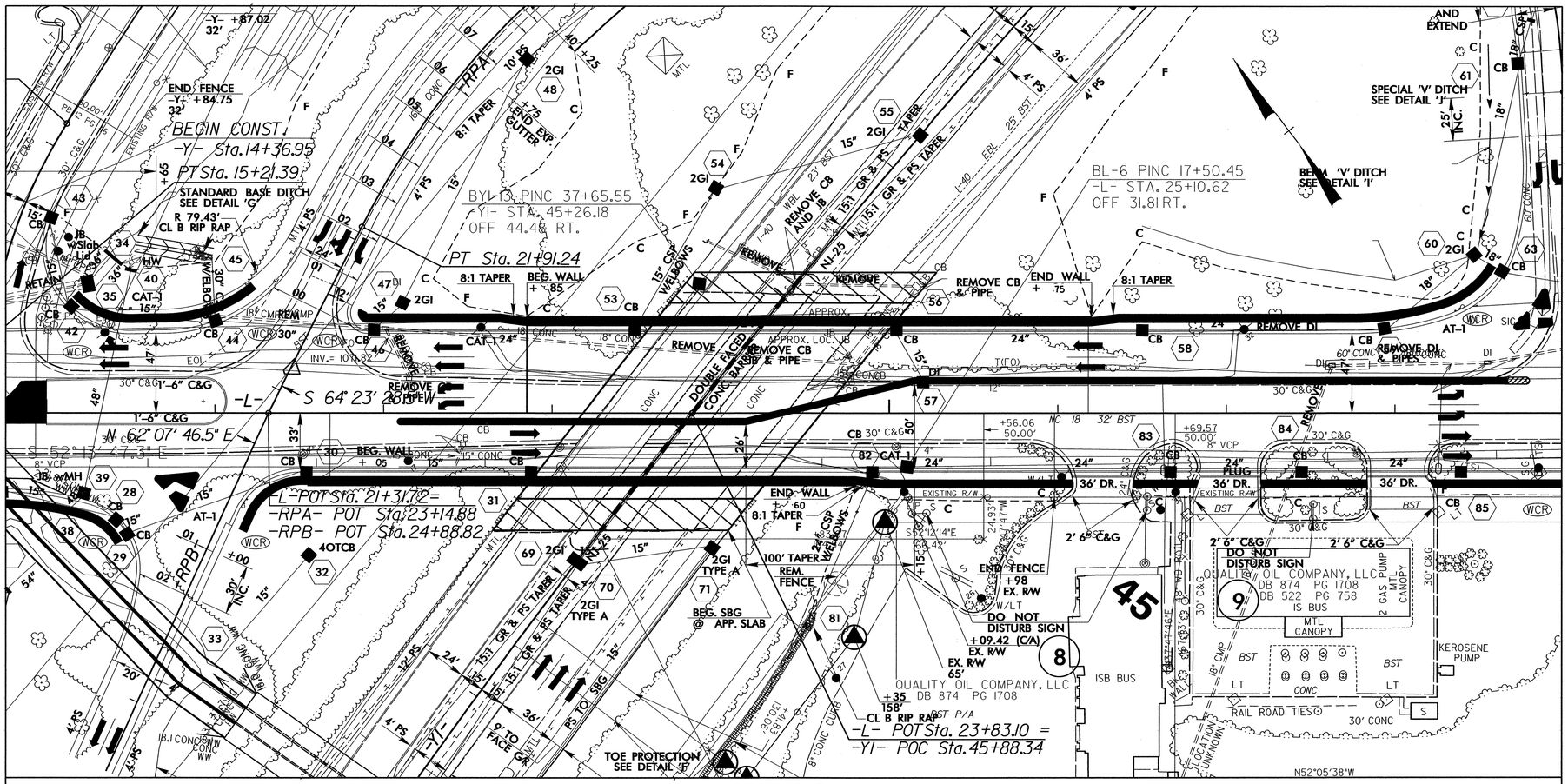

LOCATION SKETCH

TOTAL BILL OF MATERIAL (WALL #3)	
ANCHORED RETAINING WALL	5040 SQ. FT.
ARCHITECTURAL CONCRETE SURFACE TREATMENT	5040 SQ. FT.

TOTAL BILL OF MATERIAL (WALL #4)	
ANCHORED RETAINING WALL	4260 SQ. FT.
ARCHITECTURAL CONCRETE SURFACE TREATMENT	4260 SQ. FT.

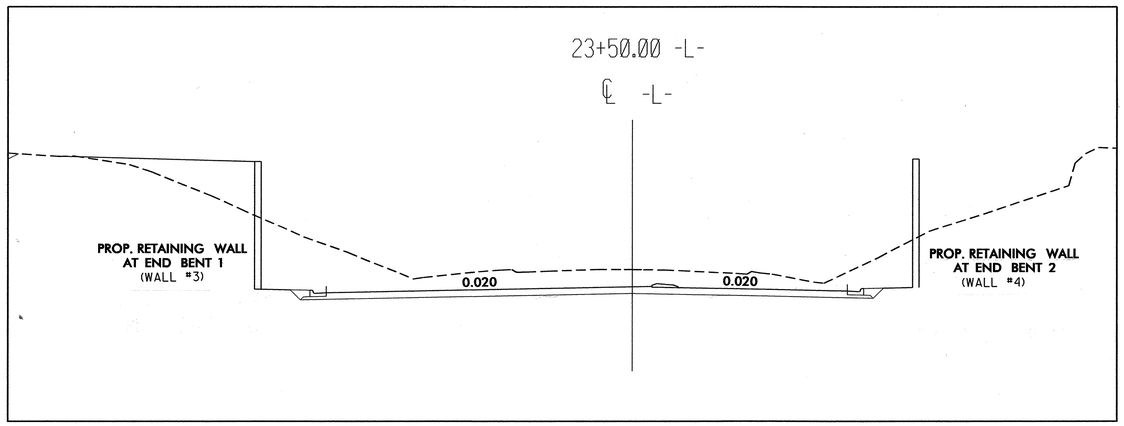

PROJECT NO.: U-2550B

BURKE ***COUNTY***

STATION: 22+85 TO 25+75 -L-, LT
22+05 TO 24+60 -L-, RT

SHEET 1 of 4

GEOTECHNICAL ENGINEERING UNIT

- ☐ *EASTERN REGIONAL OFFICE*
- ☒ *WESTERN REGIONAL OFFICE*
- ☐ *CONTRACT OFFICE*

STATE OF NORTH CAROLINA
DEPARTMENT OF TRANSPORTATION
RALEIGH

RETAINING WALL #3 AND #4 ANCHORED RETAINING WALL DETAILS AT BRIDGE END BENTS

PREPARED BY: E.J. SALVO	DATE: 12/10
REVIEWED BY: S.C. CLARK	DATE: 4/20/11

REVISIONS

NO.	BY	DATE	NO.	BY	DATE
1			3		
2			4		

SHEET NO. W-5

TOTAL SHEETS 8

GEOTECHNICAL ENGINEER	ENGINEER
NORTH CAROLINA PROFESSIONAL SEAL 029869 ENGINEER SHANE C. CLARK — SIGNATURE: S. C. Clark — DATE: 4/24/11	SIGNATURE — DATE

LW

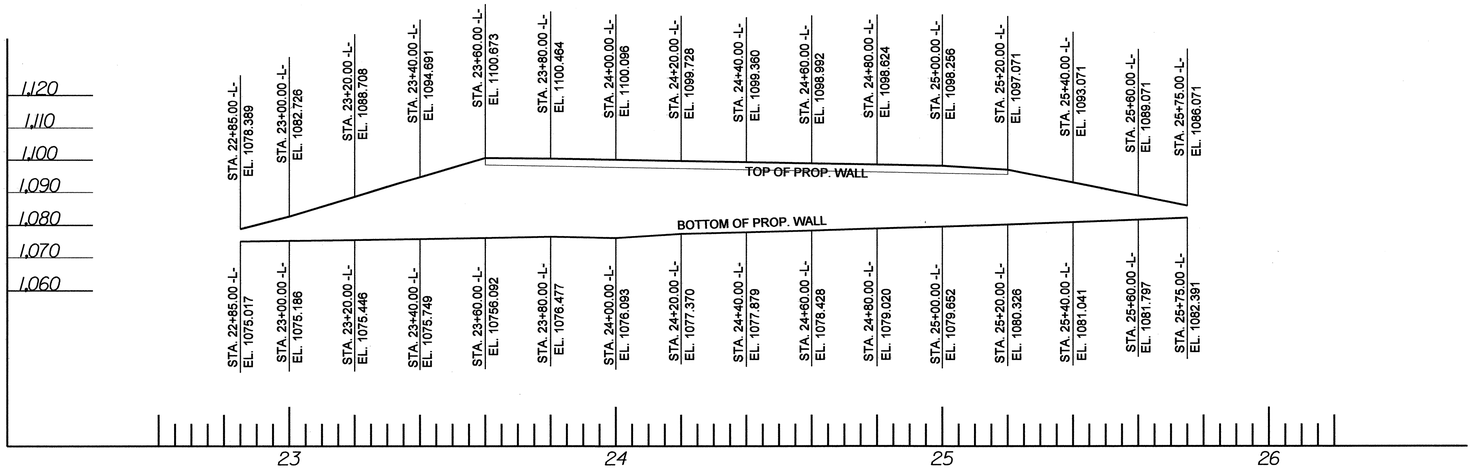

ANCHORED RETAINING WALL ENVELOPE AT END BENT 1

(LOOKING AT FACE OF WALL)
OFFSET FROM CENTERLINE –L– TO FACE OF WALL IS 57' LEFT

RW

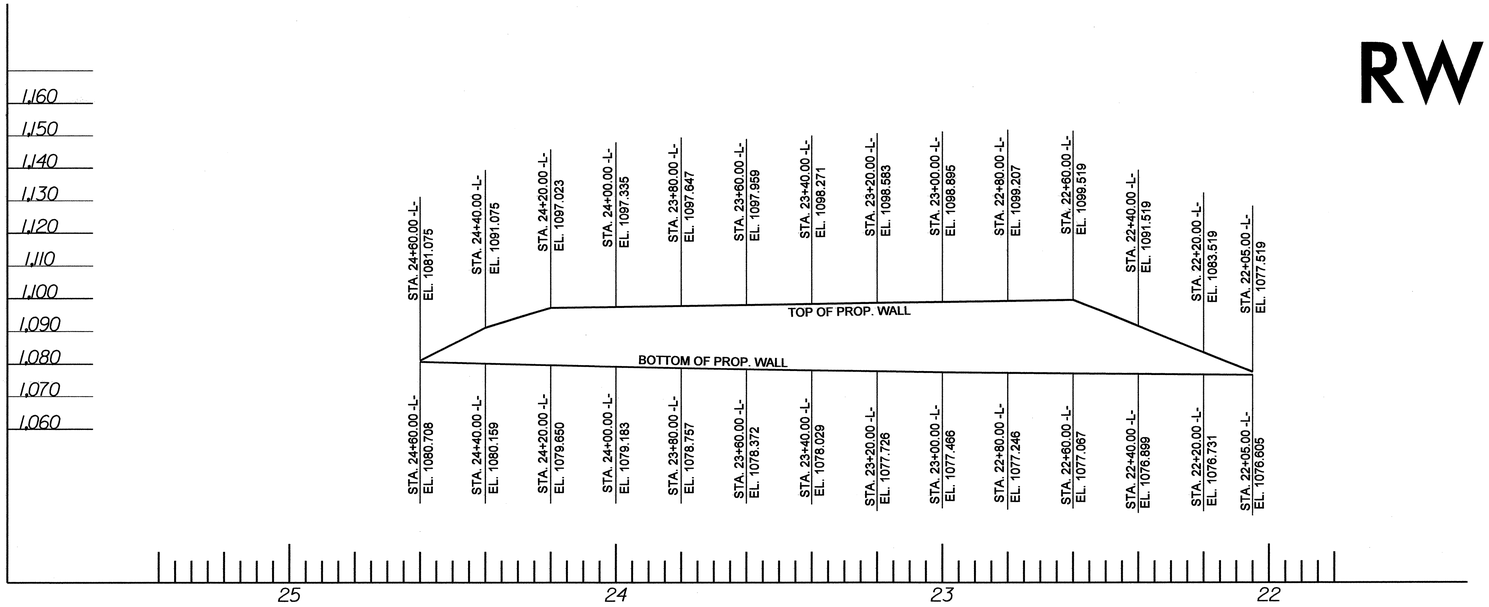

ANCHORED RETAINING WALL ENVELOPE AT END BENT 2

(LOOKING AT FACE OF WALL)
OFFSET FROM CENTERLINE –L– TO FACE OF WALL IS 43' RIGHT

PROJECT NO.: U-2550B
BURKE ***COUNTY***
STATION: 22+85 TO 25+75 -L-, LT
22+05 TO 24+60 -L-, RT
SHEET 2 OF 4

GEOTECHNICAL ENGINEERING UNIT
☐ *EASTERN REGIONAL OFFICE*
☒ *WESTERN REGIONAL OFFICE*
☐ *CONTRACT OFFICE*

STATE OF NORTH CAROLINA
DEPARTMENT OF TRANSPORTATION
RALEIGH

ANCHORED RETAINING WALL DETAILS AT BRIDGE END BENTS

REVISIONS						SHEET NO.
NO.	BY	DATE	NO.	BY	DATE	W-6
1	–	–	3	–	–	TOTAL SHEETS
2	–	–	4	–	–	8

PREPARED BY: E.J. SALVO	DATE: 12/10
REVIEWED BY: S.C. CLARK	DATE: 4/20/11

GEOTECHNICAL ENGINEER	ENGINEER
NORTH CAROLINA PROFESSIONAL SEAL 029869 ENGINEER SHANE C. CLARK — SIGNATURE 4/20/11 DATE	SIGNATURE DATE

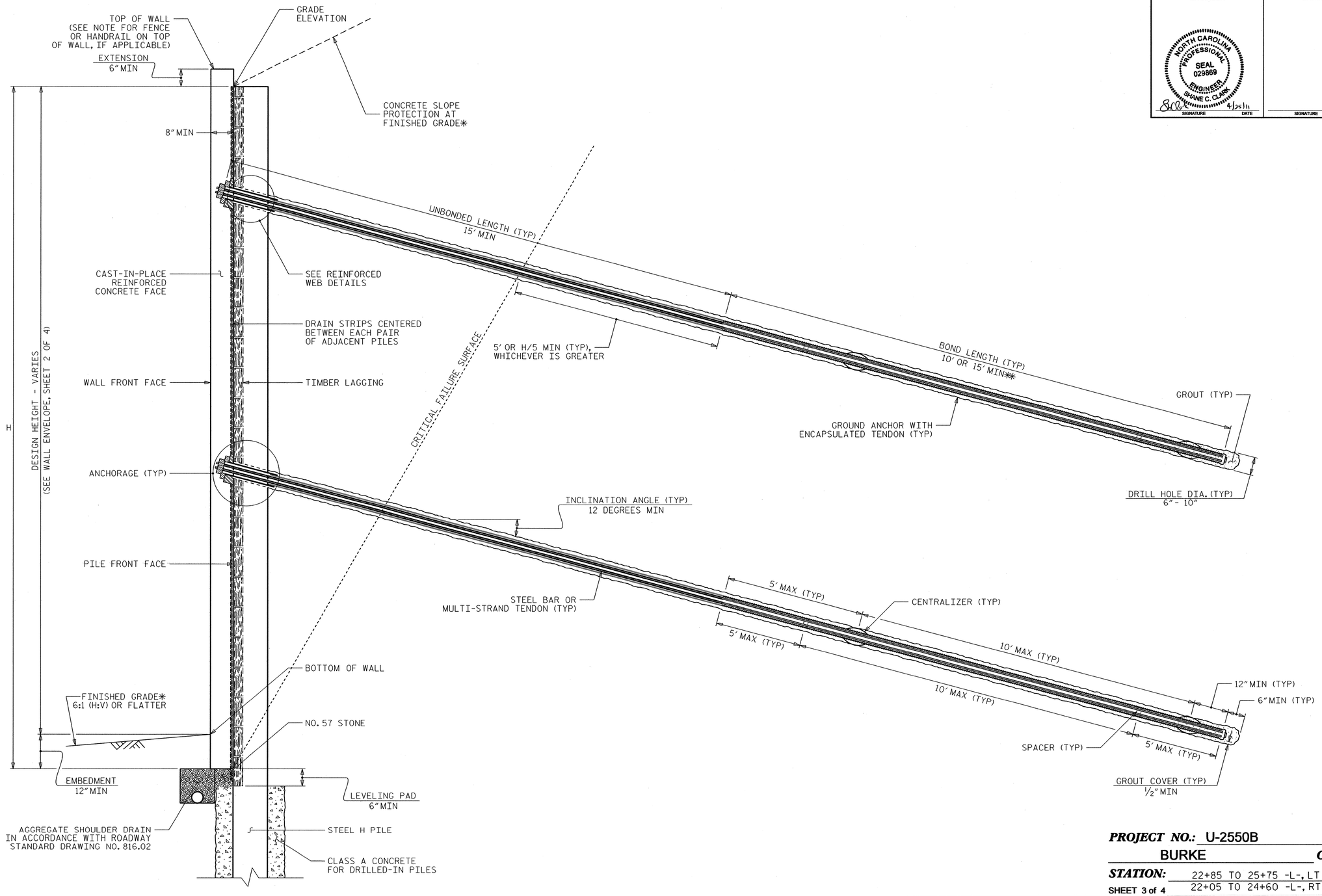

ANCHORED WALL - TYPICAL SECTION

(DOUBLE ROW OF GROUND ANCHORS SHOWN, AS NEEDED,)
*SEE ROADWAY PLANS FOR FINISHED GRADE AND DITCH DETAILS.
**SEE ANCHORED RETAINING WALLS PROVISION FOR BOND LENGTH REQUIREMENTS.

PREPARED BY: E.J. SALVO	DATE: 12/10
REVIEWED BY: S.C. CLARK	DATE: 4/20/11

PROJECT NO.: U-2550B
BURKE ***COUNTY***
STATION: 22+85 TO 25+75 -L-, LT
22+05 TO 24+60 -L-, RT
SHEET 3 of 4

GEOTECHNICAL ENGINEERING UNIT
☐ *EASTERN REGIONAL OFFICE*
☒ *WESTERN REGIONAL OFFICE*
☐ *CONTRACT OFFICE*

STATE OF NORTH CAROLINA
DEPARTMENT OF TRANSPORTATION
RALEIGH

RETAINING WALL #3 AND #4 ANCHORED RETAINING WALL DETAILS AT BRIDGE END BENTS

REVISIONS						SHEET NO.
NO.	BY	DATE	NO.	BY	DATE	W-7
1	-	-	3	-	-	TOTAL SHEETS
2	-	-	4	-	-	8

NOTES:

FOR ANCHORED RETAINING WALLS, SEE ANCHORED RETAINING WALLS PROVISION.

AT THE CONTRACTOR'S OPTION, USE DRIVEN PILES FOR RETAINING WALLS NO. 3 AND 4.

AN ARCHITECTURAL FINISH CONSISTING OF 3 INDIVIDUAL PATTERNS IS REQURIED FOR THE CAST-IN-PLACE REINFORCED CONCRETE FACE FOR RETAINING WALLS NO. 3 AND 4. SEE THE ARCHTECTURAL CONCRETE SURFACE TREATMENT PROJECT SPECIAL PROVISIONS.

BEFORE BEGINNING ANCHORED WALL DESIGN FOR RETAINING WALLS NO. 3 AND 4 SURVEY WALL LOCATION AND SUBMIT A REVISED WALL PROFILE VIEW (WALL ENVELOPE) FOR REVIEW. DO NOT START WALL DESIGN OR CONSTRUCTION UNTIL THE REVISED WALL ENVELOPE IS ACCEPTED.

DESIGN RETAINING WALLS NO. 3 AND 4 FOR WALL HEIGHTS EQUAL TO THE DESIGN HEIGHT (DIFFERENCE BETWEEN GRADE ELEVATION AND BOTTOM OF WALL ELEVATION) PLUS EMBEDMENT (DIFFERENCE BETWEEN BOTTOM OF WALL ELEVATION AND TOP OF LEVELING PAD ELEVATION).

DESIGN RETAINING WALLS NO. 3 AND 4 FOR THE FOLLOWING:
1) MINIMUM DESIGN LIFE = 100 YEARS
2) MINIMUM EMBEDMENT ELEVATION = 1 FT
3) IN-SITU ASSUMED MATERIAL PARAMETERS:
   UNIT WEIGHT, γ = 120 PCF
   FRICTION ANGLE, ϕ = 30 DEGREES
   COHESION, c = 0 PSF

DESIGN RETAINING WALL NO. 3 AND 4 FOR A LIVE LOAD (TRAFFIC) SURCHARGE AND THE ADDITIONAL SURCHARGE FROM THE OVERBURDEN AND STEEL REINFORCED BRIDGE APPROACH FILL.

EXISTING OR FUTURE OBSTRUCTIONS SUCH AS FOUNDATIONS, GUARDRAIL, FENCE OR HANDRAIL POSTS, PAVEMENTS, PIPES, INLETS OR UTILITIES MAY INTERFERE WITH GROUND ANCHORS FOR RETAINING WALL NO. 3 AND/OR 4.

FOUNDATIONS FOR END BENT NO. 1 AND END BENT NO. 2 MAY INTERFERE WITH GROUND ANCHORS FOR RETAINING WALL NO. 3 AND 4 SEE "FOUNDATION LAYOUT" SHEET FOR FOUNDATION LOCATIONS.

"TEMPORARY SHORING" MAY BE REQUIRED FOR RETAINING WALL NO. 3 AND/OR RETAINING WALL NO. 4. IN ACCORDANCE WITH THE TEMPORARY SHORING PROVISION. SEE THE TRAFFIC CONTROL PLANS FOR ADDITIONAL INFORMATION.

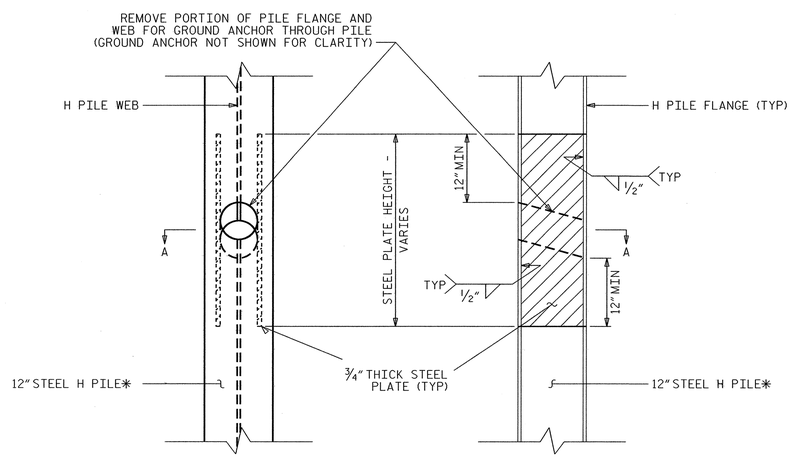

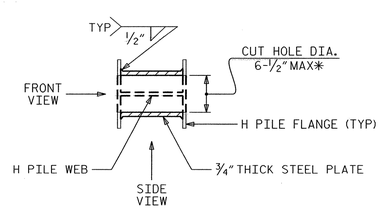

SECTION A-A

REINFORCED WEB DETAILS

*REINFORCED WEB DETAILS ABOVE ARE FOR A 12" H PILE WITH A 6" DIA. GROUND ANCHOR. FOR LARGER DIAMETER ANCHORS, SUBMIT ALTERNATE REINFORCED WEB DETAILS FOR REVIEW AND ACCEPTANCE.

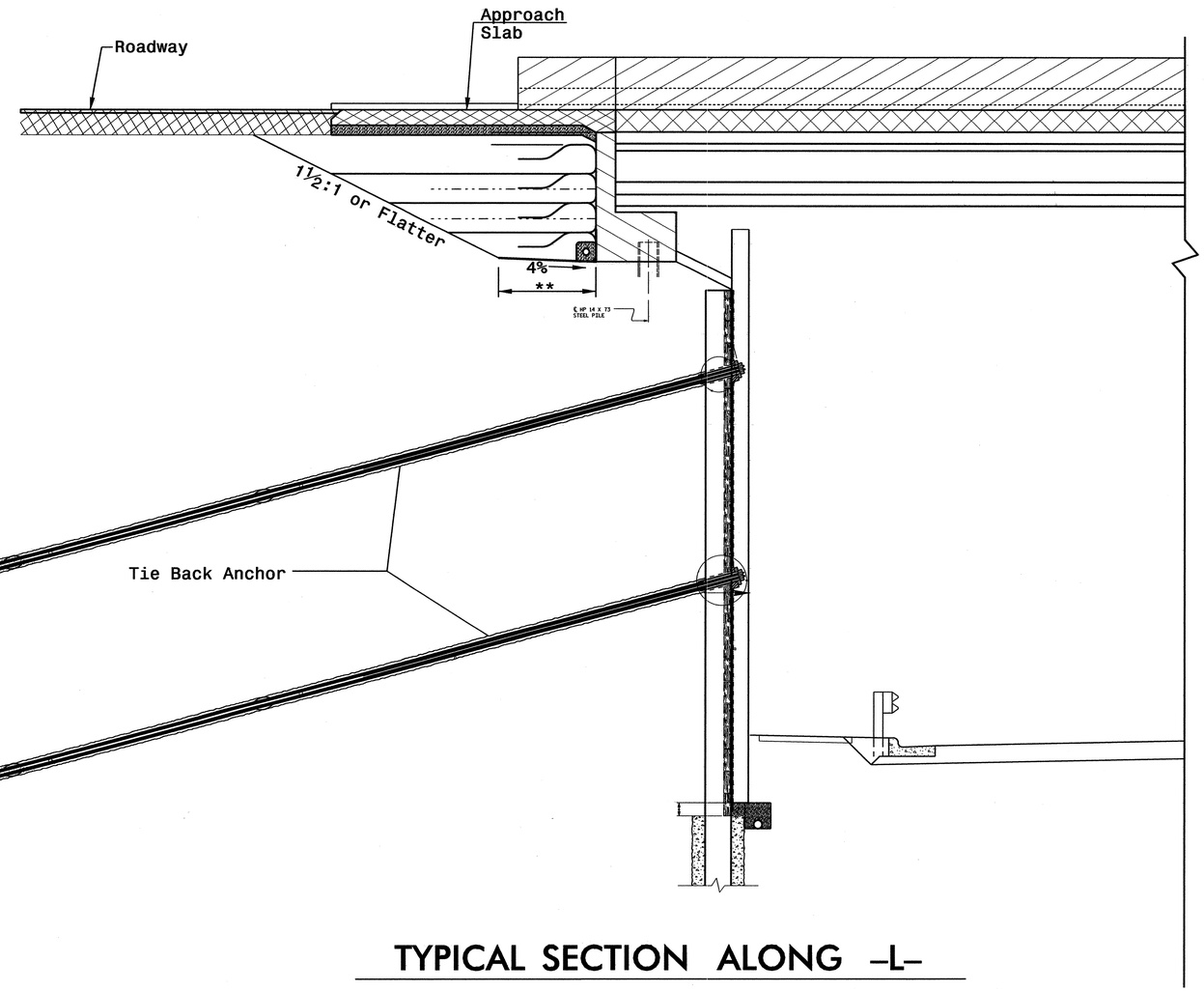

TYPICAL SECTION ALONG -L-

PREPARED BY: E.J. SALVO	DATE: 12/10
REVIEWED BY: S.C. CLARK	DATE: 4/20/11

GEOTECHNICAL ENGINEER

NORTH CAROLINA PROFESSIONAL SEAL 029869 ENGINEER SHANE C. CLARK

SIGNATURE DATE 4/25/11

ENGINEER

SIGNATURE DATE

PROJECT NO.: U-2550B

BURKE COUNTY

STATION: 22+85 TO 25+75 -L-, LT
22+05 TO 24+60 -L-, RT

SHEET 4 of 4

GEOTECHNICAL ENGINEERING UNIT

☐ EASTERN REGIONAL OFFICE
☒ WESTERN REGIONAL OFFICE
☐ CONTRACT OFFICE

STATE OF NORTH CAROLINA DEPARTMENT OF TRANSPORTATION RALEIGH

RETAINING WALL #3 AND #4 ANCHORED RETAINING WALL DETAILS AT BRIDGE END BENTS

REVISIONS

NO.	BY	DATE	NO.	BY	DATE
1	-	-	3	-	-
2	-	-	4	-	-

SHEET NO. W-8

TOTAL SHEETS 8

STANDARD NOTES

DESIGN DATA:

SPECIFICATIONS	A.A.S.H.T.O. (CURRENT)
LIVE LOAD	SEE PLANS
IMPACT ALLOWANCE	SEE A.A.S.H.T.O.
STRESS IN EXTREME FIBER OF	
STRUCTURAL STEEL - AASHTO M270 GRADE 36	20,000 LBS. PER SQ. IN.
- AASHTO M270 GRADE 50W	27,000 LBS. PER SQ. IN.
- AASHTO M270 GRADE 50	27,000 LBS. PER SQ. IN.
REINFORCING STEEL IN TENSION GRADE 60	24,000 LBS. PER SQ. IN.
CONCRETE IN COMPRESSION	1,200 LBS. PER SQ. IN.
CONCRETE IN SHEAR	SEE A.A.S.H.T.O.
STRUCTURAL TIMBER - TREATED OR UNTREATED - EXTREME FIBER STRESS	1,800 LBS. PER SQ. IN.
COMPRESSION PERPENDICULAR TO GRAIN OF TIMBER	375 LBS. PER SQ. IN.
EQUIVALENT FLUID PRESSURE OF EARTH	30 LBS. PER CU. FT. (MINIMUM)

MATERIAL AND WORKMANSHIP:

EXCEPT AS MAY OTHERWISE BE SPECIFIED ON PLANS OR IN THE SPECIAL PROVISIONS, ALL MATERIAL AND WORKMANSHIP SHALL BE IN ACCORDANCE WITH THE 2006 "STANDARD SPECIFICATIONS FOR ROADS AND STRUCTURES" OF THE N. C. DEPARTMENT OF TRANSPORTATION.

STEEL SHEET PILING FOR PERMANENT OR TEMPORARY APPLICATIONS SHALL BE HOT ROLLED.

CONCRETE:

UNLESS OTHERWISE REQUIRED ON PLANS, CLASS A CONCRETE SHALL BE USED FOR ALL PORTIONS OF ALL STRUCTURES WITH THE EXCEPTION THAT: CLASS AA CONCRETE SHALL BE USED IN BRIDGE SUPERSTRUCTURES, ABUTMENT BACKWALLS, AND APPROACH SLABS; AND CLASS B CONCRETE SHALL BE USED FOR SLOPE PROTECTION AND RIP RAP.

CONCRETE CHAMFERS:

UNLESS OTHERWISE NOTED ON THE PLANS, ALL EXPOSED CORNERS ON STRUCTURES SHALL BE CHAMFERED 3/4" WITH THE FOLLOWING EXCEPTIONS: TOP CORNERS OF CURBS MAY BE ROUNDED TO 1-1/2" RADIUS WHICH IS BUILT INTO CURB FORMS; CORNERS OF TRANSVERSE FLOOR EXPANSION JOINTS SHALL BE ROUNDED WITH A 1/4" FINISHING TOOL UNLESS OTHERWISE REQUIRED ON PLANS; AND CORNERS OF EXPANSION JOINTS IN THE ROADWAY FACES AND TOPS OF CURBS AND SIDEWALKS SHALL BE ROUNDED TO A 1/4" RADIUS WITH A FINISHING STONE OR TOOL UNLESS OTHERWISE REQUIRED ON PLANS.

DOWELS:

DOWELS WHEN INDICATED ON PLANS AS FOR CULVERT EXTENSIONS, SHALL BE EMBEDDED AT LEAST 12" INTO THE OLD CONCRETE AND GROUTED INTO PLACE WITH 1:2 CEMENT MORTAR.

ALLOWANCE FOR DEAD LOAD DEFLECTION, SETTLEMENT, ETC. IN CASTING SUPERSTRUCTURES:

BRIDGES SHALL BE BUILT ON THE GRADE OR VERTICAL CURVE SHOWN ON PLANS. SLABS, CURBS AND PARAPETS SHALL CONFORM TO THE GRADE OR CURVE.

ALL DIMENSIONS WHICH ARE GIVEN IN SECTION AND ARE AFFECTED BY DEAD LOAD DEFLECTIONS ARE DIMENSIONS AT CENTER LINE OF BEARING UNLESS OTHERWISE NOTED ON PLANS. IN SETTING FORMS FOR STEEL BEAM BRIDGES AND PRESTRESSED CONCRETE GIRDER BRIDGES, ADJUSTMENTS SHALL BE MADE DUE TO THE DEAD LOAD DEFLECTIONS FOR THE ELEVATIONS SHOWN. WHERE BLOCKS ARE SHOWN OVER BEAMS FOR BUILDING UP TO THE SLAB, THE VERTICAL DIMENSIONS OF THE BLOCKS SHALL BE ADJUSTED BETWEEN BEARINGS TO COMPENSATE FOR DEAD LOAD DEFLECTIONS, VERTICAL CURVE ORDINATE, AND ACTUAL BEAM CAMBER. WHERE BOTTOM OF SLAB IS IN LINE WITH BOTTOM OF TOP FLANGES, DEPTH OF SLAB BETWEEN BEARINGS SHALL BE ADJUSTED TO COMPENSATE FOR DEAD LOAD DEFLECTION, VERTICAL CURVE ORDINATE, AND ACTUAL BEAM CAMBER.

IN SETTING FALSEWORK AND FORMS FOR REINFORCED CONCRETE SPANS, AN ALLOWANCE SHALL BE MADE FOR DEAD LOAD DEFLECTIONS, SETTLEMENT OF FALSEWORK, AND PERMANENT CAMBER WHICH SHALL BE PROVIDED FOR IN ADDITION TO THE ELEVATIONS SHOWN. AFTER REMOVAL OF THE FALSEWORK, THE FINISHED STRUCTURES SHALL CONFORM TO THE PROFILE AND ELEVATIONS SHOWN ON THE PLANS AND CONSTRUCTION ELEVATIONS FURNISHED BY THE ENGINEER.

DETAILED DRAWINGS FOR FALSEWORK OR FORMS FOR BRIDGE SUPERSTRUCTURE AND ANY STRUCTURE OR PARTS OF A STRUCTURE AS NOTED ON THE PLANS SHALL BE SUBMITTED TO THE ENGINEER FOR APPROVAL BEFORE CONSTRUCTION OF THE FALSEWORK OR FORMS IS STARTED.

REINFORCING STEEL:

ALL REINFORCING STEEL SHALL BE DEFORMED. DIMENSIONS RELATIVE TO PLACEMENT OF REINFORCING ARE TO CENTERS OF BARS UNLESS OTHERWISE INDICATED IN THE PLANS. DIMENSIONS ON BAR DETAILS ARE TO CENTERS OF BARS OR ARE OUT TO OUT AS INDICATED ON PLANS.

WIRE BAR SUPPORTS SHALL BE PROVIDED FOR REINFORCING STEEL WHERE INDICATED ON THE PLANS. WHEN BAR SUPPORT PIECES ARE PLACED IN CONTINUOUS LINES, THEY SHALL BE SO PLACED THAT THE ENDS OF THE SUPPORTING WIRES SHALL BE LAPPED TO LOCK LEGS ON ADJOINING PIECES.

STRUCTURAL STEEL:

AT THE CONTRACTOR'S OPTION, HE MAY SUBSTITUTE 7/8"Ø SHEAR STUDS FOR THE 3/4"Ø STUDS SPECIFIED ON THE PLANS. THIS SUBSTITUTION SHALL BE MADE AT THE RATE OF 3 - 7/8"Ø STUDS FOR 4 - 3/4"Ø STUDS, AND STUD SPACING CHANGES SHALL BE MADE AS NECESSARY TO PROVIDE THE SAME EQUIVALENT NUMBER OF 7/8"Ø STUDS ALONG THE BEAM AS SHOWN FOR 3/4"Ø STUDS BASED ON THE RATIO OF 3 - 7/8"Ø STUDS FOR 4 - 3/4"Ø STUDS. STUDS OF THE LENGTH SPECIFIED ON THE PLANS MUST BE PROVIDED. THE MAXIMUM SPACING SHALL BE 2'-0".

EXCEPT AT THE INTERIOR SUPPORTS OF CONTINUOUS BEAMS WHERE THE COVER PLATE IS IN CONTACT WITH BEARING PLATE, THE CONTRACTOR MAY, AT HIS OPTION, SUBSTITUTE FOR THE COVER PLATES DESIGNATED ON THE PLANS COVER PLATES OF THE EQUIVALENT AREA PROVIDED THESE PLATES ARE AT LEAST 5/16" IN THICKNESS AND DO NOT EXCEED A WIDTH EQUAL TO THE FLANGE WIDTH LESS 2" OR A THICKNESS EQUAL TO 2 TIMES THE FLANGE THICKNESS. THE SIZE OF FILLET WELDS SHALL CONFORM TO THE REQUIREMENTS OF THE CURRENT ANSI/AASHTO/AWS "BRIDGE WELDING CODE". ELECTROSLAG WELDING WILL NOT BE PERMITTED.

WITH THE SOLE EXCEPTION OF EDGES AT SURFACES WHICH BEAR ON OTHER SURFACES, ALL SHARP EDGES AND ENDS OF SHAPES AND PLATES SHALL BE SLIGHTLY ROUNDED BY SUITABLE MEANS TO A RADIUS OF APPROXIMATELY 1/16 INCH OR EQUIVALENT FLAT SURFACE AT A SUITABLE ANGLE PRIOR TO PAINTING, GALVANIZING, OR METALLIZING.

HANDRAILS AND POSTS:

METAL STANDARDS AND FACES OF THE CONCRETE END POSTS FOR THE METAL RAIL SHALL BE SET NORMAL TO THE GRADE OF THE CURB, UNLESS OTHERWISE SHOWN ON PLANS. THE METAL RAIL AND TOPS OF CONCRETE POSTS USED WITH THE ALUMINUM RAIL SHALL BE BUILT PARALLEL TO THE GRADE OF THE CURB.

METAL HANDRAILS SHALL BE IN ACCORDANCE WITH THE PLANS. RAILS SHALL BE AS MANUFACTURED FOR BRIDGE RAILING. CASTINGS SHALL BE OF A UNIFORM APPEARANCE. FINS AND OTHER DEFORMATIONS RESULTING FROM CASTING OR OTHERWISE SHALL BE REMOVED IN A MANNER SO THAT A UNIFORM COLORING OF THE COMPLETED CASTING SHALL BE OBTAINED. CASTINGS WITH DISCOLORATIONS OR OF NON-UNIFORM COLORING WILL NOT BE ACCEPTED. CERTIFIED MILL REPORTS ARE REQUIRED FOR METAL RAILS AND POSTS.

SPECIAL NOTES:

GENERALLY, IN CASE OF DISCREPANCY, THIS STANDARD SHEET OF NOTES SHALL GOVERN OVER THE SPECIFICATIONS, BUT THE REMAINDER OF THE PLANS SHALL GOVERN OVER NOTES HEREON, AND SPECIAL PROVISIONS SHALL GOVERN OVER ALL. SEE SPECIFICATIONS ARTICLE 105-4.

ENGLISH

JANUARY, 1990

STD. NO. SN