CONTRACT: C202332 TIP PROJECT: R-2519A

STATE OF NORTH CAROLINA
DIVISION OF HIGHWAYS

YANCEY COUNTY

LOCATION: US 19 E FROM EAST OF SR 1336 (JACKS CREEK ROAD) TO SR 1186 (OLD US 19)

TYPE OF WORK: GRADING, DRAINAGE, PAVING, SIGNALS, CURB & GUTTER, CULVERTS & RETAINING WALLS

METRIC

STATE	STATE PROJECT REFERENCE NO.	SHEET NO.	TOTAL SHEETS
N.C.	R-2519A		

STATE PROJ. NO.	F. A. PROJ. NO.	DESCRIPTION
35609.1.1		PE
35609.2.1		ROW & UTIL
35609.3.1		CONST

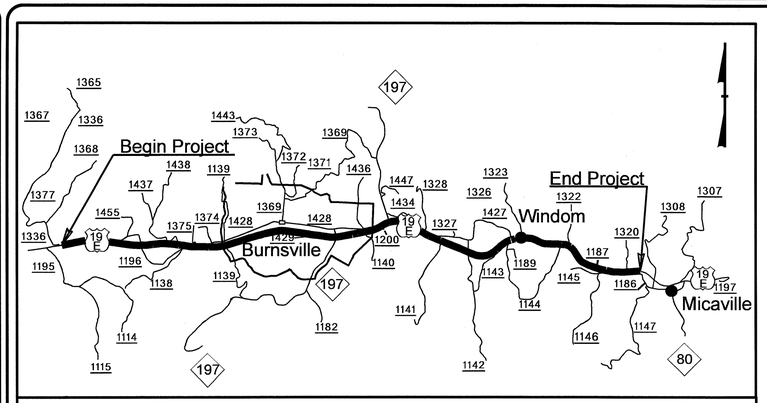

VICINITY MAP

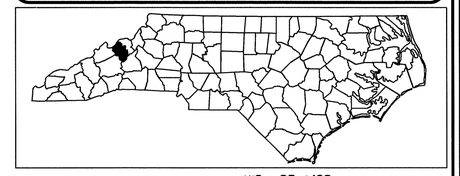

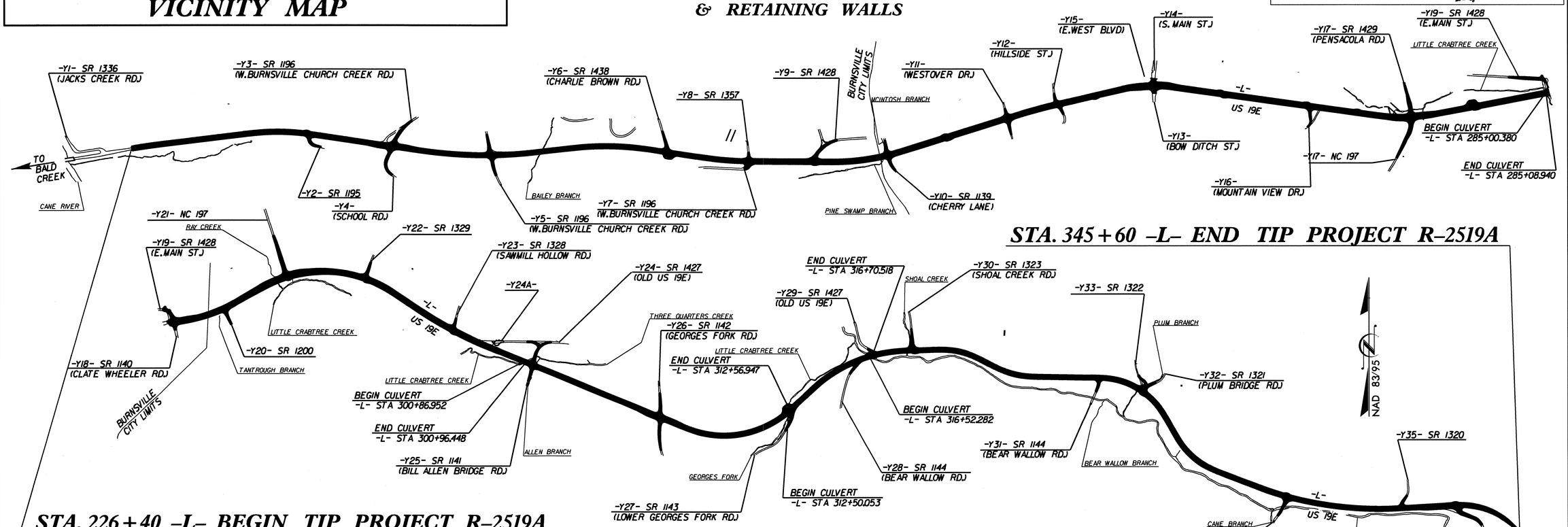

CULVERTS & RETAINING WALLS

STATE OF NORTH CAROLINA DEPARTMENT OF TRANSPORTATION

DESIGN DATA

ADT 2011	=	28,450
ADT 2031	=	40,093
DHV	=	8 %
D	=	63 %
T	=	8 % *
(C&G sect.) V	=	80 km/h
(Shld. sect.) V	=	100 km/h

* TTST 4% DUAL 4%

FUNC. CLASS = ARTERIAL
STATEWIDE TIER

PROJECT LENGTH

LENGTH OF ROADWAY TIP PROJECT R-2519A	=	11.877 Km
LENGTH STRUCTURES TIP PROJECT R-2519A	=	0.043 Km
TOTAL LENGTH TIP PROJECT R-2519A	=	11.920 Km

Prepared in the Office of:
DIVISION OF HIGHWAYS
1000 BIRCH RIDGE DR. RALEIGH, NC 27610

2006 STANDARD SPECIFICATIONS

LETTING DATE:
MAY 17, 2011

N. N. BULLOCK, PE
PROJECT ENGINEER

A. K. PASCHAL, PE
PROJECT DESIGN ENGINEER

STRUCTURE DESIGN UNIT

DIVISION OF HIGHWAYS
STATE OF NORTH CAROLINA

P.E.
STATE DESIGN ENGINEER

DEPARTMENT OF TRANSPORTATION
FEDERAL HIGHWAY ADMINISTRATION

APPROVED
DIVISION ADMINISTRATOR DATE

02-MAR-2011 09:59
R:\Structures\gallen\r2519a_sd_tsh_01.dgn
gallen

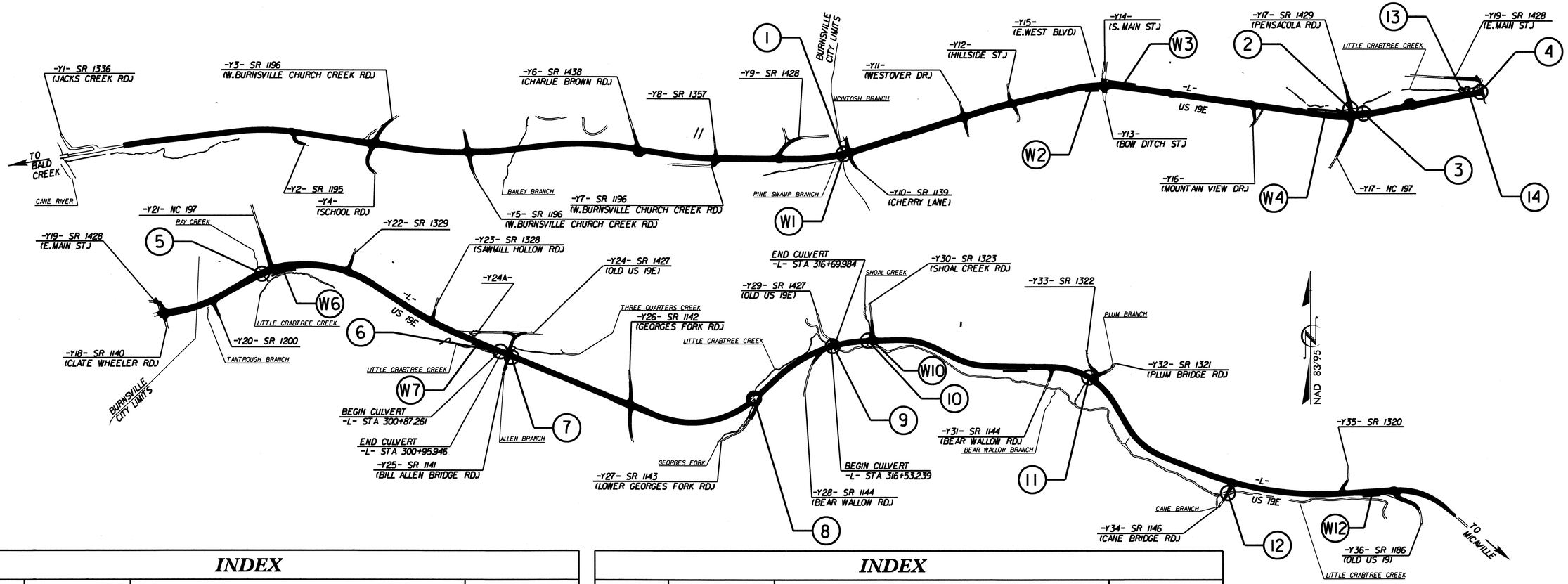

INDEX

STR. No.	STATION	DESCRIPTION	SHEETS
1	257+31.900 -L-	LEFT & RIGHT EXTENSION OF DOUBLE 1.83m X 1.83m CONCRETE BOX CULVERT	C-1 THRU C-15
2	11+28.900 -Y17-	DOUBLE 3.00m X 2.40m CONCRETE BOX CULVERT	C-16 THRU C-21
3	279+93.000 -L-	LEFT & RIGHT EXTENSION OF SINGLE 2.13m X 1.52m CONCRETE BOX CULVERT & ADD JUNCTION BOX	C-22 THRU C-29
4	285+04.660 -L-	DOUBLE 3.60m X 2.40m CONCRETE BOX CULVERT	C-30 THRU C-39
5	289+81.000 -L-	LEFT & RIGHT EXTENSION OF SINGLE 1.83m X 1.83m CONCRETE BOX CULVERT	C-40 THRU C-48
6	300+91.700 -L-	LEFT & RIGHT EXTENSION OF DOUBLE 3.05m X 2.74m CONCRETE BOX CULVERT	C-49 THRU C-57
7	301+39.600 -L-	DOUBLE 1.80m X 1.80m CONCRETE BOX CULVERT	C-58 THRU C-66
8	312+53.500 -L-	LEFT & RIGHT EXTENSION OF DOUBLE 2.13m X 1.83m BOTTOMLESS CULVERT	C-67 THRU C-75
9	316+61.400 -L-	EXTENSION OF TRIPLE 3.05m X 2.44m & ADDITION OF SINGLE 3.00m X 2.40m (INLET) & 3.00m X 2.70m (OUTLET) CONCRETE BOX CULVERT	C-76 THRU C-87
10	318+15.700 -L-	LEFT EXTENSION OF DOUBLE 2.44m X 2.13m CONCRETE BOX CULVERT	C-88 THRU C-93
11	327+86.600 -L-	LEFT EXTENSION OF SINGLE 3.05m X 1.83m CONCRETE BOX CULVERT	C-94 THRU C-100
12	10+51.500 -Y34-	LEFT & RIGHT EXTENSION OF TRIPLE 3.35m X 3.05m CONCRETE BOX CULVERT	C-101 THRU C-108
13	284+22.740 -L- (23.500m LEFT)	DOUBLE 3.40m X 2.70m CONCRETE BOX CULVERT	C-109 THRU C-113
14	284+52.460 -L- (23.000m LEFT)	DOUBLE 3.40m X 2.70m CONCRETE BOX CULVERT	C-114 THRU C-119

INDEX

STR. No.	STATION	DESCRIPTION	SHEETS
W1	256+27.000 -L-	ANCHORED SHEET PILE RETAINING WALL	W-1
W2	266+80.000 -L-	SOIL NAIL RETAINING WALL	W-2
W3	269+20.000 -L-	MECHANICALLY STABILIZED EARTH RETAINING WALL	W-3 THRU W-4
W4	277+48.000 -L-	ANCHORED SHEET PILE RETAINING WALL	W-5 THRU W-6
W5		RETAINING WALL DELETED	
W6	290+10.000 -L-	ANCHORED SHEET PILE RETAINING WALL	W-7 THRU W-8
W7	299+60.000 -L-	ANCHORED SHEET PILE RETAINING WALL	W-9
W8		RETAINING WALL DELETED	
W9		RETAINING WALL DELETED	
W10	318+30.000 -L-	ANCHORED SHEET PILE RETAINING WALL	W-10
W11		RETAINING WALL DELETED	
W12	341+22.000 -L-	ANCHORED SHEET PILE RETAINING WALL	W-11

PROJECT NO. R-2519A
YANCEY COUNTY

STATE OF NORTH CAROLINA
DEPARTMENT OF TRANSPORTATION
RALEIGH

INDEX

REVISIONS						SHEET NO.
NO.	BY:	DATE:	NO.	BY:	DATE:	
1			3			TOTAL SHEETS
2			4			

02-MAR-2011 09:59
R:\Structures\gallen\r2519a_sd_tsh_01.dgn
gallen

B.M. #4 : SPIKE SET IN BASE OF POPLAR TREE, 102.679m LT. STA. 10+00.000 -Y10- ELEV. 825.544.

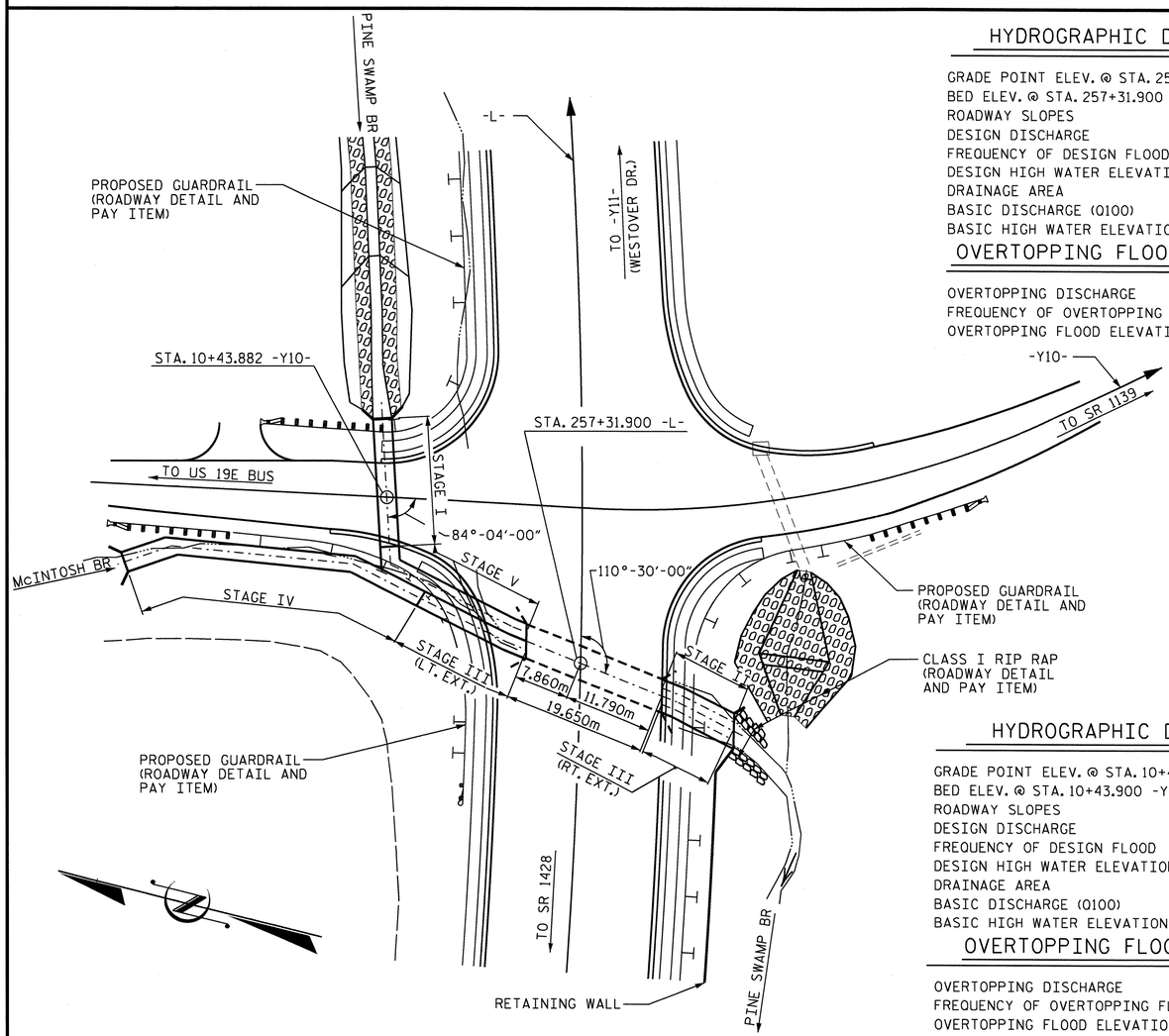

NOTE: FOR UTILITY INFORMATION, SEE UTILITY PLANS AND SPECIAL PROVISIONS.

LOCATION SKETCH

HYDROGRAPHIC DATA (-L-)

GRADE POINT ELEV. @ STA. 257+31.900 -L-	= 822.880
BED ELEV. @ STA. 257+31.900 -L-	= 819.250
ROADWAY SLOPES	= 2:1
DESIGN DISCHARGE	= 13.0 m^3/s
FREQUENCY OF DESIGN FLOOD	= 50 YEARS
DESIGN HIGH WATER ELEVATION	= 823.420
DRAINAGE AREA	= 1.20 km^2
BASIC DISCHARGE (Q100)	= 15.5 m^3/s
BASIC HIGH WATER ELEVATION	= 823.600

OVERTOPPING FLOOD DATA (-L-)

OVERTOPPING DISCHARGE	= 14.5 m^3/s
FREQUENCY OF OVERTOPPING FLOOD	= 50+ YEARS
OVERTOPPING FLOOD ELEVATION	= 823.500

HYDROGRAPHIC DATA (-Y10-)

GRADE POINT ELEV. @ STA. 10+43.900 -Y10-	= 822.770
BED ELEV. @ STA. 10+43.900 -Y10-	= 819.270
ROADWAY SLOPES	= 2:1
DESIGN DISCHARGE	= 10.0 m^3/s
FREQUENCY OF DESIGN FLOOD	= 25 YEARS
DESIGN HIGH WATER ELEVATION	= 821.740
DRAINAGE AREA	= 1.02 km^2
BASIC DISCHARGE (Q100)	= 14.0 m^3/s
BASIC HIGH WATER ELEVATION	= 822.140

OVERTOPPING FLOOD DATA (-Y10-)

OVERTOPPING DISCHARGE	= 19.5 m^3/s
FREQUENCY OF OVERTOPPING FLOOD	= 200+ YEARS
OVERTOPPING FLOOD ELEVATION	= 822.770

NOTES:

ASSUMED LIVE LOAD = MS18 OR ALTERNATE LOADING.

DESIGN FILL:2.460m.

FOR OTHER DESIGN DATA AND NOTES SEE STANDARD NOTE SHEET.

76mm Ø WEEP HOLES INDICATED TO BE IN ACCORDANCE WITH THE SPECIFICATIONS.

CONCRETE IN CULVERTS TO BE POURED IN THE FOLLOWING ORDER:

1. WING FOOTINGS AND FLOOR SLAB INCLUDING 100mm OF ALL VERTICAL WALLS.
2. THE REMAINING PORTIONS OF THE WALLS AND WINGS FULL HEIGHT FOLLOWED BY ROOF SLAB AND HEADWALLS.

THE RESIDENT ENGINEER SHALL CHECK THE LENGTH OF CULVERT BEFORE STAKING IT OUT TO MAKE CERTAIN THAT IT WILL PROPERLY TAKE CARE OF THE FILL.

DIMENSIONS FOR WING LAYOUT AS WELL AS ADDITIONAL REINFORCING STEEL EMBEDDED IN BARREL ARE SHOWN ON WING SHEETS.

IF APPROVED BY THE ENGINEER, THE CONTRACTOR MAY USE THE EXISTING WINGS AS TEMPORARY SHORING FOR THE CONSTRUCTION OF THE CULVERT EXTENSIONS. IN THIS CASE, THE BOTTOM SLAB OF THE EXTENSION SHALL BE POURED AT LEAST 72 HOURS PRIOR TO CUTTING THE WINGS. THE WINGS MAY BE CUT EARLIER PROVIDED THE SLAB CONCRETE STRENGTH HAS REACHED A MINIMUM COMPRESSIVE STRENGTH OF 10.3 MPa.

DOWELS SHALL BE USED TO CONNECT THE CULVERT EXTENSION TO THE EXISTING CULVERT AS SHOWN. FOR NOTE REGARDING SETTING OF DOWELS, SEE SHEET SNSM.

ALL DIMENSIONS ARE IN MILLIMETERS UNLESS OTHERWISE NOTED.

ALL ELEVATIONS ARE IN METERS.

AT THE CONTRACTOR'S OPTION, HE MAY SPLICE THE VERTICAL REINFORCING STEEL IN THE INTERIOR FACE OF EXTERIOR WALL AND BOTH FACES OF INTERIOR WALLS ABOVE LOWER WALL CONSTRUCTION JOINT. THE SPLICE LENGTH SHALL BE PROVIDED IN THE SPLICE LENGTH CHART SHOWN ON THE PLANS. EXTRA WEIGHT OF STEEL DUE TO THE SPLICES SHALL BE PAID FOR BY THE CONTRACTOR.

TRANSVERSE CONSTRUCTION JOINTS SHALL BE USED IN THE BARREL, SPACED TO LIMIT THE POURS TO A MAXIMUM OF 21.0m. LOCATION OF JOINTS SHALL BE SUBJECT TO APPROVAL OF THE ENGINEER.

A 900mm STRIP OF FILTER FABRIC SHALL BE ATTACHED TO THE FILL FACE OF THE WING COVERING THE ENTIRE LENGTH OF THE EXPANSION JOINT.

NO PRECAST REINFORCED BOX CULVERT OPTION WILL BE ALLOWED.

FOR CULVERT DIVERSION DETAILS AND PAY ITEM, SEE EROSION CONTROL PLANS.

FOR FALSEWORK AND FORMWORK, SEE SPECIAL PROVISIONS.

FOR SUBMITTAL OF WORKING DRAWINGS, SEE SPECIAL PROVISIONS.

FOR CRANE SAFETY, SEE SPECIAL PROVISIONS.

FOR GROUT FOR STRUCTURES, SEE SPECIAL PROVISIONS.

TOTAL STRUCTURE QUANTITIES

CLASS A CONCRETE			REINFORCING STEEL		
STAGE I	51.4	m^3	STAGE I	2920	kg
STAGE II (RT. EXT.)	24.4	m^3	STAGE II (RT. EXT.)	1942	kg
STAGE III (RT. EXT.)	25.6	m^3	STAGE III (RT. EXT.)	1909	kg
STAGE III (LT. EXT.)	42.8	m^3	STAGE III (LT. EXT.)	2612	kg
STAGE IV	105.9	m^3	STAGE IV	6194	kg
STAGE V	52.2	m^3	STAGE V	3448	kg
TOTAL	302.3	m^3	TOTAL	19025	kg

CULVERT EXCAVATION ---------- LUMP SUM

FOUNDATION COND. MAT'L. --189.1-- METRIC TONS

CLASS B RIP RAP ----------122 METRIC TONS

METRIC

PROJECT NO. R-2519A

YANCEY COUNTY

STATION: 257+31.900 -L-

SHEET 1 OF 15

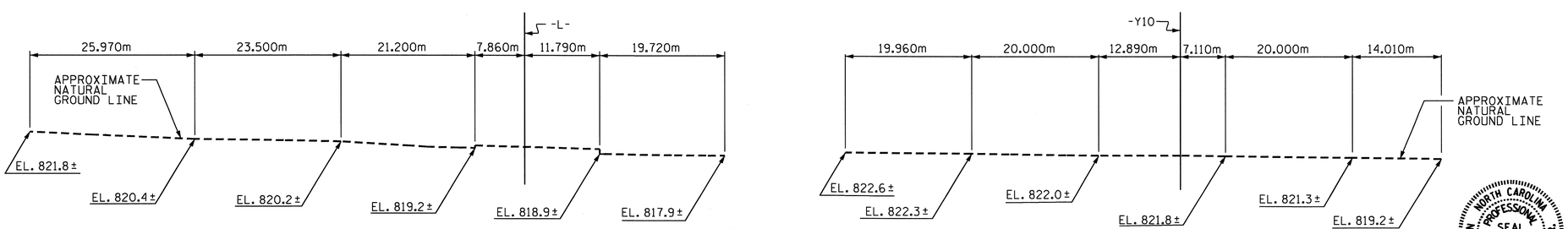

PROFILE ALONG ℄ CULVERT

NORTH CAROLINA PROFESSIONAL SEAL 12929 ENGINEER NORMAN NEBLETT BOLLOCK, JR. 3/1/11

NORTH CAROLINA PROFESSIONAL SEAL 22005 ENGINEER KEITH PASCHAL 3/1/11

STATE OF NORTH CAROLINA
DEPARTMENT OF TRANSPORTATION
RALEIGH

CONCRETE BOX CULVERT EXTENSION

REVISIONS						
NO.	BY:	DATE:	NO.	BY:	DATE:	
1			3			
2			4			

SHEET NO. C-1

TOTAL SHEETS 119

DRAWN BY : J. G. KHARVA DATE : 5/26/10
CHECKED BY : J. D. HAWK DATE : 9/10/10

01-MAR-2011 08:46
R:\Structures\str1\Final Plans\R2519A_sd_cu_01.dgn
jdhawk

STR. #1

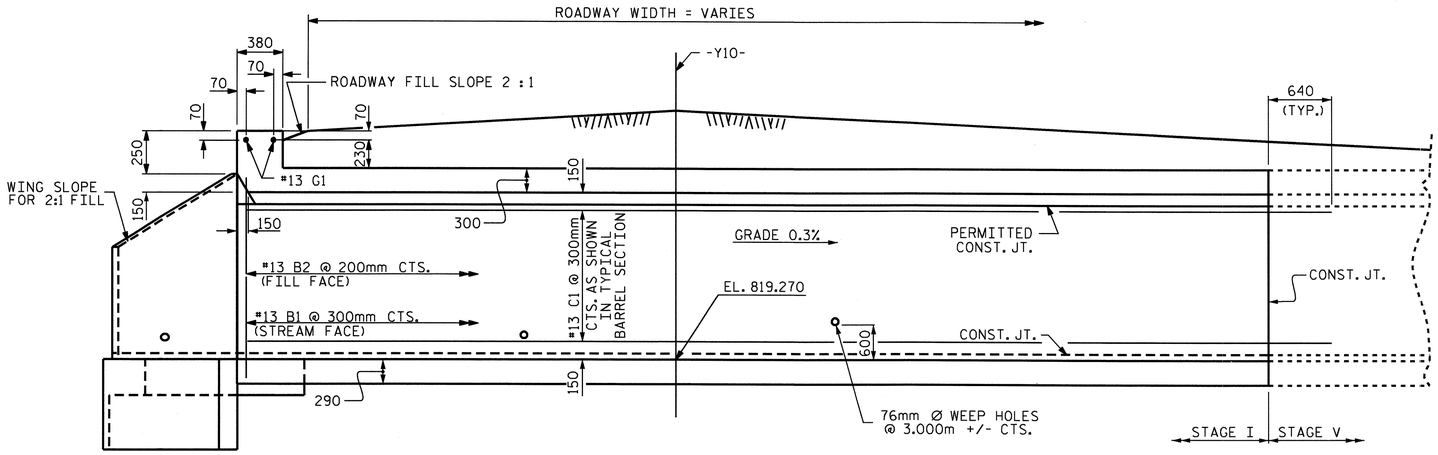

CULVERT SECTION NORMAL TO ROADWAY

STAGE I QUANTITIES

CLASS A CONCRETE			
BARREL @ 2.36 m^3/m	44.1	m^3	
WINGS ETC.	6.7	m^3	
SILLS	0.6	m^3	
TOTAL	51.4	m^3	
REINFORCING STEEL			
BARREL	2654	kg	
WINGS ETC.	258	kg	
SILLS	8	kg	
TOTAL	2920	kg	
CULVERT EXCAVATION ---------- LUMP SUM			
FOUNDATION COND. MAT'L, ---31.7-- METRIC TONS			

REINFORCING STEEL BAR SCHEDULE

STAGE I

BAR	NO.	SIZE	TYPE	LENGTH	WEIGHT
A1	188	13	6	1520	284
A2	188	13	6	1300	243
A100	110	16	STR	2400	410
A200	99	16	STR	2400	369
B1	126	13	STR	2580	323
B2	188	13	STR	1880	351
C1	102	13	STR	6600	669
G1	2	13	STR	2400	5
REINFORCING STEEL					2654 kg

SPLICE LENGTHS CHART

BAR	SIZE	SPLICE LENGTH
B1	13	540
C1	13	590

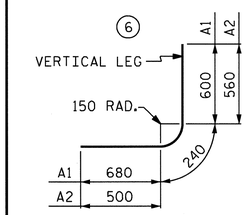

BAR TYPE

BAR DIMENSIONS ARE OUT TO OUT

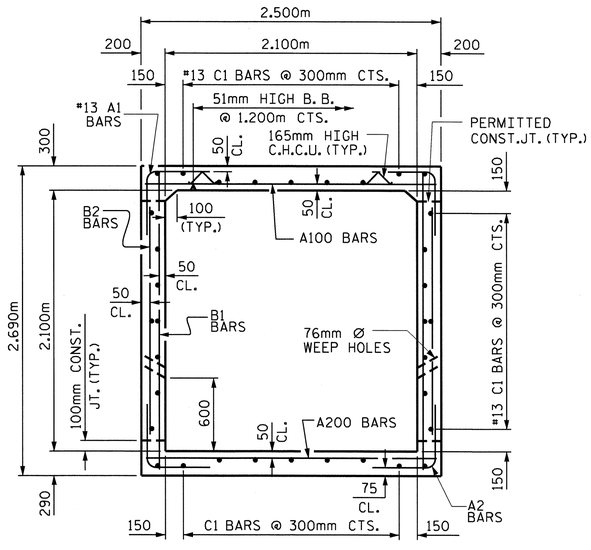

RIGHT ANGLE SECTION OF BARREL

THERE ARE 34 "C" BARS IN SECTION OF BARREL

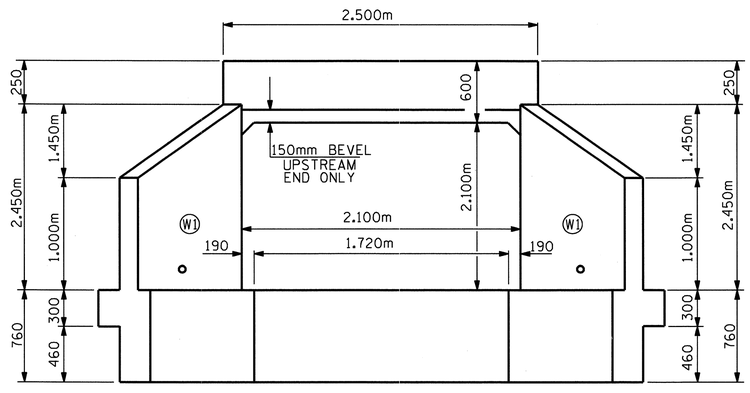

END ELEVATION NORMAL TO SKEW

PROJECT NO. R-2519A

YANCEY COUNTY

STATION: 257+31.900 -L-

SHEET 2 OF 15

STATE OF NORTH CAROLINA
DEPARTMENT OF TRANSPORTATION
RALEIGH

SINGLE 2.100m X 2.100m CONCRETE BOX CULVERT EXTENSION (STAGE I)

NORTH CAROLINA PROFESSIONAL SEAL 22905 ENGINEER M. KEITH PASCHAL 2/28/11

REVISIONS						SHEET NO.
NO.	BY:	DATE:	NO.	BY:	DATE:	C-2
1			3			TOTAL SHEETS
2			4			119

DRAWN BY : J. G. KHARVA DATE : 5/27/10
CHECKED BY : J. D. HAWK DATE : 9/10/10

28-FEB-2011 13:47
R:\Structures\str1\Final Plans\R2519A_sd_cu_01.dgn
jdhawk

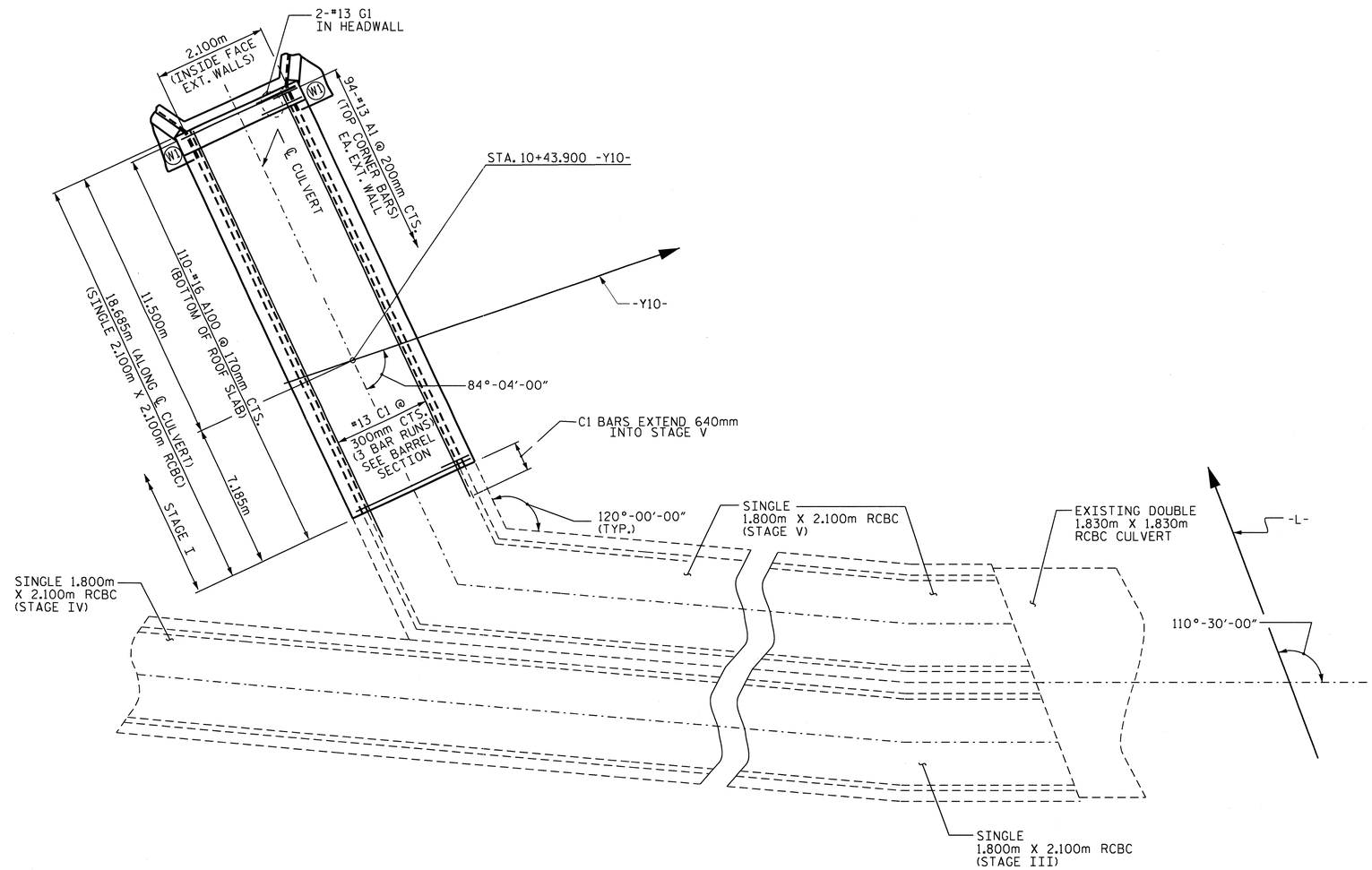

PLAN OF ROOF SLAB

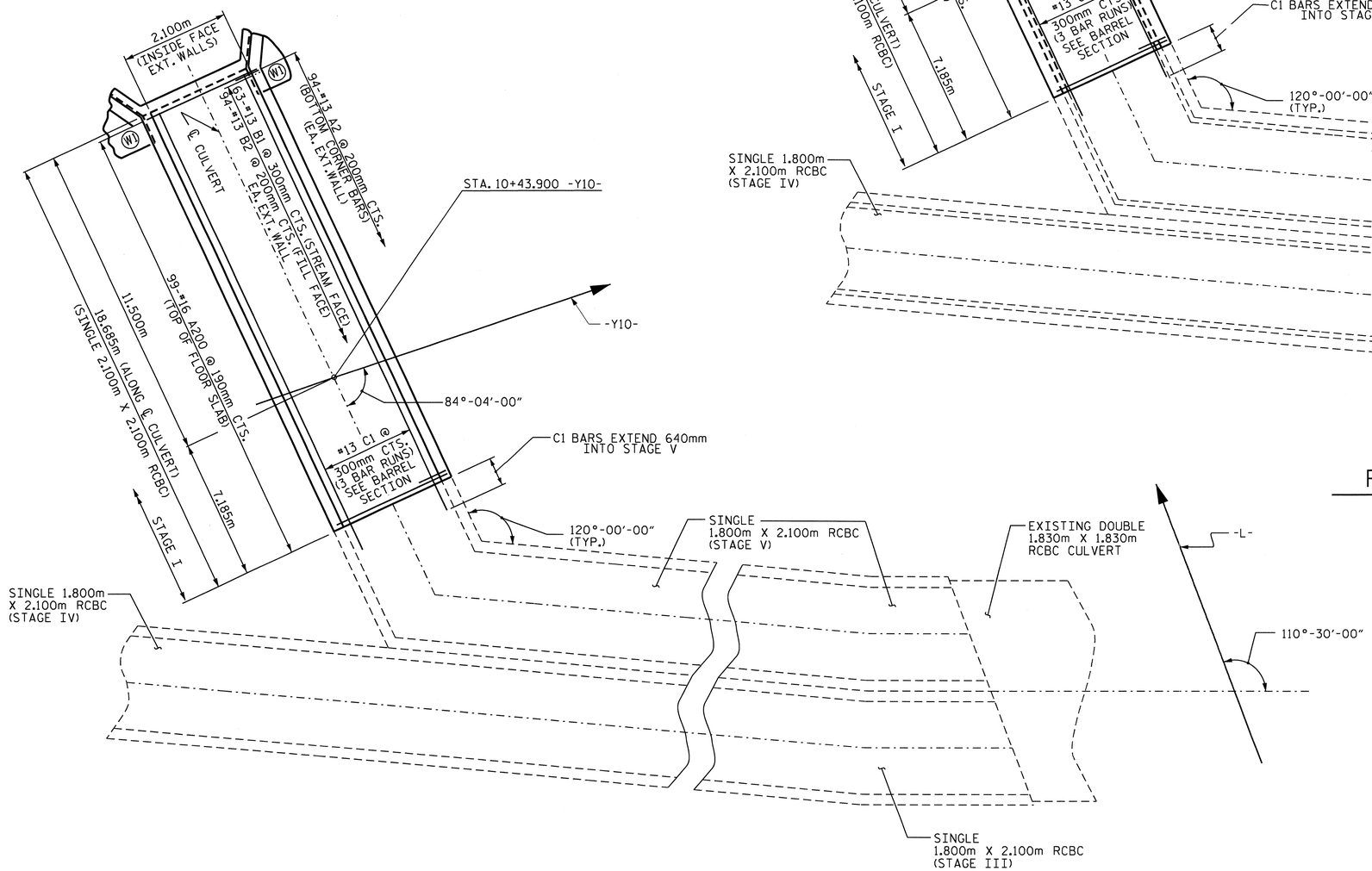

PLAN OF FLOOR SLAB

PROJECT NO. R-2519A
YANCEY COUNTY
STATION: 257+31.900 -L-

SHEET 3 OF 15

STATE OF NORTH CAROLINA
DEPARTMENT OF TRANSPORTATION
RALEIGH

CONCRETE BOX CULVERT EXTENSION (STAGE I)

NORTH CAROLINA PROFESSIONAL SEAL 22005 ENGINEER M. KEITH PASCHAL
2/28/11

REVISIONS						SHEET NO.
NO.	BY:	DATE:	NO.	BY:	DATE:	C-3
1			3			TOTAL SHEETS
2			4			119

DRAWN BY : J. G. KHARVA DATE : 05/27/10
CHECKED BY : J. D. HAWK DATE : 09/10/10

28-FEB-2011 14:02
R:\Structures\str1\Final Plans\R2519A_sd_cu_01.dgn
jdhawk

STR. #1

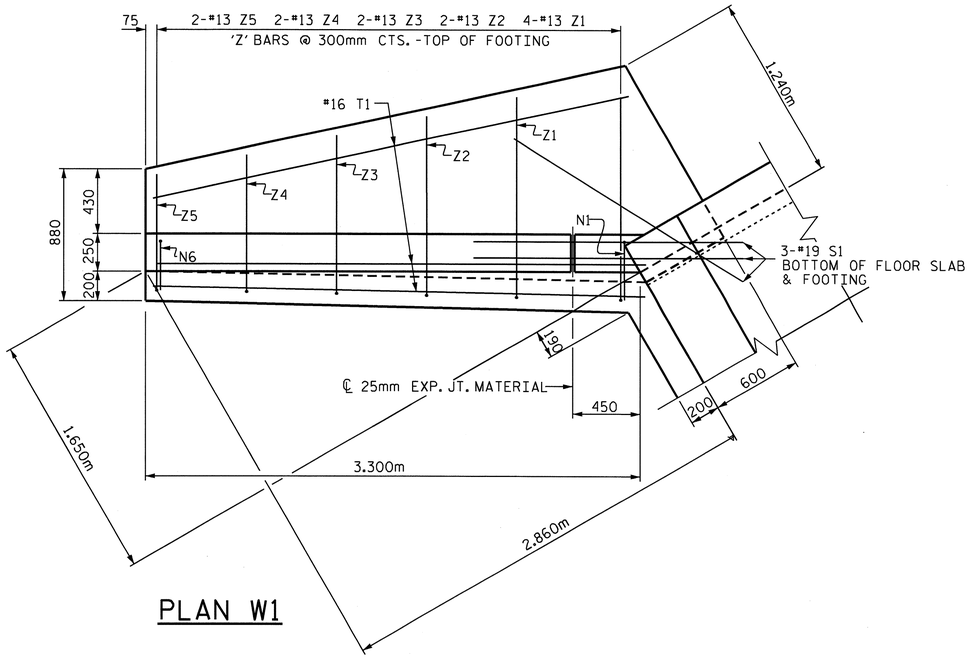

PLAN W1

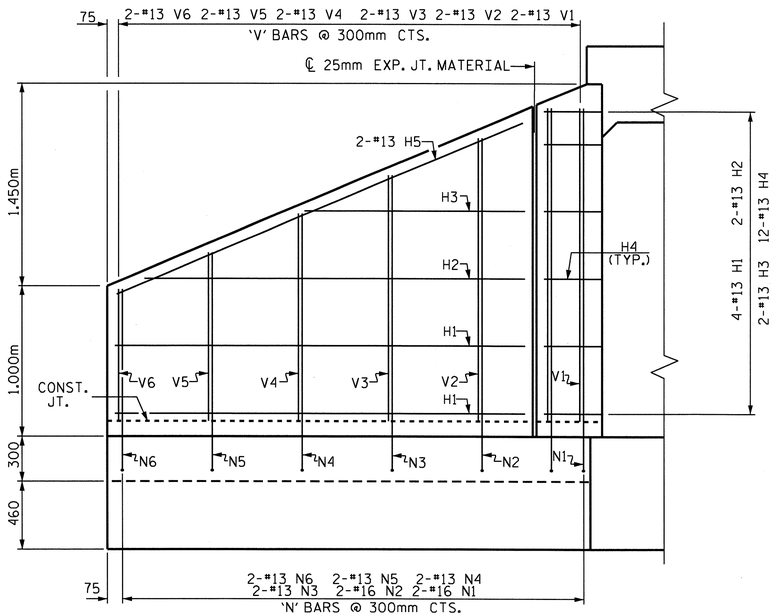

ELEVATION W1

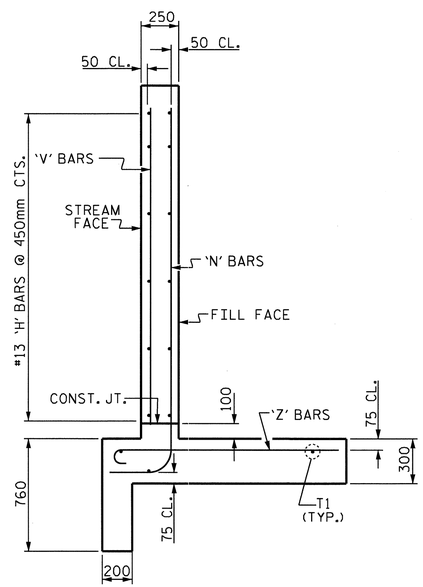

TYPICAL WING SECTION W1

BAR TYPES

ALL BAR DIMENSIONS ARE OUT TO OUT.

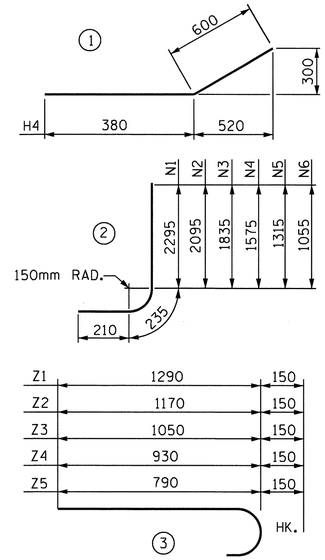

BILL OF MATERIAL
W1 (STAGE I)

BAR	NO.	SIZE	TYPE	LENGTH	WEIGHT
H1	8	13	STR	2740	22
H2	4	13	STR	2540	10
H3	4	13	STR	1520	6
H4	24	13	1	980	23
H5	4	13	STR	2980	12
N1	4	16	2	2740	17
N2	4	16	2	2540	16
N3	4	13	2	2280	9
N4	4	13	2	2020	8
N5	4	13	2	1760	7
N6	4	13	2	1500	6
S1	6	19	STR	1800	24
T1	6	16	STR	3300	31
V1	4	13	STR	2120	8
V2	4	13	STR	1920	8
V3	4	13	STR	1660	7
V4	4	13	STR	1400	6
V5	4	13	STR	1140	5
V6	4	13	STR	880	4
Z1	8	13	3	1440	11
Z2	4	13	3	1320	5
Z3	4	13	3	1200	5
Z4	4	13	3	1080	4
Z5	4	13	3	940	4

REINFORCING STEEL
FOR 2 WINGS 258 kg

CLASS A CONCRETE

2 WINGS	6.1 m^3
1 HEADWALL	0.3 m^3
1 END CURTAIN WALL	0.3 m^3
TOTAL	6.7 m^3

PROJECT NO. R-2519A
YANCEY COUNTY
STATION: 257+31.900 -L-

SHEET 4 OF 15

STATE OF NORTH CAROLINA
DEPARTMENT OF TRANSPORTATION
RALEIGH

# STANDARD WINGS FOR CONCRETE BOX CULVERT
H = 2.100m SLOPE = 2 : 1
90° SKEW

NORTH CAROLINA PROFESSIONAL SEAL 22005 ENGINEER A. KEITH PASCHAL
2/28/11

REVISIONS						SHEET NO.
NO.	BY:	DATE:	NO.	BY:	DATE:	C-4
1			3			TOTAL SHEETS
2			4			119

ASSEMBLED BY : J. G. KHARVA	DATE : 05-27-10
CHECKED BY : J. D. HAWK	DATE : 09-10-10
DRAWN BY : FPP 06/97	
CHECKED BY : VAP 06/97	

STR. #1

STD. NO. CW9021

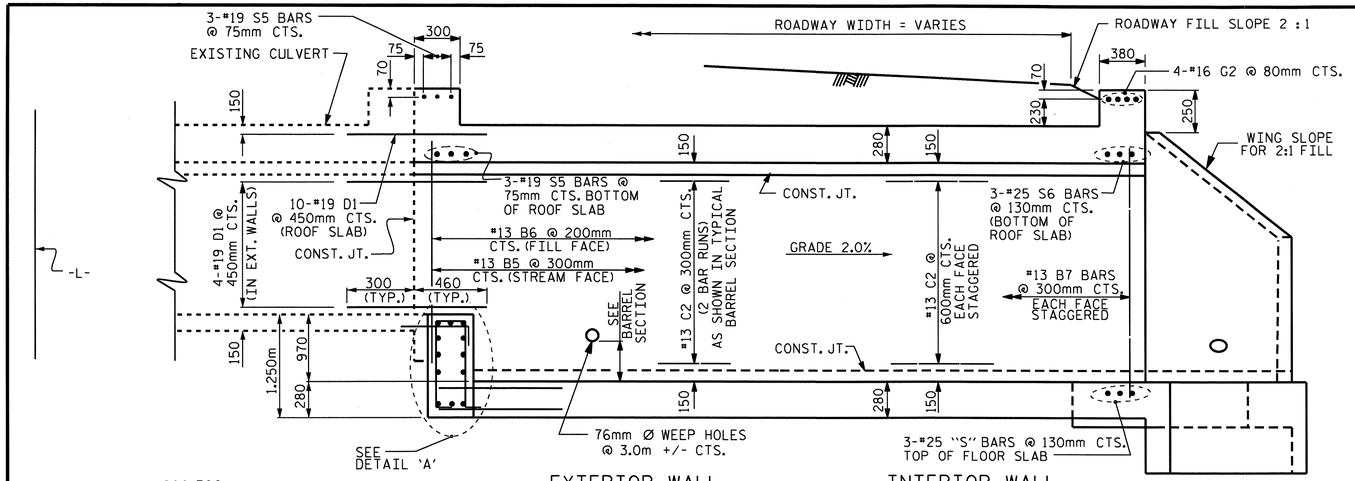

CULVERT SECTION NORMAL TO ROADWAY

(RIGHT EXTENSION)

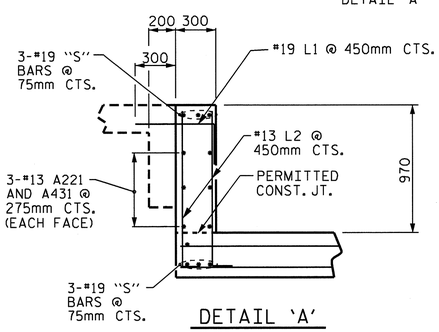

DETAIL 'A'

STAGE II & III RT. EXT. QTY.			
CLASS A CONCRETE			
BARREL @ STAGE II	1.78 m^3/m	19.2	m^3
WING ETC. @ STAGE II		4.7	m^3
SILL @ STAGE II		0.5	m^3
TOTAL (STAGE II RT.)		24.4	m^3
BARREL @ STAGE III RT.	2.27 m^3/m	24.4	m^3
HEADWALL @ STAGE III RT.		0.7	m^3
SILL @ STAGE III RT.		0.5	m^3
TOTAL (STAGE III RT. EXT.)		25.6	m^3
REINFORCING STEEL			
BARREL @ STAGE II		1692	kg
WING ETC. @ STAGE II		242	kg
SILL @ STAGE II		8	kg
TOTAL (STAGE II)		1942	kg
REINFORCING STEEL			
BARREL @ STAGE III RT.		1901	kg
SILL @ STAGE III RT.		8	kg
TOTAL (STAGE III RT. EXT.)		1909	kg
CULVERT EXCAVATION ---------- LUMP SUM			
STAGE II/RT. EXT. FOUNDATION COND. MAT'L --17.0-- METRIC TONS			
STAGE III/RT. EXT. FOUNDATION COND. MAT'L --14.0-- METRIC TONS			

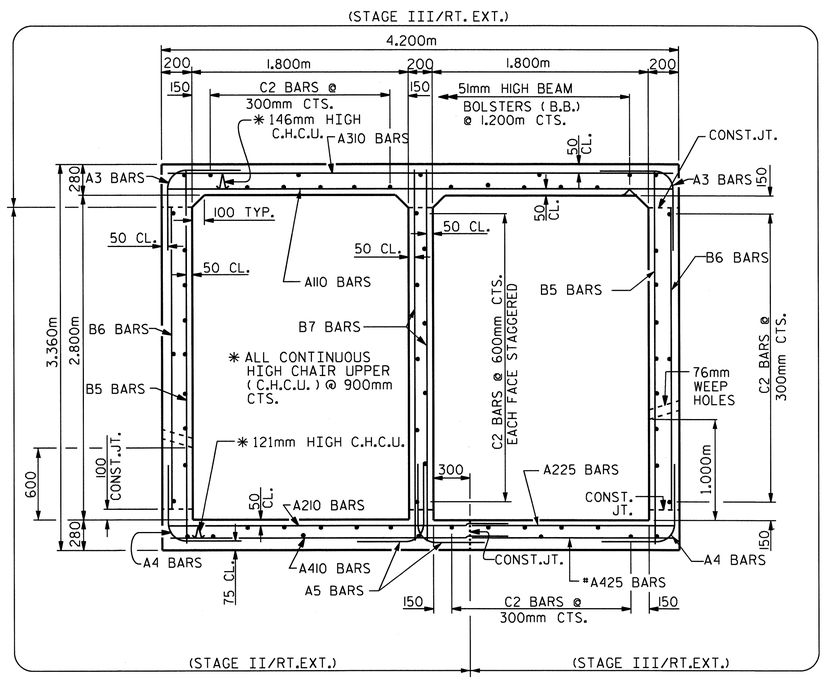

RIGHT ANGLE SECTION OF BARREL

THERE ARE 63 "C" BARS IN SECTION OF BARREL.

(STAGE II & III RT. EXT.)
(LOOKING DOWNSTREAM)

REINFORCING STEEL BAR SCHEDULE (STAGE II/RT. EXT.)					
BAR	NO.	SIZE	TYPE	LENGTH	WEIGHT
A3	53	16	2	1420	117
A4	53	16	2	1380	114
A5	72	13	2	1380	99
A210	44	13	STR	3020	132
A211	1	13	STR	2960	3
A212	1	13	STR	2380	2
A213	1	13	STR	1780	2
A214	1	13	STR	1200	1
A215	1	13	STR	600	1
A216	1	13	STR	2660	3
A217	1	13	STR	2180	2
A218	1	13	STR	1700	2
A219	1	13	STR	1220	1
A220	1	13	STR	740	1
A221	6	13	STR	3220	19
A410	48	16	STR	3020	225
A411	1	16	STR	2520	4
A412	1	16	STR	2000	3
A413	1	16	STR	1460	2
A414	1	16	STR	920	1
A415	1	16	STR	400	1
A416	1	16	STR	2640	4
A417	1	16	STR	2200	3
A418	1	16	STR	1760	3
A419	1	16	STR	1340	2
A420	1	16	STR	900	1
A421	1	16	STR	480	1
B5	36	13	STR	3200	115
B6	54	13	STR	2600	140
B7	72	13	STR	3200	229
S1	6	19	STR	3400	46
S2	3	25	STR	3660	44
D1	10	19	STR	760	17
L1	6	19	1	860	12
L2	12	13	1	1360	16
C2	58	13	STR	5640	325
REINFORCING STEEL					1692 kg

REINFORCING STEEL BAR SCHEDULE (STAGE III/RT. EXT.)					
BAR	NO.	SIZE	TYPE	LENGTH	WEIGHT
A3	53	16	2	1420	117
A4	53	16	2	1380	114
A110	48	13	STR	4060	194
A111	1	13	STR	4000	4
A112	1	13	STR	3500	3
A113	1	13	STR	2980	3
A114	1	13	STR	2440	2
A115	1	13	STR	1960	2
A116	1	13	STR	1480	1
A117	1	13	STR	940	1
A118	1	13	STR	440	1
A119	1	13	STR	3740	4
A120	1	13	STR	3340	3
A121	1	13	STR	2920	3
A122	1	13	STR	2520	3
A123	1	13	STR	2100	2
A124	1	13	STR	1680	2
A125	1	13	STR	1280	1
A126	1	13	STR	860	1
A127	1	13	STR	460	1
A310	47	16	STR	4060	296
A311	1	16	STR	3540	5
A312	1	16	STR	3000	5
A313	1	16	STR	2460	4
A314	1	16	STR	1920	3
A315	1	16	STR	1400	2
A316	1	16	STR	860	1
A317	1	16	STR	320	1
A318	1	16	STR	3720	6
A319	1	16	STR	3300	5
A320	1	16	STR	2860	4
A321	1	16	STR	2420	4
A322	1	16	STR	2000	3
A323	1	16	STR	1560	2
A324	1	16	STR	1120	2
A325	1	16	STR	700	1

REINFORCING STEEL BAR SCHEDULE (STAGE III/RT. EXT.)					
BAR	NO.	SIZE	TYPE	LENGTH	WEIGHT
A225	48	13	STR	1580	75
A226	1	13	STR	1120	1
A227	1	13	STR	540	1
A228	1	13	STR	1240	1
A229	1	13	STR	760	1
A425	52	16	STR	1580	128
A426	1	16	STR	1180	2
A427	1	16	STR	640	1
A428	1	16	STR	1460	2
A429	1	16	STR	980	2
A430	1	16	STR	500	1
A431	6	13	STR	1700	10
B5	36	13	STR	3200	115
B6	54	13	STR	2600	140
G2	4	16	STR	4360	27
S3	6	19	STR	1700	23
S4	3	25	STR	1760	21
S5	6	19	STR	4360	58
S6	3	25	STR	4500	54
D1	18	19	STR	760	31
L1	4	19	1	860	8
L2	8	13	1	1360	11
C2	68	13	STR	5640	381
REINFORCING STEEL					1901 kg

SPLICE LENGTH CHART		
B5, B6, B7	#13	540
B8, B9	#13	540
C2	#13	590
S1	#19	690
S2	#25	920

BAR TYPE

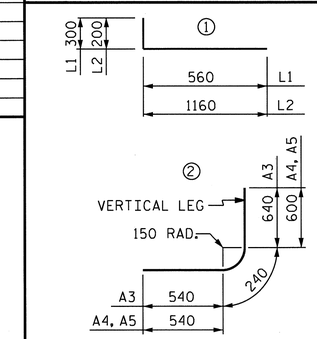

DIMENSIONS ARE OUT TO OUT

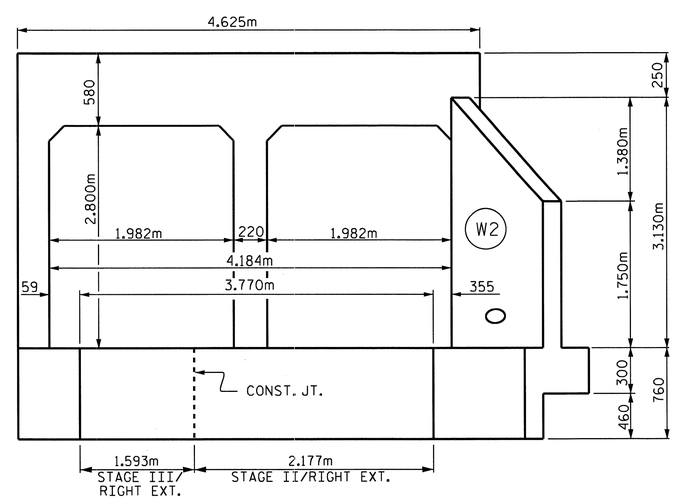

OUTLET ELEVATION NORMAL TO SKEW

PROJECT NO. R-2519A
YANCEY COUNTY
STATION: 257+31.900 -L-

SHEET 5 OF 15

STATE OF NORTH CAROLINA
DEPARTMENT OF TRANSPORTATION
RALEIGH

CONCRETE BOX CULVERT EXTENSION (STAGE II & III RT. EXT.)

NORTH CAROLINA PROFESSIONAL SEAL 22005 ENGINEER KEITH PASCHAL
2/28/11

REVISIONS						
NO.	BY:	DATE:	NO.	BY:	DATE:	SHEET NO. C-5
1			3			TOTAL SHEETS 119
2			4			

DRAWN BY : J. G. KHARVA DATE : 5/28/10
CHECKED BY : J. D. HAWK DATE : 09/10/10

28-FEB-2011 13:47
R:\Structures\str1\Final Plans\R2519A_sd_cu_01.dgn
jdhawk

STR. #1

* 'C' BARS TO BE FIELD BENT AS NECESSARY

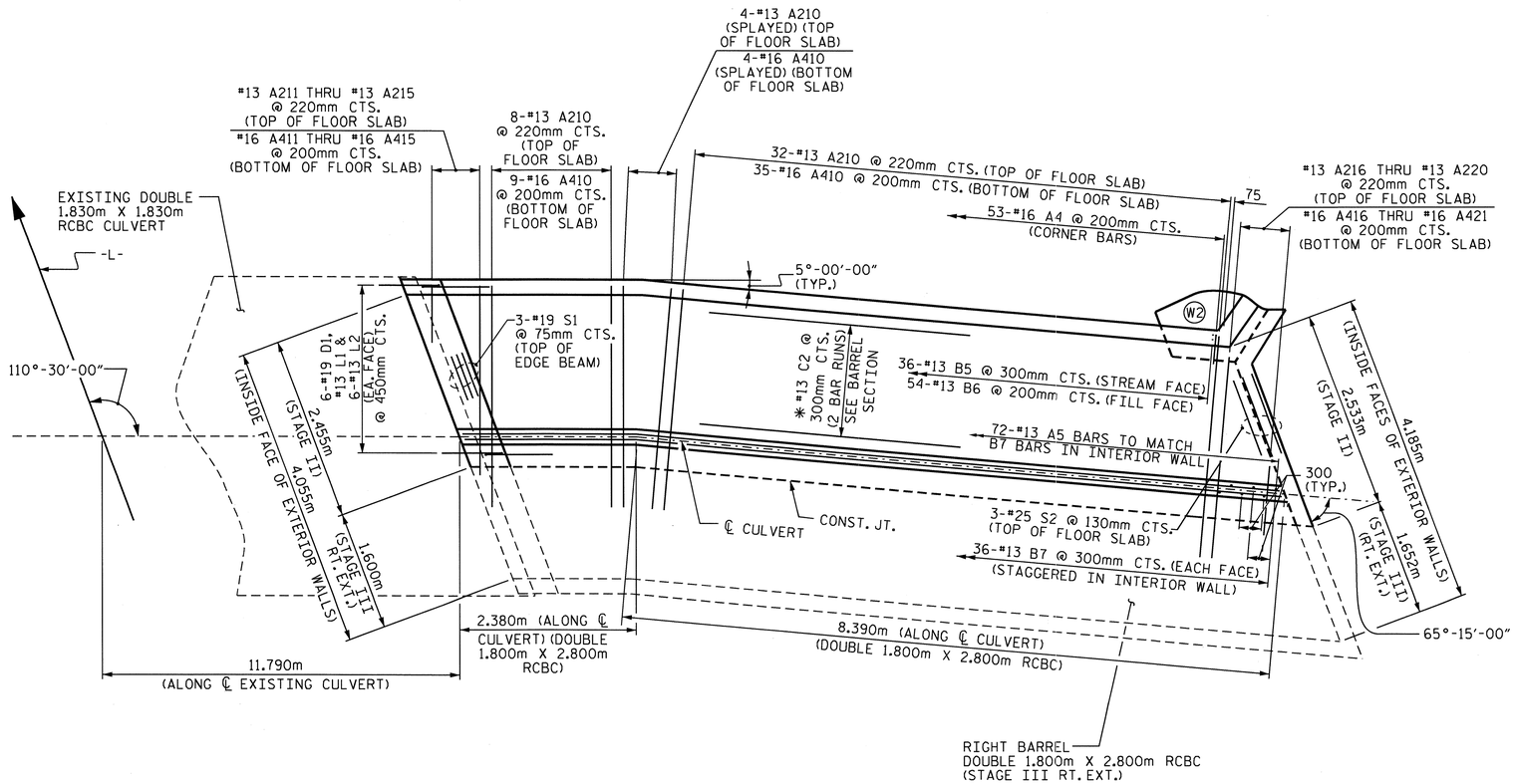

PLAN OF FLOOR SLAB

(STAGE II/RIGHT EXTENSION)

PROJECT NO. R-2519A

YANCEY COUNTY

STATION: 257+31.900 -L-

SHEET 6 OF 15

STATE OF NORTH CAROLINA
DEPARTMENT OF TRANSPORTATION
RALEIGH

CONCRETE BOX CULVERT EXTENSION (STAGE II)

NORTH CAROLINA PROFESSIONAL SEAL 22005 ENGINEER JAMES KEITH PASCHAL

2/28/11

REVISIONS						SHEET NO.
NO.	BY:	DATE:	NO.	BY:	DATE:	C-6
1			3			TOTAL SHEETS
2			4			119

DRAWN BY : J. G. KHARVA DATE : 5/28/10
CHECKED BY : J. D. HAWK DATE : 9/10/10

28-FEB-2011 13:46
R:\Structures\str1\Final Plans\R2519A_sd_cu_01.dgn
jdhawk

STR. #1

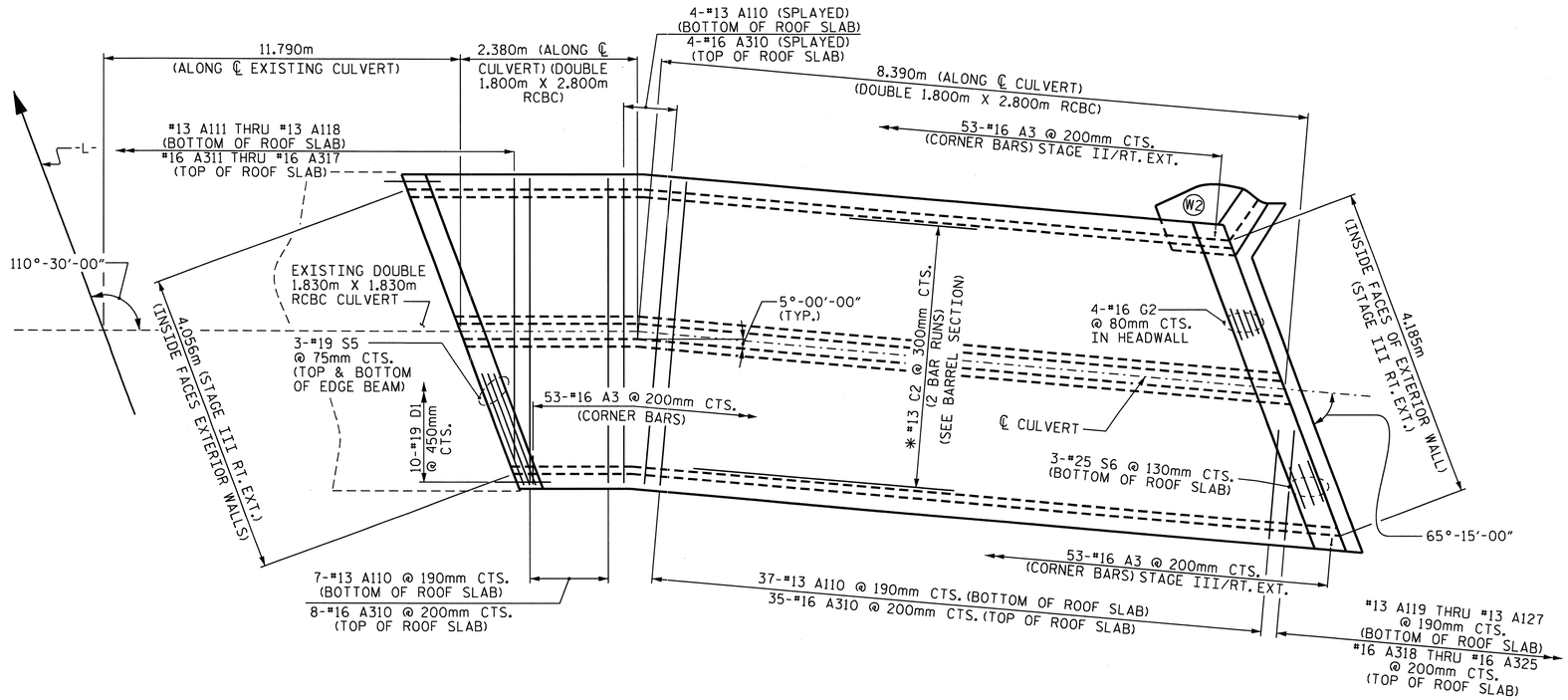

PLAN OF ROOF SLAB

(STAGE III/RIGHT EXTENSION)

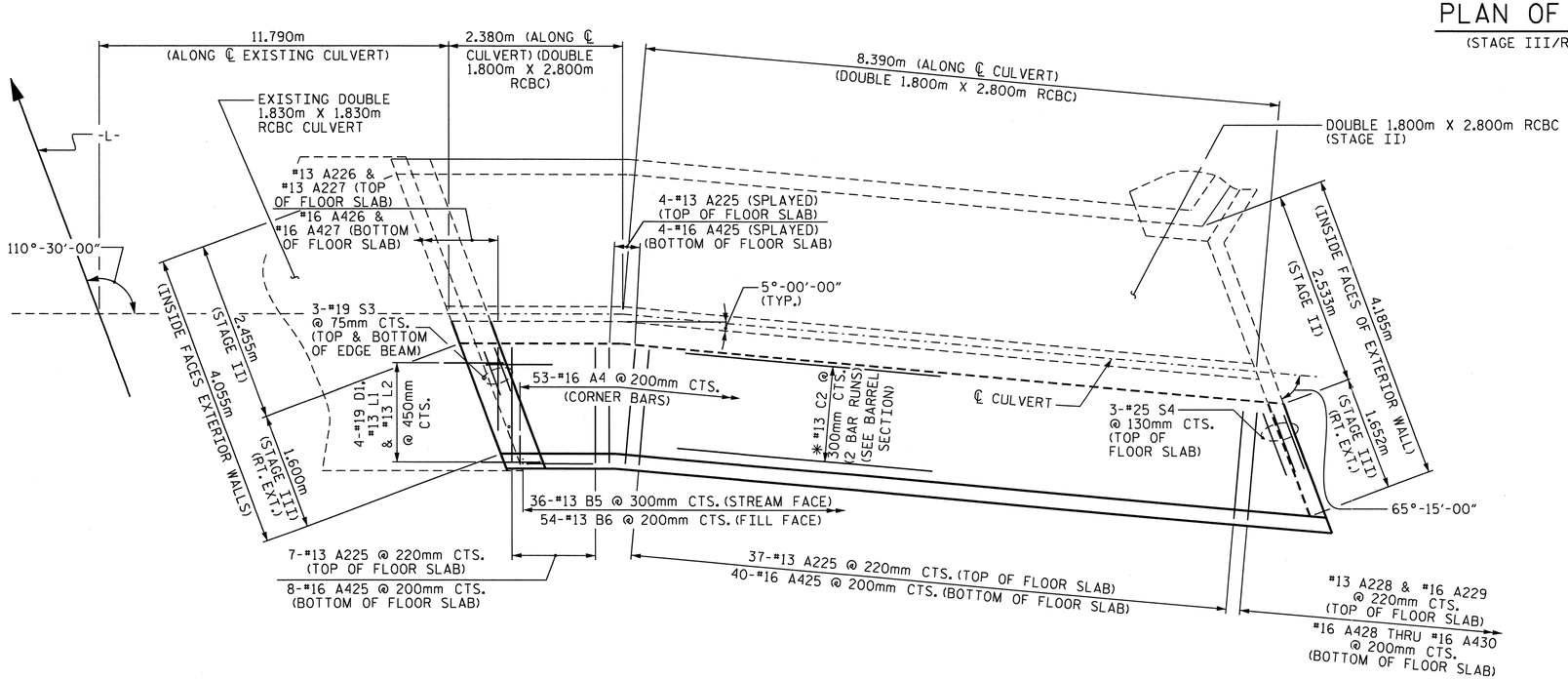

PLAN OF FLOOR SLAB

(STAGE III/RIGHT EXTENSION)

* 'C' BARS TO BE FIELD BENT AS NECESSARY

PROJECT NO. R-2519A
YANCEY COUNTY
STATION: 257+31.900 -L-

SHEET 7 OF 15

STATE OF NORTH CAROLINA
DEPARTMENT OF TRANSPORTATION
RALEIGH

CONCRETE BOX CULVERT EXTENSION (STAGE III RT. EXT.)

NORTH CAROLINA PROFESSIONAL SEAL 22005 ENGINEER KEITH PASCHAL

Approved 2/28/11

REVISIONS							SHEET NO.
NO.	BY:	DATE:	NO.	BY:	DATE:		C-7
1			3				TOTAL SHEETS
2			4				119

DRAWN BY : J. C. KHARVA DATE : 5/28/10
CHECKED BY : J. D. HAWK DATE : 9/10/10

28-FEB-2011 13:46
R:\Structures\str1\Final Plans\R2519A_sd_cu_01.dgn
jdhawk

STR. #1

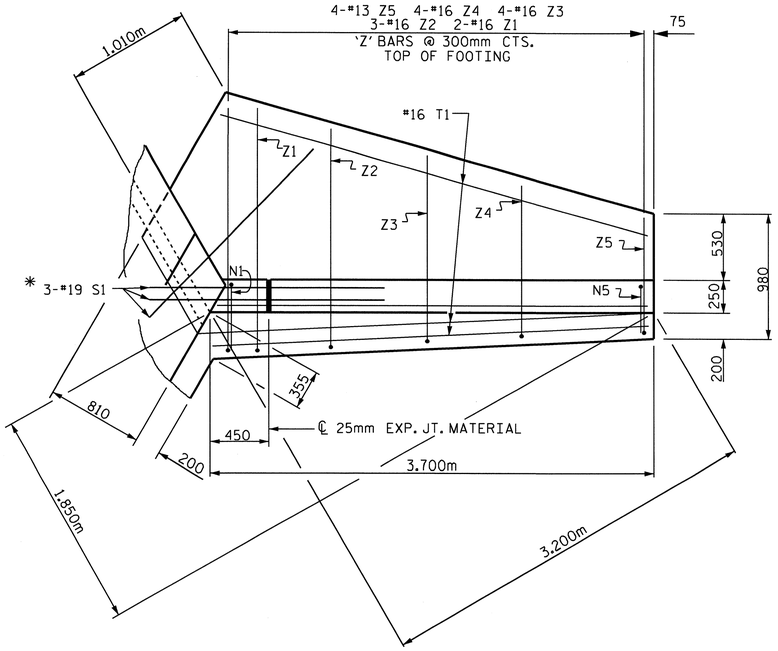

PLAN-W2

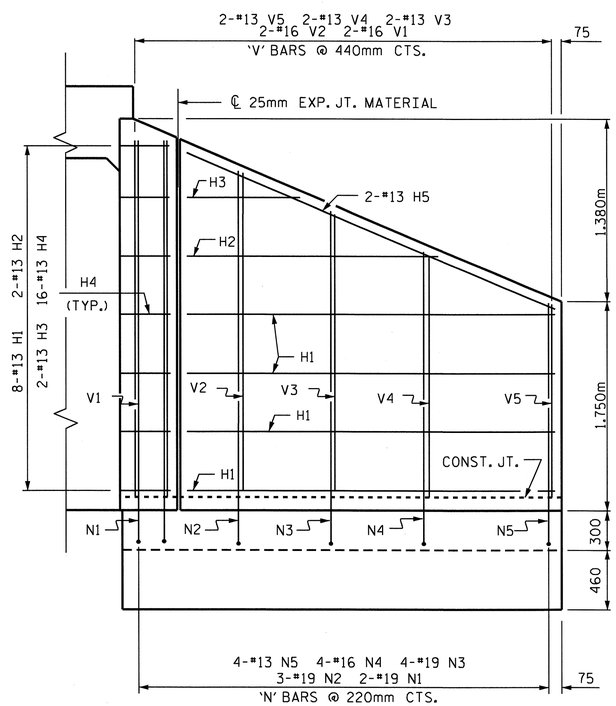

ELEVATION-W2

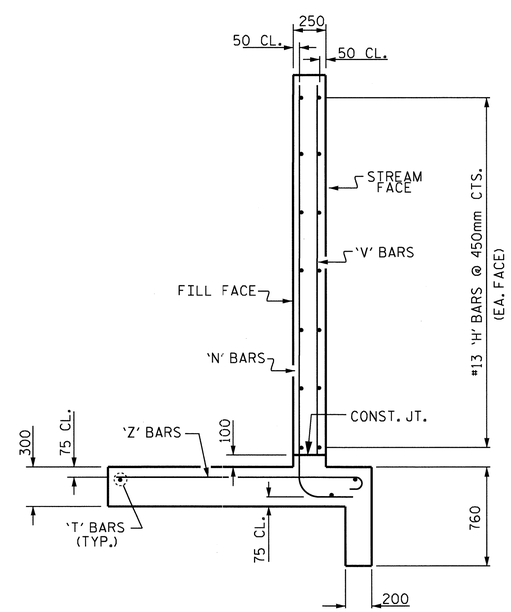

TYPICAL WING-W2 SECTION

* S1 BARS @ BOTTOM OF FLOOR SLAB & FOOTING

BAR TYPES

ALL BAR DIMENSIONS ARE OUT TO OUT.

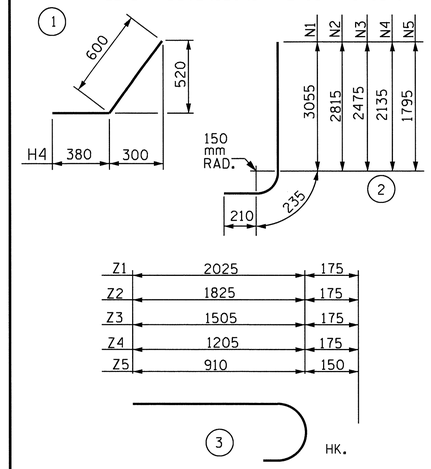

BILL OF MATERIAL

W2 (STAGE II)

BAR	NO.	SIZE	TYPE	LENGTH	WEIGHT
H1	8	13	STR	3140	25
H2	2	13	STR	2520	5
H3	2	13	STR	1340	3
H4	16	13	1	980	16
H5	2	13	STR	3360	7
N1	2	19	2	3500	16
N2	3	19	2	3260	22
N3	4	19	2	2920	26
N4	4	16	2	2580	16
N5	4	13	2	2240	9
S1	3	19	STR	1800	12
T1	3	16	STR	3700	17
V1	2	16	STR	2880	9
V2	2	16	STR	2640	8
V3	2	13	STR	2300	5
V4	2	13	STR	1960	4
V5	2	13	STR	1620	3
Z1	2	16	3	2200	7
Z2	3	16	3	2000	9
Z3	4	16	3	1680	10
Z4	4	16	3	1380	9
Z5	4	13	3	1060	4
REINFORCING STEEL FOR WING WALL					242 kg

CLASS A CONCRETE
1 WING 4.4 m^3
PART CURTAIN WALL 0.3 m^3
TOTAL 4.7 m^3

W1 (STAGE III RT. EXT.)

CLASS A CONCRETE
1 HEADWALL 0.5 m^3
PART CURTAIN WALL 0.2 m^3
TOTAL 0.7 m^3

PROJECT NO. R-2519A
YANCEY COUNTY
STATION: 257+31.900 -L-

SHEET 8 OF 15

STATE OF NORTH CAROLINA
DEPARTMENT OF TRANSPORTATION
RALEIGH

WINGS FOR CONCRETE BOX CULVERT (STAGE II) H = 2.800m SLOPE 2:1

NORTH CAROLINA PROFESSIONAL SEAL 22005 ENGINEER W. KEITH PASCHAL
2/28/11

REVISIONS							
NO.	BY:	DATE:	NO.	BY:	DATE:		SHEET NO. C-8
1			3				TOTAL SHEETS 119
2			4				

DRAWN BY : J. G. KHARVA DATE 06-06-10
CHECKED BY : J. D. HAWK DATE 09-10-10

28-FEB-2011 13:46
R:\Structures\stri\Final Plans\R2519A_sd_cu_01.dgn
jdhawk

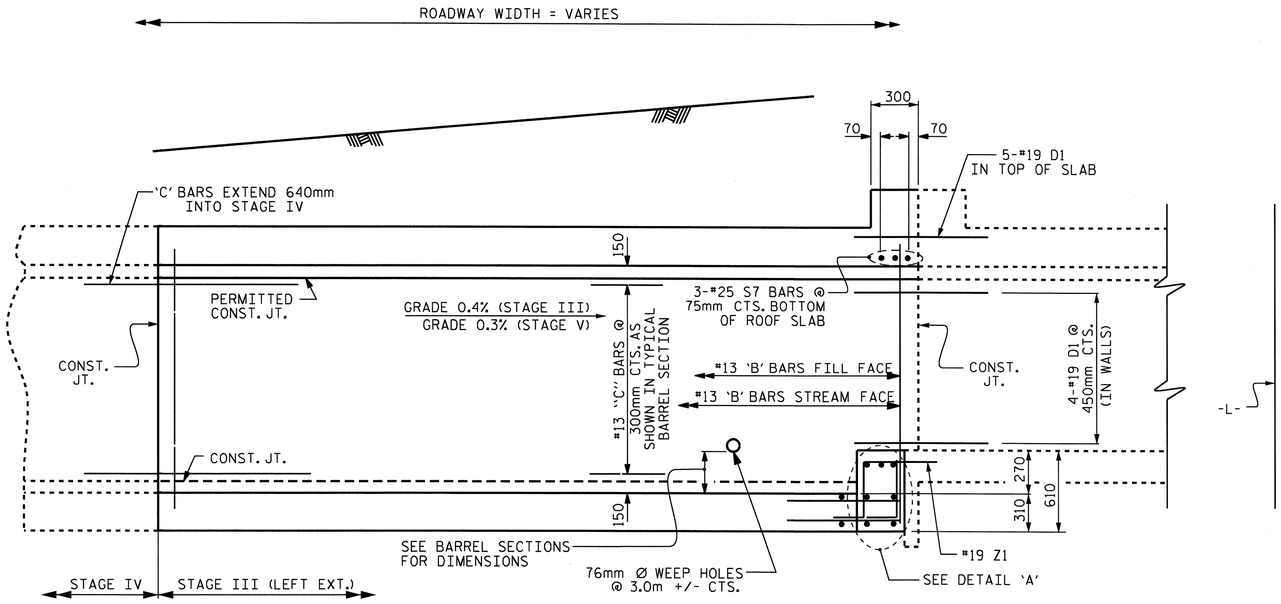

EXISTING CULVERT

CULVERT SECTION NORMAL TO ROADWAY

(LEFT EXTENSION)

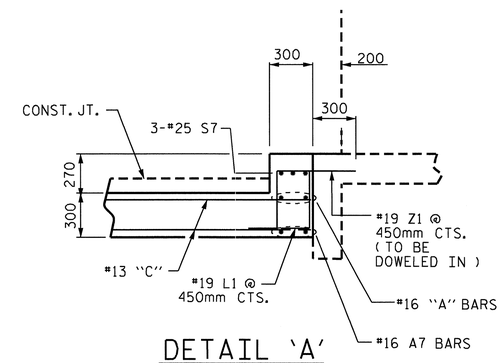

DETAIL 'A'

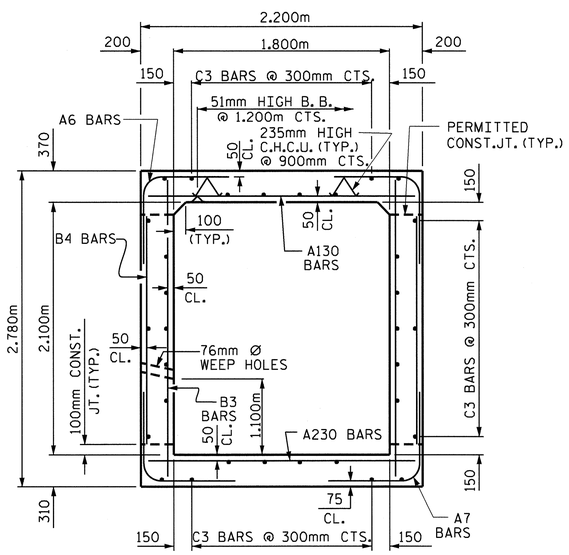

RIGHT ANGLE SECTION OF BARREL

THERE ARE 32 "C" BARS IN SECTION OF BARREL
STAGE III (LT. EXT.) & STAGE V (OUTLET)

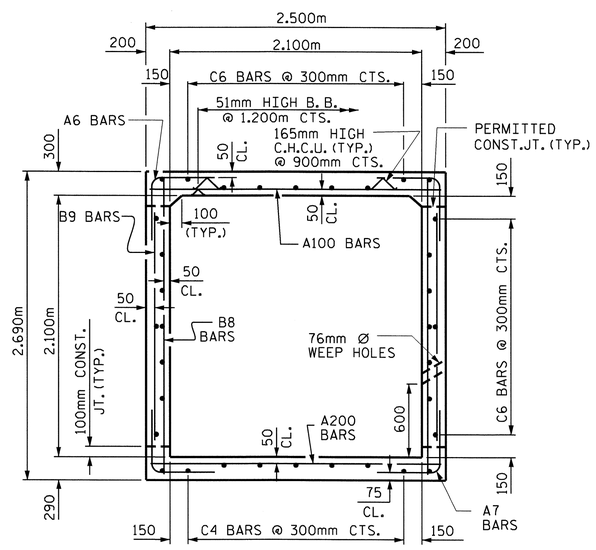

RIGHT ANGLE SECTION OF BARREL

THERE ARE 34 "C" BARS IN SECTION OF BARREL
STAGE V (INLET)

REINFORCING STEEL BAR SCHEDULE

(STAGE III LT. EXT.)

BAR	NO.	SIZE	TYPE	LENGTH	WEIGHT
A6	144	16	2	1980	442
A7	144	16	2	1440	322
A130	81	16	STR	2060	259
A131	1	16	STR	1520	2
A132	1	16	STR	920	1
A230	85	16	STR	2060	272
A231	1	16	STR	1520	2
A232	1	16	STR	960	1
B3	121	13	STR	2620	315
B4	144	13	STR	1880	269
C3	96	13	STR	6780	647
D1	13	19	STR	760	22
L1	5	19	3	600	7
S7	6	25	STR	2240	30
Z1	5	19	1	1300	15
REINFORCING STEEL					2606 kg

REINFORCING STEEL BAR SCHEDULE

(STAGE V)

BAR	NO.	SIZE	TYPE	LENGTH	WEIGHT
A6	178	16	2	1980	547
A7	178	16	2	1440	398
A100	14	16	STR	2400	52
A130	121	16	STR	2060	387
A133	1	16	STR	1640	3
A134	1	16	STR	1180	2
A135	1	16	STR	740	1
A136	1	16	STR	280	1
A200	13	16	STR	2400	48
A230	111	16	STR	2060	355
A233	1	16	STR	1580	2
A234	1	16	STR	1080	2
A235	1	16	STR	560	1
B8	148	13	STR	2560	377
B9	182	13	STR	1880	340
C6	102	13	STR	8420	854
D1	13	19	STR	760	22
L1	5	19	3	600	7
S7	6	25	STR	2240	30
Z1	5	19	1	1300	15
REINFORCING STEEL					3444 kg

SPLICE LENGTHS CHART

BAR	SIZE	SPLICE LENGTH
B1, B3	13	540
C3,C4	13	590

BAR TYPE

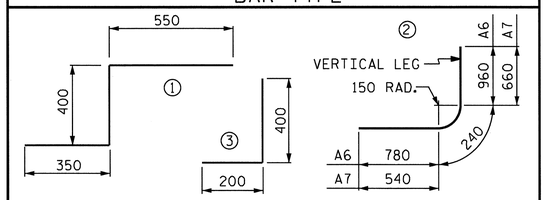

BAR DIMENSIONS ARE OUT TO OUT

STAGE III (LT.) & V QUANTITIES

CLASS A CONCRETE				
BARREL @ STAGE III LT.	2.32	m^3/m	41.9	m^3
EDGE BEAM @ STAGE III LT.			0.5	m^3
SILL			0.4	m^3
TOTAL (STAGE III LT.)			42.8	m^3
BARREL @ STAGE V	2.30	m^3/m	51.3	m^3
EDGE BEAM @ STAGE V			0.5	m^3
SILL			0.4	
TOTAL (STAGE V)			52.2	m^3
REINFORCING STEEL				
BARREL @ STAGE III LT.			2606	kg
SILL @ STAGE III LT.			5	kg
TOTAL (STAGE III LT.)			2612	kg
REINFORCING STEEL				
BARREL @ STAGE V			3444	kg
SILL @ STAGE V			5	kg
TOTAL (STAGE V)			3448	kg
CULVERT EXCAVATION ---------- LUMP SUM				
FOUNDATION COND. MAT'L.				
STAGE III (LT.)			26.9 M. TONS	
STAGE V			37.8 M. TONS	

NORTH CAROLINA PROFESSIONAL SEAL 22005 ENGINEER A. KEITH PASCHAL

2/28/11

PROJECT NO. R-2519A

YANCEY COUNTY

STATION: 257+31.90 -L-

SHEET 9 OF 15

STATE OF NORTH CAROLINA
DEPARTMENT OF TRANSPORTATION
RALEIGH

CONCRETE BOX CULVERT EXTENSION (STAGE III LT. EXT. & STAGE V)

REVISIONS						SHEET NO.
NO.	BY:	DATE:	NO.	BY:	DATE:	C-9
1			3			TOTAL SHEETS
2			4			119

DRAWN BY : J. G. KHARVA DATE : 06/07/10
CHECKED BY : J. D. HAWK DATE : 09/10/10

28-FEB-2011 13:46
R:\Structures\str1\Final Plans\R2519A_sd_cu_01.dgn
jdhawk

STR. #1

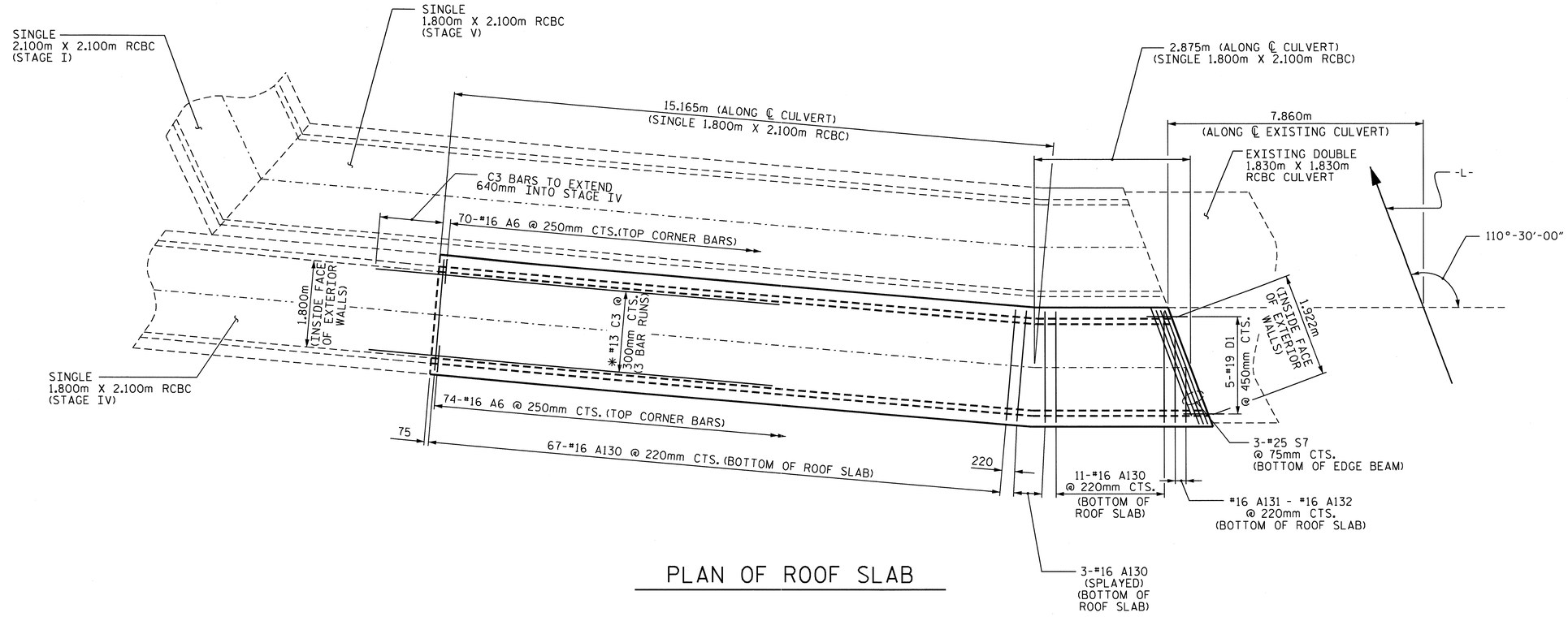

PLAN OF ROOF SLAB

* 'C' BARS TO BE FIELD BENT AS NECESSARY

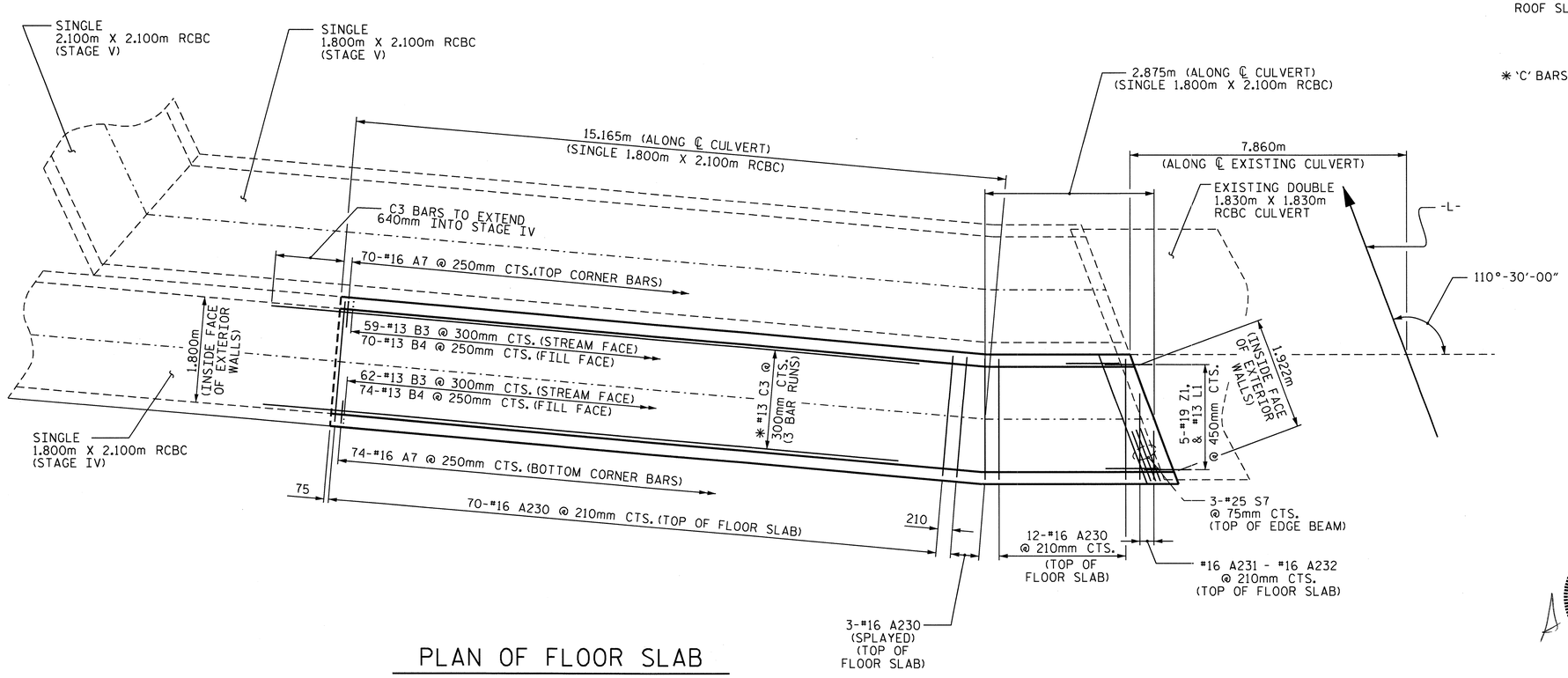

PLAN OF FLOOR SLAB

PROJECT NO. R-2519A
YANCEY COUNTY
STATION: 257+31.900 -L-

SHEET 10 OF 15

STATE OF NORTH CAROLINA
DEPARTMENT OF TRANSPORTATION
RALEIGH

CONCRETE BOX
CULVERT EXTENSION
(STAGE III LT. EXT.)

NORTH CAROLINA PROFESSIONAL SEAL 22005 ENGINEER A. KEITH PASCHAL
2/28/11

REVISIONS						SHEET NO.
NO.	BY:	DATE:	NO.	BY:	DATE:	C-10
1			3			TOTAL SHEETS
2			4			119

DRAWN BY : J. G. KHARVA DATE : 6/07/10
CHECKED BY : J. D. HAWK DATE : 9/10/10

28-FEB-2011 13:45
R:\Structures\str1\Final Plans\R2519A_sd_cu_01.dgn
jdhawk

STR. #1

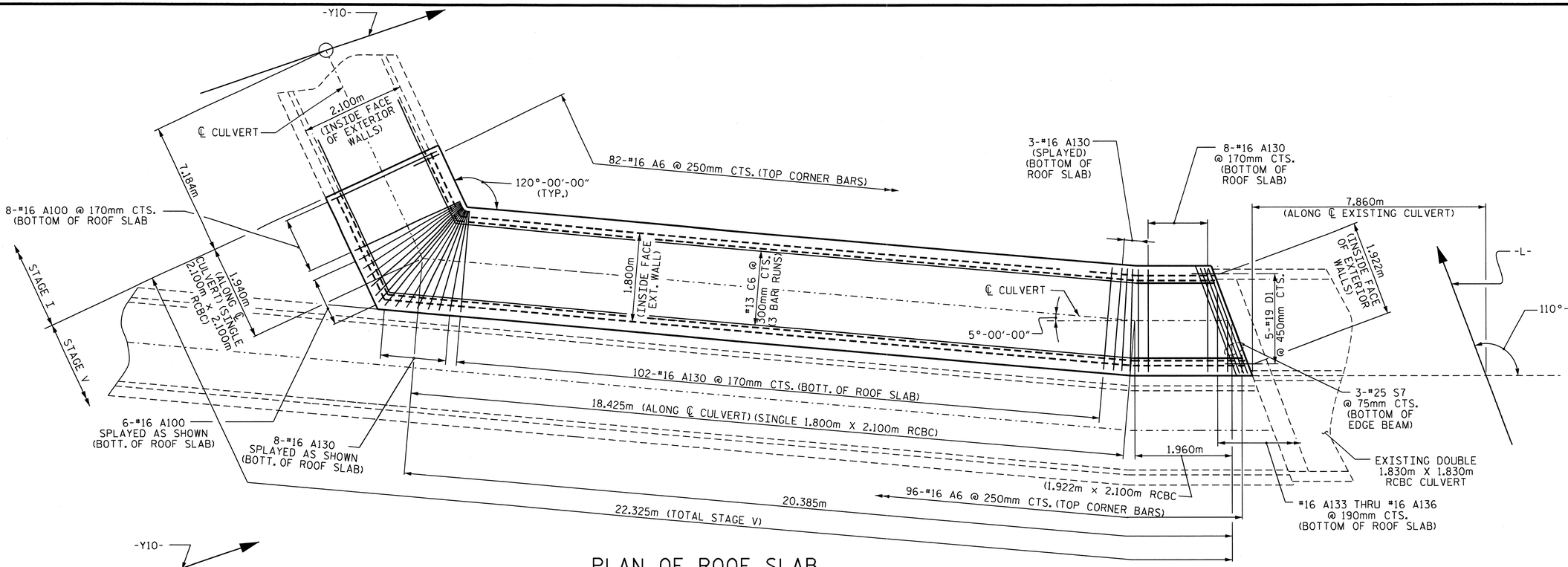

PLAN OF ROOF SLAB

✱ 'C' BARS TO BE FIELD BENT AS NECESSARY

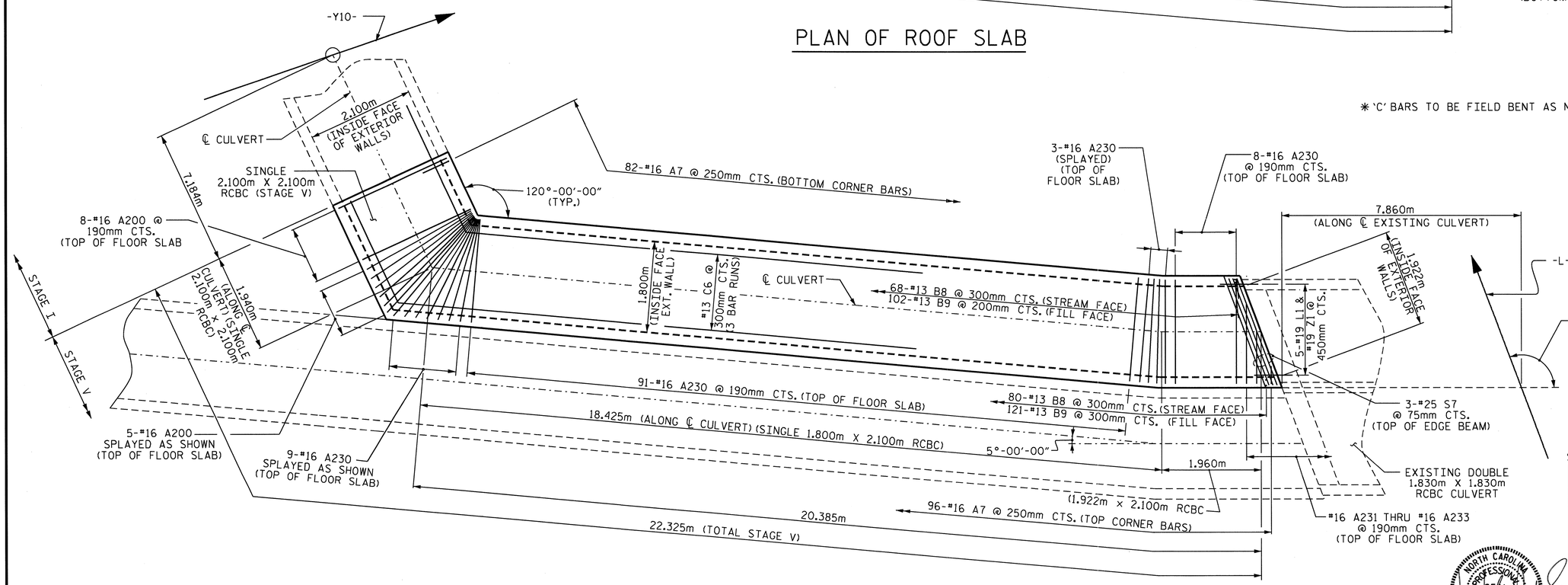

PLAN OF FLOOR SLAB

PROJECT NO. R-2519A
YANCEY COUNTY
STATION: 257+31.900 -L-

SHEET 11 OF 15

STATE OF NORTH CAROLINA
DEPARTMENT OF TRANSPORTATION
RALEIGH

CONCRETE BOX CULVERT EXTENSION (STAGE V)

NORTH CAROLINA PROFESSIONAL SEAL 22005 ENGINEER J. KEITH PASCHAL
2/28/11

REVISIONS								SHEET NO.
NO.	BY:	DATE:	NO.	BY:	DATE:			C-11
1			3					TOTAL SHEETS
2			4					119

DRAWN BY : J. G. KHARVA DATE : 06/07/10
CHECKED BY : J. D. HAWK DATE : 09/10/10

28-FEB-2011 13:45
R:\Structures\str1\Final Plans\R2519A_sd_cu_01.dgn
jdhawk

STR. #1

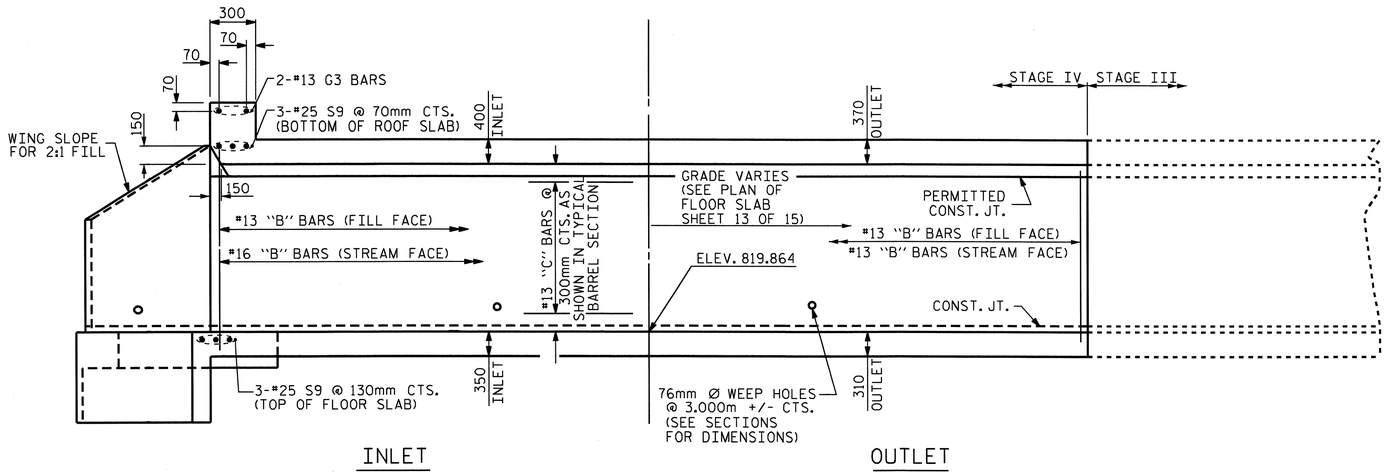

CULVERT SECTION NORMAL TO ROADWAY

(SEE PLAN OF FLOOR SLAB FOR GRADES)

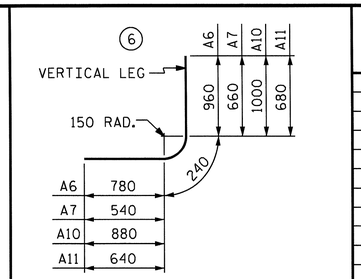

BAR TYPE

ALL BAR DIMENSIONS ARE OUT TO OUT

REINFORCING STEEL BAR SCHEDULE

STAGE IV

BAR	NO.	SIZE	TYPE	LENGTH	WEIGHT
A6	261	16	6	1980	802
A7	261	16	6	1440	583
A10	55	16	6	2120	181
A11	55	16	6	1560	133
A135	143	16	STR	2100	466
A136	5	16	STR	1500	12
A137	1	16	STR	2140	3
A138	1	16	STR	2240	3
A139	1	16	STR	2340	4
A140	1	16	STR	2440	4
A141	5	16	STR	2540	20
A145	28	16	STR	2900	126
A235	150	16	STR	2100	489
A236	5	16	STR	1500	12
A237	1	16	STR	2160	3
A238	1	16	STR	2260	4
A239	1	16	STR	2360	4
A240	1	16	STR	2460	4
A241	1	16	STR	2560	4
A242	3	16	STR	2300	11
A245	28	16	STR	2880	125
B3	218	13	STR	2680	581
B4	261	13	STR	1940	503
B8	64	13	STR	2740	174
B9	53	16	STR	1940	160
C4	160	13	STR	7300	1161
C5	36	13	STR	7640	273
G3	2	13	STR	2900	6
S9	6	25	STR	2900	69
REINFORCING STEEL					5920 kg

STAGE IV QUANTITIES

CLASS A CONCRETE

BARREL @	3.52	m^3/m	22.7	m^3
BARREL @	2.32	m^3/m	75.6	m^3
WINGS ETC.			6.7	m^3
SILL			0.9	m^3
TOTAL			105.9	m^3

REINFORCING STEEL

BARREL	5920	kg
WINGS ETC.	259	kg
SILL	15	kg
TOTAL	6194	kg

CULVERT EXCAVATION ---------- LUMP SUM

FOUNDATION COND. MAT'L. --61.7-- METRIC TONS

SPLICE LENGTHS CHART

BAR	SIZE	SPLICE LENGTH
B3,B4,B8,B9	13	540
C4,C5	13	590

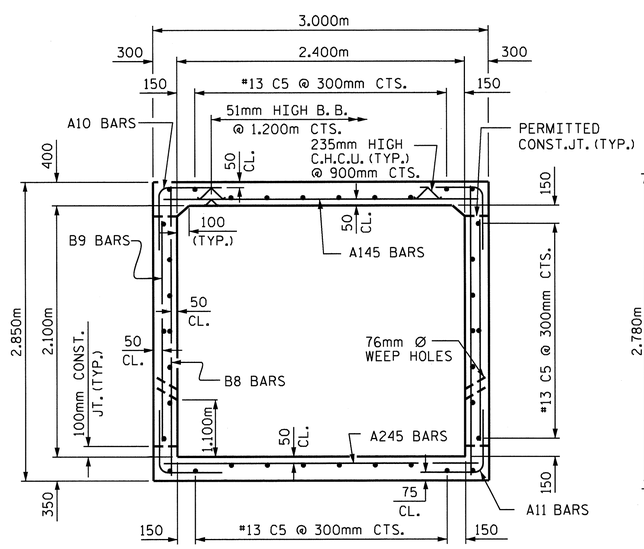

RIGHT ANGLE SECTION OF BARREL

THERE ARE 36 "C" BARS IN SECTION OF BARREL
STAGE IV (INLET)

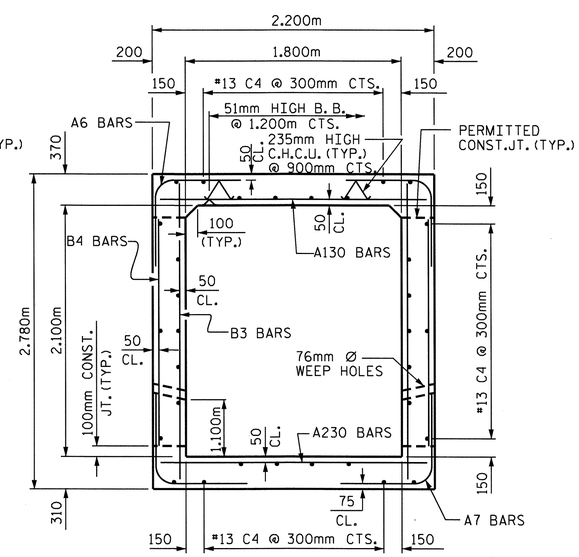

RIGHT ANGLE SECTION OF BARREL

THERE ARE 32 "C" BARS IN SECTION OF BARREL
STAGE IV (OUTLET)

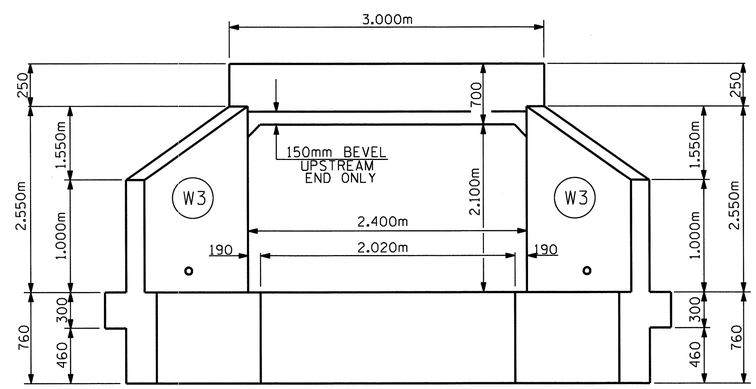

INLET ELEVATION NORMAL TO SKEW

PROJECT NO. R-2519A

YANCEY COUNTY

STATION: 257+31.900 -L-

SHEET 12 OF 15

STATE OF NORTH CAROLINA
DEPARTMENT OF TRANSPORTATION
RALEIGH

CONCRETE BOX CULVERT EXTENSION (STAGE IV)

NORTH CAROLINA PROFESSIONAL SEAL 22005 ENGINEER R. KEITH PASCHAL

2/28/11

REVISIONS							SHEET NO.
NO.	BY:	DATE:	NO.	BY:	DATE:		C-12
1			3				TOTAL SHEETS
2			4				119

DRAWN BY : J. G. KHARVA DATE : 06/07/10
CHECKED BY : J. D. HAWK DATE : 09/10/10

28-FEB-2011 13:45
R:\Structures\str1\Final Plans\R2519A_sd_cu_01.dgn
jdhawk

STR. #1

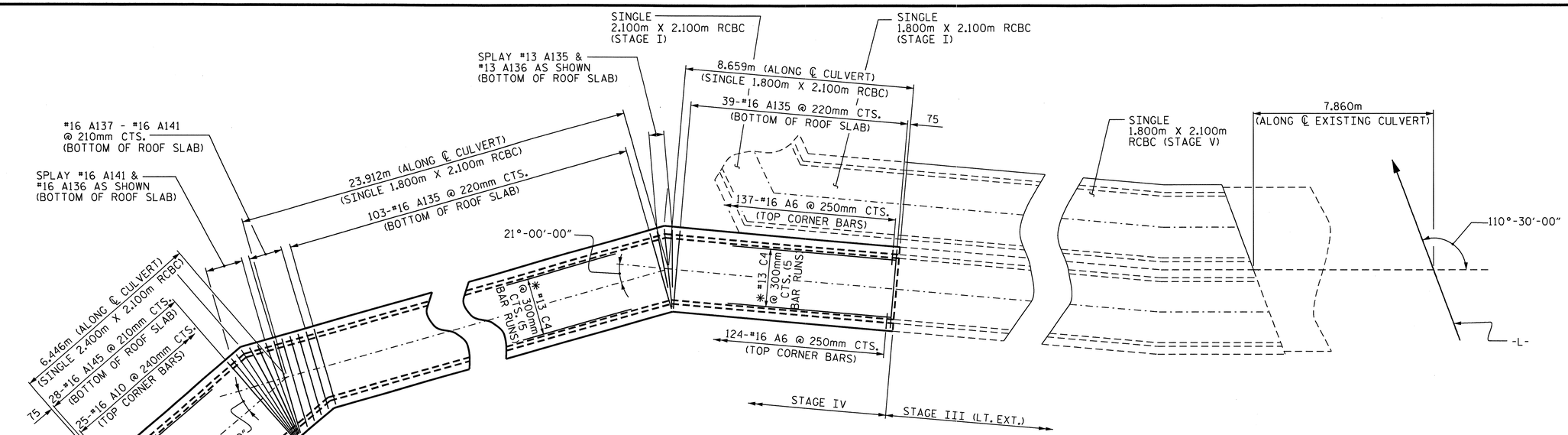

PLAN OF ROOF SLAB

* 'C' BARS TO BE FIELD BENT AS NECESSARY

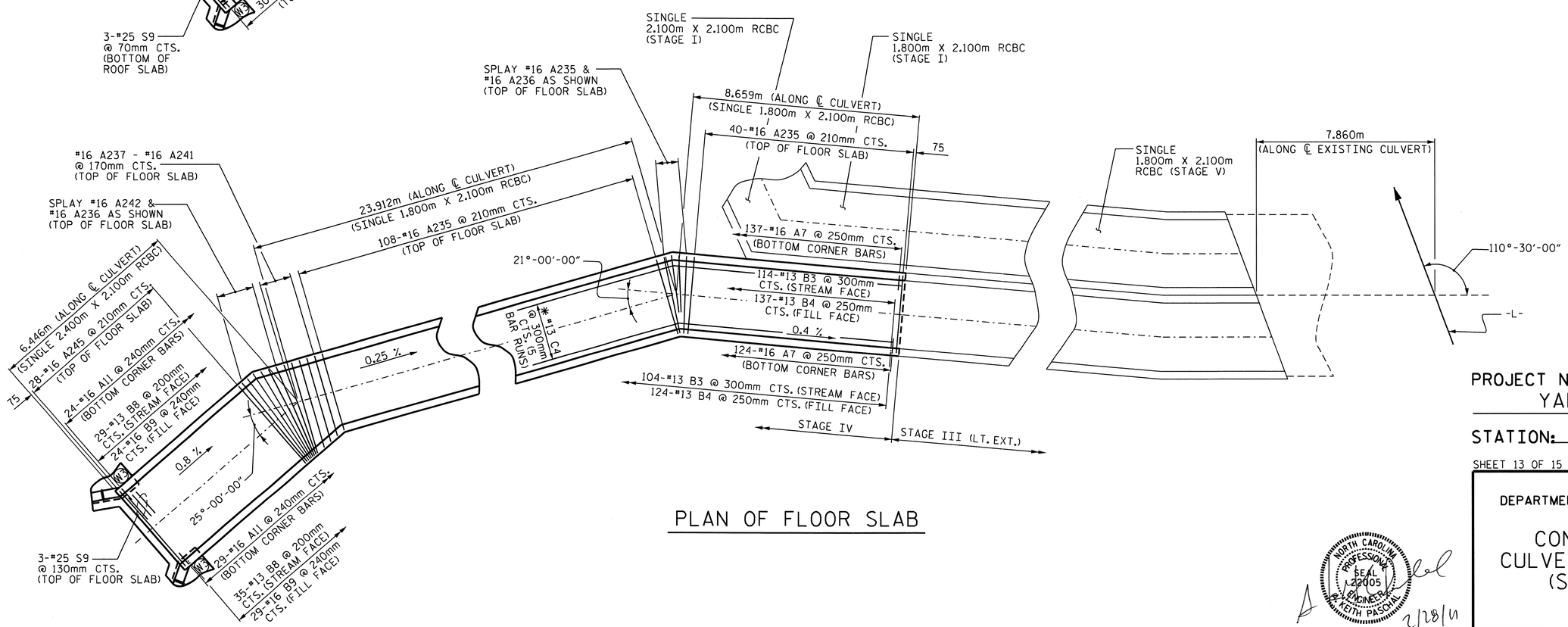

PLAN OF FLOOR SLAB

PROJECT NO. R-2519A
YANCEY COUNTY
STATION: 257+31.900 -L-

SHEET 13 OF 15

STATE OF NORTH CAROLINA
DEPARTMENT OF TRANSPORTATION
RALEIGH

CONCRETE BOX CULVERT EXTENSION (STAGE IV)

NORTH CAROLINA PROFESSIONAL SEAL 22005 ENGINEER W. KEITH PASCHAL
2/28/11

REVISIONS						SHEET NO.
NO.	BY:	DATE:	NO.	BY:	DATE:	C-13
1			3			TOTAL SHEETS
2			4			119

DRAWN BY : J. G. KHARVA DATE : 6/02/10
CHECKED BY : J. D. HAWK DATE : 9/10/10

28-FEB-2011 13:45
R:\Structures\str1\Final Plans\R2519A_sd_cu_01.dgn
jdhawk

STR. #1

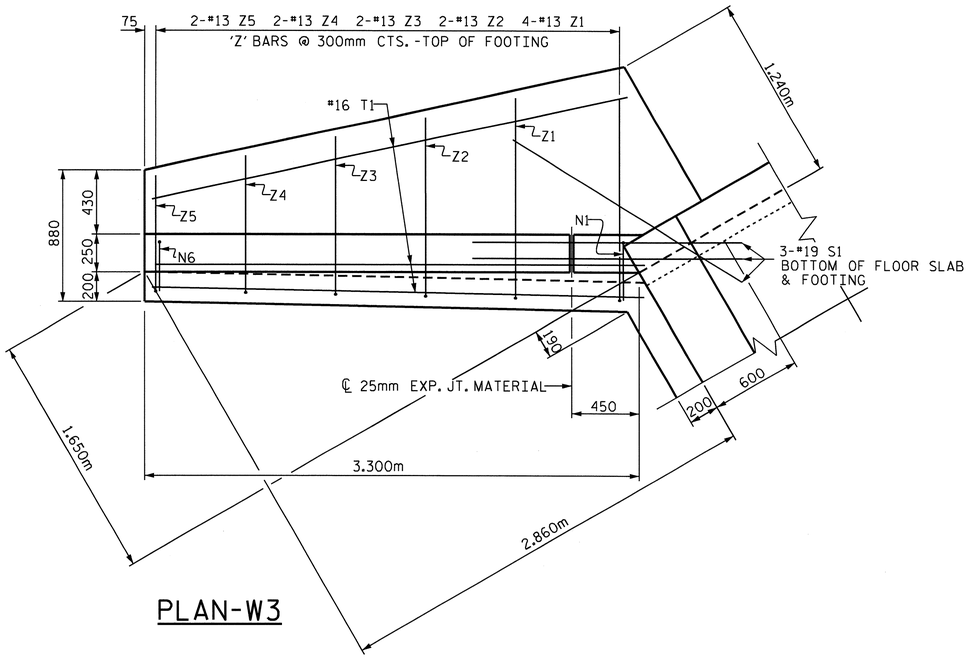

PLAN-W3

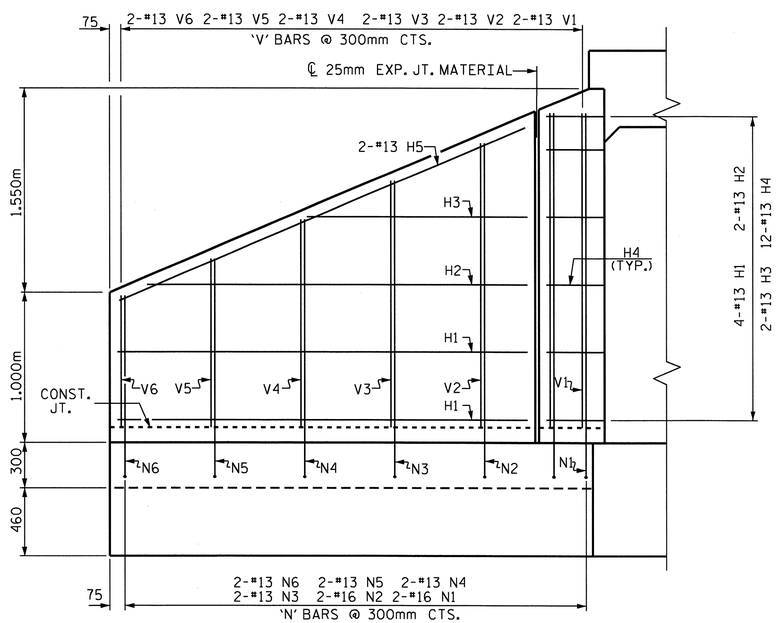

ELEVATION-W3

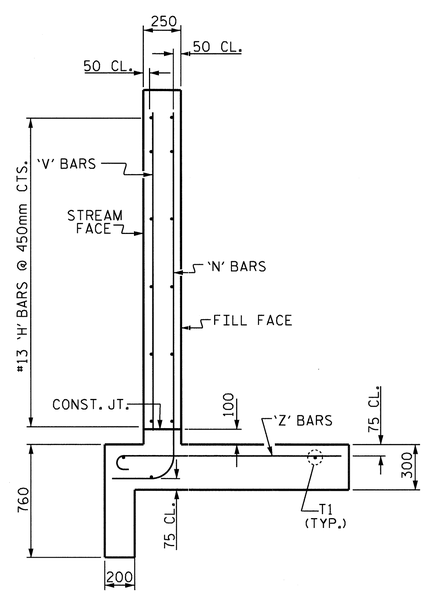

TYPICAL WING SECTION-W3

BAR TYPES

ALL BAR DIMENSIONS ARE OUT TO OUT.

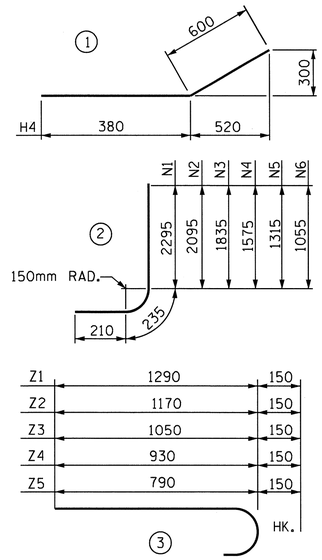

BILL OF MATERIAL

W3 (STAGE IV)

BAR	NO.	SIZE	TYPE	LENGTH	WEIGHT
H1	8	13	STR	2740	22
H2	4	13	STR	2540	10
H3	4	13	STR	1520	6
H4	24	13	1	980	23
H5	4	13	STR	2980	12
N1	4	16	2	2740	17
N2	4	16	2	2540	16
N3	4	13	2	2280	9
N4	4	13	2	2020	8
N5	4	13	2	1760	7
N6	4	13	2	1500	6
S1	6	19	STR	1800	24
T1	6	16	STR	3300	31
V1	4	13	STR	2120	8
V2	4	13	STR	1920	8
V3	4	13	STR	1660	7
V4	4	13	STR	1400	6
V5	4	13	STR	1140	5
V6	4	13	STR	880	4
Z1	8	13	3	1440	12
Z2	4	13	3	1320	5
Z3	4	13	3	1200	5
Z4	4	13	3	1080	4
Z5	4	13	3	940	4

REINFORCING STEEL
FOR 2 WINGS 259 kgs.

CLASS A CONCRETE

2 WINGS	6.1	m^3
1 HEADWALL	0.3	m^3
1 END CURTAIN WALL	0.3	m^3
TOTAL	6.7	m^3

PROJECT NO. R-2519A
YANCEY COUNTY
STATION: 257+31.900 -L-

SHEET 14 OF 15

STATE OF NORTH CAROLINA
DEPARTMENT OF TRANSPORTATION
RALEIGH

STANDARD WINGS FOR
CONCRETE BOX CULVERT
H = 2.100m SLOPE = 2:1
90° SKEW
(STAGE IV)

NORTH CAROLINA PROFESSIONAL SEAL 22005 ENGINEER K. KEITH PASCHAL
7/28/11

ASSEMBLED BY : J. G. KHARVA	DATE : 06/02/10
CHECKED BY : J. D. HAWK	DATE : 09-10-10
DRAWN BY : FPP 06/97	
CHECKED BY : VAP 06/97	

REVISIONS						SHEET NO.
NO.	BY:	DATE:	NO.	BY:	DATE:	C-14
1			3			TOTAL SHEETS
2			4			119

STD. NO. CW9021

NOTES

BED MATERIAL SHALL PLACED BETWEEN SILLS IN THE CULVERT. THE MATERIAL SHALL BE NATURAL STONE WITH A GRADATION SIZE SIMILAR TO THAT OF CLASS B RIP RAP. STONES LARGER THAN 0.15 METERS SHALL NOT BE PLACED WITHIN THE CULVERT BARRELS. BED MATERIAL IS SUBJECT TO APPROVAL BY THE ENGINEER.

SILLS ARE TO BE 0.3m WIDE AND CAST SEPERATELY AND ATTACHED BY DOWELS.

THE TOP OF THE SILLS SHOULD MATCH STREAM BED ELEVATION OF THE STREAM.

SILL QUANTITIES

(INCLUDED IN TOTAL FOR STRUCTURE)

STAGE I						STAGE II (RT. EXT.)						STAGE III (RT. EXT.)					
BAR	NO.	SIZE	TYPE	LENGTH	WEIGHT	BAR	NO.	SIZE	TYPE	LENGTH	WEIGHT	BAR	NO.	SIZE	TYPE	LENGTH	WEIGHT
D1	9	#19	STR.	400	8	D1	3	#19	STR.	400	3	D1	3	#19	STR.	400	3
						D2	3	#19	STR.	700	5	D2	3	#19	STR.	700	5
REINFORCING STEEL					8 kg	REINFORCING STEEL					8 kg	REINFORCING STEEL					8 kg
CLASS A CONCRETE					0.6 m³	CLASS A CONCRETE					0.5 m³	CLASS A CONCRETE					0.5 m³
CLASS B RIP RAP					17.9 METRIC TONS	CLASS B RIP RAP					17.8 METRIC TONS	CLASS B RIP RAP					17.8 METRIC TONS

STAGE III (LT. EXT.)						STAGE IV						STAGE V					
BAR	NO.	SIZE	TYPE	LENGTH	WEIGHT	BAR	NO.	SIZE	TYPE	LENGTH	WEIGHT	BAR	NO.	SIZE	TYPE	LENGTH	WEIGHT
D1	6	#19	STR.	400	5	D1	15	#19	STR.	400	13	D1	6	#19	STR.	400	5
REINFORCING STEEL					5 kg	REINFORCING STEEL					13 kg	REINFORCING STEEL					5 kg
CLASS A CONCRETE					0.4 m³	CLASS A CONCRETE					0.9 m³	CLASS A CONCRETE					0.4 m³
CLASS B RIP RAP					15.0 METRIC TONS	CLASS B RIP RAP					34.1 METRIC TONS	CLASS B RIP RAP					18.8 METRIC TONS

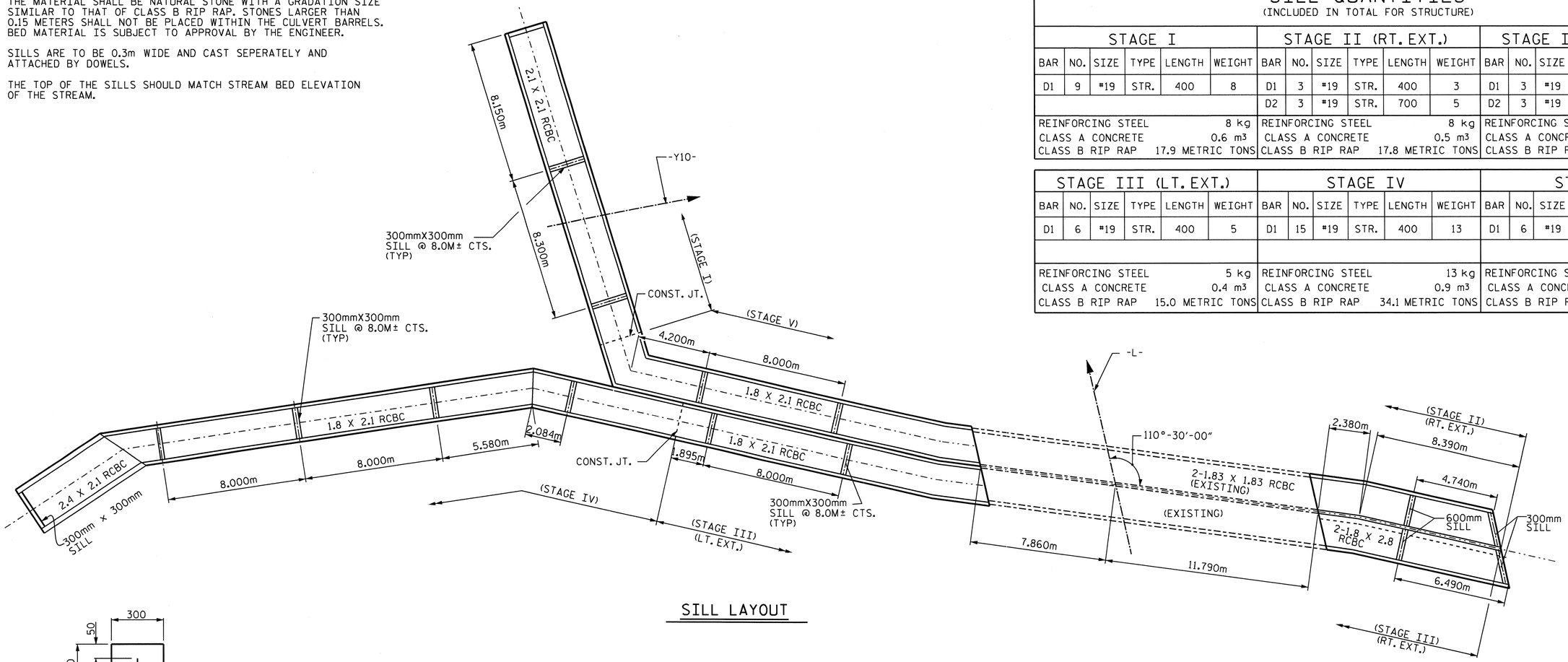

SILL LAYOUT

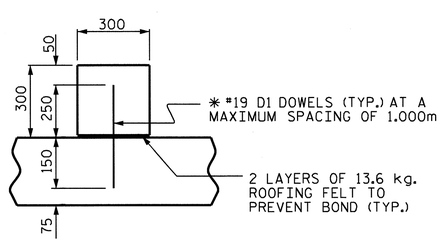

SECTION THROUGH 300mm SILL

* DOWELS MAY BE PUSHED INTO GREEN CONCRETE AFTER SLAB HAS BEEN FLOAT FINISHED.

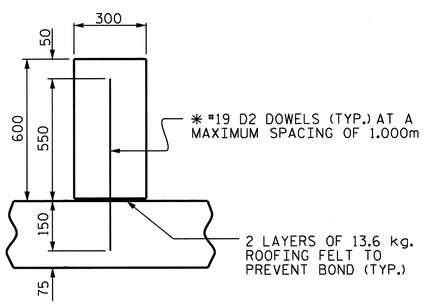

SECTION THROUGH 600mm SILL

* DOWELS MAY BE PUSHED INTO GREEN CONCRETE AFTER SLAB HAS BEEN FLOAT FINISHED.

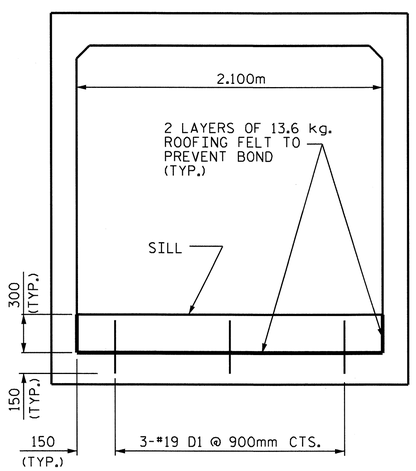

STAGE I

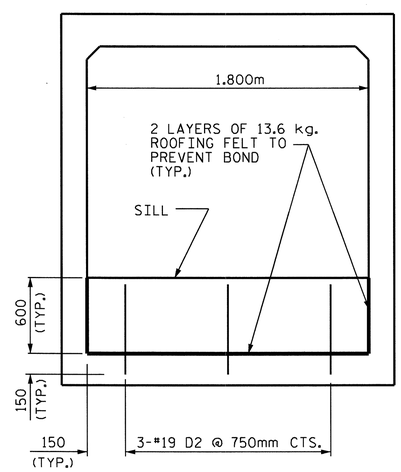

STAGE II (RT.), STAGE III (RT.)

ELEVATION VIEW-INLET

CULVERT SILL DETAILS

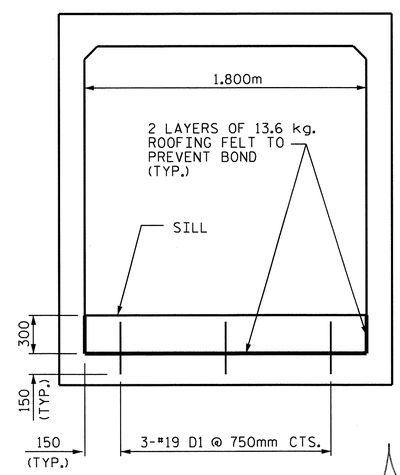

STAGE II (RT.), STAGE III (LT.)
* STAGE IV, STAGE V.

* THE INLET SILL IN STAGE IV IS 2.400m DOWELL SPACING 1.000m.

NORTH CAROLINA PROFESSIONAL SEAL 32005 ENGINEER A. KEITH PASCHAL

3/1/11

PROJECT NO. R-2519A

YANCEY COUNTY

STATION: 257+31.900 -L-

SHEET 15 OF 15

STATE OF NORTH CAROLINA
DEPARTMENT OF TRANSPORTATION
RALEIGH

CONCRETE BOX CULVERT EXTENSION SILL DETAILS

REVISIONS						SHEET NO.
NO.	BY:	DATE:	NO.	BY:	DATE:	C-15
1			3			TOTAL SHEETS
2			4			119

DRAWN BY : J. G. KHARVA DATE : 12-15-10
CHECKED BY : J. D. HAWK DATE : 12-16-10

01-MAR-2011 08:46
R:\Structures\str1\Final Plans\R2519A_sd_cu_01.dgn
jdhawk

BM #6: SPIKE SET IN BASE OF 15" DOUBLE LOCUST TREE 8.000m RIGHT STA. 13+11.000 -Y17- EL. 816.802

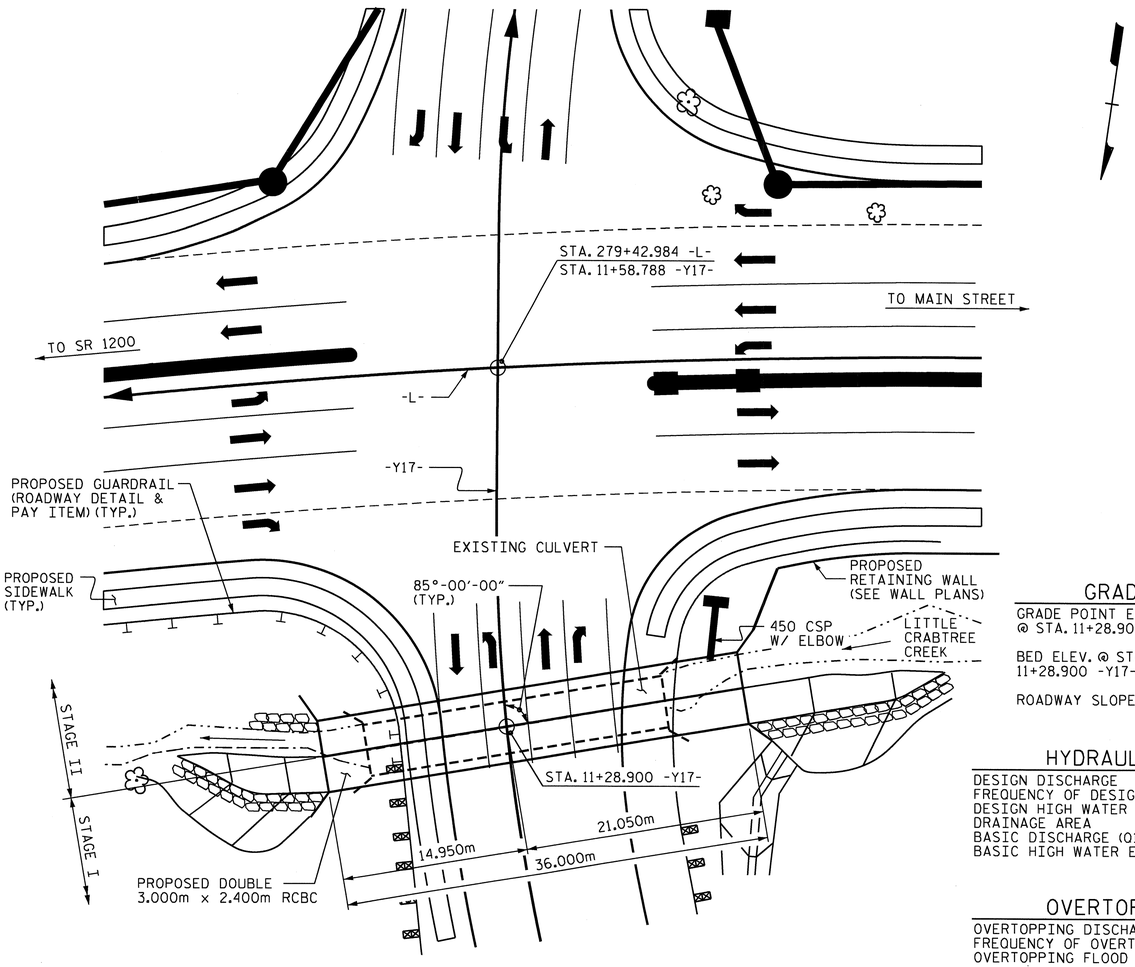

FOR UTILITY INFORMATION, SEE UTILITY PLANS AND SPECIAL PROVISIONS.

LOCATION SKETCH

GRADE DATA

GRADE POINT ELEV. @ STA. 11+28.900 -Y17-	= 809.730m
BED ELEV. @ STA. 11+28.900 -Y17-	= 805.170m
ROADWAY SLOPES	= 2:1

HYDRAULIC DATA

DESIGN DISCHARGE	= 26.5 m3/s
FREQUENCY OF DESIGN FLOOD	= 25 yr.
DESIGN HIGH WATER ELEVATION	= 807.840m
DRAINAGE AREA	= 7.25 sq.km
BASIC DISCHARGE (Q100)	= 43.0 m3/s
BASIC HIGH WATER ELEVATION	= 808.580m

OVERTOPPING DATA

OVERTOPPING DISCHARGE	= 54.0 m3/s
FREQUENCY OF OVERTOPPING FLOOD	= 200+ yr.
OVERTOPPING FLOOD ELEVATION	= 809.100m

TOTAL STRUCTURE QUANTITIES (STAGE I)

CLASS A CONCRETE - (STAGE I)		
BARREL	71.3	m3
WINGS ETC.	9.1	m3
SILL	0.3	m3
TOTAL	80.7	m3
FOUNDATION COND. MAT'L. ----	91	METRIC TONS

REINFORCING STEEL - (STAGE I)		
BARREL	9983	kg
WINGS ETC.	328	kg
SILL	3	kg
TOTAL	10314	kg

TOTAL STRUCTURE QUANTITIES (STAGE II)

CLASS A CONCRETE - (STAGE II)		
BARREL	107.5	m3
WING ETC.	6.2	m3
SILL	1.0	m3
TOTAL	114.7	m3
FOUNDATION COND. MAT'L. ----	71	METRIC TONS

REINFORCING STEEL - (STAGE II)		
BARREL	14894	kg
WING ETC.	166	kg
SILL	15	kg
TOTAL	15075	kg

TOTAL BILL OF MATERIAL

CLASS A CONCRETE		
STAGE I	80.7	m3
STAGE II	114.7	m3
TOTAL	195.4	m3

REINFORCING STEEL		
STAGE I	10314	kg
STAGE II	15075	kg
TOTAL	25389	kg

FOUNDATION COND. MAT'L		
STAGE I	91	METRIC TONS
STAGE II	71	METRIC TONS
TOTAL	162	METRIC TONS

CULVERT EXCAVATION ----------	LUMP SUM
CLASS B RIP RAP ----------	28 METRIC TONS

NOTES

ASSUMED LIVE LOAD ----------MS18 OR ALTERNATE LOADING.

ALL DIMENSIONS ARE IN MILLIMETERS UNLESS OTHERWISE NORED.

ALL ELEVATIONS ARE IN METERS.

DESIGN FILL ----------2.470m.

FOR OTHER DESIGN DATA AND NOTES SEE STANDARD NOTE SHEET.

76mm Ø WEEP HOLES INDICATED TO BE IN ACCORDANCE WITH THE SPECIFICATIONS.

CONCRETE IN CULVERTS TO BE POURED IN THE FOLLOWING ORDER:

(STAGE I)

1. WING FOOTINGS AND FLOOR SLAB INCLUDING 100mm OF ALL VERTICAL WALLS.
2. THE REMAINING PORTIONS OF THE WALLS AND WING FULL HEIGHT.

(STAGE II)

1. WING FOOTINGS AND FLOOR SLAB INCLUDING 100mm OF VERTICAL WALL.
2. THE REMAINING PORTIONS OF THE WALL AND WING FULL HEIGHT. FOLLOWED BY THE ENTIRE ROOF SLAB AND HEADWALL.

THE RESIDENT ENGINEER SHALL CHECK THE LENGTH OF CULVERT BEFORE STAKING IT OUT TO MAKE CERTAIN THAT IT WILL PROPERLY TAKE CARE OF THE FILL.

DIMENSIONS FOR WING LAYOUT AS WELL AS ADDITIONAL REINFORCING STEEL EMBEDDED IN BARREL ARE SHOWN ON WING SHEET.

TRANSVERSE CONSTRUCTION JOINTS SHALL BE USED IN THE BARREL, SPACED TO LIMIT THE POURS TO A MAXIMUM OF 21.0m. LOCATION OF JOINTS SHALL BE SUBJECT TO APPROVAL OF THE ENGINEER.

AT THE CONTRACTOR'S OPTION, HE MAY SPLICE THE VERTICAL REINFORCING STEEL IN THE INTERIOR FACE OF EXTERIOR WALL AND BOTH FACES OF INTERIOR WALLS ABOVE LOWER WALL CONSTRUCTION JOINT. THE SPLICE LENGTH SHALL BE PROVIDED IN THE SPLICE LENGTH CHART SHOWN ON THE PLANS. EXTRA WEIGHT OF STEEL DUE TO THE SPLICES SHALL BE PAID FOR BY THE CONTRACTOR.

THE EXISTING DOUBLE 2.10m X 1.80m CULVERT WITH A LENGTH OF 25.16m AND LOCATED AT THE SITE OF THE PROPOSED CULVERT SHALL BE REMOVED. PAYMENT FOR REMOVAL OF EXISTING CULVERT WILL BE INCLUDED IN THE LUMP SUM PRICE FOR CULVERT EXCAVATION.

NO PRECAST REINFORCED BOX CULVERT OPTION WILL BE ALLOWED

FOR CULVERT DIVERSION DETAILS AND PAY ITEM, SEE EROSION CONTROL PLANS.

A 900mm STRIP OF FILTER FABRIC SHALL BE ATTACHED TO THE FILL FACE OF THE WING COVERING THE ENTIRE LENGTH OF THE EXPANSION JOINT.

FOR SUBMITTAL OF WORKING DRAWINGS, SEE SPECIAL PROVISIONS.

FOR FALSEWORK AND FORMWORK, SEE SPECIAL PROVISIONS.

FOR CRANE SAFETY, SEE SPECIAL PROVISIONS.

FOR GROUT FOR STRUCTURES, SEE SPECIAL PROVISIONS.

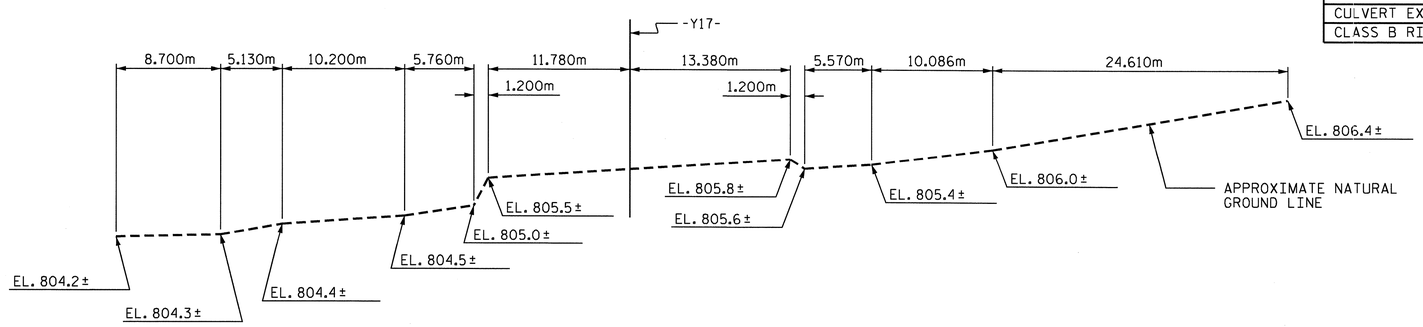

PROFILE ALONG ℄ CULVERT

ASSEMBLED BY : B.N. GRADY		DATE : 6/7/10	
CHECKED BY : J. MYA		DATE : 6/21/10	
DRAWN BY : EEM	6/97		
CHECKED BY : ARB	7/97		

01-MAR-2011 08:58
R:\Structures\str2\Final Plans\R2519A_sd_CU_02.dgn
jdhawk

PROJECT NO. R-2519A
YANCEY COUNTY
STATION: 11+28.900 -Y17-

SHEET 1 OF 6 CULVERT NO. C-323

STATE OF NORTH CAROLINA
DEPARTMENT OF TRANSPORTATION
RALEIGH

BARREL STANDARD DOUBLE 3.000m X 2.400m CONCRETE BOX CULVERT 90° SKEW

NORTH CAROLINA PROFESSIONAL SEAL 12929 ENGINEER NORMAN MELETT BOLLACK, JR.
3/1/11

NORTH CAROLINA PROFESSIONAL SEAL 22006 ENGINEER A. KEITH PASCHAL
3/1/11

REVISIONS						SHEET NO.
NO.	BY:	DATE:	NO.	BY:	DATE:	C-16
1			3			TOTAL SHEETS
2			4			119

STD. No. CB290sm

STR. 2

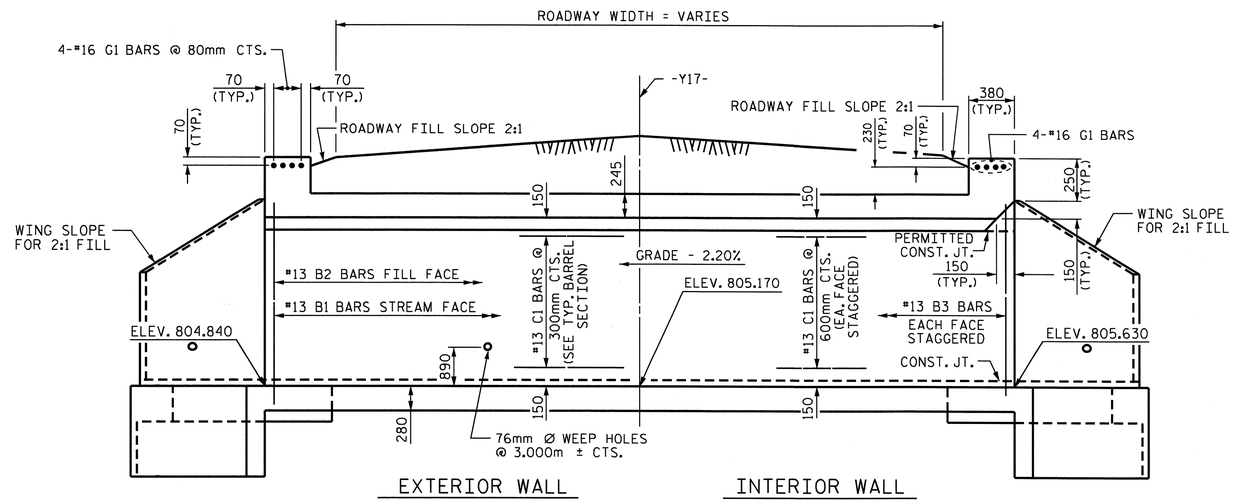

CULVERT SECTION NORMAL TO ROADWAY

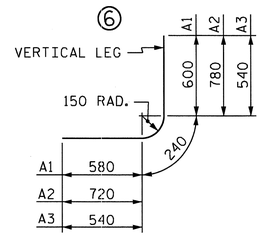

BAR TYPE

ALL BAR DIMENSIONS ARE OUT TO OUT

SPLICE LENGTH CHART		
BAR	SIZE	LENGTH
A100	#19	690
A200	#16	540
A300, A400	#22	920
B1, B3	#13	540
C1	#13	590

BILL OF MATERIAL — STAGE I

BAR	NO.	SIZE	TYPE	LENGTH	WEIGHT
A1	240	#16	6	1420	529
A2	240	#19	6	1740	933
A3	360	#13	6	1320	472
A200	225	#16	STR	4260	1488
A400	240	#22	STR	4640	3388
B1	164	#13	STR	2740	447
B2	240	#13	STR	2180	520
B3	360	#13	STR	2760	988
C1	160	#13	STR	7660	1218
REINFORCING STEEL					9983 kg.
CLASS A CONCRETE BARREL					71.3 m³

BILL OF MATERIAL — STAGE II

BAR	NO.	SIZE	TYPE	LENGTH	WEIGHT
A1	240	#16	6	1420	529
A2	240	#19	6	1740	933
A100	190	#19	STR	6500	2760
A201	225	#16	STR	2800	978
A300	240	#22	STR	6500	4746
A401	240	#22	STR	2800	2044
B1	164	#13	STR	2740	447
B2	240	#13	STR	2180	520
C1	240	#13	STR	7660	1827
E1	16	#16	STR	1160	29
G1	8	#16	STR	6500	81
REINFORCING STEEL					14894 kg.
CLASS A CONCRETE BARREL					107.5 m³

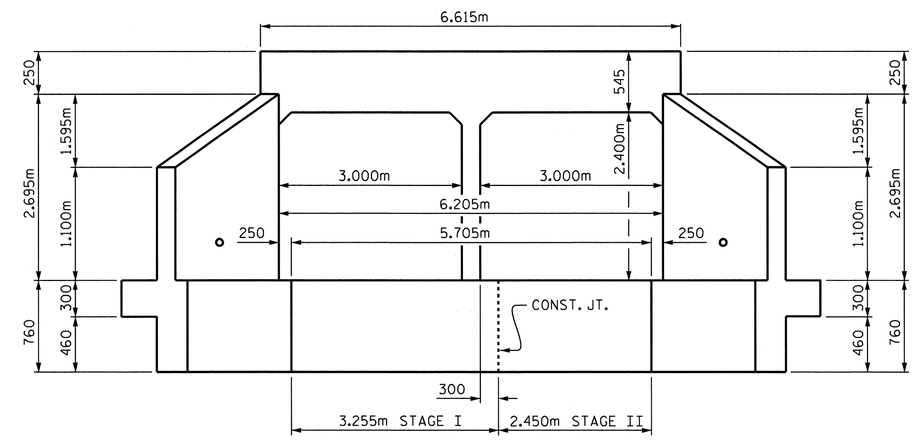

END ELEVATION NORMAL TO SKEW

(LOOKING UPSTREAM)

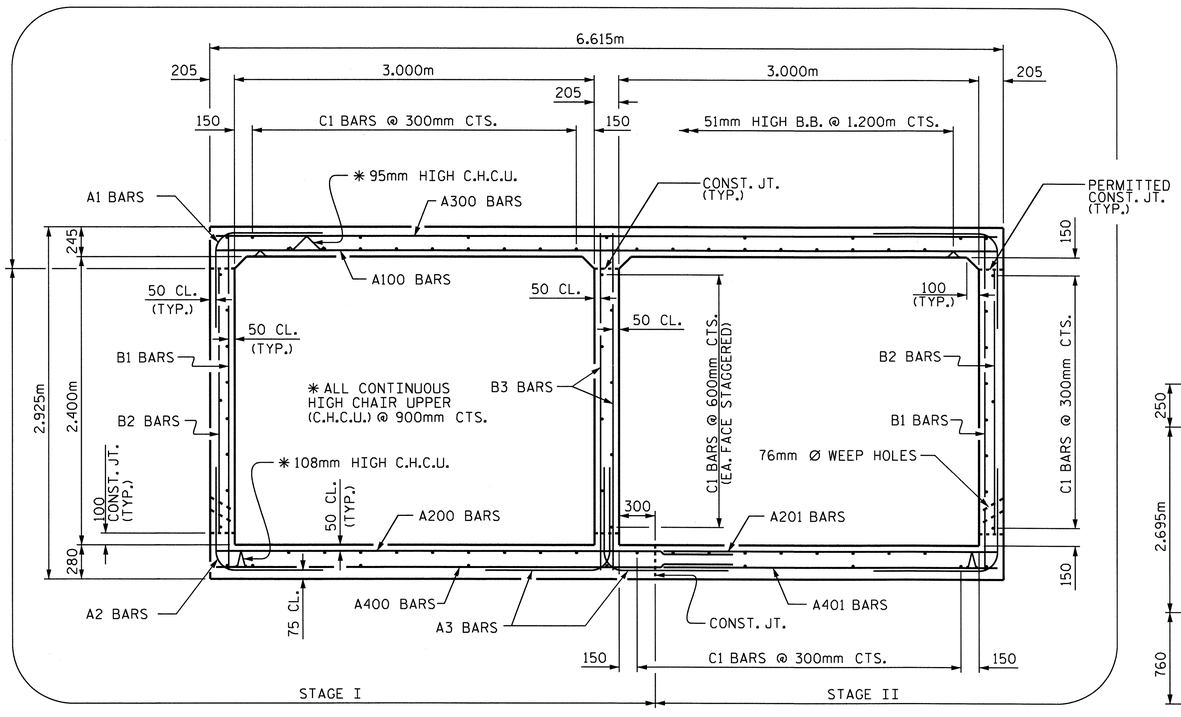

RIGHT ANGLE SECTION OF BARREL

(LOOKING DOWNSTREAM)

THERE ARE 32 "C" BARS IN SECTION OF BARREL (STAGE I)
THERE ARE 48 "C" BARS IN SECTION OF BARREL (STAGE II)

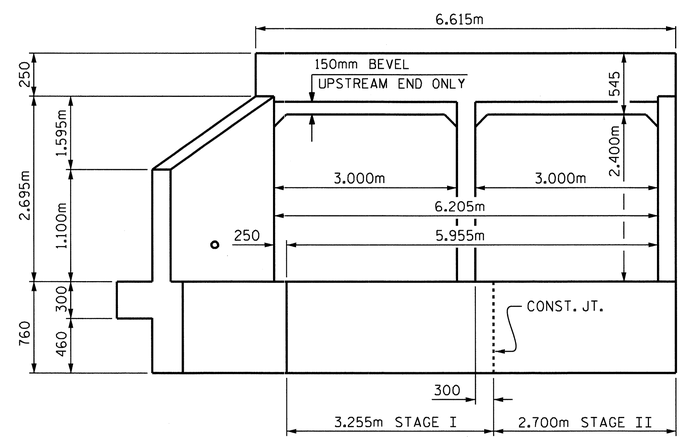

END ELEVATION NORMAL TO SKEW

(LOOKING DOWNSTREAM)

NORTH CAROLINA PROFESSIONAL SEAL 22005 ENGINEER KENNETH PASCHAL

2/28/11

PROJECT NO. R-2519A
YANCEY COUNTY
STATION: 11+28.900 -Y17-

SHEET 2 OF 6

STATE OF NORTH CAROLINA
DEPARTMENT OF TRANSPORTATION
RALEIGH

BARREL STANDARD
DOUBLE 3.000m X 2.400m
CONCRETE BOX CULVERT
90° SKEW

ASSEMBLED BY : B.N. GRADY	DATE : 6/7/10
CHECKED BY : J. MYA	DATE : 6/21/10
DRAWN BY : EEM 6/97	
CHECKED BY : ARB 7/97	

REVISIONS								SHEET NO.
NO.	BY:	DATE:	NO.	BY:	DATE:			C-17
1			3					TOTAL SHEETS
2			4					119

28-FEB-2011 13:57
R:\Structures\str2\Final Plans\R2519A_sd_CU_02.dgn
jdhawk

STD. No. CB290sm

STR. #2

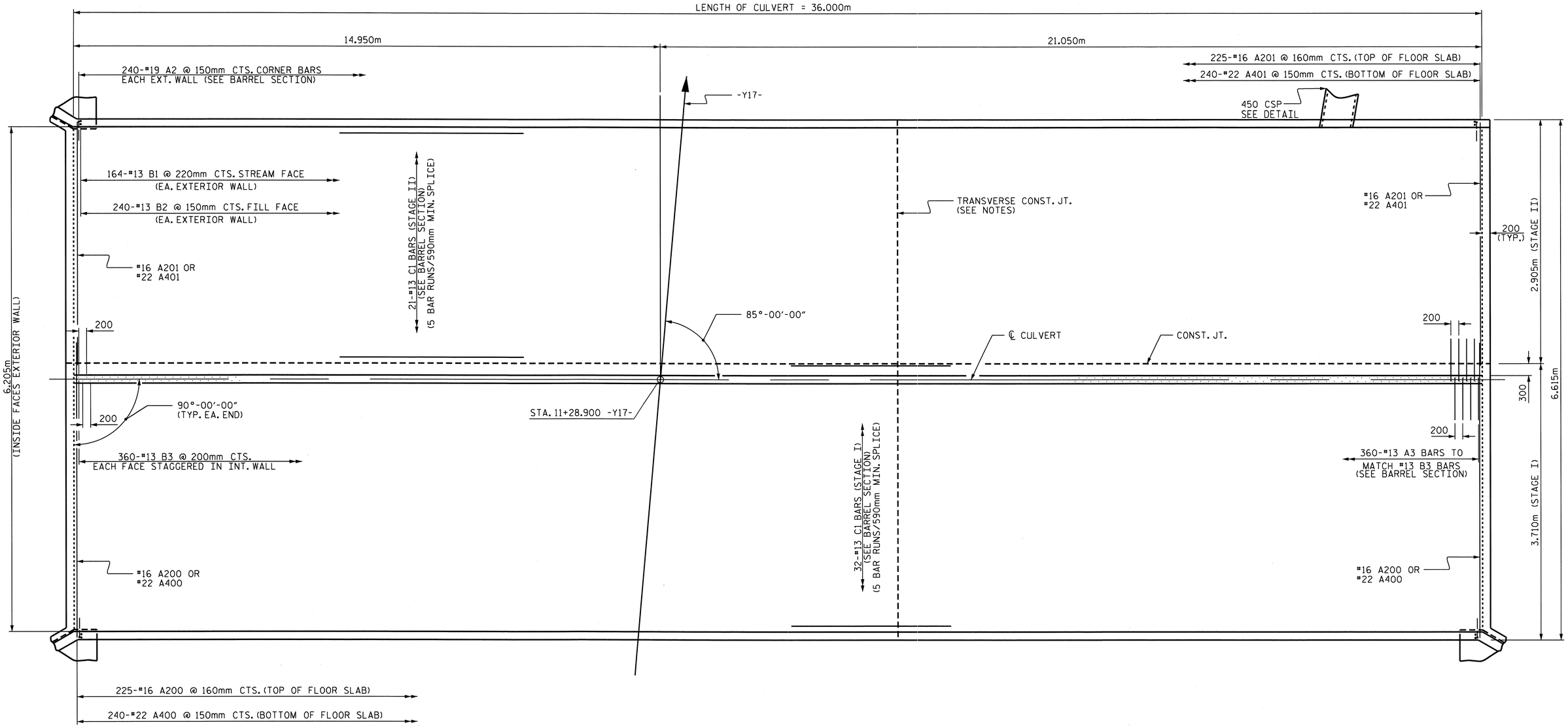

PLAN - FLOOR SLAB

(STAGES I AND II)

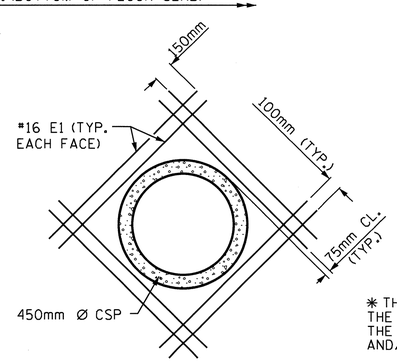

* THE 450mm Ø CSP THROUGH THE SIDEWALL OF THE CULVERT WILL BE LOCATED BY THE ENGINEER. THE REINFORCING STEEL WILL BE FIELD BENT AND/OR CUT AS NECESSARY TO CLEAR PIPE.

DETAIL OF REINFORCING AROUND 450mm Ø PIPE

PROJECT NO. R-2519A
YANCEY COUNTY
STATION: 11+28.900 -Y17-

SHEET 3 OF 6

STATE OF NORTH CAROLINA
DEPARTMENT OF TRANSPORTATION
RALEIGH

DOUBLE
3.000m x 2.400m
CONCRETE BOX CULVERT
90° SKEW

NORTH CAROLINA PROFESSIONAL SEAL 22005 ENGINEER A. KEITH PASCHAL
2/28/11

REVISIONS							SHEET NO.
NO.	BY:	DATE:	NO.	BY:	DATE:		C-18
1			3				TOTAL SHEETS
2			4				119

DRAWN BY : B.N. GRADY DATE : 6/7/10
CHECKED BY : J. MYA DATE : 6/21/10

28-FEB-2011 13:57
R:\Structures\str2\Final Plans\R2519A_sd_CU_02.dgn
jdhawk

STR. #2

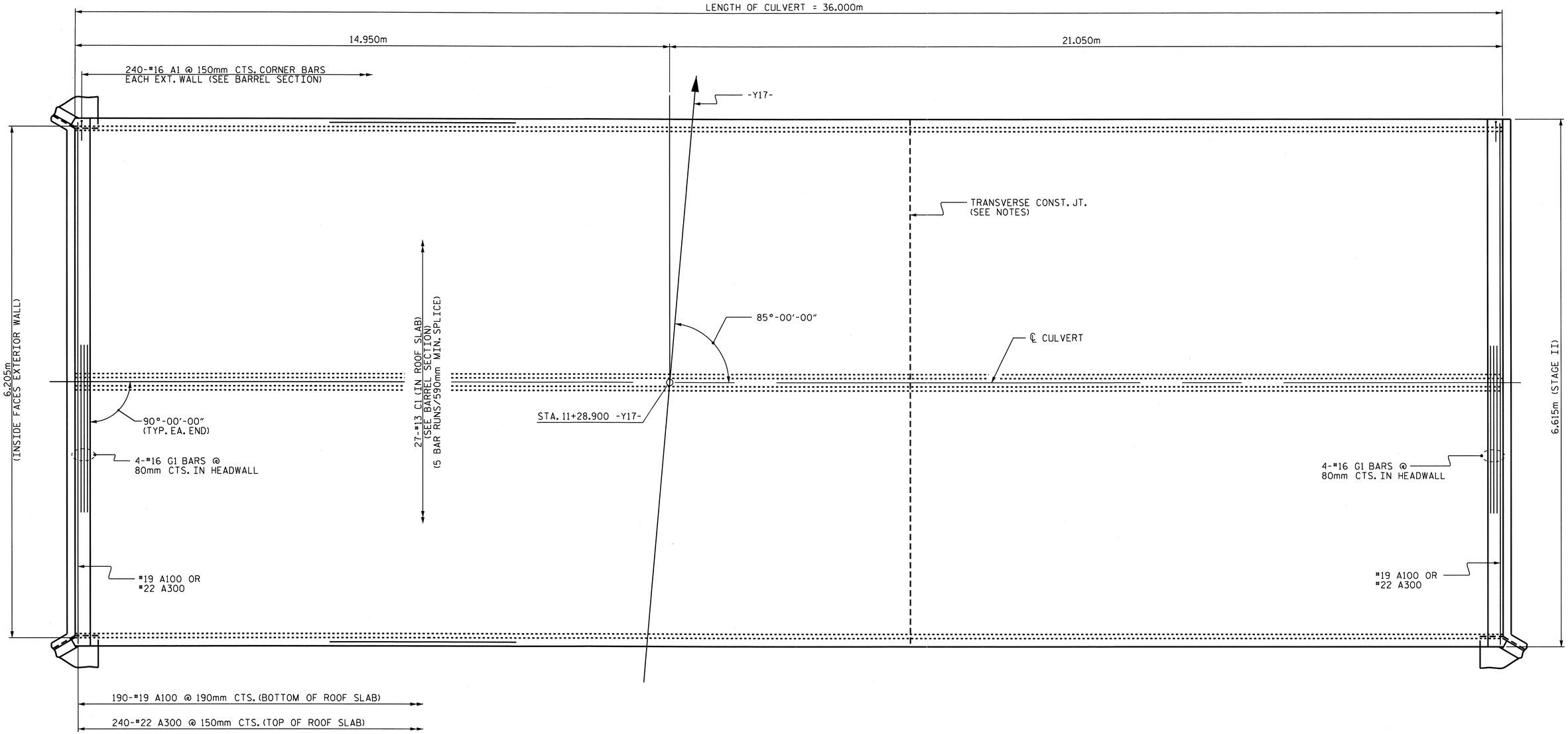

PROJECT NO. R-2519A

YANCEY COUNTY

STATION: 11+28.900 -Y17-

SHEET 4 OF 6

PLAN - ROOF SLAB

(STAGE II)

STATE OF NORTH CAROLINA
DEPARTMENT OF TRANSPORTATION
RALEIGH

DOUBLE
3.000m x 2.400m
CONCRETE BOX CULVERT
90° SKEW

NORTH CAROLINA PROFESSIONAL SEAL 22005 ENGINEER KEITH PASCHAL

2/28/11

REVISIONS								SHEET NO.
NO.	BY:	DATE:		NO.	BY:	DATE:		C-19
1				3				TOTAL SHEETS
2				4				119

DRAWN BY : B.N. GRADY DATE : 6/7/10
CHECKED BY : J. MYA DATE : 6/21/10

28-FEB-2011 13:56
R:\Structures\str2\Final Plans\R2519A_sd_CU_02.dgn
jdhawk

STR. #2

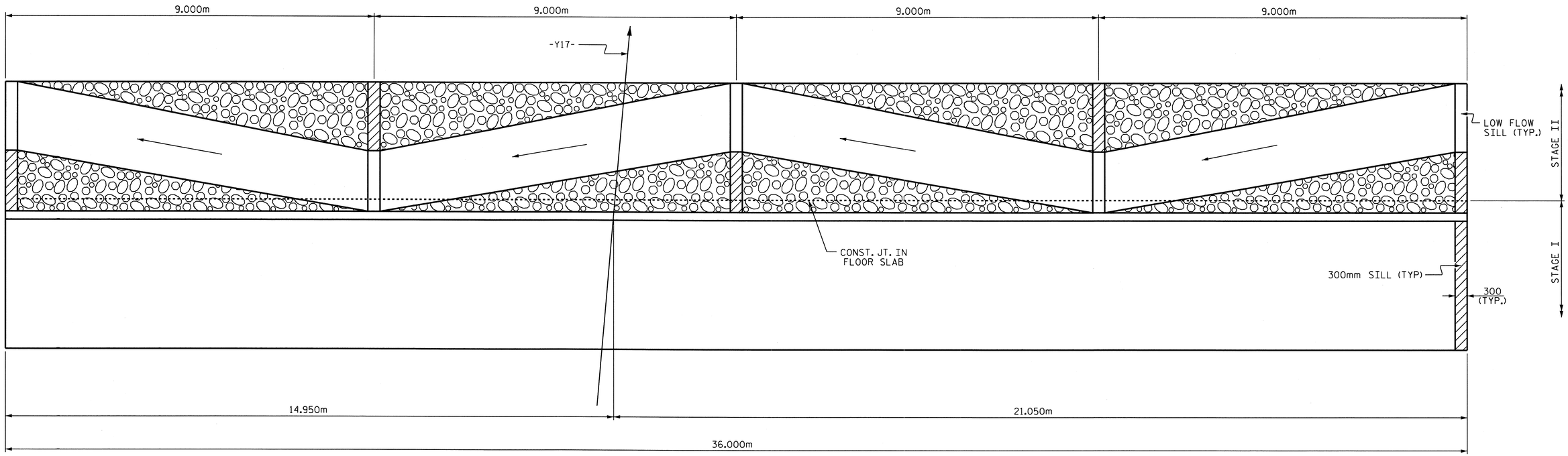

PLAN

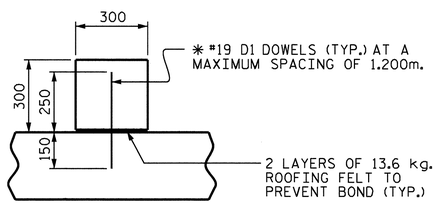

SECTION THROUGH 300mm SILL

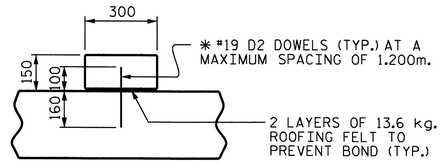

SECTION THROUGH LOW SILL

✱ DOWELS MAY BE PUSHED INTO GREEN CONCRETE AFTER SLAB HAS BEEN FLOAT FINISHED.

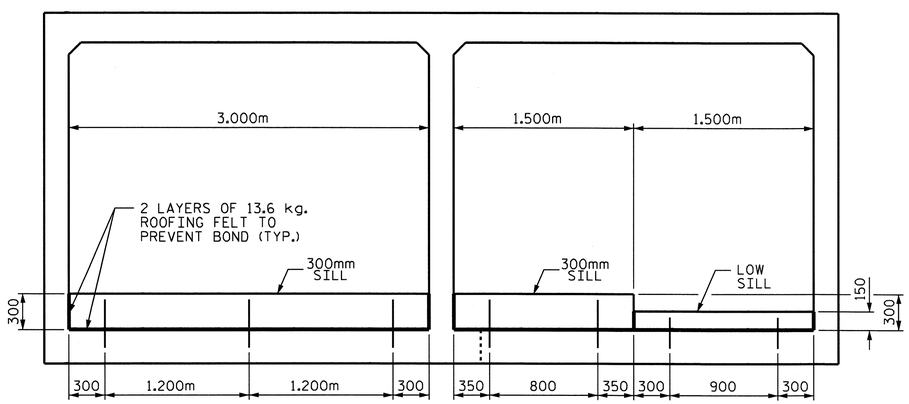

ELEVATION VIEW - INLET
(LOOKING DOWNSTREAM)

CULVERT SILL DETAILS

SILL QUANTIITES
(INCLUDED IN TOTAL FOR STRUCTURE)

STAGE I

BAR	NO.	SIZE	TYPE	LENGTH	WEIGHT
D1	3	#19	STR.	400	3
REINFORCING STEEL					3 kg.
CLASS A CONCRETE					0.3 m3

STAGE II

BAR	NO.	SIZE	TYPE	LENGTH	WEIGHT
D1	10	#19	STR.	400	9
D2	10	#19	STR.	260	6
REINFORCING STEEL					15 kg.
CLASS A CONCRETE					1.0 m3
TOTAL REINFORCING STEEL					18 kg.
TOTAL CLASS A CONCRETE					1.3 m3
CLASS B RIP RAP					28.0 METRIC TONS

NOTES:

BED MATERIAL PLACED BETWEEN SILLS IN THE CULVERT SHALL PROVIDE A CONTINUOUS LOW FLOW CHANNEL BETWEEN THE LOWER SILLS. THE MATERIAL SHALL BE NATURAL STONE WITH A GRADATION SIZE SIMILAR TO THAT OF CLASS B RIP RAP. STONES LARGER THAN 0.15m. SHALL NOT BE PLACED WITHIN THE LOW FLOW CHANNEL. BED MATERIAL IS SUBJECT TO APPROVAL BY THE ENGINEER.

SILLS ARE TO BE 0.3m WIDE AND CAST SEPARATELY AND ATTACHED BY DOWELS.

THE 0.3m HIGH AND 0.15m HIGH SILLS ARE TO BE SEPARATE UNITS.

TOP OF LOW FLOW SILL SHOULD MATCH STREAM BED ELEVATION IN LOW FLOW CHANNEL OF STREAM.

PROJECT NO. R-2519A
YANCEY COUNTY
STATION: 11+28.900 -Y17-

SHEET 5 OF 6

STATE OF NORTH CAROLINA
DEPARTMENT OF TRANSPORTATION
RALEIGH

CONCRETE SILL DETAILS

NORTH CAROLINA PROFESSIONAL SEAL 22005 ENGINEER KEITH PASCHAL
3/1/11

REVISIONS						SHEET NO.
NO.	BY:	DATE:	NO.	BY:	DATE:	C-20
1			3			TOTAL SHEETS
2			4			119

DRAWN BY : B.N. GRADY DATE : 6/7/10
CHECKED BY : J. MYA DATE : 6/21/10

01-MAR-2011 09:29
R:\Structures\str2\Final Plans\R2519A_sd_CU_02.dgn
jdhawk

STR. #2

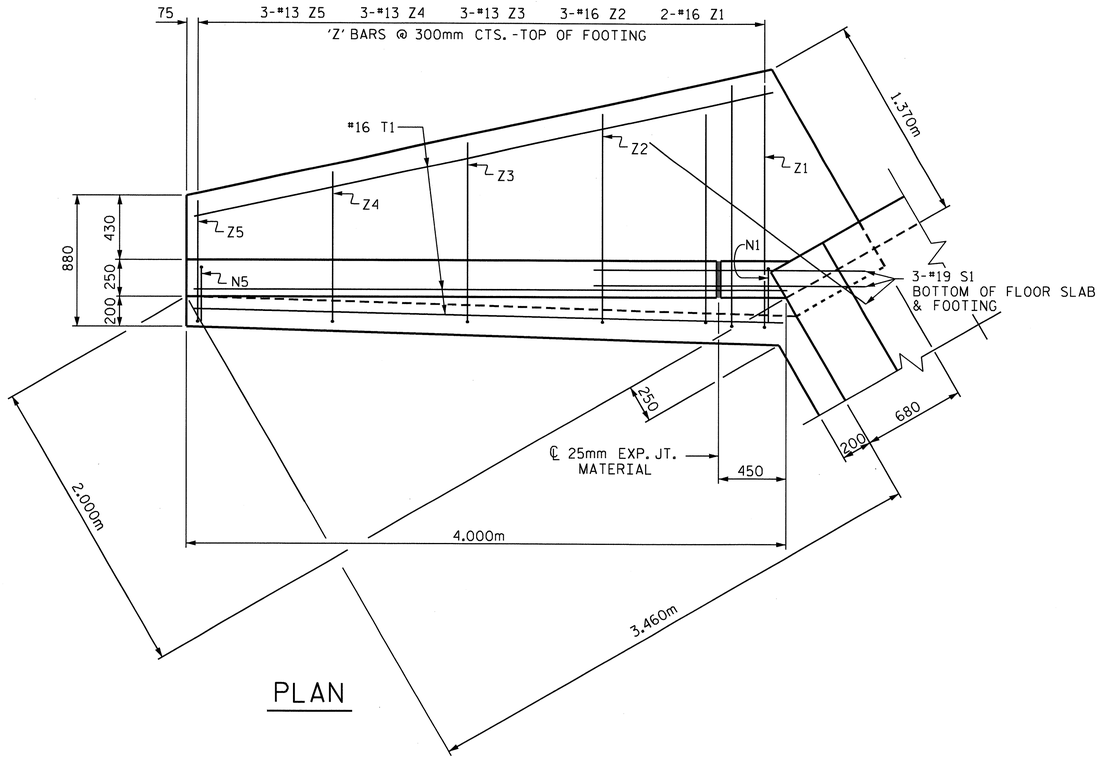

PLAN

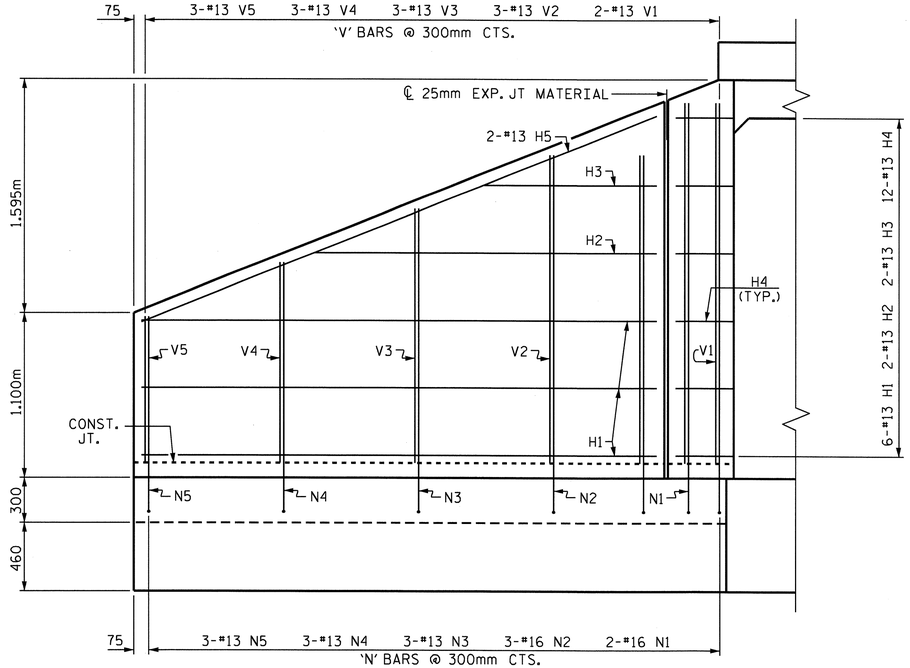

ELEVATION

BAR TYPES

ALL BAR DIMENSIONS ARE OUT TO OUT.

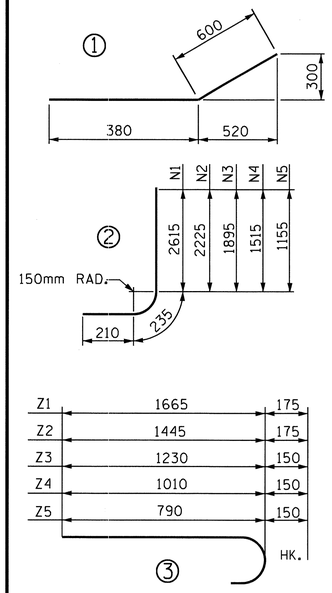

BILL OF MATERIAL

STAGE I

BAR	NO.	SIZE	TYPE	LENGTH	WEIGHT
H1	12	13	STR	3440	41
H2	4	13	STR	2380	10
H3	4	13	STR	1280	5
H4	24	13	1	980	23
H5	4	13	STR	3700	15
N1	4	16	2	3060	19
N2	6	16	2	2700	25
N3	6	13	2	2340	14
N4	6	13	2	1960	12
N5	6	13	2	1600	10
S1	6	19	STR	1800	24
T1	6	16	STR	4000	37
V1	4	13	STR	2440	10
V2	6	13	STR	2080	12
V3	6	13	STR	1720	10
V4	6	13	STR	1340	8
V5	6	13	STR	980	6
Z1	4	16	3	1840	11
Z2	6	16	3	1620	15
Z3	6	13	3	1380	8
Z4	6	13	3	1160	7
Z5	6	13	3	940	6

REINFORCING STEEL
FOR 2 WINGS 328 kg

CLASS A CONCRETE
2 WINGS 8.0 m^3
2 END CURTAIN WALLS 1.1 m^3
TOTAL 9.1 m^3

STAGE II

BAR	NO.	SIZE	TYPE	LENGTH	WEIGHT
H1	6	13	STR	3440	21
H2	2	13	STR	2380	5
H3	2	13	STR	1280	3
H4	12	13	1	980	12
H5	2	13	STR	3700	7
N1	2	16	2	3060	9
N2	3	16	2	2700	13
N3	3	13	2	2340	7
N4	3	13	2	1960	6
N5	3	13	2	1600	5
S1	3	19	STR	1800	12
T1	3	16	STR	4000	19
V1	2	13	STR	2440	5
V2	3	13	STR	2080	6
V3	3	13	STR	1720	5
V4	3	13	STR	1340	4
V5	3	13	STR	980	3
Z1	2	16	3	1840	6
Z2	3	16	3	1620	8
Z3	3	13	3	1380	4
Z4	3	13	3	1160	3
Z5	3	13	3	940	3

REINFORCING STEEL
FOR 1 WING 166 kg

CLASS A CONCRETE
1 WING 4.0 m^3
2 HEADWALLS 1.5 m^3
2 END CURTAIN WALLS 0.7 m^3
TOTAL 6.2 m^3

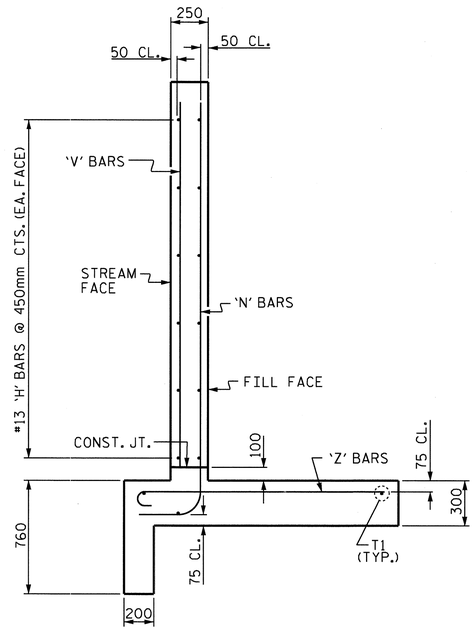

TYPICAL WING SECTION

NORTH CAROLINA PROFESSIONAL SEAL 22005 ENGINEER A. KEITH PASCHAL 2/28/11

PROJECT NO. R-2519A
YANCEY COUNTY
STATION: 11+28.900 -Y17-

SHEET 6 OF 6

STATE OF NORTH CAROLINA
DEPARTMENT OF TRANSPORTATION
RALEIGH

STANDARD WINGS FOR CONCRETE BOX CULVERT

H = 2.400m SLOPE = 2:1
90° SKEW

REVISIONS						SHEET NO.
NO.	BY:	DATE:	NO.	BY:	DATE:	C-21
1			3			TOTAL SHEETS
2			4			119

ASSEMBLED BY : B.N. GRADY	DATE : 6/7/10	
CHECKED BY : J. MYA	DATE : 6/21/10	
DRAWN BY : FPP 06/97		
CHECKED BY : VAP 08/97		

28-FEB-2011 13:56
R:\Structures\str2\Final Plans\R2519A_sd_CU_02.dgn
jdhawk

STD. NO. CW9024

STR. #2

BM #6 SPIKE SET IN BASE OF 15"DOUBLE LOCUST TREE 8.000m RT. STA. 13+11.000 -Y17- EL. 816.802.

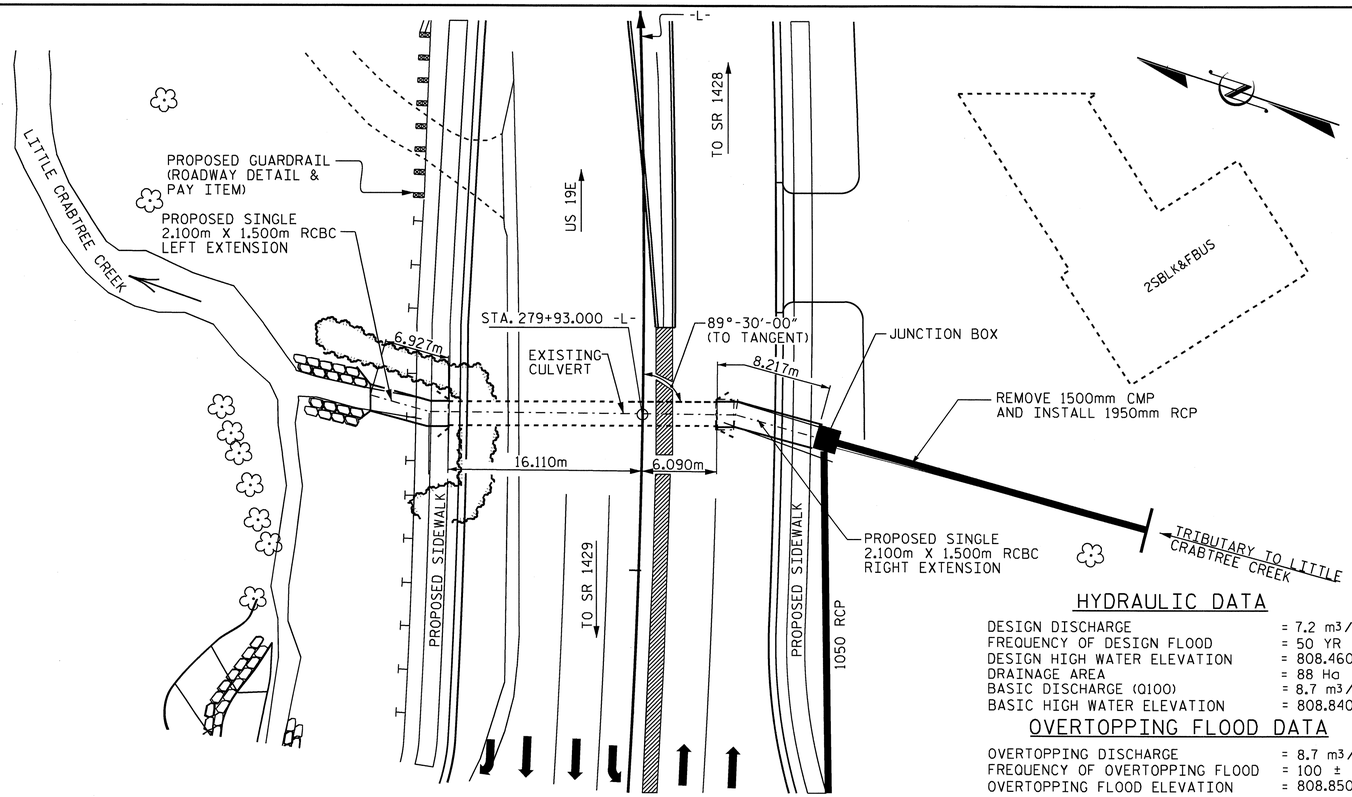

HYDRAULIC DATA

DESIGN DISCHARGE	= 7.2 m3/S
FREQUENCY OF DESIGN FLOOD	= 50 YR
DESIGN HIGH WATER ELEVATION	= 808.460
DRAINAGE AREA	= 88 Ha
BASIC DISCHARGE (Q100)	= 8.7 m3/S
BASIC HIGH WATER ELEVATION	= 808.840

OVERTOPPING FLOOD DATA

OVERTOPPING DISCHARGE	= 8.7 m3/S
FREQUENCY OF OVERTOPPING FLOOD	= 100 ±
OVERTOPPING FLOOD ELEVATION	= 808.850

GRADE DATA

ROADWAY SLOPE	= 1:1 & 2:1
GRADE PT. EL. @ STA. 279+93.000 -L-	= 809.210
BED EL. @ OUTLET END (EXIST. CULV.)	= 804.220

FOR UTILITY INFORMATION, SEE UTILITY PLANS AND SPECIAL PROVISIONS.

LOCATION SKETCH

NOTES

ASSUMED LIVE LOAD ----------MS18 OR ALTERNATE LOADING.

DESIGN FILL---------- 3.980m (OUTLET)

FOR OTHER DESIGN DATA AND NOTES SEE STANDARD NOTE SHEET.

76mm Ø WEEP HOLES INDICATED TO BE IN ACCORDANCE WITH THE SPECIFICATIONS.

CONCRETE IN CULVERTS TO BE POURED IN THE FOLLOWING ORDER:

1. WING FOOTINGS AND FLOOR SLAB INCLUDING 100mm OF ALL VERTICAL WALLS.
2. THE REMAINING PORTIONS OF THE WALLS AND WINGS FULL HEIGHT FOLLOWED BY ROOF SLAB AND HEADWALLS.

CONCRETE IN JUNCTION BOX TO BE POURED IN THE FOLLOWING ORDER:

1. BOTTOM SLAB & WALLS TO TOP OF CULVERT INCLUDING BEAM AND COLUMNS.
2. THE REMAINING HEIGHT OF THE WALLS TO BOTTOM OF ROOF SLAB.
3. ROOF SLAB.

THE RESIDENT ENGINEER SHALL CHECK THE LENGTH OF CULVERT BEFORE STAKING IT OUT TO MAKE CERTAIN THAT IT WILL PROPERLY TAKE CARE OF THE FILL.

DIMENSIONS FOR WING LAYOUT AS WELL AS ADDITIONAL REINFORCING STEEL EMBEDDED IN BARREL ARE SHOWN ON WING SHEET.

AT THE CONTRACTOR'S OPTION, HE MAY SPLICE THE VERTICAL REINFORCING STEEL IN THE INTERIOR FACE OF EXTERIOR WALL ABOVE LOWER WALL CONSTRUCTION JOINT. THE SPLICE LENGTH SHALL BE AS PROVIDED IN THE SPLICE LENGTH CHART SHOWN ON THE PLANS. EXTRA WEIGHT OF STEEL DUE TO THE SPLICES SHALL BE PAID FOR BY THE CONTRACTOR.

IF APPROVED BY THE ENGINEER, THE CONTRACTOR MAY USE THE EXISTING WINGS AS TEMPORARY SHORING FOR THE CONSTRUCTION OF THE CULVERT EXTENSIONS. IN THIS CASE, THE BOTTOM SLAB OF THE EXTENSION SHALL BE POURED AT LEAST 72 HOURS PRIOR TO CUTTING THE WINGS. THE WINGS MAY BE CUT EARLIER PROVIDED THE SLAB CONCRETE STRENGTH HAS REACHED A MINIMUM COMPRESSIVE STRENGTH OF 10.3 MPa.

DOWELS SHALL BE USED TO CONNECT THE CULVERT EXTENSION TO THE EXISTING CULVERT AS SHOWN. FOR NOTE REGARDING SETTING OF DOWELS, SEE SHEET SNSM.

ALL DIMENSIONS ARE IN MILLIMETERS UNLESS OTHERWISE NOTED.

ALL ELEVATIONS ARE IN METERS.

A 900mm STRIP OF FILTER FABRIC SHALL BE ATTACHED TO THE FILL FACE OF THE WING COVERING THE ENTIRE LENGTH OF THE EXPANSION JOINT.

FOR SUBMITTAL OF WORKING DRAWINGS, SEE SPECIAL PROVISIONS.

FOR FALSEWORK AND FORMWORK, SEE SPECIAL PROVISIONS.

FOR CRANE SAFETY, SEE SPECIAL PROVISIONS.

FOR GROUT FOR STRUCTURES, SEE SPECIAL PROVISIONS.

NO PRECAST REINFORCED BOX CULVERT OPTION WILL BE ALLOWED

FOR CULVERT DIVERSION DETAILS AND PAY ITEM, SEE EROSION CONTROL PLANS.

FOUNDATION CONDITIONING MATERIAL WILL BE REQUIRED UNDER THE JUNCTION BOX AS WELL AS THE CULVERTS.

TOTAL STRUCTURE QUANTITIES

CLASS A CONCRETE		
LEFT EXTENSION	18.0	m3
RIGHT EXTENSION	16.4	m3
JUNCTION BOX	16.2	m3
TOTAL	50.6	m3
REINFORCING STEEL		
LEFT EXTENSION	1014	Kg
RIGHT EXTENSION	961	Kg
JUNCTION BOX	2691	Kg
TOTAL	4665	Kg
CULVERT EXCAVATION	LUMP SUM	
FOUNDATION COND. MAT'L.	33.0	M. TONS

METRIC

PROJECT NO. R-2519A

YANCEY COUNTY

STATION: 279+93.000 -L-

SHEET 1 OF 8

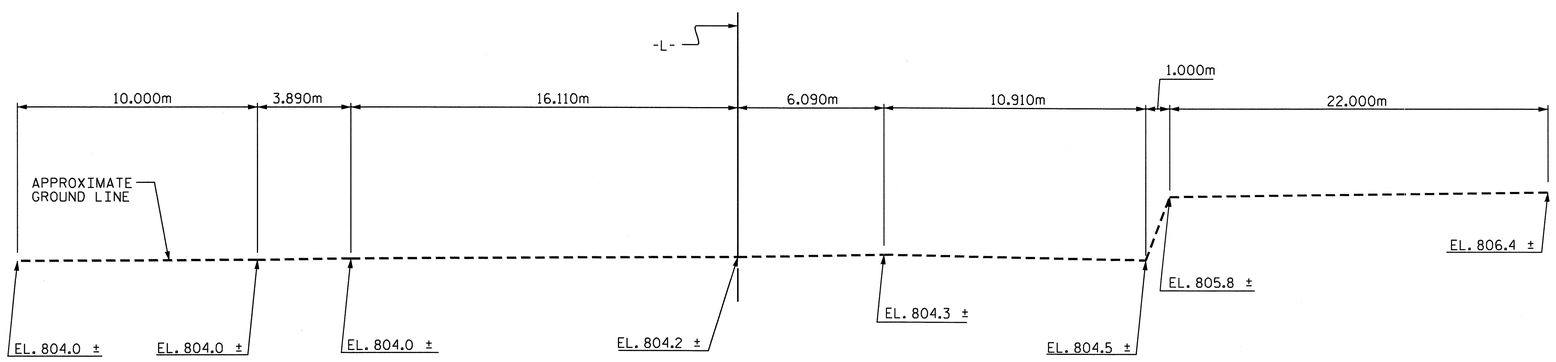

PROFILE ALONG ℄ CULVERT

ASSEMBLED BY :	J. G. KHARVA	DATE :	1/28/06
CHECKED BY :	J. MYA	DATE :	7/20/10
DRAWN BY :	EEM		6/97
CHECKED BY :	ARB		7/97

NORTH CAROLINA PROFESSIONAL SEAL 12929 ENGINEER NORMAN KENNETH BLACK, JR.
Norman K. Black Jr. 3/1/11

NORTH CAROLINA PROFESSIONAL SEAL 22005 ENGINEER K. KEITH PASCHAL
K. Keith Paschal 3/1/11

STATE OF NORTH CAROLINA
DEPARTMENT OF TRANSPORTATION
RALEIGH

SINGLE
2.130m X 1.500m
CONCRETE BOX CULVERT
105° SKEW

REVISIONS						SHEET NO.
NO.	BY:	DATE:	NO.	BY:	DATE:	C-22
1			3			TOTAL SHEETS
2			4			119

01-MAR-2011 08:00
R:\Structures\str3\Final Plans\R2519A_sd_CU_03.dgn
jdhawk

STD. No. CB1105sm

STR. #3

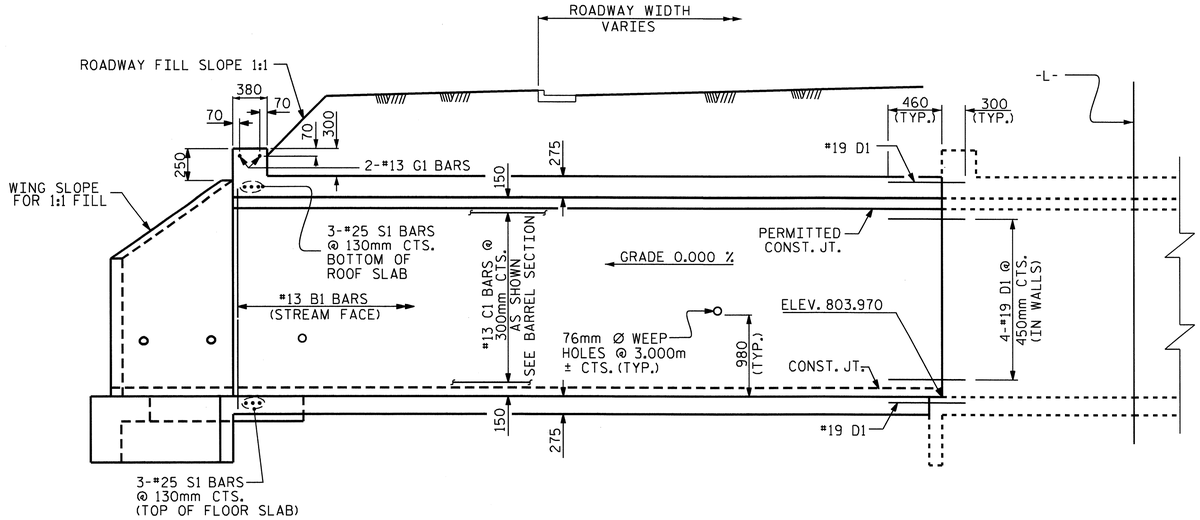

SECTION ALONG ℄ CULVERT

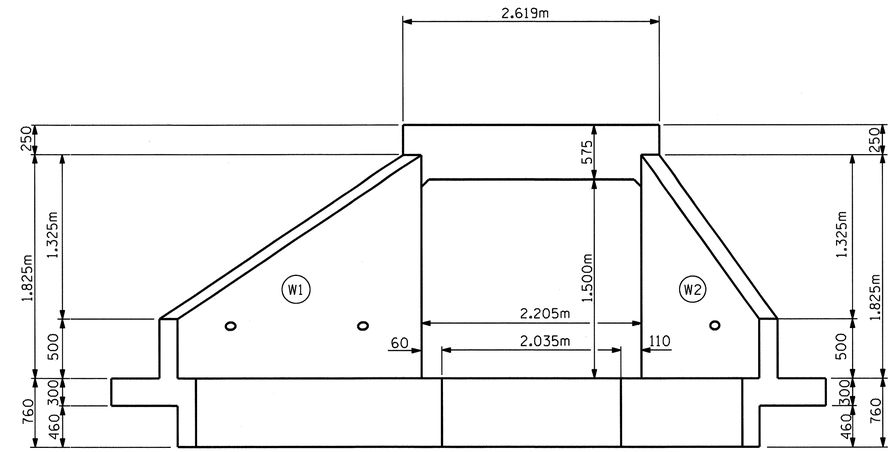

END ELEVATION - NORMAL TO SKEW

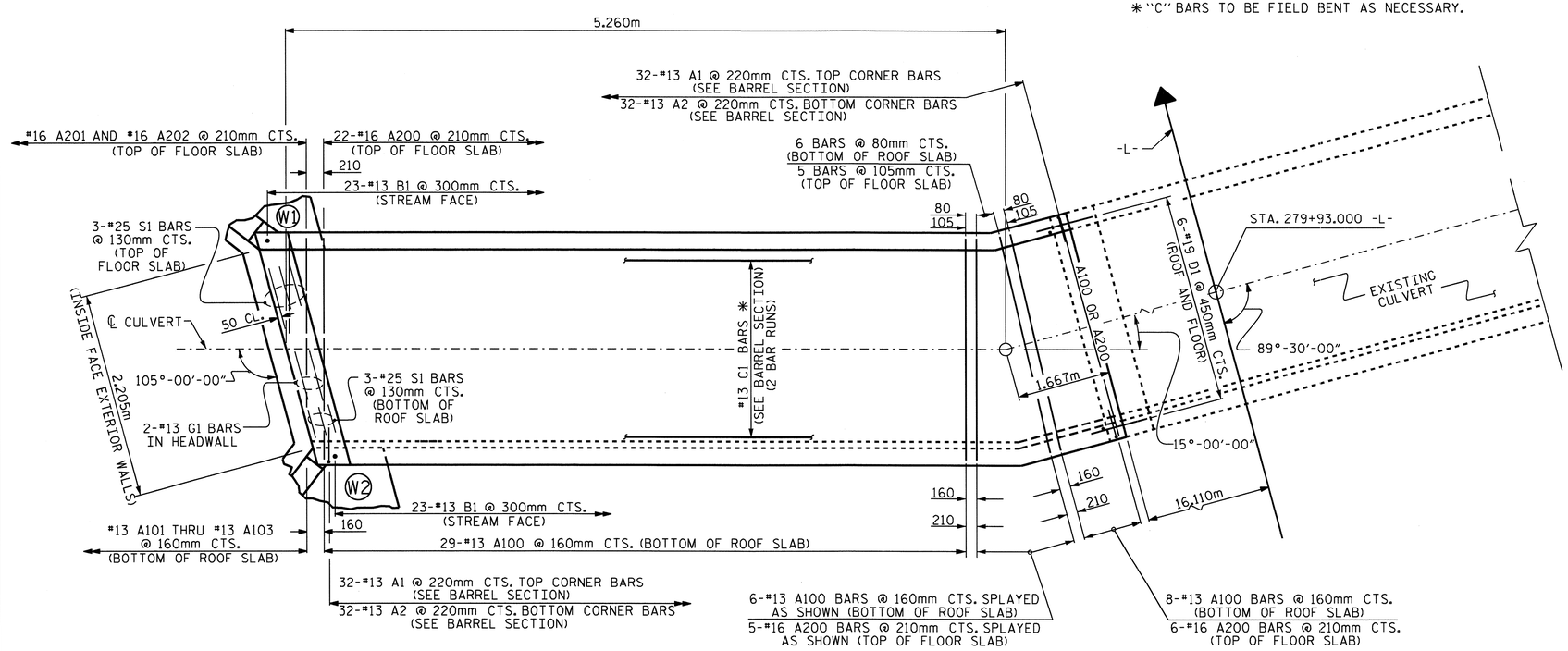

PLAN - ROOF & FLOOR SLAB

* "C" BARS TO BE FIELD BENT AS NECESSARY.

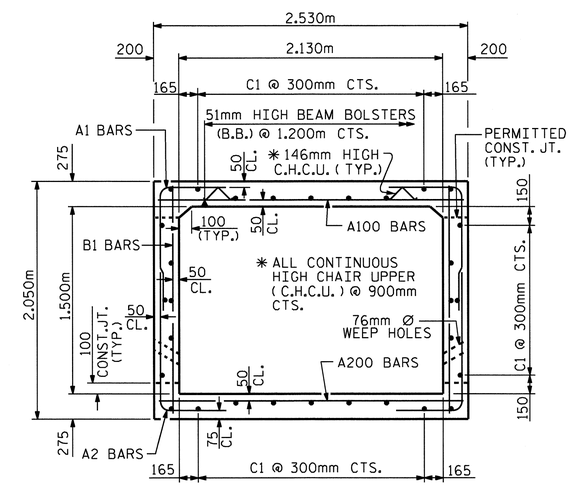

RIGHT ANGLE SECTION OF BARREL

THERE ARE 30 "C" BARS IN SECTION OF BARREL

PROJECT NO. R-2519A

YANCEY COUNTY

STATION: 279+93.000 -L-

SHEET 2 OF 8

STATE OF NORTH CAROLINA
DEPARTMENT OF TRANSPORTATION
RALEIGH

SINGLE
2.130m X 1.500m
CONCRETE BOX CULVERT
105° SKEW
(LEFT EXTENSION)

NORTH CAROLINA PROFESSIONAL SEAL 22005 ENGINEER A. KEITH PASCHAL
2/28/11

REVISIONS						SHEET NO.
NO.	BY:	DATE:	NO.	BY:	DATE:	C-23
1			3			TOTAL SHEETS
2			4			119

ASSEMBLED BY :	J. G. KHARVA	DATE :	1/18/06
CHECKED BY :	J. MIYA	DATE :	7/22/10
DRAWN BY :	EEM	6/97	
CHECKED BY :	ARB	7/97	

28-FEB-2011 13:41
R:\Structures\str3\Final Plans\R2519A_sd_CU_03.dgn
jdhawk

STD. No. CBI105sm

STR. #3

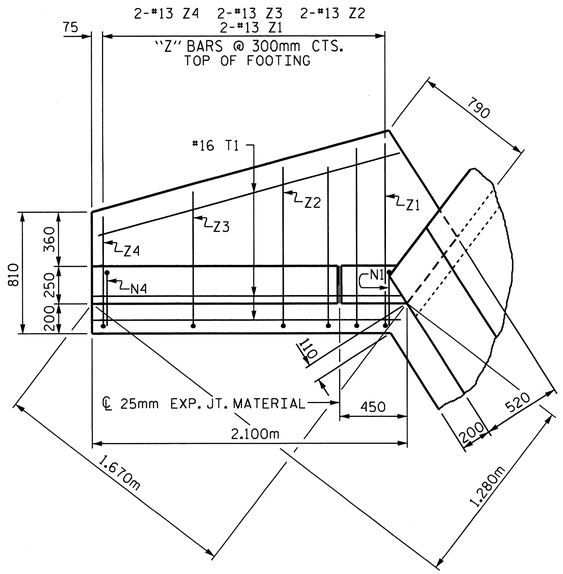

PLAN W2

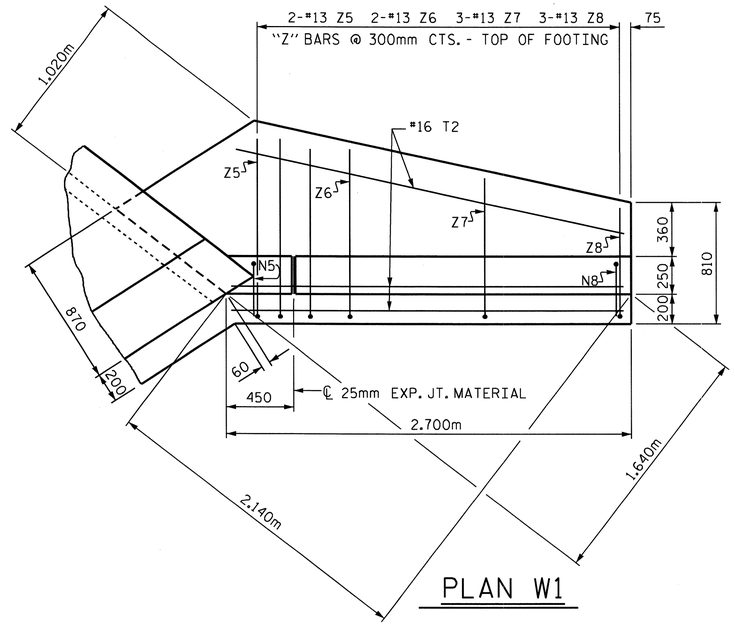

PLAN W1

BAR TYPES

ALL BAR DIMENSIONS ARE OUT TO OUT.

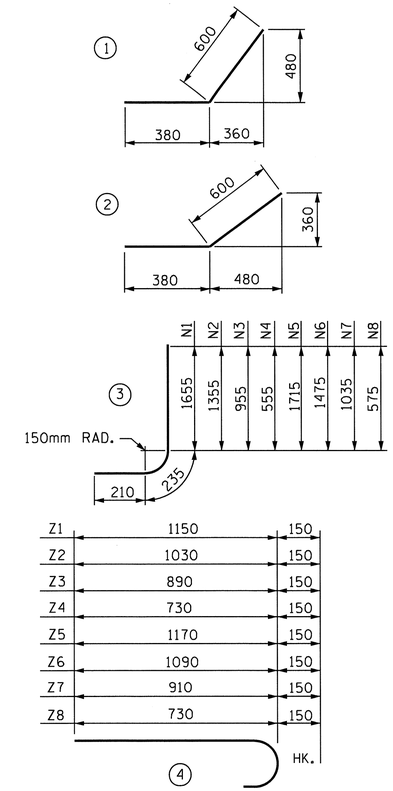

BILL OF MATERIAL

BAR	NO.	SIZE	TYPE	LENGTH	WEIGHT
H1	4	13	STR	1540	6
H2	2	13	STR	1160	2
H3	2	13	STR	700	1
H4	2	13	STR	240	1
H5	12	13	1	980	12
H6	2	13	STR	1860	4
H7	4	13	STR	2140	9
H8	2	13	STR	1620	3
H9	2	13	STR	1040	2
H10	2	13	STR	460	1
H11	12	13	2	980	12
H12	2	13	STR	2400	5
N1	2	13	3	2100	4
N2	2	13	3	1800	4
N3	2	13	3	1400	3
N4	2	13	3	1000	2
N5	2	13	3	2160	4
N6	2	13	3	1920	4
N7	3	13	3	1480	5
N8	3	13	3	1020	3
T1	3	16	STR	2100	10
T2	3	16	STR	2700	13
V1	2	13	STR	1480	3
V2	2	13	STR	1180	2
V3	2	13	STR	780	2
V4	2	13	STR	380	1
V5	2	13	STR	1540	3
V6	2	13	STR	1300	3
V7	3	13	STR	840	3
V8	3	13	STR	380	1
Z1	2	13	4	1300	3
Z2	2	13	4	1180	2
Z3	2	13	4	1040	2
Z4	2	13	4	880	2
Z5	2	13	4	1320	3
Z6	2	13	4	1240	2
Z7	3	13	4	1060	3
Z8	3	13	4	880	3

REINFORCING STEEL FOR 2 WING WALLS 148 kg

CLASS A CONCRETE
2 WINGS 3.5 m^3
1 HEADWALL 0.3 m^3
1 END CURTAIN WALL 0.3 m^3
TOTAL 4.1 m^3

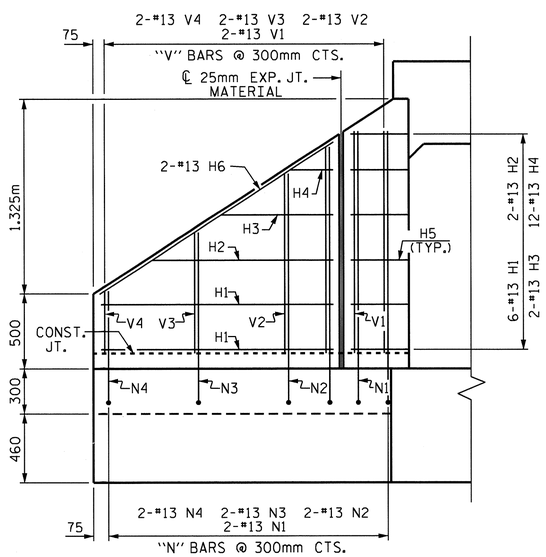

ELEVATION W2

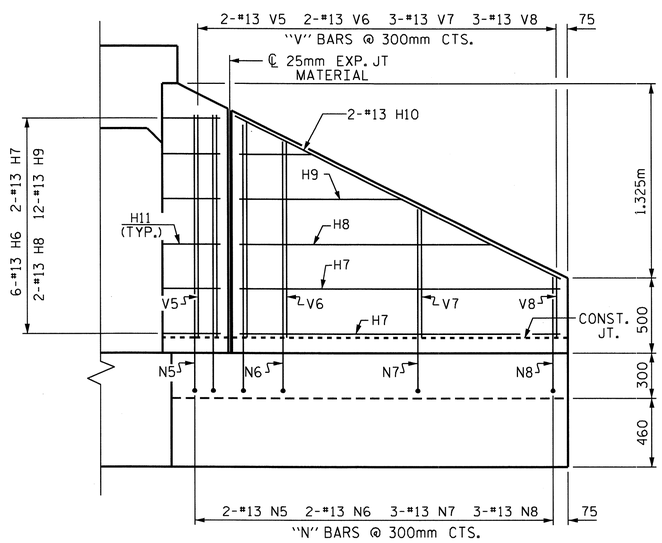

ELEVATION W1

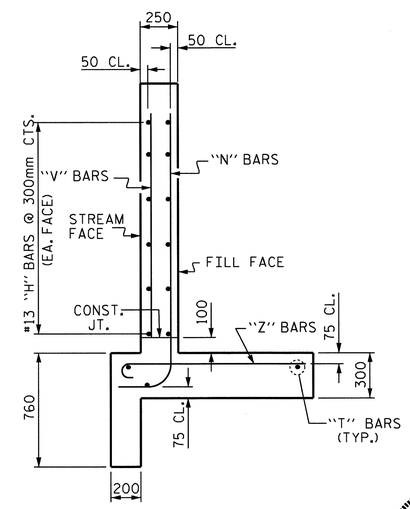

TYPICAL WING SECTION

PROJECT NO. R-2519A
YANCEY COUNTY
STATION: 279+93.000 -L-

SHEET 3 OF 8

STATE OF NORTH CAROLINA
DEPARTMENT OF TRANSPORTATION
RALEIGH

OUTLET WINGS FOR CONCRETE BOX CULVERT

H=1.500m SLOPE=2:1

105° SKEW (LEFT EXTENSION)

NORTH CAROLINA PROFESSIONAL SEAL 22005 ENGINEER H. KEITH PASCHAL

2/28/11

ASSEMBLED BY : J. G. KHARVA	DATE : 01/18/06
CHECKED BY : J. MYA	DATE : 07/22/10
DRAWN BY : JLR 6/97	
CHECKED BY : VAP 12/97	

REVISIONS

NO.	BY:	DATE:	NO.	BY:	DATE:
1			3		
2			4		

SHEET NO. C-24
TOTAL SHEETS 119

STD. NO. CW7515

STR. #3

25-FEB-2011 h59
J:\Structures\str3\Final Plans\R2519A_sd_CU_03.dgn
jmya

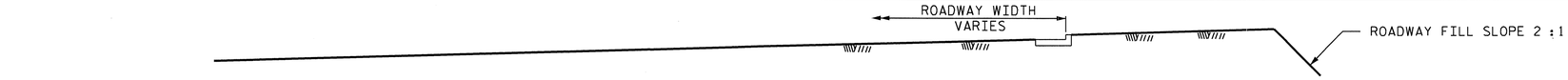

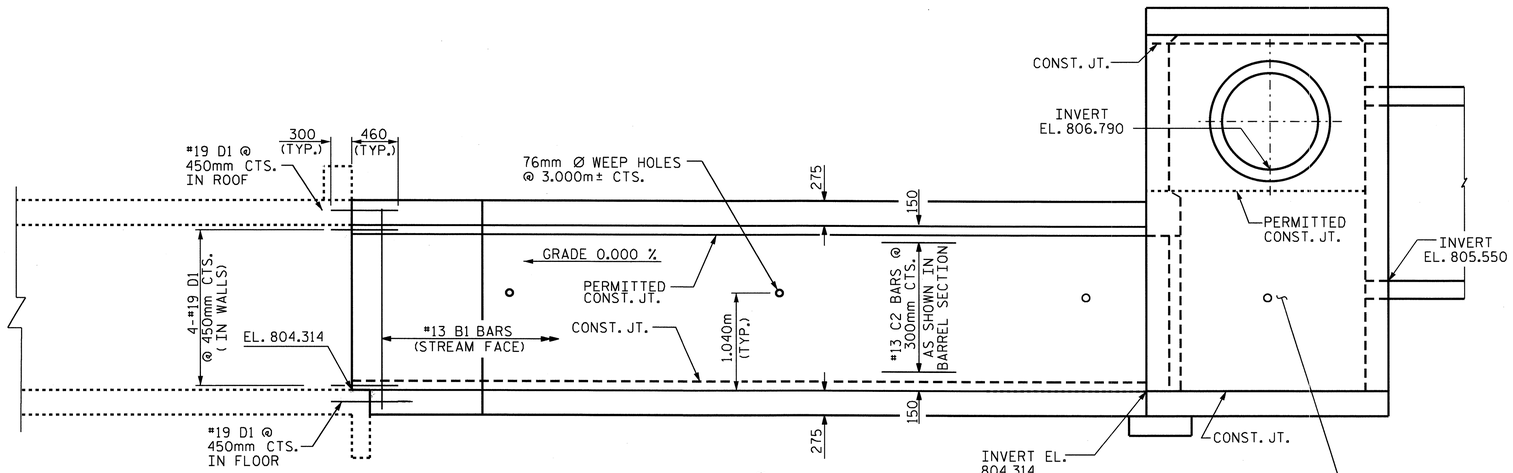

SECTION ALONG ℄ CULVERT

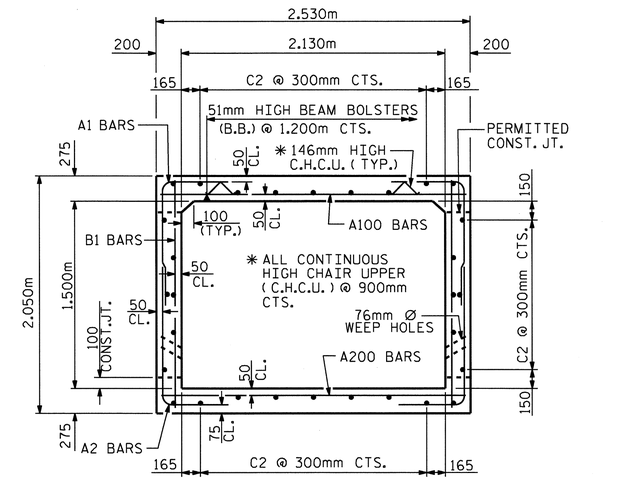

RIGHT ANGLE SECTION OF BARREL

THERE ARE 30 "C" BARS IN SECTION OF BARREL

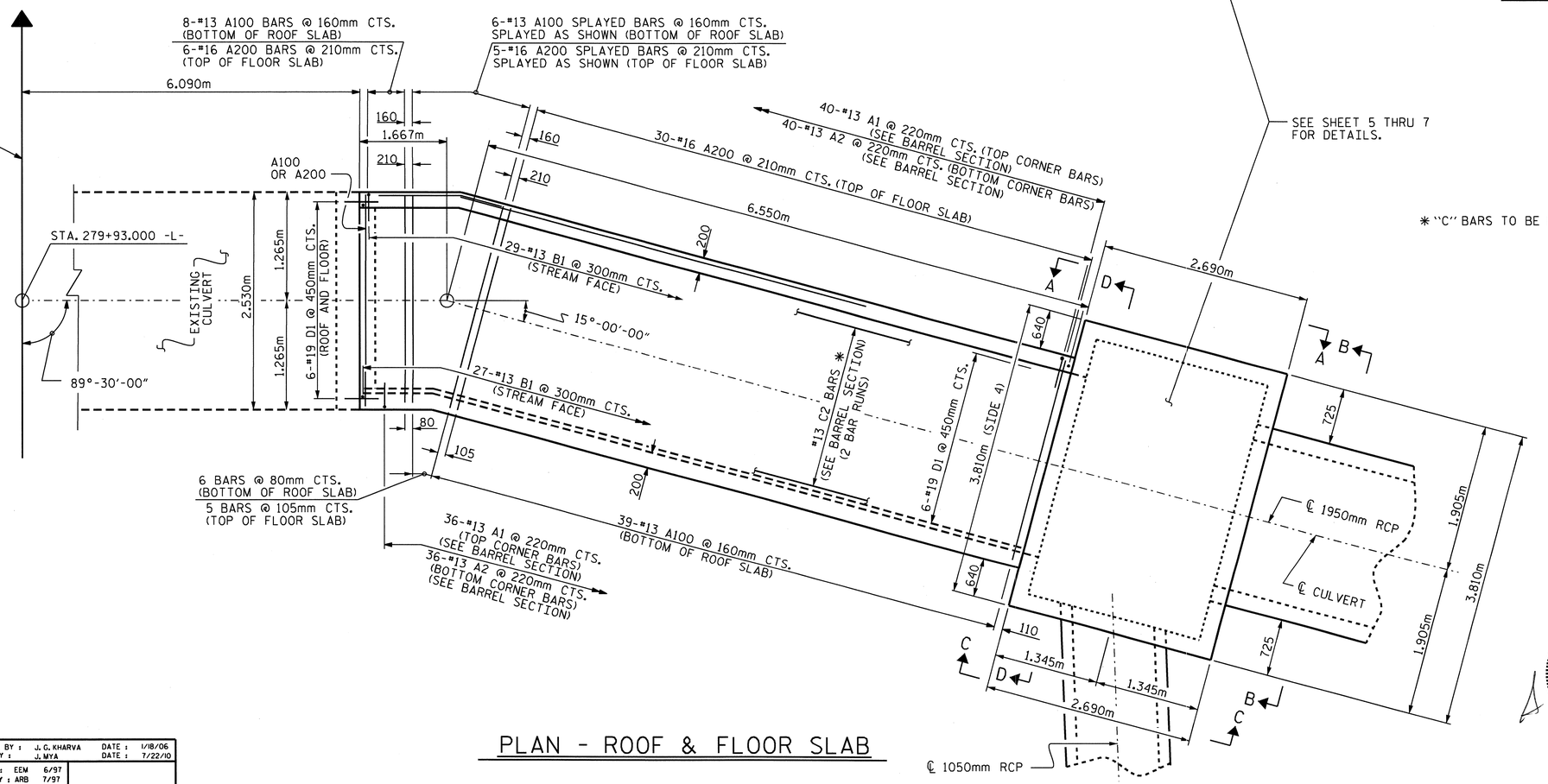

PLAN - ROOF & FLOOR SLAB

PROJECT NO. R-2519A

YANCEY COUNTY

STATION: 279+93.000 -L-

SHEET 4 OF 8

STATE OF NORTH CAROLINA
DEPARTMENT OF TRANSPORTATION
RALEIGH

SINGLE
2.130m X 1.500m
CONCRETE BOX CULVERT
(RIGHT EXTENSION)

NORTH CAROLINA PROFESSIONAL SEAL 22005 ENGINEER W. KEITH PASCHAL
2/28/11

REVISIONS						SHEET NO.
NO.	BY:	DATE:	NO.	BY:	DATE:	C-25
1			3			TOTAL SHEETS
2			4			119

ASSEMBLED BY :	J. G. KHARVA	DATE :	1/18/06
CHECKED BY :	J. MYA	DATE :	7/22/10
DRAWN BY :	EEM	6/97	
CHECKED BY :	ARB	7/97	

25-FEB-2011 13:15
Z:\Structures\str3\Final Plans\R2519A_sd_CU_03.dgn
jmya

STD. No. CBI105sm STR. #3

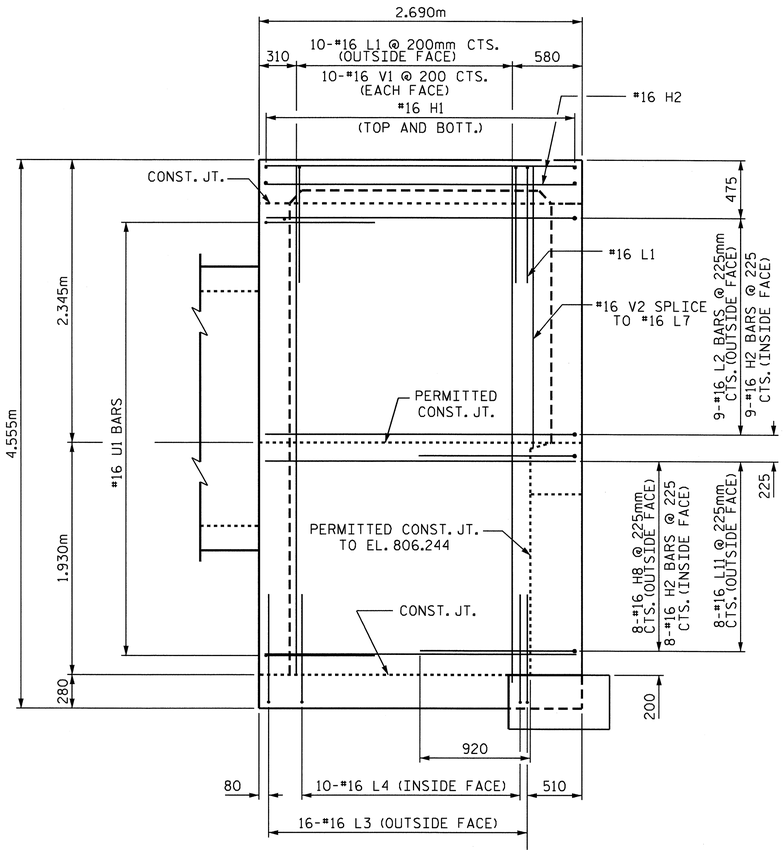

VIEW A-A

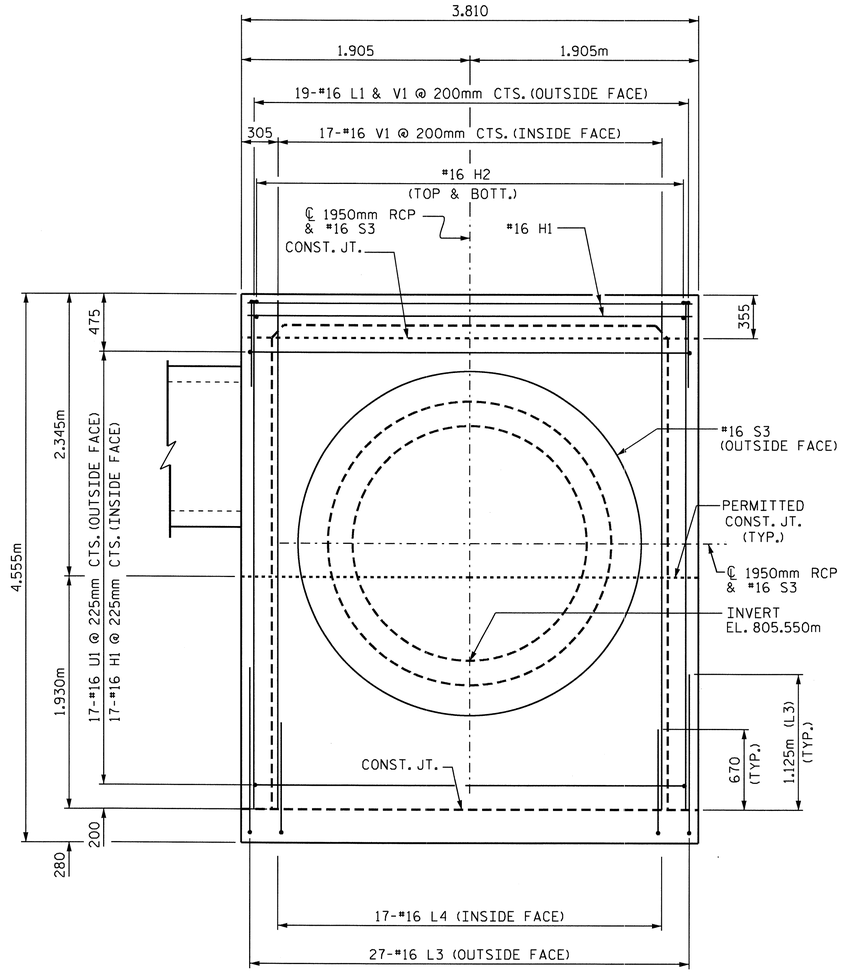

VIEW B-B

(FIELD CUT REINFORCING STEEL AT LOCATION OF BOTH RCP TO ALLOW 100mm OF CLEARANCE.)

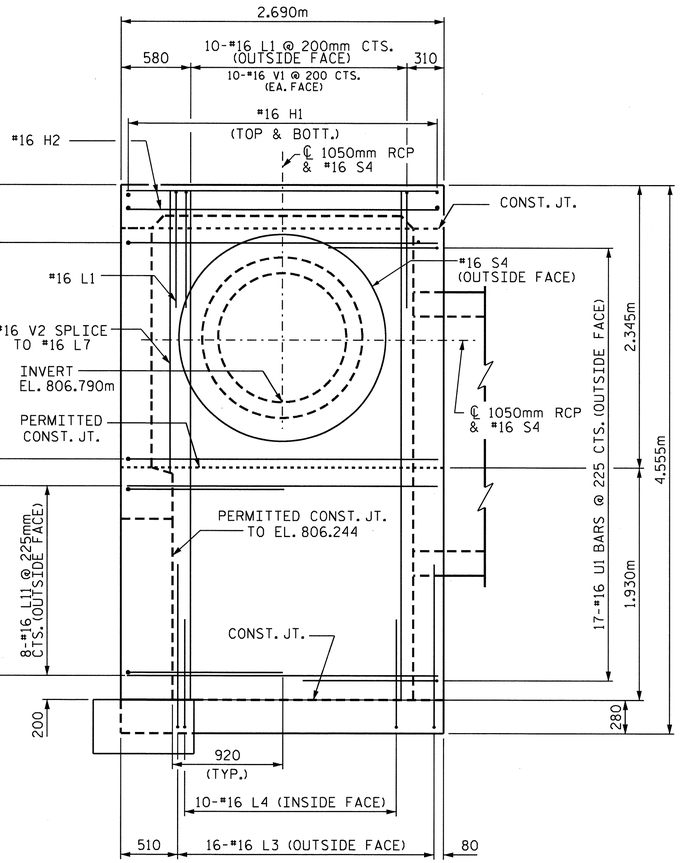

VIEW C-C

(FIELD CUT REINFORCING STEEL AT LOCATION OF BOTH RCP TO ALLOW 100mm OF CLEARANCE.)

PROJECT NO. R-2519A

YANCEY COUNTY

STATION: 279+93.00 -L-

SHEET 5 OF 8

NORTH CAROLINA PROFESSIONAL SEAL 25901 ENGINEER JOHN E. LAZAROVICH 2-25-11

STATE OF NORTH CAROLINA
DEPARTMENT OF TRANSPORTATION
RALEIGH

JUNCTION BOX DETAILS

REVISIONS						SHEET NO.
NO.	BY:	DATE:	NO.	BY:	DATE:	C-26
1			3			TOTAL SHEETS
2			4			119

DRAWN BY : J. MYA DATE : 1-15-11
CHECKED BY : J. LAZAROVICH DATE : 2-19-11

25-FEB-2011 13:13
Z:\Structures\str3\Final Plans\R2519A_sd_CU_03.dgn
jmya

STR. #3

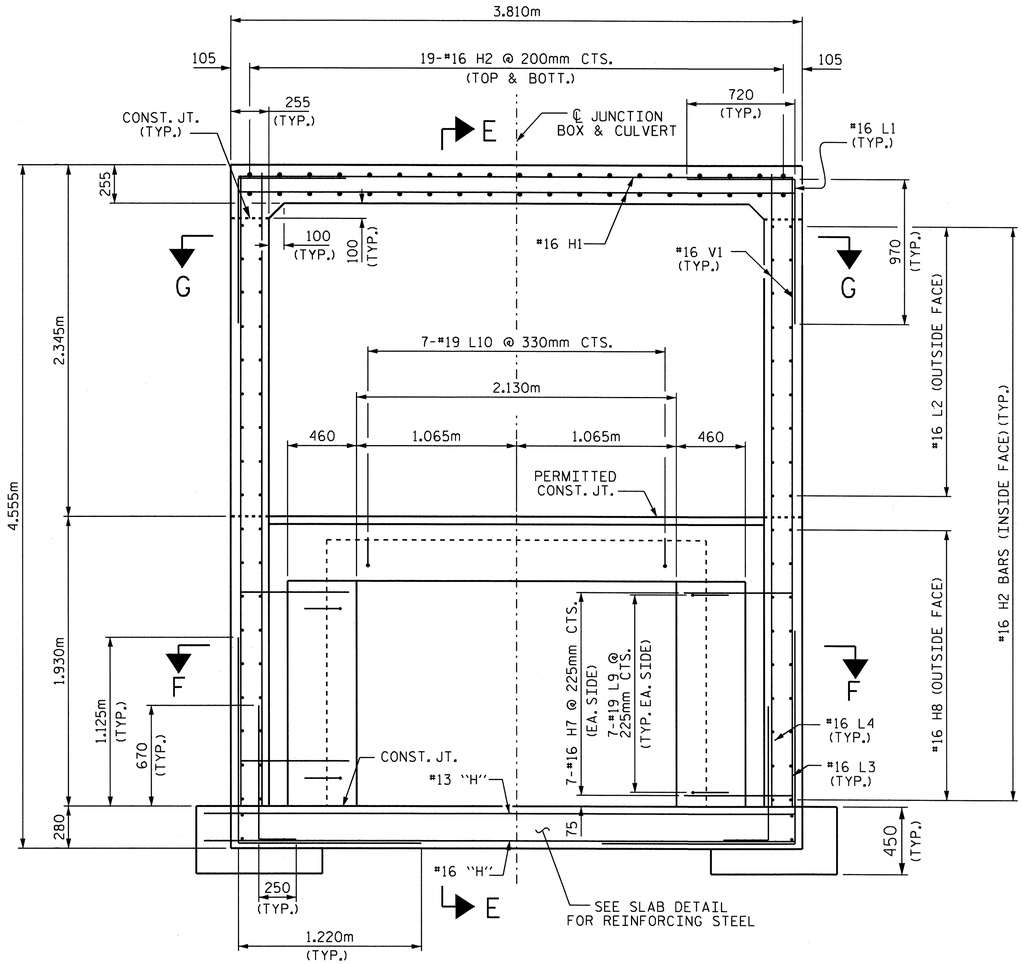

SECTION D-D

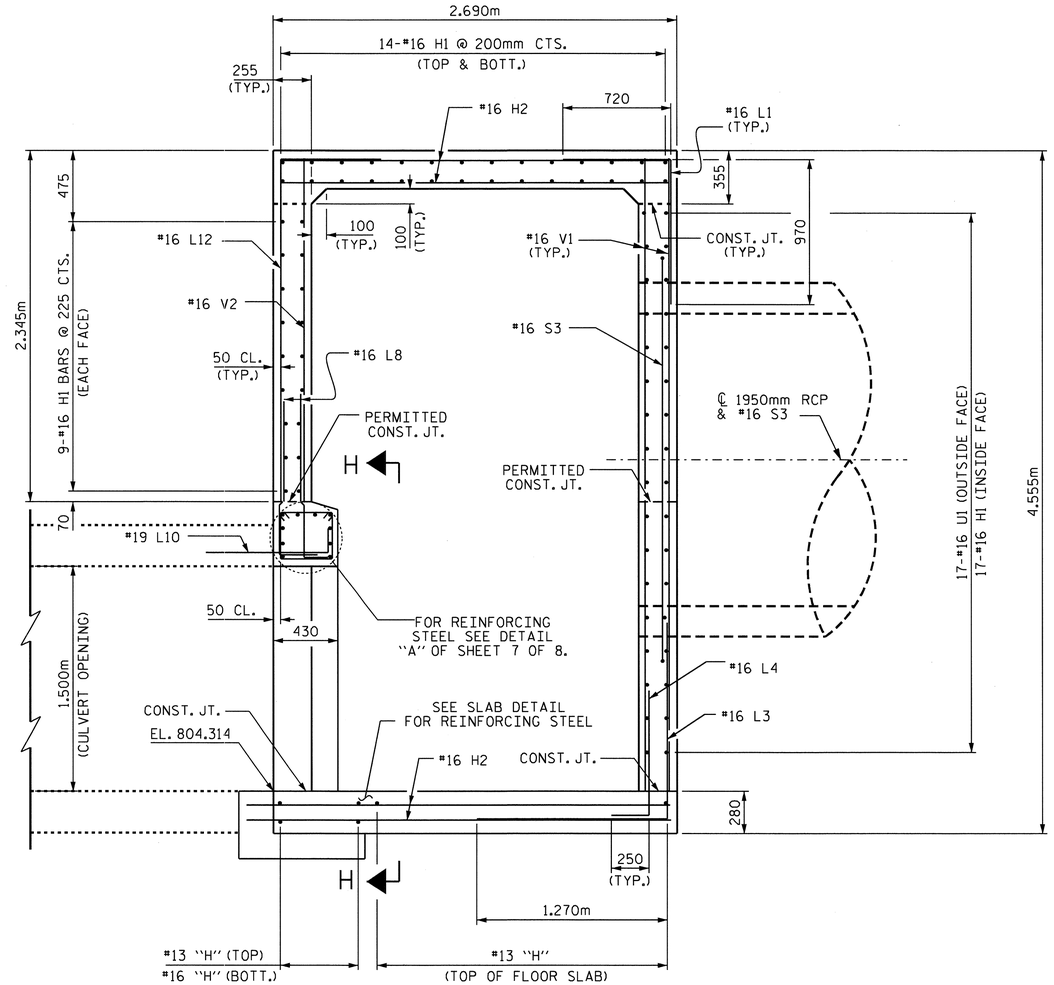

SECTION E-E

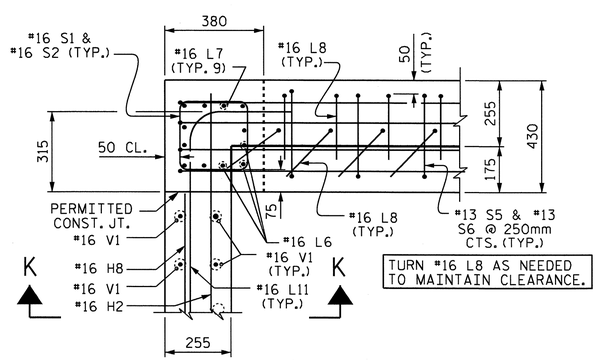

SECTION I-I

SECTION J-J (MIRROR IMAGE)

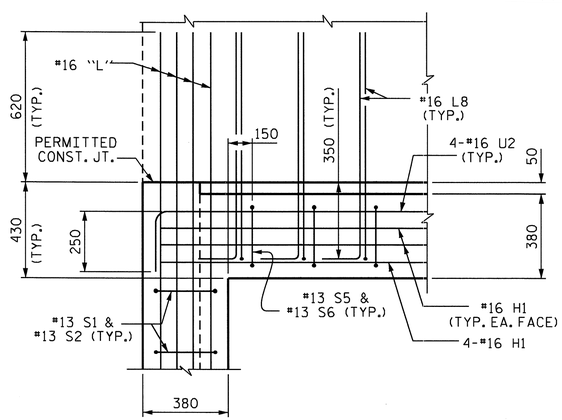

SECTION K-K

PROJECT NO. R-2519A

YANCEY COUNTY

STATION: 279+93.000 -L-

SHEET 6 OF 8

STATE OF NORTH CAROLINA
DEPARTMENT OF TRANSPORTATION
RALEIGH

JUNCTION BOX DETAILS

REVISIONS						SHEET NO.
NO.	BY:	DATE:	NO.	BY:	DATE:	C-27
1			3			TOTAL SHEETS
2			4			119

DRAWN BY : J. MYA DATE : 1-15-11
CHECKED BY : J. LAZAROVICH DATE : 2-19-11

25-FEB-2011 13:16
Z:\Structures\str3\Final Plans\R2519A_sd_CU_03.dgn
jmya

STR. #3

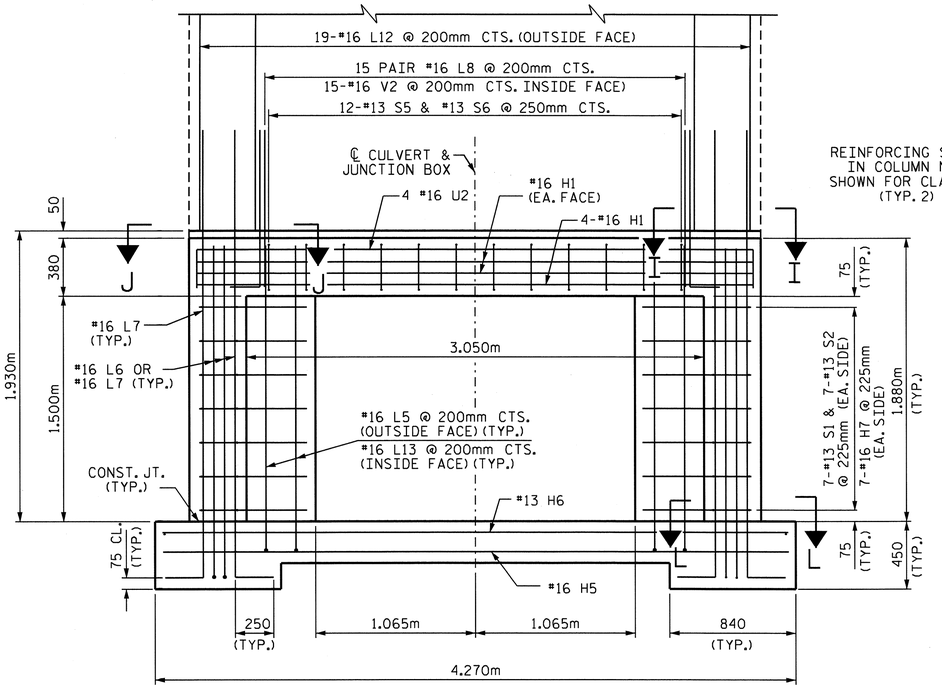

VIEW H-H

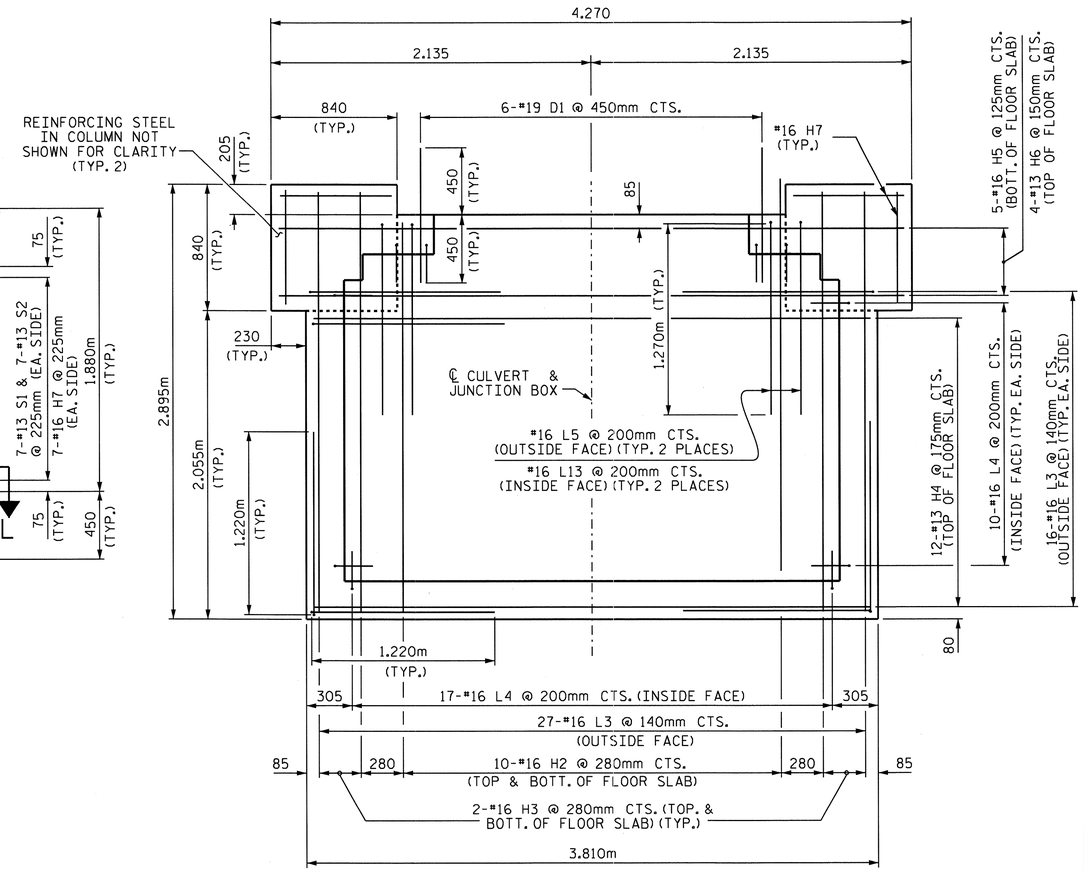

SLAB DETAIL

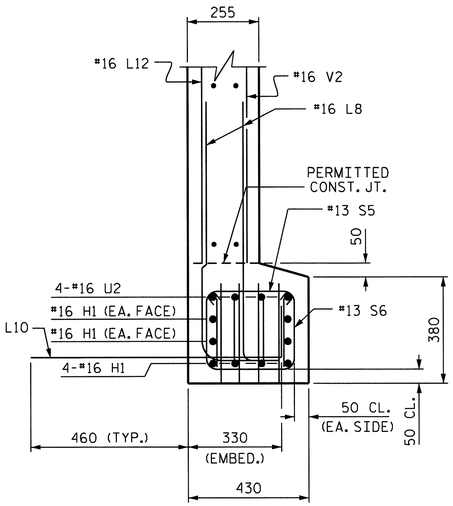

DETAIL "A"

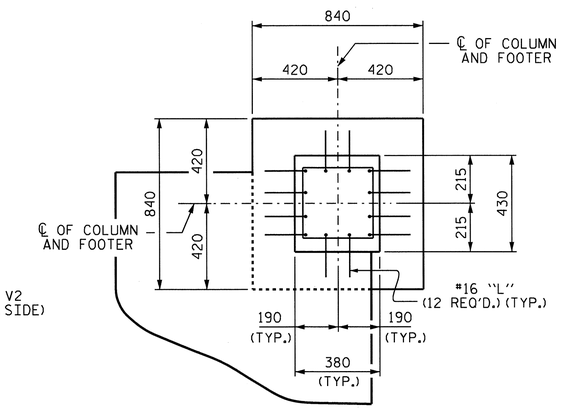

SECTION L-L

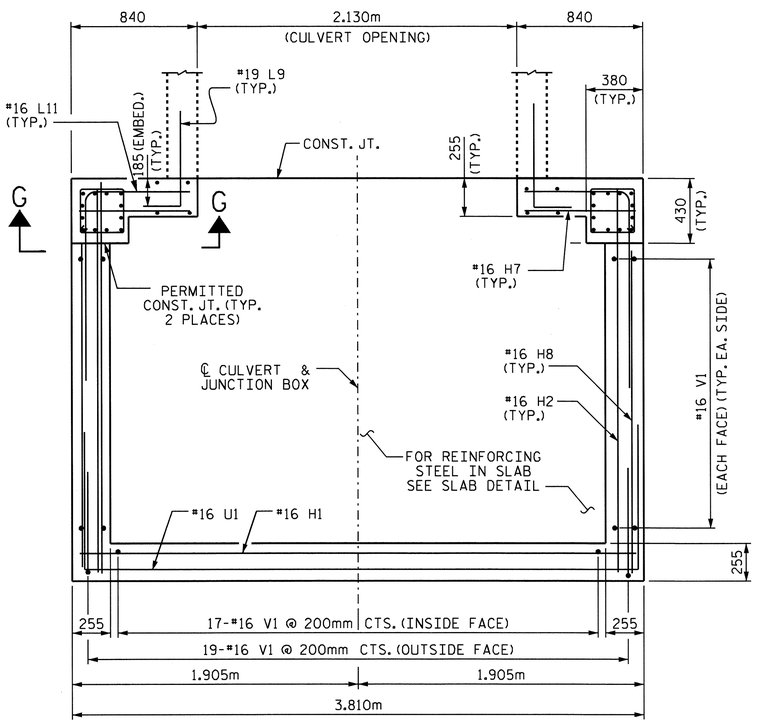

SECTION F-F

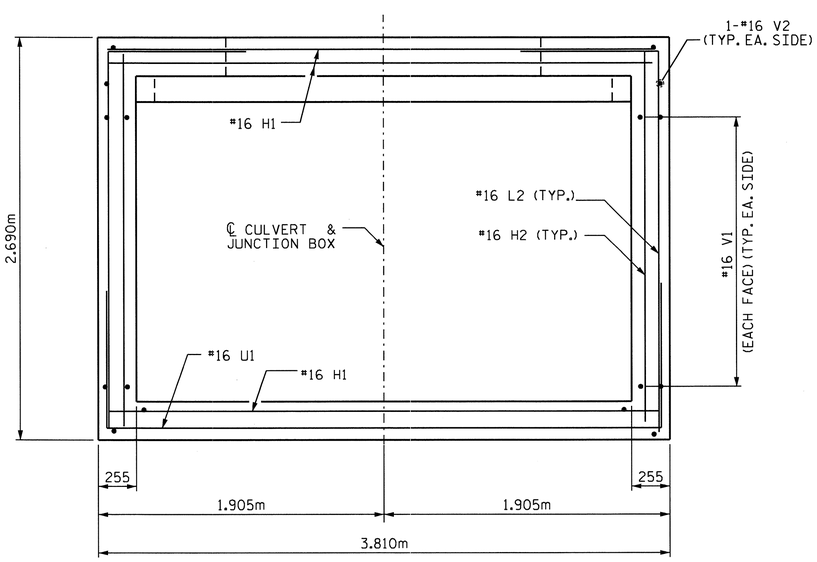

SECTION G-G

NORTH CAROLINA PROFESSIONAL SEAL 25901 ENGINEER JOHN E. LAZAROVICH 2-25-11

PROJECT NO. R-2519A
YANCEY COUNTY
STATION: 279+93.000 -L-

SHEET 7 OF 8

STATE OF NORTH CAROLINA
DEPARTMENT OF TRANSPORTATION
RALEIGH

JUNCTION BOX DETAILS

REVISIONS						SHEET NO.
NO.	BY:	DATE:	NO.	BY:	DATE:	C-28
1			3			TOTAL SHEETS
2			4			119

DRAWN BY : J. MYA DATE : 1-15-11
CHECKED BY : J. LAZAROVICH DATE : 2-19-11

25-FEB-2011 11:58
Z:\Structures\str3\Final Plans\R2519A_sd_CU_03.dgn
jmya

STR. #3

BAR SCHEDULE
(FOR LEFT EXTENSION)

BAR	NO.	SIZE	TYPE	LENGTH	WEIGHT
A1	64	#13	4	1760	112
A2	64	#13	4	1740	111
A100	43	#13	STR	2400	103
A101	1	#13	STR	1840	2
A102	1	#13	STR	1260	1
A103	1	#13	STR	660	1
A200	33	#16	STR	2400	123
A201	1	#16	STR	1660	3
A202	1	#16	STR	880	1
B1	46	#13	STR	1940	89
C1	60	#13	STR	3720	222
G1	2	#13	STR	2480	5
S1	6	#25	STR	2480	59
D1	20	#19	STR	760	34

REINFORCING STEEL = 866 kg.

BAR SCHEDULE
(FOR RIGHT EXTENSION)

BAR	NO.	SIZE	TYPE	LENGTH	WEIGHT
A1	76	#13	4	1760	133
A2	76	#13	4	1740	131
A100	53	#13	STR	2400	126
A200	41	#16	STR	2400	153
B1	56	#13	STR	1940	108
C2	60	#13	STR	4620	276
D1	20	#19	STR	760	34

REINFORCING STEEL = 961 kg.

BILL OF MATERIAL
JUNCTION BOX

BAR	NO.	SIZE	TYPE	LENGTH	WEIGHT
D1	6	#19	STR	900	12
H1	71	#16	STR	3700	408
H2	92	#16	STR	2540	363
H3	8	#16	STR	2780	35
H4	12	#13	STR	3700	44
H5	5	#16	STR	4160	32
H6	4	#13	STR	4160	17
H7	18	#16	STR	740	21
H8	16	#16	STR	2160	54
L1	41	#16	1	1700	108
L2	18	#16	1	3520	98
L3	59	#16	1	2640	242
L4	37	#16	1	1140	65
L5	4	#16	1	3280	20
L6	6	#16	1	2440	23
L7	18	#16	1	3280	92
L8	30	#16	1	1320	61
L9	14	#19	1	880	28
L10	7	#19	1	1040	16
L11	16	#16	1	2020	50
L12	19	#16	1	3000	88
L13	4	#16	1	2260	14

BILL OF MATERIAL
JUNCTION BOX

BAR	NO.	SIZE	TYPE	LENGTH	WEIGHT
S1	14	#13	2	1100	15
S2	14	#13	3	500	7
S3	1	#16	5	9900	15
S4	1	#16	5	6320	10
S5	12	#13	2	1140	14
S6	12	#13	2	560	7
U1	17	#16	6	5600	148
U2	4	#16	6	4200	26
V1	76	#16	STR	4220	498
V2	17	#16	STR	2280	60

REINFORCING STEEL 2691 kg
CLASS A CONCRETE 16.2 m³

BAR TYPES

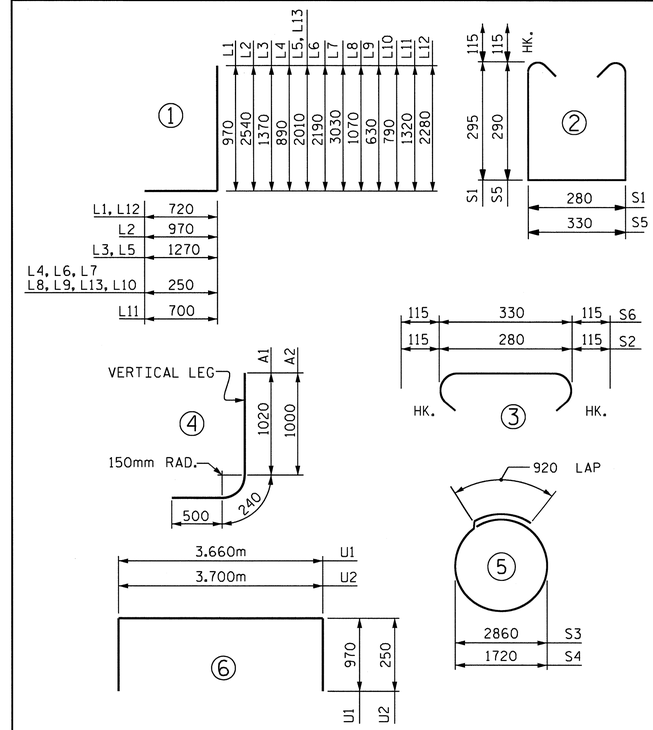

DIMENSIONS ARE OUT TO OUT.

TOTAL STRUCTURE QUANTITIES
(LEFT EXTENSION)

CLASS A CONCRETE
BARREL @ 2.0 m³/m 13.9 m³
WINGS ETC. 4.1 m³
TOTAL 18.0 m³

REINFORCING STEEL
BARREL 866 kg
WINGS ETC. 148 kg
TOTAL 1014 kg

CULVERT EXCAVATION ---------- LUMP SUM
FOUNDATION COND. MAT'L. ----12.0 METRIC TONS

TOTAL STRUCTURE QUANTITIES
(RIGHT EXTENSION)

CLASS A CONCRETE
BARREL @ 2.0 m³/m 16.4 m³
TOTAL 16.4 m³

REINFORCING STEEL
BARREL 961 kg
TOTAL 961 kg

CULVERT EXCAVATION ---------- LUMP SUM
FOUNDATION COND. MAT'L. ----14.0 METRIC TONS

TOTAL STRUCTURE QUANTITIES
(JUNCTION BOX)

CLASS A CONCRETE
JUNCTION BOX 16.2 m³
TOTAL 16.2 m³

REINFORCING STEEL
JUNCTION BOX 2691 kg
TOTAL 2691 kg

CULVERT EXCAVATION ---------- LUMP SUM
FOUNDATION COND. MAT'L. ----6.9 METRIC TONS

PROJECT NO. R-2519A
YANCEY COUNTY
STATION: 279+93.000 -L-

SHEET 8 OF 8

STATE OF NORTH CAROLINA
DEPARTMENT OF TRANSPORTATION
RALEIGH

BILL OF MATERIAL
JUNCTION BOX

NORTH CAROLINA PROFESSIONAL SEAL 22005 ENGINEER K. KEITH PASCHAL
3/1/11

REVISIONS						SHEET NO.
NO.	BY:	DATE:	NO.	BY:	DATE:	C-29
1			3			TOTAL SHEETS
2			4			119

DRAWN BY : J. MYA DATE : 1-15-11
CHECKED BY : K. PASCHAL DATE : 2-19-11

01-MAR-2011 08:01
R:\Structures\str3\Final Plans\R2519A_sd_CU_03.dgn
jdhawk

STR. #3

BM #7: SPIKE SET IN BASE OF 10" MAPLE TREE 92.840m LEFT STA. 285+10.110 -L- EL. 803.589

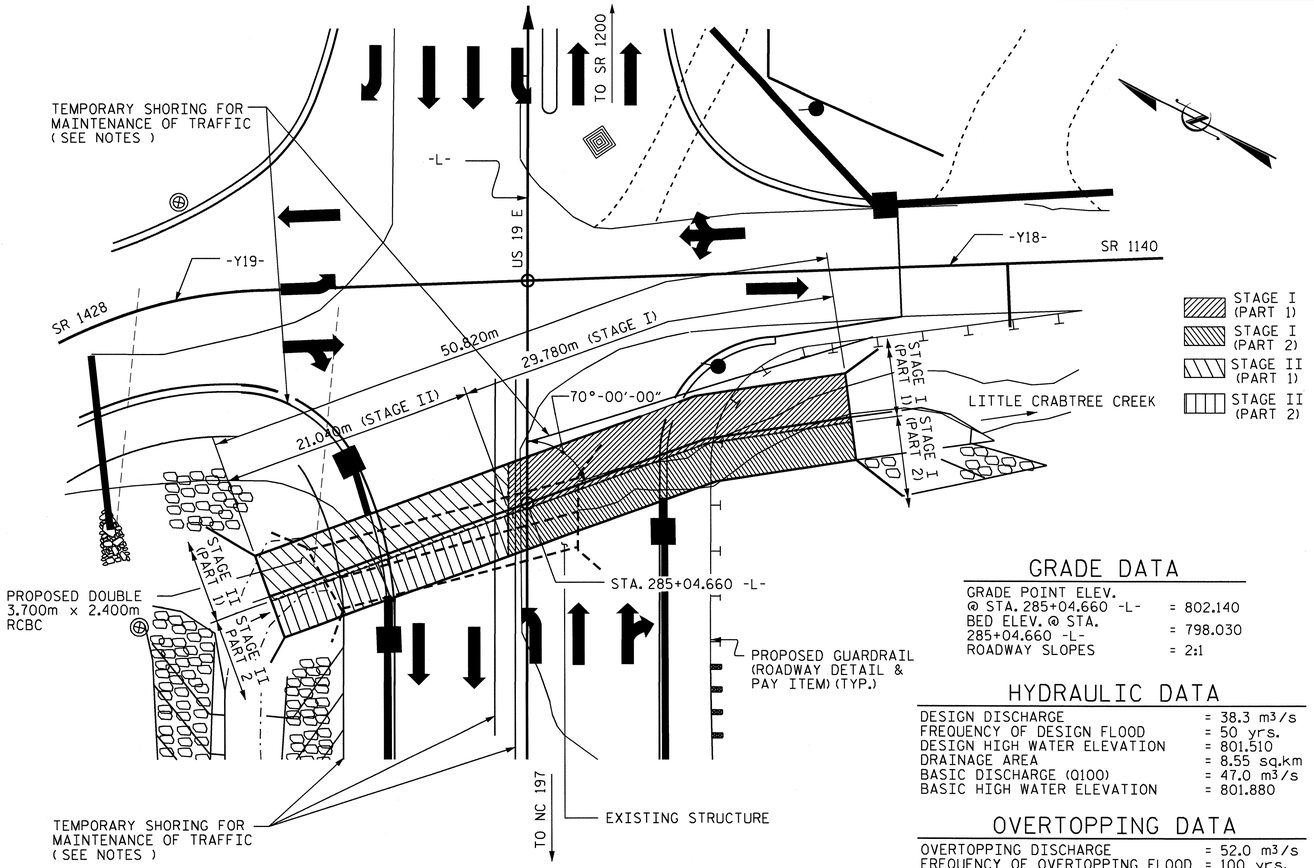

FOR UTILITY INFORMATION, SEE UTILITY PLANS AND SPECIAL PROVISIONS.

LOCATION SKETCH

GRADE DATA

GRADE POINT ELEV. @ STA. 285+04.660 -L-	= 802.140
BED ELEV. @ STA. 285+04.660 -L-	= 798.030
ROADWAY SLOPES	= 2:1

HYDRAULIC DATA

DESIGN DISCHARGE	= 38.3 m³/s
FREQUENCY OF DESIGN FLOOD	= 50 yrs.
DESIGN HIGH WATER ELEVATION	= 801.510
DRAINAGE AREA	= 8.55 sq.km
BASIC DISCHARGE (Q100)	= 47.0 m³/s
BASIC HIGH WATER ELEVATION	= 801.880

OVERTOPPING DATA

OVERTOPPING DISCHARGE	= 52.0 m3/s
FREQUENCY OF OVERTOPPING FLOOD	= 100 yrs.
OVERTOPPING FLOOD ELEVATION	= 802.12

STRUCTURE QUANTITIES STAGE I (PART 1)

CLASS A CONCRETE		
BARREL	65.3	m^3
WING W2 ETC.	4.9	m^3
TOTAL	70.2	m^3
REINFORCING STEEL		
BARREL	9592	kg
WING W2 ETC.	193	kg
TOTAL	9785	kg
CULVERT EXCAVATION	LUMP SUM	
FOUNDATION COND. MAT'L.	88.4	METRIC TONS

STRUCTURE QUANTITIES STAGE I (PART 2)

CLASS A CONCRETE		
BARREL	114.7	m^3
WING W1 ETC.	6.5	m^3
TOTAL	121.2	m^3
REINFORCING STEEL		
BARREL	15485	kg
WING W1 ETC.	165	kg
TOTAL	15650	kg
CULVERT EXCAVATION	LUMP SUM	
FOUNDATION COND. MAT'L.	74.1	METRIC TONS

STRUCTURE QUANTITIES STAGE II (PART 1)

CLASS A CONCRETE		
BARREL	48.5	m^3
WING W1 ETC.	5.0	m^3
TOTAL	53.5	m^3
REINFORCING STEEL		
BARREL	6992	kg
WING W1 ETC.	165	kg
TOTAL	7157	kg
CULVERT EXCAVATION	LUMP SUM	
FOUNDATION COND. MAT'L.	65.1	METRIC TONS

STRUCTURE QUANTITIES STAGE II (PART 2)

CLASS A CONCRETE		
BARREL	78.1	m^3
WING W1 ETC.	6.5	m^3
TOTAL	84.6	m^3
REINFORCING STEEL		
BARREL	10563	kg
WING W1 ETC.	165	kg
TOTAL	10728	kg
CULVERT EXCAVATION	LUMP SUM	
FOUNDATION COND. MAT'L.	49.6	METRIC TONS

NOTES:

ASSUMED LIVE LOAD ----------MS18 OR ALTERNATE LOADING.

DESIGN FILL 1.71m.

FOR OTHER DESIGN DATA AND NOTES SEE STANDARD NOTE SHEET.

76mm Ø WEEP HOLES INDICATED TO BE IN ACCORDANCE WITH THE SPECIFICATIONS.

CONCRETE IN CULVERTS TO BE POURED IN THE FOLLOWING ORDER:

STAGE I (PARTS 1 & 2):

1. WING FOOTINGS AND FLOOR SLAB INCLUDING 100mm OF ALL VERTICAL WALLS.
2. THE REMAINING PORTIONS OF THE WALLS AND WINGS FULL HEIGHT.
3. ROOF SLAB AND HEADWALL.

STAGE II (PARTS 1 & 2):

1. WING FOOTINGS AND FLOOR SLAB INCLUDING 100mm OF ALL VERTICAL WALLS.
2. THE REMAINING PORTIONS OF THE WALLS AND WINGS FULL HEIGHT.
3. ROOF SLAB AND HEADWALL.

THE RESIDENT ENGINEER SHALL CHECK THE LENGTH OF CULVERT BEFORE STAKING IT OUT TO MAKE CERTAIN THAT IT WILL PROPERLY TAKE CARE OF THE FILL.

DIMENSIONS FOR WING LAYOUT AS WELL AS ADDITIONAL REINFORCING STEEL EMBEDDED IN BARREL ARE SHOWN ON WING SHEET.

AT THE CONTRACTOR'S OPTION, HE MAY SPLICE THE VERTICAL REINFORCING STEEL IN THE INTERIOR FACE OF EXTERIOR WALL AND BOTH FACES OF INTERIOR WALLS ABOVE LOWER WALL CONSTRUCTION JOINT. THE SPLICE LENGTH SHALL BE AS PROVIDED IN THE SPLICE LENGTH CHART SHOWN ON THE PLANS. EXTRA WEIGHT OF STEEL DUE TO THE SPLICES SHALL BE PAID FOR BY THE CONTRACTOR.

ALL DIMENSIONS ARE IN MILLIMETERS UNLESS OTHERWISE NOTED.

ALL ELEVATIONS ARE IN METERS.

NO PRECAST REINFORCED BOX CULVERT OPTION WILL BE ALLOWED.

FOR SUBMITTAL OF WORKING DRAWINGS, SEE SPECIAL PROVISIONS.

FOR FALSEWORK AND FORMWORK, SEE SPECIAL PROVISIONS.

FOR CRANE SAFETY, SEE SPECIAL PROVISIONS.

FOR GROUT FOR STRUCTURES, SEE SPECIAL PROVISIONS.

TRAFFIC ON US 19E SHALL BE MAINTAINED. IN ORDER TO MAINTAIN TRAFFIC, THE CULVERT SHALL BE CONSTRUCTED IN STAGES AS DIRECTED BY THE PLANS AND THE ENGINEER.

TRANSVERSE CONSTRUCTION JOINTS SHALL BE USED IN THE BARREL, SPACED TO LIMIT THE POURS TO A MAXIMUM OF 21.0m. LOCATION OF JOINTS SHALL BE SUBJECT TO APPROVAL OF THE ENGINEER.

FOR CULVERT DIVERSION DETAILS AND PAY ITEM, SEE EROSION CONTROL PLANS.

A 900mm STRIP OF FILTER FABRIC SHALL BE ATTACHED TO THE FILL FACE OF THE WING COVERING THE ENTIRE LENGTH OF THE EXPANSION JOINT.

THE EXISTING DOUBLE 2.400m x 2.400m CULVERT WITH A LENGTH OF 21.838m AND LOCATED AT THE PROPOSED CULVERT SITE SHALL BE REMOVED. PAYMENT FOR REMOVAL OF CULVERT WILL BE INCLUDED IN THE LUMP SUM PRICE FOR CULVERT EXCAVATION.

FOR LIMITS OF TEMPORARY SHORING FOR MAINTENANCE OF TRAFFIC, SEE TRAFFIC CONTROL PLANS. FOR PAY ITEM FOR TEMPORARY SHORING FOR MAINTENANCE OF TRAFFIC, SEE ROADWAY PLANS.

TOTAL STRUCTURE QUANTITIES

CLASS A CONCRETE			REINFORCING STEEL		
STAGE I (PART 1)	70.2	m^3	STAGE I (PART 1)	9785	kg
STAGE I (PART 2)	121.2	m^3	STAGE I (PART 2)	15650	kg
STAGE II (PART 1)	53.5	m^3	STAGE II (PART 1)	7157	kg
STAGE II (PART 2)	84.6	m^3	STAGE II (PART 2)	10728	kg
TOTAL	329.5	m^3	TOTAL	43320	kg
CULVERT EXCAVATION -- LUMP SUM			FOUNDATION COND. MAT'L. -277.2- METRIC TONS		

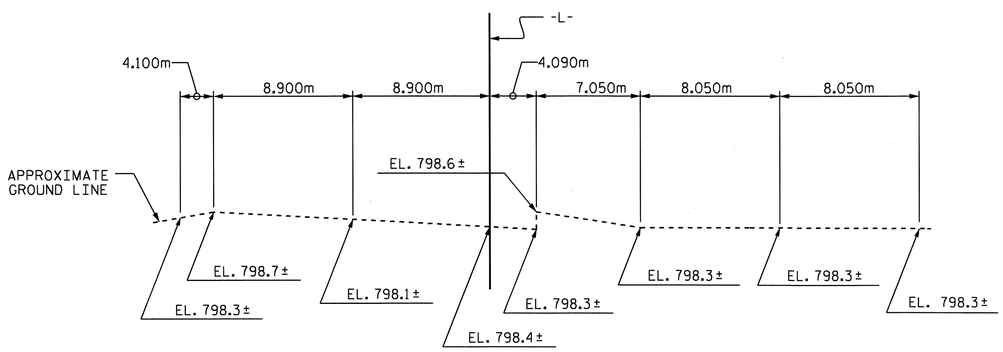

PROFILE ALONG ℄ CULVERT

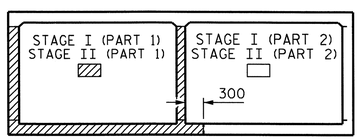

CONSTRUCTION SEQUENCE

(LOOKING DOWNSTREAM)

PROJECT NO. R-2519A
YANCEY COUNTY
STATION: 285+04.660-L-

SHEET 1 OF 10 CULVERT NO. C-324

STATE OF NORTH CAROLINA
DEPARTMENT OF TRANSPORTATION
RALEIGH

DOUBLE 3.700m X 2.400m CONCRETE BOX CULVERT

NORTH CAROLINA PROFESSIONAL SEAL 12929 ENGINEER NORMAN ABBETT BUCKLAND, JR. 3/2/11

NORTH CAROLINA PROFESSIONAL SEAL 22006 ENGINEER J. KEITH PASCHAL 3/2/11

REVISIONS							SHEET NO.
NO.	BY:	DATE:	NO.	BY:	DATE:		C-30
1			3				TOTAL SHEETS
2			4				119

DRAWN BY : J. MYA DATE : 7-7-10
CHECKED BY : J. G. KHARVA DATE : 7-19-10

02-MAR-2011 09:14
R:\Structures\str4\Final Plans\R2519A_SD_CU_04.dgn
jdhawk

STR. #4

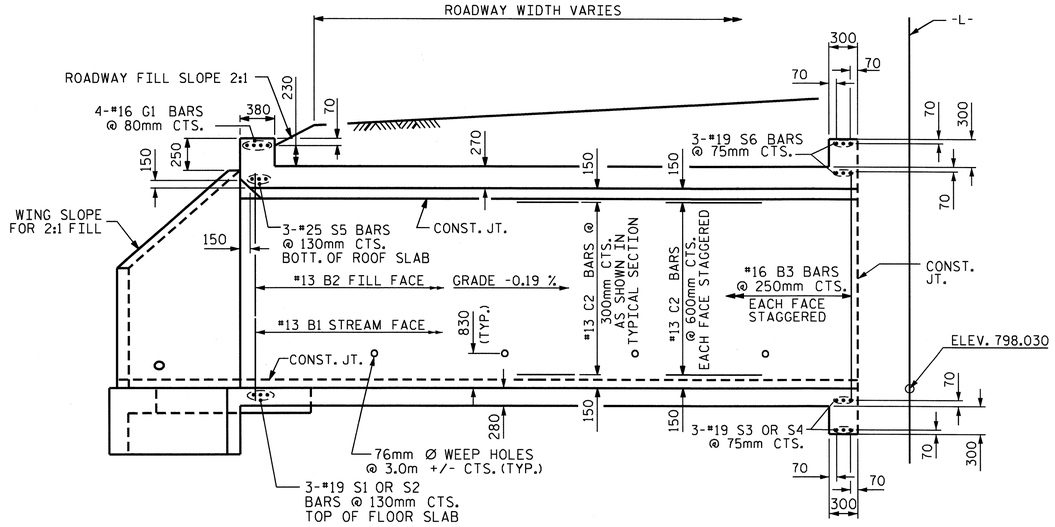

CULVERT SECTION NORMAL TO ROADWAY

(STAGE II)

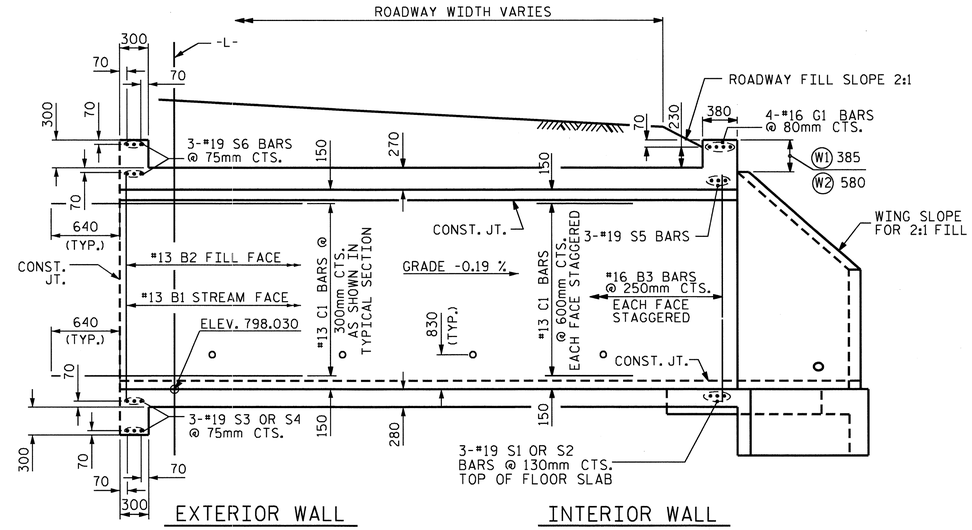

CULVERT SECTION NORMAL TO ROADWAY

(STAGE I)

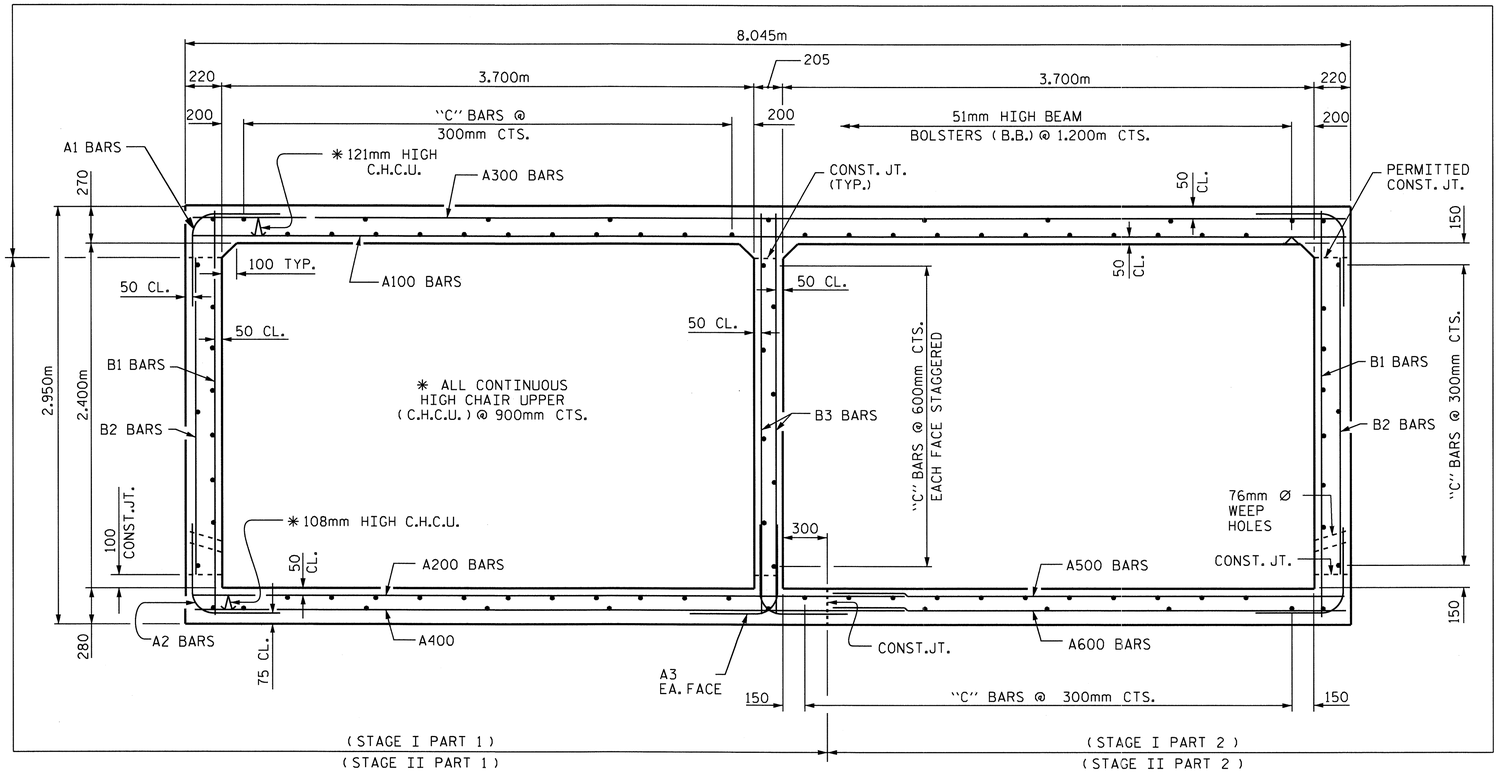

RIGHT ANGLE SECTION OF BARREL

(LOOKING DOWNSTREAM)

THERE ARE 35 "C" BARS IN SECTION OF BARREL (STAGE I PART 1 & STAGE II PART 1)
THERE ARE 57 "C" BARS IN SECTION OF BARREL (STAGE I PART 2 & STAGE II PART 2)

PROJECT NO. R-2519A
YANCEY COUNTY
STATION: 285+04.660 -L-

SHEET 2 OF 10

STATE OF NORTH CAROLINA
DEPARTMENT OF TRANSPORTATION
RALEIGH

DOUBLE 3.700m X 2.400m
CONCRETE BOX CULVERT

NORTH CAROLINA PROFESSIONAL SEAL 22005 ENGINEER A. KEITH PASCHAL
2/28/11

REVISIONS						SHEET NO.
NO.	BY:	DATE:	NO.	BY:	DATE:	C-31
1			3			TOTAL SHEETS
2			4			119

ASSEMBLED BY : J. MYA	DATE : 7-7-10
CHECKED BY : J. G. KAHRVA	DATE : 7-19-10
DRAWN BY : EEM 6/97	
CHECKED BY : ARB 7/97	

STD. No. CB275sm

STR. #4

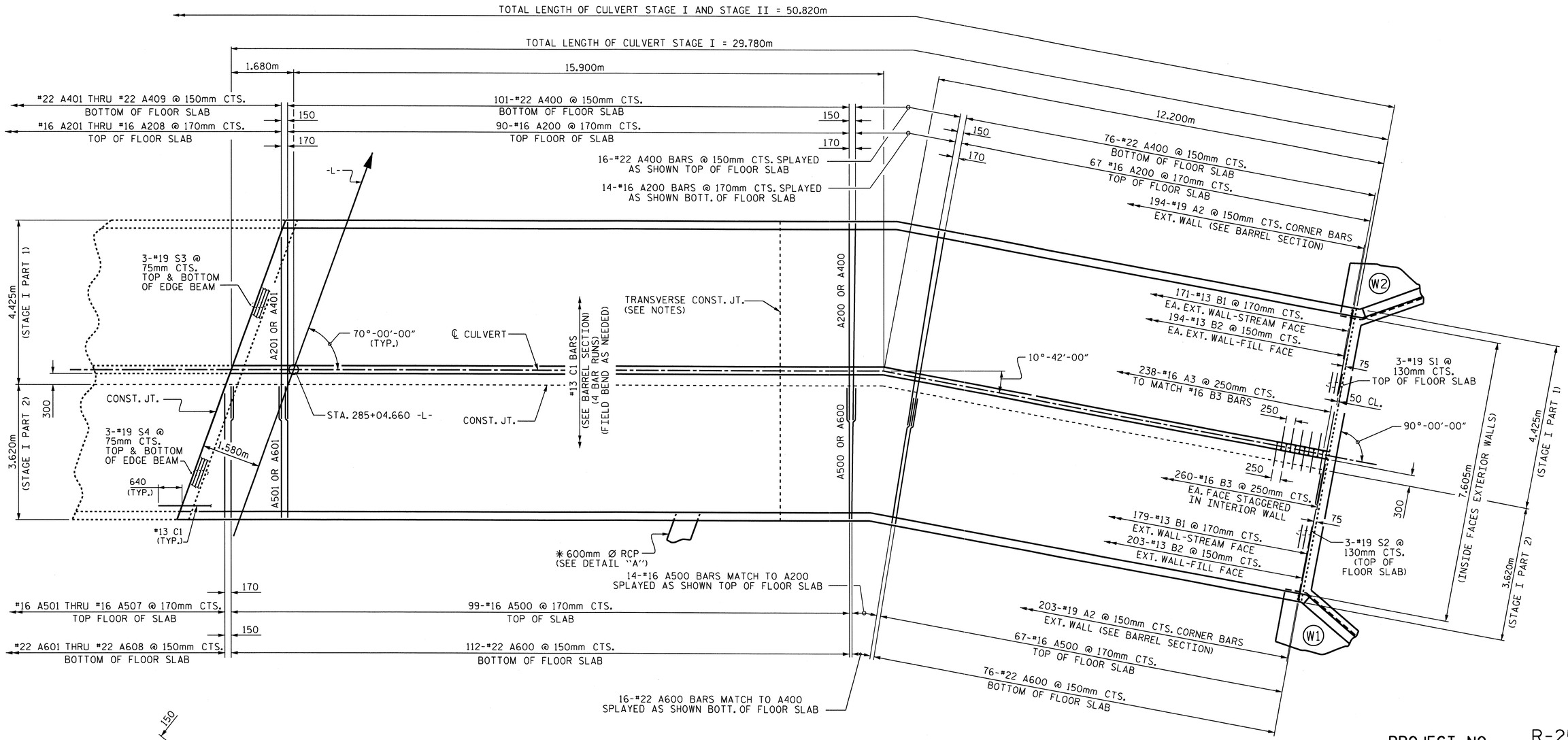

PLAN - FLOOR SLAB

(STAGE I PARTS 1 & 2)

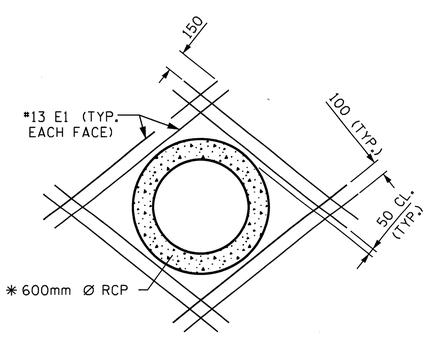

DETAIL "A"

✱ THE 600mm RCP THROUGH THE SIDEWALL OF THE CULVERT WILL BE LOCATED BY THE ENGINEER. THE REINFORCING STEEL WILL BE CUT OR FIELD BENT AS NECESSARY TO CLEAR PIPE.

PROJECT NO. R-2519A
YANCEY COUNTY
STATION: 285+04.660 -L-

SHEET 3 OF 10

STATE OF NORTH CAROLINA
DEPARTMENT OF TRANSPORTATION
RALEIGH

DOUBLE 3.700m x 2.400m CONCRETE BOX CULVERT
(STAGE I PARTS 1 & 2)

NORTH CAROLINA PROFESSIONAL SEAL 22005 ENGINEER KEITH PASCHAL
2/28/11

REVISIONS						SHEET NO.
NO.	BY:	DATE:	NO.	BY:	DATE:	C-32
1			3			TOTAL SHEETS
2			4			119

DRAWN BY : J. MYA DATE : 7-7-10
CHECKED BY : J. G. KHARVA DATE : 7-19-10

25-FEB-2011 14:35
R:\Structures\str4\Final Plans\R2519A_SD_CU_04.dgn
gallen

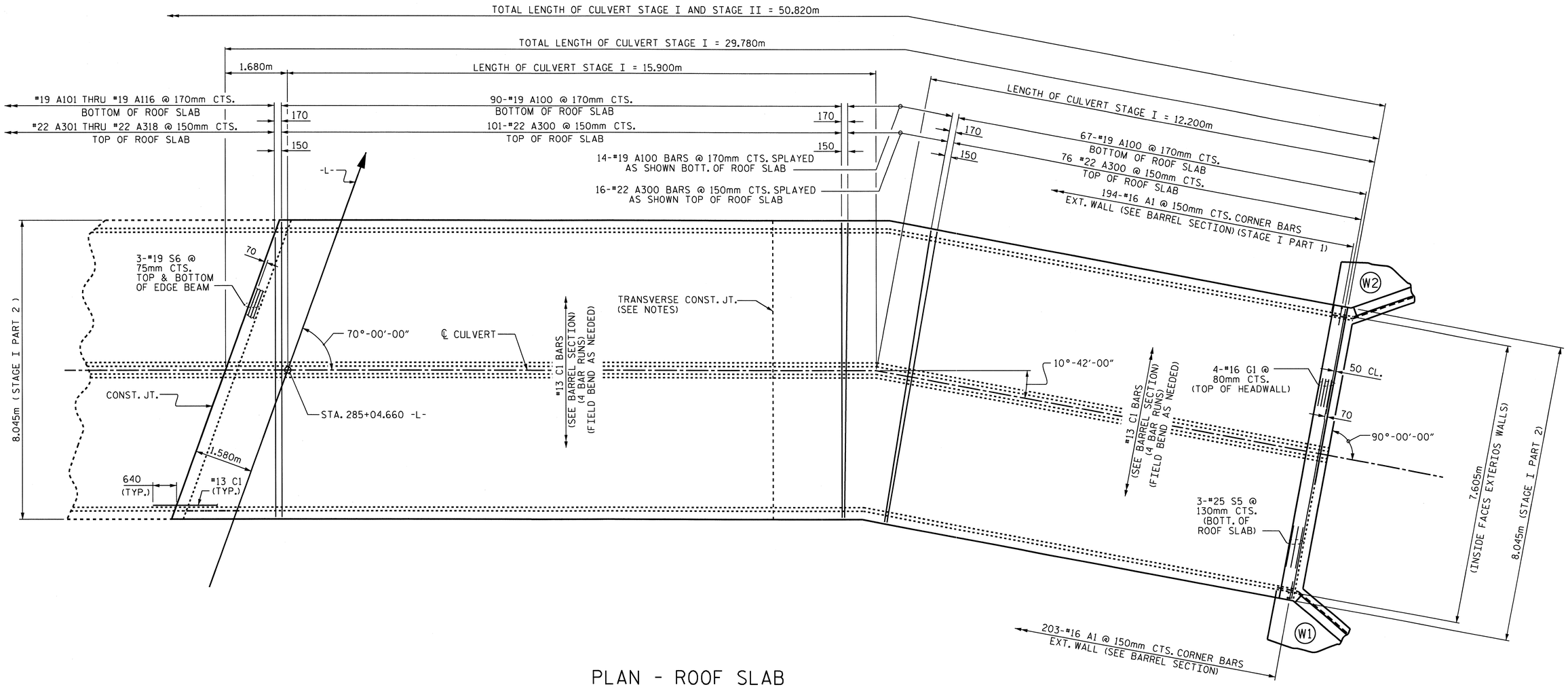

PLAN - ROOF SLAB

(STAGE I PART 2)

PROJECT NO. R-2519A

YANCEY COUNTY

STATION: 285+04.660 -L-

SHEET 4 OF 10

STATE OF NORTH CAROLINA
DEPARTMENT OF TRANSPORTATION
RALEIGH

DOUBLE 3.700m x 2.400m CONCRETE BOX CULVERT

(STAGE I PART 2)

NORTH CAROLINA PROFESSIONAL SEAL 22005 ENGINEER KEITH PASCHAL

2/28/11

REVISIONS						SHEET NO.
NO.	BY:	DATE:	NO.	BY:	DATE:	C-33
1			3			TOTAL SHEETS
2			4			119

DRAWN BY : J. MYA 7-7-10
CHECKED BY : J. G. KHARVA 7-19-10

25-FEB-2011 14:35
R:\Structures\str4\Final Plans\R2519A_SD_CU_04.dgn
gallen

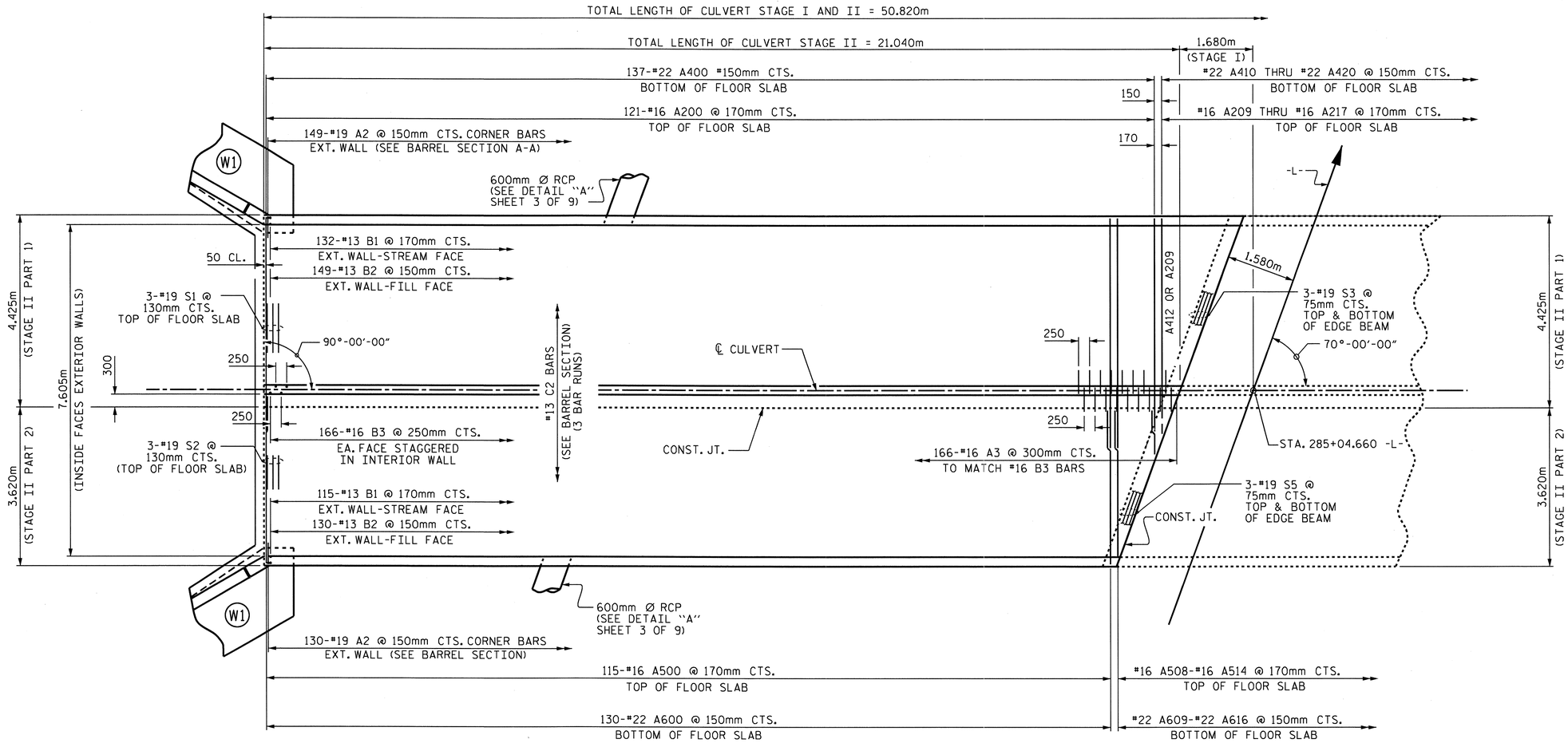

PLAN - FLOOR SLAB

(STAGE II PARTS 1 & 2)

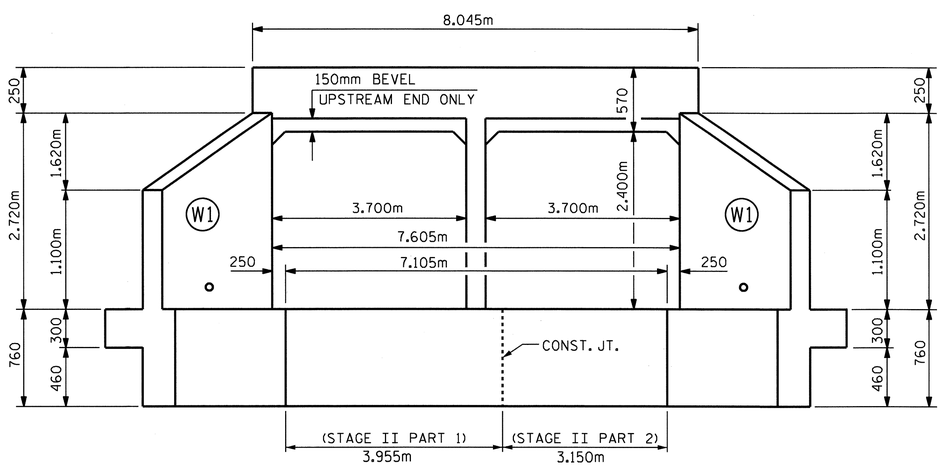

INLET ELEVATION NORMAL TO SKEW

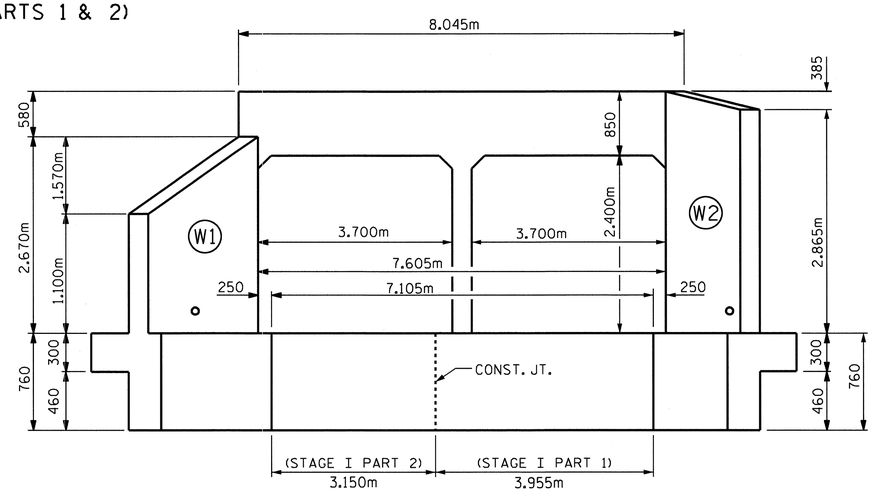

OUTLET ELEVATION - NORMAL TO SKEW

NORTH CAROLINA PROFESSIONAL SEAL 22005 ENGINEER KEITH PASCHAL

2/28/11

PROJECT NO. R-2519A

YANCEY COUNTY

STATION: 285+04.660 -L-

SHEET 5 OF 10

STATE OF NORTH CAROLINA
DEPARTMENT OF TRANSPORTATION
RALEIGH

DOUBLE 3.700m x 2.400m CONCRETE BOX CULVERT

(STAGE II PARTS 1 AND 2)

REVISIONS						SHEET NO.
NO.	BY:	DATE:	NO.	BY:	DATE:	C-34
1			3			TOTAL SHEETS
2			4			119

DRAWN BY : J. MYA DATE : 7-7-10
CHECKED BY : J. G. KHARVA DATE : 7-19-10

25-FEB-2011 14:35
R:\Structures\str4\Final Plans\R2519A_SD_CU_04.dgn
gallen

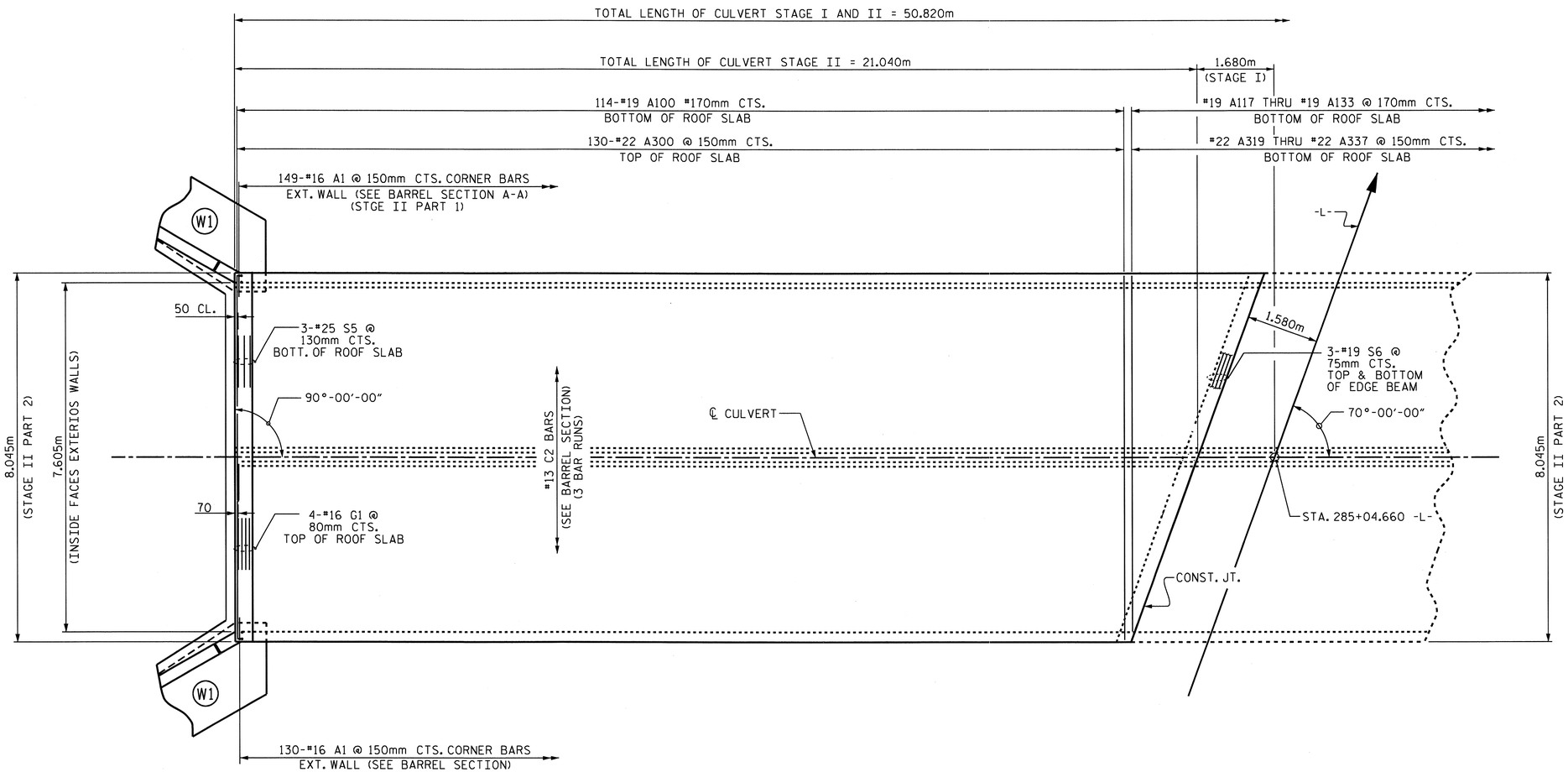

PLAN - ROOF SLAB

(STAGE II PART 2)

PROJECT NO. R-2519A

YANCEY COUNTY

STATION: 285+04.660 -L-

SHEET 6 OF 10

STATE OF NORTH CAROLINA
DEPARTMENT OF TRANSPORTATION
RALEIGH

DOUBLE
3.700m x 2.400m
CONCRETE BOX CULVERT
(STAGE II PART 2)

NORTH CAROLINA PROFESSIONAL SEAL 22005 ENGINEER G. KEITH PASCHAL
7/28/11

REVISIONS						SHEET NO.
NO.	BY:	DATE:	NO.	BY:	DATE:	C-35
1			3			TOTAL SHEETS
2			4			119

DRAWN BY : J. MYA DATE : 7-7-10
CHECKED BY : J. G. KHARVA DATE : 7-19-10

25-FEB-2011 14:34
R:\Structures\str4\Final Plans\R2519A_SD_CU_04.dgn
gallen

BILL OF MATERIAL

STAGE I (PART 1)

BAR	NO.	SIZE	TYPE	LENGTH	WEIGHT
A1	194	#16	6	1500	452
A2	194	#19	6	1740	754
A3	238	#16	6	1780	657
A200	171	#16	STR	4960	1316
A201	1	#16	STR	4560	7
A202	1	#16	STR	4100	6
A203	1	#16	STR	3620	6
A204	1	#16	STR	3160	5
A205	1	#16	STR	2680	4
A206	1	#16	STR	2220	3
A207	1	#16	STR	1760	3
A208	1	#16	STR	1280	2
A400	193	#22	STR	5340	3135
A401	1	#22	STR	5000	15
A402	1	#22	STR	4580	14
A403	1	#22	STR	4160	13
A404	1	#22	STR	3760	11
A405	1	#22	STR	3340	10
A406	1	#22	STR	2940	9
A407	1	#22	STR	2520	8
A408	1	#22	STR	2100	6
A409	1	#22	STR	1700	5
B1	171	#13	STR	2840	483
B2	194	#13	STR	2100	405
B3	238	#16	STR	2840	1049
C1	140	#13	STR	8220	1144
S1	3	#19	STR	5120	34
S3	3	#19	STR	5440	36

REINFORCING STEEL 9592

CLASS A CONCRETE
FLOOR AND WALLS 65.3 m3

STAGE I (PART 2)

BAR	NO.	SIZE	TYPE	LENGTH	WEIGHT
A1	203	#13	6	1500	303
A2	203	#19	6	1740	789
A100	171	#19	STR	7940	3035
A101	1	#19	STR	7520	17
A102	1	#19	STR	7060	16
A103	1	#19	STR	6600	15
A104	1	#19	STR	6120	14
A105	1	#19	STR	5660	13
A106	1	#19	STR	5200	12
A107	1	#19	STR	4720	11
A108	1	#19	STR	4260	10
A109	1	#19	STR	3800	8
A110	1	#19	STR	3320	7
A111	1	#19	STR	2860	6
A112	1	#19	STR	2400	5
A113	1	#19	STR	1920	4
A114	1	#19	STR	1460	3
A115	1	#19	STR	980	2
A116	1	#19	STR	520	1
A300	193	#22	STR	7940	4662
A301	1	#22	STR	7580	23
A302	1	#22	STR	7180	22
A303	1	#22	STR	6760	21
A304	1	#22	STR	6340	19
A305	1	#22	STR	5940	18
A306	1	#22	STR	5520	17
A307	1	#22	STR	5120	16
A308	1	#22	STR	4700	14
A309	1	#22	STR	4280	13
A310	1	#22	STR	3880	12
A311	1	#22	STR	3460	11
A312	1	#22	STR	3060	9
A313	1	#22	STR	2640	8
A314	1	#22	STR	2220	7
A315	1	#22	STR	1820	6
A316	1	#22	STR	1400	4
A317	1	#22	STR	980	3
A318	1	#22	STR	580	2
A500	180	#16	STR	3520	983
A501	1	#16	STR	3320	5
A502	1	#16	STR	2860	4
A503	1	#16	STR	2400	4
A504	1	#16	STR	1920	3
A505	1	#16	STR	1460	2
A506	1	#16	STR	980	2
A507	1	#16	STR	520	1
A600	204	#22	STR	3520	2184
A601	1	#22	STR	3380	10
A602	1	#22	STR	2980	9
A603	1	#22	STR	2560	8
A604	1	#22	STR	2140	7
A605	1	#22	STR	1740	5
A606	1	#22	STR	1320	4
A607	1	#22	STR	900	3
A608	1	#22	STR	500	2

BAR	NO.	SIZE	TYPE	LENGTH	WEIGHT
B1	179	#13	STR	2840	505
B2	203	#13	STR	2100	424
C1	228	#13	STR	8220	1863
E1	8	#13	STR	1220	10
G1	4	#16	STR	7940	49
S2	3	#19	STR	3520	24
S4	6	#19	STR	3740	50
S5	3	#19	STR	7940	53
S6	6	#19	STR	8440	113

REINFORCING STEEL 15485 kg.

CLASS A CONCRETE
FLOOR, WALLS AND ROOF SLAB 114.7 m3

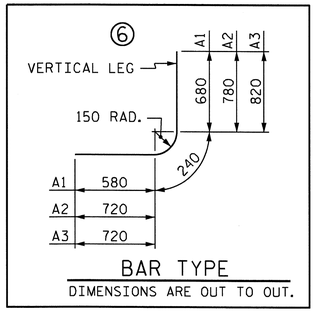

BAR TYPE
DIMENSIONS ARE OUT TO OUT.

SPLICE LENGTH CHART

BAR	SIZE	LENGTH
A200	#16	540
A400	#22	920
B1	#13	540
B3	#13	540
C1, C2	#13	590
S1, S3	#19	690

BILL OF MATERIAL

STAGE II (PART 1)

BAR	NO.	SIZE	TYPE	LENGTH	WEIGHT
A1	149	#16	6	1500	347
A2	149	#19	6	1740	579
A3	166	#16	6	1780	459
A200	121	#16	STR	4960	931
A209	1	#16	STR	4500	7
A210	1	#16	STR	4040	6
A211	1	#16	STR	3560	6
A212	1	#16	STR	3080	5
A213	1	#16	STR	2620	4
A214	1	#16	STR	2140	3
A215	1	#16	STR	1680	3
A216	1	#16	STR	1220	2
A217	1	#16	STR	740	1
A400	137	#22	STR	5340	2225
A410	1	#22	STR	4960	15
A411	1	#22	STR	4540	14
A412	1	#22	STR	4140	13
A413	1	#22	STR	3720	11
A414	1	#22	STR	3300	10
A415	1	#22	STR	2900	9
A416	1	#22	STR	2480	8
A417	1	#22	STR	2060	6
A418	1	#22	STR	1660	5
A419	1	#22	STR	1240	4
A420	1	#22	STR	840	3
B1	132	#13	STR	2840	373
B2	149	#13	STR	2100	311
B3	166	#16	STR	2840	732
C2	105	#13	STR	7860	820
E1	8	#13	STR	1220	10
S1	3	#19	STR	5120	34
S3	3	#19	STR	5440	36

REINFORCING STEEL 6992 kg.

CLASS A CONCRETE
FLOOR AND WALLS 48.5 m3

STAGE II (PART 2)

BAR	NO.	SIZE	TYPE	LENGTH	WEIGHT
A1	130	#13	6	1500	194
A2	130	#19	6	1740	506
A100	114	#19	STR	7940	2023
A117	1	#19	STR	7760	17
A118	1	#19	STR	7300	16
A119	1	#19	STR	6820	15
A120	1	#19	STR	6360	14
A121	1	#19	STR	5900	13
A122	1	#19	STR	5420	12
A123	1	#19	STR	4960	11
A124	1	#19	STR	4500	10
A125	1	#19	STR	4020	9
A126	1	#19	STR	3560	8
A127	1	#19	STR	3100	7
A128	1	#19	STR	2620	6
A129	1	#19	STR	2160	5
A130	1	#19	STR	1680	4
A131	1	#19	STR	1220	3
A132	1	#19	STR	760	2
A133	1	#19	STR	280	1
A300	130	#22	STR	7940	3140
A319	1	#22	STR	7820	24
A320	1	#22	STR	7400	23
A321	1	#22	STR	7000	21
A322	1	#22	STR	6580	20
A323	1	#22	STR	6160	19
A324	1	#22	STR	5760	18
A325	1	#22	STR	5340	16
A326	1	#22	STR	4920	15
A327	1	#22	STR	4520	14
A328	1	#22	STR	4100	12
A329	1	#22	STR	3700	11
A330	1	#22	STR	3280	10
A331	1	#22	STR	2860	9
A332	1	#22	STR	2460	7
A333	1	#22	STR	2040	6
A334	1	#22	STR	1640	5
A335	1	#22	STR	1220	4
A336	1	#22	STR	800	2
A337	1	#22	STR	400	1
A500	115	#16	STR	3520	628
A508	1	#16	STR	3340	5
A509	1	#16	STR	2860	4
A510	1	#16	STR	2400	4
A511	1	#16	STR	1920	3
A512	1	#16	STR	1460	2
A513	1	#16	STR	1000	2
A514	1	#16	STR	520	1

BAR	NO.	SIZE	TYPE	LENGTH	WEIGHT
A600	130	#22	STR	3520	1392
A609	1	#22	STR	3380	10
A610	1	#22	STR	2980	9
A611	1	#22	STR	2560	8
A612	1	#22	STR	2140	7
A613	1	#22	STR	1740	5
A614	1	#22	STR	1320	4
A615	1	#22	STR	920	3
A615	1	#22	STR	500	2
B1	115	#13	STR	2840	325
B2	130	#13	STR	2100	271
C2	171	#13	STR	7860	1336
G1	4	#16	STR	7940	49
S2	3	#19	STR	3520	24
S4	6	#19	STR	3740	50
S5	3	#19	STR	7940	53
S6	6	#19	STR	8440	113

REINFORCING STEEL 10563 kg.

CLASS A CONCRETE
FLOOR, WALLS AND ROOF SLAB 78.1 m3

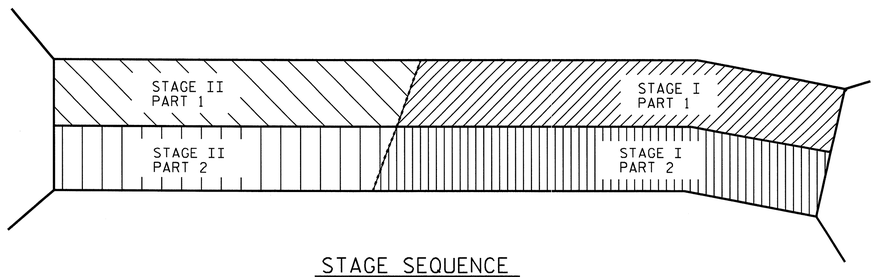

STAGE SEQUENCE

NORTH CAROLINA PROFESSIONAL SEAL 22005 ENGINEER A. KEITH PASCHAL
2/28/11

PROJECT NO. R-2519A
YANCEY COUNTY
STATION: 285+04.660 -L-

SHEET 7 OF 10

STATE OF NORTH CAROLINA
DEPARTMENT OF TRANSPORTATION
RALEIGH

BILL OF MATERIAL
DOUBLE 3.700m X 2.4700m
CONCRETE BOX CULVERT

REVISIONS						SHEET NO.
NO.	BY:	DATE:	NO.	BY:	DATE:	C-36
1			3			TOTAL SHEETS
2			4			119

DRAWN BY : J. MYA DATE : 7-7-10
CHECKED BY : J. C. KHARVA DATE : 7-19-10

25-FEB-2011 14:34
R:\Structures\str4\Final Plans\R2519A_SD_CU_04.dgn
gallen

STR. #4

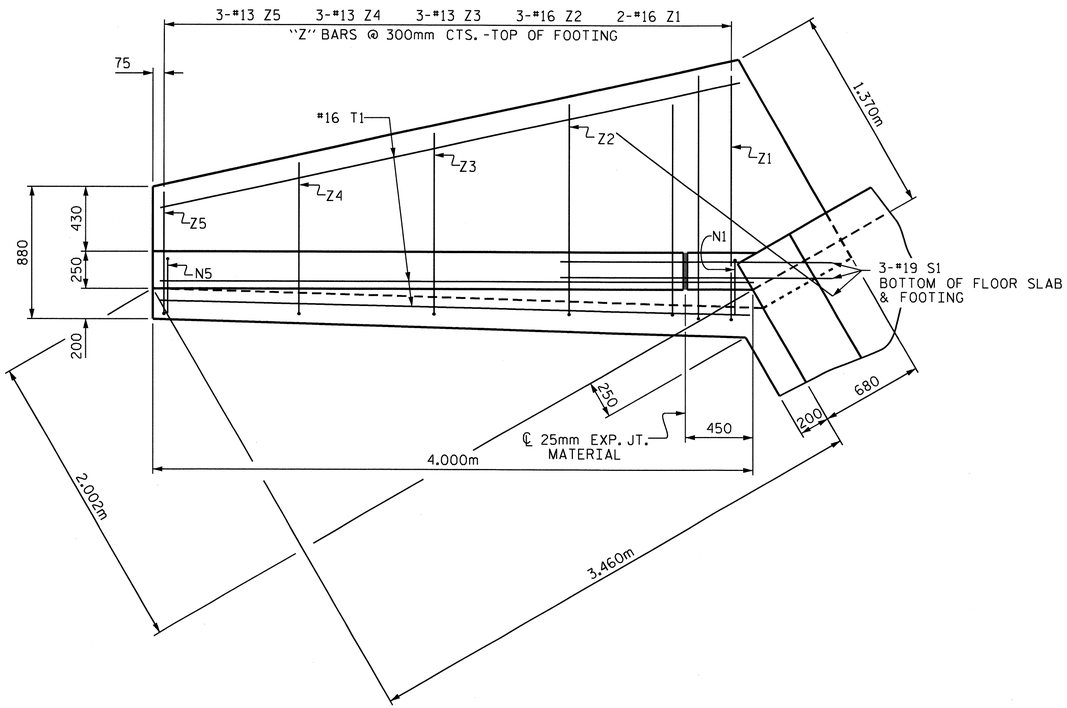

PLAN W1

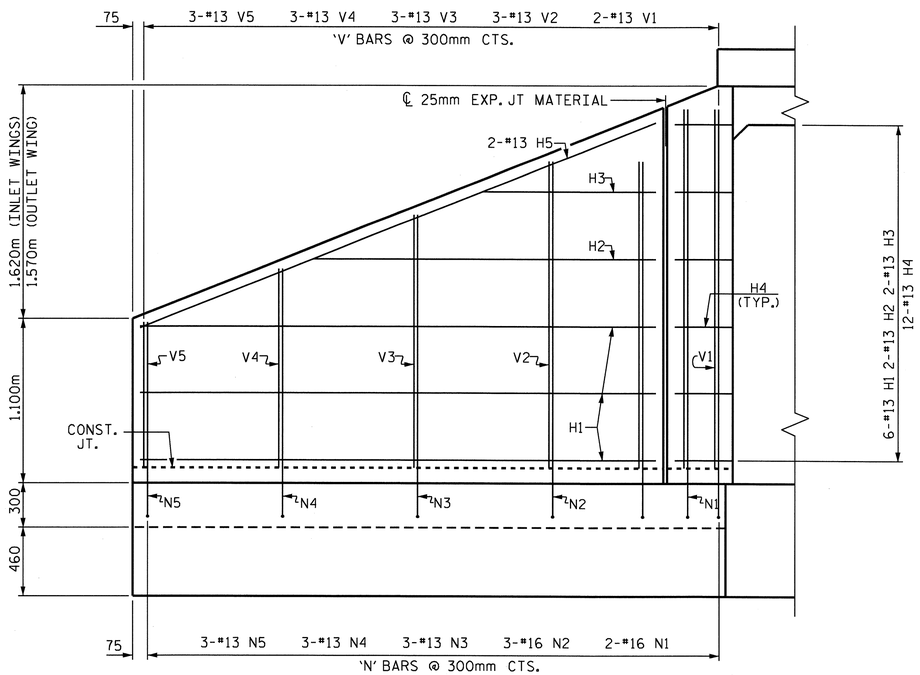

ELEVATION W1

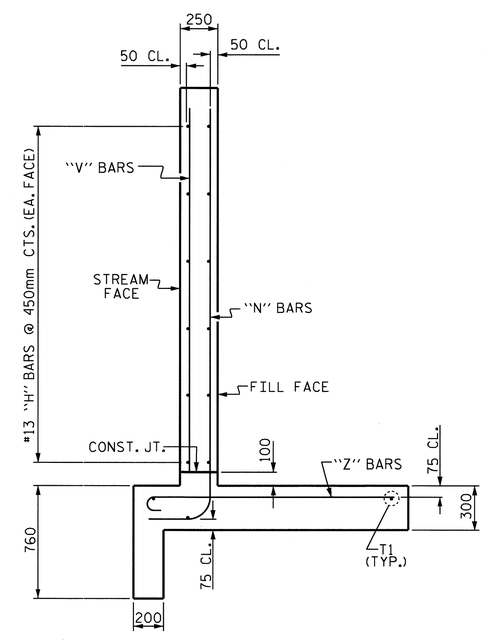

TYPICAL WING SECTION

BAR TYPES

ALL BAR DIMENSIONS ARE OUT TO OUT.

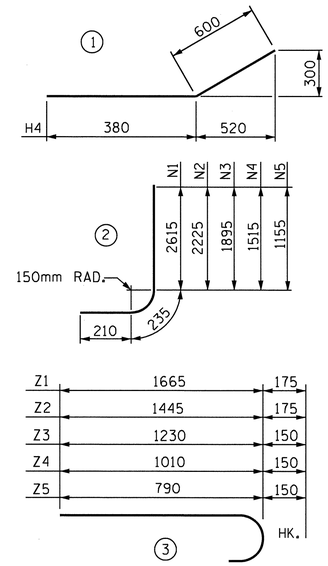

BILL OF MATERIAL W1

BAR	NO.	SIZE	TYPE	LENGTH	WEIGHT
H1	6	#13	STR	3440	21
H2	2	#13	STR	2380	5
H3	2	#13	STR	1280	3
H4	12	#13	1	980	12
H5	2	#13	STR	3700	7
N1	2	#16	2	3060	9
N2	3	#16	2	2700	13
N3	3	#13	2	2340	7
N4	3	#13	2	1960	6
N5	3	#13	2	1600	5
S1	3	#19	STR	1800	12
T1	3	#16	STR	4000	19
V1	2	#13	STR	2440	5
V2	3	#13	STR	2080	6
V3	3	#13	STR	1720	5
V4	2	#13	STR	1340	3
V5	3	#13	STR	980	3
Z1	2	#16	3	1840	6
Z2	3	#16	3	1620	8
Z3	3	#13	3	1380	4
Z4	3	#13	3	1160	3
Z5	3	#13	3	940	3

REINFORCING STEEL FOR 1 WING 165 kg

CLASS A CONCRETE: STAGE I (PART 2)

WING (W1) 4.0 m^3

PART CURTAIN WALL, HEADWALL AND EDGE BEAM 2.5 m^3

TOTAL 6.5 m^3

CLASS A CONCRETE: STAGE II (PART 1)

WING (W1) 4.0 m^3

PART CURTAIN WALL AND EDGE BEAM 1.1 m^3

TOTAL 5.0 m^3

CLASS A CONCRETE: STAGE II (PART 2)

WING (W1) 4.0 m^3

PART CURTAIN WALL, HEADWALL AND EDGE BEAM 2.5 m^3

TOTAL 6.5 m^3

PROJECT NO. R-2519A

YANCEY COUNTY

STATION: 285+04.660 -L

SHEET 8 OF 10

STATE OF NORTH CAROLINA
DEPARTMENT OF TRANSPORTATION
RALEIGH

STANDARD WING FOR CONCRETE BOX CULVERT
H = 2.400m SLOPE = 2:1
90° SKEW

NORTH CAROLINA PROFESSIONAL SEAL 22005 ENGINEER A. KEITH PASCHAL

2/28/11

REVISIONS						SHEET NO.
NO.	BY:	DATE:	NO.	BY:	DATE:	C-37
1			3			TOTAL SHEETS
2			4			119

ASSEMBLED BY : J. MYA DATE : 7-7-10
CHECKED BY : J. G. KHARVA DATE : 7-19-10

DRAWN BY : FPP 06/97
CHECKED BY : VAP 08/97

25-FEB-2011 14:34
R:\Structures\str4\Final Plans\R2519A_SD_CU_04.dgn

STR #4 STD. NO. CW9024

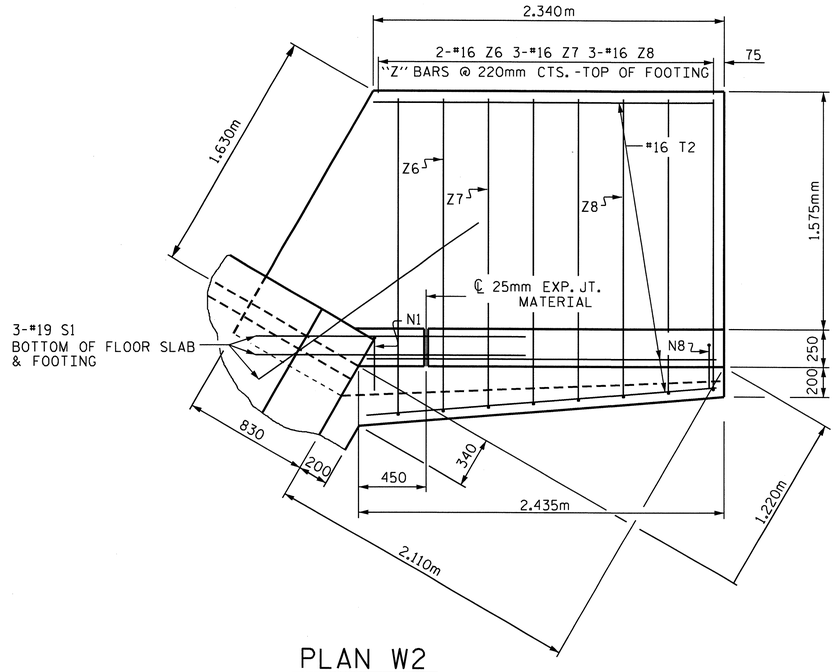

PLAN W2

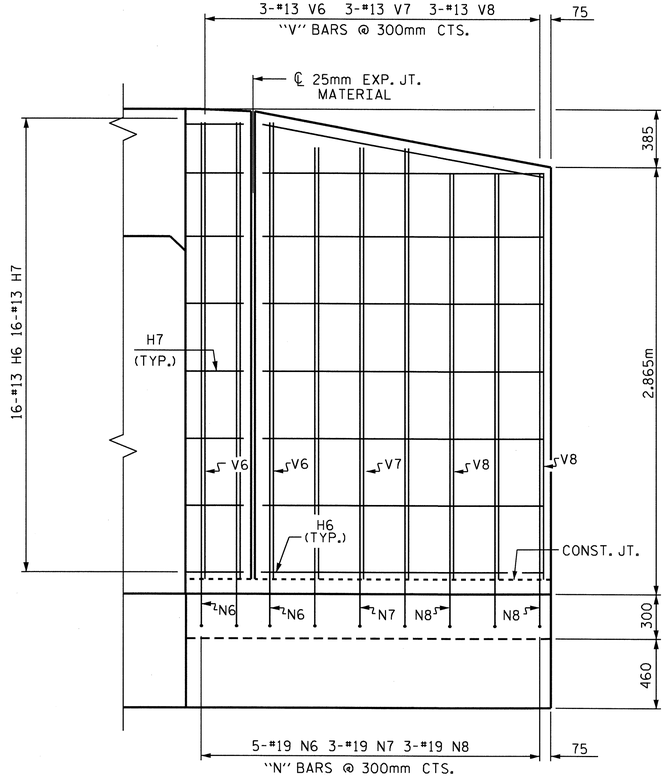

ELEVATION W2

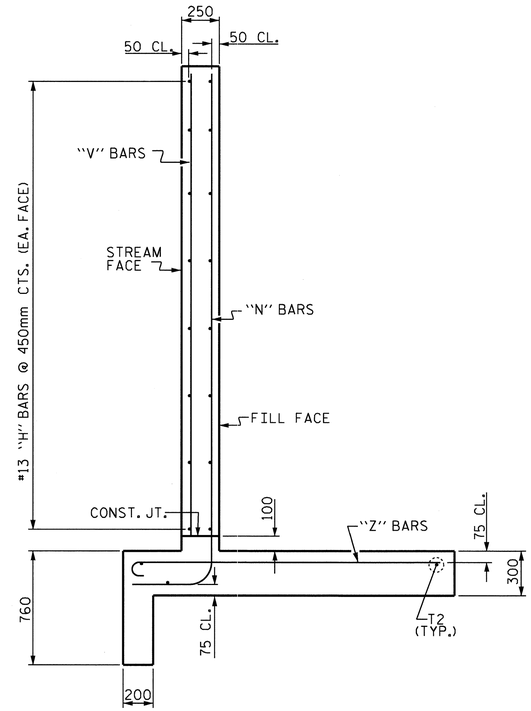

TYPICAL WING SECTION

BAR TYPES

ALL BAR DIMENSIONS ARE OUT TO OUT.

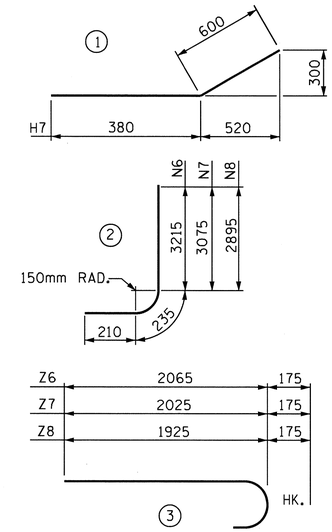

BILL OF MATERIAL W2

BAR	NO.	SIZE	TYPE	LENGTH	WEIGHT
H6	16	#13	STR	1860	30
H7	16	#13	1	980	16
N6	3	#19	2	3660	25
N7	3	#19	2	3520	24
N8	3	#19	2	3340	22
S1	3	#19	STR	1800	12
T2	3	#16	STR	2340	11
V6	3	#13	STR	3040	9
V7	3	#13	STR	2880	9
V8	3	#13	STR	2720	8
Z6	2	#16	3	2240	7
Z7	3	#16	3	2140	10
Z8	3	#16	3	2100	10

REINFORCING STEEL FOR 1 WING 193 kg

CLASS A CONCRETE: STAGE 1 (PART1)

WING (W2) 3.9 m^3

PART CURTAIN WALL AND EDGE BEAM 1.0 m^3

TOTAL 4.9 m^3

PROJECT NO. R-2519A

YANCEY COUNTY

STATION: 285+04.660 -L

SHEET 9 OF 10

STATE OF NORTH CAROLINA
DEPARTMENT OF TRANSPORTATION
RALEIGH

MODIFIED WING W2 FOR CONCRETE BOX CULVERT
(STAGE I PART 1)

NORTH CAROLINA PROFESSIONAL SEAL 22005 ENGINEER KEITH PASCHAL
2/28/11

REVISIONS							SHEET NO.
NO.	BY:	DATE:	NO.	BY:	DATE:		C-38
1			3				TOTAL SHEETS
2			4				119

ASSEMBLED BY : J. MYA	DATE : 7-7-10	
CHECKED BY : J. G. KHARVA	DATE : 7-19-10	
DRAWN BY : FPP 06/97		
CHECKED BY : VAP 06/97		

25-FEB-2011 14:34
R:\Structures\str4\Final Plans\R2519A_SD_CU_04.dgn

STR. #4

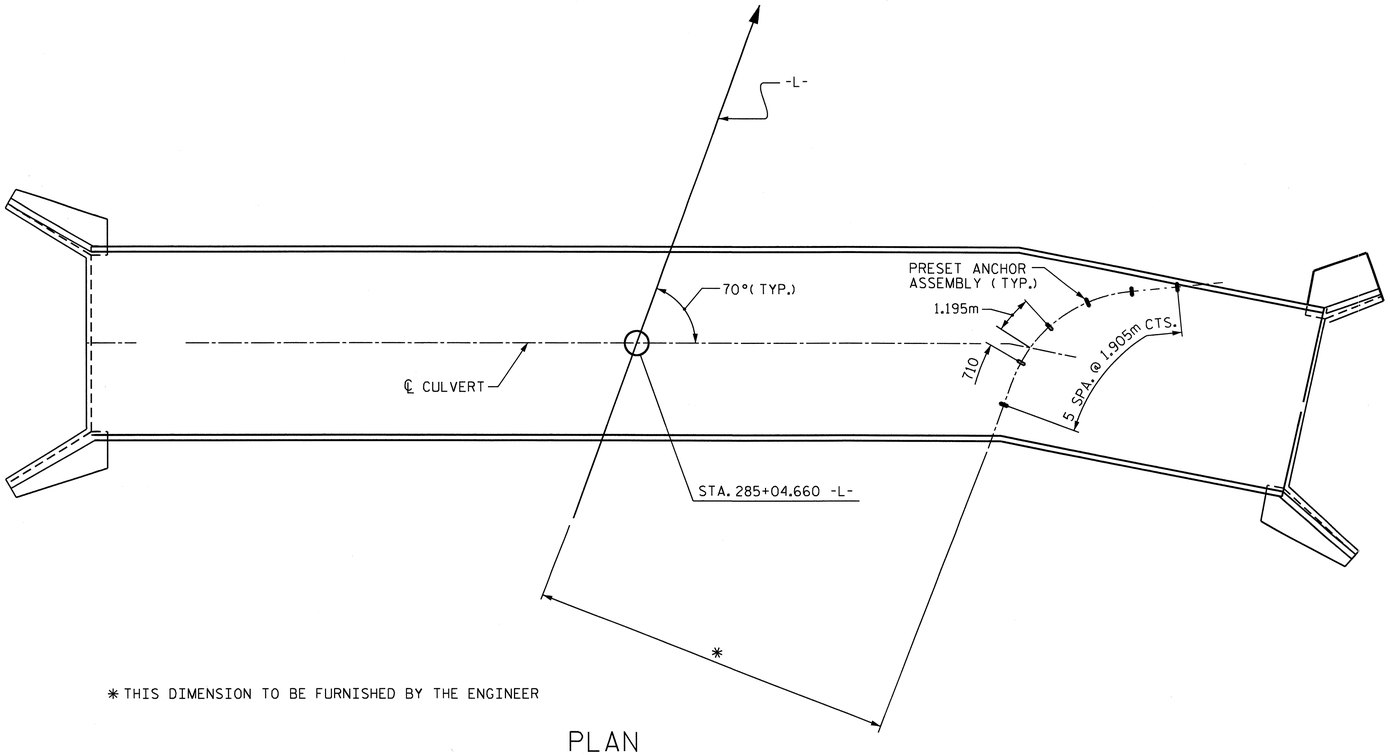

* THIS DIMENSION TO BE FURNISHED BY THE ENGINEER

PLAN

SHOWING : GUARDRAIL ANCHOR ASSEMBLY SPACING.

NOTES

THE GUARDRAIL ANCHOR ASSEMBLY FOR CULVERTS SHALL CONSIST OF THE FOLLOWING COMPONENTS :

A. FERRULES SHALL BE MADE FROM STEEL MEETING THE REQUIREMENTS OF AASHTO M169, GRADE 12L14 AND SHALL HAVE A MINIMUM LENGTH OF THREADS OF 64mm.

B. 4 - 25.40mm DIA. X 57mm BOLTS WITH WASHERS, BOLTS SHALL CONFORM TO THE REQUIREMENTS OF ASTM A307. BOLTS AND WASHERS SHALL BE GALVANIZED. (AT THE CONTRACTOR'S OPTION, STAINLESS STEEL BOLTS AND WASHERS MAY BE USED AS AN ALTERNATE FOR THE 25.40mm DIA. X 57mm GALVANIZED BOLTS AND WASHERS. THEY SHALL CONFORM TO OR EXCEED THE MECHANICAL REQUIREMENTS OF ASTM A307. THE USE OF THIS ALTERNATE SHALL BE APPROVED BY THE ENGINEER.)

C. WIRE STRUTS SHOWN IN THE GUARDRAIL ANCHOR ASSEMBLY FOR CULVERTS DETAIL ARE MINIMUM ALLOWABLE SIZE AND SHALL HAVE A MINIMUM TENSILE STRENGTH OF 689 MPa. AS AN OPTION, A 11mm Ø WIRE STRUT WITH A MINIMUM TENSILE STRENGTH OF 620 MPa. IS ACCEPTABLE.

GUARDRAIL ANCHOR ASSEMBLY WITH BOLTS SHALL BE ASSEMBLED IN THE SHOP. BOLT THREADS MAY BE RECUT AS NECESSARY TO INSURE FIT.

THE COST OF THE GUARDRAIL ANCHOR ASSEMBLY FOR CULVERTS COMPLETE IN PLACE, SHALL BE INCLUDED IN THE UNIT CONTRACT PRICE BID FOR CLASS "A" CONCRETE.

FERRULES TO BE PLUGGED DURING POURING OF SLAB AS RECOMMENDED BY THE MANUFACTURER.

AT THE CONTRACTOR'S OPTION, FERRULES WITH OPEN OR CLOSED ENDS MAY BE USED.

PAYMENT FOR GUARDRAIL, POSTS, AND POST BASE PLATES IS INCLUDED IN ROADWAY PAY ITEMS.

SLAB REINFORCING STEEL MAY BE SHIFTED AS NECESSARY TO CLEAR GUARDRAIL ANCHOR ASSEMBLY. CARE SHOULD BE TAKEN TO KEEP THE SHIFTING OF REINFORCING STEEL TO A MINIMUM.

THE CONTRACTOR MAY USE ADHESIVELY ANCHORED ANCHOR BOLTS IN PLACE OF GUARDRAIL ANCHOR ASSEMBLY. LEVEL TWO FIELD TESTING IS REQUIRED, AND THE YIELD LOAD OF THE 25.40mm Ø BOLT IS 97.0 kN. FOR ADHESIVELY ANCHORED ANCHOR BOLTS OR DOWELS, SEE SPECIAL PROVISIONS.

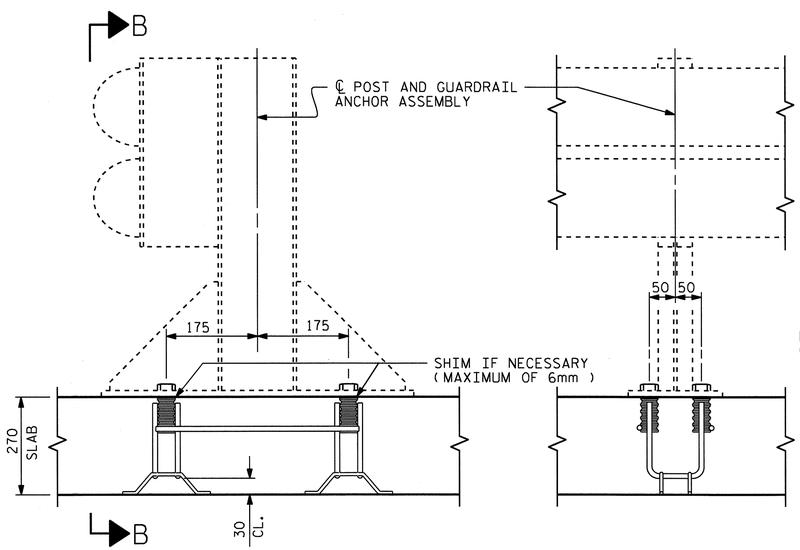

SECTION A-A

SECTION B-B

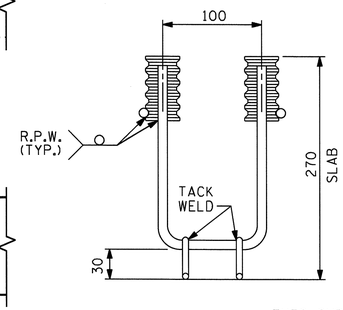

ELEVATION

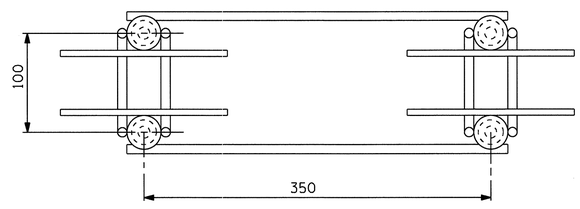

PLAN

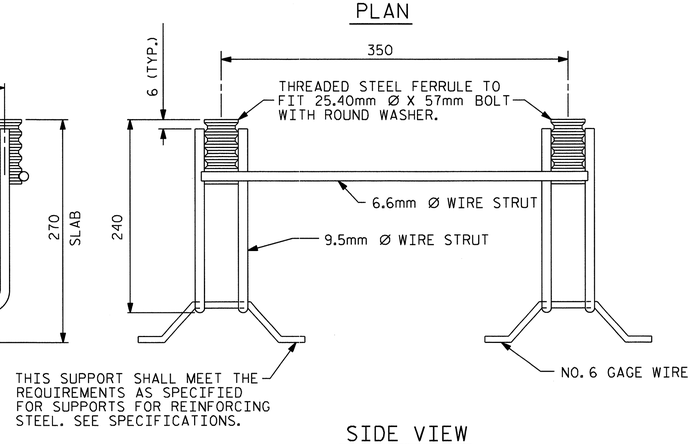

SIDE VIEW

GUARDRAIL ANCHOR ASSEMBLY FOR CULVERTS

NORTH CAROLINA PROFESSIONAL SEAL 22005 ENGINEER A. KEITH PASCHAL

3/1/11

PROJECT NO. R-2519A

YANCEY COUNTY

STATION: 285+04.660 -L-

SHEET 10 OF 10

STATE OF NORTH CAROLINA
DEPARTMENT OF TRANSPORTATION
RALEIGH

STANDARD

ANCHORAGE DETAILS FOR GUARDRAIL ANCHOR ASSEMBLY FOR CULVERTS

REVISIONS						SHEET NO.
NO.	BY:	DATE:	NO.	BY:	DATE:	C-39
1			3			TOTAL SHEETS
2			4			117

ASSEMBLED BY : E. G. ALLEN		DATE : 2/7/11	
CHECKED BY : J.D. HAWK		DATE : 2/10/11	
DRAWN BY : FCJ 6/88	REV. 7/10/01	LES/RDR	
CHECKED BY : ARB 6/88	REV. 5/7/03	RWW/JTE	
	REV. 5/1/06R	KMM/GM	

01-MAR-2011 09:40
R:\Structures\str4\Final Plans\R2519A_SD_CU_04.dgn
jdhawk

STR. #4

STD. NO. GRA1SM

BM: #7 SPIKE SET IN BASE OF 10" MAPLE TREE 38m LEFT STA. 11+62.000 -Y19- EL. 803.589.

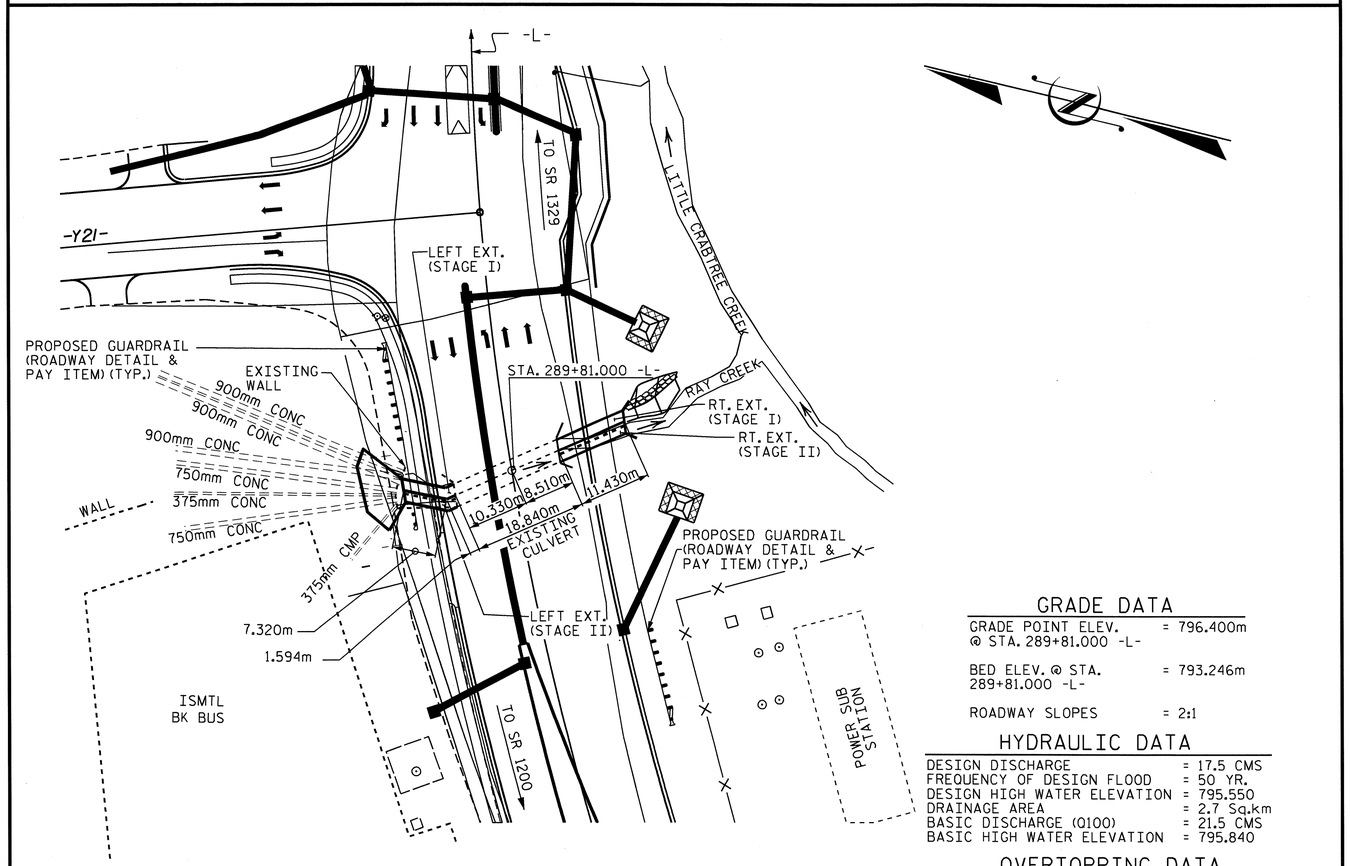

FOR UTILITY INFORMATION, SEE UTILITY PLANS AND SPECIAL PROVISIONS.

LOCATION SKETCH

GRADE DATA

GRADE POINT ELEV. @ STA. 289+81.000 -L-	= 796.400m
BED ELEV. @ STA. 289+81.000 -L-	= 793.246m
ROADWAY SLOPES	= 2:1

HYDRAULIC DATA

DESIGN DISCHARGE	= 17.5 CMS
FREQUENCY OF DESIGN FLOOD	= 50 YR.
DESIGN HIGH WATER ELEVATION	= 795.550
DRAINAGE AREA	= 2.7 Sq.km
BASIC DISCHARGE (Q100)	= 21.5 CMS
BASIC HIGH WATER ELEVATION	= 795.840

OVERTOPPING DATA

OVERTOPPING DISCHARGE	= 28.5 CMS
FREQUENCY OF OVERTOPPING FLOOD	= 100+ YRS.
OVERTOPPING FLOOD ELEVATION	= 796.500

TOTAL QUANTITIES

CLASS A CONCRETE - RETAINING WALL & SLAB

CONCRETE RET. WALL	29.2 m^3

CLASS A CONCRETE - (LEFT EXT. STAGE I)

BARREL	13.0 m^3
WING (W1) ETC.	17.6 m^3
TOTAL	30.6 m^3

FOUNDATION COND. MAT'L. ---- 15 METRIC TONS

CLASS A CONCRETE - (LEFT EXT. STAGE II)

BARREL	20.1 m^3
WING (W2) ETC.	10.7 m^3
TOTAL	30.8 m^3

FOUNDATION COND. MAT'L. ---- 10 METRIC TONS

CLASS A CONCRETE - (RIGHT EXT. STAGE I)

BARREL	16.7 m^3
WING (W3) ETC.	3.3 m^3
TOTAL	20.0 m^3

FOUNDATION COND. MAT'L. ---- 20 METRIC TONS

CLASS A CONCRETE - (RIGHT EXT. STAGE II)

BARREL	25.6 m^3
WING (W4) ETC.	2.9 m^3
TOTAL	28.5 m^3

FOUNDATION COND. MAT'L. ---- 13 METRIC TONS

REINFORCING STEEL-RETAINING WALL & SLAB	1561 kg

REINFORCING STEEL - (LEFT EXT. STAGE I)

BARREL	1158 kg
WING (W1) ETC.	534 kg
TOTAL	1692 kg

REINFORCING STEEL - (LEFT EXT. STAGE II)

BARREL	1527 kg
WING (W2) ETC.	430 kg
TOTAL	1957 kg

REINFORCING STEEL - (RIGHT EXT. STAGE I)

BARREL	1483 kg
WING (W3) ETC.	120 kg
TOTAL	1603 kg

REINFORCING STEEL - (RIGHT EXT. STAGE II)

BARREL	1632 kg
WING (W4) ETC.	96 kg
TOTAL	1728 kg

CULVERT EXCAVATION ---------- LUMP SUM

NOTES

ASSUMED LIVE LOAD ----------MS18 OR ALTERNATE LOADING.

DESIGN FILL--------0.880m (RIGHT EXT.) 1.370 (LEFT EXT.)

FOR OTHER DESIGN DATA AND NOTES SEE STANDARD NOTE SHEET.

76mm Ø WEEP HOLES INDICATED TO BE IN ACCORDANCE WITH THE SPECIFICATIONS.

AFTER CONSTRUCTION OF THE PROPOSED END WALL FOR THE EXISTING PIPES, THE CONCRETE IN CULVERTS TO BE POURED IN THE FOLLOWING ORDER :

(STAGE I / LEFT & RIGHT EXTENSIONS)

1. WING FOOTING AND FLOOR SLAB INCLUDING 100mm OF ALL VERTICAL WALLS.
2. THE REMAINING PORTIONS OF THE WALLS AND WINGS FULL HEIGHT.

(STAGE II / LEFT AND RIGHT EXTENSIONS)

1. WING FOOTING AND FLOOR SLAB INCLUDING 100mm OF ALL VERTICAL WALLS.
2. THE REMAINING PORTIONS OF THE WALLS AND WINGS FULL HEIGHT.
3. THE ROOF SLABS AND HEADWALLS.

THE RESIDENT ENGINEER SHALL CHECK THE LENGTH OF CULVERT BEFORE STAKING IT OUT TO MAKE CERTAIN THAT IT WILL PROPERLY TAKE CARE OF THE FILL.

DIMENSIONS FOR WING LAYOUT AS WELL AS ADDITIONAL REINFORCING STEEL EMBEDDED IN BARREL ARE SHOWN ON WING SHEET.

AT THE CONTRACTOR'S OPTION, HE MAY SPLICE THE VERTICAL REINFORCING STEEL IN THE INTERIOR FACE OF EXTERIOR WALL AND BOTH FACES OF INTERIOR WALLS ABOVE LOWER WALL CONSTRUCTION JOINT. THE SPLICE LENGTH SHALL BE AS PROVIDED IN THE SPLICE LENGTH CHART SHOWN ON THE PLANS. EXTRA WEIGHT OF STEEL DUE TO THE SPLICES SHALL BE PAID FOR BY THE CONTRACTOR.

IF APPROVED BY THE ENGINEER, THE CONTRACTOR MAY USE THE EXISTING WINGS AS TEMPORARY SHORING FOR THE CONSTRUCTION OF THE CULVERT EXTENSIONS. IN THIS CASE, THE BOTTOM SLAB OF THE EXTENSION SHALL BE POURED AT LEAST 72 HOURS PRIOR TO CUTTING THE WINGS. THE WINGS MAY BE CUT EARLIER PROVIDED THE SLAB CONCRETE STRENGTH HAS REACHED A MINIMUM COMPRESSIVE STRENGTH OF 10.3 MPa.

DOWELS SHALL BE USED TO CONNECT THE CULVERT EXTENSION TO THE EXISTING CULVERT AS SHOWN. FOR NOTE REGARDING SETTING OF DOWELS, SEE SHEET SN.

A 900mm STRIP OF FILTER FABRIC SHALL BE ATTACHED TO THE FILL FACE OF THE WING COVERING THE ENTIRE LENGTH OF THE EXPANSION JOINT.

FOR CULVERT DIVERSION DETAILS AND PAY ITEM, SEE EROSION CONTROL PLANS.

NO PRECAST REINFORCED BOX CULVERT OPTION WILL BE ALLOWED.

FOR SUBMITTAL OF WORKING DRAWINGS, SEE SPECIAL PROVISIONS.

FOR FALSEWORK AND FORMWORK, SEE SPECIAL PROVISIONS.

FOR CRANE SAFETY, SEE SPECIAL PROVISIONS.

FOR GROUT FOR STRUCTURES, SEE SPECIAL PROVISIONS.

ALL DIMENSIONS ARE IN MILLIMETERS UNLESS OTHERWISE NOTED.

ALL ELEVATIONS ARE IN METERS.

TOTAL STRUCTURE QUANTITIES

CLASS A CONCRETE		REINFORCING STEEL	
CONCRETE RETAINING WALL & SLAB	29.2 m^3	CONCRETE RETAINING WALL & SLAB	1561 kg
LEFT EXT. STAGE I	30.6 m^3	LEFT EXT. STAGE I	1692 kg
LEFT EXT. STAGE II	30.8 m^3	LEFT EXT. STAGE II	1957 kg
RIGHT EXT. STAGE I	20.0 m^3	RIGHT EXT. STAGE I	1603 kg
RIGHT EXT. STAGE II	28.5 m^3	RIGHT EXT. STAGE II	1728 kg
TOTAL	139.1 m^3	TOTAL	8541 kg
CULVERT EXCAVATION -- LUMP SUM		FOUNDATION COND. MAT'L--58.0-- M.TONS	

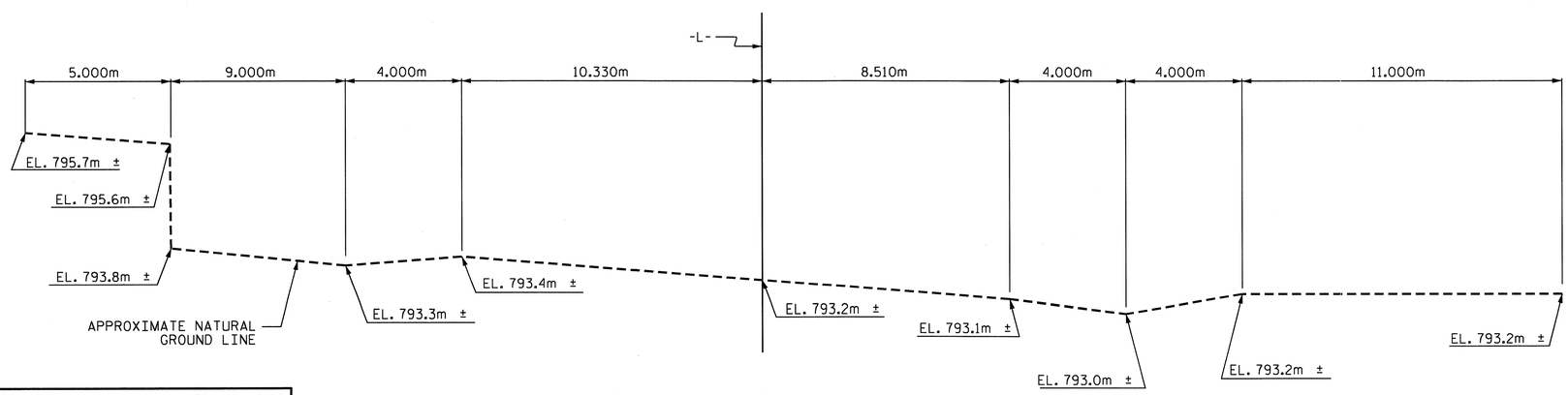

PROFILE ALONG ℄ CULVERT

PROJECT NO. R-2519A

YANCEY COUNTY

STATION: 289+81.000 -L-

SHEET 1 OF 9

STATE OF NORTH CAROLINA
DEPARTMENT OF TRANSPORTATION
RALEIGH

DOUBLE 1.800m X 1.800m CONCRETE BOX CULVERT (LEFT EXT. & RIGHT EXT.)

NORTH CAROLINA PROFESSIONAL SEAL 12929 ENGINEER NORMAN ARBELA BLOUNT, JR. 3/1/11

NORTH CAROLINA PROFESSIONAL SEAL 22005 ENGINEER K. KEITH PASCHAL 3/1/11

METRIC

REVISIONS						SHEET NO.
NO.	BY:	DATE:	NO.	BY:	DATE:	C-40
1			3			TOTAL SHEETS
2			4			119

ASSEMBLED BY :	J. G. KHARVA	DATE :	11/14/06
CHECKED BY :	J. D. HAWK	DATE :	11/29/10
DRAWN BY :	EEM	6/97	
CHECKED BY :	ARB	7/97	

01-MAR-2011 07:58
R:\Structures\str5\Final Plans\R-2519A_sd_CU_05.dgn
jdhawk

STD. No. CB2105sm

STR. #5

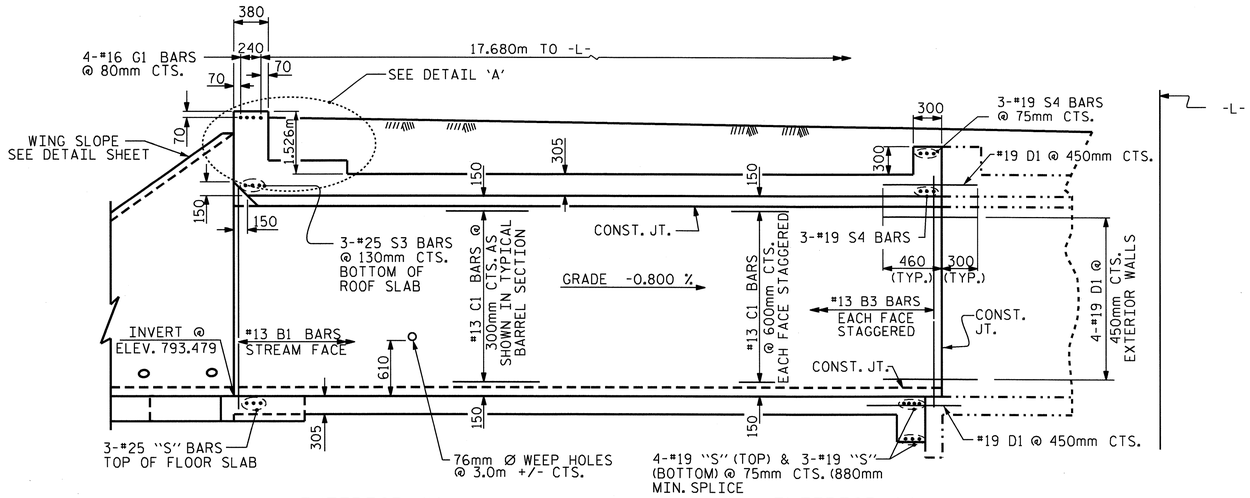

CULVERT SECTION NORMAL TO ROADWAY

(LEFT EXTENSION)

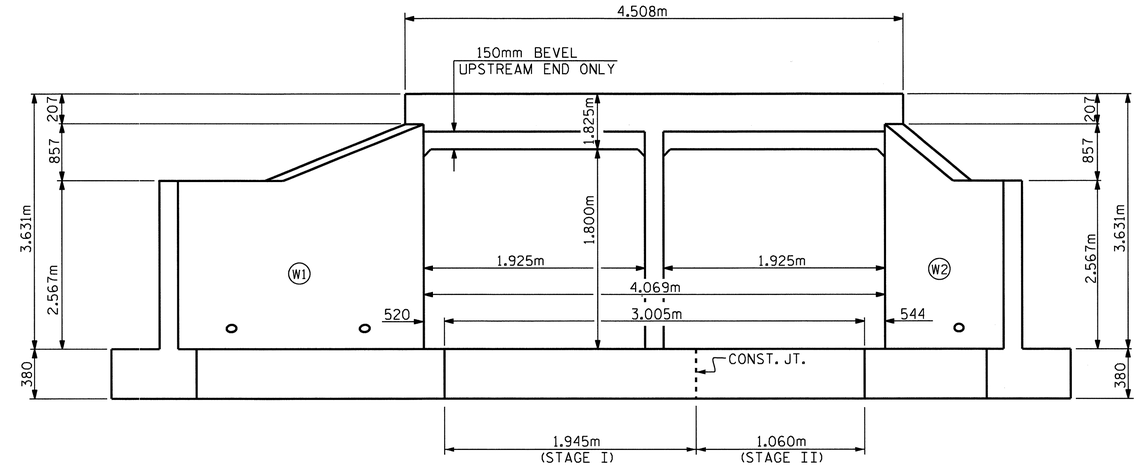

END ELEVATION - INLET

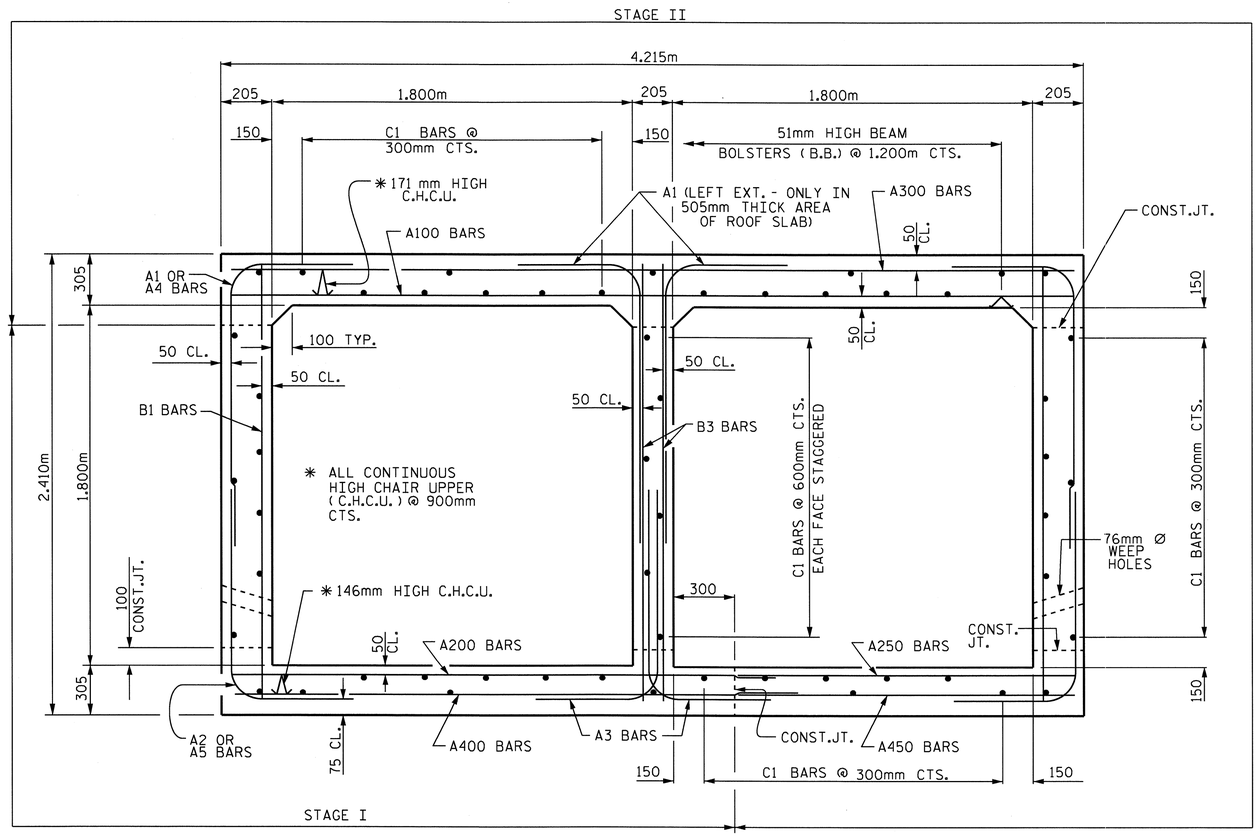

RIGHT ANGLE SECTION OF BARREL

THERE ARE 54 "C" BARS IN SECTION OF BARREL. (23 STAGE I & 31 STAGE II)
(LEFT EXT. AND RIGHT EXT.)
(LOOKING DOWNSTREAM)

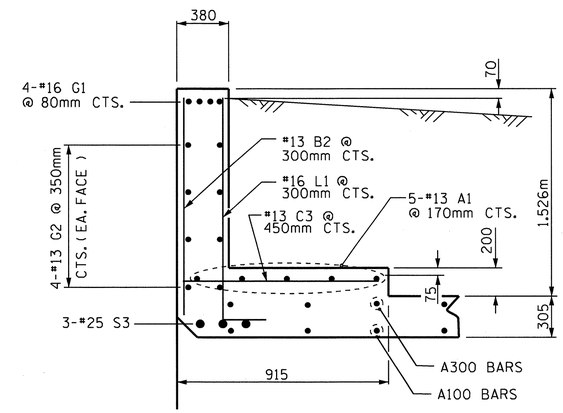

DETAIL 'A'

PROJECT NO. R-2519A
YANCEY COUNTY
STATION: 289+81.000 -L-

SHEET 2 OF 9

STATE OF NORTH CAROLINA
DEPARTMENT OF TRANSPORTATION
RALEIGH

DOUBLE 1.800m X 1.800m CONCRETE BOX CULVERT (LEFT EXTENSION)

NORTH CAROLINA PROFESSIONAL SEAL 22005 ENGINEER KEITH PASCHAL
2/28/11

REVISIONS								SHEET NO.
NO.	BY:	DATE:	NO.	BY:	DATE:			C-41
1			3					TOTAL SHEETS
2			4					119

ASSEMBLED BY :	J. G. KHARVA	DATE :	11/02/06
CHECKED BY :	J. D. HAWK	DATE :	11/29/10
DRAWN BY :	EEM	6/97	
CHECKED BY :	ARB	7/97	

25-FEB-2011 14:31
R:\Structures\str5\Final Plans\R-2519A_sd_CU_05.dgn
gallen

STD. No. CB2105sm

STR. #5

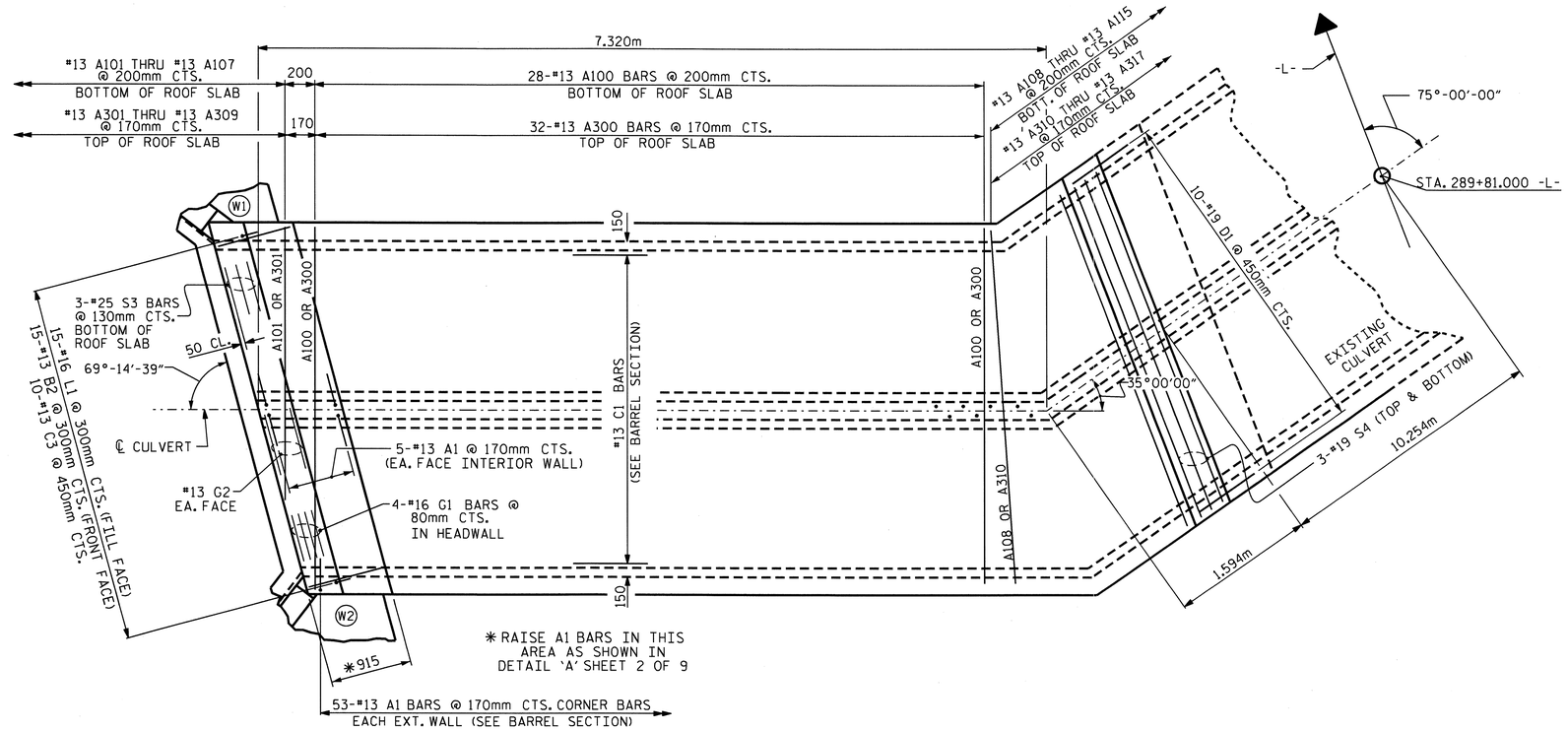

PLAN OF ROOF SLAB

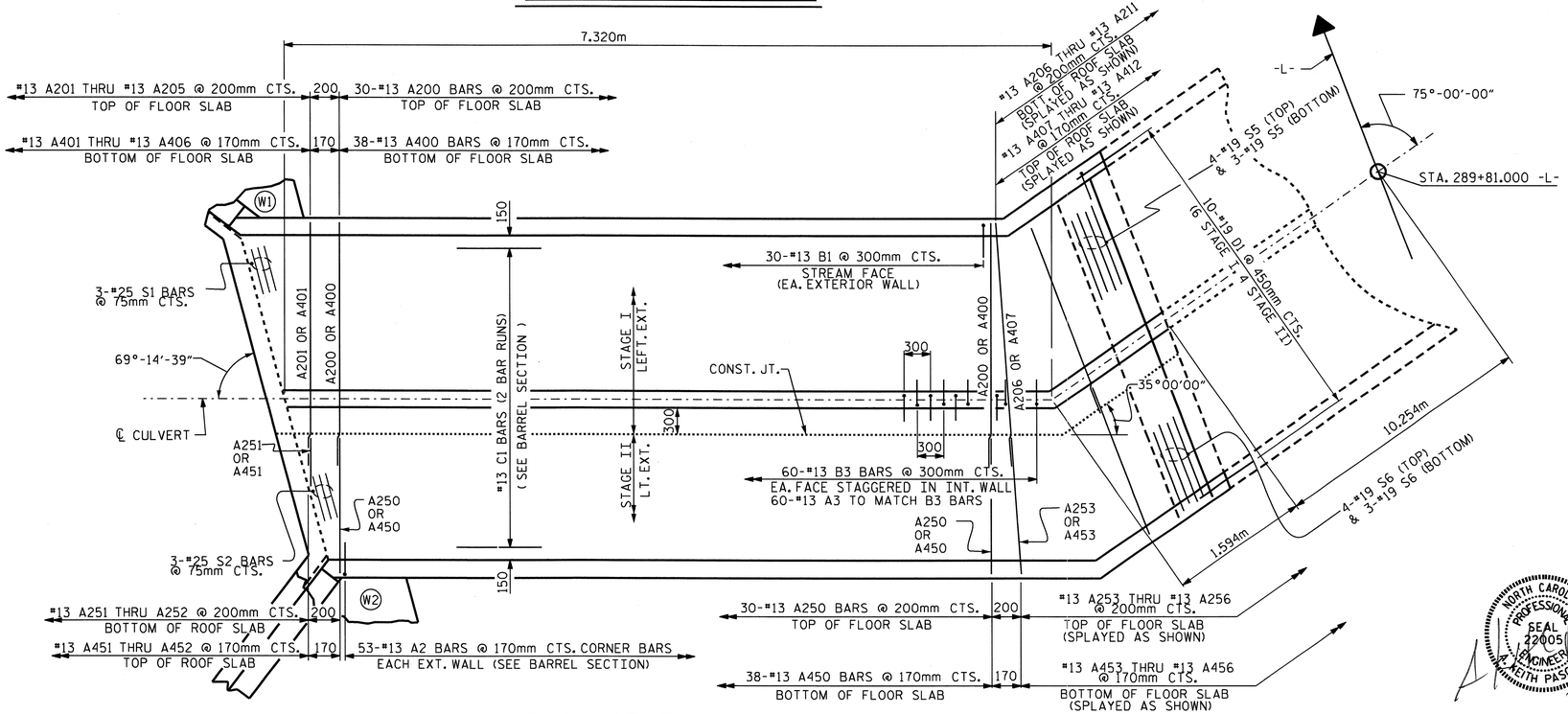

PLAN OF FLOOR SLAB

PROJECT NO. R-2519A
YANCEY COUNTY
STATION: 289+81.000 -L-

SHEET 3 OF 9

STATE OF NORTH CAROLINA
DEPARTMENT OF TRANSPORTATION
RALEIGH

DOUBLE 1.800m X 1.800m
CONCRETE BOX CULVERT
(LEFT EXTENSION)

NORTH CAROLINA PROFESSIONAL SEAL 22005 ENGINEER A. KEITH PASCHAL
2/8/11

REVISIONS						SHEET NO.
NO.	BY:	DATE:	NO.	BY:	DATE:	C-42
1			3			TOTAL SHEETS
2			4			119

ASSEMBLED BY : J. G. KHARVA		DATE :	11/02/06
CHECKED BY : J. D. HAWK		DATE :	11/29/10
DRAWN BY : EEM	6/97		
CHECKED BY : ARB	7/97		

25-FEB-2011 14:31
R:\Structures\str5\Final Plans\R-2519A_sd_CU_05.dgn
gallen

STD. No. CB2105sm

STR. #5

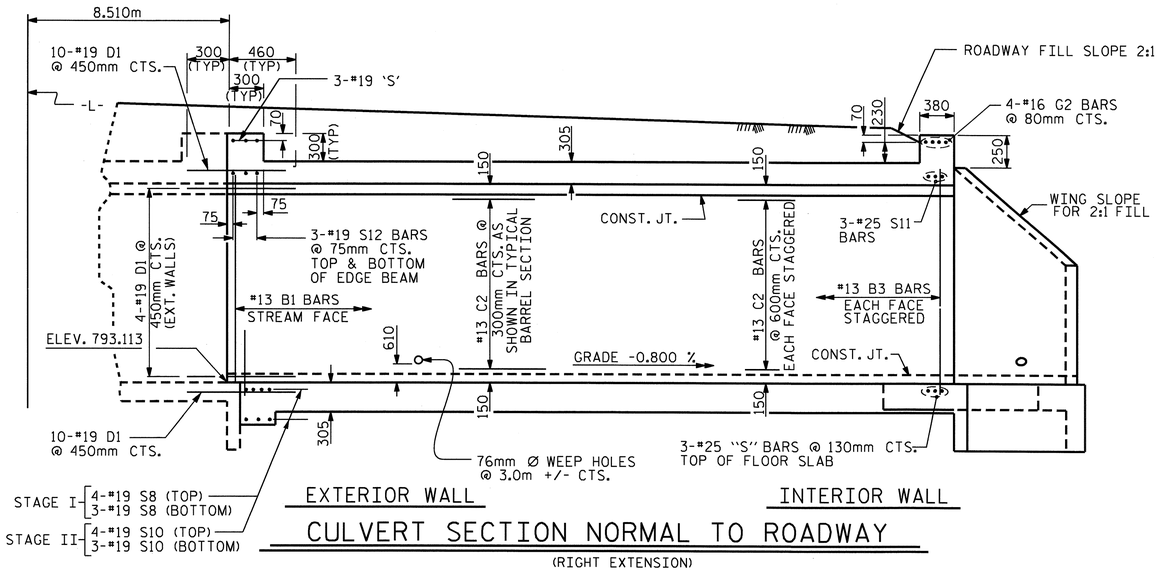

CULVERT SECTION NORMAL TO ROADWAY

(RIGHT EXTENSION)

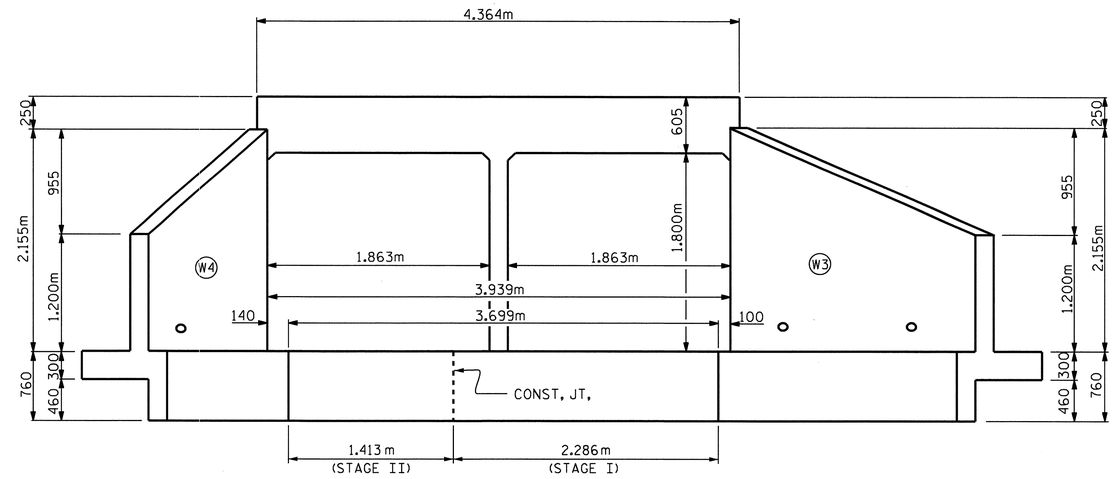

END ELEVATION - OUTLET

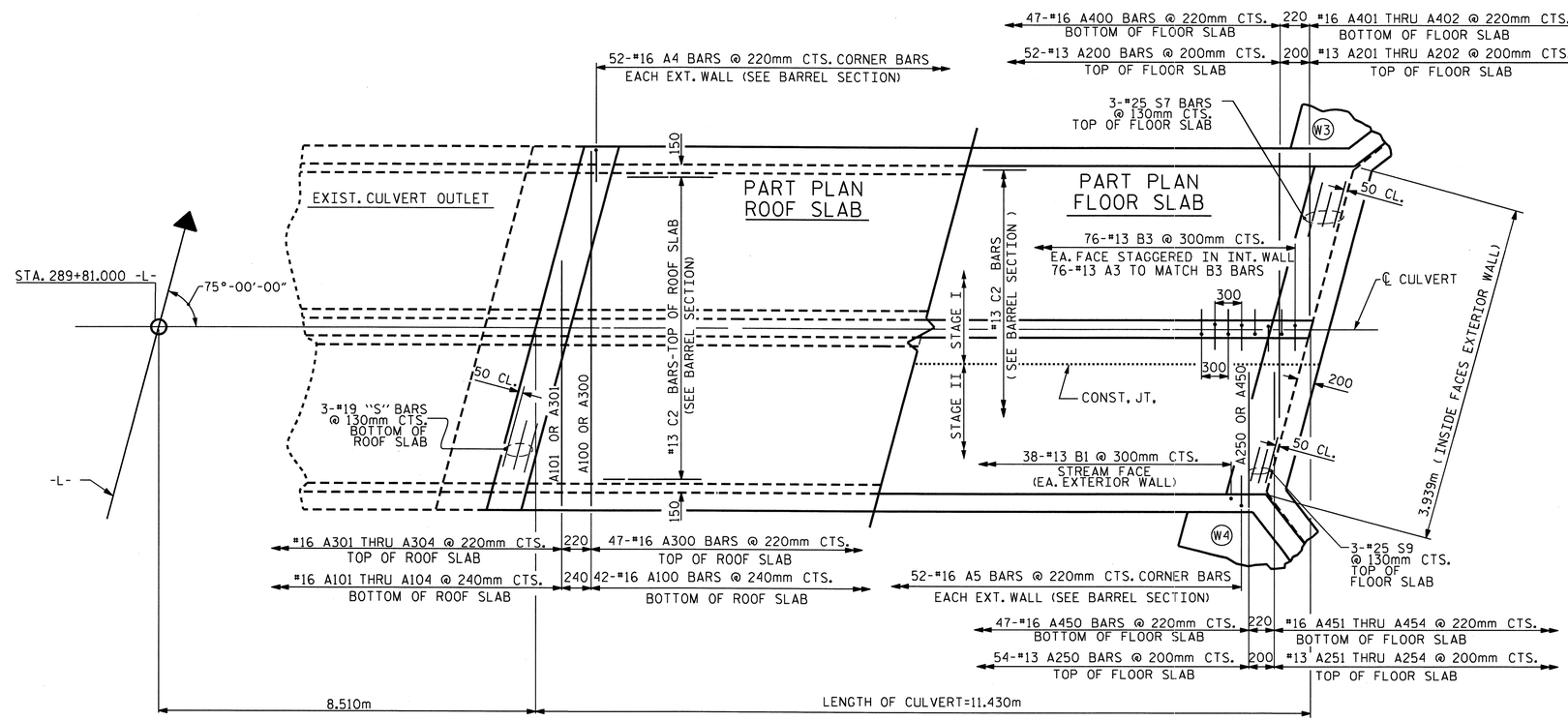

PLAN OF RIGHT EXTENSION

PROJECT NO. R-2519A

YANCEY COUNTY

STATION: 289+81.000 -L-

SHEET 4 OF 9

STATE OF NORTH CAROLINA
DEPARTMENT OF TRANSPORTATION
RALEIGH

DOUBLE 1.800m X 1.800m CONCRETE BOX CULVERT (RIGHT EXTENSION) 75° SKEW

NORTH CAROLINA PROFESSIONAL SEAL 22006 ENGINEER A. KEITH PASCHAL

2/28/11

REVISIONS						SHEET NO.
NO.	BY:	DATE:	NO.	BY:	DATE:	C-43
1			3			TOTAL SHEETS
2			4			119

ASSEMBLED BY : J. G. KHARVA		DATE :	11/02/06
CHECKED BY : J. D. HAWK		DATE :	11/29/10
DRAWN BY : EEM	6/97		
CHECKED BY : ARB	7/97		

25-FEB-2011 14:31
R:\Structures\str5\Final Plans\R-2519A_sd_CU_05.dgn
gallen

STD. No. CB2105sm

STR. #5

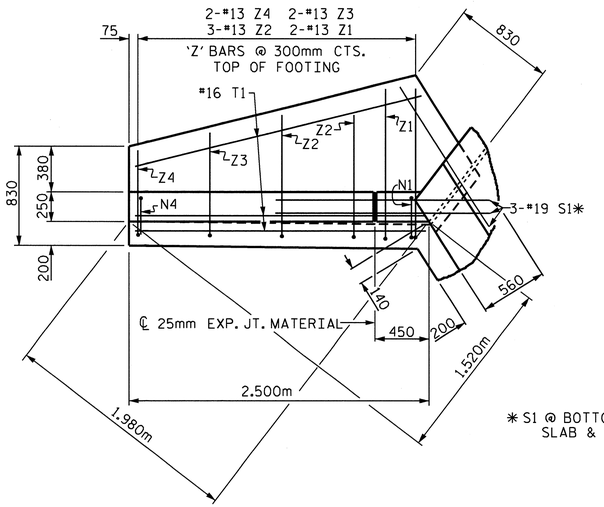

PLAN W4

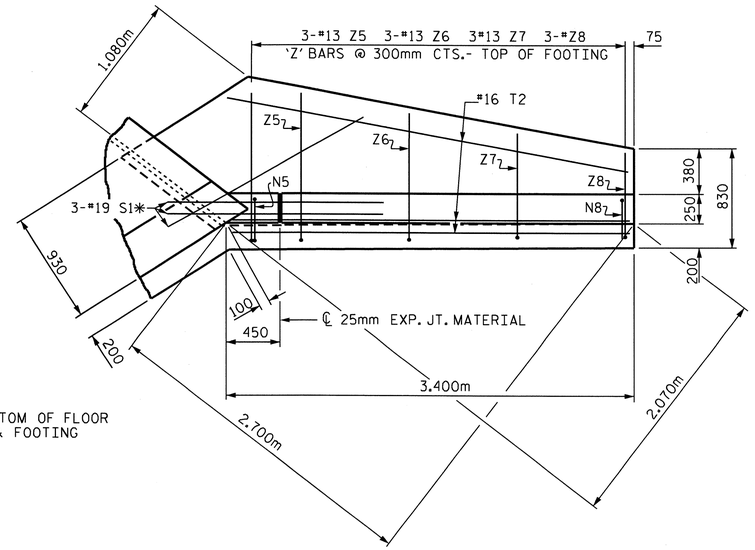

PLAN W3

* S1 @ BOTTOM OF FLOOR SLAB & FOOTING

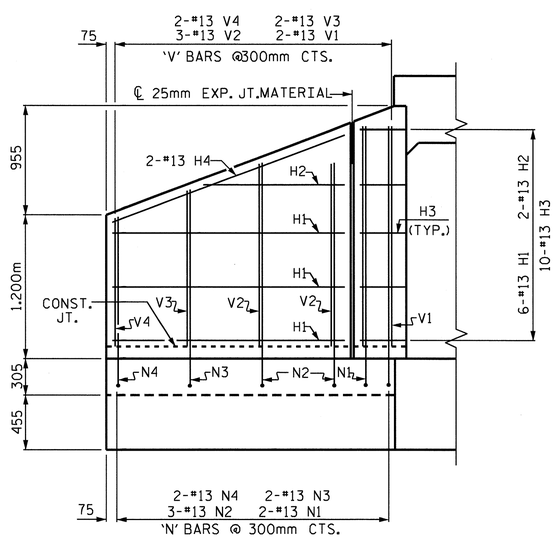

ELEVATION W4

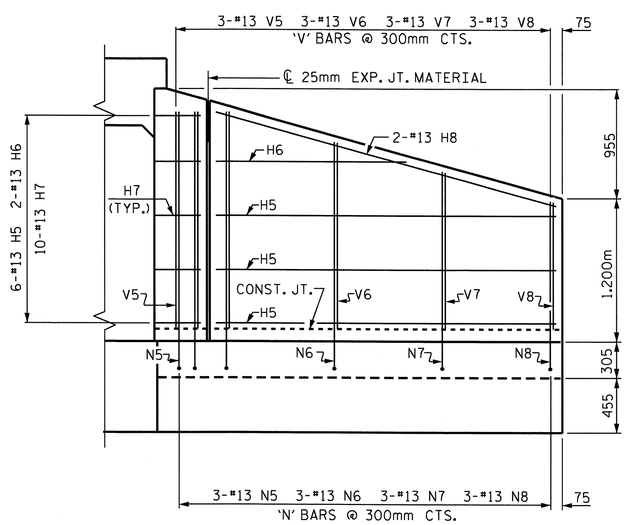

ELEVATION W3

BAR TYPES

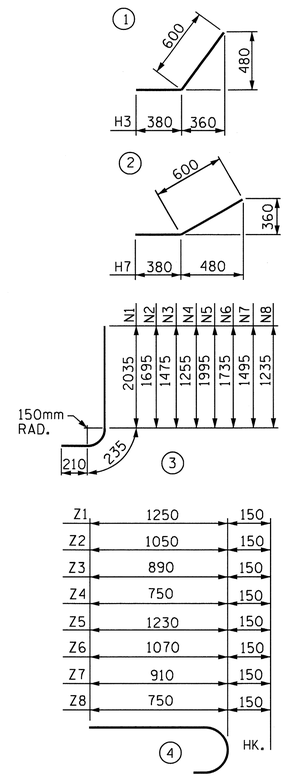

ALL BAR DIMENSIONS ARE OUT TO OUT.

BILL OF MATERIAL

WING (W3) (STAGE I)

BAR	NO.	SIZE	TYPE	LENGTH	WEIGHT
H5	6	13	STR	2840	17
H6	2	13	STR	1680	3
H7	10	13	2	980	10
H8	2	13	STR	2940	6
N5	3	13	3	2440	8
N6	3	13	3	2180	6
N7	3	13	3	1940	6
N8	3	13	3	1680	5
S1	3	19	STR	1800	12
T2	3	16	STR	3400	16
V5	3	13	STR	1820	6
V6	3	13	STR	1560	5
V7	3	13	STR	1320	4
V8	3	13	STR	1060	3
Z5	3	13	4	1380	4
Z6	3	13	4	1220	3
Z7	3	13	4	1060	3
Z8	3	13	4	900	3

REINFORCING STEEL FOR 1 WING 120 kg

CLASS A CONCRETE

1 WING 3.0 m^3

PART END CURTAIN WALL 0.3 m^3

TOTAL 3.3 m^3

WING (W4) (STAGE II)

BAR	NO.	SIZE	TYPE	LENGTH	WEIGHT
H1	6	13	STR	1940	12
H2	2	13	STR	1060	2
H3	10	13	1	980	10
H4	2	13	STR	2060	4
N1	2	13	3	2480	5
N2	3	13	3	2140	7
N3	2	13	3	1920	4
N4	2	13	3	1700	4
S1	3	19	STR	1800	12
T1	3	16	STR	2500	11
V1	2	13	STR	1860	4
V2	3	13	STR	1520	5
V3	2	13	STR	1300	3
V4	2	13	STR	1080	2
Z1	2	13	4	1400	3
Z2	3	13	4	1200	4
Z3	2	13	4	1040	2
Z4	2	13	4	900	2

REINFORCING STEEL FOR 1 WING 96 kg

CLASS A CONCRETE

1 WING 2.2 m_3

1 HEADWALL 0.5 m_3

PART END CURTAIN WALL 0.2 m_3

TOTAL 2.9 m_3

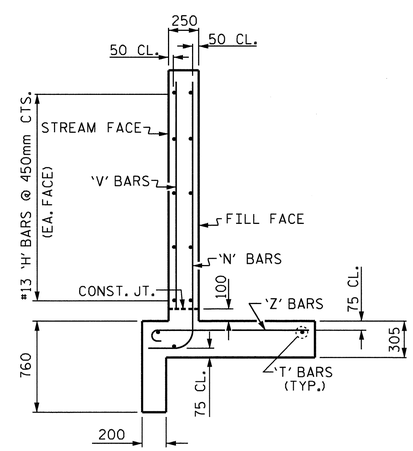

TYPICAL WING SECTION

NORTH CAROLINA PROFESSIONAL SEAL 22005 ENGINEER A. KEITH PASCHAL

2/28/11

PROJECT NO. R-2519A

YANCEY COUNTY

STATION: 289+81.000 -L-

SHEET 5 OF 9

STATE OF NORTH CAROLINA
DEPARTMENT OF TRANSPORTATION
RALEIGH

RIGHT EXTENSION WINGS

H = 1.800m SLOPE 2:1

75° SKEW

REVISIONS						SHEET NO.
NO.	BY:	DATE:	NO.	BY:	DATE:	C-44
1			3			TOTAL SHEETS
2			4			119

ASSEMBLED BY : J. G. KHARVA DATE : 11/02/06
CHECKED BY : J. D. HAWK DATE : 11/29/10

DRAWN BY : KJA 6/97
CHECKED BY : VAP 12/97

25-FEB-2011 14:30
R:\Structures\str5\Final Plans\R-2519A_sd_CU_05.dgn
gallen

STR. #5

STD. NO. CW7518

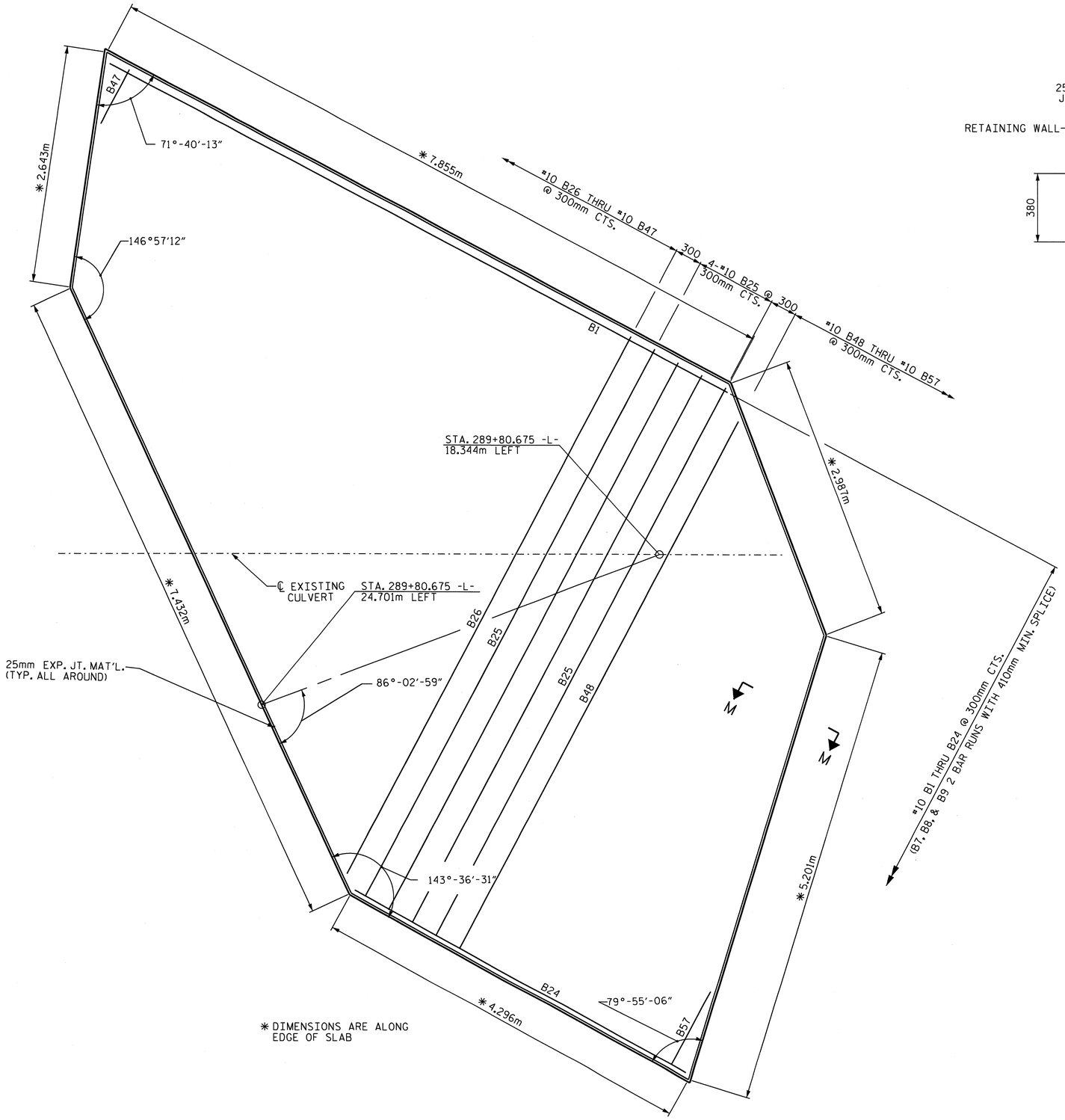

PLAN OF SLAB

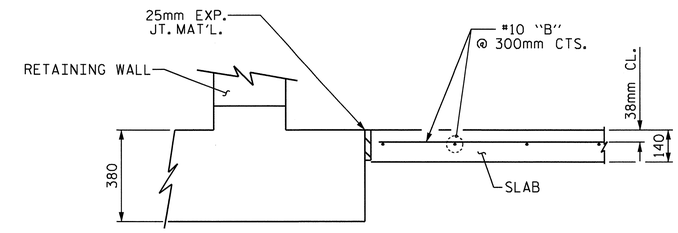

SECTION M-M

PROJECT NO. R-2519A

YANCEY COUNTY

STATION: 289+81.000 -L-

SHEET 6 OF 9

STATE OF NORTH CAROLINA
DEPARTMENT OF TRANSPORTATION
RALEIGH

LEFT EXTENSION
DOUBLE 1.800m X 1.800m
CONCRETE BOX CULVERT
SLAB DETAILS

NORTH CAROLINA PROFESSIONAL SEAL 22005 ENGINEER KEITH PASCHAL

2/28/11

REVISIONS						SHEET NO.
NO.	BY:	DATE:	NO.	BY:	DATE:	C-45
1			3			TOTAL SHEETS
2			4			119

DRAWN BY : J. C. KHARVA DATE : 08/09/10
CHECKED BY : J. D.HAWK DATE : 11/29/10

28-FEB-2011 12:28
R:\Structures\str5\Final Plans\R-2519A_sd_CU_05.dgn
jdhawk

STR. #5

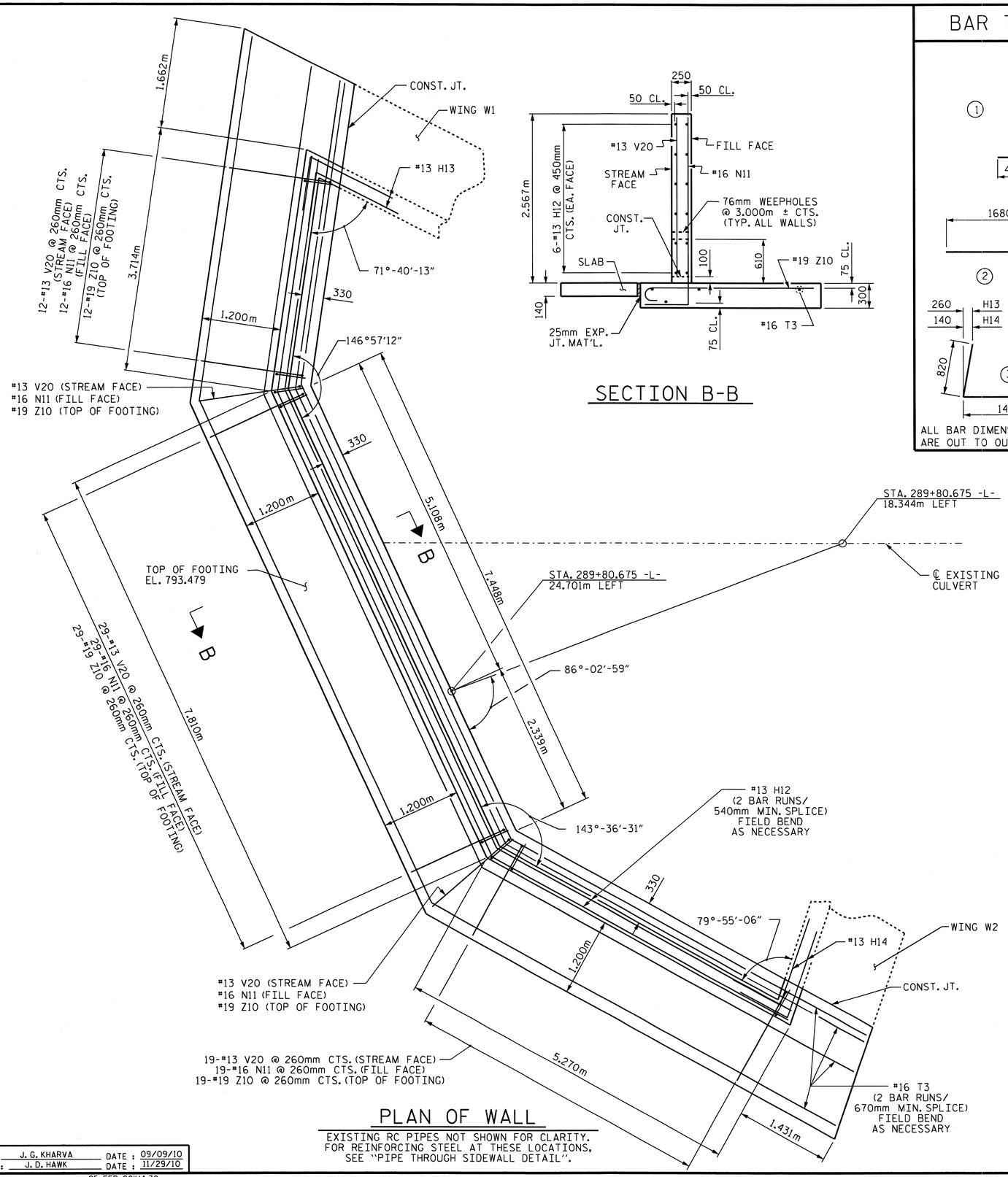

PLAN OF WALL

EXISTING RC PIPES NOT SHOWN FOR CLARITY. FOR REINFORCING STEEL AT THESE LOCATIONS, SEE "PIPE THROUGH SIDEWALL DETAIL".

SECTION B-B

BAR TYPES

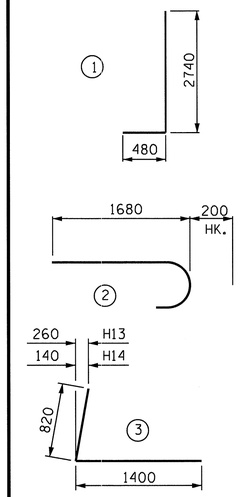

ALL BAR DIMENSIONS ARE OUT TO OUT.

BILL OF MATERIAL

BAR	NO.	SIZE	TYPE	LENGTH	WEIGHT
B1	1	10	STR	7800	4
B2	1	10	STR	8020	4
B3	1	10	STR	8260	5
B4	1	10	STR	8500	5
B5	1	10	STR	8740	5
B6	1	10	STR	8960	5
B7	2	10	STR	4820	5
B8	2	10	STR	4840	5
B9	2	10	STR	4800	5
B10	1	10	STR	8840	5
B11	1	10	STR	8500	5
B12	1	10	STR	8180	5
B13	1	10	STR	7840	4
B14	1	10	STR	7500	4
B15	1	10	STR	7160	4
B16	1	10	STR	6840	4
B17	1	10	STR	6500	4
B18	1	10	STR	6160	3
B19	1	10	STR	5820	3
B20	1	10	STR	5500	3
B21	1	10	STR	5160	3
B22	1	10	STR	4820	3
B23	1	10	STR	4500	3
B24	1	10	STR	4160	2
B25	4	10	STR	6900	15
B26	1	10	STR	6780	4
B27	1	10	STR	6540	4
B28	1	10	STR	6320	4
B29	1	10	STR	6080	3

BAR	NO.	SIZE	TYPE	LENGTH	WEIGHT
B30	1	10	STR	5860	3
B31	1	10	STR	5620	3
B32	1	10	STR	5400	3
B33	1	10	STR	5160	3
B34	1	10	STR	4940	3
B35	1	10	STR	4700	3
B36	1	10	STR	4480	3
B37	1	10	STR	4260	2
B38	1	10	STR	4020	2
B39	1	10	STR	3800	2
B40	1	10	STR	3560	2
B41	1	10	STR	3340	2
B42	1	10	STR	3100	2
B43	1	10	STR	2880	2
B44	1	10	STR	2640	1
B45	1	10	STR	2420	1
B46	1	10	STR	1600	1
B47	1	10	STR	760	1
B48	1	10	STR	6660	4
B49	1	10	STR	6380	4
B50	1	10	STR	6120	3
B51	1	10	STR	5860	3
B52	1	10	STR	5600	3
B53	1	10	STR	5340	3
B54	1	10	STR	5080	3
B55	1	10	STR	3980	2
B56	1	10	STR	2420	1
B57	1	10	STR	880	1

BAR	NO.	SIZE	TYPE	LENGTH	WEIGHT
E1	48	16	STR	1660	124
E2	32	16	STR	1500	74
E3	32	16	STR	1140	57
H12	24	13	STR	8620	206
H13	12	13	3	2220	26
H14	12	13	3	2220	26
N11	62	16	1	3220	310
T3	8	16	STR	10860	135
V20	62	13	STR	2400	148
Z10	62	19	2	1880	261

REINFORCING STEEL FOR WALL & SLAB 1561 kgs

CLASS A CONCRETE

RETAINING WALL 21.8 m^3

SLAB 7.4 m^3

TOTAL 29.2 m^3

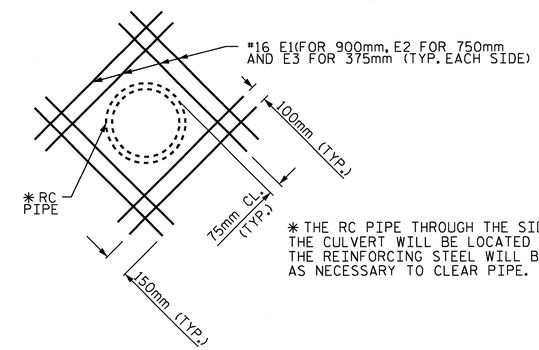

✱ THE RC PIPE THROUGH THE SIDEWALL OF THE CULVERT WILL BE LOCATED BY THE ENGINEER. THE REINFORCING STEEL WILL BE FIELD BENT AS NECESSARY TO CLEAR PIPE.

PIPE THROUGH SIDEWALL DETAIL

PROJECT NO. R-2519A

YANCEY COUNTY

STATION: 289+81.000 -L-

SHEET 7 OF 9

STATE OF NORTH CAROLINA
DEPARTMENT OF TRANSPORTATION
RALEIGH

LEFT EXTENSION
DOUBLE 1.800m X 1.800m
CONCRETE BOX CULVERT

NORTH CAROLINA PROFESSIONAL SEAL 22005 ENGINEER D. KEITH PASCHAL

2/28/11

REVISIONS						SHEET NO.
NO.	BY:	DATE:	NO.	BY:	DATE:	C-46
1			3			TOTAL SHEETS
2			4			119

DRAWN BY : J. G. KHARVA DATE : 09/09/10
CHECKED BY : J. D. HAWK DATE : 11/29/10

25-FEB-2011 14:30
R:\Structures\str5\Final Plans\R-2519A_sd_CU_05.dgn
gallen

STR. #5

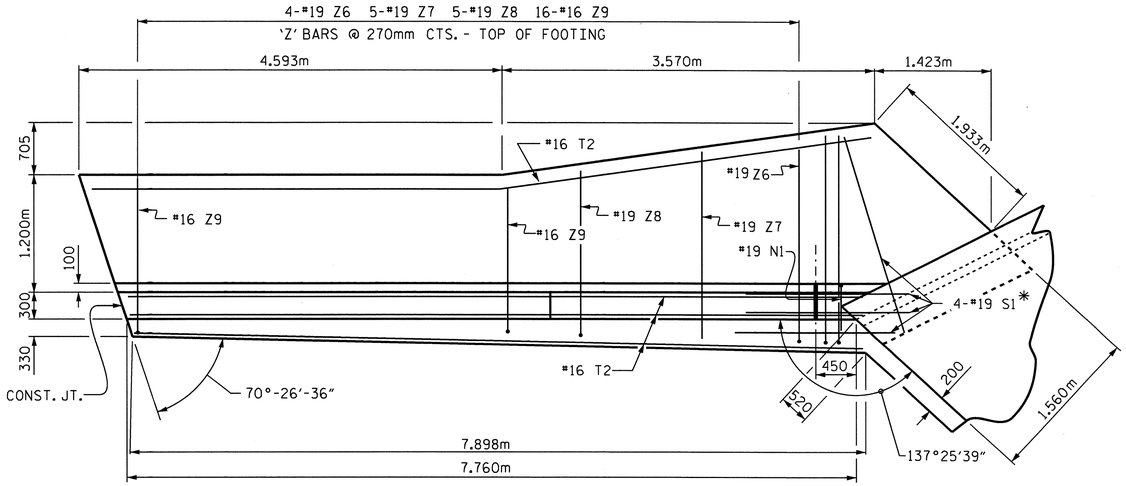

PLAN W1

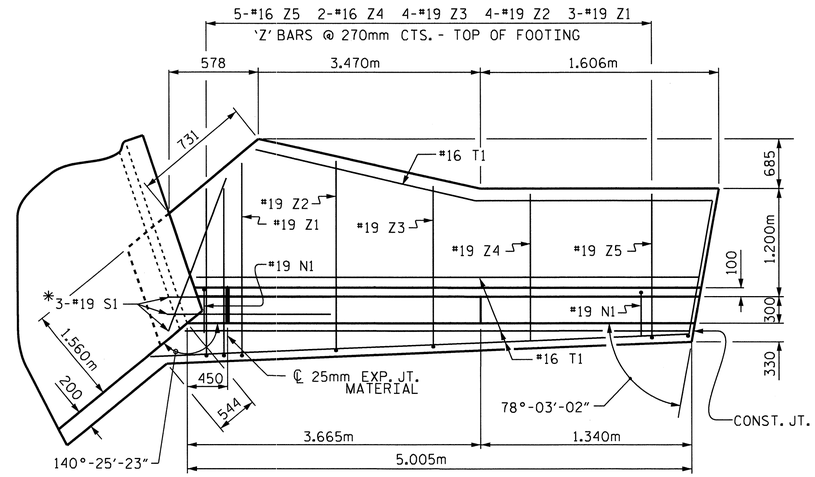

PLAN W2

* S1 @ BOTTOM OF FLOOR SLAB & FOOTING

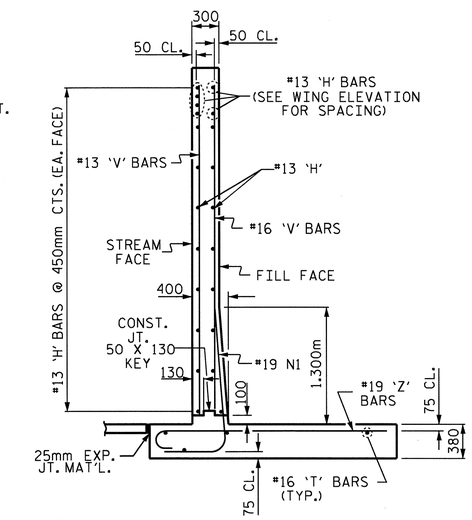

SECTION A-A

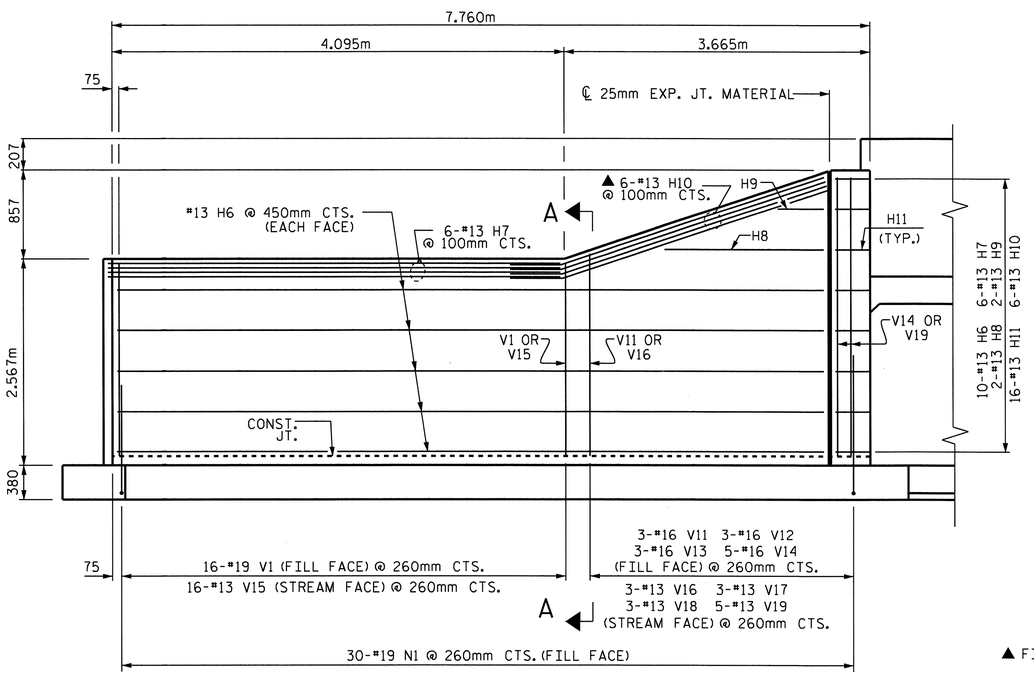

ELEVATION W1

▲ FIELD BEND AS NECESSARY

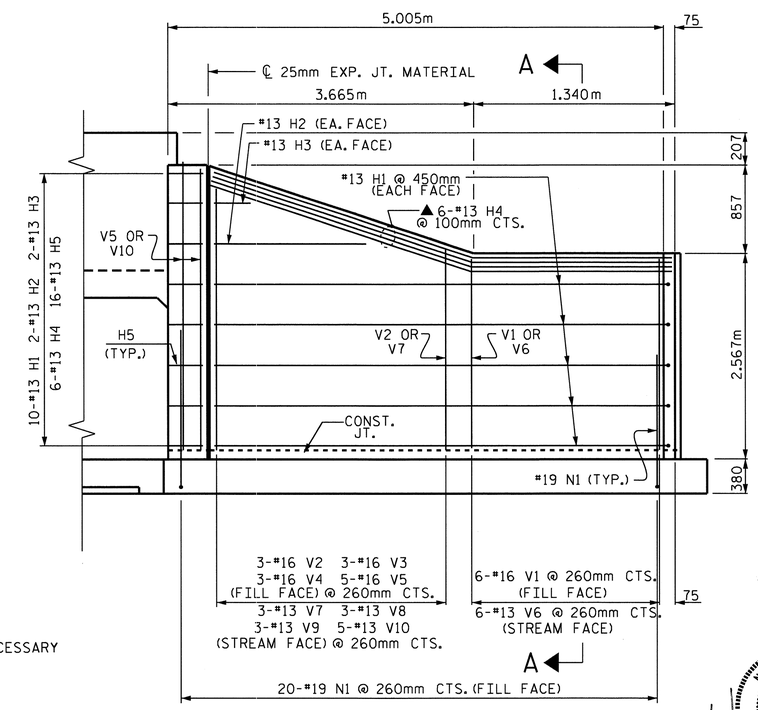

ELEVATION W2

PROJECT NO. R-2519A
YANCEY COUNTY
STATION: 289+81.000 -L-

SHEET 8 OF 9

STATE OF NORTH CAROLINA
DEPARTMENT OF TRANSPORTATION
RALEIGH

LEFT EXTENSION
DOUBLE 1.800m X 1.800m
CONCRETE BOX CULVERT

NORTH CAROLINA PROFESSIONAL SEAL 22005 ENGINEER J. KEITH PASCHAL
2/28/11

REVISIONS						SHEET NO.
NO.	BY:	DATE:	NO.	BY:	DATE:	C-47
1			3			TOTAL SHEETS
2			4			119

DRAWN BY : J. G. KHARVA DATE : 08/06/10
CHECKED BY : J. D. HAWK DATE : 11/29/10

28-FEB-2011 12:29
R:\Structures\str5\Final Plans\R-2519A_sd_CU_05.dgn
jdhawk

STR. #5

BILL OF MATERIAL

LEFT EXTENSION (STAGE I)

BAR	NO.	SIZE	TYPE	LENGTH	WEIGHT
A1	63	#13	6	1940	121
A2	53	#13	6	1900	100
A3	60	#13	6	1340	80
A200	30	#13	STR	3060	91
A201	1	#13	STR	2520	3
A202	1	#13	STR	2000	2
A203	1	#13	STR	1480	1
A204	1	#13	STR	960	1
A205	1	#13	STR	420	1
A206	2	#13	STR	3080	6
A207	7	#13	STR	3100	22
A208	2	#13	STR	3120	6
A209	2	#13	STR	3140	6
A210	2	#13	STR	3180	6
A211	1	#13	STR	3200	3
A400	38	#13	STR	3060	116
A401	1	#13	STR	2600	3
A402	1	#13	STR	2160	2
A403	1	#13	STR	1700	2
A404	1	#13	STR	1260	1
A405	1	#13	STR	820	1
A406	1	#13	STR	380	1
A407	2	#13	STR	3080	6
A408	8	#13	STR	3100	25
A409	2	#13	STR	3120	6
A410	2	#13	STR	3140	6
A411	2	#13	STR	3160	6
A412	2	#13	STR	3200	6
B1	30	#13	STR	2300	69
B3	60	#13	STR	2280	136
C1	44	#13	STR	4780	209
D1	10	#19	STR	760	17
S1	3	#25	STR	3520	42
S5	7	#19	STR	3520	55

REINFORCING STEEL 1158 kg.

CLASS A CONCRETE

BARREL 13.0 C.Y.

LEFT EXTENSION (STAGE II)

BAR	NO.	SIZE	TYPE	LENGTH	WEIGHT
A1	53	#13	6	1940	102
A2	53	#13	6	1900	100
A100	28	#13	STR	4100	114
A101	1	#13	STR	3580	4
A102	1	#13	STR	3040	3
A103	1	#13	STR	2520	3
A104	1	#13	STR	2000	2
A105	1	#13	STR	1480	1
A106	1	#13	STR	940	1
A107	1	#13	STR	420	1
A108	1	#13	STR	4120	4
A109	1	#13	STR	4140	4
A110	1	#13	STR	4160	4
A111	7	#13	STR	4180	29
A112	2	#13	STR	4200	8
A113	2	#13	STR	4240	8
A114	2	#13	STR	4280	9
A115	1	#13	STR	4320	4
A250	32	#13	STR	1600	51
A251	1	#13	STR	1060	1
A252	1	#13	STR	540	1
A253	8	#13	STR	1620	13
A254	2	#13	STR	1640	3
A255	2	#13	STR	1660	3
A256	1	#13	STR	1680	2
A300	38	#13	STR	4100	155
A301	1	#13	STR	3940	4
A302	1	#13	STR	3500	3
A303	1	#13	STR	3040	3
A304	1	#13	STR	2600	3
A305	1	#13	STR	2160	2
A306	1	#13	STR	1700	2
A307	1	#13	STR	1260	1
A308	1	#13	STR	820	1
A309	1	#13	STR	360	1
A310	2	#13	STR	4120	8
A311	1	#13	STR	4140	4
A312	1	#13	STR	4160	4
A313	8	#13	STR	4180	33
A314	2	#13	STR	4200	8
A315	2	#13	STR	4240	8
A316	2	#13	STR	4260	8
A317	2	#13	STR	4300	9
A450	45	#13	STR	1600	72
A451	1	#13	STR	1420	1
A452	1	#13	STR	980	1
A453	3	#13	STR	1620	5
A454	1	#13	STR	1640	2
A455	1	#13	STR	1660	2
A456	1	#13	STR	1680	2
B1	30	#13	STR	2300	69
B2	15	#16	STR	1600	37
C1	64	#13	STR	4780	304
C3	10	#13	STR	860	9
D1	18	#19	STR	760	31
G1	4	#16	STR	4400	27
G2	8	#13	STR	4400	35
L1	15	#16	5	1920	45
S2	3	#25	STR	1700	20
S3	3	#25	STR	4400	52
S4	6	#19	STR	4180	56
S6	7	#19	STR	1620	25

REINFORCING STEEL 1527 kg.

CLASS A CONCRETE

BARREL 20.1 C.Y.

RIGHT EXTENSION (STAGE I)

BAR	NO.	SIZE	TYPE	LENGTH	WEIGHT
A3	76	#13	2	1340	101
A4	52	#16	2	2040	165
A5	52	#16	2	2020	163
A200	52	#13	STR	3060	158
A201	2	#13	STR	2300	5
A202	2	#13	STR	1560	3
A203	2	#13	STR	800	2
A400	47	#16	STR	3200	233
A401	2	#16	STR	2400	7
A402	2	#16	STR	1580	5
D1	10	#19	STR	760	17
B1	38	#13	STR	2300	87
B3	76	#13	STR	2280	172
C2	44	#13	STR	5960	261
S7	3	#25	STR	4160	50
S8	7	#19	STR	3480	54

REINFORCING STEEL 1483 kg.

CLASS A CONCRETE

BARREL 16.7 C.Y.

RIGHT EXTENSION (STAGE II)

BAR	NO.	SIZE	TYPE	LENGTH	WEIGHT
A4	52	#16	2	2040	165
A5	52	#16	2	2020	163
A100	42	#16	STR	4100	267
A101	2	#16	STR	3320	10
A102	2	#16	STR	2420	8
A103	2	#16	STR	1520	5
A104	2	#16	STR	620	2
A300	47	#16	STR	4100	299
A301	2	#16	STR	3320	10
A302	2	#16	STR	2500	8
A303	2	#16	STR	1680	5
A304	2	#16	STR	860	3
B1	38	#13	STR	2300	87
C2	64	#13	STR	5960	379
S9	3	#25	STR	1660	20
S10	7	#19	STR	1660	26
S11	3	#25	STR	4260	51
S12	7	#19	STR	4260	67
G3	4	#16	STR	4260	26
D1	18	#19	STR	760	31

REINFORCING STEEL

CLASS A CONCRETE 1632 kg.

BARREL 25.6 C.Y.

BILL OF MATERIAL

WING W1 (STAGE I)

BAR	NO.	SIZE	TYPE	LENGTH	WEIGHT
H6	10	13	STR	7200	72
H7	6	13	STR	4040	24
H8	2	13	STR	2120	4
H9	2	13	STR	460	1
H10	6	13	STR	3980	24
H11	16	13	2	980	16
N1	30	19	3	2060	138
S1	3	19	STR	1800	12
T2	4	16	STR	7860	49
V1	16	16	STR	2100	52
V11	3	16	STR	2440	11
V12	3	16	STR	2640	12
V13	3	16	STR	2860	13
V14	5	16	STR	3080	24
V15	16	13	STR	2100	33
V16	3	13	STR	2440	7
V17	3	13	STR	2640	8
V18	3	13	STR	2860	9
V19	5	13	STR	3080	15
Z6	4	19	4	2540	23
Z7	5	19	4	2240	25
Z8	5	16	4	1960	15
Z9	16	16	4	1880	47

REINFORCING STEEL FOR 1 WING 534 kgs

CLASS A CONCRETE

1 WING 17.3 m^3

PART END CURTAIN WALL 0.3 m^3

TOTAL 17.6 m^3

WING W2 (STAGE II)

BAR	NO.	SIZE	TYPE	LENGTH	WEIGHT
H1	10	13	STR	4460	44
H2	2	13	STR	2200	4
H3	2	13	STR	620	1
H4	6	13	STR	4520	27
H5	16	13	1	980	16
N1	20	19	3	2060	92
S1	3	19	STR	1800	12
T1	4	16	STR	5100	32
V1	6	16	STR	2400	22
V2	3	16	STR	2480	12
V3	3	16	STR	2700	13
V4	3	16	STR	2900	14
V5	5	16	STR	3120	24
V6	6	13	STR	2400	14
V7	3	13	STR	2480	7
V8	3	13	STR	2780	8
V9	3	13	STR	2900	9
V10	5	13	STR	3120	16
Z1	3	19	4	2080	14
Z2	4	19	4	1880	17
Z3	4	19	4	1660	15
Z4	2	16	4	1560	5
Z5	5	16	4	1520	12

REINFORCING STEEL FOR 1 WING 430 kgs

CLASS A CONCRETE

1 WING 9.5 m^3

1 HEADWALL 1.0 m^3

PART END CURTAIN WALL 0.2 m^3

TOTAL 10.7 m^3

BAR TYPES

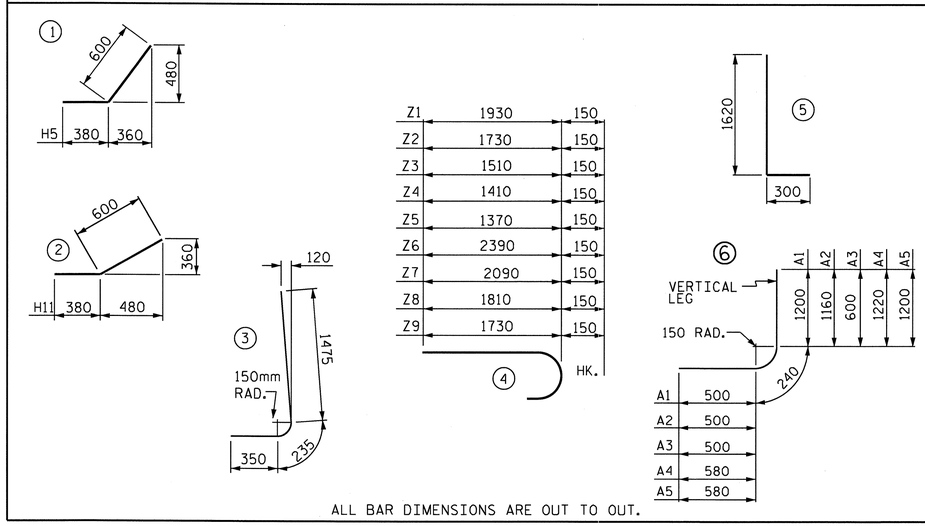

ALL BAR DIMENSIONS ARE OUT TO OUT.

SPLICE LENGTH CHART

BAR	SIZE	LENGTH
A100, A300, A400	#13	540
A200	#13	540
B1, B3	#13	540
C1	#13	590

PROJECT NO. R-2519A

YANCEY COUNTY

STATION: 289+81.000 -L-

SHEET 9 OF 9

STATE OF NORTH CAROLINA
DEPARTMENT OF TRANSPORTATION
RALEIGH

DOUBLE 1.800m X 1.800m CONCRETE BOX CULVERT (LEFT EXTENSION) & (RIGHT EXTENSION)

NORTH CAROLINA PROFESSIONAL SEAL 22005 ENGINEER A. KEITH PASCHAL

2/28/11

REVISIONS						SHEET NO.
NO.	BY:	DATE:	NO.	BY:	DATE:	C-48
1			3			TOTAL SHEETS
2			4			119

ASSEMBLED BY : J. G. KHARVA DATE : 08-10-10
CHECKED BY : J. D. HAWK DATE : 11-25-10
DRAWN BY : EEM 6/97
CHECKED BY : ARB 7/97

25-FEB-2011 14:29
R:\Structures\str5\Final Plans\R-2519A_sd_CU_05.dgn
gallen

STD. No. CB2105sm

STR. #5

BM #8 : SPIKE SET IN BASE OF 10" OAK 57.270m LT. STA. 297+82.740 -L-, EL. 794.759.

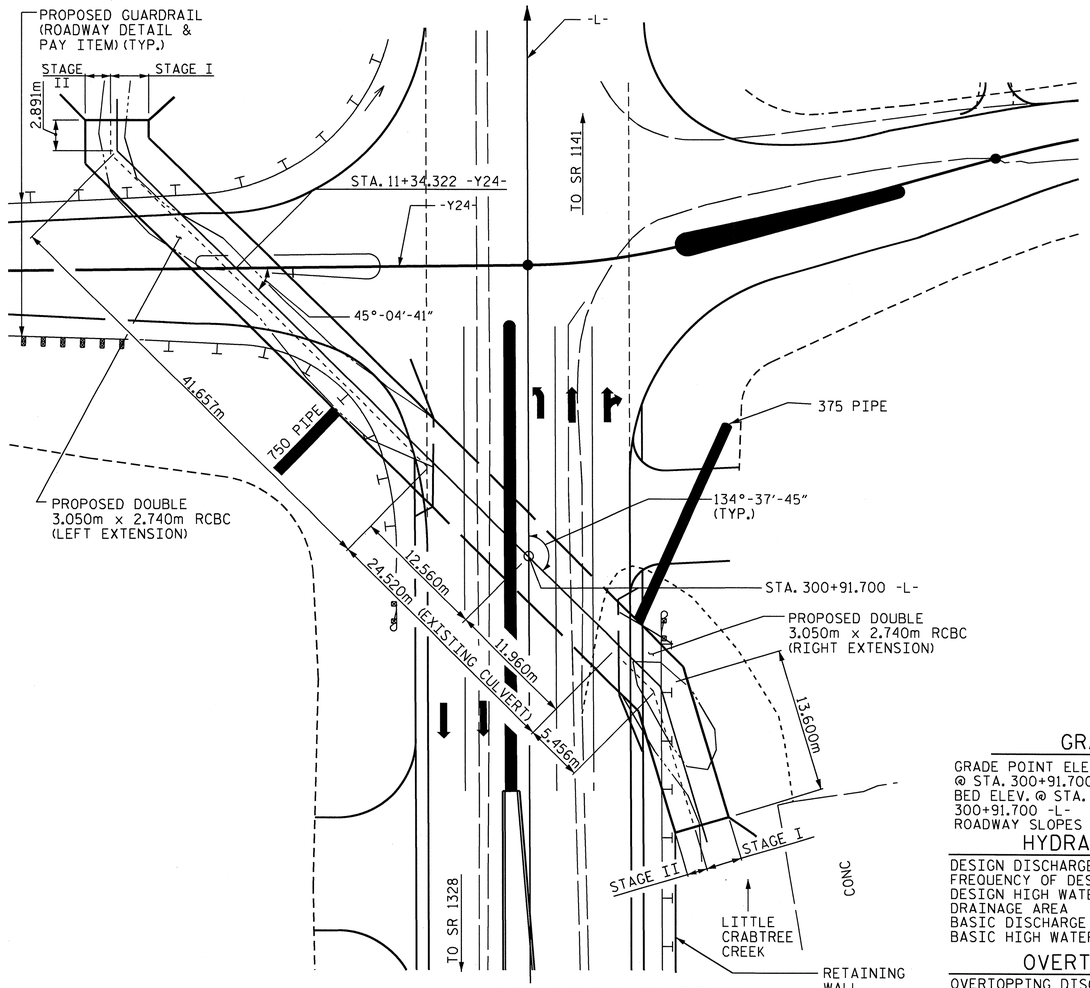

FOR UTILITY INFORMATION, SEE UTILITY PLANS AND SPECIAL PROVISIONS.

LOCATION SKETCH

GRADE DATA

GRADE POINT ELEV. @ STA. 300+91.700 -L-	= 787.670
BED ELEV. @ STA. 300+91.700 -L-	= 783.670
ROADWAY SLOPES	= 2:1

HYDRAULIC DATA

DESIGN DISCHARGE	= 48.8 cms
FREQUENCY OF DESIGN FLOOD	= 50 YR.
DESIGN HIGH WATER ELEVATION	= 786.590
DRAINAGE AREA	= 11.89 Sq.km
BASIC DISCHARGE (Q100)	= 60.0 cms
BASIC HIGH WATER ELEVATION	= 786.960

OVERTOPPING DATA

OVERTOPPING DISCHARGE	= 61.0 cms
FREQUENCY OF OVERTOPPING FLOOD	= 100 ± YRS.
OVERTOPPING FLOOD ELEVATION	= 787.000

TOTAL STRUCTURE QUANTITIES (LEFT EXTENSION)

CLASS A CONCRETE - (LEFT EXT.- STAGE I)

BARREL	85.4	m^3
WING ETC.	5.3	m^3
TOTAL	90.7	m^3

FOUNDATION COND. MAT'L ---- 105 METRIC TONS

CLASS A CONCRETE - (LEFT EXT._ STAGE II)

BARREL	155.5	m^3
WING ETC.	6.0	m^3
TOTAL	161.5	m^3

FOUNDATION COND. MAT'L ---- 96 METRIC TONS

REINFORCING STEEL - (LEFT EXT. - STAGE I)

BARREL	12275	kg
WING ETC.	206	kg
TOTAL	12481	kg

REINFORCING STEEL - (LEFT EXT. - STAGE II)

BARREL	19390	kg
WING ETC.	206	kg
TOTAL	19596	kg

TOTAL STRUCTURE QUANTITIES (RIGHT EXTENSION)

CLASS A CONCRETE - (RIGHT EXT.- STAGE I)

BARREL	43.0	m^3
WING ETC.	5.3	m^3
TOTAL	48.3	m^3

FOUNDATION COND. MAT'L ---- 54 METRIC TONS

CLASS A CONCRETE - (RIGHT EXT._ STAGE II)

BARREL	61.4	m^3
PARTIAL END CURTAIN WALL & HEADWALL	1.2	m^3
TOTAL	62.6	m^3

FOUNDATION COND. MAT'L ---- 33 METRIC TONS

REINFORCING STEEL - (RIGHT EXT. - STAGE I)

BARREL	5822	kg
WING ETC.	206	kg
TOTAL	6028	kg

REINFORCING STEEL - (RIGHT EXT. - STAGE II)

BARREL	7672	kg
TOTAL	7672	kg

NOTES

ASSUMED LIVE LOAD ----------MS18 OR ALTERNATE LOADING.

ALL DIMENSIONS ARE IN MILLIMETERS UNLESS OTHERWISE NOTED.

ALL ELEVATIONS ARE IN METERS.

DESIGN FILL ----------1.520m.

FOR OTHER DESIGN DATA AND NOTES SEE STANDARD NOTE SHEET.

76mm Ø WEEP HOLES INDICATED TO BE IN ACCORDANCE WITH THE SPECIFICATIONS.

CONCRETE IN CULVERTS TO BE POURED IN THE FOLLOWING ORDER:

(STAGE I - LEFT & RIGHT EXTENSION)
1. WING FOOTINGS AND FLOOR SLAB INCLUDING 100mm OF ALL VERTICAL WALLS.
2. THE REMAINING PORTIONS OF THE WALLS AND WINGS FULL HEIGHT.

(STAGE II - LEFT & RIGHT EXTENSION)
1. WING FOOTINGS AND FLOOR SLAB INCLUDING 100mm OF ALL VERTICAL WALLS.
2. THE REMAINING PORTIONS OF THE WALLS AND WING FULL HEIGHT.
3. ROOF SLABS AND HEADWALLS.

THE RESIDENT ENGINEER SHALL CHECK THE LENGTH OF CULVERT BEFORE STAKING IT OUT TO MAKE CERTAIN THAT IT WILL PROPERLY TAKE CARE OF THE FILL.

DIMENSIONS FOR WING LAYOUT AS WELL AS ADDITIONAL REINFORCING STEEL EMBEDDED IN BARREL ARE SHOWN ON WING SHEET.

AT THE CONTRACTOR'S OPTION, HE MAY SPLICE THE VERTICAL REINFORCING STEEL IN THE INTERIOR FACE OF EXTERIOR WALL AND BOTH FACES OF INTERIOR WALLS ABOVE LOWER WALL CONSTRUCTION JOINT. THE SPLICE LENGTH SHALL BE PROVIDED IN THE SPLICE LENGTH CHART SHOWN ON THE PLANS. EXTRA WEIGHT OF STEEL DUE TO THE SPLICES SHALL BE PAID FOR BY THE CONTRACTOR.

FOR CULVERT DIVERSION DETAILS AND PAY ITEM, SEE EROSION CONTROL PLANS.

IF APPROVED BY THE ENGINEER, THE CONTRACTOR MAY USE THE EXISTING WINGS AS TEMPORARY SHORING FOR THE CONSTRUCTION OF THE CULVERT EXTENSIONS. IN THIS CASE, THE BOTTOM SLAB OF THE EXTENSION SHALL BE POURED AT LEAST 72 HOURS PRIOR TO CUTTING THE WINGS. THE WINGS MAY BE CUT EARLIER PROVIDED THE SLAB CONCRETE STRENGTH HAS REACHED A MINIMUM COMPRESSIVE STRENGTH OF 10.3 MPa.

DOWELS SHALL BE USED TO CONNECT THE CULVERT EXTENSION TO THE EXISTING CULVERT AS SHOWN. FOR NOTE REGARDING SETTING OF DOWELS, SEE SHEET SNSM.

TRANSVERSE CONSTRUCTION JOINTS SHALL BE USED IN THE BARREL, SPACED TO LIMIT THE POURS TO A MAXIMUM OF 21.0m. LOCATION OF JOINTS SHALL BE SUBJECT TO APPROVAL OF THE ENGINEER.

A 900mm STRIP OF FILTER FABRIC SHALL BE ATTACHED TO THE FILL FACE OF THE WING COVERING THE ENTIRE LENGTH OF THE EXPANSION JOINT.

NO PRECAST REINFORCED BOX CULVERT OPTION WILL BE ALLOWED.

FOR FALSEWORK AND FORMWORK, SEE SPECIAL PROVISIONS.

FOR SUBMITTAL OF WORKING DRAWINGS, SEE SPECIAL PROVISIONS.

FOR CRANE SAFETY, SEE SPECIAL PROVISIONS.

FOR GROUT FOR STRUCTURES, SEE SPECIAL PROVISIONS.

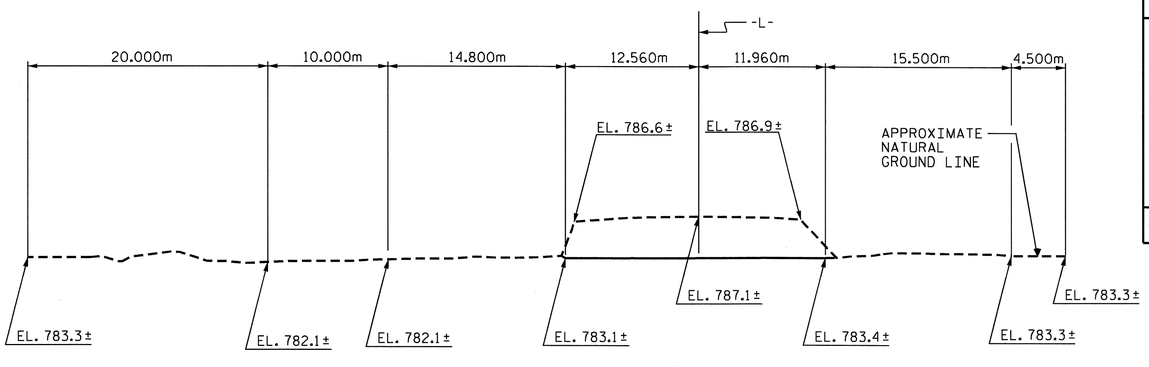

PROFILE ALONG ℄ CULVERT

TOTAL STRUCTURE QUANTITIES

CLASS A CONCRETE			REINFORCING STEEL		
STAGE I (LEFT EXT.)	90.7	m^3	STAGE I (LEFT EXT.)	12481	kg
STAGE II (LEFT EXT.)	161.5	m^3	STAGE II (LEFT EXT.)	19596	kg
STAGE I (RIGHT EXT.)	48.3	m^3	STAGE I (RIGHT EXT.)	6028	kg
STAGE II (RIGHT EXT.)	62.6	m^3	STAGE II (RIGHT EXT.)	7672	kg
TOTAL	363.1	m^3	TOTAL	45777	kg
CULVERT EXCAVATION ------LUMP SUM			FOUNDATION COND. MAT'L.-288.0-METRIC TONS		

PROJECT NO. R-2519A
YANCEY COUNTY
STATION: 300+91.700 -L-

SHEET 1 OF 9 CULVERT NO. C-19

STATE OF NORTH CAROLINA
DEPARTMENT OF TRANSPORTATION
RALEIGH

DOUBLE 3.050m X 2.740m CONCRETE BOX CULVERT

NORTH CAROLINA PROFESSIONAL SEAL 12929 ENGINEER NORMAN ALLETT BURGESS, JR. 3/1/11

NORTH CAROLINA PROFESSIONAL SEAL 22005 ENGINEER A. KEITH PASCHAL 3/1/11

REVISIONS								SHEET NO.
NO.	BY:	DATE:	NO.	BY:	DATE:			C-49
1			3					TOTAL SHEETS
2			4					119

ASSEMBLED BY : J.G. KHARVA	DATE : 12/20/10
CHECKED BY : J.D. HAWK	DATE : 1/05/11
DRAWN BY : EEM 6/97	
CHECKED BY : ARB 7/97	

01-MAR-2011 07:52
R:\Structures\str6\Final Plans\R-2519A_sd_CU_06.dgn
jdhawk

STD. No. CB290sm

STR. #6

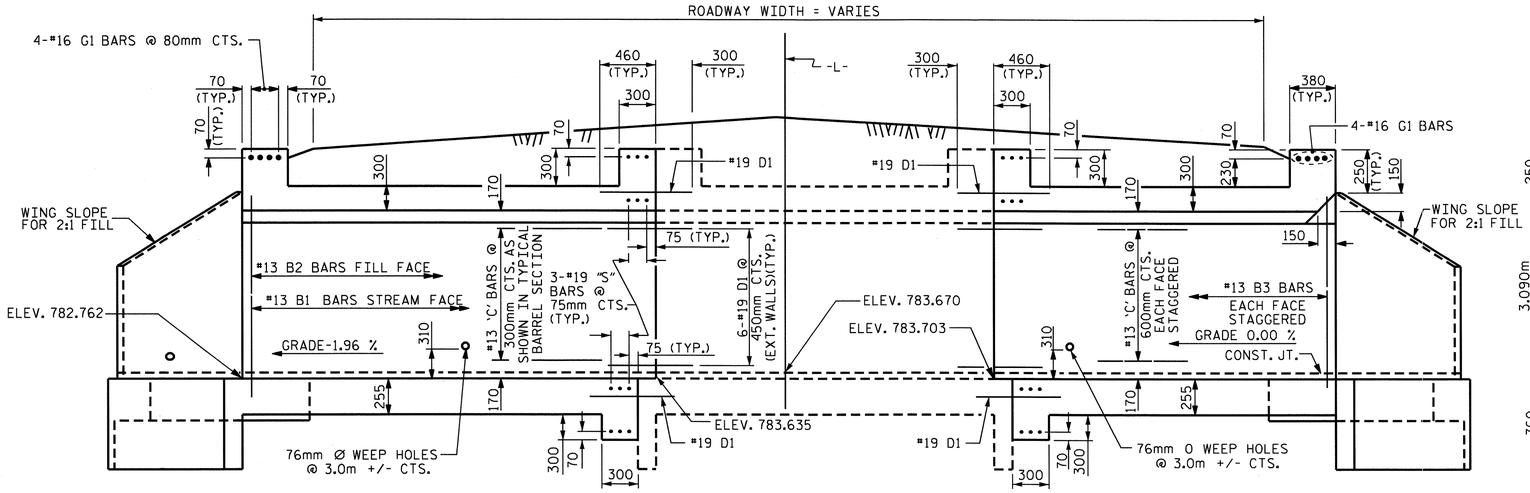

EXTERIOR WALL

PROPOSED EXTENSION
LEFT EXTENSION

EXISTING CULVERT

INTERIOR WALL

PROPOSED EXTENSION
RIGHT EXTENSION

CULVERT SECTION ALONG ℄ CULVERT

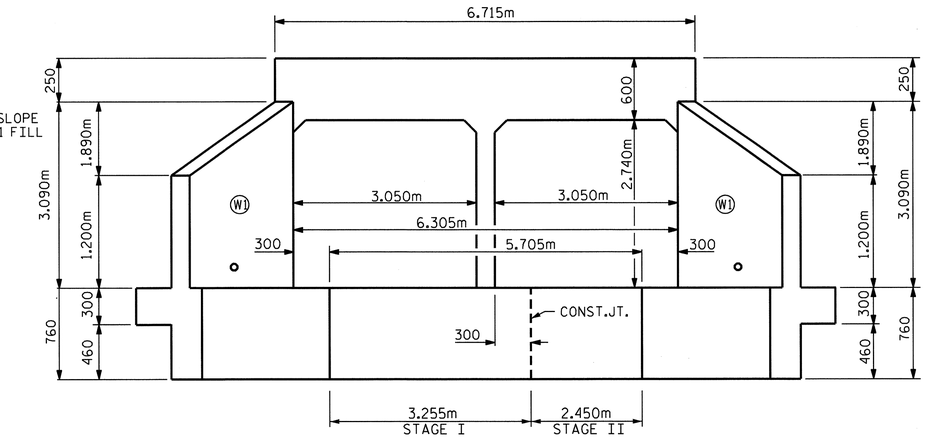

OUTLET ELEVATION NORMAL TO SKEW

(LEFT EXTENSION)

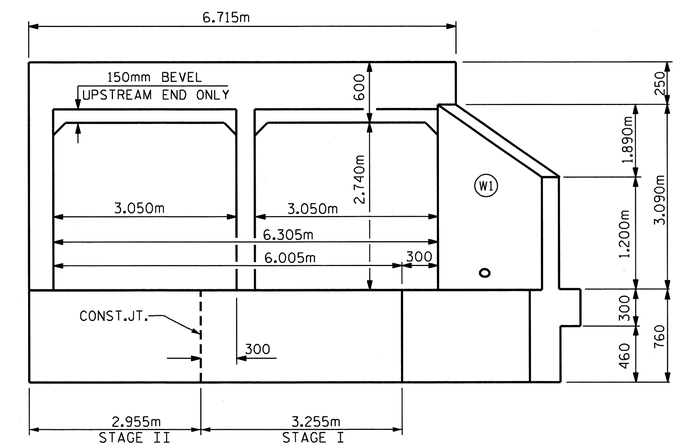

INLET ELEVATION NORMAL TO SKEW

(RIGHT EXTENSION)

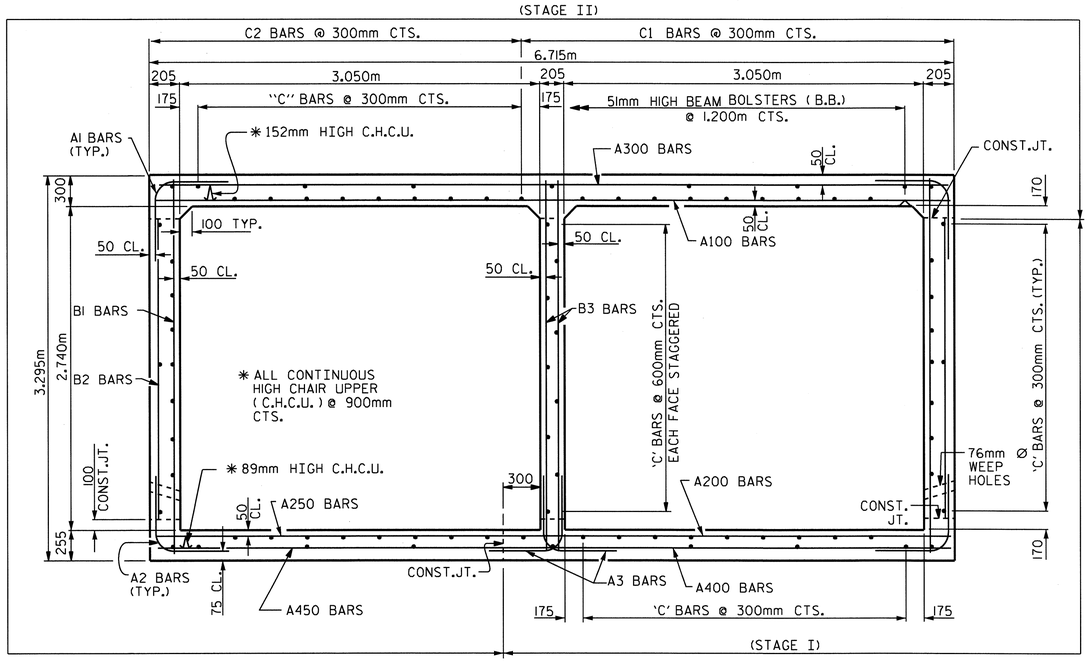

RIGHT ANGLE SECTION OF BARREL

THERE ARE 83 "C" BARS IN SECTION OF BARREL.
(34 STAGE I, 49 STAGE II)
(LEFT AND RIGHT EXTENSION)
(LOOKING DOWNSTREAM)

PROJECT NO. R-2519A
YANCEY COUNTY
STATION: 300+91.700 -L-

SHEET 2 OF 9

STATE OF NORTH CAROLINA
DEPARTMENT OF TRANSPORTATION
RALEIGH

DOUBLE
3.050m X 2.740m
CONCRETE BOX CULVERT

NORTH CAROLINA PROFESSIONAL SEAL 22005 ENGINEER J. KEITH PASCHAL
2/28/11

REVISIONS						SHEET NO.
NO.	BY:	DATE:	NO.	BY:	DATE:	C-50
1			3			TOTAL SHEETS
2			4			119

DRAWN BY : J. G. KHARVA DATE : 12/16/10
CHECKED BY : J. D. HAWK DATE : 01/10/11

25-FEB-2011 14:23
R:\Structures\str6\Final Plans\R-2519A_sd_CU_06.dgn
gallen

STR. #6

* "C" BARS TO BE FIELD BENT AS NECESSARY

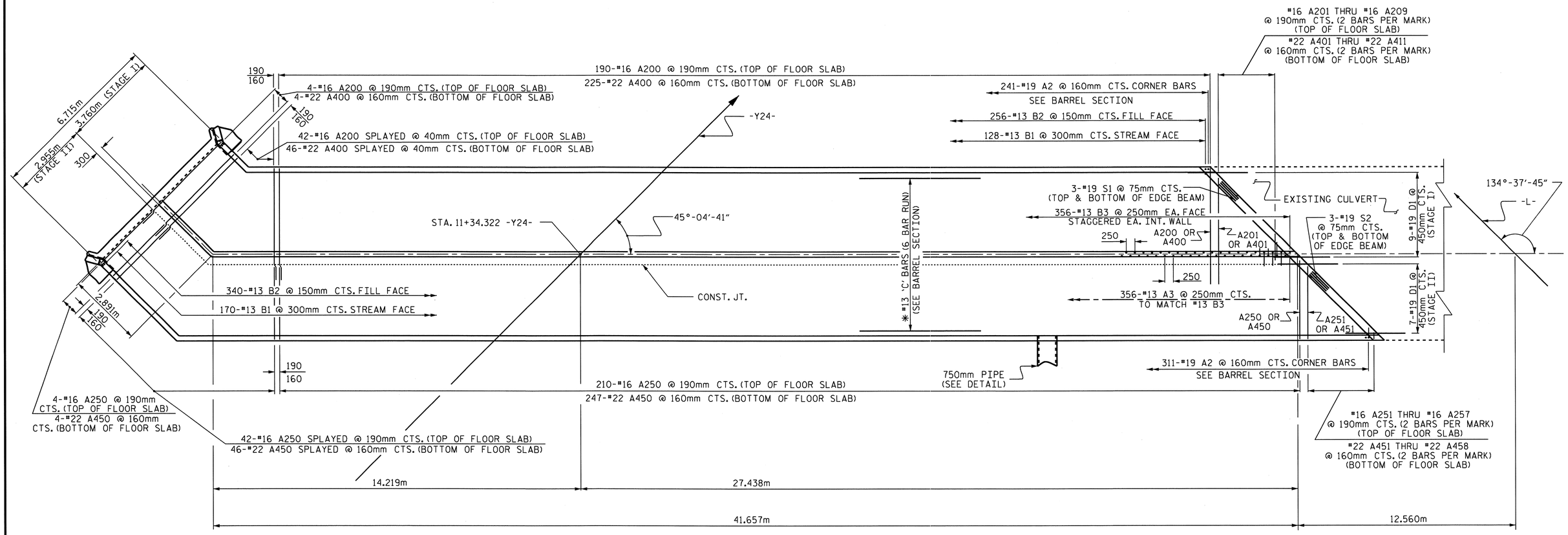

PLAN - FLOOR SLAB

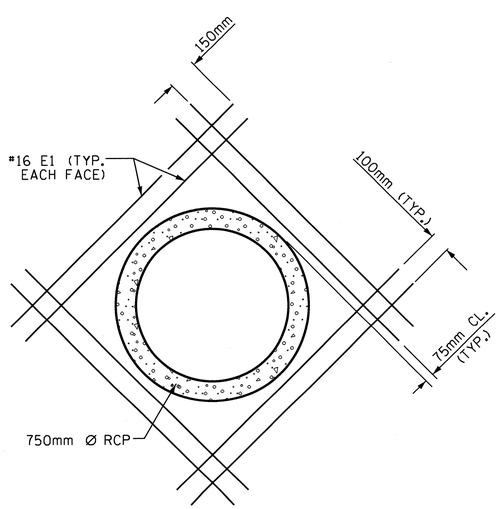

DETAIL OF REINFORCING AROUND 750mm Ø PIPE

* THE 750mm RCP THROUGH THE SIDEWALL OF THE CULVERT WILL BE LOCATED BY THE ENGINEER. THE REINFORCING STEEL WILL BE CUT OR FIELD BENT AS NECESSARY TO CLEAR PIPE.

PROJECT NO. R-2519A
YANCEY COUNTY
STATION: 300+91.700 -L-

SHEET 3 OF 9

STATE OF NORTH CAROLINA
DEPARTMENT OF TRANSPORTATION
RALEIGH

DOUBLE
3.050m X 2.740m
CONCRETE BOX CULVERT
(LEFT EXTENSION)

NORTH CAROLINA PROFESSIONAL SEAL 22005 ENGINEER R. KEITH PASCHAL
2/28/11

REVISIONS						SHEET NO.
NO.	BY:	DATE:	NO.	BY:	DATE:	C-51
1			3			TOTAL SHEETS
2			4			119

DRAWN BY : J. G. KHARVA DATE : 12/16/10
CHECKED BY : J. D.HAWK DATE : 01/10/11

25-FEB-2011 14:23
R:\Structures\str6\Final Plans\R-2519A_sd_CU_06.dgn
gallen

STR. #6

* "C" BARS TO BE FIELD BENT AS NECESSARY

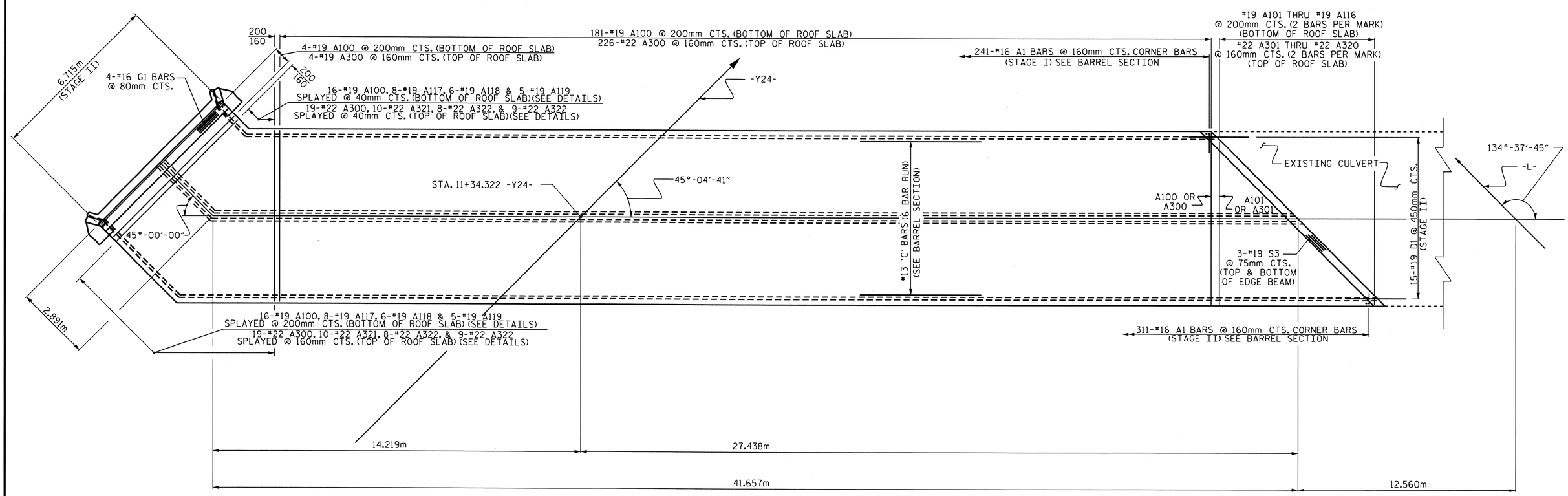

PLAN - ROOF SLAB

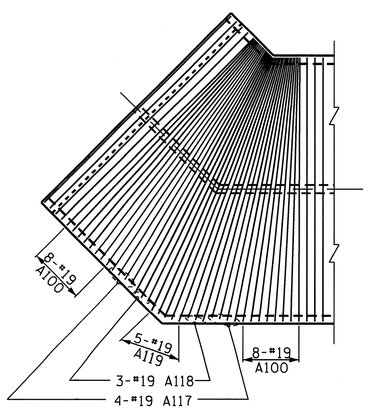

DETAILS FOR #19 "A" SPLAYED BARS

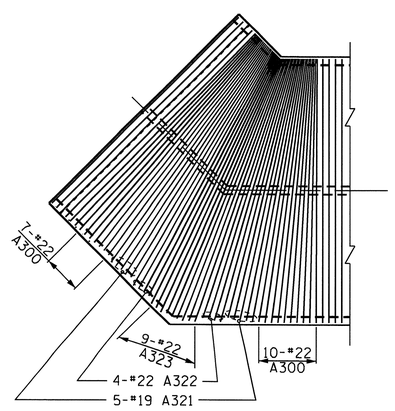

DETAILS FOR #22 "A" SPLAYED BARS

PROJECT NO. R-2519A

YANCEY COUNTY

STATION: 300+91.700 -L-

SHEET 4 OF 9

STATE OF NORTH CAROLINA
DEPARTMENT OF TRANSPORTATION
RALEIGH

DOUBLE
3.050m X 2.740m
CONCRETE BOX CULVERT
(LEFT EXTENSION)

NORTH CAROLINA PROFESSIONAL SEAL 22005 ENGINEER A. KEITH PASCHAL
2/28/11

REVISIONS						SHEET NO.
NO.	BY:	DATE:	NO.	BY:	DATE:	C-52
1			3			TOTAL SHEETS
2			4			119

DRAWN BY : J. G. KHARVA DATE : 12/16/10
CHECKED BY : J. D. HAWK DATE : 01/12/11

25-FEB-2011 14:22
R:\Structures\str6\Final Plans\R-2519A_sd_CU_06.dgn
gallen

STR. 6

* "C" BARS TO BE FIELD BENT AS NECESSARY

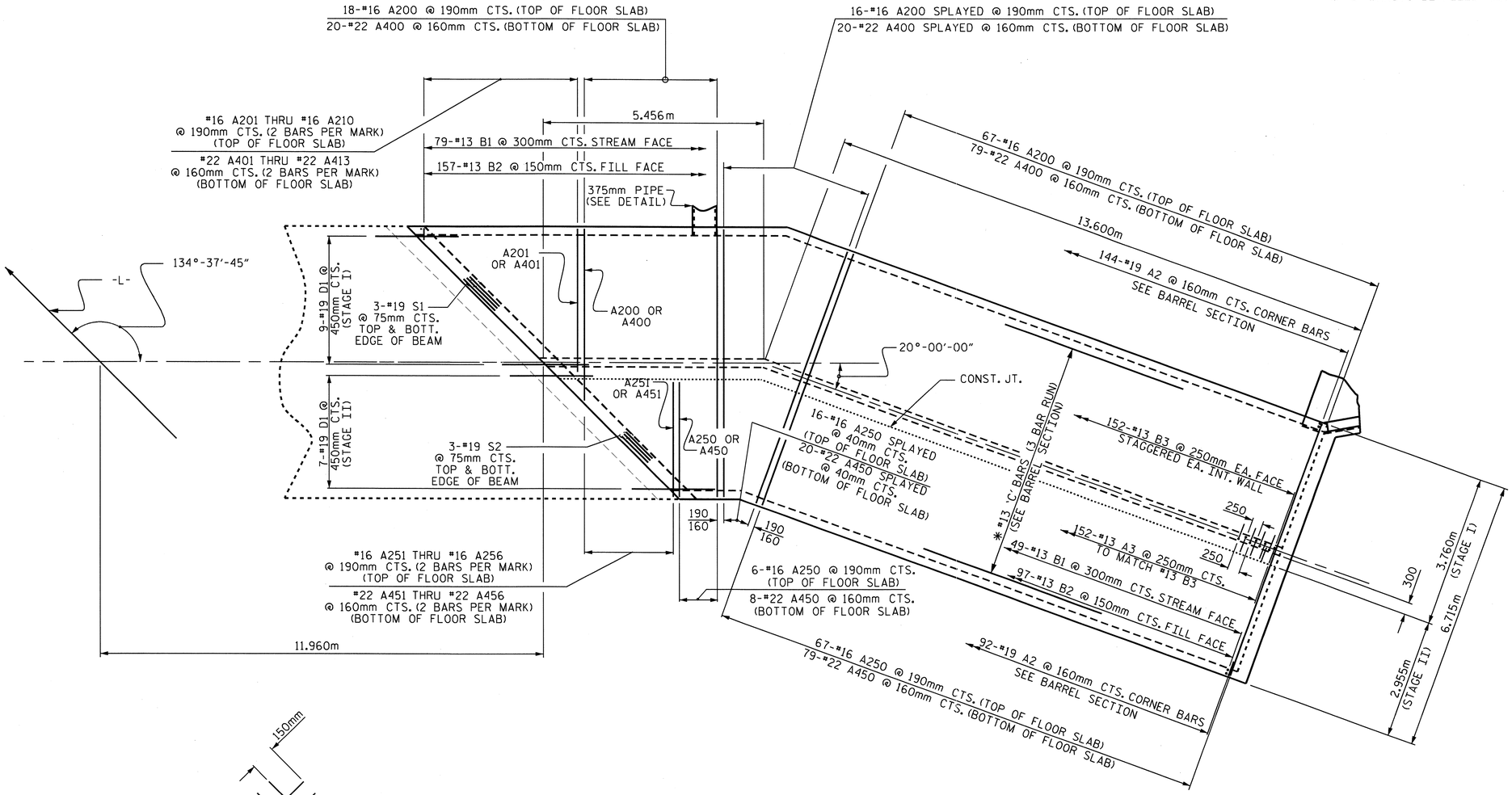

PLAN - FLOOR SLAB

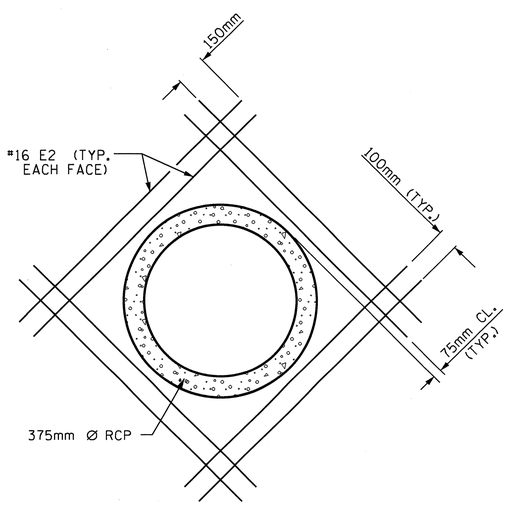

DETAIL OF REINFORCING AROUND 375mm Ø PIPE

* THE 375mm RCP THROUGH THE SIDEWALL OF THE CULVERT WILL BE LOCATED BY THE ENGINEER. THE REINFORCING STEEL WILL BE CUT OR FIELD BENT AS NECESSARY TO CLEAR PIPE.

PROJECT NO. R-2519A
YANCEY COUNTY
STATION: 300+91.700 -L-

SHEET 5 OF 9

STATE OF NORTH CAROLINA
DEPARTMENT OF TRANSPORTATION
RALEIGH

DOUBLE
3.050m X 2.740m
CONCRETE BOX CULVERT
(RIGHT EXTENSION)

NORTH CAROLINA PROFESSIONAL SEAL 22005 ENGINEER K. KEITH PASCHAL
2/28/11

REVISIONS						SHEET NO.
NO.	BY:	DATE:	NO.	BY:	DATE:	C-53
1			3			TOTAL SHEETS
2			4			119

DRAWN BY : J. G. KHARVA DATE : 12/16/10
CHECKED BY : J. D. HAWK DATE : 01/05/11

25-FEB-2011 14:22
R:\Structures\str6\Final Plans\R-2519A_sd_CU_06.dgn
gallen

STR. #6

* "C" BARSTO BE FIELD BENT AS NECESSARY

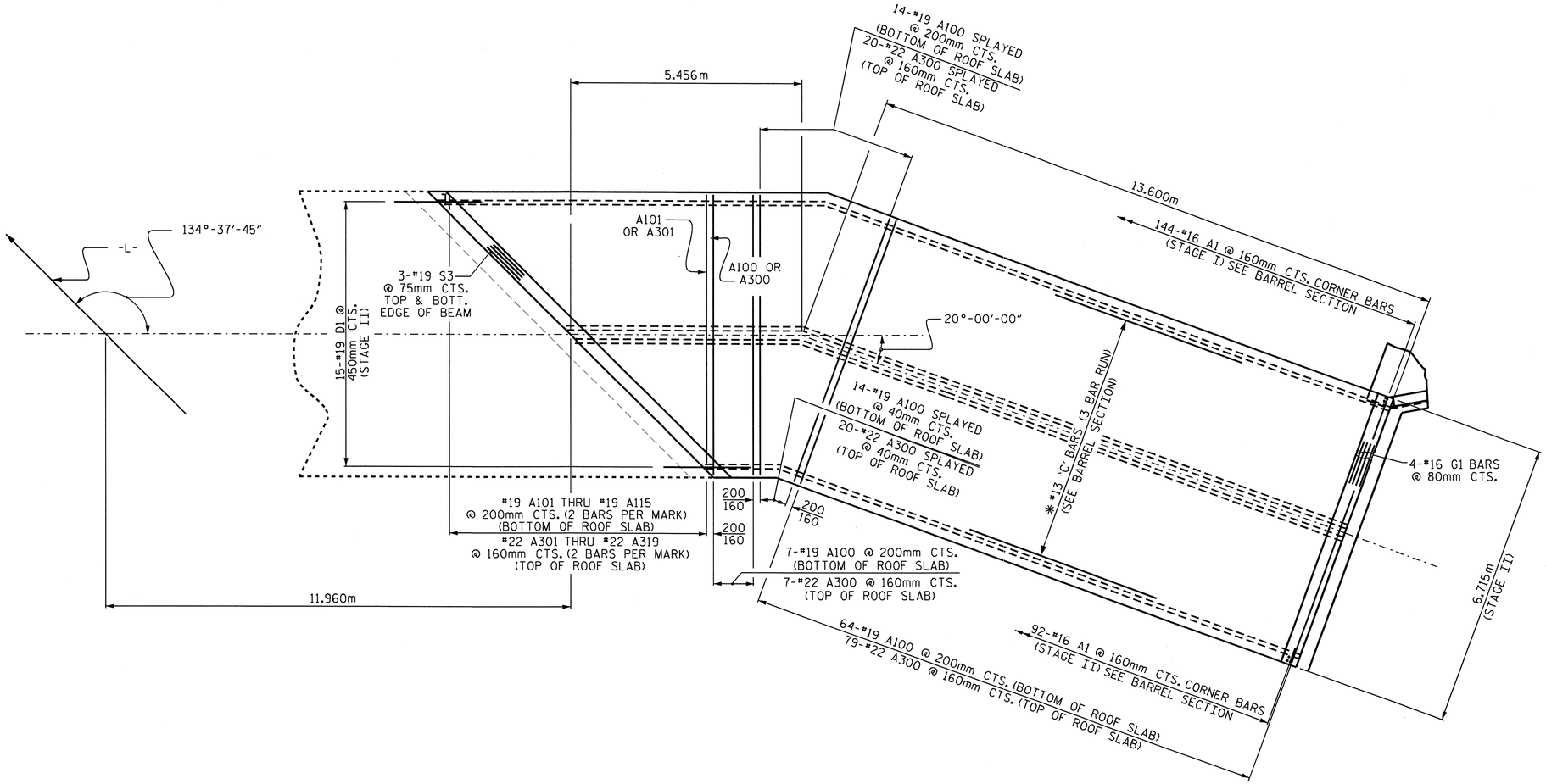

PLAN - ROOF SLAB

PROJECT NO. R-2519A
YANCEY COUNTY
STATION: 300+91.700 -L-

SHEET 6 OF 9

STATE OF NORTH CAROLINA
DEPARTMENT OF TRANSPORTATION
RALEIGH

DOUBLE 3.050m X 2.740m CONCRETE BOX CULVERT (RIGHT EXTENSION)

NORTH CAROLINA PROFESSIONAL SEAL 22005 ENGINEER K. KEITH PASCHAL
2/28/11

REVISIONS						SHEET NO.
NO.	BY:	DATE:	NO.	BY:	DATE:	C-54
1			3			TOTAL SHEETS
2			4			119

DRAWN BY : J. G. KHARVA DATE : 12/16/10
CHECKED BY : J. D. HAWK DATE : 01/10/10

25-FEB-2011 14:22
R:\Structures\str6\Final Plans\R-2519A_sd_CU_06.dgn
gallen

STR. #6

BILL OF MATERIAL (LEFT EXT. STAGE I)

BAR	NO.	SIZE	TYPE	LENGTH	WEIGHT
A1	241	#16	6	1480	554
A2	241	#19	6	1720	926
A3	356	#13	6	1420	502
A200	236	#16	STR	4860	1780
A201	2	#16	STR	4040	13
A202	2	#16	STR	3660	11
A203	2	#16	STR	3280	10
A204	2	#16	STR	2900	9
A205	2	#16	STR	2520	8
A206	2	#16	STR	2140	7
A207	2	#16	STR	1760	5
A208	2	#16	STR	1380	4
A209	2	#16	STR	1000	3
A400	275	#22	STR	5240	4384
A401	2	#22	STR	4340	26
A402	2	#22	STR	4020	24
A403	2	#22	STR	3700	23
A404	2	#22	STR	3380	21
A405	2	#22	STR	3060	19
A406	2	#22	STR	2740	17
A407	2	#22	STR	2420	15
A408	2	#22	STR	2100	13
A409	2	#22	STR	1780	11
A410	2	#22	STR	1460	9
A411	2	#22	STR	1140	7
B1	128	#13	STR	3160	402
B2	256	#13	STR	2520	641
B3	356	#13	STR	3140	1111
C1	204	#13	STR	7960	1614
D1	15	#19	STR	760	26
S1	6	#19	STR	6000	80

REINFORCING STEEL 12275 kg.

CLASS A CONCRETE BARREL 85.4 C.Y.

BILL OF MATERIAL (LEFT EXT. STAGE II)

BAR	NO.	SIZE	TYPE	LENGTH	WEIGHT
A1	311	#16	6	1480	714
A2	311	#19	6	1720	1196
A100	201	#19	STR	6600	2965
A101	2	#19	STR	6240	28
A102	2	#19	STR	5840	26
A103	2	#19	STR	5440	24
A104	2	#19	STR	5040	23
A105	2	#19	STR	4640	21
A106	2	#19	STR	4240	19
A107	2	#19	STR	3840	17
A108	2	#19	STR	3440	15
A109	2	#19	STR	3040	14
A110	2	#19	STR	2640	12
A111	2	#19	STR	2240	10
A112	2	#19	STR	1840	8
A113	2	#19	STR	1440	6
A114	2	#19	STR	1040	5
A115	2	#19	STR	640	3
A116	2	#19	STR	440	2
A117	8	#19	STR	6740	121
A118	6	#19	STR	6880	92
A119	5	#19	STR	7040	79
A250	256	#16	STR	2840	1128
A251	2	#16	STR	2560	8
A252	2	#16	STR	2180	7
A253	2	#16	STR	1800	6
A254	2	#16	STR	1420	4
A255	2	#16	STR	1040	3
A256	2	#16	STR	660	2
A257	2	#16	STR	460	1
A300	249	#22	STR	6600	4999
A301	2	#22	STR	6320	38
A302	2	#22	STR	6000	37
A303	2	#22	STR	5680	35
A304	2	#22	STR	5360	33
A305	2	#22	STR	5040	31
A306	2	#22	STR	4720	29
A307	2	#22	STR	4400	27
A308	2	#22	STR	4080	25
A309	2	#22	STR	3760	23
A310	2	#22	STR	3440	21
A311	2	#22	STR	3120	19
A312	2	#22	STR	2800	17
A313	2	#22	STR	2480	15
A314	2	#22	STR	2160	13
A315	2	#22	STR	1840	11
A316	2	#22	STR	1520	9
A317	2	#22	STR	1200	7
A318	2	#22	STR	880	5
A319	2	#22	STR	560	3
A320	2	#22	STR	400	2
A321	10	#22	STR	6700	204
A322	8	#22	STR	6840	166
A323	9	#22	STR	7000	192
A450	297	#22	STR	2840	2566
A451	2	#22	STR	2760	17
A452	2	#22	STR	2440	15
A453	2	#22	STR	2120	13
A454	2	#22	STR	1800	11
A455	2	#22	STR	1480	9
A456	2	#22	STR	1160	7
A457	2	#22	STR	840	5
A458	2	#22	STR	520	3
A459	2	#22	STR	360	2
B1	170	#13	STR	3160	534
B2	340	#13	STR	2520	852
C1	90	#13	STR	7960	712
C2	204	#13	STR	8960	1817
D1	28	#19	STR	760	36
E1	16	#16	STR	1600	40
G1	4	#16	STR	6600	48
S2	6	#19	STR	4020	54
S3	6	#19	STR	9280	124

REINFORCING STEEL 19390 kg.

CLASS A CONCRETE BARREL 155.5 C.Y.

BILL OF MATERIAL (RIGHT EXT. STAGE I)

BAR	NO.	SIZE	TYPE	LENGTH	WEIGHT
A1	144	#16	6	1480	331
A2	144	#19	6	1720	554
A3	152	#13	6	1420	215
A200	101	#16	STR	4300	674
A201	2	#16	STR	4040	13
A202	2	#16	STR	3660	11
A203	2	#16	STR	3280	10
A204	2	#16	STR	2900	9
A205	2	#16	STR	2520	8
A206	2	#16	STR	2140	7
A207	2	#16	STR	1760	5
A208	2	#16	STR	1380	4
A209	2	#16	STR	1000	3
A210	2	#16	STR	620	2
A400	119	#22	STR	4680	1694
A401	2	#22	STR	4380	27
A402	2	#22	STR	4060	25
A403	2	#22	STR	3740	23
A404	2	#22	STR	3420	21
A405	2	#22	STR	3100	19
A406	2	#22	STR	2780	17
A407	2	#22	STR	2460	15
A408	2	#22	STR	2140	13
A409	2	#22	STR	1820	11
A410	2	#22	STR	1500	9
A411	2	#22	STR	1180	7
A412	2	#22	STR	860	5
A413	2	#22	STR	540	3
B1	79	#13	STR	3160	248
B2	157	#13	STR	2520	393
B3	152	#13	STR	3140	474
C1	102	#13	STR	8260	837
D1	15	#19	STR	760	26
E2	16	#16	STR	1160	29
S1	6	#19	STR	6000	80

REINFORCING STEEL 5822 kg.

CLASS A CONCRETE BARREL 43.0 C.Y.

BILL OF MATERIAL (RIGHT EXT. STAGE II)

BAR	NO.	SIZE	TYPE	LENGTH	WEIGHT
A1	92	#16	6	1480	211
A2	92	#19	6	1720	354
A100	85	#19	STR	6600	1254
A101	2	#19	STR	6200	28
A102	2	#19	STR	5800	26
A103	2	#19	STR	5400	24
A104	2	#19	STR	5000	22
A105	2	#19	STR	4600	21
A106	2	#19	STR	4220	19
A107	2	#19	STR	3820	17
A108	2	#19	STR	3420	15
A109	2	#19	STR	3020	13
A110	2	#19	STR	2620	12
A111	2	#19	STR	2220	10
A112	2	#19	STR	1820	8
A113	2	#19	STR	1420	6
A114	2	#19	STR	1020	5
A115	2	#19	STR	620	3
A250	89	#16	STR	2860	395
A251	2	#16	STR	2560	8
A252	2	#16	STR	2180	7
A253	2	#16	STR	1800	6
A254	2	#16	STR	1420	4
A255	2	#16	STR	1040	3
A256	2	#16	STR	660	2
A300	106	#22	STR	6600	2128
A301	2	#22	STR	6300	38
A302	2	#22	STR	5980	36
A303	2	#22	STR	5660	34
A304	2	#22	STR	5340	32
A305	2	#22	STR	5020	31
A306	2	#22	STR	4700	29
A307	2	#22	STR	4380	27
A308	2	#22	STR	4060	25
A309	2	#22	STR	3740	23
A310	2	#22	STR	3420	21
A311	2	#22	STR	3100	19
A312	2	#22	STR	2780	17
A313	2	#22	STR	2460	15
A314	2	#22	STR	2140	13
A315	2	#22	STR	1820	11
A316	2	#22	STR	1500	9
A317	2	#22	STR	1180	7
A318	2	#22	STR	860	5
A319	2	#22	STR	540	3
A450	107	#22	STR	2860	931
A451	2	#22	STR	2540	15
A452	2	#22	STR	2220	14
A453	2	#22	STR	1900	12
A454	2	#22	STR	1580	10
A455	2	#22	STR	1260	8
B1	49	#13	STR	3160	154
B2	97	#13	STR	2520	243
C1	45	#13	STR	8260	369
C2	102	#13	STR	6440	653
D1	28	#19	STR	760	48
G1	4	#16	STR	6600	41
S2	6	#19	STR	4020	54
S3	6	#19	STR	9280	124

REINFORCING STEEL 7672 kg.

CLASS A CONCRETE BARREL 61.4 C.Y.

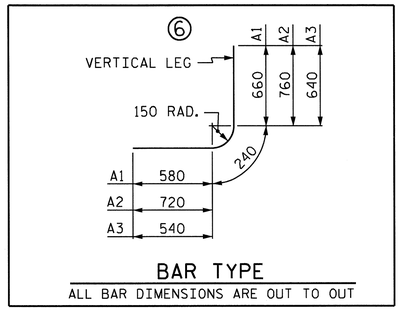

BAR TYPE

ALL BAR DIMENSIONS ARE OUT TO OUT

SPLICE LENGTH CHART

BAR	SIZE	LENGTH
A100, S1	#19	690
A200, G1	#16	540
A300, A400	#22	920
C1	#13	590
B1, B3	#13	540

PROJECT NO. R-2519A

YANCEY COUNTY

STATION: 300+91.700 -L-

SHEET 7 OF 9

STATE OF NORTH CAROLINA
DEPARTMENT OF TRANSPORTATION
RALEIGH

DOUBLE 3.050m X 2.740m CONCRETE BOX CULVERT

NORTH CAROLINA PROFESSIONAL SEAL 22095 ENGINEER W. KEITH PASCHAL

2/28/11

REVISIONS						SHEET NO.
NO.	BY:	DATE:	NO.	BY:	DATE:	C-55
1			3			TOTAL SHEETS
2			4			119

DRAWN BY : J. G. KHARVA DATE : 02/08/11
CHECKED BY : J. D HAWK DATE : 02/11/11

25-FEB-2011 14:22
R:\Structures\str6\Final Plans\R-2519A_sd_CU_06.dgn
gallen

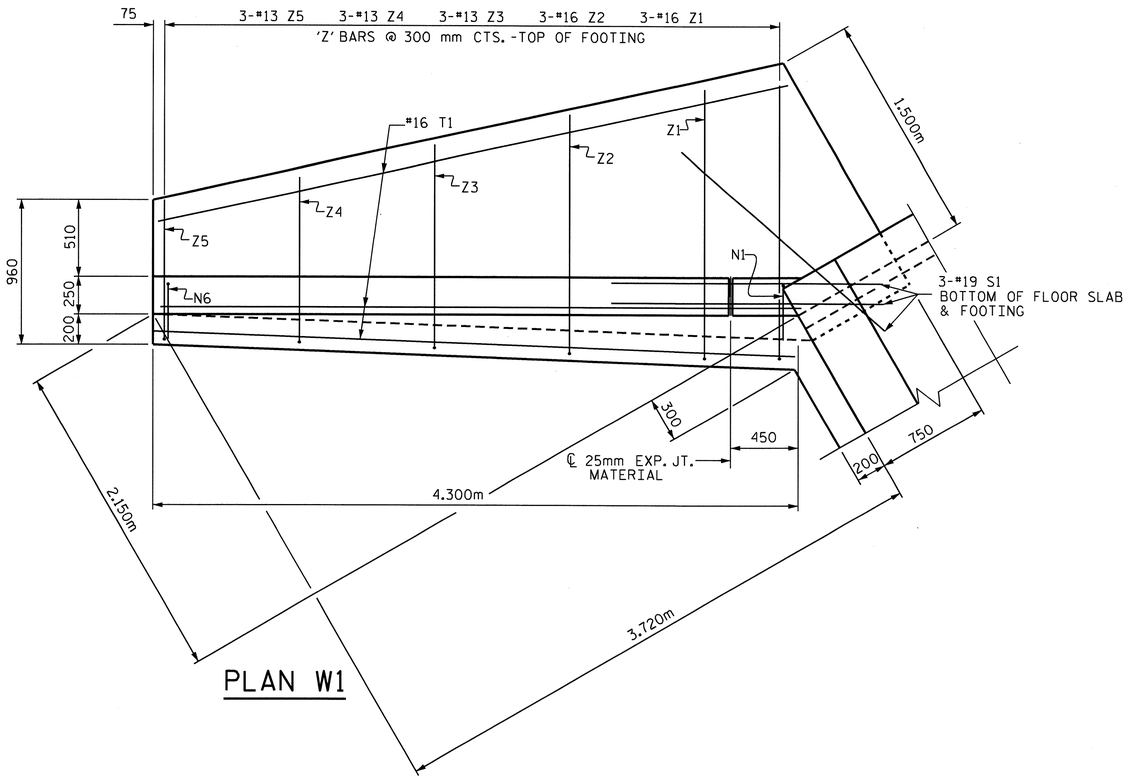

PLAN W1

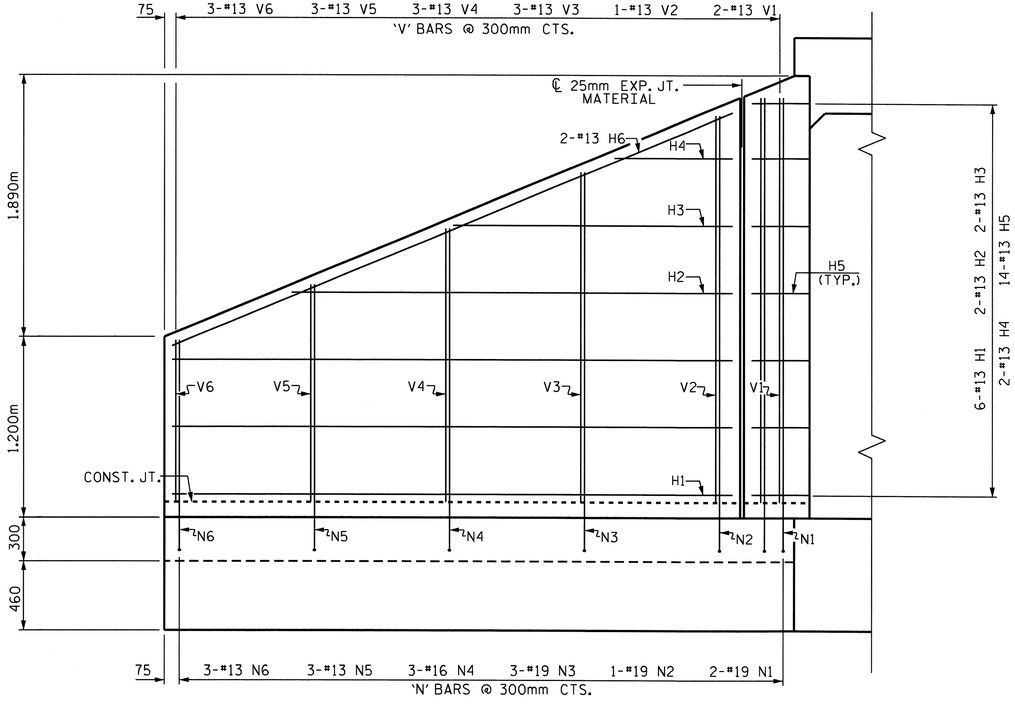

ELEVATION W1

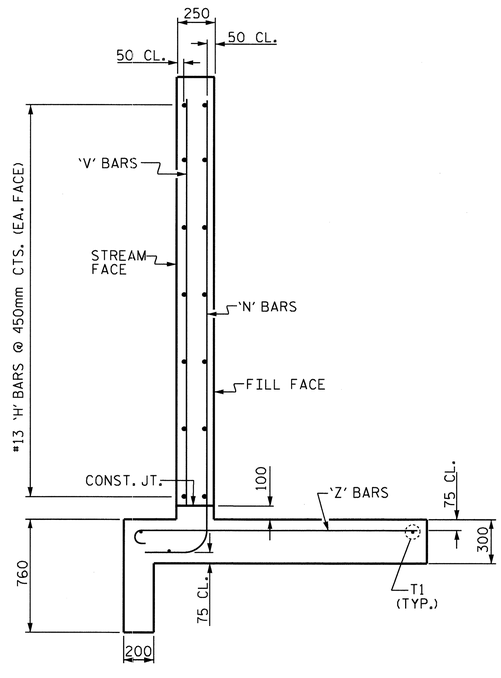

TYPICAL WING SECTION

BAR TYPES

ALL BAR DIMENSIONS ARE OUT TO OUT.

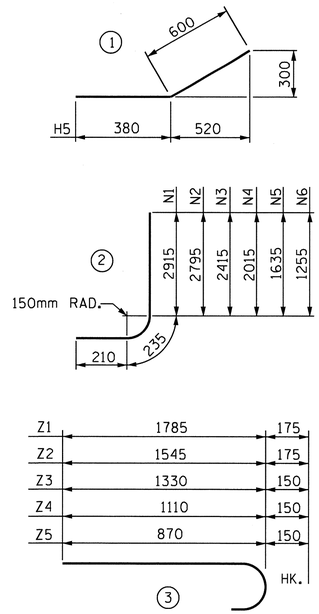

BILL OF MATERIAL

(FOR ONE WING ONLY THREE REQ'D)

BAR	NO.	SIZE	TYPE	LENGTH	WEIGHT
H1	6	13	STR	3740	22
H2	2	13	STR	2960	6
H3	2	13	STR	1900	4
H4	2	13	STR	860	2
H5	14	13	1	980	14
H6	2	13	STR	4060	8
N1	2	19	2	3360	15
N2	1	19	2	3240	7
N3	3	19	2	2860	19
N4	3	16	2	2460	11
N5	3	13	2	2080	6
N6	3	13	2	1700	5
S1	3	19	STR	1800	12
T1	3	16	STR	4300	20
V1	2	13	STR	2740	5
V2	1	13	STR	2620	3
V3	3	13	STR	2240	7
V4	3	13	STR	1840	5
V5	3	13	STR	1460	4
V6	3	13	STR	1080	3
Z1	3	16	3	1960	9
Z2	3	16	3	1720	8
Z3	3	13	3	1480	4
Z4	3	13	3	1260	4
Z5	3	13	3	1020	3
REINFORCING STEEL FOR 1 WING					206 kg

CLASS A CONCRETE

LEFT EXTENSION (STAGE I)

1 WING	4.8 m3
PARTIAL END CURTAIN WALL	0.5 m3
TOTAL	5.3 m3

LEFT EXTENSION (STAGE II)

1 WING	4.8 m3
PARTIAL END CURTAIN WALL	0.4 m3
HEADWALL	0.8 m3
TOTAL	6.0 m3

CLASS A CONCRETE

RIGHT EXTENSION (STAGE I)

1 WING	4.8 m3
PARTIAL END CURTAIN WALL	0.5 m3
TOTAL	5.3 m3

RIGHT EXTENSION (STAGE II)

PARTIAL END CURTAIN WALL	0.4 m3
HEADWALL	0.8 m3
TOTAL	1.2 m3

PROJECT NO. R-2519A

YANCEY COUNTY

STATION: 300+91.700 -L-

SHEET 8 OF 9

STATE OF NORTH CAROLINA
DEPARTMENT OF TRANSPORTATION
RALEIGH

STANDARD WING FOR
CONCRETE BOX CULVERT
H = 2.700m SLOPE = 2:1
90° SKEW
(RIGHT EXT. STAGE I)
(LEFT EXT. STAGE I & STAGE II)

NORTH CAROLINA PROFESSIONAL SEAL 22005 ENGINEER A. KEITH PASCHAL

2/28/11

REVISIONS								SHEET NO.
NO.	BY:	DATE:	NO.	BY:	DATE:			C-56
1			3					TOTAL SHEETS
2			4					119

ASSEMBLED BY :	J. G. KHARVA	DATE :	12/30/10
CHECKED BY :	J. D. HAWK	DATE :	01/05/11
DRAWN BY : FPP	06/97		
CHECKED BY : VAP	08/97		

25-FEB-2011 14:21
R:\Structures\str6\Final Plans\R-2519A_sd_CU_06.dgn
gallen

STR. #6

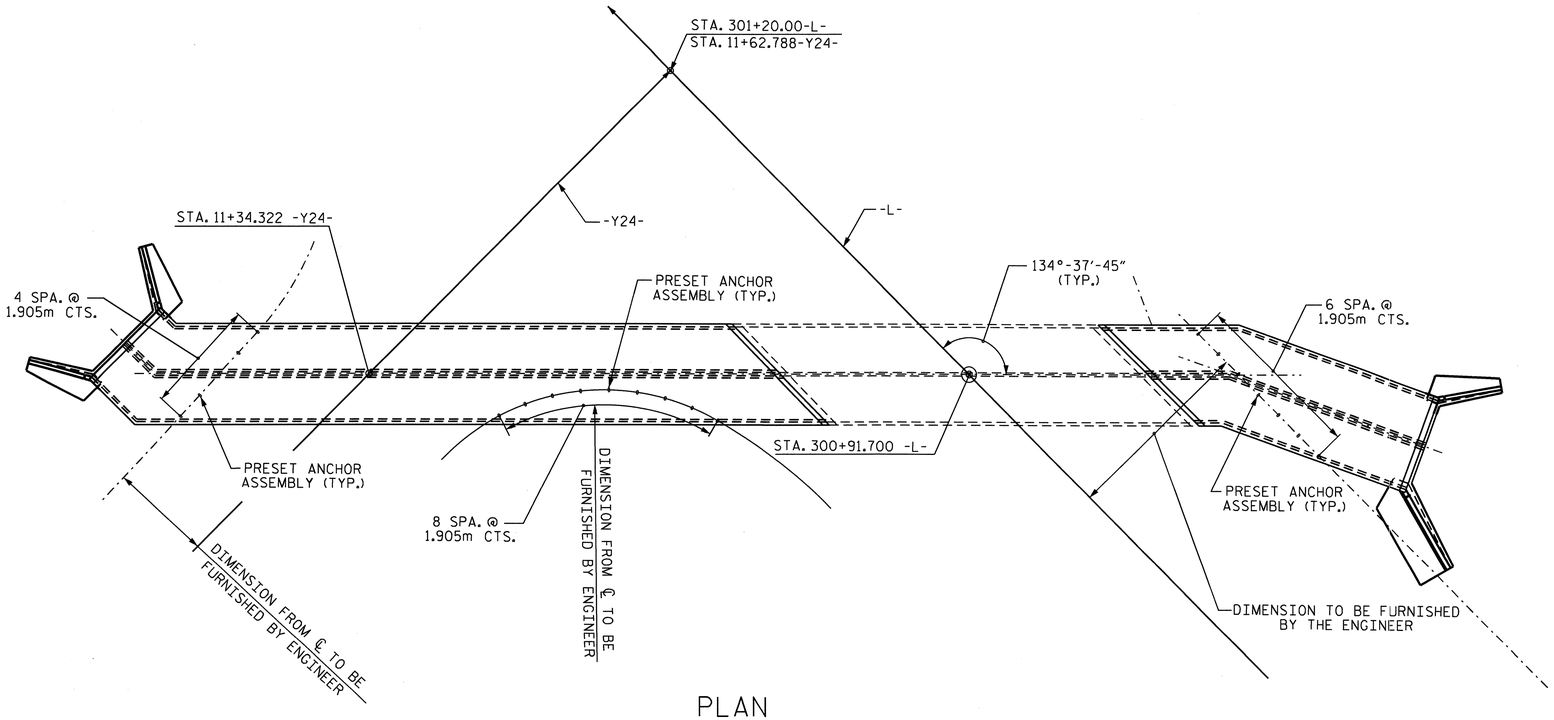

PLAN

SHOWING : GUARDRAIL ANCHOR ASSEMBLY SPACING.

NOTES

THE GUARDRAIL ANCHOR ASSEMBLY FOR CULVERTS SHALL CONSIST OF THE FOLLOWING COMPONENTS :

A. FERRULES SHALL BE MADE FROM STEEL MEETING THE REQUIREMENTS OF AASHTO M169, GRADE 12L14 AND SHALL HAVE A MINIMUM LENGTH OF THREADS OF 64mm.

B. 4 - 25.40mm DIA. X 57mm BOLTS WITH WASHERS, BOLTS SHALL CONFORM TO THE REQUIREMENTS OF ASTM A307. BOLTS AND WASHERS SHALL BE GALVANIZED. (AT THE CONTRACTOR'S OPTION, STAINLESS STEEL BOLTS AND WASHERS MAY BE USED AS AN ALTERNATE FOR THE 25.40mm DIA. X 57mm GALVANIZED BOLTS AND WASHERS. THEY SHALL CONFORM TO OR EXCEED THE MECHANICAL REQUIREMENTS OF ASTM A307. THE USE OF THIS ALTERNATE SHALL BE APPROVED BY THE ENGINEER.)

C. WIRE STRUTS SHOWN IN THE GUARDRAIL ANCHOR ASSEMBLY FOR CULVERTS DETAIL ARE MINIMUM ALLOWABLE SIZE AND SHALL HAVE A MINIMUM TENSILE STRENGTH OF 689 MPa. AS AN OPTION, A 11mm Ø WIRE STRUT WITH A MINIMUM TENSILE STRENGTH OF 620 MPa. IS ACCEPTABLE.

GUARDRAIL ANCHOR ASSEMBLY WITH BOLTS SHALL BE ASSEMBLED IN THE SHOP. BOLT THREADS MAY BE RECUT AS NECESSARY TO INSURE FIT.

THE COST OF THE GUARDRAIL ANCHOR ASSEMBLY FOR CULVERTS COMPLETE IN PLACE, SHALL BE INCLUDED IN THE UNIT CONTRACT PRICE BID FOR CLASS "A" CONCRETE.

FERRULES TO BE PLUGGED DURING POURING OF SLAB AS RECOMMENDED BY THE MANUFACTURER.

AT THE CONTRACTOR'S OPTION, FERRULES WITH OPEN OR CLOSED ENDS MAY BE USED.

PAYMENT FOR GUARDRAIL, POSTS, AND POST BASE PLATES IS INCLUDED IN ROADWAY PAY ITEMS.

SLAB REINFORCING STEEL MAY BE SHIFTED AS NECESSARY TO CLEAR GUARDRAIL ANCHOR ASSEMBLY. CARE SHOULD BE TAKEN TO KEEP THE SHIFTING OF REINFORCING STEEL TO A MINIMUM.

THE CONTRACTOR MAY USE ADHESIVELY ANCHORED ANCHOR BOLTS IN PLACE OF GUARDRAIL ANCHOR ASSEMBLY. LEVEL TWO FIELD TESTING IS REQUIRED, AND THE YIELD LOAD OF THE 25.40mm Ø BOLT IS 97.0 kN. FOR ADHESIVELY ANCHORED ANCHOR BOLTS OR DOWELS, SEE SPECIAL PROVISIONS.

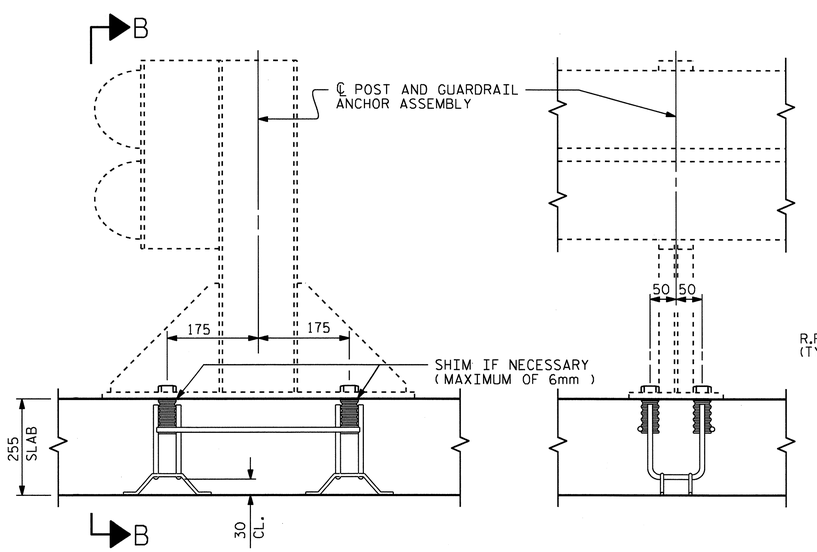

SECTION A-A

SECTION B-B

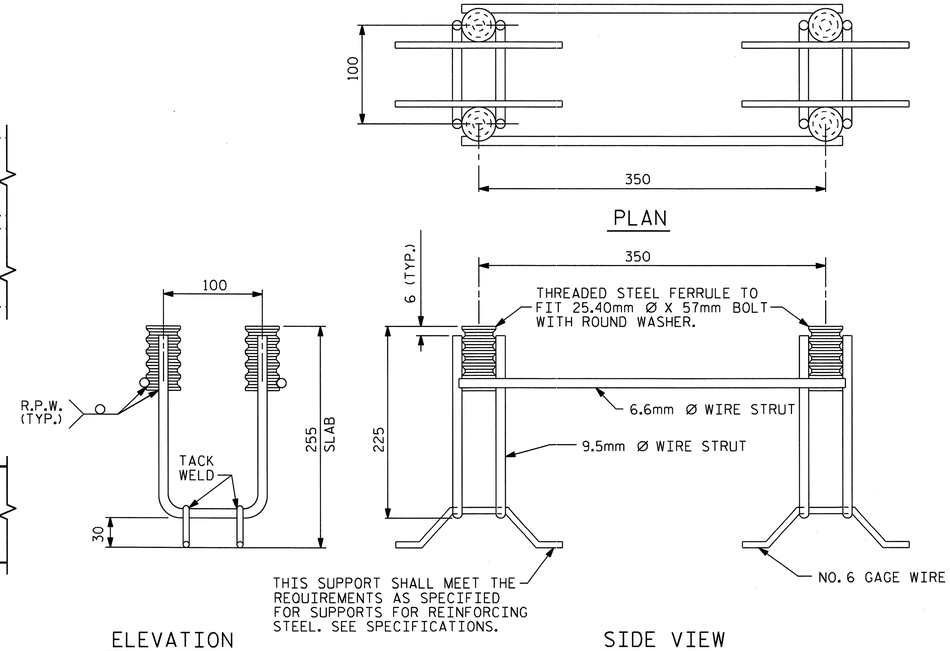

PLAN

ELEVATION

SIDE VIEW

GUARDRAIL ANCHOR ASSEMBLY FOR CULVERTS

PROJECT NO. R-2519A

YANCEY COUNTY

STATION: 300+91.700 -L-

SHEET 9 OF 9

STATE OF NORTH CAROLINA
DEPARTMENT OF TRANSPORTATION
RALEIGH

STANDARD

ANCHORAGE DETAILS FOR GUARDRAIL ANCHOR ASSEMBLY FOR CULVERTS

NORTH CAROLINA PROFESSIONAL SEAL 22005 ENGINEER A. KEITH PASCHAL

2/28/11

ASSEMBLED BY : J. G. KHARVA	DATE : 2/7/11		
CHECKED BY : J. D. HAWK	DATE : 2/9/11		
DRAWN BY : FCJ 6/88	REV. 7/10/01	LES/RDR	
CHECKED BY : ARB 6/88	REV. 5/7/03	RWW/JTE	
	REV. 5/1/06R	KMM/GM	

REVISIONS								SHEET NO.
NO.	BY:	DATE:	NO.	BY:	DATE:			C-57
1			3					TOTAL SHEETS
2			4					119

STR. #6 STD. NO. GRA1SM

25-FEB-2011 14:21
R:\Structures\str6\Final Plans\R-2519A_sd_CU_06.dgn
gallen

B.M. #8 : SPIKE SET IN BASE OF 10" OAK TREE, 57.270m LEFT STA. 297+82.740 -L-, EL. 794.759.

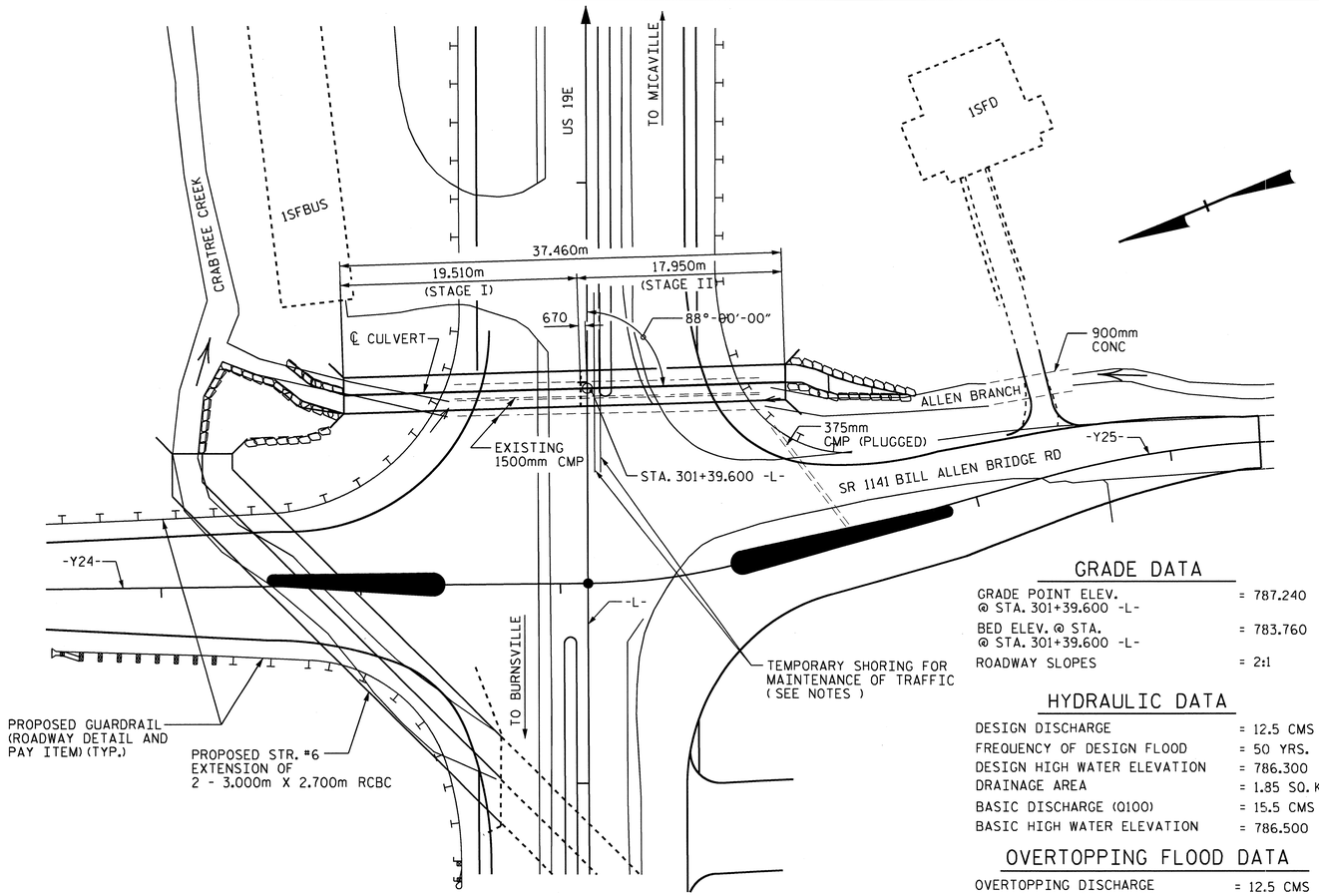

FOR UTILITY INFORMATION, SEE UTILITY PLANS AND SPECIAL PROVISIONS.

LOCATION SKETCH

GRADE DATA

GRADE POINT ELEV. @ STA. 301+39.600 -L-	= 787.240
BED ELEV. @ STA. @ STA. 301+39.600 -L-	= 783.760
ROADWAY SLOPES	= 2:1

HYDRAULIC DATA

DESIGN DISCHARGE	= 12.5 CMS
FREQUENCY OF DESIGN FLOOD	= 50 YRS.
DESIGN HIGH WATER ELEVATION	= 786.300
DRAINAGE AREA	= 1.85 SQ. Km.
BASIC DISCHARGE (Q100)	= 15.5 CMS
BASIC HIGH WATER ELEVATION	= 786.500

OVERTOPPING FLOOD DATA

OVERTOPPING DISCHARGE	= 12.5 CMS
FREQUENCY OF OVERTOPPING FLOOD	= 50± YRS
OVERTOPPING FLOOD ELEVATION	= 786.300

NOTES

ASSUMED LIVE LOAD ---------- MS18 OR ALTERNATE LOADING.

DESIGN FILL---------- 1.790m

FOR OTHER DESIGN DATA AND NOTES SEE STANDARD NOTE SHEET.

ALL DIMENSIONS ARE IN MILLIMETERS UNLESS OTHERWISE NOTED.

ALL ELEVATIONS ARE IN METERS.

76mm Ø WEEP HOLES INDICATED TO BE IN ACCORDANCE WITH THE SPECIFICATIONS.

THE RESIDENT ENGINEER SHALL CHECK THE LENGTH OF CULVERT BEFORE STAKING IT OUT TO MAKE CERTAIN THAT IT WILL PROPERLY TAKE CARE OF THE FILL.

DIMENSIONS FOR WING LAYOUT AS WELL AS ADDITIONAL REINFORCING STEEL EMBEDDED IN BARREL ARE SHOWN ON WING SHEET.

AT THE CONTRACTOR'S OPTION, HE MAY SPLICE THE VERTICAL REINFORCING STEEL IN THE INTERIOR FACE OF EXTERIOR WALL AND BOTH FACES OF INTERIOR WALLS ABOVE LOWER WALL CONSTRUCTION JOINT. THE SPLICE LENGTH SHALL BE AS PROVIDED IN THE SPLICE LENGTH CHART SHOWN ON THE PLANS. EXTRA WEIGHT OF STEEL DUE TO THE SPLICES SHALL BE PAID FOR BY THE CONTRACTOR.

FOR CULVERT DIVERSION DETAILS AND PAY ITEM, SEE EROSION CONTROL PLANS.

A 900mm STRIP OF FILTER FABRIC SHALL BE ATTACHED TO THE FILL FACE OF THE WING COVERING THE ENTIRE LENGTH OF THE EXPANSION JOINT.

CONCRETE IN CULVERT STAGE I & STAGE II TO BE POURED IN THE FOLLOWING ORDER :

STAGE I (PARTS 1 & 2):

1. OUTLET WING FOOTINGS AND FLOOR SLAB INCLUDING 100mm OF ALL VERTICAL WALLS OF BOTH BARRELS.
2. THE REMAINING PORTIONS OF THE WALLS AND WINGS FULL HEIGHT.
3. ROOF SLAB AND HEADWALL.

STAGE II (PARTS 1 & 2):

1. INLET WING FOOTINGS AND FLOOR SLAB INCLUDING 100mm OF ALL VERTICAL WALL OF BOTH BARRELS.
2. THE REMAINING PORTIONS OF THE WALL AND WINGS FULL HEIGHT.
3. ROOF SLAB AND HEADWALL.

FOR SUBMITTAL OF WORKING DRAWINGS, SEE SPECIAL PROVISIONS.

FOR FALSEWORK AND FORMWORK, SEE SPECIAL PROVISIONS.

TRAFFIC ON US 19E SHALL BE MAINTAINED. IN ORDER TO MAINTAIN TRAFFIC, THE CULVERT SHALL BE CONSTRUCTED IN STAGES AS DIRECTED BY THE PLANS AND THE ENGINEER.

FOR CRANE SAFETY, SEE SPECIAL PROVISIONS.

FOR GROUT FOR STRUCTURES, SEE SPECIAL PROVISIONS.

NO PRECAST REINFORCED BOX CULVERT OPTION WILL BE ALLOWED

FOR LIMITS OF TEMPORARY SHORING FOR MAINTENANCE OF TRAFFIC, SEE TRAFFIC CONTROL PLANS. FOR PAY ITEM FOR TEMPORARY SHORING FOR MAINTENANCE OF TRAFFIC, SEE ROADWAY PLANS.

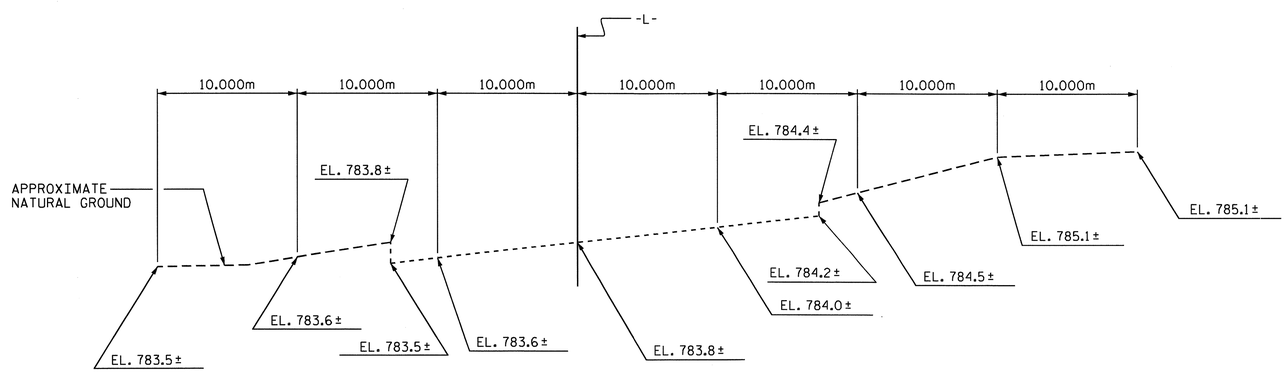

PROFILE ALONG ℄ CULVERT

TOTAL STRUCTURE QUANTITIES

CLASS A CONCRETE	
STAGE I	78.1 m3
STAGE II	72.7 m3
TOTAL	150.8 m3
REINFORCING STEEL	
STAGE I	5541 kg.
STAGE II	5003 kg.
TOTAL	10,544 kg.
FOUNDATION CONDITIONING MATERIAL	
STAGE I	56 METRIC TONS
STAGE II	52 METRIC TONS
TOTAL	108 METRIC TONS
CLASS B RIP RAP	24.9 METRIC TONS
CULVERT EXCAVATION	LUMP SUM

METRIC

PROJECT NO. R-2519A

YANCEY COUNTY

STATION: 301+39.600 -L-

SHEET 1 OF 9

STATE OF NORTH CAROLINA
DEPARTMENT OF TRANSPORTATION
RALEIGH

DOUBLE
1.800m X 1.800m
CONCRETE BOX CULVERT

NORTH CAROLINA PROFESSIONAL SEAL 12929 ENGINEER NORMAN NEBLETT BULLOCK, Jr. 3/11/11

NORTH CAROLINA PROFESSIONAL SEAL 22005 ENGINEER J. KEITH PASCHAL 2/28/11

REVISIONS						SHEET NO.
NO.	BY:	DATE:	NO.	BY:	DATE:	C-58
1			3			TOTAL SHEETS
2			4			119

DRAWN BY : J.D. HAWK DATE : 5/24/10
CHECKED BY : J. MYA DATE : 7/20/10

25-FEB-2011 14:19
R:\Structures\str7\Final Plans\R2519A_sd_CU_07.dgn
gallen

STR. #7

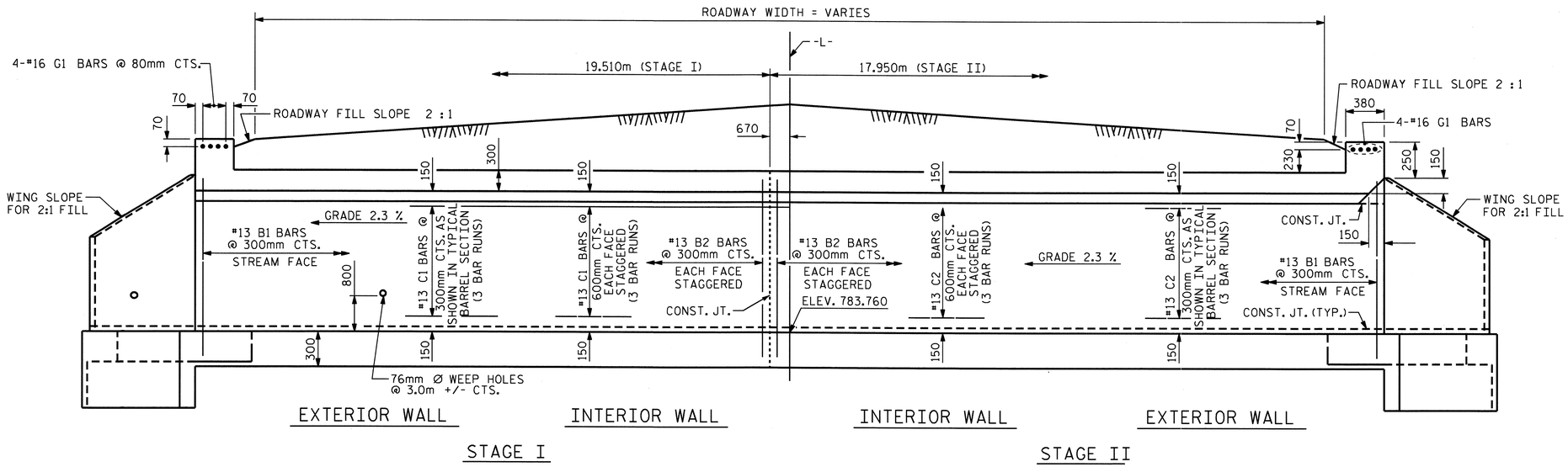

CULVERT SECTION NORMAL TO ROADWAY

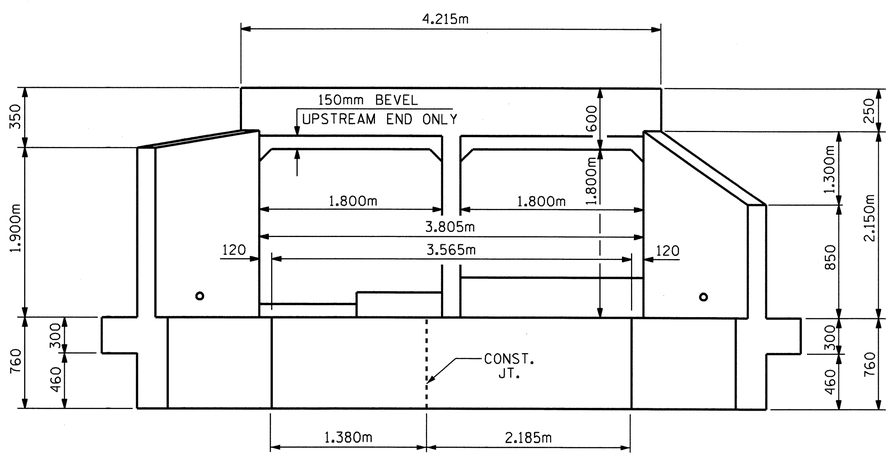

END ELEVATION NORMAL TO SKEW - INLET

FOR CULVERT SILL DETAILS, SEE SHEET 8 OF 9

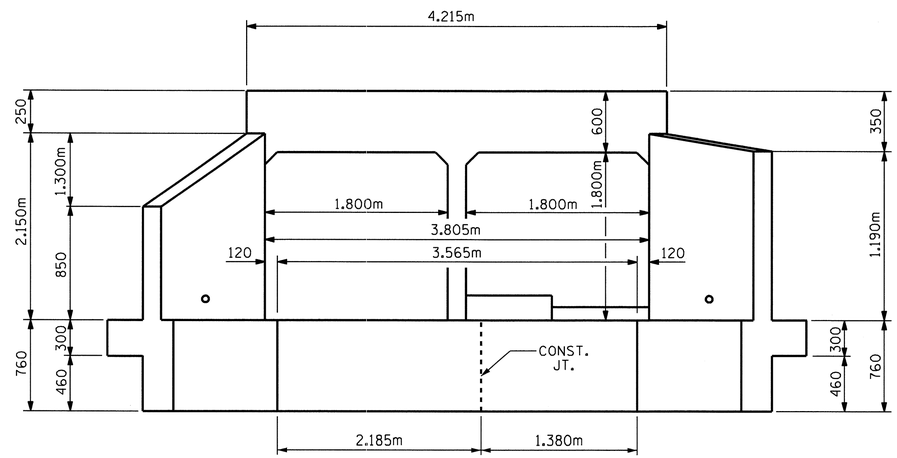

END ELEVATION NORMAL TO SKEW - OUTLET

FOR CULVERT SILL DETAILS, SEE SHEET 8 OF 9

PROJECT NO. R-2519A

YANCEY COUNTY

STATION: 301+39.600 L-

SHEET 2 OF 9

STATE OF NORTH CAROLINA
DEPARTMENT OF TRANSPORTATION
RALEIGH

BARREL STANDARD DOUBLE 1.800m X 1.800m CONCRETE BOX CULVERT

NORTH CAROLINA PROFESSIONAL SEAL 22005 ENGINEER W. KEITH PASCHAL

2/28/11

ASSEMBLED BY : J.D. HAWK	DATE : 5-24-10
CHECKED BY : J. MYA	DATE : 7-20-10
DRAWN BY : EEM 6/97	
CHECKED BY : ARB 7/97	

REVISIONS						SHEET NO.
NO.	BY:	DATE:	NO.	BY:	DATE:	C-59
1			3			TOTAL SHEETS
2			4			119

STD. No. CB290sm STR. #7

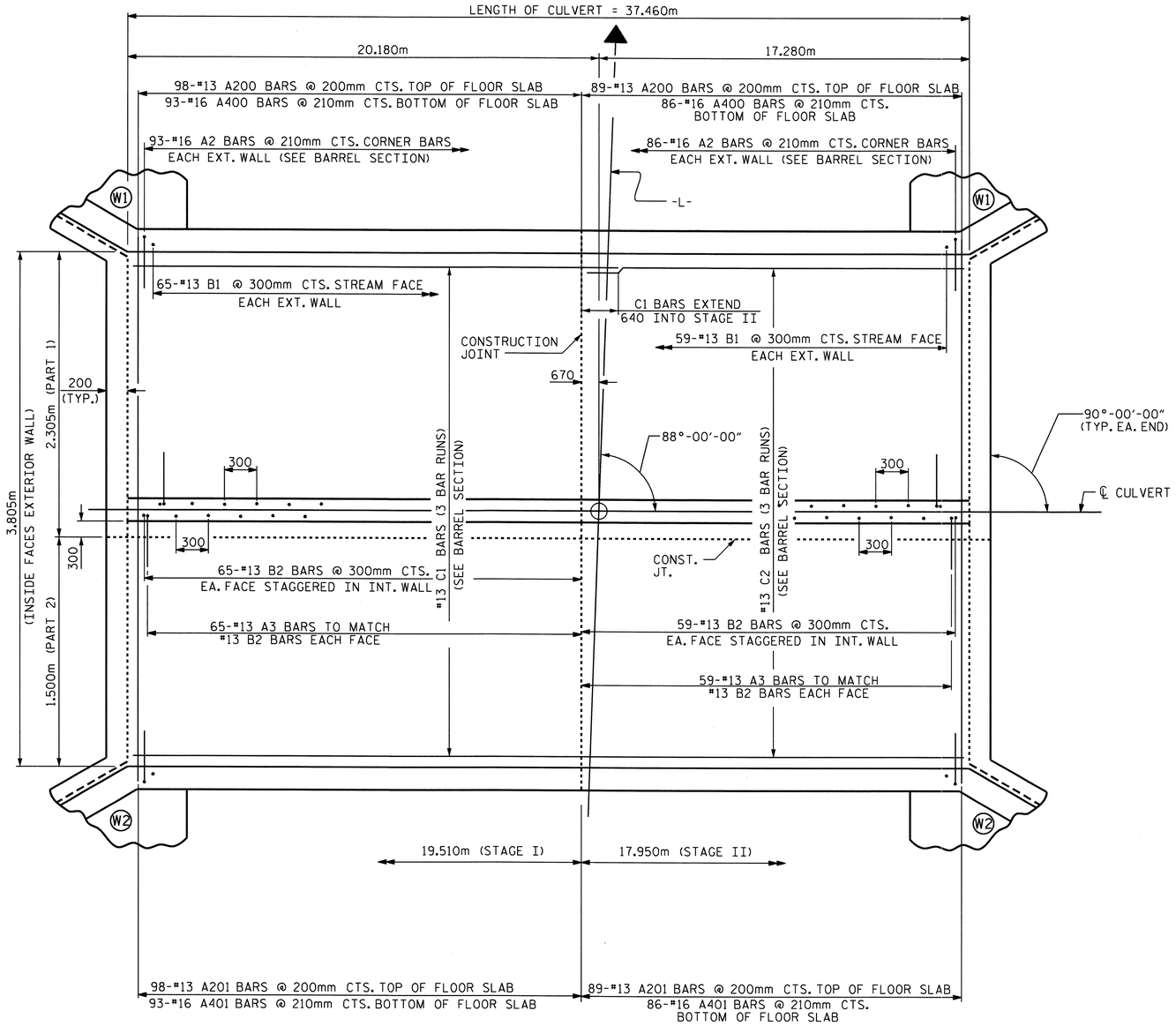

FLOOR SLAB

PROJECT NO. R-2519A
YANCEY COUNTY
STATION: 301+39.600 -L-

SHEET 3 OF 9

STATE OF NORTH CAROLINA
DEPARTMENT OF TRANSPORTATION
RALEIGH

DOUBLE 1.800m X 1.800m CONCRETE BOX CULVERT

NORTH CAROLINA PROFESSIONAL SEAL 22005 ENGINEER K. KEITH PASCHAL
2/28/11

REVISIONS						SHEET NO.
NO.	BY:	DATE:	NO.	BY:	DATE:	C-60
1			3			TOTAL SHEETS
2			4			119

DRAWN BY : J.D. HAWK DATE : 5/24/10
CHECKED BY : J. MYA DATE : 7/20/10

25-FEB-2011 14:19
R:\Structures\str7\Final Plans\R2519A_sd_CU_07.dgn
gallen

STR. #7

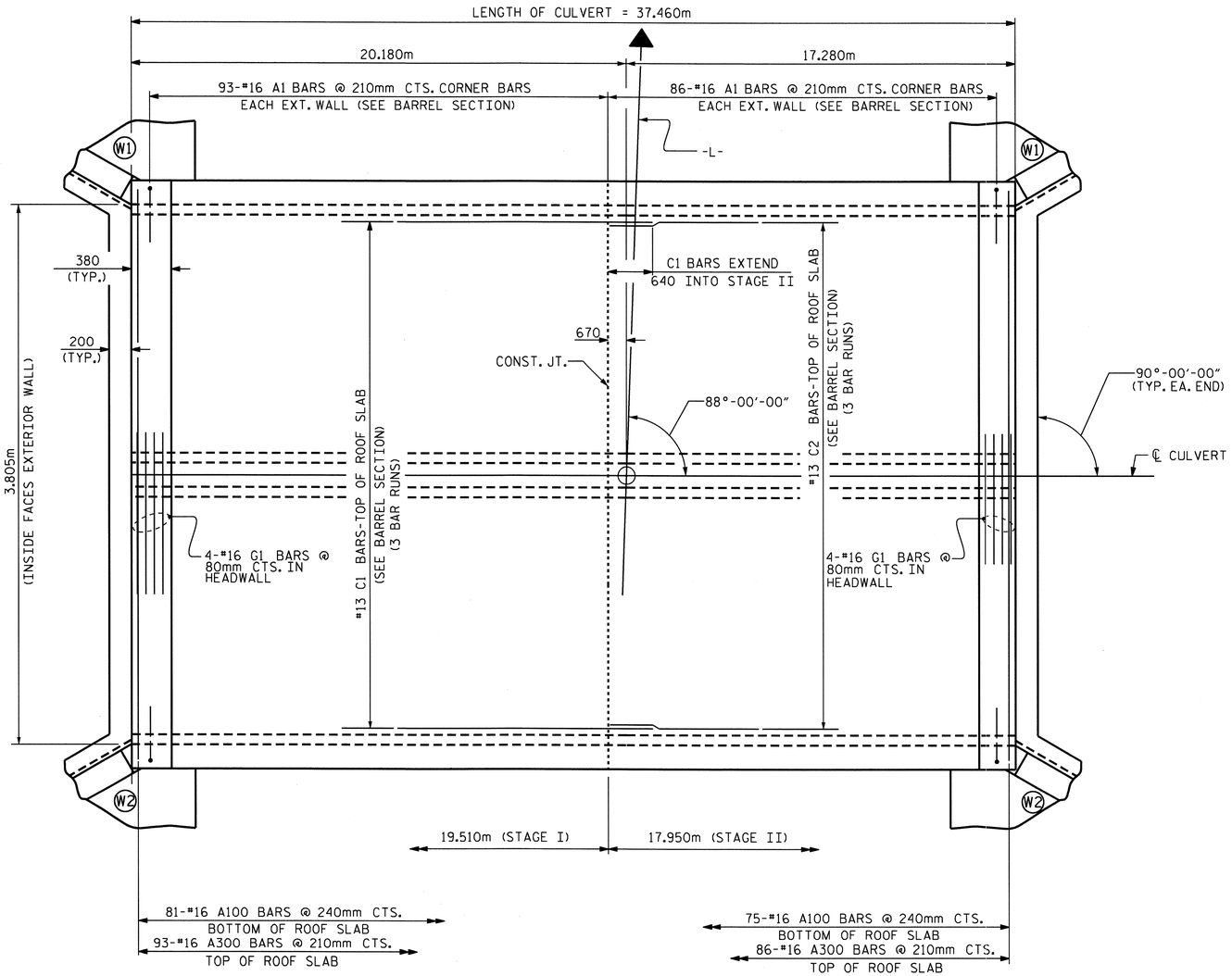

ROOF SLAB

PROJECT NO. R-2519A
YANCEY COUNTY
STATION: 301+39.600 -L-

SHEET 4 OF 9

STATE OF NORTH CAROLINA
DEPARTMENT OF TRANSPORTATION
RALEIGH

DOUBLE 1.800m X 1.800m CONCRETE BOX CULVERT

NORTH CAROLINA PROFESSIONAL SEAL 22005 ENGINEER J. KEITH PASCHAL
2/28/11

REVISIONS							SHEET NO.
NO.	BY:	DATE:	NO.	BY:	DATE:		C-61
1			3				TOTAL SHEETS
2			4				119

DRAWN BY : J.D. HAWK DATE : 5/24/10
CHECKED BY : J. MYA DATE : 7/20/10

25-FEB-2011 14:18
R:\Structures\str7\Final Plans\R2519A_sd_CU_07.dgn
gallen

STR. #7

BILL OF MATERIAL

STAGE I (PART 1)

BAR	NO.	SIZE	TYPE	LENGTH	WEIGHT
A2	93	16	1	1980	286
A3	130	13	1	1420	183
A200	98	13	STR	3060	298
A400	93	16	STR	3060	442
B1	65	13	STR	2300	149
B2	130	13	STR	2300	297
C1	69	13	STR	7120	488

REINFORCING STEEL kg. 2143

CLASS A CONCRETE
BARREL @ 1.45 m3/m 28.3 m3
WING, ETC. 2.7 m3
TOTAL 31.0 m3

REINFORCING STEEL
BARREL 2143
WING, ETC. 89
TOTAL 2232 kg.

FOUNDATION CONDITIONING MATERIAL 33 METRIC TONS

STAGE I (PART 2)

BAR	NO.	SIZE	TYPE	LENGTH	WEIGHT
A1	186	16	1	2020	583
A2	93	16	1	1980	286
A100	81	16	STR	4100	515
A201	98	13	STR	1600	156
A401	93	16	STR	1600	231
A300	93	16	STR	4100	592
B1	65	13	STR	2300	149
C1	93	13	STR	7120	658
G1	4	16	STR	4100	25

REINFORCING STEEL kg. 3195

CLASS A CONCRETE
BARREL @ 2.21 m3/m 43.1 m3
WING, HEADWALL, ETC. 3.6 m3
SILL 0.4 m3
TOTAL 47.1 m3

REINFORCING STEEL
BARREL 3195 kg.
WING, HEADWALL, ETC. 104 kg.
SILL 10 kg.
TOTAL 3309 kg.

FOUNDATION CONDITIONING MATERIAL 23 METRIC TONS

STAGE II (PART 1)

BAR	NO.	SIZE	TYPE	LENGTH	WEIGHT
A2	86	16	1	1980	264
A3	59	13	1	1420	83
A200	89	13	STR	3060	271
A400	86	16	STR	3060	408
B1	59	13	STR	2300	135
B2	118	13	STR	2300	270
C2	69	13	STR	6340	435

REINFORCING STEEL Kg. 1866

CLASS A CONCRETE
BARREL @ 1.45 m3/m 26.0 m3
WING, ECT. 2.7 m3
SILL 0.3 m3
TOTAL 29.0 m3

REINFORCING STEEL
BARREL 1866 kg.
WING, ETC. 89 kg.
SILL 5 kg.
TOTAL 1960 kg.

FOUNDATION CONDITIONING MATERIAL 31 METRIC TONS

STAGE II (PART 2)

BAR	NO.	SIZE	TYPE	LENGTH	WEIGHT
A1	172	16	1	2020	539
A2	86	16	1	1980	264
A100	75	16	STR	4100	477
A201	89	13	STR	1600	142
A401	86	16	STR	1600	214
A300	86	16	STR	4100	547
B1	59	13	STR	2300	135
C2	93	13	STR	6340	586
G1	4	16	STR	4100	25

REINFORCING STEEL Kg. 2929

CLASS A CONCRETE
BARREL @ 2.21 m3/m 39.7 m3
WING, HEADWALL, ETC. 3.6 m3
SILL 0.4 m3
TOTAL 43.7 m3

REINFORCING STEEL
BARREL 2929 kg.
WING, HEADWALL, ETC. 104 kg.
SILL 10 kg.
TOTAL 3043 kg.

SPLICE LENGTHS CHART

BAR	SIZE	SPLICE LENGTH
A200	13	540
A400	16	670
B1	13	540
B2	13	540
C1	13	590

BAR TYPE

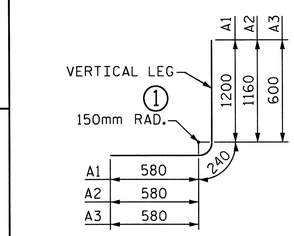

BAR DIMENSIONS ARE OUT TO OUT

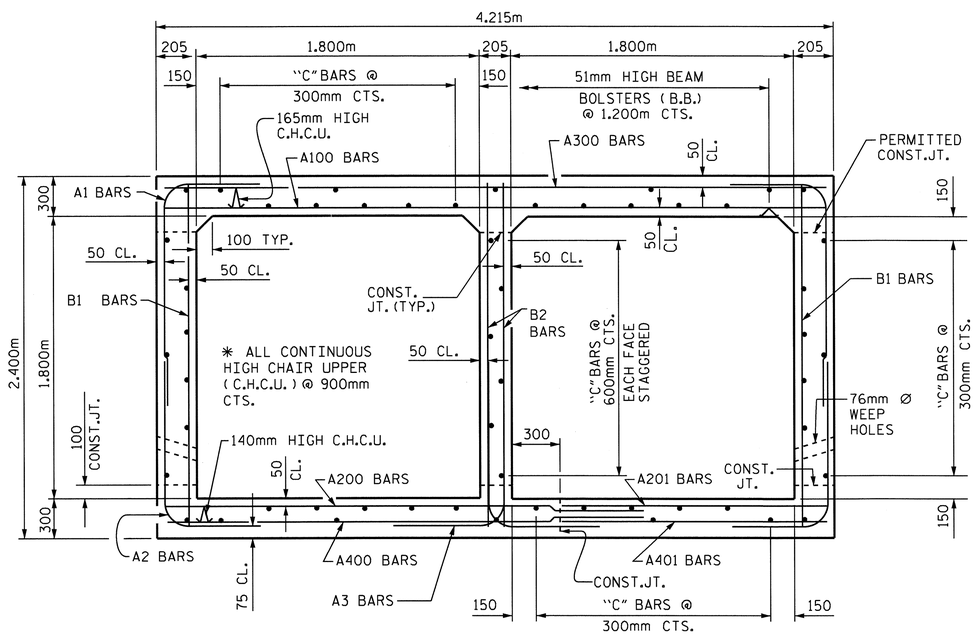

RIGHT ANGLE SECTION OF BARREL

THERE ARE 54 "C" BARS IN SECTION OF BARREL.

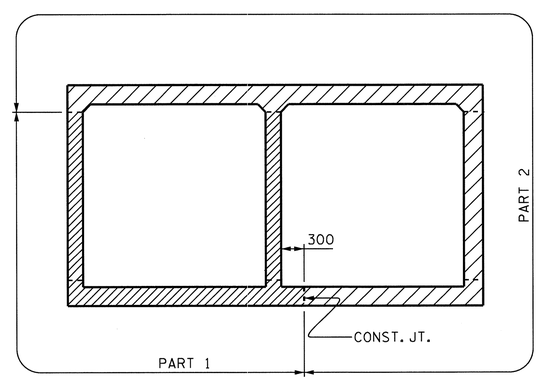

STAGE I & STAGE II
(LOOKING UPSTREAM)

DETAIL OF STAGE CONSTRUCTION

PROJECT NO. R-2519A
YANCEY COUNTY
STATION: 301+39.600 -L-

SHEET 5 OF 9

STATE OF NORTH CAROLINA
DEPARTMENT OF TRANSPORTATION
RALEIGH

BARREL STANDARD DOUBLE 1.800m X 1.800m CONCRETE BOX CULVERT

NORTH CAROLINA PROFESSIONAL SEAL 22005 ENGINEER A. KEITH PASCHAL
2/28/11

REVISIONS						SHEET NO.
NO.	BY:	DATE:	NO.	BY:	DATE:	C-62
1			3			TOTAL SHEETS
2			4			119

DRAWN BY : J.D. HAWK DATE : 5/25/10
CHECKED BY : J. MYA DATE : 7/20/10

25-FEB-2011 14:18
R:\Structures\str7\Final Plans\R2519A_sd_CU_07.dgn
gallen

STR. #7

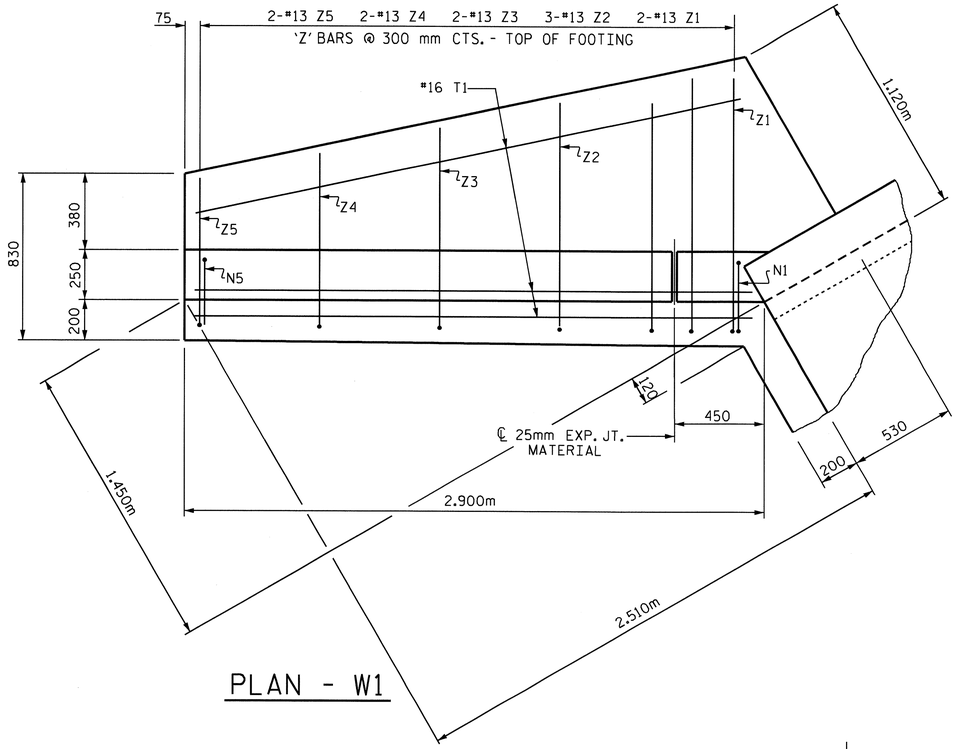

PLAN - W1

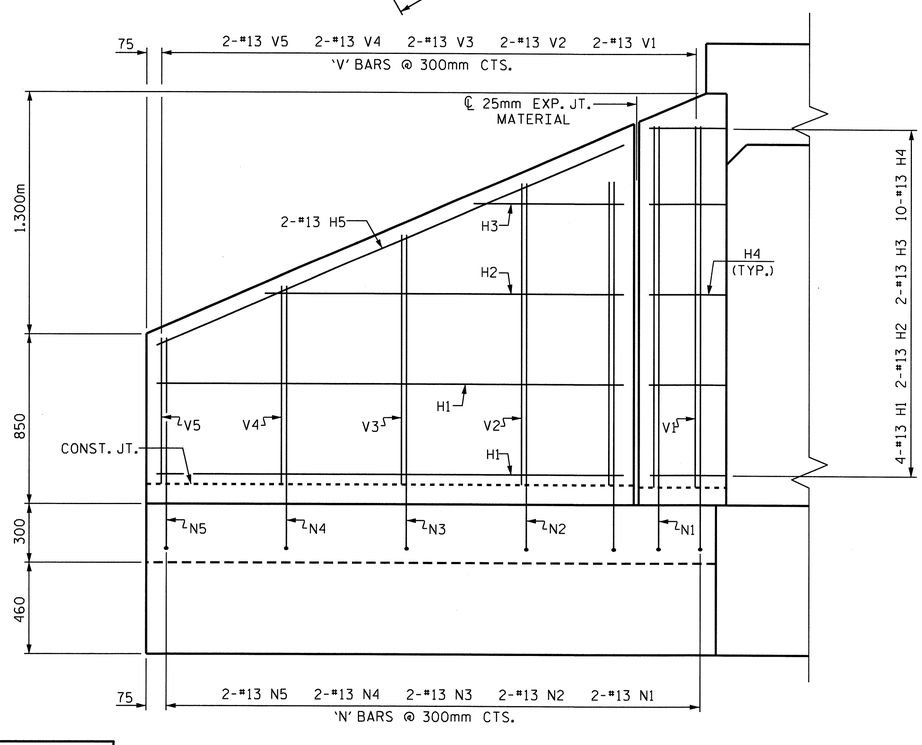

ELEVATION - W1

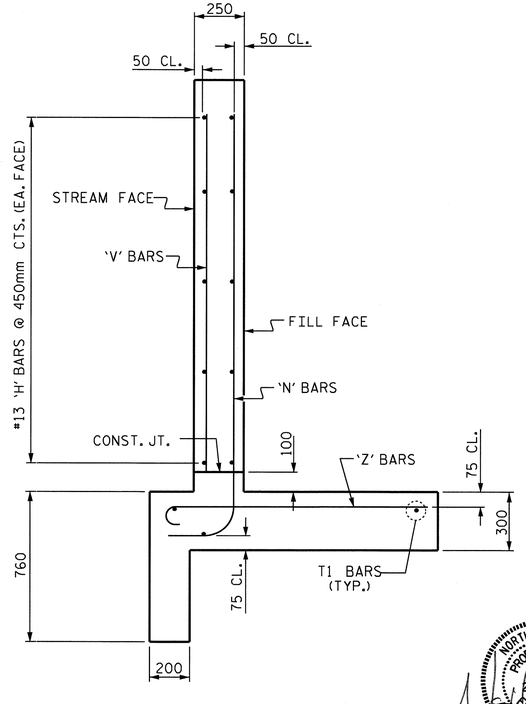

TYPICAL WING SECTION

BAR TYPES

ALL BAR DIMENSIONS ARE OUT TO OUT.

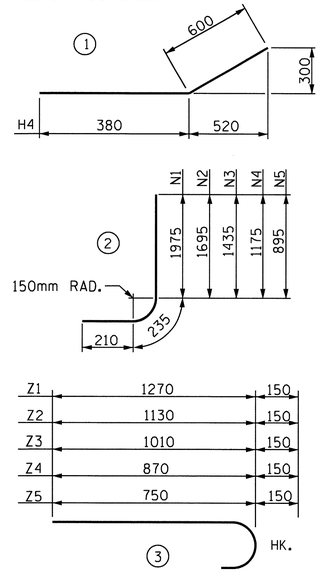

BILL OF MATERIAL FOR 1 WING (STAGE I OR STAGE II)

BAR	NO.	SIZE	TYPE	LENGTH	WEIGHT
H1	4	13	STR	2340	9
H2	2	13	STR	1800	4
H3	2	13	STR	800	2
H4	10	13	1	980	10
H5	2	13	STR	2540	5
N1	2	13	2	2420	5
N2	2	13	2	2140	4
N3	2	13	2	1880	4
N4	2	13	2	1620	3
N5	2	13	2	1340	3
T1	3	16	STR	2900	14
V1	2	13	STR	1800	4
V2	2	13	STR	1520	3
V3	2	13	STR	1260	3
V4	2	13	STR	1000	2
V5	2	13	STR	720	1
Z1	2	13	3	1420	3
Z2	3	13	3	1280	4
Z3	2	13	3	1160	2
Z4	2	13	3	1020	2
Z5	2	13	3	900	2

REINFORCING STEEL IN 1 WING 89 kg.

CLASS A CONCRETE

1 WING	2.4	m^3
1 HEADWALL	0.5	m^3
1 PARTIAL END CURTAIN WALL	0.3	m^3
TOTAL	3.2	m^3

PROJECT NO. R-2519A
YANCEY COUNTY
STATION: 301+39.600 -L-

SHEET 6 OF 9

STATE OF NORTH CAROLINA
DEPARTMENT OF TRANSPORTATION
RALEIGH

STANDARD WINGS FOR CONCRETE BOX CULVERT

H = 1.800m SLOPE = 2 : 1
90° SKEW

NORTH CAROLINA PROFESSIONAL SEAL 22005 ENGINEER A. KEITH PASCHAL
2/28/11

REVISIONS						SHEET NO.
NO.	BY:	DATE:	NO.	BY:	DATE:	C-63
1			3			TOTAL SHEETS
2			4			119

ASSEMBLED BY : J.D. HAWK DATE : 5/25/10
CHECKED BY : J. MYA DATE : 7/20/10

DRAWN BY : KJA 06/97
CHECKED BY : VAP 06/97

STD. NO. CW9018 STR. #7

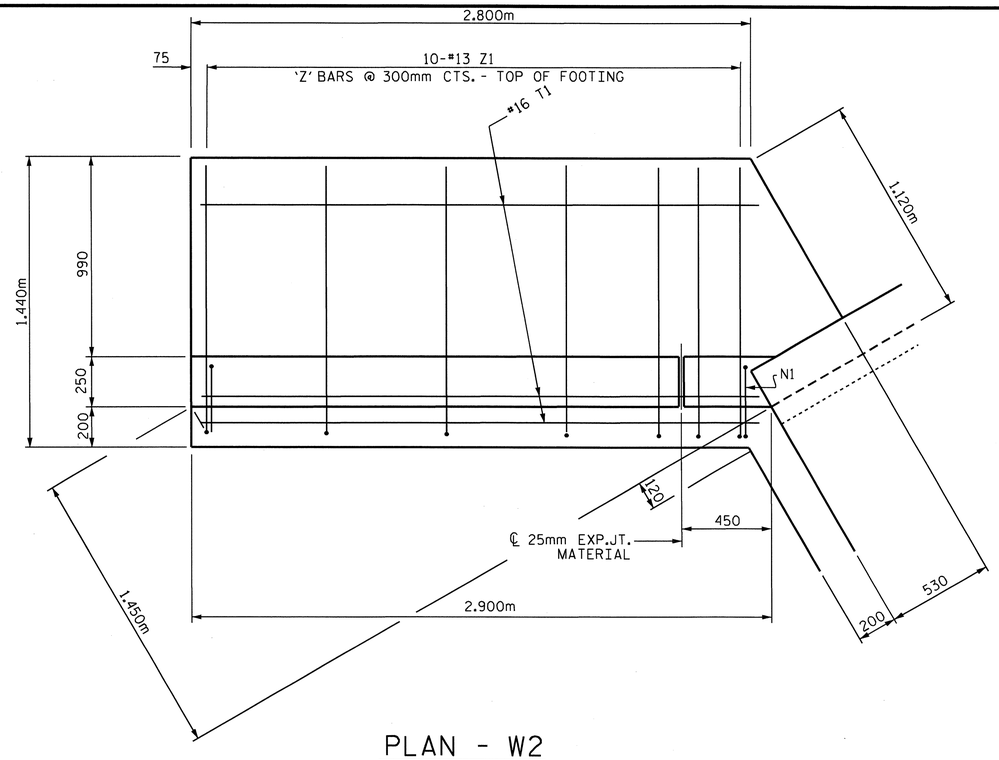

PLAN - W2

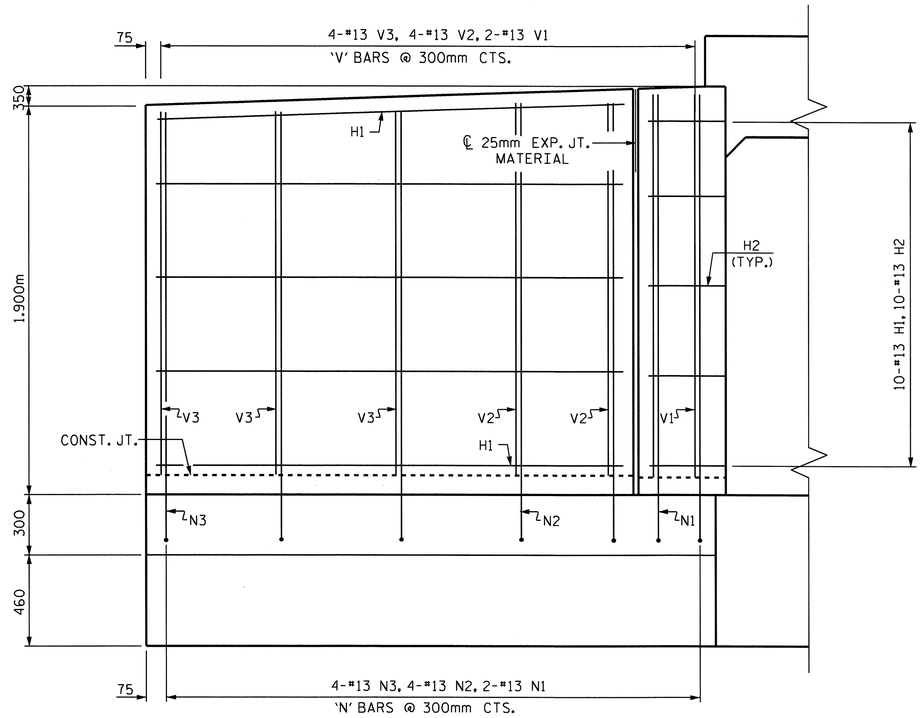

ELEVATION - W2

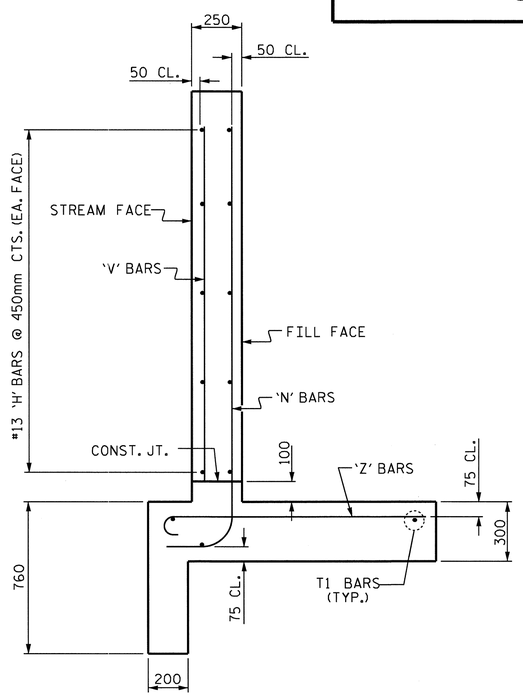

TYPICAL WING SECTION

BAR TYPES

ALL BAR DIMENSIONS ARE OUT TO OUT.

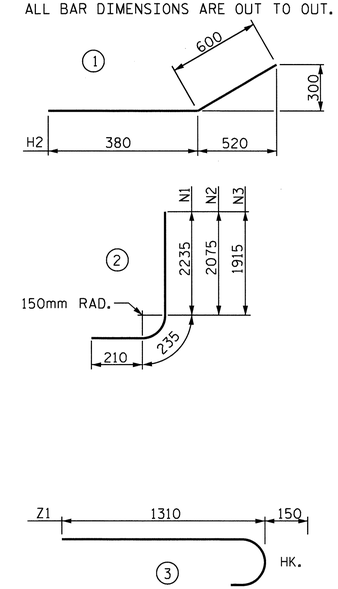

BILL OF MATERIAL FOR 1 WING (STAGE I OR STAGE II)

BAR	NO.	SIZE	TYPE	LENGTH	WEIGHT
H1	10	13	STR	2320	23
H2	10	13	1	980	10
N1	2	13	2	2680	5
N2	4	13	2	2520	10
N3	4	13	2	2360	9
T1	3	16	STR	2760	13
V1	2	13	STR	2080	4
V2	4	13	STR	1900	8
V3	4	13	STR	1760	7
Z1	10	13	3	1460	15

REINFORCING STEEL IN 1 WING 104 kg.

CLASS A CONCRETE

1 WING	2.8	m^3
1 HEADWALL	0.5	m^3
1 PARTIAL END CURTAIN WALL	0.3	m^3
TOTAL	3.6	m^3

PROJECT NO. R-2519A
YANCEY COUNTY
STATION: 301+39.600 -L-

SHEET 7 OF 9

STATE OF NORTH CAROLINA
DEPARTMENT OF TRANSPORTATION
RALEIGH

MODIFIED WINGS FOR CONCRETE BOX CULVERT

H = 1.800m SLOPE = 2 : 1
90° SKEW

NORTH CAROLINA PROFESSIONAL SEAL 22005 ENGINEER A. KEITH PASCHAL
7/20/11

ASSEMBLED BY : J.D. HAWK	DATE : 5/25/10
CHECKED BY : J. MYA	DATE : 7/20/10
DRAWN BY : KJA 06/97	
CHECKED BY : VAP 06/97	

REVISIONS						SHEET NO.
NO.	BY:	DATE:	NO.	BY:	DATE:	C-64
1			3			TOTAL SHEETS
2			4			119

STD. NO. CW9018 STR. #7

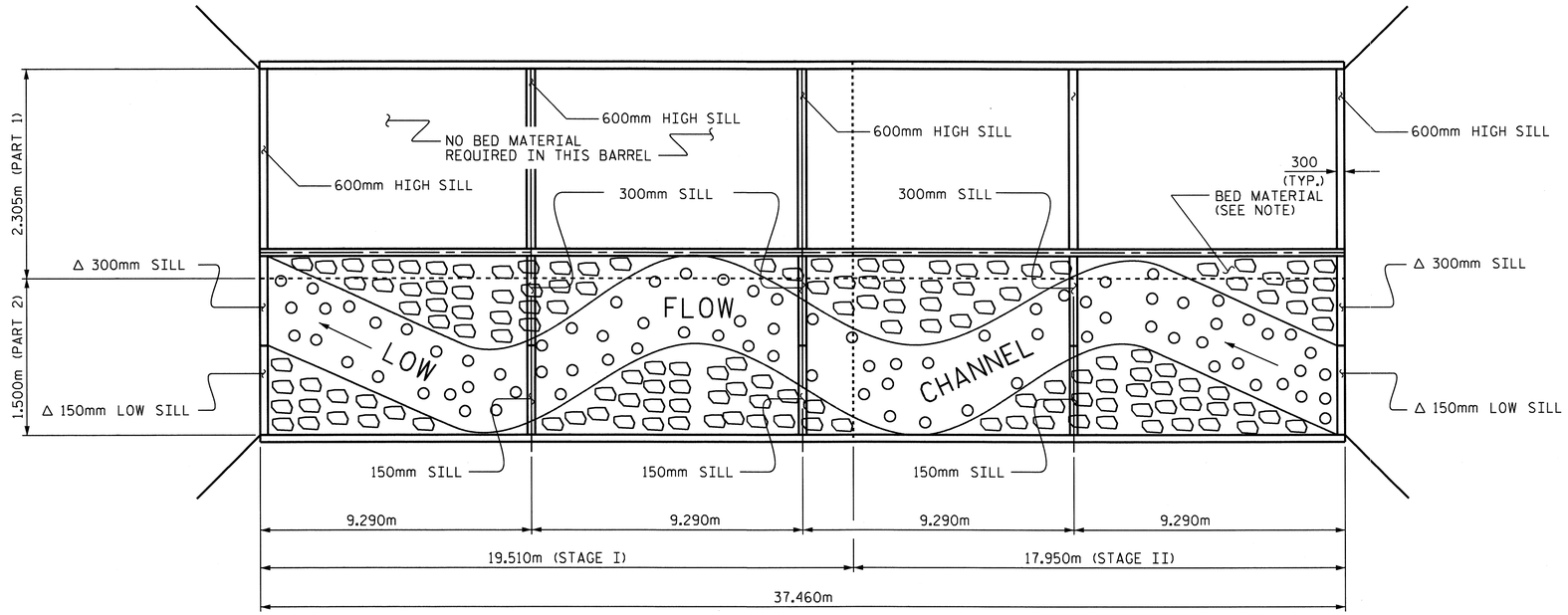

Δ ALTERNATE PLACEMENT OF 300mm SILL AND LOW SILL

PLAN

SILL QUANTITIES

(INCLUDED IN TOTAL FOR STRUCTURE)

STAGE I (PART 2)

BAR	NO.	SIZE	TYPE	LENGTH	WEIGHT
D3	6	19	STR	460	6
D4	6	19	STR	320	4
REINFORCING STEEL TOTAL					10 kg.
CLASS A CONCRETE					0.4 m3.

STAGE II (PART 1)

BAR	NO.	SIZE	TYPE	LENGTH	WEIGHT
D2	3	19	STR	760	5
REINFORCING STEEL TOTAL					5 kg.
CLASS A CONCRETE					0.3 m3

STAGE II (PART 2)

BAR	NO.	SIZE	TYPE	LENGTH	WEIGHT
D3	6	19	STR	460	6
D4	6	19	STR	320	4
REINFORCING STEEL TOTAL					10 kg.
CLASS A CONCRETE					0.4 m3

TOTAL REINFORCING STEEL	25 kg.
TOTAL CLASS A CONCRETE	1.1 m3.
TOTAL CLASS B RIP RAP	24.9 METRIC TONS

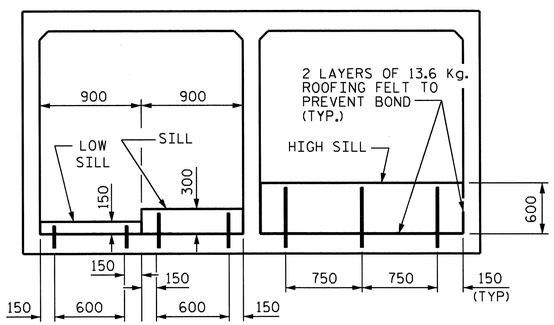

ELEVATION VIEW- INLET

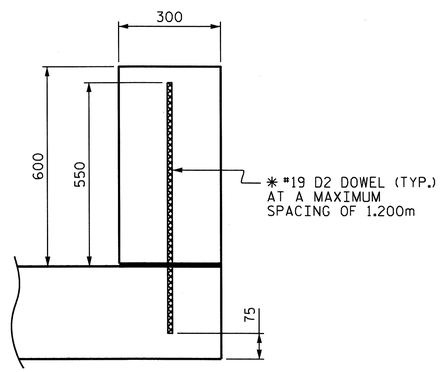

SECTION THROUGH 600mm HIGH SILL

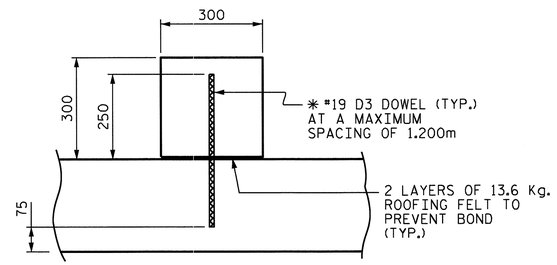

✱ DOWELS MAY BE PUSHED INTO GREEN CONCRETE AFTER SLAB HAS BEEN FLOAT FINISHED.

SECTION THROUGH 300mm SILL

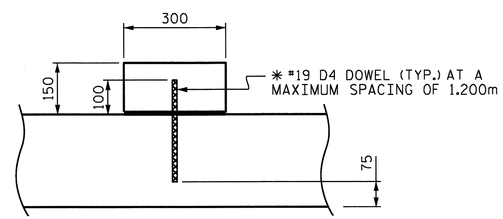

SECTION THROUGH LOW SILL

CULVERT SILL DETAILS

PROJECT NO. R-2519A

YANCEY COUNTY

STATION: 301+39.600 -L-

SHEET 8 OF 9

NOTES

BED MATERIAL PLACED BETWEEN SILLS IN THE CULVERT SHALL PROVIDE A CONTINUOUS LOW FLOW CHANNEL BETWEEN THE LOWER SILLS. THE MATERIAL SHALL BE NATURAL STONE WITH A GRADATION SIZE SIMILAR TO THAT OF CLASS B RIP RAP. STONES LARGER THAN CLASS B RIP RAP SHALL NOT BE PLACED WITHIN THE LOW FLOW CHANNEL. BED MATERIAL IS SUBJECT TO APPROVAL BY THE ENGINEER.

NORTH CAROLINA PROFESSIONAL SEAL 22005 ENGINEER KEITH PASCHAL

2/28/11

STATE OF NORTH CAROLINA
DEPARTMENT OF TRANSPORTATION
RALEIGH

CONCRETE SILL DETAILS

REVISIONS						SHEET NO.
NO.	BY:	DATE:	NO.	BY:	DATE:	C-65
1			3			TOTAL SHEETS
2			4			119

DRAWN BY : J.D. HAWK DATE : 5/25/10
CHECKED BY : J. MYA DATE : 7/20/10

25-FEB-2011 14:17
R:\Structures\str7\Final Plans\R2519A_sd_CU_07.dgn
gallen

STR. #7

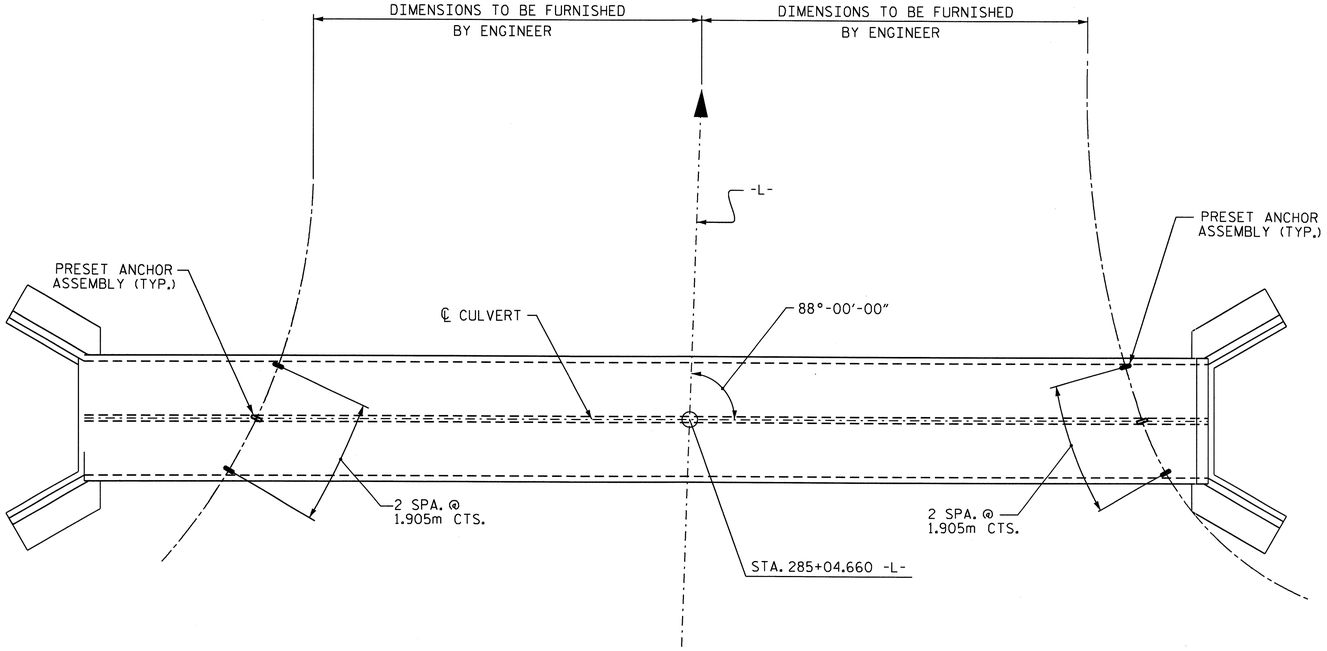

PLAN

SHOWING : GUARDRAIL ANCHOR ASSEMBLY SPACING.

NOTES

THE GUARDRAIL ANCHOR ASSEMBLY FOR CULVERTS SHALL CONSIST OF THE FOLLOWING COMPONENTS :

A. FERRULES SHALL BE MADE FROM STEEL MEETING THE REQUIREMENTS OF AASHTO M169, GRADE 12L14 AND SHALL HAVE A MINIMUM LENGTH OF THREADS OF 64mm.

B. 4 - 25.40mm DIA. X 57mm BOLTS WITH WASHERS. BOLTS SHALL CONFORM TO THE REQUIREMENTS OF ASTM A307. BOLTS AND WASHERS SHALL BE GALVANIZED. (AT THE CONTRACTOR'S OPTION, STAINLESS STEEL BOLTS AND WASHERS MAY BE USED AS AN ALTERNATE FOR THE 25.40mm DIA. X 57mm GALVANIZED BOLTS AND WASHERS. THEY SHALL CONFORM TO OR EXCEED THE MECHANICAL REQUIREMENTS OF ASTM A307. THE USE OF THIS ALTERNATE SHALL BE APPROVED BY THE ENGINEER.)

C. WIRE STRUTS SHOWN IN THE GUARDRAIL ANCHOR ASSEMBLY FOR CULVERTS DETAIL ARE MINIMUM ALLOWABLE SIZE AND SHALL HAVE A MINIMUM TENSILE STRENGTH OF 689 MPa. AS AN OPTION, A 11mm Ø WIRE STRUT WITH A MINIMUM TENSILE STRENGTH OF 620 MPa. IS ACCEPTABLE.

GUARDRAIL ANCHOR ASSEMBLY WITH BOLTS SHALL BE ASSEMBLED IN THE SHOP. BOLT THREADS MAY BE RECUT AS NECESSARY TO INSURE FIT.

THE COST OF THE GUARDRAIL ANCHOR ASSEMBLY FOR CULVERTS COMPLETE IN PLACE, SHALL BE INCLUDED IN THE UNIT CONTRACT PRICE BID FOR CLASS "A" CONCRETE.

FERRULES TO BE PLUGGED DURING POURING OF SLAB AS RECOMMENDED BY THE MANUFACTURER.

AT THE CONTRACTOR'S OPTION, FERRULES WITH OPEN OR CLOSED ENDS MAY BE USED.

PAYMENT FOR GUARDRAIL, POSTS, AND POST BASE PLATES IS INCLUDED IN ROADWAY PAY ITEMS.

SLAB REINFORCING STEEL MAY BE SHIFTED AS NECESSARY TO CLEAR GUARDRAIL ANCHOR ASSEMBLY. CARE SHOULD BE TAKEN TO KEEP THE SHIFTING OF REINFORCING STEEL TO A MINIMUM.

THE CONTRACTOR MAY USE ADHESIVELY ANCHORED ANCHOR BOLTS IN PLACE OF GUARDRAIL ANCHOR ASSEMBLY. LEVEL TWO FIELD TESTING IS REQUIRED, AND THE YIELD LOAD OF THE 25.40mm Ø BOLT IS 97.0 kN. FOR ADHESIVELY ANCHORED ANCHOR BOLTS OR DOWELS, SEE SPECIAL PROVISIONS.

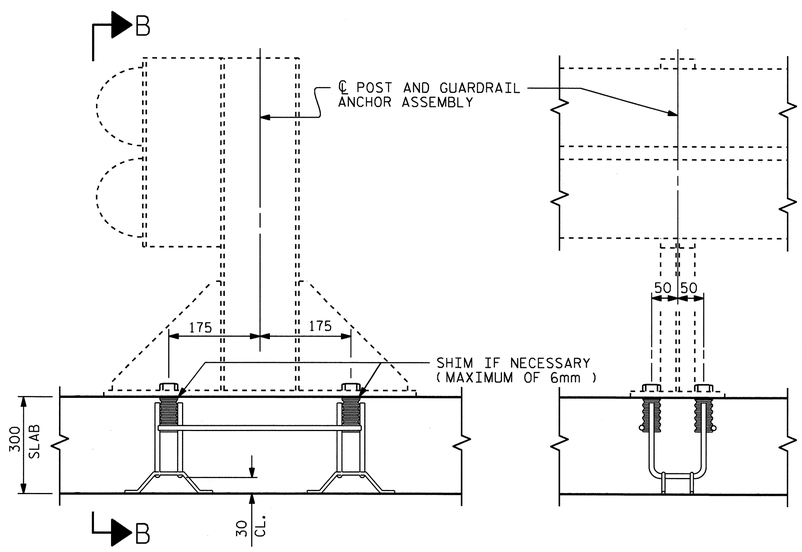

SECTION A-A

SECTION B-B

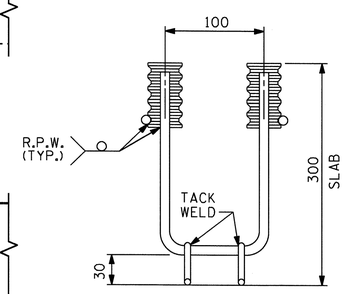

ELEVATION

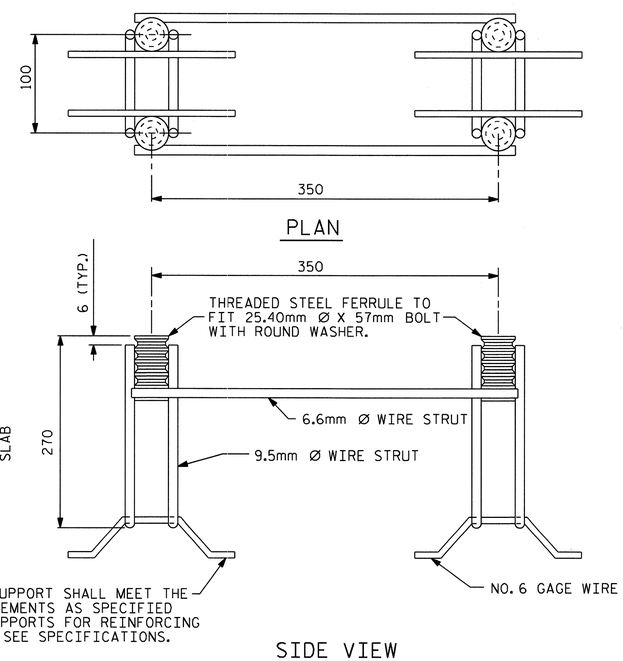

PLAN

SIDE VIEW

GUARDRAIL ANCHOR ASSEMBLY FOR CULVERTS

NORTH CAROLINA PROFESSIONAL SEAL 22005 ENGINEER KEITH PASCHAL
2/28/11

PROJECT NO. R-2519A
YANCEY COUNTY
STATION: 301+39.600 -L-

SHEET 9 OF 9

STATE OF NORTH CAROLINA
DEPARTMENT OF TRANSPORTATION
RALEIGH

STANDARD

ANCHORAGE DETAILS FOR GUARDRAIL ANCHOR ASSEMBLY FOR CULVERTS

REVISIONS								SHEET NO.
NO.	BY:	DATE:	NO.	BY:	DATE:			C-66
1			3					TOTAL SHEETS
2			4					119

ASSEMBLED BY : J. D. HAWK		DATE : 2/7/11	
CHECKED BY : J. MYA		DATE : 2/10/11	
DRAWN BY : FCJ 6/88	REV. 7/10/01	LES/RDR	
CHECKED BY : ARB 6/88	REV. 5/7/03	RWW/JTE	
	REV. 5/1/06R	KMM/GM	

25-FEB-2011 14:17
R:\Structures\str7\Final Plans\R2519A_sd_CU_07.dgn
gallen

STR. #7 STD. NO. GRA1SM

BM. #10: SPIKE SET IN BASE OF 16" OAK TREE 122.904m LEFT STA. 316+67.331 ELEV. 781.044

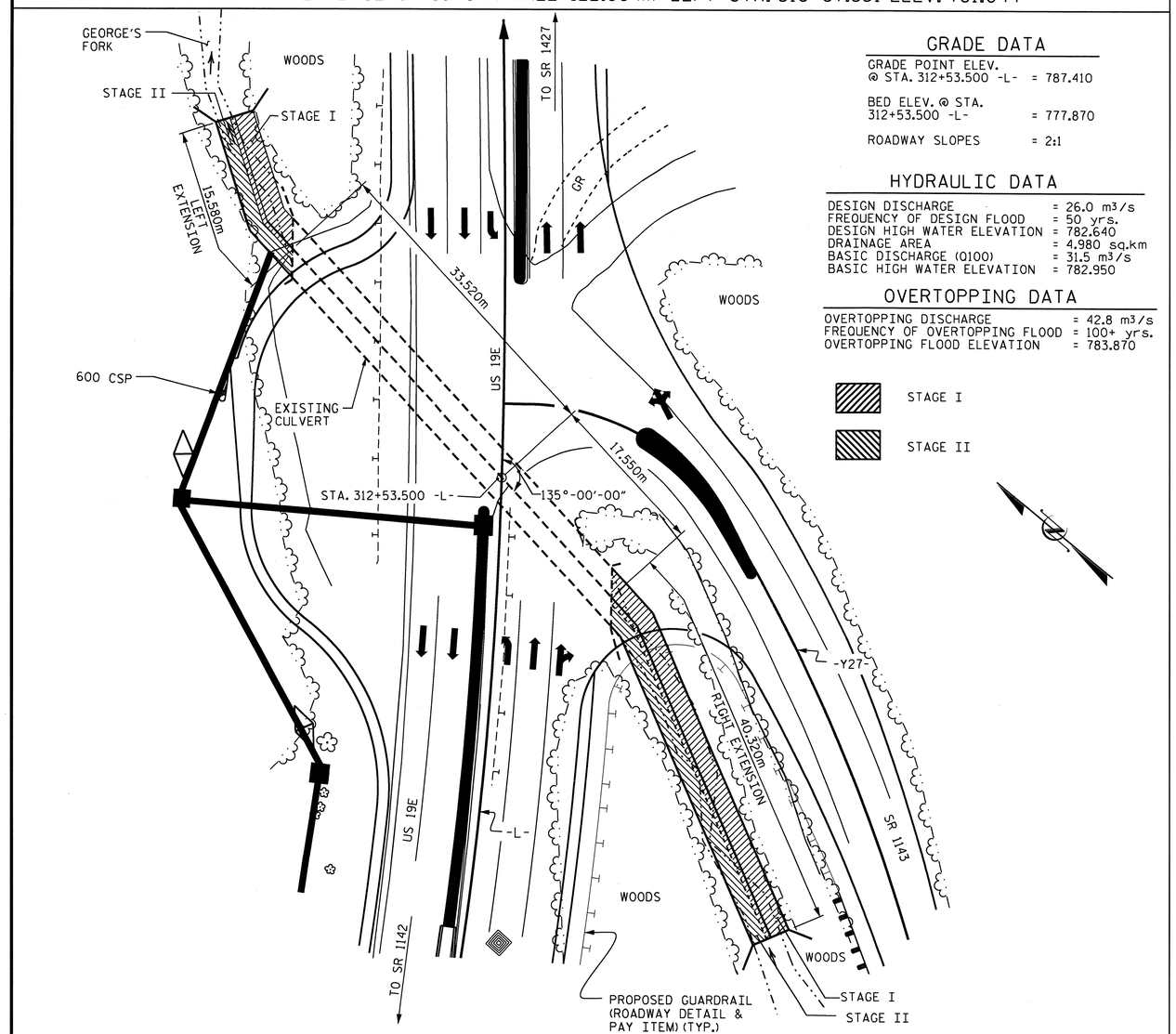

GRADE DATA

GRADE POINT ELEV. @ STA. 312+53.500 -L-	= 787.410
BED ELEV. @ STA. 312+53.500 -L-	= 777.870
ROADWAY SLOPES	= 2:1

HYDRAULIC DATA

DESIGN DISCHARGE	= 26.0 m³/s
FREQUENCY OF DESIGN FLOOD	= 50 yrs.
DESIGN HIGH WATER ELEVATION	= 782.640
DRAINAGE AREA	= 4.980 sq.km
BASIC DISCHARGE (Q100)	= 31.5 m³/s
BASIC HIGH WATER ELEVATION	= 782.950

OVERTOPPING DATA

OVERTOPPING DISCHARGE	= 42.8 m³/s
FREQUENCY OF OVERTOPPING FLOOD	= 100+ yrs.
OVERTOPPING FLOOD ELEVATION	= 783.870

STAGE I

STAGE II

FOR UTILITY INFORMATION, SEE UTILITY PLANS AND SPECIAL PROVISIONS.

LOCATION SKETCH

STRUCTURE QUANTITIES LEFT EXTENSION - STAGE I

CLASS A CONCRETE	
FOOTINGS & WALLS	17.5 m³
WING 1 ETC.	3.3 m³
TOTAL	20.8 m³
REINFORCING STEEL	
FOOTINGS & WALLS	1955 kg
WING 1 ETC.	116 kg
TOTAL	2071 kg

STRUCTURE QUANTITIES LEFT EXTENSION - STAGE II

CLASS A CONCRETE	
FOOTING, WALL & TOP SLAB	39.4 m³
WING 2 ETC.	2.8 m³
TOTAL	42.2 m³
REINFORCING STEEL	
FOOTING, WALL & TOP SLAB	3380 kg
WING 2 ETC.	92 kg
TOTAL	3472 kg

STRUCTURE QUANTITIES RIGHT EXTENSION - STAGE I

CLASS A CONCRETE	
FOOTINGS & WALLS	53.1 m³
WING 3 ETC.	2.8 m³
TOTAL	55.9 m³
REINFORCING STEEL	
FOOTINGS & WALLS	5918 kg
WING 3 ETC.	104 kg
TOTAL	6022 kg

STRUCTURE QUANTITIES RIGHT EXTENSION -STAGE II

CLASS A CONCRETE	
FOOTING, WALL & TOP SLAB	93.1 m³
WING 4 ETC.	4.1 m³
TOTAL	97.2 m³
REINFORCING STEEL	
FOOTING, WALL & TOP SLAB	6954 kg
WING 4 ETC.	122 kg
TOTAL	7076 kg

NOTES:

ASSUMED LIVE LOAD ----------MS18 OR ALTERNATE LOADING.

DESIGN FILL---------- 8.000m

FOR OTHER DESIGN DATA AND NOTES SEE STANDARD NOTE SHEET.

76mm Ø WEEP HOLES INDICATED TO BE IN ACCORDANCE WITH THE SPECIFICATIONS.

CONCRETE IN CULVERTS TO BE POURED IN THE FOLLOWING ORDER:

(STAGE I - LEFT & RIGHT EXTENSION)

1. WING FOOTING AND WALL FOOTINGS INCLUDING 100mm OF VERTICAL WALLS.
2. THE REMAINING PORTIONS OF THE WALLS AND WING FULL HEIGHT.

(STAGE II - LEFT & RIGHT EXTENSION)

1. WING FOOTING AND WALL FOOTING INCLUDING 100mm OF VERTICAL WALL.
2. THE REMAINING PORTIONS OF THE WALLS AND WINGS FULL HEIGHT.
3. ROOF SLABS AND HEADWALLS.

THE RESIDENT ENGINEER SHALL CHECK THE LENGTH OF CULVERT BEFORE STAKING IT OUT TO MAKE CERTAIN THAT IT WILL PROPERLY TAKE CARE OF THE FILL.

DIMENSIONS FOR WING LAYOUT AS WELL AS ADDITIONAL REINFORCING STEEL EMBEDDED IN BARREL ARE SHOWN ON WING SHEET.

TRANSVERSE CONSTRUCTION JOINTS SHALL BE USED IN THE BARREL, SPACED TO LIMIT THE POURS TO A MAXIMUM OF 21.0m. LOCATION OF JOINTS SHALL BE SUBJECT TO APPROVAL OF THE ENGINEER.

AT THE CONTRACTOR'S OPTION, HE MAY SPLICE THE VERTICAL REINFORCING STEEL IN THE INTERIOR FACE OF EXTERIOR WALL AND BOTH FACES OF INTERIOR WALLS ABOVE LOWER WALL CONSTRUCTION JOINT. THE SPLICE LENGTH SHALL BE AS PROVIDED IN THE SPLICE LENGTH CHART SHOWN ON THE PLANS. EXTRA WEIGHT OF STEEL DUE TO THE SPLICES SHALL BE PAID FOR BY THE CONTRACTOR.

NO PRECAST REINFORCED BOX CULVERT OPTION WILL BE ALLOWED.

ALL ELEVATIONS ARE IN METERS.

ALL DIMENSIONS ARE IN MILLIMETERS, UNLESS OTHERWISE NOTED.

FOR SUBMITTAL OF WORKING DRAWINGS, SEE SPECIAL PROVISIONS.

FOR FALSEWORK AND FORMWORK, SEE SPECIAL PROVISIONS.

FOR CRANE SAFETY, SEE SPECIAL PROVISIONS.

FOR GROUT FOR STRUCTURES, SEE SPECIAL PROVISIONS.

FOR CULVERT DIVERSION DETAILS AND PAY ITEM, SEE EROSION CONTROL PLANS.

A 900mm STRIP OF FILTER FABRIC SHALL BE ATTACHED TO THE FILL FACE OF THE WING COVERING THE ENTIRE LENGTH OF THE EXPANSION JOINT.

IF APPROVED BY THE ENGINEER, THE CONTRACTOR MAY USE THE EXISTING WINGS AS TEMPORARY SHORING FOR THE CONSTRUCTION OF THE CULVERT EXTENSIONS. IN THIS CASE, THE BOTTOM SLAB OF THE EXTENSION SHALL BE POURED AT LEAST 72 HOURS PRIOR TO CUTTING THE WINGS. THE WINGS MAY BE CUT EARLIER PROVIDED THE SLAB CONCRETE STRENGTH HAS REACHED A MINIMUM COMPRESSIVE STRENGTH OF 10.3 MPa.

DOWELS SHALL BE USED TO CONNECT THE CULVERT EXTENSION TO THE EXISTING CULVERT AS SHOWN. FOR NOTE REGARDING SETTING OF DOWELS, SEE SHEET SNSM.

FOUNDATION EXCAVATION INCLUDED IN CULVERT EXCAVATION.

METRIC

TOTAL STRUCTURE QUANTITIES

CLASS A CONCRETE		REINFORCING STEEL	
LEFT EXT. STAGE I	20.7 m³	LEFT EXT. STAGE I	2071 kg
LEFT EXT. STAGE II	42.2 m³	LEFT EXT. STAGE II	3472 kg
RIGHT EXT. STAGE I	55.9 m³	RIGHT EXT. STAGE I	6022 kg
RIGHT EXT. STAGE II	97.2 m³	RIGHT EXT. STAGE II	7076 kg
TOTAL	216.0 m³	TOTAL	18641 kg
CULVERT EXCAVATION	---------- LUMP SUM		

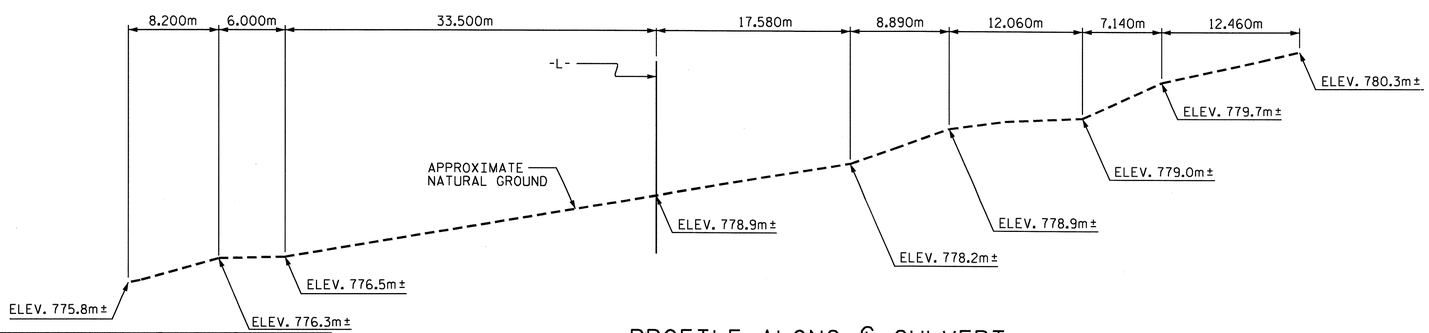

PROFILE ALONG ℄ CULVERT

DRAWN BY : J.G. KHARVA DATE : 8/12/10
CHECKED BY : J. MYA DATE : 9/17/10

01-MAR-2011 14:17
R:\Structures\str8\Final Plans\R2519A_sd_CU_08.dgn
kpaschal

NORTH CAROLINA PROFESSIONAL SEAL 12929 ENGINEER NORMAN HEBLETT BULLOCK, JR.
3/1/11

NORTH CAROLINA PROFESSIONAL SEAL 22005 ENGINEER KEITH PASCHAL
3/1/11

PROJECT NO. R-2519A
YANCEY COUNTY
STATION: 312+53.500 -L-

SHEET 1 OF 9 CULVERT NO. C-22

STATE OF NORTH CAROLINA
DEPARTMENT OF TRANSPORTATION
RALEIGH

DOUBLE 2.130m X 1.830m BOTTOMLESS CONCRETE CULVERT 90° SKEW

REVISIONS								SHEET NO.
NO.	BY:	DATE:	NO.	BY:	DATE:			C-67
1			3					TOTAL SHEETS
2			4					119

STR. #8

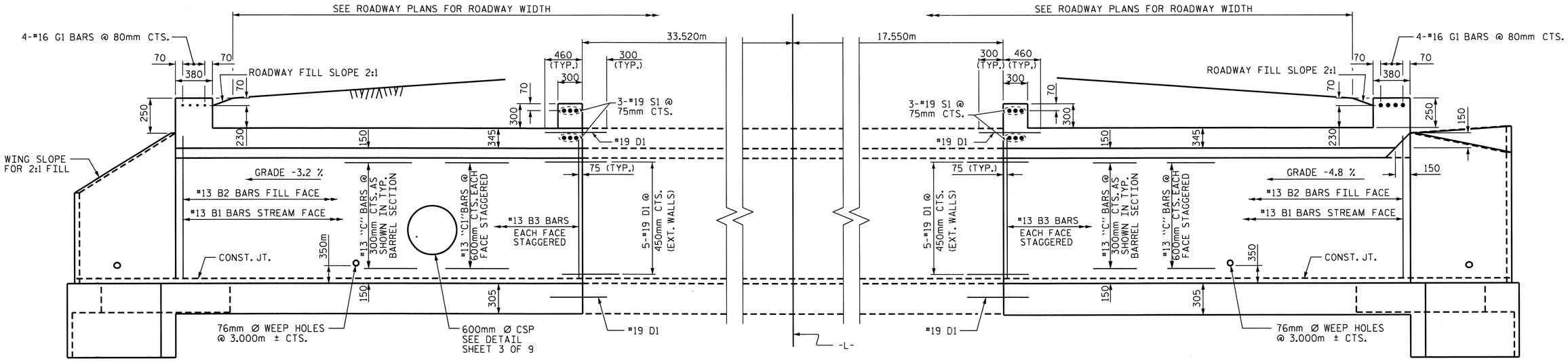

CULVERT SECTION NORMAL TO ROADWAY

CULVERT SECTION NORMAL TO ROADWAY

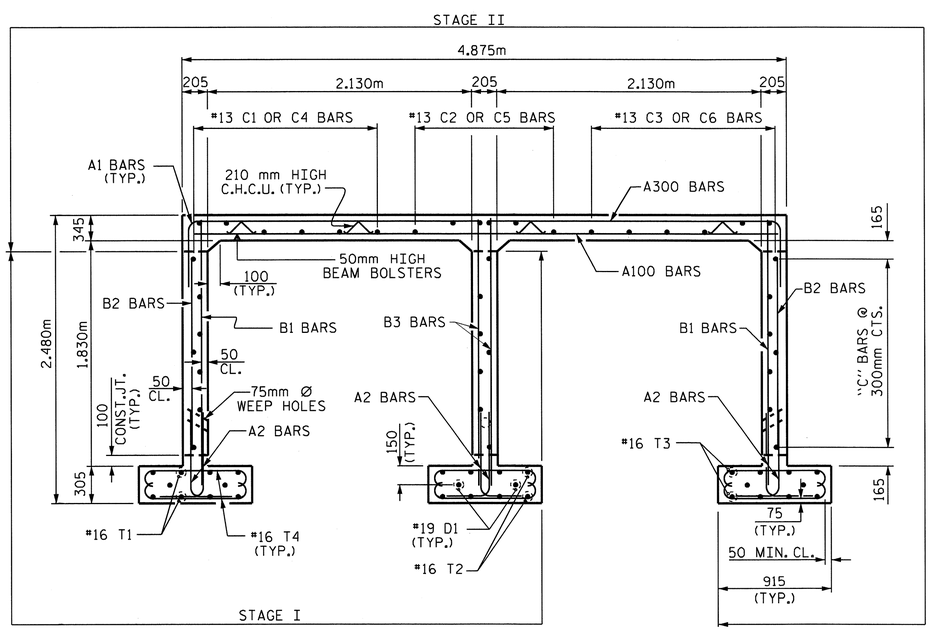

RIGHT ANGLE SECTION OF BARREL

THERE ARE 14 "C" BARS IN SECTION OF BARREL (STAGE I)
THERE ARE 25 "C" BARS IN SECTION OF BARREL (STAGE II)
(LOOKING UPSTREAM)

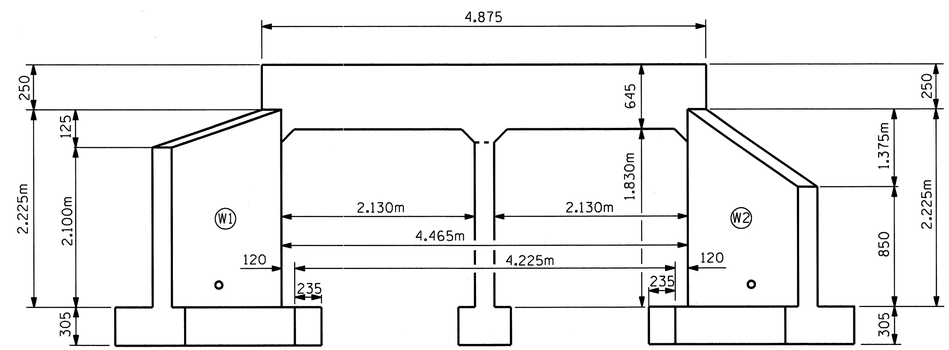

END ELEVATION NORMAL TO SKEW

(FOR LEFT EXTENSIONS)
(OUTLET END ONLY)

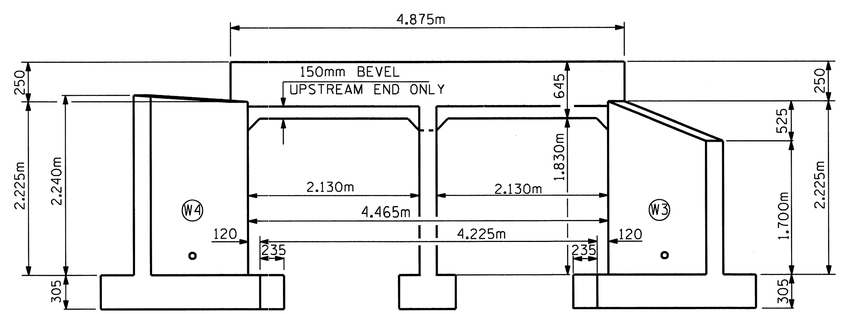

END ELEVATION NORMAL TO SKEW

(FOR RIGHT EXTENSIONS)
(INLET END ONLY)

NORTH CAROLINA PROFESSIONAL SEAL 22005 ENGINEER KEITH PASCHAL

2/28/11

PROJECT NO. R-2519A
YANCEY COUNTY
STATION: 312+53.500 -L-

SHEET 2 OF 9

STATE OF NORTH CAROLINA
DEPARTMENT OF TRANSPORTATION
RALEIGH

DOUBLE 2.130m X 1.830m BOTTOMLESS CONCRETE CULVERT 90° SKEW

ASSEMBLED BY : J. G. KHARVA	DATE : 8/12/10
CHECKED BY : J. MYA	DATE : 9/17/10
DRAWN BY : EEM 6/97	
CHECKED BY : ARB 7/97	

REVISIONS						SHEET NO.
NO.	BY:	DATE:	NO.	BY:	DATE:	C-68
1			3			TOTAL SHEETS
2			4			119

25-FEB-2011 14:05
R:\Structures\str8\Final Plans\R2519A_sd_CU_08.dgn
gallen

STR. #8

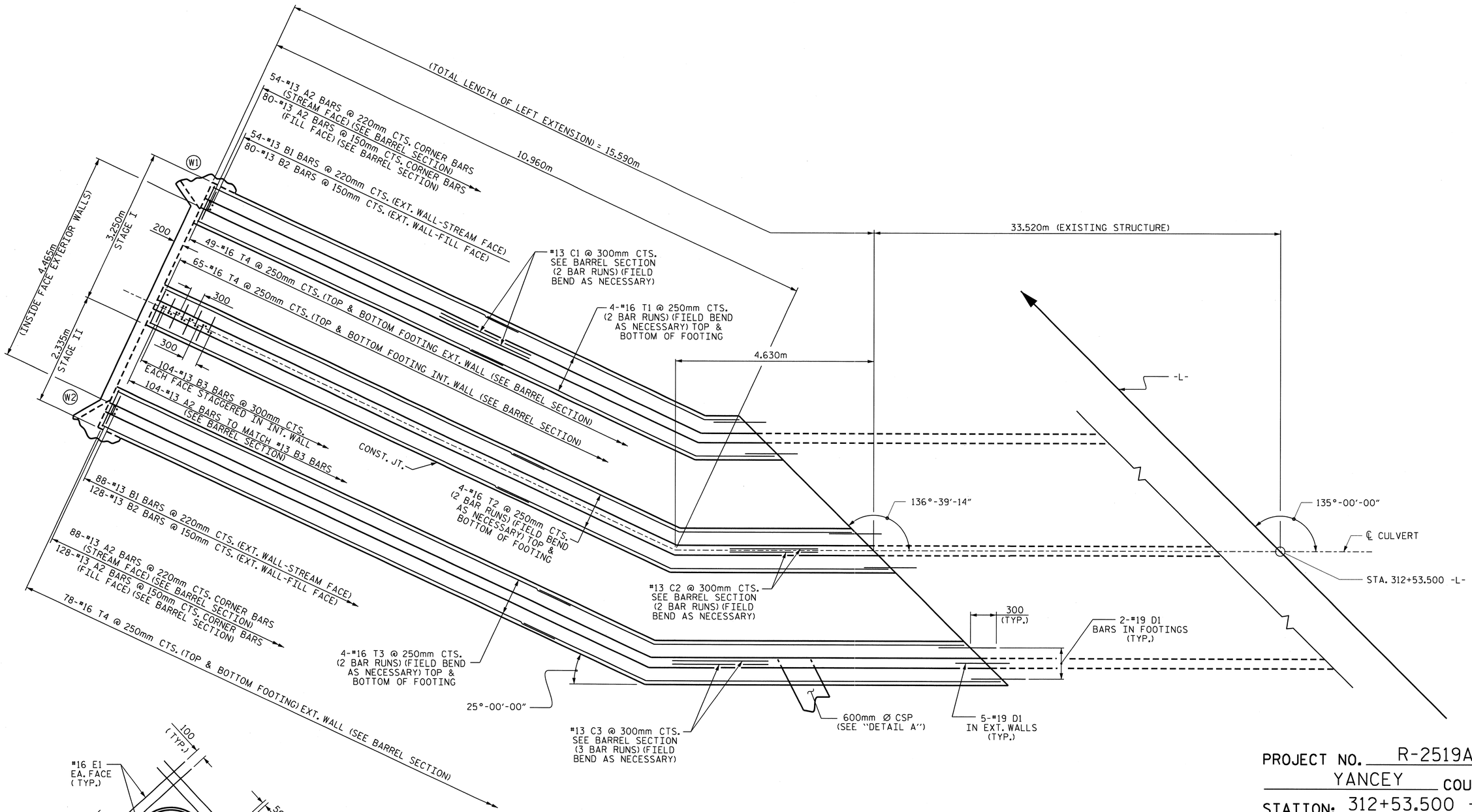

PLAN OF FOOTINGS & WALLS

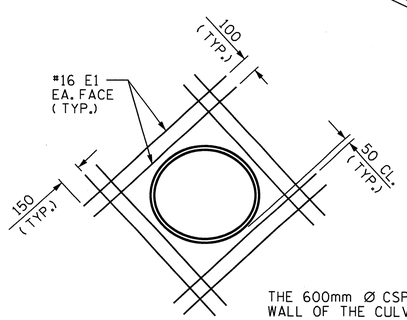

THE 600mm Ø CSP THRU THE SIDE WALL OF THE CULVERT WILL BE LOCATED BY THE ENGINEER. THE REINFORCING STEEL SHALL BE CUT AND FIELD BENT AS NECESSARY TO CLEAR THE PIPE.

DETAIL A

PROJECT NO. R-2519A
YANCEY COUNTY
STATION: 312+53.500 -L-

SHEET 3 OF 9

STATE OF NORTH CAROLINA
DEPARTMENT OF TRANSPORTATION
RALEIGH

DOUBLE
2.130m x 1.830m
BOTTOMLESS CONCRETE
CULVERT
(LEFT EXTENSION)

NORTH CAROLINA PROFESSIONAL SEAL 22005 ENGINEER KEITH PASCHAL

2/28/11

REVISIONS						SHEET NO.
NO.	BY:	DATE:	NO.	BY:	DATE:	C-69
1			3			TOTAL SHEETS
2			4			119

DRAWN BY : J.C. KHARVA DATE : 8/18/10
CHECKED BY : J. MYA DATE : 9/20/10

25-FEB-2011 14:15
R:\Structures\str8\Final Plans\R2519A_sd_CU_08.dgn
gallen

STR. #8

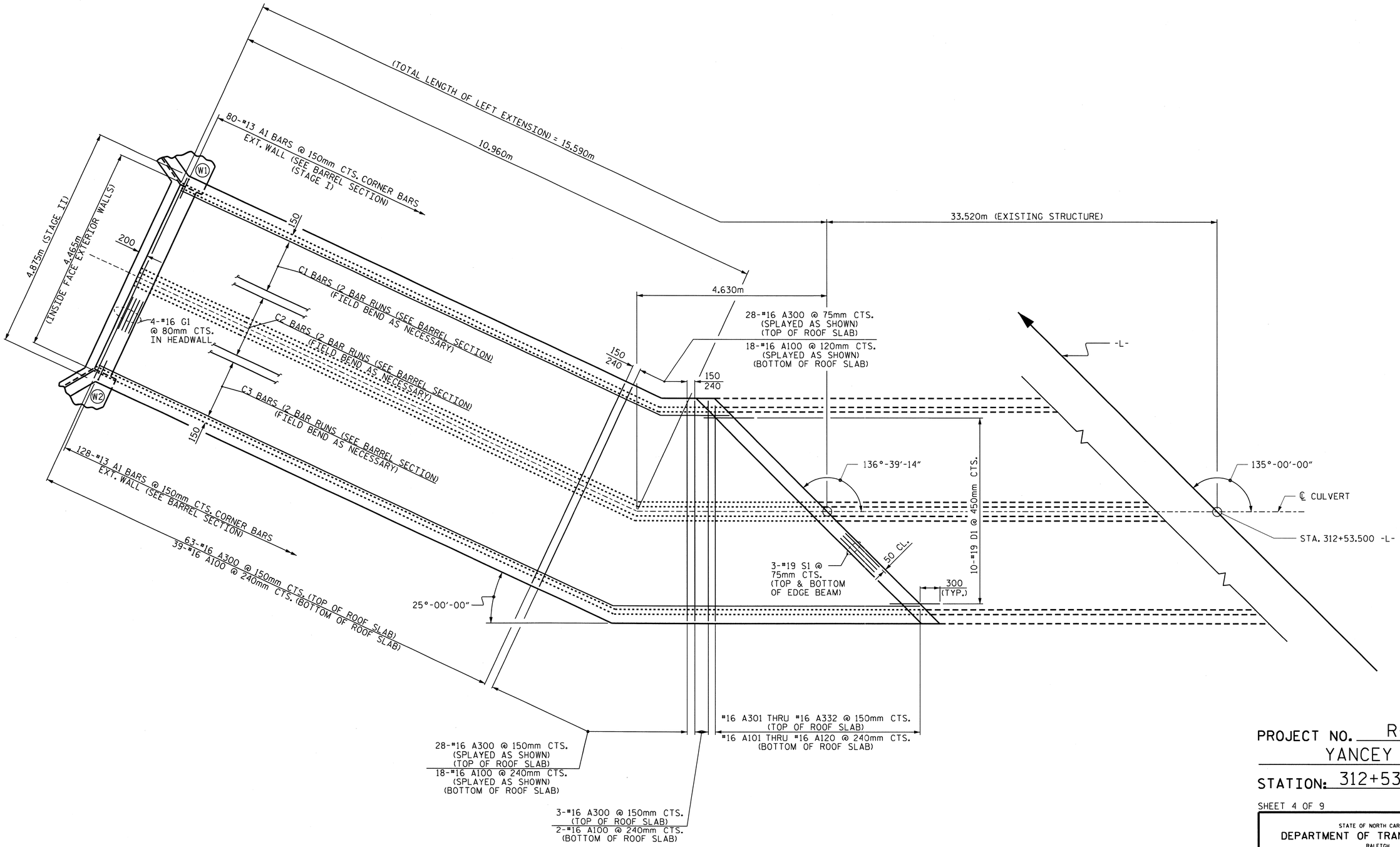

PLAN OF ROOF SLAB

PROJECT NO. R-2519A
YANCEY COUNTY
STATION: 312+53.500 -L-

SHEET 4 OF 9

STATE OF NORTH CAROLINA
DEPARTMENT OF TRANSPORTATION
RALEIGH

DOUBLE
2.130m x 1.830m
BOTTOMLESS CONCRETE
CULVERT
(LEFT EXTENSION)

NORTH CAROLINA PROFESSIONAL SEAL 22005 ENGINEER J. KEITH PASCHAL
2/18/11

REVISIONS						SHEET NO.
NO.	BY:	DATE:	NO.	BY:	DATE:	C-70
1			3			TOTAL SHEETS
2			4			119

DRAWN BY : J.G. KHARVA DATE : 8/18/10
CHECKED BY : J. MYA DATE : 9/22/10

25-FEB-2011 14:14
R:\Structures\str8\Final Plans\R2519A_sd_CU_08.dgn
gallen

STR. #8

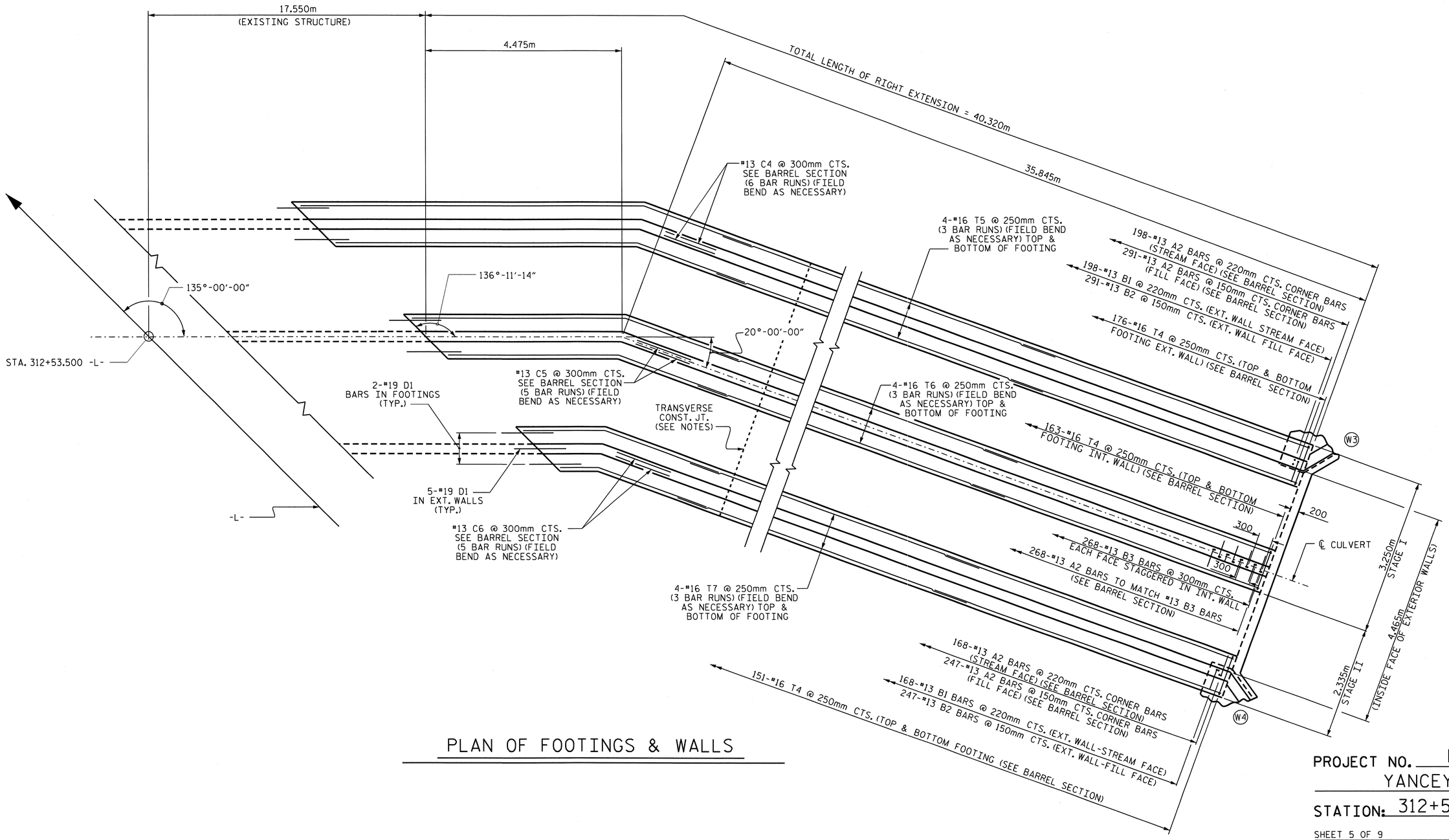

PLAN OF FOOTINGS & WALLS

PROJECT NO. R-2519A

YANCEY COUNTY

STATION: 312+53.500 -L-

SHEET 5 OF 9

STATE OF NORTH CAROLINA
DEPARTMENT OF TRANSPORTATION
RALEIGH

DOUBLE 2.130m x 1.830m BOTTOMLESS CONCRETE CULVERT (RIGHT EXTENSION)

NORTH CAROLINA PROFESSIONAL SEAL 22005 ENGINEER A. KEITH PASCHAL

2/28/11

REVISIONS						SHEET NO.
NO.	BY:	DATE:	NO.	BY:	DATE:	C-71
1			3			TOTAL SHEETS
2			4			119

DRAWN BY : J.G. KHARVA DATE : 8/23/10
CHECKED BY : J. MYA DATE : 9/22/10

25-FEB-2011 14:14
R:\Structures\str8\Final Plans\R2519A_sd_CU_08.dgn
gallen

STR. #8

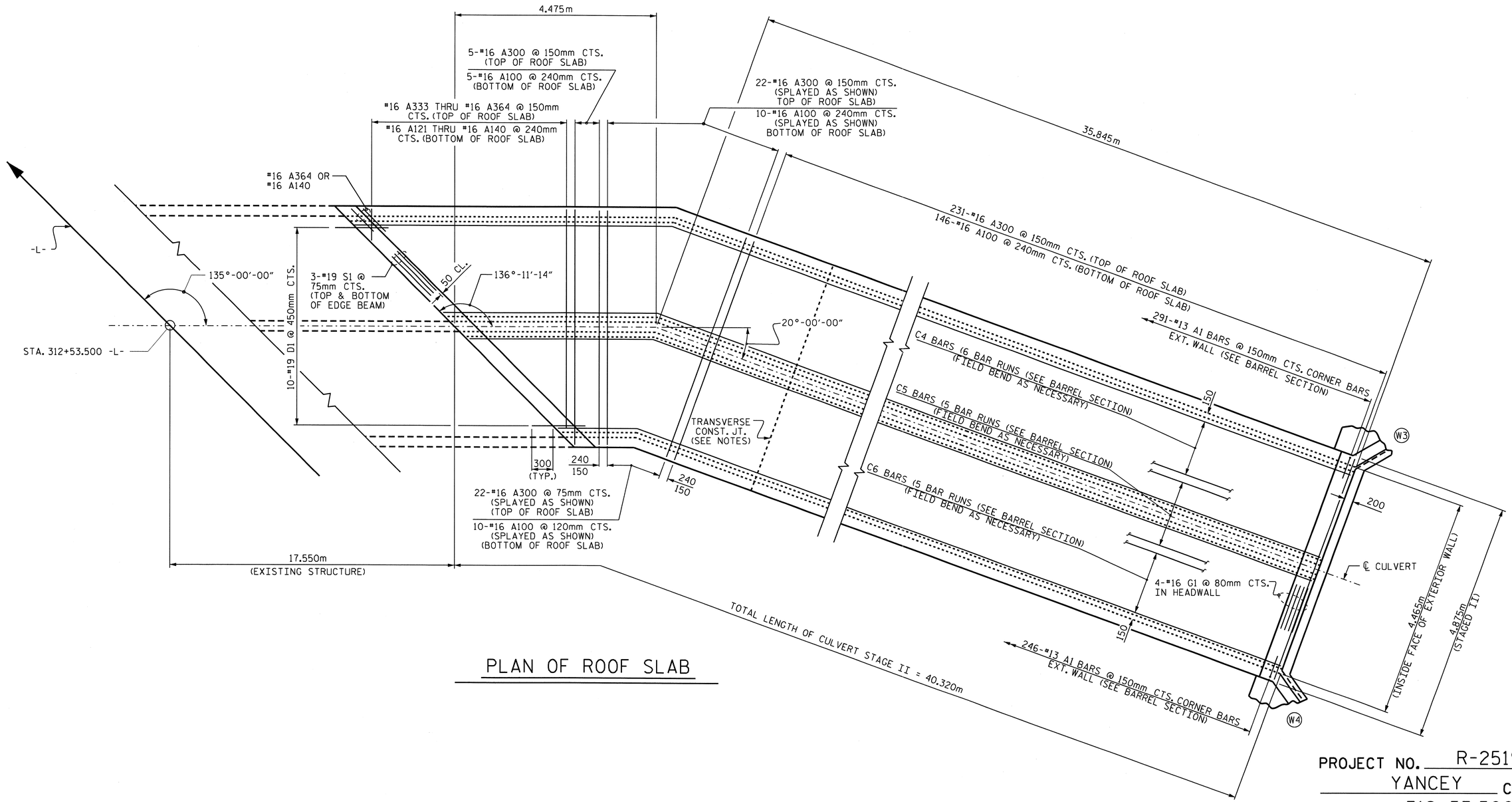

PLAN OF ROOF SLAB

PROJECT NO. R-2519A

YANCEY COUNTY

STATION: 312+53.500 -L-

SHEET 6 OF 9

STATE OF NORTH CAROLINA
DEPARTMENT OF TRANSPORTATION
RALEIGH

DOUBLE 2.130m x 1.830m BOTTOMLESS CONCRETE CULVERT (RIGHT EXTENSION)

NORTH CAROLINA PROFESSIONAL SEAL 22005 ENGINEER A. KEITH PASCHAL

2/28/11

REVISIONS						SHEET NO.
NO.	BY:	DATE:	NO.	BY:	DATE:	C-72
1			3			TOTAL SHEETS
2			4			119

DRAWN BY : J. G. KHARVA DATE : 8/24/10
CHECKED BY : J. MYA DATE : 9/22/10

25-FEB-2011 14:14
R:\Structures\str8\Final Plans\R2519A_sd_CU_08.dgn
gallen

STR. #8

BILL OF MATERIAL

LEFT EXTENSION

(STAGE I)

BAR	No.	SIZE	TYPE	LENGTH	WEIGHT
A1	80	#13	1	1400	111
A2	238	#13	1	1400	331
B1	54	#13	STR	2340	126
B2	80	#13	STR	1580	126
B3	104	#13	STR	2360	244
C1	14	#13	STR	7580	105
C2	14	#13	STR	8660	121
D1	14	#19	STR	760	24
T1	16	#16	STR	6600	164
T2	16	#16	STR	8340	207
T4	228	#16	2	1120	396

REINFORCING STEEL = 1955 kg

CLASS A CONCRETE FOOTINGS AND WALLS = 17.4 m3

(STAGE II)

BAR	No.	SIZE	TYPE	LENGTH	WEIGHT
A1	128	#13	1	1400	178
A2	216	#13	1	1400	301
A100	59	#16	STR	4760	436
A101	1	#16	STR	4580	7
A102	1	#16	STR	4360	7
A103	1	#16	STR	4120	6
A104	1	#16	STR	3900	6
A105	1	#16	STR	3680	6
A106	1	#16	STR	3460	5
A107	1	#16	STR	3220	5
A108	1	#16	STR	3000	5
A109	1	#16	STR	2780	4
A110	1	#16	STR	2540	4
A111	1	#16	STR	2320	4
A112	1	#16	STR	2100	3
A113	1	#16	STR	1860	3
A114	1	#16	STR	1640	3
A115	1	#16	STR	1400	2
A116	1	#16	STR	1180	2
A117	1	#16	STR	960	1
A118	1	#16	STR	720	1
A119	1	#16	STR	500	1
A120	1	#16	STR	280	1
A300	94	#16	STR	4760	694
A301	1	#16	STR	4700	7
A302	1	#16	STR	4560	7
A303	1	#16	STR	4420	7
A304	1	#16	STR	4280	7
A305	1	#16	STR	4140	6
A306	1	#16	STR	4000	6
A307	1	#16	STR	3860	6
A308	1	#16	STR	3720	6
A309	1	#16	STR	3580	6
A310	1	#16	STR	3440	5
A311	1	#16	STR	3300	5
A312	1	#16	STR	3160	5
A313	1	#16	STR	3020	5
A314	1	#16	STR	2860	4
A315	1	#16	STR	2720	4

BAR	No.	SIZE	TYPE	LENGTH	WEIGHT
A316	1	#16	STR	2580	4
A317	1	#16	STR	2440	4
A318	1	#16	STR	2300	4
A319	1	#16	STR	2160	3
A320	1	#16	STR	2020	3
A321	1	#16	STR	1880	3
A322	1	#16	STR	1740	3
A323	1	#16	STR	1600	2
A324	1	#16	STR	1460	2
A325	1	#16	STR	1320	2
A326	1	#16	STR	1180	2
A327	1	#16	STR	1020	2
A328	1	#16	STR	880	1
A329	1	#16	STR	740	1
A330	1	#16	STR	600	1
A331	1	#16	STR	460	1
A332	1	#16	STR	320	1
B1	88	#13	STR	2340	205
B2	128	#13	STR	1580	201
C1	12	#13	STR	7580	90
C2	12	#13	STR	8660	103
C3	39	#13	STR	6860	266
D1	17	#19	STR	760	29
E1	16	#16	STR	1300	32
G1	4	#16	STR	4760	30
S1	6	#19	STR	6960	93
T3	16	#16	STR	10060	250
T4	156	#16	2	1120	271

REINFORCING STEEL = 3380 kg

CLASS A CONCRETE FOOTING, WALL, ROOF SLAB AND EDGE BEAM 39.4 m3

BILL OF MATERIAL

RIGHT EXTENSION

(STAGE I)

BAR	No.	SIZE	TYPE	LENGTH	WEIGHT
A1	291	#13	1	1400	405
A2	757	#13	1	1400	1053
B1	198	#13	STR	2340	461
B2	291	#13	STR	1580	457
B3	268	#13	STR	2360	629
C4	42	#13	STR	7800	326
C5	35	#13	STR	8640	301
D1	14	#19	STR	760	24
T5	24	#16	STR	15100	562
T6	24	#16	STR	14000	521
T4	678	#16	2	1120	1179

REINFORCING STEEL = 5918 kg

CLASS A CONCRETE FOOTINGS AND WALLS = 53.1 m3

(STAGE II)

BAR	No.	SIZE	TYPE	LENGTH	WEIGHT
A1	246	#13	1	1400	342
A2	415	#13	1	1400	578
A100	161	#16	STR	4760	1189
A121	1	#16	STR	4540	7
A122	1	#16	STR	4300	7
A123	1	#16	STR	4080	6
A124	1	#16	STR	3840	6
A125	1	#16	STR	3620	6
A126	1	#16	STR	3380	5
A127	1	#16	STR	3160	5
A128	1	#16	STR	2920	5
A129	1	#16	STR	2700	4
A130	1	#16	STR	2460	4
A131	1	#16	STR	2240	3
A132	1	#16	STR	2000	3
A133	1	#16	STR	1780	3
A134	1	#16	STR	1540	2
A135	1	#16	STR	1320	2
A136	1	#16	STR	1080	2
A137	1	#16	STR	860	1
A138	1	#16	STR	620	1
A139	1	#16	STR	400	1
A140	1	#16	STR	220	1
A300	258	#16	STR	4760	1906
A333	1	#16	STR	4640	7
A334	1	#16	STR	4500	7
A335	1	#16	STR	4360	7
A336	1	#16	STR	4200	7
A337	1	#16	STR	4060	6
A338	1	#16	STR	3920	6
A339	1	#16	STR	3780	6
A340	1	#16	STR	3640	6

BAR	No.	SIZE	TYPE	LENGTH	WEIGHT
A341	1	#16	STR	3480	5
A342	1	#16	STR	3340	5
A343	1	#16	STR	3200	5
A344	1	#16	STR	3060	5
A345	1	#16	STR	2920	5
A346	1	#16	STR	2760	4
A347	1	#16	STR	2620	4
A348	1	#16	STR	2480	4
A349	1	#16	STR	2340	4
A350	1	#16	STR	2200	3
A351	1	#16	STR	2040	3
A352	1	#16	STR	1900	3
A353	1	#16	STR	1760	3
A354	1	#16	STR	1620	3
A355	1	#16	STR	1480	2
A356	1	#16	STR	1320	2
A357	1	#16	STR	1180	2
A358	1	#16	STR	1040	2
A359	1	#16	STR	900	1
A360	1	#16	STR	760	1
A361	1	#16	STR	600	1
A362	1	#16	STR	460	1
A363	1	#16	STR	320	1
A364	1	#16	STR	220	1
B1	168	#13	STR	2340	391
B2	247	#13	STR	1580	388
C4	36	#13	STR	7800	279
C5	30	#13	STR	8640	258
C6	65	#13	STR	8240	532
D1	17	#19	STR	760	29
G1	4	#16	STR	4760	30
S1	6	#19	STR	6960	93
T4	151	#16	2	1120	262
T7	24	#16	STR	12920	481

REINFORCING STEEL = 6954 kg

CLASS A CONCRETE FOOTINGS, WALLS, ROOF SLAB AND EDGE BEAM = 93.1 m3

SPLICE LENGTH CHART

C1,C2,C3,C4,C5,C6	#13	540
T1,T2,T3,T5,T6,T7	#16	590

BAR TYPE

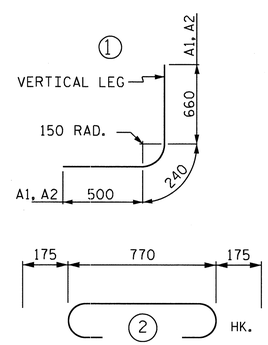

DIMENSIONS ARE OUT TO OUT.

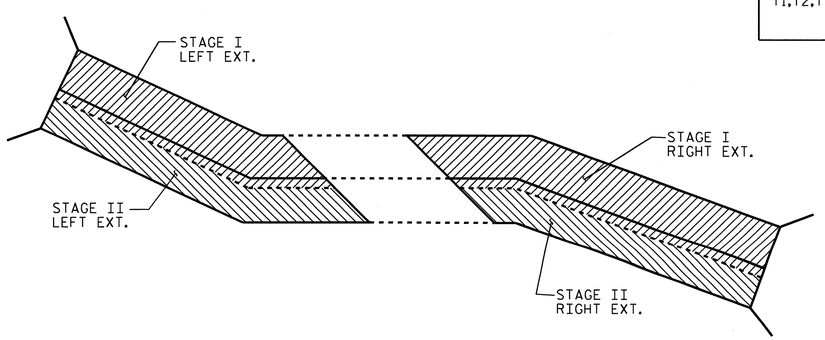

STAGE SEQUENCE

PROJECT NO. R-2519A

YANCEY COUNTY

STATION: 312+53.500 -L-

SHEET 7 OF 9

STATE OF NORTH CAROLINA
DEPARTMENT OF TRANSPORTATION
RALEIGH

DOUBLE
2.130m x 1.830m
BOTTOMLESS CULVERT

NORTH CAROLINA PROFESSIONAL SEAL 22005 ENGINEER J. KEITH PASCHAL

2/20/11

REVISIONS						SHEET NO.
NO.	BY:	DATE:	NO.	BY:	DATE:	C-73
1			3			TOTAL SHEETS
2			4			119

STR. #8

DRAWN BY : J.G. KHARVA DATE : 8/18/10
CHECKED BY : J. MYA DATE : 9/22/10

25-FEB-2011 14:13
R:\Structures\str8\Final Plans\R2519A_sd_CU_08.dgn
gallen

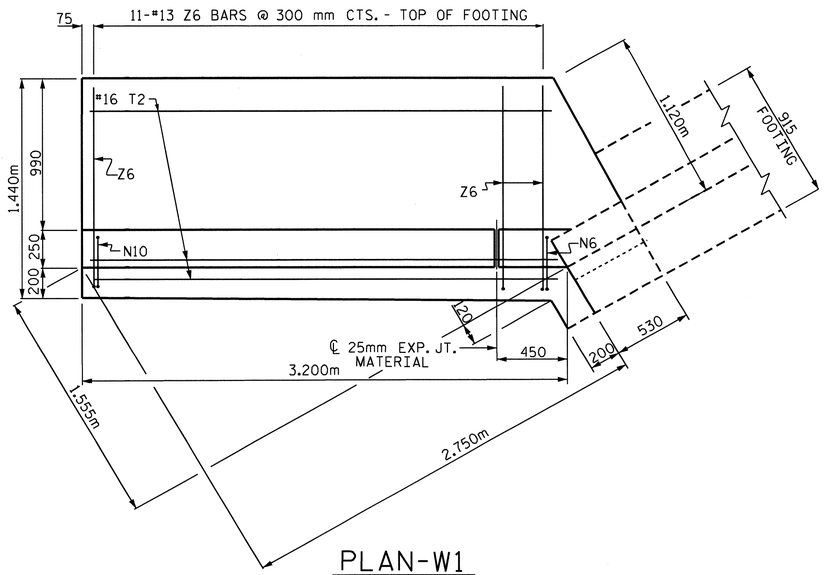

PLAN-W1

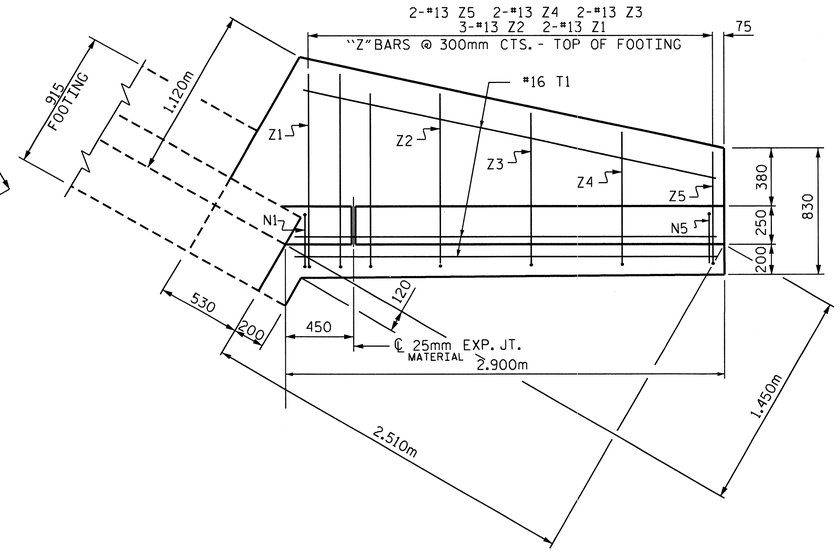

PLAN-W2

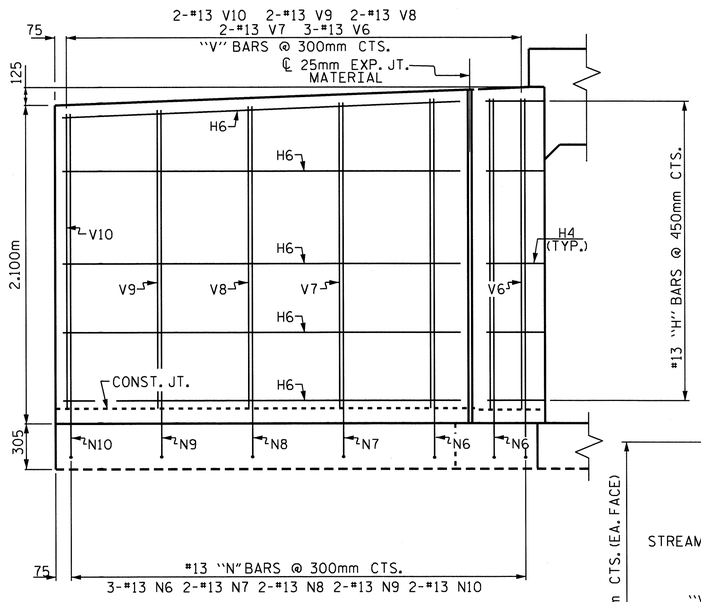

ELEVATION-W1

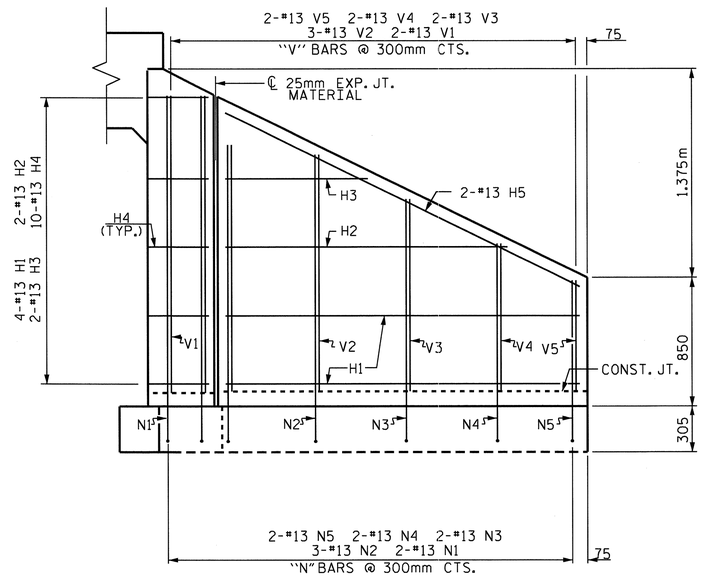

ELEVATION-W2

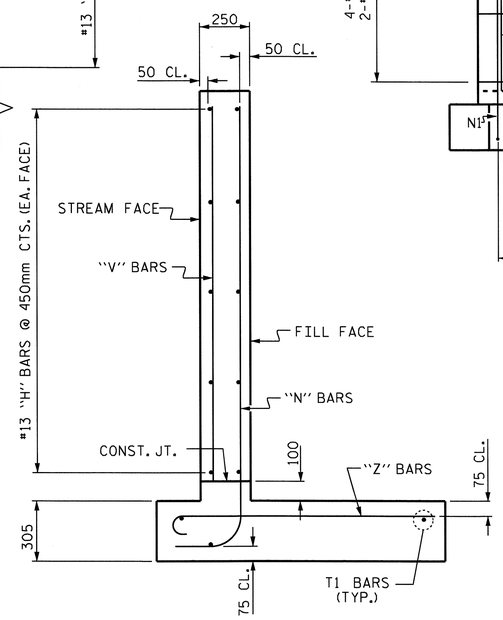

TYPICAL WING SECTION

BILL OF MATERIAL (LT. EXT. STAGE I-W1)

BAR	NO.	SIZE	TYPE	LENGTH	WEIGHT
H4	10	#13	1	980	10
H6	10	#13	STR	2620	26
N6	3	#13	2	2660	8
N7	2	#13	2	2640	5
N8	2	#13	2	2620	5
N9	2	#13	2	2600	5
N10	2	#13	2	2560	5
T2	3	#16	STR	3100	14
V6	3	#13	STR	2040	6
V7	2	#13	STR	2000	4
V8	2	#13	STR	1980	4
V9	2	#13	STR	1960	4
V10	2	#13	STR	1940	4
Z6	11	#13	3	1440	16

REINFORCING STEEL FOR 1 WING — 116 kg

CLASS A CONCRETE

1 WING — 3.3 m^3

BILL OF MATERIAL (LT. EXT. STAGE II-W2)

BAR	NO.	SIZE	TYPE	LENGTH	WEIGHT
H1	4	#13	STR	2340	9
H2	2	#13	STR	1860	4
H3	2	#13	STR	940	2
H4	10	#13	1	980	10
H5	2	#13	STR	2600	5
N1	2	#13	2	2560	5
N2	3	#13	2	2240	7
N3	2	#13	2	1940	4
N4	2	#13	2	1640	3
N5	2	#13	2	1340	3
T1	3	#16	STR	2900	14
V1	2	#13	STR	1960	4
V2	3	#13	STR	1600	3
V3	2	#13	STR	1260	3
V4	2	#13	STR	980	2
V5	2	#13	STR	720	1
Z1	2	#13	3	1420	3
Z2	3	#13	3	1260	4
Z3	2	#13	3	1140	2
Z4	2	#13	3	1000	2
Z5	2	#13	3	880	2

REINFORCING STEEL FOR 1 WING — 92 kg

CLASS A CONCRETE

1 WING — 2.2 m^3

1 HEADWALL — 0.6 m^3

TOTAL — 2.8 m^3

BAR TYPES

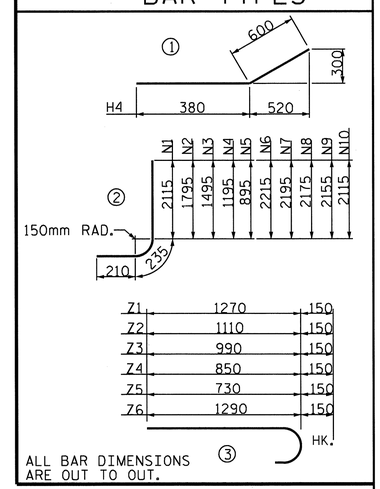

PROJECT NO. R-2519A

YANCEY COUNTY

STATION: 312+53.500 -L-

SHEET 8 OF 9

STATE OF NORTH CAROLINA
DEPARTMENT OF TRANSPORTATION
RALEIGH

CULVERT OUTLET WINGS 90° SKEW (LEFT EXTENSION)

NORTH CAROLINA PROFESSIONAL SEAL 22005 ENGINEER A. KEITH PASCHAL

2/28/11

REVISIONS								SHEET NO.
NO.	BY:	DATE:	NO.	BY:	DATE:			C-74
1			3					TOTAL SHEETS
2			4					119

ASSEMBLED BY :	J. G. KHARVA	DATE :	8-27-10
CHECKED BY :	J. MYA	DATE :	09-20-10
DRAWN BY :	KJA	06/97	
CHECKED BY :	VAP	06/97	

25-FEB-2011 14:13
R:\Structures\str8\Final Plans\R2519A_sd_CU_08.dgn

STR. #8

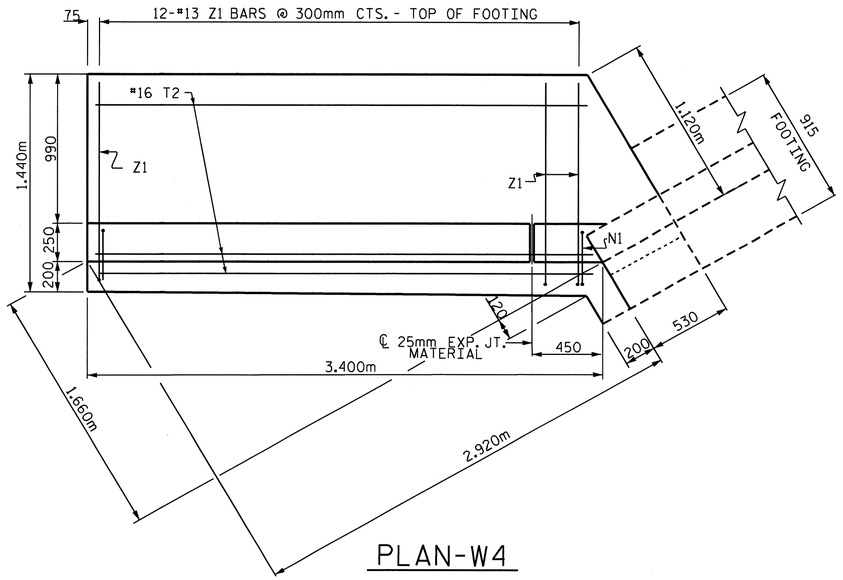

PLAN-W4

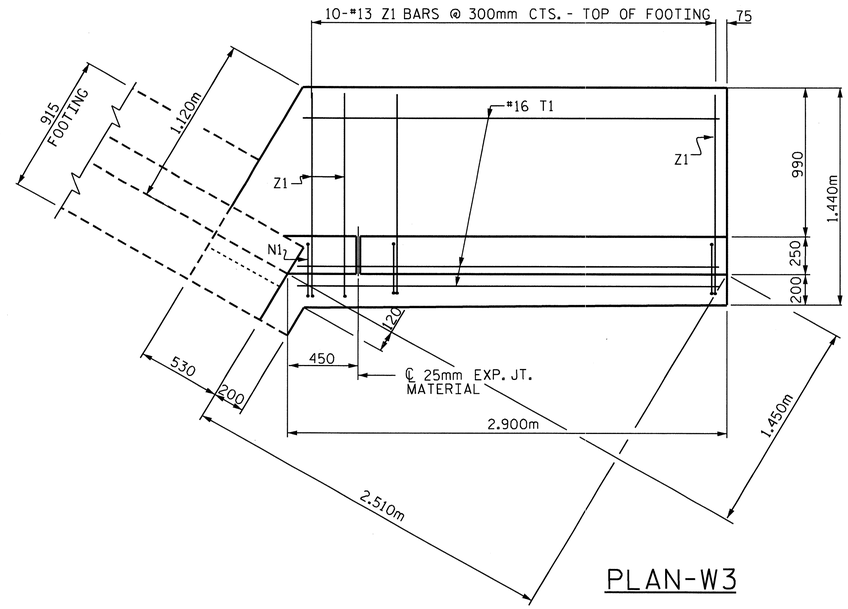

PLAN-W3

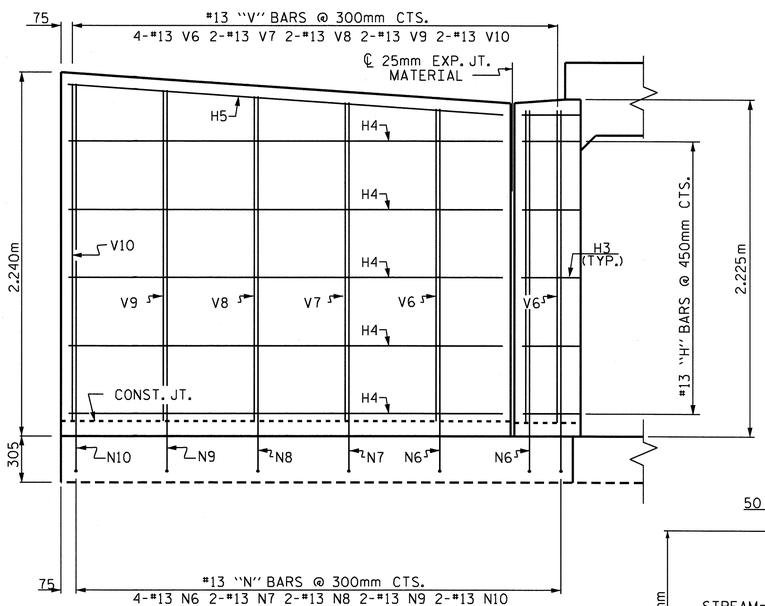

ELEVATION-W4

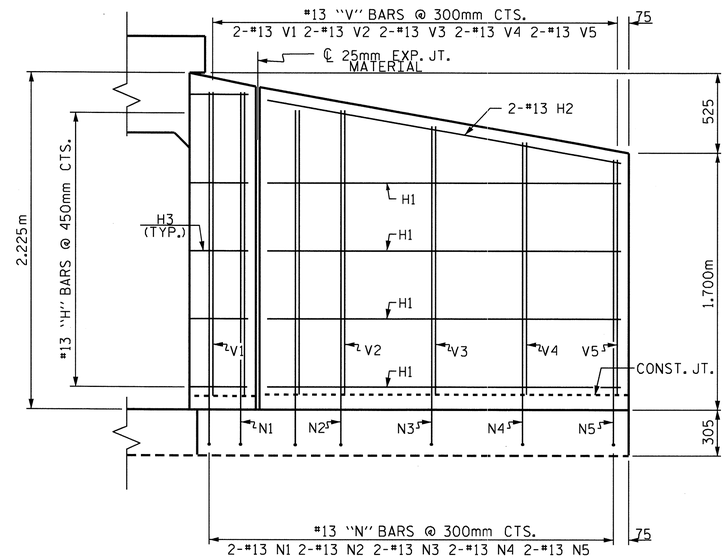

ELEVATION-W3

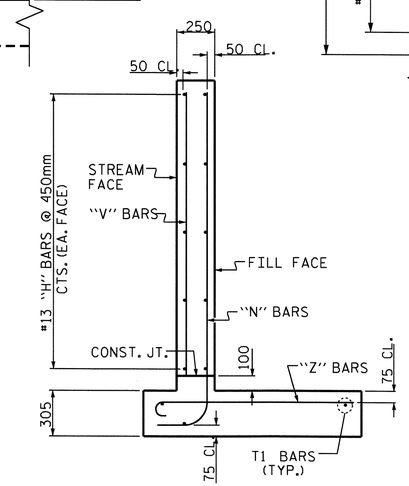

TYPICAL WING SECTION

BILL OF MATERIAL (RT. EXT. STAGE I-W3)

BAR	NO.	SIZE	TYPE	LENGTH	WEIGHT
H1	8	13	STR	2340	19
H2	2	13	STR	2360	5
H3	10	13	1	980	10
N1	2	13	2	2620	5
N2	2	13	2	2500	5
N3	2	13	2	2400	5
N4	2	13	2	2280	5
N5	2	13	2	2180	4
T1	3	16	STR	2800	13
V1	2	13	STR	2000	4
V2	2	13	STR	1880	4
V3	2	13	STR	1800	4
V4	2	13	STR	1660	3
V5	2	13	STR	1560	3
Z1	10	13	3	1460	15

REINFORCING STEEL IN 1 WING 104 kg

CLASS A CONCRETE

1 WING 2.8 m^3

BILL OF MATERIAL (RT. EXT. STAGE II-W4)

BAR	NO.	SIZE	TYPE	LENGTH	WEIGHT
H3	10	13	1	980	10
H4	8	13	STR	2860	23
H5	2	13	STR	2880	6
N6	2	13	2	2680	5
N7	2	13	2	2720	5
N8	2	13	2	2760	5
N9	2	13	2	2800	6
N10	2	13	2	2840	6
T2	3	16	STR	3240	15
V6	4	13	STR	2060	8
V7	2	13	STR	2100	4
V8	2	13	STR	2140	4
V9	2	13	STR	2180	4
V10	2	13	STR	2220	4
Z1	12	13	3	1460	17

REINFORCING STEEL IN 1 WING 122 kg

CLASS A CONCRETE

1 WING 3.5 m^3

1 HEADWALL 0.6 m^3

TOTAL 4.1 m^3

BAR TYPES

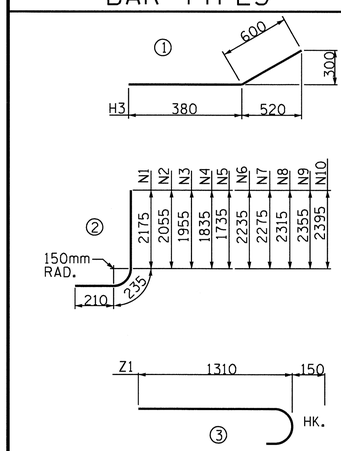

ALL BAR DIMENSIONS ARE OUT TO OUT.

PROJECT NO. R-2519A

YANCEY COUNTY

STATION: 312+53.500 -L-

SHEET 9 OF 9

STATE OF NORTH CAROLINA
DEPARTMENT OF TRANSPORTATION
RALEIGH

CULVERT INLET WINGS 90° SKEW (RIGHT EXTENSION)

NORTH CAROLINA PROFESSIONAL SEAL 22005 ENGINEER J. KEITH PASCHAL

2/28/11

REVISIONS						SHEET NO.
NO.	BY:	DATE:	NO.	BY:	DATE:	C-75
1			3			TOTAL SHEETS
2			4			119

ASSEMBLED BY : J. G. KHARVA	DATE : 8-30-10
CHECKED BY : J. MYA	DATE : 09-20-10
DRAWN BY : KJA 06/97	
CHECKED BY : VAP 06/97	

25-FEB-2011 14:13
R:\Structures\str8\Final Plans\R2519A_sd_CU_08.dgn

STR. #8

BM: #210 SPIKE SET IN BASE OF 16"OAK TREE 122.470m LT. STA. 316+66.650 -L- EL. 781.044

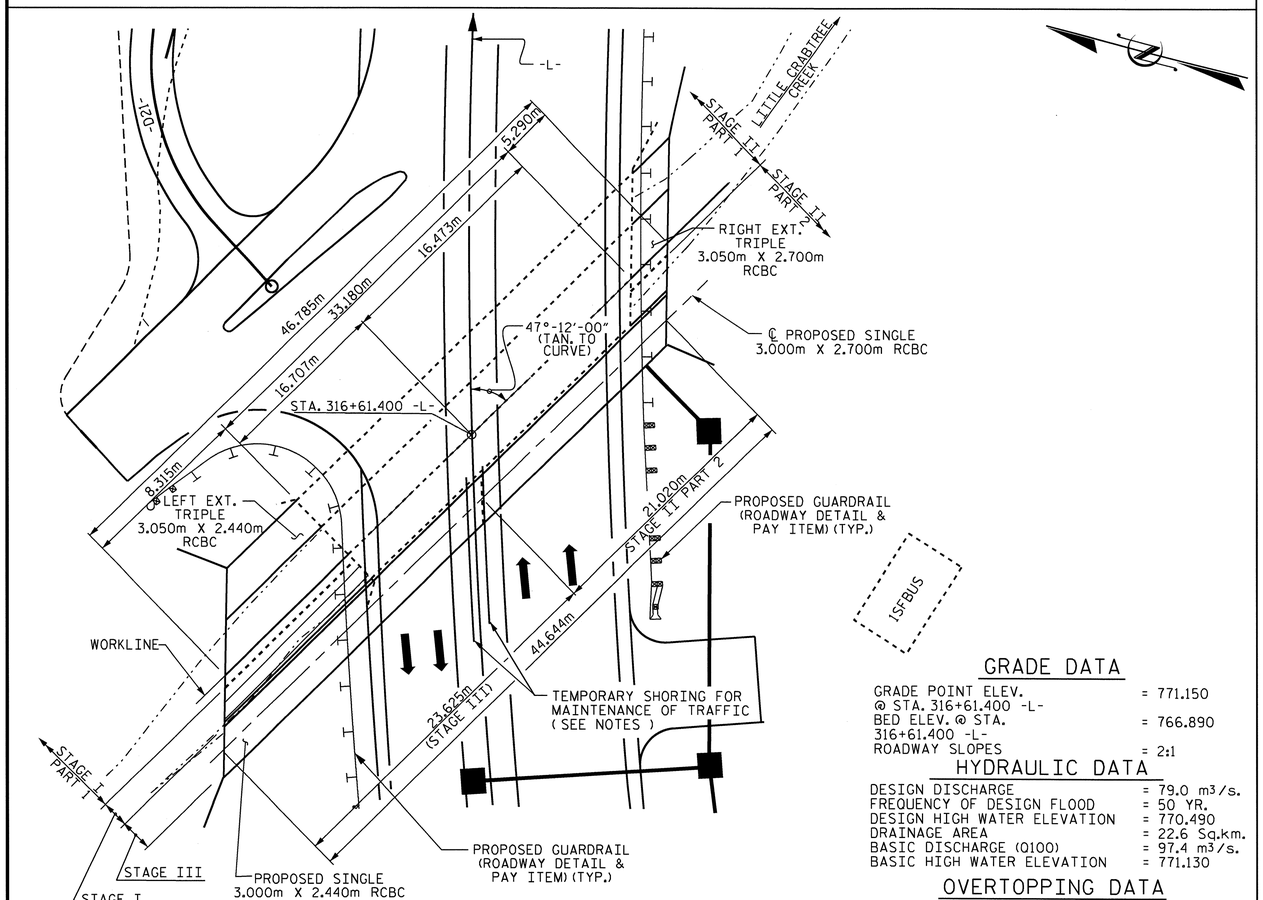

FOR UTILITY INFORMATION, SEE UTILITY PLANS AND SPECIAL PROVISIONS.

LOCATION SKETCH

GRADE DATA

GRADE POINT ELEV. @ STA. 316+61.400 -L-	= 771.150
BED ELEV. @ STA. 316+61.400 -L-	= 766.890
ROADWAY SLOPES	= 2:1

HYDRAULIC DATA

DESIGN DISCHARGE	= 79.0 m³/s.
FREQUENCY OF DESIGN FLOOD	= 50 YR.
DESIGN HIGH WATER ELEVATION	= 770.490
DRAINAGE AREA	= 22.6 Sq.km.
BASIC DISCHARGE (Q100)	= 97.4 m³/s.
BASIC HIGH WATER ELEVATION	= 771.130

OVERTOPPING DATA

OVERTOPPING DISCHARGE	= 110.5 m³/s.
FREQUENCY OF OVERTOPPING FLOOD	= 100± YRS.
OVERTOPPING FLOOD ELEVATION	= 771.600

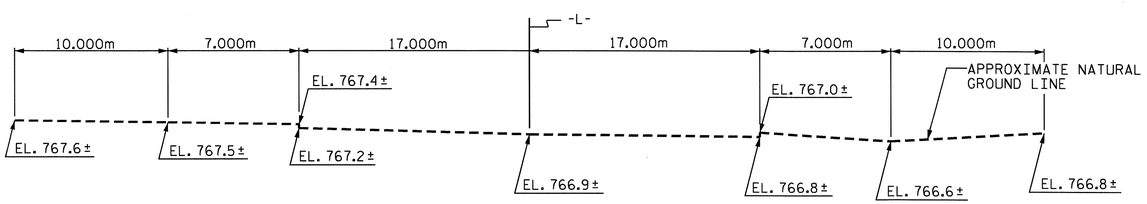

PROFILE ALONG ℄ CULVERT

TOTAL STRUCTURE QUANTITIES

CLASS A CONCRETE			REINFORCING STEEL		
STAGE I (PART 1)	29.2	m³	STAGE I (PART 1)	2656	kg
STAGE I (PART 2)	39.0	m³	STAGE I (PART 2)	3596	kg
STAGE II (PART 1)	30.1	m³	STAGE II (PART 1)	6813	kg
RT. EXT. STAGE II (PART 2)	21.7	m³	RT. EXT. STAGE II (PART 2)	1913	kg
SINGLE STAGE II (PART 2)	71.2	m³	SINGLE STAGE II (PART 2)	5801	kg
STAGE III	81.8	m³	STAGE III	5773	kg
TOTAL	273.0	m³	TOTAL	26552	kg
CULVERT EXCAVATION ---------- LUMP SUM			FOUNDATION COND. MAT'L.-186.0-METRIC TONS		

TOTAL STRUCTURE QUANTITIES LEFT EXTENSION

CLASS A CONCRETE - STAGE I (PART 1)		
BARREL	23.0	m³
WING (W1) ETC.	6.2	m³
TOTAL	29.2	m³
FOUNDATION COND. MAT'L ---- 31 METRIC TONS		
REINFORCING STEEL - STAGE I (PART 1)		
BARREL	2401	kg
WING (W1) & PART CURTAIN WALL	255	kg
TOTAL	2656	kg
CLASS A CONCRETE - STAGE I (PART 2)		
BARREL	37.2	m³
HEADWALL & PART CURTAIN WALL	1.8	m³
TOTAL	39.0	m³
FOUNDATION COND. MAT'L. ---- 15 METRIC TONS		
REINFORCING STEEL - STAGE I (PART 2)		
BARREL	3596	kg
TOTAL	3596	kg

TOTAL STRUCTURE QUANTITIES RIGHT EXTENSION

CLASS A CONCRETE - STAGE II (PART 1)		
BARREL	19.4	m³
WING (W3) & PART CURTAIN WALL	10.7	m³
TOTAL	30.1	m³
FOUNDATION COND. MAT'L. ---- 25 METRIC TONS		
REINFORCING STEEL - STAGE II (PART 1)		
BARREL	6373	kg
WING (W3) ETC.	440	kg
TOTAL	6813	kg
CLASS A CONCRETE - RT. EXT. STAGE II (PART 2)		
BARREL	19.4	m³
HEADWALL & PART CURTAIN WALL	2.3	m³
TOTAL	21.7	m³
FOUNDATION COND. MAT'L. ---- 11 METRIC TONS		
REINFORCING STEEL - RT. EXT. STAGE II (PART 2)		
BARREL	1913	kg
TOTAL	1913	kg
CLASS A CONCRETE - SINGLE STAGE II (PART 2)		
BARREL	66.0	m³
WING (W4), HEADWALL, AND PARTIAL END CURTAIN WALL	5.2	m³
TOTAL	71.2	m³
FOUNDATION COND. MAT'L. ---- 48 METRIC TONS		
REINFORCING STEEL - SINGLE STAGE II (PART 2)		
BARREL	5593	kg
WING (W4) ETC.	208	kg
TOTAL	5801	kg
CLASS A CONCRETE - STAGE III		
BARREL	72.4	m³
WINGS (W2) ETC.	9.4	m³
TOTAL	81.8	m³
FOUNDATION COND. MAT'L. ---- 56 METRIC TONS		
REINFORCING STEEL - STAGE III		
BARREL	5385	kg
WINGS (W2) ETC.	388	kg
TOTAL	5773	kg

NOTES

ASSUMED LIVE LOAD ----------MS18 OR ALTERNATE LOADING.

DESIGN FILL 1.420m.

FOR OTHER DESIGN DATA AND NOTES SEE STANDARD NOTE SHEET.

76mm Ø WEEP HOLES INDICATED TO BE IN ACCORDANCE WITH THE SPECIFICATIONS.

CONCRETE IN CULVERTS TO BE POURED IN THE FOLLOWING ORDER :

(STAGE I & STAGE II EXTENSIONS)

1. WING FOOTINGS AND FLOOR SLAB INCLUDING 100mm OF ALL VERTICAL WALLS. (PART 1)
2. THE REMAINING PORTIONS OF THE WALLS AND WINGS FULL HEIGHT FOLLOWED BY ROOF SLAB AND HEADWALLS. (PART 2)

(STAGE II PART 2 SINGLE BARREL & STAGE III SINGLE BARREL)

1. WING FOOTING AND FLOOR SLAB INCLUDING 100mm OF ALL VERTICAL WALLS.
2. THE REMAINING PORTIONS OF THE WALLS AND WINGS FULL HEIGHT FOLLOWED BY ROOF SLAB AND HEADWALLS.

THE RESIDENT ENGINEER SHALL CHECK THE LENGTH OF CULVERT BEFORE STAKING IT OUT TO MAKE CERTAIN THAT IT WILL PROPERLY TAKE CARE OF THE FILL.

DIMENSIONS FOR WING LAYOUT AS WELL AS ADDITIONAL REINFORCING STEEL EMBEDDED IN BARREL ARE SHOWN ON THE WING SHEET.

AT THE CONTRACTORS'S OPTION, HE MAY SPLICE THE VERTICAL REINFORCING STEEL IN THE INTERIOR FACE OF EXTERIOR WALL AND BOTH FACES OF INTERIOR WALLS ABOVE LOWER WALL CONSTRUCTION JOINT. THE SPLICE LENGTH SHALL BE PROVIDED IN THE SPLICE LENGTH CHART SHOWN ON THE PLANS. EXTRA WEIGHT OF STEEL DUE TO THE SPLICES SHALL BE PAID FOR BY THE CONTRACTOR.

DOWELS SHALL BE USED TO CONNECT THE CULVERT EXTENSION TO THE EXISTING CULVERT AS SHOWN. FOR NOTE REGARDING SETTING OF DOWELS, SEE SHEET SNSM.

ALL DIMENSIONS ARE IN MILLIMETERS UNLESS OTHERWISE NOTED.

ALL ELEVATIONS ARE IN METERS.

FOR CULVERT DIVERSION DETAILS AND PAY ITEM, SEE EROSION CONTROL PLANS.

A 900mm STRIP OF FILTER FABRIC SHALL BE ATTACHED TO THE FILL FACE OF THE WING COVERING THE ENTIRE LENGTH OF THE EXPANSION JOINT.

IF APPROVED BY THE ENGINEER, THE CONTRACTOR MAY USE THE EXISTING WINGS AS TEMPORARY SHORING FOR THE CONSTRUCTION OF THE CULVERT EXTENSIONS. IN THIS CASE, THE BOTTOM SLAB OF THE EXTENSION SHALL BE POURED AT LEAST 72 HOURS PRIOR TO CUTTING THE WINGS. THE WINGS MAY BE CUT EARLIER PROVIDED THE SLAB CONCRETE STRENGTH HAS REACHED A MINIMUM COMPRESSIVE STRENGTH OF 10.3 MPa.

FOR SUBMITTAL OF WORKING DRAWINGS, SEE SPECIAL PROVISIONS.

FOR FALSEWORK AND FORMWORK, SEE SPECIAL PROVISIONS.

FOR CRANE SAFETY, SEE SPECIAL PROVISIONS.

FOR GROUT FOR STRUCTURES, SEE SPECIAL PROVISIONS.

NO PRECAST REINFORCED BOX CULVERT OPTION WILL BE ALLOWED.

TRANSVERSE CONSTRUCTION JOINTS SHALL BE USED IN THE BARREL, SPACED TO LIMIT THE POURS TO A MAXIMUM OF 21.0m. LOCATION OF JOINTS SHALL BE SUBJECT TO APPROVAL OF THE ENGINEER.

TRAFFIC ON US 19E SHALL BE MAINTAINED. IN ORDER TO MAINTAIN TRAFFIC THE CULVERT SHALL BE CONSTRUCTED IN SECTIONS AS DIRECTED BY THE ENGINEER.

FOR LIMITS OF TEMPORARY SHORING FOR MAINTENANCE OF TRAFFIC, SEE TRAFFIC CONTROL PLANS. FOR PAY ITEM FOR TEMPORARY SHORING FOR MAINTENANCE OF TRAFFIC, SEE ROADWAY PLANS.

PROJECT NO. R-2519A

YANCEY COUNTY

STATION: 316+61.400 -L-

SHEET 1 OF 12 CULVERT NO. C-24

NORTH CAROLINA PROFESSIONAL SEAL 12929 ENGINEER NORMAN NEBLETT BULLOCK JR. 3/2/11

NORTH CAROLINA PROFESSIONAL SEAL 22009 ENGINEER J. KEITH PASCHAL 3/2/11

STATE OF NORTH CAROLINA
DEPARTMENT OF TRANSPORTATION
RALEIGH

LT. & RT. EXTENSION OF TRIPLE (STAGE I & II) & PROPOSED SINGLE (STAGE II & STAGE III) CONCRETE BOX CULVERT

REVISIONS						SHEET NO.
NO.	BY:	DATE:	NO.	BY:	DATE:	C-76
1			3			TOTAL SHEETS
2			4			119

DRAWN BY : J. G. KHARVA DATE : 05/19/10
CHECKED BY : J. D. HAWK DATE : 11/20/10

02-MAR-2011 07:40
R:\Structures\str9\Final Plans\r2519a_sd_cu_09.dgn
gallen

STR. #9

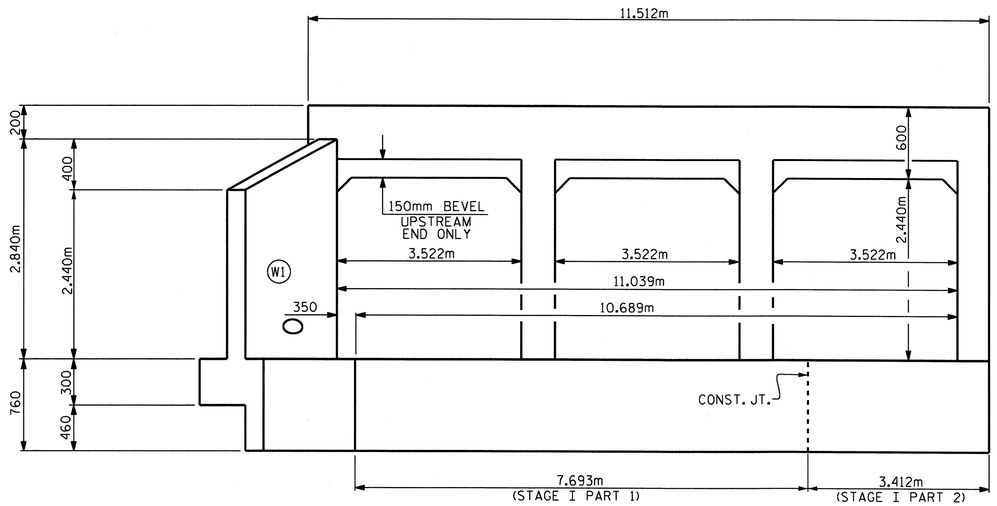

INLET ELEVATION NORMAL TO SKEW

(LEFT EXTENSION)

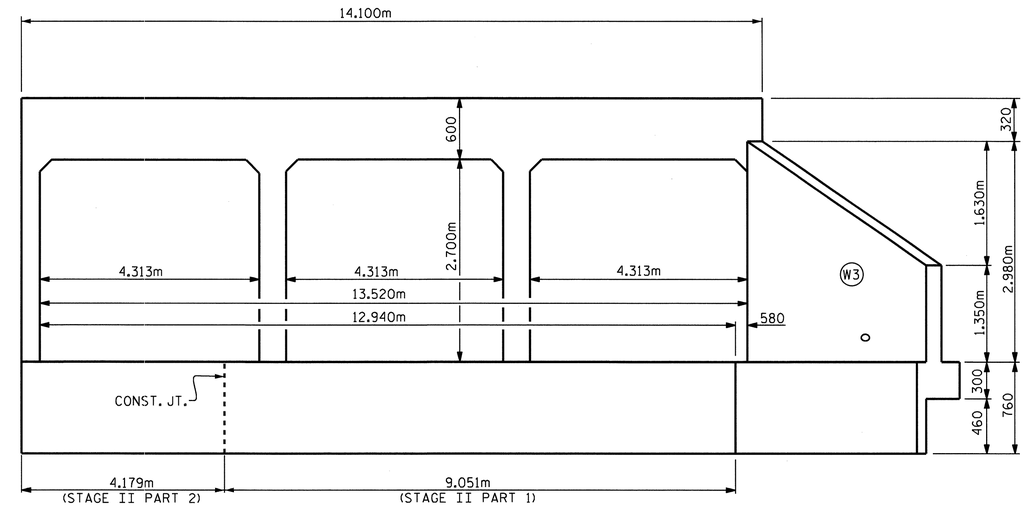

OUTLET ELEVATION NORMAL TO SKEW

(RIGHT EXTENSION)

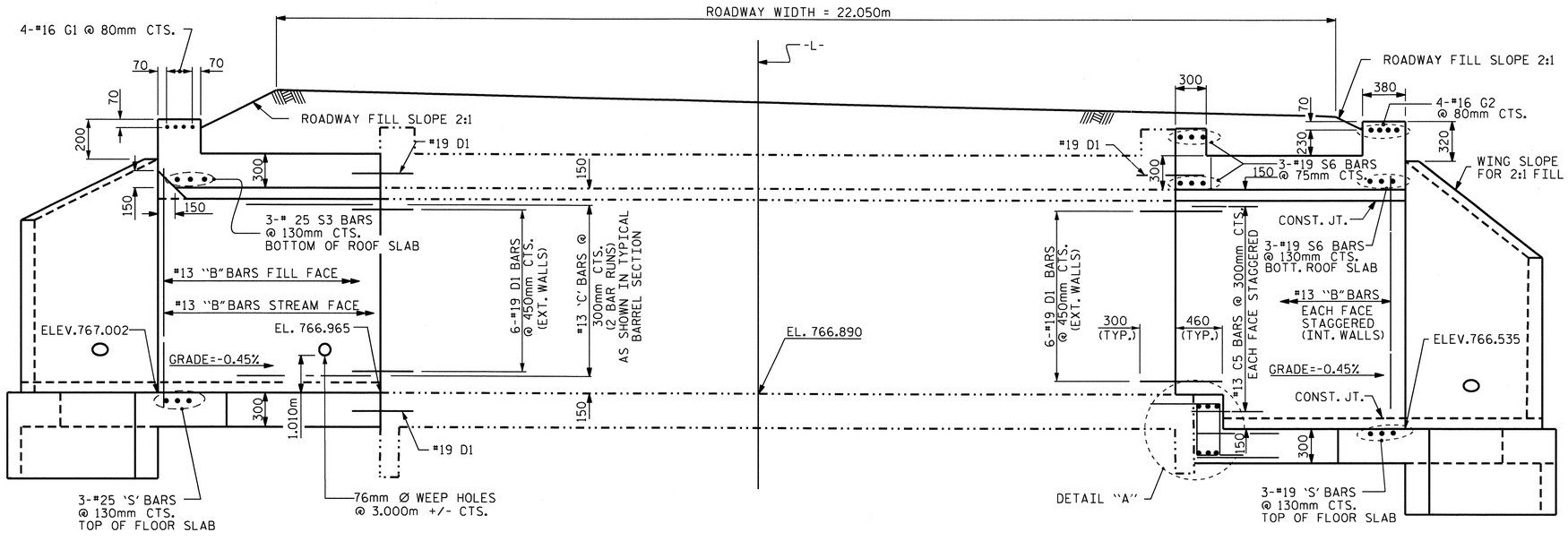

PROPOSED EXTENSION

(LEFT EXTENSION)

FOR #13 C1 BARS, SEE "RIGHT ANGLE SECTION OF BARREL" SHEET 3 OF 12.

EXISTING BARREL

CULVERT SECTION NORMAL TO ROADWAY

PROPOSED EXTENSION

(RIGHT EXTENSION)

FOR #13 C1 BARS, SEE "RIGHT ANGLE SECTION OF BARREL" SHEET 3 OF 12.

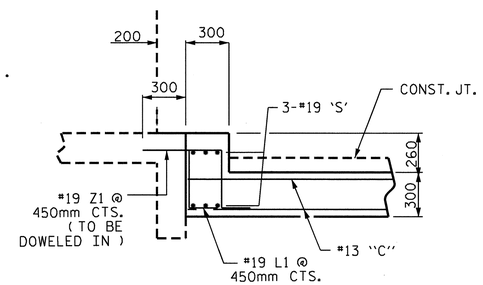

DETAIL 'A'

PROJECT NO. R-2519A

YANCEY COUNTY

STATION: 316+61.400 -L-

SHEET 2 OF 12

STATE OF NORTH CAROLINA
DEPARTMENT OF TRANSPORTATION
RALEIGH

TRIPLE CONCRETE BOX CULVERT

(STAGE I LEFT AND STAGE II RIGHT EXTENSIONS)

NORTH CAROLINA PROFESSIONAL SEAL 22005 ENGINEER KEITH PASCHAL

2/28/11

ASSEMBLED BY : J.G. KHARVA	DATE : 5/18/10		
CHECKED BY : J. D. HAWK	DATE : 11/20/10		
DRAWN BY : EEM 6/97			
CHECKED BY : ARB 7/97			

REVISIONS						SHEET NO.
NO.	BY:	DATE:	NO.	BY:	DATE:	C-77
1			3			TOTAL SHEETS
2			4			119

28-FEB-2011 08:25
R:\Structures\str9\Final Plans\r2519a_sd_cu_09.dgn
jdhawk

STD. No. CB360SM

STR. #9

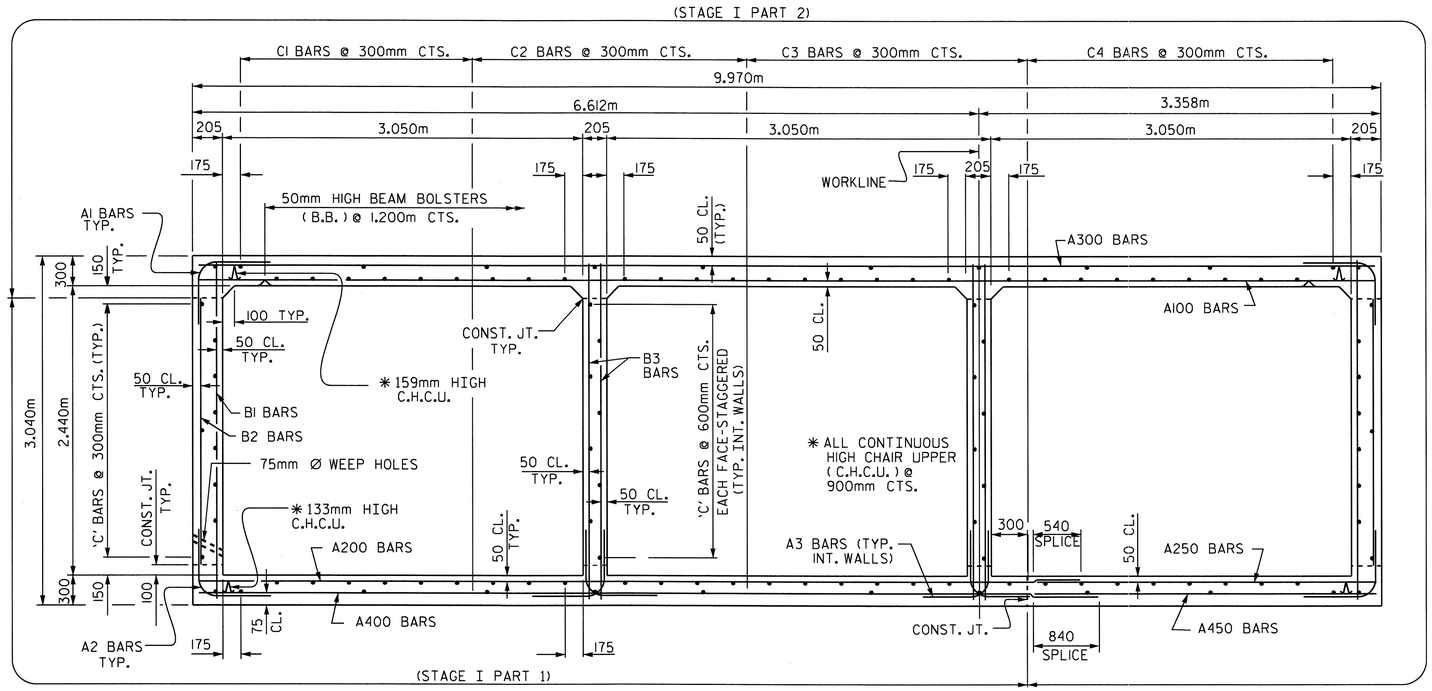

RIGHT ANGLE SECTION OF INLET BARREL

THERE ARE 114 "C" BARS IN SECTION OF BARREL.

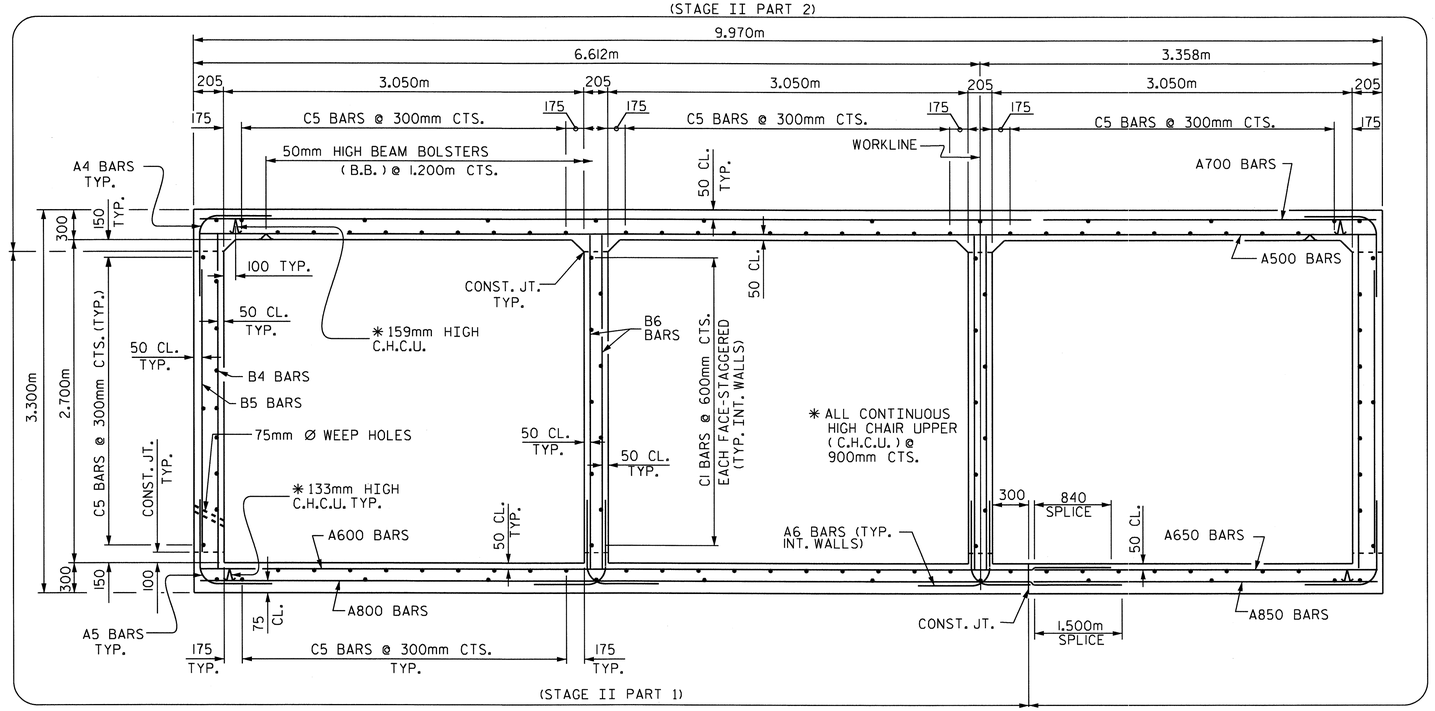

RIGHT ANGLE SECTION OF OUTLET BARREL

THERE ARE 118 "C" BARS IN SECTION OF BARREL.

PROJECT NO. R-2519A
YANCEY COUNTY
STATION: 316+61.400 -L-

SHEET 3 OF 12

STATE OF NORTH CAROLINA
DEPARTMENT OF TRANSPORTATION
RALEIGH

TRIPLE CONCRETE CULVERT
(STAGE I LEFT & STAGE II RIGHT EXTENSIONS)

NORTH CAROLINA PROFESSIONAL SEAL 22005 ENGINEER KEITH PASCHAL
2/28/11

REVISIONS						SHEET NO.
NO.	BY:	DATE:	NO.	BY:	DATE:	C-78
1			3			TOTAL SHEETS
2			4			119

DRAWN BY : J. G. KHARVA DATE : 05/10/10
CHECKED BY : J. D. HAWK DATE : 11/20/10

28-FEB-2011 08:25
R:\Structures\str9\Final Plans\r2519a_sd_cu_09.dgn
jdhawk

STR. #9

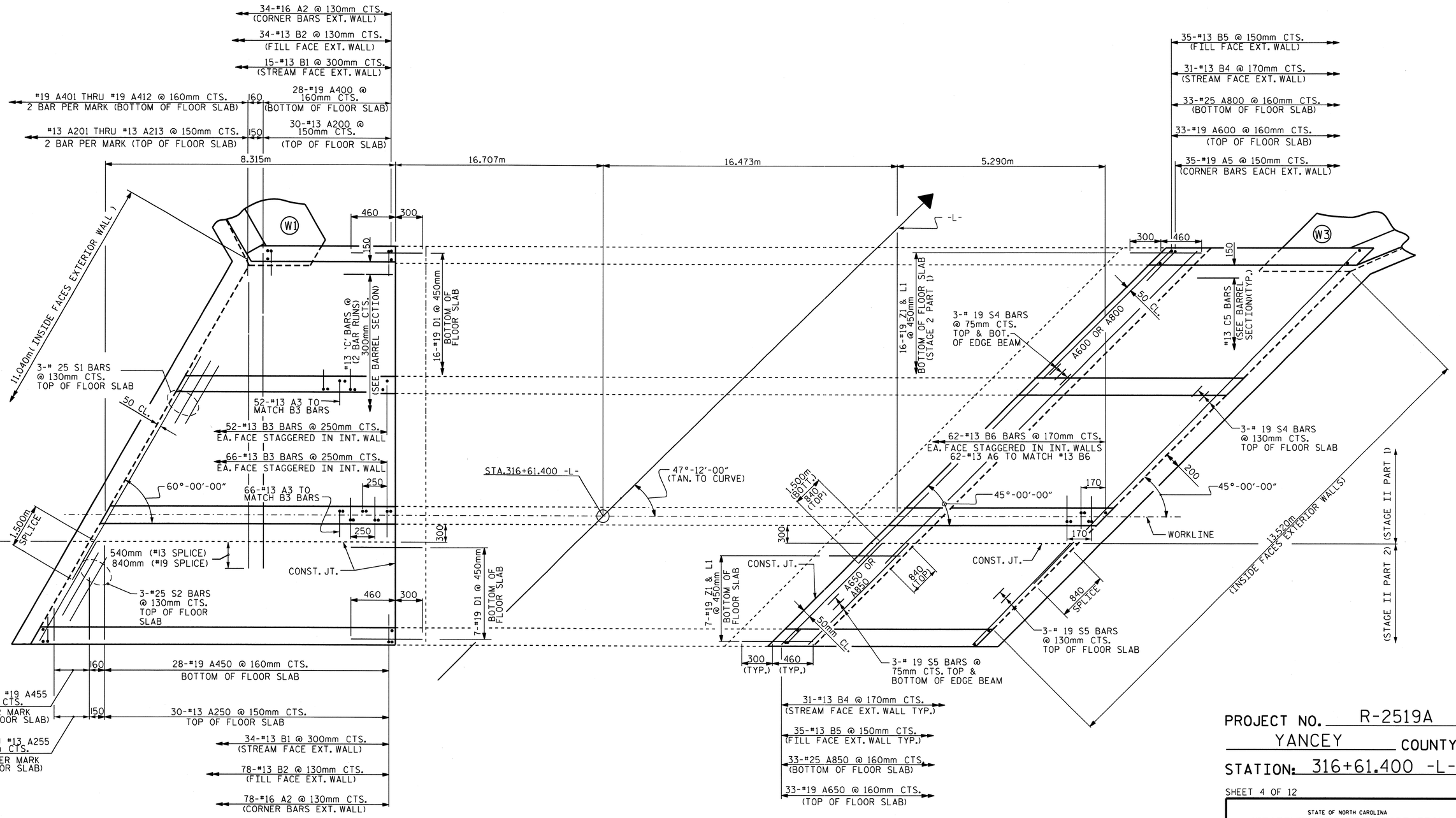

PLAN - FLOOR SLAB

PROJECT NO. R-2519A
YANCEY COUNTY
STATION: 316+61.400 -L-

SHEET 4 OF 12

STATE OF NORTH CAROLINA
DEPARTMENT OF TRANSPORTATION
RALEIGH

TRIPLE CONCRETE BOX CULVERT
(STAGE I PART 1 & 2)
(STAGE II PART 1 & 2)

NORTH CAROLINA PROFESSIONAL SEAL 22005 ENGINEER A. KEITH PASCHAL
2/28/11

REVISIONS						SHEET NO.
NO.	BY:	DATE:	NO.	BY:	DATE:	C-79
1			3			TOTAL SHEETS
2			4			119

DRAWN BY : J. G. KHARVA DATE : 5/05/10
CHECKED BY : J. D. HAWK DATE : 11/21/10

28-FEB-2011 08:25
R:\Structures\str9\Final Plans\r2519a_sd_cu_09.dgn
jdhawk

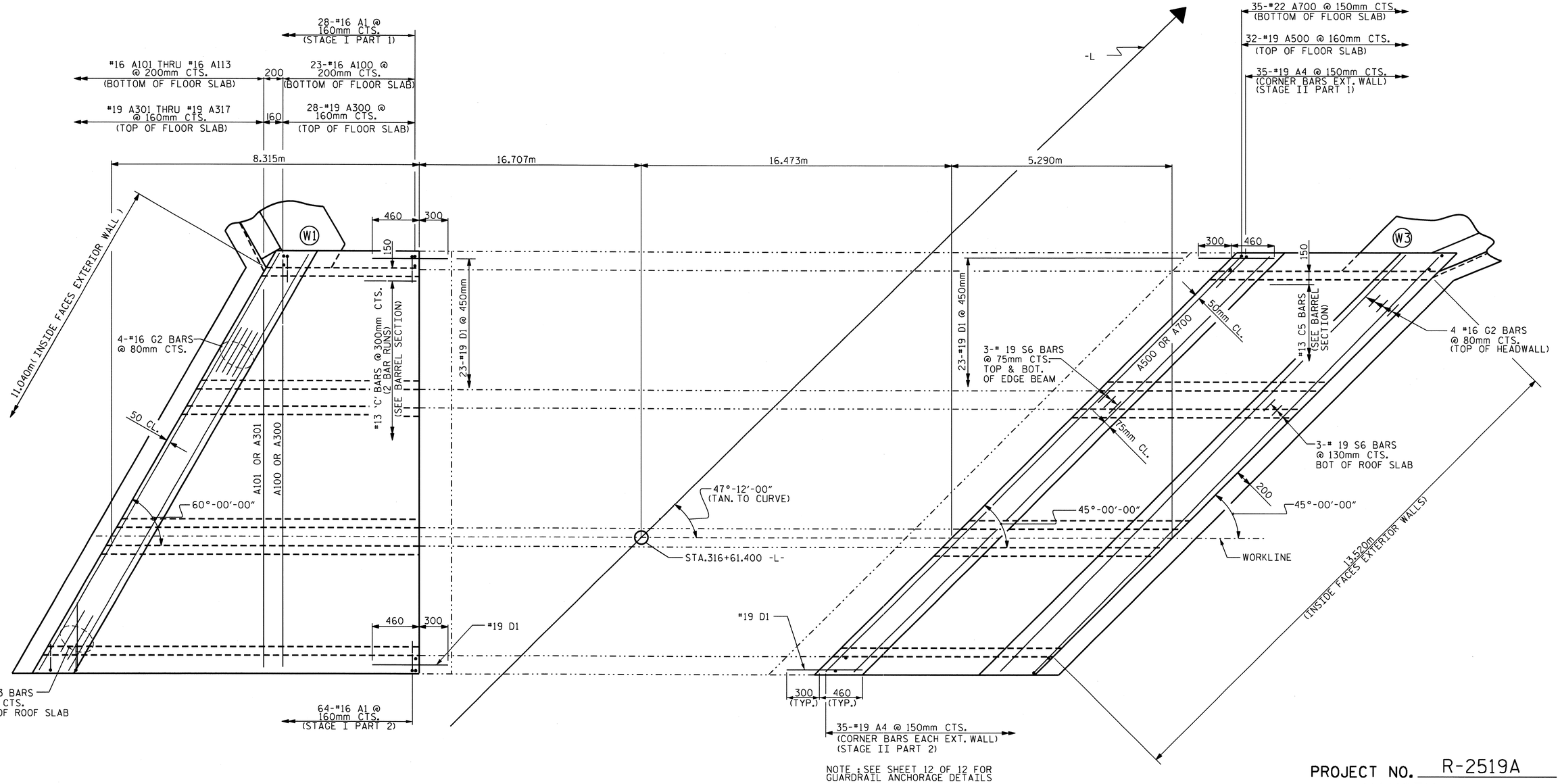

NOTE : SEE SHEET 12 OF 12 FOR GUARDRAIL ANCHORAGE DETAILS

PLAN - ROOF SLAB

PROJECT NO. R-2519A
YANCEY COUNTY
STATION: 316+61.400 -L-

SHEET 5 OF 12

STATE OF NORTH CAROLINA
DEPARTMENT OF TRANSPORTATION
RALEIGH

TRIPLE
CONCRETE BOX CULVERT

NORTH CAROLINA PROFESSIONAL SEAL 22905 ENGINEER A. KEITH PASCHAL
2/28/11

REVISIONS						SHEET NO.
NO.	BY:	DATE:	NO.	BY:	DATE:	C-80
1			3			TOTAL SHEETS
2			4			119

DRAWN BY : J. G. KHARVA DATE : 5/05/10
CHECKED BY : J. D. HAWK DATE : 11/21/10

28-FEB-2011 08:25
R:\Structures\str9\Final Plans\r2519a_sd_cu_09.dgn
jdhawk

STR. #9

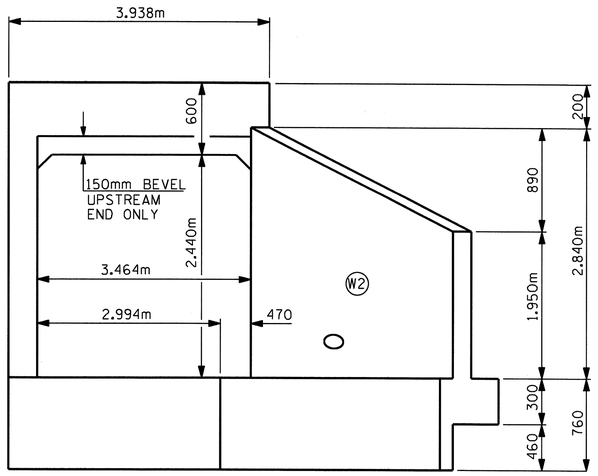

INLET ELEVATION NORMAL TO SKEW

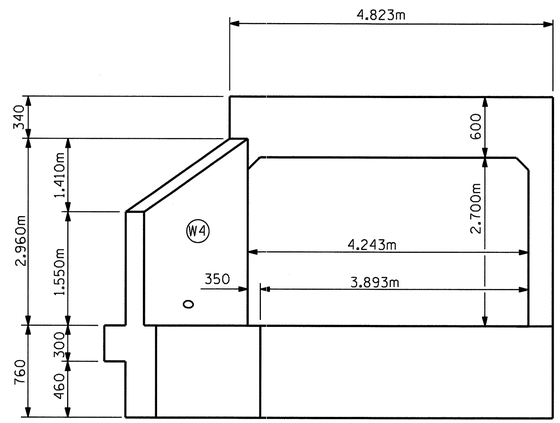

OUTLET ELEVATION NORMAL TO SKEW

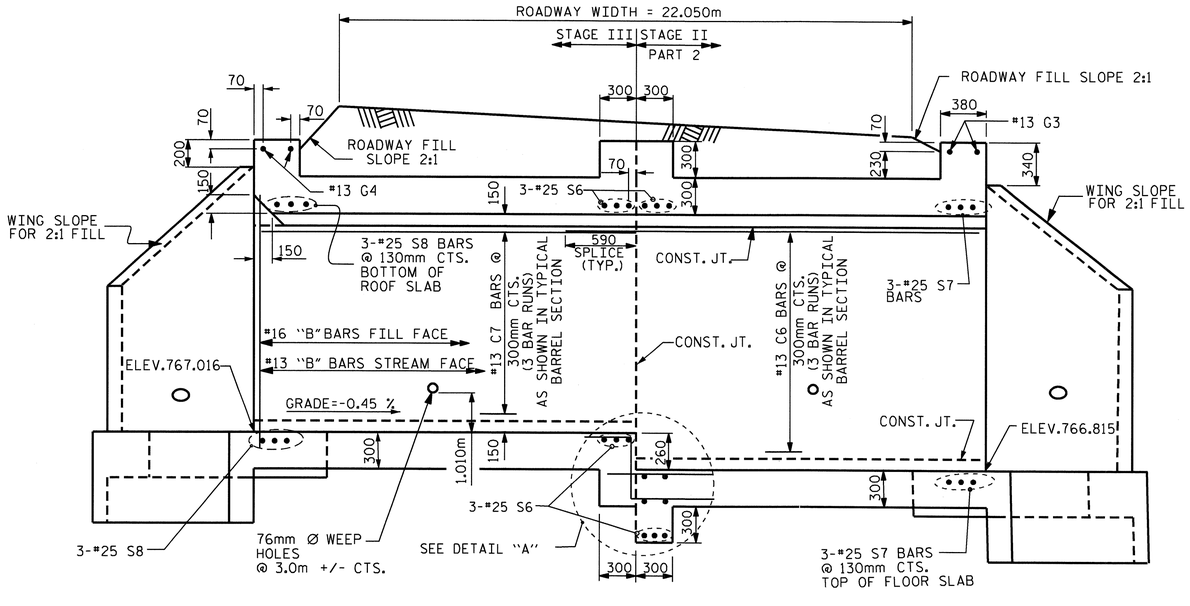

CULVERT SECTION NORMAL TO ROADWAY

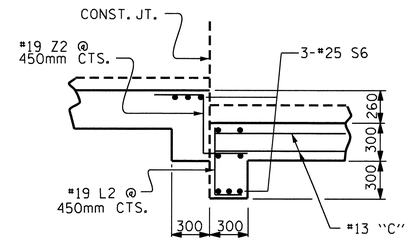

DETAIL 'A'

PROJECT NO. R-2519A

YANCEY COUNTY

STATION: 316+61.400 -L-

SHEET 6 OF 12

STATE OF NORTH CAROLINA
DEPARTMENT OF TRANSPORTATION
RALEIGH

PROPOSED SINGLE CONCRETE BOX CULVERT

(STAGE II PART 2
AND STAGE III)

NORTH CAROLINA PROFESSIONAL SEAL 22005 ENGINEER A. KEITH PASCHAL

3/1/11

REVISIONS						SHEET NO.
NO.	BY:	DATE:	NO.	BY:	DATE:	C-81
1			3			TOTAL SHEETS
2			4			119

ASSEMBLED BY : J. G. KHARVA	DATE : 05/04/10
CHECKED BY : J. D. HAWK	DATE : 11-20-10
DRAWN BY : EEM 6/97	
CHECKED BY : ARB 7/97	

01-MAR-2011 15:23
R:\Structures\str9\Final Plans\r2519a_sd_cu_09.dgn
gallen

STD. No. CBI60SM

STR. #9

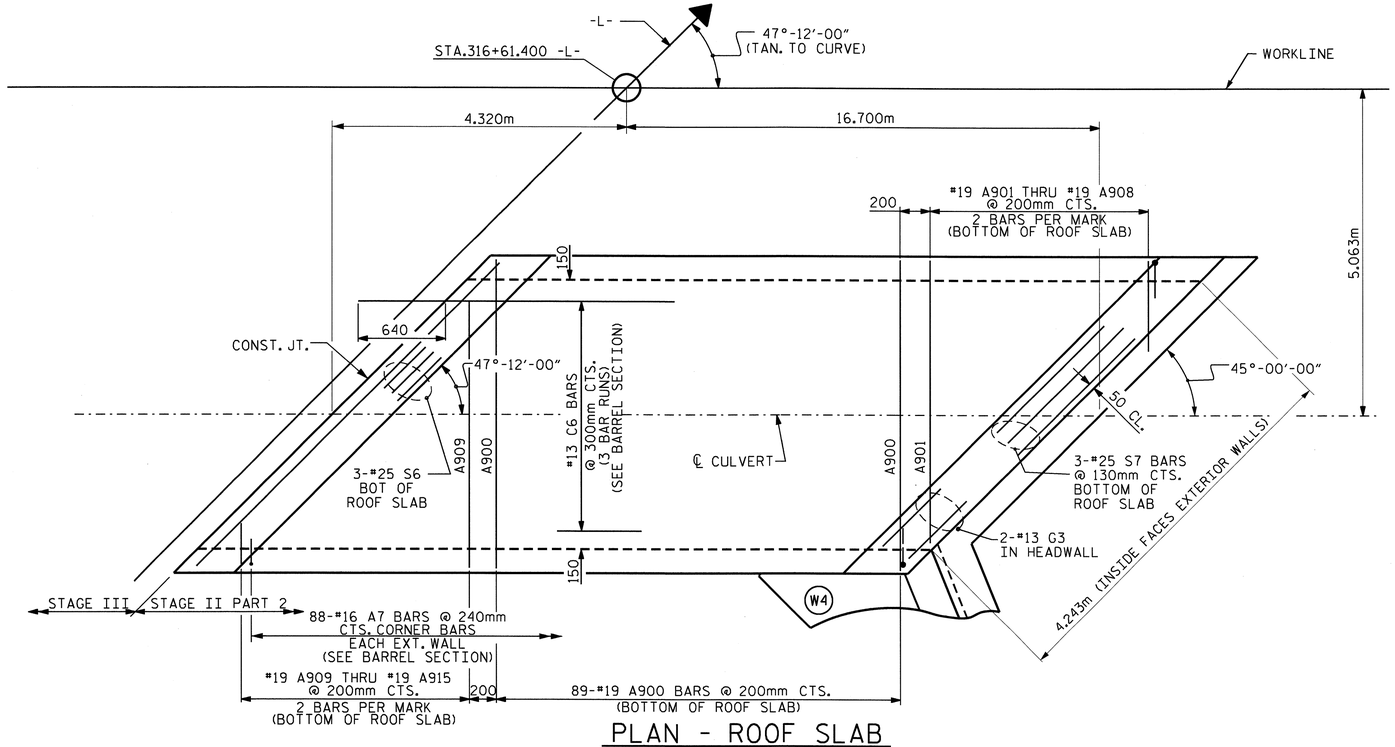

PLAN - ROOF SLAB

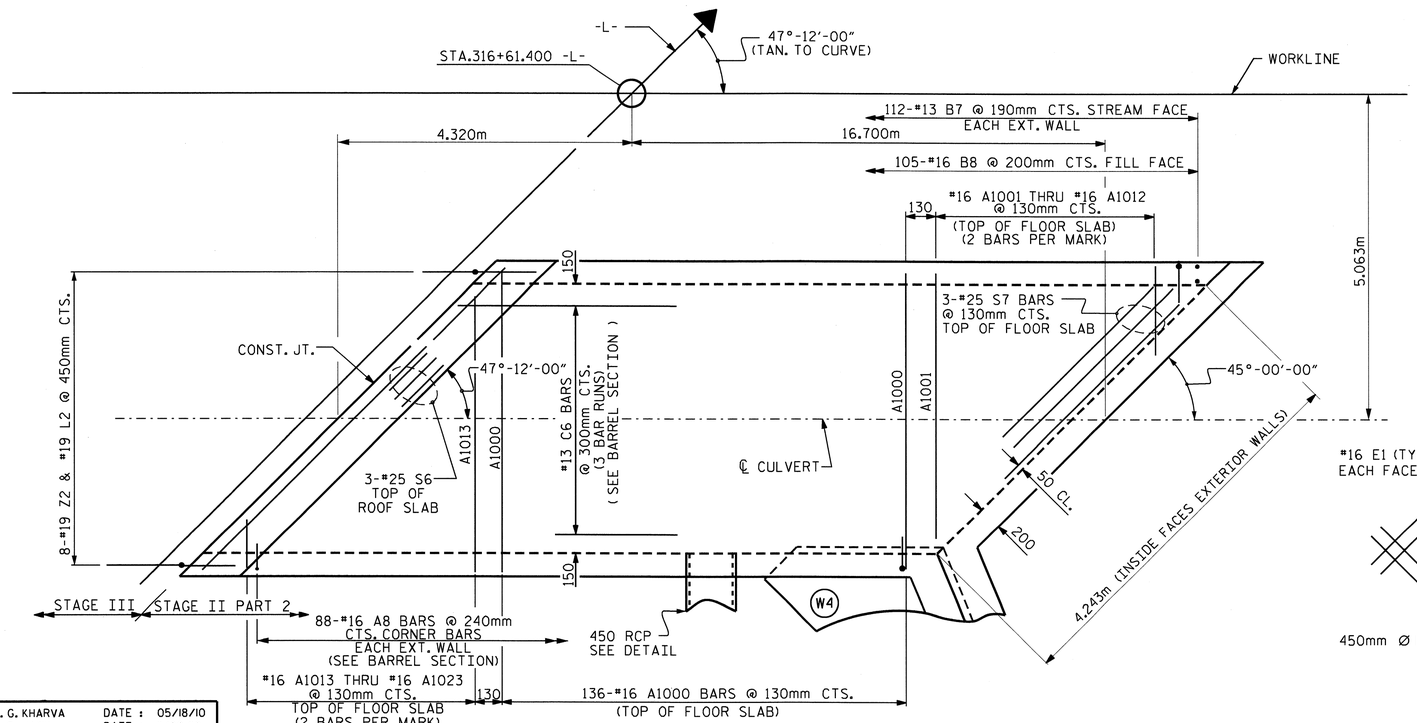

PLAN - FLOOR SLAB

NOTE : SEE SHEET 12 OF 12 FOR GUARDRAIL ANCHORAGE DETAILS

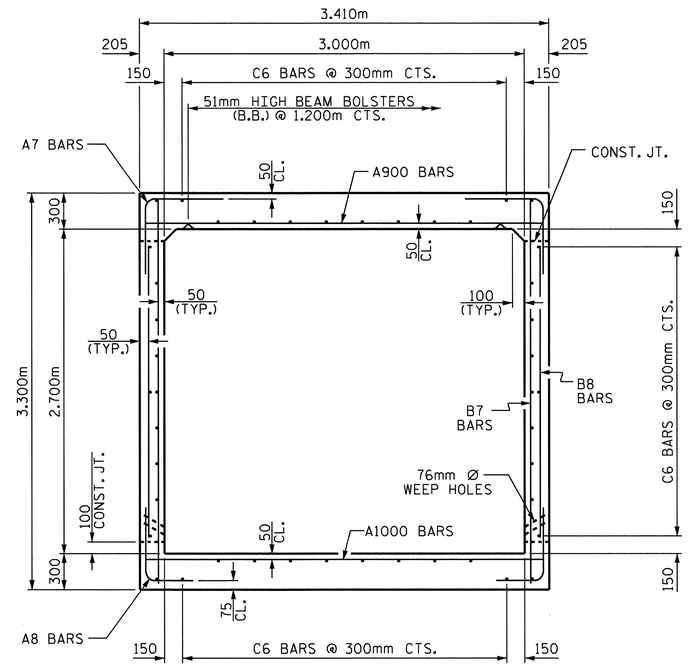

RIGHT ANGLE SECTION OF BARREL @ OUTLET

THERE ARE 44 "C" BARS IN SECTION OF BARREL

* THE 450mm Ø RCP THROUGH THE SIDEWALL OF THE CULVERT WILL BE LOCATED BY THE ENGINEER. THE REINFORCING STEEL WILL BE FIELD BENT AND/OR CUT AS NECESSARY TO CLEAR PIPE.

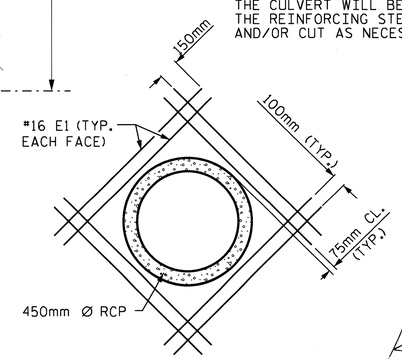

PIPE THROUGH SIDEWALL DETAIL

NORTH CAROLINA PROFESSIONAL SEAL 23005 ENGINEER R. KEITH PASCHAL
2/28/11

PROJECT NO. R-2519A
YANCEY COUNTY
STATION: 316+61.400 -L-

SHEET 7 OF 12

STATE OF NORTH CAROLINA
DEPARTMENT OF TRANSPORTATION
RALEIGH

PROPOSED SINGLE CONCRETE BOX CULVERT
(STAGE II PART 2)

REVISIONS						SHEET NO.
NO.	BY:	DATE:	NO.	BY:	DATE:	C-82
1			3			TOTAL SHEETS
2			4			119

ASSEMBLED BY :	J. G. KHARVA	DATE :	05/18/10
CHECKED BY :	J. D. HAWK	DATE :	11/20/10
DRAWN BY :	EEM 6/97		
CHECKED BY :	ARB 7/97		

28-FEB-2011 08:24
R:\Structures\str9\Final Plans\r2519a_sd_cu_09.dgn
jdhawk

STD. No. CB145SM

STR. #9

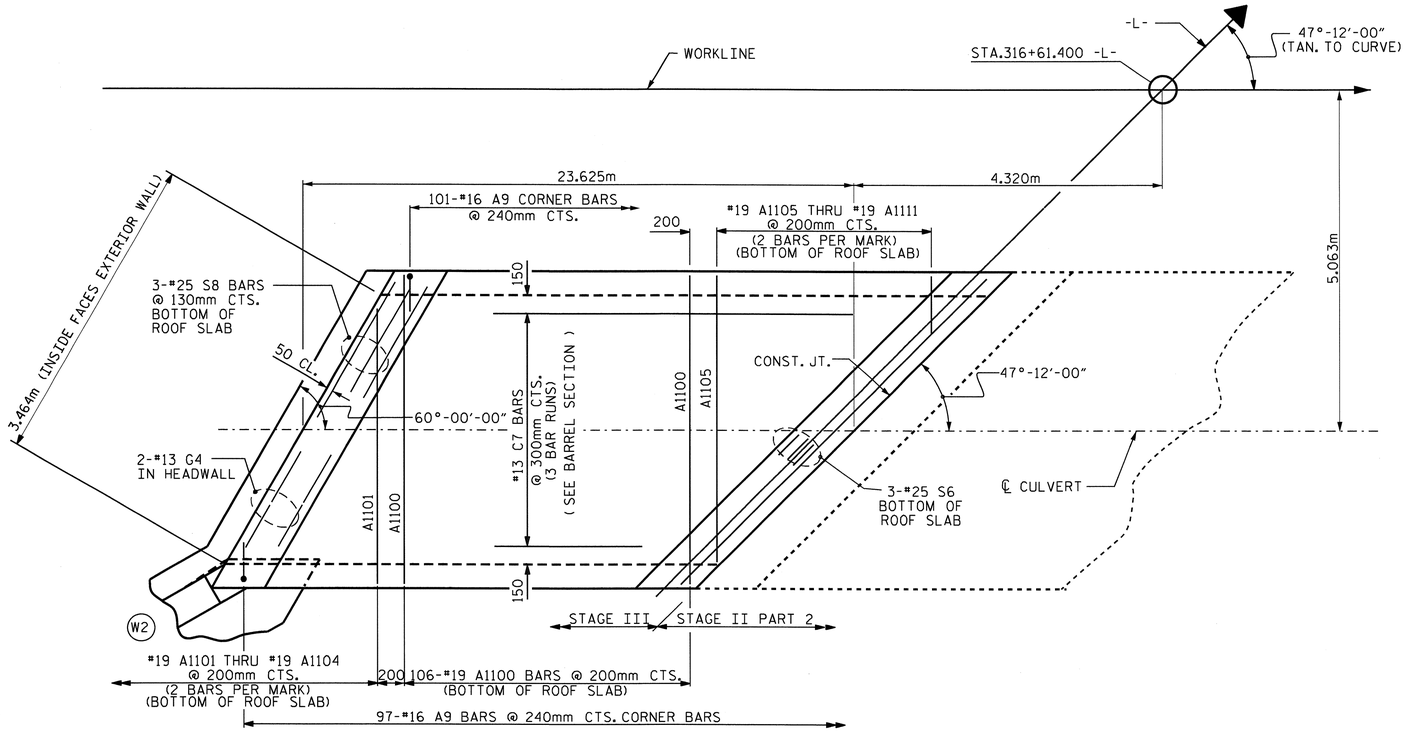

PLAN - ROOF SLAB

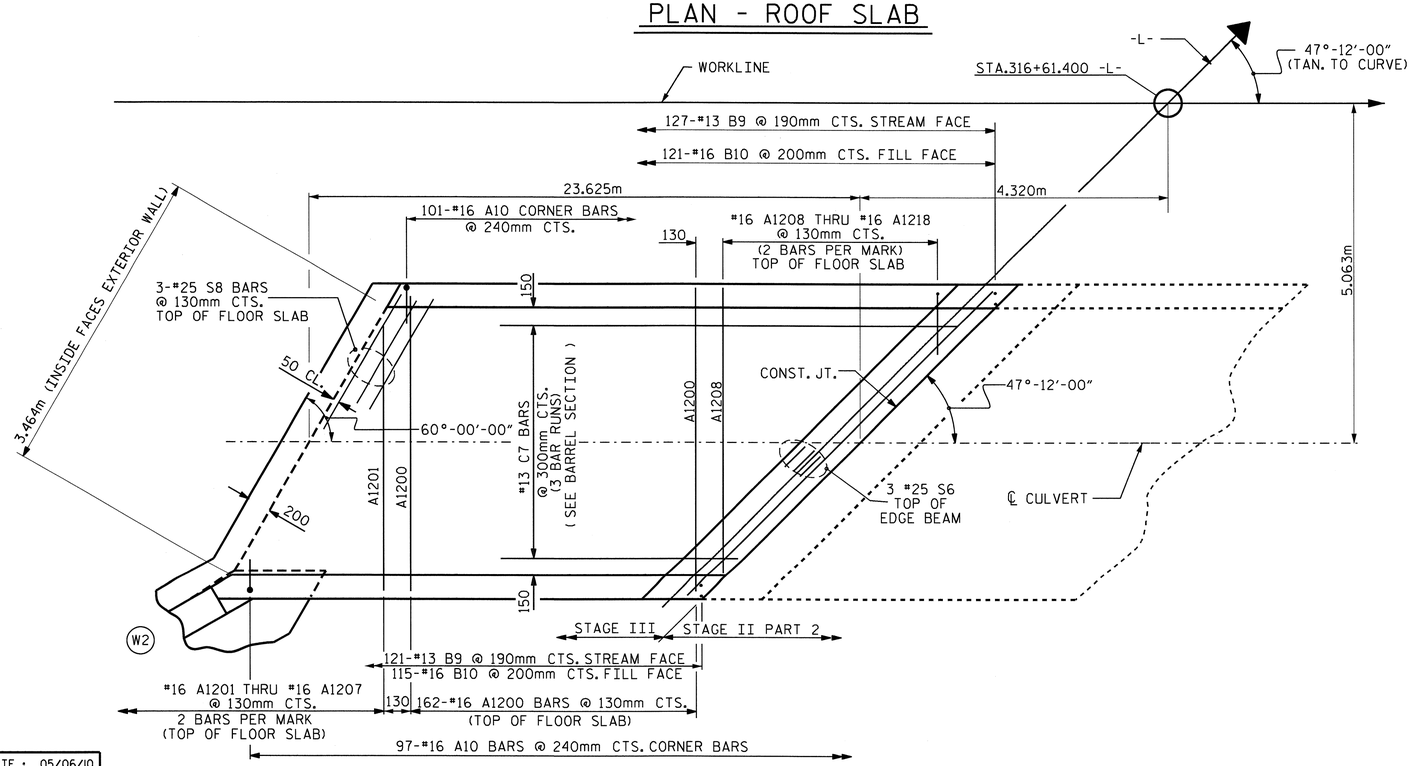

PLAN - FLOOR SLAB

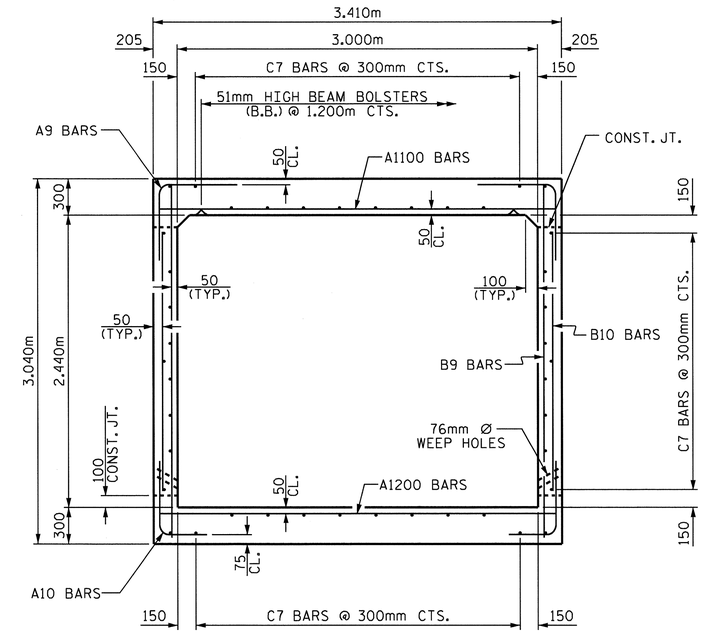

RIGHT ANGLE SECTION OF INLET BARREL

THERE ARE 42 "C" BARS IN SECTION OF BARREL

PROJECT NO. R-2519A

YANCEY COUNTY

STATION: 316+61.400 -L-

SHEET 8 OF 12

STATE OF NORTH CAROLINA
DEPARTMENT OF TRANSPORTATION
RALEIGH

SINGLE PROPOSED CONCRETE BOX CULVERT

(STAGE III)

NORTH CAROLINA PROFESSIONAL SEAL 22005 ENGINEER K. KEITH PASCHAL

2/28/11

ASSEMBLED BY : J. G. KHARVA	DATE : 05/06/10		
CHECKED BY : J. D. HAWK	DATE : 11/20/10		
DRAWN BY : EEM 6/97			
CHECKED BY : ARB 7/97			

REVISIONS						SHEET NO.
NO.	BY:	DATE:	NO.	BY:	DATE:	C-83
1			3			TOTAL SHEETS
2			4			119

28-FEB-2011 08:24
R:\Structures\str9\Final Plans\r2519a_sd_cu_09.dgn
jdhawk

STD. No. CB145SM

STR. #9

BILL OF MATERIAL

LEFT EXT.-STAGE I PART 1

BAR	NO.	SIZE	TYPE	LENGTH	WEIGHT
A1	28	#16	1	1440	63
A2	34	#16	1	1720	91
A3	118	#13	1	1500	176
A200	30	#13	STR	7560	225
A201	2	#13	STR	7160	14
A202	2	#13	STR	6640	13
A203	2	#13	STR	6120	12
A204	2	#13	STR	5600	11
A205	2	#13	STR	5080	10
A206	2	#13	STR	4560	9
A207	2	#13	STR	4040	8
A208	2	#13	STR	3520	7
A209	2	#13	STR	3000	6
A210	2	#13	STR	2440	5
A211	2	#13	STR	1960	4
A212	2	#13	STR	1440	3
A213	3	#13	STR	920	3
A400	28	#19	STR	7860	492
A401	2	#19	STR	7460	33
A402	2	#19	STR	6920	31
A403	2	#19	STR	6360	28
A404	2	#19	STR	5800	26
A405	2	#19	STR	5260	24
A406	2	#19	STR	4700	21
A407	2	#19	STR	4140	19
A408	2	#19	STR	3580	16
A409	2	#19	STR	3040	14
A410	2	#19	STR	2480	11
A411	2	#19	STR	1920	9
A412	3	#19	STR	1380	9
B1	15	#13	STR	2880	43
B2	34	#13	STR	2240	76
B3	118	#13	STR	2900	340
C1	36	#13	STR	3060	109
C2	36	#13	STR	3740	134
C3	34	#13	STR	4500	152
D1	22	#19	STR	760	37
S1	3	#25	STR	9840	117

REINFORCING STEEL BARREL 2401 kg.
CLASS A CONCRETE BARREL 23.0 m3

LEFT EXT. STAGE I PART 2

BAR	NO.	SIZE	TYPE	LENGTH	WEIGHT
A1	64	#16	1	1440	143
A2	78	#16	1	1720	208
A100	23	#16	STR	9860	352
A101	2	#16	STR	9200	29
A102	2	#16	STR	8500	26
A103	2	#16	STR	7820	24
A104	2	#16	STR	7120	22
A105	2	#16	STR	6440	20
A106	2	#16	STR	5740	18
A107	2	#16	STR	5040	16
A108	2	#16	STR	4360	14
A109	2	#16	STR	3660	11
A110	2	#16	STR	2980	9
A111	2	#16	STR	2280	7
A112	2	#16	STR	1580	5
A113	3	#16	STR	880	4
A250	57	#13	STR	2860	162
A251	2	#13	STR	2460	5
A252	2	#13	STR	1940	4
A253	2	#13	STR	1420	3
A254	2	#13	STR	900	2
A255	3	#13	STR	380	1
A300	28	#19	STR	9860	617
A301	2	#19	STR	9480	42
A302	2	#19	STR	8920	40
A303	2	#19	STR	8380	37
A304	2	#19	STR	7820	35
A305	2	#19	STR	7260	33
A306	2	#19	STR	6700	30
A307	2	#19	STR	6160	28
A308	2	#19	STR	5600	25
A309	2	#19	STR	5040	23
A310	2	#19	STR	4500	20
A311	2	#19	STR	3940	18
A312	2	#19	STR	3380	15
A313	2	#19	STR	2840	13
A314	2	#19	STR	2280	10
A315	2	#19	STR	1720	8
A316	2	#19	STR	1160	5
A317	3	#19	STR	620	4
A450	53	#19	STR	2860	339
A451	2	#19	STR	2560	11
A452	2	#19	STR	2000	9
A453	2	#19	STR	1440	6
A454	2	#19	STR	900	4
A455	2	#19	STR	340	2
B1	34	#13	STR	2880	97
B2	78	#13	STR	2240	174
C1	18	#13	STR	3060	55
C2	20	#13	STR	3740	74
C3	18	#13	STR	4500	81
C4	66	#13	STR	5340	350
G1	4	#16	STR	11400	70
S2	3	#25	STR	3300	39
S3	3	#25	STR	11400	136
D1	36	#19	STR	760	61

REINFORCING STEEL BARREL 3596 kg.
CLASS A CONCRETE BARREL 37.2 m3

SPLICE LENGTH CHART

BAR	SIZE	LENGTH
B1	#13	540
B3	#13	540
C1-C7	#13	590
G1-G2	#16	840

BILL OF MATERIAL

RIGHT EXT. STAGE II PART 1

BAR	NO.	SIZE	TYPE	LENGTH	WEIGHT
A4	35	#19	1	1780	139
A5	35	#19	1	1740	136
A6	124	#13	1	1460	180
A500	32	#19	STR	13980	1000
A600	33	#19	STR	10720	791
A700	35	#22	STR	13980	1488
A800	33	#25	STR	11380	1492
B4	31	#13	STR	3160	97
B5	35	#13	STR	2440	85
B6	124	#13	STR	3200	394
C5	55	#13	STR	5140	281
D1	6	#19	STR	760	10
L1	16	#19	2	580	21
S4	9	#19	STR	10700	215
Z1	16	#19	3	1240	44

REINFORCING STEEL 6373
CLASS A CONCRETE BARREL 19.4 m3

RIGHT EXT. STAGE II PART 2

BAR	NO.	SIZE	TYPE	LENGTH	WEIGHT
A4	35	#19	1	1780	139
A5	35	#19	1	1740	136
A650	33	#19	STR	4040	298
A850	33	#25	STR	4040	530
B4	31	#13	STR	3160	97
B5	35	#13	STR	2440	84
C5	63	#13	STR	5140	322
D1	28	#19	STR	760	48
G2	4	#16	STR	13940	87
L1	7	#19	2	580	9
S5	9	#25	STR	4020	144
Z1	7	#19	3	1240	19

REINFORCING STEEL BARREL 1913 kg.
CLASS A CONCRETE BARREL 19.4 m3

BILL OF MATERIAL

SINGLE STAGE II PART 2

A7	176	#16	1	1480	404
A8	176	#16	1	1660	453
A900	89	#19	STR	3300	656
A901	2	#19	STR	2920	13
A902	2	#19	STR	2520	11
A903	2	#19	STR	2120	9
A904	2	#19	STR	1720	8
A905	2	#19	STR	1320	6
A906	2	#19	STR	920	4
A907	2	#19	STR	520	2
A908	2	#19	STR	320	1
A909	2	#19	STR	2960	13
A910	2	#19	STR	2540	11
A911	2	#19	STR	2100	9
A912	2	#19	STR	1660	7
A913	2	#19	STR	1240	6
A914	2	#19	STR	800	4
A915	2	#19	STR	580	3
A1000	136	#19	STR	3300	1003
A1001	2	#19	STR	3060	14
A1002	2	#19	STR	2800	13
A1003	2	#19	STR	2540	11
A1004	2	#19	STR	2280	10
A1005	2	#19	STR	2020	9
A1006	2	#19	STR	1760	8
A1007	2	#19	STR	1500	7
A1008	2	#19	STR	1240	6
A1009	2	#19	STR	980	4
A1010	2	#19	STR	720	3
A1011	2	#19	STR	460	2
A1012	2	#19	STR	320	1
A1013	2	#19	STR	3160	14
A1014	2	#19	STR	2880	13
A1015	2	#19	STR	2600	12
A1016	2	#19	STR	2320	10
A1017	2	#19	STR	2040	9
A1018	2	#19	STR	1760	8
A1019	2	#19	STR	1480	7
A1020	2	#19	STR	1200	5
A1021	2	#19	STR	920	4
A1022	2	#19	STR	640	3
A1023	3	#19	STR	360	2
B7	224	#13	STR	3180	708
B8	210	#16	STR	2480	808
C6	132	#13	STR	7420	974
E1	16	#16	STR	1720	43

BILL OF MATERIAL

SINGLE STAGE II PART 2 CONT.

G3	2	#13	STR	4680	9
L2	8	#19	2	740	13
S6	6	#25	STR	4500	107
S7	6	#25	STR	4680	112
Z2	8	#19	3	1200	21

REINFORCING STEEL BARREL 5593 kg.
CLASS A CONCRETE BARREL 66.0 m3

BILL OF MATERIAL

SINGLE STAGE III

BAR	NO.	SIZE	TYPE	LENGTH	WEIGHT
A9	198	#16	1	1340	412
A10	198	#16	1	1320	406
A1100	106	#19	STR	3300	782
A1101	2	#19	STR	2620	12
A1102	2	#19	STR	1920	9
A1103	2	#19	STR	1220	5
A1104	3	#19	STR	520	2
A1105	2	#19	STR	2880	13
A1106	2	#19	STR	2460	11
A1107	2	#19	STR	2020	9
A1108	2	#19	STR	1600	7
A1109	2	#19	STR	1160	5
A1110	2	#19	STR	720	3
A1111	3	#19	STR	280	2
A1200	162	#16	STR	3300	829
A1201	2	#16	STR	2840	9
A1202	2	#16	STR	2400	7
A1203	2	#16	STR	1940	6
A1204	2	#16	STR	1500	5
A1205	2	#16	STR	1040	3
A1206	2	#16	STR	600	2
A1207	2	#16	STR	380	1
A1208	2	#16	STR	3120	10
A1209	2	#16	STR	2840	9
A1210	2	#16	STR	2560	8
A1211	2	#16	STR	2280	7
A1212	2	#16	STR	2000	6
A1213	2	#16	STR	1700	5
A1214	2	#16	STR	1420	4
A1215	2	#16	STR	1140	4
A1216	2	#16	STR	860	3
A1217	2	#16	STR	580	2
A1218	3	#16	STR	300	1
B9	248	#13	STR	2880	710
B10	236	#16	STR	2180	798
C7	126	#13	STR	8500	1065
G4	4	#13	STR	3820	15
S6	6	#25	STR	4500	107
S8	6	#25	STR	3820	91

REINFORCING STEEL 5385 kg.
CLASS A CONCRETE BARREL 72.4 m3

BAR TYPES

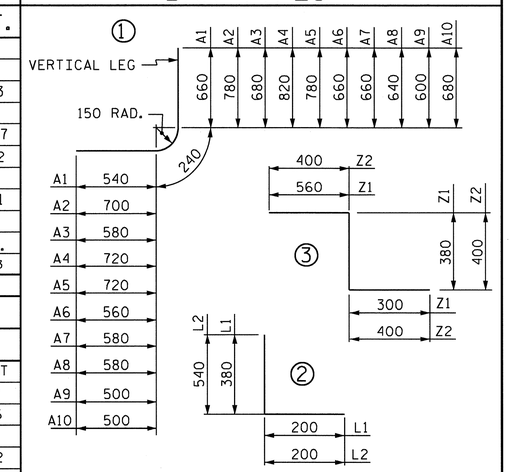

ALL BAR DIMENSIONS ARE OUT TO OUT.

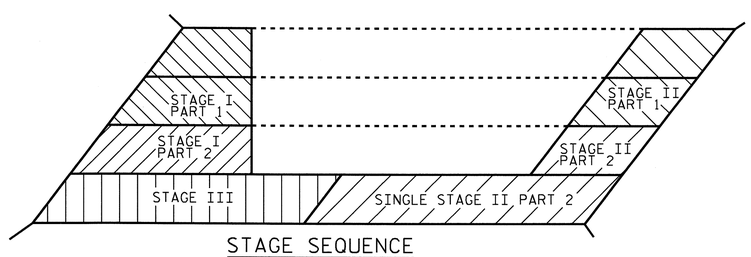

STAGE SEQUENCE

NORTH CAROLINA PROFESSIONAL SEAL 22005 ENGINEER R. KEITH PASCHAL
2/28/11

PROJECT NO. R-2519A
YANCEY COUNTY
STATION: 316+61.400 -L-

SHEET 9 OF 12

STATE OF NORTH CAROLINA
DEPARTMENT OF TRANSPORTATION
RALEIGH

BILL OF MATERIAL
CULVERT EXTENSIONS
AND SINGLE BARREL

REVISIONS						SHEET NO.
NO.	BY:	DATE:	NO.	BY:	DATE:	C-84
1			3			TOTAL SHEETS
2			4			119

DRAWN BY : J. G. KHARVA DATE : 05/18/10
CHECKED BY : J. D. HAWK DATE : 11/20/10

28-FEB-2011 08:23
R:\Structures\str9\Final Plans\r2519a_sd_cu_09.dgn
jdhawk

STR. #9

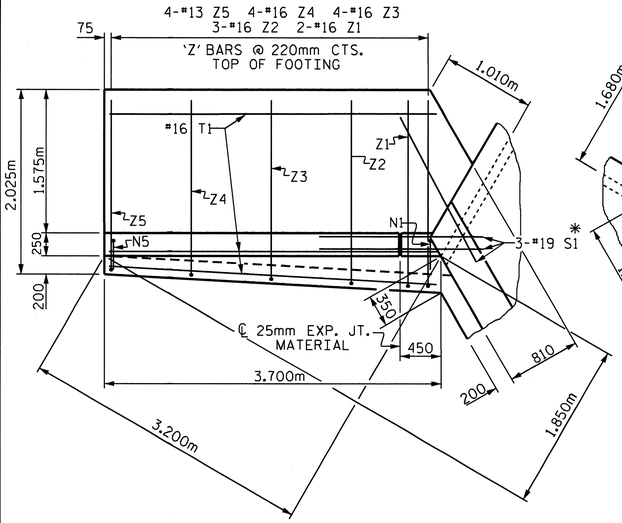

PLAN W1

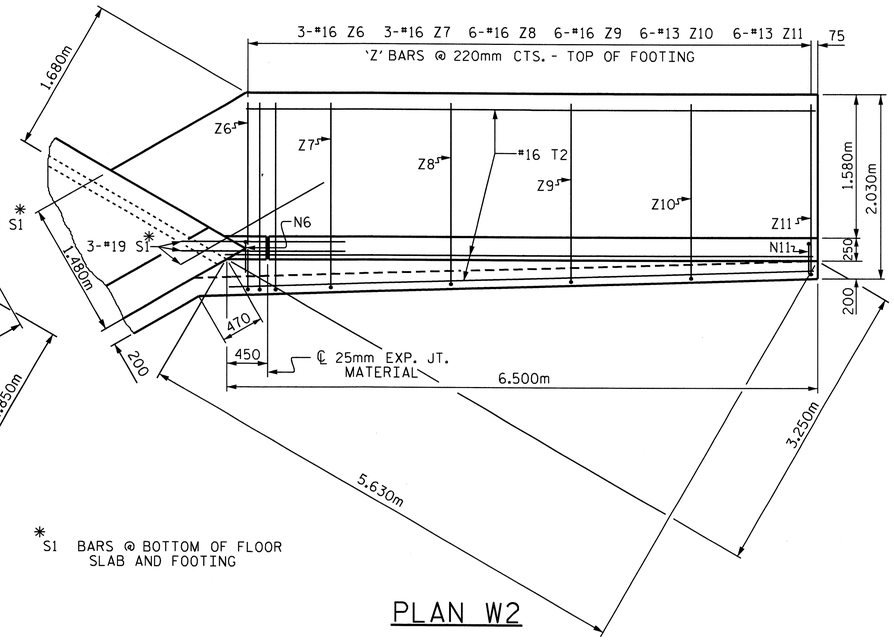

* S1 BARS @ BOTTOM OF FLOOR SLAB AND FOOTING

PLAN W2

BAR TYPES

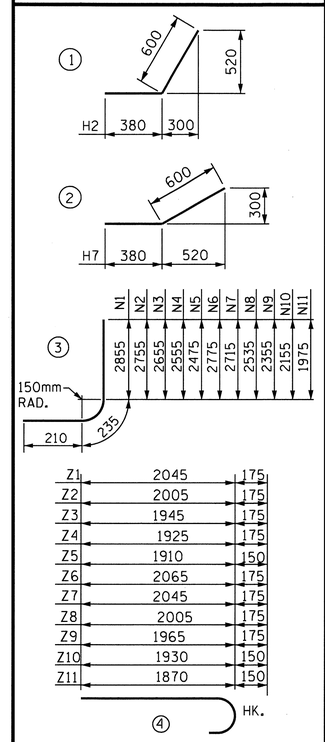

ALL BAR DIMENSIONS ARE OUT TO OUT.

BILL OF MATERIAL W1 - STAGE I

BAR	NO.	SIZE	TYPE	LENGTH	WEIGHT
H1	10	13	STR	3140	31
H2	12	13	1	980	12
H3	2	13	STR	3160	6
N1	2	19	3	3300	15
N2	3	19	3	3200	21
N3	4	19	3	3100	29
N4	4	16	3	3000	19
N5	4	13	3	2920	12
S1	3	19	STR	1800	12
T1	3	16	STR	3700	17
V1	2	16	STR	2680	8
V2	2	16	STR	2580	8
V3	2	13	STR	2480	5
V4	2	13	STR	2400	5
V5	2	13	STR	2300	5
Z1	2	16	4	2220	7
Z2	3	16	4	2180	10
Z3	4	16	4	2120	13
Z4	4	16	4	2080	13
Z5	4	13	4	2060	8

REINFORCING STEEL FOR 1 WING WALL 255 kg

CLASS A CONCRETE (PART 1)
1 WING 5.0 m^3
PARTIAL END CURTAIN WALL 1.2 m^3
PART 1 TOTAL 6.2 m^3

CLASS A CONCRETE (PART 2)
PARTIAL END CURTAIN WALL 0.5 m^3
HEADWALL 1.3 m^3
PART 2 TOTAL 1.8 m^3

BILL OF MATERIAL W2 - STAGE III

BAR	NO.	SIZE	TYPE	LENGTH	WEIGHT
H4	6	13	STR	5940	35
H5	2	13	STR	5620	11
H6	2	13	STR	2380	5
H7	12	13	2	980	12
H8	2	13	STR	5960	12
N6	2	19	3	3220	14
N7	4	19	3	3160	28
N8	6	19	3	2990	40
N9	6	16	3	2800	26
N10	6	16	3	2600	24
N11	6	13	3	2420	14
S1	3	19	STR	1800	12
T2	3	16	STR	6500	30
V6	2	16	STR	2620	8
V7	1	16	STR	2540	4
V8	3	16	STR	2360	11
V9	3	13	STR	2180	7
V10	3	13	STR	2000	6
V11	3	13	STR	1800	5
Z6	3	16	4	2240	10
Z7	3	16	4	2220	10
Z8	6	16	4	2180	20
Z9	6	16	4	2140	20
Z10	6	13	4	2080	12
Z11	6	13	4	2020	12

REINFORCING STEEL FOR 1 WING WALL 388 kg

CLASS A CONCRETE
1 WING 8.5 m^3
1 HEADWALL 0.4 m^3
1 END CURTAIN WALL 0.5 m^3
TOTAL 9.4 m^3

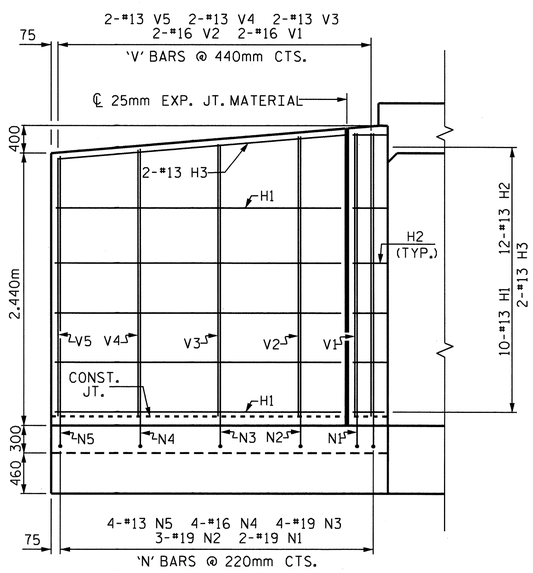

ELEVATION W1

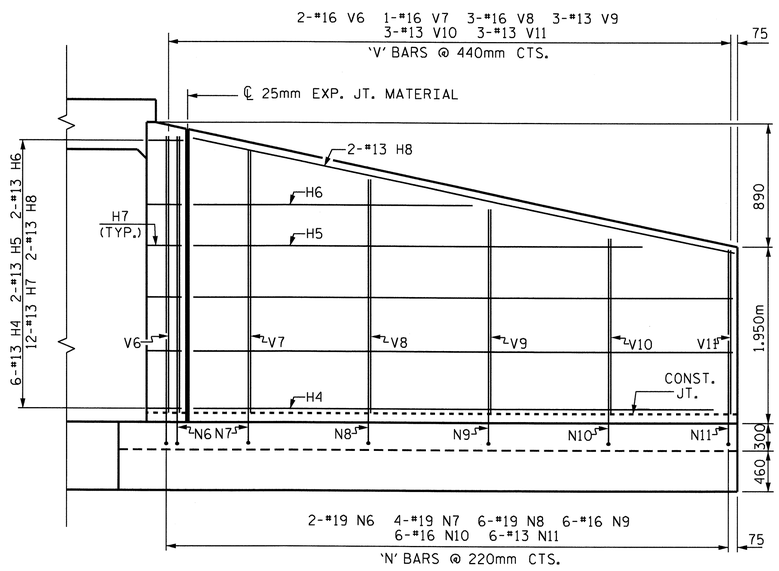

ELEVATION W2

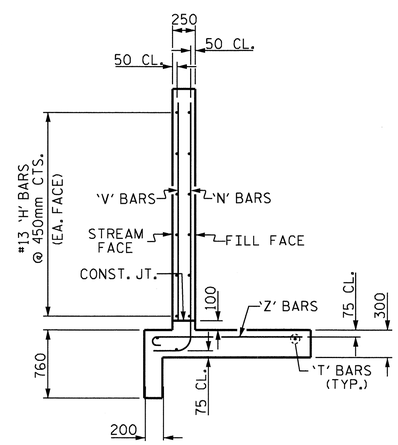

TYPICAL WING SECTION

NORTH CAROLINA PROFESSIONAL SEAL 22005 ENGINEER A. KEITH PASCHAL

3/1/11

PROJECT NO. R-2519A
YANCEY COUNTY
STATION: 316+61.400 -L-

SHEET 10 OF 12

STATE OF NORTH CAROLINA
DEPARTMENT OF TRANSPORTATION
RALEIGH

MODIFIED WINGS FOR CONCRETE BOX CULVERT SLOPE=2:1 60° SKEW

REVISIONS						SHEET NO.
NO.	BY:	DATE:	NO.	BY:	DATE:	C-85
1			3			TOTAL SHEETS
2			4			119

ASSEMBLED BY : J. G. KHARVA	DATE : 08/18/06
CHECKED BY : J. D. HAWK	DATE : 11/20/10
DRAWN BY : JLR 6/97	
CHECKED BY : VAP 6/97	

01-MAR-2011 15:18
R:\Structures\str9\Final Plans\r2519a_sd_cu_09.dgn
gallen

STD. NO. CW6030

STR. #9

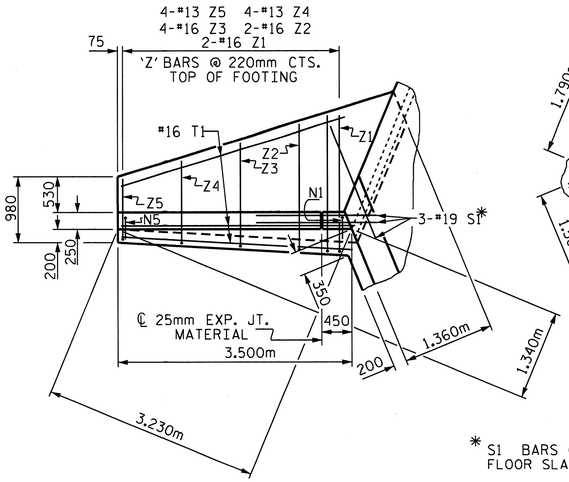

PLAN W4

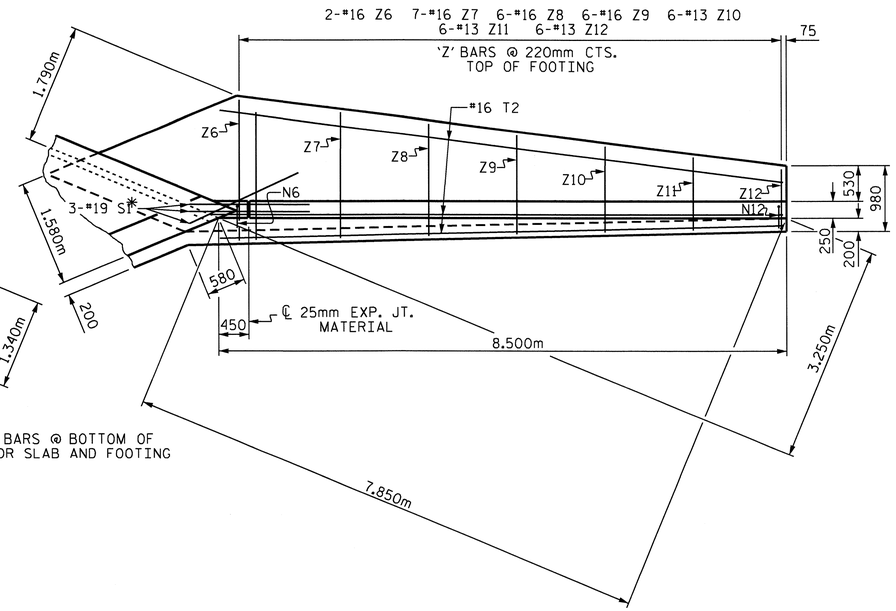

PLAN W3

* S1 BARS @ BOTTOM OF FLOOR SLAB AND FOOTING

BAR TYPES

ALL BAR DIMENSIONS ARE OUT TO OUT.

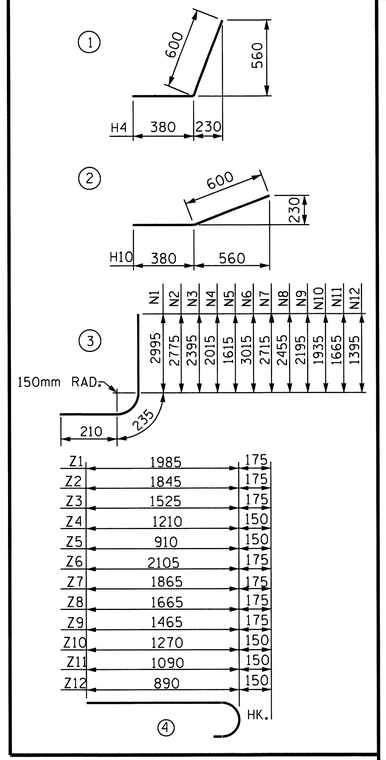

BILL OF MATERIAL W3-STAGE II PART 1

BAR	NO.	SIZE	TYPE	LENGTH	WEIGHT
H6	6	13	STR	7930	47
H7	2	13	STR	6980	13
H8	2	13	STR	4760	9
H9	2	13	STR	2540	5
H10	14	13	2	980	14
H11	2	13	STR	8080	16
N6	2	19	3	3460	15
N7	7	19	3	3160	49
N8	6	16	3	2900	27
N9	6	16	3	2640	25
N10	6	16	3	2300	21
N11	6	13	3	2100	13
N12	6	13	3	1840	10
S1	3	19	STR	1800	12
T2	3	16	STR	8500	40
V6	2	13	STR	2840	6
V7	4	13	STR	2540	10
V8	3	13	STR	2280	7
V9	3	13	STR	2020	6
V10	3	13	STR	1740	5
V11	3	13	STR	1480	4
V12	3	13	STR	1200	4
Z6	2	16	4	2280	7
Z7	7	16	4	2040	22
Z8	6	16	4	1840	17
Z9	6	16	4	1640	15
Z10	6	13	4	1420	8
Z11	6	13	4	1240	7
Z12	6	13	4	1040	6

REINFORCING STEEL FOR 1 WING 440 kg

CLASS A CONCRETE (PART 1)

1 WING 9.3 m^3

PARTIAL END CURTAIN WALL 1.4 m^3

PART 1 TOTAL 10.7 m^3

BILL OF MATERIAL W4-STAGE II PART 2

BAR	NO.	SIZE	TYPE	LENGTH	WEIGHT
H1	8	13	STR	2940	23
H2	2	13	STR	1960	4
H3	2	13	STR	940	2
H4	14	13	1	980	14
H5	2	13	STR	3200	6
N1	2	19	3	3400	15
N2	2	19	3	3220	14
N3	4	19	3	2840	25
N4	4	16	3	2460	15
N5	4	13	3	2060	8
S1	3	19	STR	1800	12
T1	3	16	STR	3500	16
V1	2	13	STR	2780	6
V2	2	13	STR	2600	5
V3	2	13	STR	2220	4
V4	2	13	STR	1820	3
V5	2	13	STR	1420	3
Z1	2	16	4	2160	7
Z2	2	16	4	2020	6
Z3	4	16	4	1700	11
Z4	4	13	4	1360	5
Z5	4	13	4	1060	4

REINFORCING STEEL FOR 1 WING 208 kg

CLASS A CONCRETE (PART 2)

PARTIAL END CURTAIN WALL 0.6 m^3

HEADWALL 1.7 m^3

PART 2 TOTAL 2.3 m^3

CLASS A CONCRETE SINGLE STAGE II (PART 2)

1 WING 4.0 m^3

1 HEADWALL 0.6 m^3

1 END CURTAIN WALL 0.6 m^3

TOTAL 5.2 m^3

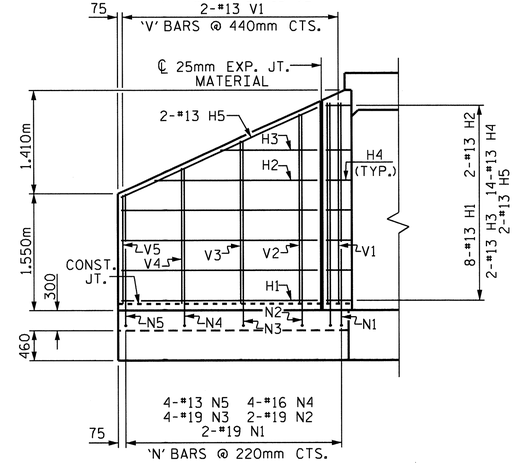

ELEVATION W4

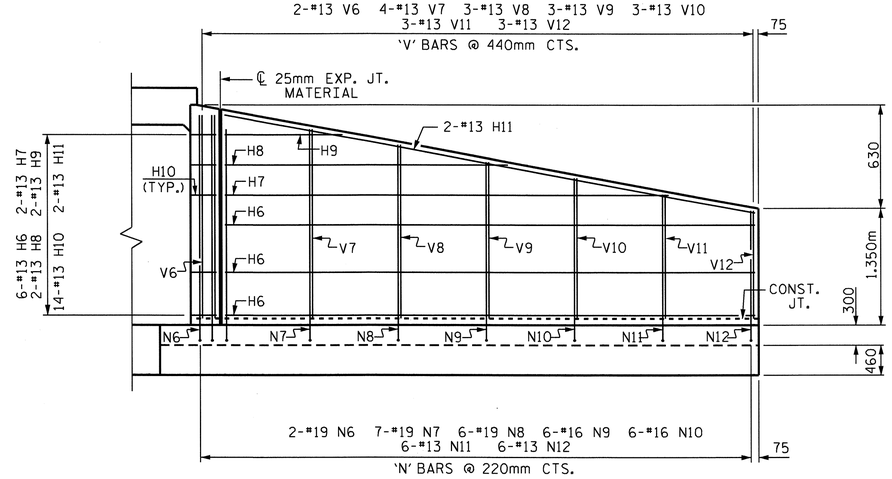

ELEVATION W3

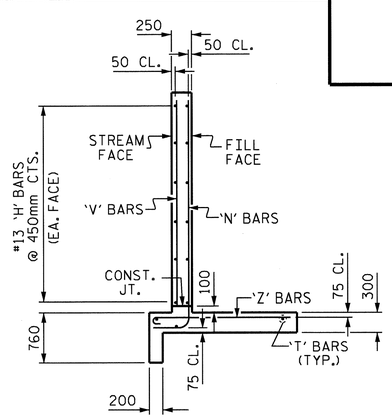

TYPICAL WING SECTION

PROJECT NO. R-2519A

YANCEY COUNTY

STATION: 316+61.400 -L-

SHEET 11 OF 12

STATE OF NORTH CAROLINA
DEPARTMENT OF TRANSPORTATION
RALEIGH

MODIFIED WINGS FOR CONCRETE BOX CULVERT SLOPE 2:1 45° SKEW

NORTH CAROLINA PROFESSIONAL SEAL 22005 ENGINEER A. KEITH PASCHAL

3/1/11

REVISIONS						SHEET NO.
NO.	BY:	DATE:	NO.	BY:	DATE:	C-86
1			3			TOTAL SHEETS
2			4			119

STD. NO. CW 4527

STR. #9

ASSEMBLED BY :	J. G. KHARVA	DATE :	08/018/6
CHECKED BY :	J. D. HAWK	DATE :	11/21/10
DRAWN BY : KJA	7/97		
CHECKED BY : RH	11/98		

01-MAR-2011 15:19
R:\Structures\str9\Final Plans\r2519a_sd_cu_09.dgn
gallen

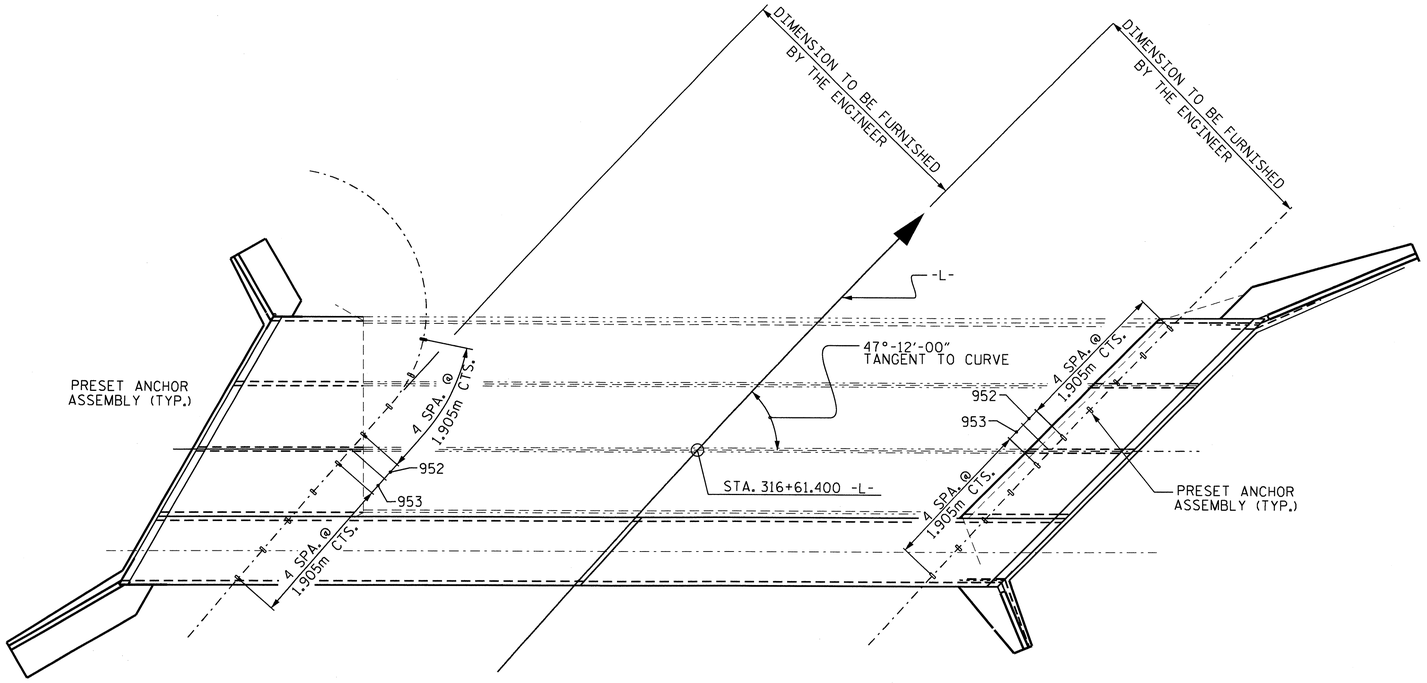

PLAN

SHOWING : GUARDRAIL ANCHOR ASSEMBLY SPACING.

NOTES

THE GUARDRAIL ANCHOR ASSEMBLY FOR CULVERTS SHALL CONSIST OF THE FOLLOWING COMPONENTS :

A. FERRULES SHALL BE MADE FROM STEEL MEETING THE REQUIREMENTS OF AASHTO M169, GRADE 12L14 AND SHALL HAVE A MINIMUM LENGTH OF THREADS OF 64mm.

B. 4 - 25.40mm DIA. X 57mm BOLTS WITH WASHERS. BOLTS SHALL CONFORM TO THE REQUIREMENTS OF ASTM A307. BOLTS AND WASHERS SHALL BE GALVANIZED. (AT THE CONTRACTOR'S OPTION, STAINLESS STEEL BOLTS AND WASHERS MAY BE USED AS AN ALTERNATE FOR THE 25.40mm DIA. X 57mm GALVANIZED BOLTS AND WASHERS. THEY SHALL CONFORM TO OR EXCEED THE MECHANICAL REQUIREMENTS OF ASTM A307. THE USE OF THIS ALTERNATE SHALL BE APPROVED BY THE ENGINEER.)

C. WIRE STRUTS SHOWN IN THE GUARDRAIL ANCHOR ASSEMBLY FOR CULVERTS DETAIL ARE MINIMUM ALLOWABLE SIZE AND SHALL HAVE A MINIMUM TENSILE STRENGTH OF 689 MPa. AS AN OPTION, A 11mm Ø WIRE STRUT WITH A MINIMUM TENSILE STRENGTH OF 620 MPa. IS ACCEPTABLE.

GUARDRAIL ANCHOR ASSEMBLY WITH BOLTS SHALL BE ASSEMBLED IN THE SHOP. BOLT THREADS MAY BE RECUT AS NECESSARY TO INSURE FIT.

THE COST OF THE GUARDRAIL ANCHOR ASSEMBLY FOR CULVERTS COMPLETE IN PLACE, SHALL BE INCLUDED IN THE UNIT CONTRACT PRICE BID FOR CLASS "A" CONCRETE.

FERRULES TO BE PLUGGED DURING POURING OF SLAB AS RECOMMENDED BY THE MANUFACTURER.

AT THE CONTRACTOR'S OPTION, FERRULES WITH OPEN OR CLOSED ENDS MAY BE USED.

PAYMENT FOR GUARDRAIL, POSTS, AND POST BASE PLATES IS INCLUDED IN ROADWAY PAY ITEMS.

SLAB REINFORCING STEEL MAY BE SHIFTED AS NECESSARY TO CLEAR GUARDRAIL ANCHOR ASSEMBLY. CARE SHOULD BE TAKEN TO KEEP THE SHIFTING OF REINFORCING STEEL TO A MINIMUM.

THE CONTRACTOR MAY USE ADHESIVELY ANCHORED ANCHOR BOLTS IN PLACE OF GUARDRAIL ANCHOR ASSEMBLY. LEVEL TWO FIELD TESTING IS REQUIRED, AND THE YIELD LOAD OF THE 25.40mm Ø BOLT IS 97.0 kN. FOR ADHESIVELY ANCHORED ANCHOR BOLTS OR DOWELS, SEE SPECIAL PROVISIONS.

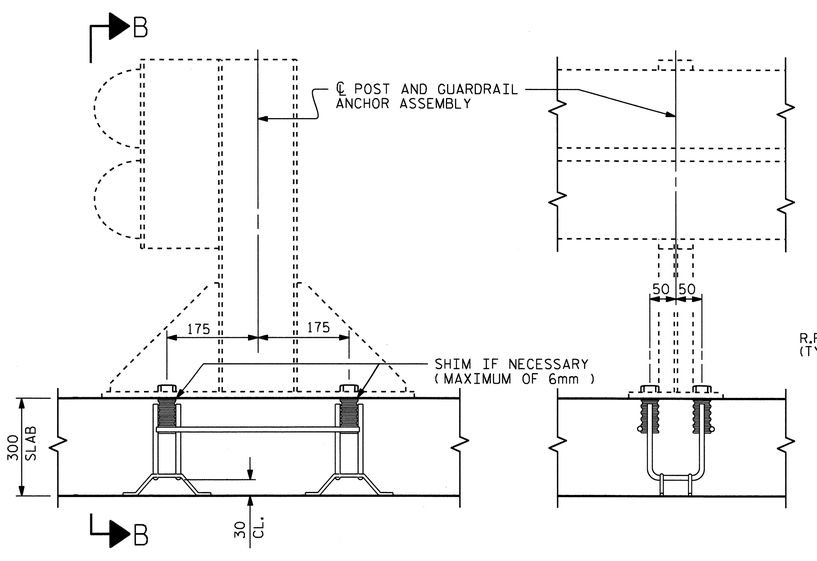

SECTION A-A

SECTION B-B

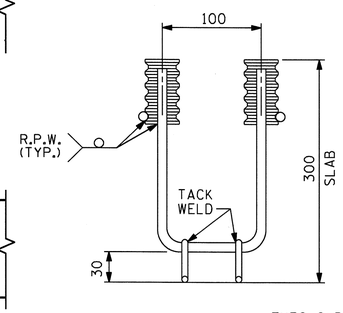

ELEVATION

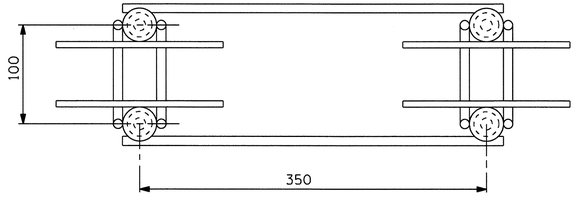

PLAN

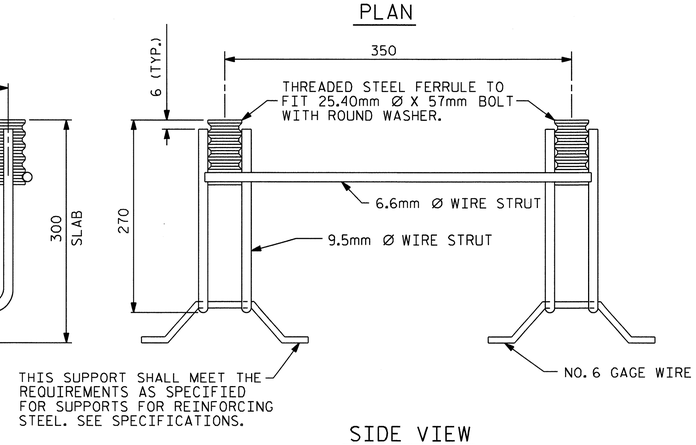

SIDE VIEW

GUARDRAIL ANCHOR ASSEMBLY FOR CULVERTS

PROJECT NO. R-2519A
YANCEY COUNTY
STATION: 316+61.400 -L-

SHEET 12 OF 12

STATE OF NORTH CAROLINA
DEPARTMENT OF TRANSPORTATION
RALEIGH

STANDARD

ANCHORAGE DETAILS FOR GUARDRAIL ANCHOR ASSEMBLY FOR CULVERTS

NORTH CAROLINA PROFESSIONAL SEAL 22005 ENGINEER A. KEITH PASCHAL 2/28/11

REVISIONS						SHEET NO.
NO.	BY:	DATE:	NO.	BY:	DATE:	C-87
1			3			TOTAL SHEETS
2			4			119

ASSEMBLED BY : J. G. KHARVA		DATE : 2/7/11	
CHECKED BY : J. D. HAWK		DATE : 2/10/11	
DRAWN BY : FCJ 6/88	REV. 7/10/01	LES/RDR	
CHECKED BY : ARB 6/88	REV. 5/7/03	RWW/JTE	
	REV. 5/1/06R	KMM/GM	

28-FEB-2011 08:22
R:\Structures\str9\Final Plans\r2519a_sd_cu_09.dgn
jdhawk

STR. #9 STD. NO. GRA1SM

BM #10: SPIKE SET IN BASE OF 16" OAK TREE 122.904m LEFT OF STA. 316+67.331 -L- EL. 781.044m

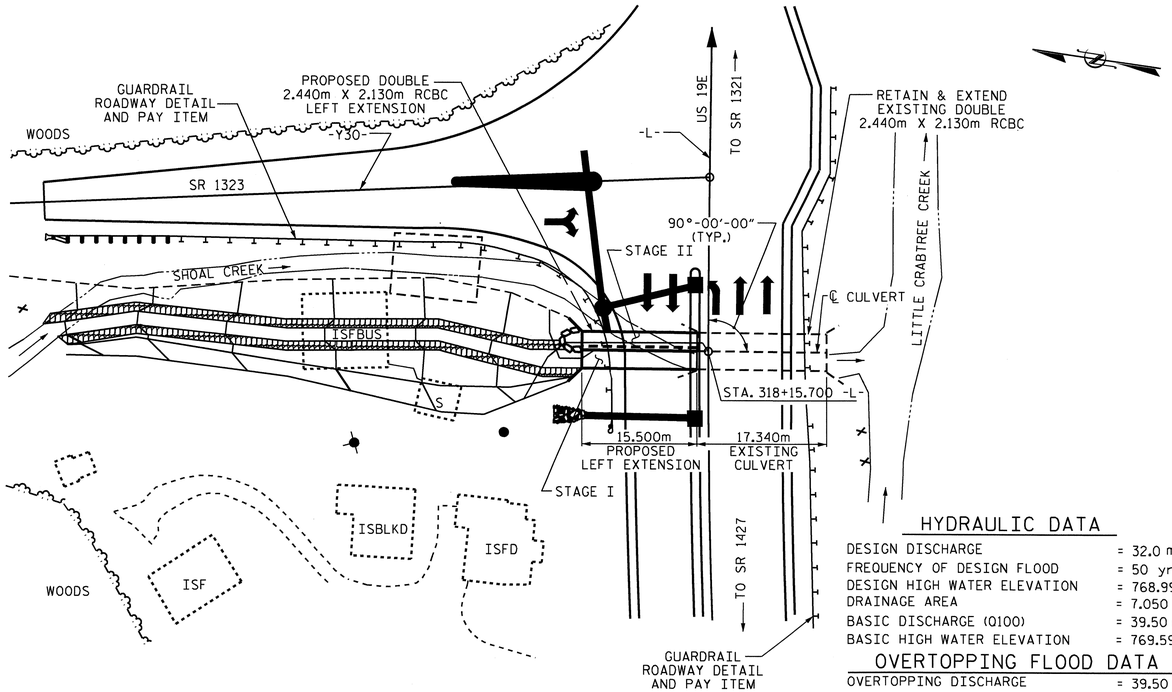

FOR UTILITY INFORMATION, SEE UTILITY PLANS AND SPECIAL PROVISIONS.

LOCATION SKETCH

HYDRAULIC DATA

DESIGN DISCHARGE	= 32.0 m^3/s
FREQUENCY OF DESIGN FLOOD	= 50 yrs.
DESIGN HIGH WATER ELEVATION	= 768.990
DRAINAGE AREA	= 7.050 sq.km
BASIC DISCHARGE (Q100)	= 39.50 m^3/s
BASIC HIGH WATER ELEVATION	= 769.590

OVERTOPPING FLOOD DATA

OVERTOPPING DISCHARGE	= 39.50 m^3/s
FREQUENCY OF OVERTOPPING FLOOD	= 100+ yrs.
OVERTOPPING FLOOD ELEVATION	= 769.550

GRADE DATA

GRADE POINT ELEV. @ STA. 318+15.700 -L-	= 769.810m
BED ELEV. @ STA. 318+15.700 -L-	= 766.410m
ROADWAY FILL SLOPES	= 2 : 1

TOTAL STRUCTURE QUANTITIES

CLASS A CONCRETE - STAGE I	
BARREL	27.6 m^3
WING ETC.	3.6 m^3
TOTAL	31.2 m^3
REINFORCING STEEL - STAGE I	
BARREL	2632 kg
WING ETC.	138 kg
TOTAL	2770 kg
CULVERT EXCAVATION ----------	LUMP SUM
FOUNDATION COND. MAT'L. -----	33 METRIC TONS

TOTAL STRUCTURE QUANTITIES

CLASS A CONCRETE - STAGE II	
BARREL	44.2 m^3
WING ETC.	4.1 m^3
TOTAL	48.3 m^3
REINFORCING STEEL - STAGE II	
BARREL	3698 kg
WING ETC.	138 kg
TOTAL	3836 kg
CULVERT EXCAVATION ----------	LUMP SUM
FOUNDATION COND. MAT'L. -----	25 METRIC TONS

TOTAL STRUCTURE QUANTITIES

CLASS A CONCRETE		REINFORCING STEEL	
STAGE I	31.2 m^3	STAGE I	2770 kg
STAGE II	48.3 m^3	STAGE II	3836 kg
TOTAL	79.5 m^3	TOTAL	6606 kg
CULVERT EXCAVATION -- LUMP SUM			
FOUNDATION COND. MAT'L. 58.0 METRIC TONS			

NOTES

ASSUMED LIVE LOAD ----------MS18 OR ALTERNATE LOADING.

DESIGN FILL----------1.440m

FOR OTHER DESIGN DATA AND NOTES SEE STANDARD NOTE SHEET.

76mm Ø WEEP HOLES INDICATED TO BE IN ACCORDANCE WITH THE SPECIFICATIONS.

CONCRETE IN CULVERTS TO BE POURED IN THE FOLLOWING ORDER:

(STAGE I)

1. WING FOOTING AND FLOOR SLAB INCLUDING 100mm OF ALL VERTICAL WALLS.
2. THE REMAINING PORTIONS OF THE WALLS AND WING FULL HEIGHT.

(STAGE II)

1. WING FOOTING AND FLOOR SLAB INCLUDING 100mm OF VERTICAL WALL.
2. THE REMAINING PORTIONS OF THE WALL AND WING FULL HEIGHT, FOLLOWED BY THE ENTIRE ROOF SLAB AND HEADWALL.

THE RESIDENT ENGINEER SHALL CHECK THE LENGTH OF CULVERT BEFORE STAKING IT OUT TO MAKE CERTAIN THAT IT WILL PROPERLY TAKE CARE OF THE FILL.

DIMENSIONS FOR WING LAYOUT AS WELL AS ADDITIONAL REINFORCING STEEL EMBEDDED IN BARREL ARE SHOWN ON WING SHEET.

AT THE CONTRACTOR'S OPTION, HE MAY SPLICE THE VERTICAL REINFORCING STEEL IN THE INTERIOR FACE OF EXTERIOR WALL AND BOTH FACES OF INTERIOR WALLS ABOVE LOWER WALL CONSTRUCTION JOINT. THE SPLICE LENGTH SHALL BE AS PROVIDED IN THE SPLICE LENGTH CHART SHOWN ON THE PLANS. EXTRA WEIGHT OF STEEL DUE TO THE SPLICES SHALL BE PAID FOR BY THE CONTRACTOR.

IF APPROVED BY THE ENGINEER, THE CONTRACTOR MAY USE THE EXISTING WINGS AS TEMPORARY SHORING FOR THE CONSTRUCTION OF THE CULVERT EXTENSIONS. IN THIS CASE, THE BOTTOM SLAB OF THE EXTENSION SHALL BE POURED AT LEAST 72 HOURS PRIOR TO CUTTING THE WINGS. THE WINGS MAY BE CUT EARLIER PROVIDED THE SLAB CONCRETE STRENGTH HAS REACHED A MINIMUM COMPRESSIVE STRENGTH OF 10.3 MPa.

DOWELS SHALL BE USED TO CONNECT THE CULVERT EXTENSION TO THE EXISTING CULVERT AS SHOWN. FOR NOTE REGARDING SETTING OF DOWELS, SEE SHEET SN.

A 900mm STRIP OF FILTER FABRIC SHALL BE ATTACHED TO THE FILL FACE OF THE WING COVERING THE ENTIRE LENGTH OF THE EXPANSION JOINT.

FOR CULVERT DIVERSION DETAILS AND PAY ITEM, SEE EROSION CONTROL PLANS.

NO PRECAST REINFORCED BOX CULVERT OPTION WILL BE ALLOWED.

FOR SUBMITTAL OF WORKING DRAWINGS, SEE SPECIAL PROVISIONS.

FOR FALSEWORK AND FORMWORK, SEE SPECIAL PROVISIONS.

FOR CRANE SAFETY, SEE SPECIAL PROVISIONS.

FOR GROUT FOR STRUCTURES, SEE SPECIAL PROVISIONS.

ALL DIMENSIONS ARE IN MILLIMETERS UNLESS OTHERWISE NOTED.

ALL ELEVATIONS ARE IN METERS.

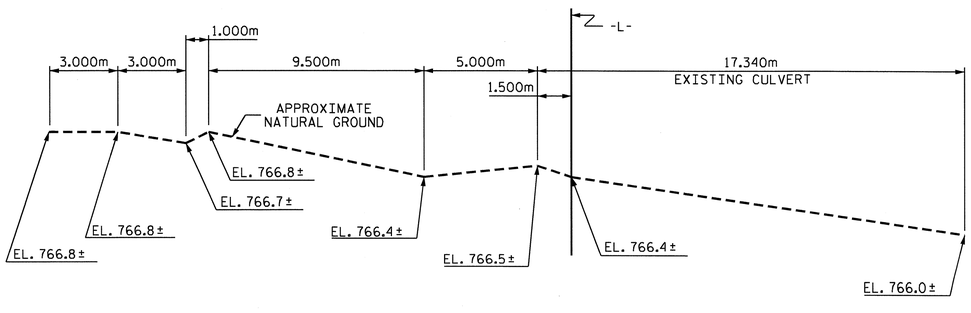

PROFILE ALONG ℄ CULVERT

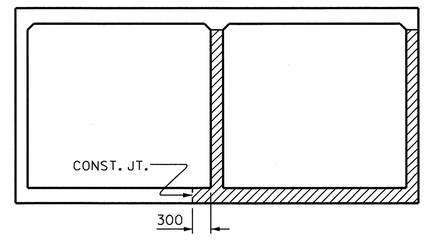

STAGE SEQUENCE

(LOOKING DOWNSTREAM)

STAGE I CONSTRUCTION

STAGE II CONSTRUCTION

PROJECT NO. R-2519A

YANCEY COUNTY

STATION: 318+15.700 -L-

SHEET 1 OF 6

STATE OF NORTH CAROLINA
DEPARTMENT OF TRANSPORTATION
RALEIGH

DOUBLE 2.440m X 2.130m CONCRETE BOX CULVERT (LEFT EXTENSION) 90° SKEW

REVISIONS						SHEET NO.
NO.	BY:	DATE:	NO.	BY:	DATE:	C-88
1			3			TOTAL SHEETS
2			4			119

DRAWN BY : J. G. KHARVA DATE : 09-27-10
CHECKED BY : J. MYA DATE : 10-05-10

01-MAR-2011 09:01
R:\Structures\str10\Final Plans\R2519A_sd_CU_10.dgn
jdhawk

STR. #10

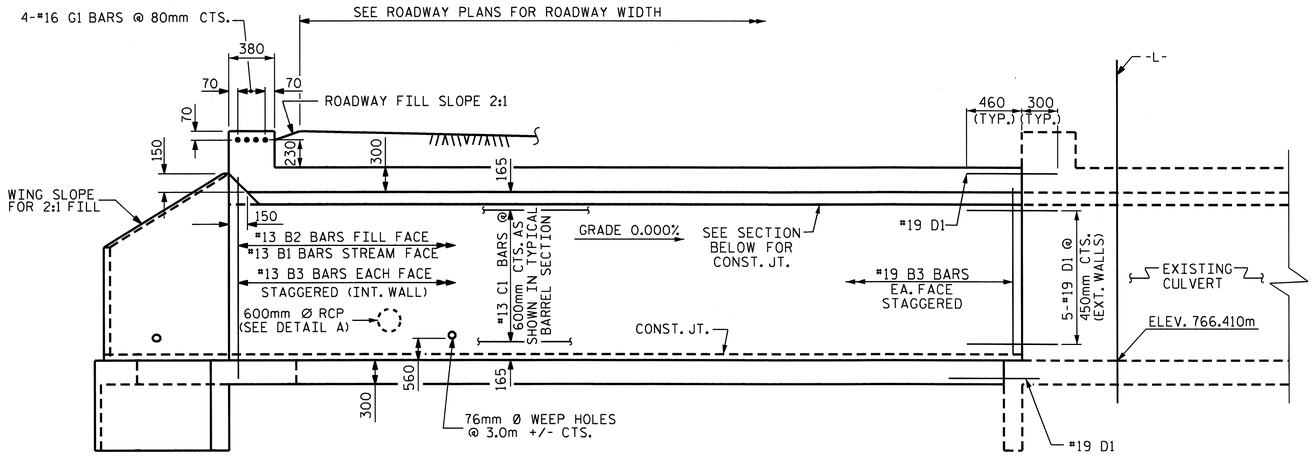

EXTERIOR WALL

INTERIOR WALL

LEFT CULVERT EXTENSION SECTION NORMAL TO ROADWAY

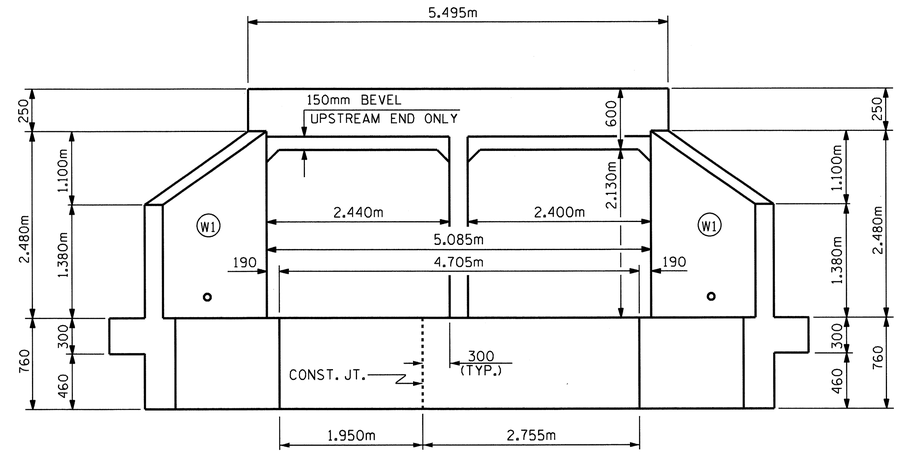

INLET ELEVATION NORMAL TO SKEW

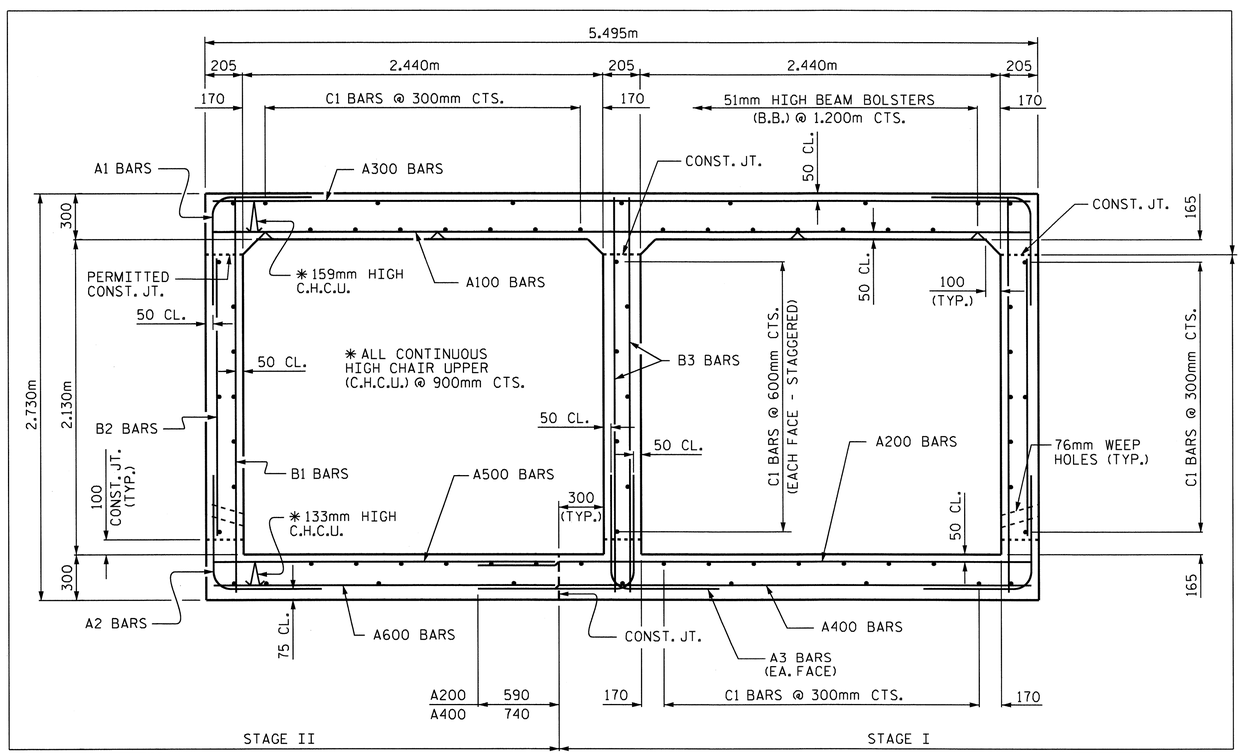

RIGHT ANGLE SECTION OF BARREL

(LOOKING DOWNSTREAM)

THERE ARE 28 "C" BARS IN SECTION BARREL (STAGE I)
THERE ARE 41 "C" BARS IN SECTION BARREL (STAGE II)

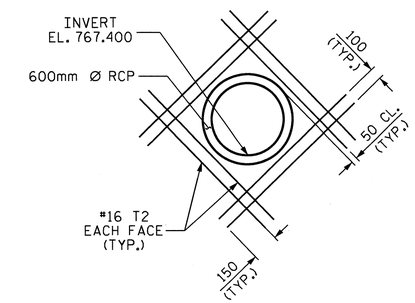

DETAIL A

THE 600mm RCP THROUGH THE SIDEWALL OF THE CULVERT TO BE LOCATED BY THE ENGINEER. THE REINFORCING STEEL SHALL BE CUT AND FIELD BENT AS NECESSARY TO CLEAR PIPE.

PROJECT NO. R-2519A
YANCEY COUNTY
STATION: 318+15.700 -L-

SHEET 2 OF 6

STATE OF NORTH CAROLINA
DEPARTMENT OF TRANSPORTATION
RALEIGH

DOUBLE 2.440m X 2.130m
CONCRETE BOX CULVERT
(LEFT EXTENSION)
90° SKEW

NORTH CAROLINA PROFESSIONAL SEAL 22005 ENGINEER A. KEITH PASCHAL
2/28/11

REVISIONS						SHEET NO.
NO.	BY:	DATE:	NO.	BY:	DATE:	C-89
1			3			TOTAL SHEETS
2			4			119

ASSEMBLED BY :	J. G. KHARVA	DATE :	9-26-10
CHECKED BY :	J. MYA	DATE :	10-04-10
DRAWN BY :	EEM	6/97	
CHECKED BY :	ARB	7/97	

28-FEB-2011 08:21
R:\Structures\str10\Final Plans\R2519A_sd_CU_10.dgn
jdhawk

STD. No. CB290sm

STR. #10

BAR TYPE

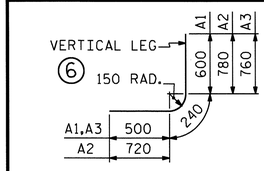

DIMENSIONS ARE OUT TO OUT

SPLICE LENGTH CHART

BAR	SIZE	SPLICE LENGTH
A200	13	540
A400	19	690
B1	13	540
B3	13	540
C1	13	590

REINFORCING STEEL (STAGE I)

BARS	NO.	SIZE	TYPE	LENGTH	WEIGHT
A1	92	13	6	1340	123
A2	78	19	6	1740	303
A3	104	13	6	1500	155
A200	92	13	STR	3700	338
A400	78	19	STR	3840	669
B1	52	13	STR	2600	134
B2	92	13	STR	1920	176
B3	104	13	STR	2600	269
C1	56	13	STR	8000	445
D1	12	19	STR	760	20

REINFORCING STEEL = 2632 kg

CLASS A CONCRETE:
FLOOR AND WALLS 27.6 m3

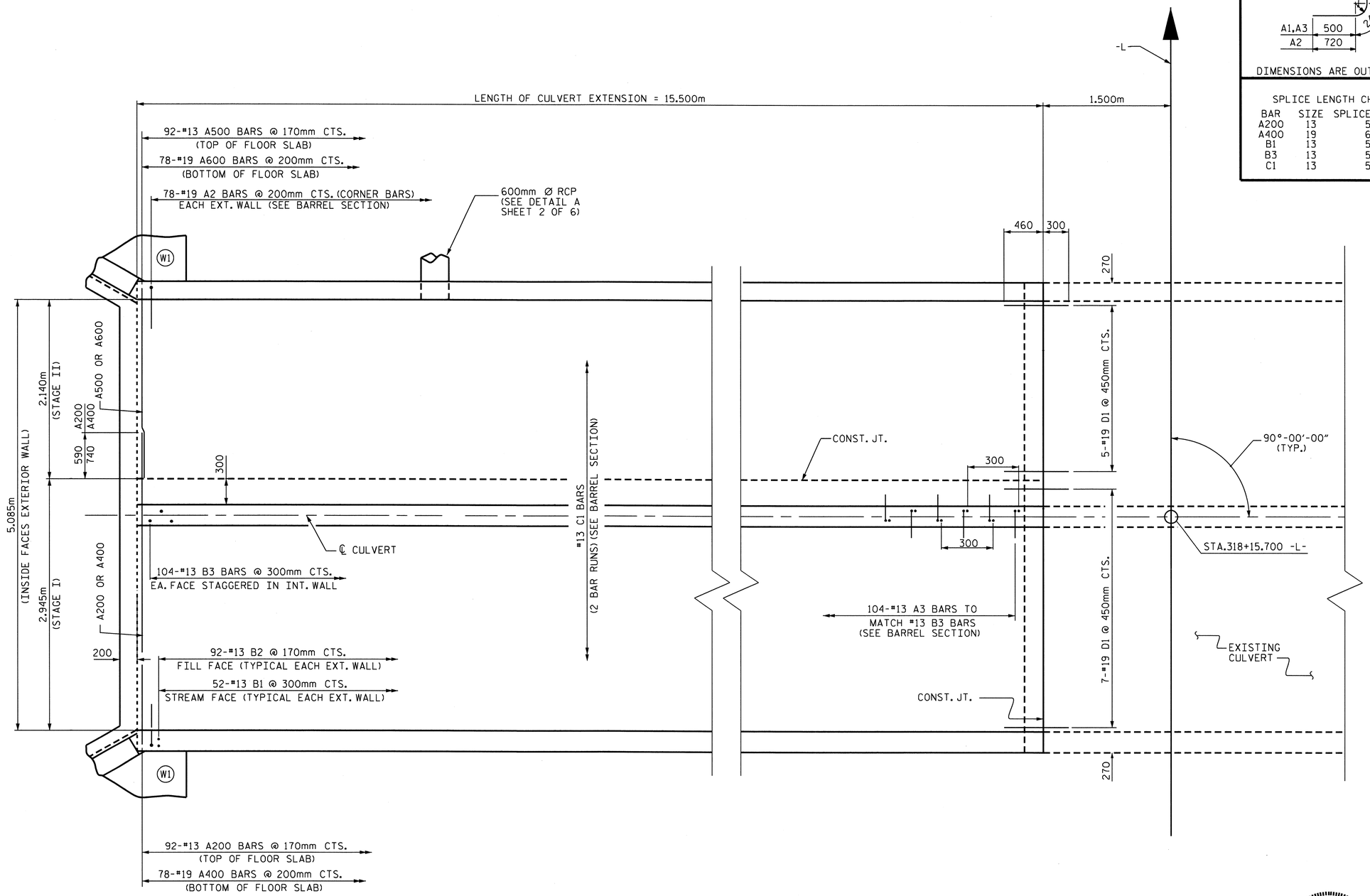

PLAN - FLOOR SLAB LEFT EXTENSION

(STAGES I AND II)

PROJECT NO. R-2519A
YANCEY COUNTY
STATION: 318+15.700 -L-

SHEET 3 OF 6

STATE OF NORTH CAROLINA
DEPARTMENT OF TRANSPORTATION
RALEIGH

DOUBLE 2.440m X 2.130m
CONCRETE BOX CULVERT
(LEFT EXTENSION)
90° SKEW

NORTH CAROLINA PROFESSIONAL SEAL 22005 ENGINEER J. KEITH PASCHAL
2/28/11

REVISIONS						SHEET NO.
NO.	BY:	DATE:	NO.	BY:	DATE:	C-90
1			3			TOTAL SHEETS
2			4			119

DRAWN BY : J. G. KHARVA DATE : 09-28-10
CHECKED BY : J. MYA DATE : 09-30-10

28-FEB-2011 08:21
R:\Structures\str10\Final Plans\R2519A_sd_CU_10.dgn
jdhnwk

STR. #10

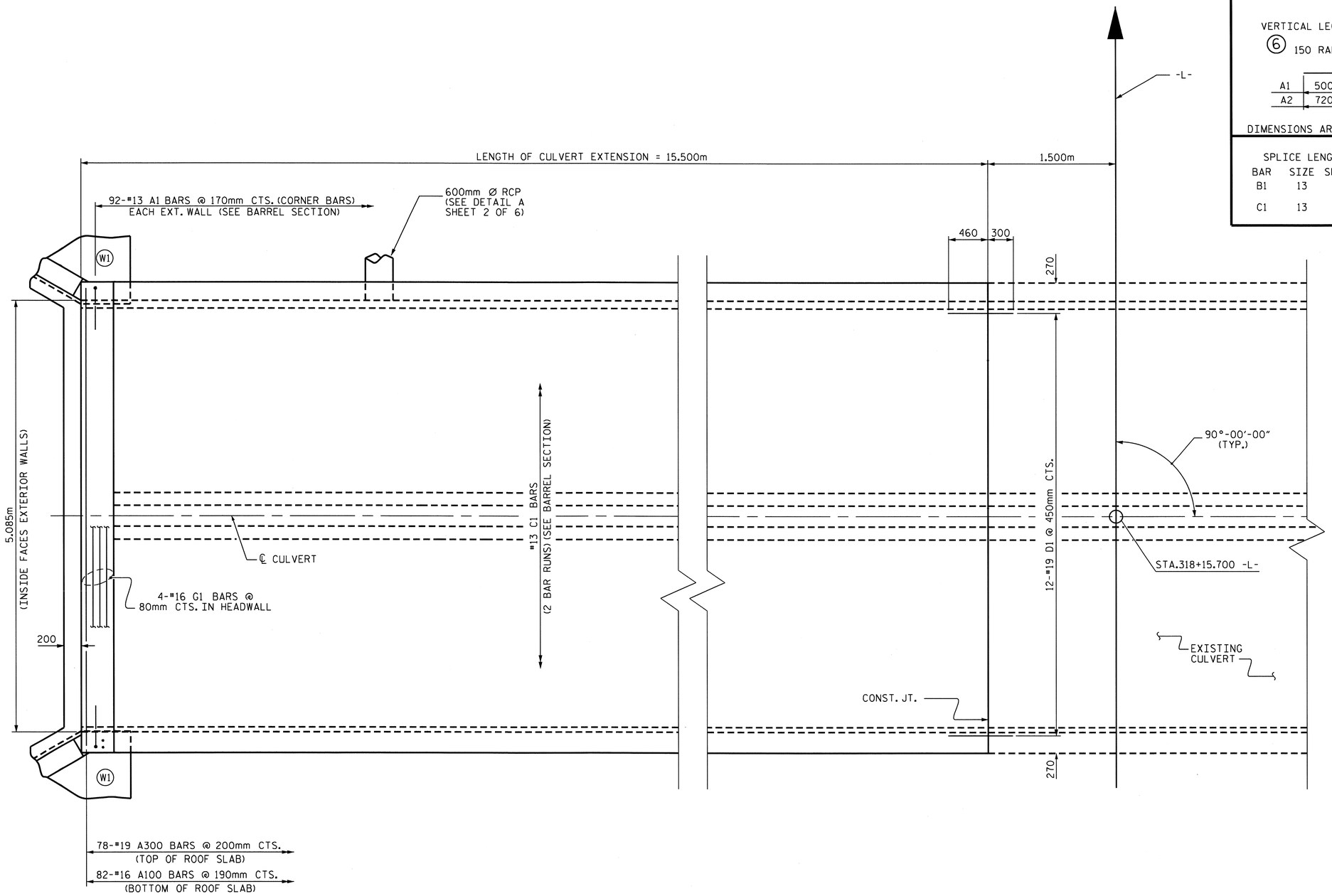

PLAN - ROOF SLAB LEFT EXTENSION

(STAGE II)

BAR TYPE

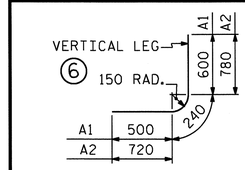

DIMENSIONS ARE OUT TO OUT

SPLICE LENGTH CHART

BAR	SIZE	SPLICE LENGTH
B1	13	540
C1	13	590

REINFORCING STEEL
(STAGE II)

BARS	NO.	SIZE	TYPE	LENGTH	WEIGHT
A1	92	13	6	1340	123
A2	78	19	6	1740	303
A100	82	16	STR	5380	685
A300	78	19	STR	5380	938
A500	92	13	STR	2240	205
A600	78	19	STR	2240	390
B1	52	13	STR	2600	134
B2	92	13	STR	1920	176
C1	82	13	STR	8000	652
D1	22	19	STR	760	37
G1	4	13	STR	5380	21
T2	16	16	STR	1360	34

REINFORCING STEEL = 3698 kg

CLASS A CONCRETE:
FLOOR, WALL & ROOF SLAB 44.2 m³

PROJECT NO. R-2519A
YANCEY COUNTY
STATION: 318+15.700 -L-

SHEET 4 OF 6

STATE OF NORTH CAROLINA
DEPARTMENT OF TRANSPORTATION
RALEIGH

DOUBLE 2.440m X 2.130m
CONCRETE BOX CULVERT
(LEFT EXTENSION)
90° SKEW

NORTH CAROLINA PROFESSIONAL SEAL 22005 ENGINEER J. KEITH PASCHAL
2/28/11

REVISIONS						SHEET NO.
NO.	BY:	DATE:	NO.	BY:	DATE:	C-91
1			3			TOTAL SHEETS
2			4			119

DRAWN BY : J. G. KHARVA DATE : 09-29-10
CHECKED BY : J. MYA DATE : 10-05-10

28-FEB-2011 08:21
R:\Structures\str10\Final Plans\R2519A_sd_CU_10.dgn
jdhawk

STR. #10

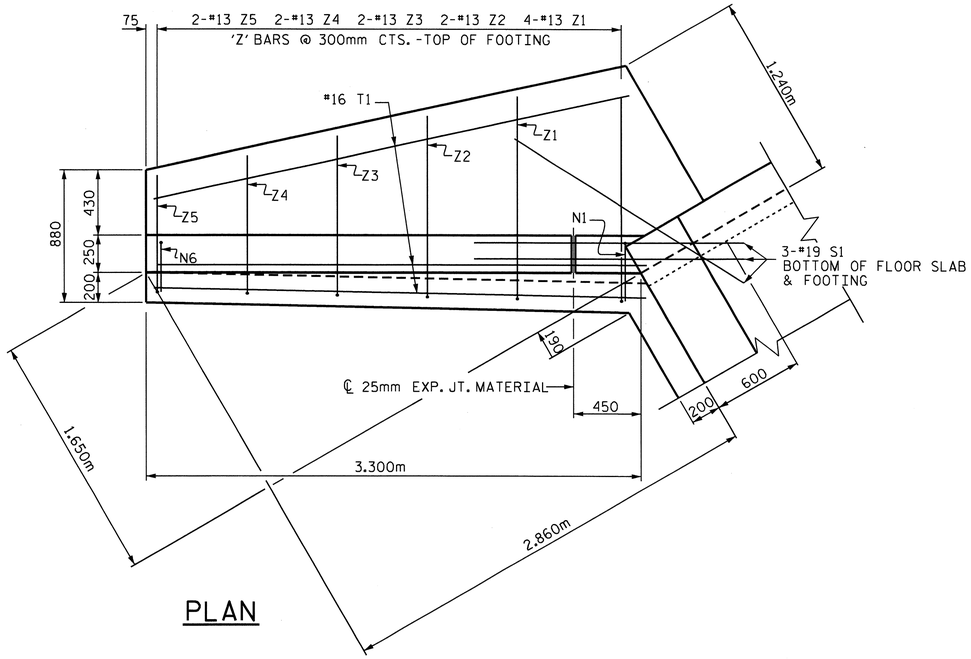

PLAN

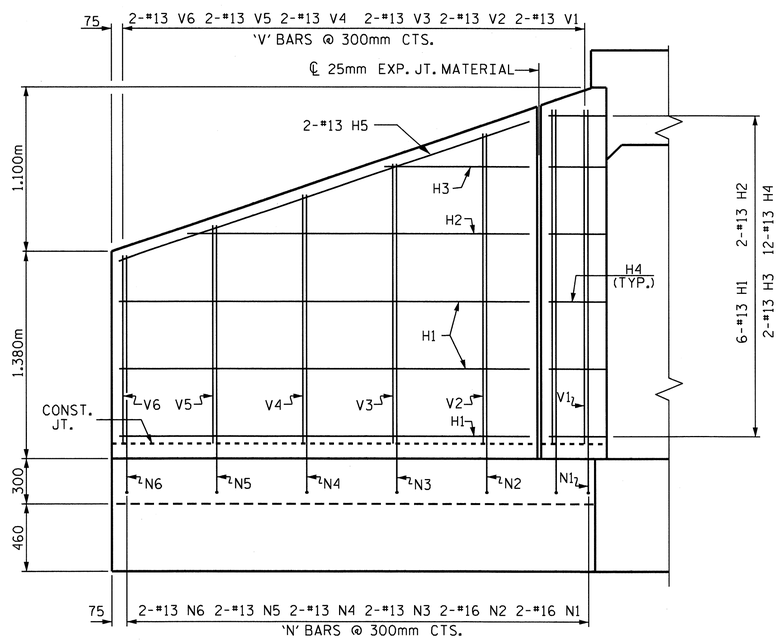

ELEVATION

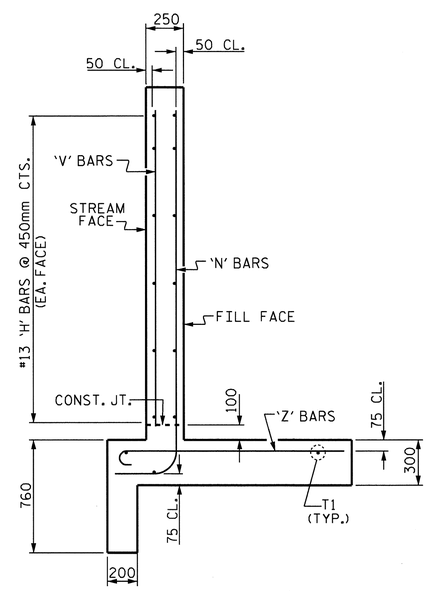

TYPICAL WING SECTION

BAR TYPES

ALL BAR DIMENSIONS ARE OUT TO OUT.

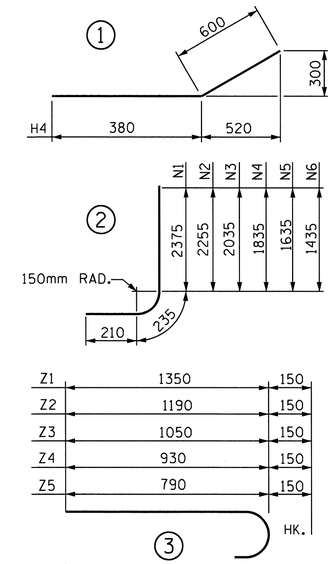

BILL OF MATERIAL W1 (ONE WING)

BAR	NO.	SIZE	TYPE	LENGTH	WEIGHT
H1	6	13	STR	2740	16
H2	2	13	STR	2280	5
H3	2	13	STR	960	2
H4	12	13	1	980	12
H5	2	13	STR	2880	6
N1	2	16	2	2820	9
N2	2	16	2	2700	8
N3	2	13	2	2480	5
N4	2	13	2	2280	5
N5	2	13	2	2080	4
N6	2	13	2	1880	4
S1	3	19	STR	1800	12
T1	3	16	STR	3300	15
V1	2	13	STR	2220	4
V2	2	13	STR	2060	4
V3	2	13	STR	1860	4
V4	2	13	STR	1660	3
V5	2	13	STR	1440	3
V6	2	13	STR	1240	2
Z1	4	13	3	1500	6
Z2	2	13	3	1340	3
Z3	2	13	3	1200	2
Z4	2	13	3	1080	2
Z5	2	13	3	940	2

REINFORCING STEEL FOR 1 WING 138 kg

CLASS A CONCRETE : (STAGE I)

WING - (W1) 3.2 m^3

PART END CURTAIN WALL 0.4 m^3

TOTAL 3.6 m^3

CLASS A CONCRETE : (STAGE II)

WING- (W1) 3.2 m^3

1 HEADWALL 0.6 m^3

PART END CURTAIN WALL 0.3 m^3

TOTAL 4.1 m^3

PROJECT NO. R-2519A

YANCEY COUNTY

STATION: 318+15.700 -L-

SHEET 5 OF 6

STATE OF NORTH CAROLINA
DEPARTMENT OF TRANSPORTATION
RALEIGH

WINGS FOR CONCRETE BOX CULVERT H = 2.100m SLOPE = 2:1 90° SKEW

NORTH CAROLINA PROFESSIONAL SEAL 22005 ENGINEER K. KEITH PASCHAL

2/28/11

REVISIONS						SHEET NO.
NO.	BY:	DATE:	NO.	BY:	DATE:	C-92
1			3			TOTAL SHEETS
2			4			119

ASSEMBLED BY : J. G. KHARVA DATE : 10-4-10
CHECKED BY : J. MYA DATE : 10-6-10

DRAWN BY : FPP 06/97
CHECKED BY : VAP 06/97

28-FEB-2011 08:21
R:\Structures\str10\Final Plans\R2519A_sd_CU_10.dgn

STD. NO. CW9021

STR. #10

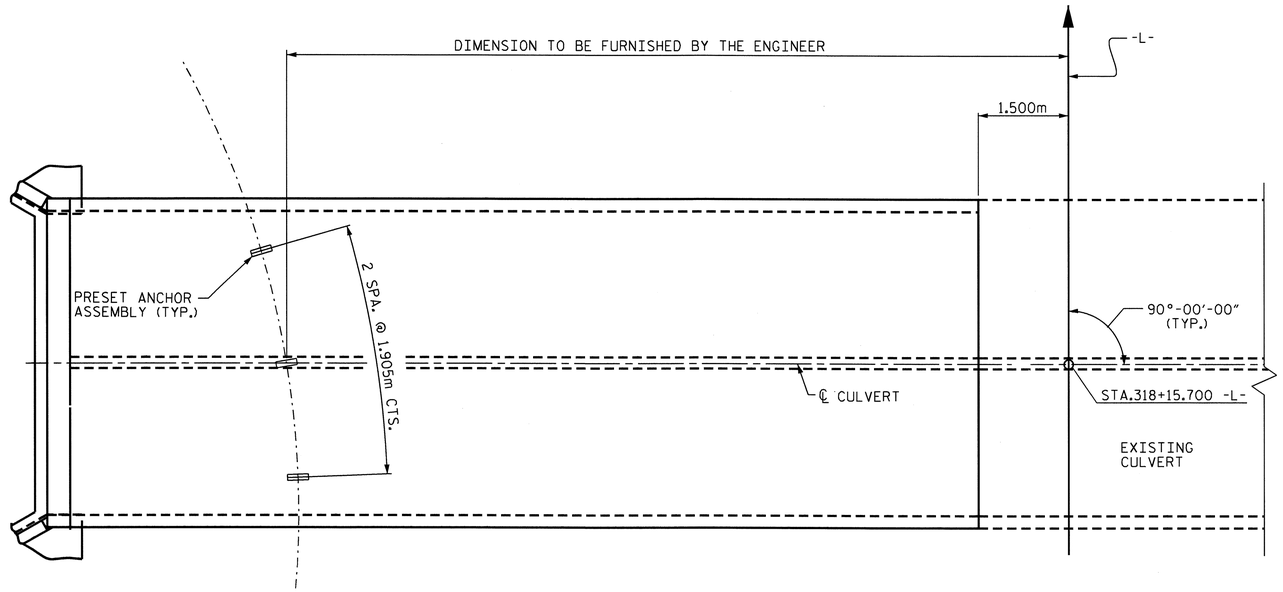

PLAN

SHOWING : GUARDRAIL ANCHOR ASSEMBLY SPACING.

NOTES

THE GUARDRAIL ANCHOR ASSEMBLY FOR CULVERTS SHALL CONSIST OF THE FOLLOWING COMPONENTS :

A. FERRULES SHALL BE MADE FROM STEEL MEETING THE REQUIREMENTS OF AASHTO M169, GRADE 12L14 AND SHALL HAVE A MINIMUM LENGTH OF THREADS OF 64mm.

B. 4 - 25.40mm DIA. X 57mm BOLTS WITH WASHERS, BOLTS SHALL CONFORM TO THE REQUIREMENTS OF ASTM A307. BOLTS AND WASHERS SHALL BE GALVANIZED. (AT THE CONTRACTOR'S OPTION, STAINLESS STEEL BOLTS AND WASHERS MAY BE USED AS AN ALTERNATE FOR THE 25.40mm DIA. X 57mm GALVANIZED BOLTS AND WASHERS. THEY SHALL CONFORM TO OR EXCEED THE MECHANICAL REQUIREMENTS OF ASTM A307. THE USE OF THIS ALTERNATE SHALL BE APPROVED BY THE ENGINEER.)

C. WIRE STRUTS SHOWN IN THE GUARDRAIL ANCHOR ASSEMBLY FOR CULVERTS DETAIL ARE MINIMUM ALLOWABLE SIZE AND SHALL HAVE A MINIMUM TENSILE STRENGTH OF 689 MPa. AS AN OPTION, A 11mm Ø WIRE STRUT WITH A MINIMUM TENSILE STRENGTH OF 620 MPa. IS ACCEPTABLE.

GUARDRAIL ANCHOR ASSEMBLY WITH BOLTS SHALL BE ASSEMBLED IN THE SHOP. BOLT THREADS MAY BE RECUT AS NECESSARY TO INSURE FIT.

THE COST OF THE GUARDRAIL ANCHOR ASSEMBLY FOR CULVERTS COMPLETE IN PLACE, SHALL BE INCLUDED IN THE UNIT CONTRACT PRICE BID FOR CLASS "A" CONCRETE.

FERRULES TO BE PLUGGED DURING POURING OF SLAB AS RECOMMENDED BY THE MANUFACTURER.

AT THE CONTRACTOR'S OPTION, FERRULES WITH OPEN OR CLOSED ENDS MAY BE USED.

PAYMENT FOR GUARDRAIL, POSTS, AND POST BASE PLATES IS INCLUDED IN ROADWAY PAY ITEMS.

SLAB REINFORCING STEEL MAY BE SHIFTED AS NECESSARY TO CLEAR GUARDRAIL ANCHOR ASSEMBLY. CARE SHOULD BE TAKEN TO KEEP THE SHIFTING OF REINFORCING STEEL TO A MINIMUM.

THE CONTRACTOR MAY USE ADHESIVELY ANCHORED ANCHOR BOLTS IN PLACE OF GUARDRAIL ANCHOR ASSEMBLY. LEVEL TWO FIELD TESTING IS REQUIRED, AND THE YIELD LOAD OF THE 25.40mm Ø BOLT IS 97.0 kN. FOR ADHESIVELY ANCHORED ANCHOR BOLTS OR DOWELS, SEE SPECIAL PROVISIONS.

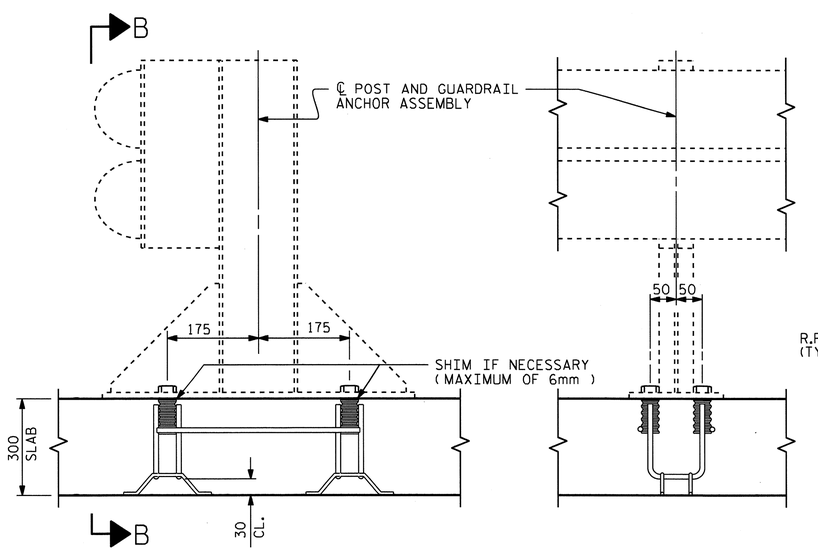

SECTION A-A

SECTION B-B

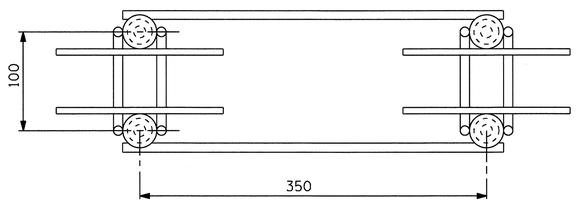

PLAN

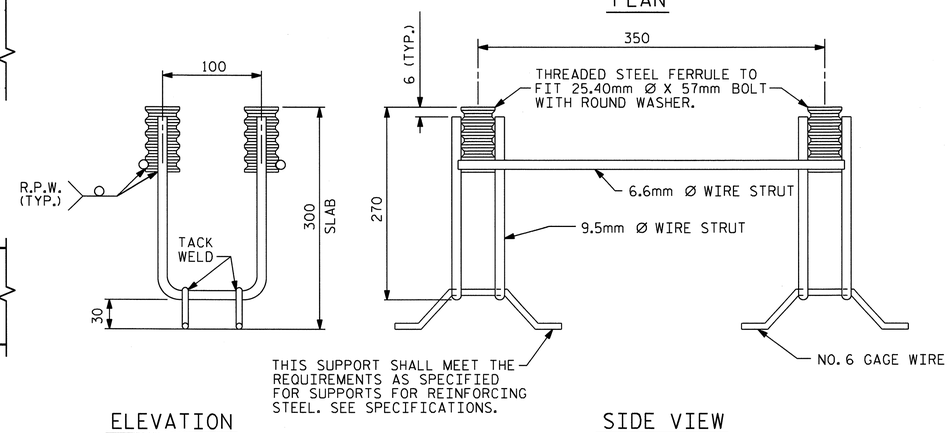

ELEVATION

SIDE VIEW

GUARDRAIL ANCHOR ASSEMBLY FOR CULVERTS

PROJECT NO. R-2519A

YANCEY COUNTY

STATION: 318+15.700 -L-

SHEET 6 OF 6

STATE OF NORTH CAROLINA
DEPARTMENT OF TRANSPORTATION
RALEIGH

STANDARD

ANCHORAGE DETAILS FOR GUARDRAIL ANCHOR ASSEMBLY FOR CULVERTS

NORTH CAROLINA PROFESSIONAL SEAL 22009 ENGINEER A. KEITH PASCHAL

2/28/11

ASSEMBLED BY : J. G. KHARVA	DATE : 2/7/11		
CHECKED BY : J. MYA	DATE : 2/10/11		
DRAWN BY : FCJ 6/88	REV. 7/10/01	LES/RDR	
CHECKED BY : ARB 6/88	REV. 5/7/03	RWW/JTE	
	REV. 5/1/06R	KMM/GM	

REVISIONS						SHEET NO.
NO.	BY:	DATE:	NO.	BY:	DATE:	C-93
1			3			TOTAL SHEETS
2			4			119

28-FEB-2011 08:20
R:\Structures\str10\Final Plans\R2519A_sd_CU_10.dgn
jdhawk

STR. #10 STD. NO. GRA1SM

B.M. #211 : SPIKE IN BASE OF 30" WAHOO TREE 153.412m RT. OF STA. 325+63.790 -L-, EL. 765.045.

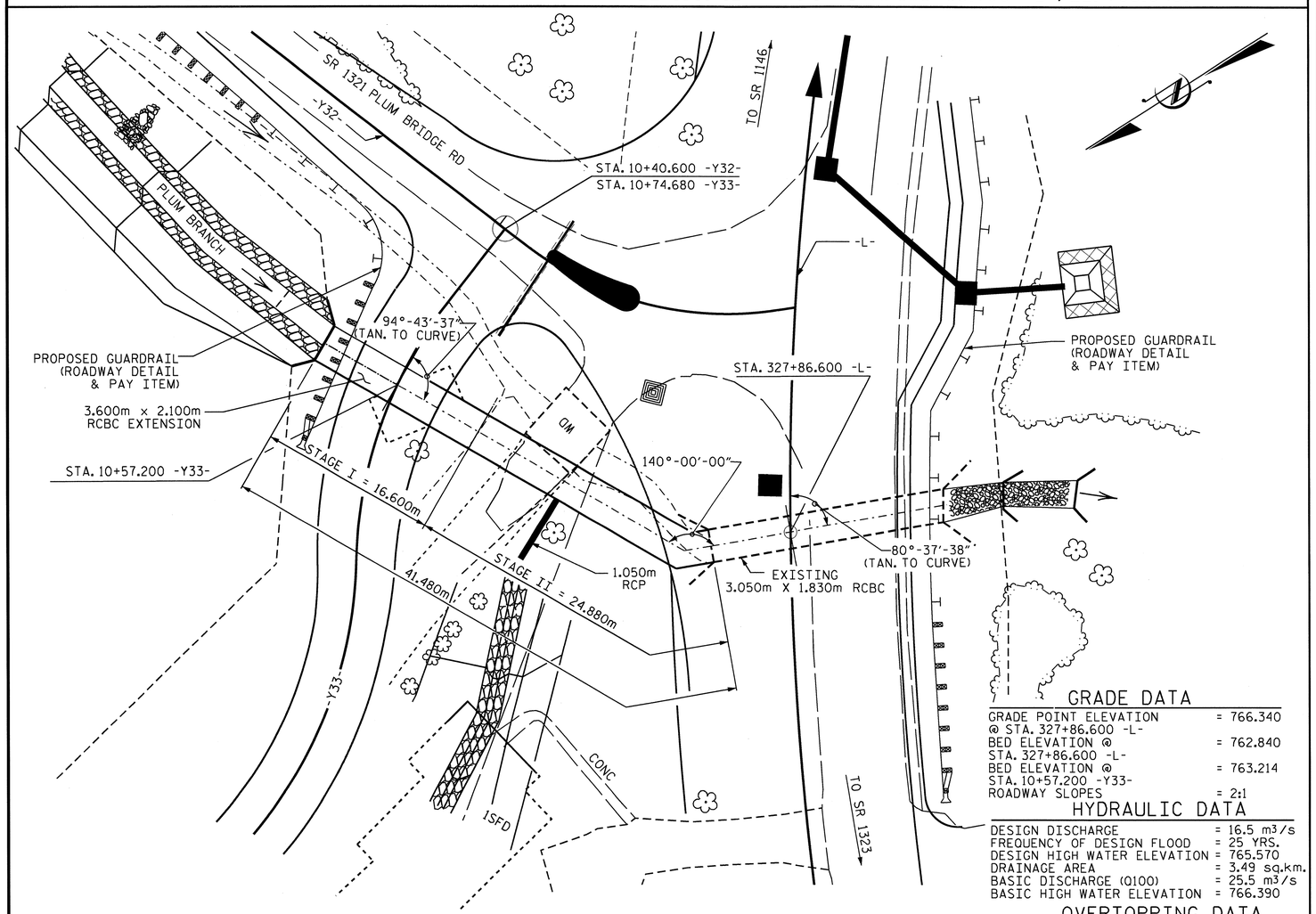

FOR UTILITY INFORMATION, SEE UTILITY PLANS AND SPECIAL PROVISIONS.

LOCATION SKETCH

GRADE DATA

GRADE POINT ELEVATION @ STA. 327+86.600 -L-	= 766.340
BED ELEVATION @ STA. 327+86.600 -L-	= 762.840
BED ELEVATION @ STA. 10+57.200 -Y33-	= 763.214
ROADWAY SLOPES	= 2:1

HYDRAULIC DATA

DESIGN DISCHARGE	= 16.5 m3/s
FREQUENCY OF DESIGN FLOOD	= 25 YRS.
DESIGN HIGH WATER ELEVATION	= 765.570
DRAINAGE AREA	= 3.49 sq.km.
BASIC DISCHARGE (Q100)	= 25.5 m3/s
BASIC HIGH WATER ELEVATION	= 766.390

OVERTOPPING DATA

OVERTOPPING DISCHARGE	= 25.5 m3/s
FREQUENCY OF OVERTOPPING FLOOD	= 100 YRS. ±
OVERTOPPING FLOOD	= 766.400

STRUCTURE QUANTITIES STAGE I

CLASS A CONCRETE		
BARREL @	2.776 m3/m	46.1 m3
WINGS ETC.		7.2 m3
CONCRETE SILLS		0.7 m3
TOTAL		54.0 m3
REINFORCING STEEL		
BARREL		5,557 kg
WINGS ETC.		263 kg
CONCRETE SILLS		8 kg
TOTAL		5,828 kg
FOUNDATION COND. MAT'L.		45 METRIC TONS
CULVERT EXCAVATION		LUMP SUM
CLASS B RIP RAP		11.8 METRIC TONS

STRUCTURE QUANTITIES STAGE II

CLASS A CONCRETE	
BARREL	68.4 m3
CONCRETE SILLS	0.5 m3
TOTAL	68.9 m3
REINFORCING STEEL	
BARREL	8,636 kg.
CONCRETE SILLS	6 kg.
TOTAL	8,642 kg.
FOUNDATION COND. MAT'L.	68 METRIC TONS
CULVERT EXCAVATION	LUMP SUM
CLASS B RIP RAP	17.7 METRIC TONS

EXISTING CULVERT

CLASS A CONCRETE	
CONCRETE SILLS	0.1 m3
TOTAL	0.1 m3
REINFORCING STEEL	
CONCRETE SILLS	4 kg.
TOTAL	4 kg.
CLASS B RIP RAP	10.9 METRIC TONS

NOTES

ASSUMED LIVE LOAD = MS18 OR ALTERNATE LOADING.

ALL DIMENSIONS ARE IN MILLIMETERS UNLESS OTHERWISE NOTED.

ALL ELEVATIONS ARE IN METERS.

DESIGN FILL 2.170m.

FOR OTHER DESIGN DATA AND NOTES SEE STANDARD NOTE SHEET.

76mm Ø WEEP HOLES INDICATED TO BE IN ACCORDANCE WITH THE SPECIFICATIONS.

CONCRETE IN CULVERTS TO BE POURED IN THE FOLLOWING ORDER:

STAGE I AND STAGE II :

1. WING FOOTINGS AND FLOOR SLAB INCLUDING 100mm OF ALL VERTICAL WALLS.
2. THE REMAINING PORTIONS OF THE WALLS AND WINGS FULL HEIGHT FOLLOWED BY ROOF SLAB AND HEADWALLS.

THE RESIDENT ENGINEER SHALL CHECK THE LENGTH OF CULVERT BEFORE STAKING IT OUT TO MAKE CERTAIN THAT IT WILL PROPERLY TAKE CARE OF THE FILL.

DIMENSIONS FOR WING LAYOUT AS WELL AS ADDITIONAL REINFORCING STEEL EMBEDDED IN BARREL ARE SHOWN ON THE WING SHEET.

AT THE CONTRACTOR'S OPTION, HE MAY SPLICE THE VERTICAL REINFORCING STEEL IN THE INTERIOR FACE OF EXTERIOR WALL ABOVE LOWER WALL CONSTRUCTION JOINT. THE SPLICE LENGTH SHALL BE AS PROVIDED IN THE SPLICE LENGTH CHART SHOWN ON THE PLANS. EXTRA WEIGHT OF STEEL DUE TO THE SPLICES SHALL BE PAID FOR BY THE CONTRACTOR.

TRANSVERSE CONSTRUCTION JOINTS SHALL BE USED IN THE BARREL, SPACED TO LIMIT THE POURS TO A MAXIMUM OF 21.0m. LOCATION JOINTS SHALL BE SUBJECT TO APPROVAL OF THE ENGINEER.

IF APPROVED BY THE ENGINEER, THE CONTRACTOR MAY USE THE EXISTING WINGS AS TEMPORARY SHORING FOR THE CONSTRUCTION OF THE CULVERT EXTENSIONS. IN THIS CASE, THE BOTTOM SLAB OF THE EXTENSION SHALL BE POURED AT LEAST 72 HOURS PRIOR TO CUTTING. THE WINGS MAY BE CUT EARLIER PROVIDED THE SLAB CONCRETE STRENGTH HAS REACHED A MINIMUM COMPRESSIVE STRENGTH OF 10.3 MPa.

DOWELS SHALL BE USED TO CONNECT THE CULVERT EXTENSION TO THE EXISTING CULVERT AS SHOWN. FOR NOTE REGARDING SETTING OF DOWELS, SEE SHEET SNSM.

FOR CULVERT DIVERSION DETAILS AND PAY ITEM, SEE EROSION CONTROL PLANS.

A 900mm STRIP OF FILTER FABRIC SHALL BE ATTATCHED TO THE FILL FACE OF THE WING COVERING THE ENTIRE LENGTH OF THE EXPANSION JOINT.

NO PRECAST REINFORCED BOX CULVERT OPTION WILL BE ALLOWED.

FOR SUBMITTAL OF WORKING DRAWINGS, SEE SPECIAL PROVISIONS.

FOR CRANE SAFETY, SEE SPECIAL PROVISIONS.

FOR FALSEWORK AND FORMWORK, SEE SPECIAL PROVISIONS.

FOR GROUT FOR STRUCTURES, SEE SPECIAL PROVISIONS.

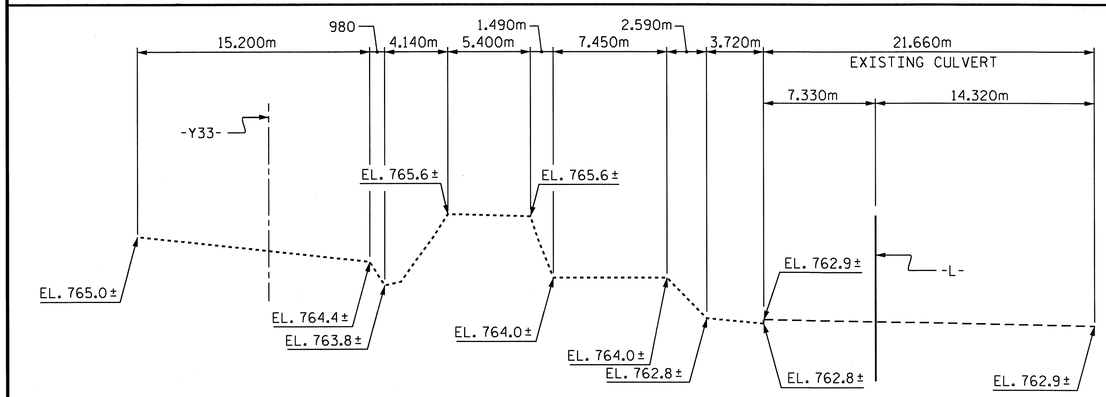

PROFILE ALONG ℄ CULVERT

TOTAL STRUCTURE QUANTITIES

CLASS A CONCRETE		REINFORCING STEEL	
STAGE I	54.0 m^3	STAGE I	5,828 kg
STAGE II	68.9 m^3	STAGE II	8,642 kg
SILLS	0.1 m^3	SILLS	4 kg
TOTAL	123.0 m^3	TOTAL	14474 kg

FOUNDATION COND. MAT'L	111 METRIC TONS
CULVERT EXCAVATION	LUMP SUM
CLASS B RIP RAP	40.4 METRIC TONS

METRIC

NORMAN WIBLETT BULLOCK JR. NORTH CAROLINA PROFESSIONAL SEAL 12929 ENGINEER — 3/3/11

A. KEITH PASCHAL NORTH CAROLINA PROFESSIONAL SEAL 22005 ENGINEER — 3/3/11

PROJECT NO. R-2519A

YANCEY COUNTY

STATION: 327+86.600 -L-

SHEET 1 OF 7

STATE OF NORTH CAROLINA
DEPARTMENT OF TRANSPORTATION
RALEIGH

SINGLE 3.600m x 2.100m CONCRETE BOX CULVERT (EXTENSION)

REVISIONS						SHEET NO.
NO.	BY:	DATE:	NO.	BY:	DATE:	C-94
1			3			TOTAL SHEETS
2			4			119

DRAWN BY : J. C. KHARVA DATE : 11-08-10
CHECKED BY : J. MYA DATE : 12-30-10

03-MAR-2011 07:58
R:\Structures\str11\Final Plans\R2519A_sd_CU_11.dgn
jdhawk

STR. #11

B.M. #211 : SPIKE IN BASE OF 30" WAHOO TREE 153.412m RT. OF STA. 325+63.790 -L-, EL. 765.045.

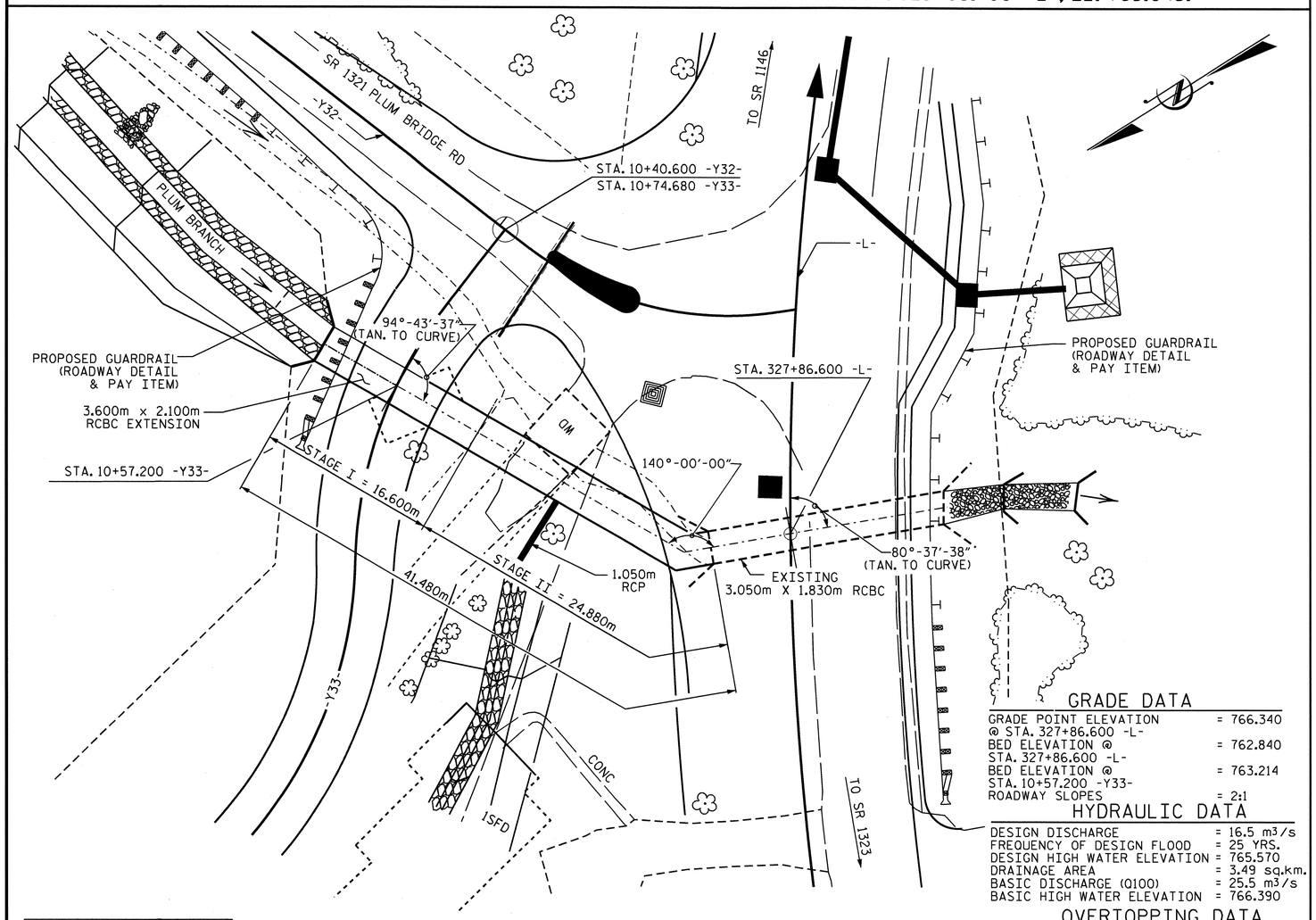

FOR UTILITY INFORMATION, SEE UTILITY PLANS AND SPECIAL PROVISIONS.

LOCATION SKETCH

GRADE DATA

GRADE POINT ELEVATION @ STA. 327+86.600 -L-	= 766.340
BED ELEVATION @ STA. 327+86.600 -L-	= 762.840
BED ELEVATION @ STA. 10+57.200 -Y33-	= 763.214
ROADWAY SLOPES	= 2:1

HYDRAULIC DATA

DESIGN DISCHARGE	= 16.5 m³/s
FREQUENCY OF DESIGN FLOOD	= 25 YRS.
DESIGN HIGH WATER ELEVATION	= 765.570
DRAINAGE AREA	= 3.49 sq.km.
BASIC DISCHARGE (Q100)	= 25.5 m³/s
BASIC HIGH WATER ELEVATION	= 766.390

OVERTOPPING DATA

OVERTOPPING DISCHARGE	= 25.5 m³/s
FREQUENCY OF OVERTOPPING FLOOD	= 100 YRS. ±
OVERTOPPING FLOOD	= 766.400

STRUCTURE QUANTITIES STAGE I

CLASS A CONCRETE		
BARREL @	2.776 m³/m	46.1 m³
WINGS ETC.		7.2 m³
CONCRETE SILLS		0.7 m³
TOTAL		54.0 m³
REINFORCING STEEL		
BARREL		5,557 kg
WINGS ETC.		263 kg
CONCRETE SILLS		8 kg
TOTAL		5,828 kg
FOUNDATION COND. MAT'L.		45 METRIC TONS
CULVERT EXCAVATION		LUMP SUM
CLASS B RIP RAP		11.8 METRIC TONS

STRUCTURE QUANTITIES STAGE II

CLASS A CONCRETE	
BARREL	68.4 m³
CONCRETE SILLS	0.5 m³
TOTAL	68.9 m³
REINFORCING STEEL	
BARREL	8,636 kg.
CONCRETE SILLS	6 kg.
TOTAL	8,642 kg.
FOUNDATION COND. MAT'L.	68 METRIC TONS
CULVERT EXCAVATION	LUMP SUM
CLASS B RIP RAP	17.7 METRIC TONS

EXISTING CULVERT

CLASS A CONCRETE	
CONCRETE SILLS	0.1 m³
TOTAL	0.1 m³
REINFORCING STEEL	
CONCRETE SILLS	4 kg.
TOTAL	4 kg.
CLASS B RIP RAP	10.9 METRIC TONS

NOTES

ASSUMED LIVE LOAD = MS18 OR ALTERNATE LOADING.

ALL DIMENSIONS ARE IN MILLIMETERS UNLESS OTHERWISE NOTED.

ALL ELEVATIONS ARE IN METERS.

DESIGN FILL 2.170m.

FOR OTHER DESIGN DATA AND NOTES SEE STANDARD NOTE SHEET.

76mm Ø WEEP HOLES INDICATED TO BE IN ACCORDANCE WITH THE SPECIFICATIONS.

CONCRETE IN CULVERTS TO BE POURED IN THE FOLLOWING ORDER:

STAGE I AND STAGE II :

1. WING FOOTINGS AND FLOOR SLAB INCLUDING 100mm OF ALL VERTICAL WALLS.
2. THE REMAINING PORTIONS OF THE WALLS AND WINGS FULL HEIGHT FOLLOWED BY ROOF SLAB AND HEADWALLS.

THE RESIDENT ENGINEER SHALL CHECK THE LENGTH OF CULVERT BEFORE STAKING IT OUT TO MAKE CERTAIN THAT IT WILL PROPERLY TAKE CARE OF THE FILL.

DIMENSIONS FOR WING LAYOUT AS WELL AS ADDITIONAL REINFORCING STEEL EMBEDDED IN BARREL ARE SHOWN ON THE WING SHEET.

AT THE CONTRACTOR'S OPTION, HE MAY SPLICE THE VERTICAL REINFORCING STEEL IN THE INTERIOR FACE OF EXTERIOR WALL ABOVE LOWER WALL CONSTRUCTION JOINT. THE SPLICE LENGTH SHALL BE AS PROVIDED IN THE SPLICE LENGTH CHART SHOWN ON THE PLANS. EXTRA WEIGHT OF STEEL DUE TO THE SPLICES SHALL BE PAID FOR BY THE CONTRACTOR.

TRANSVERSE CONSTRUCTION JOINTS SHALL BE USED IN THE BARREL, SPACED TO LIMIT THE POURS TO A MAXIMUM OF 21.0m. LOCATION JOINTS SHALL BE SUBJECT TO APPROVAL OF THE ENGINEER.

IF APPROVED BY THE ENGINEER, THE CONTRACTOR MAY USE THE EXISTING WINGS AS TEMPORARY SHORING FOR THE CONSTRUCTION OF THE CULVERT EXTENSIONS. IN THIS CASE, THE BOTTOM SLAB OF THE EXTENSION SHALL BE POURED AT LEAST 72 HOURS PRIOR TO CUTTING. THE WINGS MAY BE CUT EARLIER PROVIDED THE SLAB CONCRETE STRENGTH HAS REACHED A MINIMUM COMPRESSIVE STRENGTH OF 10.3 MPa.

DOWELS SHALL BE USED TO CONNECT THE CULVERT EXTENSION TO THE EXISTING CULVERT AS SHOWN. FOR NOTE REGARDING SETTING OF DOWELS, SEE SHEET SNSM.

FOR CULVERT DIVERSION DETAILS AND PAY ITEM, SEE EROSION CONTROL PLANS.

A 900mm STRIP OF FILTER FABRIC SHALL BE ATTATCHED TO THE FILL FACE OF THE WING COVERING THE ENTIRE LENGTH OF THE EXPANSION JOINT.

NO PRECAST REINFORCED BOX CULVERT OPTION WILL BE ALLOWED.

FOR SUBMITTAL OF WORKING DRAWINGS, SEE SPECIAL PROVISIONS.

FOR CRANE SAFETY, SEE SPECIAL PROVISIONS.

FOR FALSEWORK AND FORMWORK, SEE SPECIAL PROVISIONS.

FOR GROUT FOR STRUCTURES, SEE SPECIAL PROVISIONS.

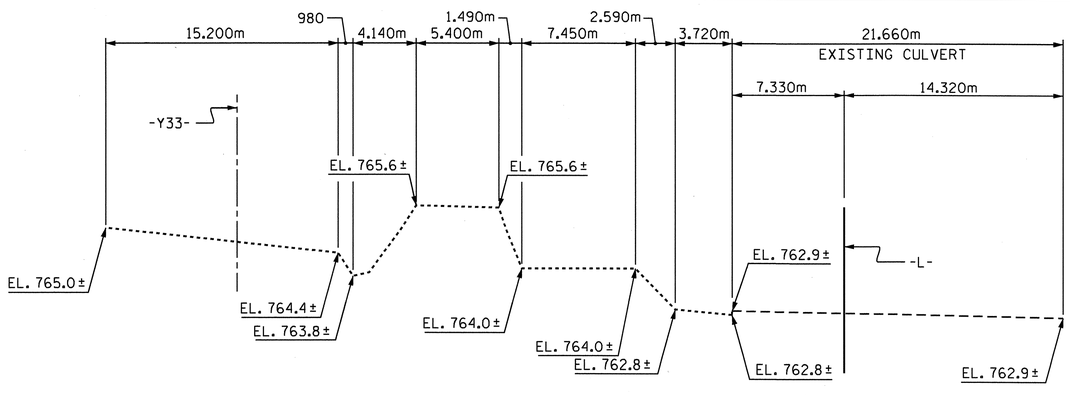

PROFILE ALONG ℄ CULVERT

TOTAL STRUCTURE QUANTITIES

CLASS A CONCRETE		REINFORCING STEEL	
STAGE I	54.0 m³	STAGE I	5,828 kg
STAGE II	68.9 m³	STAGE II	8,642 kg
SILLS	0.1 m³	SILLS	4 kg
TOTAL	130.0 m³	TOTAL	14474 kg

FOUNDATION COND. MAT'L	111 METRIC TONS
CULVERT EXCAVATION	LUMP SUM
CLASS B RIP RAP	40.4 METRIC TONS

METRIC

PROJECT NO. R-2519A

YANCEY COUNTY

STATION: 327+86.600 -L-

SHEET 1 OF 7

STATE OF NORTH CAROLINA
DEPARTMENT OF TRANSPORTATION
RALEIGH

SINGLE
3.600m x 2.100m
CONCRETE BOX CULVERT
(EXTENSION)

NORTH CAROLINA PROFESSIONAL SEAL 12929 ENGINEER NORMAN WELLES BULLOCK, JR. 3/2/11

NORTH CAROLINA PROFESSIONAL SEAL 22005 ENGINEER A. KEITH PASCHAL 3/4/11

REVISIONS						SHEET NO.
NO.	BY:	DATE:	NO.	BY:	DATE:	C-94
1			3			TOTAL SHEETS
2			4			119

DRAWN BY : J. G. KHARVA DATE : 11-08-10
CHECKED BY : J. MYA DATE : 12-30-10

02-MAR-2011 12:35
R:\Structures\str11\FinalPlans\R2519A_sd_CU_11.dgn
jdhawk

STR. #11

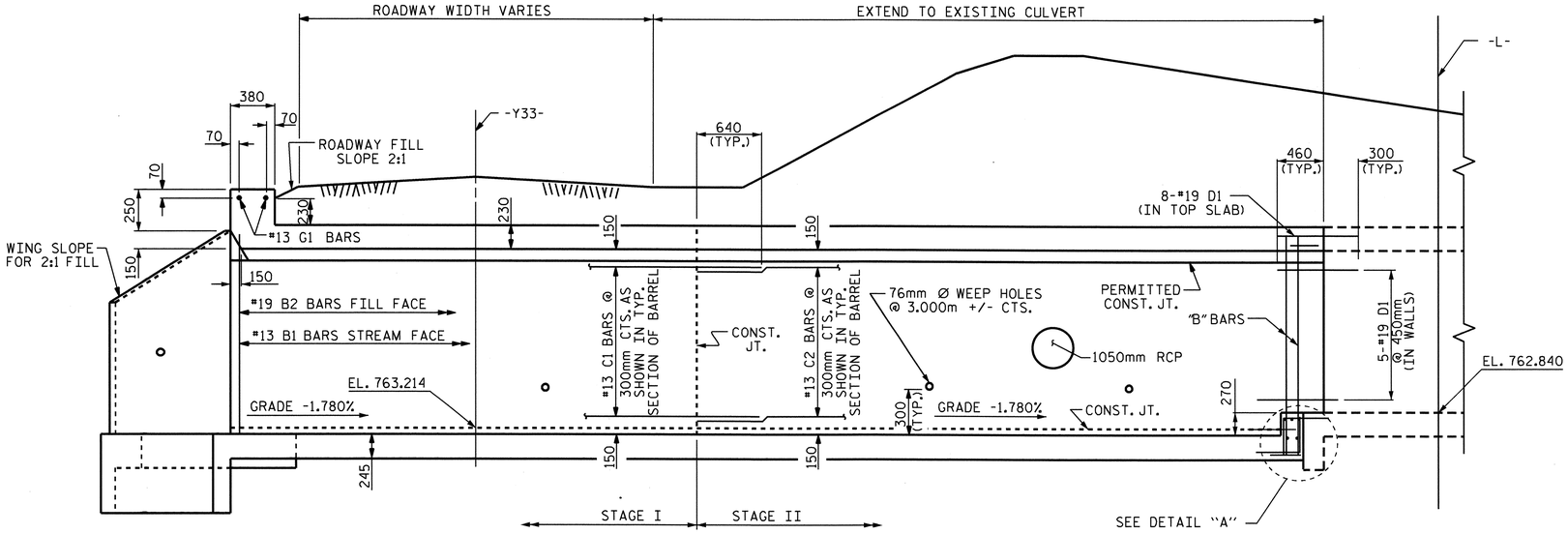

EXISTING CULVERT

CULVERT SECTION ALONG ℄ CULVERT

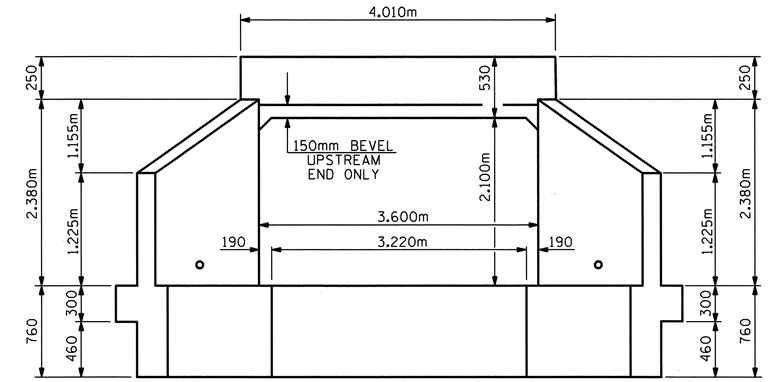

END ELEVATION NORMAL TO SKEW

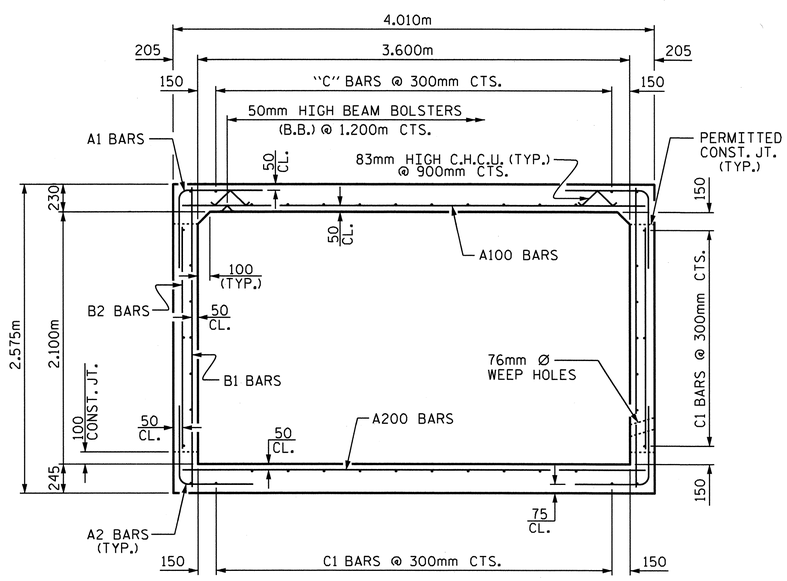

RIGHT ANGLE SECTION OF BARREL

3.600 x 2.100 RCBC @ INLET
OF PROPOSED EXTENSION
(THERE ARE 44 C1 BARS IN SECTION OF BARREL)
(STAGE I)
(LOOKING DOWNSTREAM)

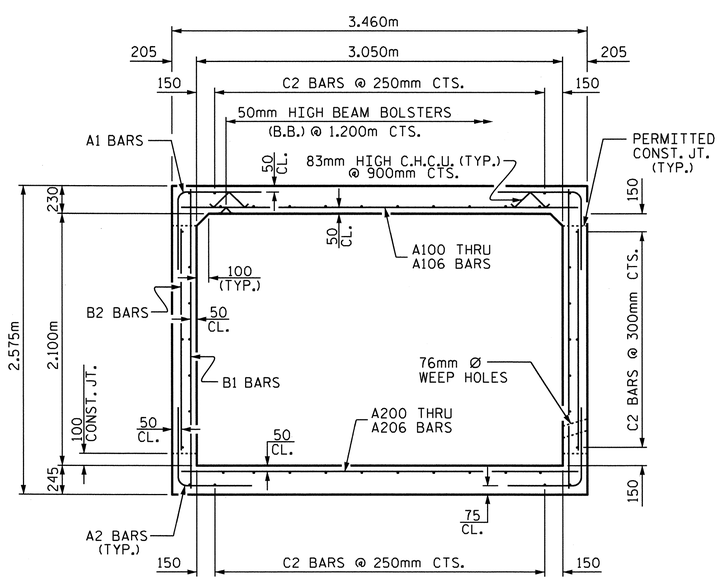

RIGHT ANGLE SECTION OF BARREL

3.050m x 2.100m RCBC @
OUTLET OF PROPOSED EXTENSION
(THERE ARE 44 "C" BARS IN SECTION OF BARREL
TO MATCH C1 BARS 44 IN 3.600m X 2.100m SECTION)
(LOOKING DOWNSTREAM)

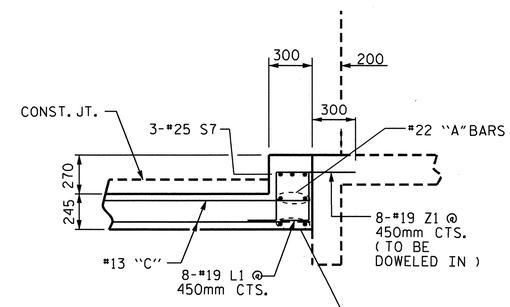

DETAIL "A"

PROJECT NO. R-2519A
YANCEY COUNTY
STATION: 327+86.600 -L-

SHEET 2 OF 7

STATE OF NORTH CAROLINA
DEPARTMENT OF TRANSPORTATION
RALEIGH

SINGLE 3.600m x 2.100m CONCRETE BOX CULVERT (EXTENSION)

NORTH CAROLINA PROFESSIONAL SEAL 22005 ENGINEER W. KEITH PASCHAL
2/28/11

REVISIONS						SHEET NO.
NO.	BY:	DATE:	NO.	BY:	DATE:	C-95
1			3			TOTAL SHEETS
2			4			119

DRAWN BY : J. G. KHARVA DATE : 11-08-10
CHECKED BY : J. MYA DATE : 12-09-10

28-FEB-2011 09:06
R:\Structures\str11\FinalPlans\R2519A_sd_CU_11.dgn
jdhawk

STR. #11 STD. No. CBI90sm

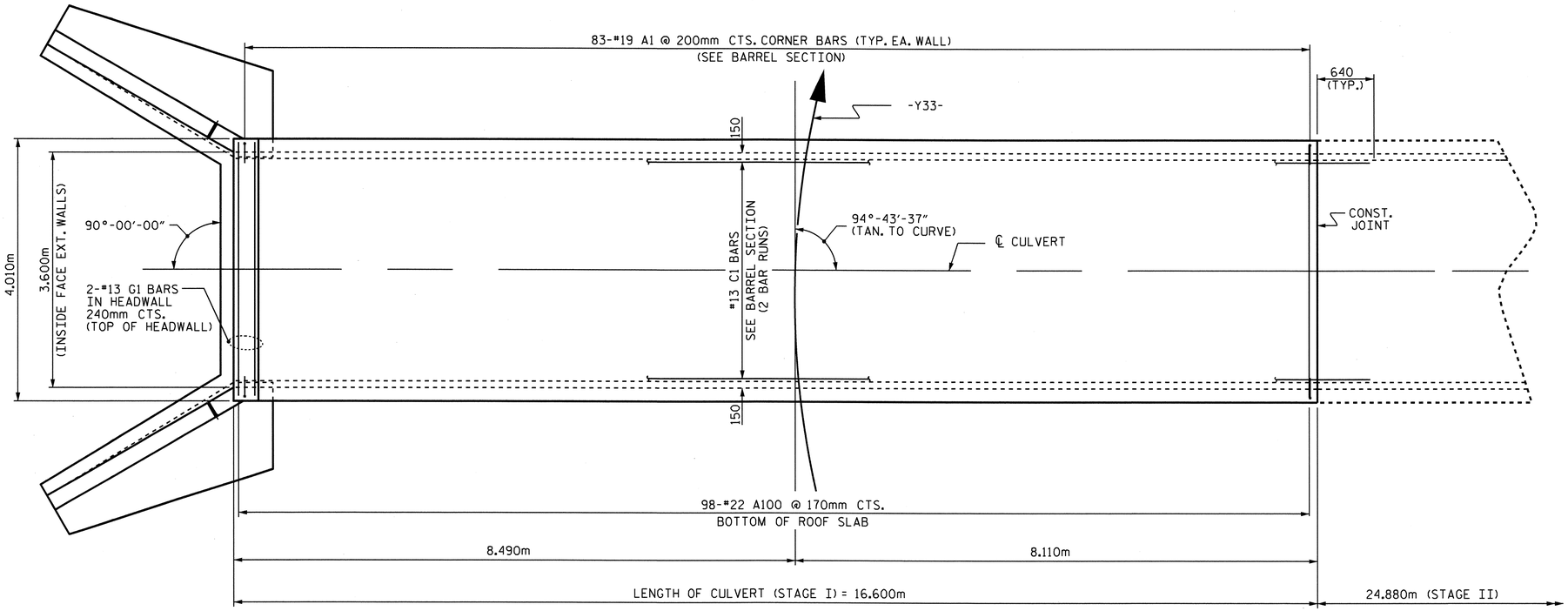

PLAN-ROOF SLAB

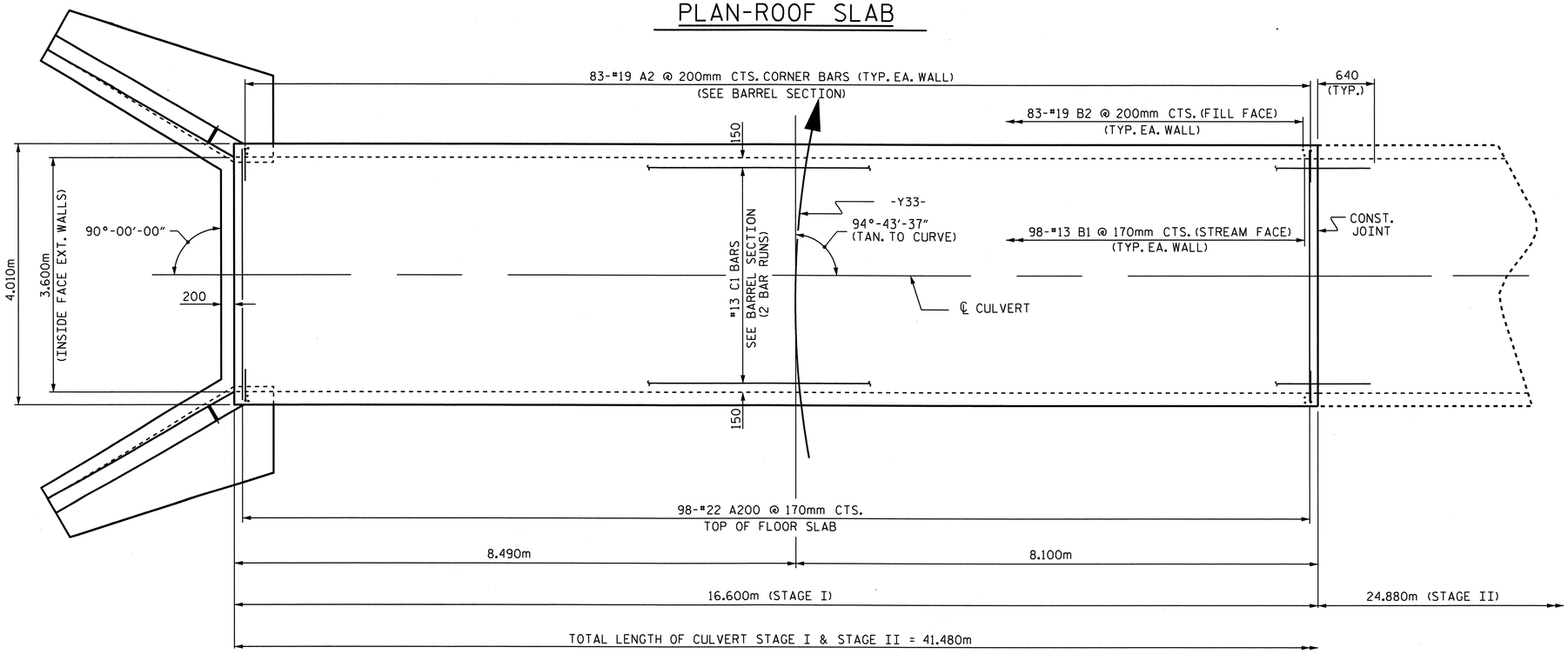

PLAN-FLOOR SLAB

BAR TYPE

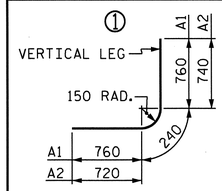

ALL BARS DIMENSIONS ARE OUT TO OUT

SPLICE LENGTH

BAR	SIZE	LENGTH
B1	#13	540
C1	#13	590

BAR SCHEDULE

STAGE I

BAR	NO.	SIZE	TYPE	LENGTH	WEIGHT
A1	166	#19	1	1760	653
A2	166	#19	1	1700	631
A100	98	#22	STR	3860	1151
A200	98	#22	STR	3860	1151
B1	196	#13	STR	2460	479
B2	166	#19	STR	1900	705
C1	88	#13	STR	8900	779
G1	2	#13	STR	3880	8

REINFORCING STEEL 5,557 kg.

CLASS A CONCRETE BARREL 46.1 C.Y.

PROJECT NO. R-2519A

YANCEY COUNTY

STATION: 327+86.600 -L-

SHEET 3 OF 7

STATE OF NORTH CAROLINA
DEPARTMENT OF TRANSPORTATION
RALEIGH

SINGLE 3.600m x 2.100m CONCRETE BOX CULVERT (STAGE I)

NORTH CAROLINA PROFESSIONAL SEAL 12005 ENGINEER A. KEITH PASCHAL

2/28/11

REVISIONS						SHEET NO.
NO.	BY:	DATE:	NO.	BY:	DATE:	C-96
1			3			TOTAL SHEETS
2			4			119

DRAWN BY : J. G. KHARVA DATE : 11-09-10
CHECKED BY : J. MYA DATE : 12-30-10

28-FEB-2011 09:06
R:\Structures\str11\Final Plans\R2519A_sd_CU_11.dgn
jdhawk

STR. #11

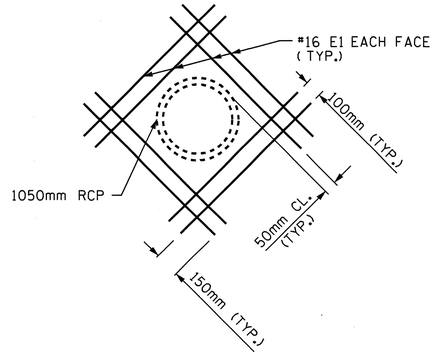

PIPE THRU SIDEWALL DETAIL

THE 1050mm PIPE THROUGH THE SIDEWALL OF THE CULVERT WILL BE LOCATED BY THE ENGINEER. THE REINFORCING STEEL WILL BE CUT OR FIELD BENT AS NECESSARY TO CLEAR PIPE.

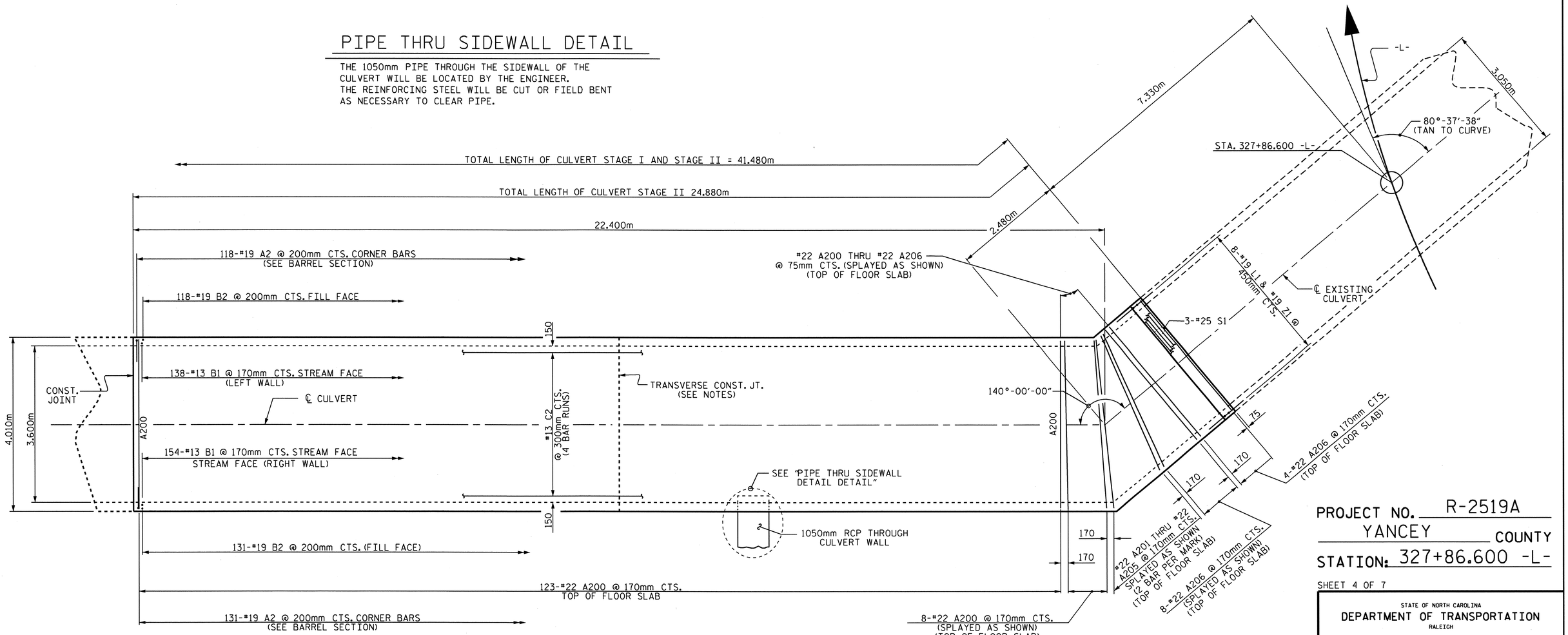

PLAN-FLOOR SLAB

PROJECT NO. R-2519A

YANCEY COUNTY

STATION: 327+86.600 -L-

SHEET 4 OF 7

STATE OF NORTH CAROLINA
DEPARTMENT OF TRANSPORTATION
RALEIGH

SINGLE 3.600m x 2.100m CONCRETE BOX CULVERT

(STAGE II)

NORTH CAROLINA PROFESSIONAL SEAL 22005 ENGINEER K. KEITH PASCHAL

2/28/11

REVISIONS						SHEET NO.
NO.	BY:	DATE:	NO.	BY:	DATE:	C-97
1			3			TOTAL SHEETS
2			4			119

DRAWN BY : J. G. KHARVA DATE : 11-08-10
CHECKED BY : J MYA DATE : 12-30-10

28-FEB-2011 09:05
R:\Structures\str11\Final Plans\R2519A_sd_CU_11.dgn
jdhawk

STR. #11

BAR TYPE

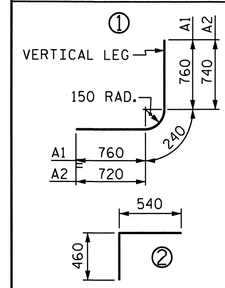

ALL BARS DIMENSIONS ARE OUT TO OUT.

SPLICE LENGTH

BAR	SIZE	LENGTH
B1	#13	540
C1	#13	590

BAR SCHEDULE
STAGE II

BAR	NO.	SIZE	TYPE	LENGTH	WEIGHT	BAR	NO.	SIZE	TYPE	LENGTH	WEIGHT
A1	249	#19	1	1760	979	B1	292	#13	STR	2460	714
A2	249	#19	1	1700	946	B2	249	#19	STR	1900	1057
A100	131	#22	STR	3900	1554	C2	176	#13	STR	6980	1221
A101	2	#22	STR	4000	24						
A102	2	#22	STR	3940	24	D1	18	#19	STR	760	31
A103	2	#22	STR	3760	23						
A104	2	#22	STR	3600	22	L1	8	#19	2	1000	18
A105	2	#22	STR	3480	21						
A106	12	#22	STR	3360	123	S1	3	#25	STR	3400	41
A200	131	#22	STR	3900	1554	E1	16	#16	STR	1880	47
A201	2	#22	STR	4000	24						
A202	2	#22	STR	3940	24						
A203	2	#22	STR	3760	23						
A204	2	#22	STR	3600	22						
A205	2	#22	STR	3480	21						
A206	12	#22	STR	3360	123						

REINFORCING STEEL	8636 kg.
CLASS A CONCRETE BARREL	68.4 C.Y.

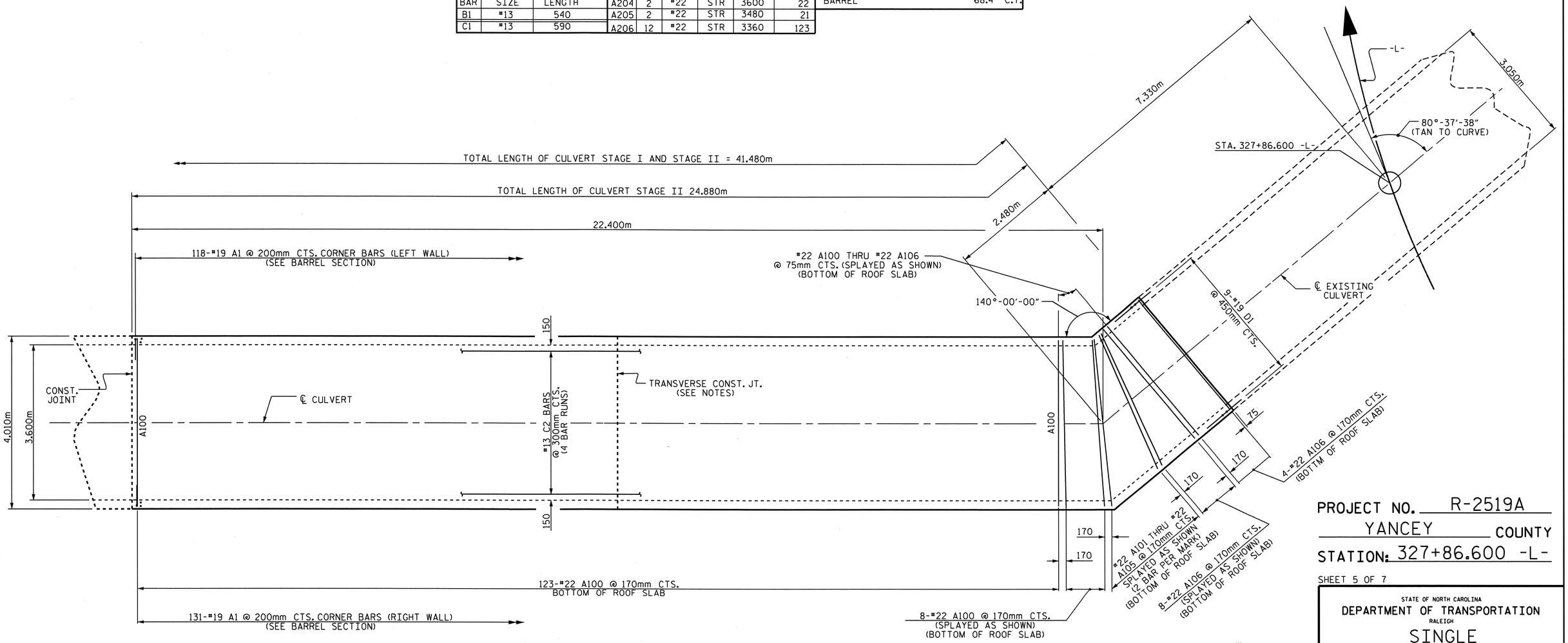

PLAN-ROOF SLAB

PROJECT NO. R-2519A
YANCEY COUNTY
STATION: 327+86.600 -L-

SHEET 5 OF 7

STATE OF NORTH CAROLINA
DEPARTMENT OF TRANSPORTATION
RALEIGH

SINGLE 3.600m x 2.100m CONCRETE BOX CULVERT
(STAGE II)

NORTH CAROLINA PROFESSIONAL SEAL 22005 ENGINEER A. KEITH PASCHAL
2/28/11

REVISIONS							SHEET NO.
NO.	BY:	DATE:	NO.	BY:	DATE:		C-98
1			3				TOTAL SHEETS
2			4				119

DRAWN BY : J. G. KHARVA DATE : 11-08-10
CHECKED BY : J MYA DATE : 12-30-10

28-FEB-2011 09:05
R:\Structures\str11\Final Plans\R2519A_sd_CU_11.dgn
jdhawk

NOTES

BED MATERIAL PLACED BETWEEN SILLS IN THE CULVERT SHALL PROVIDE A CONTINUOUS LOW FLOW CHANNEL BETWEEN THE LOWER SILLS. THE MATERIAL SHALL BE NATURAL STONE WITH A GRADATION SIZE SIMILAR TO THAT OF CLASS B RIPRAP. STONES LARGER THAN 0.15 METERS SHALL NOT BE PLACED WITHIN THE LOW FLOW CHANNEL. BED MATERIAL IS SUBJECT TO APPROVAL BY THE ENGINEER.

SILLS ARE TO BE 0.3m WIDE AND CAST SEPARATELY AND ATTACHED BY DOWELS.

THE 0.3m HIGH AND 0.15m HIGH SILLS ARE TO BE SEPARATE UNITS.

TOP OF LOW FLOW SILL SHOULD MATCH STREAM BED ELEVATION IN LOW FLOW CHANNEL OF STREAM.

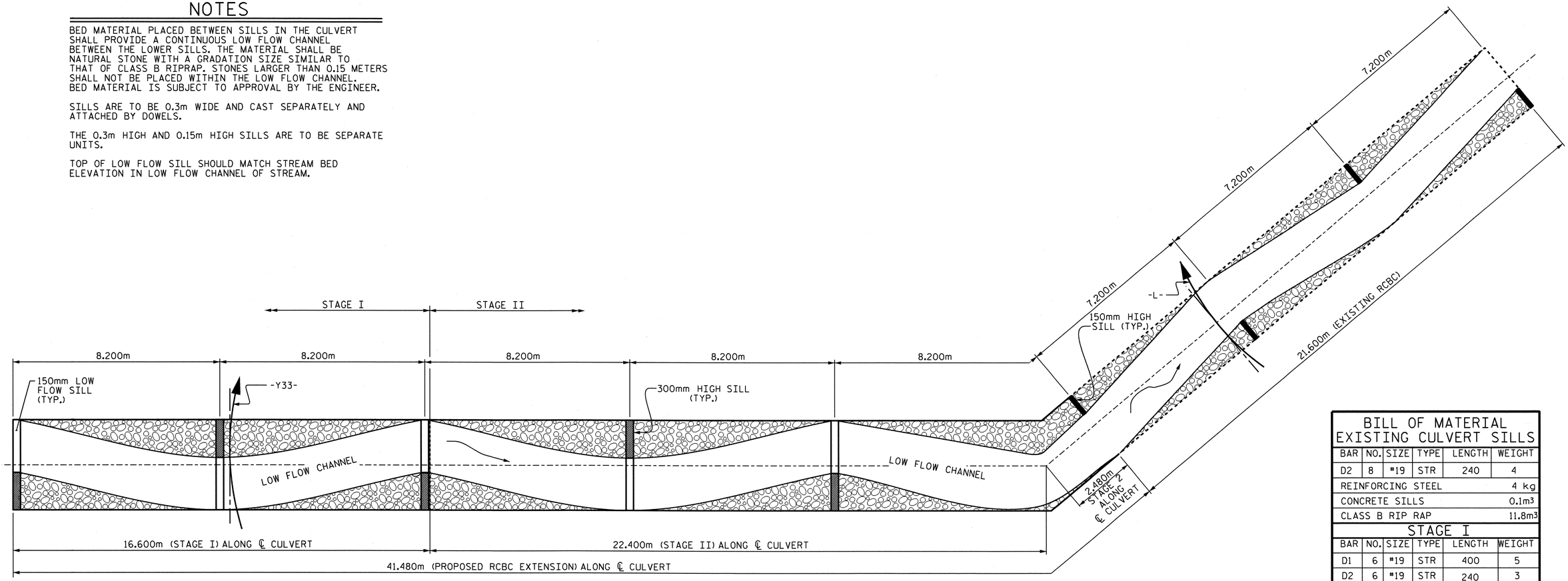

PLAN

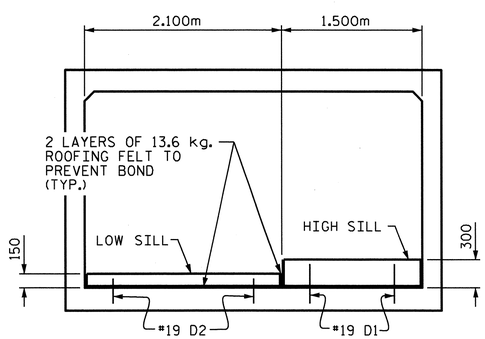

DETAIL OF SILLS WITHIN INLET ELEVATION

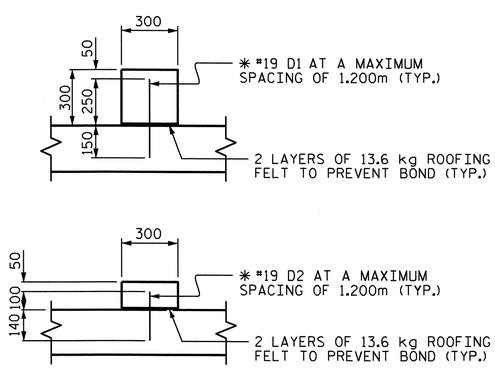

* DOWELS MAY BE PUSHED INTO GREEN CONCRETE AFTER SLAB HAS BEEN FLOAT FINISHED IN PROPOSED CULVERT EXTENSION ONLY.

SECTION THROUGH SILLS

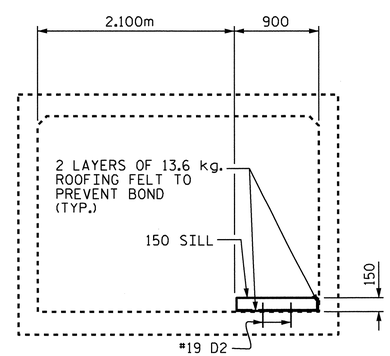

DETAIL OF SILLS WITHIN EXISTING RCBC ELEVATION

* DOWELS TO BE DRILLED AND GROUTED IN EXISTING RCBC

CULVERT SILL DETAILS

BILL OF MATERIAL EXISTING CULVERT SILLS

BAR	NO.	SIZE	TYPE	LENGTH	WEIGHT
D2	8	#19	STR	240	4
REINFORCING STEEL					4 kg
CONCRETE SILLS					0.1m3
CLASS B RIP RAP					11.8m3
STAGE I					
BAR	NO.	SIZE	TYPE	LENGTH	WEIGHT
D1	6	#19	STR	400	5
D2	6	#19	STR	240	3
REINFORCING STEEL					8 kg
CONCRETE SILLS					0.7m3
CLASS B RIP RAP					17.7m3
STAGE II					
BAR	NO.	SIZE	TYPE	LENGTH	WEIGHT
D1	4	#19	STR	400	4
D2	4	#19	STR	240	2
REINFORCING STEEL					6 kg
CONCRETE SILLS					0.5m3
CLASS B RIP RAP					10.9m3

PROJECT NO. R-2519A
YANCEY COUNTY
STATION: 327+86.600 -L-

SHEET 6 OF 7

STATE OF NORTH CAROLINA
DEPARTMENT OF TRANSPORTATION
RALEIGH

SINGLE
3.600m x 2.100m
CONCRETE BOX CULVERT
EXTENSION

NORTH CAROLINA PROFESSIONAL SEAL 22005 ENGINEER J. KEITH PASCHAL
3/1/11

REVISIONS						SHEET NO.
NO.	BY:	DATE:	NO.	BY:	DATE:	C-99
1			3			TOTAL SHEETS
2			4			119

STR. #11

DRAWN BY : J. G. KHARVA DATE : 11-12-10
CHECKED BY : J. MYA DATE : 12-30-10

01-MAR-2011 08:53
R:\Structures\str11\FinalPlans\R2519A_sd_CU_11.dgn
jdhawk

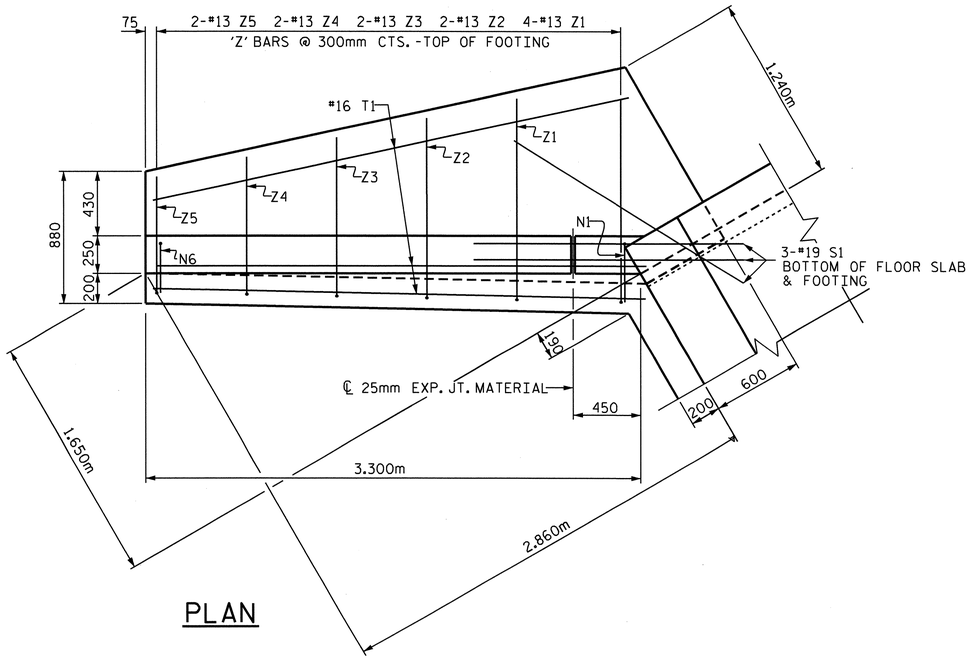

PLAN

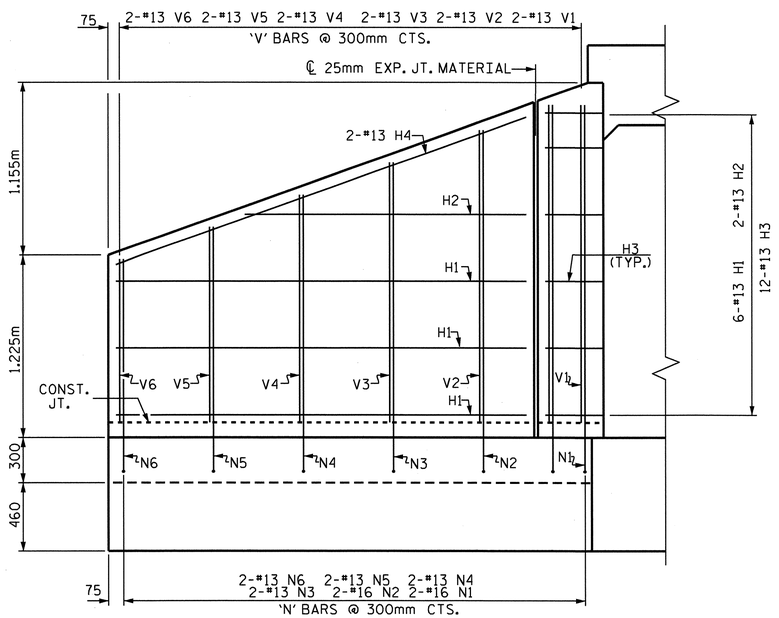

ELEVATION

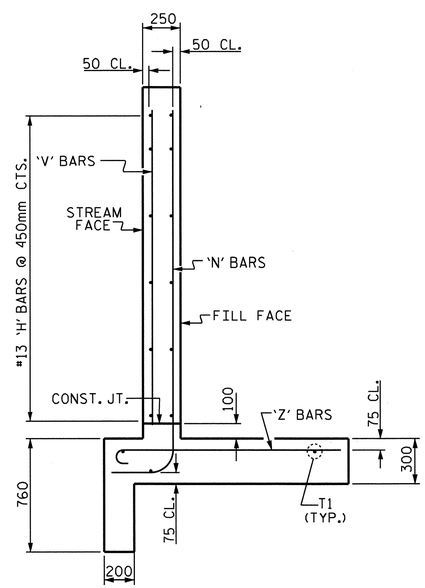

TYPICAL WING SECTION

BAR TYPES

ALL BAR DIMENSIONS ARE OUT TO OUT.

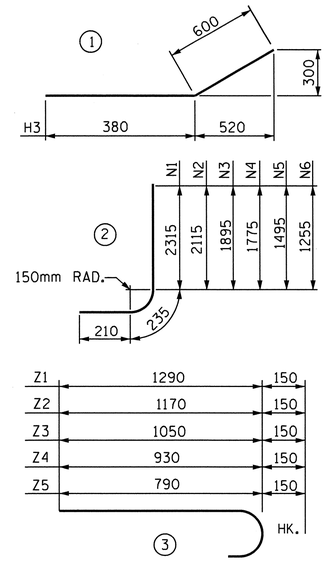

BILL OF MATERIAL

BAR	NO.	SIZE	TYPE	LENGTH	WEIGHT
H1	12	13	STR	2740	33
H2	4	13	STR	1880	7
H3	24	13	1	980	23
H4	4	13	STR	2900	12
N1	4	16	2	2760	17
N2	4	16	2	2560	16
N3	4	13	2	2340	9
N4	4	13	2	2160	9
N5	4	13	2	1940	8
N6	4	13	2	1700	7
S1	6	19	STR	1800	24
T1	6	16	STR	3300	31
V1	4	13	STR	2120	8
V2	4	13	STR	1960	8
V3	4	13	STR	1740	7
V4	4	13	STR	1520	6
V5	4	13	STR	1320	5
V6	4	13	STR	1100	4
Z1	8	13	3	1440	11
Z2	4	13	3	1320	5
Z3	4	13	3	1200	5
Z4	4	13	3	1080	4
Z5	4	13	3	940	4

REINFORCING STEEL
FOR 2 WINGS 263 kg

CLASS A CONCRETE

2 WINGS	6.2	m^3
1 HEADWALL	0.5	m^3
1 END CURTAIN WALL	0.5	m^3
TOTAL	7.2	m^3

PROJECT NO. R-2519A
YANCEY COUNTY
STATION: 327+86.600 -L-

SHEET 7 OF 7

STATE OF NORTH CAROLINA
DEPARTMENT OF TRANSPORTATION
RALEIGH

STANDARD WINGS
FOR
CONCRETE BOX CULVERT
H = 2.100m SLOPE = 2 : 1
90° SKEW

NORTH CAROLINA PROFESSIONAL SEAL 22005 ENGINEER A. KEITH PASCHAL
2/28/11

REVISIONS						SHEET NO.
NO.	BY:	DATE:	NO.	BY:	DATE:	C-100
1			3			TOTAL SHEETS
2			4			119

ASSEMBLED BY : J. G. KHARVA DATE : 11-10-10
CHECKED BY : J. MYA DATE : 12-23-10

DRAWN BY : FPP 06/97
CHECKED BY : VAP 06/97

28-FEB-2011 09:05
R:\Structures\str11\Final Plans\R2519A_sd_CU_11.dgn
jdhawk

STR. #11

STD. NO. CW9021

BM #12: SPIKE SET IN 35" SYCAMORE TREE
49.114m RT. STA. 11+01.00 -Y34- EL. 758.772

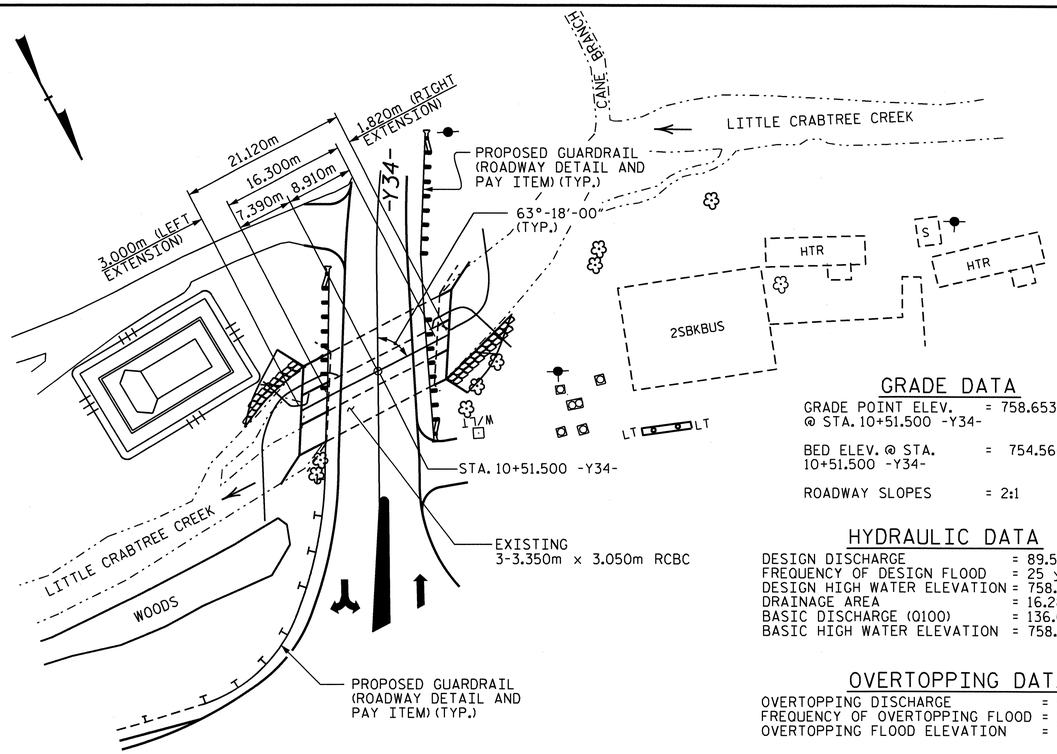

NOTE: FOR UTILITY INFORMATION, SEE UTILITY PLANS AND SPECIAL PROVISIONS.

LOCATION SKETCH

GRADE DATA

GRADE POINT ELEV. @ STA. 10+51.500 -Y34- = 758.653m

BED ELEV. @ STA. 10+51.500 -Y34- = 754.560m

ROADWAY SLOPES = 2:1

HYDRAULIC DATA

DESIGN DISCHARGE	= 89.5m³/s
FREQUENCY OF DESIGN FLOOD	= 25 yrs.
DESIGN HIGH WATER ELEVATION	= 758.100m
DRAINAGE AREA	= 16.28 sq.mi.
BASIC DISCHARGE (Q100)	= 136.0m³/s
BASIC HIGH WATER ELEVATION	= 758.720m

OVERTOPPING DATA

OVERTOPPING DISCHARGE	= 83.0m³/s
FREQUENCY OF OVERTOPPING FLOOD	= 10 yrs. +
OVERTOPPING FLOOD ELEVATION	= 757.960m

TOTAL STRUCTURE QUANTITIES

CLASS A CONCRETE	74.6 m3
REINFORCING STEEL	8521 kg
FOUNDATION COND. MAT'L.	36 METRIC TONS
CULVERT EXCAVATION	LUMP SUM

TOTAL QUANTITIES LEFT EXTENSION

CLASS A CONCRETE - STAGE I	
BARREL	11.8 m³
WINGS ETC.	9.4 m³
TOTAL	21.2 m³
FOUNDATION COND. MAT'L.	16 METRIC TONS
CLASS A CONCRETE - STAGE II	
BARREL	14.8 m³
WINGS ETC.	6.5 m³
TOTAL	21.3 m³
FOUNDATION COND. MAT'L.	7 METRIC TONS
REINFORCING STEEL - STAGE I	
BARREL	1858 kg
WINGS ETC.	398 kg
TOTAL	2256 kg
REINFORCING STEEL - STAGE II	
BARREL	2348 kg
WINGS ETC.	244 kg
TOTAL	2592 kg
CULVERT EXCAVATION	LUMP SUM

TOTAL QUANTITIES RIGHT EXTENSION

CLASS A CONCRETE - STAGE I	
BARREL	7.2 m³
WINGS ETC.	5.8 m³
TOTAL	13.0 m³
FOUNDATION COND. MAT'L.	9 METRIC TONS
CLASS A CONCRETE - STAGE II	
BARREL	9.0 m³
WINGS ETC.	10.1 m³
TOTAL	19.1 m³
FOUNDATION COND. MAT'L.	4 METRIC TONS
REINFORCING STEEL - STAGE I	
BARREL	1262 kg
WINGS ETC.	244 kg
TOTAL	1506 kg
REINFORCING STEEL - STAGE II	
BARREL	1769 kg
WINGS ETC.	398 kg
TOTAL	2167 kg
CULVERT EXCAVATION	LUMP SUM

NOTES

ASSUMED LIVE LOAD ----------MS18 OR ALTERNATE LOADING.

DESIGN FILL 1.230m.

FOR OTHER DESIGN DATA AND NOTES SEE STANDARD NOTE SHEET.

76mm Ø WEEP HOLES INDICATED TO BE IN ACCORDANCE WITH THE SPECIFICATIONS.

CONCRETE IN CULVERTS TO BE POURED IN THE FOLLOWING ORDER :

(STAGE I)

1. WING FOOTINGS AND FLOOR SLAB INCLUDING 4" OF ALL VERTICAL WALLS.
2. THE REMAINING PORTIONS OF THE WALLS AND WING FULL HEIGHT.

(STAGE II)

1. WING FOOTINGS AND FLOOR SLAB INCLUDING 4" OF ALL VERTICAL WALLS.
2. THE REMAINING PORTIONS OF THE WALLS AND WING FULL HEIGHT,
3. THE ENTIRE ROOF SLAB AND HEADWALL.

THE RESIDENT ENGINEER SHALL CHECK THE LENGTH OF CULVERT BEFORE STAKING IT OUT TO MAKE CERTAIN THAT IT WILL PROPERLY TAKE CARE OF THE FILL.

DIMENSIONS FOR WING LAYOUT AS WELL AS ADDITIONAL REINFORCING STEEL EMBEDDED IN BARREL ARE SHOWN ON THE WING SHEET.

AT THE CONTRACTORS'S OPTION, HE MAY SPLICE THE VERTICAL REINFORCING STEEL IN THE INTERIOR FACE OF EXTERIOR WALL AND BOTH FACES OF INTERIOR WALLS ABOVE LOWER WALL CONSTRUCTION JOINT. THE SPLICE LENGTH SHALL BE PROVIDED IN THE SPLICE LENGTH CHART SHOWN ON THE PLANS. EXTRA WEIGHT OF STEEL DUE TO THE SPLICES SHALL BE PAID FOR BY THE CONTRACTOR.

DOWELS SHALL BE USED TO CONNECT THE CULVERT EXTENSION TO THE EXISTING CULVERT AS SHOWN. FOR NOTE REGARDING SETTING OF DOWELS, SEE SHEET SNSM.

ALL DIMENSIONS ARE IN MILLIMETERS UNLESS OTHERWISE NOTED.

ALL ELEVATIONS ARE IN METERS.

FOR CULVERT DIVERSION DETAILS AND PAY ITEM, SEE EROSION CONTROL PLANS.

A 900mm STRIP OF FILTER FABRIC SHALL BE ATTACHED TO THE FILL FACE OF THE WING COVERING THE ENTIRE LENGTH OF THE EXPANSION JOINT.

IF APPROVED BY THE ENGINEER, THE CONTRACTOR MAY USE THE EXISTING WINGS AS TEMPORARY SHORING FOR THE CONSTRUCTION OF THE CULVERT EXTENSIONS. IN THIS CASE, THE BOTTOM SLAB OF THE EXTENSION SHALL BE POURED AT LEAST 72 HOURS PRIOR TO CUTTING THE WINGS. THE WINGS MAY BE CUT EARLIER PROVIDED THE SLAB CONCRETE STRENGTH HAS REACHED A MINIMUM COMPRESSIVE STRENGTH OF 10.3 MPa.

FOR SUBMITTAL OF WORKING DRAWINGS, SEE SPECIAL PROVISIONS.

NO PRECAST REINFORCED BOX CULVERT OPTION WILL BE ALLOWED.

FOR FALSEWORK AND FORMWORK, SEE SPECIAL PROVISIONS.

FOR CRANE SAFETY, SEE SPECIAL PROVISIONS.

FOR GROUT FOR STRUCTURES, SEE SPECIAL PROVISIONS.

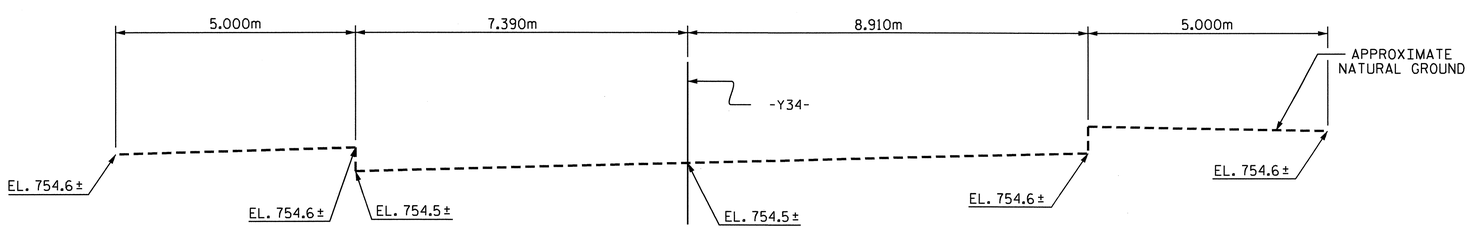

PROFILE ALONG ℄ CULVERT

ASSEMBLED BY :	J.D. HAWK	DATE :	7/01/10
CHECKED BY :	J. MYA	DATE :	7/03/10
DRAWN BY :	EEM 6/97		
CHECKED BY :	ARB 7/97		

28-FEB-2011 12:34
R:\Structures\str12\Final Plans\R2519A_sd_CU_12.dgn
jdhawk

METRIC

PROJECT NO. R-2519A
10+51.500 -Y34- COUNTY
STATION: YANCEY

SHEET 1 OF 8 CULVERT NO. C-294

STATE OF NORTH CAROLINA
DEPARTMENT OF TRANSPORTATION
RALEIGH

TRIPLE 3.350m X 3.050m
CONCRETE BOX CULVERT
60° END SKEW

NORTH CAROLINA PROFESSIONAL SEAL 12929 ENGINEER NORMAN ALBERT BURGESS, JR. 3/1/11

NORTH CAROLINA PROFESSIONAL SEAL 22005 ENGINEER K. KEITH PASCHAL 2/28/11

REVISIONS						
NO.	BY:	DATE:	NO.	BY:	DATE:	
1			3			
2			4			

SHEET NO. C-101
TOTAL SHEETS 119

STD. No. CB360SM

STR. 12

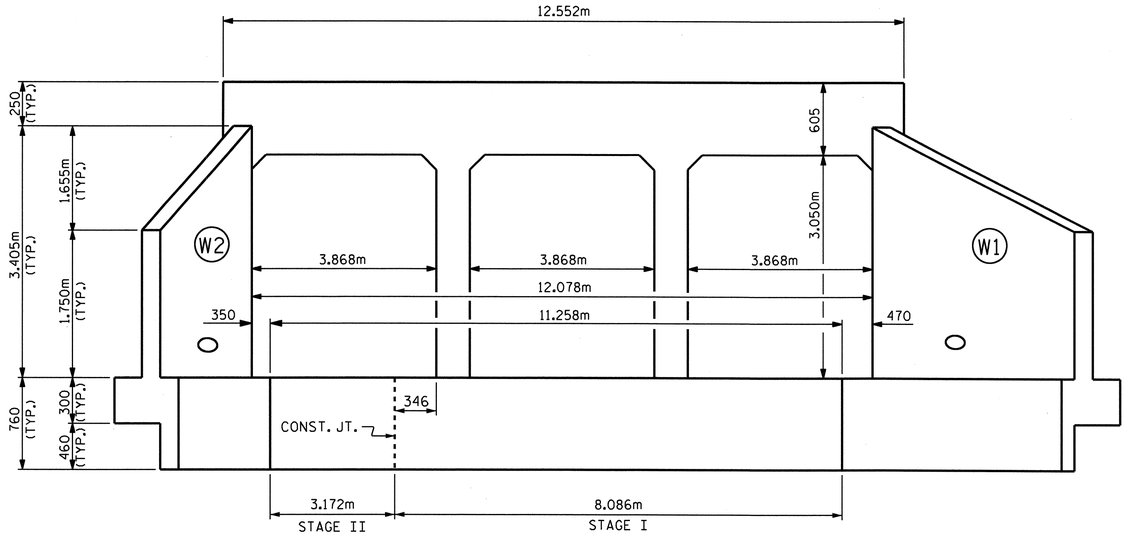

END ELEVATION - OUTLET

(LEFT EXTENSION)

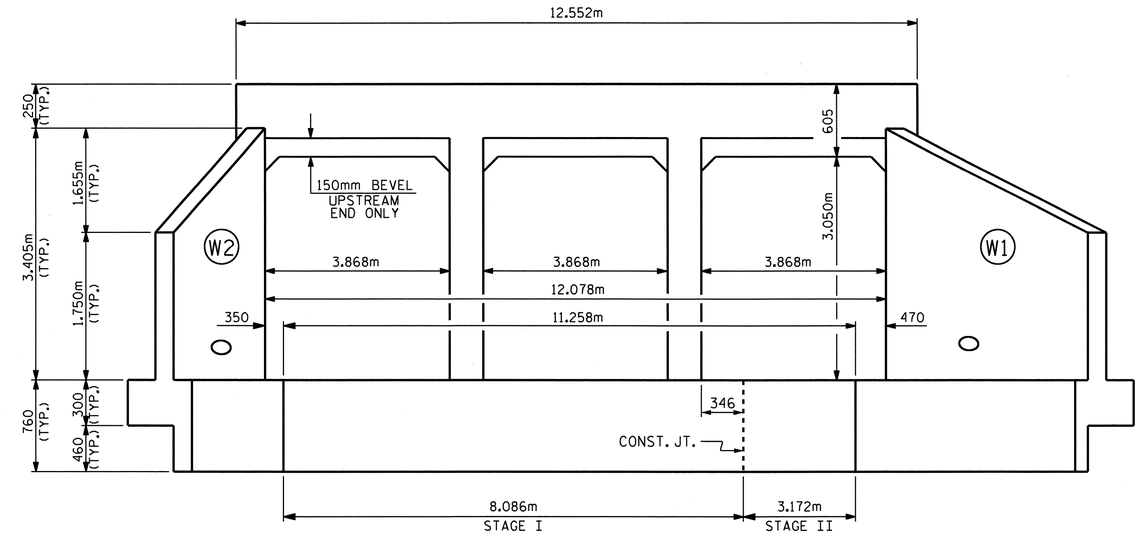

END ELEVATION - INLET

(RIGHT EXTENSION)

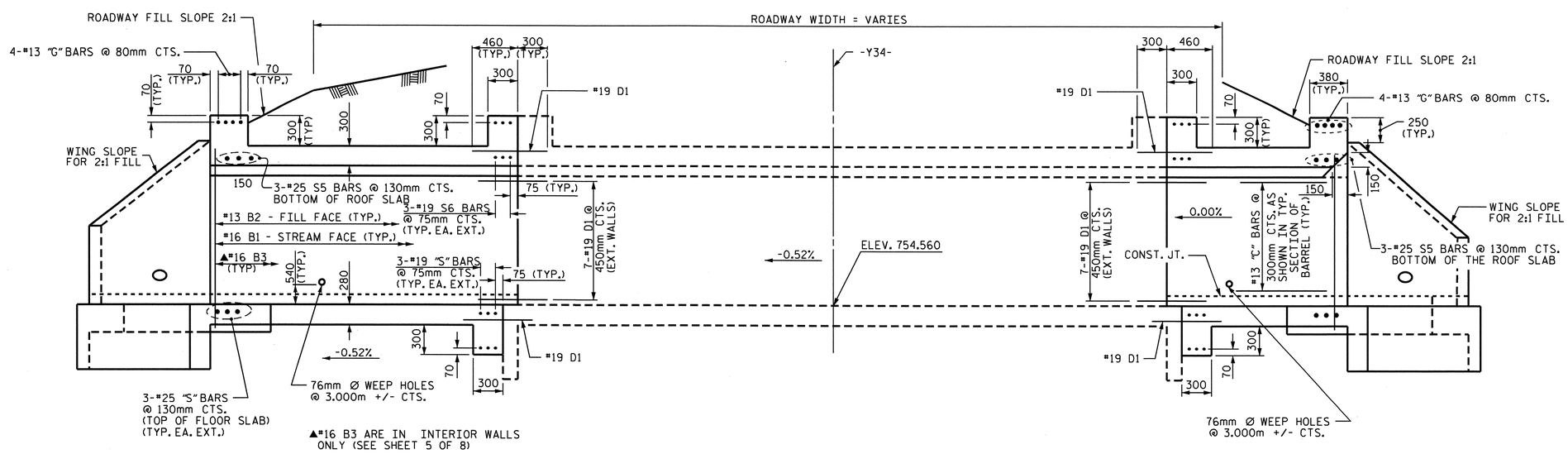

PROPOSED EXTENSION

(LEFT EXTENSION)

FOR #13 C1 BARS, SEE "RIGHT ANGLE SECTION OF BARREL" SHEET 5 OF 8.

EXISTING CULVERT

PROPOSED EXTENSION

(RIGHT EXTENSION)

FOR #13 C1 BARS, SEE "RIGHT ANGLE SECTION OF BARREL" SHEET 5 OF 8.

CULVERT SECTION NORMAL TO ROADWAY

NORTH CAROLINA PROFESSIONAL SEAL 22905 ENGINEER N. KEITH PASCHAL

2/28/11

PROJECT NO. R-2519A

10+51.500 -Y34- COUNTY

STATION: YANCEY

SHEET 2 OF 8

STATE OF NORTH CAROLINA
DEPARTMENT OF TRANSPORTATION
RALEIGH

TRIPLE 3.350m X 3.050m CONCRETE BOX CULVERT

60° END SKEW

REVISIONS						SHEET NO.
NO.	BY:	DATE:	NO.	BY:	DATE:	C-102
1			3			TOTAL SHEETS
2			4			119

STD. No. CB360SM

STR. 12

ASSEMBLED BY : J.D. HAWK		DATE : 7/01/10
CHECKED BY : J. MYA		DATE : 7/03/10
DRAWN BY : EEM	6/97	
CHECKED BY : ARB	7/97	

28-FEB-2011 09:12
R:\Structures\str12\Final Plans\R2519A_sd_CU_12.dgn
jdhawk

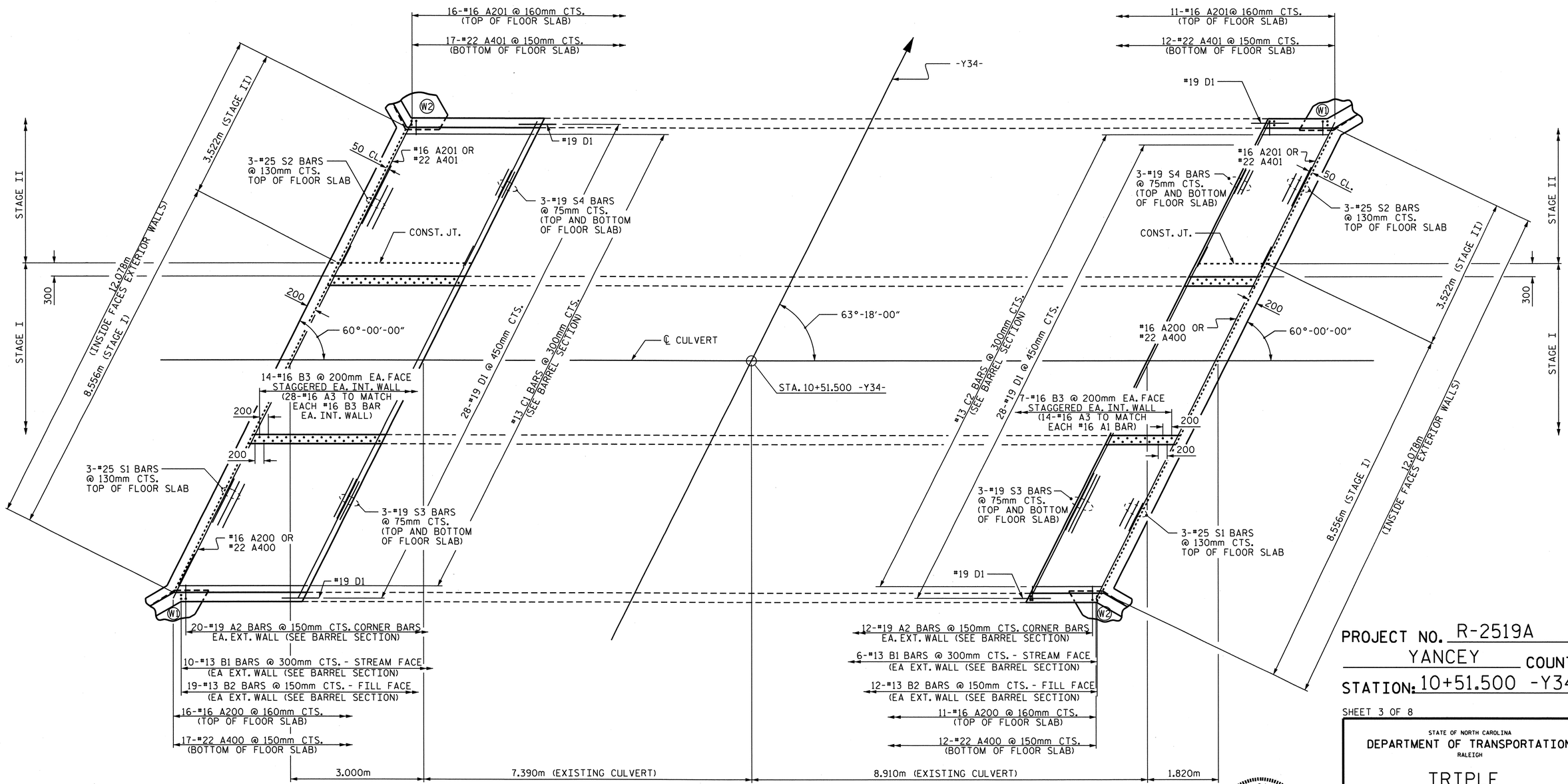

PLAN OF FLOOR SLAB

PROJECT NO. R-2519A
YANCEY COUNTY
STATION: 10+51.500 -Y34-

SHEET 3 OF 8

STATE OF NORTH CAROLINA
DEPARTMENT OF TRANSPORTATION
RALEIGH

TRIPLE
3.350m x 3.050m
CONCRETE BOX CULVERT

60° END SKEW

NORTH CAROLINA PROFESSIONAL SEAL 22005 ENGINEER J. KEITH PASCHAL
2/28/11

REVISIONS						SHEET NO.
NO.	BY:	DATE:	NO.	BY:	DATE:	C-103
1			3			TOTAL SHEETS
2			4			119

DRAWN BY : J.D. HAWK DATE : 7/01/10
CHECKED BY : J. MYA DATE : 7/03/10

28-FEB-2011 09:12
R:\Structures\str12\Final Plans\R2519A_sd_CU_12.dgn
jdhawk

STR. 12

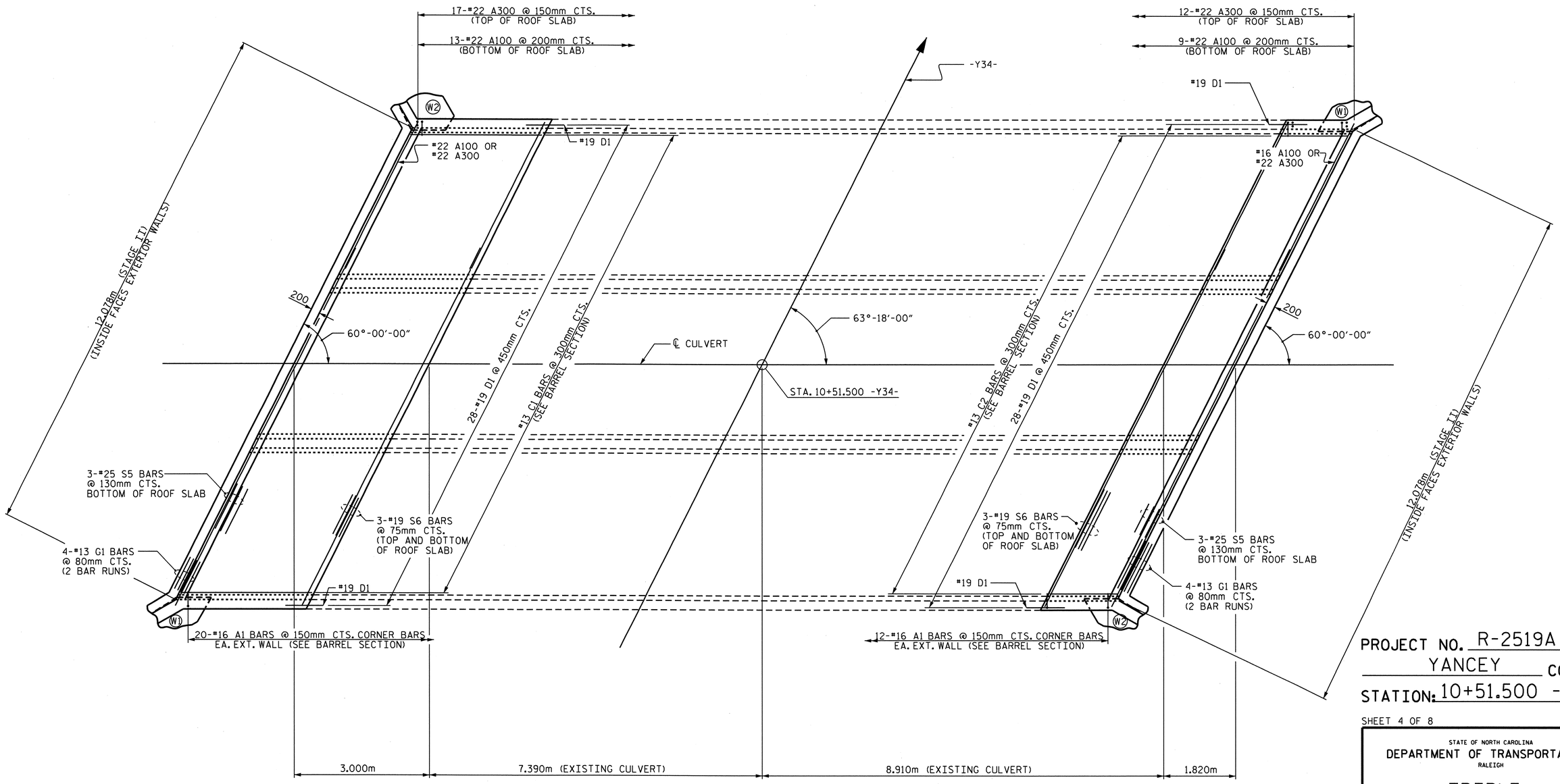

LEFT EXTENSION

RIGHT EXTENSION

PLAN OF ROOF SLAB

PROJECT NO. R-2519A

YANCEY COUNTY

STATION: 10+51.500 -Y34-

SHEET 4 OF 8

STATE OF NORTH CAROLINA
DEPARTMENT OF TRANSPORTATION
RALEIGH

TRIPLE
3.350m x 3.050m
CONCRETE BOX CULVERT

60° END SKEW

NORTH CAROLINA PROFESSIONAL SEAL 022005 ENGINEER W. KEITH PASCHAL

2/28/11

REVISIONS						SHEET NO.
NO.	BY:	DATE:	NO.	BY:	DATE:	C-104
1			3			TOTAL SHEETS
2			4			119

DRAWN BY : J.D. HAWK DATE : 7/01/10
CHECKED BY : J. MYA DATE : 7/03/10

28-FEB-2011 09:11
R:\Structures\str12\Final Plans\R2519A_sd_CU_12.dgn
jdhawk

BILL OF MATERIAL
LEFT EXTENSION-STAGE I

BAR	NO.	SIZE	TYPE	LENGTH	WEIGHT
A1	20	#16	6	1440	45
A2	20	#19	6	1740	78
A3	56	#16	6	1460	127
A200	16	#16	STR	9340	232
A400	17	#22	STR	9800	507
B1	10	#13	STR	3520	35
B2	19	#13	STR	2840	54
B3	56	#16	STR	3520	306
C1	63	#13	STR	2880	180
D1	27	#19	STR	760	46
S1	3	#25	STR	10100	120
S3	6	#19	STR	9560	128

REINFORCING STEEL 1858 kg.
CLASS A CONCRETE
BARREL 11.8 C.Y.

BILL OF MATERIAL
LEFT EXTENSION-STAGE II

BAR	NO.	SIZE	TYPE	LENGTH	WEIGHT
A1	20	#16	6	1440	46
A2	20	#19	6	1740	78
A100	13	#22	STR	12420	491
A201	16	#16	STR	3640	90
A300	17	#22	STR	12420	642
A401	17	#22	STR	3640	188
B1	10	#13	STR	3520	35
B2	19	#13	STR	2840	54
C1	71	#13	STR	2880	203
D1	43	#19	STR	760	73
G1	8	#13	STR	6520	52
S2	3	#25	STR	3640	43
S4	6	#19	STR	3640	49
S5	3	#25	STR	12420	148
S6	6	#19	STR	12420	167

REINFORCING STEEL 2348 kg.
CLASS A CONCRETE
BARREL 14.8 C.Y.

BILL OF MATERIAL
RIGHT EXTENSION-STAGE I

BAR	NO.	SIZE	TYPE	LENGTH	WEIGHT
A1	12	#16	6	1440	27
A2	12	#19	6	1740	47
A3	28	#16	6	1460	63
A200	11	#16	STR	9340	159
A400	12	#22	STR	9800	358
B1	6	#13	STR	3520	21
B2	12	#13	STR	2840	34
B3	28	#16	STR	3520	153
C2	63	#13	STR	1700	106
D1	27	#19	STR	760	46
S1	3	#25	STR	10100	120
S3	6	#19	STR	9560	128

REINFORCING STEEL 1262 kg.
CLASS A CONCRETE
BARREL 7.2 C.Y.

BILL OF MATERIAL
RIGHT EXTENSION-STAGE II

BAR	NO.	SIZE	TYPE	LENGTH	WEIGHT
A1	12	#16	6	1440	27
A2	12	#19	6	1740	47
A100	9	#22	STR	12420	340
A201	11	#16	STR	3640	62
A300	12	#22	STR	12420	453
A401	12	#22	STR	3640	133
B1	6	#13	STR	3520	21
B2	12	#13	STR	2840	34
C2	71	#13	STR	1700	120
D1	43	#19	STR	760	73
G1	8	#13	STR	6520	52
S2	3	#25	STR	3640	43
S4	6	#19	STR	3640	49
S5	3	#25	STR	12420	148
S6	6	#19	STR	12420	167

REINFORCING STEEL 1769 kg.
CLASS A CONCRETE
BARREL 9.0 C.Y.

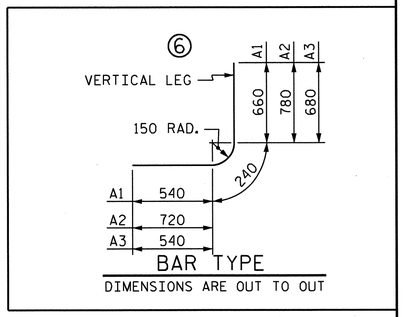

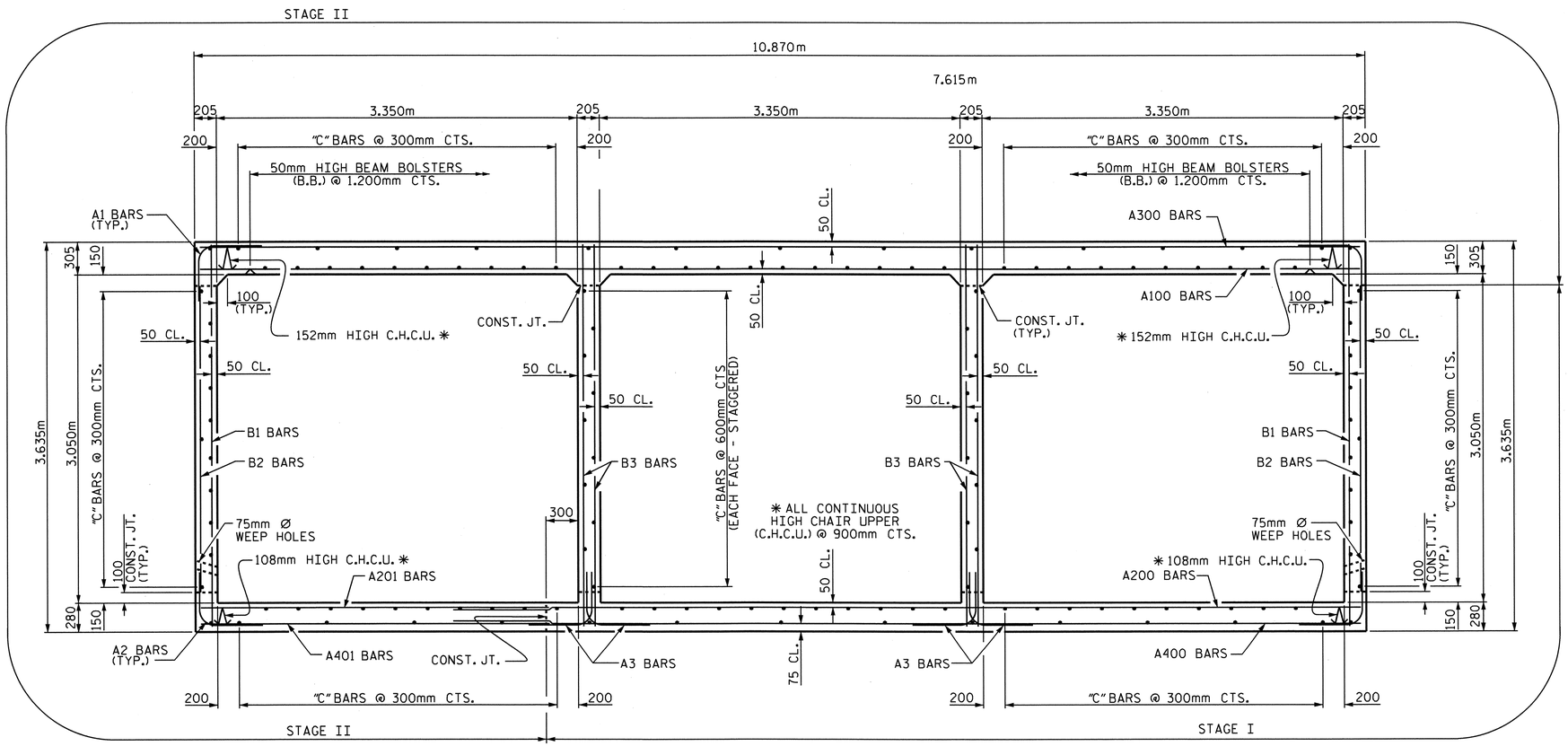

RIGHT ANGLE SECTION OF BARREL

THERE ARE 134 "C" BARS IN SECTION OF BARREL. (63 STAGE I, 71 STAGE II)
(LOOKING UPSTREAM)
(LEFT AND RIGHT EXTENSION)

SPLICE LENGTH CHART

BAR	SIZE	LENGTH
A200	#16	540
A400	#22	920
B1	#13	540
B3	#16	540
C1	#13	590
G1	#13	540
S1	#25	1220
S3	#19	690

PROJECT NO. R-2519A
YANCEY COUNTY
STATION: 10+51.500 -Y34-

SHEET 5 OF 8

STATE OF NORTH CAROLINA
DEPARTMENT OF TRANSPORTATION
RALEIGH

TRIPLE 3.350m X 3.050m
CONCRETE BOX CULVERT
60° END SKEW

NORTH CAROLINA PROFESSIONAL SEAL 22005 ENGINEER AKKITH PASCHAL
2/28/11

REVISIONS						
NO.	BY:	DATE:	NO.	BY:	DATE:	
1			3			
2			4			

SHEET NO. C-105
TOTAL SHEETS 119

DRAWN BY : J.D. HAWK DATE : 7/01/10
CHECKED BY : J. MYA DATE : 7/03/10

28-FEB-2011 09:11
R:\Structures\str12\Final Plans\R2519A_sd_CU_12.dgn
jdhawk

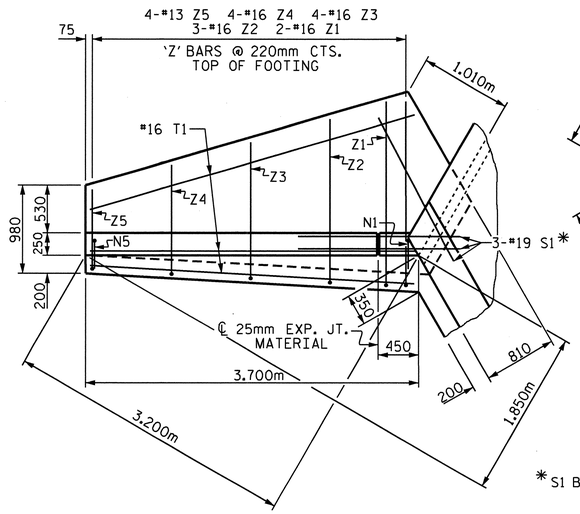

PLAN W2
(STAGE II)

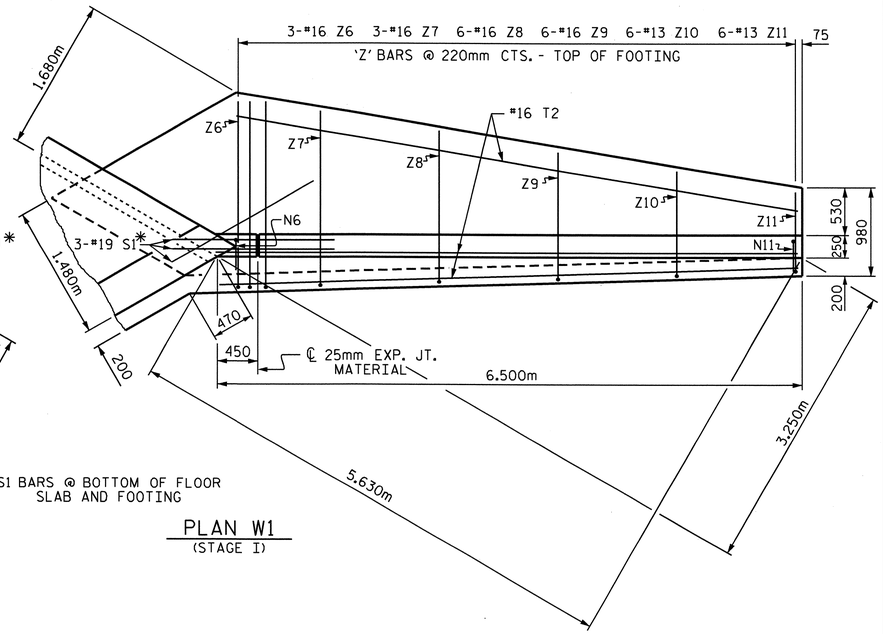

*S1 BARS @ BOTTOM OF FLOOR SLAB AND FOOTING

PLAN W1
(STAGE I)

BAR TYPES

ALL BAR DIMENSIONS ARE OUT TO OUT.

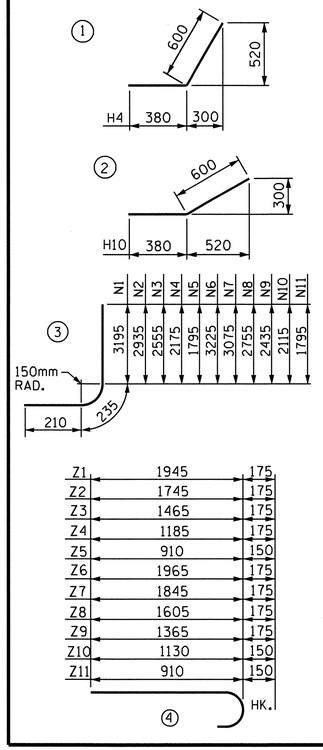

BILL OF MATERIAL

STAGE I

BAR	NO.	SIZE	TYPE	LENGTH	WEIGHT
H6	8	13	STR	5940	47
H7	2	13	STR	5040	10
H8	2	13	STR	3200	6
H9	2	13	STR	1360	3
H10	16	13	2	980	16
H11	2	13	STR	6100	12
N6	2	19	3	3680	16
N7	4	19	3	3520	31
N8	6	19	3	3200	43
N9	6	16	3	2880	27
N10	6	16	3	2560	24
N11	6	13	3	2240	13
S1	3	19	STR	1800	12
T2	3	16	STR	6500	30
V6	2	16	STR	3020	9
V7	1	16	STR	2900	5
V8	3	16	STR	2580	12
V9	3	13	STR	2260	7
V10	3	13	STR	1940	6
V11	3	13	STR	1620	5
Z6	3	16	4	2140	10
Z7	3	16	4	2020	9
Z8	6	16	4	1780	17
Z9	6	16	4	1540	14
Z10	6	13	4	1280	8
Z11	6	13	4	1060	6

REINFORCING STEEL FOR 1 WING WALL 398 kg

CLASS A CONCRETE
1 WING 8.2 m^3
PARTIAL END CURTAIN WALL 1.2 m^3
TOTAL 9.4 m^3

STAGE II

BAR	NO.	SIZE	TYPE	LENGTH	WEIGHT
H1	8	13	STR	3140	25
H2	2	13	STR	2600	5
H3	2	13	STR	1540	3
H4	16	13	1	980	16
H5	2	13	STR	3400	7
N1	2	19	3	3640	16
N2	3	19	3	3380	23
N3	4	19	3	3000	27
N4	4	16	3	2620	16
N5	4	13	3	2240	9
S1	3	19	STR	1800	12
T1	3	16	STR	3700	17
V1	2	16	STR	3020	9
V2	2	16	STR	2760	9
V3	2	13	STR	2380	5
V4	2	13	STR	2000	4
V5	2	13	STR	1620	3
Z1	2	16	4	2120	7
Z2	3	16	4	1920	9
Z3	4	16	4	1640	10
Z4	4	16	4	1360	8
Z5	4	13	4	1060	4

REINFORCING STEEL FOR 1 WING WALL 244 kg

CLASS A CONCRETE
1 WING 4.6 m^3
HEADWALL 1.4 m^3
PARTIAL END CURTAIN WALL 0.5 m^3
TOTAL 6.5 m^3

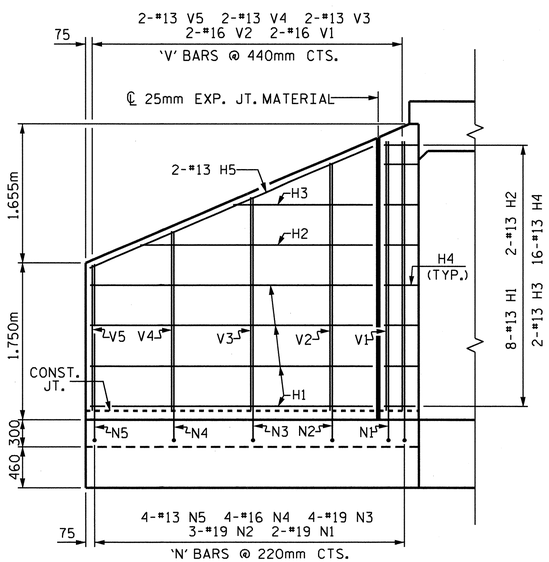

ELEVATION W2
(STAGE II)

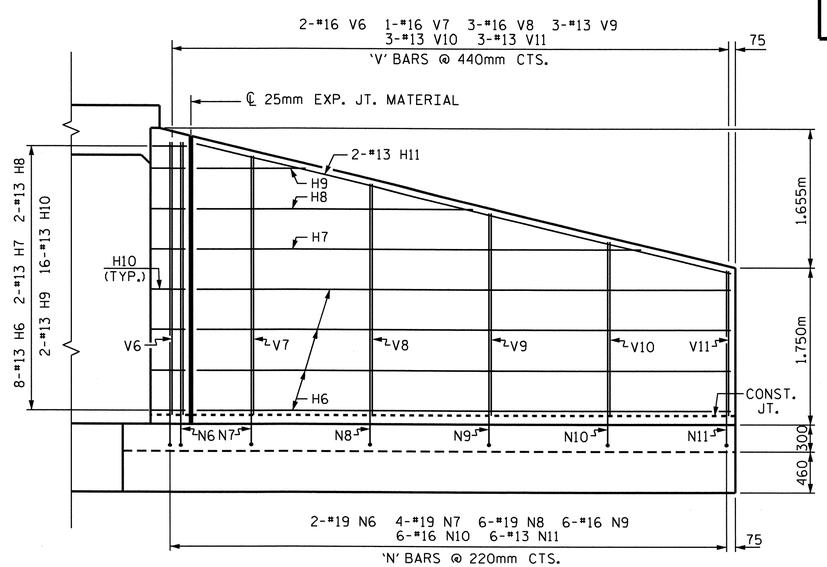

ELEVATION W1
(STAGE I)

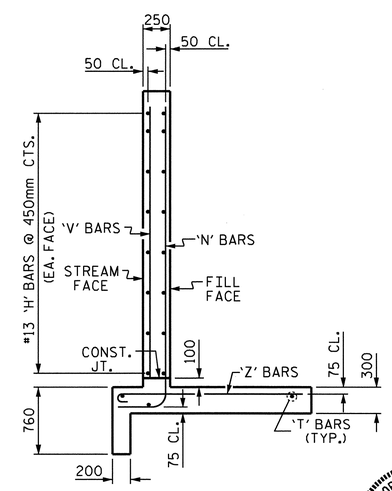

TYPICAL WING SECTION

LEFT EXTENSION

PROJECT NO. R-2519A
YANCEY COUNTY
STATION: 10+51.500 -Y34-

SHEET 6 OF 8

STATE OF NORTH CAROLINA
DEPARTMENT OF TRANSPORTATION
RALEIGH

STANDARD WINGS FOR CONCRETE BOX CULVERT
H=3.050m SLOPE=2:1
(LEFT EXTENSION)
60° SKEW

NORTH CAROLINA PROFESSIONAL SEAL 22005 ENGINEER KEITH PASCHAL
2/28/11

REVISIONS						SHEET NO.
NO.	BY:	DATE:	NO.	BY:	DATE:	C-106
1			3			TOTAL SHEETS
2			4			119

DRAWN BY : J.D. HAWK DATE : 7/01/10
CHECKED BY : J. MYA DATE : 7/03/10

28-FEB-2011 09:11
R:\Structures\str12\Final Plans\R2519A_sd_CU_12.dgn
jdhawk

STD. NO. CW6030

STR. #12

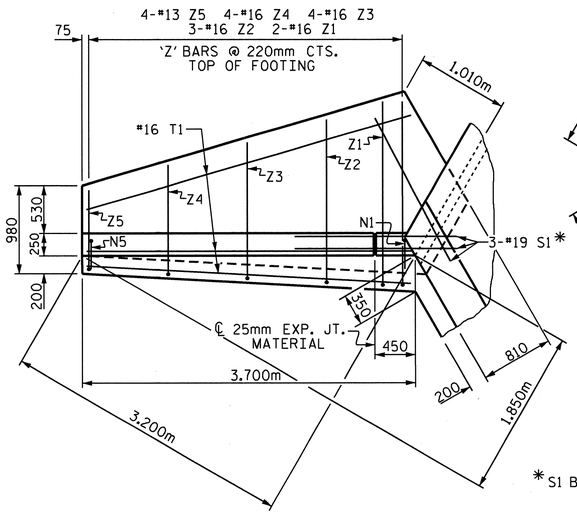

PLAN W2
(STAGE I)

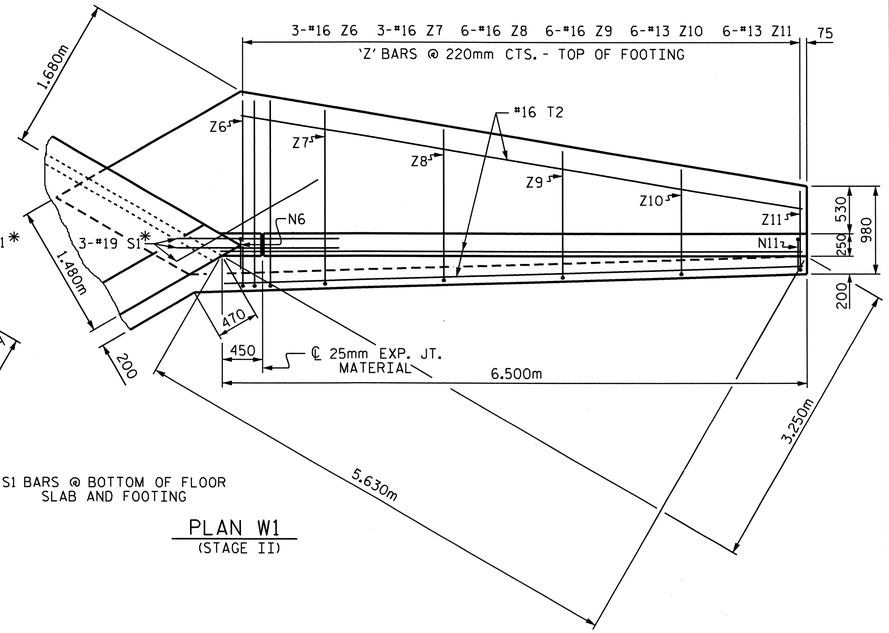

*S1 BARS @ BOTTOM OF FLOOR SLAB AND FOOTING

PLAN W1
(STAGE II)

BAR TYPES

ALL BAR DIMENSIONS ARE OUT TO OUT.

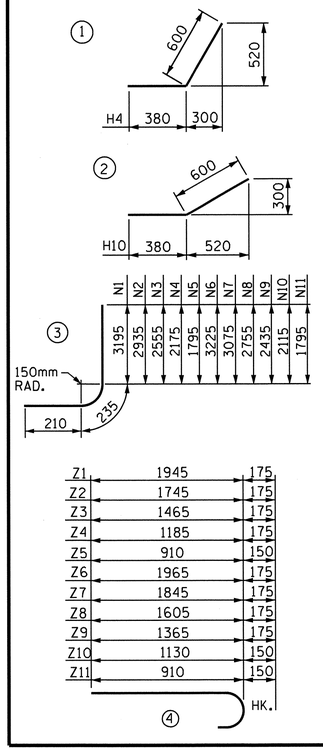

BILL OF MATERIAL

STAGE I

BAR	NO.	SIZE	TYPE	LENGTH	WEIGHT
H1	8	13	STR	3140	25
H2	2	13	STR	2600	5
H3	2	13	STR	1540	3
H4	16	13	1	980	16
H5	2	13	STR	3400	7
N1	2	19	3	3640	16
N2	3	19	3	3380	23
N3	4	19	3	3000	27
N4	4	16	3	2620	16
N5	4	13	3	2240	9
S1	3	19	STR	1800	12
T1	3	16	STR	3700	17
V1	2	16	STR	3020	9
V2	2	16	STR	2760	9
V3	2	13	STR	2380	5
V4	2	13	STR	2000	4
V5	2	13	STR	1620	3
Z1	2	16	4	2120	7
Z2	3	16	4	1920	9
Z3	4	16	4	1640	10
Z4	4	16	4	1360	8
Z5	4	13	4	1060	4

REINFORCING STEEL FOR 1 WING WALL 244 kg

CLASS A CONCRETE
1 WING 4.6 m^3
PARTIAL END CURTAIN WALL 1.2 m^3
TOTAL 5.8 m^3

STAGE II

BAR	NO.	SIZE	TYPE	LENGTH	WEIGHT
H6	8	13	STR	5940	47
H7	2	13	STR	5040	10
H8	2	13	STR	3200	6
H9	2	13	STR	1360	3
H10	16	13	2	980	16
H11	2	13	STR	6100	12
N6	2	19	3	3680	16
N7	4	19	3	3520	31
N8	6	19	3	3200	43
N9	6	16	3	2880	27
N10	6	16	3	2560	24
N11	6	13	3	2240	13
S1	3	19	STR	1800	12
T2	3	16	STR	6500	30
V6	2	16	STR	3020	9
V7	1	16	STR	2900	5
V8	3	16	STR	2580	12
V9	3	13	STR	2260	7
V10	3	13	STR	1940	6
V11	3	13	STR	1620	5
Z6	3	16	4	2140	10
Z7	3	16	4	2020	9
Z8	6	16	4	1780	17
Z9	6	16	4	1540	14
Z10	6	13	4	1280	8
Z11	6	13	4	1060	6

REINFORCING STEEL FOR 1 WING WALL 398 kg

CLASS A CONCRETE
1 WING 8.2 m^3
HEADWALL 1.4 m^3
PARTIAL END CURTAIN WALL 0.5 m^3
TOTAL 10.1 m^3

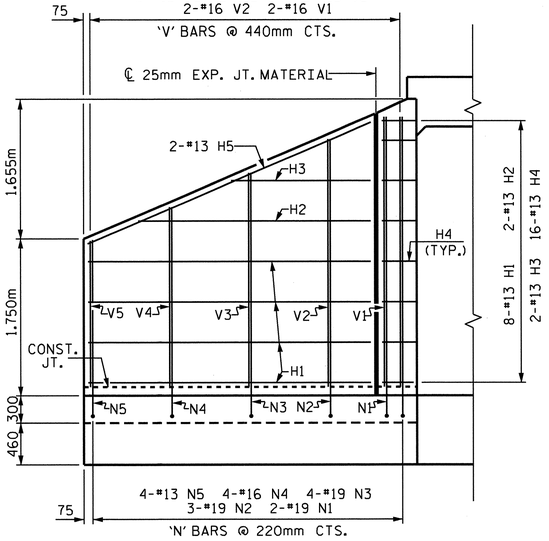

ELEVATION W2
(STAGE I)

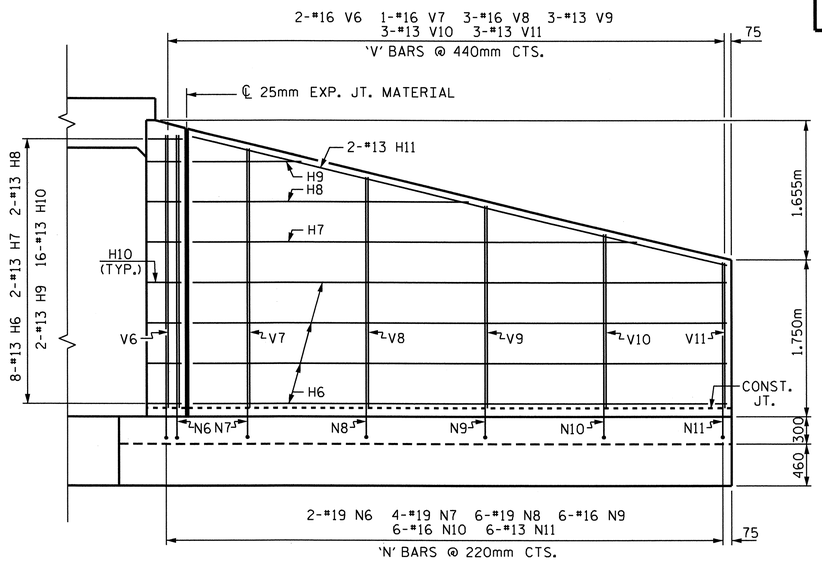

ELEVATION W1
(STAGE II)

RIGHT EXTENSION

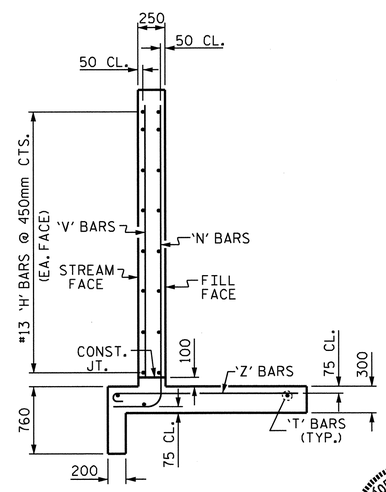

TYPICAL WING SECTION

NORTH CAROLINA PROFESSIONAL SEAL 22005 ENGINEER M. KEITH PASCHAL
2/28/11

PROJECT NO. R-2519A
YANCEY COUNTY
STATION: 10+51.500 -Y34-

SHEET 7 OF 8

STATE OF NORTH CAROLINA
DEPARTMENT OF TRANSPORTATION
RALEIGH

STANDARD WINGS FOR CONCRETE BOX CULVERT
H=3.050m SLOPE=2:1
RIGHT EXTENSION
60° SKEW

REVISIONS						SHEET NO.
NO.	BY:	DATE:	NO.	BY:	DATE:	C-107
1			3			TOTAL SHEETS
2			4			119

DRAWN BY : J.D. HAWK DATE : 7/01/10
CHECKED BY : J. MYA DATE : 7/03/10

28-FEB-2011 09:11
R:\Structures\str12\Final Plans\R2519A_sd_CU_12.dgn
jdhawk

STD. NO. CW6030

STR. #12

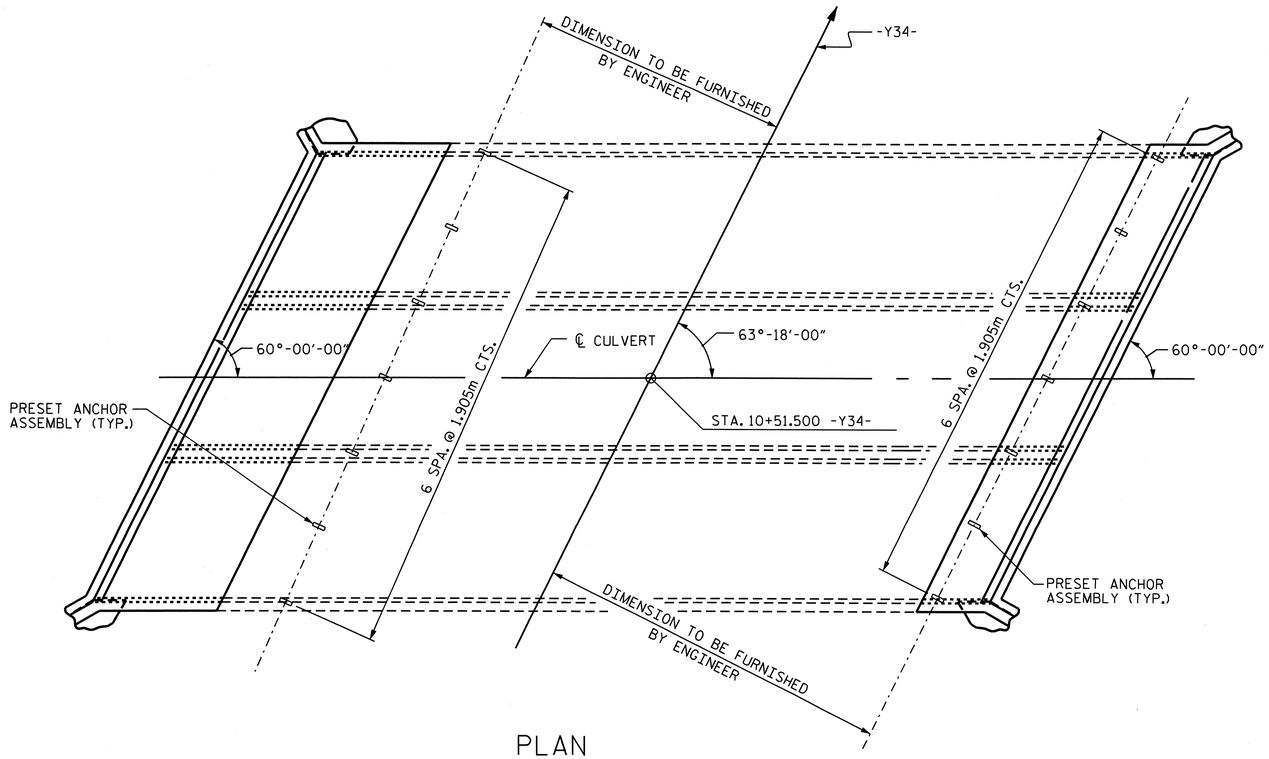

PLAN

SHOWING : GUARDRAIL ANCHOR ASSEMBLY SPACING.

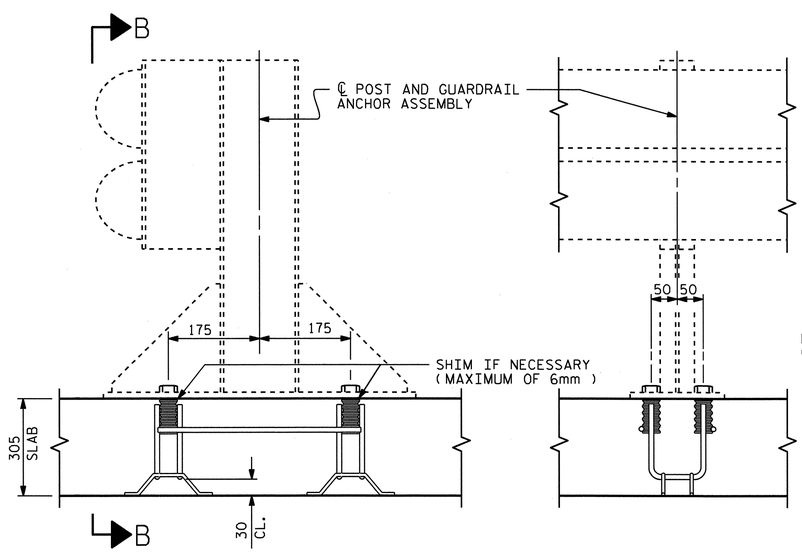

SECTION A-A

SECTION B-B

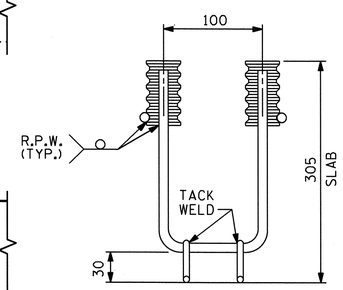

ELEVATION

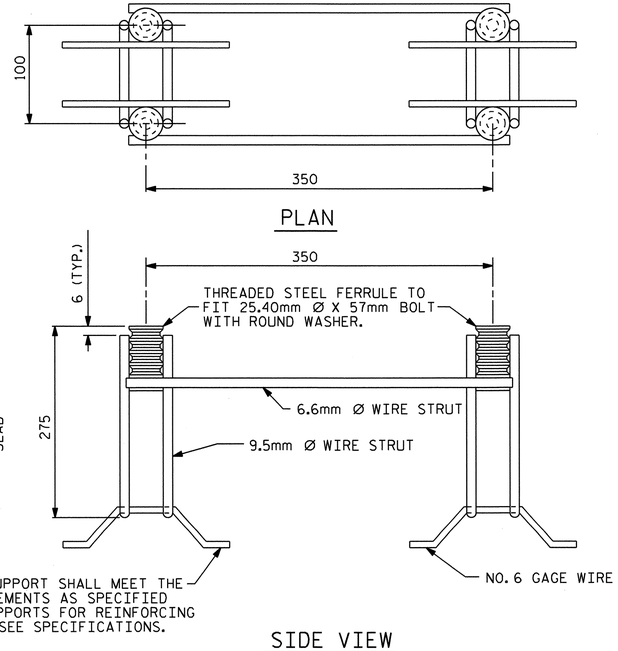

PLAN

SIDE VIEW

GUARDRAIL ANCHOR ASSEMBLY FOR CULVERTS

NOTES

THE GUARDRAIL ANCHOR ASSEMBLY FOR CULVERTS SHALL CONSIST OF THE FOLLOWING COMPONENTS :

A. FERRULES SHALL BE MADE FROM STEEL MEETING THE REQUIREMENTS OF AASHTO M169, GRADE 12L14 AND SHALL HAVE A MINIMUM LENGTH OF THREADS OF 64mm.

B. 4 - 25.40mm DIA. X 57mm BOLTS WITH WASHERS, BOLTS SHALL CONFORM TO THE REQUIREMENTS OF ASTM A307. BOLTS AND WASHERS SHALL BE GALVANIZED. (AT THE CONTRACTOR'S OPTION, STAINLESS STEEL BOLTS AND WASHERS MAY BE USED AS AN ALTERNATE FOR THE 25.40mm DIA. X 57mm GALVANIZED BOLTS AND WASHERS. THEY SHALL CONFORM TO OR EXCEED THE MECHANICAL REQUIREMENTS OF ASTM A307. THE USE OF THIS ALTERNATE SHALL BE APPROVED BY THE ENGINEER.)

C. WIRE STRUTS SHOWN IN THE GUARDRAIL ANCHOR ASSEMBLY FOR CULVERTS DETAIL ARE MINIMUM ALLOWABLE SIZE AND SHALL HAVE A MINIMUM TENSILE STRENGTH OF 689 MPa. AS AN OPTION, A 11mm Ø WIRE STRUT WITH A MINIMUM TENSILE STRENGTH OF 620 MPa. IS ACCEPTABLE.

GUARDRAIL ANCHOR ASSEMBLY WITH BOLTS SHALL BE ASSEMBLED IN THE SHOP. BOLT THREADS MAY BE RECUT AS NECESSARY TO INSURE FIT.

THE COST OF THE GUARDRAIL ANCHOR ASSEMBLY FOR CULVERTS COMPLETE IN PLACE, SHALL BE INCLUDED IN THE UNIT CONTRACT PRICE BID FOR CLASS "A" CONCRETE.

FERRULES TO BE PLUGGED DURING POURING OF SLAB AS RECOMMENDED BY THE MANUFACTURER.

AT THE CONTRACTOR'S OPTION, FERRULES WITH OPEN OR CLOSED ENDS MAY BE USED.

PAYMENT FOR GUARDRAIL, POSTS, AND POST BASE PLATES IS INCLUDED IN ROADWAY PAY ITEMS.

SLAB REINFORCING STEEL MAY BE SHIFTED AS NECESSARY TO CLEAR GUARDRAIL ANCHOR ASSEMBLY. CARE SHOULD BE TAKEN TO KEEP THE SHIFTING OF REINFORCING STEEL TO A MINIMUM.

THE CONTRACTOR MAY USE ADHESIVELY ANCHORED ANCHOR BOLTS IN PLACE OF GUARDRAIL ANCHOR ASSEMBLY. LEVEL TWO FIELD TESTING IS REQUIRED, AND THE YIELD LOAD OF THE 25.40mm Ø BOLT IS 97.0 kN. FOR ADHESIVELY ANCHORED ANCHOR BOLTS OR DOWELS, SEE SPECIAL PROVISIONS.

PROJECT NO. R-2519A
YANCEY COUNTY
STATION: 10+51.500 -Y34-

SHEET 8 OF 8

STATE OF NORTH CAROLINA
DEPARTMENT OF TRANSPORTATION
RALEIGH

STANDARD

ANCHORAGE DETAILS FOR GUARDRAIL ANCHOR ASSEMBLY FOR CULVERTS

NORTH CAROLINA PROFESSIONAL SEAL 22005 ENGINEER W. KEITH PASCHAL
2/28/11

ASSEMBLED BY : J. D. HAWK	DATE : 2/7/11		
CHECKED BY : J. MYA	DATE : 2/11/11		
DRAWN BY : FCJ 6/88	REV. 7/10/01	LES/RDR	
CHECKED BY : ARB 6/88	REV. 5/7/03	RWW/JTE	
	REV. 5/1/06R	KMM/GM	

REVISIONS

NO.	BY:	DATE:	NO.	BY:	DATE:
1			3		
2			4		

SHEET NO. C-108
TOTAL SHEETS 119

28-FEB-2011 09:10
R:\Structures\str12\Final Plans\R2519A_sd_CU_12.dgn
jdhawk

STR. #12 STD. NO. GRA1SM

B.M. #7: SPIKE SET IN BASE OF 10" MAPLE TREE
38m LEFT -Y19- STA. 11+62.00 ELEV. 803.589

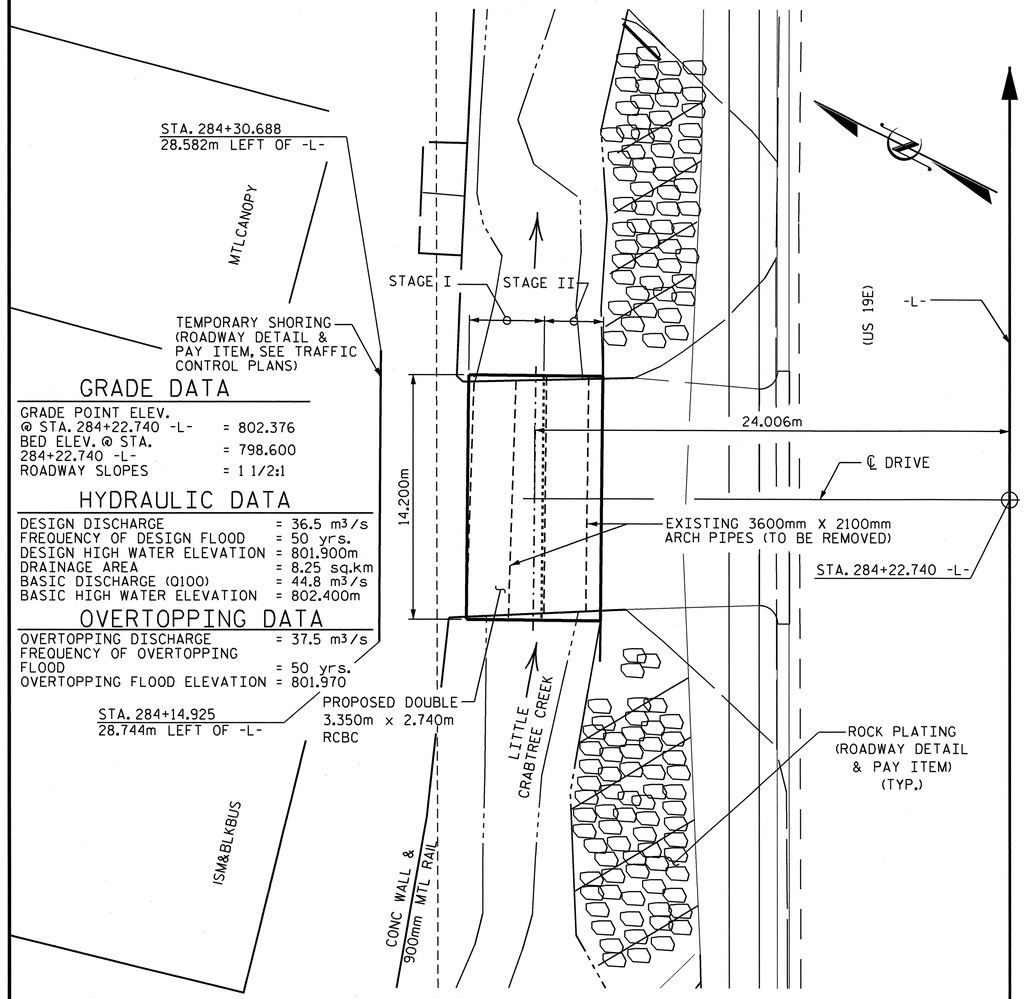

GRADE DATA

GRADE POINT ELEV. @ STA. 284+22.740 -L-	= 802.376
BED ELEV. @ STA. 284+22.740 -L-	= 798.600
ROADWAY SLOPES	= 1 1/2:1

HYDRAULIC DATA

DESIGN DISCHARGE	= 36.5 m³/s
FREQUENCY OF DESIGN FLOOD	= 50 yrs.
DESIGN HIGH WATER ELEVATION	= 801.900m
DRAINAGE AREA	= 8.25 sq.km
BASIC DISCHARGE (Q100)	= 44.8 m³/s
BASIC HIGH WATER ELEVATION	= 802.400m

OVERTOPPING DATA

OVERTOPPING DISCHARGE	= 37.5 m³/s
FREQUENCY OF OVERTOPPING FLOOD	= 50 yrs.
OVERTOPPING FLOOD ELEVATION	= 801.970

FOR UTILITY INFORMATION, SEE UTILITY PLANS AND SPECIAL PROVISIONS.

LOCATION SKETCH

TOTAL QUANTITIES STAGE I

CLASS A CONCRETE - STAGE I	
BARREL	30.9 m³
PARTIAL CURTAIN WALLS	1.2 m³
TOTAL	32.1 m³
REINFORCING STEEL	
BARREL	4407 kg
TOTAL	4407 kg
CULVERT EXCAVATION	LUMP SUM
FOUNDATION COND. MAT'L.	39 METRIC TONS

TOTAL QUANTITIES STAGE II

CLASS A CONCRETE - STAGE II	
BARREL	54.6 m³
WINGS ETC.	13.9 m³
TOTAL	68.5 m³
REINFORCING STEEL	
BARREL	6704 kg
WINGS ETC.	700 kg
TOTAL	7404 kg
CULVERT EXCAVATION	LUMP SUM
FOUNDATION COND. MAT'L	31 METRIC TONS

TOTAL STRUCTURE QUANTITIES

CLASS A CONCRETE		REINFORCING STEEL	
STAGE I	32.1 m³	STAGE I	4407 kg
STAGE II	68.5 m³	STAGE II	7404 kg
TOTAL	100.6 m³	TOTAL	11811 kg
CULVERT EXCAVATION -- LUMP SUM		FOUNDATION COND. MAT'L -70- METRIC TONS	

NOTES :

ASSUMED LIVE LOAD ----------MS18 OR ALTERNATE LOADING.

DESIGN FILL 0.480m.

FOR OTHER DESIGN DATA AND NOTES SEE STANDARD NOTE SHEET.

76mm Ø WEEP HOLES INDICATED TO BE IN ACCORDANCE WITH THE SPECIFICATIONS.

THE CONCRETE CULVERT TO BE POURED IN THE FOLLOWING ORDER :

(STAGE I)
1. FLOOR SLAB INCLUDING 100mm OF ALL VERTICAL WALLS.
2. THE REMAINING PORTIONS OF THE WALLS.

(STAGE II)
1. WING FOOTINGS AND FLOOR SLAB INCLUDING 100mm OF VERTICAL WALLS.
2. THE REMAINING PORTIONS OF THE WALLS AND WINGS FULL HEIGHT.
3. THE ROOF SLAB AND HEADWALLS.

THE RESIDENT ENGINEER SHALL CHECK THE LENGTH OF CULVERT BEFORE STAKING IT OUT TO MAKE CERTAIN THAT IT WILL PROPERLY TAKE CARE OF THE FILL.

DIMENSIONS FOR WING LAYOUT AS WELL AS ADDITIONAL REINFORCING STEEL EMBEDDED IN BARREL ARE SHOWN ON WING SHEET.

AT THE CONTRACTOR'S OPTION, HE MAY SPLICE THE VERTICAL REINFORCING STEEL IN THE INTERIOR FACE OF EXTERIOR WALL AND BOTH FACES OF INTERIOR WALLS ABOVE LOWER WALL CONSTRUCTION JOINT. THE SPLICE LENGTH SHALL BE AS PROVIDED IN THE SPLICE LENGTH CHART SHOWN ON THE PLANS. EXTRA WEIGHT OF STEEL DUE TO THE SPLICES SHALL BE PAID FOR BY THE CONTRACTOR.

THE EXISTING DOUBLE 3.60m X 2.1m PIPE ARCH WITH A LENGTH OF 12.18m AND LOCATED AT THE SITE OF THE PROPOSED CULVERT SHALL BE REMOVED. PAYMENT FOR REMOVAL OF EXISTING CULVERT PIPE WILL BE INCLUDED IN THE LUMP SUM PRICE FOR CULVERT EXCAVATION.

NO PRECAST REINFORCED BOX CULVERT OPTION WILL BE ALLOWED.

FOR SUBMITTAL OF WORKING DRAWINGS, SEE SPECIAL PROVISIONS.

FOR FALSEWORK AND FORMWORK, SEE SPECIAL PROVISIONS.

FOR CRANE SAFETY, SEE SPECIAL PROVISIONS.

FOR GROUT FOR STRUCTURES, SEE SPECIAL PROVISIONS.

ALL DIMENSIONS ARE IN MILLIMETERS UNLESS OTHERWISE NOTED.

ALL ELEVATIONS ARE IN METERS.

FOR CULVERT DIVERSION DETAILS AND PAY ITEM, SEE EROSION CONTROL PLANS.

FOR TEMPORARY SHORING, SEE TRAFFIC CONTROL PLANS.

A 900mm STRIP OF FILTER FABRIC SHALL BE ATTACHED TO THE FILL FACE OF THE WING COVERING THE ENTIRE LENGTH OF THE CONSTRUCTION JOINT.

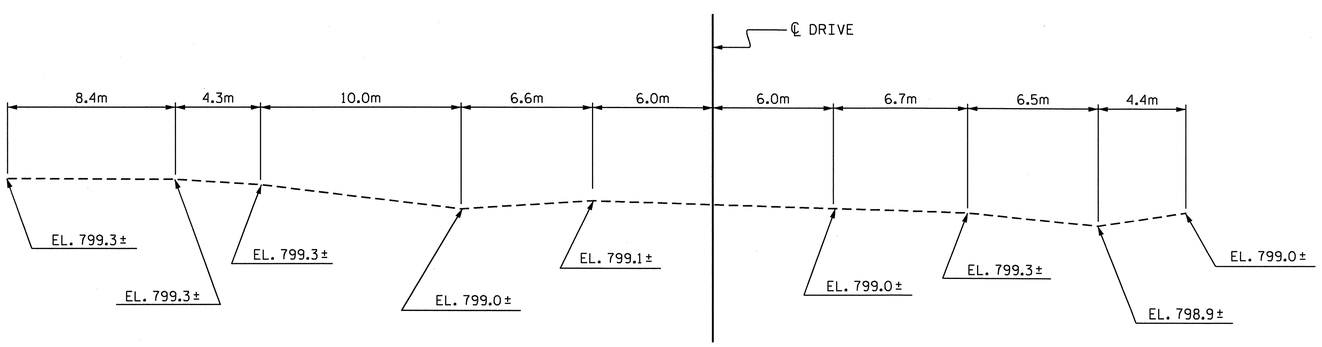

PROFILE ALONG ℄ CULVERT

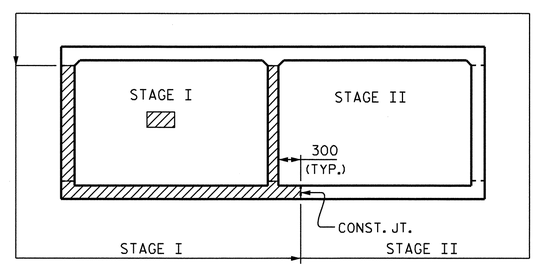

CONSTRUCTION SEQUENCE

PROJECT NO. R-2519A
YANCEY COUNTY
STATION: 284+22.740 -L-

SHEET 1 OF 5 CULVERT NO. C-325

STATE OF NORTH CAROLINA
DEPARTMENT OF TRANSPORTATION
RALEIGH

DOUBLE
3.350m X 2.740m
CONCRETE BOX CULVERT
90° SKEW

REVISIONS						SHEET NO.
NO.	BY:	DATE:	NO.	BY:	DATE:	C-109
1			3			TOTAL SHEETS
2			4			119

NORTH CAROLINA PROFESSIONAL SEAL 12929 ENGINEER NORMAN A. MCLEOD, JR. 3/1/11

NORTH CAROLINA PROFESSIONAL SEAL 22005 ENGINEER DAVID KEITH PASCHAL 3/1/11

DRAWN BY : J. MYA DATE : 7-11-10
CHECKED BY : J.C. KARVA DATE : 10-13-10

01-MAR-2011 09:10
R:\Structures\str13\Final Plans\R2519A_SD_CU_13.dgn
jdhawk

STR. #13

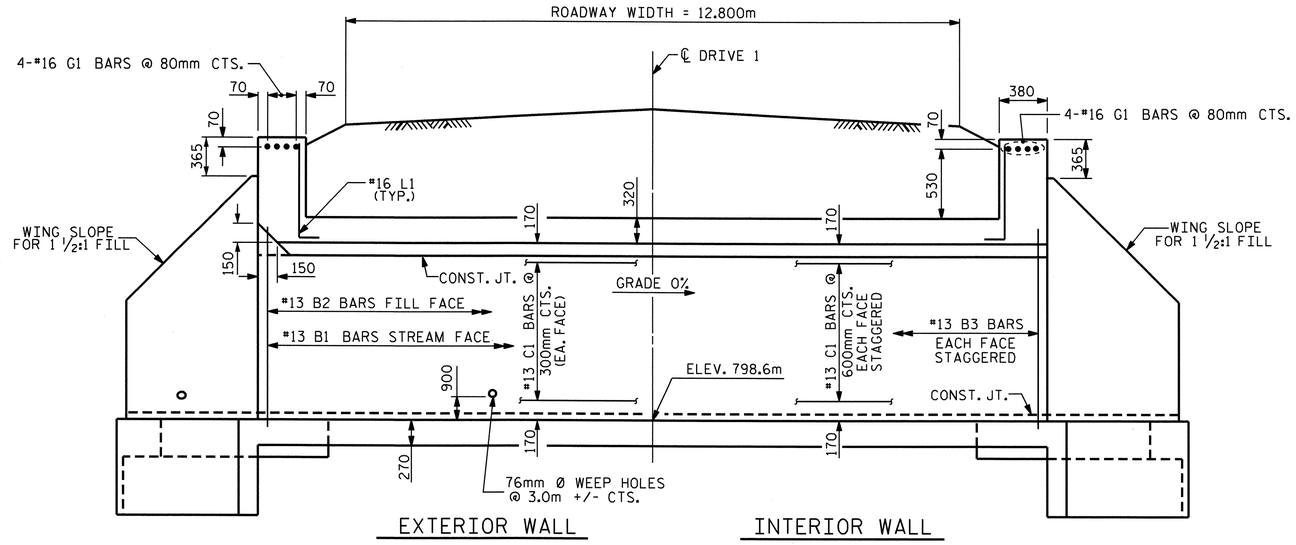

SECTION ALONG ℄ CULVERT

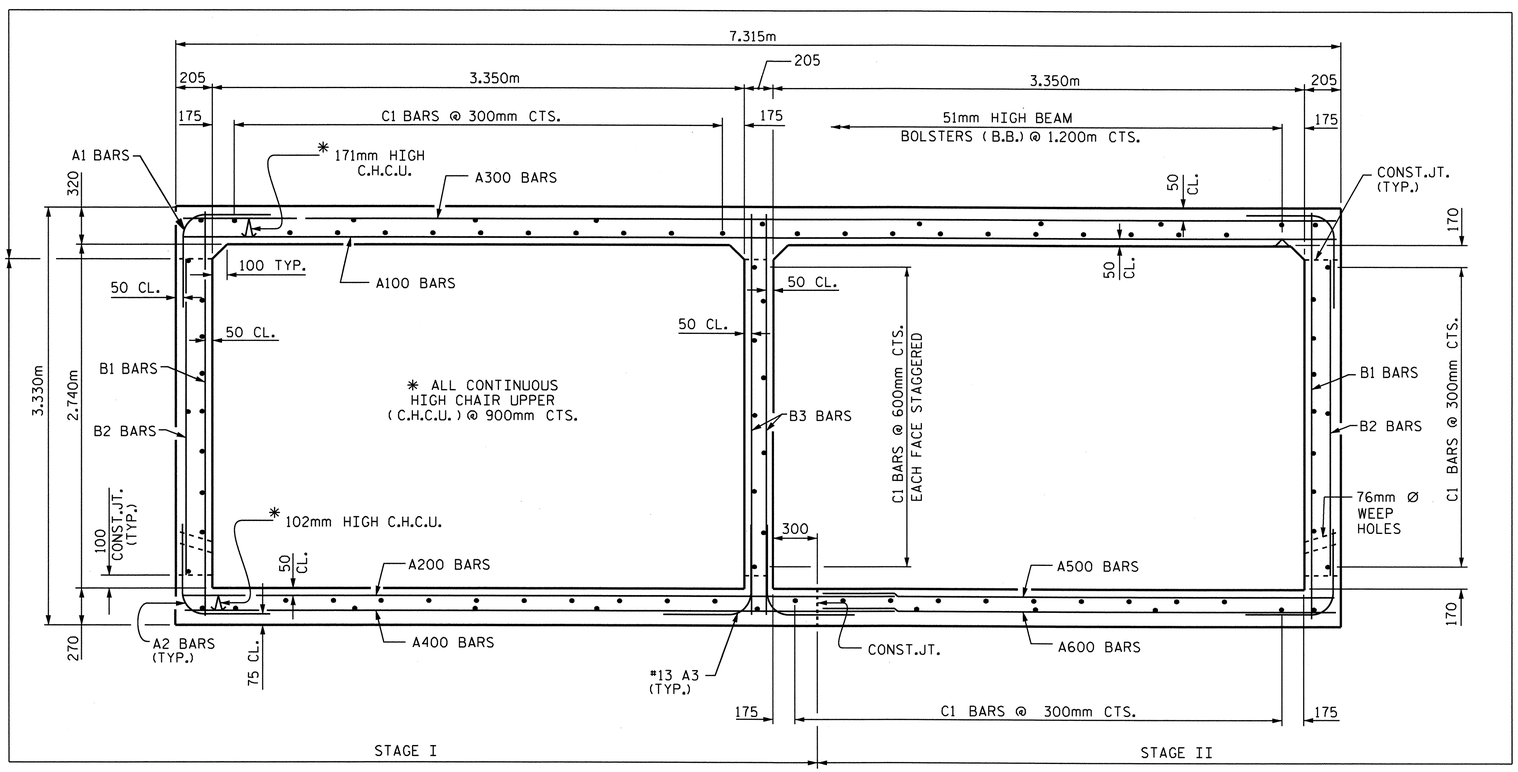

RIGHT ANGLE SECTION OF BARREL

THERE ARE 55 "C" BARS IN SECTION OF BARREL. (STAGE II)
THERE ARE 36 "C" BARS IN SECTION OF BARREL. (STAGE I)

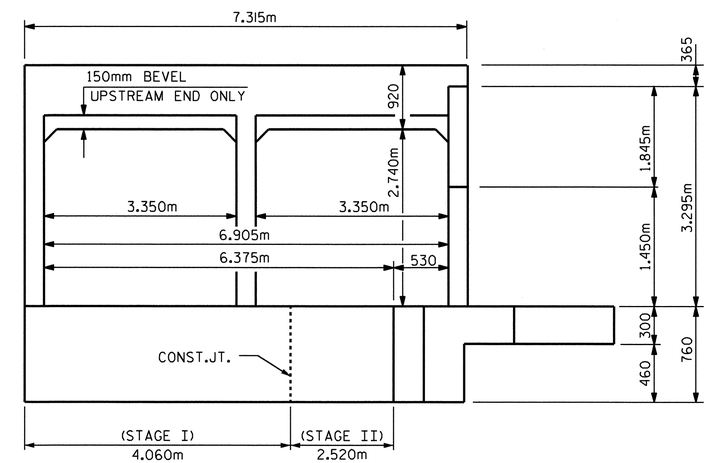

INLET ELEVATION - NORMAL TO SKEW

PROJECT NO. R-2519A
YANCEY COUNTY
STATION: 284+22.740 -L-

SHEET 2 OF 5

STATE OF NORTH CAROLINA
DEPARTMENT OF TRANSPORTATION
RALEIGH

DOUBLE 3.350m X 2.740m
CONCRETE BOX CULVERT
90° SKEW

NORTH CAROLINA PROFESSIONAL SEAL 22005 ENGINEER KEITH PASCHAL
2/28/11

ASSEMBLED BY : J. MYA	DATE : 7-11-10
CHECKED BY : J.G.K.ARVA	DATE : 10-13-10
DRAWN BY : EEM 6/97	
CHECKED BY : ARB 7/97	

REVISIONS								SHEET NO.
NO.	BY:	DATE:	NO.	BY:	DATE:			C-110
1			3					TOTAL SHEETS
2			4					119

STD. No. CB275sm

STR. #13

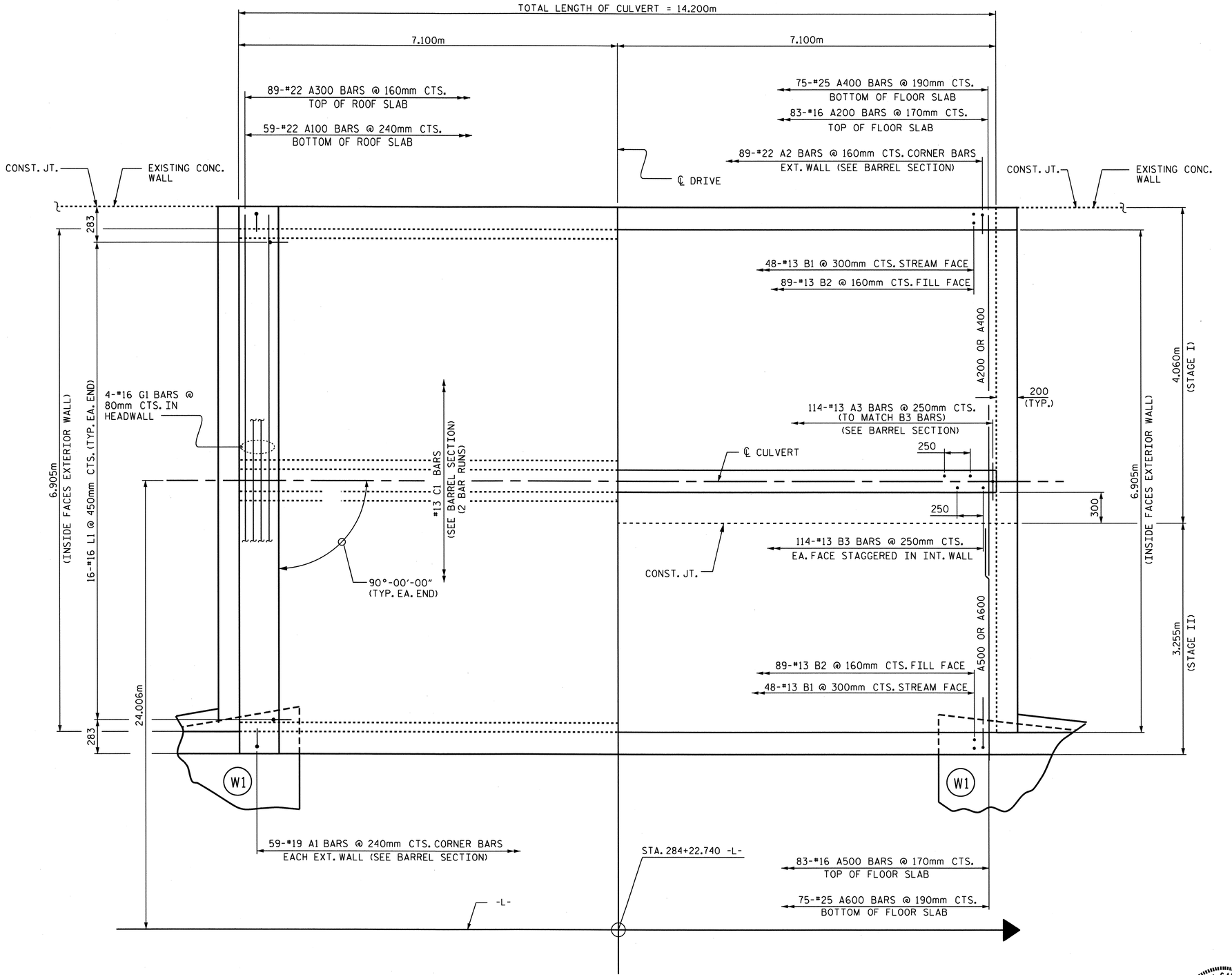

PART PLAN - ROOF SLAB

PART PLAN - FLOOR SLAB

PROJECT NO. R-2519A

YANCEY COUNTY

STATION: 284+22.740 -L-

SHEET 3 OF 5

STATE OF NORTH CAROLINA
DEPARTMENT OF TRANSPORTATION
RALEIGH

DOUBLE
3.400m x 2.740m
CONCRETE BOX CULVERT
90° SKEW

NORTH CAROLINA PROFESSIONAL SEAL 22005 ENGINEER A. KEITH PASCHAL
2/28/11

REVISIONS						SHEET NO.
NO.	BY:	DATE:	NO.	BY:	DATE:	C-111
1			3			TOTAL SHEETS
2			4			119

DRAWN BY : J. MYA DATE : 7-11-10
CHECKED BY : J.G.KHARVA DATE : 10-13-10

28-FEB-2011 12:37
R:\Structures\str13\Final Plans\R2519A_SD_CU_13.dgn
jdhawk

STR. #13

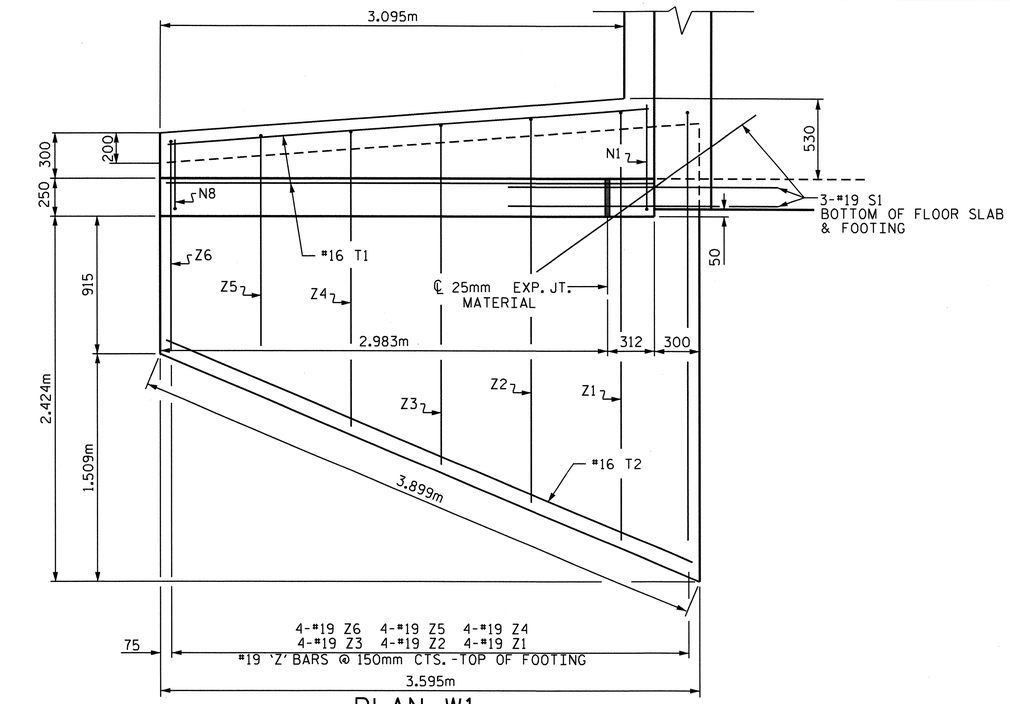

PLAN W1

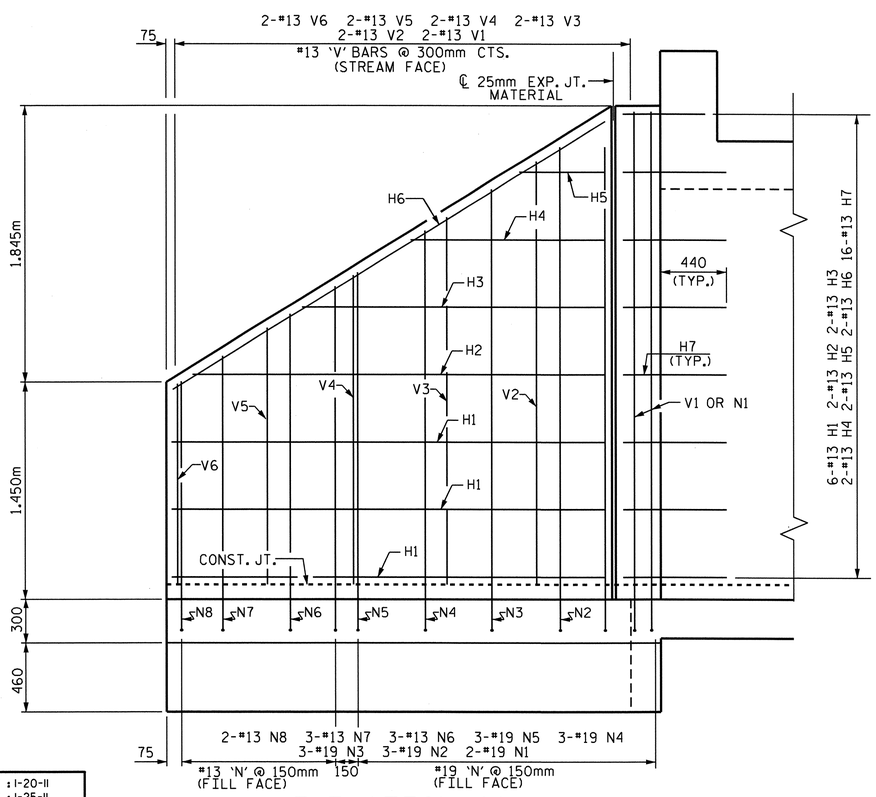

ELEVATION W1

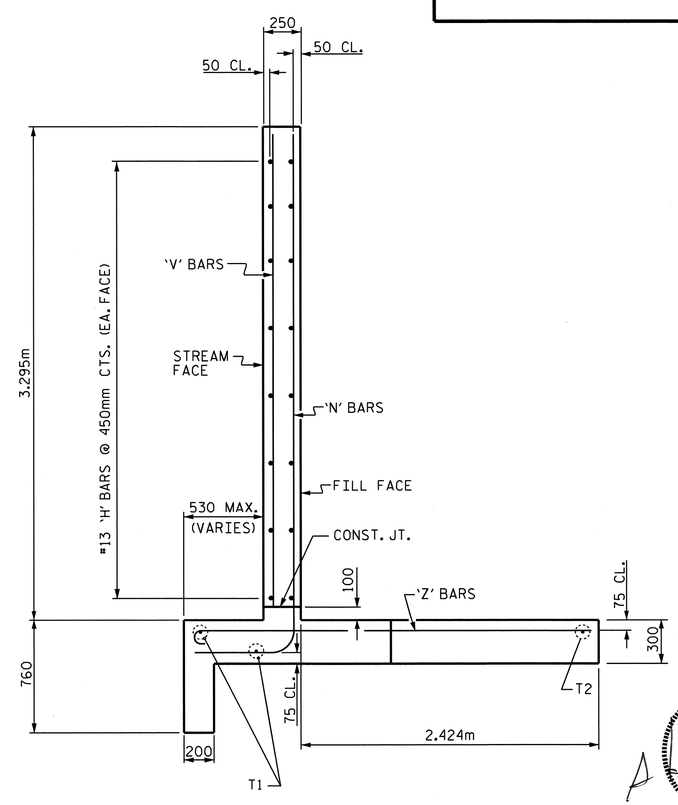

TYPICAL WING SECTION

BAR TYPES

ALL BAR DIMENSIONS ARE OUT TO OUT.

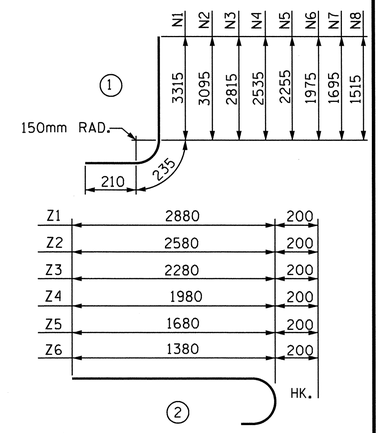

BILL OF MATERIAL W1

BAR	NO.	SIZE	TYPE	LENGTH	WEIGHT
H1	12	13	STR	2860	34
H2	4	13	STR	2740	11
H3	4	13	STR	2000	8
H4	4	13	STR	1280	5
H5	4	13	STR	560	2
H6	4	13	STR	3380	13
H7	32	13	STR	700	22
N1	4	19	1	3760	34
N2	6	19	1	3540	47
N3	6	19	1	3260	44
N4	6	19	1	2980	40
N5	6	19	1	2700	36
N6	6	13	1	2420	14
N7	6	13	1	2140	13
N8	4	13	1	1960	8
S1	6	19	STR	1800	24
T1	6	16	STR	3220	30
T2	2	16	STR	3800	12
V1	4	13	STR	3140	12
V2	4	13	STR	2820	11
V3	4	13	STR	2440	10
V4	4	13	STR	2060	8
V5	4	13	STR	1700	7
V6	4	13	STR	1320	5
Z1	8	19	2	3080	55
Z2	8	19	2	2780	50
Z3	8	19	2	2480	44
Z4	8	19	2	2180	39
Z5	8	19	2	1880	34
Z6	8	19	2	1580	28

REINFORCING STEEL
FOR 2 WINGS 700 kg

CLASS A CONCRETE : (STAGE I)
2 PARTIAL CURTAIN WALLS 1.2 m^3

CLASS A CONCRETE : (STAGE II)
2 WINGS 9.8 m^3
2 HEADWALLS 3.3 m^3
2 PARTIAL CURTAIN WALLS 0.8 m^3
TOTAL 13.9 m^3

PROJECT NO. R-2519A
YANCEY COUNTY
STATION: 284+22.740 -L-

SHEET 4 OF 5

STATE OF NORTH CAROLINA
DEPARTMENT OF TRANSPORTATION
RALEIGH

MODIFIED WING
H = 2.740m SLOPE=1 1/2:1
90° SKEW

NORTH CAROLINA PROFESSIONAL SEAL 22008 ENGINEER J. KEITH PASCHAL
2/28/11

REVISIONS								SHEET NO.
NO.	BY:	DATE:	NO.	BY:	DATE:			C-112
1			3					TOTAL SHEETS
2			4					119

ASSEMBLED BY : J.D. HAWK DATE : 1-20-11
CHECKED BY : J. MYA DATE : 1-25-11
DRAWN BY : FPP 06/97
CHECKED BY : VAP 08/97

28-FEB-2011 10:52
R:\Structures\str13\Final Plans\R2519A_SD_CU_13.dgn
jdhawk

STD. NO. CW9027

STR. #13

BILL OF MATERIAL

STAGE I

BAR	NO.	SIZE	TYPE	LENGTH	WEIGHT
A1	59	#19	1	1800	237
A2	89	#22	1	2080	563
A3	114	#13	1	1380	156
A200	83	#16	STR	4740	611
A400	75	#25	STR	5280	1573
B1	48	#13	STR	3180	152
B2	89	#13	STR	2520	223
B3	114	#13	STR	3220	365
C1	72	#13	STR	7360	527

REINFORCING STEEL 4407 kg.

CLASS A CONCRETE
BARREL 30.9 m3

STAGE II

BAR	NO.	SIZE	TYPE	LENGTH	WEIGHT
A1	59	#19	1	1800	237
A2	89	#22	1	2080	563
A100	59	#22	STR	7200	1292
A300	89	#22	STR	7200	1949
A500	83	#16	STR	3140	404
A600	75	#25	STR	3140	936
B1	48	#13	STR	3180	152
B2	89	#13	STR	2520	223
C1	110	#13	STR	7360	805
G1	8	#16	STR	7200	89
L1	32	#16	2	1080	54

REINFORCING STEEL 6704 kg.

CLASS A CONCRETE
BARREL 54.6 m3

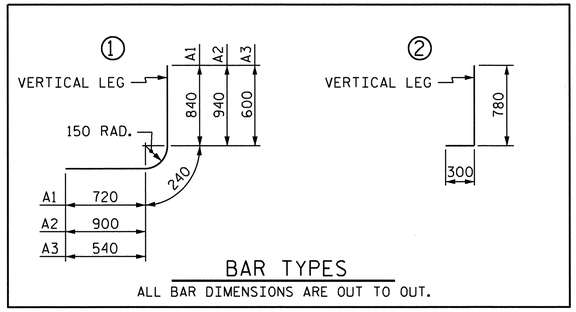

SPLICE LENGTH CHART

BAR	SIZE	LENGTH
A200	#16	670
A400	#25	1220
B1	#13	540
B3	#13	540
C1	#13	590

PROJECT NO. R-2519A
YANCEY COUNTY
STATION: 284+22.740 -L-

SHEET 5 OF 5

STATE OF NORTH CAROLINA
DEPARTMENT OF TRANSPORTATION
RALEIGH

DOUBLE 3.435m X 2.740m
CONCRETE BOX CULVERT
90° SKEW

NORTH CAROLINA PROFESSIONAL SEAL 22005 ENGINEER KEITH PASCHAL
2/28/11

REVISIONS						SHEET NO.
NO.	BY:	DATE:	NO.	BY:	DATE:	C-113
1			3			TOTAL SHEETS
2			4			119

DRAWN BY : J. MYA DATE : 7-11-10
CHECKED BY : J.G.KHARVA DATE : 10-13-10

28-FEB-2011 10:51
R:\Structures\str13\Final Plans\R2519A_SD_CU_13.dgn
jdhawk

STR. #13

B.M. #7 SPIKE SET IN BASE OF 10" MAPLE TREE
38m LEFT -Y19- STA. 11+62.000 ELEV. 803.589

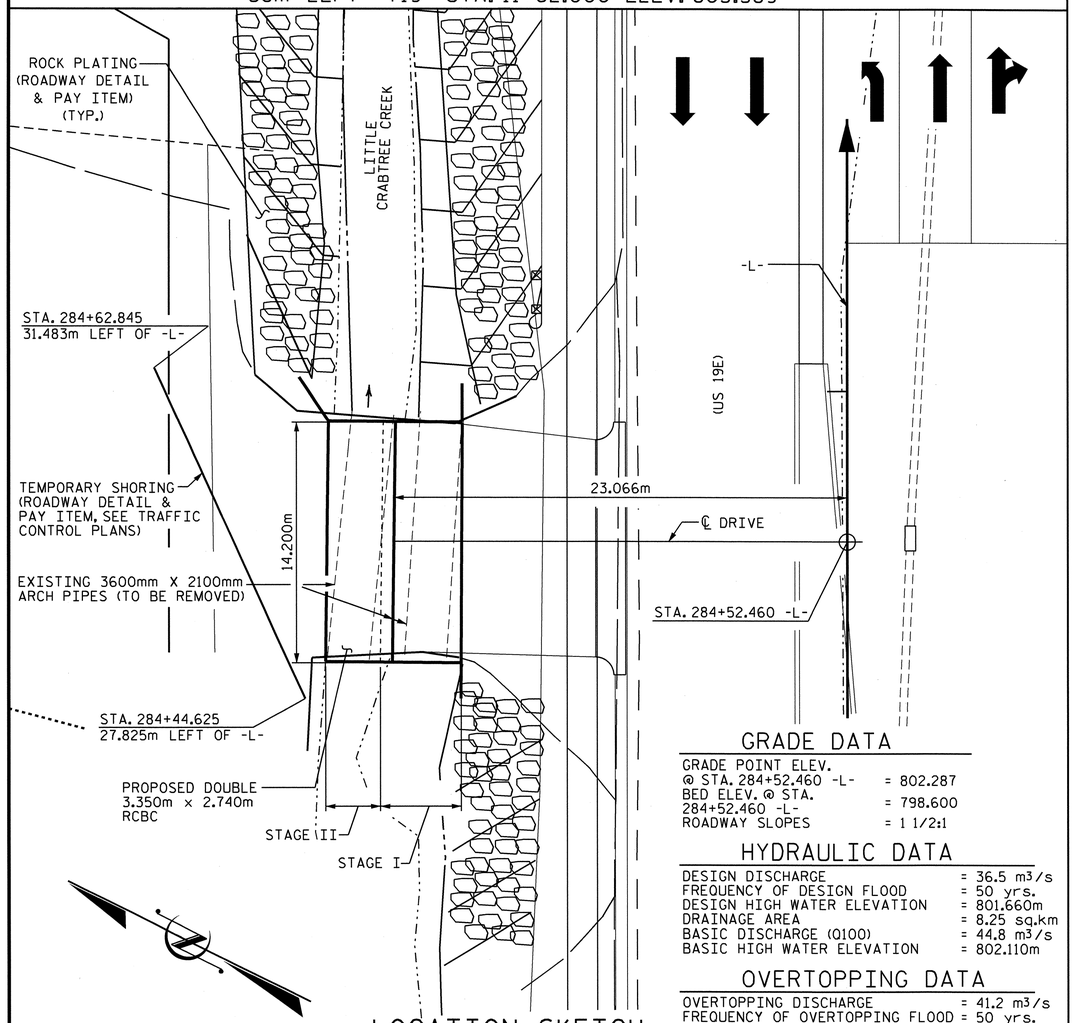

FOR UTILITY INFORMATION, SEE UTILITY PLANS AND SPECIAL PROVISIONS.

LOCATION SKETCH

GRADE DATA

GRADE POINT ELEV. @ STA. 284+52.460 -L-	= 802.287
BED ELEV. @ STA. 284+52.460 -L-	= 798.600
ROADWAY SLOPES	= 1 1/2:1

HYDRAULIC DATA

DESIGN DISCHARGE	= 36.5 m³/s
FREQUENCY OF DESIGN FLOOD	= 50 yrs.
DESIGN HIGH WATER ELEVATION	= 801.660m
DRAINAGE AREA	= 8.25 sq.km
BASIC DISCHARGE (0100)	= 44.8 m³/s
BASIC HIGH WATER ELEVATION	= 802.110m

OVERTOPPING DATA

OVERTOPPING DISCHARGE	= 41.2 m³/s
FREQUENCY OF OVERTOPPING FLOOD	= 50 yrs.
OVERTOPPING FLOOD ELEVATION	= 801.940m

TOTAL QUANTITIES STAGE I

CLASS A CONCRETE - STAGE I	
BARREL	30.9 m³
WINGS ETC.	10.8 m³
TOTAL	41.7 m³
REINFORCING STEEL	
BARREL	4407 kg
WINGS, ECT.	700 kg
TOTAL	5107 kg
CULVERT EXCAVATION	LUMP SUM
FOUNDATION COND. MAT'L	39 METRIC TONS

TOTAL QUANTITIES STAGE II

CLASS A CONCRETE - STAGE II	
BARREL	54.6 m³
WINGS ETC.	10.9 m³
TOTAL	65.5 m³
REINFORCING STEEL	
BARREL	6650 kg
WINGS ETC.	565 kg
TOTAL	7215 kg
CULVERT EXCAVATION	LUMP SUM
FOUNDATION COND. MAT'L	31 METRIC TONS

TOTAL STRUCTURE QUANTITIES

CLASS A CONCRETE		REINFORCING STEEL	
STAGE I	41.7 m³	STAGE I	5107 kg
STAGE II	65.5 m³	STAGE II	7215 kg
TOTAL	107.2 m³	TOTAL	12322 kg
CULVERT EXCAVATION -- LUMP SUM		FOUNDATION COND. MAT'L	70 METRIC TONS

NOTES :

ASSUMED LIVE LOAD ----------MS18 OR ALTERNATE LOADING.

DESIGN FILL 0.480m.

FOR OTHER DESIGN DATA AND NOTES SEE STANDARD NOTE SHEET.

76mm Ø WEEP HOLES INDICATED TO BE IN ACCORDANCE WITH THE SPECIFICATIONS.

THE CONCRETE CULVERT TO BE POURED IN THE FOLLOWING ORDER :

(STAGE I)
1. FLOOR SLAB INCLUDING 100mm OF ALL VERTICAL WALLS.
2. THE REMAINING PORTIONS OF THE WALLS.

(STAGE II)
1. WING FOOTINGS AND FLOOR SLAB INCLUDING 100mm OF VERTICAL WALLS.
2. THE REMAINING PORTIONS OF THE WALLS AND WINGS FULL HEIGHT.
3. THE ROOF SLAB AND HEADWALLS.

THE RESIDENT ENGINEER SHALL CHECK THE LENGTH OF CULVERT BEFORE STAKING IT OUT TO MAKE CERTAIN THAT IT WILL PROPERLY TAKE CARE OF THE FILL.

DIMENSIONS FOR WING LAYOUT AS WELL AS ADDITIONAL REINFORCING STEEL EMBEDDED IN BARREL ARE SHOWN ON WING SHEET.

AT THE CONTRACTOR'S OPTION, HE MAY SPLICE THE VERTICAL REINFORCING STEEL IN THE INTERIOR FACE OF EXTERIOR WALL AND BOTH FACES OF INTERIOR WALLS ABOVE LOWER WALL CONSTRUCTION JOINT. THE SPLICE LENGTH SHALL BE AS PROVIDED IN THE SPLICE LENGTH CHART SHOWN ON THE PLANS. EXTRA WEIGHT OF STEEL DUE TO THE SPLICES SHALL BE PAID FOR BY THE CONTRACTOR.

THE EXISTING DOUBLE 3.60m X 2.1m PIPE ARCH WITH A LENGTH OF 12.18m AND LOCATED AT THE SITE OF THE PROPOSED CULVERT SHALL BE REMOVED. PAYMENT FOR REMOVAL OF EXISTING CULVERT PIPE WILL BE INCLUDED IN THE LUMP SUM PRICE FOR CULVERT EXCAVATION.

NO PRECAST REINFORCED BOX CULVERT OPTION WILL BE ALLOWED.

FOR SUBMITTAL OF WORKING DRAWINGS, SEE SPECIAL PROVISIONS.

FOR FALSEWORK AND FORMWORK, SEE SPECIAL PROVISIONS.

FOR CRANE SAFETY, SEE SPECIAL PROVISIONS.

FOR GROUT FOR STRUCTURES, SEE SPECIAL PROVISIONS.

ALL DIMENSIONS ARE IN MILLIMETERS UNLESS OTHERWISE NOTED.

ALL ELEVATIONS ARE IN METERS.

FOR CULVERT DIVERSION DETAILS AND PAY ITEM, SEE EROSION CONTROL PLANS.

FOR TEMPORARY SHORING, SEE TRAFFIC CONTROL PLANS.

A 900mm STRIP OF FILTER FABRIC SHALL BE ATTACHED TO THE FILL FACE OF THE WING COVERING THE ENTIRE LENGTH OF THE CONSTRUCTION JOINT.

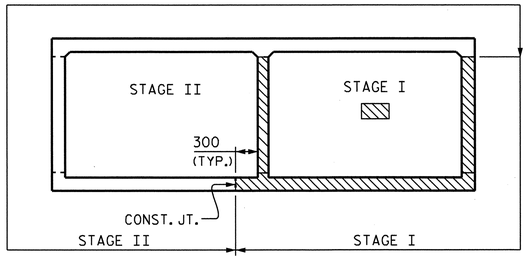

CONSTRUCTION SEQUENCE

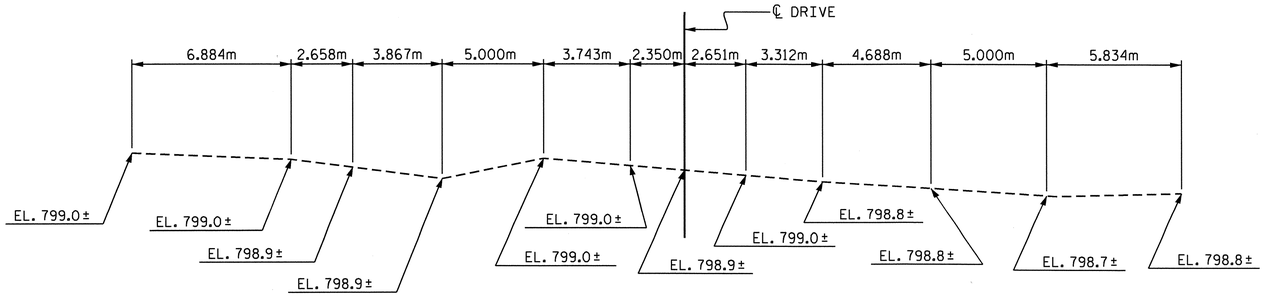

PROFILE ALONG ℄ CULVERT

PROJECT NO. R-2519A
YANCEY COUNTY
STATION: 284+52.460 -L-

SHEET 1 OF 6 CULVERT NO. C-326

STATE OF NORTH CAROLINA
DEPARTMENT OF TRANSPORTATION
RALEIGH

DOUBLE
3.350m X 2.740m
CONCRETE BOX CULVERT
90° SKEW

NORTH CAROLINA PROFESSIONAL SEAL 12929 ENGINEER NORMAN L. WEBLETT BULLOCK, JR.
3/1/11

NORTH CAROLINA PROFESSIONAL SEAL 022005 ENGINEER KEITH PASCHAL
2/28/11

REVISIONS							SHEET NO.
NO.	BY:	DATE:	NO.	BY:	DATE:		C-114
1			3				TOTAL SHEETS
2			4				119

DRAWN BY : J.D. HAWK DATE : 1-20-11
CHECKED BY : J. MYA DATE : 1-25-11

28-FEB-2011 14:07
R:\Structures\str14\Final Plans\R2519A_SD_CU_14.dgn
jdhawk

STR. #14

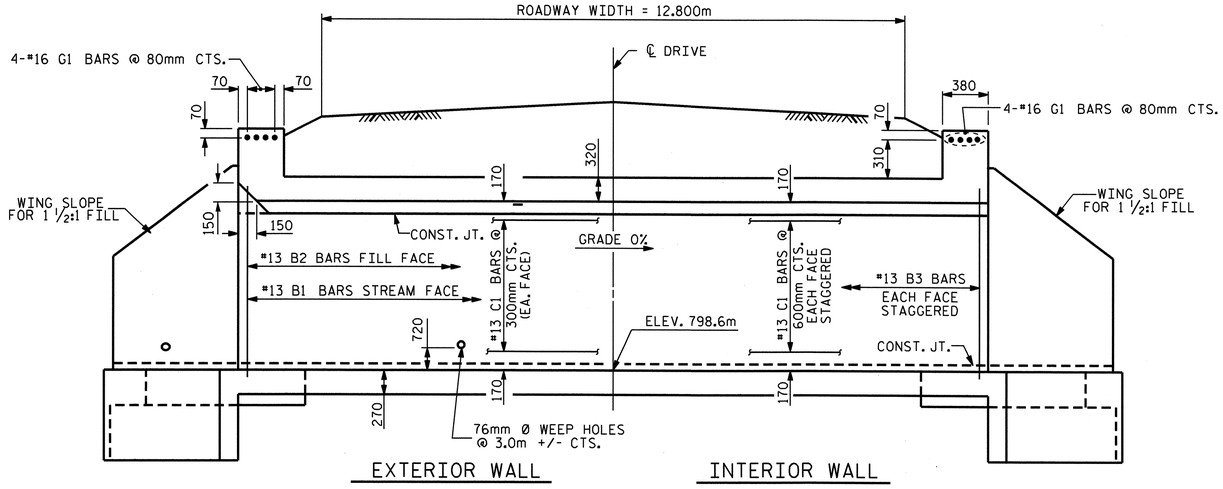

SECTION ALONG ℄ CULVERT

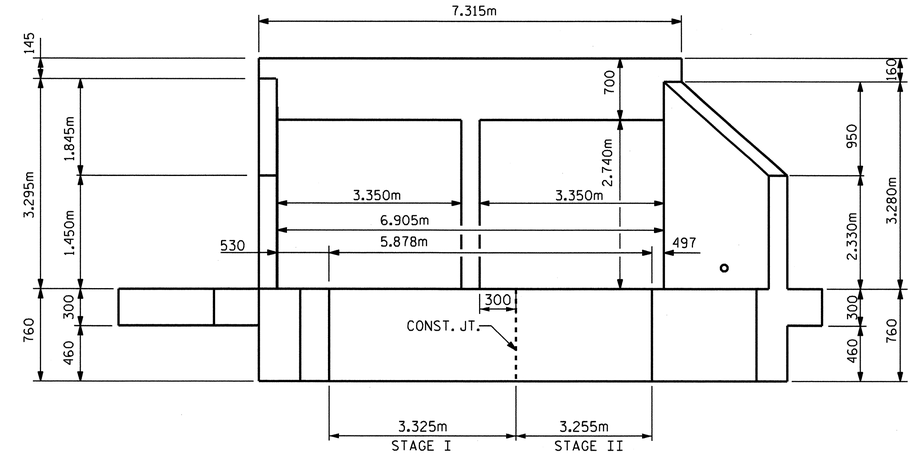

OUTLET END ELEVATION NORMAL TO SKEW

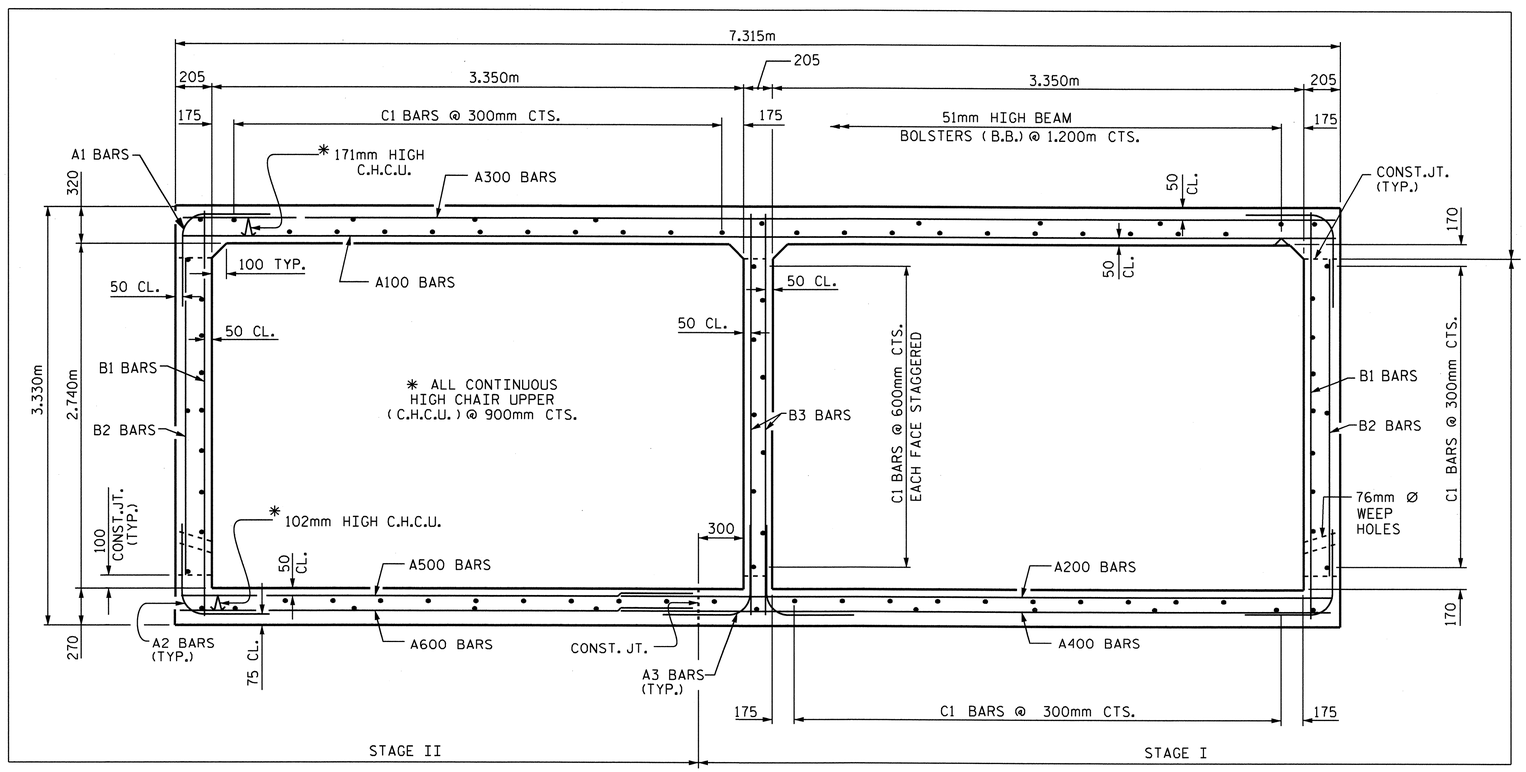

RIGHT ANGLE SECTION OF BARREL

THERE ARE 36 "C" BARS IN SECTION OF BARREL. (STAGE I)
THERE ARE 55 "C" BARS IN SECTION OF BARREL. (STAGE II)

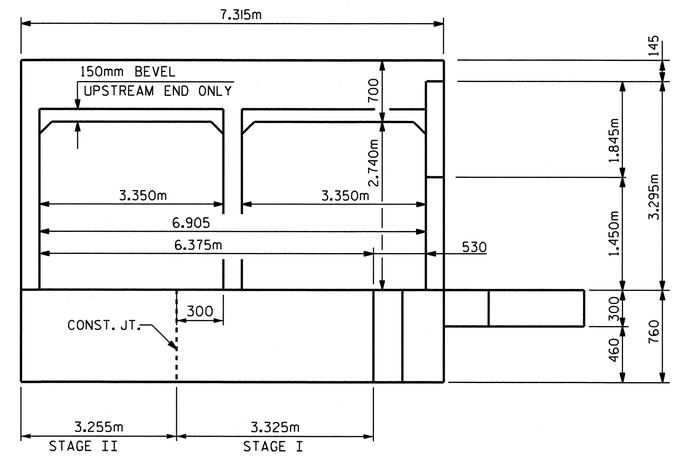

INLET END ELEVATION NORMAL TO SKEW

PROJECT NO. R-2519A
YANCEY COUNTY
STATION: 284+52.460 -L-

SHEET 2 OF 6

STATE OF NORTH CAROLINA
DEPARTMENT OF TRANSPORTATION
RALEIGH

BARREL STANDARD DOUBLE 3.350m X 2.740m CONCRETE BOX CULVERT

NORTH CAROLINA PROFESSIONAL SEAL 22005 ENGINEER C. KEITH PASCHAL
2/28/11

REVISIONS						SHEET NO.
NO.	BY:	DATE:	NO.	BY:	DATE:	C-115
1			3			TOTAL SHEETS
2			4			119

ASSEMBLED BY : J.D. HAWK	DATE : 1-20-11
CHECKED BY : J. MYA	DATE : 1-25-11
DRAWN BY : EEM 6/97	
CHECKED BY : ARB 7/97	

STD. No. CB275sm

STR. #14

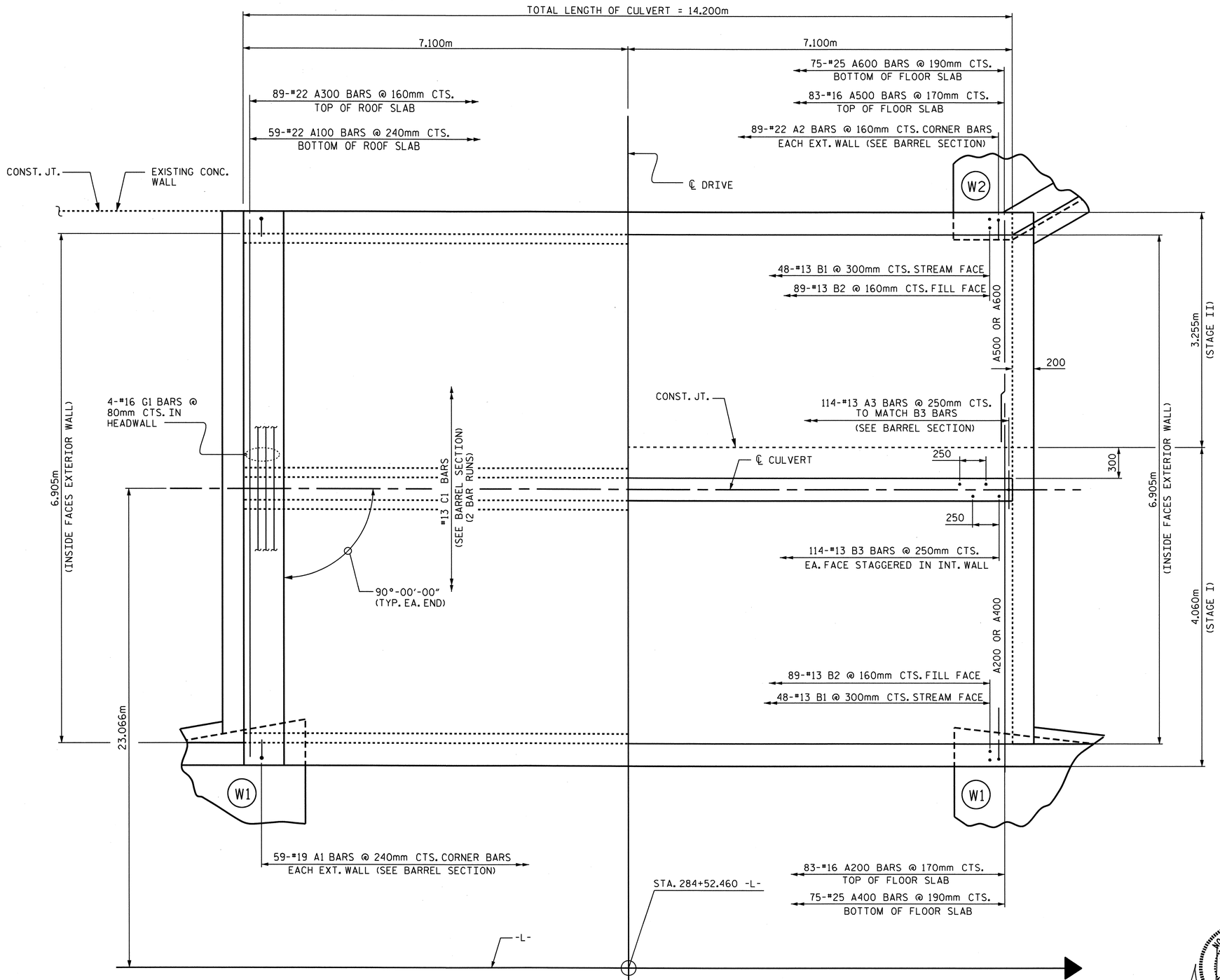

PART PLAN - ROOF SLAB

PART PLAN - FLOOR SLAB

PROJECT NO. R-2519A

YANCEY COUNTY

STATION: 284+52.460 -L-

SHEET 3 OF 6

STATE OF NORTH CAROLINA
DEPARTMENT OF TRANSPORTATION
RALEIGH

DOUBLE 3.350m x 2.740m CONCRETE BOX CULVERT FLOOR PLAN

NORTH CAROLINA PROFESSIONAL SEAL 22005 ENGINEER A. KEITH PASCHAL

2/28/11

REVISIONS						SHEET NO.
NO.	BY:	DATE:	NO.	BY:	DATE:	C-116
1			3			TOTAL SHEETS
2			4			119

DRAWN BY : J.D. HAWK DATE : 1-20-11
CHECKED BY : J. MYA DATE : 1-25-11

28-FEB-2011 12:39
R:\Structures\str14\Final Plans\R2519A_SD_CU_14.dgn
jdhawk

STR. #14

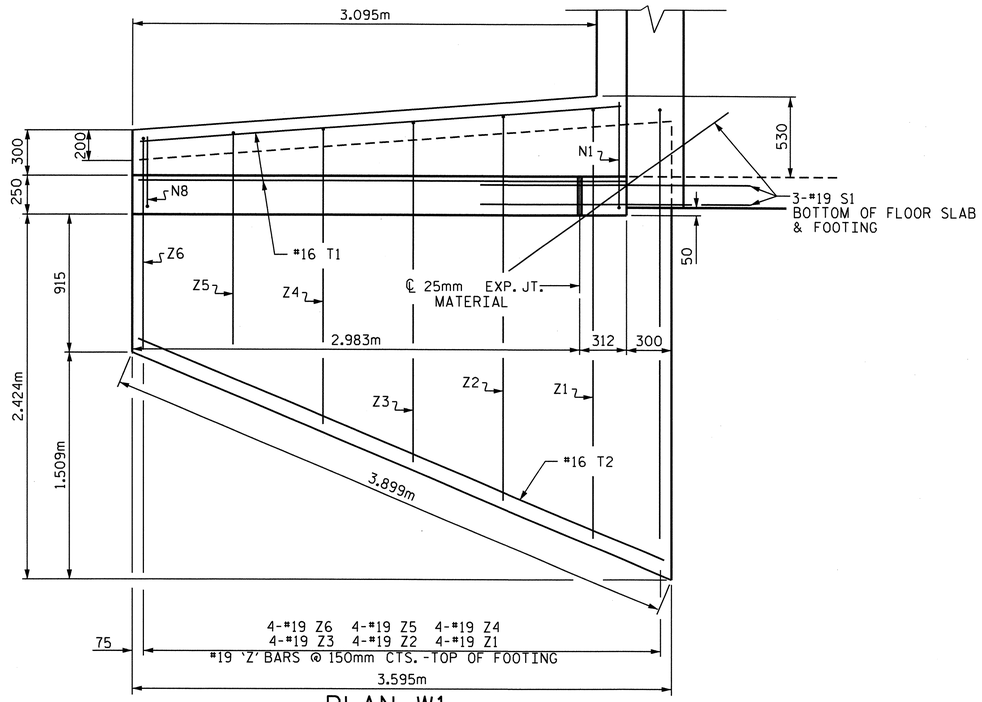

PLAN W1

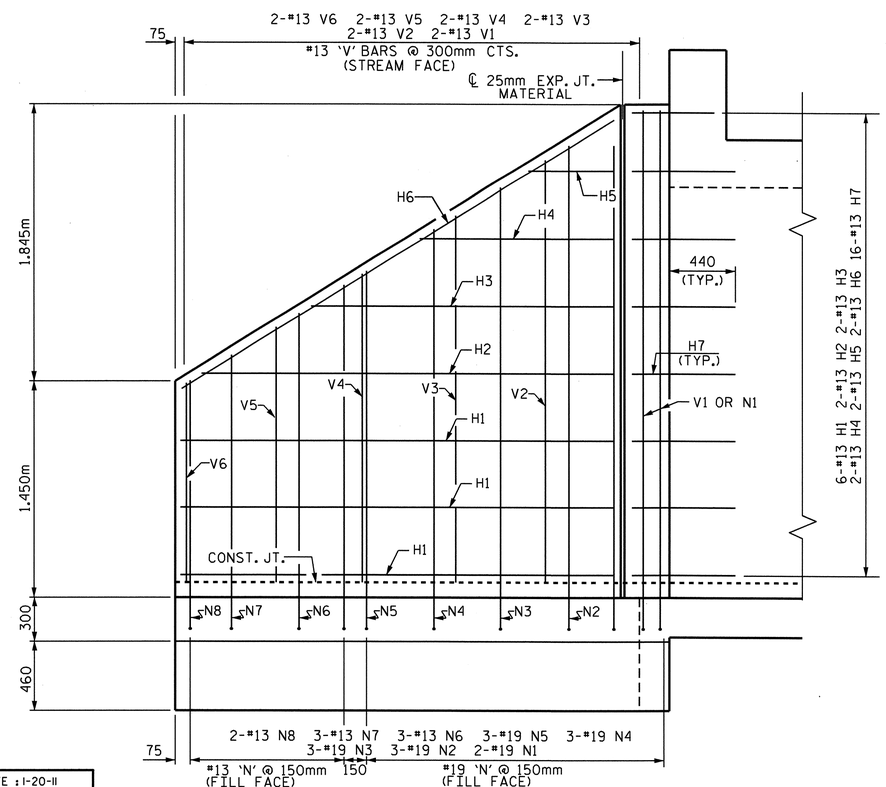

ELEVATION W1

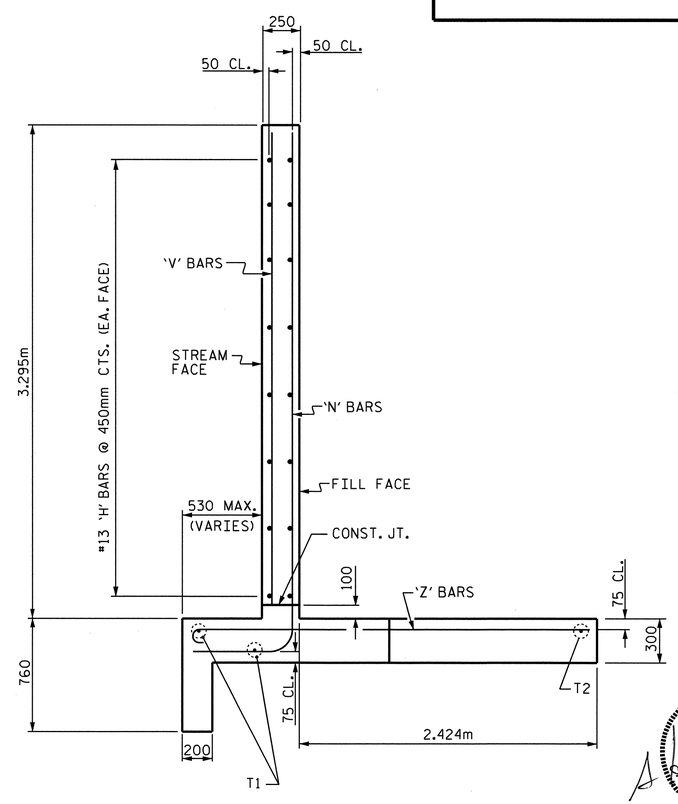

TYPICAL WING SECTION

BAR TYPES

ALL BAR DIMENSIONS ARE OUT TO OUT.

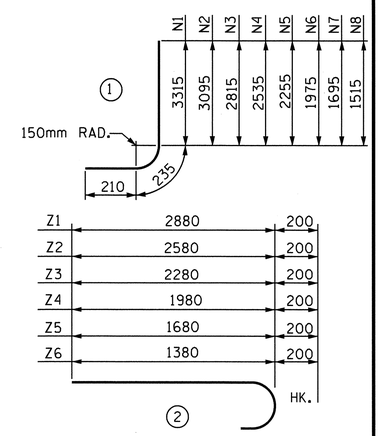

BILL OF MATERIAL W1 (STAGE I)

BAR	NO.	SIZE	TYPE	LENGTH	WEIGHT
H1	12	13	STR	2860	34
H2	4	13	STR	2740	11
H3	4	13	STR	2000	8
H4	4	13	STR	1280	5
H5	4	13	STR	560	2
H6	4	13	STR	3380	14
H7	32	13	STR	700	22
N1	4	19	1	3760	34
N2	6	19	1	3540	47
N3	6	19	1	3260	44
N4	6	19	1	2980	40
N5	6	19	1	2700	36
N6	6	13	1	2420	14
N7	6	13	1	2140	13
N8	4	13	1	1960	8
S1	6	19	STR	1800	24
T1	6	16	STR	3220	30
T2	2	16	STR	3800	12
V1	4	13	STR	3140	12
V2	4	13	STR	2820	11
V3	4	13	STR	2440	10
V4	4	13	STR	2060	8
V5	4	13	STR	1700	7
V6	4	13	STR	1320	5
Z1	8	19	2	3080	55
Z2	8	19	2	2780	50
Z3	8	19	2	2480	44
Z4	8	19	2	2180	39
Z5	8	19	2	1880	34
Z6	8	19	2	1580	28

REINFORCING STEEL
FOR 2 WINGS 700 kg

CLASS A CONCRETE : (STAGE I)

2 WINGS 9.8 m^3

2 PARTIAL CURTAIN WALLS 1.0 m^3

TOTAL 10.8 m^3

PROJECT NO. R-2919A
YANCEY COUNTY
STATION: 284+52.460 -L-

SHEET 4 OF 6

STATE OF NORTH CAROLINA
DEPARTMENT OF TRANSPORTATION
RALEIGH

MODIFIED WING
H = 2.740m SLOPE=1 1/2:1
90° SKEW

NORTH CAROLINA PROFESSIONAL SEAL 22005 ENGINEER C. KEITH PASCHAL
2/28/11

REVISIONS						SHEET NO.
NO.	BY:	DATE:	NO.	BY:	DATE:	C-117
1			3			TOTAL SHEETS
2			4			119

ASSEMBLED BY : J.D. HAWK DATE : 1-20-11
CHECKED BY : J. MYA DATE : 1-25-11
DRAWN BY : FPP 06/97
CHECKED BY : VAP 08/97

28-FEB-2011 12:10
R:\Structures\str14\Final Plans\R2519A_SD_CU_14.dgn
jdhawk

STD. NO. CW9027

STR. #14

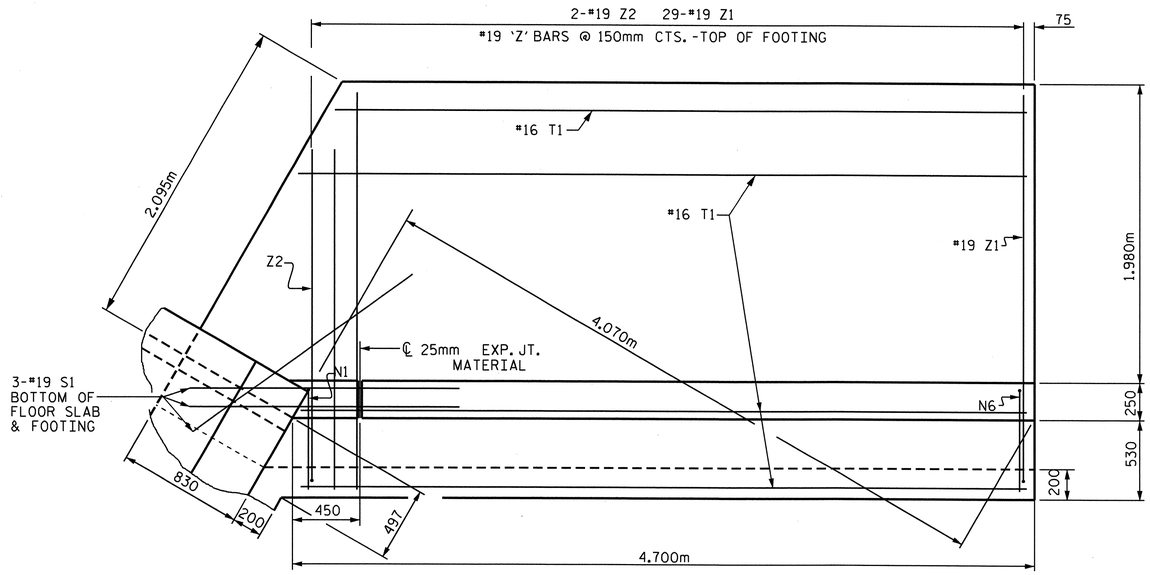

PLAN W2

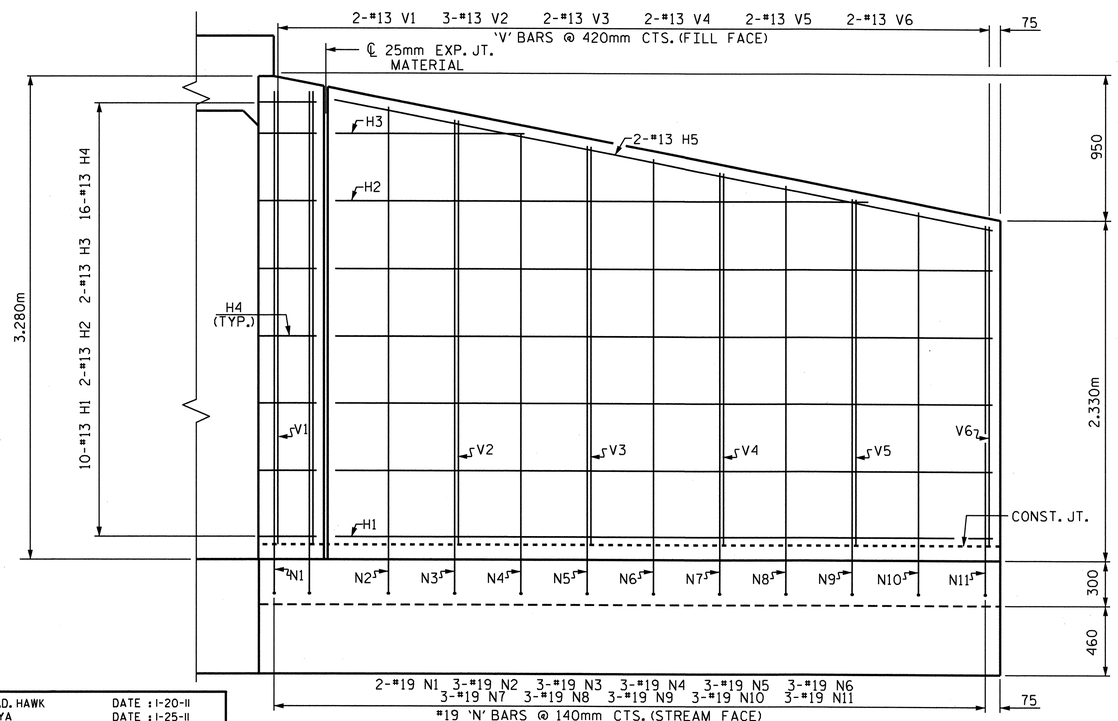

ELEVATION W2

BAR TYPES

ALL BAR DIMENSIONS ARE OUT TO OUT.

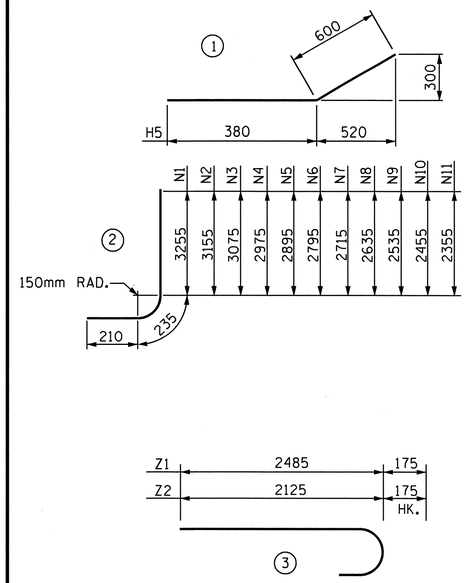

BILL OF MATERIAL W2 (STAGE II)

BAR	NO.	SIZE	TYPE	LENGTH	WEIGHT
H1	10	13	STR	4160	41
H2	2	13	STR	3660	7
H3	2	13	STR	1480	3
H4	16	13	1	980	16
H5	2	13	STR	4240	8
N1	2	19	2	3700	17
N2	3	19	2	3600	24
N3	3	19	2	3520	24
N4	3	19	2	3480	23
N5	3	19	2	3340	22
N6	3	19	2	3240	22
N7	3	19	2	3160	21
N8	3	19	2	3080	21
N9	3	19	2	2980	20
N10	3	19	2	2940	20
N11	3	19	2	2800	19
S1	3	19	STR	1800	12
T1	4	16	STR	4720	29
V1	2	13	STR	3080	6
V2	3	13	STR	2860	9
V3	2	13	STR	2700	5
V4	2	13	STR	2540	5
V5	2	13	STR	2360	5
V6	2	13	STR	2180	4
Z1	29	19	3	2660	172
Z2	2	19	3	2300	10

REINFORCING STEEL FOR 1 WING 565 kg

CLASS A CONCRETE : (STAGE II)

1 WING 7.9 m^3

2 HEADWALLS 2.1 m^3

2 PARTIAL CURTAIN WALLS 0.9 m^3

TOTAL 10.9 m^3

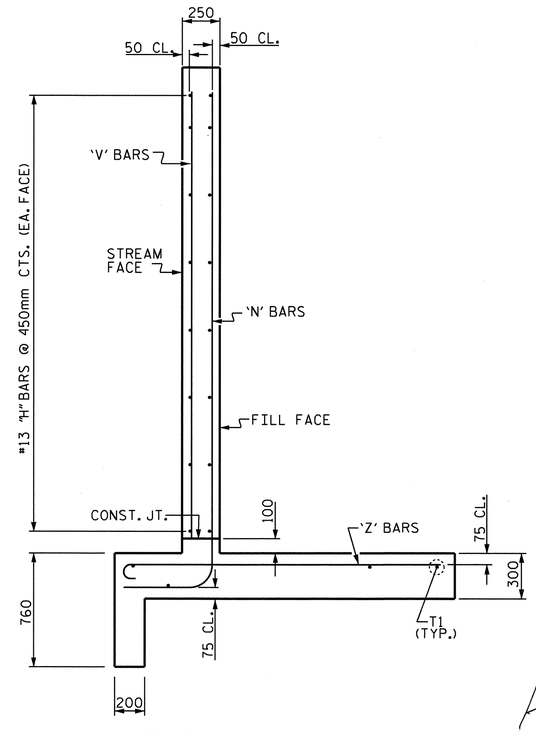

TYPICAL WING SECTION

NORTH CAROLINA PROFESSIONAL SEAL 22005 ENGINEER ANTHONY KEITH PASCHAL
2/28/11

PROJECT NO. R-2519A
YANCEY COUNTY
STATION: 284+52.460 -L-

SHEET 5 OF 6

STATE OF NORTH CAROLINA
DEPARTMENT OF TRANSPORTATION
RALEIGH

# OUTLET WING W2
H = 3.000m
SLOPE = 1 1/2 : 1
90° SKEW

ASSEMBLED BY : J.D. HAWK	DATE : 1-20-11
CHECKED BY : J. MYA	DATE : 1-25-11
DRAWN BY : FPP 06/97	
CHECKED BY : VAP 06/97	

REVISIONS							SHEET NO.
NO.	BY:	DATE:	NO.	BY:	DATE:		C-118
1			3				TOTAL SHEETS
2			4				119

STR. #14 STD. NO. CW9030

BILL OF MATERIAL

STAGE I

BAR	NO.	SIZE	TYPE	LENGTH	WEIGHT
A1	59	#19	1	1800	237
A2	89	#22	1	2080	563
A3	114	#13	1	1380	156
A200	83	#16	STR	4740	611
A400	75	#25	STR	5280	1573
B1	48	#13	STR	3180	152
B2	89	#13	STR	2520	223
B3	114	#13	STR	3220	365
C1	72	#13	STR	7360	527

REINFORCING STEEL 4407 kg.

CLASS A CONCRETE
BARREL 30.9 m3

STAGE II

BAR	NO.	SIZE	TYPE	LENGTH	WEIGHT
A1	59	#19	1	1800	237
A2	89	#22	1	2080	563
A100	59	#22	STR	7200	1292
A300	89	#22	STR	7200	1949
A500	83	#16	STR	3140	404
A600	75	#25	STR	3140	936
B1	48	#13	STR	3180	152
B2	89	#13	STR	2520	223
C1	110	#13	STR	7360	805
G1	8	#16	STR	7200	89

REINFORCING STEEL 6650 kg.

CLASS A CONCRETE
BARREL 54.6 m3

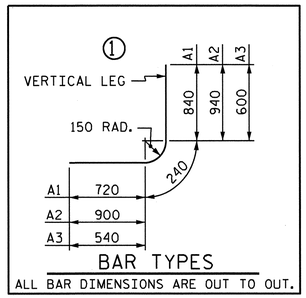

BAR TYPES

ALL BAR DIMENSIONS ARE OUT TO OUT.

SPLICE LENGTH CHART

BAR	SIZE	LENGTH
A200	#16	670
A400	#25	1220
B1	#13	540
B3	#13	540
C1	#13	590

PROJECT NO. R-2519A
YANCEY COUNTY
STATION: 284+52.460 -L-

SHEET 6 OF 6

STATE OF NORTH CAROLINA
DEPARTMENT OF TRANSPORTATION
RALEIGH

DOUBLE 3.350m X 2.740m
CONCRETE BOX CULVERT
90° SKEW

NORTH CAROLINA PROFESSIONAL SEAL 22005 ENGINEER A. KEITH PASCHAL
2/28/11

REVISIONS						SHEET NO.
NO.	BY:	DATE:	NO.	BY:	DATE:	C-119
1			3			TOTAL SHEETS
2			4			119

DRAWN BY : J. MYA DATE : 7-11-10
CHECKED BY : J.G.KHARVA DATE : 10-13-10

28-FEB-2011 12:09
R:\Structures\str14\Final Plans\R2519A_SD_CU_14.dgn
jdhawk

STR. #14

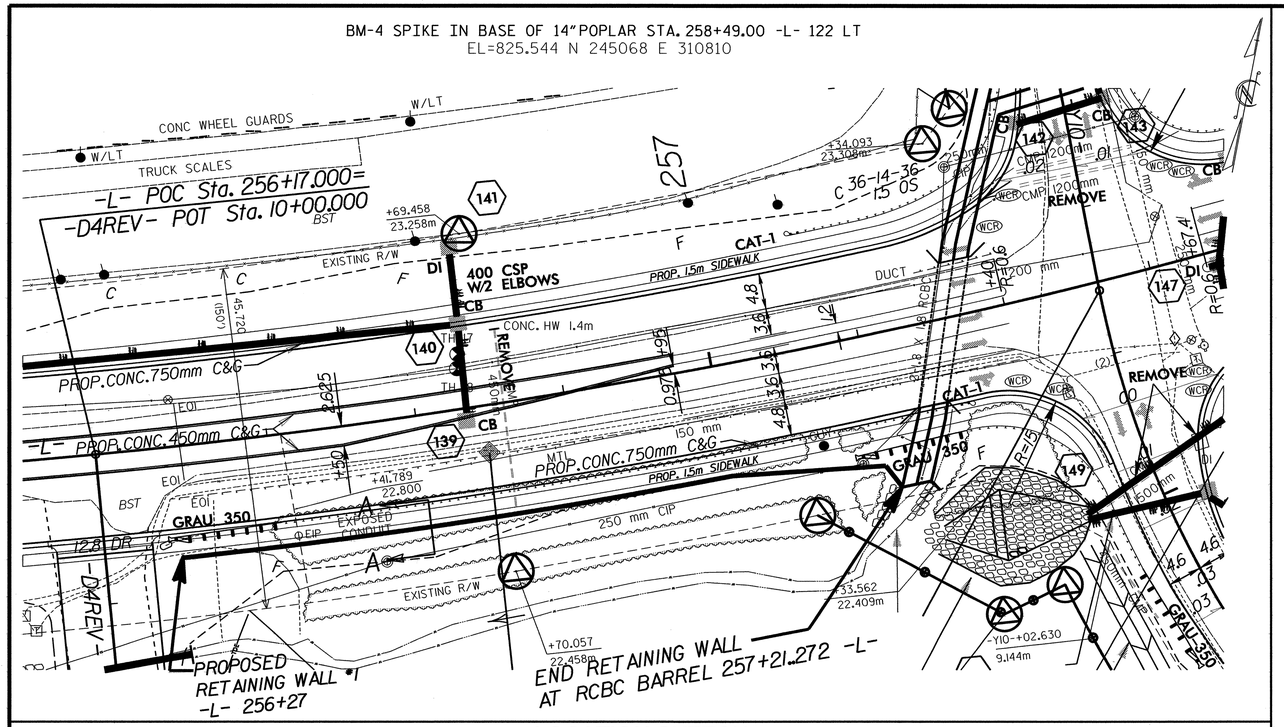

LOCATION SKETCH

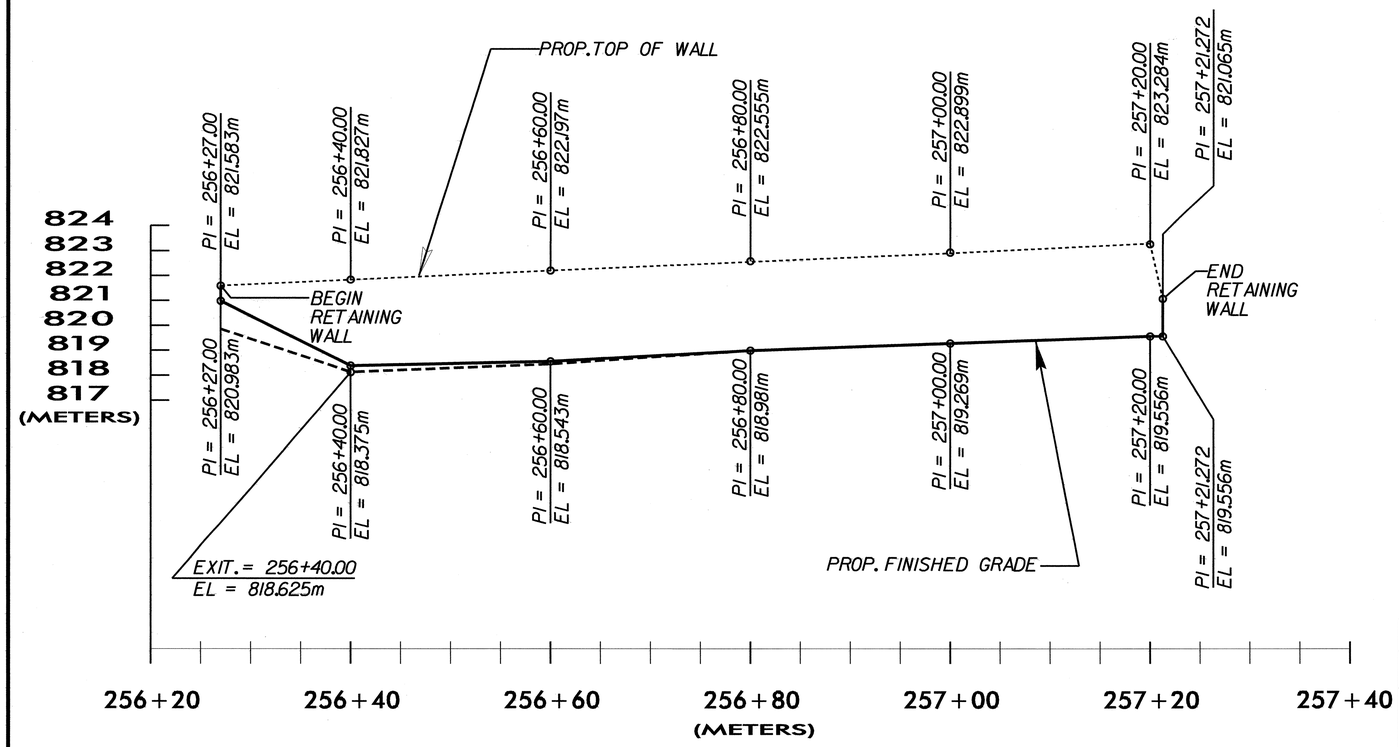

PREPARED BY: J.T.W.	DATE: 01.04.11
REVIEWED BY: S.C.C.	DATE: 01.04.11

METRIC

GEOTECHNICAL ENGINEER	ENGINEER
NORTH CAROLINA PROFESSIONAL SEAL 29869 ENGINEER SHANE C CLARK	
S. C. Clark 2/24/11 SIGNATURE DATE	SIGNATURE DATE

RETAINING WALL ELEVATIONS

-L- STA	OFFSET FROM ℄ (RT.)	ELEV @ TOP OF WALL	✳ PROPOSED FINISHED GRADE	ESTIMATED SCOUR ELEVATION	✳ EXPOSED WALL HEIGHT	✳✳ DESIGN WALL HEIGHT "H"
256+27.000	14.925m	821.583	820.983	820.000	0.600	1.433
256+40.000	14.926m	821.827	818.375	817.300	3.452	4.377
256+60.000	14.926m	822.197	818.543	817.500	3.654	4.047
256+80.000	14.926m	822.555	818.981	818.000	3.574	4.405
257+00.000	14.926m	822.899	819.269	818.000	3.630	4.749
257+20.000	17.626m	823.284	819.556	816.700	3.728	6.434
257+21.272	20.876m	821.065	819.250	816.700	0.450	2.550

✳ ELEVATION @ PROPOSED FINISHED GRADE AND EXPOSED WALL HEIGHT DO NOT INCLUDE EMBEDMENT DEPTH

✳✳ FOR DESIGN WALL HEIGHT "H", SEE ANCHORED SHEET PILE WALL DETAILS

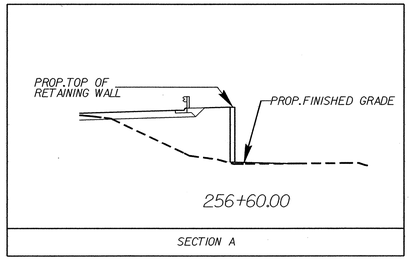

TOTAL STRUCTURE QUANTITIES

ANCHORED SHEET PILE RETAINING WALL	398	SQ. m.

PROJECT NO.: R-2519A

YANCEY **COUNTY**

STATION: 256+27.00 -L- TO 257+21.272 -L-

SHEET 1 OF 1

GEOTECHNICAL ENGINEERING UNIT

☐ EASTERN REGIONAL OFFICE
☒ WESTERN REGIONAL OFFICE
☐ CONTRACT OFFICE

STATE OF NORTH CAROLINA DEPARTMENT OF TRANSPORTATION RALEIGH

ANCHORED SHEET PILE RETAINING WALL NO. 1

REVISIONS							SHEET NO.
NO.	BY	DATE	NO.	BY	DATE		W-1
1			3				TOTAL SHEETS
2			4				15

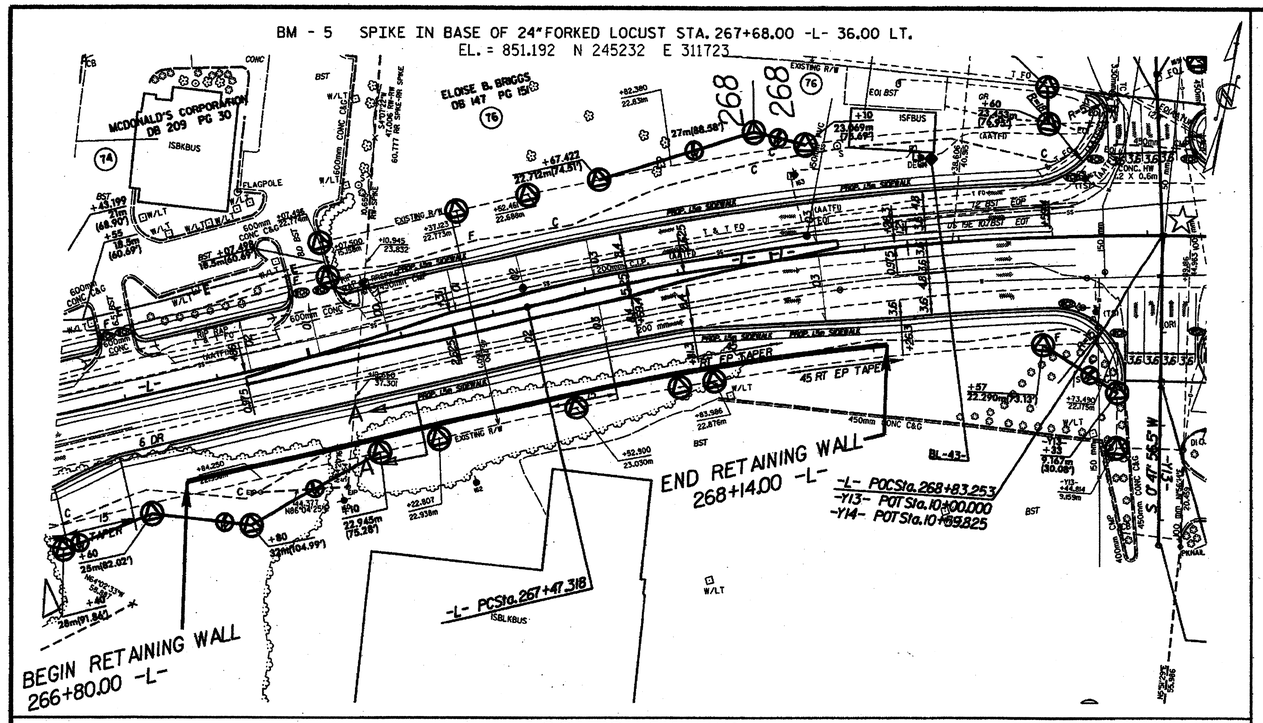

LOCATION SKETCH

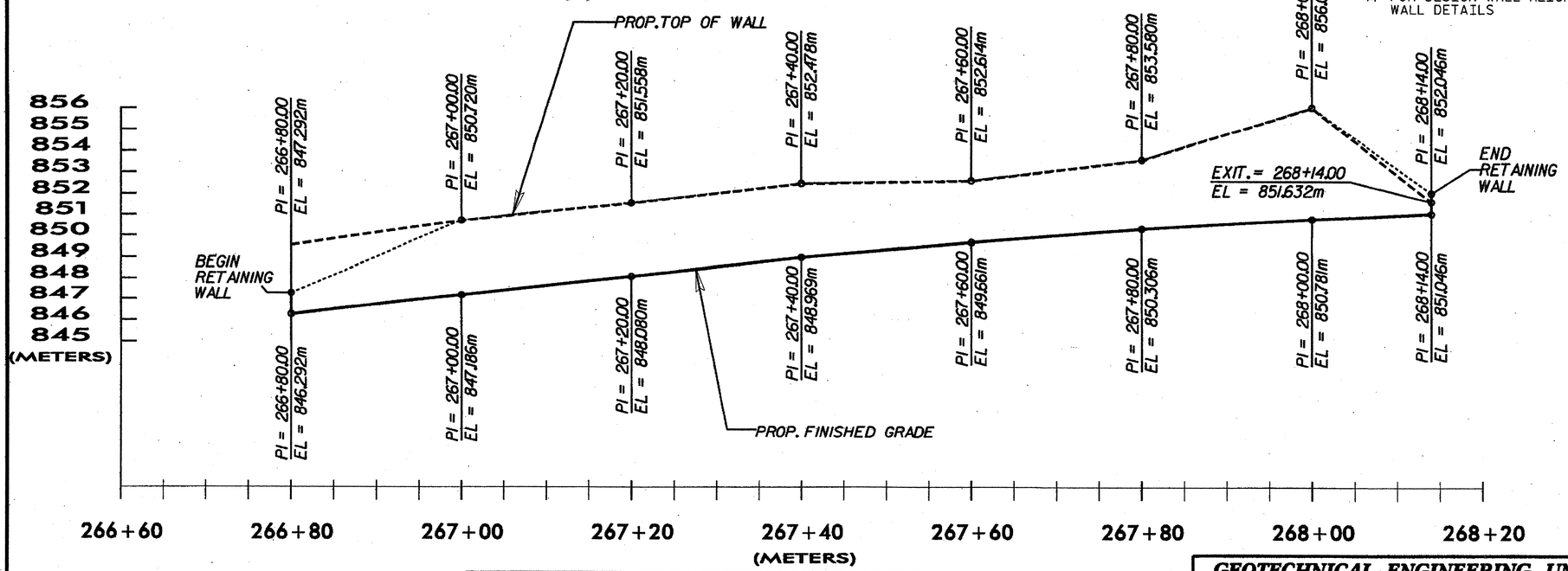

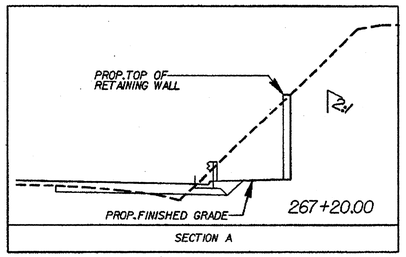

METRIC

GEOTECHNICAL ENGINEER

NORTH CAROLINA PROFESSIONAL SEAL 29869 ENGINEER SHANE C. CLARK

S. C. Clark 5-14-11
SIGNATURE DATE

ENGINEER

SIGNATURE DATE

RETAINING WALL ELEVATIONS

-L- STA	OFFSET FROM ℄ (RIGHT)	ELEV @ TOP OF WALL	* PROPOSED FINISHED GRADE	* EXPOSED WALL HEIGHT	** DESIGN WALL HEIGHT "H"
266+80.00	14.925m	847.292	846.292	1.000	0.847
267+00.00	14.925m	850.720	847.186	3.534	3.381
267+20.00	14.925m	851.558	848.080	3.478	3.325
267+40.00	14.925m	852.478	848.969	3.509	3.356
267+60.00	14.925m	852.614	849.661	2.953	2.800
267+80.00	14.925m	853.580	850.306	3.274	3.121
268+00.00	14.925m	856.031	850.781	5.250	5.097
268+14.00	17.878m	852.046	851.046	1.000	0.847

* ELEVATION @ PROPOSED FINISHED GRADE AND EXPOSED WALL HEIGHT DO NOT INCLUDE EMBEDMENT DEPTH

** FOR DESIGN WALL HEIGHT "H", SEE SOIL NAIL WALL RETAINING WALL DETAILS

TOTAL STRUCTURE QUANTITIES

SOIL NAIL RETAINING WALLS	441	SQ. m.
SOIL NAIL VERIFICATION TESTS	1	EA.
SOIL NAIL PROOF TESTS	6	EA.

PROJECT NO.: R-2519A

YANCEY COUNTY

STATION: 266+80.00 -L- TO 268+14.00 -L-

SHEET 1 OF 1

GEOTECHNICAL ENGINEERING UNIT

☐ EASTERN REGIONAL OFFICE

☒ WESTERN REGIONAL OFFICE

☐ CONTRACT OFFICE

STATE OF NORTH CAROLINA
DEPARTMENT OF TRANSPORTATION
RALEIGH

SOIL NAIL RETAINING WALL NO. 2

REVISIONS						SHEET NO.
NO.	BY	DATE	NO.	BY	DATE	W-2
1			3			TOTAL SHEETS
2			4			15

PREPARED BY: J.T.W.	DATE: 01.04.11
REVIEWED BY: S.C.C.	DATE: 03.14.11

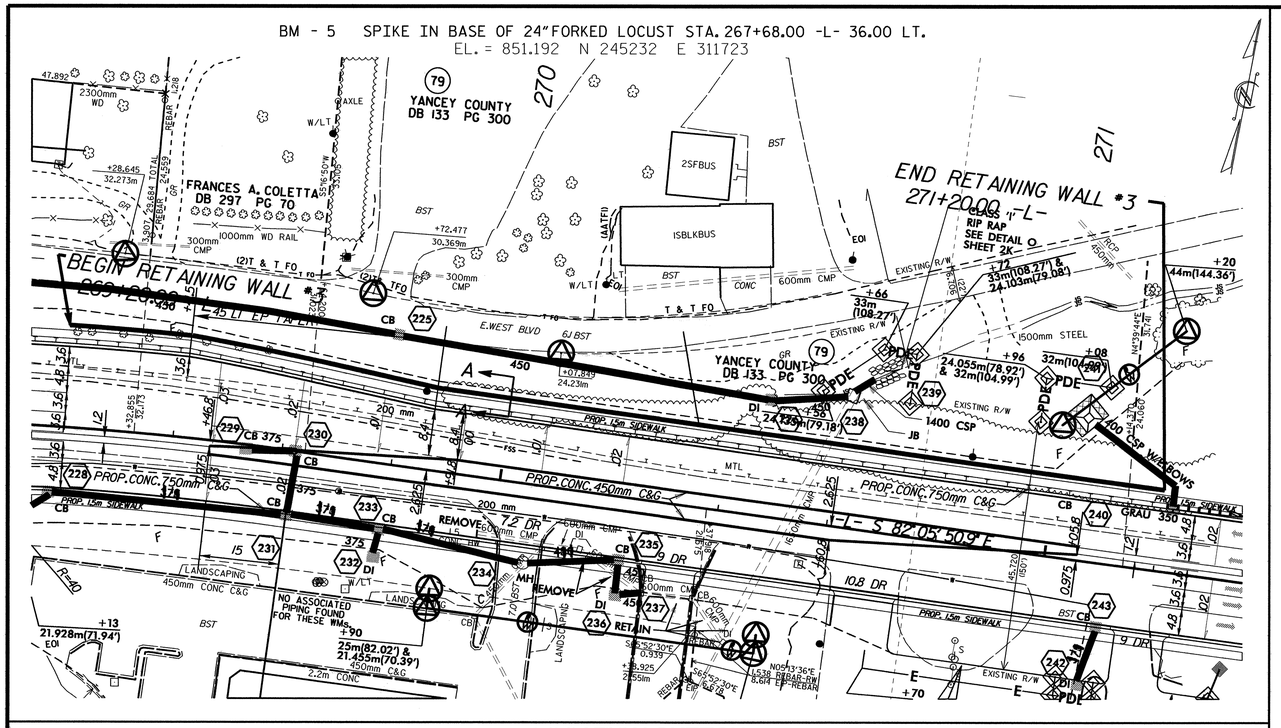

LOCATION SKETCH

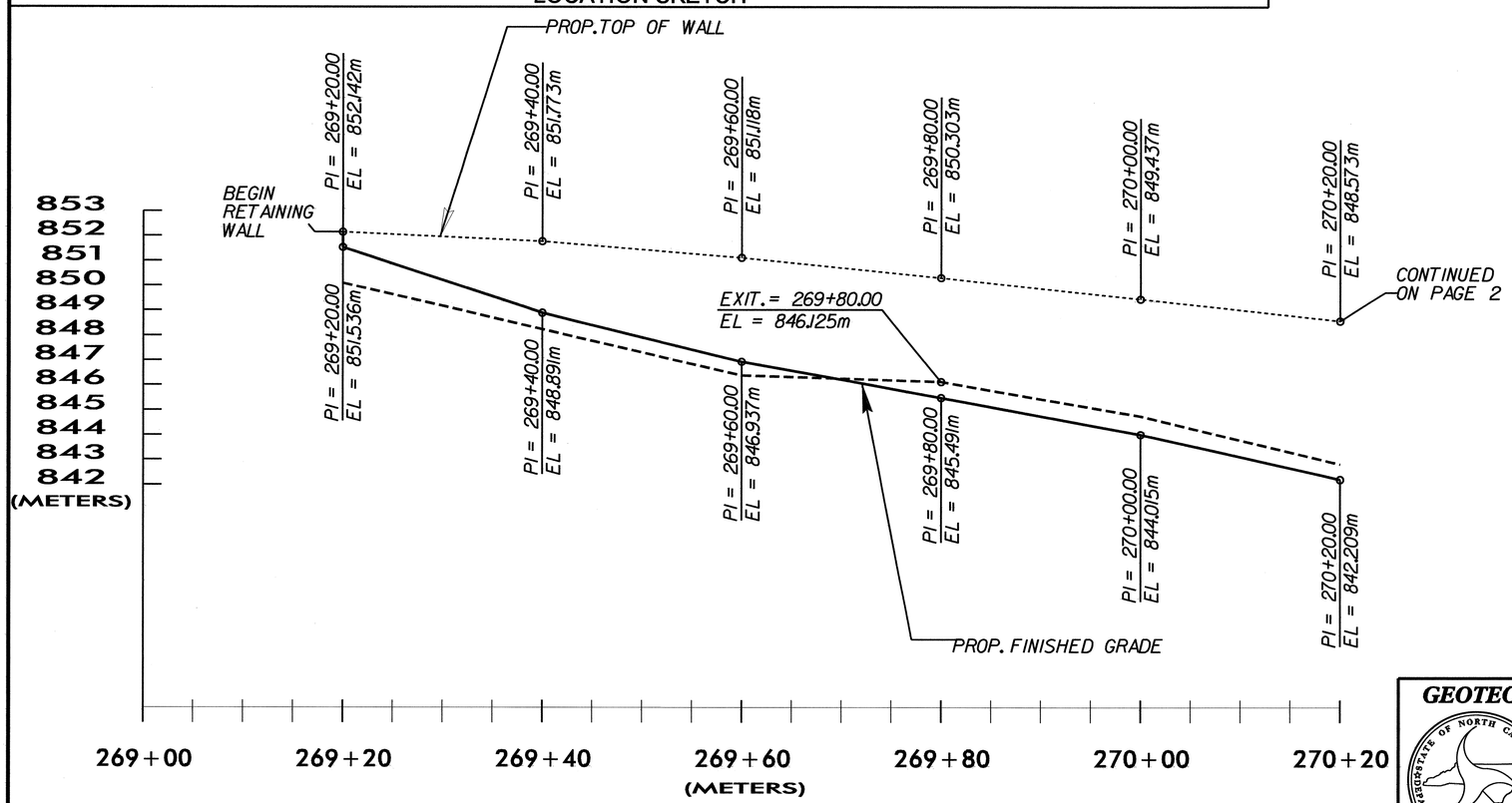

PREPARED BY: J.T.W.	DATE: 01.04.11
REVIEWED BY: S.C.C.	DATE: 01.04.11

METRIC

GEOTECHNICAL ENGINEER	ENGINEER
NORTH CAROLINA PROFESSIONAL SEAL 29869 ENGINEER SHANE C. CLARK	
SIGNATURE DATE 2/24/11	SIGNATURE DATE

RETAINING WALL ELEVATIONS

-L- STA	OFFSET FROM ℄ (LEFT)	ELEV @ TOP OF WALL	* PROPOSED FINISHED GRADE	* EXPOSED WALL HEIGHT	** DESIGN WALL HEIGHT "H"
269+20.00	18.525m	852.142	851.536	0.606	0.453
269+40.00	20.525m	851.773	848.891	2.882	2.729
269+60.00	18.431m	851.118	846.937	4.181	4.028
269+80.00	16.809m	850.303	845.491	4.812	4.659
270+00.00	16.285m	849.437	844.015	5.422	5.269
270+20.00	16.285m	848.573	842.209	6.364	6.211

ELEVATION @ PROPOSED FINISHED GRADE AND EXPOSED WALL HEIGHT DO NOT INCLUDE EMBEDMENT DEPTH

FOR DESIGN WALL HEIGHT "H", SEE MECHANICALLY STABILIZED EARTH (MSE) WALL DETAILS

TOTAL STRUCTURE QUANTITIES

MECHANICALLY STABILIZED EARTH RETAINING WALLS	1033	SQ. m.

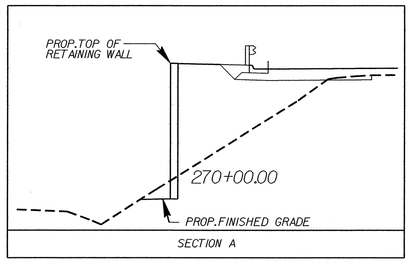

PROJECT NO.: R-2519A

YANCEY **COUNTY**

STATION: 269+20.00 -L- TO 271+20.00 -L-

SHEET 1 OF 2

GEOTECHNICAL ENGINEERING UNIT

- ☐ EASTERN REGIONAL OFFICE
- ☒ WESTERN REGIONAL OFFICE
- ☐ CONTRACT OFFICE

STATE OF NORTH CAROLINA
DEPARTMENT OF TRANSPORTATION
RALEIGH

MECHANICALLY STABILIZED EARTH RETAINING WALL NO. 3

REVISIONS						SHEET NO.
NO.	BY	DATE	NO.	BY	DATE	W-3
1	–	–	3	–	–	TOTAL SHEETS
2	–	–	4	–	–	15

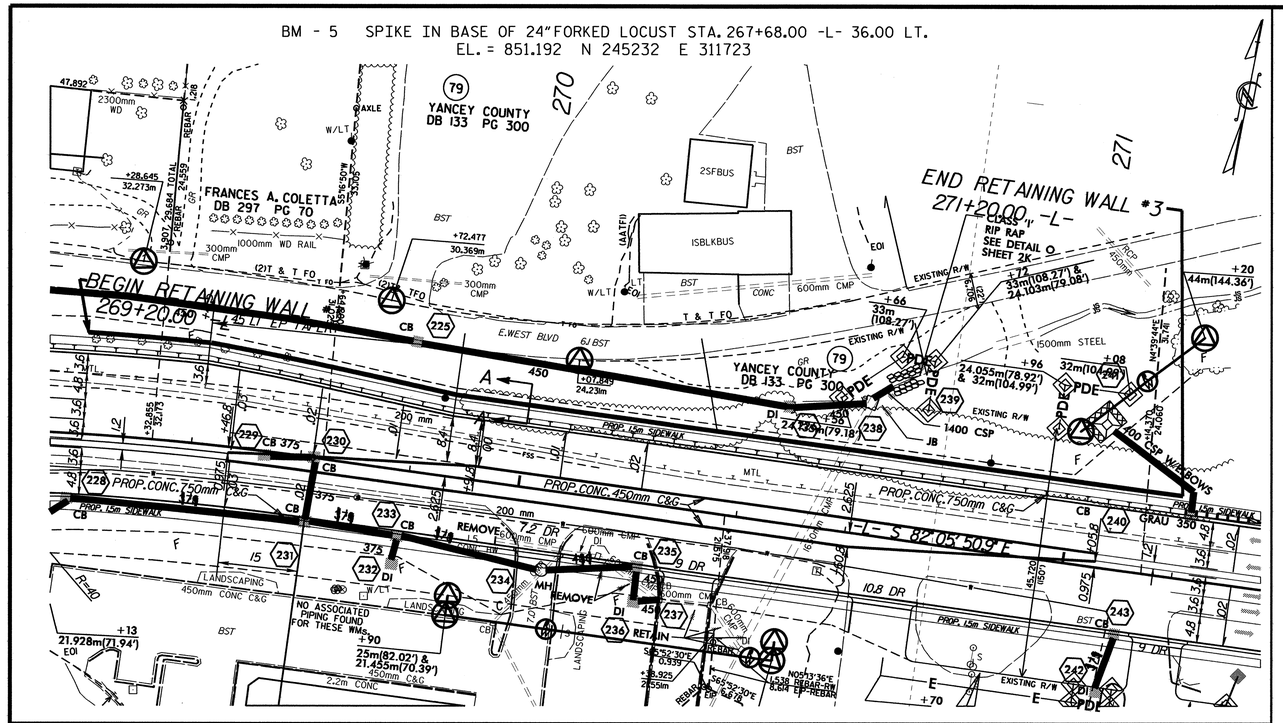

LOCATION SKETCH

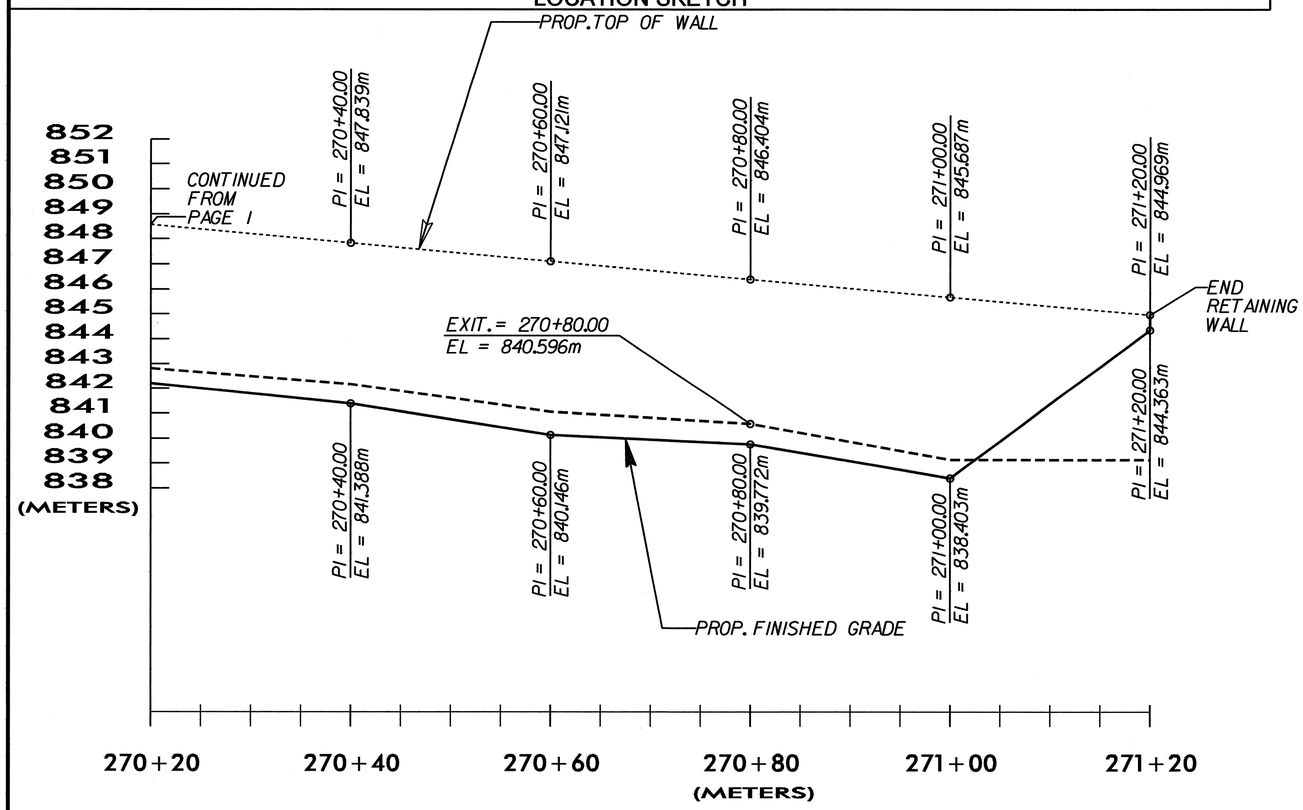

PREPARED BY: J.T.W.	DATE: 01.04.11
REVIEWED BY: S.C.C.	DATE: 01.04.11

METRIC

GEOTECHNICAL ENGINEER

NORTH CAROLINA PROFESSIONAL SEAL 29869 ENGINEER SHANE C. CLARK

SIGNATURE DATE 2/21/11

ENGINEER

SIGNATURE DATE

RETAINING WALL ELEVATIONS

-L- STA	OFFSET FROM ℄ (LEFT)	ELEV @ TOP OF WALL	* PROPOSED FINISHED GRADE	* EXPOSED WALL HEIGHT	** DESIGN WALL HEIGHT "H"
270+40.00	16.285m	847.839	841.388	6.451	6.298
270+60.00	16.285m	847.121	840.146	6.976	6.823
270+80.00	16.285m	846.404	839.772	6.632	6.479
271+00.00	16.285m	845.687	838.403	7.284	7.131
271+20.00	16.285m	844.969	844.363	0.606	0.453

* ELEVATION @ PROPOSED FINISHED GRADE AND EXPOSED WALL HEIGHT DO NOT INCLUDE EMBEDMENT DEPTH

** FOR DESIGN WALL HEIGHT "H", SEE MECHANICALLY STABILIZED EARTH (MSE) WALL DETAILS

PROJECT NO.: R-2519A

YANCEY ***COUNTY***

STATION: 269+20.00 -L- TO 271+20.00 -L-

SHEET 2 OF 2

GEOTECHNICAL ENGINEERING UNIT

☐ *EASTERN REGIONAL OFFICE*

☒ *WESTERN REGIONAL OFFICE*

☐ *CONTRACT OFFICE*

STATE OF NORTH CAROLINA
DEPARTMENT OF TRANSPORTATION
RALEIGH

MECHANICALLY STABILIZED EARTH RETAINING WALL NO. 3

REVISIONS							SHEET NO.
NO.	BY	DATE	NO.	BY	DATE		W-4
1			3				TOTAL SHEETS
2			4				15

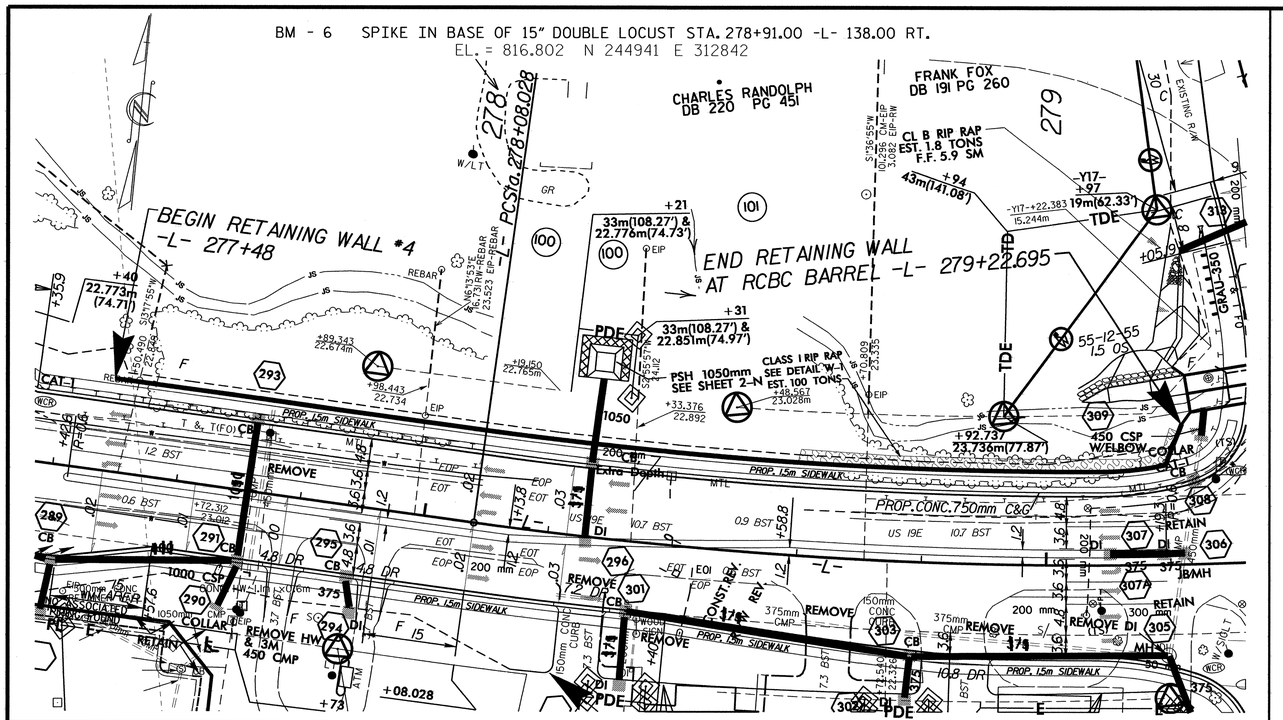

LOCATION SKETCH

GEOTECHNICAL ENGINEER	ENGINEER
NORTH CAROLINA PROFESSIONAL SEAL 29869 ENGINEER SHANE C CLARK	
SIGNATURE DATE 2/24/11	SIGNATURE DATE

RETAINING WALL ELEVATIONS

-L- STA	OFFSET FROM ℄ (LEFT)	ELEV @ TOP OF WALL	* PROPOSED FINISHED GRADE	ESTIMATED SCOUR ELEVATION	* EXPOSED WALL HEIGHT	** DESIGN WALL HEIGHT "H"
277+48.00	14.925m	820.698	820.098	819.700	0.600	0.848
277+60.00	14.925m	820.127	814.944	813.900	5.183	6.077
277+80.00	14.925m	819.208	813.876	812.800	5.332	6.258
278+00.00	14.925m	818.304	813.619	812.600	4.685	5.554
278+20.00	14.925m	817.307	812.534	810.500	4.773	6.657
278+40.00	14.925m	816.358	813.748	812.000	2.610	4.208

* ELEVATION @ PROPOSED FINISHED GRADE AND EXPOSED WALL HEIGHT DO NOT INCLUDE EMBEDMENT DEPTH

** FOR DESIGN WALL HEIGHT "H", SEE ANCHORED SHEET PILE WALL DETAILS

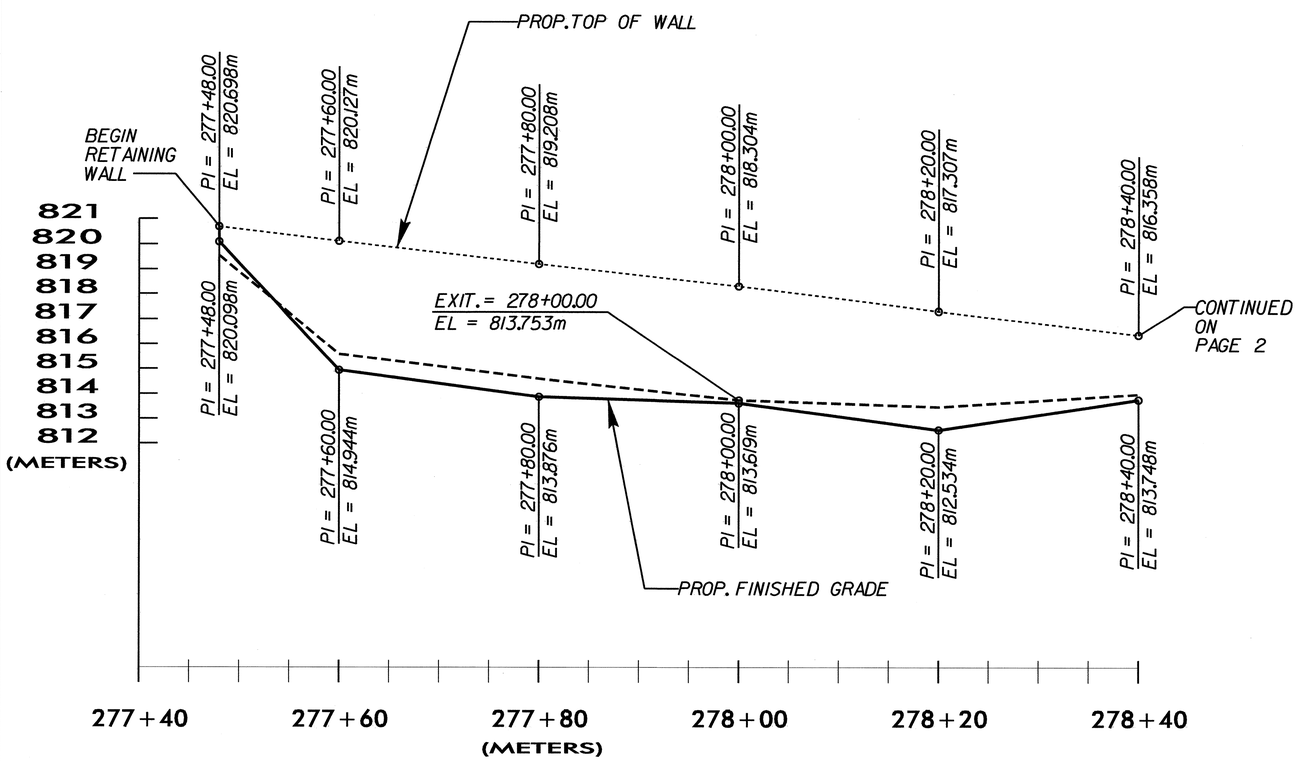

TOTAL STRUCTURE QUANTITIES

ANCHORED SHEET PILE RETAINING WALL	781	SQ. m.

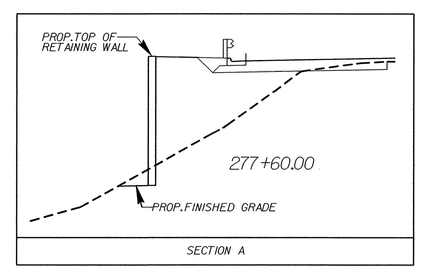

PREPARED BY: J.T.W.	DATE: 01.04.11
REVIEWED BY: S.C.C.	DATE: 01.04.11

GEOTECHNICAL ENGINEERING UNIT

☐ EASTERN REGIONAL OFFICE
☒ WESTERN REGIONAL OFFICE
☐ CONTRACT OFFICE

STATE OF NORTH CAROLINA
DEPARTMENT OF TRANSPORTATION
RALEIGH

PROJECT NO.: R-2519A
YANCEY COUNTY
STATION: 277+48.00 -L- TO 279+22.695 -L-

SHEET 1 OF 2

ANCHORED SHEET PILE RETAINING WALL NO. 4

REVISIONS						SHEET NO.
NO.	BY	DATE	NO.	BY	DATE	W-5
1	-	-	3	-	-	TOTAL SHEETS
2	-	-	4	-	-	15

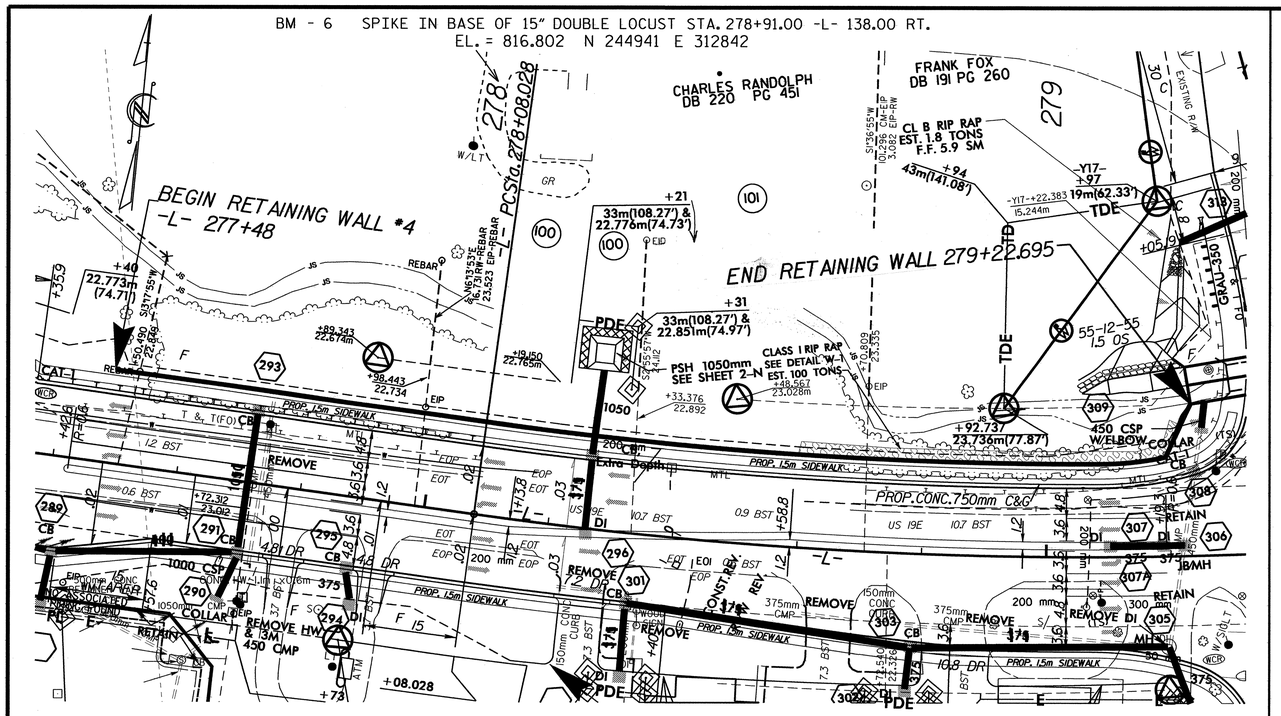

LOCATION SKETCH

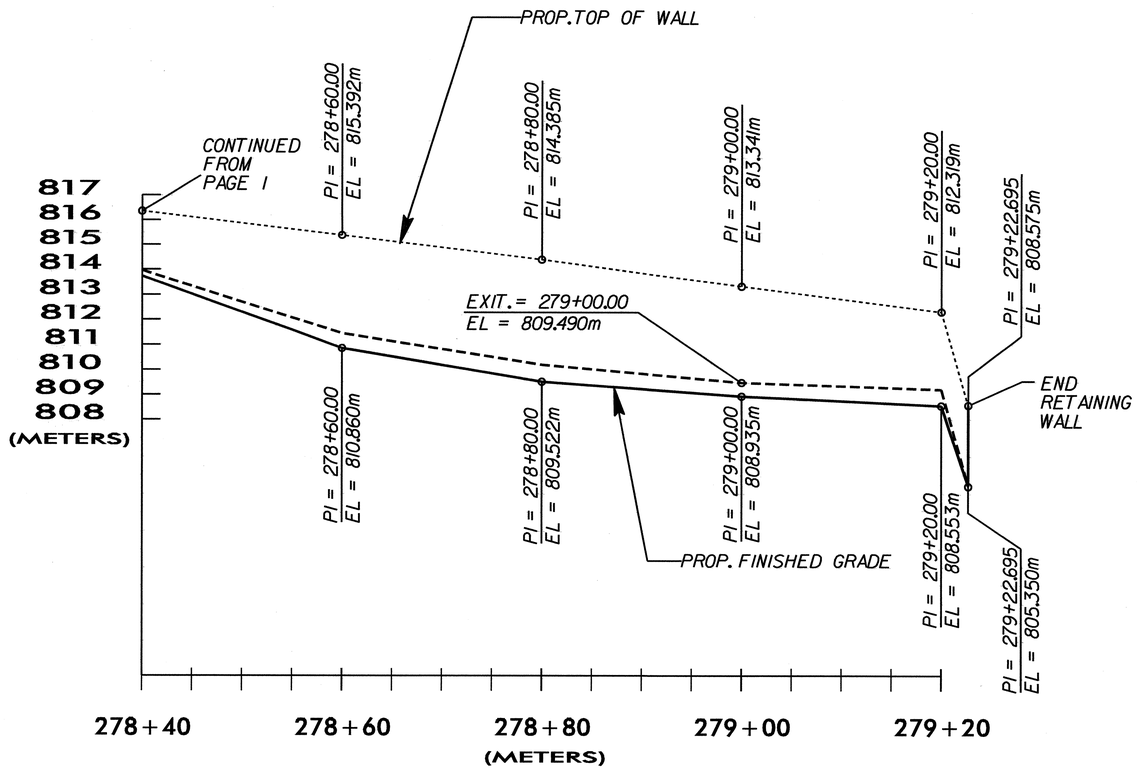

PREPARED BY: J.T.W.	DATE: 01.04.11
REVIEWED BY: S.C.C.	DATE: 01.04.11

METRIC

GEOTECHNICAL ENGINEER	ENGINEER
NORTH CAROLINA PROFESSIONAL SEAL 29869 ENGINEER SHANE C CLARK	
S. Clark 7/22/11	
SIGNATURE DATE	SIGNATURE DATE

RETAINING WALL ELEVATIONS

-L- STA	OFFSET FROM ℄ (LEFT)	ELEV @ TOP OF WALL	* PROPOSED FINISHED GRADE	ESTIMATED SCOUR ELEVATION	* EXPOSED WALL HEIGHT	** DESIGN WALL HEIGHT "H"
278+60.00	14.925m	815.392	810.860	808.000	4.532	7.242
278+80.00	14.925m	814.385	809.522	806.500	5.183	7.735
279+00.00	14.925m	813.341	808.935	805.900	5.332	7.291
279+20.00	15.930m	812.319	808.553	804.600	4.685	7.719
279+22.695	23.425m	808.575	805.350	804.600	3.225	3.825

* ELEVATION @ PROPOSED FINISHED GRADE AND EXPOSED WALL HEIGHT DO NOT INCLUDE EMBEDMENT DEPTH

** FOR DESIGN WALL HEIGHT "H", SEE ANCHORED SHEET PILE WALL DETAILS

PROJECT NO.: R-2519A
YANCEY **COUNTY**
STATION: 277+48.00 -L- TO 279+22.695 -L-
SHEET 2 OF 2

GEOTECHNICAL ENGINEERING UNIT

☐ EASTERN REGIONAL OFFICE
☒ WESTERN REGIONAL OFFICE
☐ CONTRACT OFFICE

STATE OF NORTH CAROLINA
DEPARTMENT OF TRANSPORTATION
RALEIGH

ANCHORED SHEET PILE RETAINING WALL NO. 4

REVISIONS						SHEET NO.
NO.	BY	DATE	NO.	BY	DATE	W-6
1			3			TOTAL SHEETS
2			4			15

BM - 7 SPIKE IN BASE OF 10" MAPLE STA. 285+10.00 -L- 93.00 LT.
EL. = 803.589 N 245270 E 313437

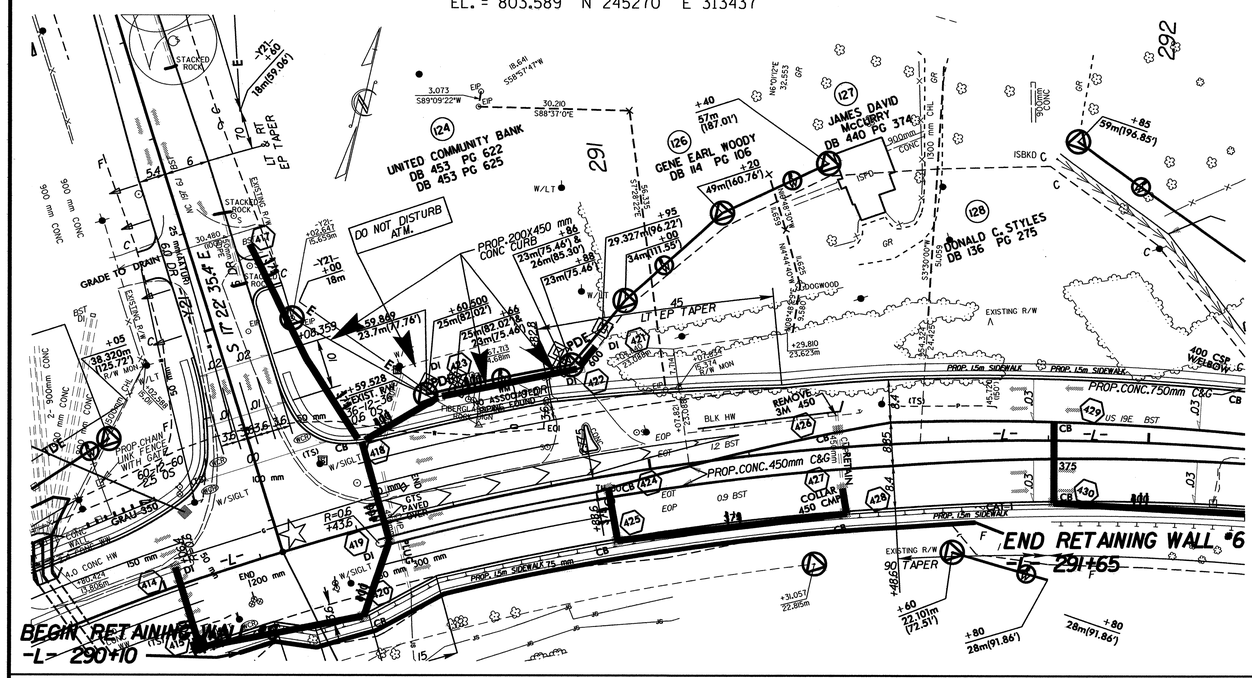

LOCATION SKETCH

RETAINING WALL ELEVATIONS						
-L- STA	OFFSET FROM ℄ (LEFT)	ELEV @ TOP OF WALL	✳ PROPOSED FINISHED GRADE	ESTIMATED SCOUR ELEVATION	✳ EXPOSED WALL HEIGHT	✳✳ DESIGN WALL HEIGHT "H"
290+10.00	16.725m	795.756	794.756	794.000	1.000	1.606
290+20.00	17.930m	795.630	793.417	792.000	2.214	33.480
290+40.00	19.980m	795.484	793.405	792.000	2.080	3.334
290+60.00	19.980m	795.626	793.499	792.000	2.128	3.746
290+80.00	16.285m	795.756	794.041	792.000	1.716	3.606
291+00.00	16.285m	795.889	794.618	793.000	1.272	2.739

✳ ELEVATION @ PROPOSED FINISHED GRADE AND EXPOSED WALL HEIGHT DO NOT INCLUDE EMBEDMENT DEPTH

✳✳ FOR DESIGN WALL HEIGHT "H", SEE ANCHORED SHEET PILE WALL DETAILS

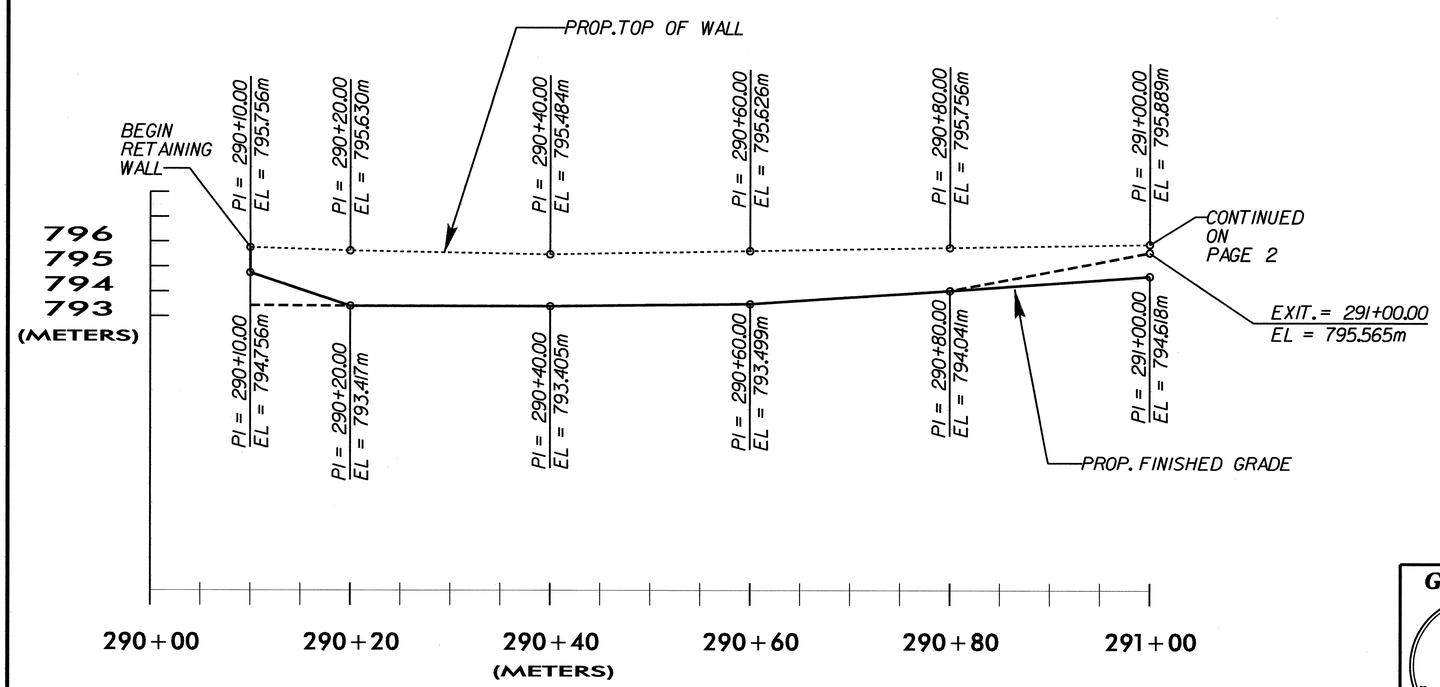

TOTAL STRUCTURE QUANTITIES		
ANCHORED SHEET PILE RETAINING WALL	300	SQ. m.

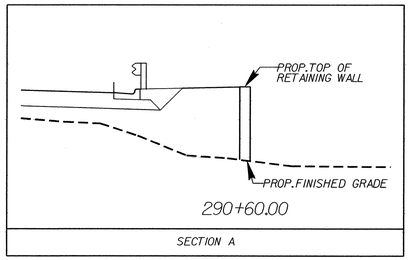

GEOTECHNICAL ENGINEER — NORTH CAROLINA PROFESSIONAL SEAL 29869 ENGINEER SHANE C CLARK — SIGNATURE — DATE 2/24/11

ENGINEER — SIGNATURE — DATE

PROJECT NO.: R-2519A
YANCEY COUNTY
STATION: 290+10.00 -L- TO 291+65.00 -L-
SHEET 1 OF 2

GEOTECHNICAL ENGINEERING UNIT
☐ EASTERN REGIONAL OFFICE
☒ WESTERN REGIONAL OFFICE
☐ CONTRACT OFFICE

STATE OF NORTH CAROLINA
DEPARTMENT OF TRANSPORTATION
RALEIGH

ANCHORED SHEET PILE RETAINING WALL NO. 6

REVISIONS							SHEET NO.
NO.	BY	DATE	NO.	BY	DATE		W-7
1	-	-	3	-	-		TOTAL SHEETS
2	-	-	4	-	-		15

PREPARED BY: J.T.W.	DATE: 01.04.11
REVIEWED BY: S.C.C.	DATE: 01.04.11

BM - 7 SPIKE IN BASE OF 10" MAPLE STA. 285+10.00 -L- 93.00 LT.
EL. = 803.589 N 245270 E 313437

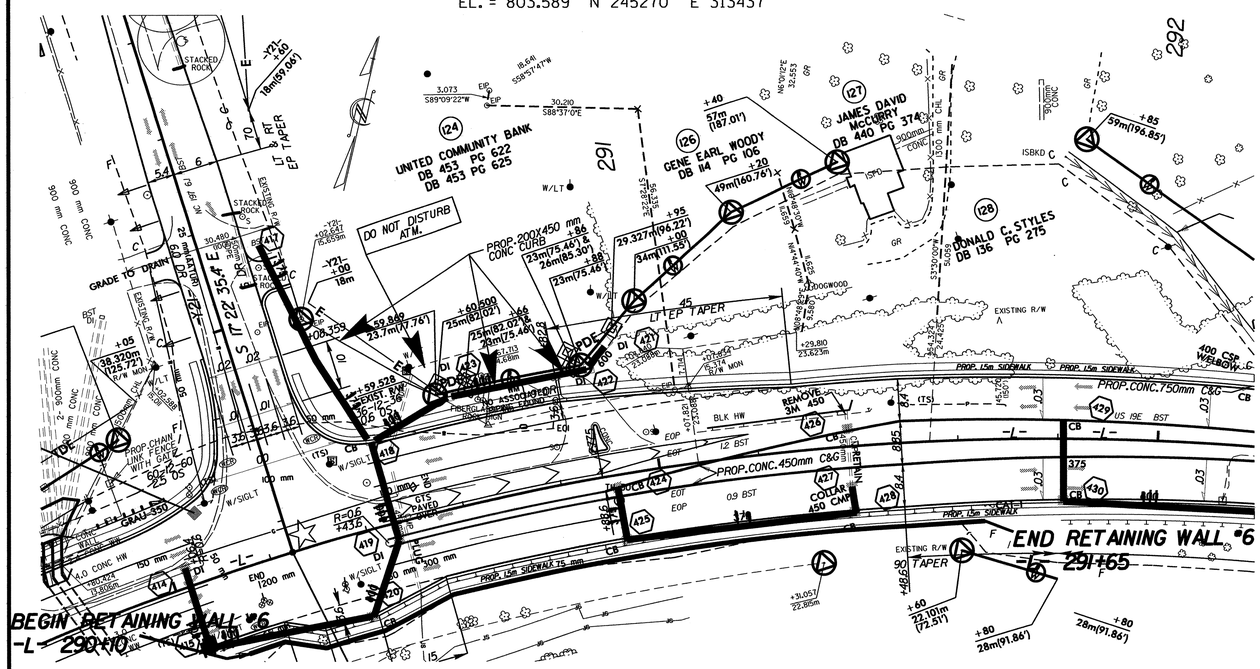

LOCATION SKETCH

METRIC

GEOTECHNICAL ENGINEER	ENGINEER
NORTH CAROLINA PROFESSIONAL SEAL 29869 ENGINEER SHANE C. CLARK	
SIGNATURE 2/22/11 DATE	SIGNATURE DATE

RETAINING WALL ELEVATIONS

-L- STA	OFFSET FROM ℄ (LEFT)	ELEV @ TOP OF WALL	* PROPOSED FINISHED GRADE	ESTIMATED SCOUR ELEVATION	* EXPOSED WALL HEIGHT	** DESIGN WALL HEIGHT "H"
291+20.00	16.725m	796.021	794.632	793.600	1.390	2.271
291+40.00	16.725m	796.153	793.863	792.800	2.290	3.203
291+60.00	16.497m	796.289	792.978	791.900	3.312	4.239
291+65.00	16.281m	796.325	795.325	794.300	1.000	1.875

* ELEVATION @ PROPOSED FINISHED GRADE AND EXPOSED WALL HEIGHT DO NOT INCLUDE EMBEDMENT DEPTH

** FOR DESIGN WALL HEIGHT "H", SEE ANCHORED SHEET PILE WALL DETAILS

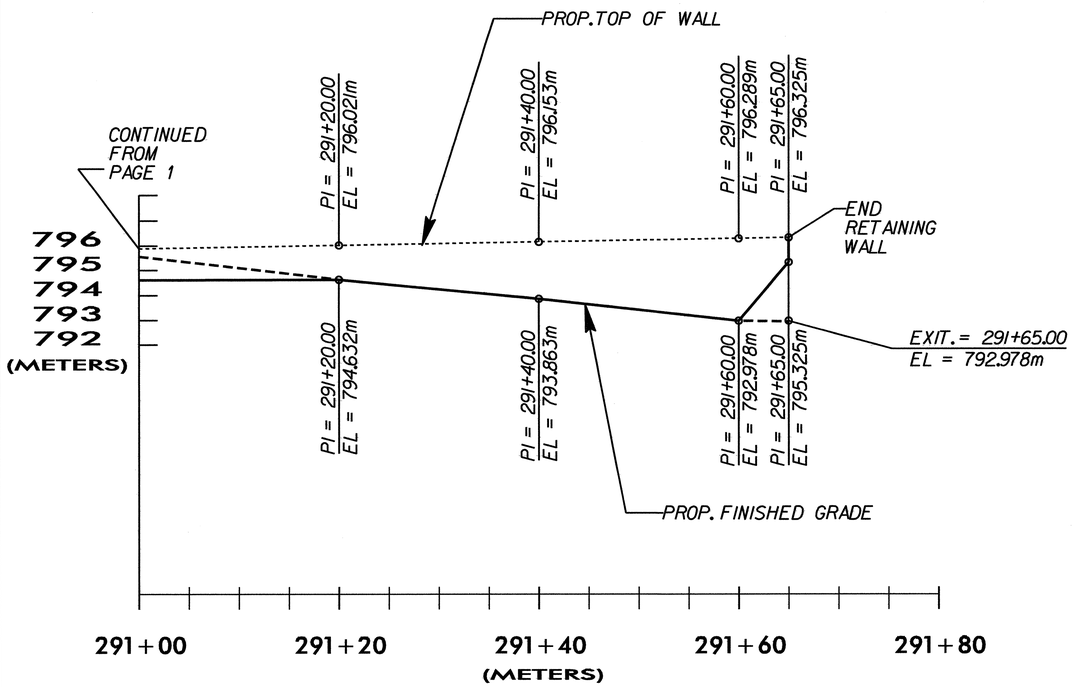

PREPARED BY: J.T.W.	DATE: 01.04.11
REVIEWED BY: S.C.C.	DATE: 01.04.11

PROJECT NO.: R-2519A
YANCEY COUNTY
STATION: 290+10.00 -L- TO 291+65.00 -L-
SHEET 2 OF 2

GEOTECHNICAL ENGINEERING UNIT
☐ EASTERN REGIONAL OFFICE
☒ WESTERN REGIONAL OFFICE
☐ CONTRACT OFFICE

STATE OF NORTH CAROLINA
DEPARTMENT OF TRANSPORTATION
RALEIGH

ANCHORED SHEET PILE RETAINING WALL NO. 6

REVISIONS						SHEET NO.
NO.	BY	DATE	NO.	BY	DATE	W-8
1	-	-	3	-	-	TOTAL SHEETS
2	-	-	4	-	-	15

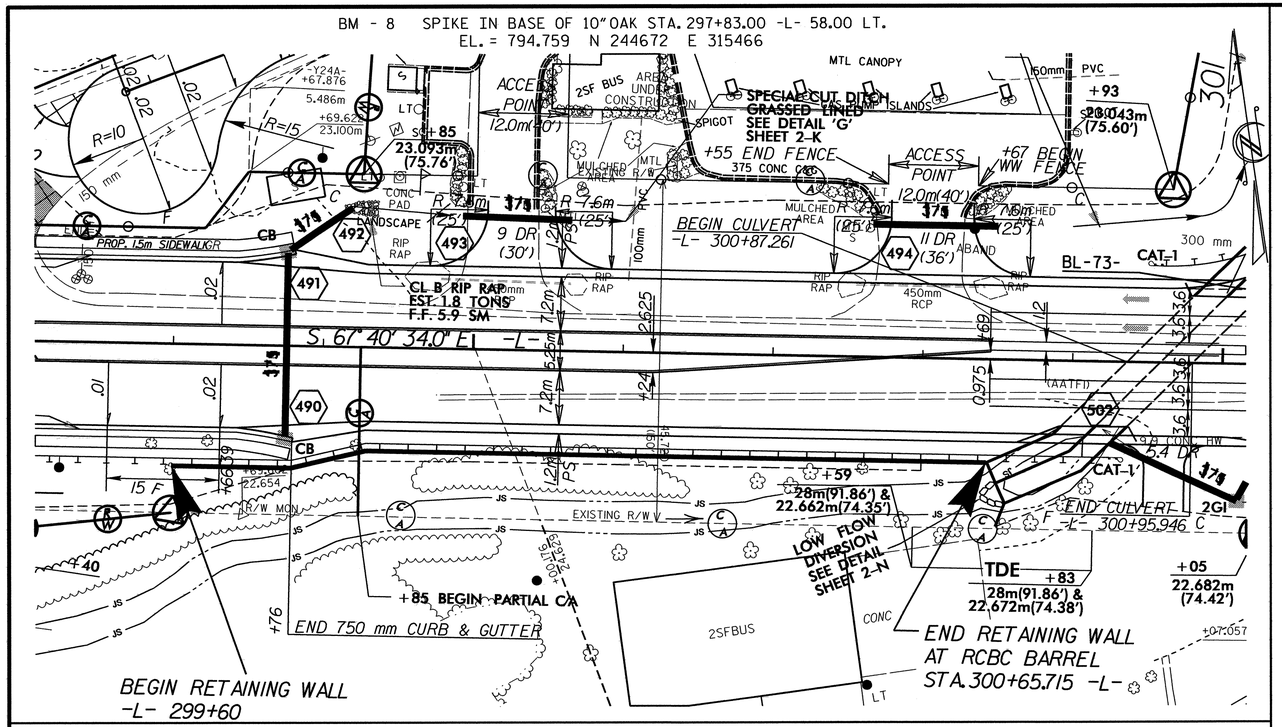

LOCATION SKETCH

GEOTECHNICAL ENGINEER	ENGINEER
NORTH CAROLINA PROFESSIONAL SEAL 29869 ENGINEER SHANE C. CLARK	
SIGNATURE DATE	SIGNATURE DATE

RETAINING WALL ELEVATIONS

-L- STA	OFFSET FROM ℄ (RT.)	ELEV @ TOP OF WALL	* PROPOSED FINISHED GRADE	ESTIMATED SCOUR ELEVATION	* EXPOSED WALL HEIGHT	** DESIGN WALL HEIGHT "H"
299+60.00	16.285m	788.980	787.980	786.900	1.000	1.930
299+80.00	15.390m	788.276	786.098	783.700	2.178	4.426
300+00.00	13.825m	788.136	785.688	783.500	2.448	4.486
300+20.00	13.825m	787.943	786.489	783.500	1.454	4.293
300+40.00	13.825m	787.750	786.332	783.300	1.418	4.300
300+60.00	13.825m	787.557	785.817	782.700	1.740	4.707
300+65.715	15.189m	787.043	783.448	782.700	3.445	4.193

* ELEVATION @ PROPOSED FINISHED GRADE AND EXPOSED WALL HEIGHT DO NOT INCLUDE EMBEDMENT DEPTH

** FOR DESIGN WALL HEIGHT "H", SEE ANCHORED SHEET PILE WALL DETAILS

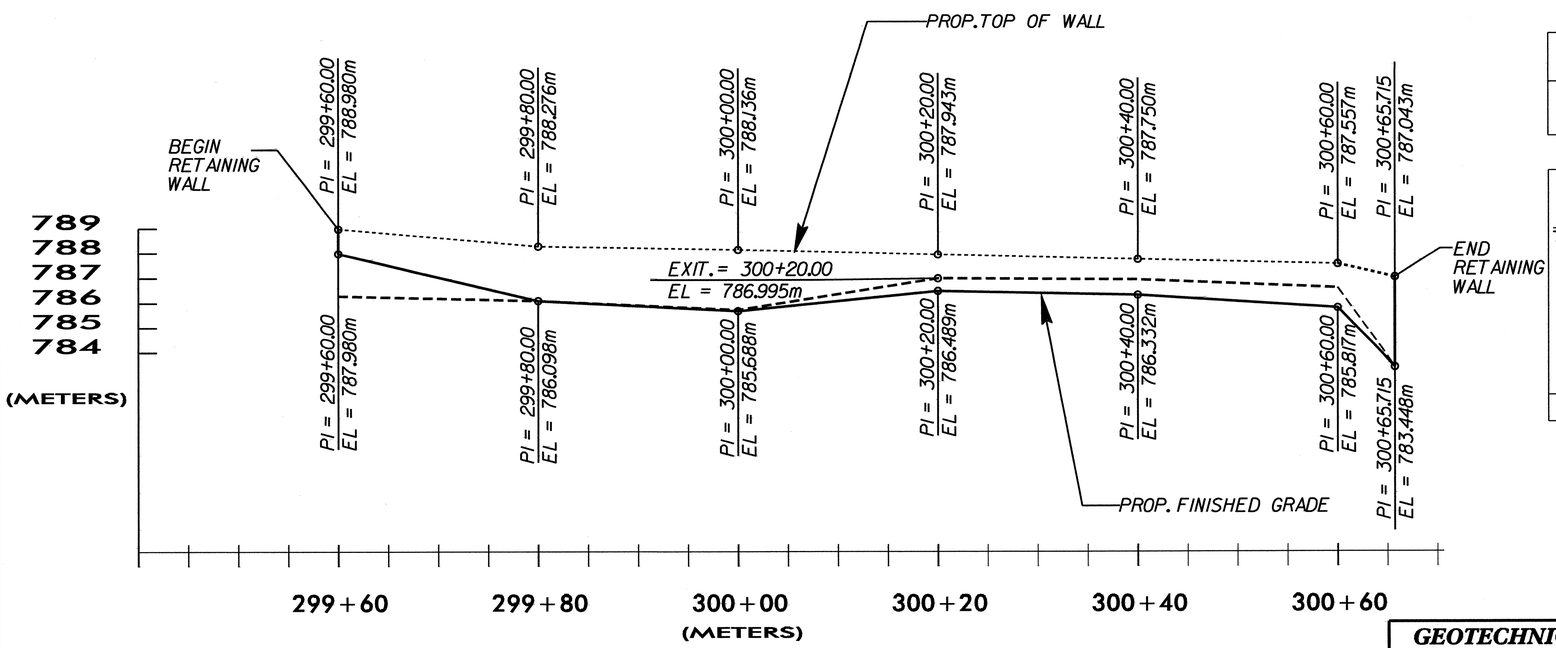

TOTAL STRUCTURE QUANTITIES

ANCHORED SHEET PILE RETAINING WALL	193	SQ. m.

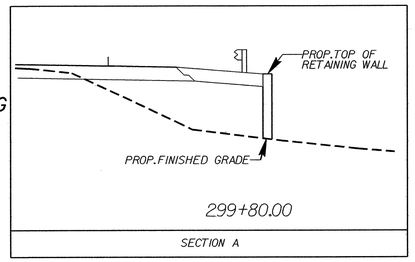

PROJECT NO.: R-2519A

YANCEY **COUNTY**

STATION: 299+60.00 -L- TO 300+60.00 -L-

SHEET 1 OF 1

PREPARED BY: J.T.W.	DATE: 01.04.11
REVIEWED BY: S.C.C.	DATE: 01.04.11

GEOTECHNICAL ENGINEERING UNIT

☐ EASTERN REGIONAL OFFICE
☒ WESTERN REGIONAL OFFICE
☐ CONTRACT OFFICE

STATE OF NORTH CAROLINA
DEPARTMENT OF TRANSPORTATION
RALEIGH

ANCHORED SHEET PILE RETAINING WALL NO. 7

REVISIONS							SHEET NO.
NO.	BY	DATE	NO.	BY	DATE		W-9
1	-	-	3	-	-		TOTAL SHEETS
2	-	-	4	-	-		15

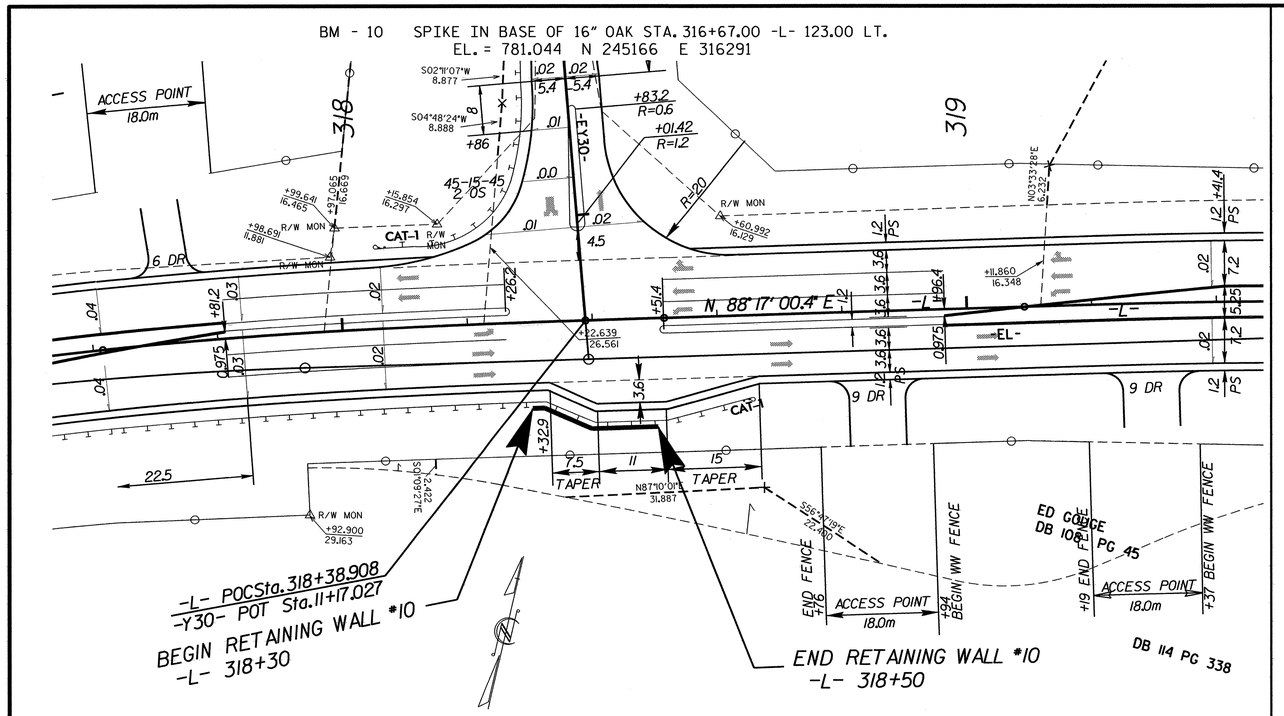

LOCATION SKETCH

METRIC

GEOTECHNICAL ENGINEER	ENGINEER
NORTH CAROLINA PROFESSIONAL SEAL 29869 ENGINEER SHANE C. CLARK	
S. C. Clark 2/24/11	
SIGNATURE DATE	SIGNATURE DATE

RETAINING WALL ELEVATIONS

-L- STA	OFFSET FROM ℄ (LEFT)	ELEV @ TOP OF WALL	* PROPOSED FINISHED GRADE	ESTIMATED SCOUR ELEVATION	* EXPOSED WALL HEIGHT	** DESIGN WALL HEIGHT "H"
318+30.00	13.825m	769.170	768.943	767.900	0.228	1.120
318+40.00	17.425m	768.947	767.372	766.000	1.576	2.797
318+50.00	17.425m	768.796	767.796	766.800	1.000	1.846

* ELEVATION @ PROPOSED FINISHED GRADE AND EXPOSED WALL HEIGHT DO NOT INCLUDE EMBEDMENT DEPTH

** FOR DESIGN WALL HEIGHT "H", SEE ANCHORED SHEET PILE WALL DETAILS

TOTAL STRUCTURE QUANTITIES

ANCHORED SHEET PILE RETAINING WALL	22	SQ. m.

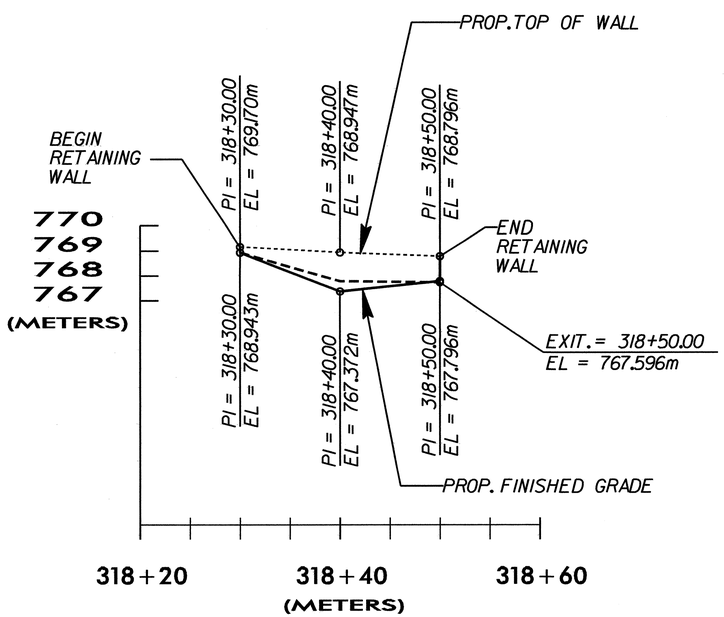

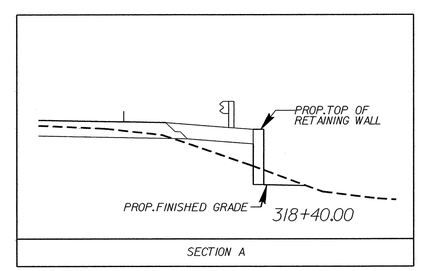

PROJECT NO.: R-2519A

YANCEY **COUNTY**

STATION: 318+30.00 -L- TO 318+50.00 -L-

SHEET 1 OF 1

PREPARED BY: J.T.W.	DATE: 01.04.11
REVIEWED BY: S.C.C.	DATE: 01.04.11

GEOTECHNICAL ENGINEERING UNIT

☐ EASTERN REGIONAL OFFICE
☒ WESTERN REGIONAL OFFICE
☐ CONTRACT OFFICE

STATE OF NORTH CAROLINA
DEPARTMENT OF TRANSPORTATION
RALEIGH

ANCHORED SHEET PILE RETAINING WALL NO. 10

REVISIONS						SHEET NO.
NO.	BY	DATE	NO.	BY	DATE	W-10
1	-	-	3	-	-	TOTAL SHEETS
2	-	-	4	-	-	15

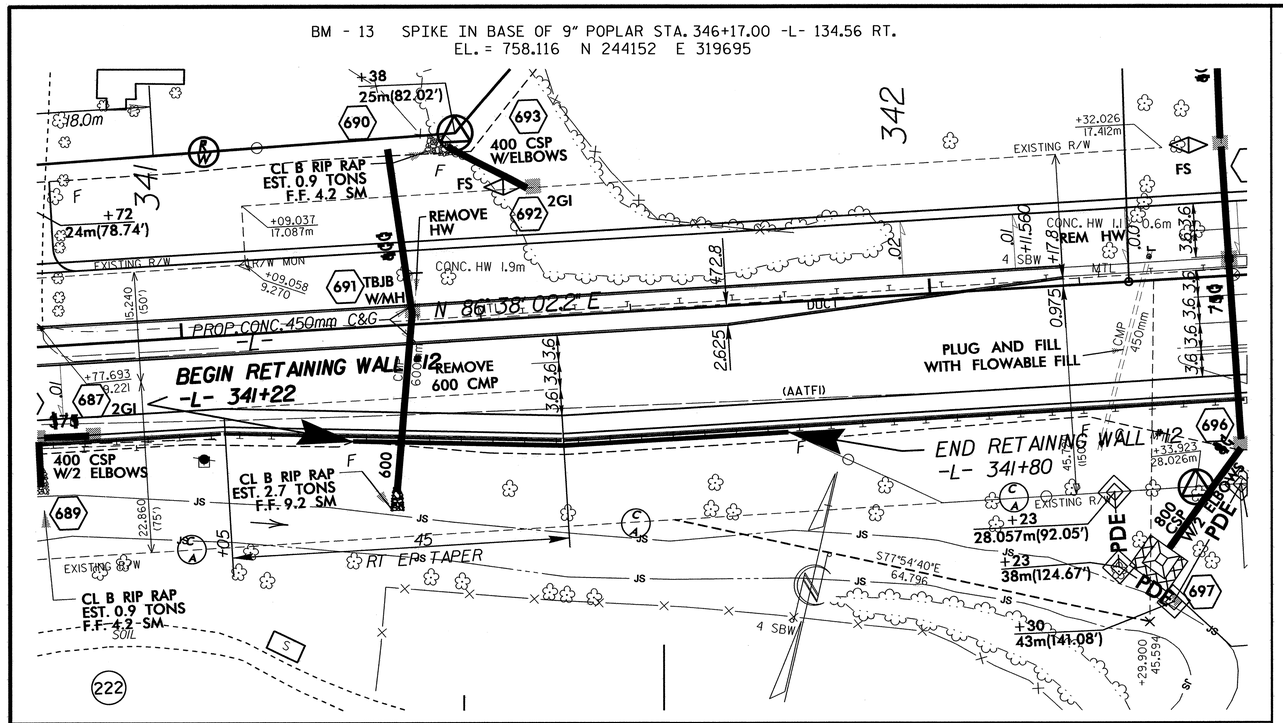

LOCATION SKETCH

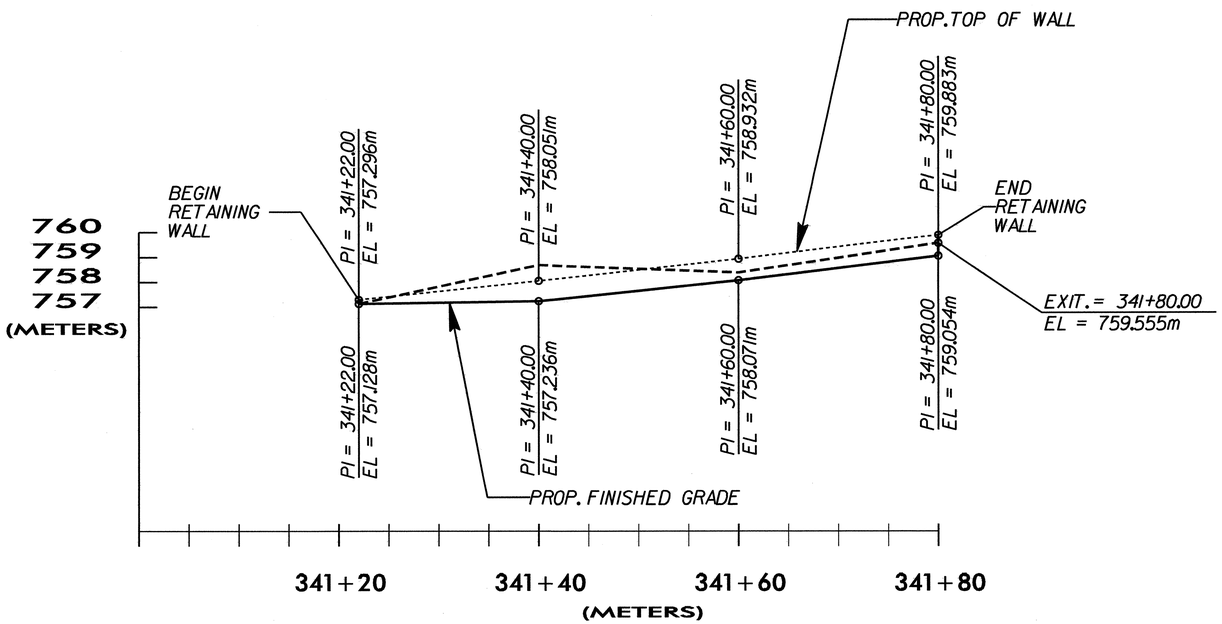

RETAINING WALL ELEVATIONS					
-L- STA	OFFSET FROM ℄ (RIGHT)	ELEV @ TOP OF WALL	* PROPOSED FINISHED GRADE	* EXPOSED WALL HEIGHT	** DESIGN WALL HEIGHT "H"
341+22.00	15.185m	757.296	757.128	0.168	0.015
341+40.00	16.625m	758.051	757.236	0.816	1.423
341+60.00	17.425m	758.932	758.071	0.862	0.709
341+80.00	17.425m	759.883	759.054	0.830	0.147

* ELEVATION @ PROPOSED FINISHED GRADE AND EXPOSED WALL HEIGHT DO NOT INCLUDE EMBEDMENT DEPTH

** FOR DESIGN WALL HEIGHT "H", SEE ANCHORED SHEET PILE WALL DETAILS

TOTAL STRUCTURE QUANTITIES		
ANCHORED SHEET PILE RETAINING WALL	43	SQ. m.

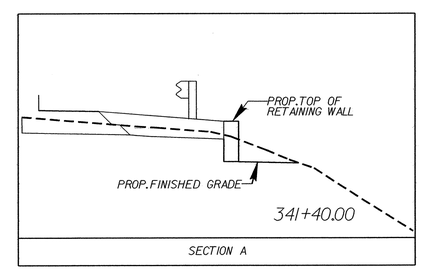

GEOTECHNICAL ENGINEER

NORTH CAROLINA PROFESSIONAL SEAL 29869 ENGINEER SHANE C CLARK

S. C. Clark 2/24/11
SIGNATURE DATE

ENGINEER

SIGNATURE DATE

PROJECT NO.: R-2519A

YANCEY COUNTY

STATION: 341+22.00 -L- TO 341+80.00 -L-

SHEET 1 OF 1

GEOTECHNICAL ENGINEERING UNIT

☐ EASTERN REGIONAL OFFICE

☒ WESTERN REGIONAL OFFICE

☐ CONTRACT OFFICE

STATE OF NORTH CAROLINA
DEPARTMENT OF TRANSPORTATION
RALEIGH

ANCHORED SHEET PILE RETAINING WALL NO. 12

REVISIONS						SHEET NO.
NO.	BY	DATE	NO.	BY	DATE	W-11
1	-	-	3	-	-	TOTAL SHEETS
2	-	-	4	-	-	15

PREPARED BY: J.T.W.	DATE: 01.04.11
REVIEWED BY: S.C.C.	DATE: 01.04.11

GEOTECHNICAL ENGINEER	ENGINEER
NORTH CAROLINA PROFESSIONAL SEAL 29869 ENGINEER SHANE C CLARK	
SIGNATURE / DATE 2/22/11	SIGNATURE / DATE

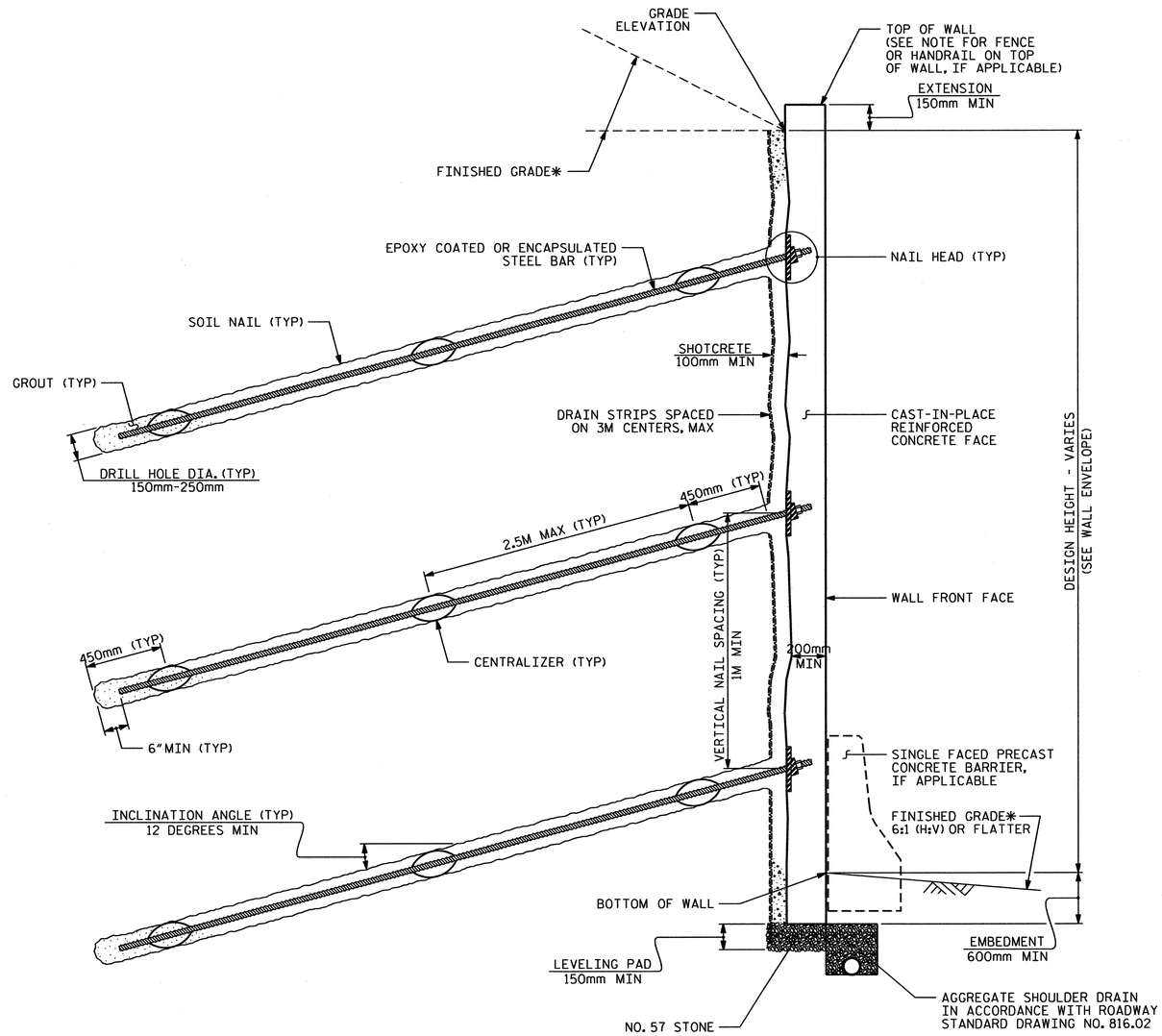

SOIL NAIL WALL - TYPICAL SECTION

*SEE ROADWAY PLANS FOR FINISHED GRADE AND DITCH DETAILS.

NOTES:

FOR SOIL NAIL RETAINING WALLS, SEE SOIL NAIL RETAINING WALLS PROVISION.

FOR STEEL BEAM GUARDRAIL, SEE ROADWAY PLANS AND SECTION 862 OF THE STANDARD SPECIFICATIONS.

FOR SINGLE FACED PRECAST CONCRETE BARRIER, SEE ROADWAY PLANS AND SECTION 857 OF THE STANDARD SPECIFICATIONS.
A FENCE IS REQUIRED ON TOP OF RETAINING WALL NO. 2. SEE ROADWAY PLANS FOR FENCE HANDRAIL ATTACHMENT DETAILS.

BEFORE BEGINNING SOIL NAIL WALL DESIGN FOR RETAINING WALL NO. 2, SURVEY WALL LOCATION AND SUBMIT A REVISED WALL PROFILE VIEW (WALL ENVELOPE) FOR REVIEW. DO NOT START WALL DESIGN OR CONSTRUCTION UNTIL THE REVISED WALL ENVELOPE IS ACCEPTED.

DESIGN RETAINING WALL NO. 2 FOR WALL HEIGHTS EQUAL TO THE DESIGN HEIGHT (DIFFERENCE BETWEEN GRADE ELEVATION AND BOTTOM OF WALL ELEVATION) PLUS EMBEDMENT (DIFFERENCE BETWEEN BOTTOM OF WALL ELEVATION AND TOP OF LEVELING PAD ELEVATION).

DESIGN RETAINING WALL NO. 2 FOR THE FOLLOWING:
1) MINIMUM DESIGN LIFE = 100 YEARS
2) MINIMUM EMBEDMENT ELEVATION = 600 mm
3) IN-SITU ASSUMED MATERIAL PARAMETERS:
   UNIT WEIGHT, γ = 18.8 kN/M3
   FRICTION ANGLE, ϕ = 30 DEGREES
   COHESION, c = 0 kPa

AN ASHLAR ARCHITECTURAL FINISH IS REQUIRED FOR THE CAST-IN-PLACE REINFORCED CONCRETE FACE FOR RETAINING WALL NO. 2. THE CONTRACTOR SHALL SUBMIT A SAMPLE OF THE ASHLAR FINISH TO THE ENGINEER FOR HIS APPROVAL. THE FORM LINERS SHALL CREATE NO VISIBLE VERTICAL OR HORIZONTAL SEAMS OR CONSPICUOUS FORM LINER BUTT JOINT MARKS.

PROJECT NO.: R-2519A
YANCEY ***COUNTY***
STATION: 266+80.00 -L- TO 268+14.00 -L-
SHEET 1 OF 1

GEOTECHNICAL ENGINEERING UNIT
☐ ***EASTERN REGIONAL OFFICE***
☒ ***WESTERN REGIONAL OFFICE***
☐ ***CONTRACT OFFICE***
STATE OF NORTH CAROLINA
DEPARTMENT OF TRANSPORTATION
RALEIGH

SOIL NAIL RETAINING WALL DETAILS

REVISIONS						SHEET NO.
NO.	BY	DATE	NO.	BY	DATE	W-12
1	–	–	3	–	–	TOTAL SHEETS
2	–	–	4	–	–	15

PREPARED BY: T WILLIAMS	DATE: 1/11
REVIEWED BY: S CLARK	DATE: 1/11

GEOTECHNICAL ENGINEER	ENGINEER
NORTH CAROLINA PROFESSIONAL SEAL 29869 ENGINEER SHANE C. CLARK	
SIGNATURE: SCClark DATE: 2/24/11	SIGNATURE: DATE:

NOTES:

FOR MECHANICALLY STABILIZED EARTH (MSE) RETAINING WALLS, SEE MECHANICALLY STABILIZED EARTH RETAINING WALLS PROVISION.

FOR STEEL BEAM GUARDRAIL, SEE ROADWAY PLANS AND SECTION 862 OF THE STANDARD SPECIFICATIONS.

DO NOT USE STANDARD SIZE NO. 2S OR 2MS FOR SELECT MATERIAL FOR RETAINING WALL NO. 3.

DO NOT USE AN MSE WALL SYSTEM WITH SEGMENTAL RETAINING WALL UNITS FOR RETAINING WALL NO. 3.

CAST-IN-PLACE REINFORCED CONCRETE COPING IS REQUIRED FOR RETAINING WALL NO 3.

AN ASHLAR FINISH IS REQUIRED FOR FRONT FACES OF PRECAST CONCRETE PANELS FOR RETAINING WALL NO. 3.

BEFORE BEGINNING MSE WALL DESIGN FOR RETAINING WALL NO. 3, SURVEY WALL LOCATION AND SUBMIT A REVISED WALL PROFILE VIEW (WALL ENVELOPE) FOR REVIEW. DO NOT START WALL DESIGN OR CONSTRUCTION UNTIL THE REVISED WALL ENVELOPE IS ACCEPTED.

DESIGN RETAINING WALL NO. 3 FOR WALL HEIGHTS EQUAL TO THE DESIGN HEIGHT (DIFFERENCE BETWEEN GRADE ELEVATION AND BOTTOM OF WALL ELEAVATION) PLUS EMBEDMENT (DIFFERENCE BETWEEN BOTTOM OF WALL ELEVATION AND TOP OF LEVELING PAD ELEVATION).

DESIGN RETAINING WALL NO. _FOR THE FOLLOWING:
1) MINIMUM SERVICE LIFE = 100 YEARS
2) ALLOWABLE BEARING CAPACITY = 125 kPa
3) SELECT MATERIAL PARAMETERS:

MATERIAL STANDARD SIZE NO. (IN ACCORDANCE WITH SECTIONS 1005 AND 1014 OF THE STANDARD SPECIFICATIONS)	UNIT WEIGHT (γ) KN/M^3	FRICTION ANGLE (ϕ) DEGREES	COHESION (c) kPa
57, 67 AND 78M	17.3	38	0

4) IN-SITU ASSUMED MATERIAL PARAMETERS:

MATERIAL TYPE	UNIT WEIGHT (γ) KN/M^3	FRICTION ANGLE (ϕ) DEGREES	COHESION (c) kPa
BACKFILL	18.8	30	0
FOUNDATION	18.8	30	0

DO NOT PLACE LEVELING PAD CONCRETE, SELECT MATERIAL OR REINFORCEMENT FOR RETAINING WALL NO. 3 UNTIL OBTAINING APPROVAL OF THE EXCAVATION DEPTH AND FOUNDATION MATERIAL.

"TEMPORARY SHORING" MAY BE REQUIRED FOR RETAINING WALL NO. 3 IN ACCORDANCE WITH THE TEMPORARY SHORING PROVISION. SEE TRAFFIC CONTROL PLANS.

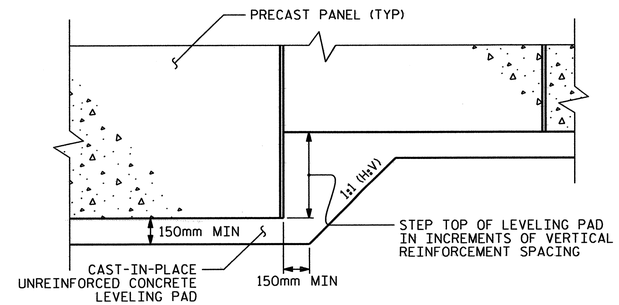

PRECAST CONCRETE PANELS

LEVELING PAD STEP DETAILS

PROJECT NO.: R-2519A
YANCEY ***COUNTY***
STATION: 269+40.000-L- TO 271+00.000-L-
SHEET 1 OF 2

GEOTECHNICAL ENGINEERING UNIT

☐ *EASTERN REGIONAL OFFICE*
☒ *WESTERN REGIONAL OFFICE*
☐ *CONTRACT OFFICE*

STATE OF NORTH CAROLINA DEPARTMENT OF TRANSPORTATION RALEIGH

MSE WALL NOTES & LEVELING PAD STEP DETAILS

REVISIONS							SHEET NO.
NO.	BY	DATE	NO.	BY	DATE		W-13
1	–	–	3	–	–		TOTAL SHEETS
2	–	–	4	–	–		15

PREPARED BY: EJS	DATE: 2/11
REVIEWED BY: SCC	DATE: 2/11

GEOTECHNICAL ENGINEER	ENGINEER
NORTH CAROLINA PROFESSIONAL SEAL 29869 ENGINEER SHANE C CLARK	
SIGNATURE / DATE	SIGNATURE / DATE

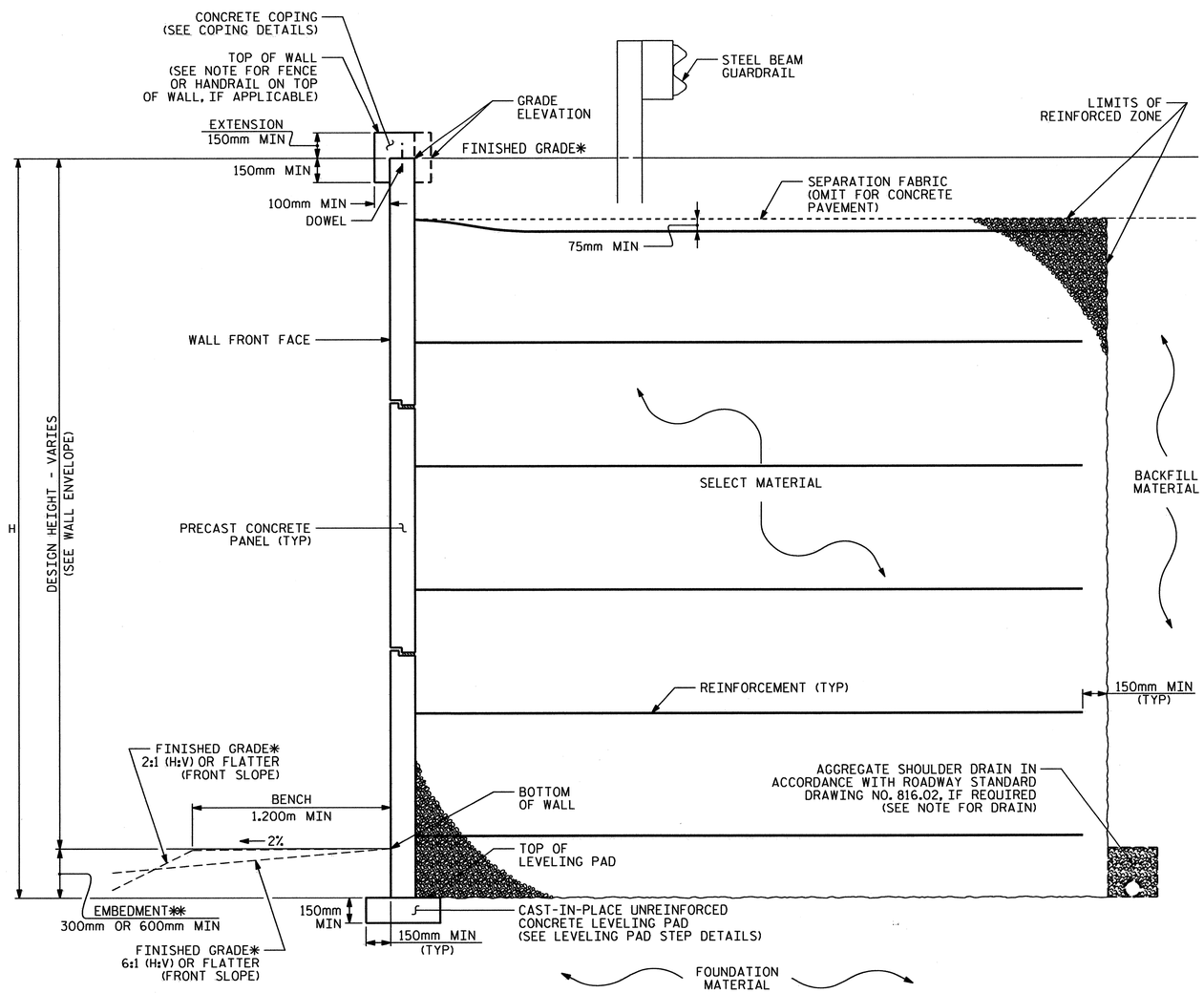

MSE WALL WITH PRECAST PANELS - TYPICAL SECTION

*SEE ROADWAY PLANS FOR FINISHED GRADE DETAILS.
**SEE MSE RETAINING WALLS PROVISION FOR EMBEDMENT REQUIREMENTS.

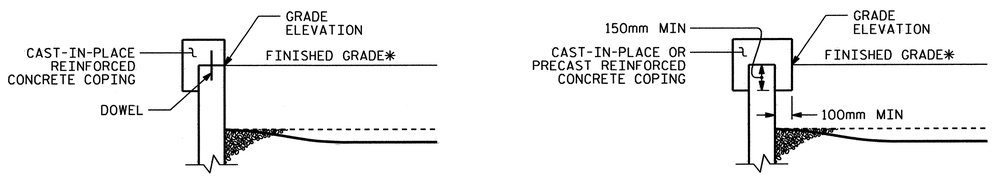

COPING DETAILS

AT THE CONTRACTOR'S OPTION, CONNECT COPING TO PANELS WITH DOWELS OR EXTEND COPING DOWN BACK OF PANELS.
*SEE ROADWAY PLANS FOR FINISHED GRADE DETAILS.

PREPARED BY: EJS	DATE: 5/10
REVIEWED BY: SCC	DATE: 2/11

PROJECT NO.: R-2519A
YANCEY **COUNTY**
STATION: 269+40.000-L- TO 271+00.000-L-
SHEET 2 OF 2

GEOTECHNICAL ENGINEERING UNIT

☐ EASTERN REGIONAL OFFICE
☒ WESTERN REGIONAL OFFICE
☐ CONTRACT OFFICE

STATE OF NORTH CAROLINA
DEPARTMENT OF TRANSPORTATION
RALEIGH

MECHANICALLY STABILIZED EARTH (MSE) WALL DETAILS

REVISIONS						SHEET NO.
NO.	BY	DATE	NO.	BY	DATE	W-14
1			3			TOTAL SHEETS
2			4			15

GEOTECHNICAL ENGINEER	ENGINEER
NORTH CAROLINA PROFESSIONAL SEAL 29869 ENGINEER SHANE C CLARK	
S Clark 2/24/11	
SIGNATURE DATE	SIGNATURE DATE

NOTES:

FOR ANCHORED SHEET PILE RETAINING WALLS, SEE ANCHORED SHEET PILE RETAINING WALLS PROVISION.

FOR STEEL BEAM GUARDRAIL, SEE ROADWAY PLANS AND SECTION 862 OF THE STANDARD SPECIFICATIONS.

FOR SINGLE FACED PRECAST CONCRETE BARRIER, SEE ROADWAY PLANS AND SECTION 857 OF THE STANDARD SPECIFICATIONS.

A FENCE OR HANDRAIL IS REQUIRED ON TOP OF SHEET PILE RETAINING WALLS. SEE ROADWAY PLANS FOR FENCE OR HANDRAIL ATTACHMENT DETAILS.

BEFORE BEGINNING ANCHORED SHEET PILE WALL DESIGN, SURVEY WALL LOCATIONS AND SUBMIT A REVISED WALL PROFILE VIEWS (WALL ENVELOPE) FOR REVIEW. DO NOT START WALL DESIGNS OR CONSTRUCTION UNTIL THE REVISED WALL ENVELOPES ARE ACCEPTED.

DESIGN ANCHORED SHEET PILE RETAINING WALLS FOR WALL HEIGHTS EQUAL TO THE DESIGN HEIGHT (DIFFERENCE BETWEEN GRADE ELEVATION AND BOTTOM OF WALL) PLUS SCOUR.

DESIGN ANCHORED SHEET PILE RETAINING WALLS FOR THE FOLLOWING:
1) MINIMUM DESIGN LIFE = 100 YEARS
2) MINIMUM EMBEDMENT DEPTH = 1 M BELOW SCOUR ELEVATION
3) IN-SITU ASSUMED MATERIAL PARAMETERS:
   UNIT WEIGHT, gamma = 18.8 kN/M3
   FRICTION ANGLE, phi = 30 DEGREES
   COHESION, c = 0 kPa
4) BACKFILL MINUMUM MATERIAL PARAMETERS:
   UNIT WEIGHT, gamma = 18.8 kN/M3
   FRICTION ANGLE, phi = 28 DEGREES
   COHESION, c = 0 kPa

DESIGN ANCHORED SHEET PILE RETAINING WALLS FOR A LIVE LOAD (TRAFFIC) SURCHARGE.

EXISTING OR FUTURE OBSTRUCTIONS SUCH AS FOUNDATIONS, GUARDRAIL, FENCE OR HANDRAIL POSTS, PAVEMENTS, PIPES, INLETS OR UTILITIES MAY INTERFERE WITH GROUND ANCHORS FOR ANCHORED SHEET PILE RETAINING WALLS.

ANCHORS ARE SHOWN IN GENERAL LOCATIONS AND MAY BE RELOCATED BASED ON THE SUBMITTED DESIGN. DESIGN AND LOCATIONS OF WALERS SHOULD BE SUBMITTED WITH THE DESIGN SUBMITTAL.

GROUTED ANCHORS ARE SHOWN, HOWEVER, ALTERNATIVE ANCHOR SYSTEMS INCLUDING DEADMEN OR AN APPROVED ALTERNATE MAY BE CONSIDERED. ALL COMPONENTS ARE REQUIRED TO PROVIDE THE STATED DESIGN LIFE.

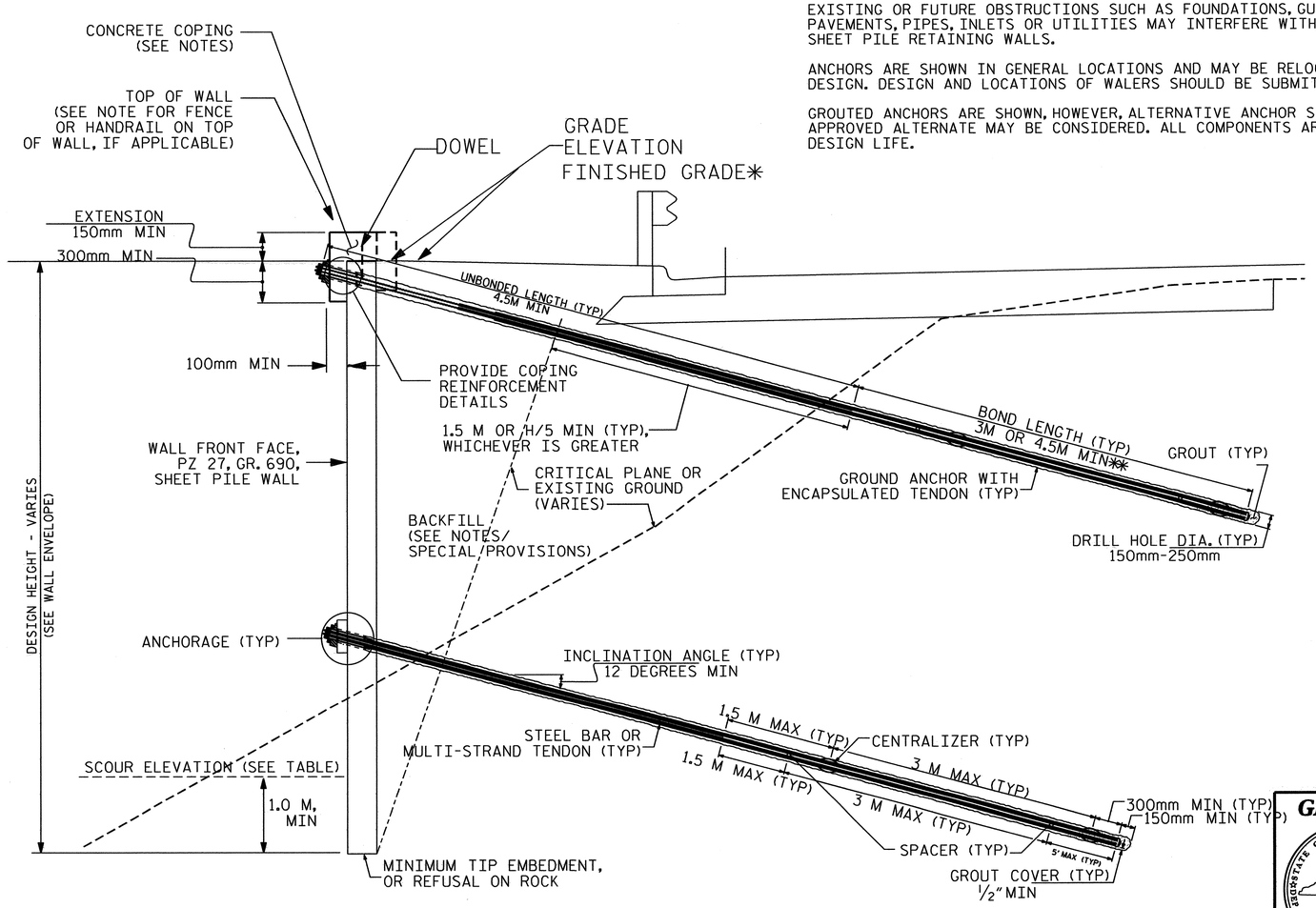

PREPARED BY: T WILLIAMS	DATE: 1/11
REVIEWED BY: S CLARK	DATE: 1/11

GEOTECHNICAL ENGINEERING UNIT

☐ EASTERN REGIONAL OFFICE
☒ WESTERN REGIONAL OFFICE
☐ CONTRACT OFFICE

STATE OF NORTH CAROLINA
DEPARTMENT OF TRANSPORTATION
RALEIGH

PROJECT NO.: R-2519A
YANCEY COUNTY
STATION: VARIES
SHEET 1 OF 1

ANCHORED SHEET PILE RETAINING WALL DETAILS

REVISIONS						SHEET NO.
NO.	BY	DATE	NO.	BY	DATE	W-15
1			3			TOTAL SHEETS
2			4			15

STANDARD NOTES

DESIGN DATA:

SPECIFICATIONS	A.A.S.H.T.O. (CURRENT)
LIVE LOAD	SEE PLANS
IMPACT ALLOWANCE	SEE A.A.S.H.T.O.
STRESS IN EXTREME FIBER OF	
STRUCTURAL STEEL - AASHTO M270 GRADE 250	140 MPa
- AASHTO M270 GRADE 345W	190 MPa
- AASHTO M270 GRADE 345	190 MPa
REINFORCING STEEL IN TENSION	
GRADE 420	165 MPa
CONCRETE IN COMPRESSION	8.3 MPa
CONCRETE IN SHEAR	SEE A.A.S.H.T.O.
STRUCTURAL TIMBER - TREATED OR	
UNTREATED - EXTREME FIBER STRESS	12 MPa
COMPRESSION PERPENDICULAR TO GRAIN OF TIMBER	2.6 MPa
EQUIVALENT FLUID PRESSURE OF EARTH	480 kg/m^3 (MINIMUM)

MATERIAL AND WORKMANSHIP:

EXCEPT AS MAY OTHERWISE BE SPECIFIED ON PLANS OR IN THE SPECIAL PROVISIONS, ALL MATERIAL AND WORKMANSHIP SHALL BE IN ACCORDANCE WITH THE 2006 "STANDARD SPECIFICATIONS FOR ROADS AND STRUCTURES" OF THE N. C. DEPARTMENT OF TRANSPORTATION.

STEEL SHEET PILING FOR PERMANENT OR TEMPORARY APPLICATIONS SHALL BE HOT ROLLED.

CONCRETE:

UNLESS OTHERWISE REQUIRED ON PLANS, CLASS A CONCRETE SHALL BE USED FOR ALL PORTIONS OF ALL STRUCTURES WITH THE EXCEPTION THAT: CLASS AA CONCRETE SHALL BE USED IN BRIDGE SUPERSTRUCTURES, ABUTMENT BACKWALLS, AND APPROACH SLABS; CLASS B CONCRETE SHALL BE USED FOR SLOPE PROTECTION AND RIP RAP; AND CLASS S SHALL BE USED FOR UNDERWATER FOOTING SEALS.

CONCRETE CHAMFERS:

UNLESS OTHERWISE NOTED ON THE PLANS, ALL EXPOSED CORNERS ON STRUCTURES SHALL BE CHAMFERED 19mm WITH THE FOLLOWING EXCEPTIONS: TOP CORNERS OF CURBS MAY BE ROUNDED TO 38mm RADIUS WHICH IS BUILT INTO CURB FORMS; CORNERS OF TRANSVERSE FLOOR EXPANSION JOINTS SHALL BE ROUNDED WITH A 6mm FINISHING TOOL UNLESS OTHERWISE REQUIRED ON PLANS; AND CORNERS OF EXPANSION JOINTS IN THE ROADWAY FACES AND TOPS OF CURBS AND SIDEWALKS SHALL BE ROUNDED TO A 6mm RADIUS WITH A FINISHING STONE OR TOOL UNLESS OTHERWISE REQUIRED ON PLANS.

DOWELS:

DOWELS WHEN INDICATED ON PLANS AS FOR CULVERT EXTENSIONS, SHALL BE EMBEDDED AT LEAST 300mm INTO THE OLD CONCRETE AND GROUTED INTO PLACE WITH 1 :2 CEMENT MORTAR.

ALLOWANCE FOR DEAD LOAD DEFLECTION, SETTLEMENT, ETC. IN CASTING SUPERSTRUCTURES:

BRIDGES SHALL BE BUILT ON THE GRADE OR VERTICAL CURVE SHOWN ON PLANS. SLABS, CURBS AND PARAPETS SHALL CONFORM TO THE GRADE OR CURVE.

ALL DIMENSIONS WHICH ARE GIVEN IN SECTION AND ARE AFFECTED BY DEAD LOAD DEFLECTIONS ARE DIMENSIONS AT CENTER LINE OF BEARING UNLESS OTHERWISE NOTED ON PLANS. IN SETTING FORMS FOR STEEL BEAM BRIDGES AND PRESTRESSED CONCRETE GIRDER BRIDGES, ADJUSTMENTS SHALL BE MADE DUE TO THE DEAD LOAD DEFLECTIONS FOR THE ELEVATIONS SHOWN. WHERE BLOCKS ARE SHOWN OVER BEAMS FOR BUILDING UP TO THE SLAB, THE VERTICAL DIMENSIONS OF THE BLOCKS SHALL BE ADJUSTED BETWEEN BEARINGS TO COMPENSATE FOR DEAD LOAD DEFLECTIONS, VERTICAL CURVE ORDINATE, AND ACTUAL BEAM CAMBER. WHERE BOTTOM OF SLAB IS IN LINE WITH BOTTOM OF TOP FLANGES, DEPTH OF SLAB BETWEEN BEARINGS SHALL BE ADJUSTED TO COMPENSATE FOR DEAD LOAD DEFLECTION, VERTICAL CURVE ORDINATE, AND ACTUAL BEAM CAMBER.

IN SETTING FALSEWORK AND FORMS FOR REINFORCED CONCRETE SPANS, AN ALLOWANCE SHALL BE MADE FOR DEAD LOAD DEFLECTIONS, SETTLEMENT OF FALSEWORK, AND PERMANENT CAMBER WHICH SHALL BE PROVIDED FOR IN ADDITION TO THE ELEVATIONS SHOWN. AFTER REMOVAL OF THE FALSEWORK, THE FINISHED STRUCTURES SHALL CONFORM TO THE PROFILE AND ELEVATIONS SHOWN ON THE PLANS AND CONSTRUCTION ELEVATIONS FURNISHED BY THE ENGINEER.

DETAILED DRAWINGS FOR FALSEWORK OR FORMS FOR BRIDGE SUPERSTRUCTURE AND ANY STRUCTURE OR PARTS OF A STRUCTURE AS NOTED ON THE PLANS SHALL BE SUBMITTED TO THE ENGINEER FOR APPROVAL BEFORE CONSTRUCTION OF THE FALSEWORK OR FORMS IS STARTED.

REINFORCING STEEL:

ALL REINFORCING STEEL SHALL BE DEFORMED. DIMENSIONS RELATIVE TO PLACEMENT OF REINFORCING ARE TO CENTERS OF BARS UNLESS OTHERWISE INDICATED IN THE PLANS. DIMENSIONS ON BAR DETAILS ARE TO CENTERS OF BARS OR ARE OUT TO OUT AS INDICATED ON PLANS.

WIRE BAR SUPPORTS SHALL BE PROVIDED FOR REINFORCING STEEL WHERE INDICATED ON THE PLANS. WHEN BAR SUPPORT PIECES ARE PLACED IN CONTINUOUS LINES, THEY SHALL BE SO PLACED THAT THE ENDS OF THE SUPPORTING WIRES SHALL BE LAPPED TO LOCK LEGS ON ADJOINING PIECES.

STRUCTURAL STEEL:

AT THE CONTRACTOR'S OPTION, HE MAY SUBSTITUTE 22.23mm Ø SHEAR STUDS FOR THE 19.05mm Ø STUDS SPECIFIED ON THE PLANS. THIS SUBSTITUTION SHALL BE MADE AT THE RATE OF 3 -22.23mm Ø STUDS FOR 4 - 19.05mm Ø STUDS, AND STUD SPACING CHANGES SHALL BE MADE AS NECESSARY TO PROVIDE THE SAME EQUIVALENT NUMBER OF 22.23mm Ø STUDS ALONG THE BEAM AS SHOWN FOR 19.05mm Ø STUDS BASED ON THE RATIO OF 3 - 22.23mm Ø STUDS FOR 4 - 19.05mm Ø STUDS. STUDS OF THE LENGTH SPECIFIED ON THE PLANS MUST BE PROVIDED. THE MAXIMUM SPACING SHALL BE 610mm.

EXCEPT AT THE INTERIOR SUPPORTS OF CONTINUOUS BEAMS WHERE THE COVER PLATE IS IN CONTACT WITH BEARING PLATE, THE CONTRACTOR MAY, AT HIS OPTION, SUBSTITUTE FOR THE COVER PLATES DESIGNATED ON THE PLANS COVER PLATES OF THE EQUIVALENT AREA PROVIDED THESE PLATES ARE AT LEAST 8mm IN THICKNESS AND DO NOT EXCEED A WIDTH EQUAL TO THE FLANGE WIDTH LESS 50mm OR A THICKNESS EQUAL TO 2 TIMES THE FLANGE THICKNESS. THE SIZE OF FILLET WELDS SHALL CONFORM TO THE REQUIREMENTS OF THE CURRENT ANSI/AASHTO/AWS "BRIDGE WELDING CODE". ELECTROSLAG WELDING WILL NOT BE PERMITTED.

PLACEMENT OF BEAM OR GIRDER MEMBERS ON TRUCKS FOR HAULING SHALL BE DONE IN COMPLIANCE WITH LIMITS SHOWN ON SKETCHES PROVIDED TO THE MATERIALS AND TEST UNIT APPROVED BY THE STRUCTURE DESIGN UNIT DATED MAY 8, 1991. THESE SKETCHES PRIMARILY LIMIT THE UNSUPPORTED CANTILEVER LENGTH OF MEMBERS. WHEN THE CONTRACTOR WISHES TO PLACE MEMBERS ON TRUCKS NOT IN ACCORDANCE WITH THESE LIMITS, TO SHIP BY RAIL, TO ATTACH SHIPPING RESTRAINTS TO THE MEMBERS OR TO INVERT MEMBERS, HE SHALL SUBMIT A SKETCH FOR APPROVAL PRIOR TO SHIPPING. SEE ALSO ARTICLE 1072-11.

WITH THE SOLE EXCEPTION OF EDGES AT SURFACES WHICH BEAR ON OTHER SURFACES, ALL SHARP EDGES AND ENDS OF SHAPES AND PLATES SHALL BE SLIGHTLY ROUNDED BY SUITABLE MEANS TO A RADIUS OF APPROXIMATELY 2mm OR EQUIVALENT FLAT SURFACE AT A SUITABLE ANGLE PRIOR TO PAINTING, GALVANIZING, OR METALLIZING.

HANDRAILS AND POSTS:

METAL STANDARDS AND FACES OF THE CONCRETE END POSTS FOR THE METAL RAIL SHALL BE SET NORMAL TO THE GRADE OF THE CURB, UNLESS OTHERWISE SHOWN ON PLANS. THE METAL RAIL AND TOPS OF CONCRETE POSTS USED WITH THE ALUMINUM RAIL SHALL BE BUILT PARALLEL TO THE GRADE OF THE CURB.

METAL HANDRAILS SHALL BE IN ACCORDANCE WITH THE PLANS. RAILS SHALL BE AS MANUFACTURED FOR BRIDGE RAILING. CASTINGS SHALL BE OF A UNIFORM APPEARANCE. FINS AND OTHER DEFORMATIONS RESULTING FROM CASTING OR OTHERWISE SHALL BE REMOVED IN A MANNER SO THAT A UNIFORM COLORING OF THE COMPLETED CASTING SHALL BE OBTAINED. CASTINGS WITH DISCOLORATIONS OR OF NON-UNIFORM COLORING WILL NOT BE ACCEPTED. CERTIFIED MILL REPORTS ARE REQUIRED FOR METAL RAILS AND POSTS.

SPECIAL NOTES:

GENERALLY, IN CASE OF DISCREPANCY, THIS STANDARD SHEET OF NOTES SHALL GOVERN OVER THE SPECIFICATIONS, BUT THE REMAINDER OF THE PLANS SHALL GOVERN OVER NOTES HEREON, AND SPECIAL PROVISIONS SHALL GOVERN OVER ALL. SEE SPECIFICATIONS ARTICLE 105-4.

METRIC

JANUARY, 1990