TIP PROJECT: U-4438

CONTRACT: C202599

K:\RAL_Roadway\01\036142\Roadway\Proj\u4438_rdy_1stsdgn

1/24/2011

SEE SHEET 1-A FOR INDEX OF SHEETS
SEE SHEET 1-B FOR CONVENTIONAL PLAN SHEET SYMBOLS

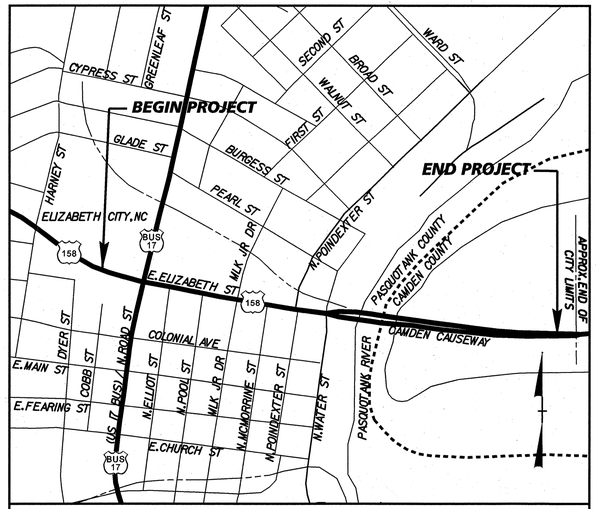

VICINITY MAP

STATE OF NORTH CAROLINA
DIVISION OF HIGHWAYS

PASQUOTANK & CAMDEN COUNTIES

STATE	STATE PROJECT REFERENCE NO.	SHEET NO.	TOTAL SHEETS
N.C.	U-4438	1	

STATE PROJ. NO.	F.A. PROJ. NO.	DESCRIPTION
35742.1.1	STP-0158(31)	P.E.
35742.2.1	STP-0158(50)	R/W & UTILITIES
35742.3.1	STP-0158(51)	CONSTRUCTION

LOCATION: ***US 158 (EAST ELIZABETH STREET) FROM US 17 BUSINESS (NORTH ROAD STREET) TO EAST OF PASQUOTANK RIVER IN ELIZABETH CITY***

TYPE OF WORK: ***GRADING, DRAINAGE, PAVING, SIGNALS, AND STRUCTURES***

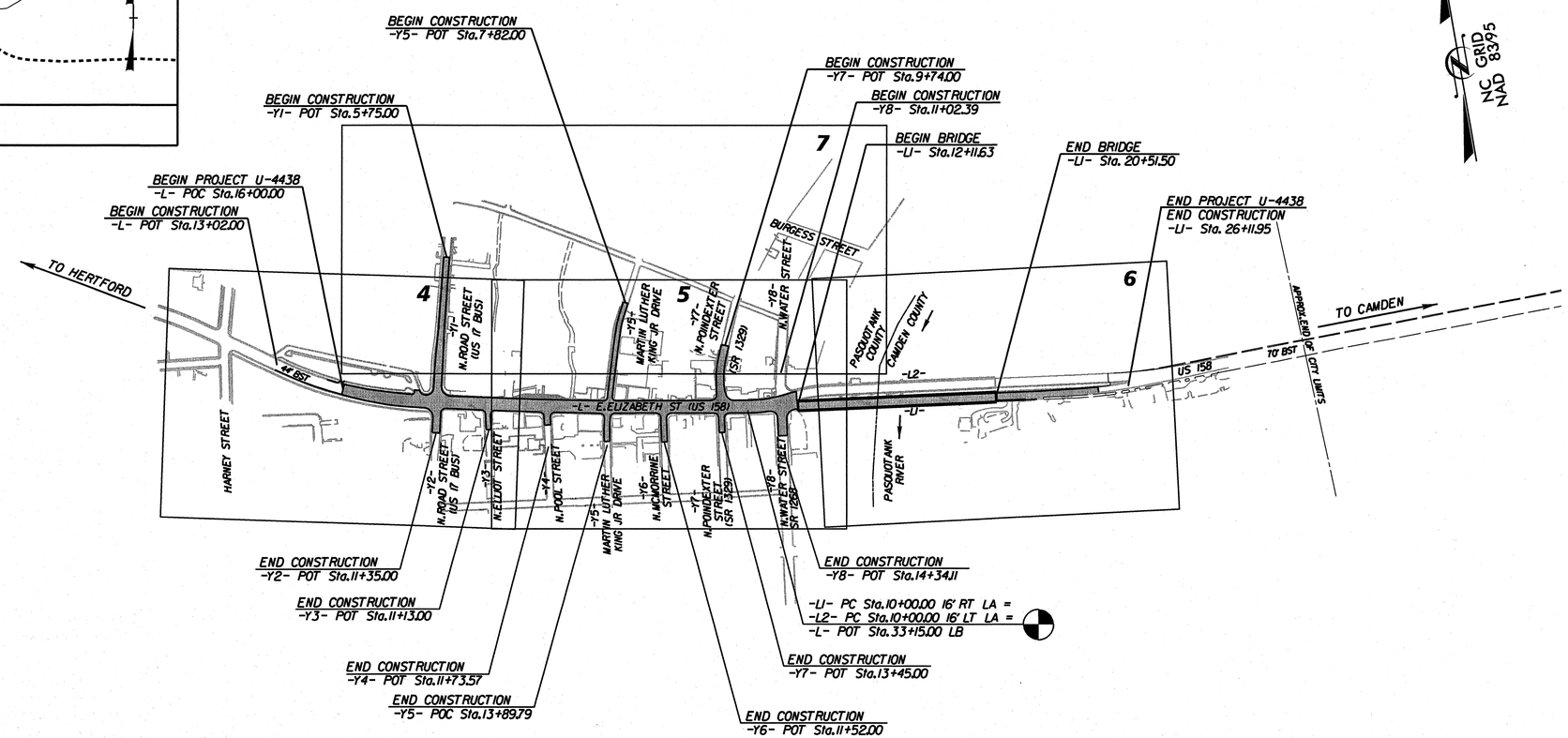

NCDOT CONTACT:
DOUG TAYLOR, P.E.
ASSISTANT STATE ROADWAY DESIGN ENGINEER
ROADWAY DESIGN UNIT

GRAPHIC SCALES

50 25 0 50 100
PLANS

50 25 0 50 100
PROFILE (HORIZONTAL)

10 5 0 10 20
PROFILE (VERTICAL)

DESIGN DATA

ADT 2011 = 12,900 VPD
ADT 2030 = 18,800 VPD
DHV = 10%
D = 55%
T = 20% *
V = 40 MPH
* (TTST 11% + DUAL 9%)

CLASS = URBAN ARTERIAL
REGIONAL TIER

PROJECT LENGTH

LENGTH ROADWAY TIP PROJECT U-4438 = 0.471 MILES
LENGTH STRUCTURE TIP PROJECT U-4438 = 0.159 MILES
TOTAL LENGTH TIP PROJECT U-4438 = 0.630 MILES

PLANS PREPARED FOR THE NCDOT BY: Kimley-Horn and Associates, Inc.
© 2010
Post Office Box 33068
Raleigh, North Carolina 27636
PE NO. F-0102

2006 STANDARD SPECIFICATIONS

RIGHT OF WAY DATE:
JULY 16, 2010

LETTING DATE:
MAY 17, 2011

JEFFREY W. MOORE, P.E.
PROJECT ENGINEER

J. JASON PACE, P.E.
PROJECT DESIGN ENGINEER

HYDRAULICS ENGINEER
NORTH CAROLINA PROFESSIONAL SEAL 026480 ENGINEER LARRY D. ROBINSON, JR.
1-24-11
SIGNATURE: P.E.

ROADWAY DESIGN ENGINEER
NORTH CAROLINA PROFESSIONAL SEAL 024436 ENGINEER JEFFREY W. MOORE
1-24-11
SIGNATURE: P.E.

DIVISION OF HIGHWAYS
STATE OF NORTH CAROLINA
STATE OF NORTH CAROLINA DEPARTMENT OF TRANSPORTATION

art McMillan P.E.
STATE HIGHWAY DESIGN ENGINEER

TIP PROJECT: U-4438

SEE SHEET 1-A FOR INDEX OF SHEETS
SEE SHEET 1-B FOR CONVENTIONAL PLAN SHEET SYMBOLS

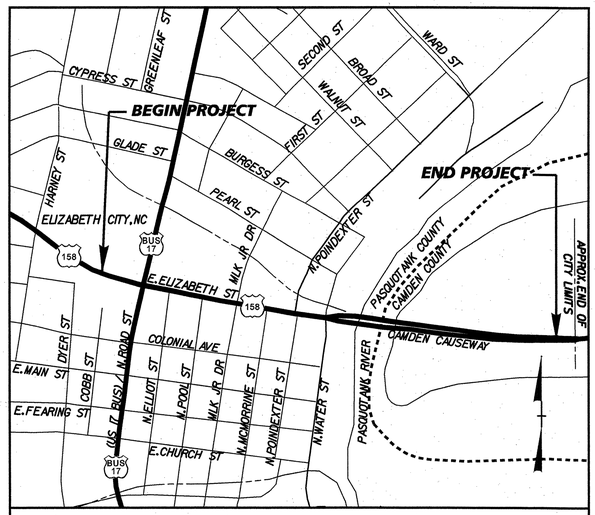

VICINITY MAP

STATE OF NORTH CAROLINA
DIVISION OF HIGHWAYS

PASQUOTANK & CAMDEN COUNTIES

STATE	STATE PROJECT REFERENCE NO.	SHEET NO.	TOTAL SHEETS
N.C.	U-4438	1	

STATE PROJ. NO.	F.A. PROJ. NO.	DESCRIPTION
35742.1.1	STP-0158(31)	P.E.
35742.2.1	STP-0158(50)	R/W & UTILITIES
35742.3.1	STP-0158(51)	CONSTRUCTION

LOCATION: ***US 158 (EAST ELIZABETH STREET) FROM US 17 BUSINESS (NORTH ROAD STREET) TO EAST OF PASQUOTANK RIVER IN ELIZABETH CITY***

TYPE OF WORK: ***GRADING, DRAINAGE, PAVING, SIGNALS, AND STRUCTURES***

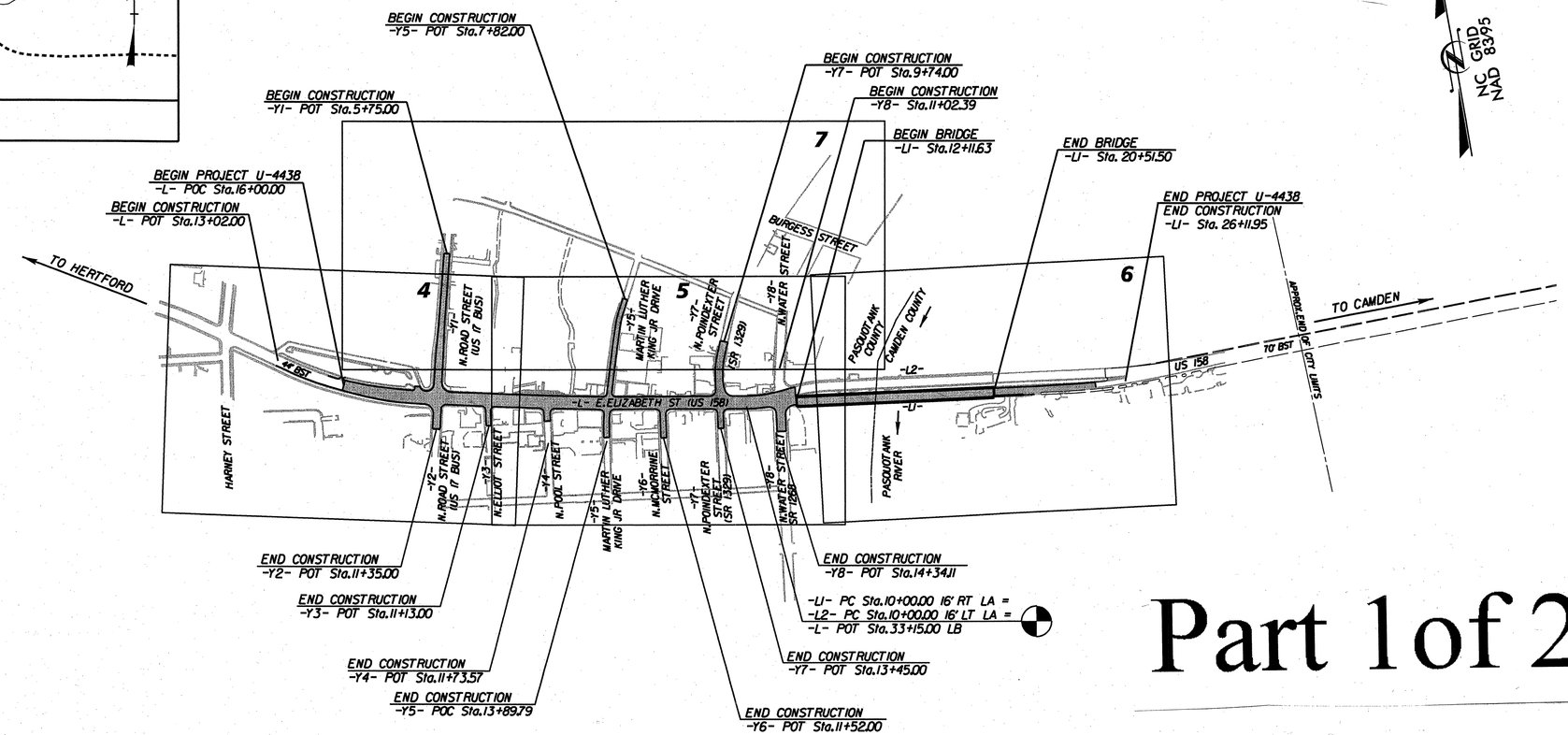

Part 1 of 2

NCDOT CONTACT:
DOUG TAYLOR, P.E.
ASSISTANT STATE ROADWAY DESIGN ENGINEER
ROADWAY DESIGN UNIT

CONTRACT: C202599

K:\RAL_Roadway\Oil\035142\Roadway\Proj\u4438_rdy_tshdgn

1/24/2011

GRAPHIC SCALES

50 25 0 50 100
PLANS

50 25 0 50 100
PROFILE (HORIZONTAL)

10 5 0 10 20
PROFILE (VERTICAL)

DESIGN DATA

ADT 2011 = 12,900 VPD
ADT 2030 = 18,800 VPD
DHV = 10%
D = 55%
T = 20% *
V = 40 MPH
* (TTST 11% + DUAL 9%)

CLASS = URBAN ARTERIAL
REGIONAL TIER

PROJECT LENGTH

LENGTH ROADWAY TIP PROJECT U-4438 = 0.471 MILES
LENGTH STRUCTURE TIP PROJECT U-4438 = 0.159 MILES
TOTAL LENGTH TIP PROJECT U-4438 = 0.630 MILES

PLANS PREPARED FOR THE NCDOT BY:

Kimley-Horn and Associates, Inc.
© , 2010
Post Office Box 33068
Raleigh, North Carolina 27636
FE NO. F-0102

2006 STANDARD SPECIFICATIONS

RIGHT OF WAY DATE:
JULY 16, 2010

LETTING DATE:
APRIL 19, 2011

JEFFREY W. MOORE, P.E.
PROJECT ENGINEER

J. JASON PACE, P.E.
PROJECT DESIGN ENGINEER

HYDRAULICS ENGINEER

NORTH CAROLINA PROFESSIONAL SEAL 026480 ENGINEER LARRY D. ROBINSON, JR.
1-24-11
SIGNATURE: P.E.

ROADWAY DESIGN ENGINEER

NORTH CAROLINA PROFESSIONAL SEAL 024436 ENGINEER JEFFREY W. MOORE
1-24-11
SIGNATURE: P.E.

DIVISION OF HIGHWAYS STATE OF NORTH CAROLINA

STATE OF NORTH CAROLINA DEPARTMENT OF TRANSPORTATION

P.E.
STATE HIGHWAY DESIGN ENGINEER

PROJECT REFERENCE NO.	SHEET NO.
U-4438	1-A

ROADWAY DESIGN ENGINEER

NORTH CAROLINA PROFESSIONAL SEAL 024436 ENGINEER JEFFREY W. MOORE 4-30-11

U-4438
PASQUOTANK & CAMDEN COUNTY

INDEX OF SHEETS

SHEET NUMBER	SHEET
1	TITLE SHEET
1A	INDEX OF SHEETS, GENERAL NOTES, LIST OF ROADWAY STANDARD DRAWINGS
1B	CONVENTIONAL SYMBOLS
1-C THRU 1-D	SURVEY CONTROL SHEETS
2	PAVEMENT SCHEDULE, TYPICAL SECTIONS, AND WEDGING DETAIL
2-A THRU 2-B	TYPICAL SECTIONS
2-C	DETENTION BASIN WALL
2-D	INTERSECTION DETAILS
2-E	DRIVEWAY GRADE DETAILS, SIDEWALK TIE DETAIL, ROCK PLATING DETAIL, EMERGENCY ACCESS DETAIL
2-F THRU 2-G	METHOD OF PIPE INSTALLATION DETAILS
2-H	CONCRETE PAVEMENT JOINTS CONSTRUCTION AND CONTRACTION JOINTS DETAIL
2-I	DOWEL ASSEMBLY DETAIL
2-J	ANCHORAGE FOR FRAMES BRICK OR CONCRETE DETAIL
2-K THRU 2-L	WHEELCHAIR RAMP CURB CUT DETAILS
2-M	CONCRETE CATCH BASIN DETAILS
2-N	OFFSET CATCH BASIN DETAIL
2-O	MODIFIED CONCRETE FLUME DETAIL
2-P	TYPE T BARRIER TRANSITION DETAIL
2-Q	TEMPORARY CONTAINMENT OF PETROLEUM CONTAMINATED SOIL DETAIL
2-R	OBSERVATION TUBE DETAIL
2-S	CURTAIN WALL SHEEETING AND FOAM CONCRETE VOID FILL DETAIL
2-T THRU 2-V	FOAMED CONCRETE FOR ROADWAY FOUNDATION DETAILS
2-W THRU 2-Y	ROADWAY SLAB ON PILES DETAILS
2-Z	STANDARD NOTES FOR ROADWAY SLAB ON PILES
2-AA	PILE SUPPORTED FOAMED CONCRETE APPROACH FILL DETAIL
2-AB	METHOD OF PIPE INSTALLATION ARCH PIPE DETAIL
2-AC	ANCHORED SHEET PILING BULKHEAD WALL DETAIL
2-AD	CONVERSION OF JUNCTION BOX TO A CATCH BASIN
3	SUMMARY OF QUANTITIES
3-A THRU 3-E	SUMMARY OF DRAINAGE QUANTITIES
3-F	SUMMARY OF GUARDRAIL, SUMMARY OF EARTHWORK, AND SUMMARY OF PAVEMENT REMOVAL
3-G	PARCEL INDEX SHEET
4 THRU 7	PLAN SHEETS
8 THRU 11	PROFILE SHEETS
TMP-1 THRU TMP-28	TRANSPORTATION MANAGEMENT PLANS
PED-1 THRU PED-6	TEMPORARY TRAFFIC CONTROL ACCESSIBILITY NARRATIVES
PMP-1 THRU PMP-4	PAVEMENT MARKING PLANS
PS-1 THRU PS-3	PUMP STATION PLANS
E-1 THRU E-4	ELECTRICAL PLANS
EC-1 THRU EC-7	EROSION CONTROL PLANS
SIGN-1 THRU SIGN-6	SIGNING PLANS
SD-1	SPECIAL SIGN DESIGN
SIG-1 THRU SIG-71	SIGNAL PLANS
UC-1 THRU UC-22	UTILITY CONSTRUCTION PLANS
UO-1 THRU UO-24C	UTILITIES BY OTHERS PLANS
X-0	CROSS-SECTION INDEX
X-1A	CROSS-SECTION SUMMARY SHEET
X-1 THRU X-29	CROSS-SECTIONS
S-1 THRU S-454	STRUCTURE PLANS

GENERAL NOTES:

2006 SPECIFICATIONS
EFFECTIVE: 07-18-06
REVISED: 07-30-08

GRADING AND SURFACING OR RESURFACING AND WIDENING:

THE GRADE LINES SHOWN DENOTE THE FINISHED ELEVATION OF THE PROPOSED SURFACING AT GRADE POINTS SHOWN ON THE TYPICAL SECTIONS. WHERE NO GRADE LINES ARE SHOWN, THE PROFILES SHOWN DENOTE THE TOP ELEVATION OF THE EXISTING PAVEMENT ALONG THE CENTER LINE OF SURVEY ON WHICH THE PROPOSED RESURFACING WILL BE PLACED. GRADE LINES MAY BE ADJUSTED BY THE ENGINEER IN ORDER TO SECURE A PROPER TIE-IN.

CLEARING:

CLEARING ON THIS PROJECT SHALL BE PERFORMED TO THE LIMITS ESTABLISHED BY METHOD II.

SUPERELEVATION:

ALL CURVES ON THIS PROJECT SHALL BE SUPERELEVATED IN ACCORDANCE WITH STD. NO. 225.04 USING THE RATE OF SUPERELEVATION AND RUNOFF SHOWN ON THE PLANS. SUPERELEVATION IS TO BE REVOLVED ABOUT THE GRADE POINTS SHOWN ON THE TYPICAL SECTIONS.

SIDE ROADS:

THE CONTRACTOR WILL BE REQUIRED TO DO ALL NECESSARY WORK TO PROVIDE SUITABLE CONNECTIONS WITH ALL ROADS, STREETS, AND DRIVES ENTERING THIS PROJECT. THIS WORK WILL BE PAID FOR AT THE CONTRACT UNIT PRICE FOR THE PARTICULAR ITEMS INVOLVED.

UNDERDRAINS:

UNDERDRAINS SHALL BE CONSTRUCTED IN ACCORDANCE WITH STD. NO. 815.03 AT LOCATIONS DIRECTED BY THE ENGINEER.

DRIVEWAYS:

DRIVEWAYS SHALL BE CONSTRUCTED IN ACCORDANCE WITH STD. 848.03 AT LOCATIONS SHOWN ON PLANS OR AS DIRECTED BY THE ENGINEER.

STREET TURNOUT:

STREET RETURNS SHALL BE CONSTRUCTED IN ACCORDANCE WITH STD. NO. 848.04 USING THE RADII NOTED ON PLANS.

GUARDRAIL:

THE GUARDRAIL LOCATIONS SHOWN ON THE PLANS MAY BE ADJUSTED DURING CONSTRUCTION AS DIRECTED BY THE ENGINEER. THE CONTRACTOR SHOULD CONSULT WITH THE ENGINEER PRIOR TO ORDERING GUARDRAIL MATERIAL.

TEMPORARY SHORING:

SHORING REQUIRED FOR THE MAINTENANCE OF TRAFFIC NOT SHOWN ON THE PLANS WILL BE PAID FOR AT THE CONTRACT PRICE FOR "CONTRACTOR DESIGNED TEMPORARY SHORING".

END BENTS:

THE ENGINEER SHALL CHECK THE STRUCTURE END BENT PLANS, DETAILS, AND CROSS-SECTION PRIOR TO SETTING OF THE SLOPE STAKES FOR THE EMBANKMENT OR EXCAVATION APPROACHING A BRIDGE.

UTILITIES:

UTILITY OWNERS ON THIS PROJECT ARE City of Elizabeth City Power

City of Elizabeth City Water/Sewer, Time Warner Cable, Centurylink Telephone,

Piedmont Gas, Mediacom CATV

ANY RELOCATION OF EXISTING UTILITIES WILL BE ACCOMPLISHED BY OTHERS, EXCEPT AS SHOWN ON THE PLANS.

RIGHT-OF-WAY MARKERS:

ALL RIGHT-OF-WAY MARKERS ON THIS PROJECT SHALL BE PLACED BY OTHERS.

WHEELCHAIR RAMPS:

WHEELCHAIR RAMPS ARE SHOWN ON THE PLANS AT APPROXIMATE LOCATIONS. THE CONSTRUCTION OF ALL WHEELCHAIR RAMPS SHALL BE IN ACCORDANCE WITH THE DETAILS ON PLANS.

2006 ROADWAY ENGLISH STANDARD DRAWINGS

The following Roadway Standards as appear in "Roadway Standard Drawings" Highway Design Branch - N. C. Department of Transportation - Raleigh, N. C., Dated July 18, 2006 are applicable to this project and by reference hereby are considered a part of these plans:

STD.NO.	TITLE
200.02	Method of Clearing - Method II
225.04	Method of Obtaining Superelevation - Two Lane Pavement
422.10	Reinforced Bridge Approach Fills
654.01	Pavement Repairs
700.02	Expansion Joint Layout - for Rigid Doweled Pavement at Bridges
700.04	Concrete Pavement Header Board
700.05	Tying Proposed Pavement to Existing
815.03	Pipe Underdrain and Blind Drain
838.01	Concrete Endwall for Single and Double Pipe Culverts - 15" thru 48" Pipe 90 Skew
838.11	Brick Endwall for Single and Double Pipe Culverts - 15" thru 48" Pipe 90 Skew
838.80	Precast Endwalls - 12" thru 72" Pipe 90 Skew
840.00	Concrete Base Pad for Drainage Structures
840.01	Brick Catch Basin - 12" thru 54" Pipe
840.02	Concrete Catch Basin - 12" thru 54" Pipe
840.03	Frame, Grates and Hood - for Use on Standard Catch Basin
840.14	Concrete Drop Inlet - 12" thru 30" Pipe
840.15	Brick Drop Inlet - 12" thru 30" Pipe
840.16	Drop Inlet Frame and Grates - for use with Std. Dwg 840.14 and 840.15
840.17	Concrete Grated Drop Inlet Type 'A' - 12" thru 72" Pipe
840.26	Brick Grated Drop Inlet Type 'A' - 12" thru 72" Pipe
840.29	Frames and Narrow Slot Flat Grates
840.31	Concrete Junction Box - 12" thru 66" Pipe
840.32	Brick Junction Box - 12" thru 66" Pipe
840.34	Traffic Bearing Junction Box - for Use with Pipes 42" and Under
840.45	Precast Drainage Structure
840.46	Traffic Bearing Precast Drainage Structure
840.54	Manhole Frame and Cover
840.66	Drainage Structure Steps
840.71	Concrete and Brick Pipe Plug
846.01	Concrete Curb, Gutter and Curb & Gutter
848.01	Concrete Sidewalk
848.03	Driveway Turnout - Drop Curb Type
848.04	Street Turnout
852.01	Concrete Islands
854.02	Double Faced Concrete Barrier - Types 'T', 'T1' and 'T2'
862.01	Guardrail Placement
862.02	Guardrail Installation
862.03	Structure Anchor Units
866.01	Chain Link Fence - 4', 5' and 6' High Fence
876.02	Guide for Rip Rap at Pipe Outlets
876.04	Drainage Ditches with Class 'B' Rip Rap

K:\RAL_Roadway\0\0036\42\Roadway\Proj\U4438_rdy_tshdgn

4/29/2011

PROJECT REFERENCE NO.	SHEET NO.
U-4438	1-B

Note: Not to Scale

**S.U.E. = Subsurface Utility Engineering*

STATE OF NORTH CAROLINA
DIVISION OF HIGHWAYS

CONVENTIONAL PLAN SHEET SYMBOLS

BOUNDARIES AND PROPERTY:

- State Line
- County Line
- Township Line
- City Line
- Reservation Line
- Property Line
- Existing Iron Pin — BP
- Property Corner
- Property Monument — EOM
- Parcel/Sequence Number — 123
- Existing Fence Line
- Proposed Woven Wire Fence
- Proposed Chain Link Fence
- Proposed Barbed Wire Fence
- Existing Wetland Boundary — WLB
- Proposed Wetland Boundary — WLB
- Existing Endangered Animal Boundary — EAB
- Existing Endangered Plant Boundary — EPB

BUILDINGS AND OTHER CULTURE:

- Gas Pump Vent or U/G Tank Cap
- Sign — S
- Well — W
- Small Mine
- Foundation
- Area Outline
- Cemetery
- Building
- School
- Church
- Dam

HYDROLOGY:

- Stream or Body of Water
- Hydro, Pool or Reservoir
- Jurisdictional Stream — JS
- Buffer Zone 1 — BZ 1
- Buffer Zone 2 — BZ 2
- Flow Arrow
- Disappearing Stream
- Spring
- Wetland
- Proposed Lateral, Tail, Head Ditch — FLOW
- False Sump

RAILROADS:

- Standard Gauge — CSX TRANSPORTATION
- RR Signal Milepost — MILEPOST 35
- Switch — SWITCH
- RR Abandoned
- RR Dismantled

RIGHT OF WAY:

- Baseline Control Point
- Existing Right of Way Marker
- Existing Right of Way Line
- Proposed Right of Way Line — RW
- Proposed Right of Way Line with Iron Pin and Cap Marker — RW
- Proposed Right of Way Line with Concrete or Granite Marker — RW
- Existing Control of Access — CA
- Proposed Control of Access — CA
- Existing Easement Line — E
- Proposed Temporary Construction Easement — E
- Proposed Temporary Drainage Easement — TDE
- Proposed Permanent Drainage Easement — PDE
- Proposed Permanent Drainage / Utility Easement — DUE
- Proposed Permanent Utility Easement — PUE
- Proposed Temporary Utility Easement — TUE
- Proposed Permanent Easement with Iron Pin and Cap Marker

ROADS AND RELATED FEATURES:

- Existing Edge of Pavement
- Existing Curb
- Proposed Slope Stakes Cut — C
- Proposed Slope Stakes Fill — F
- Proposed Wheel Chair Ramp — WCR
- Existing Metal Guardrail
- Proposed Guardrail
- Existing Cable Guiderail
- Proposed Cable Guiderail
- Equality Symbol
- Pavement Removal

VEGETATION:

- Single Tree
- Single Shrub
- Hedge
- Woods Line
- Orchard
- Vineyard — Vineyard

EXISTING STRUCTURES:

MAJOR:

- Bridge, Tunnel or Box Culvert — CONC
- Bridge Wing Wall, Head Wall and End Wall — CONC WW

MINOR:

- Head and End Wall — CONC HW
- Pipe Culvert
- Footbridge
- Drainage Box: Catch Basin, DI or JB — CB
- Paved Ditch Gutter
- Storm Sewer Manhole — S
- Storm Sewer — S

UTILITIES:

POWER:

- Existing Power Pole
- Proposed Power Pole
- Existing Joint Use Pole
- Proposed Joint Use Pole
- Power Manhole — P
- Power Line Tower
- Power Transformer
- U/G Power Cable Hand Hole — HH
- H-Frame Pole
- Recorded U/G Power Line — P
- Designated U/G Power Line (S.U.E.*) — P

TELEPHONE:

- Existing Telephone Pole
- Proposed Telephone Pole
- Telephone Manhole — T
- Telephone Booth
- Telephone Pedestal — T
- Telephone Cell Tower
- U/G Telephone Cable Hand Hole — HH
- Recorded U/G Telephone Cable — T
- Designated U/G Telephone Cable (S.U.E.*) — T
- Recorded U/G Telephone Conduit — TC
- Designated U/G Telephone Conduit (S.U.E.*) — TC
- Recorded U/G Fiber Optics Cable — T FO
- Designated U/G Fiber Optics Cable (S.U.E.*) — T FO

WATER:

- Water Manhole — W
- Water Meter
- Water Valve
- Water Hydrant
- Recorded U/G Water Line — W
- Designated U/G Water Line (S.U.E.*) — W
- Above Ground Water Line — A/G Water

TV:

- TV Satellite Dish
- TV Pedestal — C
- TV Tower
- U/G TV Cable Hand Hole — HH
- Recorded U/G TV Cable — TV
- Designated U/G TV Cable (S.U.E.*) — TV
- Recorded U/G Fiber Optic Cable — TV FO
- Designated U/G Fiber Optic Cable (S.U.E.*) — TV FO

GAS:

- Gas Valve
- Gas Meter
- Recorded U/G Gas Line — G
- Designated U/G Gas Line (S.U.E.*) — G
- Above Ground Gas Line — A/G Gas

SANITARY SEWER:

- Sanitary Sewer Manhole
- Sanitary Sewer Cleanout
- U/G Sanitary Sewer Line — SS
- Above Ground Sanitary Sewer — A/G Sanitary Sewer
- Recorded SS Forced Main Line — FSS
- Designated SS Forced Main Line (S.U.E.*) — FSS

MISCELLANEOUS:

- Utility Pole
- Utility Pole with Base
- Utility Located Object
- Utility Traffic Signal Box — S
- Utility Unknown U/G Line — ?UTL
- U/G Tank; Water, Gas, Oil
- A/G Tank; Water, Gas, Oil
- U/G Test Hole (S.U.E.*)
- Abandoned According to Utility Records — AATUR
- End of Information — E.O.I.

6/2/99

PROJECT REFERENCE NO.	SHEET NO.
U-4438	1C
Location and Surveys	

SURVEY CONTROL SHEET U-4438

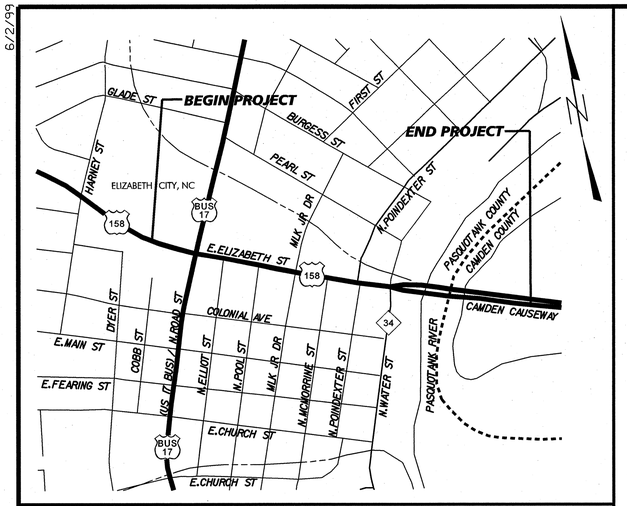

VICINITY MAP

SPEICAL NOTE:

CONTACT LOCATION AND SURVEYS, WILLIAMSTON OFFICE FOR SITE CALIBRATION FILES, IF UTILIZING GPSVRS FOR SURVEYS ON THIS PROJECT.

CONTROL

BL

POINT	DESC.	NORTH	EAST	ELEVATION	L STATION	OFFSET
JASON1	NCGS RODMARK "JASON"	940745.8510	2817298.7230	5.96	10+33.42	26.38 RT
BL1	BL-1	940738.9090	2817302.1340	6.31	10+40.21	30.09 RT
CASEY1	NCGS RODMARK "CASEY"	940460.8270	2817660.2030	3.93	14+87.88	60.47 RT
BL2	BL-2	940307.7430	2818124.9030	2.86	19+62.36	43.41 RT
BOBBY1	NCGS RODMARK "BOBBY"	940232.3790	2818860.8760	2.60	26+98.93	33.30 LT
BL3	BL-3	940232.7580	2818915.8510	2.97	27+53.25	43.10 LT

BL

POINT	DESC.	NORTH	EAST	ELEVATION	L1 STATION	OFFSET
BL4	BL-4	940037.3680	2819565.5390	4.61	11+06.13	33.30 RT
BIBLE1	NCGS RODMARK "BIBLE"	940924.2900	2819825.9130	6.64	12+55.64	870.73 LT
STUDY1	NCGS RODMARK "STUDY"	941684.3330	2820612.6100	5.60	19+38.08	1725.61 LT
BL5	BL-5	939940.5390	2820514.8640	5.55	20+65.60	19.28 RT
3	BL-1 R2414A	939885.5440	2821364.3500	5.72	OUTSIDE PROJECT LIMITS	

BENCHMARKS

JASON1 ELEVATION = 5.96
N 940746 E 2817299
L STATION 10+33.00 26 RIGHT
NCGS RODMARK "JASON"

CASEY1 ELEVATION = 3.93
N 940461 E 2817660
L STATION 14+88.00 60 RIGHT
NCGS RODMARK "CASEY"

BOBBY1 ELEVATION = 2.60
N 940232 E 2818861
L STATION 26+99.00 33 LEFT
NCGS RODMARK "BOBBY"

BIBLE1 ELEVATION = 6.64
N 940924 E 2819826
L1 STATION 12+56.00 871 LEFT
NCGS RODMARK "BIBLE"

STUDY1 ELEVATION = 5.60
N 941684 E 2820613
L1 STATION 19+38.00 1726 LEFT
NCGS RODMARK "STUDY"

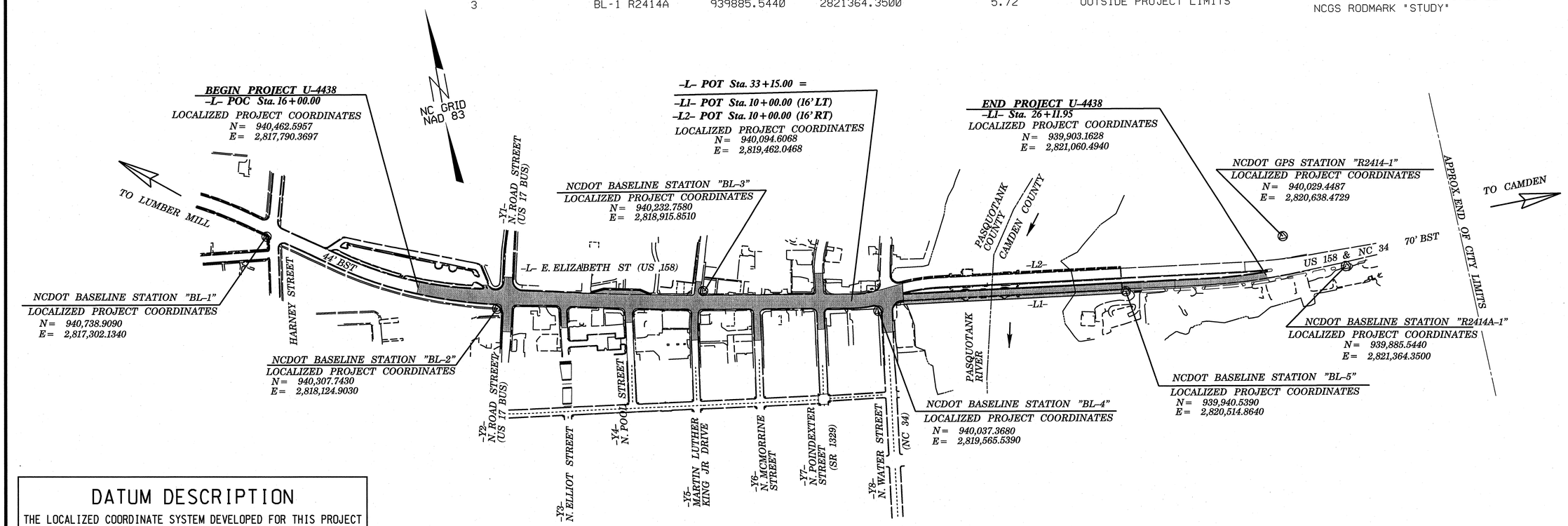

DATUM DESCRIPTION

THE LOCALIZED COORDINATE SYSTEM DEVELOPED FOR THIS PROJECT IS BASED ON THE STATE PLANE COORDINATES ESTABLISHED BY NCDOT FOR MONUMENT "R2414-1"
WITH NAD 83 STATE PLANE GRID COORDINATES OF
NORTHING: 940,029.4487 FT EASTING: 2,820,638.4729 FT
THE AVERAGE COMBINED GRID FACTOR USED ON THIS PROJECT (GROUND TO GRID) IS: 1.0000523
THE N.C. LAMBERT GRID BEARING AND LOCALIZED HORIZONTAL GROUND DISTANCE FROM "R2414-1" TO -L- STATION 16+00.00 IS
N 81°21'09.3" W 2,880.852 FT
ALL LINEAR DIMENSIONS ARE LOCALIZED HORIZONTAL DISTANCES
VERTICAL DATUM USED IS NGVD 29

NOTE: DRAWING NOT TO SCALE

NOTES:

THE CONTROL DATA FOR THIS PROJECT CAN BE FOUND ELECTRONICALLY BY SELECTING PROJECT CONTROL DATA AT:
HTTP://WWW.DOH.DOT.STATE.NC.US/PRECONSTRUCT/HIGHWAY/LOCATION/PROJECT/
FILE: u4438_ls_control_100622.txt
SITE CALIBRATION INFORMATION HAS NOT BEEN PROVIDED FOR THIS PROJECT. IF FURTHER INFORMATION IS NEEDED, PLEASE CONTACT THE LOCATION AND SURVEYS UNIT.

INDICATES GEODETIC CONTROL MONUMENTS USED OR SET FOR HORIZONTAL PROJECT CONTROL BY THE NCDOT LOCATION AND SURVEYS UNIT.
PROJECT CONTROL ESTABLISHED USING CONVENTIONAL METHODS FROM R-2414A CONTROL MONUMENTION.

$$$$SYSTIME$$$$
$$$$SCALE$$$$
$$$$USERNAME$$$$

6/2/99

PROJECT REFERENCE NO.	SHEET NO.
U-4438	1D
Location and Surveys	

SURVEY CONTROL SHEET U-4438

DESIGN ALIGNMENTS

L

TYPE	STATION	NORTH	EAST
POT	9+55.00	940812.6048	2817249.8322
PC	13+18.75	940602.9887	2817547.1072
PT	19+43.26	940354.1968	2818115.3232
PC	24+10.72	940256.1788	2818572.3979
PT	24+74.92	940243.1225	2818635.2470
PC	26+36.57	940211.2589	2818793.7299
PT	27+18.30	940196.2419	2818874.0694
POT	33+15.00	940094.6068	2819462.0468

L1

TYPE	STATION	NORTH	EAST
PC	10+00.00	940078.8406	2819459.3215
PRC	11+10.92	940070.7632	2819569.7726
PT	12+23.41	940064.9349	2819681.9998
PC	23+53.95	939919.5739	2820803.1544
PT	26+72.48	939903.4993	2821121.0218
POT	27+76.78	939905.4516	2821225.3041

L2

TYPE	STATION	NORTH	EAST
PC	10+00.00	940110.3730	2819464.7720
PRC	11+61.45	940107.2030	2819625.5731
PT	13+56.96	940107.4767	2819820.5265
PC	25+05.11	939959.8504	2820959.1530
PT	28+29.92	939941.9743	2821283.1728

Y1

TYPE	STATION	NORTH	EAST
POT	4+90.00	941019.8229	2818338.5678
PC	10+04.23	940521.0795	2818213.3030
PT	11+08.24	940419.9903	2818188.8427
POT	11+88.00	940342.3090	2818170.7577

Y2

TYPE	STATION	NORTH	EAST
POT	10+00.00	940341.4912	2818174.5716
POT	12+97.00	940052.2269	2818107.2277

Y3

TYPE	STATION	NORTH	EAST
POT	10+00.00	940297.2120	2818381.0528
POT	12+98.00	940002.0036	2818340.3588

Y4

TYPE	STATION	NORTH	EAST
POT	10+00.00	940245.0567	2818625.6750
POT	12+20.00	940027.0465	2818596.1527

Y5

TYPE	STATION	NORTH	EAST
POT	6+20.00	940759.3981	2819103.7044
PC	8+45.74	940558.9166	2818999.9491
PT	9+04.75	940504.4717	2818977.3611
PC	9+86.25	940426.8357	2818952.5811
PT	10+51.28	940364.7061	2818933.3846
PC	12+68.18	940156.8837	2818871.2815
PT	13+41.83	940085.0187	2818855.4578
POT	15+18.00	939910.6514	2818830.3386

Y6

TYPE	STATION	NORTH	EAST
POT	10+00.00	940155.4198	2819110.2324
POT	12+90.00	939868.3202	2819069.3204

Y7

TYPE	STATION	NORTH	EAST
POT	9+00.00	940431.6606	2819440.6334
PC	10+25.90	940315.7256	2819391.5430
PT	11+27.40	940218.1281	2819364.7750
POT	15+26.00	939823.1486	2819311.1934

Y8

TYPE	STATION	NORTH	EAST
POT	10+00.00	940310.7359	2819646.0376
PC	10+93.89	940219.0571	2819625.7949
PT	11+84.26	940130.0469	2819610.3209
POT	15+36.00	939781.1399	2819565.7921

Y9

TYPE	STATION	NORTH	EAST
POT	10+00.00	940916.4904	2818312.6147
POT	11+64.56	940871.6932	2818470.9648
POT	16+24.50	940620.1739	2818856.0393
POT	18+32.78	940465.4503	2818995.4597
POT	19+29.61	940436.3050	2819087.8027
POT	20+08.24	940384.8149	2819147.2248
POT	21+37.46	940357.0235	2819273.4234
POT	23+42.97	940198.7733	2819404.5458
POT	25+07.64	940157.3510	2819563.9149

DATUM DESCRIPTION

THE LOCALIZED COORDINATE SYSTEM DEVELOPED FOR THIS PROJECT IS BASED ON THE STATE PLANE COORDINATES ESTABLISHED BY NCDOT FOR MONUMENT "R2414-1"
WITH NAD 83 STATE PLANE GRID COORDINATES OF
NORTHING: 940,029.4487 FT EASTING: 2,820,638.4729 FT
THE AVERAGE COMBINED GRID FACTOR USED ON THIS PROJECT (GROUND TO GRID) IS: 1.0000523
THE N.C. LAMBERT GRID BEARING AND LOCALIZED HORIZONTAL GROUND DISTANCE FROM "R2414-1" TO -L- STATION 16+00.00 IS
N 81°21'09.3" W 2,880.852 FT
ALL LINEAR DIMENSIONS ARE LOCALIZED HORIZONTAL DISTANCES
VERTICAL DATUM USED IS NGVD 29

NOTE: DRAWING NOT TO SCALE

NOTES:

THE CONTROL DATA FOR THIS PROJECT CAN BE FOUND ELECTRONICALLY BY SELECTING PROJECT CONTROL DATA AT:
HTTP://WWW.DOH.DOT.STATE.NC.US/PRECONSTRUCT/HIGHWAY/LOCATION/PROJECT/
FILE: u4438_ls_control_100622.txt
SITE CALIBRATION INFORMATION HAS NOT BEEN PROVIDED FOR THIS PROJECT. IF FURTHER INFORMATION IS NEEDED, PLEASE CONTACT THE LOCATION AND SURVEYS UNIT.

⊚ INDICATES GEODETIC CONTROL MONUMENTS USED OR SET FOR HORIZONTAL PROJECT CONTROL BY THE NCDOT LOCATION AND SURVEYS UNIT.
PROJECT CONTROL ESTABLISHED USING CONVENTIONAL METHODS FROM R-2414A CONTROL MONUMENTION.

$$$$$$SYSTIME$$$$$$DGN$$$$$$$$$$$$$$$$$$$$$$$$USERNAME$$$$

PROJECT REFERENCE NO.	SHEET NO.
U-4438	2

Kimley-Horn and Associates, Inc.
P.O. BOX 33068
RALEIGH, N.C. 27636-3068

ROADWAY DESIGN ENGINEER
NORTH CAROLINA PROFESSIONAL SEAL 024436 ENGINEER JEFFREY W. MOORE 1-24-11

PAVEMENT DESIGN ENGINEER
NORTH CAROLINA PROFESSIONAL SEAL 22896 ENGINEER CLARK S. MORRISON 1/25/11

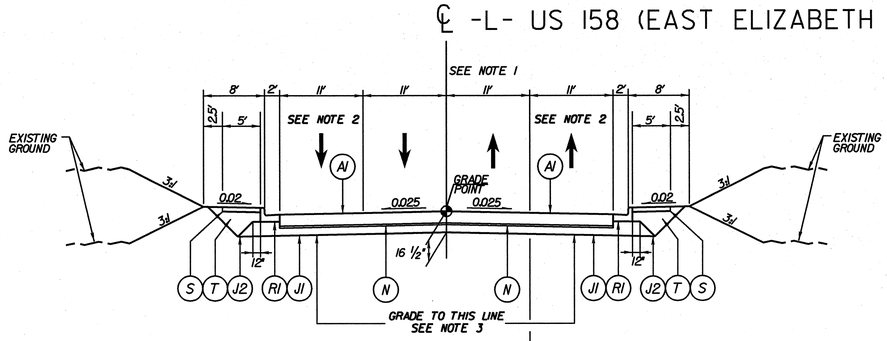

TYPICAL SECTION NO. 1

-L- STA 16+00.00 TO STA 16+07.00

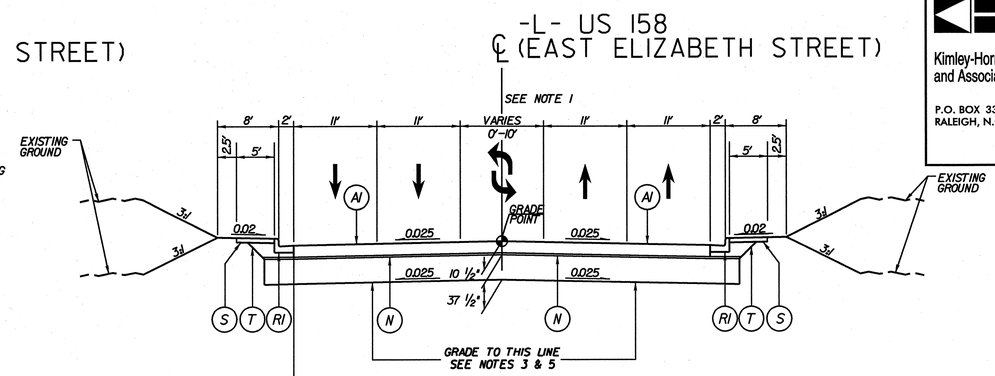

TYPICAL SECTION NO. 2

-L- STA 16+07.00 TO STA 28+75.73

TYPICAL SECTION NO. 2A

-L- STA 27+58.51 TO STA 27+75.01 LT
-L- STA 27+99.01 TO STA 28+15.91 LT
-L- STA 28+39.91 TO STA 28+75.73 LT

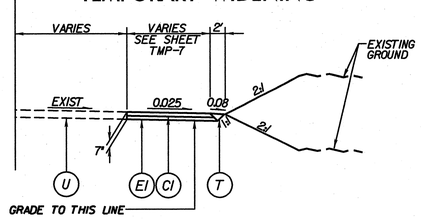

TYPICAL SECTION NO. 1A

-L- STA 13+02.00 TO STA 19+43.00 RT

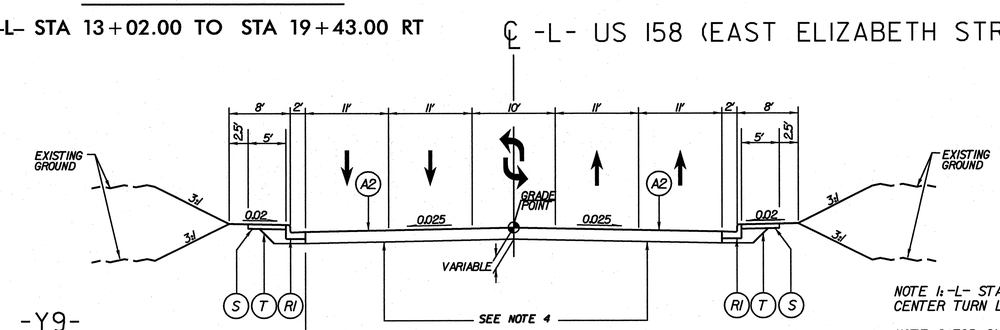

TYPICAL SECTION NO. 3

-L- STA 28+75.73 TO STA 33+15.00

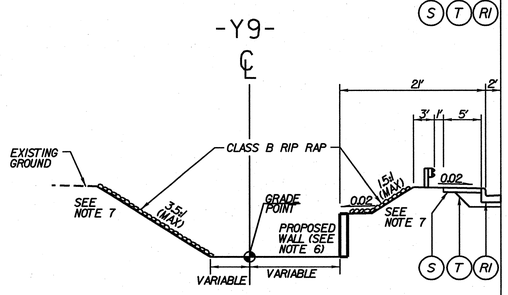

-Y9- STA 23+42.97 TO STA 25+07.64

TYPICAL SECTION NO. 3A

-L- STA 32+38.90 TO STA 33+15.00 LT
-L2- STA 10+00.00 TO STA 10+87.00 LT

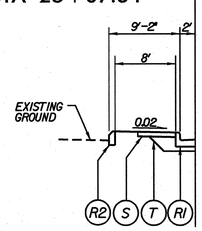

TYPICAL SECTION NO. 3B

-L- STA 28+75.73 TO STA 28+89.92 LT
-L- STA 29+13.92 TO STA 29+53.22 LT
-L- STA 30+95.57 TO STA 31+72.53 LT

NOTE 1: -L- STA 16+00.00 TO STA 16+07.00 CENTER TURN LANE TAPERS FROM 0' TO 0.18'.

NOTE 2: FOR SLABS THAT SPAN THE INTERFACE BETWEEN LIGHTWEIGHT CONCRETE FILL AND ABC, REINFORCE THE SLAB WITH WELDED WIRE FABRIC 4x4 W18xW18.

NOTE 3: REMOVE EXISTING VARIABLE DEPTH ASPHALT PAVEMENT TO EXISTING SUBGRADE. CONSTRUCT PAVEMENT AS SHOWN ON TYPICAL SECTION.

NOTE 4: REMOVE EXISTING VARIABLE DEPTH ASPHALT PAVEMENT BY MILLING AT 3" DEPTHS TO EXISTING CONCRETE. REMOVE EXIST CONCRETE PAVEMENT BY MILLING TO EXIST REINFORCING STEEL (1.5" DEPTH). CONSTRUCT PAVEMENT AS SHOWN ON TYPICAL SECTION. SEE DETAILS 2W THRU 2Y "ROADWAY SLAB ON PILES" FOR DESIGN UNDER PROPOSED VARIABLE DEPTH CONCRETE OVERLAY.

NOTE 5: SEE "FOAMED CONCRETE FOR ROADWAY FOUNDATION" PLANS (SHEETS 2-T THRU 2-V) FOR DESIGN UNDER PAVEMENT SUBGRADE AND UNDERCUT EXCAVATION DIMENSIONS.

NOTE 6: REMOVE EXISTING CONCRETE SLAB AND CONSTRUCT DETENTION BASIN WALL.

NOTE 7: CONSTRUCT SLOPES WITH ROCK PLATING (SEE DETAIL ON SHEET 2-E).

NOTE 8: PAVEMENT EDGE SLOPES ARE 1:1 UNLESS SHOWN OTHERWISE.

PAVEMENT SCHEDULE

A1	PROP. 10.5" PORTLAND CEMENT CONCRETE PAVEMENT (SEE DETAILS 2T- 2V "FOAMED CONCRETE FOR ROADWAY FOUNDATION" DETAILS)
A2	PROP. VAR. DEPTH CONCRETE OVERLAY (SEE DETAILS 2W- 2Y "ROADWAY SLAB ON PILES" DETAILS)
C1	PROP. APPROX. 3" ASPHALT CONCRETE SURFACE COURSE TYPE S9.5C, AT AN AVERAGE RATE OF 168 LBS. PER SQ. YD. IN EACH OF TWO LAYERS.
C2	PROP. VAR. DEPTH ASPHALT CONCRETE SURFACE COURSE, TYPE S9.5C, AT AN AVERAGE RATE OF 112 LBS. PER SQ. YD. PER 1" DEPTH. TO BE PLACED IN LAYERS NOT LESS THAN 1.5" IN DEPTH OR GREATER THAN 2" IN DEPTH.
D1	PROP. APPROX. 4" ASPHALT CONCRETE INTERMEDIATE COURSE TYPE I19.0C, AT AN AVERAGE RATE OF 456 LBS. PER SQ. YD.
D2	PROP. VAR. DEPTH ASPHALT CONCRETE INTERMEDIATE COURSE, TYPE I19.0C, AT AN AVERAGE RATE OF 114 LBS. PER SQ. YD. PER 1" DEPTH TO BE PLACED IN LAYERS NOT LESS THAN 2.5" OR GREATER THAN 4" IN DEPTH.
E1	PROP. APPROX. 4" ASPHALT CONCRETE BASE COURSE TYPE B25.0C, AT AN AVERAGE RATE OF 456 LBS. PER SQ. YD.
E2	PROP. VAR. DEPTH ASPHALT CONCRETE BASE COURSE, TYPE B25.0C, AT AN AVERAGE RATE OF 114 LBS. PER SQ. YD. PER 1" DEPTH TO BE PLACED IN LAYERS NOT LESS THAN 3" OR GREATER THAN 5.5" IN DEPTH.
J1	PROP. 6" AGGREGATE BASE COURSE (COMPACTED TO 92% AASHTO T180)
J2	PROP. VAR. DEPTH AGGREGATE BASE COURSE (COMPACTED TO 92% AASHTO T180)
N	PROP. NONWOVEN GEOTEXTILE INTERLAYER
R1	2'-6" CONCRETE CURB & GUTTER
R2	8"x18" CONCRETE CURB
R3	4" CONCRETE ISLAND COVER
S	4" CONCRETE SIDEWALK
T	EARTH MATERIAL
U	EXISTING PAVEMENT
W	VARIABLE DEPTH ASPHALT PAVEMENT (SEE DETAIL W ON THIS SHEET)

K:\RAL_Roadway\011036142\Roadway\Proj\u4438_rdy_typ.dgn
1/24/2011

PROJECT REFERENCE NO.	SHEET NO.
U-4438	2-A

Kimley-Horn and Associates, Inc.
P.O. BOX 33068
RALEIGH, N.C. 27636-3068

ROADWAY DESIGN ENGINEER
NORTH CAROLINA PROFESSIONAL SEAL 024436 ENGINEER JEFFREY W. MOORE
1-24-11

PAVEMENT DESIGN ENGINEER
NORTH CAROLINA PROFESSIONAL SEAL 22896 ENGINEER CLARK S. MORRISON
1/25/11

-L1-/-L2- US 158 (EAST ELIZABETH STREET)

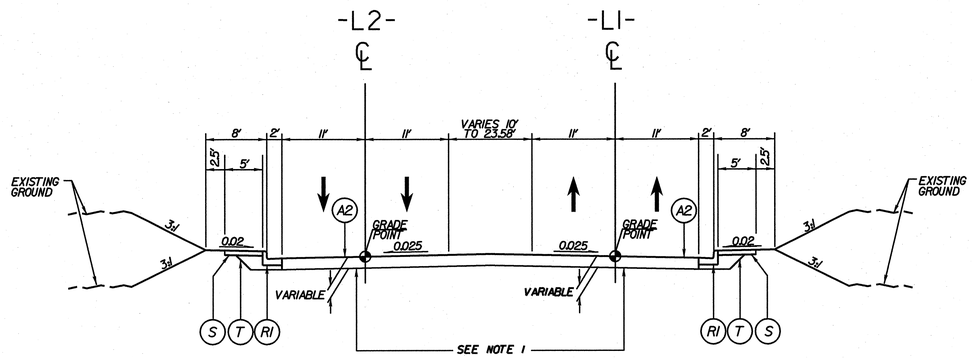

TYPICAL SECTION NO. 4

-L1- STA 10+00.00 TO STA 12+11.63 (BEGIN BRIDGE)
-L2- STA 10+00.00 TO STA 12+09.55 (EXIST BRIDGE)

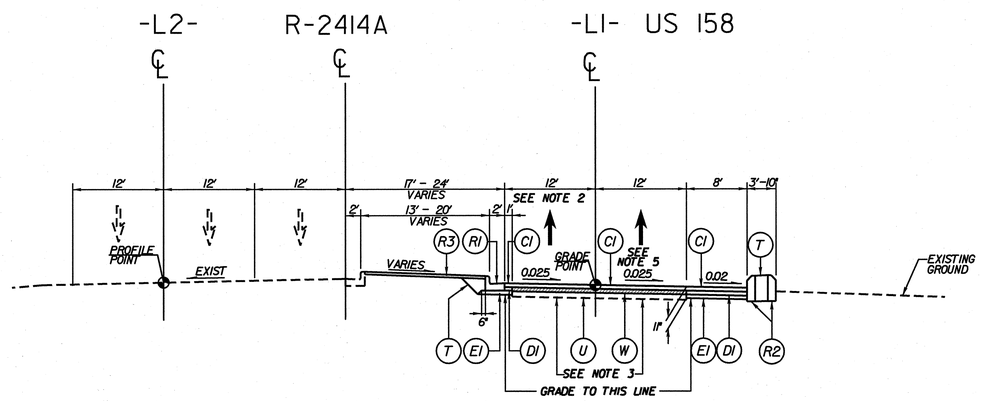

TYPICAL SECTION NO. 5

-L1- STA 20+51.50 (END BRIDGE) TO STA 24+84.00

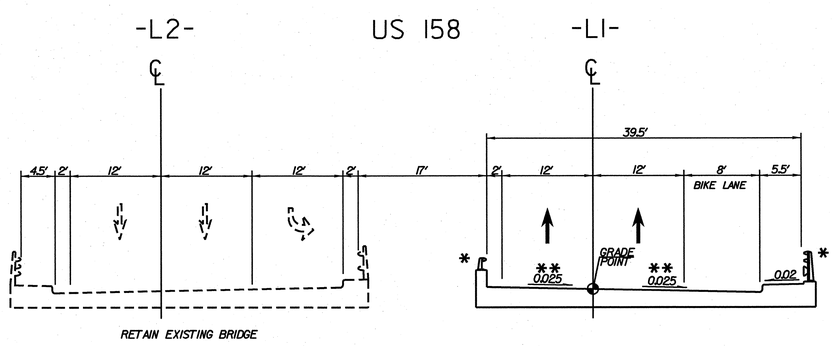

BRIDGE TYPICAL SECTION NO. 1

US 158 OVER PASQUOTANK RIVER

NOTE 1: REMOVE EXISTING VARIABLE DEPTH ASPHALT PAVEMENT BY MILLING AT 3" DEPTHS TO EXISTING CONCRETE. REMOVE EXIST CONCRETE PAVEMENT BY MILLING TO EXIST REINFORCING STEEL (1.5" DEPTH). CONSTRUCT PAVEMENT AS SHOWN ON TYPICAL SECTION. SEE DETAILS 2W THRU 2Y "ROADWAY SLAB ON PILES" FOR DESIGN UNDER PROPOSED VARIABLE DEPTH CONCRETE OVERLAY.

NOTE 2: SAWCUT AND REMOVE EXISTING ASPHALT PAVEMENT AND PROVIDE 1' MINIMUM WIDTH OF FULL DEPTH PAVEMENT

NOTE 3: MILL EXISTING ASPHALT PAVEMENT TO PROVIDE 3" MIN. DEPTH OF S9.5C

NOTE 4: MILL NOTCH TO KEY-IN S9.5C FROM -L1- STA 24+59.00 TO STA 24+84.00 (SEE MILLING DETAIL)

NOTE 5:
SEE PLANS FOR SUPERELEVATION.

NOTE 6:
PAVEMENT EDGE SLOPES ARE 1:1 UNLESS SHOWN OTHERWISE.

* FINAL BRIDGE RAIL TO BE DETERMINED BY STRUCTURE DESIGN UNIT

** 2.5% TO 0% SUPERELEVATION TRANSITION FROM -L1- STA 13+85.17 TO STA 14+28.15

0% TO 2.5% SUPERELEVATION TRANSITION FROM -L1- STA 16+23.35 TO STA 16+65.95

PAVEMENT SCHEDULE

A1	10.5" PORTLAND CEMENT CONCRETE
A2	VARIABLE DEPTH CONCRETE OVERLAY
C1	3" TYPE S9.5C
C2	VAR. DEPTH TYPE S9.5C
D1	4" TYPE I19.0C
D2	VAR. DEPTH TYPE I19.0C
E1	4" TYPE B25.0C
E2	VAR. DEPTH TYPE B25.0C
J1	6" ABC
J2	VAR. DEPTH ABC
N	GEOTEXTILE INTERLAYER
R1	2'-6" CONCRETE CURB & GUTTER
R2	8"x18" CONCRETE CURB
R3	4" CONCRETE ISLAND COVER
S	4" CONCRETE SIDEWALK
T	EARTH MATERIAL
U	EXISTING PAVEMENT
W	VARIABLE DEPTH ASPHALT

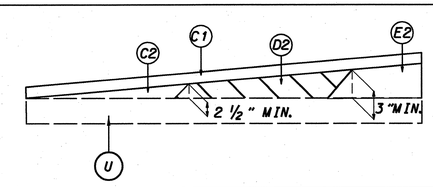

WEDGING DETAIL W

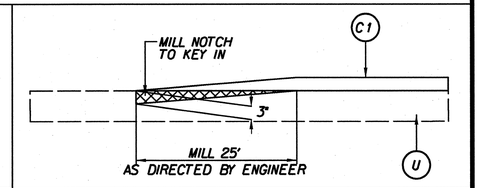

MILLING DETAIL

K:\RAL_Roadway\011036142\Roadway\Proj\u4438_rdy_typ.dgn

1/24/2011

PROJECT REFERENCE NO.	SHEET NO.
U-4438	2-B

ROADWAY DESIGN ENGINEER

NORTH CAROLINA PROFESSIONAL SEAL 024436 ENGINEER JEFFREY W. MOORE 1-24-11

PAVEMENT DESIGN ENGINEER

NORTH CAROLINA PROFESSIONAL SEAL 22896 ENGINEER CLARK S. MORRISON 1/25/11

Kimley-Horn and Associates, Inc.

P.O. BOX 33068
RALEIGH, N.C. 27636-3068

–Y1– N. ROAD ST (US 17 BUS)
–Y2– N. ROAD ST (US 17 BUS)
–Y3– N. ELLIOTT ST
–Y4– N. POOL ST
–Y5– MARTIN LUTHER KING JR DR
–Y6– N. MCMORRINE ST
–Y7– N. POINDEXTER ST (SR 1329)
–Y8– N. WATER ST (SR 1268)

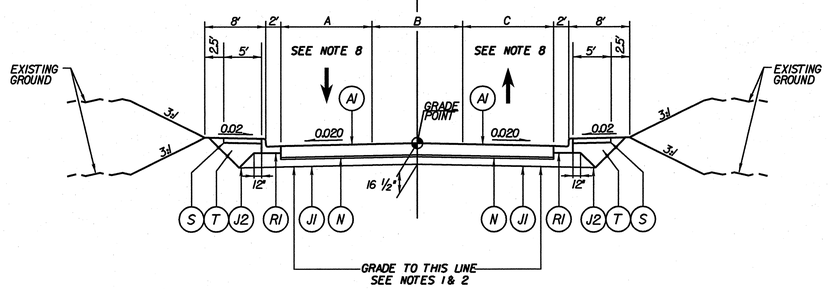

TYPICAL SECTION NO. 6

–Y1– STA 5+75.00 TO STA 10+04.23 (12' WIDTH)
–Y1– STA 10+04.23 TO STA 11+09.00 (11' WIDTH)
–Y2– STA 11+23.00 TO STA 11+30.00
–Y3– STA 11+01.00 TO STA 11+08.00
–Y4– STA 10+73.00 TO STA 10+80.00
–Y5– STA 7+82.00 TO STA 7+89.00 (10' WIDTH)
–Y5– STA 13+66.00 TO STA 13+73.00 (12' WIDTH)
–Y6– STA 11+40.00 TO STA 11+47.00
–Y7– STA 9+74.00 TO STA 9+81.00 (16' WIDTH)
–Y7– STA 13+33.00 TO STA 13+40.00 (12' WIDTH)
–Y8– STA 13+59.00 TO STA 13+66.00

	A	B	C
–Y1–	12'	0'	12'
–Y1–	11'	10'	11'
–Y2–	11'	10'	11'
–Y3–	10'	0'	10'
–Y4–	13'	0'	13'
–Y5–	10'	0'	10'
–Y5–	12'	0'	12'
–Y6–	12'	0'	12'
–Y7–	16'	0'	16'
–Y7–	12'	0'	12'
–Y8–	13'	12'	13'

–Y1– N. ROAD ST (US 17 BUS)
–Y2– N. ROAD ST (US 17 BUS)
–Y3– N. ELLIOTT ST
–Y4– N. POOL ST
–Y5– MARTIN LUTHER KING JR DR
–Y6– N. MCMORRINE ST
–Y7– N. POINDEXTER ST (SR 1329)
–Y8– N. WATER ST (SR 1268)

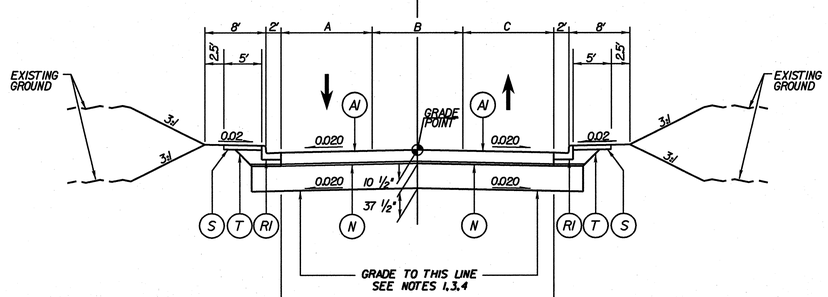

TYPICAL SECTION NO. 7

–Y1– STA 11+09.00 TO STA 11+61.00
–Y2– STA 10+27.00 TO STA 11+23.00
–Y3– STA 10+27.07 TO STA 11+01.00
–Y4– STA 10+27.06 TO STA 10+73.00
–Y5– STA 7+89.00 TO STA 12+01.45 (10' WIDTH)
–Y5– STA 12+55.83 TO STA 13+66.00 (12' WIDTH)
–Y6– STA 10+27.01 TO STA 11+40.00
–Y7– STA 9+81.00 TO STA 12+05.60 (16' WIDTH)
–Y7– STA 12+59.64 TO STA 13+33.00 (12' WIDTH)
–Y8– STA 12+55.01 TO STA 13+59.00

PAVEMENT SCHEDULE

A1	10.5" PORTLAND CEMENT CONCRETE
A2	VARIABLE DEPTH CONCRETE OVERLAY
C1	3" TYPE S9.5C
C2	VAR. DEPTH TYPE S9.5C
D1	4" TYPE I19.0C
D2	VAR. DEPTH TYPE I19.0C
E1	4" TYPE B25.0C
E2	VAR. DEPTH TYPE B25.0C
J1	6" ABC
J2	VAR. DEPTH ABC
N	GEOTEXTILE INTERLAYER
R1	2'-6" CONCRETE CURB & GUTTER
R2	8"x18" CONCRETE CURB
R3	4" CONCRETE ISLAND COVER
S	4" CONCRETE SIDEWALK
T	EARTH MATERIAL
U	EXISTING PAVEMENT
W	VARIABLE DEPTH ASPHALT

TYPICAL SECTION NO. 7A

–Y7– STA 10+80.00 TO STA 11+52.00 (LT & RT)

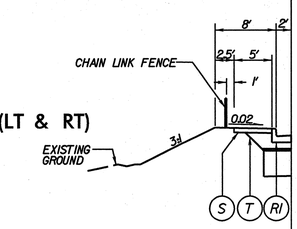

TYPICAL SECTION NO. 7B

–Y7– STA 11+52.00 TO STA 11+80.00 LT

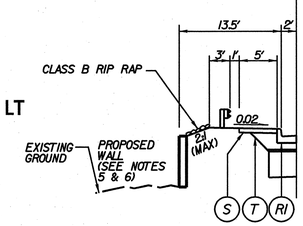

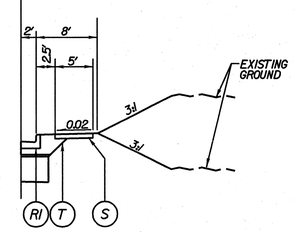

TYPICAL SECTION NO. 7C

–Y1– STA 6+04.53 TO STA 11+08.24 LT
–Y1– STA 6+06.03 TO STA 11+08.24 RT
–Y3– STA 10+44.36 TO STA 11+08.00 RT
–Y3– STA 10+49.36 TO STA 10+89.50 LT
–Y5– STA 7+94.67 TO STA 11+89.37 RT

NOTE 1: REMOVE EXISTING VARIABLE DEPTH ASPHALT PAVEMENT TO EXISTING SUBGRADE. CONSTRUCT PAVEMENT AS SHOWN ON TYPICAL SECTION.

NOTE 2: REMOVE EXISTING ASPHALT PAVEMENT TO EXISTING SUBGRADE FROM –Y1– STA 5+75.00 TO STA 11+09.00.

NOTE 3: REMOVE EXISTING VARIABLE DEPTH ASPHALT PAVEMENT BY MILLING AT 3" DEPTHS TO EXISTING CONCRETE. REMOVE EXIST CONCRETE PAVEMENT BY MILLING TO EXIST REINFORCING STEEL (1.5" DEPTH). CONSTRUCT PAVEMENT AS SHOWN ON TYPICAL SECTION. SEE DETAILS 2W THRU 2Y "ROADWAY SLAB ON PILES" FOR DESIGN UNDER PROPOSED VARIALBE DEPTH CONCRETE OVERLAY. USE AT THE FOLLOWING LOCATIONS:

–Y6– STA 10+27.01 TO STA 10+40 +/–
–Y7– STA 11+76 +/– TO STA 12+05.60
–Y7– STA 12+59.64 TO STA 12+75 +/–
–Y8– STA 12+55.01 TO STA 12+90 +/–

NOTE 4: SEE "FOAMED CONCRETE FOR ROADWAY FOUNDATION" PLANS (SHEETS 2–T THRU 2–V) FOR DESIGN UNDER PAVEMENT SUBGRADE AND UNDERCUT EXCAVATION DIMENSIONS.

NOTE 5: REMOVE EXISTING CONCRETE SLAB AND CONSTRUCT RETAINING WALL.

NOTE 6: CONSTRUCT 2:1 SLOPE WITH ROCK PLATING (SEE DETAIL ON SHEET 2–E).

NOTE 7: PAVEMENT EDGE SLOPES ARE 1:1 UNLESS SHOWN OTHERWISE.

NOTE 8: FOR SLABS THAT SPAN THE INTERFACE BETWEEN LIGHTWEIGHT CONCRETE FILL AND ABC, REINFORCE THE SLAB WITH WELDED WIRE FABRIC 4x4 W18xW18.

K:\RAL_Roadway\011036142\Roadway\Proj\u4438_rdy_typdgn

1/24/2011

PROJECT REFERENCE NO.	SHEET
U-4438	2-C

GEOTECHNICAL ENGINEER — SEAL 032672 — SIGNATURE — DATE

ENGINEER — SIGNATURE — DATE

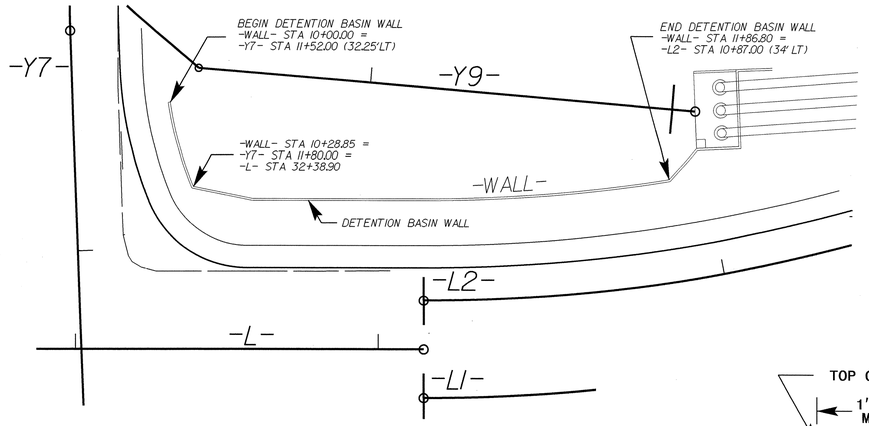

DETENTION BASIN WALL LAYOUT
N.T.S.

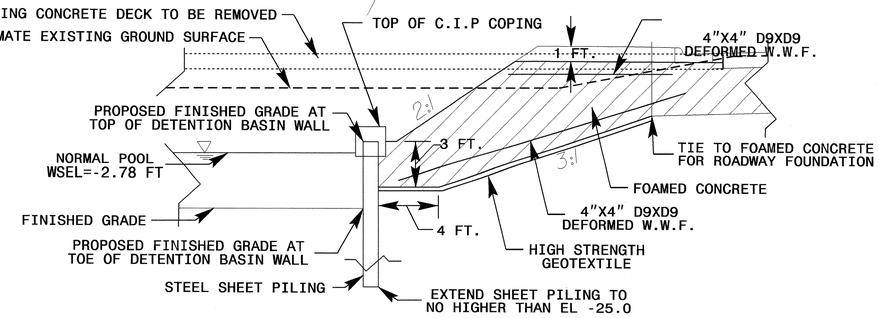

DETENTION BASIN WALL TYPICAL SECTION
10+00 TO 10+28.85 -WALL-
N.T.S.

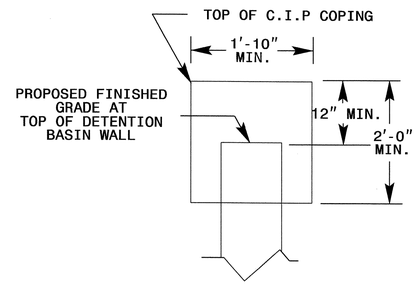

C.I.P. CONCRETE COPING
N.T.S.

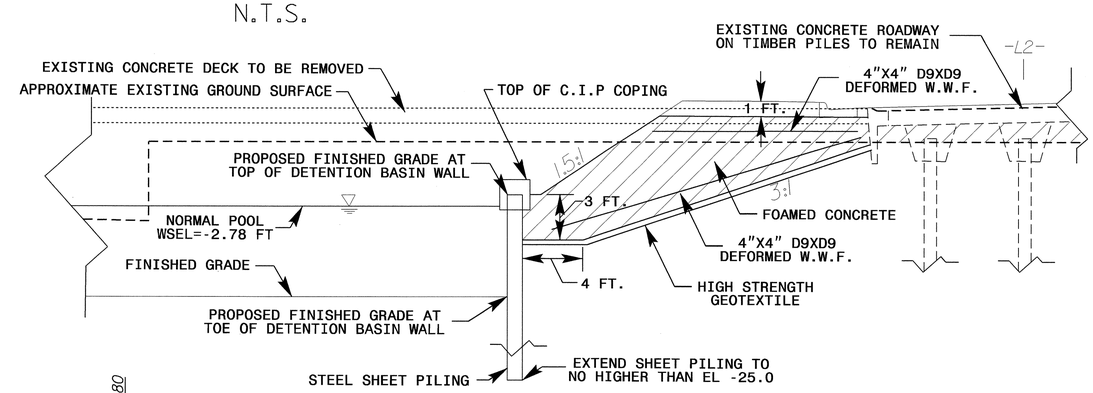

DETENTION BASIN WALL TYPICAL SECTION
10+28.85 TO 11+86.80 -WALL-
N.T.S.

NOTES

FOR DETENTION BASIN WALL, SEE DETENTION BASIN WALL SPECIAL PROVISION.

DETENTION BASIN WALL DESIGN SHOWN ON THIS PLAN IS THE MINIMUM REQUIRED FOR THE WALL DESIGNER TO INCORPORATE INTO THE FINAL WALL DESIGN.

DETENTION BASIN WALL SHALL BE PROPERLY BRACED WITH MICROPILES OR ANCHORED WITH DEADMAN ANCHORS TO LIMIT LATERAL DEFLECTION OF THE WALL TO LESS THAN ONE (1) INCH.

DESIGN DETENTION BASIN WALL FOR A DESIGN HEIGHT EQUAL TO THE DIFFERENCE BETWEEN FINISHED GRADES AT THE TOP AND TOE OF THE WALL.

DESIGN DETENTION BASIN WALL FOR THE SOIL PROPERTIES SHOWN ON THE PLANS. SEE FOAMED CONCRETE SPECIAL PROVISION FOR FOAMED CONCRETE PROPERTIES.

DESIGN DETENTION BASIN WALL FOR AN UNBALANCED HYDROSTATIC PRESSURE HEAD EQUAL THE DIFFERENCE BETWEEN THE NORMAL POOL WATER SURFACE ELEVATION AND THE FINISHED GRADE ELEVATION AT THE TOE OF WALL OR PUMP INLET ELEVATION, WHICHEVER IS HIGHER.

USE STEEL SHEET PILING MEETING THE REQUIREMENTS OF ASTM A690 WITH A MINIMUM SECTION MODULUS OF 30.2 IN³/FT FOR DETENTION BASIN WALL SHEETING. ACTUAL SHEET PILING SECTION MODULUS TO BE SELECTED BY THE WALL DESIGNER.

CAST-IN-PLACE CONCRETE COPING IS REQUIRED FOR DETENTION BASIN WALL.

INSTALL DETENTION BASIN WALL WITHOUT EXCEEDING THE VIBRATION LIMIT ESTABLISHED IN THE CONTROL OF VIBRATION SPECIAL PROVISION AT THE NEAREST STRUCTURE OFF NCDOT RIGHT-OF-WAY.

FOR HIGH STRENGTH GEOTEXTILE FOR FOAMED CONCRETE, SEE HIGH STRENGTH GEOTEXTILE FOR FOAMED CONCRETE SPECIAL PROVISION.

FOR FOAMED CONCRETE, SEE FOAMED CONCRETE SPECIAL PROVISION.

BOTTOM WELDED WIRE FABRIC (4"X4" D9XD9) SHALL BE SUPPORTED AS NECESSARY TO MAINTAIN A MINIMUM OF 6 INCHES OF CLEARANCE BETWEEN THE MESH AND THE GROUND SURFACE.

OVERLAP ALL ADJACENT WELDED WIRE FABRIC SHEETS A MINIMUM OF 18 INCHES.

FOR WELDED WIRE FABRIC FOR FOAMED CONCRETE, SEE WELDED WIRE FABRIC FOR FOAMED CONCRETE SPECIAL PROVISION.

FOAMED CONCRETE, WELDED WIRE FABRIC FOR FOAMED CONCRETE, AND HIGH STRENGTH GEOTEXTILE FOR FOAMED CONCRETE SHOWN ON THIS DETAIL SHEET AND ANY ADDITIONAL QUANTITES OF FOAMED CONCRETE, WELDED WIRE FABRIC FOR FOAMED CONCRETE, AND HIGH STRENGTH GEOTEXTILE FOR FOAMED CONCRETE INCORPORATED INTO THE DETENTION BASIN WALL DESIGN WILL BE MEASURED AND PAID FOR IN ACCORDANCE WITH THE FOAMED CONCRETE, WELDED WIRE FABRIC FOR FOAMED CONCRETE, AND HIGH STRENGTH GEOTEXTILE FOR FOAMED CONCRETE SPECIAL PROVISIONS.

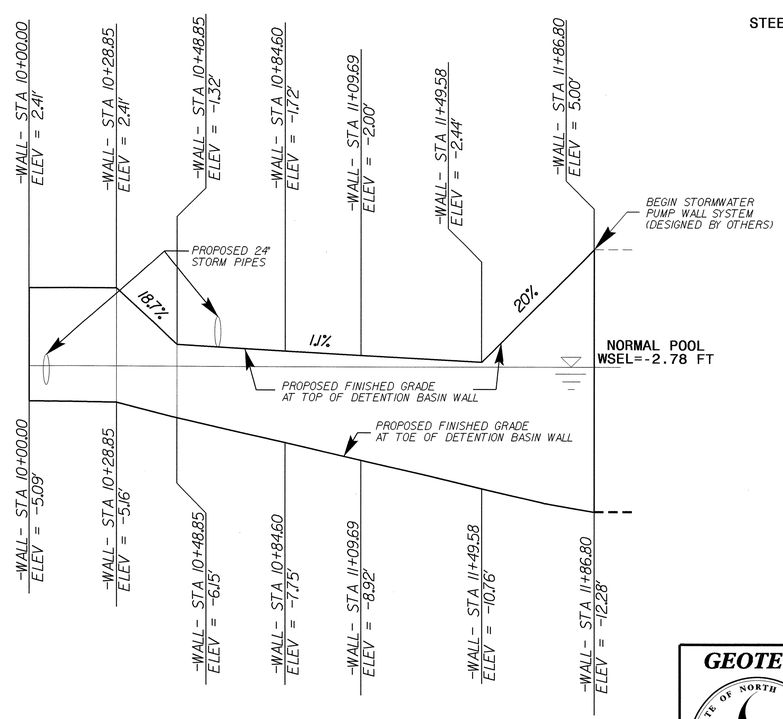

DETENTION BASIN WALL ENVELOPE
N.T.S.

SOIL PARAMETERS					
	LAYER ELEVATIONS (FT)	UNIT WEIGHT (PCF)	SUBMERGED UNIT WEIGHT (PCF)	FRICTION ANGLE (DEGREES)	COHESION (PSF)
SAND	GROUND SURFACE TO EL. -3.0	120	60	30	0
MUCK	EL. -3.0 TO EL. -22.0	80	20	5	150
SAND	EL. -22.0 TO EL. -27.0	120	60	30	0
CLAY	EL. -27.0 TO EL. -52.5	105	45	0	400
SAND	EL. -52.5 TO EL. -62.5	120	60	30	0

DETENTION BASIN WALL ESTIMATED QUANTITES

DETENTION BASIN WALL.....187 L.FT.
FOAMED CONCRETE.....700 C.Y.
HIGH STRENGTH GEOTEXTILE FOR FOAMED CONCRETE.....400 S.Y. (1)
WELDED WIRE FABRIC FOR FOAMED CONCRETE.....600 S.Y. (1)
(1) HIGH STRENGTH GEOTEXTILE FOR FOAMED CONCRETE AND WELDED WIRE FABRIC FOR FOAMED CONCRETE QUANTITY DOES NOT INCLUDE OVERLAPS OR WASTE.

PREPARED BY: MDV	DATE: 1/2011
REVIEWED BY: KJK	DATE: 1/2011

GEOTECHNICAL ENGINEERING UNIT
■ EASTERN REGIONAL OFFICE
□ WESTERN REGIONAL OFFICE

STATE OF NORTH CAROLINA
DEPARTMENT OF TRANSPORTATION
RALEIGH

DETENTION BASIN WALL (SHEET 1 OF 1)

REVISIONS

NO.	BY	DATE	NO.	BY	DATE
1			3		
2			4		

PROJECT REFERENCE NO.	SHEET NO.
U-4438	2-D
R/W SHEET NO.	

ROADWAY DESIGN ENGINEER

NORTH CAROLINA PROFESSIONAL SEAL 024436 ENGINEER JEFFREY W. MOORE 1-3-11

Kimley-Horn and Associates, Inc.

P.O. BOX 33068
RALEIGH, N.C. 27636-3068

RIGHT-OF-WAY REV.

CONST. REV.

REVISIONS

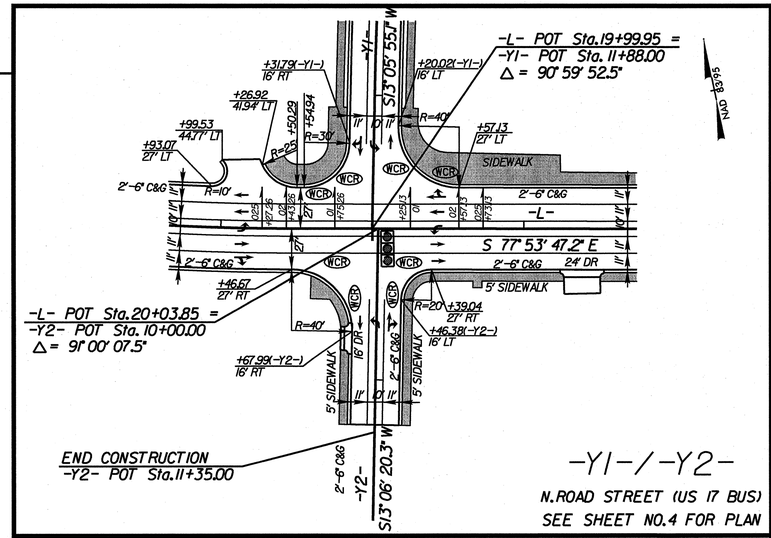

-Y1-/-Y2-

N.ROAD STREET (US 17 BUS)

SEE SHEET NO.4 FOR PLAN

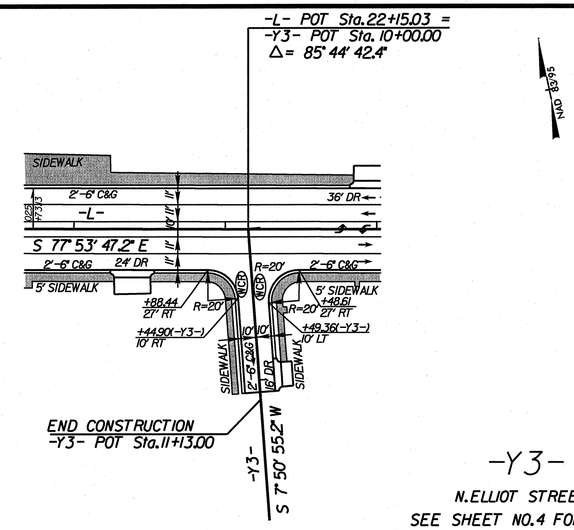

-Y3-

N.ELLIOT STREET

SEE SHEET NO.4 FOR PLAN

2011 ADT / 2030 ADT	-Y1- (US 17 BUS.) N. ROAD STREET	
DHV = 10% DIR = 55% TTST = 11% DUAL = 9%	16200 / 24300	DHV = 9% DIR = 55% TTST = 11% DUAL = 9%
-L- (US 158) E. ELIZABETH STREET	9900 / 11900; 1100 / 1300	4100 / 5700; 13500 / 17200
	1200 / 1600	1800 / 2500
DHV = 9% DIR = 50%	14000 / 21400	
	-Y2- (US 17 BUS.) N. ROAD STREET	

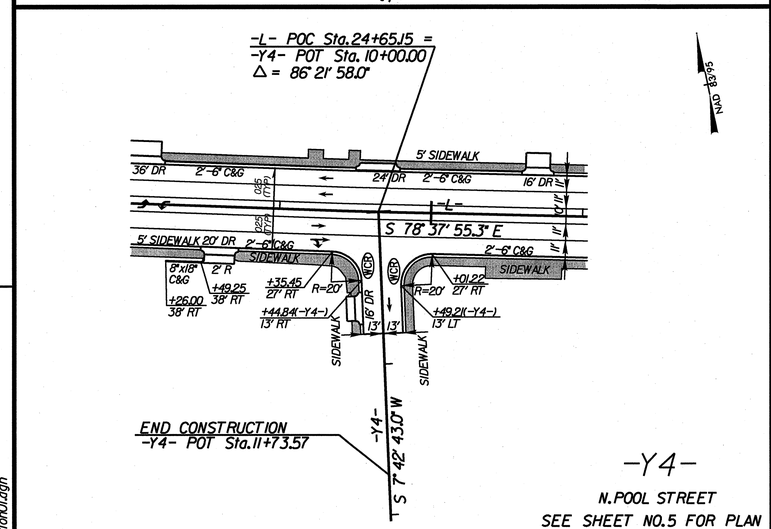

-Y4-

N.POOL STREET

SEE SHEET NO.5 FOR PLAN

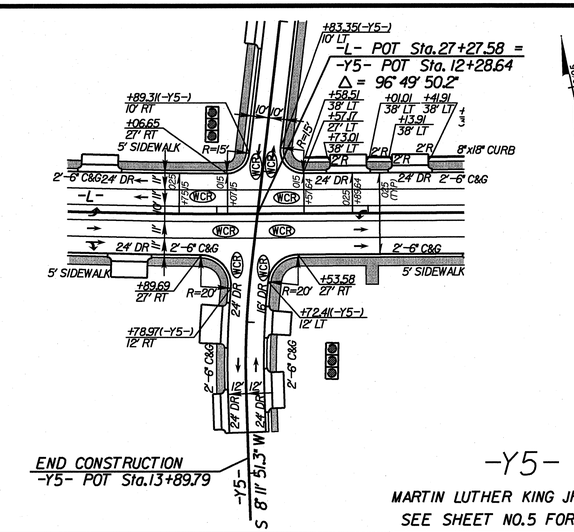

-Y5-

MARTIN LUTHER KING JR. DRIVE

SEE SHEET NO.5 FOR PLAN

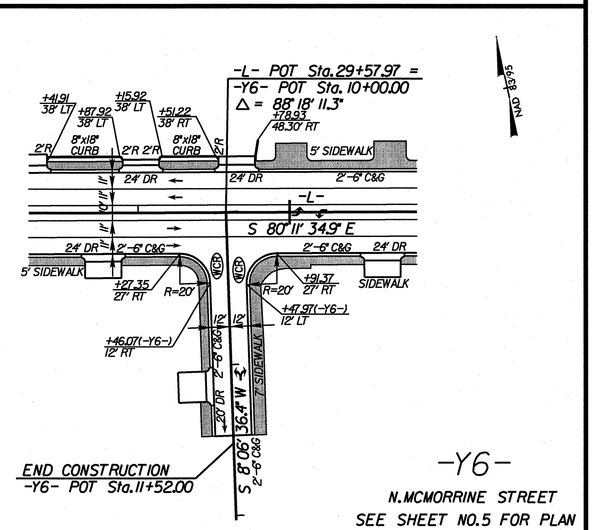

-Y6-

N.MCMORRINE STREET

SEE SHEET NO.5 FOR PLAN

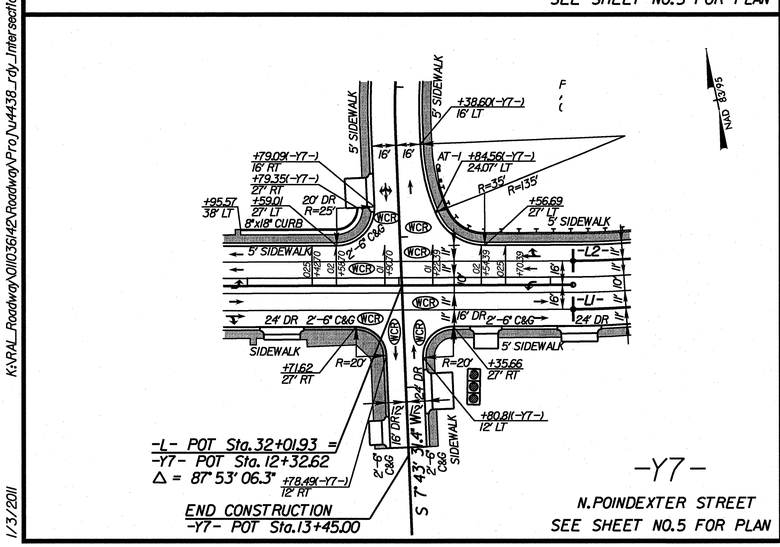

-Y7-

N.POINDEXTER STREET

SEE SHEET NO.5 FOR PLAN

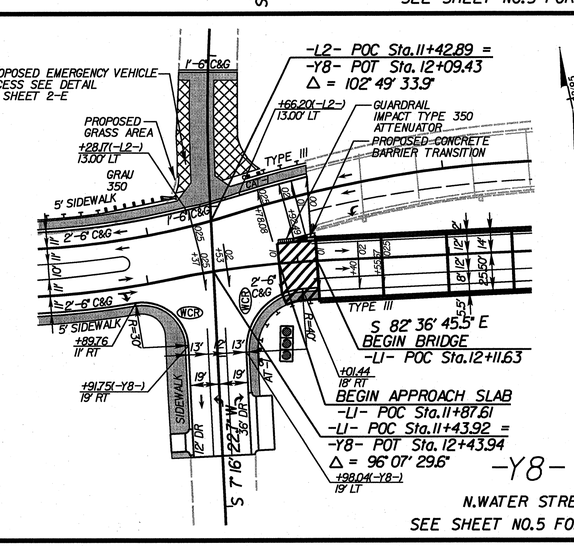

-Y8-

N.WATER STREET

SEE SHEET NO.5 FOR PLAN

-Y7- (SR 1329) POINDEXTER STREET		
2011 ADT / 2030 ADT	DHV = 9% DIR = 65%	2800 / 7000
-L- (US 158) E. ELIZABETH STREET	10900 / 15400; 500 / 800	2200 / 6200; 12600 / 20800
DHV = 10% DIR = 55% TTST = 11% DUAL = 9%	< 100 / < 100; < 100 / < 100	< 100 / < 100; DHV = 10% DIR = 55% TTST = 11% DUAL = 9%
-Y7- (SR 1329) POINDEXTER STREET		

-Y8-		
2011 ADT / 2030 ADT	DHV = 9% DIR = 60%	2100 / 0
WATER STREET TO BE CLOSED WITH PROJECT	100 / 0	1000 / 0
-L- (US 158) E. ELIZABETH STREET	12600 / 20800	21000 / 28400
DHV = 10% DIR = 55% TTST = 11% DUAL = 9%	3000 / 7400	10400 / 15000; DHV = 9% DIR = 55% TTST = 11% DUAL = 9%
	DHV = 9% DIR = 55%	14400 / 22400
-Y8-(SR 1268) WATER STREET		

SIDEWALK

REMOVE AND OBLITERATE EXISTING ASPHALT PAVEMENT

INTERSECTION DETAILS

25 0 50

K:\RAL_Roadway\011036142\Roadway\Proj\u4438_rdy_Intersection01.dgn

1/3/2011

PROJECT REFERENCE NO.	SHEET NO.
U-4438	2-E

ROADWAY DESIGN ENGINEER

Kimley-Horn and Associates, Inc.
P.O. BOX 33068
RALEIGH, N.C. 27636-3068

NORTH CAROLINA PROFESSIONAL SEAL 024436 1-3-11 ENGINEER JEFFREY W. MOORE

REVISIONS

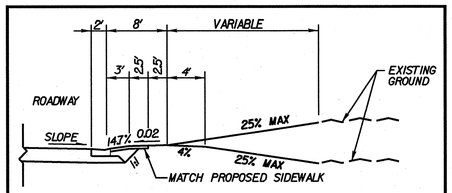

DRIVEWAY GRADE DETAIL A

NOTE: ALL DRIVEWAY TIE-INS SHALL BE CONCRETE.

-L- STA 21+39 (RT)
-L- STA 23+03 (LT)
-L- STA 23+61 (RT)
-L- STA 25+70 (LT)
-L- STA 26+22 (LT)
-L- STA 26+43 (RT)
-L- STA 27+86 (LT)
-L- STA 28+28 (LT)
-L- STA 28+77 (RT)
-L- STA 29+02 (LT)
-L- STA 29+65 (LT)
-L- STA 30+61 (RT)
-L- STA 31+23 (RT)
-L- STA 32+57 (RT)
-L- STA 33+15 (RT)
-Y1- STA 5+93 (RT)
-Y1- STA 5+95 (LT)
-Y1- STA 6+93 (RT)
-Y1- STA 6+99 (LT)
-Y1- STA 8+17 (LT)
-Y1- STA 8+89 (LT)
-Y2- STA 10+73 (RT)
-Y3- STA 10+98 (LT)
-Y4- STA 10+63 (RT)
-Y5- STA 8+25 (RT)
-Y5- STA 8+29 (LT)
-Y5- STA 9+62 (RT)
-Y5- STA 10+54 (LT)
-Y5- STA 11+09 (RT)
-Y5- STA 13+00 (LT)
-Y5- STA 13+03 (RT)
-Y5- STA 13+45 (LT)
-Y5- STA 13+57 (RT)
-Y6- STA 11+14 (RT)
-Y7- STA 10+27 (RT)
-Y7- STA 10+63 (LT)
-Y7- STA 10+69 (RT)
-Y7- STA 11+70 (RT)
-Y7- STA 13+03 (LT)
-Y7- STA 13+30 (RT)
-Y8- STA 13+43 (LT)
-Y8- STA 13+54 (RT)

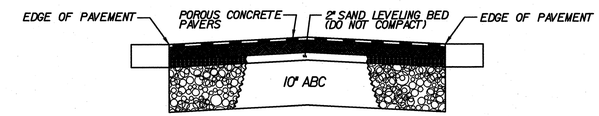

SECTION "A-A"

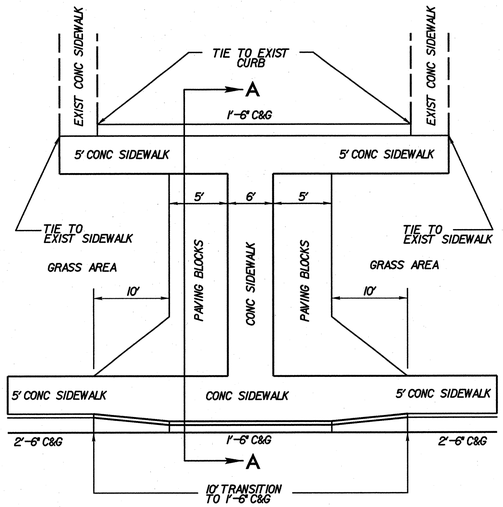

NOTE: SAND LEVELING BED AND ABC ARE INCIDENTAL TO THE "POROUS CONCRETE PAVERS" ITEM

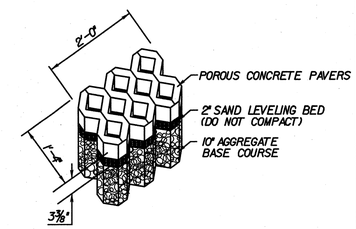

ISOMETRIC VIEW

EMERGENCY VEHICLE ACCESS DETAIL B

SIDEWALK TIE DETAIL C

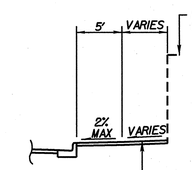

NOTES:
1. CONTRACTOR TO FIELD VERIFY THE FINAL FINISH ELEVATION OF THE INTERFACE BETWEEN THE PROPOSED SIDEWALK AND EXIST FEATURE BEFORE INSTALLATION OF SIDEWALK.

2. EXISTING STRUCTURE VARIES. TIE PROPOSED SIDEWALK TO EXISTING FEATURE AS SHOWN BELOW.

-L- STA 19+42 TO 19+76 LT (WALL BELOW WEEP HOLES)
-L- STA 20+29 TO 21+14 LT (WALL)
-L- STA 20+69 RT (SIDEWALK)
-L- STA 21+14 TO 22+72 LT (BUILDING)
-L- STA 22+72 TO 22+85 LT (PATIO)
-L- STA 23+74 TO 24+46 RT (WALL)
-L- STA 24+23 LT (SIDEWALK)
-L- STA 25+37 TO 25+87 RT (BUILDING)
-L- STA 28+02 (DOOR)
-L- STA 29+91 TO 30+77 LT (SIDEWALK WITH RAMPS)
-L- STA 29+72 TO 30+14 RT (BUILDING)
-L- STA 31+39 TO 31+86 RT (BUILDING)
-Y8- STA 13+56 RT (GARAGE DOOR)

DETAIL D
ROCK PLATING

(NOT TO SCALE)

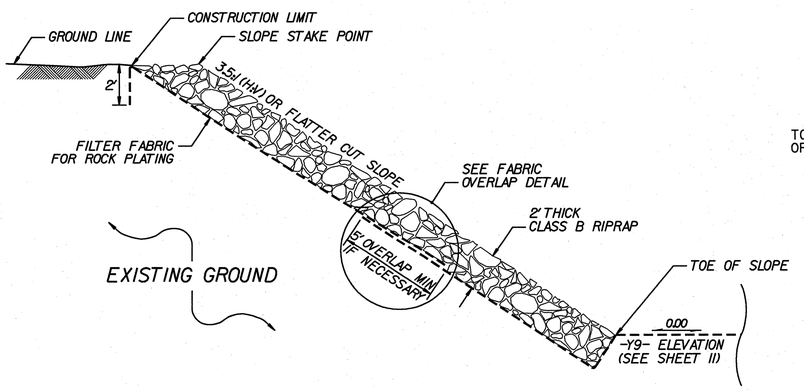

-Y9- STA 23+52 ± TO STA 25+07 ± LT.

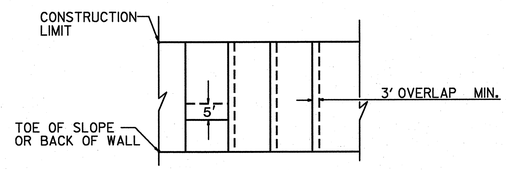

FABRIC OVERLAP DETAIL

(Not to Scale)

ROCK PLATING DETAIL AND LCOATIONS WERE PROVIDED THROUGH A SEALED DOCUMENT FROM THE GEOTECHNICAL UNIT. THE DOCUMENT WAS SUBMITTED TO THE ROADWAY DESIGN UNIT ON DECEMBER 15, 2010 AND SEALED BY A PROFESSIONAL ENGINEER, MICHAEL VALIQUETTE LICENSE #032672.

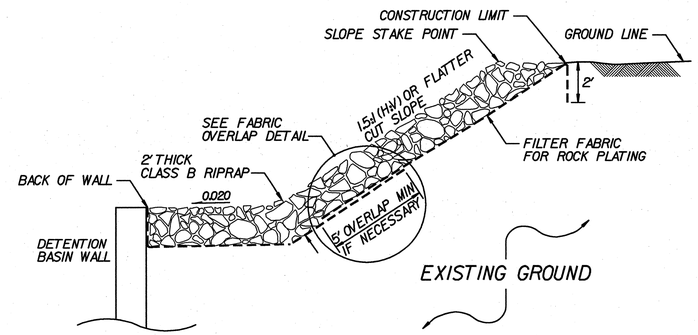

-Y9- STA 23+44 ± TO STA 25+00 ± RT.

K:\RAL_Roadway\011035142\Roadway\Proj\U4438_rdy_typ.dgn

1/3/2011

05-NOV-2009 11:35
s:\contracts\contracts\special details\ericward\stds\06' stds to special details\30001\0300d01.dgn
jhowerton AT PS237501

5/14/99

STATE OF NORTH CAROLINA
DEPT. OF TRANSPORTATION
DIVISION OF HIGHWAYS
RALEIGH, N.C.

7-06

ENGLISH DETAIL DRAWING FOR

METHOD OF PIPE INSTALLATION

FLEXIBLE PIPE

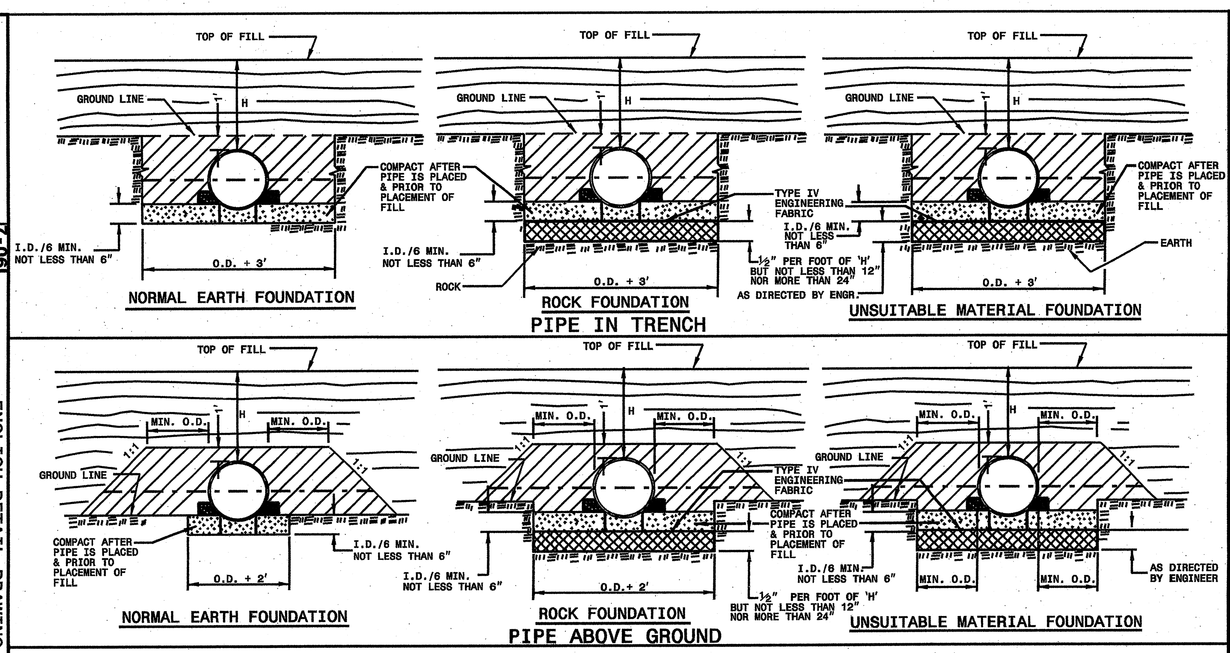

GENERAL NOTES:

I.D. = THE MAXIMUM HORIZONTAL INSIDE DIAMETER DIMENSION.

O.D. = THE MAXIMUM HORIZONTAL OUTSIDE DIAMETER DIMENSION.

H = THE FILL HEIGHT MEASURED VERTICALLY AT ANY POINT ALONG THE PIPE FROM THE TOP OF THE PIPE TO THE TOP OF THE EMBANKMENT AT THAT POINT.

TAKE CARE TO FULLY COMPACT HAUNCH ZONE OF PIPE BACKFILL.

LOOSELY PLACED SELECT MATERIAL CLASS III OR CLASS II, TYPE 1 FOR PIPE BEDDING. LEAVE SECTION DIRECTLY BENEATH PIPE UNCOMPACTED AS PIPE SEATING AND BACKFILL WILL ACCOMPLISH COMPACTION.

DO NOT OPERATE HEAVY EQUIPMENT OVER ANY PIPE CULVERT UNTIL THE PIPE CULVERT HAS BEEN PROPERLY BACKFILLED AND COVERED WITH AT LEAST 3 FEET OF APPROVED MATERIAL.

SPRINGLINE OF PIPE

SELECT BACKFILL MATERIAL CLASS III OR CLASS II, TYPE 1 ABOVE AND BELOW SPRINGLINE.

APPROVED SUITABLE LOCAL MATERIAL.

UNDISTURBED EARTH MATERIAL

SELECT MATERIAL CLASS V OR VI FOR FOUNDATION CONDITIONING. ENCAPSULATE WITH ENGINEERING FABRIC AS DIRECTED BY THE ENGINEER.

SHEET 1 OF 3

300D01

STATE OF NORTH CAROLINA
DEPT. OF TRANSPORTATION
DIVISION OF HIGHWAYS
RALEIGH, N.C.

7-06

ENGLISH DETAIL DRAWING FOR

METHOD OF PIPE INSTALLATION

RIGID PIPE

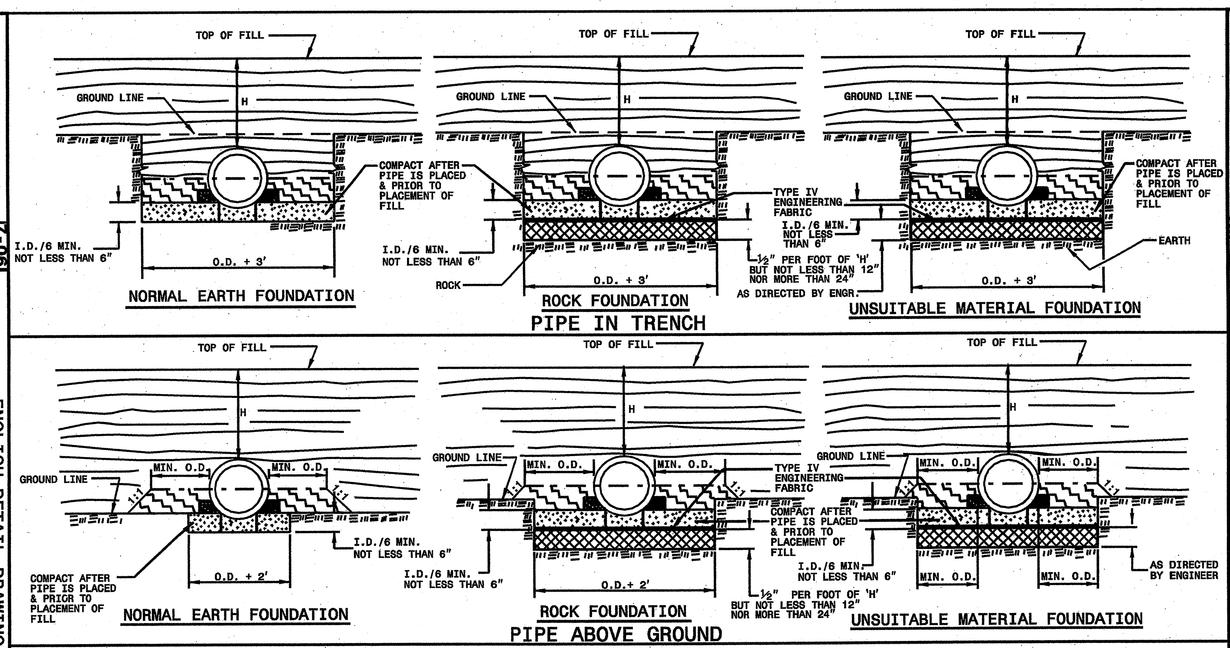

GENERAL NOTES:

I.D. = THE MAXIMUM HORIZONTAL INSIDE DIAMETER DIMENSION.

O.D. = THE MAXIMUM HORIZONTAL OUTSIDE DIAMETER DIMENSION.

H = THE FILL HEIGHT MEASURED VERTICALLY AT ANY POINT ALONG THE PIPE FROM THE TOP OF THE PIPE TO THE TOP OF THE EMBANKMENT AT THAT POINT.

TAKE CARE TO FULLY COMPACT HAUNCH ZONE OF PIPE BACKFILL.

LOOSELY PLACED SELECT MATERIAL CLASS III OR CLASS II, TYPE 1 FOR PIPE BEDDING. LEAVE SECTION DIRECTLY BENEATH PIPE UNCOMPACTED AS PIPE SEATING AND BACKFILL WILL ACCOMPLISH COMPACTION.

DO NOT OPERATE HEAVY EQUIPMENT OVER ANY PIPE CULVERT UNTIL THE PIPE CULVERT HAS BEEN PROPERLY BACKFILLED AND COVERED WITH AT LEAST 3 FEET OF APPROVED MATERIAL.

SPRINGLINE OF PIPE

SELECT BACKFILL MATERIAL CLASS III OR CLASS II, BELOW SPRINGLINE.

APPROVED SUITABLE LOCAL MATERIAL ABOVE SPRINGLINE.

UNDISTURBED EARTH MATERIAL

SELECT MATERIAL CLASS V OR VI FOR FOUNDATION CONDITIONING. ENCAPSULATE WITH ENGINEERING FABRIC AS DIRECTED BY THE ENGINEER.

SHEET 2 OF 3

300D01

PROJECT SERVICES UNIT
STANDARDS AND SPECIAL DESIGN
Office 919-250-4128 FAX 919-250-4119

SEE PLATE FOR TITLE

ORIGINAL BY: KKempf DATE: 5-15-99
MODIFIED BY: DATE:
CHECKED BY: DATE:
FILE SPEC/ericward/stds/stdstodetails/30001/0300d01.dgn

NORTH CAROLINA PROFESSIONAL SEAL 026696 ENGINEER

PROJECT REFERENCE NO. U-4436

SHEET NO. 2-F

5/14/99

STATE OF NORTH CAROLINA
DEPT. OF TRANSPORTATION
DIVISION OF HIGHWAYS
RALEIGH, N.C.

7-06

ENGLISH DETAIL DRAWING FOR
METHOD OF PIPE INSTALLATION
FILL HEIGHT TABLES

SHEET 3 OF 3
300D01

FLEXIBLE PIPE

Round Corrugated Steel Pipe
2 2/3 x ½ corrugation **

Diameter (inches)	Minimum cover (inches)	Maximum Height of Cover (feet) (Ga) 16	14	12	10	8
12	12	204	256			
15	12	162	204			
18	12	135	169	239		
21	12	115	145	204		
24	12	100	126	178		
30	12	79	100	142		
36	12	65	83	117	152	
42	12	55	70	100	130	160
48	12	48	61	87	113	139
54	12		54	77	100	123
60	12			69	90	111
66	12				81	100
72	12				74	91
78	12					81
84	12					69

Round Corrugated Aluminum Pipe
2 2/3 x ½ corrugation **

Diameter (inches)	Minimum cover (inches)	Maximum Height of Cover (feet) (Ga) 16	14	12	10	8
12	12	123	155	218	281	344
15	12	98	123	174	224	275
18	12	81	102	144	187	228
21	12	69	87	123	160	195
24	12	60	76	108	139	171
27	12		67	95	123	151
30	12		60	85	111	136
36	12		50	71	92	113
42	12			60	78	96
48	12			52	68	84
54	12			46	50	74
60	12				50	62
66	12					51
72	12					41

** FOR DIFFERENT CORRUGATIONS AND ARCH PIPES REFER TO ROADWAY DESIGN MANUAL OR MANUFACTURERS SPECIFICATION.

HDPE - * (Minimum fill) 2' for pipe diameters ≥ 12" and ≤ 60"
* (Maximum fill) 20' for pipe diameters ≤ 24"
17' for pipe diameters ≥ 30" and ≤ 60"

PVC - * (Minimum fill) 2' for pipe diameters ≥ 12" and ≤ 36"
* (Maximum fill) 30' for pipe diameters ≥ 12" and ≤ 36"

* FILL HEIGHT IS MEASURED FROM THE TOP OF THE PIPE TO THE BOTTOM OF THE PAVEMENT STRUCTURE

REFER TO THE FOLLOWING FOR PIPE SPECIFICATIONS

CSP - AASHTO M36
CAAP - AASHTO M196
HDPE - AASHTO M294
PVC - ASTM F949 or AASHTO M304

NOTES: FILL HEIGHTS SHOWN WERE CALCULATED USING AASHTO LRFD BRIDGE DESIGN SPECIFICATIONS

1' MINIMUM COVER FOR ALL SIDE DRAIN PIPE IN ACCORDANCE WITH THE STANDARD SPECIFICATIONS

RIGID PIPE

RCP - * (Minimum fill) 1' for Class IV & CLASS V
2' for Class III & Class II

* (Maximum fill) 10' - Class II pipe
20' - Class III pipe
30' - Class IV pipe
40' - Class V pipe

(For fills > 40' & < 80' use LRFD Direct Design Method)

* FILL HEIGHT IS MEASURED FROM THE TOP OF THE PIPE TO THE BOTTOM OF THE PAVEMENT STRUCTURE

REFER TO THE FOLLOWING FOR PIPE SPECIFICATIONS

RCP - AASHTO M170

NOTES: FILL HEIGHTS SHOWN WERE CALCULATED USING AASHTO LRFD BRIDGE DESIGN SPECIFICATIONS

1' MINIMUM COVER FOR ALL SIDE DRAIN PIPE IN ACCORDANCE WITH THE STANDARD SPECIFICATIONS

STATE OF NORTH CAROLINA
DEPT. OF TRANSPORTATION
DIVISION OF HIGHWAYS
RALEIGH, N.C.

7-06

ENGLISH DETAIL DRAWING FOR
METHOD OF PIPE INSTALLATION
FILL HEIGHT TABLES

SHEET 3 OF 3
300D01

NORTH CAROLINA PROFESSIONAL SEAL 022866 ENGINEER
JOHN D. HOWERTON
11/5/09

PROJECT SERVICES UNIT
STANDARDS AND SPECIAL DESIGN
Office 919-250-4128 FAX 919-250-4119

SEE PLATE FOR TITLE

ORIGINAL BY: Kdempf DATE: 5-15-09
MODIFIED BY: DATE:
CHECKED BY: DATE:
FILE SP:s:/ericward/stds/stdstock/ss/30001/0300d01.dgn

PROJECT REFERENCE NO. U-4438
SHEET NO. 2-C

STATE OF NORTH CAROLINA
DEPT. OF TRANSPORTATION
DIVISION OF HIGHWAYS
RALEIGH, N.C.

ENGLISH DETAIL DRAWING FOR
CONCRETE PAVEMENT JOINTS
CONSTRUCTION AND CONTRACTION JOINTS

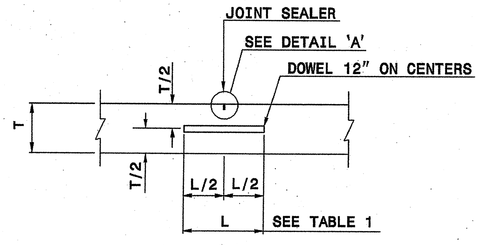

TRANSVERSE CONTRACTION JOINT

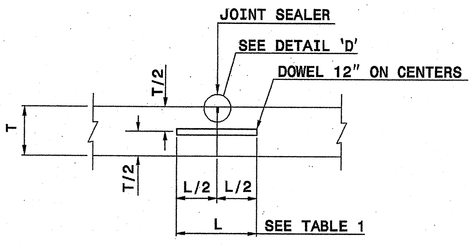

PLANNED TRANSVERSE CONSTRUCTION JOINT

GENERAL NOTES:
- FORM TRANSVERSE CONTRACTION JOINTS BY SAWING WITH APPROVED EQUIPMENT.
- SPACE TRANSVERSE CONTRACTION JOINTS AT INTERVALS OF 15'.
- USE A DOWEL ASSEMBLY OR OTHER APPROVED DOWEL INSERTION TECHNIQUE IN ALL TRANSVERSE CONTRACTION JOINTS. DOWEL ASSEMBLIES ARE COVERED IN DETAIL 700D03.
- PROVIDE SMOOTH DOWEL BARS. PROVIDE DEFORMED TIE BARS.
- WHEN UTILIZING AN EARLY ENTRY SAW, CUT THE JOINT TO A MINIMUM DEPTH OF 4".

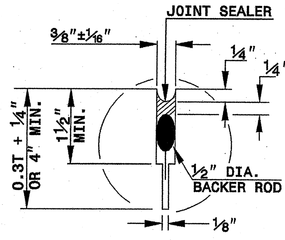

DETAIL 'A'

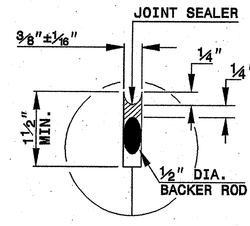

DETAIL 'D'

TABLE I - DOWEL BARS		
SLAB THICKNESS	DOWEL BAR "D"	DOWEL LENGTH "L"
8" OR LESS	1"	14"
8½" TO 9½"	1⅛"	16"
10" TO 10½"	1¼"	18"
11" AND ABOVE	1½"	18"

SHEET 1 OF 2
700D01

STATE OF NORTH CAROLINA
DEPT. OF TRANSPORTATION
DIVISION OF HIGHWAYS
RALEIGH, N.C.

ENGLISH DETAIL DRAWING FOR
CONCRETE PAVEMENT JOINTS
CONSTRUCTION AND CONTRACTION JOINTS

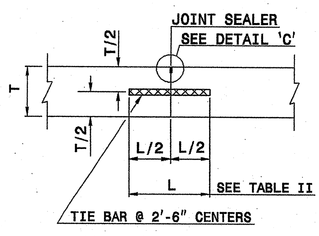

LONGITUDINAL CONSTRUCTION JOINT

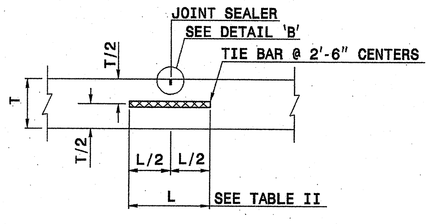

LONGITUDINAL JOINT

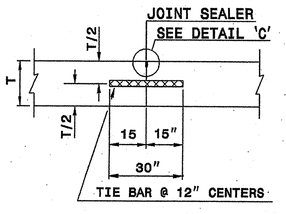

EMERGENCY TRANSVERSE CONSTRUCTION JOINT

GENERAL NOTES:
- CONSTRUCT TRANSVERSE CONSTRUCTION JOINTS AT THE END OF EACH DAY'S OPERATION (PLANNED JOINT) OR WHEN THE PLACING OF CONCRETE IS SUSPENDED FOR MORE THAN 30 MINUTES (EMERGENCY JOINT).
- USE AN APPROVED HEADER AT EMERGENCY JOINTS STD. DWG. 700.04 AND DESIGNED TO PERMIT THE PLACEMENT OF AND CORRECTLY HOLD IN PLACE TIE BARS.
- USE TIE BARS OF THE SAME DIAMETER AS DOWEL BARS FOR EMERGENCY TRANSVERSE CONSTRUCTION JOINTS.
- LOCATE PLANNED TRANSVERSE CONSTRUCTION JOINTS AT THE SPACING REQUIRED FOR CONTRACTION JOINTS. USE AN APPROVED METHOD OF INSTALLING DOWELS IN ALL PLANNED TRANSVERSE CONSTRUCTION JOINTS.
- DO NOT LOCATE EMERGENCY TRANSVERSE CONSTRUCTION JOINTS LESS THAN 6' FROM ANY CONTRACTION JOINT OR PLANNED CONSTRUCTION JOINT.
- DO NOT PLACE TIE BARS IN LONGITUDINAL JOINTS WITHIN 1'-4" OF A TRANSVERSE JOINT.
- WHEN UTILIZING AN EARLY ENTRY SAW, CUT THE JOINT TO A MINIMUM DEPTH OF 4".

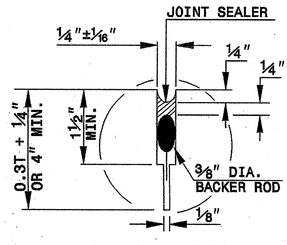

DETAIL 'B'

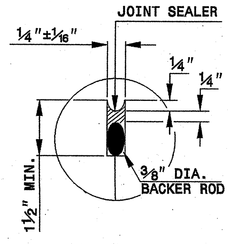

DETAIL 'C'

TABLE II - LONGITUDINAL TIE BARS		
SLAB THICKNESS	TIE BAR DIA. "D"	TIE BAR LENGTH "L"
8½" OR LESS	½"	30"
9" OR ABOVE	⅝"	30"

SHEET 2 OF 2
700D01

PROJECT SERVICES UNIT
STANDARDS AND SPECIAL DESIGN
Office 919-250-4128 FAX 919-250-4119

SEE PLATE FOR TITLE

ORIGINAL BY: 2002 STANDARDS DATE: 01-15-02
MODIFIED BY: E.E. WARD DATE: 09-26-06
CHECKED BY: DATE:
FILE SPEC.: stds/06stdsdetails/english/700d01.dgn

NORTH CAROLINA PROFESSIONAL SEAL 025986 ENGINEER JOELIS D. ROBINSON

PROJECT REFERENCE NO. U-4438
SHEET NO. 2-H

STATE OF NORTH CAROLINA
DEPT. OF TRANSPORTATION
DIVISION OF HIGHWAYS
RALEIGH, N.C.

ENGLISH DETAIL DRAWING FOR
DOWEL ASSEMBLY

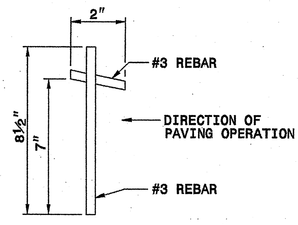

STAKING PIN
(MIN. 8 PER BASKET)

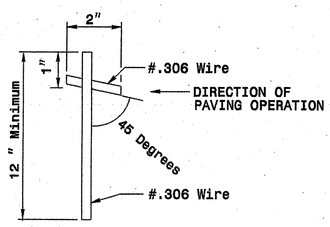

STAKING PIN ALTERNATE
(MIN. 8 PER BASKET)

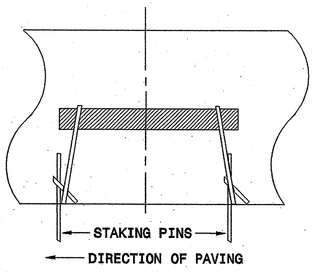

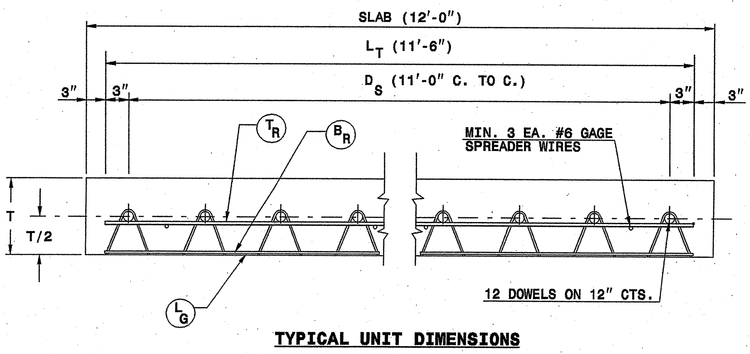

TYPICAL UNIT DIMENSIONS

"V" LEG ONLY			
SLAB THICKNESS	WIRE GAGE		
	T_R	B_R	L_G
8" OR LESS	2	2	2
8½" - 10"	0	2	2
10½" & ABOVE	2/0's	2/0's	2/0's

GENERAL NOTES:
- -USE RIGID CONSTRUCTED DOWEL ASSEMBLY CAPABLE OF HOLDING THE DOWEL BAR IN PROPER POSITION DURING PLACMENT OF CONCRETE AND DESIGNED AS TO PERMIT UNRESTRICTED MOVEMENT OF THE SLAB. USE DOWEL ASSEMBLY APPROVED BY THE ENGINEER PRIOR TO USE.
- -USE DOWEL ASSEMBLIES MANUFACTURED WITH DOWELS ALTERNATELY WELDED TO FRAME MEMBERS.
- -USE STAKING PIN OR APPROVED ALTERNATE.
- -SAW CUT EPOXY COATED DOWELS, BUFFING AS NECESSARY TO FACILITATE PROPER WELDING OF THE DOWEL TO THE ASSEMBLY FRAME. TOUCH UP OF THE BUFFED AREA WILL NOT BE REQUIRED.
- -RESISTANCE WELD FRAME MEMBERS; DOWELS AND SPREADER WIRES MAY BE ARC WELDED. WELD IN ACCORDANCE WITH AWS WELDING CODE.
- -FULLY DIP THE DOWEL ASSEMBLIES TO ASSURE A COMPLETE COATING OF WAX.
- -SEE DETAIL 700D01 FOR DOWEL BAR SIZES.

SHEET 1 OF 2
700D03

STATE OF NORTH CAROLINA
DEPT. OF TRANSPORTATION
DIVISION OF HIGHWAYS
RALEIGH, N.C.

ENGLISH DETAIL DRAWING FOR
DOWEL ASSEMBLY

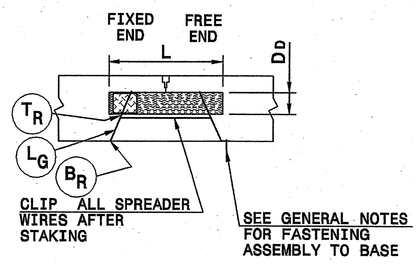

SECTION - CONTRACTION

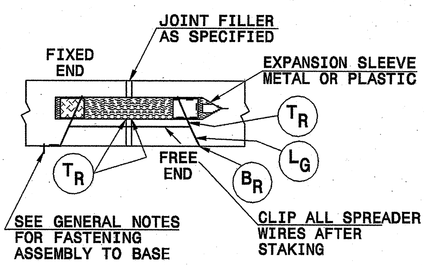

SECTION - EXPANSION

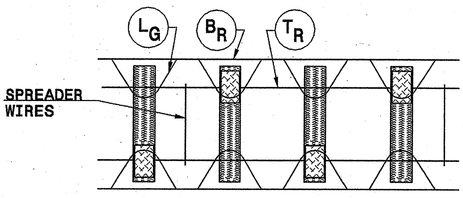

PARTIAL PLAN CONTRACTION
NORMAL

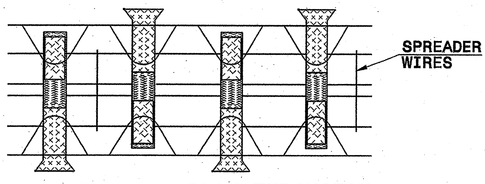

PARTIAL PLAN EXPANSION
NORMAL

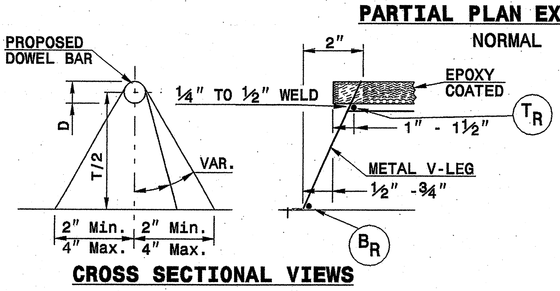

CROSS SECTIONAL VIEWS

SHEET 2 OF 2
700D03

STATE OF NORTH CAROLINA
DEPT. OF TRANSPORTATION
DIVISION OF HIGHWAYS
RALEIGH, N.C.

ENGLISH DETAIL DRAWING FOR
DOWEL ASSEMBLY

PROJECT SERVICES UNIT
STANDARDS AND SPECIAL DESIGN
Office 919-250-4128 FAX 919-250-4119

SEE PLATE FOR TITLE

ORIGINAL BY: 2002 STANDARDS DATE: 01-15-02
MODIFIED BY: E.E. WARD DATE: 12-15-06
CHECKED BY: DATE:
FILE SPEC.: stds/02stdstodetails/english/700d01.dgn

NORTH CAROLINA PROFESSIONAL SEAL 02996 ENGINEER

PROJECT REFERENCE NO. U-4438
SHEET NO. 2-I

PROJECT REFERENCE NO.	SHEET NO.
U-4438	2-J

STATE OF
NORTH CAROLINA
DEPT. OF TRANSPORTATION
DIVISION OF HIGHWAYS
RALEIGH, N.C.

ENGLISH DETAIL DRAWING FOR
ANCHORAGE FOR FRAMES
BRICK/CONCRETE/PRECAST CONCRETE

SHEET 1 OF 1
840D25

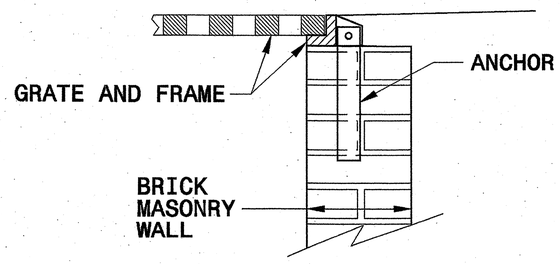

BRICK MASONRY CONSTRUCTION

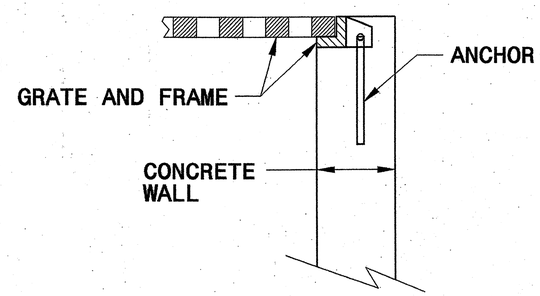

CONCRETE CONSTRUCTION

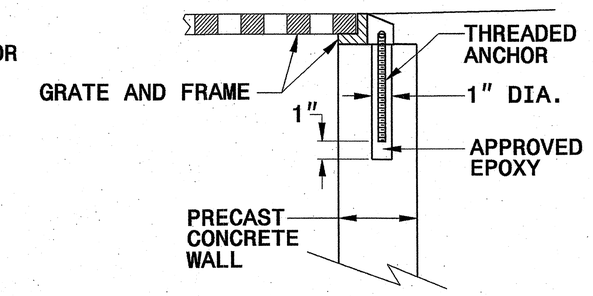

PRECAST CONCRETE CONSTRUCTION

DETAIL SHOWING ANCHORAGE OF FRAME FOR GRATED DROP INLET

NOTE:
CONSTRUCT GRATED DROP INLET TO COINCIDE WITH NORMAL OR SUPERELEVATED SHOULDER OR PAVEMENT SLOPE.

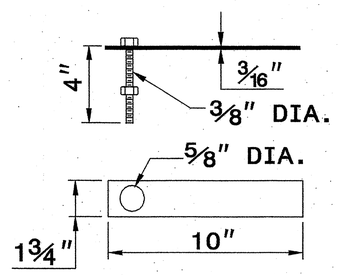

MASONRY ANCHOR
3/8" DIA. BOLT WITH PLATE

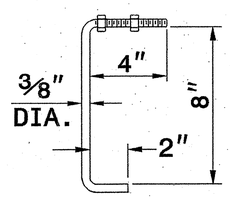

CONCRETE ANCHOR
3/8" DIA. BENT BAR

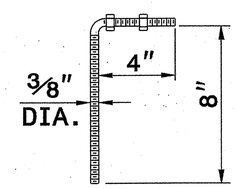

PRECAST CONCRETE ANCHOR
3/8" DIA. BENT BAR

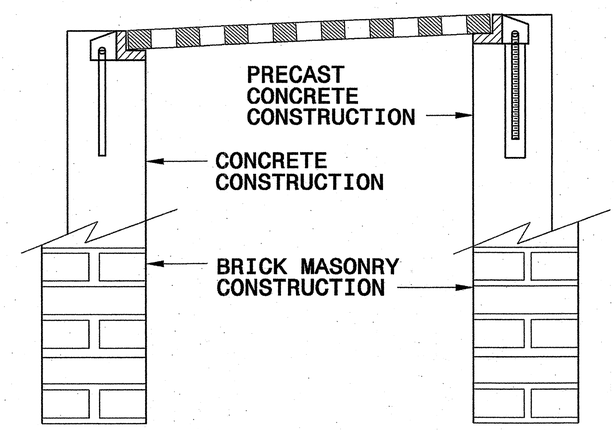

FRAME AND GRATE INSTALLATION FOR NORMAL CROWN AND SUPERELEVATED SECTIONS

STATE OF
NORTH CAROLINA
DEPT. OF TRANSPORTATION
DIVISION OF HIGHWAYS
RALEIGH, N.C.

ENGLISH DETAIL DRAWING FOR
ANCHORAGE FOR FRAMES
BRICK/CONCRETE/PRECAST CONCRETE

SHEET 1 OF 1
840D25

NORTH CAROLINA PROFESSIONAL SEAL 022966 ENGINEER JOEL S. HOWERTON
1/5/11

PROJECT SERVICES UNIT
STANDARDS AND SPECIAL DESIGN
Office 919-250-4128 FAX 919-250-4119

SEE PLATE FOR TITLE

ORIGINAL BY:	2006 STD 840.25	DATE:	07/18/06
MODIFIED BY:	E.E. WARD	DATE:	9/25/06
CHECKED BY:		DATE:	
FILE SPEC.:			

27-SEP-2006 08:59
S:\Contracts\Contracts\Special Details\ericward\stds\06' Stds to Special Details\84025 Anchorage for Frames\0840d25.dgn
ericward AT PS222293

PROJECT REFERENCE NO.	SHEET NO.
U-4438	2-K

STATE OF
NORTH CAROLINA
DEPT. OF TRANSPORTATION
DIVISION OF HIGHWAYS
RALEIGH, N.C.

ENGLISH DETAIL DRAWING FOR

WHEELCHAIR RAMP

PROPOSED CURB AND GUTTER

SHEET 1 OF 3 **848D05**

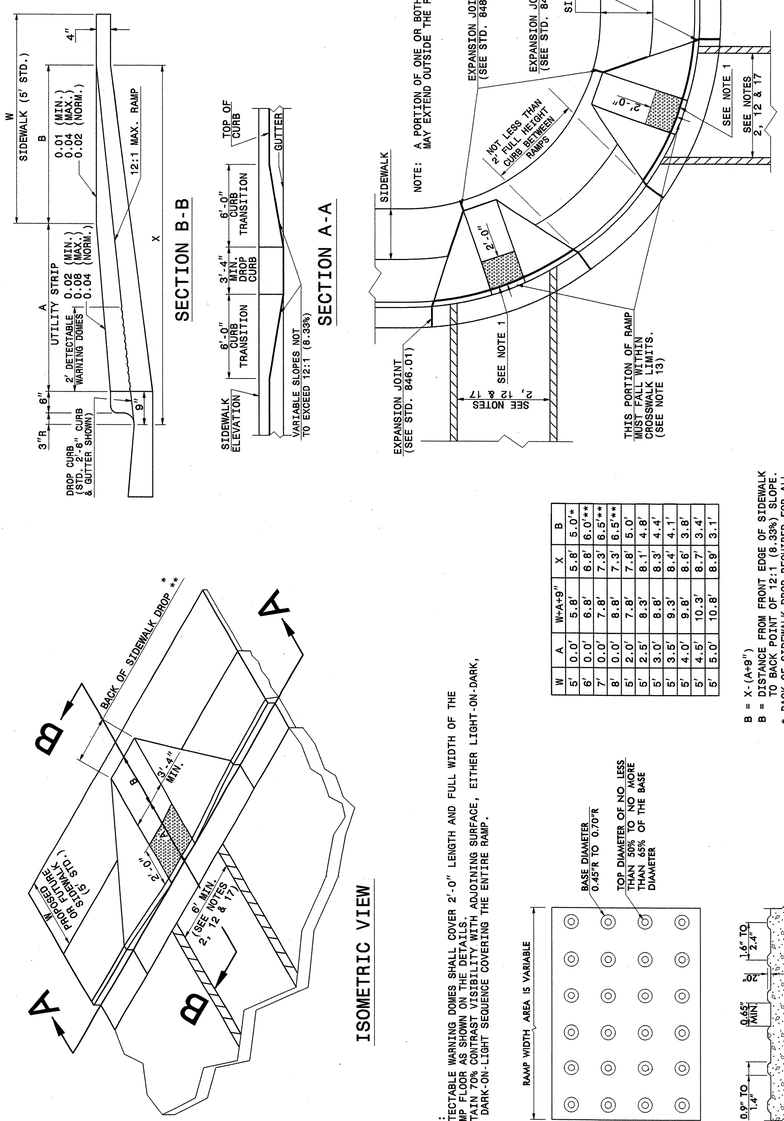

W	A	W-A+9"	X	B
5'	0.0'	5.8'	5.8'	5.0'*
6'	0.0'	6.8'	6.8'	6.0'**
7'	0.0'	7.8'	7.3'	6.5'**
8'	0.0'	8.8'	7.3'	6.5'**
5'	2.0'	7.8'	7.8'	5.0'
5'	2.5'	8.3'	8.1'	4.8'
5'	3.0'	8.8'	8.3'	4.4'
5'	3.5'	9.3'	8.4'	4.1'
5'	4.0'	9.8'	8.6'	3.8'
5'	4.5'	10.3'	8.7'	3.4'
5'	5.0'	10.8'	8.9'	3.1'

B = X-(A+9")
B = DISTANCE FROM FRONT EDGE OF SIDEWALK TO BACK POINT OF 12:1 (8.33%) SLOPE.
* BACK OF SIDEWALK DROP REQUIRED FOR SIDEWALK SLOPES.
** BACK OF SIDEWALK DROP REQUIRED FOR SIDEWALK SLOPES 0.04.

NOTES:
1. DETECTABLE WARNING DOMES SHALL COVER 2'-0" LENGTH AND FULL WIDTH OF THE RAMP FLOOR AS SHOWN ON THE DETAILS.
2. OBTAIN 70% CONTRAST VISUAL WITH ADJOINING SURFACE, EITHER LIGHT-ON-DARK, OR DARK-ON-LIGHT SEQUENCE COVERING THE ENTIRE RAMP.

STATE OF
NORTH CAROLINA
DEPT. OF TRANSPORTATION
DIVISION OF HIGHWAYS
RALEIGH, N.C.

ENGLISH DETAIL DRAWING FOR

WHEELCHAIR RAMP

PROPOSED CURB AND GUTTER

SHEET 1 OF 3 **848D05**

STATE OF
NORTH CAROLINA
DEPT. OF TRANSPORTATION
DIVISION OF HIGHWAYS
RALEIGH, N.C.

ENGLISH DETAIL DRAWING FOR

WHEELCHAIR RAMP

PROPOSED CURB AND GUTTER

SHEET 2 OF 3 **848D05**

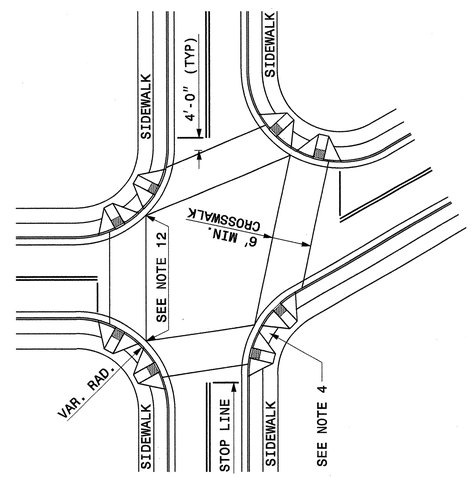

DETAIL SHOWING TYPICAL LOCATION OF WHEELCHAIR RAMPS, PEDESTRIAN CROSSWALKS AND STOP LINES

ALLOWABLE LOCATIONS
DUAL RAMP RADII.....ANY

PROPOSED WHEELCHAIR RAMP
PROPOSED OR FUTURE SIDEWALK

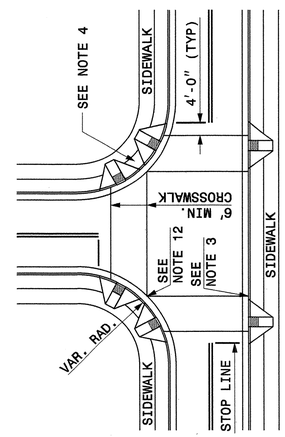

DETAIL SHOWING TYPICAL LOCATION OF WHEELCHAIR RAMPS, PEDESTRIAN CROSSWALKS AND STOP LINES FOR TEE INTERSECTIONS

ROADWAY PLAN SYMBOL
(WCR)
FOR PROPOSED WHEELCHAIR RAMP

STATE OF
NORTH CAROLINA
DEPT. OF TRANSPORTATION
DIVISION OF HIGHWAYS
RALEIGH, N.C.

ENGLISH DETAIL DRAWING FOR

WHEELCHAIR RAMP

PROPOSED CURB AND GUTTER

SHEET 2 OF 3 **848D05**

NORTH CAROLINA PROFESSIONAL SEAL 022966 ENGINEER
1/5/11

PROJECT SERVICES UNIT
STANDARDS AND SPECIAL DESIGN
Office 919-250-4128 FAX 919-250-4119

SEE PLATE FOR TITLE

ORIGINAL BY: STD.NO.848.05 DATE: 4-22-10
MODIFIED BY: DATE:
CHECKED BY: DATE: 4/22/10
FILE SPEC.: SpecialDetails/EricWard/STDS/848d05.dgn

22-APR-2010 09:59
S:\Contracts\Contracts\Special Details\Ericward\stds\06' Stds to Special Details\848d05 Prop. Wheelchair Ramp\0848d05.dgn
.tspell AT PS24552

STATE OF
NORTH CAROLINA
DEPT. OF TRANSPORTATION
DIVISION OF HIGHWAYS
RALEIGH, N.C.

ENGLISH DETAIL DRAWING FOR

WHEELCHAIR RAMP

PROPOSED CURB AND GUTTER

SHEET 3 OF 3

848D05

NOTES:

1. CONSTRUCT THE WALKING SURFACE WITH SLIP RESISTANTANCE AND A 70% CONTRASTING COLOR TO THE SIDEWALK.
2. CROSSWALK WIDTHS AND CONFIGURATION VARY BUT MUST CONFORM TO TRAFFIC DESIGN STANDARDS.
3. NORTH CAROLINA GENERAL STATUTE 136-44.14 REQUIRES THAT ALL STREET CURBS BEING CONSTRUCTED OR RECONSTRUCTED FOR MAINTENANCE PROCEDURES, TRAFFIC OPERATIONS, REPAIRS, CORRECTION OF UTILTIES OR ALTERED FOR ANY REASON AFTER SEPTEMBER 1, 1973 SHALL PROVIDE WHEELCHAIR RAMPS FOR THE PHYSICALLY DISABLED AT ALL INTERSECTIONS WHERE BOTH CURB AND GUTTER AND SIDEWALKS ARE PROVIDED AND AT OTHER POINTS OF PEDESTRIAN FLOW.

   IN ADDITION, SECTION 228 OF THE 1973 FEDERAL AID HIGHWAY SAFETY ACT REQUIRES PROVISION OF CURB RAMPS ON ANY CURB CONSTRUCTION AFTER JULY 1,1976 WHETHER A SIDEWALK IS PROPOSED INITIALLY OR IS PLANNED FOR A FUTURE DATE.

   THE AMERICANS WITH DISABILITIES ACT (ADA) OF 1990 EXTENDS TO INDIVIDUALS WITH DISABILITIES. COMPREHENSIVE CIVIL RIGHTS PROTECTIONS SIMILIAR TO THOSE PROVIDED TO PERSONS ON THE BASIS OF RACE, SEX, NATIONAL ORIGIN AND RELIGION UNDER THE CIVIL RIGHTS ACT OF 1964. THESE CURB RAMPS HAVE BEEN DESIGNED TO COMPLY WITH THE CURRENT ADA STANDARDS.
4. PROVIDE WHEELCHAIR RAMPS AT LOCATIONS AS SHOWN ON THE PLANS OR AS DIRECTED BY THE ENGINEER. LOCATE WHEELCHAIR RAMPS AS DIRECTED BY THE ENGINEER WHERE EXISTING LIGHT POLES, FIRE HYDRANTS, DROP INLETS, ETC. AFFECT PLACEMENT. WHERE TWO RAMPS ARE INSTALLED PLACE NOT LESS THAN 2 FEET OF FULL HEIGHT CURB BETWEEN THE RAMPS. PLACE DUAL RAMPS AS NEAR PERPENDICULAR TO THE TRAVEL LANE BEING CROSSED AS POSSIBLE.
5. DO NOT EXCEED 0.08 (12:1) SLOPE ON THE WHEELCHAIR RAMP IN RELATIONSHIP TO THE GRADE OF THE STREET.
6. CONSTRUCT WHEELCHAIR RAMPS 40" (3'-4") OR GREATER FOR DUAL RAMPS.
7. USE CLASS "B" CONCRETE WITH A SIDEWALK FINISH IN ORDER TO OBTAIN A ROUGH NON-SKID TYPE SURFACE.
8. PLACE A ½" EXPANSION JOINT WHERE THE CONCRETE WHEELCHAIR RAMP JOINS THE CURB AND AS SHOWN ON STD. DWG. 848.01.
9. PLACE THE INSIDE PEDESTRIAN CROSSWALK LINES NO CLOSER IN THE INTERSECTION BY BISECTING THE INTERSECTION RADII, WITH ALLOWANCE OF A 4' CLEAR ZONE IN THE VEHICULAR TRAVELWAY WHEN ONE RAMP IS INSTALLED. (SEE NOTE 17)
10. COORDINATE THE CURB CUT AND THE PEDESTRIAN CROSSWALK LINES SO THE FLOOR OF THE WHEELCHAIR RAMP WILL FALL WITHIN THE PEDESTRIAN CROSSWALK LINES. PLACE DIAGONAL RAMPS WITH FLARED SIDES SO 24" OF FULL HEIGHT CURB FALLS WITHIN THE CROSSWALK MARKINGS ON EACH SIDE OF THE FLARES.
11. CONSTRUCT THE PEDESTRIAN CROSSWALK A MINIMUM OF 6 FEET. A CROSSWALK WIDTH OF 10 FEET OR GREATER IS DESIRABLE.
12. USE STOP LINES, NORMALLY PERPENDICULAR TO THE LANE LINES, WHERE IT IS IMPORTANT TO INDICATE THE POINT BEHIND WHICH VEHICLES ARE REQUIRED TO STOP IN COMPLIANCE WITH A TRAFFIC SIGNAL, STOP SIGN OR OTHER LEGAL REQUIREMENT. AN UNUSUAL APPROACH SKEW MAY REQUIRE THE PLACEMENT OF THE STOP LINE TO BE PARALLEL TO THE INTERSECTING ROADWAY.
13. TERMINATE PARKING A MINIMUM OF 20 FEET BACK OF PEDESTRIAN CROSSWALK.
14. PLACE ALL PAVEMENT MARKINGS IN ACCORDANCE WITH THE LATEST EDITION OF THE MANUAL OF UNIFORM TRAFFIC CONTROL DEVICES (MUTCD) PUBLISHED BY THE FEDERAL HIGHWAY ADMINISTRATION AND THE NORTH CAROLINA SUPPLEMENT TO THE MUTCD.

STATE OF
NORTH CAROLINA
DEPT. OF TRANSPORTATION
DIVISION OF HIGHWAYS
RALEIGH, N.C.

ENGLISH DETAIL DRAWING FOR

WHEELCHAIR RAMP

PROPOSED CURB AND GUTTER

SHEET 3 OF 3

848D05

NORTH CAROLINA PROFESSIONAL SEAL 022566 ENGINEER
4/22/10

PROJECT SERVICES UNIT
STANDARDS AND SPECIAL DESIGN
Office 919-250-4128 FAX 919-250-4119

SEE PLATE FOR TITLE

ORIGINAL BY: STD.NO.848.05 DATE: 4-22-10
MODIFIED BY: DATE:
CHECKED BY: DATE: 4/22/10
FILE SPEC.: S:\Special Details\Ericward\STDS\848d05.dgn

PROJECT REFERENCE NO. U-4438
SHEET NO. 2-4

PROJECT REFERENCE NO.	SHEET NO.
U-4438	Z-M

5/14/99

GENERAL NOTES:

USE CLASS "B" CONCRETE THROUGHOUT.

PROVIDE ALL CATCH BASINS OVER 3'-6" IN DEPTH WITH STEPS 12" ON CENTER. USE STEPS WHICH COMPLY WITH STD. DRAWING 840.66.

OPTIONAL CONSTRUCTION - MONOLITHIC POUR, 2" KEYWAY, OR #4 BAR DOWELS AT 12" CENTERS AS DIRECTED BY THE ENGINEER.

USE FORMS FOR THE CONSTRUCTION OF THE BOTTOM SLAB.

IF REINFORCED CONCRETE PIPE IS SET IN BOTTOM SLAB OF BOX, ADD TO SLAB AS SHOWN ON STD. NO. 840.00.

USE TYPE "E", "F" AND "G" GRATES UNLESS OTHERWISE INDICATED.

FOR 8'-0" IN HEIGHT OR LESS USE 6" WALLS AND BOTTOM SLAB. OVER 8'-0" TO 15'-0" IN HEIGHT USE 8" WALLS AND BOTTOM SLAB. ADJUST QUANTITIES ACCORDINGLY.

CONSTRUCT WITH PIPE CROWNS MATCHING.

CHAMFER ALL EXPOSED CORNERS 1".

DRAWING NOT TO SCALE.

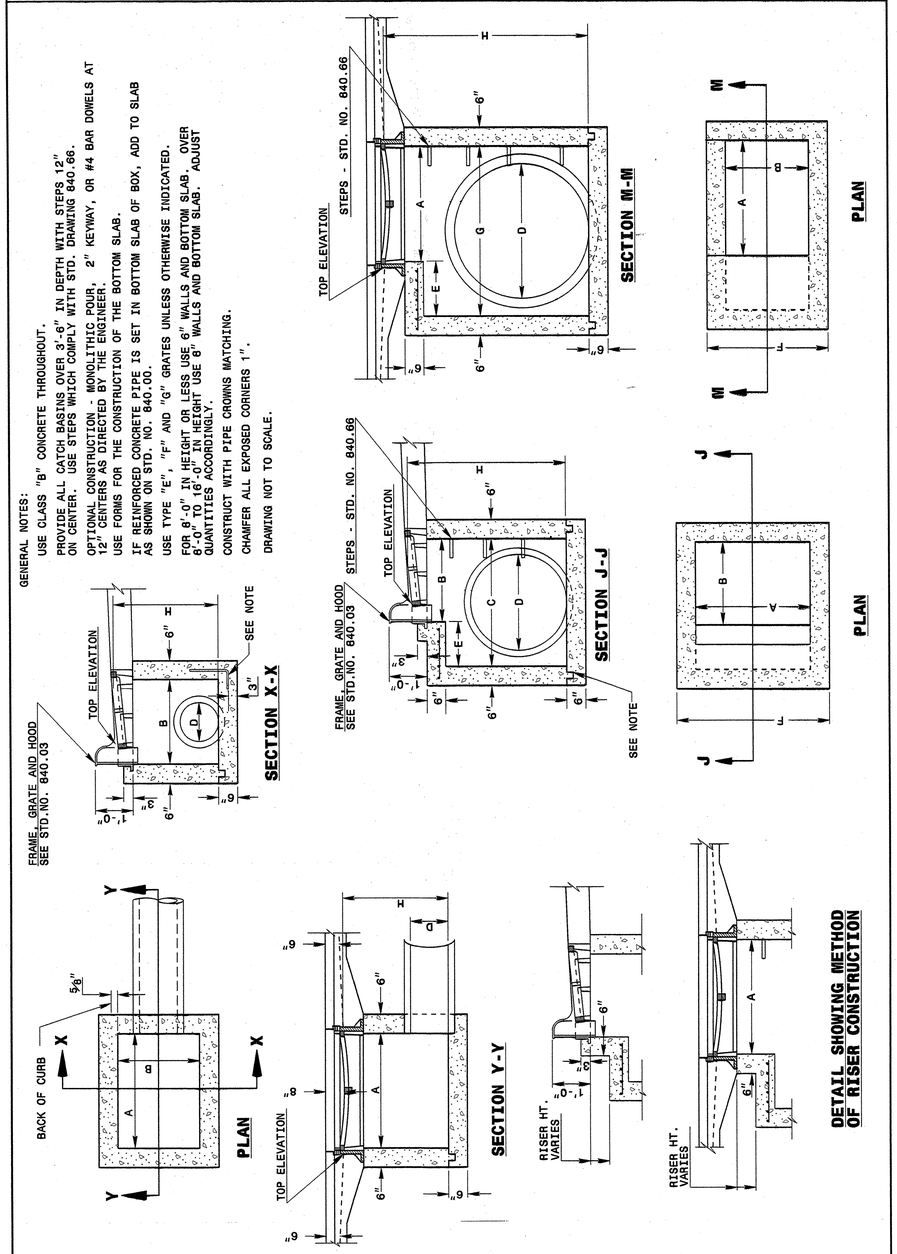

STATE OF NORTH CAROLINA DEPT. OF TRANSPORTATION DIVISION OF HIGHWAYS RALEIGH, N.C.

ENGLISH DETAIL DRAWING FOR

CONCRETE CATCH BASIN

12" THRU 54" PIPE

SHEET 1 OF 2 **840D02**

STATE OF NORTH CAROLINA DEPT. OF TRANSPORTATION DIVISION OF HIGHWAYS RALEIGH, N.C.

ENGLISH DETAIL DRAWING FOR

CONCRETE CATCH BASIN

12" THRU 54" PIPE

SHEET 1 OF 2 **840D02**

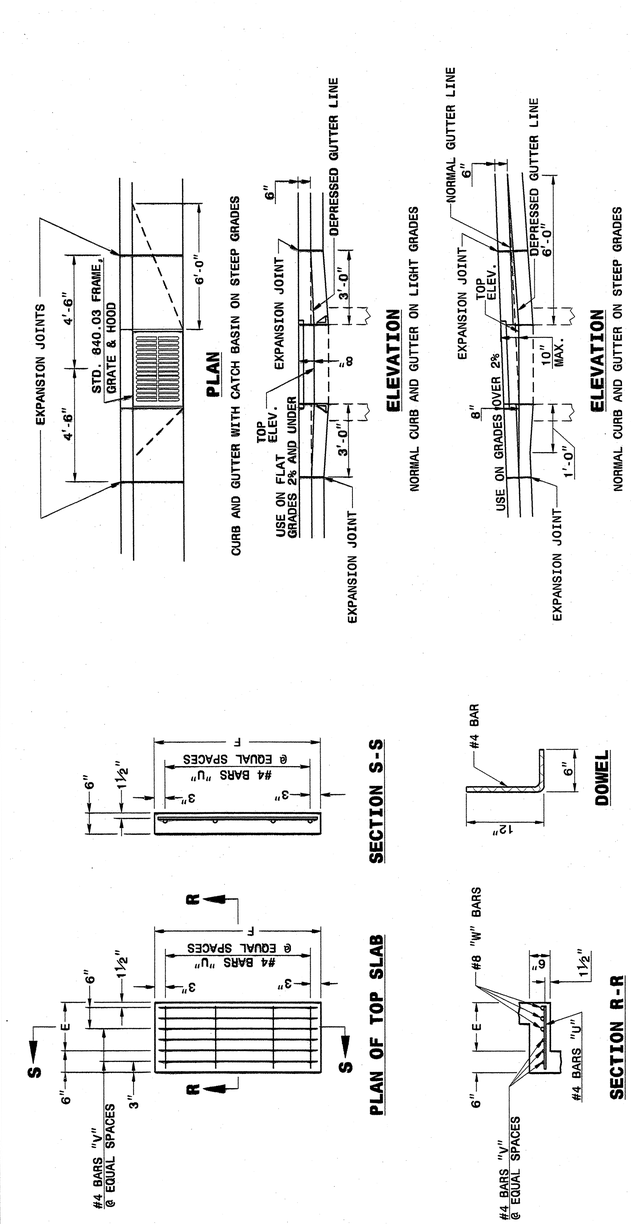

MINIMUM DIMENSIONS AND QUANTITIES FOR CONCRETE CATCH BASIN(BASED ON MIN. HEIGHT, H, WITH NO RISER) *

DIMENSIONS OF BOX AND PIPE							COVER DIMENSION		BARS-U		BARS-V		BARS-W		TOTAL LBS.	CU.YDS. CONC. IN BOX. TOTAL CONC. FOR MINIMUM HEIGHT, H		DEDUCTIONS ONE PIPE	
PIPE D	SPAN A	WIDTH B	WIDTH C	SPAN G	MIN. HEIGHT H		E	F	NO.	LENGTH	NO.	LENGTH	NO.	LENGTH		TOP SLAB	BOTTOM SLAB	C.M.	R.C.
12"	3'-0"	2'-2"	--	--	2'-9"		--	--	--	--	--	--				--	0.235	0.772	0.015	0.026
15"	3'-0"	2'-2"			3'-0"												0.235	0.829	0.023	0.036
18"	3'-0"	2'-2"			3'-3"												0.235	0.887	0.033	0.049
24"	3'-0"	2'-2"			3'-9"												0.235	1.001	0.059	0.085
30"	3'-0"	2'-2"	3'-4"	3'-4"	4'-3"		1'-2"	4'-0"	4	1'-5"	2	3'-9"	3		39	0.123	0.321	1.433	0.092	0.127
36"	3'-0"	2'-2"	3'-10"	3'-10"	4'-9"		1'-8"	4'-0"	4	1'-11"	3	3'-9"	3		43	0.161	0.358	1.714	0.132	0.178
42"	3'-0"	2'-2"	4'-5"	4'-5"	5'-3"		1'-5"	3'-2"	4	1'-8"	2	2'-11"	3		32	0.112	0.318	1.738	0.180	0.243
48"	3'-0"	2'-2"	5'-0"	5'-0"	5'-9"		2'-0"	3'-2"	4	2'-3"	3	2'-11"	3		35	0.145	0.352	2.052	0.235	0.317
54"	3'-0"	2'-2"	5'-7"	5'-7"	6'-3"		2'-7"	3'-2"	4	2'-10"	5	2'-11"	3		41	0.180	0.386	2.387	0.297	0.401

* RISER HAS .228 CUBIC YARDS OF CONCRETE PER FOOT HEIGHT

STATE OF NORTH CAROLINA DEPT. OF TRANSPORTATION DIVISION OF HIGHWAYS RALEIGH, N.C.

ENGLISH DETAIL DRAWING FOR

CONCRETE CATCH BASIN

12" THRU 54" PIPE

SHEET 2 OF 2 **840D02**

NORTH CAROLINA PROFESSIONAL SEAL 022566 ENGINEER JOEL E. HOCKER

1/5/11

CONTRACT STANDARDS AND DEVELOPMENT UNIT

Office 919-250-4128 FAX 919-250-4119

SEE PLATE FOR TITLE

ORIGINAL BY: 2002 Std.840.01 DATE:

MODIFIED BY: E.E. WARD DATE: 3-1-02

CHECKED BY: DATE: 12/21/10

FILE SPEC.: details/stand/840d01.dgn

$$$$$$SYSTIME$$$$$$

$$$$$$$$$$$$$$$$$$$$$$$$$$$$$$$$

$$$$$$USERNAME$$$$$$

PROJECT REFERENCE NO.	SHEET NO.
U-4438	2-N

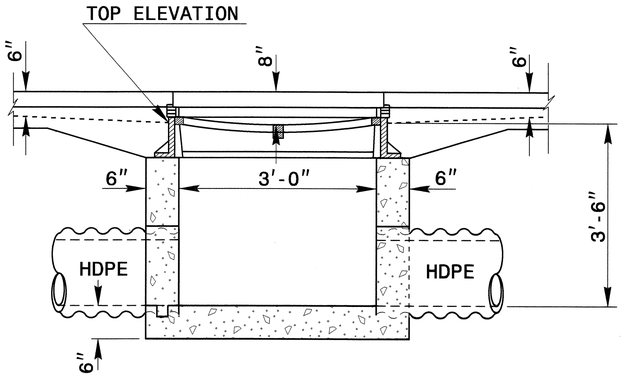

SECTION Y-Y

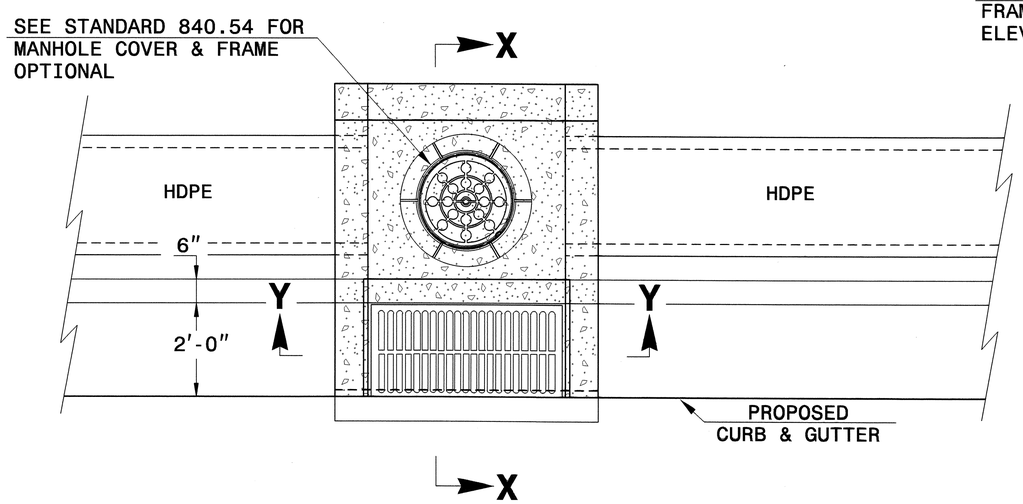

PLAN

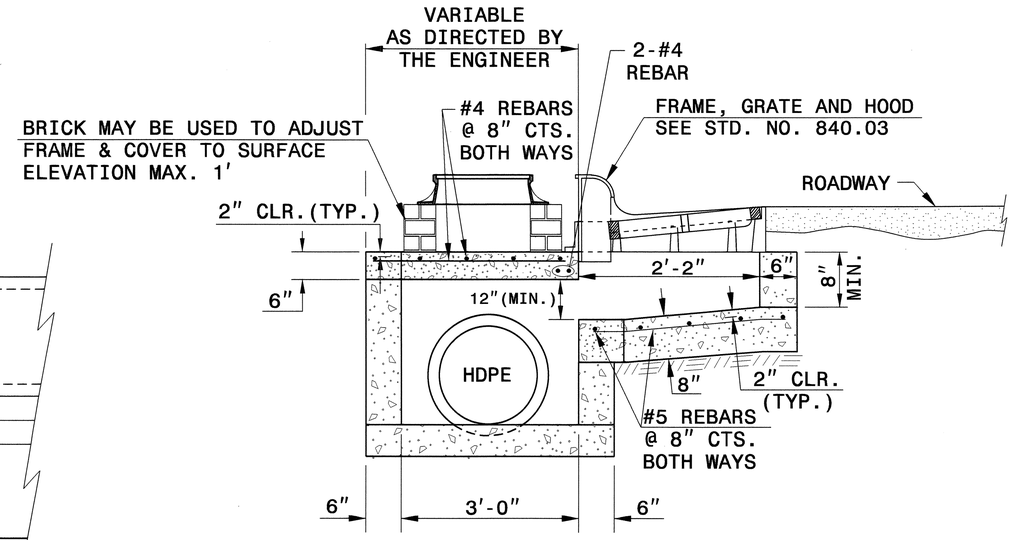

SECTION X-X

REINFORCING STEEL (LBS.) =	60.4
CONCRETE TOTAL (CU.YDS.) =	1.2

NOTES:

- MORTAR JOINTS ½" TO ¼" THICK.
- USE CLASS "B" CONCRETE THROUGHOUT.
- USE TYPE "E", "F" AND "G" GRATES UNLESS OTHERWISE INDICATED.
- CHAMFER ALL EXPOSED CORNERS 1".
- DRAWING NOT TO SCALE.
- DIMENSIONS MAY BE ADJUSTED AS DIRECTED BY THE ENGINEER.

NORTH CAROLINA PROFESSIONAL SEAL 022966 ENGINEER JOEL S. HOWARD 1/5/11

CONTRACT STANDARDS
AND DEVELOPMENT UNIT
Office 919-250-4128 FAX 919-250-4119

OFFSET CATCH BASIN

ORIGINAL BY: E.E. WARD DATE: 1-24-02
MODIFIED BY: T.S. Spell DATE: 12-10-10
CHECKED BY: [signature] DATE: 1/5/11
FILE SPEC.: s/eric\details\stand\840d06.dgn

03-JAN-2011h21
S:\Contracts\Contracts\Special Details\ericward\usr\details\stand\840d06.dgn
$$$$USERNAME$$$$

PROJECT REFERENCE NO.	SHEET NO.
U-4438	2-0

STATE OF
NORTH CAROLINA
DEPT. OF TRANSPORTATION
DIVISION OF HIGHWAYS
RALEIGH, N.C.

ENGLISH DETAIL DRAWING FOR
CONCRETE FLUME INSTALLATION IN 8" X 18" CURB

SHEET 1 OF 1

MODFLMDTCH

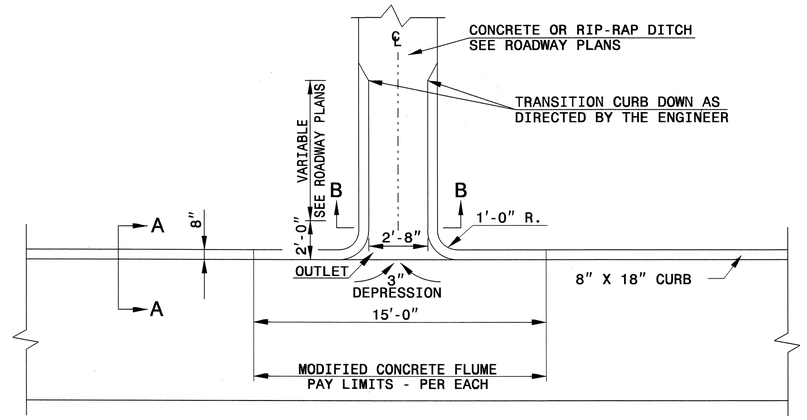

PLAN VIEW

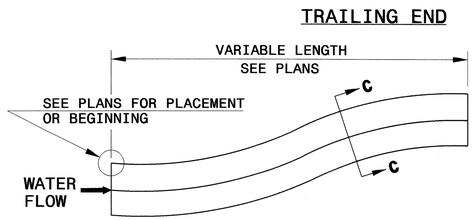

DOWNGRADE OR SAG

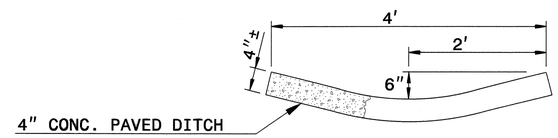

SECTION C-C

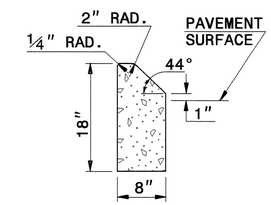

SECTION A-A

8" X 18" CONCRETE CURB

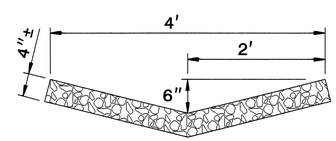

RIP-RAP LINED DITCH

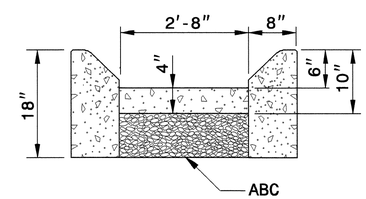

SECTION B-B

NOTES:

- CONSTRUCT CONCRETE DITCH IN ACCORDANCE WITH STD. DWG. NO. 850.01.
- CONSTRUCT RIP RAP LINED DITCH IN ACCORDANCE WITH THIS DETAIL, IF CALLED FOR IN PLANS.
- CONCRETE OR RIP RAP LINED DITCH SHALL BE THE TYPE AND LENGTH SPECIFIED BY THE ROADWAY PLANS. THE DITCH SHALL TERMINATE AS SHOWN ON THE PLANS. IF NO TERMINATION IS INDICATED PLACE RIP-RAP AT THE END OF THE DITCH AS INDICATED BY STD. DWG. 876.02 FOR AN 18" PIPE. TRANSITIONS FROM THE DITCH TO TERMINATION SHALL BE AS DIRECTED BY THE ENGINEER.
- MODIFICATIONS SHALL BE AS DICTATED BY SITE CONDITIONS AND DIRECTED BY THE ENGINEER.
- REFER TO RDWY. STD. 846.01 FOR 8"x18" CURB.

STATE OF
NORTH CAROLINA
DEPT. OF TRANSPORTATION
DIVISION OF HIGHWAYS
RALEIGH, N.C.

ENGLISH DETAIL DRAWING FOR
CONCRETE FLUME INSTALLATION IN 8" X 18" CURB

SHEET 1 OF 1

MODFLMDTCH

NORTH CAROLINA PROFESSIONAL SEAL 022566 ENGINEER JOEL S. HOWERTON
1/5/11

CONTRACT STANDARDS AND DEVELOPMENT UNIT
Office 919-250-4128 FAX 919-250-4119

SEE PLATE FOR TITLE

ORIGINAL BY: E.E. Ward DATE: 3-12-02
MODIFIED BY: T.S. Spell DATE: 12-16-07
CHECKED BY: [signature] DATE: 12/31/10
FILE SPEC.: s:details\stand\modifiedflume.dgn

PROJECT REFERENCE NO.	SHEET NO.
U-4438	2-P

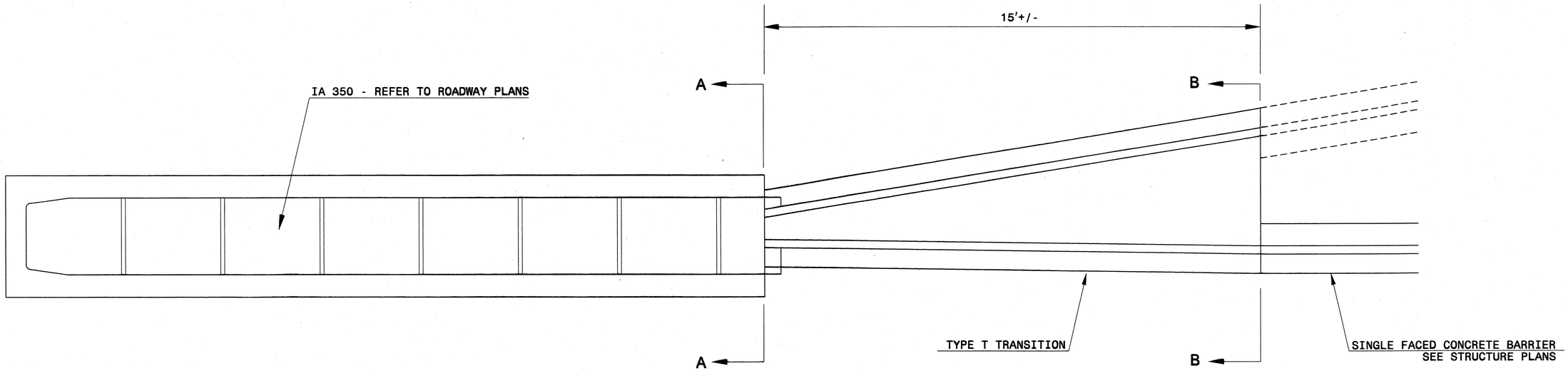

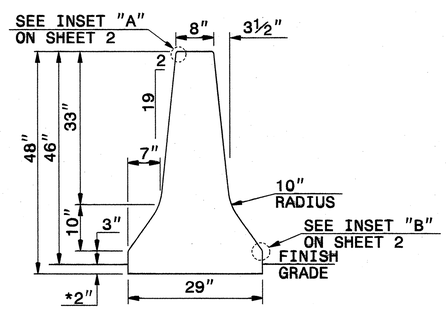

SECTION A-A

TYPE - T

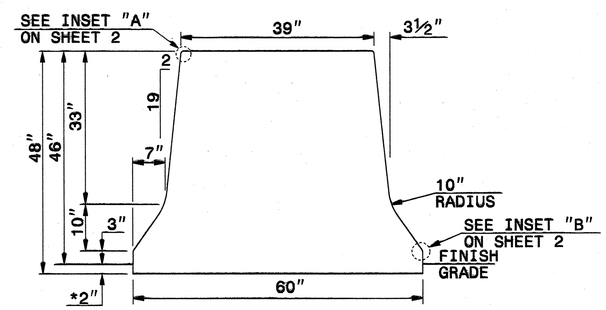

SECTION B-B

TYPE - T

BILL OF MATERIAL		
REINF. STEEL LBS.		584
CLASS "AA" CONCRETE	CU. YDS.	5.5

NOTE:
PLACE REINFORCING STEEL IN ACCORDANCE WITH ROADWAY STANDARD DRAWING 854.02, SHEET 3 OF 4.
SUBMIT ALTERNATIVE METHODS FOR STEEL FABRICATION TO THE ENGINEER.

CONSTRUCT EXPANSION AND CONTRACTION JOINTS AS SHOWN IN ROADWAY STANDARD DRAWING 854.02, SHEET 2 OF 4.
SEAL ALL EXPANSION JOINTS WITH JOINT FILLER. (SEE SECTION 1028 OF THE SPECIFICATIONS).

REFER TO PLAN SHEET AND/OR TYPICAL SECTIONS FOR PROPER BARRIER ORIENTATION.

*THE 2" DIMENSION FROM FINSIH GRADE TO THE BASE IS A MINIMUM DIMENSION. REFER TO PLAN TYPICAL SECTIONS AND PAVEMENT SCHEDULE TO DETERMINE KEY-IN DEPTH.

NORTH CAROLINA PROFESSIONAL SEAL 022966 ENGINEER JOEL S. HOWERTON
1/5/11

PROJECT SERVICES UNIT
STANDARDS AND SPECIAL DESIGN
Office 919-250-4128 FAX 919-250-4119

DETAIL OF TYPE T BARRIER TRANSITION

ORIGINAL BY: KYLE KEMPF DATE: 12-2010
MODIFIED BY: DATE:
CHECKED BY: DATE: 12/15/10
FILE SPEC.: details\kkempf\english\854d0201.dgn

15-DEC-2010 14:50
S:\Contracts\Contracts\Special Details\kkempf\english\854D0201.dgn
$$$$USERNAME$$$$

PROJECT REFERENCE NO.	SHEET
U-4438	2-Q

Detail for Temporary Containment of Petroleum Contaminated Soil

Cross-Section View

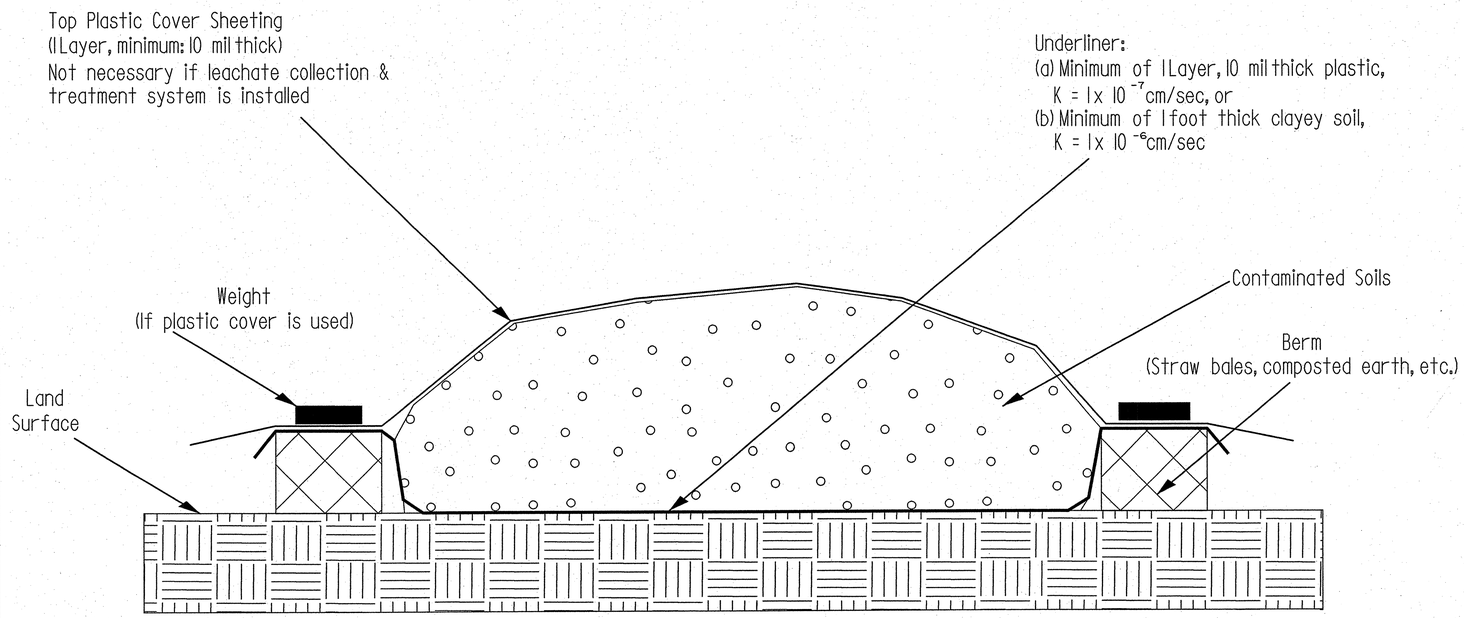

Map View

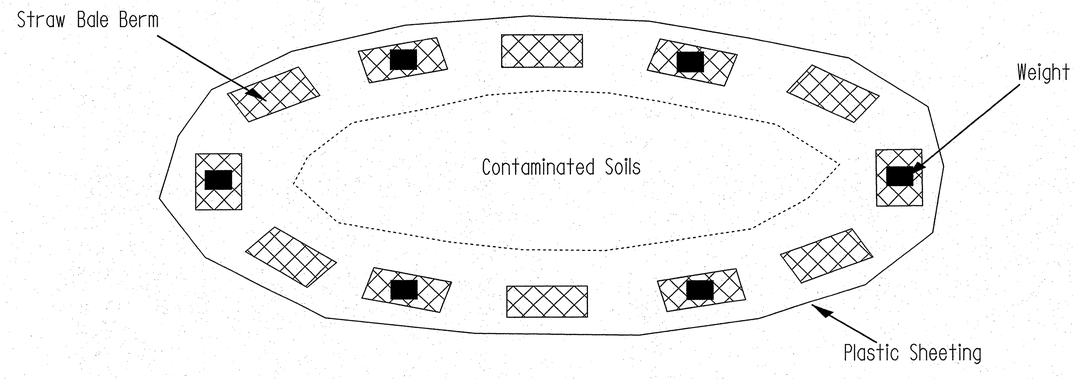

PROJECT REFERENCE NO.	SHEET NO.
U-4438	2-R

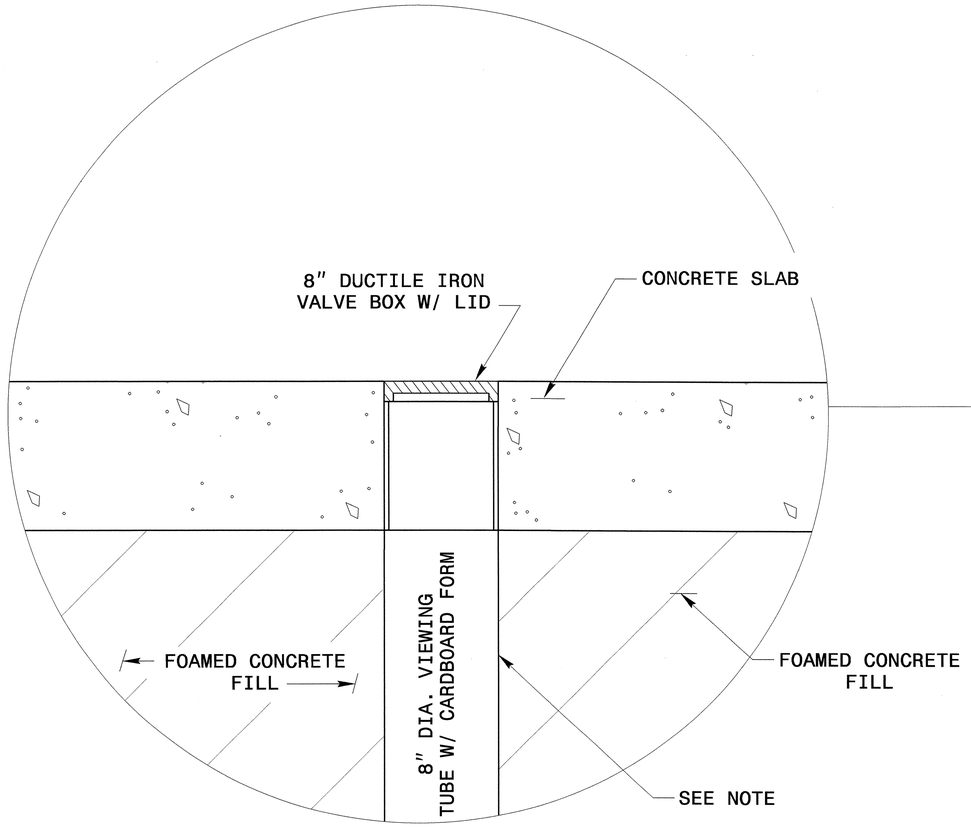

DETAIL "A"

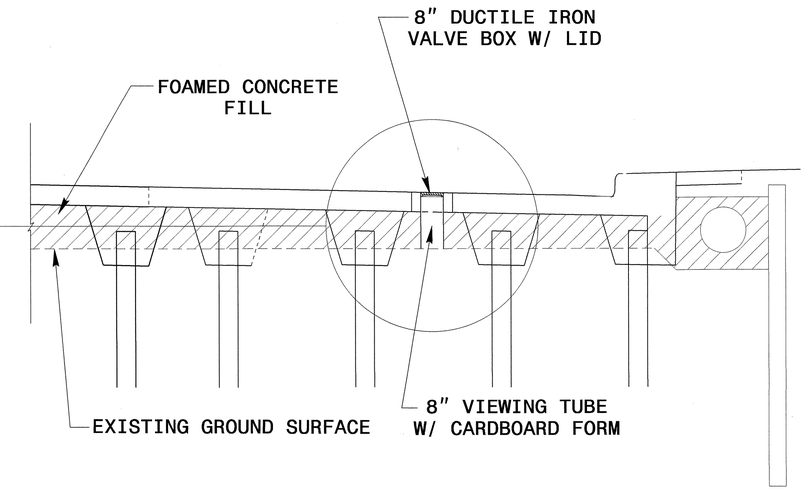

SECTION X-X

NOTES:
OBSERVATION TUBES WILL BE PLACED AT THE DISCRETION OF THE ENGINEER.

STRIP CARDBOARD FORMS FROM THE TUBES ONCE THE FOAMED CONCRETE FILL IS IN PLACE AND HAS SUFFICIENTLY CURED.

DUCTILE IRON VALVE BOX WILL EXTEND FROM THE TOP OF PAVEMENT STRUCTURE TO THE TOP OF THE FOAMED CONCRETE FILL.

CARDBOARD FORM WILL EXTEND FROM THE TOP OF THE FOAMED CONCRETE FILL TO THE BOTTOM OF THE FOAMED CONCRETE FILL.

NORTH CAROLINA PROFESSIONAL SEAL 022966 ENGINEER JOEL S. HOWERTON 4/12/11

CONTRACT STANDARDS & DEVELOPMENT UNIT
STANDARDS AND SPECIAL DESIGN
Office 919-250-4128 FAX 919-250-4119

OBSERVATION TUBE DETAIL

ORIGINAL BY: DATE:
MODIFIED BY: rnbritt DATE: 04-12-11
CHECKED BY: DATE: 4/12/11
FILE SPEC.: details/rnbritt/english/hydro/observationtube.dgn

$$$$$SYSTIME$$$$
$$$$$USERNAME$$$$

PROJECT REFERENCE NO.	SHEET
U-4438	2-S

GEOTECHNICAL ENGINEER — ENGINEER

NORTH CAROLINA PROFESSIONAL SEAL 032672 ENGINEER MICHEL D. VALIQUETTE

SIGNATURE DATE SIGNATURE DATE

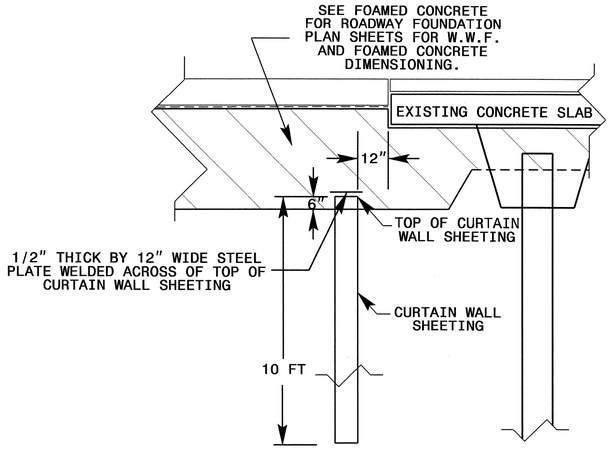

CURTAIN WALL DETAIL AT TRANSITIONS BETWEEN FOAMED CONCRETE FOR ROADWAY FOUNDATION AND EXISTING CONCRETE SLAB AT -Y6-, -Y7- AND -Y8-

NTS

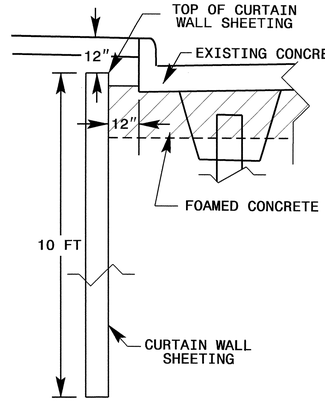

CURTAIN WALL DETAIL WITHOUT DRAINAGE STRUCTURES

NTS

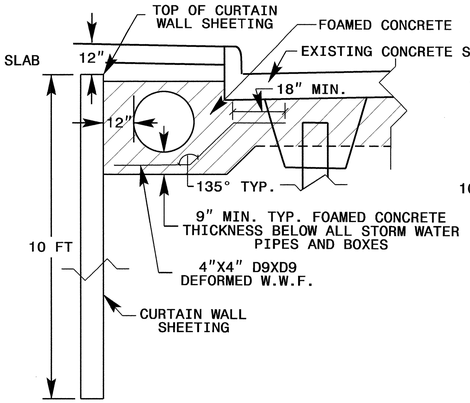

CURTAIN WALL DETAIL WITH DRAINAGE PIPE

NTS

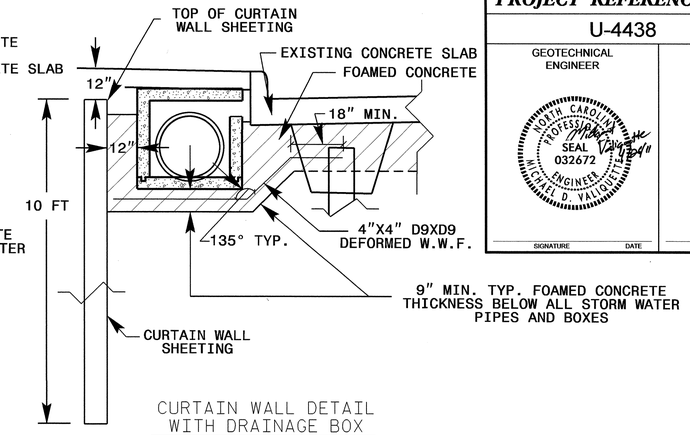

CURTAIN WALL DETAIL WITH DRAINAGE BOX

NTS

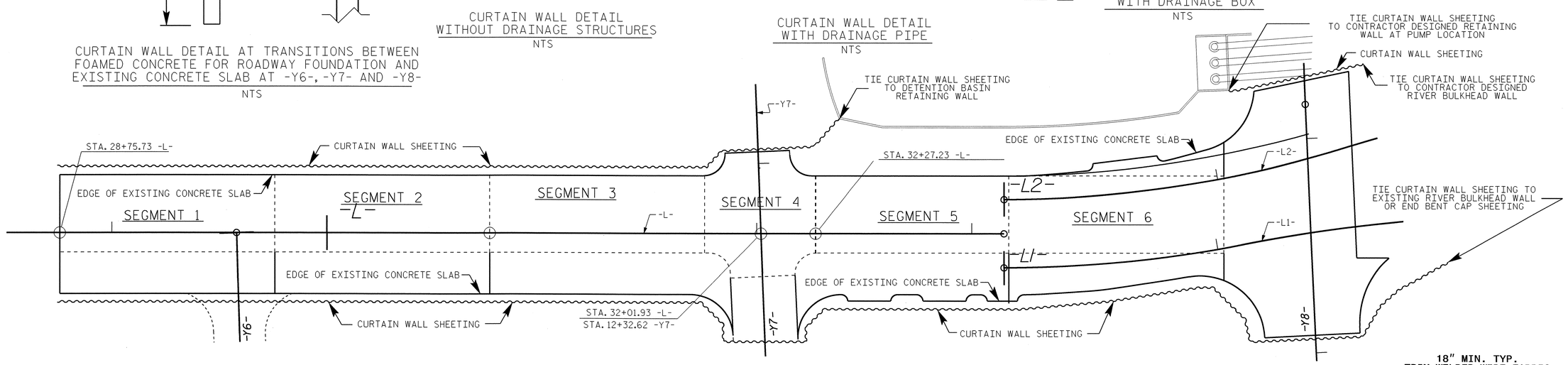

CURTAIN WALL LAYOUT

N.T.S.

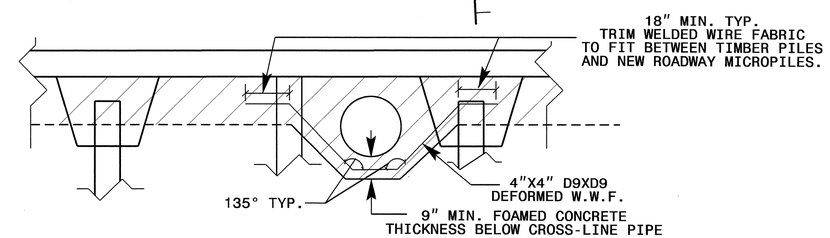

CROSS-LINE PIPE DETAIL

N.T.S.

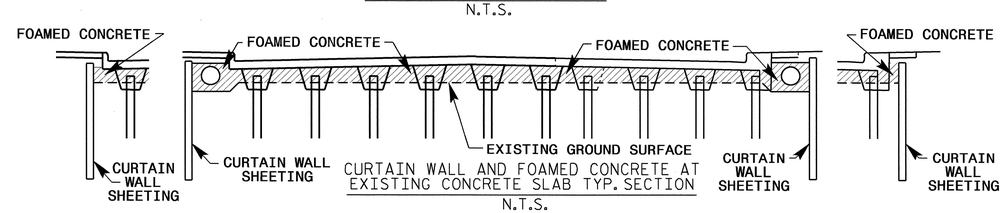

CURTAIN WALL AND FOAMED CONCRETE AT EXISTING CONCRETE SLAB TYP. SECTION

N.T.S.

NOTES

FOR CURTAIN WALL SHEETING, SEE CURTAIN WALL SHEETING SPECIAL PROVISION.

INSTALL CURTAIN WALL SHEETING TO THE DEPTH SHOWN USING PUSHING OR HYDRAULIC PRESSING INSTALLATION TECHNIQUES. DO NOT USE VIBRATORY OR IMPACT HAMMER TO INSTALL CURTAIN WALL SHEETING.

USE SHEET PILING WITH A MINIMUM SECTION MODULUS OF 18.1 IN'/FT FOR CURTAIN WALL SHEETING.

WELD 1/2" THICK BY 12" WIDE STEEL PLATE ACROSS THE TOP OF CURTAIN WALL SHEETING AT TRANSITIONS BETWEEN FOAMED CONCRETE FOR ROADWAY FOUNDATION AND EXISTING CONCRETE SLAB. 1/2" THICK STEEL PLATE IS INCIDENTAL TO THE COST OF CURTAIN WALL SHEETING.

CURTAIN WALL SHEETING HAS NOT BEEN DESIGNED TO SUPPORT HORIZONTAL EARTH PRESSURES. DO NOT USE CURTAIN WALL SHEETING TO SUPPORT EXCAVATION SIDEWALLS. INSTALL CURTAIN WALL SHEETING AFTER EXCAVATIONS FOR DRAINAGE PIPES AND BOXES HAVE BEEN COMPLETED.

WELDED WIRE FABRIC (4"X4" D9XD9) SHALL BE SUPPORTED AS NECESSARY TO MAINTAIN A MINIMUM OF 6 INCHES OF CLEARANCE BETWEEN THE WELDED WIRE FABRIC AND THE GROUND SURFACE.

TERMINATE WELDED WIRE FABRIC 3 INCHES FROM SIDES OF SHEET PILING OR 6 INCHES FROM SIDES OF EXCAVATIONS.

WELDED WIRE FABRIC SHALL BE DEFORMED AND EPOXY COATED. FOR WELDED WIRE FABRIC FOR FOAMED CONCRETE, SEE WELDED WIRE FABRIC FOR FOAMED CONCRETE SPECIAL PROVISION.

FOR FOAMED CONCRETE, SEE FOAMED CONCRETE SPECIAL PROVISION.

ADJACENT WELDED WIRE FABRIC PANELS SHALL BE OVERLAPPED A MINIMUM OF 18 INCHES ON ALL SIDES. PAY QUANTITY FOR WELDED WIRE FABRIC FOR FOAMED CONCRETE DOES NOT INCLUDE OVERLAPS.

THE CONTRACTOR IS RESPONSIBLE FOR DETERMINING MEANS AND METHODS OF SUPPORTING ALL PIPES, BOXES, AND WELDED WIRE FABRIC PRIOR TO AND DURING FOAMED CONCRETE PLACEMENT AND RESISTING BUOYANT FORCES DURING FOAMED CONCRETE PLACEMENT. THE CONTRACTOR SHALL SEAL ALL PIPES AND BOXES TIGHT AGAINST FOAMED CONCRETE INTRUSION.

USE DURABLE NON-DEGRADABLE MATERIALS TO SUPPORT ALL PIPES, BOXES, AND WELDED WIRE FABRIC.

THE CONTRACTOR SHALL SEAL ALL PIPES AND BOXES TIGHT AGAINST FOAMED CONCRETE INTRUSION.

DEWATERING EXCAVATIONS, SUPPORTING ALL PIPES, BOXES, AND WELDED WIRE FABRIC PRIOR TO AND DURING FOAMED CONCRETE PLACEMENT AND RESISTING BUOYANT FORCES DURING FOAMED CONCRETE PLACEMENT AND SEALING ALL PIPES AND BOXES AGAINST FOAMED CONCRETE INTRUSION WILL BE INCIDENTAL TO THE INDIVIDUAL LINE ITEM UNIT PRICES OF THE ITEMS REQUIRING DEWATERING, SEALING, OR SUPPORTING.

FILL EXISTING VOID UNDER CONCRETE SLAB AND AROUND DRAINAGE PIPES ADJACENT TO SLAB WITH FOAMED CONCRETE. STANDING WATER SHALL BE PUMPED OFF PRIOR TO PLACING FOAMED CONCRETE.

CURTAIN WALL SHEETING AND FOAMED CONCRETE VOID FILL ESTIMATED QUANTITY

CURTAIN WALL SHEETING	1,140 L.FT
WELDED WIRE FABRIC FOR FOAMED CONCRETE	500 SQ.Y. (1)
FOAMED CONCRETE	2,500 C.Y

(1) WELDED WIRE FABRIC QUANTITY DOES NOT INCLUDE OVERLAPS OR WASTE.

PREPARED BY:	MDV	DATE:	1/2011
REVIEWED BY:	KJK	DATE:	1/2011

GEOTECHNICAL ENGINEERING UNIT

■ EASTERN REGIONAL OFFICE
□ WESTERN REGIONAL OFFICE

STATE OF NORTH CAROLINA DEPARTMENT OF TRANSPORTATION

STATE OF NORTH CAROLINA DEPARTMENT OF TRANSPORTATION RALEIGH

CURTAIN WALL SHEETING AND FOAMED CONCRETE VOID FILL (SHEET 1 OF 1)

REVISIONS

NO.	BY	DATE	NO.	BY	DATE
1			3		
2			4		

PROJECT REFERENCE NO.	SHEET
U-4438	2-T

GEOTECHNICAL ENGINEER

NORTH CAROLINA PROFESSIONAL SEAL 032672 ENGINEER MICHAEL D. VALIQUETTE

SIGNATURE DATE

ENGINEER

SIGNATURE DATE

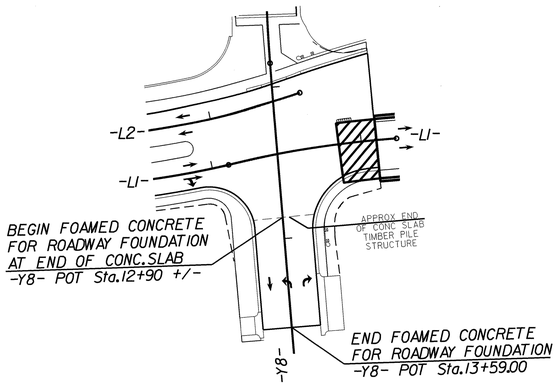

FOAMED CONCRETE FOR ROADWAY FOUNDATION LIMITS
SEE TYPICAL SECTIONS FOR HORIZONTAL LIMITS
N.T.S.

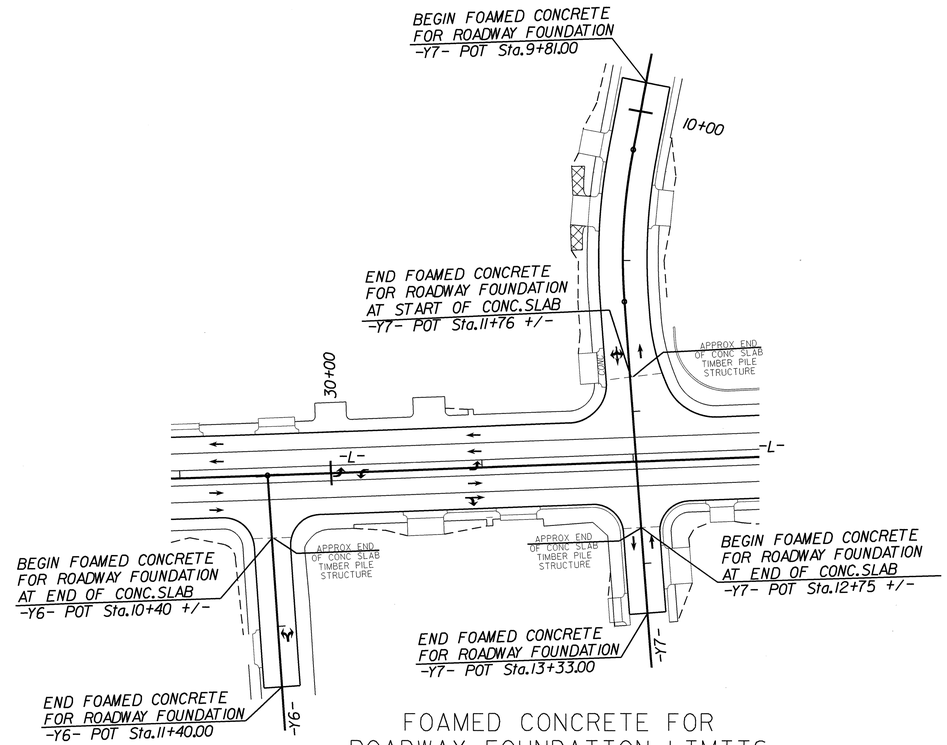

FOAMED CONCRETE FOR ROADWAY FOUNDATION LIMITS
SEE TYPICAL SECTIONS FOR HORIZONTAL LIMITS
N.T.S.

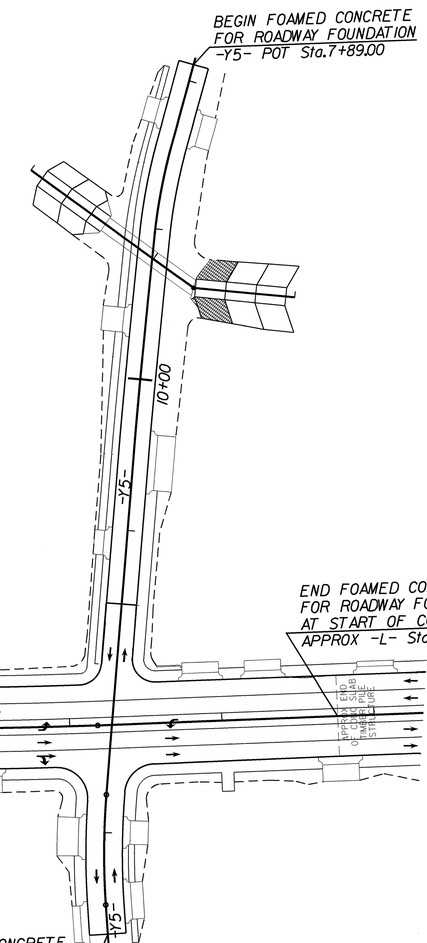

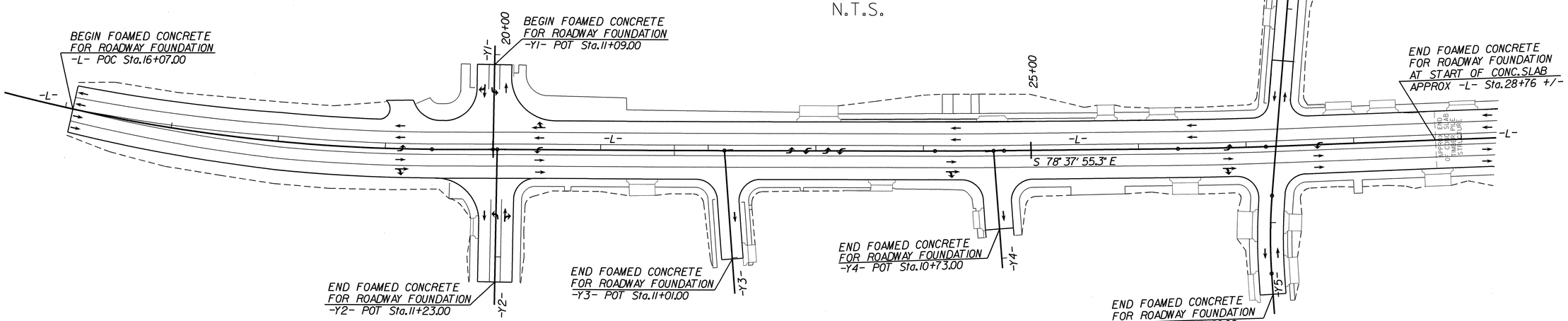

FOAMED CONCRETE FOR ROADWAY FOUNDATION LIMITS
SEE TYPICAL SECTIONS FOR HORIZONTAL LIMITS
N.T.S.

PREPARED BY:	MDV	DATE:	1/2011
REVIEWED BY:	KJK	DATE:	1/2011

GEOTECHNICAL ENGINEERING UNIT

■ EASTERN REGIONAL OFFICE
□ WESTERN REGIONAL OFFICE

STATE OF NORTH CAROLINA DEPARTMENT OF TRANSPORTATION RALEIGH

FOAMED CONCRETE FOR ROADWAY FOUNDATION (SHEET 1 OF 3)

REVISIONS

NO.	BY	DATE	NO.	BY	DATE
1			3		
2			4		

PROJECT REFERENCE NO.	SHEET
U-4438	2-U

GEOTECHNICAL ENGINEER — ENGINEER

NORTH CAROLINA PROFESSIONAL SEAL 032672 ENGINEER MICHAEL D. VALIQUETTE

SIGNATURE DATE SIGNATURE DATE

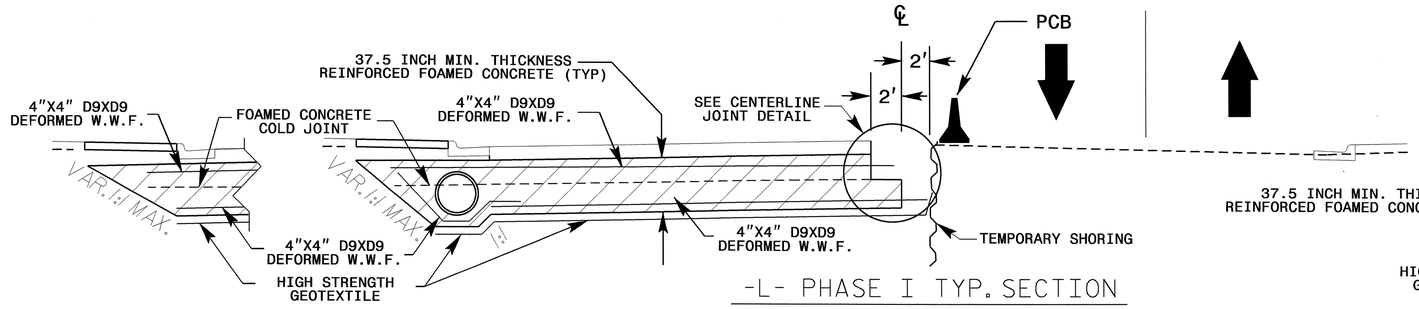

-L- PHASE I TYP. SECTION

16+07 to 28+76 +/- -L-

N.T.S.

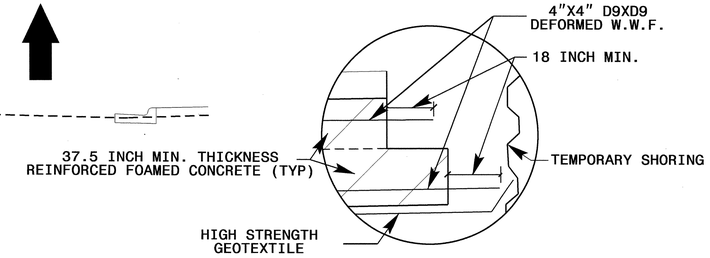

CENTERLINE FOAMED CONCRETE BUTT JOINT DETAIL

NTS

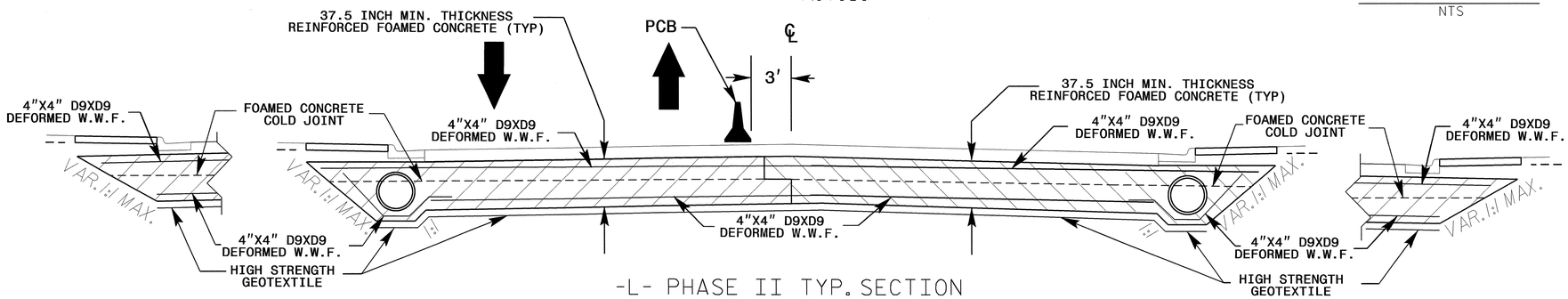

-L- PHASE II TYP. SECTION

16+07 to 28+76 +/- -L-

N.T.S.

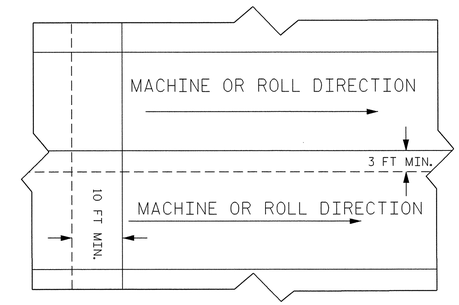

HIGH STRENGTH GEOTEXTILE FOR FOAMED CONCRETE OVERLAP DETAIL PLAN VIEW

NTS

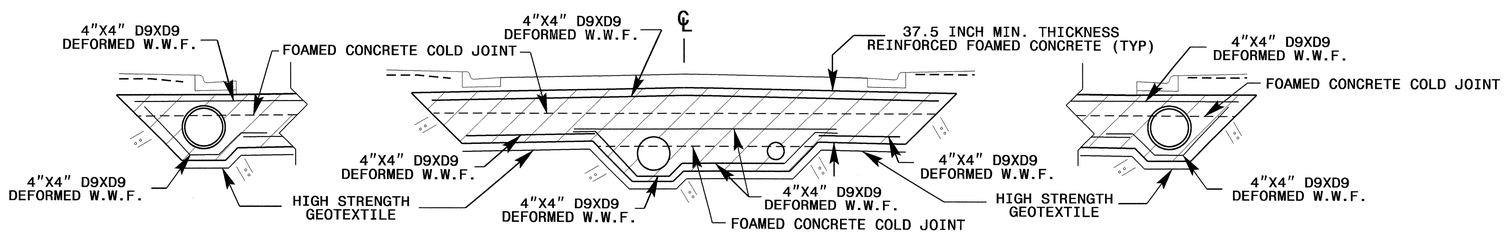

-Y- LINE TYP. SECTION

7+89 to 13+66 +/- -Y5-

N.T.S.

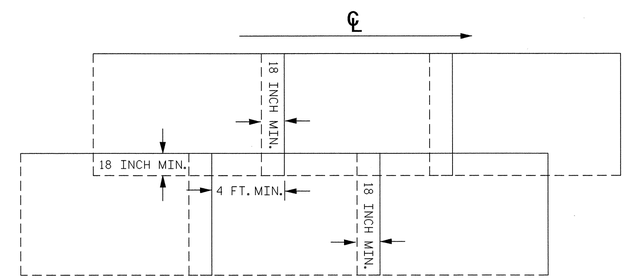

WELDED WIRE FABRIC FOR FOAMED CONCRETE OVERLAP DETAIL PLAN VIEW

NTS

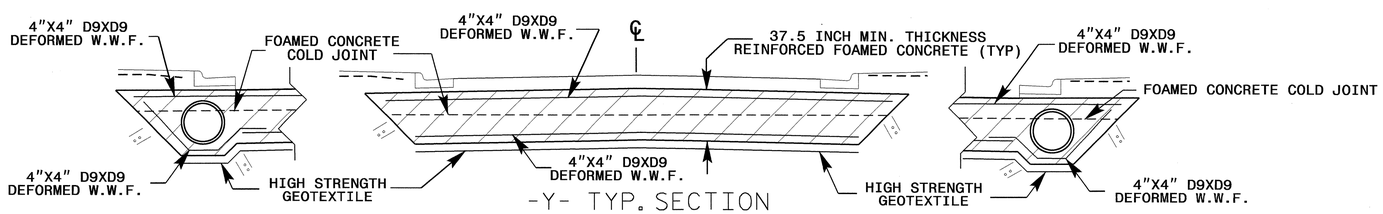

-Y- TYP. SECTION

11+09 -Y1- to -L-
-L- to 11+23 -Y2-
-L- to 11+01 -Y3-
-L- to 10+73 -Y4-
10+40 +/- to 11+40 -Y6-
9+81 to 11+76 +/- -Y7-
12+75 +/- to 13+33 -Y7-
12+90 +/- to 13+59 -Y8-

N.T.S.

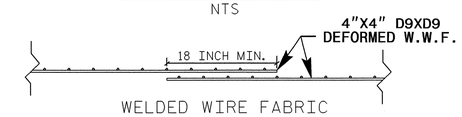

WELDED WIRE FABRIC FOR FOAMED CONCRETE OVERLAP DETAIL

NTS

NOTES

DETAILS FOR LEFT AND RIGHT LIMITS OF FOAMED CONCRETE VARY DEPENDING ON PRESENCE OF DRAINAGE PIPES AND BOXES.

DETAILS FOR LEFT AND RIGHT LIMITS WITH AND WITHOUT DRAINAGE FEATURES ARE SHOWN ON TYPICAL SECTIONS.

PREPARED BY:	MDV	DATE:	12/2010
REVIEWED BY:	KJK	DATE:	12/2010

GEOTECHNICAL ENGINEERING UNIT

■ EASTERN REGIONAL OFFICE
□ WESTERN REGIONAL OFFICE

STATE OF NORTH CAROLINA DEPARTMENT OF TRANSPORTATION

STATE OF NORTH CAROLINA
DEPARTMENT OF TRANSPORTATION
RALEIGH

FOAMED CONCRETE FOR ROADWAY FOUNDATION (SHEET 2 OF 3)

REVISIONS

NO.	BY	DATE	NO.	BY	DATE
1			3		
2			4		

PROJECT REFERENCE NO.	SHEET
U-4438	2-✓

GEOTECHNICAL ENGINEER | ENGINEER

NORTH CAROLINA PROFESSIONAL SEAL 032672 ENGINEER MICHAEL D. VALIQUETTE

SIGNATURE DATE | SIGNATURE DATE

NOTES

PLACE HIGH STRENGTH GEOTEXTILE FOR FOAMED CONCRETE WITH THE ROLL DIRECTION PARALLEL TO THE CENTERLINE OF THE ROADWAY.

ADJACENT HIGH STRENGTH GEOTEXTILE FOR FOAMED CONCRETE SHEETS SHALL BE OVERLAPPED A MINIMUM OF 10 FEET IN THE MACHINE DIRECTION AND 3 FEET IN THE CROSS-MACHINE DIRECTION. PAY QUANTITY FOR HIGH STRENGTH GEOTEXTILE FOR FOAMED CONCRETE DOES NOT INCLUDE OVERLAPS.

FOR HIGH STRENGTH GEOTEXTILE FOR FOAMED CONCRETE, SEE HIGH STRENGTH GEOTEXTILE FOR FOAMED CONCRETE SPECIAL PROVISION.

BOTTOM WELDED WIRE FABRIC (4"X4" D9XD9) SHALL BE SUPPORTED AS NECESSARY TO MAINTAIN A MINIMUM OF 6 INCHES OF CLEARANCE BETWEEN THE WELDED WIRE FABRIC AND THE GROUND SURFACE.

TERMINATE WELDED WIRE FABRIC 6 INCHES FROM SIDES OF EXCAVATION.

WELDED WIRE FABRIC SHALL BE DEFORMED AND EPOXY COATED. FOR WELDED WIRE FABRIC FOR FOAMED CONCRETE, SEE WELDED WIRE FABRIC FOR FOAMED CONCRETE SPECIAL PROVISION.

ADJACENT WELDED WIRE FABRIC PANELS SHALL BE OVERLAPPED A MINIMUM OF 18 INCHES ON ALL SIDES. PAY QUANTITY FOR WELDED WIRE FABRIC FOR FOAMED CONCRETE DOES NOT INCLUDE OVERLAPS.

WELDED WIRE FABRIC OVERLAPS PERPENDICULAR TO THE CENTERLINE SHALL BE STAGGERED BY 4 FT. MINIMUM.

THE CONTRACTOR IS RESPONSIBLE FOR DETERMINING MEANS AND METHODS OF SUPPORTING ALL PIPES, BOXES, AND WELDED WIRE FABRIC PRIOR TO AND DURING FOAMED CONCRETE PLACEMENT AND RESISTING BUOYANT FORCES DURING FOAMED CONCRETE PLACEMENT.

USE DURABLE NON-DEGRADABLE MATERIALS TO SUPPORT ALL PIPES, BOXES, AND WELDED WIRE FABRIC.

THE CONTRACTOR SHALL SEAL ALL PIPES AND BOXES TIGHT AGAINST FOAMED CONCRETE INTRUSION.

DEWATERING EXCAVATIONS, SUPPORTING ALL PIPES, BOXES, AND WELDED WIRE FABRIC PRIOR TO AND DURING FOAMED CONCRETE PLACEMENT AND RESISTING BUOYANT FORCES DURING FOAMED CONCRETE PLACEMENT AND SEALING ALL PIPES AND BOXES AGAINST FOAMED CONCRETE INTRUSION WILL BE INCIDENTAL TO THE INDIVIDUAL LINE ITEM UNIT PRICES OF THE ITEMS REQUIRING DEWATERING, SEALING, OR SUPPORTING.

FIRST LIFT OF FOAMED CONCRETE SHALL BE PLACED DIRECTLY ON HIGH STRENGTH GEOTEXTILE FOR FOAMED CONCRETE. ANY STANDING WATER SHALL BE PUMPED OFF PRIOR TO PLACING FOAMED CONCRETE DIRECTLY ON FABRIC.

FOR FOAMED CONCRETE, SEE FOAMED CONCRETE SPECIAL PROVISION.

FOAMED CONCRETE LIFTS SHALL BE A MINIMUM OF 9 INCHES AND A MAXIMUM OF 20 INCHES THICK, AND MAXIMUM LENGTH OF 200 FEET.

TOP WELDED WIRE FABRIC (4"X4" D9XD9) SHALL BE SUPPORTED AS NECESSARY TO MAINTAIN A MINIMUM OF 6 INCHES OF CLEARANCE BETWEEN THE MESH AND TOP OF FOAMED CONCRETE.

TOP LIFT OF FOAMED CONCRETE SHALL BE PLACED UP TO THE BOTTOM OF THE TYPICAL PAVEMENT SECTION. THE PAVEMENT SECTION WILL BE PLACED DIRECTLY ON THE TOP OF THE FOAMED CONCRETE.

TOP LIFT OF FOAMED CONCRETE FOR ROADWAY FOUNDATION SHALL HAVE THE SAME GRADE AND SLOPE AS THE TYPICAL PAVEMENT SECTION.

NO EQUIPMENT WILL BE ALLOWED ON THE FOAMED CONCRETE UNTIL THE TOP LIFT HAS BEEN POURED AND HAS REACHED SPECIFIED 28-DAY COMPRESSIVE STRENGTH.

FOAMED CONCRETE FOR ROADWAY FOUNDATION
ESTIMATED QUANTITIES

HIGH STRENGTH GEOTEXTILE FOR FOAMED CONCRETE.....13,000 SQ.Y. (1)
WELDED WIRE FABRIC FOR FOAMED CONCRETE.....29,000 SQ.Y. (1)
FOAMED CONCRETE.....17,000 C.Y
(1) HIGH STRENGTH GEOTEXTILE FOR FOAMED CONCRETE AND WELDED WIRE FABRIC QUANTITY DOES NOT INCLUDE OVERLAPS OR WASTE.

CONSTRUCTION SEQUENCE

PERFORM UNDERCUT IN ACCORDANCE WITH SECTION 225 OF THE NCDOT STANDARD SPECIFICATIONS. REMOVE ANY EXISTING PILING TO A MINIMUM OF 3 FEET BELOW BOTTOM OF FOAMED CONCRETE. REMOVAL OF ANY NATURAL OR MAN MADE OBSTRUCTIONS OR PILING WILL BE INCIDENTAL TO COST OF UNDERCUT.

PLACE HIGH STRENGTH GEOTEXTILE FOR FOAMED CONCRETE, BOTTOM MAT OF WELDED WIRE FABRIC FOR FOAMED CONCRETE, ALL PIPES, UTILITIES, BOXES, OR CONDUITS IN UNDERCUT EXCAVATION.

PLACE FIRST LIFT OF FOAMED CONCRETE.

PLACE MIDDLE LIFT OF FOAMED CONCRETE IF NEEDED.

PLACE TOP MAT OF WELDED WIRE FABRIC FOR FOAMED CONCRETE.

PLACE TOP LIFT OF FOAMED CONCRETE.

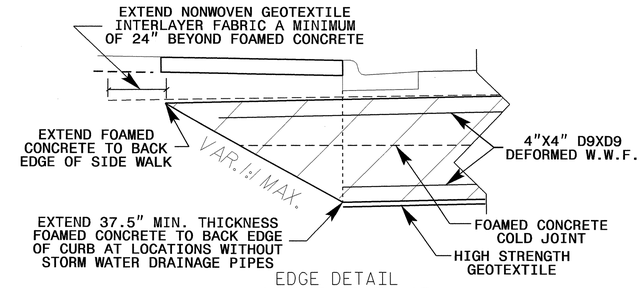

EDGE DETAIL WITHOUT DRAINAGE
NTS

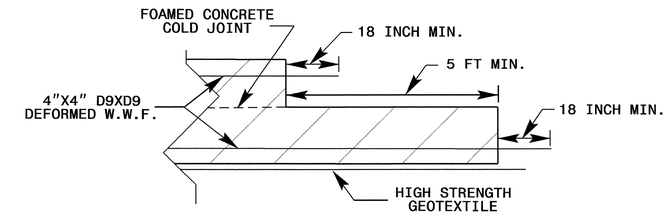

FOAMED CONCRETE JOINT DETAIL PERPENDICULAR TO CENTERLINE
NTS

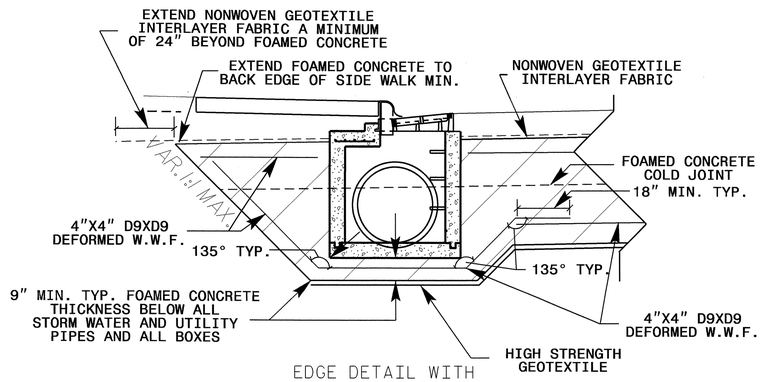

EDGE DETAIL WITH DRAINAGE BOX
NTS

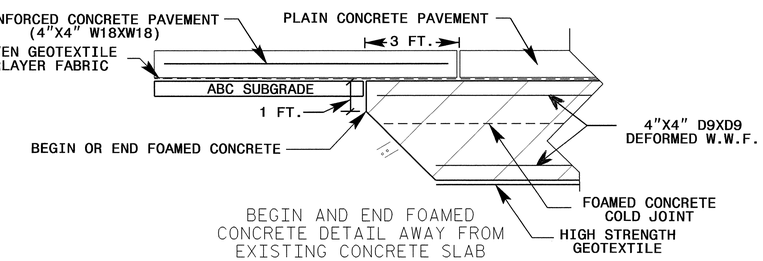

BEGIN AND END FOAMED CONCRETE DETAIL AWAY FROM EXISTING CONCRETE SLAB
NTS

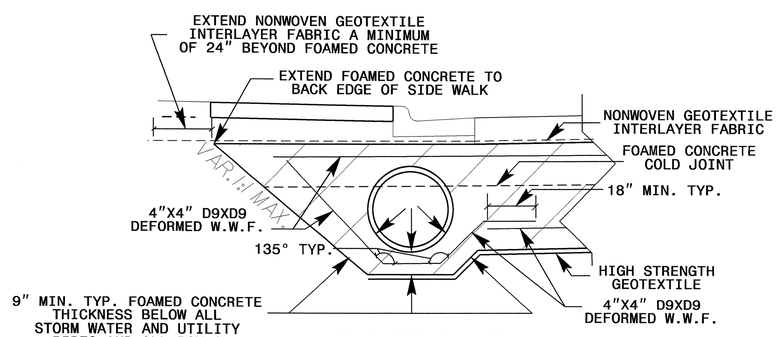

EDGE DETAIL WITH DRAINAGE PIPE
NTS

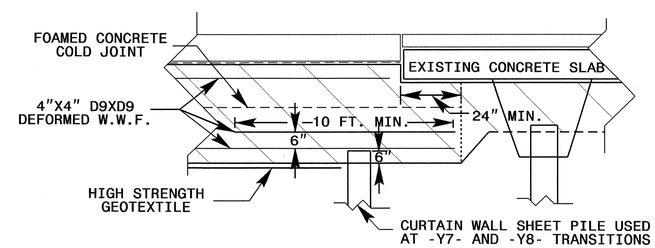

BEGIN AND END FOAMED CONCRETE FOR ROADWAY FOUNDATION DETAIL AT EXISTING CONCRETE SLAB
NTS

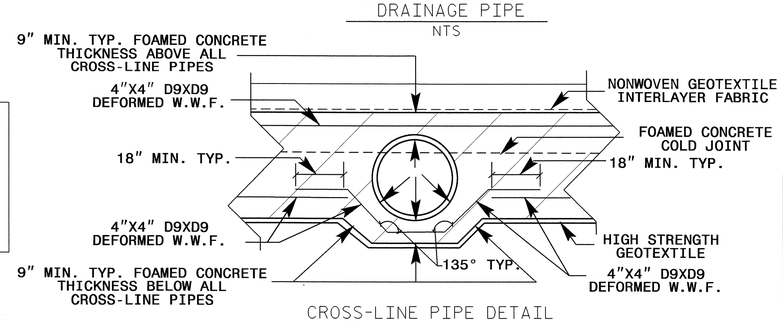

CROSS-LINE PIPE DETAIL
NTS

PREPARED BY: MDV	DATE: 1/2011
REVIEWED BY: KJK	DATE: 1/2011

GEOTECHNICAL ENGINEERING UNIT

■ EASTERN REGIONAL OFFICE
□ WESTERN REGIONAL OFFICE

STATE OF NORTH CAROLINA DEPARTMENT OF TRANSPORTATION

STATE OF NORTH CAROLINA
DEPARTMENT OF TRANSPORTATION
RALEIGH

FOAMED CONCRETE FOR ROADWAY FOUNDATION (SHEET 3 OF 3)

REVISIONS

NO.	BY	DATE	NO.	BY	DATE
1			3		
2			4		

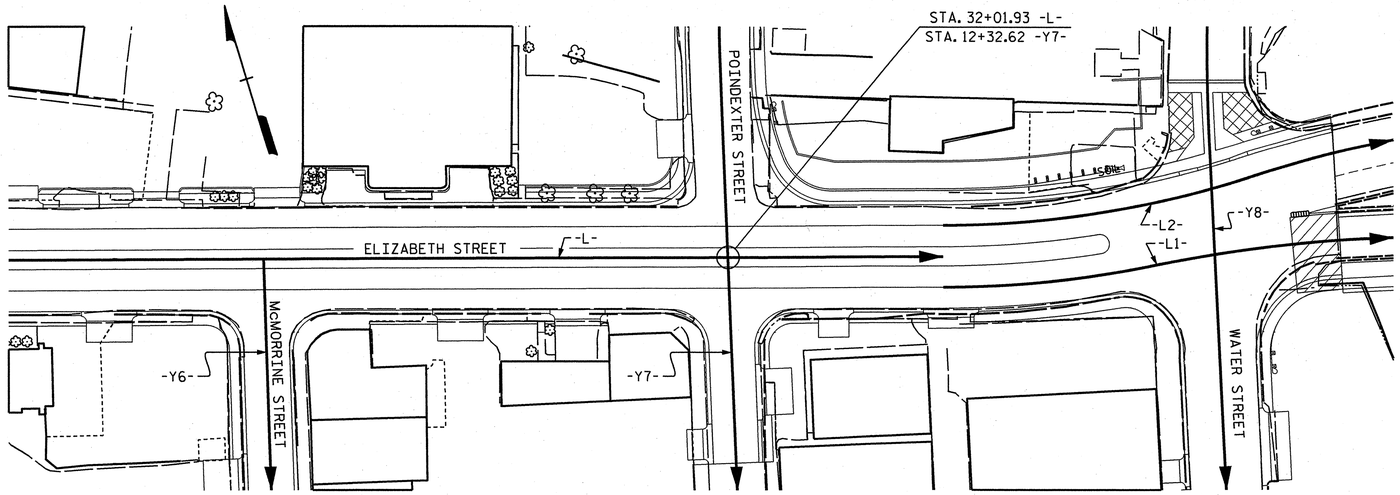

LOCATION SKETCH

FOR UTILITY INFORMATION, SEE UTILITY PLANS AND SPECIAL PROVISIONS.

NOTES

REMOVE EXISTING WEARING SURFACE AND 1.5" OF EXISTING CONCRETE SLAB. (SEE ROADWAY PLANS)

BOTTOM OF OBSERVATION TUBES TO TERMINATE AT THE INTERSECTION OF BOTTOM OF EXISTING SLAB AND FOAM CONCRETE.

FOR ROADWAY MICROPILES, SEE MICROPILES SPECIAL PROVISION.

DESIGN ROADWAY MICROPILES FOR A FACTORED COMPRESSION RESISTANCE OF 25 TONS PER PILE. DESIGN THE BOND LENGTH TO PROVIDE THE REQUIRED FACTORED RESISTANCE.

PERMANENT CASINGS WITH A MINIMUM OUTSIDE DIAMETER OF 8.625 INCHES ARE REQUIRED FOR ROADWAY MICROPILES. INSTALL ROADWAY MICROPILE PERMANENT CASINGS TO A TIP ELEVATION NO HIGHER THAN -52 FT.

USE MINIMUM 0.25 INCH WALL THICKNESS PERMANENT CASINGS WITH MINIMUM YIELD STRENGTH OF 50 KSI WITHOUT JOINTS ALONG THE PERMANENT CASING LENGTH FOR ROADWAY MICROPILES OR MINIMUM 0.5 INCH WALL THICKNESS PERMANENT CASINGS WITH A MINIMUM YIELD STRENGTH OF 80 KSI WITH THREADED JOINTS. DO NOT LOCATE THREADED CASING JOINTS WITHIN THE TOP TEN (10) FEET FOR ALL ROADWAY MICROPILES.

FULL LENGTH CENTRAL REINFORCING BAR IS REQUIRED FOR ALL ROADWAY MICROPILES.

FOR CONCRETE OVERLAY, SEE ROADWAY PLANS.

DEMONSTRATION ROADWAY MICROPILES ARE REQUIRED AS SHOWN ON PLANS.

VERIFICATION LOAD TESTS ARE REQUIRED FOR ALL DEMONSTRATION ROADWAY MICROPILES. LOAD TEST DEMONSTRATION ROADWAY MICROPILES TO A MINIMUM OF 36 TONS FOR VERIFICATION TESTS.

PROOF LOAD TESTS ARE REQUIRED FOR FIFTEEN (15) PRODUCTION ROADWAY MICROPILES TO BE SELECTED BY THE ENGINEER. LOAD TEST EACH SELECTED PILE TO 25 TONS FOR PROOF TESTS.

ROADWAY MICROPILE VERIFICATION LOAD TESTS AND PROOF LOAD TESTS MAY BE EITHER COMPRESSION OF TENSION TESTS AT THE CONTRACTOR'S DISCRETION.

CONSTRUCT ROADWAY MICROPILES THROUGH CORE HOLES IN THE EXISTING CONCRETE ROADWAY SLAB A MINIMUM OF 10.5 INCHES IN DIAMETER BUT NO LARGER THAN 12 INCHES IN DIAMETER.

FOR EROSION CONTROL MEASURES, SEE EROSION CONTROL PLANS.

FOR CRANE SAFETY, SEE SPECIAL PROVISIONS.

FOR OTHER DESIGN DATA AND GENERAL NOTES, SEE SHEET 2-Z.

FOR GROUT FOR STRUCTURES, SEE SPECIAL PROVISIONS.

BILL OF MATERIAL

SEGMENT 1 SHOWN (2, 3, & 6 SIMILAR)

BAR	NO.	SIZE	TYPE	LENGTH	WEIGHT
✳A1	199	#4	STR	36'-8"	4874
✳B1	296	#4	STR	26'-5"	5223
✳C1	840	#4	STR	4'-10"	2712
✳U1	168	#4	1	6'-5"	720

✳EPOXY COATED REINFORCING STEEL 13529 LBS.

MICROPILES No: 42 EACH

SEGMENT 4

BAR	NO.	SIZE	TYPE	LENGTH	WEIGHT
✳A2	206	#4	STR	30'-0"	4128
✳A4	8	#4	STR	17'-8"	94
✳B3	236	#4	STR	26'-7"	4191
✳B5	63	#4	STR	1'-4"	56
✳C1	960	#4	STR	4'-10"	3100
✳D1	62	#6	STR	3'-0"	279
✳U1	192	#4	1	6'-5"	823

✳EPOXY COATED REINFORCING STEEL 12671 LBS.

MICROPILES No: 48 EACH

SEGMENT 5

BAR	NO.	SIZE	TYPE	LENGTH	WEIGHT
✳A1	179	#4	STR	36'-8"	4384
✳A3	14	#4	STR	30'-0"	281
✳B2	296	#4	STR	23'-11"	4729
✳B4	117	#4	STR	3'-5"	267
✳C1	720	#4	STR	4'-10"	2325
✳D1	118	#6	STR	3'-0"	532
✳U1	144	#4	1	6'-5"	617

✳EPOXY COATED REINFORCING STEEL 13135 LBS.

MICROPILES No: 36 EACH

BAR TYPE

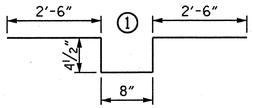

BAR DIMENSION IS OUT TO OUT

TOTAL BILL OF MATERIAL

EPOXY COATED REINFORCING STEEL	79922	LBS.
ROADWAY MICROPILES	NO.: 255	EACH
ROADWAY MICROPILE VERIFICATION TESTS	NO.: 3	EACH
ROADWAY MICROPILE PROOF TESTS	NO.: 15	EACH
OBSERVATION TUBES	NO.: 20	EACH

PROJECT NO. U-4438
PASQUOTANK COUNTY
STATION: 32+01.93 -L-
12+32.62 -Y7-

SHEET 1 OF 3

STATE OF NORTH CAROLINA
DEPARTMENT OF TRANSPORTATION
RALEIGH

ROADWAY SLAB ON PILES

NORTH CAROLINA PROFESSIONAL SEAL 12929 ENGINEER NORMAN NEBLETT BRADDOCK, JR.
Norman Neblett Braddock, Jr. 12/14/10

NORTH CAROLINA PROFESSIONAL SEAL 22005 ENGINEER A.K. KEITH PASCHAL
12/14/10

REVISIONS						SHEET NO.
NO.	BY:	DATE:	NO.	BY:	DATE:	2-W
1			3			
2			4			

DRAWN BY : B.N. GRADY DATE : 11/18/10
CHECKED BY : A.K. PASHCHAL DATE : 12/13/10

15-DEC-2010 11:03
R:\Structures\bngrady\Microstation\U4438_sd_PILES.dgn
kpaschal

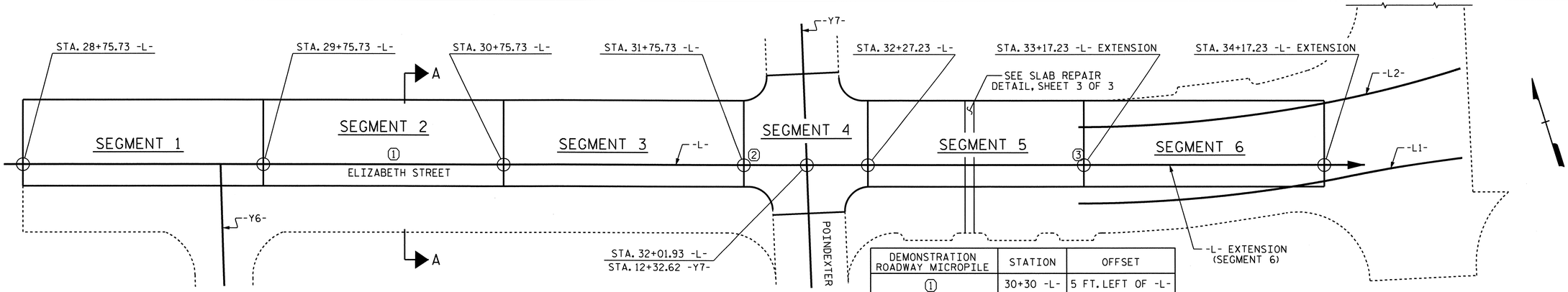

DEMONSTRATION ROADWAY MICROPILE	STATION	OFFSET
1	30+30 -L-	5 FT. LEFT OF -L-
2	31+80 -L-	5 FT. LEFT OF -L-
3	33+15 -L-	5 FT. LEFT OF -L-

ROADWAY LAYOUT

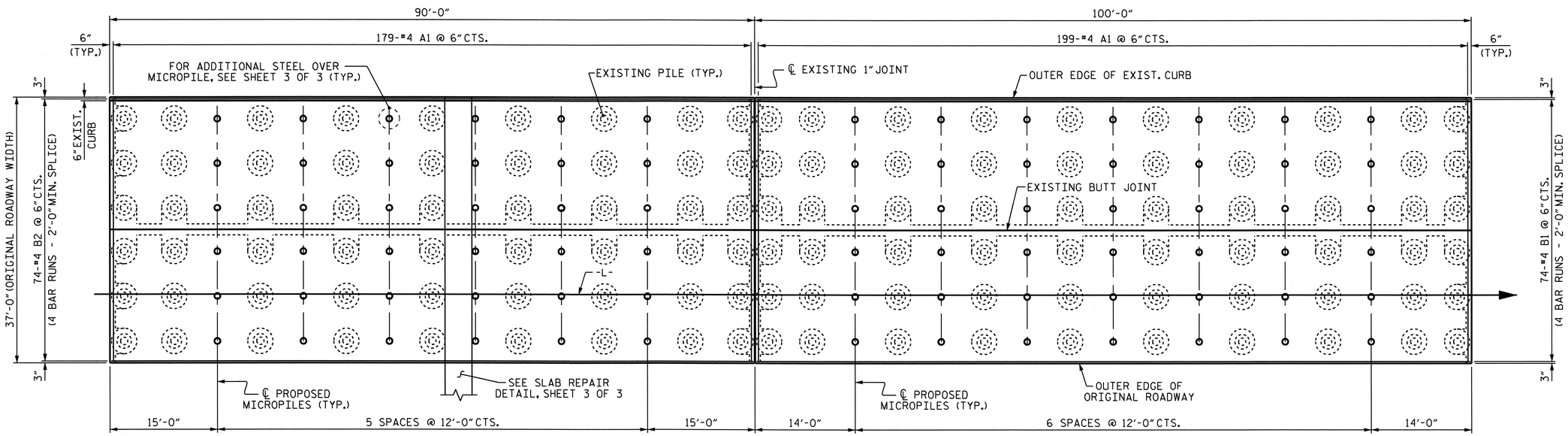

PLAN OF SEGMENT 5

PLAN OF SEGMENTS 1, 2, 3, & 6

(SEE SHEET 3 OF 3 FOR PLAN OF SEGMENT 4)

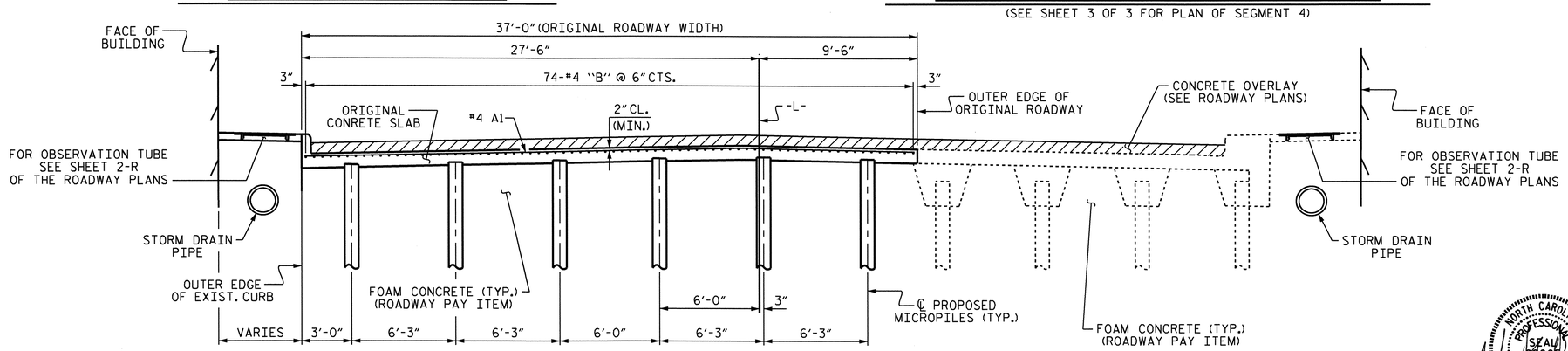

SECTION A-A

(THRU PROPOSED MICROPILES)

(FOR PILE & SLAB DETAILS, SEE SHEET 3 OF 3)

PROJECT NO. U-4438

PASQUOTANK COUNTY

STATION: 32+01.93 -L-

SHEET 2 OF 3

STATE OF NORTH CAROLINA
DEPARTMENT OF TRANSPORTATION
RALEIGH

ROADWAY SLAB ON PILES

NORTH CAROLINA PROFESSIONAL SEAL 22005 ENGINEER A. KEITH PASCHAL

5/3/11

REVISIONS						SHEET NO.
NO.	BY:	DATE:	NO.	BY:	DATE:	2-X
1			3			
2			4			

DRAWN BY : B.N. GRADY DATE : 11/18/10

CHECKED BY : A.K. PASCHAL DATE : 12/13/10

04-MAY-2011 08:08
R:\Structures\opulgcerver\microstation\U4438_sd_PILES.dgn
opulgcerver

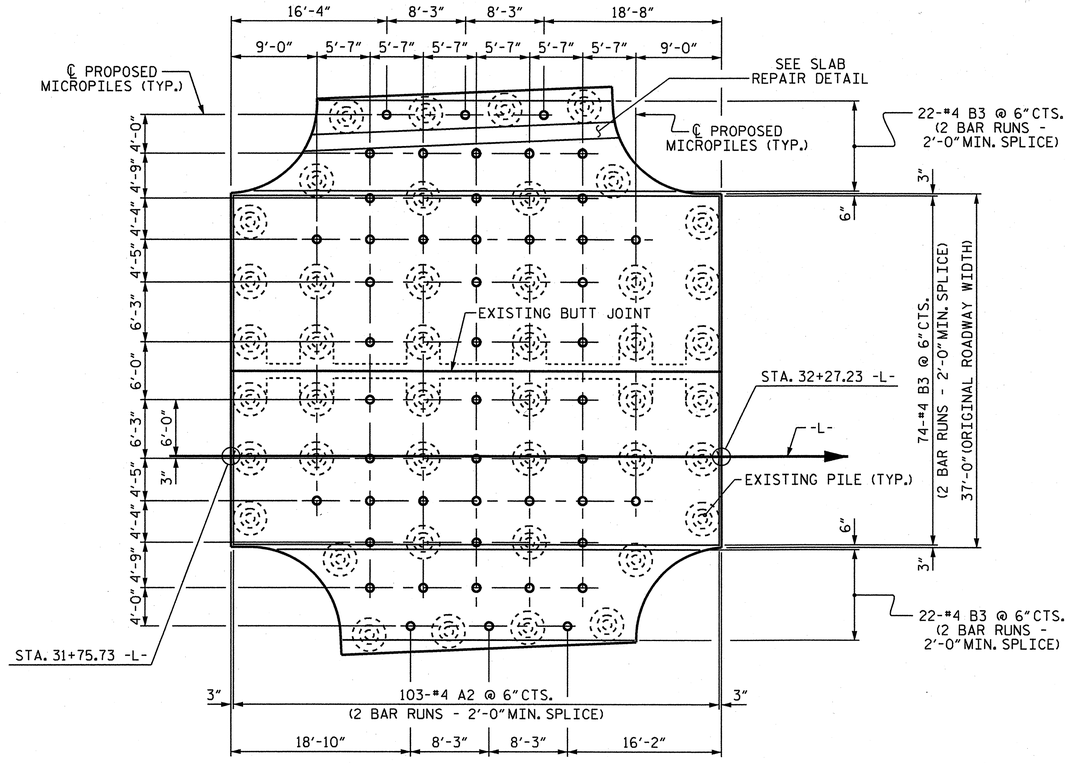

PLAN OF SEGMENT 4

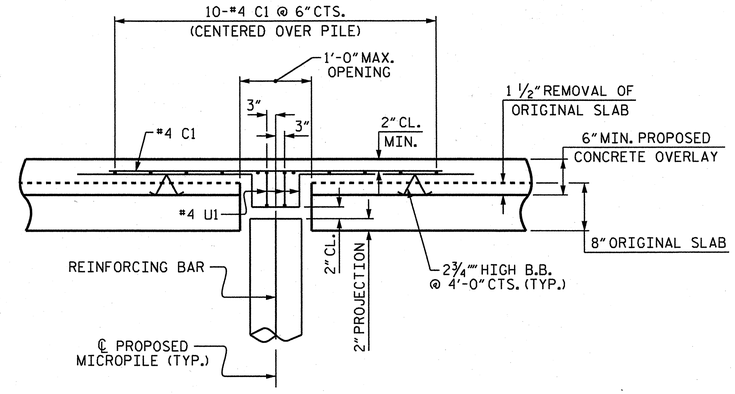

ELEVATION

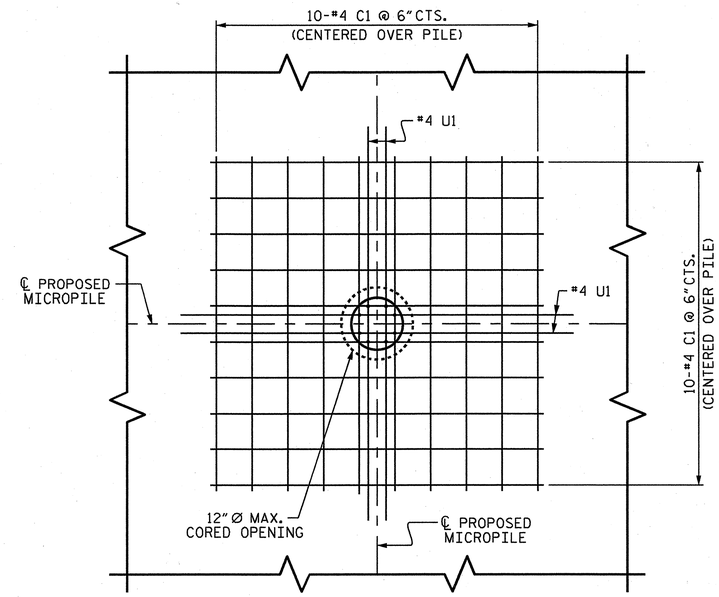

PLAN

PILE & SLAB DETAILS

(TYP. EACH MICROPILE)
(#4 "A" & "B" BARS NOT SHOWN FOR CLARITY)
(#4 C1 BARS MAY BE SHIFTED SLIGHTLY TO AVOID #4 "A" & "B" BARS)

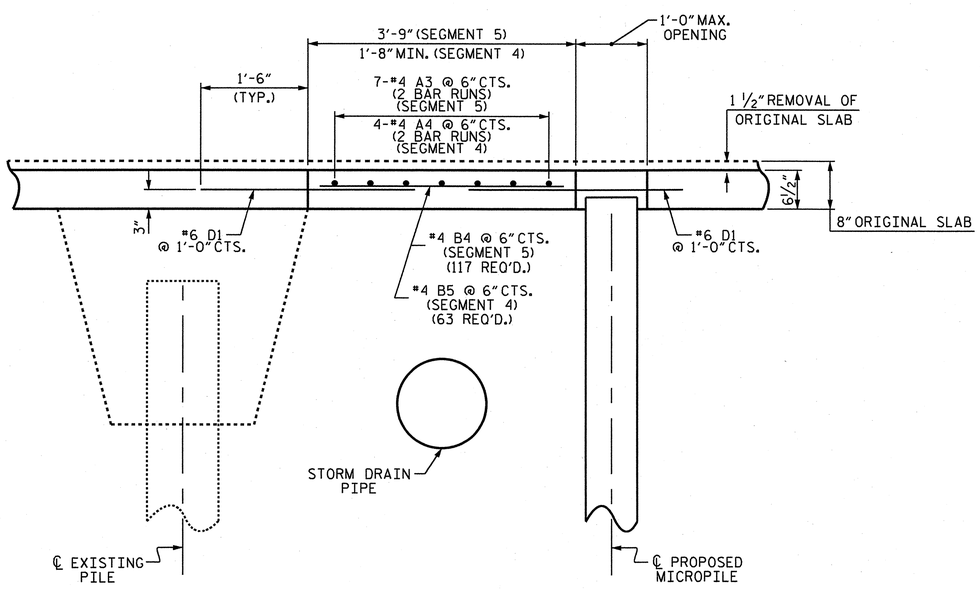

SLAB REPAIR DETAIL

PROJECT NO. U-4438
PASQUOTANK COUNTY
STATION: 32+01.93 -L-

SHEET 3 OF 3

STATE OF NORTH CAROLINA
DEPARTMENT OF TRANSPORTATION
RALEIGH

ROADWAY SLAB ON PILES

NORTH CAROLINA PROFESSIONAL SEAL 22005 ENGINEER A.K. KEITH PASCHAL
12/14/10

REVISIONS						SHEET NO.
NO.	BY:	DATE:	NO.	BY:	DATE:	2-Y
1			3			
2			4			

DRAWN BY : B.N. GRADY DATE : 11/18/10
CHECKED BY : A.K. PASCHAL DATE : 12/13/10

15-DEC-2010 10:25
Z:\Structures\bngrady\Microstation\U4438_sd_PILES.dgn
bngrady

STANDARD NOTES

DESIGN DATA:

SPECIFICATIONS	A.A.S.H.T.O. (CURRENT)
LIVE LOAD	SEE PLANS
IMPACT ALLOWANCE	SEE A.A.S.H.T.O.
STRESS IN EXTREME FIBER OF	
STRUCTURAL STEEL - AASHTO M270 GRADE 36	20,000 LBS. PER SQ. IN.
- AASHTO M270 GRADE 50W	27,000 LBS. PER SQ. IN.
- AASHTO M270 GRADE 50	27,000 LBS. PER SQ. IN.
REINFORCING STEEL IN TENSION	
GRADE 60	24,000 LBS. PER SQ. IN.
CONCRETE IN COMPRESSION	1,200 LBS. PER SQ. IN.
CONCRETE IN SHEAR	SEE A.A.S.H.T.O.
STRUCTURAL TIMBER - TREATED OR	
UNTREATED - EXTREME FIBER STRESS	1,800 LBS. PER SQ. IN.
COMPRESSION PERPENDICULAR TO GRAIN OF TIMBER	375 LBS. PER SQ. IN.
EQUIVALENT FLUID PRESSURE OF EARTH	30 LBS. PER CU. FT. (MINIMUM)

MATERIAL AND WORKMANSHIP:

EXCEPT AS MAY OTHERWISE BE SPECIFIED ON PLANS OR IN THE SPECIAL PROVISIONS, ALL MATERIAL AND WORKMANSHIP SHALL BE IN ACCORDANCE WITH THE 2006 "STANDARD SPECIFICATIONS FOR ROADS AND STRUCTURES" OF THE N. C. DEPARTMENT OF TRANSPORTATION.

STEEL SHEET PILING FOR PERMANENT OR TEMPORARY APPLICATIONS SHALL BE HOT ROLLED.

CONCRETE:

UNLESS OTHERWISE REQUIRED ON PLANS, CLASS A CONCRETE SHALL BE USED FOR ALL PORTIONS OF ALL STRUCTURES WITH THE EXCEPTION THAT: CLASS AA CONCRETE SHALL BE USED IN BRIDGE SUPERSTRUCTURES, ABUTMENT BACKWALLS, AND APPROACH SLABS; AND CLASS B CONCRETE SHALL BE USED FOR SLOPE PROTECTION AND RIP RAP.

CONCRETE CHAMFERS:

UNLESS OTHERWISE NOTED ON THE PLANS, ALL EXPOSED CORNERS ON STRUCTURES SHALL BE CHAMFERED 3/4" WITH THE FOLLOWING EXCEPTIONS: TOP CORNERS OF CURBS MAY BE ROUNDED TO 1-1/2" RADIUS WHICH IS BUILT INTO CURB FORMS; CORNERS OF TRANSVERSE FLOOR EXPANSION JOINTS SHALL BE ROUNDED WITH A 1/4" FINISHING TOOL UNLESS OTHERWISE REQUIRED ON PLANS; AND CORNERS OF EXPANSION JOINTS IN THE ROADWAY FACES AND TOPS OF CURBS AND SIDEWALKS SHALL BE ROUNDED TO A 1/4" RADIUS WITH A FINISHING STONE OR TOOL UNLESS OTHERWISE REQUIRED ON PLANS.

DOWELS:

DOWELS WHEN INDICATED ON PLANS AS FOR CULVERT EXTENSIONS, SHALL BE EMBEDDED AT LEAST 12" INTO THE OLD CONCRETE AND GROUTED INTO PLACE WITH 1:2 CEMENT MORTAR.

ALLOWANCE FOR DEAD LOAD DEFLECTION, SETTLEMENT, ETC. IN CASTING SUPERSTRUCTURES:

BRIDGES SHALL BE BUILT ON THE GRADE OR VERTICAL CURVE SHOWN ON PLANS. SLABS, CURBS AND PARAPETS SHALL CONFORM TO THE GRADE OR CURVE.

ALL DIMENSIONS WHICH ARE GIVEN IN SECTION AND ARE AFFECTED BY DEAD LOAD DEFLECTIONS ARE DIMENSIONS AT CENTER LINE OF BEARING UNLESS OTHERWISE NOTED ON PLANS. IN SETTING FORMS FOR STEEL BEAM BRIDGES AND PRESTRESSED CONCRETE GIRDER BRIDGES, ADJUSTMENTS SHALL BE MADE DUE TO THE DEAD LOAD DEFLECTIONS FOR THE ELEVATIONS SHOWN. WHERE BLOCKS ARE SHOWN OVER BEAMS FOR BUILDING UP TO THE SLAB, THE VERTICAL DIMENSIONS OF THE BLOCKS SHALL BE ADJUSTED BETWEEN BEARINGS TO COMPENSATE FOR DEAD LOAD DEFLECTIONS, VERTICAL CURVE ORDINATE, AND ACTUAL BEAM CAMBER. WHERE BOTTOM OF SLAB IS IN LINE WITH BOTTOM OF TOP FLANGES, DEPTH OF SLAB BETWEEN BEARINGS SHALL BE ADJUSTED TO COMPENSATE FOR DEAD LOAD DEFLECTION, VERTICAL CURVE ORDINATE, AND ACTUAL BEAM CAMBER.

IN SETTING FALSEWORK AND FORMS FOR REINFORCED CONCRETE SPANS, AN ALLOWANCE SHALL BE MADE FOR DEAD LOAD DEFLECTIONS, SETTLEMENT OF FALSEWORK, AND PERMANENT CAMBER WHICH SHALL BE PROVIDED FOR IN ADDITION TO THE ELEVATIONS SHOWN. AFTER REMOVAL OF THE FALSEWORK, THE FINISHED STRUCTURES SHALL CONFORM TO THE PROFILE AND ELEVATIONS SHOWN ON THE PLANS AND CONSTRUCTION ELEVATIONS FURNISHED BY THE ENGINEER.

DETAILED DRAWINGS FOR FALSEWORK OR FORMS FOR BRIDGE SUPERSTRUCTURE AND ANY STRUCTURE OR PARTS OF A STRUCTURE AS NOTED ON THE PLANS SHALL BE SUBMITTED TO THE ENGINEER FOR APPROVAL BEFORE CONSTRUCTION OF THE FALSEWORK OR FORMS IS STARTED.

REINFORCING STEEL:

ALL REINFORCING STEEL SHALL BE DEFORMED. DIMENSIONS RELATIVE TO PLACEMENT OF REINFORCING ARE TO CENTERS OF BARS UNLESS OTHERWISE INDICATED IN THE PLANS. DIMENSIONS ON BAR DETAILS ARE TO CENTERS OF BARS OR ARE OUT TO OUT AS INDICATED ON PLANS.

WIRE BAR SUPPORTS SHALL BE PROVIDED FOR REINFORCING STEEL WHERE INDICATED ON THE PLANS. WHEN BAR SUPPORT PIECES ARE PLACED IN CONTINUOUS LINES, THEY SHALL BE SO PLACED THAT THE ENDS OF THE SUPPORTING WIRES SHALL BE LAPPED TO LOCK LEGS ON ADJOINING PIECES.

STRUCTURAL STEEL:

AT THE CONTRACTOR'S OPTION, HE MAY SUBSTITUTE 7/8" Ø SHEAR STUDS FOR THE 3/4" Ø STUDS SPECIFIED ON THE PLANS. THIS SUBSTITUTION SHALL BE MADE AT THE RATE OF 3 - 7/8" Ø STUDS FOR 4 - 3/4" Ø STUDS, AND STUD SPACING CHANGES SHALL BE MADE AS NECESSARY TO PROVIDE THE SAME EQUIVALENT NUMBER OF 7/8" Ø STUDS ALONG THE BEAM AS SHOWN FOR 3/4" Ø STUDS BASED ON THE RATIO OF 3 - 7/8" Ø STUDS FOR 4 - 3/4" Ø STUDS. STUDS OF THE LENGTH SPECIFIED ON THE PLANS MUST BE PROVIDED. THE MAXIMUM SPACING SHALL BE 2'-0".

EXCEPT AT THE INTERIOR SUPPORTS OF CONTINUOUS BEAMS WHERE THE COVER PLATE IS IN CONTACT WITH BEARING PLATE, THE CONTRACTOR MAY, AT HIS OPTION, SUBSTITUTE FOR THE COVER PLATES DESIGNATED ON THE PLANS COVER PLATES OF THE EQUIVALENT AREA PROVIDED THESE PLATES ARE AT LEAST 5/16" IN THICKNESS AND DO NOT EXCEED A WIDTH EQUAL TO THE FLANGE WIDTH LESS 2" OR A THICKNESS EQUAL TO 2 TIMES THE FLANGE THICKNESS. THE SIZE OF FILLET WELDS SHALL CONFORM TO THE REQUIREMENTS OF THE CURRENT ANSI/AASHTO/AWS "BRIDGE WELDING CODE". ELECTROSLAG WELDING WILL NOT BE PERMITTED.

WITH THE SOLE EXCEPTION OF EDGES AT SURFACES WHICH BEAR ON OTHER SURFACES, ALL SHARP EDGES AND ENDS OF SHAPES AND PLATES SHALL BE SLIGHTLY ROUNDED BY SUITABLE MEANS TO A RADIUS OF APPROXIMATELY 1/16 INCH OR EQUIVALENT FLAT SURFACE AT A SUITABLE ANGLE PRIOR TO PAINTING, GALVANIZING, OR METALLIZING.

HANDRAILS AND POSTS:

METAL STANDARDS AND FACES OF THE CONCRETE END POSTS FOR THE METAL RAIL SHALL BE SET NORMAL TO THE GRADE OF THE CURB, UNLESS OTHERWISE SHOWN ON PLANS. THE METAL RAIL AND TOPS OF CONCRETE POSTS USED WITH THE ALUMINUM RAIL SHALL BE BUILT PARALLEL TO THE GRADE OF THE CURB.

METAL HANDRAILS SHALL BE IN ACCORDANCE WITH THE PLANS. RAILS SHALL BE AS MANUFACTURED FOR BRIDGE RAILING. CASTINGS SHALL BE OF A UNIFORM APPEARANCE. FINS AND OTHER DEFORMATIONS RESULTING FROM CASTING OR OTHERWISE SHALL BE REMOVED IN A MANNER SO THAT A UNIFORM COLORING OF THE COMPLETED CASTING SHALL BE OBTAINED. CASTINGS WITH DISCOLORATIONS OR OF NON-UNIFORM COLORING WILL NOT BE ACCEPTED. CERTIFIED MILL REPORTS ARE REQUIRED FOR METAL RAILS AND POSTS.

SPECIAL NOTES:

GENERALLY, IN CASE OF DISCREPANCY, THIS STANDARD SHEET OF NOTES SHALL GOVERN OVER THE SPECIFICATIONS, BUT THE REMAINDER OF THE PLANS SHALL GOVERN OVER NOTES HEREON, AND SPECIAL PROVISIONS SHALL GOVERN OVER ALL. SEE SPECIFICATIONS ARTICLE 105-4.

SHEET 2-Z

ENGLISH

JANUARY, 1990

PROJECT REFERENCE NO.	SHEET
U-4438	2-AA

GEOTECHNICAL ENGINEER

NORTH CAROLINA PROFESSIONAL SEAL 032672 ENGINEER MICHAEL D. VALIQUETTE

SIGNATURE DATE

ENGINEER

SIGNATURE DATE

NOTES

UNDERCUT EXISTING GROUND SURFACE BELOW NEW APPROACH SLAB AS NECESSARY TO PROVIDE A MINIMUM FOAMED CONCRETE THICKNESS OF 3 FEET.

CUT OFF EXISTING TIMBER PILES 9 INCHES ABOVE BOTTOM OF FOAMED CONCRETE. EXISTING TIMBER PILES ARE NOT SHOWN.

FOR ROADWAY MICROPILES, SEE MICROPILES SPECIAL PROVISION.

ROADWAY MICROPILE LAYOUT BELOW APPROACH SLAB IS TENTATIVE AND MAY BE FIELD ADJUSTED BY THE ENGINEER BASED ON ACTUAL SITE CONDITIONS.

DESIGN ROADWAY MICROPILES FOR A FACTORED COMPRESSION RESISTANCE OF 25 TONS PER PILE. DESIGN THE BOND LENGTH TO PROVIDE THE REQUIRED FACTORED RESISTANCE.

PERMANENT CASINGS WITH A MINIMUM OUTSIDE DIAMETER OF 8.625 INCHES ARE REQUIRED FOR ROADWAY MICROPILES. INSTALL ROADWAY MICROPILE PERMANENT CASINGS TO A TIP ELEVATION NO HIGHER THAN -52 FT.

USE MINIMUM 0.25 INCH WALL THICKNESS PERMANENT CASINGS WITH MINIMUM YIELD STRENGTH OF 50 KSI WITHOUT JOINTS ALONG THE PERMANENT CASING LENGTH FOR ROADWAY MICROPILES OR MINIMUM 0.5 INCH WALL THICKNESS PERMANENT CASINGS WITH A MINIMUM YIELD STRENGTH OF 80 KSI WITH THREADED JOINTS. DO NOT LOCATE THREADED CASING JOINTS WITHIN THE TOP TEN (10) FEET FOR ALL ROADWAY MICROPILES.

FULL LENGTH CENTRAL REINFORCING BAR IS REQUIRED FOR ALL ROADWAY MICROPILES.

CONSTRUCT ROADWAY DEMONSTRATION MICROPILES AND VERIFICATION TESTING AS SHOWN THE "ROADWAY SLAB ON PILES" PLAN SHEETS PRIOR TO BEGINNING PRODUCTION ROADWAY MICROPILES.

WELDED WIRE FABRIC (4"X4" D9XD9) SHALL BE SUPPORTED AS NECESSARY TO MAINTAIN A MINIMUM OF 9 INCHES OF CLEARANCE BETWEEN THE WELDED WIRE FABRIC AND THE GROUND SURFACE. SUPPORT OF WELDED WIRE FABRIC WILL BE INCIDENTAL TO THE UNIT COST OF WELDED WIRE FABRIC FOR FOAMED CONCRETE.

TERMINATE WELDED WIRE FABRIC 3 INCHES FROM SIDES EXISTING BRIDGE END BENT OR 6 INCHES FROM SIDES OF EXCAVATIONS.

ADJACENT WELDED WIRE FABRIC PANELS SHALL BE OVERLAPPED A MINIMUM OF 18 INCHES ON ALL SIDES. PAY QUANTITY FOR WELDED WIRE FABRIC FOR FOAMED CONCRETE DOES NOT INCLUDE OVERLAPS.

WELDED WIRE FABRIC SHALL BE DEFORMED AND EPOXY COATED. FOR WELDED WIRE FABRIC FOR FOAMED CONCRETE, SEE WELDED WIRE FABRIC FOR FOAMED CONCRETE SPECIAL PROVISION.

FOR FOAMED CONCRETE, SEE FOAMED CONCRETE SPECIAL PROVISION.

FOAMED CONCRETE LIFTS SHALL BE A MINIMUM OF 9 INCHES AND A MAXIMUM OF 20 INCHES THICK.

THE CONTRACTOR SHALL PREVENT FOAMED CONCRETE FROM FLOWING INTO RIVER WATER.

TOP LIFT OF FOAMED CONCRETE SHALL BE PLACED UP TO THE BOTTOM OF THE NEW APPROACH SLAB. THE NEW APPROACH SLAB WILL BE PLACED DIRECTLY ON TOP OF THE NONWOVEN GEOTEXTILE INTERLAYER FABRIC.

TOP LIFT OF FOAMED CONCRETE SHALL HAVE THE SAME GRADE AND SLOPE AS THE NEW APPROACH SLAB.

NO EQUIPMENT WILL BE ALLOWED ON THE FOAMED CONCRETE UNTIL THE TOP LIFT HAS BEEN POURED AND HAS REACHED SPECIFIED 28-DAY COMPRESSIVE STRENGTH.

EXTEND NONWOVEN GEOTEXTILE INTERLAYER FABRIC A MINIMUM OF 24 INCHES BEYOND EDGE OF FOAMED CONCRETE RIGHT OF -L1-.

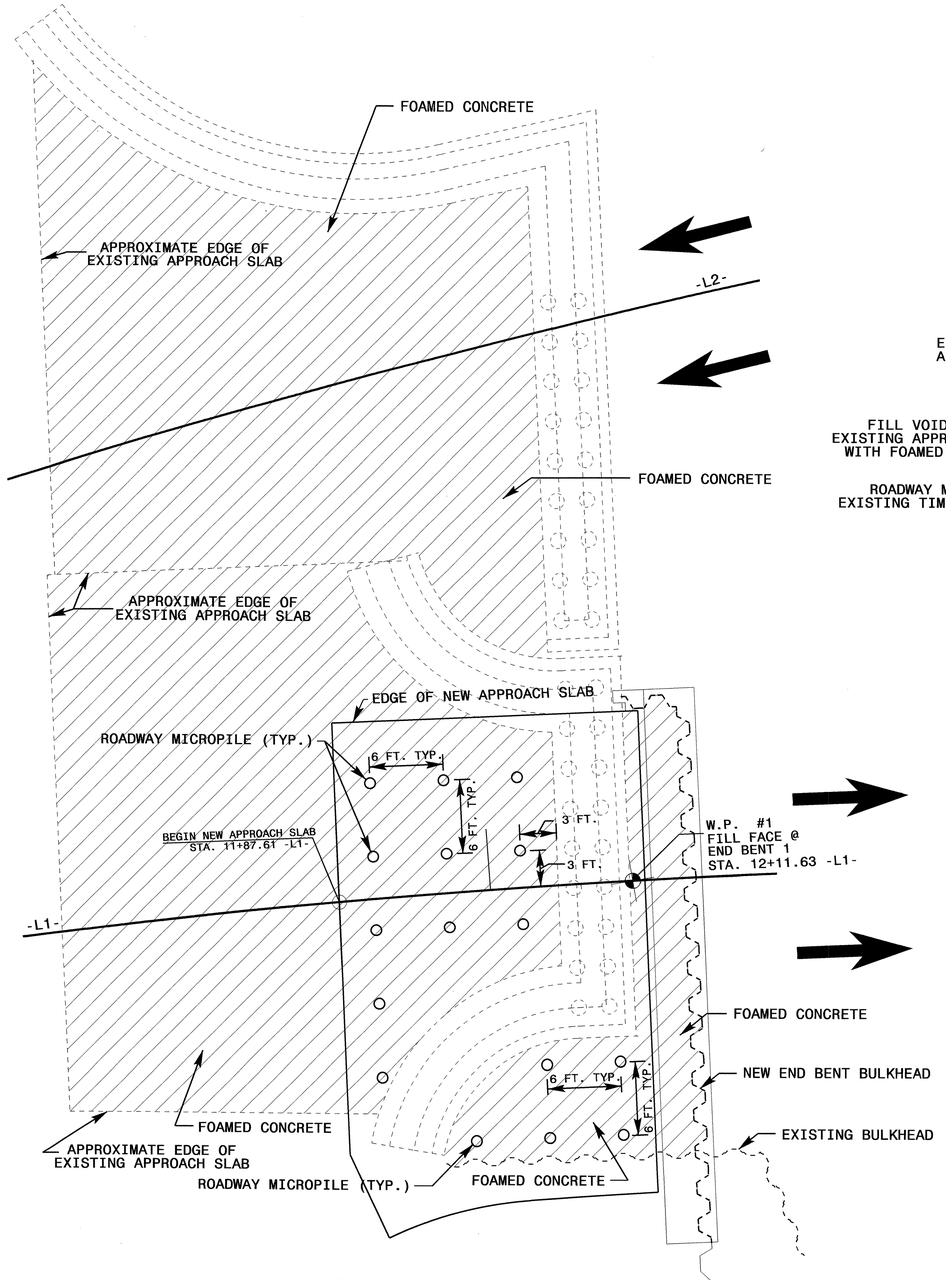

PILE SUPPORTED FOAMED CONCRETE APPROACH FILL
PLAN VIEW
N.T.S.

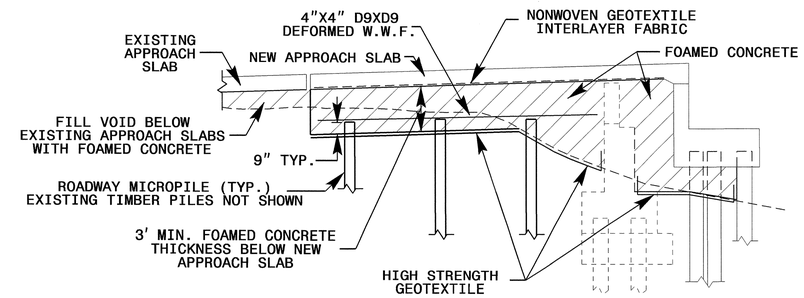

PILE SUPPORTED FOAMED CONCRETE APPROACH FILL
TYPICAL SECTION
N.T.S.

PILE SUPPORTED FOAMED CONCRETE APPROACH FILL
ESTIMATED QUANTITY

UNDERCUT	30 C.Y
ROADWAY MICROPILE	16 EA.
HIGH STRENGTH GEOTEXTILE FOR FOAMED CONCRETE	80 S.Y. (1)
WELDED WIRE FABRIC FOR FOAMED CONCRETE	60 S.Y. (1)
FOAMED CONCRETE	330 C.Y
NONWOVEN GEOTEXTILE INTERLAYER FABRIC	120 S.Y (1)

(1) HIGH STRENGTH GEOTEXTILE FOR FOAMED CONCRETE, WELDED WIRE FABRIC, OR NONWOVEN GEOTEXTILE INTERLAYER FABRIC QUANTITY DOES NOT INCLUDE OVERLAPS OR WASTE.

PREPARED BY: MDV	DATE: 1/2011
REVIEWED BY: KJK	DATE: 1/2011

GEOTECHNICAL ENGINEERING UNIT

■ EASTERN REGIONAL OFFICE
□ WESTERN REGIONAL OFFICE

STATE OF NORTH CAROLINA DEPARTMENT OF TRANSPORTATION

STATE OF NORTH CAROLINA
DEPARTMENT OF TRANSPORTATION
RALEIGH

PILE SUPPORTED FOAMED CONCRETE APPROACH FILL (SHEET 1 OF 1)

REVISIONS

NO.	BY	DATE	NO.	BY	DATE
1			3		
2			4		

PROJECT REFERENCE NO.	SHEET NO.
U-4438	2-A8

STATE OF NORTH CAROLINA
DEPT. OF TRANSPORTATION
DIVISION OF HIGHWAYS
RALEIGH, N.C.

7-06

ENGLISH DETAIL DRAWING FOR
METHOD OF PIPE INSTALLATION

ARCH PIPE

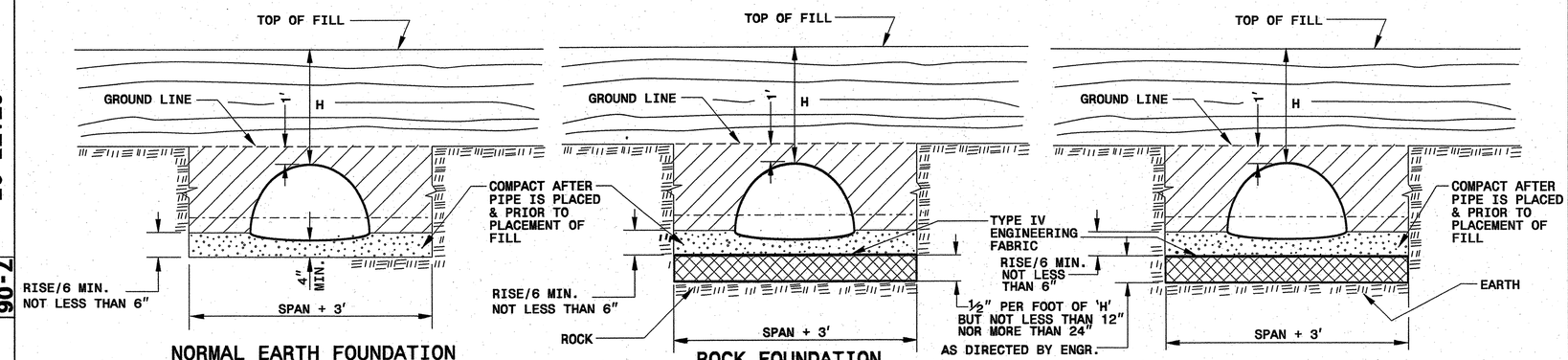

PIPE IN TRENCH

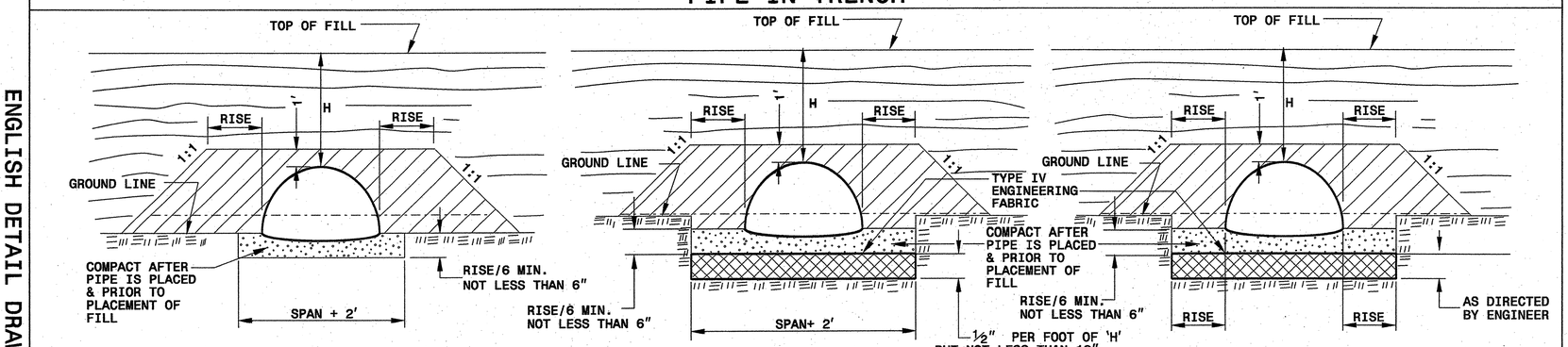

PIPE ABOVE GROUND

GENERAL NOTES:

SPAN = HORIZONTL DIMENSION OF PIPE ARCH.

RISE = VERTICAL DIMENSION OF PIPE ARCH.

H = THE FILL HEIGHT MEASURED VERTICALLY AT ANY POINT ALONG THE PIPE FROM THE TOP OF THE PIPE TO THE TOP OF THE EMBANKMENT AT THAT POINT.

NOTE: TAKE CARE TO SEAT ARCH PIPE SO THAT THE ENTIRE BOTTOM OF ARCH IS TOUCHING THE BEDDING MATERIAL.

LOOSELY PLACED SELECT MATERIAL CLASS III OR CLASS II, TYPE 1 FOR PIPE BEDDING. LEAVE SECTION DIRECTLY BENEATH PIPE UNCOMPACTED AS PIPE SEATING AND BACKFILL WILL ACCOMPLISH COMPACTION.

DO NOT OPERATE HEAVY EQUIPMENT OVER ANY PIPE CULVERT UNTIL THE PIPE CULVERT HAS BEEN PROPERLY BACKFILLED AND COVERED WITH AT LEAST 3 FEET OF APPROVED MATERIAL.

SPRINGLINE OF PIPE

SELECT BACKFILL MATERIAL CLASS III OR CLASS II, TYPE 1 ABOVE AND BELOW SPRINGLINE.

APPROVED SUITABLE LOCAL MATERIAL.

UNDISTURBED EARTH MATERIAL

SELECT MATERIAL CLASS V OR VI FOR FOUNDATION CONDITIONING. ENCAPSULATE WITH ENGINEERING FABRIC AS DIRECTED BY THE ENGINEER.

SHEET 1 OF 3

300D01

STATE OF NORTH CAROLINA
DEPT. OF TRANSPORTATION
DIVISION OF HIGHWAYS
RALEIGH, N.C.

7-06

ENGLISH DETAIL DRAWING FOR
METHOD OF PIPE INSTALLATION

ARCH PIPE

SHEET 1 OF 3

300D01

NORTH CAROLINA PROFESSIONAL SEAL 022966 ENGINEER JOEL R. HOMEYER 1/5/11

PROJECT SERVICES UNIT
STANDARDS AND SPECIAL DESIGN
Office 919-250-4128 FAX 919-250-4119

SEE PLATE FOR TITLE

ORIGINAL BY: _____ DATE: _____
MODIFIED BY: rnbritt DATE: 12-14-10
CHECKED BY: [signature] DATE: 12/15/10
FILE SPEC.: details/nbritt/english/hydro/arch0300d01.dgn

5/14/99

$$$$SYSTIME$$$$
$$$$USERNAME$$$$

PROJECT REFERENCE NO.	SHEET
U-4438	2-AC

GEOTECHNICAL ENGINEER

NORTH CAROLINA PROFESSIONAL SEAL 032672 ENGINEER MICHAEL D. VALIQUETTE

SIGNATURE DATE

ENGINEER

SIGNATURE DATE

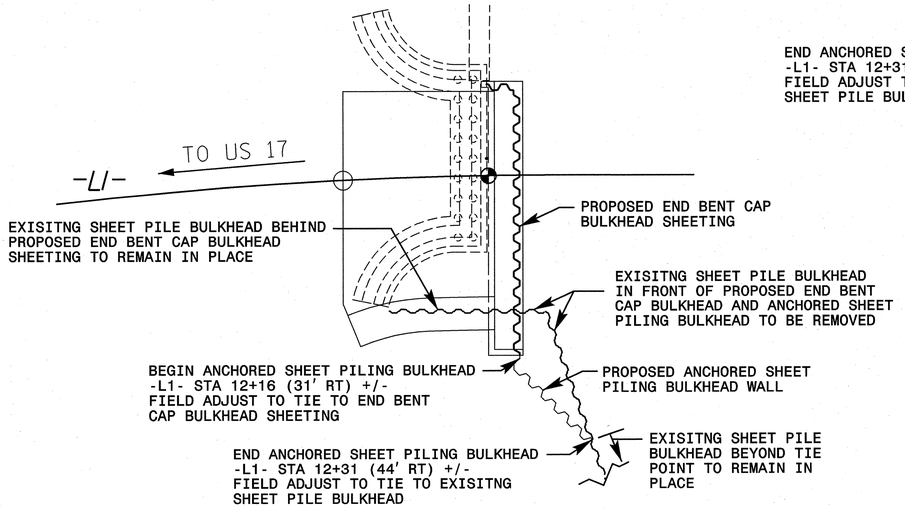

ANCHORED SHEET PILING BULKHEAD WALL LAYOUT

N.T.S.

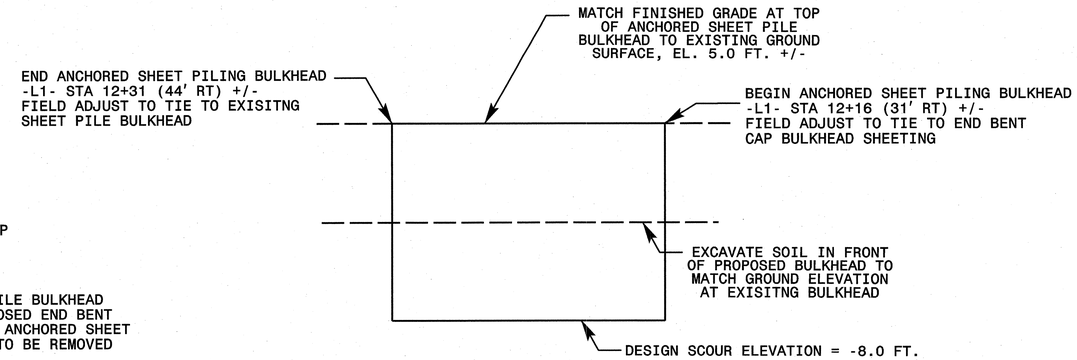

ANCHORED SHEET PILING BULKEAD WALL ENVELOPE

N.T.S.

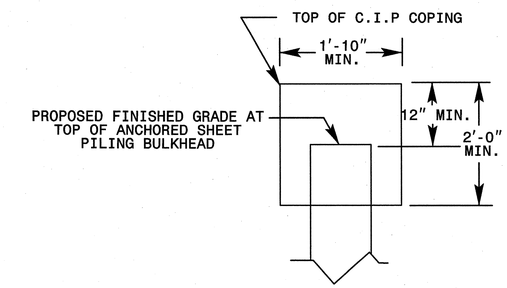

C.I.P. CONCRETE COPING

N.T.S.

NOTES

FOR ANCHORED SHEET PILING BULKHEAD WALL, SEE ANCHORED SHEET PILING BULKHEAD WALL SPECIAL PROVISION.

ANCHORED SHEET PILING BULKHEAD WALL SHALL BE ANCHORED WITH DEADMAN ANCHORS TO LIMIT LATERAL DEFLECTION OF THE WALL TO LESS THAN ONE (1) INCH.

DESIGN ANCHORED SHEET PILING BULKHEAD WALL FOR A DESIGN HEIGHT EQUAL TO THE DIFFERENCE BETWEEN FINISHED GRADE AT THE TOP AND A DESIGN SCOUR ELEVATION OF -8.0 FT. AT THE TOE OF THE WALL.

DESIGN ANCHORED SHEET PILING BULKHEAD WALL FOR THE SOIL PROPERTIES SHOWN ON THE PLANS.

DESIGN ANCHORED SHEET PILING BULKHEAD WALL FOR AN UNBALANCED HYDROSTATIC PRESSURE HEAD EQUAL THE DIFFERENCE BETWEEN A HIGH TIDE ELEVATION OF 2.0 FT. AND A LOW TIDE ELEVATION OF 0.0 FT.

USE STEEL SHEET PILING MEETING THE REQUIREMENTS OF ASTM A690 WITH A MINIMUM SECTION MODULUS OF 30.2 IN^3/FT FOR ANCHORED SHEET PILING BULKHEAD WALL SHEETING. ACTUAL SHEET PILING SECTION MODULUS TO BE SELECTED BY THE WALL DESIGNER.

CAST-IN-PLACE CONCRETE COPING IS REQUIRED FOR ANCHORED SHEET PILING BULKHEAD WALL.

INSTALL ANCHORED SHEET PILING BULKHEAD WALL WITHOUT EXCEEDING THE VIBRATION LIMIT ESTABLISHED IN THE CONTROL OF VIBRATION SPECIAL PROVISION AT THE NEAREST STRUCTURE OFF NCDOT RIGHT-OF-WAY.

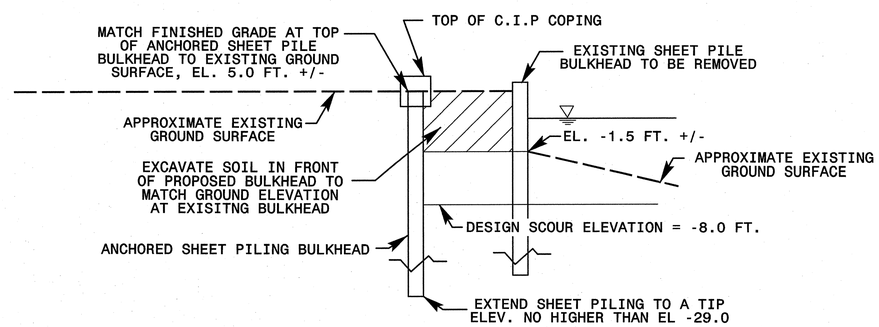

ANCHORED SHEET PILING BULKHEAD WALL TYPICAL SECTION

N.T.S.

SOIL PARAMETERS					
	LAYER ELEVATIONS (FT)	UNIT WEIGHT (PCF)	SUBMERGED UNIT WEIGHT (PCF)	FRICTION ANGLE (DEGREES)	COHESION (PSF)
SAND	GROUND SURFACE TO EL. -3.0	120	60	30	0
MUCK	EL. -3.0 TO EL. -20.0	80	20	5	150
CLAY	EL. -20.0 TO EL. -57.5	105	45	0	400
SAND	EL. -57.5 TO EL. -72.5	120	60	30	0

ANCHORED SHEET PILING BULKHEAD WALL ESTIMATED QUANTITES

ANCHORED SHEET PILING BULKHEAD WALL.....18 LINEAR FEET

PREPARED BY: MDV	DATE: 1/2011		
REVIEWED BY: KJK	DATE: 1/2011		

GEOTECHNICAL ENGINEERING UNIT

■ EASTERN REGIONAL OFFICE

☐ WESTERN REGIONAL OFFICE

STATE OF NORTH CAROLINA DEPARTMENT OF TRANSPORTATION RALEIGH

ANCHORED SHEET PILING BULKHEAD WALL (SHEET 1 OF 1)

REVISIONS

NO.	BY	DATE	NO.	BY	DATE
1			3		
2			4		

PROJECT REFERENCE NO.	SHEET NO.
U-4438	2-AD

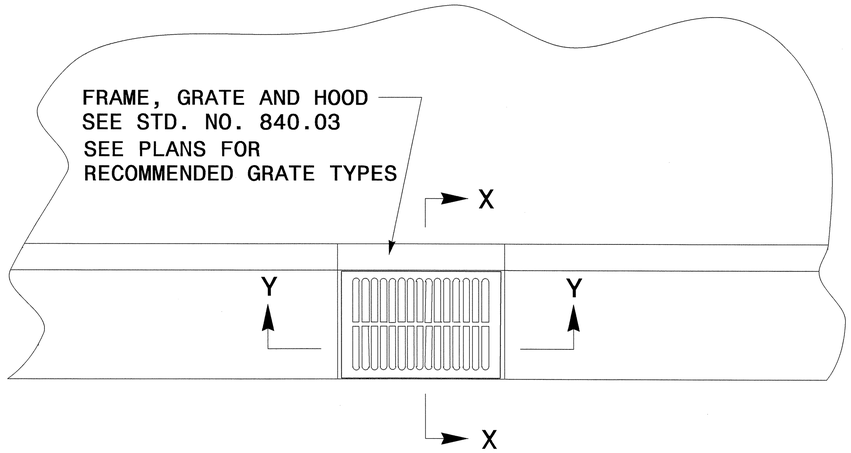

PLAN

GENERAL NOTES:

- THE ROADWAY PLANS INDICATE STRUCTURES TO BE CONVERTED.
- AFTER REMOVAL, STORE GRATES AND FRAMES AS DIRECTED BY THE ENGINEER.
- 4" SOLID CLAY BRICK, JUMBO BRICK, CONCRETE, OR 4" SOLID CONCRETE BLOCK MAY BE USED FOR VERTICAL ADJUSTMENT OF THE STRUCTURE.
- CONVERT IN ACCORDANCE WITH SECTION 859 OF THE STANDARD SPECIFICATIONS.

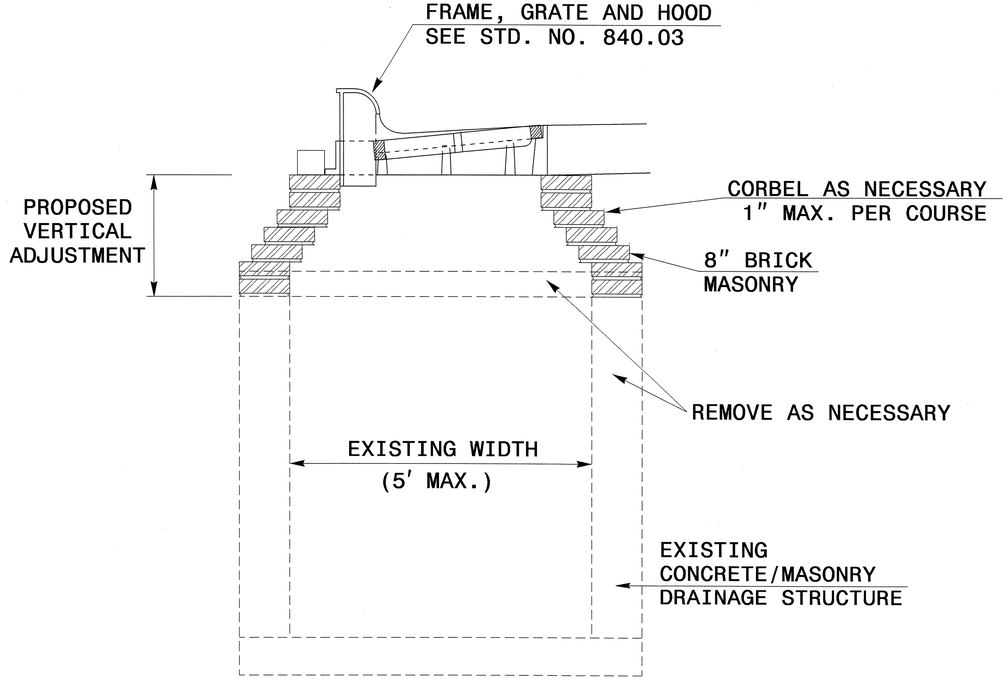

SECTION X-X

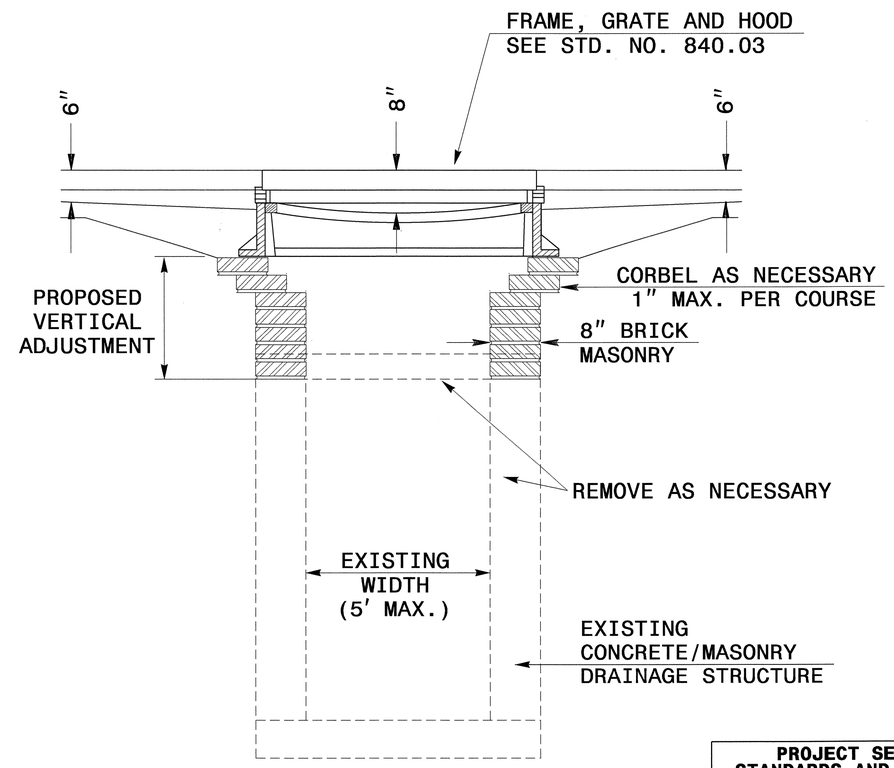

SECTION Y-Y

NORTH CAROLINA PROFESSIONAL SEAL 022966 ENGINEER JOEL S. HOCKERSON
1/26/11

PROJECT SERVICES UNIT
STANDARDS AND SPECIAL DESIGN
Office 919-250-4128 FAX 919-250-4119

CONVERSION OF DROP INLET OR JUNCTION BOX TO CATCH BASIN

ORIGINAL BY: E.E. WARD DATE: 11-97
MODIFIED BY: DATE:
CHECKED BY: DATE: 1/26/11
FILE SPEC.: 0937:usr\details\stand\jbtocb.dgn

5/14/99

$$$$$SYSTIME$$$$
$$$$$$$$DGN$$$$$$$$$$$$$$$$
$$$$USERNAME$$$$

PROJECT REFERENCE NO.	SHEET NO.
U-4438	3

Kimley-Horn and Associates, Inc.
P.O. BOX 33068
RALEIGH, N.C. 27636-3068

(1 of 2)

STATE OF NORTH CAROLINA
DIVISION OF HIGHWAYS

SUMMARY OF QUANTITIES

STATE OF NORTH CAROLINA
DIVISION OF HIGHWAYS
ROADWAY SUMMARY OF QUANTITIES FOR CONTRACT - C202599

ItemNumber	Sec #	Quantity	Unit	Description
0000100000-N	800	Lump Sum		MOBILIZATION
0000900000-N	SP	Lump Sum		GENERIC MISCELLANEOUS ITEM STORMWATER PUMP SYSTEM & SITE WORK
0000930000-E	SP	187	LF	GENERIC MISCELLANEOUS ITEM DETENTION BASIN WALL
0000940000-E	SP	79,922	LB	GENERIC MISCELLANEOUS ITEM EPOXY COATED REINFORCING STEEL (ROADWAY)
0001000000-E	200	Lump Sum		CLEARING & GRUBBING .. ACRE(S)
0001020000-N	SP	20	EA	GENERIC MISCELLANEOUS ITEM OBSERVATION TUBES
0008000000-E	200	1	ACR	SUPPLEMENTARY CLEARING & GRUB-BING
0022000000-E	225	1,200	CY	UNCLASSIFIED EXCAVATION
0029000000-N	SP	Lump Sum		REINFORCED BRIDGE APPROACH FILL, STATION ********** (16+31.56)
0036000000-E	225	22,530	CY	UNDERCUT EXCAVATION
0038000000-E	SP	500	CY	SHALLOW UNDERCUT
0080000000-E	SP	1,000	TON	CLASS IV SUBGRADE STABILIZA-TION
0134000000-E	240	5,810	CY	DRAINAGE DITCH EXCAVATION
0195000000-E	SP	1,000	CY	SELECT GRANULAR MATERIAL
0196000000-E	270	2,500	SY	FABRIC FOR SOIL STABILIZATION
0223000000-E	SP	1,100	SY	ROCK PLATING
0234000000-E	SP	4,000	CY	GENERIC GRADING ITEM CONTAMINATED SOIL STOCKPILING
0234000000-E	SP	20,530	CY	GENERIC GRADING ITEM FOAMED CONCRETE
0234000000-E	SP	5,500	CY	GENERIC GRADING ITEM REMOVAL OF EXISTING ASPHALT PAVEMENT
0241000000-E	SP	13,480	SY	GENERIC GRADING ITEM HIGH STRENGTH GEOTEXTILE FOR FOAMED CONC
0241000000-E	SP	30,160	SY	GENERIC GRADING ITEM WELDED WIRE FABRIC FOR FOAMED CONC
0255000000-E	SP	6,000	TON	GENERIC GRADING ITEM CONTAMINATED SOIL HAULING AND DISPOSAL
0257000000-E	SP	18	LF	GENERIC GRADING ITEM ANCHORED SHEET PILING BULKHEAD WALL
0257000000-E	SP	15	LF	GENERIC GRADING ITEM CONTRACTOR DESIGNED TEMPORARY SHORING
0257000000-E	SP	1,140	LF	GENERIC GRADING ITEM CURTAIN WALL SHEETING
0257000000-E	SP	1,261	LF	GENERIC GRADING ITEM TEMPORARY SHEETING
0262000000-N	SP	15	EA	GENERIC GRADING ITEM ROADWAY MICROPILE PROOF TEST
0262000000-N	SP	3	EA	GENERIC GRADING ITEM ROADWAY MICROPILE VERIFICATION TEST
0262000000-N	SP	277	EA	GENERIC GRADING ITEM ROADWAY MICROPILES
0262000000-N	SP	2	EA	GENERIC GRADING ITEM UNDERGROUND STORAGE TANK REMOVAL AND DISPOSAL
0318000000-E	SP	710	TON	FOUNDATION CONDITIONING MATE-RIAL, MINOR STRS
0320000000-E	SP	2,210	SY	FOUNDATION CONDITIONING FABRIC
0335200000-E	SP	680	LF	15" DRAINAGE PIPE
0335300000-E	SP	808	LF	18" DRAINAGE PIPE
0335400000-E	SP	492	LF	24" DRAINAGE PIPE
0335500000-E	SP	812	LF	30" DRAINAGE PIPE
0335600000-E	SP	680	LF	36" DRAINAGE PIPE
0335700000-E	SP	3,156	LF	42" DRAINAGE PIPE
0986000000-E	SP	277	LF	GENERIC PIPE ITEM 9'-7" X 6'-6" CAA STRUCTUAL PLATE PIPE ARCH, 0.125" THICK, CONTRACTOR DESIGN
0995000000-E	340	4,323	LF	PIPE REMOVAL
1011000000-N	500	Lump Sum		FINE GRADING
1121000000-E	520	885	TON	AGGREGATE BASE COURSE

ItemNumber	Sec #	Quantity	Unit	Description
1220000000-E	545	200	TON	INCIDENTAL STONE BASE
1231000000-E	560	1,290	CY	SHOULDER BORROW
1297000000-E	607	5,940	SY	MILLING ASPHALT PAVEMENT, ***" DEPTH (3")
1308000000-E	607	4,410	SY	MILLING ASPHALT PAVEMENT, ***" TO ******" DEPTH (1" TO 3")
1330000000-E	607	80	SY	INCIDENTAL MILLING
1491000000-E	610	170	TON	ASPHALT CONC BASE COURSE, TYPE B25.0C
1503000000-E	610	42	TON	ASPHALT CONC INTERMEDIATE COURSE, TYPE I19.0C
1523000000-E	610	270	TON	ASPHALT CONC SURFACE COURSE, TYPE S9.5C
1560000000-E	620	10	TON	ASPHALT BINDER FOR PLANT MIX, GRADE PG 64-22
1565000000-E	620	17	TON	ASPHALT BINDER FOR PLANT MIX, GRADE PG 70-22
1693000000-E	654	200	TON	ASPHALT PLANT MIX, PAVEMENT REPAIR
1847000000-E	710	14,200	SY	******" PORT CEM CONC PAVEMENT, THROUGH LANES (WITH DOWELS) (10-1/2")
1891000000-E	SP	4,400	SY	GENERIC PAVING ITEM MILLING CONC PAVEMENT, 1-1/2" DEPTH
1891000000-E	SP	18,520	SY	GENERIC PAVING ITEM NONWOVEN GEOTEXTILE INTERLAYER FOR SEPARATING CEMENTITIOUS PVT LAYERS
1891000000-E	SP	4,100	SY	GENERIC PAVING ITEM VARIABLE DEPTH CONCRETE OVERLAY
1902000000-N	710	Lump Sum		SURFACE TESTING CONCRETE PAVE-MENT
1924000000-N	725	Lump Sum		FIELD LABORATORY RENTAL, PORT CEM CONC PAVEMENT
2022000000-E	SP	224	CY	SUBDRAIN EXCAVATION
2033000000-E	SP	168	CY	SUBDRAIN FINE AGGREGATE
2044000000-E	SP	1,000	LF	6" PERFORATED SUBDRAIN PIPE
2070000000-N	SP	2	EA	SUBDRAIN PIPE OUTLETS
2077000000-E	SP	12	LF	6" OUTLET PIPE (SUBDRAINS)
2209000000-E	838	6	CY	ENDWALLS
2264000000-E	840	1	CY	PIPE PLUGS
2275000000-E	SP	2	CY	FLOWABLE FILL
2286000000-N	840	101	EA	MASONRY DRAINAGE STRUCTURES
2308000000-E	840	24	LF	MASONRY DRAINAGE STRUCTURES
2364000000-N	840	9	EA	FRAME WITH TWO GRATES, STD 840.16
2367000000-N	840	9	EA	FRAME WITH TWO GRATES, STD 840.29
2374000000-N	840	14	EA	FRAME WITH GRATE & HOOD, STD 840.03, TYPE ** (E)
2374000000-N	840	31	EA	FRAME WITH GRATE & HOOD, STD 840.03, TYPE ** (F)
2374000000-N	840	31	EA	FRAME WITH GRATE & HOOD, STD 840.03, TYPE ** (G)
2396000000-N	840	13	EA	FRAME WITH COVER, STD 840.54
2535000000-E	846	510	LF	**"X **" CONCRETE CURB (8" X 18")
2542000000-E	846	60	LF	1'-6" CONCRETE CURB & GUTTER
2549000000-E	846	6,475	LF	2'-6" CONCRETE CURB & GUTTER
2570000000-N	SP	1	EA	MODIFIED CONCRETE FLUME
2580000000-E	846	30	LF	CONCRETE VALLEY GUTTER
2591000000-E	848	3,890	SY	4" CONCRETE SIDEWALK
2605000000-N	848	32	EA	CONCRETE WHEELCHAIR RAMPS
2612000000-E	848	1,550	SY	6" CONCRETE DRIVEWAY
2627000000-E	852	400	SY	4" CONCRETE ISLAND COVERS
2710000000-N	854	1	EA	CONCRETE BARRIER TRANSITION SECTION
2738000000-E	SP	140	SY	GENERIC PAVING ITEM POROUS CONCRETE PAVERS

ItemNumber	Sec #	Quantity	Unit	Description
2815000000-N	858	5	EA	ADJUSTMENT OF DROP INLETS
2965000000-N	SP	1	EA	CONVERT EXISTING JUNCTION BOX TO CATCH BASIN
3000000000-N	SP	2	EA	IMPACT ATTENUATOR UNIT, TYPE 350
3030000000-E	862	400	LF	STEEL BM GUARDRAIL
3045000000-E	862	75	LF	STEEL BM GUARDRAIL, SHOP CURVED
3150000000-N	862	5	EA	ADDITIONAL GUARDRAIL POSTS
3195000000-N	862	2	EA	GUARDRAIL ANCHOR UNITS, TYPE AT-1
3210000000-N	862	1	EA	GUARDRAIL ANCHOR UNITS, TYPE CAT-1
3215000000-N	862	4	EA	GUARDRAIL ANCHOR UNITS, TYPE III
3270000000-N	SP	3	EA	GUARDRAIL ANCHOR UNITS, TYPE 350
3360000000-E	863	387	LF	REMOVE EXISTING GUARDRAIL
3533000000-E	866	144	LF	CHAIN LINK FENCE, **" FABRIC (54")
3539000000-E	866	12	EA	METAL LINE POSTS FOR **" CHAIN LINK FENCE (54")
3545000000-E	866	4	EA	METAL TERMINAL POSTS FOR **" CHAIN LINK FENCE (54")
3574000000-E	867	140	LF	GENERIC FENCING ITEM WOOD FENCE RESET
3628000000-E	876	2	TON	RIP RAP, CLASS I
3649000000-E	876	35	TON	RIP RAP, CLASS B
3656000000-E	876	3,070	SY	FILTER FABRIC FOR DRAINAGE
4072000000-E	903	169	LF	SUPPORTS, 3-LB STEEL U-CHANNEL
4082000000-E	903	643	LF	SUPPORTS, WOOD
4096000000-N	904	7	EA	SIGN ERECTION, TYPE D
4102000000-N	904	47	EA	SIGN ERECTION, TYPE E
4108000000-N	904	16	EA	SIGN ERECTION, TYPE F
4155000000-N	907	14	EA	DISPOSAL OF SIGN SYSTEM, U-CHANNEL
4158000000-N	907	34	EA	DISPOSAL OF SIGN SYSTEM, WOOD
4360000000-N	SP	1	EA	GENERIC SIGNING ITEM DISPOSAL OF FLASHER SYSTEM
4400000000-E	1110	1,070	SF	WORK ZONE SIGNS (STATIONARY)
4410000000-E	1110	973	SF	WORK ZONE SIGNS (BARRICADE MOUNTED)
4415000000-N	1115	4	EA	FLASHING ARROW PANELS, TYPE C
4420000000-N	1120	6	EA	CHANGEABLE MESSAGE SIGN
4430000000-N	1130	275	EA	DRUMS
4435000000-N	1135	8	EA	CONES
4445000000-E	1145	378	LF	BARRICADES (TYPE III)
4450000000-N	1150	8,640	HR	FLAGGER
4465000000-N	1160	2	EA	TEMPORARY CRASH CUSHIONS
4470000000-N	1160	7	EA	RESET TEMPORARY CRASH CUSHIONS
4480000000-N	1165	4	EA	TMIA
4485000000-E	1170	948	LF	PORTABLE CONCRETE BARRIER
4495000000-E	1170	880	LF	PORTABLE CONCRETE BARRIER (DRAINAGE)
4500000000-E	1170	318	LF	RESET PORTABLE CONCRETE BAR-RIER
4506000000-E	1170	98	LF	RESET PORTABLE CONCRETE BAR-RIER (DRAINAGE)
4507000000-E	SP	1,480	LF	WATER FILLED BARRIER
4508000000-E	SP	1,084	LF	RESET WATER FILLED BARRIER
4510000000-N	SP	2,400	HR	LAW ENFORCEMENT
4516000000-N	1180	31	EA	SKINNY DRUM
4685000000-E	1205	432	LF	THERMOPLASTIC PAVEMENT MARKING LINES (4", 90 MILS)
4686000000-E	1205	109	LF	THERMOPLASTIC PAVEMENT MARKING LINES (4", 120 MILS)
4695000000-E	1205	55	LF	THERMOPLASTIC PAVEMENT MARKING LINES (8", 90 MILS)

12/30/2010 K:\RAL_Roadway\U036142\Roadway\Proj\u4438_rdy_sum.dgn

STATE OF NORTH CAROLINA
SUMMARY OF QUANTITIES

PROJECT REFERENCE No.	SHEET No.
U-4438	3 (2 of 2)

ItemNumber	Sec #	Quantity	Unit	Description
4710000000-E	1205	2,089	LF	THERMOPLASTIC PAVEMENT MARKING LINES (24", 120 MILS)
4725000000-E	1205	59	EA	THERMOPLASTIC PAVEMENT MARKING SYMBOL (90 MILS)
4770000000-E	1205	53,234	LF	COLD APPLIED PLASTIC PAVEMENT MARKING LINES, TYPE ** (4") (IV)
4780000000-E	1205	3,662	LF	COLD APPLIED PLASTIC PAVEMENT MARKING LINES, TYPE ** (8") (IV)
4795000000-E	1205	700	LF	COLD APPLIED PLASTIC PAVEMENT MARKING LINES, TYPE ** (24") (IV)
4800000000-N	1205	7	EA	COLD APPLIED PLASTIC PAVEMENT MARKING CHARACTER, TYPE ** (IV)
4805000000-N	1205	126	EA	COLD APPLIED PLASTIC PAVEMENT MARKING SYMBOL, TYPE ** (IV)
4810000000-E	1205	53,231	LF	PAINT PAVEMENT MARKING LINES (4")
4820000000-E	1205	3,660	LF	PAINT PAVEMENT MARKING LINES (8")
4835000000-E	1205	698	LF	PAINT PAVEMENT MARKING LINES (24")
4840000000-N	1205	7	EA	PAINT PAVEMENT MARKING CHARACTER
4845000000-N	1205	126	EA	PAINT PAVEMENT MARKING SYMBOL
4847000000-E	1205	8,611	LF	POLYUREA PAVEMENT MARKING LINES (4", **********) (HIGHLY REFLECTIVE ELEMENTS)
4847000000-E	1205	3,300	LF	POLYUREA PAVEMENT MARKING LINES (4", **********) (STANDARD GLASS BEADS)
4847140000-E	1205	36	LF	POLYUREA PAVEMENT MARKING LINES (24", **********) (STANDARD GLASS BEADS)
4847220000-N	1205	9	EA	POLYUREA PAVEMENT MARKING SYMBOL (**********) (STANDARD GLASS BEADS)
4850000000-E	1205	16,098	LF	REMOVAL OF PAVEMENT MARKING LINES (4")
4860000000-E	1205	1,488	LF	REMOVAL OF PAVEMENT MARKING LINES (8")
4870000000-E	1205	115	LF	REMOVAL OF PAVEMENT MARKING LINES (24")
4875000000-N	1205	12	EA	REMOVAL OF PAVEMENT MARKING SYMBOLS & CHARACTERS
4880000000-E	1205	840	LF	CURING COMPOUND REMOVAL, LINES (IV)
4905000000-N	1253	150	EA	SNOWPLOWABLE PAVEMENT MARKERS
5160000000-E	1409	325	LF	ELECTRICAL DUCT, TYPE JA, SIZE ***** (4")
5265000000-E	SP	3,100	LF	GENERIC LIGHTING ITEM FEEDER CIRCUIT CONDUIT, SIZE 2", TYPE BD
5270000000-N	SP	21	EA	GENERIC LIGHTING ITEM ELECTRICAL JUNCTION BOXES, TYPE PC18
5270000000-N	SP	22	EA	GENERIC LIGHTING ITEM POST TOP FOUNDATION
5325000000-E	1510	609	LF	**" WATER LINE (14")
5325400000-E	1510	130	LF	4" WATER LINE
5325600000-E	1510	85	LF	6" WATER LINE
5325800000-E	1510	195	LF	8" WATER LINE
5326000000-E	1510	1,346	LF	10" WATER LINE
5326200000-E	1510	216	LF	12" WATER LINE
5538000000-E	1515	1	EA	4" VALVE
5540000000-E	1515	4	EA	6" VALVE
5552000000-E	1515	4	EA	10" VALVE
5606000000-E	1515	1	EA	2" BLOW OFF
5643100000-E	1515	1	EA	3/4" WATER METER
5648000000-N	1515	15	EA	RELOCATE WATER METER
5649000000-N	1515	8	EA	RECONNECT WATER METER
5666000000-E	1515	5	EA	FIRE HYDRANT
5672000000-N	1515	5	EA	RELOCATE FIRE HYDRANT
5678400000-E	1515	4	EA	6" LINE STOP
5678800000-E	1515	4	EA	10" LINE STOP
5679600000-E	1515	2	EA	24" LINE STOP
5691100000-E	1520	20	LF	4" SANITARY GRAVITY SEWER
5691200000-E	1520	100	LF	6" SANITARY GRAVITY SEWER
5691300000-E	1520	1,115	LF	8" SANITARY GRAVITY SEWER
5709100000-E	1520	136	LF	2" FORCE MAIN SEWER
5709900000-E	1520	611	LF	24" FORCE MAIN SEWER
5768000000-N	1520	15	EA	SANITARY SEWER CLEAN-OUT
5775000000-E	1525	9	EA	4' DIA UTILITY MANHOLE
5776000000-E	1525	6	EA	5' DIA UTILITY MANHOLE
5781000000-E	1525	23	LF	UTILITY MANHOLE WALL, 4' DIA
5782000000-E	1525	46	LF	UTILITY MANHOLE WALL, 5' DIA
5798000000-E	1530	156	LF	ABANDON **" UTILITY PIPE (4")
5800000000-E	1530	1,723	LF	ABANDON 6" UTILITY PIPE
5801000000-E	1530	3,071	LF	ABANDON 8" UTILITY PIPE
5802000000-E	1530	1,060	LF	ABANDON 10" UTILITY PIPE
5804000000-E	1530	1,258	LF	ABANDON 12" UTILITY PIPE
5813000000-E	1530	900	LF	ABANDON 24" UTILITY PIPE
5816000000-N	1530	1	EA	ABANDON UTILITY MANHOLE
5828000000-N	1530	20	EA	REMOVE UTILITY MANHOLE
5888000000-E	SP	1,025	LF	GENERIC UTILITY ITEM TEMPORARY 6" PVC WATER PIPE SDR 21, 200 #WP
5912000000-N	SP	Lump Sum		GENERIC UTILITY ITEM TEMPORARY WATER AND SEWER SERVICE
6000000000-E	1605	2,000	LF	TEMPORARY SILT FENCE
6006000000-E	1610	800	TON	STONE FOR EROSION CONTROL, CLASS A
6009000000-E	1610	130	TON	STONE FOR EROSION CONTROL, CLASS B
6012000000-E	1610	2,000	TON	SEDIMENT CONTROL STONE
6015000000-E	1615	3	ACR	TEMPORARY MULCHING
6018000000-E	1620	100	LB	SEED FOR TEMPORARY SEEDING
6021000000-E	1620	0.25	TON	FERTILIZER FOR TEMPORARY SEEDING
6024000000-E	1622	200	LF	TEMPORARY SLOPE DRAINS
6027000000-N	1622	6	EA	INLET PROTECTION AT TEMPORARY SLOPE DRAINS
6029000000-E	SP	1,000	LF	SAFETY FENCE
6030000000-E	1630	110	CY	SILT EXCAVATION
6036000000-E	1631	2,000	SY	MATTING FOR EROSION CONTROL
6042000000-E	1632	6,500	LF	1/4" HARDWARE CLOTH
6048000000-E	SP	8,000	SY	FLOATING TURBIDITY CURTAIN
6070000000-N	SP	20	EA	SPECIAL STILLING BASINS
6071012000-E	SP	200	LF	COIR FIBER WATTLE
6071020000-E	SP	100	LB	POLYACRYLAMIDE (PAM)
6084000000-E	1660	3	ACR	SEEDING & MULCHING
6087000000-E	1660	3	ACR	MOWING
6090000000-E	1661	50	LB	SEED FOR REPAIR SEEDING
6093000000-E	1661	0.25	TON	FERTILIZER FOR REPAIR SEEDING
6096000000-E	1662	75	LB	SEED FOR SUPPLEMENTAL SEEDING
6108000000-E	1665	1.75	TON	FERTILIZER TOPDRESSING
6114500000-N	SP	20	MHR	SPECIALIZED HAND MOWING
6117000000-N	SP	50	EA	RESPONSE FOR EROSION CONTROL
7000000000-E	1705	16	EA	PEDESTRIAN SIGNAL HEAD (**", ** SECTION) (16" WITH COUNTDOWN)
7060000000-E	1705	5,500	LF	SIGNAL CABLE
7120000000-E	1705	29	EA	VEHICLE SIGNAL HEAD (12", 3 SECTION)
7132000000-E	1705	7	EA	VEHICLE SIGNAL HEAD (12", 4 SECTION)
7144000000-E	1705	3	EA	VEHICLE SIGNAL HEAD (12", 5 SECTION)
7300000000-E	1715	250	LF	UNPAVED TRENCHING (**********) (1-2")
7300000000-E	1715	4,500	LF	UNPAVED TRENCHING (**********) (2-2")
7324000000-N	1716	12	EA	JUNCTION BOX (STANDARD SIZE)
7348000000-N	1716	3	EA	JUNCTION BOX (OVER-SIZED, HEAVY DUTY)
7456000000-E	1726	2,400	LF	LEAD-IN CABLE (**********) (14-2)
7516000000-E	1730	4,800	LF	COMMUNICATIONS CABLE (**FIBER) (12)
7552000000-N	1731	4	EA	INTERCONNECT CENTER
7566000000-N	1733	3	EA	DELINEATOR MARKER
7574000000-N	SP	1	EA	FURNISH FIBER-OPTIC TRANSCEIVER
7588000000-N	SP	2	EA	METAL POLE WITH SINGLE MAST ARM
7590000000-N	SP	6	EA	METAL POLE WITH DUAL MAST ARM
7624000000-N	1743	9	EA	SIGNAL PEDESTAL WITH FOUNDATION
7631000000-N	SP	8	EA	MAST ARM WITH METAL POLE DESIGN
7636000000-N	1745	2	EA	SIGN FOR SIGNALS
7684000000-N	1750	4	EA	SIGNAL CABINET FOUNDATION
7756000000-N	1751	4	EA	CONTROLLER WITH CABINET (TYPE 2070L, BASE MOUNTED)
7901000000-N	1753	4	EA	CABINET BASE EXTENDER
7960000000-N	SP	2	EA	METAL POLE FOUNDATION REMOVAL
7972000000-N	SP	2	EA	METAL POLE REMOVAL
7980000000-N	SP	11	EA	GENERIC SIGNAL ITEM OPTICAL PREEMPTION DETECTORS
7980000000-N	SP	4	EA	GENERIC SIGNAL ITEM OPTICAL PREEMPTION PHASE SELECTORS
7980000000-N	SP	6	EA	GENERIC SIGNAL ITEM POWDER COAT FOR DOUBLE MAST ARM WITH METAL POLE
7980000000-N	SP	9	EA	GENERIC SIGNAL ITEM POWDER COAT FOR PEDESTRIAN PEDESTAL
7980000000-N	SP	4	EA	GENERIC SIGNAL ITEM POWDER COAT FOR PUSH BUTTON POST
7980000000-N	SP	2	EA	GENERIC SIGNAL ITEM POWDER COAT FOR SINGLE MAST ARM WITH METAL POLE
7980000000-N	SP	4	EA	GENERIC SIGNAL ITEM PUSH BUTTON POST
7980000000-N	SP	8	EA	GENERIC SIGNAL ITEM SIGNAL POLE MICROPILE PROOF TEST
7980000000-N	SP	32	EA	GENERIC SIGNAL ITEM SIGNAL POLE MICROPILES
7980000000-N	SP	4	EA	GENERIC SIGNAL ITEM WIRELESS MAGNETIC SENSOR VEHICLE DETECTOR SYSTEM
7992000000-E	SP	68	CY	GENERIC SIGNAL ITEM SIGNAL PILE CAP FOUNDATION

COMPUTED BY: GLD DATE: 10/18/2010

CHECKED BY: JWM DATE: 1/3/2011

DD83305

NORTH CAROLINA DEPARTMENT OF TRANSPORTATION
DIVISION OF HIGHWAYS

PROJECT NO.	SHEET NO.
U-4438	3-A

Kimley-Horn and Associates, Inc. P.O. Box 33068 Raleigh, N.C. 27636-3068

LIST OF PIPES, ENDWALLS, ETC. (FOR PIPES 48 INCHES & UNDER)

STATION / SIZE / THICKNESS OR GAUGE	LOCATION (LT, RT, OR CL)'	STRUCTURE NO. FROM	STRUCTURE NO. TO	TOP ELEVATION	INVERT ELEVATION	INVERT ELEVATION	SLOPE CRITICAL	DRAINAGE PIPE (HDPE PIPE WITH WATER TIGHT JOINTS AND CONNECTIONS) 12"	15"	18"	24"	30"	36"	42"	48"	DO NOT USE RCP	DO NOT USE CSP	DO NOT USE CAAP	DO NOT USE PVC
SHEET 4																			
14+42 -L-		400B																	
15+08 -L-	RT	400C		3.2	-2.7														
15+63 -L-	RT	400D																	
15+30 -L-	LT	400		3.2	-2.9														
		400	401		-2.9	-3.1	0.001							172		X	X	X	X
17+06 -L-	LT	401		2.9	-3.1														
		400A	401		-1.4	-1.6	0.021			8						X	X	X	X
17+06 -L-	LT	400A		2.0	-1.4														
		401	402		-3.1	-3.2	0.001							160		X	X	X	X
18+70 -L-	LT	402		2.0	-3.2														
		402	403		-3.2	-3.2	0.011							16		X	X	X	X
18+86 -L-	LT	403		2.0	-3.2														
		403	404		-3.2	-3.2	0.001							60		X	X	X	X
19+50 -L-	LT	404		2.4	-3.2														
		404	407		-3.2	-3.3	0.001							32		X	X	X	X
11+60 -Y1-	RT	407		3.2	-3.3														
		407	405		-3.3	-3.3	0.001							40		X	X	X	X
		407	430		-1.9	-1.9	0.001						76			X	X	X	X
11+18 -Y1-	RT	405		3.7	-3.3														
		405	425		-3.3	-3.3	0.001							20		X	X	X	X
11+18 -Y1-	LT	406		3.7	0.2														
		406	405		0.2	-0.1	0.009		32							X	X	X	X
10+95 -Y1-	RT	425		4.3	-3.3														
		425	431		-3.3	-3.5	0.001							208		X	X	X	X
8+84 -Y1-	RT	431		5.3	-3.5														
		431	706		-3.5	-3.7	0.001							268		X	X	X	X
20+60 -L-	LT	430		2.8	-1.9														
		430	408		-1.9	-2.0	0.001						28			X	X	X	X
20+89 -L-	LT	408		2.6	-2.0														
		408	409		-2.0	-2.0	0.001						12			X	X	X	X
21+04 -L-	LT	409		2.6	-2.0														
		409	410		-2.0	-2.1	0.001						176			X	X	X	X
18+69 -L-	RT	412		2.0	-1.7														
		412	413		-1.7	-1.7	0.001					16				X	X	X	X
18+86 -L-	RT	413		2.0	-1.7														
		413	414		-1.7	-1.7	0.001					16				X	X	X	X
19+02 -L-	RT	414		2.0	-1.7														
		414	429		-1.7	-1.8	0.001					36				X	X	X	X
19+38 -L-	RT	429		2.3	-1.8														
		429	416		-1.8	-1.8	0.001					80				X	X	X	X
20+20 -L-	RT	416		2.8	-1.8														
		416	418		-1.8	-1.9	0.001					24				X	X	X	X
10+58 -Y2-	RT	415		2.6	-0.6														
		415	417		-0.6	-0.6	0.001		36							X	X	X	X
10+53 -Y2-	LT	417		2.5	-0.6														
		417	416		-0.6	-0.6	0.001			24						X	X	X	X
20+46 -L-	RT	418		2.8	-1.9														
		418	419		-1.9	-1.9	0.001						40			X	X	X	X
SHEET TOTALS									68	32		172	332	976					

C.S. PIPE 12"	15"	18"	24"	30"	36"	42"	48"	R.C. PIPE CLASS III 12"	15"	18"	24"	30"	36"	42"	48"	R.C. PIPE CLASS IV 12"	15"	18"	24"	30"	36"	42"	48"

STATION	STRUCTURE NO. FROM	** " R.C. PIPE (CLASS V)	***" RC PIPE CULVERTS, CONTRACTOR DESIGN	***" RC PIPE CULVERTS, CONTRACTOR DESIGN	ENDWALLS STD. 838.01 OR STD. 838.11 (UNLESS NOTED OTHERWISE) CU. YARDS R.C.P.	C.S.P.	QUANTITIES FOR DRAINAGE STRUCTURES PER EACH (0' THRU 5.0')	*TOTAL L.F. FOR PAY QUANTITY SHALL BE COL. 'A' + (1.3 X COL.'B') LIN. FT. A 5.0' THRU 10.0'	B 10.0' AND ABOVE	C.B. STD. 840.01 OR STD. 840.02	FRAME, GRATES, AND HOOD STANDARD 840.03 TYPE OF GRATE E	F	G	CONCRETE TRANSITIONAL SECTION DROP INLET	CATCH BASIN	D.I. STD. 840.14 OR STD. 840.15	D.I. FRAME AND GRATE STD. 840.16	G.D.I. TYPE "A" STD. 840.17 OR 840.26	G.D.I. (NS) FRAME WITH TWO FLAT GRATES 840.29	J.B. STD. 840.31 OR 840.32	T.B.J.B. STD. 840.34	M.H. FRAME AND COVER STD. 840.54	OVERSIZED CATCH BASIN (SEE DETAIL 2-M)	OFFSET CATCH BASIN (SEE DETAIL 2-N)	ADJUSTMENT OF DROP INLETS	CONVERT JUNCTION BOX TO CATCH BASIN	CONC. & BRICK PIPE PLUG, C.Y. STD. 840.71	CONC. COLLARS CL. "B" C.Y. STD. 840.72	PIPE REMOVAL LIN. FT.	REMARKS
14+42 -L-	400B																								2					
15+08 -L-	400C						1	0.9				1									1	1				1				
15+63 -L-	400D																								2					
15+30 -L-	400						1	1.1					1										1						411	REMOVE EXIST CB
17+06 -L-	401						1				1												1						48	REMOVE EXIST DI
17+06 -L-	400A						1			1	1																			
18+70 -L-	402						1	0.2					1										1							
18+86 -L-	403						1	0.2			1												1						51	
19+50 -L-	404						1	0.7				1											1						52	REMOVE EXIST CB AND JB
11+60 -Y1-	407						1	1.4													1	1								
11+18 -Y1-	405						1	2.0				1											1							
11+18 -Y1-	406						1			1			1																23	REMOVE EXIST CB
10+95 -Y1-	425						1	2.6													1	1								
8+84 -Y1-	431						1	3.8													1	1								
20+60 -L-	430						1			1			1																	
20+89 -L-	408						1			1			1																	
21+04 -L-	409						1			1	1																			
18+69 -L-	412						1			1		1																		
18+86 -L-	413						1			1	1														1					
19+02 -L-	414						1			1			1																28	REMOVE EXIST DI
19+38 -L-	429						1			1			1																29	REMOVE EXIST CB
20+20 -L-	416						1														1	1							69	REMOVE EXIST MH
10+58 -Y2-	415						1			1			1																	
10+53 -Y2-	417						1			1		1																		
20+46 -L-	418						1			1		1																	45	REMOVE EXIST CB
SHEET TOTALS							23	12.8		12	5	6	8								5	5	6		5	1			756	

ABBREVIATIONS

C.B.	CATCH BASIN
N.D.I.	NARROW DROP INLET
D.I.	DROP INLET
G.D.I.	GRATED DROP INLET
G.D.I.(N.S.)	(NARROW SLOT)
J.B.	JUNCTION BOX
M.H.	MANHOLE
T.B.D.I.	TRAFFIC BEARING DROP INLET
T.B.J.B.	TRAFFIC BEARING JUNCTION BOX

COMPUTED BY: GLD	DATE: 10/18/2010
CHECKED BY: JWM	DATE: 1/3/2011

DD83305

NORTH CAROLINA DEPARTMENT OF TRANSPORTATION
DIVISION OF HIGHWAYS

PROJECT NO.	SHEET NO.
U-4438	3-B

Kimley-Horn and Associates, Inc. P.O. Box 33068 Raleigh, N.C. 27636-3068

LIST OF PIPES, ENDWALLS, ETC. (FOR PIPES 48 INCHES & UNDER)

STATION / SIZE / THICKNESS OR GAUGE	LOCATION (LT, RT, OR CL)'	STRUCTURE NO. FROM	STRUCTURE NO. TO	TOP ELEVATION	INVERT ELEVATION	INVERT ELEVATION	SLOPE CRITICAL	DRAINAGE PIPE (HDPE PIPE WITH WATER TIGHT JOINTS AND CONNECTIONS) 12"	15"	18"	24"	30"	36"	42"	48"	DO NOT USE RCP	DO NOT USE CSP	DO NOT USE CAAP	DO NOT USE PVC
SHEET 4 (CONT.)																			
20+46 -L-	RT	426		2.5	-0.7														
		426	418		-0.7	-0.7	0.005		8							X	X	X	X
20+88 -L-	RT	419		2.6	-1.9														
		419	420		-1.9	-1.9	0.001						12			X	X	X	X
21+02 -L-	RT	427		2.6	-0.6														
		427	420		-0.6	-0.6	0.004		12							X	X	X	X
21+03 -L-	RT	420		2.6	-1.9														
		420	409		-1.9	-2.0	0.001						56			X	X	X	X
22+80 -L-	LT	410		2.1	-2.1														
		410	411		-2.1	-2.2	0.001						16			X	X	X	X
22+98 -L-	LT	411		2.1	-2.2														
		411	501		-2.2	-2.2	0.001						36			X	X	X	X
10+45 -Y3-	RT	428		2.3	-1.1														
		428	421		-1.1	-1.2	0.002		16							X	X	X	X
10+55 -Y3-	RT	421		2.8	-1.2														
		421	422		-1.2	-1.2	0.002					20				X	X	X	X
10+56 -Y3-	LT	422		2.8	-1.2														
		422	423		-1.2	-1.3	0.002					36				X	X	X	X
22+55 -L-	RT	423		2.3	-1.3														
		423	424		-1.3	-1.4	0.002					40				X	X	X	X
22+98 -L-	RT	424		2.1	-1.4														
		424	516		-1.4	-1.4	0.002					16				X	X	X	X
SHEET 5																			
23+35 -L-	LT	501		2.1	-2.2														
		501	502		-2.2	-2.3	0.001							96		X	X	X	X
24+33 -L-	LT	502		2.5	-2.3														
		502	505		-2.3	-2.5	0.001							248		X	X	X	X
26+83 -L-	LT	505		2.5	-2.5														
		505	506		-2.5	-2.5	0.001							12		X	X	X	X
26+96 -L-	LT	506		2.6	-2.5														
		506	514		-2.5	-2.6	0.001							8		X	X	X	X
26+96 -L-	LT	514		2.6	-2.6														
		514	507		-2.6	-2.6	0.001							32		X	X	X	X
11+74 -Y5-	RT	507		3.0	-2.6														
		507	552		-2.6	-2.8	0.001							224		X	X	X	X
9+48 -Y5-	RT	552		3.9	-2.8														
		552	554		-2.8	-2.8	0.001							20		X	X	X	X
9+48 -Y5-	LT	554		3.9	-2.8														
		554	553		-2.8	-2.8	0.000							20		X	X	X	X
23+13 -L-	RT	516		2.1	-1.4														
		516	519		-1.4	-1.8	0.002					192				X	X	X	X
25+08 -L-	RT	519		2.7	-1.8														
		519	520		-1.8	-2.0	0.002						96			X	X	X	X
25+06 -L-	RT	520		2.6															
		520	522		-2.0	-2.2	0.002						64			X	X	X	X
10+50 -Y4-	RT	517		2.8	-0.2														
		517	518		-0.2	-0.2	0.001		28							X	X	X	X
SHEET TOTALS									64			304	280	660					

STATION	STRUCTURE NO. FROM	TO	C.S. PIPE 12"	15"	18"	24"	30"	36"	42"	48"	R.C. PIPE CLASS III 12"	15"	18"	24"	30"	36"	42"	48"	R.C. PIPE CLASS IV 12"	15"	18"	24"	30"	36"	42"	48"	** " R.C. PIPE (CLASS V)	***" RC PIPE CULVERTS, CONTRACTOR DESIGN	***" RC PIPE CULVERTS, CONTRACTOR DESIGN	ENDWALLS STD. 838.01 OR STD. 838.11 (UNLESS NOTED OTHERWISE) CU. YARDS R.C.P.	C.S.P.	QUANTITIES FOR DRAINAGE STRUCTURES PER EACH (0' THRU 5.0')	*TOTAL L.F. FOR PAY QUANTITY SHALL BE COL. 'A' + (1.3 X COL.'B') LIN. FT. A 5.0' THRU 10.0'	B 10.0' AND ABOVE	C.B. STD. 840.01 OR STD. 840.02	FRAME, GRATES, AND HOOD STANDARD 840.03 TYPE OF GRATE E	F	G	CONCRETE TRANSITIONAL SECTION DROP INLET	CATCH BASIN	D.I. STD. 840.14 OR STD. 840.15	D.I. FRAME AND GRATE STD. 840.16	G.D.I. TYPE "A" STD. 840.17 OR 840.26	G.D.I. (NS) FRAME WITH TWO FLAT GRATES 840.29	J.B. STD. 840.31 OR 840.32	T.B.J.B. STD. 840.34	M.H. FRAME AND COVER STD. 840.54	OVERSIZED CATCH BASIN (SEE DETAIL 2-M)	OFFSET CATCH BASIN (SEE DETAIL 2-N)	ADJUSTMENT OF DROP INLETS	CONVERT JUNCTION BOX TO CATCH BASIN	CONC. & BRICK PIPE PLUG, C.Y. STD. 840.71	CONC. COLLARS CL. "B" C.Y. STD. 840.72	PIPE REMOVAL LIN. FT.	REMARKS
SHEET 4 (CONT.)																																																							
20+46 -L-	426																															1									1	1												45	REMOVE EXIST DI
	426	418																																																					
20+88 -L-	419																															1			1		1																		
	419	420																																																			148	
21+02 -L-	427																															1									1	1													
	427	420																																																					
21+03 -L-	420																															1			1	1																			
	420	409																																																					
22+80 -L-	410																															1			1		1																		REMOVE EXIST CB
	410	411																																																					
22+98 -L-	411																															1											1	1												SAG
	411	501																																																					
10+45 -Y3-	428																															1									1	1													REMOVE EXIST CB
	428	421																																																					
10+55 -Y3-	421																															1			1			1																	REMOVE EXIST CB
	421	422																																																					
10+56 -Y3-	422																															1			1		1																		REMOVE EXIST CB
	422	423																																																					
22+55 -L-	423																															1			1		1																		REMOVE EXIST CB AND JB
	423	424																																																					
22+98 -L-	424																															1			1	1																			
	424	516																																																					
SHEET 5																																																							
23+35 -L-	501																															1					1												1							
	501	502																																																					
24+33 -L-	502																															1					1												1						74	REMOVE EXIST DI
	502	505																																																			33	REMOVE EXIST JB
26+83 -L-	505																															1						1											1							
	505	506																																																					
26+96 -L-	506																															1	0.1			1													1						8	REMOVE EXIST CB
	506	514																																																					
26+96 -L-	514																															1	0.1													1	1								
	514	507																																																					
11+74 -Y5-	507																															1	0.6				1												1							
	507	552																																																			19	REMOVE EXIST JB
9+48 -Y5-	552																															1	1.7				1												1						24	REMOVE (2) EXIST DI AND JB
	552	554																																																			24	
9+48 -Y5-	554																															1	1.8		1			1																		
	554	553																																																				TIE TO ENDWALL
23+13 -L-	516																															1			1			1																		
	516	519																																																			10	REMOVE (2) EXIST CB
25+08 -L-	519																															1			1			1																		
	519	520																																																				REMOVE EXIST CB
25+06 -L-	520																															1			1		1																		
	520	522																																																					
10+50 -Y4-	517																															1			1			1																		
	517	518																																																			29	REMOVE EXIST CB
SHEET TOTALS																																23	4.3		12	3	9	6			3	3	1	1		1	1	6						414	

ABBREVIATIONS

C.B.	CATCH BASIN
N.D.I.	NARROW DROP INLET
D.I.	DROP INLET
G.D.I.	GRATED DROP INLET
G.D.I.(N.S.)	(NARROW SLOT)
J.B.	JUNCTION BOX
M.H.	MANHOLE
T.B.D.I.	TRAFFIC BEARING DROP INLET
T.B.J.B.	TRAFFIC BEARING JUNCTION BOX

DD83305

COMPUTED BY: GLD DATE: 10/18/2010

CHECKED BY: JWM DATE: 1/3/2011

NORTH CAROLINA DEPARTMENT OF TRANSPORTATION
DIVISION OF HIGHWAYS

PROJECT NO.	SHEET NO.
U-4438	3-C

Kimley-Horn and Associates, Inc. P.O. Box 33068 Raleigh, N.C. 27636-3068

LIST OF PIPES, ENDWALLS, ETC. (FOR PIPES 48 INCHES & UNDER)

(Columns C.S. PIPE 12"–48", R.C. PIPE CLASS III 12"–48", R.C. PIPE CLASS IV 12"–48", ** " R.C. PIPE (CLASS V), *** " RC PIPE CULVERTS, CONTRACTOR DESIGN (2 columns) contain no entries on this sheet.)

STATION	LOCATION (LT, RT, OR CL)	STRUCTURE NO. FROM	TO	TOP ELEVATION	INVERT ELEVATION	INVERT ELEVATION	SLOPE CRITICAL	DRAINAGE PIPE (HDPE PIPE WITH WATER TIGHT JOINTS AND CONNECTIONS) 12"	15"	18"	24"	30"	36"	42"	48"	DO NOT USE RCP	DO NOT USE CSP	DO NOT USE CAAP	DO NOT USE PVC
SHEET 5 (CONT.)																			
10+56 -Y4-	LT	518		2.9	-0.2														
		518	519		-0.2	-0.3	0.001		36							X	X	X	X
26+05 -Y-	RT	521		2.1	-1.1														
		521	520		-1.1	-1.1	0.001		16							X	X	X	X
26+71 -Y-	RT	522		2.4	-2.2														
		522	523		-2.2	-2.2	0.002						12			X	X	X	X
26+83 -L-	RT	523		2.4	-2.2														
		523	506		-2.2	-2.5	0.006						56			X	X	X	X
12+85 -Y5-	RT	524		2.4	-0.8														
		524	523		-0.8	-1.0	0.004		36							X	X	X	X
11+73 -Y5-	LT	508		3.0	0.5														
		508	509		0.5	0.2	0.007		36							X	X	X	X
12+80 -Y5-	LT	525		2.4	-0.2														
		525	526		-0.2	-0.3	0.001				36					X	X	X	X
27+62 -L-	RT	526		2.7	-0.3														
		526	509		-0.2	-0.3	0.001				56					X	X	X	X
27+68 -L-	LT	509		2.9	-0.3														
		509	560		-0.3	-0.4	0.001				80					X	X	X	X
10+75 -Y6-	RT	530		2.7	-0.2														
		530	531		-0.2	-0.2	0.001				20					X	X	X	X
10+55 -Y6-	LT	532		2.8	-0.2														
		532	531		-0.2	-0.2	0.001				24					X	X	X	X
10+54 -Y6-	RT	531		2.8	-0.2														
		531	529		-0.2	-0.3	0.001				20					X	X	X	X
29+24 -L-	RT	529		2.4	-0.3														
		529	528		-0.3	-0.3	0.001				20					X	X	X	X
29+20 -L-	RT	528		3.5	-0.3														
		528	527		-0.3	-0.4	0.001				72					X	X	X	X
28+46 -L-	RT	527		3.4	-0.4														
		527	560		-0.4	-0.4	0.001					56				X	X	X	X
28+50 -L-	LT	560		3.5	-0.4														
		560	510		-0.4	-0.5	0.001					96				X	X	X	X
29+98 -L-	LT	511		3.6	1.5														
		511	510		1.5	-0.1	0.030		52							X	X	X	X
29+46 -L-	LT	510		3.5	-0.5														
		510	504		-0.5	-0.6	0.001					128				X	X	X	X
29+63 -L-	LT	504		3.2	-0.6														
		504	533		-0.6	-0.7	0.001					56				X	X	X	X
29+98 -L-	RT	534		3.6	0.6														
		534	535		0.6	0.4	0.003		44							X	X	X	X
9+19.43 -Y5-		515			-5.5	-5.6	0.001												
11+03.25 -Y7-		503			-5.9	-6.1	0.001												
SHEET TOTALS									220		328	336	68						

STATION	STRUCTURE NO.	ENDWALLS STD. 838.01 OR STD. 838.11 (UNLESS NOTED OTHERWISE) CU. YARDS R.C.P.	C.S.P.	QUANTITIES FOR DRAINAGE STRUCTURES PER EACH (0' THRU 5.0')	*TOTAL L.F. FOR PAY QUANTITY SHALL BE COL. 'A' + (1.3 X COL.'B') LIN. FT. A 5.0' THRU 10.0'	B 10.0' AND ABOVE	C.B. STD. 840.01 OR STD. 840.02	FRAME, GRATES, AND HOOD STANDARD 840.03 TYPE OF GRATE E	F	G	CONCRETE TRANSITIONAL SECTION DROP INLET	CATCH BASIN	D.I. STD. 840.14 OR STD. 840.15	D.I. FRAME AND GRATE STD. 840.16	G.D.I. TYPE "A" STD. 840.17 OR 840.26	G.D.I. (NS) FRAME WITH TWO FLAT GRATES 840.29	J.B. STD. 840.31 OR 840.32	T.B.J.B. STD. 840.34	M.H. FRAME AND COVER STD. 840.54	OVERSIZED CATCH BASIN (SEE DETAIL 2-M)	OFFSET CATCH BASIN (SEE DETAIL 2-N)	ADJUSTMENT OF DROP INLETS	CONVERT JUNCTION BOX TO CATCH BASIN	CONC. & BRICK PIPE PLUG, C.Y. STD. 840.71	CONC. COLLARS CL. "B" C.Y. STD. 840.72	PIPE REMOVAL LIN. FT.	REMARKS
10+56 -Y4-	518			1			1		1																		282	REMOVE EXIST CB
26+05 -Y-	521			1									1	1													50	REMOVE EXIST DI
26+71 -Y-	522			1			1		1																			
26+83 -L-	523			1			1		1																		72	REMOVE EXIST CB AND MH
12+85 -Y5-	524			1			1			1																		REMOVE EXIST CB
11+73 -Y5-	508			1			1			1																		
12+80 -Y5-	525			1			1		1																			REMOVE EXIST CB
27+62 -L-	526			1			1			1																	47	46" X 36" CMAP (88')
27+68 -L-	509			1			1		1																			REMOVE EXIST CB
10+75 -Y6-	530			1			1			1																	82	REMOVE (2) EXIST DI
10+55 -Y6-	532			1			1			1															0.045			PLUG, FILL & ABANDON
10+54 -Y6-	531			1			1		1																		114	REMOVE (2) EXIST CB
29+24 -L-	529			1									1	1														
29+20 -L-	528			1					1													1					31	REMOVE EXIST CB
28+46 -L-	527			1						1												1					46	46" X 36" CMAP AND CB
28+50 -L-	560			1					1													1					12	46" X 36" CMAP AND (2) JB
29+98 -L-	511			1					1													1						
29+46 -L-	510			1				1														1					32	REMOVE EXIST MH
29+63 -L-	504			1													1		1								29	REMOVE EXIST MH
29+98 -L-	534			1						1												1					51	REMOVE EXIST CB
9+19.43 -Y5-	515																											72 LF 9'7"x6'6" CAAPA CULVERT WITH ALUMINUM HEADWALLS
11+03.25 -Y7-	503																											205 LF 9'7"x6'6" CAAPA CULVERT WITH ALUMINUM HEADWALLS
SHEET TOTALS				20			11	1	9	7			2	2			1		1			6			0.045		848	

ABBREVIATIONS

C.B.	CATCH BASIN
N.D.I.	NARROW DROP INLET
D.I.	DROP INLET
G.D.I.	GRATED DROP INLET
G.D.I.(N.S.)	(NARROW SLOT)
J.B.	JUNCTION BOX
M.H.	MANHOLE
T.B.D.I.	TRAFFIC BEARING DROP INLET
T.B.J.B.	TRAFFIC BEARING JUNCTION BOX

COMPUTED BY: GLD DATE: 10/18/2010

CHECKED BY: JWM DATE: 1/3/2011

NORTH CAROLINA DEPARTMENT OF TRANSPORTATION
DIVISION OF HIGHWAYS

PROJECT NO.	SHEET NO.
U-4438	3-D

Kimley-Horn and Associates, Inc. P.O. Box 33068 Raleigh, N.C. 27636-3068

DD83305

LIST OF PIPES, ENDWALLS, ETC. (FOR PIPES 48 INCHES & UNDER)

STATION	LOCATION (LT, RT, OR CL)'	STRUCTURE NO.		TOP ELEVATION	INVERT ELEVATION	INVERT ELEVATION	SLOPE CRITICAL	DRAINAGE PIPE (HDPE PIPE WITH WATER TIGHT JOINTS AND CONNECTIONS)												C.S. PIPE								R.C. PIPE CLASS III								R.C. PIPE CLASS IV								** " R.C. PIPE (CLASS V)	***" RC PIPE CULVERTS, CONTRACTOR DESIGN	***" RC PIPE CULVERTS, CONTRACTOR DESIGN
SIZE / THICKNESS OR GAUGE		FROM	TO					12"	15"	18"	24"	30"	36"	42"	48"	DO NOT USE RCP	DO NOT USE CSP	DO NOT USE CAAP	DO NOT USE PVC	12"	15"	18"	24"	30"	36"	42"	48"	12"	15"	18"	24"	30"	36"	42"	48"	12"	15"	18"	24"	30"	36"	42"	48"			
SHEET 5 (CONT.)																																														
30+45 -L-	RT	535		3.7	0.4																																									
		535	537		0.1	-0.2	0.003			104						X	X	X	X																											
30+51 -L-	RT	536		3.2	0.7																																									
		537	538		0.1	0.1	0.002			12						X	X	X	X																											
31+51 -L-	RT	537		3.5	-0.2																																									
		536	535		0.2	0.116	0.002		20							X	X	X	X																											
31+64 -L-	RT	538		3.5	0.1																																									
		538	541		0.1	-0.1	0.003			76						X	X	X	X																											
12+86 -Y7-	RT	539		3.4	0.4																																									
		539	540		0.4	0.4	0.003		24							X	X	X	X																											
12+87 -Y7-	LT	540		3.4	0.4																																									
		540	541		0.4	0.3	0.003		36							X	X	X	X																											
32+42 -L-	RT	541		3.6	-0.1																																									
		541	542		-0.1	-0.2	0.003			32						X	X	X	X																											
32+72 -L-	RT	543		3.1	0.4																																									
		543	542		0.4	0.3	0.003		16							X	X	X	X																											
11+76 -L1-	RT	549		6.1	2.9																																									
		549	547		1.8	1.0	0.042		28							X	X	X	X																											
12+90 -Y8-	LT	548		4.1	1.1																																									
		548	547		1.1	1.0	0.004			16						X	X	X	X																											
12+95 -Y8-	LT	547		4.4	1.0																																									
		547	546		1.0	1.0	0.000			40						X	X	X	X																											
12+95 -Y8-	RT	546		4.5	1.0																																									
		546	550		1.0	0.6	0.007			60						X	X	X	X																											
10+70 -L1-	RT	550		4.0	0.6																																									
		550	542		0.6	-0.2	0.007			112						X	X	X	X																											
32+72 -L-	RT	542		3.6	-0.2																																									
		542	544		-0.2	-0.4	0.003				56					X	X	X	X																											
31+43 -L-	LT	512		3.5	0.5																																									
		512	513		0.5	0.5	0.002		12							X	X	X	X																											
31+56 -L-	LT	513		3.6	0.5																																									
		513	544		0.5	0.1	0.003		120							X	X	X	X																											
32+72 -L-	LT	544		3.6	-0.4																																									
		544	545		-0.4	-0.5	0.004				20					X	X	X	X																											
10+13 -Y7-	RT	558		2.7	-0.2																																									
		558	557		-0.2	-0.6	0.010			32						X	X	X	X																											
10+13 -Y7-	LT	557		2.7	-0.6																																									
		557	561		-0.6	-1.5	0.010			92						X	X	X	X																											
11+04 -Y7-	LT	561		4.3	-1.5																																									
		561	559		-1.4	-1.8	0.009			44						X	X	X	X																											
		555	556		-4.0	-4.0	0.001				88					X	X	X	X																											
8+52 -Y5-	RT	562		2.9	-0.4																																									
		562	563		-0.4	-0.7	0.011		20							X	X	X	X																											
8+52 -Y5-	LT	563		2.9	-0.7																																									
		563	564		-0.7	-1.2	0.010			56						X	X	X	X																											
9+11 -Y5-	LT	564		3.4	-1.2																																									
		564	565		-1.2	-1.5	0.012			24						X	X	X	X																											
SHEET TOTALS									276	700	164																																			

STATION	STRUCTURE NO.		ENDWALLS STD. 838.01 OR STD. 838.11 (UNLESS NOTED OTHERWISE) CU. YARDS		QUANTITIES FOR DRAINAGE STRUCTURES	*TOTAL L.F. FOR PAY QUANTITY SHALL BE COL. 'A' + (1.3 X COL.'B') LIN. FT.		C.B. STD. 840.01 OR STD. 840.02	FRAME, GRATES, AND HOOD STANDARD 840.03 TYPE OF GRATE			CONCRETE TRANSITIONAL SECTION		D.I. STD. 840.14 OR STD. 840.15	D.I. FRAME AND GRATE STD. 840.16	G.D.I. TYPE "A" STD. 840.17 OR 840.26	G.D.I. (NS) FRAME WITH TWO FLAT GRATES 840.29	J.B. STD. 840.31 OR 840.32	T.B.J.B. STD. 840.34	M.H. FRAME AND COVER STD. 840.54	OVERSIZED CATCH BASIN (SEE DETAIL 2-M)	OFFSET CATCH BASIN (SEE DETAIL 2-N)	ADJUSTMENT OF DROP INLETS	CONVERT JUNCTION BOX TO CATCH BASIN	CONC. & BRICK PIPE PLUG, C.Y. STD. 840.71	CONC. COLLARS CL. "B" C.Y. STD. 840.72	PIPE REMOVAL LIN. FT.	REMARKS
	FROM	TO	R.C.P.	C.S.P.	PER EACH (0' THRU 5.0')	A 5.0' THRU 10.0'	B 10.0' AND ABOVE		E	F	G	DROP INLET	CATCH BASIN															
SHEET 5 (CONT.)																												
30+45 -L-	535				1						1											1						
	535	537																										
30+51 -L-	536				1									1	1													
	537	538																										
31+51 -L-	537				1					1												1						
	536	535																										
31+64 -L-	538				1					1												1					39	REMOVE EXIST CB
	538	541																										
12+86 -Y7-	539				1			1			1																	
	539	540																										
12+87 -Y7-	540				1			1		1																		
	540	541																										
32+42 -L-	541				1						1											1					34	REMOVE EXIST CB
	541	542																										
32+72 -L-	543				1									1	1													
	543	542																										
11+76 -L1-	549				1			1			1																	
	549	547																										
12+90 -Y8-	548				1									1	1												50	REMOVE EXIST DI
	548	547																										
12+95 -Y8-	547				1			1		1																	71	REMOVE EXIST CB
	547	546																										
12+95 -Y8-	546				1			1			1																20	REMOVE EXIST CB
	546	550																										
10+70 -L1-	550				1						1											1						
	550	542																										
32+72 -L-	542				1						1											1					47	REMOVE EXIST CB
	542	544																										
31+43 -L-	512				1						1											1					62	REMOVE EXIST DI
	512	513																										
31+56 -L-	513				1						1											1						
	513	544																										
32+72 -L-	544				1			1		1																	255	REMOVE EXIST DI
	544	545																										
10+13 -Y7-	558				1			1	1																		255	REMOVE EXIST DI
	558	557																										
10+13 -Y7-	557				1											1	1										259	REMOVE EXIST DI
	557	561																										
11+04 -Y7-	561				1	0.7		1		1																		
	561	559																										TIE TO ENDWALL
	555	556																									259	78" CMP (48')
8+52 -Y5-	562				1			1	1																			TIE TO RETAINING WALL
	562	563																										
8+52 -Y5-	563				1			1	1																			
	563	564																										
9+11 -Y5-	564				1			1		1																		
	564	565																										TIE TO ENDWALL
																											140	2 @ 48" CMP
SHEET TOTALS					23	0.7		11	3	7	9			3	3	1	1					8					1491	

ABBREVIATIONS

C.B.	CATCH BASIN
N.D.I.	NARROW DROP INLET
D.I.	DROP INLET
G.D.I.	GRATED DROP INLET
G.D.I.(N.S.)	(NARROW SLOT)
J.B.	JUNCTION BOX
M.H.	MANHOLE
T.B.D.I.	TRAFFIC BEARING DROP INLET
T.B.J.B.	TRAFFIC BEARING JUNCTION BOX

DD83305

COMPUTED BY: GLD DATE: 10/18/2010

CHECKED BY: JWM DATE: 1/3/2011

NORTH CAROLINA DEPARTMENT OF TRANSPORTATION
DIVISION OF HIGHWAYS

PROJECT NO.	SHEET NO.
U-4438	3-E

Kimley-Horn and Associates, Inc. P.O. Box 33068 Raleigh, N.C. 27636-3068

LIST OF PIPES, ENDWALLS, ETC. (FOR PIPES 48 INCHES & UNDER)

STATION / SIZE / THICKNESS OR GAUGE	LOCATION (LT, RT, OR CL)	STRUCTURE NO. FROM	STRUCTURE NO. TO	TOP ELEVATION	INVERT ELEVATION	INVERT ELEVATION	SLOPE CRITICAL	DRAINAGE PIPE (HDPE PIPE WITH WATER TIGHT JOINTS AND CONNECTIONS) 12"	15"	18"	24"	30"	36"	42"	48"	DO NOT USE RCP	DO NOT USE CSP	DO NOT USE CAAP	DO NOT USE PVC	C.S. PIPE 12"	15"	18"	24"	30"	36"	42"	48"	R.C. PIPE CLASS III 12"	15"	18"	24"	30"	36"	42"	48"	R.C. PIPE CLASS IV 12"	15"	18"	24"	30"	36"	42"	48"	** " R.C. PIPE (CLASS V)	***" RC PIPE CULVERTS, CONTRACTOR DESIGN	***" RC PIPE CULVERTS, CONTRACTOR DESIGN	ENDWALLS STD. 838.01 OR STD. 838.11 (UNLESS NOTED OTHERWISE) CU. YARDS R.C.P.	C.S.P.	QUANTITIES FOR DRAINAGE STRUCTURES PER EACH (0' THRU 5.0')	*TOTAL L.F. FOR PAY QUANTITY SHALL BE COL. 'A' + (1.3 X COL.'B') LIN. FT. A 5.0' THRU 10.0'	B 10.0' AND ABOVE	C.B. STD. 840.01 OR STD. 840.02	FRAME, GRATES, AND HOOD STANDARD 840.03 TYPE OF GRATE E	F	G	CONCRETE TRANSITIONAL SECTION DROP INLET	CATCH BASIN	D.I. STD. 840.14 OR STD. 840.15	D.I. FRAME AND GRATE STD. 840.16	G.D.I. TYPE "A" STD. 840.17 OR 840.26	G.D.I. (NS) FRAME WITH TWO FLAT GRATES 840.29	J.B. STD. 840.31 OR 840.32	T.B.J.B. STD. 840.34	M.H. FRAME AND COVER STD. 840.54	OVERSIZED CATCH BASIN (SEE DETAIL 2-M)	OFFSET CATCH BASIN (SEE DETAIL 2-N)	ADJUSTMENT OF DROP INLETS	CONVERT JUNCTION BOX TO CATCH BASIN	CONC. & BRICK PIPE PLUG, C.Y. STD. 840.71	CONC. COLLARS CL. "B" C.Y. STD. 840.72	PIPE REMOVAL LIN. FT.	REMARKS
SHEET 6																																																																							
20+80 -L1-	LT	601		7.1	3.9																																												1			1			1																32	REMOVE (2) EXIST STRUCTURES
		601	602		3.9	2.7	0.020			60						X	X	X	X																																																					
SHEET 7																																																																							
6+18 -Y1-	RT	714		2.6	-0.5																																												1			1	1																				
		714	706		-0.5	-0.6	0.007		8							X	X	X	X																																																					
6+12 -Y1-	RT	706		2.8	-3.7																																												1	1.5														1	1									
		706	701		-3.7	-3.7	0.001							20		X	X	X	X																																																				
6+18 -Y1-	LT	707		2.2	-0.7																																												1			1	1																				
		707	701		-0.7	-0.9	0.008			16						X	X	X	X																																																					
6+01 -Y1-	LT	701		2.1	-3.7																																												1	0.9										1	1													
		701	702		-3.7	-3.8	0.001							148		X	X	X	X																																																				
11+63 -Y9-	RT	702		1.0	-3.8																																												1											1	1											39	REMOVE EXIST DI, 76" X 54" PIPE
		702	703		-3.8	-4.2	0.001							312		X	X	X	X																																																			
14+58 -Y9-	LT	700		1.1	-3.2																																												1									1	1													40	REMOVE EXIST DI
		700	703		-3.2	-4.0	0.019		44							X	X	X	X																																																					
14+78 -Y9-	RT	703		1.6	-4.2																																												1	0.8										1	1											60	REMOVE (3) EXIST DI
		703	704		-4.2	-4.3	0.001							144		X	X	X	X																												6																									TIE TO ENDWALL
														268																																																								
5+92 -Y1-	RT	709		2.8	-3.6																																												1	1.4										1	1											294	REMOVE EXIST DI, 36" X 54" PIPE
		709	710		-3.6	-3.7	0.001							24		X	X	X	X																																																			
5+93 -Y1-	LT	710		2.2	-3.7																																												1	0.8										1	1											349	REMOVE EXIST DI, 36" X 54" PIPE
		710	711		-3.7	-3.8	0.001							148		X	X	X	X																																																				
11+65 -Y9-	LT	711		1.1	-3.8																																												1											1	1												
		711	712		-3.8	-4.2	0.001							312		X	X	X	X																																																				
14+78 -Y9-	LT	712		1.6	-4.2																																												1	0.8										1	1												TIE TO ENDWALL
		712	713		-4.2	-4.3	0.001							144		X	X	X	X																																																				
																																																														5									SEE SHEET 2-N. USE AT THE DISCRETION OF THE ENGINEER
SHEET TOTALS									52	76				1520																																	6		12	6.1		3	2		1			1	1	7	7		1	6							814	
PROJECT TOTALS									680	808	492	812	680	3156																																	6		101	23.9		49	14	31	31			9	9	9	9	1	7	13	12	14	5	1	0.045		4323	
SAY																																																			24																		1	1			

ABBREVIATIONS

C.B.	CATCH BASIN
N.D.I.	NARROW DROP INLET
D.I.	DROP INLET
G.D.I.	GRATED DROP INLET
G.D.I.(N.S.)	(NARROW SLOT)
J.B.	JUNCTION BOX
M.H.	MANHOLE
T.B.D.I.	TRAFFIC BEARING DROP INLET
T.B.J.B.	TRAFFIC BEARING JUNCTION BOX

COMPUTED BY: J.JOHNSON DATE: 5/24/10
CHECKED BY: J.PACE DATE: 5/25/10

STATE OF NORTH CAROLINA
DIVISION OF HIGHWAYS

PROJECT REFERENCE NO.	SHEET NO.
U-4438	3-F

Kimley-Horn and Associates, Inc.
P.O. BOX 33068
RALEIGH, N.C. 27636-3068

"N" = DISTANCE FROM EDGE OF LANE TO FACE OF GUARDRAIL.
TOTAL SHOULDER WIDTH = DISTANCE FROM EDGE OF TRAVEL LANE TO SHOULDER BREAK POINT.
FLARE LENGTH = DISTANCE FROM LAST SECTION OF PARALLEL GUARDRAIL TO END OF GUARDRAIL.
W = TOTAL WIDTH OF FLARE FROM BEGINNING OF TAPER TO END OF GUARDRAIL.
G = GATING IMPACT ATTENUATOR TYPE 350
NG = NON-GATING IMPACT ATTENUATOR TYPE 350

GUARDRAIL SUMMARY

SURVEY LINE	BEG. STA.	END STA.	LOCATION	LENGTH			WARRANT POINT		"N" DIST. FROM E.O.L.	TOTAL BERM WIDTH	FLARE LENGTH		W		ANCHORS				IMPACT ATTENUATOR TYPE 350			SINGLE FACED GUARDRAIL	REMOVE EXISTING GUARDRAIL	CONCRETE BARRIER TRANSITION	REMARKS
				STRAIGHT	SHOP CURVED	DOUBLE FACED	APPROACH END	TRAILING END			APPROACH END	TRAILING END	APPROACH END	TRAILING END	GRAU 350	TYPE-III	CAT-1	AT-1	EA	G	NG				
-Y7-	11+50.50	11+81.75	LT	31.25					8	8								1							
-Y8-	13+01.43	13+07.68	RT	6.25					7.5	8								1					60		
-L-	32+52.50	33+15.00	LT	62.50	25.00				8.5	9.5															
-L1-	11+87.61	11+96.63	MEDIAN																1		1				QUADGUARD
-L1-	11+92.88	12+11.63	RT	18.75	50.00		12+11.63		7.5	8						1									
-L1-	11+96.63	12+11.63	MEDIAN																					1	SEE DETAIL 2-P
-L1-	14+38.00																		1		1				SEE STRUCTURE PLANS FOR DETAIL AND PLACEMENT
-L2-	10+00.00	11+25.00	LT	125.00					8.5	9.5	50		1		1										
-L2-	11+72.05	12+09.55	LT	37.50				12+09.55	7.5	8						1	1								
-L2-	20+52.13	21+83.38	LT	131.25							50		1		1	1							125		
-L2-	20+52.13	22+58.38	RT	206.25							50		1		1	1							202		
			SUBTOTAL	618.75	75.00																				
	LESS ANCHOR DEDUCTIONS																								
	TYPE-III	4 @ 18.75'	=	-75.00'																					
	CAT-1	1 @ 6.25'	=	-6.25'																					
	AT-1	2 @ 6.25'	=	-12.50'																					
	GRAU 350	3 @ 50.00'	=	-150.00'																					
			TOTAL	375	75.00																				
															3	4	1	2	2				387	1	
			SAY	400																					

ADDITIONAL GUARDRAIL POSTS = 5 EA

REMOVAL OF EXISTING ASPHALT PAVEMENT

LINE	STATION TO STATION	LOCATION	SQ. YDS.
-L-	STA 16+00.00 TO STA 18+00.00	LT /RT	1,089
-L-	STA 18+00.00 TO STA 28+76.15	LT /RT	6,457
-L-	STA 18+93.07 TO STA 19+50.29	LT	61
-L-	STA 13+02.00 TO STA 19+43.00	RT	422
-Y1-	STA 5+75.00 TO STA 8+84.23	LT /RT	825
-Y1-	STA 8+84.23 TO STA 10+04.23	LT /RT	373
-Y1-	STA 10+04.23 TO STA 11+20.00	LT /RT	412
-Y1-	STA 11+20.00 TO STA 11+61.00	LT /RT	206
-Y2-	STA 10+27.00 TO STA 10+67.99	LT /RT	195
-Y2-	STA 10+67.99 TO STA 11+30.00	LT /RT	220
-Y3-	STA 10+27.07 TO STA 10+49.36	LT /RT	69
-Y3-	STA 10+49.36 TO STA 11+08.00	LT /RT	130
-Y4-	STA 10+27.06 TO STA 10+49.21	LT /RT	83
-Y4-	STA 10+49.21 TO STA 10+80.00	LT /RT	89
-Y5-	STA 7+82.00 TO STA 11+83.35	LT /RT	892
-Y5-	STA 11+83.35 TO STA 12+01.45	LT /RT	51
-Y5-	STA 12+55.83 TO STA 12+78.97	LT /RT	81
-Y5-	STA 12+78.97 TO STA 13+73.00	LT /RT	251
-Y6-	STA 10+40.00 TO STA 10+47.97	LT /RT	22
-Y6-	STA 10+47.97 TO STA 11+47.00	LT /RT	264
-Y7-	STA 9+74.00 TO STA 11+38.60	LT /RT	585
-Y7-	STA 11+38.60 TO STA 11+76.00	LT /RT	140
-Y7-	STA 12+75.00 TO STA 12+80.81	LT /RT	16
-Y7-	STA 12+80.81 TO STA 13+40.00	LT /RT	158
-Y8-	STA 11+09.34 TO STA 12+05.90	LT /RT	461
-Y8-	STA 12+90.00 TO STA 12+98.04	LT /RT	34
-Y8-	STA 12+98.04 TO STA 13+66.00	LT /RT	287
TOTAL			13,873
SAY			14,000 SY*
SAY			6,100 CY

* THE SY QUANTITY IS FOR INFORMATIONAL PURPOSES ONLY, THE REMOVAL OF EXISTING ASPHALT PAVEMENT SHALL BE PAID FOR PER CY. SEE REMOVAL OF EXISTING ASPHALT PAVEMENT SPECIAL PROVISION.

SUMMARY OF EARTHWORK
IN CUBIC YARDS

LOCATION	UNCLASSIFIED EXCAVATION	UNDERCUT	EMBT+%	BORROW	WASTE
-L- STA 16+00.00 TO STA 33+15.00	593	21,500	540	125	21,678
-L1- STA 10+00.00 TO STA 12+11.63 (BEGIN BRIDGE)	82		134	77	25
-L1- STA 20+51.50 (END BRIDGE) TO STA 24+84.00	62		38		24
-Y1- STA 5+75.00 TO STA 11+61.00	164		94		70
-Y2- STA 10+27.00 TO STA 11+30.00	32		8		24
-Y3- STA 10+27.07 TO STA 11+08.00	19		9		10
-Y4- STA 10+27.06 TO STA 10+80.00	8		3		5
-Y5- STA 7+82.00 TO STA 12+01.45	72		442	392	22
-Y5- STA 12+55.83 TO STA 13+73.00	31		21		10
-Y6- STA 10+27.01 TO STA 11+47.00	26		29	11	8
-Y7- STA 9+74.00 TO STA 12+05.60	40		384	356	12
-Y7- STA 12+59.64 TO STA 13+40.00	16		17	6	5
-Y8- STA 12+55.01 TO STA 13+66.00	25		13		12
-Y9- STA 18+32.78 TO STA 21+37.46			654	654	
-Y9- STA 23+42.97 TO STA 25+07.64			77	77	
TOTALS	1,170	21,500	2,463	1,698	21,905
EARTH WASTE TO REPLACE BORROW				-1,698	-1,698
GRAND TOTALS	1,170	21,500	2,463	0	20,207
CONTINGENCY UNDERCUT		1,030			
SAY	1,200	22,530			
SHALLOW UNDERCUT = 500 CY					
SELECT GRANULAR MATERIAL = 1,000 CY					
CLASS IV SUBGRADE STABILIZATION = 1,000 TONS					
DDE = 5,810 CY					
SHOULDER BORROW = 1,290 CY					

NOTE: "QUANTITIES ARE APPROXIMATE ONLY. THE RESIDENT ENGINEER WILL RE-CROSS-SECTION THE WORK ACCURATELY WHEN THE PROJECT IS STAKED OUT. THESE CROSS-SECTION NOTES WILL BE USED IN COMPUTING THE FINAL QUANTITIES FOR WHICH THE CONTRACTOR WILL BE PAID."

NOTE: EARTHWORK QUANTITIES ARE CALCULATED BY THE ROADWAY DESIGN UNIT. THESE QUANTITIES ARE BASED IN PART ON SUBSURFACE DATA PROVIDED BY THE GEOTECHNICAL ENGINEERING UNIT.

$FILEL$
$DATE$

PROJ. REFERENCE NO.	SHEET NO.
U-4438	3-G

Kimley-Horn and Associates, Inc.
P.O. Box 33068
Raleigh, N.C.
27636-3068

STATE OF NORTH CAROLINA
DIVISION OF HIGHWAYS

PARCEL INDEX SHEET

PARCEL No.	SHEET No.	PROPERTY OWNER NAME
1	4	PASQUOTANK COUNTY
2	4	REDEVELOPMENT COMMISSION OF THE CITY OF ELIZABETH CITY
3	4	EMILY H. MCCARTHY
4	4, 5, 7	PASQUOTANK COUNTY
5	4	O.C. ABBOTT AND H.T. MULLEN, JR
6	4, 5	RICHARD M. KING
7	5	ELIZABETH CITY
8	5	CITY OF ELIZABETH CITY
9	5	NEW LIFE FAMILY CENTER
10	5	HAZYL, LLC
11	5	HAROLD L. TURNER ET UX
12	5	NEW LIFE FAMILY CENTER
13	5	NORTHSHORE INVESTMENTS, L.L.C.
14	5	WAREHOUSE PROP OF ELIZ CITY LLC
15	5	FOOTPRINT PROPERTIES LLC
16	5	JOSEPH HUDAK ET UX
17	5	A. JOSH TUNNELL ET UX
18	5	MANN CAPITAL PROPERTIES LIMITED, GARY T MANN ET AL
19	5	CITY OF ELIZABETH CITY
20	5	VALUE MART, INC.
20A	5	WILLIAM MANN
21	5	CITY OF ELIZABETH CITY
22	6	CALVIN GUTMAN, JR.
23	6	GARDNER POINTE CONDOMINIUMS
24	6	HARBOR PLACE CONDOMINIUMS
25	6	NO CLAIM
26	6	MACHELHE COVE CONDOMINIUMS
27	6	CITY OF ELIZABETH CITY
28	4, 5	PASQUOTANK COUNTY
29	5	ELIZABETH CITY
30	5	LENNIE L. HUGHES ET UX
31	5	WARREN Z. MEADS
32	5	MANN CAPITAL PROPERTIES, LTD.
33	5	SANDERS COMPANY, INC.
34	5	SANDERS COMPANY, INC.
35	5	AMBROSE SIGNS, INC.
36	7	NEAT HOMES LLC
37	5, 7	MELVIN DONALD WATKINS
38	7	MID-ATLANTIC CHRISTIAN UNIVERSITY
39	5	PASSPORT RENT-A-CENTER
40	7	JOSEPH REV. STYONS, et ux
41	5	JENNETTE FRUIT & PRODUCE CO., INC.
42	5	ELIZABETH CITY
43	5	S.E.P. OF E.C., LLC
44	5, 7	SHEILA S. ALBURY
45	5	DANIEL BIRCH
46	5	WILLIAM R. & DARLENE M. SANDERLIN

PROJECT REFERENCE NO.	SHEET NO.
U-4438	4
R/W SHEET NO.	
ROADWAY DESIGN ENGINEER	HYDRAULICS ENGINEER

Kimley-Horn and Associates, Inc.
P.O. BOX 33068
RALEIGH, N.C. 27636-3068

RIGHT-OF-WAY REV.
CONST. REV.

NORTH CAROLINA PROFESSIONAL SEAL 024436 1-25-11 ENGINEER JEFFREY W. HOOPER

NORTH CAROLINA PROFESSIONAL SEAL 026480 ENGINEER JERRY D. ROBINSON, JR. 1-25-11

REVISIONS

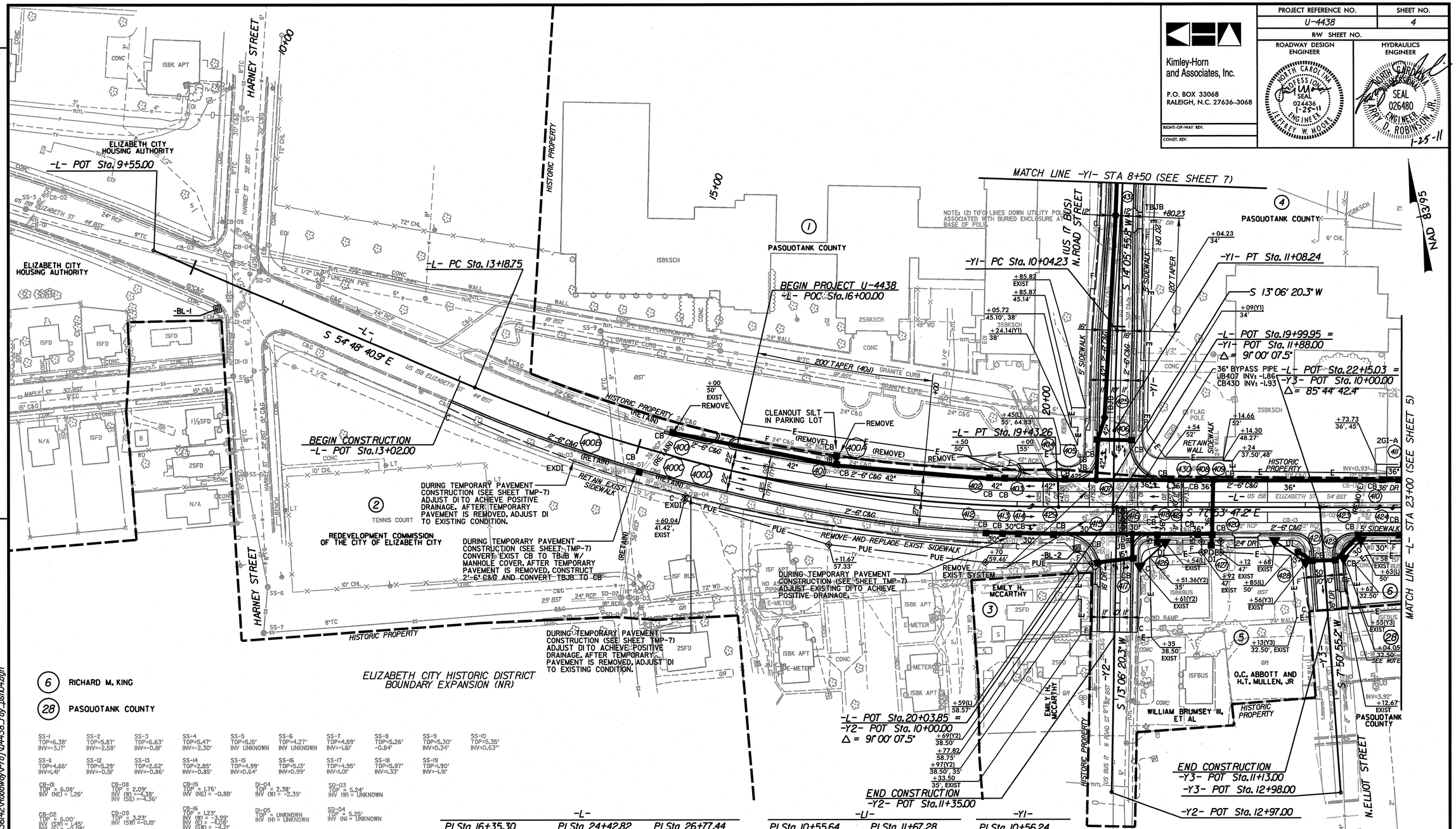

SS-1 TOP=6.38' INV=-3.17'
SS-2 TOP=5.87' INV=-2.58'
SS-3 TOP=6.63' INV=-0.81'
SS-4 TOP=5.47' INV=-2.30'
SS-5 TOP=5.15' INV UNKNOWN
SS-6 TOP=4.27' INV UNKNOWN
SS-7 TOP=4.59' INV=-1.61'
SS-8 TOP=5.26' -0.84'
SS-9 TOP=5.30' INV=0.34'
SS-10 TOP=5.35' INV=0.63'
SS-11 TOP=4.66' INV=1.41'
SS-12 TOP=5.29' INV=-0.51'
SS-13 TOP=2.62' INV=-0.86'
SS-14 TOP=2.85' INV=-0.85'
SS-15 TOP=4.99' INV=0.64'
SS-16 TOP=5.13' INV=0.99'
SS-17 TOP=4.95' INV=1.01'
SS-18 TOP=5.97' INV=1.33'
SS-19 TOP=1.90' INV=-1.91'

CB-01 TOP = 6.08' INV (NE) = 1.26'
CB-02 TOP = 6.00' INV (SW) = 1.45' INV (E) = -0.08'
CB-03 TOP = 5.75' INV (W) = -0.38' INV (E) = -0.38
CB-04 TOP = 5.31' INV (SE) = 1.03' INV (NW) = 1.10'
CB-05 TOP = 5.66' INV (SE) = 1.21'
CB-06 TOP = 3.15' INV (S) = 0.10' INV (E) = -2.72 INV (W) = -2.91'
CB-07 TOP = 3.23' INV (N) = -0.17' INV (W) = -2.58' INV (E) = -2.98' INV (S) = UNKNOWN
CB-08 TOP = 2.09' INV (W) = -4.38' INV (SE) = -4.36'
CB-09 TOP = 3.23' INV (SW) = -0.18'
CB-10 TOP = 1.73' INV (W) = -2.38' INV (E) = -2.36'
CB-11 TOP = 1.52' INV (NW) = -3.28' INV (E) = -3.67' INV (S) = -3.67'
CB-12 TOP = UNKNOWN INV = UNKNOWN
CB-13 TOP = 1.02' INV (W) = -3.92' INV (E) = -3.92' INV (SE) = -4.25'
CB-14 TOP = 1.50' INV (NW) = -1.59'
CB-15 TOP = 1.76' INV (NE) = -0.88'
CB-16 TOP = 1.23' INV (W) = -3.99' INV (E) = -4.08' INV (SW) = -4.21' INV (N) = -4.28'
CB-17 TOP = 1.51' INV (S) = -1.92' INV (NE) = -1.80'
CB-18 TOP = 6.24' INV (S) = 4.12'
DI-01 TOP = 4.73' INV (N) = 1.80'
DI-02 TOP = 5.49' INV (S) = UNKNOWN INV (N) = 1.49'
DI-03 TOP = 3.47' INV (E) = -1.92'
DI-04 TOP = 2.38' INV (W) = -2.39'
DI-05 TOP = UNKNOWN INV (N) = UNKNOWN
DI-06 TOP = 1.35' INV (W) = -3.62' INV (E) = -3.70'
DI-07 TOP = 2.46' INV (E) = -1.20'
DI-08 TOP = 0.85' INV IN=UNKNOWN INV OUT=-0.68'
SD-01 TOP = 5.74' INV (N) = 0.81' INV (S) = 0.76' INV (W) = -0.92' INV (E) = -1.75'
SD-02 TOP = 5.23' INV (N) = UNKNOWN INV (E) = UNKNOWN INV (S) = UNKNOWN INV (W) = UNKNOWN
SD-03 TOP = 5.24' INV (W) = UNKNOWN
SD-04 TOP = 5.25' INV (N) = UNKNOWN
SD-05 TOP = 4.61' INV = UNKNOWN
JB-01 TOP = UNKNOWN INV (NW) = UNKNOWN INV (SE) = UNKNOWN INV (S) = UNKNOWN INV (SW) = UNKNOWN INV (NW) = UNKNOWN
JB-02 (STORM SEWER VAULT) TOP = 2 @ INV (E) = -1.57 (PLUGGED SYSTEM)

-L-

PI Sta 16+35.30	PI Sta 24+42.82	PI Sta 26+77.44
Δ = 23° 05' 06.3" (LT)	Δ = 0° 44' 08.1" (LT)	Δ = 1° 33' 39.6" (LT)
D = 3° 41' 47.4"	D = 1° 08' 45.3"	D = 1° 54' 35.5"
L = 624.51'	L = 64.19'	L = 81.73'
T = 316.55'	T = 32.10'	T = 40.87'
R = 1,550.00'	R = 5,000.00'	R = 3,000.00'
SE = SEE PLANS	SE = SEE PLANS	SE = SEE PLANS
RO = SEE PLANS	RO = SEE PLANS	RO = SEE PLANS

-L1-

PI Sta 10+55.64	PI Sta 11+67.28
Δ = 11° 14' 55.1" (LT)	Δ = 8° 49' 44.5" (RT)
D = 10° 08' 27.0"	D = 7° 50' 55.5"
L = 110.92'	L = 112.49'
T = 55.64'	T = 56.36'
R = 565.00'	R = 730.00'
SE = SEE PLANS	SE = SEE PLANS
RO = SEE PLANS	RO = SEE PLANS

-Y1-

PI Sta 10+56.24
Δ = 0° 59' 35.5" (LT)
D = 0° 57' 17.7"
L = 104.01'
T = 52.01'
R = 6,000.00'
SE = SEE PLANS
RO = SEE PLANS

-L2-

PI Sta 10+81.35	PI Sta 12+59.76
Δ = 17° 21' 18.8" (LT)	Δ = 14° 56' 08.2" (RT)
D = 10° 44' 58.8"	D = 7° 38' 22.0"
L = 161.45'	L = 195.51'
T = 81.35'	T = 98.31'
R = 533.00'	R = 750.00'
SE = SEE PLANS	SE = SEE PLANS
RO = SEE PLANS	RO = SEE PLANS

-Y5-

PI Sta 8+75.32	PI Sta 10+18.76	PI Sta 13+05.07
Δ = 9° 39' 38.9" (LT)	Δ = 1° 03' 52.3" (LT)	Δ = 8° 26' 24.0" (LT)
D = 16° 22' 12.8"	D = 1° 38' 13.3"	D = 11° 27' 33.0"
L = 59.01'	L = 65.03'	L = 73.65'
T = 29.58'	T = 32.52'	T = 36.89'
R = 350.00'	R = 3,500.00'	R = 500.00'
SE = SEE PLANS	SE = SEE PLANS	SE = SEE PLANS
RO = SEE PLANS	RO = SEE PLANS	RO = SEE PLANS

-Y7-

PI Sta 10+76.95
Δ = 15° 13' 26.0" (LT)
D = 14° 59' 56.0"
L = 101.50'
T = 51.05'
R = 382.00'
SE = SEE PLANS
RO = SEE PLANS

-Y8-

PI Sta 11+39.11
Δ = 5° 10' 41.4" (LT)
D = 5° 43' 46.5"
L = 90.38'
T = 45.22'
R = 1,000.00'
SE = SEE PLANS
RO = SEE PLANS

NOTE: RESET EXIST FENCE 1' BEHIND SIDEWALK
-Y3- STA 10+56 LT TO STA 10+84 LT
-Y3- STA 10+49 LT TO STA 10+53 LT
-L- STA 22+39 RT TO STA 23+86 RT
-L- STA 22+89 RT TO STA 23+45 RT

SEE SHEET 2-C FOR INTERSECTION DETAILS
SEE SHEET NO.8 FOR -L- PROFILE
SEE SHEET NO.9 FOR -Y1- PROFILE
SEE SHEET NO.10 FOR -Y2- & -Y3- PROFILES

K:\RAL_Roadway\011036142\Roadway\Proj\U4438_rdy_pstl04.dgn
1/25/2011

NOTES

1. CONTRACTOR TO COMPLETELY REMOVE EXISTING BUSINESS AND CONCRETE SLAB ON PARCEL 18. CONSTRUCT WALL AND ROCK PLATING (SEE DETAIL D ON SHEET 2-E). GRADE BASED ON Y9 PROFILE. DDE = 3,360 CY

2. PROPOSED GRASS AREA AND EMERGENCY VEHICLE ACCESS AREA INCLUDING CONTROL BUILDING AND PUMP GENERATOR PAD (SEE DETAIL B ON SHEET 2-E).

3. REMOVE EXISTING 2 @ 48" CMP'S. RETAIN EXISTING PUMP SYSTEM AND 24" OUTLET PIPES. CONSTRUCT NEW PUMP SYSTEM (SEE SHEETS PS-1 TO PS-3 FOR DETAILS).

4. REMOVE EXISTING BULKHEAD AND CONSTRUCT NEW BULKHEAD TO TIE INTO EXISTING (SEE STRUCTURE SHEETS).

5. REMOVE EXISTING 36" PIPE AND DROP INLETS.

6. INSTALL 54" CHAIN LINK FENCE 1' FROM SIDEWALK -Y7- STA 10+60 TO 11+52 (LT & RT)

7. REMOVE EXISTING DRAINAGE SYSTEM BETWEEN 557 - 558

8. REMOVE EXISTING CONCRETE WALL

9. TIE PROP WALL TO PROP ALUM ARCH CULVERT HW. MITER 24" PIPE TO MATCH SLOPE ABOVE WALL.

10. REMOVE PARKING SLAB AND SAWCUT PIERS TO GROUND ELEVATION. 12' BASE DITCH. PROPOSED BEGINNING INVERT = -4.58. GRADE TO DRAIN AT 0.0985% SLOPE.

11. DO NOT DISTURB SIGN

12. PROVIDE SEALED DRAWINGS AND CALCULATIONS OF CULVERTS AND HEADWALLS. DESIGN TO BE APPROVED BY NCDOT ENGINEER. HEADWALL TO BE FULLY WELDED TO PIPE. USE 0.123" PLATE THICKNESS. TIE STORM DRAIN PIPES INTO HEADWALL. (SEE SPECIAL PROVISION)

13. TRANSITION PROP. 5' SIDEWALK TO 6'-2" WIDTH FROM -Y5- STA 8+32.80 TO STA 8+50.36 TO MATCH EXISTING.

14. RESET EXIST FENCE 1' BEHIND SIDEWALK -L- STA 22+89 RT TO -L- STA 23+45 RT

15. BRIDGE GENERATOR PAD AND ELECTRICAL CONDUIT (SEE STRUCTURE PLANS FOR DETAILS).

16. PIPE INSTALLATION IN AND ADJACENT TO EXISTING DECK SLAB TO FOLLOW PROVISIONS SHOWN ON SPECIAL DETAIL (SHEET 2-N). MAXIMUM CUT IN DECK IS APPROXIMATELY 4' WIDE.

REVISIONS

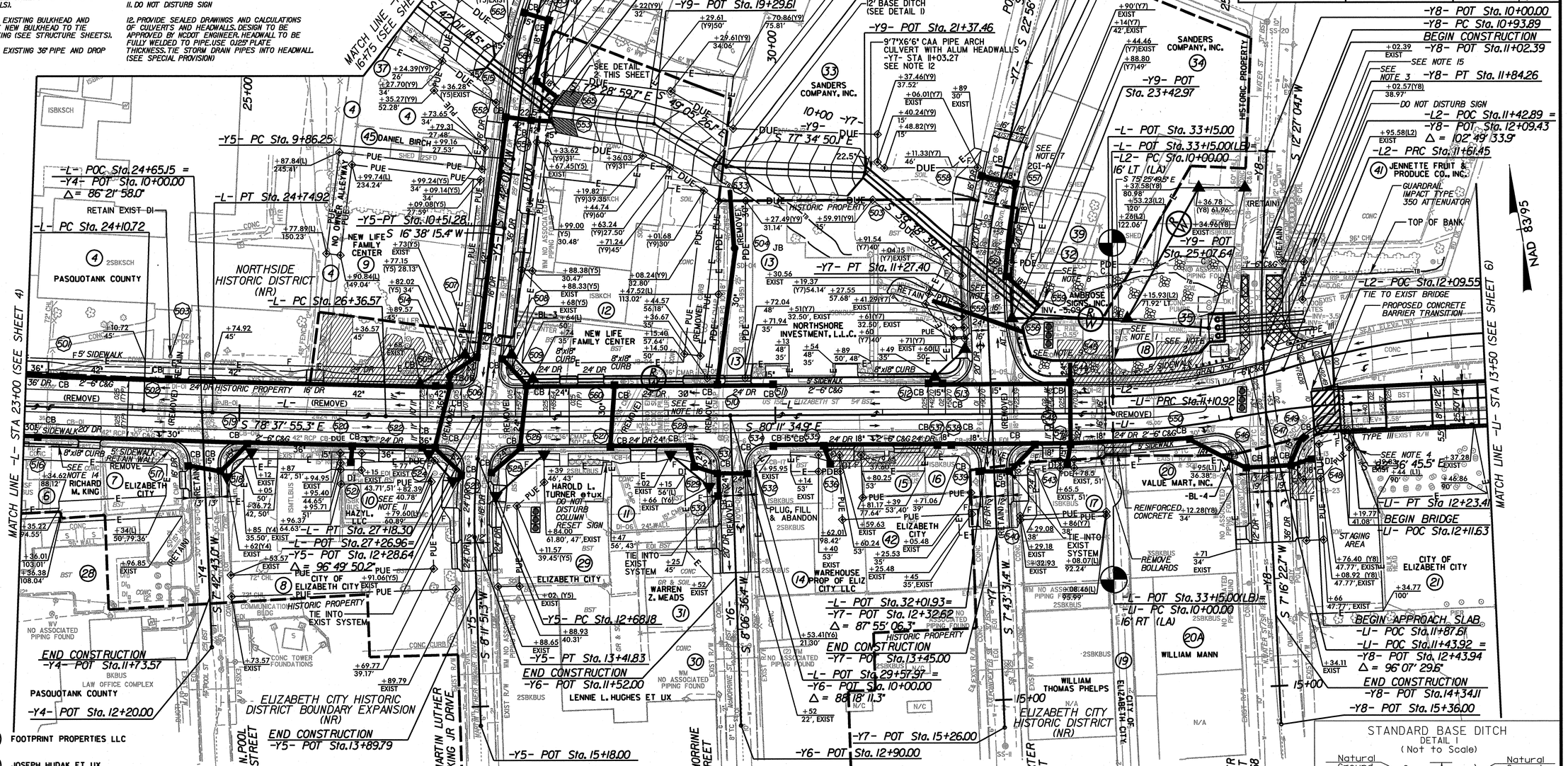

15	FOOTPRINT PROPERTIES LLC
16	JOSEPH HUDAK ET UX
17	A. JOSH TUNNELL ET UX
18	MANN CAPITAL PROPERTIES LIMITED, GARY T MANN ET AL
32	MANN CAPITAL PROPERTIES, LTD.
37	MELVIN DONALD WATKINS
39	PASSPORT RENT-A-CENTER
44	SHEILA S. ALBURY
46	WILLIAM R. & DARLENE M SANDERLIN

CB-01 TOP = 110' INV (SE) = -3.92' INV (SW) = -3.90'	CB-07 TOP = 1.70' INV (S) = -4.62' INV (W) = -4.62' INV (E) = -4.78'	CB-13 TOP = 2.00' INV (S) = -1.05'	CB-19 TOP = 2.66 INV (SE) = -0.47'
CB-02 TOP = 1.80' INV (N) = -2.97' INV (NE) = -4.26' INV (E) = -3.88' INV (SE) = -3.98'	CB-08 TOP = 1.93' INV (NE) = -2.78' INV (E) = -4.26' INV (SE) = -4.49'	CB-14 TOP = 1.64' INV (NE) = -5.42' INV (E) = -5.82' INV (SE) = -5.82'	CB-20 TOP = 2.23' INV (S) = 1.10' INV (NW) = -0.31' INV (N) = -0.62'
CB-03 TOP = UNKNOWN INV (NW) = -3.41' INV (S) = UNKNOWN	CB-09 TOP = 1.76' INV (S) = -1.40'	CB-15 TOP = 2.78' INV (SE) = -0.71'	CB-21 TOP = 3.34' INV (N) = -0.04'
CB-04 TOP = UNKNOWN INV (N) = 0.63' INV (SW) = 0.47'	CB-10 TOP = 1.60' INV (S) = -0.90' INV (NW) = -2.50'	CB-16 TOP = UNKNOWN INV (NW) = -4.93' INV (E) = -3.26'	CB-22 TOP = 4.22' INV (E) = 1.73'
CB-05 TOP = 2.34' INV (NE) = -0.99'	CB-11 TOP = 1.38' INV (NE) = -3.45'	CB-17 TOP = 1.99' INV (W) = -1.34' INV (E) = -0.96'	CB-23 TOP = 4.06' INV (SE) = 1.43' INV (E) = 1.66'
CB-06 TOP = 1.56' INV (SE) = -4.26' INV (S) = -4.26' INV (SW) = -4.54'	CB-12 TOP = 0.83' INV (N) = -3.77' INV (E) = -3.77' INV (W) = -5.82' INV (SW) = -5.18'	CB-18 TOP = 2.77' INV (SW) = -0.17'	CB-24 TOP = 2.46' INV (E) = -1.51'

DI-01 TOP = 1.28' INV (S) = -2.85' INV (E) = -2.67'	DI-07 TOP = 1.78' INV (SW) = -1.38' INV (W) = -2.17'	DI-13 TOP = 4.00' INV (S) = 1.40' INV (NW) = 1.21'				
DI-02 TOP = 1.23' INV (S) = -0.51'	DI-08 TOP = 2.03' INV (SW) = -0.24'	DI-14 TOP = 3.02' INV (E) = 1.74' INV (W) = 1.68'				
DI-03 TOP = 1.45' INV (N) = -1.65'	DI-09 TOP = 3.44' INV (S) = 0.19' INV (N) = -0.06'	DI-15 TOP = 3.42 INV (W) = 1.80' INV (S) = 1.75'				
DI-04 TOP = 0.89' INV (E) = -5.83'	DI-10 TOP = 1.52' INV (E) = -0.17' INV (SW) = -0.46'	SD-01 TOP = 6.59' INV (NE) = 0.55'				
DI-05 TOP = 1.26' INV (W) = -4.48' INV (E) = -4.56'	DI-11 TOP = 1.62' INV (W) = -0.17'	SD-02 TOP = 1.79' INV (W) = UNKNOWN INV (E) = UNKNOWN				
DI-06 TOP = 0.53' INV (NE) = 0.65' INV (NW) = -1.08'	DI-12 TOP = 3.41' INV (S) = -0.01' INV (N) = -0.09'	SD-03 TOP = 3.26' INV (N) = -2.37'				
SD-04 TOP = 3.83' INV (S) = 0.91' INV (N) = UNKNOWN	SS-1 TOP=2.65' INV=-2.47'	SS-2 TOP=7.03' INV=2.43'	SS-3 TOP=1.94' INV=-2.85'	SS-4 TOP=2.83' INV=-2.26'	SS-5 TOP=1.27' INV=-2.22'	SS-6 TOP=2.82' INV=-3.10'	SS-7 TOP=3.59' INV=0.45'
SD-05 TOP = 4.61' INV = UNKNOWN	SS-8 TOP=4.04' INV=0.80'	SS-9 TOP=5.16' INV=1.35'	SS-10 TOP=3.39' INV=-3.40'	SS-11 TOP=5.93' INV=1.39'	SS-12 TOP=3.88' INV=-0.26'	SS-13 TOP=2.90' INV=-2.10'	SS-14 TOP=3.72' INV=-3.69'
	SS-15 TOP=4.38' INV=-4.20'	SS-16 TOP=4.55' INV=-4.30'	SS-17 TOP=4.98' INV=1.70'	SS-18 TOP=5.22' INV=1.91'	SS-19 TOP=4.47' INV=-3.17'	SS-20 TOP=5.93' INV=-3.03'	
JB-01 TOP = 2.90 INV (E) = 2 @ -1.51 (PLUGGED SYSTEM) INV (N) = UNKNOWN INV (W) = 2 @ UNKNOWN (PLUGGED SYSTEM) INV (S) = 2 @ UNKNOWN	JB-04 TOP = 3.39 INV (SW) = UNKNOWN INV (E) = UNKNOWN	JB-03 TOP = 2.14 INV (SW) = -2.64'				
JB-02 TOP = 3.19 INV (W) = 2 @ -1.74' (PLUGGED SYSTEM) INV (NW) = -1.00' INV (N) = -1.29' INV (E) = 2 @ UNKNOWN	JB-05 TOP = 3.76 INV (W) = UNKNOWN INV (N) = UNKNOWN INV (S) = UNKNOWN					

CONTAMINATED SOIL LOCATIONS (SEE SPECIAL PROVISIONS)

REMOVE AND OBLITERATE EXISTING ASPHALT PAVEMENT

SEE SHEET 2-C FOR INTERSECTION DETAILS
SEE SHEET 4 FOR CURVE DATA
SEE SHEET NO.8 FOR -L- PROFILE
SEE SHEET NO.9 FOR -L1- AND -L2- PROFILES
SEE SHEET NO.10 FOR -Y4-, -Y5-, AND -Y6- PROFILES
SEE SHEET NO.11 FOR -Y7-, -Y8-, AND -Y9- PROFILES
SEE SHEET NOS. S-1 THRU S-454 FOR STRUCTURE PLANS

STANDARD BASE DITCH
DETAIL 1
(Not to Scale)

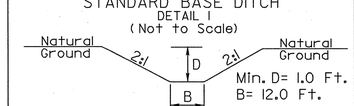

-Y9- STA 16+75.00 TO 17+64.70 (DDE=460 CY)
-Y9- STA 18+54.13 TO 21+37.46 (DDE=1630 CY)

STANDARD BASE DITCH
DETAIL 2
(Not to Scale)

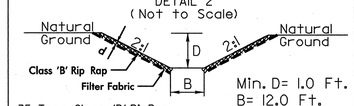

35 Tons Class 'B' RipRap
70 SY Filter Fabric
131 CY DRAINAGE DITCH EXCAVATION
-Y9- STA 18+32.78 TO 18+54.13

Kimley-Horn and Associates, Inc.
P.O. BOX 33068
RALEIGH, N.C. 27636-3068

RIGHT-OF-WAY REV.
CONST. REV.

PROJECT REFERENCE NO.	SHEET NO.
U-4438	5
R/W SHEET NO.	

ROADWAY DESIGN ENGINEER
NORTH CAROLINA PROFESSIONAL SEAL 024436 ENGINEER JEFFREY W. MOODS 1-26-11

HYDRAULICS ENGINEER
NORTH CAROLINA PROFESSIONAL SEAL 026480 ENGINEER LARRY D. ROBINSON, JR. 1-26-11

1/26/2011
K:\RAL_Roadway\011036142\Roadway\Proj\u4438_rdy_psh05.dgn

PROJECT REFERENCE NO.	SHEET NO.
U-4438	6
R/W SHEET NO.	

Kimley-Horn and Associates, Inc.
P.O. BOX 33068
RALEIGH, N.C. 27636-3068

RIGHT-OF-WAY REV.
CONST. REV.

ROADWAY DESIGN ENGINEER: NORTH CAROLINA PROFESSIONAL SEAL 024436 ENGINEER JEFFREY W. MOORE 1-26-11

HYDRAULICS ENGINEER: NORTH CAROLINA PROFESSIONAL SEAL 026480 ENGINEER LARRY D. ROBINSON, JR. 1-26-11

REVISIONS

DETAIL 1
SPECIAL 'V' DITCH
(Not to Scale)

Min. D= 1.5 Ft.
Type of Liner= None
20 CY DRAINAGE DITCH EXCAVATION
FROM STA. 20+24.58 TO STA. 21+23.28 -L1- (RT)

-L1-	-L2-
PI Sta 25+13.47	PI Sta 26+67.81
Δ = 7° 56' 05.7" (LT)	Δ = 8° 27' 32.9" (LT)
D = 2° 29' 28.0"	D = 2° 36' 15.7"
L = 318.53'	L = 324.81'
T = 159.52'	T = 162.70'
R = 2,300.00'	R = 2,200.00'
SE = SEE PLANS	
RO = SEE PLANS	

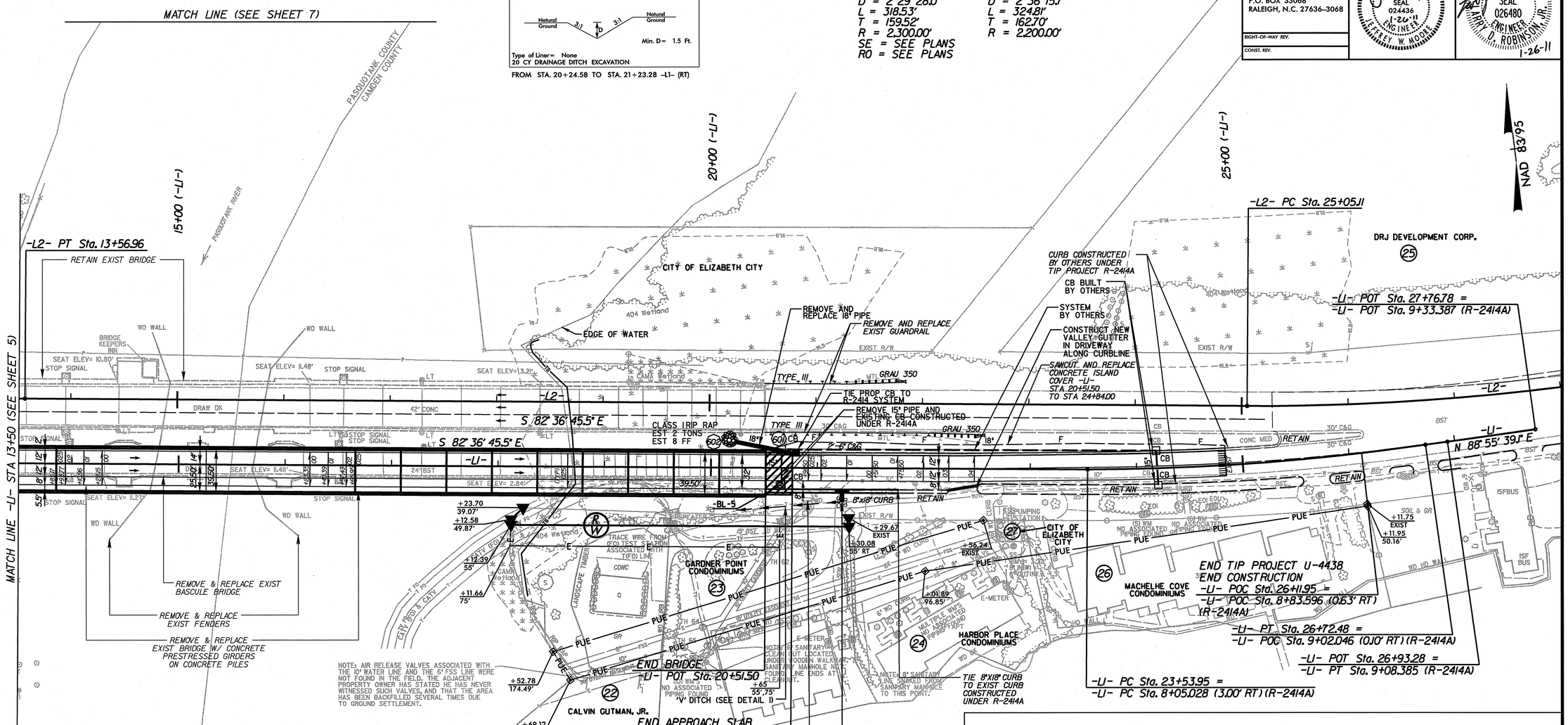

SEE SHEET NO.9 FOR -L1- PROFILE
SEE SHEET NOS.S-1 THRU S-454 FOR STRUCTURE PLANS

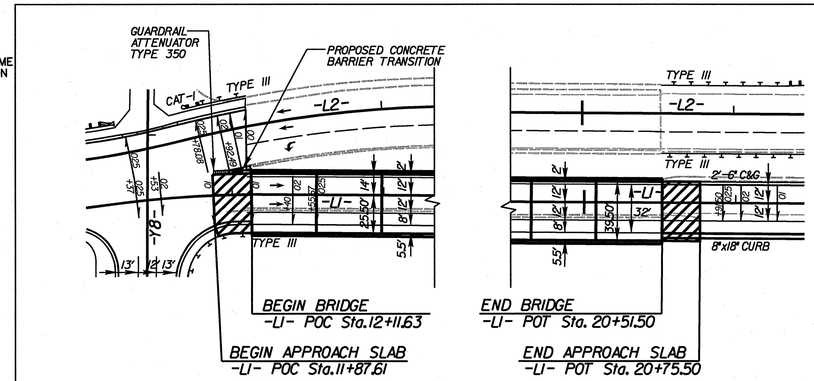

SKETCH SHOWING BRIDGE /PAVEMENT RELATIONSHIP

K:\RAL_Roadway\011036142\Roadway\Proj\u4438_rdy_psh06.dgn
1/25/2011

PROJECT REFERENCE NO.	SHEET NO.
U-4438	7
RW SHEET NO.	

Kimley-Horn and Associates, Inc.
P.O. BOX 33068
RALEIGH, N.C. 27636-3068

RIGHT-OF-WAY REV.
CONST. REV.

ROADWAY DESIGN ENGINEER: NORTH CAROLINA PROFESSIONAL SEAL 024436 ENGINEER JEFFREY W. MOORE 1-3-11

HYDRAULICS ENGINEER: NORTH CAROLINA PROFESSIONAL SEAL 026480 ENGINEER ARRY D. ROBINSON, JR. 1-3-11

REVISIONS

DI-01 TOP=4.88' INV=-2.52'	DI-02 TOP=4.53' INV=-1.50'	DI-03 TOP=4.72' INV=-2.12'	DI-04 TOP=4.03' INV=-1.79'	DI-05 TOP=4.08' INV=UNKNOWN
DI-06 TOP=0.60' INV=-0.59'	DI-07 TOP=2.46' INV IN=-0.09' INV IN=-0.14' INV OUT=-0.18'	DI-08 TOP=0.85' INV IN=UNKNOWN INV OUT=-0.68'	DI-09 TOP=0.29' INV IN=-0.96' INV OUT=-0.98'	DI-10 TOP=-0.18' INV=-1.28'
SS-01 TOP=2.28' INV=-2.26'	SS-02 TOP=4.54' INV=-1.70'	SS-03 TOP=4.98' INV=-0.16'	SS-04 TOP=5.94' INV=0.30'	SS-05 TOP=6.16' INV=0.12'
SS-06 TOP=4.96' INV=0.52'	SS-07 TOP=4.89' INV=0.95'			

STANDARD BASE DITCH
DETAIL I
(Not to Scale)

Natural Ground 2:1 D 2:1 Natural Ground
Min. D= 1.0 Ft.
B= 12.0 Ft.
B
220 CY DRAINAGE DITCH EXCAVATION

-Y9- STA 16+24.50 TO 16+75.00

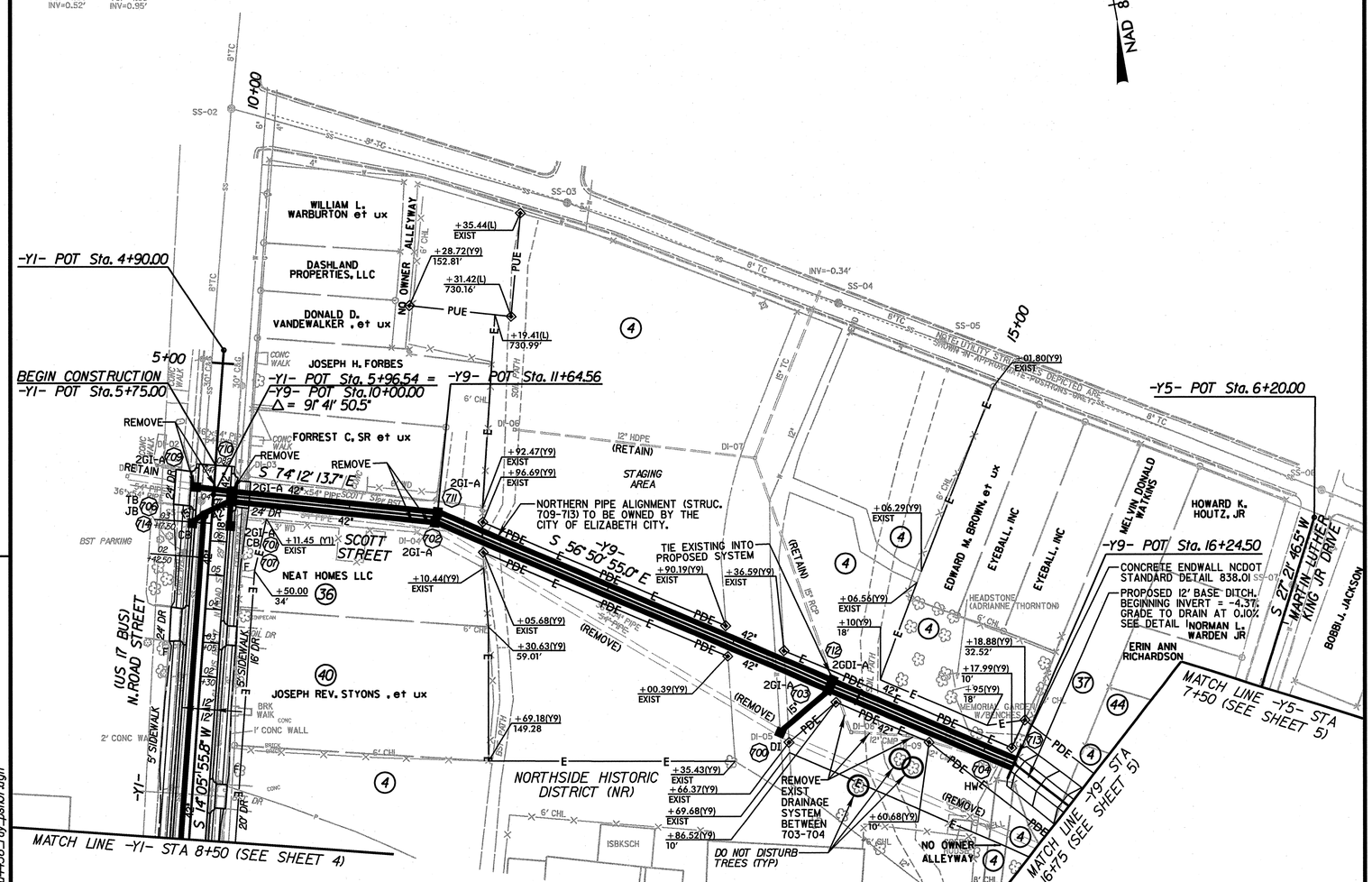

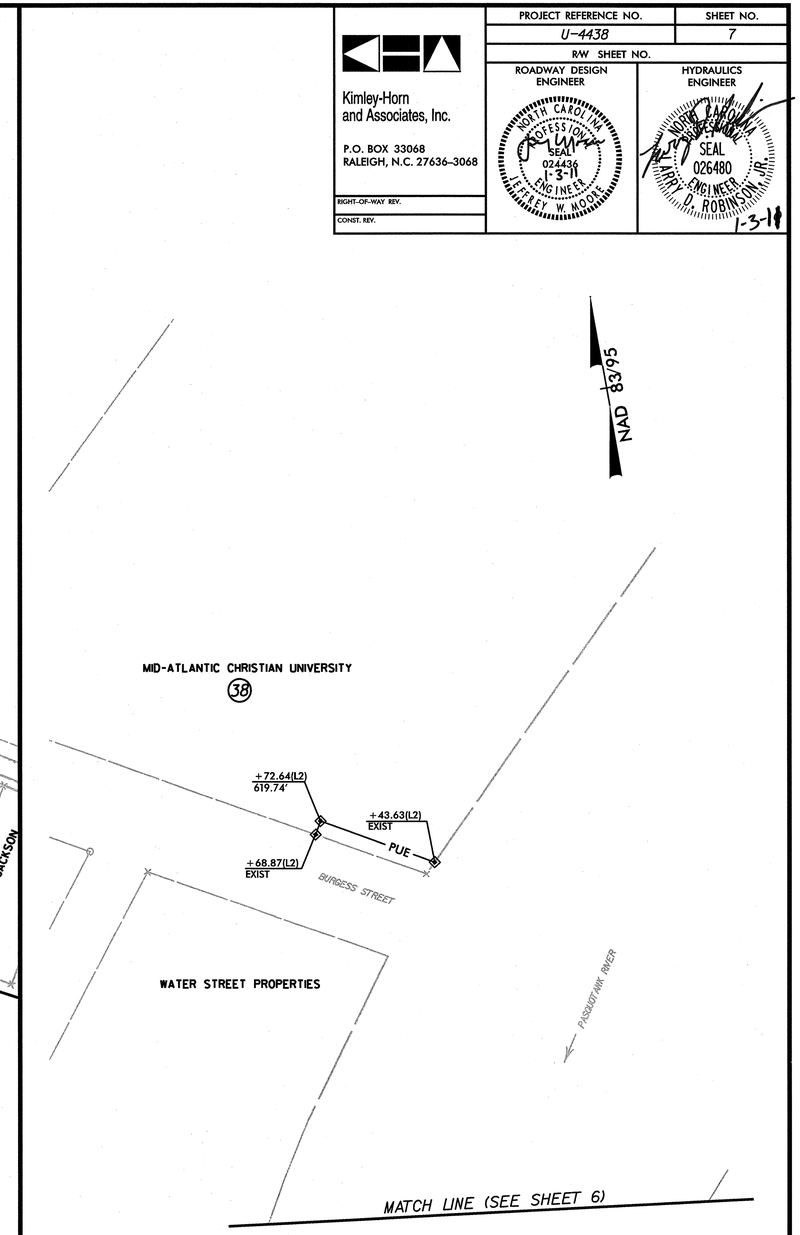

(4) PASQUOTANK COUNTY
(44) SHEILA S. ALBURY

SEE SHEET NO.9 FOR -Y1- PROFILE
SEE SHEET NO.11 FOR -Y9- PROFILE

K:\RAL_Roadway\011036142\Roadway\Proj\u4438_rdy_pst07.dgn
1/3/2011

PROJECT REFERENCE NO.	SHEET NO.
U-4438	8

Kimley-Horn and Associates, Inc.
P.O. BOX 33068
RALEIGH, N.C. 27636-3068

ROADWAY DESIGN ENGINEER

NORTH CAROLINA PROFESSIONAL SEAL 024436 1-3-11 ENGINEER JEFFREY W. MOORE

HYDRAULICS ENGINEER

NORTH CAROLINA PROFESSIONAL SEAL 026480 ENGINEER LARRY D. ROBINSON, JR. 1-3-11

REVISIONS

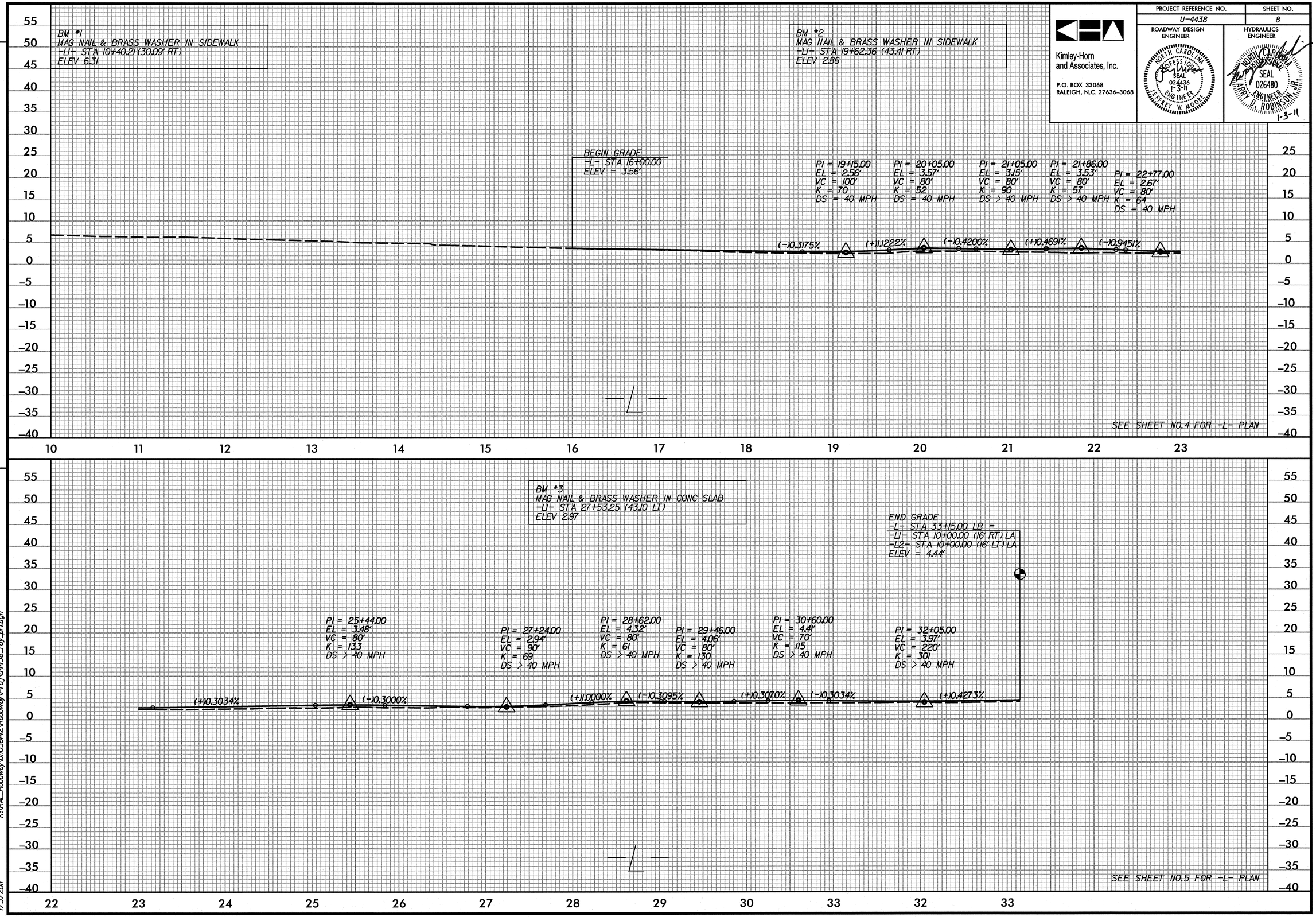

K:\RAL_Roadway\0110361\42\Roadway\Pro_\u4438_rdy_pf1.dgn

1/3/2011

PROJECT REFERENCE NO.	SHEET NO.
U-4438	9

Kimley-Horn and Associates, Inc.
P.O. BOX 33068
RALEIGH, N.C. 27636-3068

ROADWAY DESIGN ENGINEER: NORTH CAROLINA PROFESSIONAL SEAL 024436 1-3-11 ENGINEER JEFFREY W. MOORE

HYDRAULICS ENGINEER: NORTH CAROLINA PROFESSIONAL SEAL 026480 ENGINEER TIMOTHY D. ROBINSON, JR. 1-3-11

REVISIONS

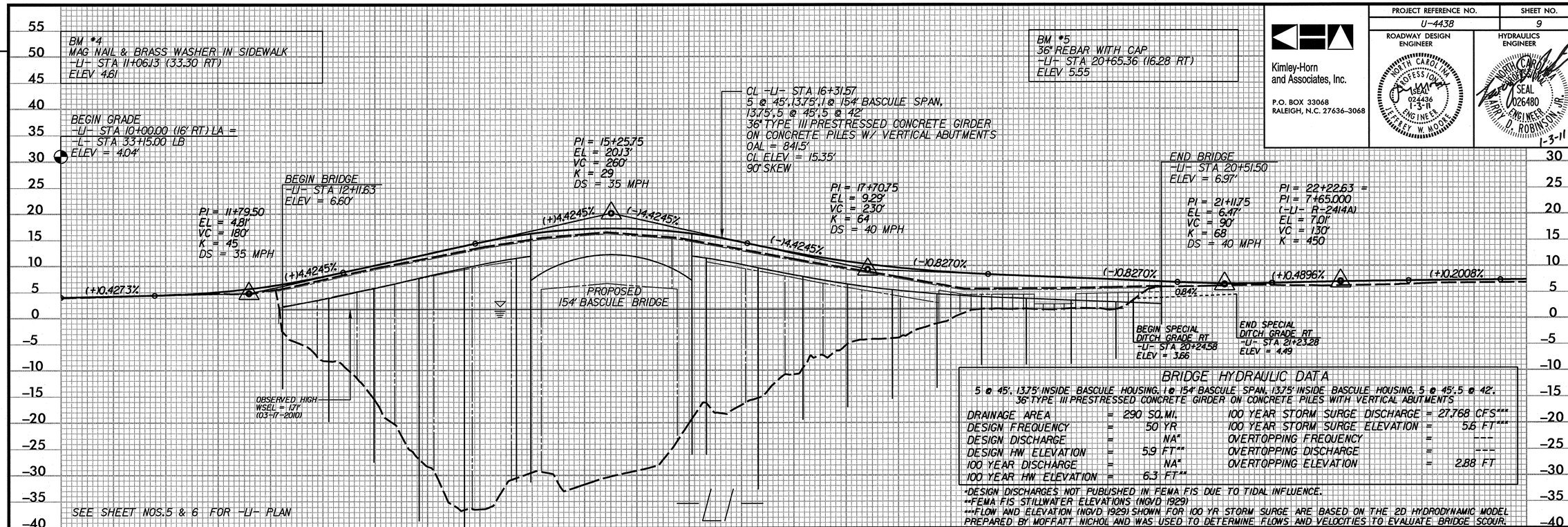

BRIDGE HYDRAULIC DATA

5 @ 45', 13.75' INSIDE BASCULE HOUSING, 1 @ 154' BASCULE SPAN, 13.75' INSIDE BASCULE HOUSING, 5 @ 45', 5 @ 42',
36" TYPE III PRESTRESSED CONCRETE GIRDER ON CONCRETE PILES WITH VERTICAL ABUTMENTS

DRAINAGE AREA	=	290 SQ.MI.	100 YEAR STORM SURGE DISCHARGE	=	27,768 CFS***
DESIGN FREQUENCY	=	50 YR	100 YEAR STORM SURGE ELEVATION	=	5.6 FT***
DESIGN DISCHARGE	=	NA*	OVERTOPPING FREQUENCY	=	---
DESIGN HW ELEVATION	=	5.9 FT**	OVERTOPPING DISCHARGE	=	---
100 YEAR DISCHARGE	=	NA*	OVERTOPPING ELEVATION	=	2.88 FT
100 YEAR HW ELEVATION	=	6.3 FT**			

*DESIGN DISCHARGES NOT PUBLISHED IN FEMA FIS DUE TO TIDAL INFLUENCE.
**FEMA FIS STILLWATER ELEVATIONS (NGVD 1929)
***FLOW AND ELEVATION (NGVD 1929) SHOWN FOR 100 YR STORM SURGE ARE BASED ON THE 2D HYDRODYNAMIC MODEL PREPARED BY MOFFATT NICHOL AND WAS USED TO DETERMINE FLOWS AND VELOCITIES TO EVALUATE BRIDGE SCOUR.

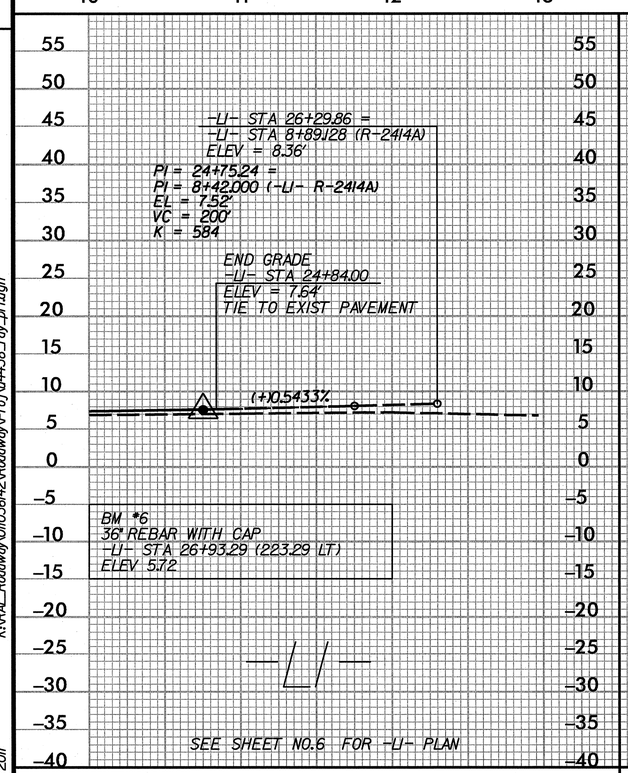

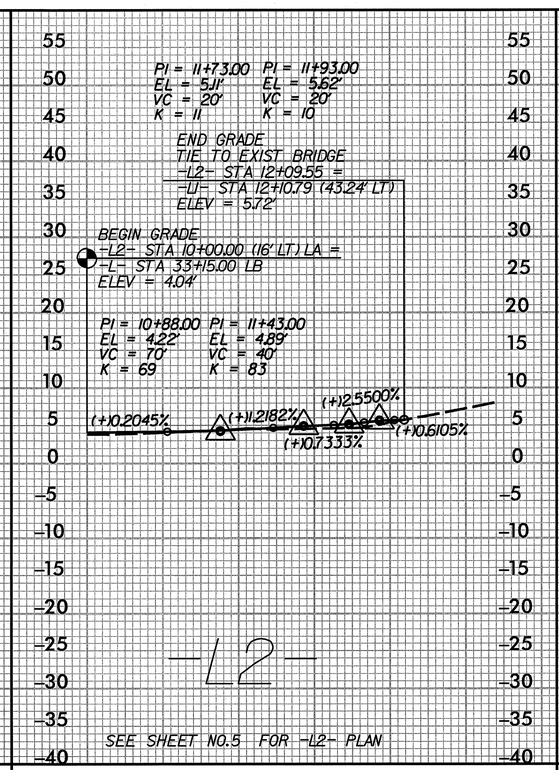

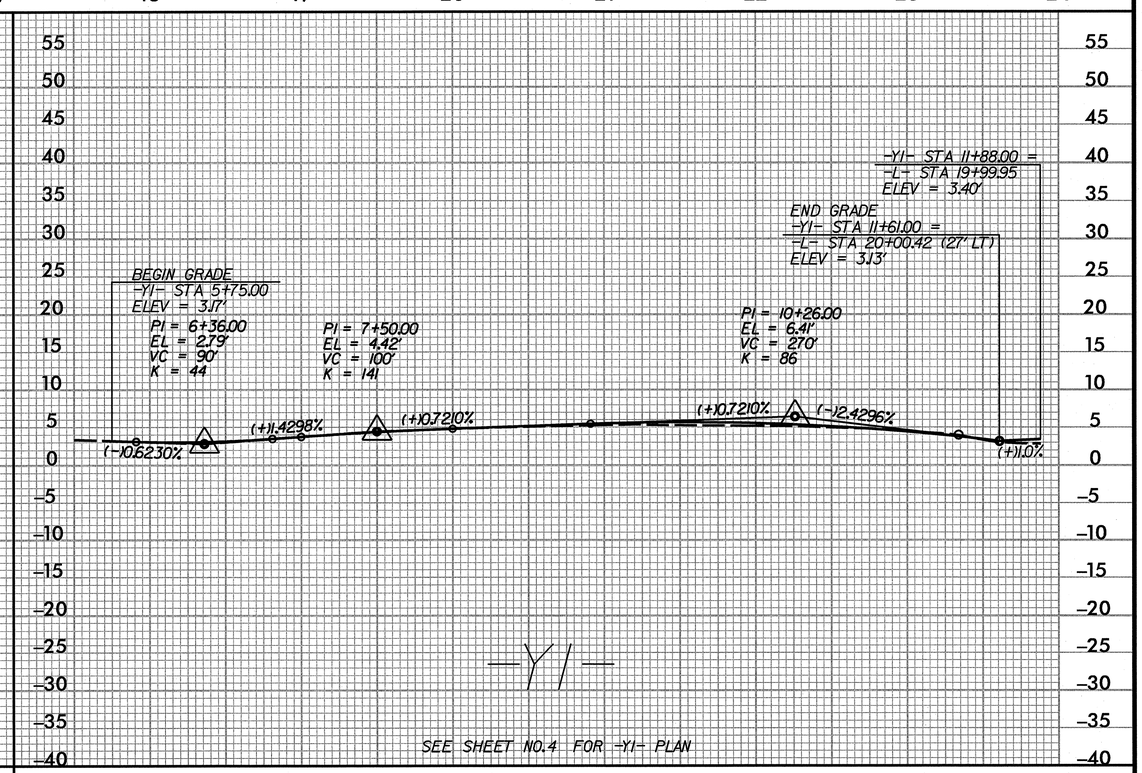

K:\RAL_Roadway\011036142\Roadway\Proj\u4438_rdy_pf1.dgn
1/31/2011

PROJECT REFERENCE NO.	SHEET NO.
U-4438	10

Kimley-Horn and Associates, Inc.
P.O. BOX 33068
RALEIGH, N.C. 27636-3068

ROADWAY DESIGN ENGINEER
NORTH CAROLINA PROFESSIONAL SEAL 024436 3-11 ENGINEER JEFFREY W. MOORE

HYDRAULICS ENGINEER
NORTH CAROLINA PROFESSIONAL SEAL 026480 ENGINEER LARRY D. ROBINSON, JR. 1-3-11

REVISIONS

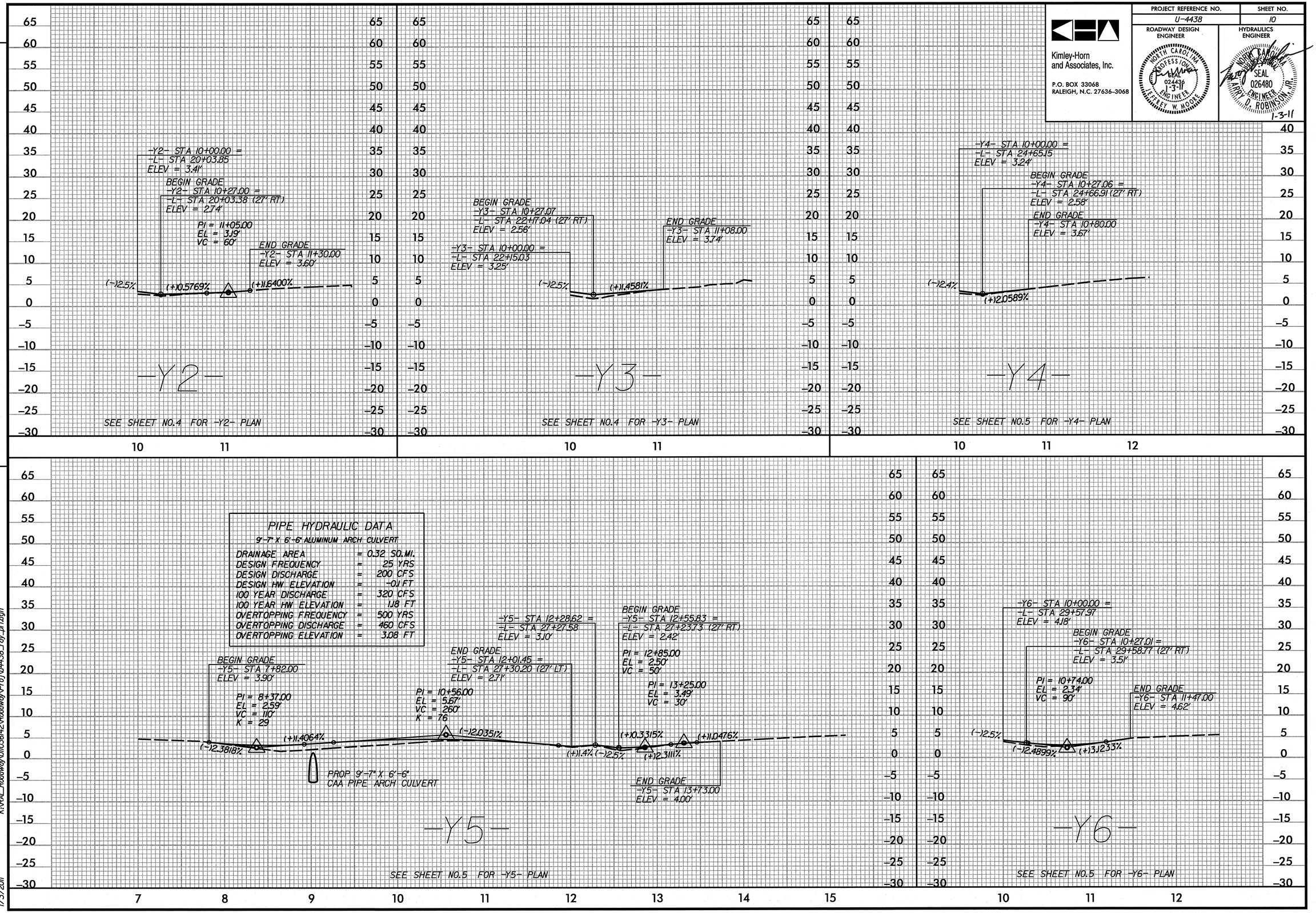

K:\RAL_Roadway\011036142\Roadway\Proj\u4438_rdy_pf1.dgn

1/3/2011

PROJECT REFERENCE NO.	SHEET NO.
U-4438	11

ROADWAY DESIGN ENGINEER

HYDRAULICS ENGINEER

Kimley-Horn and Associates, Inc.
P.O. BOX 33068
RALEIGH, N.C. 27636-3068

NORTH CAROLINA PROFESSIONAL SEAL 024436 ENGINEER JEFFREY W. MOORE 1-3-11

NORTH CAROLINA PROFESSIONAL SEAL 026480 ENGINEER D. ROBINSON JR. 1-3-11

REVISIONS

PIPE HYDRAULIC DATA

9'-7" X 6'-6" ALUMINUM ARCH CULVERT

DRAINAGE AREA	=	0.46 SQ.MI.
DESIGN FREQUENCY	=	25 YRS
DESIGN DISCHARGE	=	300 CFS
DESIGN HW ELEVATION	=	1.20 FT
100 YEAR DISCHARGE	=	450 CFS
100 YEAR HW ELEVATION	=	4.00 FT
OVERTOPPING FREQUENCY	=	> 50 YRS
OVERTOPPING DISCHARGE	=	390 CFS
OVERTOPPING ELEVATION	=	2.98 FT

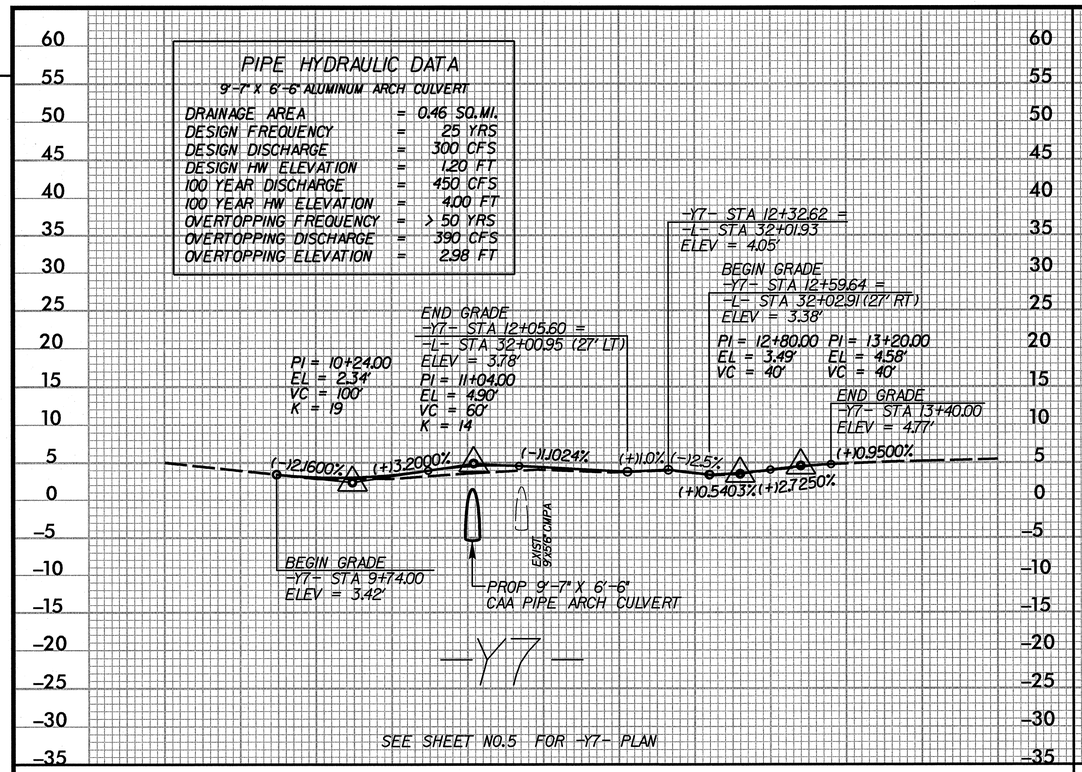

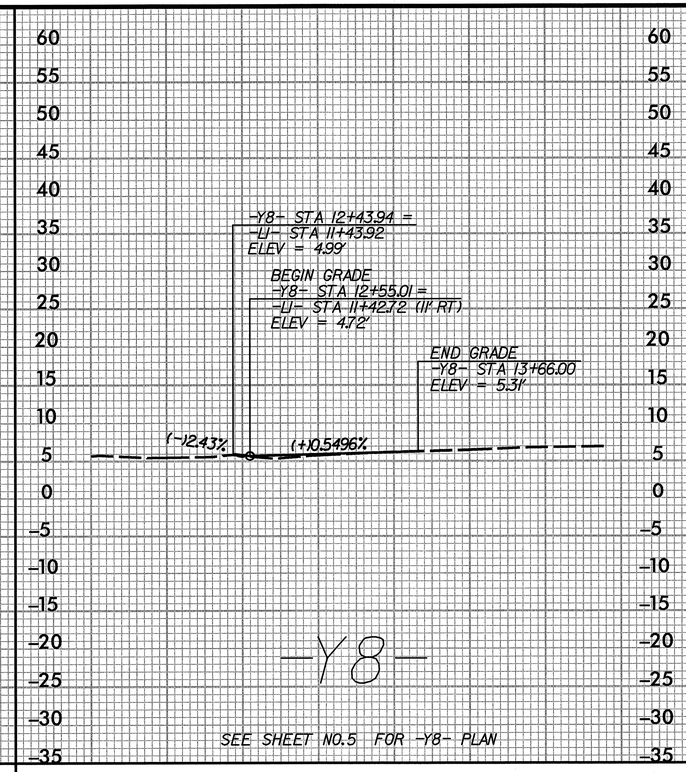

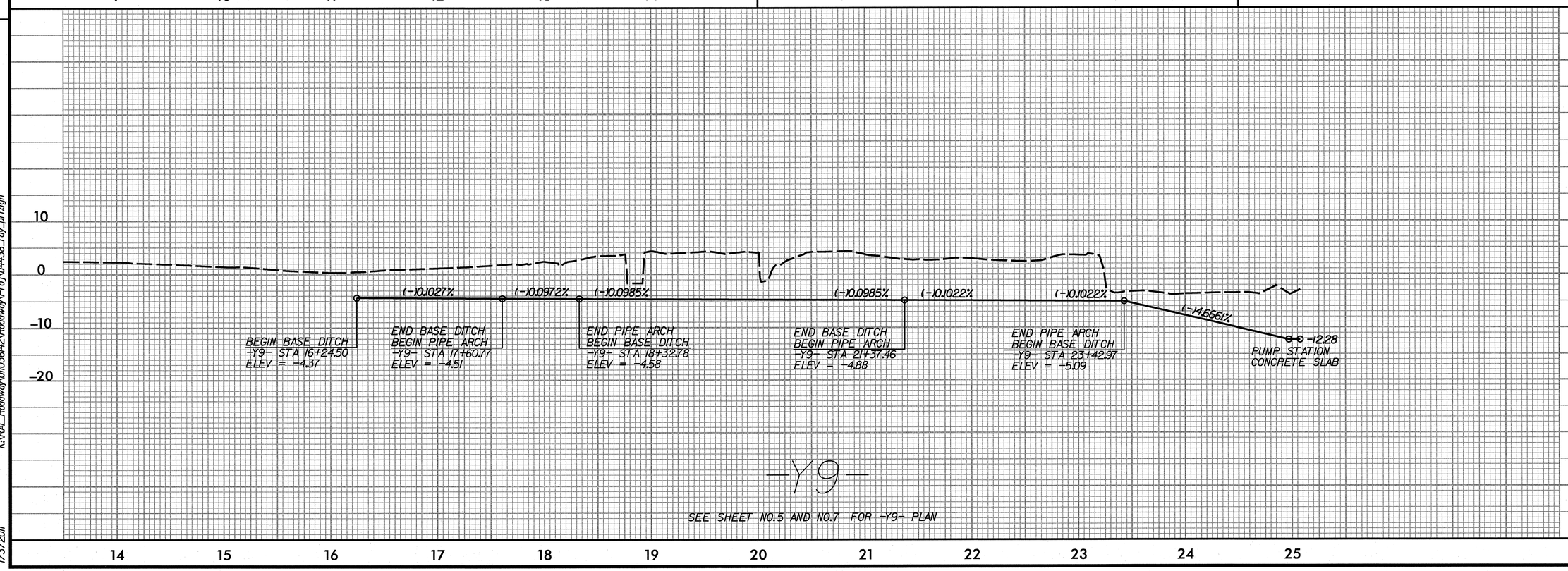

K:\RAL_Roadway\011035142\Roadway\Proj\u4438_rdy_pf1.dgn

1/3/2011