TIP PROJECT: U-4438

CONTRACT: C202599

STRUCTURES

STATE	STATE PROJECT REFERENCE NO.	SHEET NO.	TOTAL SHEETS
N.C.	U-4438		

STATE PROJ. NO.	F.A. PROJ. NO.	DESCRIPTION
35742.1.1	STP-0158(31)	P.E.
35742.2.1	STP-0158(50)	R/W & UTILITIES
35742.3.1	STP-0158(51)	CONSTRUCTION

STATE OF NORTH CAROLINA
DIVISION OF HIGHWAYS

PASQUOTANK & CAMDEN COUNTIES

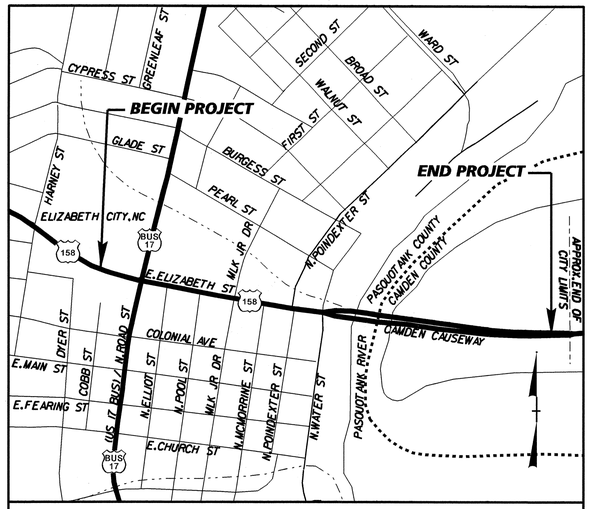

LOCATION: US 158 (EAST ELIZABETH STREET) FROM US 17 BUSINESS (NORTH ROAD STREET) TO EAST OF PASQUOTANK RIVER IN ELIZABETH CITY

TYPE OF WORK: GRADING, DRAINAGE, PAVING, SIGNALS, AND STRUCTURES

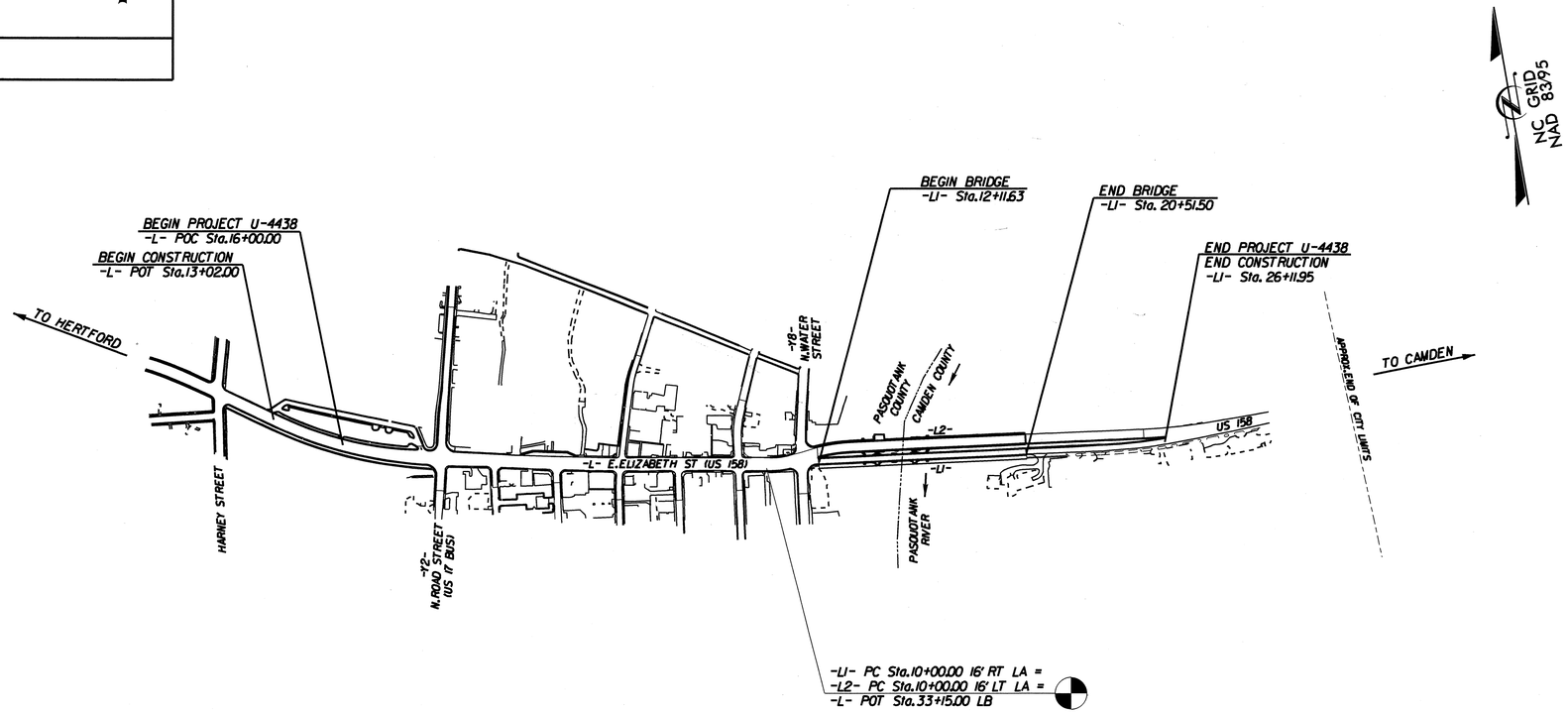

STATE OF NORTH CAROLINA · DEPARTMENT OF TRANSPORTATION

PROJECT LENGTH

LENGTH ROADWAY TIP PROJECT U-4438 = 0.471 MILES
LENGTH STRUCTURE TIP PROJECT U-4438 = 0.159 MILES
TOTAL LENGTH TIP PROJECT U-4438 = 0.630 MILES

Prepared for the Office of:
DEPARTMENT OF TRANSPORTATION
DIVISION OF HIGHWAYS
1000 Birch Ridge Drive Raleigh, N.C. 27610

2006 STANDARD SPECIFICATIONS

LETTING DATE:
MAY 17, 2011

STRUCTURE DESIGN UNIT

DIVISION OF HIGHWAYS
STATE OF NORTH CAROLINA

STATE DESIGN ENGINEER

DEPARTMENT OF TRANSPORTATION
FEDERAL HIGHWAY ADMINISTRATION

APPROVED
DIVISION ADMINISTRATOR DATE

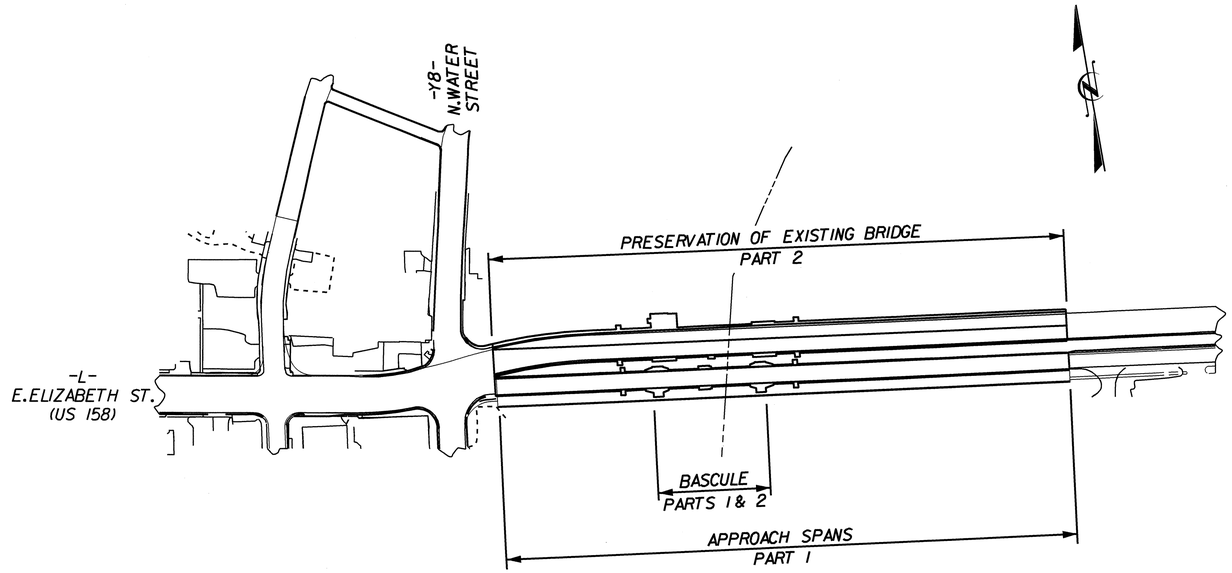

INDEX		
	DESCRIPTION	SHEETS
PART 1	***APPROACH SPANS***	S-1 THRU S-88
	BASCULE SPAN – EASTBOUND STRUCTURAL & MECHANICAL	S-89 THRU S-218
PART 2	***BASCULE SPAN – EASTBOUND ELECTRICAL, ARCHITECTURAL WESTBOUND MECHANICAL, ELECTRICAL & STRUCTURAL***	S-219 THRU S-447
	PRESERVATION PLANS	S-448 THRU S-454

FOR BASCULE SPAN "INDEX OF DRAWINGS",
SEE SHEETS S-89 THRU S-91

PROJECT NO. U-4438
CAMDEN & PASQUOTANK COUNTY
STATION:

STATE OF NORTH CAROLINA
DEPARTMENT OF TRANSPORTATION
RALEIGH

INDEX

REVISIONS

NO.	BY:	DATE:	NO.	BY:	DATE:
1			3		
2			4		

PART 1 OF 2

07-FEB-2011 15:49
S:\PG3\Darrell\u4438_title.dgn
dcrutcher

F.A. PROJECT No. STP-0158(51)

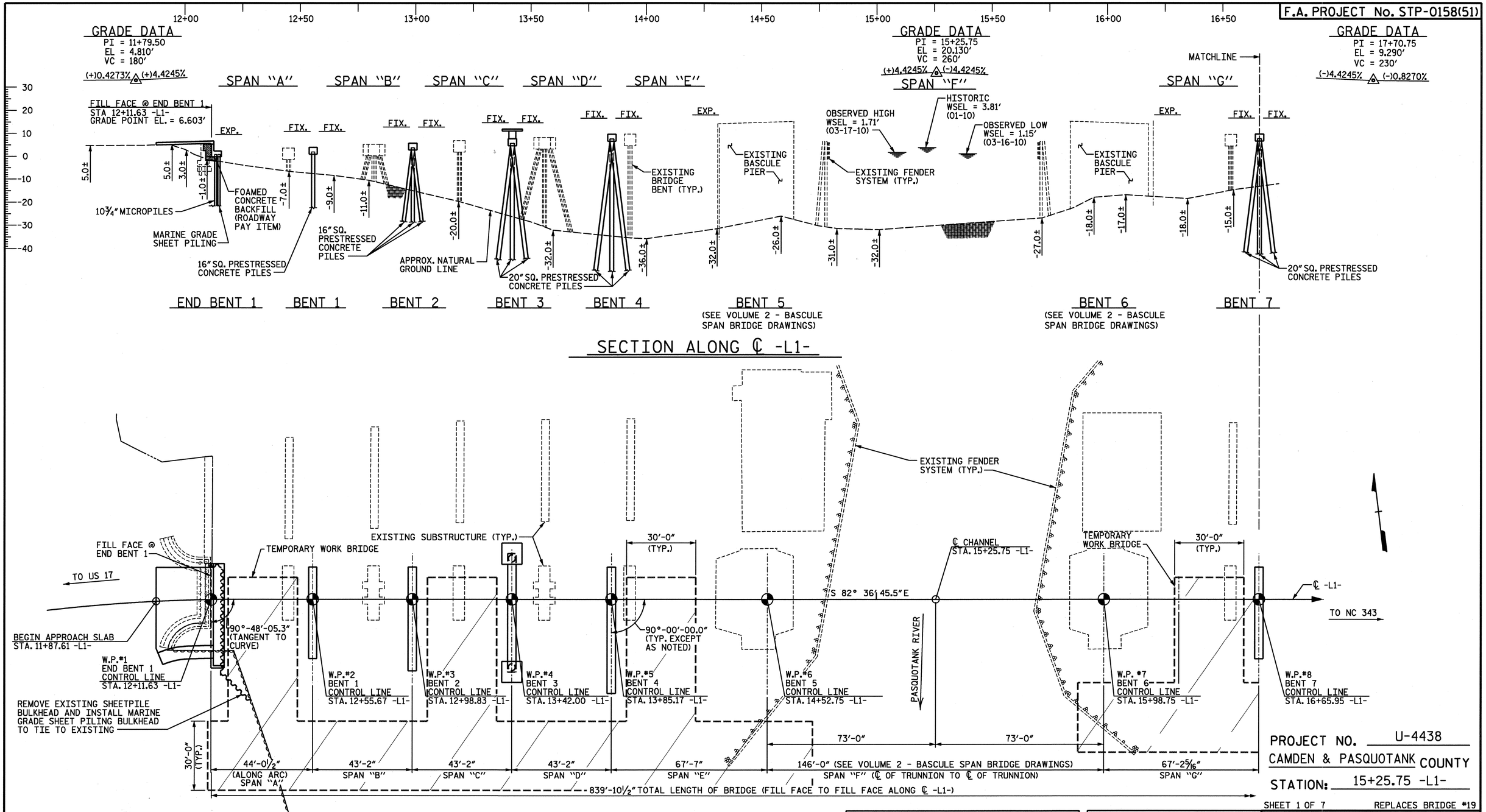

SECTION ALONG ℄ -L1-

PLAN

(PILES NOT SHOWN FOR CLARITY)

HORIZONTAL CURVE DATA

PI Sta 11+67.28 -L1-
Δ = 8° 49' 44.5" (RT)
D = 7° 50' 55.5"
L = 112.49'
T = 56.36'
R = 730.00'

HYDRAULIC DATA

DESIGN DISCHARGE _____ = N/A
FREQUENCY OF DESIGN FLOOD____ = 50 YRS.
DESIGN HIGH WATER ELEVATION__ = N/A
DRAINAGE AREA_____ = 290 SQ. MI.
BASIC DISCHARGE (Q100)_____ = 10,699 C.F.S.
BASIC HIGH WATER ELEVATION___ = 6.2 FT.

OVERTOPPING FLOOD DATA

OVERTOPPING DISCHARGE _____ = N/A
FREQUENCY OF OVERTOPPING FLOOD __ = N/A
OVERTOPPING FLOOD ELEVATION_____ = 2.88 FT.
NOTE: LOW ROADWAY ELEVATION LOACTED ON RIGHT SIDE OF ROADWAY LOOKING DOWNSTREAM.

PROJECT NO. U-4438
CAMDEN & PASQUOTANK COUNTY
STATION: 15+25.75 -L1-

SHEET 1 OF 7 REPLACES BRIDGE #19

NORTH CAROLINA PROFESSIONAL SEAL 026891 ENGINEER JOHN T. DIFFEE, III

ETHERILL ENGINEERING
559 Jones Franklin Rd. Suite 164
Raleigh, N.C. 27606
Bus: 919 851 8077
Fax: 919 851 8107
License: F-0377
TRANSPORTATION PLANNING/DESIGN - BRIDGE/STRUCTURE DESIGN
CIVIL/SITE DESIGN - GIS/GPS - CONSTRUCTION OBSERVATION

STATE OF NORTH CAROLINA
DEPARTMENT OF TRANSPORTATION
RALEIGH

GENERAL DRAWING
FOR BRIDGE ON US158
(EAST ELIZABETH STREET)
OVER PASQUOTANK RIVER
BETWEEN US 17 AND NC 343

REVISIONS						SHEET NO.
NO.	BY:	DATE:	NO.	BY:	DATE:	S-1
1			3			TOTAL SHEETS
2			4			454

DRAWN BY : J PENDERGRAFT DATE : 8-10
CHECKED BY : T DIFFEE DATE : 8-10

P:\2010\101902 U-4438\Structures\06NS01_U-4438_SD_GD_01.dgn
2/4/2011 4:10:44 PM

REVISED MARCH 17, 2011

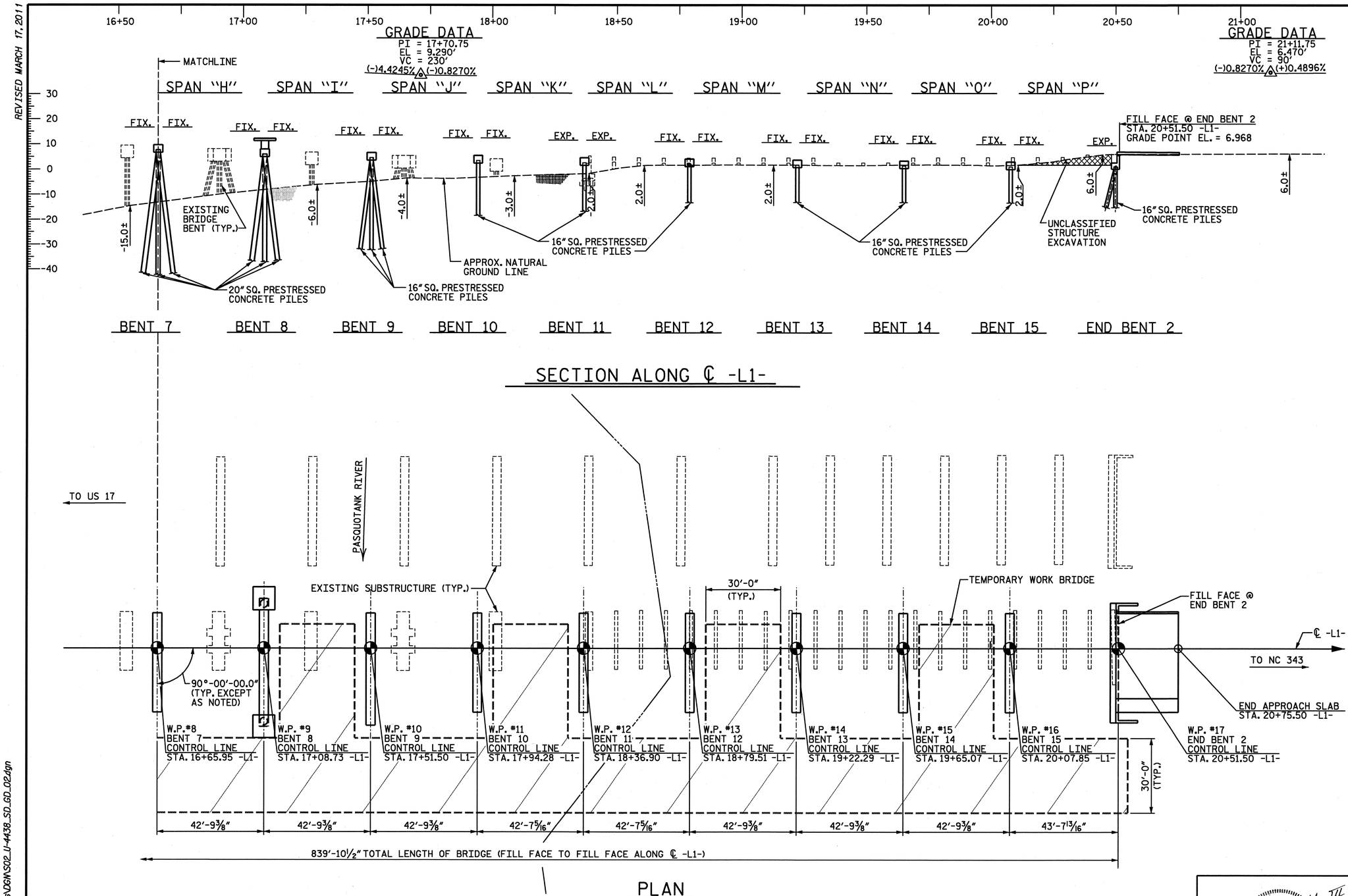

SECTION ALONG ℄ -L1-

PLAN

(PILES NOT SHOWN FOR CLARITY)

PROJECT NO. U-4438

CAMDEN & PASQUOTANK COUNTY

STATION: 15+25.75 -L1-

SHEET 2 OF 7

NORTH CAROLINA PROFESSIONAL SEAL 026891 ENGINEER JOHN T. DIFFEE, III 3-17-11

ETHERILL ENGINEERING
559 Jones Franklin Rd. Suite 164
Raleigh, N.C. 27606
Bus: 919 851 8077
Fax: 919 851 8107
License: F-0377

TRANSPORTATION PLANNING/DESIGN - BRIDGE/STRUCTURE DESIGN
CIVIL/SITE DESIGN - GIS/GPS - CONSTRUCTION OBSERVATION

STATE OF NORTH CAROLINA
DEPARTMENT OF TRANSPORTATION
RALEIGH

GENERAL DRAWING
FOR BRIDGE ON US158
(EAST ELIZABETH STREET)
OVER PASQUOTANK RIVER
BETWEEN US 17 AND NC 343

REVISIONS						SHEET NO.
NO.	BY:	DATE:	NO.	BY:	DATE:	S-2
1			3			TOTAL SHEETS
2			4			454

DRAWN BY : J PENDERGRAFT DATE : 8-10
CHECKED BY : T DIFFEE DATE : 8-10

P:\2010\10119.02_U-4438\Structures\DGN\S02_U-4438_SD_GD_02.dgn
3/17/2011 11:19:56 AM

REVISED MARCH 17, 2011

BM. BL #4 -PINC- STA. 29+01.83 (STA. 11+06.13 -L1-, 33.30' RT.) (MAG NAIL & BRASS WASHER IN SIDEWALK) EL.=4.61 (NAVD 29)

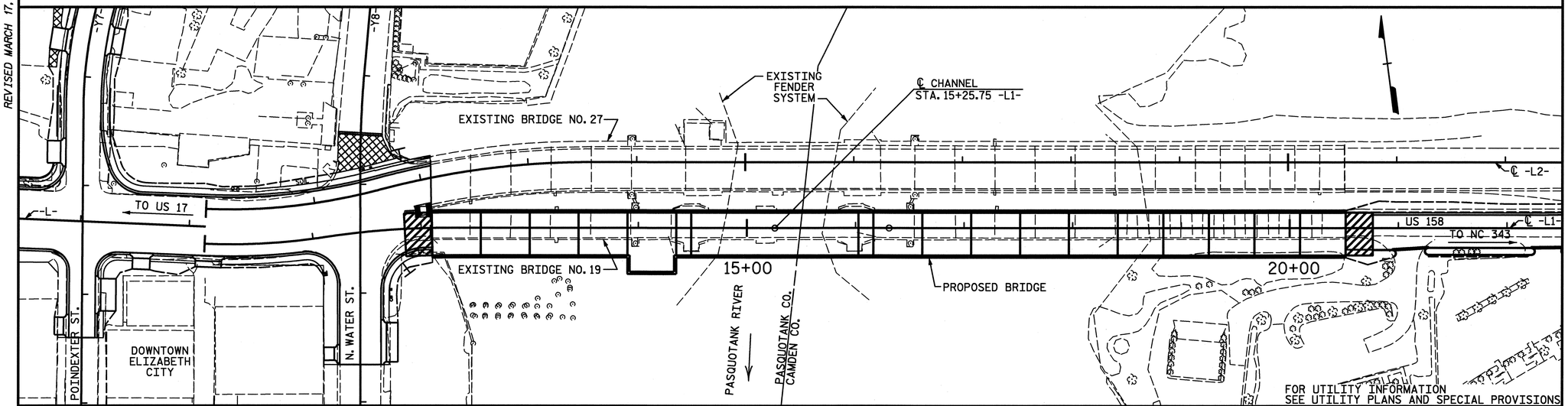

LOCATION SKETCH

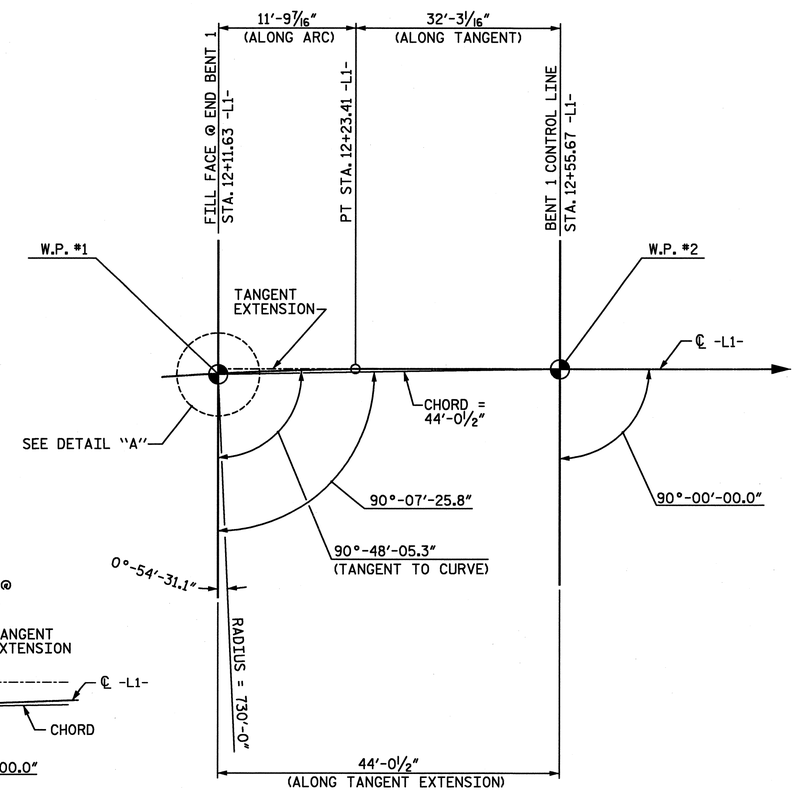

CHORD LAYOUT

SPAN "A"

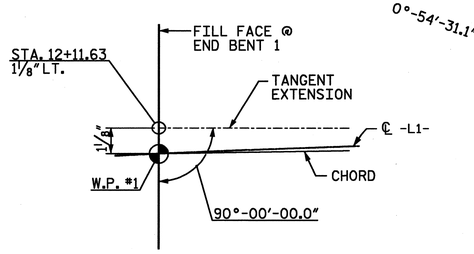

DETAIL "A"

THE 'WORKLINE' FOR THE BRIDGE IS HEREBY DEFINED AS THE COMBINATION OF THE TANGENT EXTENSION AND TANGENT PROTION OF ℄ -L1- FROM FILL FACE OF END BENT 1 TO FILL FACE OF END BENT 2.

NOTES:

ASSUMED LIVE LOAD = HL 93 OR ALTERNATE LOADING.

FOR OTHER DESIGN DATA AND GENERAL NOTES, SEE SHEET SN.

THIS BRIDGE HAS BEEN DESIGNED IN ACCORDANCE WITH THE AASHTO LRFD BRIDGE DESIGN SPECIFICATIONS.

THIS STRUCTURE HAS BEEN DESIGNED IN ACCORDANCE WITH HEC 18, "EVALUATING SCOUR AT BRIDGES", MAY, 2001.

THIS STRUCTURE CONTAINS THE NECESSARY CORROSION PROTECTION REQUIRED FOR A CORROSIVE SITE.

ALL METALLIZED SURFACES SHALL RECEIVE A SEAL COATING AS SPECIFIED IN THE SPECIAL PROVISIONS FOR THERMAL SPRAYED COATINGS (METALLIZATION).

CLASS AA CONCRETE SHALL BE USED IN ALL CAST-IN-PLACE PLATFORM COLUMNS, END BENT AND BENTS CAPS AND SHALL CONTAIN CALCIUM NITRITE CORROSION INHIBITOR.

ALL BAR SUPPORTS USED IN THE PARAPET, SIDEWALK, DECK, BENT CAPS AND ALL INCIDENTAL REINFORCING STEEL SHALL BE EPOXY COATED IN ACCORDANCE WITH THE STANDARD SPECIFICATIONS.

PRESTRESSED CONCRETE GIRDERS, PRECAST DECK PANELS, AND PILES SHALL CONTAIN CALCIUM NITRITE CORROSION INHIBITOR.

THE CONCRETE IN THE END BENT AND BENT CAPS INCLUDING THE PLATFORM COLUMNS AT BENTS 3 AND 8 AS WELL AS THE PILES FOR ALL BENTS AND END BENT 2 SHALL CONTAIN SILICA FUME. SILICA FUME SHALL BE SUBSTITUTED FOR 5% OF THE PORTLAND CEMENT BY WEIGHT. IF THE OPTION OF ARTICLE 1024-1 OF THE STANDARD SPECIFICATIONS TO PARTIALLY SUBSTITUTE CLASS 'F' FLY ASH FOR PORTLAND CEMENT IS EXERCISED, THEN THE RATE OF FLY ASH SUBSTITUTION SHALL BE REDUCED TO 1.0 LB. OF FLY ASH PER 1.0 LB. NO PAYMENT WILL BE MADE FOR THIS SUBSTITUTION AS IT IS CONSIDERED INCIDENTAL TO THE VARIOUS PAY ITEMS.

THE EXISTING STRUCTURE WITH A CLEAR ROADWAY WIDTH OF 24'-1", CONSISTS OF 12 SPANS OF REINFORCED CONCRETE T-BEAMS, 1 SPAN STEEL GIRDER DOUBLE LEAF BASCULE SPAN WITH AN OPEN GRID STEEL GRATING DECK, AND 21 SPANS OF REINFORCED CONCRETE FLAT SLABS. THE APPROACH SPANS TO THE BASCULE ARE SUPPORTED ON REINFORCED CONCRETE CAP AND PILES WITH THE REINFORCED CONCRETE BASCULE PIERS SUPPORTED ON TIMBER PILES. ALL THE EXISTING STRUCTURE, EXCEPT END BENT 1, SHALL BE REMOVED. THE EXISTING BRIDGE IS PRESENTLY POSTED SV11, TTST19. SHOULD THE STRUCTURAL INTEGRITY OF THE BRIDGE FURTHER DETERIORATE, AN ADDITIONAL LOAD LIMITATION MAY BE IMPOSED AS FOUND NECESSARY DURING THE LIFE OF THE PROJECT. SEE SPECIAL PROVISIONS FOR REMOVAL OF EXISTING STRUCTURE.

REMOVAL OF THE EXISTING BRIDGE SHALL BE PERFORMED SO AS NOT TO ALLOW DEBRIS TO FALL INTO THE WATER. THE CONTRACTOR SHALL REMOVE THE BRIDGE AND SUBMIT PLANS FOR DEMOLITION IN ACCORDANCE WITH ARTICLE 402-2 OF THE STANDARD SPECIFICATIONS.

THE MATERIAL SHOWN IN THE CROSS-HATCHED AREA SHALL BE EXCAVATED FOR A DISTANCE OF 20 FT. LEFT AND 32 FT. RIGHT OF THE CENTERLINE ROADWAY AS DIRECTED BY THE ENGINEER. THIS WORK WILL BE PAID FOR AT THE CONTRACT LUMP SUM PRICE FOR UNCLASSIFIED STRUCTURE EXCAVATION. THE SUBSTRUCTURE OF THE EXISTING BRIDGE INDICATED ON THE PLANS IS FROM THE BEST INFORMATION AVAILABLE. SINCE THIS INFORMATION IS SHOWN FOR THE CONVENIENCE OF THE CONTRACTOR, THE CONTRACTOR SHALL HAVE NO CLAIM WHATSOEVER AGAINST THE DEPARTMENT OF TRANSPORTATION FOR ANY DELAYS OR ADDITIONAL COST INCURRED BASED ON DIFFERENCES BETWEEN THE EXISTING BRIDGE SUBSTRUCTURE SHOWN ON THE PLANS AND THE ACTUAL CONDITIONS AT THE PROJECT SITE.

FOR EROSION CONTROL MEASURES SEE EROSION CONTROL PLANS.

FOR SECURING OF VESSELS, SEE SPECIAL PROVISIONS.

THE CONTRACTOR SHALL PROVIDE INDEPENDENT ASSURANCE SAMPLES OF REINFORCING STEEL AS FOLLOWS: FOR PROJECTS REQUIRING UP TO 400 TONS OF REINFORCING STEEL, ONE 30 INCH SAMPLE OF EACH SIZE BAR USED, AND FOR PROJECTS REQUIRING OVER 400 TONS OF REINFORCING STEEL, TWO 30 INCH SAMPLES OF EACH SIZE BAR USED. THE BARS FROM WHICH THE SAMPLES ARE TAKEN MUST THEN BE SPLICED WITH REPLACEMENT BARS OF THE SIZE AND LENGTH OF THE SAMPLE, PLUS A MINIMUM LAP SPLICE OF THIRTY BAR DIAMETERS. PAYMENT FOR THE SAMPLES OF REINFORCING STEEL SHALL BE CONSIDERED INCIDENTAL TO VARIOUS PAY ITEMS.

SEE GENERAL DRAWING, SHEET 7 OF 7 FOR ADDITIONAL NOTES.

PROJECT NO. U-4438
CAMDEN & PASQUOTANK COUNTY
STATION: 15+25.75 -L1-

SHEET 3 OF 7

NORTH CAROLINA PROFESSIONAL SEAL 026891 ENGINEER JOHN T. DIFFEE III
2-17-11

WETHERILL ENGINEERING
559 Jones Franklin Rd. Suite 164
Raleigh, N.C. 27606
Bus: 919 851 8077
Fax: 919 851 8107
License: F-0377

TRANSPORTATION PLANNING/DESIGN - BRIDGE/STRUCTURE DESIGN
CIVIL/SITE DESIGN - GIS/GPS - CONSTRUCTION OBSERVATION

STATE OF NORTH CAROLINA
DEPARTMENT OF TRANSPORTATION
RALEIGH

GENERAL DRAWING
FOR BRIDGE ON US158
(EAST ELIZABETH STREET)
OVER PASQUOTANK RIVER
BETWEEN US 17 AND NC 343

REVISIONS						SHEET NO.
NO.	BY:	DATE:	NO.	BY:	DATE:	S-3
1			3			TOTAL SHEETS
2			4			454

DRAWN BY : J. PENDERGRAFT DATE : 5/10
CHECKED BY : T. DIFFEE DATE : 5/10

P:\2010\1019.02_U-4438\Structures\DGN\S03_U-4438_SD_GD_03.dgn
3/17/2011 10:25:18 AM

REVISED MARCH 17, 2011

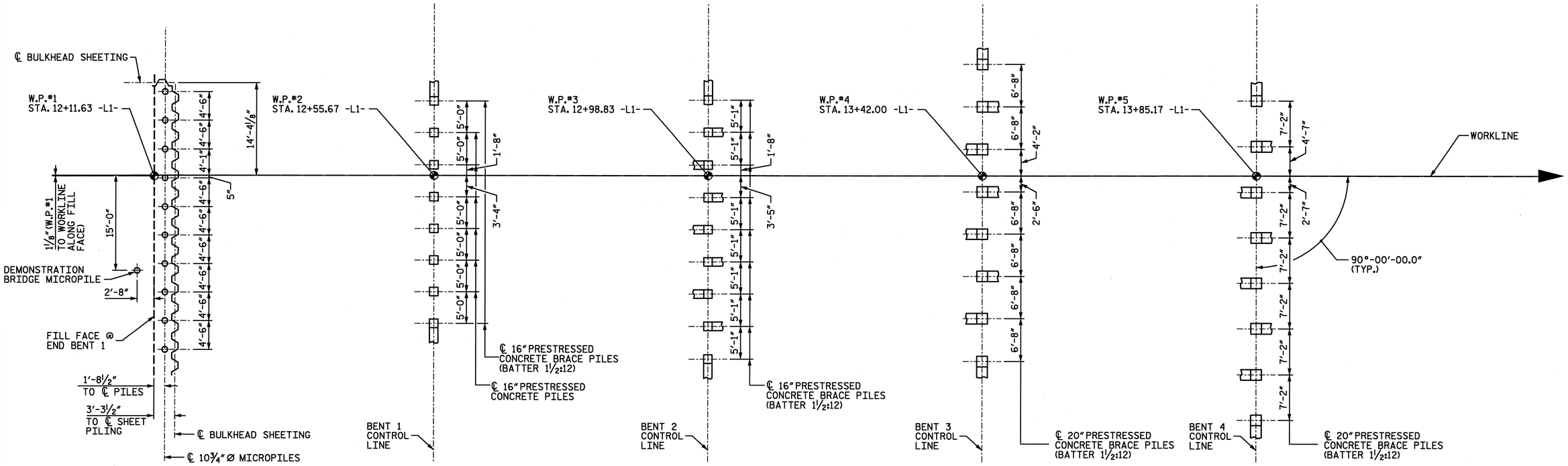

SEE END BENT 1 FOR ADDITIONAL INFORMATION ABOUT LOCATION OF BULKHEAD SHEETING

FOUNDATION LAYOUT

DIMENSIONS LOCATION PILES ARE SHOWN TO PILE CENTER AT BOTTOM OF CAP

ALL DIMENSIONS SHOWN ARE FROM THE WORKLINE

SEE FOUNDATION NOTES ON SHEET 6 OF 7

PROJECT NO. U-4438

CAMDEN & PASQUOTANK COUNTY

STATION: 15+25.75 -L1-

SHEET 4 of 7

NORTH CAROLINA PROFESSIONAL SEAL 026891 ENGINEER JOHN T. DIFFEE III

WETHERILL ENGINEERING
559 Jones Franklin Rd. Suite 164
Raleigh, N.C. 27606
Bus: 919 851 8077
Fax: 919 851 8107
License: F-0377

TRANSPORTATION PLANNING/DESIGN - BRIDGE/STRUCTURE DESIGN
CIVIL/SITE DESIGN - GIS/GPS - CONSTRUCTION OBSERVATION

STATE OF NORTH CAROLINA
DEPARTMENT OF TRANSPORTATION
RALEIGH

GENERAL DRAWING
FOR BRIDGE ON US158
(EAST ELIZABETH STREET)
OVER PASQUOTANK RIVER
BETWEEN US 17 AND NC 343

REVISIONS						SHEET NO.
NO.	BY:	DATE:	NO.	BY:	DATE:	S-4
1			3			TOTAL SHEETS
2			4			454

DRAWN BY :	Z. PIATEK	DATE :	1/11
CHECKED BY :	T. DIFFEE	DATE :	1/11

P:\2010\101902_U-4438\Structures\DGN\S04_U-4438_SD_GD_04.dgn
3/17/2011 11:43:12 AM

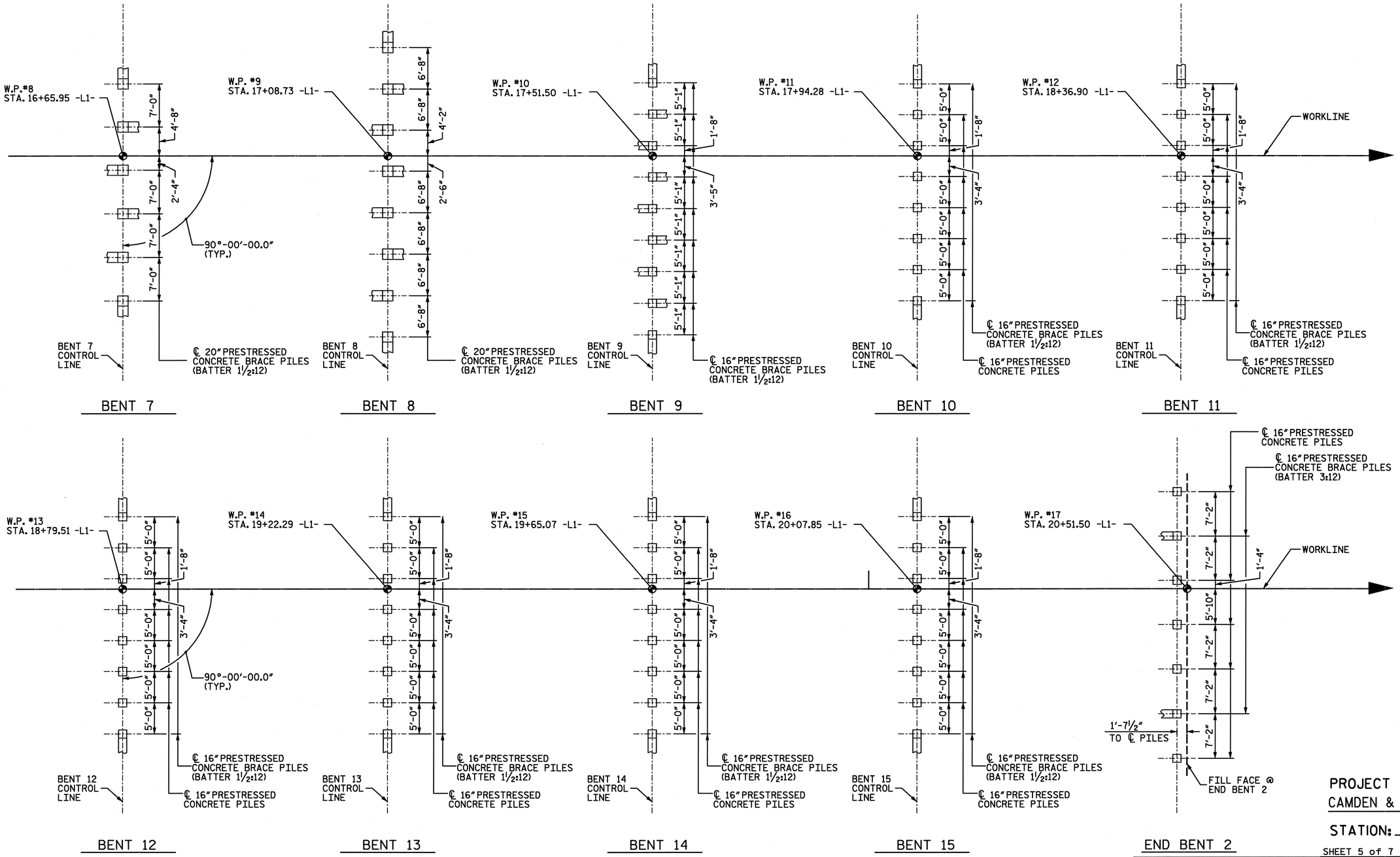

PROJECT NO. U-4438
CAMDEN & PASQUOTANK COUNTY
STATION: 15+25.75 -L1-

SHEET 5 of 7

FOUNDATION LAYOUT

DIMENSIONS LOCATION PILES ARE SHOWN TO PILE CENTER AT BOTTOM OF CAP

ALL DIMENSIONS SHOWN ARE FROM THE WORKLINE

SEE FOUNDATION NOTES ON SHEET 6 OF 7

NORTH CAROLINA PROFESSIONAL SEAL 026891 ENGINEER JOHN L. DIFFEE III
2-6-11

ETHERILL ENGINEERING
559 Jones Franklin Rd. Suite 164
Raleigh, N.C. 27606
Bus: 919 851 8077
Fax: 919 851 8107
License: F-0377

TRANSPORTATION PLANNING/DESIGN - BRIDGE/STRUCTURE DESIGN
CIVIL/SITE DESIGN - GIS/GPS - CONSTRUCTION OBSERVATION

STATE OF NORTH CAROLINA
DEPARTMENT OF TRANSPORTATION
RALEIGH

GENERAL DRAWING
FOR BRIDGE ON US158
(EAST ELIZABETH STREET)
OVER PASQUOTANK RIVER
BETWEEN US 17 AND NC 343

REVISIONS						SHEET NO.
NO.	BY:	DATE:	NO.	BY:	DATE:	S-5
1			3			TOTAL SHEETS
2			4			454

DRAWN BY : Z. PIATEK DATE : 1/11
CHECKED BY : T. DIFFEE DATE : 1/11

P:\2010\10119.02 U-4438\Structures\DGN\S04_U-4438_SD_GD_04.dgn
2/4/2011 4:12:09 PM

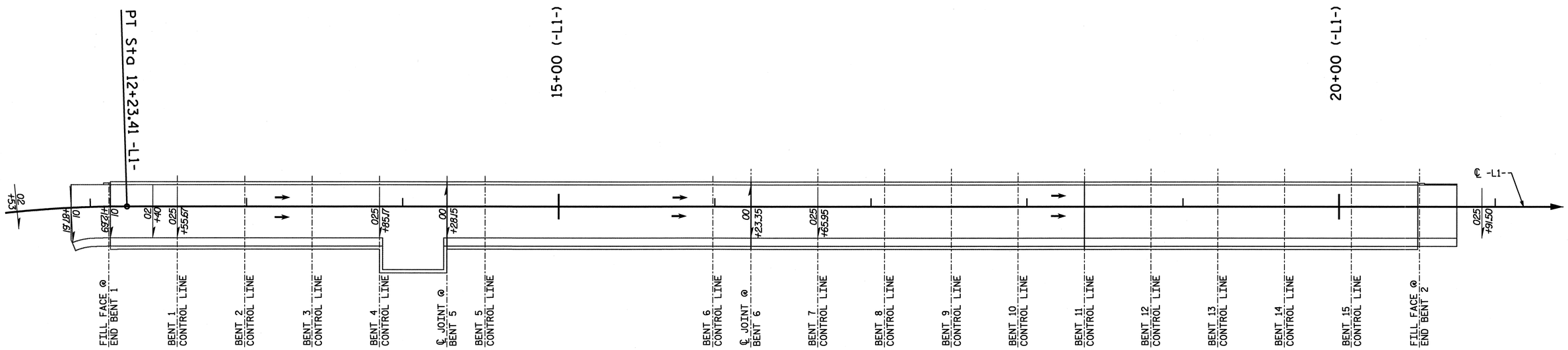

SUPER TRANSITIONS

SEE ROADWAY PLANS FOR ADDITIONAL INFORMATION

NOTES

FOR BRIDGE MICROPILES, SEE MICROPILES SPECIAL PROVISION.

DESIGN BRIDGE MICROPILES AT END BENT NO. 1 FOR A FACTORED COMPRESSION RESISTANCE OF 50 TONS PER PILE. DESIGN THE BOND LENGTH TO PROVIDE THE REQUIRED FACTORED RESISTANCE.

PERMANENT CASINGS WITH A MINIMUM OUTSIDE DIAMETER OF 10.75 INCHES ARE REQUIRED FOR BRIDGE MICROPILES. INSTALL BRIDGE MICROPILE PERMANENT CASINGS TO A TIP ELEVATION NO HIGHER THAN -58 FT.

USE MINIMUM 0.5 INCH WALL THICKNESS PERMANENT CASINGS WITH MINIMUM YIELD STRENGTH OF 50 KSI WITHOUT JOINTS ALONG THE PERMANENT CASING LENGTH FOR BRIDGE MICROPILES OR MINIMUM 0.5 INCH WALL THICKNESS PERMANENT CASINGS WITH A MINIMUM YIELD STRENGTH OF 80 KSI WITH THREADED JOINTS. DO NOT LOCATE THREADED CASING JOINTS WITHIN THE TOP TEN (10) FEET FOR ALL BRIDGE MICROPILES.

FULL LENGTH CENTRAL REINFORCING BAR IS REQUIRED FOR ALL BRIDGE MICROPILES.

ONE (1) DEMONSTRATION BRIDGE MICROPILE IS REQUIRED AS SHOWN ON PLANS.

VERIFICATION LOAD TEST IS REQUIRED FOR DEMONSTRATION BRIDGE MICROPILE. LOAD TEST DEMONSTRATION BRIDGE MICROPILE TO A MINIMUM OF 72 TONS FOR VERIFICATION TEST.

TWO BRIDGE MICROPILE PROOF LOAD TESTS ARE REQUIRED FOR PRODUCTION BRIDGE MICROPILES TO BE SELECTED BY THE ENGINEER. LOAD TEST EACH SELECTED PILE TO 50 TONS FOR PROOF TESTS.

BRIDGE MICROPILE VERIFICATION LOAD TEST AND PROOF LOAD TESTS MAY BE EITHER COMPRESSION OR TENSION TESTS AT THE CONTRACTOR'S DISCRETION.

FOR PILES, SEE SPECIAL PROVISIONS.

PILES AT END BENT NO. 2 ARE DESIGNED FOR A FACTORED RESISTANCE OF 80 TONS PER PILES. DRIVE PILES TO A REQUIRED DRIVING RESISTANCE OF 110 TONS PER PILE.

PILES AT BENT NO. 1, BENT NO. 2 AND BENT NO. 9 THROUGH BENT NO. 15 ARE DESIGNED FOR A FACTORED RESISTANCE OF 90 TONS PER PILE. DRIVE PILES TO A REQUIRED DRIVING RESISTANCE OF 125 TONS PER PILE. THIS REQUIRED DRIVING RESISTANCE INCLUDES ADDITIONAL RESISTANCE FOR DOWNDRAG OR SCOUR.

PILES AT BENT NO. 3, BENT NO. 7 AND BENT NO. 8 ARE DESIGNED FOR A FACTORED RESISTANCE OF 115 TONS PER PILE. DRIVE PILES TO A REQUIRED DRIVING RESISTANCE OF 170 TONS PER PILE. THIS REQUIRED DRIVING RESISTANCE INCLUDES ADDITIONAL RESISTANCE FOR DOWNDRAG OR SCOUR.

PILES AT BENT NO. 4 ARE DESIGNED FOR A FACTORED RESISTANCE OF 125 TONS PER PILE. DRIVE PILES TO A REQUIRED DRIVING RESISTANCE OF 190 TONS PER PILE. THIS REQUIRED DRIVING RESISTANCE INCLUDES ADDITIONAL RESISTANCE FOR DOWNDRAG OR SCOUR.

INSTALL PILES AT BENT NO. 1 TO A TIP ELEVATION NO HIGHER THAN -50 FT.

INSTALL PILES AT BENT NO. 10 AND BENT NO. 11 TO A TIP ELEVATION NO HIGHER THAN -48 FT.

INSTALL PILES AT BENT NO. 12 THROUGH BENT NO. 15 TO A TIP ELEVATION NO HIGHER THAN -40 FT.

SCOUR CRITICAL ELEVATIONS FOR BENT NO. 1, 2, 3, 4, 7, 8, 9, 10, 11, 12, 13, 14 AND 15 ARE -18, -25, -37, -45, -30, -18, -15, -13, -11, -7, -7, -7 AND -7, RESPECTIVELY. SCOUR CRITICAL ELEVATIONS ARE USED TO MONITOR POSSIBLE SCOUR PROBLEMS DURING THE LIFE OF THE STRUCTURE.

IT HAS BEEN ESTIMATED THAT A HAMMER WITH AN EQUIVALENT RATED ENERGY IN THE RANGE OF 30,000 FT-LBS PER BLOW TO 80,000 FT-LBS PER BLOW WILL BE REQUIRED TO DRIVE PILES AT BENT NO. 1 THROUGH BENT NO. 4, BENT NO. 7 THROUGH BENT NO. 15 AND END BENT NO. 2. THIS ESTIMATED ENERGY RANGE DOES NOT RELEASE THE CONTRACTOR FROM PROVIDING DRIVING EQUIPMENT IN ACCORDANCE WITH THE PILES SPECIAL PROVISION.

TESTING THE FIRST 16" PRESSTRESSED CONCRETE PRODUCTION PILE WITH THE PILE DRIVING ANALYZER DURING DRIVING, RESTRIKING OR REDRIVING IS REQUIRED AT BENT NO. 1 AND BENT NO. 2. FOR PILE DRIVING ANALYZER, SEE PILES SPECIAL PROVISION.

TESTING THE FIRST 16" PRESTRESSED CONCRETE PRODUCTION PILES WITH THE PILE DRIVING ANALYZER DURING DRIVING, RESTRIKING OR REDRIVING IS REQUIRED AT BENT NO. 9, 10, 11, 12, 13, 14 OR 15. FOR PILE DRIVING ANALYZER, SEE PILES SPECIAL PROVISION.

TESTING THE FIRST 20" PRESTRESSED CONCRETE PRODUCTION PILES WITH THE PILE DRIVING ANALYZER DURING DRIVING, RESTRIKING OR REDRIVING IS REQUIRED AT BENT NO. 3, 4, 7 OR 8. FOR PILE DRIVING ANALYZER, SEE PILES SPECIAL PROVISION.

CONTRACTOR SHALL USE AN EXTERNAL COMBUSTION HAMMER SUCH AS HYDRAULIC HAMMER OR AIR/ STEAM HAMMER WITH A STROKE CONTROL PRECISION OF 6 INCHES TO INSTALL ALL PILES AT THIS BRIDGE SITE EXCEPT END BENT NO. 1.

FOR END BENT CAP BULKHEAD SHEETING, SEE END BENT CAP BULKHEAD SPECIAL PROVISION.

INSTALL END BENT CAP BULKHEAD SHEETING AT END BENT NO. 1 AS SHOWN ON THE STRUCTURE PLANS TO A SHEETING TIP ELEVATION OF -29.0 FEET.

HYDRAULIC PRESSING OR PUSHING OF END BENT CAP BULKHEAD SHEETING MAY BE REQUIRED AT THE CONTRACTOR'S EXPENSE TO INSTALL THE BULKHEAD SHEETING TO THE REQUIRED SHEET PILE TIP ELEVATION WITHOUT EXCEEDING THE VIBRATION LIMIT ESTABLISHED IN THE CONTROL OF VIBRATION SPECIAL PROVISION AT THE NEAREST STRUCTURE NOT LOCATED WITHIN NCDOT RIGHT OF WAY.

USE SHEET PILING WITH A MINIMUM SECTION MODULUS OF 30.2 IN^3/FT. FOR END BENT CAP BULKHEAD SHEETING.

PROJECT NO. U-4438
CAMDEN & PASQUOTANK COUNTY
STATION: 15+25.75 -L1-

SHEET 6 of 7

NORTH CAROLINA SEAL 026891 ENGINEER JOHN T. DIFFEE III
John T. Diffee III 2-6-11

ETHERILL ENGINEERING
559 Jones Franklin Rd. Suite 164
Raleigh, N.C. 27606
Bus: 919 851 8077
Fax: 919 851 8107
License: F-0377

TRANSPORTATION PLANNING/DESIGN - BRIDGE/STRUCTURE DESIGN
CIVIL/SITE DESIGN - GIS/GPS - CONSTRUCTION OBSERVATION

STATE OF NORTH CAROLINA
DEPARTMENT OF TRANSPORTATION
RALEIGH

GENERAL DRAWING
FOR BRIDGE ON US158
(EAST ELIZABETH STREET)
OVER PASQUOTANK RIVER
BETWEEN US 17 AND NC 343

REVISIONS						SHEET NO.
NO.	BY:	DATE:	NO.	BY:	DATE:	S-6
1			3			TOTAL SHEETS
2			4			454

DRAWN BY : Z. PIATEK DATE : 12/10
CHECKED BY : T. DIFFEE DATE : 12/10

P:\2010\101902 U-4438\Structures\DGN\S06_U-4438_SD_GD_05.dgn
2/7/2011 7:21:31 AM

REVISED MARCH 17, 2011

TOTAL BILL OF MATERIAL

	CONSTRUCTION, MAINTENANCE & REMOVAL OF TEMPORARY ACCESS	REMOVAL OF EXISTING STRUCTURE	UNCLASSIFIED STRUCTURE EXCAVATION	PDA TESTING	PDA ASSISTANCE	REINFORCED CONCRETE DECK SLAB	GROOVING BRIDGE FLOORS	CLASS AA CONCRETE	BRIDGE APPROACH SLABS	EPOXY COATED REINFORCING STEEL	EPOXY COATED SPIRAL COLUMN REINFORCING STEEL	36 INCH PRESTRESSED CONCRETE GIRDERS		16" PRESTRESSED CONCRETE PILES		20" PRESTRESSED CONCRETE PILES		END BENT CAP BULKHEAD SHEETING	PILE REDRIVES	ONE BAR METAL RAIL	1'-0" X 1'-6" CONCRETE PARAPET	THREE BAR METAL RAIL
	LUMP SUM	LUMP SUM	LUMP SUM	EACH	EACH	SQ. FT.	SQ. FT.	CU. YDS.	LUMP SUM	LBS.	LBS.	NO.	LIN. FT.	NO.	LIN. FT.	NO.	LIN. FT.	LIN. FT.	EACH	LIN. FT.	LIN. FT.	LIN. FT.
SUPERSTRUCTURE						27,582	21,897					77	3,240.40							627.33	642.13	624.12
END BENT 1								25.8		4,395												
BENT 1								15.7		2,697				8	520			47.1	4			
BENT 2								18.3		3,258	41			9	630				5			
BENT 3								30.4		4,859	215					8	560		4			
BENT 4								24.4		3,663						8	600		4			
BENT 5																						
BENT 6																						
BENT 7								17.7		2,749						6	450		3			
BENT 8								30.3		4,852	215					8	600		4			
BENT 9								18.2		3,258	41			9	630				5			
BENT 10								15.7		2,697				8	560				4			
BENT 11								15.7		2,697				8	600				4			
BENT 12								15.7		2,697				8	600				4			
BENT 13								15.7		2,697				8	600				4			
BENT 14								15.7		2,697				8	600				4			
BENT 15								15.7		2,697				8	600				4			
END BENT 2			LUMP SUM					26.6		4,108				7	490				4			
TOTAL	LUMP SUM	LUMP SUM	LUMP SUM	6	6	27,582	21,897	301.6	LUMP SUM	50,021	512	77	3,240.40	81	5,830	30	2,210	47.1	57	627.33	642.13	624.12

TOTAL BILL OF MATERIAL

	ELASTOMERIC BEARINGS	EXPANSION JOINT SEALS	BRIDGE MICROPILES	BRIDGE MICROPILE VERIFICATION TESTS	BRIDGE MICROPILE PROOF TESTS	2-BAR ALUMINUM HANDRAIL
	LUMP SUM	LUMP SUM	EACH	EACH	EACH	LIN. FT.
SUPERSTRUCTURE	LUMP SUM	LUMP SUM				
END BENT 1			10	1	2	
BENT 1						
BENT 2						
BENT 3						51.2
BENT 4						
BENT 5						
BENT 6						
BENT 7						
BENT 8						51.2
BENT 9						
BENT 10						
BENT 11						
BENT 12						
BENT 13						
BENT 14						
BENT 15						
END BENT 2						
TOTAL	LUMP SUM	LUMP SUM	10	1	2	102.4

NOTES:

SEE VOLUME 2 OF STRUCTURE PLANS FOR BASCULE SPAN QUANTITIES.

SEE VOLUME 2 OF STRUCTURE PLANS FOR BRIDGE UTILITY QUANTITIES.

INASMUCH AS THE PAINT SYSTEM ON THE EXISTING STRUCTURAL STEEL CONTAINS LEAD, THE CONTRACTOR'S ATTENTION IS DIRECTED TO ARTICLE 107-1 OF THE STANDARD SPECIFICATIONS. ANY COSTS RESULTING FROM COMPLIANCE WITH APPLICABLE STATE OR FEDERAL REGULATIONS PERTAINING TO HANDLING OF MATERIALS CONTAINING LEAD BASED PAINT SHALL BE INCLUDED IN THE BID PRICE FOR "REMOVAL OF EXISTING STRUCTURE AT STATION 15+25.75 -L1-."

NEEDLE BEAMS WILL NOT BE ALLOWED UNLESS OTHERWISE CALLED FOR ON THE PLANS OR APPROVED BY THE ENGINEER.

FOR SUBMITTAL OF WORKING DRAWINGS, SEE SPECIAL PROVISIONS.

FOR FALSEWORK AND FORMWORK, SEE SPECIAL PROVISIONS.

FOR CRANE SAFETY, SEE SPECIAL PROVISIONS.

FOR PRESTRESSED CONCRETE MEMBERS, SEE SPECIAL PROVISIONS.

FOR GROUT FOR STRUCTURES, SEE SPECIAL PROVISIONS.

FOR CURING CONCRETE, SEE SPECIAL PROVISIONS.

FOR FORMS FOR CONCRETE BRIDGE DECKS, SEE SPECIAL PROVISIONS.

FOR PLACING LOAD ON STRUCTURE MEMBERS, SEE SPECIAL PROVISIONS.

FOR CONSTRUCTION, MAINTENANCE AND REMOVAL OF TEMPORARY ACCESS AT STATION 15+25.75 -L1-, SEE SPECIAL PROVISIONS.

PROJECT NO. U-4438
CAMDEN & PASQUOTANK COUNTY
STATION: 15+25.75 -L1-

SHEET 7 of 7

NORTH CAROLINA PROFESSIONAL SEAL 026891 ENGINEER JOHN T. DIFFEE III

ETHERILL ENGINEERING
559 Jones Franklin Rd. Suite 164
Raleigh, N.C. 27606
Bus: 919 851 8077
Fax: 919 851 8107
License: F-0377
TRANSPORTATION PLANNING/DESIGN - BRIDGE/STRUCTURE DESIGN
CIVIL/SITE DESIGN - GIS/GPS - CONSTRUCTION OBSERVATION

STATE OF NORTH CAROLINA
DEPARTMENT OF TRANSPORTATION
RALEIGH

GENERAL DRAWING
FOR BRIDGE ON US158
(EAST ELIZABETH STREET)
OVER PASQUOTANK RIVER
BETWEEN US 17 AND NC 343

REVISIONS								SHEET NO.
NO.	BY:	DATE:	NO.	BY:	DATE:			S-7
1			3					TOTAL SHEETS
2			4					454

DRAWN BY : G. WILSON DATE : 12/10
CHECKED BY : T. DIFFEE DATE : 12/10

P:\2010\1019.02_U-4438\Structures\DGN\S07_U-4438_SD_GD_07.dgn
3/17/2011 10:22:30 AM

LOAD AND RESISTANCE FACTOR RATING (LRFR) SUMMARY FOR PRESTRESSED CONCRETE GIRDERS

LEVEL		VEHICLE	WEIGHT (W) (TONS)	CONTROLLING LOAD RATING (#)	MINIMUM RATING FACTORS (RF)	TONS = W × RF	STRENGTH I LIMIT STATE											SERVICE III LIMIT STATE						COMMENT NUMBER
								MOMENT					SHEAR						MOMENT					
							LIVE-LOAD FACTORS ($\gamma_{(LL)}$)	DISTRIBUTION FACTORS (DF)	RATING FACTOR	SPAN	GIRDER LOCATION	DISTANCE FROM LEFT END OF SPAN (FT)	DISTRIBUTION FACTORS (DF)	RATING FACTOR	SPAN	GIRDER LOCATION	DISTANCE FROM LEFT END OF SPAN (FT)	LIVE-LOAD FACTORS ($\gamma_{(LL)}$)	DISTRIBUTION FACTORS (DF)	RATING FACTOR	SPAN	GIRDER LOCATION	DISTANCE FROM LEFT END OF SPAN (FT)	
DESIGN LOAD RATING		HL-93 (INVENTORY)	N/A	1	1.24	--	1.75	0.801	1.70	C	I	3.6	0.896	1.51	C	I	7.8	0.80	0.801	1.24	C	I	20.5	
		HL-93 (OPERATING)	N/A		1.96	--	1.35	0.801	2.21	C	I	3.6	0.896	1.96	C	I	7.8	N/A	--	--	--	--	--	
		HS-20 (INVENTORY)	36.000	2	1.52	54.720	1.75	0.801	2.02	C	I	3.6	0.896	1.79	C	I	7.8	0.80	0.801	1.52	C	I	20.5	
		HS-20 (OPERATING)	36.000		2.32	83.520	1.35	0.801	2.62	C	I	3.6	0.896	2.32	C	I	7.8	N/A	--	--	--	--	--	
LEGAL LOAD RATING	SINGLE VEHICLE (SV)	SNSH	13.500		2.89	39.015	1.40	0.801	4.99	C	I	20.5	0.896	5.05	C	I	7.8	0.80	0.801	2.89	C	I	20.5	
		SNGARBS2	20.000		2.37	47.400	1.40	0.801	4.02	C	I	3.6	0.896	3.70	C	I	7.8	0.80	0.801	2.37	C	I	20.5	
		SNAGRIS2	22.000		2.35	51.700	1.40	0.801	3.81	C	I	3.6	0.896	3.51	C	I	7.8	0.80	0.801	2.35	C	I	20.5	
		SNCOTTS3	27.250		1.44	39.240	1.40	0.801	2.49	C	I	20.5	0.896	2.35	C	I	7.8	0.80	0.801	1.44	C	I	20.5	
		SNAGGRS4	34.925		1.29	45.053	1.40	0.801	2.23	C	I	20.5	0.896	2.06	C	I	7.8	0.80	0.801	1.29	C	I	20.5	
		SNS5A	35.550		1.25	44.438	1.40	0.801	2.17	C	I	20.5	0.896	2.18	C	I	7.8	0.80	0.801	1.25	C	I	20.5	
		SNS6A	39.950		1.19	47.541	1.40	0.801	2.05	C	I	20.5	0.896	2.00	C	I	7.8	0.80	0.801	1.19	C	I	20.5	
		SNS7B	42.000	3	1.13	47.460	1.40	0.801	1.96	C	I	20.5	0.896	2.05	C	I	7.8	0.80	0.801	1.13	C	I	20.5	
	TRUCK TRACTOR SEMI-TRAILER (TTST)	TNAGRIT3	33.000		1.46	48.180	1.40	0.801	2.52	C	I	20.5	0.896	2.43	C	I	7.8	0.80	0.801	1.46	C	I	20.5	
		TNT4A	33.075		1.48	48.951	1.40	0.801	2.55	C	I	20.5	0.896	2.28	C	I	7.8	0.80	0.801	1.48	C	I	20.5	
		TNT6A	41.600		1.25	52.000	1.40	0.801	2.15	C	I	20.5	0.896	2.24	C	I	7.8	0.80	0.801	1.25	C	I	20.5	
		TNT7A	42.000		1.27	53.340	1.40	0.801	2.20	C	I	20.5	0.896	2.03	C	I	7.8	0.80	0.801	1.27	C	I	20.5	
		TNT7B	42.000		1.32	55.440	1.40	0.801	2.28	C	I	20.5	0.896	1.93	C	I	7.8	0.80	0.801	1.32	C	I	20.5	
		TNAGRIT4	43.000		1.27	54.610	1.40	0.801	2.14	C	I	3.6	0.896	1.87	C	I	7.8	0.80	0.801	1.27	C	I	20.5	
		TNAGT5A	45.000		1.17	52.650	1.40	0.801	2.03	C	I	20.5	0.896	1.99	C	I	7.8	0.80	0.801	1.17	C	I	20.5	
		TNAGT5B	45.000		1.14	51.300	1.40	0.801	1.98	C	I	20.5	0.896	1.75	C	I	7.8	0.80	0.801	1.14	C	I	20.5	

LOAD FACTORS:

DESIGN LOAD RATING FACTORS	LIMIT STATE	γ_{DC}	γ_{DW}
	STRENGTH I	1.25	1.50
	SERVICE III	1.00	1.00

NOTES:

MINIMUM RATING FACTORS ARE BASED ON THE STRENGTH I AND SERVICE III LIMIT STATES.

ALLOWABLE STRESSES FOR SERVICE III LIMIT STATE ARE AS REQUIRED FOR DESIGN.

COMMENTS:

1. SPANS A THROUGH E CONTROL DESIGN
2. SPANS G THROUGH K, SPANS L THROUGH P SIMILAR.

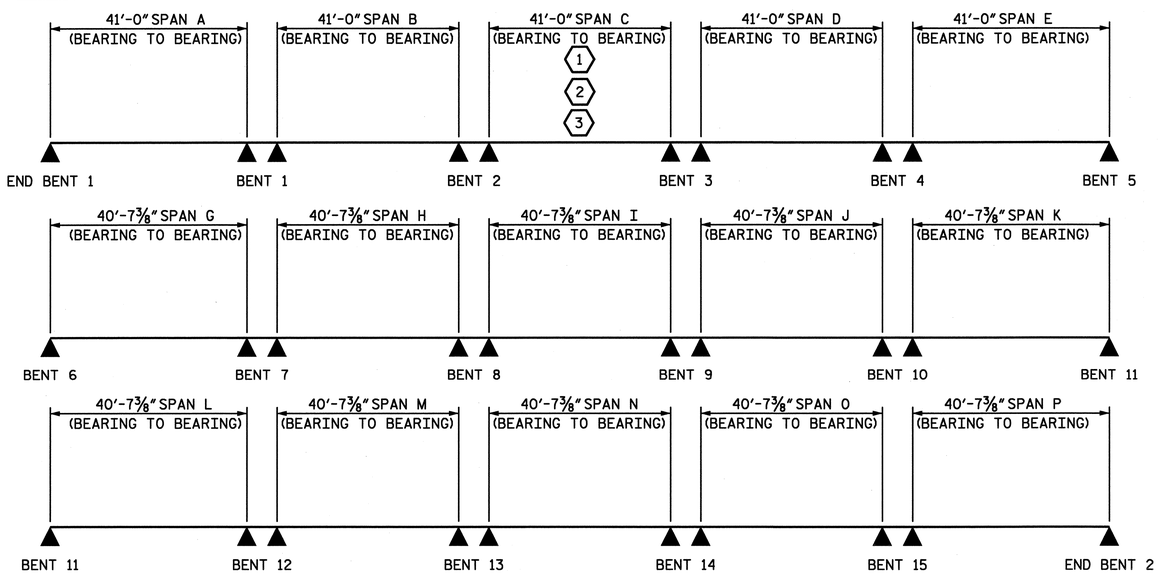

(#) CONTROLLING LOAD RATING

- (1) DESIGN LOAD RATING (HL-93)
- (2) DESIGN LOAD RATING (HS-20)
- (3) LEGAL LOAD RATING **
- ** SEE CHART FOR VEHICLE TYPE

GIRDER LOCATION

- I - INTERIOR GIRDER
- EL - EXTERIOR LEFT GIRDER
- ER - EXTERIOR RIGHT GIRDER

PROJECT NO. U-4438

CAMDEN & PASQUOTANK COUNTY

STATION: 15+25.75 -L1-

ASSEMBLED BY : Z. PIATEK DATE : 11/10
CHECKED BY : J. DILWORTH DATE : 11/10
DRAWN BY : MAA 1/08
CHECKED BY : GM/DI 2/08
REV. 11/12/08RR MAA/GM

LRFR SUMMARY

NORTH CAROLINA PROFESSIONAL SEAL 028881 ENGINEER JOHN T. DILWORTH III

ETHERILL ENGINEERING
559 Jones Franklin Rd. Suite 164
Raleigh, N.C. 27606
Bus: 919 851 8077
Fax: 919 851 8107
License: F-0377

TRANSPORTATION PLANNING/DESIGN - BRIDGE/STRUCTURE DESIGN
CIVIL/SITE DESIGN - GIS/GPS - CONSTRUCTION OBSERVATION

STATE OF NORTH CAROLINA
DEPARTMENT OF TRANSPORTATION
RALEIGH

STANDARD
LRFR SUMMARY FOR PRESTRESSED CONCRETE GIRDERS
(NON-INTERSTATE TRAFFIC)

REVISIONS						SHEET NO.
NO.	BY:	DATE:	NO.	BY:	DATE:	S-8
1			3			TOTAL SHEETS
2			4			454

STD. NO. LRFR1

8-20-09

REVISED MARCH 21, 2011

NOTES:

FOR NOTES, SEE SHEET 3 OF 3.

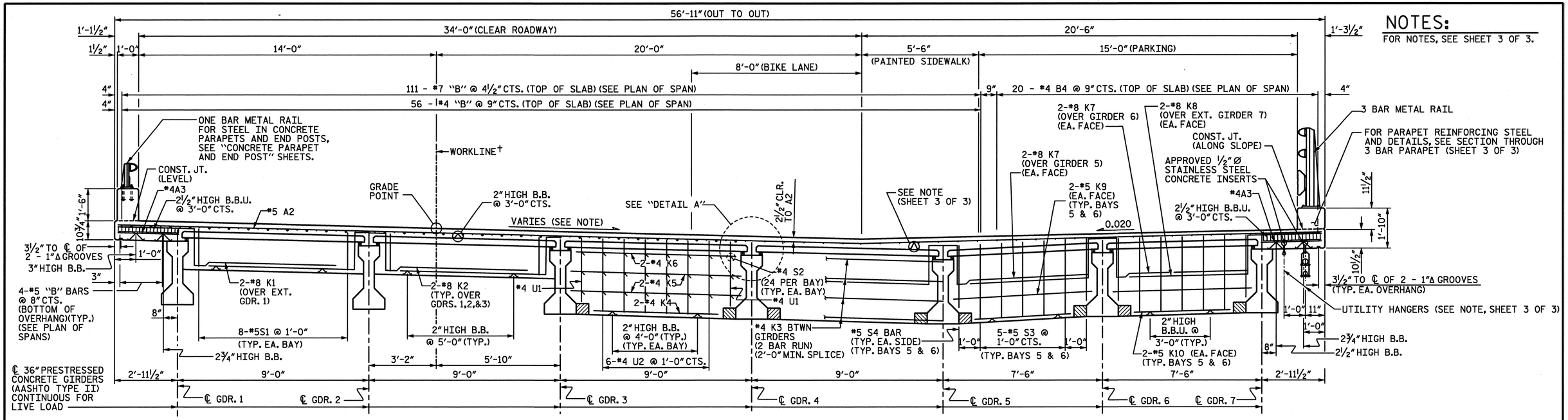

AT BENT DIAPHRAGM
(BENT 5, BAYS 1 THROUGH 6)

AT CONTINUOUS BENT DIAPHRAGM
(BENT 4, BAYS 1 THROUGH 4)

AT FULL DEPTH BENT DIAPHRAGM
(BENT 4, BAYS 5 AND 6)

TYPICAL SECTION - SPAN 'E'

NOTES: SEE GENERAL DRAWING SHEET 6 OF 7 FOR LOCATION OF SUPER TRANSITIONS
† SEE GENERAL DRAWING SHEET 3 OF 7 FOR DEFINITION OF WORKLINE

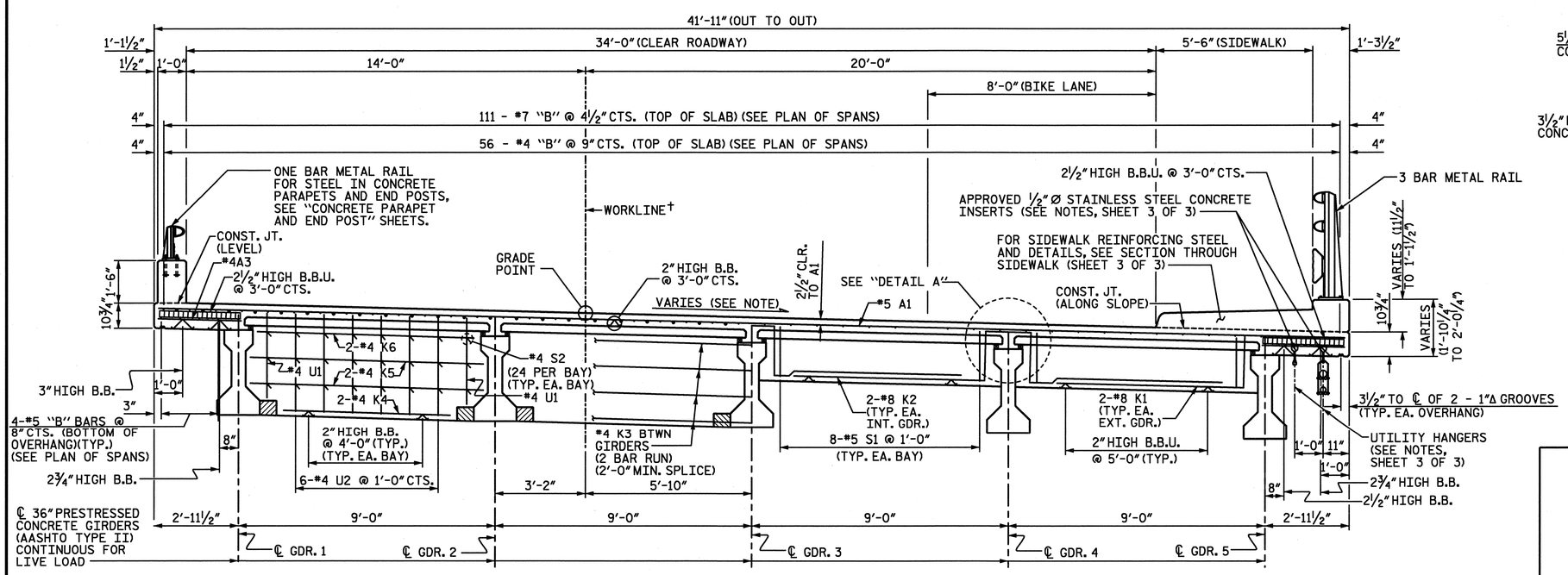

AT CONTINUOUS BENT DIAPHRAGMS

AT END BENT, BENT AND BASCULE PIER DIAPHRAGMS

TYPICAL SECTION - SPANS 'A' THRU 'D' & 'G' THRU 'P'

NOTES: SEE GENERAL DRAWING SHEET 6 OF 7 FOR LOCATION OF SUPER TRANSITIONS
† SEE GENERAL DRAWING SHEET 3 OF 7 FOR DEFINITION OF WORKLINE

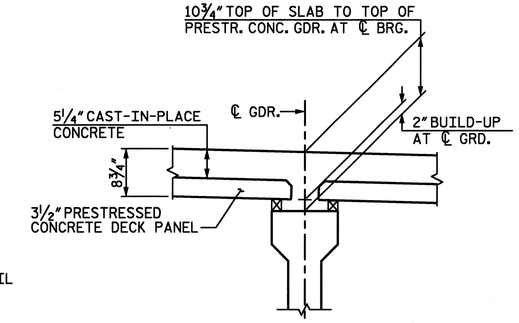

DETAIL A

PROJECT NO. U-4438
CAMDEN & PASQUOTANK COUNTY
STATION: 15+25.75 -L1-

SHEET 1 of 3

DRAWN BY : J. T. DIFFEE DATE : 5/10
CHECKED BY : J. A. DILWORTH DATE : 7/10

NORTH CAROLINA PROFESSIONAL SEAL 026891 ENGINEER JOHN T. DIFFEE III
3/21/11

ETHERILL ENGINEERING
559 Jones Franklin Rd. Suite 164
Raleigh, N.C. 27606
Bus: 919 851 8077
Fax: 919 851 8107
License: F-0377

TRANSPORTATION PLANNING/DESIGN - BRIDGE/STRUCTURE DESIGN
CIVIL/SITE DESIGN - GIS/GPS - CONSTRUCTION OBSERVATION

STATE OF NORTH CAROLINA
DEPARTMENT OF TRANSPORTATION
RALEIGH

SUPERSTRUCTURE
TYPICAL SECTION

REVISIONS								SHEET NO.
NO.	BY:	DATE:	NO.	BY:	DATE:			S-9
1			3					TOTAL SHEETS
2			4					454

P:\2010\101902_U-4438\Structures\DGN\S09_U-4438_SD_TS.dgn
3/21/2011 4:24:00 PM

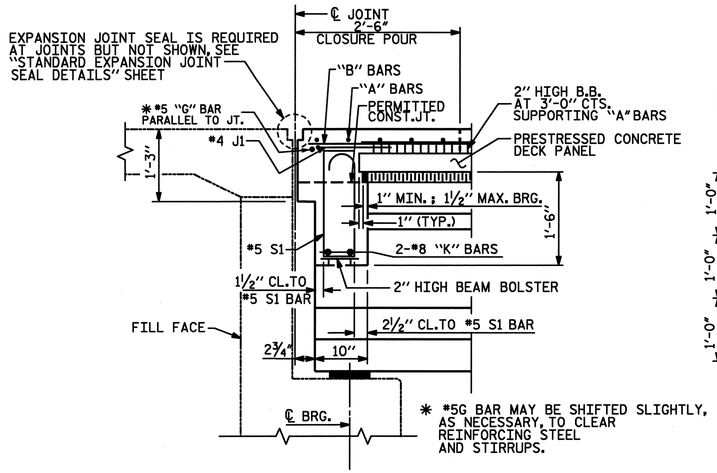

SECTION THROUGH END BENT DIAPHRAGM SECTION A-A

(END BENT 1 SHOWN, END BENT 2 SIMILAR)

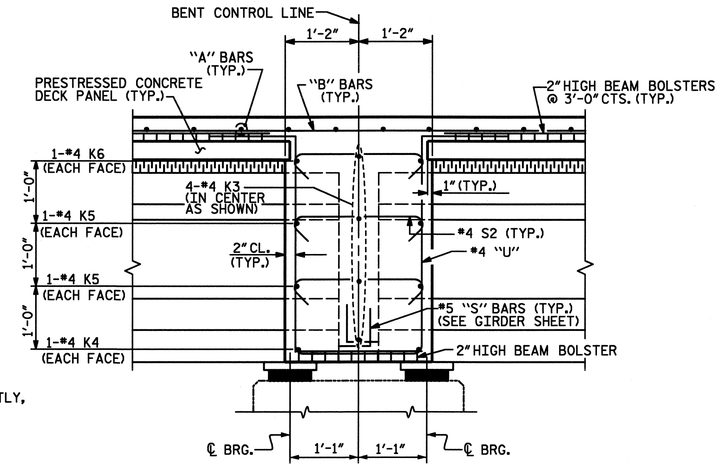

SECTION THROUGH BENT DIAPHRAGM - SECTION B-B

(AT BENTS 1-4, 7-10, 12-15)

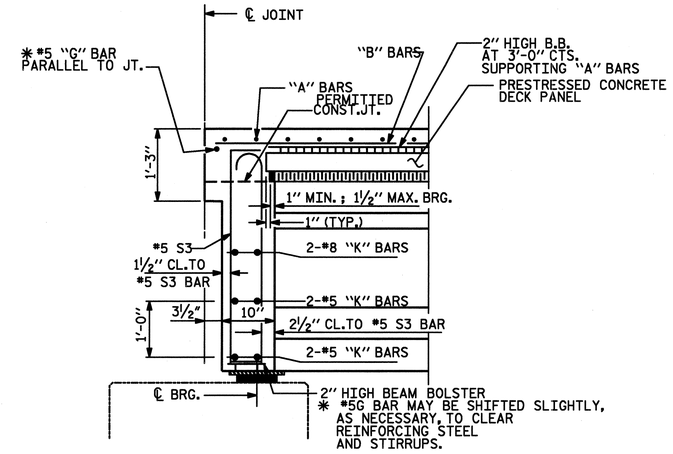

SECTION THROUGH FULL-DEPTH BENT DIAPHRAGM SECTION C-C

(BENT 4 SHOWN, BETWEEN GIRDERS 5&7)

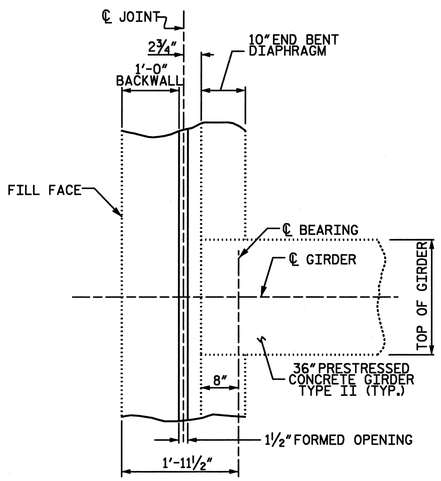

PLAN OF END BENT DIAPHRAGM

(END BENT 1 SHOWN, END BENT 2 SIMILAR)

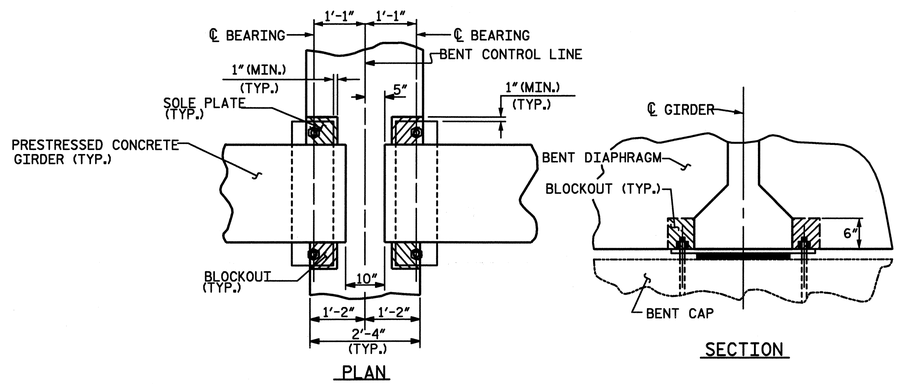

BENT DIAPHRAGM BLOCKOUT DETAIL

(CONTINUOUS BENT DIAPHRAGM SHOWN, FULL-DEPTH BENT DIAPHRAGM SIMILAR)

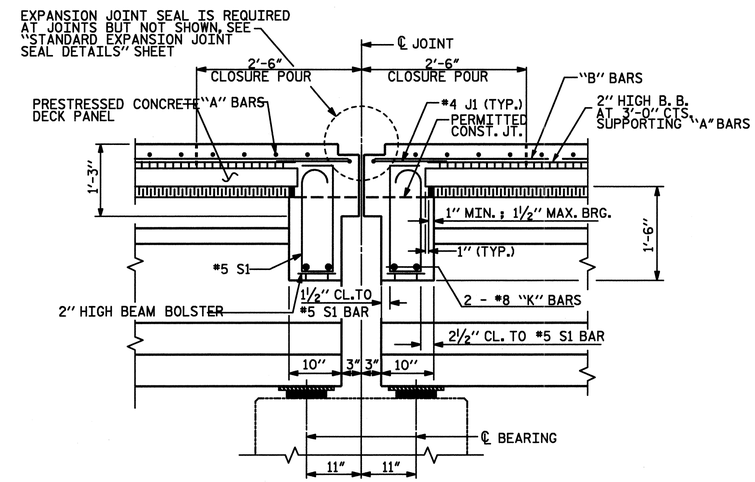

SECTION THROUGH BENT DIAPHRAGM - SECTION E-E

(BENT 11 SHOWN)

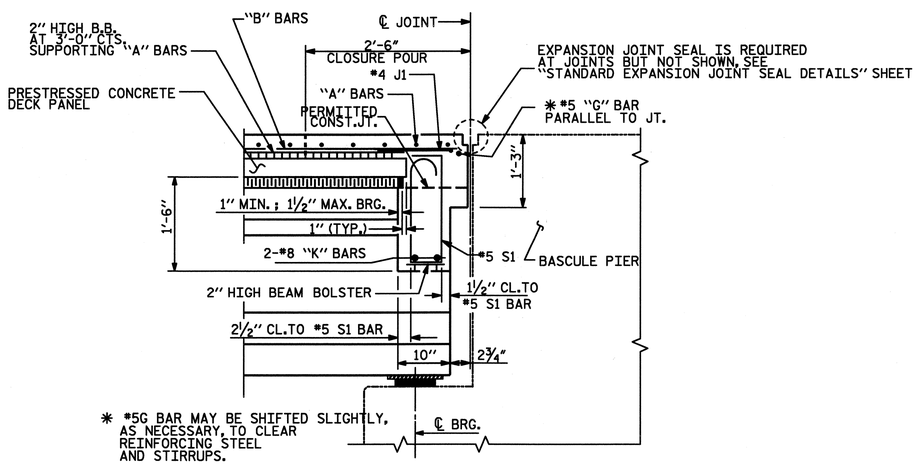

SECTION THROUGH BENT DIAPHRAGM - SECTION D-D

(BENT 5 SHOWN, BENT 6 SIMILAR)

PROJECT NO. U-4438

CAMDEN & PASQUOTANK COUNTY

STATION: 15+25.75 -L1-

SHEET 2 OF 3

NORTH CAROLINA PROFESSIONAL SEAL 026891 ENGINEER JOHN T. DIFFEE

ETHERILL ENGINEERING
559 Jones Franklin Rd. Suite 164
Raleigh, N.C. 27606
Bus: 919 851 8077
Fax: 919 851 8107
License: F-0377

TRANSPORTATION PLANNING/DESIGN - BRIDGE/STRUCTURE DESIGN
CIVIL/SITE DESIGN - GIS/GPS - CONSTRUCTION OBSERVATION

STATE OF NORTH CAROLINA
DEPARTMENT OF TRANSPORTATION
RALEIGH

SUPERSTRUCTURE TYPICAL SECTION DETAILS

REVISIONS								SHEET NO.
NO.	BY:	DATE:	NO.	BY:	DATE:			S-10
1			3					TOTAL SHEETS
2			4					454

DRAWN BY : Z PIATEK DATE : 8/10
CHECKED BY : J DILWORTH DATE : 8/10

P:\2010\1019.02 U-4438\Structures\DGN\S10_U-4438_SD_TSD.dgn
2/4/2011 4:14:19 PM

REVISED MARCH 21, 2011

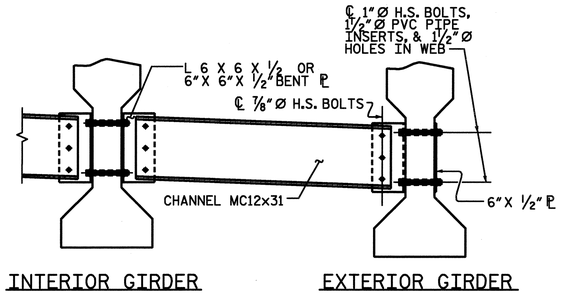

PART SECTION AT INTERMEDIATE DIAPHRAGM

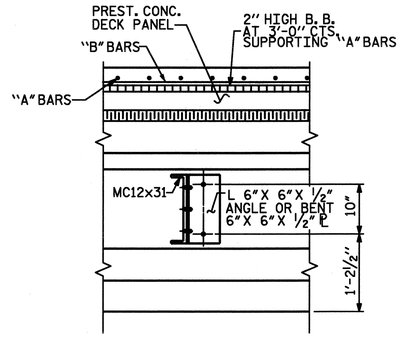

SECTION AT INTERMEDIATE STEEL DIAPHRAGM

NOTES:

LONGITUDINAL STEEL MAY BE SHIFTED SLIGHTLY, AS NECESSARY, TO AVOID INTERFERENCE WITH STIRRUPS IN PRESTRESSED CONCRETE GIRDERS.

PREVIOUSLY CAST CONCRETE IN A CONTINUOUS UNIT SHALL HAVE ATTAINED A MINIMUM COMPRESSIVE STRENGTH OF 3,000 PSI BEFORE ADDITIONAL CONCRETE IS CAST IN THE UNIT.

PARAPET AND SIDEWALK IN A CONTINUOUS UNIT SHALL NOT BE CAST UNTIL ALL SLAB CONCRETE IN THE UNIT HAS BEEN CAST AND HAS REACHED A MINIMUM COMPRESSIVE STRENGTH OF 3,000 PSI., EXCLUDING SIDEWALK SECTION TO BE CAST INTEGRAL WITH THE DECK IN SPAN 'E'.

#5 G1, G2, AND G3 BARS MAY BE SHIFTED SLIGHTLY, AS NECESSARY, TO CLEAR REINFORCING STEEL AND STIRRUPS.

ALL REINFORCING STEEL IN PARAPET, END POSTS AND SIDEWALK SHALL BE EPOXY COATED.

GROOVED CONTRACTION JOINTS ½" IN DEPTH, SHALL BE TOOLED IN ALL EXPOSED FACES OF PARAPET AND SIDEWALK IN ACCORDANCE WITH ARTICLE 825-10(B) OF THE STANDARD SPECIFICATIONS. THE CONTRACTION JOINTS SHALL BE LOCATED AT A SPACING OF 8 FEET TO 10 FEET BETWEEN EXPANSION JOINTS. NO CONTRACTION JOINTS WILL BE REQUIRED FOR SEGMENTS LESS THAN 10 FEET IN LENGTH.

#4 U3 BARS MAY BE PUSHED INTO GREEN CONCRETE AFTER SPAN HAS BEEN SCREEDED OFF.

THE CONTRACTOR IS MADE AWARE SPECIAL MEANS WILL BE NEEDED TO SUPPORT THE REINFORCING IN SPAN 'E' AROUND GIRDER 5 AS THE CROSS SLOPE OF THE BRIDGE DECK CHANGES.

SEWER AND WATER PIPE SUPPORTS REQUIRED ON THE SOUTH OVERHANG OF SPANS 'A' THRU 'E'. MESSENGER SUPPORT CABLES REQUIRED ON THE SOUTH OVERHANGS OF SPANS 'A' THRU 'E' AND THE SOUTH OVERHANGS OF SPANS 'G' THRU 'I'. FOR ADDITIONAL DETAILS OF UTILITIES TO BE HUNG FROM THE BRIDGE AND THE UTILITY HANGERS, SEE VOLUME 2 OF STRUCTURE PLANS.

CONCRETE INSERTS FOR UTILITY HANGERS SHALL BE ½"Ø AND A.I.S.I. TYPE 316 STAINLESS STEEL. THE INSERTS FOR THE MESSENGER CABLE SYSTEM SHALL BE INSTALLED AT 20'-0" MAX. CENTERS, AND AT 6'-0" MAX. CENTERS FOR THE PIPE HANGERS. INSERTS SHALL BE RATED BY THE MANUFACTURER FOR AN ALLOWABLE TENSILE LOAD OF 2.5 KIPS (MIN.) AND AN ALLOWABLE SHEAR LOAD OF 1.8 KIPS (MIN.).

CONTRACTOR SHALL SUBMIT INFORMATION ON PROPOSED INSERTS INCLUDING A LAYOUT PLAN SHOWING LOCATION OF THE INSERTS TO THE ENGINEER FOR APPROVAL. CONTRACTOR SHALL COORDINATE LOCATION OF INSERTS WITH ELECTRICAL AND PLUMBING SUBCONTRACTORS PRIOR TO SUBMITTING LAYOUT FOR REVIEW.

ALL COSTS FOR MATERIALS AND INSTALLATION OF THE CONCRETE INSERTS SHALL BE INCLUDED IN THE VARIOUS PAY ITEMS. NO SEPERATE PAYMENT WILL BE MADE.

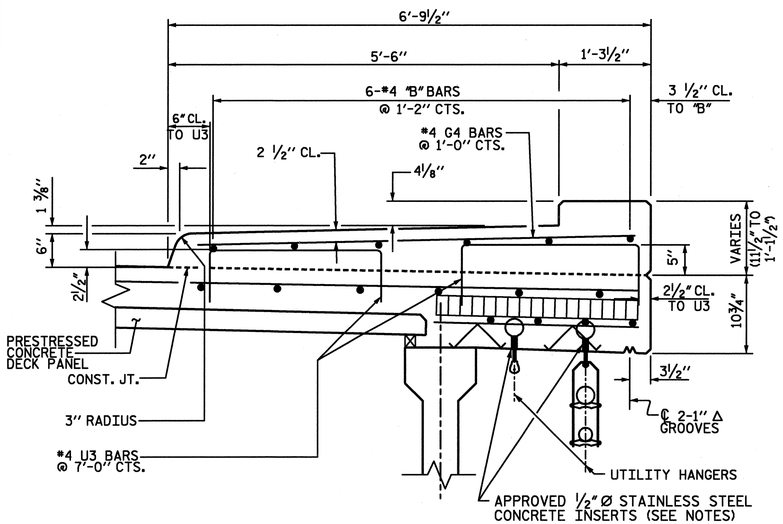

SECTION THROUGH SIDEWALK

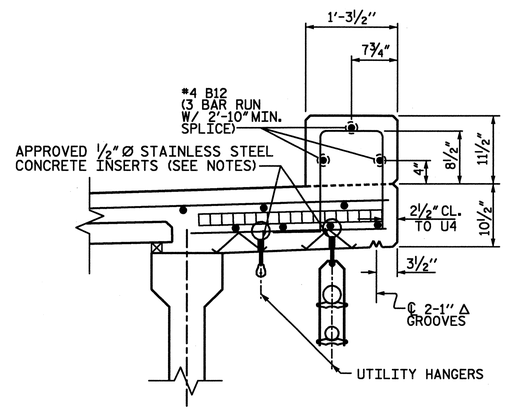

SECTION THROUGH 3 BAR PARAPET

(SPAN 'E')

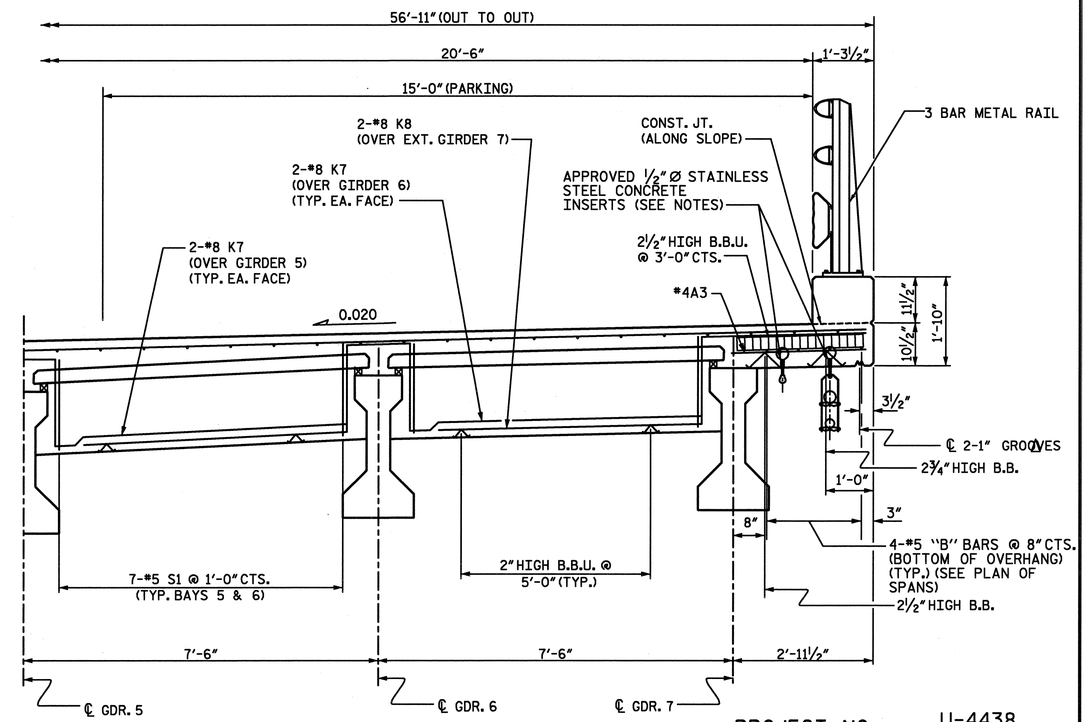

AT BENT DIAPHRAGM

(BENT 5, BAYS 5 AND 6)

PARTIAL SECTION

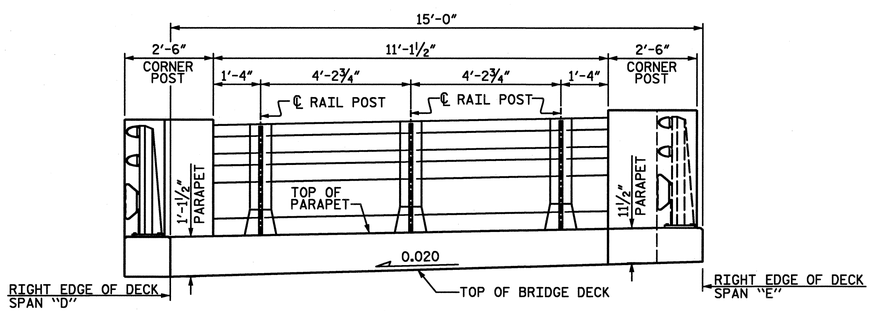

VIEW OF 3 BAR PARAPET ALONG BENT 4 CONTROL LINE

VARY HEIGHT OF PARAPET LINEARLY FROM 1'-1½" TO 11½"

PROJECT NO. U-4438

CAMDEN & PASQUOTANK COUNTY

STATION: 15+25.75 -L1-

SHEET 3 OF 3

STATE OF NORTH CAROLINA
DEPARTMENT OF TRANSPORTATION
RALEIGH

SUPERSTRUCTURE
TYPICAL SECTION
DETAILS

NORTH CAROLINA PROFESSIONAL SEAL 026591 ENGINEER JOHN T. DIFFEE III
3-21-11

ETHERILL ENGINEERING
559 Jones Franklin Rd. Suite 164
Raleigh, N.C. 27606
Bus: 919 851 8077
Fax: 919 851 8107
License: F-0377
TRANSPORTATION PLANNING/DESIGN - BRIDGE/STRUCTURE DESIGN
CIVIL/SITE DESIGN - GIS/GPS - CONSTRUCTION OBSERVATION

REVISIONS						SHEET NO.
NO.	BY:	DATE:	NO.	BY:	DATE:	S-11
1			3			TOTAL SHEETS
2			4			454

DRAWN BY : Z. PIATEK DATE : 1/11
CHECKED BY : J. DILWORTH DATE : 1/11

P:\2010\101192 U-4438\Structures\DGNS11_U-4438_SD_TSD2.dgn
3/21/2011 4:26:52 PM

DECK PANEL SUPPORTS

THE CONTRACTOR SHALL PROVIDE THE DECK PANEL SUPPORT SYSTEM SHOWN OR HE MAY SUBMIT A DECK PANEL SUPPORT SYSTEM OF HIS OWN DESIGN TO THE ENGINEER FOR APPROVAL.

POLYSTYRENE SUPPORT SYSTEM

1. ALL POLYSTYRENE SHALL BE DOW STYROFOAM 60 HIGH-LOAD, UC INDUSTRIES FOAMULAR 600 OR APPROVED EQUAL.
2. THE POLYSTYRENE SUPPORT SYSTEM SHALL CONSIST OF ONE LAYER WITH A MINIMUM WIDTH OF 1½" AND A MAXIMUM WIDTH OF 2". THE POLYSTYRENE SHALL HAVE ½" X ½" WIDE SLOTS OR ½" DIAMETER HOLES AT 4'-0" CENTERS STAGGERED ALONG THE TOP AND BOTTOM.
3. THE POLYSTYRENE MAY BE CUT AND PLACED ON EDGE AS NECESSARY TO MATCH THE REQUIRED BUILDUP PROFILE ALONG THE GIRDER.
4. ADHESIVE, AS APPROVED BY THE ENGINEER, SHALL BE APPLIED TO THE TOP OF THE GIRDER IN A CONTINUOUS BEAD AND IN SUFFICIENT AMOUNT TO PREVENT THE POLYSTYRENE FROM BLOWING OUT AND TO PREVENT GAPS FROM FORMING BETWEEN THE POLYSTYRENE AND THE GIRDER. PRIOR TO PLACEMENT OF THE DECK PANELS, THE ADHESIVE SHALL ALSO BE APPLIED TO THE TOP OF THE POLYSTYRENE.
5. CONCRETE-FILLED BUCKETS, STACKS OF DECK PANELS, BUNDLED REINFORCING BARS OR OTHER HEAVY CONCENTRATED LOADS WILL NOT BE PERMITTED ON THE DECK PANEL ONCE THE PANEL HAS BEEN PLACED ON THE POLYSTYRENE SUPPORT SYSTEM.

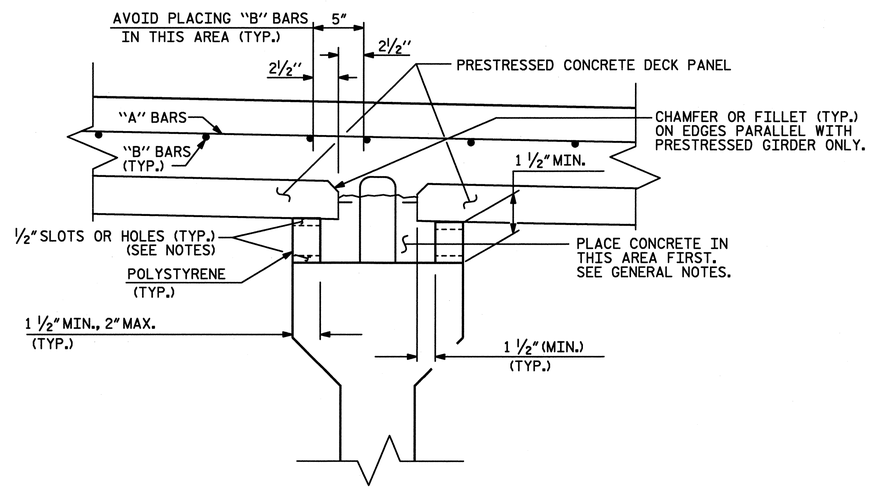

POLYSTYRENE SUPPORT

GENERAL NOTES

1. THE DESIGN COMPRESSIVE STRENGTH (f'c) FOR THE CONCRETE IN PRESTRESSED PANELS SHALL BE 5000 PSI MINIMUM AT 28 DAYS. COMPRESSIVE STRENGTH OF CONCRETE AT TIME OF RELEASE OF STRANDS SHALL BE 4000 PSI MINIMUM.
2. THE PRECAST PRESTRESSED PANEL SHALL HAVE A THICKNESS OF 3 ½" WITH THE PRESTRESSED STRANDS LOCATED AT HALF THE DEPTH OF THE PANEL.
3. FOR SKEWED SPANS, TRAPEZOIDAL CLOSURE PANELS SHALL HAVE A MINIMUM WIDTH OF 2 FEET ON THE SHORT SIDE.
4. ALL PRESTRESSING STRANDS SHALL EXTEND 2" BEYOND THE PANEL EDGES.
5. SHEAR REINFORCING OF 0.60 SQ. INCHES OF REINFORCING STEEL PER 10 SQ. FEET OF PANEL SURFACE SHALL BE PROVIDED IN THE PANEL TO ENSURE COMPOSITE ACTION BETWEEN PANEL AND THE CAST-IN-PLACE CONCRETE. SHEAR REINFORCEMENT SHALL BE MADE OF WELDED WIRE HAVING A MINIMUM YIELD STRENGTH OF 60 KSI.
6. SHEAR REINFORCEMENT AND LIFTING DEVICES SHALL BE CONSTRUCTED AND PLACED SO AS TO AVOID ANY INTERFERENCE WITH REINFORCING STEEL IN THE CAST-IN-PLACE DECK SLAB AND TO ALLOW FOR PROPER CONCRETE CONSOLIDATION IN THE DECK PANEL.
7. SHIFT LONGITUDINAL "B" BARS AS NECESSARY TO OBTAIN A MINIMUM CLEAR DISTANCE OF 2 ½" TO THE RIGHT OR LEFT OF THE EDGE OF THE DECK PANEL. IF, IN SHIFTING TO OBTAIN THIS CLEARANCE, THE "B" BAR INTERFERES WITH THE STIRRUP IN THE TOP OF THE GIRDER THE "B" BAR MAY BE ELIMINATED.
8. WHEN CASTING THE DECK, PLACE CONCRETE FIRST OVER THE GIRDERS IN CONTINUOUS STRIPS A MINIMUM OF THREE PANEL LENGTHS AHEAD OF THE REST OF THE CONCRETE. CAREFULLY VIBRATE THE CONCRETE OVER THE GIRDERS SO THAT CONCRETE COMPLETELY FILLS THE AREA UNDER THE DECK PANEL OVERHANGS. THEN PLACE AND VIBRATE THE REMAINING DECK CONCRETE.
9. PRECAST DECK PANELS SHALL BE DESIGNED FOR AN ALLOWABLE TENSILE STRESS OF 0 PSI. IN THE PRECOMPRESSED TENSILE ZONE UNDER ALL LOADING CONDITIONS.
10. PRESTRESSED CONCRETE DECK PANELS SHALL CONTAIN CALCIUM NITRITE CORROSION INHIBITOR. SEE SPECIAL PROVISIONS FOR CALCIUM NITRITE CORROSION INHIBITOR.

PROJECT NO. U-4438
CAMDEN & PASQUOTANK COUNTY
STATION: 15+25.75 -L1-

NORTH CAROLINA PROFESSIONAL SEAL 026891 ENGINEER JOHN T. DIFFEE, III
7/9/2011

ETHERILL ENGINEERING
559 Jones Franklin Rd. Suite 164
Raleigh, N.C. 27606
Bus: 919 851 8077
Fax: 919 851 8107
License: F-0377
TRANSPORTATION PLANNING/DESIGN - BRIDGE/STRUCTURE DESIGN
CIVIL/SITE DESIGN - GIS/GPS - CONSTRUCTION OBSERVATION

STATE OF NORTH CAROLINA
DEPARTMENT OF TRANSPORTATION
RALEIGH

STANDARD

PRECAST PRESTRESSED CONCRETE DECK PANELS

REVISIONS						SHEET NO.
NO.	BY:	DATE:	NO.	BY:	DATE:	S-12
1			3			TOTAL SHEETS
2			4			454

STD. NO. PDP1

ASSEMBLED BY : J. PENDERGRAFT		DATE : 11-10	
CHECKED BY : J. DILWORTH		DATE : 11-10	
DRAWN BY : ELR 1/92	REV. 3/3/93	ELR/RGW	
CHECKED BY : GRP 4/92	REV. 5/7/03R	RWW/JTE	
	REV. 5/1/06R	TLA/GM	

2/4/2011
P:\2010\10115.02 U-4438\Structures\DGN\S12_U-4438_SD_PDP1.dgn

REVISED MARCH 24, 2011

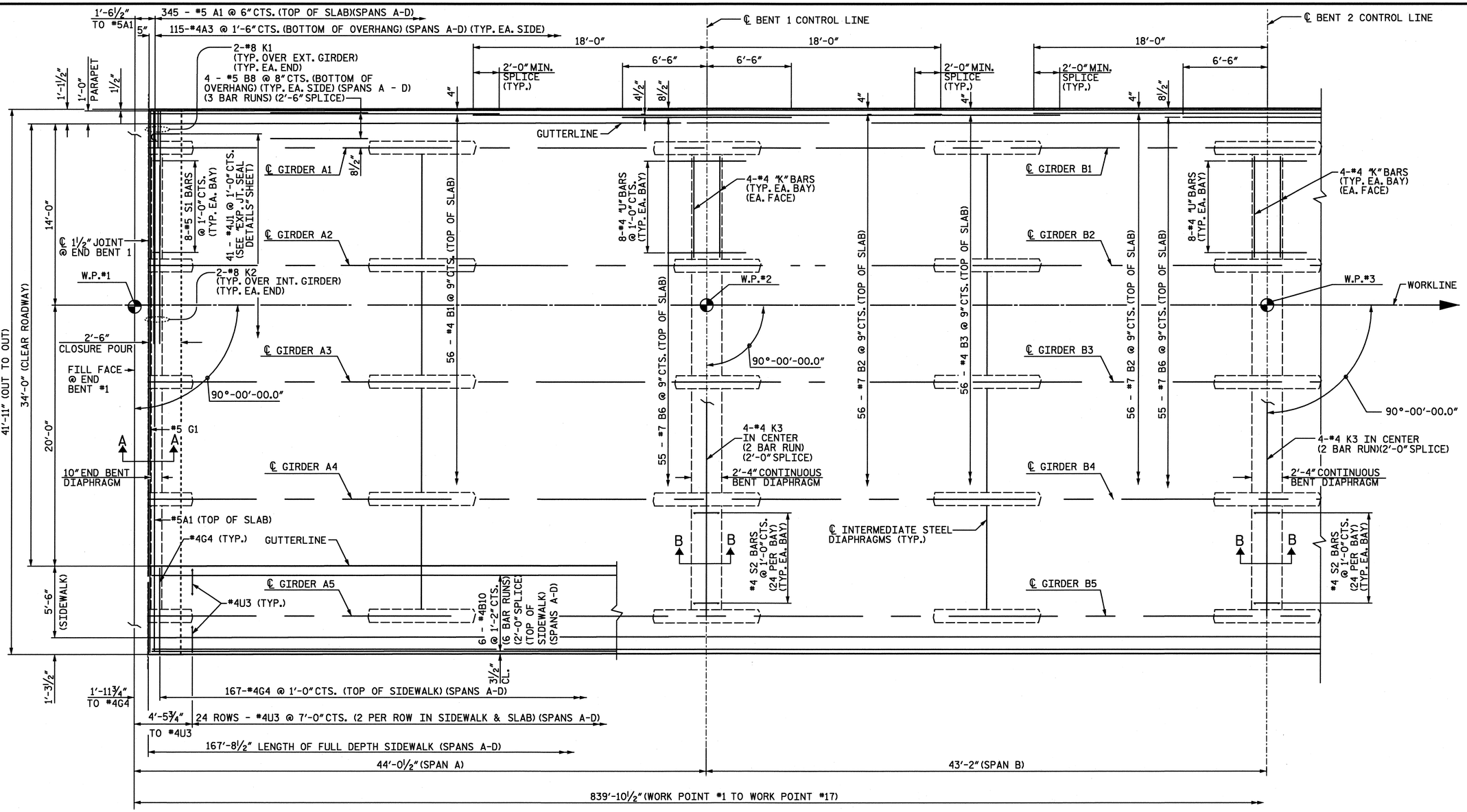

SPANS A & B

NOTES:
FOR SECTIONS, SEE "TYPICAL SECTIONS" SHEET 2 OF 3.

FOR ONE BAR METAL RAIL CONCRETE PARAPET REINFORCING STEEL AND DETAILS, SEE "PARAPET AND END POST DETAILS FOR ONE BAR METAL RAIL" SHEET.

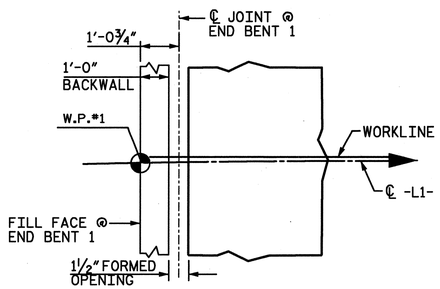

END BENT DETAIL

FOR JOINT DETAILS AT END BENT, SEE "STANDARD EXPANSION JOINT SEAL DETAILS" SHEET.

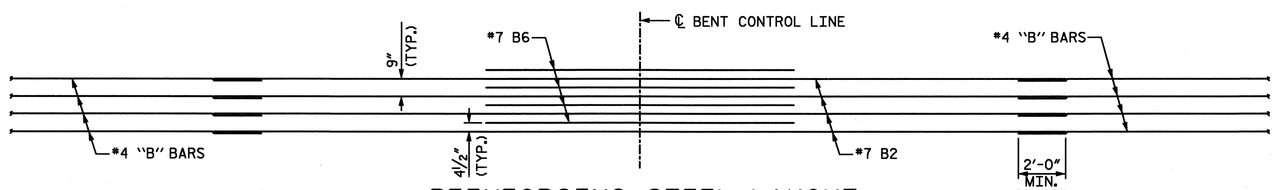

REINFORCING STEEL LAYOUT

(TYPICAL FOR BENTS 1, 2, 3, 4, 7, 8, 9, 10, 12, 13, 14 AND 15)

PROJECT NO. U-4438
CAMDEN & PASQUOTANK COUNTY
STATION: 15+25.75 -L1-

SHEET 1 of 8

STATE OF NORTH CAROLINA
DEPARTMENT OF TRANSPORTATION
RALEIGH

SUPERSTRUCTURE PLAN OF SPANS A & B

NORTH CAROLINA PROFESSIONAL SEAL 026891 ENGINEER JOHN T. DIFFEE, III

WETHERILL ENGINEERING
559 Jones Franklin Rd. Suite 164
Raleigh, N.C. 27606
Bus: 919 851 8077
Fax: 919 851 8107
License: F-0377

TRANSPORTATION PLANNING/DESIGN - BRIDGE/STRUCTURE DESIGN
CIVIL/SITE DESIGN - GIS/GPS - CONSTRUCTION OBSERVATION

REVISIONS							SHEET NO.
NO.	BY:	DATE:	NO.	BY:	DATE:		S-13
1			3				TOTAL SHEETS
2			4				454

DRAWN BY :	J. PENDERGRAFT	DATE :	11-10
CHECKED BY :	J. DILWORTH	DATE :	11-10

P:\2010\10119.02_U-4438\Structures\DGNS\13_U-4438_SD_PS-A&B.dgn
3/25/2011 9:12:21 AM

REVISED MARCH 17, 2011

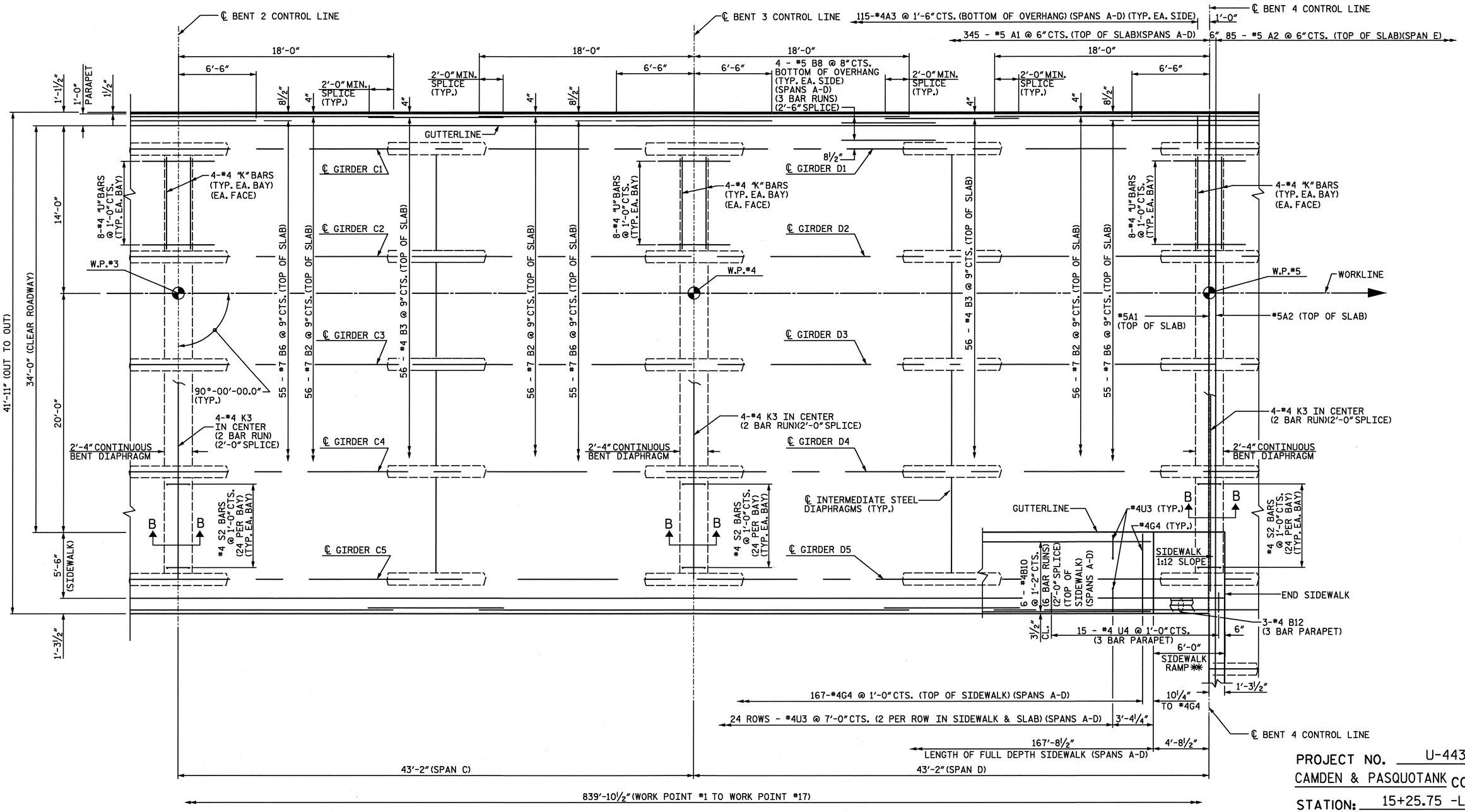

PROJECT NO. U-4438
CAMDEN & PASQUOTANK COUNTY
STATION: 15+25.75 -L1-

SHEET 2 of 8

SPANS C & D

NOTES:

FOR SECTIONS, SEE "TYPICAL SECTIONS" SHEET 2 OF 3.

FOR ONE BAR METAL RAIL CONCRETE PARAPET REINFORCING STEEL AND DETAILS, SEE "PARAPET AND END POST DETAILS FOR ONE BAR METAL RAIL" SHEET.

FOR THREE BAR METAL RAIL POST REINFORCING STEEL AND DETAILS, SEE "END POST DETAILS FOR THREE BAR METAL RAIL", SHEET 5 OF 6.

** SIDEWALK RAMP SHALL BE CAST MONOLITHICALLY WITH BRIDGE DECK.

NORTH CAROLINA PROFESSIONAL SEAL 026891 ENGINEER JOHN T. DIFFEE III

ETHERILL ENGINEERING
559 Jones Franklin Rd. Suite 164
Raleigh, N.C. 27606
Bus: 919 851 8077
Fax: 919 851 8107
License: F-0377

TRANSPORTATION PLANNING/DESIGN - BRIDGE/STRUCTURE DESIGN
CIVIL/SITE DESIGN - GIS/GPS - CONSTRUCTION OBSERVATION

STATE OF NORTH CAROLINA
DEPARTMENT OF TRANSPORTATION
RALEIGH

SUPERSTRUCTURE
PLAN OF SPANS C & D

REVISIONS						SHEET NO.
NO.	BY:	DATE:	NO.	BY:	DATE:	S-14
1			3			TOTAL SHEETS
2			4			454

DRAWN BY : J. PENDERGRAFT DATE : 11-10
CHECKED BY : J. DILWORTH DATE : 11-10

P:\2010\1019.02 U-4438\Structures\DGNS 14_U-4438_SD_PS-C&D.dgn
3/17/2011 10:02:11 AM

REVISED MARCH 17, 2011

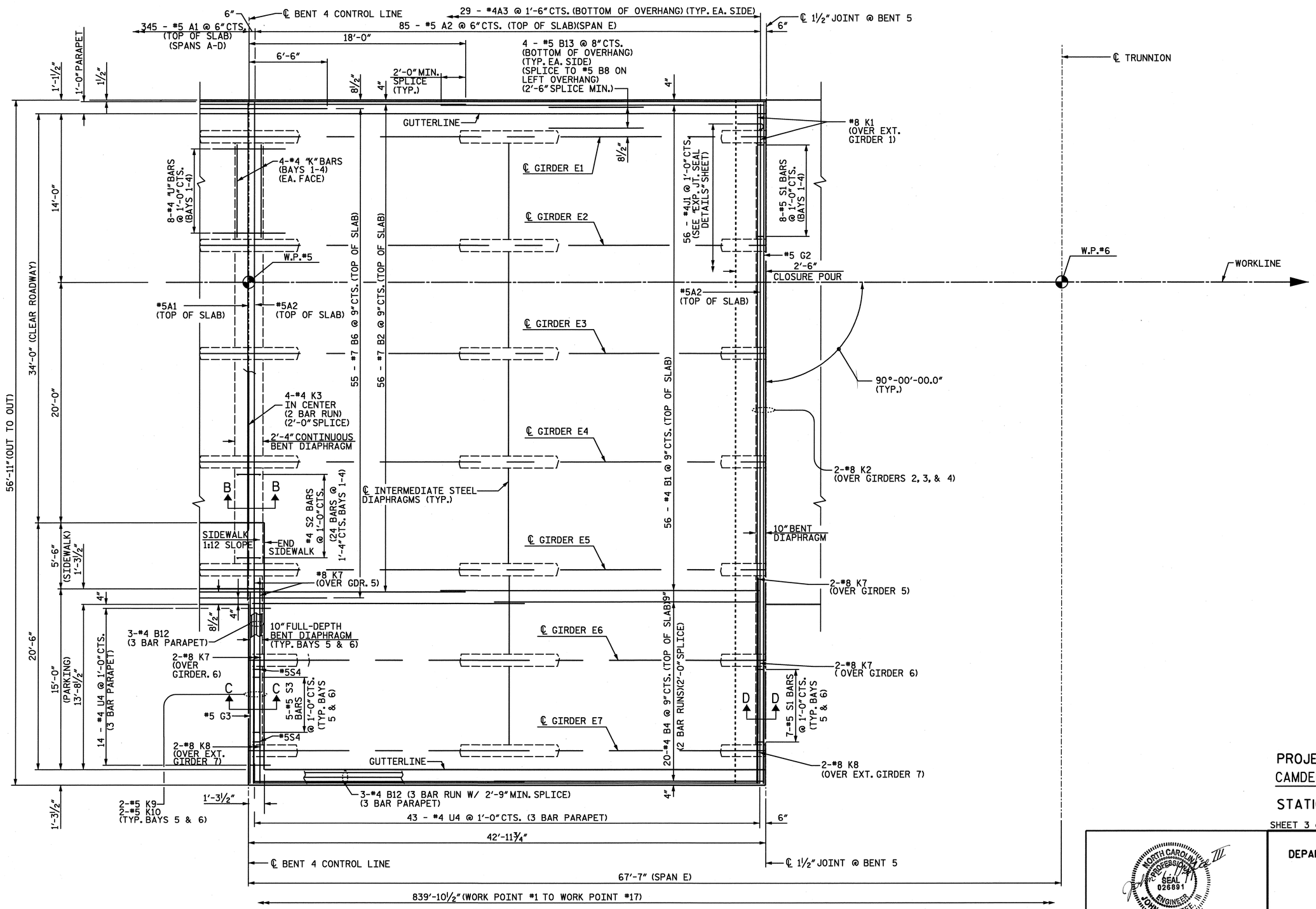

SPAN E

NOTES:

FOR SECTIONS, SEE "TYPICAL SECTIONS" SHEET 2 OF 3.

FOR ONE BAR METAL RAIL CONCRETE PARAPET REINFORCING STEEL AND DETAILS, SEE "PARAPET AND END POST DETAILS FOR ONE BAR METAL RAIL" SHEET.

FOR THREE BAR METAL RAIL POST REINFORCING STEEL AND DETAILS, SEE "END POST DETAILS FOR THREE BAR METAL RAIL", SHEET 5 OF 6.

FIELD BEND #5A2 BARS AS REQUIRED TO MATCH DECK CROSS SLOPE.

PROJECT NO. U-4438

CAMDEN & PASQUOTANK COUNTY

STATION: 15+25.75 -L1-

SHEET 3 of 8

STATE OF NORTH CAROLINA
DEPARTMENT OF TRANSPORTATION
RALEIGH

SUPERSTRUCTURE PLAN OF SPAN E

NORTH CAROLINA PROFESSIONAL SEAL 026891 ENGINEER JOHN T. DIFFEE, III 3/17/11

WETHERILL ENGINEERING
559 Jones Franklin Rd. Suite 164
Raleigh, N.C. 27606
Bus: 919 851 8077
Fax: 919 851 8107
License: F-0377

TRANSPORTATION PLANNING/DESIGN - BRIDGE/STRUCTURE DESIGN
CIVIL/SITE DESIGN - GIS/GPS - CONSTRUCTION OBSERVATION

REVISIONS								SHEET NO.
NO.	BY:	DATE:	NO.	BY:	DATE:			S-15
1			3					TOTAL SHEETS
2			4					454

DRAWN BY : J. PENDERGRAFT DATE : 11-10
CHECKED BY : J. DILWORTH DATE : 11-10

P:\2010\1019.02 U-4438\Structures\DGNS\15_U-4438_SD_PS-E.dgn
3/17/2011 10:02:39 AM

REVISED MARCH 17, 2011

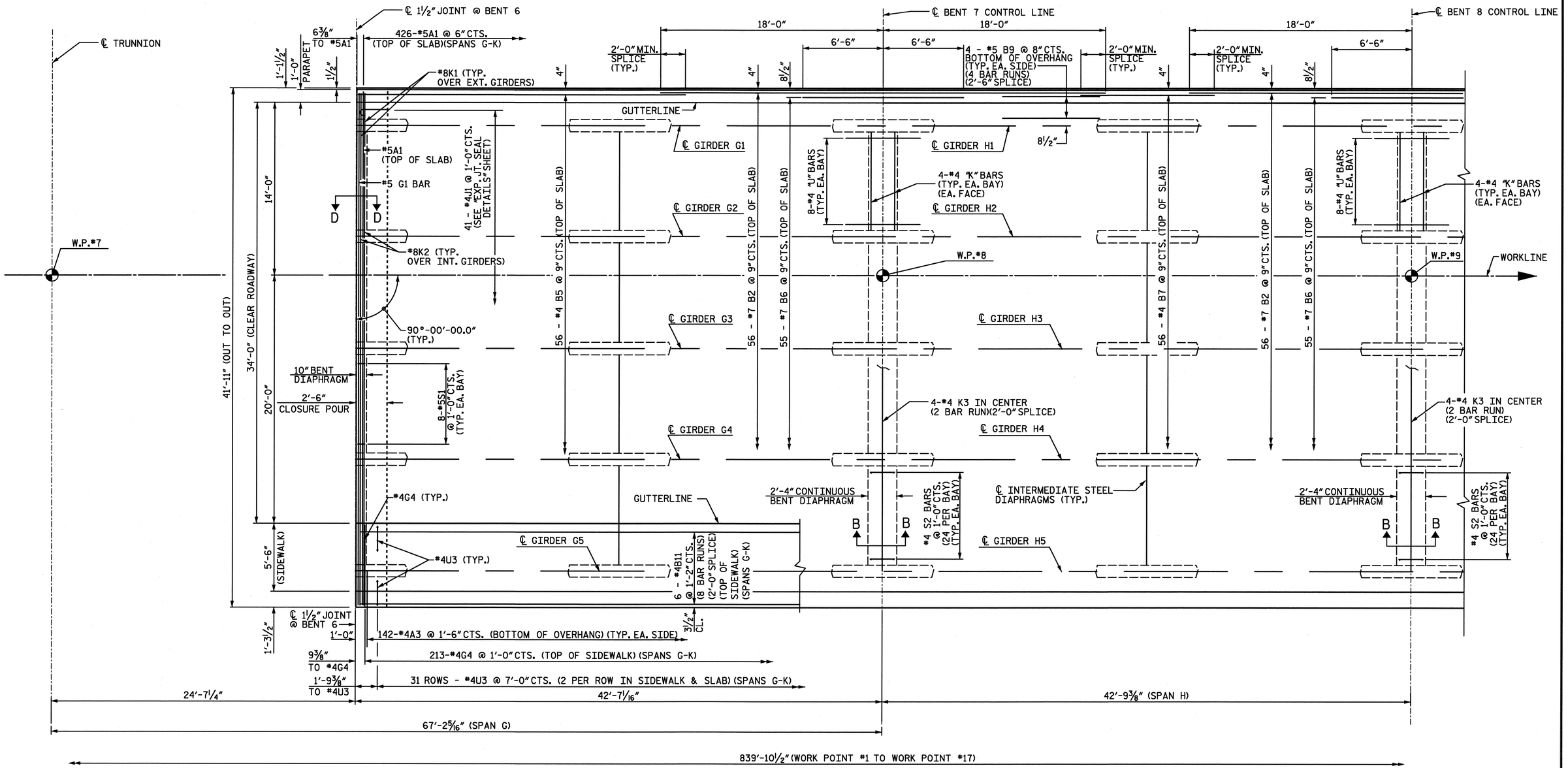

PROJECT NO. U-4438

CAMDEN & PASQUOTANK COUNTY

STATION: 15+25.75 -L1-

SHEET 4 of 8

SPANS G & H

NOTES:

FOR SECTIONS, SEE "TYPICAL SECTIONS" SHEET 2 OF 3.

FOR ONE BAR METAL RAIL CONCRETE PARAPET REINFORCING STEEL AND DETAILS, SEE "PARAPET AND END POST DETAILS FOR ONE BAR METAL RAIL" SHEET.

FOR THREE BAR METAL RAIL POST REINFORCING STEEL AND DETAILS, SEE "END POST DETAILS FOR THREE BAR METAL RAIL", SHEET 5 OF 6.

NORTH CAROLINA PROFESSIONAL SEAL 026891 ENGINEER JOHN T. DIFFEE III

WETHERILL ENGINEERING
559 Jones Franklin Rd. Suite 164
Raleigh, N.C. 27606
Bus: 919 851 8077
Fax: 919 851 8107
License: F-0377

TRANSPORTATION PLANNING/DESIGN - BRIDGE/STRUCTURE DESIGN
CIVIL/SITE DESIGN - GIS/GPS - CONSTRUCTION OBSERVATION

STATE OF NORTH CAROLINA
DEPARTMENT OF TRANSPORTATION
RALEIGH

SUPERSTRUCTURE
PLAN OF SPANS G & H

REVISIONS								SHEET NO.
NO.	BY:	DATE:	NO.	BY:	DATE:			S-16
1			3					TOTAL SHEETS
2			4					454

DRAWN BY : J. PENDERGRAFT DATE : 11-10
CHECKED BY : J. DILWORTH DATE : 11-10

P:\2010\10119.02 U-4438\Structures\DGN\S16_U-4438_SD_PS-G&H.dgn
3/17/2011 10:03:06 AM

REVISED MARCH 17, 2011

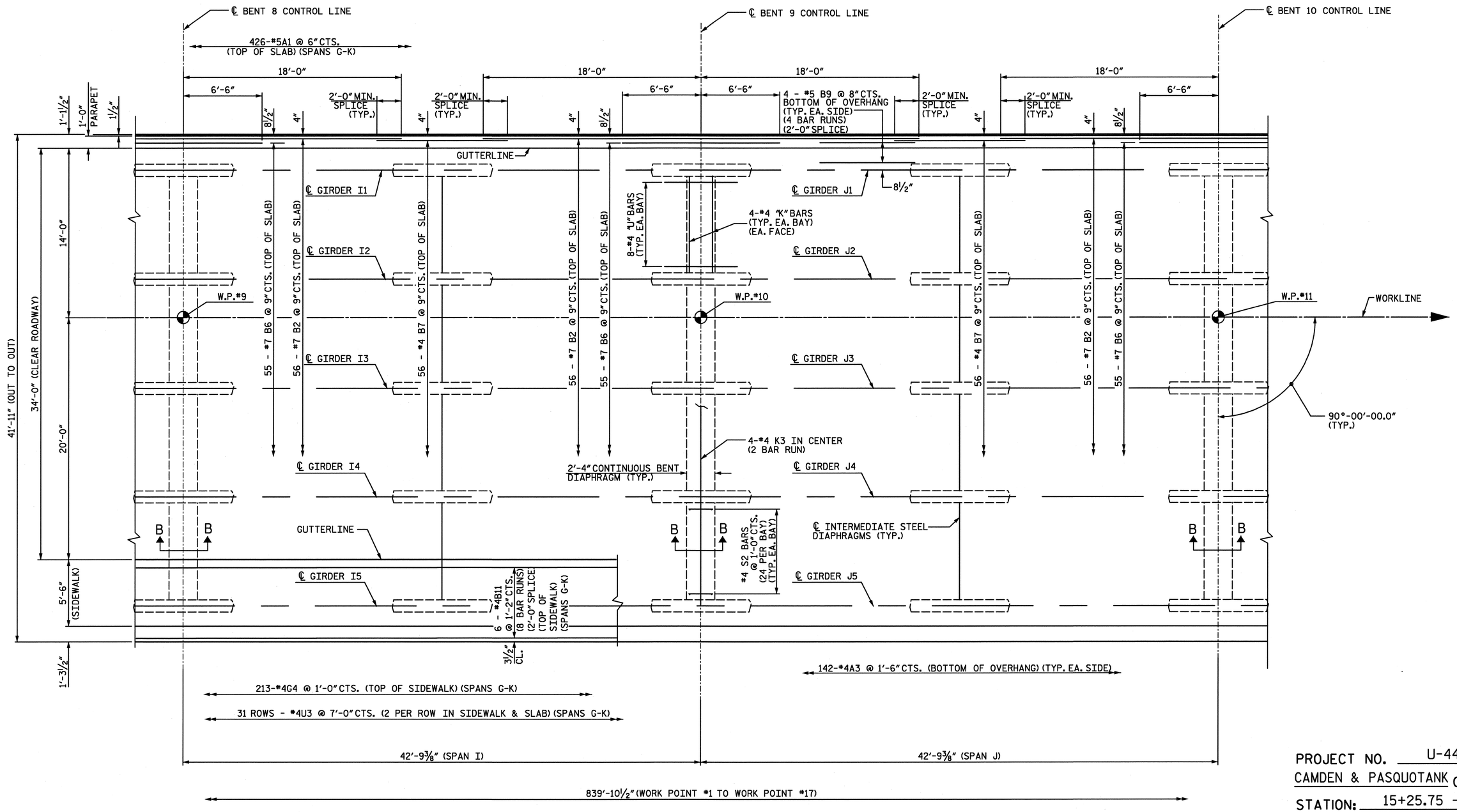

PROJECT NO. U-4438
CAMDEN & PASQUOTANK COUNTY
STATION: 15+25.75 -L1-

SHEET 5 of 8

SPANS I & J

NOTES:
FOR SECTIONS, SEE "TYPICAL SECTIONS" SHEET 2 OF 3.

FOR ONE BAR METAL RAIL CONCRETE PARAPET REINFORCING STEEL AND DETAILS, SEE "PARAPET AND END POST DETAILS FOR ONE BAR METAL RAIL" SHEET.

NORTH CAROLINA PROFESSIONAL SEAL 026891 ENGINEER JOHN T. DIFFEE III 3/17/11

WETHERILL ENGINEERING
559 Jones Franklin Rd. Suite 164
Raleigh, N.C. 27606
Bus: 919 851 8077
Fax: 919 851 8107
License: F-0377

TRANSPORTATION PLANNING/DESIGN - BRIDGE/STRUCTURE DESIGN
CIVIL/SITE DESIGN - GIS/GPS - CONSTRUCTION OBSERVATION

STATE OF NORTH CAROLINA
DEPARTMENT OF TRANSPORTATION
RALEIGH

SUPERSTRUCTURE
PLAN OF SPANS I & J

REVISIONS						SHEET NO.
NO.	BY:	DATE:	NO.	BY:	DATE:	S-17
1			3			TOTAL SHEETS
2			4			454

DRAWN BY : J. PENDERGRAFT DATE : 11-10
CHECKED BY : J. DILWORTH DATE : 11-10

P:\20\0\101 19.02 U-4438\Structures\DGNS\17_U-4438_SD_PS-1&J.dgn
3/17/2011 10:03:28 AM

REVISED MARCH 17,2011

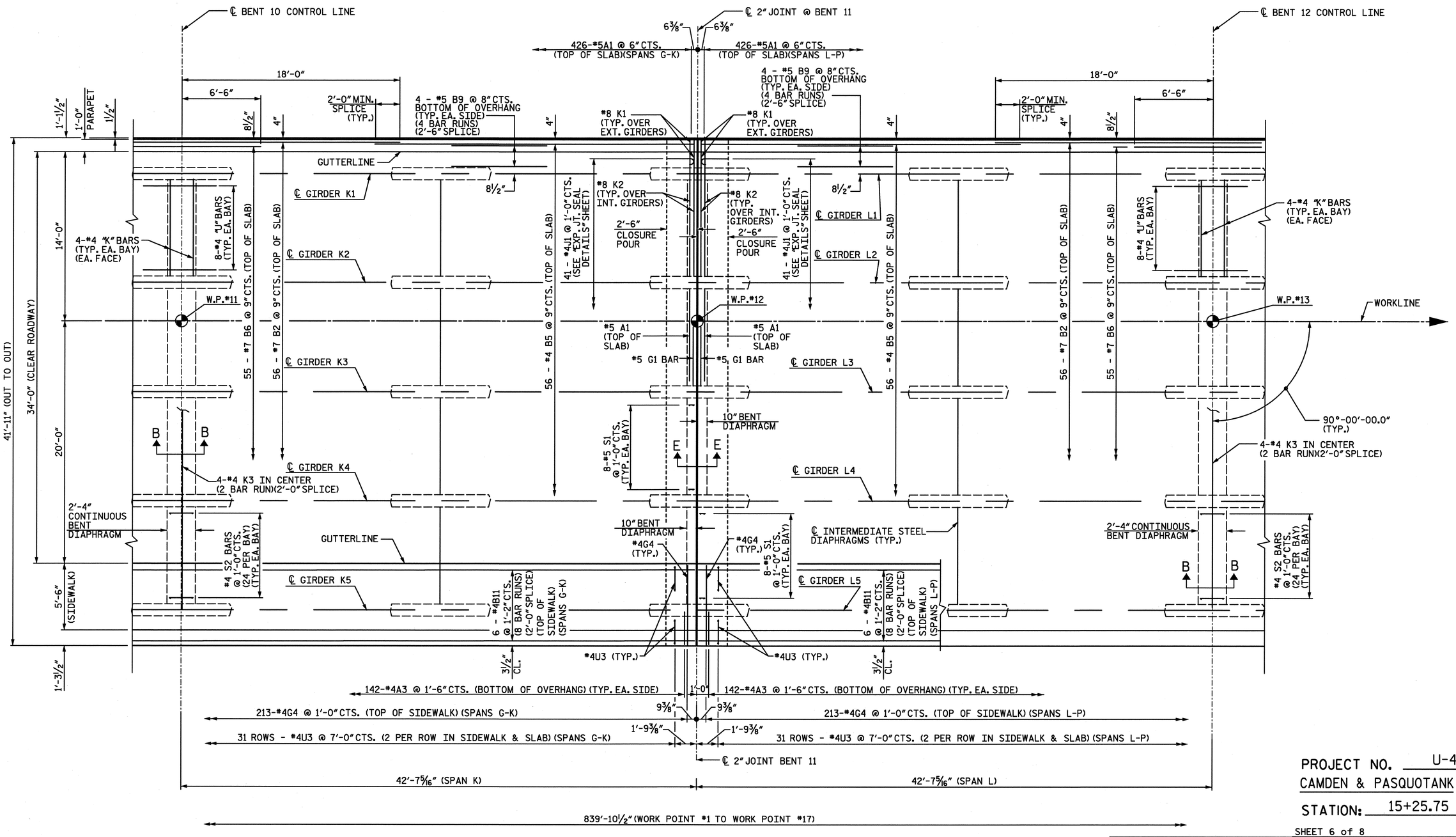

PROJECT NO. U-4438
CAMDEN & PASQUOTANK COUNTY
STATION: 15+25.75 -L1-

SHEET 6 of 8

SPANS K & L

NOTES:
FOR SECTIONS, SEE "TYPICAL SECTIONS" SHEET 2 OF 3.

FOR ONE BAR METAL RAIL CONCRETE PARAPET REINFORCING STEEL AND DETAILS, SEE "PARAPET AND END POST DETAILS FOR ONE BAR METAL RAIL" SHEET.

NORTH CAROLINA PROFESSIONAL SEAL 026891 ENGINEER JOHN T. DIFFEE, III 3/17/11

ETHERILL ENGINEERING
559 Jones Franklin Rd. Suite 164
Raleigh, N.C. 27606
Bus: 919 851 8077
Fax: 919 851 8107
License: F-0377

TRANSPORTATION PLANNING/DESIGN - BRIDGE/STRUCTURE DESIGN
CIVIL/SITE DESIGN - GIS/GPS - CONSTRUCTION OBSERVATION

STATE OF NORTH CAROLINA
DEPARTMENT OF TRANSPORTATION
RALEIGH

SUPERSTRUCTURE
PLAN OF SPANS K & L

REVISIONS								SHEET NO.
NO.	BY:	DATE:	NO.	BY:	DATE:			S-18
1			3					TOTAL SHEETS
2			4					454

DRAWN BY : J. PENDERGRAFT DATE : 11-10
CHECKED BY : J. DILWORTH DATE : 11-10

P:\2010\1019.02 U-4438\Structures\DGNS\18_U-4438_SD_PS-K&L.dgn
3/17/2011 12:01:26 PM

REVISED MARCH 17, 2011

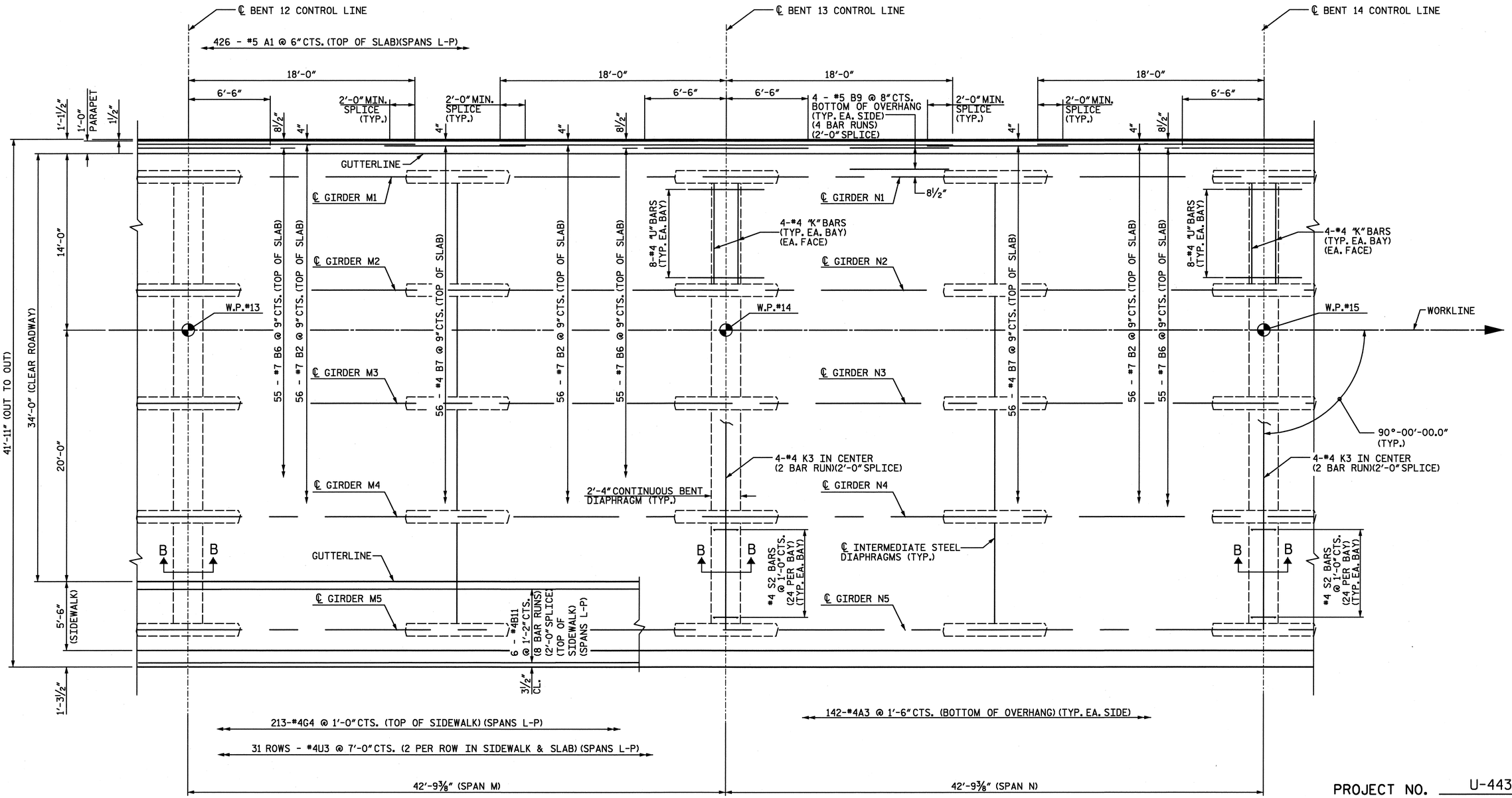

PROJECT NO. U-4438
CAMDEN & PASQUOTANK COUNTY
STATION: 15+25.75 -L1-

SHEET 7 of 8

SPANS M & N

NOTES:
FOR SECTIONS, SEE "TYPICAL SECTIONS" SHEET 2 OF 3.

FOR ONE BAR METAL RAIL CONCRETE PARAPET REINFORCING STEEL AND DETAILS, SEE "PARAPET AND END POST DETAILS FOR ONE BAR METAL RAIL" SHEET.

NORTH CAROLINA PROFESSIONAL SEAL 026691 ENGINEER JOHN T. DIFFEE III

ETHERILL ENGINEERING
559 Jones Franklin Rd. Suite 164
Raleigh, N.C. 27606
Bus: 919 851 8077
Fax: 919 851 8107
License: F-0377

TRANSPORTATION PLANNING/DESIGN - BRIDGE/STRUCTURE DESIGN
CIVIL/SITE DESIGN - GIS/GPS - CONSTRUCTION OBSERVATION

STATE OF NORTH CAROLINA
DEPARTMENT OF TRANSPORTATION
RALEIGH

SUPERSTRUCTURE
PLAN OF SPANS M & N

REVISIONS								SHEET NO.
NO.	BY:	DATE:	NO.	BY:	DATE:			S-19
1			3					TOTAL SHEETS
2			4					454

DRAWN BY : J. PENDERGRAFT DATE : 11-10
CHECKED BY : J. DILWORTH DATE : 11-10

P:\2010\10119.02_U-4438\Structures\DGN\S19_U-4438_SD_PS-M&N.dgn
3/17/2011 12:02:10 PM

REVISED MARCH 17, 2011

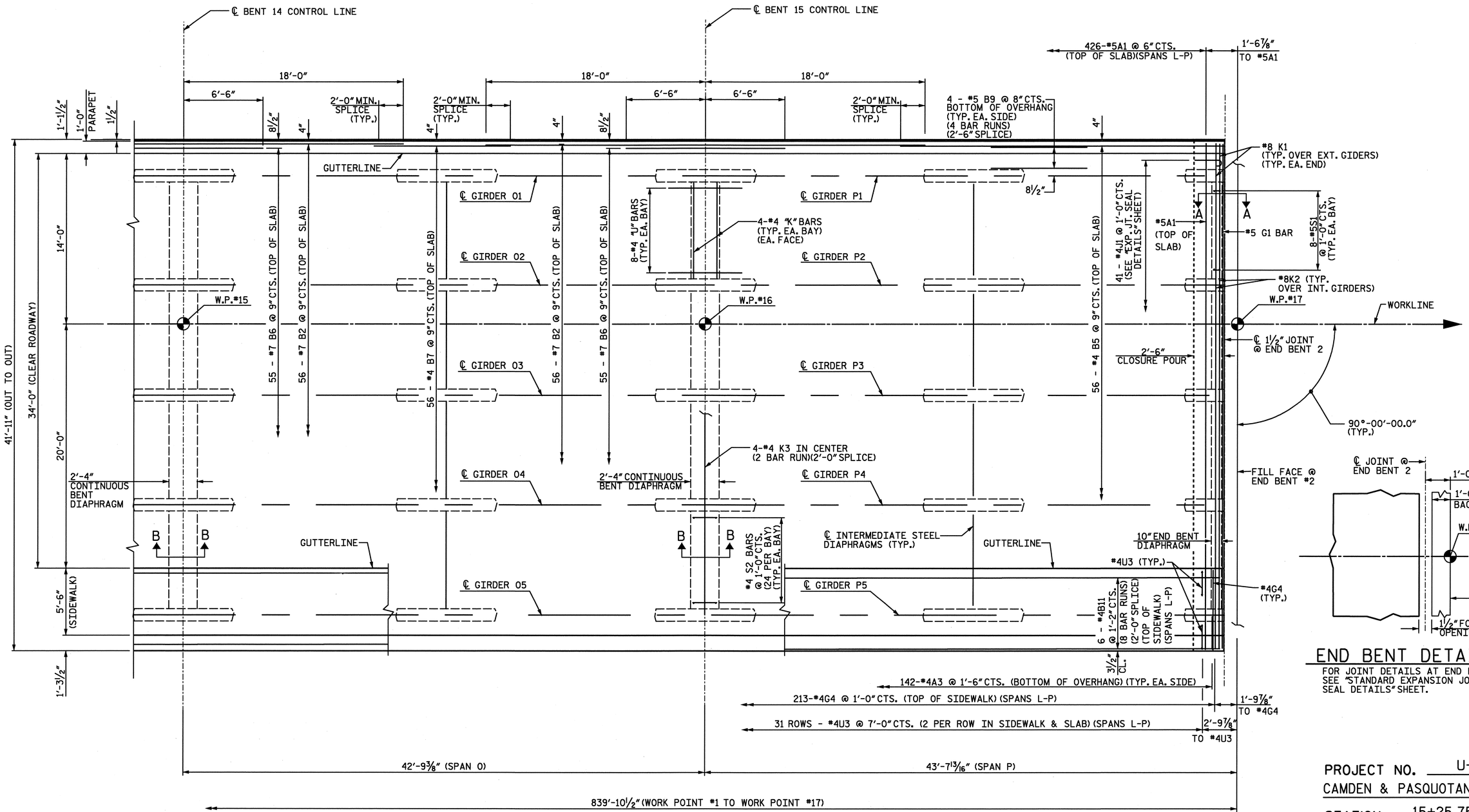

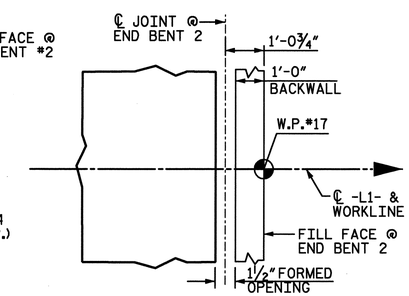

END BENT DETAIL

FOR JOINT DETAILS AT END BENT, SEE "STANDARD EXPANSION JOINT SEAL DETAILS" SHEET.

SPANS O & P

NOTES:
FOR SECTIONS, SEE "TYPICAL SECTIONS" SHEET 2 OF 3.

FOR ONE BAR METAL RAIL CONCRETE PARAPET REINFORCING STEEL AND DETAILS, SEE "PARAPET AND END POST DETAILS FOR ONE BAR METAL RAIL" SHEET.

PROJECT NO. U-4438
CAMDEN & PASQUOTANK COUNTY
STATION: 15+25.75 -L1-

SHEET 8 of 8

NORTH CAROLINA PROFESSIONAL SEAL 026891 ENGINEER JOHN T. DIFFEE III

ETHERILL ENGINEERING
559 Jones Franklin Rd. Suite 164
Raleigh, N.C. 27606
Bus: 919 851 8077
Fax: 919 851 8107
License: F-0377

TRANSPORTATION PLANNING/DESIGN - BRIDGE/STRUCTURE DESIGN
CIVIL/SITE DESIGN - GIS/GPS - CONSTRUCTION OBSERVATION

STATE OF NORTH CAROLINA
DEPARTMENT OF TRANSPORTATION
RALEIGH

SUPERSTRUCTURE
PLAN OF SPANS O & P

REVISIONS						SHEET NO.
NO.	BY:	DATE:	NO.	BY:	DATE:	S-20
1			3			TOTAL SHEETS
2			4			454

DRAWN BY : J. PENDERGRAFT DATE : 11-10
CHECKED BY : J. DILWORTH DATE : 11-10

P:\2010\101 19.02 U-4438\Structures\DGN\S20_U-4438_SD_PS-08P.dgn
3/17/2011 10:05:03 AM

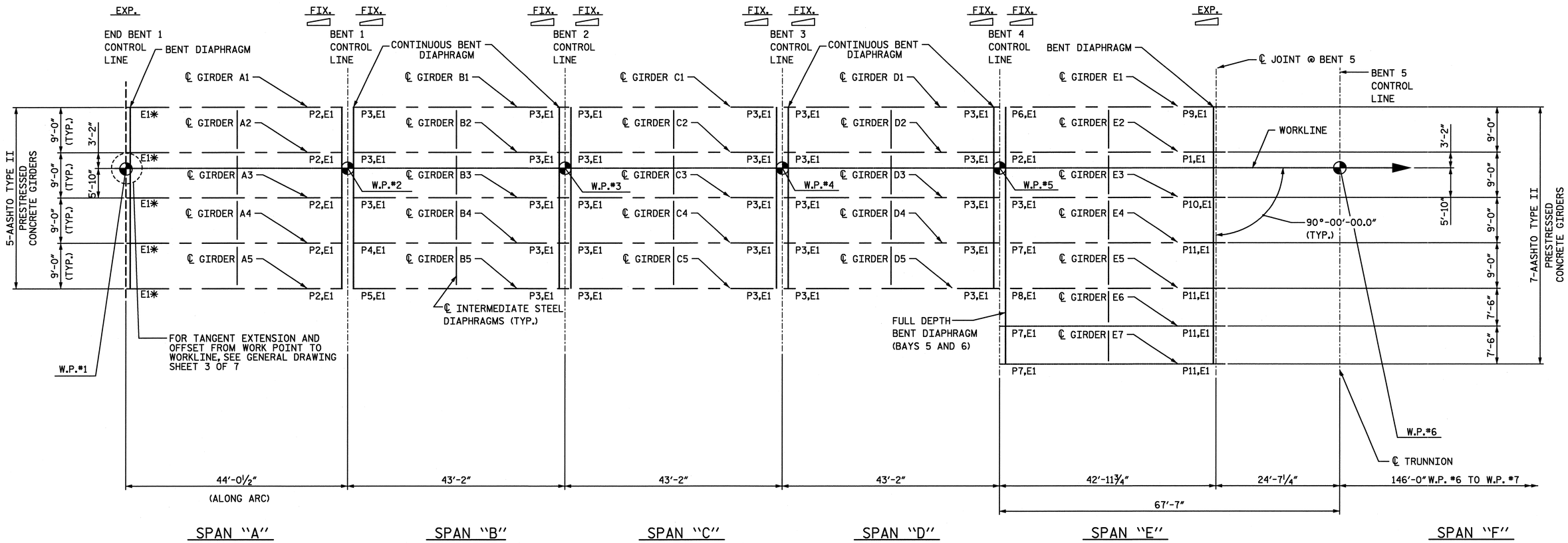

FRAMING PLAN SPANS "A" THROUGH "E"

*NO SOLE PLATES AT END BENT 1.
GIRDERS TO BEAR DIRECTLY ON ELASTOMERIC PAD.

PROJECT NO. U-4438
CAMDEN & PASQUOTANK COUNTY
STATION: 15+25.75 -L1-

SHEET 1 of 3

NORTH CAROLINA PROFESSIONAL SEAL 026891 ENGINEER JOHN T. DIFFEE, III
2-6-11

WETHERILL ENGINEERING
559 Jones Franklin Rd. Suite 164
Raleigh, N.C. 27606
Bus: 919 851 8077
Fax: 919 851 8107
License: F-0377
TRANSPORTATION PLANNING/DESIGN - BRIDGE/STRUCTURE DESIGN
CIVIL/SITE DESIGN - GIS/GPS - CONSTRUCTION OBSERVATION

STATE OF NORTH CAROLINA
DEPARTMENT OF TRANSPORTATION
RALEIGH

SUPERSTRUCTURE FRAMING PLAN SPANS A THRU E

REVISIONS						SHEET NO.
NO.	BY:	DATE:	NO.	BY:	DATE:	S-21
1			3			TOTAL SHEETS
2			4			454

DRAWN BY : Z PIATEK DATE : 8-10
CHECKED BY : T DIFFEE DATE : 8-10

P:\2010\1019.02 U-4438\Structures\DGN\S21_U-4438_SD_FP.dgn
2/4/2011 4:18:05 PM

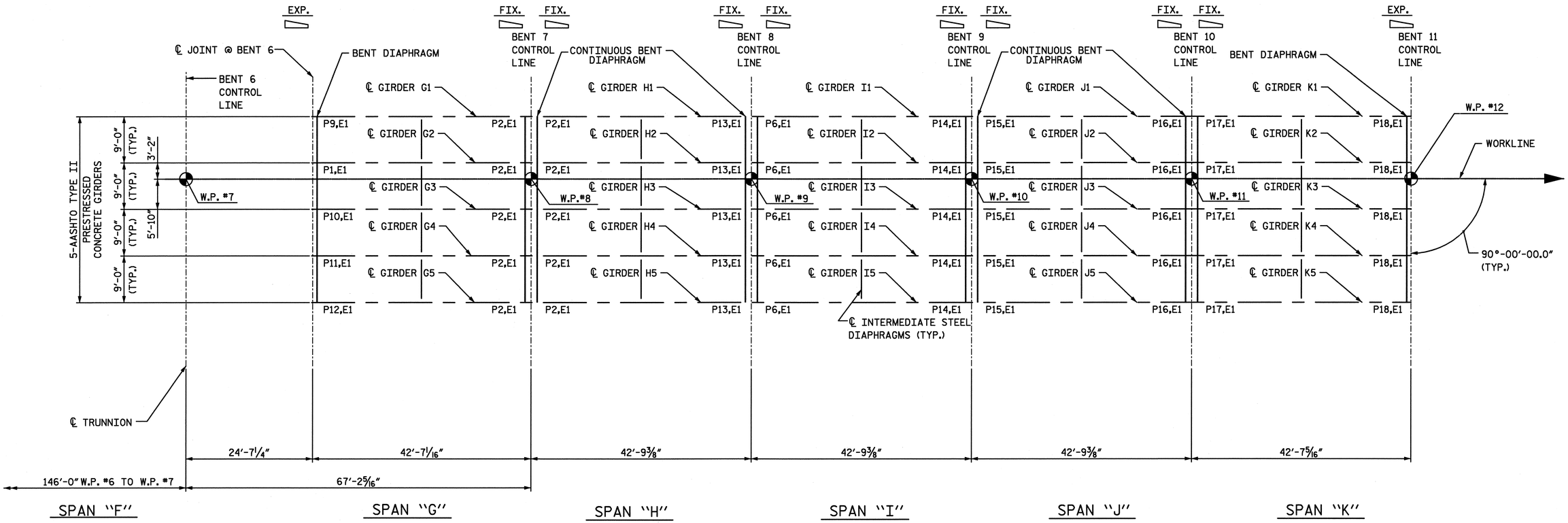

FRAMING PLAN SPANS "G" THROUGH "K"

PROJECT NO. U-4438
CAMDEN & PASQUOTANK COUNTY
STATION: 15+25.75 -L1-

SHEET 2 of 3

STATE OF NORTH CAROLINA
DEPARTMENT OF TRANSPORTATION
RALEIGH

SUPERSTRUCTURE
FRAMING PLAN
SPANS G THRU K

NORTH CAROLINA PROFESSIONAL SEAL 026891 ENGINEER JOHN T. DIFFEE, III

ETHERILL ENGINEERING
559 Jones Franklin Rd. Suite 164
Raleigh, N.C. 27606
Bus: 919 851 8077
Fax: 919 851 8107
License: F-0377

TRANSPORTATION PLANNING/DESIGN - BRIDGE/STRUCTURE DESIGN
CIVIL/SITE DESIGN - GIS/GPS - CONSTRUCTION OBSERVATION

REVISIONS						SHEET NO.
NO.	BY:	DATE:	NO.	BY:	DATE:	S-22
1			3			TOTAL SHEETS
2			4			454

DRAWN BY : Z PIATEK DATE : 8-10
CHECKED BY : T DIFFEE DATE : 8-10

P:\2010\1011902 U-4438\Structures\DGN\S21_U-4438_SD_FP.dgn
2/4/2011 4:18:15 PM

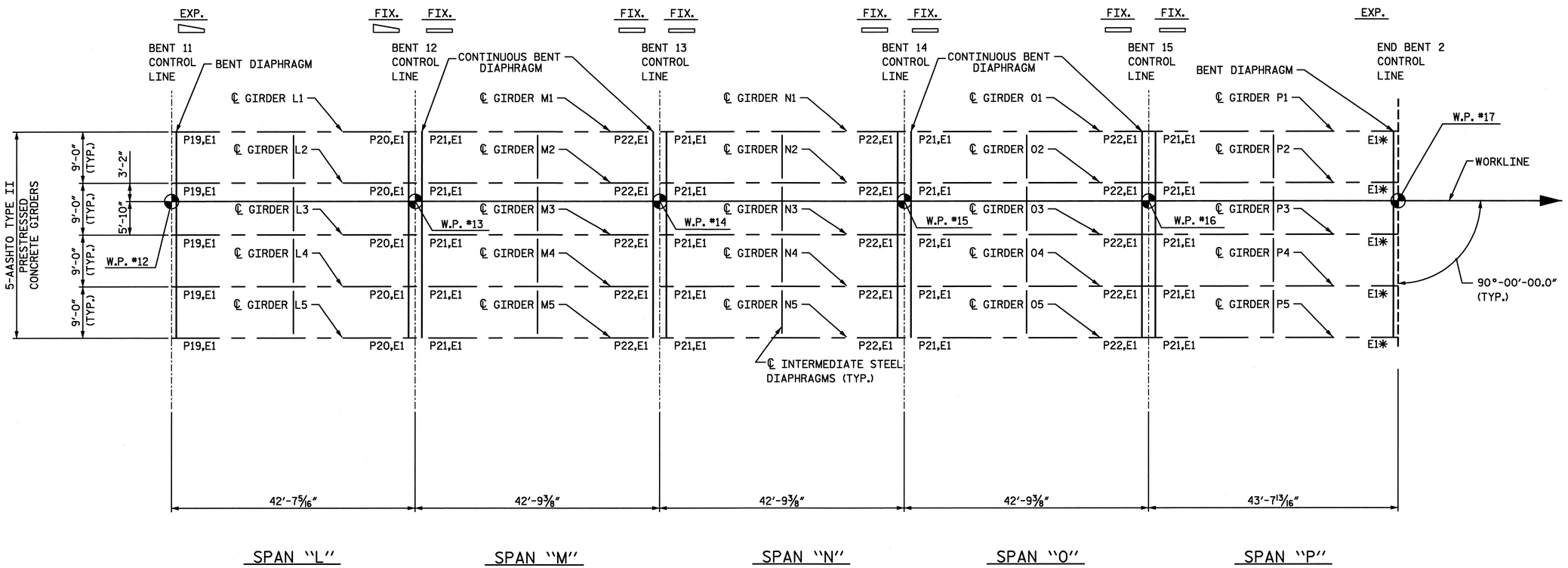

FRAMING PLAN SPANS "L" THROUGH "P"

*NO SOLE PLATES AT END BENT 2.
GIRDERS TO BEAR DIRECTLY ON ELASTOMERIC PAD.

PROJECT NO. U-4438
CAMDEN & PASQUOTANK COUNTY
STATION: 15+25.75 -L1-

SHEET 3 of 3

NORTH CAROLINA PROFESSIONAL SEAL 026891 ENGINEER JOHN T. DIFFEE III

ETHERILL ENGINEERING
559 Jones Franklin Rd. Suite 164
Raleigh, N.C. 27606
Bus: 919 851 8077
Fax: 919 851 8107
License: F-0377
TRANSPORTATION PLANNING/DESIGN - BRIDGE/STRUCTURE DESIGN
CIVIL/SITE DESIGN - GIS/GPS - CONSTRUCTION OBSERVATION

STATE OF NORTH CAROLINA
DEPARTMENT OF TRANSPORTATION
RALEIGH

SUPERSTRUCTURE
FRAMING PLAN
SPANS L THRU P

REVISIONS						SHEET NO.
NO.	BY:	DATE:	NO.	BY:	DATE:	S-23
1			3			TOTAL SHEETS
2			4			454

DRAWN BY : Z PIATEK DATE : 8-10
CHECKED BY : T DIFFEE DATE : 8-10

P:\2010\10119.02 U-4438\Structures\DGN\S21_U-4438_SD_FP.dgn
2/4/2011 4:18:24 PM

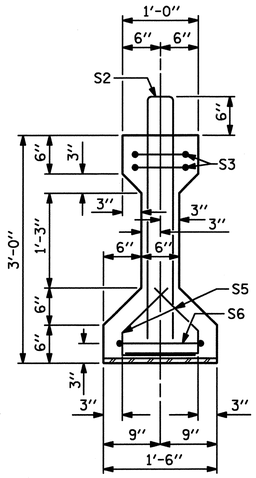

SECTION A-A

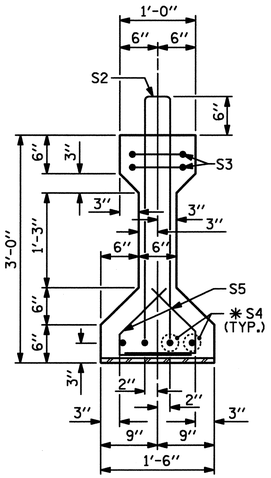

SECTION B-B

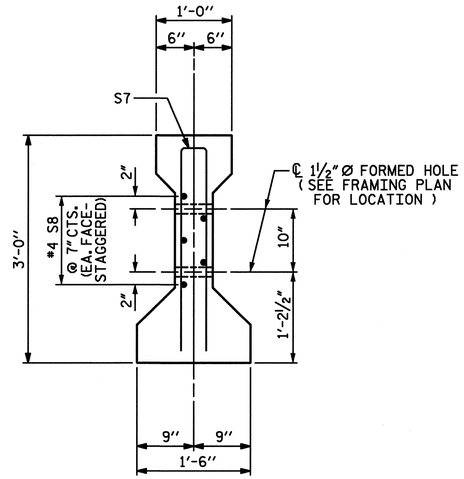

SECTION C-C

(S1 BARS NOT SHOWN)

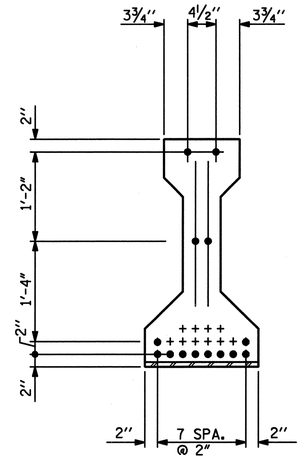

AT END OF GIRDER

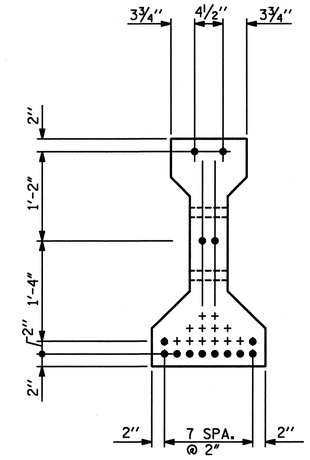

AT ℄ OF GIRDER

0.6" Ø LOW RELAXATION STRAND LAYOUT

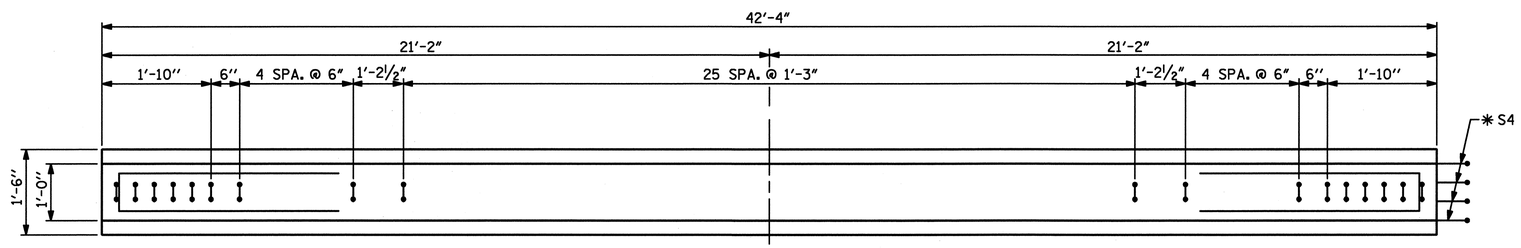

PLAN OF GIRDER

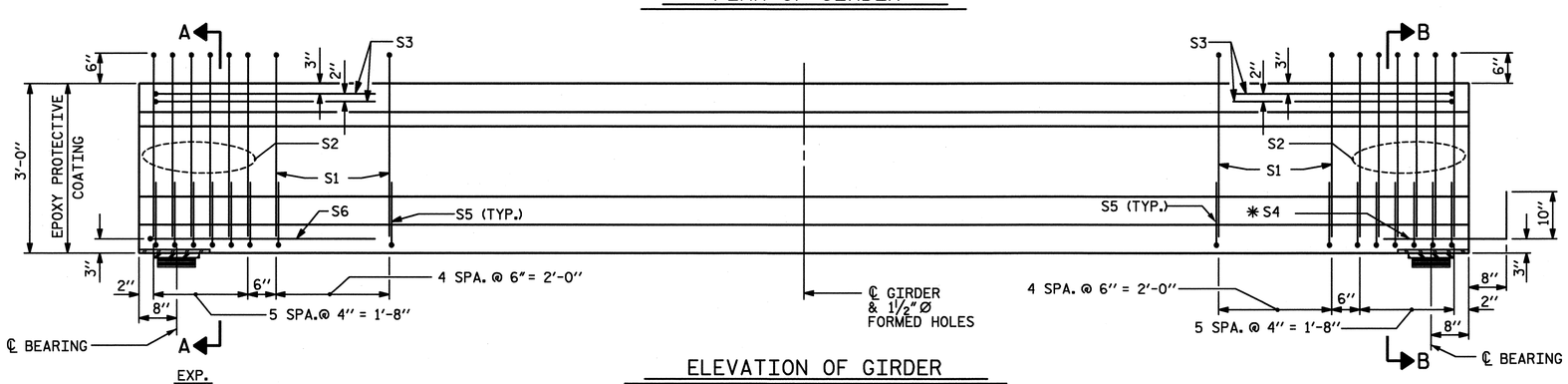

ELEVATION OF GIRDER

(SPAN A SHOWN, SPAN E - GIRDER 1 THRU 5 MIRROR IMAGE)

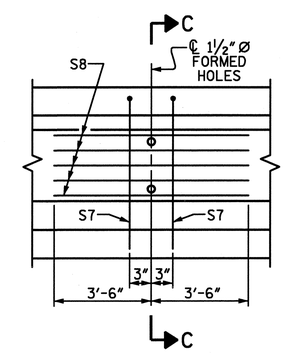

PARTIAL ELEVATION

SHOWING INTERMEDIATE DIAPHRAGM REINFORCING STEEL FOR ALL GIRDERS

0.6" Ø L. R. GRADE 270 STRANDS

AREA (SQUARE INCHES)	ULTIMATE STRENGTH (LBS. PER STRAND)	APPLIED PRESTRESS (LBS. PER STRAND)
0.217	58,600	43,950

REINFORCING STEEL FOR ONE GIRDER

BAR	NUMBER	SIZE	TYPE	LENGTH	WEIGHT
S1	36	#4	1	6'-10"	164
S2	12	#5	1	6'-10"	86
S3	4	#4	3	8'-8"	23
✱S4	4	#5	STR	3'-8"	15
S5	44	#4	2	2'-4"	69
S6	1	#4	3	9'-2"	6
S7	2	#5	3	5'-8"	12
S8	5	#4	STR	7'-0"	23

✱NOTE: S4 BARS SHALL BE BENT BEFORE SHIPMENT. HEAT BENDING SHALL NOT BE ALLOWED.

BAR TYPES

ALL BAR DIMENSIONS ARE OUT-TO-OUT

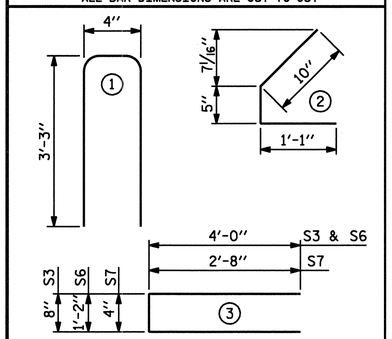

QUANTITIES FOR ONE GIRDER

	REINFORCING STEEL LB.	6000 PSI CONCRETE C.Y.	0.6" Ø L. R. STRANDS No.
	398	4.0	14

GIRDERS REQUIRED

SPAN	NUMBER	LENGTH	TOTAL LENGTH
A	5	42'-4"	211'-8"
E	5	42'-4"	211'-8"

PROJECT NO. U-4438

CAMDEN & PASQUOTANK COUNTY

STATION: 15+25.75 -L1-

SHEET 1 OF 5

STATE OF NORTH CAROLINA
DEPARTMENT OF TRANSPORTATION
RALEIGH

STANDARD
AASHTO TYPE II
PRESTRESSED CONCRETE GIRDER
CONTINUOUS FOR LIVE LOAD
SPANS A AND E
(GIRDERS 1 THRU 5)

NORTH CAROLINA PROFESSIONAL SEAL 026891 ENGINEER JOHN T. DIFFEE III

ETHERILL ENGINEERING
559 Jones Franklin Rd. Suite 164
Raleigh, N.C. 27606
Bus: 919 851 8077
Fax: 919 851 8107
License: F-0377

TRANSPORTATION PLANNING/DESIGN - BRIDGE/STRUCTURE DESIGN
CIVIL/SITE DESIGN - GIS/GPS - CONSTRUCTION OBSERVATION

REVISIONS							SHEET NO.
NO.	BY:	DATE:	NO.	BY:	DATE:		S-24
1			3				TOTAL SHEETS
2			4				454

ASSEMBLED BY : J. PENDERGRAFT DATE : 11-10	
CHECKED BY : J. DILWORTH DATE : 11-10	
DRAWN BY : ELR 8/91	REV. 8/16/99 RWW/LES
CHECKED BY : GRP 8/91	REV. 10/17/00R RWW/LES
	REV. 5/1/06R TLA/GM

STD. NO. PCG4

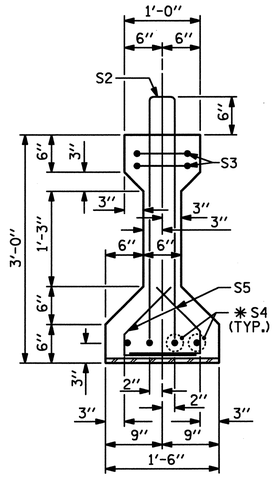

SECTION B-B

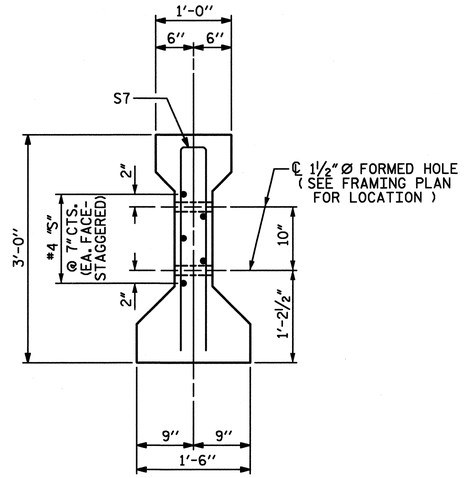

SECTION C-C

(S1 BARS NOT SHOWN)

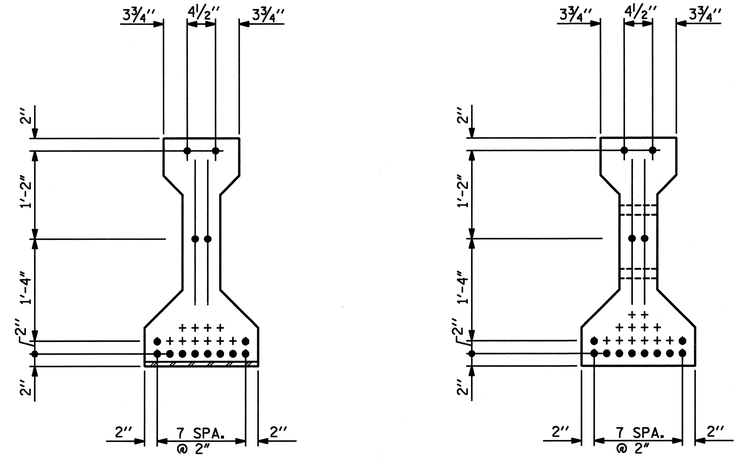

AT END OF GIRDER

AT ℄ OF GIRDER

0.6" Ø LOW RELAXATION STRAND LAYOUT

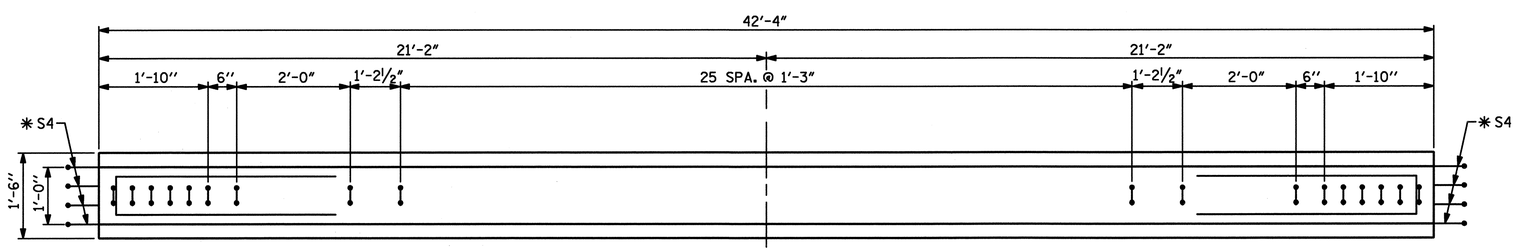

PLAN OF GIRDER

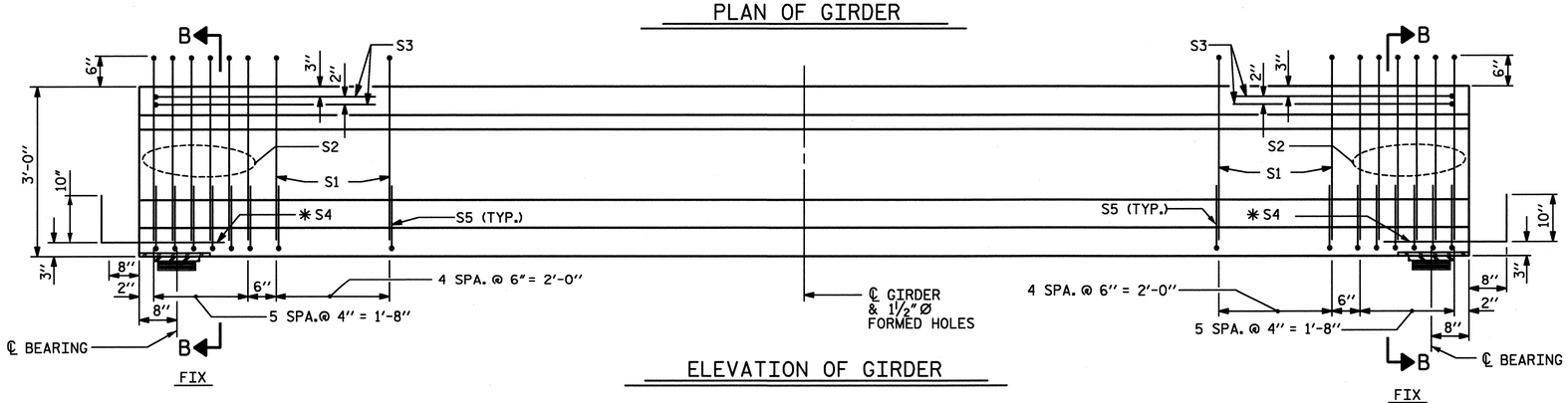

ELEVATION OF GIRDER

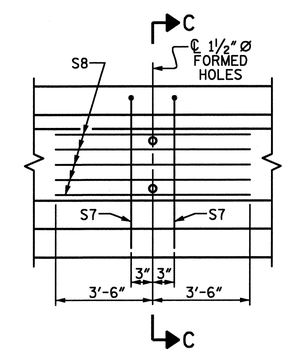

PARTIAL ELEVATION

SHOWING INTERMEDIATE DIAPHRAGM REINFORCING STEEL FOR ALL GIRDERS

0.6" Ø L. R. GRADE 270 STRANDS

AREA (SQUARE INCHES)	ULTIMATE STRENGTH (LBS. PER STRAND)	APPLIED PRESTRESS (LBS. PER STRAND)
0.217	58,600	43,950

REINFORCING STEEL FOR ONE GIRDER

BAR	NUMBER	SIZE	TYPE	LENGTH	WEIGHT
S1	36	#4	1	6'-10"	164
S2	12	#5	1	6'-10"	86
S3	4	#4	3	8'-8"	23
✱S4	8	#5	STR	3'-8"	31
S5	44	#4	2	2'-4"	69
S7	2	#5	3	5'-8"	12
S8	5	#4	STR	7'-0"	23

✱NOTE: S4 BARS SHALL BE BENT BEFORE SHIPMENT. HEAT BENDING SHALL NOT BE ALLOWED.

BAR TYPES

ALL BAR DIMENSIONS ARE OUT-TO-OUT

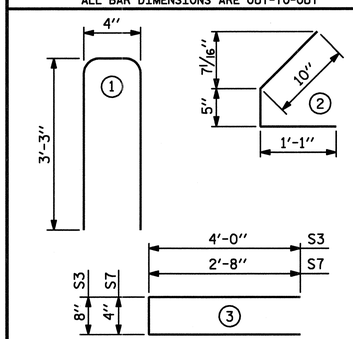

QUANTITIES FOR ONE GIRDER

	REINFORCING STEEL LB.	6000 PSI CONCRETE C.Y.	0.6" Ø L. R. STRANDS No.
	408	4.0	14

GIRDERS REQUIRED

SPAN	NUMBER	LENGTH	TOTAL LENGTH
B	5	42'-4"	211'-8"
C	5	42'-4"	211'-8"
D	5	42'-4"	211'-8"

PROJECT NO. U-4438

CAMDEN & PASQUOTANK COUNTY

STATION: 15+25.75 -L1-

SHEET 2 OF 5

NORTH CAROLINA PROFESSIONAL SEAL 026891 ENGINEER JOHN T. DIFFEE III 2-6-11

WETHERILL ENGINEERING
559 Jones Franklin Rd. Suite 164
Raleigh, N.C. 27606
Bus: 919 851 8077
Fax: 919 851 8107
License: F-0377

TRANSPORTATION PLANNING/DESIGN - BRIDGE/STRUCTURE DESIGN
CIVIL/SITE DESIGN - GIS/GPS - CONSTRUCTION OBSERVATION

STATE OF NORTH CAROLINA
DEPARTMENT OF TRANSPORTATION
RALEIGH

STANDARD
AASHTO TYPE II
PRESTRESSED CONCRETE GIRDER
CONTINUOUS FOR LIVE LOAD
SPANS B, C, AND D

REVISIONS						SHEET NO.
NO.	BY:	DATE:	NO.	BY:	DATE:	S-25
1			3			TOTAL SHEETS
2			4			454

ASSEMBLED BY : J. PENDERGRAFT		DATE : 11-10	
CHECKED BY : J. DILWORTH		DATE : 11-10	
DRAWN BY : ELR 8/91	REV. 8/16/99	RWW/LES	
CHECKED BY : GRP 8/91	REV. 10/17/00R	RWW/LES	
	REV. 5/1/06R	TLA/GM	

STD. NO. PCG4

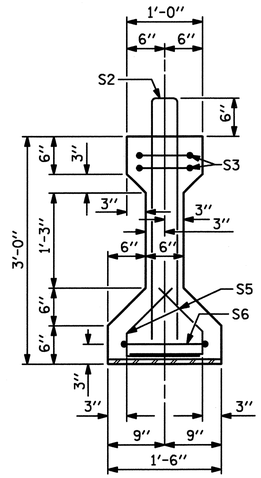

SECTION A-A

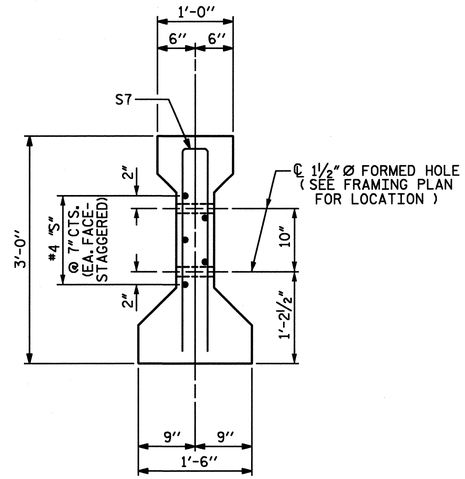

SECTION C-C

(S1 BARS NOT SHOWN)

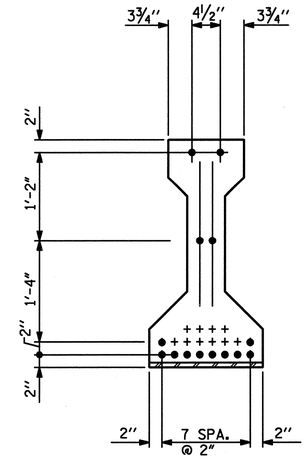

AT END OF GIRDER

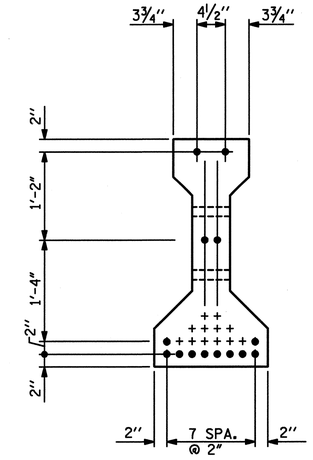

AT ℄ OF GIRDER

0.6" Ø LOW RELAXATION STRAND LAYOUT

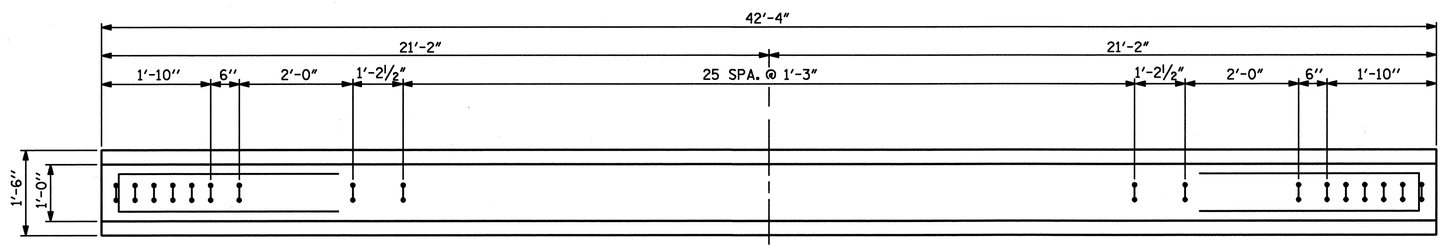

PLAN OF GIRDER

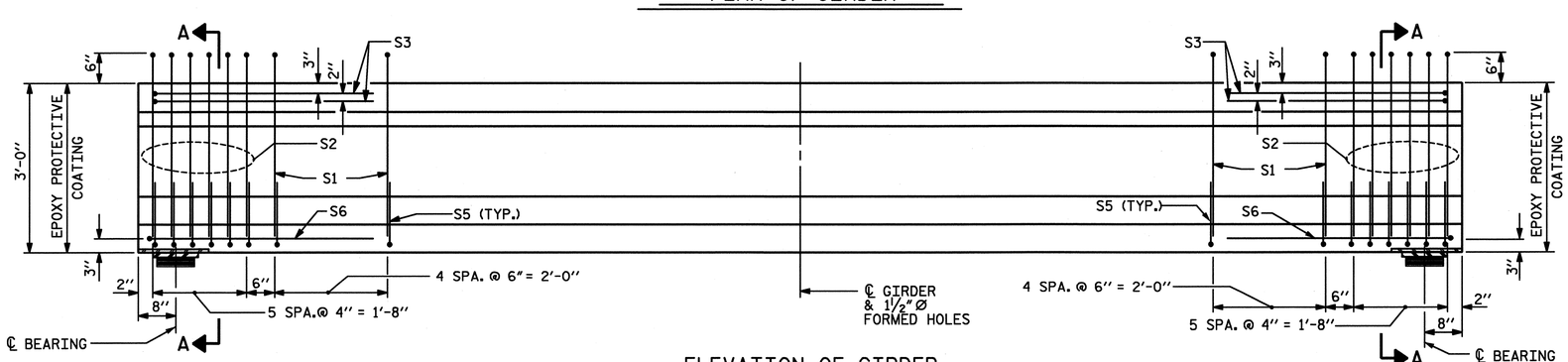

ELEVATION OF GIRDER

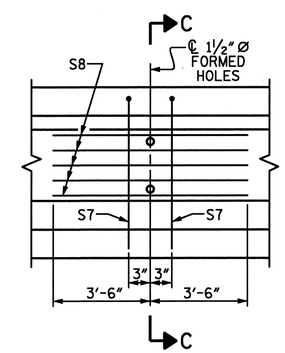

PARTIAL ELEVATION

SHOWING INTERMEDIATE DIAPHRAGM
REINFORCING STEEL FOR ALL GIRDERS

0.6" Ø L. R. GRADE 270 STRANDS

AREA (SQUARE INCHES)	ULTIMATE STRENGTH (LBS. PER STRAND)	APPLIED PRESTRESS (LBS. PER STRAND)
0.217	58,600	43,950

REINFORCING STEEL FOR ONE GIRDER

BAR	NUMBER	SIZE	TYPE	LENGTH	WEIGHT
S1	36	#4	1	6'-10"	164
S2	12	#5	1	6'-10"	86
S3	4	#4	3	8'-8"	23
S5	44	#4	2	2'-4"	69
S6	2	#4	3	9'-2"	12
S7	2	#5	3	5'-8"	12
S8	5	#4	STR	7'-0"	23

✱ NOTE: S4 BARS SHALL BE BENT BEFORE SHIPMENT. HEAT BENDING SHALL NOT BE ALLOWED.

BAR TYPES

ALL BAR DIMENSIONS ARE OUT-TO-OUT

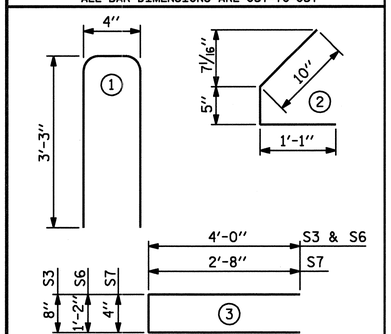

QUANTITIES FOR ONE GIRDER

	REINFORCING STEEL LB.	6000 PSI CONCRETE C.Y.	0.6" Ø L. R. STRANDS No.
	389	4.0	14

GIRDERS REQUIRED

SPAN	NUMBER	LENGTH	TOTAL LENGTH
E	2	42'-4"	84'-8"

PROJECT NO. U-4438

CAMDEN & PASQUOTANK COUNTY

STATION: 15+25.75 -L1-

SHEET 3 OF 5

STATE OF NORTH CAROLINA
DEPARTMENT OF TRANSPORTATION
RALEIGH

STANDARD
AASHTO TYPE II
PRESTRESSED CONCRETE GIRDER
SPAN E (GIRDERS 6 AND 7)

NORTH CAROLINA PROFESSIONAL SEAL 026891 ENGINEER JOHN T. DIFFEE III

WETHERILL ENGINEERING
559 Jones Franklin Rd. Suite 164
Raleigh, N.C. 27606
Bus: 919 851 8077
Fax: 919 851 8107
License: F-0377

TRANSPORTATION PLANNING/DESIGN - BRIDGE/STRUCTURE DESIGN
CIVIL/SITE DESIGN - GIS/GPS - CONSTRUCTION OBSERVATION

REVISIONS						SHEET NO.
NO.	BY:	DATE:	NO.	BY:	DATE:	S-26
1			3			TOTAL SHEETS
2			4			454

ASSEMBLED BY : J. PENDERGRAFT DATE : 11-10
CHECKED BY : J. DILWORTH DATE : 11-10

DRAWN BY : ELR 8/91
CHECKED BY : GRP 8/91

REV. 8/16/99 RWW/LES
REV. 10/17/00R RWW/LES
REV. 5/1/06R TLA/GM

STD. NO. PCG4

2/4/2011
DGN
P:\2010\10119.02 U-4438\Structures\DGN\S26_U-4438_SD_PCG4-E&G.dgn

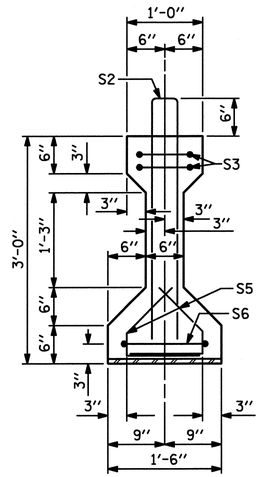

SECTION A-A

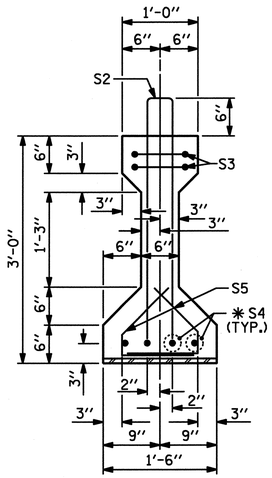

SECTION B-B

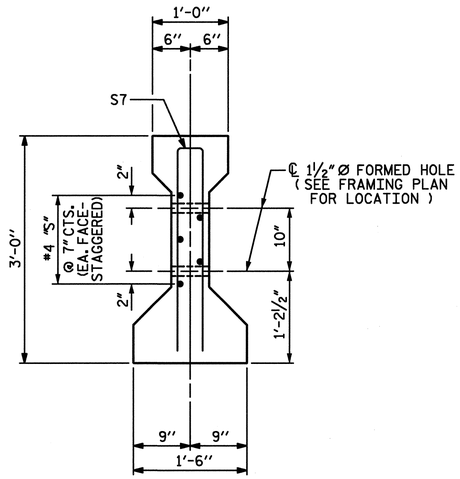

SECTION C-C

(S1 BARS NOT SHOWN)

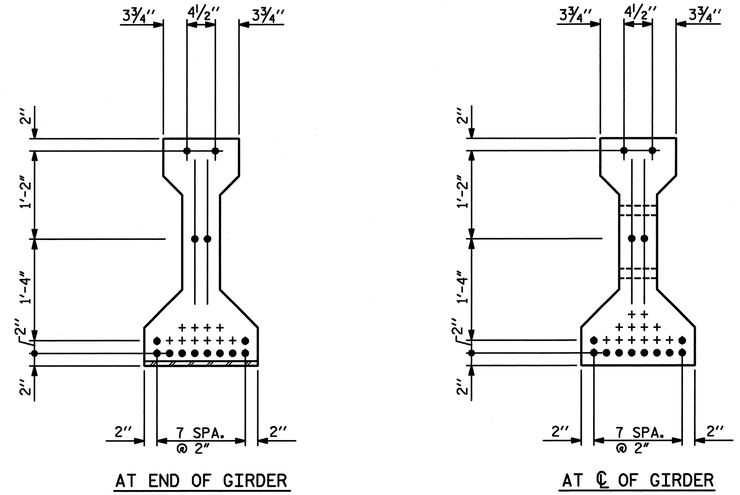

0.6" Ø LOW RELAXATION STRAND LAYOUT

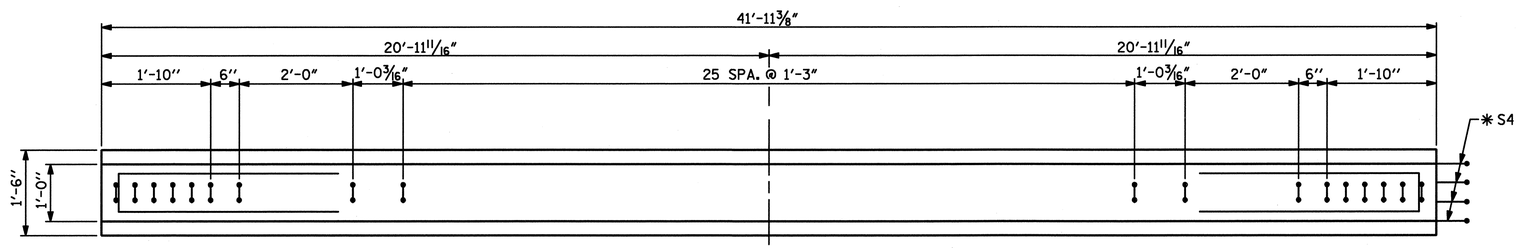

PLAN OF GIRDER

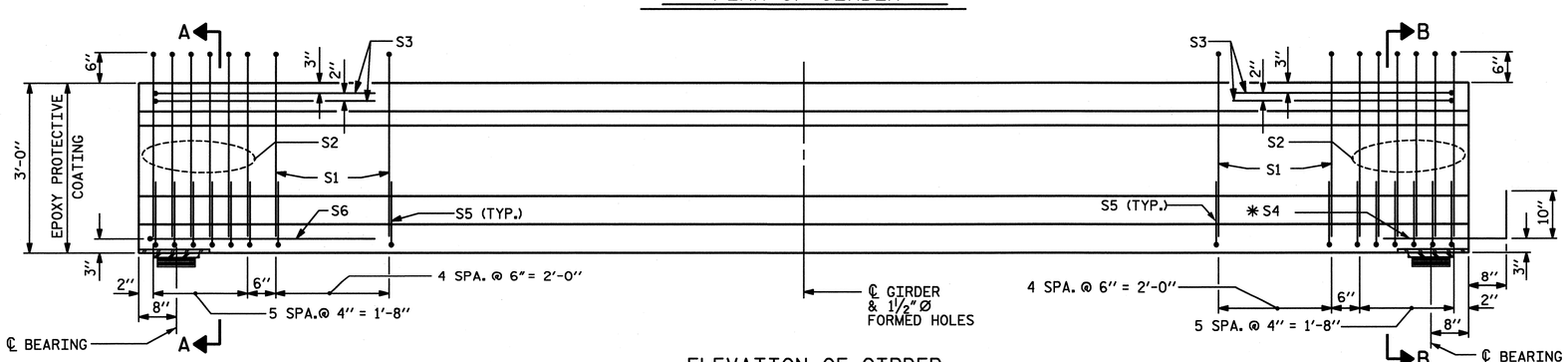

ELEVATION OF GIRDER

(SPAN G & L SHOWN, SPAN K & P MIRROR IMAGE)

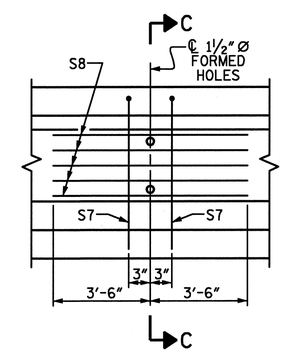

PARTIAL ELEVATION

SHOWING INTERMEDIATE DIAPHRAGM REINFORCING STEEL FOR ALL GIRDERS

0.6" Ø L. R. GRADE 270 STRANDS

AREA (SQUARE INCHES)	ULTIMATE STRENGTH (LBS. PER STRAND)	APPLIED PRESTRESS (LBS. PER STRAND)
0.217	58,600	43,950

REINFORCING STEEL FOR ONE GIRDER

BAR	NUMBER	SIZE	TYPE	LENGTH	WEIGHT
S1	36	#4	1	6'-10"	164
S2	12	#5	1	6'-10"	86
S3	4	#4	3	8'-8"	23
✱S4	4	#5	STR	3'-8"	15
S5	44	#4	2	2'-4"	69
S6	1	#4	3	9'-2"	6
S7	2	#5	3	5'-8"	12
S8	5	#4	STR	7'-0"	23

✱NOTE: S4 BARS SHALL BE BENT BEFORE SHIPMENT. HEAT BENDING SHALL NOT BE ALLOWED.

BAR TYPES

ALL BAR DIMENSIONS ARE OUT-TO-OUT

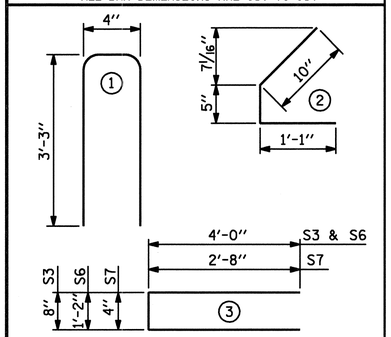

QUANTITIES FOR ONE GIRDER

	REINFORCING STEEL LB.	6000 PSI CONCRETE C.Y.	0.6" Ø L. R. STRANDS No.
	398	4.0	14

GIRDERS REQUIRED

SPAN	NUMBER	LENGTH	TOTAL LENGTH
G	5	41'-11⅜"	209'-8⅞"
K	5	41'-11⅜"	209'-8⅞"
L	5	41'-11⅜"	209'-8⅞"
P	5	41'-11⅜"	209'-8⅞"

PROJECT NO. U-4438

CAMDEN & PASQUOTANK COUNTY

STATION: 15+25.75 -L1-

SHEET 4 OF 5

NORTH CAROLINA PROFESSIONAL SEAL 026891 ENGINEER JOHN T. DIFFEE, III 2-6-11

ETHERILL ENGINEERING
559 Jones Franklin Rd. Suite 164
Raleigh, N.C. 27606
Bus: 919 851 8077
Fax: 919 851 8107
License: F-0377

TRANSPORTATION PLANNING/DESIGN - BRIDGE/STRUCTURE DESIGN
CIVIL/SITE DESIGN - GIS/GPS - CONSTRUCTION OBSERVATION

STATE OF NORTH CAROLINA
DEPARTMENT OF TRANSPORTATION
RALEIGH

STANDARD
AASHTO TYPE II
PRESTRESSED CONCRETE GIRDER
CONTINUOUS FOR LIVE LOAD
SPANS G, K, L, AND P

REVISIONS						SHEET NO.
NO.	BY:	DATE:	NO.	BY:	DATE:	S-27
1			3			TOTAL SHEETS
2			4			454

ASSEMBLED BY : J. PENDERGRAFT	DATE : 11-10
CHECKED BY : J. DILWORTH	DATE : 11-10
DRAWN BY : ELR 8/91	REV. 8/16/99 RWW/LES
CHECKED BY : GRP 8/91	REV. 10/17/00R RWW/LES
	REV. 5/1/06R TLA/GM

STD. NO. PCG4

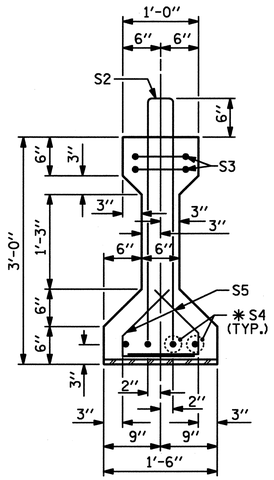

SECTION B-B

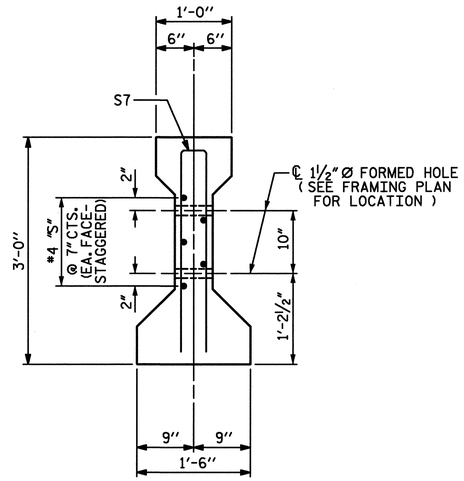

SECTION C-C

(S1 BARS NOT SHOWN)

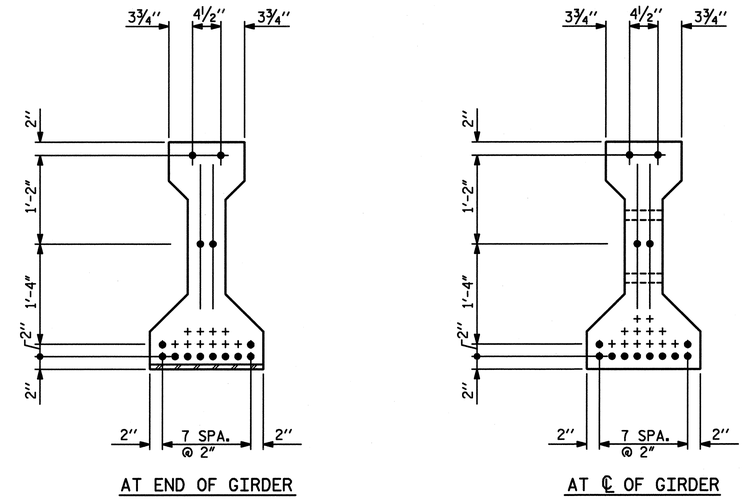

0.6" Ø LOW RELAXATION STRAND LAYOUT

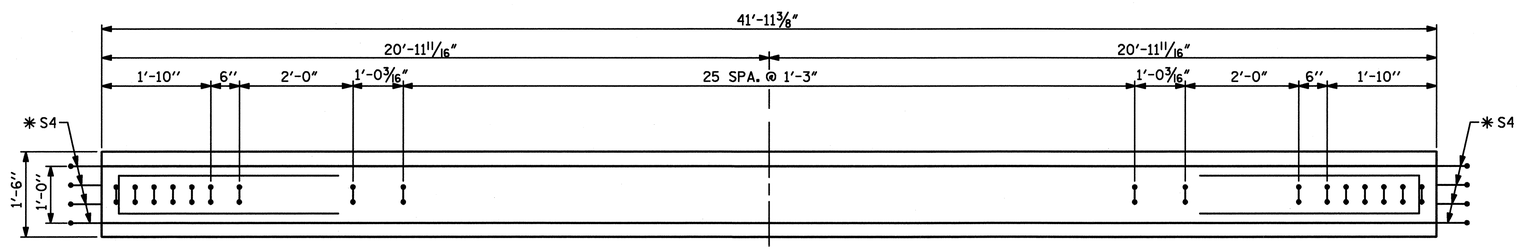

PLAN OF GIRDER

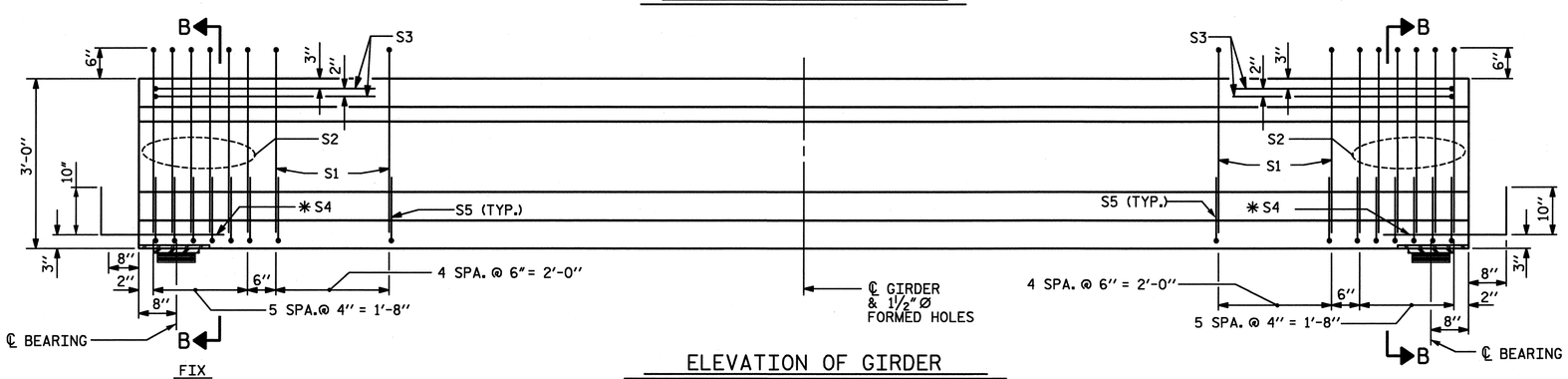

ELEVATION OF GIRDER

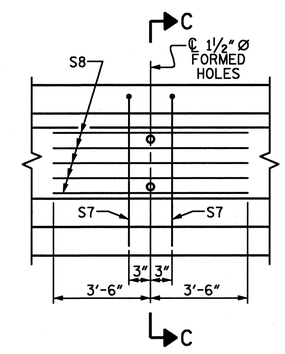

PARTIAL ELEVATION

SHOWING INTERMEDIATE DIAPHRAGM REINFORCING STEEL FOR ALL GIRDERS

0.6" Ø L. R. GRADE 270 STRANDS

AREA (SQUARE INCHES)	ULTIMATE STRENGTH (LBS. PER STRAND)	APPLIED PRESTRESS (LBS. PER STRAND)
0.217	58,600	43,950

REINFORCING STEEL FOR ONE GIRDER

BAR	NUMBER	SIZE	TYPE	LENGTH	WEIGHT
S1	36	#4	1	6'-10"	164
S2	12	#5	1	6'-10"	86
S3	4	#4	3	8'-8"	23
✱S4	8	#5	STR	3'-8"	31
S5	44	#4	2	2'-4"	69
S7	2	#5	3	5'-8"	12
S8	5	#4	STR	7'-0"	23

✱NOTE: S4 BARS SHALL BE BENT BEFORE SHIPMENT. HEAT BENDING SHALL NOT BE ALLOWED.

BAR TYPES

ALL BAR DIMENSIONS ARE OUT-TO-OUT

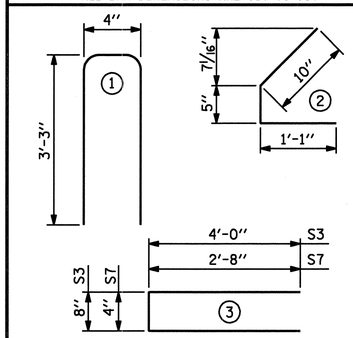

QUANTITIES FOR ONE GIRDER

	REINFORCING STEEL LB.	6000 PSI CONCRETE C.Y.	0.6" Ø L. R. STRANDS No.
	408	4.0	14

GIRDERS REQUIRED

SPAN	NUMBER	LENGTH	TOTAL LENGTH
H	5	41'-11⅜"	209'-8⅞"
I	5	41'-11⅜"	209'-8⅞"
J	5	41'-11⅜"	209'-8⅞"
M	5	41'-11⅜"	209'-8⅞"
N	5	41'-11⅜"	209'-8⅞"
O	5	41'-11⅜"	209'-8⅞"

PROJECT NO. U-4438

CAMDEN & PASQUOTANK COUNTY

STATION: 15+25.75 -L1-

SHEET 5 OF 5

STATE OF NORTH CAROLINA
DEPARTMENT OF TRANSPORTATION
RALEIGH

STANDARD
AASHTO TYPE II
PRESTRESSED CONCRETE GIRDER
CONTINUOUS FOR LIVE LOAD
SPANS H, I, J, M, N, AND O

NORTH CAROLINA PROFESSIONAL SEAL 026891 ENGINEER JOHN T. DIFFEE III

ETHERILL ENGINEERING
559 Jones Franklin Rd. Suite 164
Raleigh, N.C. 27606
Bus: 919 851 8077
Fax: 919 851 8107
License: F-0377

TRANSPORTATION PLANNING/DESIGN - BRIDGE/STRUCTURE DESIGN
CIVIL/SITE DESIGN - GIS/GPS - CONSTRUCTION OBSERVATION

ASSEMBLED BY : J. PENDERGRAFT	DATE : 11-10
CHECKED BY : J. DILWORTH	DATE : 11-10
DRAWN BY : ELR 8/91	REV. 8/16/99 RWW/LES
CHECKED BY : GRP 8/91	REV. 10/17/00R RWW/LES
	REV. 5/1/06R TLA/GM

REVISIONS							SHEET NO.
NO.	BY:	DATE:	NO.	BY:	DATE:		S-28
1			3				TOTAL SHEETS
2			4				454

STD. NO. PCG4

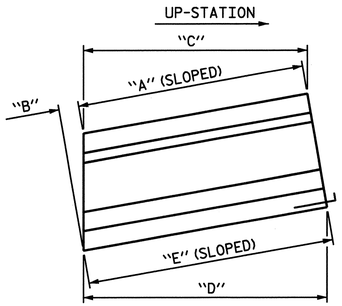

SPAN A

ELEVATION OF GIRDER
SHOWING BEVEL AND SLOPE LENGTH
(SEE TABLE FOR DIMENSIONS)

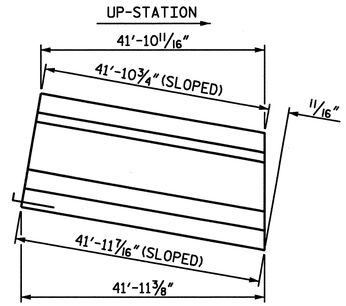

SPAN K

ELEVATION OF GIRDER
SHOWING BEVEL AND SLOPE LENGTH

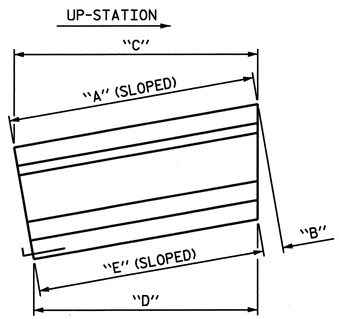

SPAN E

ELEVATION OF GIRDER
SHOWING BEVEL AND SLOPE LENGTH
(SEE TABLE FOR DIMENSIONS)

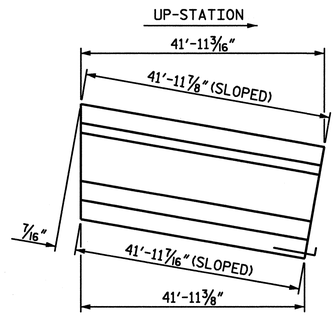

SPAN L

ELEVATION OF GIRDER
SHOWING BEVEL AND SLOPE LENGTH

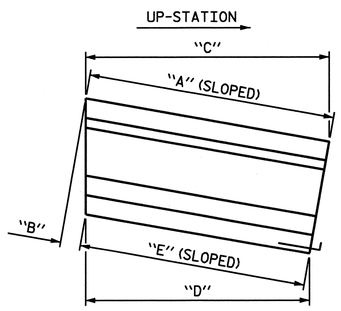

SPAN G

ELEVATION OF GIRDER
SHOWING BEVEL AND SLOPE LENGTH
(SEE TABLE FOR DIMENSIONS)

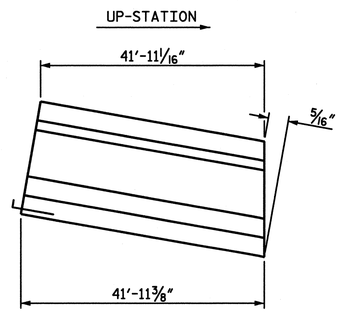

SPAN P

ELEVATION OF GIRDER
SHOWING BEVEL AND SLOPE LENGTH

SPAN "A"

GIRDER	"A" TOP HORIZ.	"B" BEVEL	"C" TOP SLOPED	"D" BOTTOM HORIZ.	"E" BOTTOM SLOPED
1	42'-2 9/16"	1 7/16"	42'-3"	42'-4"	42'-4 7/16"
2	42'-2 5/8"	1 3/8"	42'-3"	42'-4"	42'-4 3/8"
3	42'-2 3/4"	1 1/4"	42'-3 1/16"	42'-4"	42'-4 5/16"
4	42'-2 7/8"	1 1/8"	42'-3 1/8"	42'-4"	42'-4 1/4"
5	42'-3"	1"	42'-3 3/16"	42'-4"	42'-4 3/16"

SPAN "E"

GIRDER	"A" TOP HORIZ.	"B" BEVEL	"C" TOP SLOPED	"D" BOTTOM HORIZ.	"E" BOTTOM SLOPED
1	42'-5 3/16"	1 3/16"	42'-5 7/16"	42'-4"	42'-4 1/4"
2	42'-5 3/8"	1 3/8"	42'-5 3/4"	42'-4"	42'-4 3/8"
3	42'-5 9/16"	1 9/16"	42'-6 1/16"	42'-4"	42'-4 1/2"
4	42'-5 3/4"	1 3/4"	42'-6 3/8"	42'-4"	42'-4 5/8"
5	42'-5 15/16"	1 15/16"	42'-6 11/16"	42'-4"	42'-4 3/4"
6	42'-5 7/8"	1 7/8"	42'-6 9/16"	42'-4"	42'-4 11/16"
7	42'-5 7/8"	1 7/8"	42'-6 9/16"	42'-4"	42'-4 11/16"

SPAN "G"

GIRDER	"A" TOP HORIZ.	"B" BEVEL	"C" TOP SLOPED	"D" BOTTOM HORIZ.	"E" BOTTOM SLOPED
1	42'-0 9/16"	1 3/16"	42'-0 13/16"	41'-11 3/8"	41'-11 5/8"
2	42'-0 3/4"	1 3/8"	42'-1 1/8"	41'-11 3/8"	41'-11 3/4"
3	42'-0 15/16"	1 9/16"	42'-1 7/16"	41'-11 3/8"	41'-11 7/8"
4	42'-1 1/8"	1 3/4"	42'-1 3/4"	41'-11 3/8"	42'-0"
5	42'-1 5/16"	1 15/16"	42'-2 1/16"	41'-11 3/8"	42'-0 1/8"

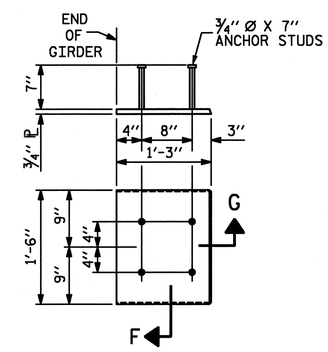

EMBEDDED PLATE "B-1" DETAILS FOR AASHTO TYPE II GIRDER

(2 REQ'D PER GIRDER)

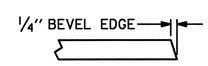

SECTION "G"

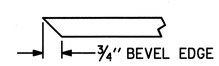

SECTION "F"

(SEE NOTES)

NOTES

PRESTRESSED CONCRETE GIRDERS ARE DESIGNED FOR 0 PSI IN THE PRECOMPRESSED TENSILE ZONE UNDER ALL LOADING CONDITIONS.

PRESTRESSED CONCRETE GIRDERS SHALL CONTAIN CALCIUM NITRITE CORROSION INHIBITOR. SEE SPECIAL PROVISIONS FOR CALCIUM NITRITE CORROSION INHIBITOR.

ALL PRESTRESSING STRANDS SHALL BE 7-WIRE LOW-RELAXATION GRADE 270 STRANDS AND SHALL CONFORM TO AASHTO M203 EXCEPT FOR SAMPLING REQUIREMENTS WHICH SHALL BE IN ACCORDANCE WITH THE STANDARD SPECIFICATIONS.

ALL REINFORCING STEEL SHALL BE GRADE 60.

APPLY EPOXY PROTECTIVE COATING TO END OF GIRDER SURFACES INDICATED IN ELEVATION VIEW.

EMBEDDED PLATE "B-1" SHALL BE GALVANIZED IN ACCORDANCE WITH THE STANDARD SPECIFICATIONS. BEVEL EDGES OF PLATE "B-1" TO GIVE CLOSE FIT BUT NOT TIGHT FIT TO STEEL CASTING FORM.

ANCHOR STUDS SHALL CONFORM TO AASHTO M169 GRADES 1010 THROUGH 1020 OR APPROVED EQUAL, AND SHALL MEET THE TYPE "B" REQUIREMENTS OF SUBSECTION 7.3 OF THE ANSI/AASHTO/AWS D1.5 BRIDGE WELDING CODE.

AT ENDS OF GIRDERS TO BE EMBEDDED IN CONCRETE DIAPHRAGMS OR END WALLS, PRESTRESSING STRANDS MAY EXTEND A MAXIMUM OF 2" BEYOND THE GIRDER ENDS. OTHERWISE, PRESTRESSING STRANDS SHALL BE CUT FLUSH WITH THE GIRDER ENDS.

THE TRANSFER OF LOAD FROM THE ANCHORAGES TO THE GIRDER SHALL BE DONE WHEN CONCRETE HAS REACHED A COMPRESSIVE STRENGTH OF NOT LESS THAN 4,800 PSI.

DEPENDING ON THE TYPE OF SYSTEM USED TO SUPPORT THE DECK SLAB FORMS, PRESET ANCHORS MAY BE NECESSARY IN THE PRESTRESSED CONCRETE GIRDER.

THE TOP SURFACE OF THE GIRDER, EXCLUDING THE OUTSIDE 4", SHALL BE RAKED TO A DEPTH OF 1/4".

FOR PRESTRESSED CONCRETE MEMBERS, SEE SPECIAL PROVISIONS.

PROJECT NO. U-4438
CAMDEN & PASQUOTANK COUNTY
STATION: 15+25.75 -L1-

ASSEMBLED BY : Z. PIATEK	DATE : 12/10
CHECKED BY : T. DIFFEE	DATE : 12/10
DRAWN BY : ELR 11/91	REV. 10/17/00 RWW/LES
CHECKED BY : GRP 11/91	REV. 7/10/01RR LES/RDR
	REV. 5/1/06 TLA/GM

NORTH CAROLINA PROFESSIONAL SEAL 026891 ENGINEER JOHN T. DIFFEE III
2-6-11

ETHERILL ENGINEERING
559 Jones Franklin Rd. Suite 164
Raleigh, N.C. 27606
Bus: 919 851 8077
Fax: 919 851 8107
License: F-0377
TRANSPORTATION PLANNING/DESIGN - BRIDGE/STRUCTURE DESIGN
CIVIL/SITE DESIGN - GIS/GPS - CONSTRUCTION OBSERVATION

STATE OF NORTH CAROLINA
DEPARTMENT OF TRANSPORTATION
RALEIGH

STANDARD

PRESTRESSED CONCRETE GIRDER CONTINUOUS FOR LIVE LOAD DETAILS

REVISIONS						SHEET NO.
NO.	BY:	DATE:	NO.	BY:	DATE:	S-29
1			3			TOTAL SHEETS
2			4			454

STD. NO. PCG11

DEAD LOAD DEFLECTION TABLE FOR GIRDERS

0.6"Ø LOW RELAXATION	SPANS "A", "B", "C", & "D" GIRDER 1										
TENTH POINTS	0	.1	.2	.3	.4	.5	.6	.7	.8	.9	1
CAMBER (GIRDER ALONE IN PLACE) ↑	0	0.023	0.041	0.053	0.060	0.063	0.060	0.053	0.041	0.023	0
✱DEFLECTION DUE TO SUPERIMPOSED D.L. ↓	0	0.005	0.011	0.016	0.019	0.020	0.019	0.016	0.011	0.005	0
FINAL CAMBER ↑	0	3/16"	3/8"	7/16"	1/2"	1/2"	1/2"	7/16"	3/8"	3/16"	0

0.6"Ø LOW RELAXATION	SPANS "A", "B", "C", & "D" GIRDERS 2, 3 & 4										
TENTH POINTS	0	.1	.2	.3	.4	.5	.6	.7	.8	.9	1
CAMBER (GIRDER ALONE IN PLACE) ↑	0	0.023	0.041	0.053	0.060	0.063	0.060	0.053	0.041	0.023	0
✱DEFLECTION DUE TO SUPERIMPOSED D.L. ↓	0	0.006	0.012	0.018	0.021	0.022	0.021	0.018	0.013	0.006	0
FINAL CAMBER ↑	0	3/16"	5/16"	7/16"	1/2"	1/2"	1/2"	7/16"	5/16"	3/16"	0

0.6"Ø LOW RELAXATION	SPANS "A", "B", "C", & "D" GIRDER 5										
TENTH POINTS	0	.1	.2	.3	.4	.5	.6	.7	.8	.9	1
CAMBER (GIRDER ALONE IN PLACE) ↑	0	0.023	0.041	0.053	0.060	0.063	0.060	0.053	0.041	0.023	0
✱DEFLECTION DUE TO SUPERIMPOSED D.L. ↓	0	0.006	0.012	0.018	0.021	0.022	0.021	0.018	0.013	0.006	0
FINAL CAMBER ↑	0	3/16"	5/16"	7/16"	1/2"	1/2"	1/2"	7/16"	5/16"	3/16"	0

DEAD LOAD DEFLECTION TABLE FOR GIRDERS

0.6"Ø LOW RELAXATION	SPAN "E" GIRDER 1										
TENTH POINTS	0	.1	.2	.3	.4	.5	.6	.7	.8	.9	1
CAMBER (GIRDER ALONE IN PLACE) ↑	0	0.023	0.041	0.053	0.060	0.063	0.060	0.053	0.041	0.023	0
✱DEFLECTION DUE TO SUPERIMPOSED D.L. ↓	0	0.006	0.012	0.017	0.020	0.021	0.020	0.017	0.012	0.006	0
FINAL CAMBER ↑	0	3/16"	3/8"	7/16"	1/2"	1/2"	1/2"	7/16"	5/16"	3/16"	0

0.6"Ø LOW RELAXATION	SPAN "E" GIRDERS 2, 3 & 4										
TENTH POINTS	0	.1	.2	.3	.4	.5	.6	.7	.8	.9	1
CAMBER (GIRDER ALONE IN PLACE) ↑	0	0.023	0.041	0.053	0.060	0.063	0.060	0.053	0.041	0.023	0
✱DEFLECTION DUE TO SUPERIMPOSED D.L. ↓	0	0.006	0.013	0.019	0.022	0.024	0.022	0.019	0.014	0.007	0
FINAL CAMBER ↑	0	3/16"	5/16"	7/16"	7/16"	1/2"	7/16"	7/16"	5/16"	3/16"	0

0.6"Ø LOW RELAXATION	SPAN "E" GIRDER 5										
TENTH POINTS	0	.1	.2	.3	.4	.5	.6	.7	.8	.9	1
CAMBER (GIRDER ALONE IN PLACE) ↑	0	0.023	0.041	0.053	0.060	0.063	0.060	0.053	0.041	0.023	0
✱DEFLECTION DUE TO SUPERIMPOSED D.L. ↓	0	0.007	0.014	0.020	0.024	0.026	0.024	0.021	0.015	0.007	0
FINAL CAMBER ↑	0	3/16"	5/16"	3/8"	7/16"	7/16"	7/16"	3/8"	5/16"	3/16"	0

DEAD LOAD DEFLECTION TABLE FOR GIRDERS

0.6"Ø LOW RELAXATION	SPAN "E" GIRDER 6										
TENTH POINTS	0	.1	.2	.3	.4	.5	.6	.7	.8	.9	1
CAMBER (GIRDER ALONE IN PLACE) ↑	0	0.023	0.041	0.053	0.060	0.063	0.060	0.053	0.041	0.023	0
✱DEFLECTION DUE TO SUPERIMPOSED D.L. ↓	0	0.006	0.012	0.017	0.020	0.021	0.020	0.017	0.012	0.006	0
FINAL CAMBER ↑	0	3/16"	3/8"	7/16"	1/2"	1/2"	1/2"	7/16"	3/8"	3/16"	0

0.6"Ø LOW RELAXATION	SPAN "E" GIRDER 7										
TENTH POINTS	0	.1	.2	.3	.4	.5	.6	.7	.8	.9	1
CAMBER (GIRDER ALONE IN PLACE) ↑	0	0.023	0.041	0.053	0.060	0.063	0.060	0.053	0.041	0.023	0
✱DEFLECTION DUE TO SUPERIMPOSED D.L. ↓	0	0.006	0.012	0.016	0.019	0.020	0.019	0.016	0.012	0.006	0
FINAL CAMBER ↑	0	3/16"	3/8"	7/16"	1/2"	1/2"	1/2"	7/16"	3/8"	3/16"	0

DEAD LOAD DEFLECTION TABLE FOR GIRDERS

0.6"Ø LOW RELAXATION	SPANS "G", "H", "I", "J", "K", "L", "M", "N", "O", & "P" GIRDER 1										
TENTH POINTS	0	.1	.2	.3	.4	.5	.6	.7	.8	.9	1
CAMBER (GIRDER ALONE IN PLACE) ↑	0	0.023	0.040	0.053	0.060	0.062	0.060	0.053	0.040	0.023	0
✱DEFLECTION DUE TO SUPERIMPOSED D.L. ↓	0	0.006	0.012	0.017	0.020	0.021	0.020	0.017	0.012	0.006	0
FINAL CAMBER ↑	0	3/16"	5/16"	7/16"	1/2"	1/2"	1/2"	7/16"	5/16"	3/16"	0

0.6"Ø LOW RELAXATION	SPANS "G", "H", "I", "J", "K", "L", "M", "N", "O", & "P" GIRDERS 2, 3 & 4										
TENTH POINTS	0	.1	.2	.3	.4	.5	.6	.7	.8	.9	1
CAMBER (GIRDER ALONE IN PLACE) ↑	0	0.023	0.040	0.053	0.060	0.062	0.060	0.053	0.040	0.023	0
✱DEFLECTION DUE TO SUPERIMPOSED D.L. ↓	0	0.006	0.013	0.019	0.022	0.023	0.022	0.019	0.013	0.006	0
FINAL CAMBER ↑	0	3/16"	5/16"	7/16"	7/16"	7/16"	7/16"	7/16"	5/16"	3/16"	0

0.6"Ø LOW RELAXATION	SPANS "G", "H", "I", "J", "K", "L", "M", "N", "O", & "P" GIRDER 5										
TENTH POINTS	0	.1	.2	.3	.4	.5	.6	.7	.8	.9	1
CAMBER (GIRDER ALONE IN PLACE) ↑	0	0.023	0.040	0.053	0.060	0.062	0.060	0.053	0.040	0.023	0
✱DEFLECTION DUE TO SUPERIMPOSED D.L. ↓	0	0.006	0.012	0.017	0.020	0.021	0.020	0.017	0.013	0.006	0
FINAL CAMBER ↑	0	3/16"	5/16"	7/16"	1/2"	1/2"	1/2"	7/16"	5/16"	3/16"	0

✱ INCLUDES FUTURE WEARING SURFACE
ALL VALUES ARE SHOWN IN FEET (DECIMAL FORM), EXCEPT "FINAL CAMBER", WHICH IS GIVEN IN INCHES (FRACTION FORM).

PROJECT NO. U-4438
CAMDEN & PASQUOTANK COUNTY
STATION: 15+25.75 -L1-

NORTH CAROLINA PROFESSIONAL SEAL 026891 ENGINEER JOHN T. DIFFEE, III
See TT
2-16-11

ETHERILL ENGINEERING
559 Jones Franklin Rd. Suite 164
Raleigh, N.C. 27606
Bus: 919 851 8077
Fax: 919 851 8107
License: F-0377
TRANSPORTATION PLANNING/DESIGN - BRIDGE/STRUCTURE DESIGN
CIVIL/SITE DESIGN - GIS/GPS - CONSTRUCTION OBSERVATION

STATE OF NORTH CAROLINA
DEPARTMENT OF TRANSPORTATION
RALEIGH
SUPERSTRUCTURE
DEAD LOAD DEFLECTIONS

REVISIONS						
NO.	BY:	DATE:	NO.	BY:	DATE:	
1			3			
2			4			

SHEET NO. S-30
TOTAL SHEETS 454

DRAWN BY : Z. PIATEK DATE : 11-10
CHECKED BY : T. DIFFEE DATE : 11-10

P:\2010\101902 U-4438\Structures\DGN\S30_U-4438_SD_PCG-DT.dgn
2/4/2011 4:24:03 PM

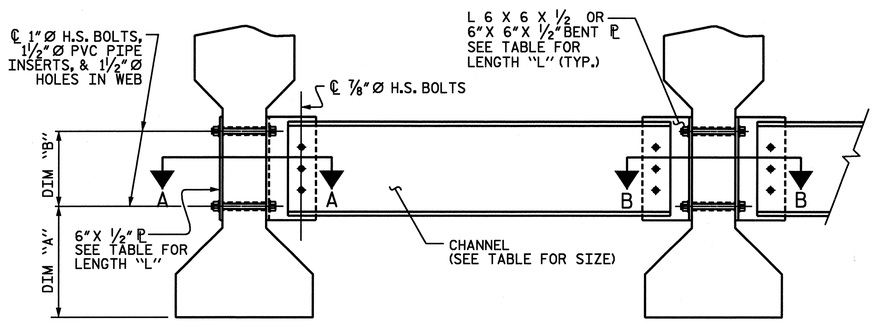

EXTERIOR GIRDER

INTERIOR GIRDER

PART SECTION AT INTERMEDIATE DIAPHRAGM

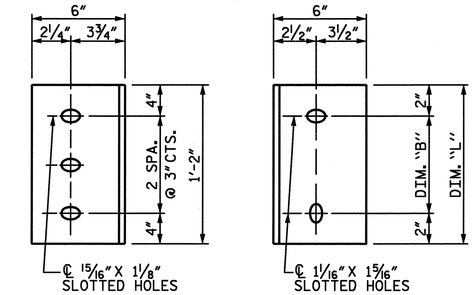

DIAPHRAGM FACE
(TYPE II GDR.)

WEB FACE

CONNECTOR PLATE DETAILS

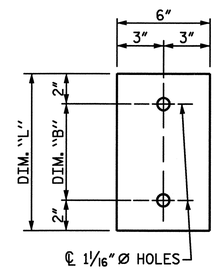

PLATE DETAILS

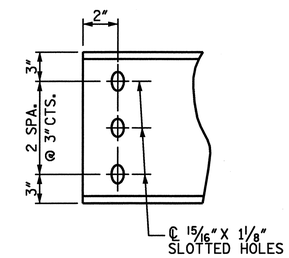

CHANNEL END

(TYPE II GDR.)

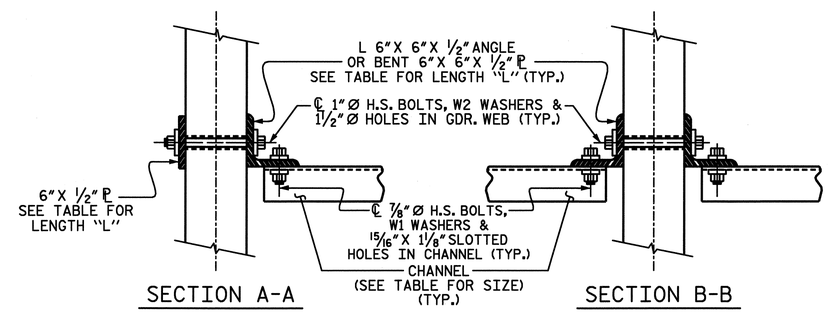

SECTION A-A

SECTION B-B

CONNECTION DETAILS

(FOR SKEW = 90°)

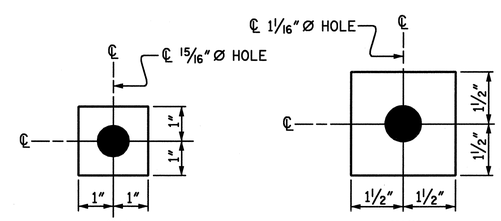

W1

ℙ 7/16"X 2"X 2"

USE WITH ⅞"Ø HVY. HEX NUTS & DIRECT TENSION INDICATOR WASHERS AT DIAPHRAGM CHANNEL TO CONNECTOR PLATE CONNECTIONS

W2

ℙ 7/16"X 3"X 3"

USE WITH 1"Ø HVY. HEX NUTS AT CONNECTOR PLATE TO GIRDER CONNECTIONS

WASHER DETAILS

STRUCTURAL STEEL NOTES

ALL INTERMEDIATE DIAPHRAGM STEEL, CONNECTOR PLATES AND PLATE WASHERS SHALL BE AASHTO M270 GRADE 50 OR APPROVED EQUAL.

TENSION ON THE AASHTO M164 BOLTS THROUGH THE CHANNEL MEMBER SHALL BE CALIBRATED USING DIRECT TENSION INDICATOR WASHERS IN ACCORDANCE WITH THE STANDARD SPECIFICATIONS. FOR DIRECT TENSION INDICATORS, SEE SPECIAL PROVISIONS.

TENSION ON THE AASHTO M164 BOLTS THROUGH THE GIRDER WEB SHALL BE SNUG TIGHTENED FOLLOWED BY AN ADDITIONAL ¼ TURN.

THE PLATES, BENT PLATES, CHANNELS, ANGLES, AND PLATE WASHERS SHALL BE GALVANIZED OR METALLIZED IN ACCORDANCE WITH THE STANDARD SPECIFICATIONS. FOR THERMAL SPRAYED COATINGS (METALLIZATION), SEE SPECIAL PROVISIONS.

FOR METALLIZATION, APPLY AN 8 MIL THICK 99.99 PERCENT ZINC (W-Zn-1) THERMAL SPRAYED COATING WITH A 0.5 MIL THICK SEAL COAT TO ALL STEEL DIAPHRAGM SURFACES IN ACCORDANCE WITH THE THERMAL SPRAYED COATINGS SPECIAL PROVISIONS AND SECTION 442 OF THE STANDARD SPECIFICATIONS.

GALVANIZE THE HIGH STRENGTH BOLTS, NUTS, WASHERS AND DIRECT TENSION INDICATORS IN ACCORDANCE WITH THE STANDARD SPECIFICATIONS. FOR HIGH STRENGTH BOLTS, SEE SPECIAL PROVISIONS.

USE A MINIMUM 7/16" THICK PLATE WASHER WITH STANDARD HOLES UNDER EACH BOLT HEAD AND NUT. THE PLATE WASHERS SHALL HAVE SUFFICIENT SIZE TO COVER THE HOLES AFTER INSTALLATION. HARDENED WASHERS AND DIRECT TENSION INDICATORS ARE TO BE USED IN CONJUNCTION WITH THE PLATE WASHERS IN THE CHANNEL MEMBER CONNECTION.

FOR BOLTS THROUGH THE GIRDER WEB, PROVIDE SUFFICIENT LENGTH OF ALL BOLTS TO ACCOMMODATE WASHERS AND THE THICKNESS OF CONNECTING MEMBER PLUS AT LEAST ¼" PROJECTION BEYOND THE NUT.

INTERMEDIATE DIAPHRAGM ASSEMBLY SHALL COMPLY WITH SECTION 1072 OF THE STANDARD SPECIFICATIONS.

CONTRACTOR SHALL SUBMIT TWO SETS OF WORKING DRAWINGS FOR THE INTERMEDIATE DIAPHRAGM ASSEMBLY FOR REVIEW, COMMENTS AND ACCEPTANCE. AFTER REVIEW, COMMENTS, AND ACCEPTANCE, SUBMIT SEVEN SETS FOR DISTRIBUTION.

IN THE EXTERIOR BAYS, TEMPORARY STRUTS SHALL BE PLACED BETWEEN PRESTRESSED GIRDERS ADJACENT TO THE STEEL DIAPHRAGMS. STRUTS SHALL REMAIN IN PLACE 3 DAYS AFTER CONCRETE IS PLACED. ALL AASHTO M164 H.S. BOLTS SHALL BE FULLY TIGHTENED AFTER THE STRUTS HAVE BEEN REMOVED.

THE COST OF THE STEEL DIAPHRAGMS AND ASSEMBLIES SHALL BE INCLUDED IN THE UNIT PRICE BID FOR PRESTRESSED CONCRETE GIRDERS.

TABLE

GIRDER TYPE	CHANNEL SIZE	DIM "A"	DIM "B"	DIM "L"
II	MC 12 x 31	1'-2½"	10"	1'-2"

PROJECT NO. U-4438

CAMDEN & PASQUOTANK COUNTY

STATION: 15+25.75 -L1-

ASSEMBLED BY : J. PENDERGRAFT	DATE : 11-10
CHECKED BY : J. DILWORTH	DATE : 11-10
DRAWN BY : TLA 6/05	ADDED 10/21/05
CHECKED BY : VC 6/05	REV. 5/1/06RR KMM/GM

NORTH CAROLINA PROFESSIONAL SEAL 026691 ENGINEER JOHN T. DILWORTH

WETHERILL ENGINEERING

559 Jones Franklin Rd. Suite 164
Raleigh, N.C. 27606
Bus: 919 851 8077
Fax: 919 851 8107
License: F-0377

TRANSPORTATION PLANNING/DESIGN - BRIDGE/STRUCTURE DESIGN
CIVIL/SITE DESIGN - GIS/GPS - CONSTRUCTION OBSERVATION

STATE OF NORTH CAROLINA
DEPARTMENT OF TRANSPORTATION
RALEIGH

STANDARD
INTERMEDIATE STEEL DIAPHRAGMS FOR TYPE II PRESTRESSED CONCRETE GIRDERS

REVISIONS						SHEET NO.
NO.	BY:	DATE:	NO.	BY:	DATE:	S-31
1			3			TOTAL SHEETS
2			4			454

STD. NO. PCG12

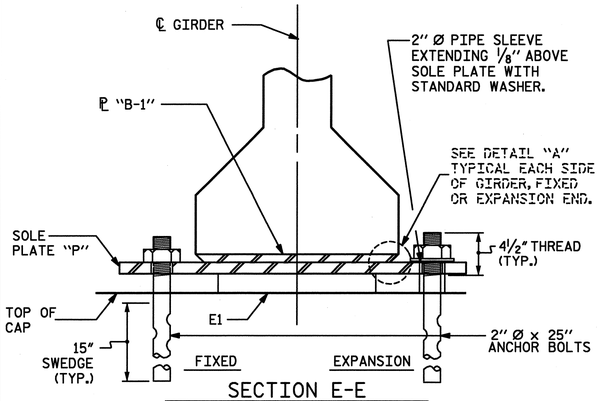

SECTION E-E

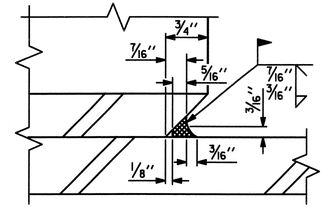

DETAIL "A"

LOAD RATINGS	
	MAX.D.L.+L.L.
36"PCG -TYPE II	82 K

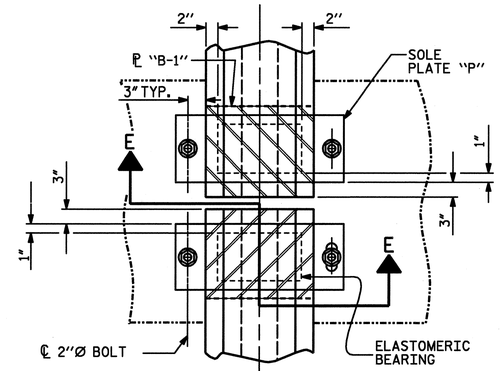

TYPICAL HALF-PLAN (SHOWING CONTINUOUS BENT)

TYPICAL HALF-PLAN (SHOWING SIMPLE SPAN BENT)

NOTES

AT ALL FIXED POINTS OF SUPPORT, NUTS FOR ANCHOR BOLTS ARE TO BE TIGHTENED FINGER TIGHT AND THEN BACKED OFF 1/2 TURN. THE THREAD OF THE NUT AND BOLT SHALL THEN BE BURRED WITH A SHARP POINTED TOOL.

THE 2" Ø PIPE SLEEVE SHALL BE CUT FROM SCHEDULE 40 PVC PLASTIC PIPE. THE PVC PLASTIC PIPE SHALL MEET THE REQUIREMENTS OF ASTM D1785.

STEEL SOLE PLATES, ANCHOR BOLTS, NUTS, AND WASHERS SHALL BE GALVANIZED IN ACCORDANCE WITH THE STANDARD SPECIFICATIONS.

PRIOR TO WELDING, GRIND THE GALVANIZED SURFACE OF THE PORTION OF THE EMBEDDED PLATE AND SOLE PLATE THAT ARE TO BE WELDED. AFTER WELDING, DAMAGED GALVANIZED SURFACES SHALL BE REPAIRED IN ACCORDANCE WITH THE STANDARD SPECIFICATIONS.

WHEN WELDING THE SOLE PLATE TO THE EMBEDDED PLATE IN THE GIRDER, USE TEMPERATURE INDICATING WAX PENS, OR OTHER SUITABLE MEANS, TO ENSURE THAT THE TEMPERATURE OF THE SOLE PLATE DOES NOT EXCEED 300°F. TEMPERATURES ABOVE THIS MAY DAMAGE THE ELASTOMER.

SOLE PLATE "P", BOLTS, NUTS, WASHERS, AND PIPE SLEEVE SHALL BE INCLUDED IN THE PAY ITEM FOR PRESTRESSED CONCRETE GIRDERS.

ANCHOR BOLTS SHALL MEET THE REQUIREMENTS OF ASTM A449. NUTS SHALL MEET THE REQUIREMENTS OF AASHTO M291-DH OR AASHTO M292-2H. WASHERS SHALL MEET THE REQUIREMENTS OF AASHTO M293. SHOP DRAWINGS ARE NOT REQUIRED FOR ANCHOR BOLT, NUTS AND WASHERS. SHOP INSPECTION IS REQUIRED.

ALL SURFACES OF BEARING PLATES SHALL BE SMOOTH AND STRAIGHT.

SEE FRAMING PLAN FOR SOLE PLATE PLACEMENT DIRECTION

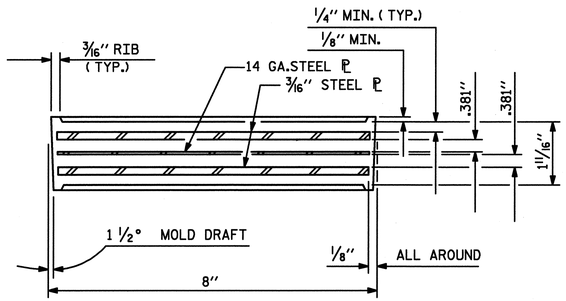

TYPICAL SECTION OF ELASTOMERIC BEARINGS

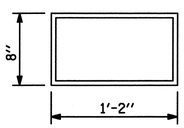

E1 (154 REQ'D)

PLAN VIEW OF ELASTOMERIC BEARING

TYPE II

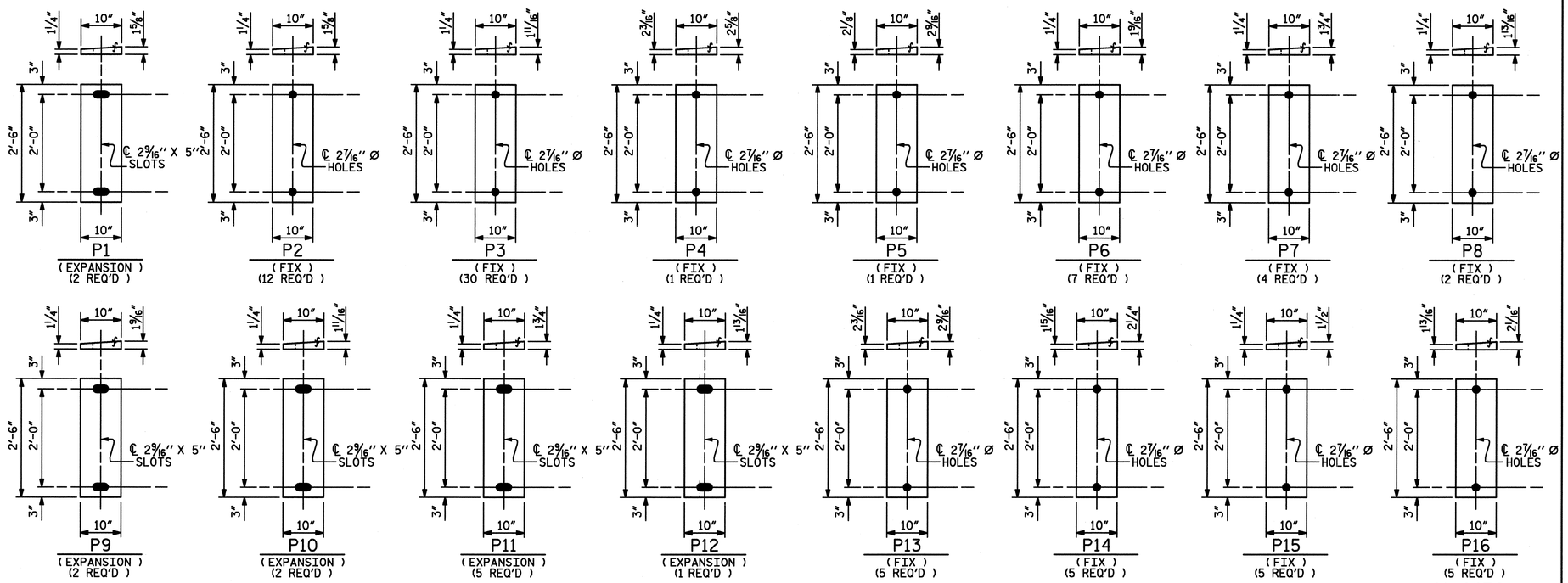

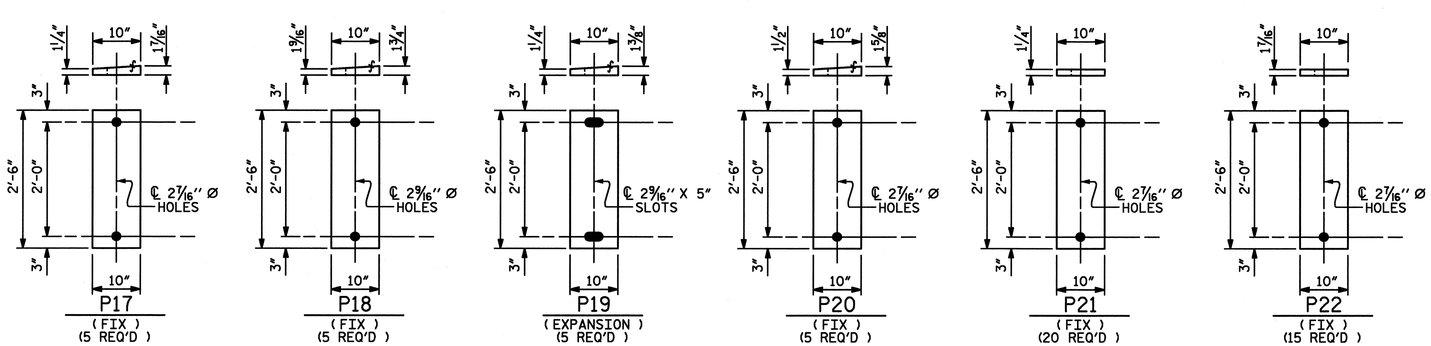

SOLE PLATE DETAILS ("P")

PROJECT NO. U-4438

CAMDEN & PASQUOTANK COUNTY

STATION: 15+25.75 -L1-

ASSEMBLED BY : J. PENDERGRAFT		DATE : 12-10	
CHECKED BY : T. DIFFEE		DATE : 12-10	
DRAWN BY : WJH 8/89	REV. 10/17/00	RWW/LES	
CHECKED BY : CRK 8/89	REV. 7/10/01	RWW/LES	
	REV. 5/1/06	TLA/GM	

NORTH CAROLINA PROFESSIONAL SEAL 026891 ENGINEER JOHN T. DIFFEE III

ETHERILL ENGINEERING
559 Jones Franklin Rd. Suite 164
Raleigh, N.C. 27606
Bus: 919 851 8077
Fax: 919 851 8107
License: F-0377

TRANSPORTATION PLANNING/DESIGN - BRIDGE/STRUCTURE DESIGN
CIVIL/SITE DESIGN - GIS/GPS - CONSTRUCTION OBSERVATION

STATE OF NORTH CAROLINA
DEPARTMENT OF TRANSPORTATION
RALEIGH

STANDARD

ELASTOMERIC BEARING DETAILS

PRESTRESSED CONCRETE GIRDER SUPERSTRUCTURE

REVISIONS						SHEET NO.
NO.	BY:	DATE:	NO.	BY:	DATE:	S-32
1			3			TOTAL SHEETS
2			4			454

STD. NO. EB3

REVISED MARCH 17, 2011

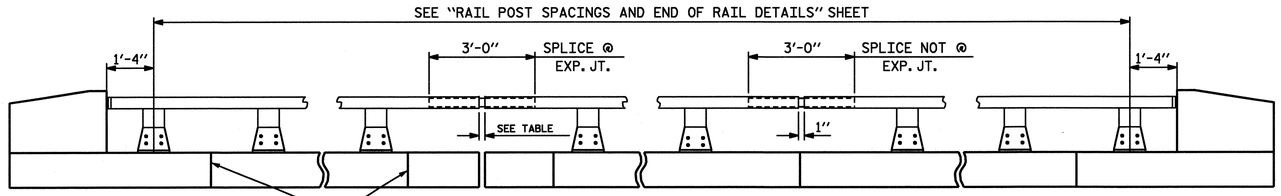

NOTE:
FOR ATTACHMENT OF METAL RAIL TO END POST, SEE STANDARD NO. BMR2.

ELEVATION

TABLE	
℄ EXP. JT. @	RAIL OPENING
BENT No. 5	1½"
BENT No. 6	1½"
BENT No. 11	2"

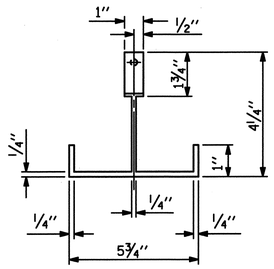

PLAN

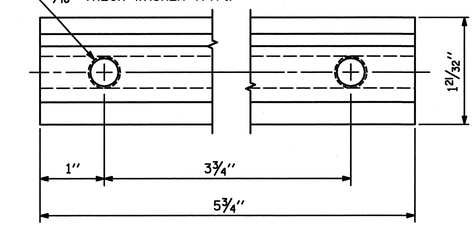

CLAMP BAR DETAIL

(2 REQUIRED PER POST)

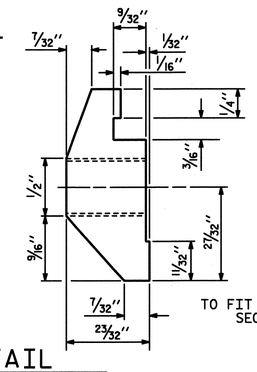

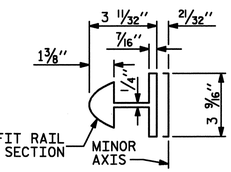

BAR SECTION

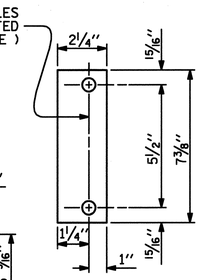

REAR PLATE

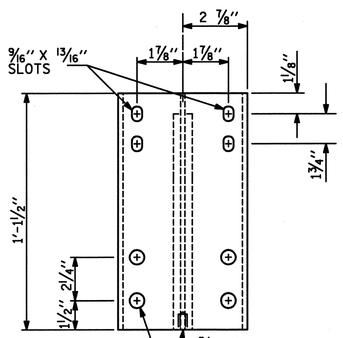

FRONT ELEVATION

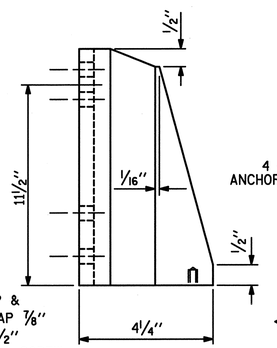

SIDE ELEVATION

DETAILS OF POST

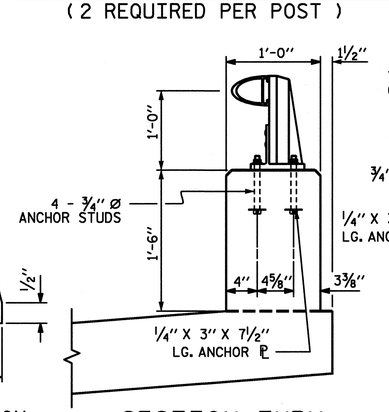

SECTION THRU PARAPET AND RAIL

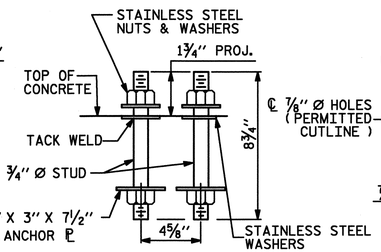

ANCHOR ASSEMBLY

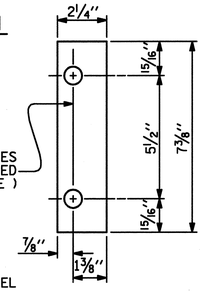

FRONT PLATE

SHIM DETAILS

NOTE : SHIMS MAY BE CUT ALONG PERMITTED CUTLINE OR SLOTTED TO EDGE OF PLATE TO FACILITATE PLACEMENT.

NOTES

THE METAL RAIL SHALL BE ALUMINUM IN ACCORDANCE WITH THE REQUIREMENTS OF THE GENERAL NOTES AND THE FOLLOWING SPECIFICATIONS:

ALUMINUM RAILS

MATERIAL FOR POSTS, BASES AND RAILS, EXPANSION BARS AND CLAMP BARS SHALL BE ASTM B221 ALLOY 6061-T6.

MATERIAL FOR RIVETS SHALL BE ASTM B316 ALLOY 6061-T6. RIVETS SHALL BE STANDARD BUTTON HEAD AND CONE POINT COLD DRIVEN AS PER DRAWING.

THE BASE OF RAIL POSTS, OR ANY OTHER ALUMINUM SURFACE IN CONTACT WITH CONCRETE SHALL BE THOROUGHLY COATED WITH AN ALUMINUM IMPREGNATED CAULKING COMPOUND OF APPROVED QUALITY.

MATERIAL FOR SHIMS TO BE ASTM B209 ALLOY 6061-T6.

GENERAL NOTES

RAILING SHALL BE CONTINUOUS FROM END POST TO END POST OF BRIDGE. EACH JOINT IN RAIL LENGTH SHALL BE SPLICED AS DETAILED. PANEL LENGTHS OF RAIL SHALL BE ATTACHED TO A MINIMUM OF THREE POSTS.

FOR END OF RAIL TO CLEAR FACE OF CONCRETE END POST DIMENSION, SEE STANDARD NO. BMR2.

MATERIAL FOR ANCHOR STUDS SHALL BE ASTM F593 ALLOY 304 STAINLESS STEEL WITH MINIMUM 75,000 PSI ULTIMATE STRENGTH. STUDS TO BE EMBEDDED 7" IN CONCRETE. NUTS SHALL BE AMERICAN STANDARD FINISHED HEXAGON THICK, CLASS 2B THREAD, AND MEET THE REQUIREMENTS OF ASTM F594 ALLOY 304 STAINLESS STEEL. WASHERS SHALL MEET THE REQUIREMENTS OF ASTM F844 EXCEPT THEY SHALL BE MADE FROM ALLOY 304 STAINLESS STEEL. ANCHOR ℙ SHALL BE AASHTO M270 GRADE 36.

CAP SCREWS SHALL BE ASTM F593 ALLOY 305 STAINLESS STEEL.

CERTIFIED MILL REPORTS ARE REQUIRED FOR RAILS AND POSTS. SHOP INSPECTION IS NOT REQUIRED.

METAL RAIL POSTS SHALL BE SET NORMAL TO CURB GRADE.

METHOD OF MEASUREMENT FOR METAL RAILS: FOR LENGTH OF METAL RAILS TO BE PAID FOR, SEE THE STANDARD SPECIFICATIONS.

CURVED RAIL USAGE: WHERE RAILS ARE TO BE USED ON BRIDGES ON HORIZONTAL AND/OR VERTICAL CURVATURE THE CONTRACTOR MAY, AT HIS OPTION, HAVE THE REQUIRED CURVATURE IN THE RAIL FORMED IN THE SHOP OR IN THE FIELD. IN EITHER EVENT, THE RAIL SHALL CONFORM WITHOUT BUCKLING OR KINKINGTO THE REQUIRED CURVATURE IN A UNIFORM MANNER ACCEPTABLE TO THE ENGINEER.

TO INSURE FUTURE IDENTIFICATION OF THE FABRICATOR, A PERMANENT IDENTIFYING MARK SHALL BE PLACED ON EACH POST. THE METHOD OF MARKING AND LOCATION SHALL BE SUCH THAT IT DOES NOT DETRACT FROM THE APPEARANCE OF THE POST.

SHIMS SHALL BE USED AS NECESSARY FOR POST ALIGNMENT.

ALLOY 6351-T5 MAY BE SUBSTITUTED FOR ALLOY 6061-T6 WHERE APPLICABLE.

MINOR VARIATIONS IN DETAILS OF METAL RAIL WILL BE CONSIDERED. DETAILS OF SUCH VARIATIONS, IF DESIRED, SHALL BE SUBMITTED FOR APPROVAL.

THE CONTRACTOR MAY USE ADHESIVELY ANCHORED ANCHOR BOLTS IN PLACE OF THE ANCHOR ASSEMBLY. LEVEL TWO FIELD TESTING IS REQUIRED, AND THE YIELD LOAD OF THE ¾" Ø BOLT IS 10 KIPS. FOR ADHESIVELY ANCHORED ANCHOR BOLTS OR DOWELS, SEE SPECIAL PROVISIONS.

WHEN ADHESIVELY ANCHORED ANCHOR BOLTS ARE USED, BOLTS, NUTS AND WASHERS SHALL MEET THE SAME REQUIREMENTS AS THE ANCHOR STUDS, NUTS AND WASHERS FOR USE WITH THE ANCHOR ASSEMBLY.

GROOVED CONTRACTION JOINTS, ½" IN DEPTH, SHALL BE TOOLED IN ALL EXPOSED FACES OF THE PARAPET IN ACCORDANCE WITH ARTICLE 825-10(B) OF THE STANDARD SPECIFICATIONS. THE CONTRACTION JOINT SHALL BE LOCATED AT A SPACING OF 8FT. TO 10FT. BETWEEN EXPANSION JOINTS. NO CONTRACTION JOINTS WILL BE REQUIRED FOR SEGMENTS LESS THAN 10 FEET IN LENGTH.

PAY LENGTH = 627.33 LIN. FT.

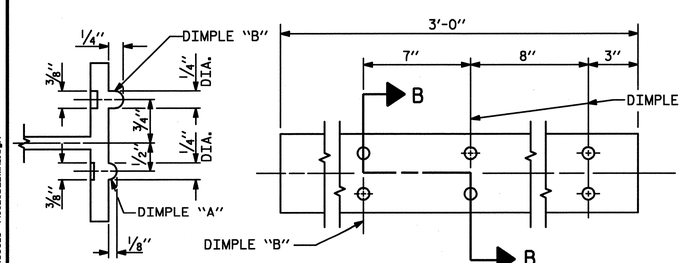

SECTION B - B

EXPANSION BAR DETAILS

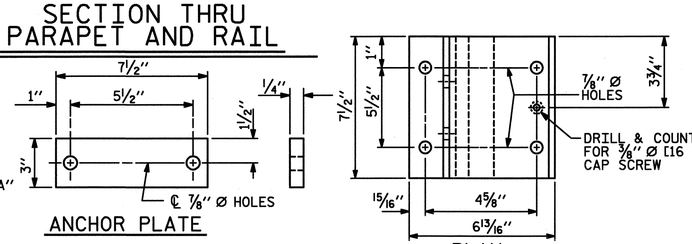

ANCHOR PLATE

PLAN

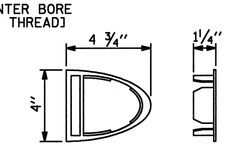

RAIL CAP

NOTE : BASE CAN BE SUPPLIED AS ONE EXTRUSION OR TWO EXTRUSIONS WELDED TOGETHER AS SHOWN.

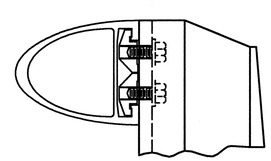

CLAMP & RAIL ASSEMBLY

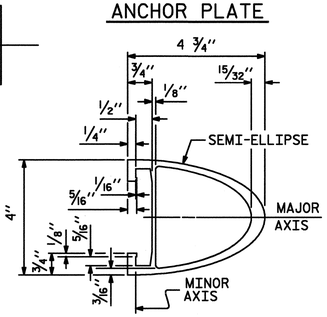

RAIL SECTION

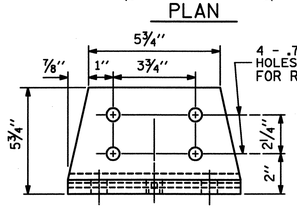

FRONT ELEVATION

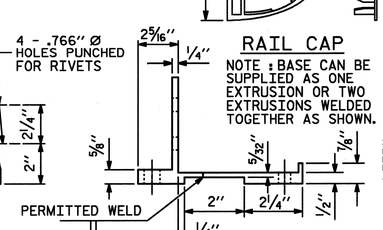

SIDE ELEVATION

POST BASE DETAILS

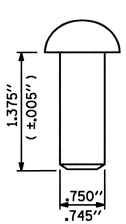

RIVET DETAIL

PROJECT NO. U-4438

CAMDEN & PASQUOTANK COUNTY

STATION: 15+25.75 -L1-

SHEET 1 OF 5

STATE OF NORTH CAROLINA
DEPARTMENT OF TRANSPORTATION
RALEIGH

STANDARD

1 BAR METAL RAIL

NORTH CAROLINA PROFESSIONAL SEAL 026891 ENGINEER JOHN T. DIFFEE

WETHERILL ENGINEERING
559 Jones Franklin Rd. Suite 164
Raleigh, N.C. 27606
Bus: 919 851 8077
Fax: 919 851 8107
License: F-0377

TRANSPORTATION PLANNING/DESIGN - BRIDGE/STRUCTURE DESIGN
CIVIL/SITE DESIGN - GIS/GPS - CONSTRUCTION OBSERVATION

REVISIONS						SHEET NO.
NO.	BY:	DATE:	NO.	BY:	DATE:	S-33
1			3			TOTAL SHEETS
2			4			454

ASSEMBLED BY : J. PENDERGRAFT	DATE : 11-10		
CHECKED BY : J. DILWORTH	DATE : 11-10		
DRAWN BY : FCJ 1/88	REV. 10/17/00	LES/RDR	
CHECKED BY : CRK 3/89	REV. 5/7/03R	RWW/JTE	
	REV. 5/1/06R	KMM/GM	

3/17/2011
10:06:44 AM
P:\2010\U0119.02 U-4438\Structures\DGN\S33_U-4438_SD_BMR1.dgn

STD. NO. BMR1

REVISED MARCH 24, 2011

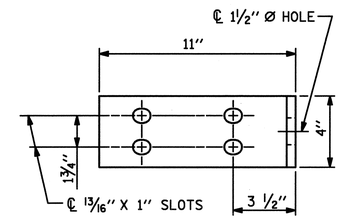

ELEVATION

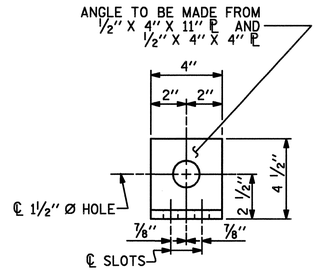

END VIEW (FIX)

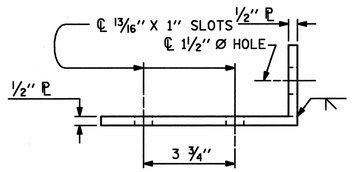

TOP VIEW

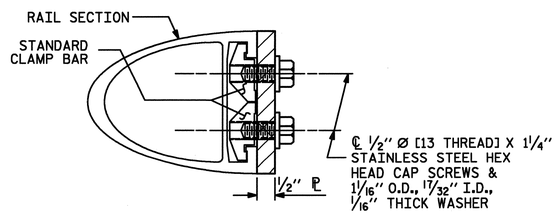

SECTION H-H (FIX)

FIXED

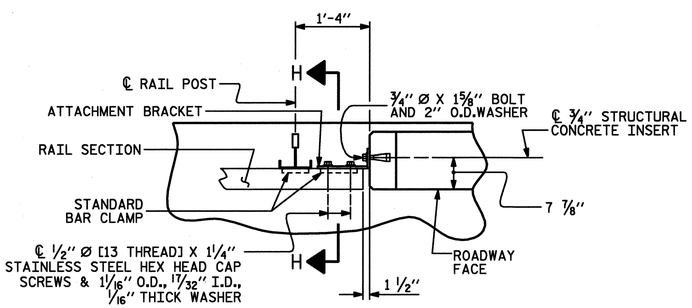

PLAN - RAIL AND END POST

DETAILS FOR ATTACHING METAL RAIL TO END POST

NOTES

STRUCTURAL CONCRETE INSERT

THE STRUCTURAL CONCRETE INSERT ASSEMBLY SHALL CONSIST OF THE FOLLOWING COMPONENTS:

A. FERRULES SHALL BE MADE FROM STEEL MEETING THE REQUIREMENTS OF AASHTO M169, GRADE 12L14 AND SHALL HAVE A MINIMUM LENGTH OF THREADS OF 1½".

B. 1 - ¾" Ø X 1⅝" BOLT WITH WASHER. BOLT SHALL CONFORM TO THE REQUIREMENTS OF ASTM A307. BOLT AND WASHER SHALL BE GALVANIZED. (AT THE CONTRACTOR'S OPTION, STAINLESS STEEL BOLT AND WASHER MAY BE USED AS AN ALTERNATE FOR THE ¾" Ø X 1⅝" GALVANIZED BOLT AND WASHER. THEY SHALL CONFORM TO OR EXCEED THE MECHANICAL REQUIREMENTS OF ASTM A307. THE USE OF THIS ALTERNATE SHALL BE APPROVED BY THE ENGINEER.)

C. WIRE STRUT SHOWN IN THE CONCRETE INSERT ASSEMBLY DETAIL IS THE MINIMUM ALLOWABLE SIZE AND SHALL HAVE A MINIMUM TENSILE STRENGTH OF 100,000 PSI. AS AN OPTION, A 7/16" Ø WIRE STRUT WITH A MINIMUM TENSILE STRENGTH OF 90,000 PSI IS ACCEPTABLE.

NOTES

METAL RAIL TO END POST CONNECTION

THE METAL RAIL TO END POST CONNECTION SHALL CONSIST OF THE FOLLOWING COMPONENTS:

A. ½" PLATES SHALL CONFORM TO AASHTO M270 GRADE 36 AND SHALL BE GALVANIZED AFTER FABRICATION.

B. ¾" STRUCTURAL CONCRETE INSERT SHALL HAVE A WORKING LOAD SHEAR CAPACITY OF 4800 LBS. THE FERRULES SHALL ENGAGE A ¾"Ø X 1⅝" BOLT WITH 2" O.D. WASHER IN PLACE. THE ¾"Ø X 1⅝" BOLT SHALL HAVE N. C. THREADS.

C. CAP SCREWS FOR RAIL ATTACHMENT TO ANGLE SHALL CONFORM TO THE REQUIREMENTS OF ASTM F593 ALLOY 305 STAINLESS STEEL. CAP SCREWS TO BE CENTERED IN SLOTS AT 60°F.

D. STANDARD CLAMP BARS (SEE METAL RAIL SHEET).

E. ½" Ø PIPE SLEEVES (IF REQUIRED) TO BE GALVANIZED.

THE COST OF THE STANDARD CLAMP BARS AND CAP SCREWS USED IN THE METAL RAIL TO END POST CONNECTION SHALL BE INCLUDED IN THE UNIT CONTRACT PRICE BID FOR LINEAR FEET OF 1 OR 2 BAR METAL RAILS.

THE ¾" STRUCTURAL CONCRETE INSERT WITH BOLT SHALL BE ASSEMBLED IN THE SHOP.

THE COST OF THE ¾" STRUCTURAL CONCRETE INSERT ASSEMBLY, AND THE ½" PLATES COMPLETE IN PLACE SHALL BE INCLUDED IN THE VARIOUS PAY ITEMS.

THE CONTRACTOR, AT HIS OPTION, MAY USE AN ADHESIVE BONDING SYSTEM IN LIEU OF THE STRUCTURAL CONCRETE INSERT EMBEDDED IN THE END POST. IF THE ADHESIVE BONDING SYSTEM IS USED, THE ¾" Ø X 1⅝" BOLT WITH WASHER SHALL BE REPLACED WITH A ¾"Ø X 6½" BOLT AND 2" O.D. WASHER. ALL SPECIFICATIONS THAT APPLY TO THE ¾" Ø X 1⅝" BOLT SHALL APPLY TO THE ¾"Ø X 6 ½" BOLT. FIELD TESTING OF THE ADHESIVE BONDING SYSTEM IS NOT REQUIRED.

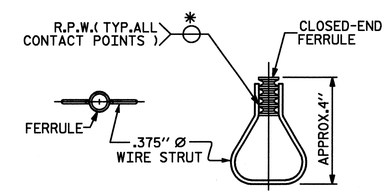

PLAN ELEVATION

STRUCTURAL CONCRETE INSERT

*EACH WELDED ATTACHMENT OF WIRE TO FERRULE SHALL DEVELOP THE TENSILE STRENGTH OF THE WIRE.

PROJECT NO. U-4438

CAMDEN & PASQUOTANK COUNTY

STATION: 15+25.75 -L1-

SHEET 2 OF 5

ASSEMBLED BY : J. PENDERGRAFT	DATE : 11-10
CHECKED BY : J. DILWORTH	DATE : 11-10
DRAWN BY : FCJ 1/88	REV. 10/17/00 LES/RDR
CHECKED BY : CRK 3/89	REV. 5/7/03 RWW/JTE
	REV. 5/1/06 TLA/GM

NORTH CAROLINA PROFESSIONAL SEAL 026891 ENGINEER JOHN T. DIFFEE III

WETHERILL ENGINEERING
559 Jones Franklin Rd. Suite 164
Raleigh, N.C. 27606
Bus: 919 851 8077
Fax: 919 851 8107
License: F-0377

TRANSPORTATION PLANNING/DESIGN - BRIDGE/STRUCTURE DESIGN
CIVIL/SITE DESIGN - GIS/GPS - CONSTRUCTION OBSERVATION

STATE OF NORTH CAROLINA
DEPARTMENT OF TRANSPORTATION
RALEIGH

STANDARD

END OF RAIL DETAILS FOR ONE BAR METAL RAILS

REVISIONS								SHEET NO.
NO.	BY:	DATE:	NO.	BY:	DATE:			S-34
1			3					TOTAL SHEETS
2			4					454

STD. NO. BMR2

3/25/2011
3:06:27 PM
P:\2010\10119.02 U-4438\Structures\DGN\S34_U-4438_SD_BMR2.dgn

REVISED MARCH 24,2011

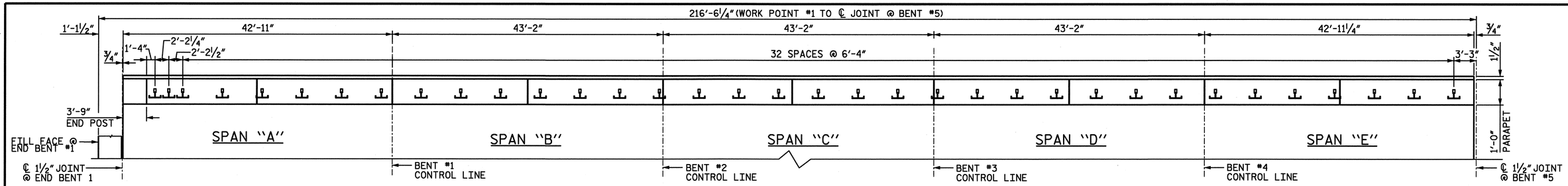

PLAN OF RAIL POST SPACING - SPANS "A" THRU "E"

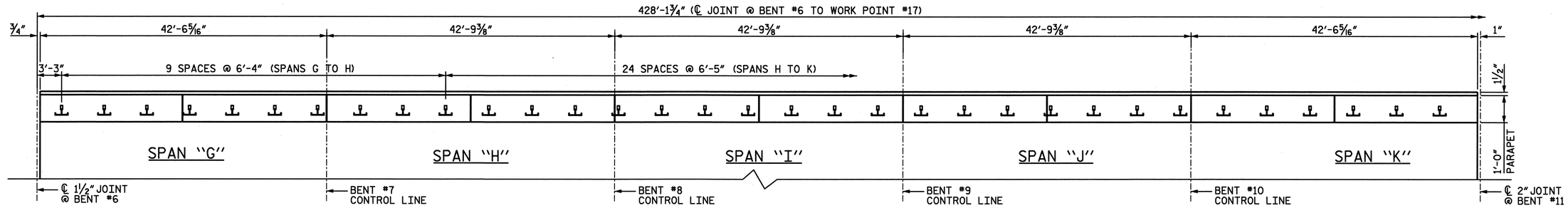

PLAN OF RAIL POST SPACING - SPANS "G" THRU "K"

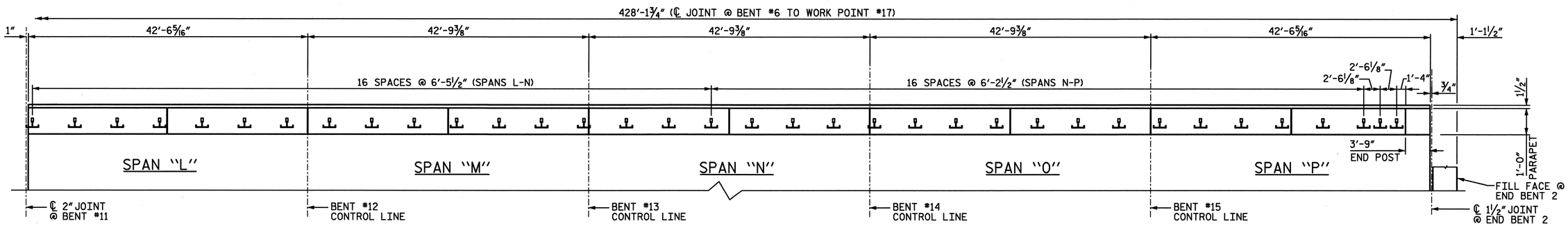

PLAN OF RAIL POST SPACING - SPANS "L" THRU "P"

NOTE: SEE VOLUME 2 OF STRUCTURE PLANS FOR CONTINUATION OF RAILING ONTO BASCULE SPANS.

PROJECT NO. U-4438
CAMDEN & PASQUOTANK COUNTY
STATION: 15+25.75 -L1-

SHEET 3 of 5

NORTH CAROLINA PROFESSIONAL SEAL 026891 ENGINEER JOHN T. DIFFEE III
3/25/11

WETHERILL ENGINEERING
559 Jones Franklin Rd. Suite 164
Raleigh, N.C. 27606
Bus: 919 851 8077
Fax: 919 851 8107
License: F-0377

TRANSPORTATION PLANNING/DESIGN - BRIDGE/STRUCTURE DESIGN
CIVIL/SITE DESIGN - GIS/GPS - CONSTRUCTION OBSERVATION

STATE OF NORTH CAROLINA
DEPARTMENT OF TRANSPORTATION
RALEIGH

PLAN OF RAIL POST SPACING FOR ONE BAR METAL RAIL

REVISIONS						SHEET NO.
NO.	BY:	DATE:	NO.	BY:	DATE:	S-35
1			3			TOTAL SHEETS
2			4			454

DRAWN BY : J. PENDERGRAFT DATE : 11-10
CHECKED BY : J. DILWORTH DATE : 11-10

P:\2010\101190.2 U-4438\Structures\DGN\S35_U-4438_SD_1BRP.dgn
3/25/2011 9:13:13 AM

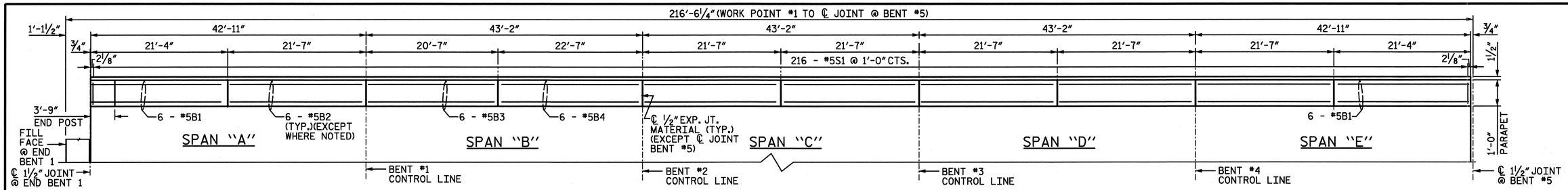

PLAN OF PARAPET - SPANS "A" THRU "E"

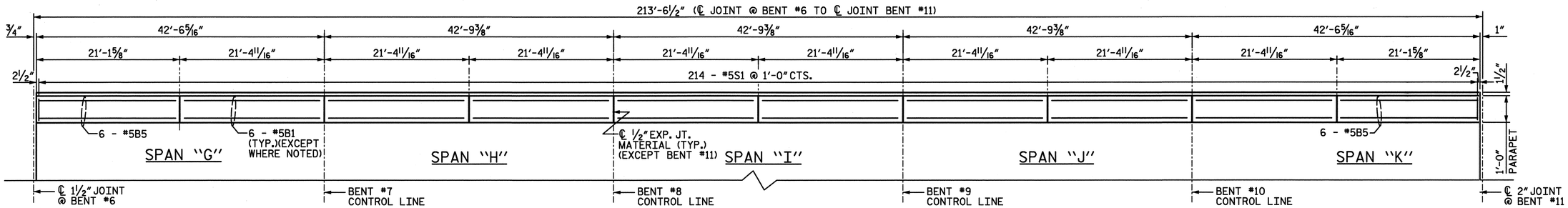

PLAN OF PARAPET - SPANS "G" THRU "K"

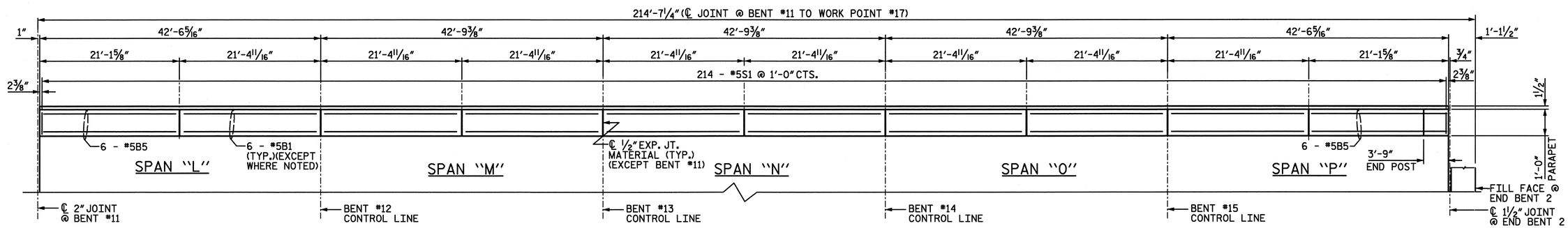

PLAN OF PARAPET - SPANS "L" THRU "P"

PROJECT NO. U-4438
CAMDEN & PASQUOTANK COUNTY
STATION: 15+25.75 -L1-

SHEET 4 of 5

NORTH CAROLINA PROFESSIONAL SEAL 026891 ENGINEER JOHN T. DIFFEE, III 2-6-11

WETHERILL ENGINEERING
559 Jones Franklin Rd. Suite 164
Raleigh, N.C. 27606
Bus: 919 851 8077
Fax: 919 851 8107
License: F-0377

TRANSPORTATION PLANNING/DESIGN - BRIDGE/STRUCTURE DESIGN
CIVIL/SITE DESIGN - GIS/GPS - CONSTRUCTION OBSERVATION

STATE OF NORTH CAROLINA
DEPARTMENT OF TRANSPORTATION
RALEIGH

CONCRETE PARAPET FOR ONE BAR METAL RAIL

REVISIONS								SHEET NO.
NO.	BY:	DATE:		NO.	BY:	DATE:		S-36
1				3				TOTAL SHEETS
2				4				454

DRAWN BY : J. PENDERGRAFT DATE : 11-10
CHECKED BY : J. DILWORTH DATE : 11-10

P:\2010\101192 U-4438\Structures\DGN\S36_U-4438_SD_1BPT.dgn
2/6/2011 11:55:02 AM

REVISED MARCH 17, 2011

NOTES

PARAPET IN THE CONTINUOUS UNIT SHALL NOT BE CAST UNTIL ALL SLAB CONCRETE IN THE UNIT HAS BEEN CAST AND HAS REACHED A MINIMUM COMPRESSIVE STRENGTH OF 3,000 PSI.

ALL REINFORCING STEEL IN PARAPET AND END POSTS SHALL BE EPOXY COATED.

THE #5 S1 BARS MAY BE SHIFTED SLIGHTLY IN ORDER TO MAINTAIN A 2" MINIMUM CLEARANCE TO THE ½" EXPANSION JOINT MATERIAL IN PARAPET.

FOR DETAILS OF CONCRETE INSERTS IN END POSTS, SEE "END OF RAIL DETAILS" SHEET.

GROOVED CONTRACTION JOINTS, ½" IN DEPTH, SHALL BE TOOLED IN ALL EXPOSED FACES OF THE PARAPET IN ACCORDANCE WITH ARTICLE 825-10(B) OF THE STANDARD SPECIFICATIONS. THE CONTRACTION JOINT SHALL BE LOCATED AT A SPACING OF 8FT. TO 10FT. BETWEEN EXPANSION JOINTS. NO CONTRACTION JOINTS WILL BE REQUIRED FOR SEGMENTS LESS THAN 10 FEET IN LENGTH.

— SPANS A THRU E — BILL OF MATERIAL

FOR CONCRETE PARAPET & ONE END POST

BAR	NO.	SIZE	TYPE	LENGTH	WEIGHT
✱B1	12	#5	STR	21'-0"	263
✱B2	36	#5	STR	21'-2"	795
✱B3	6	#5	STR	20'-2"	126
✱B4	6	#5	STR	22'-2"	139
✱E1	2	#7	STR	2'-0"	8
✱E2	2	#7	STR	2'-2"	9
✱E3	2	#7	STR	2'-9"	11
✱E4	2	#7	STR	2'-6"	10
✱E5	2	#7	STR	2'-7"	11
✱F1	4	#6	STR	3'-5"	21
✱S1	216	#5	1	5'-0"	1126

✱ EPOXY COATED REINF. STEEL 2,519 LBS.

CLASS AA CONCRETE 12.3 C.Y.

1'-0" x 1'-6" CONCRETE PARAPET 215.33 L.F.

— SPANS G THRU K — BILL OF MATERIAL

FOR CONCRETE PARAPET

BAR	NO.	SIZE	TYPE	LENGTH	WEIGHT
✱B1	12	#5	STR	21'-0"	263
✱B5	48	#5	STR	20'-9"	1039
✱S1	214	#5	1	5'-0"	1116

✱ EPOXY COATED REINF. STEEL 2418 LBS.

CLASS AA CONCRETE 12.0 C.Y.

1'-0" x 1'-6" CONCRETE PARAPET 213.40 L.F.

— SPANS L THRU P — BILL OF MATERIAL

FOR CONCRETE PARAPET & ONE END POST

BAR	NO.	SIZE	TYPE	LENGTH	WEIGHT
✱B1	12	#5	STR	21'-0"	263
✱B5	48	#5	STR	20'-9"	1039
✱E1	2	#7	STR	2'-0"	8
✱E2	2	#7	STR	2'-2"	9
✱E3	2	#7	STR	2'-9"	11
✱E4	2	#7	STR	2'-6"	10
✱E5	2	#7	STR	2'-7"	11
✱F1	4	#6	STR	3'-5"	21
✱S1	214	#5	1	5'-0"	1116

✱ EPOXY COATED REINF. STEEL 2488 LBS.

CLASS AA CONCRETE 12.0 C.Y.

1'-0" x 1'-6" CONCRETE PARAPET 213.40 L.F.

TOTALS

✱ EPOXY COATED REINF. STEEL	7425 LBS.
CLASS AA CONCRETE	36.3 C.Y.
1'-0" x 1'-6" CONCRETE PARAPET	642.13 L.F.

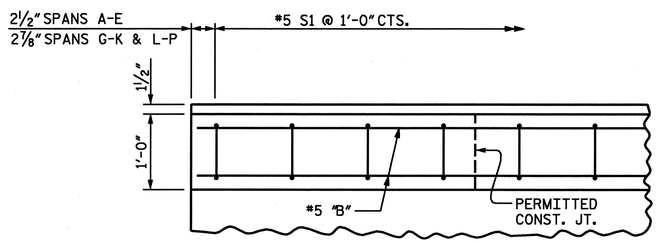

PLAN OF PARAPET

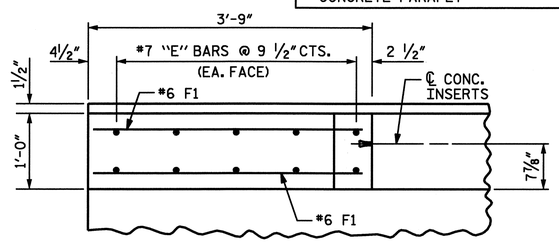

PLAN OF END POST

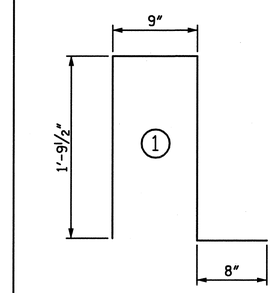

BAR TYPE

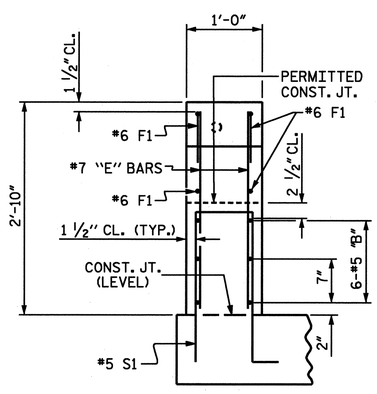

END VIEW

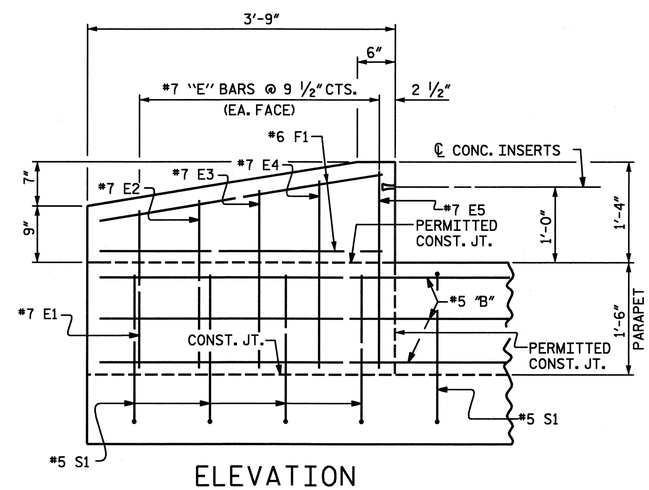

ELEVATION

PARAPET AND END POST FOR ONE BAR RAIL

PROJECT NO. U-4438

CAMDEN & PASQUOTANK COUNTY

STATION: 15+25.75 -L1-

SHEET 5 of 5

STATE OF NORTH CAROLINA
DEPARTMENT OF TRANSPORTATION
RALEIGH

CONCRETE PARAPET AND END POST DETAILS FOR ONE BAR METAL RAIL

NORTH CAROLINA PROFESSIONAL SEAL 026891 ENGINEER JOHN T. DIFFEE III
3-17-11

ETHERILL ENGINEERING
559 Jones Franklin Rd. Suite 164
Raleigh, N.C. 27606
Bus: 919 851 8077
Fax: 919 851 8107
License: F-0377

TRANSPORTATION PLANNING/DESIGN - BRIDGE/STRUCTURE DESIGN
CIVIL/SITE DESIGN - GIS/GPS - CONSTRUCTION OBSERVATION

REVISIONS							
NO.	BY:	DATE:	NO.	BY:	DATE:	SHEET NO.	S-37
1			3			TOTAL SHEETS	454
2			4				

DRAWN BY : J. PENDERGRAFT DATE : 11-10
CHECKED BY : J. DILWORTH DATE : 11-10

P:\2010\10119.02_U-4438\Structures\DGN\S36_U-4438_SD_1BPT.dgn
3/17/2011 4:23:24 PM

REVISED MARCH 17, 2011

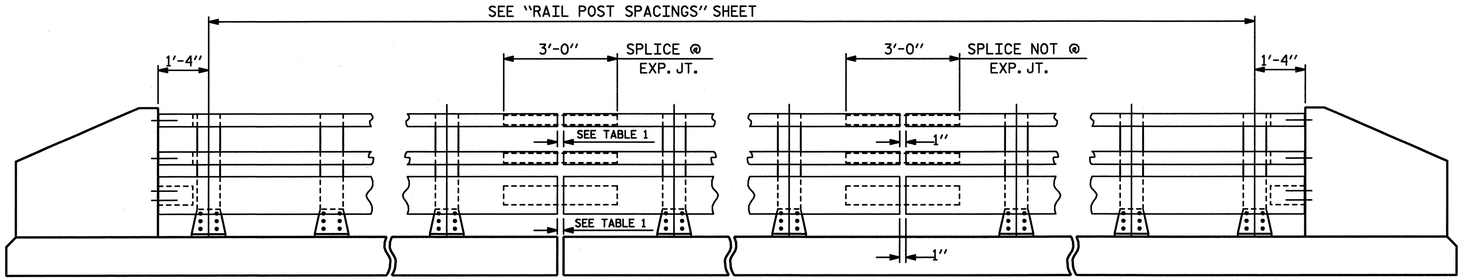

NOTE:
FOR ATTACHMENT OF METAL RAIL TO END POST, SEE STANDARD NO. BMR7.

ELEVATION

TABLE 1	
℄ EXP.JT. @ BENT	RAIL OPENING
BENT No. 11	2"

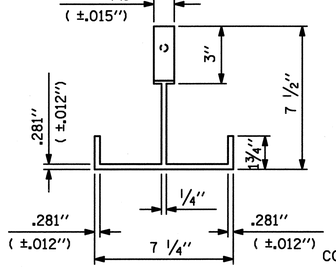

PLAN

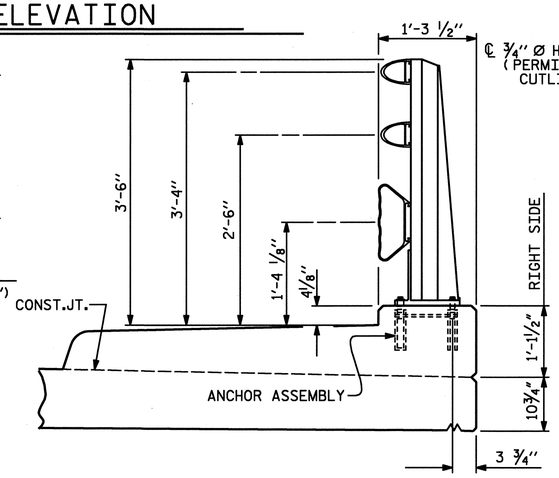

SECTION THRU RAIL

FOR ANCHOR ASSEMBLY, SEE "3 BAR METAL RAIL" STD.No.BMR6

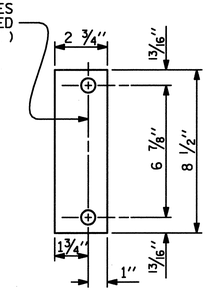

REAR PLATE

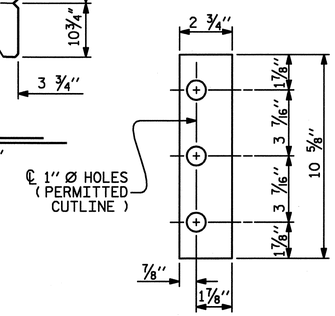

FRONT PLATE

SHIM DETAILS

NOTE :
SHIMS MAY BE CUT ALONG PERMITTED CUTLINE OR SLOTTED TO EDGE OF PLATE TO FACILITATE PLACEMENT.

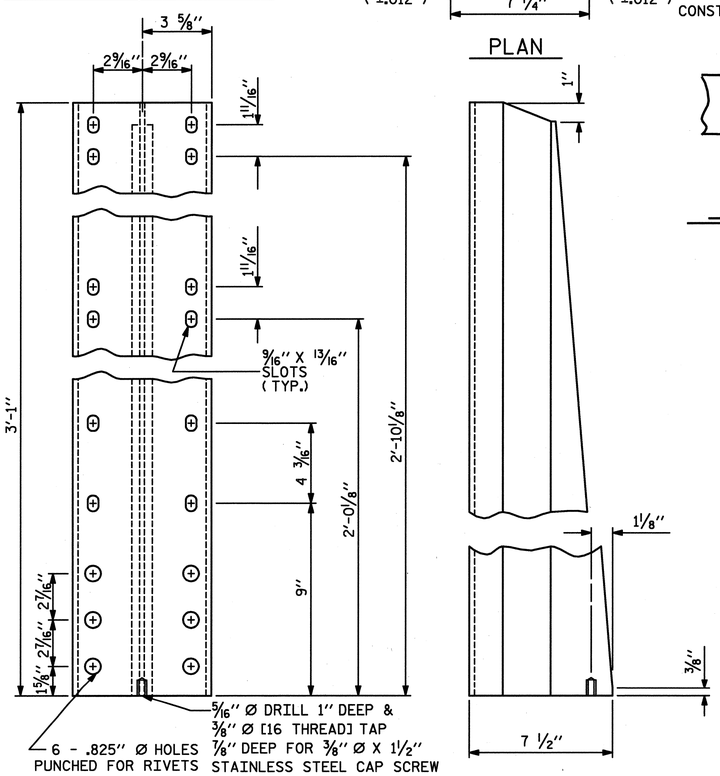

FRONT ELEVATION

SIDE ELEVATION

DETAILS OF POST

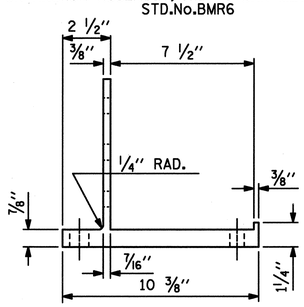

SIDE ELEVATION

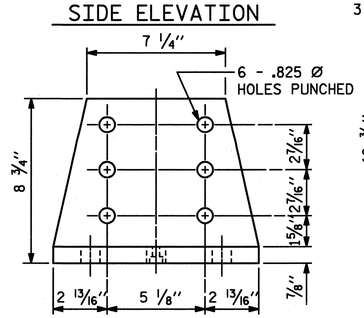

FRONT ELEVATION

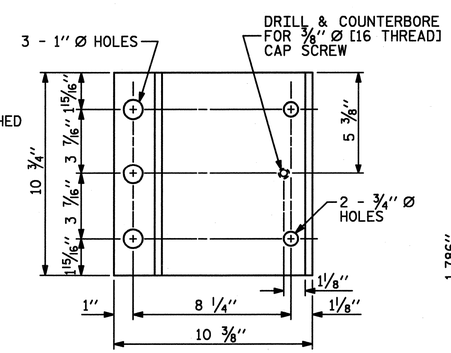

PLAN

POST BASE DETAILS

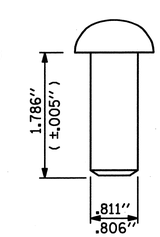

RIVET DETAIL

NOTES

THE METAL RAIL SHALL BE ALUMINUM IN ACCORDANCE WITH THE REQUIREMENTS OF THE GENERAL NOTES AND THE FOLLOWING SPECIFICATIONS:

ALUMINUM RAILS

MATERIAL FOR POSTS, BASES AND RAILS, EXPANSION BARS AND CLAMP BARS SHALL BE ASTM B221 ALLOY 6061-T6.

MATERIAL FOR RIVETS SHALL BE ASTM B316 ALLOY 6061-T6. RIVETS SHALL BE STANDARD BUTTON HEAD AND CONE POINT COLD DRIVEN AS PER DRAWING.

THE BASE OF RAIL POSTS, OR ANY OTHER ALUMINUM SURFACE IN CONTACT WITH CONCRETE SHALL BE THOROUGHLY COATED WITH AN ALUMINUM IMPREGNATED CAULKING COMPOUND OF APPROVED QUALITY.

MATERIAL FOR SHIMS TO BE ASTM B209 ALLOY 6061-T6.

GENERAL NOTES

RAILING SHALL BE CONTINUOUS FROM END POST TO END POST OF BRIDGE. EACH JOINT IN RAIL LENGTH SHALL BE SPLICED AS DETAILED. PANEL LENGTHS OF RAIL SHALL BE ATTACHED TO A MINIMUM OF THREE POSTS. PLACE ONE JOINT SPLICE JUST BEYOND THE 3RD RAIL POST FROM EACH END, TYPICALLY 14' FROM THE END. PLACE OTHER JOINTS AS NEEDED.

FOR END OF RAIL TO CLEAR FACE OF CONCRETE END POST DIMENSION, SEE STANDARD NO. BMR7.

CAP SCREWS SHALL BE ASTM F593 ALLOY 305 STAINLESS STEEL. WASHERS FOR RAIL ATTACHMENT SHALL MEET THE REQUIREMENTS OF ASTM F844 EXCEPT THEY SHALL BE MADE FROM ALLOY 304 STAINLESS STEEL.

CERTIFIED MILL REPORTS ARE REQUIRED FOR RAILS AND POSTS. SHOP INSPECTION IS NOT REQUIRED.

METAL RAIL POSTS SHALL BE SET NORMAL TO CURB GRADE.

METHOD OF MEASUREMENT FOR METAL RAILS: FOR LENGTH OF METAL RAILS TO BE PAID FOR, SEE THE STANDARD SPECIFICATIONS.

CURVED RAIL USAGE: WHERE RAILS ARE TO BE USED ON BRIDGES ON HORIZONTAL AND/OR VERTICAL CURVATURE THE CONTRACTOR MAY, AT HIS OPTION, HAVE THE REQUIRED CURVATURE IN THE RAIL FORMED IN THE SHOP OR IN THE FIELD. IN EITHER EVENT, THE RAIL SHALL CONFORM WITHOUT BUCKLING OR KINKING TO THE REQUIRED CURVATURE IN A UNIFORM MANNER ACCEPTABLE TO THE ENGINEER.

TO INSURE FUTURE IDENTIFICATION OF THE FABRICATOR, A PERMANENT IDENTIFYING MARK SHALL BE PLACED ON EACH POST. THE METHOD OF MARKING AND LOCATION SHALL BE SUCH THAT IT DOES NOT DETRACT FROM THE APPEARANCE OF THE POST, BUT REMAIN VISIBLE AFTER RAIL PLACEMENT.

SHIMS SHALL BE USED AS NECESSARY FOR POST ALIGNMENT.

ALLOY 6351-T5 MAY BE SUBSTITUTED FOR ALLOY 6061-T6 WHERE APPLICABLE.

MINOR VARIATIONS IN DETAILS OF METAL RAIL WILL BE CONSIDERED. DETAILS OF SUCH VARIATIONS, IF DESIRED, SHALL BE SUBMITTED FOR APPROVAL.

PAY LENGTH = 624.12 LIN. FT.

PROJECT NO. U-4438
CAMDEN & PASQUOTANK COUNTY
STATION: 15+25.75 -L1-

SHEET 1 OF 6

ASSEMBLED BY : J. PENDERGRAFT	DATE : 11-10
CHECKED BY : J. DILWORTH	DATE : 11-10
DRAWN BY : JMB 1/88	REV. 10/17/00 RWW/LES
CHECKED BY : GGH 1/88	REV. 5/7/03 RWW/JTE
	REV. 5/1/06 TLA/GM

NORTH CAROLINA PROFESSIONAL SEAL 026891 ENGINEER JOHN T. DIFFEE, III 3-17-11

WETHERILL ENGINEERING
559 Jones Franklin Rd. Suite 164
Raleigh, N.C. 27606
Bus: 919 851 8077
Fax: 919 851 8107
License: F-0377

TRANSPORTATION PLANNING/DESIGN - BRIDGE/STRUCTURE DESIGN
CIVIL/SITE DESIGN - GIS/GPS - CONSTRUCTION OBSERVATION

STATE OF NORTH CAROLINA
DEPARTMENT OF TRANSPORTATION
RALEIGH

STANDARD

3 BAR METAL RAIL

REVISIONS									SHEET NO.
NO.	BY:	DATE:	NO.	BY:	DATE:				S-38
1			3						TOTAL SHEETS
2			4						454

STD. NO. BMR5

3/17/2011 12:03:11 PM
P:\2010\10119.02 U-4438\Structures\DGN\S38_U-4438_SD_BMR567.dgn

NOTES

STRUCTURAL CONCRETE ANCHOR ASSEMBLY

THE STRUCTURAL CONCRETE ANCHOR ASSEMBLY SHALL CONSIST OF THE FOLLOWING COMPONENTS:

A. FERRULES SHALL BE MADE FROM STEEL MEETING THE REQUIREMENTS OF AASHTO M169, GRADE 12L14 AND SHALL HAVE A MINIMUM LENGTH OF THREADS OF 2" FOR 3/4" FERRULES AND 1 3/4" FOR 5/8" FERRULES.

B. 3 - 3/4" Ø X 2 1/2" BOLTS WITH WASHERS. BOLTS SHALL CONFORM TO THE REQUIREMENTS OF ASTM A307. BOLTS AND WASHERS SHALL BE GALVANIZED. AT THE CONTRACTOR'S OPTION, STAINLESS STEEL BOLTS AND WASHERS MAY BE USED AS AN ALTERNATE FOR THE 3/4" Ø X 2 1/2" GALVANIZED BOLTS AND WASHERS. THEY SHALL CONFORM TO OR EXCEED THE MECHANICAL REQUIREMENTS OF ASTM A307. THE USE OF THIS ALTERNATE SHALL BE APPROVED BY THE ENGINEER.

C. 2 - 5/8" Ø X 2 1/4" BOLTS WITH WASHERS. BOLTS SHALL CONFORM TO THE REQUIREMENTS OF ASTM A307. BOLTS AND WASHERS SHALL BE GALVANIZED. AT THE CONTRACTOR'S OPTION, STAINLESS STEEL BOLTS AND WASHERS MAY BE USED AS AN ALTERNATE FOR THE 5/8" Ø X 2 1/4" GALVANIZED BOLTS AND WASHERS. THEY SHALL CONFORM TO OR EXCEED THE MECHANICAL REQUIREMENTS OF ASTM A307. THE USE OF THIS ALTERNATE SHALL BE APPROVED BY THE ENGINEER.

D. WIRE STRUT SHOWN IN THE CONCRETE ANCHOR ASSEMBLY DETAIL IS THE MINIMUM ALLOWABLE SIZE AND SHALL HAVE A MINIMUM TENSILE STRENGTH OF 100,000 PSI. AS AN OPTION, A 7/16" Ø WIRE STRUT WITH A MINIMUM TENSILE STRENGTH OF 90,000 PSI IS ACCEPTABLE.

E. THE METAL RAIL ANCHOR ASSEMBLIES TO BE HOT DIPPED GALVANIZED TO CONFORM TO REQUIREMENTS OF AASHTO M111.

F. THE COST OF THE METAL RAIL ANCHOR ASSEMBLY WITH BOLTS AND WASHERS COMPLETE IN PLACE SHALL BE INCLUDED IN THE PRICE BID FOR LINEAR FEET OF METAL RAIL.

G. BOLTS TO BE TIGHTENED ONE-HALF TURN WITH A WRENCH FROM A FINGER-TIGHT POSITION.

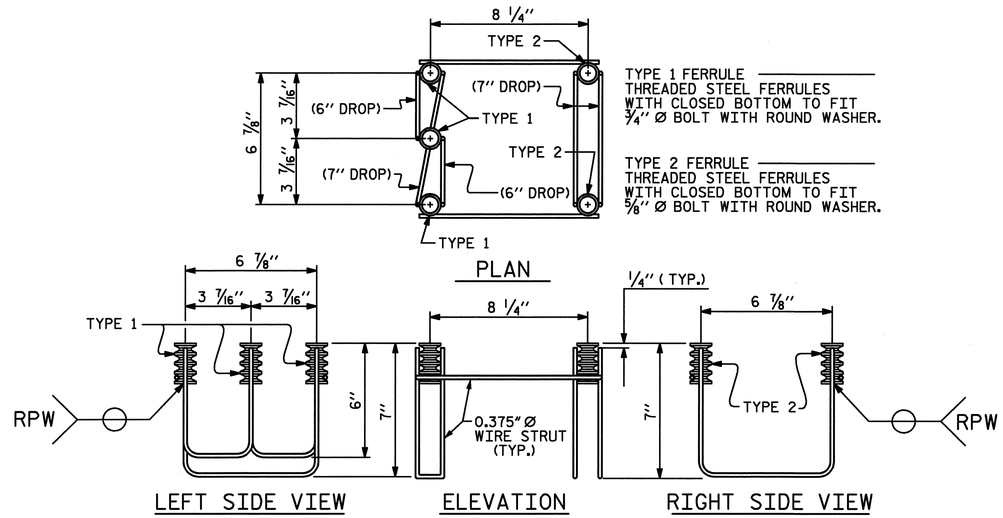

5-BOLT METAL RAIL ANCHOR ASSEMBLY

(113 ASSEMBLIES REQUIRED)

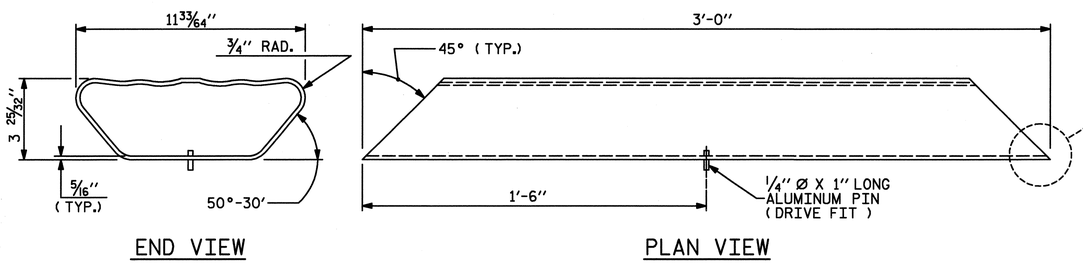

BOTTOM RAIL EXPANSION BAR

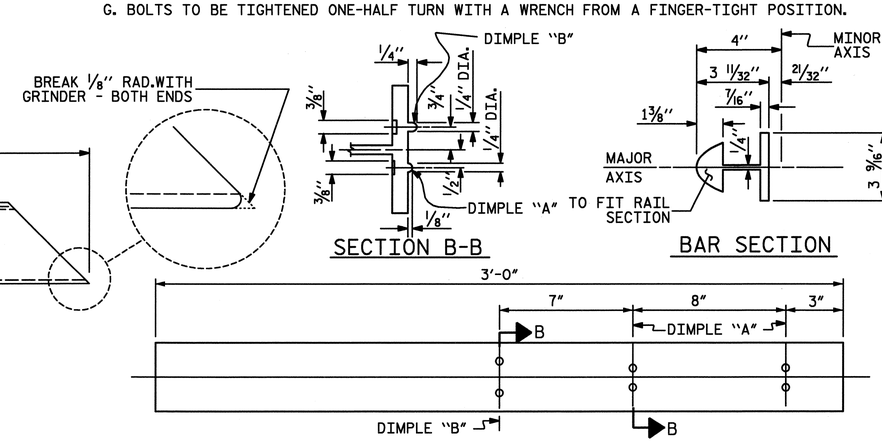

TOP & MIDDLE RAIL EXPANSION BAR

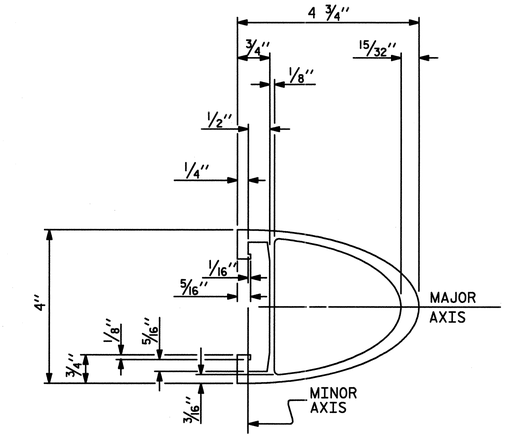

TOP & MIDDLE RAIL SECTION

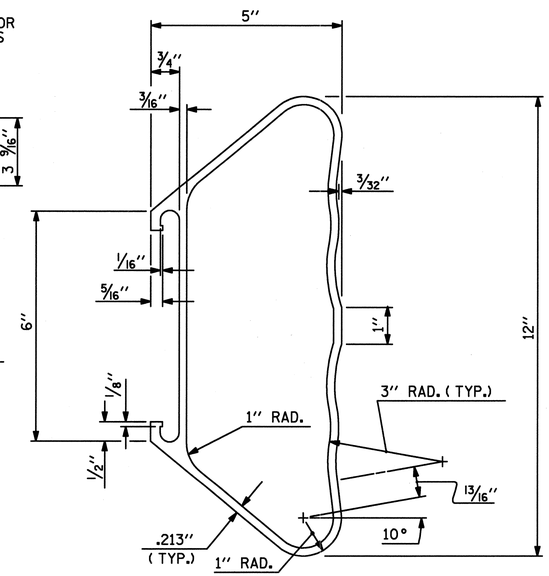

BOTTOM RAIL SECTION

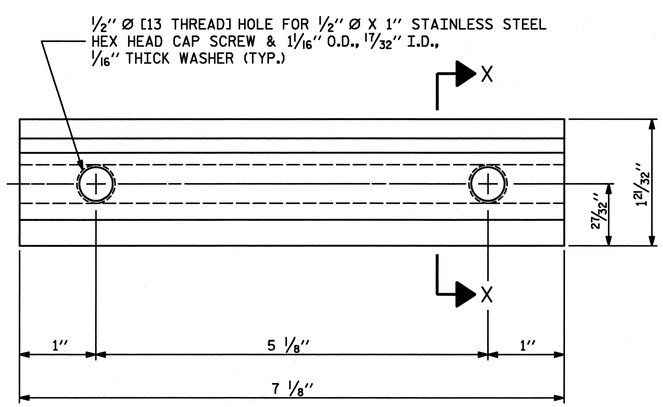

ELEVATION

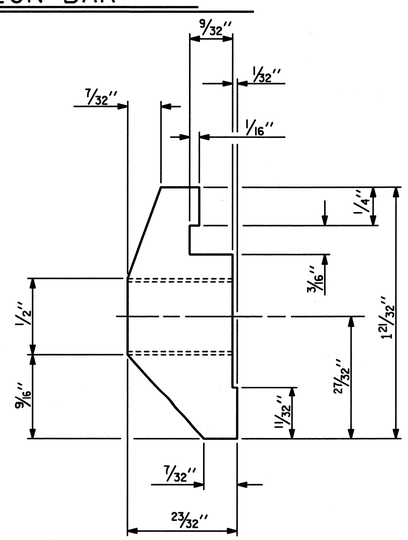

SECTION X-X

CLAMP BAR DETAIL

(6 REQUIRED PER POST)

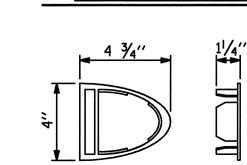

TOP & MIDDLE RAIL CAP

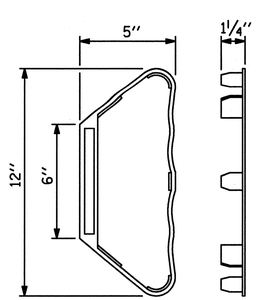

BOTTOM RAIL CAP

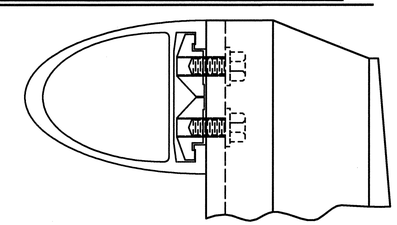

CLAMP ASSEMBLY

TOP RAIL SHOWN
(MIDDLE & BOTTOM RAIL ARE SIMILAR)

PROJECT NO. U-4438

CAMDEN & PASQUOTANK COUNTY

STATION: 15+25.75 -L1-

SHEET 2 OF 6

ASSEMBLED BY : J. PENDERGRAFT	DATE : 11-10
CHECKED BY : J. DILWORTH	DATE : 11-10

DRAWN BY : JMB	1/88	REV. 7/10/01	RWW/LES
CHECKED BY : GGH	1/88	REV. 5/7/03	RWW/JTE
		REV. 5/1/06	TLA/GM

WETHERILL ENGINEERING
559 Jones Franklin Rd. Suite 164
Raleigh, N.C. 27606
Bus: 919 851 8077
Fax: 919 851 8107
License: F-0377
TRANSPORTATION PLANNING/DESIGN - BRIDGE/STRUCTURE DESIGN
CIVIL/SITE DESIGN - GIS/GPS - CONSTRUCTION OBSERVATION

STATE OF NORTH CAROLINA
DEPARTMENT OF TRANSPORTATION
RALEIGH

STANDARD

3 BAR METAL RAIL

REVISIONS							SHEET NO.
NO.	BY:	DATE:	NO.	BY:	DATE:		S-39
1			3				TOTAL SHEETS
2			4				454

STD. NO. BMR6

2/6/2011
P:\2010\10119.02 U-4438\Structur~#s\DGN\S39_U-4438_STD_BMR561.dgn

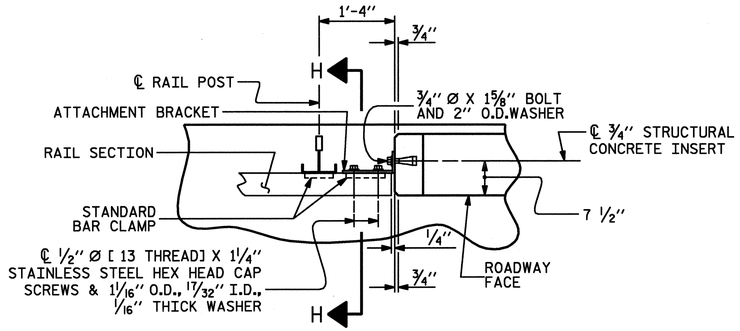

PLAN OF RAIL AND END POST

(STIFFENER ON 1/2" ℙ NOT SHOWN FOR CLARITY)

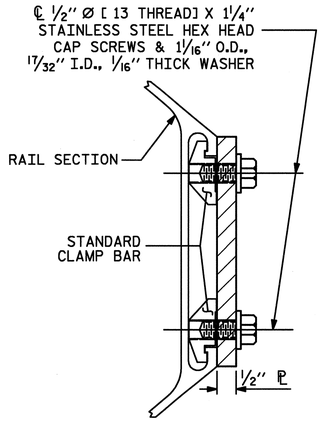

SECTION H-H

(FOR BOTTOM RAIL)

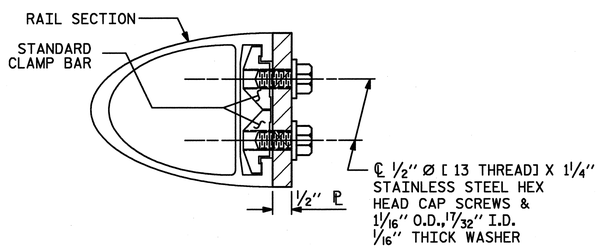

SECTION H-H

(FOR TOP & MIDDLE RAIL)

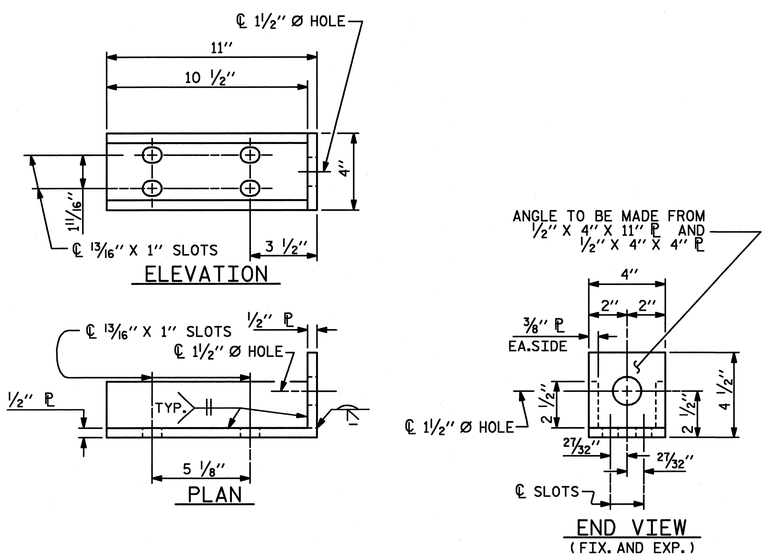

DETAILS FOR ATTACHMENT BRACKET

(TOP & MIDDLE RAIL ONLY)

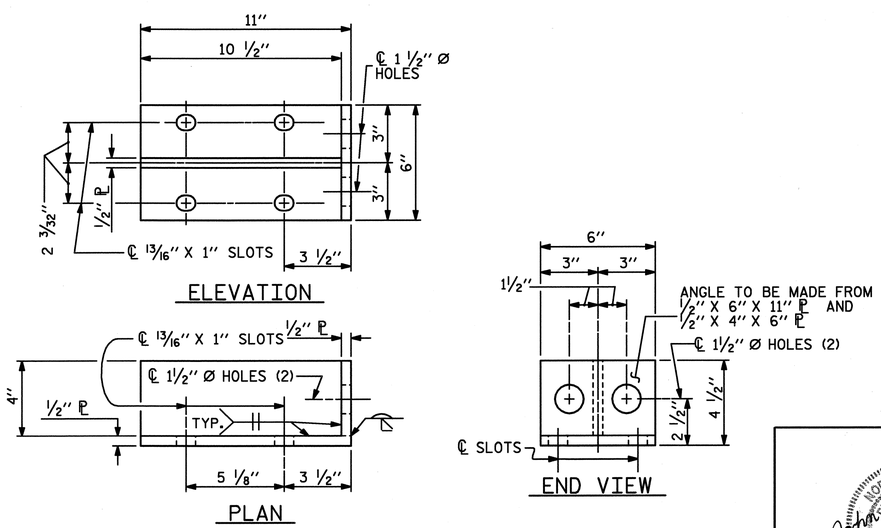

DETAILS FOR ATTACHMENT BRACKET

(BOTTOM RAIL ONLY)

NOTES

METAL RAIL TO END POST CONNECTION

THE METAL RAIL TO END POST CONNECTION SHALL CONSIST OF THE FOLLOWING COMPONENTS:

A. 1/2" PLATES SHALL CONFORM TO AASHTO M270 GRADE 36 AND SHALL BE GALVANIZED AFTER FABRICATION.

B. 3/4" STRUCTURAL CONCRETE INSERT SHALL HAVE A WORKING LOAD SHEAR CAPACITY OF 4800 LBS. THE FERRULES SHALL ENGAGE A 3/4" Ø X 1 5/8" BOLT WITH 2" O.D. WASHER IN PLACE. THE 3/4" Ø X 1 5/8" BOLT SHALL HAVE N. C. THREADS.

C. CAP SCREWS FOR RAIL ATTACHMENT TO ANGLE SHALL CONFORM TO THE REQUIREMENTS OF ASTM F593 ALLOY 305 STAINLESS STEEL. CAP SCREWS TO BE CENTERED IN SLOTS AT 60°F. WASHERS FOR RAIL ATTACHMENT SHALL MEET THE REQUIREMENTS OF ASTM F844 EXCEPT THEY SHALL BE MADE FROM ALLOY 304 STAINLESS STEEL.

D. STANDARD CLAMP BARS (STD. No. BMR6).

THE COST OF THE STANDARD CLAMP BARS AND CAP SCREWS USED IN THE METAL RAIL TO END POST CONNECTION SHALL BE INCLUDED IN THE UNIT CONTRACT PRICE BID FOR LINEAR FEET OF 3 BAR METAL RAIL.

THE 3/4" STRUCTURAL CONCRETE INSERT WITH BOLT SHALL BE ASSEMBLED IN THE SHOP.

THE COST OF THE 3/4" STRUCTURAL CONCRETE INSERT ASSEMBLY, AND THE 1/2" PLATES COMPLETE IN PLACE SHALL BE INCLUDED IN THE VARIOUS PAY ITEMS.

THE CONTRACTOR, AT HIS OPTION, MAY USE AN ADHESIVE BONDING SYSTEM IN LIEU OF THE STRUCTURAL CONCRETE INSERT EMBEDDED IN THE END POST. IF THE ADHESIVE BONDING SYSTEM IS USED, THE 3/4" Ø X 1 5/8" BOLT WITH WASHER SHALL BE REPLACED WITH A 3/4" Ø X 6 1/2" BOLT AND 2" O.D.WASHER. ALL SPECIFICATIONS THAT APPLY TO THE 3/4" Ø X 1 5/8" BOLT SHALL APPLY TO THE 3/4" Ø X 6 1/2" BOLT. FIELD TESTING OF THE ADHESIVE BONDING SYSTEM IS NOT REQUIRED.

NOTES

STRUCTURAL CONCRETE INSERT

THE STRUCTURAL CONCRETE INSERT ASSEMBLY SHALL CONSIST OF THE FOLLOWING COMPONENTS:

A. FERRULES SHALL BE MADE FROM STEEL MEETING THE REQUIREMENTS OF AASHTO M169, GRADE 12L14 AND SHALL HAVE A MINIMUM LENGTH OF THREADS OF 1 1/2".

B. 1 - 3/4" Ø X 1 5/8" BOLT WITH WASHER. BOLT SHALL CONFORM TO THE REQUIREMENTS OF ASTM A307. BOLT AND WASHER SHALL BE GALVANIZED. AT THE CONTRACTORS OPTION, STAINLESS STEEL BOLT AND WASHER MAY BE USED AS AN ALTERNATE FOR THE 3/4" Ø X 1 5/8" GALVANIZED BOLT AND WASHER. THEY SHALL CONFORM TO OR EXCEED THE MECHANICAL REQUIREMENTS OF ASTM A307. THE USE OF THIS ALTERNATE SHALL BE APPROVED BY THE ENGINEER.

C. WIRE STRUT SHOWN IN THE CONCRETE INSERT ASSEMBLY DETAIL IS THE MINIMUM ALLOWABLE SIZE AND SHALL HAVE A MINIMUM TENSILE STRENGTH OF 100,000 PSI. AS AN OPTION, A 7/16" Ø WIRE STRUT WITH A MINIMUM TENSILE STRENGTH OF 90,000 PSI IS ACCEPTABLE.

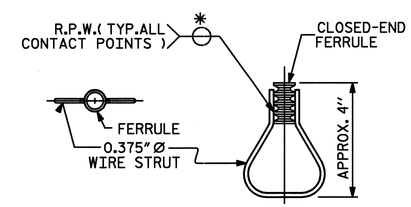

STRUCTURAL CONCRETE INSERT

* EACH WELDED ATTACHMENT OF WIRE TO FERRULE SHALL DEVELOP THE TENSILE STRENGTH OF THE WIRE.

PROJECT NO. U-4438

CAMDEN & PASQUOTANK COUNTY

STATION: 15+25.75 -L1-

SHEET 3 OF 6

ASSEMBLED BY : J. PENDERGRAFT		DATE : 11-10					
CHECKED BY : J. DILWORTH		DATE : 11-10					
DRAWN BY : JMB	1/88	REV. 7/10/01	RWW/LES				
CHECKED BY : GGH	1/88	REV. 5/7/03	RWW/JTE				
		REV. 5/1/06	TLA/GM				

ETHERILL ENGINEERING
559 Jones Franklin Rd. Suite 164
Raleigh, N.C. 27606
Bus: 919 851 8077
Fax: 919 851 8107
License: F-0377
TRANSPORTATION PLANNING/DESIGN - BRIDGE/STRUCTURE DESIGN
CIVIL/SITE DESIGN - GIS/GPS - CONSTRUCTION OBSERVATION

STATE OF NORTH CAROLINA
DEPARTMENT OF TRANSPORTATION
RALEIGH

STANDARD

3 BAR METAL RAIL

REVISIONS						SHEET NO.
NO.	BY:	DATE:	NO.	BY:	DATE:	S-40
1			3			TOTAL SHEETS
2			4			454

STD. NO. BMR7

2/4/2011
8:44:44 AM
P:\2010\10119.02 U-4438\Structures\DGN\S38_U-4438_SD_BMR567.dgn

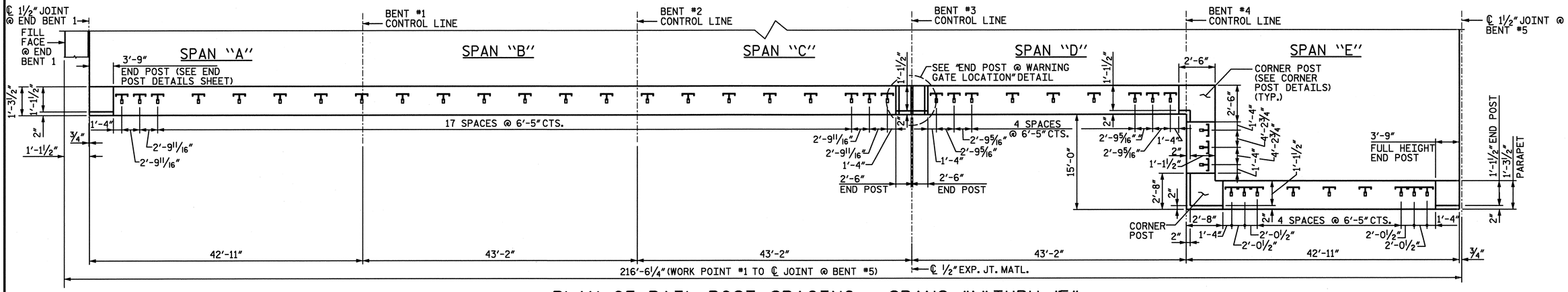

PLAN OF RAIL POST SPACING - SPANS "A" THRU "E"

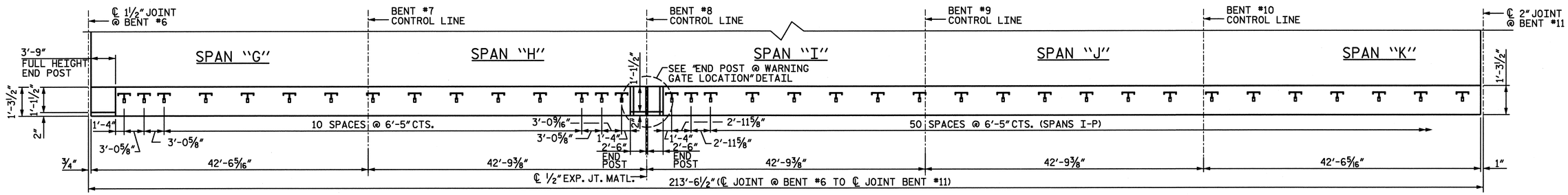

PLAN OF RAIL POST SPACING - SPANS "G" THRU "K"

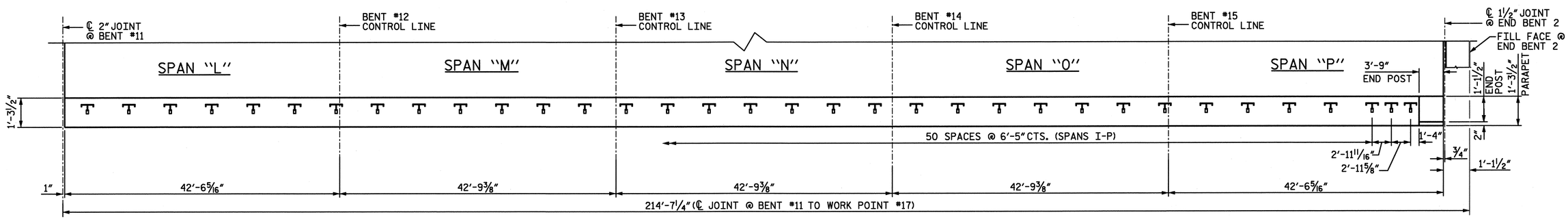

PLAN OF RAIL POST SPACING - SPANS "L" THRU "P"

PROJECT NO. U-4438
CAMDEN & PASQUOTANK COUNTY
STATION: 15+25.75 -L1-

SHEET 4 of 6

STATE OF NORTH CAROLINA
DEPARTMENT OF TRANSPORTATION
RALEIGH

RAIL POST SPACINGS FOR THREE BAR METAL RAIL

NORTH CAROLINA PROFESSIONAL SEAL 026891 ENGINEER JOHN T. DILWORTH
2-6-11

WETHERILL ENGINEERING
559 Jones Franklin Rd. Suite 164
Raleigh, N.C. 27606
Bus: 919 851 8077
Fax: 919 851 8107
License: F-0377
TRANSPORTATION PLANNING/DESIGN - BRIDGE/STRUCTURE DESIGN
CIVIL/SITE DESIGN - GIS/GPS - CONSTRUCTION OBSERVATION

REVISIONS						SHEET NO.
NO.	BY:	DATE:	NO.	BY:	DATE:	S-41
1			3			TOTAL SHEETS
2			4			454

DRAWN BY : J. PENDERGRAFT DATE : 11-10
CHECKED BY : J. DILWORTH DATE : 11-10

P:\2010\1011902 U-4438\Structures\DGN\S41_U-4438_SD_3BRP.dgn
2/6/2011 11:56:41 AM

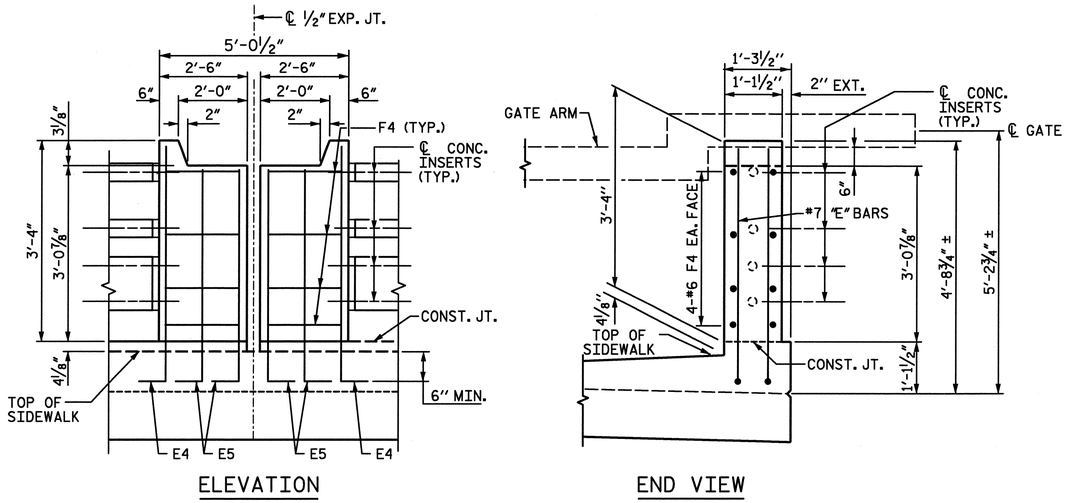

END POST AT WARNING GATE LOCATION DETAIL - RIGHT SIDE

(BENTS #2 AND #8)
(0.33 CY/POST)

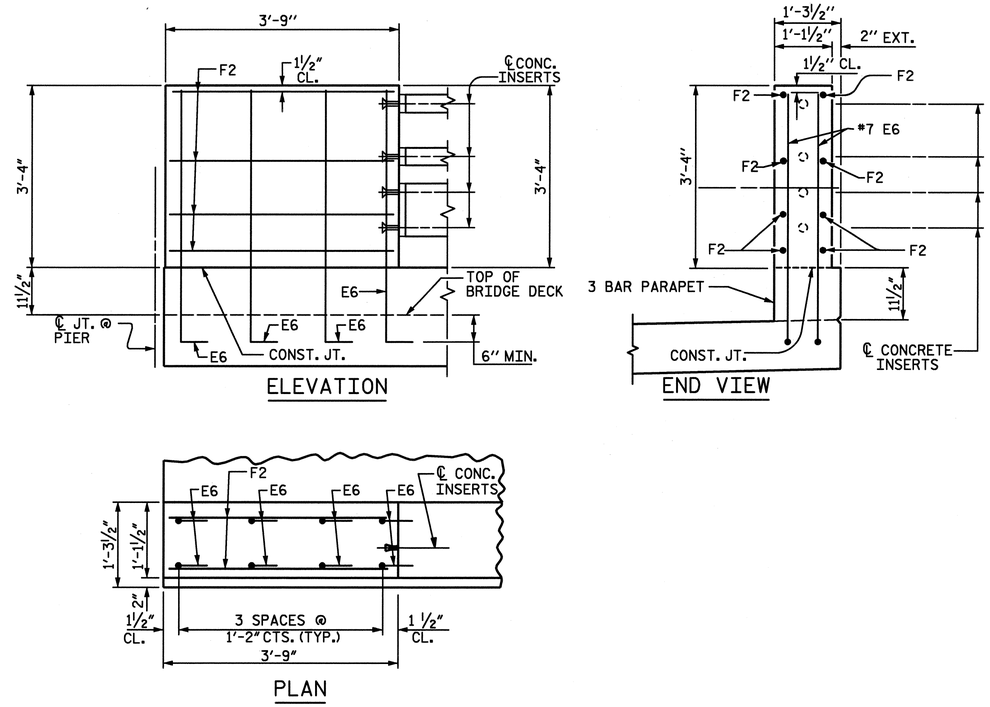

NOTE:
SEE SHEET 6 OF 6 FOR POST BILL OF MATERIAL

FULL HEIGHT END POST DETAILS

(0.52 CY/POST)

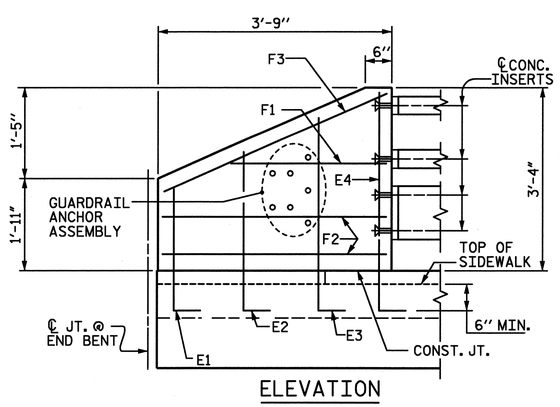

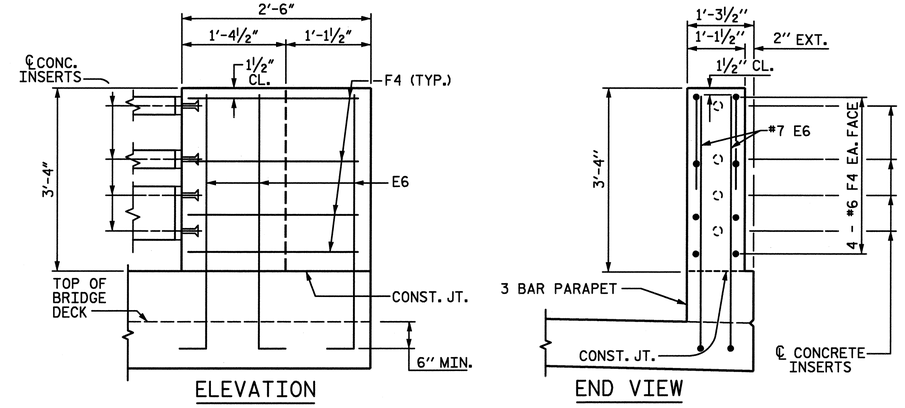

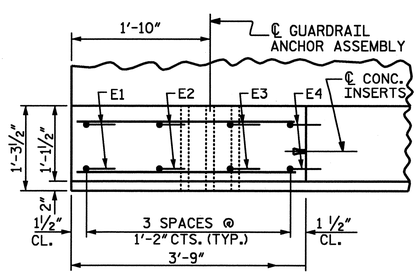

END POST DETAILS

(0.43 CY/POST)

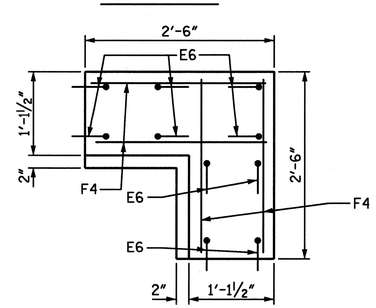

CORNER POST DETAILS

PROJECT NO. U-4438
CAMDEN & PASQUOTANK COUNTY
STATION: 15+25.75 -L1-

SHEET 5 of 6

STATE OF NORTH CAROLINA
DEPARTMENT OF TRANSPORTATION
RALEIGH

END POST DETAILS
FOR THREE BAR
METAL RAIL

NORTH CAROLINA PROFESSIONAL SEAL 026891 ENGINEER JOHN T. DIFFEE III 2-6-11

ETHERILL ENGINEERING
559 Jones Franklin Rd. Suite 164
Raleigh, N.C. 27606
Bus: 919 851 8077
Fax: 919 851 8107
License: F-0377
TRANSPORTATION PLANNING/DESIGN - BRIDGE/STRUCTURE DESIGN
CIVIL/SITE DESIGN - GIS/GPS - CONSTRUCTION OBSERVATION

REVISIONS							
NO.	BY:	DATE:	NO.	BY:	DATE:	SHEET NO.	S-42
1			3			TOTAL SHEETS	454
2			4				

DRAWN BY : J. PENDERGRAFT DATE : 11-10
CHECKED BY : J. DILWORTH DATE : 11-10

P:\2010\10119.02 U-4438\Structures\DGN\S41_U-4438_SD_3BRP.dgn
2/6/2011 11:56:49 AM

— SPANS A THRU E — BILL OF MATERIAL

ONE END POST, ONE FULL HEIGHT END POST, TWO GATE END POSTS AND TWO CORNER POST

BAR	NO.	SIZE	TYPE	LENGTH	WEIGHT
E1	2	#7	1	3'-5"	14
E2	2	#7	1	4'-0"	16
E3	2	#7	1	4'-7"	19
E4	6	#7	1	5'-1"	62
E5	8	#7	1	4'-9"	78
E6	28	#7	1	5'-10"	334
F1	2	#6	STR	2'-6"	8
F2	12	#6	STR	3'-5"	62
F3	2	#6	STR	3'-10"	12
F4	48	#6	STR	2'-2"	156
EPOXY COATED REINFORCING STEEL					702 LBS.
CLASS AA CONCRETE					2.7 C.Y.

— SPANS G THRU K — BILL OF MATERIAL

ONE FULL HEIGHT END POST AND TWO GATE END POSTS

BAR	NO.	SIZE	TYPE	LENGTH	WEIGHT
E4	4	#7	1	5'-1"	42
E5	8	#7	1	4'-9"	78
E6	8	#7	1	5'-10"	95
F2	8	#6	STR	3'-5"	41
F4	16	#6	STR	2'-2"	52
EPOXY COATED REINFORCING STEEL					308 LBS.
CLASS AA CONCRETE					1.2 C.Y.

— SPANS L THRU P — BILL OF MATERIAL

ONE END POST

BAR	NO.	SIZE	TYPE	LENGTH	WEIGHT
E1	2	#7	1	3'-5"	14
E2	2	#7	1	4'-0"	16
E3	2	#7	1	4'-7"	19
E4	2	#7	1	5'-1"	21
F1	2	#6	STR	2'-6"	8
F2	4	#6	STR	3'-5"	21
F3	2	#6	STR	3'-10"	12
EPOXY COATED REINFORCING STEEL					111 LBS.
CLASS AA CONCRETE					0.4 C.Y.

TOTALS

EPOXY COATED REINFORCING STEEL	1,121 LBS.
CLASS AA CONCRETE	3.9 C.Y.

NOTES:

NO ADDITIONAL PAYMENT SHALL BE MADE FOR THE CONCRETE POSTS AS THIS SHALL BE CONSIDERED INCIDENTAL TO THE CONSTRUCTION OF THE 3 BAR METAL RAIL.

VERTICAL REINFORCEMENT FOR CONCRETE POST IN SPANS "E" AND "G" SHALL BE CAST WITH THE BRIDGE DECK.

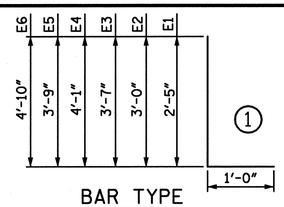

BAR TYPE

NOTES

THE GUARDRAIL ANCHOR ASSEMBLY SHALL CONSIST OF A 1/4" HOLD DOWN PLATE AND 7 - 7/8" Ø BOLTS WITH NUTS AND WASHERS.

THE HOLD-DOWN PLATE SHALL CONFORM TO AASHTO M270 GRADE 36. AFTER FABRICATION, THE HOLD-DOWN PLATE SHALL BE HOT-DIP GALVANIZED IN ACCORDANCE WITH AASHTO M111.

BOLTS SHALL CONFORM TO THE REQUIREMENTS OF ASTM A307 AND NUTS SHALL CONFORM TO THE REQUIREMENTS OF AASHTO M291. BOLTS, NUTS AND WASHERS SHALL BE GALVANIZED. AT THE CONTRACTOR'S OPTION, STAINLESS STEEL BOLTS, NUTS AND WASHERS MAY BE USED AS AN ALTERNATE FOR THE 7/8" Ø GALVANIZED BOLTS, NUTS AND WASHERS. THEY SHALL CONFORM TO OR EXCEED THE MECHANICAL REQUIREMENTS OF ASTM A307. THE USE OF THIS ALTERNATE SHALL BE APPROVED BY THE ENGINEER.

THE GUARDRAIL ANCHOR ASSEMBLY IS REQUIRED AT ALL POINTS WHERE APPROACH GUARDRAIL IS TO BE ATTACHED TO THE END OF THE PARAPET. FOR POINTS OF ATTACHMENT, SEE SKETCH.

AFTER INSTALLATION, THE EXPOSED THREAD OF THE BOLT SHALL BE BURRED WITH A SHARP POINTED TOOL.

THE COST OF THE GUARDRAIL ANCHOR ASSEMBLIES WITH BOLTS, NUTS AND WASHERS COMPLETE IN PLACE, SHALL BE INCLUDED IN THE VARIOUS PAY ITEMS.

THE VERTICAL REINFORCING BARS MAY BE SHIFTED SLIGHTLY IN THE END POST TO CLEAR ASSEMBLY BOLTS.

THE 1 1/4" Ø HOLES SHALL BE FORMED OR DRILLED WITH A CORE BIT. IMPACT TOOLS WILL NOT BE PERMITTED. ANY CONCRETE DAMAGED BY THIS WORK SHALL BE REPAIRED TO THE SATISFACTION OF THE ENGINEER.

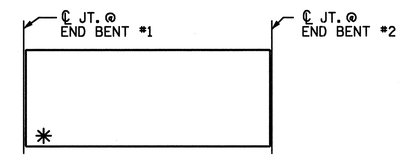

SKETCH SHOWING POINTS OF ATTACHMENT

✱ LOCATION OF GUARDRAIL ATTACHMENT

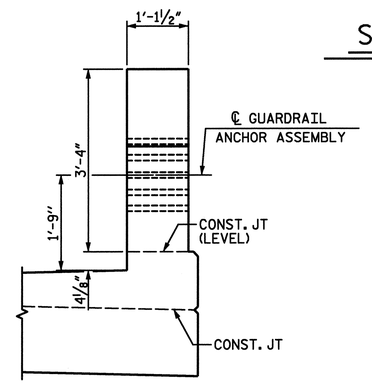

END VIEW
(THREE BAR METAL RAIL)

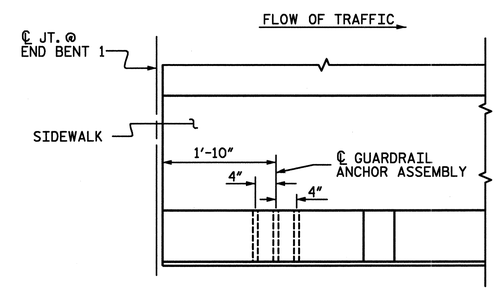

PLAN

LOCATION OF GUARDRAIL ANCHOR AT END POST

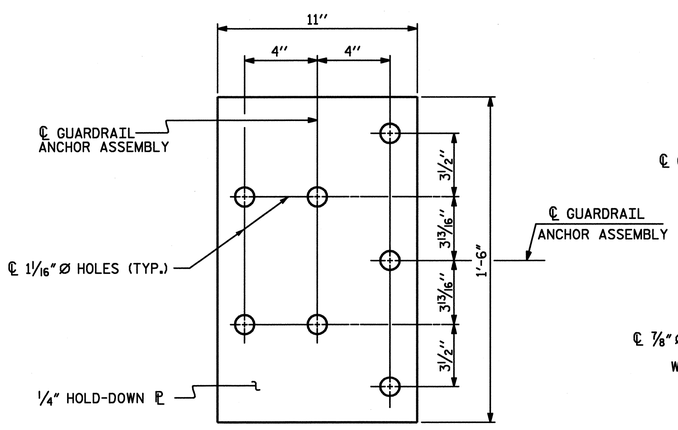

PLAN

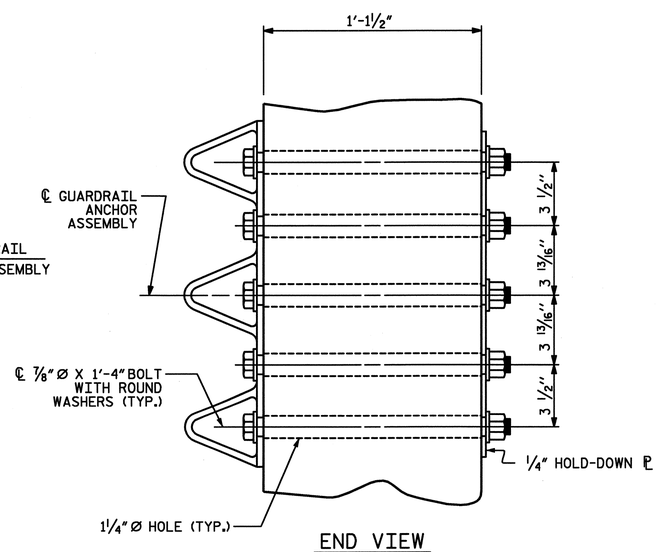

END VIEW

GUARDRAIL ANCHOR ASSEMBLY DETAILS

PROJECT NO. U-4438
CAMDEN & PASQUOTANK COUNTY
STATION: 15+25.75 -L1-

SHEET 6 of 6

NORTH CAROLINA PROFESSIONAL SEAL 026891 ENGINEER JOHN T. DIFFEE III
2/4/11

ETHERILL ENGINEERING
559 Jones Franklin Rd. Suite 164
Raleigh, N.C. 27606
Bus: 919 851 8077
Fax: 919 851 8107
License: F-0377

TRANSPORTATION PLANNING/DESIGN - BRIDGE/STRUCTURE DESIGN
CIVIL/SITE DESIGN - GIS/GPS - CONSTRUCTION OBSERVATION

STATE OF NORTH CAROLINA
DEPARTMENT OF TRANSPORTATION
RALEIGH

END POST DETAILS FOR THREE BAR METAL RAIL AND GUARDRAIL ANCHORAGE DETAILS FOR METAL RAILS

REVISIONS						SHEET NO.
NO.	BY:	DATE:	NO.	BY:	DATE:	S-43
1			3			TOTAL SHEETS
2			4			454

DRAWN BY : _____ DATE : _____
CHECKED BY : _____ DATE : _____

P:\2010\1011902 U-4438\Structures\DGN\S43_U-4438_SD_GRA3.dgn
2/4/2011 4:28:17 PM

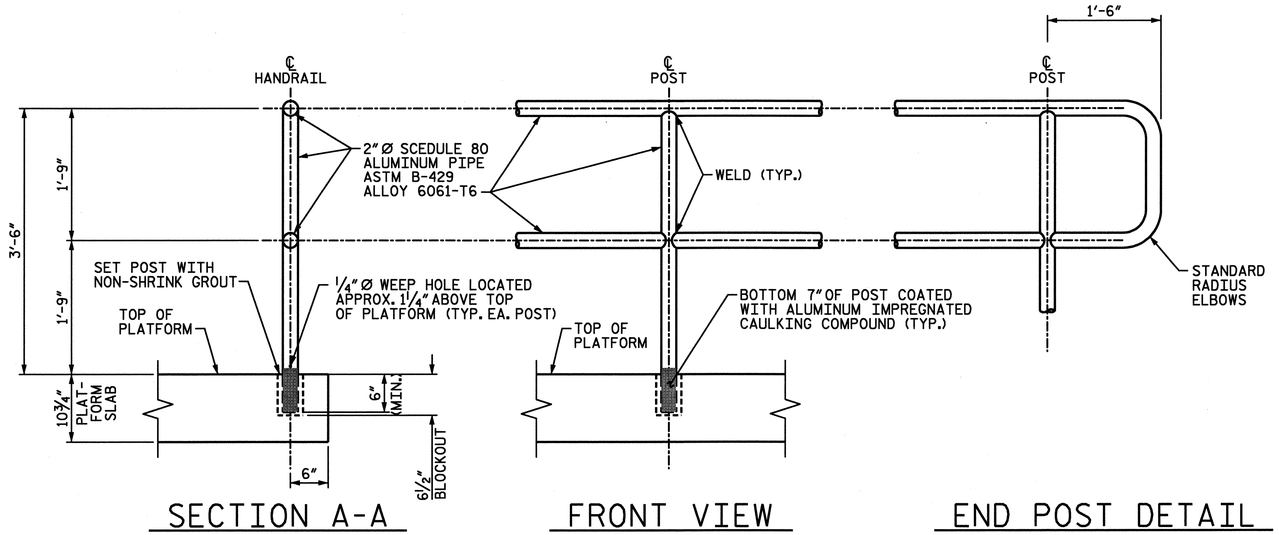

NOTES:

AT CONTRACTOR'S OPTION, RAILING MAY BE SPLICED. JOINTS IN RAILING SHALL BE AS SHOWN IN THE POST SPACING PLAN.

ALUMINUM PIPE TO BE ASTM B-429, ALLOY 6061-T6.

POST TO BE SET PERPENDICULAR TO TOP OF PLATFORM AND RAILS SHALL BE PLACED PARALLEL TO THE GRADE OF THE PLATFORM.

CERTIFIED MILL REPORTS ARE REQUIRED FOR RAIL AND POST. SHOP INSPECTIONS ARE NOT REQUIRED.

THE CENTERLINE OF ANY SPLICE JOINT IS TO BE LOCATED AT LEAST 1'-8" AWAY FROM THE CENTERLINE OF THE POST. SPLICE JOINTS FOR EACH OF THE TWO RAILS ARE TO BE PLACED IN THE SAME LOCATION AND IN THE SAME PANEL.

WELDING SHALL BE IN ACCORDANCE WITH THE CURRENT AWS STRUCTURAL WELDING CODE - ALUMINUM.

THE LENGTH OF METAL RAIL TO BE PAID FOR SHALL BE THE CONTINUOUS LENGTH MEASURED FROM END TO END OF RAIL, ALONG THE TOP OF RAIL.

SHOP DRAWINGS SHALL BE REQUIRED.

FOR 2-BAR ALUMINUM HANDRAIL, SEE SPECIAL PROVISIONS.

THE BOTTOM 7 INCHES OF EACH RAIL POST SHALL BE COATED, BOTH INSIDE AND OUT, BY DIPPING THE RAIL POST INTO A BRUSH GRADE ALUMINUM IMPREGNATED CAULKING COMPOUND OF APPROVED QUALITY. POST SHALL NOT BE SET UNTIL THE CAULKING COMPOUND HAS CURED.

POST HOLE BLOCKOUTS MAY BE SLIGHTLY TAPERED TO ALLOW FOR REMOVAL OF THE BLOCKOUT MATERIAL.

POST SHALL BE SET USING A NON-SHRINK GROUT OF APPROVED QUALITY.

SEE BENT 3 AND BENT 8 DRAWINGS FOR PLATFORM DETAILS.

PAY LENGTH =	25.58 LIN. FT. PER PLATFORM
x	4 PLATFORMS
=	102.33 LIN. FT.

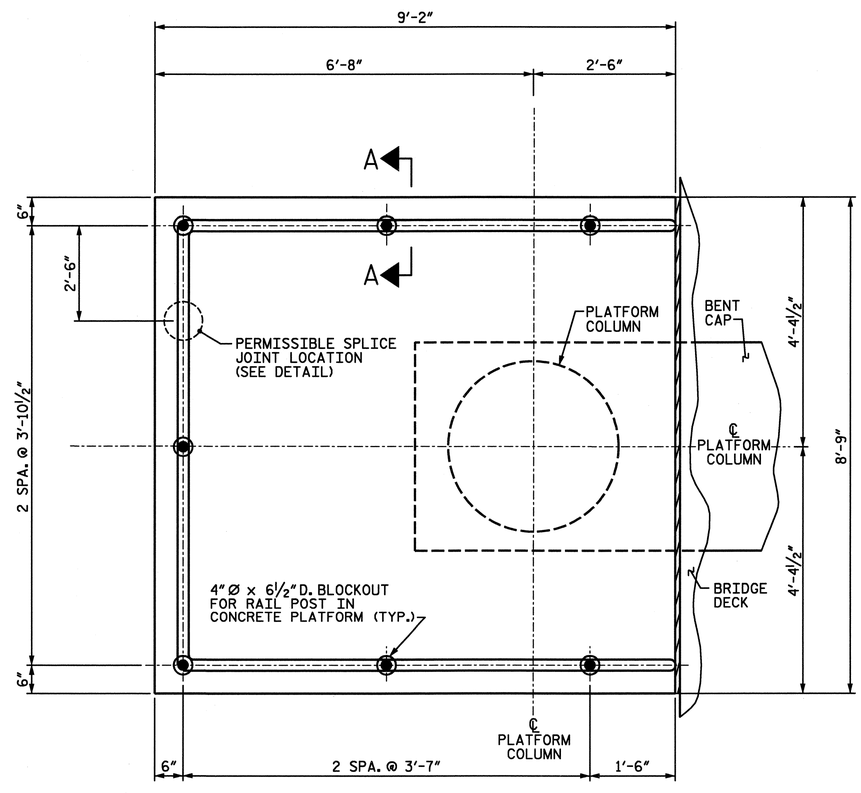

METAL HANDRAIL POST SPACING -- PLATFORMS

LEFT PLATFORM SHOWN, RIGHT PLATFORM SIMILAR

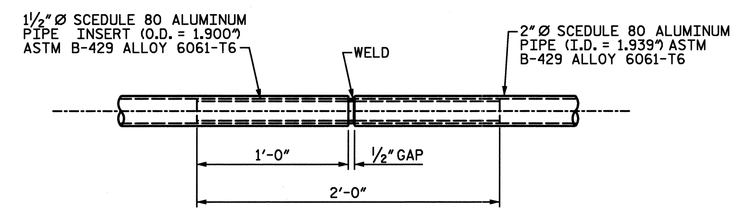

SPLICE JOINT DETAIL

(OPTIONAL)

PROJECT NO. U-4438

CAMDEN & PASQUOTANK COUNTY

STATION: 15+25.75 -L1-

NORTH CAROLINA PROFESSIONAL SEAL 026891 ENGINEER JOHN T. DIFFEE III

ETHERILL ENGINEERING
559 Jones Franklin Rd. Suite 164
Raleigh, N.C. 27606
Bus: 919 851 8077
Fax: 919 851 8107
License: F-0377

TRANSPORTATION PLANNING/DESIGN - BRIDGE/STRUCTURE DESIGN
CIVIL/SITE DESIGN - GIS/GPS - CONSTRUCTION OBSERVATION

STATE OF NORTH CAROLINA
DEPARTMENT OF TRANSPORTATION
RALEIGH

TWO BAR ALUMINUM HANDRAIL

REVISIONS						SHEET NO.
NO.	BY:	DATE:	NO.	BY:	DATE:	S-44
1			3			TOTAL SHEETS
2			4			454

DRAWN BY : T. DIFFEE DATE : 1-11
CHECKED BY : J. DILWORTH DATE : 1-11

P:\2010\101 19.02 U-4438\Structures\DGN\S44_U-4438_SD_HR.dgn
2/4/2011 4:28:39 PM

REVISED MARCH 17, 2011

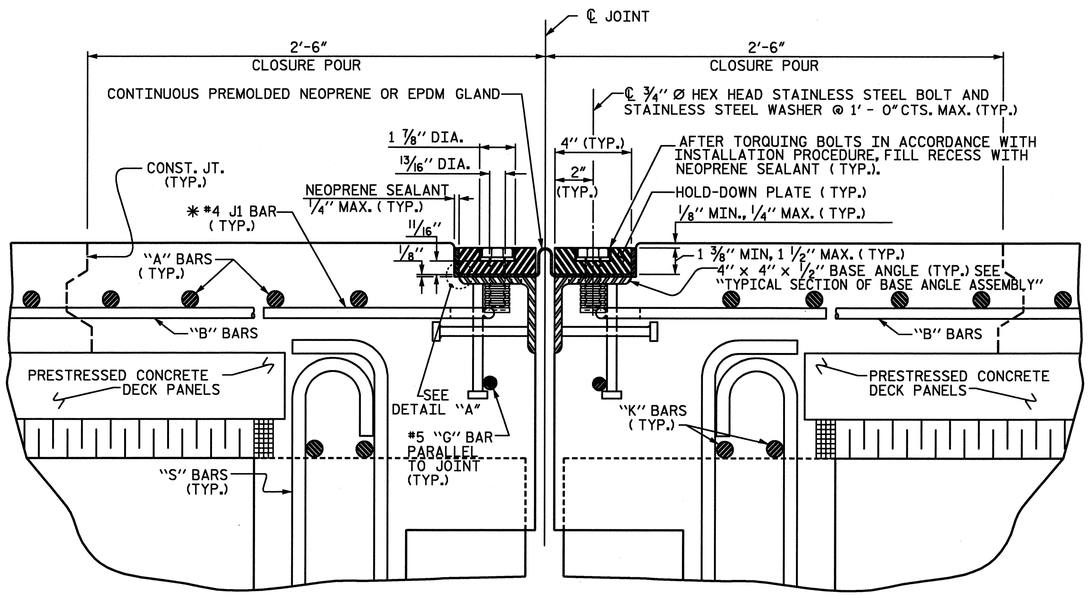

EXPANSION JOINT DETAILS

SECTION NORMAL TO JOINT -- PRESTRESSED GIRDER SUPERSTRUCTURE

✱ THE QUANTITY OF #4 J1 BARS ON THE BILL OF MATERIAL IS BASED ON 1'-0" CENTERS. J1 BARS SHALL BE PLACED AT EACH VERTICAL STUD ANCHOR BOLT. IN THE EVENT THAT THE NUMBER OF VERTICAL STUD ANCHORS EXCEEDS THE NUMBER OF J1 BARS SPECIFIED, ADDITIONAL J1 BARS WILL NOT BE REQUIRED.

INSTALLATION PROCEDURE

1. A TEMPLATE OR OTHER SUITABLE DEVICE SHALL BE USED TO FORM THE TOP OF THE EXPANSION JOINT SEAL BLOCKOUT TO THE PROPER DEPTH AND WIDTH. THE TEMPLATE SHALL BE 4⅛" TO 4¼" WIDE AND OF SUCH THICKNESS AS TO PROVIDE FOR CORRECT FINAL ELEVATION OF TOP OF HOLD-DOWN PLATES. THE TEMPLATE SHALL BE ATTACHED TO THE BASE ANGLE ASSEMBLY WITH THE ¾" Ø HEX HEAD BOLTS PROVIDED FOR THE HOLD-DOWN PLATES. A 1" Ø HOLE SHALL BE PROVIDED IN THE TEMPLATE CENTERED OVER EACH WEEP HOLE IN THE 4" X 4" X ½" BASE ANGLE. OTHER METHODS OF INSURING DRAINAGE THROUGH WEEP HOLES MAY BE EMPLOYED SUBJECT TO ENGINEER'S APPROVAL.
2. AFTER THE CONCRETE HAS BEEN CAST ON BOTH SIDES OF THE JOINT, REMOVE THE TEMPLATE. THOROUGHLY CLEAN THE BOLT HOLES AND THE ANGLE PLATE. REMOVE ANY EXCESS CONCRETE THAT COMES OUT OF THE WEEP HOLES. ANY DAMAGED STEEL SHALL BE COATED WITH A MINIMUM THICKNESS OF 4 DRY MILS OF ZINC-RICH PAINT IN ACCORDANCE WITH THE STANDARD SPECIFICATIONS.
3. LAY THE GLAND ON THE BASE ANGLE AND FIELD MARK THE GLAND FOR THE BOLT HOLES. HOLES IN THE GLAND SHALL BE PUNCHED ⅞" IN DIAMETER WITH A HAND PUNCH.
4. IN ORDER TO CHECK FOR PROPER ALIGNMENT, PLACE THE GLAND AND HOLD-DOWN PLATES ON THE BASE ANGLE. DO NOT APPLY NEOPRENE SEALANT. BOLT THE HOLD-DOWN PLATES TO THE BASE ANGLE BUT DO NOT TIGHTEN. THE ENGINEER SHALL INSPECT THE JOINT SEAL DEVICE FOR PROPER ALIGNMENT.
5. AFTER INSPECTION, REMOVE THE HOLD-DOWN PLATES AND GLAND. APPLY NEOPRENE SEALANT TO THE BASE ANGLE IN ACCORDANCE WITH THE "INSTALLATION SKETCH". PLACE GLAND AND HOLD-DOWN PLATES ON THE BASE ANGLE. BOLT THE HOLD-DOWN PLATES TO THE BASE ANGLE ASSEMBLY AND TORQUE THE BOLTS TO 88 FT-LBS WITH A TORQUE WRENCH. THE TORQUE WRENCH SHALL BE CALIBRATED IN ACCORDANCE WITH SECTION 440-10 (D) OF THE STANDARD SPECIFICATIONS. CHECK THE TORQUE AFTER THREE (3) HOURS AND, IF NECESSARY, RETIGHTEN TO 88 FT-LBS. A FINAL CHECK SHALL BE MADE AT SEVEN (7) DAYS. TORQUE SHALL NOT BE LESS THAN 80 FT-LBS AFTER SEVEN (7) DAYS.
6. AFTER PROPER TORQUING, CLEAN THE BOLT HOLE RECESSES AND THE RECESS BETWEEN THE JOINT SEAL DEVICE AND CONCRETE, COMPLETELY FILL THESE RECESSES WITH NEOPRENE SEALANT.

GENERAL NOTES

1. FOR EXPANSION JOINT SEALS, SEE SPECIAL PROVISIONS.
2. ALL PLATES AND ANGLES SHALL CONFORM TO AASHTO M270 GRADE 36 STEEL OR APPROVED EQUAL. ALL HOLD-DOWN BOLTS SHALL CONFORM TO ASTM F593 ALLOY 304 STAINLESS STEEL AND WASHERS SHALL CONFORM TO ASTM F844 EXCEPT THEY SHALL BE MADE FROM ALLOY 304 STAINLESS STEEL. ALL STUD ANCHORS SHALL CONFORM TO AASHTO M169, GRADES 1010 THRU 1020 OR APPROVED EQUAL. ALL CONCRETE INSERTS SHALL BE CLOSED END AND SHALL CONFORM TO AASHTO M169, GRADE 12L14. TENSILE CAPACITY SHALL BE 3000 LBS. MIN.
3. A PREMOLDED CORRUGATED OR NON-CORRUGATED GLAND SHALL BE USED FOR JOINTS SKEWED BETWEEN 50° THRU 130°. FOR JOINTS SKEWED LESS THAN 50° OR MORE THAN 130°, ONLY A CORRUGATED GLAND SHALL BE USED.
4. CLOSED END FERRULES AND STUD ANCHORS SHALL BE SHOP WELDED AND ALL HOLES SHALL BE SHOP DRILLED AS SHOWN ON PLANS. STUD ANCHORS SHALL BE ELECTRIC ARC END WELDED WITH COMPLETE FUSION.
5. SURFACES COMING IN CONTACT WITH NEOPRENE SHALL BE GROUND SMOOTH PRIOR TO METALLIZING.
6. UPON COMPLETION OF SHOP FABRICATION, THE HOLD DOWN PLATE AND BASE ANGLE ASSEMBLY, AS SHOWN IN THE "TYPICAL SECTION OF BASE ANGLE ASSEMBLY", SHALL BE METALLIZED. SEE SPECIAL PROVISION FOR THERMAL SPRAYED COATINGS (METALLIZATION).
7. BASE ANGLE ASSEMBLY SHALL BE CONTINUOUS FOR THE LENGTH OF THE JOINT. AT CROWN BREAKS, THE ENDS OF THE BASE ANGLE ASSEMBLY SHALL BE CUT PARALLEL TO THE BRIDGE CENTERLINE FOR SKEWS LESS THAN 80° AND GREATER THAN 100°. FINISHED WELD SHALL BE GROUND SMOOTH AND COATED WITH A MINIMUM THICKNESS OF 4 DRY MILS OF ZINC-RICH PAINT IN ACCORDANCE WITH THE STANDARD SPECIFICATIONS.
8. FIELD SPLICES OF HOLD-DOWN PLATES SHALL BE KEPT TO A MINIMUM. CONTRACTOR SHALL FURNISH DETAILED PLANS SHOWING PROPOSED SPLICE LOCATIONS FOR APPROVAL. HOLD-DOWN PLATES SHALL NOT EXCEED 20' LENGTHS UNLESS APPROVED BY THE ENGINEER.
9. NO ALTERNATE JOINT DETAILS SHALL BE PERMITTED IN LIEU OF THOSE SHOWN ON THESE PLANS.
10. THE CONTRACTOR MAY, AT HIS OPTION, USE ADHESIVELY ANCHORED ANCHOR BOLTS IN PLACE OF CONCRETE INSERTS FOR COVER PLATES. THE YIELD LOAD OF THE ¾" Ø BOLT IS 10 KIPS. FIELD TESTING OF THE ADHESIVE BONDING SYSTEM IS NOT REQUIRED.

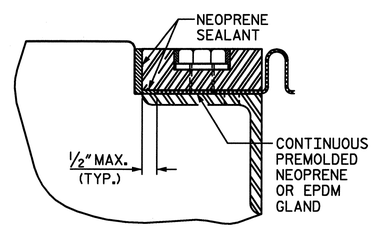

DETAIL "A"

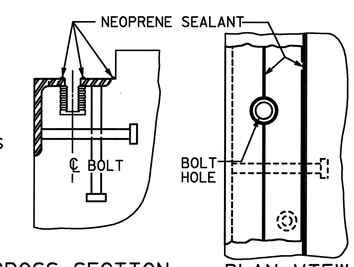

CROSS SECTION PLAN VIEW

INSTALLATION SKETCH

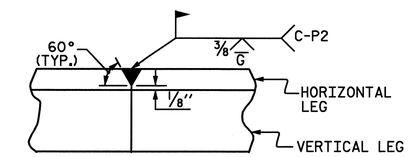

DETAIL- FIELD WELD SPLICE OF BASE ANGLE

MOVEMENT AND SETTING AT JOINT					
BENT NO.	SKEW ANGLE	TOTAL MOVEMENT (ALONG ℄ RDWY)	PERPENDICULAR JOINT OPENING AT 45° F	PERPENDICULAR JOINT OPENING AT 60° F	PERPENDICULAR JOINT OPENING AT 90° F
EB1	90°-00'-00"	⅞"	1⅝"	1½"	1 3/16"
BT5	90°-00'-00"	⅞"	1⅝"	1½"	1 3/16"
BT6	90°-00'-00"	⅞"	1⅝"	1½"	1⅛"
BT11	90°-00'-00"	1¾"	2¼"	2"	1 5/16"
EB2	90°-00'-00"	⅞"	1⅝"	1½"	1⅛"

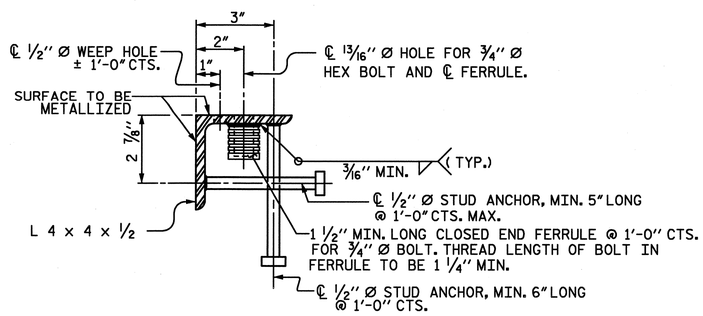

TYPICAL SECTION OF BASE ANGLE ASSEMBLY

PROJECT NO. U-4438
CAMDEN & PASQUOTANK COUNTY
STATION: 15+25.75 -L1-

SHEET 1 OF 4

NORTH CAROLINA PROFESSIONAL SEAL 026891 ENGINEER JOHN T. DIFFEE, III 3-17-11

ETHERILL ENGINEERING
559 Jones Franklin Rd. Suite 164
Raleigh, N.C. 27606
Bus: 919 851 8077
Fax: 919 851 8107
License: F-0377

TRANSPORTATION PLANNING/DESIGN - BRIDGE/STRUCTURE DESIGN
CIVIL/SITE DESIGN - GIS/GPS - CONSTRUCTION OBSERVATION

STATE OF NORTH CAROLINA
DEPARTMENT OF TRANSPORTATION
RALEIGH

STANDARD

EXPANSION JOINT SEAL DETAILS

REVISIONS							SHEET NO.
NO.	BY:	DATE:	NO.	BY:	DATE:		S-45
1			3				TOTAL SHEETS
2			4				454

ASSEMBLED BY : E. BONNEY		DATE : 11-10	
CHECKED BY : J. A. DILWORTH		DATE : 11-10	
DRAWN BY : REK	9/87	REV. 10/17/00	RWW/LES
CHECKED BY : CRK	10/87	REV. 5/7/03R	RWW/JTE
		REV. 5/1/06	TLA/GM

3/17/2011
10:12:27 AM
P:\2010\10119.02 U-4438\Structures\DGN\S45_U-4438_SD_EJS1.dgn

STD. NO. EJS1

REVISED MARCH 17, 2011

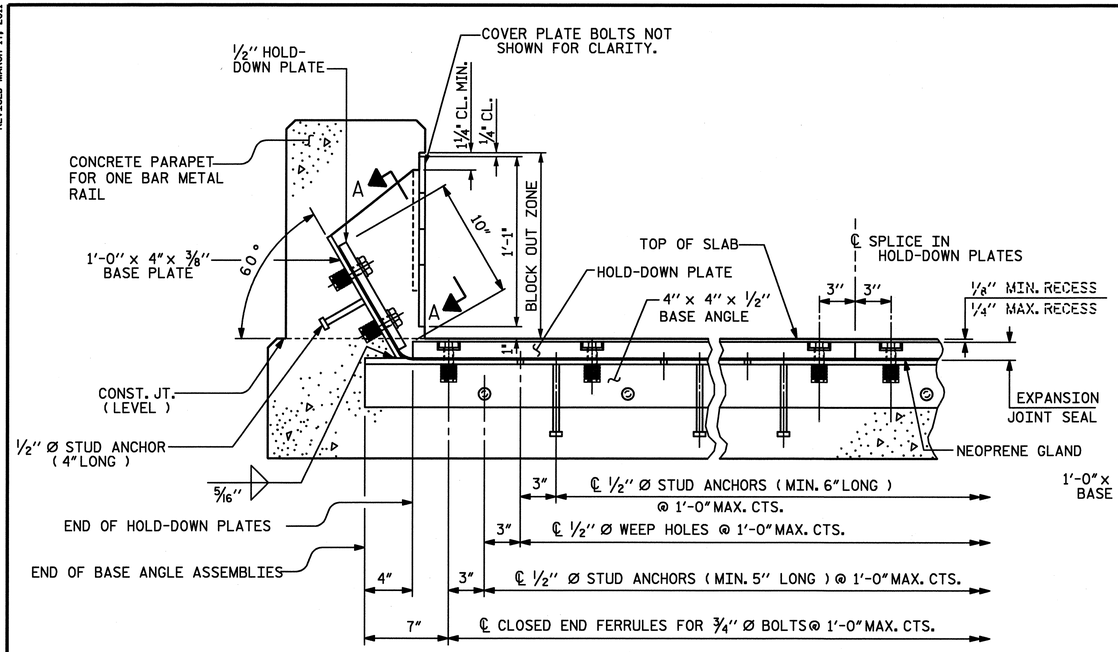

SECTION THRU PARAPET NORMAL TO JOINT

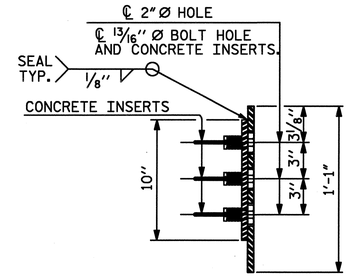

END VIEW

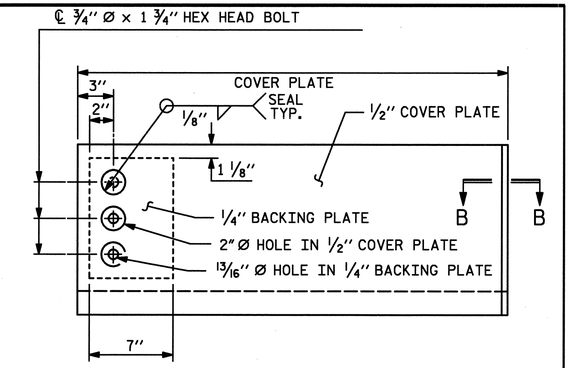

TYPE I - ELEVATION VIEW

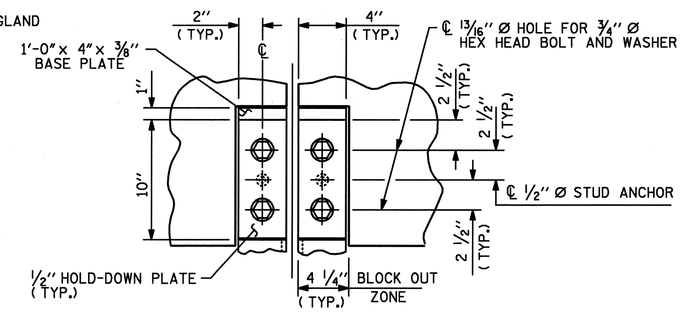

SECTION A - A

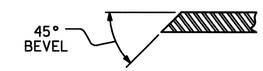

SECTION B - B

COVER PLATE DETAILS

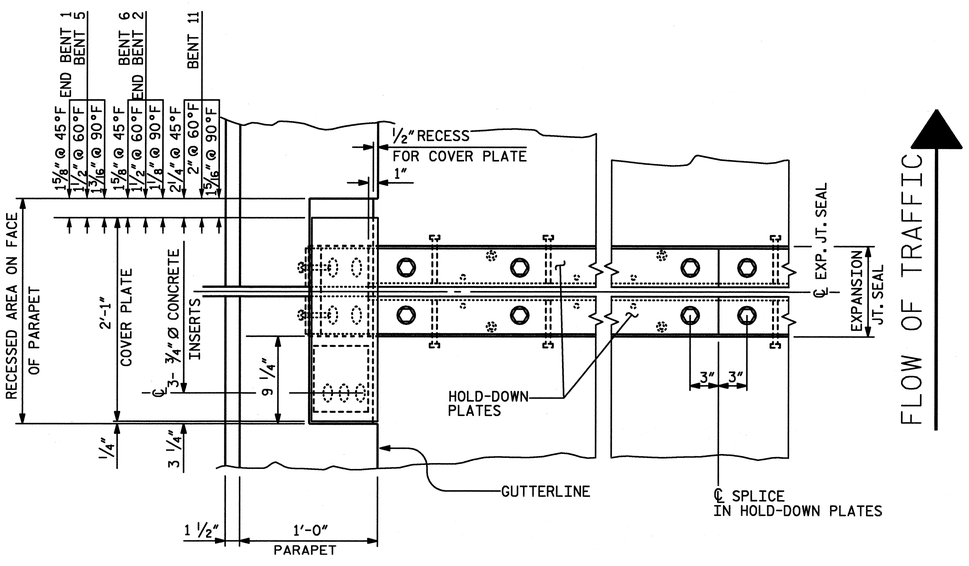

PLAN OF EXPANSION JOINT SEAL - LEFT SIDE

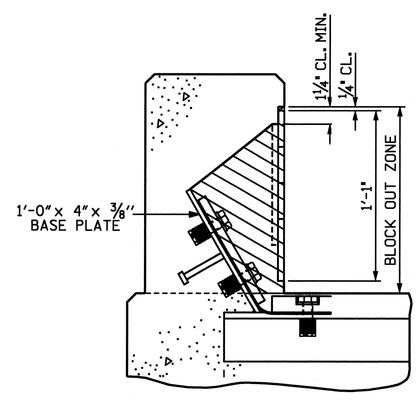

BLOCK OUT DETAIL

SEE "SECTION A - A" FOR OTHER DETAILS.

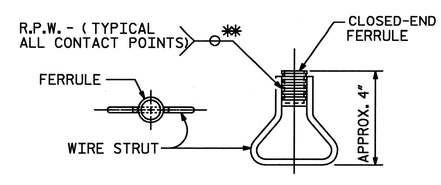

PLAN ELEVATION

CONCRETE INSERT

** EACH WELDED ATTACHMENT OF WIRE TO FERRULE SHALL DEVELOP THE TENSILE STRENGTH OF THE WIRE.

PROJECT NO. U-4438

CAMDEN & PASQUOTANK COUNTY

STATION: 15+25.75 -L1-

SHEET 2 OF 4

ASSEMBLED BY : E. BONNEY		DATE : 11-10	
CHECKED BY : J. A. DILWORTH		DATE : 11-10	
DRAWN BY : REK 9/87	REV. 7/17/98	RWW/LES	
CHECKED BY : CRK 10/87	REV. 10/17/00	RWW/LES	
	REV. 5/1/06	TLA/GM	

NORTH CAROLINA PROFESSIONAL SEAL 026891 ENGINEER JOHN T. DIFFEE III 3/17/11

WETHERILL ENGINEERING
559 Jones Franklin Rd. Suite 164
Raleigh, N.C. 27606
Bus: 919 851 8077
Fax: 919 851 8107
License: F-0377

TRANSPORTATION PLANNING/DESIGN - BRIDGE/STRUCTURE DESIGN
CIVIL/SITE DESIGN - GIS/GPS - CONSTRUCTION OBSERVATION

STATE OF NORTH CAROLINA
DEPARTMENT OF TRANSPORTATION
RALEIGH

STANDARD

EXPANSION JOINT SEAL DETAILS FOR ONE BAR METAL RAIL CONCRETE PARAPET

REVISIONS								
NO.	BY:	DATE:	NO.	BY:	DATE:	SHEET NO. S-46
1			3			TOTAL SHEETS 454
2			4			

3/17/2011
PA3310\U0119.02 U-4438\Structures\DGN\S46_U-4438_S0_EJS2.dgn

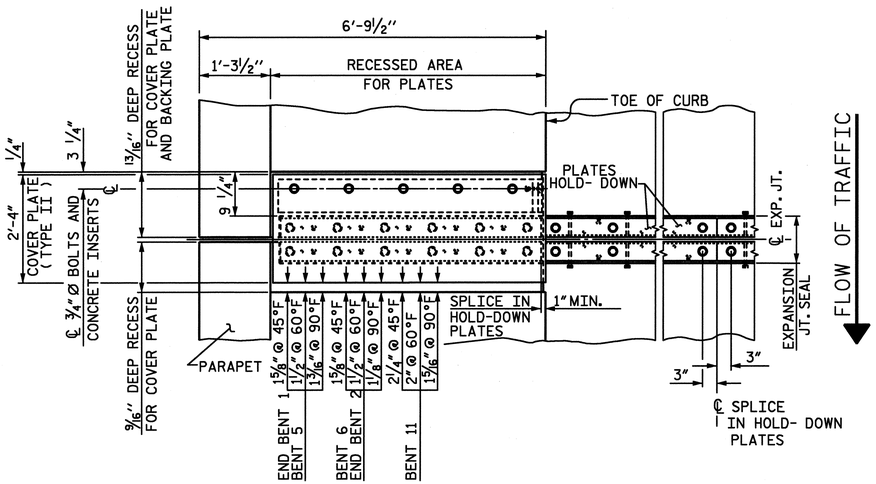

PLAN OF EXPANSION JOINT SEAL - RIGHT SIDE

NOTES:

THE STEEL PLATES SHALL CONFORM TO AASHTO M270 GRADE 36 OR APPROVED EQUAL. AFTER FABRICATION, THE PLATES SHALL BE COMMERCIALLY BLAST CLEANED AND EITHER COATED WITH A MINIMUM THICKNESS OF 4 MILS (DRY) OF ZINC-RICH PAINT, GALVANIZED OR METALLIZED TO A MINIMUM THICKNESS OF 6 MILS IN ACCORDANCE WITH THE STANDARD SPECIFICATIONS. FOR THERMAL SPRAYED COATINGS (METALLIZATION), SEE SPECIAL PROVISIONS.

THE ¾" DIAMETER HEX HEAD BOLTS SHALL CONFORM TO ASTM F593 ALLOY 304 STAINLESS STEEL.

NO SEPARATE PAYMENT WILL BE MADE FOR FURNISHING AND INSTALLING THE COVER PLATE. THE ENTIRE COST OF THIS WORK SHALL BE INCLUDED IN THE LUMP SUM PRICE FOR "EXPANSION JOINT SEALS".

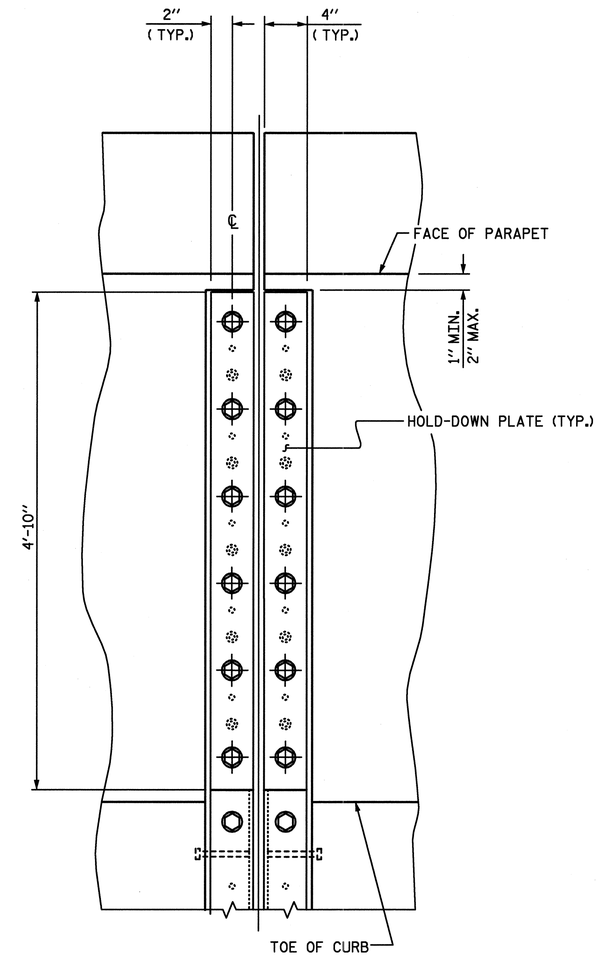

SECTION A - A

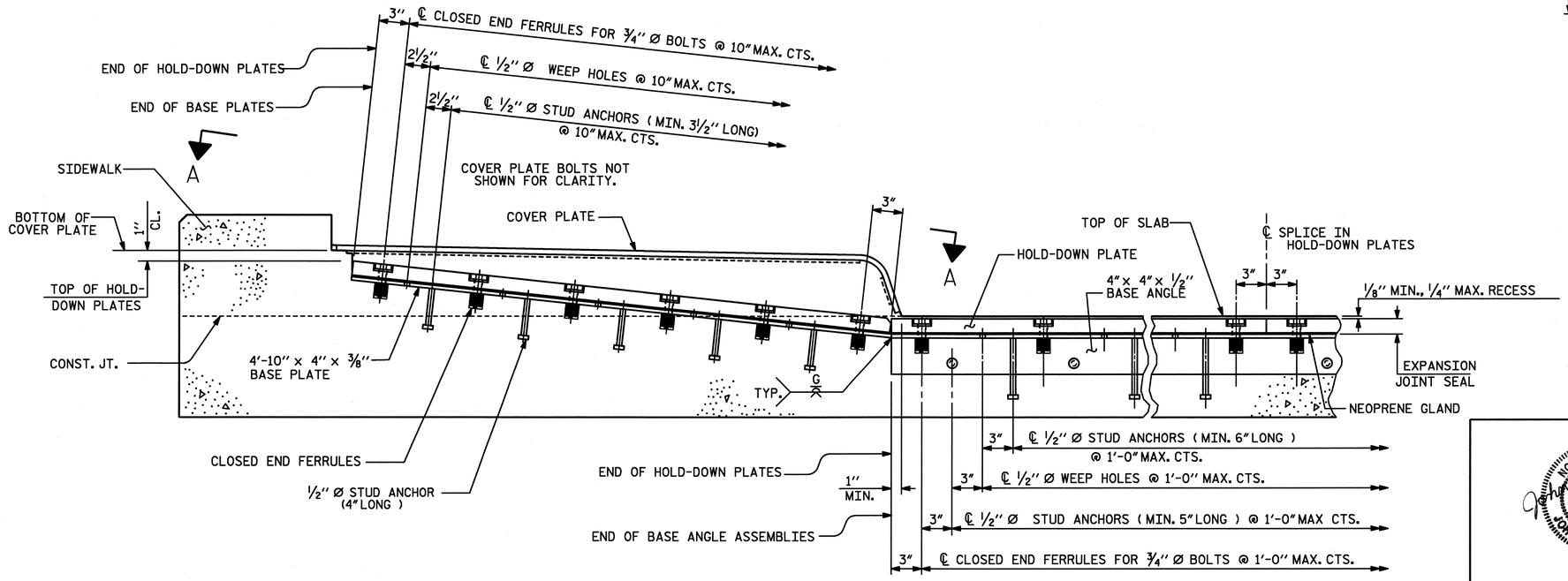

SECTION THRU SIDEWALK NORMAL TO JOINT

PROJECT NO. U-4438
CAMDEN & PASQUOTANK COUNTY
STATION: 15+25.75 -L1-

SHEET 3 OF 4

NORTH CAROLINA PROFESSIONAL SEAL 026891 ENGINEER JOHN T. DIFFEE III 2/6/11

ETHERILL ENGINEERING
559 Jones Franklin Rd. Suite 164
Raleigh, N.C. 27606
Bus: 919 851 8077
Fax: 919 851 8107
License: F-0377

TRANSPORTATION PLANNING/DESIGN - BRIDGE/STRUCTURE DESIGN
CIVIL/SITE DESIGN - GIS/GPS - CONSTRUCTION OBSERVATION

STATE OF NORTH CAROLINA
DEPARTMENT OF TRANSPORTATION
RALEIGH

STANDARD
EXPANSION JOINT SEAL DETAILS FOR SIDEWALK

REVISIONS						SHEET NO.
NO.	BY:	DATE:	NO.	BY:	DATE:	S-47
1			3			TOTAL SHEETS
2			4			454

STD. NO. EJS3

ASSEMBLED BY : E. BONNEY		DATE :	11-10
CHECKED BY : J. A. DILWORTH		DATE :	11-10
DRAWN BY : REK 10/87	REV.	6/1/94	EEM/GRP
CHECKED BY : CRK 1/88	REV.	2/6/97	EEM/RGW
	REV.	5/1/06	TLA/GM

2/4/2011
P:\2010\10119.02 U-4438\Structures\DGN\S47_U-4438_S0_EJS3.dgn

S3.dgn

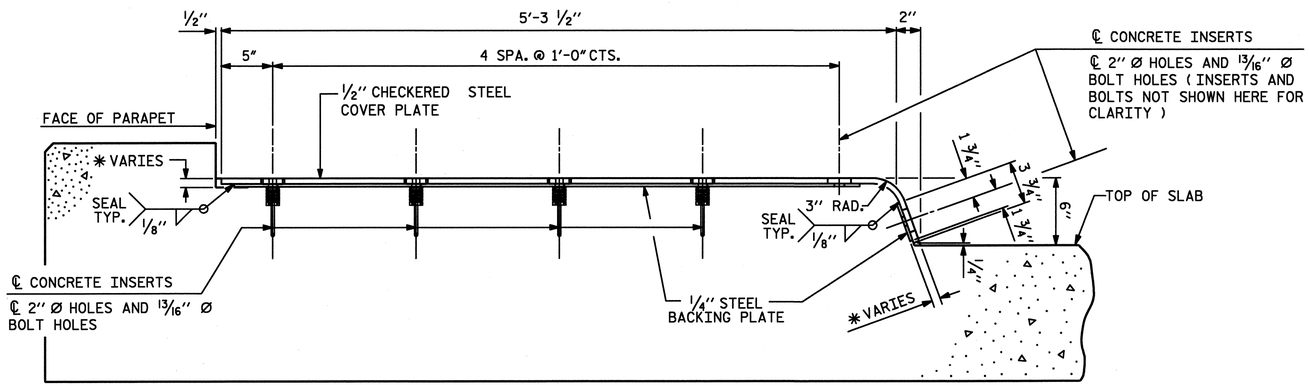

END VIEW
(NORMAL TO SIDEWALK)

* CONCRETE RECESS DIMENSIONS:

13/16" FOR THE SIDE OF THE JOINT HAVING THE 1/2" COVER PLATE WITH A 1/4" BACKING PLATE.

9/16" FOR THE SIDE OF THE JOINT HAVING ONLY THE 1/2" COVER PLATE.

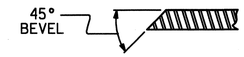

SECTION B - B

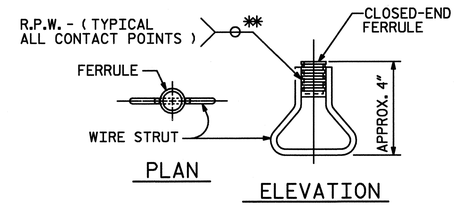

CONCRETE INSERT

** EACH WELDED ATTACHMENT OF WIRE TO FERRULE SHALL DEVELOP THE TENSILE STRENGTH OF THE WIRE.

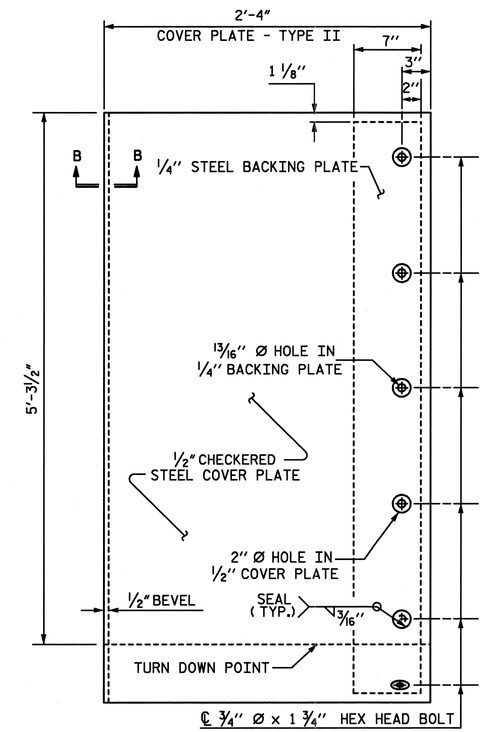

SIDEWALK COVERPLATE DETAIL-TYPE II

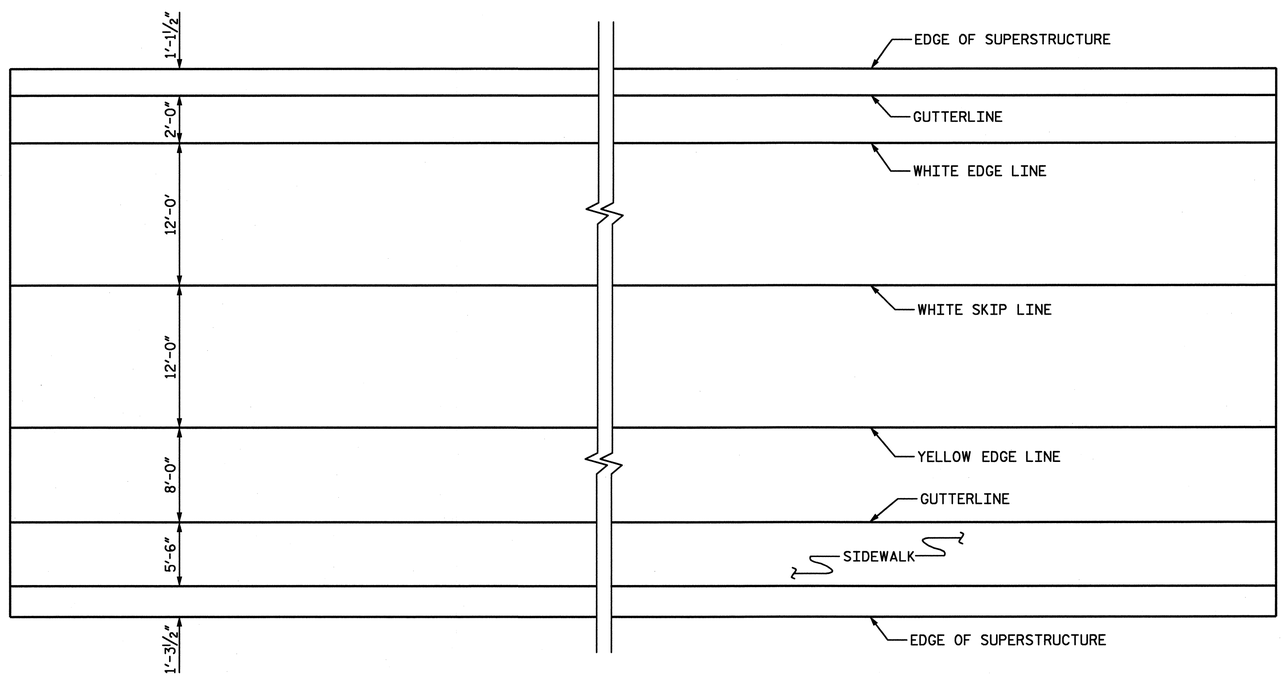

PAVEMENT MARKING ALIGNMENT

PROJECT NO. U-4438
CAMDEN & PASQUOTANK COUNTY
STATION: 15+25.75 -L1-

SHEET 4 OF 4

STATE OF NORTH CAROLINA
DEPARTMENT OF TRANSPORTATION
RALEIGH

STANDARD
EXPANSION JOINT SEAL DETAILS FOR SIDEWALK

NORTH CAROLINA PROFESSIONAL SEAL 026891 ENGINEER JOHN I. DIFFEE
2-6-11

WETHERILL ENGINEERING
559 Jones Franklin Rd. Suite 164
Raleigh, N.C. 27606
Bus: 919 851 8077
Fax: 919 851 8107
License: F-0377

TRANSPORTATION PLANNING/DESIGN - BRIDGE/STRUCTURE DESIGN
CIVIL/SITE DESIGN - GIS/GPS - CONSTRUCTION OBSERVATION

REVISIONS						SHEET NO.
NO.	BY:	DATE:	NO.	BY:	DATE:	S-48
1			3			TOTAL SHEETS
2			4			454

STD. NO. EJS4

ASSEMBLED BY : E. BONNEY		DATE : 11-10	
CHECKED BY : J. A. DILWORTH		DATE : 11-10	
DRAWN BY : REK 10/87	REV. 7/17/98	RWW/LES	
CHECKED BY : CRK 1/88	REV. 10/17/00	RWW/LES	
	REV. 5/1/06	TLA/GM	

2/4/2011
R:\Roadway\Proposals\U4438_SD_EJS4.dgn
P:\2010\U0118.02 U-4438\Structures\DGN\S48_U-4438_SD_EJS4.dgn

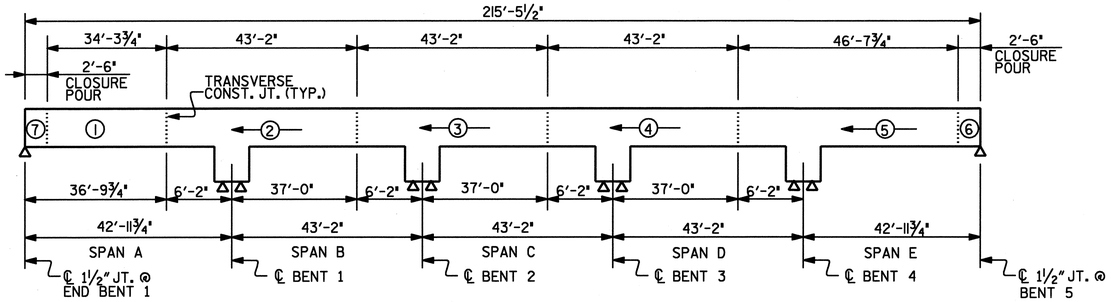

SPANS "A" THROUGH "E"

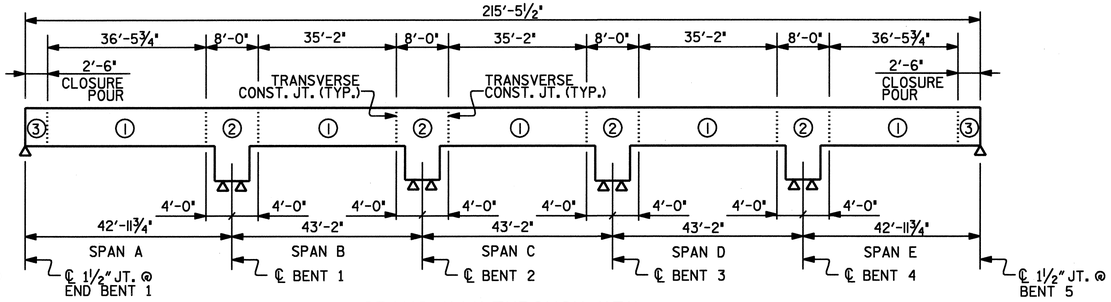

SPANS "A" THROUGH "E"

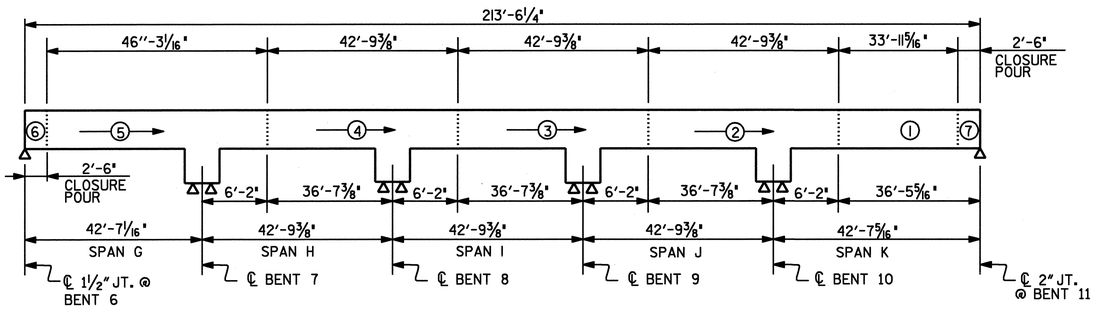

SPANS "G" THROUGH "K"

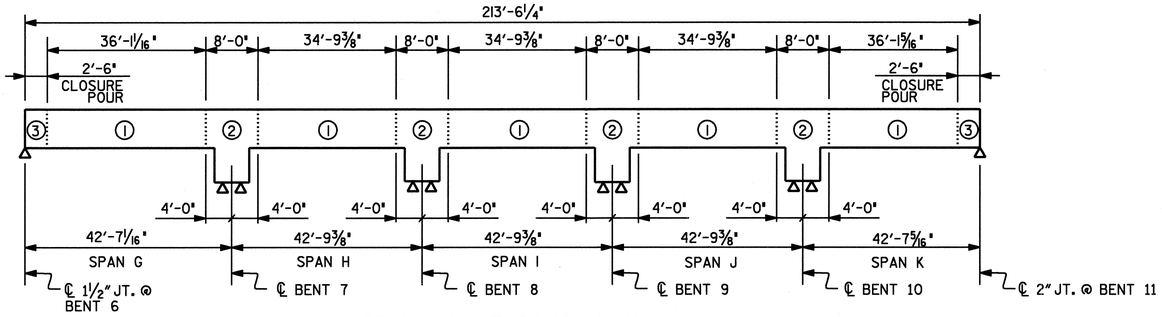

SPANS "G" THROUGH "K"

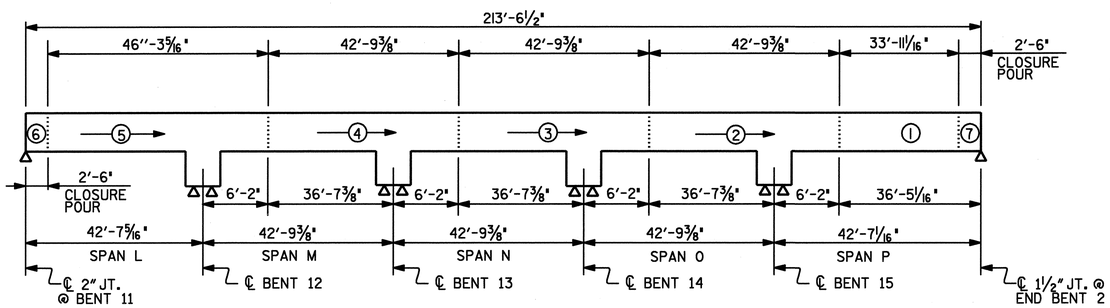

SPANS "L" THROUGH "P"

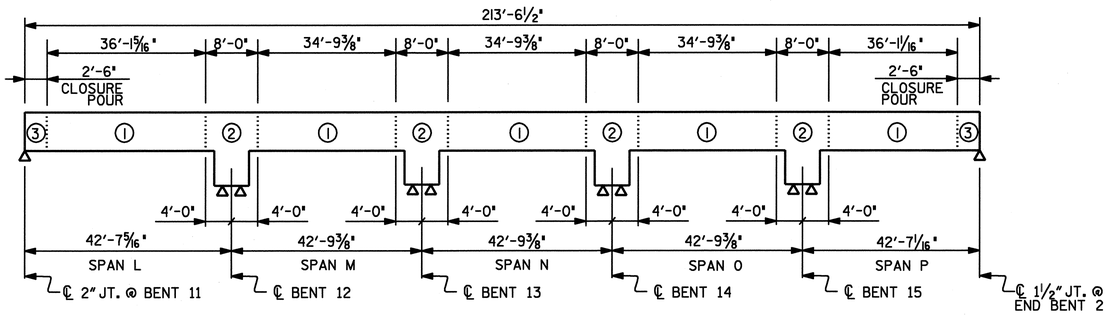

SPANS "L" THROUGH "P"

POURING SEQUENCE

←(*)— INDICATES POUR NUMBER AND DIRECTION OF POUR

OPTIONAL POURING SEQUENCE

POUR ② CAN NOT BE STARTED UNTIL BOTH ADJACENT ① POURS REACH A MINIMUM OF 3000 PSI.

PROJECT NO. U-4438

CAMDEN & PASQUOTANK COUNTY

STATION: 15+25.75 -L1-

STATE OF NORTH CAROLINA
DEPARTMENT OF TRANSPORTATION
RALEIGH

SUPERSTRUCTURE POURING SEQUENCE
(APPROACH SPANS ONLY)

NORTH CAROLINA PROFESSIONAL SEAL 026891 ENGINEER JOHN T. DIFFEE

ETHERILL ENGINEERING
559 Jones Franklin Rd. Suite 164
Raleigh, N.C. 27606
Bus: 919 851 8077
Fax: 919 851 8107
License: F-0377
TRANSPORTATION PLANNING/DESIGN - BRIDGE/STRUCTURE DESIGN
CIVIL/SITE DESIGN - GIS/GPS - CONSTRUCTION OBSERVATION

REVISIONS						SHEET NO.
NO.	BY:	DATE:	NO.	BY:	DATE:	S-49
1			3			TOTAL SHEETS
2			4			454

DRAWN BY : Z. PIATEK DATE : 11/10
CHECKED BY : J. DILWORTH DATE : 11/10

2/4/2011
P:\2010\10119.02 U-4438\Structures\DGN\S49_U-4438_SD_SSPS.dgn

REINFORCING BAR SCHEDULE

SPANS "A" THROUGH "E"

BAR	NO.	SIZE	TYPE	LENGTH	WEIGHT
✱A1	345	#5	STR.	41'-7"	14963
✱A2	85	#5	STR.	56'-7"	5016
✱A3	288	#4	STR.	2'-10"	545
✱B1	112	#4	STR.	26'-10"	2008
✱B2	224	#7	STR.	36'-0"	16483
✱B3	168	#4	STR.	11'-2"	1253
✱B4	40	#4	STR.	22'-4"	597
✱B6	220	#7	STR.	13'-0"	5846
✱B8	24	#5	STR.	60'-0"	1502
✱B10	36	#4	STR.	29'-7"	711
✱B12	15	#4	STR.	15'-11"	160
✱B13	8	#5	STR.	42'-5"	354
✱S1	78	#5	3	5'-2"	420
✱S2	384	#4	4	2'-9"	705
✱S3	10	#5	3	8'-6"	89
✱S4	4	#5	3	7'-4"	31
✱J1	97	#4	6	1'-5"	92
✱K1	6	#8	1	12'-7"	202
✱K2	12	#8	2	19'-9"	633
✱K3	32	#4	STR.	19'-0"	406
✱K4	32	#4	STR.	5'-10"	125
✱K5	64	#4	STR.	8'-2"	349
✱K6	32	#4	STR.	7'-8"	164
✱K7	8	#8	2	18'-1"	386
✱K8	4	#8	1	11'-9"	125
✱K9	4	#5	STR.	6'-8"	28
✱K10	4	#5	STR.	4'-6"	19
✱U1	32	#4	2	12'-0"	257
✱U2	96	#4	2	13'-0"	834
✱U3	48	#4	5	3'-4"	107
✱U4	72	#4	7	4'-3"	204
✱G1	1	#5	STR.	41'-7"	43
✱G2	1	#5	STR.	56'-7"	59
✱G3	1	#5	STR.	17'-9"	19
✱G4	167	#4	STR.	6'-5"	716
✱EPOXY COATED REINFORCING STEEL (LBS.)					55,451

SPANS "G" THROUGH "K"

BAR	NO.	SIZE	TYPE	LENGTH	WEIGHT
✱A1	426	#5	STR.	41'-7"	18476
✱A3	284	#4	STR.	2'-10"	538
✱B2	224	#7	STR.	36'-0"	16483
✱B5	112	#4	STR.	26'-5"	1976
✱B6	220	#7	STR.	13'-0"	5846
✱B7	168	#4	STR.	10'-10"	1216
✱B9	32	#5	STR.	55'-2"	1841
✱B11	48	#4	STR.	28'-5"	911
✱S1	64	#5	3	5'-2"	345
✱S2	384	#4	4	2'-9"	705
✱J1	82	#4	6	1'-5"	78
✱K1	8	#8	1	12'-7"	269
✱K2	12	#8	2	19'-9"	633
✱K3	32	#4	STR.	19'-0"	406
✱K4	32	#4	STR.	5'-10"	125
✱K5	64	#4	STR.	8'-2"	349
✱K6	32	#4	STR.	7'-8"	164
✱U1	32	#4	2	12'-0"	257
✱U2	96	#4	2	13'-0"	834
✱U3	62	#4	5	3'-4"	138
✱G1	2	#5	STR.	41'-7"	87
✱G4	213	#4	STR.	6'-5"	913
✱EPOXY COATED REINFORCING STEEL (LBS.)					52,590

SPANS "L" THROUGH "P"

BAR	NO.	SIZE	TYPE	LENGTH	WEIGHT
✱A1	426	#5	STR.	41'-7"	18476
✱A3	284	#4	STR.	2'-10"	538
✱B2	224	#7	STR.	36'-0"	16483
✱B5	112	#4	STR.	26'-5"	1976
✱B6	220	#7	STR.	13'-0"	5846
✱B7	168	#4	STR.	10'-10"	1216
✱B9	32	#5	STR.	55'-2"	1841
✱B11	48	#4	STR.	28'-5"	911
✱S1	64	#5	3	5'-2"	345
✱S2	384	#4	4	2'-9"	705
✱J1	82	#4	6	1'-5"	78
✱K1	8	#8	1	12'-7"	269
✱K2	12	#8	2	19'-9"	633
✱K3	32	#4	STR.	19'-0"	406
✱K4	32	#4	STR.	5'-10"	125
✱K5	64	#4	STR.	8'-2"	349
✱K6	32	#4	STR.	7'-8"	164
✱U1	32	#4	2	12'-0"	257
✱U2	96	#4	2	13'-0"	834
✱U3	62	#4	5	3'-4"	138
✱G1	2	#5	STR.	41'-7"	87
✱G4	213	#4	STR.	6'-5"	913
✱EPOXY COATED REINFORCING STEEL (LBS.)					52,590

✱ALL BARS ARE EPOXY COATED.

SUPERSTRUCTURE REINFORCING STEEL LENGTHS ARE BASED ON THE FOLLOWING MINIMUM SPLICE LENGTHS

BAR SIZE	SUPERSTRUCTURE EXCEPT APPROACH SLABS, PARAPET, AND BARRIER RAIL		APPROACH SLABS		PARAPET AND BARRIER RAIL
	EPOXY COATED	UNCOATED	EPOXY COATED	UNCOATED	
#4	2'-0"	1'-9"	2'-0"	1'-9"	2'-9"
#5	2'-6"	2'-2"	2'-6"	2'-2"	3'-5"
#6	3'-0"	2'-7"	3'-10"	2'-7"	4'-4"
#7	5'-3"	3'-6"	——	——	——
#8	6'-10"	4'-7"	——	——	——

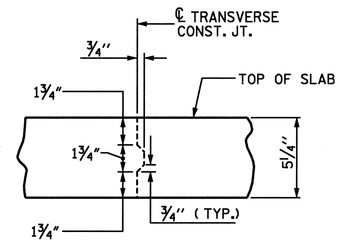

TRANSVERSE CONSTRUCTION JOINT DETAIL IN DECK

NOTE: REINFORCING STEEL IN SLAB NOT SHOWN. LONGITUDINAL REINFORCING STEEL SHALL BE CONTINUOUS THRU JOINT

BAR TYPES

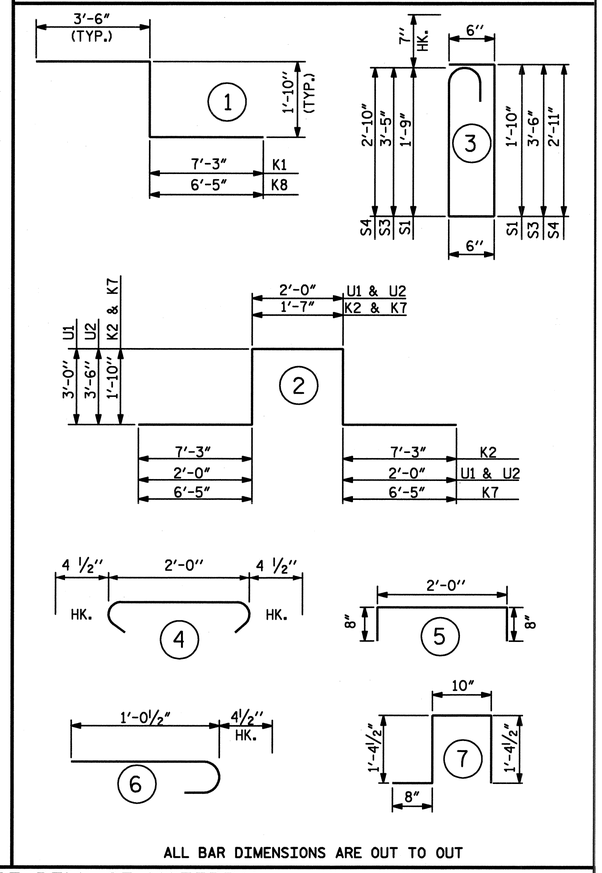

ALL BAR DIMENSIONS ARE OUT TO OUT

GROOVING BRIDGE FLOORS

APPROACH SLABS	1,488	SQ.FT.
BRIDGE DECK	20,409	SQ.FT.
TOTAL	21,897	SQ.FT.

SUPERSTRUCTURE BILL OF MATERIAL

	CLASS AA CONCRETE (CU. YDS.)									EPOXY COATED REINFORCING STEEL (LBS.)
	POUR 1	POUR 2	POUR 3	POUR 4	POUR 5	POUR 6	POUR 7	SIDEWALK	TOTAL	
SPANS "A" THROUGH "E"	28.1	44.4	44.4	44.4	60.7	5.8	3.7	33.9	265.4	55,451
SPANS "G" THROUGH "K"	27.8	44.0	44.0	44.0	46.9	3.7	3.7	38.1	252.2	52,590
SPANS "L" THROUGH "P"	27.8	44.0	44.0	44.0	46.9	3.7	3.7	38.6	252.7	52,590
TOTALS✱✱									770.3	160,631

✱✱QUANTITIES FOR ONE BAR RAIL CONCRETE PARAPET ARE NOT INCLUDED.

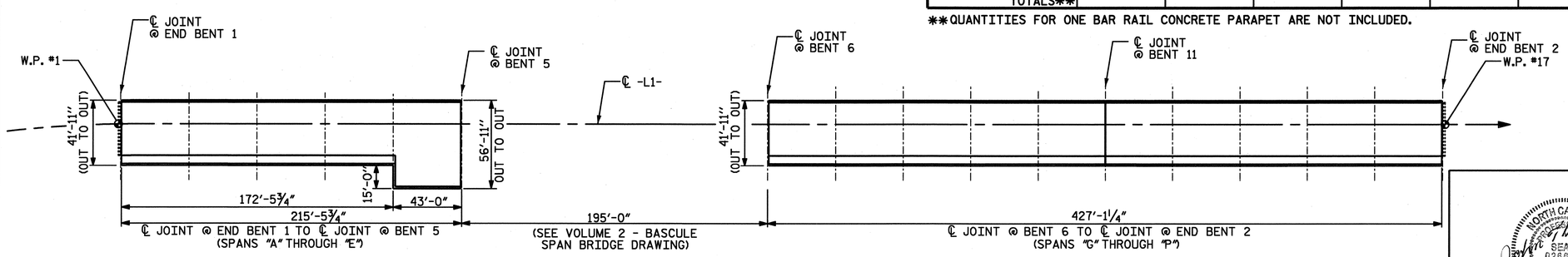

LAYOUT FOR COMPUTING AREA REINFORCED CONCRETE DECK SLAB
(SQ. FT. = 27,582)

PROJECT NO. U-4438
CAMDEN & PASQUOTANK COUNTY
STATION: 15+25.75 -L1-

ASSEMBLED BY : Z. PIATEK		DATE : 12/10	
CHECKED BY : J. DILWORTH		DATE : 12/10	
DRAWN BY : JMB 5/87	REV. 6/1/94	EEM/GRP	
CHECKED BY : SJD 9/87	REV. 8/16/99	RWW/LES	
	REV. 5/1/06	TLA/GM	

WETHERILL ENGINEERING
559 Jones Franklin Rd. Suite 164
Raleigh, N.C. 27606
Bus: 919 851 8077
Fax: 919 851 8107
License: F-0377
TRANSPORTATION PLANNING/DESIGN - BRIDGE/STRUCTURE DESIGN
CIVIL/SITE DESIGN - GIS/GPS - CONSTRUCTION OBSERVATION

STATE OF NORTH CAROLINA
DEPARTMENT OF TRANSPORTATION
RALEIGH

STANDARD
SUPERSTRUCTURE BILL OF MATERIAL
(APPROACH SPANS ONLY)

REVISIONS						SHEET NO.
NO.	BY:	DATE:	NO.	BY:	DATE:	S-50
1			3			TOTAL SHEETS
2			4			454

STD. NO. BOM2

REVISED MARCH 21, 2011

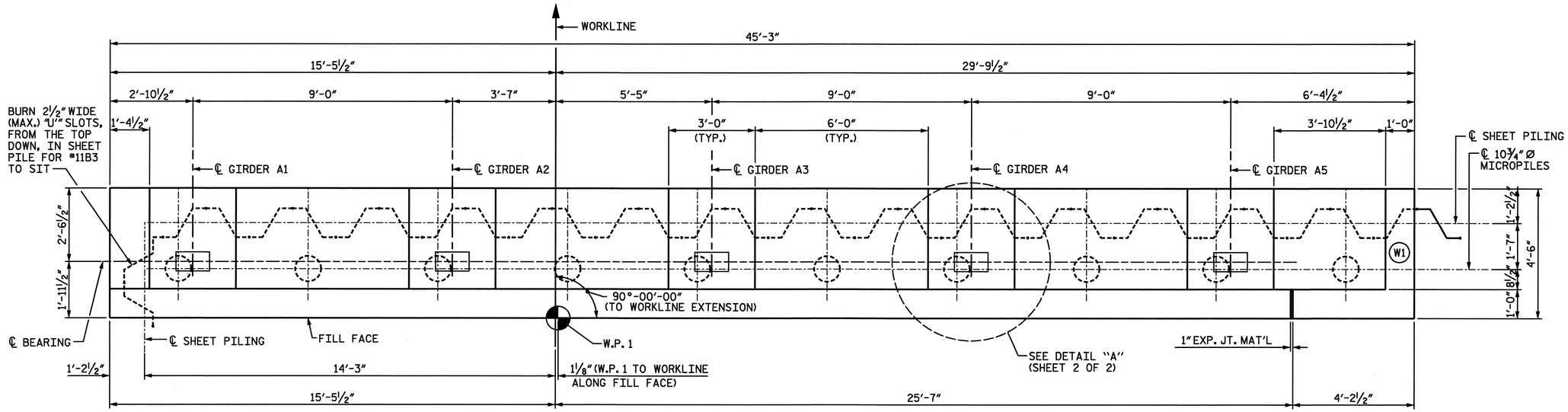

PLAN

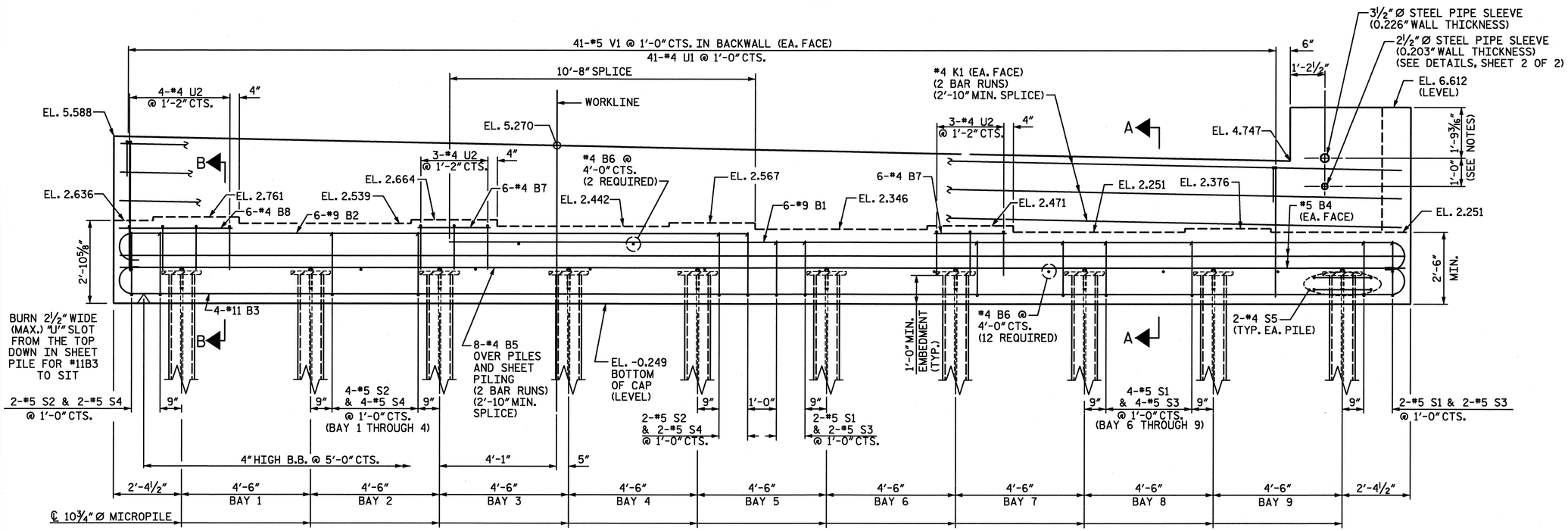

ELEVATION

SHEET PILING NOT SHOWN FOR CLARITY

NOTES

BACKWALL SHALL BE PLACED BEFORE APPLYING THE EPOXY PROTECTIVE COATING.

THE TOP SURFACE AREAS OF THE END BENT CAP SHALL BE CURED IN ACCORDANCE WITH THE STANDARD SPECIFICATIONS EXCEPT THAT THE MEMBRANE CURING COMPOUND METHOD SHALL NOT BE USED.

THE TOP SURFACE OF THE CAP EXCEPT THE BRIDGE SEAT BUILDUPS SHALL BE SLOPED TRANSVERSELY FROM THE FILL FACE TO THE BACK FACE AT THE RATE OF 2%.

LOCATION OF PIPE SLEEVES FOR SEWER AND WATER LINES MAY BE ADJUSTED SLIGHTLY TO MATCH WITH INSTALLED GRADES OF UTILITIES. MAINTAIN 2" CLEARANCE MIN. BETWEEN SLEEVE AND REINFORCING.

ALL COSTS FOR MATERIALS AND INSTALLATION OF THE BACKWALL PENETRATIONS SHALL BE INCLUDED IN THE VARIOUS PAY ITEMS. NO SEPARATE PAYMENT WILL BE MADE.

AN A.I.S.I TYPE 316 STAINLESS STEEL FERRULE INSERT MAY BE REQUIRED IN THE BACKWALL AS THE ANCHOR POINT FOR THE MESSENGER CABLE SYSTEM. CONTRACTOR SHALL COORDINATE WITH ELECTRICAL SUBCONTRACTOR ON LOCATION OF INSERT. SEE TYPICAL SECTION, SHEET 3 OF 3 AND VOLUME 2 OF STRUCTURE PLANS FOR ADDITIONAL DETAILS.

PROJECT NO. U-4438
CAMDEN & PASQUOTANK COUNTY
STATION: 15+25.75 -L1-

SHEET 1 of 2

NORTH CAROLINA PROFESSIONAL SEAL 026891 ENGINEER JOHN T. DIFFEE III
3-21-11

WETHERILL ENGINEERING
559 Jones Franklin Rd. Suite 164
Raleigh, N.C. 27606
Bus: 919 851 8077
Fax: 919 851 8007
License: F-0377

TRANSPORTATION PLANNING/DESIGN - BRIDGE/STRUCTURE DESIGN
CIVIL/SITE DESIGN - GIS/GPS - CONSTRUCTION OBSERVATION

STATE OF NORTH CAROLINA
DEPARTMENT OF TRANSPORTATION
RALEIGH

SUBSTRUCTURE
END BENT 1

REVISIONS								SHEET NO.
NO.	BY:	DATE:	NO.	BY:	DATE:			S-51
1			3					TOTAL SHEETS
2			4					454

DRAWN BY : J. PENDERGRAFT DATE : 1-11
CHECKED BY : T. DIFFEE DATE : 1-11

P:\2010\1019.02 U-4438\Structures\DGN\S51_U-4438_SD_EB1.dgn
3/21/2011 4:07:14 PM

REVISED MARCH 17, 2011

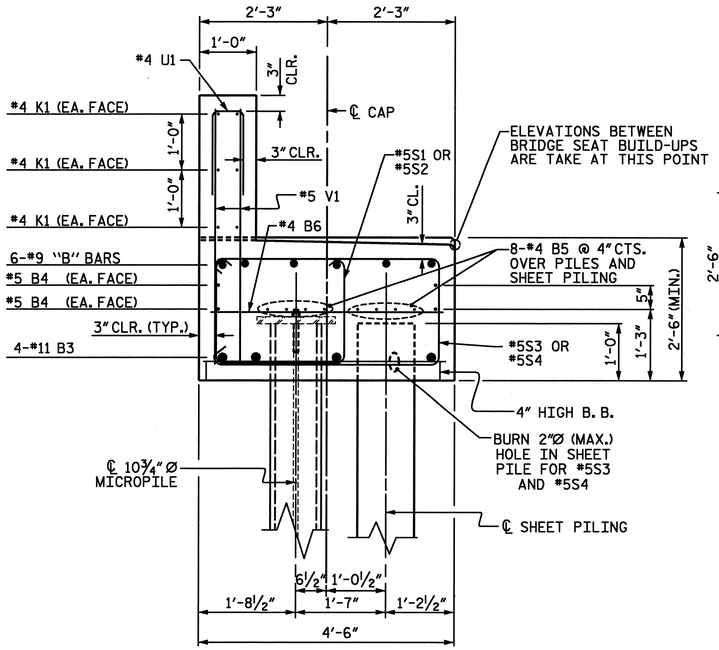

SECTION A-A

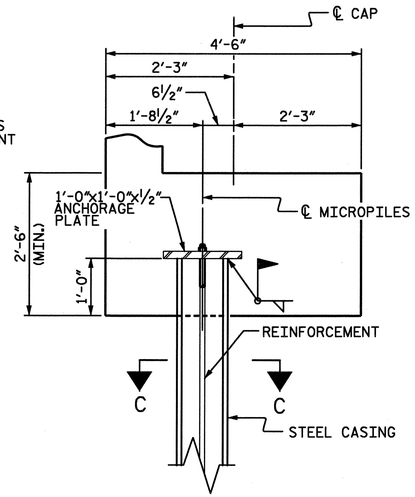

MICROPILE DETAIL

(TYP. EACH MICROPILE)

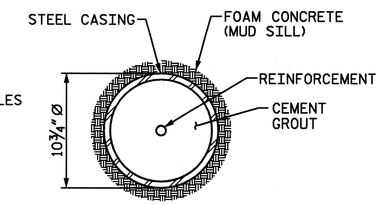

SECTION C-C

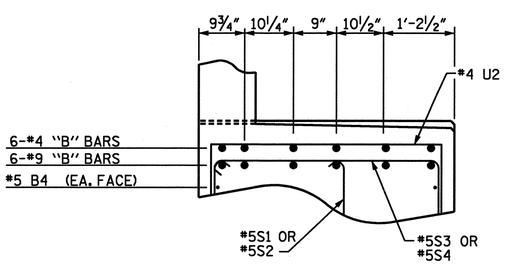

PARTIAL SECTION B-B

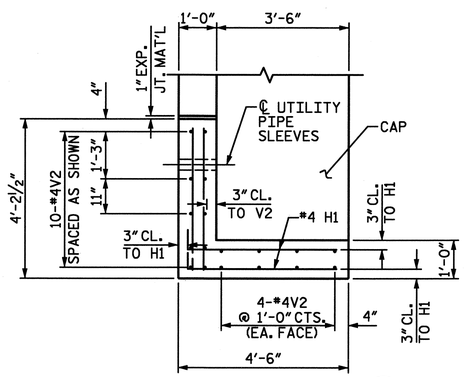

PLAN OF WING (W1)

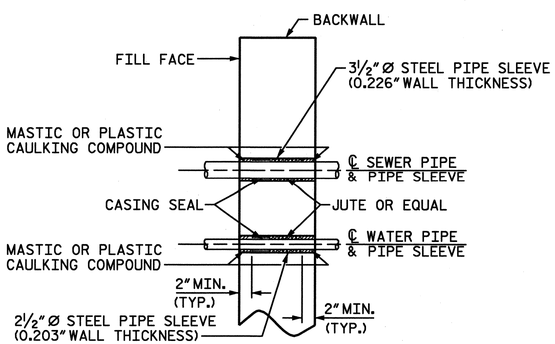

SECTION THROUGH PIPE SLEEVES

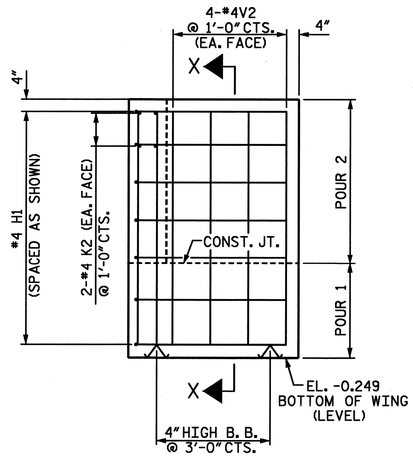

ELEVATION OF WING (W1)

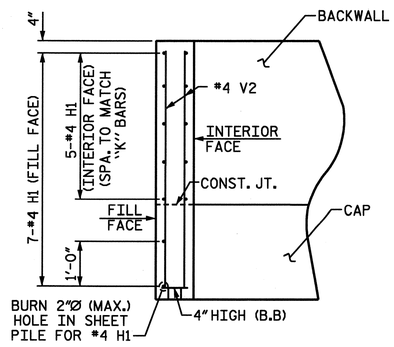

SECTION X-X

BAR TYPES

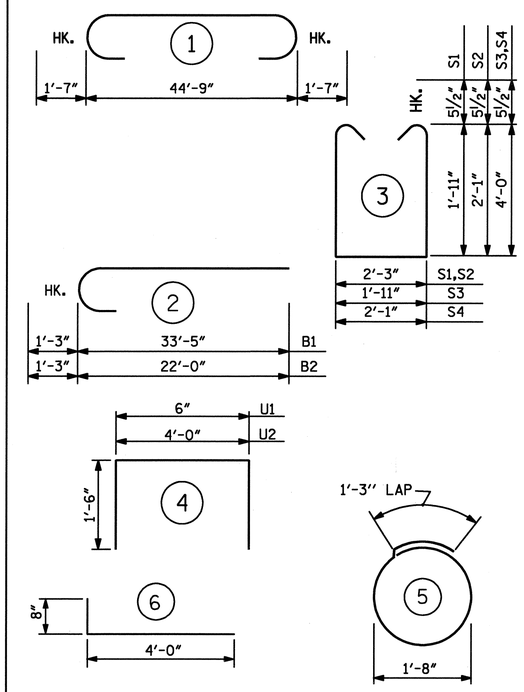

(ALL BAR DIMENSIONS ARE OUT TO OUT.)

BILL OF MATERIAL
END BENT 1

BAR	NO.	SIZE	TYPE	LENGTH	WEIGHT
* B1	6	#9	2	34'-8"	707
* B2	6	#9	2	23'-3"	474
* B3	4	#11	1	47'-11"	1018
* B4	4	#5	STR.	44'-9"	187
* B5	16	#4	STR.	23'-10"	255
* B6	14	#4	STR.	4'-0"	37
* B7	12	#4	STR.	2'-6"	20
* B8	6	#4	STR.	3'-10"	15
* H1	12	#4	6	4'-8"	37
* K1	12	#4	STR.	23'-10"	191
* K2	4	#4	STR.	3'-10"	10
* S1	20	#5	3	7'-0"	146
* S2	20	#5	3	7'-4"	153
* S3	20	#5	3	10'-10"	226
* S4	20	#5	3	11'-0"	229
* S5	20	#4	5	6'-6"	87
* U1	41	#4	4	3'-6"	96
* U2	10	#4	4	7'-0"	47
* V1	82	#5	STR.	4'-6"	385
* V2	18	#4	STR.	6'-3"	75

*EPOXY COATED REINFORCING STEEL 4,395 LBS.

CLASS AA CONCRETE
POUR 1 CAP & LOWER WINGS 20.5 CU. YDS.
POUR 2 BACKWALL & UPPER WINGS 5.3 CU. YDS.
TOTAL 25.8 CU. YDS.

BRIDGE MICROPILES (10¾"Ø NO. 10

BRIDGE MICROPILE VERIFICATION TESTS NO. 1

BRIDGE MICROPILE PROOF TEST NO. 2

END BENT CAP BULKHEAD SHEETING 47.1 LIN. FT.

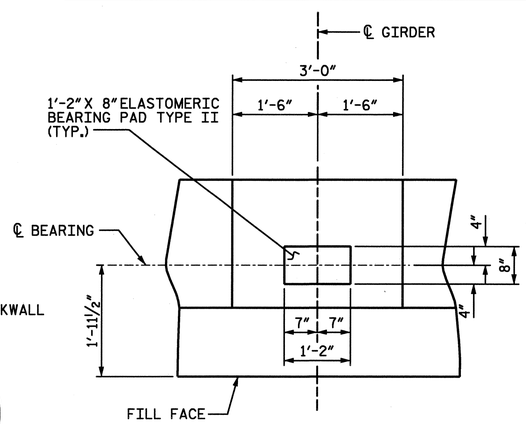

DETAIL "A"

NO ANCHOR BOLTS AT END BENT 2 (TYP. EA. GIRDER)

BILL OF MATERIALS FOR UTILITIES

QNTY.	UNITS	ITEMS
1	EA.	3½"Ø STEEL PIPE SLEEVE, 0.226" WALL THICKNESS, 1'-0" LENGTH
1	EA.	2½"Ø STEEL PIPE SLEEVE, 0.203" WALL THICKNESS, 1'-0" LENGTH
2	EA.	APPROVED MODULAR TYPE CASING SEAL
15	LBS.	JUTE
10	LBS.	MASTIC OR PLASTIC CAULKING COMPOUND

THESE ARE ESTIMATED QUNTITIES ONLY.

PROJECT NO. U-4438
CAMDEN & PASQUOTANK COUNTY
STATION: 15+25.75 -L1-

SHEET 2 of 2

NORTH CAROLINA PROFESSIONAL SEAL 026891 ENGINEER JOHN T. DIFFEE III 3-17-11

ETHERILL ENGINEERING
559 Jones Franklin Rd. Suite 164
Raleigh, N.C. 27606
Bus: 919 851 8077
Fax: 919 851 8107
License: F-0377

TRANSPORTATION PLANNING/DESIGN - BRIDGE/STRUCTURE DESIGN
CIVIL/SITE DESIGN - GIS/GPS - CONSTRUCTION OBSERVATION

STATE OF NORTH CAROLINA
DEPARTMENT OF TRANSPORTATION
RALEIGH

SUBSTRUCTURE
END BENT 1

REVISIONS								SHEET NO.
NO.	BY:	DATE:	NO.	BY:	DATE:			S-52
1			3					TOTAL SHEETS
2			4					454

DRAWN BY : J. PENDERGRAFT DATE : 1-11
CHECKED BY : T. DIFFEE DATE : 1-11

P:\2010\101902_U-4438\Structures\DGNS\51_U-4438_SD_EB1.dgn
3/17/2011 2:43:05 PM

NOTES:
STIRRUPS IN CAP MAY BE SHIFTED AS NECESSARY TO CLEAR ANCHOR BOLTS.

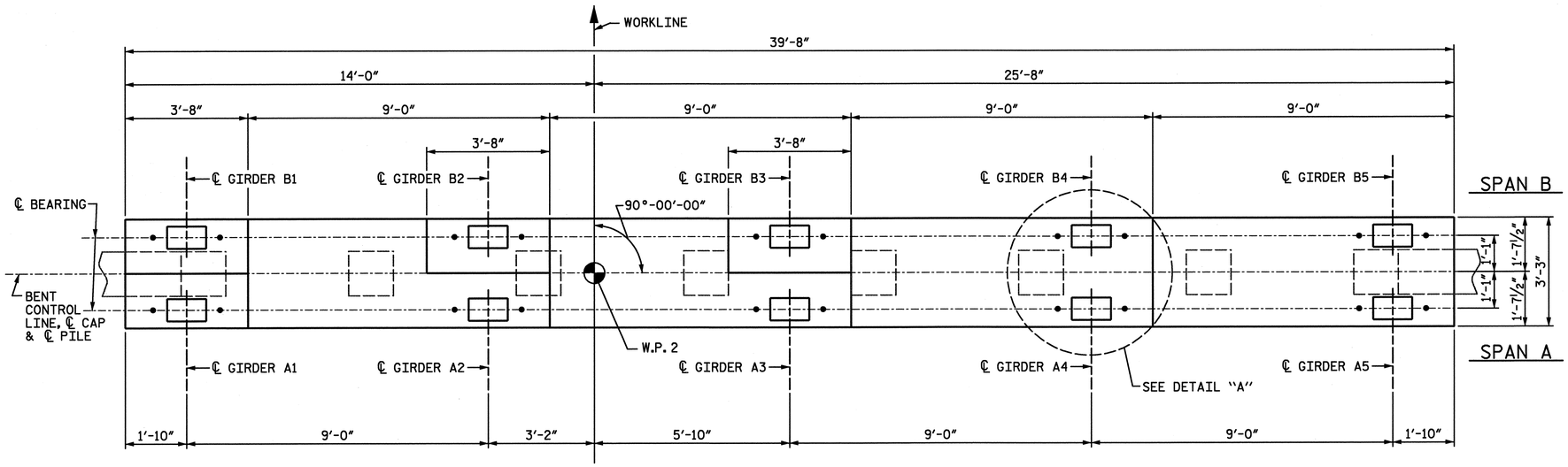

PLAN

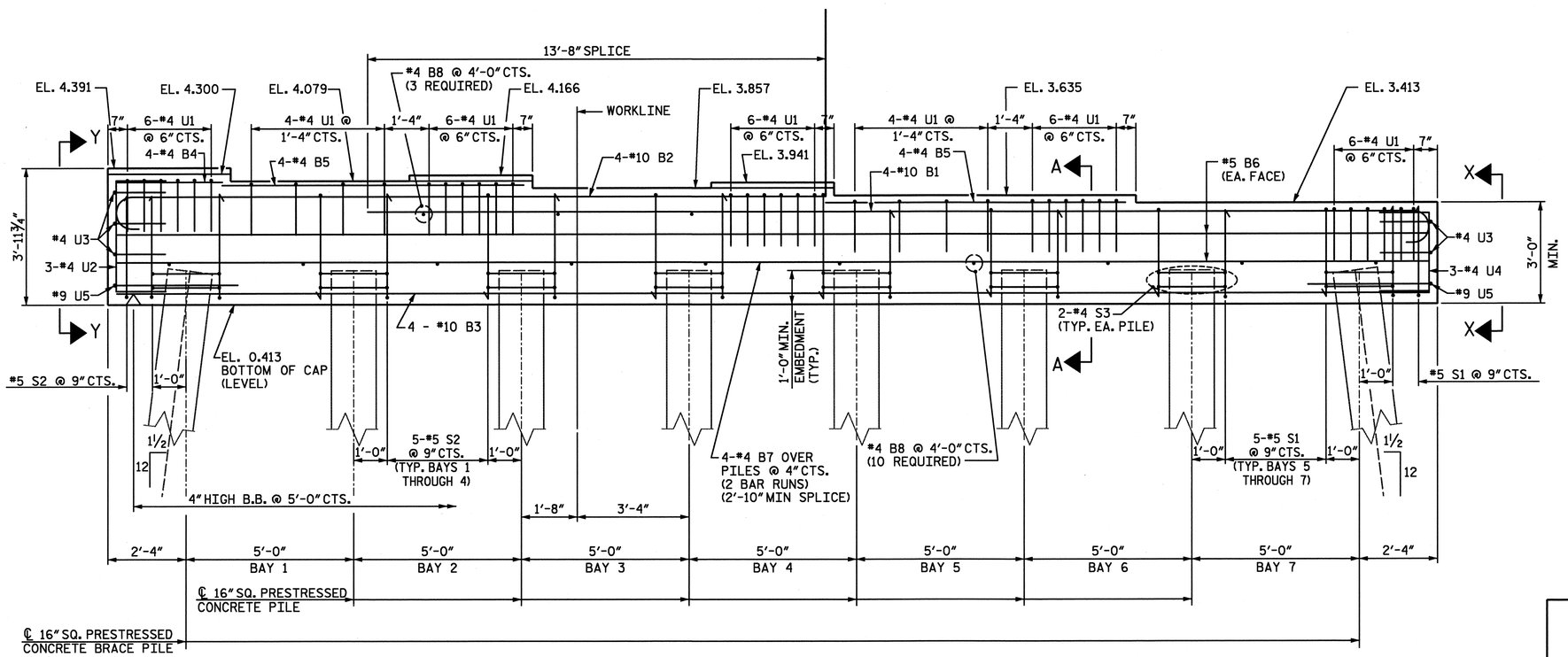

ELEVATION
INVERT ALTERNATE STIRRUPS

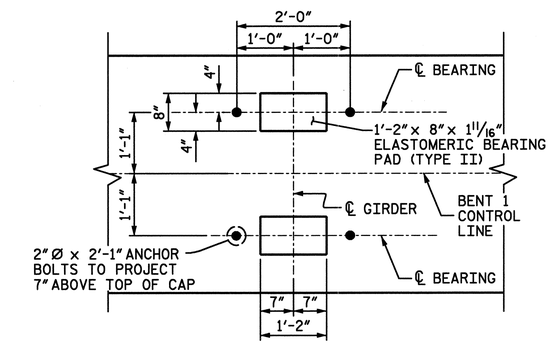

DETAIL "A"
(DETAILS AND DIMENSIONS ARE TYPICAL FOR EACH BEARING)

PROJECT NO. U-4438
CAMDEN & PASQUOTANK COUNTY
STATION: 15+25.75 -L1-

SHEET 1 of 2

NORTH CAROLINA PROFESSIONAL SEAL 026891 ENGINEER JOHN T. DIFFEE III

WETHERILL ENGINEERING
559 Jones Franklin Rd. Suite 164
Raleigh, N.C. 27606
Bus: 919 851 8077
Fax: 919 851 8107
License: F-0377

TRANSPORTATION PLANNING/DESIGN - BRIDGE/STRUCTURE DESIGN
CIVIL/SITE DESIGN - GIS/GPS - CONSTRUCTION OBSERVATION

STATE OF NORTH CAROLINA
DEPARTMENT OF TRANSPORTATION
RALEIGH

SUBSTRUCTURE
BENT 1

REVISIONS								SHEET NO.
NO.	BY:	DATE:	NO.	BY:	DATE:			S-53
1			3					TOTAL SHEETS
2			4					454

DRAWN BY : J. PENDERGRAFT DATE : 11-10
CHECKED BY : T. DIFFEE DATE : 11-10

P:\2010\101902 U-4438\Structures\DGN\S53_U-4438_SD_BENT 1.dgn
2/4/2011 4:35:00 PM

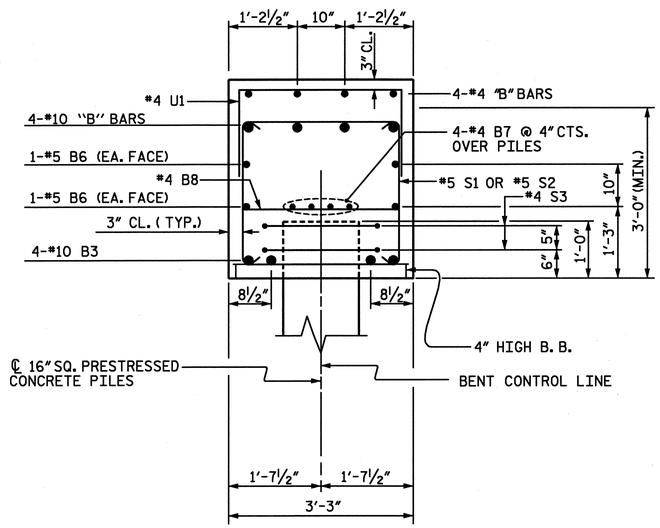

SECTION A-A

INVERT ALTERNATE STIRRUPS

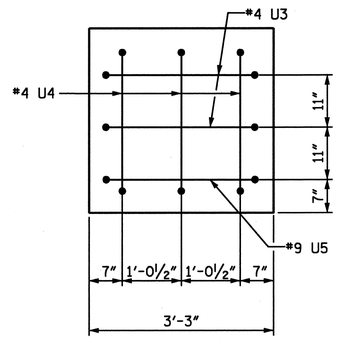

VIEW X-X

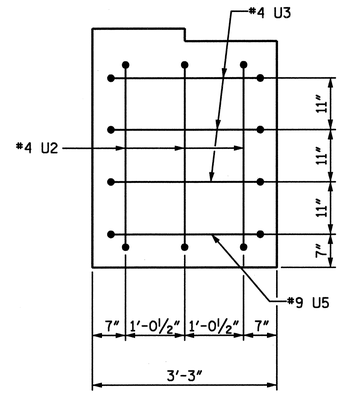

VIEW Y-Y

BAR TYPES

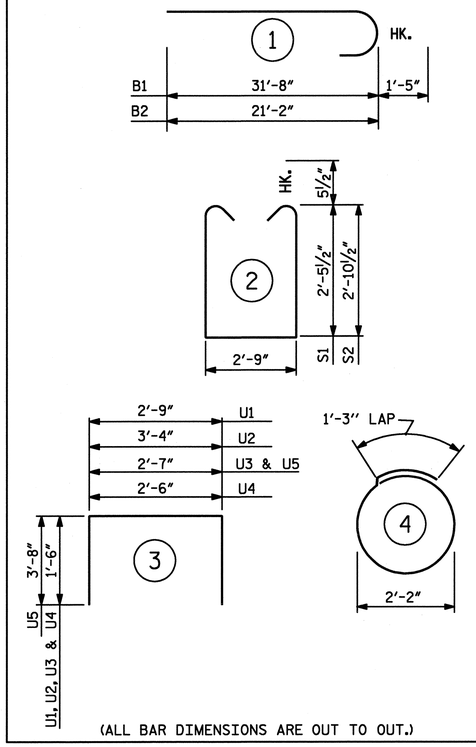

(ALL BAR DIMENSIONS ARE OUT TO OUT.)

BILL OF MATERIAL

BENT 1

BAR	NO.	SIZE	TYPE	LENGTH	WEIGHT
* B1	4	#10	1	33'-1"	569
* B2	4	#10	1	22'-7"	389
* B3	4	#10	STR.	39'-2"	674
* B4	4	#4	STR.	3'-2"	8
* B5	8	#4	STR.	9'-0"	48
* B6	4	#5	STR.	39'-2"	163
* B7	8	#4	STR.	21'-0"	112
* B8	13	#4	STR.	2'-9"	24
* S1	17	#5	2	8'-7"	152
* S2	22	#5	2	9'-5"	216
* S3	16	#4	4	8'-1"	86
* U1	38	#4	3	5'-9"	146
* U2	3	#4	3	6'-4"	13
* U3	5	#4	3	5'-7"	19
* U4	3	#4	3	5'-6"	11
* U5	2	#9	3	9'-11"	67

* EPOXY COATED REINFORCING STEEL	2,697 LBS.
CLASS AA CONCRETE	15.7 CU. YDS.
16" SQ. PRESTRESSED CONCRETE PILES NO. 8	520 LIN. FT.

PROJECT NO. U-4438

CAMDEN & PASQUOTANK COUNTY

STATION: 15+25.75 -L1-

SHEET 2 of 2

NORTH CAROLINA PROFESSIONAL SEAL 026891 ENGINEER JOHN T. DIFFEE III

2-6-11

WETHERILL ENGINEERING
559 Jones Franklin Rd. Suite 164
Raleigh, N.C. 27606
Bus: 919 851 8077
Fax: 919 851 8107
License: F-0377

TRANSPORTATION PLANNING/DESIGN - BRIDGE/STRUCTURE DESIGN
CIVIL/SITE DESIGN - GIS/GPS - CONSTRUCTION OBSERVATION

STATE OF NORTH CAROLINA
DEPARTMENT OF TRANSPORTATION
RALEIGH

SUBSTRUCTURE
BENT 1

REVISIONS						SHEET NO.
NO.	BY:	DATE:	NO.	BY:	DATE:	S-54
1			3			TOTAL SHEETS
2			4			454

DRAWN BY : J. PENDERGRAFT DATE : 11-10
CHECKED BY : T. DIFFEE DATE : 11-10

P:\2010\1011902 U-4438\Structures\DGN\S53_U-4438_SD_BENT 1.dgn
2/4/2011 4:35:10 PM

REVISED MARCH 17, 2011

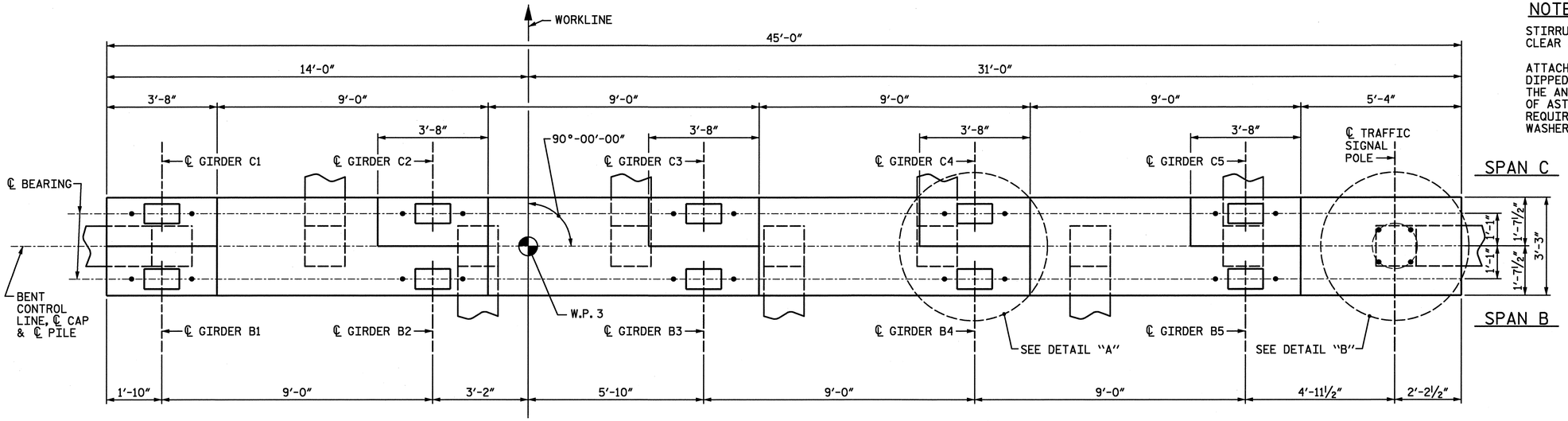

PLAN

NOTES:

STIRRUPS IN CAP MAY BE SHIFTED AS NECESSARY TO CLEAR ANCHOR BOLTS.

ATTACH SIGNAL POLE TO BENT CAP WITH 4 - 2"Ø HOT DIPPED GALVANIZED THREADED ROADS, NUTS AND WASHERS. THE ANCHOR RODS SHALL CONFORM TO THE REQUIREMENTS OF ASTM F1554, GRADE 55. NUTS SHALL MEET THE REQUIREMENTS OF ASTM A536, GRADE A, HEAVY HEX, AND WASHERS SHALL MEET THE REQUIREMENTS OF ASTM F436.

5"× 5"× ½"STEEL ANCHOR EMBEDMENT PLATES SHALL MEET THE REQUIREMENTS OF ASTM A36. THE PLATES SHALL BE HOT DIPPED GALVANIZED.

SEE VOLUME 2 OF STRUCTURE PLANS FOR SIGNAL POLE DETAILS.

ROTATE SPIRAL CAGE AS REQUIRED TO ALLOW PROPER PLACEMENT OF #10 B1 BARS THROUGH CAGE.

A TEMPLATE SUPPLIED BY THE POLE MANUFACTURER SHALL BE USED TO LOCATE AND SUPPORT THE ANCHOR RODS DURING CASTING OF THE BENT CAP.

THE COST OF THE TRAFFIC SIGNAL ANCHOR BOLT ASSEMBLIES SHALL BE CONSIDERED INCIDENTAL TO THE COST OF THE SIGNAL POLE.

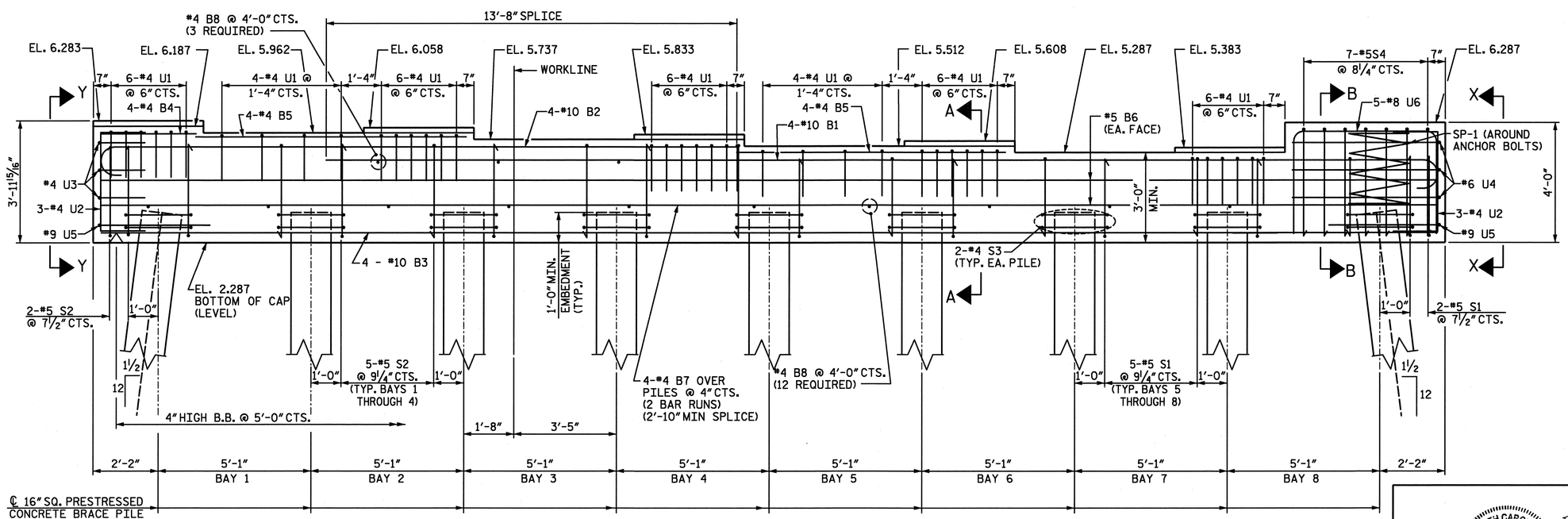

ELEVATION

INVERT ALTERNATE STIRRUPS EXCEPT FOR #5 S4 WHICH SHALL BE PLACED WITH OPENING DOWN

PROJECT NO. U-4438

CAMDEN & PASQUOTANK COUNTY

STATION: 15+25.75 -L1-

SHEET 1 of 2

NORTH CAROLINA PROFESSIONAL SEAL 026891 ENGINEER JOHN T. DIFFEE III

WETHERILL ENGINEERING
559 Jones Franklin Rd. Suite 164
Raleigh, N.C. 27606
Bus: 919 851 8077
Fax: 919 851 8107
License: F-0377

TRANSPORTATION PLANNING/DESIGN - BRIDGE/STRUCTURE DESIGN
CIVIL/SITE DESIGN - GIS/GPS - CONSTRUCTION OBSERVATION

STATE OF NORTH CAROLINA
DEPARTMENT OF TRANSPORTATION
RALEIGH

SUBSTRUCTURE
BENT 2

REVISIONS						SHEET NO.
NO.	BY:	DATE:	NO.	BY:	DATE:	S-55
1			3			TOTAL SHEETS
2			4			454

DRAWN BY : T. DIFFEE DATE : 1-11
CHECKED BY : J. DILWORTH DATE : 1-11

P:\2010\1011902 U-4438\Structures\DGN\S55_U-4438_SD_BENT2.dgn
3/17/2011 10:13:44 AM

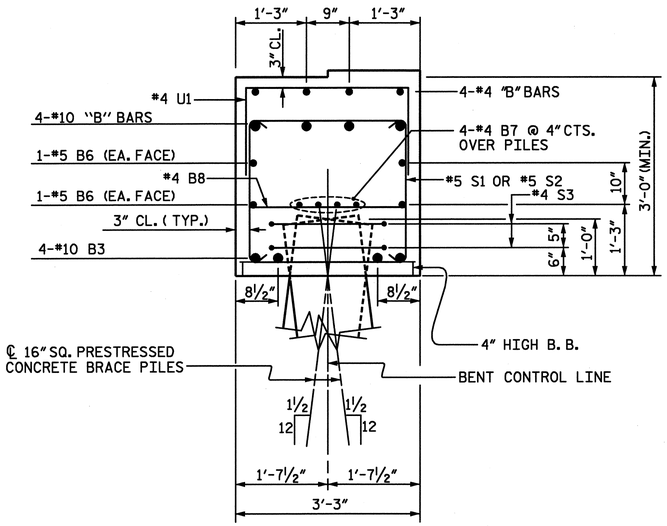

SECTION A-A

INVERT ALTERNATE STIRRUPS FOR *5 S1 AND *5 S2

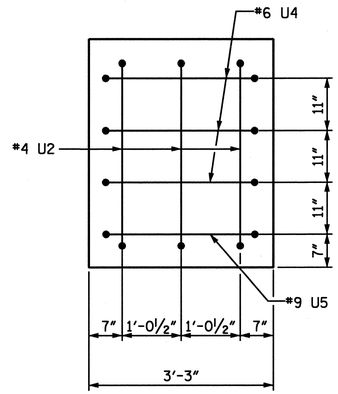

VIEW X-X

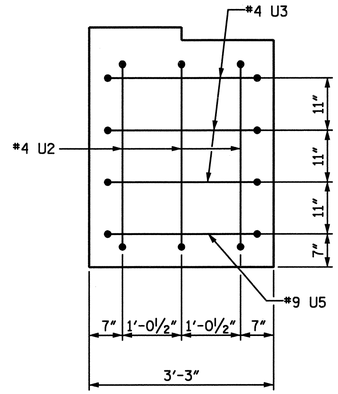

VIEW Y-Y

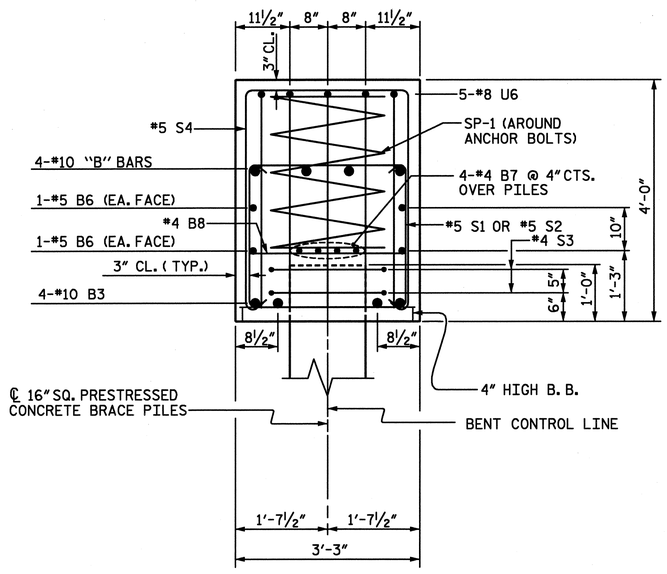

SECTION B-B

INVERT ALTERNATE STIRRUPS EXCEPT FOR *5 S4 WHICH SHALL BE PLACED WITH OPENING DOWN

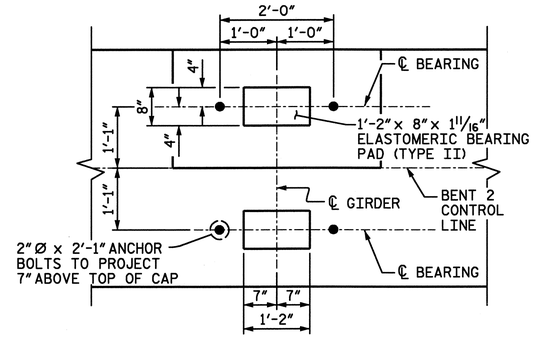

DETAIL "A"

(DETAILS AND DIMENSIONS ARE TYPICAL FOR EACH BEARING)

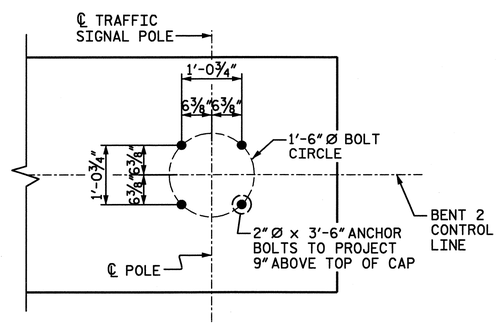

DETAIL "B"

BAR TYPES

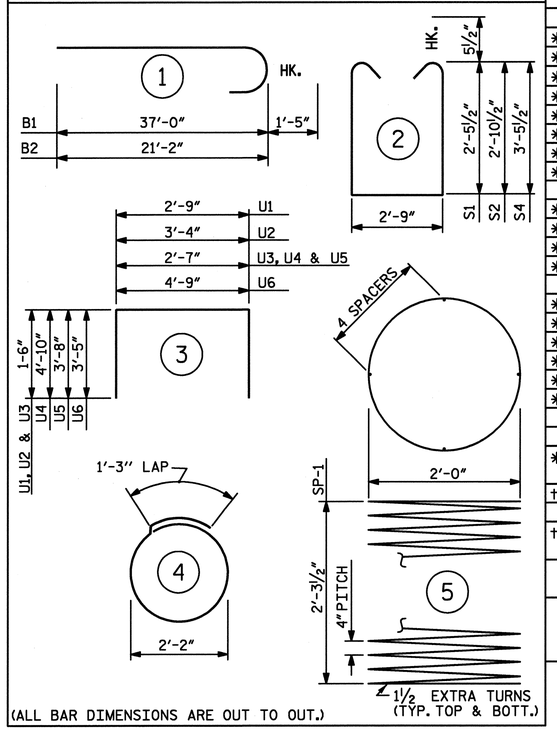

(ALL BAR DIMENSIONS ARE OUT TO OUT.)

BILL OF MATERIAL

BENT 2

BAR	NO.	SIZE	TYPE	LENGTH	WEIGHT
* B1	4	#10	1	38'-5"	661
* B2	4	#10	1	22'-7"	389
* B3	4	#10	STR.	44'-6"	766
* B4	4	#4	STR.	3'-2"	8
* B5	8	#4	STR.	9'-0"	48
* B6	4	#5	STR.	44'-6"	186
* B7	8	#4	STR.	23'-8"	126
* B8	15	#4	STR.	2'-9"	28
* S1	22	#5	2	8'-7"	197
* S2	22	#5	2	9'-5"	216
* S3	18	#4	4	8'-1"	97
* S4	7	#5	2	10'-7"	77
* U1	38	#4	3	5'-9"	146
* U2	6	#4	3	6'-4"	25
* U3	3	#4	3	5'-7"	12
* U4	3	#6	3	12'-3"	55
* U5	2	#9	3	9'-11"	67
* U6	5	#8	3	11'-7"	155
* EPOXY COATED REINFORCING STEEL					3,258 LBS.
† SP-1	1	**	5	60'-10"	41
† EPOXY COATED SPIRAL COLUMN REINFORCING STEEL					41 LBS.
CLASS AA CONCRETE					18.3 CU. YDS.
16" SQ. PRESTRESSED CONCRETE PILES NO. 9					630 LIN. FT.

** THE SPIRAL REINFORCING STEEL SHALL BE W20 OR D-20 COLD DRAWN WIRE OR #4 PLAIN OR DEFORMED BAR.

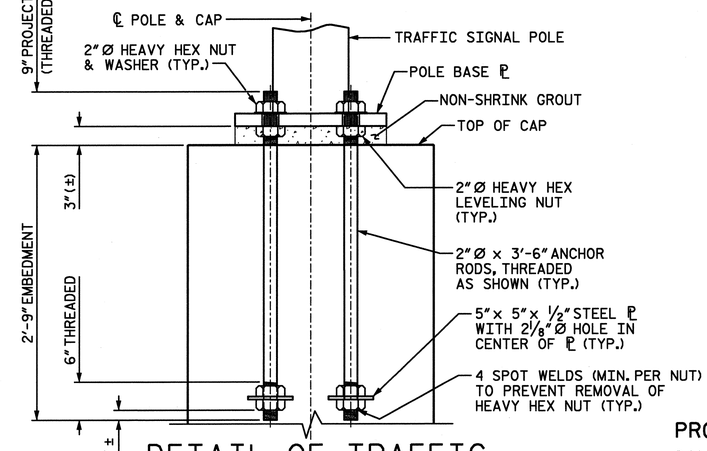

DETAIL OF TRAFFIC SIGNAL ANCHOR BOLTS

REINFORCING NOT SHOWN FOR CLARITY
(4 ANCHOR ROD ASSEMBLIES REQUIRED)

PROJECT NO. U-4438
CAMDEN & PASQUOTANK COUNTY
STATION: 15+25.75 -L1-

SHEET 2 of 2

STATE OF NORTH CAROLINA
DEPARTMENT OF TRANSPORTATION
RALEIGH

SUBSTRUCTURE
BENT 2

NORTH CAROLINA PROFESSIONAL SEAL 026691 ENGINEER JOHN T. DIFFEE III

WETHERILL ENGINEERING
559 Jones Franklin Rd. Suite 164
Raleigh, N.C. 27606
Bus: 919 851 8077
Fax: 919 851 8107
License: F-0377

TRANSPORTATION PLANNING/DESIGN - BRIDGE/STRUCTURE DESIGN
CIVIL/SITE DESIGN - GIS/GPS - CONSTRUCTION OBSERVATION

REVISIONS						SHEET NO.
NO.	BY:	DATE:	NO.	BY:	DATE:	S-56
1			3			TOTAL SHEETS
2			4			454

DRAWN BY : T. DIFFEE DATE : 1-11
CHECKED BY : J. DILWORTH DATE : 1-11

P:\2010\10119.02 U-4438\Structures\DGNS\S5_U-4438_SD_BENT2.dgn
2/4/2011 4:35:41 PM

REVISED MARCH 17, 2011

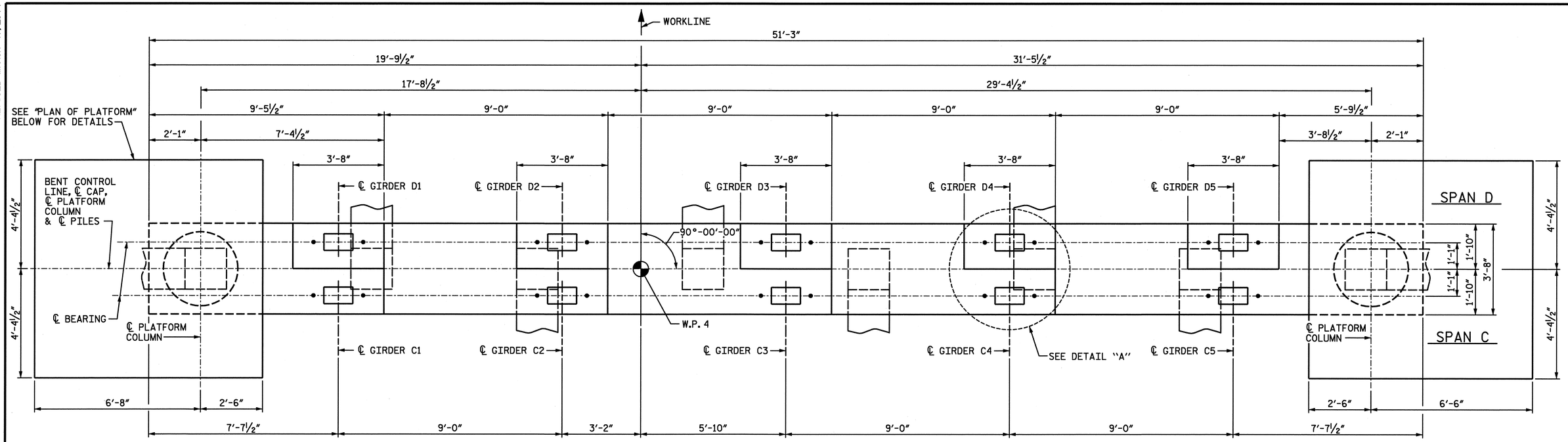

PLAN

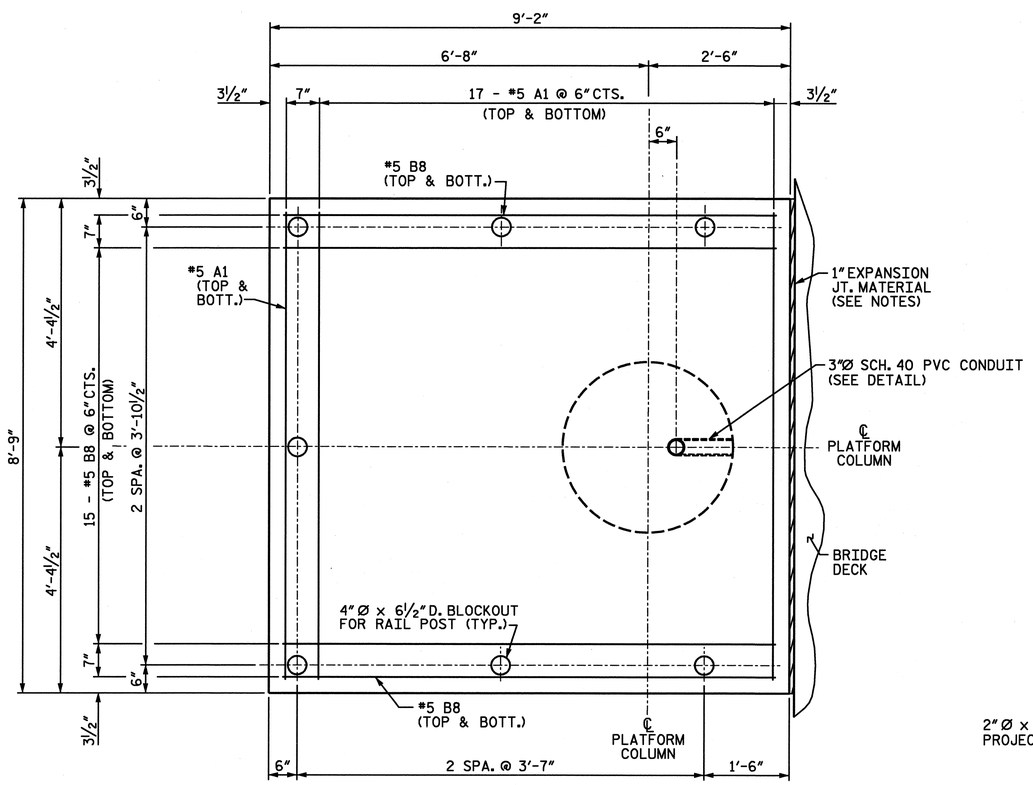

PLAN OF PLATFORM

LEFT PLATFORM SHOWN, RIGHT PLATFORM SIMILAR
COLUMN REINFORCING NOT SHOWN FOR CLARITY

NOTES:

STIRRUPS IN CAP MAY BE SHIFTED AS NECESSARY TO CLEAR ANCHOR BOLTS.

PLATFORM COLUMNS AND PLATFORM SLAB SHALL BE POURED AFTER BRIDGE DECK AND SIDEWALK ARE CAST.

ATTACH 1" EXPANSION JOINT MATERIAL FOR PLATFORM TO SIDE OF BRIDGE DECK USING ¼"Ø x 3¼" CONCRETE SCREWS AT 4'-0" CTS. (MAX.). PREDRILL ATTACHMENT HOLE PER MANUFACTURER REQUIREMENTS TO AVOID SPALLING DECK CONCRETE.

#5 A1 AND #5 B8 BARS MAY BE SHIFTED SLIGHTLY AS NECESSARY TO CLEAR #9 "V" BARS.

ROTATE SPIRAL CAGE TO ALLOW PROPER PLACEMENT OF CONDUIT IN COLUMN.

PLATFORMS SLABS SHALL BE SLOPED TO DRAIN AS SHOWN.

PLATFORMS SLABS SHALL HAVE A NON-GROOVED FINISHED.

SEE "TWO BAR ALUMINUM HANDRAIL" DETAIL SHEET FOR HANDRAILING DETAILS.

FOR TRAFFIC GATE DETAILS, SEE VOLUME 2 OF STRUCTURE PLANS.

CONTRACTOR SHALL PROVIDE A GROUT LEVELING PAD NOT TO EXCEED 3" IN HEIGHT TO PLACE TRAFFIC GATE HOUSINGS ON.

ATTACH TRAFFIC GATE TO PLATFORM WITH 4 -¾"Ø HOT DIPPED GALVANIZED THREADED RODS, NUTS AND WASHERS. THE THREADED RODS SHALL CONFORM TO THE REQUIREMENTS OF ASTM F1554, GRADE 36. NUTS SHALL MEET THE REQUIREMENTS OF ASTM A563A HEX. WASHERS SHALL MEET THE REQUIREMENTS OF ASTM F436.

ADHESIVELY ANCHOR THE RODS TO THE PLATFORM. LEVEL ONE FIELD TESTING IS REQUIRED, AND THE YIELD LOAD OF THE ¾"Ø THREADED ROD IS 10 KIPS. FOR ADHESIVELY ANCHORED ANCHOR BOLTS OR DOWELS, SEE SPECIAL PROVISIONS. A MINIMUM OF 1 ANCHOR PER BENT SHALL BE TESTED.

USE DOUBLE NUTS "JAMMED" AGAINST ONE ANOTHER ON EACH ANCHOR TO RESIST TRAFFIC VIBRATION "WALK-OFF".

ANCHOR RODS FOR THE GATES SHALL BE LOCATED USING A TEMPLATE SUPPLIED BY THE GATE MANUFACTURER.

THE COST OF THE GROUT LEVELING PADS, ANCHORS, WASHERS, NUTS, ADHESIVE AND THE REQUIRED PROOF TESTING SHALL BE CONSIDERED INCIDENTAL TO THE COST OF THE TRAFFIC GATES.

PVC CONDUIT SHALL BE SCHEDULE 40, AND MEET THE REQUIREMENTS OF ASTM F512.

THE COST OF THE 3" DIAMETER CONDUIT SHALL BE CONSIDERED INCIDENTAL TO THE COST OF CONCRETE FOR THE BENT.

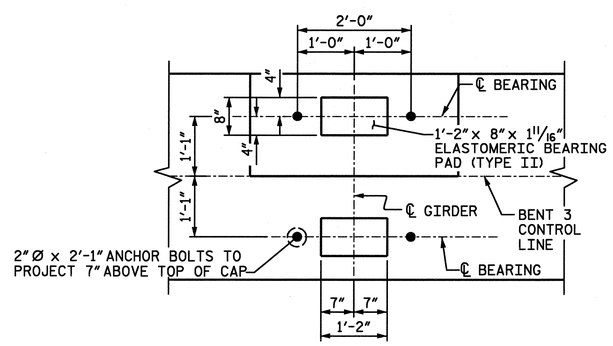

DETAIL A

(DETAILS AND DIMENSIONS ARE
TYPICAL FOR EACH BEARING)

PROJECT NO. U-4438
CAMDEN & PASQUOTANK COUNTY
STATION: 15+25.75 -L1-

SHEET 1 OF 3

NORTH CAROLINA PROFESSIONAL SEAL 026691 ENGINEER JOHN T. DIFFEE III 3/17/11

ETHERILL ENGINEERING
559 Jones Franklin Rd. Suite 164
Raleigh, N.C. 27606
Bus: 919 851 8077
Fax: 919 851 8107
License: F-0377
TRANSPORTATION PLANNING/DESIGN - BRIDGE/STRUCTURE DESIGN
CIVIL/SITE DESIGN - GIS/GPS - CONSTRUCTION OBSERVATION

STATE OF NORTH CAROLINA
DEPARTMENT OF TRANSPORTATION
RALEIGH

SUBSTRUCTURE
BENT 3

REVISIONS						SHEET NO.
NO.	BY:	DATE:	NO.	BY:	DATE:	S-57
1			3			TOTAL SHEETS
2			4			454

DRAWN BY : Z. PIATEK DATE : 12-10
CHECKED BY : T. DIFFEE DATE : 12-10

P:\2010\1011902 U-4438\Structures\DGN\S57_U-4438_SD_BENT3.dgn
3/17/2011 10:14:11 AM

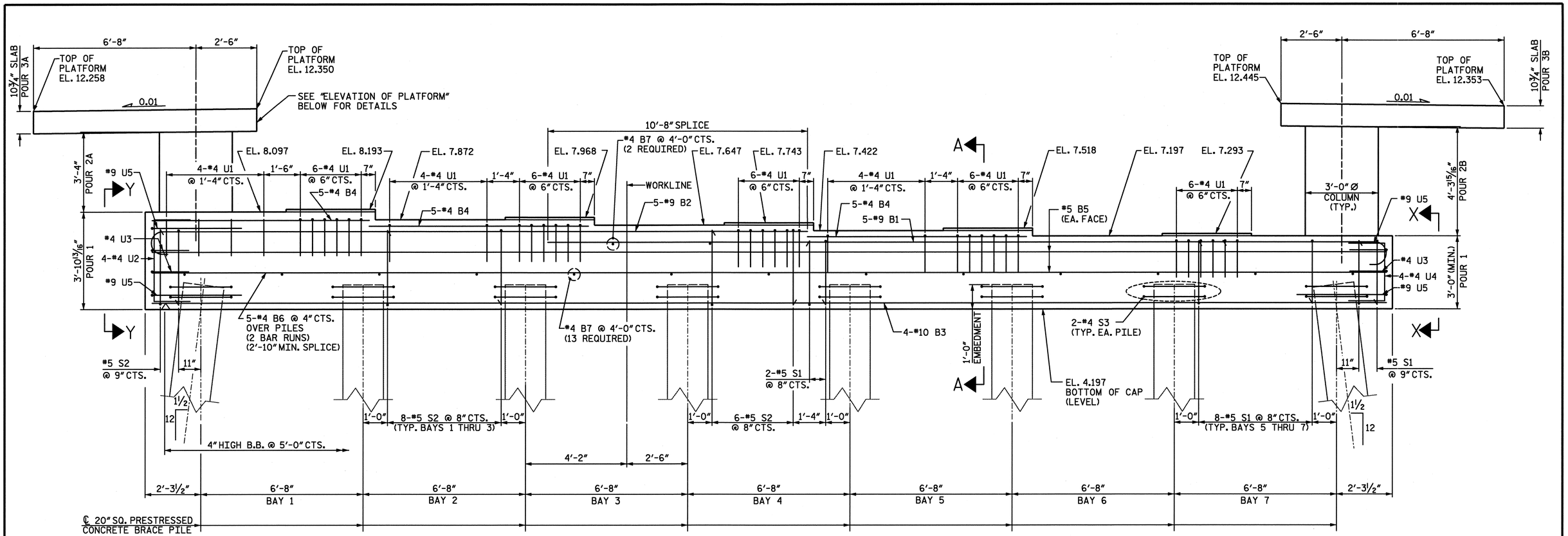

ELEVATION

INVERT ALTERNATE STIRRUPS
PLATFORM REINFORCING NOT SHOWN FOR CLARITY

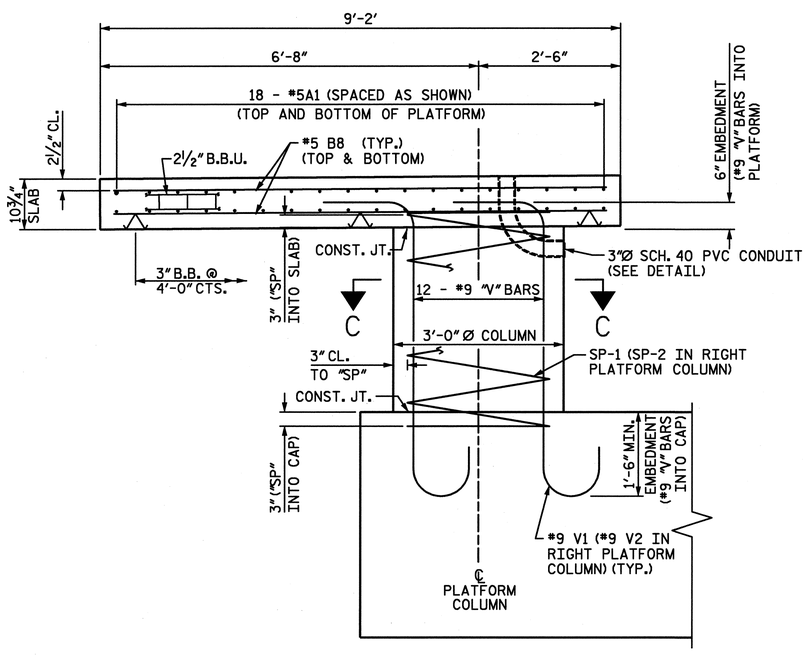

ELEVATION OF PLATFORM

LEFT PLATFORM SHOWN, RIGHT PLATFORM SIMILAR.
CAP REINFORCING NOT SHOWN FOR CLARITY.

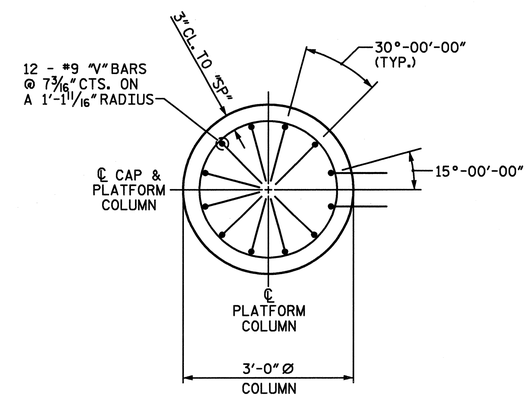

SECTION C-C

REQUIRED ORIENTATION OF BOTTOM HOOKS SHOWN

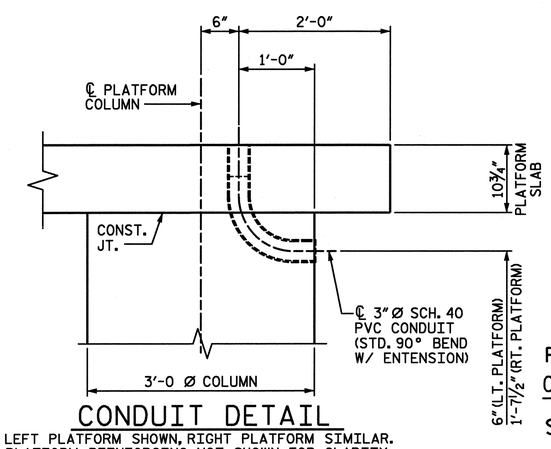

CONDUIT DETAIL

LEFT PLATFORM SHOWN, RIGHT PLATFORM SIMILAR.
PLATFORM REINFORCING NOT SHOWN FOR CLARITY.

PROJECT NO. U-4438
CAMDEN & PASQUOTANK COUNTY
STATION: 15+25.75 -L1-

SHEET 2 OF 3

NORTH CAROLINA PROFESSIONAL SEAL 026891 ENGINEER JOHN T. DIFFEE III
Original signed by John T. Diffee III 12-6-11

WETHERILL ENGINEERING
559 Jones Franklin Rd. Suite 164
Raleigh, N.C. 27606
Bus: 919 851 8077
Fax: 919 851 8107
License: F-0377

TRANSPORTATION PLANNING/DESIGN - BRIDGE/STRUCTURE DESIGN
CIVIL/SITE DESIGN - GIS/GPS - CONSTRUCTION OBSERVATION

STATE OF NORTH CAROLINA
DEPARTMENT OF TRANSPORTATION
RALEIGH

SUBSTRUCTURE
BENT 3

REVISIONS						SHEET NO.
NO.	BY:	DATE:	NO.	BY:	DATE:	S-58
1			3			TOTAL SHEETS
2			4			454

DRAWN BY : Z. PIATEK DATE : 12-10
CHECKED BY : T. DIFFEE DATE : 12-10

P:\2010\10119.02_U-4438\Structures\DGN\S57_U-4438_SD_BENT3.dgn
2/4/2011 4:36:09 PM

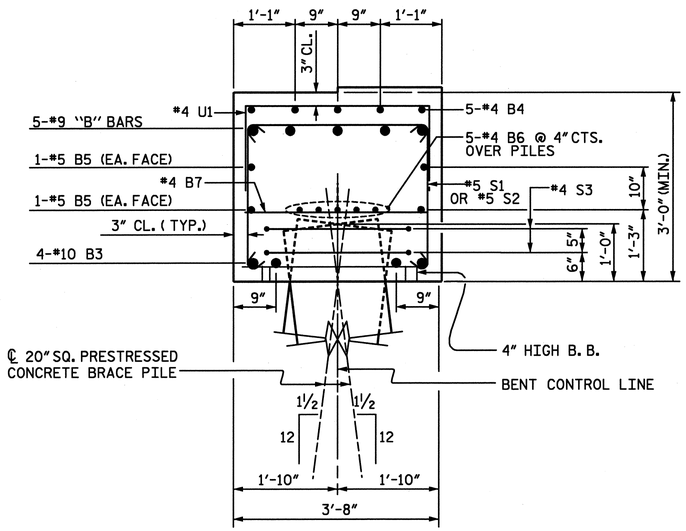

SECTION A-A

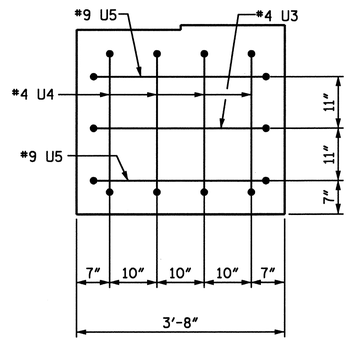

VIEW X-X

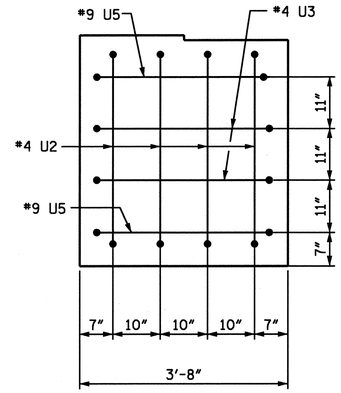

VIEW Y-Y

BAR TYPES

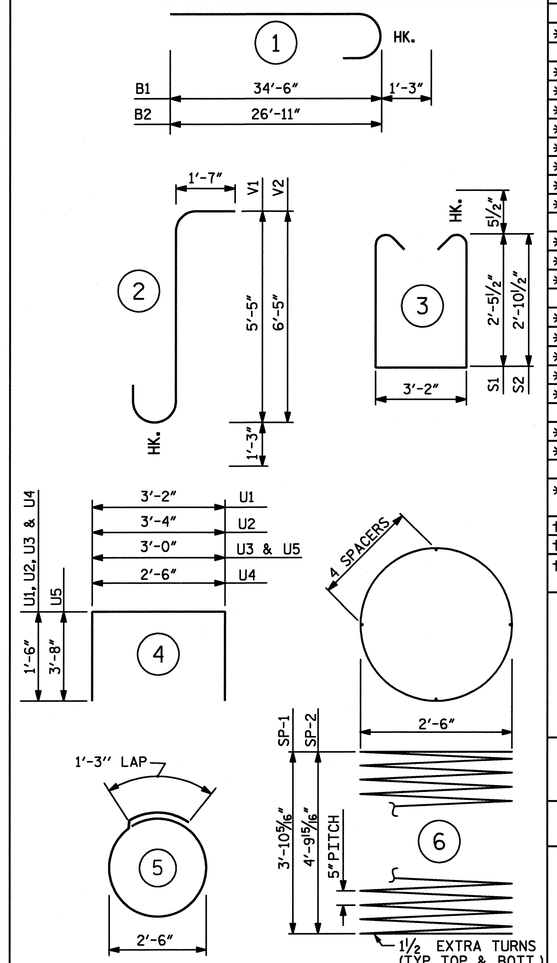

(ALL BAR DIMENSIONS ARE OUT TO OUT.)

BILL OF MATERIAL
BENT 3

BAR	NO.	SIZE	TYPE	LENGTH	WEIGHT
* A1	36	#5	STR.	8'-4"	313
* B1	5	#9	1	35'-9"	608
* B2	5	#9	1	28'-2"	479
* B3	4	#10	STR.	50'-9"	874
* B4	15	#4	STR.	9'-0"	90
* B5	4	#5	STR.	50'-9"	212
* B6	10	#4	STR.	26'-10"	179
* B7	15	#4	STR.	3'-3"	33
* B8	34	#5	STR.	8'-9"	310
* S1	28	#5	3	9'-0"	263
* S2	32	#5	3	9'-10"	328
* S3	16	#4	5	9'-2"	98
* U1	42	#4	4	6'-2"	173
* U2	4	#4	4	6'-4"	17
* U3	3	#4	4	6'-0"	12
* U4	4	#4	4	5'-6"	15
* U5	4	#9	4	10'-4"	141
* V1	12	#9	2	8'-3"	337
* V2	12	#9	2	9'-3"	377
* EPOXY COATED REINFORCING STEEL					4,859 LBS.
† SP-1	1	**	6	94'-0"	98
† SP-2	1	**	6	112'-6"	117
† EPOXY COATED SPIRAL COLUMN REINFORCING STEEL					215 LBS.

CLASS AA CONCRETE BREAKDOWN

POUR 1 (CAP)	23.0 CU. YDS.
POUR 2A (COLUMN - LT.)	0.9 CU. YDS.
POUR 2B (COLUMN - RT.)	1.1 CU. YDS.
POUR 3A (PLATFORM - LT.)	2.7 CU. YDS.
POUR 3B (PLATFORM - RT.)	2.7 CU. YDS.
TOTAL	30.4 CU. YDS.

20" SQ. PRESTRESSED CONCRETE PILES

NO. 8 — 560 LIN. FT.

2-BAR ALUMINUM HANDRAIL — 51.2 LIN. FT.

** THE SPIRAL REINFORCING STEEL SHALL BE W31 OR D-31 COLD DRAWN WIRE OR #5 PLAIN OR DEFORMED BAR.

PROJECT NO. U-4438
CAMDEN & PASQUOTANK COUNTY
STATION: 15+25.75 -L1-

SHEET 3 OF 3

NORTH CAROLINA PROFESSIONAL SEAL 026891 ENGINEER JOHN T. DIFFEE III
2-6-11

WETHERILL ENGINEERING
559 Jones Franklin Rd. Suite 164
Raleigh, N.C. 27606
Bus: 919 851 8077
Fax: 919 851 8107
License: F-0377

TRANSPORTATION PLANNING/DESIGN - BRIDGE/STRUCTURE DESIGN
CIVIL/SITE DESIGN - GIS/GPS - CONSTRUCTION OBSERVATION

STATE OF NORTH CAROLINA
DEPARTMENT OF TRANSPORTATION
RALEIGH

SUBSTRUCTURE
BENT 3

REVISIONS						SHEET NO.
NO.	BY:	DATE:	NO.	BY:	DATE:	S-59
1			3			TOTAL SHEETS
2			4			454

DRAWN BY : Z. PIATEK DATE : 12-10
CHECKED BY : T. DIFFEE DATE : 12-10

P:\2010\1019.02 U-4438\Structures\DGN\S57_U-4438_SD_BENT3.dgn
2/4/2011 4:36:17 PM

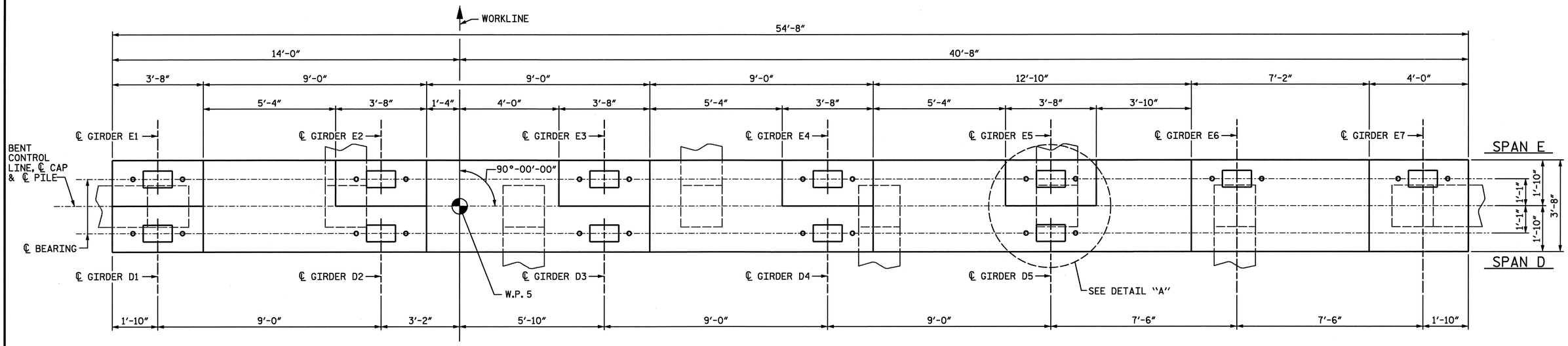

PLAN

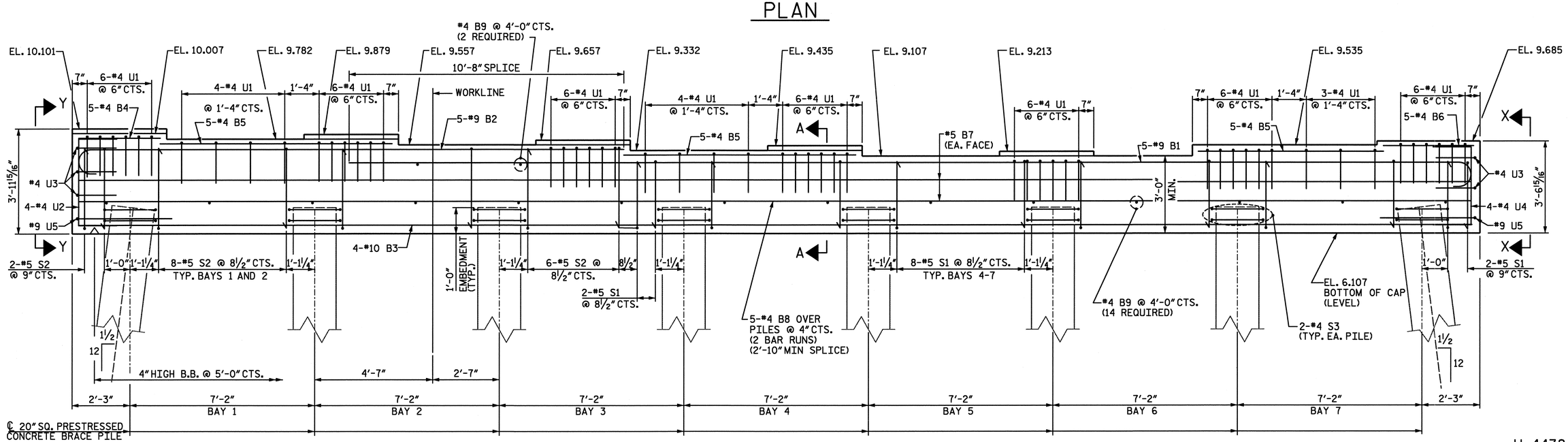

ELEVATION

PROJECT NO. U-4438
CAMDEN & PASQUOTANK COUNTY
STATION: 15+25.75 -L1-

SHEET 1 OF 2

STATE OF NORTH CAROLINA
DEPARTMENT OF TRANSPORTATION
RALEIGH

SUBSTRUCTURE
BENT 4

NORTH CAROLINA PROFESSIONAL SEAL 026891 ENGINEER JOHN T. DIFFEE, III 2/6/11

WETHERILL ENGINEERING
559 Jones Franklin Rd. Suite 164
Raleigh, N.C. 27606
Bus: 919 851 8077
Fax: 919 851 8807
License: F-0377

TRANSPORTATION PLANNING/DESIGN - BRIDGE/STRUCTURE DESIGN
CIVIL/SITE DESIGN - GIS/GPS - CONSTRUCTION OBSERVATION

REVISIONS						SHEET NO.
NO.	BY:	DATE:	NO.	BY:	DATE:	S-60
1			3			TOTAL SHEETS
2			4			454

DRAWN BY : J. PENDERGRAFT DATE : 12-10
CHECKED BY : J. DILWORTH DATE : 12-10

P:\2010\10119.02 U-4438\Structures\DGN\S60_U-4438_SD_BENT4.dgn
2/4/2011 4:36:34 PM

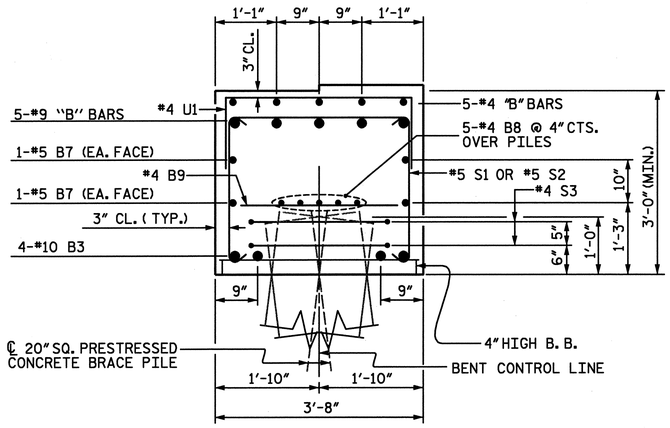

SECTION A-A

INVERT ALTERNATE STIRRUPS

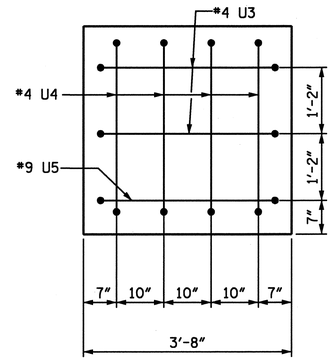

VIEW X-X

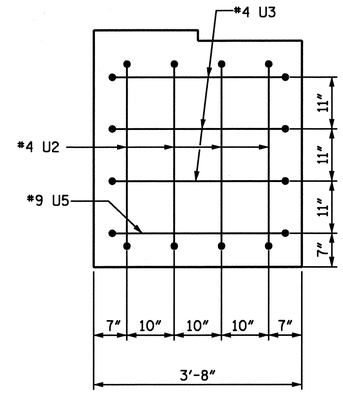

VIEW Y-Y

BAR TYPES

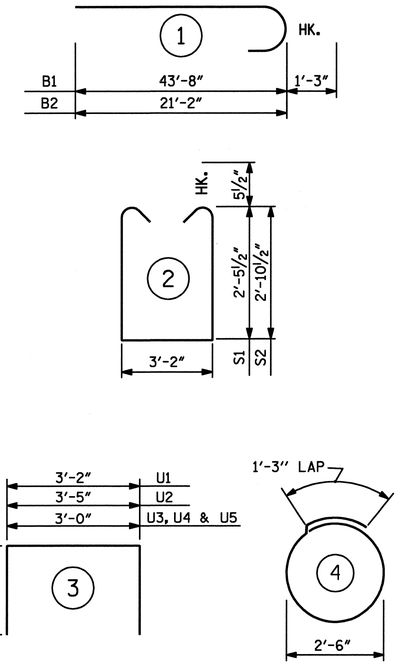

(ALL BAR DIMENSIONS ARE OUT TO OUT.)

BILL OF MATERIAL

BENT 4

BAR	NO.	SIZE	TYPE	LENGTH	WEIGHT
✱ B1	5	#9	1	44'-11"	764
✱ B2	5	#9	1	22'-5"	381
✱ B3	4	#10	STR.	54'-2"	932
✱ B4	5	#4	STR.	3'-2"	11
✱ B5	15	#4	STR.	9'-0"	90
✱ B6	5	#4	STR.	3'-6"	12
✱ B7	4	#5	STR.	54'-2"	226
✱ B8	10	#4	STR.	28'-6"	190
✱ B9	16	#4	STR.	3'-2"	34
✱ S1	36	#5	2	9'-0"	338
✱ S2	24	#5	2	9'-10"	246
✱ S3	16	#4	4	9'-2"	98
✱ U1	53	#4	3	6'-2"	218
✱ U2	4	#4	3	6'-4"	17
✱ U3	5	#4	3	6'-0"	20
✱ U4	4	#4	3	6'-0"	16
✱ U5	2	#9	3	10'-4"	70

✱ EPOXY COATED REINFORCING STEEL 3663 LBS.

CLASS AA CONCRETE 24.4 CU. YDS.

20" SQ. PRESTRESSED CONCRETE PILES

NO. 8 600 LIN. FT.

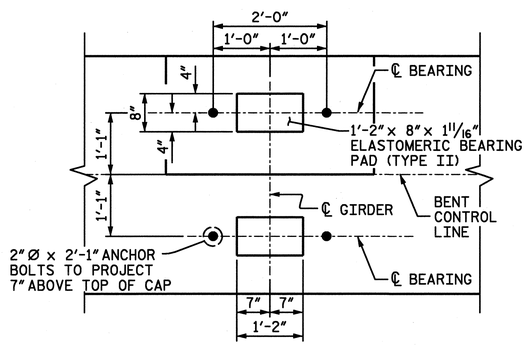

DETAIL A

(DETAILS AND DIMENSIONS ARE TYPICAL FOR EACH BEARING)

PROJECT NO. U-4438

CAMDEN & PASQUOTANK COUNTY

STATION: 15+25.75 -L1-

SHEET 2 OF 2

NORTH CAROLINA PROFESSIONAL SEAL 026891 ENGINEER JOHN T. DIFFEE III

2-16-11

WETHERILL ENGINEERING

559 Jones Franklin Rd. Suite 164
Raleigh, N.C. 27606
Bus: 919 851 8077
Fax: 919 851 8107
License: F-0377

TRANSPORTATION PLANNING/DESIGN – BRIDGE/STRUCTURE DESIGN
CIVIL/SITE DESIGN – GIS/GPS – CONSTRUCTION OBSERVATION

STATE OF NORTH CAROLINA
DEPARTMENT OF TRANSPORTATION
RALEIGH

SUBSTRUCTURE
BENT 4

REVISIONS						SHEET NO.
NO.	BY:	DATE:	NO.	BY:	DATE:	S-61
1			3			TOTAL SHEETS
2			4			454

DRAWN BY : J. PENDERGRAFT DATE : 12-10
CHECKED BY : J. DILWORTH DATE : 12-10

P:\2010\1019.02 U-4438\Structures\DGN\S60_U-4438_SD_BENT4.dgn
2/4/2011 4:36:45 PM

NOTES:
STIRRUPS IN CAP MAY BE SHIFTED AS NECESSARY TO CLEAR ANCHOR BOLTS.

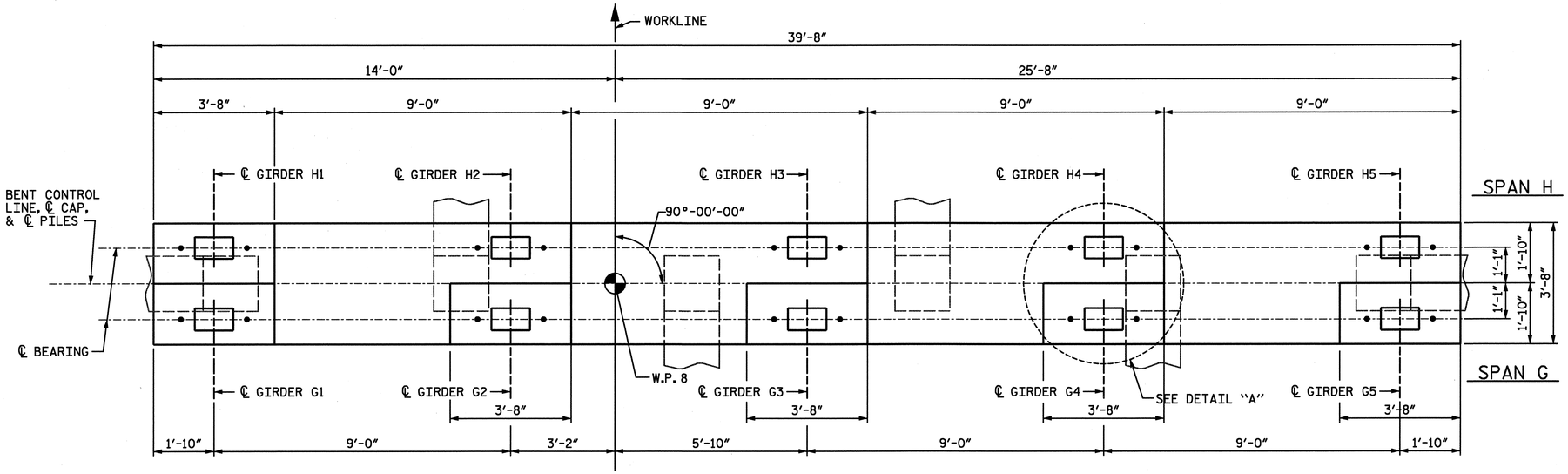

PLAN

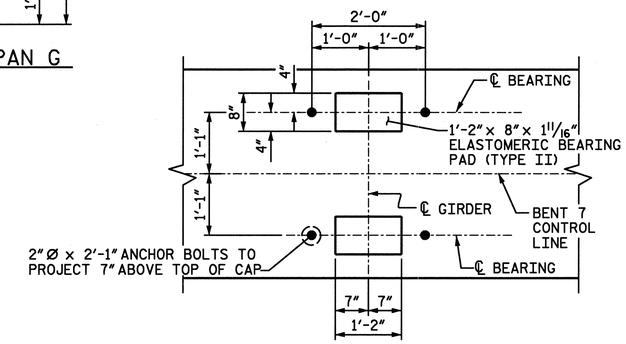

DETAIL A

(DETAILS AND DIMENSIONS ARE TYPICAL FOR EACH BEARING)

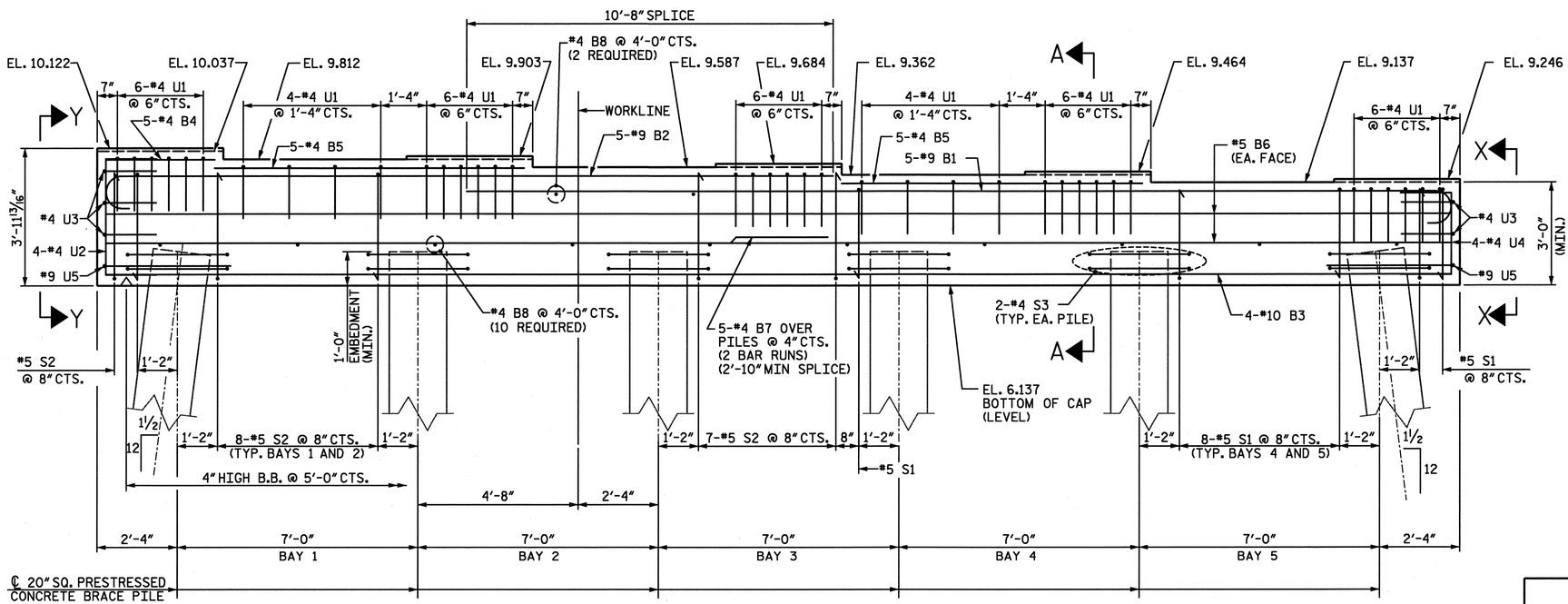

ELEVATION

INVERT ALTERNATE STIRRUPS

PROJECT NO. U-4438
CAMDEN & PASQUOTANK COUNTY
STATION: 15+25.75 -L1-

SHEET 1 OF 2

STATE OF NORTH CAROLINA
DEPARTMENT OF TRANSPORTATION
RALEIGH

SUBSTRUCTURE
BENT 7

NORTH CAROLINA PROFESSIONAL SEAL 026891 ENGINEER JOHN T. DIFFEE, III

WETHERILL ENGINEERING
559 Jones Franklin Rd. Suite 164
Raleigh, N.C. 27606
Bus: 919 851 8077
Fax: 919 851 8107
License: F-0377

TRANSPORTATION PLANNING/DESIGN - BRIDGE/STRUCTURE DESIGN
CIVIL/SITE DESIGN - GIS/GPS - CONSTRUCTION OBSERVATION

REVISIONS						SHEET NO.
NO.	BY:	DATE:	NO.	BY:	DATE:	S-62
1			3			TOTAL SHEETS
2			4			454

DRAWN BY : Z. PIATEK DATE : 12-10
CHECKED BY : T. DIFFEE DATE : 12-10

P:\2010\101 19.02 U-4438\Structures\DGN\S62_U-4438_SD_BENT7.dgn
2/4/2011 4:39:51 PM

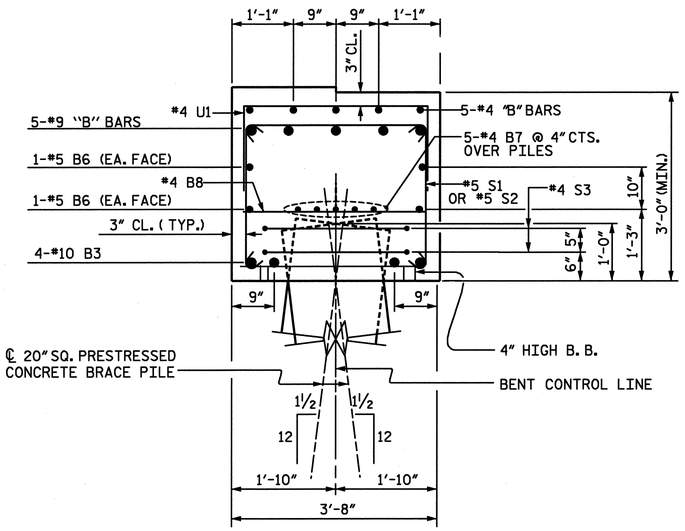

SECTION A-A

INVERT ALTERNATE STIRRUPS

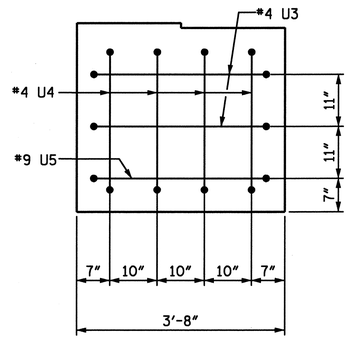

VIEW X-X

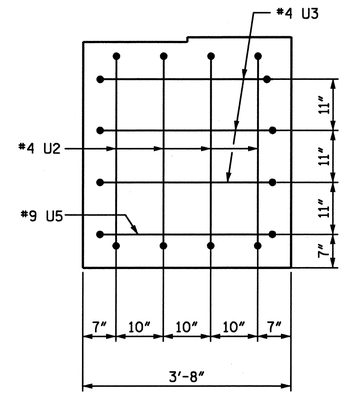

VIEW Y-Y

BAR TYPES

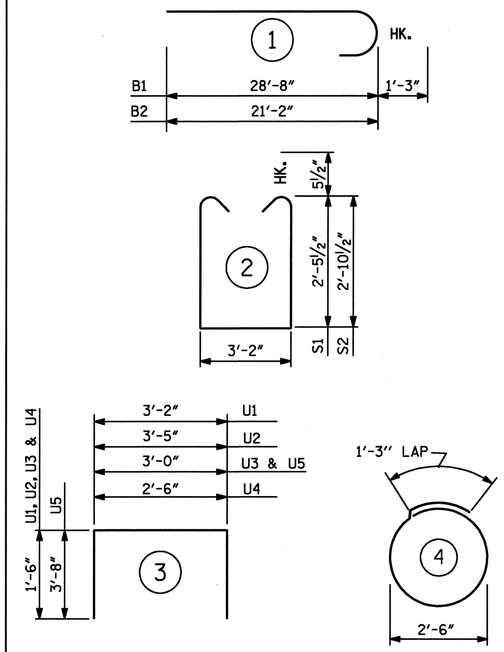

(ALL BAR DIMENSIONS ARE OUT TO OUT.)

BILL OF MATERIAL

BENT 7

BAR	NO.	SIZE	TYPE	LENGTH	WEIGHT
* B1	5	*9	1	29'-11"	509
* B2	5	*9	1	22'-5"	381
* B3	4	*10	STR.	39'-2"	674
* B4	5	*4	STR.	3'-2"	11
* B5	10	*4	STR.	9'-0"	60
* B6	4	*5	STR.	39'-2"	163
* B7	10	*4	STR.	21'-0"	140
* B8	12	*4	STR.	3'-2"	21
* S1	19	*5	2	9'-0"	178
* S2	25	*5	2	9'-10"	256
* S3	12	*4	4	9'-2"	73
* U1	38	*4	3	6'-2"	157
* U2	4	*4	3	6'-5"	17
* U3	5	*4	3	6'-0"	20
* U4	4	*4	3	5'-6"	15
* U5	2	*9	3	10'-4"	70

* EPOXY COATED REINFORCING STEEL 2,749 LBS.

CLASS AA CONCRETE 17.7 CU. YDS.

20" SQ. PRESTRESSED CONCRETE PILES

NO. 6 450 LIN. FT.

PROJECT NO. U-4438

CAMDEN & PASQUOTANK COUNTY

STATION: 15+25.75 -L1-

SHEET 2 OF 2

STATE OF NORTH CAROLINA
DEPARTMENT OF TRANSPORTATION
RALEIGH

SUBSTRUCTURE
BENT 7

WETHERILL ENGINEERING
559 Jones Franklin Rd. Suite 164
Raleigh, N.C. 27606
Bus: 919 851 8077
Fax: 919 851 8107
License: F-0377
TRANSPORTATION PLANNING/DESIGN - BRIDGE/STRUCTURE DESIGN
CIVIL/SITE DESIGN - GIS/GPS - CONSTRUCTION OBSERVATION

NORTH CAROLINA PROFESSIONAL SEAL 026891 ENGINEER JOHN T. DIFFEE III

REVISIONS						SHEET NO.
NO.	BY:	DATE:	NO.	BY:	DATE:	S-63
1			3			TOTAL SHEETS
2			4			454

DRAWN BY : Z. PIATEK DATE : 12-10
CHECKED BY : T. DIFFEE DATE : 12-10

P:\2010\101902 U-4438\Structures\DGN\S62_U-4438_SD_BENT7.dgn
2/4/2011 4:39:58 PM

REVISED MARCH 17, 2011

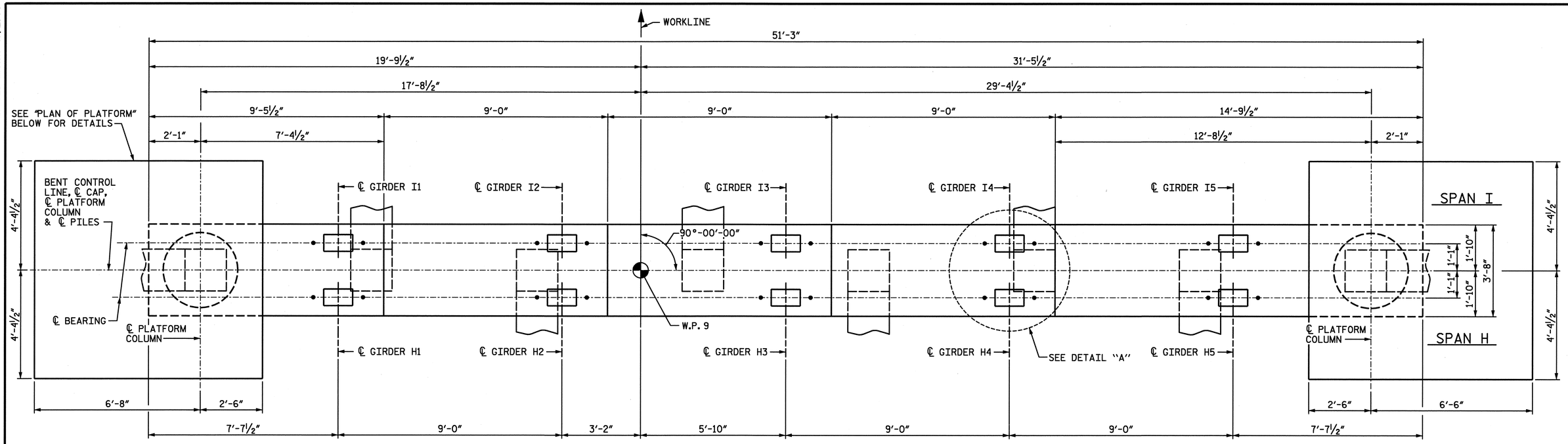

PLAN

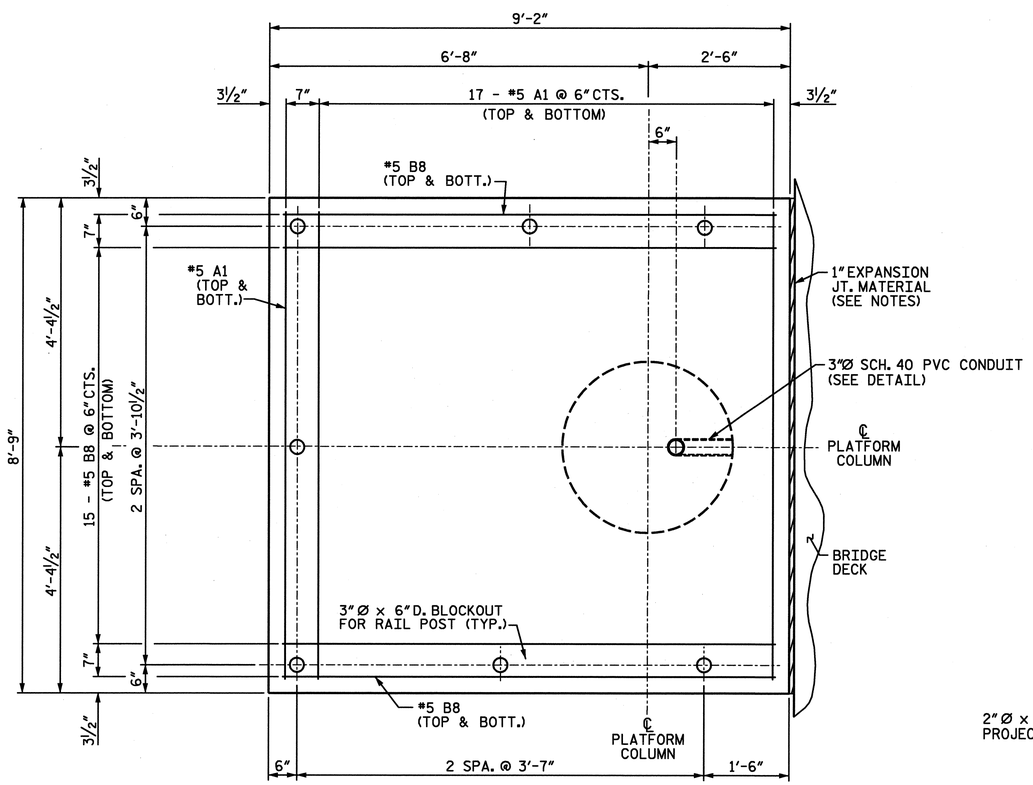

PLAN OF PLATFORM

LEFT PLATFORM SHOWN, RIGHT PLATFORM SIMILAR
COLUMN REINFORCING NOT SHOWN FOR CLARITY

NOTES:

STIRRUPS IN CAP MAY BE SHIFTED AS NECESSARY TO CLEAR ANCHOR BOLTS.

PLATFORM COLUMNS AND PLATFORM SLAB SHALL BE POURED AFTER BRIDGE DECK AND SIDEWALK ARE CAST.

ATTACH 1" EXPANSION JOINT MATERIAL FOR PLATFORM TO SIDE OF BRIDGE DECK USING ¼"Ø x 3¼" CONCRETE SCREWS AT 4'-0" CTS. (MAX.). PREDRILL ATTACHMENT HOLE PER MANUFACTURER REQUIREMENTS TO AVOID SPALLING DECK CONCRETE.

#5 A1 AND #5 B8 BARS MAY BE SHIFTED SLIGHTLY AS NECESSARY TO CLEAR #9 "V" BARS.

ROTATE SPIRAL CAGE TO ALLOW PROPER PLACEMENT OF CONDUIT IN COLUMN.

PLATFORMS SLABS SHALL BE SLOPED TO DRAIN AS SHOWN.

PLATFORMS SLABS SHALL HAVE A NON-GROOVED FINISHED.

SEE "TWO BAR ALUMINUM HANDRAIL" DETAIL SHEET FOR HANDRAILING DETAILS.

FOR TRAFFIC GATE DETAILS, SEE VOLUME 2 OF STRUCTURE PLANS.

CONTRACTOR SHALL PROVIDE A GROUT LEVELING PAD NOT TO EXCEED 3" IN HEIGHT TO PLACE TRAFFIC GATE HOUSINGS ON.

ATTACH TRAFFIC GATE TO PLATFORM WITH 4 -¾"Ø HOT DIPPED GALVANIZED THREADED RODS, NUTS AND WASHERS. THE THREADED RODS SHALL CONFORM TO THE REQUIREMENTS OF ASTM F1554, GRADE 36. NUTS SHALL MEET THE REQUIREMENTS OF ASTM A563A HEX. WASHERS SHALL MEET THE REQUIREMENTS OF ASTM F436.

ADHESIVELY ANCHOR THE RODS TO THE PLATFORM. LEVEL ONE FIELD TESTING IS REQUIRED, AND THE YIELD LOAD OF THE ¾"Ø THREADED ROD IS 10 KIPS. FOR ADHESIVELY ANCHORED ANCHOR BOLTS OR DOWELS, SEE SPECIAL PROVISIONS. A MINIMUM OF 1 ANCHOR PER BENT SHALL BE TESTED.

USE DOUBLE NUTS "JAMMED" AGAINST ONE ANOTHER ON EACH ANCHOR TO RESIST TRAFFIC VIBRATION "WALK-OFF".

ANCHOR RODS FOR THE GATES SHALL BE LOCATED USING A TEMPLATE SUPPLIED BY THE GATE MANUFACTURER.

THE COST OF THE GROUT LEVELING PADS, ANCHORS, WASHERS, NUTS, ADHESIVE AND THE REQUIRED PROOF TESTING SHALL BE CONSIDERED INCIDENTAL TO THE COST OF THE TRAFFIC GATES.

PVC CONDUIT SHALL BE SCHEDULE 40, AND MEET THE REQUIREMENTS OF ASTM F512.

THE COST OF THE 3" DIAMETER CONDUIT SHALL BE CONSIDERED INCIDENTAL TO THE COST OF CONCRETE FOR THE BENT.

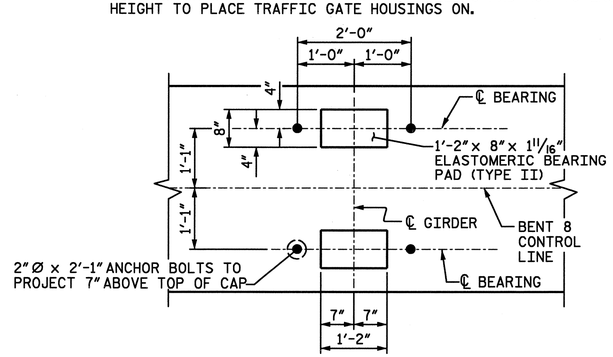

DETAIL A

(DETAILS AND DIMENSIONS ARE
TYPICAL FOR EACH BEARING)

PROJECT NO. U-4438
CAMDEN & PASQUOTANK COUNTY
STATION: 15+25.75 -L1-

SHEET 1 OF 3

NORTH CAROLINA PROFESSIONAL SEAL 026891 ENGINEER JOHN T. DIFFEE III 3-17-11

ETHERILL ENGINEERING
559 Jones Franklin Rd. Suite 164
Raleigh, N.C. 27606
Bus: 919 851 8077
Fax: 919 851 8107
License: F-0377

TRANSPORTATION PLANNING/DESIGN - BRIDGE/STRUCTURE DESIGN
CIVIL/SITE DESIGN - GIS/GPS - CONSTRUCTION OBSERVATION

STATE OF NORTH CAROLINA
DEPARTMENT OF TRANSPORTATION
RALEIGH

SUBSTRUCTURE
BENT 8

REVISIONS								SHEET NO.
NO.	BY:	DATE:	NO.	BY:	DATE:			S-64
1			3					TOTAL SHEETS
2			4					454

DRAWN BY : Z. PIATEK DATE : 12-10
CHECKED BY : T. DIFFEE DATE : 12-10

P:\2010\1011902 U-4438\Structures\DGN\S64_U-4438_SD_BENT8.dgn
3/17/2011 10:14:50 AM

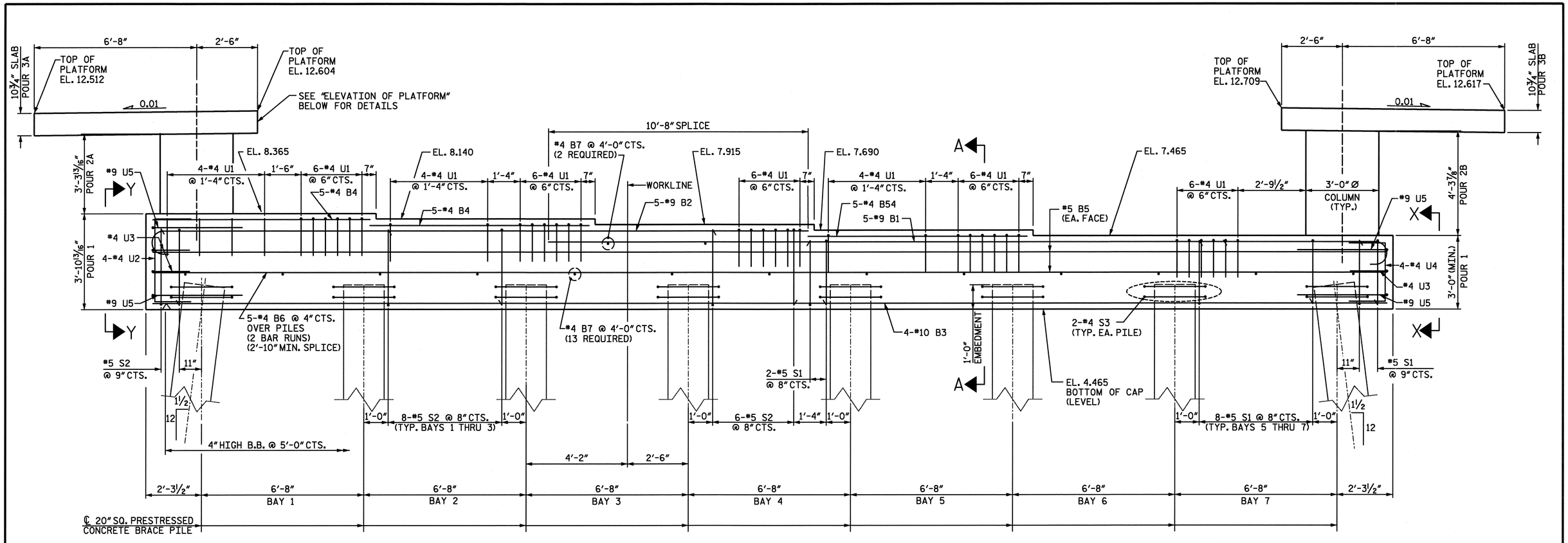

ELEVATION

INVERT ALTERNATE STIRRUPS
PLATFORM REINFORCING NOT SHOWN FOR CLARITY

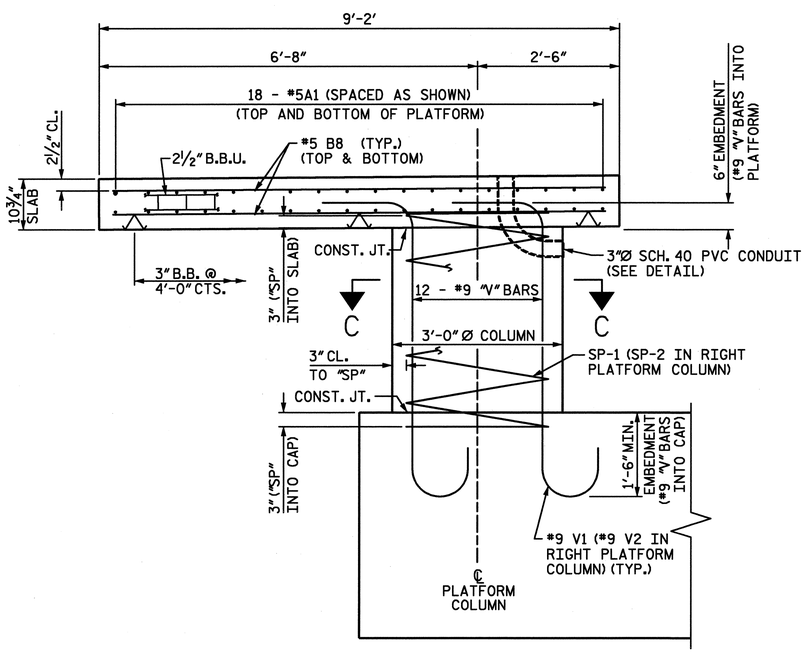

ELEVATION OF PLATFORM

LEFT PLATFORM SHOWN, RIGHT PLATFORM SIMILAR.
CAP REINFORCING NOT SHOWN FOR CLARITY.

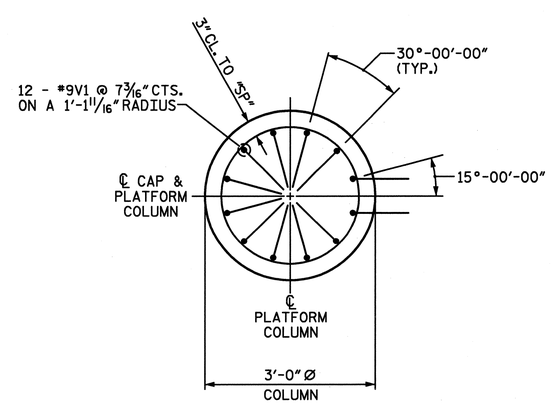

SECTION C-C

REQUIRED ORIENTATION OF BOTTOM HOOKS SHOWN

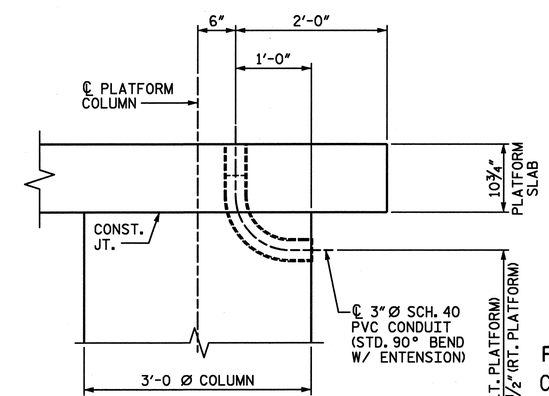

CONDUIT DETAIL

LEFT PLATFORM SHOWN, RIGHT PLATFORM SIMILAR.
PLATFORM REINFORCING NOT SHOWN FOR CLARITY.

PROJECT NO. U-4438
CAMDEN & PASQUOTANK COUNTY
STATION: 15+25.75 -L1-

SHEET 2 OF 3

STATE OF NORTH CAROLINA
DEPARTMENT OF TRANSPORTATION
RALEIGH

SUBSTRUCTURE
BENT 8

NORTH CAROLINA PROFESSIONAL SEAL 026891 ENGINEER JOHN T. DIFFEE III 12-2-11

WETHERILL ENGINEERING
559 Jones Franklin Rd. Suite 164
Raleigh, N.C. 27606
Bus: 919 851 8077
Fax: 919 851 8107
License: F-0377

TRANSPORTATION PLANNING/DESIGN - BRIDGE/STRUCTURE DESIGN
CIVIL/SITE DESIGN - GIS/GPS - CONSTRUCTION OBSERVATION

REVISIONS						SHEET NO.
NO.	BY:	DATE:	NO.	BY:	DATE:	S-65
1			3			TOTAL SHEETS
2			4			454

DRAWN BY : Z. PIATEK DATE : 12-10
CHECKED BY : T. DIFFEE DATE : 12-10

P:\2010\10119.02 U-4438\Structures\DGN\S64_U-4438_SD_BENT8.dgn
2/4/2011 4:41:36 PM

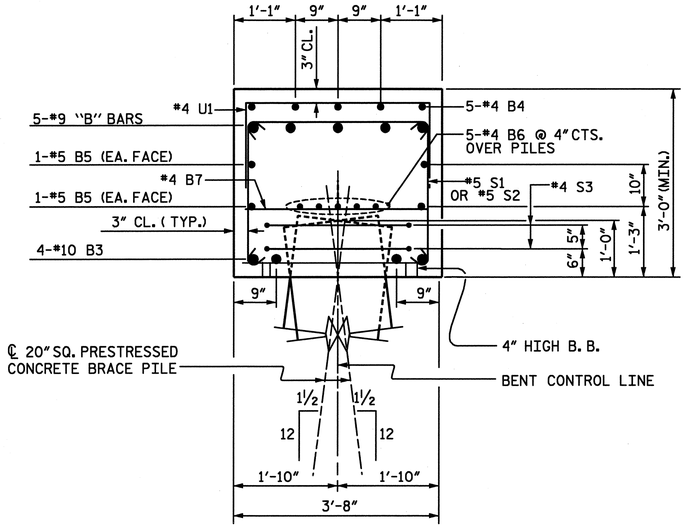

SECTION A-A

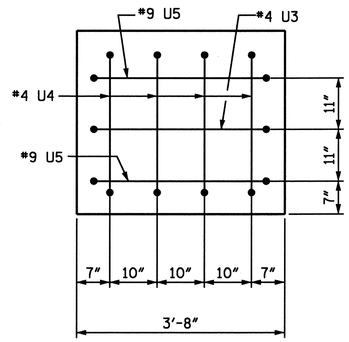

VIEW X-X

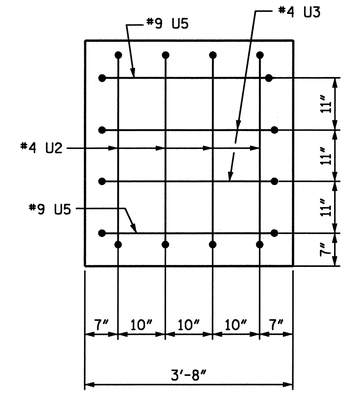

VIEW Y-Y

BAR TYPES

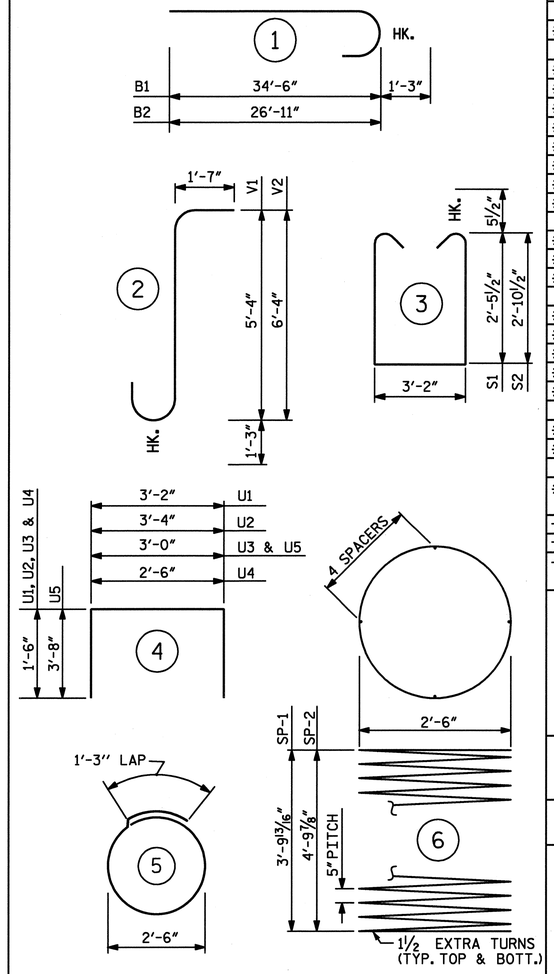

(ALL BAR DIMENSIONS ARE OUT TO OUT.)

BILL OF MATERIAL
BENT 8

BAR	NO.	SIZE	TYPE	LENGTH	WEIGHT
* A1	36	#5	STR.	8'-4"	313
* B1	5	#9	1	35'-9"	608
* B2	5	#9	1	28'-2"	479
* B3	4	#10	STR.	50'-9"	874
* B4	15	#4	STR.	9'-0"	90
* B5	4	#5	STR.	50'-9"	212
* B6	10	#4	STR.	26'-10"	179
* B7	15	#4	STR.	3'-3"	33
* B8	34	#5	STR.	8'-9"	310
* S1	28	#5	3	9'-0"	263
* S2	32	#5	3	9'-10"	328
* S3	16	#4	5	9'-2"	98
* U1	42	#4	4	6'-2"	173
* U2	4	#4	4	6'-4"	17
* U3	3	#4	4	6'-0"	12
* U4	4	#4	4	5'-6"	15
* U5	4	#9	4	10'-4"	141
* V1	12	#9	2	8'-2"	333
* V2	12	#9	2	9'-2"	374
* EPOXY COATED REINFORCING STEEL					4,852 LBS.
† SP-1	1	**	6	93'-10"	98
† SP-2	1	**	6	112'-4"	117
† EPOXY COATED SPIRAL COLUMN REINFORCING STEEL					215 LBS.

CLASS AA CONCRETE BREAKDOWN

POUR 1 (CAP)	22.9 CU. YDS.
POUR 2A (COLUMN - LT.)	0.9 CU. YDS.
POUR 2B (COLUMN - RT.)	1.1 CU. YDS.
POUR 3A (PLATFORM - LT.)	2.7 CU. YDS.
POUR 3B (PLATFORM - RT.)	2.7 CU. YDS.
TOTAL	30.3 CU. YDS.

20" SQ. PRESTRESSED CONCRETE PILES NO. 8	600 LIN. FT.
2-BAR ALUMINUM HANDRAIL	51.2 LIN. FT.

** THE SPIRAL REINFORCING STEEL SHALL BE W31 OR D-31 COLD DRAWN WIRE OR #5 PLAIN OR DEFORMED BAR.

PROJECT NO. U-4438
CAMDEN & PASQUOTANK COUNTY
STATION: 15+25.75 -L1-

SHEET 3 OF 3

NORTH CAROLINA PROFESSIONAL SEAL 026891 ENGINEER JOHN T. DIFFEE III 2-6-11

WETHERILL ENGINEERING
559 Jones Franklin Rd. Suite 164
Raleigh, N.C. 27606
Bus: 919 851 8077
Fax: 919 851 8107
License: F-0377

TRANSPORTATION PLANNING/DESIGN - BRIDGE/STRUCTURE DESIGN
CIVIL/SITE DESIGN - GIS/GPS - CONSTRUCTION OBSERVATION

STATE OF NORTH CAROLINA
DEPARTMENT OF TRANSPORTATION
RALEIGH

SUBSTRUCTURE
BENT 8

REVISIONS						SHEET NO.
NO.	BY:	DATE:	NO.	BY:	DATE:	S-66
1			3			TOTAL SHEETS
2			4			454

DRAWN BY : _____ DATE : _____
CHECKED BY : _____ DATE : _____

P:\2010\1019.02 U-4438\Structures\DGN\S64_U-4438_SD_BENT8.dgn
2/4/2011 4:41:44 PM

REVISED MARCH 17, 2011

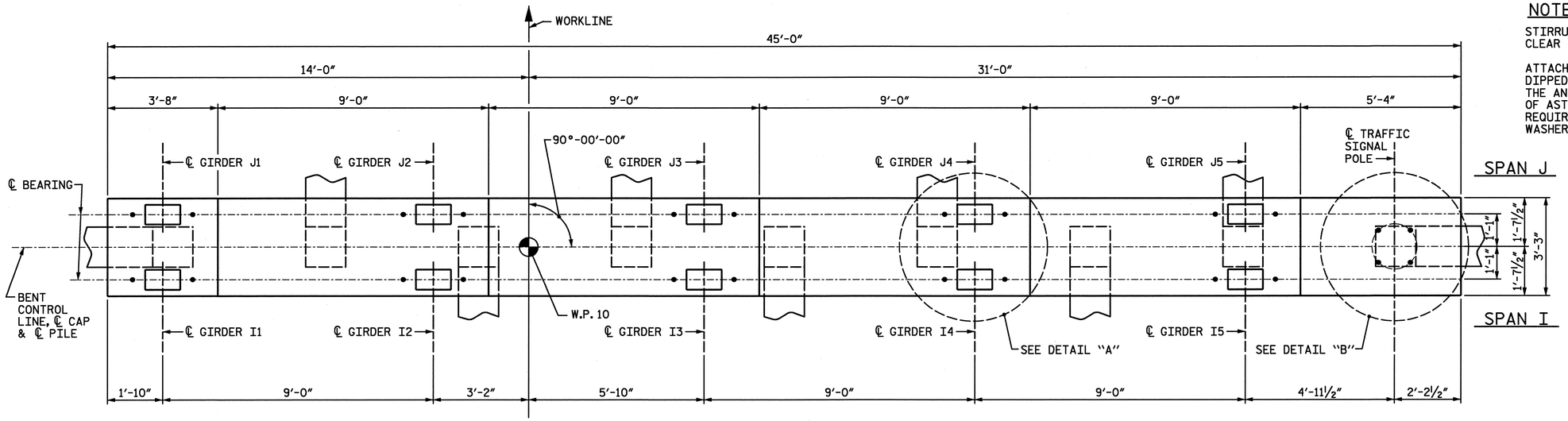

PLAN

NOTES:

STIRRUPS IN CAP MAY BE SHIFTED AS NECESSARY TO CLEAR ANCHOR BOLTS.

ATTACH SIGNAL POLE TO BENT CAP WITH 4 - 2"Ø HOT DIPPED GALVANIZED THREADED ROADS, NUTS AND WASHERS. THE ANCHOR RODS SHALL CONFORM TO THE REQUIREMENTS OF ASTM F1554, GRADE 55. NUTS SHALL MEET THE REQUIREMENTS OF ASTM A536, GRADE A, HEAVY HEX, AND WASHERS SHALL MEET THE REQUIREMENTS OF ASTM F436.

5"x 5"x ½"STEEL ANCHOR EMBEDMENT PLATES SHALL MEET THE REQUIREMENTS OF ASTM A36. THE PLATES SHALL BE HOT DIPPED GALVANIZED.

SEE VOLUME 2 OF STRUCTURE PLANS FOR SIGNAL POLE DETAILS.

ROTATE SPIRAL CAGE AS REQUIRED TO ALLOW PROPER PLACEMENT OF #10 B1 BARS THROUGH CAGE.

A TEMPLATE SUPPLIED BY THE POLE MANUFACTURER SHALL BE USED TO LOCATE AND SUPPORT THE ANCHOR RODS DURING CASTING OF THE BENT CAP.

THE COST OF THE TRAFFIC SIGNAL ANCHOR BOLT ASSEMBLIES SHALL BE CONSIDERED INCIDENTAL TO THE COST OF THE SIGNAL POLE.

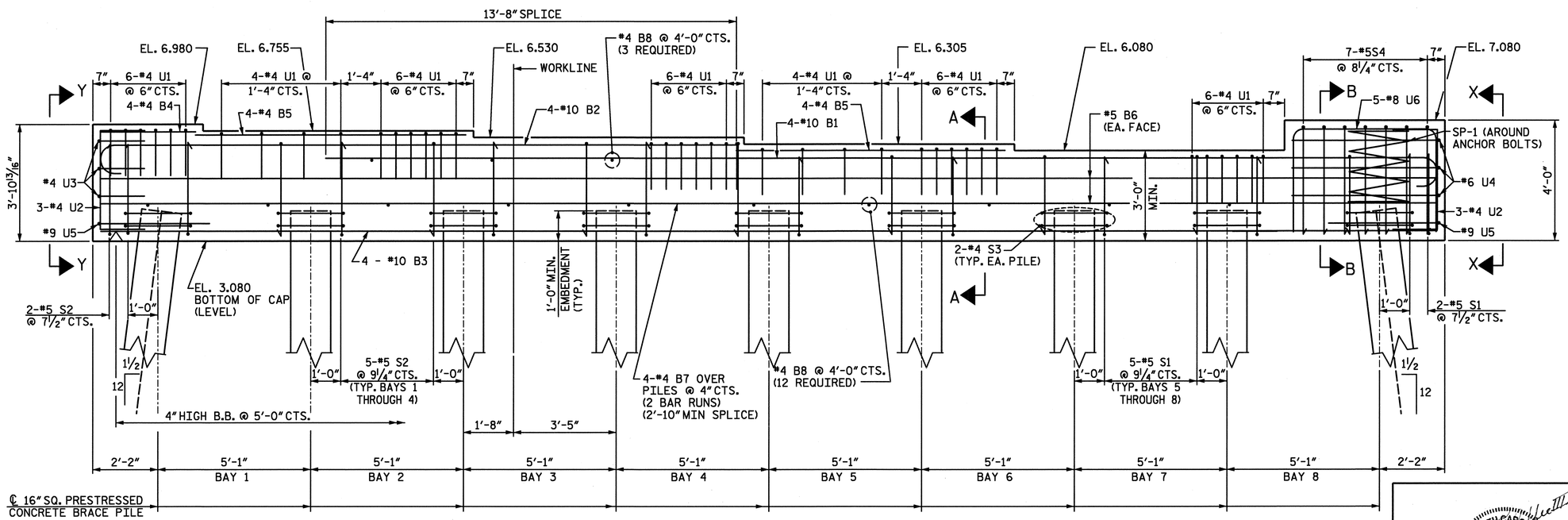

ELEVATION

INVERT ALTERNATE STIRRUPS EXCEPT FOR #5 S4 WHICH SHALL BE PLACED WITH OPENING DOWN

PROJECT NO. U-4438

CAMDEN & PASQUOTANK COUNTY

STATION: 15+25.75 -L1-

SHEET 1 of 2

STATE OF NORTH CAROLINA
DEPARTMENT OF TRANSPORTATION
RALEIGH

SUBSTRUCTURE
BENT 9

NORTH CAROLINA PROFESSIONAL SEAL 026891 ENGINEER JOHN T. DIFFEE III

WETHERILL ENGINEERING
559 Jones Franklin Rd. Suite 164
Raleigh, N.C. 27606
Bus: 919 851 8077
Fax: 919 851 8107
License: F-0377

TRANSPORTATION PLANNING/DESIGN - BRIDGE/STRUCTURE DESIGN
CIVIL/SITE DESIGN - GIS/OPS - CONSTRUCTION OBSERVATION

REVISIONS						SHEET NO.
NO.	BY:	DATE:	NO.	BY:	DATE:	S-67
1			3			TOTAL SHEETS
2			4			454

DRAWN BY : T. DIFFEE DATE : 1-11
CHECKED BY : J. DILWORTH DATE : 1-11

P:\2010\1019.02 U-4438\Structures\DGN\S67_U-4438_SD_BENT9.dgn
3/17/2011 10:15:35 AM

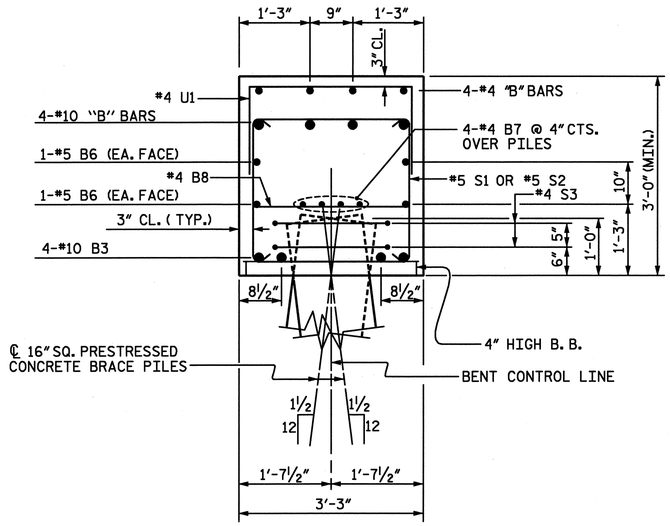

SECTION A-A

INVERT ALTERNATE STIRRUPS FOR #5 S1 AND #5 S2

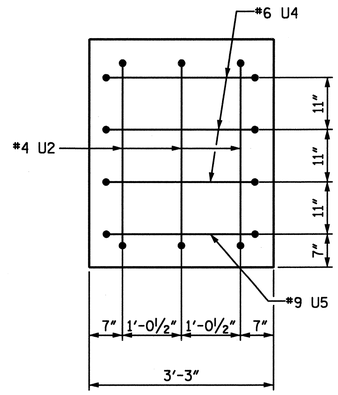

VIEW X-X

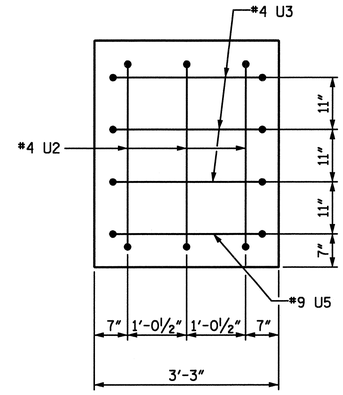

VIEW Y-Y

BAR TYPES

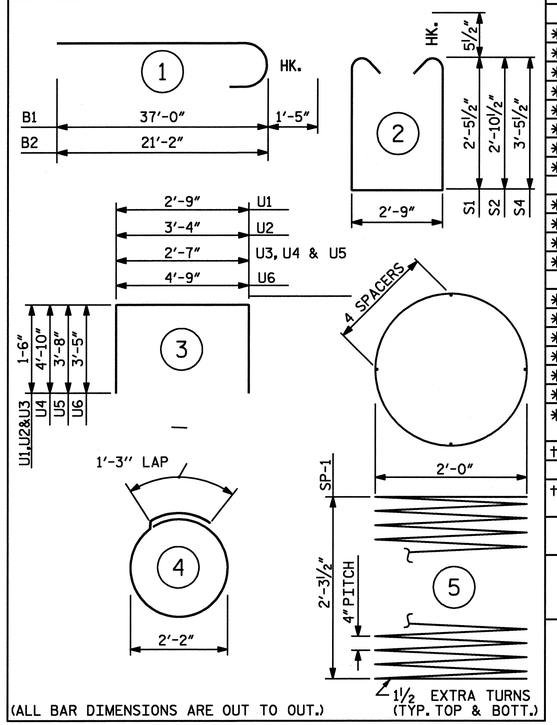

(ALL BAR DIMENSIONS ARE OUT TO OUT.)

BILL OF MATERIAL

BENT 9

BAR	NO.	SIZE	TYPE	LENGTH	WEIGHT
* B1	4	#10	1	38'-5"	661
* B2	4	#10	1	22'-7"	389
* B3	4	#10	STR.	44'-6"	766
* B4	4	#4	STR.	3'-2"	8
* B5	8	#4	STR.	9'-0"	48
* B6	4	#5	STR.	44'-6"	186
* B7	8	#4	STR.	23'-8"	126
* B8	15	#4	STR.	2'-9"	28
* S1	22	#5	2	8'-7"	197
* S2	22	#5	2	9'-5"	216
* S3	18	#4	4	8'-1"	97
* S4	7	#5	2	10'-7"	77
* U1	38	#4	3	5'-9"	146
* U2	6	#4	3	6'-4"	25
* U3	3	#4	3	5'-7"	11
* U4	3	#6	3	12'-3"	55
* U5	2	#9	3	9'-11"	67
* U6	5	#8	3	11'-7"	155
* EPOXY COATED REINFORCING STEEL					3,258 LBS.
† SP-1	1	**	5	60'-10"	41
† EPOXY COATED SPIRAL COLUMN REINFORCING STEEL					41 LBS.
CLASS AA CONCRETE					18.2 CU. YDS.
16" SQ. PRESTRESSED CONCRETE PILES NO. 9					630 LIN. FT.

** THE SPIRAL REINFORCING STEEL SHALL BE W20 OR D-20 COLD DRAWN WIRE OR #4 PLAIN OR DEFORMED BAR.

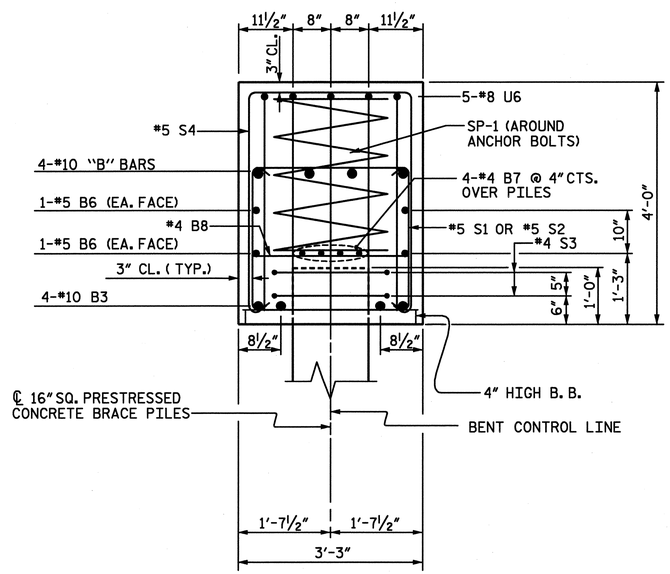

SECTION B-B

INVERT ALTERNATE STIRRUPS EXCEPT FOR #5 S4 WHICH SHALL BE PLACED WITH OPENING DOWN

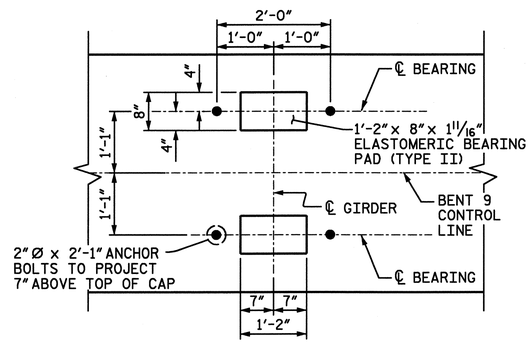

DETAIL "A"

(DETAILS AND DIMENSIONS ARE TYPICAL FOR EACH BEARING)

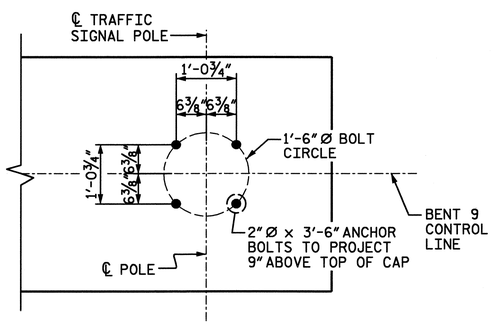

DETAIL "B"

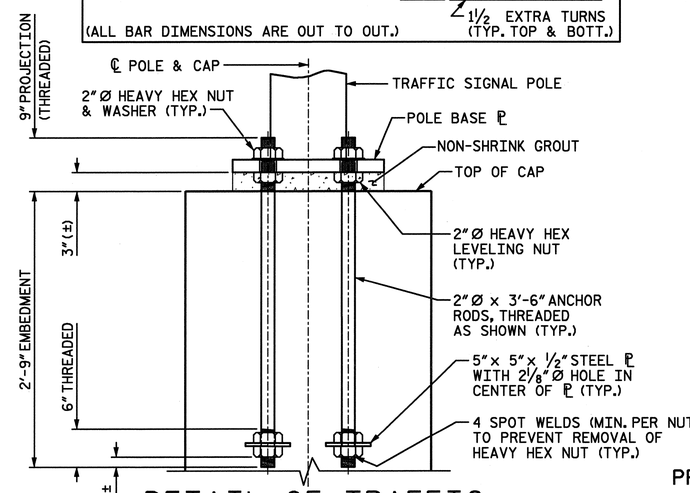

DETAIL OF TRAFFIC SIGNAL ANCHOR BOLTS

REINFORCING NOT SHOWN FOR CLARITY
(4 ANCHOR ROD ASSEMBLIES REQUIRED)

PROJECT NO. U-4438
CAMDEN & PASQUOTANK COUNTY
STATION: 15+25.75 -L1-

SHEET 2 of 2

NORTH CAROLINA PROFESSIONAL SEAL 026891 ENGINEER JOHN T. DIFFEE, III 2-6-11

ETHERILL ENGINEERING
559 Jones Franklin Rd. Suite 164
Raleigh, N.C. 27606
Bus: 919 851 8077
Fax: 919 851 8107
License: F-0377

TRANSPORTATION PLANNING/DESIGN - BRIDGE/STRUCTURE DESIGN
CIVIL/SITE DESIGN - GIS/GPS - CONSTRUCTION OBSERVATION

STATE OF NORTH CAROLINA
DEPARTMENT OF TRANSPORTATION
RALEIGH

SUBSTRUCTURE
BENT 9

REVISIONS						SHEET NO.
NO.	BY:	DATE:	NO.	BY:	DATE:	S-68
1			3			TOTAL SHEETS
2			4			454

DRAWN BY : T. DIFFEE DATE : 1-11
CHECKED BY : J. DILWORTH DATE : 1-11

P:\2010\101902 U-4438\Structures\DGN\S67_U-4438_SD_BENT9.dgn
2/4/2011 4:42:14 PM

NOTES:
STIRRUPS IN CAP MAY BE SHIFTED AS NECESSARY TO CLEAR ANCHOR BOLTS.

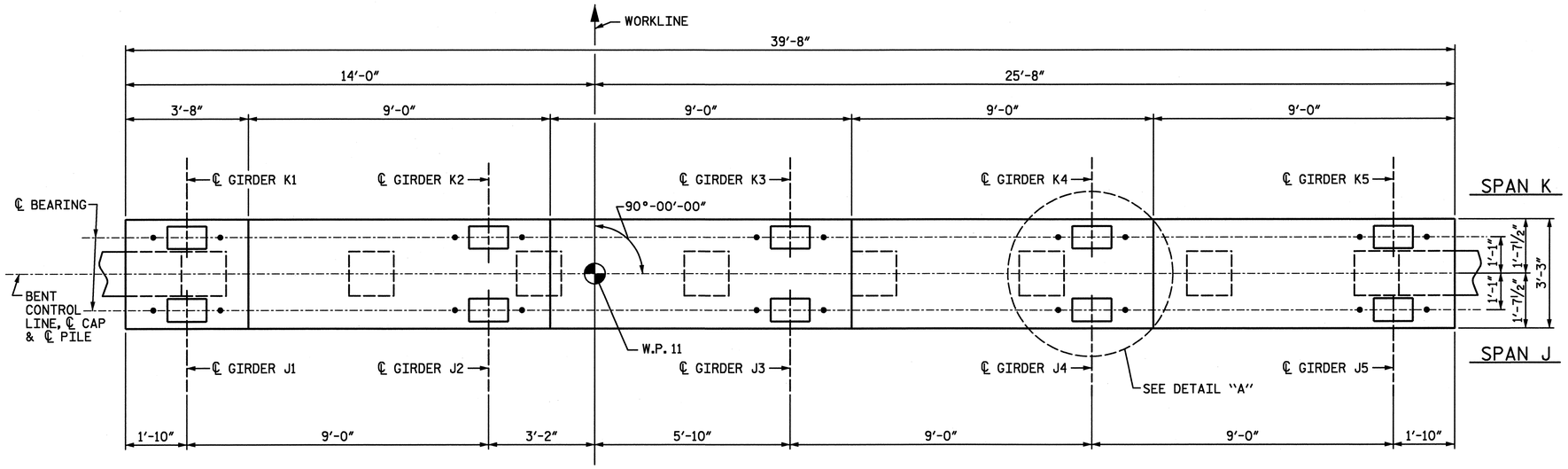

PLAN

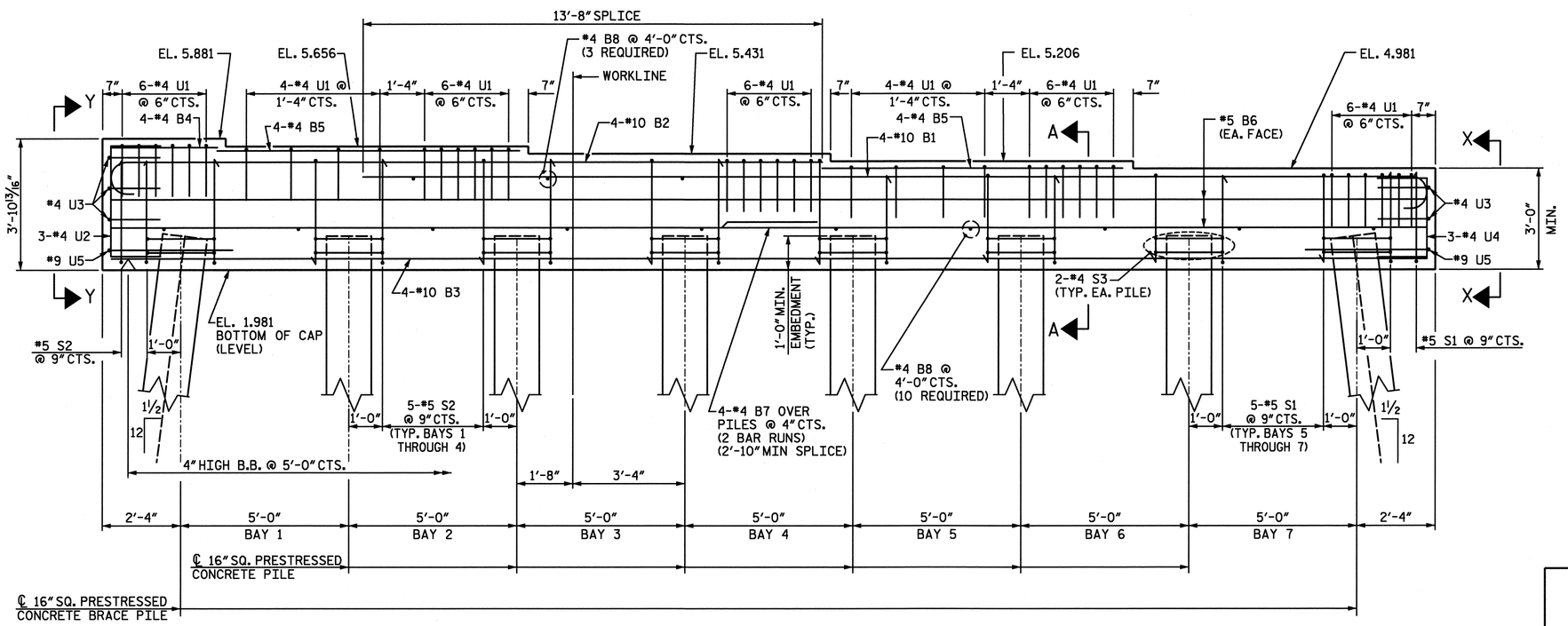

ELEVATION
INVERT ALTERNATE STIRRUPS

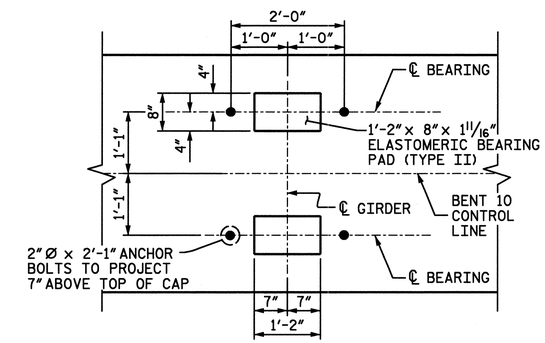

DETAIL "A"
(DETAILS AND DIMENSIONS ARE TYPICAL FOR EACH BEARING)

PROJECT NO. U-4438
CAMDEN & PASQUOTANK COUNTY
STATION: 15+25.75 -L1-

SHEET 1 of 2

STATE OF NORTH CAROLINA
DEPARTMENT OF TRANSPORTATION
RALEIGH

SUBSTRUCTURE
BENT 10

NORTH CAROLINA PROFESSIONAL SEAL 026891 ENGINEER JOHN T. DIFFEE III
2-6-11

ETHERILL ENGINEERING
559 Jones Franklin Rd. Suite 164
Raleigh, N.C. 27606
Bus: 919 851 8077
Fax: 919 851 8107
License: F-0377

TRANSPORTATION PLANNING/DESIGN - BRIDGE/STRUCTURE DESIGN
CIVIL/SITE DESIGN - GIS/GPS - CONSTRUCTION OBSERVATION

REVISIONS						SHEET NO.
NO.	BY:	DATE:	NO.	BY:	DATE:	S-69
1			3			TOTAL SHEETS
2			4			454

DRAWN BY : J. PENDERGRAFT DATE : 11-10
CHECKED BY : T. DIFFEE DATE : 11-10

P:\2010\101 19.02 U-4438\Structures\DGN\S69_U-4438_SD_BENT 10.dgn
2/4/2011 4:42:32 PM

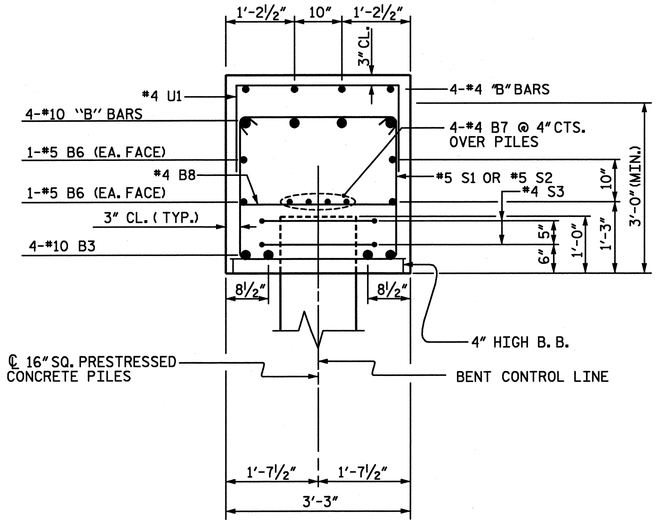

SECTION A-A

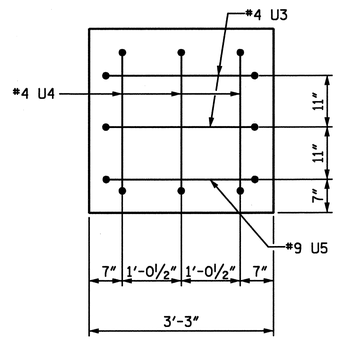

VIEW X-X

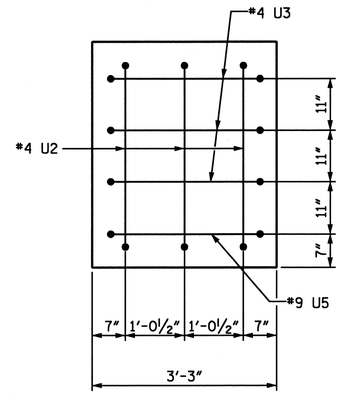

VIEW Y-Y

BAR TYPES

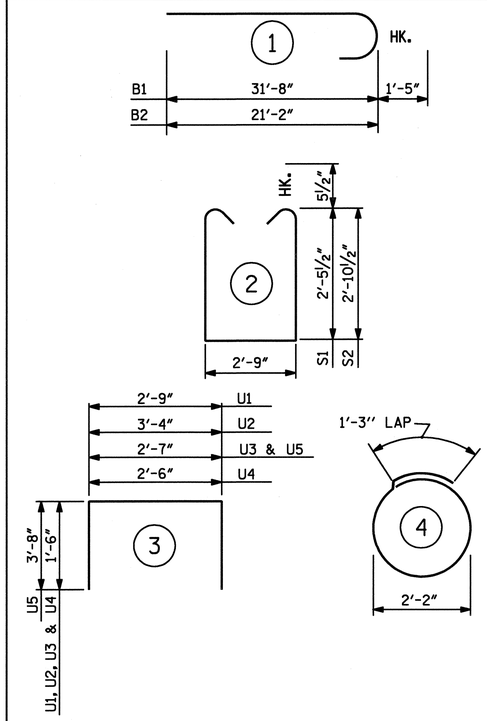

(ALL BAR DIMENSIONS ARE OUT TO OUT.)

BILL OF MATERIAL
BENT 10

BAR	NO.	SIZE	TYPE	LENGTH	WEIGHT
* B1	4	#10	1	33'-1"	569
* B2	4	#10	1	22'-7"	389
* B3	4	#10	STR.	39'-2"	674
* B4	4	#4	STR.	3'-2"	8
* B5	8	#4	STR.	9'-0"	48
* B6	4	#5	STR.	39'-2"	163
* B7	8	#4	STR.	21'-0"	112
* B8	13	#4	STR.	2'-9"	24
* S1	17	#5	2	8'-7"	152
* S2	22	#5	2	9'-5"	216
* S3	16	#4	4	8'-1"	86
* U1	38	#4	3	5'-9"	146
* U2	3	#4	3	6'-4"	13
* U3	5	#4	3	5'-7"	19
* U4	3	#4	3	5'-6"	11
* U5	2	#9	3	9'-11"	67

* EPOXY COATED REINFORCING STEEL	2,697 LBS.
CLASS AA CONCRETE	15.7 CU. YDS.
16" SQ. PRESTRESSED CONCRETE PILES NO. 8	560 LIN. FT.

PROJECT NO. U-4438
CAMDEN & PASQUOTANK COUNTY
STATION: 15+25.75 -L1-

SHEET 2 of 2

NORTH CAROLINA PROFESSIONAL SEAL 026891 ENGINEER JOHN T. DIFFEE III

ETHERILL ENGINEERING
559 Jones Franklin Rd. Suite 164
Raleigh, N.C. 27606
Bus: 919 851 8077
Fax: 919 851 8107
License: F-0377

TRANSPORTATION PLANNING/DESIGN - BRIDGE/STRUCTURE DESIGN
CIVIL/SITE DESIGN - GIS/GPS - CONSTRUCTION OBSERVATION

STATE OF NORTH CAROLINA
DEPARTMENT OF TRANSPORTATION
RALEIGH

SUBSTRUCTURE
BENT 10

REVISIONS						SHEET NO.
NO.	BY:	DATE:	NO.	BY:	DATE:	S-70
1			3			TOTAL SHEETS
2			4			454

DRAWN BY : _____ DATE : _____
CHECKED BY : _____ DATE : _____

P:\2010\10119.02 U-4438\Structures\DGN\S69_U-4438_SD_BENT 10.dgn
2/4/2011 4:42:41 PM

NOTES:
STIRRUPS IN CAP MAY BE SHIFTED AS NECESSARY TO CLEAR ANCHOR BOLTS.

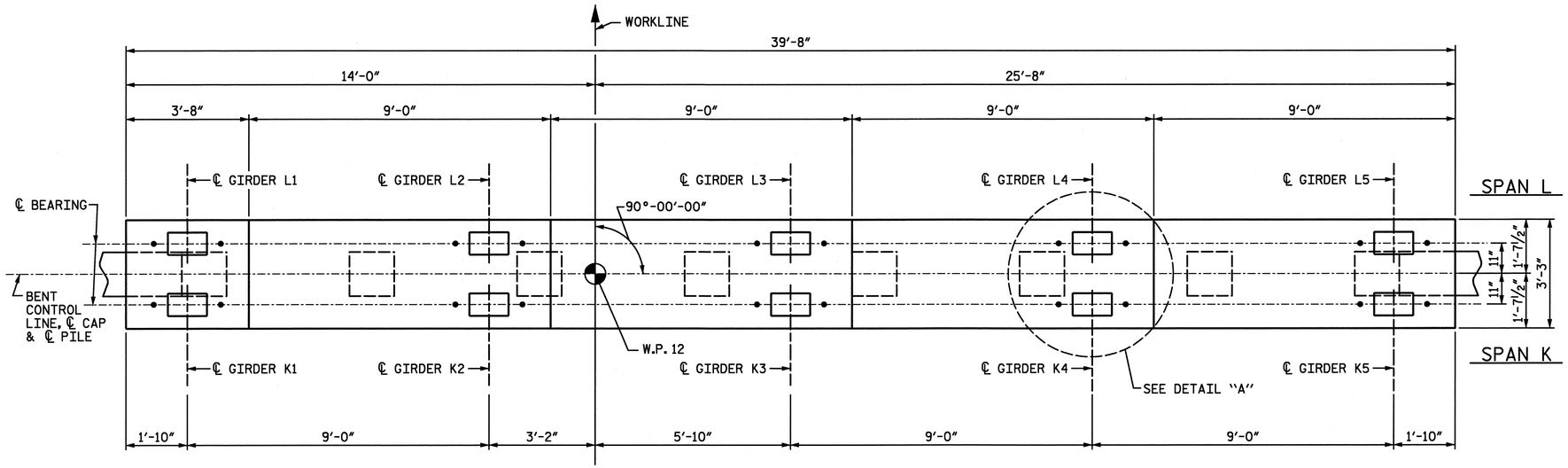

PLAN

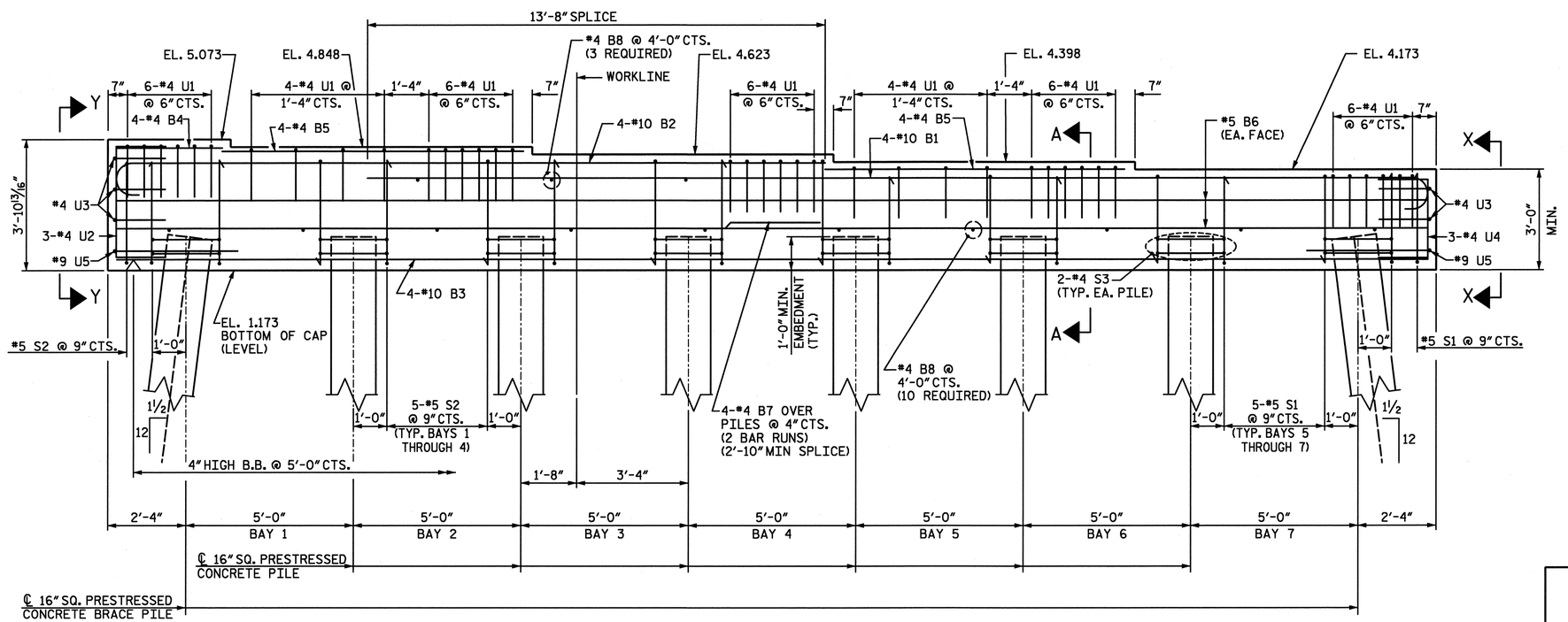

ELEVATION
INVERT ALTERNATE STIRRUPS

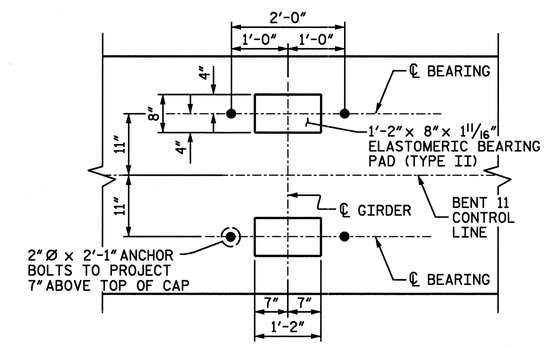

DETAIL "A"
(DETAILS AND DIMENSIONS ARE TYPICAL FOR EACH BEARING)

PROJECT NO. U-4438
CAMDEN & PASQUOTANK COUNTY
STATION: 15+25.75 -L1-

SHEET 1 of 2

STATE OF NORTH CAROLINA
DEPARTMENT OF TRANSPORTATION
RALEIGH

SUBSTRUCTURE
BENT 11

NORTH CAROLINA PROFESSIONAL SEAL 026891 ENGINEER JOHN T. DIFFEE III

ETHERILL ENGINEERING
559 Jones Franklin Rd. Suite 164
Raleigh, N.C. 27606
Bus: 919 851 8077
Fax: 919 851 8107
License: F-0377
TRANSPORTATION PLANNING/DESIGN - BRIDGE/STRUCTURE DESIGN
CIVIL/SITE DESIGN - GIS/GPS - CONSTRUCTION OBSERVATION

REVISIONS						SHEET NO.
NO.	BY:	DATE:	NO.	BY:	DATE:	S-71
1			3			TOTAL SHEETS
2			4			454

DRAWN BY : J. PENDERGRAFT DATE : 11-10
CHECKED BY : T. DIFFEE DATE : 11-10

P:\2010\101902 U-4438\Structures\DB\NST1_U-4438_SD_BENT 11.dgn
2/4/2011 4:43:04 PM

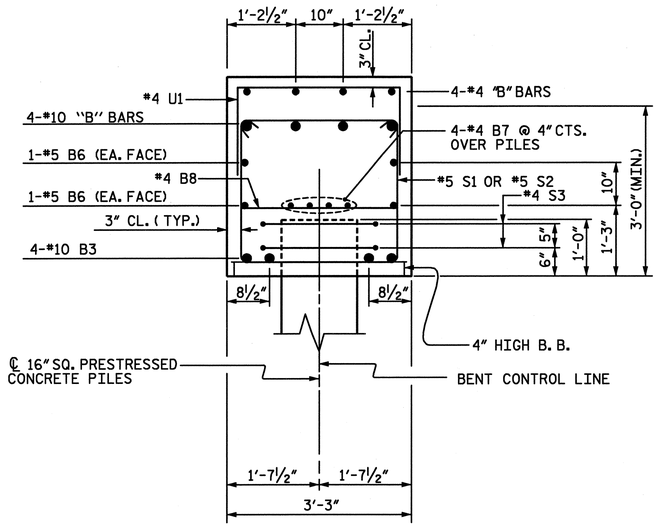

SECTION A-A

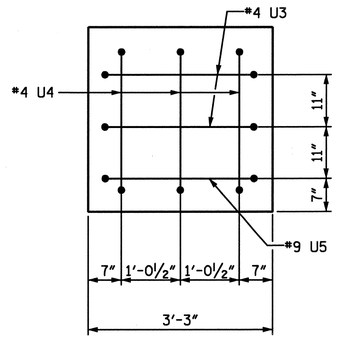

VIEW X-X

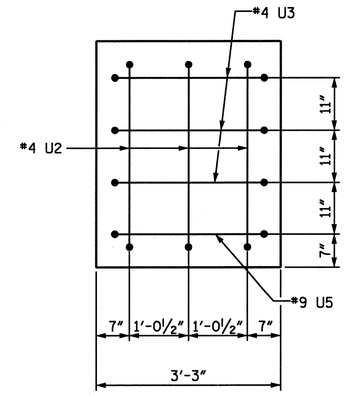

VIEW Y-Y

BAR TYPES

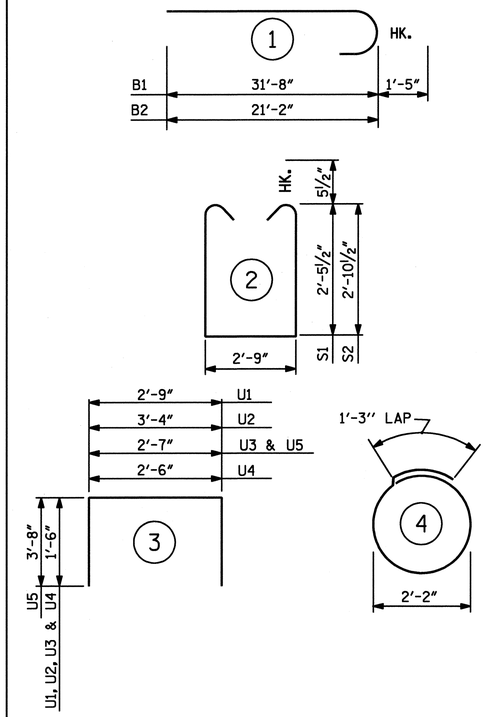

(ALL BAR DIMENSIONS ARE OUT TO OUT.)

BILL OF MATERIAL
BENT 11

BAR	NO.	SIZE	TYPE	LENGTH	WEIGHT
* B1	4	#10	1	33'-1"	569
* B2	4	#10	1	22'-7"	389
* B3	4	#10	STR.	39'-2"	674
* B4	4	#4	STR.	3'-2"	8
* B5	8	#4	STR.	9'-0"	48
* B6	4	#5	STR.	39'-2"	163
* B7	8	#4	STR.	21'-0"	112
* B8	13	#4	STR.	2'-9"	24
* S1	17	#5	2	8'-7"	152
* S2	22	#5	2	9'-5"	216
* S3	16	#4	4	8'-1"	86
* U1	38	#4	3	5'-9"	146
* U2	3	#4	3	6'-4"	13
* U3	5	#4	3	5'-7"	19
* U4	3	#4	3	5'-6"	11
* U5	2	#9	3	9'-11"	67

* EPOXY COATED REINFORCING STEEL	2,697 LBS.
CLASS AA CONCRETE	15.7 CU. YDS.
16" SQ. PRESTRESSED CONCRETE PILES NO. 8	600 LIN. FT.

PROJECT NO. U-4438
CAMDEN & PASQUOTANK COUNTY
STATION: 15+25.75 -L1-

SHEET 2 of 2

NORTH CAROLINA PROFESSIONAL SEAL 026691 ENGINEER JOHN T. DIFFEE III

ETHERILL ENGINEERING
559 Jones Franklin Rd. Suite 164
Raleigh, N.C. 27606
Bus: 919 851 8077
Fax: 919 851 8107
License: F-0377

TRANSPORTATION PLANNING/DESIGN - BRIDGE/STRUCTURE DESIGN
CIVIL/SITE DESIGN - GIS/GPS - CONSTRUCTION OBSERVATION

STATE OF NORTH CAROLINA
DEPARTMENT OF TRANSPORTATION
RALEIGH

SUBSTRUCTURE
BENT 11

REVISIONS						SHEET NO.
NO.	BY:	DATE:	NO.	BY:	DATE:	S-72
1			3			TOTAL SHEETS
2			4			454

DRAWN BY : _____ DATE : _____
CHECKED BY : _____ DATE : _____

P:\2010\10119.02 U-4438\Structures\DGN\ST1_U-4438_SD_BENT 11.dgn
2/4/2011 4:43:13 PM

NOTES:
STIRRUPS IN CAP MAY BE SHIFTED AS NECESSARY TO CLEAR ANCHOR BOLTS.

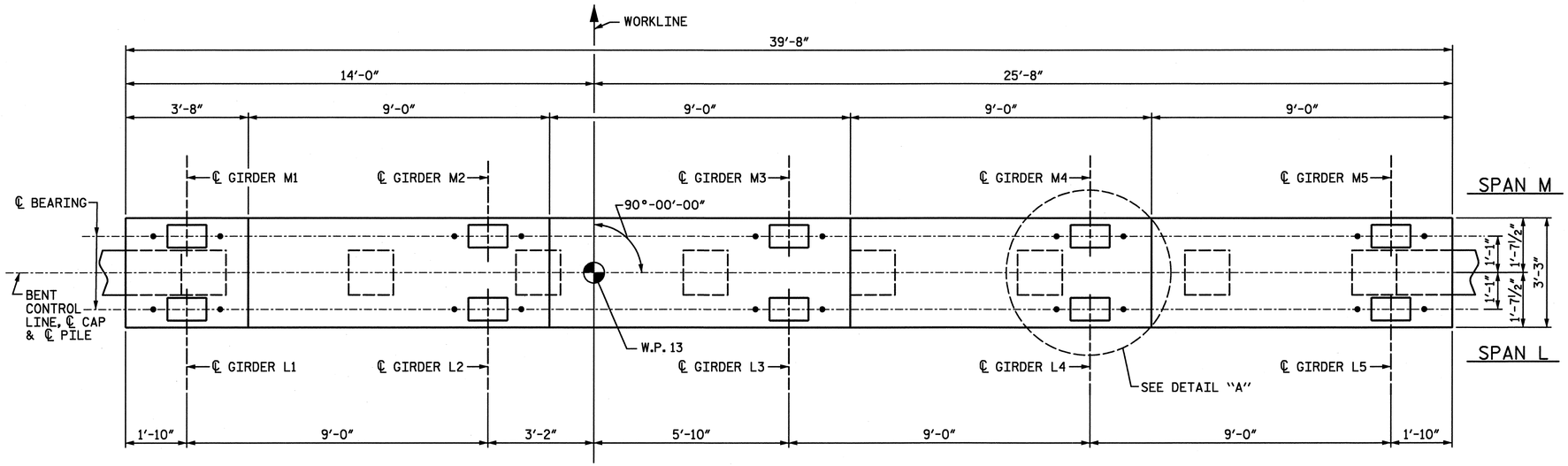

PLAN

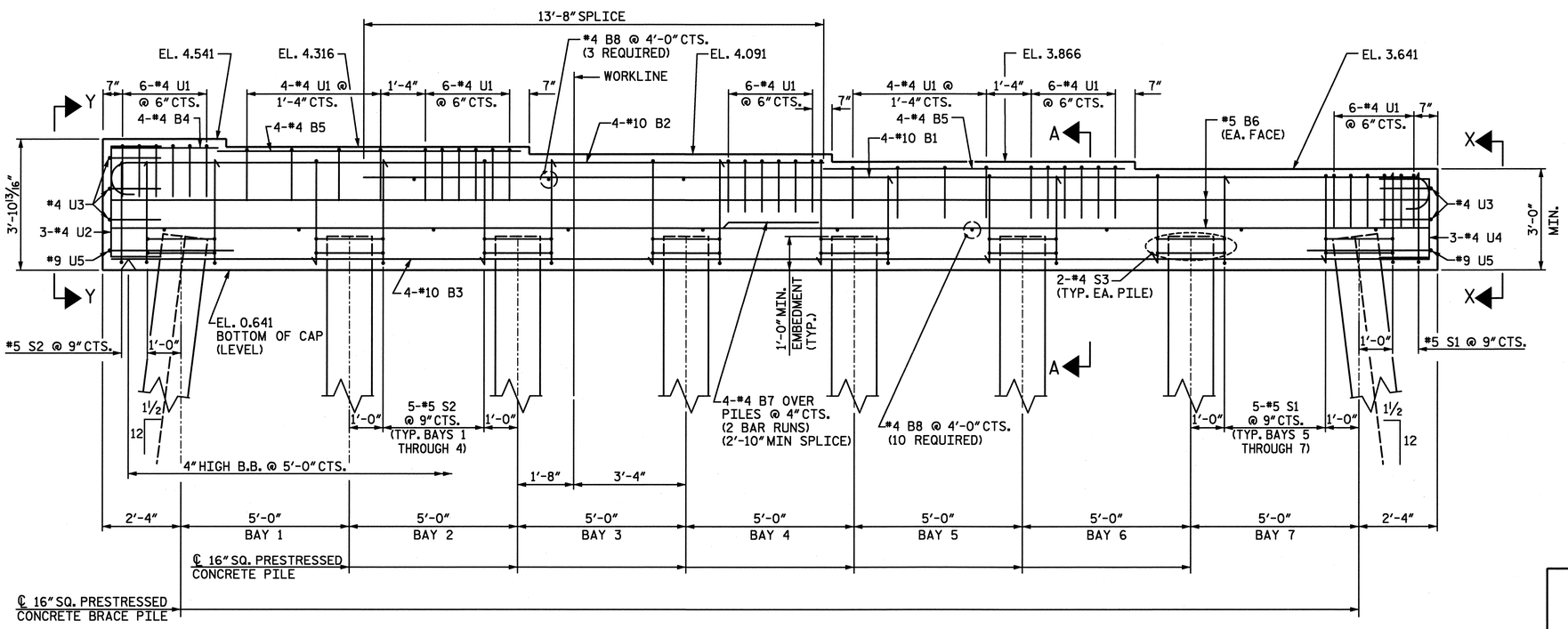

ELEVATION
INVERT ALTERNATE STIRRUPS

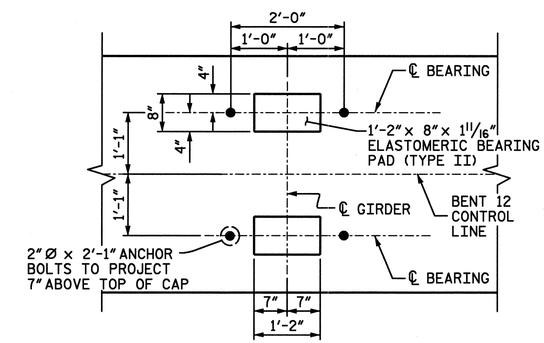

DETAIL "A"
(DETAILS AND DIMENSIONS ARE TYPICAL FOR EACH BEARING)

PROJECT NO. U-4438
CAMDEN & PASQUOTANK COUNTY
STATION: 15+25.75 -L1-

SHEET 1 of 2

STATE OF NORTH CAROLINA
DEPARTMENT OF TRANSPORTATION
RALEIGH

SUBSTRUCTURE
BENT 12

NORTH CAROLINA PROFESSIONAL SEAL 026891 ENGINEER JOHN T. DIFFEE III
2-6-11

WETHERILL ENGINEERING
559 Jones Franklin Rd. Suite 164
Raleigh, N.C. 27606
Bus: 919 851 8077
Fax: 919 851 8107
License: F-0377

TRANSPORTATION PLANNING/DESIGN - BRIDGE/STRUCTURE DESIGN
CIVIL/SITE DESIGN - GIS/OPS - CONSTRUCTION OBSERVATION

REVISIONS						SHEET NO.
NO.	BY:	DATE:	NO.	BY:	DATE:	S-73
1			3			TOTAL SHEETS
2			4			454

DRAWN BY : J. PENDERGRAFT DATE : 11-10
CHECKED BY : T. DIFFEE DATE : 11-10

P:\2010\10119.02 U-4438\Structures\DGN\S73_U-4438_SD_BENT 12.dgn
2/4/2011 4:43:32 PM

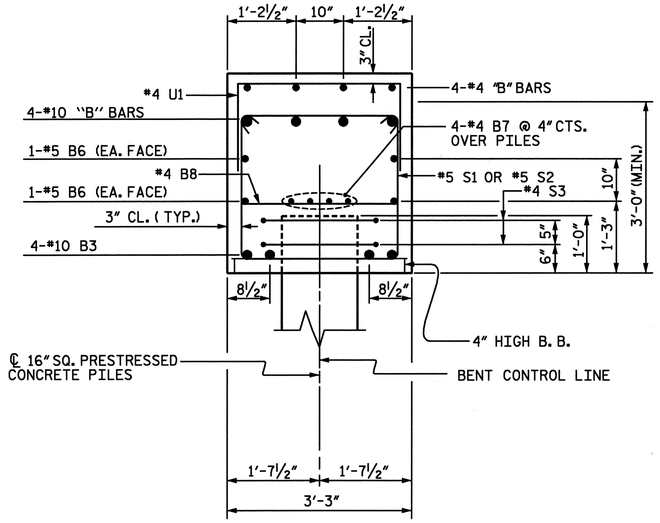

SECTION A-A

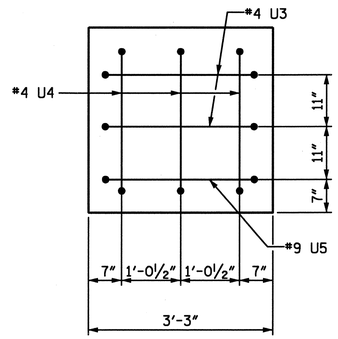

VIEW X-X

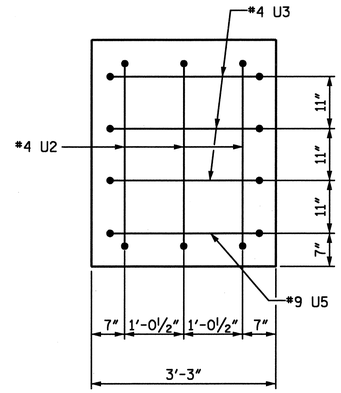

VIEW Y-Y

BAR TYPES

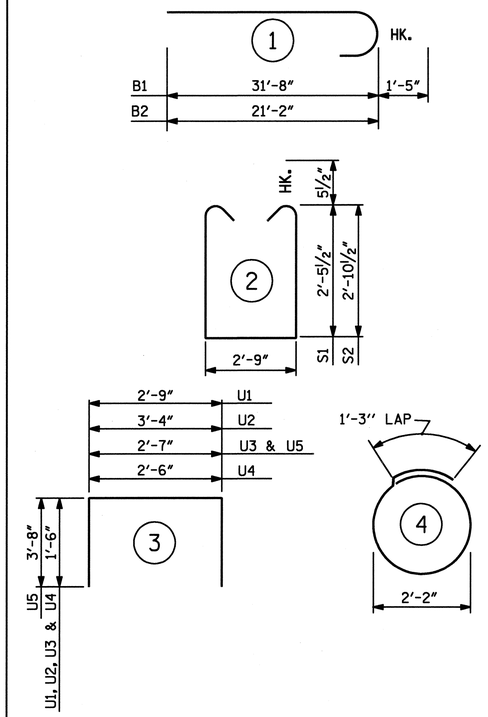

(ALL BAR DIMENSIONS ARE OUT TO OUT.)

BILL OF MATERIAL
BENT 12

BAR	NO.	SIZE	TYPE	LENGTH	WEIGHT
* B1	4	#10	1	33'-1"	569
* B2	4	#10	1	22'-7"	389
* B3	4	#10	STR.	39'-2"	674
* B4	4	#4	STR.	3'-2"	8
* B5	8	#4	STR.	9'-0"	48
* B6	4	#5	STR.	39'-2"	163
* B7	8	#4	STR.	21'-0"	112
* B8	13	#4	STR.	2'-9"	24
* S1	17	#5	2	8'-7"	152
* S2	22	#5	2	9'-5"	216
* S3	16	#4	4	8'-1"	86
* U1	38	#4	3	5'-9"	146
* U2	3	#4	3	6'-4"	13
* U3	5	#4	3	5'-7"	19
* U4	3	#4	3	5'-6"	11
* U5	2	#9	3	9'-11"	67

* EPOXY COATED REINFORCING STEEL	2,697 LBS.
CLASS AA CONCRETE	15.7 CU. YDS.
16" SQ. PRESTRESSED CONCRETE PILES NO. 8	600 LIN. FT.

PROJECT NO. U-4438
CAMDEN & PASQUOTANK COUNTY
STATION: 15+25.75 -L1-

SHEET 2 of 2

NORTH CAROLINA PROFESSIONAL SEAL 026891 ENGINEER JOHN T. DIFFEE III 2-8-11

ETHERILL ENGINEERING
559 Jones Franklin Rd. Suite 164
Raleigh, N.C. 27606
Bus: 919 851 8077
Fax: 919 851 8107
License: F-0377
TRANSPORTATION PLANNING/DESIGN - BRIDGE/STRUCTURE DESIGN
CIVIL/SITE DESIGN - GIS/GPS - CONSTRUCTION OBSERVATION

STATE OF NORTH CAROLINA
DEPARTMENT OF TRANSPORTATION
RALEIGH

SUBSTRUCTURE
BENT 12

REVISIONS						SHEET NO.
NO.	BY:	DATE:	NO.	BY:	DATE:	S-74
1			3			TOTAL SHEETS
2			4			454

DRAWN BY : _____ DATE : _____
CHECKED BY : _____ DATE : _____

P:\2010\1019.02 U-4438\Structures\DGN\S73_U-4438_SD_BENT 12.dgn
2/4/2011 4:43:41 PM

NOTES:
STIRRUPS IN CAP MAY BE SHIFTED AS NECESSARY TO CLEAR ANCHOR BOLTS.

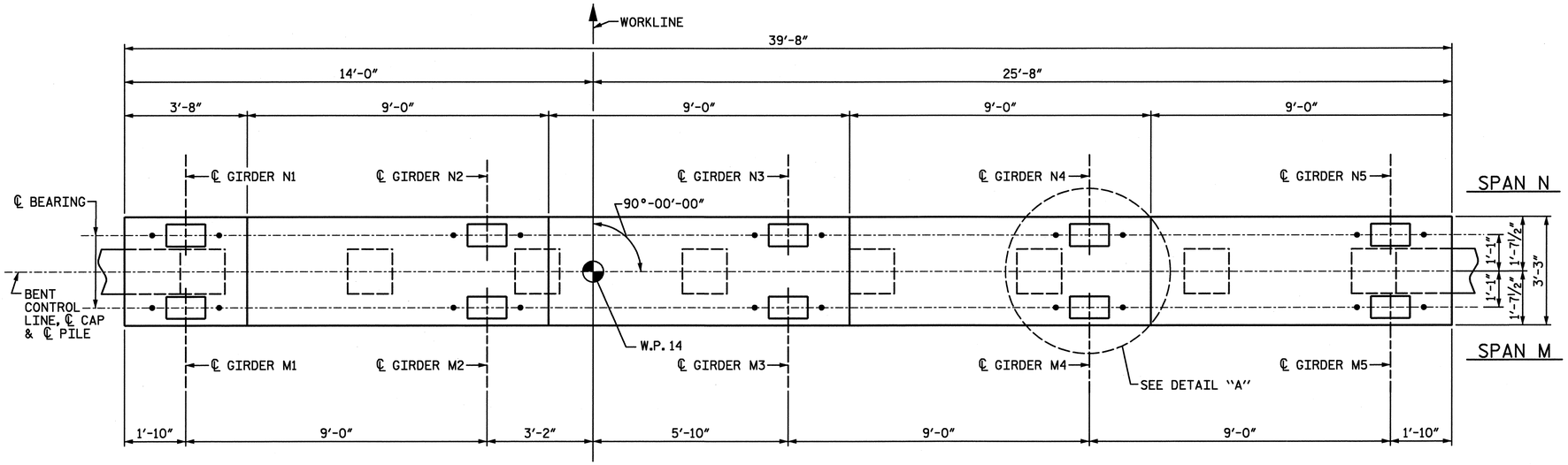

PLAN

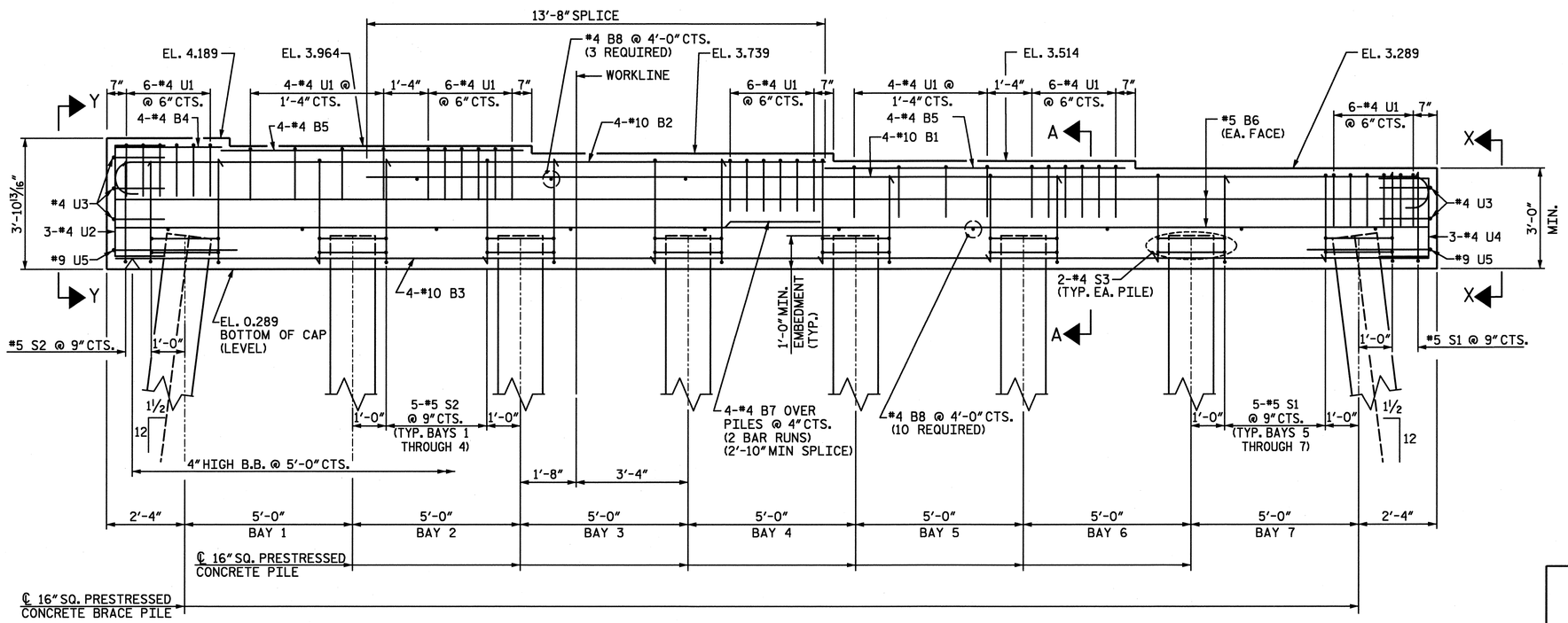

ELEVATION
INVERT ALTERNATE STIRRUPS

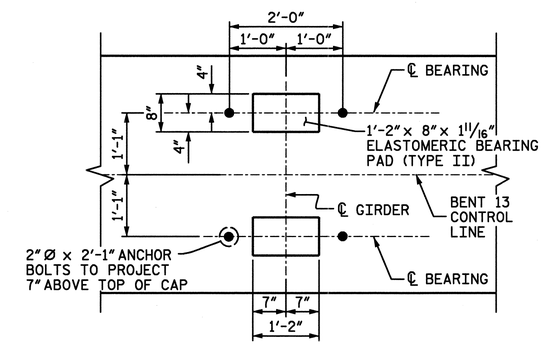

DETAIL "A"
(DETAILS AND DIMENSIONS ARE TYPICAL FOR EACH BEARING)

PROJECT NO. U-4438
CAMDEN & PASQUOTANK COUNTY
STATION: 15+25.75 -L1-

SHEET 1 of 2

STATE OF NORTH CAROLINA
DEPARTMENT OF TRANSPORTATION
RALEIGH

SUBSTRUCTURE
BENT 13

NORTH CAROLINA PROFESSIONAL SEAL 026891 ENGINEER JOHN T. DIFFEE III
2-8-11

ETHERILL ENGINEERING
559 Jones Franklin Rd. Suite 164
Raleigh, N.C. 27606
Bus: 919 851 8077
Fax: 919 851 8107
License: F-0377

TRANSPORTATION PLANNING/DESIGN - BRIDGE/STRUCTURE DESIGN
CIVIL/SITE DESIGN - GIS/GPS - CONSTRUCTION OBSERVATION

REVISIONS						SHEET NO.
NO.	BY:	DATE:	NO.	BY:	DATE:	S-75
1			3			TOTAL SHEETS
2			4			454

DRAWN BY : J. PENDERGRAFT DATE : 11-10
CHECKED BY : T. DIFFEE DATE : 11-10

P:\2010\101 19.02 U-4438\Structures\DGN\S75_U-4438_SD_BENT 13.dgn
2/4/2011 4:44:01 PM

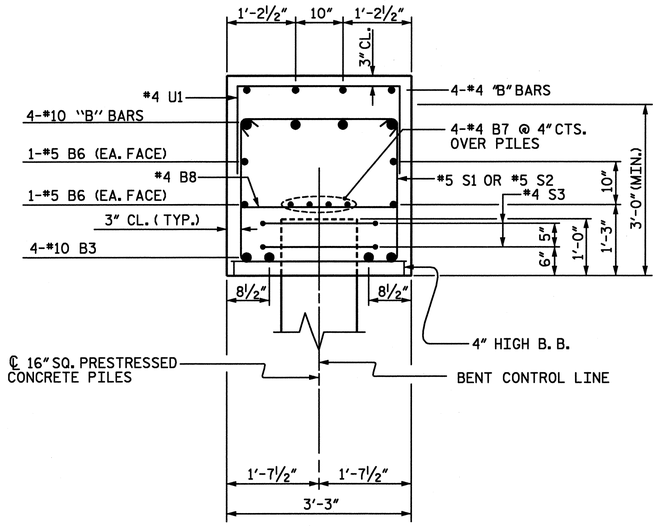

SECTION A-A

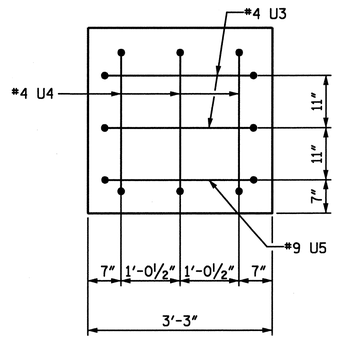

VIEW X-X

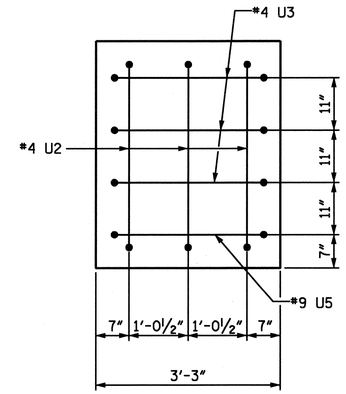

VIEW Y-Y

BAR TYPES

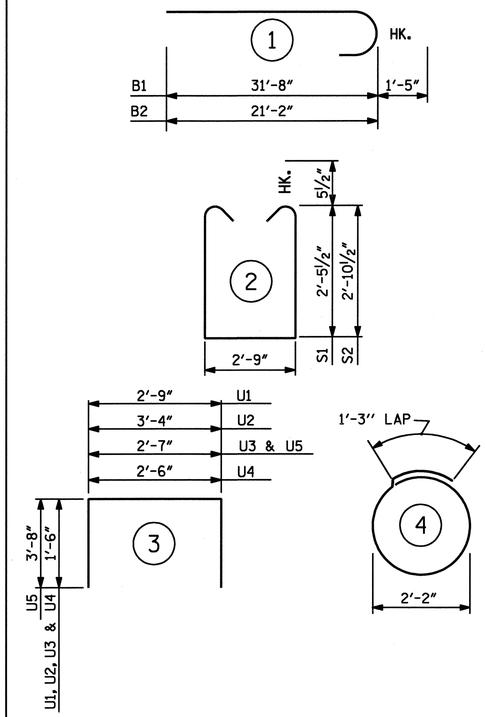

(ALL BAR DIMENSIONS ARE OUT TO OUT.)

BILL OF MATERIAL
BENT 13

BAR	NO.	SIZE	TYPE	LENGTH	WEIGHT
* B1	4	#10	1	33'-1"	569
* B2	4	#10	1	22'-7"	389
* B3	4	#10	STR.	39'-2"	674
* B4	4	#4	STR.	3'-2"	8
* B5	8	#4	STR.	9'-0"	48
* B6	4	#5	STR.	39'-2"	163
* B7	8	#4	STR.	21'-0"	112
* B8	13	#4	STR.	2'-9"	24
* S1	17	#5	2	8'-7"	152
* S2	22	#5	2	9'-5"	216
* S3	16	#4	4	8'-1"	86
* U1	38	#4	3	5'-9"	146
* U2	3	#4	3	6'-4"	13
* U3	5	#4	3	5'-7"	19
* U4	3	#4	3	5'-6"	11
* U5	2	#9	3	9'-11"	67

* EPOXY COATED REINFORCING STEEL	2,697 LBS.
CLASS AA CONCRETE	15.7 CU. YDS.
16" SQ. PRESTRESSED CONCRETE PILES NO. 8	600 LIN. FT.

PROJECT NO. U-4438
CAMDEN & PASQUOTANK COUNTY
STATION: 15+25.75 -L1-

SHEET 2 of 2

STATE OF NORTH CAROLINA
DEPARTMENT OF TRANSPORTATION
RALEIGH

SUBSTRUCTURE
BENT 13

NORTH CAROLINA PROFESSIONAL SEAL 026891 ENGINEER JOHN T. DIFFEE, III

ETHERILL ENGINEERING
559 Jones Franklin Rd. Suite 164
Raleigh, N.C. 27606
Bus: 919 851 8077
Fax: 919 851 8107
License: F-0377

TRANSPORTATION PLANNING/DESIGN - BRIDGE/STRUCTURE DESIGN
CIVIL/SITE DESIGN - GIS/GPS - CONSTRUCTION OBSERVATION

REVISIONS						SHEET NO.
NO.	BY:	DATE:	NO.	BY:	DATE:	S-76
1			3			TOTAL SHEETS
2			4			454

DRAWN BY : _____ DATE : _____
CHECKED BY : _____ DATE : _____

P:\2010\10119.02 U-4438\Structures\DGN\S75_U-4438_SD_BENT 13.dgn
2/4/2011 4:44:13 PM

NOTES:
STIRRUPS IN CAP MAY BE SHIFTED AS NECESSARY TO CLEAR ANCHOR BOLTS.

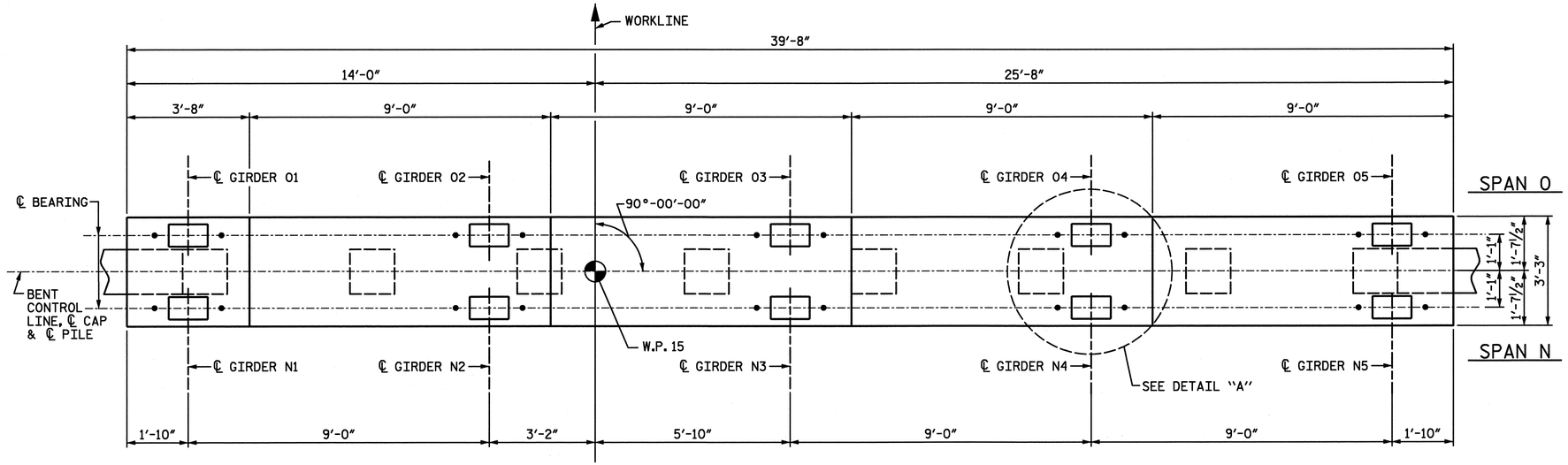

PLAN

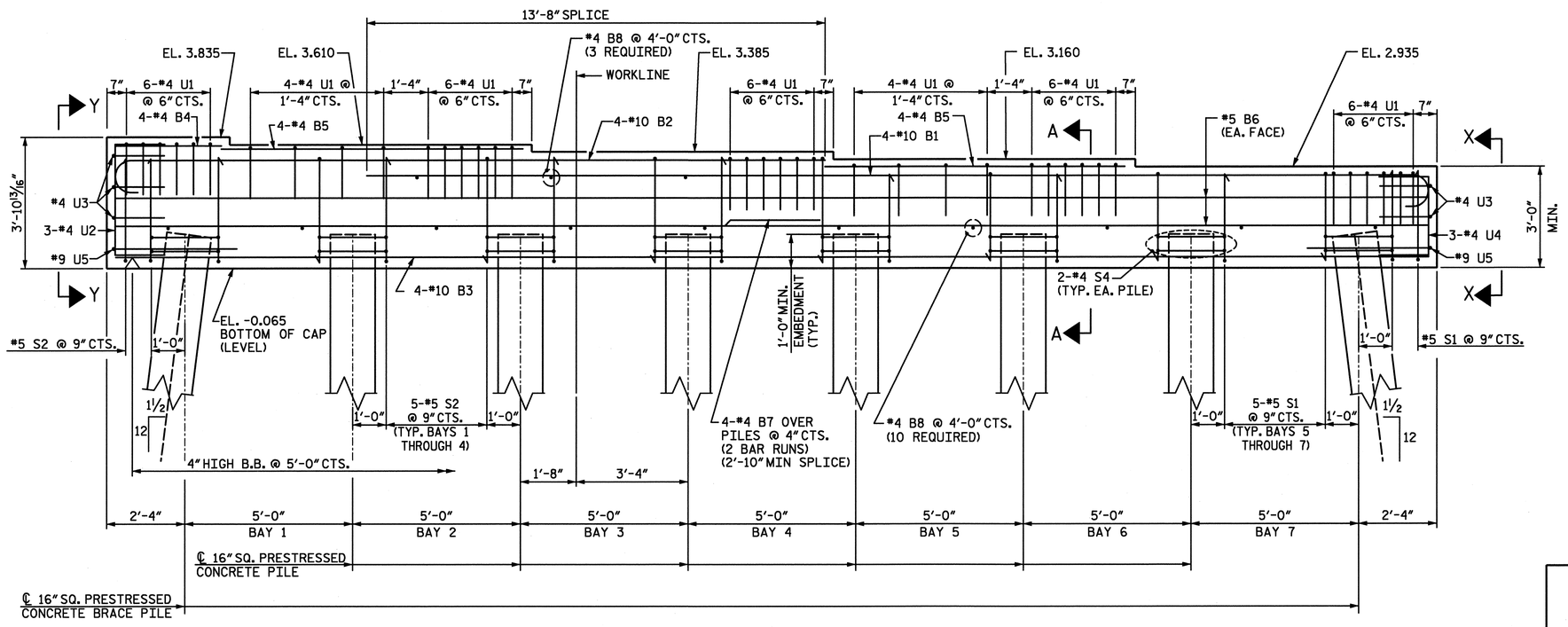

ELEVATION
INVERT ALTERNATE STIRRUPS

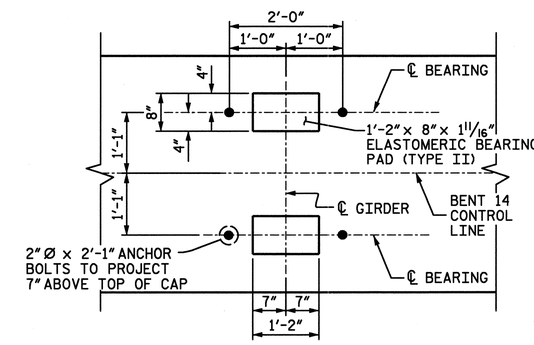

DETAIL "A"
(DETAILS AND DIMENSIONS ARE TYPICAL FOR EACH BEARING)

PROJECT NO. U-4438
CAMDEN & PASQUOTANK COUNTY
STATION: 15+25.75 -L1-

SHEET 1 of 2

STATE OF NORTH CAROLINA
DEPARTMENT OF TRANSPORTATION
RALEIGH

SUBSTRUCTURE
BENT 14

NORTH CAROLINA PROFESSIONAL SEAL 026891 ENGINEER JOHN T. DIFFEE, III

WETHERILL ENGINEERING
559 Jones Franklin Rd. Suite 164
Raleigh, N.C. 27606
Bus: 919 851 8077
Fax: 919 851 8107
License: F-0377

TRANSPORTATION PLANNING/DESIGN - BRIDGE/STRUCTURE DESIGN
CIVIL/SITE DESIGN - GIS/GPS - CONSTRUCTION OBSERVATION

REVISIONS						SHEET NO.
NO.	BY:	DATE:	NO.	BY:	DATE:	S-77
1			3			TOTAL SHEETS
2			4			454

DRAWN BY : J. PENDERGRAFT DATE : 11-10
CHECKED BY : T. DIFFEE DATE : 11-10

P:\2010\101902_U-4438\Structures\DGN\S77_U-4438_SD_BENT 14.dgn
2/4/2011 4:44:30 PM

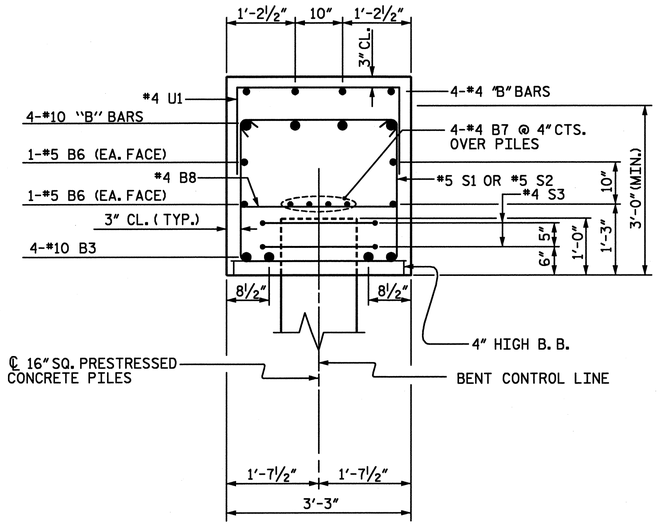

SECTION A-A

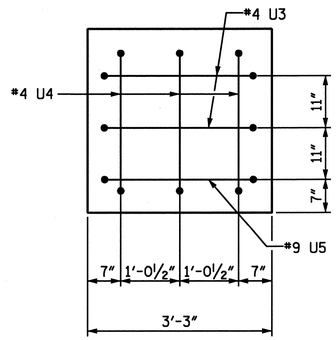

VIEW X-X

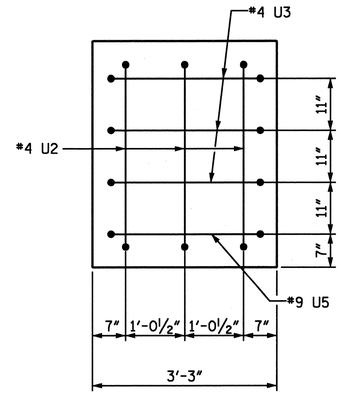

VIEW Y-Y

BAR TYPES

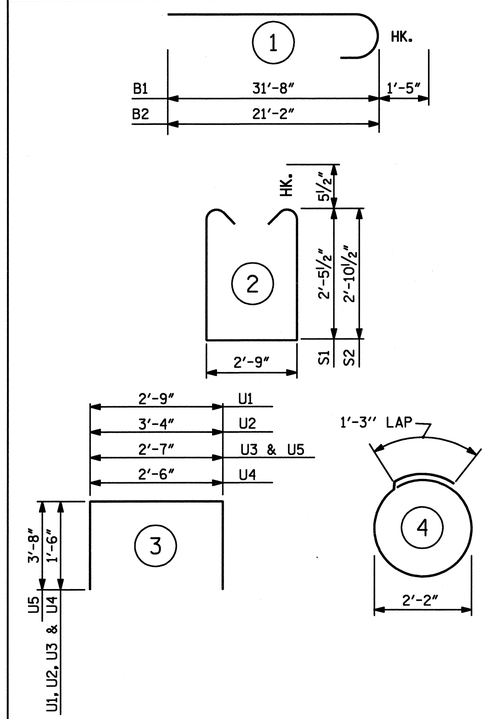

(ALL BAR DIMENSIONS ARE OUT TO OUT.)

BILL OF MATERIAL
BENT 14

BAR	NO.	SIZE	TYPE	LENGTH	WEIGHT
* B1	4	#10	1	33'-1"	569
* B2	4	#10	1	22'-7"	389
* B3	4	#10	STR.	39'-2"	674
* B4	4	#4	STR.	3'-2"	8
* B5	8	#4	STR.	9'-0"	48
* B6	4	#5	STR.	39'-2"	163
* B7	8	#4	STR.	21'-0"	112
* B8	13	#4	STR.	2'-9"	24
* S1	17	#5	2	8'-7"	152
* S2	22	#5	2	9'-5"	216
* S3	16	#4	4	8'-1"	86
* U1	38	#4	3	5'-9"	146
* U2	3	#4	3	6'-4"	13
* U3	5	#4	3	5'-7"	19
* U4	3	#4	3	5'-6"	11
* U5	2	#9	3	9'-11"	67

* EPOXY COATED REINFORCING STEEL	2,697 LBS.
CLASS AA CONCRETE	15.7 CU. YDS.
16" SQ. PRESTRESSED CONCRETE PILES NO. 8	600 LIN. FT.

PROJECT NO. U-4438
CAMDEN & PASQUOTANK COUNTY
STATION: 15+25.75 -L1-

SHEET 2 of 2

STATE OF NORTH CAROLINA
DEPARTMENT OF TRANSPORTATION
RALEIGH

SUBSTRUCTURE
BENT 14

NORTH CAROLINA PROFESSIONAL SEAL 026891 ENGINEER JOHN T. DIFFEE III

ETHERILL ENGINEERING
559 Jones Franklin Rd. Suite 164
Raleigh, N.C. 27606
Bus: 919 851 8077
Fax: 919 851 8107
License: F-0377
TRANSPORTATION PLANNING/DESIGN - BRIDGE/STRUCTURE DESIGN
CIVIL/SITE DESIGN - GIS/GPS - CONSTRUCTION OBSERVATION

REVISIONS						
NO.	BY:	DATE:	NO.	BY:	DATE:	
1			3			
2			4			

SHEET NO. S-78
TOTAL SHEETS 454

DRAWN BY : _____ DATE : _____
CHECKED BY : _____ DATE : _____

P:\2010\10119.02 U-4438\Structures\DGN\S77_U-4438_SD_BENT 14.dgn
2/4/2011 4:44:38 PM

NOTES:
STIRRUPS IN CAP MAY BE SHIFTED AS NECESSARY TO CLEAR ANCHOR BOLTS.

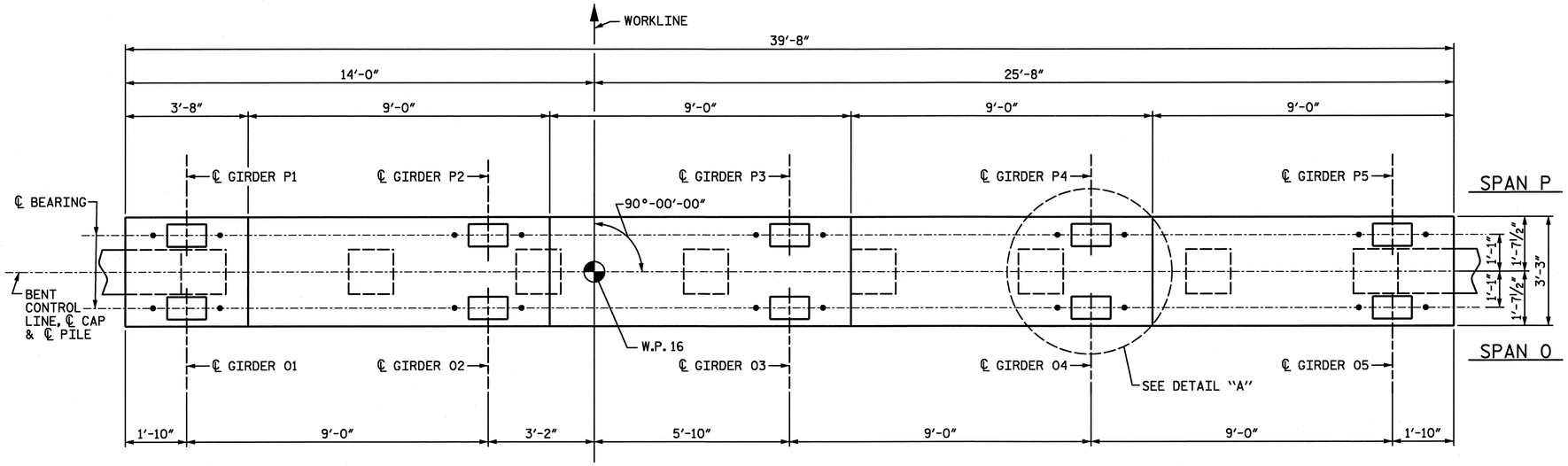

PLAN

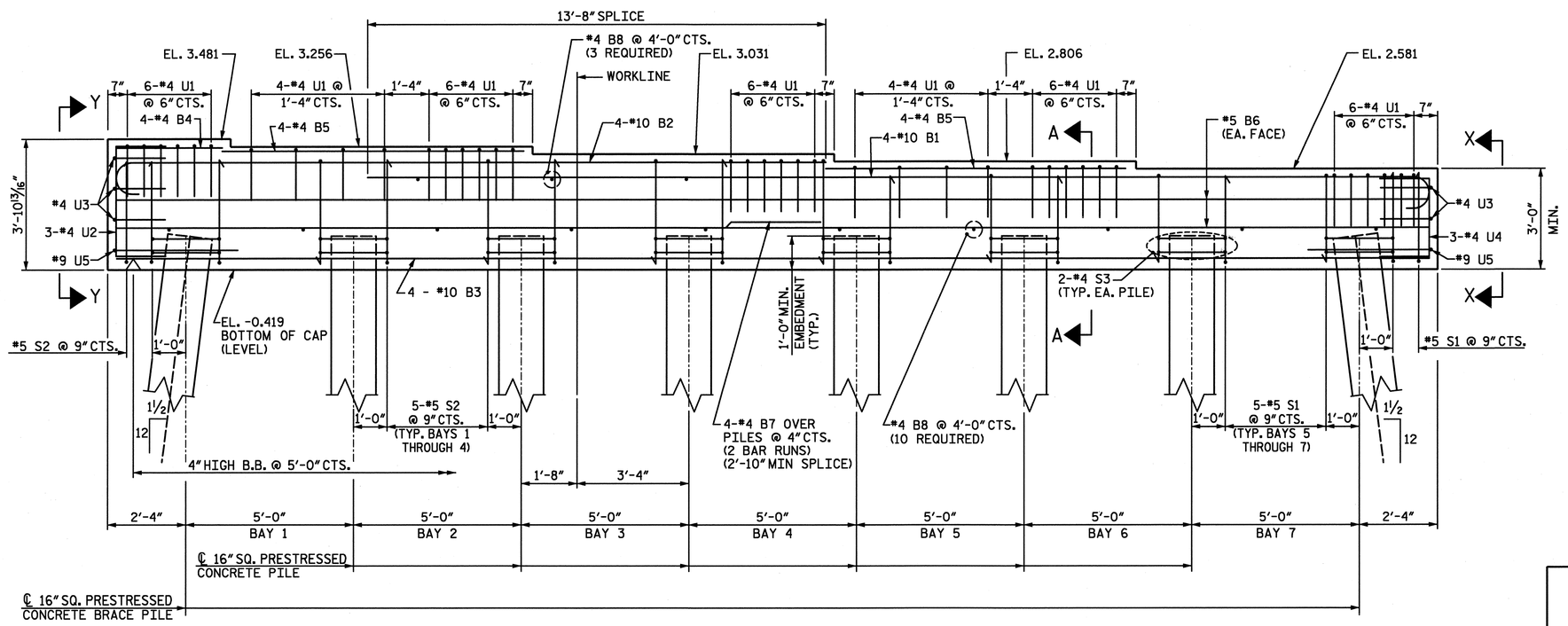

ELEVATION
INVERT ALTERNATE STIRRUPS

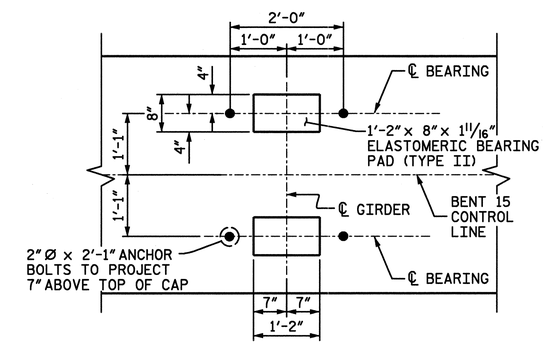

DETAIL "A"
(DETAILS AND DIMENSIONS ARE TYPICAL FOR EACH BEARING)

PROJECT NO. U-4438
CAMDEN & PASQUOTANK COUNTY
STATION: 15+25.75 -L1-

SHEET 1 of 2

STATE OF NORTH CAROLINA
DEPARTMENT OF TRANSPORTATION
RALEIGH

SUBSTRUCTURE
BENT 15

NORTH CAROLINA PROFESSIONAL SEAL 026891 ENGINEER JOHN T. DIFFEE III

WETHERILL ENGINEERING
559 Jones Franklin Rd. Suite 164
Raleigh, N.C. 27606
Bus: 919 851 8077
Fax: 919 851 8107
License: F-0377

TRANSPORTATION PLANNING/DESIGN - BRIDGE/STRUCTURE DESIGN
CIVIL/SITE DESIGN - GIS/GPS - CONSTRUCTION OBSERVATION

REVISIONS						SHEET NO.
NO.	BY:	DATE:	NO.	BY:	DATE:	S-79
1			3			TOTAL SHEETS
2			4			454

DRAWN BY : J. PENDERGRAFT DATE : 11-10
CHECKED BY : T. DIFFEE DATE : 11-10

P:\2010\101 19.02 U-4438\Structures\DGN\S79_U-4438_SD_BENT 15.dgn
2/4/2011 4:45:07 PM

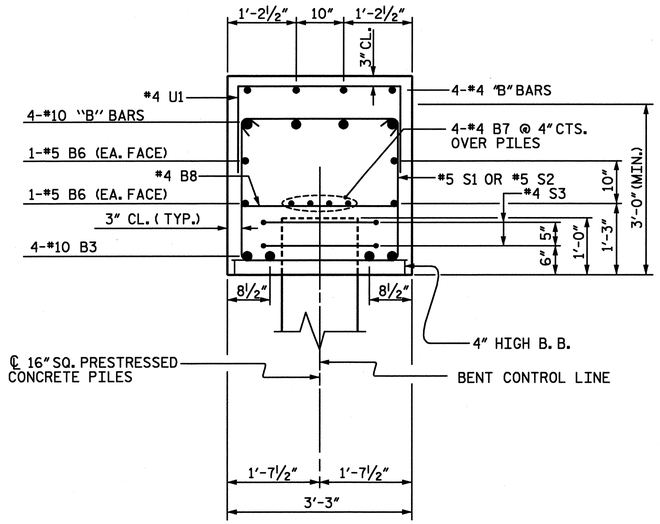

SECTION A-A

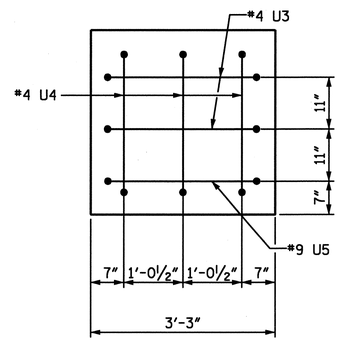

VIEW X-X

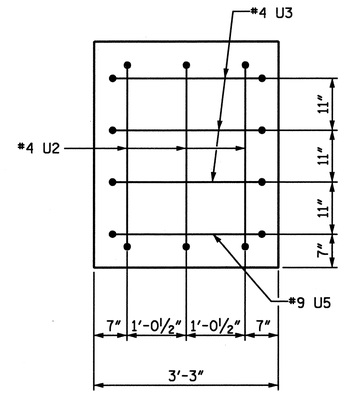

VIEW Y-Y

BAR TYPES

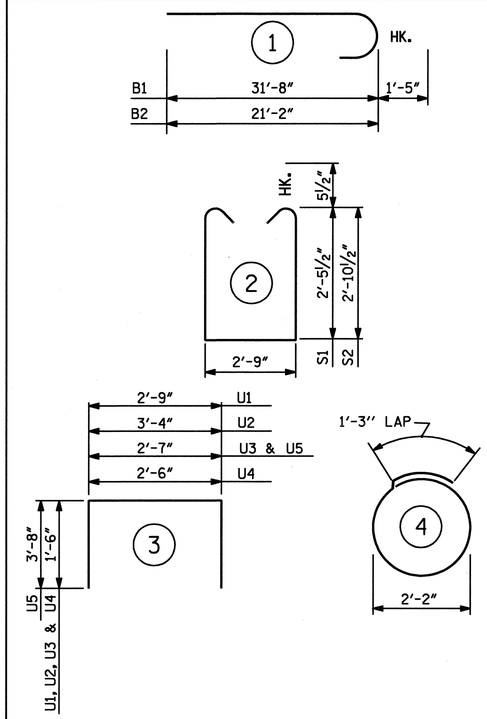

(ALL BAR DIMENSIONS ARE OUT TO OUT.)

BILL OF MATERIAL
BENT 15

BAR	NO.	SIZE	TYPE	LENGTH	WEIGHT
* B1	4	#10	1	33'-1"	569
* B2	4	#10	1	22'-7"	389
* B3	4	#10	STR.	39'-2"	674
* B4	4	#4	STR.	3'-2"	8
* B5	8	#4	STR.	9'-0"	48
* B6	4	#5	STR.	39'-2"	163
* B7	8	#4	STR.	21'-0"	112
* B8	13	#4	STR.	2'-9"	24
* S1	17	#5	2	8'-7"	152
* S2	22	#5	2	9'-5"	216
* S3	16	#4	4	8'-1"	86
* U1	38	#4	3	5'-9"	146
* U2	3	#4	3	6'-4"	13
* U3	5	#4	3	5'-7"	19
* U4	3	#4	3	5'-6"	11
* U5	2	#9	3	9'-11"	67

* EPOXY COATED REINFORCING STEEL	2,697 LBS.
CLASS AA CONCRETE	15.7 CU. YDS.
16" SQ. PRESTRESSED CONCRETE PILES NO. 8	600 LIN. FT.

PROJECT NO. U-4438
CAMDEN & PASQUOTANK COUNTY
STATION: 15+25.75 -L1-

SHEET 2 of 2

NORTH CAROLINA PROFESSIONAL SEAL 026891 ENGINEER JOHN T. DIFFEE, III
2-6-11

WETHERILL ENGINEERING
559 Jones Franklin Rd. Suite 164
Raleigh, N.C. 27606
Bus: 919 851 8077
Fax: 919 851 8107
License: F-0377

TRANSPORTATION PLANNING/DESIGN - BRIDGE/STRUCTURE DESIGN
CIVIL/SITE DESIGN - GIS/GPS - CONSTRUCTION OBSERVATION

STATE OF NORTH CAROLINA
DEPARTMENT OF TRANSPORTATION
RALEIGH

SUBSTRUCTURE
BENT 15

REVISIONS						SHEET NO.
NO.	BY:	DATE:	NO.	BY:	DATE:	S-80
1			3			TOTAL SHEETS
2			4			454

DRAWN BY : _____ DATE : _____
CHECKED BY : _____ DATE : _____

P:\2010\101 19.02 U-4438\Structures\DGN\S79_U-4438_SD_BENT 15.dgn
2/4/2011 4:45:28 PM

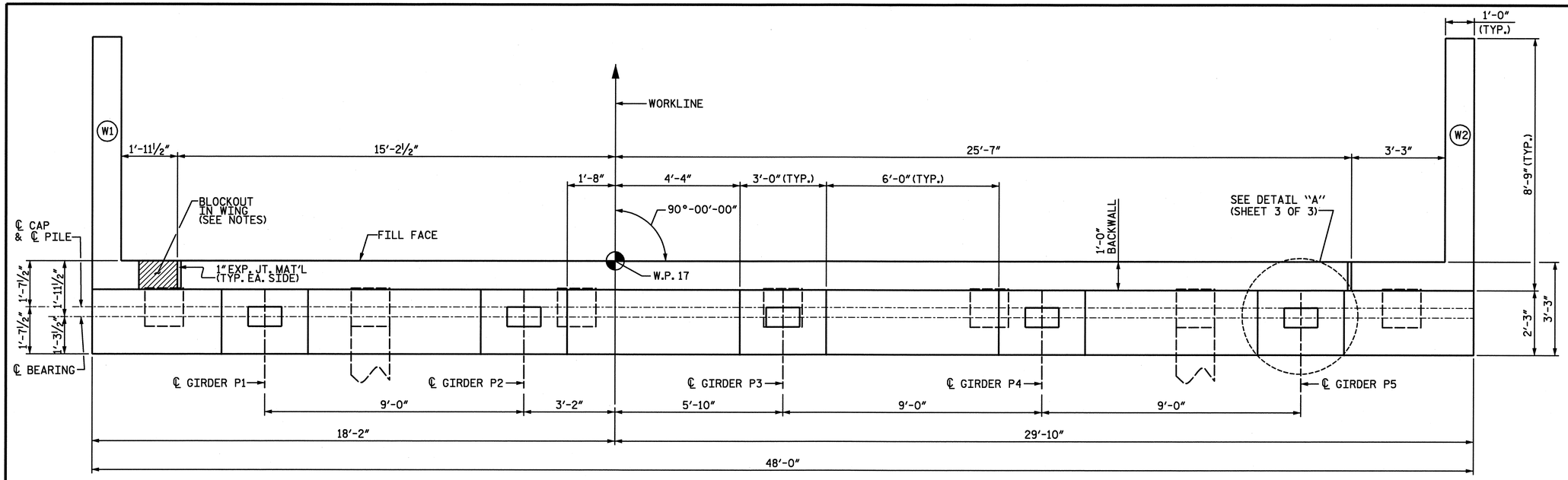

PLAN

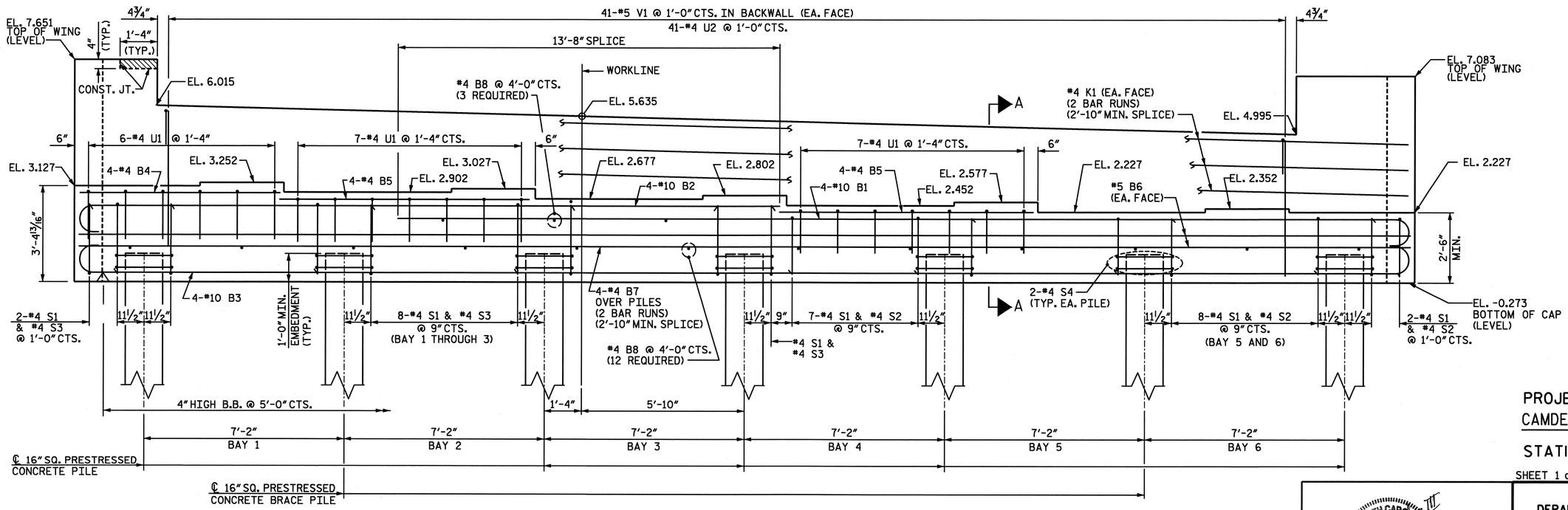

ELEVATION

NOTES

BACKWALL SHALL BE PLACED BEFORE APPLYING THE EPOXY PROTECTIVE COATING.

THE TOP SURFACE AREAS OF THE END BENT CAPS SHALL BE CURED IN ACCORDANCE WITH THE STANDARD SPECIFICATIONS EXCEPT THE MEMBRANE CURING COMPOUND METHOD SHALL NOT BE USED.

THE TOP SURFACE OF THE CAP EXCEPT THE BRIDGE SEAT BUILDUPS SHALL BE SLOPED TRANSVERSELY FROM THE FILL FACE TO THE BACK FACE AT THE RATE OF 2%.

THE CONCRETE IN THE SHADED AREA OF THE WING SHALL BE POURED AFTER THE PARAPET AND END POST ARE CAST IF SLIP FORMING IS USED.

THE CONTRACTOR SHALL PROVIDE FOR INSTALLATION OF THE 4" DIAMETER DRAIN PIPE THROUGH THE WINGWALL AS REQUIRED FOR REINFORCED BRIDGE APPROACH FILLS, SEE THE ROADWAY PLANS. REINFORCING STEEL IN THE WINGWALL MAY BE SHIFTED AS NECESSARY TO CLEAR THE DRAIN PIPE.

PROJECT NO. U-4438
CAMDEN & PASQUOTANK COUNTY
STATION: 15+25.75 -L1-

SHEET 1 of 3

STATE OF NORTH CAROLINA
DEPARTMENT OF TRANSPORTATION
RALEIGH

SUBSTRUCTURE
END BENT 2

NORTH CAROLINA PROFESSIONAL SEAL 026891 ENGINEER JOHN T. DIFFEE III 2-6-11

ETHERILL ENGINEERING
559 Jones Franklin Rd. Suite 164
Raleigh, N.C. 27606
Bus: 919 851 8077
Fax: 919 851 8107
License: F-0377

TRANSPORTATION PLANNING/DESIGN - BRIDGE/STRUCTURE DESIGN
CIVIL/SITE DESIGN - GIS/GPS - CONSTRUCTION OBSERVATION

REVISIONS						
NO.	BY:	DATE:	NO.	BY:	DATE:	
1			3			
2			4			

SHEET NO. S-81
TOTAL SHEETS 454

DRAWN BY : J. PENDERGRAFT DATE : 11-10
CHECKED BY : T. DIFFEE DATE : 11-10

P:\2010\10119.02 U-4438\Structures\DGN\S81_U-4438_SD_EB2.dgn
2/6/2011 12:01:24 PM

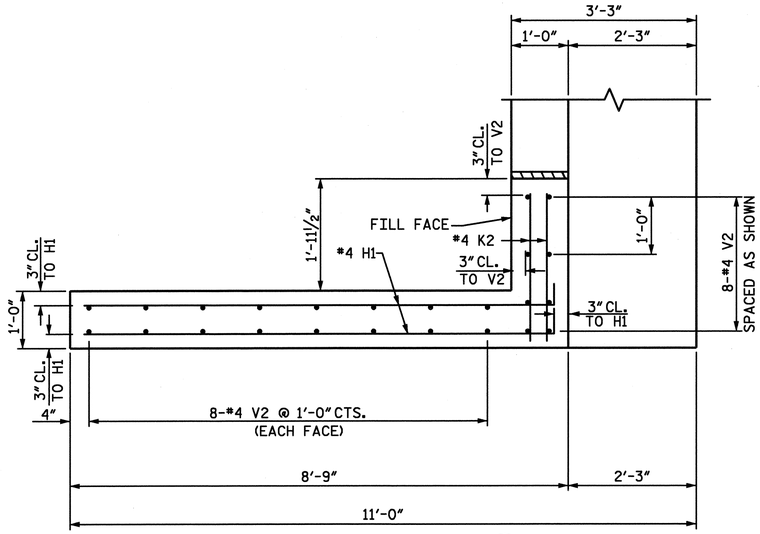

PLAN OF WING (W1)

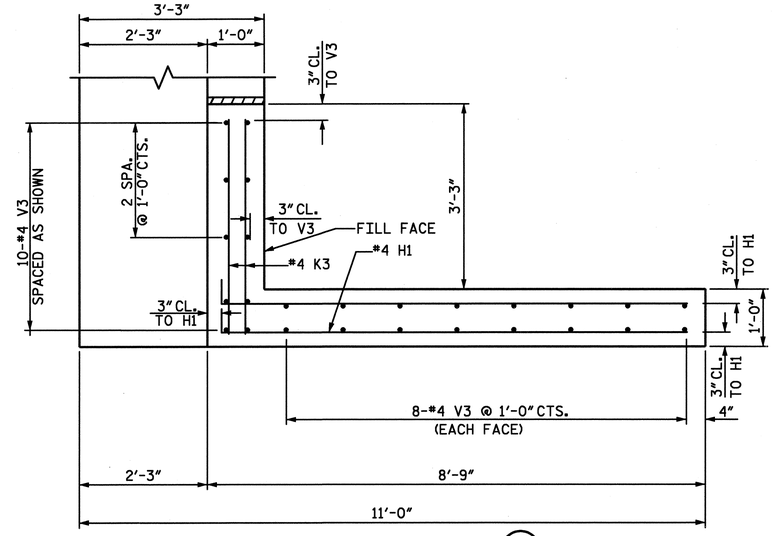

PLAN OF WING (W2)

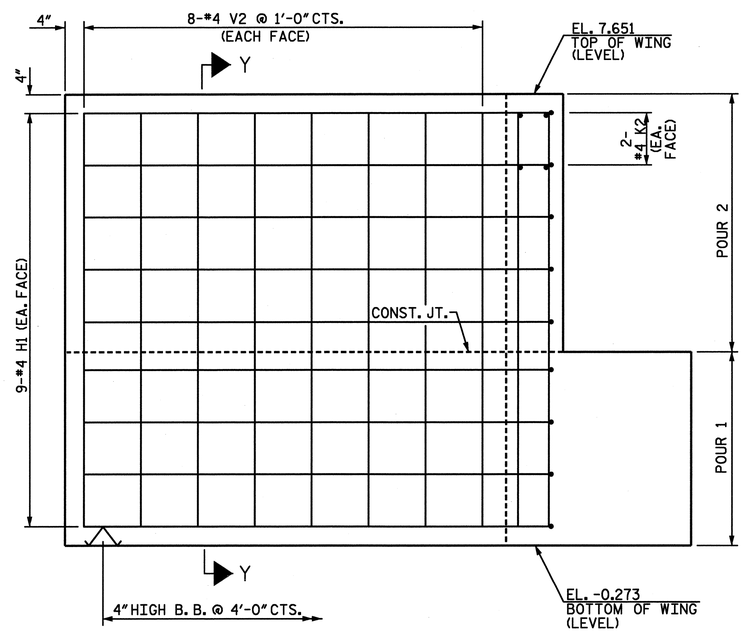

ELEVATION OF WING (W1)

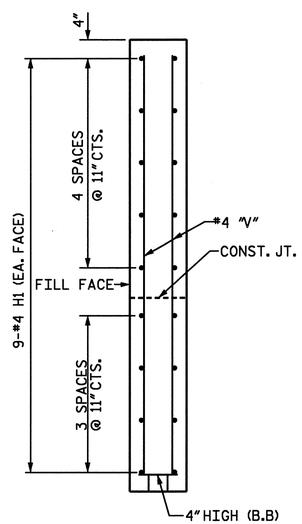

SECTION Y-Y

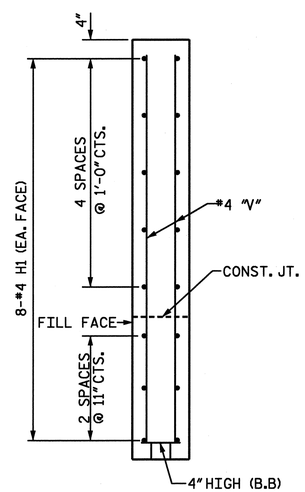

SECTION X-X

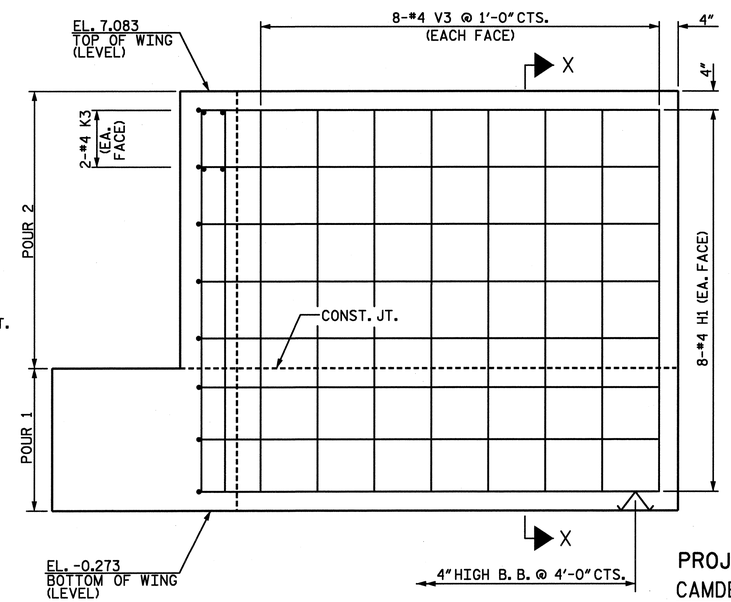

ELEVATION OF WING (W2)

PROJECT NO. U-4438
CAMDEN & PASQUOTANK COUNTY
STATION: 15+25.75 -L1-

SHEET 2 of 3

NORTH CAROLINA PROFESSIONAL SEAL 026891 ENGINEER JOHN T. DIFFEE III

WETHERILL ENGINEERING
559 Jones Franklin Rd. Suite 164
Raleigh, N.C. 27606
Bus: 919 851 8077
Fax: 919 851 8107
License: F-0377

TRANSPORTATION PLANNING/DESIGN - BRIDGE/STRUCTURE DESIGN
CIVIL/SITE DESIGN - GIS/GPS - CONSTRUCTION OBSERVATION

STATE OF NORTH CAROLINA
DEPARTMENT OF TRANSPORTATION
RALEIGH

SUBSTRUCTURE
END BENT 2

REVISIONS						SHEET NO.
NO.	BY:	DATE:	NO.	BY:	DATE:	S-82
1			3			TOTAL SHEETS
2			4			454

DRAWN BY : J. PENDERGRAFT DATE : 11-10
CHECKED BY : T. DIFFEE DATE : 11-10

P:\2010\10119.02 U-4438\Structures\DGNS\81_U-4438_SD_EB2.dgn
2/4/2011 4:46:33 PM

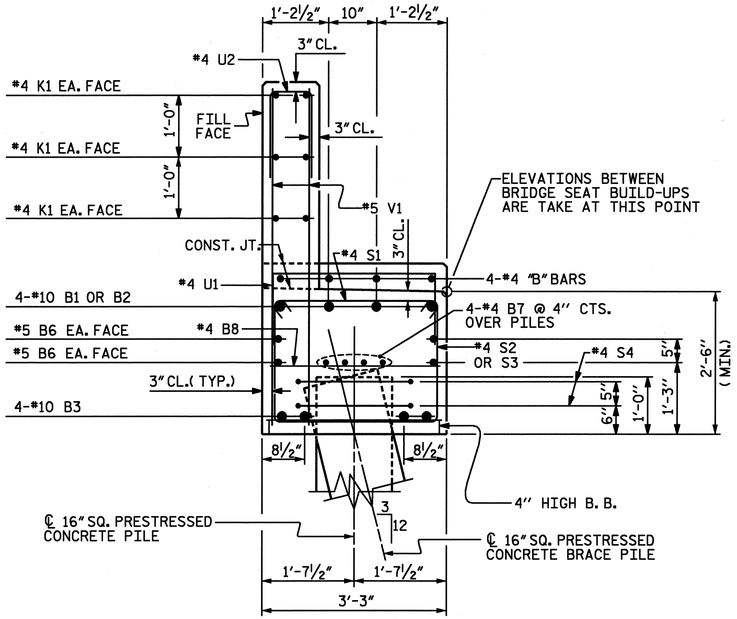

SECTION A-A

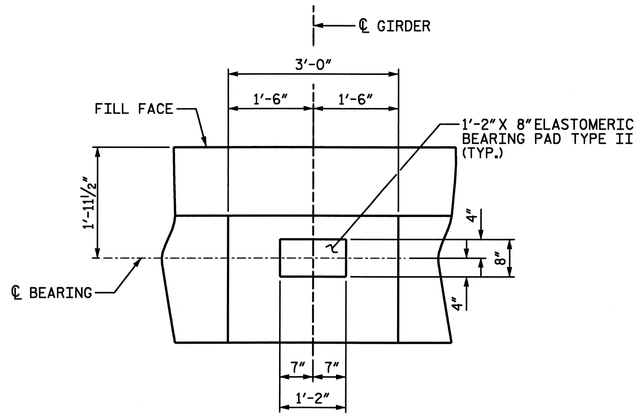

DETAIL "A"

NO ANCHOR BOLTS AT END BENT 2.
(TYP. EA. GIRDER)

BAR TYPES

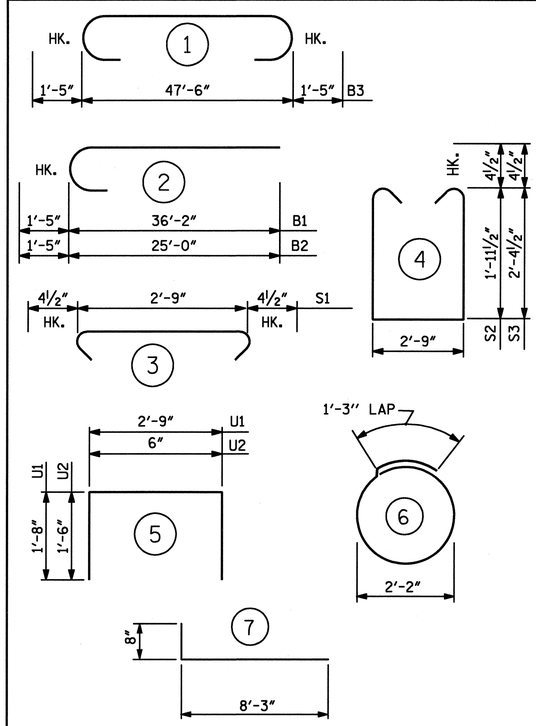

(ALL BAR DIMENSIONS ARE OUT TO OUT.)

BILL OF MATERIAL
END BENT 2

BAR	NO.	SIZE	TYPE	LENGTH	WEIGHT
* B1	4	#10	2	37'-7"	647
* B2	4	#10	2	26'-5"	455
* B3	4	#10	1	50'-4"	866
* B4	4	#4	STR.	7'-0"	19
* B5	8	#4	STR.	9'-0"	48
* B6	4	#5	STR.	47'-6"	198
* B7	8	#4	STR.	25'-2"	134
* B8	15	#4	STR.	2'-10"	28
* H1	34	#4	7	8'-11"	203
* K1	12	#4	STR.	25'-2"	202
* K2	4	#4	STR.	2'-5"	6
* K3	4	#4	STR.	3'-9"	10
* S1	52	#4	3	3'-6"	122
* S2	25	#4	4	7'-5"	124
* S3	27	#4	4	8'-3"	149
* S4	14	#4	6	8'-1"	76
* U1	20	#4	5	6'-1"	81
* U2	41	#4	5	3'-6"	96
* V1	82	#5	STR.	4'-9"	406
* V2	24	#4	STR.	7'-5"	119
* V3	26	#4	STR.	6'-10"	119

* EPOXY COATED REINFORCING STEEL 4,108 LBS.

CLASS AA CONCRETE
POUR 1 CAP & LOWER WINGS 18.4 CU. YDS.
POUR 2 BACKWALL & UPPER WINGS 8.2 CU. YDS.
TOTAL 26.6 CU. YDS.

16" SQ. PRESTRESSED CONCRETE PILE
NO. 7 490 LIN. FT.

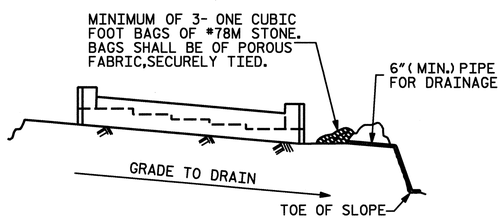

BAGGED STONE AND PIPE SHALL BE PLACED IMMEDIATELY AFTER COMPLETION OF END BENT EXCAVATION. PIPE MAY BE EITHER CONCRETE, CORRUGATED STEEL, CORRUGATED ALUMINUM ALLOY, OR CORRUGATED PLASTIC. PERFORATED PIPE WILL NOT BE ALLOWED.

BAGGED STONE SHALL REMAIN IN PLACE UNTIL THE ENGINEER DIRECTS THAT IT BE REMOVED. THE CONTRACTOR SHALL REMOVE AND DISPOSE OF SILT ACCUMULATIONS AT BAGGED STONE WHEN SO DIRECTED BY THE ENGINEER. BAGS SHALL BE REMOVED AND REPLACED WHENEVER THE ENGINEER DETERMINES THAT THEY HAVE DETERIORATED AND LOST THEIR EFFECTIVENESS.

NO SEPARATE PAYMENT WILL BE MADE FOR THIS WORK AND THE ENTIRE COST OF THIS WORK SHALL BE INCLUDED IN THE UNIT CONTRACT PRICE BID FOR THE SEVERAL PAY ITEMS.

TEMPORARY DRAINAGE AT END BENT

PROJECT NO. U-4438
CAMDEN & PASQUOTANK COUNTY
STATION: 15+25.75 -L1-

SHEET 3 of 3

STATE OF NORTH CAROLINA
DEPARTMENT OF TRANSPORTATION
RALEIGH

SUBSTRUCTURE
END BENT 2

NORTH CAROLINA PROFESSIONAL SEAL 026891 ENGINEER JOHN T. DIFFEE, III 2-6-11

ETHERILL ENGINEERING
559 Jones Franklin Rd. Suite 164
Raleigh, N.C. 27606
Bus: 919 851 8077
Fax: 919 851 8107
License: F-0377

TRANSPORTATION PLANNING/DESIGN - BRIDGE/STRUCTURE DESIGN
CIVIL/SITE DESIGN - GIS/GPS - CONSTRUCTION OBSERVATION

REVISIONS							SHEET NO.
NO.	BY:	DATE:	NO.	BY:	DATE:		S-83
1			3				TOTAL SHEETS
2			4				454

DRAWN BY : J. PENDERGRAFT DATE : 11-10
CHECKED BY : T. DIFFEE DATE : 11-10

P:\2010\10119.02 U-4438\Structures\DGN\S81_U-4438_SD_EB2.dgn
2/6/2011 12:01:33 PM

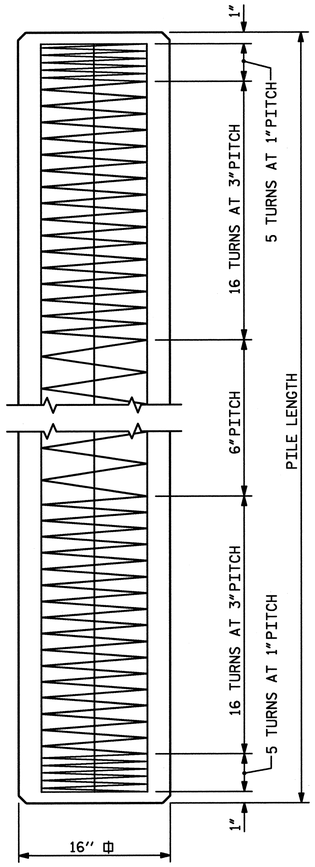

ELEVATION

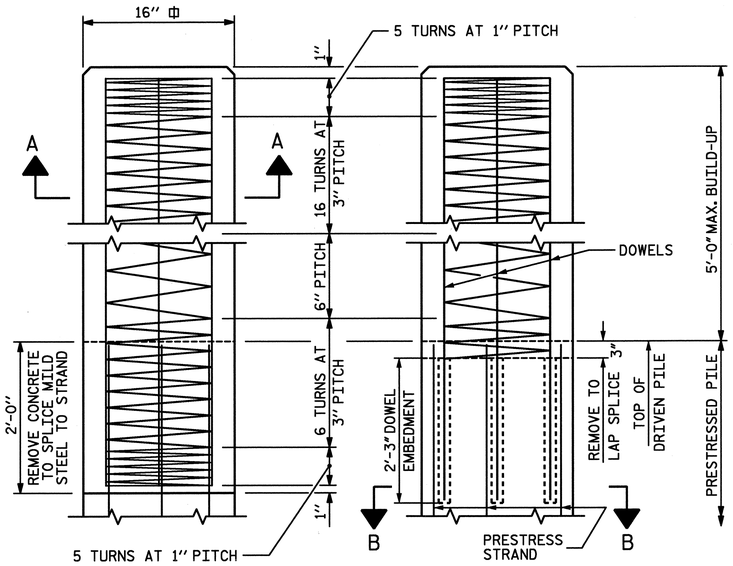

BUILD-UP AND SPIRAL REINFORCING

OPTIONAL BUILD-UP WITH DOWELS

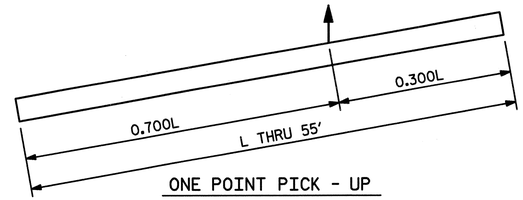

ONE POINT PICK - UP

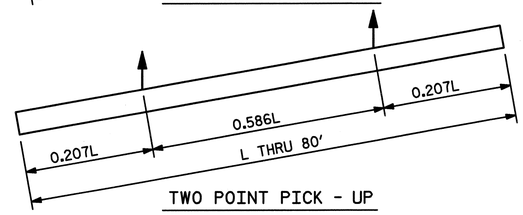

TWO POINT PICK - UP

PICK - UP POINTS

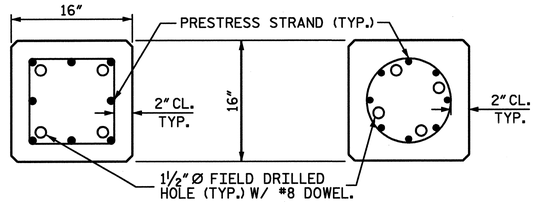

SECTION "B-B"

(AT THE CONTRACTOR'S OPTION, PILE BUILD-UP MAY BE CONSTRUCTED WITH DOWELS.)

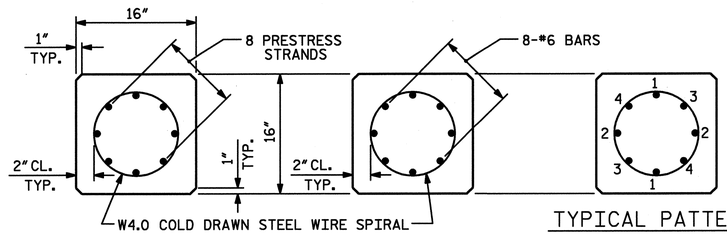

TYPICAL SECTION

SECTION "A-A"

TYPICAL PATTERN FOR BURNING STRANDS

½" OR 0.6" Ø GRADE 270 L.R. PRESTRESS STRANDS

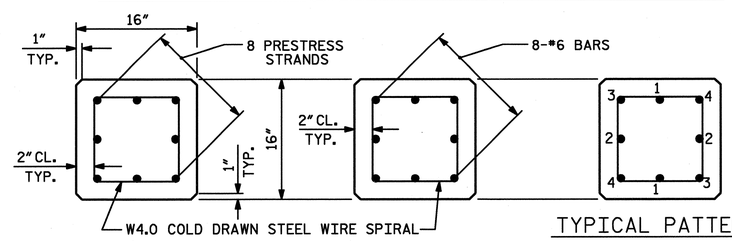

TYPICAL SECTION

SECTION "A-A"

TYPICAL PATTERN FOR BURNING STRANDS

½" OR 0.6" Ø GRADE 270 L.R. PRESTRESS STRANDS

QUANTITIES FOR ONE 16" PRESTRESSED PILE

LENGTH	CONCRETE CU. YDS.	PILE WT. TONS	ONE POINT PICK-UP 0.300L	ONE POINT PICK-UP 0.700L	TWO POINT PICK-UP 0.207L	TWO POINT PICK-UP 0.586L
25'-0"	1.63	3.31	7'-6"	17'-6"	5'-2"	14'-8"
30'-0"	1.96	3.97	9'-0"	21'-0"	6'-2½"	17'-7"
35'-0"	2.29	4.63	10'-6"	24'-6"	7'-3"	20'-6"
40'-0"	2.61	5.29	12'-0"	28'-0"	8'-3½"	23'-5"
45'-0"	2.94	5.95	13'-6"	31'-6"	9'-4"	26'-4"
50'-0"	3.27	6.61	15'-0"	35'-0"	10'-4"	29'-4"
55'-0"	3.59	7.28	16'-6"	38'-6"	11'-4½"	32'-3"
60'-0"	3.92	7.94			12'-5"	35'-2"
65'-0"	4.25	8.60			13'-5½"	38'-1"
70'-0"	4.57	9.26			14'-6"	41'-0"
75'-0"	4.90	9.92			15'-6½"	43'-11"
80'-0"	5.23	10.58			16'-7"	46'-10"

NOTES

PRESTRESSED CONCRETE STRENGTH : f'c = 7,500 PSI

BUILD-UP CONCRETE STRENGTH : f'c = 7,500 PSI

STRAND DATA:

SIZE	GRADE	AREA	ULTIMATE STRENGTH	APPLIED PRESTRESS FORCE
½"	270 L.R.	0.153	41,300# PER STRAND	30,980# PER STRAND
0.6"	270 L.R.	0.217	58,600# PER STRAND	43,940# PER STRAND

ALL PRESTRESSING STRANDS SHALL BE 7-WIRE LOW-RELAXATION GRADE 270 STRANDS CONFORMING TO AASHTO M203. STRAND SAMPLING REQUIREMENTS SHALL BE IN ACCORDANCE WITH THE STANDARD SPECIFICATIONS.

AT THE CONTRACTOR'S OPTION, ½" OR 0.6" STRANDS MAY BE USED IN EITHER STRAND CONFIGURATION SHOWN IN THE TYPICAL SECTION DETAIL. MIXING OF STRAND SIZE IS NOT ALLOWED.

THE SLIP-FORM METHOD OF CASTING PILES WILL NOT BE PERMITTED.

TRANSFER THE LOAD FROM THE ANCHORAGES TO THE PILE AFTER THE CONCRETE HAS ATTAINED A MINIMUM COMPRESSIVE STRENGTH OF 4,000 PSI.

IF STRAND STRESS IS RELIEVED BY BURNING, THE STRANDS SHALL BE BURNED IN OPPOSITE PAIRS AS INDICATED IN THE TYPICAL PATTERN SHOWN. FOR ANY NUMBER OF STRANDS, BURN IN OPPOSITE PAIRS AND SYMMETRICALLY ABOUT BOTH THE VERTICAL AND HORIZONTAL AXES. STRANDS 1-1 SHALL BE BURNED BEFORE 2-2, ETC. NOT MORE THAN 4 STRANDS, SAY 3-3 AND 4-4, MAY BE BURNED AT ANY ONE SECTION BEFORE THESE SAME PAIRS OF STRANDS ARE BURNED AT BOTH ENDS OF THE BED AND BETWEEN EACH PAIR OF PILES IN THE BED.

PROPOSED DEVICES FOR LIFTING PILES, RECESS DETAILS, AND PATCHING MATERIAL SHALL BE DETAILED IN SHOP DRAWINGS. AFTER ATTACHMENTS HAVE BEEN REMOVED, OPENINGS SHALL BE REPAIRED SUCH THAT THE APPEARANCE OF THE PILE IS UNIFORM.

WHERE CAST-IN-PLACE LIFTING DEVICES ARE NOT USED, PICK-UP POINTS ARE TO BE INDICATED WITH A 2" WIDE BLACK MARK.

DRIVE PILES USING A METHOD APPROVED BY THE ENGINEER, WHEREBY THE HEAD OF THE PILE IS NOT DAMAGED.

DRIVING OF THE BUILT-UP PILE WILL NOT BE PERMITTED UNTIL THE CONCRETE HAS REACHED A COMPRESSIVE STRENGTH OF 5,000 PSI AND UNTIL A PERIOD OF SEVEN DAYS HAS ELAPSED SINCE CASTING OF THE BUILD-UP.

THE WATER CEMENT RATIO FOR CONCRETE PILES SHALL NOT EXCEED 0.40.

PRESTRESSED PILES SHALL CONTAIN CALCIUM NITRITE CORROSION INHIBITOR. SEE SPECIAL PROVIONS FOR CALCIUM NITRITE CORROSION INHIBITOR.

THE CONCRETE IN THE PILES SHALL CONTAIN SILICA FUME. SILICA FUME SHALL BE SUBSTITUTED FOR 5% OF THE PORTLAND CEMENT BY WEIGHT. IF THE OPTION OF ARTICLE 1024-1 OF THE STANDARD SPECIFICATIONS TO PARTIALLY SUBSTITUTE CLASS 'F' FLY ASH FOR PORTLAND CEMENT IS EXERCISED, THEN THE RATE OF FLY ASH SUBSTITUTION SHALL BE REDUCED TO 1.0 LB. OF FLY ASH PER 1.0 LB. NO PAYMENT WILL BE MADE FOR THIS SUBSTITUTION AS IT IS CONSIDERED INCIDENTAL TO THE VARIOUS PAY ITEMS.

DOWEL INSTALLATION FOR OPTIONAL BUILD-UP

GROUT COMPRESSIVE STRENGTH: f'c= 5,000 PSI

BEFORE DRILLING DOWEL HOLES, REMOVE THE UPPER 3" OF CONCRETE FROM THE TOP OF THE PILE WITHOUT DAMAGE TO THE REINFORCING STEEL. THE REMOVAL PLANE SHOULD BE NORMAL TO THE EDGE OF THE PILE.

DOWEL HOLES SHALL BE POSITIONED TO MAINTAIN ½" CLEAR TO ALL EXISTING PRESTRESSING STRANDS IN THE CONCRETE PILE.

FIELD DRILLED HOLES SHALL BE CLEAN AND FREE OF ANY OBSTRUCTIONS BEFORE GROUTING OF DOWELS. DOWEL BARS SHALL BE INSTALLED AND GROUTED WITH AN APPROVED NON-SHRINK GROUT.

THE SPIRAL REINFORCING IN ALL BUILD-UPS SHALL BE W4.0 COLD DRAWN WIRE WHICH SHALL BE SECURED TO THE LONGITUDINAL REINFORCEMENT TO MAINTAIN PITCH.

THE SPIRAL REINFORCING IN THE BUILD-UP AND THE PRESTRESSED CONCRETE PILE SHALL BE SPLICED BY OVERLAPPING A MIN. OF ONE TURN.

PROJECT NO. U-4438

CAMDEN & PASQUOTANK COUNTY

STATION: 15+25.75 -L1-

NORTH CAROLINA PROFESSIONAL SEAL 026891 ENGINEER JOHN I. DIFFEE 2/6/11

WETHERILL ENGINEERING
559 Jones Franklin Rd. Suite 164
Raleigh, N.C. 27606
Bus: 919 851 8077
Fax: 919 851 8107
License: F-0377

TRANSPORTATION PLANNING/DESIGN - BRIDGE/STRUCTURE DESIGN
CIVIL/SITE DESIGN - GIS/GPS - CONSTRUCTION OBSERVATION

STATE OF NORTH CAROLINA
DEPARTMENT OF TRANSPORTATION
RALEIGH

STANDARD

16" PRESTRESSED CONCRETE PILE

REVISIONS						
NO.	BY:	DATE:	NO.	BY:	DATE:	
1			3			
2			4			

SHEET NO. S-84

TOTAL SHEETS 454

STD. NO. PCP2

ASSEMBLED BY : J. PENDERGRAFT DATE : 11-10
CHECKED BY : J. DILWORTH DATE : 11-10

DRAWN BY : RH 9/98
CHECKED BY : LES 10/98

ADDED 12/2/98
REV. 8/16/99RR RWW/LES
REV. 5/1/06 TLA/GM

2/4/2011
P:\2010\10119.02 U-4438\Structures\DGN\S84_U-4438_SD_PCP2.dgn

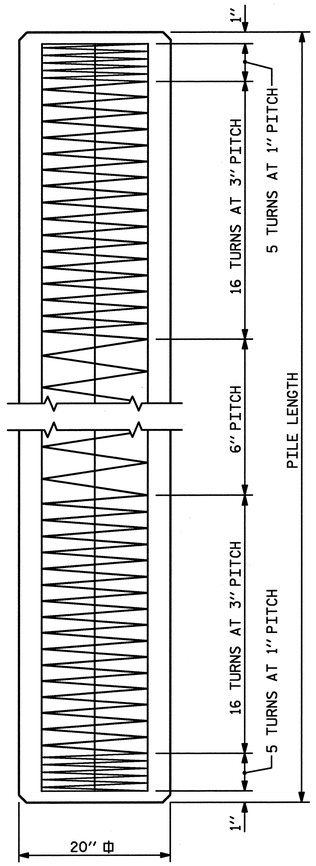

ELEVATION

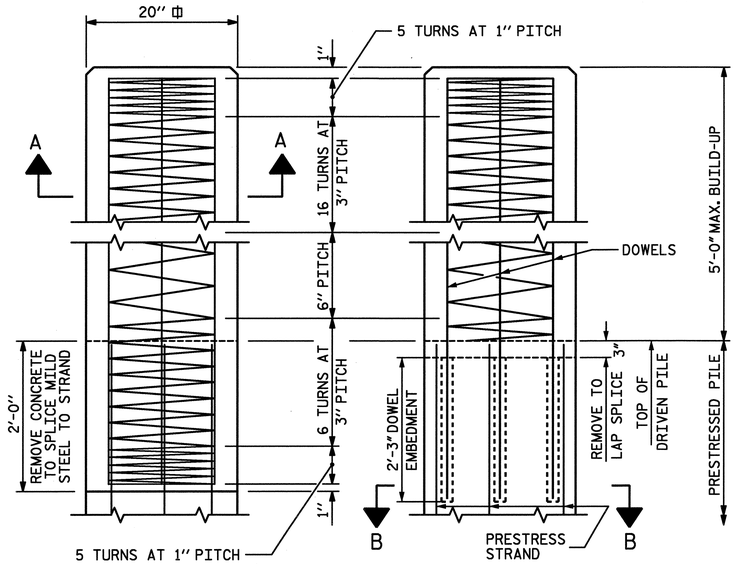

BUILD-UP AND SPIRAL REINFORCING

OPTIONAL BUILD-UP WITH DOWELS

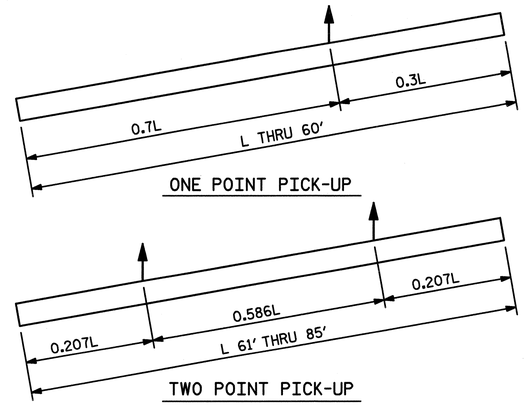

PICK-UP POINTS

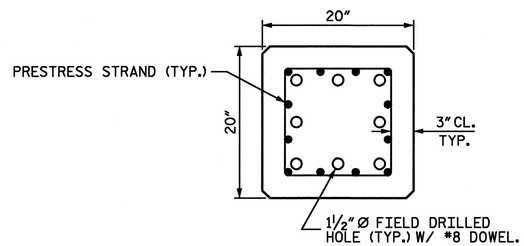

SECTION "B-B"

(AT THE CONTRACTOR'S OPTION, PILE BUILD-UP MAY BE CONSTRUCTED WITH DOWELS.)

QUANTITIES FOR ONE 20" SQUARE PILE

LENGTH	CONCRETE CU. YDS.	PILE WT. TONS	ONE POINT PICK-UP 0.3L	ONE POINT PICK-UP 0.7L	TWO POINT PICK-UP 0.207L	TWO POINT PICK-UP 0.586L
25'-0"	2.56	5.18	7'-6"	17'-6"		
30'-0"	3.07	6.22	9'-0"	21'-0"		
35'-0"	3.58	7.26	10'-6"	24'-6"		
40'-0"	4.09	8.29	12'-0"	28'-0"		
45'-0"	4.61	9.33	13'-6"	31'-6"		
50'-0"	5.12	10.36	15'-0"	35'-0"		
55'-0"	5.63	11.40	16'-6"	38'-6"		
60'-0"	6.14	12.44	18'-0"	42'-0"		
65'-0"	6.65	13.47			13'-5½"	38'-1"
70'-0"	7.17	14.51			14'-6"	41'-0"
75'-0"	7.68	15.55			15'-6½"	43'-11"
80'-0"	8.19	16.58			16'-6½"	46'-11"
85'-0"	8.70	17.62			17'-7"	49'-10"

NOTES

PRESTRESSED CONCRETE STRENGTH : f'c = 7,500 PSI

BUILD-UP CONCRETE STRENGTH : f'c = 7,500 PSI

STRAND DATA:

SIZE	GRADE	AREA	ULTIMATE STRENGTH	APPLIED PRESTRESS FORCE
½"	270 L.R.	0.153	41,300* PER STRAND	30,980* PER STRAND
0.6"	270 L.R.	0.217	58,600* PER STRAND	43,940* PER STRAND

ALL PRESTRESSING STRANDS SHALL BE 7-WIRE LOW-RELAXATION GRADE 270 STRANDS CONFORMING TO AASHTO M203. STRAND SAMPLING REQUIREMENTS SHALL BE IN ACCORDANCE WITH THE STANDARD SPECIFICATIONS.

AT THE CONTRACTOR'S OPTION, ½" OR 0.6" STRANDS MAY BE USED IN EITHER STRAND CONFIGURATION SHOWN IN THE TYPICAL SECTION DETAIL. MIXING OF STRAND SIZE IS NOT ALLOWED.

THE SLIP-FORM METHOD OF CASTING PILES WILL NOT BE PERMITTED.

TRANSFER THE LOAD FROM THE ANCHORAGES TO THE PILE AFTER THE CONCRETE HAS ATTAINED A MINIMUM COMPRESSIVE STRENGTH OF 4,000 PSI.

IF STRAND STRESS IS RELIEVED BY BURNING, THE STRANDS SHALL BE BURNED IN OPPOSITE PAIRS AS INDICATED IN THE TYPICAL PATTERN SHOWN. FOR ANY NUMBER OF STRANDS, BURN IN OPPOSITE PAIRS AND SYMMETRICALLY ABOUT BOTH THE VERTICAL AND HORIZONTAL AXES. STRANDS 1-1 SHALL BE BURNED BEFORE 2-2, ETC. NOT MORE THAN 4 STRANDS, SAY 3-3 AND 4-4, MAY BE BURNED AT ANY ONE SECTION BEFORE THESE SAME PAIRS OF STRANDS ARE BURNED AT BOTH ENDS OF THE BED AND BETWEEN EACH PAIR OF PILES IN THE BED.

PROPOSED DEVICES FOR LIFTING PILES, RECESS DETAILS, AND PATCHING MATERIAL SHALL BE DETAILED IN SHOP DRAWINGS. AFTER ATTACHMENTS HAVE BEEN REMOVED, OPENINGS SHALL BE REPAIRED SUCH THAT THE APPEARANCE OF THE PILE IS UNIFORM.

WHERE CAST-IN-PLACE LIFTING DEVICES ARE NOT USED, PICK-UP POINTS ARE TO BE INDICATED WITH A 2" WIDE BLACK MARK.

DRIVE PILES USING A METHOD APPROVED BY THE ENGINEER, WHEREBY THE HEAD OF THE PILE IS NOT DAMAGED.

DRIVING OF THE BUILT-UP PILE WILL NOT BE PERMITTED UNTIL THE CONCRETE HAS REACHED A COMPRESSIVE STRENGTH OF 5,000 PSI AND UNTIL A PERIOD OF SEVEN DAYS HAS ELAPSED SINCE CASTING OF THE BUILD-UP.

THE WATER CEMENT RATIO FOR CONCRETE PILES SHALL NOT EXCEED 0.40.

PRESTRESSED PILES SHALL CONTAIN CALCIUM NITRITE CORROSION INHIBITOR. SEE SPECIAL PROVIONS FOR CALCIUM NITRITE CORROSION INHIBITOR.

THE CONCRETE IN THE PILES SHALL CONTAIN SILICA FUME. SILICA FUME SHALL BE SUBSTITUTED FOR 5% OF THE PORTLAND CEMENT BY WEIGHT. IF THE OPTION OF ARTICLE 1024-1 OF THE STANDARD SPECIFICATIONS TO PARTIALLY SUBSTITUTE CLASS 'F' FLY ASH FOR PORTLAND CEMENT IS EXERCISED, THEN THE RATE OF FLY ASH SUBSTITUTION SHALL BE REDUCED TO 1.0 LB. OF FLY ASH PER 1.0 LB. NO PAYMENT WILL BE MADE FOR THIS SUBSTITUTION AS IT IS CONSIDERED INCIDENTAL TO THE VARIOUS PAY ITEMS.

DOWEL INSTALLATION FOR OPTIONAL BUILD-UP

GROUT COMPRESSIVE STRENGTH: f'c= 5,000 PSI

BEFORE DRILLING DOWEL HOLES, REMOVE THE UPPER 3" OF CONCRETE FROM THE TOP OF THE PILE WITHOUT DAMAGE TO THE REINFORCING STEEL. THE REMOVAL PLANE SHOULD BE NORMAL TO THE EDGE OF THE PILE.

DOWEL HOLES SHALL BE POSITIONED TO MAINTAIN ½" CLEAR TO ALL EXISTING PRESTRESSING STRANDS IN THE CONCRETE PILE.

FIELD DRILLED HOLES SHALL BE CLEAN AND FREE OF ANY OBSTRUCTIONS BEFORE GROUTING OF DOWELS. DOWEL BARS SHALL BE INSTALLED AND GROUTED WITH AN APPROVED NON-SHRINK GROUT.

THE SPIRAL REINFORCING IN ALL BUILD-UPS SHALL BE W4.0 COLD DRAWN WIRE WHICH SHALL BE SECURED TO THE LONGITUDINAL REINFORCEMENT TO MAINTAIN PITCH.

THE SPIRAL REINFORCING IN THE BUILD-UP AND THE PRESTRESSED CONCRETE PILE SHALL BE SPLICED BY OVERLAPPING A MIN. OF ONE TURN.

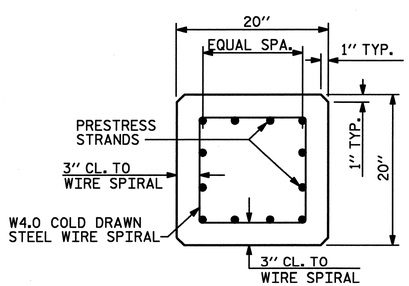

TYPICAL SECTION

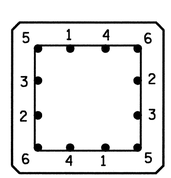

TYPICAL PATTERN FOR BURNING STRANDS

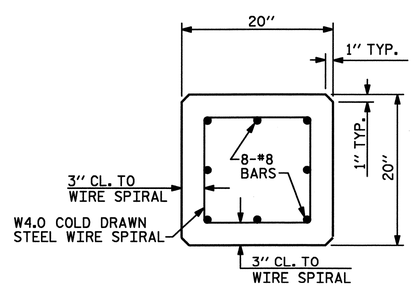

SECTION A-A

½" OR 0.6" Ø GRADE 270 L.R. PRESTRESS STRANDS

PROJECT NO. U-4438

CAMDEN & PASQUOTANK COUNTY

STATION: 15+25.75 -L1-

NORTH CAROLINA PROFESSIONAL SEAL 026891 ENGINEER JOHN T. DIFFEE III

ETHERILL ENGINEERING
559 Jones Franklin Rd. Suite 164
Raleigh, N.C. 27606
Bus: 919 851 8077
Fax: 919 851 8107
License: F-0377

TRANSPORTATION PLANNING/DESIGN - BRIDGE/STRUCTURE DESIGN
CIVIL/SITE DESIGN - GIS/GPS - CONSTRUCTION OBSERVATION

STATE OF NORTH CAROLINA
DEPARTMENT OF TRANSPORTATION
RALEIGH

STANDARD

20" PRESTRESSED CONCRETE PILE

REVISIONS						SHEET NO.
NO.	BY:	DATE:	NO.	BY:	DATE:	S-85
1			3			TOTAL SHEETS
2			4			454

STD. NO. PCP3

ASSEMBLED BY : J. PENDERGRAFT		DATE :	
CHECKED BY : J. DILWORTH		DATE :	
DRAWN BY : WJH 1/89	REV. 8/16/99R	RAL/LES	
CHECKED BY : CRK 3/89	REV. 5/1/06R	TLA/GM	
	REV. 11/30/10	WMC/GM	

2/4/2011
8:49:41
P:\2010\10119.02 U-4438\Structures\DGN\S85_U-4438_SD_PCP3.dgn

REVISED MARCH 31,2011

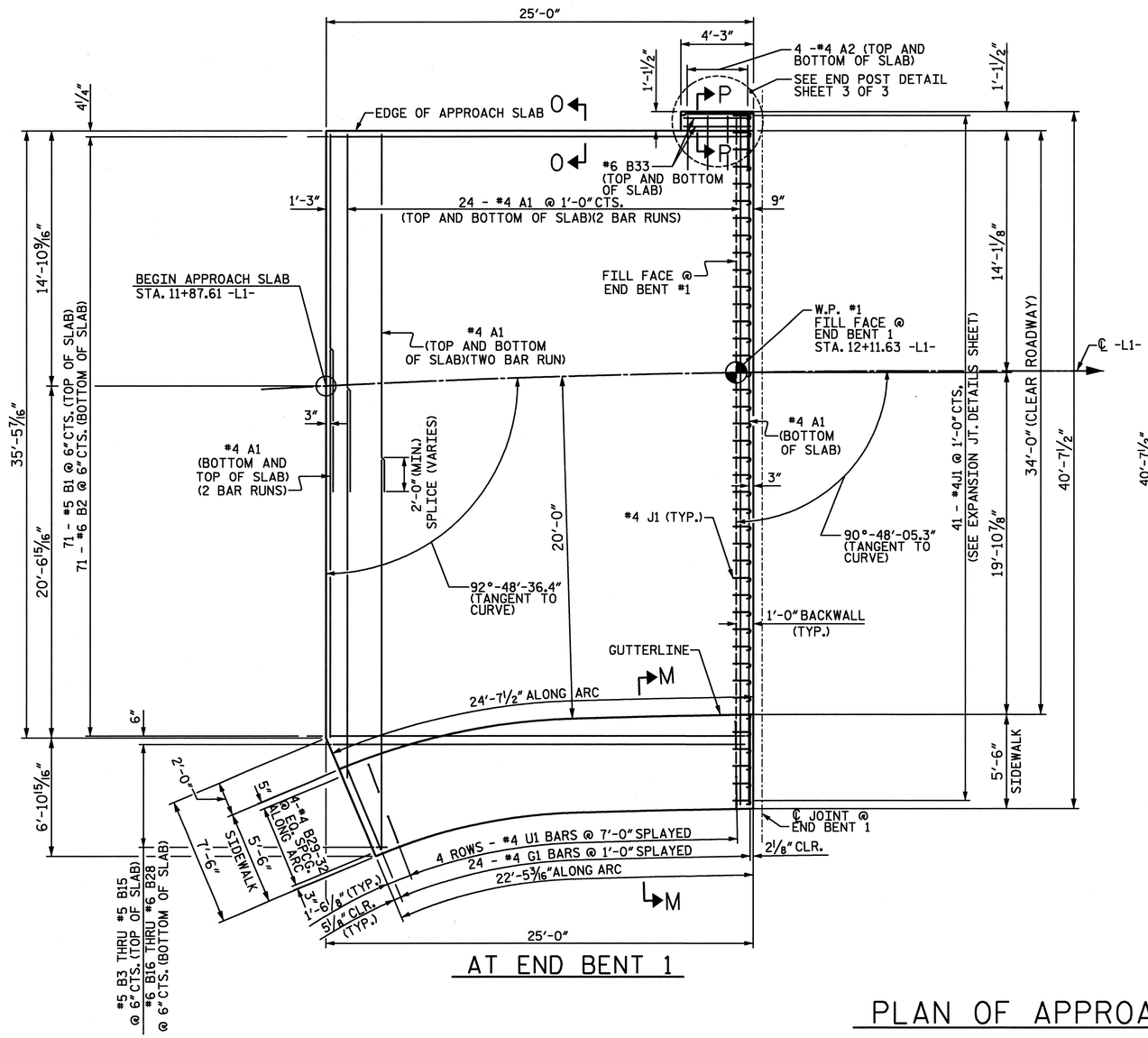

AT END BENT 1

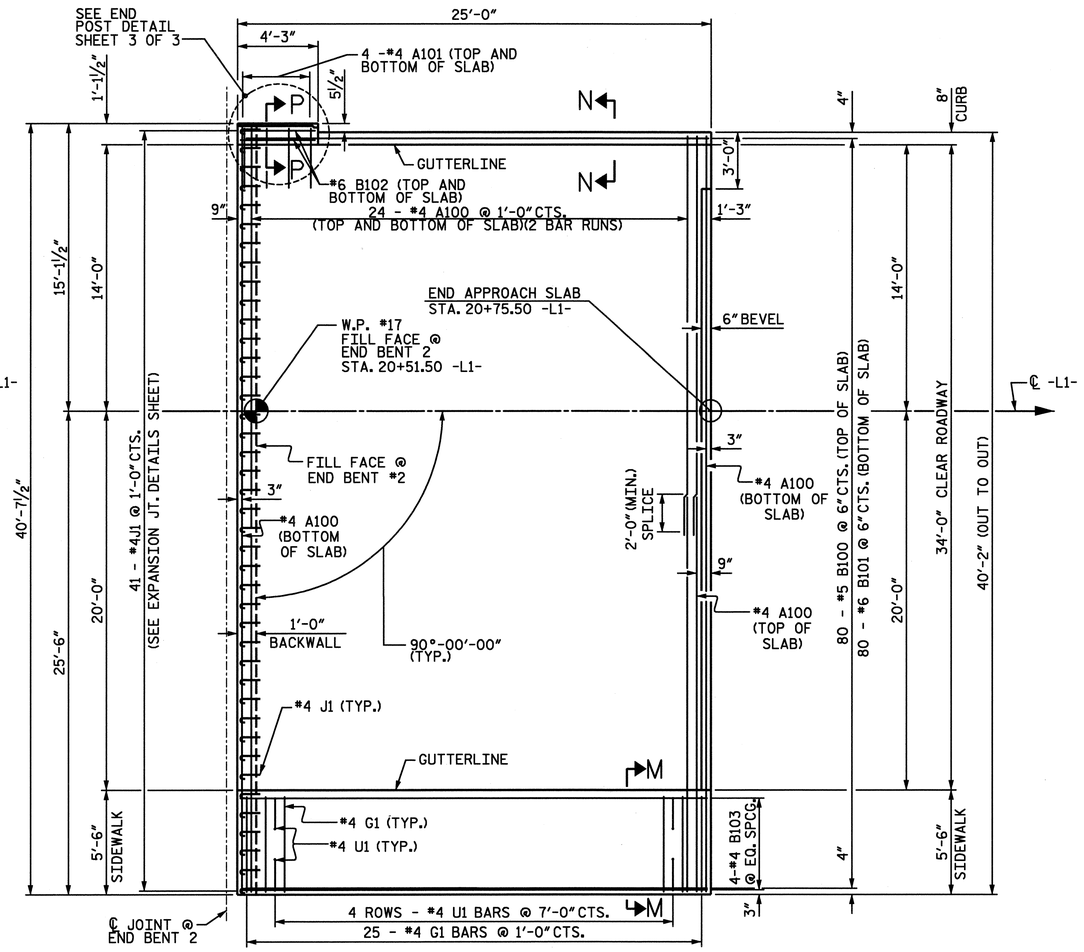

AT END BENT 2

PLAN OF APPROACH SLAB

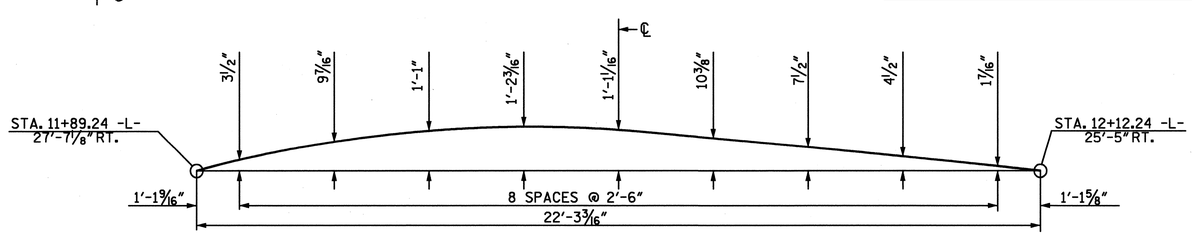

RIGHT EDGE APPROACH SLAB

PROJECT NO. U-4438

CAMDEN & PASQUOTANK COUNTY

STATION: 15+25.75 -L1-

SHEET 1 OF 3

STATE OF NORTH CAROLINA
DEPARTMENT OF TRANSPORTATION
RALEIGH

BRIDGE APPROACH SLAB

NORTH CAROLINA PROFESSIONAL SEAL 026891 ENGINEER JOHN T. DIFFEE, III

ETHERILL ENGINEERING
559 Jones Franklin Rd. Suite 164
Raleigh, N.C. 27606
Bus: 919 851 8077
Fax: 919 851 8107
License: F-0377

TRANSPORTATION PLANNING/DESIGN - BRIDGE/STRUCTURE DESIGN
CIVIL/SITE DESIGN - GIS/GPS - CONSTRUCTION OBSERVATION

REVISIONS						SHEET NO.
NO.	BY:	DATE:	NO.	BY:	DATE:	S-86
1			3			TOTAL SHEETS
2			4			454

DRAWN BY : J. PENDERGRAFT DATE : 11-10
CHECKED BY : J. DILWORTH DATE : 11-10

P:\2010\101902 U-4438\Structures\DGN\S86_U-4438_SD_BAS.dgn
3/31/2011 11:19:50 AM

REVISED MARCH 31, 2011

NOTES

APPROACH SLAB SHALL NOT BE CONSTRUCTED PRIOR TO COMPLETION OF THE BRIDGE DECK.

FOR REINFORCED BRIDGE APPROACH FILL INCLUDING FABRIC, IMPERMEABLE GEOMEMBRANE, 4" Ø DRAINAGE PIPE, #78M STONE, AND SELECT MATERIAL, SEE ROADWAY PLANS.

AREA BETWEEN THE WINGWALL AND APPROACH SLAB SHALL BE GRADED TO DRAIN THE WATER AWAY FROM THE FILL FACE OF THE BRIDGE AND SHALL BE PAVED. SEE ROADWAY PLANS.

THE 6" COMP. A.B.C. SHALL BE FLUSH WITH THE ROADWAY END OF THE APPROACH SLAB AND SHALL EXTEND 1'-0" OUTSIDE EACH EDGE OF THE APPROACH SLAB.

THE CONTRACTOR MAY USE 4" TYPE B-25.0B ASPHALT CONCRETE BASE COURSE IN LIEU OF 6" COMP. A.B.C. IF THIS OPTION IS USED, THE BASE COURSE SHALL BE FLUSH WITH THE ROADWAY END OF THE APPROACH SLAB, AND THE WIDTH SHALL BE THE SAME AS THAT OF THE APPROACH SLAB.

THE CONTRACTOR MAY USE 5" CLASS "A" CONCRETE BASE IN LIEU OF 6" COMP. A.B.C. IF THIS OPTION IS USED, THE CONCRETE BASE SHALL BE FLUSH WITH THE ROADWAY END OF THE APPROACH SLAB, AND THE WIDTH SHALL BE THE SAME AS THAT OF THE APPROACH SLAB. THE CONCRETE SHALL BE FINISHED TO A SMOOTH SURFACE AND A LAYER OF 30 LB. ROOFING FELT SHALL BE PLACED BETWEEN THE CONCRETE BASE AND THE APPROACH SLAB TO PREVENT BOND. THE APPROACH SLAB SHALL NOT BE CAST UNTIL THE CONCRETE BASE HAS REACHED AN AGE OF THREE CURING DAYS.

SAW CUT AND REMOVE BACKWALL AND WINGWALLS OF EXISTING END BENT AS NECESSARY ALLOW FOR CONSTRUCTION OF NEW APPROACH SLAB.

THE COST OF SAW CUTTING AND REMOVING ANY PORTION OF THE EXISTING END BENT 1 REQUIRED FOR CONSTRUCTION OF THE PROPOSED APPROACH SLAB SHALL BE CONSIDERED INCIDENTAL TO THE COST OF APPROACH SLABS.

THE COST OF THE NON-WOVEN FABRIC REQUIRED AT THE END BENT 1 APPROACH SLAB TO SEPARATE THE FOAM CONCRETE FROM THE APPROACH SLAB CONCRETE SHALL BE INCLUDED IN THE LUMP SUM UNIT COST OF THE APPROACH SLAB.

BILL OF MATERIAL

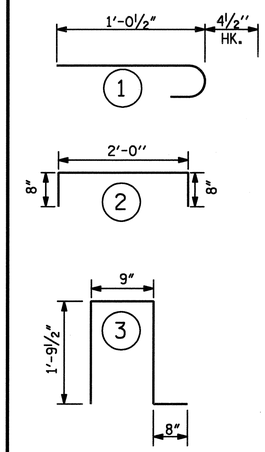

APPROACH SLAB AT EB #1

BAR	NO.	SIZE	TYPE	LENGTH	WEIGHT
✱A1	102	#4	STR	22'-1"	1505
✱A2	10	#4	STR	2'-9"	18
✱B1	71	#5	STR	24'-8"	1827
✱B2	71	#6	STR	24'-8"	2631
✱B3	1	#5	STR	24'-0"	25
✱B4	1	#5	STR	23'-10"	25
✱B5	1	#5	STR	23'-7"	25
✱B6	1	#5	STR	23'-5"	24
✱B7	1	#5	STR	23'-2"	24
✱B8	1	#5	STR	23'-0"	24
✱B9	1	#5	STR	22'-9"	24
✱B10	1	#5	STR	22'-7"	24
✱B11	1	#5	STR	9'-2"	10
✱B12	1	#5	STR	6'-1"	6
✱B13	1	#5	STR	3'-11"	4
✱B14	1	#5	STR	2'-2"	2
✱B15	1	#5	STR	1'-0"	1
✱B16	1	#6	STR	24'-0"	36
✱B17	1	#6	STR	23'-10"	36
✱B18	1	#6	STR	23'-7"	35
✱B19	1	#6	STR	23'-5"	35
✱B20	1	#6	STR	23'-2"	35
✱B21	1	#6	STR	23'-0"	35
✱B22	1	#6	STR	22'-9"	34
✱B23	1	#6	STR	22'-7"	34
✱B24	1	#6	STR	9'-2"	14

BAR	NO.	SIZE	TYPE	LENGTH	WEIGHT
✱B25	1	#6	STR	6'-1"	9
✱B26	1	#6	STR	3'-11"	6
✱B27	1	#6	STR	2'-2"	3
✱B28	1	#6	STR	1'-0"	2
✱B29	1	#4	STR	23'-11"	16
✱B30	1	#4	STR	23'-3"	16
✱B31	1	#4	STR	22'-8"	15
✱B32	1	#4	STR	22'-1"	15
✱B33	4	#6	STR	3'-11"	24
✱E1	12	#7	STR	1'-11"	47
✱F1	8	#6	STR	3'-11"	47
✱G1	24	#4	STR	5'-2"	83
✱J1	41	#4	1	1'-5"	39
✱S1	5	#5	3	5'-0"	18
✱U1	8	#4	2	3'-4"	18
NON-WOVEN FABRIC				S. Y.	125
✱EPOXY COATED REINFORCING STEEL				LBS.	6851
CLASS AA CONCRETE				C. Y.	41.1

APPROACH SLAB AT EB #2

BAR	NO.	SIZE	TYPE	LENGTH	WEIGHT
✱A100	102	#4	STR	20'-11"	1425
✱A101	10	#4	STR	2'-9"	18
✱B100	80	#5	STR	24'-2"	2016
✱B101	80	#6	STR	24'-8"	2964
✱B102	4	#6	STR	3'-11"	24
✱B103	4	#4	STR	24'-8"	66
✱E1	12	#7	STR	1'-11"	47
✱F1	8	#6	STR	3'-11"	47
✱G1	25	#4	STR	5'-2"	83
✱J1	41	#4	1	1'-5"	39
✱S1	5	#5	3	5'-0"	26
✱U1	8	#4	2	3'-3"	18
✱EPOXY COATED REINFORCING STEEL				LBS.	6773
CLASS AA CONCRETE				C. Y.	41.4

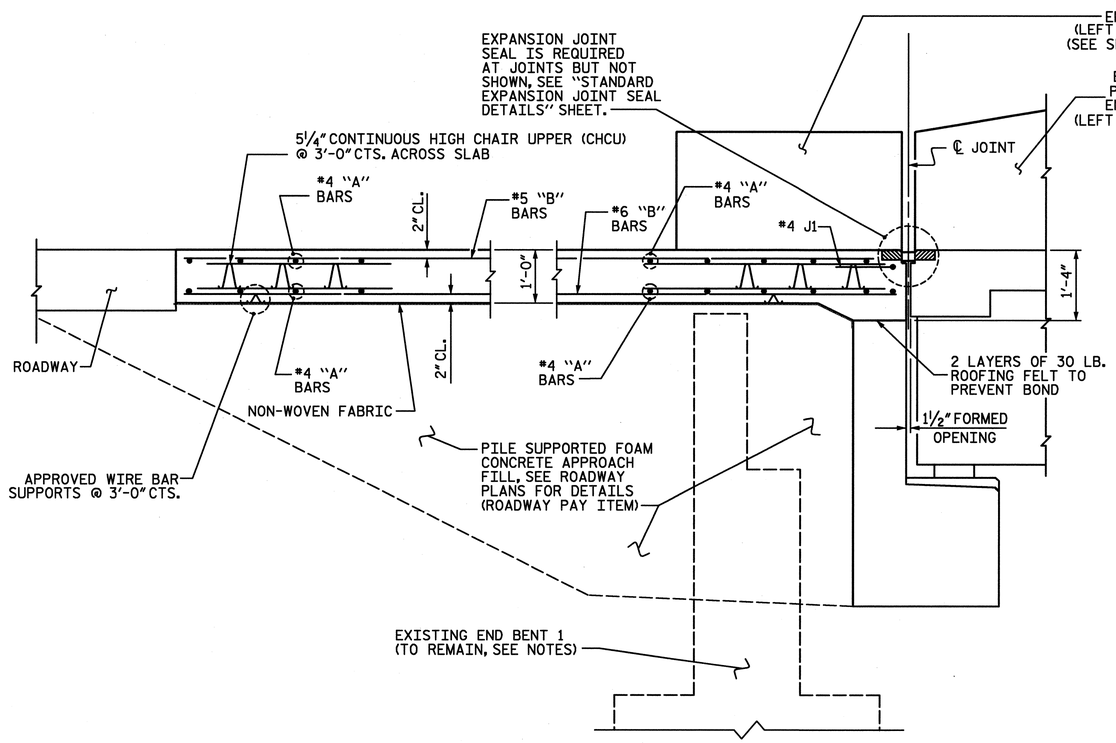

APPROACH SLAB @ END BENT 1

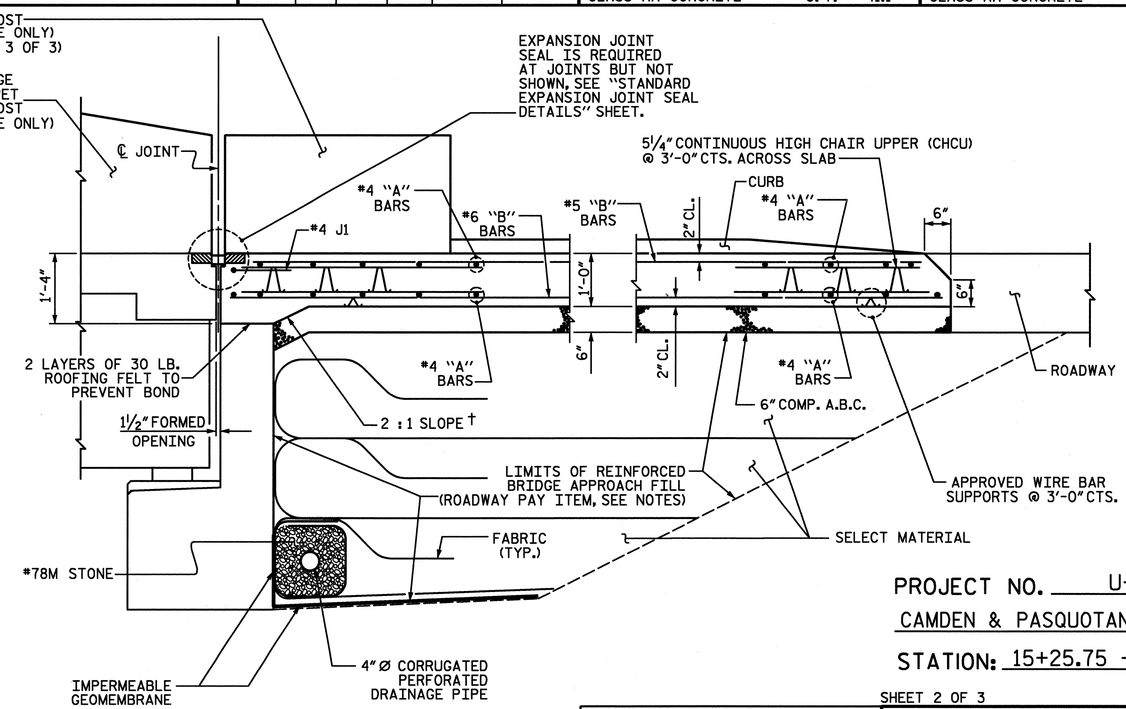

APPROACH SLAB @ END BENT 2

† NORMAL TO END BENT

SECTION THRU SLAB

PROJECT NO. U-4438
CAMDEN & PASQUOTANK COUNTY
STATION: 15+25.75 -L1-

SHEET 2 OF 3

NORTH CAROLINA PROFESSIONAL SEAL 026831 ENGINEER JOHN T. DILWORTH 3-31-11

WETHERILL ENGINEERING
559 Jones Franklin Rd. Suite 164
Raleigh, N.C. 27606
Bus: 919 851 8077
Fax: 919 851 8107
License: F-0377

TRANSPORTATION PLANNING/DESIGN - BRIDGE/STRUCTURE DESIGN
CIVIL/SITE DESIGN - GIS/GPS - CONSTRUCTION OBSERVATION

STATE OF NORTH CAROLINA
DEPARTMENT OF TRANSPORTATION
RALEIGH

STANDARD
BRIDGE APPROACH SLAB

REVISIONS						SHEET NO.
NO.	BY:	DATE:	NO.	BY:	DATE:	S-87
1			3			TOTAL SHEETS
2			4			454

ASSEMBLED BY : J. PENDERGRAFT	DATE : 11-10		
CHECKED BY : J. DILWORTH	DATE : 11-10		
DRAWN BY : EEM 3/95	REV. 7/10/01	LES/RDR	
CHECKED BY : VAP 3/95	REV. 5/7/03R	RWW/JTE	
	REV. 5/1/06R	KMM/GM	

3/31/2011
11:19:20 AM
P:\2010\10119.02 U-4438\Structures\DGN\S87_U-4438_SD_BAS4.dgn

STD. NO. BAS4 (SHT 4)

INDEX OF DRAWINGS BASCULE SPAN "F" EASTBOUND (BRIDGE NO. 19)

GENERAL

DWG. NO.	DRAWING TITLE	SHEET NO.
G-001	BASCULE SPAN "F" INDEX OF DRAWINGS - 1	S-089
G-002	BASCULE SPAN "F" INDEX OF DRAWINGS - 2	S-090
G-003	BASCULE SPAN "F" INDEX OF DRAWINGS - 3	S-091
G-004	BASCULE SPAN "F" GENERAL NOTES	S-092
G-005	BASCULE SPAN "F" QUANTITIES - 1	S-093
G-006	BASCULE SPAN "F" QUANTITIES - 2	S-094
G-007	FENDER SYSTEM GENERAL PLAN	S-095
G-008	FENDER SYSTEM DETAILS - 1	S-096
G-009	FENDER SYSTEM DETAILS - 2	S-097
G-010	FENDER SYSTEM DETAILS - 3	S-098
G-011	FENDER SYSTEM DETAILS - 4	S-099
G-012	FENDER SYSTEM ACCESS PLAN	S-100
G-013	FENDER SYSTEM ACCESS DETAILS - 1	S-101
G-014	FENDER SYSTEM ACCESS DETAILS - 2	S-102

STRUCTURAL

DWG. NO.	DRAWING TITLE	SHEET NO.
S-001E	BASCULE SPAN "F" GENERAL PLAN	S-103
S-002E	BASCULE SPAN "F" GENERAL ELEVATION - 1	S-104
S-003E	BASCULE SPAN "F" GENERAL ELEVATION - 2	S-105
S-004E	BASCULE SPAN TYPICAL CROSS SECTIONS - 1	S-106
S-005E	BASCULE SPAN TYPICAL CROSS SECTIONS - 2	S-107
S-006E	BASCULE PIER 5 AND 6 PILE CAP PLANS	S-108
S-007E	BASCULE PIER 5 AND 6 24"STEEL PIPE PILE	S-109
S-008E	BASCULE PIER 5 AND 6 PIT LEVEL PLAN	S-110
S-009E	BASCULE PIER 5 AND 6 PIT LEVEL REINFORCING	S-111
S-010E	BASCULE PIER 5 AND 6 MACHINERY LEVEL PLAN	S-112
S-011E	BASCULE PIER 5 AND 6 MACHINERY LEVEL REINFORCING DECK REINFORCING	S-113
S-012E	BASCULE PIER 5 AND 6 MACHINERY LEVEL REINFORCING WALL REINFORCING	S-114
S-013E	BASCULE PIER 5 ROADWAY LEVEL PLAN	S-115
S-014E	BASCULE PIER 5 ROADWAY LEVEL REINFORCING	S-116
S-015E	BASCULE PIER 5 AND 6 FRONT WALL ELEVATION	S-117
S-016E	BASCULE PIER 5 APPROACH WALL ELEVATION	S-118
S-017E	BASCULE PIER 5 AND 6 NORTH WALL ELEVATION	S-119
S-018E	BASCULE PIER 5 AND 6 SOUTH WALL ELEVATION	S-120
S-019E	BASCULE PIER 5 AND 6 SECTIONS & DETAILS - 1	S-121
S-020E	BASCULE PIER 5 AND 6 SECTIONS & DETAILS - 2	S-122
S-021E	BASCULE PIER 5 AND 6 SECTIONS & DETAILS - 3	S-123
S-022E	BASCULE PIER 5 AND 6 SECTIONS & DETAILS - 4	S-124
S-023E	BASCULE PIER 5 AND 6 SECTIONS & DETAILS - 5	S-125
S-024E	BASCULE PIER 5 AND 6 SECTIONS & DETAILS - 6	S-126
S-025E	BASCULE PIER 5 AND 6 SECTIONS & DETAILS - 7	S-127
S-026E	BASCULE PIER 5 AND 6 SECTIONS & DETAILS - 8	S-128
S-027E	BASCULE PIER 5 AND 6 TRUNNION COLUMN REINFORCING	S-129
S-028E	BASCULE PIER 5 AND 6 BARRIER DETAILS	S-130
S-029E	BASCULE PIER 5 BARRIER DETAILS	S-131
S-030E	BASCULE PIER 5 AND 6 CONTROL HOUSE EAST AND SOUTH ELEVATIONS	S-132
S-031E	BASCULE PIER 5 AND 6 CONTROL HOUSE WEST AND NORTH ELEVATIONS	S-133
S-032E	BASCULE PIER 5 AND 6 CONTROL HOUSE STORAGE ROOM PLAN AND DETAILS	S-134
S-033E	BASCULE PIER 5 CONTROL HOUSE ELECTRICAL RM. PLAN AND DETAILS	S-135
S-034E	BASCULE PIER 5 CONTROL HOUSE OPERATORS RM. PLAN AND DETAILS	S-136
S-035E	BASCULE PIER 5 AND 6 STAIR DETAILS	S-137
S-036E	BASCULE PIER 5 AND 6 CONTROL HOUSE DETAILS	S-138
S-037E	BASCULE PIER 5 AND 6 CONTROL HOUSE CONDUIT SLEEVE LOCATIONS	S-139
S-038E	BASCULE PIER 5 BAR SCHEDULE - 1	S-140
S-039E	BASCULE PIER 5 BAR SCHEDULE - 2	S-141
S-040E	BASCULE PIER 5 BAR SCHEDULE - 3	S-142
S-041E	BASCULE PIER 5 BAR SCHEDULE - 4	S-143
S-042E	BASCULE PIER 6 ROADWAY LEVEL PLAN	S-144
S-043E	BASCULE PIER 6 ROADWAY LEVEL REINFORCING	S-145
S-044E	BASCULE PIER 6 APPROACH WALL ELEVATION	S-146
S-045E	BASCULE PIER 6 SECTIONS AND DETAILS - 1	S-147
S-046E	BASCULE PIER 6 SECTIONS AND DETAILS - 2	S-148
S-047E	BASCULE PIER 6 BAR SCHEDULE - 1	S-149
S-048E	BASCULE PIER 6 BAR SCHEDULE - 2	S-150
S-049E	BASCULE PIER 6 BAR SCHEDULE - 3	S-151
S-050E	BASCULE PIER ACCESS SYSTEM - 1 WALKWAY BETWEEN PIERS	S-152
S-051E	BASCULE PIER ACCESS SYSTEM - 2 TAIL LOCK ACCESS	S-153
S-052E	BASCULE PIER DRAINAGE DETAILS	S-154
S-053E	BASCULE PIER FIXED SPAN OVER COUNTERWEIGHT - 1	S-155

INDEX OF DRAWINGS BASCULE SPAN "F" EASTBOUND (BRIDGE NO. 19) CONTINUED

STRUCTURAL CONTINUED

DWG. NO.	DRAWING TITLE	SHEET NO.
S-054E	BASCULE PIER FIXED SPAN OVER COUNTERWEIGHT - 2	S-156
S-055E	BASCULE PIER FIXED SPAN OVER COUNTERWEIGHT - 3	S-157
S-056E	BASCULE PIER FIXED SPAN OVER COUNTERWEIGHT - 4	S-158
S-057E	TRUNNION COLUMN ELEVATION	S-159
S-058E	TRUNNION COLUMN DETAILS	S-160
S-059E	MACHINERY GRILLAGE DETAILS - 1	S-161
S-060E	MACHINERY GRILLAGE DETAILS - 2	S-162
S-061E	MACHINERY GRILLAGE DETAILS - 3	S-163
S-062E	MACHINERY GRILLAGE DETAILS - 4	S-164
S-063E	BASCULE SPAN FRAMING PLAN	S-165
S-064E	BASCULE GIRDER ELEVATION	S-166
S-065E	BASCULE GIRDER DETAILS - 1	S-167
S-066E	BASCULE GIRDER DETAILS - 2	S-168
S-067E	BASCULE SPAN LIVE LOAD BEARING	S-169
S-068E	BASCULE SPAN CROSS SECTION AT FLBM 1	S-170
S-069E	BASCULE SPAN CROSS SECT. AT FLBMS 2 & 3	S-171
S-070E	BASCULE SPAN CROSS SECT. AT FLBMS 4 & 5	S-172
S-071E	BASCULE SPAN CROSS SECT. AT FLBMS 6 & 7	S-173
S-072E	BASCULE SPAN CROSS SECTION AT FLBM 8	S-174
S-073E	BASCULE SPAN LATERAL BRACING DETAILS - 1	S-175
S-074E	BASCULE SPAN LATERAL BRACING DETAILS - 2	S-176
S-075E	BASCULE SPAN COUNTERWEIGHT DETAILS - 1	S-177
S-076E	BASCULE SPAN COUNTERWEIGHT DETAILS - 2	S-178
S-077E	BASCULE SPAN COUNTERWEIGHT DETAILS - 3	S-179
S-078E	BASCULE SPAN COUNTERWEIGHT DETAILS - 4	S-180
S-079E	BASCULE SPAN COUNTERWEIGHT DETAILS - 5	S-181
S-080E	BASCULE SPAN DECK PLAN	S-182
S-081E	BASCULE SPAN DECK DETAILS - 1	S-183
S-082E	BASCULE SPAN DECK DETAILS - 2	S-184
S-083E	BASCULE SPAN CENTER LOCK MAINTENANCE PLATFORM DETAILS	S-185
S-084E	BASCULE SPAN MIDSPAN JOINT DETAILS	S-186
S-085E	BASCULE SPAN PARAPET AND SIDEWALK DETAILS - 1	S-187
S-086E	BASCULE SPAN PARAPET AND SIDEWALK DETAILS - 2	S-188
S-087E	BASCULE SPAN 1 BAR METAL RAIL DETAILS - 1	S-189
S-088E	BASCULE SPAN 1 BAR METAL RAIL DETAILS - 2	S-190
S-089E	BASCULE SPAN 3 BAR METAL RAIL DETAILS - 1	S-191
S-090E	BASCULE SPAN 3 BAR METAL RAIL DETAILS - 2	S-192
S-091E	BASCULE SPAN 3 BAR METAL RAIL DETAILS - 3	S-193
S-092E	BASCULE SPAN SCREENING DETAILS - 1	S-194
S-093E	BASCULE SPAN SCREENING DETAILS - 2	S-195
S-094E	BASCULE SPAN RATING SUMMARY	S-196

MECHANICAL

DWG. NO.	DRAWING TITLE	SHEET NO.
M-001E	BASCULE SPAN- GENERAL ELEVATION MACHINERY	S-197
M-002E	BASCULE SPAN- GENERAL PLAN MACHINERY	S-198
M-003E	BASCULE SPAN- GENERAL MACHINERY NOTES-1	S-199
M-004E	BASCULE SPAN- GENERAL MACHINERY NOTES-2	S-200
M-005E	BASCULE SPAN- SECTION- PIER AT MACHINERY	S-201
M-006E	BASCULE SPAN- MACHINERY LAYOUT	S-202
M-007E	BASCULE SPAN- RACK DETAILS	S-203
M-008E	BASCULE SPAN- TRUNNION DETAILS	S-204
M-009E	BASCULE SPAN- PINION DETAILS-1	S-205
M-010E	BASCULE SPAN- PINION DETAILS-2	S-206
M-011E	BASCULE SPAN- MAIN/AUXILIARY DRIVE DETAILS-1	S-207
M-012E	BASCULE SPAN- MAIN/AUXILIARY DRIVE DETAILS-2	S-208
M-013E	BASCULE SPAN- REDUCER DETAILS	S-209
M-014E	BASCULE SPAN- AUXILIARY DRIVE SHIFTER MECHANISM	S-210
M-015E	BASCULE SPAN- LIMIT SWITCH DRIVE DETAILS	S-211
M-016E	BASCULE SPAN- SPAN OPENING INDICATOR DETAILS	S-212
M-017E	BASCULE SPAN- CENTER SPAN LOCK DETAILS-1	S-213
M-018E	BASCULE SPAN- CENTER SPAN LOCK DETAILS-2	S-214
M-019E	BASCULE SPAN- TAIL LOCK ASSEMBLY	S-215
M-020E	BASCULE SPAN- TAIL LOCK DETAILS-1	S-216
M-021E	BASCULE SPAN- TAIL LOCK DETAILS-2	S-217
M-022E	BASCULE SPAN- CENTERING DEVICE DETAILS	S-218

ABBREVIATIONS

ALT	ALTERNATE
BOT OR B	BOTTOM
BRG(S)	BEARING(S)
CF	CUT FROM
CG	CENTER OF GRAVITY
CJP	COMPLETE JOINT PENETRATION
℄	CENTER LINE
CL	CLASS
CLR	CLEAR
CONC	CONCRETE
CONN	CONNECTION
CONST	CONSTRUCTION
CONST JT	CONSTRUCTION JOINT
CTS OR C-C	CENTER TO CENTER
CU YD(S)	CUBIC YARD(S)
Ø OR DIA	DIAMETER
DWG(S)	DRAWING(S)
EA	EACH
EB	EASTBOUND
EF	EACH FACE
EL	ELEVATION
EMBED	EMBEDDED
EQ	EQUAL
EQ SPA	EQUALLY SPACED/EQUAL SPACES
EXIST	EXISTING
EXP	EXPANSION
f	FAHRENHEIT
FF	FRONT FACE
FIX	FIXED
FLBM OR FB	FLOOR BEAM
FRP	FIBERGLASS REINFORCED PLASTIC
FS	FAR SIDE
FT	FEET
GA	GAUGE
GALV	GALVANIZED
HBB	HIGH BEAM BOLSTER
HEX	HEXAGONAL
HORIZ	HORIZONTAL
HP	HORSE POWER
HS	HIGH STRENGTH
HSLA	HIGH STRENGTH LOW ALLOY
HVY	HEAVY
ID	INSIDE DIAMETER
JT	JOINT
KSI	KIPS PER SQUARE INCH
-L-	GRADE DATA LINE
LB(S)	POUND(S)
LG	LONG
LIN	LINEAR
MAX	MAXIMUM
MECH	MECHANICAL
MHW	MEAN HIGH WATER
MIN	MINIMUM
MISC	MISCELLANEOUS
NPS	NOMINAL PIPE SIZE
NS	NEAR SIDE
NTS	NOT TO SCALE
OD	OUTSIDE DIAMETER
ℙ	PLATE
PC	POINT OF CURVE
PCF	POUNDS PER CUBIC FOOT
PRC	POINT OF REVERSE CURVE
PROJ	PROJECTION
PSI	POUNDS PER SQUARE INCH
PT	POINT OF TANGENCY
PVC	POLYVINYL CHLORIDE
R OR RAD	RADIUS
REINF	REINFORCEMENT
RF	REAR FACE
RPM	REVOLUTIONS PER MINUTE
RPW	RESISTANCE PROJECTION WELDING
SHDR	SHOULDER
SPA	SPACING/SPACES
SPECS	SPECIFICATIONS
SQ	SQUARE
SS	STAINLESS STEEL
STA	STATION
STD	STANDARD
STR	STRAIGHT
SYMM	SYMMETRICAL
T	TOP
THK	THICK
TOC	TOP OF CONCRETE
TYP	TYPICAL
UNO	UNLESS NOTED OTHERWISE
W/	WITH
WB	WESTBOUND
WP	WORK POINT
WSEL	WATER SURFACE ELEVATION

DRAWING NAMING CONVENTION

S-XXXE

A = ARCHITECTURAL DRAWINGS
E = ELECTRICAL DRAWINGS
G = GENERAL DRAWINGS
M = MECHANICAL DRAWINGS
S = STRUCTURAL DRAWINGS

DRAWING NUMBER

BLANK = GENERAL DRAWING
E = EASTBOUND BRIDGE
W = WESTBOUND BRIDGE

PROJECT NO. U-4438
PASQUOTANK COUNTY
STATION: 15+25.75 -L1-

NOTES:

1. FOR INDEX OF ELECTRICAL DRAWINGS, SEE DWG. G-002.
2. FOR INDEX OF MECHANICAL DRAWINGS, SEE DWG. G-002.
3. FOR INDEX OF ARCHITECTURAL DRAWINGS, SEE DWG. G-002.

MODJESKI and MASTERS
Experience great bridges.
Mechanicsburg, PA NC License No. C-2979

NORTH CAROLINA PROFESSIONAL ENGINEER SEAL 025801 LANCE V. BORDEN 11/29/2011

STATE OF NORTH CAROLINA
DEPARTMENT OF TRANSPORTATION
RALEIGH

ELIZABETH CITY BRIDGE OVER PASQUOTANK RIVER
BASCULE SPAN "F"
INDEX OF DRAWINGS - 1

DWG NUMBER	TOTAL DWGS
G-001	14

REVISIONS						SHEET NO.
NO.	BY:	DATE:	NO.	BY:	DATE:	S-089
1			3			TOTAL SHEETS
2			4			454

DRAWN BY : CMM DATE : 01/11
CHECKED BY : CMM DATE : 01/11

$$$$$$SYSTIME$$$$$
$$$$$$$$$$$$$$$$DGN$$$$$$$$$$$$$$$$
$$$$USERNAME$$$$

INDEX OF DRAWINGS BASCULE SPAN "F" EASTBOUND (BRIDGE NO. 19)

GENERAL

DWG. NO.	DRAWING TITLE
G-001	BASCULE SPAN "F" INDEX OF DRAWINGS - 1
G-002	BASCULE SPAN "F" INDEX OF DRAWINGS - 2
G-003	BASCULE SPAN "F" INDEX OF DRAWINGS - 3
G-004	BASCULE SPAN "F" GENERAL NOTES
G-005	BASCULE SPAN "F" QUANTITIES - 1
G-006	BASCULE SPAN "F" QUANTITIES - 2
G-007	FENDER SYSTEM GENERAL PLAN
G-008	FENDER SYSTEM DETAILS - 1
G-009	FENDER SYSTEM DETAILS - 2
G-010	FENDER SYSTEM DETAILS - 3
G-011	FENDER SYSTEM DETAILS - 4
G-012	FENDER SYSTEM ACCESS PLAN
G-013	FENDER SYSTEM ACCESS DETAILS - 1
G-014	FENDER SYSTEM ACCESS DETAILS - 2

STRUCTURAL

DWG. NO.	DRAWING TITLE
S-001E	BASCULE SPAN "F" GENERAL PLAN
S-002E	BASCULE SPAN "F" GENERAL ELEVATION - 1
S-003E	BASCULE SPAN "F" GENERAL ELEVATION - 2
S-004E	BASCULE SPAN TYPICAL CROSS SECTIONS - 1
S-005E	BASCULE SPAN TYPICAL CROSS SECTIONS - 2
S-006E	BASCULE PIER 5 AND 6 PILE CAP PLANS
S-007E	BASCULE PIER 5 AND 6 24"STEEL PIPE PILE
S-008E	BASCULE PIER 5 AND 6 PIT LEVEL PLAN
S-009E	BASCULE PIER 5 AND 6 PIT LEVEL REINFORCING
S-010E	BASCULE PIER 5 AND 6 MACHINERY LEVEL PLAN
S-011E	BASCULE PIER 5 AND 6 MACHINERY LEVEL REINFORCING DECK REINFORCING
S-012E	BASCULE PIER 5 AND 6 MACHINERY LEVEL REINFORCING WALL REINFORCING
S-013E	BASCULE PIER 5 ROADWAY LEVEL PLAN
S-014E	BASCULE PIER 5 ROADWAY LEVEL REINFORCING
S-015E	BASCULE PIER 5 AND 6 FRONT WALL ELEVATION
S-016E	BASCULE PIER 5 APPROACH WALL ELEVATION
S-017E	BASCULE PIER 5 AND 6 NORTH WALL ELEVATION
S-018E	BASCULE PIER 5 AND 6 SOUTH WALL ELEVATION
S-019E	BASCULE PIER 5 AND 6 SECTIONS & DETAILS - 1
S-020E	BASCULE PIER 5 AND 6 SECTIONS & DETAILS - 2
S-021E	BASCULE PIER 5 AND 6 SECTIONS & DETAILS - 3
S-022E	BASCULE PIER 5 AND 6 SECTIONS & DETAILS - 4
S-023E	BASCULE PIER 5 AND 6 SECTIONS & DETAILS - 5
S-024E	BASCULE PIER 5 AND 6 SECTIONS & DETAILS - 6
S-025E	BASCULE PIER 5 AND 6 SECTIONS & DETAILS - 7
S-026E	BASCULE PIER 5 AND 6 SECTIONS & DETAILS - 8
S-027E	BASCULE PIER 5 AND 6 TRUNNION COLUMN REINFORCING
S-028E	BASCULE PIER 5 AND 6 BARRIER DETAILS
S-029E	BASCULE PIER 5 BARRIER DETAILS
S-030E	BASCULE PIER 5 AND 6 CONTROL HOUSE EAST AND SOUTH ELEVATIONS
S-031E	BASCULE PIER 5 AND 6 CONTROL HOUSE WEST AND NORTH ELEVATIONS
S-032E	BASCULE PIER 5 AND 6 CONTROL HOUSE STORAGE ROOM PLAN AND DETAILS
S-033E	BASCULE PIER 5 CONTROL HOUSE ELECTRICAL RM. PLAN AND DETAILS
S-034E	BASCULE PIER 5 CONTROL HOUSE OPERATORS RM. PLAN AND DETAILS
S-035E	BASCULE PIER 5 AND 6 STAIR DETAILS
S-036E	BASCULE PIER 5 AND 6 CONTROL HOUSE DETAILS
S-037E	BASCULE PIER 5 AND 6 CONTROL HOUSE CONDUIT SLEEVE LOCATIONS
S-038E	BASCULE PIER 5 BAR SCHEDULE - 1
S-039E	BASCULE PIER 5 BAR SCHEDULE - 2
S-040E	BASCULE PIER 5 BAR SCHEDULE - 3
S-041E	BASCULE PIER 5 BAR SCHEDULE - 4
S-042E	BASCULE PIER 6 ROADWAY LEVEL PLAN
S-043E	BASCULE PIER 6 ROADWAY LEVEL REINFORCING
S-044E	BASCULE PIER 6 APPROACH WALL ELEVATION
S-045E	BASCULE PIER 6 SECTIONS AND DETAILS - 1
S-046E	BASCULE PIER 6 SECTIONS AND DETAILS - 2
S-047E	BASCULE PIER 6 BAR SCHEDULE - 1
S-048E	BASCULE PIER 6 BAR SCHEDULE - 2
S-049E	BASCULE PIER 6 BAR SCHEDULE - 3
S-050E	BASCULE PIER ACCESS SYSTEM - 1 WALKWAY BETWEEN PIERS
S-051E	BASCULE PIER ACCESS SYSTEM - 2 TAIL LOCK ACCESS
S-052E	BASCULE PIER DRAINAGE DETAILS
S-053E	BASCULE PIER FIXED SPAN OVER COUNTERWEIGHT - 1

INDEX OF DRAWINGS BASCULE SPAN "F" EASTBOUND (BRIDGE NO. 19) CONTINUED

STRUCTURAL CONTINUED

DWG. NO.	DRAWING TITLE
S-054E	BASCULE PIER FIXED SPAN OVER COUNTERWEIGHT - 2
S-055E	BASCULE PIER FIXED SPAN OVER COUNTERWEIGHT - 3
S-056E	BASCULE PIER FIXED SPAN OVER COUNTERWEIGHT - 4
S-057E	TRUNNION COLUMN ELEVATION
S-058E	TRUNNION COLUMN DETAILS
S-059E	MACHINERY GRILLAGE DETAILS - 1
S-060E	MACHINERY GRILLAGE DETAILS - 2
S-061E	MACHINERY GRILLAGE DETAILS - 3
S-062E	MACHINERY GRILLAGE DETAILS - 4
S-063E	BASCULE SPAN FRAMING PLAN
S-064E	BASCULE GIRDER ELEVATION
S-065E	BASCULE GIRDER DETAILS - 1
S-066E	BASCULE GIRDER DETAILS - 2
S-067E	BASCULE SPAN LIVE LOAD BEARING
S-068E	BASCULE SPAN CROSS SECTION AT FLBM 1
S-069E	BASCULE SPAN CROSS SECT. AT FLBMS 2 & 3
S-070E	BASCULE SPAN CROSS SECT. AT FLBMS 4 & 5
S-071E	BASCULE SPAN CROSS SECT. AT FLBMS 6 & 7
S-072E	BASCULE SPAN CROSS SECTION AT FLBM 8
S-073E	BASCULE SPAN LATERAL BRACING DETAILS - 1
S-074E	BASCULE SPAN LATERAL BRACING DETAILS - 2
S-075E	BASCULE SPAN COUNTERWEIGHT DETAILS - 1
S-076E	BASCULE SPAN COUNTERWEIGHT DETAILS - 2
S-077E	BASCULE SPAN COUNTERWEIGHT DETAILS - 3
S-078E	BASCULE SPAN COUNTERWEIGHT DETAILS - 4
S-079E	BASCULE SPAN COUNTERWEIGHT DETAILS - 5
S-080E	BASCULE SPAN DECK PLAN
S-081E	BASCULE SPAN DECK DETAILS - 1
S-082E	BASCULE SPAN DECK DETAILS - 2
S-083E	BASCULE SPAN CENTER LOCK MAINTENANCE PLATFORM DETAILS
S-084E	BASCULE SPAN MIDSPAN JOINT DETAILS
S-085E	BASCULE SPAN PARAPET AND SIDEWALK DETAILS - 1
S-086E	BASCULE SPAN PARAPET AND SIDEWALK DETAILS - 2
S-087E	BASCULE SPAN 1 BAR METAL RAIL DETAILS - 1
S-088E	BASCULE SPAN 1 BAR METAL RAIL DETAILS - 2
S-089E	BASCULE SPAN 3 BAR METAL RAIL DETAILS - 1
S-090E	BASCULE SPAN 3 BAR METAL RAIL DETAILS - 2
S-091E	BASCULE SPAN 3 BAR METAL RAIL DETAILS - 3
S-092E	BASCULE SPAN SCREENING DETAILS - 1
S-093E	BASCULE SPAN SCREENING DETAILS - 2
S-094E	BASCULE SPAN RATING SUMMARY

MECHANICAL

DWG. NO.	DRAWING TITLE
M-001E	BASCULE SPAN- GENERAL ELEVATION MACHINERY
M-002E	BASCULE SPAN- GENERAL PLAN MACHINERY
M-003E	BASCULE SPAN- GENERAL MACHINERY NOTES-1
M-004E	BASCULE SPAN- GENERAL MACHINERY NOTES-2
M-005E	BASCULE SPAN- SECTION- PIER AT MACHINERY
M-006E	BASCULE SPAN- MACHINERY LAYOUT
M-007E	BASCULE SPAN- RACK DETAILS
M-008E	BASCULE SPAN- TRUNNION DETAILS
M-009E	BASCULE SPAN- PINION DETAILS-1
M-010E	BASCULE SPAN- PINION DETAILS-2
M-011E	BASCULE SPAN- MAIN/AUXILIARY DRIVE DETAILS-1
M-012E	BASCULE SPAN- MAIN/AUXILIARY DRIVE DETAILS-2
M-013E	BASCULE SPAN- REDUCER DETAILS
M-014E	BASCULE SPAN- AUXILIARY DRIVE SHIFTER MECHANISM
M-015E	BASCULE SPAN- LIMIT SWITCH DRIVE DETAILS
M-016E	BASCULE SPAN- SPAN OPENING INDICATOR DETAILS
M-017E	BASCULE SPAN- CENTER SPAN LOCK DETAILS-1
M-018E	BASCULE SPAN- CENTER SPAN LOCK DETAILS-2
M-019E	BASCULE SPAN- TAIL LOCK ASSEMBLY
M-020E	BASCULE SPAN- TAIL LOCK DETAILS-1
M-021E	BASCULE SPAN- TAIL LOCK DETAILS-2
M-022E	BASCULE SPAN- CENTERING DEVICE DETAILS

ABBREVIATIONS

ALT	ALTERNATE
BOT OR B	BOTTOM
BRG(S)	BEARING(S)
CF	CUT FROM
CG	CENTER OF GRAVITY
CJP	COMPLETE JOINT PENETRATION
℄	CENTER LINE
CL	CLASS
CLR	CLEAR
CONC	CONCRETE
CONN	CONNECTION
CONST	CONSTRUCTION
CONST JT	CONSTRUCTION JOINT
CTS OR C-C	CENTER TO CENTER
CU YD(S)	CUBIC YARD(S)
Ø OR DIA	DIAMETER
DWG(S)	DRAWING(S)
EA	EACH
EB	EASTBOUND
EF	EACH FACE
EL	ELEVATION
EMBED	EMBEDDED
EQ	EQUAL
EQ SPA	EQUALLY SPACED/EQUAL SPACES
EXIST	EXISTING
EXP	EXPANSION
f	FAHRENHEIT
FF	FRONT FACE
FIX	FIXED
FLBM OR FB	FLOOR BEAM
FRP	FIBERGLASS REINFORCED PLASTIC
FS	FAR SIDE
FT	FEET
GA	GAUGE
GALV	GALVANIZED
HBB	HIGH BEAM BOLSTER
HEX	HEXAGONAL
HORIZ	HORIZONTAL
HP	HORSE POWER
HS	HIGH STRENGTH
HSLA	HIGH STRENGTH LOW ALLOY
HVY	HEAVY
ID	INSIDE DIAMETER
JT	JOINT
KSI	KIPS PER SQUARE INCH
-L-	GRADE DATA LINE
LB(S)	POUND(S)
LG	LONG
LIN	LINEAR
MAX	MAXIMUM
MECH	MECHANICAL
MHW	MEAN HIGH WATER
MIN	MINIMUM
MISC	MISCELLANEOUS
NPS	NOMINAL PIPE SIZE
NS	NEAR SIDE
NTS	NOT TO SCALE
OD	OUTSIDE DIAMETER
ℙ	PLATE
PC	POINT OF CURVE
PCF	POUNDS PER CUBIC FOOT
PRC	POINT OF REVERSE CURVE
PROJ	PROJECTION
PSI	POUNDS PER SQUARE INCH
PT	POINT OF TANGENCY
PVC	POLYVINYL CHLORIDE
R OR RAD	RADIUS
REINF	REINFORCEMENT
RF	REAR FACE
RPM	REVOLUTIONS PER MINUTE
RPW	RESISTANCE PROJECTION WELDING
SHDR	SHOULDER
SPA	SPACING/SPACES
SPECS	SPECIFICATIONS
SQ	SQUARE
SS	STAINLESS STEEL
STA	STATION
STD	STANDARD
STR	STRAIGHT
SYMM	SYMMETRICAL
T	TOP
THK	THICK
TOC	TOP OF CONCRETE
TYP	TYPICAL
UNO	UNLESS NOTED OTHERWISE
W/	WITH
WB	WESTBOUND
WP	WORK POINT
WSEL	WATER SURFACE ELEVATION

DRAWING NAMING CONVENTION

S-XXXE

A = ARCHITECTURAL DRAWINGS
E = ELECTRICAL DRAWINGS
G = GENERAL DRAWINGS
M = MECHANICAL DRAWINGS
S = STRUCTURAL DRAWINGS

DRAWING NUMBER

BLANK = GENERAL DRAWING
E = EASTBOUND BRIDGE
W = WESTBOUND BRIDGE

PROJECT NO. U-4438
PASQUOTANK COUNTY
STATION: 15+25.75 -L1-

NOTES:

1. FOR INDEX OF ELECTRICAL DRAWINGS, SEE DWG. G-002.
2. FOR INDEX OF MECHANICAL DRAWINGS, SEE DWG. G-002.
3. FOR INDEX OF ARCHITECTURAL DRAWINGS, SEE DWG. G-002.

DRAWN BY : CMM DATE : 01/11
CHECKED BY : CMM DATE : 01/11

MODJESKI and MASTERS
Experience great bridges.
Mechanicsburg, PA NC License No. C-2979

NORTH CAROLINA PROFESSIONAL ENGINEER SEAL 025801 LANCE V. BORDEN 2/3/2011

STATE OF NORTH CAROLINA
DEPARTMENT OF TRANSPORTATION
RALEIGH

ELIZABETH CITY BRIDGE OVER
PASQUOTANK RIVER
BASCULE SPAN "F"
INDEX OF DRAWINGS - 1

DWG NUMBER	TOTAL DWGS
G-001	14

REVISIONS						SHEET NO.
NO.	BY:	DATE:	NO.	BY:	DATE:	S-089
1			3			TOTAL SHEETS
2			4			454

2/3/2011
2:00:24 PM
K:\2986.02\CADD\Structural\dgn files\G-001_U4438_SD_IS01_01_G.dgn

INDEX OF DRAWINGS BASCULE SPAN "F" EASTBOUND (BRIDGE NO. 19) CONTINUED

ELECTRICAL

DWG. NO.	DRAWING TITLE	SHEET NO.
E-001	ELECTRICAL GENERAL NOTES - 1	S-219
E-002	ELECTRICAL GENERAL NOTES - 2	S-220
E-003	ELECTRICAL PLAN BASCULE SPAN "F" AND EXISTING BASCULE SPAN	S-221
E-004	GENERATOR PAD DETAILS - 1	S-222
E-005	GENERATOR PAD DETAILS - 2	S-223
E-006	ELECTRIC SERVICE AND UTILITIY DETAILS	S-224
E-007	BRIDGE GROUNDING DETAILS	S-225
E-008	CONTROL HOUSE ELECTRICAL ROOM EQUIPMENT LAYOUT	S-226
E-009	CONTROL HOUSE ELECTRICAL ROOM LIGHTING	S-227
E-010	CONTROL HOUSE STORAGE ROOM EQUIPMENT LAYOUT	S-228
E-011	CONTROL HOUSE STORAGE ROOM LIGHTING	S-229
E-012	EB FARSIDE STORAGE ROOM EQUIPMENT LAYOUT AND LIGHTING	S-230
E-013	THREE LINE DIAGRAM POWER FEED, GENERATOR, & AUTO TRANSFER SWITCH	S-231
E-014	THREE LINE DIAGRAM DP-1 DISTRIBTION PANEL - 1	S-232
E-015	THREE LINE DIAGRAM DP-1 DISTRIBTION PANEL - 2	S-233
E-016	LOAD PANEL LP-1 AND LP-2 LAYOUTS	S-234
E-017	LOAD PANEL CIRCUITS - 1	S-235
E-018	LOAD PANEL CIRCUITS - 2	S-236
E-019	LOAD PANEL CIRCUITS - 3	S-237
E-020	LOAD PANEL CIRCUITS - 4	S-238
E-021	LOAD PANEL CIRCUITS - 5	S-239
E-022	LOAD PANEL CIRCUITS - 6	S-240
E-023	CCTV SURVEILLANCE SYSTEM DETAILS - 1	S-241
E-024	CCTV SURVEILLANCE SYSTEM DETAILS - 2	S-242
E-025	CONTROL SYSTEM PLC LAYOUT - 1	S-243
E-026	CONTROL SYSTEM PLC LAYOUT - 2	S-244
E-027	CONTROL CONSOLE DETAILS - 1	S-245
E-028	CONTROL CONSOLE DETAILS - 2	S-246
E-029	TRAFFIC CONTROL CONSOLE DETAILS	S-247
E-030	CONTROL DEVICE AND INDICATOR LEGENDS - 1	S-248
E-031	CONTROL DEVICE AND INDICATOR LEGENDS - 2	S-249
E-032	CONTROL DEVICE AND INDICATOR LEGENDS - 3	S-250
E-033	CONTROL DEVICE AND INDICATOR LEGENDS - 4	S-251
E-034	CONTROL DEVICE AND INDICATOR LEGENDS - 5	S-252
E-035	CONTROL DEVICE AND INDICATOR LEGENDS - 6	S-253
E-036	CONTROL DEVICE AND INDICATOR LEGENDS - 7	S-254
E-037	CONTROL DEVICE AND INDICATOR LEGENDS - 8	S-255
E-038	CONTROL DEVICE AND INDICATOR LEGENDS - 9	S-256
E-039	CONTROL DEVICE AND INDICATOR LEGENDS - 10	S-257
E-040	CONTROL CIRCUIT LEGEND	S-258
E-041	CONTROL CIRCUIT 1	S-259
E-042	CONTROL CIRCUIT 2	S-260
E-043	CONTROL CIRCUIT 3	S-261
E-044	CONTROL CIRCUIT 4	S-262
E-045	CONTROL CIRCUIT 5	S-263
E-046	CONTROL CIRCUIT 6	S-264
E-047	CONTROL CIRCUIT 7	S-265
E-048	CONTROL CIRCUIT 8	S-266
E-049	CONTROL CIRCUIT 9	S-267
E-050	CONTROL CIRCUIT 10	S-268
E-051	CONTROL CIRCUIT 11	S-269
E-052	CONTROL CIRCUIT 12	S-270
E-053	CONTROL CIRCUIT 13	S-271
E-054	CONTROL CIRCUIT 14	S-272
E-055	CONTROL CIRCUIT 15	S-273
E-056	CONTROL CIRCUIT 16	S-274
E-057	CONTROL CIRCUIT 17	S-275
E-058	CONTROL CIRCUIT 18	S-276
E-059	LIMIT SWITCH OPERATION CHART	S-277
E-060	ELECTRICAL GENERAL DETAILS - 1	S-278
E-061	ELECTRICAL GENERAL DETAILS - 2	S-279
E-062	ELECTRICAL GENERAL DETAILS - 3	S-280
E-063	ELECTRICAL GENERAL DETAILS - 4	S-281
E-064	ELECTRICAL GENERAL DETAILS - 5	S-282
E-065	ELECTRICAL GENERAL DETAILS - 6	S-283
E-066	ELECTRICAL GENERAL DETAILS - 7	S-284
E-067	TRAFFIC SIGNAL POLE DETAILS - 1	S-285
E-068	TRAFFIC SIGNAL POLE DETAILS - 2	S-286
E-069	ELECTRICAL EQUIPMENT SCHEDULE - 1	S-287
E-070	ELECTRICAL EQUIPMENT SCHEDULE - 2	S-288
E-071	ELECTRICAL EQUIPMENT SCHEDULE - 3	S-289

INDEX OF DRAWINGS BASCULE SPAN "F" EASTBOUND (BRIDGE NO. 19) CONTINUED

ELECTRICAL

DWG. NO.	DRAWING TITLE	SHEET NO.
E-072	ELECTRICAL EQUIPMENT SCHEDULE - 4	S-290
E-073	ELECTRICAL EQUIPMENT SCHEDULE - 5	S-291
E-074	ELECTRICAL EQUIPMENT SCHEDULE - 6	S-292
E-075E	ELECTRICAL ELEVATION BASCULE SPAN "F"	S-293
E-076E	ELECTRICAL PLAN BASCULE SPAN "F" NEARSIDE MACHINERY	S-294
E-077E	THREE LINE DIAGRAM MCC-1 1	S-295
E-078E	THREE LINE DIAGRAM MCC-1 2	S-296
E-079E	THREE LINE DIAGRAM MCC-1 3	S-297
E-080E	THREE LINE DIAGRAM VFD POWER WIRING	S-298
E-081E	THREE LINE DIAGRAM AUXILIARY DRIVE MOTOR STARTERS	S-299
E-082E	MOTOR CONTROL CENTER MCC-1 LAYOUT	S-300
E-083E	LOAD PANEL LP-3 LAYOUT	S-301
E-084E	EB LOAD PANEL CIRCUITS - 1	S-302
E-085E	EB LOAD PANEL CIRCUITS - 2	S-303
E-086E	EB LOAD PANEL CIRCUITS - 3	S-304
E-087E	EB CONTROL CIRCUIT 1	S-305
E-088E	EB CONTROL CIRCUIT 2	S-306
E-089E	EB CONTROL CIRCUIT 3	S-307
E-090E	EB CONTROL CIRCUIT 4	S-308
E-091E	EB CONTROL CIRCUIT 5	S-309
E-092E	EB CONTROL CIRCUIT 6	S-310
E-093E	EB CONTROL CIRCUIT 7	S-311
E-094E	EB CONTROL CIRCUIT 8	S-312
E-095E	EB CONTROL CIRCUIT 9	S-313
E-096E	EB CONTROL CIRCUIT 10	S-314
E-097E	EB CONTROL CIRCUIT 11	S-315
E-098E	EB CONTROL CIRCUIT 12	S-316
E-099E	EB CONTROL CIRCUIT 13	S-317
E-100E	EB CONTROL CIRCUIT 14	S-318
E-101E	EB CONTROL CIRCUIT 15	S-319
E-102E	EB CONTROL CIRCUIT 16	S-320
E-103E	EB CONTROL CIRCUIT 17	S-321
E-104E	EB CONTROL CIRCUIT 18	S-322
E-105E	EB CONTROL CIRCUIT 19	S-323
E-106E	EB CONTROL CIRCUIT 20	S-324
E-107E	EB CONTROL CIRCUIT 21	S-325
E-108E	EB CONTROL CIRCUIT 22	S-326
E-109E	EB CONTROL CIRCUIT 23	S-327
E-110E	EB CONTROL CIRCUIT 24	S-328
E-111E	EB CONTROL CIRCUIT 25	S-329
E-112E	EB CONTROL CIRCUIT 26	S-330
E-113E	EB CONTROL CIRCUIT 27	S-331
E-114E	EB CONTROL CIRCUIT 28	S-332
E-115E	EB CONTROL CIRCUIT 29	S-333
E-116E	EB CONTROL CIRCUIT 30	S-334
E-117E	EB CONTROL CIRCUIT 31	S-335
E-118E	EB CONTROL CIRCUIT 32	S-336
E-119E	EB CONTROL CIRCUIT 33	S-337
E-120E	EB CONTROL CIRCUIT 34	S-338
E-121E	EB CONTROL CIRCUIT 35	S-339
E-122E	EB CONTROL CIRCUIT 36	S-340
E-123E	EB CONTROL CIRCUIT 37	S-341
E-124E	EB CONTROL CIRCUIT 38	S-342
E-125E	EB CONTROL CIRCUIT 39	S-343
E-126E	EB CONTROL CIRCUIT 40	S-344
E-127E	EB CONTROL CIRCUIT 41	S-345
E-128E	EB CONTROL CIRCUIT 42	S-346
E-129E	EB CONTROL CIRCUIT 43	S-347
E-130E	EB CONTROL CIRCUIT 44	S-348
E-131E	EB CONTROL CIRCUIT 45	S-349
E-132E	EB CONTROL CIRCUIT 46	S-350
E-133E	EB TRAFFIC GATES DETAILS	S-351
E-134E	EB CONDUIT & CABLE WIRING LAYOUT - 1	S-352
E-135E	EB CONDUIT & CABLE WIRING LAYOUT - 2	S-353
E-136E	EB CONDUIT & CABLE WIRING LAYOUT - 3	S-354
E-137E	EB CONDUIT & CABLE WIRING LAYOUT - 4	S-355
E-138E	EB CONDUIT & CABLE WIRING LAYOUT - 5	S-356
E-139E	EB CONDUIT & CABLE WIRING LAYOUT - 6	S-357
E-140E	EB CONDUIT & CABLE WIRING LAYOUT - 7	S-358

INDEX OF DRAWINGS BASCULE SPAN "F" EASTBOUND (BRIDGE NO. 19) CONTINUED

ARCHITECTURAL

DWG. NO.	DRAWING TITLE	SHEET NO.
A-001	CONTROL HOUSE OPERATORS ROOM - PLANS	S-359
A-002	CONTROL HOUSE OPERATORS ROOM - EXTERIOR ELEVATIONS	S-360
A-003	CONTROL HOUSE OPERATORS ROOM - WALL SECTIONS & DETAILS	S-361
A-004	CONTROL HOUSE OPERATORS ROOM - ROOF PLAN & DETAILS	S-362
AS-001	CONTROL HOUSE OPERATORS ROOM - STRUCTURAL GENERAL NOTES	S-363
AS-002	CONTROL HOUSE OPERATORS ROOM - STRUCTURAL FRAMING PLANS	S-364
AS-003	CONTROL HOUSE OPERATORS ROOM - STRUCTURAL FRAMING SECTIONS	S-365
AP-001	CONTROL HOUSE OPERATORS ROOM - PLUMBING NOTES AND SCHEDULES	S-366
AP-101	CONTROL HOUSE OPERATORS ROOM - PLUMBING PLANS	S-367
AM-101	CONTROL HOUSE OPERATORS ROOM - MECHANICAL PLAN AND NOTES	S-368
AE-001	CONTROL HOUSE OPERATORS ROOM - ELECTRICAL PLANS	S-369
AE-002	CONTROL HOUSE OPERATORS ROOM - ELECTRICAL NOTES	S-370
AE-003	CONTROL HOUSE OPERATORS ROOM - FIRE ALARM PLAN	S-371

NOTES:

1. FOR INDEX OF STRUCTURAL DRAWINGS, SEE DWG. G-001.

PROJECT NO. U-4438

PASQUOTANK COUNTY

STATION: 15+25.75 -L1-

STATE OF NORTH CAROLINA
DEPARTMENT OF TRANSPORTATION
RALEIGH

ELIZABETH CITY BRIDGE OVER PASQUOTANK RIVER
BASCULE SPAN "F"
INDEX OF DRAWINGS - 2

MODJESKI and MASTERS
Experience great bridges.
Mechanicsburg, PA NC License No. C-2979

NORTH CAROLINA PROFESSIONAL SEAL 025801 ENGINEER LANCE V. BORDEN 11/29/11

DWG NUMBER	TOTAL DWGS
G-002	14

REVISIONS						SHEET NO.
NO.	BY:	DATE:	NO.	BY:	DATE:	S-090
1			3			TOTAL SHEETS
2			4			454

DRAWN BY : CMM DATE : 01/11
CHECKED BY : CMM DATE : 01/11

$$$$$$SYSTIME$$$$$
$$$$$$$$$$$$$$$$DGN$$$$$$$$$$$$$$$$
$$$$USERNAME$$$$

INDEX OF DRAWINGS EXISTING BASCULE SPAN WESTBOUND (BRIDGE NO. 27)

MECHANICAL

DWG. NO.	DRAWING TITLE	SHEET NO.
M-001W	BASCULE SPAN- EQUIPMENT SCHEDULE/NOTES	S-372
M-002W	BASCULE SPAN- MODIFIED MACHINERY DETAILS	S-373
M-003W	BASCULE SPAN- NEW TAIL LOCK ASSEMBLY	S-374
M-004W	BASCULE SPAN- NEW TAIL LOCK DETAILS-1	S-375
M-005W	BASCULE SPAN- NEW TAIL LOCK DETAILS-2	S-376
M-006W	BASCULE SPAN- AIR BUFFER REHABILITATION	S-377
M-007W	BASCULE SPAN- NEW SPAN OPENING LIMIT SWITCH DRIVE	S-378
M-008W	BASCULE SPAN- NEW LIMIT SWITCH DETAILS	S-379
M-009W	BASCULE SPAN- CENTER SPAN LOCK MODIFICATIONS	S-380

ELECTRICAL

DWG. NO.	DRAWING TITLE	SHEET NO.
E-001W	ELECTRICAL ELEVATION EXISTING BASCULE SPAN	S-381
E-002W	ELECTRICAL PLAN EXISTING BASCULE SPAN NEARSIDE STORAGE ROOM	S-382
E-003W	ELECTRICAL PLAN EXISTING BASCULE SPAN NEARSIDE MACHINERY	S-383
E-004W	THREE LINE DIAGRAM MCC-2 1	S-384
E-005W	THREE LINE DIAGRAM MCC-2 2	S-385
E-006W	THREE LINE DIAGRAM MCC-2 3	S-386
E-007W	THREE LINE DIAGRAM VFD POWER WIRING	S-387
E-008W	THREE LINE DIAGRAM AUXILIARY DRIVE MOTOR STARTERS	S-388
E-009W	MOTOR CONTROL CENTER MCC-2 LAYOUT	S-389
E-010W	LOAD PANEL LP-4 AND LP-5 LAYOUTS	S-390
E-011W	WB LOAD PANEL CIRCUITS - 1	S-391
E-012W	WB LOAD PANEL CIRCUITS - 2	S-392
E-013W	WB LOAD PANEL CIRCUITS - 3	S-393
E-014W	WB LOAD PANEL CIRCUITS - 4	S-394
E-015W	WB LOAD PANEL CIRCUITS - 5	S-395
E-016W	WB CONTROL CIRCUIT 1	S-396
E-017W	WB CONTROL CIRCUIT 2	S-397
E-018W	WB CONTROL CIRCUIT 3	S-398
E-019W	WB CONTROL CIRCUIT 4	S-399
E-020W	WB CONTROL CIRCUIT 5	S-400
E-021W	WB CONTROL CIRCUIT 6	S-401
E-022W	WB CONTROL CIRCUIT 7	S-402
E-023W	WB CONTROL CIRCUIT 8	S-403
E-024W	WB CONTROL CIRCUIT 9	S-404
E-025W	WB CONTROL CIRCUIT 10	S-405
E-026W	WB CONTROL CIRCUIT 11	S-406
E-027W	WB CONTROL CIRCUIT 12	S-407
E-028W	WB CONTROL CIRCUIT 13	S-408
E-029W	WB CONTROL CIRCUIT 14	S-409
E-030W	WB CONTROL CIRCUIT 15	S-410
E-031W	WB CONTROL CIRCUIT 16	S-411
E-032W	WB CONTROL CIRCUIT 17	S-412
E-033W	WB CONTROL CIRCUIT 18	S-413
E-034W	WB CONTROL CIRCUIT 19	S-414
E-035W	WB CONTROL CIRCUIT 20	S-415
E-036W	WB CONTROL CIRCUIT 21	S-416
E-037W	WB CONTROL CIRCUIT 22	S-417
E-038W	WB CONTROL CIRCUIT 23	S-418
E-039W	WB CONTROL CIRCUIT 24	S-419
E-040W	WB CONTROL CIRCUIT 25	S-420
E-041W	WB CONTROL CIRCUIT 26	S-421
E-042W	WB CONTROL CIRCUIT 27	S-422
E-043W	WB CONTROL CIRCUIT 28	S-423
E-044W	WB CONTROL CIRCUIT 29	S-424
E-045W	WB CONTROL CIRCUIT 30	S-425
E-046W	WB CONTROL CIRCUIT 31	S-426
E-047W	WB CONTROL CIRCUIT 32	S-427
E-048W	WB CONTROL CIRCUIT 33	S-428
E-049W	WB CONTROL CIRCUIT 34	S-429
E-050W	WB CONTROL CIRCUIT 35	S-430
E-051W	WB CONTROL CIRCUIT 36	S-431
E-052W	WB CONTROL CIRCUIT 37	S-432
E-053W	WB CONTROL CIRCUIT 38	S-433
E-054W	WB CONTROL CIRCUIT 39	S-434
E-055W	WB CONTROL CIRCUIT 40	S-435
E-056W	WB CONTROL CIRCUIT 41	S-436
E-057W	WB CONTROL CIRCUIT 42	S-437
E-058W	WB TRAFFIC GATES DETAILS	S-438

INDEX OF DRAWINGS EXISTING BASCULE SPAN WESTBOUND (BRIDGE NO. 27) CONTINUED

ELECTRICAL CONTINUED

DWG. NO.	DRAWING TITLE	SHEET NO.
E-059W	WB BRIDGE GROUNDING DETAILS	S-439
E-060W	WB CONDUIT & CABLE WIRING LAYOUT - 1	S-440
E-061W	WB CONDUIT & CABLE WIRING LAYOUT - 2	S-441
E-062W	WB CONDUIT & CABLE WIRING LAYOUT - 3	S-442
E-063W	WB CONDUIT & CABLE WIRING LAYOUT - 4	S-443

STRUCTURAL

DWG. NO.	DRAWING TITLE	SHEET NO.
S-001W	EXISTING BASCULE SPAN GENERAL PLAN	S-444
S-002W	EXISTING BASCULE SPAN GENERAL ELEVATION	S-445
S-003W	EXISTING BASCULE SPAN PIER 1 REHABILITATION -1	S-446
S-004W	EXISTING BASCULE SPAN PIER 1 REHABILITATION - 2	S-447

NOTES:

1. FOR INDEX OF STRUCTURAL DRAWINGS, SEE DWG. G-001.

PROJECT NO. U-4438

PASQUOTANK COUNTY

STATION: 15+25.75 -L1-

STATE OF NORTH CAROLINA
DEPARTMENT OF TRANSPORTATION
RALEIGH

ELIZABETH CITY BRIDGE OVER PASQUOTANK RIVER
BASCULE SPAN "F"
INDEX OF DRAWINGS - 3

MODJESKI and MASTERS
Experience great bridges.
Mechanicsburg, PA NC License No. C-2979

NORTH CAROLINA PROFESSIONAL SEAL 025801 ENGINEER LANCE V. BORDEN 11/29/2011

DWG NUMBER	TOTAL DWGS
G-003	14

REVISIONS						SHEET NO.
NO.	BY:	DATE:	NO.	BY:	DATE:	S-091
1			3			TOTAL SHEETS
2			4			454

DRAWN BY : CMM DATE : 01/11
CHECKED BY : CMM DATE : 01/11

$$$$$$SYSTIME$$$$$
$$$$$$$$$$$$$$$$DGN$$$$$$$$$$$$$$$$
$$$$USERNAME$$$$

GENERAL DRAWING NOTES:

A. DESIGN SPECIFICATIONS:

1. THIS BRIDGE HAS BEEN DESIGNED IN ACCORDANCE WITH THE AASHTO LRFD BRIDGE DESIGN SPECIFICATIONS, 4th EDITION, 2007 WITH 2008 AND 2009 INTERIMS.
2. AASHTO LRFD MOVABLE HIGHWAY BRIDGE DESIGN SPECIFICATIONS 2nd EDITION, 2007 WITH 2008 INTERIM.
3. 2006 NCDOT STANDARD SPECIFICATIONS FOR ROADS AND STRUCTURES.
4. NCDOT STRUCTURE DESIGN - DESIGN MANUAL.
5. AASHTO/AWS D1.5 BRIDGE WELDING CODE.

B. GEOMETRY:

1. REPLACEMENT OF BRIDGE NO. 19 AND REHABILITATION OF BRIDGE NO. 27
2. ALL DIMENSIONS ARE HORIZONTAL EXCEPT AS NOTED.
3. LAYOUT DIMENSIONS AND LENGTHS OF GIRDERS SHOWN ARE HORIZONTAL DIMENSIONS AND MUST HAVE THE ADDITIONAL LENGTHS ADDED FOR THE LENGTHS ALONG GRADE.
4. CAMBER ORDINATES, AS SHOWN ON THE PLANS, ARE COMPUTED TO COMPENSATE FOR ALL DEAD LOAD DEFELECTIONS AND FOR THE CURVATURE OF THE FINISHED GRADE PROFILE.
5. HYDRAULIC DATA:
   DESIGN DISCHARGE: N/A CFS.
   FREQUENCY OF DESIGN FLOOD: 100 YEARS
   DESIGN HIGH WATER ELEVATION: 6.20
   DRAINAGE AREA: 290 SQ. MI.
   BASIC DISCHARGE(Q100): N/A CFS.
   BASIC HIGH WATER ELEVATION: N/A

   OVERTOPPING FLOOD DATA:
   OVERTOPPING DISCHARGE: N/A CFS.
   FREQUENCY OF OVERTOPPING FLOOD: N/A YRS.
   OVERTOPPING FLOOD ELEVATION: 2.88
6. A MINIMUM OF 90'-0" CLEAR CHANNEL SHALL BE PROVIDED.
7. A MINIMUM VERTICAL CLEARANCE OF 7 FT. MEASURED FROM THE LOW STEEL ON THE SUPERSTRUCTURE TO MEAN HIGH WATER SHALL BE PROVIDED AT THE FACE OF FENDER.

C. DESIGN LOADS:

1. ASSUMED LIVE LOAD = HL 93 OR ALTERNATE LOADING.
2. THIS STRUCTURE HAS BEEN DESIGNED IN ACCORDANCE WITH HEC 18, "EVALUATING SCOUR AT BRIDGES", MAY 2001.
3. DEAD LOAD: LIGHTWEIGHT CONCRETE (UNREINFORCED): 115 PCF
   REINFORCED CONCRETE: 150 PCF
   STRUCTURAL STEEL: 490 PCF
   FUTURE WEARING SURFACE: NO ALLOWANCE
4. SHIP IMPACT: AN INDEPENDENT FENDER SYSTEM IS RELIED UPON FOR PROTECTION OF THE BASCULE PIERS FROM VESSEL COLLISION. THE BASCULE PIERS ARE NOT DESIGNED FOR ANY VESSEL IMPACT. THE FENDER SYSTEM DESIGN IMPACT IS BASED UPON A 2200 TONNE VESSEL WITH AN IMPACT SPEED OF 4.7 KNOTS. THE NAVIGABLE CHANNEL DEPTH IS APPROXIMATELY 33 FT. BELOW NORMAL LOW WATER EL. 1.15.

D. MATERIALS:

1. THE CLASS AA CONCRETE AND SAND LIGHTWEIGHT CONCRETE IN THE BRIDGE DECK SHALL CONTAIN FLY ASH OR GROUND GRANULATED BLAST FURNACE SLAG AT THE SUBSTITUTION RATE SPECIFIED IN ARTICLE 1024-1 AND IN ACCORDANCE WITH ARTICLES 1024-5 AND 1024-6 OF THE STANDARD SPECIFICATIONS. NO PAYMENT WILL BE MADE FOR THIS SUBSTITUTION AS IT IS CONSIDERED INCIDENTAL TO THE COST OF THE REINFORCED CONCRETE DECK SLAB AND PARTIALLY FILLED STEEL GRID DECK, RESPECTIVELY.
2. ALL METALIZED SURFACES SHALL RECEIVE A SEAL COATING AS SPECIFIED IN THE SPECIAL PROVISION FOR THERMAL SPRAYED COATINGS (METALIZATION).
3. STEEL PILES FOR FENDER SYSTEMS SHALL CONTAIN 0.2% COPPER AND BE METALLIZED. FOR THERMAL SPRAYED COATINGS, SEE SPECIAL PROVISIONS.
4. FOR PRESTRESSED CONCRETE MEMBERS, SEE SPECIAL PROVISIONS.
5. THE BRIDGE RAILS ON THE TEMPORARY STRUCTURE SHALL BE DESIGNED FOR THE AASHTO LRFD TEST LEVEL 2 (TL-2) CRASH TEST CRITERIA.
6. CONCRETE: SPECIFIED DESIGN COMPRESSIVE STRENGTH (F'C)
   CLASS AA CONCRETE: 4500 PSI
   SAND LIGHTWEIGHT CONCRETE: 4500 PSI
7. THIS STRUCTURE CONTAINS THE NECESSARY CORROSION PROTECTION REQUIRED FOR A CORROSIVE SITE.
8. CLASS AA CONCRETE SHALL BE USED IN ALL CAST-IN-PLACE COLUMNS, BENT CAPS, PILE CAPS, WALLS, FLOOR SLABS AND FOOTINGS, AND SHALL CONTAIN CALCIUM NITRITE CORROSION INHIBITOR.
9. THE CONCRETE IN PIER 5 AND PIER 6 SHALL CONTAIN SILICA FUME. SILICA FUME SHALL BE SUBSTITUTED FOR 5% OF THE PORTLAND CEMENT BY WEIGHT. IF THE OPTION OF ARTICLE 1024-1 OF THE STANDARD SPECIFICATIONS TO PARTIALLY SUBSTITUTE CLASS F FLY ASH FOR PORTLAND CEMENT IS EXERCISED, THEN THE RATE OF FLY ASH SUBSTITUTION SHALL BE REDUCED TO 1.0 LB OF FLY ASH PER 1.0 LB OF CEMENT. NO PAYMENT WILL BE MADE FOR THIS SUBSTITUTION AS IT IS CONSIDERED INCIDENTAL TO THE VARIOUS PAY ITEMS.
10. FOR CURING CONCRETE, SEE SPECIAL PROVISIONS.
11. REINFORCING STEEL: AASHTO M31, GRADE 60, EPOXY COATED.
12. ALL BAR SUPPORTS USED IN THE PARAPET, SIDEWALK, DECK, BENT CAPS, COLUMNS, PILE CAPS, FOOTINGS AND ALL INCIDENTAL REINFORCING STEEL SHALL BE EPOXY COATED IN ACCORDANCE WITH THE STANDARD SPECIFICATIONS.
13. THE CONTRACTOR SHALL PROVIDE INDEPENDENT ASSURANCE SAMPLES OF REINFORCING STEEL AS FOLLOWS: FOR PROJECTS REQUIRING UP TO 400 TONS OF REINFORCING STEEL, ONE 30 INCH SAMPLE OF EACH SIZE BAR USED, AND FOR PROJECTS REQUIRING OVER 400 TONS OF REINFORCING STEEL, TWO 30 INCH SAMPLES OF EACH SIZE BAR USED. THE BARS FROM WHICH THE SAMPLES ARE TAKEN MUST THEN BE SPLICED WITH REPLACEMENT BARS OF THE SIZE AND LENGTH OF THE SAMPLE, PLUS A MINIMUM LAP SPLICE OF THIRTY BAR DIAMETERS.
14. STRUCTURAL STEEL: ALL STRUCTURAL STEEL SHALL BE AASHTO M270 GRADE 50 AND PAINTED IN ACCORDANCE WITH SYSTEM 1 OF ARTICLE 442-7 OF THE STANDARD SPECIFICATIONS UNLESS OTHERWISE NOTED ON THE PLANS.
15. STEEL SHEET PILING REQUIRED FOR SHORING SHALL BE HOT ROLLED.

E. STRUCTURAL METALWORK:

1. THE BASCULE GIRDERS, TRUNNION COLUMNS AND BASCULE SPAN FLOORBEAMS SHALL BE CONSIDERED TO BE FRACTURE CRITICAL. FRACTURE CRITICAL MEMBERS (FCM'S) SHALL CONFORM TO THE PROVISIONS OF THE LATEST EDITION OF AASHTO/AWS D1.5 BRIDGE WELDING CODE, SECTION 12 FRACTURE CONTROL PLAN FOR NONREDUNDANT MEMBERS.
2. ALL FASTENERS ARE 7/8"Ø AASHTO M164 (ASTM A325), GALVANIZED HIGH STRENGTH BOLTS, EXCEPT AS NOTED.
3. BOLTED CONNECTIONS ARE DESIGNED AS SLIP-CRITICAL JOINTS WITH ALL PAINT APPLIED TO FAYING SURFACES HAVING A CLASS A SLIP COEFFICIENT. EXCLUDE THREADS FROM THE SHEAR PLANE.
4. BEARING STIFFENERS AND INTERMEDIATE WEB STIFFENERS OR INTERMEDIATE FLOORBEAM CONNECTION PLATES SHALL BE NORMAL TO THE TOP FLANGE, UNLESS SHOWN OTHERWISE.

F. CONCRETE CONSTRUCTION:

1. CONCRETE COVER: 4" TOP LAYER IN BASCULE PIER FOOTINGS AND EXTERIOR FACE OF BASCULE PIER WALLS
   3" INTERIOR FACE OF BASCULE PIER WALLS
   OTHER LOCATIONS AS NOTED
2. LIGHTWEIGHT CONCRETE - BASCULE SPAN HALF FILLED GRID DECK, RAILINGS AND SIDEWALK, AS NOTED.
3. NORMAL WEIGHT CONCRETE - ALL CONCRETE NOT LISTED AS LIGHTWEIGHT CONCRETE.

G. MISCELLANEOUS NOTES:

1. THE EXISTING STRUCTURE CONSISTING OF A DOUBLE LEAF TRUNNION BASCULE WITH STEEL PLATE GIRDERS, FLOORBEAMS AND STRINGERS AND AN OPEN GRID DECK ON A REINFORCED CONCRETE PIER WITH A TIMBER PILE FOUNDATION AND LOCATED WITHIN THE PROPOSED ALIGNMENT SHALL BE REMOVED. THE EXISTING BRIDGE IS PRESENTLY POSTED FOR LOAD LIMIT. SHOULD THE STRUCTURAL INTEGRITY OF THE BRIDGE FURTHER DETERIORATE THIS LOAD LIMITATION MAY BE REDUCED AS FOUND NECESSARY DURING THE LIFE OF THE PROJECT. SEE SPECIAL PROVISIONS FOR REMOVAL OF EXISTING BASCULE STRUCTURE AT STA. 15+25.75 -L1-.
2. REMOVAL OF THE EXISTING BRIDGE SHALL BE PERFORMED SO AS NOT TO ALLOW DEBRIS TO FALL INTO THE WATER. THE CONTRACTOR SHALL REMOVE THE BRIDGE AND SUBMIT PLANS FOR DEMOLITION IN ACCORDANCE WITH ARTICLE 402-2 OF THE STANDARD SPECIFICATIONS.
3. THE SUBSTRUCTURE OF THE EXISTING BRIDGE INDICATED ON THE PLANS IS FROM THE BEST INFORMATION AVAILABLE. SINCE THIS INFORMATION IS SHOWN FOR THE CONVENIENCE OF THE CONTRACTOR, THE CONTRACTOR SHALL HAVE NO CLAIM WHAT-SO-EVER AGAINST THE DEPARTMENT OF TRANSPORTATION FOR ANY DELAYS OR ADDITIONAL COST INCURRED BASED ON DIFFERENCES BETWEEN THE EXISTING BRIDGE SUBSTRUCTURE SHOWN ON THE PLANS AND THE ACTUAL CONDITIONS AT THE PROJECT SITE.
4. ALL PAVEMENT MARKING WILL BE IN ACCORDANCE WITH THE PAVEMENT MARKING PLANS AND SHALL PROVIDE FOR BICYCLES.
5. FOR SECURING OF VESSELS, SEE SPECIAL PROVISIONS.
6. IN AS MUCH AS THE PAINT SYSTEM ON THE EXISTING STRUCTURAL STEEL CONTAINS LEAD, THE CONTRACTOR'S ATTENTION IS DIRECTED TO ARTICLE 107-1 OF THE STANDARD SPECIFICATIONS. ANY COSTS RESULTING FROM COMPLIANCE WITH APPLICABLE STATE OR FEDERAL REGULATIONS PERTAINING TO HANDLING OF MATERIALS CONTAINING LEAD BASED PAINT SHALL BE INCLUDED IN THE BID PRICE FOR REMOVAL OF EXISTING STRUCTURE AT STATION 15+25.75 -L1-
7. FOR FALSEWORK AND FORMWORK, SEE SPECIAL PROVISIONS.
8. COFFERDAMS SHALL NOT BE DEWATERED WHEN THE WATER ELEVATION IS ABOVE EL. 3.000
9. FOR MAINTENANCE AND PROTECTION OF WATERWAY TRAFFIC BENEATH PROPOSED STRUCTURE, SEE SPECIAL PROVISIONS.
10. COFFERDAMS AND SEALS SHALL BE DESIGNED FOR A HYDROSTATIC HEAD FROM THE BOTTOM OF THE SEAL TO EL. 3.000. THE CONTRACTOR SHALL BE RESPONSIBLE FOR THE DESIGN OF THE SHEET PILE COFFERDAM, SEE SECTION 410-4 OF THE STANDARD SPECIFICATION. THE SHEET PILE COFFERDAMS SHALL BE REMOVED AFTER CONSTRUCTION OF THE PIERS ARE COMPLETE, AS A MINIMUM THE SHEET PILES SHALL BE REMOVED TO TOP OF SEAL. TOTAL COST OF COFFERDAM CONSTRUCTION SHALL BE INCLUDED IN THE PAY ITEM FOR REMOVAL OF EXISTING BASCULE STRUCTURE AT STA. 15+25.75 -L1-.
11. VERIFY ALL DIMENSIONS AND GEOMETRY OF THE EXISTING STRUCTURE IN THE FIELD AS NECESSARY FOR PROPER FIT OF PROPOSED CONSTRUCTION PRIOR TO FABRICATION OF ANY COMPONENT. MAKE NO CLAIM AGAINST THE DEPARTMENT FOR WORK PERTAINING TO MODIFICATIONS AS MAY BE REQUIRED DUE TO ANY DIFFERENCE BETWEEN ACTUAL FIELD CONDITIONS AND THOSE SHOWN BY THE DETAILS AND DIMENSIONS ON THE CONTRACT PLANS.
12. USE CARE WHEN REMOVING PORTIONS OF THE EXISTING BRIDGE SO AS TO NOT DAMAGE OTHER REMAINING PARTS OF THE STRUCTURE, OR REMAINING REINFORCEMENT BARS. REPLACE ALL PARTS OF THE STRUCTURE WHICH ARE DESIGNATED TO REMAIN AND ARE DAMAGED DURING THE REMOVAL OPERATIONS AT NO COST TO THE DEPARTMENT.
13. DO NOT CONSIDER ANY OF THE DATA ON THE EXISTING STRUCTURE SUPPLIED IN THE ORIGINAL DESIGN DRAWINGS OR MADE AVAILABLE TO YOU BY THE DEPARTMENT OR ITS AUTHORIZED AGENTS AS POSITIVE REPRESENTATION OF ANY OF THE CONDITIONS THAT YOU WILL ENCOUNTER IN THE FIELD.
14. THE INFORMATION SHOWN ON THE PLANS FOR THE EXISTING BRIDGE IS NOT PART OF THE PLANS, PROPOSAL, OR CONTRACT AND IS NOT TO BE CONSIDERED A BASIS FOR COMPUTATION OF THE UNIT PRICES USED FOR BIDDING PURPOSES. THERE IS NO EXPRESSED OR IMPLIED AGREEMENT THAT INFORMATION IS CORRECTLY SHOWN. THE BIDDER IS NOT TO RELY ON THIS INFORMATION, BUT IS TO ASSUME THE POSSIBILITY THAT CONDITIONS AFFECTING THE COST AND/OR QUANTITIES OF WORK TO BE PERFORMED MAY DIFFER FROM THOSE INDICATED.
15. ASBESTOS ABATEMENT FOR THE DEMOLITION OF THE EXISTING BRIDGE TENDER'S HOUSE WILL BE PERFORMED BY THE DEPARTMENT, SEE SPECIAL PROVISIONS FOR DETAILS.
16. SEE SPECIAL PROVISIONS FOR REMOVAL OF PORTION OF EXISTING BASCULE STRUCTURE AT STA. 15+25.75 -L2-.
17. FOR EROSION CONTROL MEASURES, SEE EROSION CONTROL PLANS.
18. FOR OTHER DESIGN DATA AND GENERAL NOTES, SEE SHEET SN.

H. SUGGESTED CONSTRUCTION SEQUENCE

1. DIVERT EASTBOUND (EB) TRAFFIC ONTO WESTBOUND (WB) BRIDGE, REFER TO MPT PLANS.
2. CLOSE THE EB BRIDGE TO VEHICULAR TRAFFIC. RAISE THE EB BASCULE AND LOCK INTO POSITION AND DE-ENERGIZE THE EB BASCULE SPAN.
3. REMOVE BASCULE LEAVES, COUNTERWEIGHTS AND UPPER PORTION OF BASCULE PIERS.
4. INSTALL COFFERDAMS
5. REMOVE REMAINING EXISTING BASCULE PIERS AND TIMBER PILES IN THEIR ENTIRETY.
6. INSTALL NEW PILES.
7. PLACE TREMIE SEALS IN COFFERDAMS AND DEWATER.
8. CONSTRUCT NEW BASCULE PIERS AND OPERATOR'S HOUSE.
9. INSTALL OPERATING MACHINERY.
10. ERECT BASCULE SPAN AND COUNTERWEIGHTS.
11. ERECT FIXED ROADWAY ON BASCULE PIERS.
12. REMOVE AND REPLACE THE SOUTH HALF OF THE FENDER SYSTEM.
13. INSTALL NEW SUBMARINE CABLES BETWEEN NEW EB BASCULE PIERS.
14. ENERGIZE AND COMPLETE TESTING OF EB BASCULE SPAN.
15. COMPLETE ALL ASSOCIATED BRIDGE WORK FOR THE EB BRIDGE INCLUDING THE APPROACH ROADWAYS.
16. DIVERT WB TRAFFIC ONTO THE EB BRIDGE, REFER TO MPT PLANS.
17. CLOSE THE WB BRIDGE TO VEHICULAR TRAFFIC. RAISE THE WB BASCULE AND LOCK INTO POSITION AND DE-ENERGIZE THE WB BASCULE SPAN.
18. INSTALL THE ELECTRICAL AND MECHANICAL COMPONENTS OF THE WB BASCULE SPAN SCHEDULED FOR REHABILITATION/REPLACEMENT.
19. AFTER TRANSFER OF CONTROL TO THE NEW OPERATOR'S HOUSE, REMOVE THE EXISTING OPERATOR'S HOUSE FROM THE WB BRIDGE.
20. MAKE RETROFITS TO WB BASCULE PIERS.
21. ENERGIZE AND COMPLETE TESTING OF WB BASCULE SPAN. COMPLETE ALL ASSOCIATED BRIDGE WORK FOR THE WB BRIDGE.
22. REMOVE AND REPLACE THE REMAINDER OF THE EXISTING FENDER SYSTEM.
23. OPEN THE WB BRIDGE TO TRAFFIC.

PROJECT NO. U-4438
PASQUOTANK COUNTY
STATION: 15+25.75 -L1-

STATE OF NORTH CAROLINA
DEPARTMENT OF TRANSPORTATION
RALEIGH

ELIZABETH CITY BRIDGE OVER
PASQUOTANK RIVER
BASCULE SPAN "F"
GENERAL NOTES

MODJESKI and MASTERS
Experience great bridges.
Mechanicsburg, PA NC License No. C-2979

NORTH CAROLINA PROFESSIONAL SEAL 025801 ENGINEER LANCE V. BORDEN 4/21/2011

REVISIONS						SHEET NO.
NO.	BY:	DATE:	NO.	BY:	DATE:	S-092
1			3			TOTAL SHEETS
2			4			454

DWG NUMBER	TOTAL DWGS
G-004	14

DRAWN BY : CMM DATE : 01/11
CHECKED BY : BMR DATE : 01/11

4/21/2011
1:28:55 PM
K:\2986.02\CADD\Structural\dgn files\G-004_U4438_SD_GN01_01_G.dgn

TOTAL BILL OF MATERIALS - STRUCTURAL - BASCULE SPAN ONLY

ITEM	FOUNDATION EXCAVATION	PDA TESTING	PDA ASSISTANCE	PP 24 X 0.5 STEEL PILES	PILE REDRIVES	REINFORCED CONCRETE DECK SLAB	GROOVING BRIDGE FLOORS	CLASS AA CONCRETE (BRIDGE)	CLASS S CONCRETE (SEAL)	EPOXY COATED REINFORCING STEEL (BRIDGE)	APPROX 622000 LBS STRUCTURAL STEEL	ONE BAR METAL RAIL	THREE BAR METAL RAIL	1'-0" X 1'-6" CONCRETE PARAPET	REMOVAL OF EXISTING BASCULE STRUCTURE AT STA. 15+25.75 -L1-
LOCATION/UNIT	CY	EA	EA	LF	EA	SF	SF	CY	CY	LB	LS	LF	LF	LF	LS
SUPERSTRUCTURE, WEST BASCULE SPAN "F"	-	-	-	-	-	705	430	-	-	600	-	94	73	37	-
SUPERSTRUCTURE, EAST BASCULE SPAN "F"	-	-	-	-	-	705	430	-	-	600	-	94	73	37	-
WEST BASCULE PIER 5	455	4	4	8230	22	-	-	1625	1900	209100	-	-	-	-	-
EAST BASCULE PIER 6	745	4	4	8670	22	-	-	1575	1900	201700	-	-	-	-	-
TOTAL	1200	8	8	16900	44	1410	860	3200	3800	412000	LS	188	146	74	LS

TOTAL BILL OF MATERIALS - STRUCTURAL - BASCULE SPAN ONLY

ITEM	ELASTOMERIC BEARINGS	EVAZOTE JOINT SEALS	3'-0" X 2'-9" PRESTRESSED CONC BOX BEAMS	BIRD PROTECTION	ACCESS SYSTEM	FENDER SYSTEM	1'-0" X 1'-6" CONCRETE PARAPET (SAND LTWT)	SAND LIGHTWEIGHT CONCRETE	OPEN STEEL GRID DECK	PARTIALLY-FILLED STEEL GRID DECK	BALANCE BARS	COUNTERWEIGHTS	REHABILITATION OF PIER 1	REMOVAL OF PORTION OF EXISTING BASCULE STRUCTURE AT STA. 15+25.75 -L2-
LOCATION/UNIT	LS	LS	LF	LS	LS	LS	LF	CY	SF	SF	EA	EA	LS	LS
SUPERSTRUCTURE, WEST BASCULE SPAN "F"	-	-	183	-	-	-	59	10	2250	980	248	1	-	-
SUPERSTRUCTURE, EAST BASCULE SPAN "F"	-	-	183	-	-	-	59	10	2250	980	248	1	-	-
WEST BASCULE PIER 5	-	-	-	-	-	-	-	-	-	-	-	-	-	-
EAST BASCULE PIER 6	-	-	-	-	-	-	-	-	-	-	-	-	-	-
TOTAL	LS	LS	366	LS	LS	LS	118	20	4500	1960	496	2	LS	LS

NOTES:

1. THE PAY ITEMS AND QUANTITIES SHOWN IN THE ABOVE BILL OF MATERIAL ARE FOR THE BASCULE SPAN AND FENDER CONSTRUCTION AS INDICATED. THESE QUANTITIES ARE IN ADDITION TO THE PAY ITEMS AND QUANTITIES REFLECTED IN THE BRIDGE APPROACH SPAN BILL OF MATERIAL.
2. THE CONTROL HOUSE STRUCTURAL STEEL SHALL BE INCLUDED IN THE PAY ITEM FOR CONTROL HOUSE - ARCHITECTURAL/STRUCTURAL/GENERAL CONSTRUCTION.

PROJECT NO. U-4438
PASQUOTANK COUNTY
STATION: 15+25.75 -L1-

STATE OF NORTH CAROLINA
DEPARTMENT OF TRANSPORTATION
RALEIGH

ELIZABETH CITY BRIDGE OVER PASQUOTANK RIVER
BASCULE SPAN "F"
QUANTITIES - 1

MODJESKI and MASTERS
Experience great bridges.
Mechanicsburg, PA NC License No. C-2979

NORTH CAROLINA PROFESSIONAL SEAL 025801 ENGINEER LANCE V. BORDEN 3/18/2011

DWG NUMBER	TOTAL DWGS
G-005	14

REVISIONS						SHEET NO.
NO.	BY:	DATE:	NO.	BY:	DATE:	S-093
1			3			TOTAL SHEETS
2			4			454

DRAWN BY : CMM DATE : 01/11
CHECKED BY : BMR DATE : 01/11

3/18/2011
3:27:11 PM
K:\2986.02\CADD\Structural\dgn files\G-005_U4438_SD_BM01_01_G.dgn

TOTAL BILL OF MATERIALS - ELECTRICAL

	QUANTITY	UNIT	TOTAL
NEW EASTBOUND BRIDGE ELECTRICAL WORK	1	L.S.	1
REHABILITATION OF WESTBOUND BRIDGE ELECTRICAL WORK	1	L.S.	1

TOTAL BILL OF MATERIALS - MECHANICAL

	QUANTITY	UNIT	TOTAL
NEW EASTBOUND BRIDGE MECHANICAL WORK	1	L.S.	1
REHABILITATION OF WESTBOUND BRIDGE MECHANICAL WORK	1	L.S.	1

TOTAL BILL OF MATERIALS - CONTROL HOUSE

	QUANTITY	UNIT	TOTAL
CONTROL HOUSE - MECHANICAL WORK	1	L.S.	1
CONTROL HOUSE - ARCHITECTURAL/STRUCTURAL/GENERAL CONSTRUCTION	1	L.S.	1

PROJECT NO. U-4438

PASQUOTANK COUNTY

STATION: 15+25.75 -L1-

STATE OF NORTH CAROLINA
DEPARTMENT OF TRANSPORTATION
RALEIGH

ELIZABETH CITY BRIDGE OVER
PASQUOTANK RIVER
BASCULE SPAN "F"
QUANTITIES - 2

MODJESKI and MASTERS
Experience great bridges.
Mechanicsburg, PA NC License No. C-2979

NORTH CAROLINA PROFESSIONAL SEAL 025801 ENGINEER LANCE V. BORDEN 2/3/2011

DWG NUMBER	TOTAL DWGS
G-006	14

REVISIONS						SHEET NO.
NO.	BY:	DATE:	NO.	BY:	DATE:	S-094
1			3			TOTAL SHEETS
2			4			454

DRAWN BY : CMM DATE : 01/11
CHECKED BY : DLM DATE : 01/11

2/3/2011
2:00:44 PM
K:\2986.02\CADD\Structural\dgn files\G-006_U4438_SD_BM02_01_G.dgn

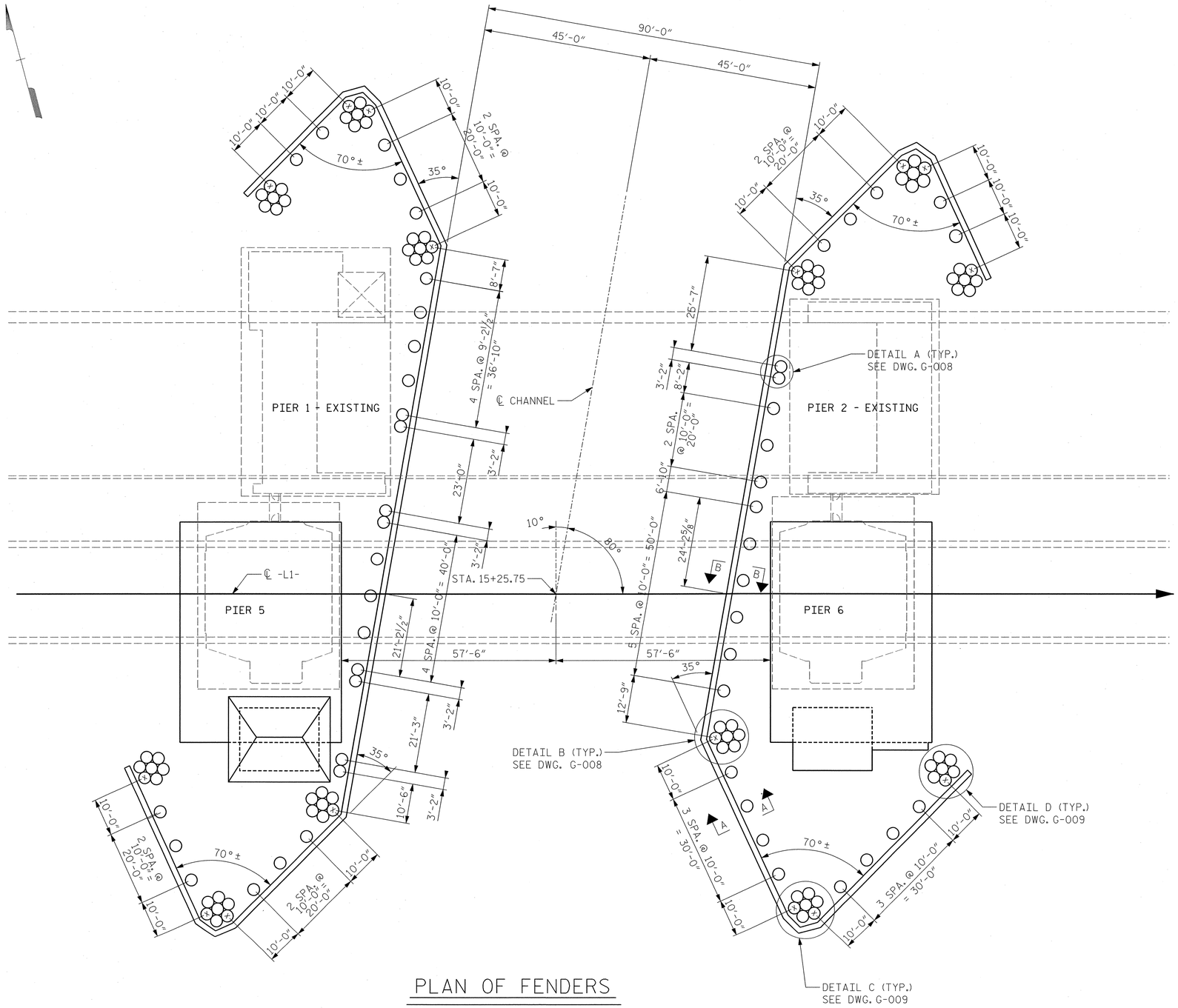

PLAN OF FENDERS

NOTES:

1. FOR GENERAL NOTES, SEE DWG. G-004.
2. CONTRACTOR SHALL VERIFY LOCATIONS OF ALL UTILITY CABLES BEFORE DRIVING FENDER PILES.
3. FOR SECTIONS AA AND BB, SEE DWG. G-008.
4. ALL MATERIAL NEW UNLESS NOTED OTHERWISE.

PROJECT NO. U-4438

PASQUOTANK COUNTY

STATION: 15+25.75 -L1-

STATE OF NORTH CAROLINA
DEPARTMENT OF TRANSPORTATION
RALEIGH

ELIZABETH CITY BRIDGE OVER PASQUOTANK RIVER
FENDER SYSTEM
GENERAL PLAN

MODJESKI and MASTERS
Experience great bridges.
Mechanicsburg, PA NC License No. C-2979

NORTH CAROLINA PROFESSIONAL SEAL 025801 ENGINEER LANCE V. BORDEN 2/3/2011

DWG NUMBER	TOTAL DWGS
G-007	14

REVISIONS								SHEET NO.
NO.	BY:	DATE:	NO.	BY:	DATE:			S-095
1			3					TOTAL SHEETS
2			4					454

DRAWN BY : CMM DATE : 01/11
CHECKED BY : DBI DATE : 01/11

2/3/2011
2:00:48 PM
K:\2986.02\CADD\Structural\dgn files\G-007_U4438_SD_GPFS_01_G.dgn

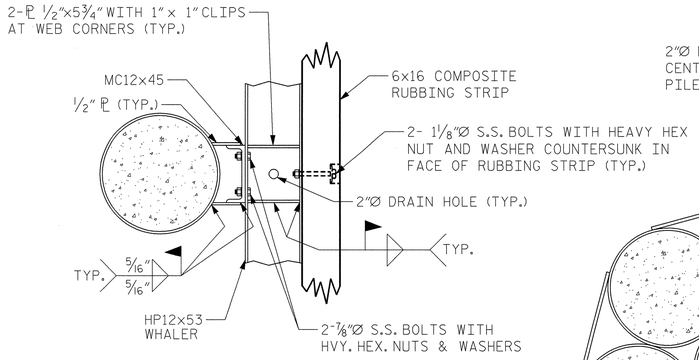

TYPICAL PILE DETAIL

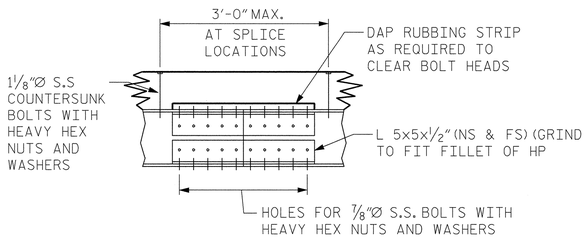

HP12x53 SPLICE DETAIL

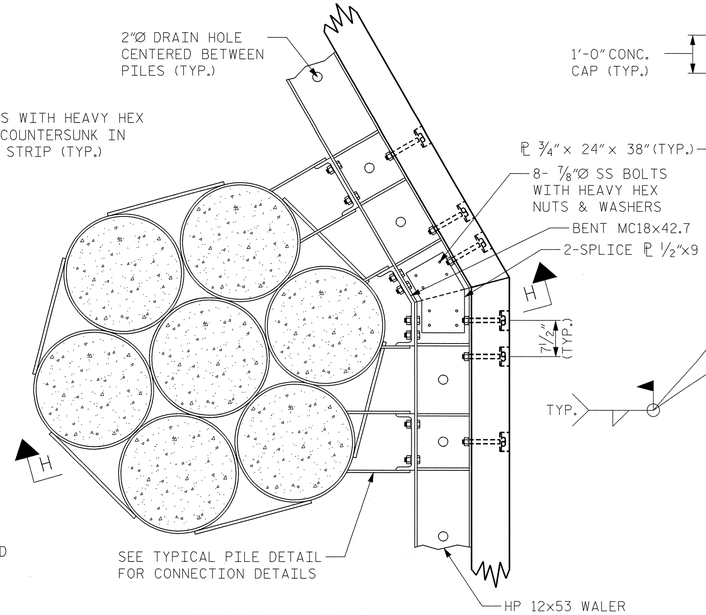

DETAIL B

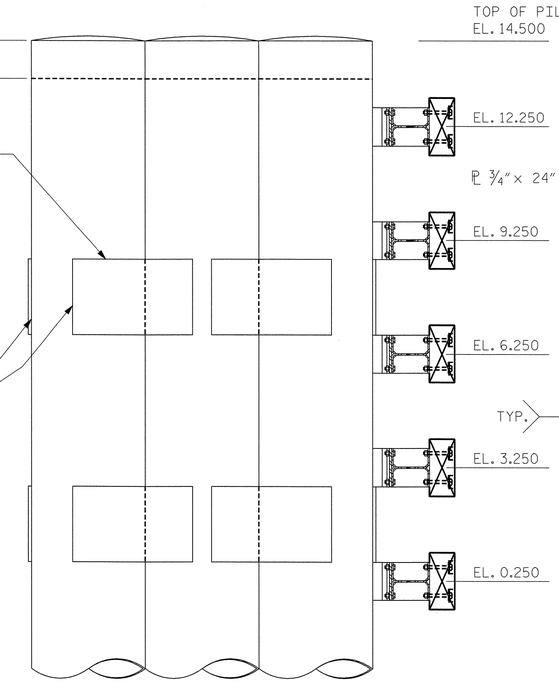

SECTION H-H

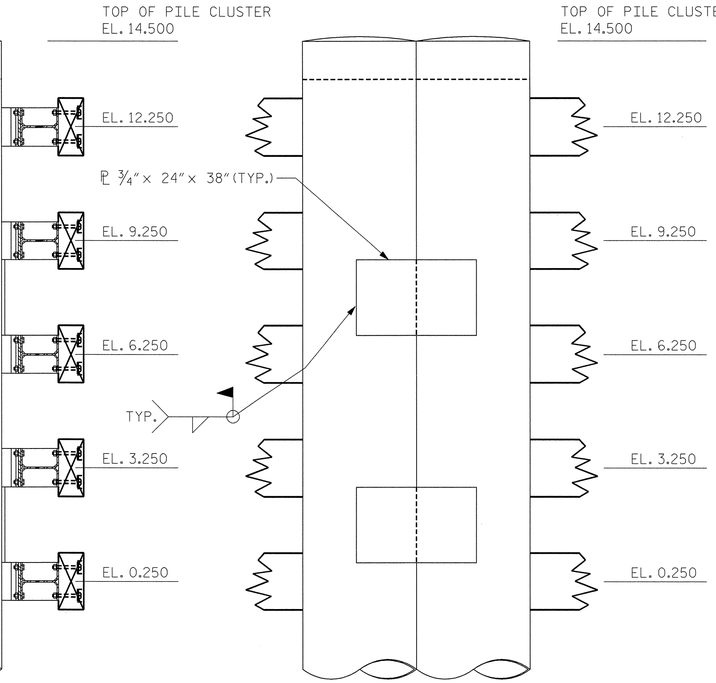

SECTION J-J

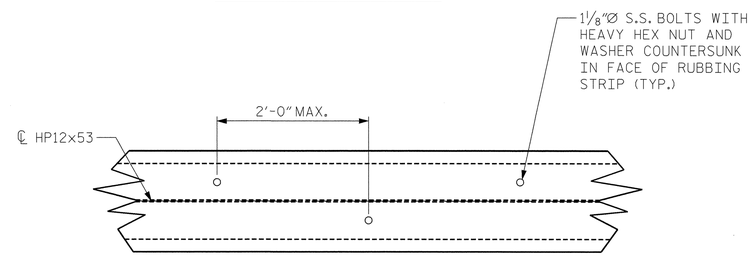

COMPOSITE RUBBING STRIP DETAIL

(BETWEEN PILES)

NOTES:

1. FOR GENERAL NOTES, SEE DWG. G-004.
2. METALLIZE THE TOP OF EACH FENDER PILE A MINIMUM OF 60 FEET. SPLICE PLATES AND WALERS SHALL BE FULLY METALLIZED. COST TO METALLIZE COMPONENTS SHALL BE INCLUDED IN FENDER SYSTEM PAY ITEM. SEE THE THERMAL SPRAYED COATINGS (METALLIZATION) SPECIAL PROVISION AND SECTION 442 OF THE STANDARD SPECIFICATIONS.

   FOR ALL METALLIZED AND PARTIALLY METALLIZED COMPONENTS, APPLY AN 8 MIL THICK 1350 ALUMINUM (W-A1-1350) THERMAL SPRAYED COATING WITH A 0.5 MIL THICK SEAL COAT.

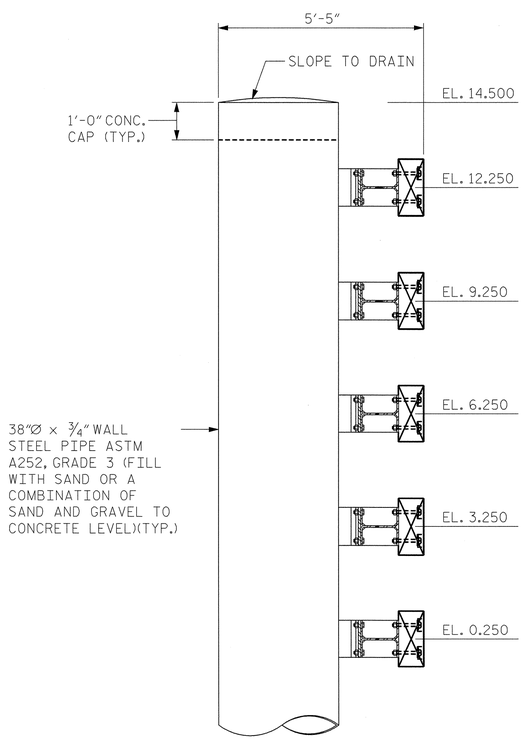

SECTION A-A

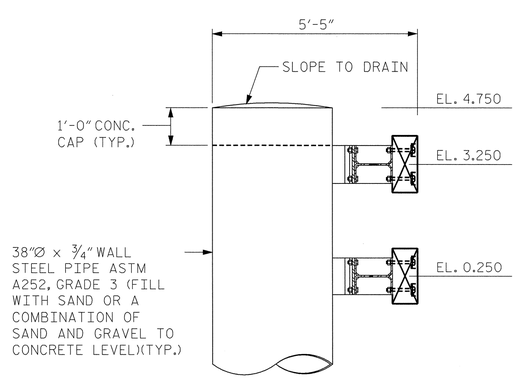

SECTION B-B

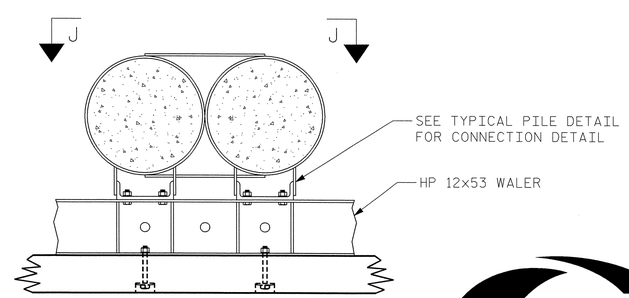

DETAIL A

PROJECT NO. U-4438

PASQUOTANK COUNTY

STATION: 15+25.75 -L1-

STATE OF NORTH CAROLINA
DEPARTMENT OF TRANSPORTATION
RALEIGH

ELIZABETH CITY BRIDGE OVER PASQUOTANK RIVER
FENDER SYSTEM
DETAILS - 1

MODJESKI and MASTERS
Experience great bridges.
Mechanicsburg, PA NC License No. C-2979

NORTH CAROLINA PROFESSIONAL SEAL 025801 ENGINEER LANCE V. BORDEN 4/21/2011

REVISIONS						SHEET NO.
NO.	BY:	DATE:	NO.	BY:	DATE:	S-096
1			3			TOTAL SHEETS
2			4			454

DWG NUMBER	TOTAL DWGS
G-008	14

DRAWN BY : CMM DATE : 01/11
CHECKED BY : DBI DATE : 01/11

4/21/2011
1:29:00 PM
K:\2986.02\CADD\Structural\dgn files\G-008_U4438_SD_FSD1_01_G.dgn

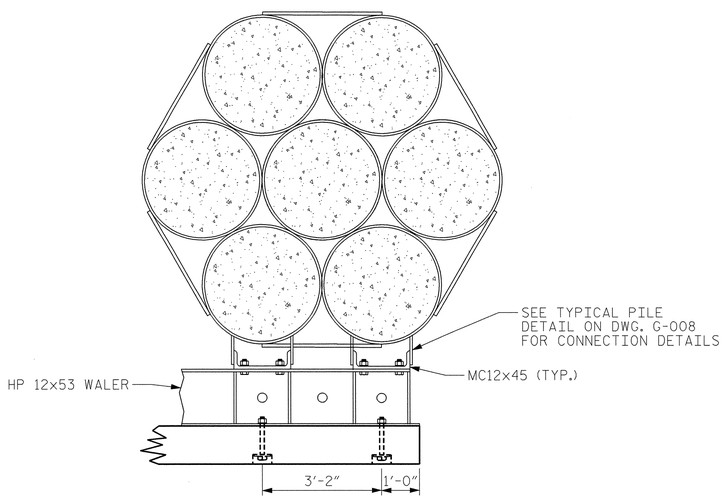

DETAIL D

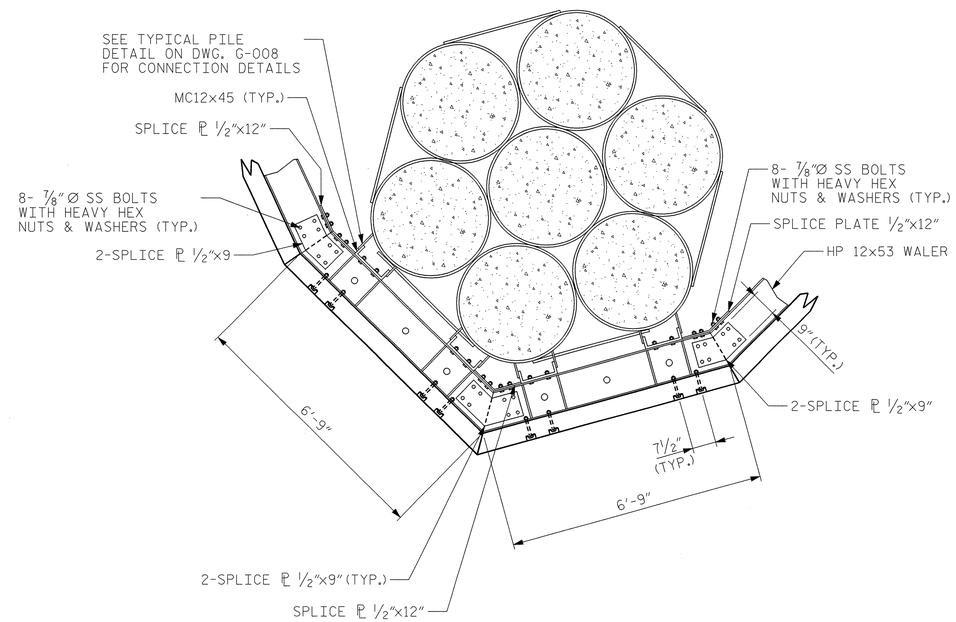

DETAIL C

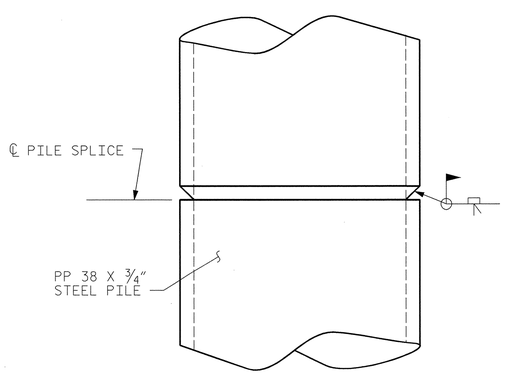

OPTIONAL PIPE PILE SPLICE DETAIL

NOTES:

1. FOR GENERAL NOTES, SEE DWG. G-004.
2. METALLIZE THE TOP OF EACH FENDER PILE A MINIMUM OF 60 FEET. SPLICE PLATES AND WALERS SHALL BE FULLY METALLIZED. COST TO METALLIZE COMPONENTS SHALL BE INCLUDED IN FENDER SYSTEM PAY ITEM. SEE THE THERMAL SPRAYED COATINGS (METALLIZATION) SPECIAL PROVISION AND SECTION 442 OF THE STANDARD SPECIFICATIONS.

   FOR ALL METALLIZED AND PARTIALLY METALLIZED COMPONENTS, APPLY AN 8 MIL THICK 1350 ALUMINUM (W-A1-1350) THERMAL SPRAYED COATING WITH A 0.5 MIL THICK SEAL COAT.

PROJECT NO. U-4438

PASQUOTANK COUNTY

STATION: 15+25.75 -L1-

STATE OF NORTH CAROLINA
DEPARTMENT OF TRANSPORTATION
RALEIGH

ELIZABETH CITY BRIDGE OVER
PASQUOTANK RIVER
FENDER SYSTEM
DETAILS - 2

MODJESKI and MASTERS
Experience great bridges.
Mechanicsburg, PA NC License No. C-2979

NORTH CAROLINA PROFESSIONAL SEAL 025801 ENGINEER LANCE V. BORDEN 4/21/2011

DWG NUMBER	TOTAL DWGS
G-009	14

REVISIONS						SHEET NO.
NO.	BY:	DATE:	NO.	BY:	DATE:	S-097
1			3			TOTAL SHEETS
2			4			454

DRAWN BY : CMM DATE : 01/11
CHECKED BY : DBI DATE : 01/11

4/21/2011
1:29:06 PM
K:\2986.02\CADD\Structural\dgn files\G-009_U4438_SD_FSD4_01_G.dgn

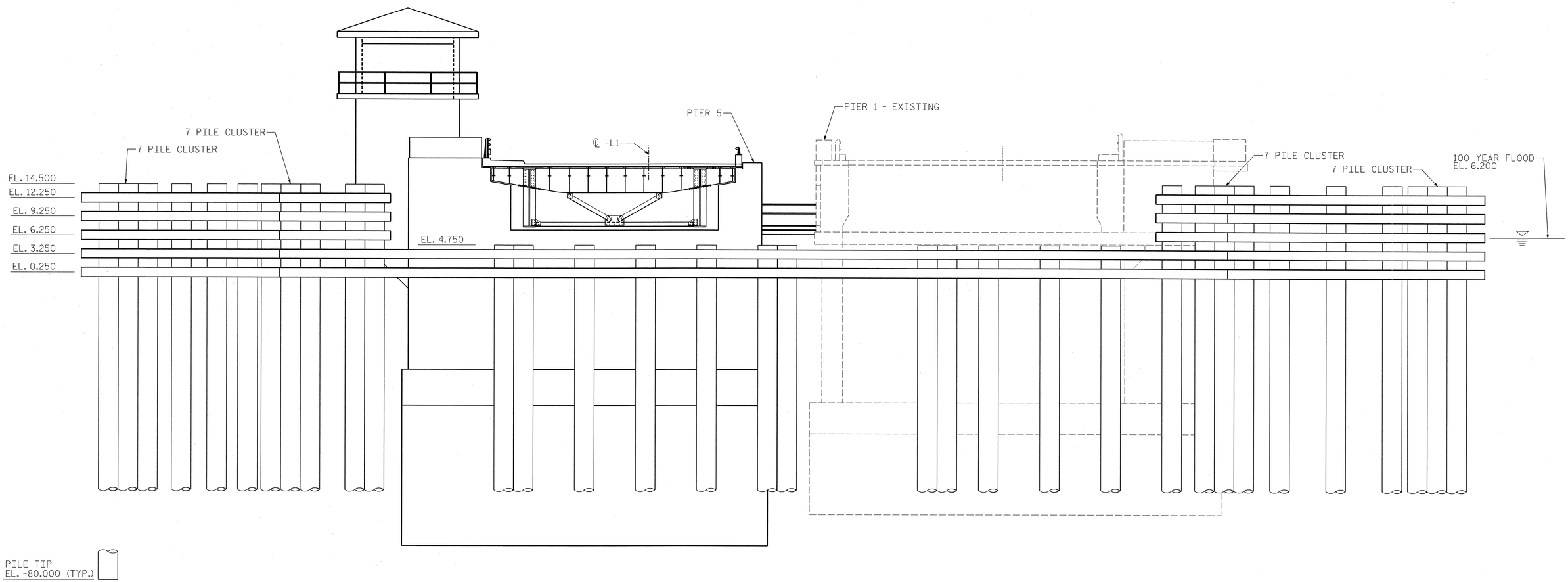

ELEVATION - WEST FENDER

(LOOKING WEST)

NOTES:

1. FOR GENERAL NOTES, SEE DWG. G-004.
2. ALL MATERIAL NEW UNLESS NOTED OTHERWISE.
3. INSTALL PILES FOR FENDER AT BENT NO. 5 TO A TIP ELEVATION NO HIGHER THAN -80 FT.
4. SEE DWG. G-009 FOR OPTIONAL PILE SPLICE DETAIL.

PROJECT NO. U-4438

PASQUOTANK COUNTY

STATION: 15+25.75 -L1-

STATE OF NORTH CAROLINA
DEPARTMENT OF TRANSPORTATION
RALEIGH

ELIZABETH CITY BRIDGE OVER
PASQUOTANK RIVER
FENDER SYSTEM
DETAILS - 3

MODJESKI and MASTERS
Experience great bridges.
Mechanicsburg, PA NC License No. C-2979

NORTH CAROLINA PROFESSIONAL SEAL 025801 ENGINEER LANCE V. BORDEN 2/3/2011

DWG NUMBER	TOTAL DWGS
G-010	14

REVISIONS						SHEET NO.
NO.	BY:	DATE:	NO.	BY:	DATE:	S-098
1			3			TOTAL SHEETS
2			4			454

DRAWN BY : CMM DATE : 01/11
CHECKED BY : DBI DATE : 01/11

2/3/2011
2:01:00 PM
K:\2986.02\CADD\Structural\dgn files\G-010_U4438_SD_FSD2_01_G.dgn

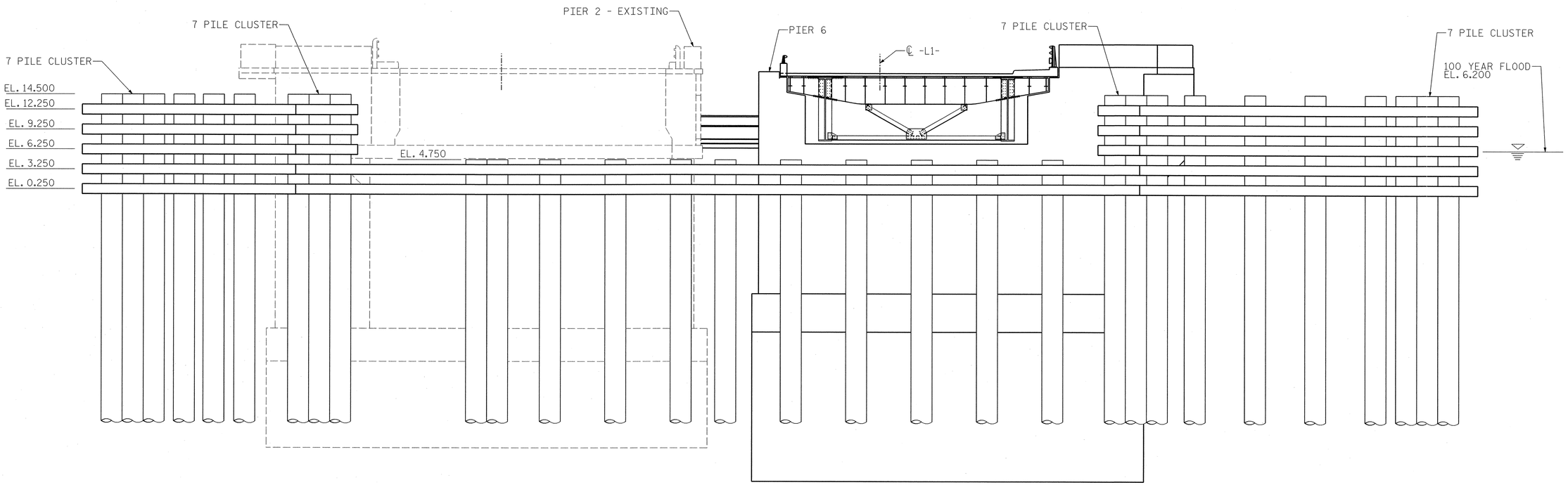

PILE TIP
EL. -85.000 (TYP.)

ELEVATION - EAST FENDER

(LOOKING EAST)

NOTES:

1. FOR GENERAL NOTES, SEE DWG. G-004.
2. ALL MATERIAL NEW UNLESS NOTED OTHERWISE.
3. INSTALL PILES FOR FENDER AT BENT NO. 6 TO A TIP ELEVATION NO HIGHER THAN -85 FT.
4. SEE DWG. G-009 FOR OPTIONAL PILE SPLICE DETAIL.

PROJECT NO. U-4438
PASQUOTANK COUNTY
STATION: 15+25.75 -L1-

STATE OF NORTH CAROLINA
DEPARTMENT OF TRANSPORTATION
RALEIGH

ELIZABETH CITY BRIDGE OVER
PASQUOTANK RIVER
FENDER SYSTEM
DETAILS - 4

MODJESKI and MASTERS
Experience great bridges.
Mechanicsburg, PA NC License No. C-2979

NORTH CAROLINA PROFESSIONAL SEAL 025801 ENGINEER LANCE V. BORDEN 2/3/2011

DWG NUMBER	TOTAL DWGS
G-011	14

REVISIONS						SHEET NO.
NO.	BY:	DATE:	NO.	BY:	DATE:	S-099
1			3			TOTAL SHEETS
2			4			454

DRAWN BY : CMM DATE : 01/11
CHECKED BY : DBI DATE : 01/11

2/3/2011
2:01:05 PM
K:\2986.02\CADD\Structural\dgn files\G-011_U4438_SD_FSD3_01_G.dgn

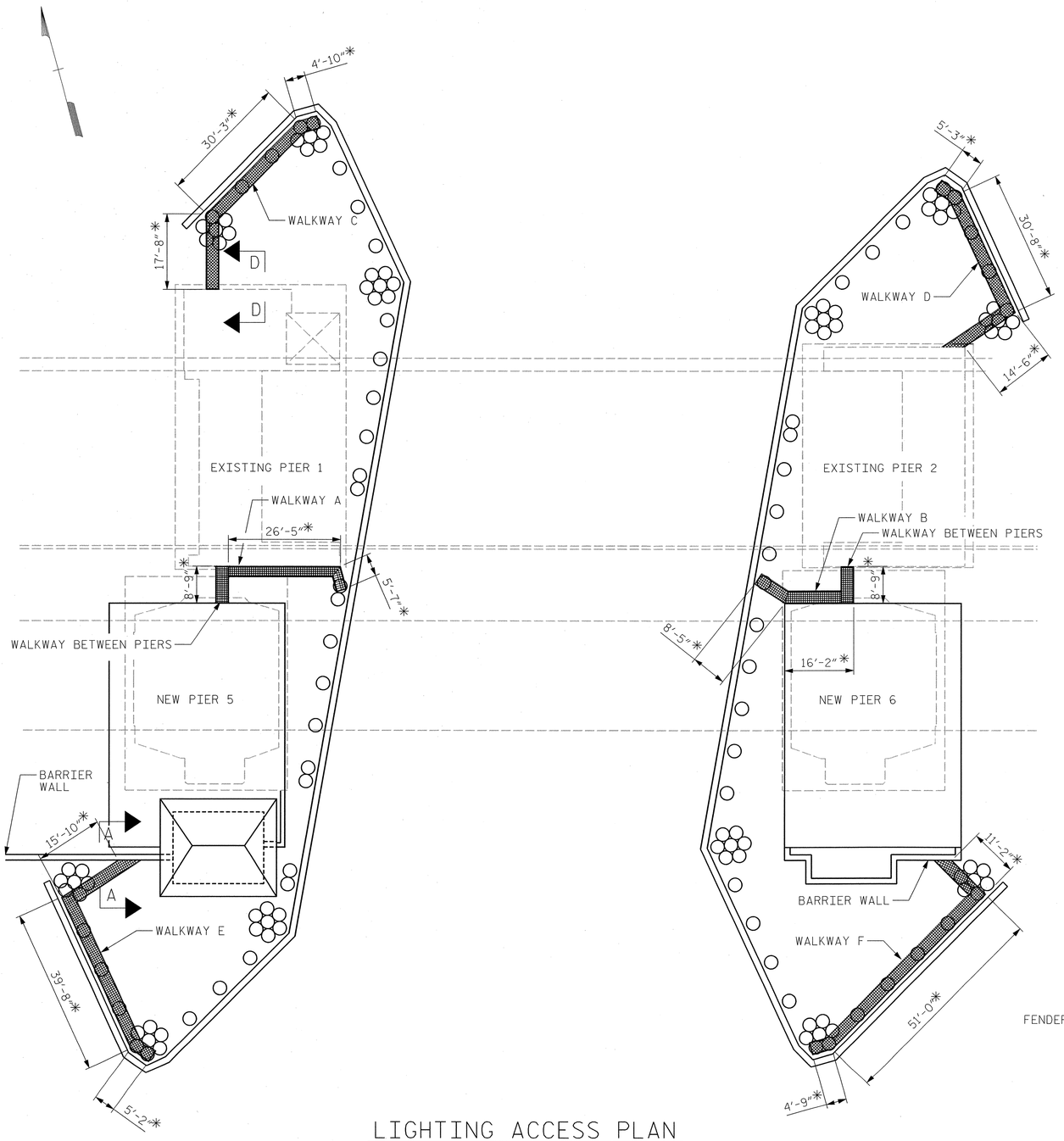

LIGHTING ACCESS PLAN

* DIMENSIONS SHOWN ARE APPROXIMATE. VERIFY ALL DIMENSIONS IN THE FIELD PRIOR TO FABRICATION OF ANY COMPONENT.

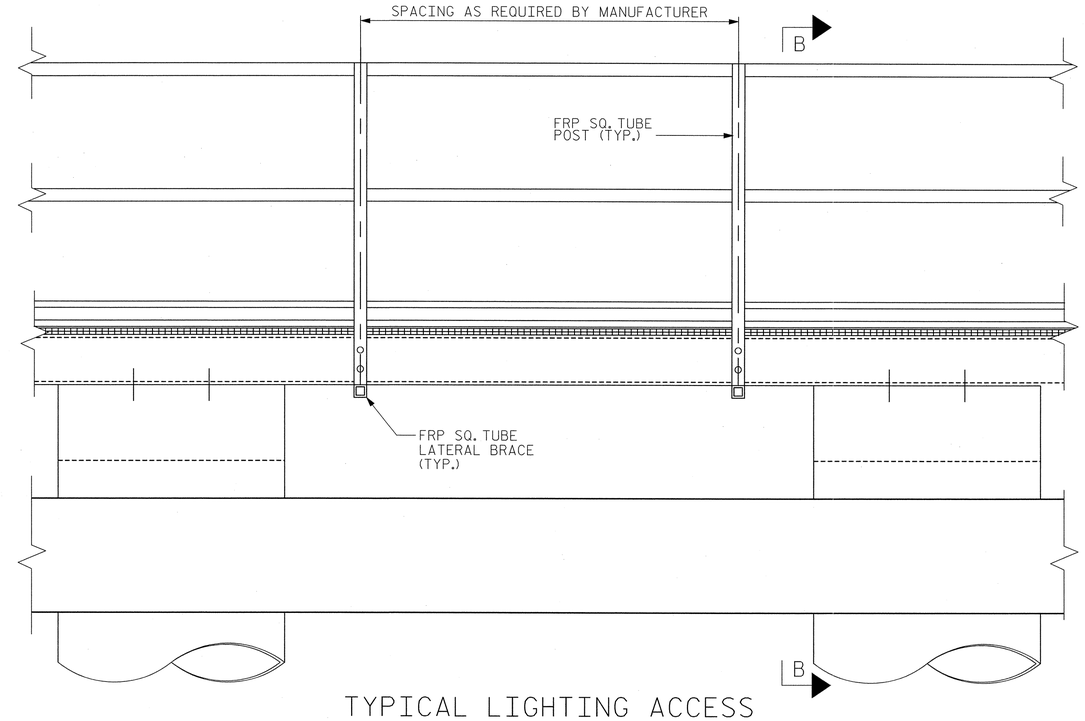

TYPICAL LIGHTING ACCESS WALKWAY - ELEVATION

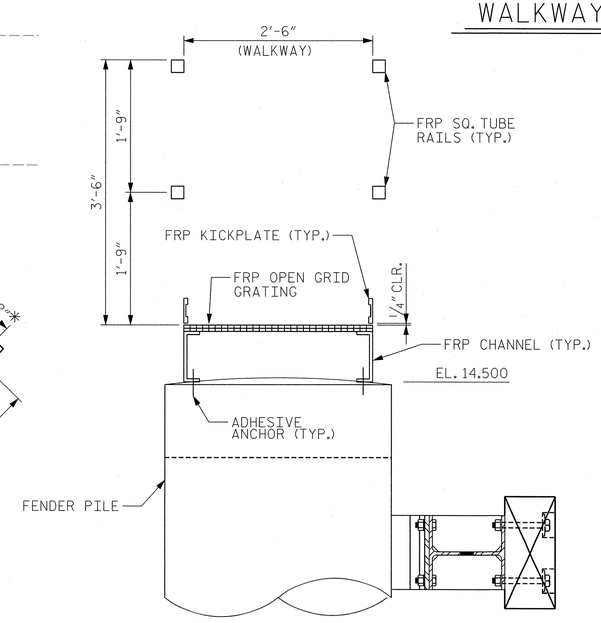

SECTION B-B

NOTES:

1. FOR GENERAL NOTES, SEE DWG. G-004.
2. FOR FENDER SYSTEM PILE SPACING, SEE DWG. G-007.
3. FOR SECTIONS A-A & D-D, SEE DWG. G-014.
4. FOR DETAILS OF WALKWAY BETWEEN PIERS, SEE DWG. S-050E.

EASTBOUND

PROJECT NO. U-4438

PASQUOTANK COUNTY

STATION: 15+25.75 -L1-

STATE OF NORTH CAROLINA
DEPARTMENT OF TRANSPORTATION
RALEIGH

ELIZABETH CITY BRIDGE OVER PASQUOTANK RIVER
FENDER SYSTEM
ACCESS PLAN

MODJESKI and MASTERS
Experience great bridges.
Mechanicsburg, PA NC License No. C-2979

NORTH CAROLINA PROFESSIONAL SEAL 025801 ENGINEER LANCE V. BORDEN 2/3/2011

DWG NUMBER	TOTAL DWGS
G-012	14

REVISIONS								SHEET NO.
NO.	BY:	DATE:	NO.	BY:	DATE:			S-100
1			3					TOTAL SHEETS
2			4					454

DRAWN BY : CMM DATE : 01/11
CHECKED BY : BMR DATE : 01/11

2/3/2011
2:01:09 PM
k:\2986.02\CADD\Structural\dgn files\G-012_U4438_SD_FSAP_01_G.dgn

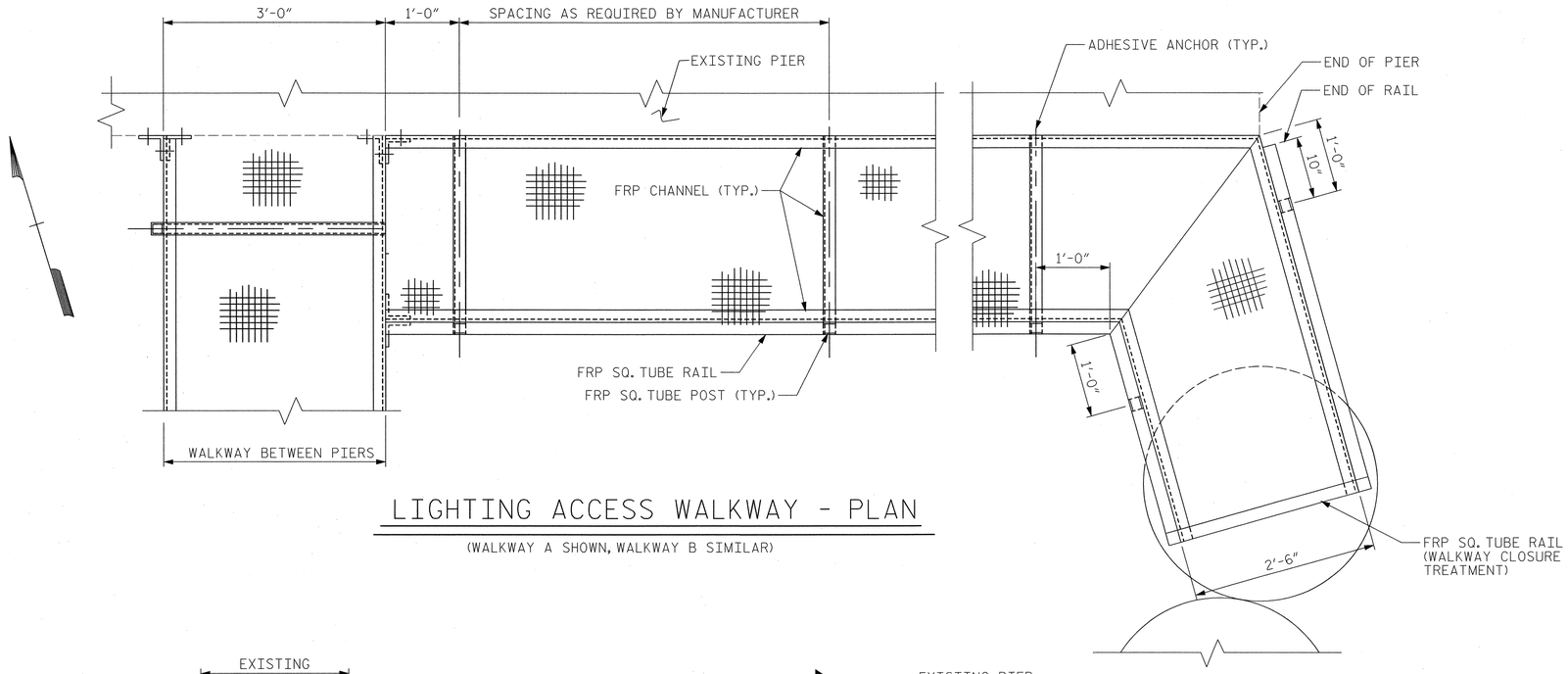

LIGHTING ACCESS WALKWAY - PLAN

(WALKWAY A SHOWN, WALKWAY B SIMILAR)

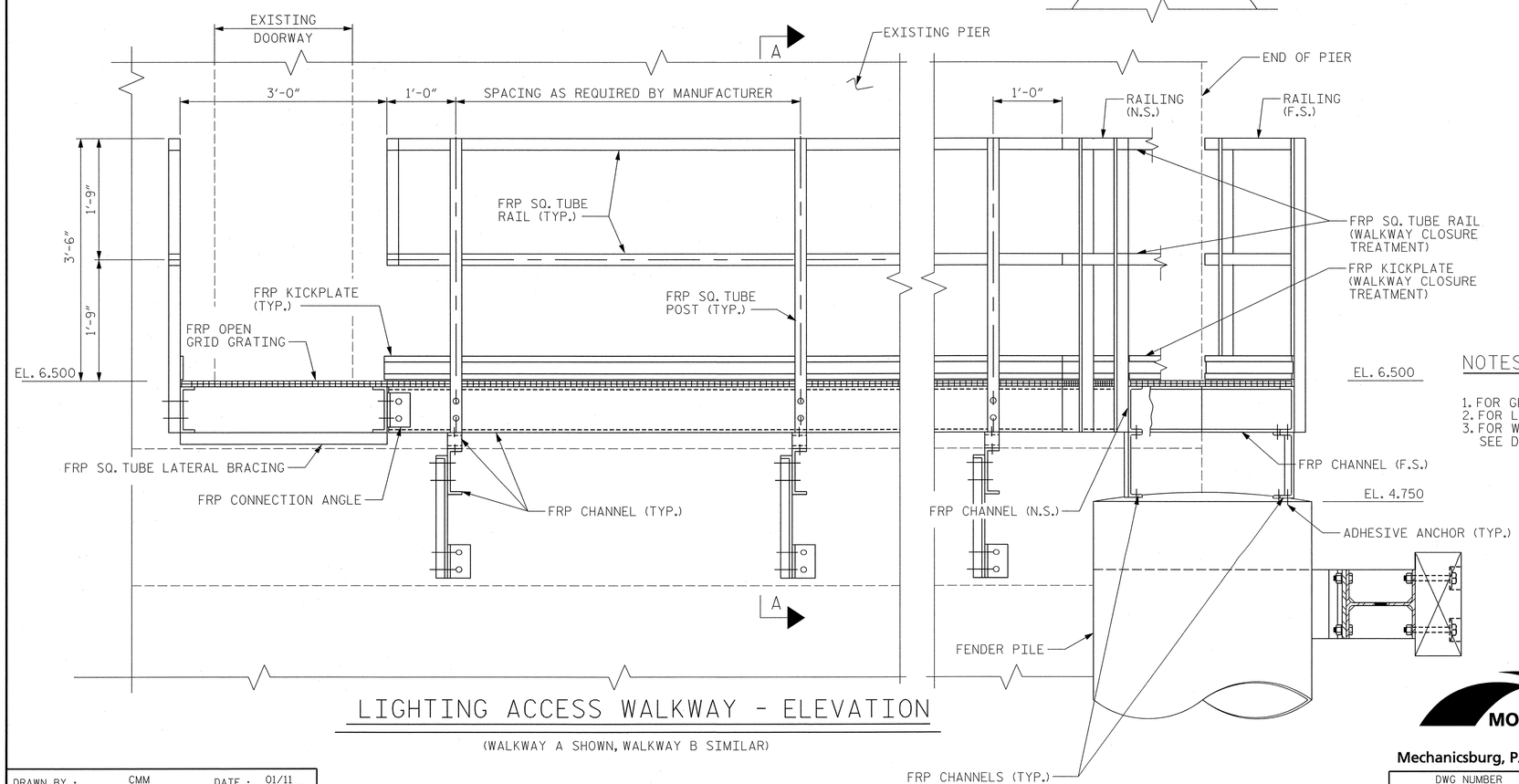

LIGHTING ACCESS WALKWAY - ELEVATION

(WALKWAY A SHOWN, WALKWAY B SIMILAR)

* DIMENSIONS SHOWN ARE APPROXIMATE. VERIFY ALL DIMENSIONS IN THE FIELD PRIOR TO FABRICATION OF ANY COMPONENT.

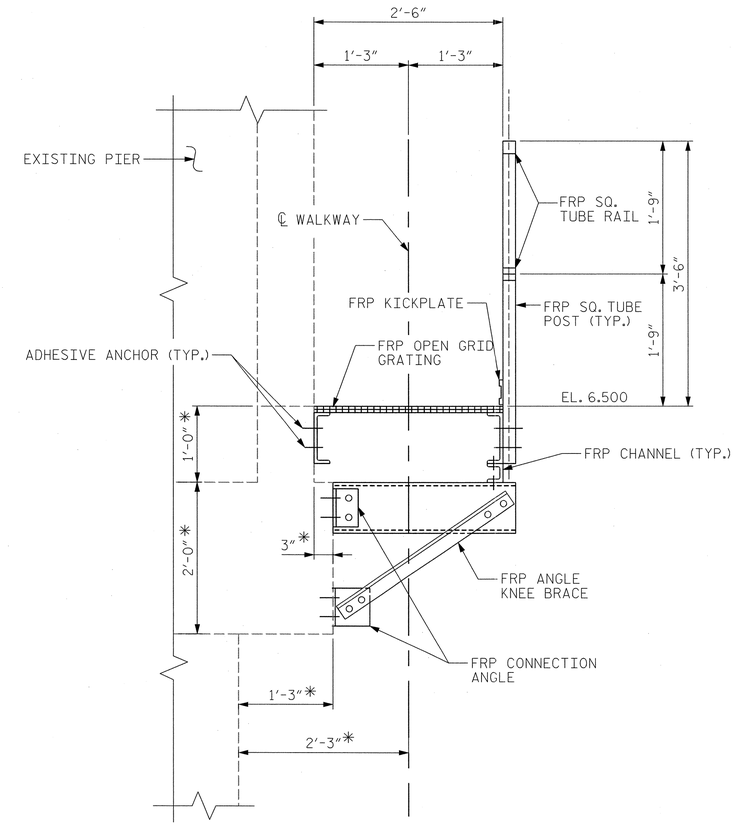

SECTION A-A

NOTES:

1. FOR GENERAL NOTES, SEE DWG. G-004.
2. FOR LIGHTING ACCESS PLAN, SEE DWG. G-012.
3. FOR WALKWAY BETWEEN PIERS DETAILS, SEE DWG. S-050E.

EASTBOUND

PROJECT NO. U-4438

PASQUOTANK COUNTY

STATION: 15+25.75 -L1-

STATE OF NORTH CAROLINA
DEPARTMENT OF TRANSPORTATION
RALEIGH

ELIZABETH CITY BRIDGE OVER
PASQUOTANK RIVER
FENDER SYSTEM
ACCESS DETAILS - 1

MODJESKI and MASTERS
Experience great bridges.
Mechanicsburg, PA NC License No. C-2979

NORTH CAROLINA PROFESSIONAL ENGINEER SEAL 025801 LANCE V. BORDEN 2/3/2011

REVISIONS						SHEET NO.
NO.	BY:	DATE:	NO.	BY:	DATE:	S-101
1			3			TOTAL SHEETS
2			4			454

DWG NUMBER	TOTAL DWGS
G-013	14

DRAWN BY : CMM DATE : 01/11
CHECKED BY : BMR DATE : 01/11

2/3/2011
2:01:13 PM
K:\2986.02\CADD\Structural\dgn files\G-013_U4438_SD_FSAD1_01_G.dgn

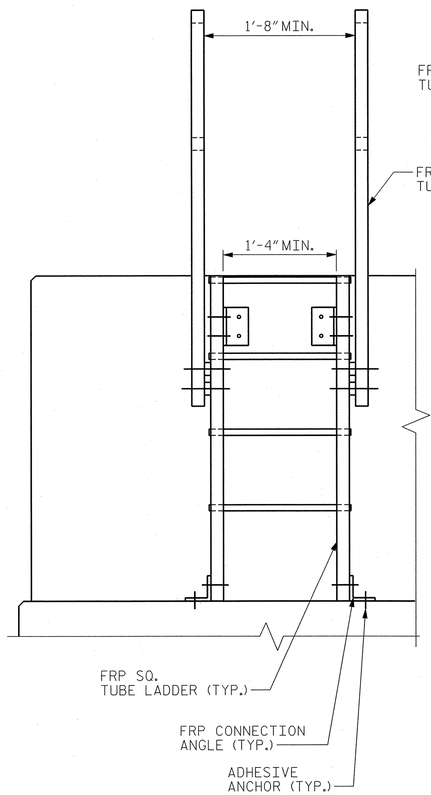

SECTION B-B

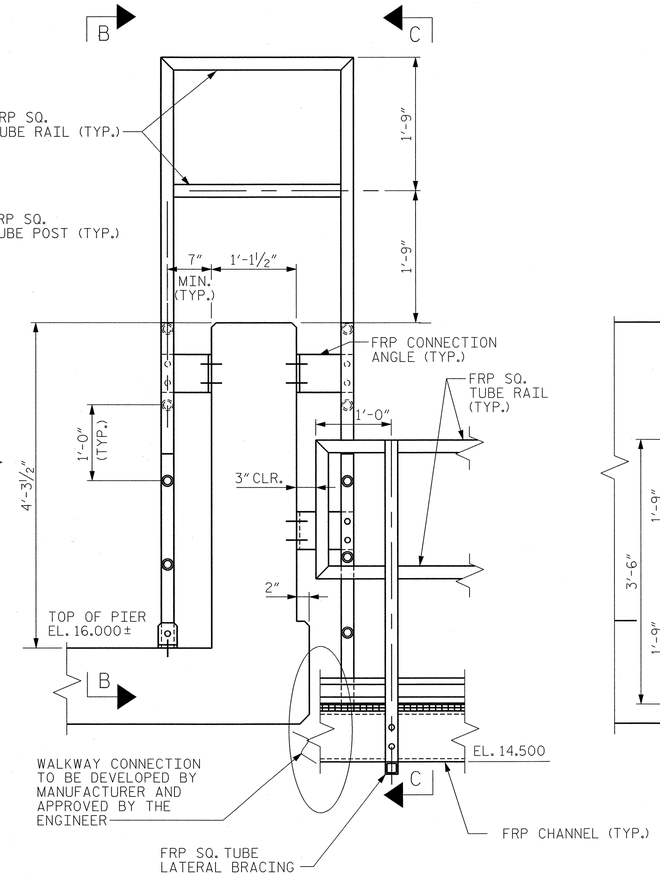

SECTION A-A

(WALKWAY E SHOWN, WALKWAY F SIMILAR)

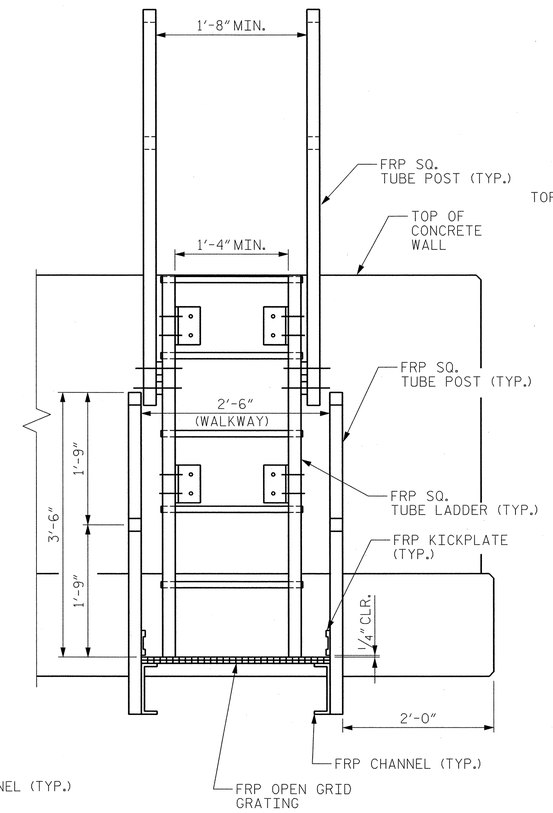

SECTION C-C

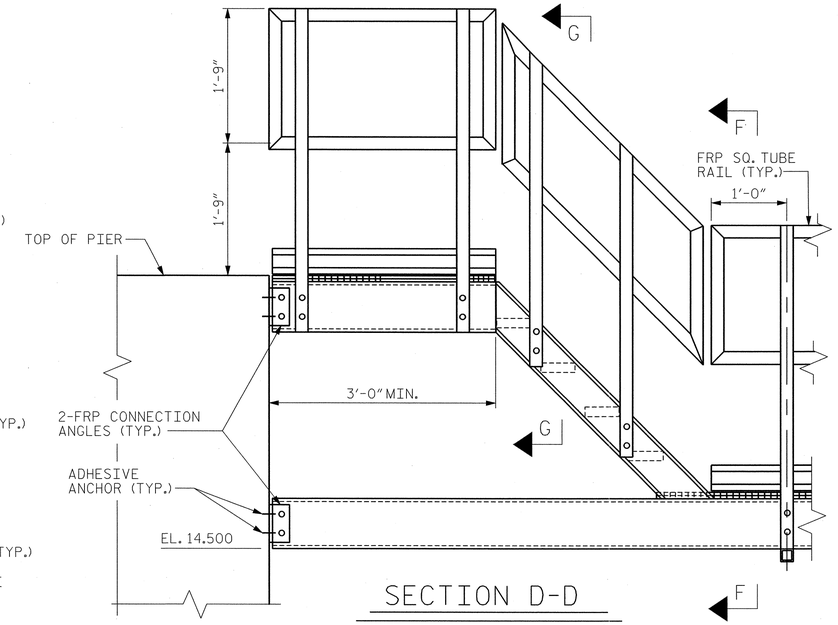

SECTION D-D

(WALKWAY C SHOWN, WALKWAY D SIMILAR)
(EXISTING RAILING NOT SHOWN FOR CLARITY)

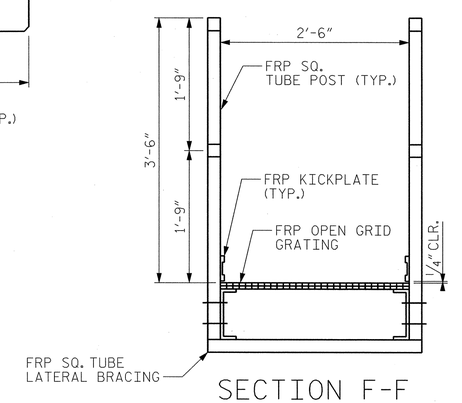

SECTION F-F

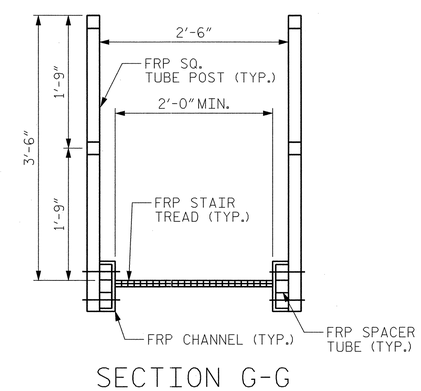

SECTION G-G

NOTES:

1. FOR GENERAL NOTES, SEE DWG. G-004.
2. FOR LOCATION OF SECTIONS A-A & D-D, SEE DWG. G-012.

EASTBOUND

PROJECT NO. U-4438

PASQUOTANK COUNTY

STATION: 15+25.75 -L1-

STATE OF NORTH CAROLINA
DEPARTMENT OF TRANSPORTATION
RALEIGH

ELIZABETH CITY BRIDGE OVER PASQUOTANK RIVER
FENDER SYSTEM
ACCESS DETAILS - 2

MODJESKI and MASTERS
Experience great bridges.
Mechanicsburg, PA NC License No. C-2979

NORTH CAROLINA PROFESSIONAL SEAL 025801 ENGINEER LANCE V. BORDEN 2/3/2011

REVISIONS						SHEET NO.
NO.	BY:	DATE:	NO.	BY:	DATE:	S-102
1			3			TOTAL SHEETS
2			4			454

DWG NUMBER	TOTAL DWGS
G-014	14

DRAWN BY : EAR DATE : 01/11
CHECKED BY : BMR DATE : 01/11

2/3/2011
2:01:17 PM
K:\2986.02\CADD\Structural\dgn files\G-014_U4438_SD_FSAD2_01_G.dgn

NOTES:

1. FOR GENERAL NOTES, SEE DWG. G-004.
2. ALL MATERIAL NEW UNLESS NOTED OTHERWISE.
3. FOR ADDITIONAL NAVIGATION LIGHT LOCATIONS SEE DWG. E-003.

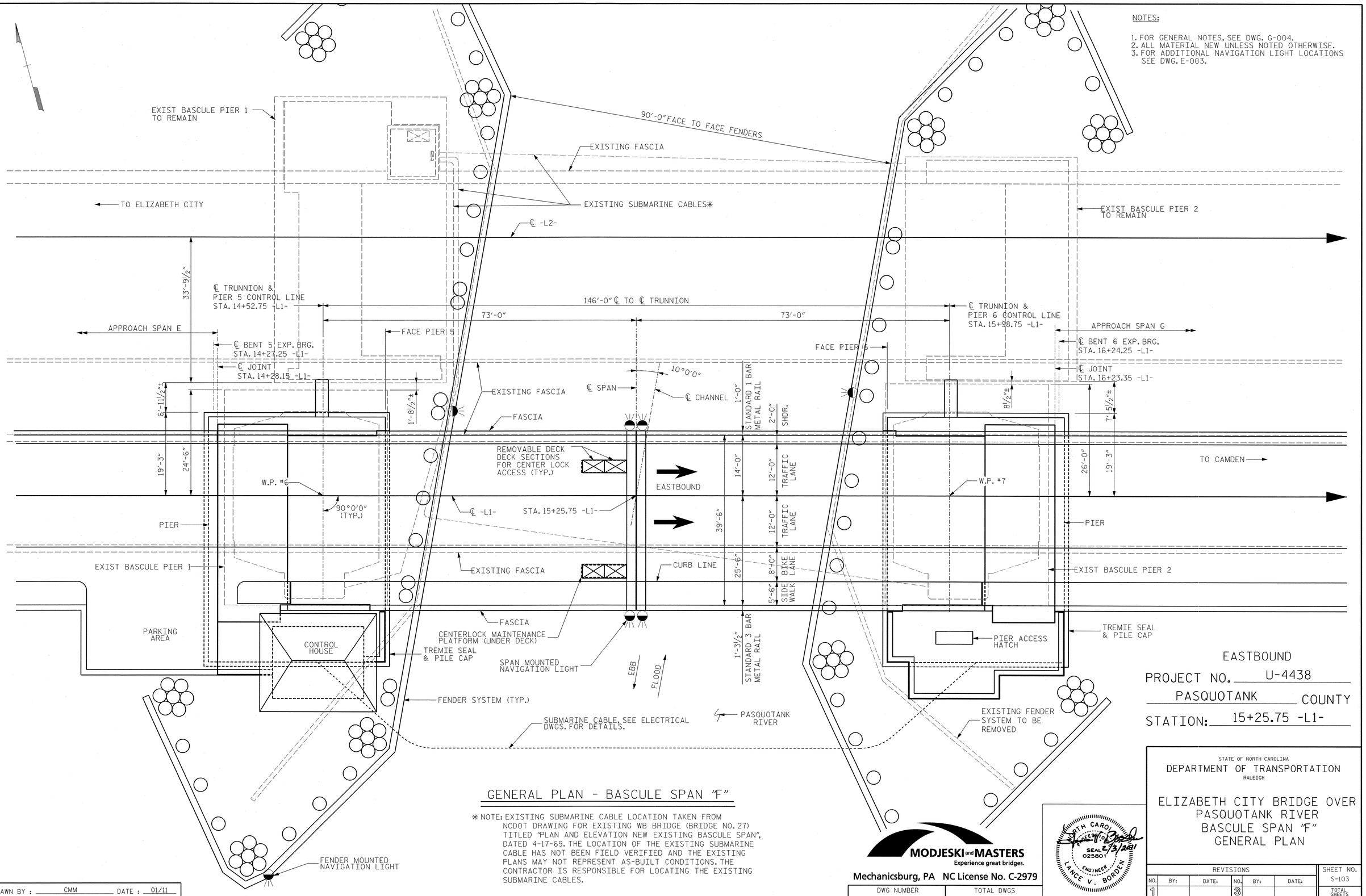

GENERAL PLAN - BASCULE SPAN "F"

* NOTE: EXISTING SUBMARINE CABLE LOCATION TAKEN FROM NCDOT DRAWING FOR EXISTING WB BRIDGE (BRIDGE NO. 27) TITLED "PLAN AND ELEVATION NEW EXISTING BASCULE SPAN", DATED 4-17-69. THE LOCATION OF THE EXISTING SUBMARINE CABLE HAS NOT BEEN FIELD VERIFIED AND THE EXISTING PLANS MAY NOT REPRESENT AS-BUILT CONDITIONS. THE CONTRACTOR IS RESPONSIBLE FOR LOCATING THE EXISTING SUBMARINE CABLES.

EASTBOUND

PROJECT NO. U-4438

PASQUOTANK COUNTY

STATION: 15+25.75 -L1-

MODJESKI and MASTERS
Experience great bridges.
Mechanicsburg, PA NC License No. C-2979

NORTH CAROLINA PROFESSIONAL SEAL 025801 ENGINEER LANCE V. BORDEN 2/3/2011

STATE OF NORTH CAROLINA
DEPARTMENT OF TRANSPORTATION
RALEIGH

ELIZABETH CITY BRIDGE OVER PASQUOTANK RIVER
BASCULE SPAN "F"
GENERAL PLAN

REVISIONS						SHEET NO.
NO.	BY:	DATE:	NO.	BY:	DATE:	S-103
1			3			TOTAL SHEETS
2			4			454

DWG NUMBER	TOTAL DWGS
S-001E	94

DRAWN BY : CMM DATE : 01/11
CHECKED BY : KWJ DATE : 01/11

2/3/2011
2:01:23 PM
K:\2986.02\CADD\Structural\dgn files\S-001E_U4438_SD_GP01_01_E.dgn

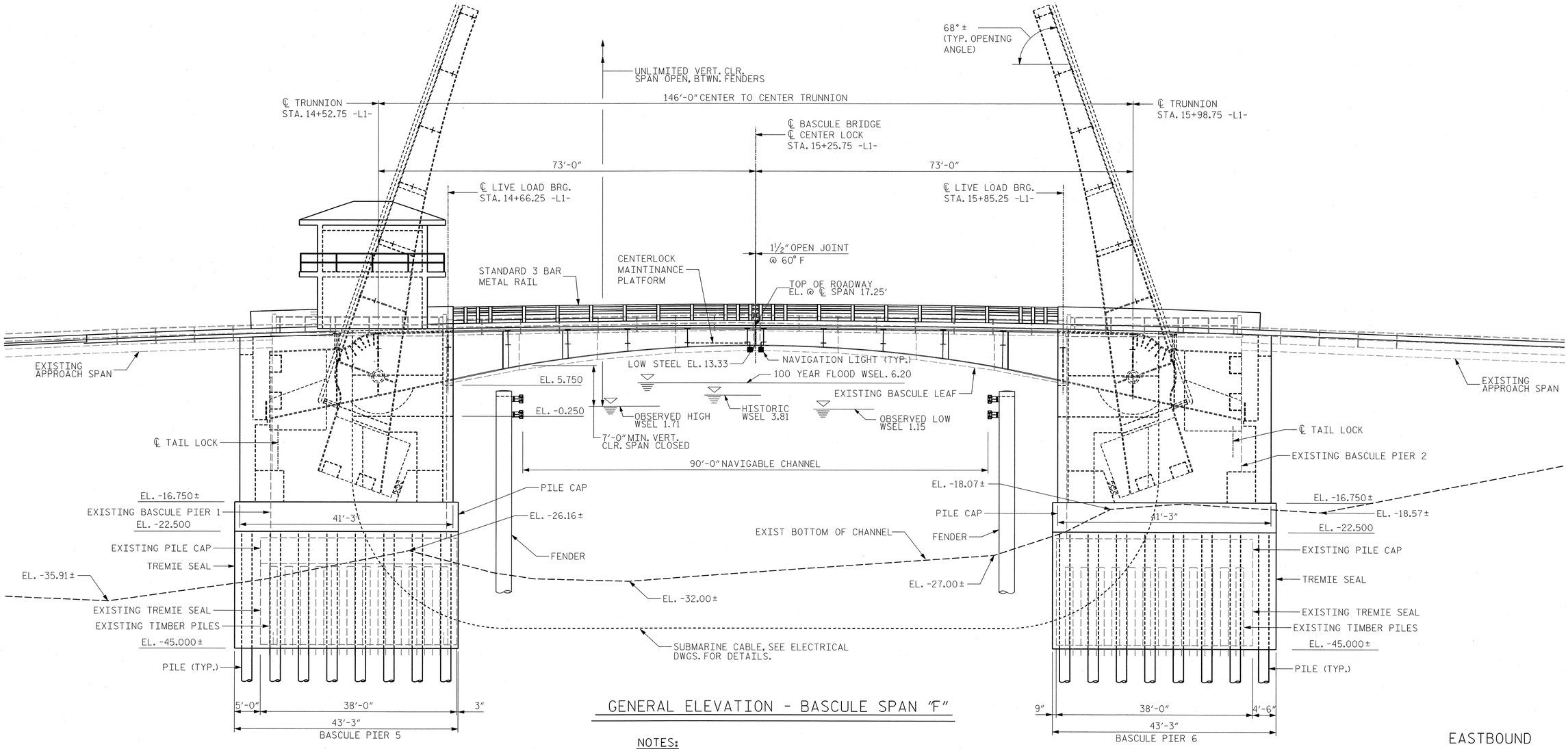

GENERAL ELEVATION - BASCULE SPAN "F"

NOTES:

1. FOR GENERAL PLAN OF BASCULE SPAN, SEE DWG. S-001E.
2. FOR GENERAL NOTES, SEE DWG. G-004.
3. FOR TYPICAL CROSS SECTIONS OF BASCULE SPAN, SEE DWG. S-004E AND S-005E.
4. ALL MATERIAL NEW UNLESS NOTED OTHERWISE.
5. VERTICAL DATUM USED IS NGVD29. THE FOLLOWING BENCHMARK SHALL BE USED:
   BM#4 MAG NAIL & BRASS WASHER IN SIDEWALK -L1- STA. 11+06.13 (33.30 RT) ELEV. 4.61'

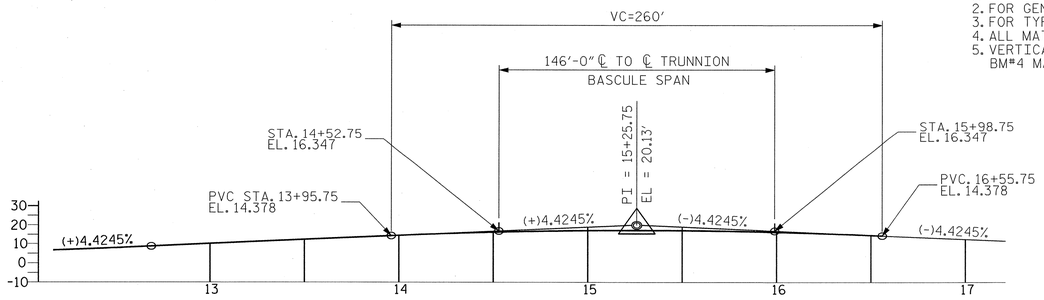

GRADE DATA FOR -L1-

EASTBOUND

PROJECT NO. U-4438

PASQUOTANK COUNTY

STATION: 15+25.75 -L1-

STATE OF NORTH CAROLINA
DEPARTMENT OF TRANSPORTATION
RALEIGH

ELIZABETH CITY BRIDGE OVER
PASQUOTANK RIVER
BASCULE SPAN "F"
GENERAL ELEVATION - 1

MODJESKI and MASTERS
Experience great bridges.
Mechanicsburg, PA NC License No. C-2979

NORTH CAROLINA PROFESSIONAL SEAL 025801 ENGINEER LANCE V. BORDEN 2/3/2011

DWG NUMBER	TOTAL DWGS
S-002E	94

REVISIONS						SHEET NO.
NO.	BY:	DATE:	NO.	BY:	DATE:	S-104
1			3			TOTAL SHEETS
2			4			454

DRAWN BY : CMM DATE : 01/11
CHECKED BY : KWJ DATE : 01/11

2/3/2011
2:01:28 PM
K:\2986.02\CADD\Structural\dgn files\S-002E_U4438_SD_GE02_01_E.dgn

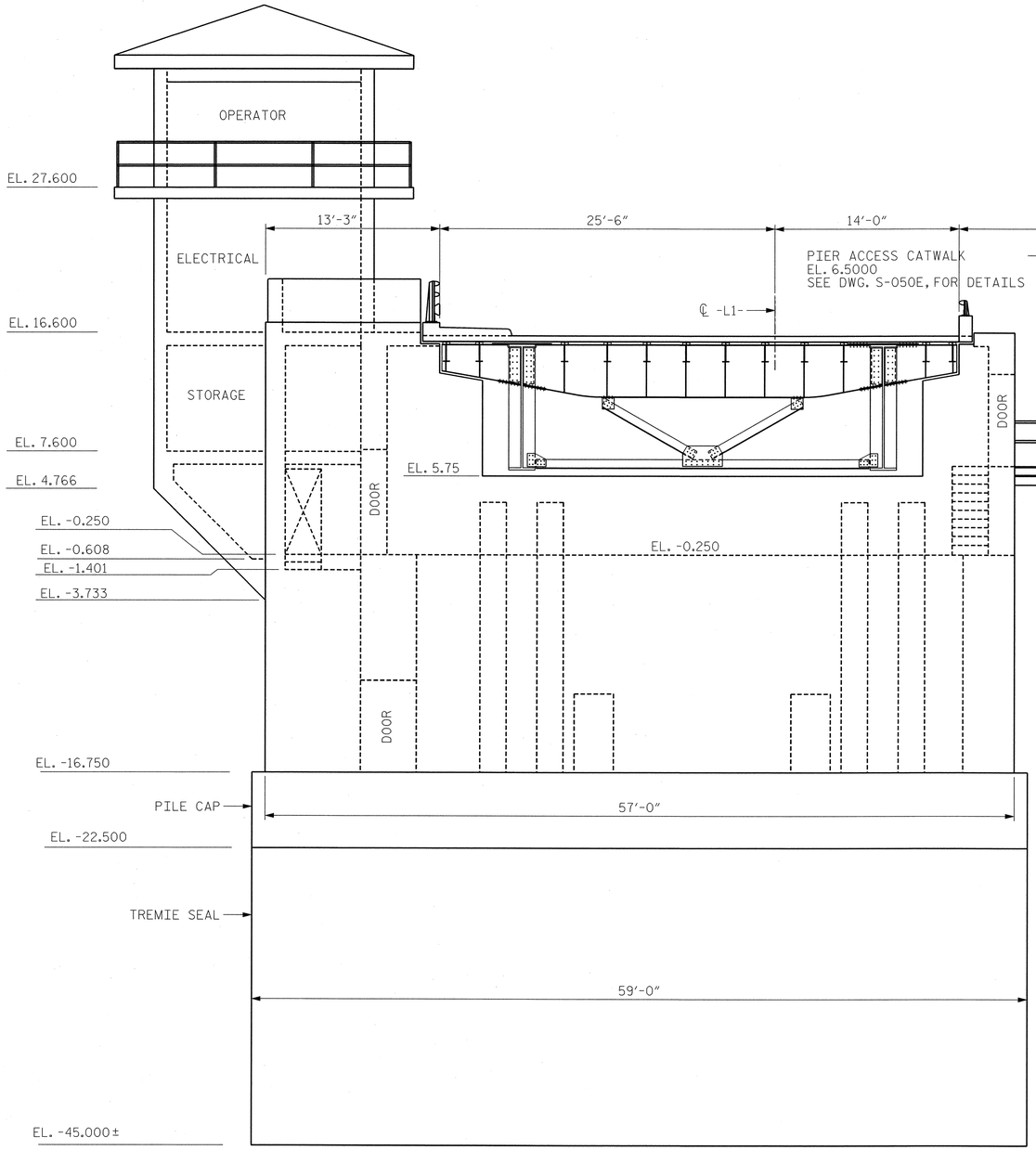

PROPOSED PIER 5 - EAST ELEVATION

(LOOKING WEST)

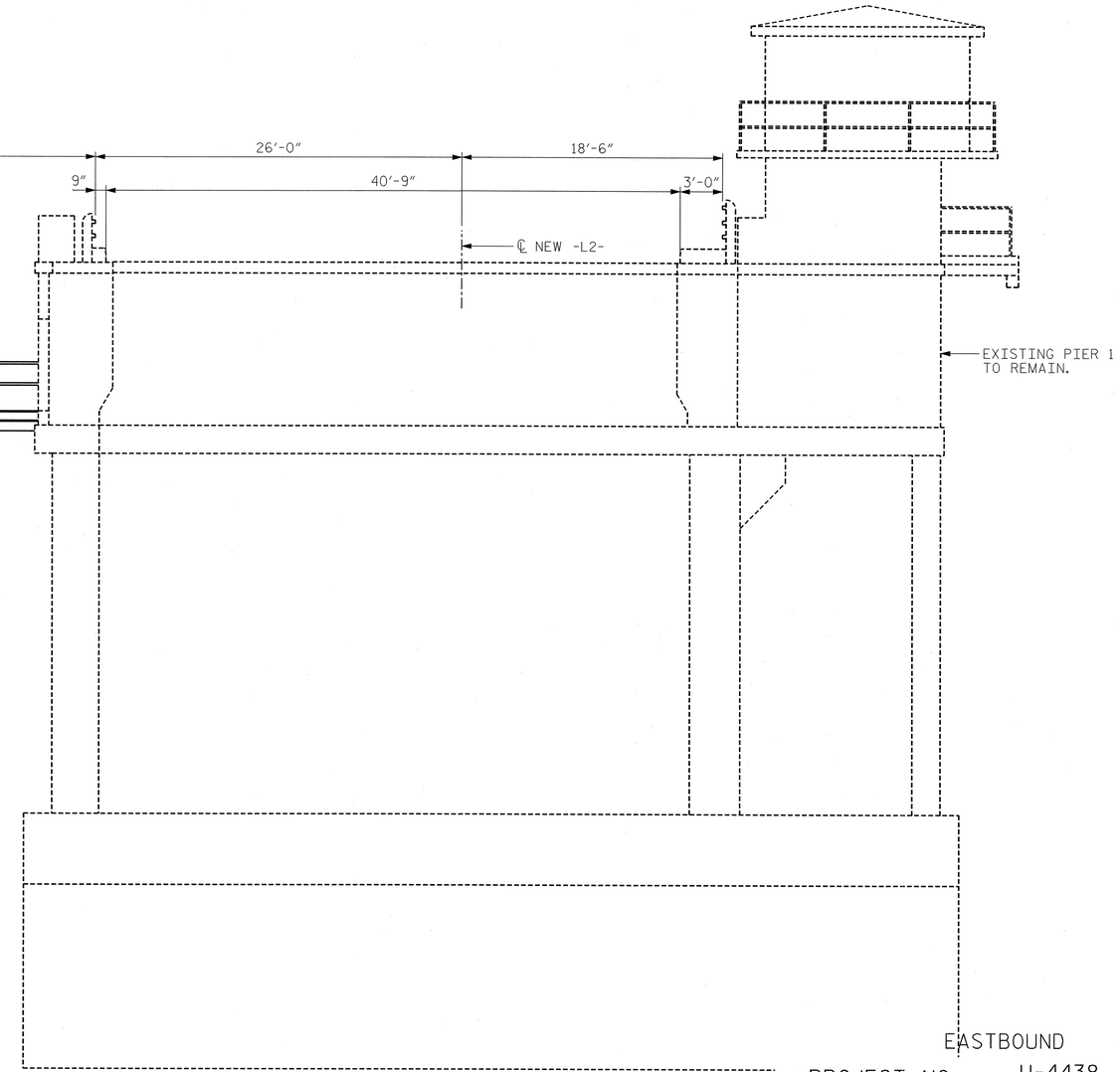

EXISTING PIER 1 - EAST ELEVATION

(LOOKING WEST)

EASTBOUND

PROJECT NO. U-4438

PASQUOTANK COUNTY

STATION: 15+25.75 -L1-

NOTES:

1. FOR GENERAL NOTES, SEE DWG. G-004.
2. PIER 5 SHOWN, PIER 6 SIMILAR.

MODJESKI and MASTERS
Experience great bridges.
Mechanicsburg, PA NC License No. C-2979

NORTH CAROLINA PROFESSIONAL SEAL 025801 ENGINEER LANCE V. BORDEN 2/3/2011

STATE OF NORTH CAROLINA
DEPARTMENT OF TRANSPORTATION
RALEIGH

ELIZABETH CITY BRIDGE OVER
PASQUOTANK RIVER
BASCULE SPAN "F"
GENERAL ELEVATION - 2

REVISIONS						SHEET NO.
NO.	BY:	DATE:	NO.	BY:	DATE:	S-105
1			3			TOTAL SHEETS
2			4			454

DWG NUMBER	TOTAL DWGS
S-003E	94

DRAWN BY : CMM DATE : 01/11
CHECKED BY : KWJ DATE : 01/11

2/3/2011
2:01:33 PM
k:\2986.02\CADD\Structural\dgn files\S-003E_U4438_SD_GE03_01_E.dgn

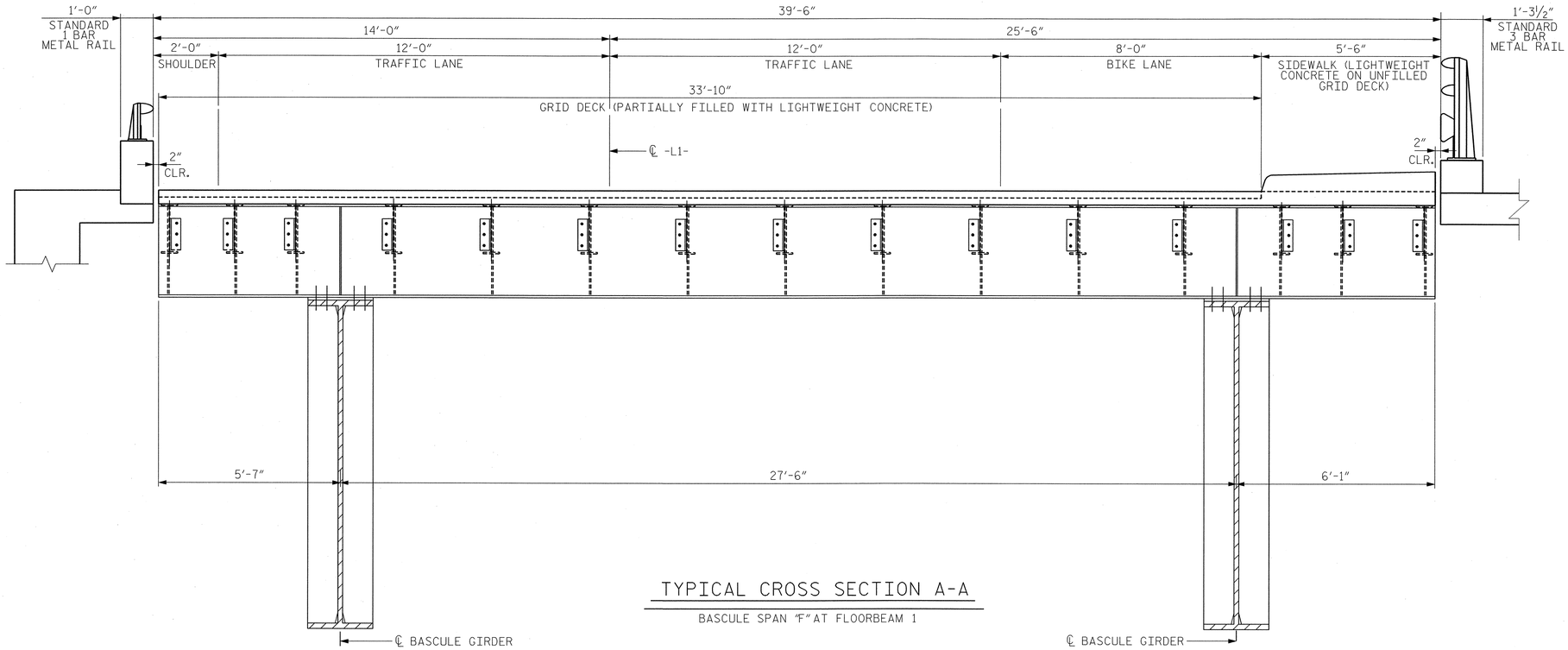

TYPICAL CROSS SECTION A-A

BASCULE SPAN "F" AT FLOORBEAM 1

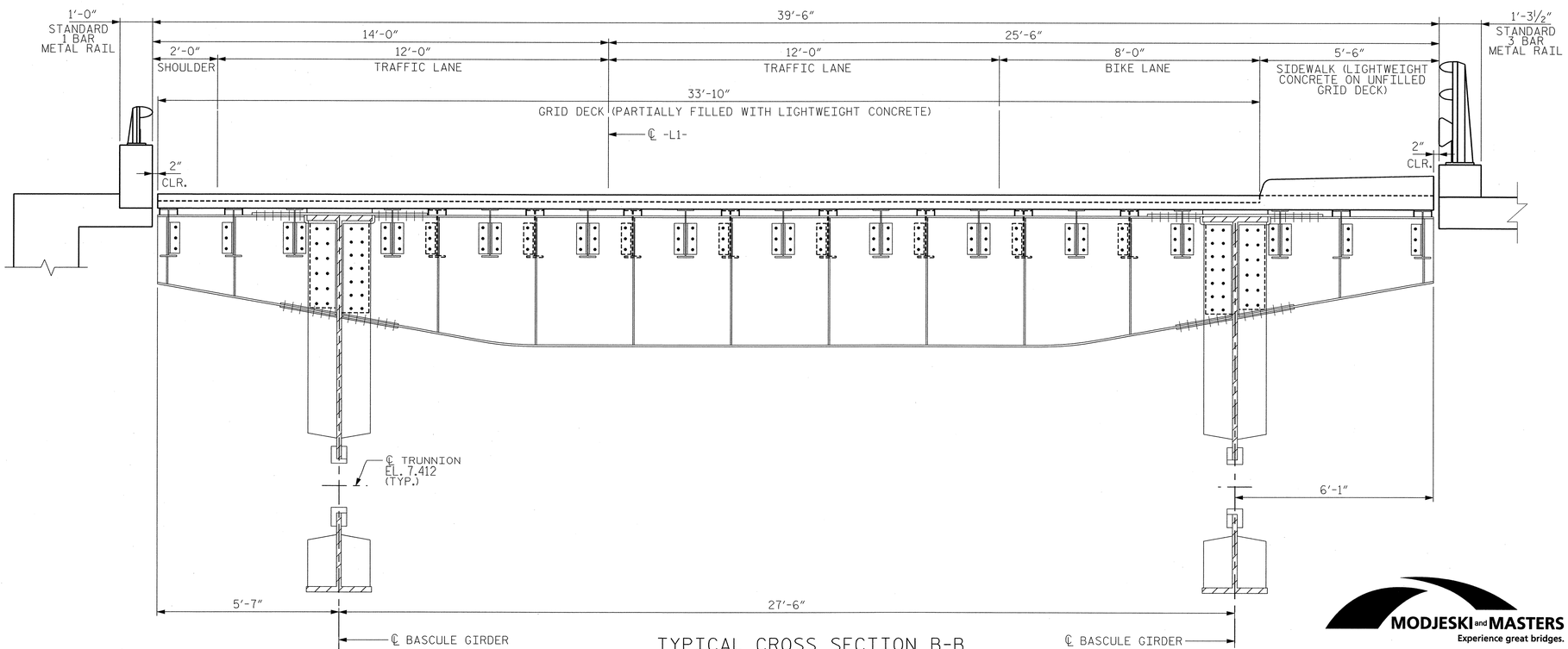

TYPICAL CROSS SECTION B-B

BASCULE SPAN "F" AT FLOORBEAM 2

NOTES:

1. FOR GENERAL NOTES, SEE DWG. G-004
2. FOR BASCULE SPAN FRAMING PLAN, SEE DWG. S-063E
3. FOR LOCATION OF SECTIONS A-A & B-B, SEE DWG. S-063E

EASTBOUND
PROJECT NO. U-4438
PASQUOTANK COUNTY
STATION: 15+25.75 -L1-

STATE OF NORTH CAROLINA
DEPARTMENT OF TRANSPORTATION
RALEIGH

ELIZABETH CITY BRIDGE OVER
PASQUOTANK RIVER
BASCULE SPAN
TYPICAL CROSS SECTIONS - 1

MODJESKI and MASTERS
Experience great bridges.
Mechanicsburg, PA NC License No. C-2979

NORTH CAROLINA PROFESSIONAL SEAL 025801 ENGINEER LANCE V. BORDEN 2/3/2011

DWG NUMBER	TOTAL DWGS
S-004E	94

REVISIONS								SHEET NO.
NO.	BY:	DATE:	NO.	BY:	DATE:			S-106
1			3					TOTAL SHEETS
2			4					454

DRAWN BY : CMM DATE : 01/11
CHECKED BY : JPS DATE : 01/11

2/3/2011
2:01:38 PM
K:\2986.02\CADD\Structural\dgn files\S-004E_U4438_SD_TS1_01_E.dgn

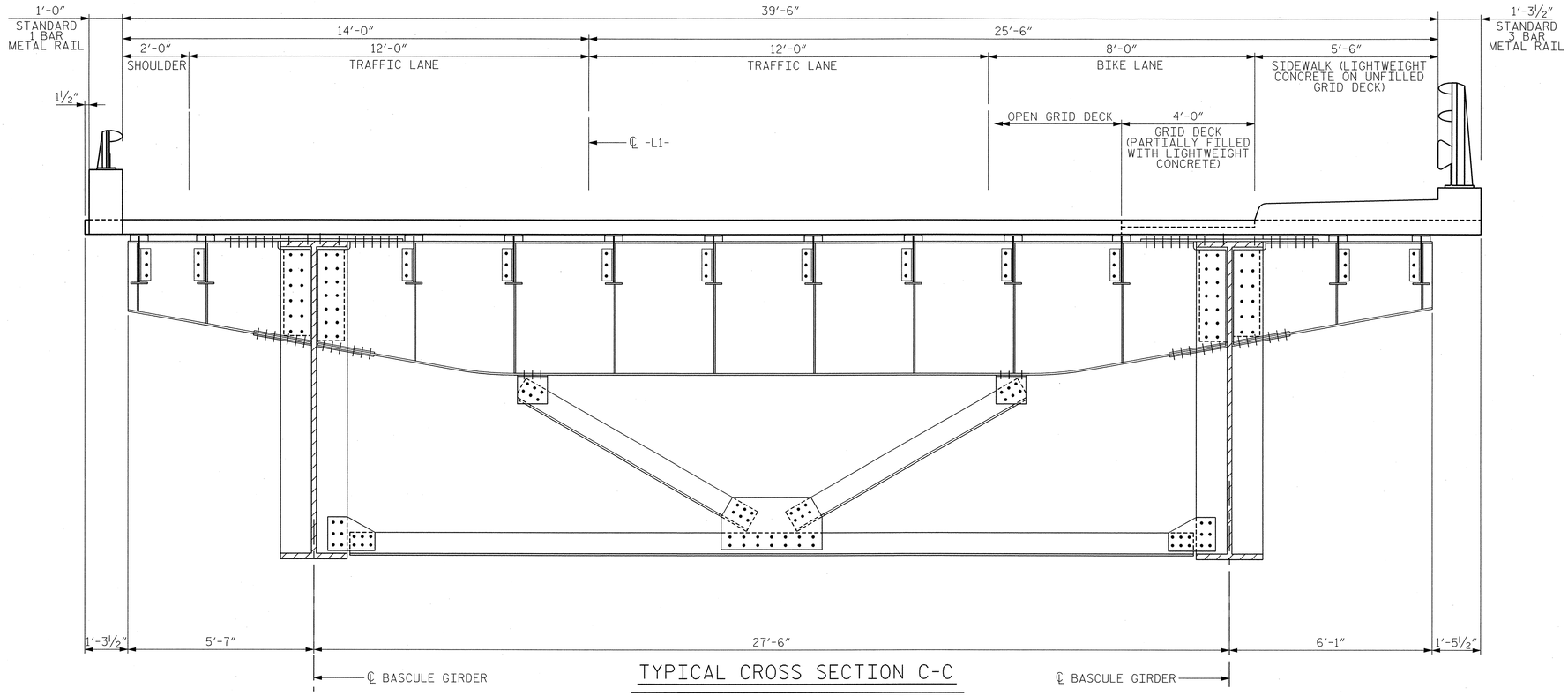

TYPICAL CROSS SECTION C-C

BASCULE SPAN "F" AT FLOORBEAM 3

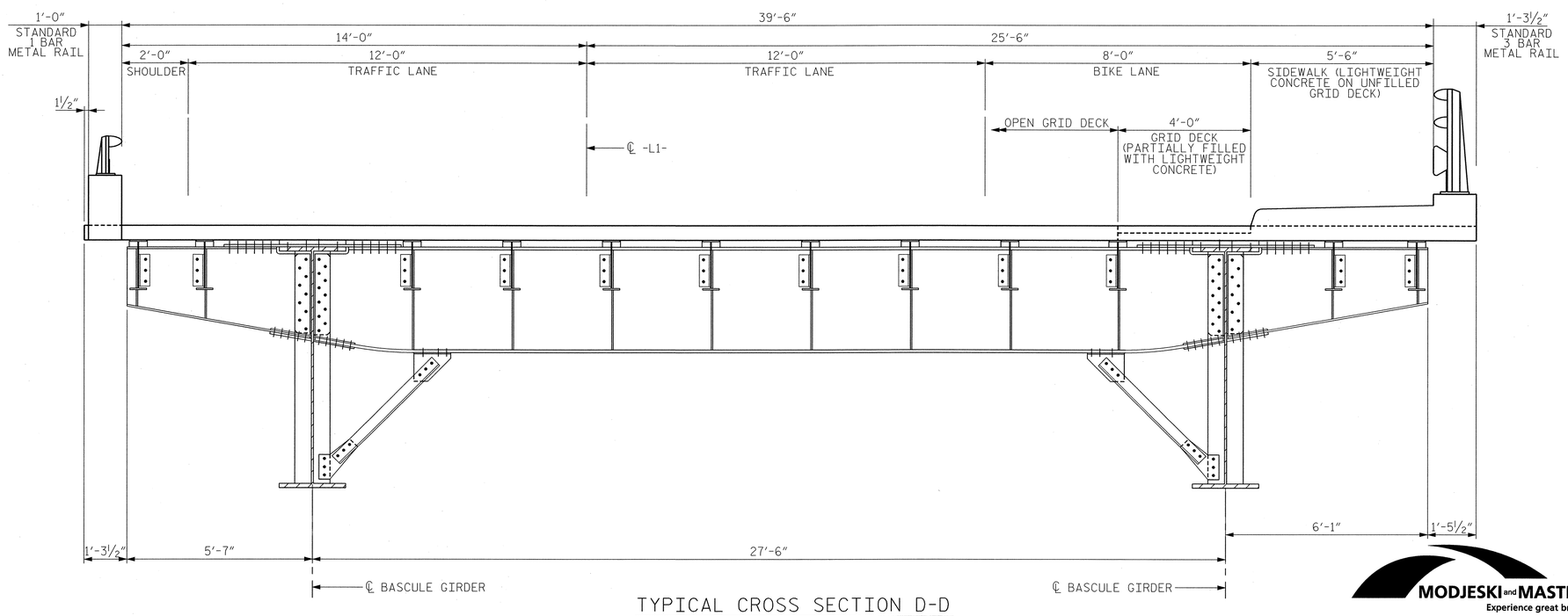

TYPICAL CROSS SECTION D-D

BASCULE SPAN "F" AT FLOORBEAM 4
(FLOORBEAMS 5-8 SIMILAR)

NOTES:

1. FOR GENERAL NOTES, SEE DWG. G-004
2. FOR BASCULE SPAN FRAMING PLAN, SEE DWG. S-063E
3. FOR LOCATION OF SECTIONS C-C & D-D, SEE DWG. S-063E

EASTBOUND
PROJECT NO. U-4438
PASQUOTANK COUNTY
STATION: 15+25.75 -L1-

STATE OF NORTH CAROLINA
DEPARTMENT OF TRANSPORTATION
RALEIGH

ELIZABETH CITY BRIDGE OVER
PASQUOTANK RIVER
BASCULE SPAN
TYPICAL CROSS SECTIONS - 2

MODJESKI and MASTERS
Experience great bridges.
Mechanicsburg, PA NC License No. C-2979

NORTH CAROLINA PROFESSIONAL SEAL 025801 ENGINEER LANCE V. BORDEN
2/3/2011

DWG NUMBER	TOTAL DWGS
S-005E	94

REVISIONS						SHEET NO.
NO.	BY:	DATE:	NO.	BY:	DATE:	S-107
1			3			TOTAL SHEETS
2			4			454

DRAWN BY : CMM DATE : 01/11
CHECKED BY : JPS DATE : 01/11

2/3/2011
2:01:42 PM
K:\2986.02\CADD\Structural\dgn files\S-005E_U4438_SD_TS2_01_E.dgn

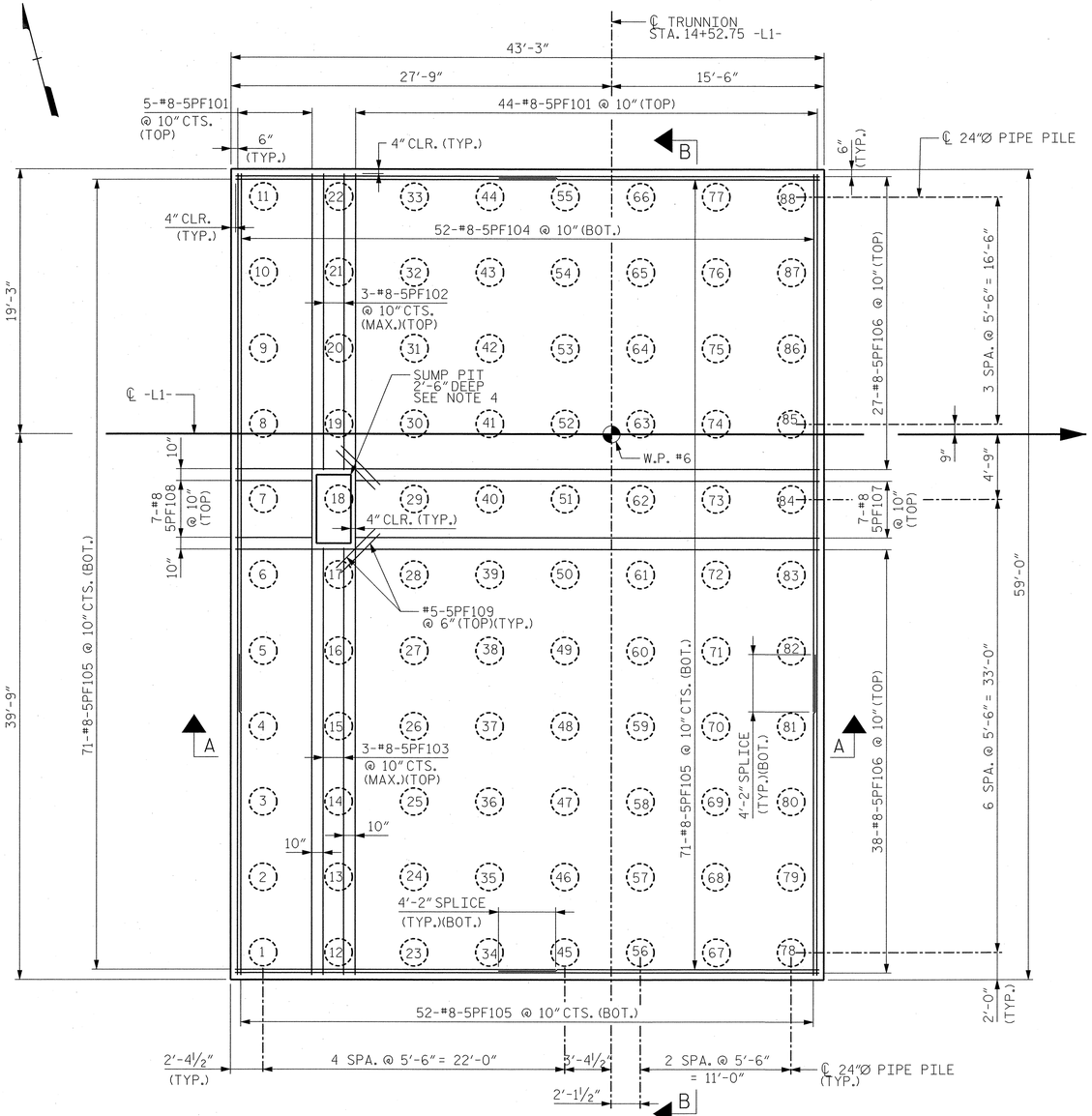

PIER 5 - PILE CAP PLAN

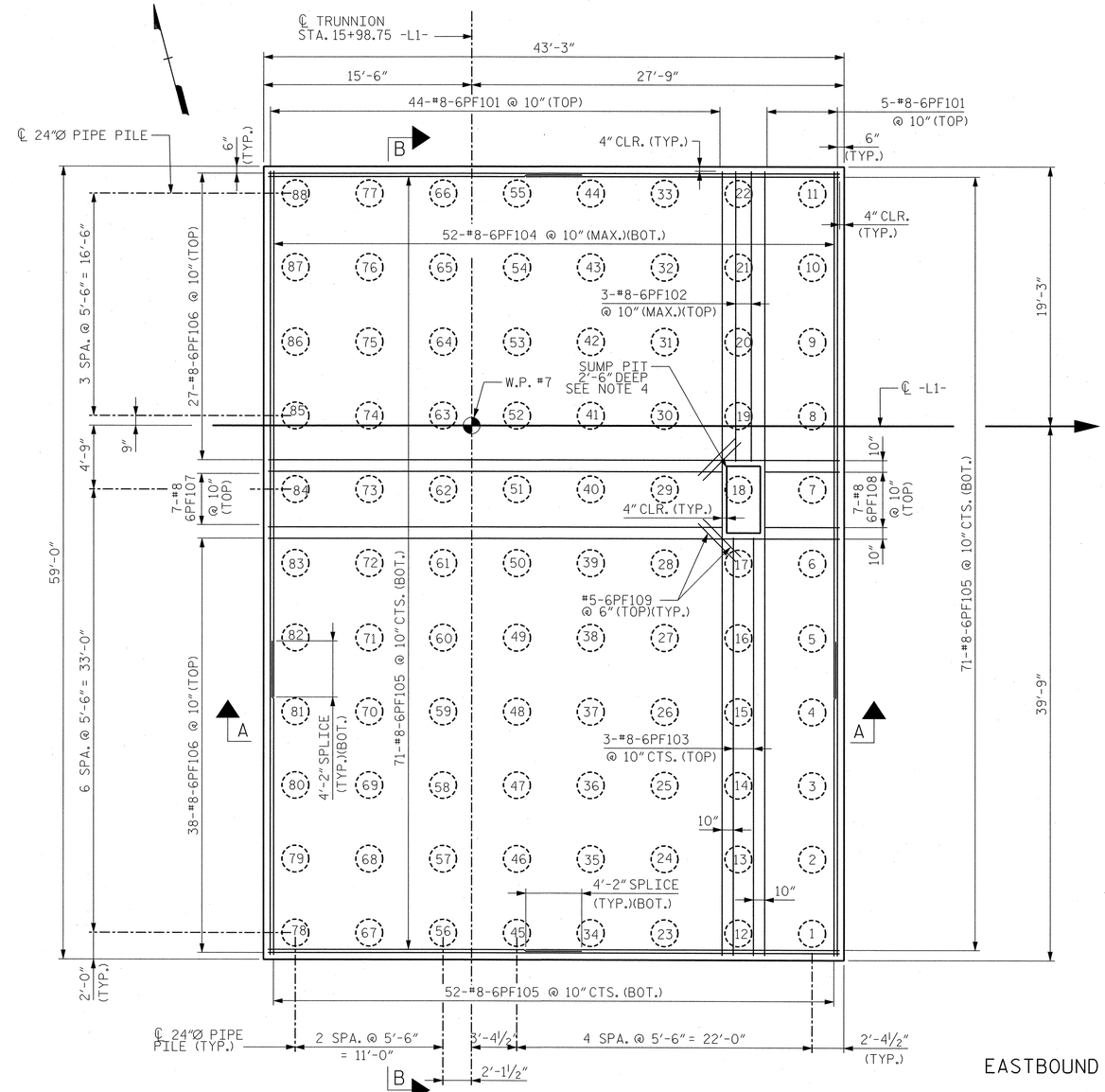

PIER 6 - PILE CAP PLAN

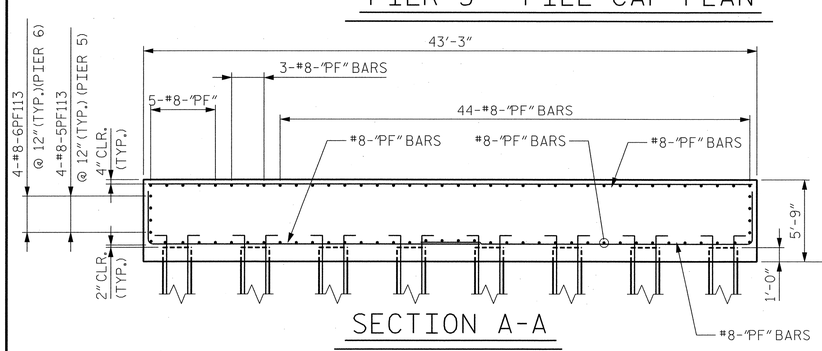

SECTION A-A

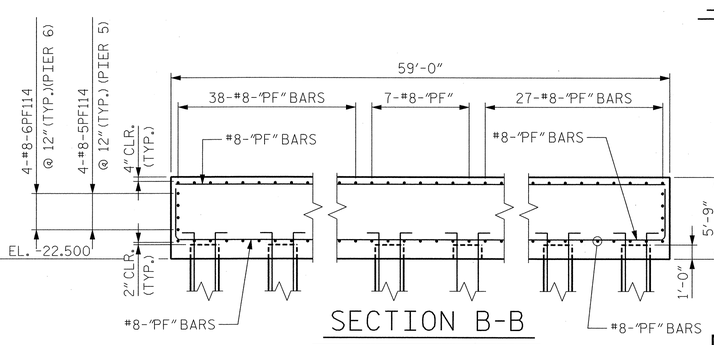

SECTION B-B

NOTES:

1. FOR GENERAL NOTES, SEE DWG. G-004.
2. FOR PILE DETAILS, SEE DWG. S-007E.
3. FOR PIER DETAILS AT PIT LEVEL, SEE DWG. S-008E.
4. FOR ADDITIONAL REINFORCEMENT AT SUMP PIT, SEE SECTION A-A ON DWG. S-009E.
5. FOR BAR NAMING CONVENTION, SEE DWG. S-038E.
6. FOR EMBED DOWN CONDUCTOR, SEE DWG. E-007

EASTBOUND

PROJECT NO. U-4438

PASQUOTANK COUNTY

STATION: 15+25.75 -L1-

STATE OF NORTH CAROLINA
DEPARTMENT OF TRANSPORTATION
RALEIGH

ELIZABETH CITY BRIDGE OVER PASQUOTANK RIVER
BASCULE PIER 5 AND 6
PILE CAP PLANS

MODJESKI and MASTERS
Experience great bridges.
Mechanicsburg, PA NC License No. C-2979

NORTH CAROLINA PROFESSIONAL SEAL 025801 ENGINEER LANCE V. BORDEN 3/18/2011

DWG NUMBER	TOTAL DWGS
S-006E	94

REVISIONS									SHEET NO.
NO.	BY:	DATE:	NO.	BY:	DATE:	NO.	BY:	DATE:	S-108
1			3						TOTAL SHEETS
2			4						454

DRAWN BY : CMM DATE : 01/11
CHECKED BY : HNB DATE : 01/11

3/18/2011
3:34:42 PM
K:\2986.02\CADD\Structural\dgn files\S-006E_U4438_SD_FTP1_01_E.dgn

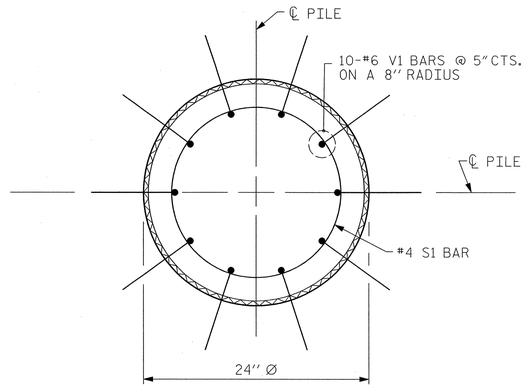

PLAN

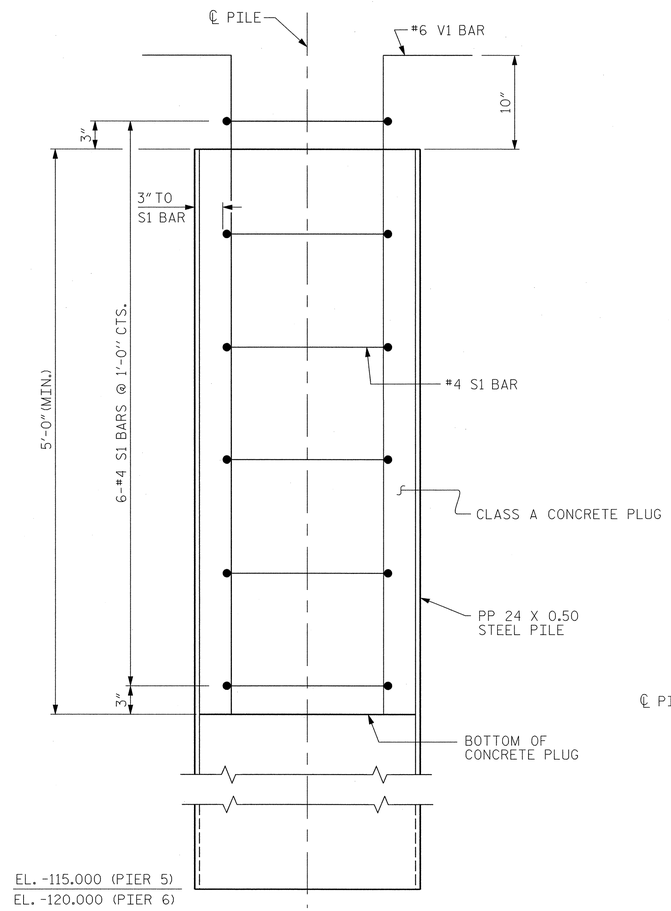

ELEVATION

PP 24 X 0.50 STEEL PILE

(OPEN END)

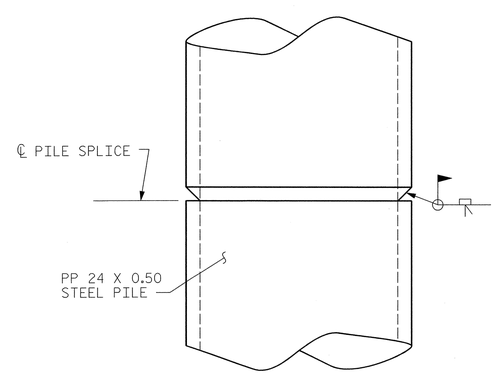

PIPE PILE SPLICE DETAIL

NOTES

PIPE PILES SHALL BE IN ACCORDANCE WITH SECTION 1084 OF THE STANDARD SPECIFICATIONS.

REMOVE AND REPLACE OR REPAIR TO THE SATISFACTION OF THE ENGINEER PILES THAT ARE DAMAGED, DEFORMED OR COLLAPSED DURING INSTALLATION OR DRIVING.

PILE SPLICES SHALL BE IN ACCORDANCE WITH THE STANDARD SPECIFICATIONS AND AWS D1.1.

REMOVE ENOUGH SOIL AND WATER FROM INSIDE THE PILES TO CONSTRUCT THE CONCRETE PLUG WITHOUT FOULING THE CONCRETE.

FORM THE CONCRETE PLUG SUCH THAT THE REINFORCING STEEL OR CONCRETE DOES NOT MOVE AND THE CLEARANCE FROM THE REINFORCING STEEL TO THE INSIDE OF THE PILE IS MAINTAINED AFTER CONCRETE PLACEMENT. DO NOT PLACE CONCRETE IN THE BENT CAP UNTIL THE CONCRETE PLUG HAS ATTAINED A MINIMUM COMPRESSIVE STRENGTH OF 1500 PSI.

THE REINFORCING STEEL AND CLASS A CONCRETE ARE CONSIDERED INCIDENTAL TO THE CONTRACT UNIT PRICE BID PER LINEAR FOOT FOR PP 24 X 0.50 STEEL PILES.

FOR PILES, SEE SPECIAL PROVISIONS.

PILES AT BENT NO. 5 AND BENT NO. 6 ARE DESIGNED FOR A FACTORED RESISTANCE OF 186 TONS PER PILE. DRIVE PILES TO A REQUIRED DRIVING RESISTANCE OF 250 TONS PER PILE. THIS REQUIRED DRIVING RESISTANCE INCLUDES ADDITIONAL RESISTANCE FOR DOWNDRAG OR SCOUR.

INSTALL PILES AT BENT NO. 5 TO A TIP ELEVATION NO HIGHER THAN -115 FT.

INSTALL PILES AT BENT NO. 6 TO A TIP ELEVATION NO HIGHER THAN -120 FT.

SCOUR CRITICAL ELEVATIONS FOR BENT NO. 5 AND BENT NO. 6 ARE -54 AND -40 FT. RESPECTIVELY. SCOUR CRITICAL ELEVATIONS ARE USED TO MONITOR POSSIBLE SCOUR PROBLEMS DURING THE LIFE OF THE STRUCTURE.

IT HAS BEEN ESTIMATED THAT A HAMMER WITH AN EQUIVALENT RATED ENERGY IN THE RANGE OF 43,000 FT-LBS PER BLOW TO 80,000 FT-LBS PER BLOW WILL BE REQUIRED TO DRIVE PILES AT BENT NO. 5 AND BENT NO. 6. THIS ESTIMATED ENERGY RANGE DOES NOT RELEASE THE CONTRACTOR FROM PROVIDING DRIVING EQUIPMENT IN ACCORDANCE WITH THE PILES SPECIAL PROVISION.

TESTING THE FIRST PRODUCTION PILES WITH THE PILE DRIVING ANALYZER DURING DRIVING, RESTRIKING OR REDRIVING IS REQUIRED AT BOTH BENT NO. 5 AND BENT NO. 6. FOR PILE DRIVING ANALYZER, SEE PILES SPECIAL PROVISIONS.

CONTRACTOR SHALL USE AN EXTERNAL COMBUSTION HAMMER SUCH AS HYDRAULIC HAMMER OR AIR/STEAM HAMMER WITH A STROKE CONTROL PRECISION OF 6 INCHES TO INSTALL ALL PILES AT THIS BRIDGE SITE EXCEPT END BENT NO. 1.

FOR GENERAL NOTES, SEE DWG. G-004.

FOR PILE LOCATIONS, SEE DWG. S-006E.

BILL OF MATERIAL FOR ONE PP 24 X 0.50 STEEL PILE

BAR	NO.	SIZE	TYPE	LENGTH	WEIGHT
S1	6	#4	1	6'-0"	24
V1	10	#6	2	6'-8"	100
REINFORCING STEEL =					124 lbs

CLASS A CONCRETE

5'-0" MINIMUM PLUG 0.5 CY

BAR TYPES

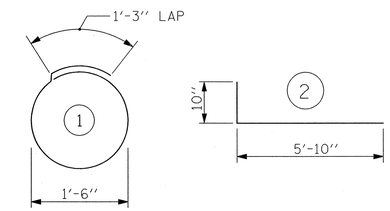

ALL BAR DIMENSIONS ARE OUT TO OUT.

EASTBOUND

PROJECT NO. U-4438

PASQUOTANK COUNTY

STATION: 15+25.75 -L1-

STATE OF NORTH CAROLINA
DEPARTMENT OF TRANSPORTATION
RALEIGH

ELIZABETH CITY BRIDGE OVER PASQUOTANK RIVER
BASCULE PIER 5 AND 6
24" STEEL PIPE PILE

MODJESKI and MASTERS
Experience great bridges.
Mechanicsburg, PA NC License No. C-2979

NORTH CAROLINA PROFESSIONAL SEAL 025801 ENGINEER LANCE V. BORDEN 2/3/2011

DWG NUMBER	TOTAL DWGS
S-007E	94

REVISIONS								SHEET NO.
NO.	BY:	DATE:	NO.	BY:	DATE:			S-109
1			3					TOTAL SHEETS
2			4					454

DRAWN BY : CMM DATE : 01/11
CHECKED BY : HNB DATE : 01/11

2/3/2011
2:02:04 PM
K:\2986.02\CADD\Structural\dgn files\S-007E_U4438_SD_SPP4_01_E.dgn

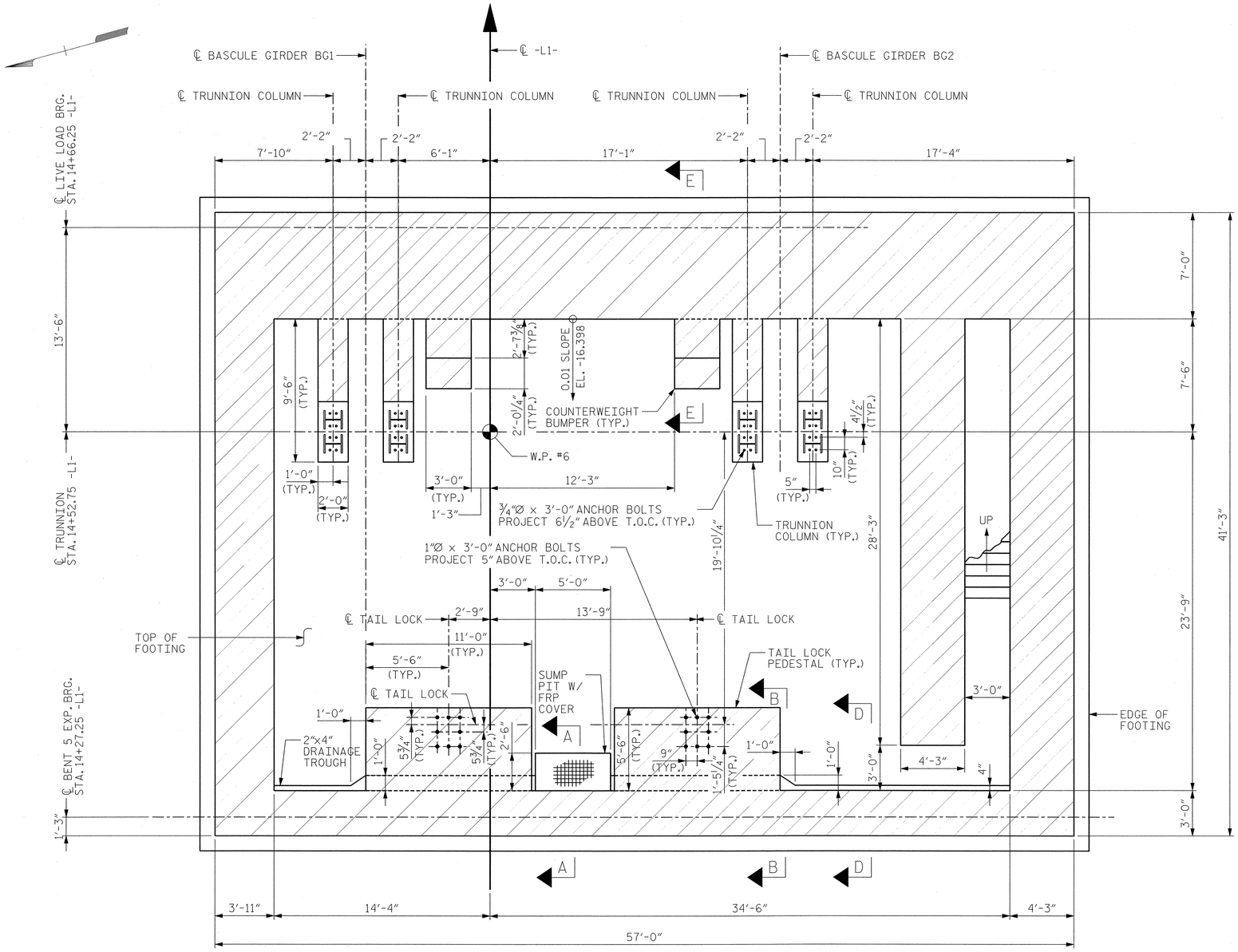

PIER 5 PIT LEVEL SECTION PLAN @ EL. -16.75

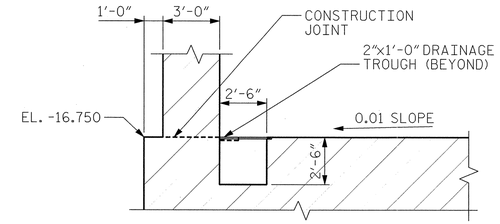

SECTION A-A

AT SUMP PIT

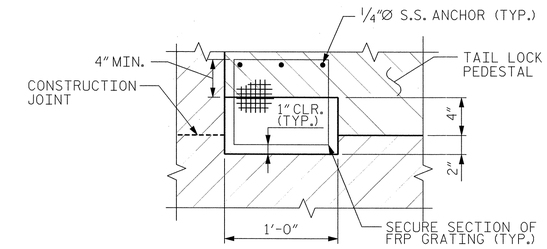

SECTION B-B

AT DRAINAGE TROUGH

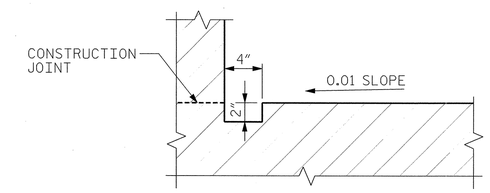

SECTION D-D

AT DRAINAGE TROUGH

EASTBOUND

PROJECT NO. U-4438

PASQUOTANK COUNTY

STATION: 15+25.75 -L1-

NOTES:

1. FOR GENERAL NOTES, SEE DWG. G-004
2. FOR TRUNNION COLUMN DETAILS, SEE DWGS. S-027E AND S-057E
3. FOR SECTION E-E DETAILS, SEE DWG. S-026E
4. FOR FOOTING AND PILE LAYOUT PLAN, SEE DWG S-006E
5. FOR PIER 5 PIT LEVEL REINFORCEMENT DETAILS, SEE DWG. S-009E
6. FOR TAIL LOCK DETAILS, SEE DWG. M-019E

MODJESKI and MASTERS
Experience great bridges.
Mechanicsburg, PA NC License No. C-2979

NORTH CAROLINA PROFESSIONAL SEAL 025801 ENGINEER LANCE V. BORDEN 2/3/2011

STATE OF NORTH CAROLINA
DEPARTMENT OF TRANSPORTATION
RALEIGH

ELIZABETH CITY BRIDGE OVER PASQUOTANK RIVER
BASCULE PIER 5 AND 6
PIT LEVEL PLAN

REVISIONS						SHEET NO.
NO.	BY:	DATE:	NO.	BY:	DATE:	S-110
1			3			TOTAL SHEETS
2			4			454

DWG NUMBER	TOTAL DWGS
S-008E	94

DRAWN BY : CMM DATE : 02/10
CHECKED BY : KWJ DATE : 02/10

2/3/2011
2:02:09 PM
K:\2986.02\CADD\Structural\dgn files\S-008E_U4438_SD_PP05_01_E.dgn

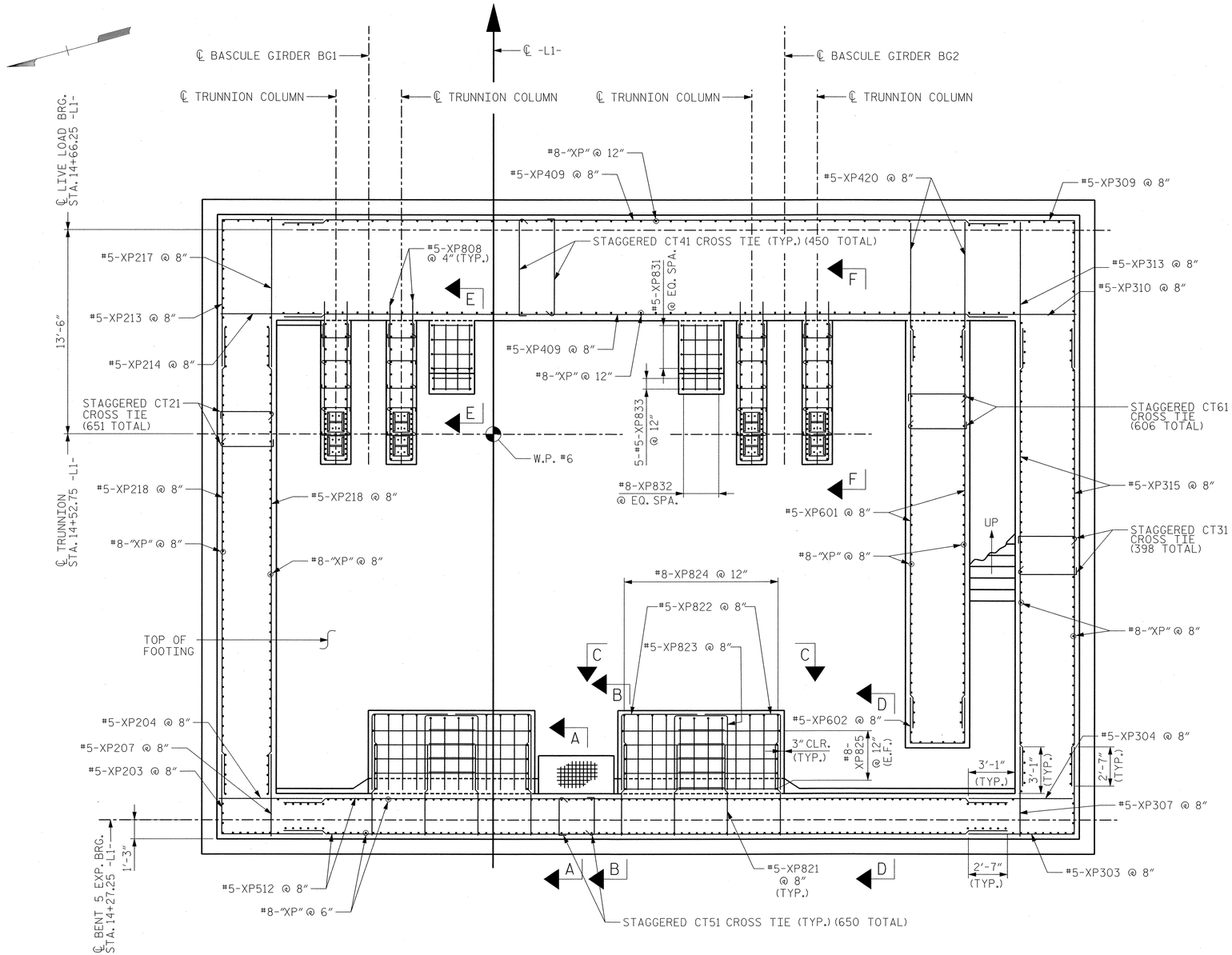

PIER 5 PIT LEVEL REINFORCEMENT SECTION PLAN @ EL. -16.75

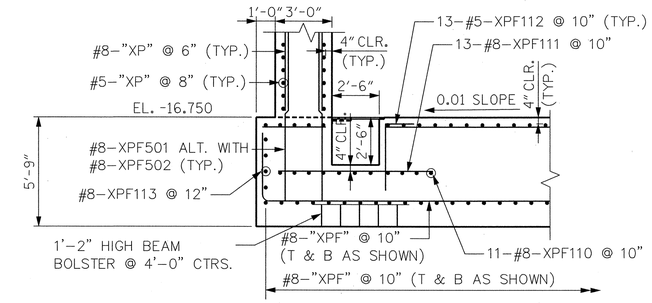

SECTION A-A

AT SUMP PIT

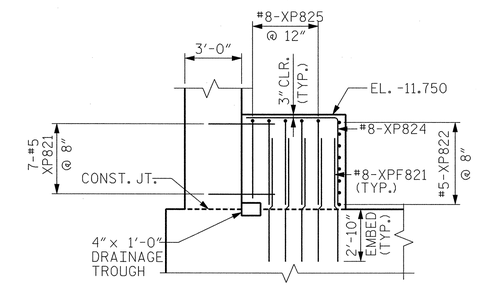

SECTION B-B

AT DRAINAGE TROUGH

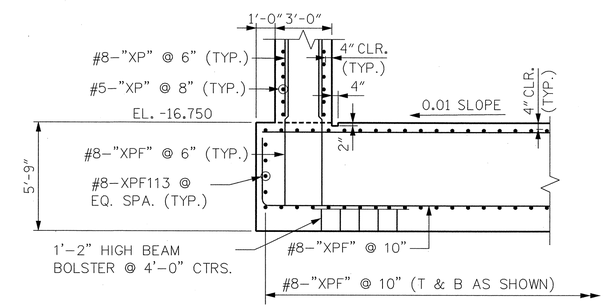

SECTION D-D

AT DRAINAGE TROUGH

EASTBOUND

PROJECT NO. U-4438

PASQUOTANK COUNTY

STATION: 15+25.75 -L1-

NOTES:

1. FOR GENERAL NOTES, SEE DWG. G-004.
2. FOR TRUNNION COLUMN DETAILS, SEE DWGS. S-057E AND S-058E.
3. FOR FOOTING AND PILE LAYOUT PLAN, SEE DWG. S-006E.
4. FOR SECTIONS C-C & E-E DETAILS, SEE DWG. S-026E.
5. FOR SECTION F-F DETAILS, SEE DWG. S-027E.
6. PIER 5 SHOWN. PIER 6 OPPOSITE HAND UNLESS NOTED OTHERWISE.
7. FOR BAR NAMING CONVENTION, SEE DWG. S-038E.
8. FOR SCHEMATIC DIAGRAM OF CROSS TIE LOCATIONS, SEE DWG. S-026E.

MODJESKI and MASTERS
Experience great bridges.
Mechanicsburg, PA NC License No. C-2979

NORTH CAROLINA PROFESSIONAL SEAL 025801 ENGINEER LANCE V. BORDEN 3/18/2011

STATE OF NORTH CAROLINA
DEPARTMENT OF TRANSPORTATION
RALEIGH

ELIZABETH CITY BRIDGE OVER
PASQUOTANK RIVER
BASCULE PIER 5 AND 6
PIT LEVEL REINFORCING

REVISIONS						SHEET NO.
NO.	BY:	DATE:	NO.	BY:	DATE:	S-111
1			3			TOTAL SHEETS
2			4			454

DWG NUMBER	TOTAL DWGS
S-009E	94

DRAWN BY : CMM DATE : 01/11
CHECKED BY : KWJ DATE : 01/11

3/18/2011
2:12:56 PM
K:\2986.02\CADD\Structural\dgn files\S-009E_U4438_SD_PPR5_01_E.dgn

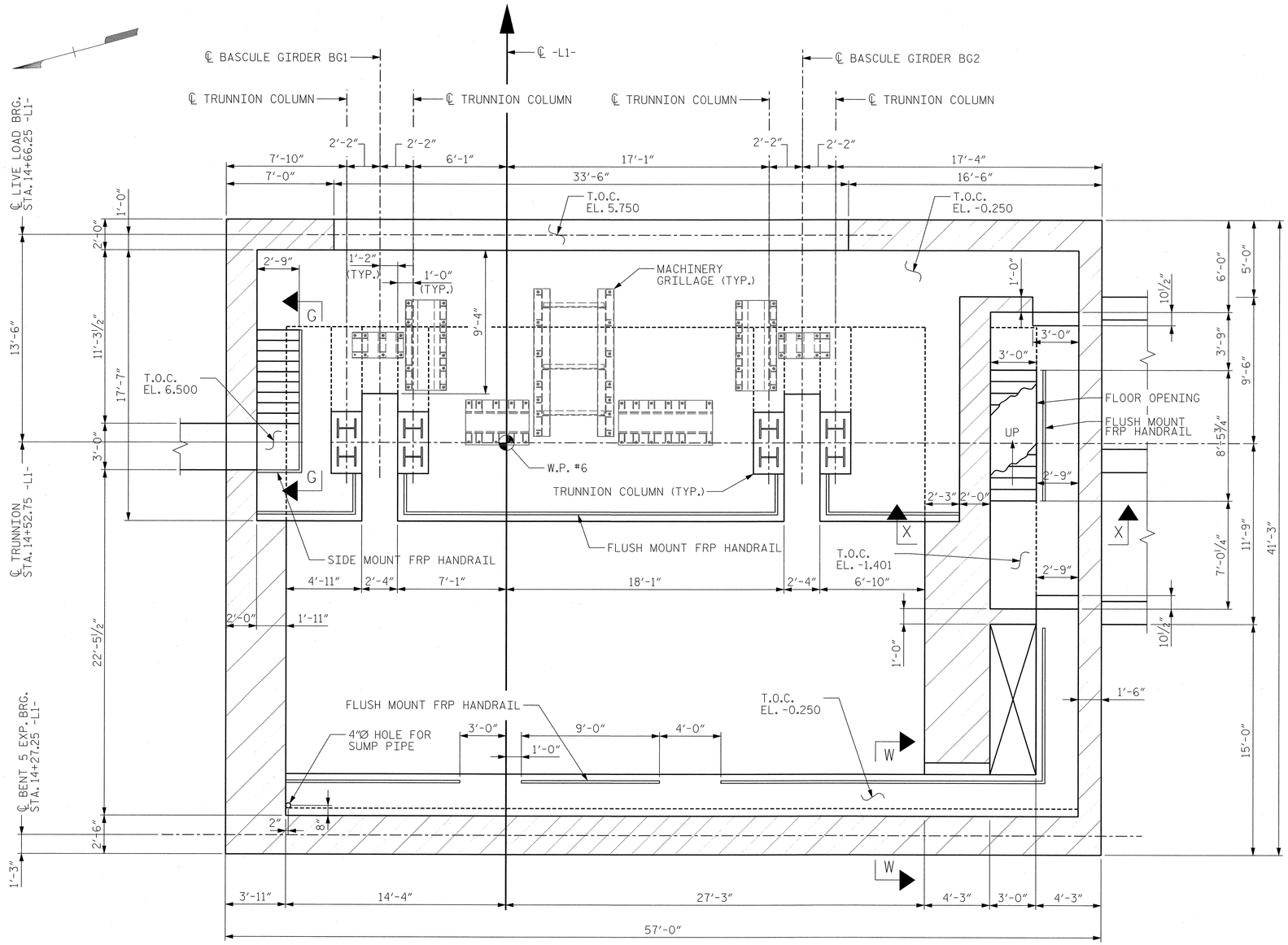

PIER 5 MACHINERY LEVEL SECTION PLAN @ EL. 6.500

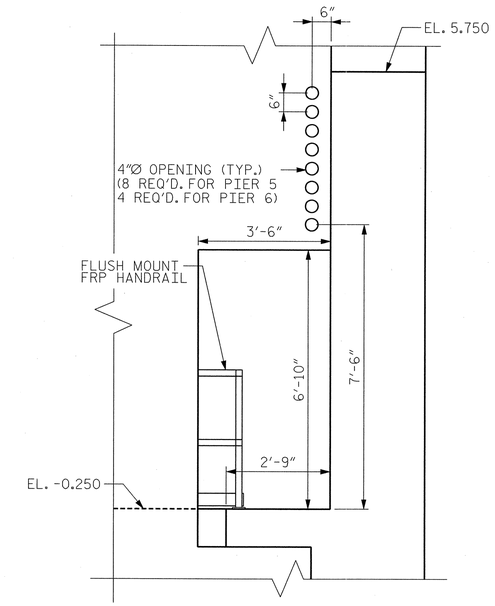

SECTION W-W

EASTBOUND

PROJECT NO. U-4438

PASQUOTANK COUNTY

STATION: 15+25.75 -L1-

NOTES:

1. FOR GENERAL NOTES, SEE DWG. G-004.
2. FOR TRUNNION COLUMN DETAILS, SEE DWGS. S-027E AND S-057E.
3. FOR MAINTENANCE WALKWAYS AND RAILING DETAILS, SEE DWG. S-035E.
4. FOR PIER 5 MACHINERY LEVEL REINFORCEMENT DETAILS, SEE DWG. S-011E.
5. FOR SECTION G-G, SEE DWG. S-035E.
6. FOR SECTION X-X, SEE DWG. S-036E.
7. FOR MACHINERY GRILLAGE DETAILS AND ANCHOR BOLT LOCATIONS, SEE DWG. S-059E.
8. FOR CONDUIT LOCATIONS SEE ELECTRICAL DWGS.

MODJESKI and MASTERS
Experience great bridges.
Mechanicsburg, PA NC License No. C-2979

NORTH CAROLINA PROFESSIONAL SEAL 025801 ENGINEER LANCE V. BORDEN 2/3/2011

STATE OF NORTH CAROLINA
DEPARTMENT OF TRANSPORTATION
RALEIGH

ELIZABETH CITY BRIDGE OVER PASQUOTANK RIVER
BASCULE PIER 5 AND 6
MACHINERY LEVEL PLAN

DRAWN BY : KWJ CMM	DATE : 01/11
CHECKED BY : KWJ	DATE : 01/11

DWG NUMBER	TOTAL DWGS
S-010E	94

REVISIONS								SHEET NO.
NO.	BY:	DATE:	NO.	BY:	DATE:			S-112
1			3					TOTAL SHEETS
2			4					454

2/3/2011
2:02:17 PM
K:\2986.02\CADD\Structural\dgn files\S-010E_U4438_SD_MP05_01_E.dgn

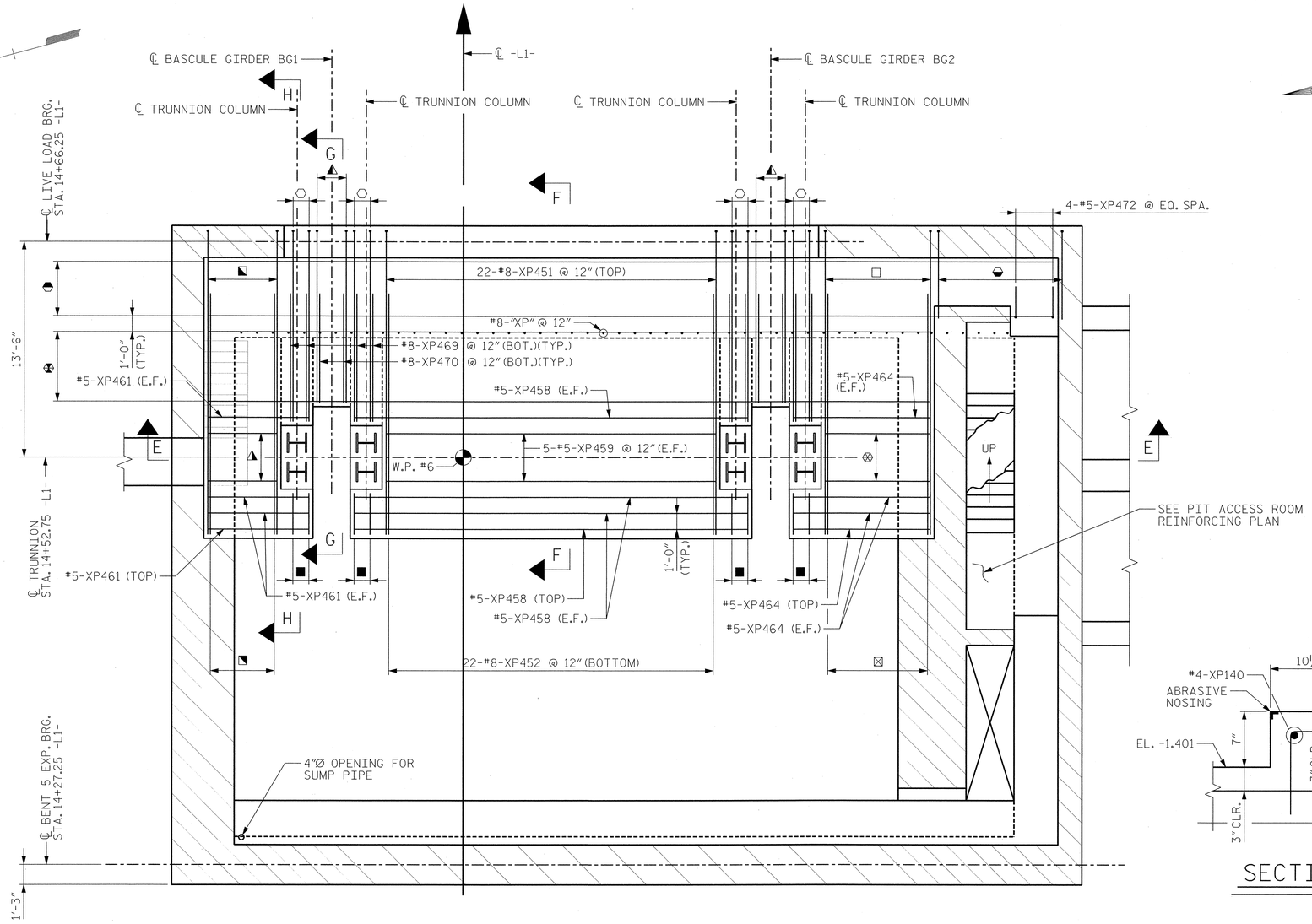

PIER 5 MACHINERY LEVEL DECK REINFORCEMENT PLAN @ EL. 6.500

(FRP HANDRAIL NOT SHOWN FOR CLARITY)

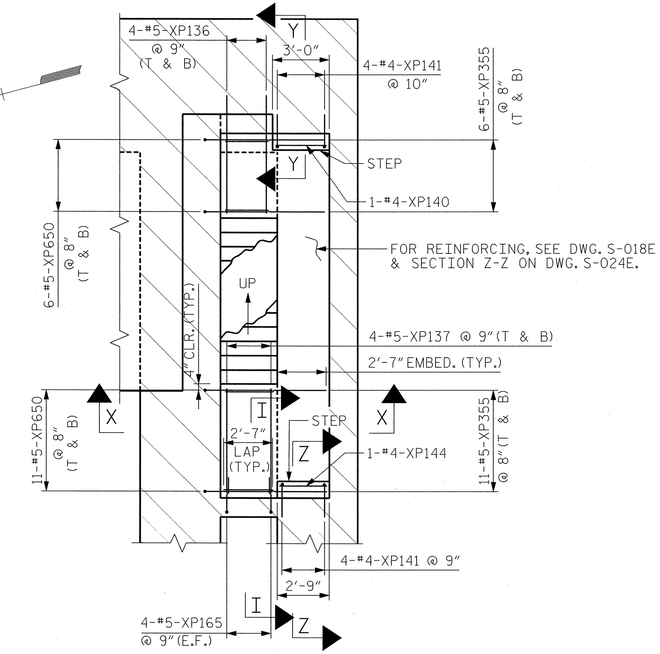

PIT ACCESS ROOM REINFORCING PLAN

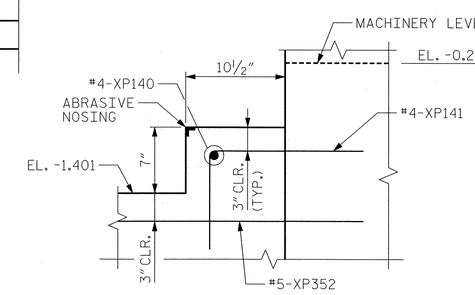

SECTION Y-Y

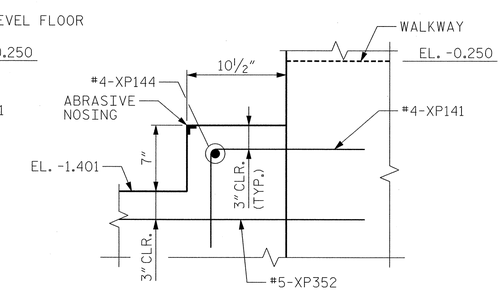

SECTION Z-Z

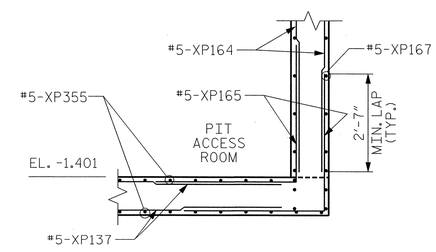

SECTION I-I

EASTBOUND

PROJECT NO. U-4438

PASQUOTANK COUNTY

STATION: 15+25.75 -L1-

- DENOTES: 6-#8-XP452 @ 12"(BOT.)
- DENOTES: 6-#8-XP451 @ 12"(TOP)
- DENOTES: 8-#8-XP452 @ 12"(BOT.)
- DENOTES: 8-#8-XP451 @ 12"(TOP)
- DENOTES: #8-XP468 @ 12"(E.F.)
- DENOTES: #8-XP453 @ 12"(TOP)
- DENOTES: #8-XP454 @ 12"(TOP)
- DENOTES: 5-#5-XP462 @ 12"(E.F.)
- DENOTES: 5-#5-XP465 @ 12"(E.F.)
- DENOTES: 5-#5-XP457 @ 12"(E.F.)
- DENOTES: 5-#5-XP456 @ 12"(TOP)
- DENOTES: 8-#8-XP455 @ 12"(TOP)

NOTES:

1. FOR GENERAL NOTES, SEE DWG. G-004.
2. FOR TRUNNION COLUMN DETAILS, SEE DWGS. S-027E AND S-057E.
3. FOR WALL REINFORCING, SEE DWG. S-012E.
4. FOR SECTION E-E, SEE DWG. S-022E.
5. FOR ADDITIONAL MACHINERY LEVEL PLAN DETAILS, SEE DWG. S-010E.
6. FOR SECTION X-X, SEE DWG. S-036E.
7. FOR SECTION F-F, G-G & H-H, SEE DWG. S-025E.
8. FOR BAR NAMING CONVENTION, SEE DWG. S-038E.
9. PIER 5 SHOWN, PIER 6 OPPOSITE HAND UNLESS NOTED OTHERWISE.

MODJESKI and MASTERS
Experience great bridges.
Mechanicsburg, PA NC License No. C-2979

NORTH CAROLINA PROFESSIONAL SEAL 025801 ENGINEER LANCE V. BORDEN 3/18/2011

STATE OF NORTH CAROLINA
DEPARTMENT OF TRANSPORTATION
RALEIGH

ELIZABETH CITY BRIDGE OVER PASQUOTANK RIVER
BASCULE PIER 5 AND 6
MACHINERY LEVEL REINFORCING DECK REINFORCING

REVISIONS						SHEET NO.
NO.	BY:	DATE:	NO.	BY:	DATE:	S-113
1			3			TOTAL SHEETS
2			4			454

DWG NUMBER	TOTAL DWGS
S-011E	94

DRAWN BY : CMM DATE : 01/11
CHECKED BY : AEC DATE : 01/11

3/18/2011
2:13:01 PM
K:\2986.02\CADD\Structural\dgn files\S-011E_U4438_SD_MPR5_01_E.dgn

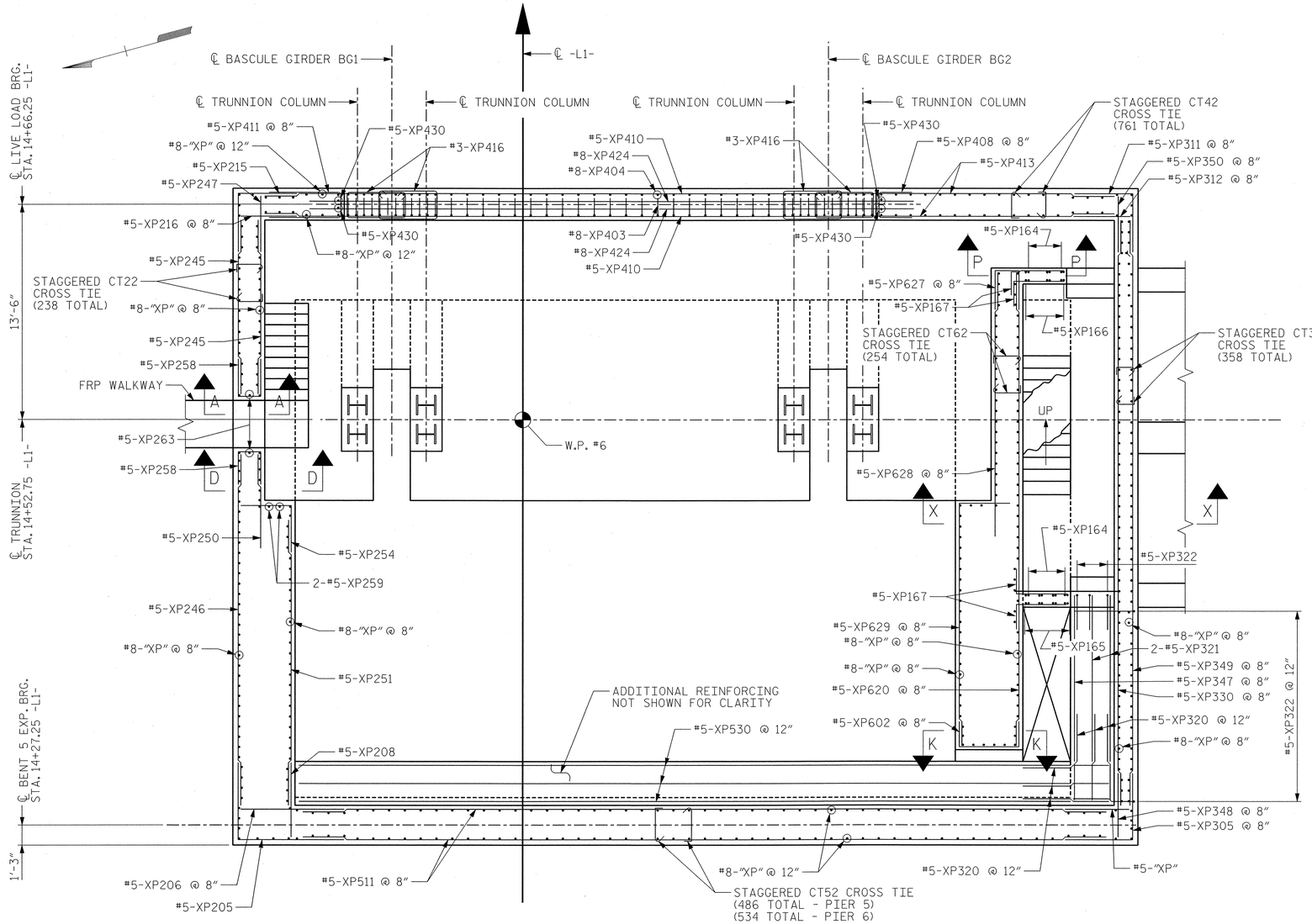

PIER 5 MACHINERY LEVEL WALL REINFORCEMENT PLAN @ EL. 6.500

(FRP HAND RAIL NOT SHOWN FOR CLARITY)

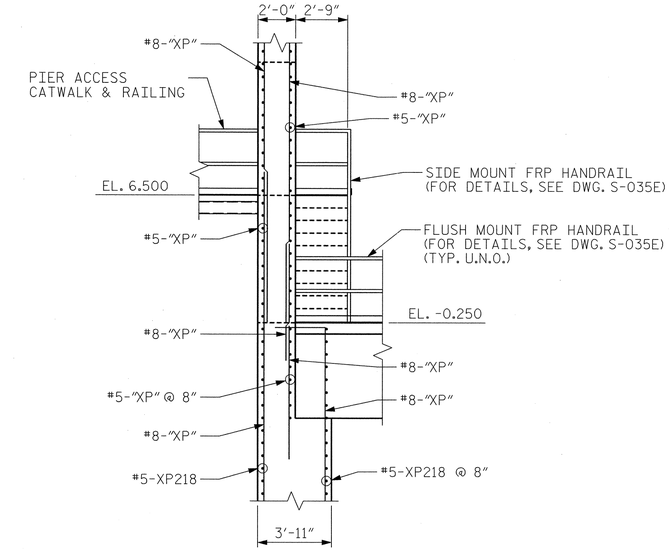

SECTION D-D

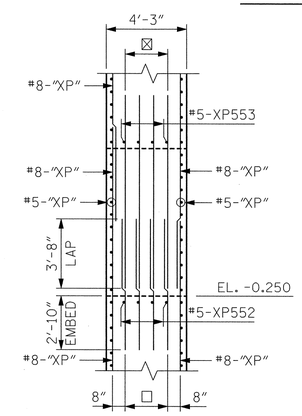

SECTION K-K

☒ DENOTES: 4-#8-XP637 @ 9"

☐ DENOTES: 4-#8-XP636 @ 9"

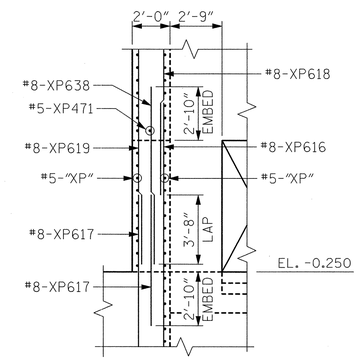

SECTION P-P

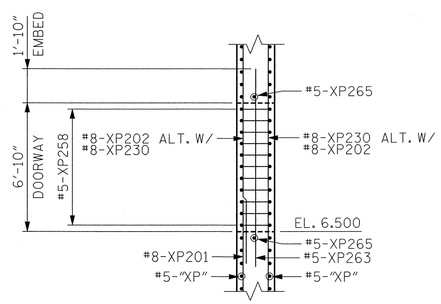

SECTION A-A

NOTES:

1. FOR GENERAL NOTES, SEE DWG. G-004.
2. FOR TRUNNION COLUMN DETAILS, SEE DWGS. S-027E AND S-057E.
3. FOR LIVE LOAD BRG. DETAILS, SEE DWG. S-015E.
4. FOR MAINTENANCE WALKWAYS, STAIR AND RAILING DETAILS, SEE DWG. S-035E.
5. FOR PIER 5 MACHINERY LEVEL PLAN DETAILS, SEE DWG. S-010E.
6. FOR SECTION X-X, SEE DWG. S-036E.
7. FOR LOCATION OF SECTION A-A, SEE DWG. S-017E.
8. FOR FRP WALKWAY DETAILS, SEE DWG. G-013E.
9. FOR SCHEMATIC DIAGRAM OF CROSS TIE LOCATIONS, SEE DWG. S-026E.

EASTBOUND

PROJECT NO. U-4438

PASQUOTANK COUNTY

STATION: 15+25.75 -L1-

STATE OF NORTH CAROLINA
DEPARTMENT OF TRANSPORTATION
RALEIGH

ELIZABETH CITY BRIDGE OVER PASQUOTANK RIVER
BASCULE PIER 5 AND 6
MACHINERY LEVEL REINFORCING WALL REINFORCING

MODJESKI and MASTERS
Experience great bridges.
Mechanicsburg, PA NC License No. C-2979

NORTH CAROLINA PROFESSIONAL SEAL 025801 ENGINEER LANCE V. BORDEN 2/3/2011

DWG NUMBER	TOTAL DWGS
S-012E	94

REVISIONS						SHEET NO.
NO.	BY:	DATE:	NO.	BY:	DATE:	S-114
1			3			TOTAL SHEETS
2			4			454

DRAWN BY : CMM DATE : 01/11
CHECKED BY : KWJ DATE : 01/11

2/3/2011
2:02:26 PM
K:\2986.02\CADD\Structural\dgn files\S-012E_U4438_SD_MPR25_01_E.dgn

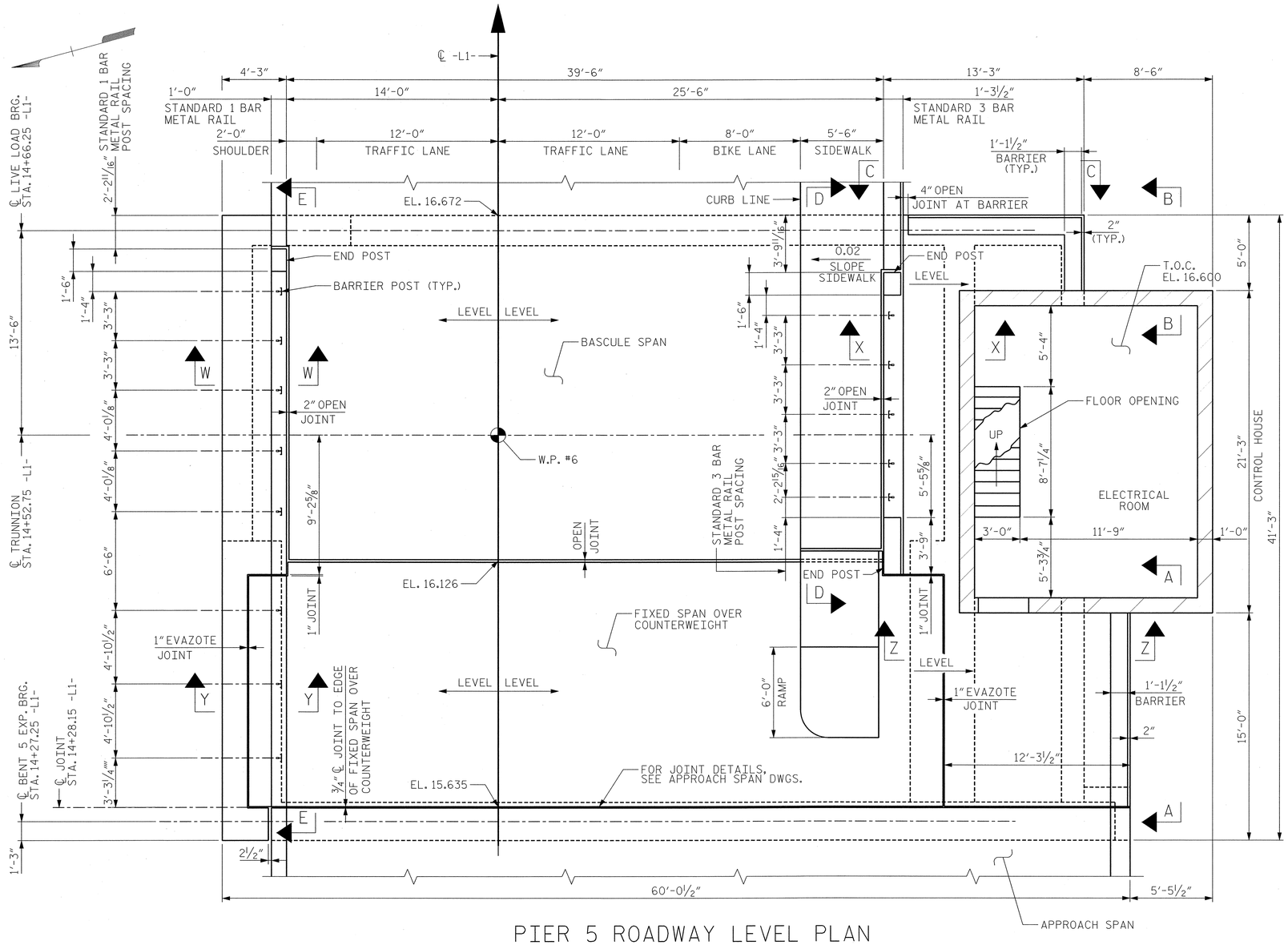

PIER 5 ROADWAY LEVEL PLAN

(METAL RAIL & ATTENUATOR NOT SHOWN FOR CLARITY)

EASTBOUND

PROJECT NO. U-4438

PASQUOTANK COUNTY

STATION: 15+25.75 -L1-

NOTES:

1. FOR GENERAL NOTES, SEE DWG. G-004.
2. FOR PIER 5 ROADWAY LEVEL REINFORCEMENT DETAILS, SEE DWG. S-014E.
3. FOR FIXED SPAN OVER COUNTERWEIGHT DETAILS, SEE DWGS S-053E THROUGH S-056E.
4. FOR SECTIONS A-A & B-B, SEE DWG. S-029E.
5. FOR SECTIONS C-C, D-D & E-E, SEE DWG. S-028E.
6. FOR EVAZOTE JOINT DETAIL, SEE DWG. S-053E.
7. FOR SECTIONS W-W, X-Y & Z-Z, SEE DWG. S-014E.

MODJESKI and MASTERS
Experience great bridges.
Mechanicsburg, PA NC License No. C-2979

NORTH CAROLINA PROFESSIONAL SEAL 025801 ENGINEER LANCE V. BORDEN 2/3/2011

STATE OF NORTH CAROLINA
DEPARTMENT OF TRANSPORTATION
RALEIGH

ELIZABETH CITY BRIDGE OVER PASQUOTANK RIVER
BASCULE PIER 5
ROADWAY LEVEL PLAN

DWG NUMBER	TOTAL DWGS
S-013E	94

REVISIONS						SHEET NO.
NO.	BY:	DATE:	NO.	BY:	DATE:	S-115
1			3			TOTAL SHEETS
2			4			454

DRAWN BY : CMM DATE : 01/11
CHECKED BY : AEC DATE : 01/11

2/3/2011
2:02:31 PM
K:\2986.02\CADD\Structural\dgn files\S-013E_U4438_SD_RP05_01_E.dgn

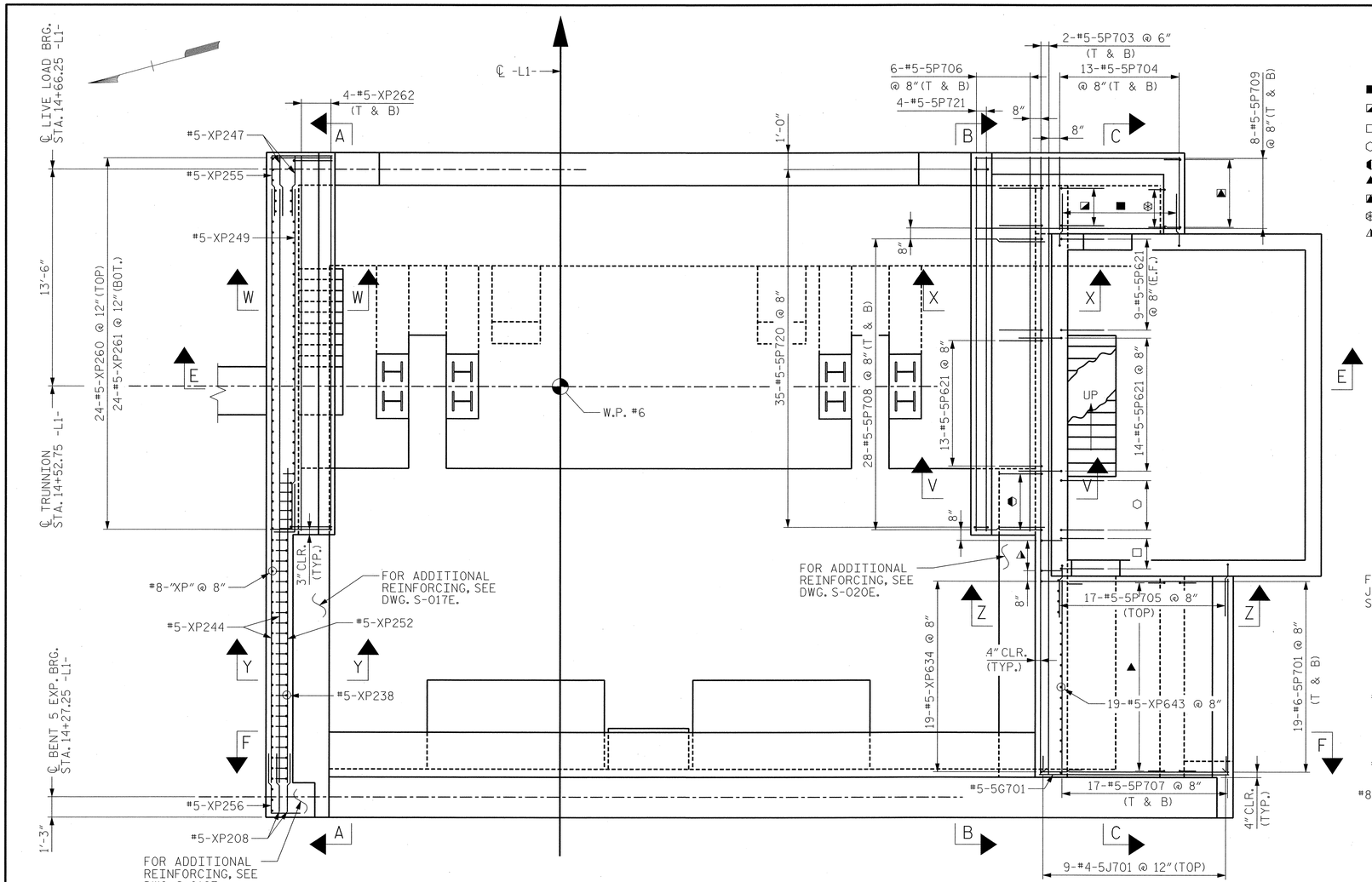

PIER 5 ROADWAY LEVEL REINFORCEMENT PLAN @ EL. 16.600

(FIXED SPAN AND MOVABLE SPAN NOT SHOWN FOR CLARITY)

■ DENOTES: 13-#5-5P705 @ 8" (TOP)
◪ DENOTES: 5-#5-5P621 @ 8" (E.F.)
□ DENOTES: 4-#5-5P621 @ 8"
⬡ DENOTES: 5-#5-5P621 @ 8"
◐ DENOTES: 6-#5-XP634 @ 8"
▲ DENOTES: 19-#5-XP331 @ 8" (E.F.)
◮ DENOTES: 8-#5-XP331 @ 8"
⊛ DENOTES: 5-#5-XP331 @ 8"
◭ DENOTES: 4-#5-5P642 @ 8"

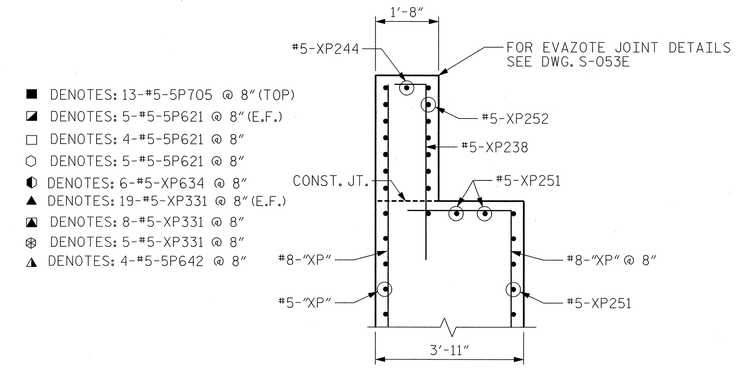

SECTION Y-Y

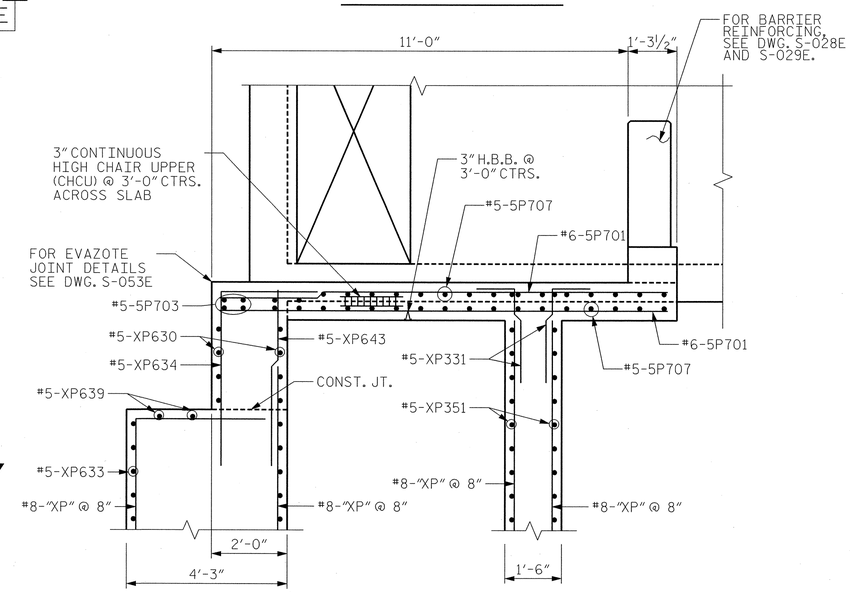

SECTION Z-Z

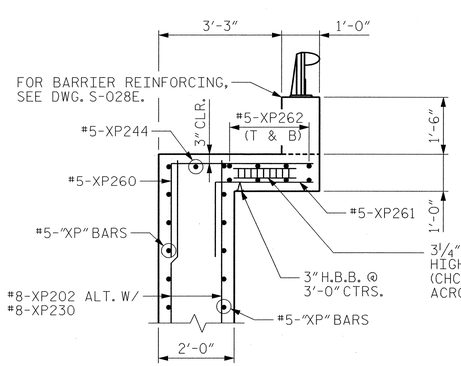

SECTION W-W

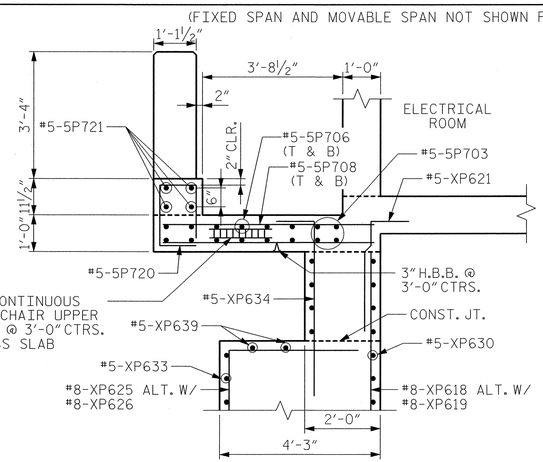

SECTION V-V

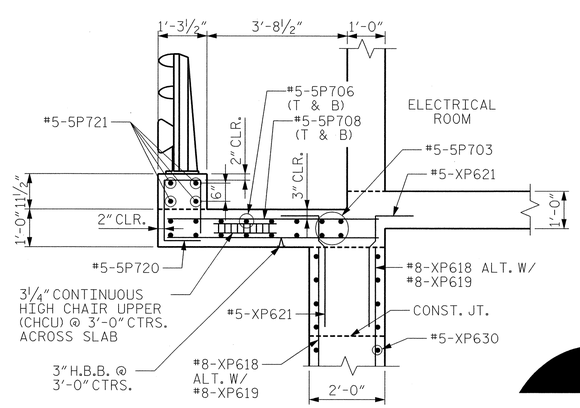

SECTION X-X

NOTES:

1. FOR GENERAL NOTES, SEE DWG. G-004.
2. FOR SECTION A-A, SEE DWG. S-019E
3. FOR SECTION B-B, SEE DWG. S-020E
4. FOR SECTION C-C, SEE DWG. S-021E
5. FOR SECTION E-E, SEE DWG. S-022E
6. FOR SECTION F-F, SEE DWG. S-023E
7. FOR EXPANSION JOINT DETAILS, SEE APPROACH SPAN DRAWINGS.
8. FOR ADDITIONAL 1 BAR AND 3 BAR METAL RAIL DETAILS, SEE DWG. S-087E THRU S-091E.
9. FOR BAR NAMING CONVENTION, SEE DWG. S-038E.

EASTBOUND
PROJECT NO. U-4438
PASQUOTANK COUNTY
STATION: 15+25.75 -L1-

STATE OF NORTH CAROLINA
DEPARTMENT OF TRANSPORTATION
RALEIGH

ELIZABETH CITY BRIDGE OVER PASQUOTANK RIVER
BASCULE PIER 5
ROADWAY LEVEL REINFORCING

MODJESKI and MASTERS
Experience great bridges.
Mechanicsburg, PA NC License No. C-2979

NORTH CAROLINA PROFESSIONAL SEAL 025801 ENGINEER LANCE V. BORDEN 3/18/2011

DWG NUMBER	TOTAL DWGS
S-014E	94

REVISIONS								SHEET NO.
NO.	BY:	DATE:	NO.	BY:	DATE:			S-116
1			3					TOTAL SHEETS
2			4					454

DRAWN BY : CMM DATE : 01/11
CHECKED BY : KWJ DATE : 01/11

3/18/2011
2:13:06 PM
K:\2986.02\CADD\Structural\dgn files\S-014E_U4438_SD_RPR5_01_E.dgn

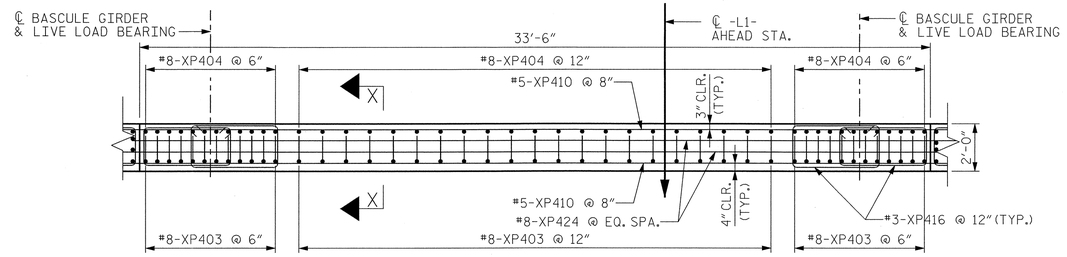

SECTION A-A

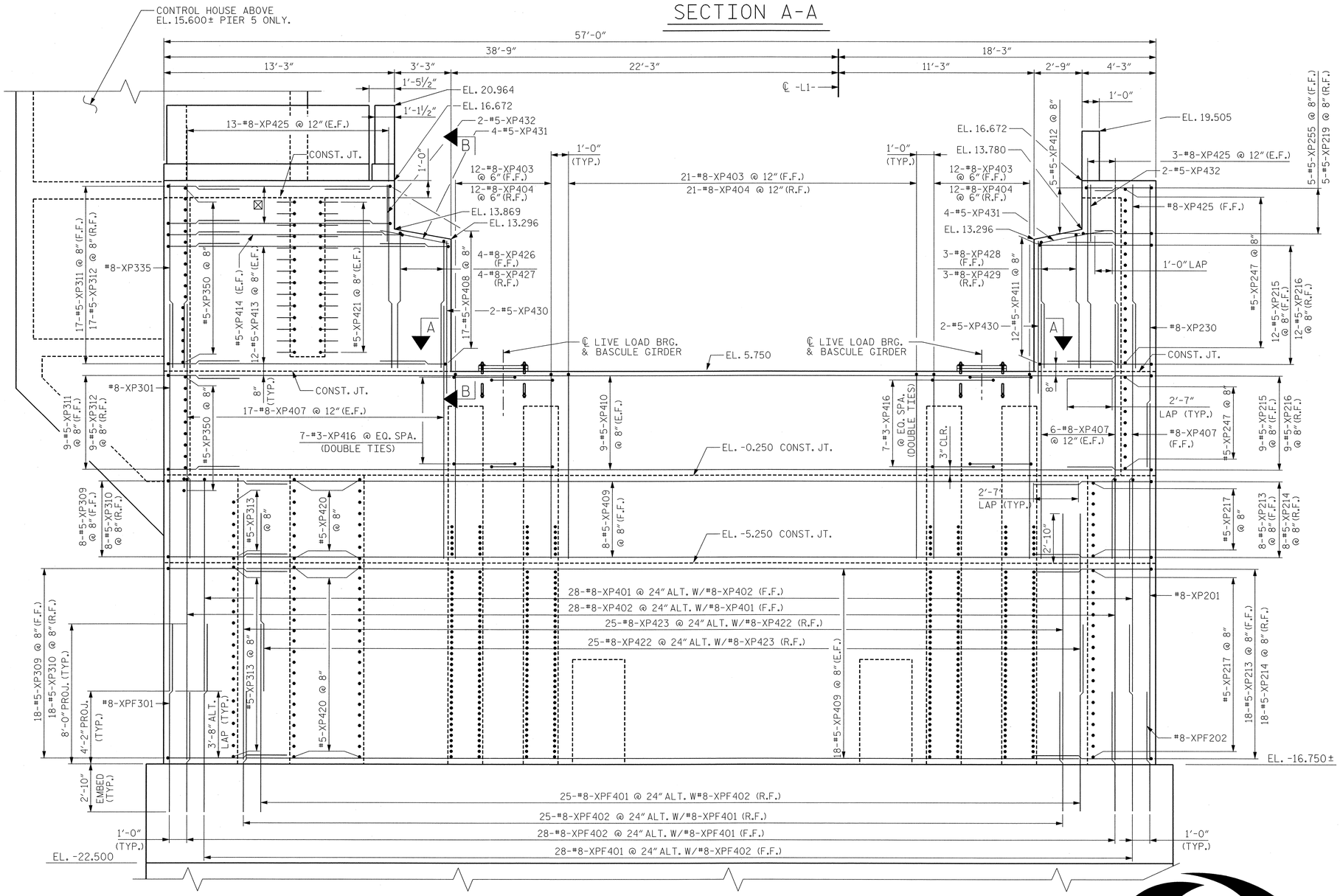

PIER 5 - FRONT WALL ELEVATION

(LOOKING WEST)

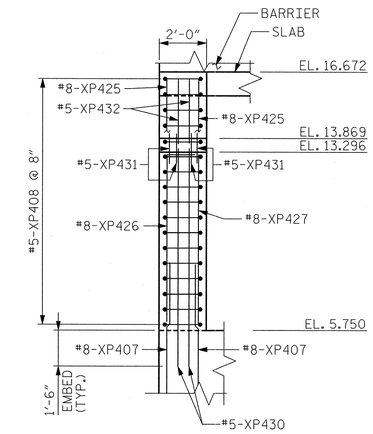

VIEW B-B

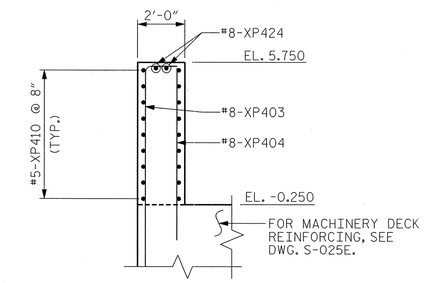

SECTION X-X

⊠ DENOTES: 4-#5-XP415 @ 8" (E.F.)

NOTES:

1. FOR GENERAL NOTES, SEE DWG. G-004.
2. FOR CONTROL HOUSE DETAILS, SEE DWGS. S-030E THRU S-037E
3. PIER 5 SHOWN, PIER 6 OPPOSITE HAND UNLESS NOTED OTHERWISE.
4. FOR BAR NAMING CONVENTION, SEE DWG. S-038E.

EASTBOUND

PROJECT NO. U-4438

PASQUOTANK COUNTY

STATION: 15+25.75 -L1-

STATE OF NORTH CAROLINA
DEPARTMENT OF TRANSPORTATION
RALEIGH

ELIZABETH CITY BRIDGE OVER PASQUOTANK RIVER
BASCULE PIER 5 AND 6
FRONT WALL ELEVATION

MODJESKI and MASTERS
Experience great bridges.
Mechanicsburg, PA NC License No. C-2979

NORTH CAROLINA PROFESSIONAL SEAL 025801 ENGINEER LANCE V. BORDEN 2/3/2011

REVISIONS								SHEET NO.
NO.	BY:	DATE:	NO.	BY:	DATE:			S-117
1			3					TOTAL SHEETS
2			4					454

DWG NUMBER	TOTAL DWGS
S-015E	94

DRAWN BY : CMM DATE : 01/11
CHECKED BY : AEC DATE : 01/11

2/3/2011
2:02:40 PM
K:\2986.02\CADD\Structural\dgn files\S-015E_U4438_SD_P5EE_01_E.dgn

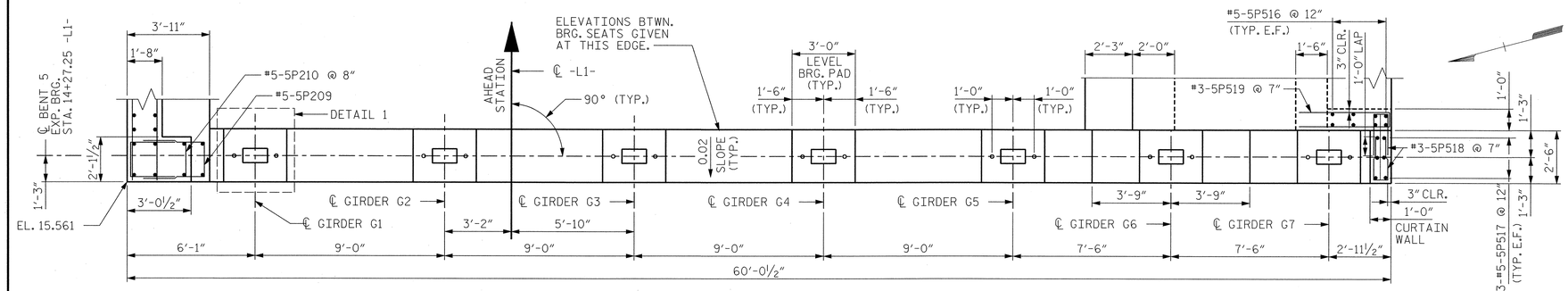

PIER 5 - PARTIAL PLAN

(AT BENT 5 BEARING SEAT)

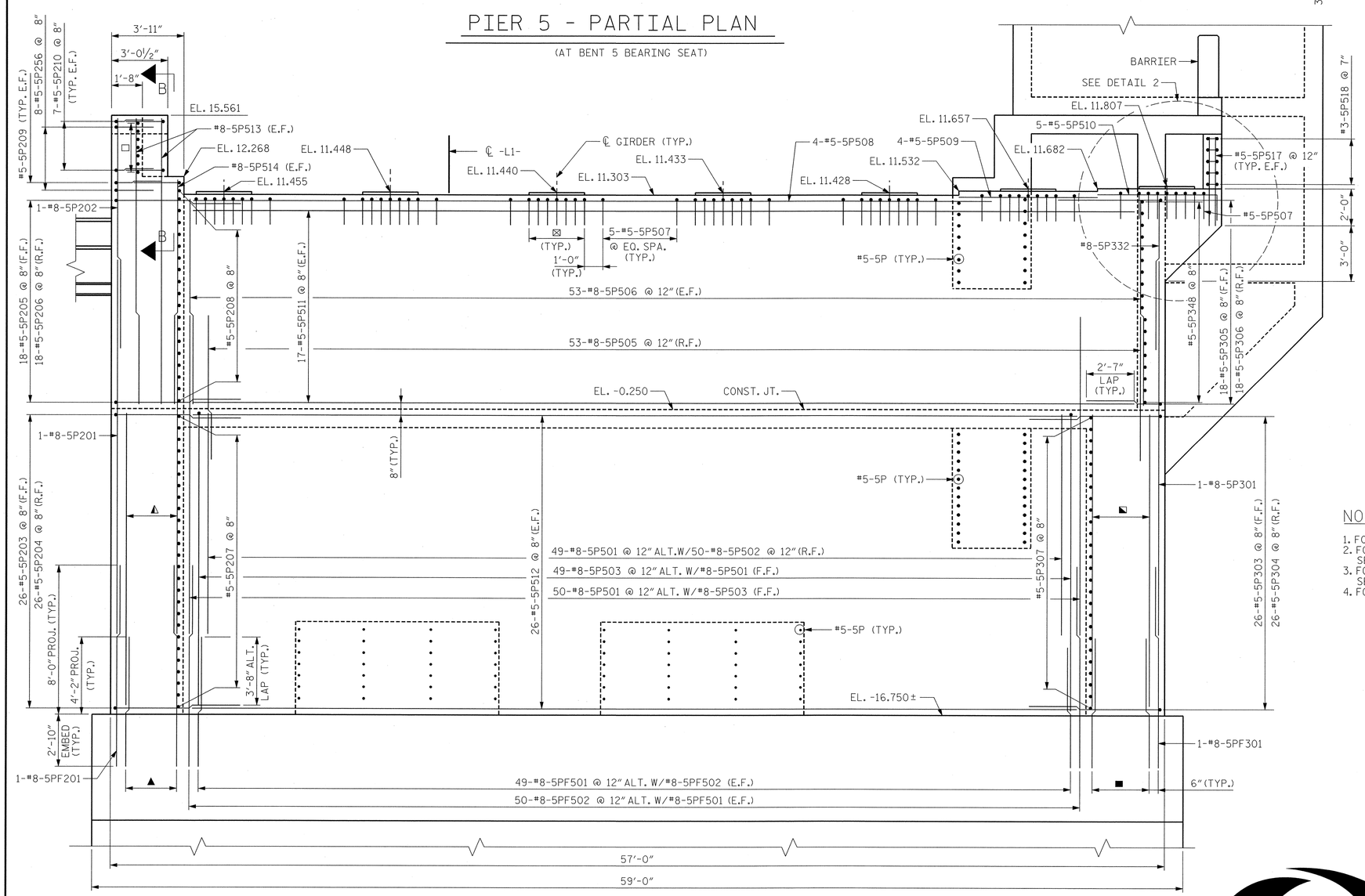

▲ DENOTES: 3-#8-5PF501 @ 12" ALT. W/3-#8-5PF502 (F.F.)
◭ DENOTES: 6-#8-5P501 @ 6" (F.F.)

■ DENOTES: 4-#8-5PF501 @ 12" ALT. W/3-#8-5PF502 (F.F.)
◪ DENOTES: 7-#8-5P501 @ 6" (F.F.)
⊠ DENOTES: 7-#5-5P507 @ 6"
□ DENOTES: #5-XP208 @ EQ. SPA.

PIER 5 - APPROACH WALL ELEVATION

(LOOKING EAST)

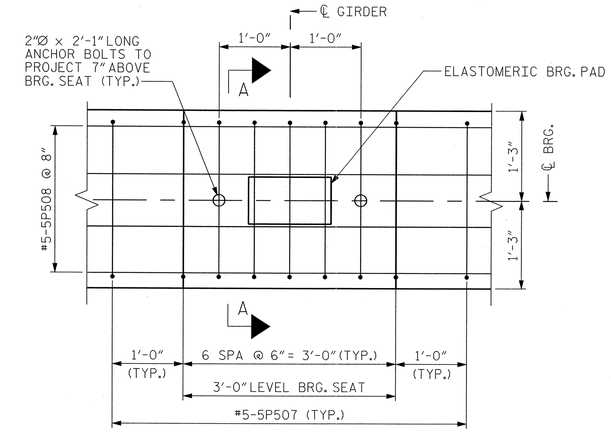

DETAIL 1

(TYP. AT EACH GIRDER)

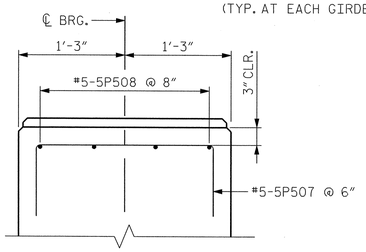

SECTION A

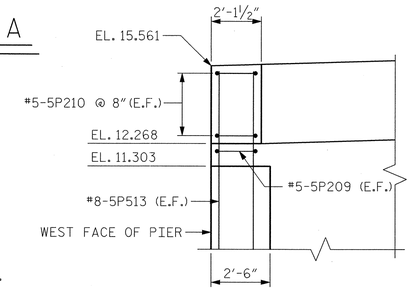

SECTION B-B

EASTBOUND

NOTES:

1. FOR GENERAL NOTES, SEE DWG. G-004.
2. FOR CONTROL HOUSE DETAILS, SEE DWGS. S-030E THRU S-037E.
3. FOR ELASTOMERIC BRG. DETAILS, SEE APPROACH DWGS.
4. FOR DETAIL 2, SEE DWG. S-025E.

PROJECT NO. U-4438
PASQUOTANK COUNTY
STATION: 15+25.75 -L1-

STATE OF NORTH CAROLINA
DEPARTMENT OF TRANSPORTATION
RALEIGH

ELIZABETH CITY BRIDGE OVER PASQUOTANK RIVER
BASCULE PIER 5
APPROACH WALL ELEVATION

MODJESKI and MASTERS
Experience great bridges.
Mechanicsburg, PA NC License No. C-2979

NORTH CAROLINA PROFESSIONAL SEAL 025801 ENGINEER LANCE V. BORDEN 2/3/2011

DWG NUMBER	TOTAL DWGS
S-016E	94

REVISIONS						SHEET NO.
NO.	BY:	DATE:	NO.	BY:	DATE:	S-118
1			3			TOTAL SHEETS
2			4			454

DRAWN BY :	CMM	DATE :	01/11
CHECKED BY :	AEC	DATE :	01/11

2/3/2011
2:02:44 PM
K:\2986.02\CADD\Structural\dgn files\S-016E_U4438_SD_P5WE_01_E.dgn

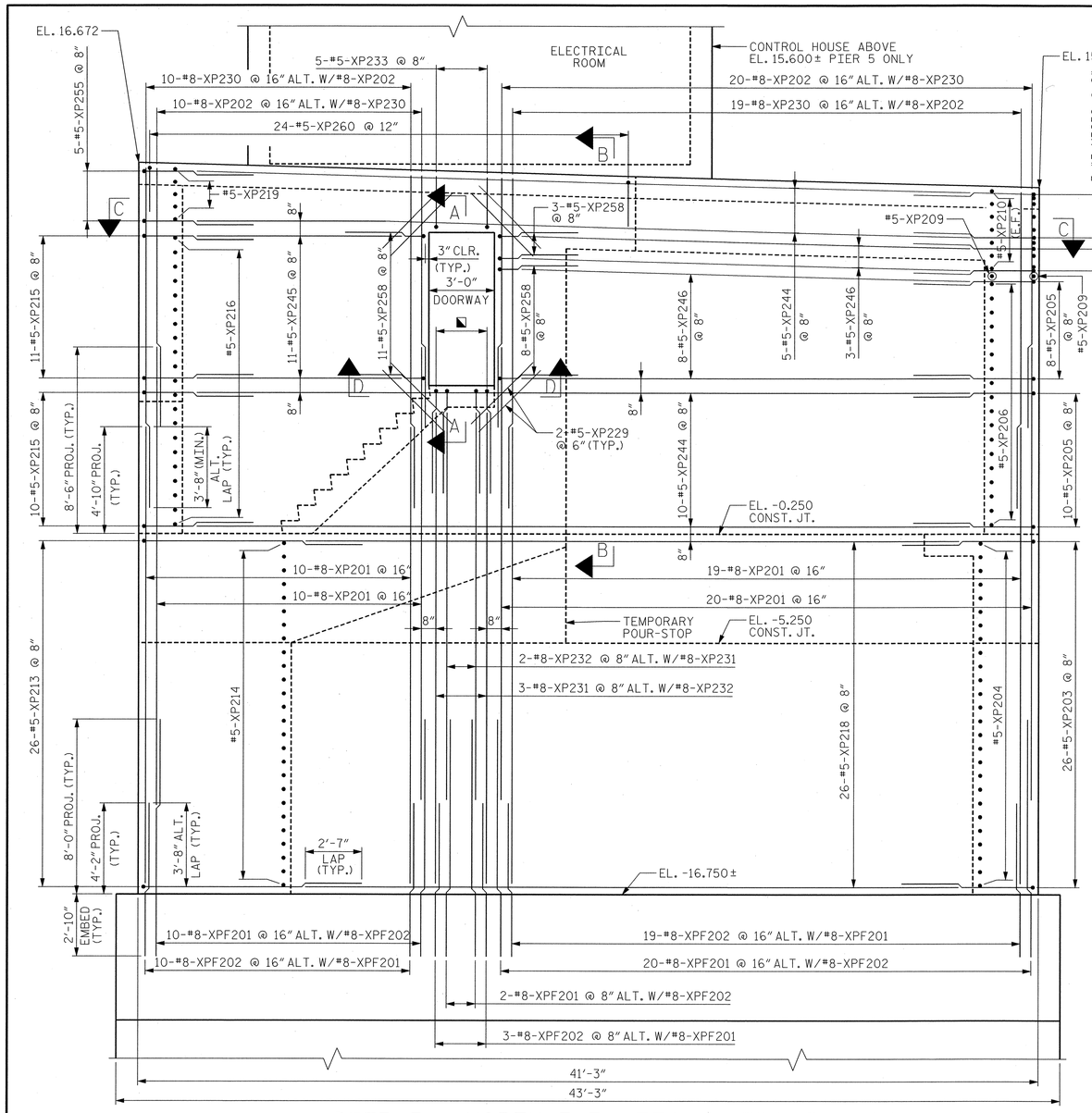

PIER 5 - NORTH ELEVATION - FRONT FACE

(LOOKING SOUTH)
(BARRIER NOT SHOWN FOR CLARITY)

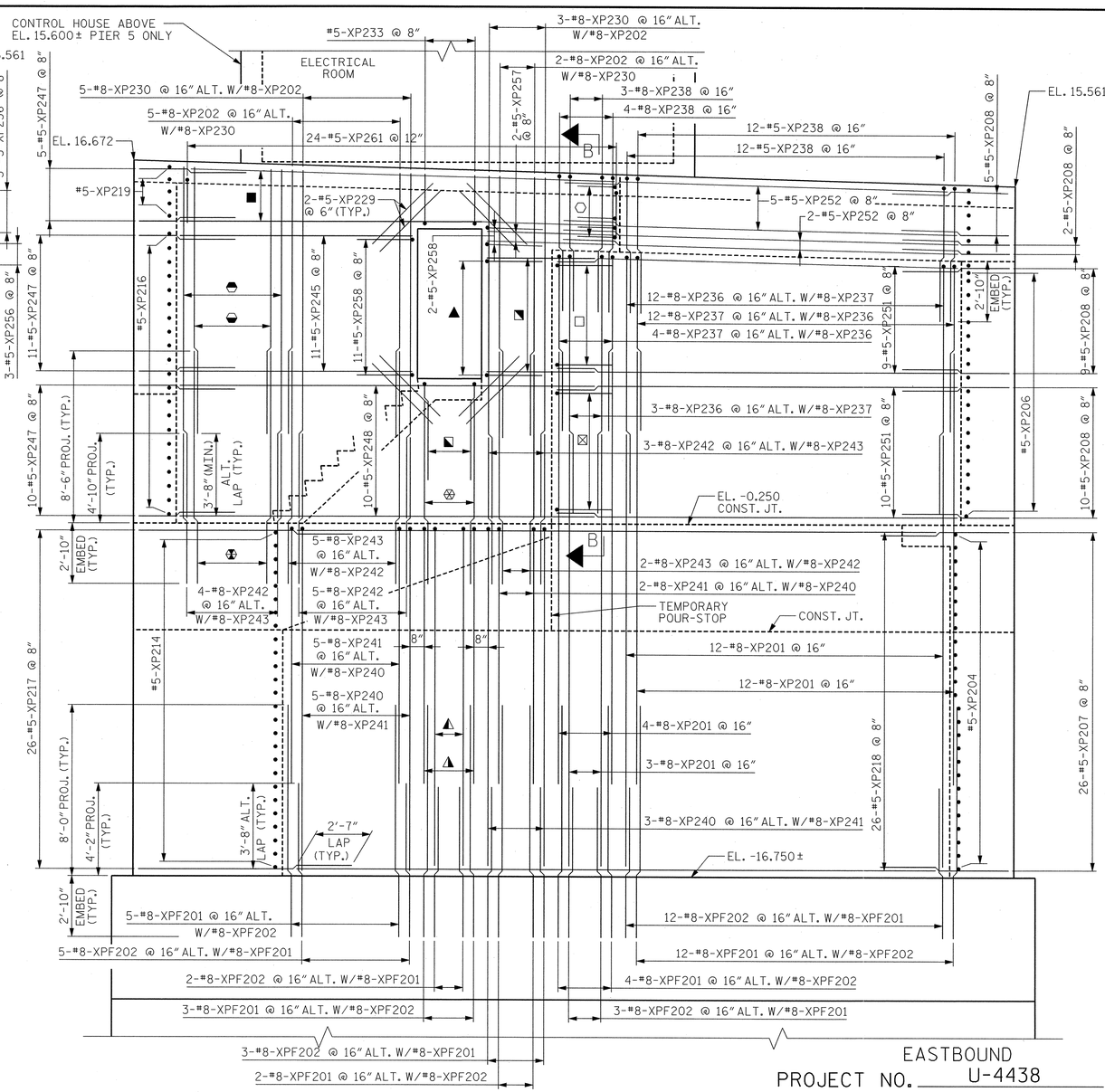

PIER 5 - NORTH ELEVATION REAR FACE

(LOOKING SOUTH)
(BARRIER NOT SHOWN FOR CLARITY)

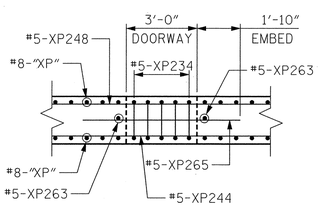

SECTION D-D

(TOP OF DOORWAY SIMILAR)

DENOTES: 9-#5-XP250 @ 8"
DENOTES: 5-#5-XP234 @ 8"
DENOTES: 10-#5-XP254 @ 8"
DENOTES: 9-#5-XP254 @ 8"
DENOTES: 5-#5-XP249 @ 8"
DENOTES: 7-#5-XP253 @ 8"
DENOTES: 2-#8-XP240 @ 16" ALT. W/#8-XP241
DENOTES: 3-#8-XP241 @ 16" ALT. W/#8-XP240
DENOTES: 5-#8-XP239 @ 8"
DENOTES: 3-#8-XP243 @ 16" ALT. W/#8-XP242
DENOTES: 4-#8-XPF230 @ 16" ALT. W/#8-XPF202
DENOTES: 3-#8-XPF202 @ 16" ALT. W/#8-XPF230
DENOTES: 9-#5-XP258 @ 8"

NOTES:

1. FOR GENERAL NOTES, SEE DWG. G-004.
2. FOR CONTROL HOUSE DETAILS, SEE DWGS. S-030E THRU S-037E.
3. FOR SECTION A-A, SEE DWG. S-012E.
4. FOR SECTION B-B, SEE DWG. S-024E.
5. FOR SECTION C-C, SEE DWG. S-024E.
6. PIER 5 SHOWN, PIER 6 OPPOSITE HAND UNLESS NOTED OTHERWISE.
7. FOR BAR NAMING CONVENTION, SEE DWG. S-038E.

EASTBOUND
PROJECT NO. U-4438
PASQUOTANK COUNTY
STATION: 15+25.75 -L1-

STATE OF NORTH CAROLINA
DEPARTMENT OF TRANSPORTATION
RALEIGH

ELIZABETH CITY BRIDGE OVER PASQUOTANK RIVER
BASCULE PIER 5 AND 6
NORTH WALL ELEVATION

MODJESKI and MASTERS
Experience great bridges.
Mechanicsburg, PA NC License No. C-2979

NORTH CAROLINA PROFESSIONAL SEAL 025801 ENGINEER LANCE V. BORDEN 2/3/2011

DWG NUMBER	TOTAL DWGS
S-017E	94

REVISIONS						SHEET NO.
NO.	BY:	DATE:	NO.	BY:	DATE:	S-119
1			3			TOTAL SHEETS
2			4			454

DRAWN BY : CMM DATE : 01/11
CHECKED BY : KWJ DATE : 01/11

2/3/2011
2:02:48 PM
K:\2986.02\CADD\Structural\dgn files\S-017E_U4438_SD_P5NE_01_E.dgn

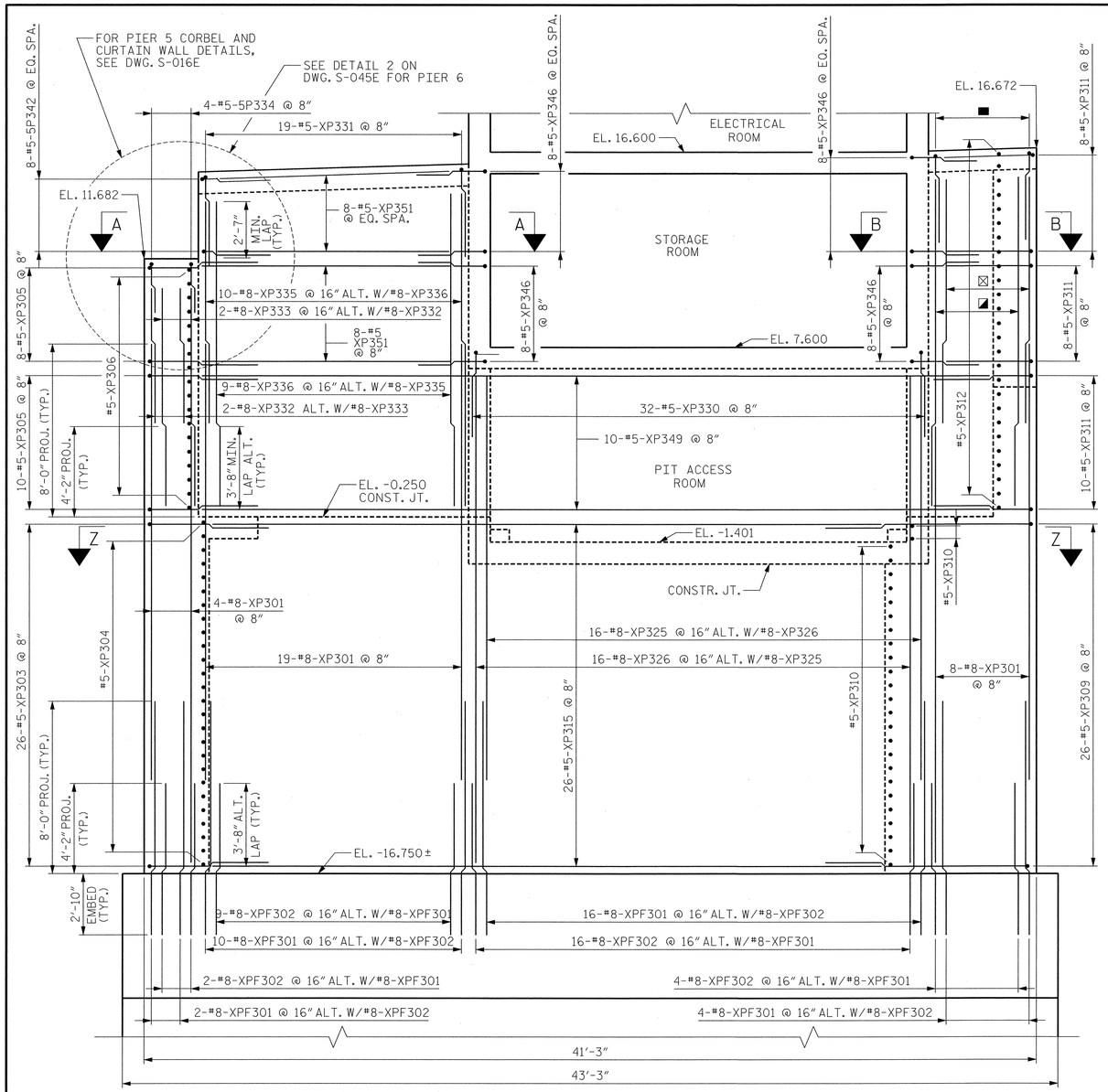

PIER 5 - SOUTH ELEVATION FRONT FACE

(LOOKING NORTH)
(BARRIER NOT SHOWN FOR CLARITY)

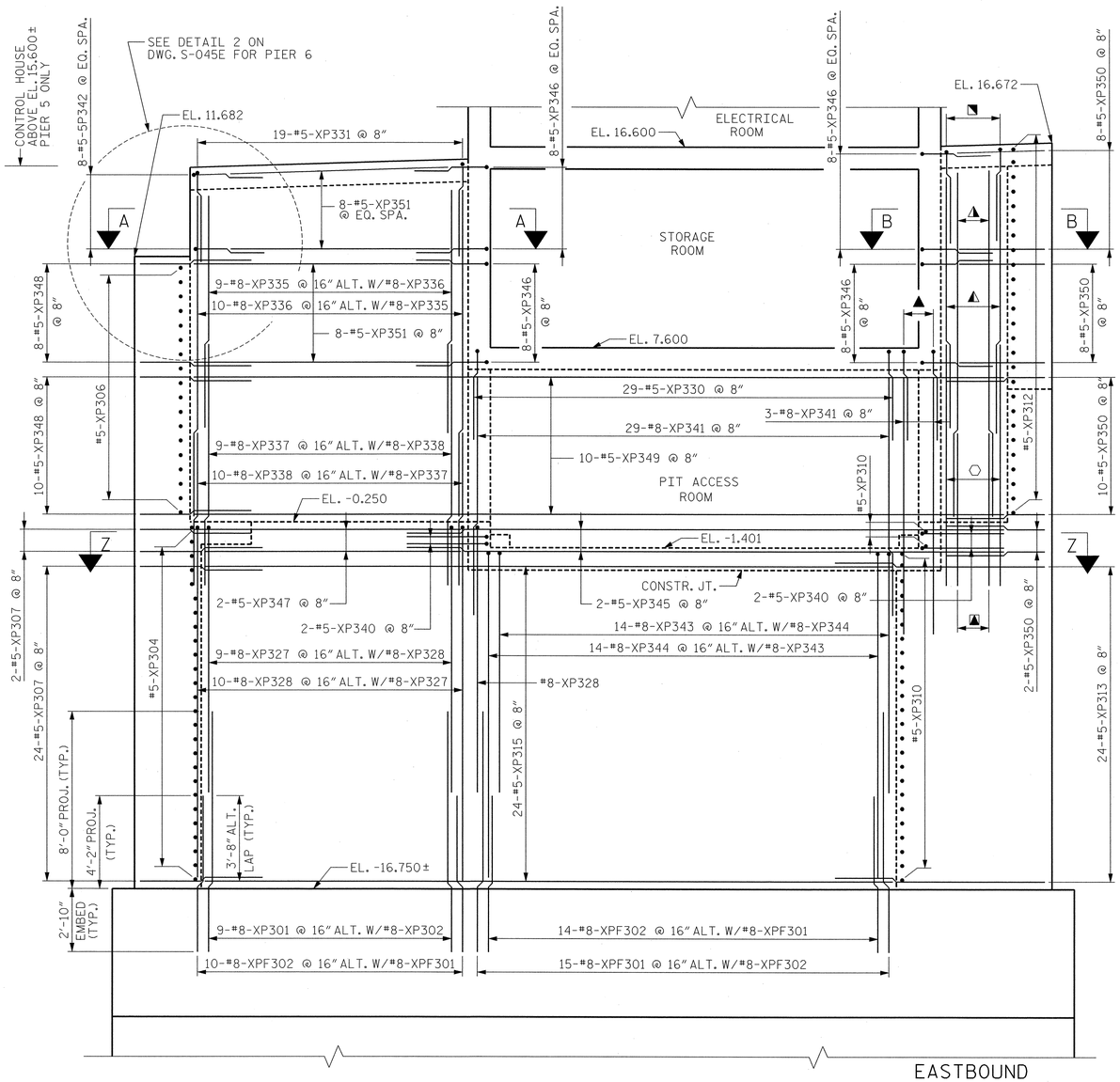

PIER 5 - SOUTH ELEVATION REAR FACE

(LOOKING NORTH)
(BARRIER NOT SHOWN FOR CLARITY)

PROJECT NO. U-4438
PASQUOTANK COUNTY
STATION: 15+25.75 -L1-

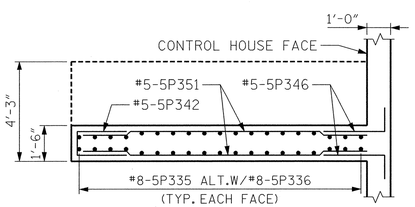

SECTION A-A - PIER 5

(SEE DWG. S-045E FOR PIER 6)

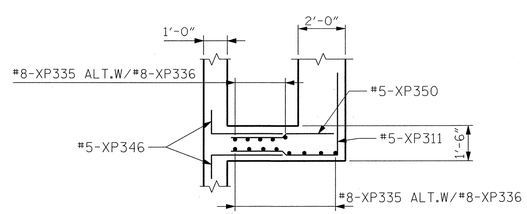

SECTION B-B

- ■ DENOTES: 8-#5-XP331 @ 8"
- ◥ DENOTES: 5-#5-XP331 @ 8"
- ⊠ DENOTES: 4-#8-XP335 @ 16" ALT. W/#8-XP336
- ◪ DENOTES: 4-#8-XP336 @ 16" ALT. W/#8-XP335
- ◩ DENOTES: 2-#8-XP338 @ 16" ALT. W/#8-XP337
- ⬡ DENOTES: 3-#8-XP337 @ 16" ALT. W/#8-XP338
- ◭ DENOTES: 3-#8-XP335 @ 16" ALT. W/#8-XP336
- ◮ DENOTES: 2-#8-XP336 @ 16" ALT. W/#8-XP335
- ▲ DENOTES: 3-#5-XP330 @ 8"

NOTES:

1. FOR GENERAL NOTES, SEE DWG. G-004.
2. FOR CONTROL HOUSE DETAILS, SEE DWGS. S-030E THRU S-037E.
3. FOR SECTION Z-Z, SEE DWG. S-024E.
4. PIER 5 SHOWN, PIER 6 OPPOSITE HAND UNLESS NOTED OTHERWISE.
5. FOR BAR NAMING CONVENTION, SEE DWG. S-038E.

MODJESKI and MASTERS
Experience great bridges.
Mechanicsburg, PA NC License No. C-2979

NORTH CAROLINA PROFESSIONAL ENGINEER SEAL 025801 LANCE V. BORDEN 3/18/2011

STATE OF NORTH CAROLINA
DEPARTMENT OF TRANSPORTATION
RALEIGH

ELIZABETH CITY BRIDGE OVER PASQUOTANK RIVER
BASCULE PIER 5 AND 6
SOUTH WALL ELEVATION

DRAWN BY : CMM	DATE : 01/11
CHECKED BY : KWJ	DATE : 01/11

DWG NUMBER	TOTAL DWGS
S-018E	94

REVISIONS						SHEET NO.
NO.	BY:	DATE:	NO.	BY:	DATE:	S-120
1			3			TOTAL SHEETS
2			4			454

3/18/2011
2:13:10 PM
K:\2986.02\CADD\Structural\dgn files\S-018E_U4438_SD_P5SE_01_E.dgn

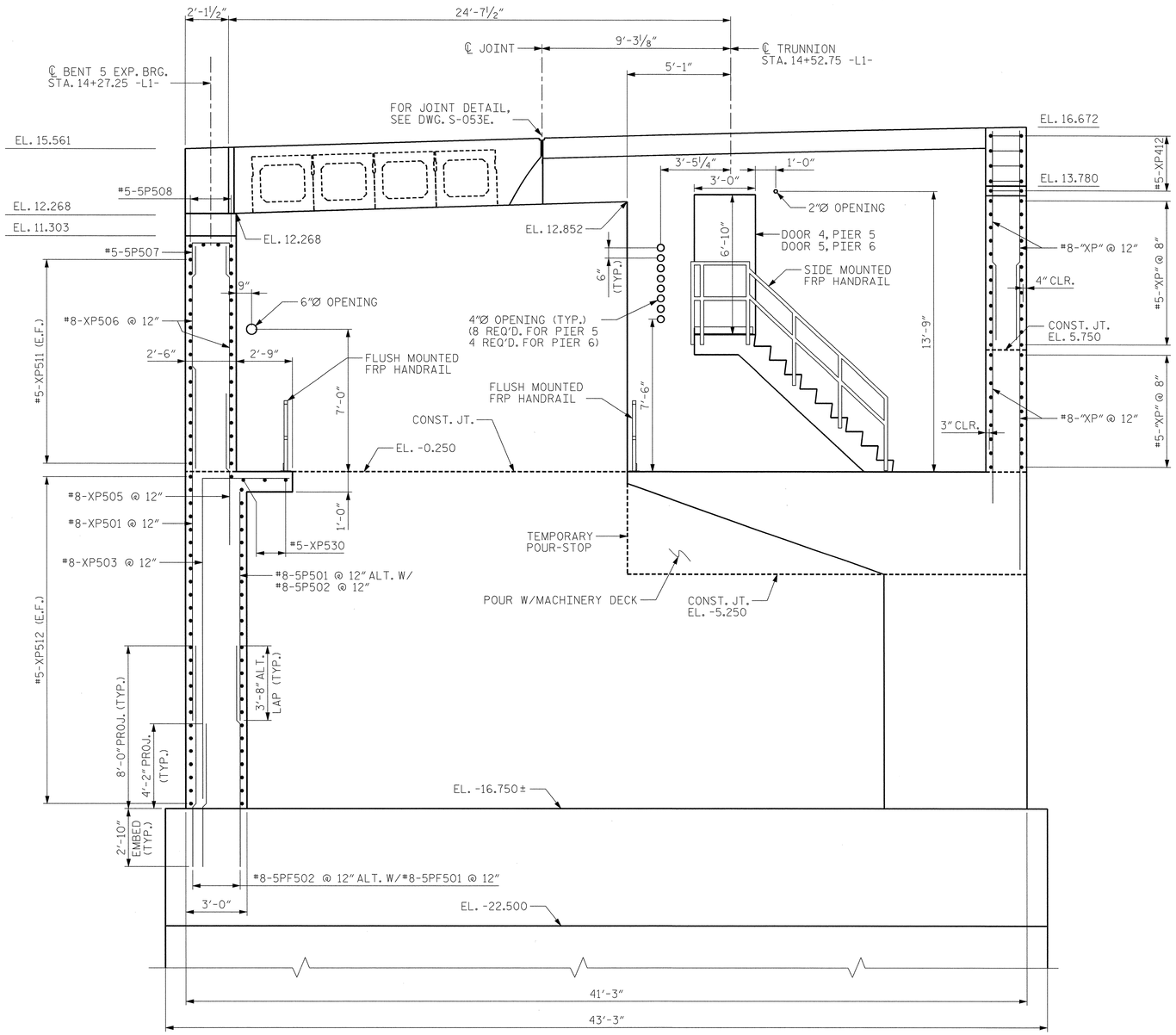

SECTION A-A

(LOOKING NORTH)
(BARRIER NOT SHOWN FOR CLARITY)

DOOR SCHEDULE

DOOR NO.	DOOR LOCATIONS	SHEET NO.	EXTERIOR OR INTERIOR	MATERIAL/FINISH
1	EB ELECTRICAL ROOM	S-226	EXTERIOR	316 STAINLESS STEEL, 16 GAGE
2	EB ELECTRICAL ROOM	S-226	INTERIOR	PAINTED GALVANNEALED STEEL, 16 GAGE
3	EB ELECTRICAL ROOM	S-226	INTERIOR	PAINTED GALVANNEALED STEEL, 16 GAGE
4	EB PIER 5 ACCESS WALK	S-121	EXTERIOR	316 STAINLESS STEEL, 16 GAGE
5	EB PIER 6 ACCESS WALK	S-121	EXTERIOR	316 STAINLESS STEEL, 16 GAGE
6	WB BASCULE PIER 1 ACCESS WALK	S-444	EXTERIOR	316 STAINLESS STEEL, 16 GAGE
7	WB BASCULE PIER 2 ACCESS WALK	S-444	EXTERIOR	316 STAINLESS STEEL, 16 GAGE
8	WB ELECTRICAL/STORAGE ROOM	S-382	EXTERIOR	316 STAINLESS STEEL, 16 GAGE

DOOR SPECIFICATION: HEAVY DUTY COMMERICAL STEEL DOOR, 1¾ INCH THICK, NOMINAL 36"W x 80"H EXCEPT DOORS 6 AND 7 SHALL BE CUSTOM SIZE TO FIT EXISTING OPENINGS. INTERNAL DOOR STIFFENERS OF 22 GAGE SAME MATERIAL AS DOOR, LAMINATED TO DOOR SKIN. FOR EXTERIOR DOORS, VOIDS BETWEEN STIFFENERS SHALL BE FILLED WITH POLYSTYRENE, TOP AND BOTTOM EDGES SHALL HAVE CONTINUOUS 16 GAGE STAINLESS STEEL CHANNELS SPOT WELDED TO BOTH FACES, TOP EDGE SHALL BE SEALED WATERTIGHT, VERTICAL EDGES HAIRLINE SEAM REINFORCED WITH 16 GAGE STAINLESS STEEL CHANNEL. STANDARD HINGE PREPARATION, ALL HARDWARE STAINLESS STEEL, 100 SQUARE INCH GLASS LIGHT ON ALL DOORS SHALL BE VANDEL RESISTANT ON EXTERNAL DOORS. FRAMES SHALL BE 14 GAGE MINIMUM, SAME MATERIAL AND FINISH AS DOORS. EXTERIOR DOORS ONLY SHALL BE LOCKABLE WITH KEY ACCESS ON OUTSIDE.

NOTES:

1. FOR GENERAL NOTES, SEE DWG. G-004.
2. FOR MACHINERY DECK REINFORCING, SEE DWG. S-025E
3. FOR STAIR & HANDRAIL DETAILS, SEE DWG. S-035E
4. CIRCULAR WALL OPENINGS SHALL BE SLEEVED WITH SCHEDULE 40 PVC PIPE. THE OPENING DIAMETER SHOWN IS THE INSIDE DIAMETER OF THE PVC PIPE.
5. PIER 5 SHOWN, PIER 6 OPPOSITE HAND UNLESS NOTED OTHERWISE.
6. FOR BAR NAMING CONVENTION, SEE DWG. S-038E.
7. FOR LOCATION OF SECTION A-A, SEE DWG. S-014E.

EASTBOUND

PROJECT NO. U-4438

PASQUOTANK COUNTY

STATION: 15+25.75 -L1-

STATE OF NORTH CAROLINA
DEPARTMENT OF TRANSPORTATION
RALEIGH

ELIZABETH CITY BRIDGE OVER
PASQUOTANK RIVER
BASCULE PIER 5 AND 6
SECTIONS & DETAILS - 1

MODJESKI and MASTERS
Experience great bridges.
Mechanicsburg, PA NC License No. C-2979

NORTH CAROLINA PROFESSIONAL SEAL 025801 ENGINEER LANCE V. BORDEN 01/09/2011

DWG NUMBER	TOTAL DWGS
S-019E	94

REVISIONS						SHEET NO.
NO.	BY:	DATE:	NO.	BY:	DATE:	S-121
1			3			TOTAL SHEETS
2			4			454

DRAWN BY : CMM DATE : 01/11
CHECKED BY : AEC DATE : 01/11

$$$$$$$SYSTIME$$$$$
$$$$$$$$$$$$$$$$DGN$$$$$$$$$$$$$$$$
$$$$USERNAME$$$$

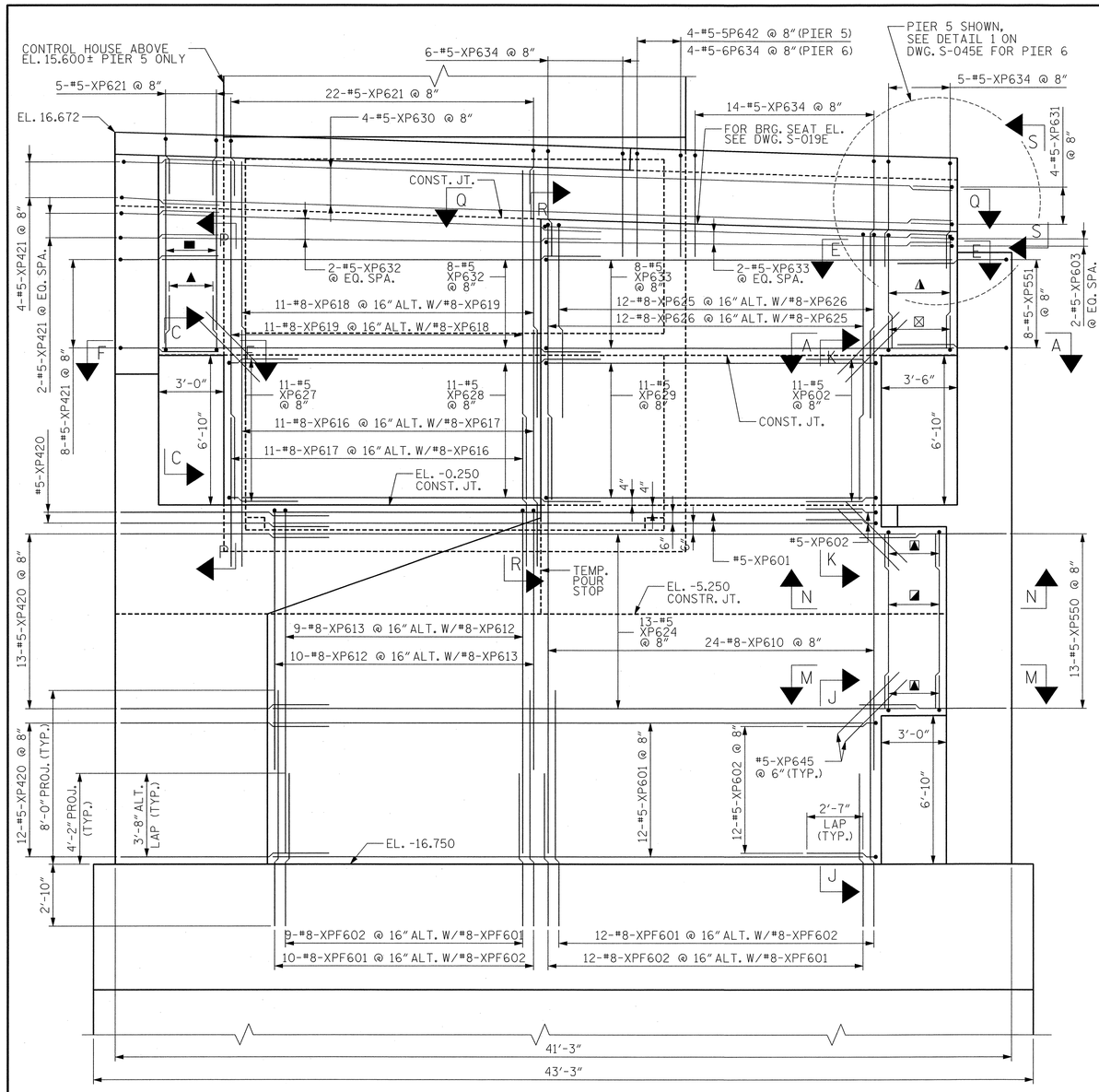

SECTION B-B FRONT FACE

(LOOKING SOUTH)
(BARRIER NOT SHOWN FOR CLARITY)

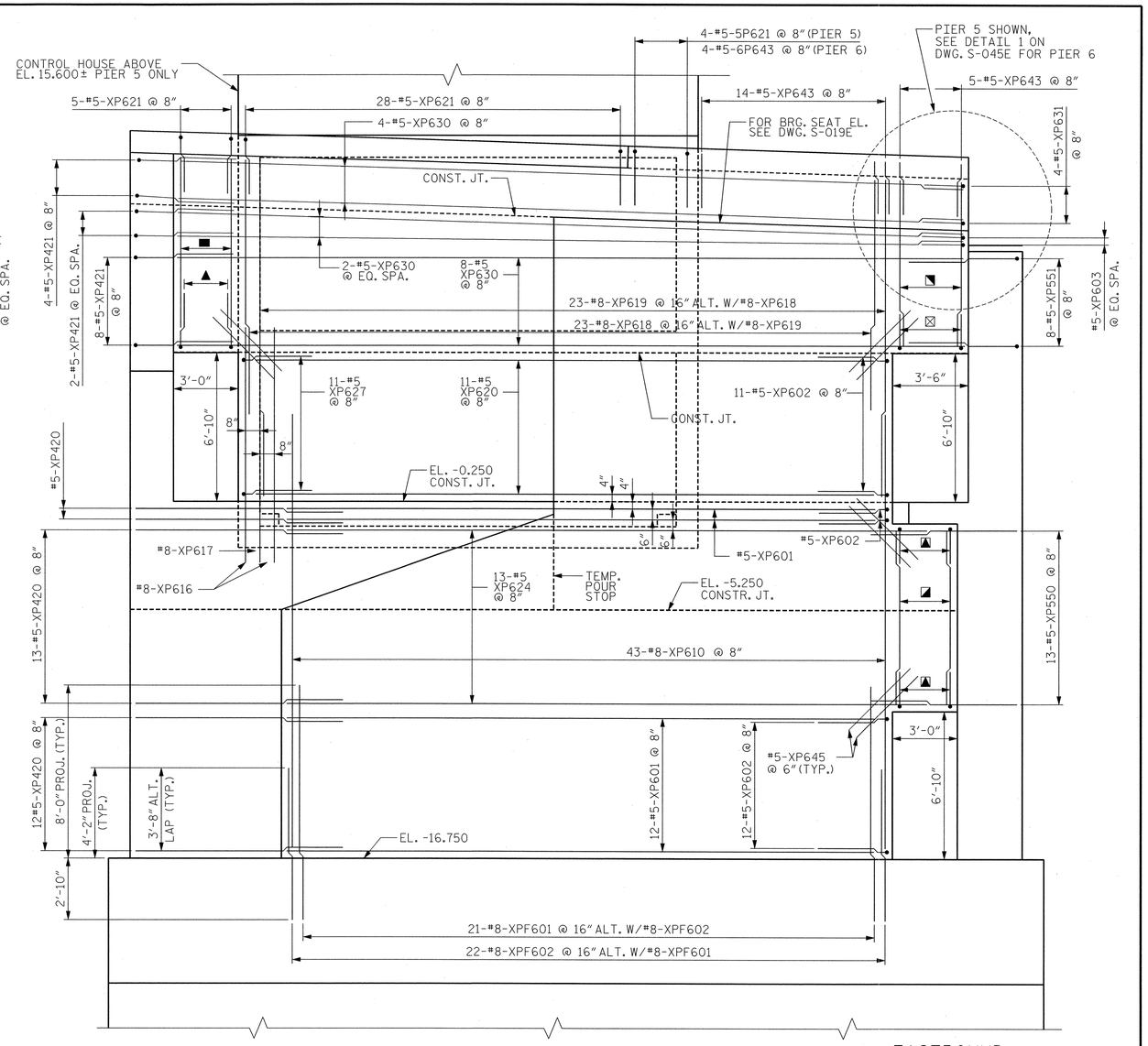

SECTION B-B REAR FACE

(LOOKING SOUTH)
(BARRIER NOT SHOWN FOR CLARITY)

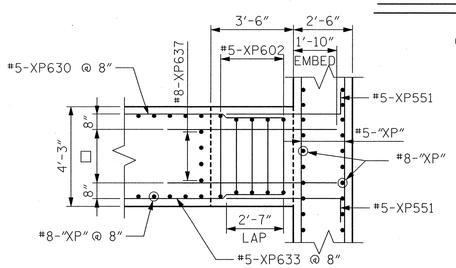

SECTION A-A

□ DENOTES: 4-#5-XP553 @ 9"

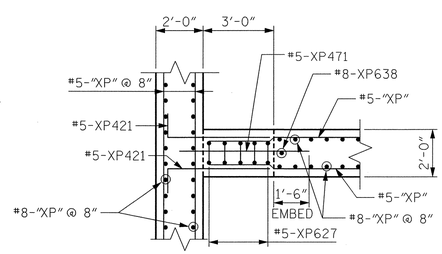

SECTION F-F

■ DENOTES: 5-#8-XP635 @ 8"
◥ DENOTES: 5-#8-XP622 @ 8"
⊠ DENOTES: 5-#5-XP602 @ 8"
◪ DENOTES: 4-#8-XP615 @ 8"
◭ DENOTES: 4-#5-XP602 @ 8"
▲ DENOTES: 5-#5-XP627 @ 8"
◮ DENOTES: 5-#8-XP623 @ 8"

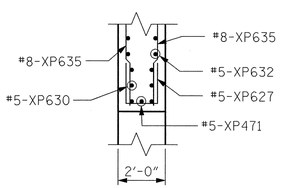

SECTION C-C

NOTES:

1. FOR GENERAL NOTES, SEE DWG. G004.
2. PVC SLEEVES NOT SHOWN FOR CLARITY. FOR PVC SLEEVE LOCATION, SEE DWG. S-010E.
3. PIER 5 SHOWN, PIER 6 OPPOSITE HAND EXCEPT AS NOTED.
4. FOR ORIGIN OF SECTION B-B, SEE DWG. S-014E.
5. FOR BAR NAMING CONVENTION, SEE DWG. S-038E.
6. FOR SECTIONS P-P & K-K, SEE DWG. S-012E.
7. FOR SECTIONS E-E, J-J, M-M, N-N, Q-Q, R-R & S-S, SEE DWG. S-024E.

EASTBOUND

PROJECT NO. U-4438

PASQUOTANK COUNTY

STATION: 15+25.75 -L1-

STATE OF NORTH CAROLINA
DEPARTMENT OF TRANSPORTATION
RALEIGH

ELIZABETH CITY BRIDGE OVER PASQUOTANK RIVER
BASCULE PIER 5 AND 6
SECTIONS & DETAILS -2

MODJESKI and MASTERS
Experience great bridges.
Mechanicsburg, PA NC License No. C-2979

NORTH CAROLINA PROFESSIONAL SEAL 025801 ENGINEER LANCE V. BORDEN 2/3/2011

DWG NUMBER	TOTAL DWGS
S-020E	94

REVISIONS						SHEET NO.
NO.	BY:	DATE:	NO.	BY:	DATE:	S-122
1			3			TOTAL SHEETS
2			4			454

DRAWN BY : CMM DATE : 01/11
CHECKED BY : KWJ DATE : 01/11

2/3/2011
2:03:01 PM
K:\2986.02\CADD\Structural\dgn files\S-020E_U4438_SD_B5SD4_01_E.dgn

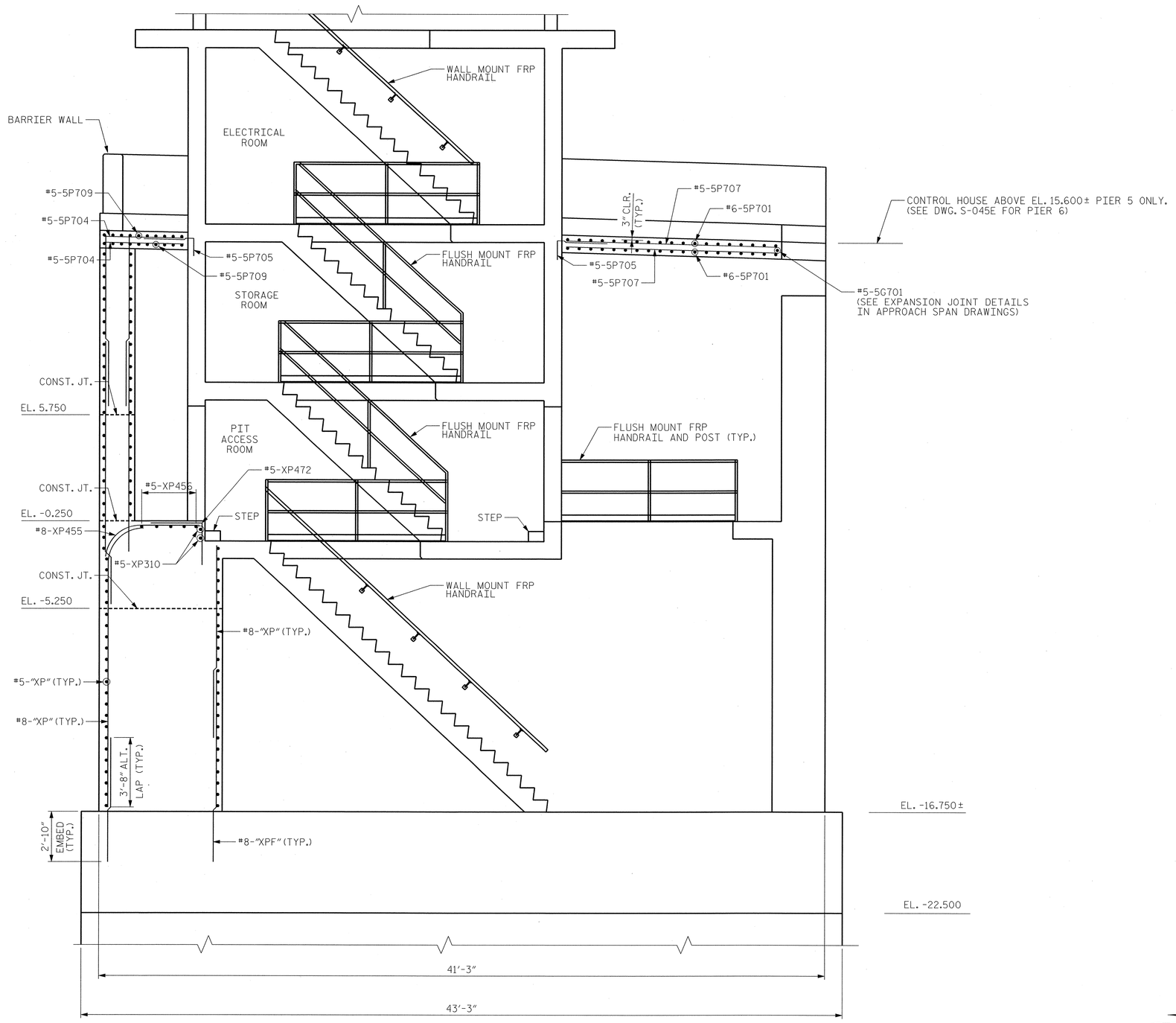

SECTION C-C

(LOOKING SOUTH)

NOTES:

1. FOR GENERAL NOTES, SEE DWG. G-004.
2. FOR CONTROL HOUSE DETAILS, SEE DWGS. S-030E THRU S-037E
3. FOR STAIR AND HANDRAIL DETAILS, SEE DWG. S-035E.
4. FOR LOCATION OF SECTION C-C, SEE DWG. S-014E.
5. PIER 5 SHOWN, PIER 6 OPPOSITE HAND UNLESS NOTED OTHERWISE.
6. FOR BAR NAMING CONVENTION, SEE DWG. S-038E.

EASTBOUND

PROJECT NO. U-4438

PASQUOTANK COUNTY

STATION: 15+25.75 -L1-

STATE OF NORTH CAROLINA
DEPARTMENT OF TRANSPORTATION
RALEIGH

ELIZABETH CITY BRIDGE OVER PASQUOTANK RIVER
BASCULE PIER 5 AND 6
SECTIONS & DETAILS - 3

MODJESKI and MASTERS
Experience great bridges.
Mechanicsburg, PA NC License No. C-2979

NORTH CAROLINA PROFESSIONAL SEAL 025801 ENGINEER LANCE V. BORDEN 3/18/2011

REVISIONS						SHEET NO.
NO.	BY:	DATE:	NO.	BY:	DATE:	S-123
1			3			TOTAL SHEETS
2			4			454

DWG NUMBER	TOTAL DWGS
S-021E	94

DRAWN BY : CMM DATE : 01/11
CHECKED BY : AEC DATE : 01/11

3/18/2011
2:13:14 PM
K:\2986.02\CADD\Structural\dgn files\S-021E_U4438_SD_B5SD3_01_E.dgn

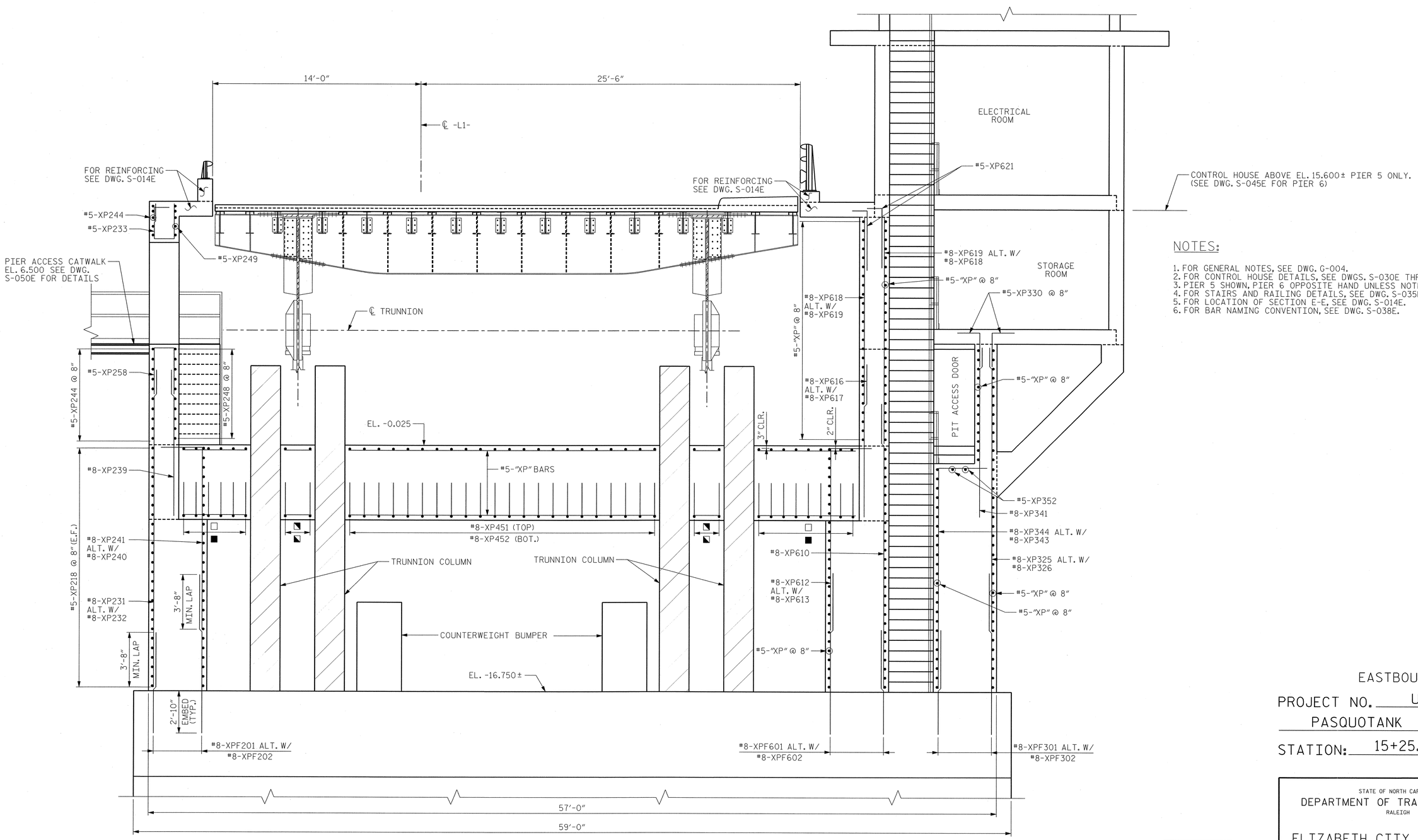

NOTES:

1. FOR GENERAL NOTES, SEE DWG. G-004.
2. FOR CONTROL HOUSE DETAILS, SEE DWGS. S-030E THROUGH S-037E.
3. PIER 5 SHOWN, PIER 6 OPPOSITE HAND UNLESS NOTED OTHERWISE.
4. FOR STAIRS AND RAILING DETAILS, SEE DWG. S-035E.
5. FOR LOCATION OF SECTION E-E, SEE DWG. S-014E.
6. FOR BAR NAMING CONVENTION, SEE DWG. S-038E.

■ DENOTES: #8-XP454 (TOP)
◪ DENOTES: #8-XP470 (BOT.)
□ DENOTES: #8-XP451 (TOP)
■ DENOTES: #8-XP452 (BOT.)

SECTION E-E

(LOOKING EAST)

EASTBOUND

PROJECT NO. U-4438

PASQUOTANK COUNTY

STATION: 15+25.75 -L1-

STATE OF NORTH CAROLINA
DEPARTMENT OF TRANSPORTATION
RALEIGH

ELIZABETH CITY BRIDGE OVER PASQUOTANK RIVER
BASCULE PIER 5 AND 6
SECTIONS & DETAILS - 4

MODJESKI and MASTERS
Experience great bridges.
Mechanicsburg, PA NC License No. C-2979

NORTH CAROLINA PROFESSIONAL ENGINEER SEAL 025801 LANCE V. BORDEN 2/3/2011

DWG NUMBER	TOTAL DWGS
S-022E	94

REVISIONS						SHEET NO.
NO.	BY:	DATE:	NO.	BY:	DATE:	S-124
1			3			TOTAL SHEETS
2			4			454

DRAWN BY : CMM DATE : 01/11
CHECKED BY : KWJ DATE : 01/11

2/3/2011
2:03:10 PM
K:\2986.02\CADD\Structural\dgn files\S-022E_U4438_SD_P5ES_01_E.dgn

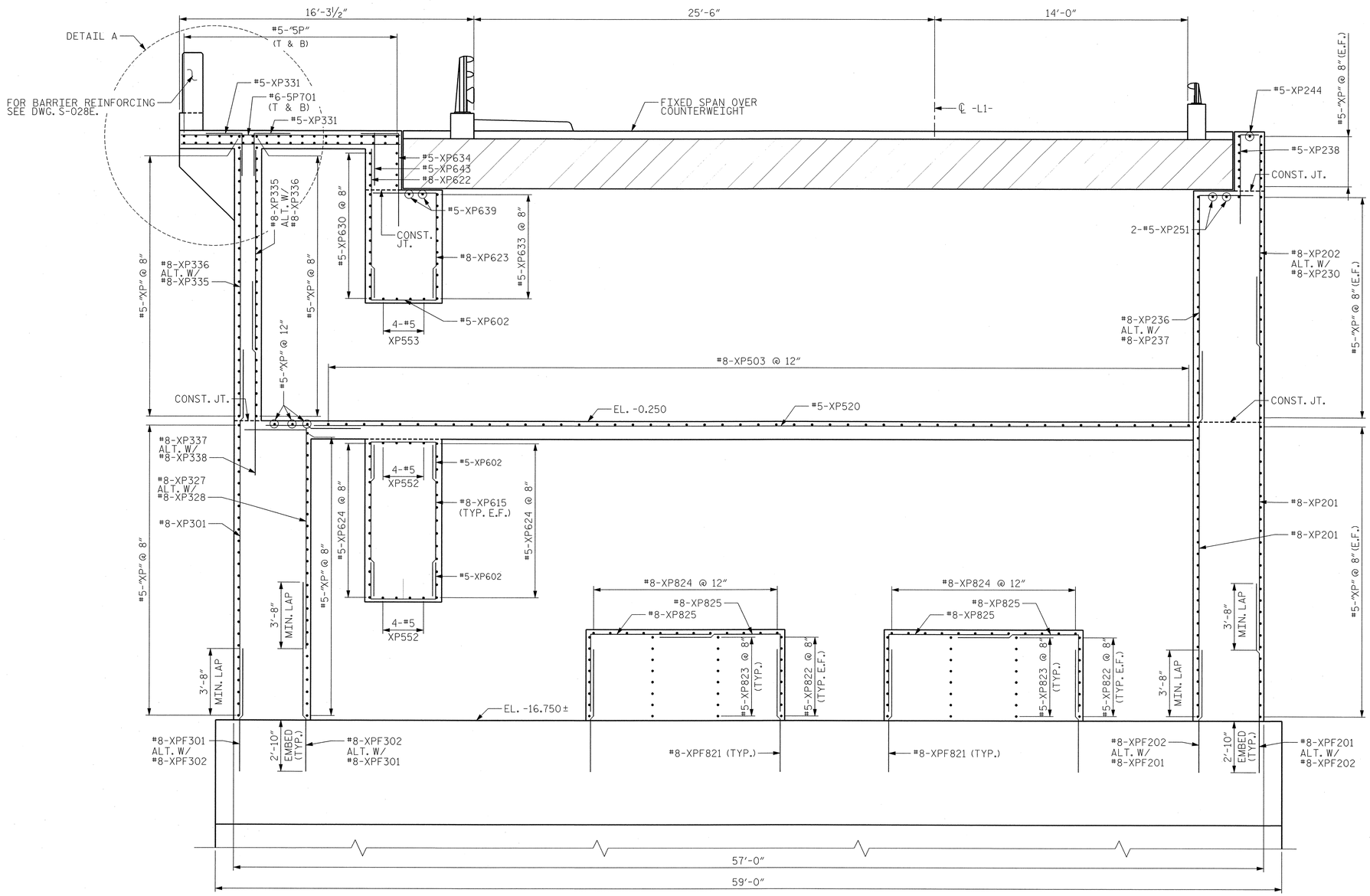

SECTION F-F

(LOOKING WEST)
(PIER 5 SHOWN, FOR PIER 6, SEE DETAIL A)

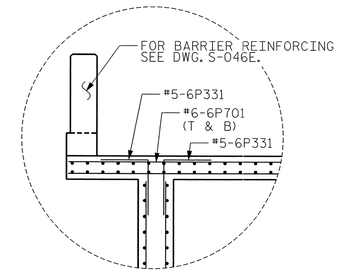

DETAIL A

(PIER 6 ONLY)

NOTES:

1. FOR GENERAL NOTES, SEE DWG. G-004.
2. FOR LOCATION OF SECTION F-F, SEE DWG. S-014E.
3. FOR FIXED SPAN DETAILS, SEE DWGS. S-053E THROUGH S-056E.
4. PIER 5 SHOWN, PIER 6 OPPOSITE HAND UNLESS NOTED OTHERWISE.
5. FOR BAR NAMING CONVENTION, SEE DWG. S-038E.

EASTBOUND

PROJECT NO. U-4438

PASQUOTANK COUNTY

STATION: 15+25.75 -L1-

STATE OF NORTH CAROLINA
DEPARTMENT OF TRANSPORTATION
RALEIGH

ELIZABETH CITY BRIDGE OVER
PASQUOTANK RIVER
BASCULE PIER 5 AND 6
SECTIONS & DETAILS - 5

MODJESKI and MASTERS
Experience great bridges.
Mechanicsburg, PA NC License No. C-2979

NORTH CAROLINA PROFESSIONAL SEAL 025801 ENGINEER LANCE V. BORDEN 2/3/2011

DWG NUMBER	TOTAL DWGS
S-023E	94

REVISIONS						SHEET NO.
NO.	BY:	DATE:	NO.	BY:	DATE:	S-125
1			3			TOTAL SHEETS
2			4			454

DRAWN BY : CMM DATE : 01/11
CHECKED BY : KWJ DATE : 01/11

2/3/2011
2:03:16 PM
K:\2986.02\CADD\Structural\dgn files\S-023E_U4438_SD_P5WS_01_E.dgn

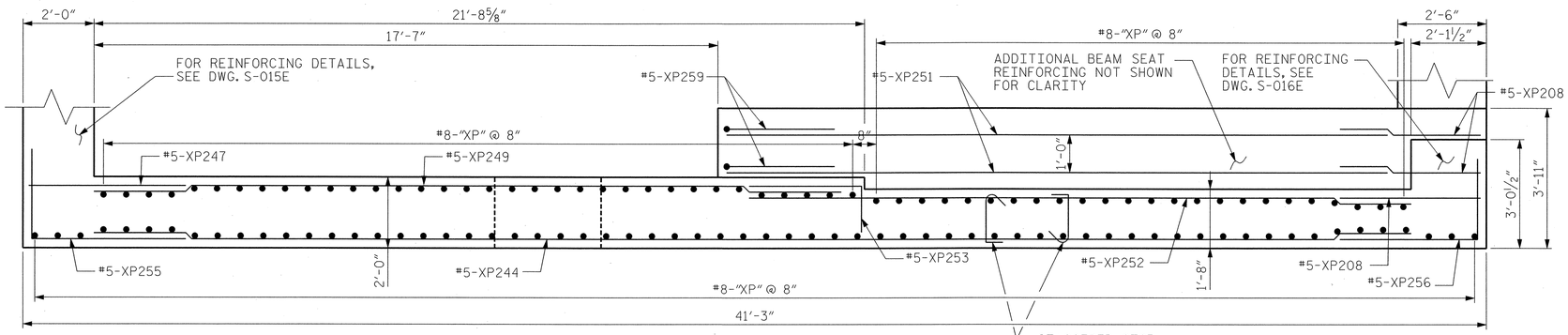

SECTION C-C

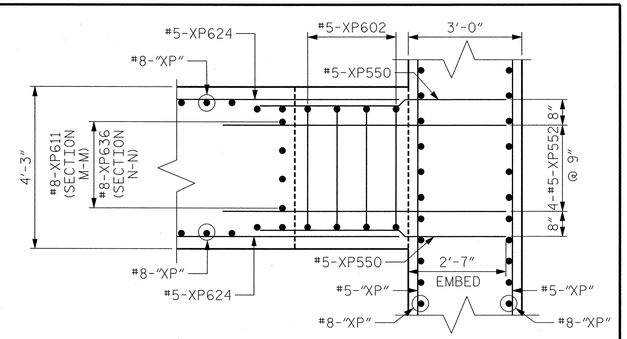

SECTION M-M & SECTION N-N

(SECTION M-M SHOWN, SECTION N-N SIMILAR)

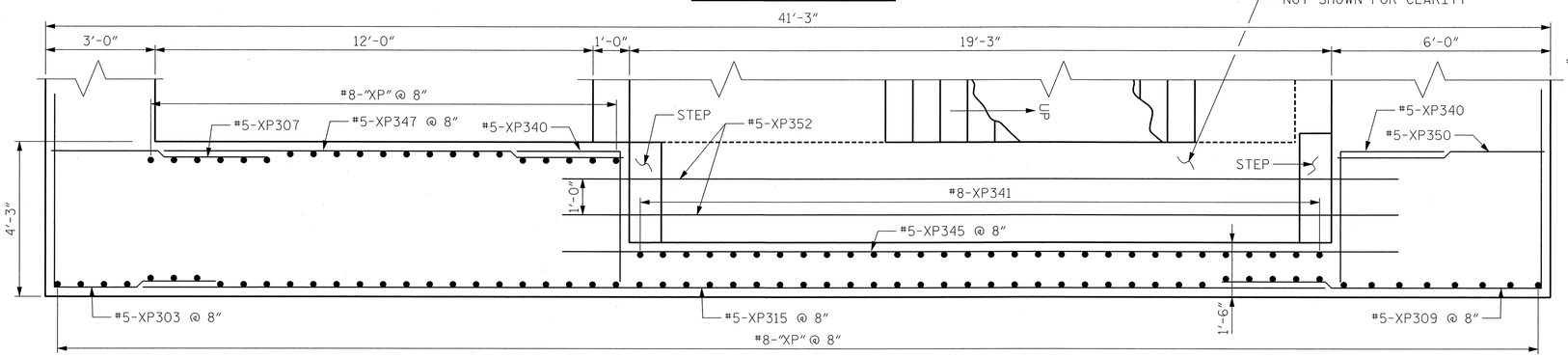

SECTION Z-Z

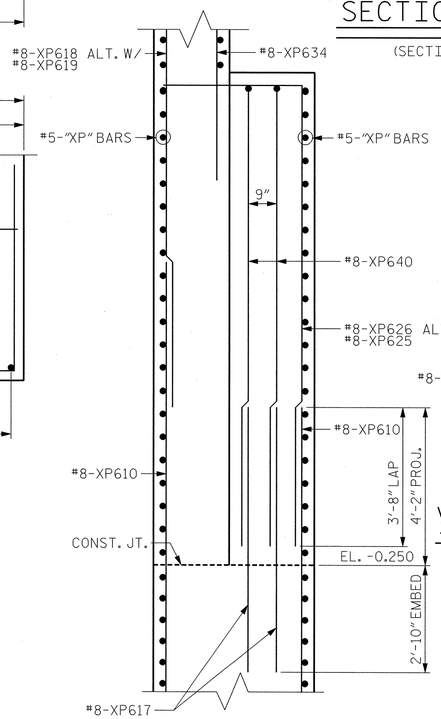

SECTION R-R

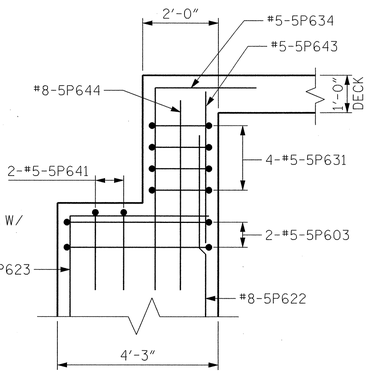

VIEW S-S - PIER 5 ONLY

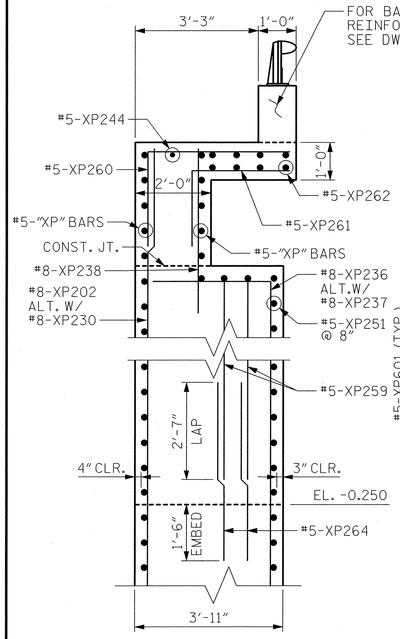

SECTION B-B

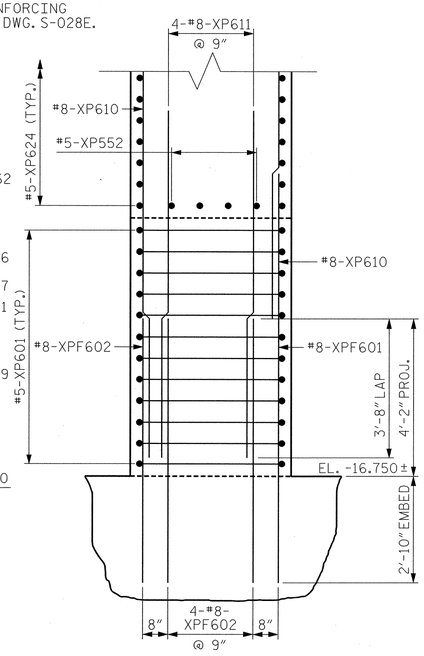

SECTION J-J

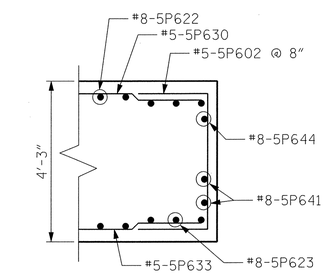

SECTION E-E - PIER 5

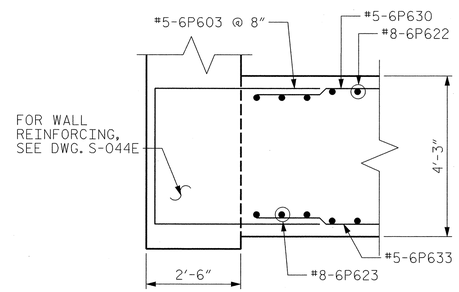

SECTION E-E - PIER 6

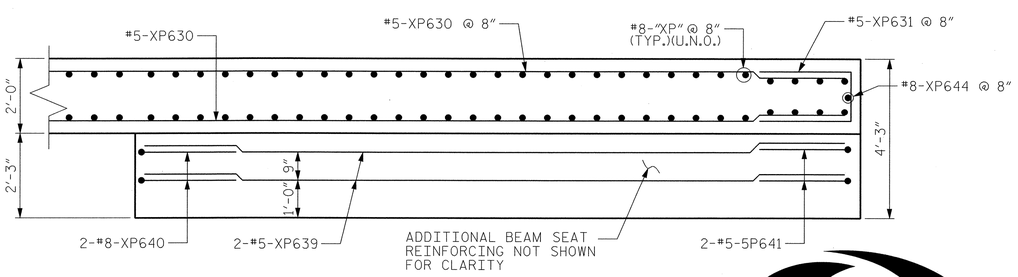

SECTION Q-Q - PIER 5

(SEE DWG. S-045E FOR PIER 6)

NOTES:

1. FOR GENERAL NOTES, SEE DWG. G-004.
2. FOR SECTIONS B-B & C-C, SEE DWG. S-017E.
3. FOR SECTION Z-Z, SEE DWG. S-018E.
4. FOR SECTIONS E-E, J-J, M-M, N-N, Q-Q, R-R, & S-S SEE DWG. S-020E.
5. FOR BAR NAMING CONVENTION, SEE DWG. S-038E.
6. FOR SCHEMATIC DIAGRAM OF CROSS TIE LOCATIONS, SEE DWG. S-026E.

EASTBOUND

PROJECT NO. U-4438

PASQUOTANK COUNTY

STATION: 15+25.75 -L1-

STATE OF NORTH CAROLINA
DEPARTMENT OF TRANSPORTATION
RALEIGH

ELIZABETH CITY BRIDGE OVER PASQUOTANK RIVER
BASCULE PIER 5 AND 6
SECTIONS & DETAILS - 6

MODJESKI and MASTERS
Experience great bridges.
Mechanicsburg, PA NC License No. C-2979

NORTH CAROLINA PROFESSIONAL ENGINEER SEAL 025801 LANCE V. BORDEN 3/18/2011

REVISIONS						SHEET NO.
NO.	BY:	DATE:	NO.	BY:	DATE:	S-126
1			3			TOTAL SHEETS
2			4			454

DWG NUMBER	TOTAL DWGS
S-024E	94

DRAWN BY : CMM DATE : 01/11
CHECKED BY : KWJ DATE : 01/11

3/18/2011
2:13:18 PM
K:\2986.02\CADD\Structural\dgn files\S-024E_U4438_SD_B5SD5_01_E.dgn

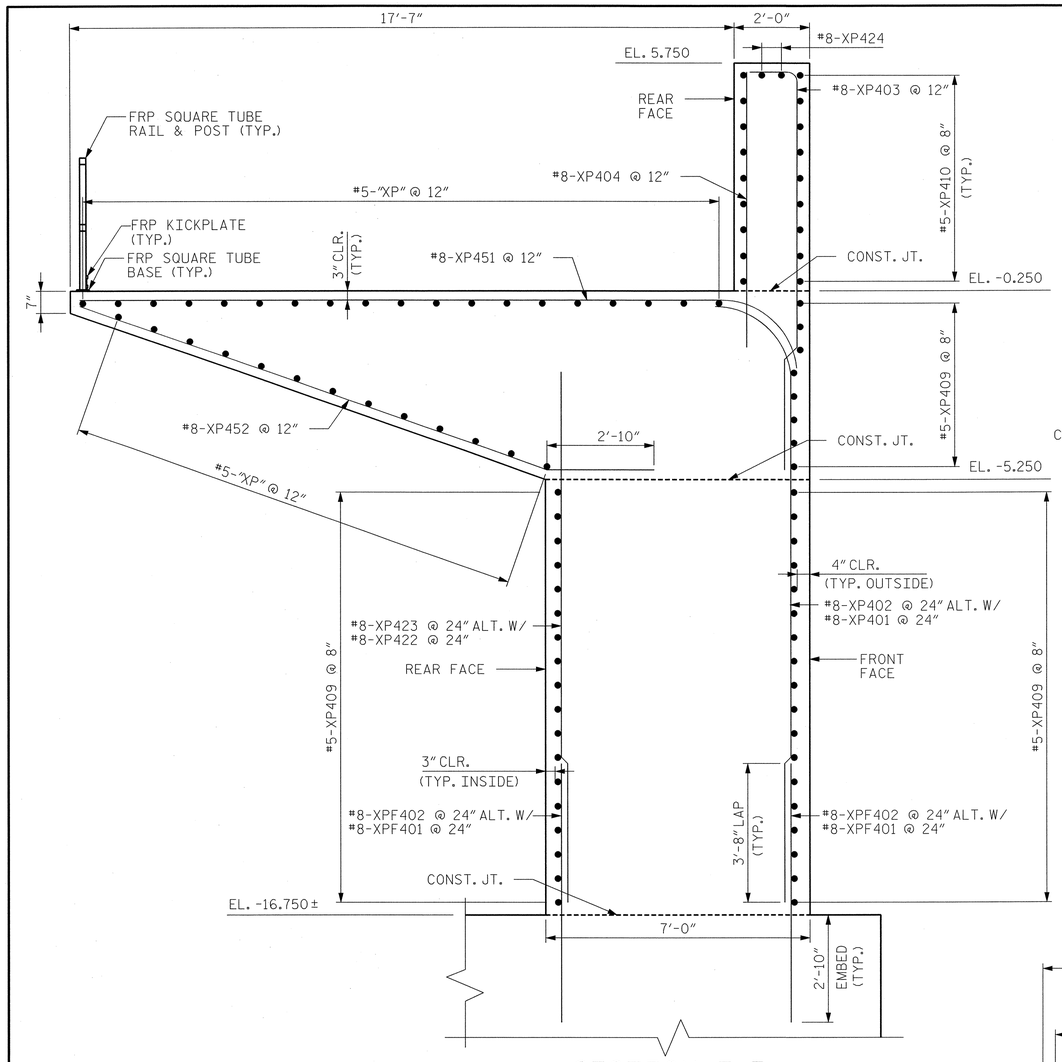

SECTION F-F

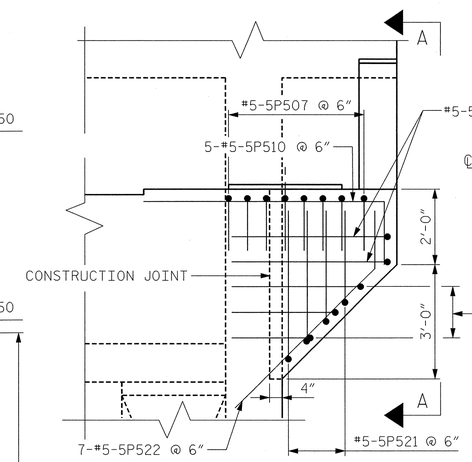

DETAIL 2

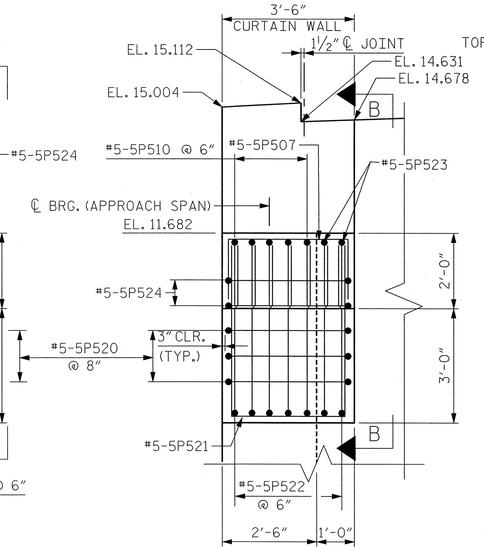

SECTION A-A

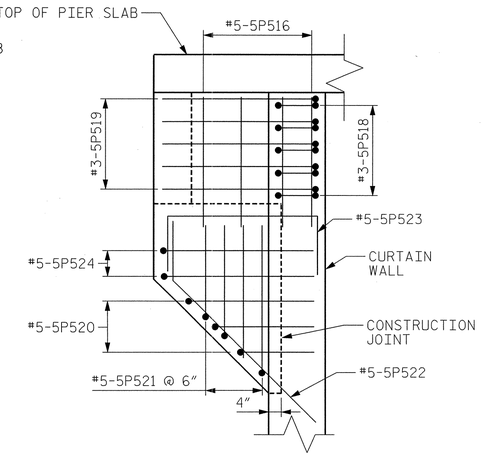

SECTION B-B

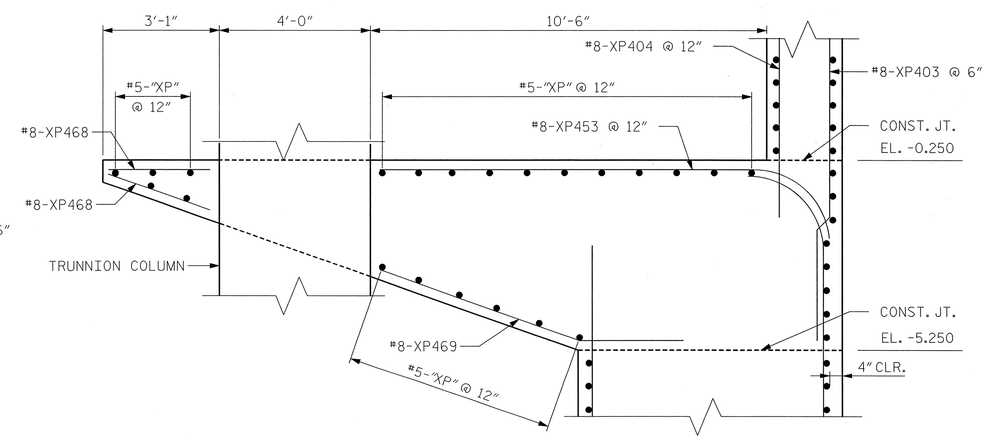

SECTION H-H

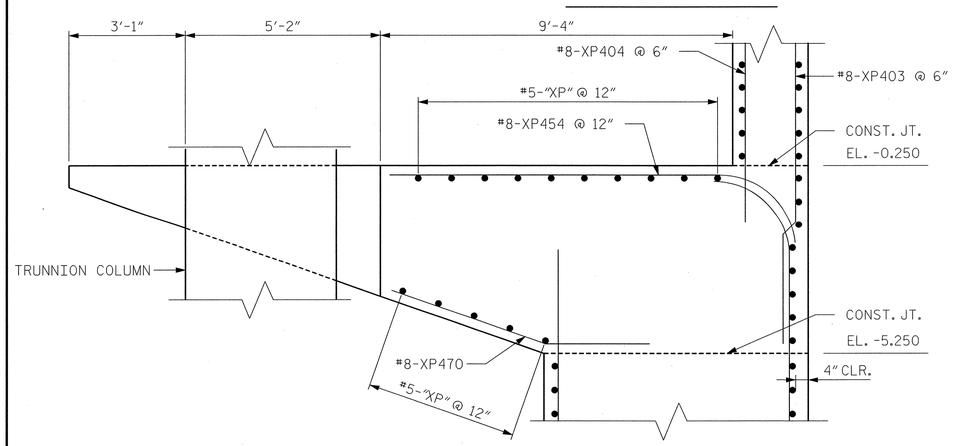

SECTION G-G

NOTES:

1. FOR GENERAL NOTES, SEE DWG. G-004.
2. FOR TRUNNION COLUMN DETAILS, SEE DWG. S-027E.
3. FOR SECTIONS F-F, G-G AND H-H, SEE DWG. S-011E.
4. FOR LOCATION OF DETAIL 2, SEE DWG. S-016E.
5. FOR BAR NAMING CONVENTION, SEE DWG. S-038E.
6. FOR FRP RAILING DETAILS, SEE DWG. S-035E.

EASTBOUND

PROJECT NO. U-4438

PASQUOTANK COUNTY

STATION: 15+25.75 -L1-

STATE OF NORTH CAROLINA
DEPARTMENT OF TRANSPORTATION
RALEIGH

ELIZABETH CITY BRIDGE OVER PASQUOTANK RIVER
BASCULE PIER 5 AND 6
SECTIONS & DETAILS - 7

MODJESKI and MASTERS
Experience great bridges.
Mechanicsburg, PA NC License No. C-2979

NORTH CAROLINA PROFESSIONAL SEAL 025801 ENGINEER LANCE V. BORDEN 2/3/2011

DWG NUMBER	TOTAL DWGS
S-025E	94

REVISIONS								SHEET NO.
NO.	BY:	DATE:	NO.	BY:	DATE:			S-127
1			3					TOTAL SHEETS
2			4					454

DRAWN BY : CMM DATE : 01/11
CHECKED BY : AEC DATE : 01/11

2/3/2011
2:03:33 PM
K:\2986.02\CADD\Structural\dgn files\S-025E_U4438_SD_B5SD6_01_E.dgn

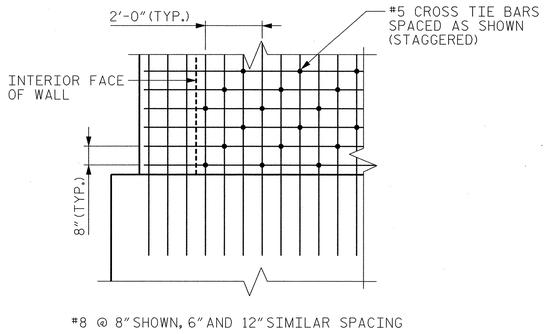

CROSS TIE LOCATIONS

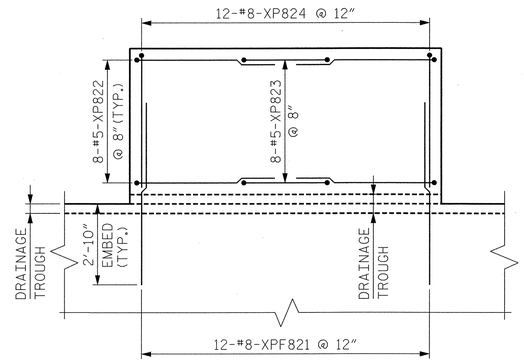

SECTION C-C

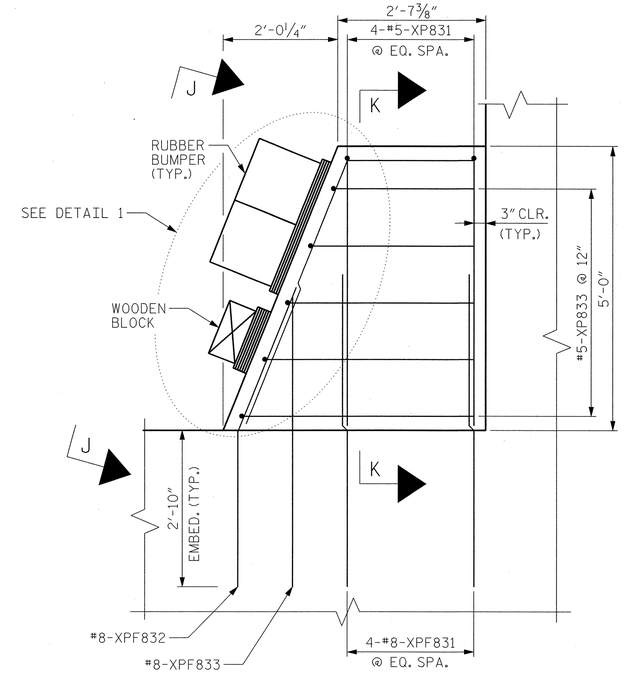

SECTION E-E

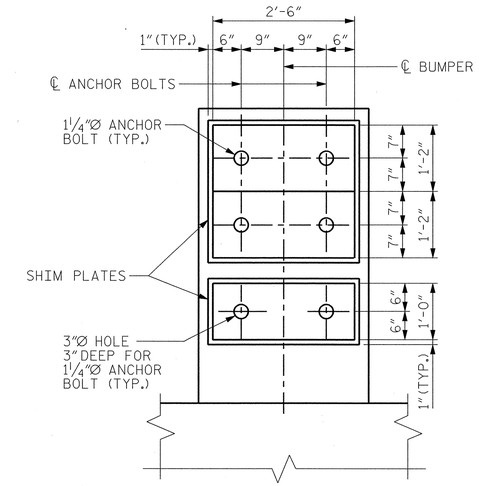

VIEW J-J

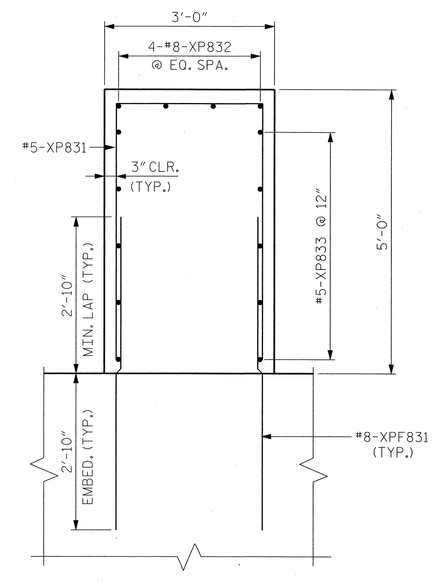

SECTION K-K

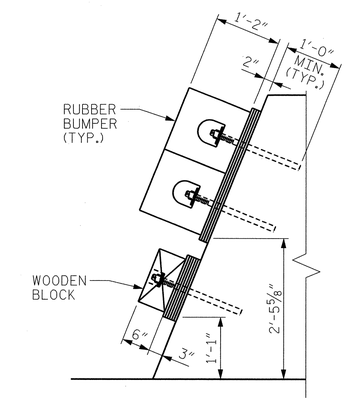

DETAIL 1

EASTBOUND

PROJECT NO. U-4438

PASQUOTANK COUNTY

STATION: 15+25.75 -L1-

NOTES:

1. FOR GENERAL NOTES, SEE DWG. G-004.
2. FOR LOCATION OF SECTION C-C, SEE DWG. S-009E.
3. FOR LOCATION OF SECTION E-E, SEE DWG. S-009E.
4. PIER 5 SHOWN, PIER 6 OPPOSITE HAND UNLESS NOTED OTHERWISE.
5. FOR BAR NAMING CONVENTION, SEE DWG. S-038E.

MODJESKI and MASTERS
Experience great bridges.
Mechanicsburg, PA NC License No. C-2979

NORTH CAROLINA PROFESSIONAL SEAL 025801 ENGINEER LANCE V. BORDEN 3/18/2011

STATE OF NORTH CAROLINA
DEPARTMENT OF TRANSPORTATION
RALEIGH

ELIZABETH CITY BRIDGE OVER PASQUOTANK RIVER
BASCULE PIER 5 AND 6
SECTIONS & DETAILS - 8

DWG NUMBER	TOTAL DWGS
S-026E	94

REVISIONS						SHEET NO.
NO.	BY:	DATE:	NO.	BY:	DATE:	S-128
1			3			TOTAL SHEETS
2			4			454

DRAWN BY : CMM DATE : 01/11
CHECKED BY : KWJ DATE : 01/11

3/18/2011
2:13:23 PM
K:\2986.02\CADD\Structural\dgn files\S-026E_U4438_SD_B5SD_01_E.dgn

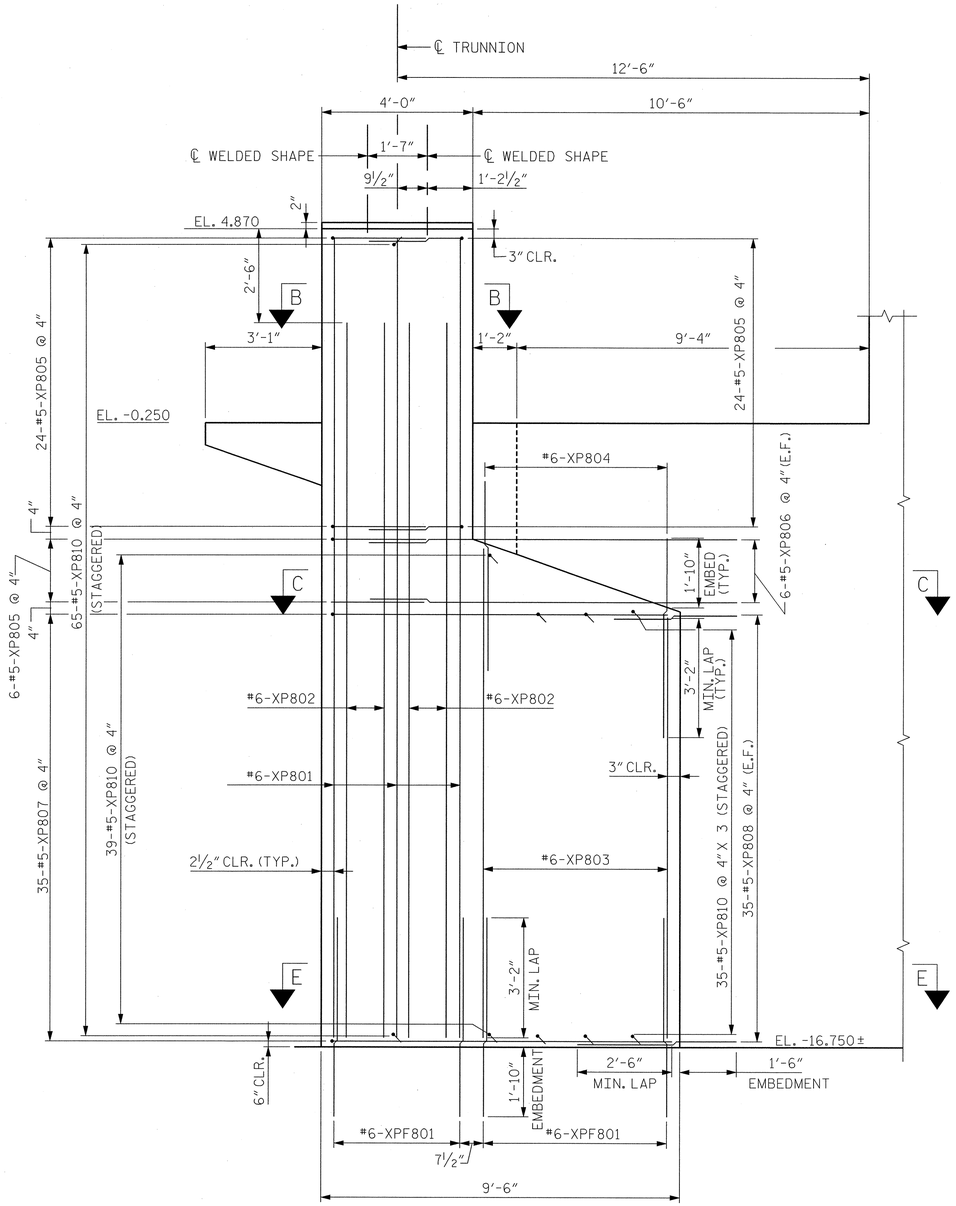

SECTION F-F

(WELDED SHAPE TRUNNION COLUMN NOT SHOWN FOR CLARITY)

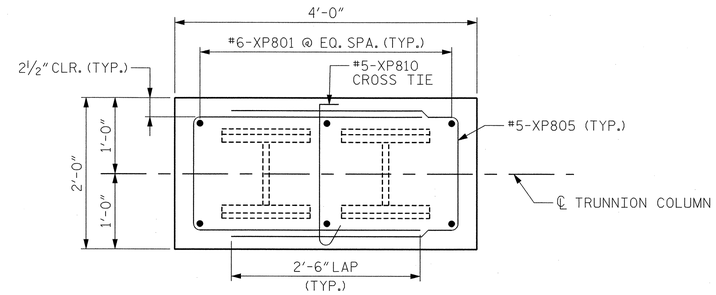

SECTION B-B

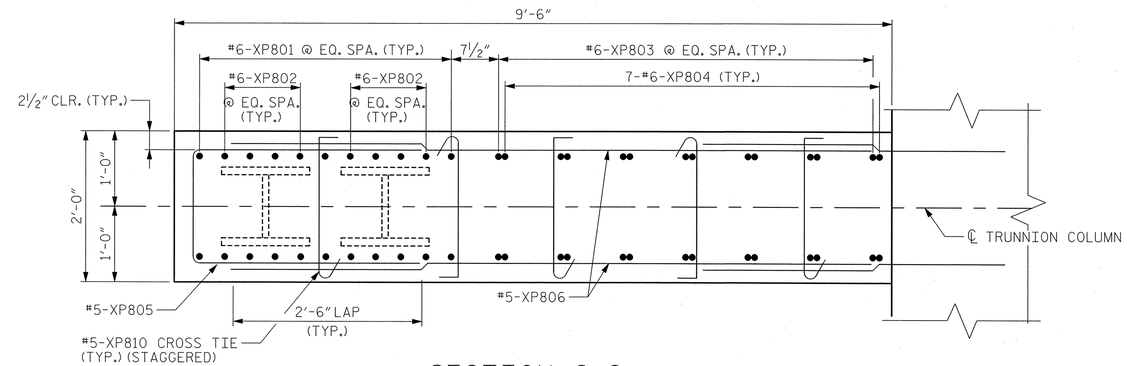

SECTION C-C

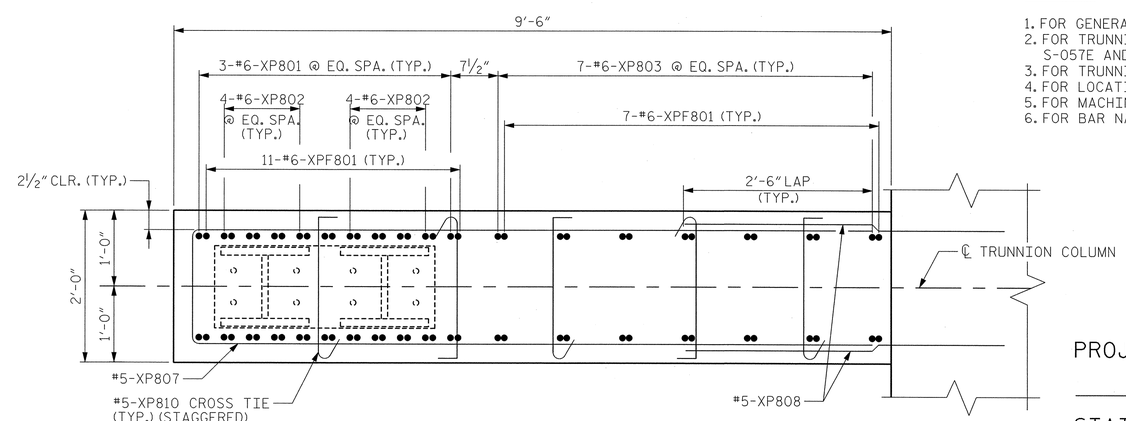

SECTION E-E

NOTES:

1. FOR GENERAL NOTES, SEE DWG. G-004.
2. FOR TRUNNION COLUMN DETAILS, SEE DWGS. S-057E AND S-058E.
3. FOR TRUNNION BEARING DETAILS, SEE DWG. M-008E.
4. FOR LOCATION OF SECTION F-F, SEE DWG. S-009E.
5. FOR MACHINERY DECK REINFORCING, SEE DWG. S-011E.
6. FOR BAR NAMING CONVENTION, SEE DWG. S-038E.

EASTBOUND

PROJECT NO. U-4438

PASQUOTANK COUNTY

STATION: 15+25.75 -L1-

STATE OF NORTH CAROLINA
DEPARTMENT OF TRANSPORTATION
RALEIGH

ELIZABETH CITY BRIDGE OVER
PASQUOTANK RIVER
BASCULE PIER 5 AND 6
TRUNNION COLUMN REINFORCING

MODJESKI and MASTERS
Experience great bridges.
Mechanicsburg, PA NC License No. C-2979

NORTH CAROLINA PROFESSIONAL SEAL 025801 ENGINEER LANCE V. BORDEN 2/3/2011

REVISIONS						SHEET NO.
NO.	BY:	DATE:	NO.	BY:	DATE:	S-129
1			3			TOTAL SHEETS
2			4			454

DWG NUMBER	TOTAL DWGS
S-027E	94

DRAWN BY : CMM DATE : 01/11
CHECKED BY : HNB DATE : 01/11

2/3/2011
2:03:42 PM
K:\2986.02\CADD\Structural\dgn files\S-027E_U4438_SD_TCR_01_E.dgn

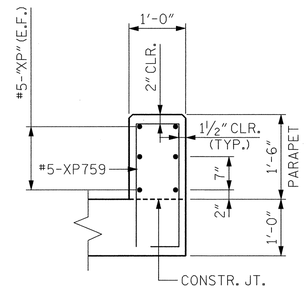

SECTION W-W

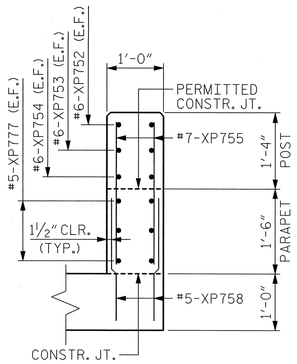

SECTION X-X

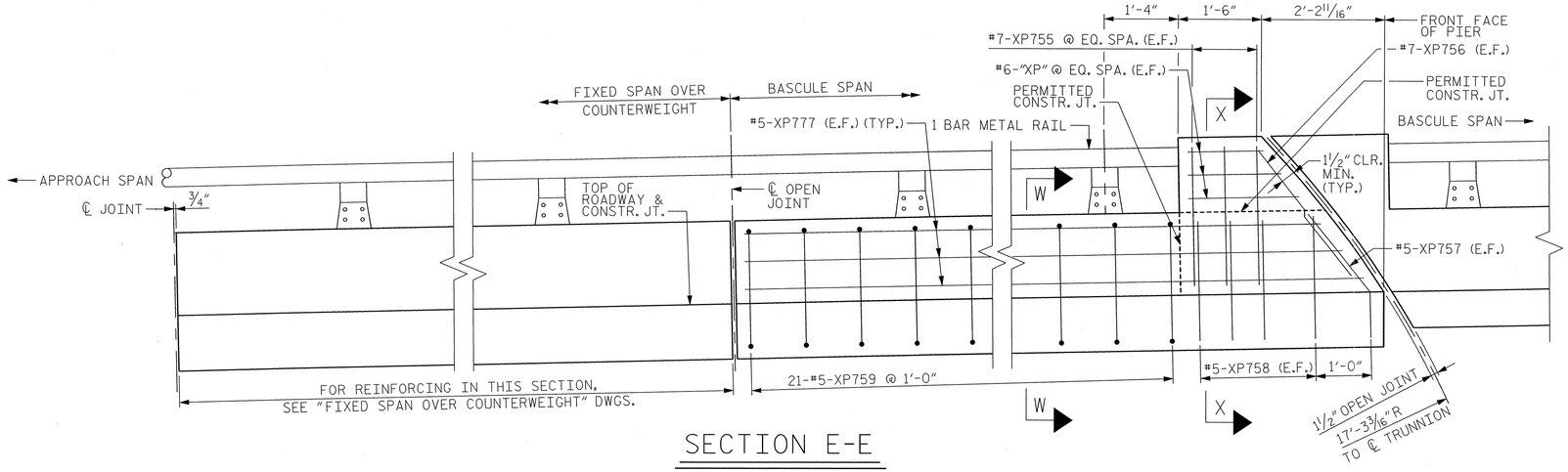

SECTION E-E

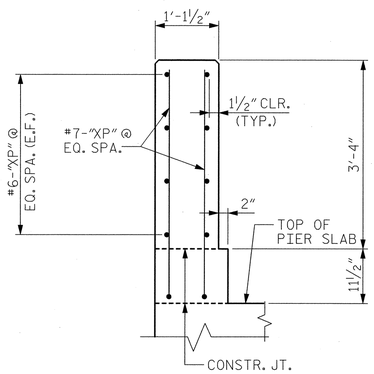

SECTION Z-Z

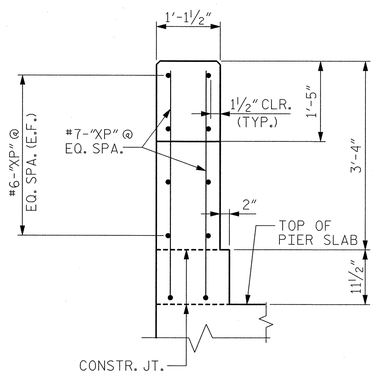

SECTION Y-Y

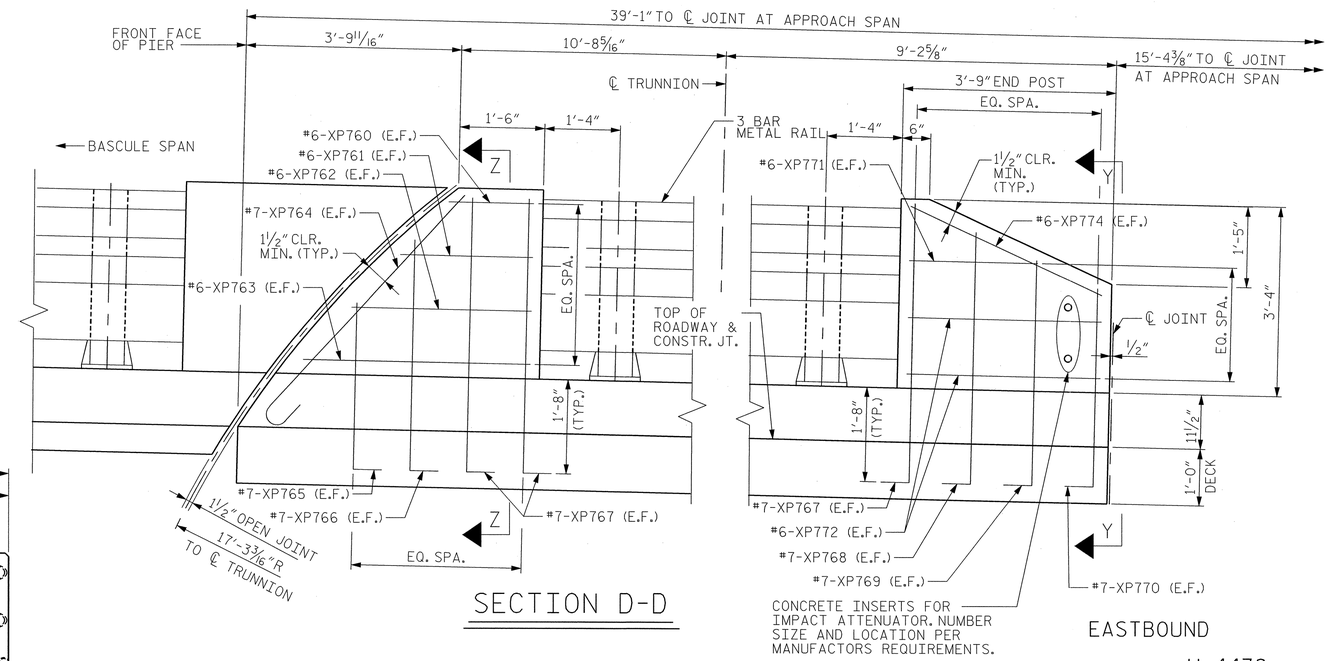

SECTION D-D

EASTBOUND

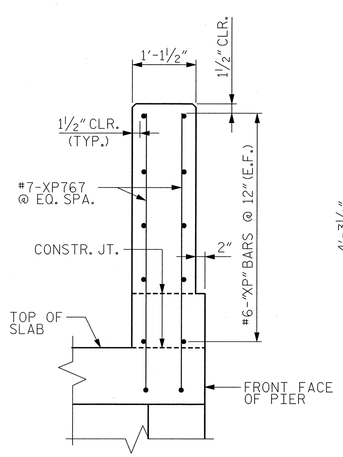

SECTION V-V

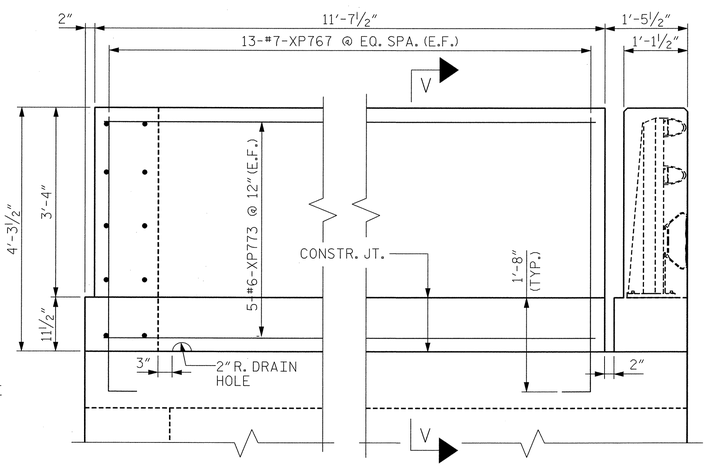

SECTION C-C

NOTES:

1. FOR GENERAL NOTES, SEE DWG. G-004.
2. FOR LOCATION OF SECTIONS C-C, D-D & E-E, SEE DWG. S-013E.
3. FOR ADDITIONAL 1-BAR METAL RAIL DETAILS, SEE DWGS. S-087E & S-088E.
4. FOR ADDITIONAL 3-BAR METAL RAIL DETAILS, SEE DWGS. S-089E THRU S-091E.
5. FOR RAIL POST SPACING, SEE DWG. S-013E.
6. FOR BAR NAMING CONVENTION, SEE DWG. S-038E.
7. PIER 5 SHOWN, PIER 6 OPPOSITE HAND UNLESS NOTED OTHERWISE.

PROJECT NO. U-4438

PASQUOTANK COUNTY

STATION: 15+25.75 -L1-

STATE OF NORTH CAROLINA
DEPARTMENT OF TRANSPORTATION
RALEIGH

ELIZABETH CITY BRIDGE OVER PASQUOTANK RIVER
BASCULE PIER 5 AND 6
BARRIER DETAILS

MODJESKI and MASTERS
Experience great bridges.
Mechanicsburg, PA NC License No. C-2979

NORTH CAROLINA PROFESSIONAL SEAL 025801 ENGINEER LANCE V. BORDEN 2/3/2011

DWG NUMBER	TOTAL DWGS
S-028E	94

REVISIONS						SHEET NO.
NO.	BY:	DATE:	NO.	BY:	DATE:	S-130
1			3			TOTAL SHEETS
2			4			454

DRAWN BY : CMM DATE : 01/11
CHECKED BY : JPS DATE : 01/11

2/3/2011
2:03:46 PM
K:\2986.02\CADD\Structural\dgn files\S-028E_U4438_SD_BD1_01_E.dgn

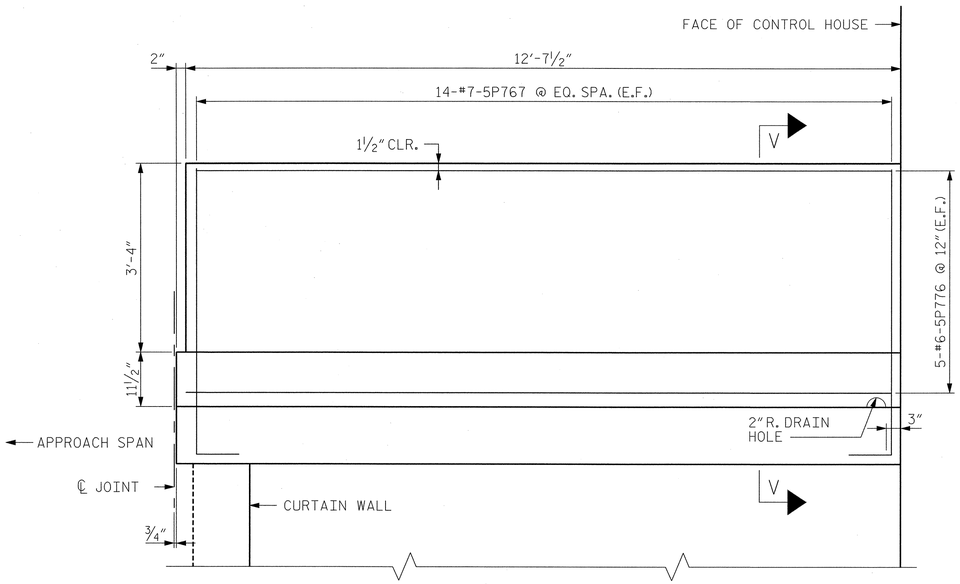

SECTION A-A

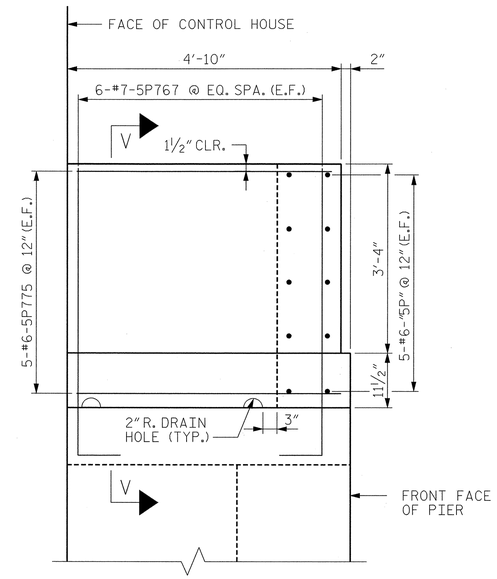

SECTION B-B

NOTES:

1. FOR GENERAL NOTES, SEE DWG. G-004.
2. FOR LOCATION OF SECTIONS A-A & B-B, SEE DWG. S-013E.
3. FOR BAR NAMING CONVENTION, SEE DWG. S-038E.
4. FOR SECTION V-V, SEE DWG. S-028E.

EASTBOUND

PROJECT NO. U-4438

PASQUOTANK COUNTY

STATION: 15+25.75 -L1-

STATE OF NORTH CAROLINA
DEPARTMENT OF TRANSPORTATION
RALEIGH

ELIZABETH CITY BRIDGE OVER
PASQUOTANK RIVER
BASCULE PIER 5
BARRIER DETAILS

MODJESKI and MASTERS
Experience great bridges.
Mechanicsburg, PA NC License No. C-2979

NORTH CAROLINA PROFESSIONAL SEAL 025801 ENGINEER LANCE V. BORDEN 2/3/2011

REVISIONS						SHEET NO.
NO.	BY:	DATE:	NO.	BY:	DATE:	S-131
1			3			TOTAL SHEETS
2			4			454

DWG NUMBER	TOTAL DWGS
S-029E	94

DRAWN BY : CMM DATE : 01/11
CHECKED BY : JPS DATE : 01/11

2/3/2011
2:03:50 PM
K:\2986.02\CADD\Structural\dgn files\S-029E_U4438_SD_BD2_01_E.dgn

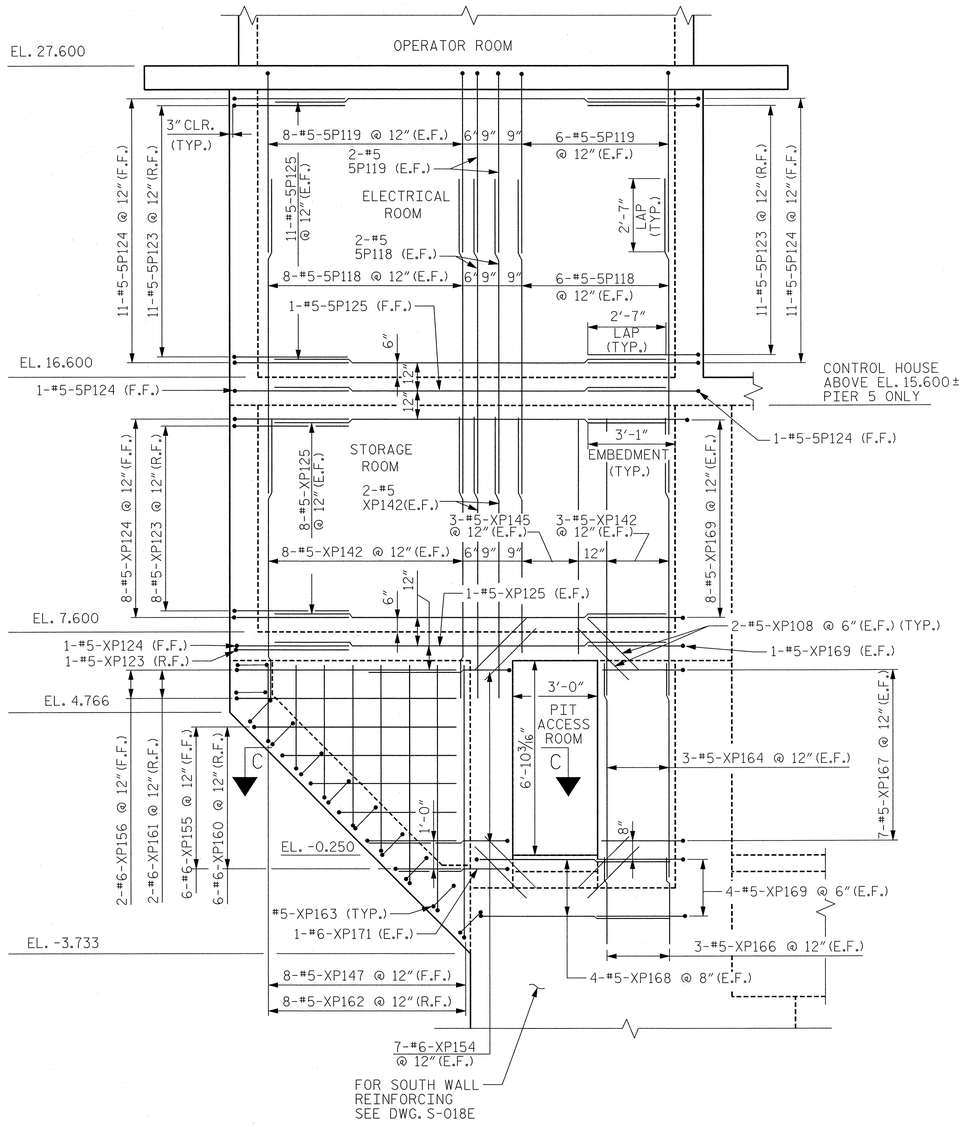

CONTROL HOUSE - EAST ELEVATION

(LOOKING WEST)

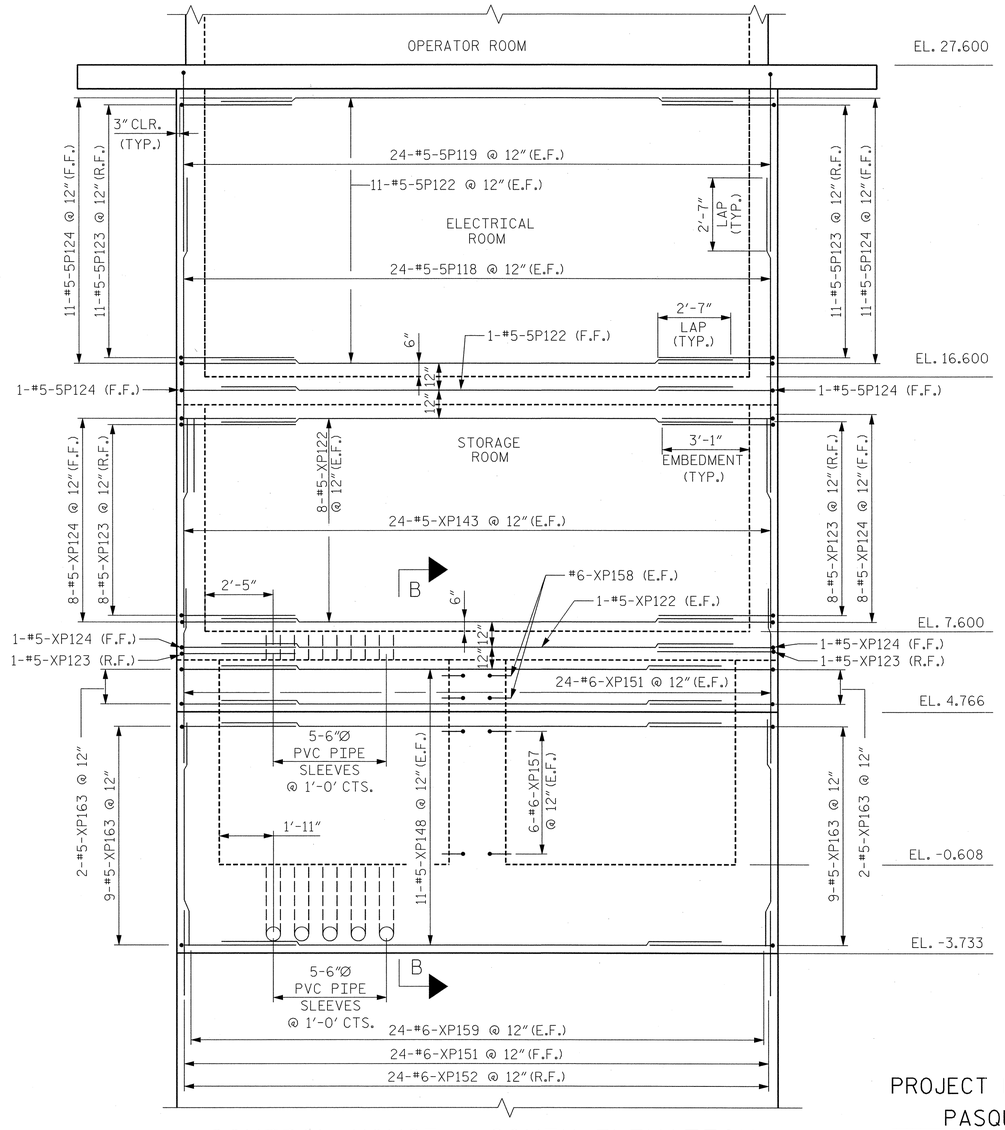

CONTROL HOUSE - SOUTH ELEVATION

(LOOKING NORTH)

EASTBOUND

PROJECT NO. U-4438

PASQUOTANK COUNTY

STATION: 15+25.75 -L1-

NOTES:

1. FOR GENERAL NOTES, SEE DWG. G-004.
2. FOR DETAILS OF OPERATOR ROOM, SEE ARCHITECTURAL DRAWINGS.
3. FOR SECTION B-B, SEE DWG. S-032E.
4. FOR SECTION C-C, SEE DWG. S-031E.
5. FOR LOCATION OF PVC SLEEVES THROUGH WALLS, SEE DWG. S-037E.
6. FOR BAR NAMING CONVENTION, SEE DWG. S-038E.
7. PIER 5 SHOWN, PIER 6 OPPOSITE HAND UNLESS NOTED OTHERWISE.
8. FOR SUBMARINE CABLE PIER MOUNTING BRACKETS, SEE DWG. E-065.

MODJESKI and MASTERS
Experience great bridges.
Mechanicsburg, PA NC License No. C-2979

DWG NUMBER	TOTAL DWGS
S-030E	94

NORTH CAROLINA PROFESSIONAL SEAL 025801 ENGINEER LANCE V. BORDEN 2/3/2011

STATE OF NORTH CAROLINA
DEPARTMENT OF TRANSPORTATION
RALEIGH

ELIZABETH CITY BRIDGE OVER PASQUOTANK RIVER
BASCULE PIER 5 AND 6
CONTROL HOUSE
EAST AND SOUTH ELEVATIONS

REVISIONS							SHEET NO.
NO.	BY:	DATE:	NO.	BY:	DATE:		S-132
1			3				TOTAL SHEETS
2			4				454

DRAWN BY : CMM DATE : 01/11
CHECKED BY : HNB DATE : 01/11

2/3/2011
2:03:55 PM
K:\2986.02\CADD\Structural\dgn files\S-030E_U4438_SD_CHES_01_E.dgn

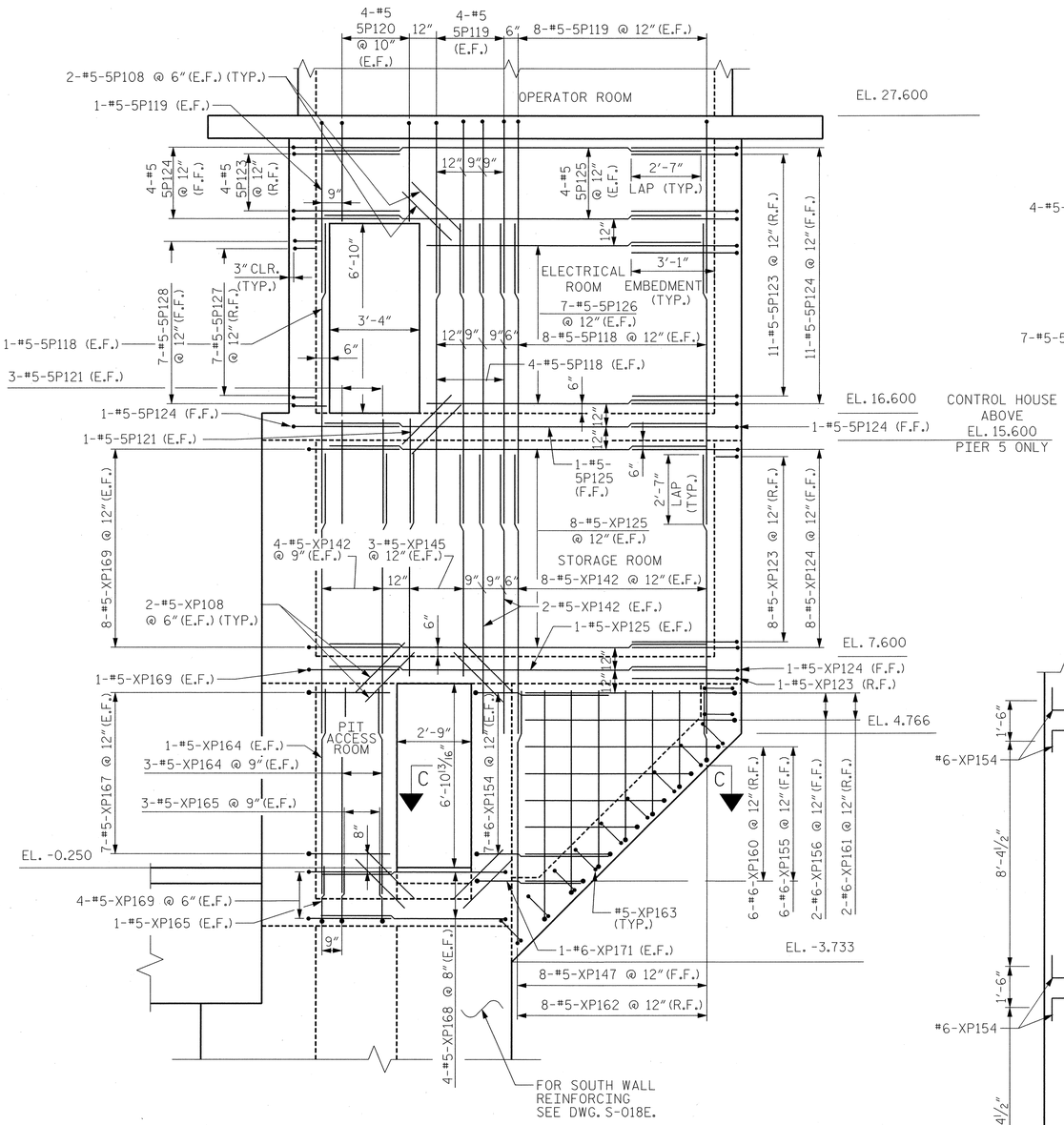

CONTROL HOUSE - WEST ELEVATION

(LOOKING EAST)

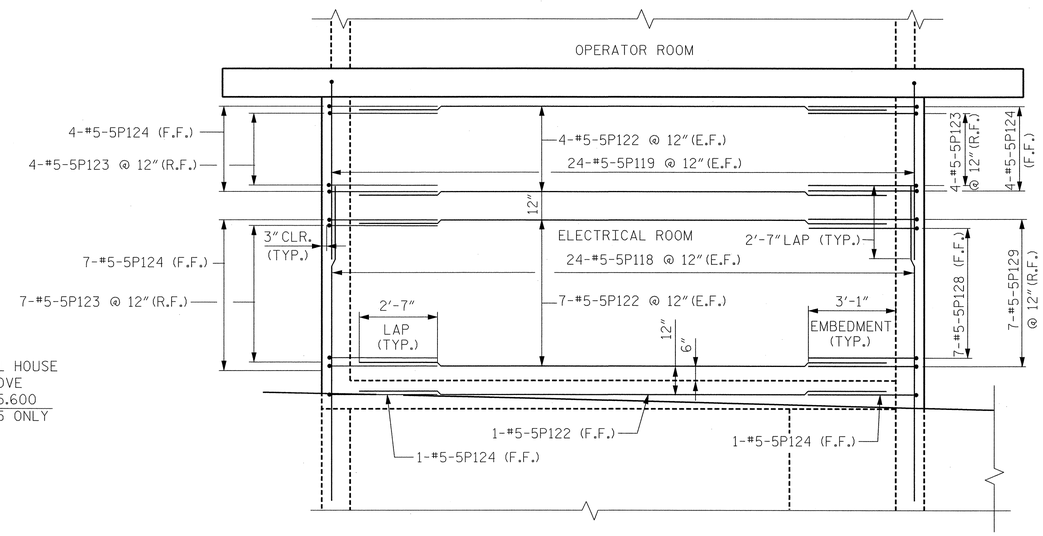

CONTROL HOUSE - NORTH ELEVATION

(LOOKING SOUTH)

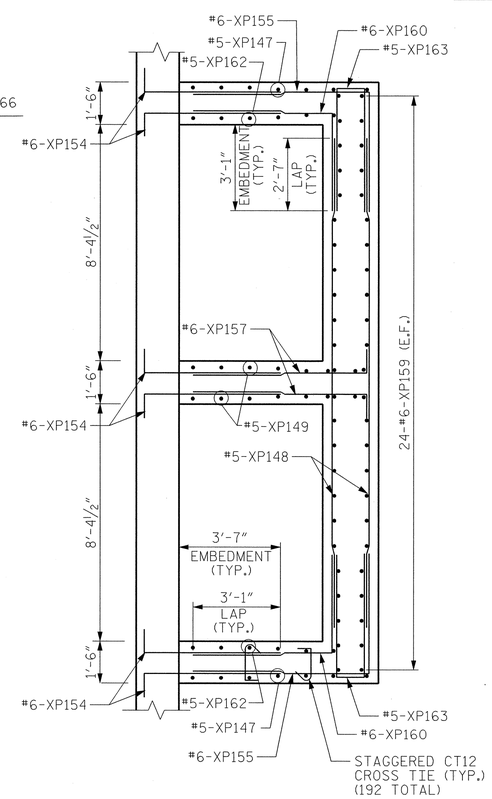

SECTION C-C

NOTES:

1. FOR GENERAL NOTES, SEE DWG. G-004.
2. FOR LOCATION OF PVC SLEEVES THROUGH WALLS, SEE DWG. S-037E.
3. FOR BAR NAMING CONVENTION, SEE DWG. S-038E.
4. PIER 5 SHOWN, PIER 6 OPPOSITE HAND UNLESS NOTED OTHERWISE.
5. FOR SCHEMATIC OF CROSS TIE LOCATION, SEE DWG. S-026E.

EASTBOUND

PROJECT NO. U-4438

PASQUOTANK COUNTY

STATION: 15+25.75 -L1-

STATE OF NORTH CAROLINA
DEPARTMENT OF TRANSPORTATION
RALEIGH

ELIZABETH CITY BRIDGE OVER PASQUOTANK RIVER
BASCULE PIER 5 AND 6
CONTROL HOUSE
WEST AND NORTH ELEVATIONS

MODJESKI and MASTERS
Experience great bridges.
Mechanicsburg, PA NC License No. C-2979

NORTH CAROLINA PROFESSIONAL ENGINEER SEAL 025801 LANCE V. BORDEN 3/18/2011

REVISIONS						SHEET NO.
NO.	BY:	DATE:	NO.	BY:	DATE:	S-133
1			3			TOTAL SHEETS
2			4			454

DWG NUMBER	TOTAL DWGS
S-031E	94

DRAWN BY : CMM DATE : 01/11
CHECKED BY : HNB DATE : 01/11

3/18/2011
2:13:27 PM
K:\2986.02\CADD\Structural\dgn files\S-031E_U4438_SD_CHWN_01_E.dgn

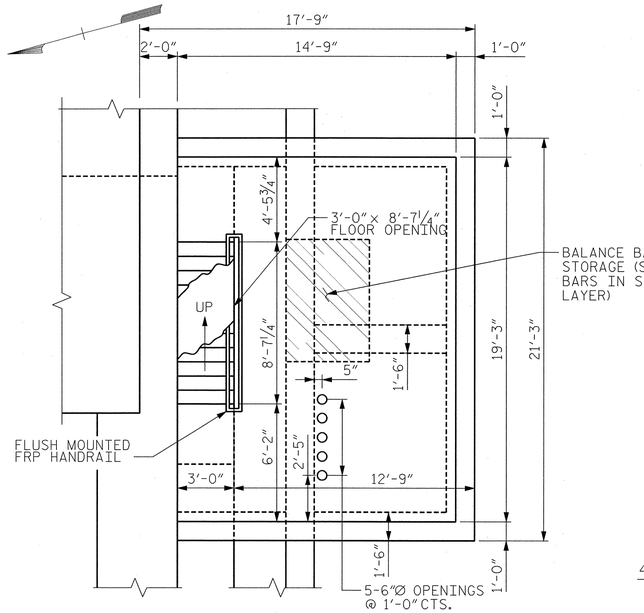

STORAGE ROOM PLAN AT EL. 7.600

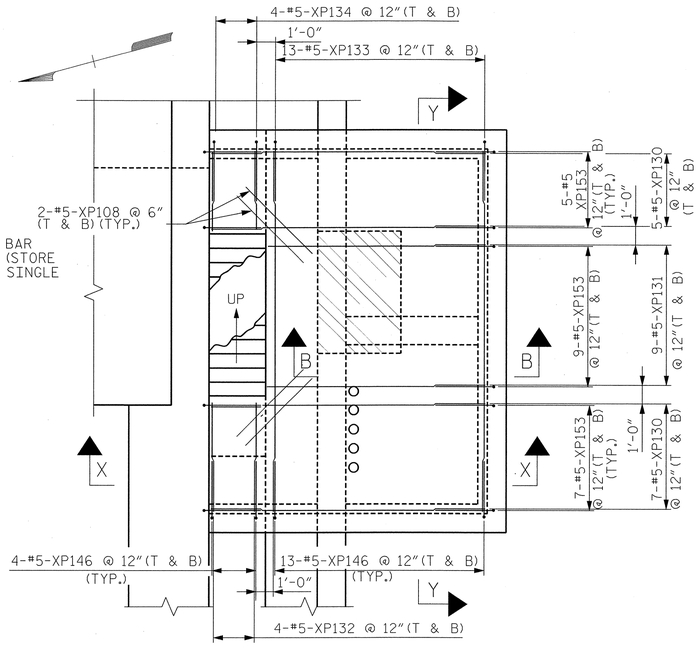

STORAGE ROOM FLOOR REINFORCING PLAN

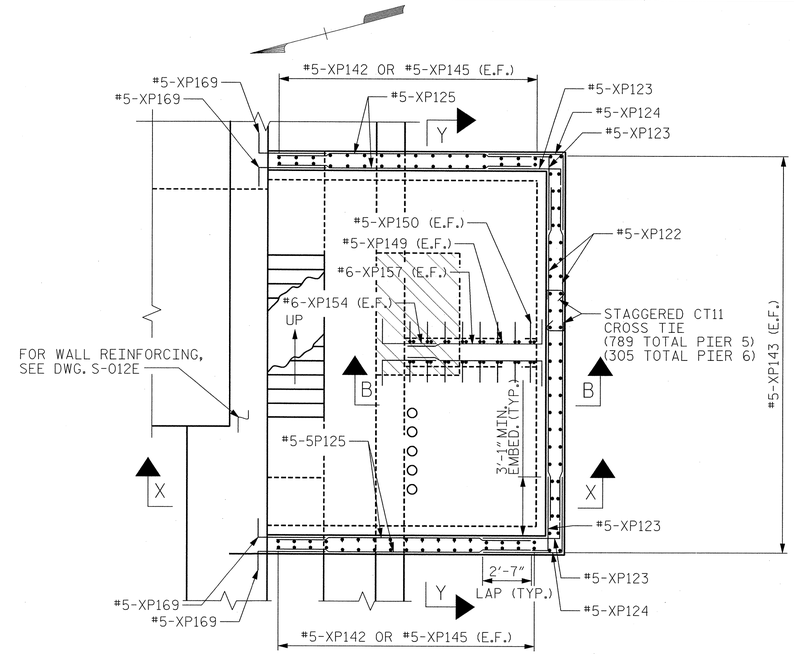

STORAGE ROOM WALL REINFORCING PLAN

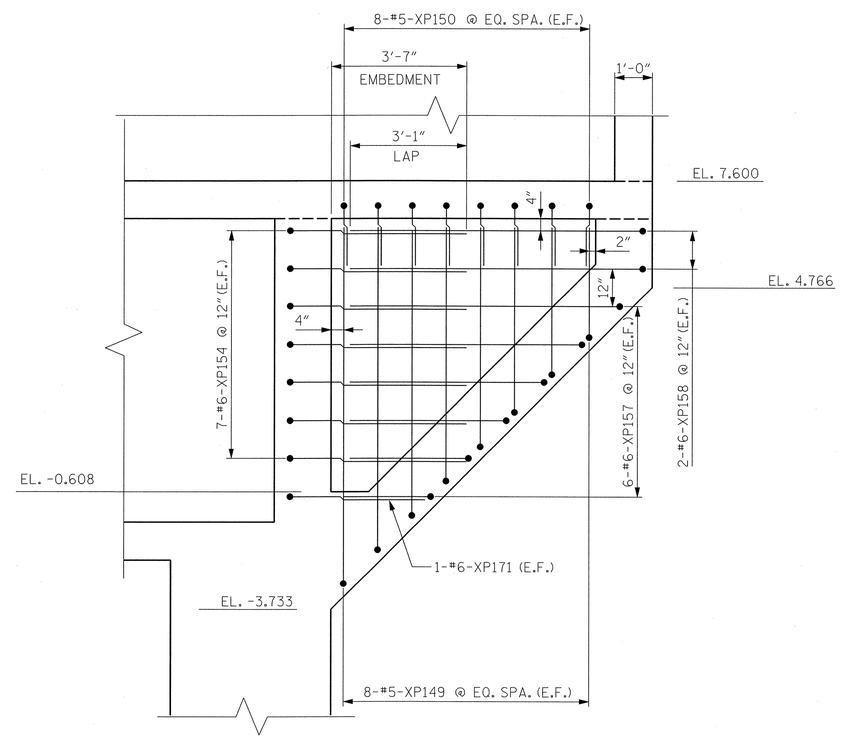

SECTION B-B

(FOR ADDITIONAL REINFORCING DETAILS, SEE SECTION X-X ON DWG. S-036E)

NOTES:

1. FOR GENERAL NOTES, SEE DWG. G-004.
2. FOR CONTROL HOUSE ELEVATIONS, SEE DWGS. S-030E & S-031E.
3. FOR SECTIONS X-X AND Y-Y, SEE DWG. S-036E.
4. CIRCULAR OPENINGS IN THE CONTROL HOUSE SHALL BE SLEEVED WITH SCHEDULE 40 PVC PIPE. THE OPENING DIAMETER SHOWN IS THE INSIDE DIAMETER OF THE PVC PIPE.
5. PIER 5 SHOWN, PIER 6 OPPOSITE HAND EXCEPT WHERE NOTED.
6. FOR BAR NAMING CONVENTION, SEE DWG. S-038E.
7. FOR STAIRWAY AND RAILING DETAILS, SEE DWG. S-035E.
8. FOR SCHEMATIC OF CROSS TIE LOCATION, SEE DWG. S-026E.

EASTBOUND

PROJECT NO. U-4438

PASQUOTANK COUNTY

STATION: 15+25.75 -L1-

STATE OF NORTH CAROLINA
DEPARTMENT OF TRANSPORTATION
RALEIGH

ELIZABETH CITY BRIDGE OVER PASQUOTANK RIVER
BASCULE PIER 5 AND 6
CONTROL HOUSE STORAGE ROOM
PLAN AND DETAILS

MODJESKI and MASTERS
Experience great bridges.
Mechanicsburg, PA NC License No. C-2979

NORTH CAROLINA PROFESSIONAL SEAL 025801 ENGINEER LANCE V. BORDEN 2/3/2011

REVISIONS						SHEET NO.
NO.	BY:	DATE:	NO.	BY:	DATE:	S-134
1			3			TOTAL SHEETS
2			4			454

DWG NUMBER	TOTAL DWGS
S-032E	94

DRAWN BY : CMM DATE : 01/11
CHECKED BY : HNB DATE : 01/11

2/3/2011
2:04:03 PM
K:\2986.02\CADD\Structural\dgn files\S-032E_U4438_SD_CHST_01_E.dgn

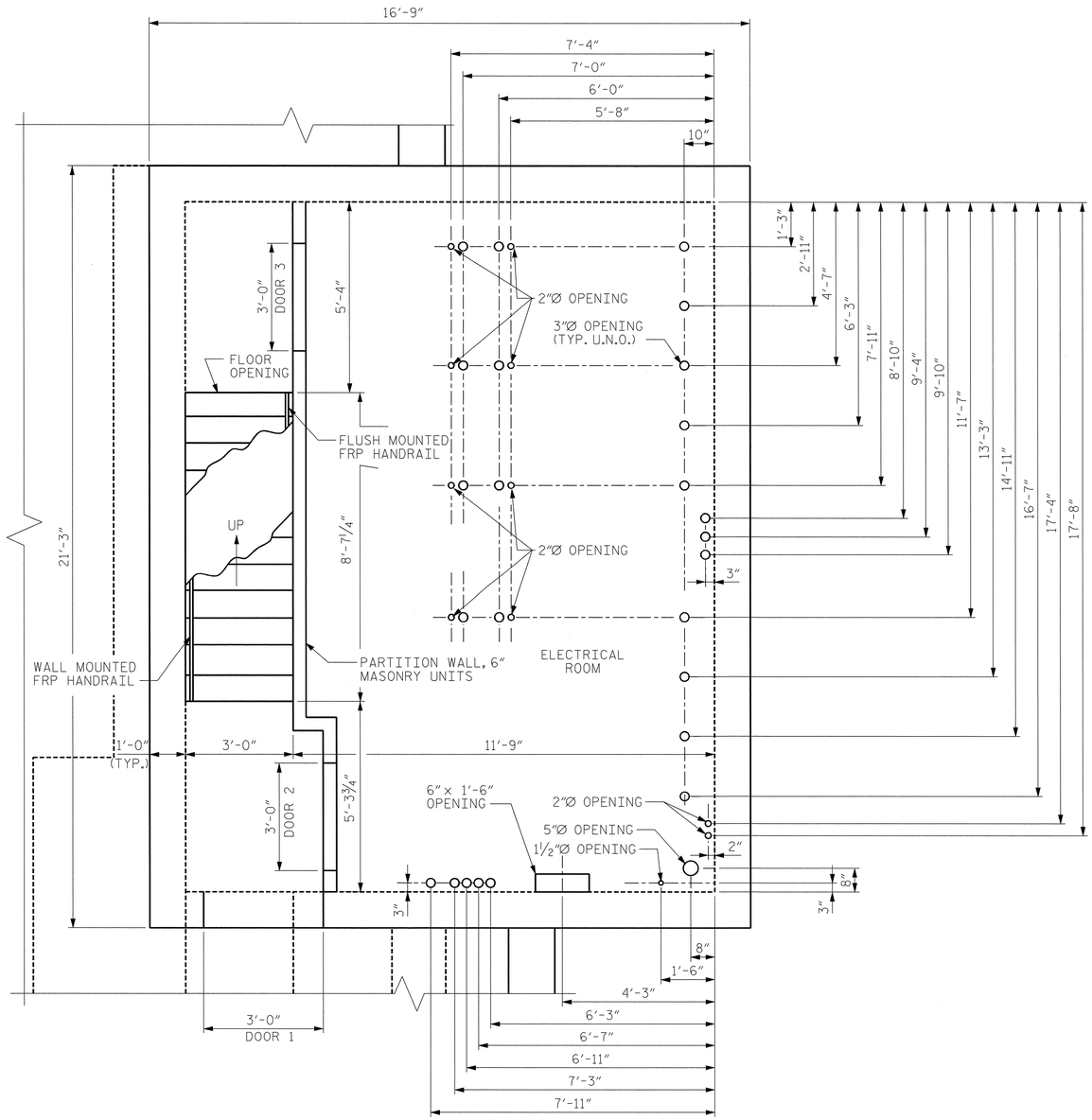

ELECTRICAL ROOM PLAN AT EL. 16.600

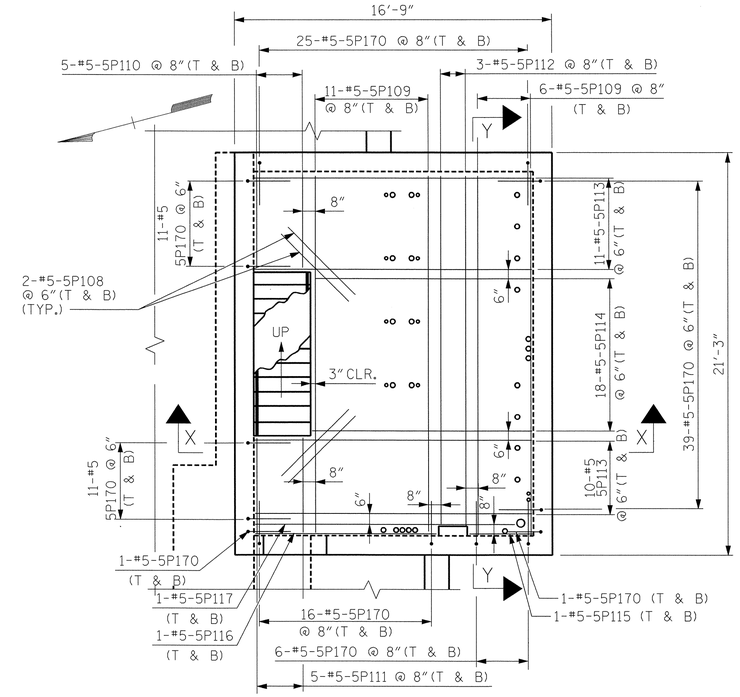

ELECTRICAL ROOM FLOOR REINFORCING PLAN

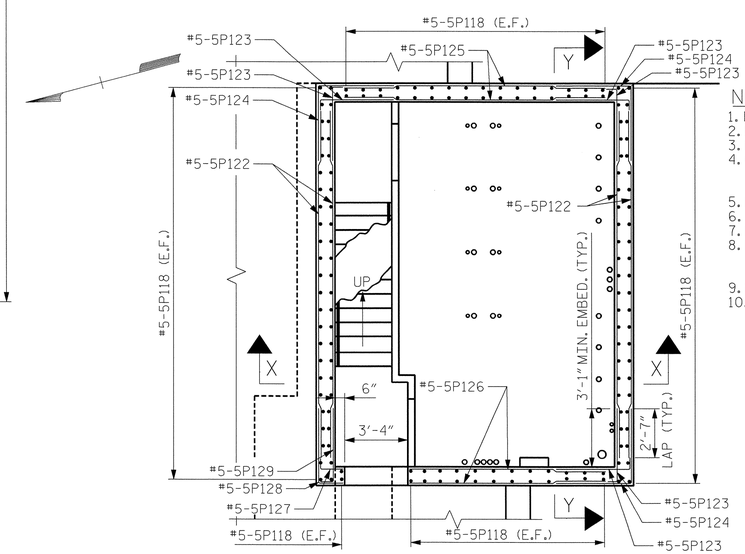

ELECTRICAL ROOM WALL REINFORCING PLAN

NOTES:

1. FOR GENERAL NOTES, SEE DWG. G-004.
2. FOR CONTROL HOUSE ELEVATIONS, SEE DWGS. S-030E & S-031E.
3. FOR SECTION X-X AND Y-Y, SEE DWG. S-36E.
4. CIRCULAR OPENINGS IN THE CONTROL HOUSE SHALL BE SLEEVED WITH SCHEDULE 40 PVC PIPE. THE OPENING DIAMETER SHOWN IS THE INSIDE DIAMETER OF THE PVC PIPE.
5. FOR PARTITION WALL DETAILS, SEE SPECIAL PROVISIONS.
6. FOR STAIRWAY AND RAILING DETAILS, SEE DWG. S-035E.
7. FOR BAR NAMING CONVENTION, SEE DWG. S-038E.8.
8. FOR WALL, FLOOR AND CEILING FINISH IN ELECTRICAL ROOM AND STAIRWAY TO OPERATOR ROOM, SEE SPECIAL SPECIFICATIONS SECTION 09 91 23. "HIGH PERFORMANCE CONCRETE COATINGS."
9. FOR DOOR SCHEDULE, SEE SHEET S-121.
10. PARTITION WALL IS INCEIDENTAL TO ITEM "CONTROL HOUSE - ARCHITECTURAL/STRUCTURAL/GENERAL CONSTRUCTION."

EASTBOUND

PROJECT NO. U-4438

PASQUOTANK COUNTY

STATION: 15+25.75 -L1-

STATE OF NORTH CAROLINA
DEPARTMENT OF TRANSPORTATION
RALEIGH

ELIZABETH CITY BRIDGE OVER PASQUOTANK RIVER
BASCULE PIER 5
CONTROL HOUSE ELECTRICAL RM. PLAN AND DETAILS

MODJESKI and MASTERS
Experience great bridges.
Mechanicsburg, PA NC License No. C-2979

NORTH CAROLINA PROFESSIONAL ENGINEER SEAL 025801 LANCE V. BORDEN 4/29/2011

DWG NUMBER	TOTAL DWGS
S-033E	94

REVISIONS								SHEET NO.
NO.	BY:	DATE:	NO.	BY:	DATE:			S-135
1			3					TOTAL SHEETS
2			4					454

DRAWN BY : CMM DATE : 01/11
CHECKED BY : HNB DATE : 01/11

$$$$$$SYSTIME$$$$$
$$$$$$$$$$$$$$$$DGN$$$$$$$$$$$$$$$$
$$$$USERNAME$$$$

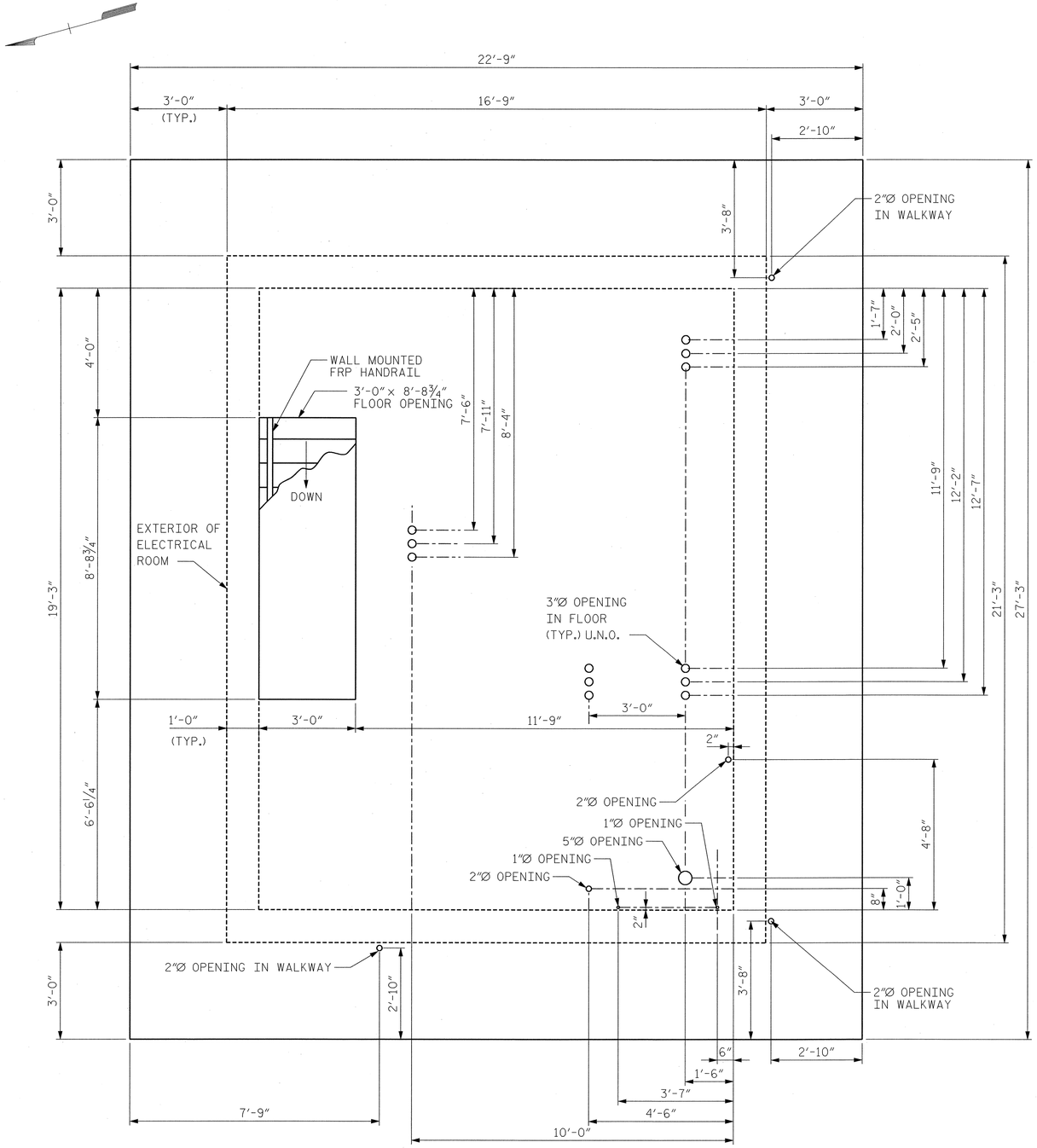

OPERATOR ROOM PLAN AT EL. 27.600

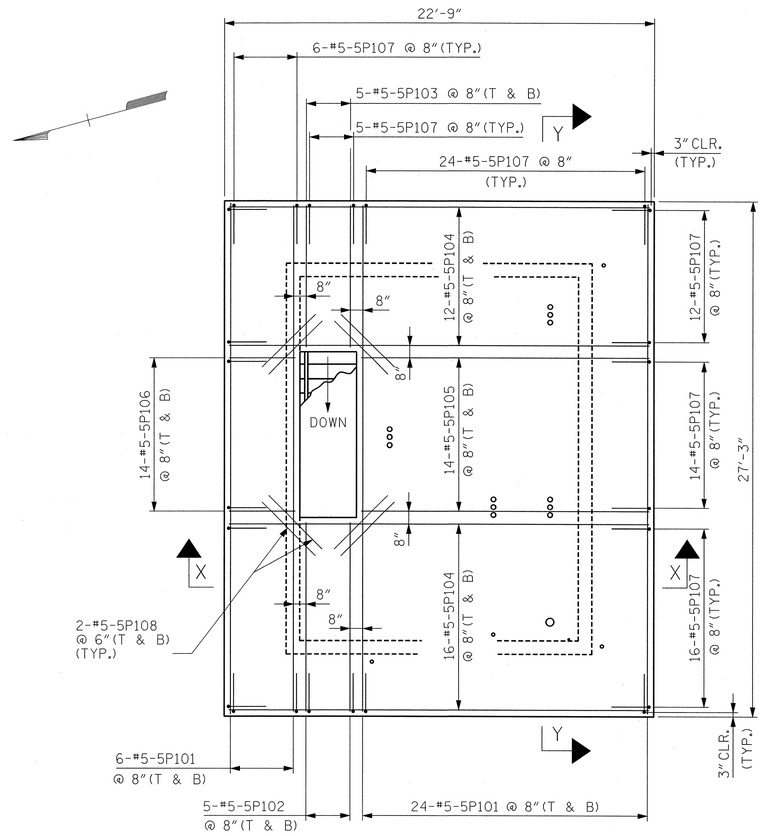

OPERATOR ROOM REINFORCING PLAN

NOTES:

1. FOR GENERAL NOTES, SEE DWG. G-004.
2. FOR CONTROL HOUSE ELEVATIONS, SEE DWGS. S-030E & S-031E.
3. FOR SECTIONS X-X AND Y-Y, SEE DWG. S-36E.
4. CIRCULAR OPENINGS IN THE CONTROL HOUSE SHALL BE SLEEVED WITH SCHEDULE 40 PVC PIPE. THE OPENING DIAMETER SHOWN IS THE INSIDE DIAMETER OF THE PVC PIPE.
5. FOR OPERATOR ROOM AND EXTERIOR WALKWAY DETAILS, SEE ARCHITECTURAL DRAWINGS.
6. FOR STAIRWAY AND RAILING DETAIS, SEE DWG. S-035E.

EASTBOUND

PROJECT NO. U-4438

PASQUOTANK COUNTY

STATION: 15+25.75 -L1-

STATE OF NORTH CAROLINA
DEPARTMENT OF TRANSPORTATION
RALEIGH

ELIZABETH CITY BRIDGE OVER PASQUOTANK RIVER
BASCULE PIER 5
CONTROL HOUSE OPERATORS RM.
PLAN AND DETAILS

MODJESKI and MASTERS
Experience great bridges.
Mechanicsburg, PA NC License No. C-2979

NORTH CAROLINA PROFESSIONAL SEAL 025801 ENGINEER LANCE V. BORDEN 2/3/2011

DWG NUMBER	TOTAL DWGS
S-034E	94

REVISIONS						SHEET NO.
NO.	BY:	DATE:	NO.	BY:	DATE:	S-136
1			3			TOTAL SHEETS
2			4			454

DRAWN BY : CMM DATE : 01/11
CHECKED BY : HNB DATE : 01/11

2/3/2011
2:04:12 PM
K:\2986.02\CADD\Structural\dgn files\S-034E_U4438_SD_CHOR_01_E.dgn

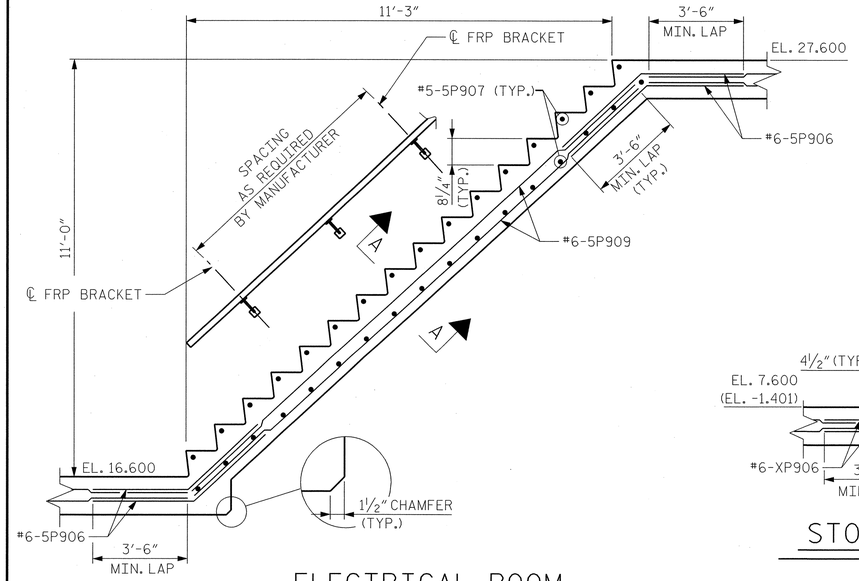

ELECTRICAL ROOM

(PIER 5 ONLY)

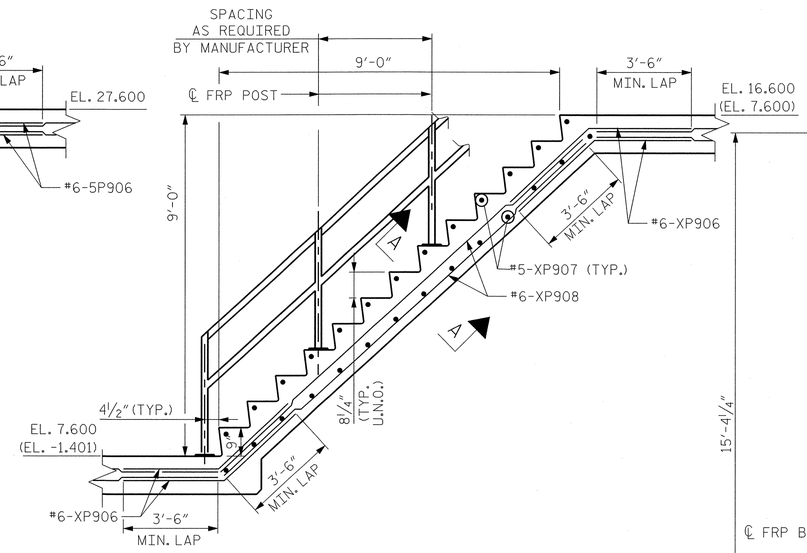

STORAGE ROOM & PIT ACCESS ROOM

(STORAGE ROOM STAIRS FOR PIER 5 ONLY.
FOR PIER 6 STORAGE ROOM STAIRS, SEE DWG. S-046E)

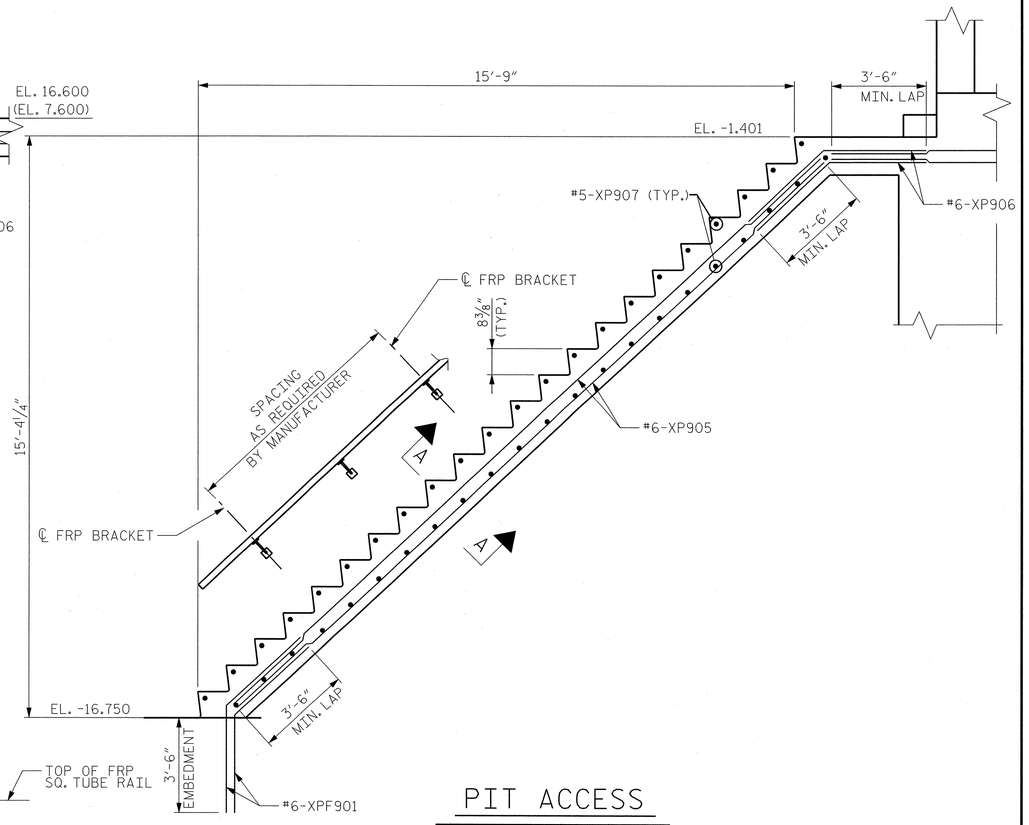

PIT ACCESS

(SECTION THROUGH STAIRWAY)

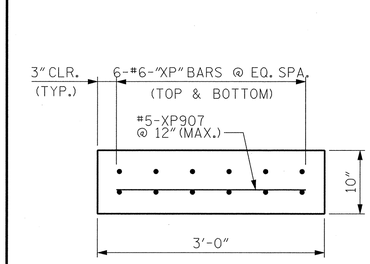

SECTION A-A

(RAIL NOT SHOWN FOR CLARITY)

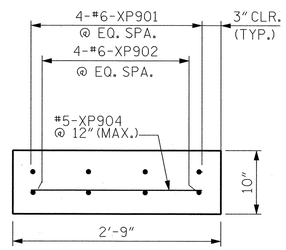

SECTION B-B

(RAIL NOT SHOWN FOR CLARITY)

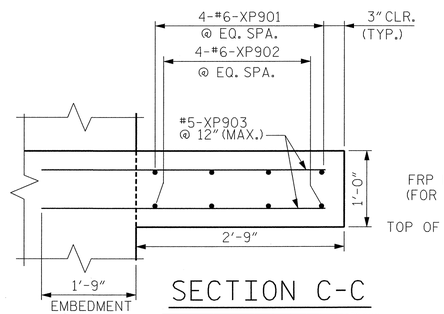

SECTION C-C

(RAIL NOT SHOWN FOR CLARITY)

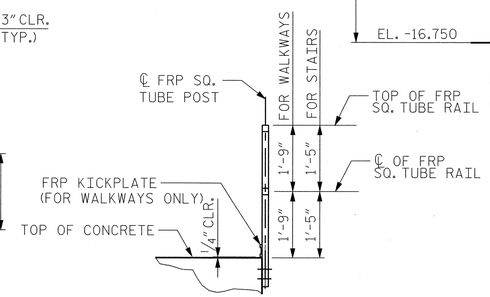

TYPICAL SIDE MOUNT POST DETAIL

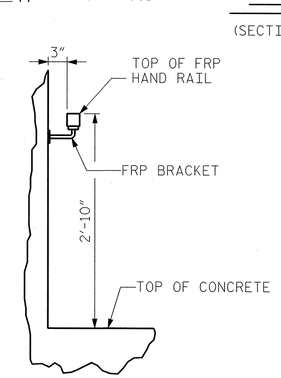

TYPICAL WALL MOUNT DETAIL

NOTES:

1. FOR GENERAL NOTES, SEE DWG. G-004.
2. FOR LOCATION OF SECTION G-G, SEE DWG. S-010E.
3. PIER 5 SHOWN, PIER 6 OPPOSITE HAND UNLESS NOTED OTHERWISE.
4. FOR ADDITIONAL PIT ACCESS ROOM REINFORCING, SEE DWG. S-011E.
5. FOR ADDITIONAL STORAGE ROOM REINFORCING, SEE DWG. S-032E.
6. FOR ADDITIONAL ELECTRICAL ROOM REINFORCING, SEE DWG. S-033E.
7. FOR ADDITIONAL OPERATOR ROOM REINFORCING, SEE DWG. S-034E.

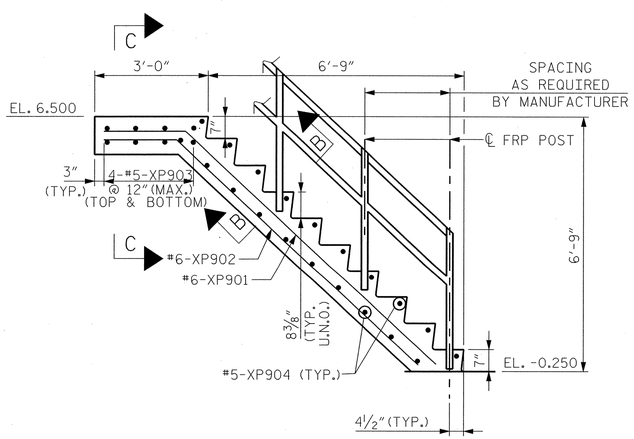

SECTION G-G

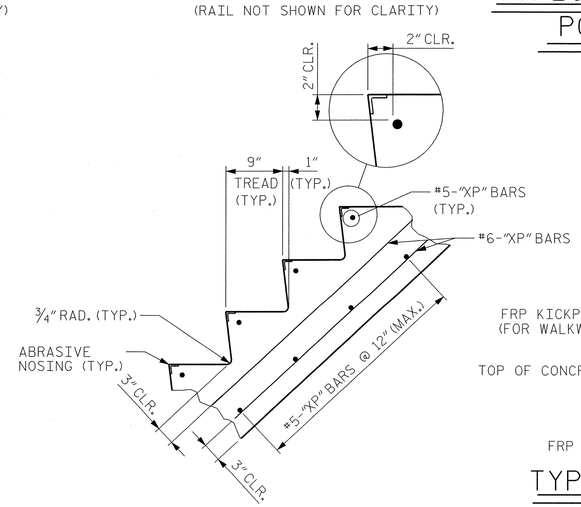

TYPICAL STAIR DETAIL

(RAIL NOT SHOWN FOR CLARITY)

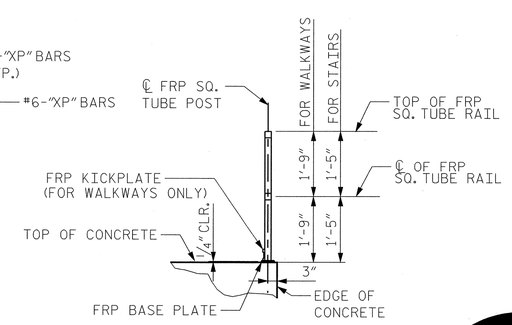

TYPICAL FLUSH MOUNT POST DETAIL

EASTBOUND
PROJECT NO. U-4438
PASQUOTANK COUNTY
STATION: 15+25.75 -L1-

STATE OF NORTH CAROLINA
DEPARTMENT OF TRANSPORTATION
RALEIGH

ELIZABETH CITY BRIDGE OVER PASQUOTANK RIVER
BASCULE PIER 5 AND 6
STAIR DETAILS

MODJESKI and MASTERS
Experience great bridges.
Mechanicsburg, PA NC License No. C-2979

NORTH CAROLINA PROFESSIONAL ENGINEER SEAL 025801 LANCE V. BORDEN 3/18/2011

REVISIONS						SHEET NO.
NO.	BY:	DATE:	NO.	BY:	DATE:	S-137
1			3			TOTAL SHEETS
2			4			454

DWG NUMBER	TOTAL DWGS
S-035E	94

DRAWN BY : CMM DATE : 01/11
CHECKED BY : JPS DATE : 01/11

3/18/2011
2:13:31 PM
K:\2986.02\CADD\Structural\dgn files\S-035E_U4438_SD_P5SD_01_E.dgn

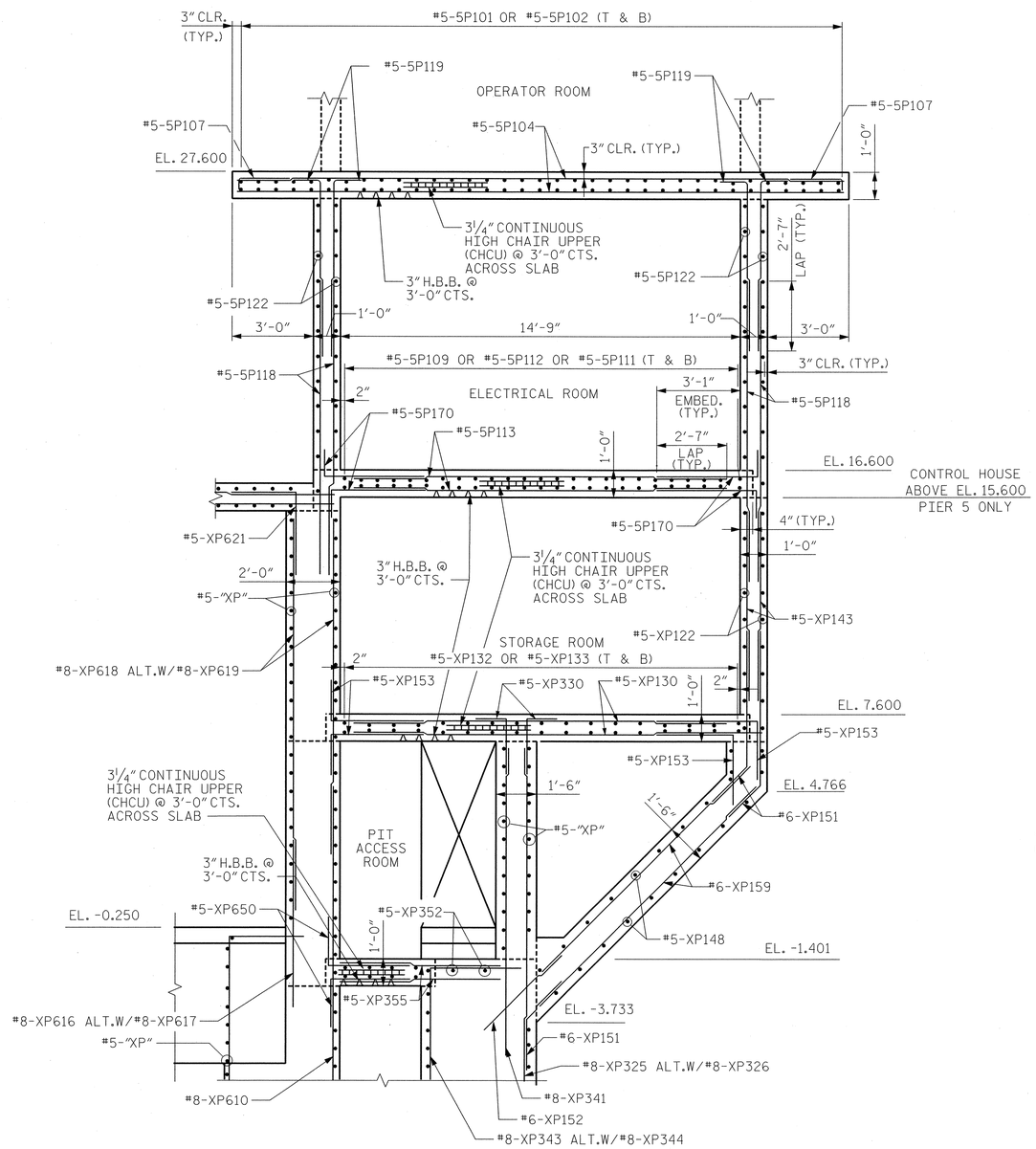

SECTION X-X

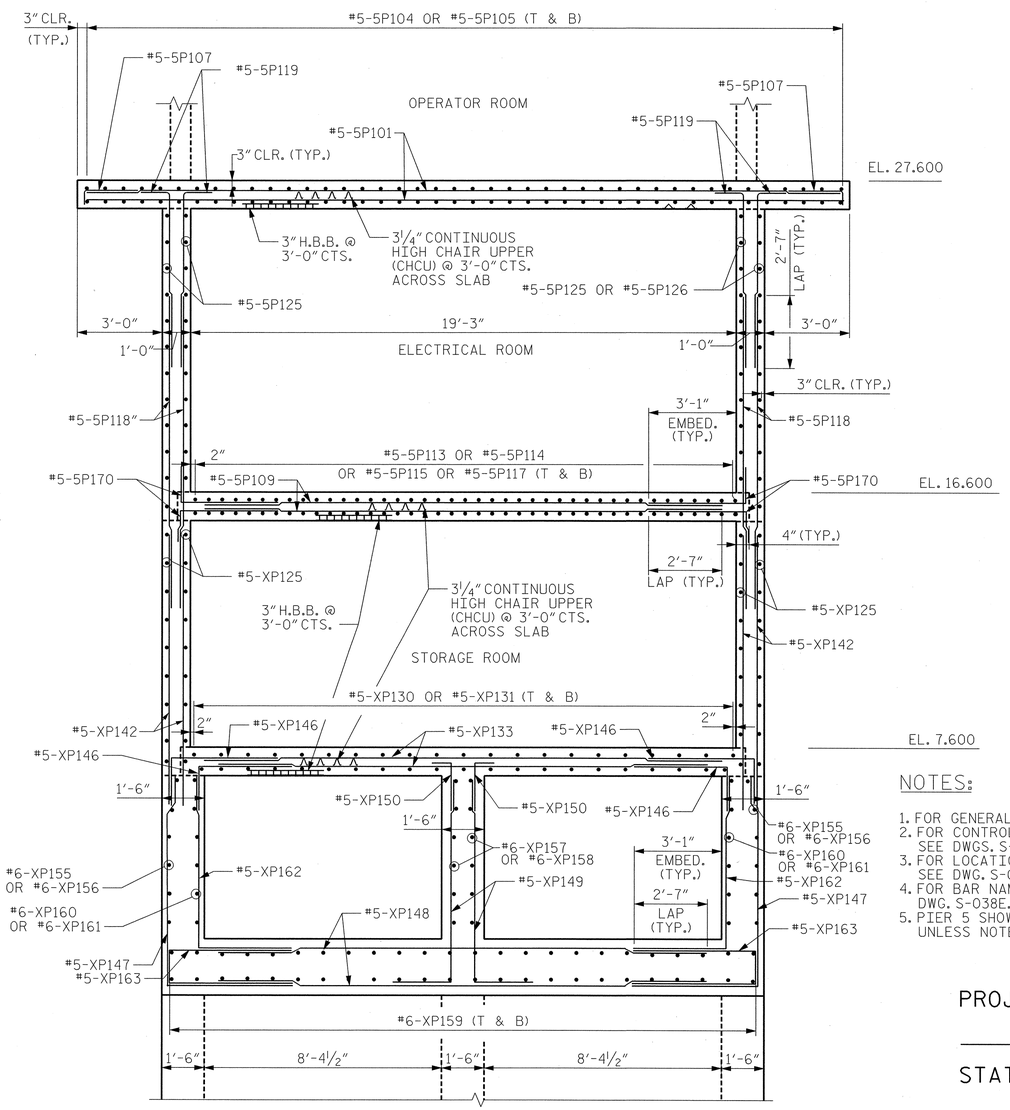

SECTION Y-Y

NOTES:

1. FOR GENERAL NOTES, SEE DWG. G-004.
2. FOR CONTROL HOUSE ELEVATIONS, SEE DWGS. S-030E & S-031E.
3. FOR LOCATION OF SECTIONS X-X AND Y-Y, SEE DWG. S-032E THRU S-034E.
4. FOR BAR NAMING CONVENTION, SEE DWG. S-038E.
5. PIER 5 SHOWN, PIER 6 OPPOSITE HAND UNLESS NOTED OTHERWISE.

EASTBOUND

PROJECT NO. U-4438

PASQUOTANK COUNTY

STATION: 15+25.75 -L1-

STATE OF NORTH CAROLINA
DEPARTMENT OF TRANSPORTATION
RALEIGH

ELIZABETH CITY BRIDGE OVER PASQUOTANK RIVER
BASCULE PIER 5 AND 6
CONTROL HOUSE DETAILS

MODJESKI and MASTERS
Experience great bridges.
Mechanicsburg, PA NC License No. C-2979

NORTH CAROLINA SEAL 025801 ENGINEER LANCE V. BORDEN 3/18/2011

DWG NUMBER	TOTAL DWGS
S-036E	94

REVISIONS						SHEET NO.
NO.	BY:	DATE:	NO.	BY:	DATE:	S-138
1			3			TOTAL SHEETS
2			4			454

DRAWN BY : CMM DATE : 01/11
CHECKED BY : HNB DATE : 01/11

3/18/2011
2:13:35 PM
K:\2986.02\CADD\Structural\dgn files\S-036E_U4438_SD_CHD1_01_E.dgn

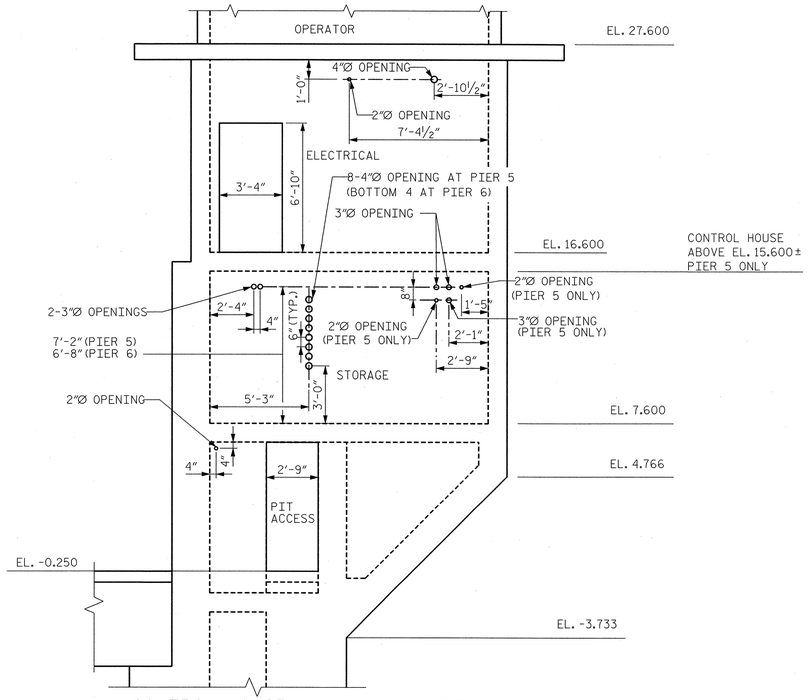

CONTROL HOUSE - WEST ELEVATION

(LOOKING EAST)

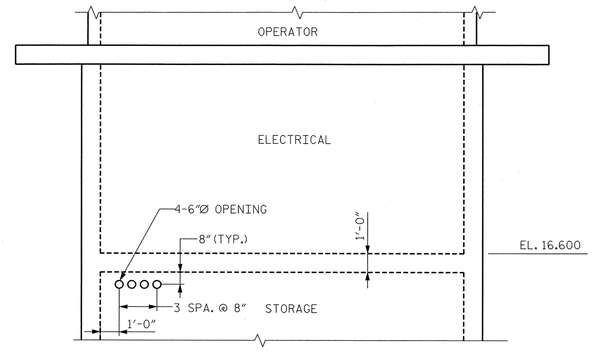

CONTROL HOUSE - NORTH ELEVATION - PIER 5

(LOOKING SOUTH)

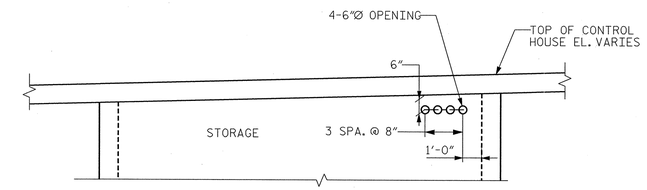

CONTROL HOUSE - NORTH ELEVATION - PIER 6

(LOOKING SOUTH)

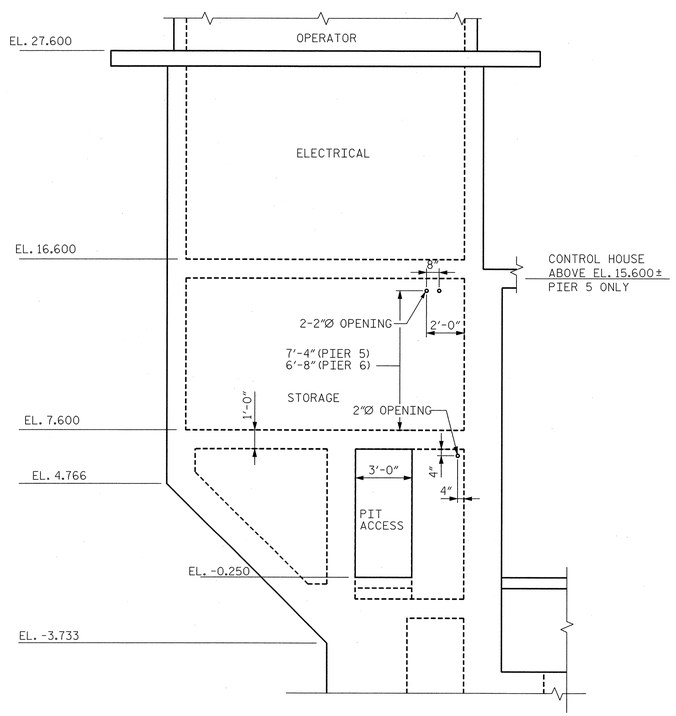

CONTROL HOUSE - EAST ELEVATION

(LOOKING WEST)

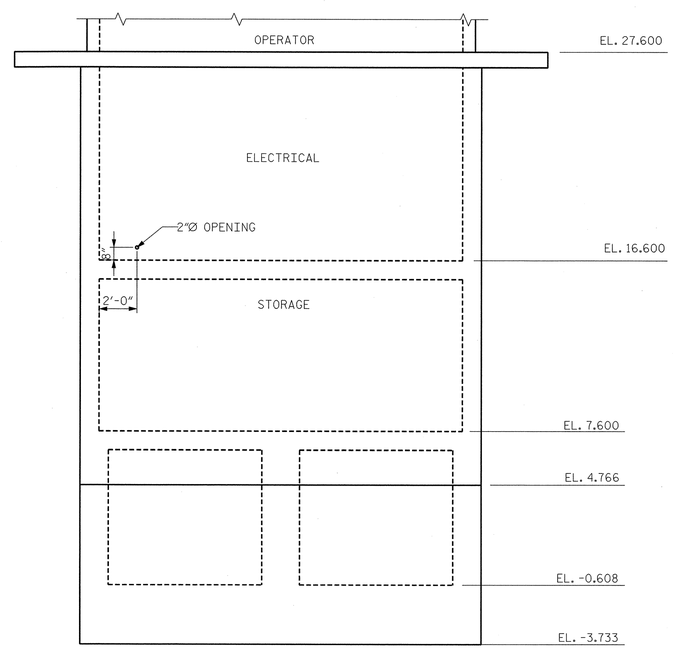

CONTROL HOUSE - SOUTH ELEVATION

(LOOKING NORTH)

NOTES:

1. FOR GENERAL NOTES, SEE DWG. G-004.
2. CIRCULAR OPENINGS IN THE CONTROL HOUSE SHALL BE SLEEVED WITH SCHEDULE 40 PVC PIPE. THE OPENING DIAMETER SHOWN IS THE INSIDE DIAMETER OF THE PVC PIPE.
3. PIER 5 SHOWN, PIER 6 OPPOSITE HAND EXCEPT WHERE NOTED.

EASTBOUND

PROJECT NO. U-4438

PASQUOTANK COUNTY

STATION: 15+25.75 -L1-

STATE OF NORTH CAROLINA
DEPARTMENT OF TRANSPORTATION
RALEIGH

ELIZABETH CITY BRIDGE OVER
PASQUOTANK RIVER
BASCULE PIER 5 AND 6
CONTROL HOUSE
CONDUIT SLEEVE LOCATIONS

MODJESKI and MASTERS
Experience great bridges.
Mechanicsburg, PA NC License No. C-2979

NORTH CAROLINA PROFESSIONAL SEAL 025801 ENGINEER LANCE V. BORDEN 2/3/2011

DRAWN BY : EAR	DATE : 01/11
CHECKED BY : HNB	DATE : 01/11

DWG NUMBER	TOTAL DWGS
S-037E	94

REVISIONS

NO.	BY:	DATE:	NO.	BY:	DATE:
1			3		
2			4		

SHEET NO. S-139

TOTAL SHEETS 454

2/3/2011
2:04:26 PM
K:\2986.02\CADD\Structural\dgn files\S-037E_U4438_SD_CHD2_01_E.dgn

REINFORCING BAR SCHEDULE

BASCULE PIER 5

MARK	NO.	SIZE	TYPE	LENGTH	A	B	C	REMARKS	WT. (LBS.)
BASCULE PIER 5 - FOOTING									
5PF101	49	8	STR	58'-4"					7632
5PF102	3	8	STR	21'-7"					173
5PF103	3	8	STR	31'-1"					249
5PF104	52	8	1	42'-11"	39'-2"	3'-9"			5959
5PF105	194	8	1	27'-2"	23'-5"	3'-9"			14072
5PF106	65	8	STR	42'-7"					7390
5PF107	7	8	STR	36'-1"					674
5PF108	7	8	STR	3'-4"					62
5PF109	4	5	STR	5'-0"					21
5PF110	11	8	STR	10'-0"					294
5PF111	13	8	STR	7'-6"					260
5PF112	13	5	1	6'-6"	4'-3"	2'-3"			88
5PF113	8	8	STR	58'-4"					1246
5PF114	8	8	STR	42'-7"					910
5PF201	58	8	STR	10'-10"					1678
5PF202	57	8	STR	7'-0"					1065
5PF301	56	8	STR	10'-10"					1620
5PF302	55	8	STR	7'-0"					1028
5PF401	53	8	STR	10'-10"					1533
5PF402	53	8	STR	7'-0"					991
5PF501	105	8	STR	7'-0"					1962
5PF502	106	8	STR	10'-10"					3066
5PF601	43	8	STR	10'-10"					1244
5PF602	47	8	STR	7'-0"					878
5PF801	144	6	STR	5'-6"					1190
5PF821	40	8	STR	7'-0"					748
5PF831	16	8	STR	7'-0"					299
5PF832	8	8	4	7'-0"	2'-10"	4'-2"	3'-10¼"		150
5PF833	4	8	STR	5'-2"					55
5PF901	12	6	4	8'-0"	4'-0"	4'-0"	2'-8¾"		144
BASCULE PIER 5 - CONTROL HOUSE									
5P101	60	5	STR	26'-7"					1664
5P102	10	5	STR	9'-11"					103
5P103	10	5	STR	7'-4"					76
5P104	56	5	STR	22'-1"					1290
5P105	28	5	STR	15'-1"					440
5P106	28	5	STR	3'-4"					97
5P107	154	5	1	3'-9"	3'-4"	0'-5"			602
5P108	72	5	STR	4'-0"					300
5P109	34	5	STR	18'-11"					671
5P110	10	5	STR	4'-11"					51
5P111	10	5	STR	4'-10"					50
5P112	6	5	STR	18'-4"					115
5P113	42	5	STR	14'-5"					632
5P114	36	5	STR	11'-4"					426
5P115	2	5	STR	3'-2"					7
5P116	2	5	STR	9'-4"					19
5P117	2	5	STR	13'-5"					28
5P118	154	5	STR	11'-9"					1887
5P119	154	5	1	7'-4"	6'-4"	1'-0"			1178
5P120	8	5	1	4'-8"	3'-8"	1'-0"			39
5P121	8	5	STR	4'-7"					38
5P122	64	5	STR	18'-3"					1218
5P123	110	5	1	4'-8"	3'-10"	0'-10"			535
5P124	59	5	1	7'-8"	3'-10"	3'-10"			472
5P125	68	5	STR	13'-9"					975
5P126	14	5	STR	10'-6"					153
5P127	7	5	1	1'-10"	1'-0"	0'-10"			13
5P128	7	5	1	4'-10"	3'-10"	1'-0"			35
5P129	7	5	1	4'-4"	3'-10"	0'-6"			32
5P130	24	5	STR	14'-5"					361
5P131	18	5	STR	11'-4"					213
5P132	8	5	STR	5'-9"					48
5P133	26	5	STR	18'-11"					513

REINFORCING BAR SCHEDULE

BASCULE PIER 5

MARK	NO.	SIZE	TYPE	LENGTH	A	B	C	REMARKS	WT. (LBS.)
BASCULE PIER 5 - CONTROL HOUSE (CONTINUED)									
5P134	8	5	STR	4'-0"					33
5P136	8	5	STR	6'-0"					50
5P137	8	5	STR	6'-4"					53
5P140	1	4	STR	2'-6"					2
5P141	8	4	1	4'-0"	2'-0"	2'-0"			21
5P142	54	5	STR	11'-0"					620
5P143	48	5	STR	6'-6"					325
5P144	1	4	STR	2'-3"					2
5P145	12	5	STR	7'-9"					97
5P146	68	5	1	6'-2"	4'-2"	2'-0"			437
5P147	16	5	1	7'-0" TO 13'-5"	2'-8" TO 9'-1"	4'-4"		2 SETS 8 BARS EACH, VARY A BY 11"	170
5P148	22	5	STR	17'-9"					407
5P149	16	5	1	5'-3" TO 11'-8"	2'-8" TO 9'-1"	2'-7"		2 SETS 8 BARS EACH, VARY A BY 11"	141
5P150	16	5	1	3'-10"	2'-10"	1'-0"			64
5P151	72	6	4	9'-0"	4'-6"	4'-6"	3'-2¼"		973
5P152	24	6	STR	5'-8"					204
5P153	66	5	1	5'-4"	3'-10"	1'-6"			367
5P154	42	6	1	6'-6"	4'-6"	2'-0"			410
5P155	12	6	1	6'-11" TO 11'-11"	2'-4" TO 7'-4"	4'-7"		2 SETS 6 BARS EACH, VARY A BY 12"	170
5P156	4	6	1	12'-7"	8'-0"	4'-7"			76
5P157	12	6	1	4'-11" TO 9'-11"	2'-4" TO 7'-4"	2'-7"		2 SETS 6 BARS EACH, VARY A BY 12"	134
5P158	4	6	1	10'-7"	8'-0"	2'-7"			64
5P159	48	6	STR	10'-9"					775
5P160	12	6	1	4'-2" TO 9'-2"	0'-10" TO 5'-10"	3'-4"		2 SETS 6 BARS EACH, VARY A BY 12"	120
5P161	4	6	1	10'-4"	7'-0"	3'-4"			62
5P162	16	5	1	4'-6" TO 10'-11"	1'-5" TO 7'-10"	3'-1"		2 SETS 8 BARS EACH, VARY A BY 11"	129
5P163	22	5	2	9'-8"	4'-4"	1'-0"			222
5P164	14	5	STR	7'-6"					110
5P165	8	5	1	7'-8"	3'-10"	3'-10"			64
5P166	6	5	STR	5'-6"					34
5P167	28	5	1	3'-9"	2'-9"	1'-0"			110
5P168	16	5	1	7'-9"	6'-9"	1'-0"			129
5P169	52	5	1	4'-6"	3'-6"	1'-0"			244
5P170	220	5	1	4'-7"	3'-7"	1'-0"			1052
5P171	6	6	1	5'-0"	3'-0"	2'-0"			45
CT11	789	4	6	1'-3"	0'-6"	0'-4½"	0'-4½"		659
CT12	192	4	6	1'-9"	1'-0"	0'-4½"	0'-4½"		224

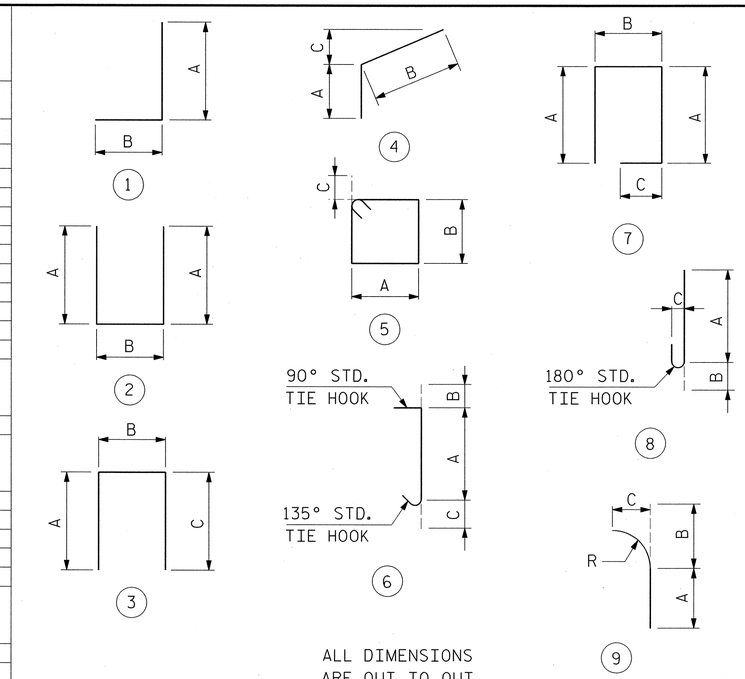

BAR LEGEND:

BAR LOCATION
5 INDICATES PIER 5
6 INDICATES PIER 6
X INDICATES PIER 5 OR 6

BAR NUMBER

5 P 1

ELEMENT IDENTIFICATION
P INDICATES PIER
PF INDICATES PIER FOOTING

FOR REINFORCING BAR SCHEDULES, THE "XP" BAR PREFIX WAS REPLACED BY "5P" OR "6P", AS APPROPRIATE.

PROJECT NO. U-4438

PASQUOTANK COUNTY

STATION: 15+25.75 -L1-

STATE OF NORTH CAROLINA
DEPARTMENT OF TRANSPORTATION
RALEIGH

ELIZABETH CITY BRIDGE OVER PASQUOTANK RIVER
BASCULE PIER 5
BAR SCHEDULE - 1

MODJESKI and MASTERS
Experience great bridges.
Mechanicsburg, PA NC License No. C-2979

NORTH CAROLINA PROFESSIONAL SEAL 025801 ENGINEER LANCE V. BORDEN 3/18/2011

DWG NUMBER	TOTAL DWGS
S-038E	94

REVISIONS						SHEET NO.
NO.	BY:	DATE:	NO.	BY:	DATE:	S-140
1			3			TOTAL SHEETS
2			4			454

DRAWN BY : CMM DATE : 01/11
CHECKED BY : AEC/KWJ DATE : 01/11

3/18/2011
2:13:39 PM
K:\2986.02\CADD\Structural\dgn files\S-038E_U4438_SD_P5BS_01_E.dgn

REINFORCING BAR SCHEDULE

BASCULE PIER 5

MARK	NO.	SIZE	TYPE	LENGTH	A	B	C	REMARKS	WT. (LBS.)
BASCULE PIER 5 - NORTH WALL									
5P201	90	8	STR	20'-10"					5006
5P202	40	8	STR	11'-10"					1264
5P203	26	5	1	13'-1"	6'-1"	7'-0"			355
5P204	26	5	STR	6'-8"					181
5P205	18	5	1	12'-7"	5'-7"	7'-0"			236
5P206	18	5	STR	6'-8"					125
5P207	26	5	STR	5'-10"					158
5P208	28	5	STR	5'-7"					163
5P209	2	5	2	6'-4 1/2"	2'-5"	1'-6 1/2"			13
5P210	14	5	2	5'-6 1/2"	2'-0"	1'-6 1/2"			81
5P213	26	5	1	16'-10"	9'-10"	7'-0"			456
5P214	26	5	STR	6'-8"					181
5P215	21	5	1	10'-2"	5'-1"	5'-1"			223
5P216	21	5	STR	4'-9"					104
5P217	26	5	STR	9'-10"					267
5P218	52	5	STR	30'-6"					1654
5P219	5	5	STR	3'-7"					19
5P229	16	5	STR	4'-0"					67
5P230	41	8	STR	15'-6"					1697
5P231	3	8	STR	22'-3"					178
5P232	2	8	STR	18'-5"					98
5P233	5	5	2	5'-11 3/4"	2'-4"	1'-3 3/4"			31
5P234	5	8	2	9'-7 3/4"	4'-2"	1'-3 3/4"			129
5P236	15	8	1	15'-3"	12'-0"	3'-3"			611
5P237	16	8	1	11'-10"	8'-7"	3'-3"			506
5P238	31	5	1	7'-3"	6'-3"	1'-0"			234
5P239	5	8	STR	9'-2"					122
5P240	10	8	1	19'-2"	15'-9"	3'-5"			512
5P241	10	8	1	15'-5"	12'-0"	3'-5"			412
5P242	12	8	STR	7'-0"					224
5P243	10	8	STR	11'-4"					303
5P244	16	5	STR	36'-0"					601
5P245	22	5	STR	10'-9"					247
5P246	11	5	STR	21'-11"					251
5P247	26	5	STR	5'-2"					140
5P248	10	5	STR	20'-0"					209
5P249	5	5	STR	20'-11"					109
5P250	9	5	STR	5'-8"					53
5P251	21	5	STR	18'-5"					403
5P252	7	5	STR	19'-0"					139
5P253	7	5	1	4'-7"	3'-3"	1'-4"			33
5P254	19	5	1	6'-2"	3'-1"	3'-1"			122
5P255	5	5	1	8'-1"	5'-1"	3'-0"			42
5P256	8	5	1	7'-10"	5'-7"	2'-3"			65
5P257	2	5	STR	6'-5"					13
5P258	22	5	2	7'-7"	3'-1"	1'-5"			174
5P259	2	5	1	15'-1"	12'-0"	3'-1"			31
5P260	24	5	1	5'-10"	2'-4"	3'-7"			148
5P261	24	5	1	4'-3"	1'-11"	2'-4"			106
5P262	8	5	STR	22'-3"					186
5P263	2	5	STR	10'-6"					22
5P264	2	5	STR	4'-7"					10
5P265	2	5	STR	6'-8"					14
CT21	651	5	6	4'-3 1/2"	3'-4"	0'-6"	0'-5 1/2"		2914
CT22	238	5	6	2'-4 1/2"	1'-5"	0'-6"	0'-5 1/2"		590
CT23	56	5	6	2'-0 1/2"	1'-1"	0'-6"	0'-5 1/2"		119
BASCULE PIER 5 - SOUTH WALL									
5P301	31	8	STR	20'-10"					1724
5P303	26	5	1	12'-9"	5'-9"	7'-0"			346
5P304	26	5	STR	7'-0"					190
5P305	18	5	1	9'-6"	5'-3"	4'-3"			178
5P306	18	5	STR	4'-3"					80
5P307	26	5	STR	5'-9"					156
5P309	26	5	1	16'-9"	9'-9"	7'-0"			454
5P310	26	5	STR	7'-0"					190
5P311	26	5	1	8'-10"	4'-5"	4'-5"			240
5P312	26	5	STR	4'-3"					115
5P313	24	5	STR	9'-9"					244
5P315	50	5	STR	30'-6"					1591
5P320	6	5	STR	5'-10"					37

REINFORCING BAR SCHEDULE

BASCULE PIER 5

MARK	NO.	SIZE	TYPE	LENGTH	A	B	C	REMARKS	WT. (LBS.)
BASCULE PIER 5 - SOUTH WALL (CONTINUED)									
5P321	2	5	STR	9'-0"					19
5P322	3	5	1	6'-0"	3'-0"	3'-0"			19
5P325	16	8	STR	18'-7"					794
5P326	16	8	STR	22'-5"					958
5P327	9	8	1	15'-7"	12'-2"	3'-5"			374
5P328	11	8	1	19'-2"	15'-9"	3'-5"			563
5P330	64	5	1	4'-10"	3'-10"	1'-0"			323
5P331	51	5	1	6'-1"	5'-1"	1'-0"			324
5P332	2	8	STR	7'-4"					39
5P333	2	8	STR	10'-8"					57
5P334	4	5	1	4'-3"	3'-3"	1'-0"			18
5P335	26	8	STR	11'-3"					781
5P336	25	8	STR	14'-2"					946
5P337	12	8	STR	10'-10"					347
5P338	12	8	STR	7'-0"					224
5P340	4	5	1	7'-0"	3'-6"	3'-6"			29
5P341	32	8	STR	10'-6"					897
5P342	8	5	2	7'-1"	3'-1"	0'-11"			59
5P343	14	8	1	14'-3"	10'-10"	3'-5"			533
5P344	14	8	1	18'-1"	14'-8"	3'-5"			676
5P345	2	5	STR	26'-0"					54
5P346	64	5	1	4'-6"	3'-6"	1'-0"			300
5P347	2	5	STR	11'-4"					24
5P348	18	5	STR	5'-2"					99
5P349	20	5	STR	36'-1"					753
5P350	28	5	STR	4'-6"					131
5P351	32	5	STR	11'-10"					395
5P352	2	5	STR	22'-0"					46
5P355	34	5	STR	5'-4"					189
CT31	398	5	6	4'-7 1/2"	3'-8"	0'-6"	0'-5 1/2"		1920
CT32	358	5	6	1'-10 1/2"	0'-11"	0'-6"	0'-5 1/2"		700
BASCULE PIER 5 - FRONT WALL									
5P401	28	8	9	12'-7"	9'-7"	3'-0"	1'-10"	RADIUS = 2'-0"	941
5P402	28	8	9	16'-7"	13'-7"	3'-0"	1'-10"	RADIUS = 2'-0"	1240
5P403	45	8	1	11'-11"	10'-6"	1'-5"			1432
5P404	45	8	STR	8'-7"					1031
5P407	47	8	STR	14'-11"					1872
5P408	17	5	2	7'-7"	3'-1"	1'-5"			134
5P409	44	5	STR	48'-4"					2218
5P410	18	5	STR	53'-0"					995
5P411	12	5	2	10'-5"	4'-6"	1'-5"			130
5P412	5	5	2	4'-11"	1'-9"	1'-5"			26
5P413	24	5	STR	14'-6"					363
5P414	2	5	STR	12'-2"					25
5P415	8	5	STR	11'-3"					94
5P416	28	3	5	10'-10 1/2"	1'-5"	3'-8"	0'-4 1/4"		114
5P420	54	5	STR	9'-8"					544
5P421	28	5	1	6'-4"	4'-10"	1'-6"			185
5P422	25	8	STR	9'-7"					640
5P423	25	8	STR	13'-8"					912
5P424	2	8	STR	39'-0"					208
5P425	33	8	STR	10'-5"					918
5P426	4	8	1	8'-4" TO 8'-10"	6'-11" TO 7'-5"	1'-5"		VARY A BY 2"	92
5P427	4	8	STR	6'-11" TO 7'-5"				VARY BY 2"	77
5P428	3	8	1	8'-4" TO 8'-9"	6'-11" TO 7'-4"	1'-5"		VARY A BY 2 1/2"	68
5P429	3	8	STR	6'-11" TO 7'-4"				VARY BY 2 1/2"	57

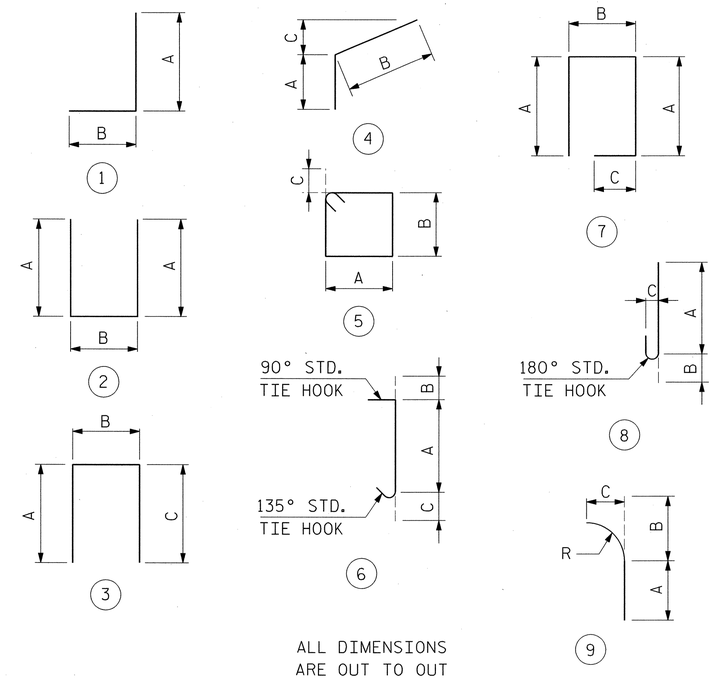

ALL DIMENSIONS ARE OUT TO OUT

BAR LEGEND:

BAR LOCATION
5 INDICATES PIER 5
6 INDICATES PIER 6
X INDICATES PIER 5 OR 6

BAR NUMBER

5 P 1

ELEMENT IDENTIFICATION
P INDICATES PIER
PF INDICATES PIER FOOTING

FOR REINFORCING BAR SCHEDULES, THE "XP" BAR PREFIX WAS REPLACED BY "5P" OR "6P", AS APPROPRIATE.

PROJECT NO. U-4438
PASQUOTANK COUNTY
STATION: 15+25.75 -L1-

STATE OF NORTH CAROLINA
DEPARTMENT OF TRANSPORTATION
RALEIGH

ELIZABETH CITY BRIDGE OVER PASQUOTANK RIVER
BASCULE PIER 5
BAR SCHEDULE - 2

REVISIONS						SHEET NO.
NO.	BY:	DATE:	NO.	BY:	DATE:	S-141
1			3			TOTAL SHEETS
2			4			454

MODJESKI and MASTERS
Experience great bridges.
Mechanicsburg, PA NC License No. C-2979

DWG NUMBER	TOTAL DWGS
S-039E	94

NORTH CAROLINA PROFESSIONAL ENGINEER SEAL 025801 LANCE V. BORDEN 3/18/2011

DRAWN BY : CMM DATE : 01/11
CHECKED BY : AEC/KWJ DATE : 01/11

3/18/2011
2:13:43 PM
K:\2986.02\CADD\Structural\dgn files\S-039E_U4438_SD_P5B2_01_E.dgn

REINFORCING BAR SCHEDULE

BASCULE PIER 5

MARK	NO.	SIZE	TYPE	LENGTH	A	B	C	REMARKS	WT. (LBS.)
BASCULE PIER 5 - FRONT WALL (CONTINUED)									
5P430	4	5	STR	8′-9″					37
5P431	8	5	STR	4′-7″					38
5P432	4	5	STR	4′-1″					17
5P451	36	8	9	19′-11″	16′-11″	3′-0″	1′-10″	RADIUS = 2′-0″	1914
5P452	36	8	4	15′-11″	13′-1″	2′-10″	2′-8″		1530
5P453	8	8	9	12′-10″	9′-10″	3′-0″	1′-10″	RADIUS = 2′-0″	274
5P454	4	8	9	11′-8″	8′-8″	3′-0″	1′-10″	RADIUS = 2′-0″	125
5P455	8	8	9	6′-6″	3′-6″	3′-0″	1′-10″	RADIUS = 2′-0″	139
5P456	5	5	STR	53′-2″					277
5P457	10	5	STR	45′-5″					474
5P458	7	5	STR	24′-8″					180
5P459	10	5	STR	20′-8″					216
5P461	7	5	STR	6′-6″					47
5P462	10	5	STR	4′-6″					47
5P464	7	5	STR	8′-9″					64
5P465	10	5	STR	6′-9″					70
5P468	16	8	STR	2′-10″					121
5P469	8	8	4	8′-5¼″	5′-7¼″	2′-10″	2′-8″		180
5P470	4	8	4	7′-2″	4′-4″	2′-10″	2′-8″		77
5P471	1	5	STR	6′-0″					6
5P472	4	5	1	7′-0″	3′-6″	3′-6″			29
CT41	450	5	6	7′-4½″	6′-5″	0′-6″	0′-5½″		3461
CT42	761	5	6	2′-4½″	1′-5″	0′-6″	0′-5½″		1885
BASCULE PIER 5 - APPROACH WALL									
5P501	112	8	STR	16′-2″					4834
5P502	50	8	STR	11′-11″					1591
5P503	49	8	1	20′-7″	15′-11″	4′-8″			2693
5P505	53	8	STR	7′-0″					991
5P506	106	8	STR	11′-2″					3160
5P507	80	5	2	4′-11¾″	1′-7″	1′-9¾″			415
5P508	4	5	STR	43′-8″					182
5P509	4	5	STR	7′-6″					31
5P510	5	5	1	8′-0″	6′-4″	1′-8″			42
5P511	34	5	STR	51′-1″					1812
5P512	52	5	STR	48′-4″					2621
5P513	4	8	STR	15′-4″					164
5P514	2	8	STR	12′-1″					65
5P516	8	5	STR	5′-0″					42
5P517	6	5	STR	4′-6″					28
5P518	10	3	2	4′-8″	2′-1″	0′-6″			18
5P519	5	3	2	8′-4″	3′-11″	0′-6″			16
5P520	3	5	2	9′-10″ TO 7′-2″	3′-5″ TO 2′-1″	3′-0″		3 SETS 2 BARS EACH, VARY A BY 8″	27
5P521	4	5	2	8′-6¾″ TO 11′-6¾″	2′-10″ TO 4′-4″	2′-10¾″		VARY A BY 6″	40
5P522	7	5	4	7′-2½″	1′-7½″	5′-7″	3′-11″		53
5P523	2	5	2	7′-2″	1′-8″	3′-10″			15
5P524	2	5	2	10′-10″	3′-11″	3′-0″			23
5P530	3	5	STR	48′-3″					151
5P550	26	5	STR	5′-8″					154
5P551	16	5	1	6′-3″	5′-3″	1′-0″			104
5P552	8	5	STR	7′-6″					63
5P553	4	5	STR	7′-2″					30
CT51	650	5	6	3′-4½″	2′-5″	0′-6″	0′-5½″		2288
CT52	486	5	6	2′-10½″	1′-11″	0′-6″	0′-5½″		1457
BASCULE PIER 5 - INTERIOR WALL									
5P601	28	5	STR	27′-6″					803
5P602	38	5	2	9′-11″	3′-1″	3′-9″			393
5P603	2	5	2	9′-11″	3′-1″	3-9″			21
5P610	67	8	STR	20′-8″					3697
5P611	4	8	STR	9′-2″					98
5P612	10	8	1	15′-5″	11′-11″	3′-6″			412
5P613	9	8	1	19′-3″	15′-9″	3′-6″			463
5P615	8	8	STR	7′-8″					164
5P616	13	8	STR	11′-1″					385
5P617	15	8	STR	7′-3″					290
5P618	34	8	STR	11′-4″					1029
5P619	34	8	STR	14′-4″					1301

REINFORCING BAR SCHEDULE

BASCULE PIER 5

MARK	NO.	SIZE	TYPE	LENGTH	A	B	C	REMARKS	WT. (LBS.)
BASCULE PIER 5 - INTERIOR WALL (CONTINUED)									
5P620	11	5	STR	29′-6″					338
5P621	64	5	1	5′-0″	4′-0″	1′-0″			334
5P622	5	8	STR	7′-8″					102
5P623	5	8	1	8′-4″	4′-10″	3′-6″			111
5P624	26	5	STR	30′-6″					827
5P625	12	8	1	11′-10″	8′-4″	3′-6″			379
5P626	12	8	1	15′-2″	11′-8″	3′-6″			486
5P627	16	5	2	7′-8″	3′-1″	1′-6″			128
5P628	11	5	STR	16′-8″					191
5P629	11	5	1	18′-2″	14′-8″	3′-6″			208
5P630	18	5	STR	36′-0″					676
5P631	4	5	2	7′-8″	3′-1″	1′-6″			32
5P632	10	5	STR	19′-8″					205
5P633	10	5	1	12′-11″	18′-5″	3′-6″			229
5P634	25	5	1	9′-3″	6′-3″	3′-0″			241
5P635	10	8	STR	8′-0″					214
5P636	4	8	STR	7′-0″					75
5P637	4	8	STR	10′-2″					109
5P638	1	8	STR	9′-0″					24
5P639	2	5	STR	17′-8″					37
5P640	2	8	1	15′-8″	12′-7″	3′-1″			84
5P641	2	5	1	5′-8″	3′-1″	2′-7″			12
5P642	4	5	1	7′-9″	6′-3″	1′-6″			32
5P643	19	5	STR	4′-0″					79
5P644	1	5	STR	3′-6″					4
5P645	16	5	STR	4′-0″					67
5P650	34	5	1	4′-9″	3′-3″	1′-6″			168
CT61	606	5	6	4′-8½″	3′-9″	0′-6″	0′-5½″		2976
CT62	254	5	6	2′-5½″	1-6″	0′-6″	0′-5½″		651
BASCULE PIER 5 - DECK AND BARRIER									
5G701	1	5	STR	11′-9″					12
5J701	9	4	6	1′-5″	1′-0½″		0′-4½″		9
5P701	38	6	STR	11′-7½″					664
5P703	4	5	STR	38′-4″					160
5P704	26	5	STR	4′-4″		1′-0″			118
5P705	30	5	1	3′-10″	2′-10″				120
5P706	12	5	STR	23′-3″					291
5P707	34	5	STR	12′-1″					428
5P708	56	5	STR	5′-4″					312
5P709	16	5	STR	12′-10″		0′-9″			214
5P720	35	5	7	4′-7″	1′-7″		0′-8″		167
5P721	4	5	STR	22′-6″					94
5P752	2	6	STR	1′-4″					4
5P753	2	6	STR	1′-10″					6
5P754	2	6	STR	2′-3″					7
5P755	6	7	STR	2′-7″					32
5P756	2	7	STR	3′-0″					12
5P757	2	5	4	2′-6½″	0′-9″	1′-9½″	1′-5″		5
5P758	8	5	STR	2′-1½″					18
5P759	21	5	7	5′-6″	2′-0½″	0′-9″	0′-8″		120
5P760	2	6	STR	1′-4″					4
5P761	2	6	STR	2′-6″					8
5P762	2	6	STR	3′-6″					11
5P763	2	6	STR	4′-3″					13
5P764	2	7	8	5′-11″	5′-1″	0′-10″	0′-7″		24
5P765	2	7	1	4′-3″	3′-3″	1′-0″			17
5P766	2	7	1	5′-3″	4′-3″	1′-0″			21
5P767	72	7	1	5′-10½″	4′-10½″	1′-0″			865
5P768	2	7	1	5′-5″	4′-5″	1′-0″			22
5P769	2	7	1	4′-11″	3′-11″	1′-0″			20
5P770	2	7	1	4′-4″	3′-4″	1′-0″			18
5P771	2	6	STR	2′-4½″					7
5P772	4	6	STR	3′-6″					21
5P773	10	6	STR	11′-4½″					171
5P774	2	6	STR	3′-8″					11
5P775	10	6	STR	4′-7″					69

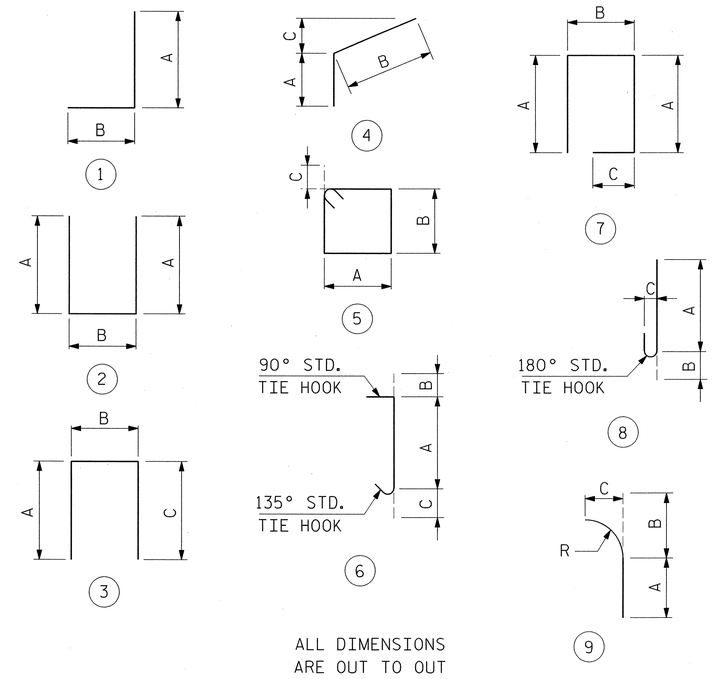

BAR LEGEND:

BAR LOCATION

5 INDICATES PIER 5
6 INDICATES PIER 6

BAR NUMBER

5 P 1

ELEMENT IDENTIFICATION

P INDICATES PIER
PF INDICATES PIER FOOTING

PROJECT NO. U-4438

PASQUOTANK COUNTY

STATION: 15+25.75 -L1-

STATE OF NORTH CAROLINA
DEPARTMENT OF TRANSPORTATION
RALEIGH

ELIZABETH CITY BRIDGE OVER
PASQUOTANK RIVER
BASCULE PIER 5
BAR SCHEDULE - 3

MODJESKI and MASTERS
Experience great bridges.
Mechanicsburg, PA NC License No. C-2979

NORTH CAROLINA PROFESSIONAL SEAL 025801 ENGINEER LANCE V. BORDEN 3/18/2011

DWG NUMBER	TOTAL DWGS
S-040E	94

REVISIONS						SHEET NO.
NO.	BY:	DATE:	NO.	BY:	DATE:	S-142
1			3			TOTAL SHEETS
2			4			454

DRAWN BY : CMM DATE : 01/11
CHECKED BY : AEC/KWJ DATE : 01/11

3/18/2011
2:13:47 PM
K:\2986.02\CADD\Structural\dgn files\S-040E_U4438_SD_P5B3_01_E.dgn

REINFORCING BAR SCHEDULE

BASCULE PIER 5

MARK	NO.	SIZE	TYPE	LENGTH	A	B	C	REMARKS	WT. (LBS.)
BASCULE PIER 5 - DECK AND BARRIER (CONTINUED)									
5P776	10	6	STR	12'-4½"					186
5P777	6	5	STR	22'-6" TO 23'-6"				3 SETS 2 BARS EACH, VARY BY 6"	144
BASCULE PIER 5 - TRUNNION COLUMN, TAIL LOCK AND BUMPER BLOCK									
5P801	24	6	STR	20'-8"					745
5P802	64	6	STR	18'-5"					1770
5P803	56	6	STR	10'-9" TO 12'-9"				4 SETS 7 BARS EACH, VARY BY 4"	988
5P804	56	6	STR	5'-6"					463
5P805	216	5	2	7'-9"	3'-1"	1'-7"			1746
5P806	48	5	STR	10'-3"					513
5P807	140	5	2	19'-3"	8'-10"	1'-7"			2811
5P808	280	5	STR	4'-6"					1314
5P810	836	5	6	2'-6"	1'-7"	0'-5½"	0'-5½"		2180
5P821	56	5	STR	6'-10"					399
5P822	32	5	1	10'-1"	5'-1"	5'-0"			337
5P823	16	5	2	13'-1¼"	5'-0"	3'-1¼"			219
5P824	24	8	1	9'-6"	4'-6"	5'-0"			609
5P825	20	8	1	11'-0"	4'-0"	7'-0"			587
5P831	8	5	2	11'-6"	4'-6"	2'-6"			96
5P832	8	8	4	7'-0"	2'-2"	4'-10"	1'-9¾"		150
5P833	10	5	2	2'-6" TO 4'-0"	2'-6" TO 4'-0"	2'-4¾"		2 SETS OF 5 VARY A BY 3⅝"	93
BASCULE PIER 5 - STAIRS									
5P901	4	6	4	11'-1"	2'-1"	9'-0"	6'-7"		67
5P902	4	6	4	10'-8"	1'-11"	8'-9"	6'-3¼""		64
5P903	8	5	STR	4'-3"					35
5P904	20	5	STR	2'-3"					47
5P905	12	6	STR	21'-2"					382
5P906	84	6	4	8'-0"	4'-0"	4'-0"	2'-11"		1009
5P907	131	5	STR	2'-6"					342
5P908	24	6	STR	13'-0"					469
5P909	12	6	STR	15'-11"					287

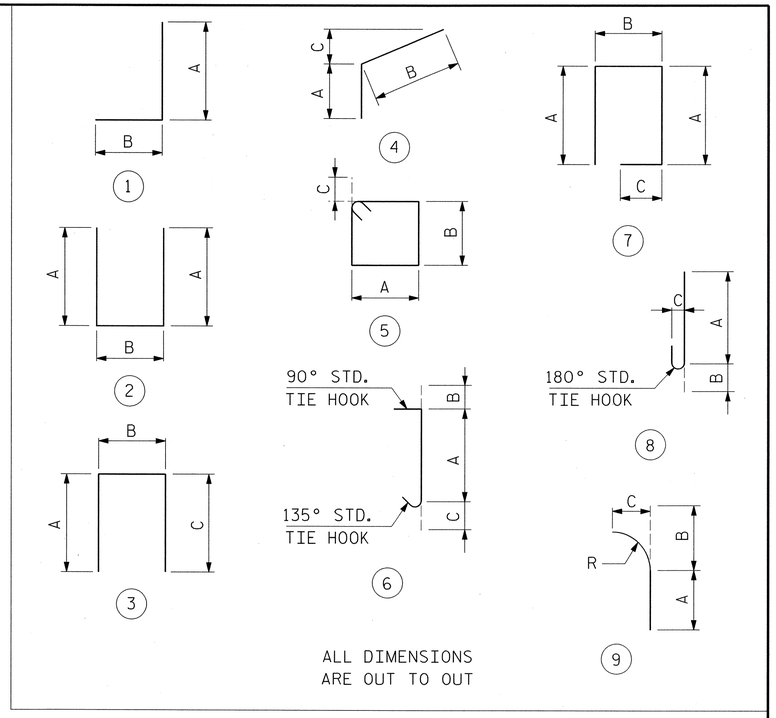

BAR LEGEND:

BAR LOCATION

5 INDICATES PIER 5
6 INDICATES PIER 6

BAR NUMBER

5 P 1

ELEMENT IDENTIFICATION

P INDICATES PIER
PF INDICATES PIER FOOTING

PROJECT NO. U-4438

PASQUOTANK COUNTY

STATION: 15+25.75 -L1-

STATE OF NORTH CAROLINA
DEPARTMENT OF TRANSPORTATION
RALEIGH

ELIZABETH CITY BRIDGE OVER PASQUOTANK RIVER
BASCULE PIER 5
BAR SCHEDULE - 4

MODJESKI and MASTERS
Experience great bridges.
Mechanicsburg, PA NC License No. C-2979

NORTH CAROLINA PROFESSIONAL SEAL 025801 ENGINEER LANCE V. BORDEN 3/18/2011

DWG NUMBER	TOTAL DWGS
S-041E	94

REVISIONS						SHEET NO.
NO.	BY:	DATE:	NO.	BY:	DATE:	S-143
1			3			TOTAL SHEETS
2			4			454

DRAWN BY : CMM DATE : 01/11
CHECKED BY : AEC/KWJ DATE : 01/11

3/18/2011
2:13:51 PM
K:\2986.02\CADD\Structural\dgn files\S-041E_U4438_SD_P5B4_01_E.dgn

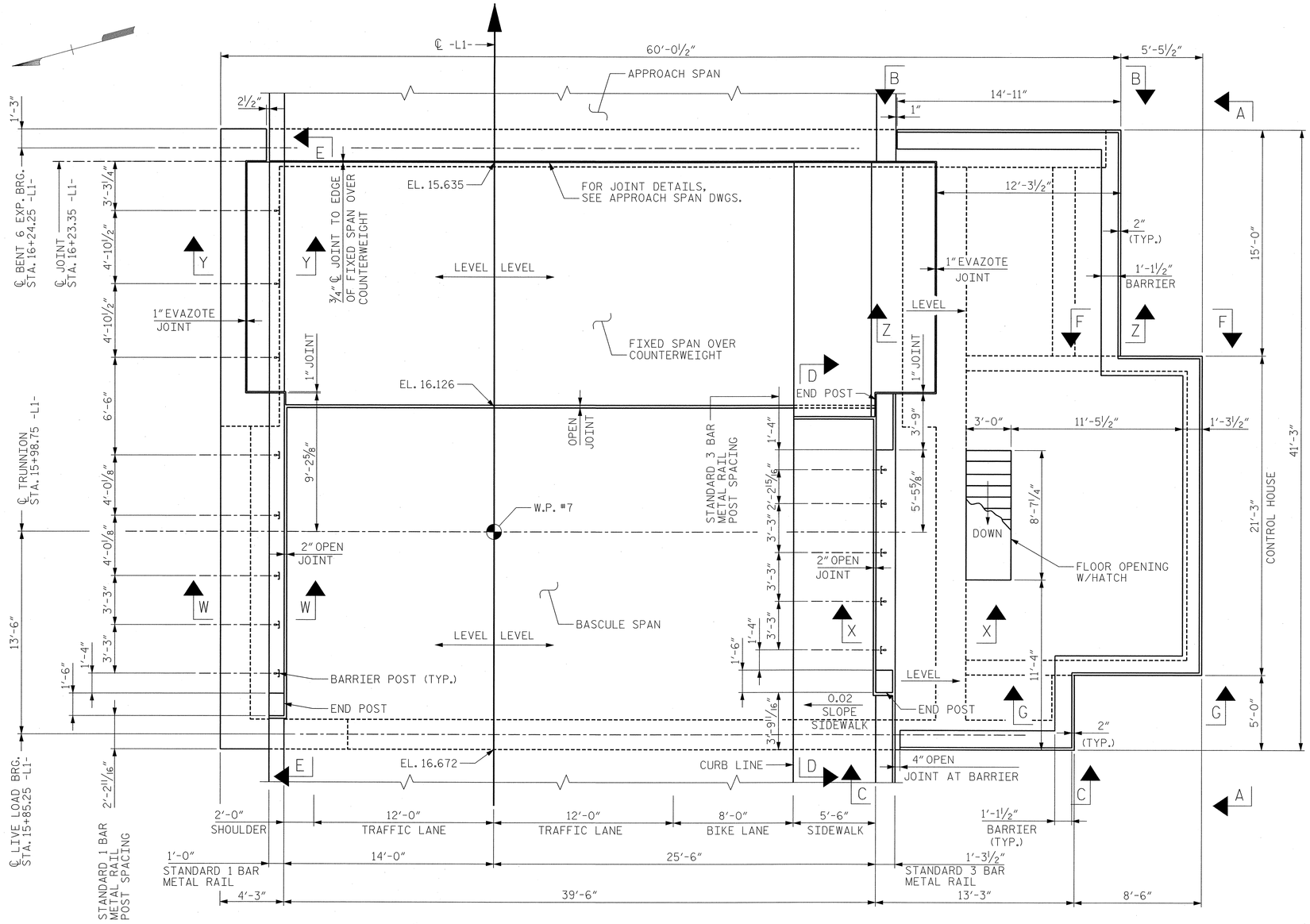

PIER 6 ROADWAY LEVEL PLAN

(METAL RAIL NOT SHOWN FOR CLARITY)

EASTBOUND

PROJECT NO. U-4438

PASQUOTANK COUNTY

STATION: 15+25.75 -L1-

NOTES:

1. FOR GENERAL NOTES, SEE DWG. G-004.
2. FOR PIER 6 ROADWAY LEVEL REINFORCEMENT DETAILS, SEE DWG. S-043E.
3. FOR FIXED SPAN OVER COUNTERWEIGHT DETAILS, SEE DWGS S-053E THROUGH S-056E.
4. FOR SECTIONS A-A & B-B, SEE DWG. S-046E.
5. FOR SECTIONS C-C, D-D & E-E, SEE DWG. S-028E.
6. FOR SECTIONS F-F & G-G, SEE DWG. S-046E.
7. FOR EVAZOTE JOINT DETAIL, SEE DWG. S-053E.
8. FOR SECTIONS W-W & Y-Y, SEE DWG. S-014E.
9. FOR SECTIONS Z-Z & X-X, SEE DWG. S-043E.

MODJESKI and MASTERS
Experience great bridges.
Mechanicsburg, PA NC License No. C-2979

NORTH CAROLINA PROFESSIONAL SEAL 025801 ENGINEER LANCE V. BORDEN 2/3/2011

STATE OF NORTH CAROLINA
DEPARTMENT OF TRANSPORTATION
RALEIGH

ELIZABETH CITY BRIDGE OVER PASQUOTANK RIVER
BASCULE PIER 6
ROADWAY LEVEL PLAN

REVISIONS						SHEET NO.
NO.	BY:	DATE:	NO.	BY:	DATE:	S-144
1			3			TOTAL SHEETS
2			4			454

DWG NUMBER	TOTAL DWGS
S-042E	94

DRAWN BY : CMM DATE : 01/11
CHECKED BY : AEC DATE : 01/11

2/3/2011
2:04:46 PM
K:\2986.02\CADD\Structural\dgn files\S-042E_U4438_SD_RP06_01_E.dgn

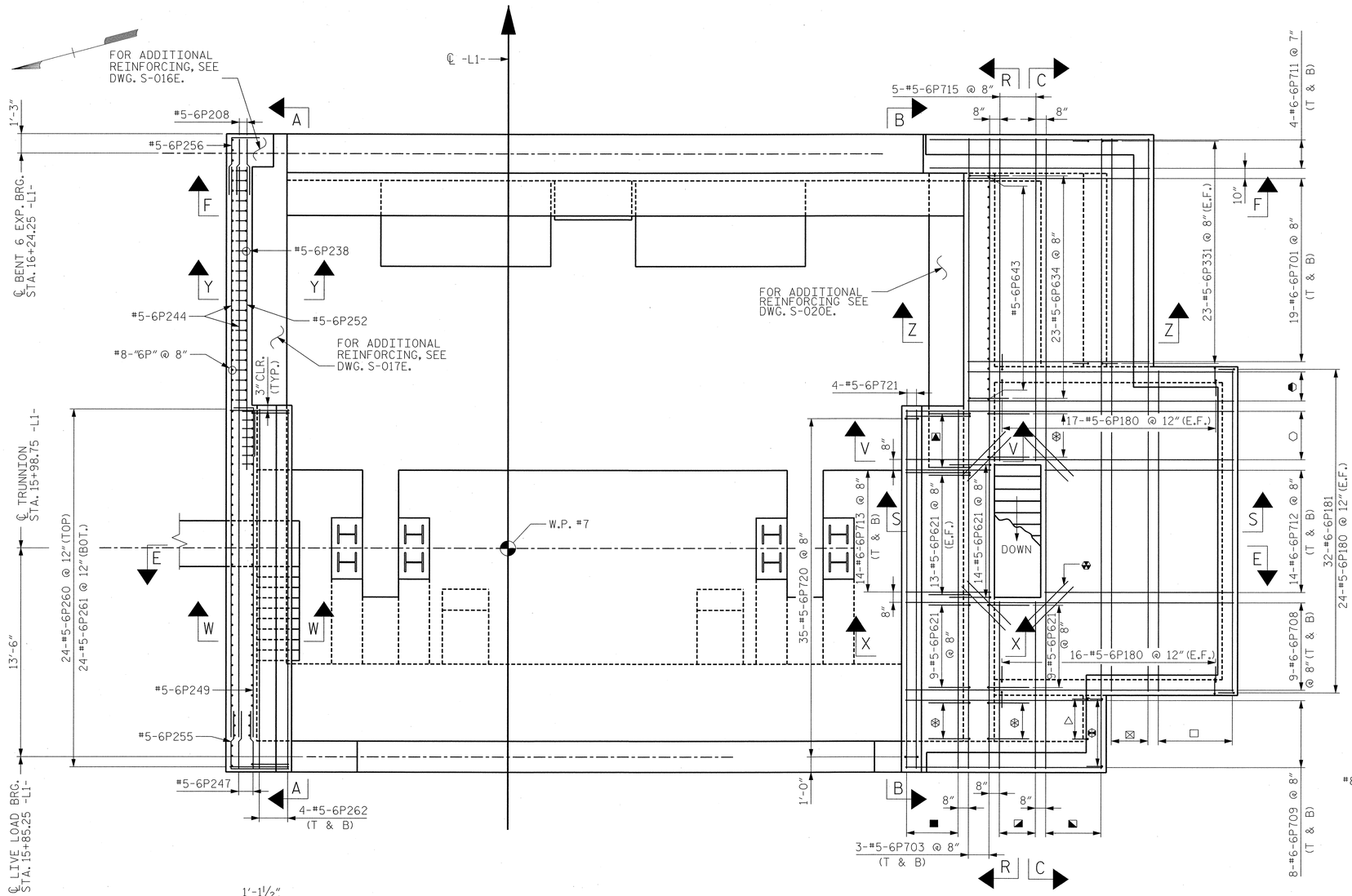

PIER 6 ROADWAY LEVEL REINFORCEMENT PLAN @ 16.600

(FIXED SPAN AND MOVABLE SPAN NOT SHOWN FOR CLARITY)

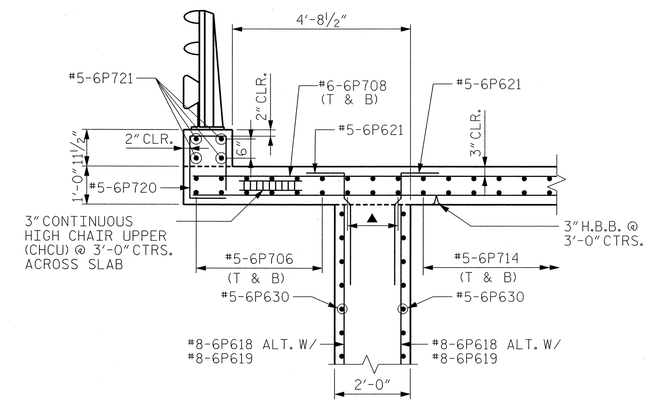

SECTION X-X

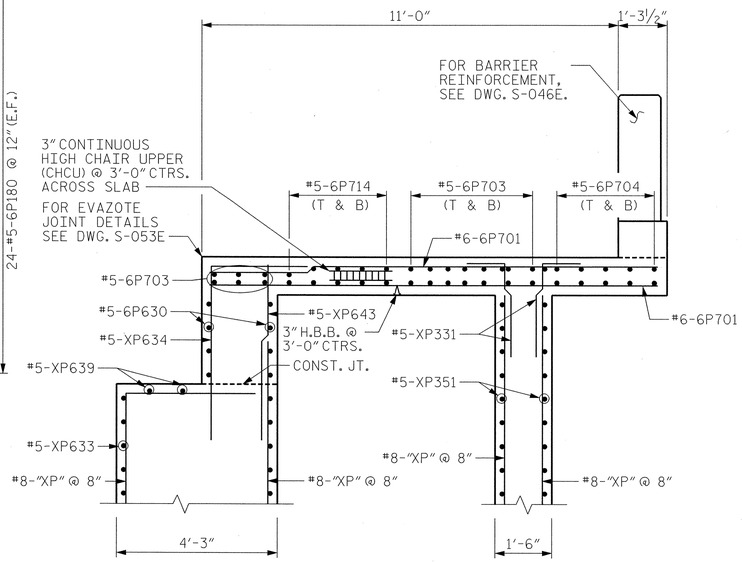

SECTION Z-Z

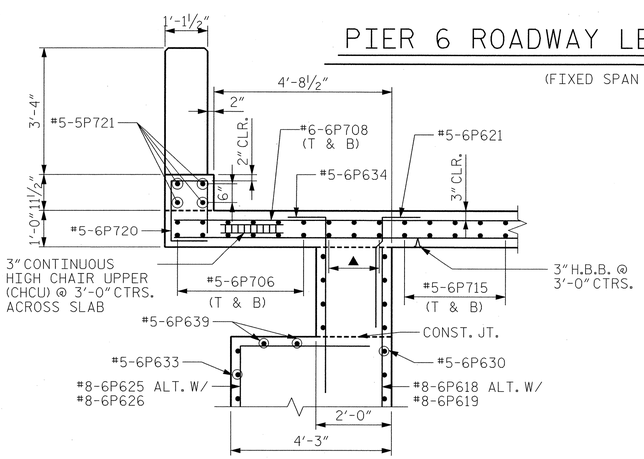

SECTION V-V

(FIXED SPAN AND MOVABLE SPAN NOT SHOWN FOR CLARITY)

- ■ DENOTES: 6-#5-6P706 @ 8" (T & B)
- ◪ DENOTES: 5-#5-6P714 @ 8" (T & B)
- ◩ DENOTES: 7-#5-6P703 @ 8" (T & B)
- ⊠ DENOTES: 5-#5-6P704 @ 8" (T & B)
- □ DENOTES: 9-#5-6P707 @ 8" (T & B)
- ⬡ DENOTES: 5-#6-6P708 @ 8" (T & B)
- ◐ DENOTES: 4-#6-6P710 @ 8" (T & B)
- ⊗ DENOTES: 5-#6-6P621 @ 8"
- ◭ DENOTES: 6-#5-6P634 @ 8"
- ▲ DENOTES: #5-6P703 @ 8" (T & B)
- △ DENOTES: 5-#5-XP331 @ 8"
- ⊗ DENOTES: 8-#5-XP331 @ 8"
- ⊗ DENOTES: #5-6P716 @ 6" (T & B)(TYP.)

NOTES:

1. FOR GENERAL NOTES, SEE DWG. G-004.
2. FOR SECTION A-A, SEE DWG. S-019E.
3. FOR SECTION B-B, SEE DWG. S-020E.
4. FOR SECTION C-C, SEE DWG. S-021E.
5. FOR SECTION E-E, SEE DWG. S-022E.
6. FOR SECTION F-F, SEE DWG. S-023E.
7. FOR 1-BAR AND 3-BAR METAL RAIL DETAILS, SEE DWG. S-087E THRU S-091E.
8. FOR SECTIONS R-R & S-S, SEE DWG. S-045E.
9. FOR SECTIONS Y-Y AND W-W, SEE DWG. S-014E.
10. FOR BAR NAMING CONVENTION, SEE DWG. S-038E.

EASTBOUND

PROJECT NO. U-4438

PASQUOTANK COUNTY

STATION: 15+25.75 -L1-

STATE OF NORTH CAROLINA
DEPARTMENT OF TRANSPORTATION
RALEIGH

ELIZABETH CITY BRIDGE OVER PASQUOTANK RIVER
BASCULE PIER 6
ROADWAY LEVEL REINFORCING

MODJESKI and MASTERS
Experience great bridges.
Mechanicsburg, PA NC License No. C-2979

NORTH CAROLINA SEAL 025801 ENGINEER LANCE V. BORDEN 3/18/2011

DRAWN BY : CMM	DATE : 01/11
CHECKED BY : KWJ	DATE : 01/11

DWG NUMBER	TOTAL DWGS
S-043E	94

REVISIONS								SHEET NO.
NO.	BY:	DATE:	NO.	BY:	DATE:			S-145
1			3					TOTAL SHEETS
2			4					454

3/18/2011
2:13:55 PM
K:\2986.02\CADD\Structural\dgn files\S-043E_U4438_SD_RPR6_01_E.dgn

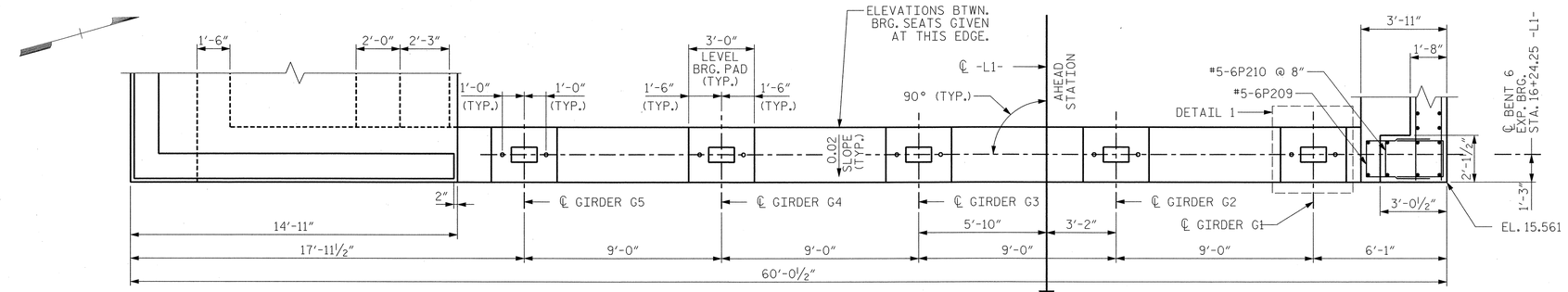

PIER 6 - PARTIAL PLAN

(AT BENT 6 BEARING SEAT)

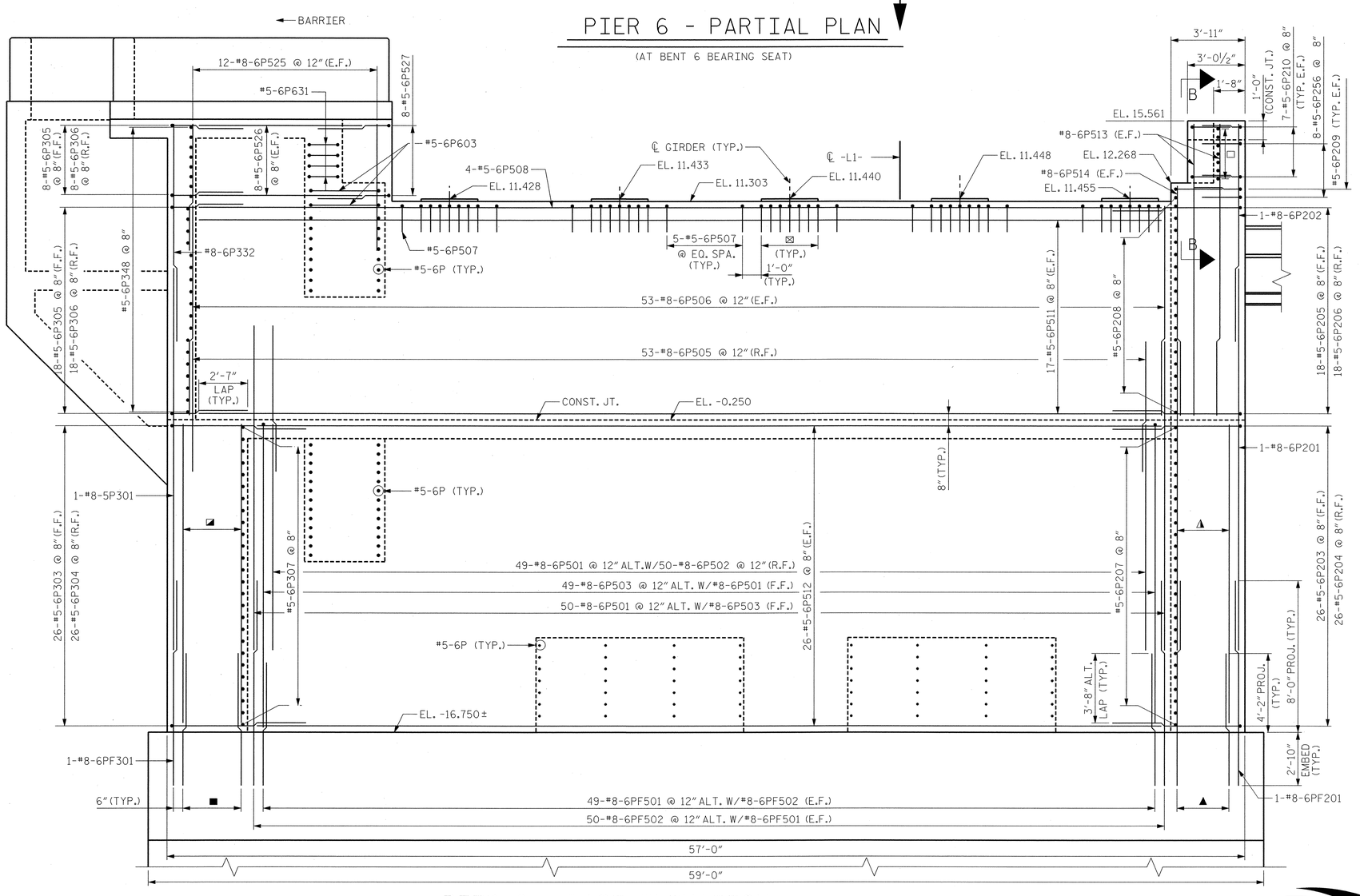

PIER 6 - EAST ELEVATION

(LOOKING WEST)

■ DENOTES: 4-#8-6PF501 @ 12" ALT. W/3-#8-6PF502 (F.F.)
◪ DENOTES: 7-#8-6P501 @ 6" (F.F.)
⊠ DENOTES: 7-#5-6P507 @ 6"
□ DENOTES: #5-6P208 @ EQ. SPA.
▲ DENOTES: 3-#8-6PF501 @ 12" ALT. W/3-#8-6PF502 (F.F.)
◭ DENOTES: 6-#8-6P501 @ 6" (F.F.)

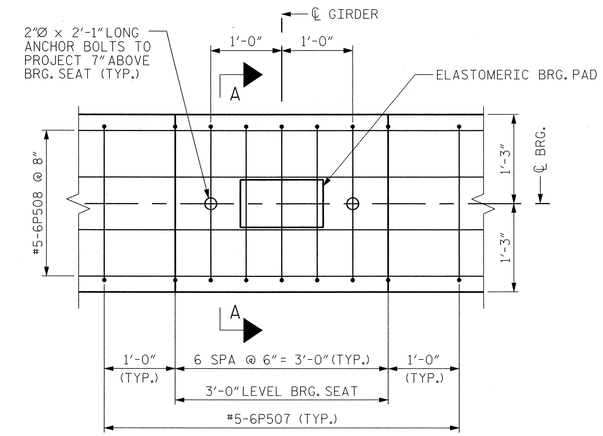

DETAIL 1

(TYP. AT EACH GIRDER)

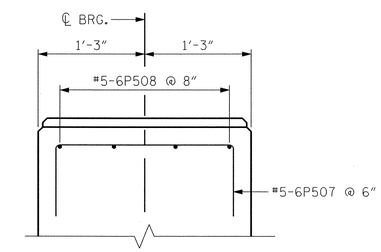

SECTION A

NOTES:

1. FOR GENERAL NOTES, SEE DWG. G-004.
2. FOR CONTROL HOUSE DETAILS, SEE DWGS. S-030E THRU S-037E.
3. FOR ELASTOMERIC BRG. DETAILS, SEE APPROACH DWGS.
4. FOR SECTION B-B, SEE DWG. S-016E.
5. FOR BAR NAMING CONVENTION, SEE DWG. S-038E.

EASTBOUND
PROJECT NO. U-4438
PASQUOTANK COUNTY
STATION: 15+25.75 -L1-

STATE OF NORTH CAROLINA
DEPARTMENT OF TRANSPORTATION
RALEIGH

ELIZABETH CITY BRIDGE OVER PASQUOTANK RIVER
BASCULE PIER 6
APPROACH WALL ELEVATION

MODJESKI and MASTERS
Experience great bridges.
Mechanicsburg, PA NC License No. C-2979

NORTH CAROLINA PROFESSIONAL SEAL 025801 ENGINEER LANCE V. BORDEN 3/18/2011

REVISIONS						SHEET NO.
NO.	BY:	DATE:	NO.	BY:	DATE:	S-146
1			3			TOTAL SHEETS
2			4			454

DWG NUMBER	TOTAL DWGS
S-044E	94

DRAWN BY : CMM DATE : 01/11
CHECKED BY : AEC DATE : 01/11

3/18/2011
2:14:00 PM
K:\2986.02\CADD\Structural\dgn files\S-044E_U4438_SD_P6EE_01_E.dgn

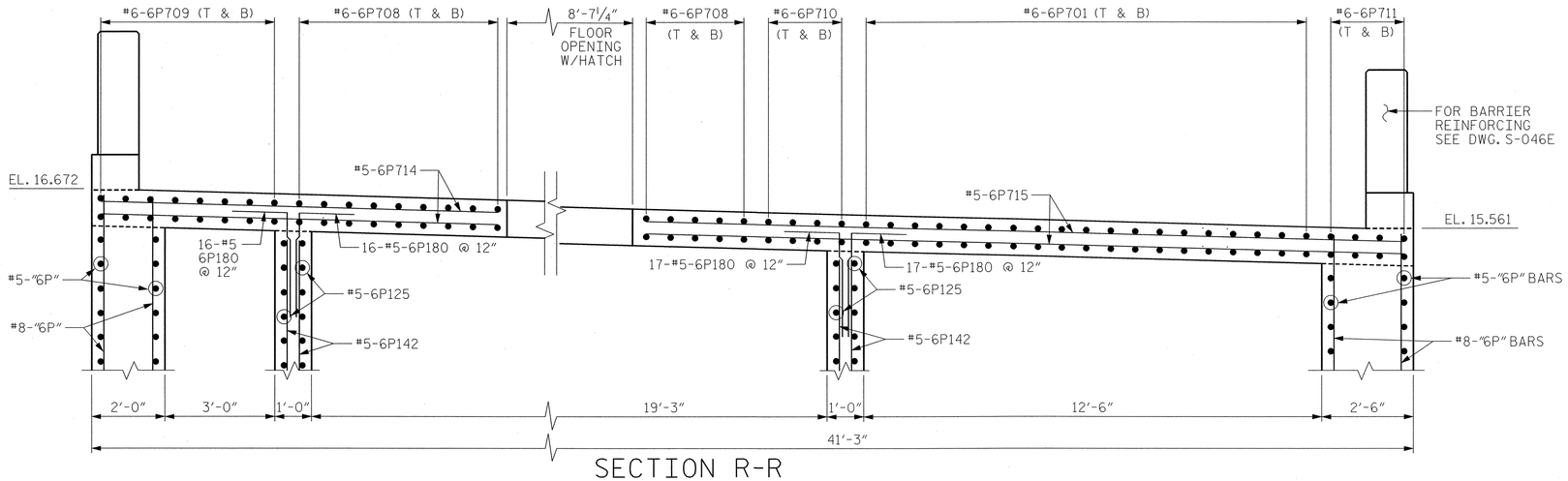

SECTION R-R

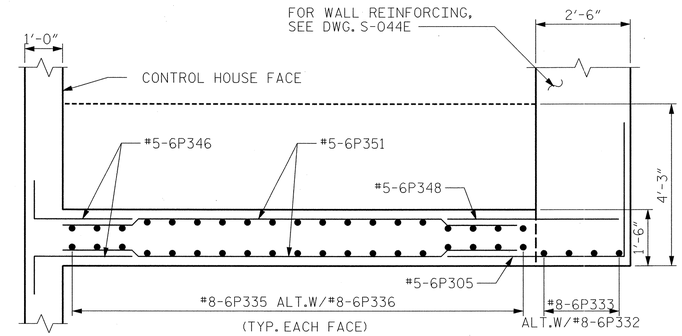

SECTION A-A

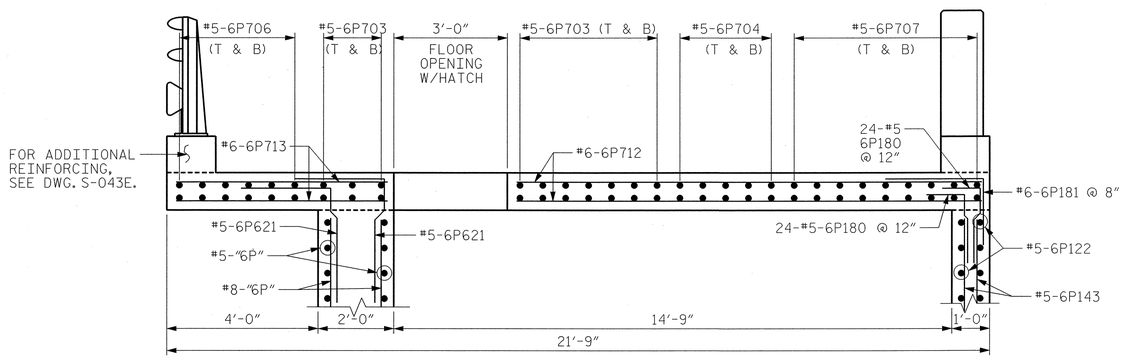

SECTION S-S

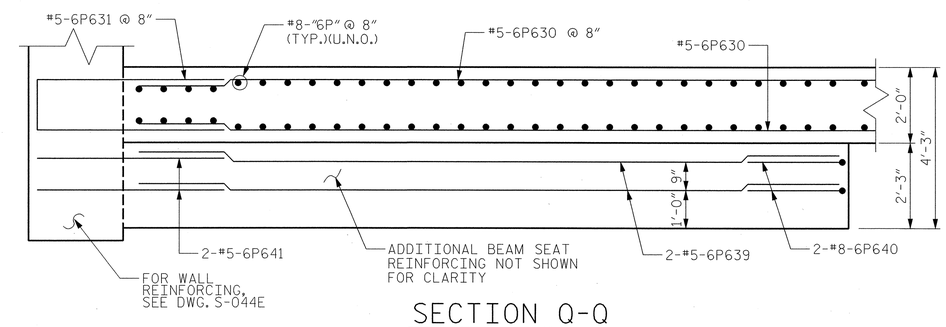

SECTION Q-Q

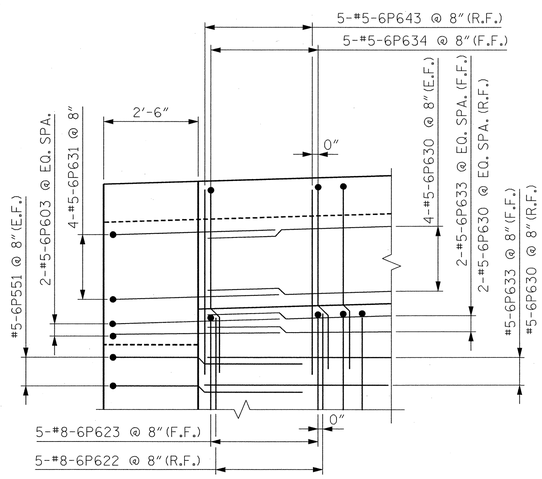

DETAIL 1

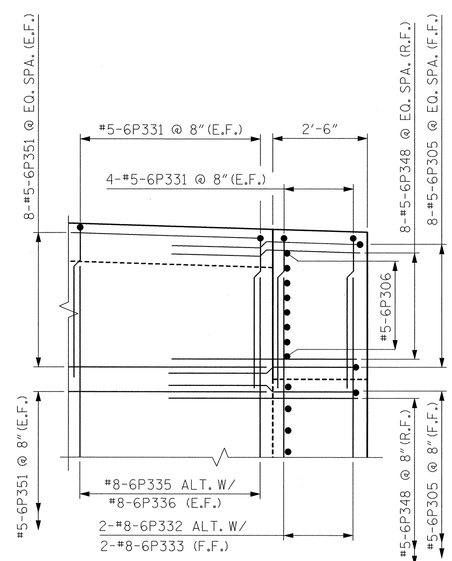

DETAIL 2

NOTES:

1. FOR GENERAL NOTES, SEE DWG. G-004.
2. FOR SECTIONS R-R & S-S, SEE DWG. S-043E.
3. FOR BAR NAMING CONVENTION, SEE DWG. S-038E.
4. FOR LOCATION OF DETAIL 1 AND SECTION Q-Q, SEE DWG. S-020E.
5. FOR LOCATION OF DETAIL 2 AND SECTION A-A, SEE DWG. S-018E.

EASTBOUND

PROJECT NO. U-4438

PASQUOTANK COUNTY

STATION: 15+25.75 -L1-

STATE OF NORTH CAROLINA
DEPARTMENT OF TRANSPORTATION
RALEIGH

ELIZABETH CITY BRIDGE OVER PASQUOTANK RIVER
BASCULE PIER 6
SECTIONS AND DETAILS - 1

MODJESKI and MASTERS
Experience great bridges.
Mechanicsburg, PA NC License No. C-2979

NORTH CAROLINA PROFESSIONAL SEAL 025801 ENGINEER LANCE V. BORDEN 3/18/2011

DWG NUMBER	TOTAL DWGS
S-045E	94

REVISIONS								SHEET NO.
NO.	BY:	DATE:	NO.	BY:	DATE:			S-147
1			3					TOTAL SHEETS
2			4					454

DRAWN BY : CMM DATE : 01/11
CHECKED BY : KWJ DATE : 01/11

3/18/2011
2:14:04 PM
K:\2986.02\CADD\Structural\dgn files\S-045E_U4438_SD_P6D1_01_E.dgn

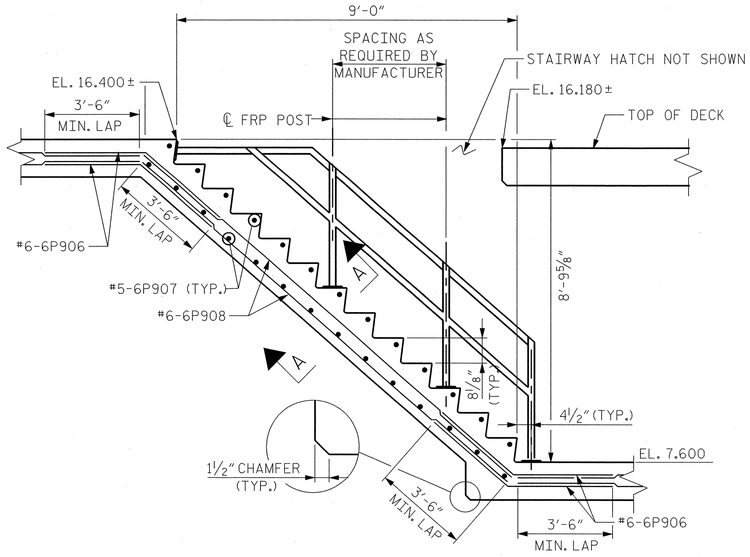

STORAGE ROOM

(FOR PIER 6 ONLY)

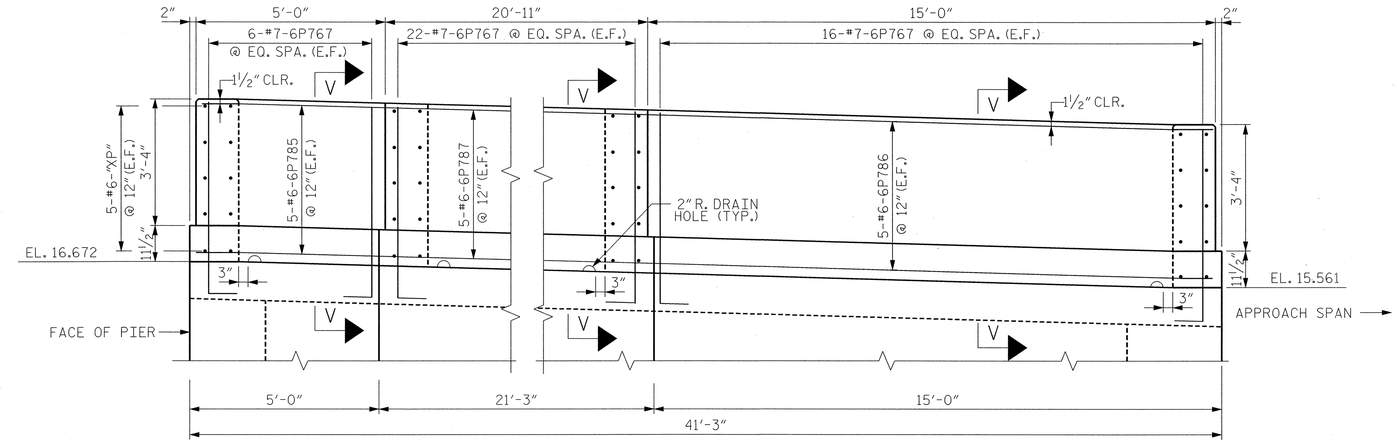

SECTION A-A

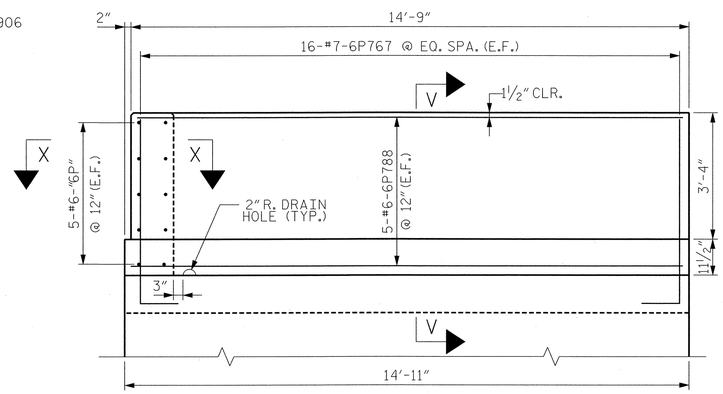

SECTION B-B

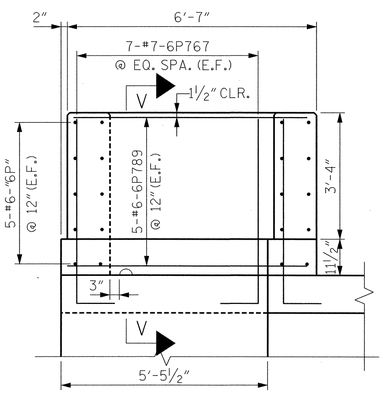

SECTION F-F

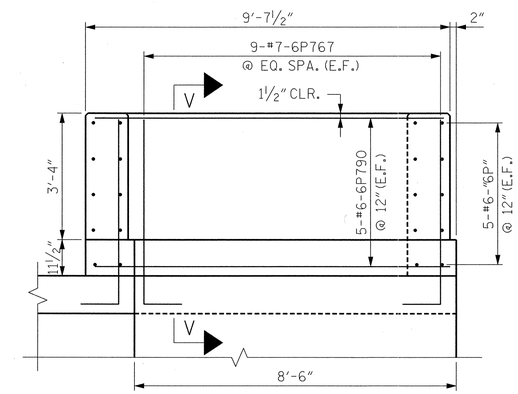

SECTION G-G

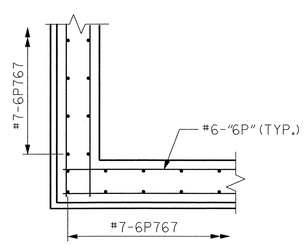

SECTION X-X

(TYPICAL CORNER DETAIL)

NOTES:

1. FOR GENERAL NOTES, SEE DWG. G-004.
2. FOR ADDITIONAL DECK SLAB REINFORCING, SEE DWG. S-043E.
3. FOR STAIRWAY AND HANDRAIL DETAILS, SEE DWG. S-035E.
4. FOR ADDITIONAL STORAGE ROOM REINFORCING, SEE DWG. S-032E.
5. FOR SECTION A-A & B-B, SEE DWG. S-042E.
6. FOR SECTION F-F & G-G, SEE DWG. S-042E.
7. FOR SECTION V-V, SEE DWG. S-028E.

EASTBOUND

PROJECT NO. U-4438

PASQUOTANK COUNTY

STATION: 15+25.75 -L1-

STATE OF NORTH CAROLINA
DEPARTMENT OF TRANSPORTATION
RALEIGH

ELIZABETH CITY BRIDGE OVER
PASQUOTANK RIVER
BASCULE PIER 6
SECTIONS AND DETAILS - 2

MODJESKI and MASTERS
Experience great bridges.
Mechanicsburg, PA NC License No. C-2979

NORTH CAROLINA PROFESSIONAL ENGINEER SEAL 025801 LANCE V. BORDEN 3/18/2011

DWG NUMBER	TOTAL DWGS
S-046E	94

REVISIONS						SHEET NO.
NO.	BY:	DATE:	NO.	BY:	DATE:	S-148
1			3			TOTAL SHEETS
2			4			454

DRAWN BY : CMM DATE : 01/11
CHECKED BY : JPS DATE : 01/11

3/18/2011
2:14:08 PM
K:\2986.02\CADD\Structural\dgn files\S-046E_U4438_SD_P6D2_01_E.dgn

REINFORCING BAR SCHEDULE

BASCULE PIER 6

MARK	NO.	SIZE	TYPE	LENGTH	A	B	C	REMARKS	WT. (LBS.)
BASCULE PIER 6 - FOOTING									
6PF101	49	8	STR	58'-4"					7632
6PF102	3	8	STR	21'-7"					173
6PF103	3	8	STR	31'-1"					249
6PF104	52	8	1	42'-11"	39'-2"	3'-9"			5959
6PF105	194	8	1	27'-2"	23'-5"	3'-9"			14072
6PF106	65	8	STR	42'-7"					7390
6PF107	7	8	STR	36'-1"					674
6PF108	7	8	STR	3'-4"					62
6PF109	4	5	STR	5'-0"					21
6PF110	11	8	STR	10'-0"					294
6PF111	13	8	STR	7'-6"					260
6PF112	13	5	1	6'-6"	4'-3"	2'-3"			88
6PF113	8	8	STR	58'-4"					1246
6PF114	8	8	STR	42'-7"					910
6PF201	58	8	STR	10'-10"					1678
6PF202	57	8	STR	7'-0"					1065
6PF301	56	8	STR	10'-10"					1620
6PF302	55	8	STR	7'-0"					1028
6PF401	53	8	STR	10'-10"					1533
6PF402	53	8	STR	7'-0"					991
6PF501	105	8	STR	7'-0"					1962
6PF502	106	8	STR	10'-10"					3066
6PF601	43	8	STR	10'-10"					1244
6PF602	47	8	STR	7'-0"					878
6PF801	144	6	STR	5'-6"					1190
6PF821	40	8	STR	7'-0"					748
6PF831	16	8	STR	7'-0"					299
6PF832	8	8	4	7'-0"	2'-10"	4'-2"	3'-10 1/4"		150
6PF833	4	8	STR	5'-2"					55
6PF901	12	6	4	8'-0"	4'-0"	4'-0"	2'-8 3/4"		144
BASCULE PIER 6 - CONTROL HOUSE									
6P108	40	5	STR	4'-0"					167
6P122	18	5	STR	18'-3"					343
6P123	36	5	1	4'-8"	3'-10"	0'-10"			175
6P124	18	5	1	7'-8"	3'-10"	3'-10"			144
6P125	36	5	STR	13'-9"					516
6P130	24	5	STR	14'-5"					361
6P131	18	5	STR	11'-4"					213
6P132	8	5	STR	5'-9"					48
6P133	26	5	STR	18'-11"					513
6P134	8	5	STR	4'-0"					33
6P136	8	5	STR	6'-0"					50
6P137	8	5	STR	6'-4"					53
6P140	1	4	STR	2'-6"					2
6P141	8	4	1	4'-0"	2'-0"	2'-0"			21
6P142	54	5	STR	11'-0"					620
6P143	48	5	STR	6'-6"					325
6P144	1	4	STR	2'-3"					2
6P145	12	5	STR	7'-9"					97
6P146	68	5	1	6'-2"	4'-2"	2'-0"			437
6P147	16	5	1	7'-0" TO 13'-5"	2'-8" TO 9'-1"	4'-4"		2 SETS 8 BARS EACH, VARY A BY 11"	170
6P148	22	5	STR	17'-9"					407
6P149	16	5	1	5'-3" TO 11'-8"	2'-8" TO 9'-1"	2'-7"		2 SETS 8 BARS EACH, VARY A BY 11"	141
6P150	16	5	1	3'-10"	2'-10"	1'-0"			64
6P151	72	6	4	9'-0"	4'-6"	4'-6"	3'-2 1/4"		973
6P152	24	6	STR	5'-8"					204
6P153	66	5	1	5'-4"	3'-10"	1'-6"			367
6P154	42	6	1	6'-6"	4'-6"	2'-0"			410

REINFORCING BAR SCHEDULE

BASCULE PIER 6

MARK	NO.	SIZE	TYPE	LENGTH	A	B	C	REMARKS	WT. (LBS.)
BASCULE PIER 6 - CONTROL HOUSE (CONTINUED)									
6P155	12	6	1	6'-11" TO 11'-11"	2'-4" TO 7'-4"	4'-7"		2 SETS 6 BARS EACH, VARY A BY 12"	170
6P156	4	6	1	12'-7"	8'-0"	4'-7"			76
6P157	12	6	1	4'-11" TO 9'-11"	2'-4" TO 7'-4"	2'-7"		2 SETS 6 BARS EACH, VARY A BY 12"	134
6P158	4	6	1	10'-7"	8'-0"	2'-7"			64
6P159	48	6	STR	10'-9"					775
6P160	12	6	1	4'-2" TO 9'-2"	0'-10" TO 5'-10"	3'-4"		2 SETS 6 BARS EACH, VARY A BY 12"	120
6P161	4	6	1	10'-4"	7'-0"	3'-4"			62
6P162	16	5	1	4'-6" TO 10'-11"	1'-5" TO 7'-10"	3'-1"		2 SETS 8 BARS EACH, VARY A BY 11"	129
6P163	22	5	2	9'-8"	4'-4"	1'-0"			222
6P164	14	5	STR	7'-6"					110
6P165	8	5	1	7'-8"	3'-10"	3'-10"			64
6P166	6	5	STR	5'-6"					34
6P167	28	5	1	3'-9"	2'-9"	1'-0"			110
6P168	16	5	1	7'-9"	6'-9"	1'-0"			129
6P169	52	5	1	4'-6"	3'-6"	1'-0"			244
6P171	6	6	1	5'-0"	3'-0"	2'-0"			45
6P180	114	5	1	5'-0"	4'-0"	1'-0"			595
6P181	32	6	1	4'-4"	2'-7"	1'-9"			208
CT11	305	4	6	1'-3"	0'-6"	0'-4 1/2"	0'-4 1/2"		255
CT12	192	4	6	1'-9"	1'-0"	0'-4 1/2"	0'-4 1/2"		224
BASCULE PIER 6 - NORTH WALL									
6P201	90	8	STR	20'-10"					5006
6P202	40	8	STR	11'-10"					1264
6P203	26	5	1	13'-1"	6'-1"	7'-0"			355
6P204	26	5	STR	6'-8"					181
6P205	18	5	1	12'-7"	5'-7"	7'-0"			236
6P206	18	5	STR	6'-8"					125
6P207	26	5	STR	5'-10"					158
6P208	28	5	STR	5'-7"					163
6P209	2	5	2	6'-4 1/2"	2'-5"	1'-6 1/2"			13
6P210	14	5	2	5'-6 1/2"	2'-0"	1'-6 1/2"			81
6P213	26	5	1	16'-10"	9'-10"	7'-0"			456
6P214	26	5	STR	6'-8"					181
6P215	21	5	1	10'-2"	5'-1"	5'-1"			223
6P216	21	5	STR	4'-9"					104
6P217	26	5	STR	9'-10"					267
6P218	52	5	STR	30'-6"					1654
6P219	5	5	STR	3'-7"					19
6P229	16	5	STR	4'-0"					67
6P230	41	8	STR	15'-6"					1697
6P231	3	8	STR	22'-3"					178
6P232	2	8	STR	18'-5"					98
6P233	5	5	2	5'-11 3/4"	2'-4"	1'-3 3/4"			31
6P234	5	8	2	9'-7 3/4"	4'-2"	1'-3 3/4"			129
6P236	15	8	1	15'-3"	12'-0"	3'-3"			611
6P237	16	8	1	11'-10"	8'-7"	3'-3"			506
6P238	31	5	1	7'-3"	6'-3"	1'-0"			234
6P239	5	8	STR	9'-2"					122
6P240	10	8	1	19'-2"	15'-9"	3'-5"			512
6P241	10	8	1	15'-5"	12'-0"	3'-5"			412
6P242	12	8	STR	7'-0"					224
6P243	10	8	STR	11'-4"					303
6P244	16	5	STR	36'-0"					601
6P245	22	5	STR	10'-9"					247

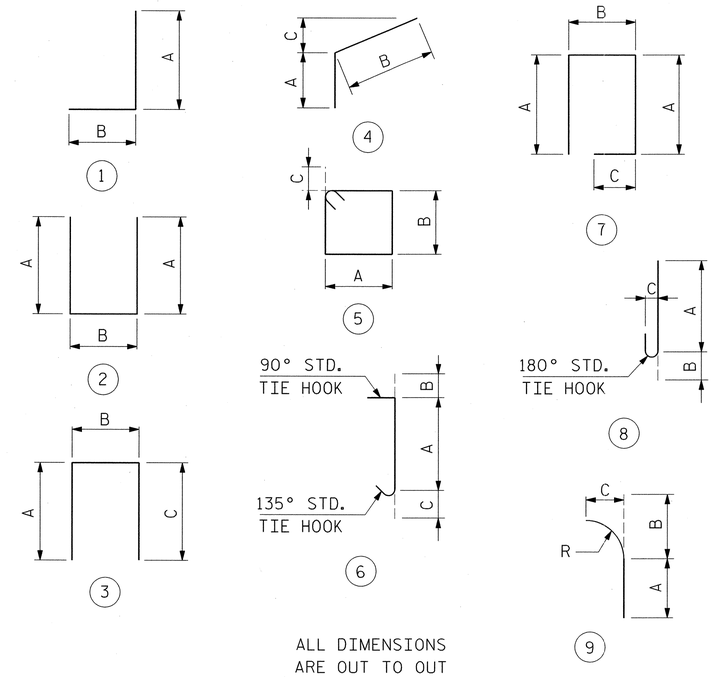

ALL DIMENSIONS ARE OUT TO OUT

BAR LEGEND:

BAR LOCATION

5 INDICATES PIER 5
6 INDICATES PIER 6

BAR NUMBER

6 P 1

ELEMENT IDENTIFICATION

P INDICATES PIER
PF INDICATES PIER FOOTING

PROJECT NO. U-4438

PASQUOTANK COUNTY

STATION: 15+25.75 -L1-

STATE OF NORTH CAROLINA
DEPARTMENT OF TRANSPORTATION
RALEIGH

ELIZABETH CITY BRIDGE OVER
PASQUOTANK RIVER
BASCULE PIER 6
BAR SCHEDULE - 1

MODJESKI and MASTERS
Experience great bridges.
Mechanicsburg, PA NC License No. C-2979

NORTH CAROLINA PROFESSIONAL SEAL 025801 ENGINEER LANCE V. BORDEN 3/18/2011

DWG NUMBER	TOTAL DWGS
S-047E	94

REVISIONS						SHEET NO.
NO.	BY:	DATE:	NO.	BY:	DATE:	S-149
1			3			TOTAL SHEETS
2			4			454

DRAWN BY : CMM DATE : 01/11
CHECKED BY : AEC/KWJ DATE : 01/11

3/18/2011
2:14:12 PM
K:\2986.02\CADD\Structural\dgn files\S-047E_U4438_SD_P6BS_01_E.dgn

REINFORCING BAR SCHEDULE

BASCULE PIER 6

MARK	NO.	SIZE	TYPE	LENGTH	A	B	C	REMARKS	WT. (LBS.)
BASCULE PIER 6 - NORTH WALL (CONTINUED)									
6P246	11	5	STR	21′-11″					251
6P247	26	5	STR	5′-2″					140
6P248	10	5	STR	20′-0″					209
6P249	5	5	STR	20′-11″					109
6P250	9	5	STR	5′-8″					53
6P251	21	5	STR	18′-5″					403
6P252	7	5	STR	19′-0″					139
6P253	7	5	1	4′-7″	3′-3″	1′-4″			33
6P254	19	5	1	6′-2″	3′-1″	3′-1″			122
6P255	5	5	1	8′-1″	5′-1″	3′-0″			42
6P256	8	5	1	7′-10″	5′-7″	2′-3″			65
6P257	2	5	STR	6′-5″					13
6P258	22	5	2	7′-7″	3′-1″	1′-5″			174
6P259	2	5	1	15′-1″	12′-0″	3′-1″			31
6P260	24	5	1	5′-10″	2′-4″	3′-7″			148
6P261	24	5	1	4′-3″	1′-11″	2′-4″			106
6P262	8	5	STR	22′-3″					186
6P263	2	5	STR	10′-6″					22
6P264	2	5	STR	4′-7″					10
6P265	2	5	STR	6′-8″					14
CT21	651	5	6	4′-3½″	3′-4″	0′-6″	0′-5½″		2914
CT22	238	5	6	2′-4½″	1′-5″	0′-6″	0′-5½″		590
CT23	56	5	6	2′-0½″	1′-1″	0′-6″	0′-5½″		119
BASCULE PIER 6 - SOUTH WALL									
6P301	31	8	STR	20′-10″					1724
6P303	26	5	1	12′-9″	5′-9″	7′-0″			346
6P304	26	5	STR	7′-0″					190
6P305	26	5	1	9′-6″	5′-3″	4′-3″			258
6P306	26	5	STR	4′-3″					115
6P307	26	5	STR	5′-9″					156
6P309	26	5	1	16′-9″	9′-9″	7′-0″			454
6P310	26	5	STR	7′-0″					190
6P311	26	5	1	8′-10″	4′-5″	4′-5″			240
6P312	26	5	STR	4′-3″					115
6P313	24	5	STR	9′-9″					244
6P315	50	5	STR	30′-6″					1591
6P320	6	5	STR	5′-10″					37
6P321	2	5	STR	9′-0″					19
6P322	3	5	1	6′-0″	3′-0″	3′-0″			19
6P325	16	8	STR	18′-7″					794
6P326	16	8	STR	22′-5″					958
6P327	9	8	1	15′-7″	12′-2″	3′-5″			374
6P328	11	8	1	19′-2″	15′-9″	3′-5″			563
6P330	64	5	1	4′-10″	3′-10″	1′-0″			323
6P331	59	5	1	6′-1″	5′-1″	1′-0″			374
6P332	2	8	STR	10′-10″					58
6P333	2	8	STR	14′-8″					78
6P335	26	8	STR	11′-3″					781
6P336	25	8	STR	14′-2″					946
6P337	12	8	STR	10′-10″					347
6P338	12	8	STR	7′-0″					224
6P340	4	5	1	7′-0″	3′-6″	3′-6″			29
6P341	32	8	STR	10′-6″					897
6P343	14	8	1	14′-3″	10′-10″	3′-5″			533
6P344	14	8	1	18′-1″	14′-8″	3′-5″			676
6P345	2	5	STR	26′-0″					54
6P346	64	5	1	4′-6″	3′-6″	1′-0″			300
6P347	2	5	STR	11′-4″					24
6P348	26	5	STR	5′-2″					142
6P349	20	5	STR	36′-1″					753
6P350	28	5	STR	4′-6″					131
6P351	32	5	STR	11′-10″					395
6P352	2	5	STR	22′-0″					46
6P355	34	5	STR	5′-4″					189
CT31	398	5	6	4′-7½″	3′-8″	0′-6″			1920
CT32	358	5	6	1′-10½″	0′-11″	0′-6″			700

DRAWN BY : CMM DATE : 01/11
CHECKED BY : AEC/KWJ DATE : 01/11

REINFORCING BAR SCHEDULE

BASCULE PIER 6

MARK	NO.	SIZE	TYPE	LENGTH	A	B	C	REMARKS	WT. (LBS.)
BASCULE PIER 6 - FRONT WALL									
6P401	28	8	9	12′-7″	9′-7″	3′-0″	1′-10″	RADIUS = 2′-0″	941
6P402	28	8	9	16′-7″	13′-7″	3′-0″	1′-10″	RADIUS = 2′-0″	1240
6P403	45	8	1	11′-11″	10′-6″	1′-5″			1432
6P404	45	8	STR	8′-7″					1031
6P407	47	8	STR	14′-11″					1872
6P408	17	5	2	7′-7″	3′-1″	1′-5″			134
6P409	44	5	STR	48′-4″					2218
6P410	18	5	STR	53′-0″					995
6P411	12	5	2	10′-5″	4′-6″	1′-5″			130
6P412	5	5	2	4′-11″	1′-9″	1′-5″			26
6P413	24	5	STR	14′-6″					363
6P414	2	5	STR	12′-2″					25
6P415	8	5	STR	11′-3″					94
6P416	28	3	5	10′-10½″	1′-5″	3′-8″	0′-4¼″		114
6P420	54	5	STR	9′-8″					544
6P421	28	5	1	6′-4″	4′-10″	1′-6″			185
6P422	25	8	STR	9′-7″					640
6P423	25	8	STR	13′-8″					912
6P424	2	8	STR	39′-0″					208
6P425	33	8	STR	10′-5″					918
6P426	4	8	1	8′-4″ TO 8′-10″	6′-11″ TO 7′-5″	1′-5″		VARY A BY 2″	92
6P427	4	8	STR	6′-11″ TO 7′-5″				VARY BY 2″	77
6P428	3	8	1	8′-4″ TO 8′-9″	6′-11″ TO 7′-4″	1′-5″		VARY A BY 2½″	68
6P429	3	8	STR	6′-11″ TO 7′-4″				VARY BY 2½″	57
6P430	4	5	STR	8′-9″					37
6P431	8	5	STR	4′-7″					38
6P432	4	5	STR	4′-1″					17
6P451	36	8	9	19′-11″	16′-11″	3′-0″	1′-10″	RADIUS = 2′-0″	1914
6P452	36	8	4	15′-11″	13′-1″	2′-10″	2′-8″		1530
6P453	8	8	9	12′-10″	9′-10″	3′-0″	1′-10″	RADIUS = 2′-0″	274
6P454	4	8	9	11′-8″	8′-8″	3′-0″	1′-10″	RADIUS = 2′-0″	125
6P455	8	8	9	6′-6″	3′-6″	3′-0″	1′-10″	RADIUS = 2′-0″	139
6P456	5	5	STR	53′-2″					277
6P457	10	5	STR	45′-5″					474
6P458	7	5	STR	24′-8″					180
6P459	10	5	STR	20′-8″					216
6P461	7	5	STR	6′-6″					47
6P462	10	5	STR	4′-6″					47
6P464	7	5	STR	8′-9″					64
6P465	10	5	STR	6′-9″					70
6P468	16	8	STR	2′-10″					121
6P469	8	8	4	8′-5¼″	5′-7¼″	2′-10″	2′-8″		180
6P470	4	8	4	7′-2″	4′-4″	2′-10″	2′-8″		77
6P471	1	5	STR	6′-0″					6
6P472	4	5	1	7′-0″	3′-6″	3′-6″			29
CT41	450	5	6	7′-4½″	6′-5″	0′-6″	0′-5½″		3461
CT42	761	5	6	2′-4½″	1′-5″	0′-6″	0′-5½″		1885

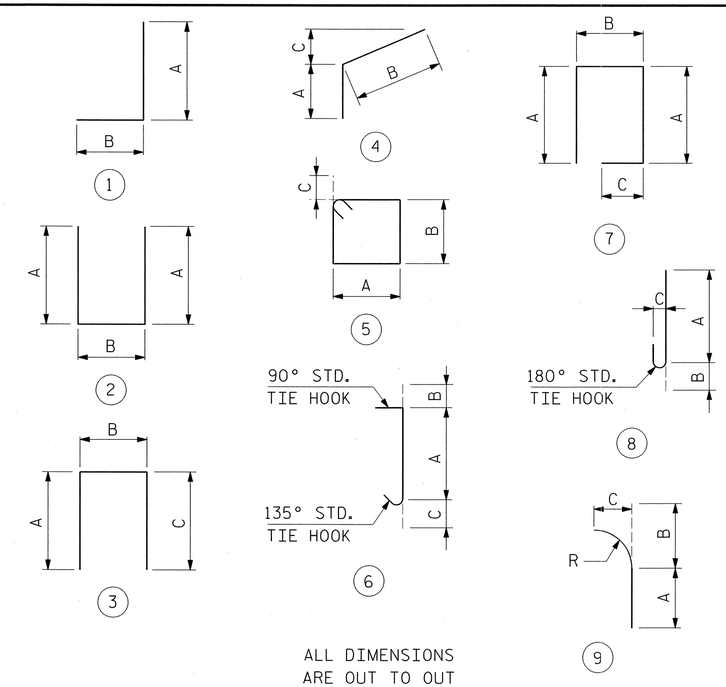

BAR LEGEND:

BAR LOCATION
5 INDICATES PIER 5
6 INDICATES PIER 6

BAR NUMBER

6 P 1

ELEMENT IDENTIFICATION
P INDICATES PIER
PF INDICATES PIER FOOTING

PROJECT NO. U-4438
PASQUOTANK COUNTY
STATION: 15+25.75 -L1-

STATE OF NORTH CAROLINA
DEPARTMENT OF TRANSPORTATION
RALEIGH

ELIZABETH CITY BRIDGE OVER
PASQUOTANK RIVER
BASCULE PIER 6
BAR SCHEDULE - 2

MODJESKI and MASTERS
Experience great bridges.
Mechanicsburg, PA NC License No. C-2979

NORTH CAROLINA PROFESSIONAL SEAL 025801 ENGINEER LANCE V. BORDEN 3/18/2011

DWG NUMBER	TOTAL DWGS
S-048E	94

REVISIONS						SHEET NO.
NO.	BY:	DATE:	NO.	BY:	DATE:	S-150
1			3			TOTAL SHEETS
2			4			454

3/18/2011
2:14:16 PM
K:\2986.02\CADD\Structural\dgn files\S-048E_U4438_SD_P6B2_01_E.dgn

REINFORCING BAR SCHEDULE

BASCULE PIER 6

MARK	NO.	SIZE	TYPE	LENGTH	A	B	C	REMARKS	WT. (LBS.)
BASCULE PIER 6 - APPROACH WALL									
6P501	112	8	STR	16'-2"					4834
6P502	50	8	STR	11'-11"					1591
6P503	49	8	1	20'-7"	15'-11"	4'-8"			2693
6P505	53	8	STR	7'-0"					991
6P506	106	8	STR	11'-2"					3160
6P507	56	5	2	4'-11¾"	1'-7"	1'-9¾"			291
6P508	4	5	STR	51'-1"					213
6P511	34	5	STR	51'-1"					1812
6P512	52	5	STR	48'-4"					2621
6P513	4	8	STR	15'-4"					164
6P514	2	8	STR	12'-1"					65
6P525	24	8	STR	7'-0"					449
6P526	16	5	STR	9'-10"					164
6P527	8	5	2	8'-1"	3'-1"	1'-11"			67
6P530	3	5	STR	48'-3"					151
6P550	26	5	STR	5'-8"					154
6P551	16	5	1	6'-3"	5'-3"	1'-0"			104
6P552	8	5	STR	7'-6"					63
6P553	4	5	STR	7'-2"					30
CT51	650	5	6	3'-4½"	2'-5"	0'-6"	0'-5½"		2288
CT52	534	5	6	2'-10½"	1'-11"	0'-6"	0'-5½"		1601
BASCULE PIER 6 - INTERIOR WALL									
6P601	28	5	STR	27'-6"					803
6P602	38	5	2	9'-11"	3'-1"	3'-9"			393
6P603	2	5	2	14'-3"	5'-3"	3'-9"			30
6P610	67	8	STR	20'-8"					3697
6P611	4	8	STR	9'-2"					98
6P612	10	8	1	15'-5"	11'-11"	3'-6"			412
6P613	9	8	1	19'-3"	15'-9"	3'-6"			463
6P615	8	8	STR	7'-8"					164
6P616	13	8	STR	11'-1"					385
6P617	15	8	STR	7'-3"					290
6P618	34	8	STR	11'-4"					1029
6P619	34	8	STR	14'-4"					1301
6P620	11	5	STR	29'-6"					338
6P621	60	5	1	5'-0"	4'-0"	1'-0"			313
6P622	5	8	STR	7'-8"					164
6P623	5	8	1	8'-4"	4'-10"	3'-6"			111
6P624	26	5	STR	30'-6"					827
6P625	12	8	1	11'-10"	8'-4"	3'-6"			379
6P626	12	8	1	15'-2"	11'-8"	3'-6"			486
6P627	16	5	2	7'-8"	3'-1"	1'-6"			128
6P628	11	5	STR	16'-8"					191
6P629	11	5	1	18'-2"	14'-8"	3'-6"			208
6P630	18	5	STR	36'-0"					676
6P631	4	5	2	12'-0"	5'-3"	1'-6"			50
6P632	10	5	STR	19'-8"					205
6P633	10	5	1	12'-11"	18'-5"	3'-6"			229
6P634	29	5	1	9'-3"	6'-3"	3'-0"			280
6P635	10	8	STR	8'-0"					214
6P636	4	8	STR	7'-0"					75
6P637	4	8	STR	10'-2"					109
6P638	1	8	STR	9'-0"					24
6P639	2	5	STR	17'-8"					37
6P640	2	8	1	15'-8"	12'-7"	3'-1"			84
6P641	2	5	STR	5'-3"					11
6P643	23	5	STR	4'-0"					96
6P645	16	5	STR	4'-0"					67
6P650	34	5	1	4'-9"	3'-3"	1'-6"			168
CT61	606	5	6	4'-8½"	3'-9"	0'-6"	0'-5½"		2976
CT62	254	5	6	2'-5½"	1'-6"	0'-6"	0'-5½"		651
BASCULE PIER 6 - DECK AND BARRIER									
6P701	38	6	STR	11'-7½"					664
6P703	20	5	STR	40'-7"					847
6P704	10	5	STR	35'-7"					371
6P706	12	5	STR	23'-3"					291
6P707	18	5	STR	20'-7"					386
6P708	28	6	STR	21'-1"					887
6P709	16	6	STR	12'-10"					308
6P710	8	6	STR	17'-1"					205

REINFORCING BAR SCHEDULE

BASCULE PIER 6

MARK	NO.	SIZE	TYPE	LENGTH	A	B	C	REMARKS	WT. (LBS.)
BASCULE PIER 6 - DECK AND BARRIER (CONTINUED)									
6P711	8	6	STR	14'-4"					172
6P712	28	6	STR	12'-1"					508
6P713	28	6	STR	5'-4"					224
6P714	10	5	STR	10'-8"					111
6P715	10	5	STR	20'-7"					215
6P716	16	5	STR	4'-0"					67
6P720	35	5	7	4'-7"	1'-7"	0'-9"	0'-8"		167
6P721	4	5	STR	22'-6"					94
									0
6P752	2	6	STR	1'-4"					4
6P753	2	6	STR	1'-10"					6
6P754	2	6	STR	2'-3"					7
6P755	6	7	STR	2'-7"					32
6P756	2	7	STR	3'-0"					12
6P757	2	5	4	2'-6½"	0'-9"	1'-9½"	1'-5"		5
6P758	8	5	STR	2'-1½"					18
6P759	21	5	7	5'-6"	2'-0½"	0'-9"	0'-8"		120
6P760	2	6	STR	1'-4"					4
6P761	2	6	STR	2'-6"					8
6P762	2	6	STR	3'-6"					11
6P763	2	6	STR	4'-3"					13
6P764	2	7	8	5'-11"	5'-1"	0'-10"	0'-7"		24
6P765	2	7	1	4'-3"	3'-3"	1'-0"			17
6P766	2	7	1	5'-3"	4'-3"	1'-0"			21
6P767	184	7	1	5'-10½"	4'-10½"	1'-0"			2210
6P768	2	7	1	5'-5"	4'-5"	1'-0"			22
6P769	2	7	1	4'-11"	3'-11"	1'-0"			20
6P770	2	7	1	4'-4"	3'-4"	1'-0"			18
6P771	2	6	STR	2'-4½"					7
6P772	4	6	STR	3'-6"					21
6P773	10	6	STR	11'-4½"					171
6P774	2	6	STR	3'-8"					11
6P777	6	5	STR	22'-6" TO 23'-6"				3 SETS 2 BARS EACH, VARY BY 6"	144
6P785	10	6	STR	5'-10"					88
6P786	10	6	STR	15'-10"					238
6P787	10	6	STR	20'-8"					310
6P788	10	6	STR	14'-6"					218
6P789	10	6	STR	6-4"					95
6P790	10	6	STR	9'-4"					140
BASCULE PIER 6 - TRUNNION COLUMN AND TAIL LOCK									
6P801	24	6	20'-8"	STR					745
6P802	64	6	18'-5"	STR					1770
6P803	56	6	STR	10'-9" TO 12'-9"				4 SETS 7 BARS EACH, VARY BY 4"	988
6P804	56	6	STR	5'-6"					463
6P805	216	5	2	7'-9"	3'-1"	1'-7"			1746
6P806	48	5	STR	10'-3"					513
6P807	140	5	2	19'-3"	8'-10"	1'-7"			2811
6P808	280	5	STR	4'-6"					1314
6P810	836	5	6	2'-6"	1'-7"	0'-5½"	0'-5½"		2180
6P821	56	5	STR	6'-10"	6'-10"				399
6P822	32	5	1	10'-1"	5'-1"	5'-0"			337
6P823	16	5	2	13'-1¼"	5'-0"	3'-1¼"			219
6P824	24	8	1	9'-6"	4'-6"	5'-0"			609
6P825	20	8	1	11'-0"	4'-0"	7'-0"			587
6P831	8	5	2	11'-6"	4'-6"	2'-6"			96
6P832	8	8	4	7'-0"	2'-2	4'-10"	1'-9¾"		150
6P833	10	5	2	2'-6" TO 4'-0"	2'-6" TO 4'-0"	2'-4¾"		2 SETS OF 5 VARY A BY 3⅝"	93

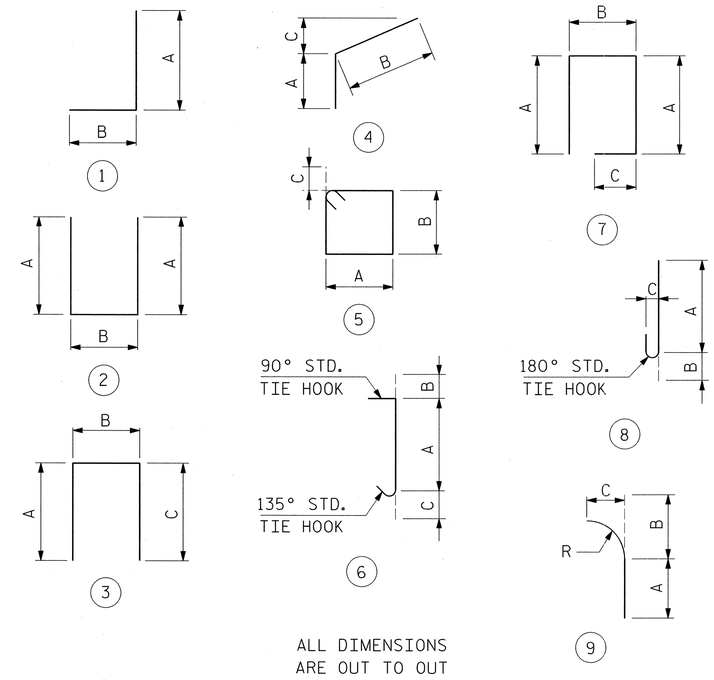

ALL DIMENSIONS ARE OUT TO OUT

REINFORCING BAR SCHEDULE

BASCULE PIER 6

MARK	NO.	SIZE	TYPE	LENGTH	A	B	C	REMARKS	WT. (LBS.)
BASCULE PIER 6 - STAIRS									
6P901	4	6	4	11'-1"	2'-1"	9'-0"	6'-7"		67
6P902	4	6	4	10'-8"	1'-11"	8'-9"	6'-3¼"		64
6P903	8	5	STR	4'-3"					35
6P904	20	5	STR	2'-3"					47
6P905	12	6	STR	21'-2"					382
6P906	60	6	4	8'-0"	4'-0"	4'-0"	2'-11"		721
6P907	98	5	STR	2'-6"					256
6P908	24	6	STR	13'-0"					469

BAR LEGEND:

BAR LOCATION

5 INDICATES PIER 5
6 INDICATES PIER 6

BAR NUMBER

6 P 1

ELEMENT IDENTIFICATION

P INDICATES PIER
PF INDICATES PIER FOOTING

PROJECT NO. U-4438

PASQUOTANK COUNTY

STATION: 15+25.75 -L1-

STATE OF NORTH CAROLINA
DEPARTMENT OF TRANSPORTATION
RALEIGH

ELIZABETH CITY BRIDGE OVER
PASQUOTANK RIVER
BASCULE PIER 6
BAR SCHEDULE - 3

MODJESKI and MASTERS
Experience great bridges.
Mechanicsburg, PA NC License No. C-2979

NORTH CAROLINA PROFESSIONAL SEAL 025801 ENGINEER LANCE V. BORDEN 3/18/2011

DWG NUMBER	TOTAL DWGS
S-049E	94

REVISIONS						SHEET NO.
NO.	BY:	DATE:	NO.	BY:	DATE:	S-151
1			3			TOTAL SHEETS
2			4			454

DRAWN BY : CMM DATE : 01/11
CHECKED BY : AEC/KWJ DATE : 01/11

3/18/2011
2:14:20 PM
K:\2986.02\CADD\Structural\dgn files\S-049E_U4438_SD_P6B3_01_E.dgn

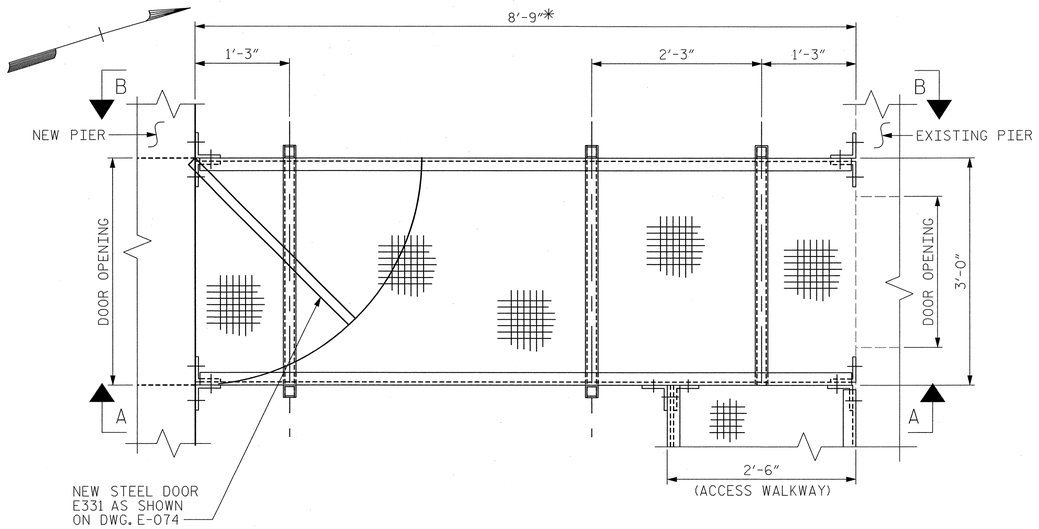

WALKWAY BETWEEN PIERS - PLAN

(WALKWAY A SHOWN, WALKWAY B SIMILAR)

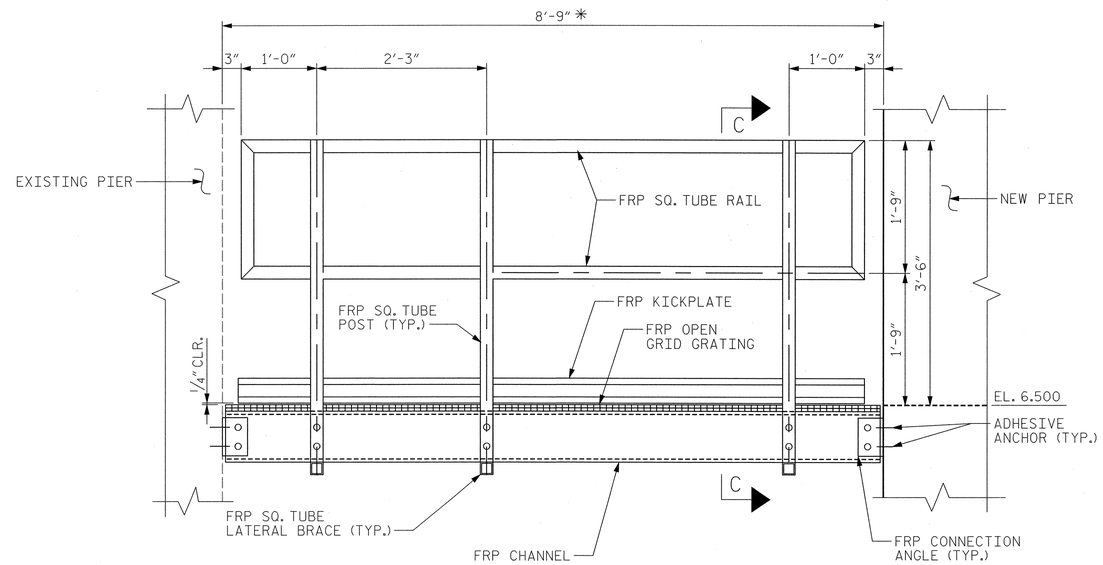

SECTION B-B

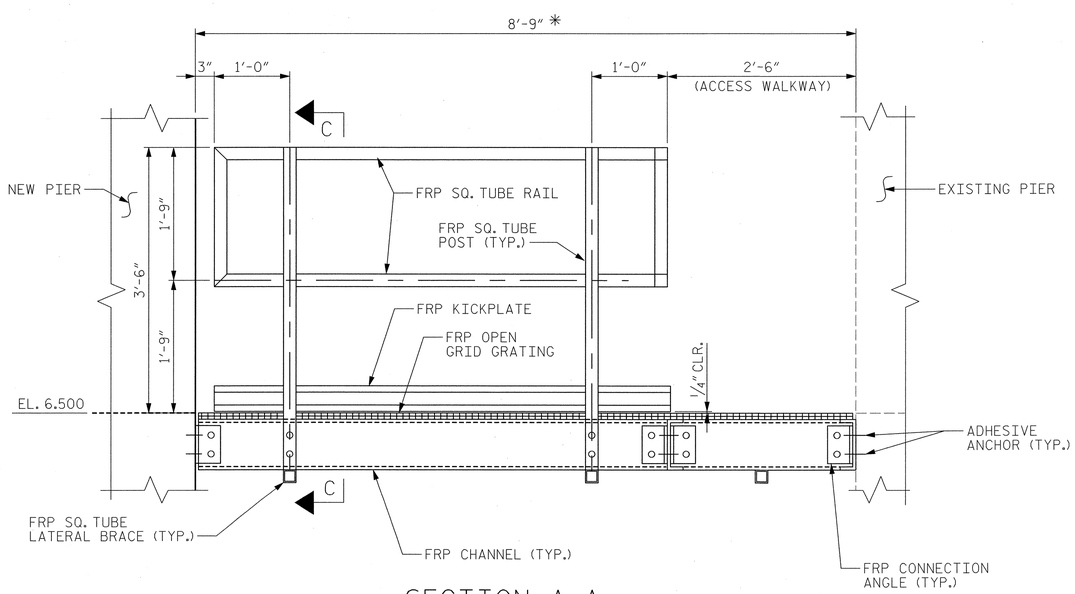

SECTION A-A

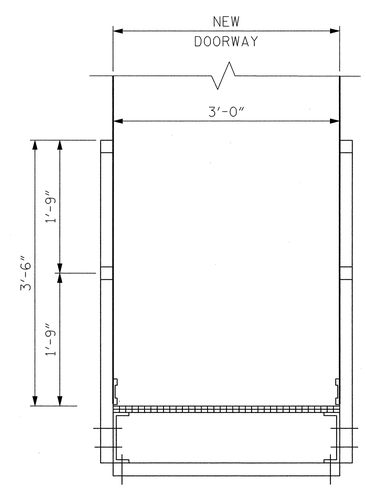

SECTION C-C

NOTES:

1. FOR GENERAL NOTES, SEE DWG. G-004.
2. FOR FENDER SYSTEM ACCESS PLAN, SEE DWG. G-012.
3. FOR LIGHTING ACCESS WALKWAY DETAILS, SEE DWGS. G-012, G-013, AND G-014.

EASTBOUND

PROJECT NO. U-4438

PASQUOTANK COUNTY

STATION: 15+25.75 -L1-

* DIMENSIONS SHOWN ARE APPROXIMATE. VERIFY ALL DIMENSIONS IN THE FIELD PRIOR TO FABRICATION OF ANY COMPONENT.

MODJESKI and MASTERS
Experience great bridges.
Mechanicsburg, PA NC License No. C-2979

NORTH CAROLINA PROFESSIONAL SEAL 025801 ENGINEER LANCE V. BORDEN 2/3/2011

STATE OF NORTH CAROLINA
DEPARTMENT OF TRANSPORTATION
RALEIGH

ELIZABETH CITY BRIDGE OVER
PASQUOTANK RIVER
BASCULE PIER
ACCESS SYSTEM - 1
WALKWAY BETWEEN PIERS

REVISIONS						SHEET NO.
NO.	BY:	DATE:	NO.	BY:	DATE:	S-152
1			3			TOTAL SHEETS
2			4			454

DWG NUMBER	TOTAL DWGS
S-050E	94

DRAWN BY : CMM DATE : 01/11
CHECKED BY : BMR DATE : 01/11

2/3/2011
2:05:21 PM
K:\2986.02\CADD\Structural\dgn files\S-050E_U4438_SD_PAS1_01_E.dgn

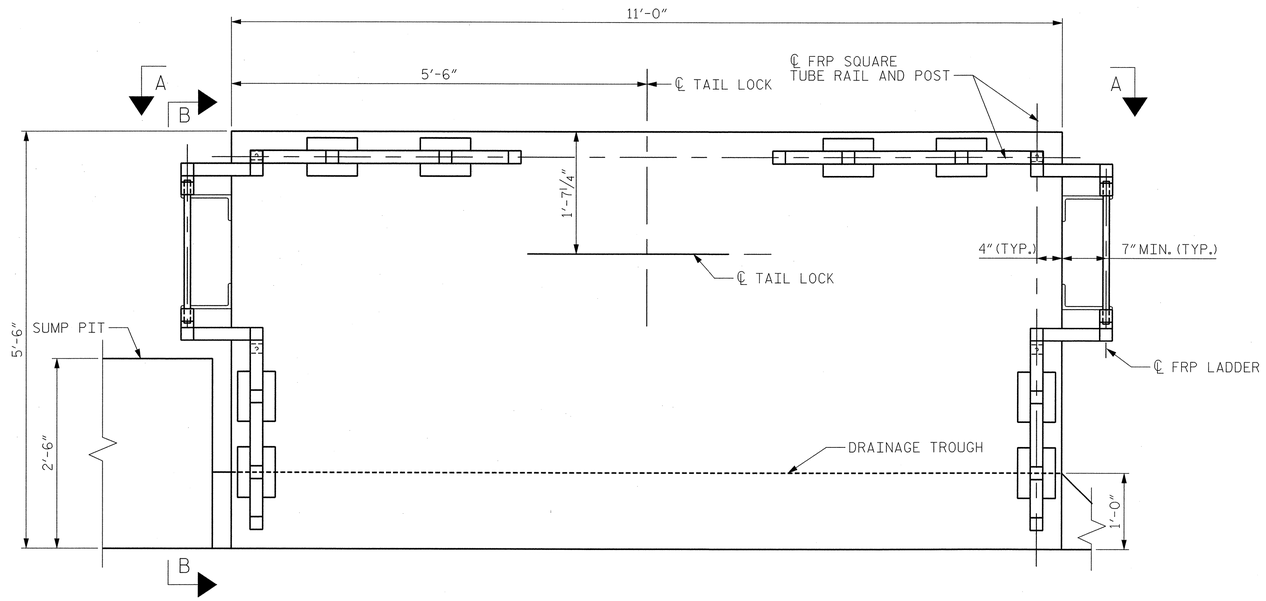

TAIL LOCK ACCESS - PLAN

(SOUTH PEDESTAL OF PIER 5 SHOWN; OTHER PEDESTALS SIMILAR)

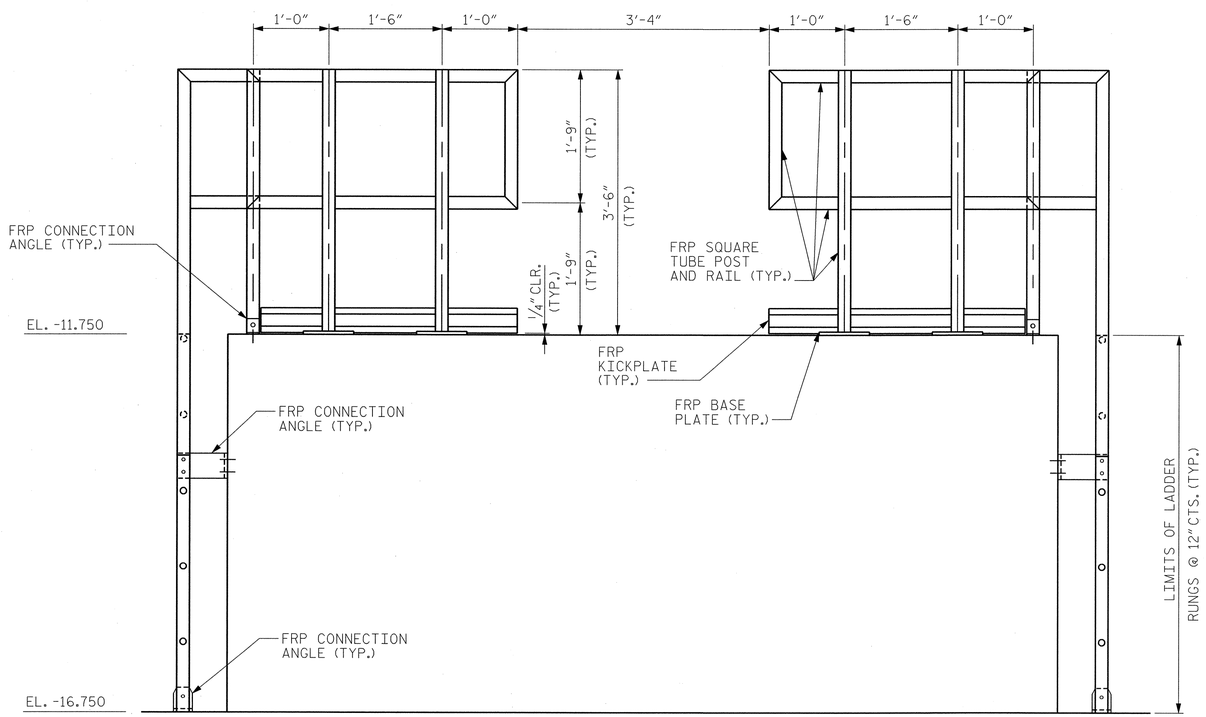

SECTION A-A

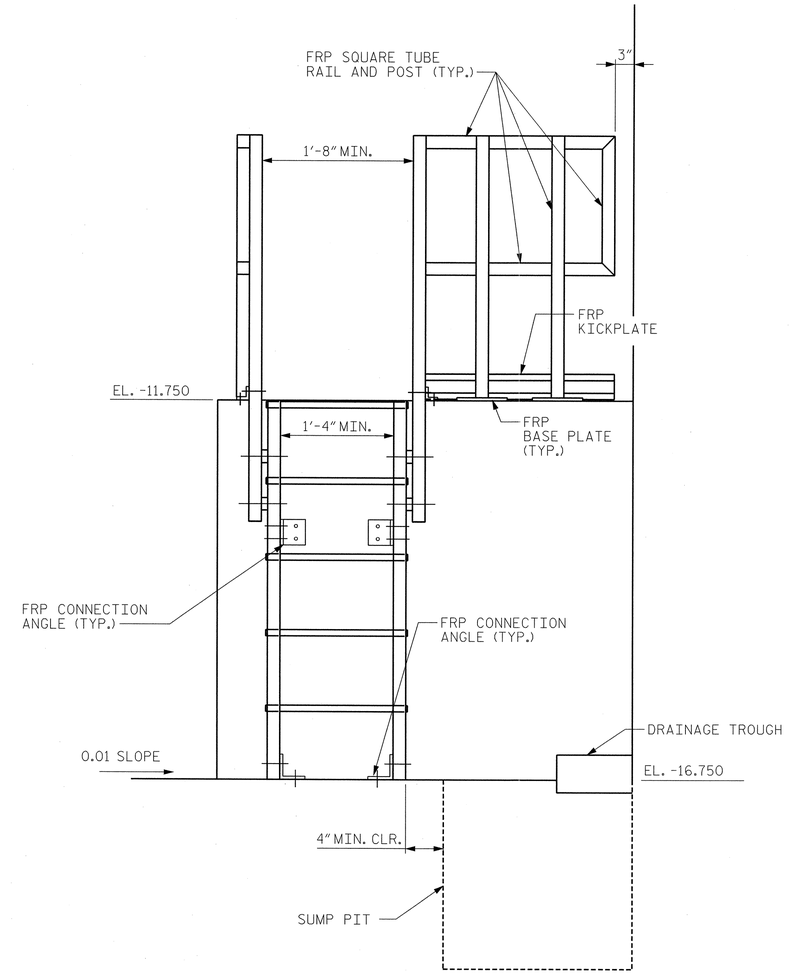

SECTION B-B

NOTES:

1. FOR GENERAL NOTES, SEE DWG. G-004.
2. FOR TAIL LOCK PEDESTAL REINFORCING DETAILS, SEE DWGS. S-009E AND S-026E.
3. FOR SUMP PIT COVER DETAILS, SEE DWG. S-008E.

EASTBOUND

PROJECT NO. U-4438

PASQUOTANK COUNTY

STATION: 15+25.75 -L1-

STATE OF NORTH CAROLINA
DEPARTMENT OF TRANSPORTATION
RALEIGH

ELIZABETH CITY BRIDGE OVER
PASQUOTANK RIVER
BASCULE PIER
ACCESS SYSTEM - 2
TAIL LOCK ACCESS

MODJESKI and MASTERS
Experience great bridges.
Mechanicsburg, PA NC License No. C-2979

NORTH CAROLINA PROFESSIONAL SEAL 025801 ENGINEER LANCE V. BORDEN 2/3/2011

DWG NUMBER	TOTAL DWGS
S-051E	94

REVISIONS						SHEET NO.
NO.	BY:	DATE:	NO.	BY:	DATE:	S-153
1			3			TOTAL SHEETS
2			4			454

DRAWN BY : CMM DATE : 01/11
CHECKED BY : BMR DATE : 01/11

2/3/2011
2:05:25 PM
K:\2986.02\CADD\Structural\dgn files\S-051E_U4438_SD_PAS2_01_E.dgn

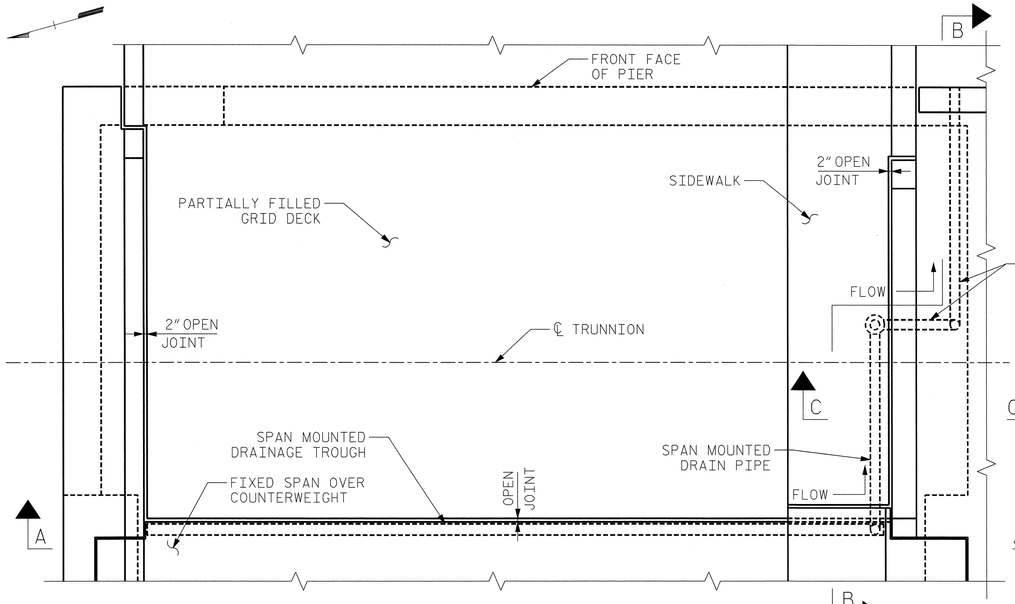

PIER 5 PLAN

(PIER 6 SIMILAR)

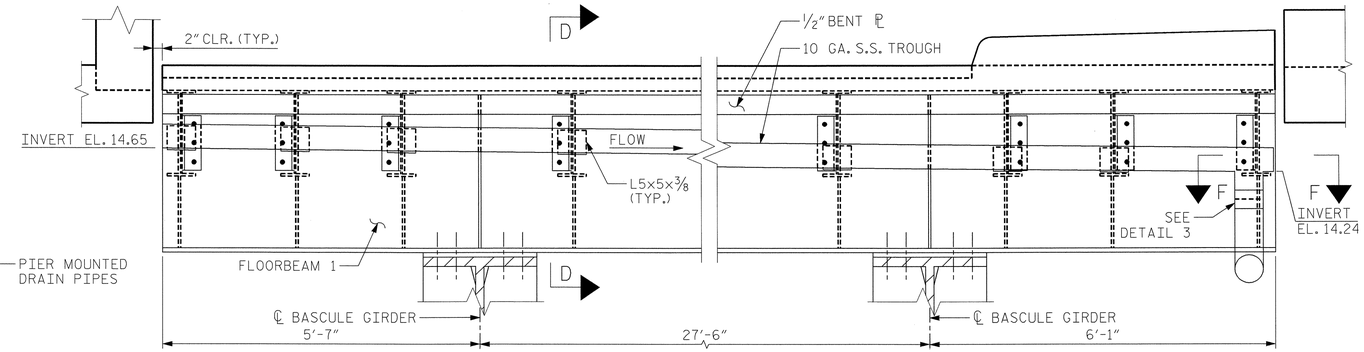

SECTION A-A

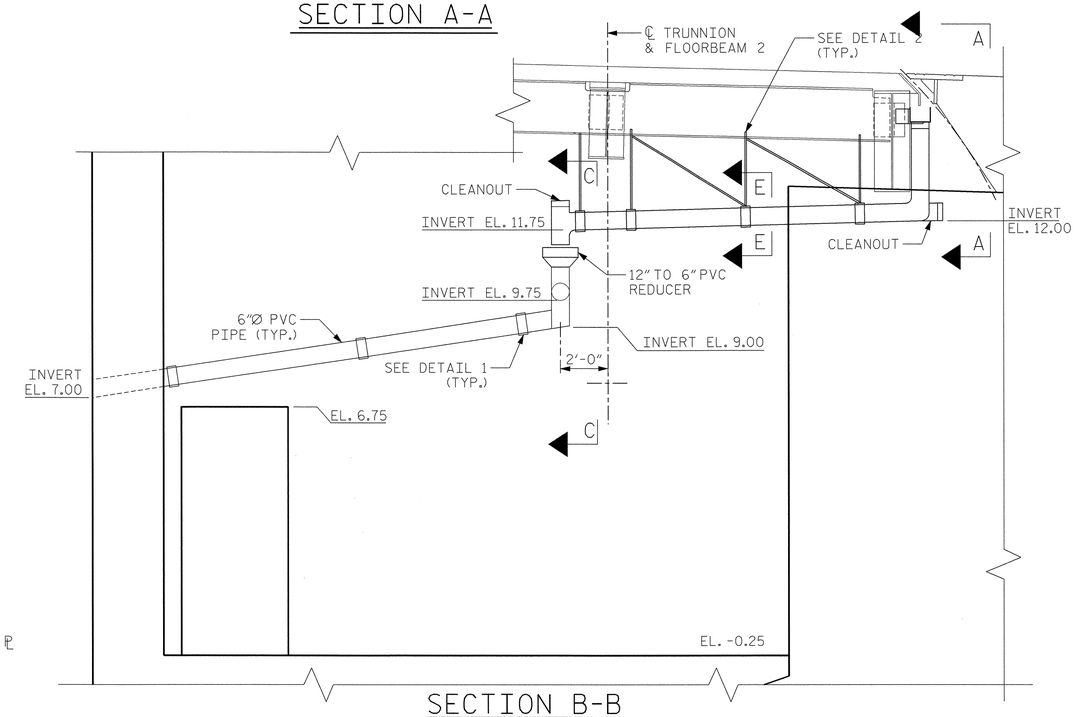

SECTION B-B

(PIER 5 SHOWN, PIER 6 SIMILAR)

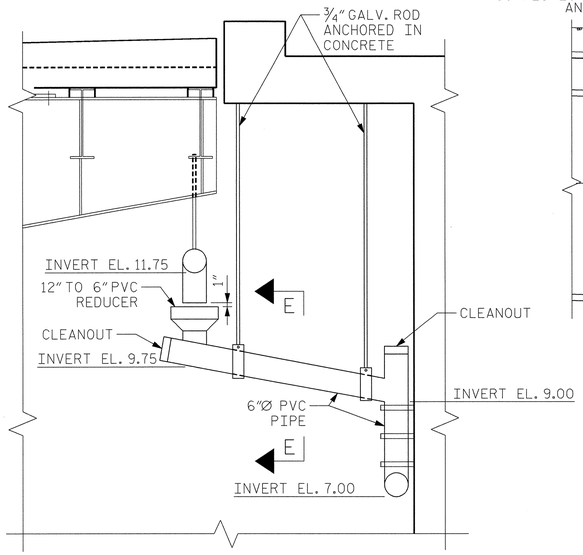

SECTION C-C

(3 BAR METAL RAIL NOT SHOWN)

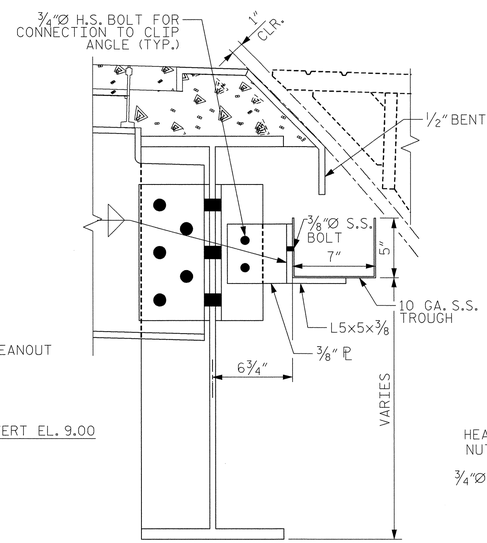

SECTION D-D

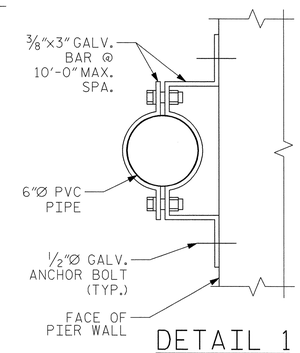

DETAIL 1

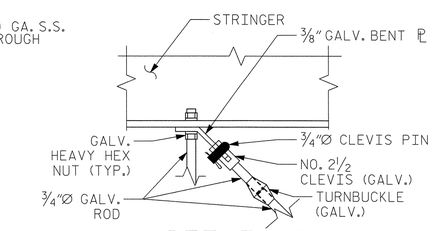

DETAIL 2

THREADS OF TURNBUCKLES AND CLEVISES SHALL BE LOCKED BY WELDING AFTER FINAL TIGHTENING HAS BEEN ACCOMPLISHED.

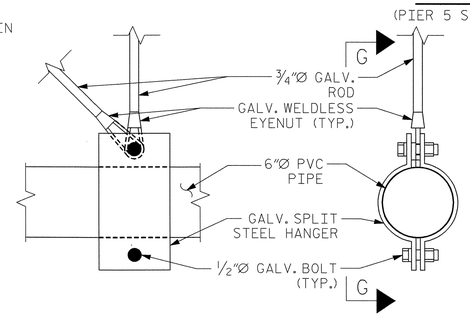

SECTION G-G

SECTION E-E

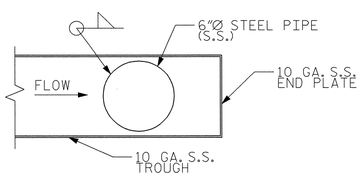

SECTION F-F

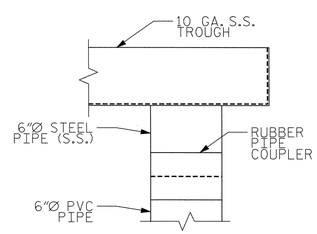

DETAIL 3

NOTES:

1. FOR GENERAL NOTES, SEE DWG. G-004.
2. THE COST OF THE DRAINAGE SYSTEM SHALL BE INCLUDED IN THE PAY ITEM FOR STRUCTURAL STEEL.

EASTBOUND

PROJECT NO. U-4438

PASQUOTANK COUNTY

STATION: 15+25.75 -L1-

STATE OF NORTH CAROLINA
DEPARTMENT OF TRANSPORTATION
RALEIGH

ELIZABETH CITY BRIDGE OVER PASQUOTANK RIVER
BASCULE PIER
DRAINAGE DETAILS

MODJESKI and MASTERS
Experience great bridges.
Mechanicsburg, PA NC License No. C-2979

NORTH CAROLINA PROFESSIONAL SEAL 025801 ENGINEER LANCE V. BORDEN 4/29/2011

DWG NUMBER	TOTAL DWGS
S-052E	94

REVISIONS						SHEET NO.
NO.	BY:	DATE:	NO.	BY:	DATE:	S-154
1			3			TOTAL SHEETS
2			4			454

DRAWN BY : DMW DATE : 01/11
CHECKED BY : DBI DATE : 01/11

4/29/2011
2:52:58 PM
K:\2986.02\CADD\Structural\From New York\dgn files\S-052E_U4438_SD_P6DD_01_E.dgn

NOTES:

1. FOR GENERAL NOTES, SEE DWG. G-004.
2. THE 2½"Ø DOWEL HOLES AT FIXED ENDS OF BOX BEAM SECTIONS SHALL BE FILLED WITH NON-SHRINK GROUT. THE 2½"Ø DOWEL HOLES AT EXPANSION ENDS OF BOX BEAM SECTIONS SHALL BE FILLED WITH JOINT SEALER MATERIAL TO 1½" ABOVE THE TOP OF DOWELS AND THEN FILLED WITH GROUT.
3. THE JOINT SEALER MATERIAL SHALL CONFORM TO THE REQUIREMENTS OF TYPE SL LOW MODULUS SILICONE SEALANT. SEE SECTION 1028 OF THE STANDARD SPECIFICATIONS.
4. FOR EVAZOTE JOINT SEALS, SEE SPECIAL PROVISIONS.
5. THE COST OF THE REINFORCING STEEL CAST WITH THE CONCRETE SLAB SHALL BE INCLUDED IN THE UNIT PRICE BID FOR REINFORCED CONCRETE DECK SLAB.
6. FOR ELASTOMERIC CONCRETE, SEE SPECIAL PROVISIONS.
7. FOR SECTION B-B, C-C, AND E-E, SEE DWG. S-054E.
8. FOR BAR TABLES AND SECTION F-F, SEE DWG. S-055E.
9. FOR PRESTRESSED BOX BEAM DETAILS, SEE DWG. S-056E.

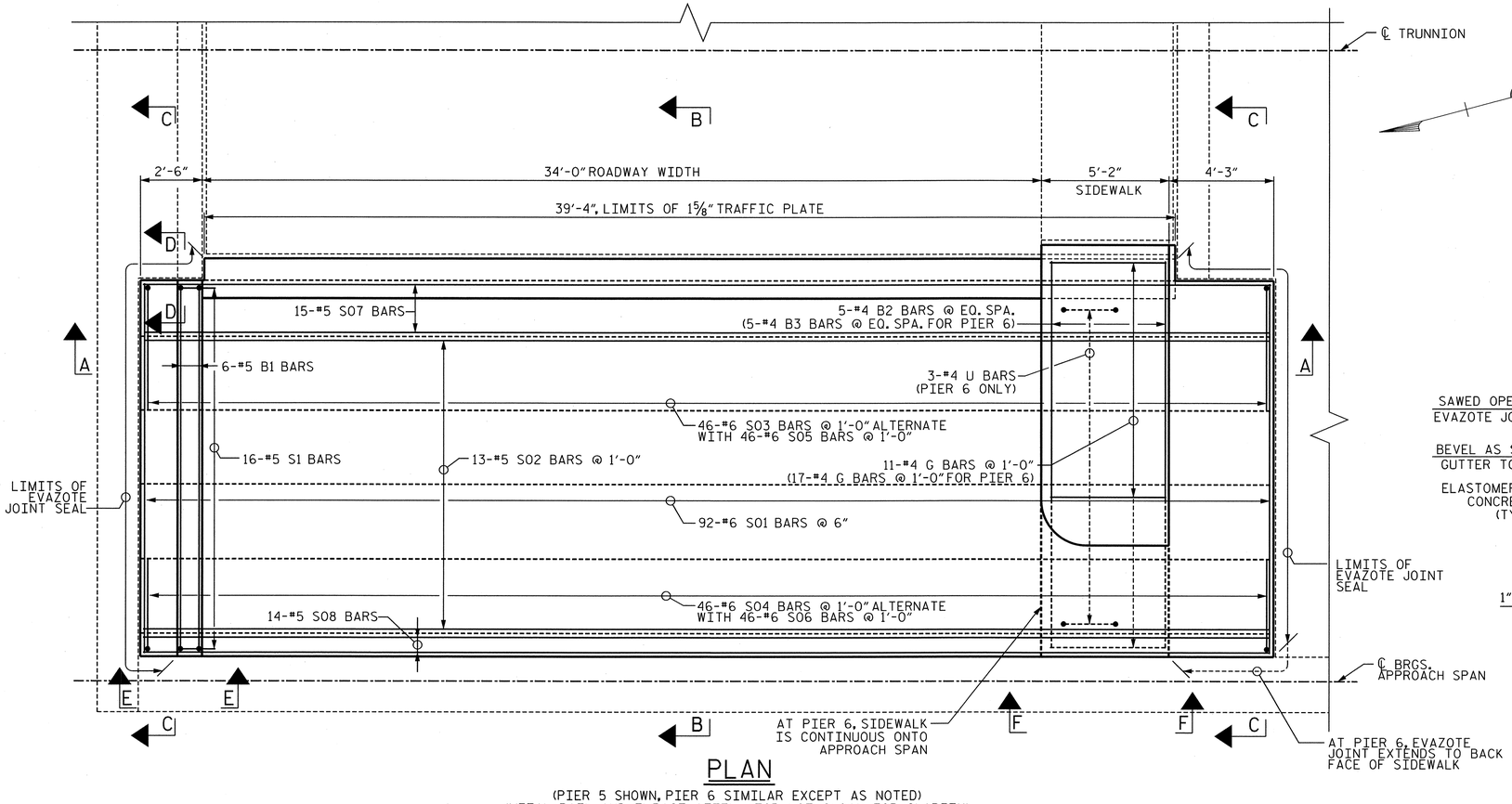

PLAN

(PIER 5 SHOWN, PIER 6 SIMILAR EXCEPT AS NOTED)
(METAL RAIL AND IMPACT ATTENUATOR NOT SHOWN FOR CLARITY)
(#4 J1 BARS NOT SHOWN FOR CLARITY)

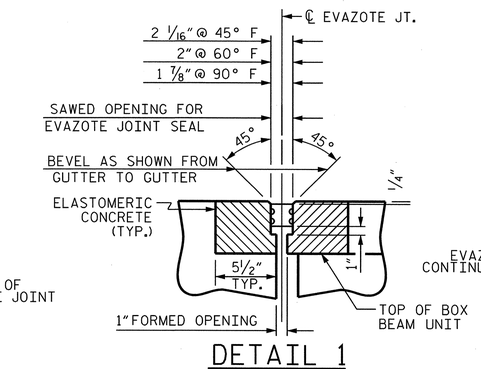

DETAIL 1

(EVAZOTE JOINT SEAL)

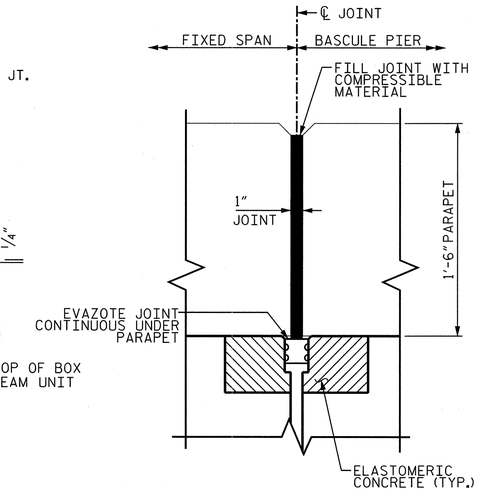

SECTION D-D

(1 BAR METAL RAIL NOT SHOWN)

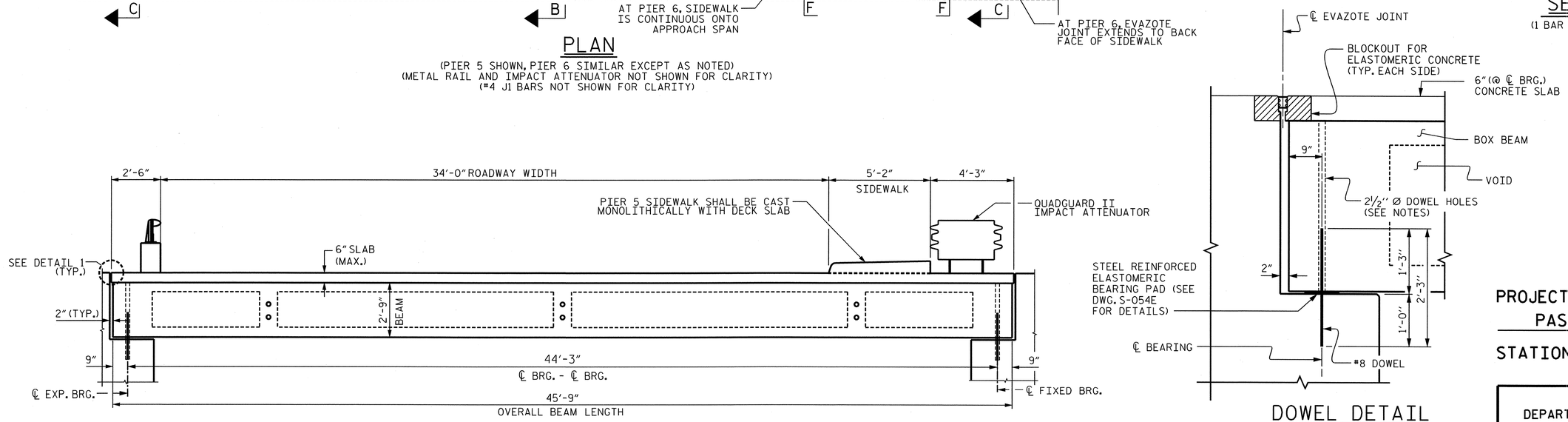

SECTION A-A

(NO IMPACT ATTENUATOR ON PIER 6)
(SIDEWALK WIDTH IS 5'-4" ON PIER 6)

DOWEL DETAIL

EASTBOUND

PROJECT NO. U-4438

PASQUOTANK COUNTY

STATION: 15+25.75 -L1-

STATE OF NORTH CAROLINA
DEPARTMENT OF TRANSPORTATION
RALEIGH

ELIZABETH CITY BRIDGE OVER
PASQUOTANK RIVER
BASCULE PIER
FIXED SPAN OVER
COUNTERWEIGHT - 1

MODJESKI and MASTERS
Experience great bridges.
Mechanicsburg, PA NC License No. C-2979

NORTH CAROLINA PROFESSIONAL SEAL 025801 ENGINEER LANCE V. BORDEN 2/3/2011

DWG NUMBER	TOTAL DWGS
S-053E	94

REVISIONS						SHEET NO.
NO.	BY:	DATE:	NO.	BY:	DATE:	S-155
1			3			TOTAL SHEETS
2			4			454

DRAWN BY : DMW DATE : 01/11
CHECKED BY : HNB DATE : 01/11

2/1/2011
11:37:45 AM
P:\2986.02 NCDOT Elizabeth City\CADD\Structural\S-053E_U4438_SD_FS1_01_E.DGN

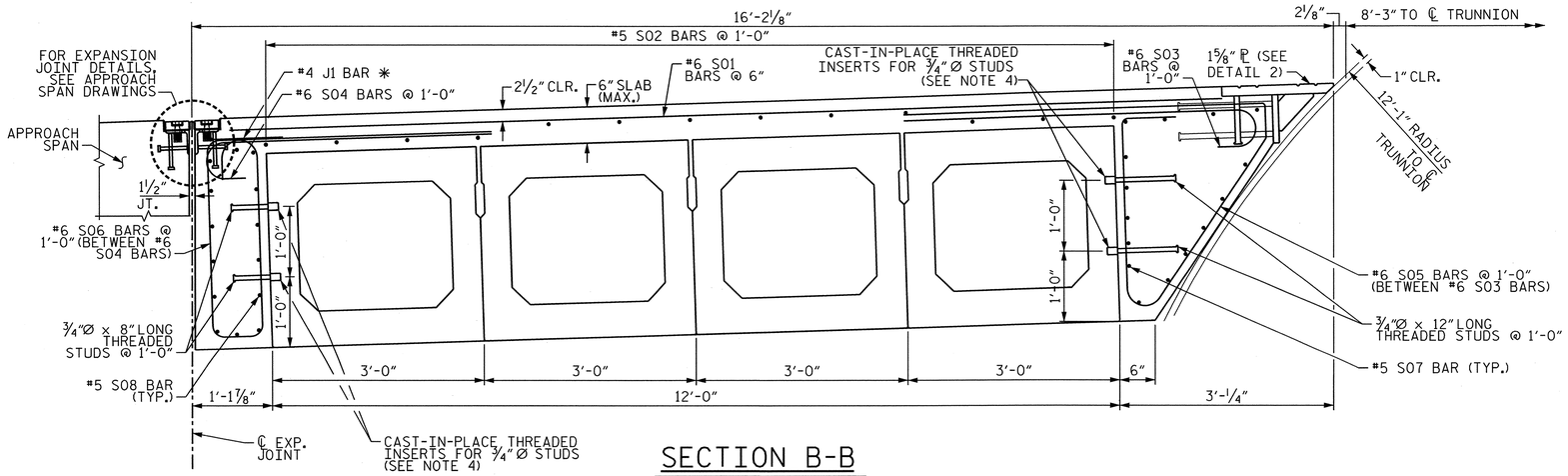

SECTION B-B

✱ THE QUANTITY OF #4 J1 BARS ON THE BILL OF MATERIALS IS BASED ON 1'-0" CENTERS. J1 BARS SHALL BE PLACED AT EACH VERTICAL STUD ANCHOR BOLT. IN THE EVENT THAT THE NUMBER OF VERTICAL STUD ANCHORS EXCEEDS THE NUMBER OF J1 BARS SPECIFIED, ADDITIONAL J1 BARS WILL NOT BE REQUIRED.

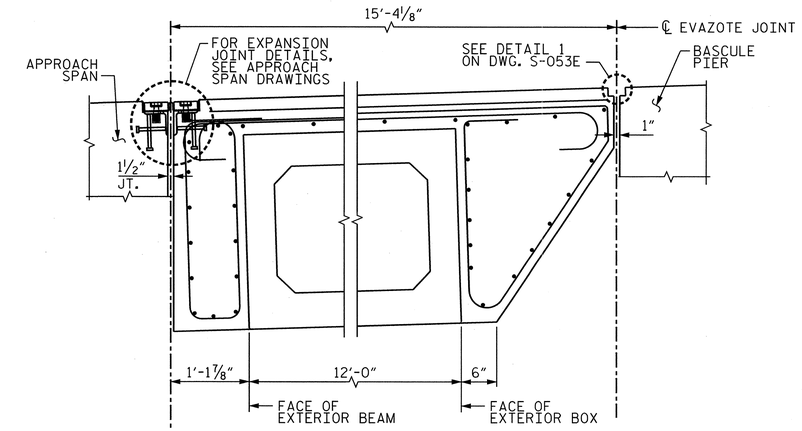

SECTION C-C

(SEE SECTION B-B FOR REINFORCEMENT DETAILS)

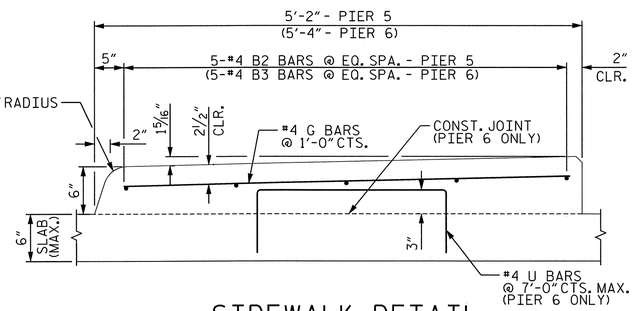

SIDEWALK DETAIL

(PIER 5 SIDEWALK SHALL BE CAST MONOLITHICALLY WITH DECK SLAB)

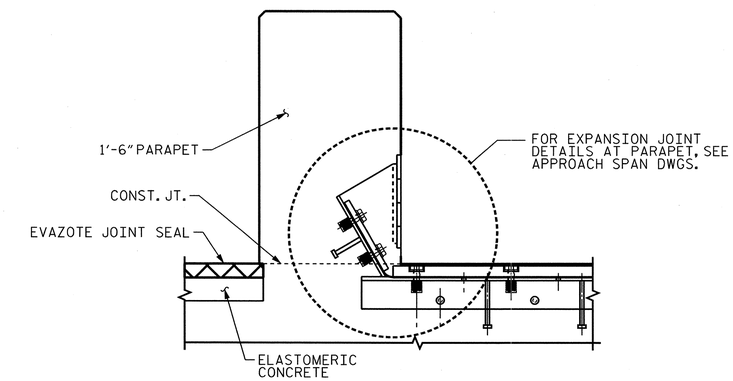

SECTION E-E

(ARMORED EXPANSION JOINT SECTION THROUGH PARAPET)
(1 BAR METAL RAIL NOT SHOWN)

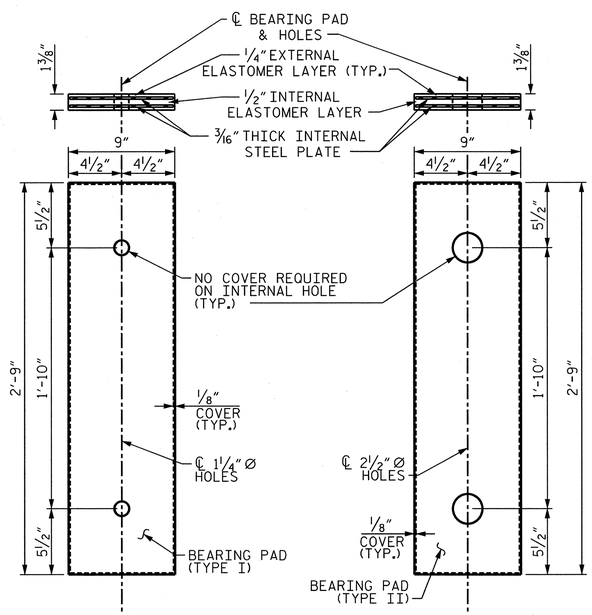

FIXED END
(TYPE I - 4 REQUIRED)

EXPANSION END
(TYPE II - 4 REQUIRED)

STEEL REINFORCED ELASTOMETRIC BEARING DETAILS

(THE SHEAR MODULUS, G, OF THE ELASTOMER SHALL BE 110 PSI FOR ALL BEARINGS.)

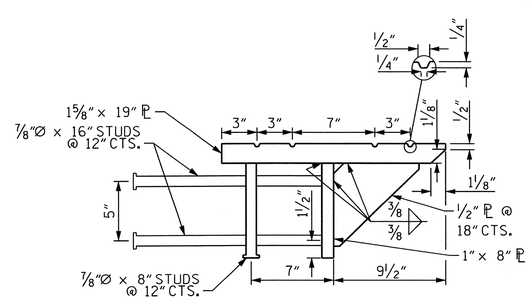

DETAIL 2

(WELDMENT SHALL BE GALVANIZED)

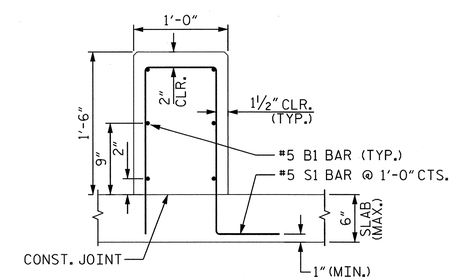

PARAPET DETAIL

(1 BAR METAL RAIL AND ANCHORAGE NOT SHOWN FOR CLARITY)

EASTBOUND

PROJECT NO. U-4438

PASQUOTANK COUNTY

STATION: 15+25.75 -L1-

NOTES:

1. FOR GENERAL NOTES, SEE DWG. G-004.
2. FOR LOCATION OF SECTIONS B-B, C-C, AND E-E, SEE DWG. S-053E.
3. FOR PRESTRESSED BOX BEAM DETAILS, SEE DWG. S-056E.
4. AT DIAPHRAGMS, CAST-IN-PLACE THREADED INSERTS SHALL BE LOCATED TO CLEAR POST-TENSIONING STRANDS.

MODJESKI and MASTERS
Experience great bridges.
Mechanicsburg, PA NC License No. C-2979

DWG NUMBER	TOTAL DWGS
S-054E	94

NORTH CAROLINA PROFESSIONAL SEAL 025801 ENGINEER LANCE V. BORDEN 2/3/2011

STATE OF NORTH CAROLINA
DEPARTMENT OF TRANSPORTATION
RALEIGH

ELIZABETH CITY BRIDGE OVER PASQUOTANK RIVER
BASCULE PIER
FIXED SPAN OVER COUNTERWEIGHT - 2

REVISIONS						SHEET NO.
NO.	BY:	DATE:	NO.	BY:	DATE:	S-156
1			3			TOTAL SHEETS
2			4			454

DRAWN BY : DMW DATE : 01/11
CHECKED BY : HNB DATE : 01/11

2/3/2011
8:30:35 AM
P:\2986.02 NCDOT Elizabeth City\CADD\Structural\S-054E_U4438_SD_FS2_01_E.DGN

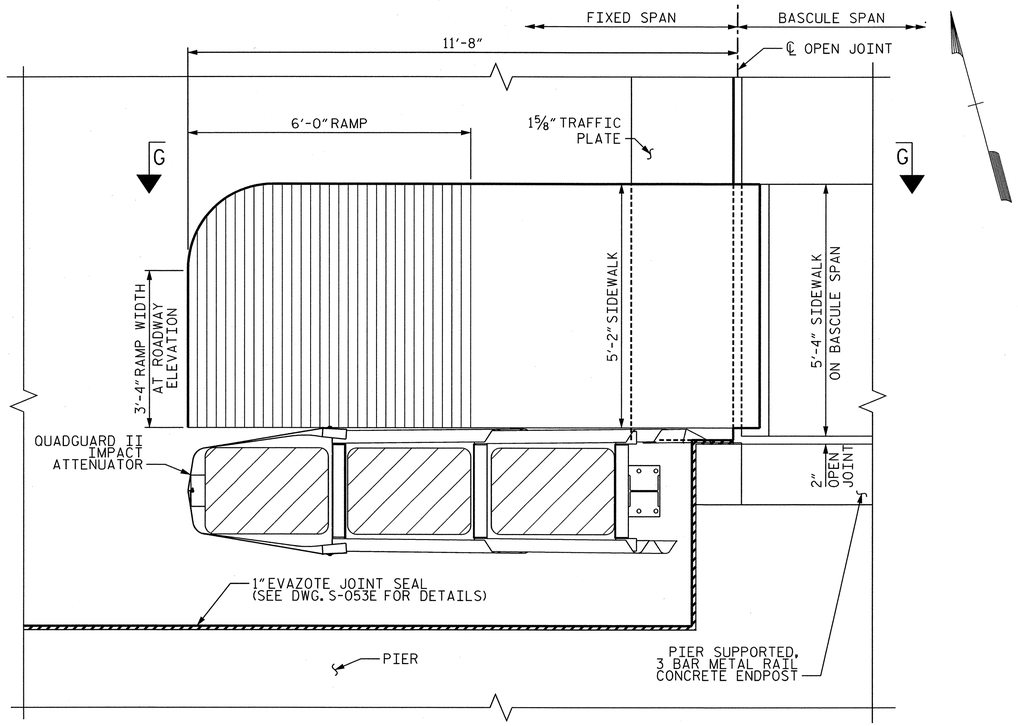

PLAN OF SIDEWALK RAMP & IMPACT ATTENUATOR AT PIER 5

BAR TYPE

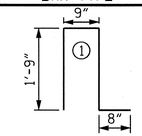

BAR DIMENSIONS ARE OUT-TO-OUT

BILL OF MATERIAL

FOR PARAPETS ON FIXED SPAN

BAR	NO.	SIZE	TYPE	LENGTH	WEIGHT
S1	32	#5	1	4'-11"	164 LBS.
B1	12	#5	STR.	14'-10"	186 LBS.

ALL BARS ARE EPOXY COATED
EPOXY COATED REINF. STEEL = 350 LBS.
CLASS AA CONCRETE = 1.7 CU. YDS.

BAR TYPE

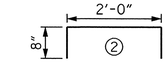

BAR DIMENSIONS ARE OUT-TO-OUT

BILL OF MATERIAL

FOR SIDEWALKS ON FIXED SPAN

BAR	NO.	SIZE	TYPE	LENGTH	WEIGHT
B2	5	#4	STR	9'-8"	32 LBS.
B3	5	#4	STR	15'-10"	53 LBS.
G	28	#4	STR	4'-7"	86 LBS.
U	3	#4	2	3'-4"	7 LBS.

ALL BARS ARE EPOXY COATED
EPOXY COATED REINF. STEEL = 178 LBS.
CLASS AA CONCRETE = 2.8 CU. YDS.

BAR TYPE

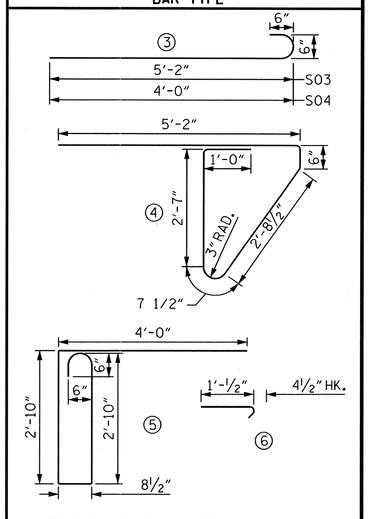

BAR DIMENSIONS ARE OUT-TO-OUT

BILL OF MATERIAL

FOR FIXED SPAN SLABS

BAR	NO.	SIZE	TYPE	LENGTH	WEIGHT
S01	184	#6	STR	14'-0"	3869 LBS.
S02	26	#5	STR	45'-8"	1238 LBS.
S03	92	#6	3	5'-10"	806 LBS.
S04	92	#6	3	4'-8"	645 LBS.
S05	92	#6	4	12'-7"	1739 LBS.
S06	92	#6	5	11'-½"	1526 LBS.
S07	30	#5	STR	45'-8"	1429 LBS.
S08	28	#5	STR	45'-8"	1334 LBS.
J1	85	#4	6	1'-5"	80 LBS.

ALL BARS ARE EPOXY COATED
EPOXY COATED REINF. STEEL = 12,666 LBS.
CLASS AA CONCRETE = 48.7 CU. YDS.

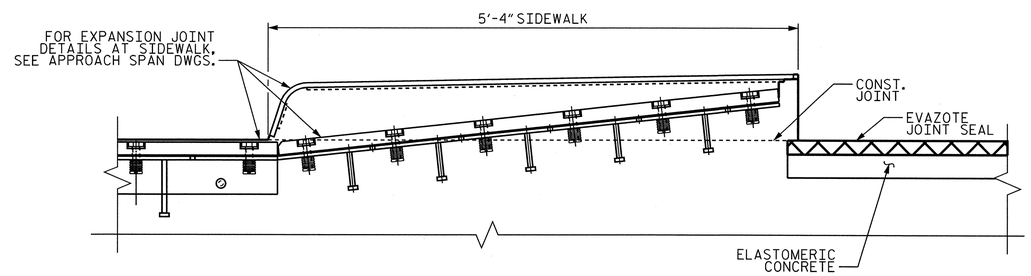

SECTION F-F

(ARMORED EXPANSION JOINT SECTION THROUGH SIDEWALK)
(PIER 6 ONLY)

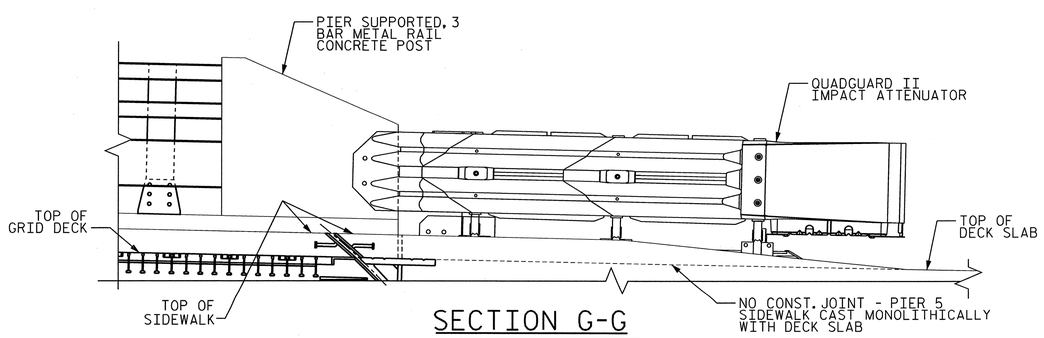

SECTION G-G

(DECK AND SIDEWALK REINFORCEMENT NOT SHOWN FOR CLARITY)
(FOR SIDEWALK JOINT ARMORING DETAIL, SEE DWG. S-086E)

EASTBOUND
PROJECT NO. U-4438
PASQUOTANK COUNTY
STATION: 15+25.75 -L1-

NOTES:

1. FOR GENERAL NOTES, SEE DWG. G-004.
2. FOR LOCATION OF SECTION F-F, SEE DWG. S-053E.
3. FOR 3 BAR METAL RAIL CONCRETE POST DETAILS, SEE DWGS. S-028E & S-029E.

MODJESKI and MASTERS
Experience great bridges.
Mechanicsburg, PA NC License No. C-2979

NORTH CAROLINA PROFESSIONAL SEAL 025801 ENGINEER LANCE V. BORDEN 2/3/2011

STATE OF NORTH CAROLINA
DEPARTMENT OF TRANSPORTATION
RALEIGH

ELIZABETH CITY BRIDGE OVER PASQUOTANK RIVER
BASCULE PIER
FIXED SPAN OVER COUNTERWEIGHT - 3

REVISIONS						SHEET NO.
NO.	BY:	DATE:	NO.	BY:	DATE:	S-157
1			3			TOTAL SHEETS
2			4			454

DWG NUMBER	TOTAL DWGS
S-055E	94

DRAWN BY : DMW DATE : 01/11
CHECKED BY : HNB DATE : 01/11

2/1/2011
11:41:20 AM
P:\2986.02 NCDOT Elizabeth City\CADD\Structural\S-055E_U4438_SD_FS3_01_E.DGN

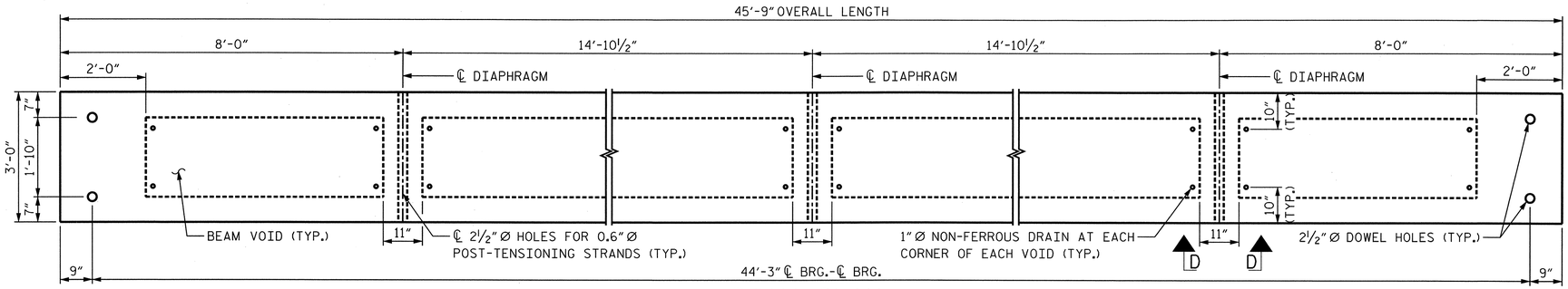

BEAM PLAN

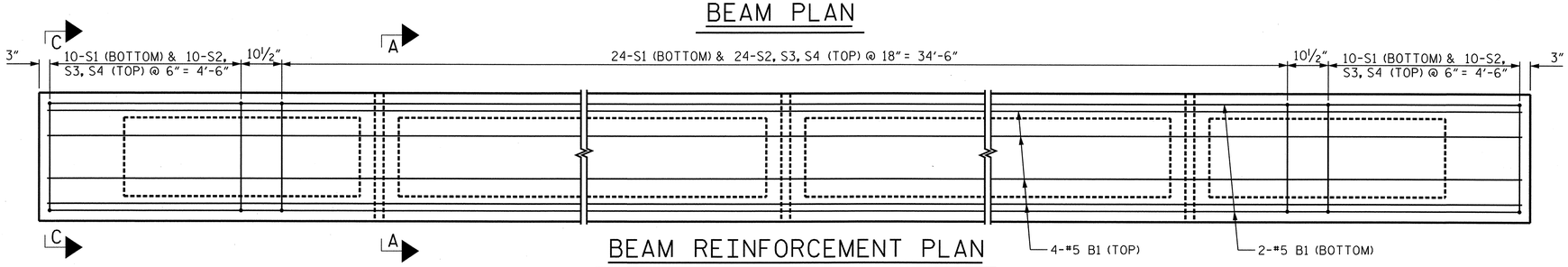

BEAM REINFORCEMENT PLAN

(DIAPHRAGM REINFORCMENT AND ADDITIONAL END REINFORCING NOT SHOWN FOR CLARITY)

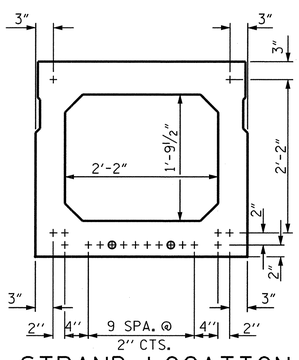

STRAND LOCATION

(18 STRANDS REQUIRED)

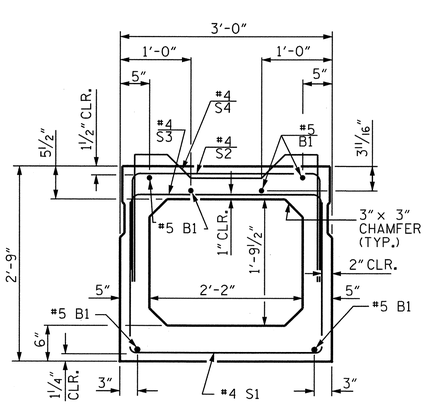

BOX BEAM SECTION

(STRAND LAYOUT NOT SHOWN)

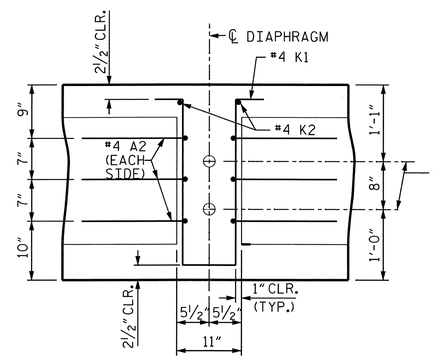

SECTION B-B

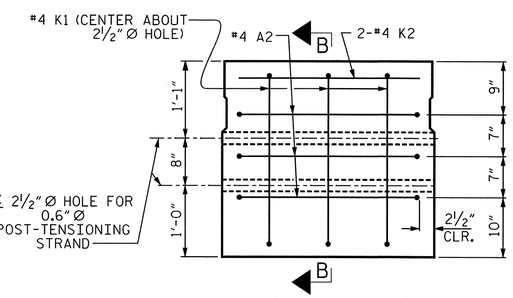

SECTION A-A

(VOIDS NOT SHOWN)

DOUBLE DIAPHRAGM DETAILS

(#4 "S" BARS NOT SHOWN. #4 "S" BARS MAY BE SHIFTED SLIGHTLY TO CLEAR 2½" Ø HOLE.)

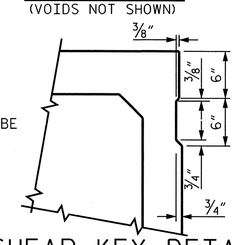

SHEAR KEY DETAIL

(OMIT SHEAR KEY ON OUTSIDE FACE OF EXTERIOR BOX BEAMS)

DEBONDING LEGEND

+ FULLY BONDED STRAND

⊕ DEBONDED STRAND ✱✱

✱✱BOND SHALL BE BROKEN ON THESE STRANDS FOR A DISTANCE OF 4 FEET FROM THE END OF BOX BEAM UNIT. SEE STANDARD SPECIFICATIONS ARTICLE 1078-7.

GRADE 270 STRANDS	
	0.6" Ø L.R.
AREA (SQUARE INCHES)	0.217
ULTIMATE STRENGTH (LBS. PER STRAND)	58,600
APPLIED PRESTRESS (LBS. PER STRAND)	43,950

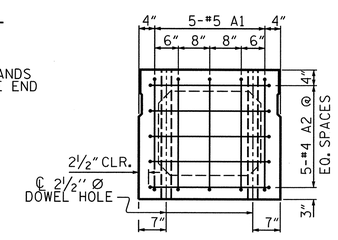

SECTION C-C

SHOWING PLACEMENT OF #5 & #4 "A" BARS AND LOCATION OF DOWEL HOLES. (STRAND LAYOUT NOT SHOWN)

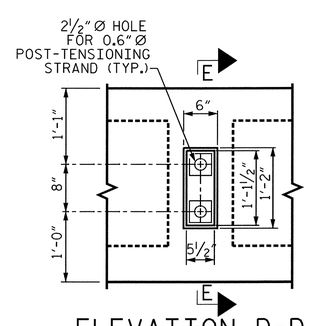

ELEVATION D-D

(OUTSIDE FACE OF EXTERIOR BEAM ONLY)

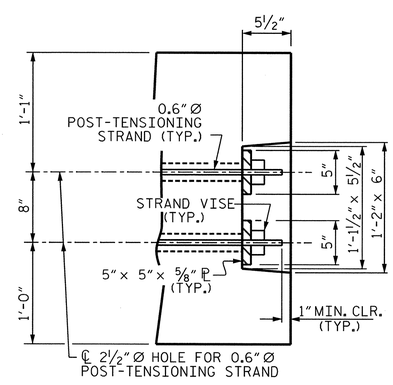

SECTION E-E

BAR TYPES

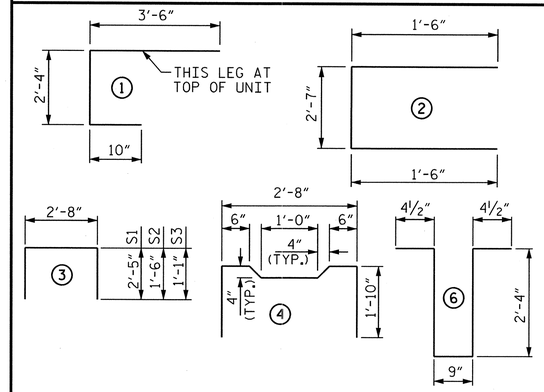

ALL BAR DIMENSIONS ARE OUT-TO-OUT

BILL OF MATERIAL FOR ONE BOX BEAM SECTION

BAR	NUMBER	SIZE	TYPE	LENGTH	WEIGHT
A1	10	#5	1	6'-8"	70 LBS.
A2	28	#4	2	5'-7"	104 LBS.
B1	6	#5	STR	45'-6"	285 LBS.
K1	9	#4	6	6'-2"	37 LBS.
K2	6	#4	STR	2'-7"	10 LBS.
S1	44	#4	3	7'-6"	220 LBS.
S2	44	#4	3	5'-8"	167 LBS.
S3	44	#4	3	4'-10"	142 LBS.
✱ S4	44	#4	4	5'-10"	172 LBS.
REINFORCING STEEL					1035 LBS.
✱ EPOXY COATED REINF. STEEL					172 LBS.
7,000 P.S.I. CONCRETE					8.5 CU. YDS.
0.6" Ø L.R. STRANDS					18 TOTAL

NOTES:

1. FOR GENERAL NOTES, SEE DWG. G-004.
2. ALL PRESTRESSING STRANDS SHALL BE 7-WIRE LOW RELAXATION GRADE 270 STRANDS AND SHALL CONFORM TO AASHTO M203 EXCEPT FOR SAMPLING REQUIREMENTS WHICH SHALL BE IN ACCORDANCE WITH THE STANDARD SPECIFICATIONS.
3. ALL REINFORCING STEEL CAST WITH THE BOX BEAM SECTIONS SHALL BE GRADE 60 AND SHALL BE INCLUDED IN THE UNIT PRICE BID FOR PRESTRESSED CONCRETE BOX BEAMS.
4. THE TRANSFER OF LOAD FROM THE ANCHORAGES TO THE BOX BEAM UNIT SHALL BE DONE WHEN THE CONCRETE HAS REACHED A COMPRESSIVE STRENGTH OF NOT LESS THAN 5000 PSI.
5. PRESTRESSING STRANDS SHALL BE CUT FLUSH WITH THE BOX BEAM UNIT ENDS.
6. APPLY EPOXY PROTECTIVE COATING TO BOX BEAM UNIT ENDS.
7. THE LOCATION OF THE VOID DRAINS MAY BE SHIFTED SLIGHTLY WHERE NECESSARY TO CLEAR PRESTRESSING STRANDS OR TRANSVERSE REINFORCING STEEL.
8. CAST-IN-PLACE THREADED INSERTS FOR ¾" Ø STUDS SHALL BE SPACED LONGITUDINALLY AT 1'-0" MAX. ALONG OUTSIDE FACE OF EXTERIOR BEAMS. SEE SECTION B-B ON DWG. S-054E FOR DETAILS.

DEAD LOAD DEFLECTION AND CAMBER		
	INTERIOR	EXTERIOR
CAMBER (BEAM ALONE IN PLACE)	1 3/16" ↑	1 3/16" ↑
DEFLECTION DUE TO DEAD LOAD	1/16" ↓	1/4" ↓
FINAL CAMBER	1 1/8" ↑	15/16" ↑

EASTBOUND

PROJECT NO. U-4438

PASQUOTANK COUNTY

STATION: 15+25.75 -L1-

MODJESKI and MASTERS
Experience great bridges.
Mechanicsburg, PA NC License No. C-2979

NORTH CAROLINA PROFESSIONAL SEAL 025801 ENGINEER LANCE V. BORDEN 2/3/2021

STATE OF NORTH CAROLINA
DEPARTMENT OF TRANSPORTATION
RALEIGH

ELIZABETH CITY BRIDGE OVER PASQUOTANK RIVER
BASCULE PIER
FIXED SPAN OVER COUNTERWEIGHT - 4

DWG NUMBER	TOTAL DWGS
S-056E	94

REVISIONS							
NO.	BY:	DATE:	NO.	BY:	DATE:	SHEET NO.	S-158
1			3			TOTAL SHEETS	454
2			4				

DRAWN BY : DMW DATE : 01/11
CHECKED BY : HNB DATE : 01/11

2/1/2011
11:42:47 AM
P:\2986.02 NCDOT Elizabeth City\CADD\Structural\S-056E_U4438_SD_FS4_01_E.DGN

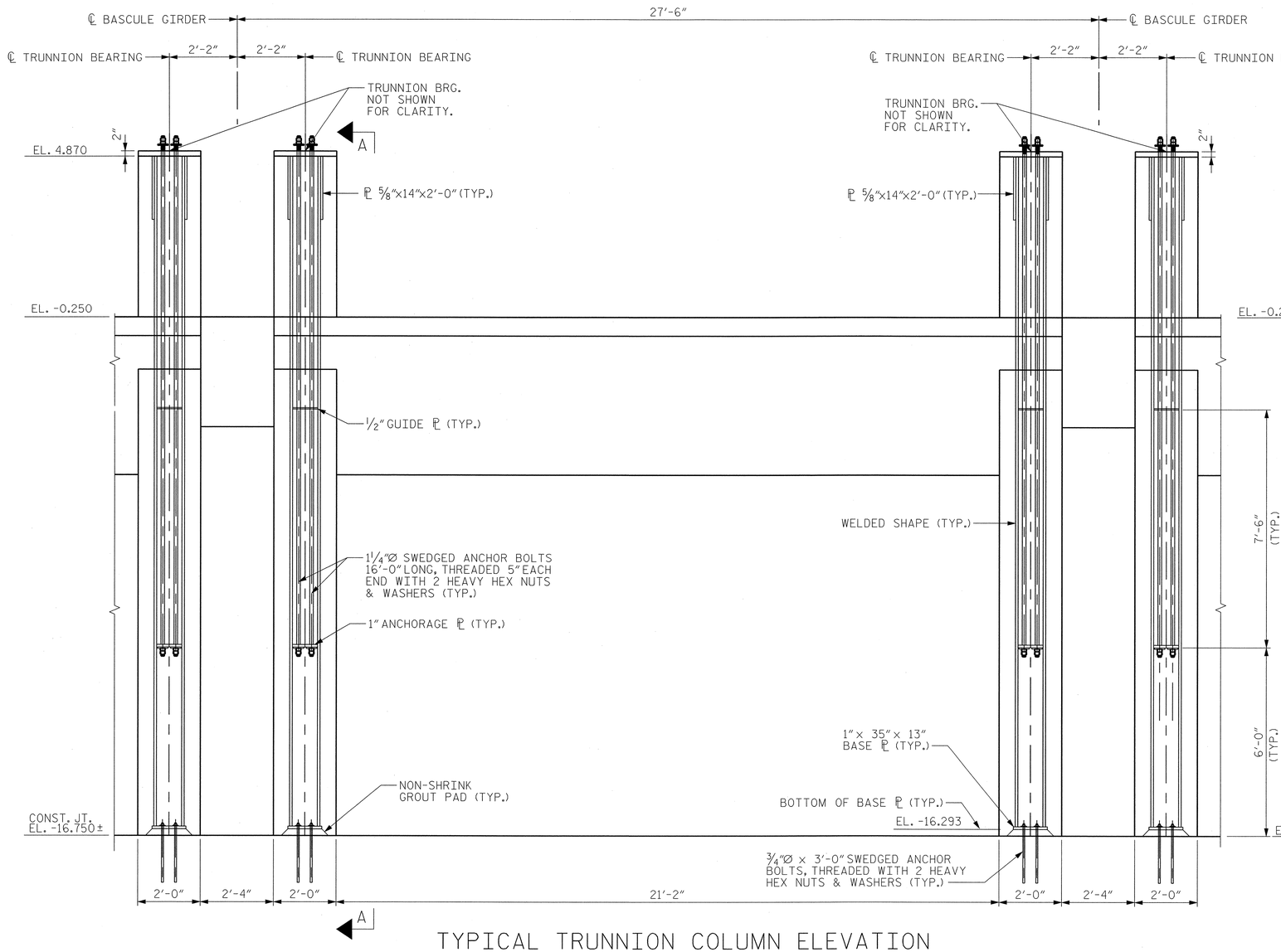

TYPICAL TRUNNION COLUMN ELEVATION

(REINFORCING NOT SHOWN FOR CLARITY)

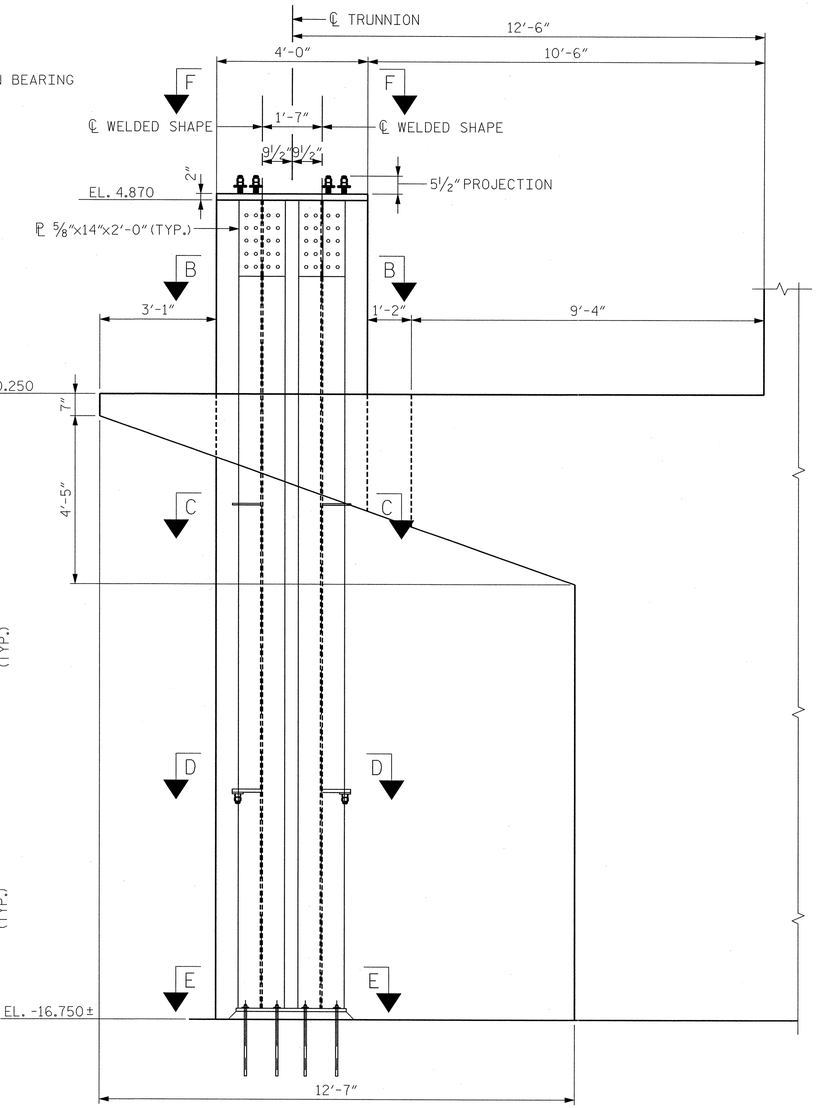

SECTION A-A

(REINFORCING NOT SHOWN FOR CLARITY)

EASTBOUND

PROJECT NO. U-4438

PASQUOTANK COUNTY

STATION: 15+25.75 -L1-

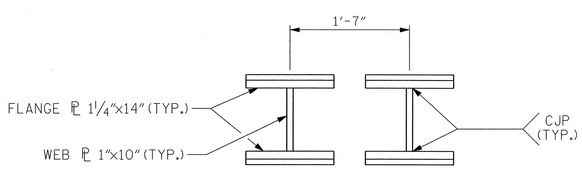

SECTION B-B

NOTES:

1. FOR GENERAL NOTES, SEE DWG. G-004.
2. FOR SECTIONS C-C THRU F-F, SEE DWG. S-058E.
3. FOR TRUNNION BEARING DETAILS, SEE DWG. M-008E.
4. THE 1 1/4"Ø AND 3/4"Ø ANCHOR BOLTS SHALL BE ASTM F1554 GRADE 105 WITH 2 HEAVY HEX NUTS AND WASHERS.
5. FOR TRUNNION COLUMN REINFORCING, SEE DWG. S-027E.
6. A TOLERANCE OF 1/16(±)" SHALL BE MAINTAINED BETWEEN THE TRUNNION BASE PLATE ELEVATIONS FOR EACH LEAF.

MODJESKI and MASTERS
Experience great bridges.
Mechanicsburg, PA NC License No. C-2979

NORTH CAROLINA PROFESSIONAL SEAL 025801 ENGINEER LANCE V. BORDEN 2/3/2011

STATE OF NORTH CAROLINA
DEPARTMENT OF TRANSPORTATION
RALEIGH

ELIZABETH CITY BRIDGE OVER PASQUOTANK RIVER
TRUNNION
COLUMN ELEVATION

REVISIONS						SHEET NO.
NO.	BY:	DATE:	NO.	BY:	DATE:	S-159
1			3			TOTAL SHEETS
2			4			454

DWG NUMBER	TOTAL DWGS
S-057E	94

DRAWN BY : CMM DATE : 01/11
CHECKED BY : HNB DATE : 01/11

2/3/2011
2:05:36 PM
K:\2986.02\CADD\Structural\dgn files\S-057E_U4438_SD_TBSG_01_E.dgn

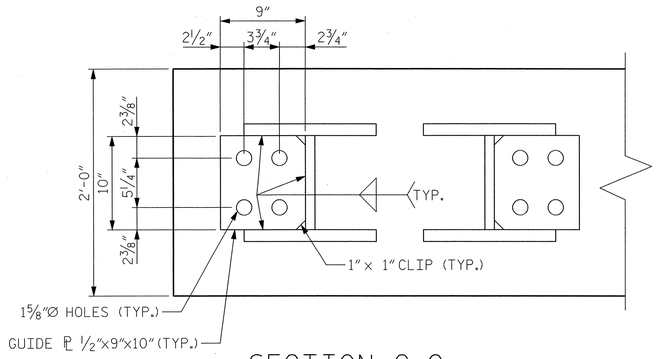

SECTION C-C

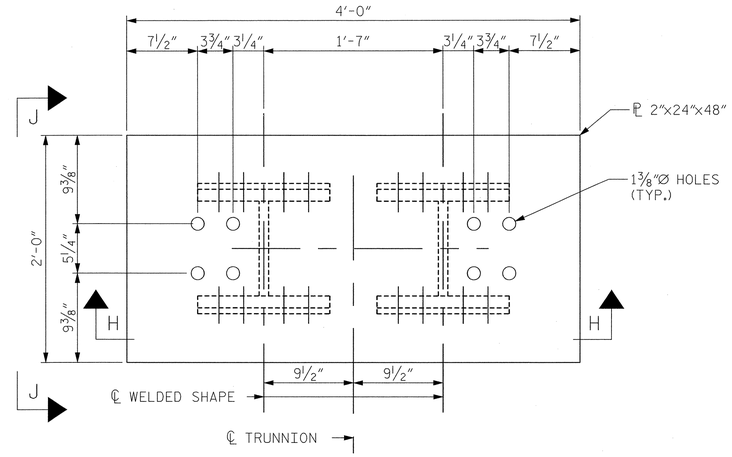

SECTION F-F

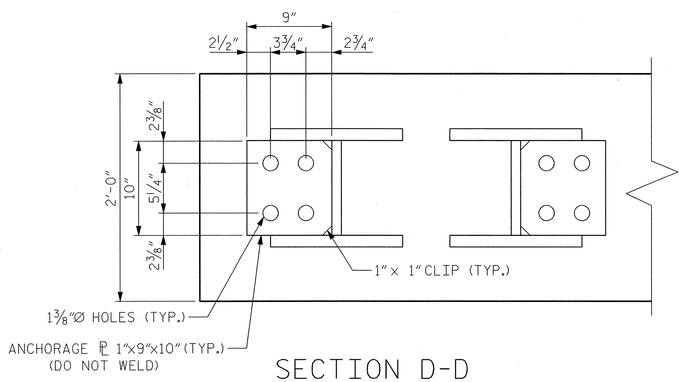

SECTION D-D

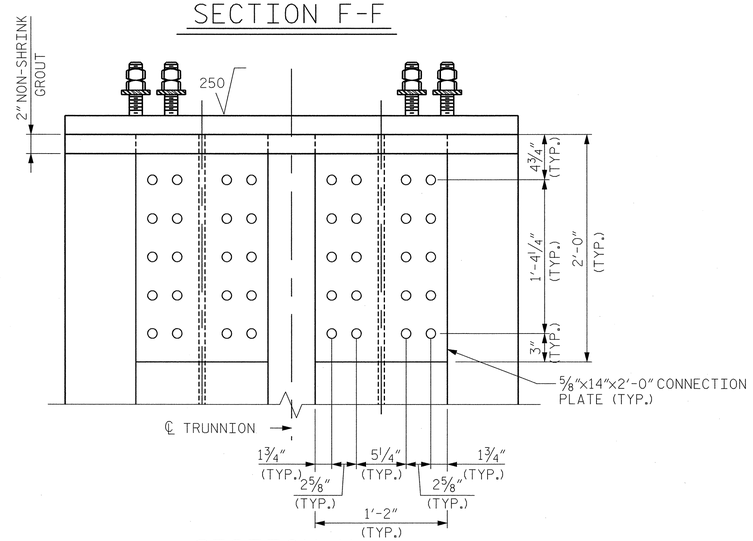

SECTION H-H

(REINFORCING NOT SHOWN FOR CLARITY)

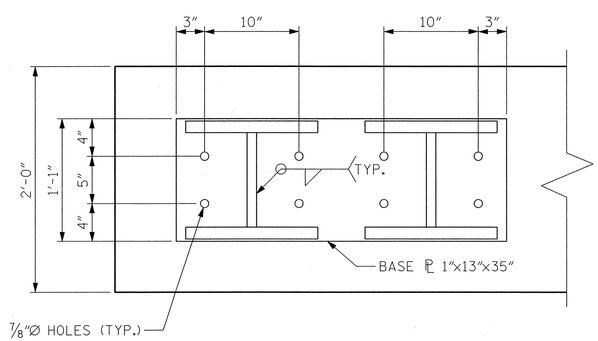

SECTION E-E

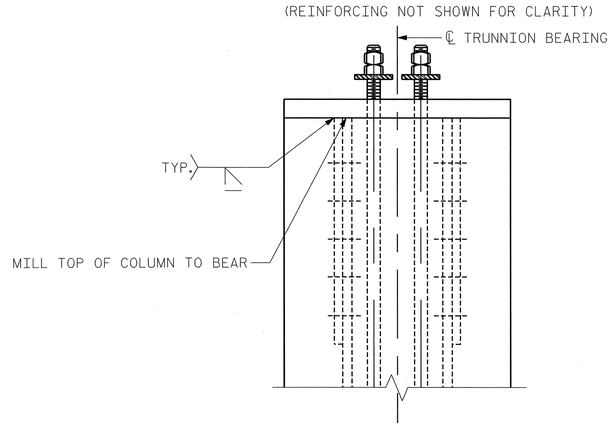

SECTION J-J

(REINFORCING NOT SHOWN FOR CLARITY)

NOTES:

1. FOR GENERAL NOTES, SEE DWG. G-004.
2. THE 1¼"Ø AND ¾"Ø ANCHOR BOLTS SHALL BE ASTM F1554 GRADE 105 WITH HEAVY HEX NUTS AND WASHERS.
3. FOR TRUNNION BEARING DETAILS, SEE DWG. M-008E.

EASTBOUND

PROJECT NO. U-4438

PASQUOTANK COUNTY

STATION: 15+25.75 -L1-

STATE OF NORTH CAROLINA
DEPARTMENT OF TRANSPORTATION
RALEIGH

ELIZABETH CITY BRIDGE OVER PASQUOTANK RIVER
TRUNNION
COLUMN DETAILS

MODJESKI and MASTERS
Experience great bridges.
Mechanicsburg, PA NC License No. C-2979

NORTH CAROLINA PROFESSIONAL SEAL 025801 ENGINEER LANCE V. BORDEN 2/3/2011

DWG NUMBER	TOTAL DWGS
S-058E	94

REVISIONS						SHEET NO.
NO.	BY:	DATE:	NO.	BY:	DATE:	S-160
1			3			TOTAL SHEETS
2			4			454

DRAWN BY : CMM DATE : 01/11
CHECKED BY : HNB DATE : 01/11

2/3/2011
2:05:40 PM
K:\2986.02\CADD\Structural\dgn files\S-058E_U4438_SD_TBGD_01_E.dgn

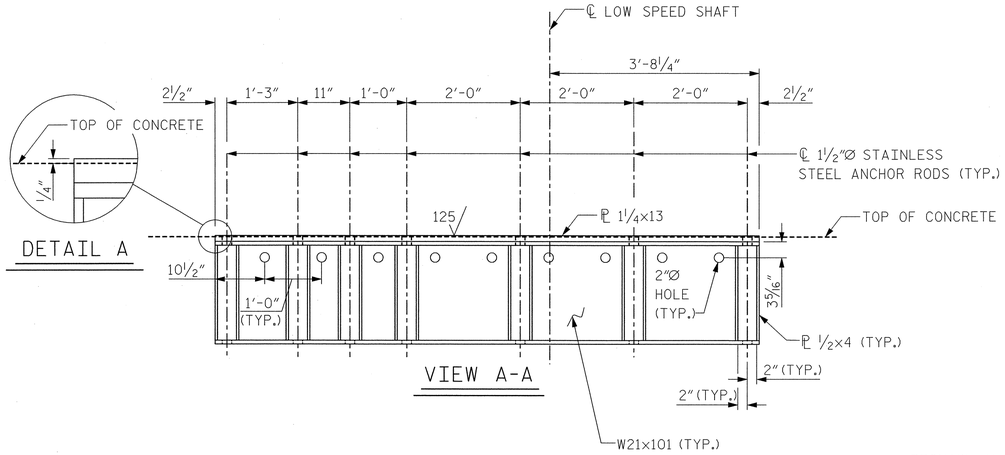

DETAIL A

VIEW A-A

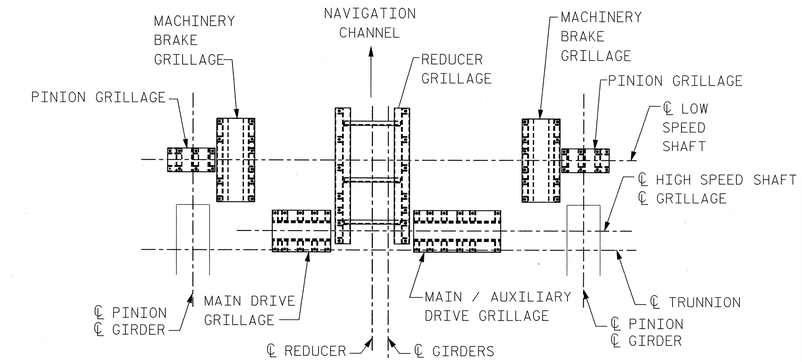

KEY PLAN

NOT TO SCALE

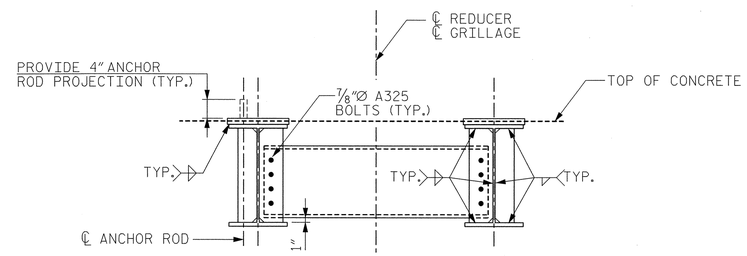

SECTION B-B

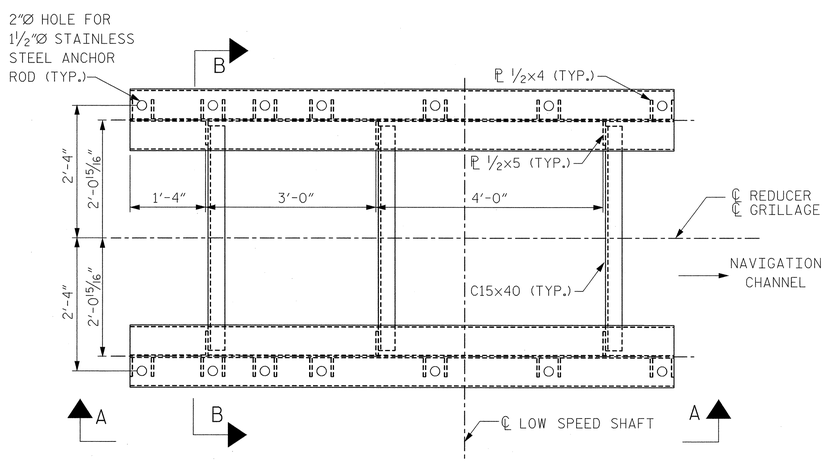

PLAN

REDUCER GRILLAGE

NOTES:

1. FOR GENERAL NOTES, SEE DWG. G-004.
2. FOR MACHINERY DETAILS, SEE MECHANICAL DRAWINGS.

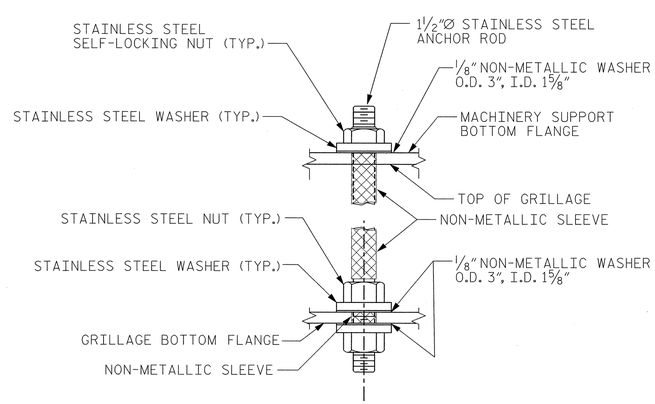

ANCHOR ROD END DETAIL

EASTBOUND

PROJECT NO. U-4438

PASQUOTANK COUNTY

STATION: 15+25.75 -L1-

STATE OF NORTH CAROLINA
DEPARTMENT OF TRANSPORTATION
RALEIGH

ELIZABETH CITY BRIDGE OVER PASQUOTANK RIVER
MACHINERY GRILLAGE DETAILS - 1

MODJESKI and MASTERS
Experience great bridges.
Mechanicsburg, PA NC License No. C-2979

NORTH CAROLINA PROFESSIONAL SEAL 025801 ENGINEER LANCE V. BORDEN 2/3/2011

DWG NUMBER	TOTAL DWGS
S-059E	94

REVISIONS								SHEET NO.
NO.	BY:	DATE:	NO.	BY:	DATE:			S-161
1			3					TOTAL SHEETS
2			4					454

DRAWN BY : EAR DATE : 01/11
CHECKED BY : DLM DATE : 01/11

2/3/2011
2:05:44 PM
K:\2986.02\CADD\Structural\dgn files\S-059E_U4438_SD_MGD1_01_E.dgn

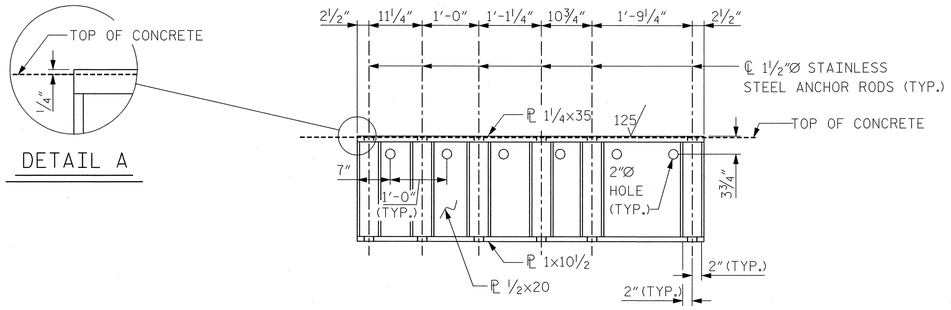

VIEW A-A

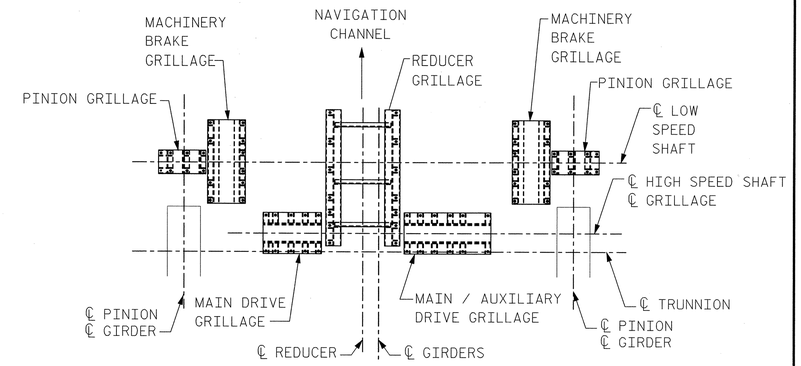

KEY PLAN

NOT TO SCALE

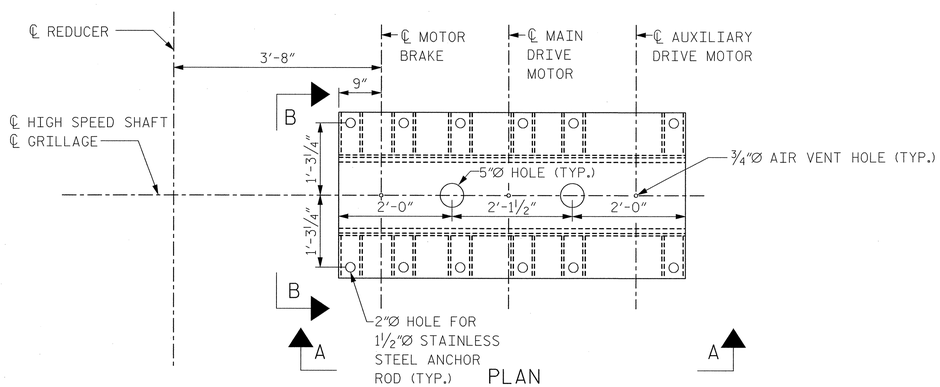

PLAN

MAIN / AUXILIARY DRIVE GRILLAGE

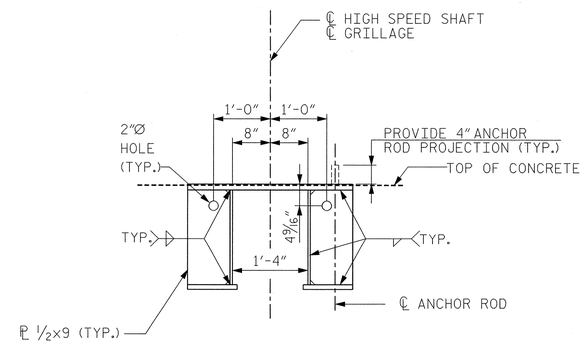

VIEW B-B

NOTES:

1. FOR GENERAL NOTES, SEE DWG. G-004.
2. FOR MACHINERY DETAILS, SEE MECHANICAL DRAWINGS.
3. FOR ANCHOR ROD END DETAIL, SEE DWG. S-059E.

EASTBOUND

PROJECT NO. U-4438

PASQUOTANK COUNTY

STATION: 15+25.75 -L1-

STATE OF NORTH CAROLINA
DEPARTMENT OF TRANSPORTATION
RALEIGH

ELIZABETH CITY BRIDGE OVER PASQUOTANK RIVER
MACHINERY GRILLAGE DETAILS - 2

MODJESKI and MASTERS
Experience great bridges.
Mechanicsburg, PA NC License No. C-2979

NORTH CAROLINA PROFESSIONAL SEAL 025801 ENGINEER LANCE V. BORDEN 2/3/2011

REVISIONS						SHEET NO.
NO.	BY:	DATE:	NO.	BY:	DATE:	S-162
1			3			TOTAL SHEETS
2			4			454

DWG NUMBER	TOTAL DWGS
S-060E	94

DRAWN BY : EAR DATE : 01/11
CHECKED BY : DLM DATE : 01/11

2/3/2011
2:05:48 PM
K:\2986.02\CADD\Structural\dgn files\S-060E_U4438_SD_MGD2_01_E.dgn

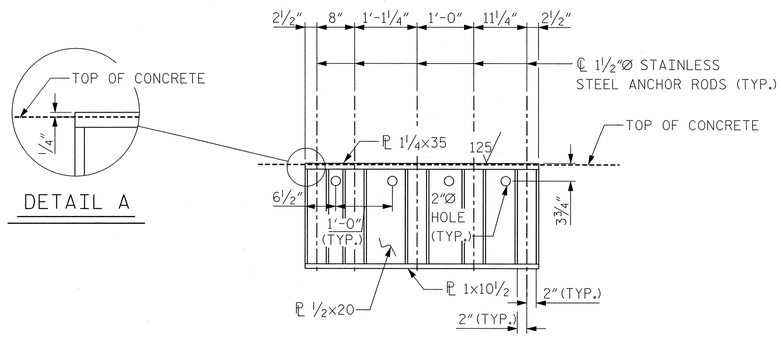

VIEW A-A

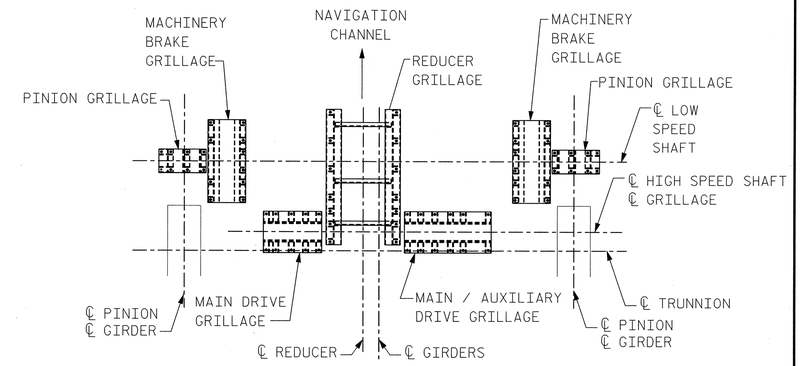

KEY PLAN

NOT TO SCALE

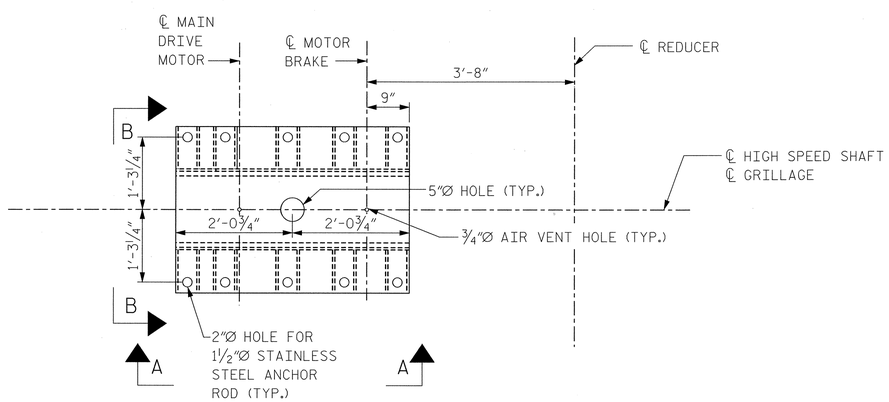

PLAN

MAIN DRIVE GRILLAGE

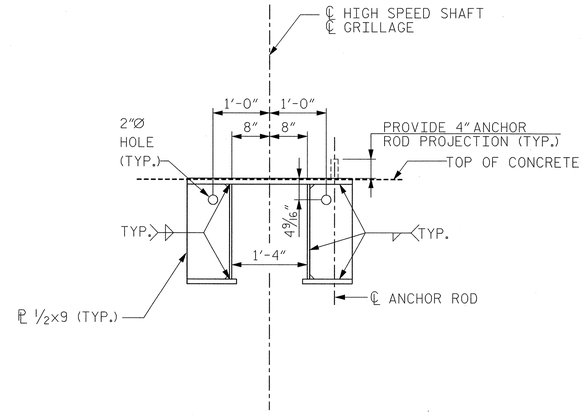

VIEW B-B

NOTES:

1. FOR GENERAL NOTES, SEE DWG. G-004.
2. FOR MACHINERY DETAILS, SEE MECHANICAL DRAWINGS.
3. FOR ANCHOR ROD END DETAIL, SEE DWG. S-059E.

EASTBOUND

PROJECT NO. U-4438

PASQUOTANK COUNTY

STATION: 15+25.75 -L1-

STATE OF NORTH CAROLINA
DEPARTMENT OF TRANSPORTATION
RALEIGH

ELIZABETH CITY BRIDGE OVER PASQUOTANK RIVER
MACHINERY GRILLAGE DETAILS - 3

MODJESKI and MASTERS
Experience great bridges.
Mechanicsburg, PA NC License No. C-2979

NORTH CAROLINA PROFESSIONAL SEAL 025801 ENGINEER LANCE V. BORDEN 2/3/2011

REVISIONS						SHEET NO.
NO.	BY:	DATE:	NO.	BY:	DATE:	S-163
1			3			TOTAL SHEETS
2			4			454

DWG NUMBER	TOTAL DWGS
S-061E	94

DRAWN BY : EAR DATE : 01/11
CHECKED BY : DLM DATE : 01/11

2/3/2011
2:05:53 PM
K:\2986.02\CADD\Structural\dgn files\S-061E_U4438_SD_MGD3_01_E.dgn

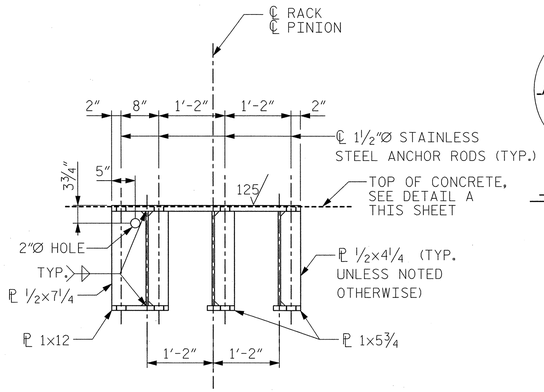

VIEW A-A

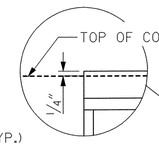

DETAIL A

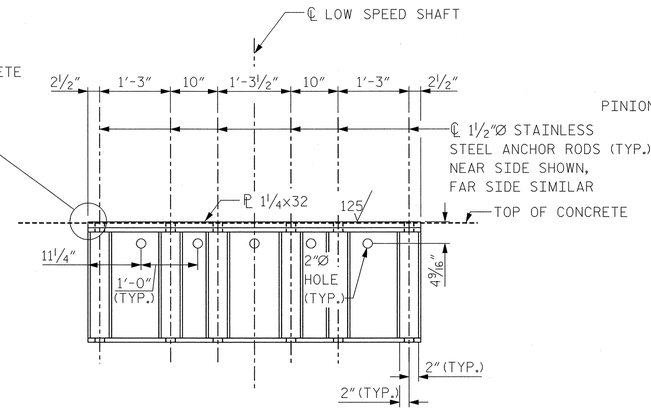

VIEW C-C

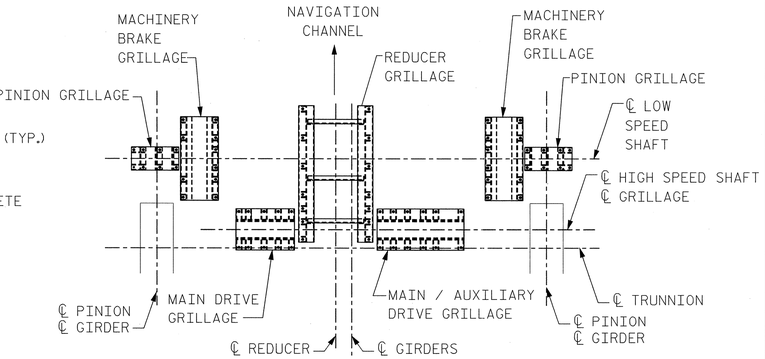

KEY PLAN

NOT TO SCALE

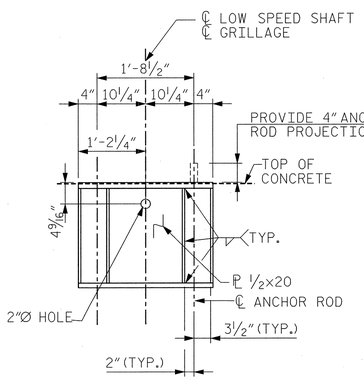

VIEW B-B

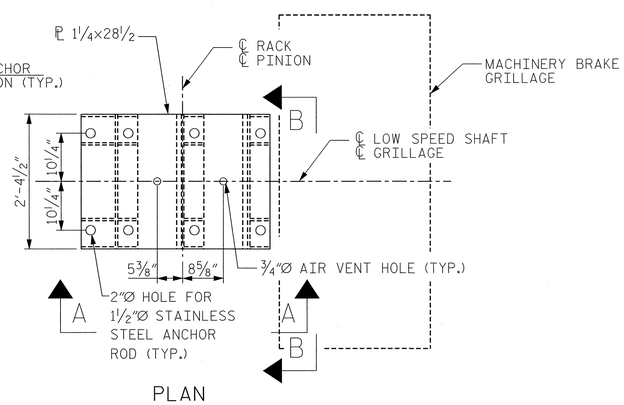

PLAN

PINION GRILLAGE

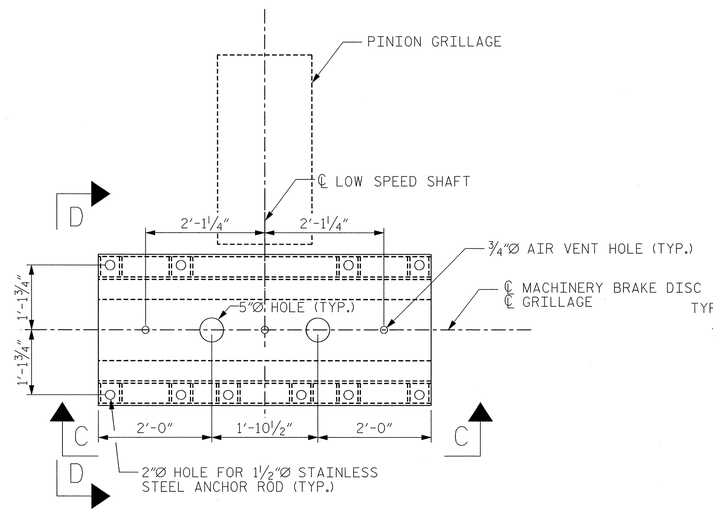

PLAN

MACHINERY BRAKE GRILLAGE

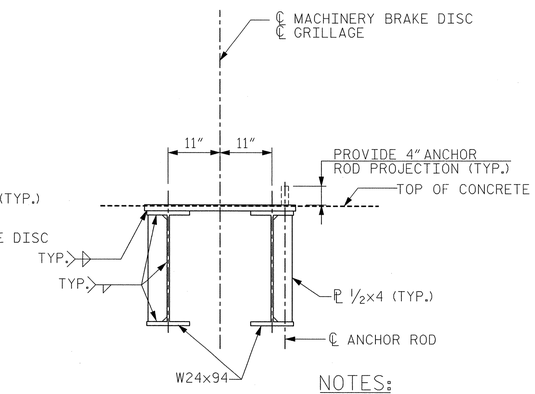

VIEW D-D

NOTES:

1. FOR GENERAL NOTES, SEE DWG. G-004.
2. FOR MACHINERY DETAILS, SEE MECHANICAL DRAWINGS.
3. FOR ANCHOR ROD END DETAIL, SEE DWG. S-059E.

EASTBOUND

PROJECT NO. U-4438

PASQUOTANK COUNTY

STATION: 15+25.75 -L1-

STATE OF NORTH CAROLINA
DEPARTMENT OF TRANSPORTATION
RALEIGH

ELIZABETH CITY BRIDGE OVER PASQUOTANK RIVER
MACHINERY GRILLAGE DETAILS - 4

MODJESKI and MASTERS
Experience great bridges.
Mechanicsburg, PA NC License No. C-2979

NORTH CAROLINA PROFESSIONAL SEAL 025801 ENGINEER LANCE V. BORDEN 2/3/2011

DWG NUMBER	TOTAL DWGS
S-062E	94

REVISIONS						SHEET NO.
NO.	BY:	DATE:	NO.	BY:	DATE:	S-164
1			3			TOTAL SHEETS
2			4			454

DRAWN BY : EAR DATE : 01/11
CHECKED BY : DLM DATE : 01/11

2/3/2011
2:05:57 PM
K:\2986.02\CADD\Structural\dgn files\S-062E_U4438_SD_MGD4_01_E.dgn

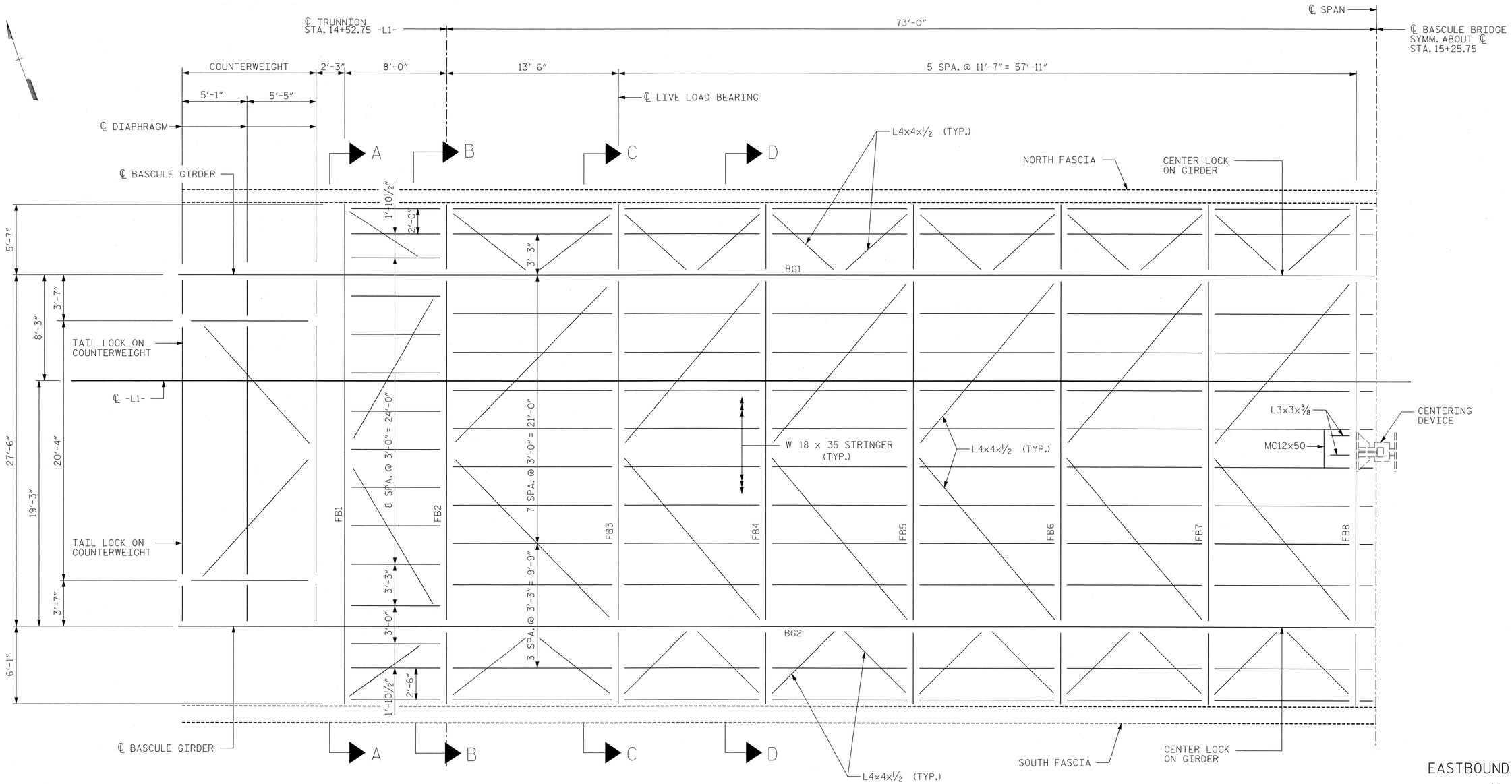

EASTBOUND

PROJECT NO. U-4438

PASQUOTANK COUNTY

STATION: 15+25.75 -L1-

BASCULE SPAN "F" - FRAMING PLAN

NOTES:

1. FOR GENERAL NOTES, SEE DWG. G-004.
2. FOR TYPICAL SECTIONS A-A AND B-B, SEE DWG. S-004E.
3. FOR TYPICAL SECTIONS C-C AND D-D, SEE DWG. S-005E.
4. BG1 = BASCULE GIRDER NUMBER, TYP.
   FB1 = FLOORBEAM NUMBER, TYP.

MODJESKI and MASTERS
Experience great bridges.
Mechanicsburg, PA NC License No. C-2979

NORTH CAROLINA PROFESSIONAL SEAL 025801 ENGINEER LANCE V. BORDEN 2/3/2011

STATE OF NORTH CAROLINA
DEPARTMENT OF TRANSPORTATION
RALEIGH

ELIZABETH CITY BRIDGE OVER
PASQUOTANK RIVER
BASCULE SPAN
FRAMING PLAN

DWG NUMBER	TOTAL DWGS
S-063E	94

REVISIONS						SHEET NO.
NO.	BY:	DATE:	NO.	BY:	DATE:	S-165
1			3			TOTAL SHEETS
2			4			454

DRAWN BY : CMM DATE : 01/11
CHECKED BY : JPS DATE : 01/11

2/3/2011
2:06:02 PM
K:\2986.02\CADD\Structural\dgn files\S-063E_U4438_SD_FRP1_01_E.dgn

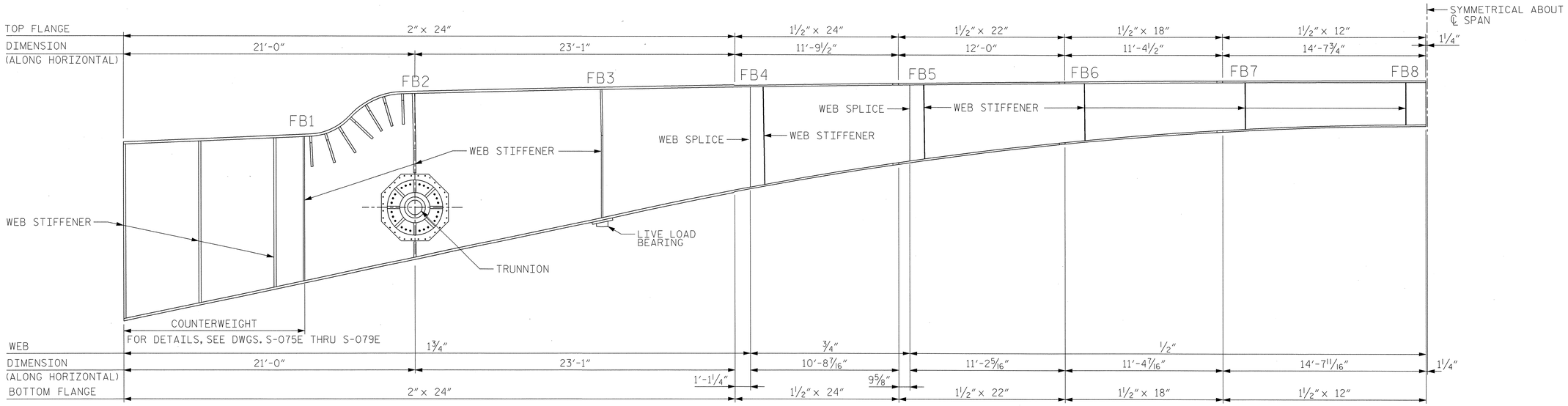

BASCULE GIRDER ELEVATION

ROADWAY GIRDER (BG1) CAMBER-BASCULE GIRDER SPAN													
	POINT NUMBER												
	1.0	0.5	2.0	2.1	2.2	2.3	2.4	2.5	2.6	2.7	2.8	2.9	3.0
A	0.013 ft	0.006 ft	0.000 ft	-0.001 ft	0.000 ft	0.003 ft	0.009 ft	0.019 ft	0.033 ft	0.051 ft	0.074 ft	0.099 ft	0.126 ft
B	0.000 ft	0.000 ft	0.000 ft	0.172 ft	0.326 ft	0.462 ft	0.580 ft	0.680 ft	0.761 ft	0.825 ft	0.870 ft	0.898 ft	0.907 ft
C	1/8"	1/16"	0"	2 1/16"	3 15/16"	5 9/16"	7 1/16"	8 3/8"	9 9/16"	10 1/2"	11 5/16"	11 15/16"	1'-0 3/8"

SIDEWALK GIRDER (BG2) CAMBER-BASCULE GIRDER SPAN													
	POINT NUMBER												
	1.0	0.5	2.0	2.1	2.2	2.3	2.4	2.5	2.6	2.7	2.8	2.9	3.0
A	0.012 ft	0.006 ft	0.000 ft	-0.001 ft	0.000 ft	0.004 ft	0.012 ft	0.025 ft	0.043 ft	0.067 ft	0.096 ft	0.128 ft	0.161 ft
B	0.000 ft	0.000 ft	0.000 ft	0.172 ft	0.326 ft	0.462 ft	0.580 ft	0.680 ft	0.761 ft	0.825 ft	0.870 ft	0.898 ft	0.907 ft
C	1/8"	1/16"	0"	2 1/16"	3 15/16"	5 5/8"	7 1/8"	8 7/16"	9 5/8"	10 11/16"	11 9/16"	1'-0 5/16"	1'-0 13/16"

A = TOTAL DEAD LOAD DEFLECTION
B = VERTICAL CURVE ORDINATE
C = REQUIRED CAMBER

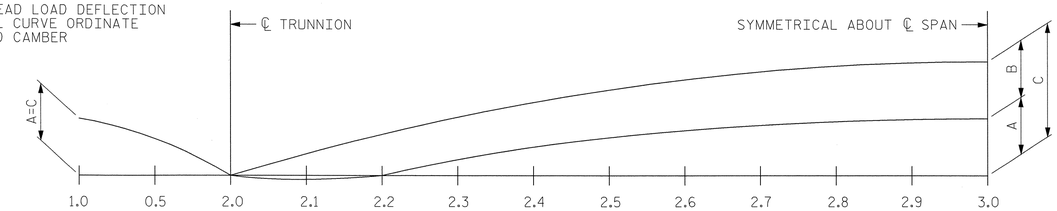

DEAD LOAD CAMBER DIAGRAM

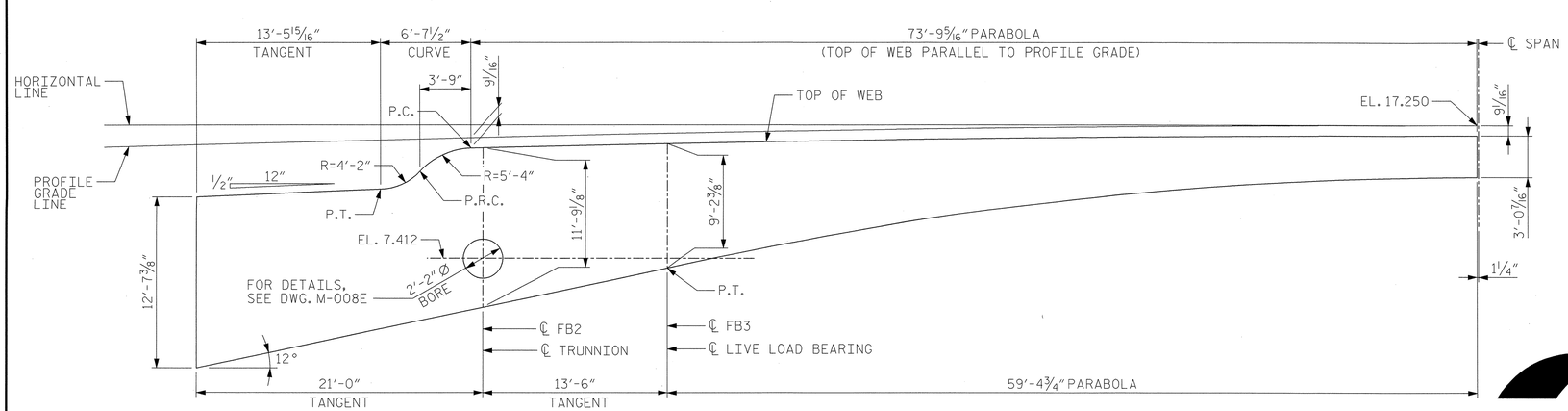

BASCULE GIRDER WEB GEOMETRY

NOTES:

1. FOR GENERAL NOTES, SEE DWG. G-004.
2. FOR BASCULE GIRDER DETAILS, SEE DWGS. S-065E AND S-066E.
3. A BOLTED FIELD SPLICE WILL BE PERMITTED ON THE BASCULE GIRDER. IF A FIELD SPLICE IS USED, IT SHALL BE MADE ENTIRELY AT THE CONTRACTOR'S EXPENSE AND NO ADDITIONAL MEASUREMENT OR PAYMENT WILL BE MADE FOR THE ADDITIONAL MATERIALS OR EXPENSES REQUIRED. THE CONTRACTOR IS REQUIRED TO SUBMIT DESIGN COMPUTATIONS AND REVISED PLAN SHEETS FOR APPROVAL TO THE ENGINEER. THE DEPARTMENT SHALL BE GIVEN TWENTY (20) DAYS FOR THEIR REVIEW. THE COMPUTATIONS AND PLAN SHEETS SHALL BE SEALED BY AN ENGINEER LICENSED IN NORTH CAROLINA.

EASTBOUND

PROJECT NO. U-4438

PASQUOTANK COUNTY

STATION: 15+25.75 -L1-

STATE OF NORTH CAROLINA
DEPARTMENT OF TRANSPORTATION
RALEIGH

ELIZABETH CITY BRIDGE OVER
PASQUOTANK RIVER
BASCULE GIRDER
ELEVATION

MODJESKI and MASTERS
Experience great bridges.
Mechanicsburg, PA NC License No. C-2979

NORTH CAROLINA PROFESSIONAL ENGINEER SEAL 025801 LANCE V. BORDEN 4/5/2011

DWG NUMBER	TOTAL DWGS
S-064E	94

REVISIONS								SHEET NO.
NO.	BY:	DATE:	NO.	BY:	DATE:			S-166
1			3					TOTAL SHEETS
2			4					454

DRAWN BY : CMM DATE : 01/11
CHECKED BY : JPS DATE : 01/11

4/5/2011
10:41:17 AM
K:\2986.02\CADD\Structural\dgn files\S-064E_U4438_SD_BGEL_01_E.dgn

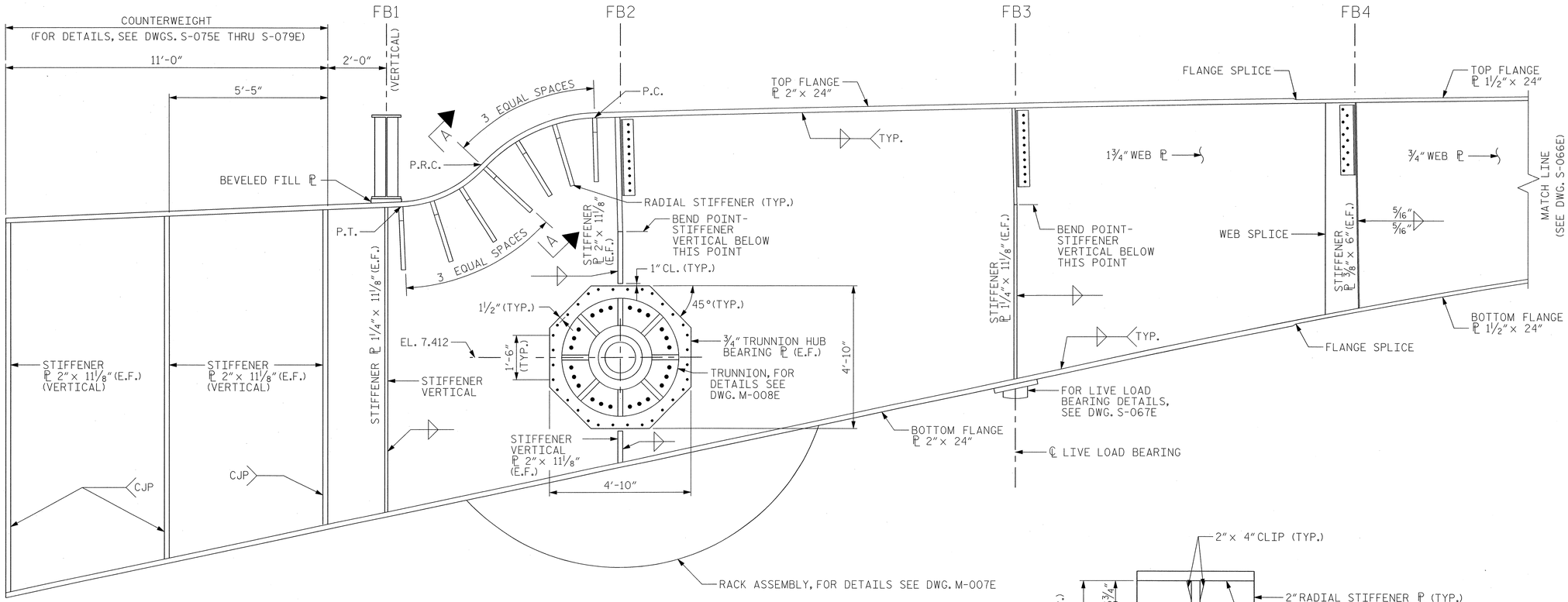

BASCULE GIRDER ELEVATION

(LATERAL BRACING NOT SHOWN FOR CLARITY
FOR DETAILS, SEE DWGS. S-073E AND S-074E)

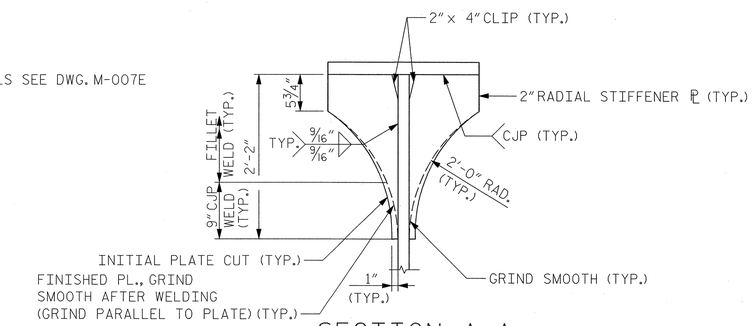

SECTION A-A

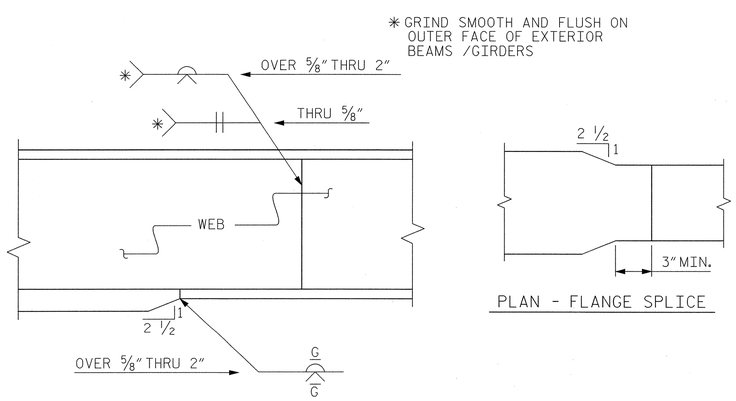

PLAN - FLANGE SPLICE

ELEVATION

TYPICAL FLANGE AND WEB BUTT JOINT

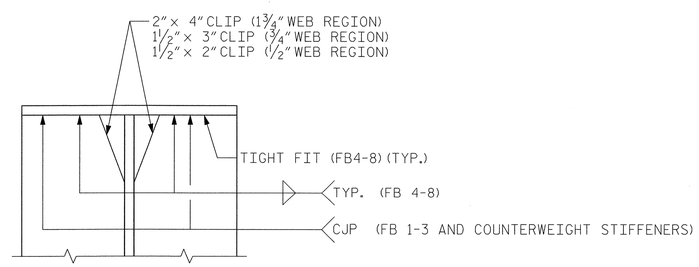

TYPICAL STIFFENER DETAIL

(TOP SHOWN, BOTTOM SIMILAR)

NOTES:

1. FOR GENERAL NOTES, SEE DWG. G-004.
2. ALL FLOORBEAMS AND STIFFENERS SHALL BE NORMAL TO GRADE UNLESS NOTED.

EASTBOUND

PROJECT NO. U-4438

PASQUOTANK COUNTY

STATION: 15+25.75 -L1-

STATE OF NORTH CAROLINA
DEPARTMENT OF TRANSPORTATION
RALEIGH

ELIZABETH CITY BRIDGE OVER PASQUOTANK RIVER
BASCULE GIRDER
DETAILS - 1

MODJESKI and MASTERS
Experience great bridges.
Mechanicsburg, PA NC License No. C-2979

NORTH CAROLINA PROFESSIONAL SEAL 025801 ENGINEER LANCE V. BORDEN 2/3/2011

REVISIONS						SHEET NO.
NO.	BY:	DATE:	NO.	BY:	DATE:	S-167
1			3			TOTAL SHEETS
2			4			454

DWG NUMBER	TOTAL DWGS
S-065E	94

DRAWN BY : CMM DATE : 01/11
CHECKED BY : JPS DATE : 01/11

2/3/2011
2:06:10 PM
K:\2986.02\CADD\Structural\dgn files\S-065E_U4438_SD_BGD1_01_E.dgn

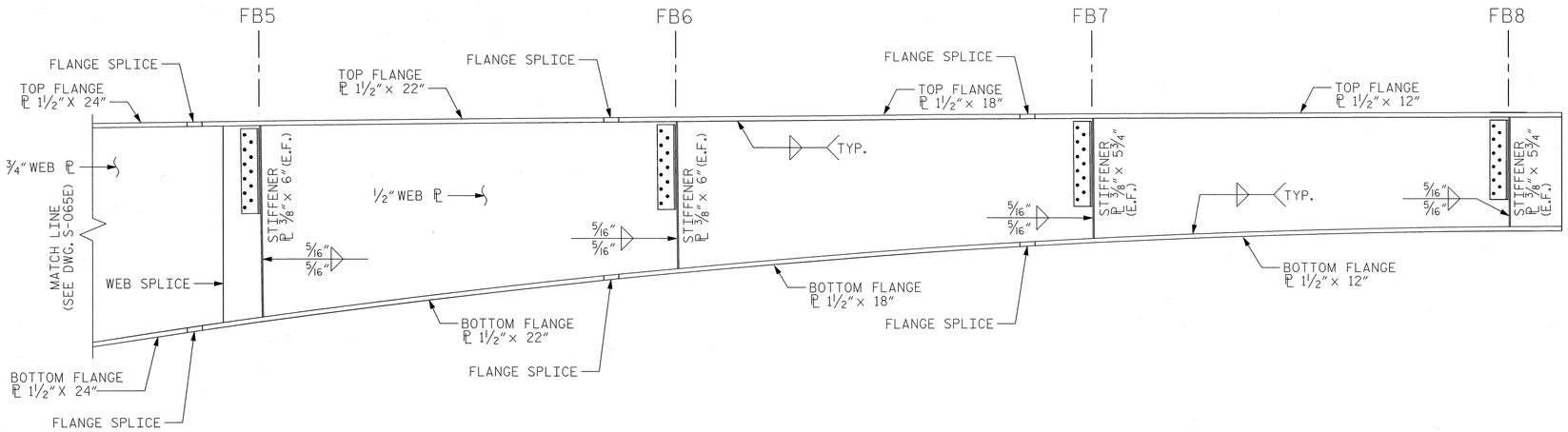

BASCULE GIRDER ELEVATION

(LATERAL BRACING NOT SHOWN FOR CLARITY
FOR DETAILS, SEE DWGS. S-073E AND S-074E)

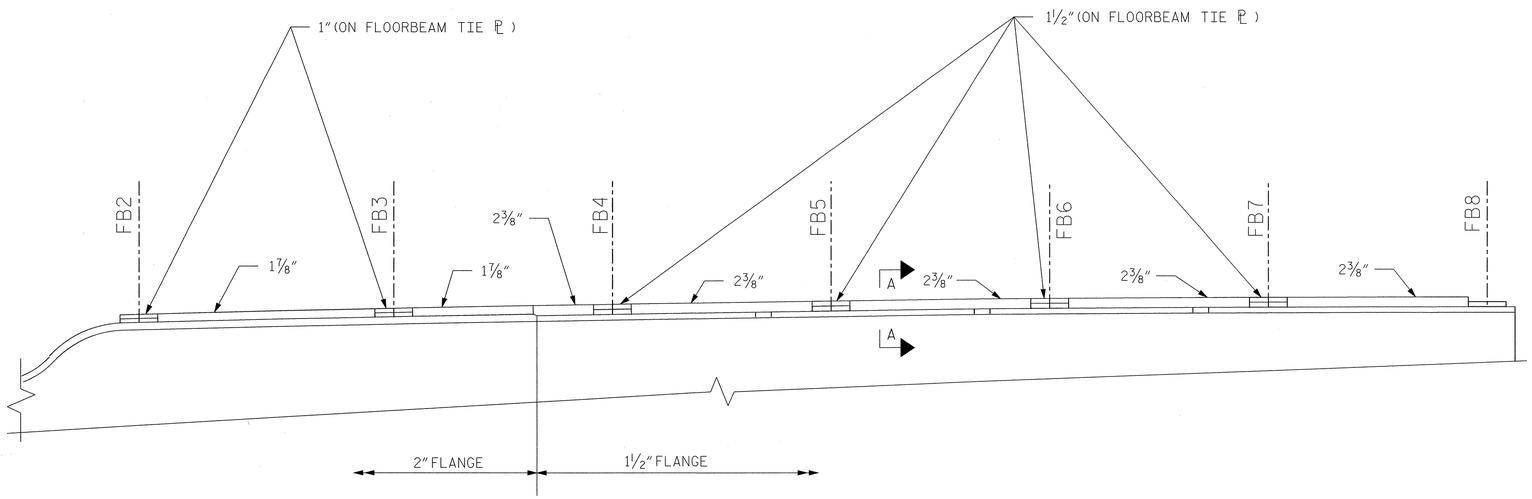

THICKNESS ALONG LENGTH OF BASCULE GIRDER

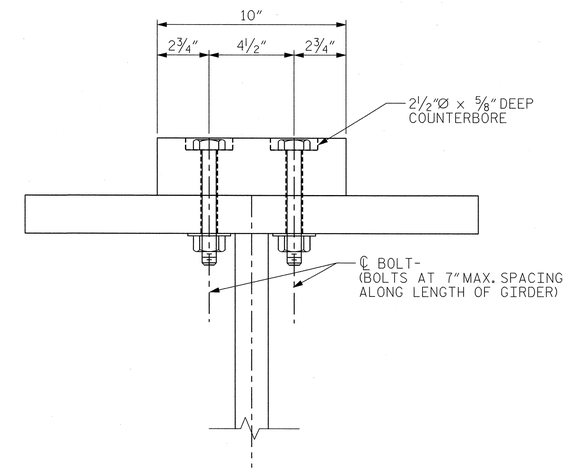

TYPICAL SECTION A-A

NOTES:

1. FOR GENERAL NOTES, SEE DWG. G-004.
2. ALL FLOORBEAMS AND STIFFENERS SHALL BE NORMAL TO GRADE UNLESS NOTED.
3. FOR FLANGE AND WEB SPLICE DETAILS, SEE DWG. S-065E.

EASTBOUND

PROJECT NO. U-4438

PASQUOTANK COUNTY

STATION: 15+25.75 -L1-

GIRDER-DECK BEARING BLOCK DETAILS

MODJESKI and MASTERS
Experience great bridges.
Mechanicsburg, PA NC License No. C-2979

NORTH CAROLINA PROFESSIONAL SEAL 025801 ENGINEER LANCE V. BORDEN 2/3/2011

STATE OF NORTH CAROLINA
DEPARTMENT OF TRANSPORTATION
RALEIGH

ELIZABETH CITY BRIDGE OVER
PASQUOTANK RIVER
BASCULE GIRDER
DETAILS - 2

REVISIONS						SHEET NO.
NO.	BY:	DATE:	NO.	BY:	DATE:	S-168
1			3			TOTAL SHEETS
2			4			454

DWG NUMBER	TOTAL DWGS
S-066E	94

DRAWN BY : CMM DATE : 01/11
CHECKED BY : JPS DATE : 01/11

2/3/2011
2:06:15 PM
K:\2986.02\CADD\Structural\dgn files\S-066E_U4438_SD_BGD2_01_E.dgn

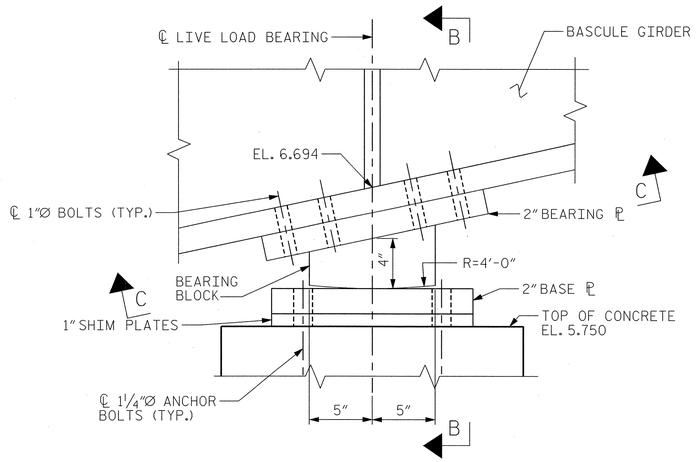

LIVE LOAD BEARING ELEVATION

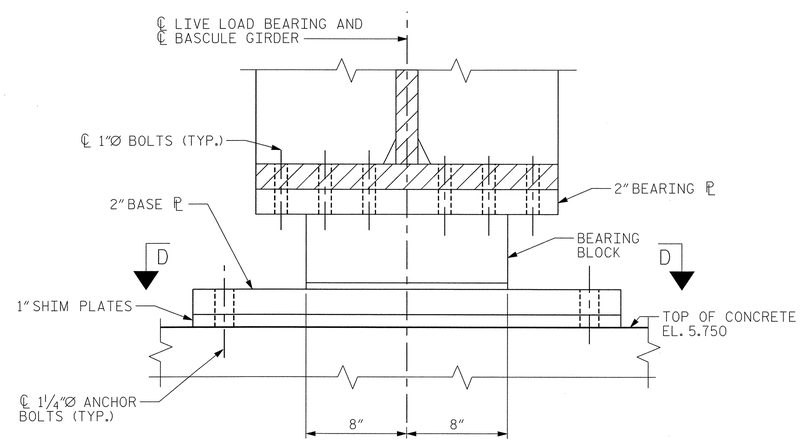

SECTION B-B

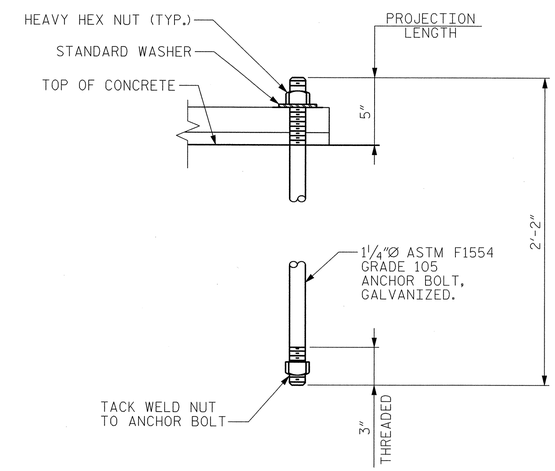

ANCHOR BOLT DETAIL

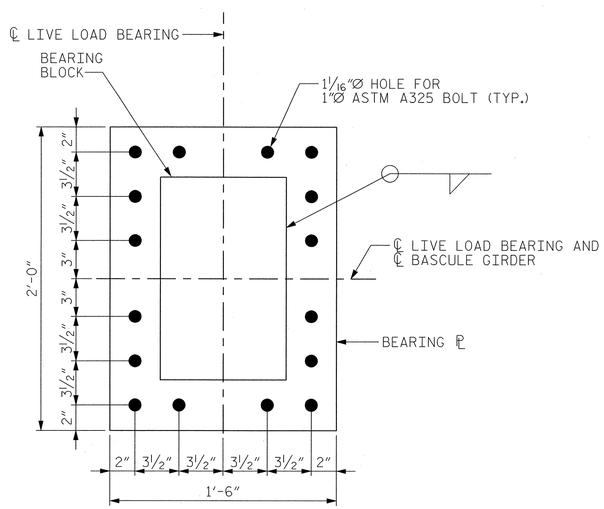

SECTION C-C

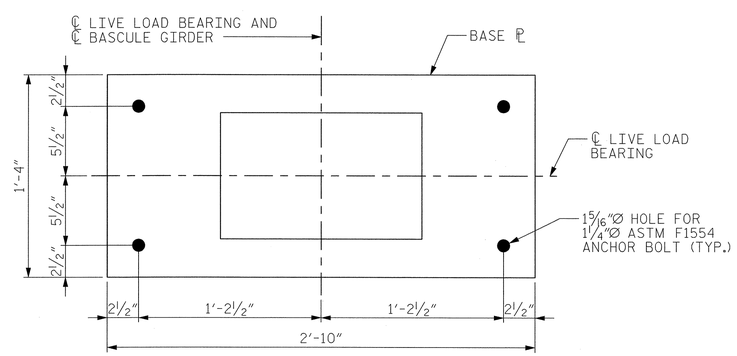

SECTION D-D

NOTES:

1. FOR GENERAL NOTES, SEE DWG. G-004.
2. FOR BASCULE GIRDER DETAILS, SEE DWGS. S-064E THRU S-066E.
3. FOR LIVE LOAD BEARING WALL DETAILS, SEE DWG. S-029E.
4. BOTTOM SURFACES OF ALL BEARINGS TO BE PLANED, STRAIGHTENED OR OTHERWISE TREATED TO OBTAIN A TRUE PLANE SURFACE AS INDICATED. PLATE THICKNESS SHOWN ARE FINISHED DIMENSIONS.
5. INSTALL LIVE LOAD BEARING ASSEMBLY AFTER ALL CONCRETE IN COUNTERWEIGHT, DECK, SIDEWALK AND PARAPET HAVE BEEN POURED.
6. PROVIDE SHIM PLATES OF THICKNESS INDICATED, PLUS ADDITIONAL SHIM PACKS MADE UP OF PLATES OF VARYING THICKNESS TO PROVIDE 1/16" VARIATIONS TO SHIM PLATE THICKNESS INDICATED. EACH SHIM PACK TOTAL THICKNESS SHALL EQUAL THE CORRESPONDING SHIM PLATE THICKNESS.
7. COST OF LIVE LOAD BEARING ASSEMBLY TO BE INCLUDED IN PAY ITEM "STRUCTURAL STEEL".

EASTBOUND

PROJECT NO. U-4438

PASQUOTANK COUNTY

STATION: 15+25.75 -L1-

STATE OF NORTH CAROLINA
DEPARTMENT OF TRANSPORTATION
RALEIGH

ELIZABETH CITY BRIDGE OVER
PASQUOTANK RIVER
BASCULE SPAN
LIVE LOAD BEARING

MODJESKI and MASTERS
Experience great bridges.
Mechanicsburg, PA NC License No. C-2979

NORTH CAROLINA PROFESSIONAL SEAL 025801 ENGINEER LANCE V. BORDEN 2/3/2011

DWG NUMBER	TOTAL DWGS
S-067E	94

REVISIONS						SHEET NO.
NO.	BY:	DATE:	NO.	BY:	DATE:	S-169
1			3			TOTAL SHEETS
2			4			454

DRAWN BY : CMM DATE : 01/11
CHECKED BY : JPS DATE : 01/11

2/3/2011
2:06:19 PM
K:\2986.02\CADD\Structural\dgn files\S-067E_U4438_SD_B5LB_01_E.dgn

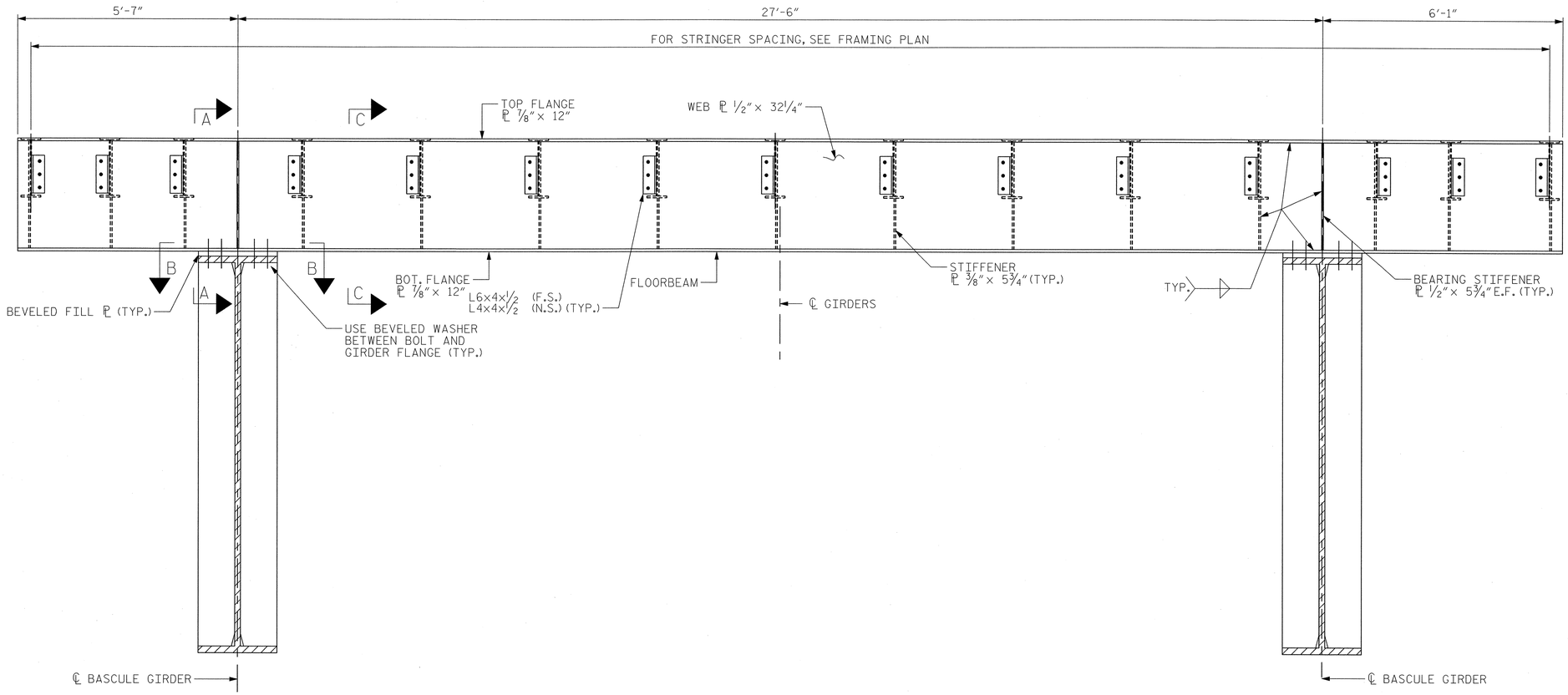

FLOORBEAM FB1 ELEVATION

(LOOKING AHEAD STATION)
(LATERAL BRACING NOT SHOWN FOR CLARITY)

NOTES:

1. FOR GENERAL NOTES, SEE DWG. G-004.
2. FOR STRINGER SPACING, SEE DWG. S-063E.
3. FOR STRINGER CONNECTION DETAILS, SEE SECTION L-L DWG. S-071E.
4. FOR BASCULE SPAN GIRDER DETAILS, SEE DWGS. S-064E THRU S-066E.
5. WEST LEAF SHOWN, EAST LEAF OPPOSITE HAND.
6. FOR LATERAL BRACING DETAILS, SEE DWGS. S-073E AND S-074E.

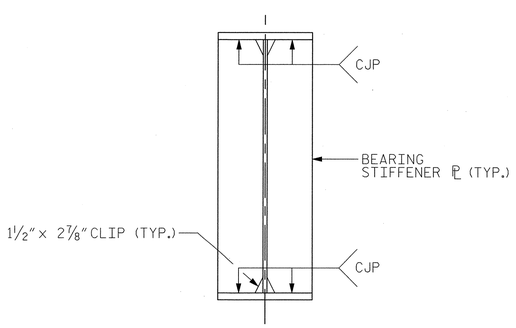

SECTION A-A

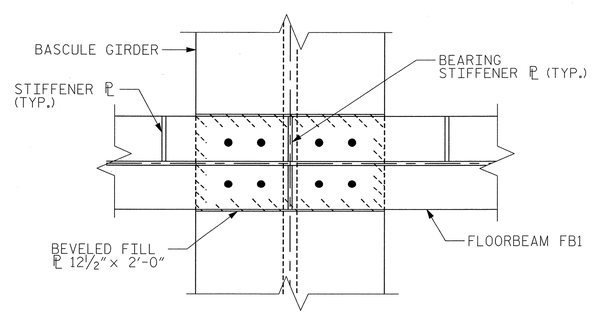

SECTION B-B

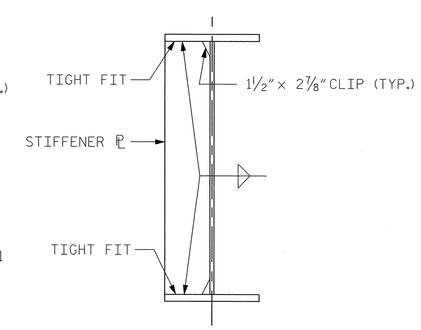

SECTION C-C

(STRINGER NOT SHOWN FOR CLARITY)

EASTBOUND

PROJECT NO. U-4438

PASQUOTANK COUNTY

STATION: 15+25.75 -L1-

STATE OF NORTH CAROLINA
DEPARTMENT OF TRANSPORTATION
RALEIGH

ELIZABETH CITY BRIDGE OVER
PASQUOTANK RIVER
BASCULE SPAN
CROSS SECTION AT FLBM 1

MODJESKI and MASTERS
Experience great bridges.
Mechanicsburg, PA NC License No. C-2979

NORTH CAROLINA PROFESSIONAL SEAL 025801 ENGINEER LANCE V. BORDEN 2/3/2011

REVISIONS						SHEET NO.
NO.	BY:	DATE:	NO.	BY:	DATE:	S-170
1			3			TOTAL SHEETS
2			4			454

DWG NUMBER	TOTAL DWGS
S-068E	94

DRAWN BY : CMM DATE : 01/11
CHECKED BY : JPS DATE : 01/11

2/3/2011
2:06:24 PM
K:\2986.02\CADD\Structural\dgn files\S-068E_U4438_SD_FLB1_01_E.dgn

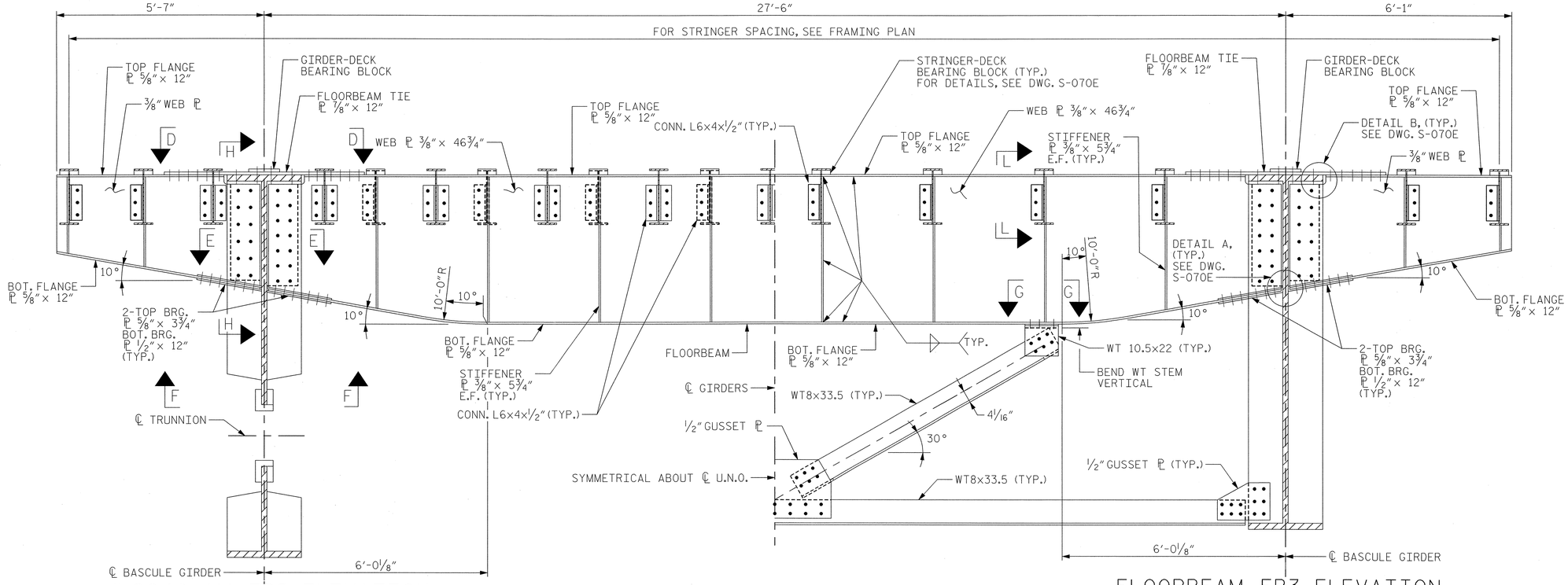

FLOORBEAM FB2 ELEVATION

(LOOKING AHEAD STATION)
(LATERAL BRACING NOT SHOWN FOR CLARITY)

FLOORBEAM FB3 ELEVATION

(LOOKING AHEAD STATION)
(LATERAL BRACING NOT SHOWN FOR CLARITY)

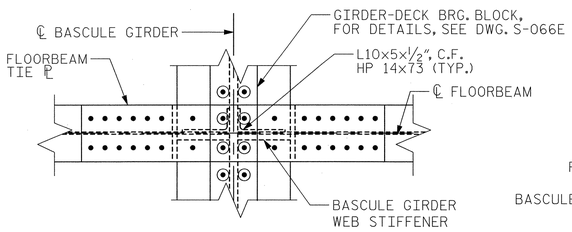

VIEW D-D

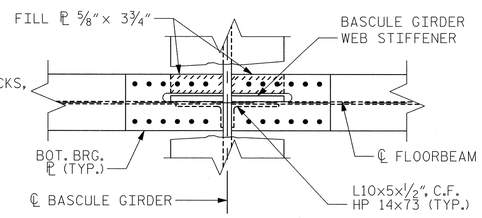

VIEW F-F

(FOR ADDITIONAL DETAILS, SEE FLOORBEAM BOTTOM FLANGE DETAILS, DWG. S-071E)

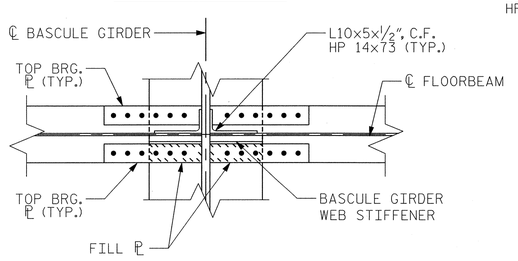

SECTION E-E

(FOR ADDITIONAL DETAILS, SEE FLOORBEAM BOTTOM FLANGE DETAILS, DWG. S-071E)

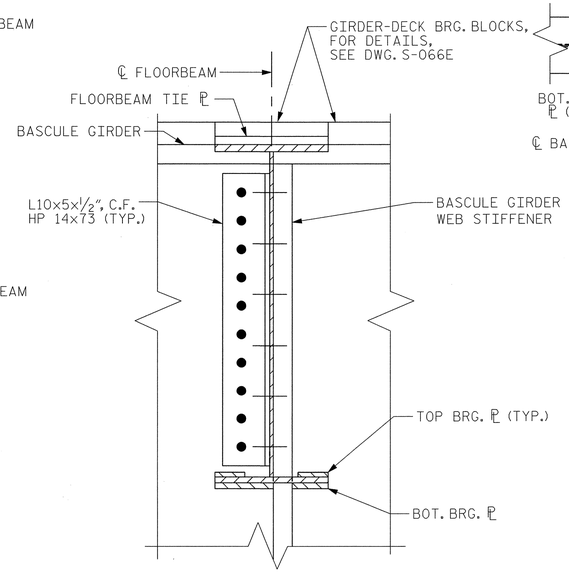

SECTION H-H

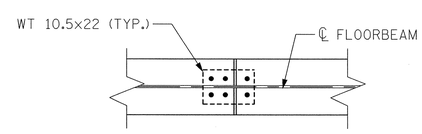

SECTION G-G

NOTES:

1. FOR GENERAL NOTES, SEE DWG. G-004.
2. FOR STRINGER SPACING, SEE DWG. S-063E.
3. FOR STRINGER CONNECTION DETAILS, SEE SECTION L-L ON DWG. S-071E.
4. FOR BASCULE SPAN GIRDER DETAILS, SEE DWGS. S-064E THRU S-066E.
5. WEST LEAF SHOWN, EAST LEAF OPPOSITE HAND.
6. FOR LATERAL BRACING DETAILS, SEE DWGS. S-073E AND S-074E.

EASTBOUND

PROJECT NO. U-4438

PASQUOTANK COUNTY

STATION: 15+25.75 -L1-

STATE OF NORTH CAROLINA
DEPARTMENT OF TRANSPORTATION
RALEIGH

ELIZABETH CITY BRIDGE OVER PASQUOTANK RIVER
BASCULE SPAN
CROSS SECT. AT FLBMS 2 & 3

MODJESKI and MASTERS
Experience great bridges.
Mechanicsburg, PA NC License No. C-2979

NORTH CAROLINA PROFESSIONAL SEAL 025801 ENGINEER LANCE V. BORDEN 2/3/2011

REVISIONS						SHEET NO.
NO.	BY:	DATE:	NO.	BY:	DATE:	S-171
1			3			TOTAL SHEETS
2			4			454

DWG NUMBER	TOTAL DWGS
S-069E	94

DRAWN BY : CMM DATE : 01/11
CHECKED BY : JPS DATE : 01/11

2/3/2011
2:06:28 PM
K:\2986.02\CADD\Structural\dgn files\S-069E_U4438_SD_FLB2_01_E.dgn

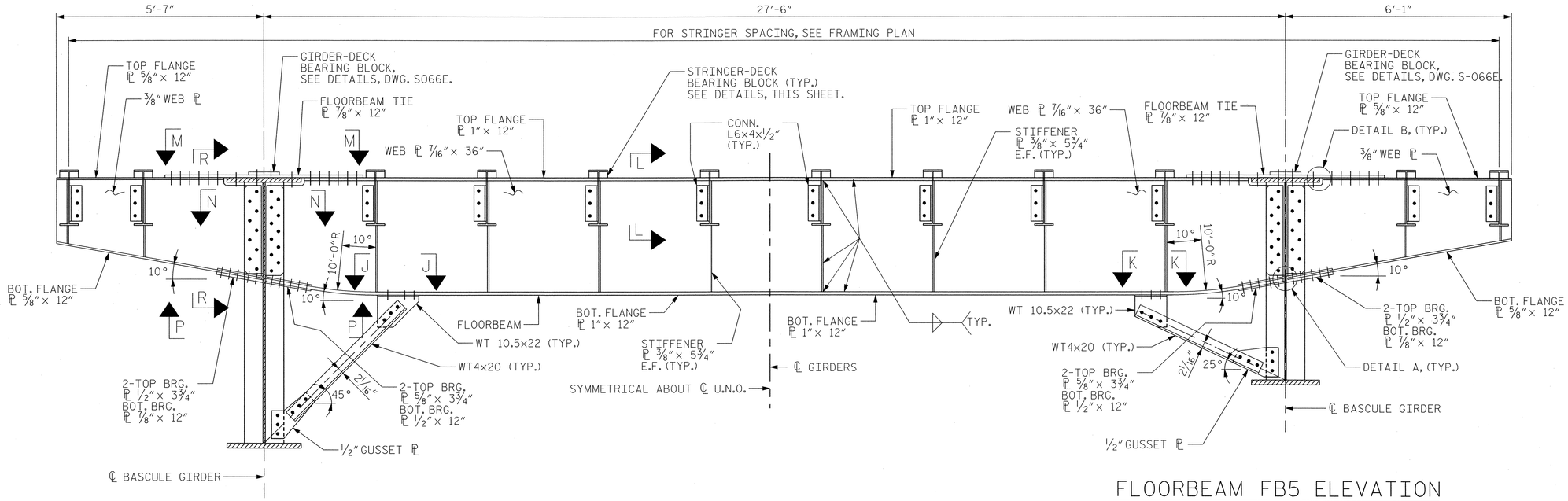

FLOORBEAM FB4 ELEVATION

(LOOKING AHEAD STATION)
(LATERAL BRACING NOT SHOWN FOR CLARITY)

FLOORBEAM FB5 ELEVATION

(LOOKING AHEAD STATION)
(LATERAL BRACING NOT SHOWN FOR CLARITY)

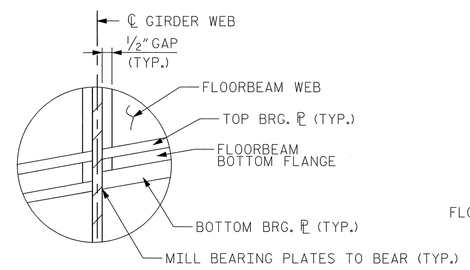

DETAIL A

NOTE: CONTRACTOR HAS THE OPTION OF EXTENDING AND SLOTTING FLOORBEAM BOTTOM FLANGES AND MILLING THEM TO BEAR IN LIEU OF USING TOP AND BOTTOM BEARING PLATES.

DETAIL B

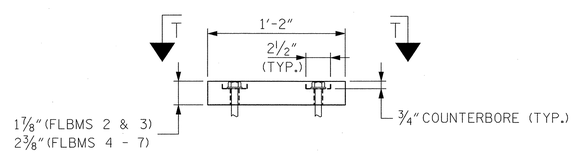

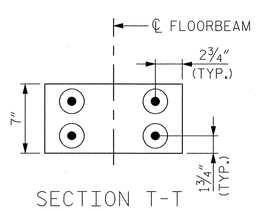

SECTION T-T

STRINGER-DECK BEARING BLOCK DETAILS

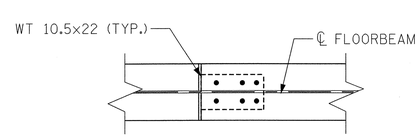

SECTION J-J

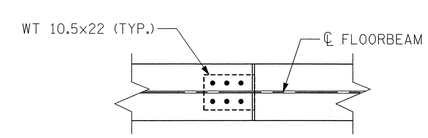

SECTION K-K

NOTES:

1. FOR GENERAL NOTES, SEE DWG. G-004.
2. FOR STRINGER SPACING, SEE DWG. S-063E.
3. FOR STRINGER CONNECTION DETAILS, SEE SECTION L-L ON DWG. S-071E.
4. FOR BASCULE SPAN GIRDER DETAILS, SEE DWGS. S-064E THRU S-066E.
5. FOR SECTIONS M-M, P-P, N-N & R-R, SEE DWG. S-072E.
6. WEST LEAF SHOWN, EAST LEAF OPPOSITE HAND.
7. FOR LATERAL BRACING DETAILS, SEE DWGS. S-073E AND S-074E.

EASTBOUND

PROJECT NO. U-4438

PASQUOTANK COUNTY

STATION: 15+25.75 -L1-

STATE OF NORTH CAROLINA
DEPARTMENT OF TRANSPORTATION
RALEIGH

ELIZABETH CITY BRIDGE OVER
PASQUOTANK RIVER
BASCULE SPAN
CROSS SECT. AT FLBMS 4 & 5

MODJESKI and MASTERS
Experience great bridges.
Mechanicsburg, PA NC License No. C-2979

NORTH CAROLINA PROFESSIONAL ENGINEER SEAL 025801 LANCE V. BORDEN 2/3/2011

DWG NUMBER	TOTAL DWGS
S-070E	94

REVISIONS						SHEET NO.
NO.	BY:	DATE:	NO.	BY:	DATE:	S-172
1			3			TOTAL SHEETS
2			4			454

DRAWN BY : CMM DATE : 01/11
CHECKED BY : JPS DATE : 01/11

2/3/2011
2:06:32 PM
K:\2986.02\CADD\Structural\dgn files\S-070E_U4438_SD_FLB3_01_E.dgn

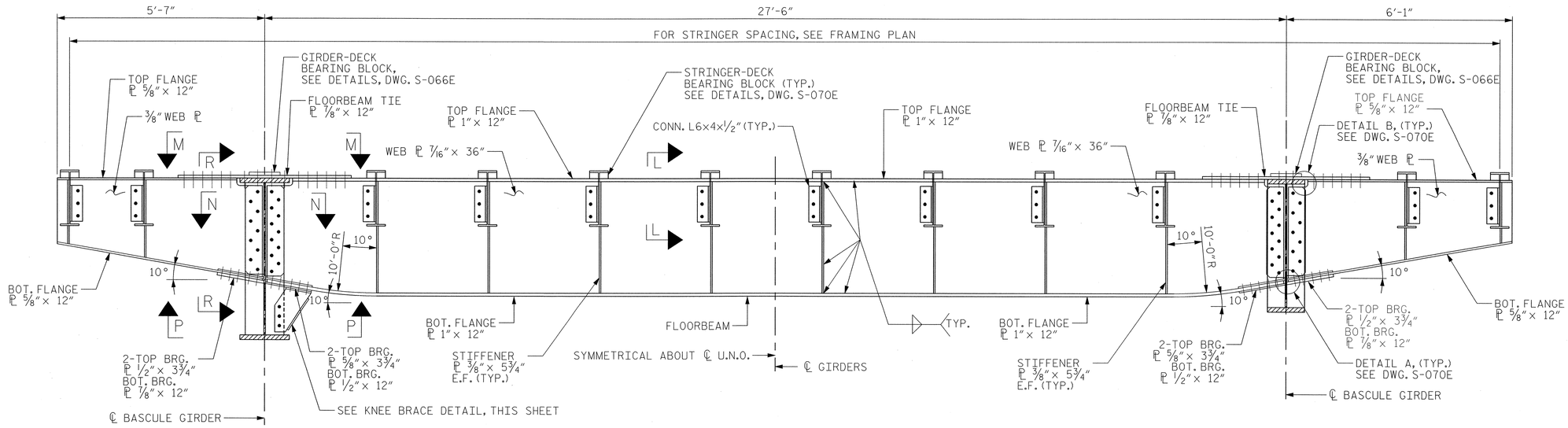

FLOORBEAM FB6 ELEVATION

(LOOKING AHEAD STATION)
(LATERAL BRACING NOT SHOWN FOR CLARITY)

FLOORBEAM FB7 ELEVATION

(LOOKING AHEAD STATION)
(LATERAL BRACING NOT SHOWN FOR CLARITY)

NOTES:

1. FOR GENERAL NOTES, SEE DWG. G-004.
2. FOR STRINGER SPACING, SEE DWG. S-063E.
3. FOR BASCULE SPAN GIRDER DETAILS, SEE DWG. S-064E THRU S-066E.
4. FOR SECTIONS M-M, N-N, P-P & R-R SEE DWG. S-072E.
5. WEST LEAF SHOWN, EAST LEAF OPPOSITE HAND.
6. FOR LATERAL BRACING DETAILS, SEE DWGS. S-073E AND S-074E.

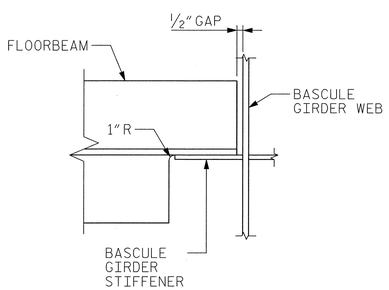

BOTTOM FLANGE COPE AT STIFFENER CONNECTION

(SOME CONNECTION DETAILS OMITTED FOR CLARITY)

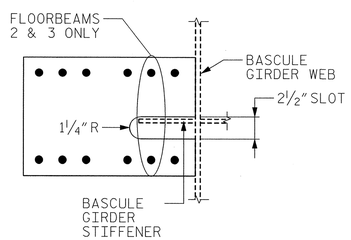

BOTTOM BEARING PLATE

FLOORBEAM BOTTOM FLANGE DETAILS

(TYPICAL, FLOORBEAMS 2-8)

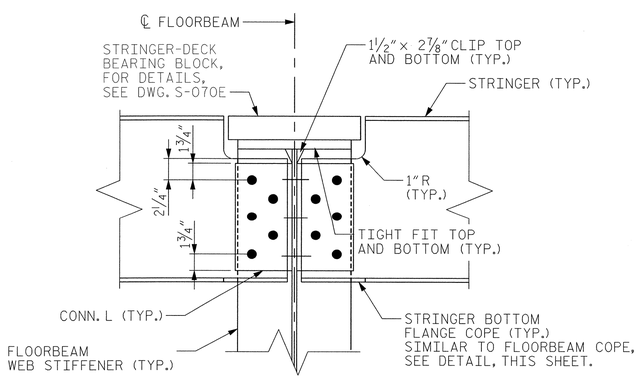

SECTION L-L

(TYPICAL CONNECTION SHOWN, OTHERS SIMILAR)

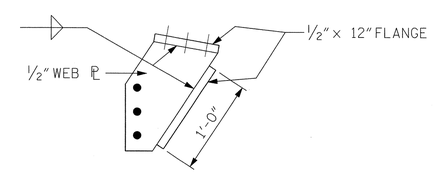

KNEE BRACE DETAIL

EASTBOUND

PROJECT NO. U-4438

PASQUOTANK COUNTY

STATION: 15+25.75 -L1-

STATE OF NORTH CAROLINA
DEPARTMENT OF TRANSPORTATION
RALEIGH

ELIZABETH CITY BRIDGE OVER PASQUOTANK RIVER
BASCULE SPAN
CROSS SECT. AT FLBMS 6 & 7

MODJESKI and MASTERS
Experience great bridges.
Mechanicsburg, PA NC License No. C-2979

NORTH CAROLINA PROFESSIONAL SEAL 025801 ENGINEER LANCE V. BORDEN 2/3/2011

REVISIONS						SHEET NO.
NO.	BY:	DATE:	NO.	BY:	DATE:	S-173
1			3			TOTAL SHEETS
2			4			454

DWG NUMBER	TOTAL DWGS
S-071E	94

DRAWN BY : CMM DATE : 01/11
CHECKED BY : JPS DATE : 01/11

2/3/2011
2:06:36 PM
K:\2986.02\CADD\Structural\dgn files\S-071E_U4438_SD_FLB4_01_E.dgn

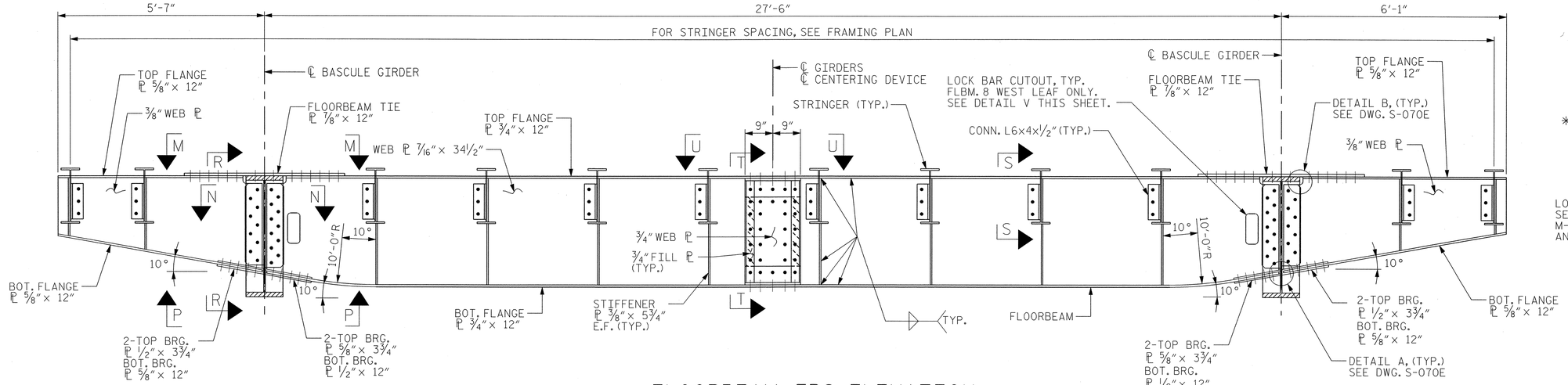

FLOORBEAM FB8 ELEVATION

(LOOKING AHEAD STATION)
(LATERAL BRACING NOT SHOWN FOR CLARITY)

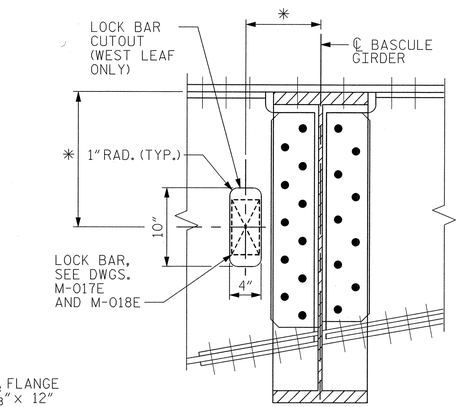

DETAIL V

* - FOR LOCATION OF CENTER LOCK, SEE DWGS. M-017E AND M-018E

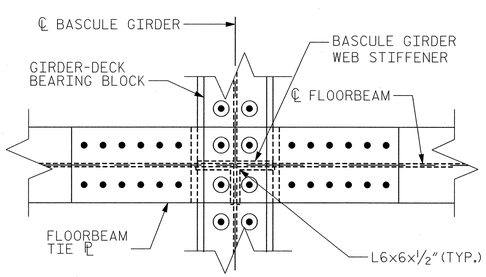

VIEW M-M

(FLBM 7 SHOWN, OTHERS SIMILAR)

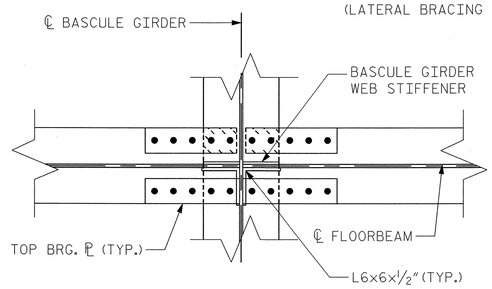

SECTION N-N

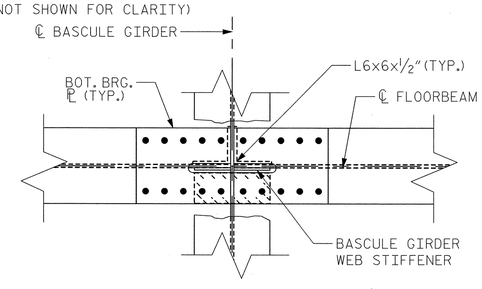

VIEW P-P

(BOTTOM FLANGE OF BASCULE GIRDER NOT SHOWN FOR CLARITY)

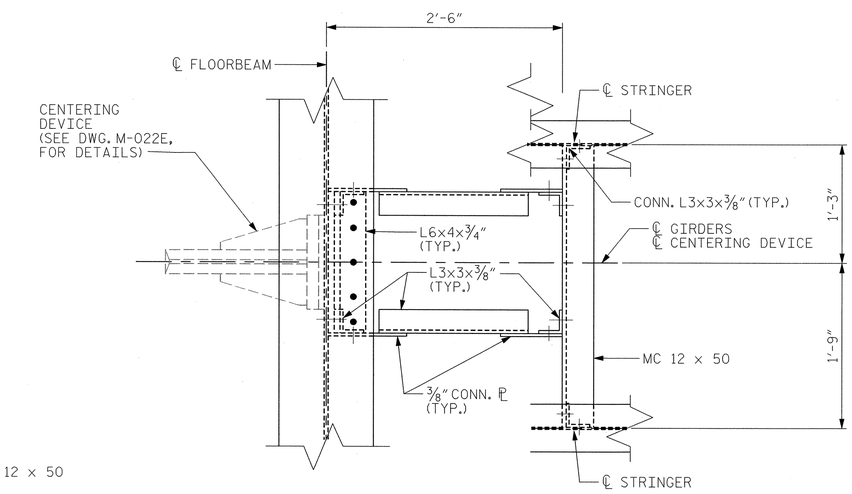

VIEW U-U

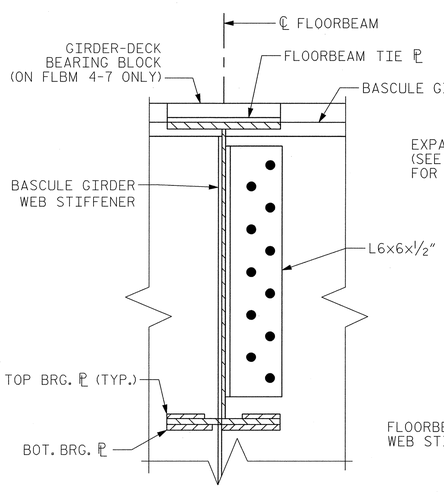

SECTION R-R

(FLBM 6 SHOWN, OTHERS SIMILAR)

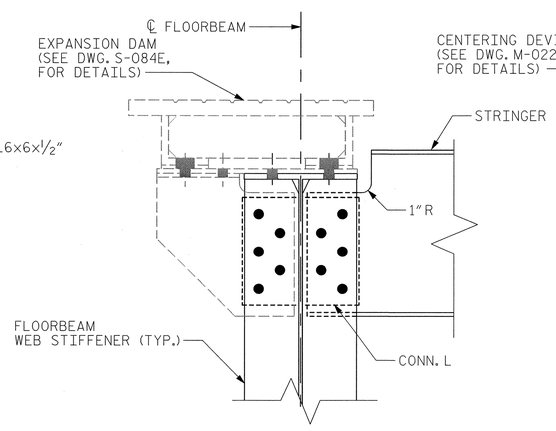

SECTION S-S

(FOR ADDITIONAL STRINGER CONNECTION DETAILS, SEE SECTION L-L ON DWG. S-071E)

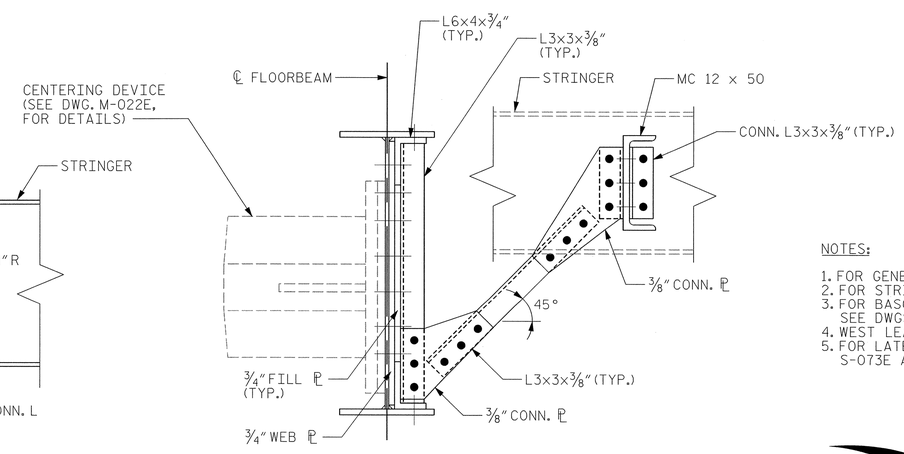

SECTION T-T

NOTES:

1. FOR GENERAL NOTES, SEE DWG. G-004.
2. FOR STRINGER SPACING, SEE DWG. S-063E.
3. FOR BASCULE SPAN GIRDER DETAILS, SEE DWGS. S-064E THRU S-066E.
4. WEST LEAF SHOWN, EAST LEAF OPPOSITE HAND.
5. FOR LATERAL BRACING DETAILS, SEE DWGS. S-073E AND S-074E.

EASTBOUND

PROJECT NO. U-4438

PASQUOTANK COUNTY

STATION: 15+25.75 -L1-

STATE OF NORTH CAROLINA
DEPARTMENT OF TRANSPORTATION
RALEIGH

ELIZABETH CITY BRIDGE OVER
PASQUOTANK RIVER
BASCULE SPAN
CROSS SECTION AT FLBM 8

MODJESKI and MASTERS
Experience great bridges.
Mechanicsburg, PA NC License No. C-2979

NORTH CAROLINA PROFESSIONAL SEAL 025801 ENGINEER LANCE V. BORDEN 2/3/2011

DRAWN BY : CMM	DATE : 01/11
CHECKED BY : JPS	DATE : 01/11

DWG NUMBER	TOTAL DWGS
S-072E	94

REVISIONS						SHEET NO.
NO.	BY:	DATE:	NO.	BY:	DATE:	S-174
1			3			TOTAL SHEETS
2			4			454

2/3/2011
2:06:40 PM
K:\2986.02\CADD\Structural\dgn files\S-072E_U4438_SD_FLB5_01_E.dgn

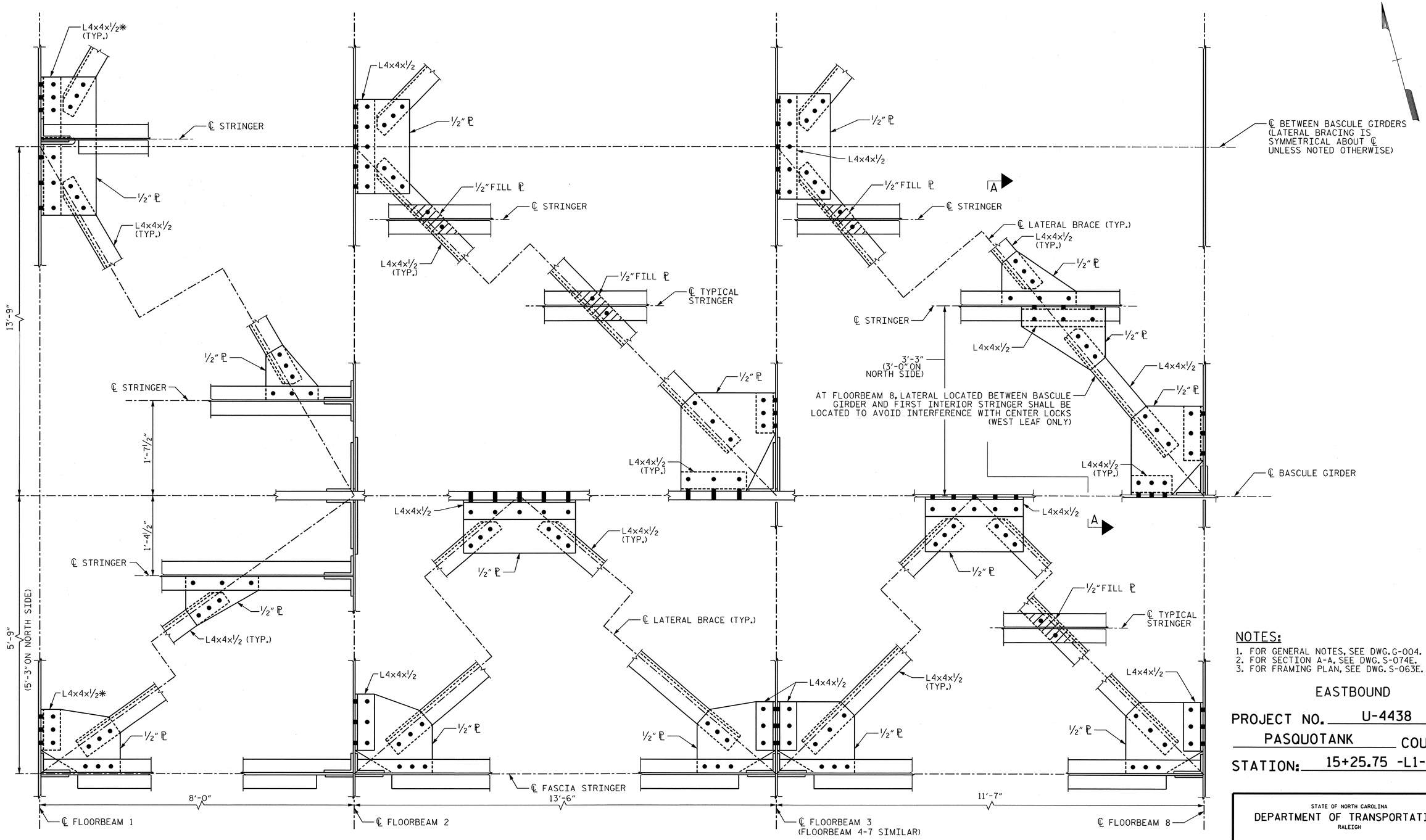

LATERAL BRACING DETAILS

(NOT ALL FLOORBEAM-GIRDER AND STRINGER-FLOORBEAM CONNECTION DETAILS SHOWN FOR CLARITY)
(FLOORBEAM AND GIRDER FLANGES NOT SHOWN FOR CLARITY)

* BEND THESE CLIP ANGLES TO MATCH THE GRADE. SEE DETAIL 1 ON DWG. S-074E.

NOTES:

1. FOR GENERAL NOTES, SEE DWG. G-004.
2. FOR SECTION A-A, SEE DWG. S-074E.
3. FOR FRAMING PLAN, SEE DWG. S-063E.

EASTBOUND

PROJECT NO. U-4438

PASQUOTANK COUNTY

STATION: 15+25.75 -L1-

STATE OF NORTH CAROLINA
DEPARTMENT OF TRANSPORTATION
RALEIGH

ELIZABETH CITY BRIDGE OVER PASQUOTANK RIVER
BASCULE SPAN
LATERAL BRACING DETAILS - 1

MODJESKI and MASTERS
Experience great bridges.
Mechanicsburg, PA NC License No. C-2979

NORTH CAROLINA PROFESSIONAL SEAL 025801 ENGINEER LANCE V. BORDEN 2/3/2011

DWG NUMBER	TOTAL DWGS
S-073E	94

REVISIONS								SHEET NO.
NO.	BY:	DATE:	NO.	BY:	DATE:			S-175
1			3					TOTAL SHEETS
2			4					454

DRAWN BY : DMW DATE : 01/11
CHECKED BY : HNB DATE : 01/11

2/1/2011
11:44:22 AM
P:\2986.02 NCDOT Elizabeth City\CADD\Structural\S-073E_U4438_SD_LB1_01_E.DGN

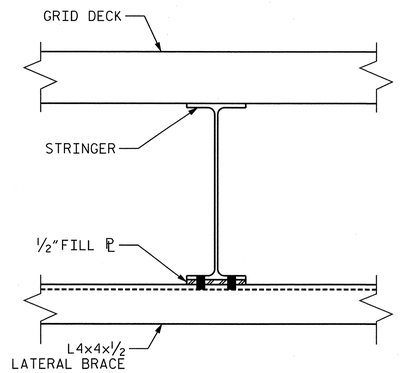

SECTION AT TYPICAL STRINGER CONNECTION

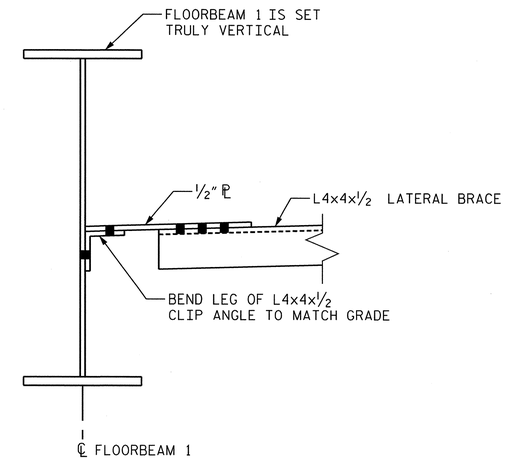

DETAIL 1

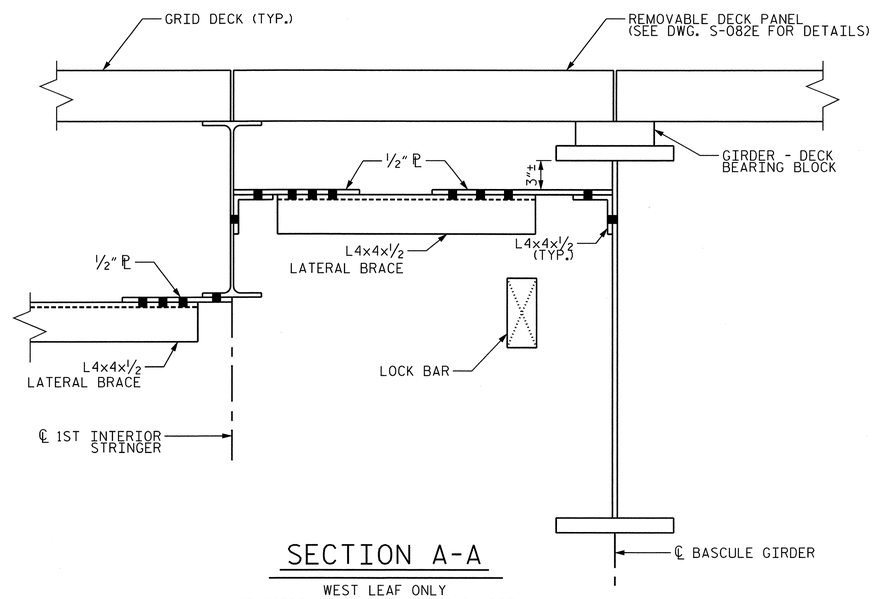

SECTION A-A

WEST LEAF ONLY
(FLOORBEAM NOT SHOWN FOR CLARITY)
(FOR CENTER LOCK DETAILS, SEE DWGS. M-017E & M-018E)

NOTES:

1. FOR GENERAL NOTES, SEE DWG. G-004.
2. FOR LOCATION OF SECTION A-A, SEE DWG. S-073E.

EASTBOUND

PROJECT NO. U-4438

PASQUOTANK COUNTY

STATION: 15+25.75 -L1-

STATE OF NORTH CAROLINA
DEPARTMENT OF TRANSPORTATION
RALEIGH

ELIZABETH CITY BRIDGE OVER
PASQUOTANK RIVER
BASCULE SPAN
LATERAL BRACING DETAILS - 2

MODJESKI and MASTERS
Experience great bridges.
Mechanicsburg, PA NC License No. C-2979

NORTH CAROLINA PROFESSIONAL SEAL 025801 ENGINEER LANCE V. BORDEN 2/3/2011

DWG NUMBER	TOTAL DWGS
S-074E	94

REVISIONS						SHEET NO.
NO.	BY:	DATE:	NO.	BY:	DATE:	S-176
1			3			TOTAL SHEETS
2			4			454

DRAWN BY : DMW DATE : 01/11
CHECKED BY : HNB DATE : 01/11

2/1/2011
11:45:52 AM
P:\2986.02 NCDOT Elizabeth City\CADD\Structural\S-074E_U4438_SD_LB2_01_E.DGN

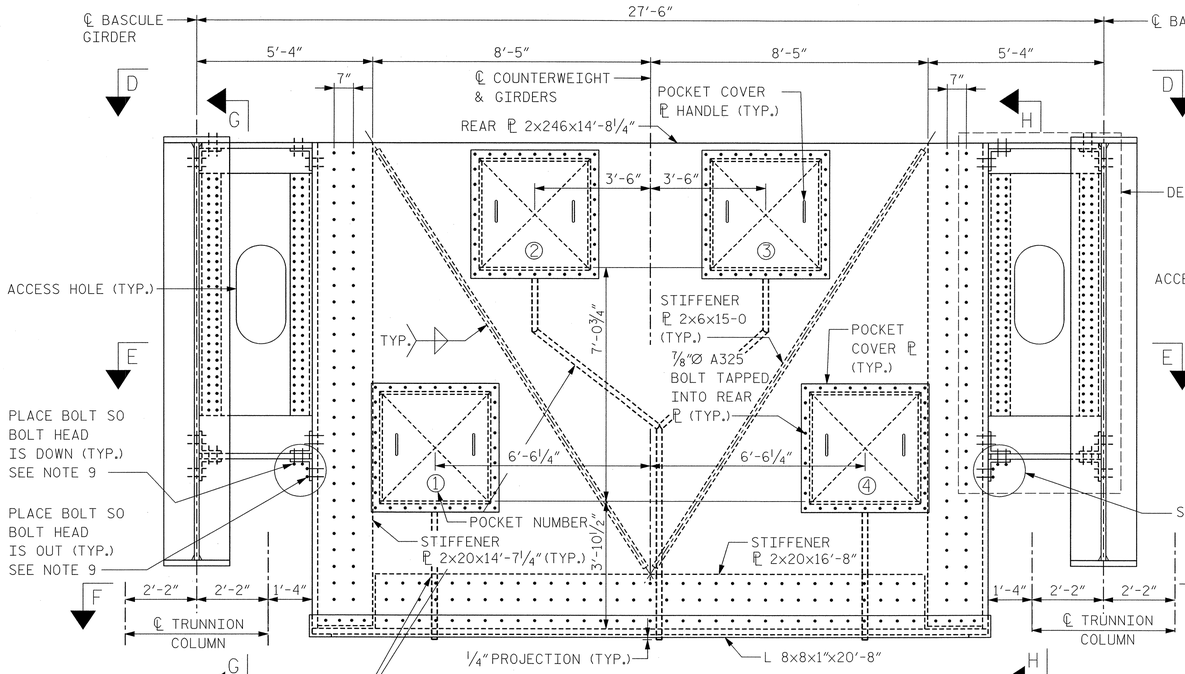

COUNTERWEIGHT - SECTION A-A

(1½" TIE ROD NOT SHOWN FOR CLARITY)

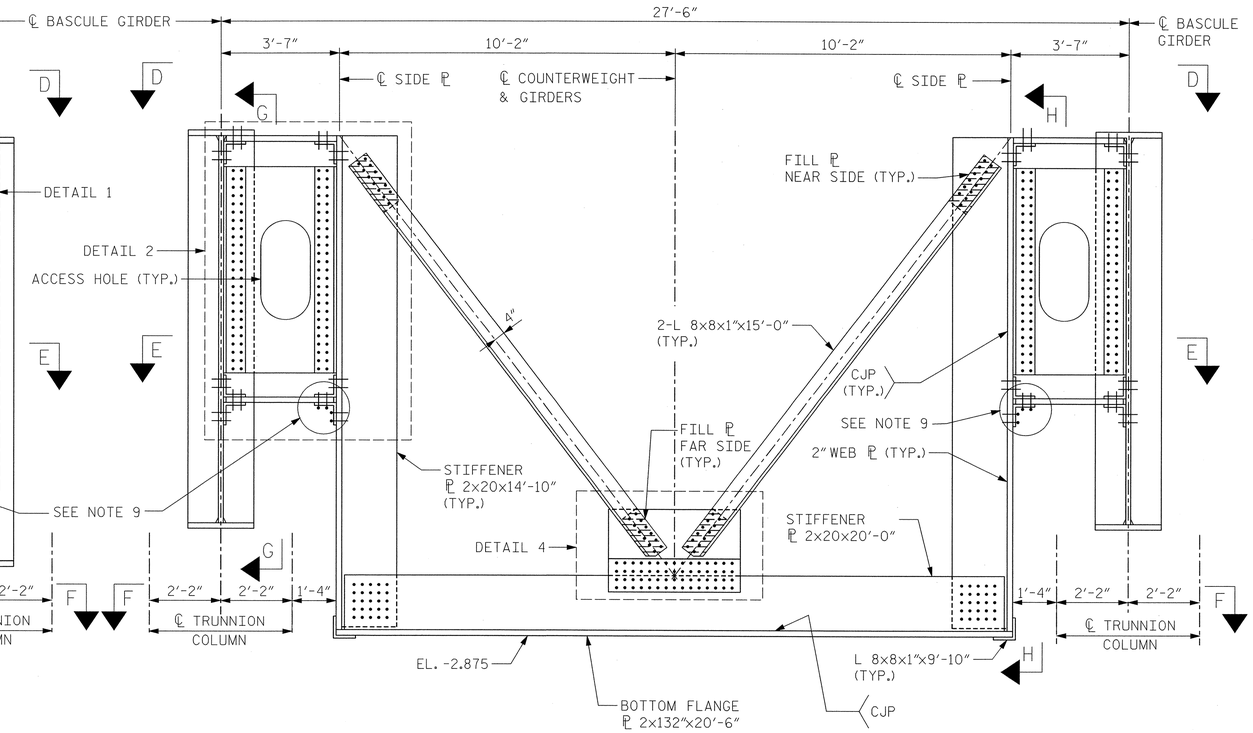

COUNTERWEIGHT - SECTION C-C

(1½" TIE ROD NOT SHOWN FOR CLARITY)

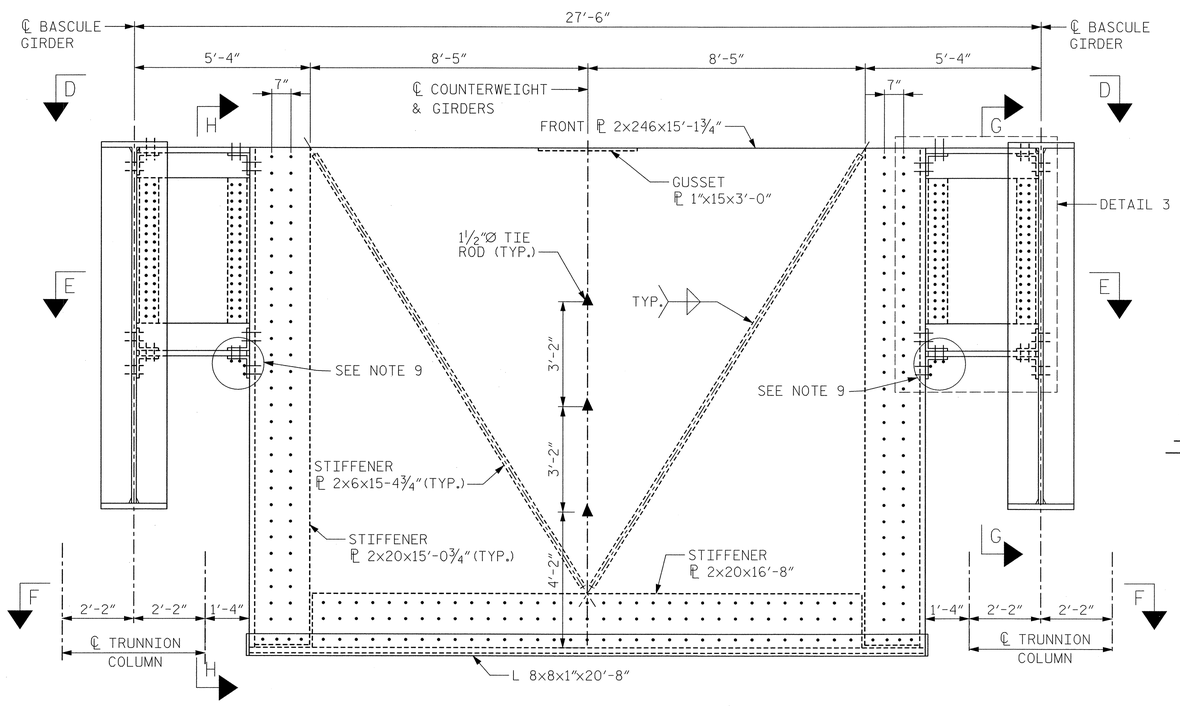

COUNTERWEIGHT - SECTION B-B

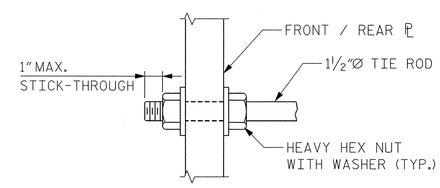

TIE ROD CONNECTION DETAIL

NOTES:

1. FOR GENERAL NOTES, SEE DWG. G-004.
2. FOR COUNTERWEIGHT NOTES, SEE DWG. S-078E.
3. FOR LOCATION OF SECTION A-A, B-B AND C-C, SEE DWG. S.076E.
4. FOR DETAILS 1 THRU 4, SEE DWG. S-077E.
5. FOR SECTIONS D-D, E-E & F-F, SEE DWG. S-076E.
6. FOR SECTIONS G-G & H-H, SEE DWG. S-077E.
7. FOR POCKET DETAILS, SEE DWG. S-078E.
8. ▲ DENOTES 1½"Ø TIE ROD.
9. •—DENOTES BOLT HEAD LOCATION WITH WASHER UNDER NUT (TURNED ELEMENT) FOR REQUIRED CLEARANCE IN THIS AREA.
10. WEST LEAF SHOWN, EAST LEAF OPPOSITE HAND.

EASTBOUND

PROJECT NO. U-4438

PASQUOTANK COUNTY

STATION: 15+25.75 -L1-

STATE OF NORTH CAROLINA
DEPARTMENT OF TRANSPORTATION
RALEIGH

ELIZABETH CITY BRIDGE OVER PASQUOTANK RIVER
BASCULE SPAN
COUNTERWEIGHT DETAILS - 1

MODJESKI and MASTERS
Experience great bridges.
Mechanicsburg, PA NC License No. C-2979

NORTH CAROLINA PROFESSIONAL SEAL 025801 ENGINEER LANCE V. BORDEN 2/3/2011

DRAWN BY : CMM	DATE : 01/11
CHECKED BY : JPS	DATE : 01/11

DWG NUMBER	TOTAL DWGS
S-075E	94

REVISIONS						SHEET NO.
NO.	BY:	DATE:	NO.	BY:	DATE:	S-177
1			3			TOTAL SHEETS
2			4			454

2/3/2011
2:06:47 PM
K:\2986.02\CADD\Structural\dgn files\S-075E_U4438_SD_CWD1_01_E.dgn

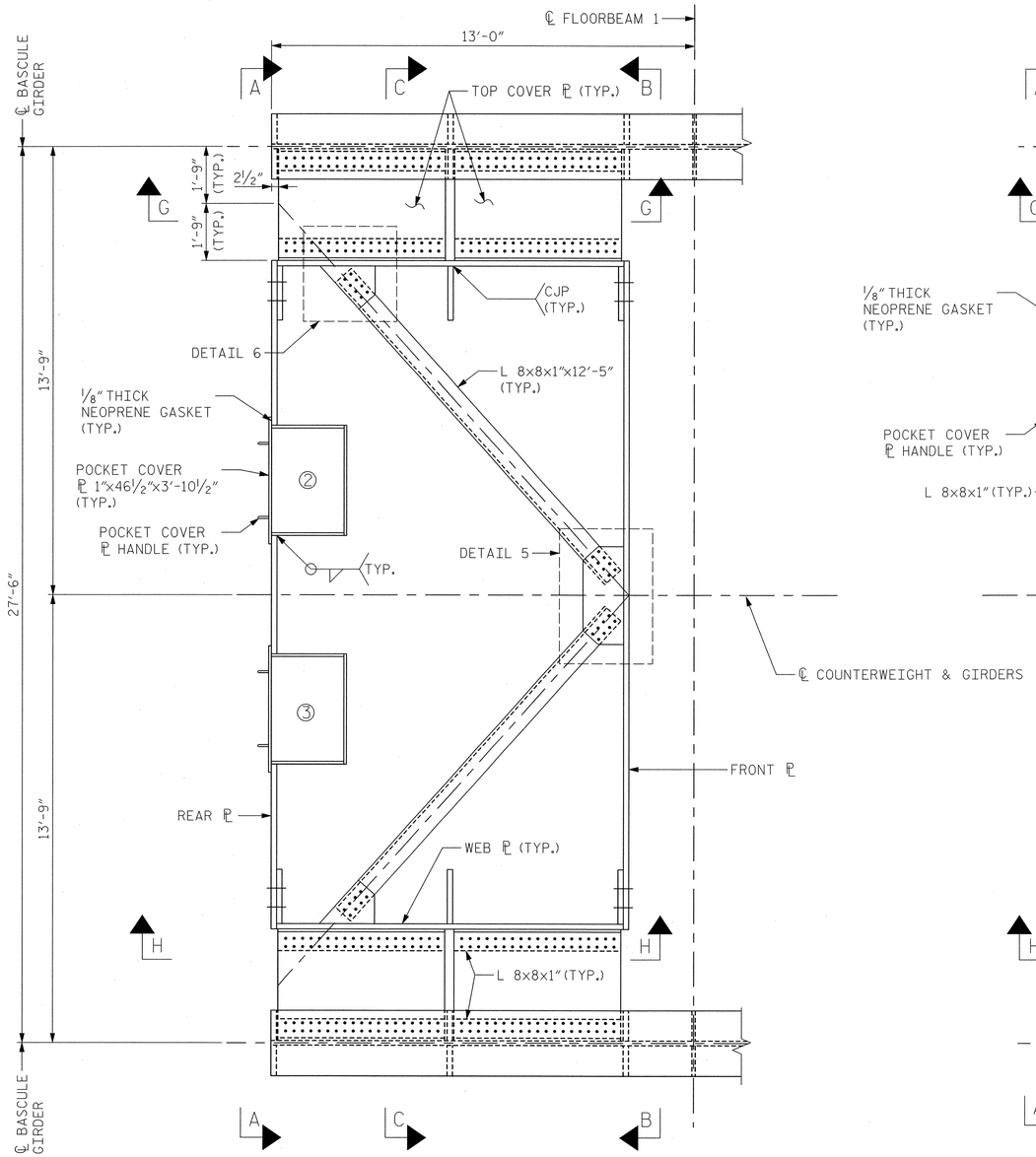

COUNTERWEIGHT - SECTION D-D

(DIAPHRAGM NOT SHOWN FOR CLARITY)
(STIFFENERS ON FRONT AND REAR ℙ NOT SHOWN FOR CLARITY)

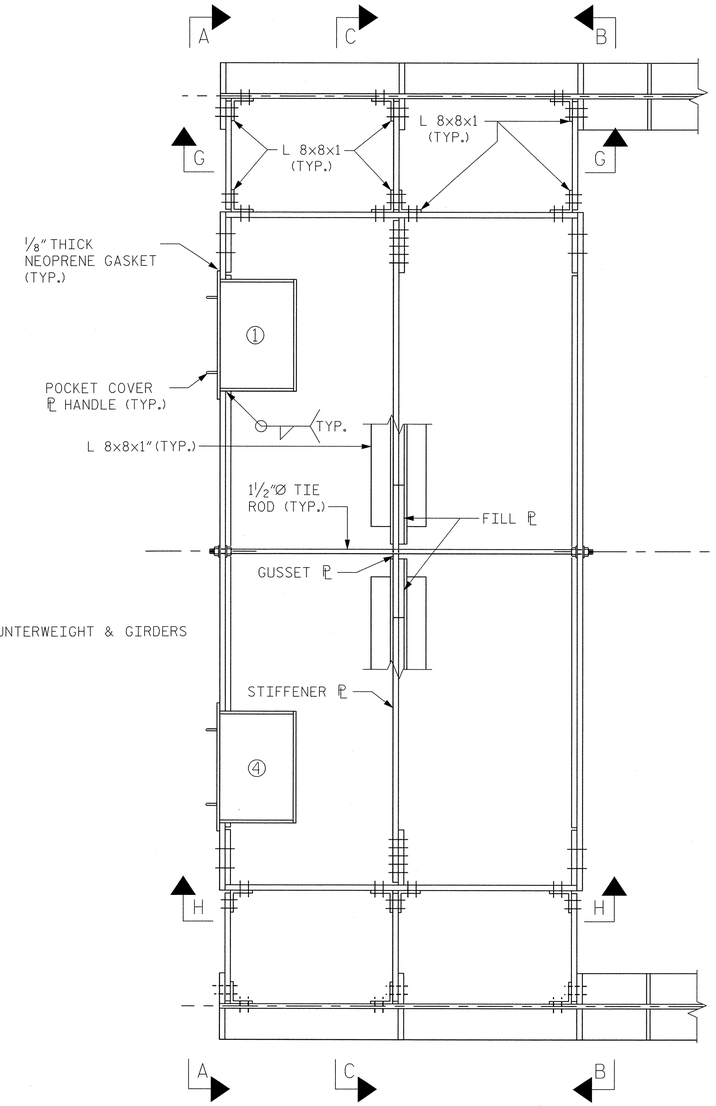

COUNTERWEIGHT - SECTION E-E

(DIAPHRAGM NOT SHOWN FOR CLARITY)
(STIFFENERS ON FRONT AND REAR ℙ NOT SHOWN FOR CLARITY)

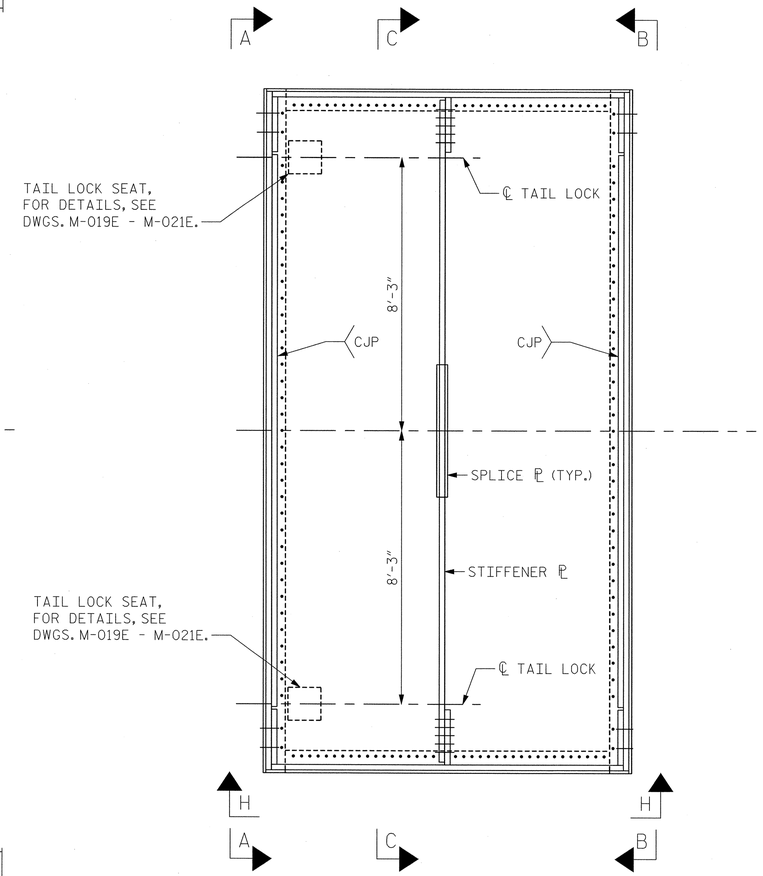

COUNTERWEIGHT - SECTION F-F

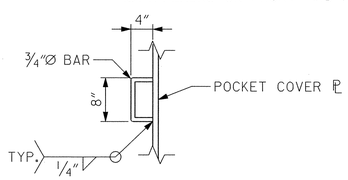

POCKET COVER PLATE HANDLE DETAIL

NOTES:

1. FOR GENERAL NOTES, SEE DWG. G-004.
2. FOR COUNTERWEIGHT NOTES, SEE DWG. S-078E.
3. FOR DETAILS 5 AND 6, SEE DWG. S-077E.
4. FOR SECTIONS A-A, B-B & C-C, SEE DWG. S-075E.
5. FOR SECTIONS G-G & H-H, SEE DWG. S-077E.
6. FOR POCKET DETAILS, SEE DWG. S-078E.
7. WEST LEAF SHOWN, EAST LEAF OPPOSITE HAND.

EASTBOUND
PROJECT NO. U-4438
PASQUOTANK COUNTY
STATION: 15+25.75 -L1-

STATE OF NORTH CAROLINA
DEPARTMENT OF TRANSPORTATION
RALEIGH

ELIZABETH CITY BRIDGE OVER
PASQUOTANK RIVER
BASCULE SPAN
COUNTERWEIGHT DETAILS - 2

MODJESKI and MASTERS
Experience great bridges.
Mechanicsburg, PA NC License No. C-2979

NORTH CAROLINA PROFESSIONAL SEAL 025801 ENGINEER LANCE V. BORDEN 2/3/2011

DWG NUMBER	TOTAL DWGS
S-076E	94

REVISIONS						SHEET NO.
NO.	BY:	DATE:	NO.	BY:	DATE:	S-178
1			3			TOTAL SHEETS
2			4			454

DRAWN BY : CMM DATE : 01/11
CHECKED BY : JPS DATE : 01/11

2/3/2011
2:06:52 PM
K:\2986.02\CADD\Structural\dgn files\S-076E_U4438_SD_CWD2_01_E.dgn

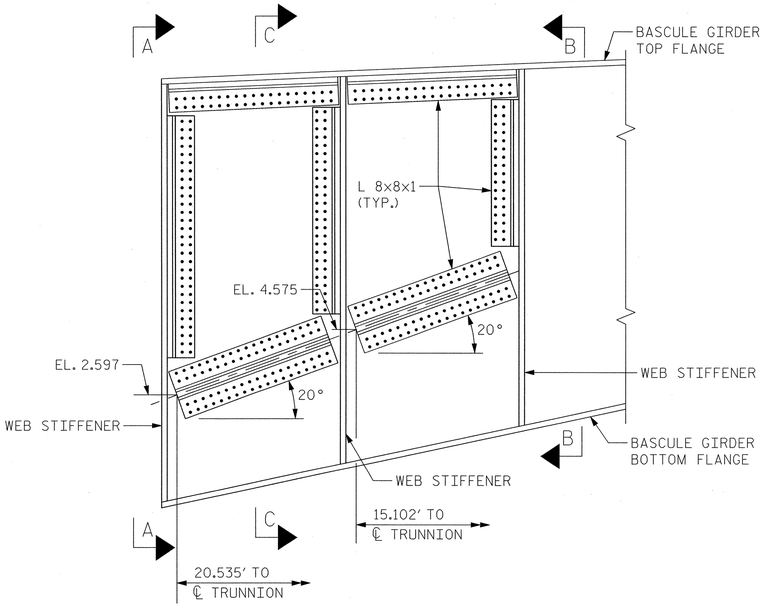

SECTION G-G

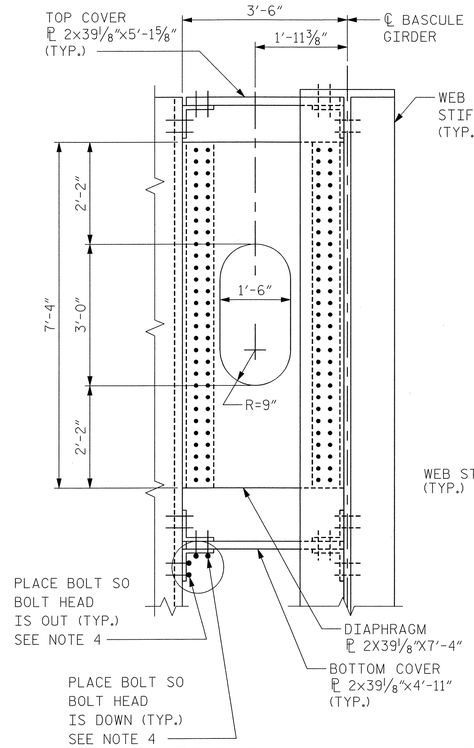

DETAIL 1

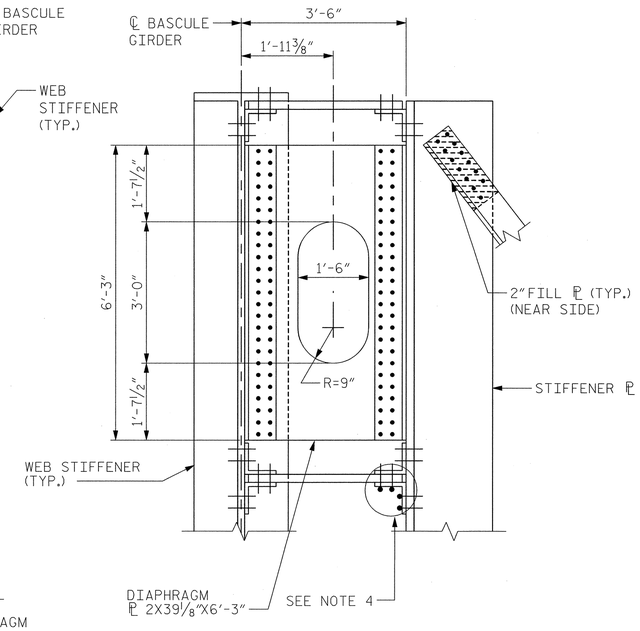

DETAIL 2

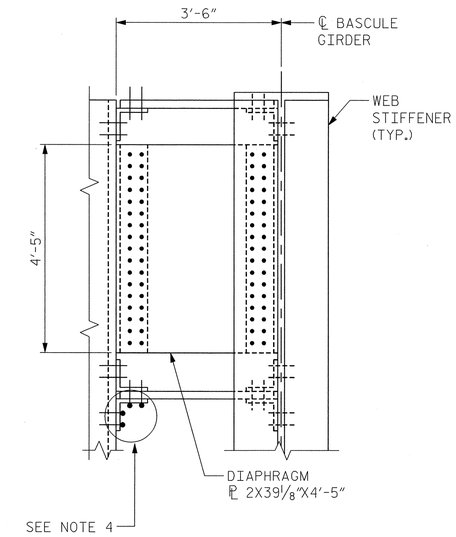

DETAIL 3

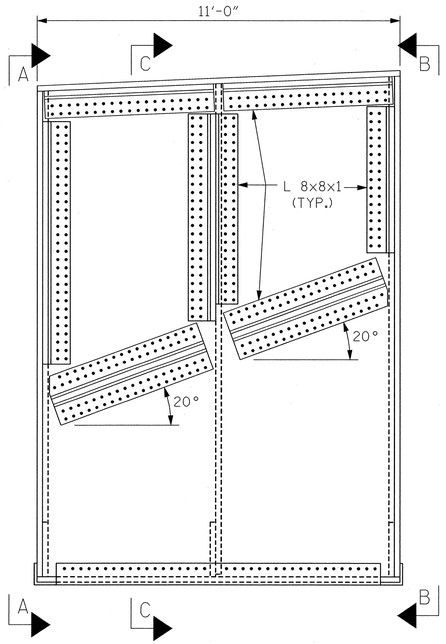

SECTION H-H

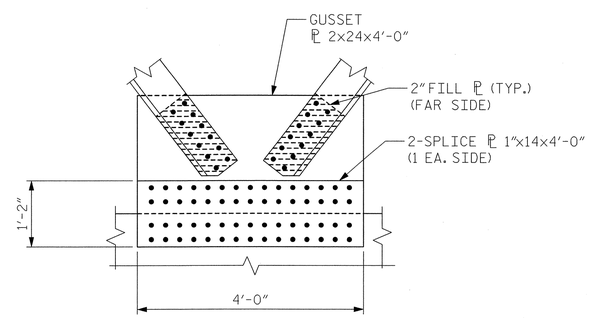

DETAIL 4

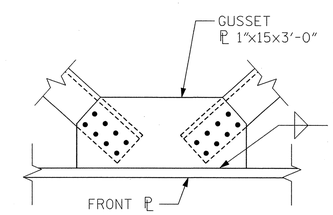

DETAIL 5

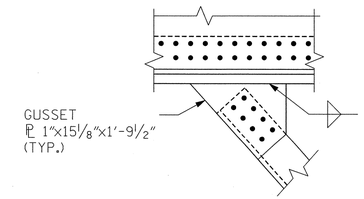

DETAIL 6

NOTES:

1. FOR GENERAL NOTES, SEE DWG. G-004.
2. FOR COUNTERWEIGHT NOTES, SEE DWG. S-078E.
3. FOR SECTIONS A-A, B-B & C-C, SEE DWG. S-075E.
4. •—DENOTES BOLT HEAD LOCATION WITH WASHER UNDER NUT (TURNED ELEMENT) FOR REQUIRED CLEARANCE IN THIS AREA.
5. WEST LEAF SHOWN, EAST LEAF OPPOSITE HAND.

EASTBOUND

PROJECT NO. U-4438

PASQUOTANK COUNTY

STATION: 15+25.75 -L1-

STATE OF NORTH CAROLINA
DEPARTMENT OF TRANSPORTATION
RALEIGH

ELIZABETH CITY BRIDGE OVER PASQUOTANK RIVER
BASCULE SPAN
COUNTERWEIGHT DETAILS - 3

MODJESKI and MASTERS
Experience great bridges.
Mechanicsburg, PA NC License No. C-2979

NORTH CAROLINA PROFESSIONAL SEAL 025801 ENGINEER LANCE V. BORDEN 2/3/2011

DWG NUMBER	TOTAL DWGS
S-077E	94

REVISIONS								SHEET NO.
NO.	BY:	DATE:	NO.	BY:	DATE:			S-179
1			3					TOTAL SHEETS
2			4					454

DRAWN BY : CMM DATE : 01/11
CHECKED BY : JPS DATE : 01/11

2/3/2011
2:06:56 PM
K:\2986.02\CADD\Structural\dgn files\S-077E_U4438_SD_CWD3_01_E.dgn

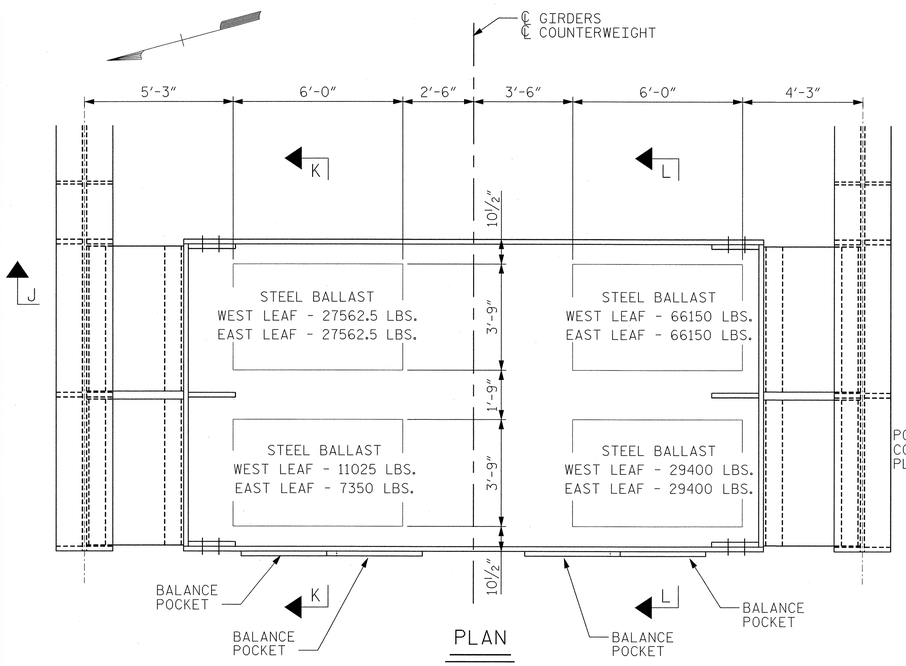

PLAN

(WEST LEAF SHOWN, EAST LEAF OPPOSITE HAND)

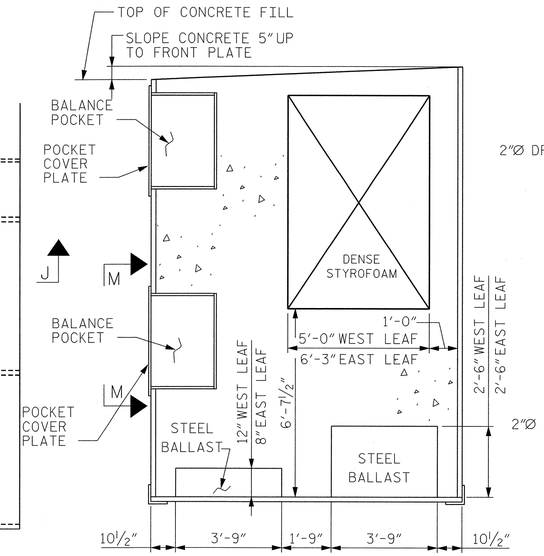

SECTION K-K

(WEST LEAF SHOWN, EAST LEAF OPPOSITE HAND)

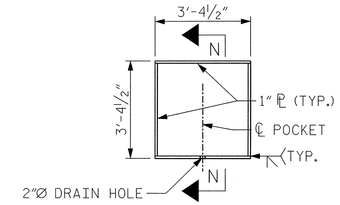

VIEW M-M

(POCKET COVER PLATE NOT SHOWN FOR CLARITY)

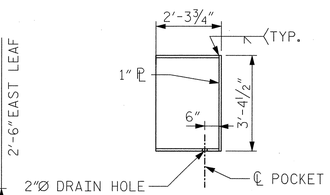

SECTION N-N

POCKET DETAILS

COUNTERWEIGHT NOTES:

1. ALL SURFACES OF THE STEEL COUNTERWEIGHT BOX IN CONTACT WITH CONCRETE SHALL HAVE ONE 1⅛"Ø OPEN HOLE LOCATED WITHIN EACH 10ft² OF SURFACE AREA.
2. THE AMOUNT AND LOCATION OF BALANCE BARS, STEEL BALLAST, AND COUNTERWEIGHT CONCRETE ARE ESTIMATED BASED ON PRELIMINARY BALANCE CALCULATIONS USING THE ASSUMED DIMENSIONS, DETAILS, AND UNIT WEIGHTS SHOWN ON THE PLANS. THESE SHOULD BE USED FOR INFORMATION AND BIDDING PURPOSES ONLY. THE CONTRACTOR IS RESPONSIBLE FOR DETERMINING THE FINAL ADJUSTMENTS TO THE COUNTERWEIGHT TO ACHIEVE THE PROPER BALANCE OF THE LEAVES. SEE THE SPECIFICATIONS FOR ADDITIONAL INFORMATION.
3. ASSUMED DENSITY OF COUNTERWEIGHT CONCRETE IS 135 PCF
4. TABULATIONS WITH COMPLETE CENTER OF GRAVITY CALCULATIONS SHALL BE FURNISHED TO THE ENGINEER FOR APPROVAL A MINIMUM OF 6 WEEKS BEFORE POURING OF THE CONCRETE HAS BEGUN. CALCULATIONS SHALL BE MADE FROM APPROVED SHOP DRAWINGS.
5. THE WEST LEAF BALANCE WILL DIFFER FROM THE EAST LEAF BALANCE DUE TO CENTER LOCKS, CENTER LOCK ACCESS, AND CENTERING DEVICE.
6. BALANCE BARS SHALL BE PLACED IN POCKETS IN FULL ROWS OF 10 BEFORE STARTING THE NEXT ROW.
7. DO NOT OPERATE BRIDGE UNTIL COUNTERWEIGHT CONCRETE HAS CURED FOR A MINIMUM OF 5 DAYS AFTER THE FINAL CONCRETE POUR.
8. THE CONTRACTOR SHALL BE RESPONSIBLE TO ENSURE THAT ALL SPECIFIED GEOMETRY IS MAINTAINED DURING ALL PHASES OF CONSTRUCTION.

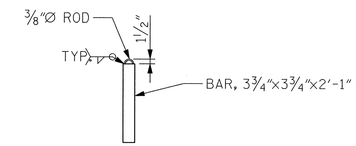

BALANCE BAR DETAIL

	BALANCE TABLE								
	LEAF WEIGHT W (KIPS)	DIST. TO CG L (FT)	ANGLE α (DEG)	MOMENT WL (KIP-FT)	LIVE LOAD BRG. REACTION PER GIRDER (KIPS)	BALANCE BARS			
						POCKET 1	POCKET 2	POCKET 3	POCKET 4
WEST LEAF	1093.85	0.2258	49.845	247.04	9.15	30	54	74	50
EAST LEAF	1075.22	0.2260	49.813	242.95	9.00	30	54	74	50

NOTES:
1. FOR POCKET NUMBERS, SEE DWG. S-075E.
2. ABOVE ARE PRELIMINARY VALUES BASED ON ASSUMED DIMENSIONS, DETAILS, AND UNIT WEIGHTS SHOWN ON THE PLANS. SEE THE SPECIFICATIONS FOR PERMISSIBLE RANGE OF ANGLES, (α), AND MOMENTS, WL.
3. FOR ADDITIONAL NOTES, SEE COUNTERWEIGHT NOTES.

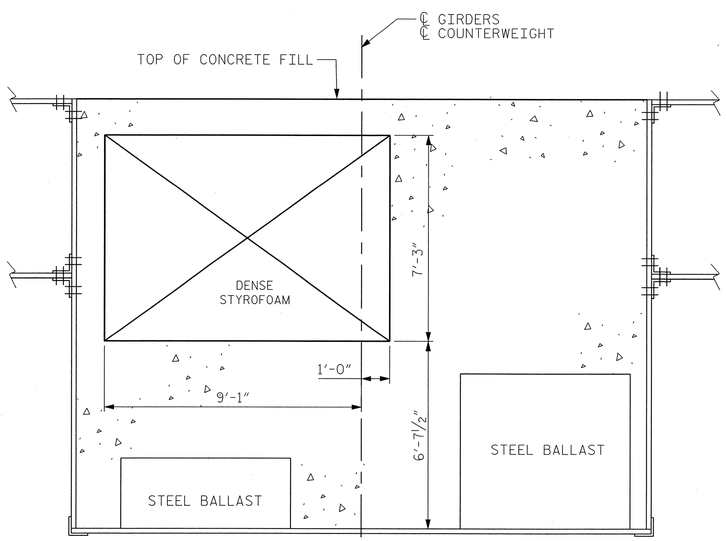

SECTION J-J

(WEST LEAF SHOWN, EAST LEAF OPPOSITE HAND)

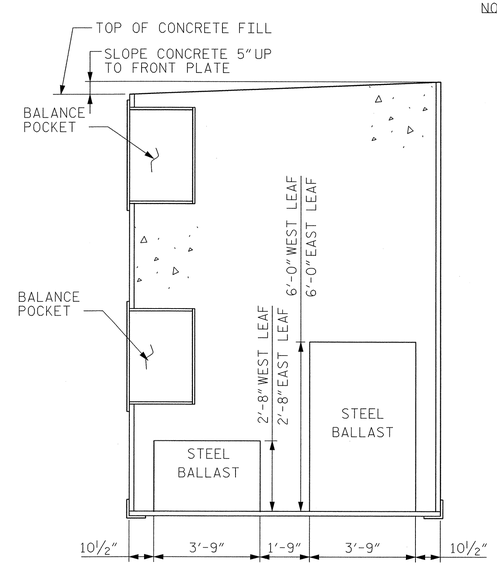

SECTION L-L

(WEST LEAF SHOWN, EAST LEAF OPPOSITE HAND)

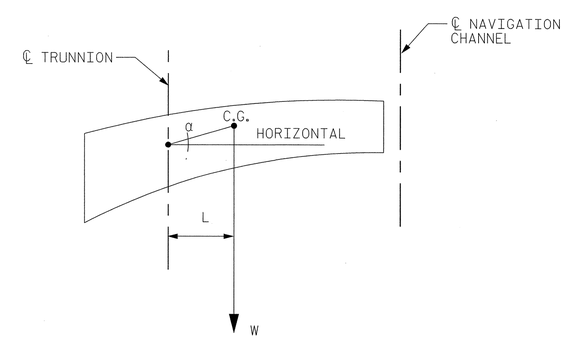

KEY DIAGRAM

NOTES:
1. FOR GENERAL NOTES, SEE DWG. G-004.

EASTBOUND

PROJECT NO. U-4438

PASQUOTANK COUNTY

STATION: 15+25.75 -L1-

STATE OF NORTH CAROLINA
DEPARTMENT OF TRANSPORTATION
RALEIGH

ELIZABETH CITY BRIDGE OVER PASQUOTANK RIVER
BASCULE SPAN
COUNTERWEIGHT DETAILS - 4

MODJESKI and MASTERS
Experience great bridges.
Mechanicsburg, PA NC License No. C-2979

NORTH CAROLINA PROFESSIONAL SEAL 025801 ENGINEER LANCE V. BORDEN 2/3/2011

DWG NUMBER	TOTAL DWGS
S-078E	94

REVISIONS						SHEET NO.
NO.	BY:	DATE:	NO.	BY:	DATE:	S-180
1			3			TOTAL SHEETS
2			4			454

DRAWN BY : EAR DATE : 01/11
CHECKED BY : JPS DATE : 01/11

2/3/2011
2:07:01 PM
K:\2986.02\CADD\Structural\dgn files\S-078E_U4438_SD_CWD4_01_E.dgn

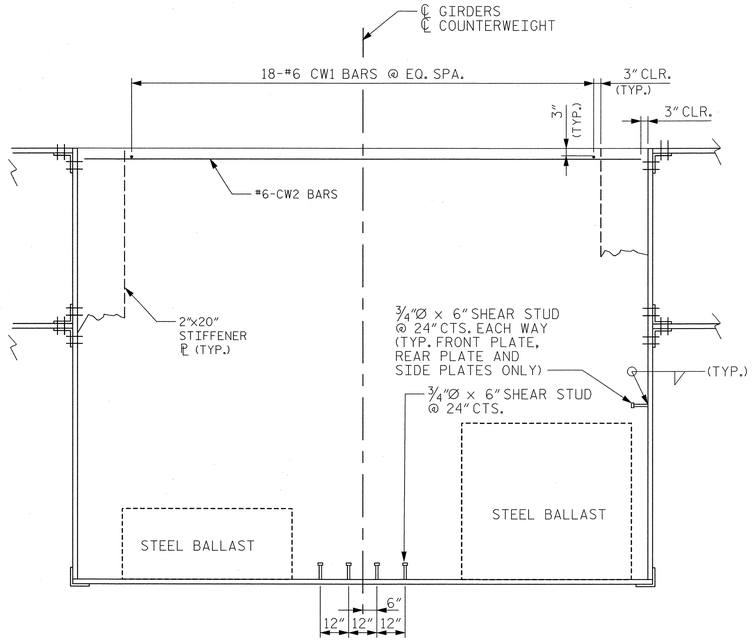

SECTION P-P

(DENSE STYROFOAM NOT SHOWN FOR CLARITY)
(NOTE: DRILL 1"Ø HOLES IN L8x8x1
TOP DIAGONAL BRACING
(SHOWN ON SECTION D-D, DWG. S-076E)
TO PASS CW1 AND CW2 BARS THROUGH

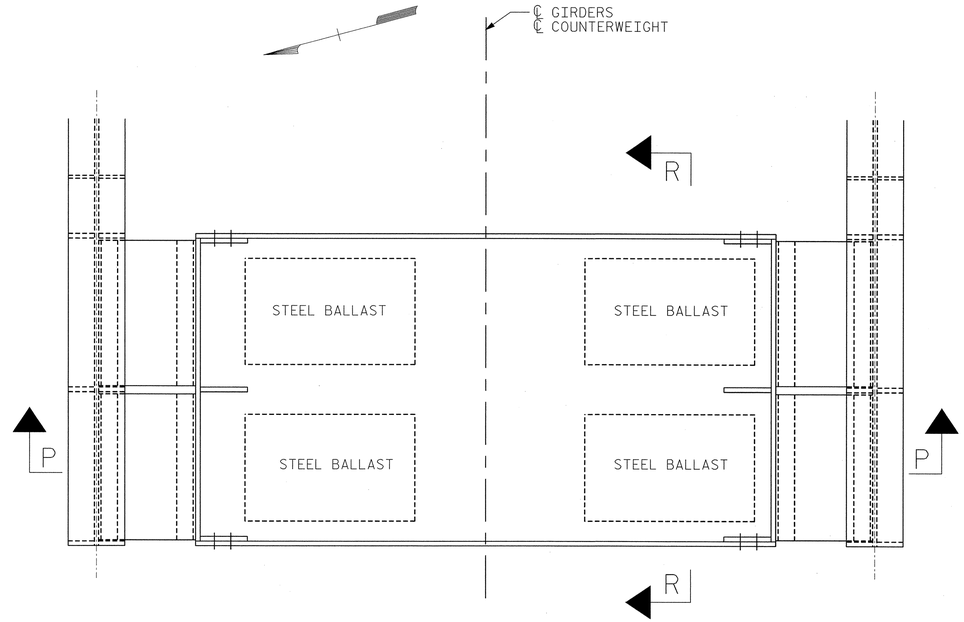

PLAN

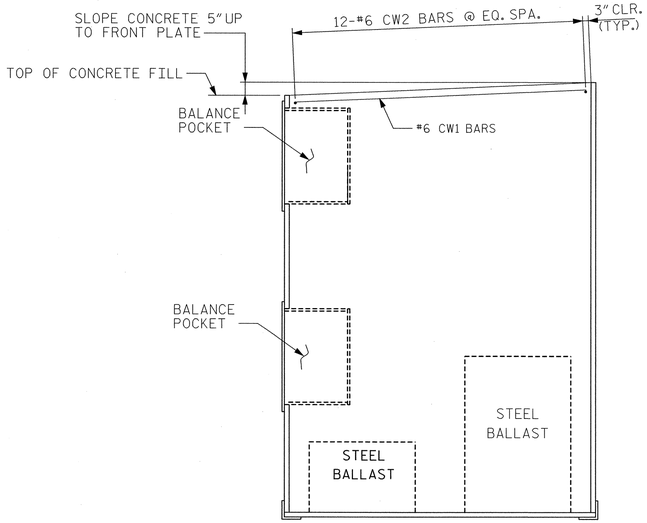

SECTION R-R

(DENSE STYROFOAM NOT SHOWN FOR CLARITY)
NOTE: DRILL 1"Ø HOLES IN L8x8x1
TOP DIAGONAL BRACING
(SHOWN ON SECTION D-D, DWG. S-076E)
TO PASS CW1 AND CW2 BARS THROUGH

BILL OF MATERIAL FOR 2 COUNTERWEIGHTS

BAR	NUMBER	SIZE	TYPE	LENGTH	WEIGHT
CW1	36	6	STR.	10'-2"	550 LBS.
CW2	24	6	STR.	19'-8'	709 LBS.
ALL BARS ARE EPOXY COATED					
EPOXY COATED REINF. STEEL				=	1259 LBS.
COUNTERWEIGHT CONCRETE - WEST LEAF				=	92 CU. YDS.
COUNTERWEIGHT CONCRETE - EAST LEAF				=	89 CU. YDS.

NOTE:
COUNTERWEIGHT CONCRETE VOLUMES ARE BASED ON PRELIMINARY BALANCE ESTIMATES AND SHALL BE USED FOR INFORMATION AND BIDDING PURPOSES ONLY. SEE COUNTERWEIGHT NOTES, DWG. S-078E.

NOTES:
1. FOR GENERAL NOTES, SEE DWG. G-004.
2. WEST LEAF SHOWN, EAST LEAF OPPOSITE HAND.

EASTBOUND

PROJECT NO. U-4438
PASQUOTANK COUNTY
STATION: 15+25.75 -L1-

STATE OF NORTH CAROLINA
DEPARTMENT OF TRANSPORTATION
RALEIGH

ELIZABETH CITY BRIDGE OVER
PASQUOTANK RIVER
BASCULE SPAN
COUNTERWEIGHT DETAILS - 5

MODJESKI and MASTERS
Experience great bridges.
Mechanicsburg, PA NC License No. C-2979

NORTH CAROLINA PROFESSIONAL SEAL 025801 ENGINEER LANCE V. BORDEN 2/3/2011

DWG NUMBER	TOTAL DWGS
S-079E	94

REVISIONS						SHEET NO.
NO.	BY:	DATE:	NO.	BY:	DATE:	S-181
1			3			TOTAL SHEETS
2			4			454

DRAWN BY : EAR DATE : 01/11
CHECKED BY : JPS DATE : 01/11

2/3/2011
2:07:05 PM
K:\2986.02\CADD\Structural\dgn files\S-079E_U4438_SD_CWD5_01_E.dgn

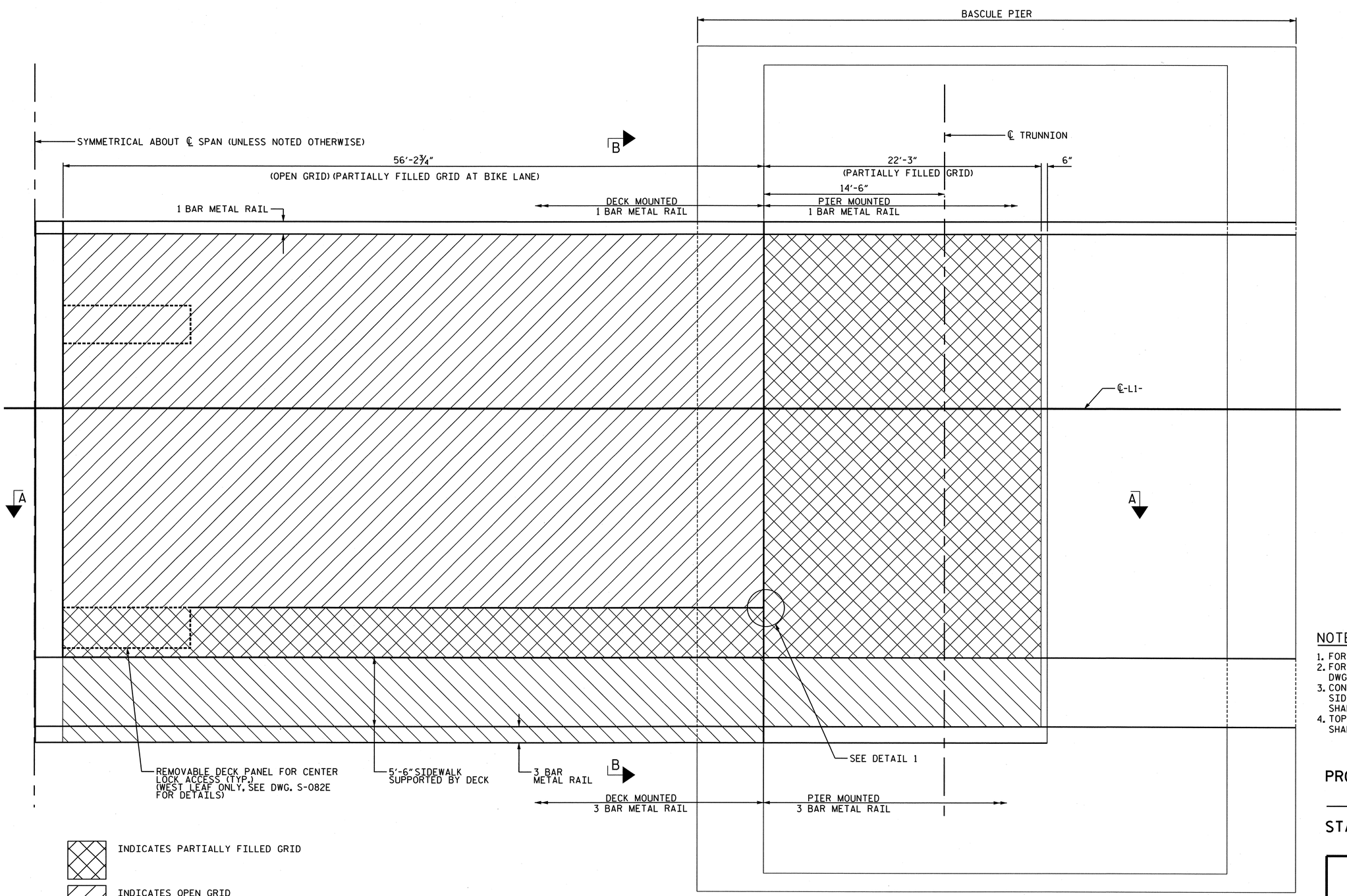

INDICATES PARTIALLY FILLED GRID

INDICATES OPEN GRID

INDICATES OPEN GRID UNDER SIDEWALK AND 3 BAR METAL RAIL

PLAN OF BASCULE SPAN DECK

EAST LEAF SHOWN, WEST LEAF SIMILAR

NOTES:

1. FOR GENERAL NOTES, SEE DWG. G-004.
2. FOR SECTION A-A & B-B AND DETAIL 1, SEE DWG. S-081E.
3. CONCRETE FOR PARTIALLY FILLED GRID DECK, SIDEWALKS AND 1 BAR METAL RAIL PARAPET, SHALL BE SAND LIGHTWEIGHT CONCRETE.
4. TOP SURFACES OF PARTIALLY FILLED GRID SHALL NOT BE GROOVED.

EASTBOUND

PROJECT NO. U-4438

PASQUOTANK COUNTY

STATION: 15+25.75 -L1-

STATE OF NORTH CAROLINA
DEPARTMENT OF TRANSPORTATION
RALEIGH

ELIZABETH CITY BRIDGE OVER PASQUOTANK RIVER
BASCULE SPAN
DECK PLAN

MODJESKI and MASTERS
Experience great bridges.
Mechanicsburg, PA NC License No. C-2979

NORTH CAROLINA PROFESSIONAL SEAL 025801 ENGINEER LANCE V. BORDEN 3/18/2011

DRAWN BY : DMW	DATE : 01/11
CHECKED BY : DBI	DATE : 01/11

DWG NUMBER	TOTAL DWGS
S-080E	94

REVISIONS								SHEET NO.
NO.	BY:	DATE:	NO.	BY:	DATE:			S-182
1			3					TOTAL SHEETS
2			4					454

3/17/2011
12:55:10 PM
P:\2986.02 NCDOT Elizabeth City\CADD\Structural\DGN\S-080E_U4438_SD_DP1_01_E.DGN

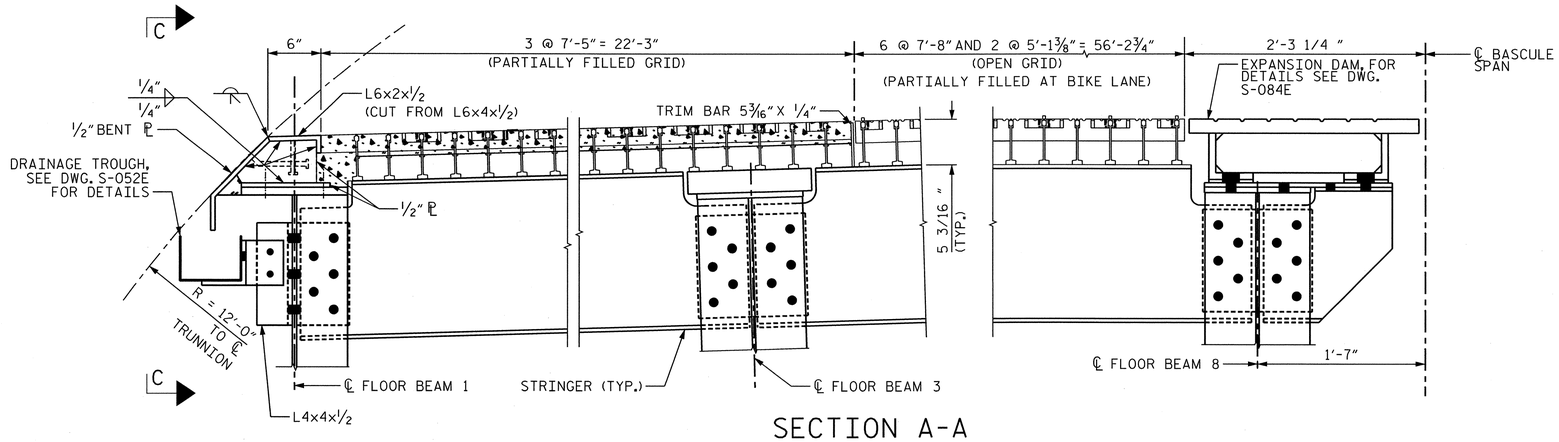

SECTION A-A

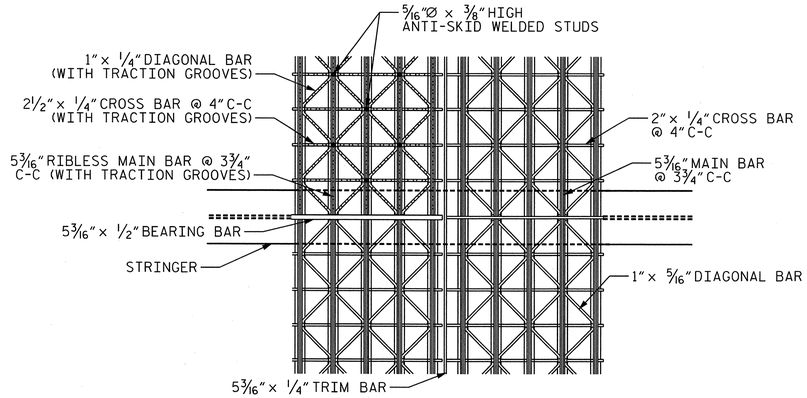

DETAIL 1

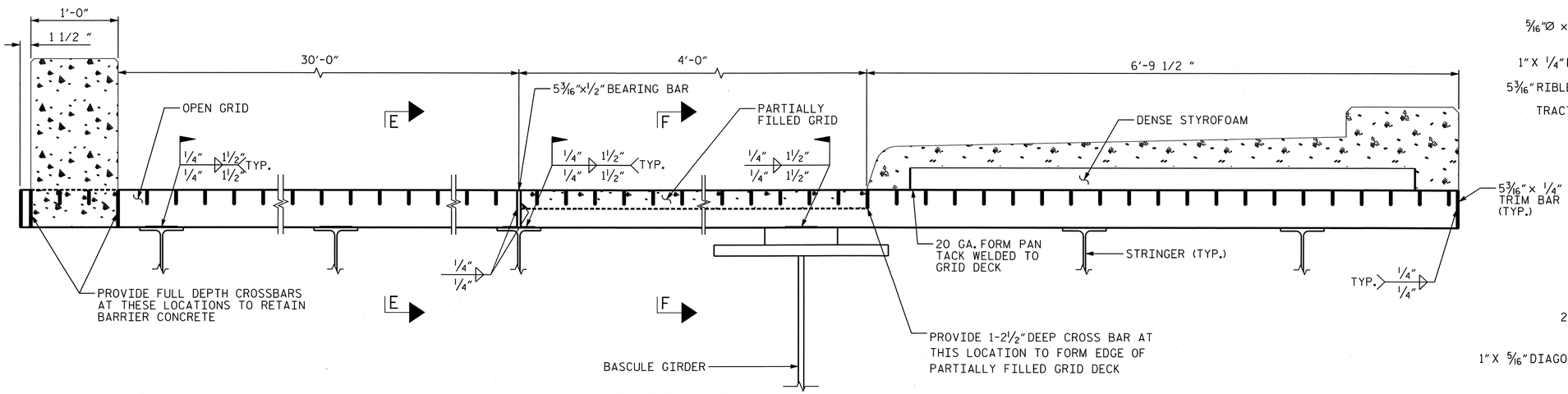

SECTION B-B

(FOR SIDEWALK AND PARAPET DETAILS, SEE DWG. S-085E & S-086E)

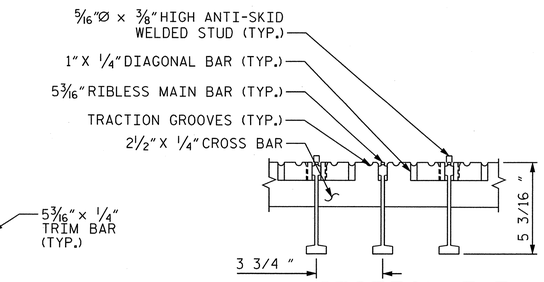

SECTION E-E

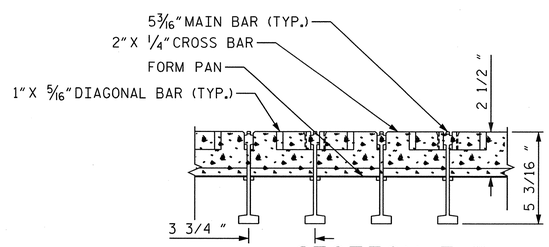

SECTION F-F

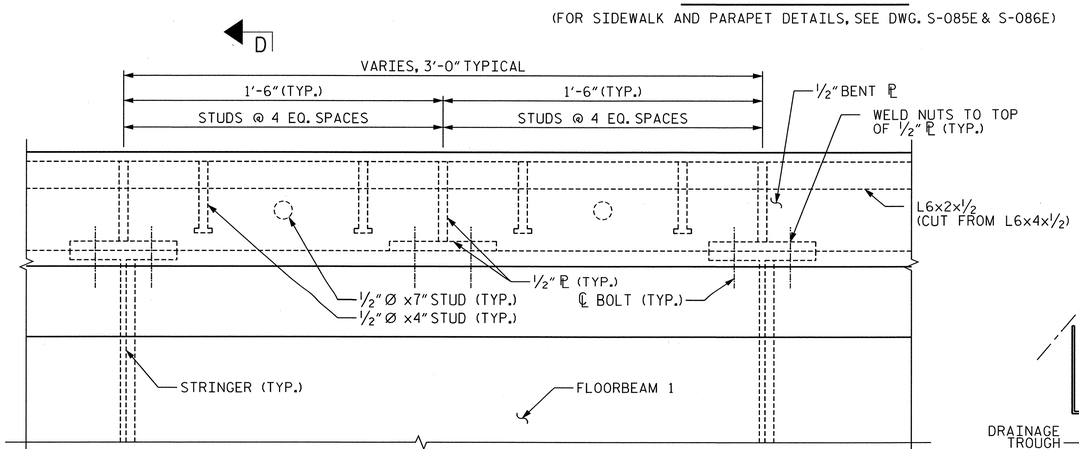

SECTION C-C

(1/2" BENT PLATE, ANGLE, STUDS, AND 1/2" PLATES SHALL BE GALVANIZED)

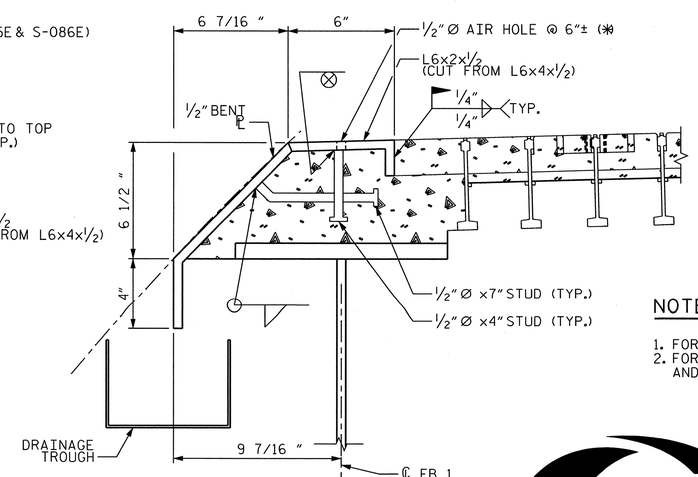

SECTION D-D

* PROVIDE 1/2" Ø AIR HOLES AT 6" ± ALONG L6x2x1/2. LOCATE TO AVOID INTERFERENCE WITH 1/2" Ø STUDS AND 1/2" VERTICAL PLATE.

NOTES:

1. FOR GENERAL NOTES, SEE DWG. G-004.
2. FOR LOCATION OF SECTION A-A, B-B AND DETAIL 1, SEE DWG. S-080E.

EASTBOUND

PROJECT NO. U-4438

PASQUOTANK COUNTY

STATION: 15+25.75 -L1-

STATE OF NORTH CAROLINA
DEPARTMENT OF TRANSPORTATION
RALEIGH

ELIZABETH CITY BRIDGE OVER PASQUOTANK RIVER
BASCULE SPAN
DECK DETAILS - 1

MODJESKI and MASTERS
Experience great bridges.
Mechanicsburg, PA NC License No. C-2979

NORTH CAROLINA PROFESSIONAL SEAL 025801 ENGINEER LANCE V. BORDEN 2/3/2011

DWG NUMBER	TOTAL DWGS
S-081E	94

REVISIONS								SHEET NO.
NO.	BY:	DATE:	NO.	BY:	DATE:			S-183
1			3					TOTAL SHEETS
2			4					454

DRAWN BY : DMW DATE : 01/11
CHECKED BY : DBI DATE : 01/11

2/1/2011
11:48:43 AM
P:\2986.02 NCDOT Elizabeth City\CADD\Structural\S-081E_U4438_SD_DD1_01_E.DGN

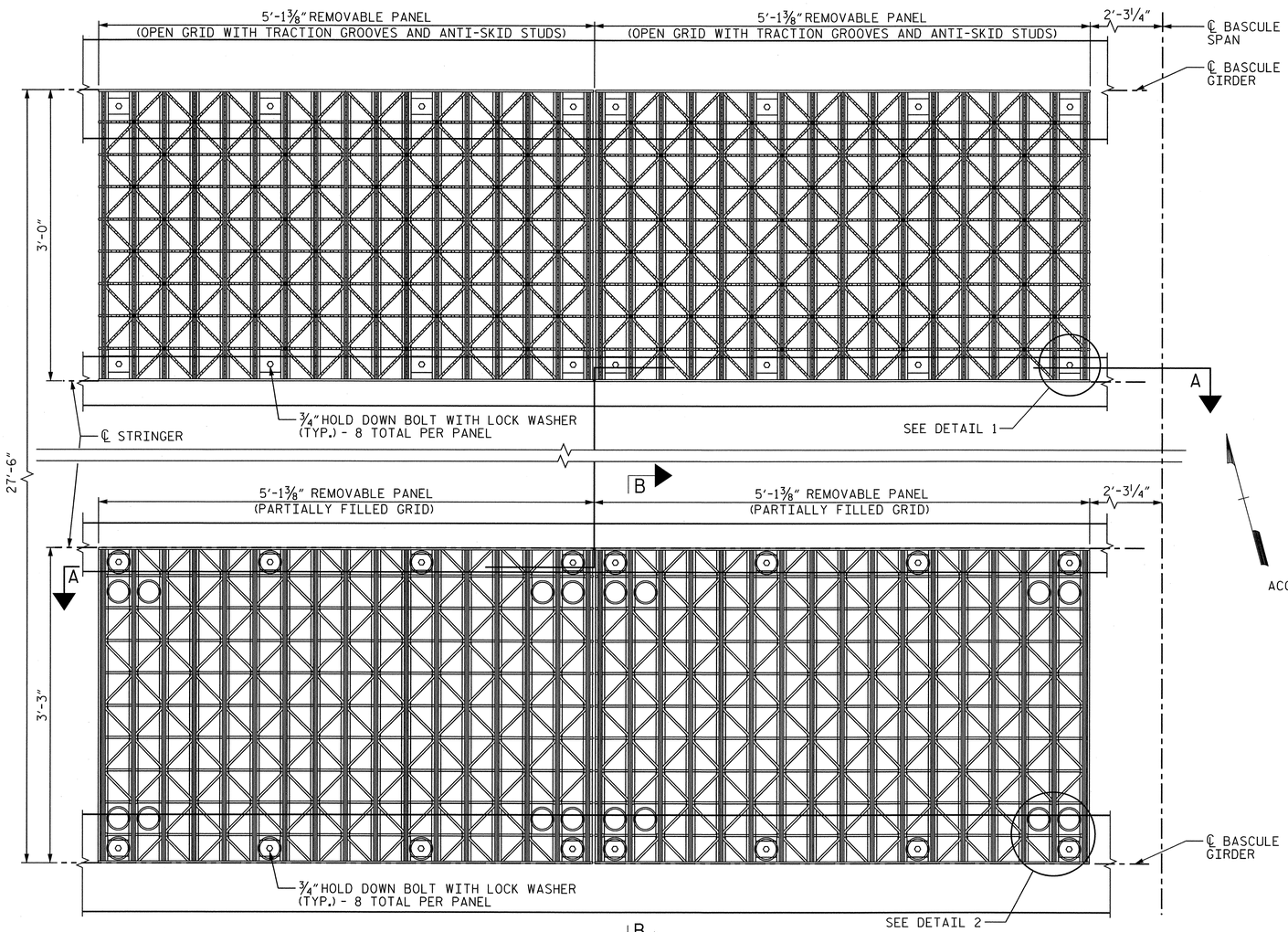

PLAN OF REMOVABLE DECK PANELS

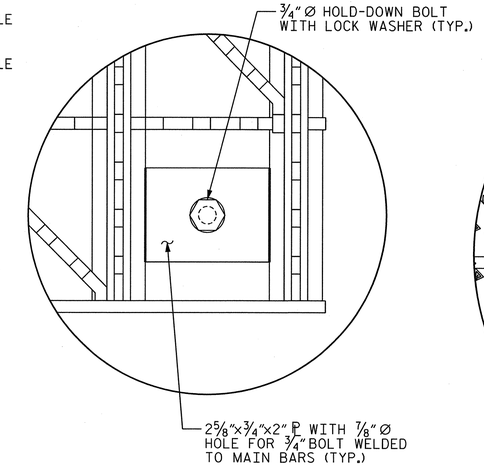

DETAIL 1

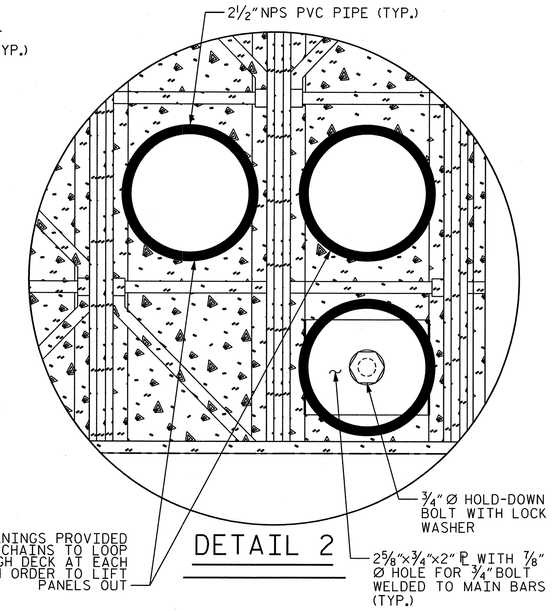

DETAIL 2

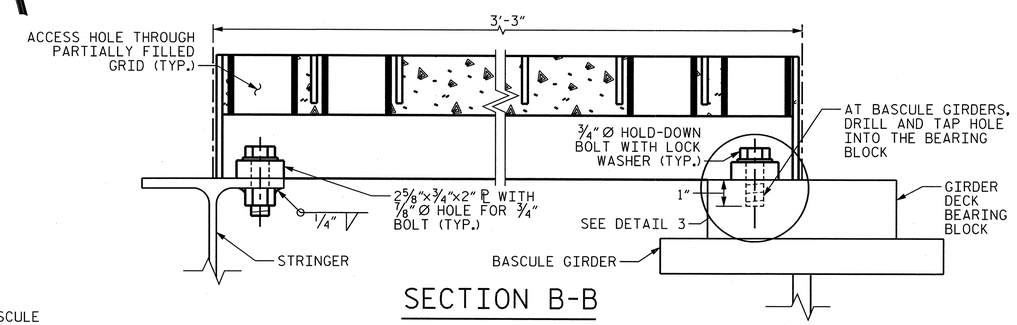

SECTION B-B

SHOWN FOR PARTIALLY FILLED GRID, SIMILAR FOR OPEN GRID

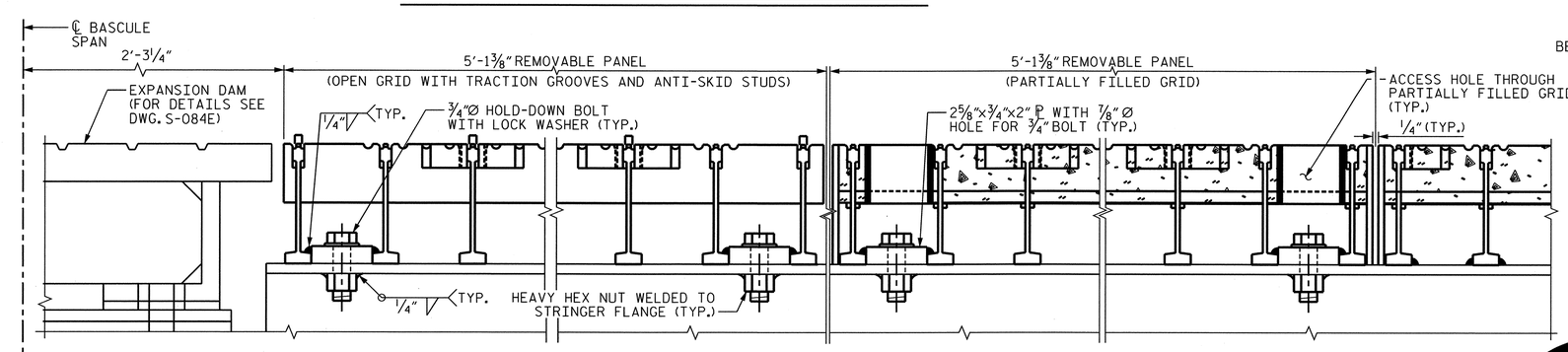

SECTION A-A

SHOWN AT STRINGERS, SIMILAR AT BASCULE GIRDERS

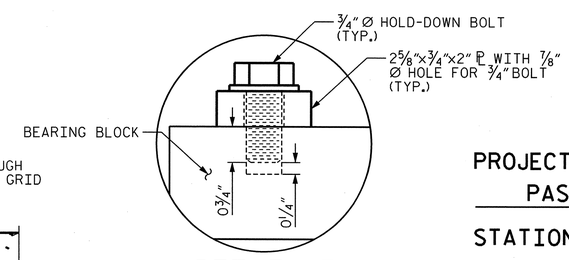

DETAIL 3

NOTES:

1. FOR GENERAL NOTES, SEE DWG. G-004.

EASTBOUND

PROJECT NO. U-4438

PASQUOTANK COUNTY

STATION: 15+25.75 -L1-

STATE OF NORTH CAROLINA
DEPARTMENT OF TRANSPORTATION
RALEIGH

ELIZABETH CITY BRIDGE OVER PASQUOTANK RIVER
BASCULE SPAN
DECK DETAILS - 2

MODJESKI and MASTERS
Experience great bridges.
Mechanicsburg, PA NC License No. C-2979

NORTH CAROLINA PROFESSIONAL ENGINEER SEAL 025801 LANCE V. BORDEN 2/3/2011

DWG NUMBER	TOTAL DWGS
S-082E	94

REVISIONS								SHEET NO.
NO.	BY:	DATE:	NO.	BY:	DATE:			S-184
1			3					TOTAL SHEETS
2			4					454

DRAWN BY : DMW DATE : 01/11
CHECKED BY : DBI DATE : 01/11

2/1/2011
11:50:37 AM
P:\2986.02 NCDOT Elizabeth City\CADD\Structural\S-082E_U4438_SD_DD2_01_E.DGN

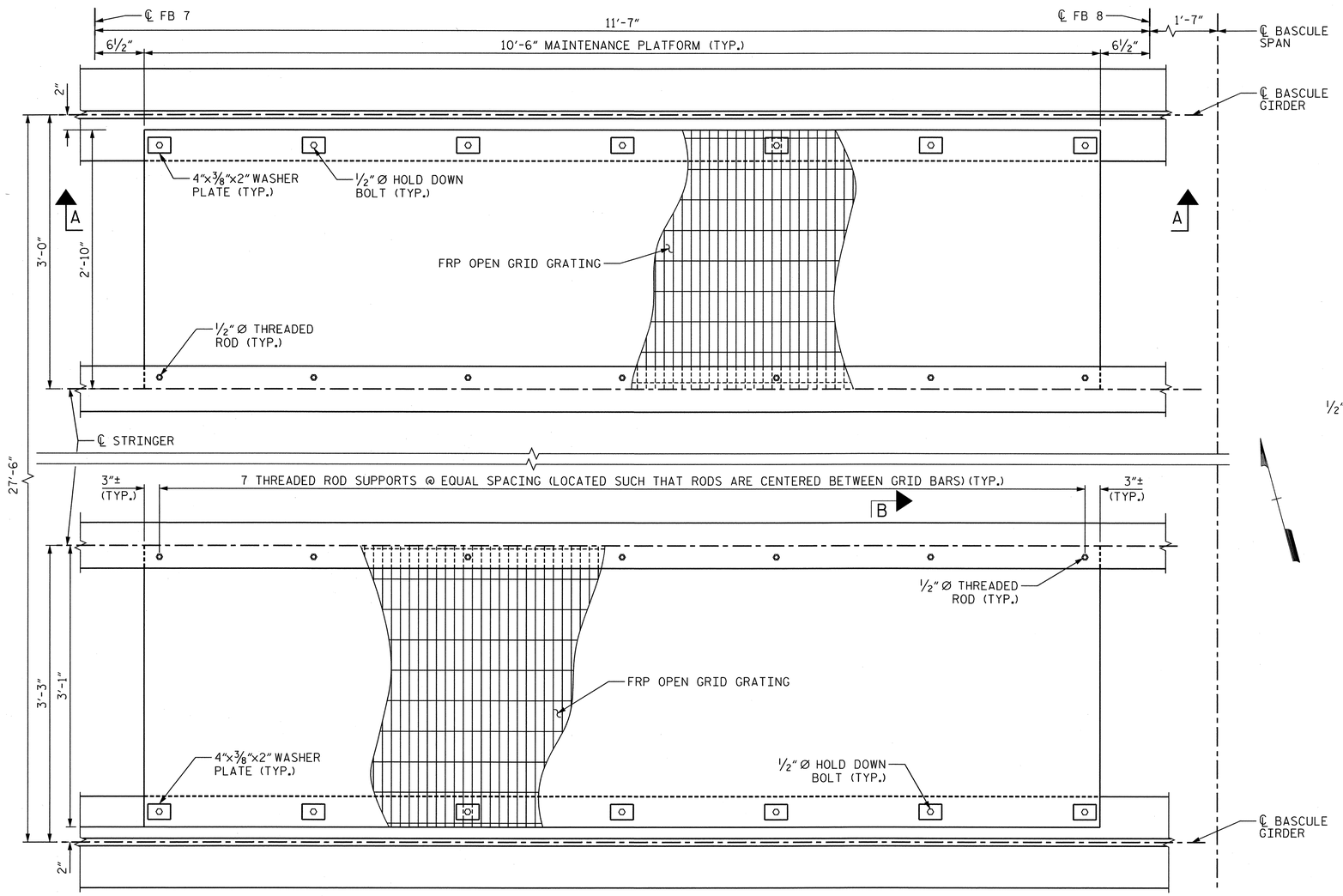

PLAN OF MAINTENANCE PLATFORMS

FLOORBEAMS, LATERAL BRACING AND CENTER LOCK ASSEMBLY NOT SHOWN FOR CLARITY

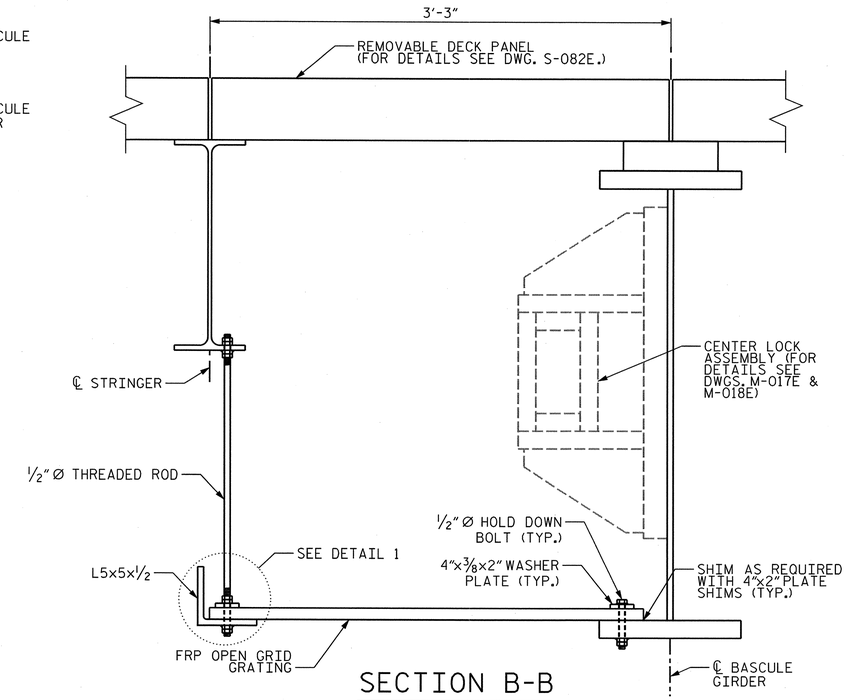

SECTION B-B

LATERAL BRACING NOT SHOWN FOR CLARITY

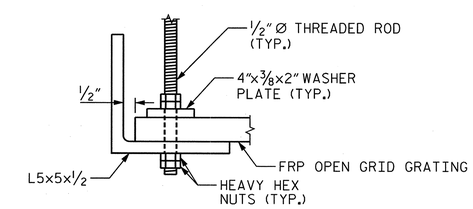

DETAIL 1

CONNECTION TO STRINGER IS SIMILAR

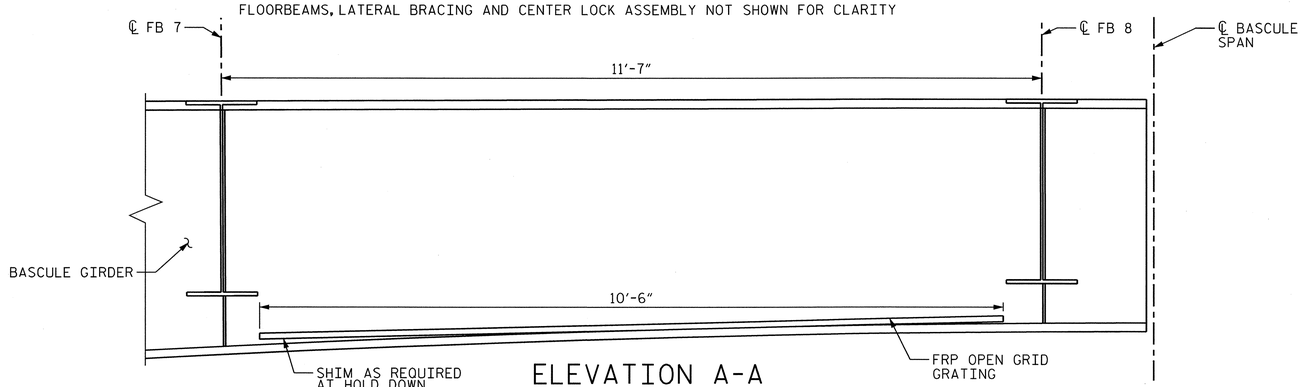

ELEVATION A-A

FLOORBEAMS, LATERAL BRACING AND CENTER LOCK ASSEMBLY NOT SHOWN FOR CLARITY

NOTES:

1. FOR GENERAL NOTES, SEE DWG. G-004.
2. L5x5x½ SUPPORT ANGLE SHALL BE ASTM A276, TYPE 316 STAINLESS STEEL.
3. CONNECTION HARDWARE SHALL BE STAINLESS STEEL IN ACCORDANCE WITH FOLLOWING SPECIFICATIONS:

   BOLTS - ASTM A193, GR B8M

   NUTS - ASTM A194, GR 8M

   WASHER AND SHIM PLATES - TYPE 316 STAINLESS STEEL

EASTBOUND

PROJECT NO. U-4438

PASQUOTANK COUNTY

STATION: 15+25.75 -L1-

STATE OF NORTH CAROLINA
DEPARTMENT OF TRANSPORTATION
RALEIGH

ELIZABETH CITY BRIDGE OVER PASQUOTANK RIVER
BASCULE SPAN
CENTER LOCK MAINTENANCE PLATFORM DETAILS

MODJESKI and MASTERS
Experience great bridges.
Mechanicsburg, PA NC License No. C-2979

NORTH CAROLINA PROFESSIONAL SEAL 025801 ENGINEER LANCE V. BORDEN 2/3/2011

DWG NUMBER	TOTAL DWGS
S-083E	94

REVISIONS								SHEET NO.
NO.	BY:	DATE:	NO.	BY:	DATE:			S-185
1			3					TOTAL SHEETS
2			4					454

DRAWN BY : DMW DATE : 01/11
CHECKED BY : DBI DATE : 01/11

2/1/2011
11:52:04 AM
P:\2986.02 NCDOT Elizabeth City\CADD\Structural\S-083E_U4438_SD_DD3_01_E.DGN

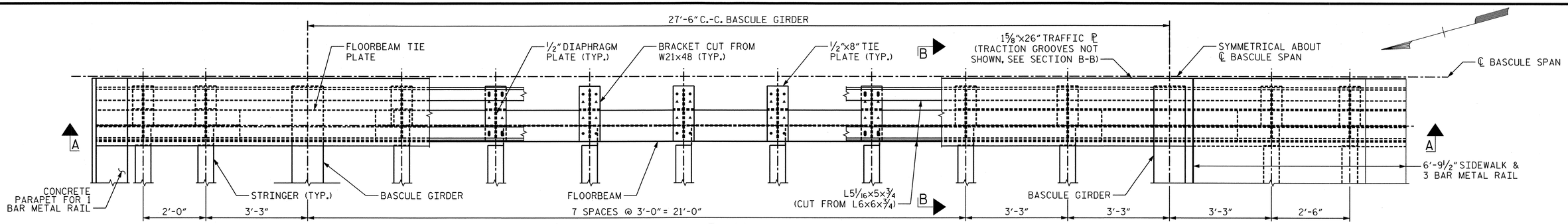

PLAN

LATERAL BRACING NOT SHOWN FOR CLARITY

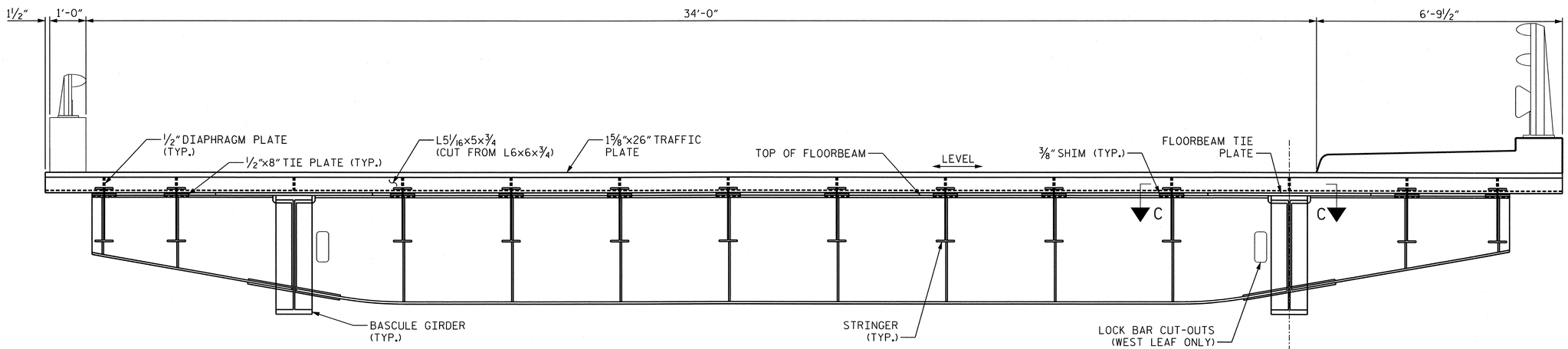

SECTION A-A

LATERAL BRACING NOT SHOWN FOR CLARITY

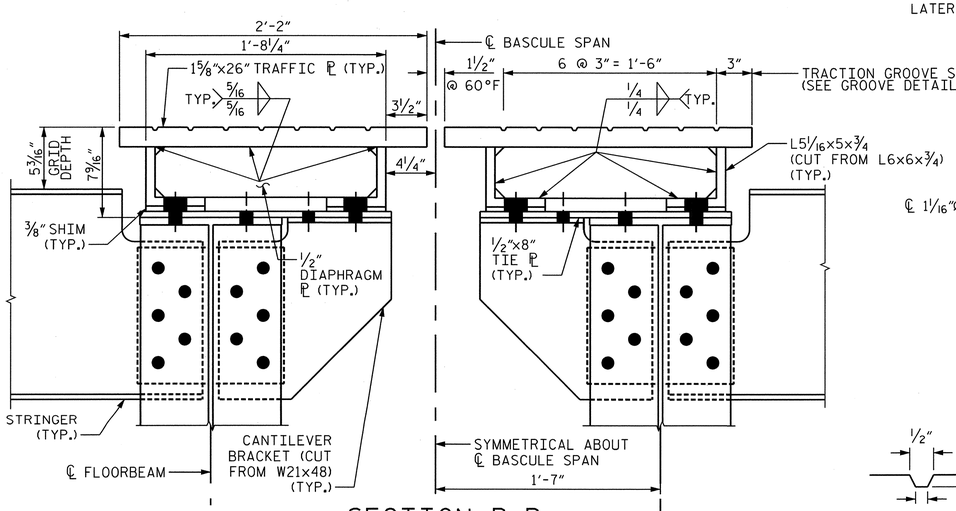

SECTION B-B

DETAIL SIMILAR AT BASCULE GIRDER.
(L5 1/16x5x3/4 BEARS DIRECTLY ON FLOORBEAM TIE PLATE - BRACKET AND 1/2"x8" TIE PLATE ARE NOT REQUIRED.)

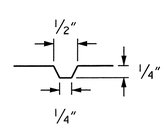

GROOVE DETAIL

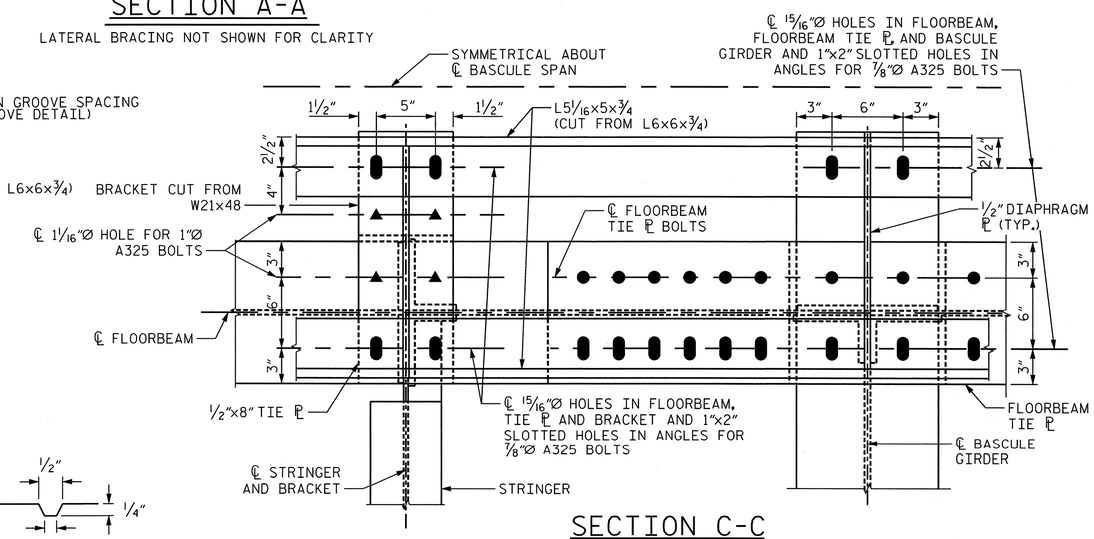

SECTION C-C

NOTES:

1. FOR GENERAL NOTES, SEE DWG. G-004.
2. THE 1 5/8" TRAFFIC PLATE, L5 1/16x5x3/4 ANGLES, AND 1/2" DIAPHRAGM PLATES ARE TO BE GALVANIZED AFTER FABRICATION.
3. STRINGER/BRACKET WEB TO FLOORBEAM CONNECTION MATCHES TYPICAL STRINGER TO FLOORBEAM CONNECTION DETAILS (SEE SECTION L-L ON DWG. S-071D.
4. ▲ DENOTES 1"Ø A325 BOLT.

EASTBOUND

PROJECT NO. U-4438

PASQUOTANK COUNTY

STATION: 15+25.75 -L1-

STATE OF NORTH CAROLINA
DEPARTMENT OF TRANSPORTATION
RALEIGH

ELIZABETH CITY BRIDGE OVER PASQUOTANK RIVER
BASCULE SPAN
MIDSPAN JOINT DETAILS

MODJESKI and MASTERS
Experience great bridges.
Mechanicsburg, PA NC License No. C-2979

NORTH CAROLINA PROFESSIONAL SEAL 025801 ENGINEER LANCE V. BORDEN 2/3/2011

DWG NUMBER	TOTAL DWGS
S-084E	94

REVISIONS								SHEET NO.
NO.	BY:	DATE:	NO.	BY:	DATE:			S-186
1			3					TOTAL SHEETS
2			4					454

DRAWN BY : DMW DATE : 01/11
CHECKED BY : DBI DATE : 01/11

2/1/2011
11:53:33 AM
P:\2986.02 NCDOT Elizabeth City\CADD\Structural\S-084E_U4438_SD_JD1_01_E.DGN

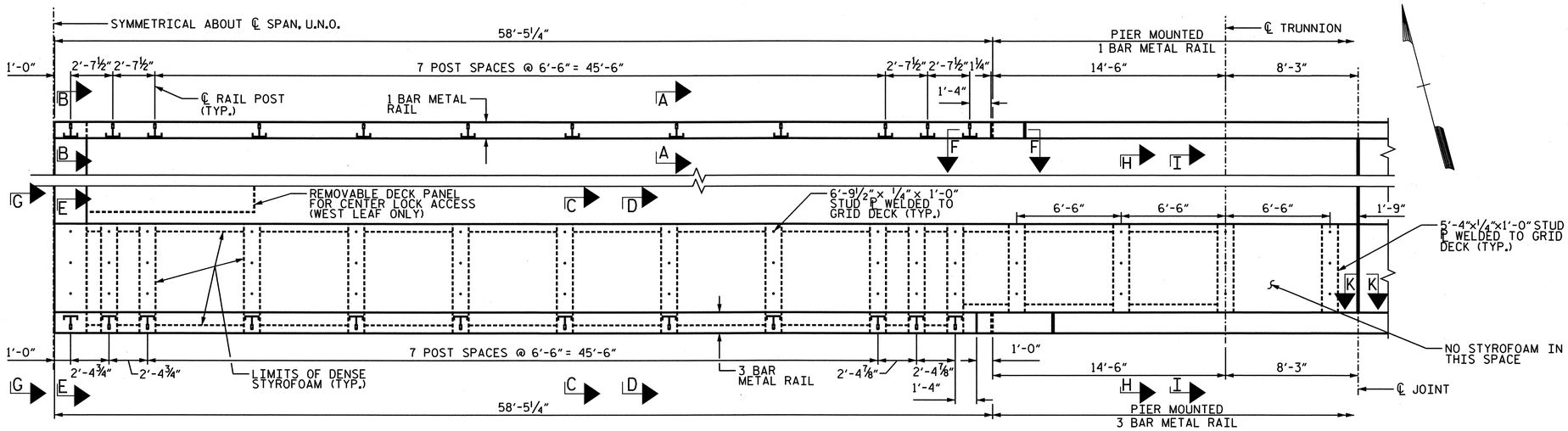

PLAN

EAST LEAF SHOWN, WEST LEAF SIMILAR

BAR TYPE

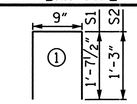

BAR DIMENSIONS ARE OUT-TO-OUT

BILL OF MATERIAL

FOR PARAPET & SIDEWALK LOCATED ON BASCULE SPAN

BAR	NO.	SIZE	TYPE	LENGTH	WEIGHT
S1	116	#5	1	4'-0"	484 LBS.
S2	120	#5	1	3'-3"	407 LBS.
G1	120	#4	STR	6'-0"	481 LBS.
G2	46	#4	STR	4'-9"	146 LBS.
B1	24	#5	STR	31'-3"	782 LBS.
B2	36	#4	STR	21'-8"	521 LBS.
B3	10	#4	STR	25'-4"	169 LBS.

ALL BARS ARE EPOXY COATED

EPOXY COATED REINF. STEEL = 2,990 LBS. (1,673 LBS. FOR PARAPETS, 1,317 LBS. FOR SIDEWALKS)

SAND LIGHTWEIGHT CONCRETE = 26.2 CU. YDS. (8.4 CU. YDS. FOR PARAPETS, 17.8 CU. YDS. FOR SIDEWALKS)

* MINIMUM SPLICE LENGTHS ARE AS FOLLOWS:
#4 BAR - 2'-9"
#5 BAR - 3'-5"

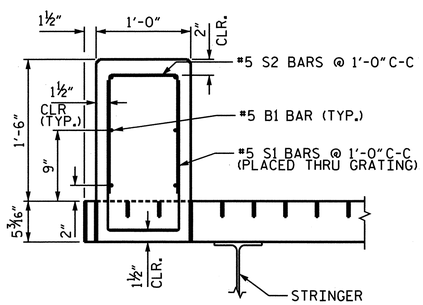

SECTION A-A

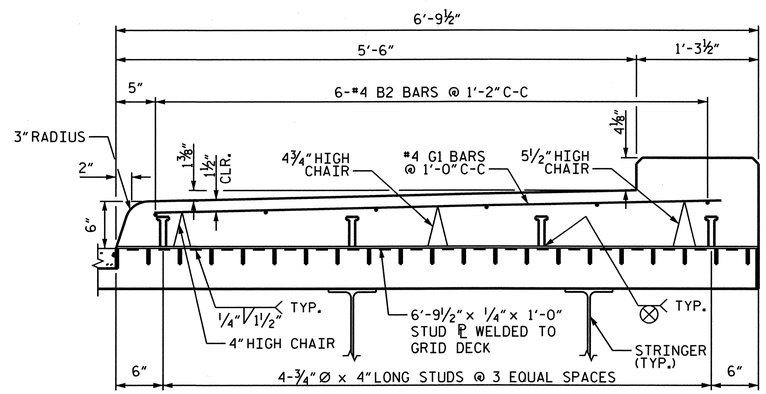

SECTION C-C

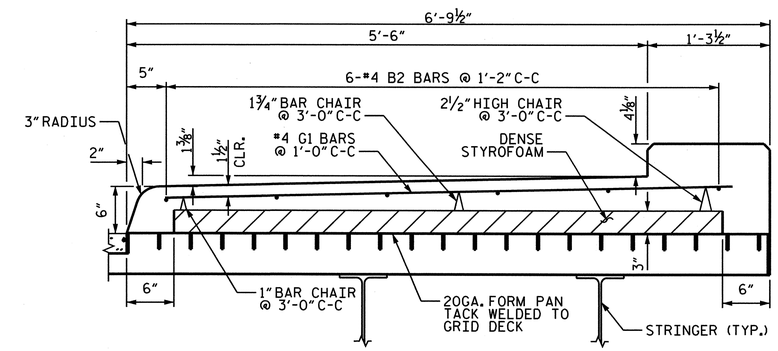

SECTION D-D

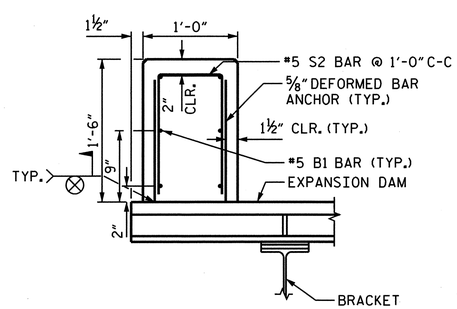

SECTION B-B

FOR EXPANSION DAM DETAILS, SEE DWG. S-084E.

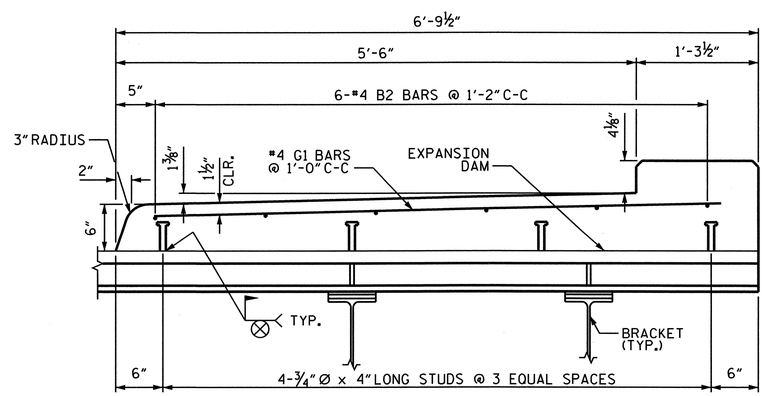

SECTION E-E

FOR EXPANSION DAM DETAILS, SEE DWG. S-084E.
(FOR BAR SUPPORT DETAILS, SEE SECTION C-C)

NOTES:

1. FOR GENERAL NOTES, SEE DWG. G-004.
2. GROOVED CONTRACTION JOINT, ½" IN DEPTH, SHALL BE TOOLED IN ALL EXPOSED FACES OF THE PARAPET AND SIDEWALK IN ACCORDANCE WITH ARTICLE 825-10(B) OF THE STANDARD SPECIFICATIONS. THE CONTRACTION JOINT SHALL BE LOCATED AT A SPACING OF 8 FT. TO 10 FT. BETWEEN EXPANSION JOINTS. NO CONTRACTION JOINTS WILL BE REQUIRED FOR SEGMENTS LESS THAN 10 FEET IN LENGTH.
3. ALL CONCRETE FOR PARAPET AND SIDEWALK SHALL BE SAND LIGHTWEIGHT CONCRETE.
4. ALL REINFORCING STEEL SHALL BE EPOXY COATED.
5. THE REINFORCING STEEL MAY BE SHIFTED SLIGHTLY AS NECESSARY TO CLEAR THE ANCHOR ASSEMBLY.
6. FOR SECTION F-F, G-G, H-H, I-I & K-K SEE DWG. S-086E.
7. FOR RAILING AND POST ANCHORAGE DETAILS, SEE DWGS. S-087E TO S-091E.

EASTBOUND

PROJECT NO. U-4438

PASQUOTANK COUNTY

STATION: 15+25.75 -L1-

STATE OF NORTH CAROLINA
DEPARTMENT OF TRANSPORTATION
RALEIGH

ELIZABETH CITY BRIDGE OVER PASQUOTANK RIVER
BASCULE SPAN
PARAPET AND SIDEWALK DETAILS - 1

MODJESKI and MASTERS
Experience great bridges.
Mechanicsburg, PA NC License No. C-2979

NORTH CAROLINA PROFESSIONAL SEAL 025801 ENGINEER LANCE V. BORDEN 3/18/2011

DWG NUMBER	TOTAL DWGS
S-085E	94

REVISIONS							SHEET NO.
NO.	BY:	DATE:	NO.	BY:	DATE:		S-187
1			3				TOTAL SHEETS
2			4				454

DRAWN BY : DMW DATE : 01/11
CHECKED BY : DBI DATE : 01/11

3/17/2011
1:02:19 PM
P:\2986.02 NCDOT Elizabeth City\CADD\Structural\DGN\S-085E_U4438_SD_SW1_01_E.DGN

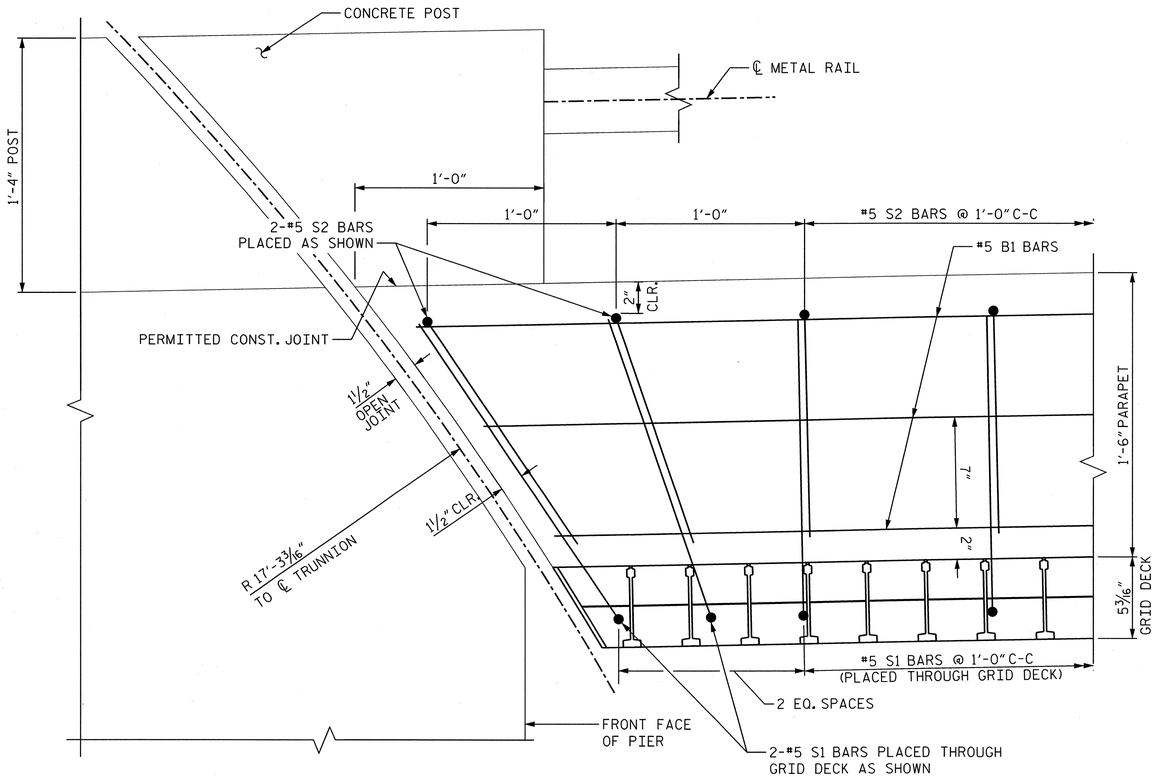

SECTION F-F

CONCRETE POST REINFORCEMENT AND METAL RAIL POSTS NOT SHOWN FOR CLARITY. FOR POST REINFORCEMENT, SEE DWG. S-088E.

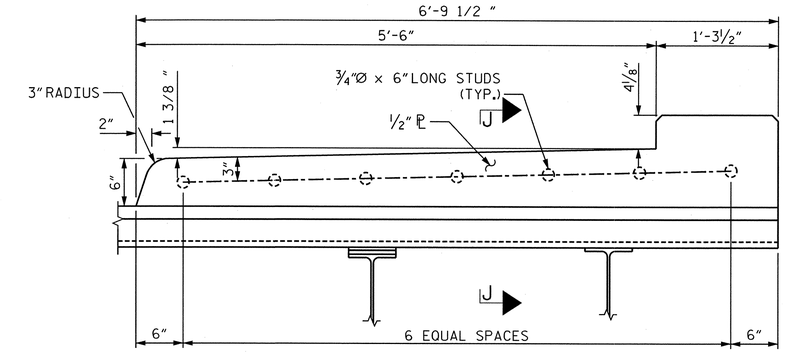

ELEVATION G-G

ELEVATION SHOWN AT TOE (SIMILAR AT HEEL-ONLY 5 STUDS REQUIRED AS WIDTH IS ONLY 5'-4" WITH NO PEDESTAL FOR 3 BAR METAL RAIL)

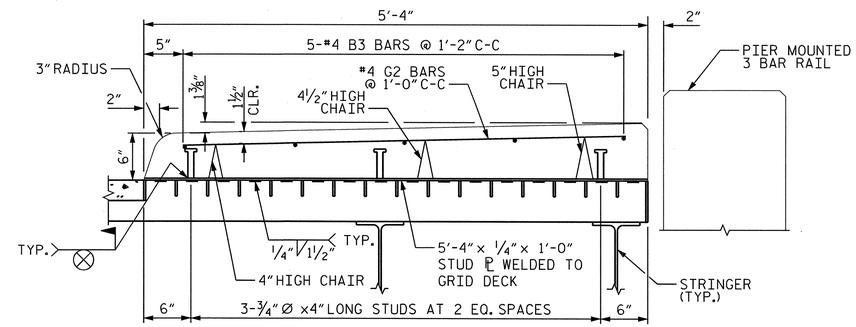

SECTION H-H

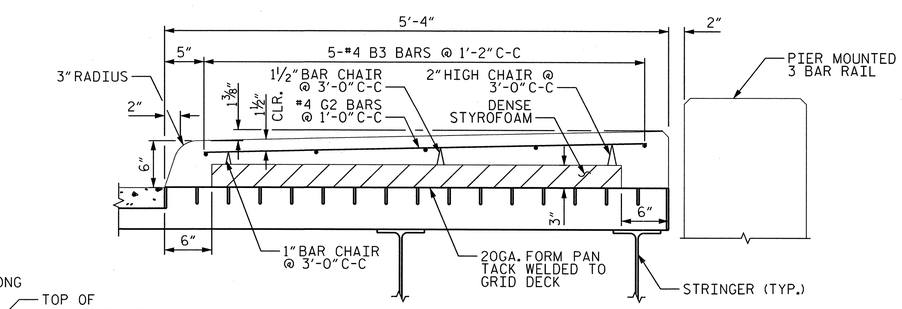

SECTION I-I

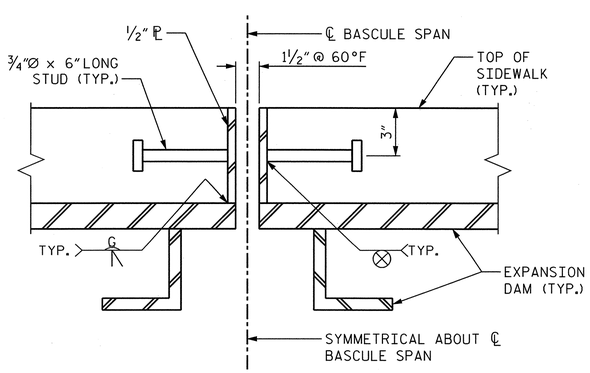

SECTION J-J

SIDEWALK JOINT AT TOE

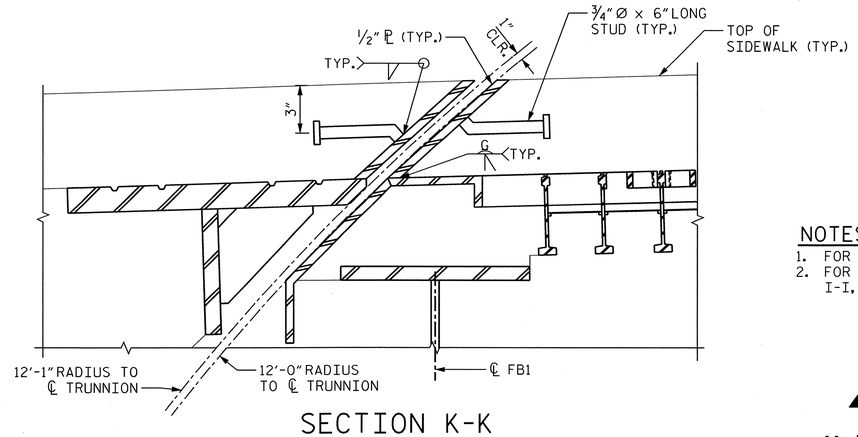

SECTION K-K

SIDEWALK JOINT AT HEEL

NOTES:

1. FOR GENERAL NOTES, SEE DWG. G-004.
2. FOR LOCATIONS OF SECTIONS F-F, G-G, H-H, I-I, AND K-K, SEE DWG. S-085E.

EASTBOUND

PROJECT NO. U-4438

PASQUOTANK COUNTY

STATION: 15+25.75 -L1-

STATE OF NORTH CAROLINA
DEPARTMENT OF TRANSPORTATION
RALEIGH

ELIZABETH CITY BRIDGE OVER PASQUOTANK RIVER
BASCULE SPAN
PARAPET AND SIDEWALK DETAILS - 2

MODJESKI and MASTERS
Experience great bridges.
Mechanicsburg, PA NC License No. C-2979

NORTH CAROLINA PROFESSIONAL SEAL 025801 ENGINEER LANCE V. BORDEN 2/3/2011

DWG NUMBER	TOTAL DWGS
S-086E	94

REVISIONS						SHEET NO.
NO.	BY:	DATE:	NO.	BY:	DATE:	S-188
1			3			TOTAL SHEETS
2			4			454

DRAWN BY : DMW DATE : 01/11
CHECKED BY : DBI DATE : 01/11

2/1/2011
11:56:18 AM
P:\2986.02 NCDOT Elizabeth City\CADD\Structural\S-086E_U4438_SD_SW2_01_E.DGN

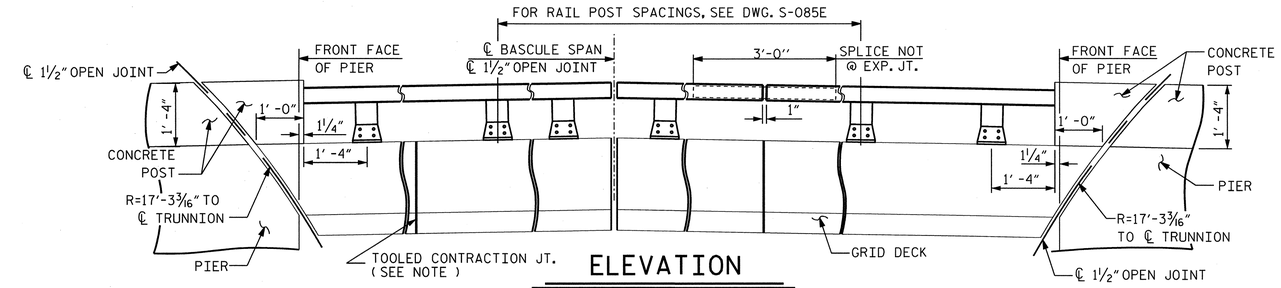

ELEVATION

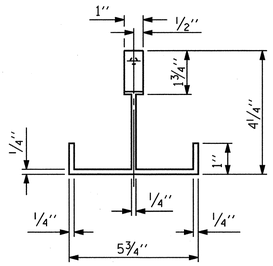

PLAN

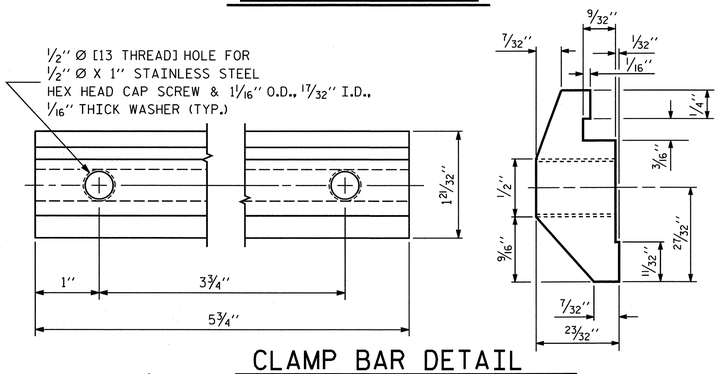

CLAMP BAR DETAIL

(2 REQUIRED PER POST)

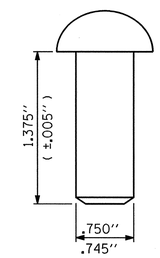

RIVET DETAIL

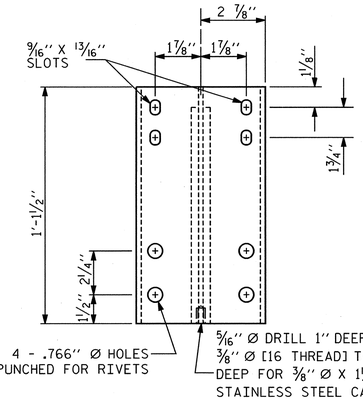

FRONT ELEVATION

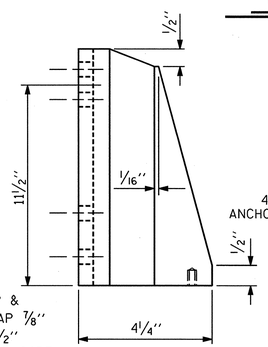

SIDE ELEVATION

DETAILS OF POST

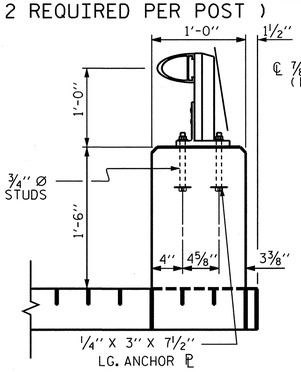

SECTION THRU PARAPET AND RAIL

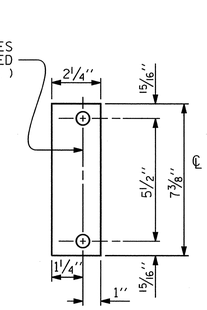

REAR PLATE

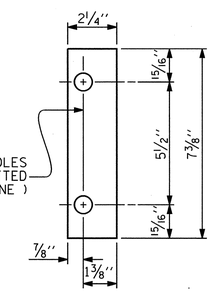

FRONT PLATE

SHIM DETAILS

NOTE : SHIMS MAY BE CUT ALONG PERMITTED CUTLINE OR SLOTTED TO EDGE OF PLATE TO FACILITATE PLACEMENT.

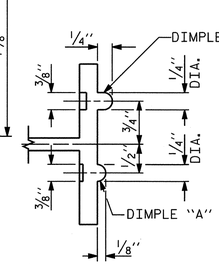

SECTION B - B

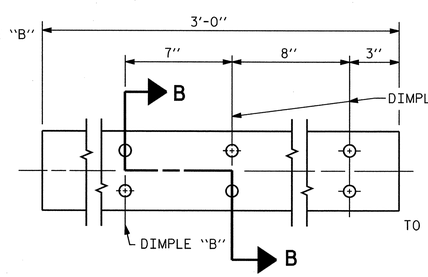

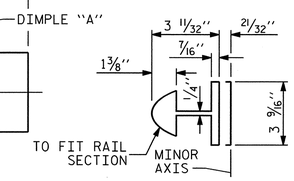

BAR SECTION

EXPANSION BAR DETAILS

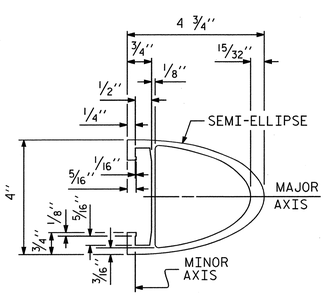

RAIL SECTION

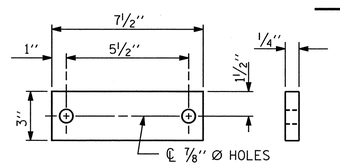

ANCHOR PLATE

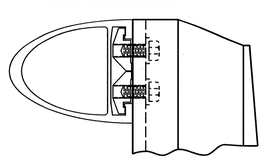

CLAMP & RAIL ASSEMBLY

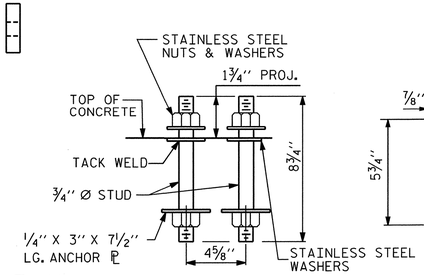

ANCHOR ASSEMBLY

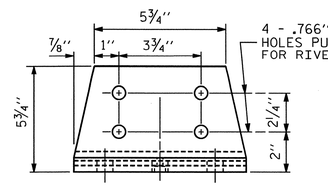

FRONT ELEVATION

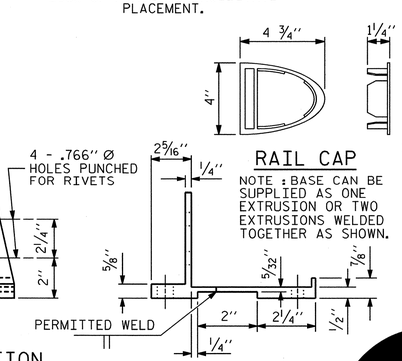

RAIL CAP

NOTE : BASE CAN BE SUPPLIED AS ONE EXTRUSION OR TWO EXTRUSIONS WELDED TOGETHER AS SHOWN.

SIDE ELEVATION

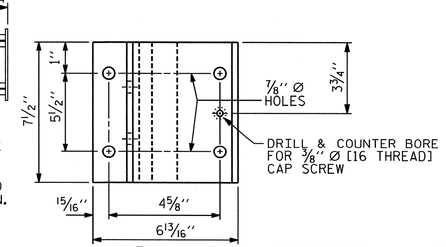

PLAN

POST BASE DETAILS

NOTES:

1. FOR GENERAL NOTES, SEE DWG. G-004.

ALUMINUM RAIL NOTES:

1. MATERIAL FOR POSTS, BASES AND RAILS, EXPANSION BARS AND CLAMP BARS SHALL BE ASTM B221 ALLOY 6061-T6.
2. MATERIAL FOR RIVETS SHALL BE ASTM B316 ALLOY 6061-T6. RIVETS SHALL BE STANDARD BUTTON HEAD AND CONE POINT COLD DRIVEN AS PER DRAWING.
3. THE BASE OF RAIL POSTS, OR ANY OTHER ALUMINUM SURFACE IN CONTACT WITH CONCRETE SHALL BE THOROUGHLY COATED WITH AN ALUMINUM IMPREGNATED CAULKING COMPOUND OF APPROVED QUALITY.
4. MATERIAL FOR SHIMS TO BE ASTM B209 ALLOY 6061-T6.

GENERAL RAILING NOTES:

1. RAILING SHALL BE CONTINUOUS FROM END POST TO END POST OF BRIDGE. EACH JOINT IN RAIL LENGTH SHALL BE SPLICED AS DETAILED. PANEL LENGTHS OF RAIL SHALL BE ATTACHED TO A MINIMUM OF THREE POSTS.
2. MATERIAL FOR ANCHOR STUDS SHALL BE ASTM F593 ALLOY 304 STAINLESS STEEL WITH MINIMUM 75,000 PSI ULTIMATE STRENGTH. STUDS TO BE EMBEDDED 7" IN CONCRETE. NUTS SHALL BE AMERICAN STANDARD FINISHED HEXAGON THICK, CLASS 2B THREAD, AND MEET THE REQUIREMENTS OF ASTM F594 ALLOY 304 STAINLESS STEEL. WASHERS SHALL MEET THE REQUIREMENTS OF ASTM F844 EXCEPT THEY SHALL BE MADE FROM ALLOY 304 STAINLESS STEEL. ANCHOR ℙ SHALL BE AASHTO M270 GRADE 36.
3. CAP SCREWS SHALL BE ASTM F593 ALLOY 305 STAINLESS STEEL.
4. CERTIFIED MILL REPORTS ARE REQUIRED FOR RAILS AND POSTS. SHOP INSPECTION IS NOT REQUIRED.
5. METAL RAIL POSTS SHALL BE SET NORMAL TO CURB GRADE.
6. METHOD OF MEASUREMENT FOR METAL RAILS: FOR LENGTH OF METAL RAILS TO BE PAID FOR, SEE THE STANDARD SPECIFICATIONS.
7. CURVED RAIL USAGE: WHERE RAILS ARE TO BE USED ON BRIDGES ON HORIZONTAL AND/OR VERTICAL CURVATURE THE CONTRACTOR MAY, AT HIS OPTION, HAVE THE REQUIRED CURVATURE IN THE RAIL FORMED IN THE SHOP OR IN THE FIELD. IN EITHER EVENT, THE RAIL SHALL CONFORM WITHOUT BUCKLING OR KINKING TO THE REQUIRED CURVATURE IN A UNIFORM MANNER ACCEPTABLE TO THE ENGINEER.
8. TO INSURE FUTURE IDENTIFICATION OF THE FABRICATOR, A PERMANENT IDENTIFYING MARK SHALL BE PLACED ON EACH POST. THE METHOD OF MARKING AND LOCATION SHALL BE SUCH THAT IT DOES NOT DETRACT FROM THE APPEARANCE OF THE POST.
9. SHIMS SHALL BE USED AS NECESSARY FOR POST ALIGNMENT.
10. ALLOY 6351-T5 MAY BE SUBSTITUTED FOR ALLOY 6061-T6 WHERE APPLICABLE.
11. MINOR VARIATIONS IN DETAILS OF METAL RAIL WILL BE CONSIDERED. DETAILS OF SUCH VARIATIONS, IF DESIRED, SHALL BE SUBMITTED FOR APPROVAL.
12. THE CONTRACTOR MAY USE ADHESIVELY ANCHORED ANCHOR BOLTS IN PLACE OF THE ANCHOR ASSEMBLY. LEVEL TWO FIELD TESTING IS REQUIRED, AND THE YIELD LOAD OF THE ¾" Ø BOLT IS 10 KIPS. FOR ADHESIVELY ANCHORED ANCHOR BOLTS OR DOWELS, SEE SPECIAL PROVISIONS.
13. WHEN ADHESIVELY ANCHORED ANCHOR BOLTS ARE USED, BOLTS, NUTS AND WASHERS SHALL MEET THE SAME REQUIREMENTS AS THE ANCHOR STUDS, NUTS AND WASHERS FOR USE WITH THE ANCHOR ASSEMBLY.
14. GROOVED CONTRACTION JOINTS, ½" IN DEPTH, SHALL BE TOOLED IN ALL EXPOSED FACES OF THE PARAPET IN ACCORDANCE WITH ARTICLE 825-10(B) OF THE STANDARD SPECIFICATIONS. THE CONTRACTION JOINT SHALL BE LOCATED AT A SPACING OF 8FT. TO 10FT. BETWEEN EXPANSION JOINTS. NO CONTRACTION JOINTS WILL BE REQUIRED FOR SEGMENTS LESS THAN 10 FEET IN LENGTH.

PAY LENGTH = 117 LIN. FT. (FOR RAIL ON BASCULE SPAN)

EASTBOUND

PROJECT NO. U-4438

PASQUOTANK COUNTY

STATION: 15+25.75 -L1-

STATE OF NORTH CAROLINA
DEPARTMENT OF TRANSPORTATION
RALEIGH

ELIZABETH CITY BRIDGE OVER PASQUOTANK RIVER
BASCULE SPAN
1 BAR METAL RAIL DETAILS-1

MODJESKI and MASTERS
Experience great bridges.
Mechanicsburg, PA NC License No. C-2979

NORTH CAROLINA PROFESSIONAL ENGINEER SEAL 025801 LANCE V. BORDEN 2/3/2011

REVISIONS						SHEET NO.
NO.	BY:	DATE:	NO.	BY:	DATE:	S-189
1			3			TOTAL SHEETS
2			4			454

DWG NUMBER	TOTAL DWGS
S-087E	94

DRAWN BY : DMW DATE : 01/11
CHECKED BY : DBI DATE : 01/11

2/1/2011
1:21:11 PM
P:\2986.02 NCDOT Elizabeth City\CADD\Structural\S-087E_U4438_SD_1MR1_01_E.DGN

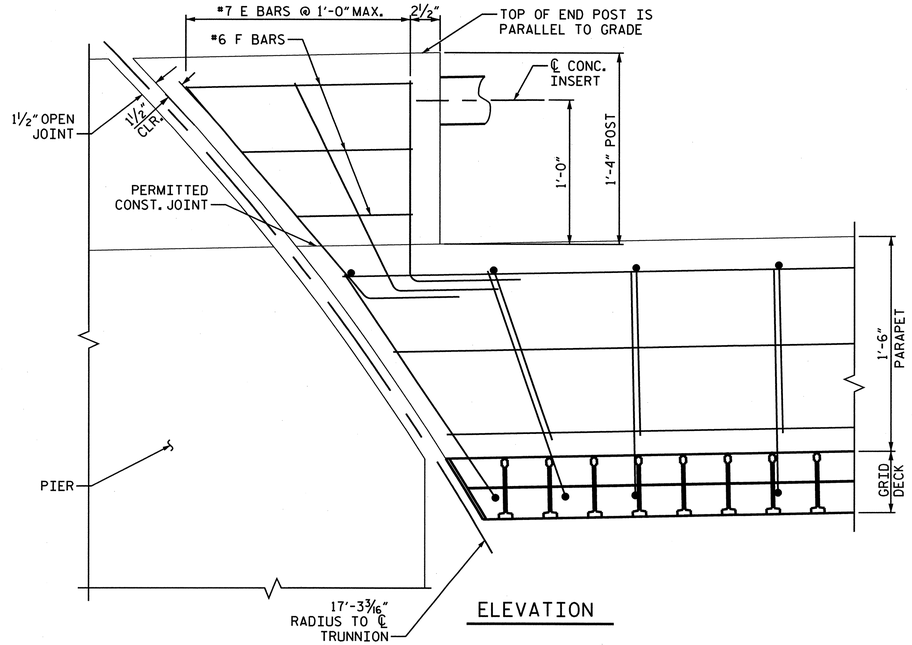

ELEVATION

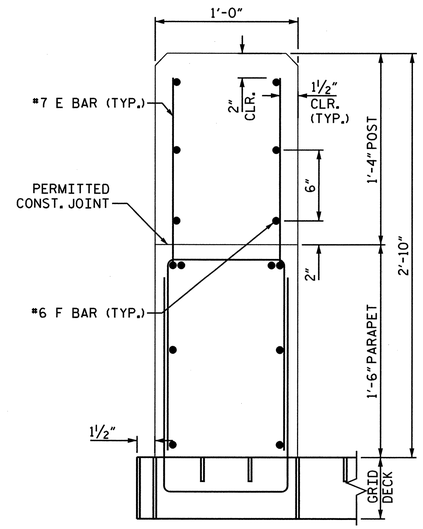

SECTION

END POST REINFORCEMENT

NOTES:

1. FOR GENERAL NOTES, SEE DWG. G-004.

STRUCTURAL CONCRETE INSERT NOTES:

1. THE STRUCTURAL CONCRETE INSERT ASSEMBLY SHALL CONSIST OF THE FOLLOWING COMPONENTS:
   A. FERRULES SHALL BE MADE FROM STEEL MEETING THE REQUIREMENTS OF AASHTO M169, GRADE 12L14 AND SHALL HAVE A MINIMUM LENGTH OF THREADS OF 1½".
   B. 1 - ¾" Ø X 1⅝" BOLT WITH WASHER. BOLT SHALL CONFORM TO THE REQUIREMENTS OF ASTM A307. BOLT AND WASHER SHALL BE GALVANIZED. (AT THE CONTRACTOR'S OPTION, STAINLESS STEEL BOLT AND WASHER MAY BE USED AS AN ALTERNATE FOR THE ¾" Ø X 1⅝" GALVANIZED BOLT AND WASHER. THEY SHALL CONFORM TO OR EXCEED THE MECHANICAL REQUIREMENTS OF ASTM A307. THE USE OF THIS ALTERNATE SHALL BE APPROVED BY THE ENGINEER.)
   C. WIRE STRUT SHOWN IN THE CONCRETE INSERT ASSEMBLY DETAIL IS THE MINIMUM ALLOWABLE SIZE AND SHALL HAVE A MINIMUM TENSILE STRENGTH OF 100,000 PSI. AS AN OPTION, A 7/16" Ø WIRE STRUT WITH A MINIMUM TENSILE STRENGTH OF 90,000 PSI IS ACCEPTABLE.

METAL RAIL TO END POST CONNECTION NOTES:

1. THE METAL RAIL TO END POST CONNECTION SHALL CONSIST OF THE FOLLOWING COMPONENTS:
   A. ½" PLATES SHALL CONFORM TO AASHTO M270 GRADE 36 AND SHALL BE GALVANIZED AFTER FABRICATION.
   B. ¾" STRUCTURAL CONCRETE INSERT SHALL HAVE A WORKING LOAD SHEAR CAPACITY OF 4800 LBS. THE FERRULES SHALL ENGAGE A ¾"Ø X 1⅝" BOLT WITH 2" O.D. WASHER IN PLACE. THE ¾"Ø X 1⅝" BOLT SHALL HAVE N.C. THREADS.
   C. CAP SCREWS FOR RAIL ATTACHMENT TO ANGLE SHALL CONFORM TO THE REQUIREMENTS OF ASTM F593 ALLOY 305 STAINLESS STEEL. CAP SCREWS TO BE CENTERED IN SLOTS AT 60°F. WASHERS FOR RAIL ATTACHMENT SHALL MEET THE REQUIREMENTS OF ASTM F844 EXCEPT THEY SHALL BE MADE FROM ALLOY 304 STAINLESS STEEL.
   D. STANDARD CLAMP BARS SEE DWG. S-087E. (DWG. S-090E FOR 3 BAR RAIL).
2. THE COST OF THE STANDARD CLAMP BARS AND CAP SCREWS USED IN THE METAL RAIL TO END POST CONNECTION SHALL BE INCLUDED IN THE UNIT CONTRACT PRICE BID FOR LINEAR FEET OF 1 OR 3 BAR METAL RAILS.
3. THE ¾" STRUCTURAL CONCRETE INSERT WITH BOLT SHALL BE ASSEMBLED IN THE SHOP.
4. THE COST OF THE ¾" STRUCTURAL CONCRETE INSERT ASSEMBLY, AND THE ½" PLATES COMPLETE IN PLACE SHALL BE INCLUDED IN THE VARIOUS PAY ITEMS.
5. THE CONTRACTOR, AT HIS OPTION, MAY USE AN ADHESIVE BONDING SYSTEM IN LIEU OF THE STRUCTURAL CONCRETE INSERT EMBEDDED IN THE END POST. IF THE ADHESIVE BONDING SYSTEM IS USED, THE ¾" Ø X 1⅝" BOLT WITH WASHER SHALL BE REPLACED WITH A ¾"Ø X 6½" BOLT AND 2" O.D. WASHER.
   ALL SPECIFICATIONS THAT APPLY TO THE ¾" Ø X 1⅝" BOLT SHALL APPLY TO THE ¾"Ø X 6 ½" BOLT. FIELD TESTING OF THE ADHESIVE BONDING SYSTEM IS NOT REQUIRED.

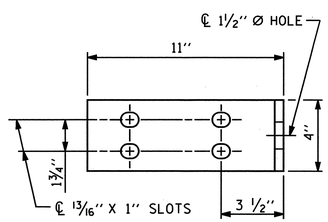

ATTACHMENT BRACKET ELEVATION

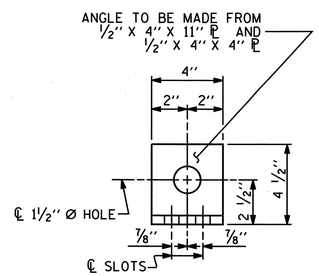

ATTACHMENT BRACKET END VIEW

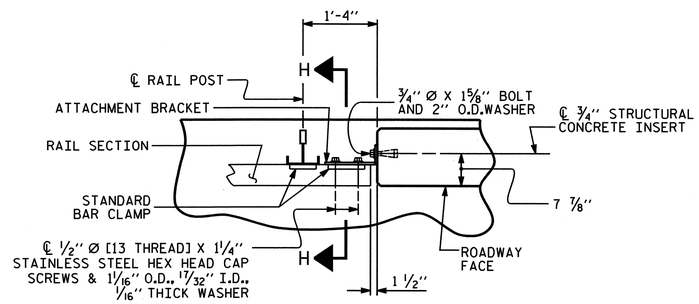

PLAN - RAIL AND END POST

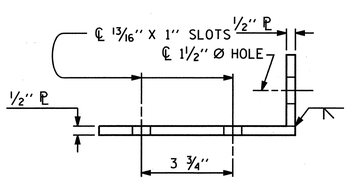

ATTACHMENT BRACKET TOP VIEW

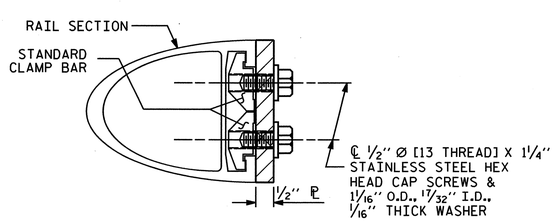

SECTION H-H

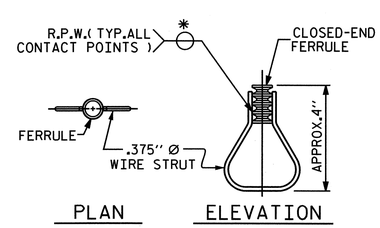

STRUCTURAL CONCRETE INSERT

* EACH WELDED ATTACHMENT OF WIRE TO FERRULE SHALL DEVELOP THE TENSILE STRENGTH OF THE WIRE.

DETAILS FOR ATTACHING METAL RAIL TO END POST

BAR TYPE

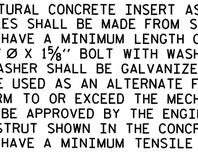

BAR DIMENSIONS ARE OUT-TO-OUT

BILL OF MATERIAL
FOR PARAPET ENDPOSTS LOCATED ON BASCULE SPAN

BAR	NO.	SIZE	TYPE	LENGTH	WEIGHT
E1	4	#7	1	2'-5½"	20 LBS.
E2	4	#7	1	2'-7"	21 LBS.
E3	4	#7	1	2'-11"	24 LBS.
F1	4	#6	STR	0'-9"	5 LBS.
F2	4	#6	STR	1'-2"	7 LBS.
F3	4	#6	STR	1'-7½"	10 LBS.

ALL BARS ARE EPOXY COATED
EPOXY COATED REINF. STEEL = 87 LBS.
SAND LIGHTWEIGHT CONCRETE = 0.2 CU. YDS.

EASTBOUND
PROJECT NO. U-4438
PASQUOTANK COUNTY
STATION: 15+25.75 -L1-

STATE OF NORTH CAROLINA
DEPARTMENT OF TRANSPORTATION
RALEIGH

ELIZABETH CITY BRIDGE OVER PASQUOTANK RIVER
BASCULE SPAN
1 BAR METAL RAIL DETAILS-2

MODJESKI and MASTERS
Experience great bridges.
Mechanicsburg, PA NC License No. C-2979

NORTH CAROLINA PROFESSIONAL SEAL 025801 ENGINEER LANCE V. BORDEN 3/18/2011

DRAWN BY : DMW	DATE : 01/11
CHECKED BY : DBI	DATE : 01/11

DWG NUMBER	TOTAL DWGS
S-088E	94

REVISIONS							SHEET NO.
NO.	BY:	DATE:	NO.	BY:	DATE:		S-190
1			3				TOTAL SHEETS
2			4				454

3/17/2011
1:06:38 PM
P:\2986.02 NCDOT Elizabeth City\CADD\Structural\DGN\S-088E_U4438_SD_1MR2_01_E.DGN

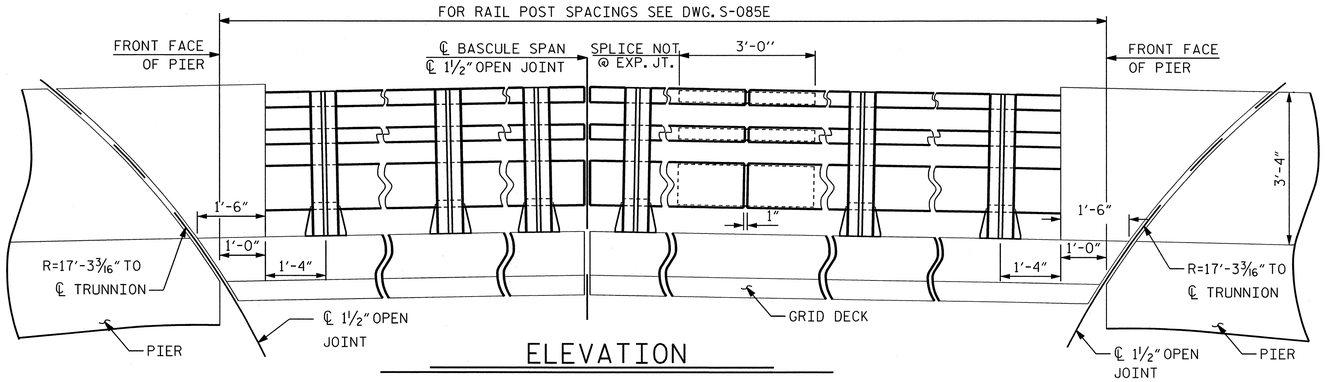

ELEVATION

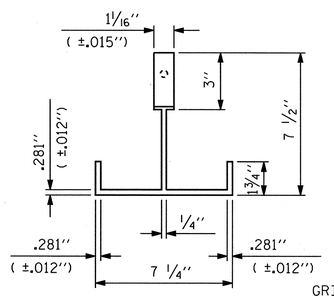

PLAN

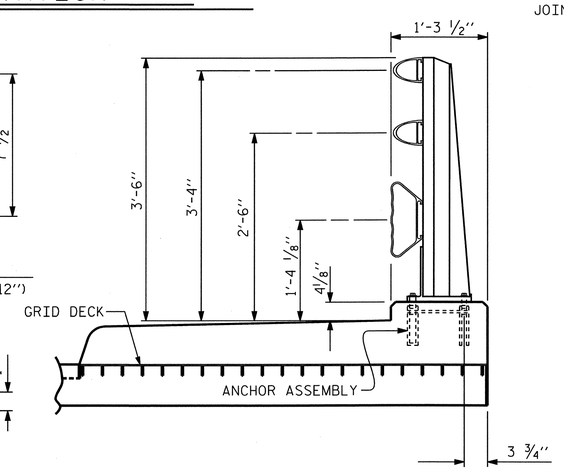

SECTION THRU RAIL

FOR ANCHOR ASSEMBLY, SEE DWG. S-090E

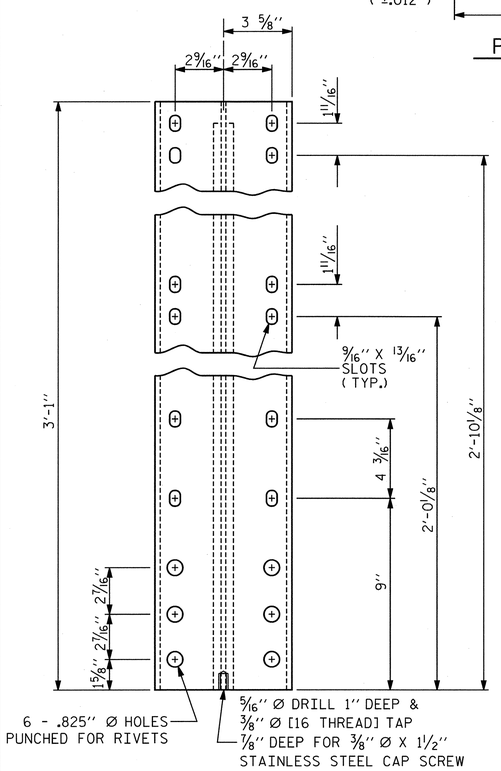

FRONT ELEVATION

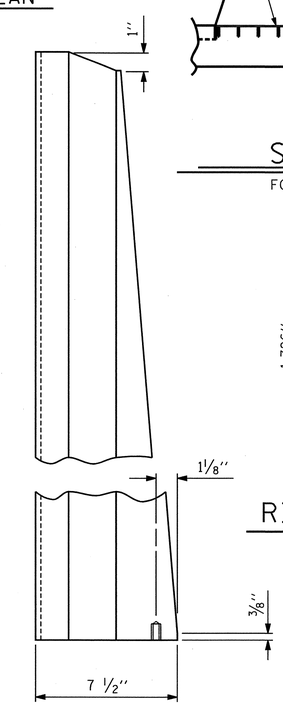

SIDE ELEVATION

DETAILS OF POST

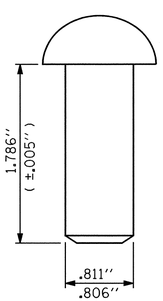

RIVET DETAIL

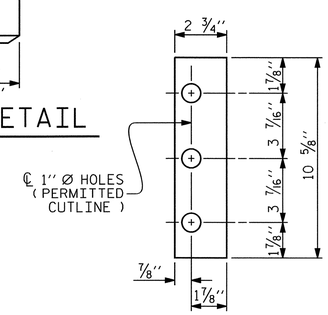

FRONT PLATE

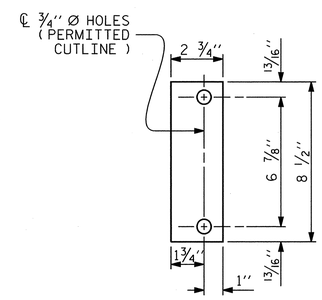

REAR PLATE

SHIM DETAILS

NOTE :
SHIMS MAY BE CUT ALONG PERMITTED CUTLINE OR SLOTTED TO EDGE OF PLATE TO FACILITATE PLACEMENT.

NOTES:

1. FOR GENERAL NOTES, SEE DWG.G-004.

ALUMINUM RAIL NOTES:

1. MATERIAL FOR POSTS, BASES AND RAILS, EXPANSION BARS AND CLAMP BARS SHALL BE ASTM B221 ALLOY 6061-T6.
2. MATERIAL FOR RIVETS SHALL BE ASTM B316 ALLOY 6061-T6. RIVETS SHALL BE STANDARD BUTTON HEAD AND CONE POINT COLD DRIVEN AS PER DRAWING.
3. THE BASE OF RAIL POSTS, OR ANY OTHER ALUMINUM SURFACE IN CONTACT WITH CONCRETE SHALL BE THOROUGHLY COATED WITH AN ALUMINUM IMPREGNATED CAULKING COMPOUND OF APPROVED QUALITY.
4. MATERIAL FOR SHIMS TO BE ASTM B209 ALLOY 6061-T6.

GENERAL RAILING NOTES:

1. RAILING SHALL BE CONTINUOUS FROM END POST TO END POST OF BRIDGE. EACH JOINT IN RAIL LENGTH SHALL BE SPLICED AS DETAILED. PANEL LENGTHS OF RAIL SHALL BE ATTACHED TO A MINIMUM OF THREE POSTS. PLACE ONE JOINT SPLICE JUST BEYOND THE 3RD RAIL POST FROM EACH END, TYPICALLY 14' FROM THE END. PLACE OTHER JOINTS AS NEEDED.
2. CAP SCREWS SHALL BE ASTM F593 ALLOY 305 STAINLESS STEEL. WASHERS FOR RAIL ATTACHMENT SHALL MEET THE REQUIREMENTS OF ASTM F844 EXCEPT THEY SHALL BE MADE FROM ALLOY 304 STAINLESS STEEL.
3. CERTIFIED MILL REPORTS ARE REQUIRED FOR RAILS AND POSTS. SHOP INSPECTION IS NOT REQUIRED.
4. METAL RAIL POSTS SHALL BE SET NORMAL TO CURB GRADE.
5. METHOD OF MEASUREMENT FOR METAL RAILS: FOR LENGTH OF METAL RAILS TO BE PAID FOR, SEE THE STANDARD SPECIFICATIONS.
6. CURVED RAIL USAGE: WHERE RAILS ARE TO BE USED ON BRIDGES ON HORIZONTAL AND/OR VERTICAL CURVATURE THE CONTRACTOR MAY, AT HIS OPTION, HAVE THE REQUIRED CURVATURE IN THE RAIL FORMED IN THE SHOP OR IN THE FIELD. IN EITHER EVENT, THE RAIL SHALL CONFORM WITHOUT BUCKLING OR KINKING TO THE REQUIRED CURVATURE IN A UNIFORM MANNER ACCEPTABLE TO THE ENGINEER.
7. TO INSURE FUTURE IDENTIFICATION OF THE FABRICATOR, A PERMANENT IDENTIFYING MARK SHALL BE PLACED ON EACH POST. THE METHOD OF MARKING AND LOCATION SHALL BE SUCH THAT IT DOES NOT DETRACT FROM THE APPEARANCE OF THE POST, BUT REMAIN VISIBLE AFTER RAIL PLACEMENT.
8. SHIMS SHALL BE USED AS NECESSARY FOR POST ALIGNMENT.
9. ALLOY 6351-T5 MAY BE SUBSTITUTED FOR ALLOY 6061-T6 WHERE APPLICABLE.
10. MINOR VARIATIONS IN DETAILS OF METAL RAIL WILL BE CONSIDERED. DETAILS OF SUCH VARIATIONS, IF DESIRED, SHALL BE SUBMITTED FOR APPROVAL.

PAY LENGTH = 117 LIN. FT. (FOR RAIL ON BASCULE SPAN)

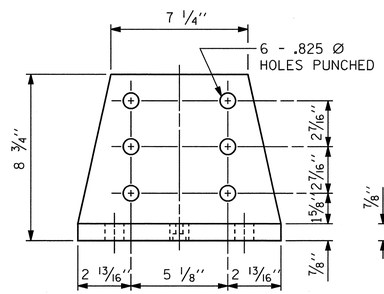

FRONT ELEVATION

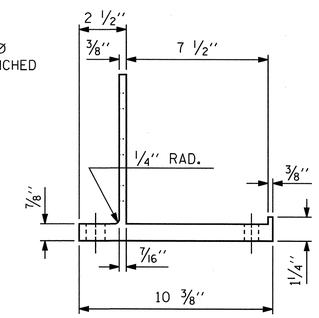

SIDE ELEVATION

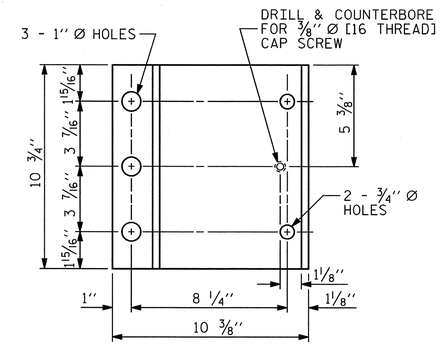

PLAN

POST BASE DETAILS

EASTBOUND

PROJECT NO. U-4438

PASQUOTANK COUNTY

STATION: 15+25.75 -L1-

STATE OF NORTH CAROLINA
DEPARTMENT OF TRANSPORTATION
RALEIGH

ELIZABETH CITY BRIDGE OVER PASQUOTANK RIVER
BASCULE SPAN
3 BAR METAL RAIL DETAILS-1

MODJESKI and MASTERS
Experience great bridges.
Mechanicsburg, PA NC License No. C-2979

NORTH CAROLINA PROFESSIONAL SEAL 025801 ENGINEER LANCE V. BORDEN 2/3/2011

REVISIONS						SHEET NO.
NO.	BY:	DATE:	NO.	BY:	DATE:	S-191
1			3			TOTAL SHEETS
2			4			454

DWG NUMBER	TOTAL DWGS
S-089E	94

DRAWN BY : DMW DATE : 01/11
CHECKED BY : DBI DATE : 01/11

2/1/2011
12:01:41 PM
P:\2986.02 NCDOT Elizabeth City\CADD\Structural\S-089E_U4438_SD_3MRI_01_E.DGN

NOTES:

1. FOR GENERAL NOTES, SEE DWG. G-004.

STRUCTURAL CONCRETE ANCHOR ASSEMBLY NOTES:

1. THE STRUCTURAL CONCRETE ANCHOR ASSEMBLY SHALL CONSIST OF THE FOLLOWING COMPONENTS:
   - A. FERRULES SHALL BE MADE FROM STEEL MEETING THE REQUIREMENTS OF AASHTO M169, GRADE 12L14 AND SHALL HAVE A MINIMUM LENGTH OF THREADS OF 2" FOR 3/4" FERRULES AND 1 3/4" FOR 5/8" FERRULES.
   - B. 3 - 3/4" Ø X 2 1/2" BOLTS WITH WASHERS. BOLTS SHALL CONFORM TO THE REQUIREMENTS OF ASTM A307. BOLTS AND WASHERS SHALL BE GALVANIZED. AT THE CONTRACTOR'S OPTION, STAINLESS STEEL BOLTS AND WASHERS MAY BE USED AS AN ALTERNATE FOR THE 3/4" Ø X 2 1/2" GALVANIZED BOLTS AND WASHERS. THEY SHALL CONFORM TO OR EXCEED THE MECHANICAL REQUIREMENTS OF ASTM A307. THE USE OF THIS ALTERNATE SHALL BE APPROVED BY THE ENGINEER.
   - C. 2 - 5/8" Ø X 2 1/4" BOLTS WITH WASHERS. BOLTS SHALL CONFORM TO THE REQUIREMENTS OF ASTM A307. BOLTS AND WASHERS SHALL BE GALVANIZED. AT THE CONTRACTOR'S OPTION, STAINLESS STEEL BOLTS AND WASHERS MAY BE USED AS AN ALTERNATE FOR THE 5/8" Ø X 2 1/4" GALVANIZED BOLTS AND WASHERS. THEY SHALL CONFORM TO OR EXCEED THE MECHANICAL REQUIREMENTS OF ASTM A307. THE USE OF THIS ALTERNATE SHALL BE APPROVED BY THE ENGINEER.
   - D. WIRE STRUT SHOWN IN THE CONCRETE ANCHOR ASSEMBLY DETAIL IS THE MINIMUM ALLOWABLE SIZE AND SHALL HAVE A MINIMUM TENSILE STRENGTH OF 100,000 PSI. AS AN OPTION, A 7/16" Ø WIRE STRUT WITH A MINIMUM TENSILE STRENGTH OF 90,000 PSI IS ACCEPTABLE.
   - E. THE METAL RAIL ANCHOR ASSEMBLIES TO BE HOT DIPPED GALVANIZED TO CONFORM TO REQUIREMENTS OF AASHTO M111.
   - F. THE COST OF THE METAL RAIL ANCHOR ASSEMBLY WITH BOLTS AND WASHERS COMPLETE IN PLACE SHALL BE INCLUDED IN THE PRICE BID FOR LINEAR FEET OF METAL RAIL.
   - G. BOLTS TO BE TIGHTENED ONE-HALF TURN WITH A WRENCH FROM A FINGER-TIGHT POSITION.

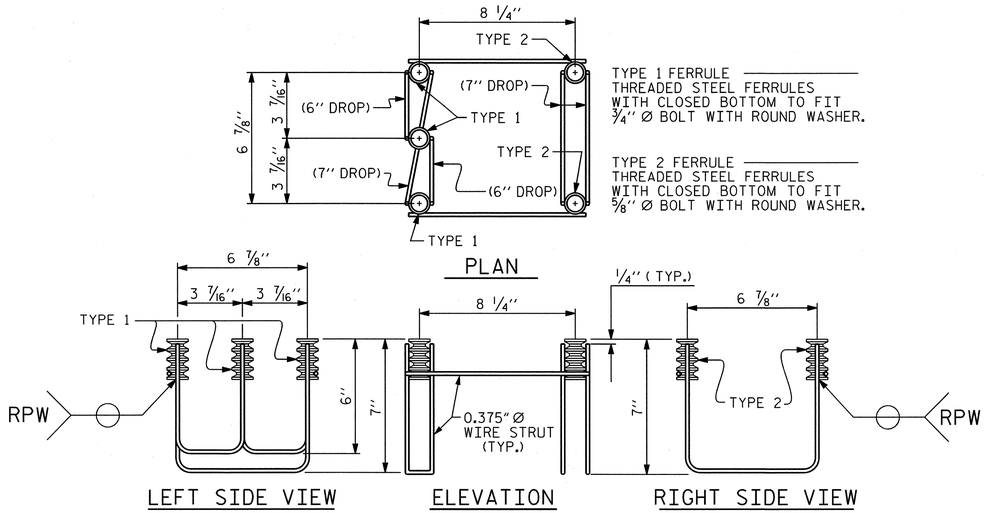

5-BOLT METAL RAIL ANCHOR ASSEMBLY

(24 ASSEMBLIES REQUIRED FOR BASCULE SPAN)

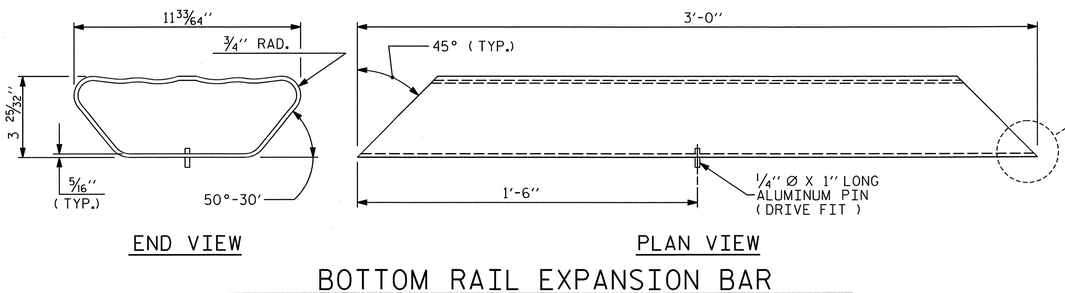

BOTTOM RAIL EXPANSION BAR

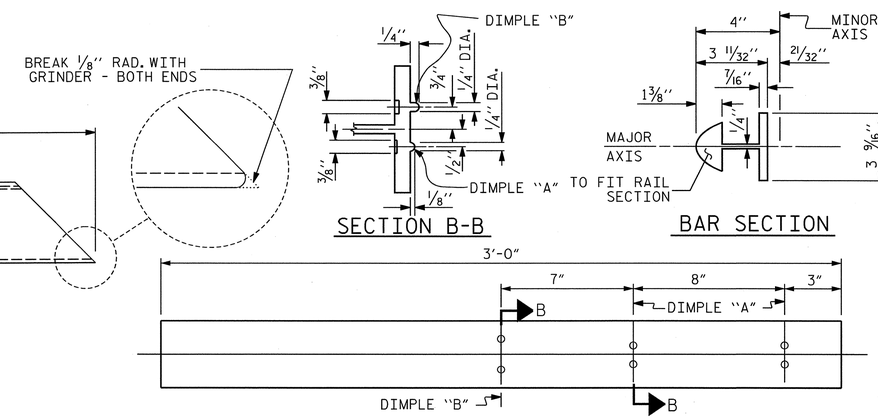

TOP & MIDDLE RAIL EXPANSION BAR

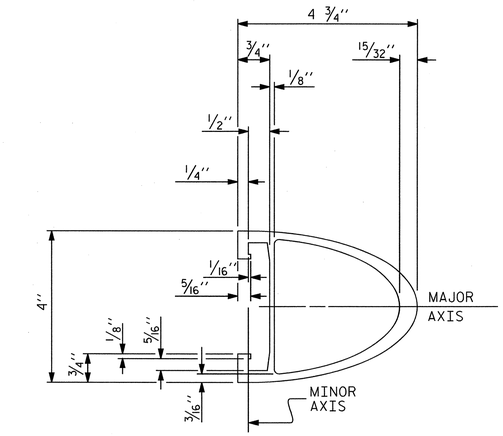

TOP & MIDDLE RAIL SECTION

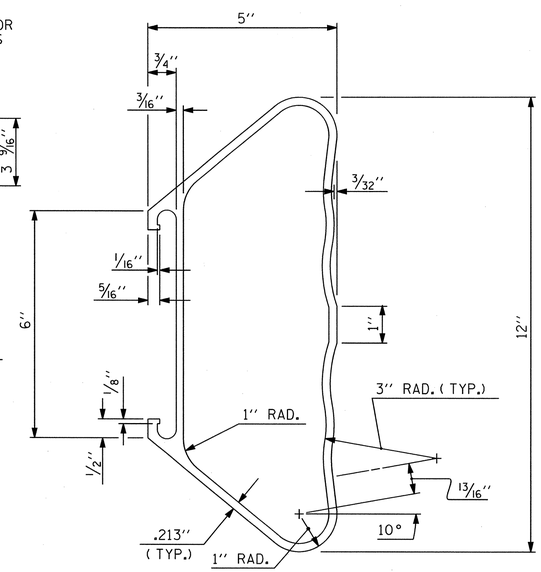

BOTTOM RAIL SECTION

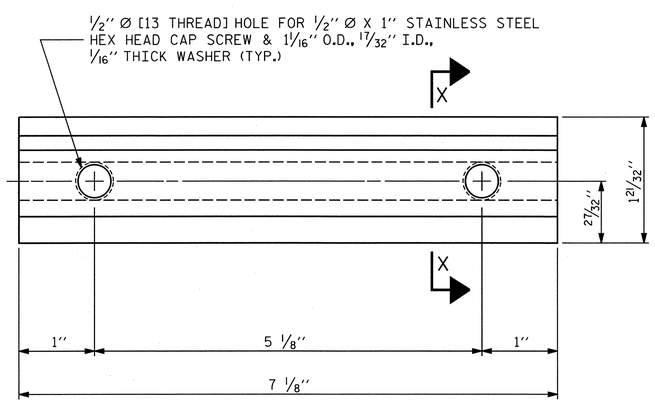

ELEVATION

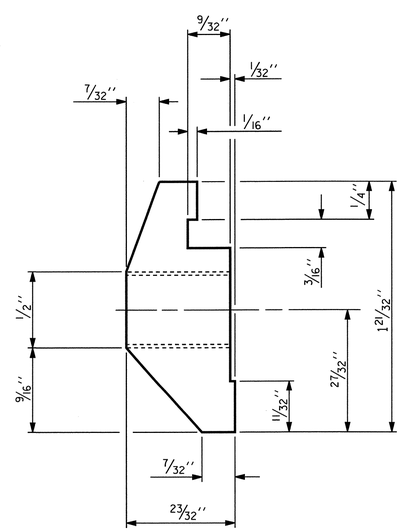

SECTION X-X

CLAMP BAR DETAIL

(6 REQUIRED PER POST)

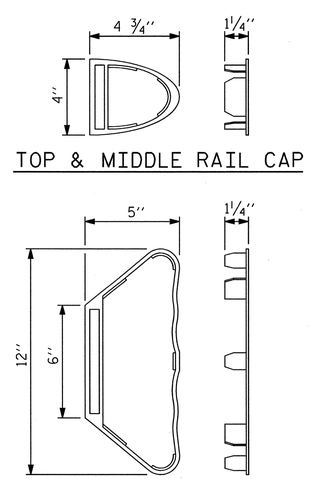

TOP & MIDDLE RAIL CAP

BOTTOM RAIL CAP

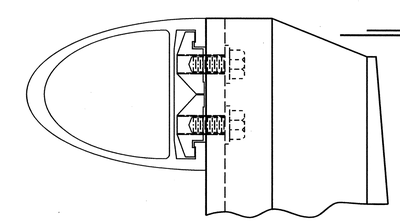

CLAMP ASSEMBLY

TOP RAIL SHOWN
(MIDDLE & BOTTOM RAIL ARE SIMILAR)

EASTBOUND

PROJECT NO. U-4438

PASQUOTANK COUNTY

STATION: 15+25.75 -L1-

STATE OF NORTH CAROLINA
DEPARTMENT OF TRANSPORTATION
RALEIGH

ELIZABETH CITY BRIDGE OVER
PASQUOTANK RIVER
BASCULE SPAN
3 BAR METAL RAIL DETAILS-2

MODJESKI and MASTERS
Experience great bridges.
Mechanicsburg, PA NC License No. C-2979

NORTH CAROLINA PROFESSIONAL ENGINEER SEAL 025801 LANCE V. BORDEN 2/3/2011

REVISIONS						SHEET NO.
NO.	BY:	DATE:	NO.	BY:	DATE:	S-192
1			3			TOTAL SHEETS
2			4			454

DWG NUMBER	TOTAL DWGS
S-090E	94

DRAWN BY : DMW DATE : 01/11
CHECKED BY : DBI DATE : 01/11

2/1/2011
12:03:12 PM
P:\2986.02 NCDOT Elizabeth City\CADD\Structural\S-090E_U4438_SD_3MR2_01_E.DGN

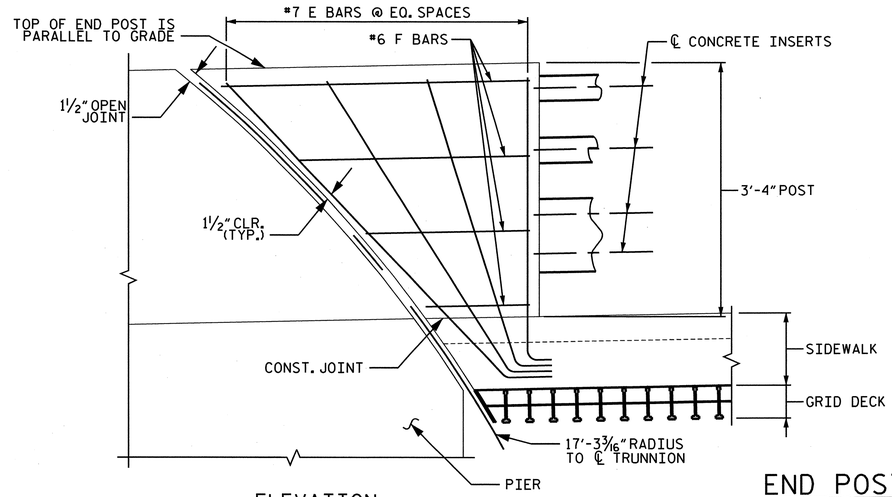

ELEVATION

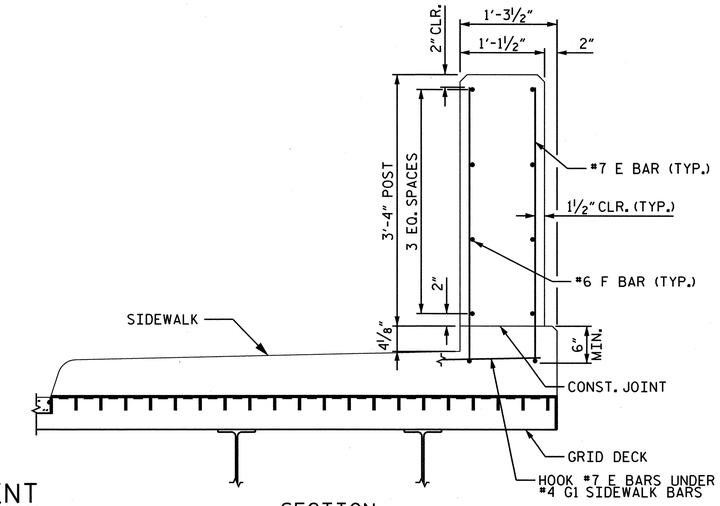

SECTION

END POST REINFORCEMENT

SIDEWALK REINFORCEMENT NOT SHOWN FOR CLARITY

BAR TYPE

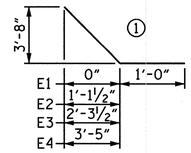

BAR DIMENSIONS ARE OUT-TO-OUT

BILL OF MATERIAL

FOR 3 BAR METAL RAIL ENDPOSTS LOCATED ON BASCULE SPAN

BAR	NO.	SIZE	TYPE	LENGTH	WEIGHT
E1	4	#7	1	4'-8"	38 LBS.
E2	4	#7	1	4'-10"	40 LBS.
E3	4	#7	1	5'-4"	44 LBS.
E4	4	#7	1	6'-0½"	49 LBS.
F1	4	#6	STR	1'-4"	8 LBS.
F2	4	#6	STR	2'-1½"	13 LBS.
F3	4	#6	STR	3'-0½"	18 LBS.
F4	4	#6	STR	4'-0"	24 LBS.

ALL BARS ARE EPOXY COATED

EPOXY COATED REINF. STEEL = 234 LBS.

SAND LIGHTWEIGHT CONCRETE = 0.9 CU. YDS.

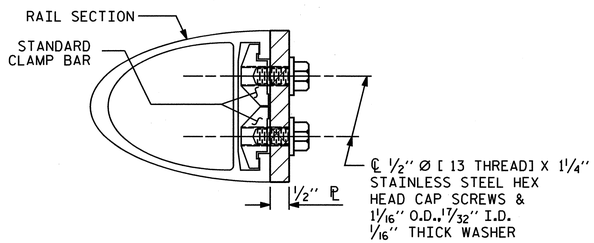

SECTION H-H

(FOR TOP & MIDDLE RAIL)

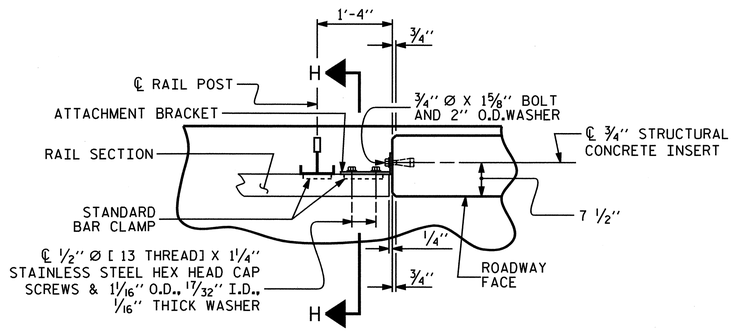

PLAN OF RAIL AND END POST

(STIFFENER ON ½" ℙ NOT SHOWN FOR CLARITY)

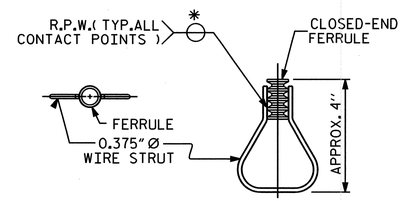

PLAN ELEVATION

STRUCTURAL CONCRETE INSERT

* EACH WELDED ATTACHMENT OF WIRE TO FERRULE SHALL DEVELOP THE TENSILE STRENGTH OF THE WIRE.

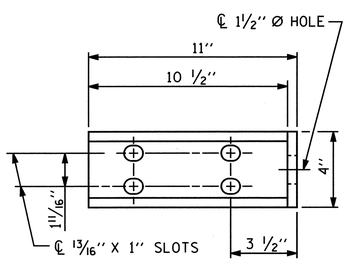

ELEVATION

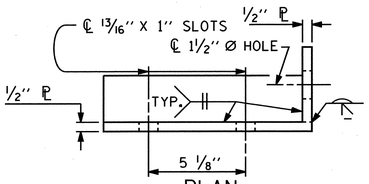

PLAN

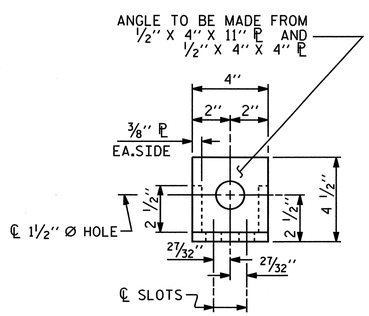

END VIEW

(FIX. AND EXP.)

DETAILS FOR ATTACHMENT BRACKET

(TOP & MIDDLE RAIL ONLY)

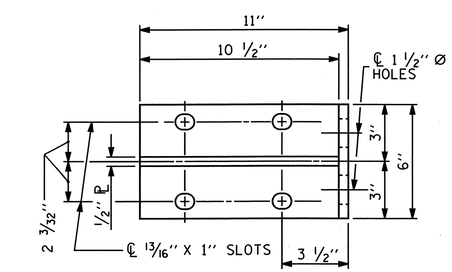

ELEVATION

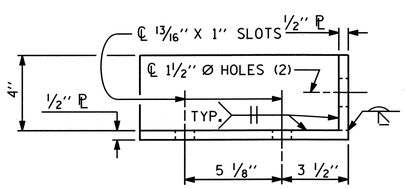

PLAN

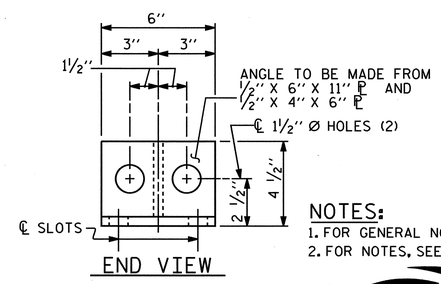

END VIEW

DETAILS FOR ATTACHMENT BRACKET

(BOTTOM RAIL ONLY)

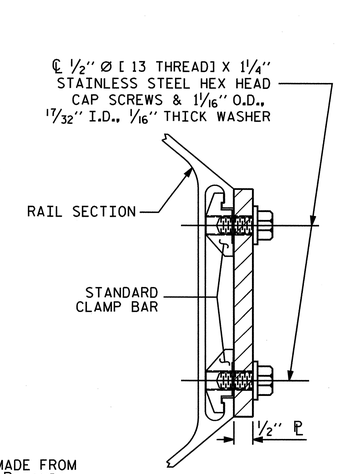

SECTION H-H

(FOR BOTTOM RAIL)

NOTES:

1. FOR GENERAL NOTES, SEE DWG. G-004.
2. FOR NOTES, SEE DWG. S-088E.

EASTBOUND

PROJECT NO. U-4438

PASQUOTANK COUNTY

STATION: 15+25.75 -L1-

STATE OF NORTH CAROLINA
DEPARTMENT OF TRANSPORTATION
RALEIGH

ELIZABETH CITY BRIDGE OVER PASQUOTANK RIVER

BASCULE SPAN

3 BAR METAL RAIL DETAILS-3

MODJESKI and MASTERS
Experience great bridges.
Mechanicsburg, PA NC License No. C-2979

NORTH CAROLINA PROFESSIONAL ENGINEER SEAL 025807 LANCE V. BORDEN 3/18/2011

DWG NUMBER	TOTAL DWGS
S-091E	94

REVISIONS								SHEET NO.
NO.	BY:	DATE:	NO.	BY:	DATE:			S-193
1			3					TOTAL SHEETS
2			4					454

DRAWN BY : DMW DATE : 01/11
CHECKED BY : DBI DATE : 01/11

3/17/2011
1:09:30 PM
P:\2986.02 NCDOT Elizabeth City\CADD\Structural\DGN\S-091E_U4438_SD_3MR3_01_E.DGN

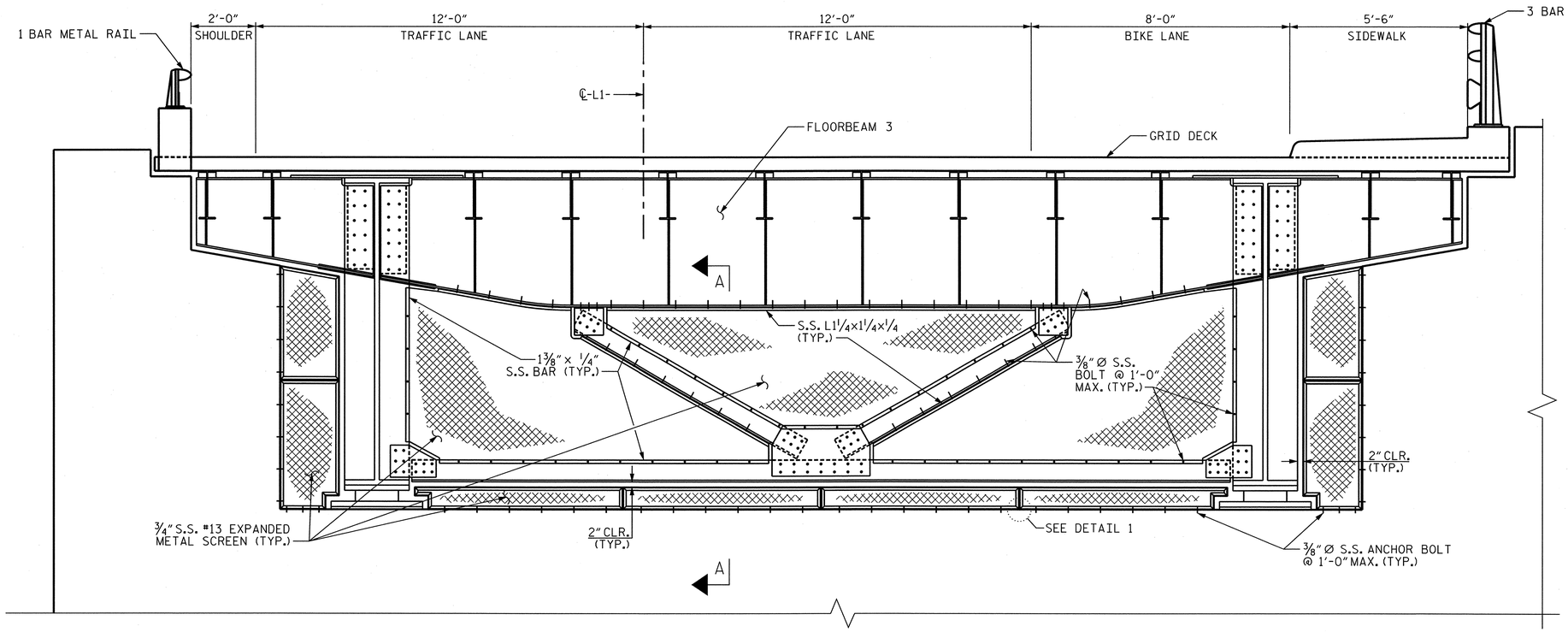

ELEVATION AT FLOORBEAM 3

(LOOKING AHEAD STATION AT PIER 6 - PIER 5 SIMILAR)
(BIRD SPIKES NOT SHOWN FOR CLARITY - SEE SECTION A-A)

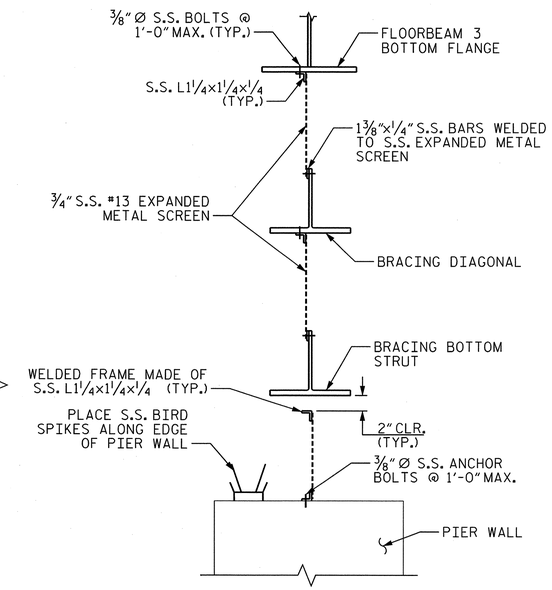

SECTION A-A

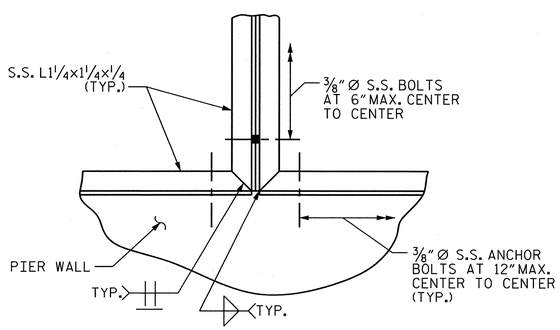

DETAIL 1

(OTHER WELDED ANGLE FRAME CONNECTIONS SIMILAR)

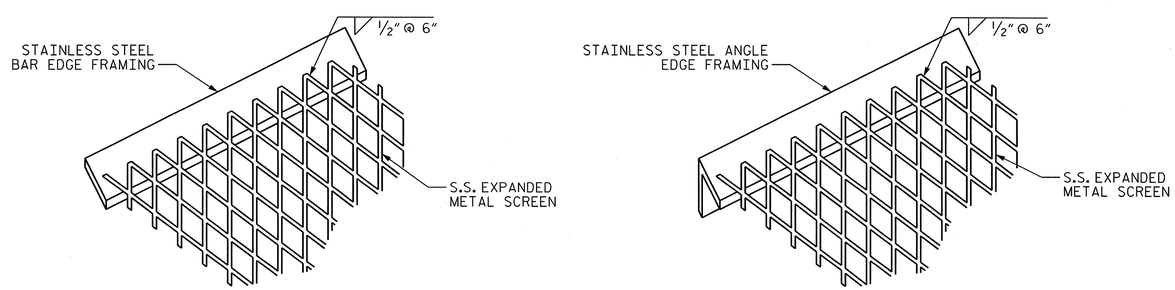

SCREEN WELD DETAILS

NOTES:

1. FOR GENERAL NOTES, SEE DWG. G-004

EASTBOUND
PROJECT NO. U-4438
PASQUOTANK COUNTY
STATION: 15+25.75 -L1-

STATE OF NORTH CAROLINA
DEPARTMENT OF TRANSPORTATION
RALEIGH

ELIZABETH CITY BRIDGE OVER PASQUOTANK RIVER
BASCULE SPAN
SCREENING DETAILS - 1

MODJESKI and MASTERS
Experience great bridges.
Mechanicsburg, PA NC License No. C-2979

NORTH CAROLINA PROFESSIONAL SEAL 025801 ENGINEER LANCE V. BORDEN 2/3/2011

DWG NUMBER	TOTAL DWGS
S-092E	94

REVISIONS						SHEET NO.
NO.	BY:	DATE:	NO.	BY:	DATE:	S-194
1			3			TOTAL SHEETS
2			4			454

DRAWN BY : DMW DATE : 01/11
CHECKED BY : DBI DATE : 01/11

2/1/2011
12:06:09 PM
P:\2986.02 NCDOT Elizabeth City\CADD\Structural\S-092E_U4438_SD_BS1_01_E.DGN

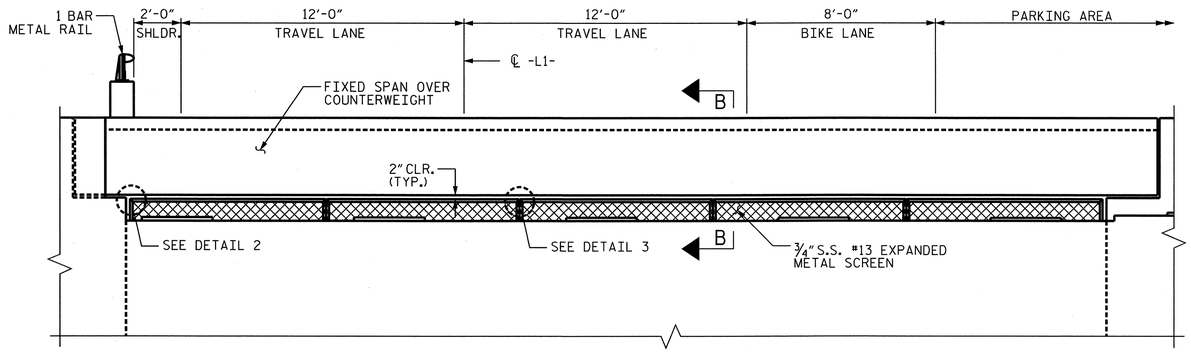

ELEVATION AT APPROACH SPAN SIDE OF PIER

(LOOKING AHEAD STATION AT PIER 5)
(PIER 6 SIMILAR)

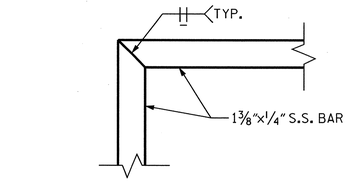

DETAIL 2

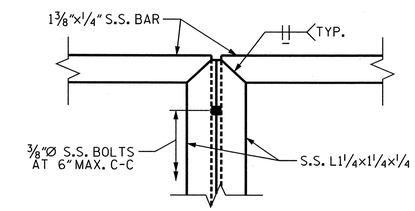

DETAIL 3

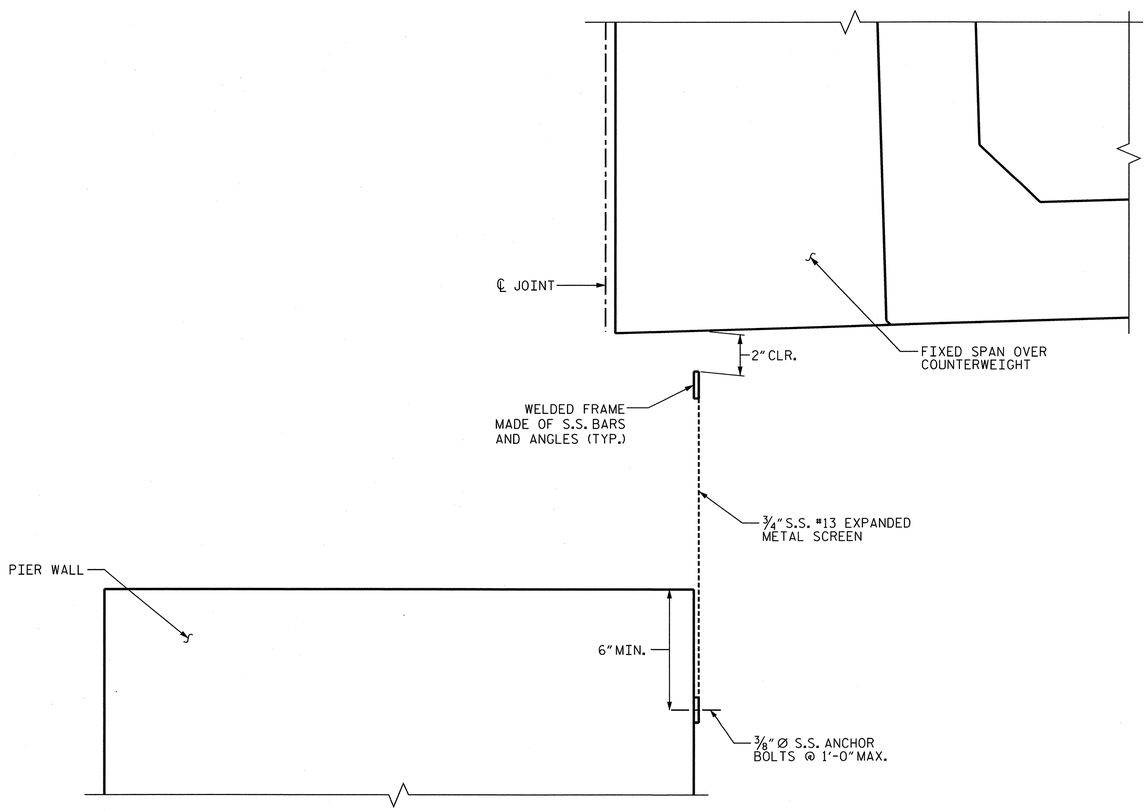

SECTION B-B

(APPROACH SPAN BEAMS NOT SHOWN FOR CLARITY)

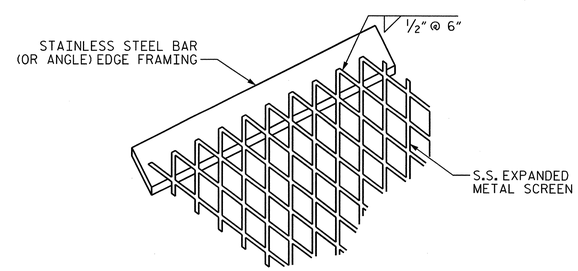

SCREEN WELD DETAILS

NOTES:

1. FOR GENERAL NOTES, SEE DWG. G-004.

EASTBOUND

PROJECT NO. U-4438

PASQUOTANK COUNTY

STATION: 15+25.75 -L1-

STATE OF NORTH CAROLINA
DEPARTMENT OF TRANSPORTATION
RALEIGH

ELIZABETH CITY BRIDGE OVER
PASQUOTANK RIVER
BASCULE SPAN
SCREENING DETAILS - 2

MODJESKI and MASTERS
Experience great bridges.
Mechanicsburg, PA NC License No. C-2979

NORTH CAROLINA PROFESSIONAL SEAL 025801 ENGINEER LANCE V. BORDEN 2/3/2011

DWG NUMBER	TOTAL DWGS
S-093E	94

REVISIONS								SHEET NO.
NO.	BY:	DATE:	NO.	BY:	DATE:			S-195
1			3					TOTAL SHEETS
2			4					454

DRAWN BY :	DMW	DATE :	01/11
CHECKED BY :	DBI	DATE :	01/11

2/1/2011
12:07:37 PM
P:\2986.02 NCDOT Elizabeth City\CADD\Structural\S-093E_U4438_SD_BS2_01_E.DGN

LOAD AND RESISTANCE FACTOR RATING (LRFR) SUMMARY FOR BASCULE SPAN "F"

LEVEL		VEHICLE	WEIGHT (W) (TONS)	CONTROLLING LOAD RATING (#)	MINIMUM RATING FACTORS (RF)	TONS = W × RF	STRENGTH I LIMIT STATE									SERVICE II LIMIT STATE					COMMENT NUMBER
							LIVE-LOAD FACTORS (γ_{LL})	MOMENT				SHEAR				LIVE-LOAD FACTORS (γ_{LL})	MOMENT				
								DISTRIBUTION FACTORS (DF)	RATING FACTOR	CONTROLLING MEMBER	DISTANCE ALONG MEMBER (FT)	DISTRIBUTION FACTORS (DF)	RATING FACTOR	CONTROLLING MEMBER	DISTANCE ALONG MEMBER (FT)		DISTRIBUTION FACTORS (DF)	RATING FACTOR	CONTROLLING MEMBER	DISTANCE ALONG MEMBER (FT)	
DESIGN LOAD RATING		HL-93 (INVENTORY)	N/A	1	1.24	-	1.75	1.739	1.24	BG2	36.67	1.739	1.30	BG2	36.67	1.30	-	1.52	FB8	13.75	1, 2
		HL-93 (OPERATING)	N/A		1.61	-	1.35	1.739	1.61	BG2	36.67	1.739	1.68	BG2	36.67	1.00	-	1.97	FB8	13.75	1, 2
		HS-20 (INVENTORY)	36.00	2	1.61	58.0	1.75	1.739	1.61	BG2	36.67	1.739	1.66	BG2	36.67	1.30	1.739	2.01	BG2	36.67	1
		HS-20 (OPERATING)	36.00		2.09	75.2	1.35	1.739	2.09	BG2	36.67	1.739	2.16	BG2	36.67	1.00	1.739	2.61	BG2	36.67	1
LEGAL LOAD RATING	SINGLE VEHICLE (SV)	SNSH	13.500		3.05	41.2	1.40	-	3.21	FB8	13.75	-	4.80	FB8	13.75	1.30	-	3.05	FB8	13.75	2
		SNGARBS2	20.000		2.86	57.1	1.40	-	3.01	FB8	13.75	1.739	3.67	BG2	36.67	1.30	-	2.86	FB8	13.75	1, 2
		SNAGRIS2	22.000		3.05	67.1	1.40	1.739	3.08	BG2	59.83	1.739	3.30	BG2	36.67	1.30	-	3.05	FB8	13.75	1, 2
		SNCOTTS3	27.250		1.62	44.2	1.40	-	1.71	FB8	13.75	-	2.55	FB8	13.75	1.30	-	1.62	FB8	13.75	2
		SNAGGRS4	34.925		1.85	64.5	1.40	1.739	1.88	BG2	48.25	1.739	2.07	BG2	36.67	1.30	-	1.85	FB8	13.75	1, 2
		SNS5A	35.550		1.80	63.8	1.40	1.739	1.86	BG2	48.25	1.739	2.07	BG2	36.67	1.30	-	1.80	FB8	13.75	1, 2
		SNS6A	39.950		1.71	68.5	1.40	1.739	1.71	BG2	48.25	1.739	1.88	BG2	36.67	1.30	1.739	1.76	BG2	36.67	1
		SNS7B	42.000		1.64	69.1	1.40	1.739	1.64	BG2	48.25	1.739	1.82	BG2	36.67	1.30	1.739	1.65	BG2	36.67	1
	TRUCK TRACTOR SEMI-TRAILER (TTST)	TNAGRIT3	33.000		2.13	70.2	1.40	1.739	2.13	BG2	36.67	1.739	2.24	BG2	36.67	1.30	1.739	2.13	BG2	36.67	1
		TNT4A	33.075		1.93	63.9	1.40	-	2.03	FB8	13.75	1.739	2.22	BG2	36.67	1.30	-	1.93	FB8	13.75	1, 2
		TNT6A	41.600		1.72	71.4	1.40	1.739	1.72	BG2	36.67	1.739	1.91	BG2	36.67	1.30	1.739	1.72	BG2	36.67	1
		TNT7A	42.000		1.72	72.1	1.40	1.739	1.72	BG2	36.67	1.739	1.88	BG2	36.67	1.30	1.739	1.72	BG2	36.67	1
		TNT7B	42.000		1.77	74.4	1.40	1.739	1.77	BG2	48.25	1.739	1.81	BG2	36.67	1.30	-	1.80	FB8	13.75	1, 2
		TNAGRIT4	43.000		1.69	72.6	1.40	1.739	1.69	BG2	36.67	1.739	1.75	BG2	36.67	1.30	1.739	1.69	BG2	36.67	1
		TNAGT5A	45.000		1.61	72.5	1.40	1.739	1.62	BG2	36.67	1.739	1.75	BG2	36.67	1.30	1.739	1.61	BG2	36.67	1
		TNAGT5B	45.000	3	1.56	70.4	1.40	1.739	1.57	BG2	36.67	1.739	1.66	BG2	36.67	1.30	1.739	1.56	BG2	36.67	1
FATIGUE		HL-93 (INVENTORY)	γ_{LL}=0.75		2.06																

LOAD FACTORS:

DESIGN LOAD RATING FACTORS	LIMIT STATE	γ_{DC}
	STRENGTH I	1.25
	SERVICE II	1.00

COMMENTS:

1. DUE TO THE ASYMMETRICAL CROSS SECTION AND THE SIDEWALK BEING MOUNTABLE, THE DEAD AND LIVE LOAD EFFECTS ON BASCULE GIRDER 2 CONTROLS OVER BASCULE GIRDER 1. THE DISTANCE ALONG THE MEMBER IS MEASURED FROM THE CENTERLINE OF THE TRUNNION AT BASCULE PIER 5 FOR THE WEST SPAN AND THE CENTERLINE OF THE TRUNNION AT PIER 6 FOR THE EAST SPAN.
2. TYPICAL DISTRIBUTION FACTOR IS NOT USED IN THE DESIGN OF TRANSVERSE FLOORBEAMS. THEREFORE, IT IS NOT APPROPRIATE TO LIST DISTRIBUTION FACTORS FOR THE CONTROLLING FLOORBEAMS. THE INTERIOR SECTION OF THE FLOORBEAMS CONTROLLED OVER THE CANTILEVER BRACKETS OF THE FLOORBEAMS. THE DISTANCE ALONG THE MEMBER IS MEASURED FROM THE CENTERLINE OF BASCULE GIRDER 1.

LEGEND:

ST = STRINGER
FB# = FLOORBEAM #
BG# = BASCULE GIRDER #

	YEAR	ADTT
CURRENT	2011	12,900
FUTURE	2030	18,800

#	CONTROLLING LOAD RATING
1	DESIGN LOAD RATING (HL-93) **
2	DESIGN LOAD RATING (HS-20) **
3	LEGAL LOAD RATING **
**	SEE CHART FOR VEHICLE TYPE

NOTES:

1. FOR GENERAL NOTES, SEE DWG. G-004.

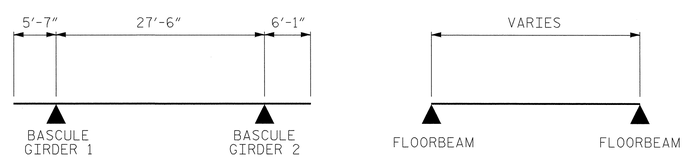

FLOORBEAM STRINGER

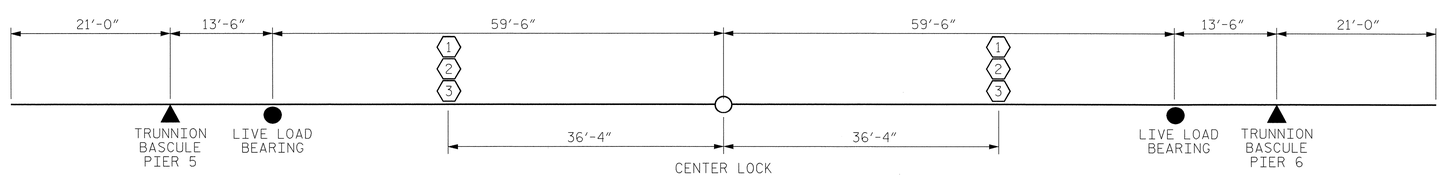

BASCULE GIRDER

LRFR SUMMARY

EASTBOUND
PROJECT NO. U-4438
PASQUOTANK COUNTY
STATION: 15+25.75 -L1-

STATE OF NORTH CAROLINA
DEPARTMENT OF TRANSPORTATION
RALEIGH

ELIZABETH CITY BRIDGE OVER
PASQUOTANK RIVER
BASCULE SPAN
RATING SUMMARY

MODJESKI and MASTERS
Experience great bridges.
Mechanicsburg, PA NC License No. C-2979

NORTH CAROLINA PROFESSIONAL ENGINEER SEAL 025801 4/21/2011 LANCE V. BORDEN

DWG NUMBER	TOTAL DWGS
S-094E	94

REVISIONS						SHEET NO.
NO.	BY:	DATE:	NO.	BY:	DATE:	S-196
1			3			TOTAL SHEETS
2			4			454

DRAWN BY : CMM DATE : 01/11
CHECKED BY : JPS DATE : 01/11

4/21/2011
1:29:13 PM
K:\2986.02\CADD\Structural\dgn files\S-094E_U4438_SD_LR01_01_E.dgn

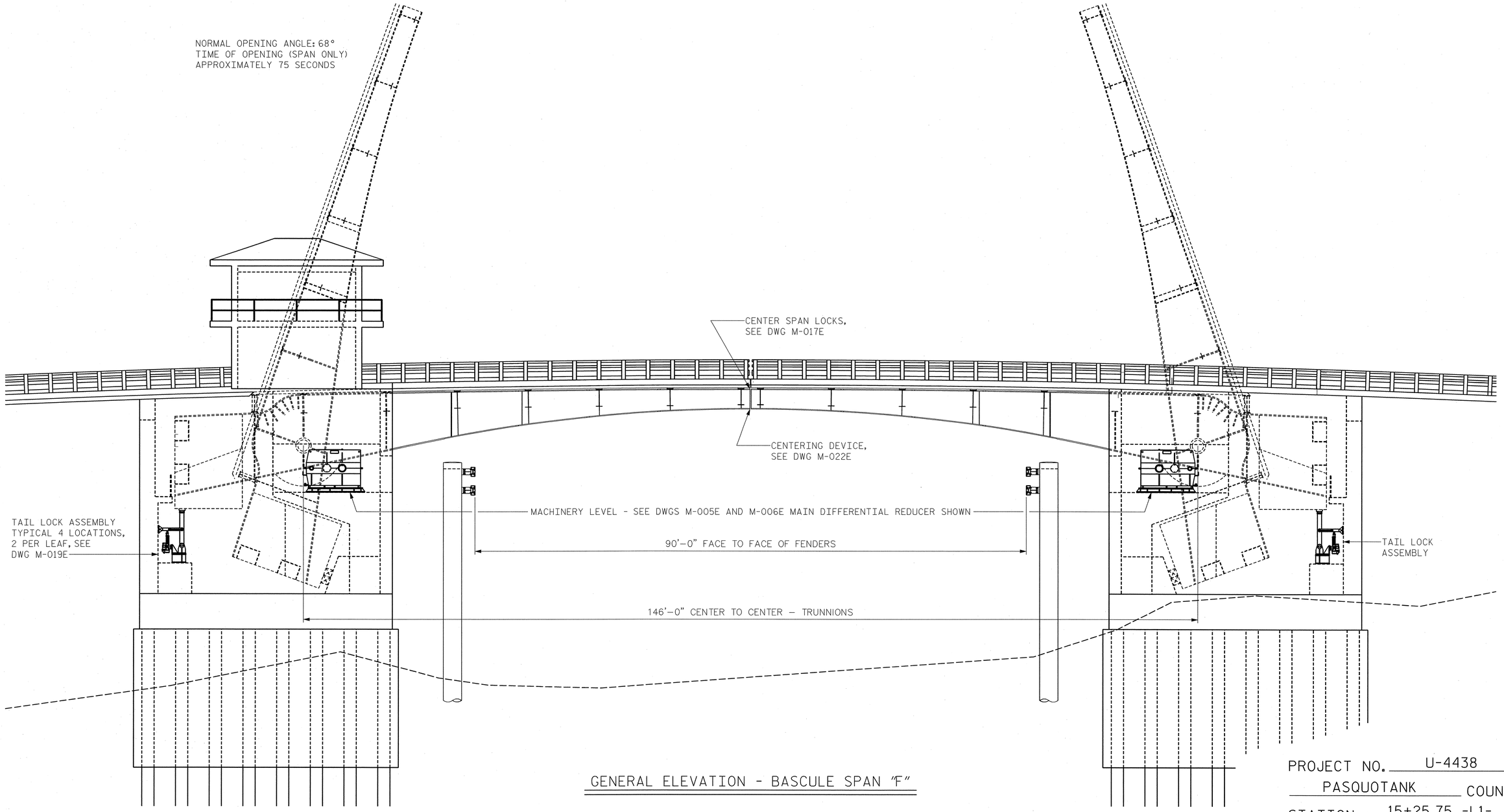

GENERAL ELEVATION - BASCULE SPAN "F"

PROJECT NO. U-4438

PASQUOTANK COUNTY

STATION: 15+25.75 -L1-

NOTES:

1. SEE ALSO DWG S-002E.

STATE OF NORTH CAROLINA
DEPARTMENT OF TRANSPORTATION
RALEIGH

ELIZABETH CITY BRIDGE OVER
PASQUOTANK RIVER
NEW BASCULE SPAN
GENERAL ELEVATION
MACHINERY

MODJESKI and MASTERS
Experience great bridges.
Mechanicsburg, PA NC License No. C-2979

NORTH CAROLINA PROFESSIONAL SEAL 025801 ENGINEER LANCE V. BORDEN 2/3/2011

DWG NUMBER	TOTAL DWGS
M-001E	22

REVISIONS								SHEET NO.
NO.	BY:	DATE:	NO.	BY:	DATE:			S-197
1			3					TOTAL SHEETS
2			4					454

DRAWN BY : RLR DATE : 01/11
CHECKED BY : TJM DATE : 01/11

2/3/2011
2:58:19 PM
K:\2986.02\CADD\Mechanical\EB\M-001E_U4438_MD_GEM_01_E.dgn

EXISTING PIER 1

90'-0" FACE TO FACE FENDERS

TO ELIZABETH CITY

EXISTING PIER 2

℄ -L2-

℄ TRUNNION &
PIER 5 CONTROL LINE
STA. 14+52.75 -L1-

℄ TRUNNION &
PIER 6 CONTROL LINE
STA. 15+98.75 -L1-

℄ SPAN

℄ CHANNEL

CENTER SPAN LOCKS
BENEATH REMOVABLE
DECK SECTIONS

TO CAMDEN

℄ -L1-

CENTERING DEVICE LOCATION

℄ BRIDGE

PARKING
AREA

CONTROL
HOUSE

SPAN DRIVE MACHINERY,
SEE DWG M-006E

EBB

FLOOD

PASQUOTANK
RIVER

GENERAL PLAN - BASCULE SPAN "F"

PROJECT NO. U-4438

PASQUOTANK COUNTY

STATION: 15+25.75 -L1-

STATE OF NORTH CAROLINA
DEPARTMENT OF TRANSPORTATION
RALEIGH

ELIZABETH CITY BRIDGE OVER
PASQUOTANK RIVER
NEW BASCULE SPAN
GENERAL PLAN
MACHINERY

NOTES:

1. SEE ALSO DWG S-001E.

MODJESKI and MASTERS
Experience great bridges.
Mechanicsburg, PA NC License No. C-2979

NORTH CAROLINA PROFESSIONAL SEAL 025801 ENGINEER LANCE V. BORDEN 2/3/2011

DRAWN BY : RLR	DATE : 01/11
CHECKED BY : TJM	DATE : 01/11

DWG NUMBER	TOTAL DWGS
M-002E	22

REVISIONS								SHEET NO.
NO.	BY:	DATE:	NO.	BY:	DATE:			S-198
1			3					TOTAL SHEETS
2			4					454

2/3/2011
2:58:25 PM
K:\2986.02\CADD\Mechanical\EB\M-002E_U4438_MD_GPM_01_E.dgn

MECHANICAL EQUIPMENT SCHEDULE - NEW SPAN - EASTBOUND

ITEM NO	REFERENCE DRAWING	QUANTITY	MANUFACTURER	DESCRIPTION
M101	M-013E	2	EARLE GEAR 12 DDC	DIFFERENTIAL GEAR REDUCER; DOUBLE REDUCTION; 60:1 RATIO; 50 HP; 105 RPM INPUT, EITHER INPUT SHAFT
M102	M-006E	4	SEW EURODRIVE GEARMOTOR MAIN DRIVE	HELICAL-BEVEL GEARMOTOR; 50 HP; 105 RPM OUTPUT; 2 WITH DOUBLE OUTPUT SHAFTS; 2 WITH SINGLE OUTPUT SHAFT 16.75:1 RATIO; ALL WITH ENCODERS; CANOPY; SEE ELECTRICAL EQUIPMENT LIST ALSO
M103	M-006E	2	SEW EURODRIVE GEARMOTOR AUXILIARY DRIVE	HELICAL-BEVEL GEARMOTOR; 10 HP; 17 RPM OUTPUT; WITH SINGLE OUTPUT SHAFT; MOTOR BRAKE 100.75:1 RATIO; CANOPY; SEE ELECTRICAL EQUIPMENT LIST ALSO
M104	M-006E	4	MAGNETEK (MONDEL) MOTOR BRAKE	16" DRUM BRAKE WITH SYMMETRICAL BRAKE WHEEL 1400 LB-FT RATING; LOW FORCE HAND RELEASE; TYPE 3R STAINLESS STEEL COVER; THREE LIMIT SWITCHES; SEE ELECTRICAL EQUIPMENT LIST ALSO
M105	M-006E	8	BUBENZER DISC BRAKE MACHINERY BRAKE UNIT	THRUSTER DISC BRAKE UNIT; SB28; FOR 39.370"Ø DISC 2 UNITS PER MACHINERY BRAKE; 12,170 LB-FT RATING EACH LOW FORCE HAND RELEASE; TYPE 3R STAINLESS STEEL COVER; SEE ELECTRICAL EQUIPMENT LIST ALSO
M106	M-006E	4	FALK MOTOR COUPLING	1040G20 DOUBLE ENGAGEMENT GEAR COUPLING; 270,900 LB-IN TORQUE RATING
M107	M-006E	2	FALK DISCONNECT COUPLING	1030G72 AUXILIARY DRIVE "CLUTCH" COUPLING; 107,100 LB-IN TORQUE RATING
M108	M-006E	8	FALK OUTPUT SHAFT COUPLING	1080G52 SINGLE ENGAGEMENT GEAR COUPLING WITH GAP DISC; 1000 SERIES; 1,500,000 LB-IN TORQUE RATING
M109	M-006E	8	EARLE PILLOW BLOCK PINION BEARING	EPB-100 PILLOW BLOCK; 10" DIAMETER BORE 102,500 LB AASHTO LOAD RATING
M110	M-015E	2	ANDANTEX RIGHT ANGLE GEAR REDUCER	SIZE 10; Z SERIES; 4:1 RATIO; USED AS A 1:4 SPEED INCREASER; LOW BACKLASH OPTION
M111	M-015E	4	ZERO-MAX CD COUPLING	#6A30C-SS STAINLESS STEEL FLEXIBLE COUPLING; BORES AND KEYSLOTS TO MATCH COMPONENTS
M112	M-015E	2	GEMCO COUPLING	¾" DIRECT DRIVE ADJUSTABLE COUPLING SERIES 3001
M113	M-008E	8	EARLE GEAR OR MEITHER BEARING	TRUNNION BEARING - SPECIAL; 13" DIAMETER BORE SPLIT PLAIN FLANGED BRONZE BEARING
M114	M-017E	2	RACO ELECTRIC CYLINDER	MA ELECTRIC LINEAR CYLINDER; TYPE N; THRUST UNIT SIZE 8; WITH 20" GROSS STROKE; 19" NET STROKE; WITH TWO SPDT STROKE LIMIT SWITCHES; MOTOR BRAKE WITH HAND RELEASE; HAND WHEEL WITH DISENGAGING MECHANISM AND ELECTRIC INTERLOCK SWITCH; SEE ELECTRICAL EQUIPMENT LIST ALSO
M115	M-019E	4	RACO ELECTRIC CYLINDER	MA ELECTRIC LINEAR CYLINDER; TYPE N; THRUST UNIT SIZE 7; WITH 13" GROSS STROKE; 10.63" NET STROKE; WITH TWO SPDT STROKE LIMIT SWITCHES; MOTOR BRAKE WITH HAND RELEASE; HAND WHEEL WITH DISENGAGING MECHANISM AND ELECTRIC INTERLOCK SWITCH; SEE ELECTRICAL EQUIPMENT LIST ALSO

MACHINERY NOTES (M-001E THRU M-022E AND M-001W THRU M-009W)

ALL WORK SHALL BE PERFORMED IN ACCORDANCE WITH THE 2007 2ND EDITION OF THE AASHTO LRFD "MOVABLE HIGHWAY BRIDGE DESIGN SPECIFICATIONS", AND INTERIM REVISIONS 2008 AND 2010.

ALL ITEMS SPECIFIED IN THE PLANS SHALL BE CONSIDERED TO BE FOLLOWED BY THE PHASE "OR APPROVED EQUAL" UNLESS OTHERWISE SPECIFIED ON THE PLANS.

THE CONTRACTOR SHALL PROVIDE ALL MATERIAL, EQUIPMENT, TOOLS, AND LABOR TO PURCHASE/FABRICATE, TRANSPORT, REHABILITATE, INSTALL/ERECT, ALIGN/ADJUST, PAINT, LUBRICATE, AND TEST ALL MECHANICAL MACHINERY TO PROVIDE A COMPLETE AND OPERABLE BRIDGE AND DRIVE SYSTEM AS DESCRIBED ON THE FOLLOWING SHEETS.

THE INFORMATION AND DIRECTIONS GIVEN IN THESE MECHANICAL NOTES COVER GENERAL SITUATIONS. EVERY ITEM IN THESE MECHANICAL NOTES CAN BE CONSIDERED TO BE FOLLOWED BY THE PHRASE "UNLESS OTHERWISE SPECIFIED ON THE PLANS."

ALL DIMENSIONS AND DETAILS SHALL BE VERIFIED AT THE SITE BEFORE PROCEEDING WITH ANY WORK TO AVOID CAUSING CONFLICTS AND ANY SUBSEQUENT DELAY IN WORK.

THE PROJECT ENGINEER SHALL BE NOTIFIED IMMEDIATELY FOR CLARIFICATION WHENEVER ANY PORTION OF THE WORK IS NOT CLEARLY OR ACCURATELY DEFINED.

SHOP WORK:

REMOVE ALL BURRS AND BREAK ALL SHARP EDGES ON FABRICATED PARTS.

FINISHED MATING SURFACES:
FINISHED MATING SURFACES SUCH AS OPEN GEAR TEETH, AND SHAFT ENDS THAT FIT IN COUPLINGS/BORE OF COUPLINGS SHALL HAVE A 125 MICROINCH FINISH. PLAIN BEARING JOURNALS SHALL HAVE AN 8 MICROINCH FINISH. THESE SURFACES SHALL BE PROTECTED FROM CORROSION BY A COATING OF NO-OX-ID "A SPECIAL" PROTECTIVE GREASE AS MANUFACTURED BY SANCHEM, INC. CHICAGO, ILLINOIS OR APPROVED EQUAL.

FITS AND SURFACE FINISHES:
WHEN NOT INCLUDED ON THE PLANS, SHALL BE AS SHOWN BELOW, OR VENDOR'S RECOMMENDED SPECIFICATIONS, WHICHEVER IS MORE RIGOROUS.

SURFACE FINISHES ARE GIVEN AS THE ROUGHNESS HEIGHT IN MICROINCHES.

PART	FIT	FINISH
MACHINERY BASE ON STEEL	-	250
MACHINERY BASE ON MASONRY	-	500
SHAFT JOURNALS	RC6	8
JOURNAL BUSHING	RC6	16
SPLIT BUSHING IN BASE	LC1	125
SOLID BUSHING IN BASE (TO ¼" INCH WALL)	FN1	63
SOLID BUSHING IN BASE (OVER ¼" INCH WALL)	FN2	63
HUBS ON SHAFTS (TO 2 INCH BORE)	FN2	32
HUBS ON SHAFTS (OVER 2 INCH BORE)	FN2	63
HUBS ON MAIN TRUNNIONS	FN3	63
TURNED BOLTS IN FINISHED HOLES	LC6	63
SLIDING BEARINGS	RC6	32
KEYS AND KEYWAYS (TOP AND BOTTOM)	LC4	63
KEYS AND KEYWAYS (SIDES)	FN2	63
MACHINERY PARTS IN FIXED CONTACT	-	125
TEETH OF OPEN SPUR GEARS:		
UNDER 1 INCH CIRCULAR PITCH	-	32
OVER 1 INCH CIRCULAR PITCH	-	63

THE ABOVE FITS FOR CYLINDRICAL PARTS SHALL ALSO APPLY TO THE MAJOR DIMENSIONS OF NONCYLINDRICAL PARTS.
UNSPECIFIED MACHINED SURFACES (√) SHALL BE 125 MICRO-INCH FINISH.

PROJECT NO. U-4438
PASQUOTANK COUNTY
STATION: 15+25.75 -L1-

STATE OF NORTH CAROLINA
DEPARTMENT OF TRANSPORTATION
RALEIGH

ELIZABETH CITY BRIDGE OVER PASQUOTANK RIVER
NEW BASCULE SPAN
GENERAL MACHINERY NOTES - 1

MODJESKI and MASTERS
Experience great bridges.
Mechanicsburg, PA NC License No. C-2979

NORTH CAROLINA PROFESSIONAL ENGINEER SEAL 025801 LANCE V. BORDEN 5/3/2011

DWG NUMBER	TOTAL DWGS
M-003E	22

REVISIONS							SHEET NO.
NO.	BY:	DATE:	NO.	BY:	DATE:		S-199
1			3				TOTAL SHEETS
2			4				454

DRAWN BY : RLR DATE : 01/11
CHECKED BY : TJM DATE : 01/11

5/4/2011
9:10:33 AM
\\mmdc10\projects\2986.02\CADD\Mechanical\EB\M-003E_U4438_MD_GMN1_01_E.dgn

MACHINERY NOTES (M-001E THRU M-022E AND M-001W THRU M-009W) (CONTINUED)

TEMPLATES:
TEMPLATES SHALL BE FABRICATED FOR ALL MACHINERY BASES SECURED BY ANCHOR BOLTS TO CONCRETE. THE TEMPLATE SHALL BE DELIVERED TO THE WORK SITE AND USED TO ASSURE PROPER POSITIONING OF NEW ANCHOR BOLTS.

TOLERANCES:
ALL TOLERANCES SHALL BE AS SHOWN ON THE PLANS. WHERE NOT SHOWN, TOLERANCES SHALL BE AS FOLLOWS:
FRACTIONS: +/- 1/32"; DECIMALS: +/- 0.010; ANGLES: +/- 0.5 DEGREE

MECHANICAL PARTS/EQUIPMENT:

ALL MATERIAL FOR NEW FABRICATED PARTS AND ALL MANUFACTURED EQUIPMENT PROVIDED BY THE CONTRACTOR SHALL BE NEW AND SHALL CONFORM TO ASTM AND OTHER STANDARDS AS SHOWN ON THE PLANS OR AN APPROVED EQUAL.

THE WEIGHT OF EACH ITEM (FABRICATED OR MANUFACTURED) SHALL BE SHOWN ON THE SHOP DRAWINGS.

THE CONTRACTOR SHALL VERIFY THE FINAL DIMENSIONS OF ALL COMMERICAL PRODUCTS SUCH AS MOTORS, SPEED REDUCERS, BEARINGS, ELECTRICAL EQUIPMENT, ETC, FROM CERTIFIED DRAWINGS PROVIDED BY THE MANUFACTURER PRIOR TO PRODUCING SHOP DRAWINGS.

IF THE CONTRACTOR PROPOSES TO USE MATERIAL OR EQUIPMENT OTHER THAN DETAILED ON THE DRAWINGS, ANY REDESIGN OF THE STRUCTURE, FOUNDATION, WIRING OR ANY OTHER PART OF THE MECHANICAL OR ELECTRICAL LAYOUT, ALL SUCH REDESIGN, AND ALL NEW DRAWINGS REQUIRED, SHALL, WITH THE APPROVAL OF THE BRIDGE DESIGN ENGINEER, BE PREPARED BY THE CONTRACTOR AT NO ADDITIONAL COST TO THE NCDOT.

WELDMENTS:

UNLESS OTHERWISE SPECIFIED, THE MINIMUM WELD SIZE ALLOWED IS SHOWN BELOW:

MATERIAL THICKNESS	MINIMUM SIZE FILLET ✱✱
UP TO 1/2"	3/16"✱
OVER 1/2" TO 3/4"	1/4"✱
OVER 3/4" TO 1 1/2"	5/16"✱
OVER 1 1/2" TO 2 1/4"	3/8"
OVER 2 1/4" TO 6"	1/2"

✱ SINGLE PASS WELD MUST BE USED. THE MINIMUM WELD SHALL BE A ✱ INCH FILLET WELD.

✱✱ WELD SIZE IS DETERMINED BY THE THICKER OF THE TWO PARTS JOINED UNLESS A LARGER SIZE IS REQUIRED BY CALCULATED STRESS. THE WELD SIZE NEED NOT EXCEED THE THICKNESS OF THE THINNER PART JOINED.

FASTENERS:

STANDARD MECHANICAL MACHINERY BOLTS:
BOLTS FOR FASTENING MECHANICAL MACHINERY TOGETHER OR TO BASES SHALL BE HEAVY HEX HIGH STRENGTH STRUCTURAL BOLTS. BOLTS SHALL COME COMPLETE WITH ONE HEAVY HEX NUT (ASTM A563 GRADE C), ONE HARDENED STEEL FLAT WASHER (ASTM F436), AND ONE EXTRA DUTY LOCK WASHER.

MATERIAL: BOLTS UP TO AND INCLUDING 1 1/2", ASTM A325; GREATER THAN 1 1/2", ASTM A449.
BOLT HOLE DIAMETER SHALL BE 1/16" LARGER THAN THE NORMAL BOLT DIAMETER FOR ALL BOLTS, EXCEPT TURNED BOLTS.

TURNED BOLTS:
SHANK SHALL BE STRAIGHT WITHIN 0.001" PER INCH LENGTH.

BOLTS SHALL BE MANUFACTURED TO ANSI B18.2.6, HEAVY HEX STRUCTURAL BOLTS.

SURFACE DISCONTINUITIES SHALL BE IN ACCORDANCE WITH ASTM F788. BREAK SHARP EDGES 0.010" – 0.015".

MATERIAL: LESS THAN 1.5" BODY DIAMETER, ASTM A325; GREATER THAN 1.5" BODY DIAMETER, ASTM A449.
EACH BOLT SHALL BE MARKED AS PER ASTM A325 OR A449 ON TOP OF BOLT HEAD AND MAY BE RAISED OR DEPRESSED AT THE OPTION OF THE MANUFACTURER.

ALL TURNED BOLTS SHALL HAVE A HARDENED STEEL WASHER WHICH CONFORMS TO ASTM F436.
THREADS OF TURNED BOLTS SHALL NOT BE IN THE SHEAR PLANE OF THE PARTS TO BE FASTENED.

STAINLESS STEEL FOR FASTENERS:
STAINLESS STEEL FASTENERS SHALL BE TYPE 316, WITH A MINIMUM TENSILE STRENGTH OF 85,000 PSI AND SHALL MEET OR EXCEED ASTM F593, ALLOY GROUP 2, CONDITION CW.

SHIMS:

SHOP ASSEMBLED MACHINERY:
THE SHOP MAY FABRICATE A SINGLE SHIM TO PRECISE DIMENSIONS FOR ANY MACHINERY ASSEMBLED IN THE SHOP.

FIELD ASSEMBLED MACHINERY:
CONTRACTOR SHALL SUPPLY COMPLETE SHIM PACKS TO THE FIELD FOR ALL MACHINERY WHICH REQUIRES LEVELING AND ALIGNMENT IN THE FIELD. SHIMS SHALL BE PLACED TO PROVIDE FULL CONTACT BETWEEN MACHINERY AND MOUNT/SUPPORT.

SHIM PACKS SHALL BE NEATLY TRIMMED TO THE DIMENSIONS OF THE ASSEMBLIED PARTS AND DRILLED FOR ALL BOLTS THAT PASS THROUGH THE SHIMS.
THE THICKNESS OF EACH SHIM SHALL BE MARKED ON THE SHIM WITH AN INDELIBLE MARKER.

SHIM PACKS SHALL BE INDIVIDUALLY PACKED TO PREVENT DAMAGE FROM HANDLING DURING SHIPMENT TO THE PROJECT SITE. PACKAGING SHALL BE CLEARLY MARKED WITH THE PLAN SHEET NUMBER AND ITEM NUMBER OF THE PART FOR WHICH THE SHIM PACK WAS FABRICATED.

MATERIAL: ALL SHIMS SHALL BE MADE FROM ASTM A240 OR A666, TYPE 316 STAINLESS STEEL.

IN GENERAL, TOTAL SHIM THICKNESS AVAILABLE SHALL BE NO LESS THAN EQUAL TO TWICE THE NOMINAL THICKNESS SHOWN ON THE DRAWINGS, AND SUFFICIENT VARYING THICKNESSES SHALL BE FURNISHED TO SECURE 0.010-INCH VARIATIONS OF THE SHIM ALLOWANCE INCLUDING ONE SHIM EQUAL TO THE FULL ALLOWANCE. SHIMS SHALL BE SHOWN IN DETAIL ON THE SHOP DRAWINGS.

SHOP ASSEMBLIES:

SHOP TESTING AND CALIBRATION:
TESTS AND CALIBRATIONS SHALL BE MADE IN THE PRESENCE OF NCDOT OFFICALS OR THEIR REPRESENTATIVE(S). AFTER CALIBRATIONS ARE MADE, THE EQUIPMENT SHALL BE MATCH MARKED AND TAGGED TO SHOW SET POINTS.

NO EQUIPMENT SHALL BE SHIPPED TO THE FIELD WITHOUT BEING SUCCESSFULLY TESTED AND CALIBRATED.

ALL MACHINERY COMPONENTS, INCLUDING SPAN DRIVE CONTROL EQUIPMENT, SHALL BE SHOP ASSEMBLED TO VERIFY THEIR CORRECT FIT PRIOR TO SHIPMENT. COMPONENTS NOT MOUNTED ON A COMMON BASE SHALL THEN BE DISASSEMBLED FOR SHIPMENT. ALL COMPONENTS REQUIRING SELECTIVE ASSEMBLY SHALL BE MATCH-MARKED FOR FUTURE ASSEMBLY.

MATERIAL FOR SUPPORT WELDMENTS AND MISCELLANEOUS STEEL COMPONENTS:
MATERIAL SHALL CONFORM TO ASTM A588, HSLA STEEL UNLESS OTHERWISE SPECIFIED.

BRAKES:
THE MOTOR AND MACHINERY BRAKES SHALL BE ADJUSTED AND TESTED IN THE SHOP TO DELIVER THE BRAKING TORQUE SPECIFIED AND SHOWN ON THE EXTERNAL ADJUSTABLE SCALE.

FIELD WORK:

MACHINERY INSTALLATION:

ALL MACHINERY COMPONENTS, INCLUDING ALL FABRICATED AND COMMERCIAL ITEMS, WHICH HAVE BEEN DELIVERED TO THE FIELD, BUT HAVE NOT BEEN INSTALLED, SHALL BE PROTECTED AGAINST RUST AND CORROSION BY ANY MEANS AGREED UPON BETWEEN THE CONTRACTOR AND THE PROJECT ENGINEER. MACHINERY PIECES SHALL BE FREQUENTLY INSPECTED AND IF RUST OR CORROSION IS FOUND, THE CONTRACTOR SHALL TAKE IMMEDIATE STEPS TO CLEAN AND PROTECT EQUIPMENT.

ALL MACHINERY SHALL BE INSTALLED BY THOSE COMPETENT AND SKILLED IN THE TYPE OF WORK INVOLVED. INSTALLERS SHALL BE PROVIDED WITH ALL THE NECESSARY MEASURING AND LEVELING INSTRUMENTS AS MAY BE REQUIRED.

ALL MACHINERY SHALL BE LAID OUT TO A TOLERANCE OF 1/32".

ALL PARTS ALIGNED WITH SHIM PACKS SHALL BE PRECISELY ADJUSTED AND ALIGNED TO THE LIMITS OF THE CAPABILITY OF THE SHIM PACKS.

WHERE A PIECE OF MACHINERY OR A FABRICATED BASE FOR A PIECE OF MACHINERY IS TO BE ANCHORED TO THE CONCRETE DECK PEDESTAL OR PIER, A LEAD SHIM SHALL BE PLACED BETWEEN THE CONCRETE AND COMPONENT OR FABRICATED BASE.

AT THE TIME OF THE FIELD INSTALLATION, THE RUST INHIBITING GREASE COATING ON MECHANICAL PARTS THAT HAVE FINISHED MATING SURFACES SHALL BE COMPLETELY REMOVED BY AN APPROVED SOLVENT SUCH AS GASOLINE OR BENZENE. ONCE THE INSTALLATION OF THE ENTIRE MECHANISM IS COMPLETED. PAINTED SURFACES OF THE MECHANISM SHALL BE TOUCHED-UP AND PAINTED IN ACCORDANCE WITH THE PAINT SPECIFICATION. UNPAINTED, FINISHED MATING SURFACES THAT SLIDE DURING OPERATION SUCH AS OPEN GEAR TEETH SHALL THEN BE CLEANED OF ALL DIRT, RUST, AND INCIDENTAL PAINT, AND COATED WITH THE PROPER LUBRICATING GREASE FROM THE LUBRICATION DIAGRAM. UNPAINTED, FINISHED MATING SURFACES THAT DO NOT SLIDE DURING OPERATION SUCH AS SHAFT ENDS THAT FIT IN COUPLING/BORE OF COUPLINGS WILL BE PROTECTED FROM CORROSION BY THE TOP COAT OF THE PAINT SYSTEM.

BOLTS:
TORQUES FOR THE VARIOUS GRADES OF BOLTS SHALL BE PROPORTIONED TO THEIR STRENGTH AND SHALL BE INDICATED ON THE ERECTION DRAWINGS.

MACHINERY BOLTS:
FIELD DRILLED HOLES SHALL BE USED ONLY WHERE INDICATED ON THE PLANS. FIELD DRILLED HOLES NOT INDICATED ON THE PLANS MUST BE APPROVED BY THE BRIDGE DESIGN ENGINEER. NO BURNED HOLES WILL BE ALLOWED.

FIELD DRILLED BOLT HOLES IN STRUCTURAL STEEL FOR MOUNTING MACHINERY SHALL IN GENERAL, BE DRILLED FROM THE SOLID AFTER FINAL ALIGNMENT OF THE MACHINERY. SUFFICIENT ERECTION HOLES, SUB DRILLED 1/4" UNDERSIZE FOR TEMPORARY BOLTS, MAY BE USED FOR ERECTION AND ALIGNMENT OF THE MACHINERY. WHEN THE MACHINERY IS ALIGNED IN ITS FINAL POSITION, FULL SIZE HOLES FOR PERMANENT TURNED BOLTS SHALL BE SUB DRILLED AND REAMED. FULL SIZE BOLTS INSTALLED, AND THE TEMPORARY BOLTS REMOVED.

MACHINERY INSTALLATION, ADJUSTMENTS, AND TESTING:

PRIOR TO DELIVERY OF ANY MACHINERY TO THE SITE, THE CONTRACTOR SHALL SUBMIT A DETAILED INSTALLATION AND ALIGNMENT PROCEDURE TO THE BRIDGE DESIGN ENGINEER FOR APPROVAL.

THE CONTRACTOR SHALL PROVIDE THE NECESSARY ELECTRICAL AND MECHANICAL TECHNICIANS AS WELL AS ALL THE TOOLS AND LABOR REQUIRED TO PERFORM INSTALLATION PROCEDURE.

INSPECTION:
AFTER THE CONTRACTOR HAS COMPLETED THE MACHINERY INSTALLATION, AN INSPECTION SHALL BE ARRANGED WITH REPRESENTATIVES FROM THE MECHANICAL AND ELECTRICAL UNITS OF BRIDGE DESIGN AND THE PROJECT ENGINEER. WRITTEN NOTICE SHALL BE PROVIDED TEN (10) DAYS PRIOR TO THE DATE OF THE INSPECTION. THE CONTRACTOR SHALL PROVIDE ELECTRICAL AND MECHANICAL TECHNICIANS AS WELL AS ALL THE TOOLS AND LABOR NECESSARY TO MAKE NECESSARY ADJUSTMENTS.

GEARMOTOR PROTECTION:

ALL SEW-EURODRIVE GEARMOTORS (EASTBOUND AND WESTBOUND SPANS) SHALL BE ORDERED WITH CORROSION PROTECTION, IP66 DUST TIGHT PROTECTION AND OS4 SURFACE COATING PROTECTION.

PROJECT NO. U-4438
PASQUOTANK COUNTY
STATION: 15+25.75 -L1-

STATE OF NORTH CAROLINA
DEPARTMENT OF TRANSPORTATION
RALEIGH

ELIZABETH CITY BRIDGE OVER
PASQUOTANK RIVER
NEW BASCULE SPAN
GENERAL MACHINERY NOTES - 2

MODJESKI and MASTERS
Experience great bridges.
Mechanicsburg, PA NC License No. C-2979

NORTH CAROLINA PROFESSIONAL ENGINEER SEAL 025801 LANCE V. BORDEN 2/3/2011

DWG NUMBER	TOTAL DWGS
M-004E	22

REVISIONS

NO.	BY:	DATE:	NO.	BY:	DATE:
1			3		
2			4		

SHEET NO. S-200
TOTAL SHEETS 454

DRAWN BY : RLR DATE : 01/11
CHECKED BY : TJM DATE : 01/11

2/3/2011
2:58:36 PM
K:\2986.02\CADD\Mechanical\EB\M-004E_U4438_MD_GMN2_01_E.dgn

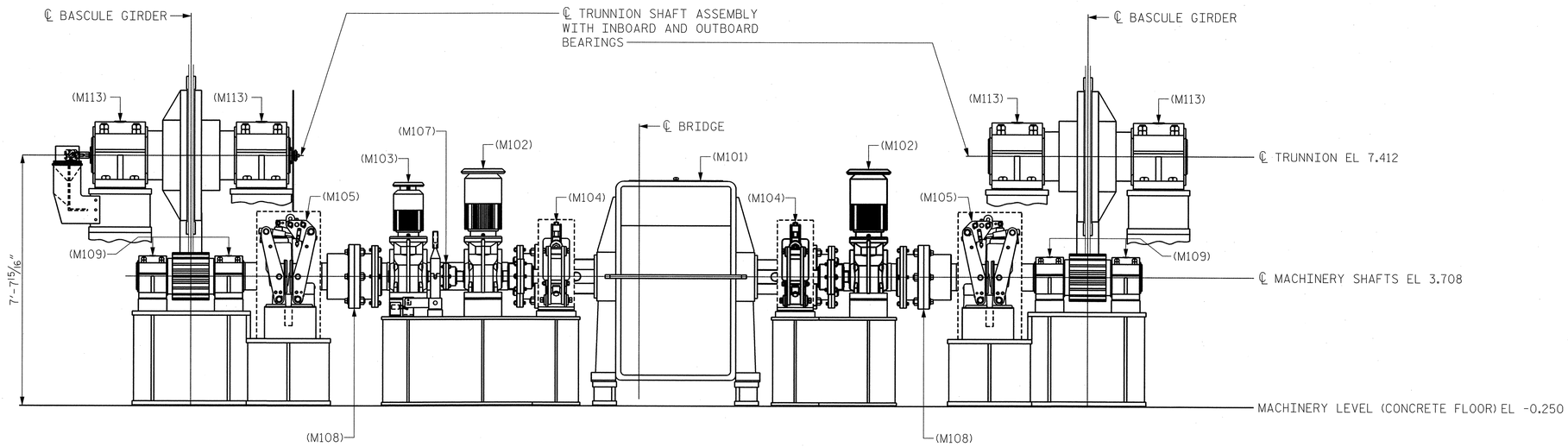

ELEVATION AT PIER 6 SPAN DRIVE MACHINERY

(LOOKING WEST)

PROJECT NO. U-4438

PASQUOTANK COUNTY

STATION: 15+25.75 -L1-

STATE OF NORTH CAROLINA
DEPARTMENT OF TRANSPORTATION
RALEIGH

ELIZABETH CITY BRIDGE OVER
PASQUOTANK RIVER
NEW BASCULE SPAN
SECTION
PIER AT MACHINERY

MODJESKI and MASTERS
Experience great bridges.
Mechanicsburg, PA NC License No. C-2979

NORTH CAROLINA PROFESSIONAL SEAL 025801 ENGINEER LANCE V. BORDEN 2/3/2011

REVISIONS						SHEET NO.
NO.	BY:	DATE:	NO.	BY:	DATE:	S-201
1			3			TOTAL SHEETS
2			4			454

DWG NUMBER	TOTAL DWGS
M-005E	22

DRAWN BY : RLR DATE : 01/11
CHECKED BY : TJM DATE : 01/11

2/3/2011
2:58:41 PM
K:\2986.02\CADD\Mechanical\EB\M-005E_U4438_MD_SPAM_01_E.dgn

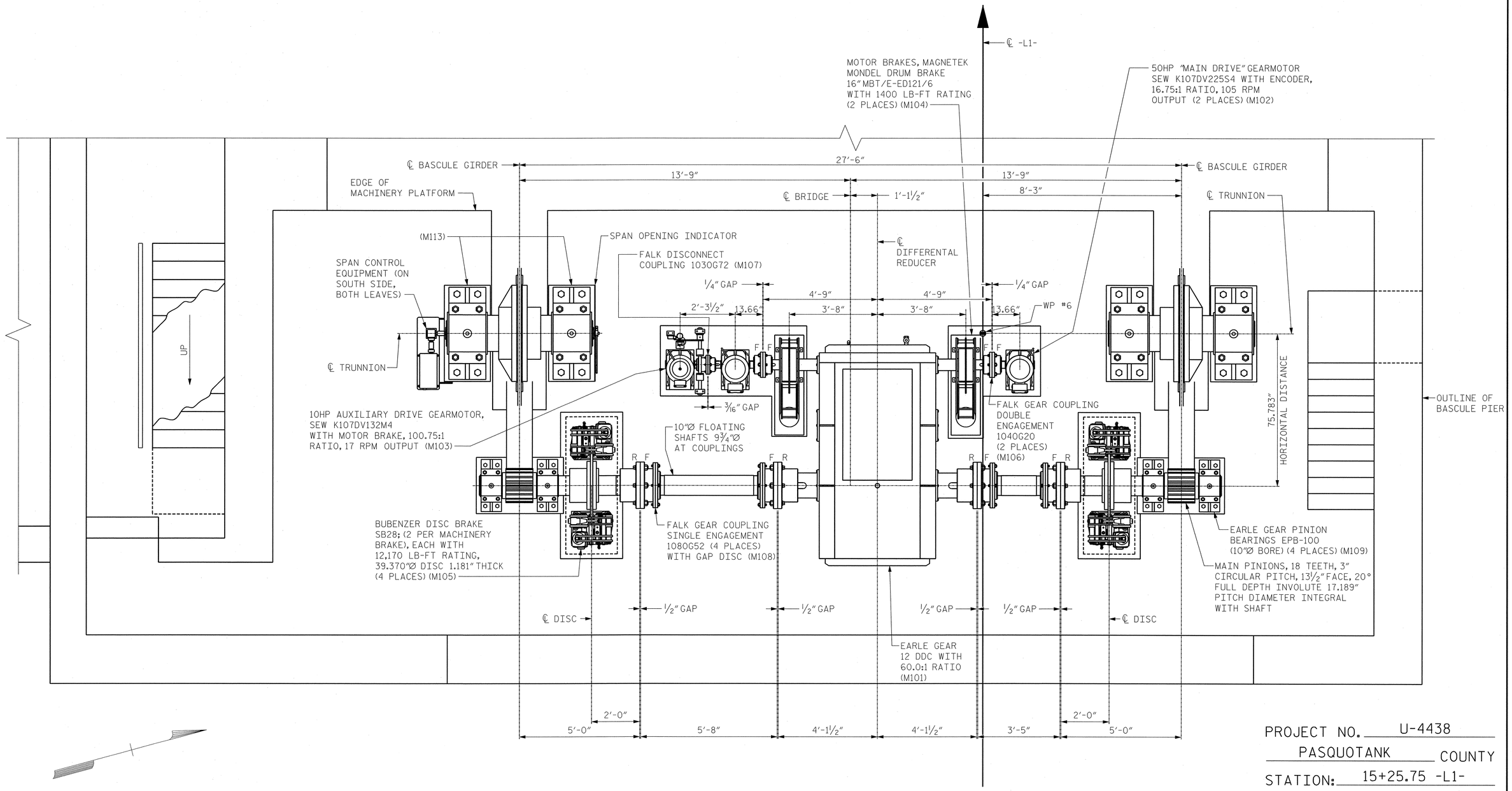

PROJECT NO. U-4438

PASQUOTANK COUNTY

STATION: 15+25.75 -L1-

PLAN - MACHINERY LAYOUT

PIER 5 SHOWN, PIER 6 OPPOSITE HAND

STATE OF NORTH CAROLINA
DEPARTMENT OF TRANSPORTATION
RALEIGH

ELIZABETH CITY BRIDGE OVER PASQUOTANK RIVER
NEW BASCULE SPAN
MACHINERY LAYOUT

MODJESKI and MASTERS
Experience great bridges.
Mechanicsburg, PA NC License No. C-2979

NORTH CAROLINA PROFESSIONAL SEAL 025801 ENGINEER LANCE V. BORDEN 2/3/2011

DWG NUMBER	TOTAL DWGS
M-006E	22

REVISIONS						SHEET NO.
NO.	BY:	DATE:	NO.	BY:	DATE:	S-202
1			3			TOTAL SHEETS
2			4			454

DRAWN BY : RLR DATE : 01/11
CHECKED BY : TJM DATE : 01/11

2/3/2011
2:58:46 PM
K:\2986.02\CADD\Mechanical\EB\M-006E_U4438_MD_ML_01_E.dgn

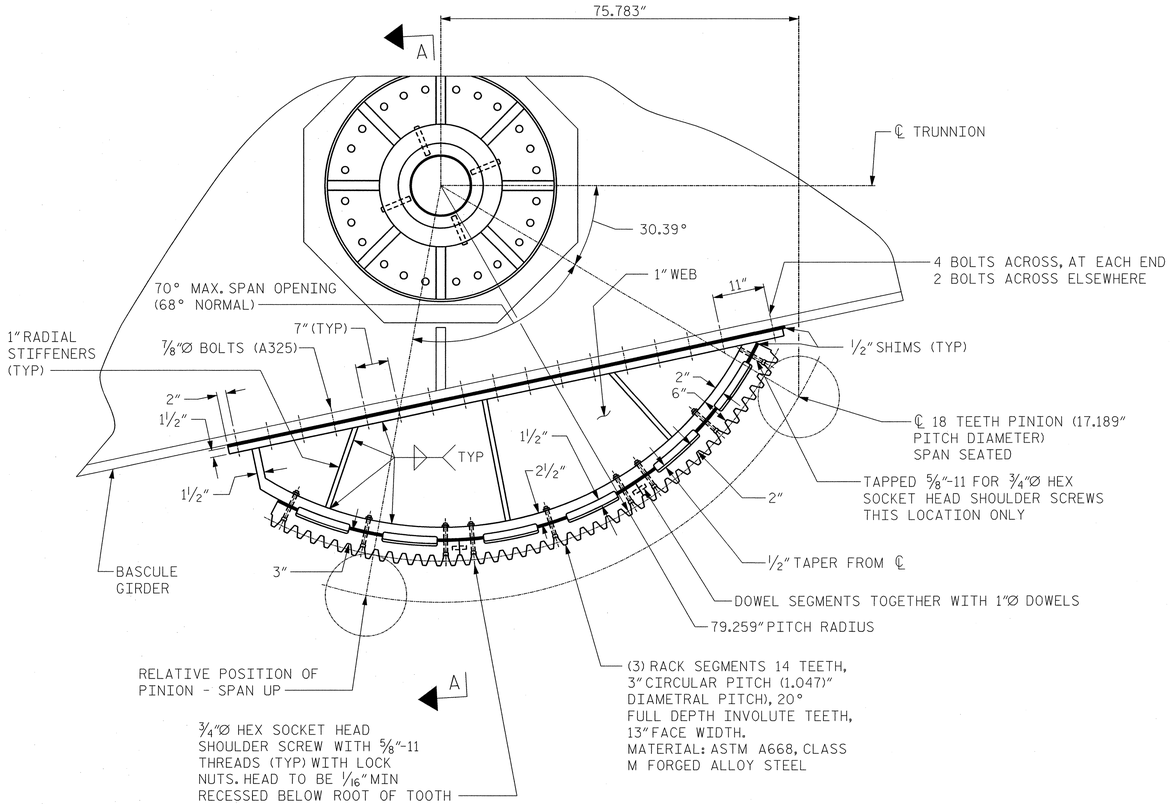

RACK WELDMENT

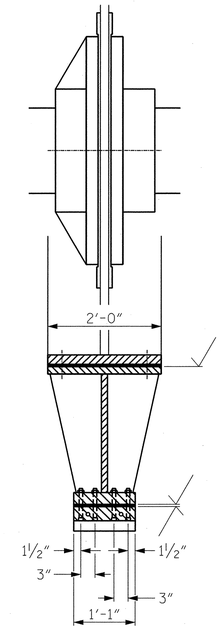

SECTION A-A

NOTES:

1. ALL WELDMENTS TO BE STRESS RELIEVED BY HEAT PRIOR TO MACHINING.
2. MATERIAL: ASTM A588, HSLA STEEL, EXCEPT AS OTHERWISE NOTED.
3. FINISHED SURFACES 125 EXCEPT OTHERWISE NOTED.

PROJECT NO. U-4438

PASQUOTANK COUNTY

STATION: 15+25.75 -L1-

STATE OF NORTH CAROLINA
DEPARTMENT OF TRANSPORTATION
RALEIGH

ELIZABETH CITY BRIDGE OVER
PASQUOTANK RIVER
NEW BASCULE SPAN
RACK DETAILS

MODJESKI and MASTERS
Experience great bridges.
Mechanicsburg, PA NC License No. C-2979

NORTH CAROLINA PROFESSIONAL ENGINEER SEAL 025801 ENGINEER LANCE V. BORDEN 2/3/2011

DWG NUMBER	TOTAL DWGS
M-007E	22

REVISIONS						SHEET NO.
NO.	BY:	DATE:	NO.	BY:	DATE:	S-203
1			3			TOTAL SHEETS
2			4			454

DRAWN BY : RLR DATE : 01/11
CHECKED BY : TJM DATE : 01/11

2/3/2011
2:58:51 PM
K:\2986.02\CADD\Mechanical\EB\M-007E_U4438_MD_RAD_01_E.dgn

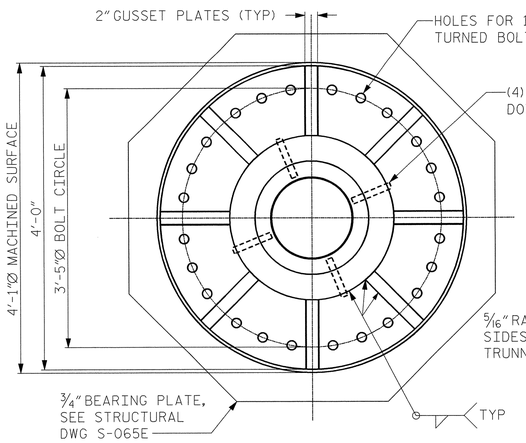

VIEW A-A

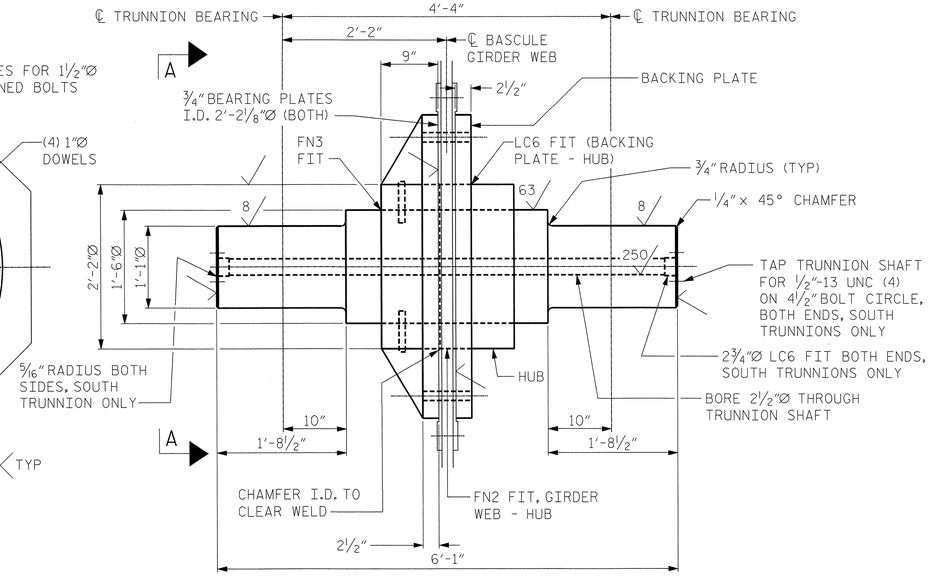

TRUNNION BEARING AND GIRDER CONNECTION

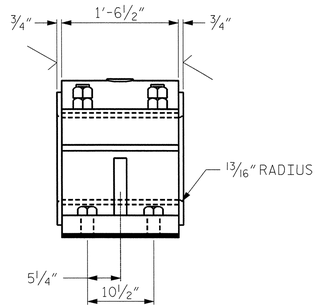

VIEW C-C

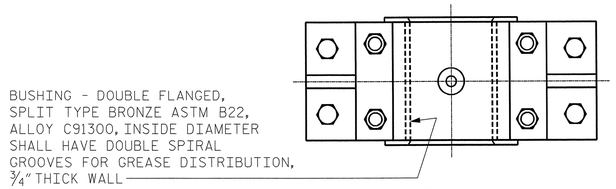

PLAN

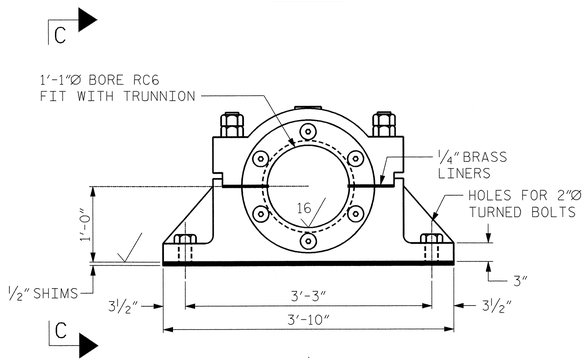

TRUNNION BEARING

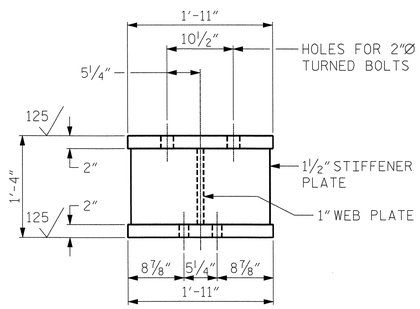

VIEW B-B

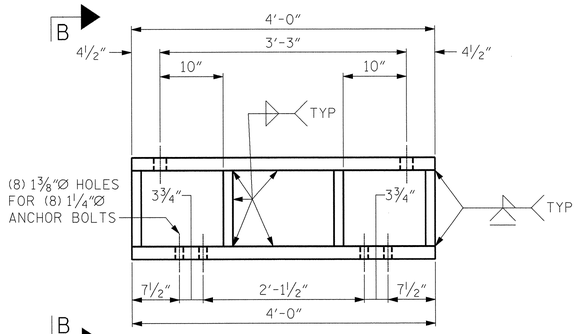

TRUNNION BEARING PEDESTAL WELDMENT

TRUNNION MATERIAL:
ASTM A291, CLASS 6, ALLOY STEEL FORGING.

GIRDER CONNECTION:
ASTM A588, HSLA STEEL PLATE.

HUB:
ASTM A668, CLASS G ALLOY STEEL FORGING.

MATERIAL: ASTM A588, HSLA STEEL PLATE.

NOTES:

1. BEARING HOUSINGS:
   ASTM A27, GRADE 70-36 CAST STEEL, OR A36 WELDMENTS. TWO PIECE, SPLIT CONSTRUCTION PROVIDING FOR ACCURATE CAP AND BASE REGISTRATION AND EASY REMOVAL OF THE CAP. HIGH STRENGTH CAP BOLTS ARE DOUBLE NUTTED. BASE BOLT HOLES ARE SUB-DRILLED IN THE SHOP .030" UNDER BOLT DIAMETER TO PERMIT FIELD REAMING. CAP IS EQUIPPED WITH ALEMITE "BUTTON-HEAD" LUBRICATION FITTING.
2. BEARING LINERS:
   BRASS, HAVING A TOTAL THICKNESS OF ¼", CONSISTING OF ONE SOLID PIECE ⅛" THICK AND ONE LAMINATED PIECE ⅛" THICK WITH .003 LAMINATIONS.
3. SHIMS:
   FULL SIZE STAINLESS STEEL WITH PRE-DRILLED BOLT HOLES. EACH SET CONSISTS OF ONE PLATE ½" THICK, ONE PLATE ¼" THICK, ONE PLATE ⅛" THICK, ONE PLATE 1/16" THICK, AND TWO PLATES 1/32" THICK.
4. FINISHED SURFACES 125/ EXCEPT AS NOTED.
5. ALL WELDMENTS TO BE STRESS RELIEVED BY HEAT PRIOR TO MACHINING.

PROJECT NO. U-4438
PASQUOTANK COUNTY
STATION: 15+25.75 -L1-

STATE OF NORTH CAROLINA
DEPARTMENT OF TRANSPORTATION
RALEIGH

ELIZABETH CITY BRIDGE OVER PASQUOTANK RIVER
NEW BASCULE SPAN
TRUNNION DETAILS

MODJESKI and MASTERS
Experience great bridges.
Mechanicsburg, PA NC License No. C-2979

NORTH CAROLINA PROFESSIONAL SEAL 025801 ENGINEER LANCE V. BORDEN 5/3/2011

DWG NUMBER	TOTAL DWGS
M-008E	22

REVISIONS						SHEET NO.
NO.	BY:	DATE:	NO.	BY:	DATE:	S-204
1			3			TOTAL SHEETS
2			4			454

DRAWN BY : RLR DATE : 01/11
CHECKED BY : TJM DATE : 01/11

5/3/2011
2:27:54 PM
K:\2986.02\CADD\Mechanical\EB\M-008E_U4438_MD_TD_01_E.dgn

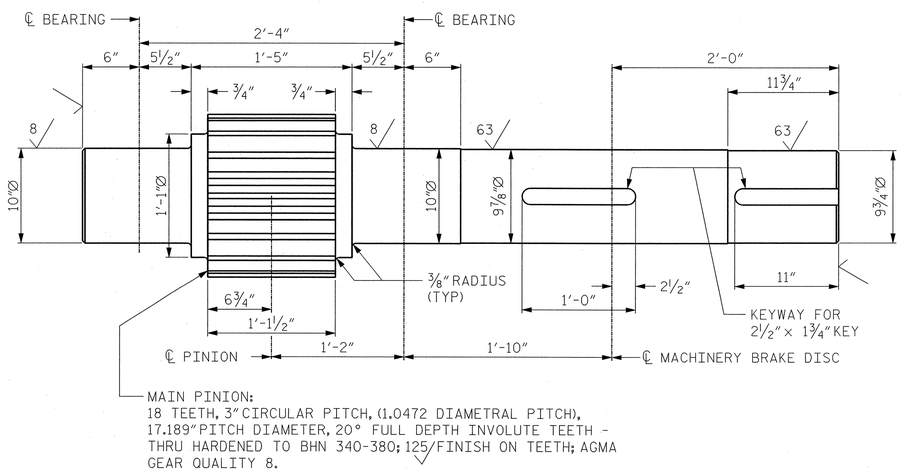

MAIN PINION AND SHAFT

MATERIAL: ASTM A291, CLASS 7

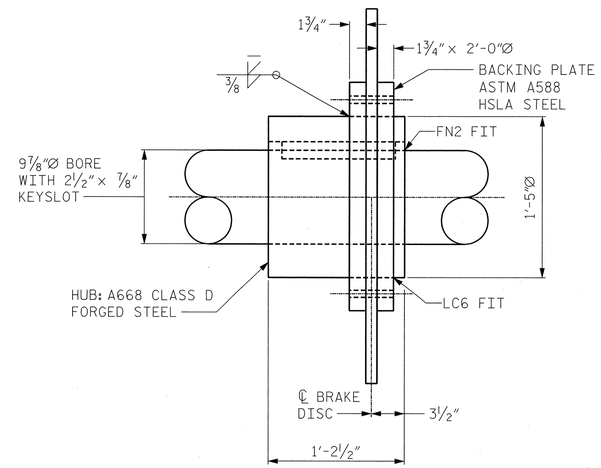

VIEW A-A

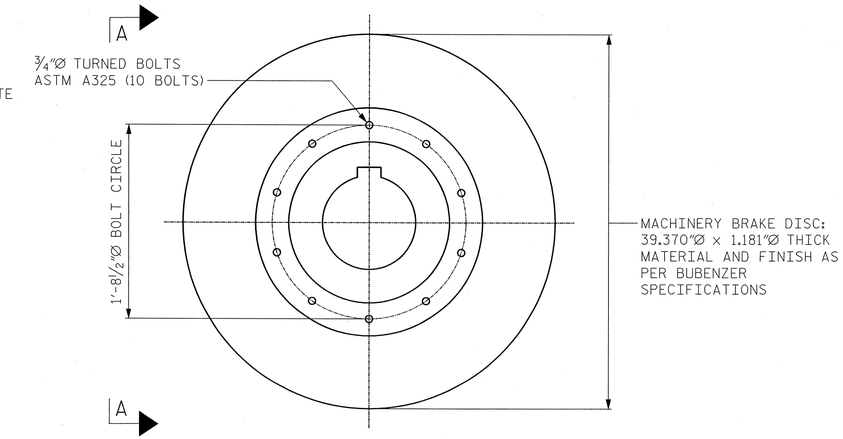

MACHINERY BRAKE DISC AND HUB

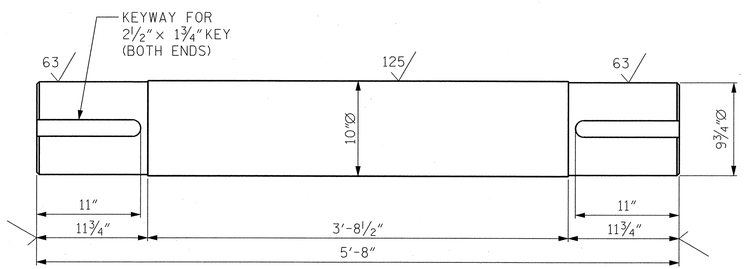

FLOATING SHAFT 1

MATERIAL: ASTM A668, CLASS K FORGED ALLOY STEEL

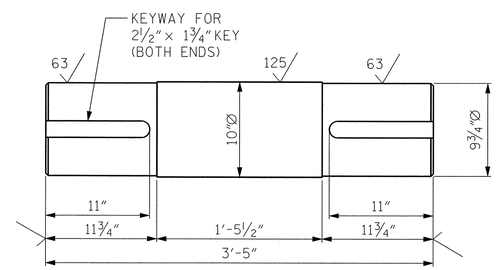

FLOATING SHAFT 2

MATERIAL: ASTM A668, CLASS K FORGED ALLOY STEEL

NOTES:

1. ALL WELDMENTS TO BE STRESS RELIEVED BY HEAT PRIOR TO MACHINING.
2. FINISHED SURFACES 125/ EXCEPT OTHERWISE NOTED.

PROJECT NO. U-4438

PASQUOTANK COUNTY

STATION: 15+25.75 -L1-

STATE OF NORTH CAROLINA
DEPARTMENT OF TRANSPORTATION
RALEIGH

ELIZABETH CITY BRIDGE OVER
PASQUOTANK RIVER
NEW BASCULE SPAN
PINION DETAILS - 1

MODJESKI and MASTERS
Experience great bridges.
Mechanicsburg, PA NC License No. C-2979

NORTH CAROLINA PROFESSIONAL SEAL 025801 ENGINEER LANCE V. BORDEN 2/3/2011

DWG NUMBER	TOTAL DWGS
M-009E	22

REVISIONS								SHEET NO.
NO.	BY:	DATE:	NO.	BY:	DATE:			S-205
1			3					TOTAL SHEETS
2			4					454

DRAWN BY : RLR DATE : 01/11
CHECKED BY : TJM DATE : 01/11

2/3/2011
2:59:00 PM
K:\2986.02\CADD\Mechanical\EB\M-009E_U4438_MD_PD1_01_E.dgn

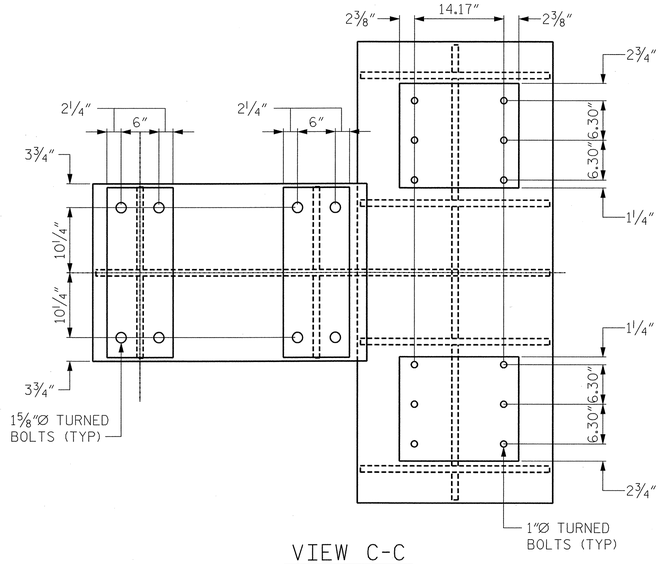

VIEW C-C

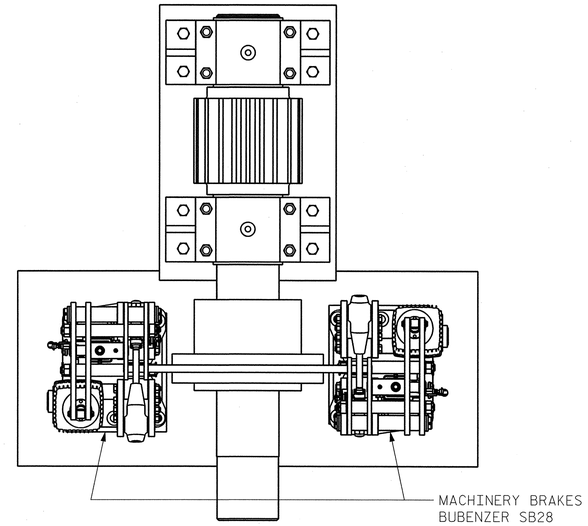

PLAN

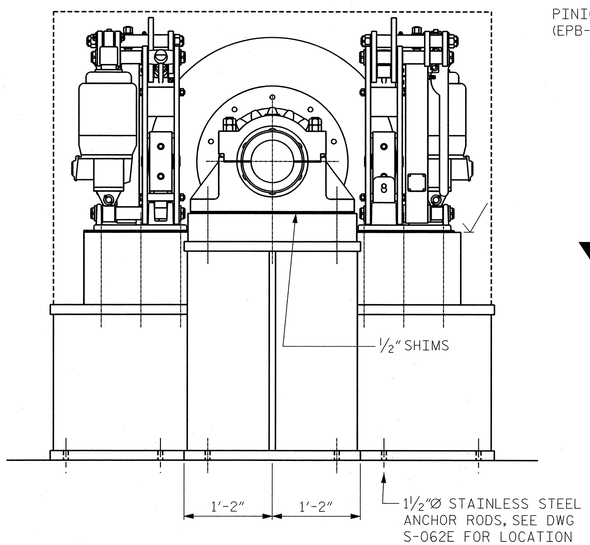

VIEW A-A

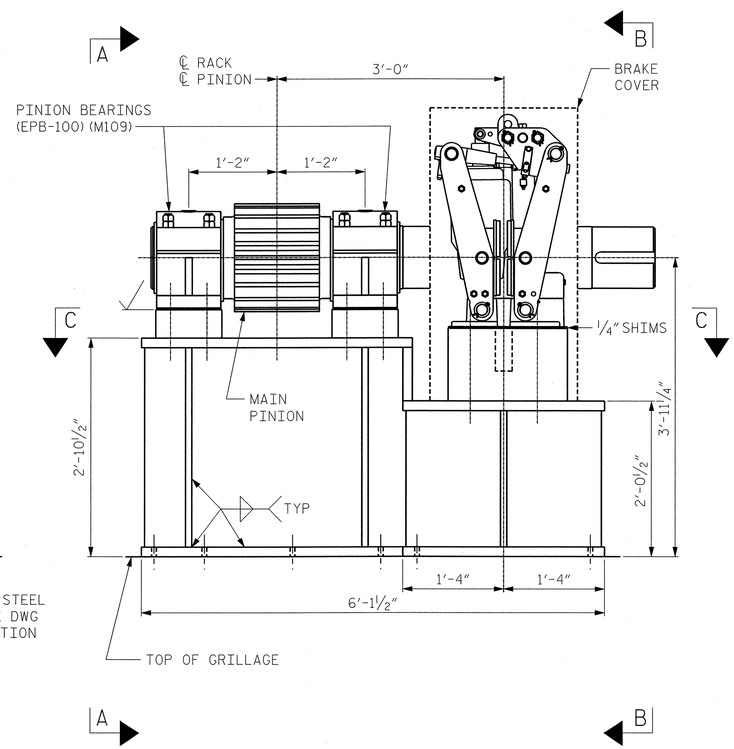

PINION/ PINION BEARINGS

MACHINERY BRAKE SUPPORT WELDMENT

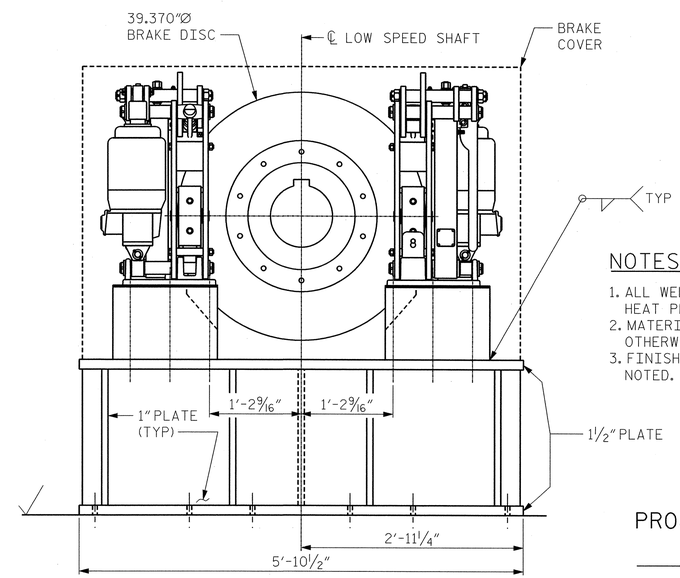

VIEW B-B

NOTES:

1. ALL WELDMENTS TO BE STRESS RELIEVED BY HEAT PRIOR TO MACHINING.
2. MATERIAL: ASTM A588, HSLA STEEL, EXCEPT AS OTHERWISE NOTED.
3. FINISHED SURFACES 125√ EXCEPT OTHERWISE NOTED.

PROJECT NO. U-4438

PASQUOTANK COUNTY

STATION: 15+25.75 -L1-

STATE OF NORTH CAROLINA
DEPARTMENT OF TRANSPORTATION
RALEIGH

ELIZABETH CITY BRIDGE OVER
PASQUOTANK RIVER
NEW BASCULE SPAN
PINION DETAILS - 2

MODJESKI and MASTERS
Experience great bridges.
Mechanicsburg, PA NC License No. C-2979

NORTH CAROLINA PROFESSIONAL SEAL 025801 ENGINEER LANCE V. BORDEN 2/3/2011

REVISIONS						SHEET NO.
NO.	BY:	DATE:	NO.	BY:	DATE:	S-206
1			3			TOTAL SHEETS
2			4			454

DWG NUMBER	TOTAL DWGS
M-010E	22

DRAWN BY : RLR DATE : 01/11
CHECKED BY : TJM DATE : 01/11

2/3/2011
2:59:05 PM
K:\2986.02\CADD\Mechanical\EB\M-010E_U4438_MD_PD2_01_E.dgn

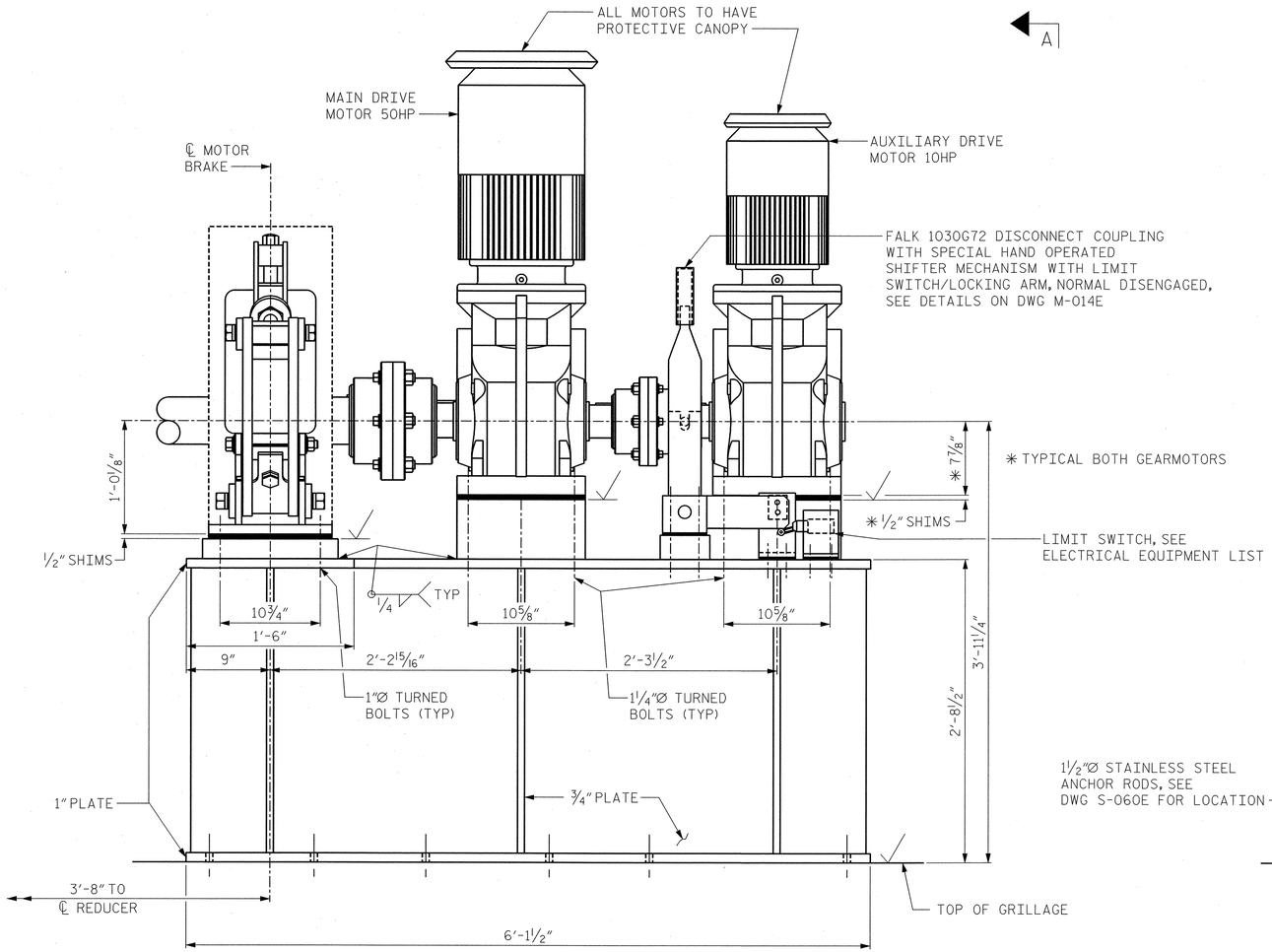

MAIN/AUXILIARY DRIVE SUPPORT WELDMENT

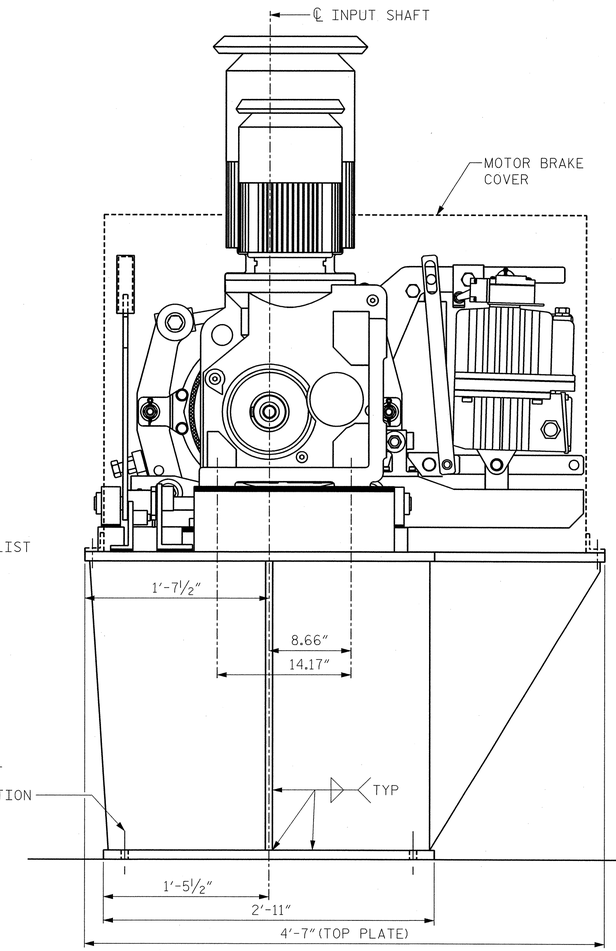

VIEW A-A

PROJECT NO. U-4438

PASQUOTANK COUNTY

STATION: 15+25.75 -L1-

NOTES:

1. ALL WELDMENTS TO BE STRESS RELIEVED BY HEAT PRIOR TO MACHINING.
2. MATERIAL: ASTM A588, HSLA STEEL, EXCEPT AS OTHERWISE NOTED.
3. FINISHED SURFACES 125 ✓ EXCEPT OTHERWISE NOTED.

MODJESKI and MASTERS
Experience great bridges.
Mechanicsburg, PA NC License No. C-2979

NORTH CAROLINA PROFESSIONAL SEAL 025801 ENGINEER LANCE V. BORDEN
2/3/2011

STATE OF NORTH CAROLINA
DEPARTMENT OF TRANSPORTATION
RALEIGH

ELIZABETH CITY BRIDGE OVER PASQUOTANK RIVER
NEW BASCULE SPAN
MAIN/AUXILIARY DRIVE
DETAILS - 1

REVISIONS						SHEET NO.
NO.	BY:	DATE:	NO.	BY:	DATE:	S-207
1			3			TOTAL SHEETS
2			4			454

DWG NUMBER	TOTAL DWGS
M-011E	22

DRAWN BY : RLR DATE : 01/11
CHECKED BY : TJM DATE : 01/11

2/3/2011
2:59:10 PM
K:\2986.02\CADD\Mechanical\EB\M-011E_U4438_MD_MADD1_01_E.dgn

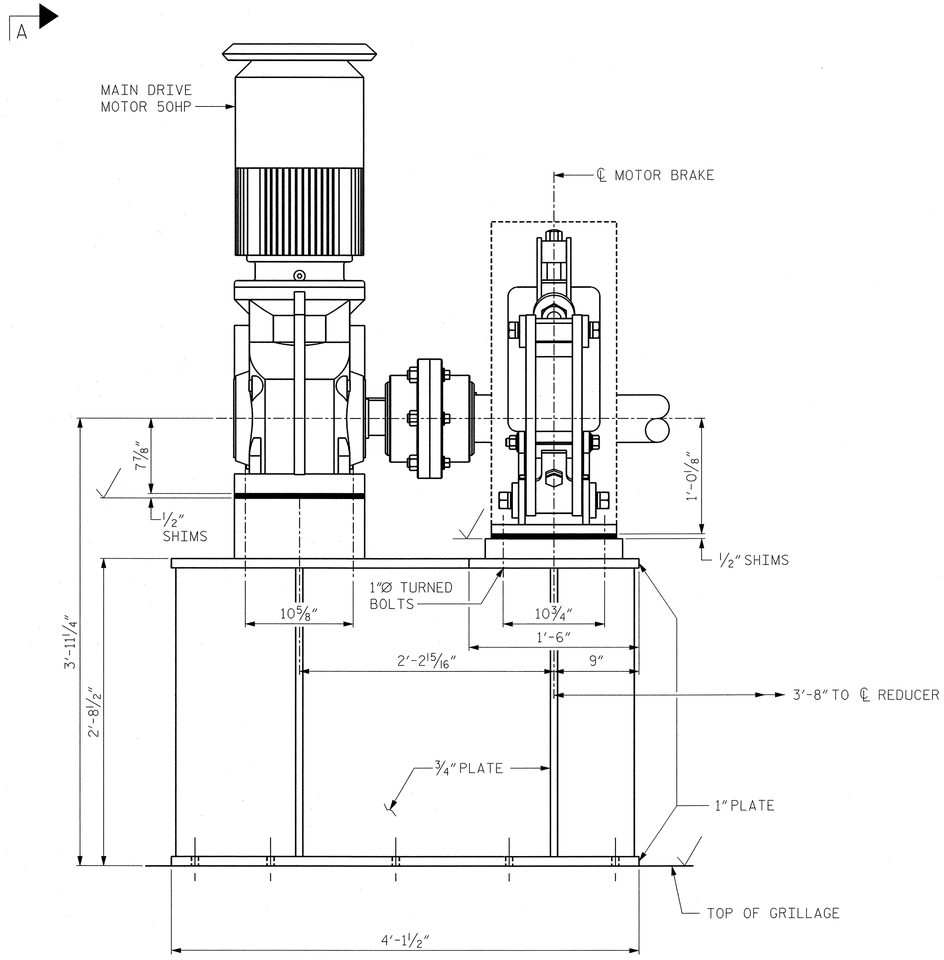

MAIN DRIVE SUPPORT WELDMENT

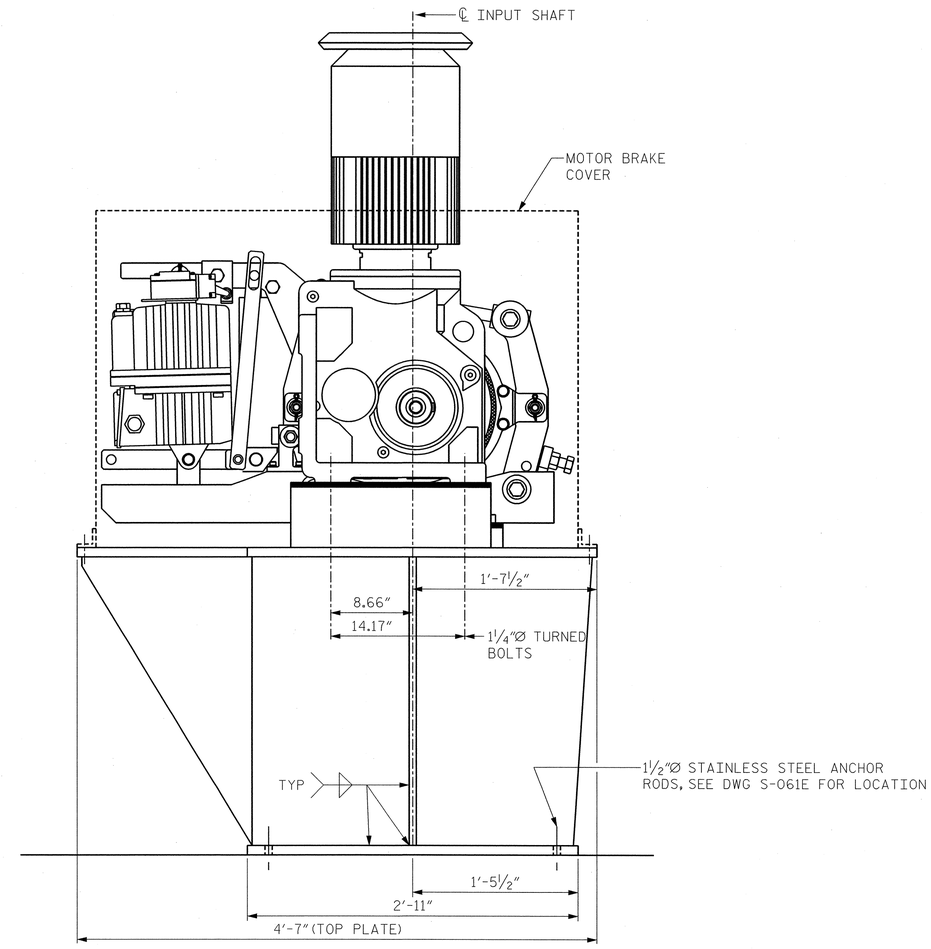

VIEW A-A

PROJECT NO. U-4438

PASQUOTANK COUNTY

STATION: 15+25.75 -L1-

NOTES:

1. ALL WELDMENTS TO BE STRESS RELIEVED BY HEAT PRIOR TO MACHINING.
2. MATERIAL: ASTM A588, HSLA STEEL, EXCEPT AS OTHERWISE NOTED.
3. FINISHED SURFACES 125/ EXCEPT OTHERWISE NOTED.

MODJESKI and MASTERS
Experience great bridges.
Mechanicsburg, PA NC License No. C-2979

NORTH CAROLINA PROFESSIONAL ENGINEER SEAL 025801 LANCE V. BORDEN 2/3/2011

STATE OF NORTH CAROLINA
DEPARTMENT OF TRANSPORTATION
RALEIGH

ELIZABETH CITY BRIDGE OVER
PASQUOTANK RIVER
NEW BASCULE SPAN
MAIN/AUXILIARY DRIVE
DETAILS - 2

REVISIONS								SHEET NO.
NO.	BY:	DATE:	NO.	BY:	DATE:			S-208
1			3					TOTAL SHEETS
2			4					454

DWG NUMBER	TOTAL DWGS
M-012E	22

DRAWN BY : RLR DATE : 01/11
CHECKED BY : TJM DATE : 01/11

2/3/2011
2:59:14 PM
K:\2986.02\CADD\Mechanical\EB\M-012E_U4438_MD_MADD2_01_E.dgn

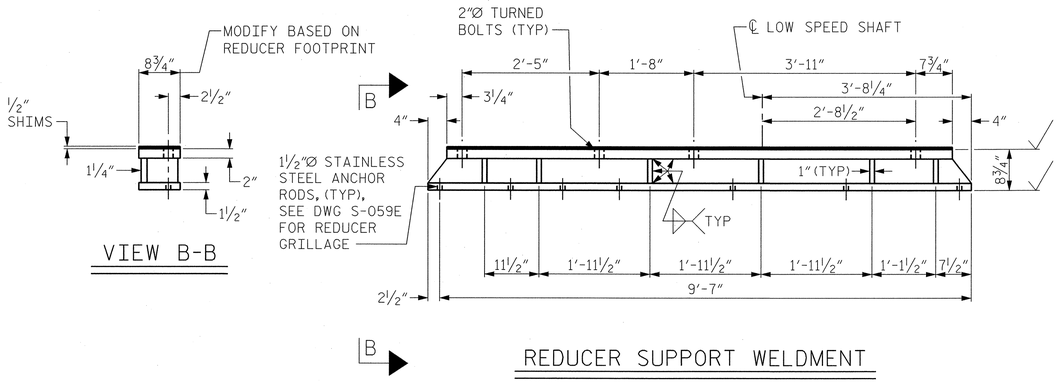

REDUCER SUPPORT WELDMENT

RIGHT HAND SHOWN, LEFT HAND SYMMETRICALLY OPPOSITE

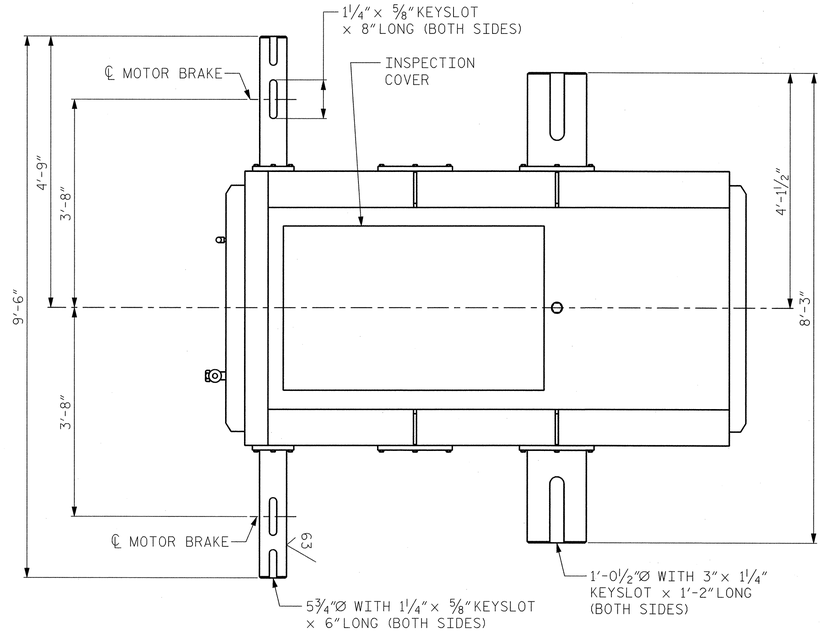

PLAN

DIFFERENTIAL REDUCER

(2 REQUIRED)

PRIMARY DIFFERENTIAL REDUCER INFORMATION:

- DOUBLE REDUCTION DIFFERENTIAL REDUCER - EARLE GEAR 12DDC OR EQUAL
- RATING 50 HP, 105 RPM INPUT, EITHER INPUT SHAFT. SERVICE FACTOR = 1.5; OVERALL RATIO = 60:1 OUTPUT TORQUE RATING (TOTAL BOTH SIDES) = 1,800.000 LB-IN AT FULL LOAD TORQUE

NOTES:

1. SEE SPECIFICATIONS FOR ADDITIONAL NOTES AND REQUIREMENTS.
2. ALL SHAFTS SHALL HAVE 63/ FINISH OR BETTER.
3. TOP AND BOTTOM SURFACES OF SUPPORT WELDMENT MUST BE PARALLEL.
4. ALL WELDMENTS TO BE STRESS RELIEVED BY HEAT PRIOR TO MACHINING.
5. MATERIAL: ASTM A588, HSLA STEEL, EXCEPT AS OTHERWISE NOTED.
6. FINISHED SURFACES 125/EXCEPT OTHERWISE NOTED.

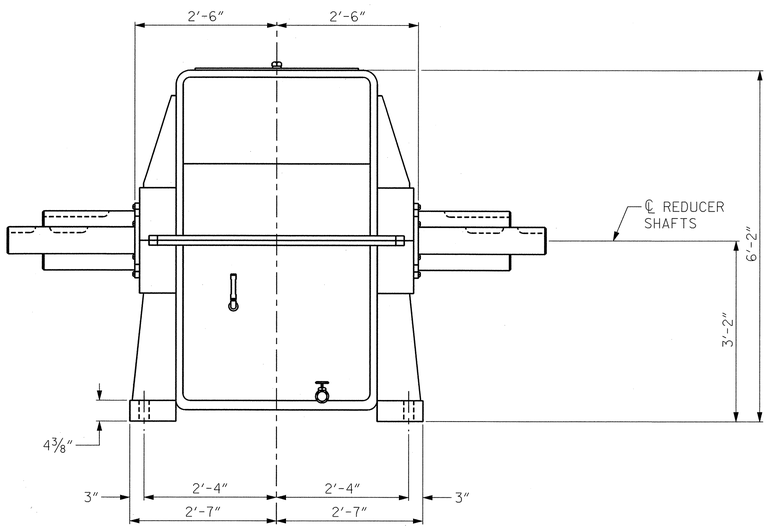

VIEW A-A

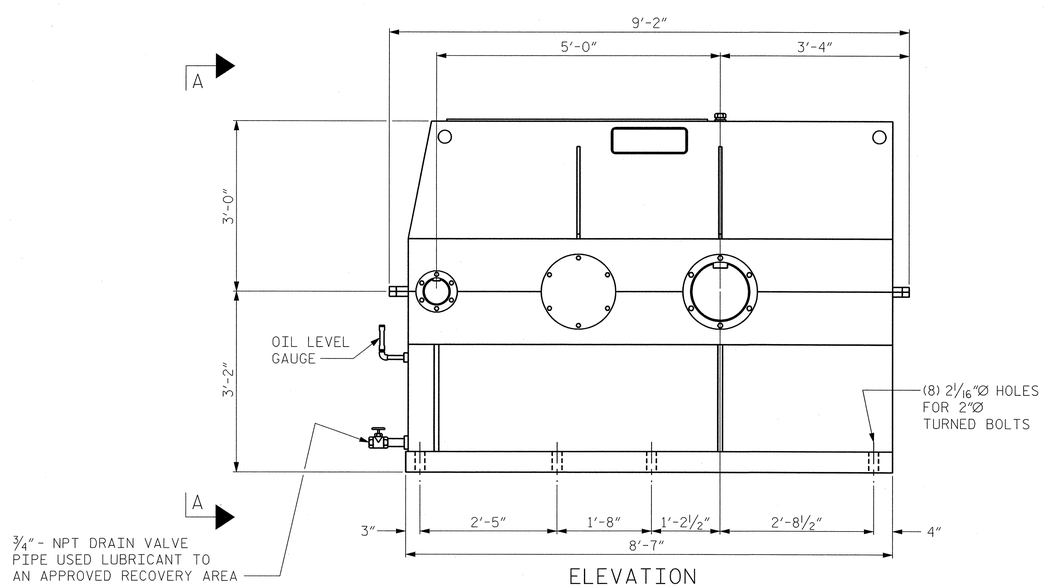

ELEVATION

PRIMARY DIFFERENTIAL REDUCER

PROJECT NO. U-4438

PASQUOTANK COUNTY

STATION: 15+25.75 -L1-

STATE OF NORTH CAROLINA
DEPARTMENT OF TRANSPORTATION
RALEIGH

ELIZABETH CITY BRIDGE OVER PASQUOTANK RIVER
NEW BASCULE SPAN
REDUCER DETAILS

MODJESKI and MASTERS
Experience great bridges.
Mechanicsburg, PA NC License No. C-2979

NORTH CAROLINA PROFESSIONAL SEAL 025801 ENGINEER LANCE V. BORDEN 2/3/2011

DWG NUMBER	TOTAL DWGS
M-013E	22

REVISIONS						SHEET NO.
NO.	BY:	DATE:	NO.	BY:	DATE:	S-209
1			3			TOTAL SHEETS
2			4			454

DRAWN BY : RLR DATE : 01/11
CHECKED BY : TJM DATE : 01/11

2/3/2011
2:59:19 PM
K:\2986.02\CADD\Mechanical\EB\M-013E_U4438_MD_RED_01_E.dgn

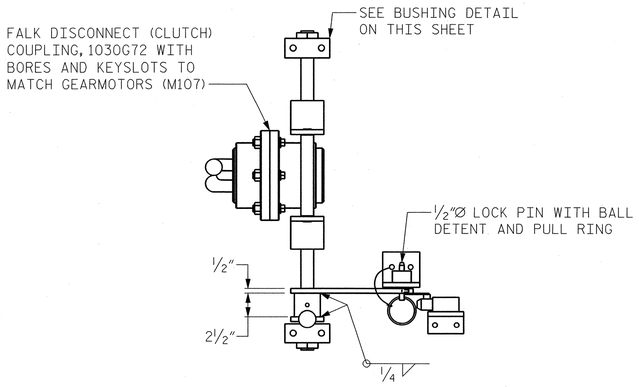

PLAN

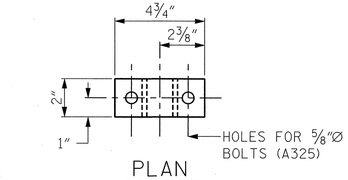

PLAN

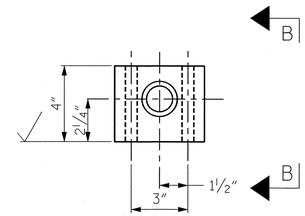

BUSHING DETAIL

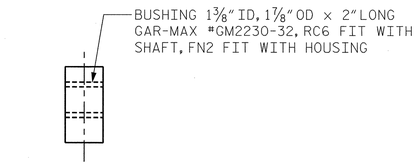

VIEW B-B

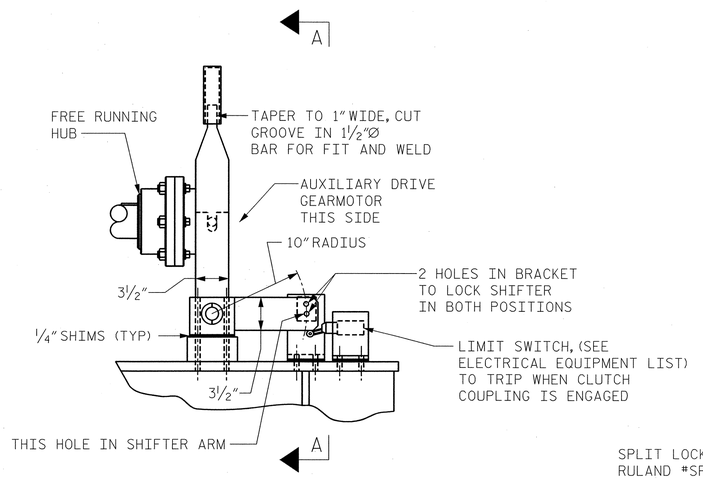

SHIFTER MECHANISM

ENGAGED POSITION SHOWN

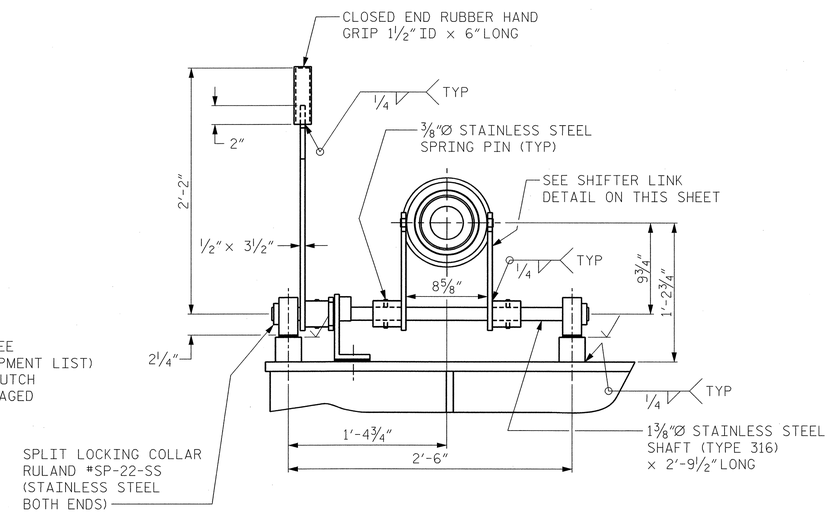

SECTION A-A

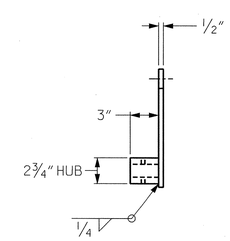

VIEW C-C

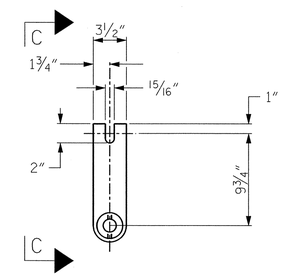

SHIFTER LINK

NOTES:

1. ALL WELDMENTS TO BE STRESS RELIEVED BY HEAT PRIOR TO MACHINING.
2. MATERIAL: ASTM A588, HSLA STEEL, EXCEPT AS OTHERWISE NOTED.
3. FINISHED SURFACES 125 EXCEPT OTHERWISE NOTED.

PROJECT NO. U-4438

PASQUOTANK COUNTY

STATION: 15+25.75 -L1-

STATE OF NORTH CAROLINA
DEPARTMENT OF TRANSPORTATION
RALEIGH

ELIZABETH CITY BRIDGE OVER PASQUOTANK RIVER
NEW BASCULE SPAN
AUXILIARY DRIVE
SHIFTER MECHANISM

MODJESKI and MASTERS
Experience great bridges.
Mechanicsburg, PA NC License No. C-2979

NORTH CAROLINA PROFESSIONAL ENGINEER SEAL 025801 LANCE V. BORDEN 2/3/2011

REVISIONS								SHEET NO.
NO.	BY:	DATE:	NO.	BY:	DATE:			S-210
1			3					TOTAL SHEETS
2			4					454

DWG NUMBER	TOTAL DWGS
M-014E	22

DRAWN BY : RLR DATE : 01/11
CHECKED BY : TJM DATE : 01/11

2/3/2011
2:59:24 PM
K:\2986.02\CADD\Mechanical\EB\M-014E_U4438_MD_ADSM_01_E.dgn

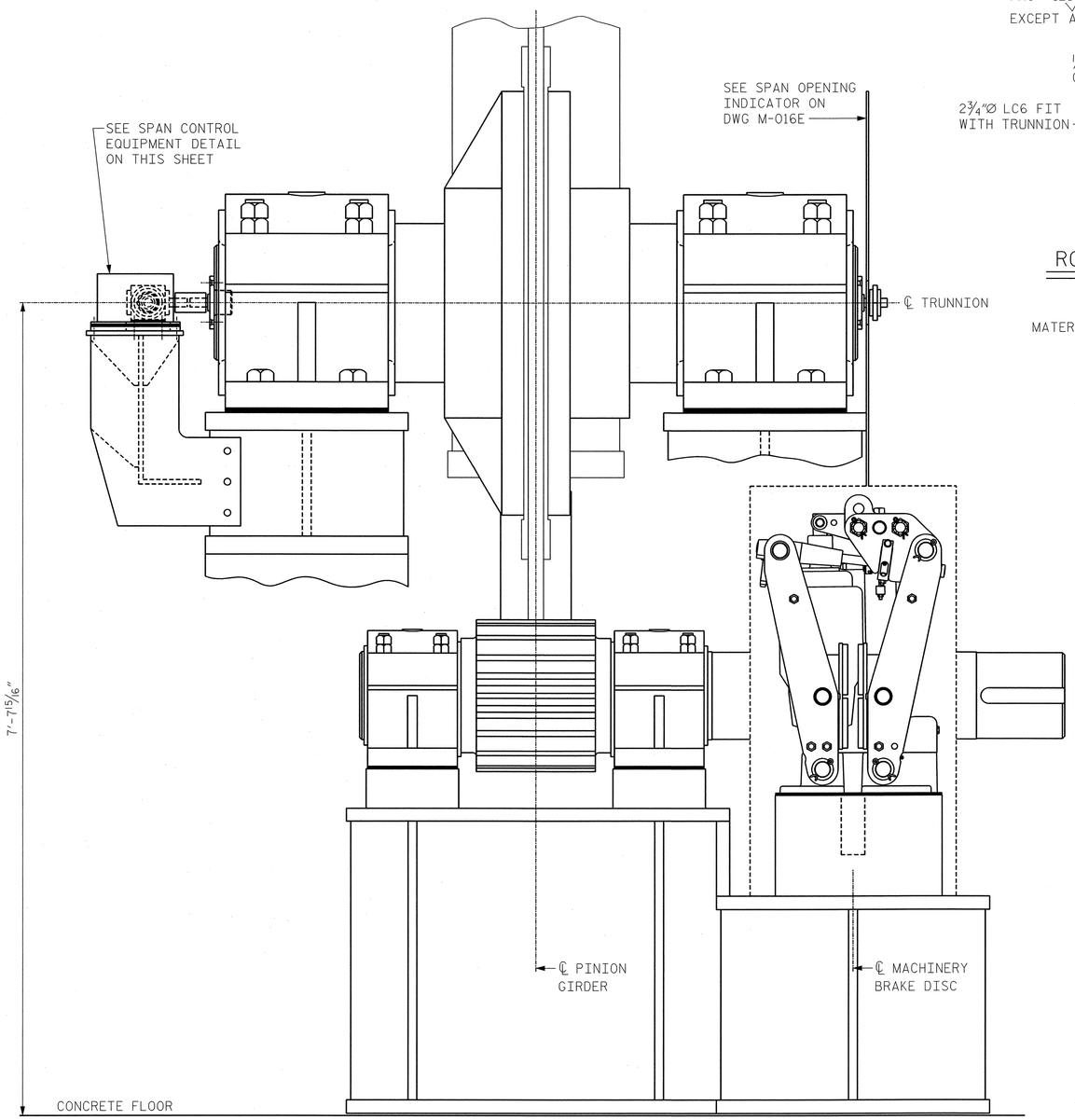

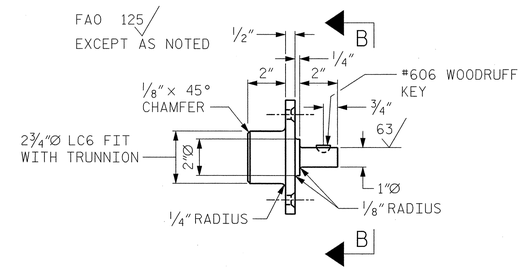

ROTARY CAM LIMIT SWITCH

DRIVE ADAPTER

MATERIAL: ASTM A276, TYPE 316 STAINLESS STEEL

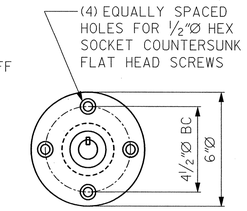

VIEW B-B

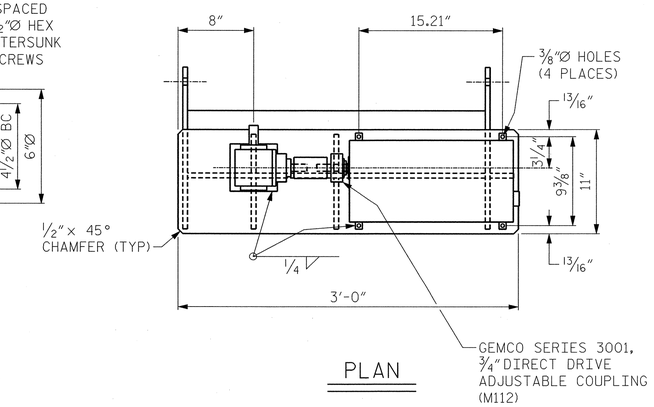

PLAN

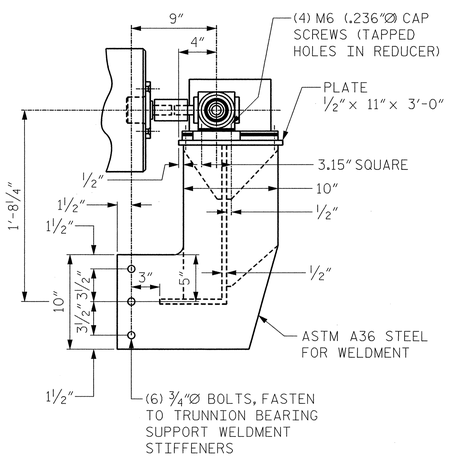

VIEW A-A

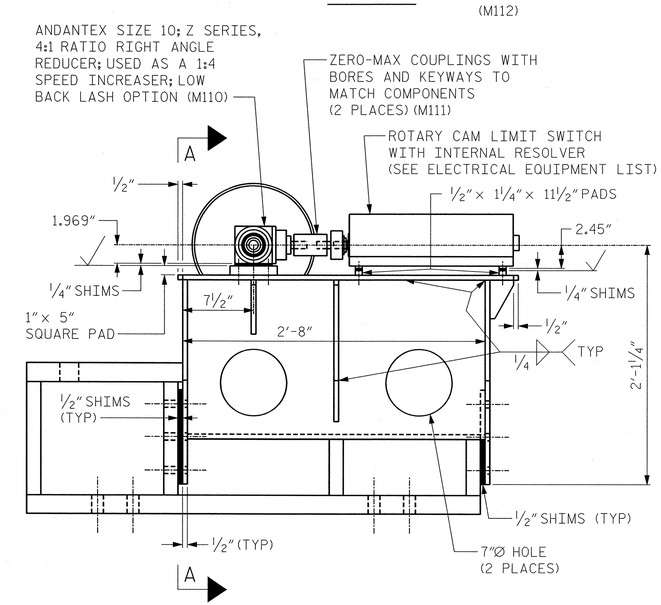

ROTARY CAM LIMIT SWITCH

SUPPORT WELDMENT

PROJECT NO. U-4438

PASQUOTANK COUNTY

STATION: 15+25.75 -L1-

NOTES:

1. ALL WELDMENTS TO BE STRESS RELIEVED BY HEAT PRIOR TO MACHINING.
2. MATERIAL: ASTM A588, HSLA STEEL, EXCEPT AS OTHERWISE NOTED.
3. FINISHED SURFACES 125/ EXCEPT OTHERWISE NOTED.

STATE OF NORTH CAROLINA
DEPARTMENT OF TRANSPORTATION
RALEIGH

ELIZABETH CITY BRIDGE OVER PASQUOTANK RIVER
NEW BASCULE SPAN
LIMIT SWITCH DETAILS

MODJESKI and MASTERS
Experience great bridges.
Mechanicsburg, PA NC License No. C-2979

DWG NUMBER	TOTAL DWGS
M-015E	22

NORTH CAROLINA PROFESSIONAL ENGINEER SEAL 025801 LANCE V. BORDEN 2/3/2011

REVISIONS						SHEET NO.
NO.	BY:	DATE:	NO.	BY:	DATE:	S-211
1			3			TOTAL SHEETS
2			4			454

DRAWN BY : RLR DATE : 01/11
CHECKED BY : TJM DATE : 01/11

2/3/2011
2:59:29 PM
K:\2986.02\CADD\Mechanical\EB\M-015E_U4438_MD_LSD_01_E.dgn

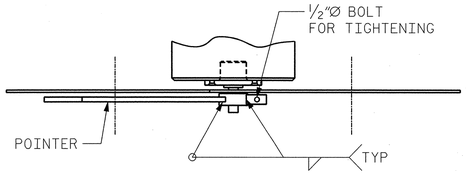

PLAN

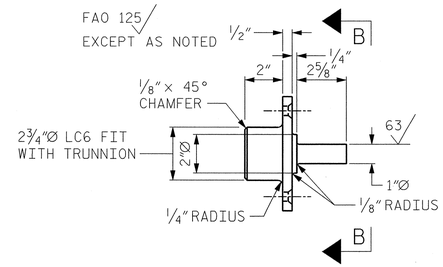

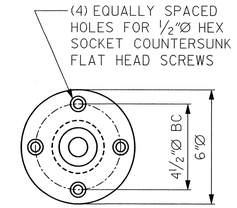

VIEW B-B

SPAN OPENING INDICATOR

DRIVE ADAPTER

MATERIAL: ASTM A276, TYPE 316 STAINLESS STEEL

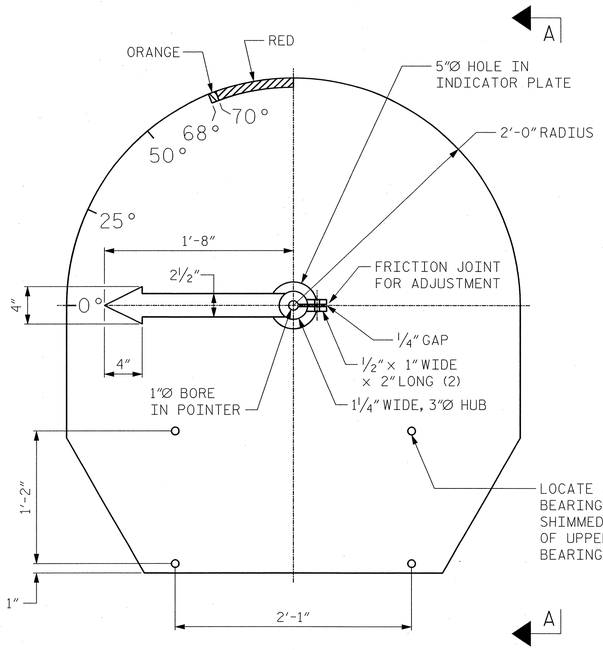

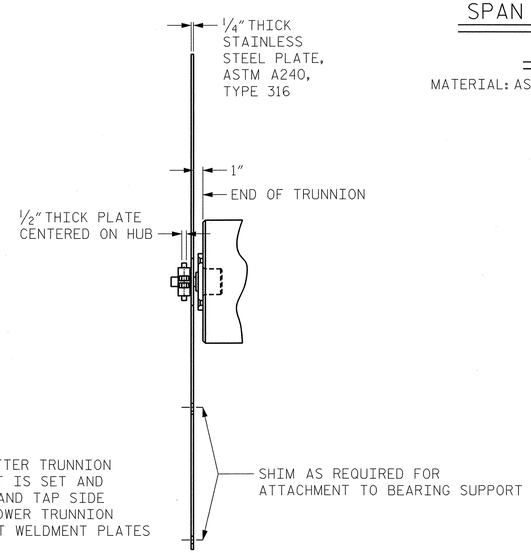

VIEW A-A

SPAN OPENING INDICATOR

NOTES:

1. ALL WELDMENTS TO BE STRESS RELIEVED BY HEAT PRIOR TO MACHINING.
2. MATERIAL: ASTM A588, HSLA STEEL, EXCEPT AS OTHERWISE NOTED.
3. FINISHED SURFACES 125 EXCEPT OTHERWISE NOTED.

PROJECT NO. U-4438

PASQUOTANK COUNTY

STATION: 15+25.75 -L1-

STATE OF NORTH CAROLINA
DEPARTMENT OF TRANSPORTATION
RALEIGH

ELIZABETH CITY BRIDGE OVER
PASQUOTANK RIVER
NEW BASCULE SPAN
SPAN OPENING
INDICATOR DETAILS

MODJESKI and MASTERS
Experience great bridges.
Mechanicsburg, PA NC License No. C-2979

NORTH CAROLINA PROFESSIONAL SEAL 025801 ENGINEER LANCE V. BORDEN 2/3/2011

REVISIONS						SHEET NO.
NO.	BY:	DATE:	NO.	BY:	DATE:	S-212
1			3			TOTAL SHEETS
2			4			454

DWG NUMBER	TOTAL DWGS
M-016E	22

DRAWN BY : RLR DATE : 01/11
CHECKED BY : TJM DATE : 01/11

2/3/2011
2:59:33 PM
K:\2986.02\CADD\Mechanical\EB\M-016E_U4438_MD_SOID_01_E.dgn

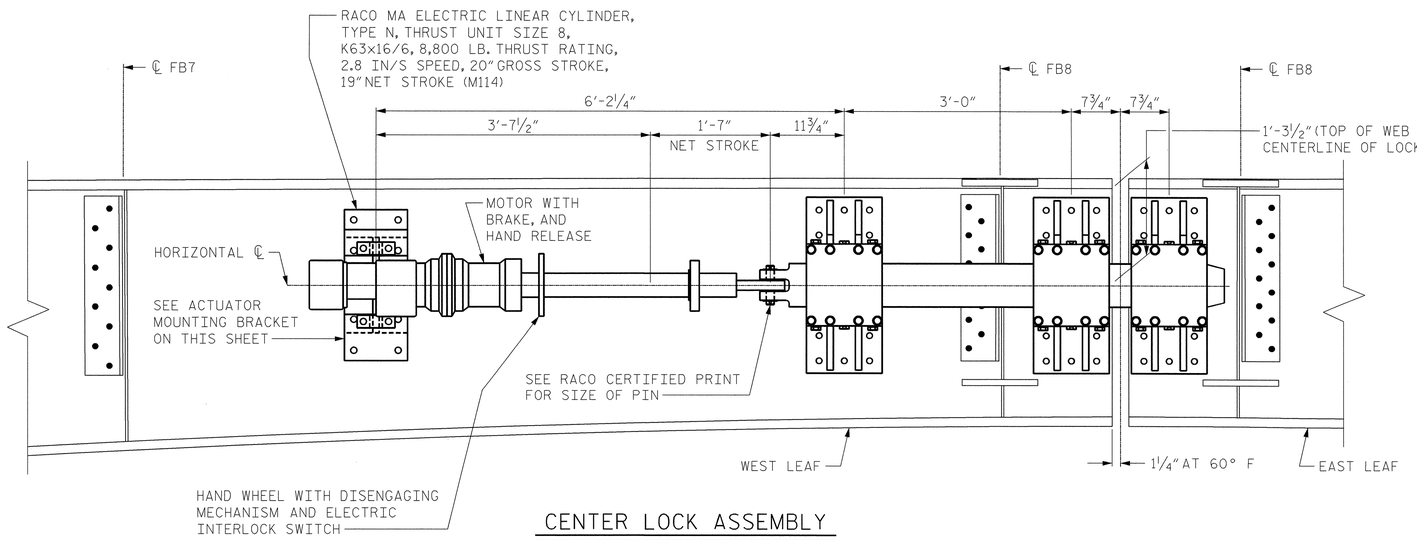

CENTER LOCK ASSEMBLY

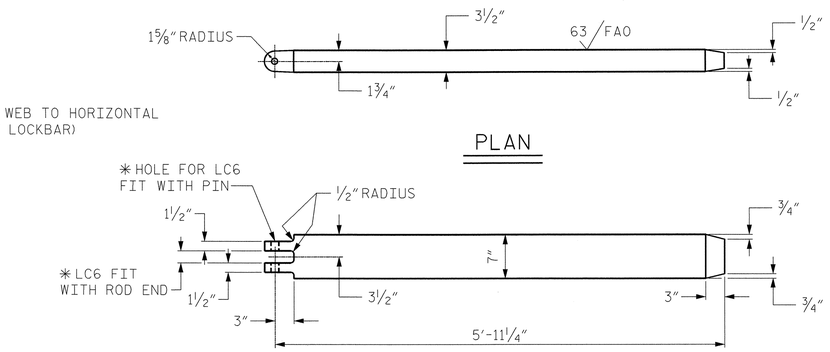

LOCK BAR DETAIL

MATERIAL: ASTM A668, CLASS M FORGED ALLOY STEEL

✱ AS PER RACO CERTIFIED PRINT

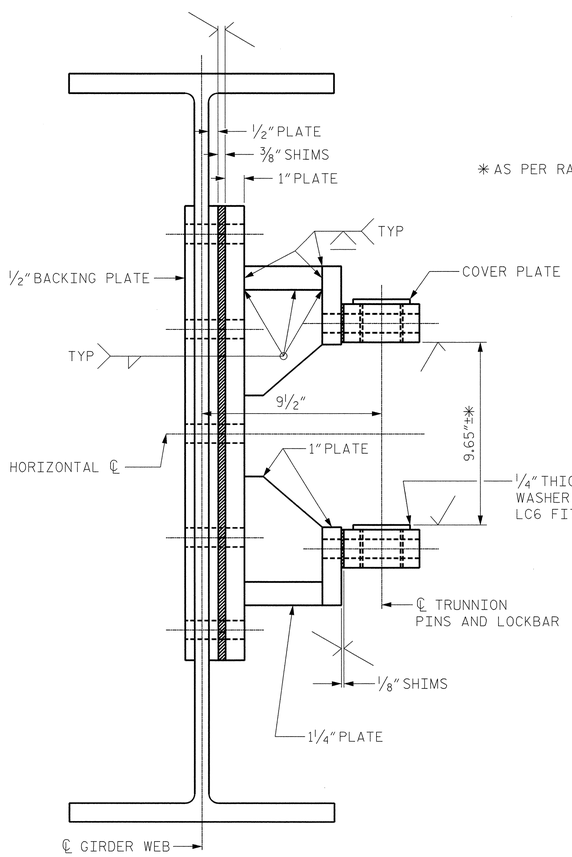

VIEW A-A

✱ AS PER RACO CERTIFIED PRINT

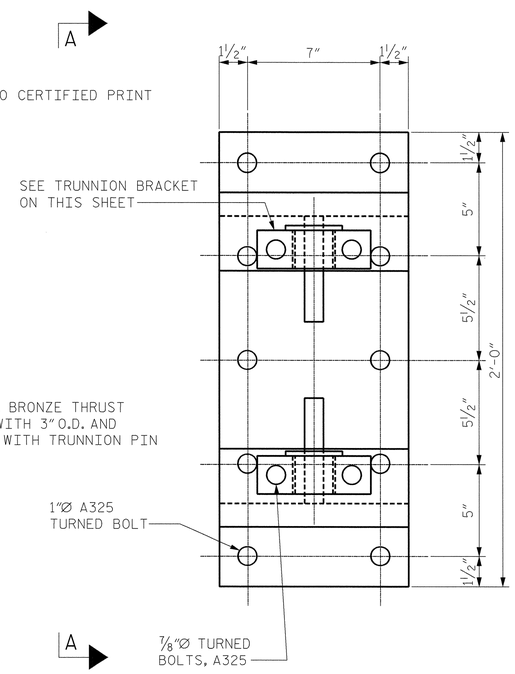

ACTUATOR MOUNTING BRACKET

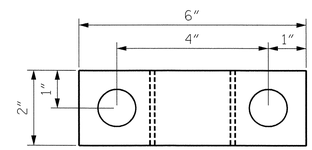

TRUNNION BRACKET

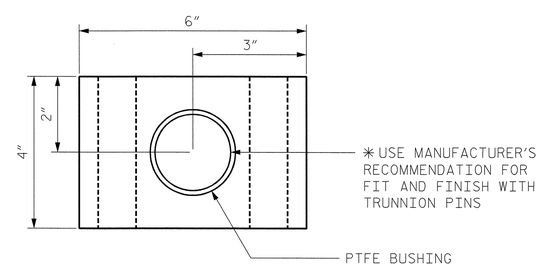

VIEW B-B

NOTES:

1. ALL WELDMENTS TO BE STRESS RELIEVED BY HEAT PRIOR TO MACHINING.
2. MATERIAL: ASTM A588, HSLA STEEL, EXCEPT AS OTHERWISE NOTED.
3. FINISHED SURFACES 125√ EXCEPT OTHERWISE NOTED.

PROJECT NO. U-4438

PASQUOTANK COUNTY

STATION: 15+25.75 -L1-

STATE OF NORTH CAROLINA
DEPARTMENT OF TRANSPORTATION
RALEIGH

ELIZABETH CITY BRIDGE OVER
PASQUOTANK RIVER
NEW BASCULE SPAN
CENTER SPAN
LOCK DETAILS - 1

MODJESKI and MASTERS
Experience great bridges.
Mechanicsburg, PA NC License No. C-2979

NORTH CAROLINA PROFESSIONAL SEAL 025801 ENGINEER LANCE V. BORDEN 5/3/2011

DWG NUMBER	TOTAL DWGS
M-017E	22

REVISIONS							SHEET NO.
NO.	BY:	DATE:	NO.	BY:	DATE:		S-213
1			3				TOTAL SHEETS
2			4				454

DRAWN BY : RLR DATE : 01/11
CHECKED BY : TJM DATE : 01/11

5/4/2011
9:12:47 AM
\\mmdc10\projects\2986.02\CADD\Mechanical\EB\M-017E_U4438_MD_CSLD1_01_E.dgn

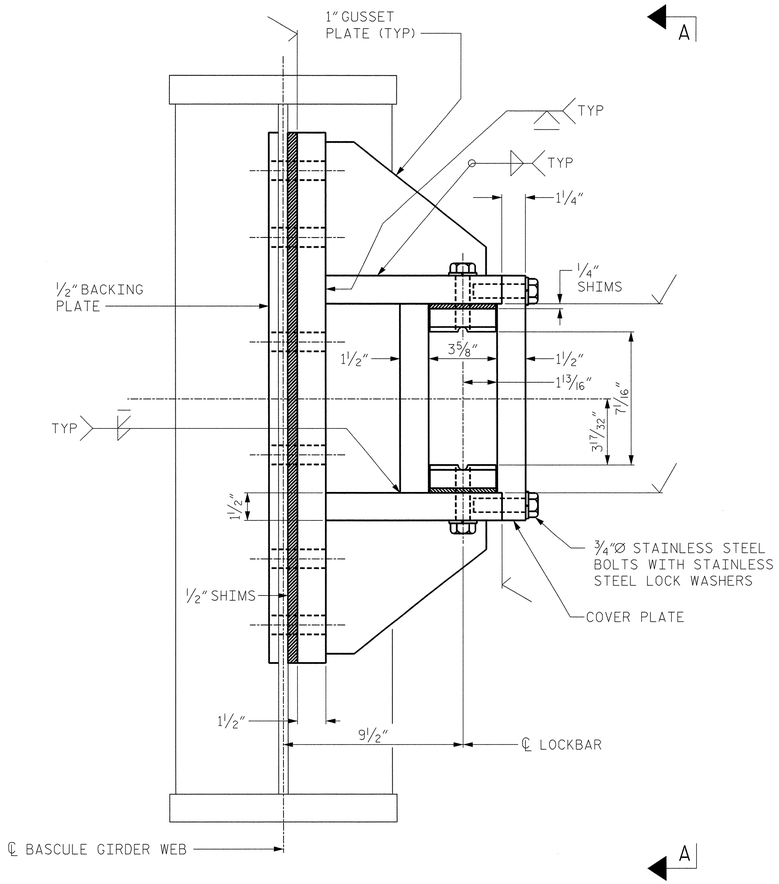

CENTER SPAN LOCK GUIDE AND RECEIVER

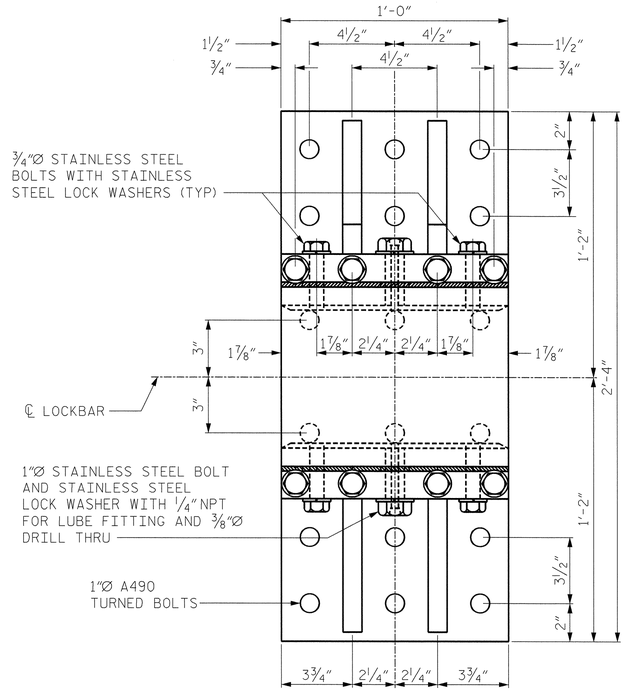

VIEW A-A

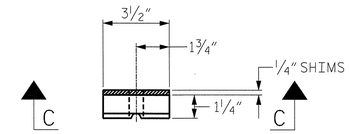

VIEW B-B

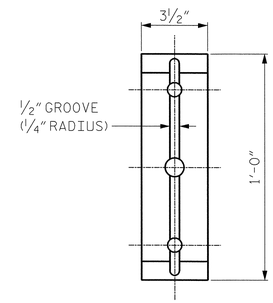

VIEW C-C

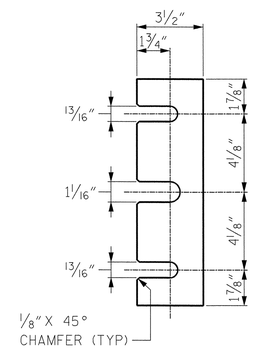

SHIM DETAIL

STAINLESS STEEL TYPE 316

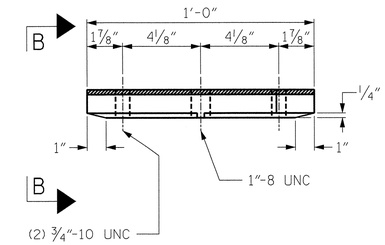

BEARING BLOCK

MATERIAL: ASTM B22, ALLOY C86300 ALUMINUM BRONZE FINISH ALL OVER 63

NOTES:

1. ALL WELDMENTS TO BE STRESS RELIEVED BY HEAT PRIOR TO MACHINING.
2. MATERIAL: ASTM A588, HSLA STEEL, EXCEPT AS OTHERWISE NOTED.
3. FINISHED SURFACES 125 EXCEPT OTHERWISE NOTED.
4. EASILY ACCESSIBLE CENTRALIZED GREASE PORTS SHALL BE INSTALLED WITH INTERCONNECTING TUBING FOR EACH GUIDE AND RECEIVER.

PROJECT NO. U-4438

PASQUOTANK COUNTY

STATION: 15+25.75 -L1-

STATE OF NORTH CAROLINA
DEPARTMENT OF TRANSPORTATION
RALEIGH

ELIZABETH CITY BRIDGE OVER PASQUOTANK RIVER
NEW BASCULE SPAN
CENTER SPAN
LOCK DETAILS - 2

MODJESKI and MASTERS
Experience great bridges.
Mechanicsburg, PA NC License No. C-2979

NORTH CAROLINA PROFESSIONAL SEAL 025801 ENGINEER LANCE V. BORDEN 5/3/2011

DWG NUMBER	TOTAL DWGS
M-018E	22

REVISIONS

NO.	BY:	DATE:	NO.	BY:	DATE:
1			3		
2			4		

SHEET NO. S-214

TOTAL SHEETS 454

DRAWN BY : RLR DATE : 01/11
CHECKED BY : TJM DATE : 01/11

5/4/2011
9:14:17 AM
\\mmdc10\projects\2986.02\CADD\Mechanical\EB\M-018E_U4438_MD_CSLD2_01_E.dgn

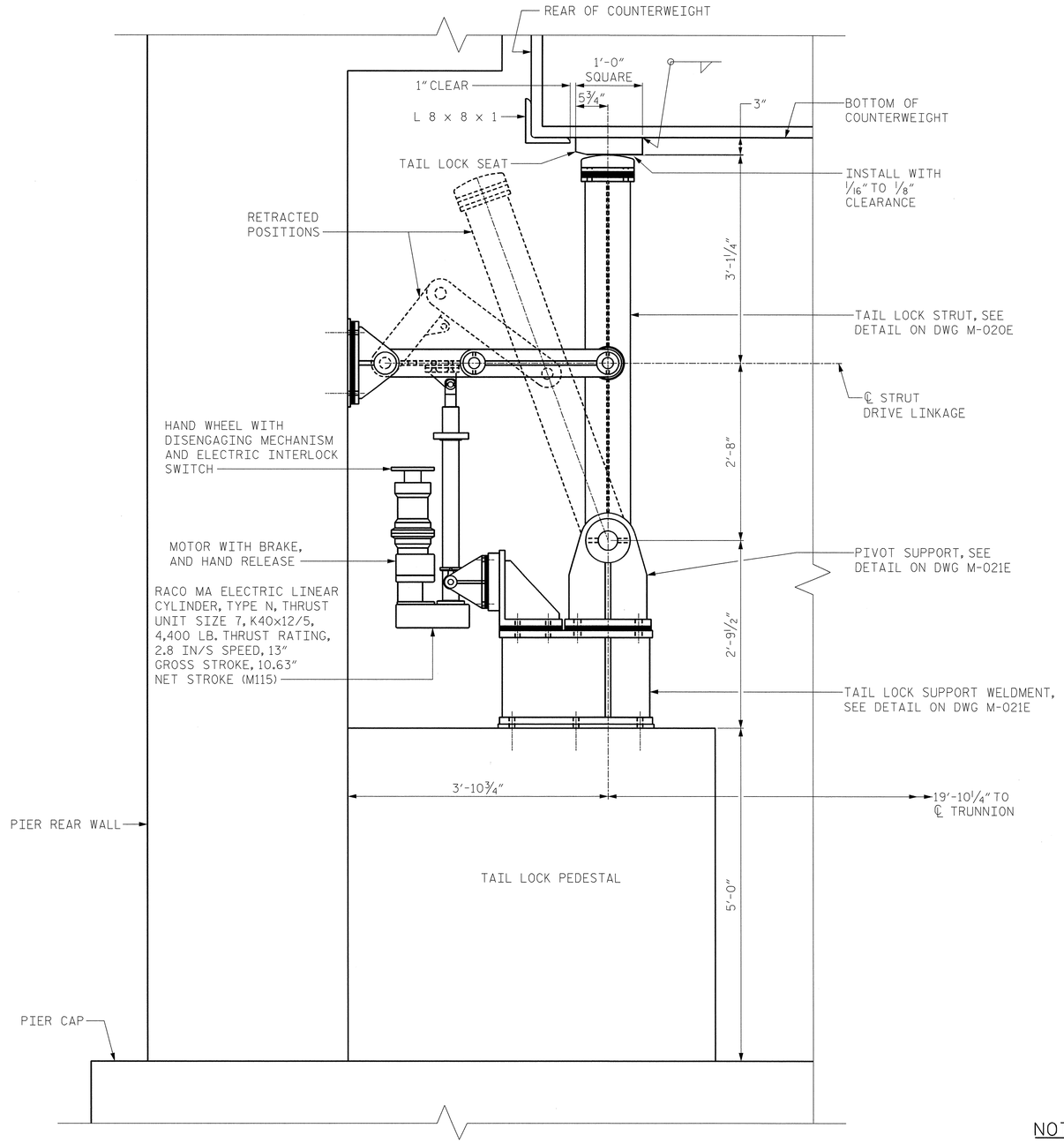

TAIL LOCK ASSEMBLY

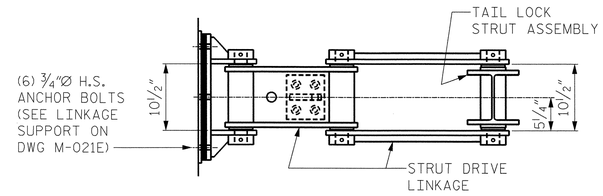

PLAN

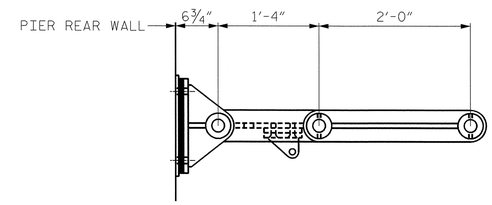

STRUT DRIVE LINKAGE

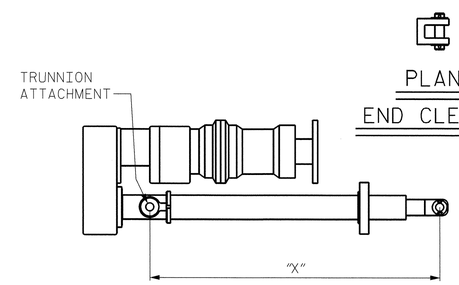

PLAN

END CLEVIS

TAIL LOCK POWER CYLINDER

TAIL LOCK STRUT VERTICAL, "X" = 35.50"
TAIL LOCK STRUT RETRACTED, "X" = 46.13"

NOTES:

1. TWO TAIL LOCK ASSEMBLIES PER LEAF (4 TOTAL), REFER TO DRAWING S-008E FOR TAIL LOCK PEDESTALS AND LATERAL CENTERLINES.
2. MATERIAL: ASTM A588, HSLA STEEL, EXCEPT AS OTHERWISE NOTED.

PROJECT NO. U-4438

PASQUOTANK COUNTY

STATION: 15+25.75 -L1-

STATE OF NORTH CAROLINA
DEPARTMENT OF TRANSPORTATION
RALEIGH

ELIZABETH CITY BRIDGE OVER PASQUOTANK RIVER
NEW BASCULE SPAN
TAIL LOCK ASSEMBLY

MODJESKI and MASTERS
Experience great bridges.
Mechanicsburg, PA NC License No. C-2979

NORTH CAROLINA PROFESSIONAL ENGINEER SEAL 025801 LANCE V. BORDEN 5/3/2011

REVISIONS						SHEET NO.
NO.	BY:	DATE:	NO.	BY:	DATE:	S-215
1			3			TOTAL SHEETS
2			4			454

DWG NUMBER	TOTAL DWGS
M-019E	22

DRAWN BY : RLR DATE : 01/11
CHECKED BY : TJM DATE : 01/11

5/4/2011
9:16:09 AM
\\mmdc10\projects\2986.02\CADD\Mechanical\EB\M-019E_U4438_MD_TLA_01_E.dgn

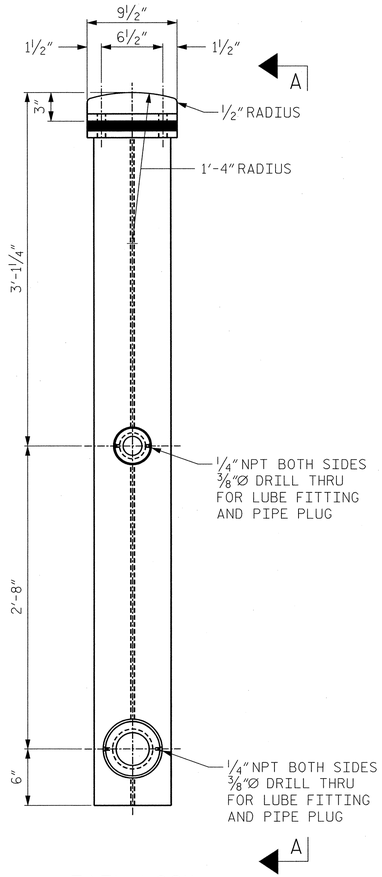

TAIL LOCK
STRUT DETAIL

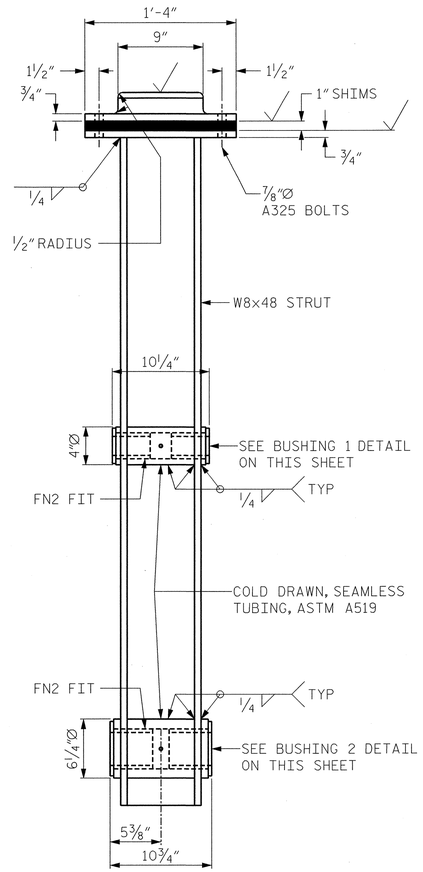

VIEW A-A

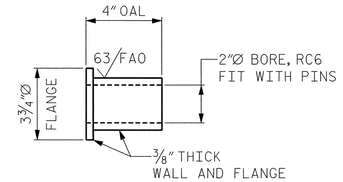

BUSHING 1 DETAIL

BUSHING MATERIAL: ASTM B22, ALLOY C91300

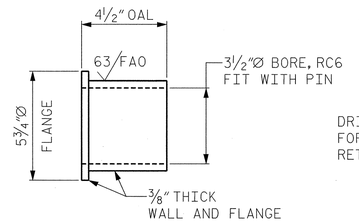

BUSHING 2 DETAIL

BUSHING MATERIAL: ASTM B22, ALLOY C91300

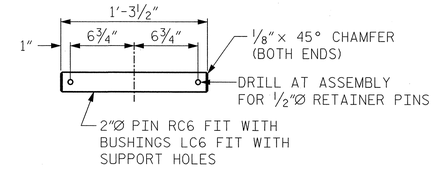

PIN DETAIL - 1

PIN MATERIAL: ASTM A564, TYPE 630, 17-4PH

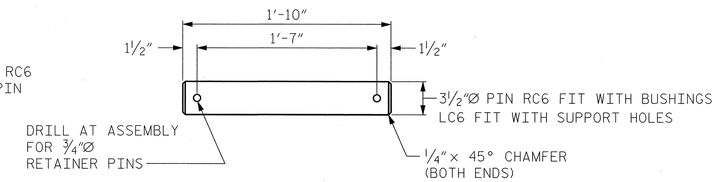

PIN DETAIL - 2

PIN MATERIAL: ASTM A564, TYPE 630, 17-4PH

NOTES:

1. BUSHINGS TO HAVE DOUBLE OVAL GREASE GROOVES AND FEED FROM INSIDE EDGE.
2. WELDMENTS MUST BE STRESS RELIEVED BY HEAT PRIOR TO ANY MACHINING.
3. MATERIAL: ASTM A588, HSLA STEEL, EXCEPT AS OTHERWISE NOTED.
4. FINISHED SURFACES 125 EXCEPT OTHERWISE NOTED.

PROJECT NO. U-4438

PASQUOTANK COUNTY

STATION: 15+25.75 -L1-

STATE OF NORTH CAROLINA
DEPARTMENT OF TRANSPORTATION
RALEIGH

ELIZABETH CITY BRIDGE OVER
PASQUOTANK RIVER
NEW BASCULE SPAN
TAIL LOCK DETAILS - 1

MODJESKI and MASTERS
Experience great bridges.
Mechanicsburg, PA NC License No. C-2979

NORTH CAROLINA PROFESSIONAL SEAL 025801 ENGINEER LANCE V. BORDEN 2/3/2011

DWG NUMBER	TOTAL DWGS
M-020E	22

REVISIONS						SHEET NO.
NO.	BY:	DATE:	NO.	BY:	DATE:	S-216
1			3			TOTAL SHEETS
2			4			454

DRAWN BY : RLR DATE : 01/11
CHECKED BY : TJM DATE : 01/11

2/3/2011
2:59:53 PM
K:\2986.02\CADD\Mechanical\EB\M-020E_U4438_MD_TLD1_01_E.dgn

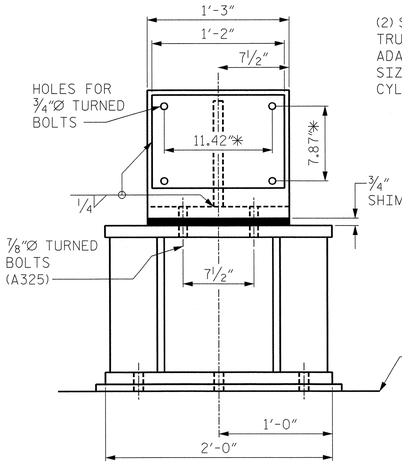

VIEW A-A

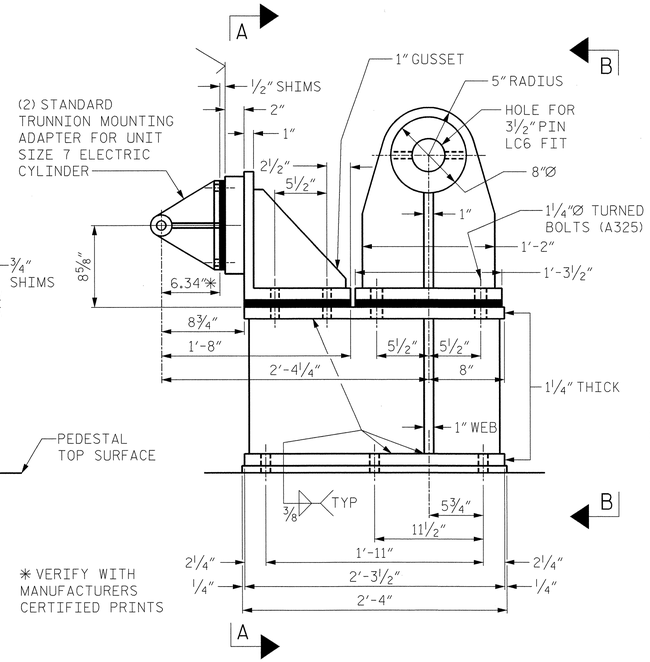

TAIL LOCK SUPPORT WELDMENT

WELD ALL FREE EDGES OF STIFFENERS AND WEB PLATES

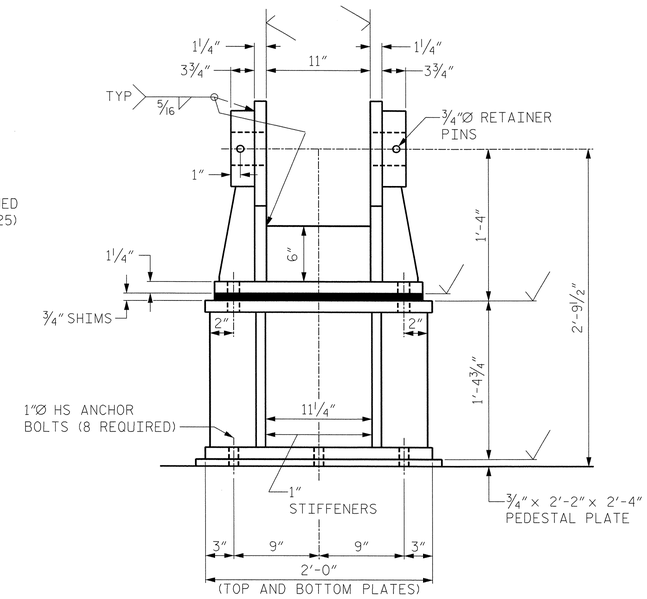

VIEW B-B

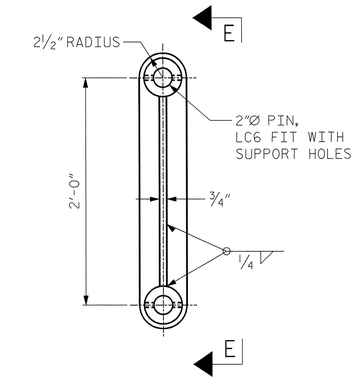

STRUT LINK WELDMENT

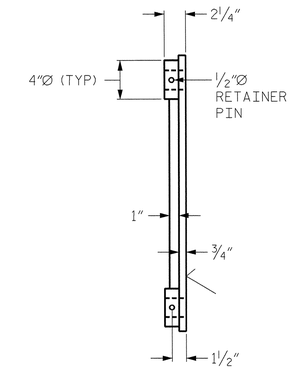

VIEW E-E

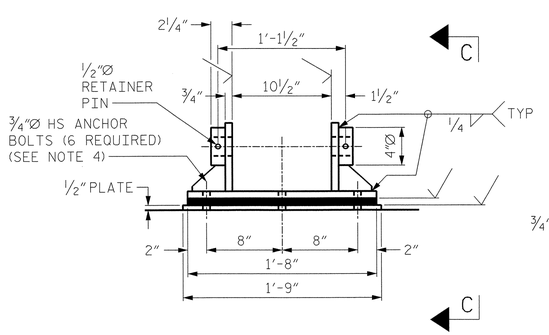

LINKAGE SUPPORT

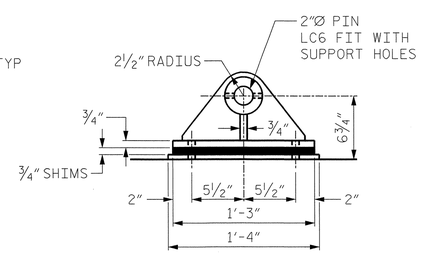

VIEW C-C

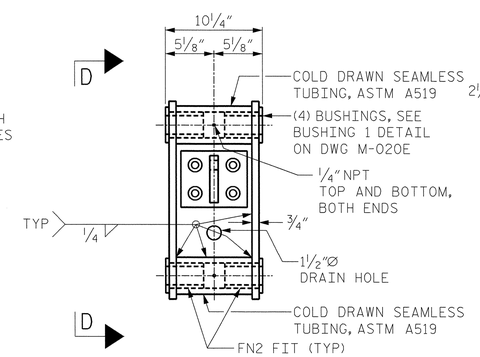

INTERMEDIATE LINK WELDMENT

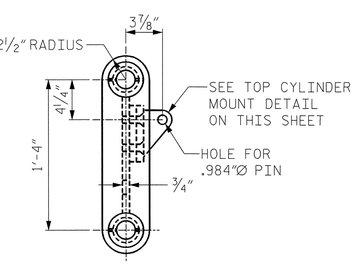

VIEW D-D

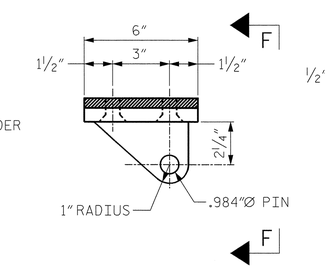

TOP CYLINDER MOUNT

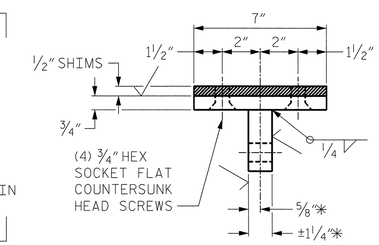

VIEW F-F

PROJECT NO. U-4438

PASQUOTANK COUNTY

STATION: 15+25.75 -L1-

NOTES:

1. ALL WELDMENTS TO BE STRESS RELIEVED BY HEAT PRIOR TO MACHINING.
2. MATERIAL: ASTM A588, HSLA STEEL, EXCEPT AS OTHERWISE NOTED.
3. FINISHED SURFACES 125 EXCEPT OTHERWISE NOTED.
4. ALL ANCHOR BOLTS SHALL BE ASTM F1554, GRADE 105 WITH HEAVY HEX NUTS AND WASHERS.

STATE OF NORTH CAROLINA
DEPARTMENT OF TRANSPORTATION
RALEIGH

ELIZABETH CITY BRIDGE OVER PASQUOTANK RIVER
NEW BASCULE SPAN
TAIL LOCK DETAILS - 2

MODJESKI and MASTERS
Experience great bridges.
Mechanicsburg, PA NC License No. C-2979

NORTH CAROLINA PROFESSIONAL SEAL 025801 ENGINEER LANCE V. BORDEN 5/3/2011

DWG NUMBER	TOTAL DWGS
M-021E	22

REVISIONS						SHEET NO.
NO.	BY:	DATE:	NO.	BY:	DATE:	S-217
1			3			TOTAL SHEETS
2			4			454

DRAWN BY : RLR DATE : 01/11
CHECKED BY : TJM DATE : 01/11

5/4/2011
9:17:30 AM
\\mmdc10\projects\2986.02\CADD\Mechanical\EB\M-021E_U4438_MD_TLD2_01_E.dgn

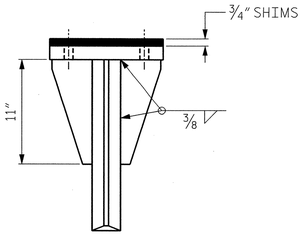

PLAN

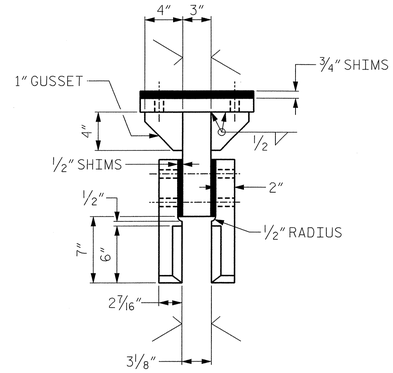

PLAN

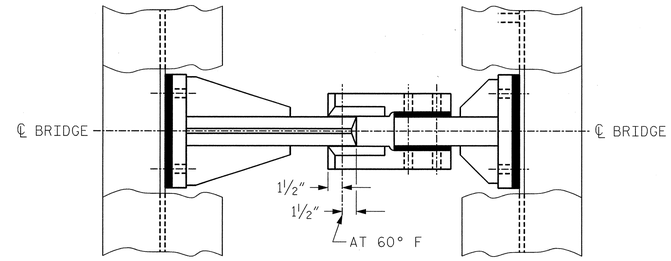

PLAN

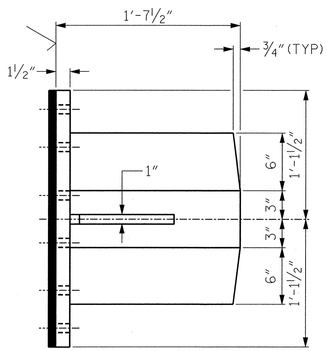

VIEW A-A

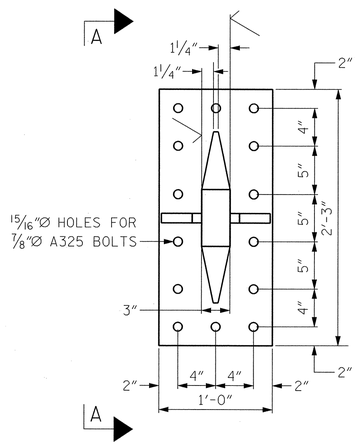

CENTERING DEVICE GUIDE

MATERIAL: ASTM A588 HSLA STEEL

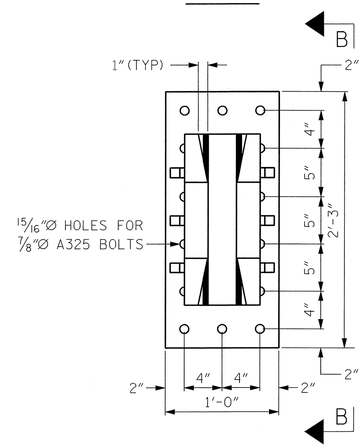

CENTERING DEVICE SOCKET

MATERIAL: ASTM A588 HSLA STEEL

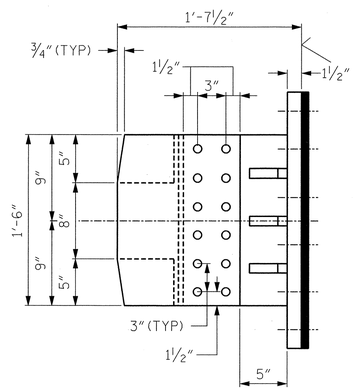

VIEW B-B

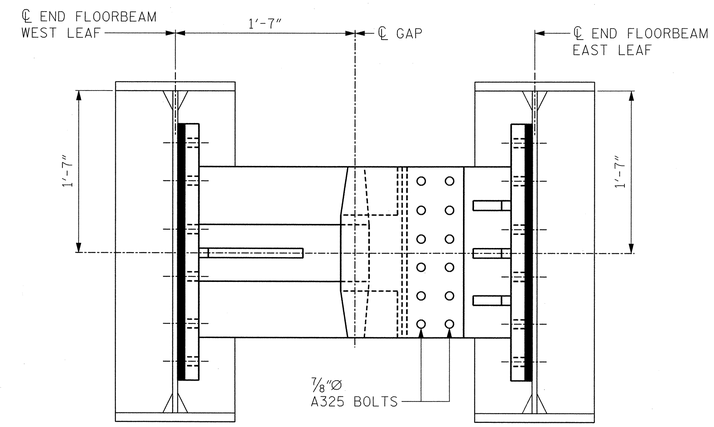

CENTERING DEVICE ASSEMBLY AT MID SPAN

NOTES:

1. ALL WELDMENTS TO BE STRESS RELIEVED BY HEAT PRIOR TO MACHINING.
2. MATERIAL: ASTM A588, HSLA STEEL, EXCEPT AS OTHERWISE NOTED.
3. FINISHED SURFACES 125/ EXCEPT OTHERWISE NOTED.

PROJECT NO. U-4438

PASQUOTANK COUNTY

STATION: 15+25.75 -L1-

STATE OF NORTH CAROLINA
DEPARTMENT OF TRANSPORTATION
RALEIGH

ELIZABETH CITY BRIDGE OVER
PASQUOTANK RIVER
NEW BASCULE SPAN
CENTERING DEVICE DETAILS

MODJESKI and MASTERS
Experience great bridges.
Mechanicsburg, PA NC License No. C-2979

NORTH CAROLINA PROFESSIONAL SEAL 025801 ENGINEER LANCE V. BORDEN 2/3/2011

DWG NUMBER	TOTAL DWGS
M-022E	22

REVISIONS

NO.	BY:	DATE:	NO.	BY:	DATE:
1			3		
2			4		

SHEET NO. S-218

TOTAL SHEETS 454

DRAWN BY : RLR DATE : 01/11
CHECKED BY : TJM DATE : 01/11

2/3/2011
3:00:02 PM
K:\2986.02\CADD\Mechanical\EB\M-022E_U4438_MD_CDD_01_E.dgn