TIP PROJECT: R-2510C

CONTRACT: C202242

STRUCTURES

STATE OF NORTH CAROLINA
DIVISION OF HIGHWAYS

BEAUFORT COUNTY

STATE	STATE PROJECT REFERENCE NO.	SHEET NO.	TOTAL SHEETS
N.C.	R-2510C		

STATE PROJ. NO.	F. A. PROJ. NO.	DESCRIPTION
34440.1.1	MAF-75-3(26)	P.E.
34440.2.GVI	NHF-0017 (69)	R/W & UTIL
34440.3.6	NHF-0017 (87)	CONST.

LOCATION: US 17 FROM NORTH OF SR 1509 (SPRINGS ROAD) TO NORTH OF NC 171.

TYPE OF WORK: GRADING, DRAINAGE, PAVING AND STRUCTURES

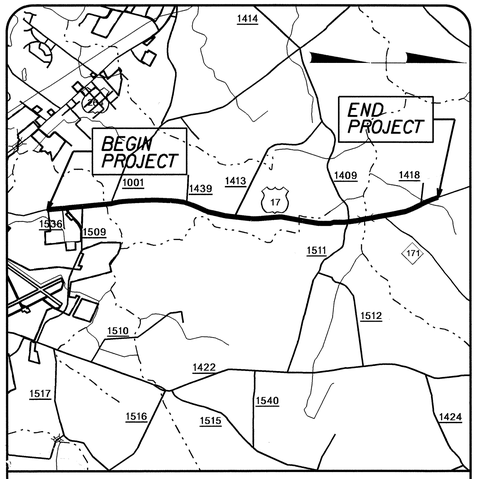

VICINITY MAP

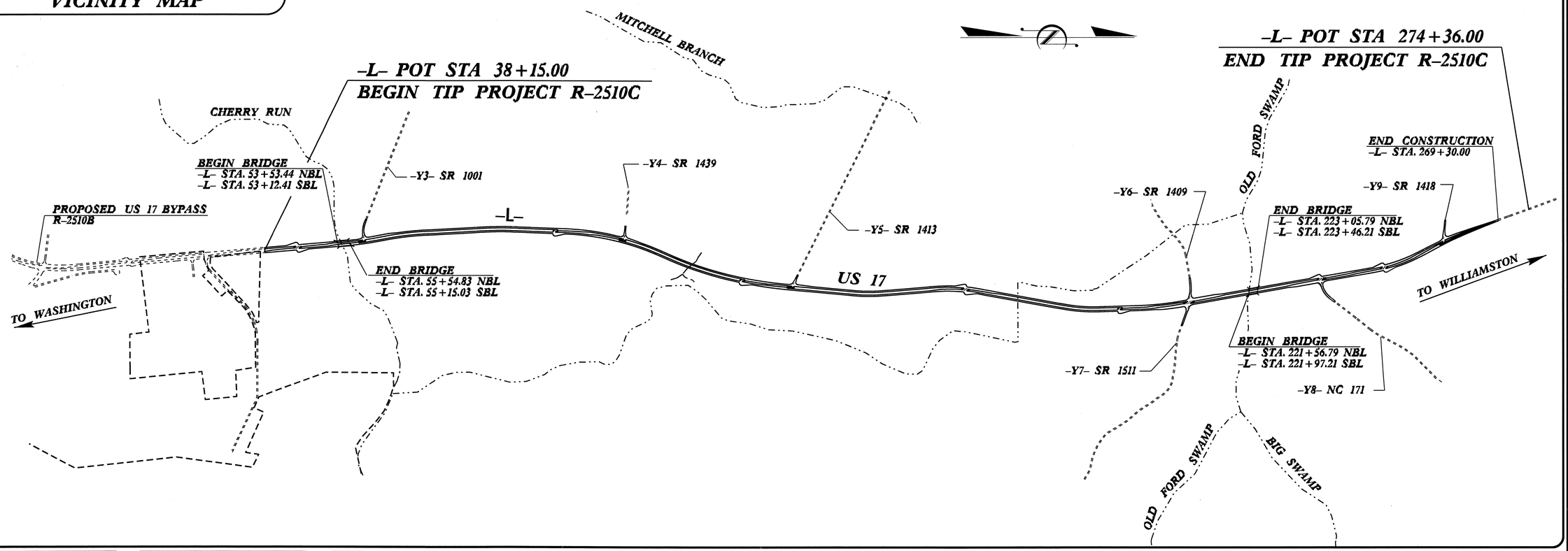

STATE OF NORTH CAROLINA DEPARTMENT OF TRANSPORTATION

DESIGN DATA

ADT 2011	=	11,280	
ADT 2031	=	18,400	
DHV	=	10	%
D	=	55	%
T	=	11	% *
V	=	60 MPH	
CLASS	=	RURAL ARTERIAL	

* TTST 7% DUAL 4%

PROJECT LENGTH

LENGTH ROADWAY TIP PROJECT R-2510C = 4.408 MI

LENGTH STRUCTURE TIP PROJECT R-2510C = 0.067 MI

TOTAL LENGTH TIP PROJECT R-2510C = 4.475 MI

PLAN PREPARED IN THE OFFICE OF:

DIVISION OF HIGHWAYS
1000 BIRCH RIDGE DR., RALEIGH NC, 27610

2006 STANDARD SPECIFICATIONS

LETTING DATE :

MARCH 15, 2011

J. C. FRYE, P.E.
PROJECT ENGINEER

T. H. FANG, P.E.
PROJECT DESIGN ENGINEER

STRUCTURE DESIGN UNIT
1000 BIRCH RIDGE DR.
RALEIGH, N.C. 27610

DIVISION OF HIGHWAYS
STATE OF NORTH CAROLINA

P.E.
STATE DESIGN ENGINEER

DEPARTMENT OF TRANSPORTATION
FEDERAL HIGHWAY ADMINISTRATION

APPROVED
DIVISION ADMINISTRATOR DATE

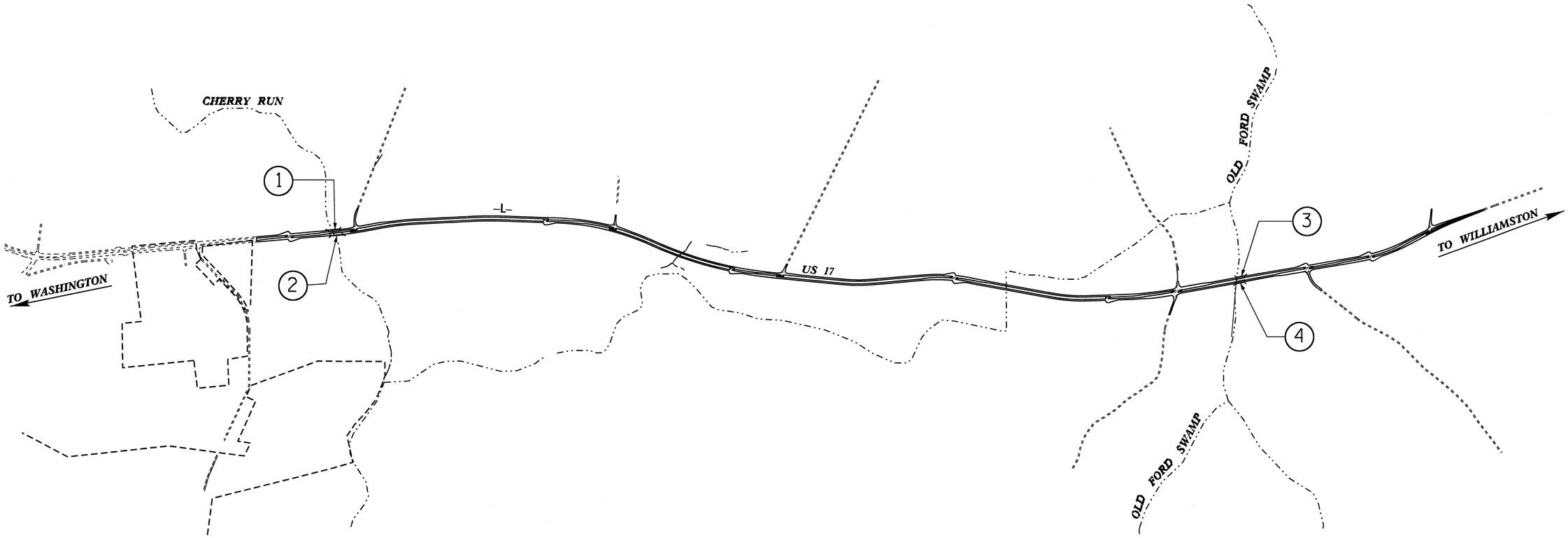

BRIDGES			
INDEX NUMBER	STATION	DESCRIPTION	SHEET NUMBERS
1	54+34.00 -L- POC	BRIDGE CARRYING US 17 OVER CHERRY RUN LEFT LANE	S-1 THRU S-37
2	54+34.00 -L- POC	BRIDGE CARRYING US 17 OVER CHERRY RUN RIGHT LANE	S-38 THRU S-74
3	222+51.50 -L-	BRIDGE CARRYING US 17 OVER OLD FORD SWAMP LEFT LANE	S-75 THRU S-104
4	222+51.50 -L-	BRIDGE CARRYING US 17 OVER OLD FORD SWAMP RIGHT LANE	S-105 THRU S-134

PROJECT NO. R-2510C

BEAUFORT COUNTY

STATE OF NORTH CAROLINA
DEPARTMENT OF TRANSPORTATION
RALEIGH

INDEX SHEET

REVISIONS						SHEET NO.
NO.	BY:	DATE:	NO.	BY:	DATE:	
1			3			TOTAL SHEETS
2			4			

DRAWN BY : QT NGUYEN DATE : 8-09
CHECKED BY : T. H. FANG DATE : 8-10

06-OCT-2010 15:59
H:\R2510c\Structures\r2510c\FinalPlans\r2510c_sd_is.dgn
tfang

F.A. PROJECT NO. NHF-0017(87)

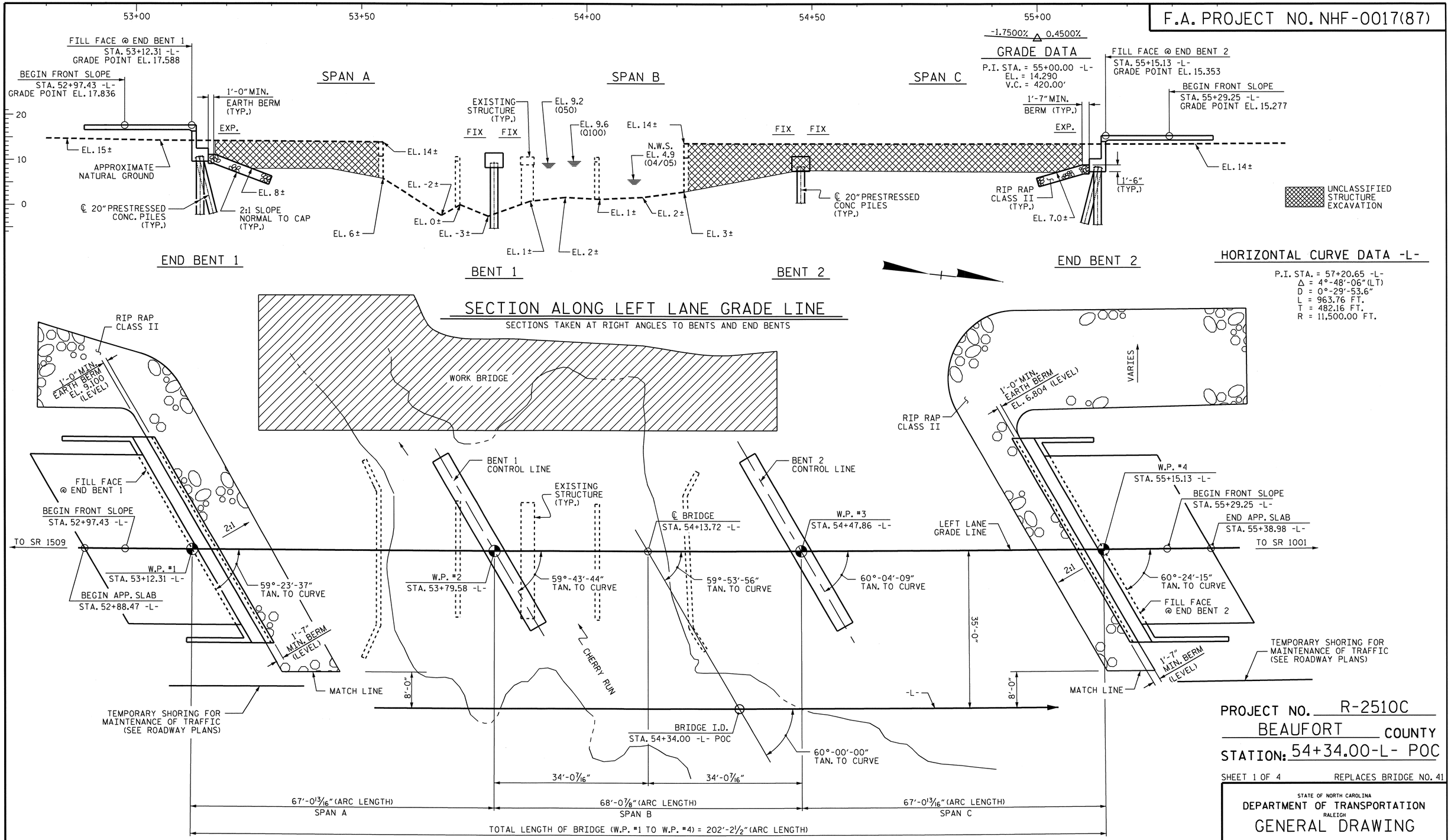

PROJECT NO. R-2510C
BEAUFORT COUNTY
STATION: 54+34.00-L- POC

SHEET 1 OF 4 REPLACES BRIDGE NO. 41

STATE OF NORTH CAROLINA
DEPARTMENT OF TRANSPORTATION
RALEIGH

GENERAL DRAWING

FOR BRIDGE OVER CHERRY RUN ON US 17 BETWEEN SR 1509 AND SR 1001

(LEFT LANE)

NORTH CAROLINA PROFESSIONAL SEAL 11915 ENGINEER JOHN C. EAVES 12/9/10

NORTH CAROLINA PROFESSIONAL SEAL 16301 ENGINEER TING HSIUNG LANG 12/8/10

REVISIONS						SHEET NO.
NO.	BY:	DATE:	NO.	BY:	DATE:	S-1
1			3			TOTAL SHEETS
2			4			134

DRAWN BY : S. DOMBROWSKI DATE : 05/09
CHECKED BY : Q.T. NGUYEN DATE : 06/09

08-DEC-2010 11:00
Y:\TIPProjects-R\R2510c\Structures\r2510c\Final Plans\STR1\r-2510c_sd_gd_01.dgn
qtnguyen

STR. #1

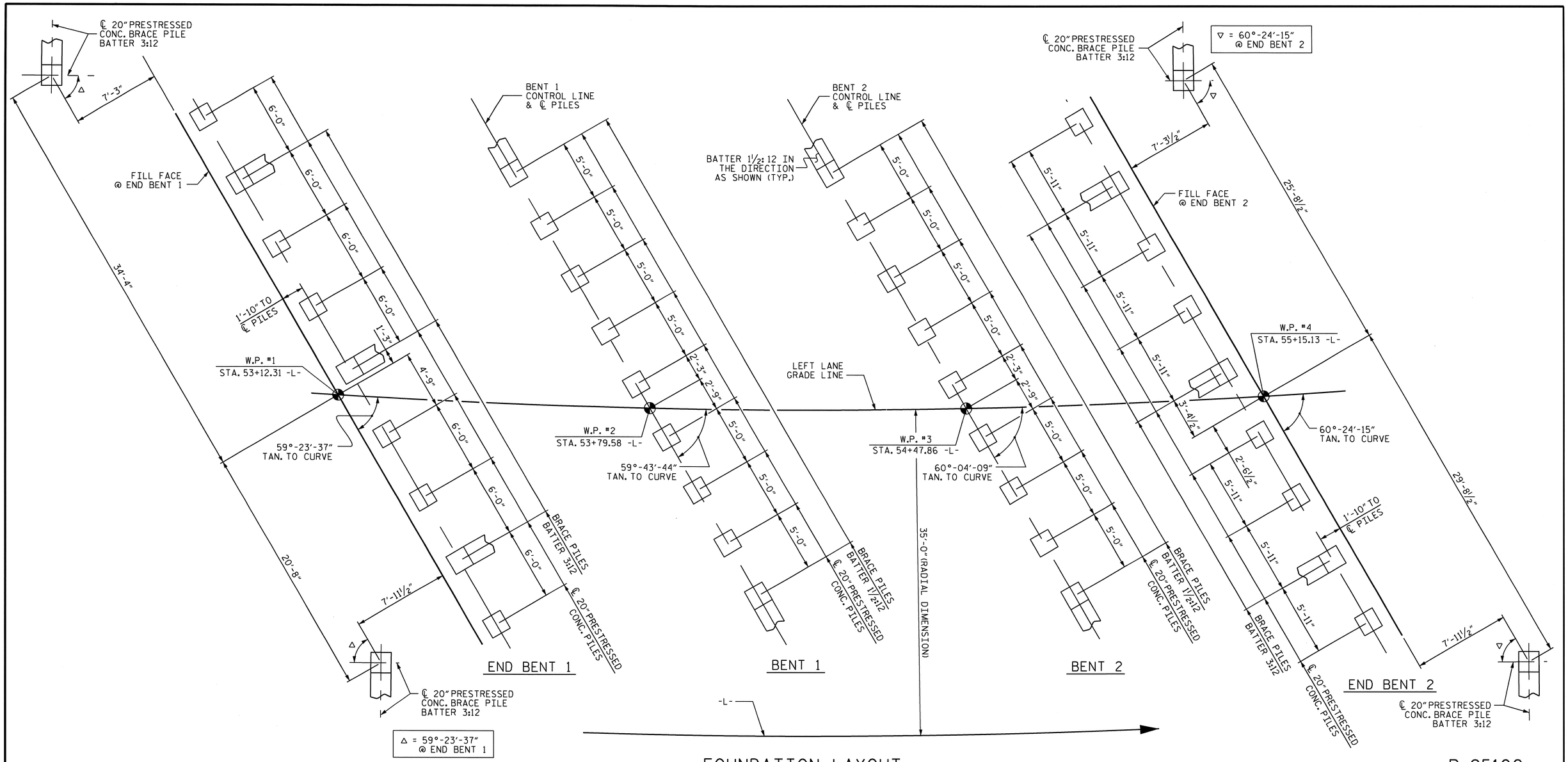

FOUNDATION LAYOUT

DIMENSIONS LOCATING PILES ARE SHOWN TO PILE CENTERLINE AND MEASURED AT CAP BOTTOM.
BRACE PILES AT END BENTS ARE BATTERED 3:12 BRACE PILES AT BENTS ARE BATTERED 1½:12

NOTES

DRIVE PILES AT END BENTS 1 AND 2 TO A REQUIRED BEARING CAPACITY OF 120 TONS PER PILE. THE REQUIRED BEARING CAPACITY IS EQUAL TO THE ALLOWABLE BEARING CAPACITY WITH A MINIMUM FACTOR OF SAFETY OF TWO.

THE ALLOWABLE BEARING CAPACITY FOR PILES AT END BENTS 1 & 2 IS 60 TONS PER PILE.

DRIVE PILES AT BENTS 1 AND 2 TO A REQUIRED BEARING CAPACITY OF 180 TONS PER PILE. THE REQUIRED BEARING CAPACITY IS EQUAL TO THE ALLOWABLE BEARING CAPACITY WITH A MINIMUM FACTOR OF SAFETY OF TWO PLUS ANY ADDITIONAL CAPACITY TO ACCOUNT FOR DOWN DRAG OR NEGATIVE SKIN FRICTION AND SCOUR.

THE ALLOWABLE BEARING CAPACITY FOR PILES AT BENTS 1 AND 2 IS 80 TONS PER PILE.

INSTALL PILES AT BENT 1 TO A TIP ELEVATION NO HIGHER THAN -42 FT.

INSTALL PILES AT BENT 2 TO A TIP ELEVATION NO HIGHER THAN -35 FT.

THE SCOUR CRITICAL ELEVATION FOR BENT 1 IS ELEVATION -15 FT. SCOUR CRITICAL ELEVATIONS ARE USED TO MONITOR POSSIBLE SCOUR PROBLEMS DURING THE LIFE OF THE STRUCTURE.

THE SCOUR CRITICAL ELEVATION FOR BENT 2 IS ELEVATION -5 FT. SCOUR CRITICAL ELEVATIONS ARE USED TO MONITOR POSSIBLE SCOUR PROBLEMS DURING THE LIFE OF THE STRUCTURE.

IT HAS BEEN ESTIMATED THAT A HAMMER WITH AN EQUIVALENT RATED ENERGY IN THE RANGE OF 30,000 FT-LB TO 55,000 FT-LB PER BLOW WILL BE REQUIRED TO DRIVE PILES. THIS ESTIMATED ENERGY RANGE DOES NOT RELEASE THE CONTRACTOR FROM ARTICLE 450-5 OF THE STANDARD SPECIFICATIONS.

TESTING PILES WITH THE PILE DRIVING ANALYZER (PDA) DURING DRIVING, RESTRIKING OR REDRIVING MAY BE REQUIRED. THE ENGINEER WILL DETERMINE THE NEED FOR PDA TESTING. SEE PILE DRIVING ANALYZER SPECIAL PROVISION.

FOR PILES, SEE SPECIAL PROVISIONS.

NORTH CAROLINA PROFESSIONAL SEAL 16301 ENGINEER TING-HSIUNG FANG

10/11/10

PROJECT NO. R-2510C
BEAUFORT COUNTY
STATION: 54+34.00-L- POC

SHEET 2 OF 4

STATE OF NORTH CAROLINA
DEPARTMENT OF TRANSPORTATION
RALEIGH

GENERAL DRAWING

FOR BRIDGE OVER CHERRY RUN ON US 17 BETWEEN SR 1509 AND SR 1001

(LEFT LANE)

REVISIONS						SHEET NO.
NO.	BY:	DATE:	NO.	BY:	DATE:	S-2
1			3			TOTAL SHEETS
2			4			134

STR. #1

DRAWN BY : S. DOMBROWSKI DATE : 05/09
CHECKED BY : O.T. NGUYEN DATE : 06/09

11-OCT-2010 12:54
Y:\TIPProjects-R\R2510c\Structures\r2510c\FinalPlans\STR1\r-2510c_sd_gd_01.dgn
qtnguyen

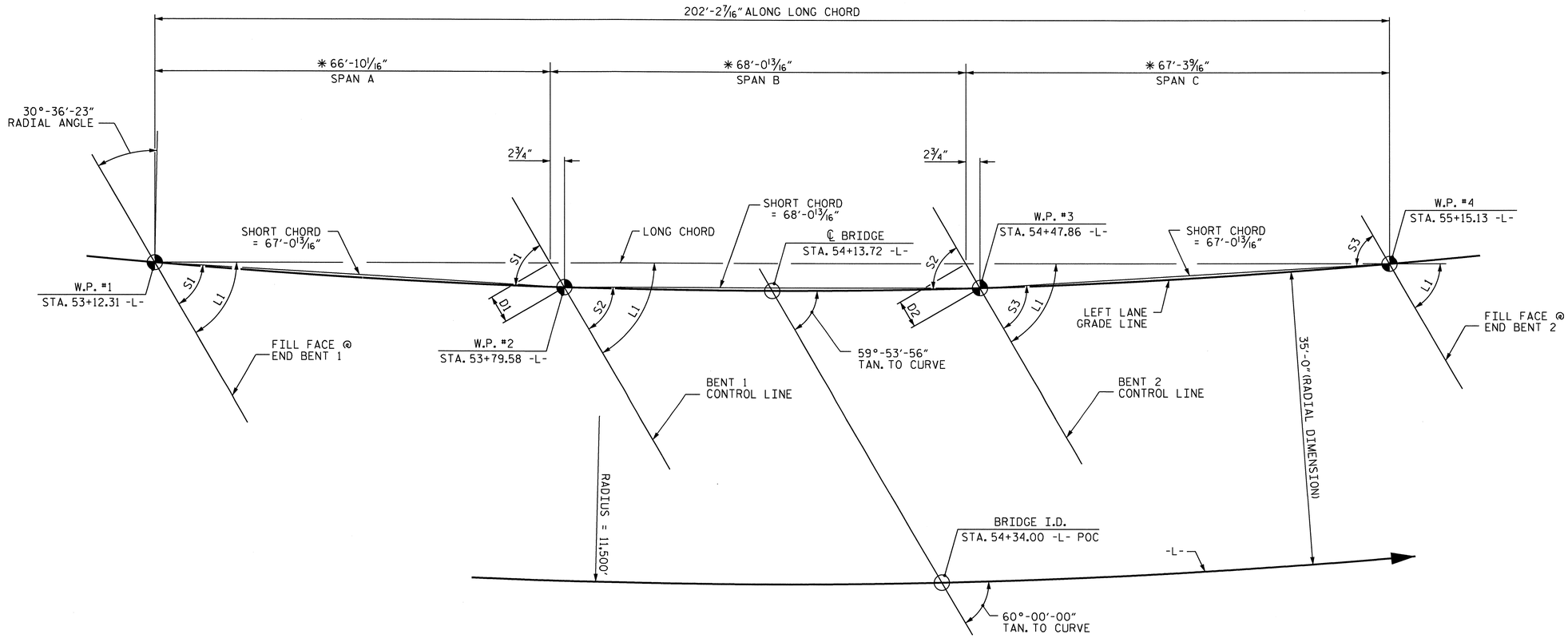

LONG CHORD LAYOUT

* ALONG LONG CHORD.

ANGLES				OFFSETS	
LONG CHORD		SHORT CHORD			
L1	59°-53'-56"	S1	59°-33'-41"	D1	5 1/2"
		S2	59°-53'-56"	D2	5 1/2"
		S3	60°-14'-12"		

HORIZONTAL CURVE DATA -L-

P.I. STA. = 57+20.65 -L-
Δ = 4°-48'-06" (LT)
D = 0°-29'-53.6"
L = 963.76 FT.
T = 482.16 FT.
R = 11,500.00 FT.

PROJECT NO. R-2510C
BEAUFORT COUNTY
STATION: 54+34.00-L- POC

SHEET 3 OF 4

STATE OF NORTH CAROLINA
DEPARTMENT OF TRANSPORTATION
RALEIGH

GENERAL DRAWING

FOR BRIDGE OVER CHERRY RUN ON US 17 BETWEEN SR 1509 AND SR 1001

(LEFT LANE)

NORTH CAROLINA PROFESSIONAL SEAL 16301 ENGINEER TING-HSIONG FANG
12/8/10

REVISIONS						SHEET NO.
NO.	BY:	DATE:	NO.	BY:	DATE:	S-3
1			3			TOTAL SHEETS
2			4			134

STR. #1

DRAWN BY : S. DOMBROWSKI DATE : 05/09
CHECKED BY : O.T. NGUYEN DATE : 06/09

08-DEC-2010 11:01
Y:\TIPProjects-R\R2510c\Structures\r2510c\FinalPlans\STR1\r-2510c_sd_gd_01.dgn
qtnguyen

BM #1: RR SPIKE IN BASE OF 28" PINE TREE, 176.42' RT. OF STA. 58+18.72 -L-, EL. 12.90

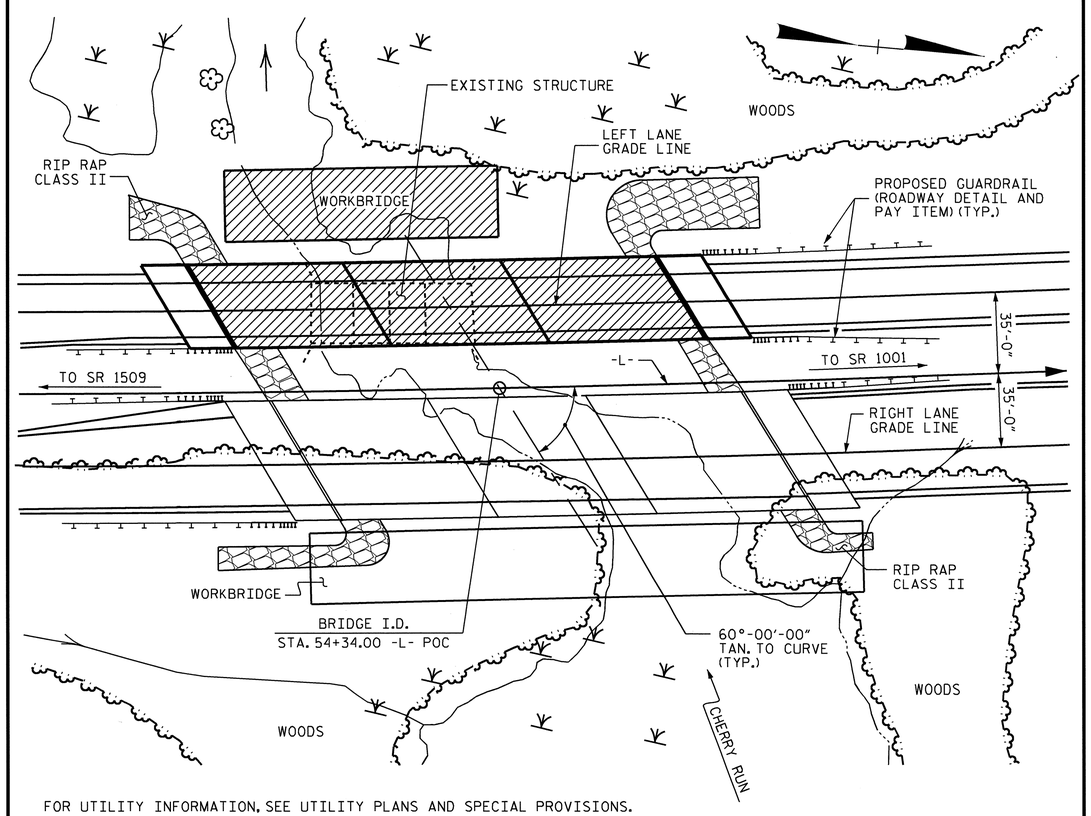

FOR UTILITY INFORMATION, SEE UTILITY PLANS AND SPECIAL PROVISIONS.

LOCATION SKETCH

NOTES

ASSUMED LIVE LOAD = HS20 OR ALTERNATE LOADING, EXCEPT THAT THE GIRDERS HAVE BEEN DESIGNED FOR HS25.

FOR OTHER DESIGN DATA AND GENERAL NOTES, SEE SHEET SN.

FOR EROSION CONTROL MEASURES SEE EROSION CONTROL PLANS.

THIS STRUCTURE HAS BEEN DESIGNED IN ACCORDANCE WITH HEC 18, "EVALUATING SCOUR AT BRIDGES", MAY, 2001.

THIS BRIDGE HAS BEEN DESIGNED BY THE STRENGTH DESIGN METHOD AS SPECIFIED IN AASHTO STANDARD SPECIFICATIONS.

THIS BRIDGE HAS BEEN DESIGNED IN ACCORDANCE WITH THE REQUIREMENTS OF THE AASHTO STANDARD SPECIFICATIONS FOR SEISMIC DESIGN OF HIGHWAY BRIDGES FOR SEISMIC PERFORMANCE CATEGORY A.

PRESTRESSED CONCRETE DECK PANELS MAY BE USED IN LIEU OF METAL STAY-IN-PLACE FORMS IN ACCORDANCE WITH ARTICLE 420-3 OF THE STANDARD SPECIFICATIONS.

REMOVABLE FORMS MAY BE USED IN LIEU OF METAL STAY-IN-PLACE FORMS IN ACCORDANCE WITH ARTICLE 420-3 OF THE STANDARD SPECIFICATIONS.

AFTER SERVING AS A TEMPORARY BRIDGE, THE EXISTING STRUCTURE CONSISTS OF A REINFORCED CONCRETE DECK ON 7 LINES 21" I-BEAMS @ VARYING CENTERS IN 4 SPANS (1 @ 19'-3", 1 @ 15'-6", 1 @ 15'-7" AND 1 @ 20'-1") WITH AN OUT TO OUT WIDTH OF 28'-0" AND A CLEAR ROADWAY WIDTH OF 25'-6". THE SUBSTRUCTURE CONSISTS OF REINFORCED CONCRETE ABUTMENTS AND REINFORCED CONCRETE CAP ON REINFORCED CONCRETE COLUMNS AND WEB AT BENT 2; HP 12X53 CAP AND PILES AT BENTS 1 AND 3. THE EXISTING BRIDGE IS PRESENTLY POSTED BELOW THE LEGAL LOAD LIMIT. SHOULD THE STRUCTURAL INTEGRITY OF THE BRIDGE DETERIORATE, THIS LOAD LIMITATION MAY BE REDUCED AS FOUND NECESSARY DURING THE LIFE OF THE PROJECT.

REMOVAL OF THE EXISTING BRIDGE SHALL BE PERFORMED SO AS NOT TO ALLOW DEBRIS TO FALL INTO THE WATER. THE CONTRACTOR SHALL REMOVE THE BRIDGE AND SUBMIT PLANS FOR DEMOLITION IN ACCORDANCE WITH ARTICLE 402-2 OF THE STANDARD SPECIFICATIONS.

THE MATERIAL SHOWN IN THE CROSS-HATCHED AREA SHALL BE EXCAVATED FOR A DISTANCE OF 20 FT. LEFT AND 25 FT. RIGHT AT END BENT 1 AND 35 FT. LEFT AND RIGHT AT END BENT 2 OF CENTERLINE ROADWAY AS DIRECTED BY THE ENGINEER. THIS WORK WILL BE PAID FOR AT THE CONTRACT LUMP SUM PRICE FOR UNCLASSIFIED STRUCTURE EXCAVATION. SEE SECTION 412 OF THE STANDARD SPECIFICATIONS.

INASMUCH AS THE PAINT SYSTEM ON THE EXISTING STRUCTURAL STEEL CONTAINS LEAD, THE CONTRACTOR'S ATTENTION IS DIRECTED TO ARTICLE 107-1 OF THE STANDARD SPECIFICATIONS. ANY COSTS RESULTING FROM COMPLIANCE WITH APPLICABLE STATE OR FEDERAL REGULATIONS PERTAINING TO HANDLING OF MATERIALS CONTAINING LEAD BASED PAINT SHALL BE INCLUDED IN THE BID PRICE FOR "REMOVAL OF EXISTING STRUCTURE AT STATION 54+34.00 -L-".

THE SUBSTRUCTURE OF THE EXISTING BRIDGE INDICATED ON THE PLANS IS FROM THE BEST INFORMATION AVAILABLE. SINCE THIS INFORMATION IS SHOWN FOR THE CONVENIENCE OF THE CONTRACTOR, THE CONTRACTOR SHALL HAVE NO CLAIM WHATSOEVER AGAINST THE DEPARTMENT OF TRANSPORTATION FOR ANY DELAYS OR ADDITIONAL COST INCURRED BASED ON DIFFERENCES BETWEEN THE EXISTING BRIDGE SUBSTRUCTURE SHOWN ON THE PLANS AND THE ACTUAL CONDITIONS AT THE PROJECT SITE.

THE CONTRACTOR SHALL PROVIDE INDEPENDENT ASSURANCE SAMPLES OF REINFORCING STEEL AS FOLLOWS: FOR PROJECTS REQUIRING UP TO 400 TONS OF REINFORCING STEEL, ONE 30 INCH SAMPLE OF EACH SIZE BAR USED, AND FOR PROJECTS REQUIRING OVER 400 TONS OF REINFORCING STEEL, TWO 30 INCH SAMPLES OF EACH SIZE BAR USED. THE BARS FROM WHICH THE SAMPLES ARE TAKEN MUST THEN BE SPLICED WITH REPLACEMENT BARS OF THE SIZE AND LENGTH OF THE SAMPLE, PLUS A MINIMUM LAP SPLICE OF THIRTY BAR DIAMETERS.

NEEDLE BEAMS WILL NOT BE ALLOWED UNLESS OTHERWISE CALLED FOR ON THE PLANS OR APPROVED BY THE ENGINEER.

FOR CONSTRUCTION MAINTENANCE & REMOVAL OF TEMPORARY ACCESS, SEE SPECIAL PROVISION.

FOR LIMITS OF TEMPORARY SHORING FOR MAINTENANCE OF TRAFFIC, SEE TRAFFIC CONTROL PLANS, FOR TEMPORARY SHORING PAY ITEM, SEE ROADWAY PLANS.

FOR SUBMITTAL OF WORKING DRAWINGS, SEE SPECIAL PROVISIONS.

FOR CURING CONCRETE, SEE SPECIAL PROVISIONS.

FOR PLACING LOAD ON STRUCTURE MEMBERS, SEE SPECIAL PROVISIONS.

FOR PRESTRESSED CONCRETE MEMBERS, SEE SPECIAL PROVISIONS.

FOR FALSEWORK AND FORMWORK, SEE SPECIAL PROVISIONS.

FOR CRANE SAFETY, SEE SPECIAL PROVISIONS.

FOR GROUT FOR STRUCTURES, SEE SPECIAL PROVISIONS.

HYDRAULIC DATA

DESIGN DISCHARGE	=	1,700 C.F.S.
FREQUENCY OF DESIGN FLOOD	=	50 YRS.
DESIGN HIGH WATER ELEVATION	=	9.20
DRAINAGE AREA	=	8.1 SQ. MI.
BASIC DISCHARGE (Q100)	=	2,000 C.F.S.
BASIC HIGH WATER ELEVATION	=	9.60

OVERTOPPING FLOOD DATA

OVERTOPPING DISCHARGE	=	7,100 C.F.S.
FREQUENCY OF OVERTOPPING FLOOD	=	500 YRS.+
OVERTOPPING FLOOD ELEVATION	=	15.30

NORTH CAROLINA PROFESSIONAL SEAL 16301 ENGINEER TING-HSIUNG FANG
12/8/10

TOTAL BILL OF MATERIAL

	CONSTRUCTION, MAINTENANCE AND REMOVAL OF TEMPORARY ACCESS	REMOVAL OF EXISTING STRUCTURE	PDA TESTING	PDA ASSISTANCE	UNCLASSIFIED STRUCTURE EXCAVATION	REINFORCED CONCRETE DECK SLAB	GROOVING BRIDGE FLOORS	CLASS A CONCRETE	BRIDGE APPROACH SLABS	REINFORCING STEEL	45" PRESTRESSED CONCRETE GIRDERS		20" PRESTRESSED CONC PILES		PILE REDRIVES	CONCRETE BARRIER RAIL	RIP RAP CLASS II (2'-0" THICK)	FILTER FABRIC FOR DRAINAGE	ELASTOMERIC BEARINGS	EVAZOTE JOINT SEALS
	LUMP SUM	LUMP SUM	EACH	EACH	LUMP SUM	SQ.FT.	SQ.FT.	CU.YDS.	LUMP SUM	LBS.	NO.	LIN. FT.	NO.	LIN. FT.	EACH	LIN. FT.	TON	SQ. YD.	LUMP SUM	LUMP SUM
SUPERSTRUCTURE						7,842	8,097				15	982.81				399.62				
END BENT 1								36.4		4,659			11	330	5		125	140		
BENT 1								19.9		2,985			9	540	4					
BENT 2								20.1		2,985			9	450	4					
END BENT 2								36.6		4,651			11	330	5		205	225		
TOTAL	LUMP SUM	LUMP SUM	1	1	LUMP SUM	7,842	8,097	113.0	LUMP SUM	15,280	15	982.81	40	1650	18	399.62	330	365	LUMP SUM	LUMP SUM

PROJECT NO. R-2510C
BEAUFORT COUNTY
STATION: 54+34.00-L- POC

SHEET 4 OF 4

STATE OF NORTH CAROLINA
DEPARTMENT OF TRANSPORTATION
RALEIGH

GENERAL DRAWING

FOR BRIDGE OVER CHERRY RUN ON US 17 BETWEEN SR 1509 AND SR 1001

(LEFT LANE)

REVISIONS						SHEET NO.
NO.	BY:	DATE:	NO.	BY:	DATE:	S-4
1			3			TOTAL SHEETS
2			4			134

STR. #1

DRAWN BY : S. DOMBROWSKI DATE : 05/09
CHECKED BY : O.T. NGUYEN DATE : 06/09

08-DEC-2010 11:01
Y:\TIPProjects-R\R2510c\Structures\r2510c\FinalPlans\STR1\r-2510c_sd_gd_01.dgn
qtnguyen

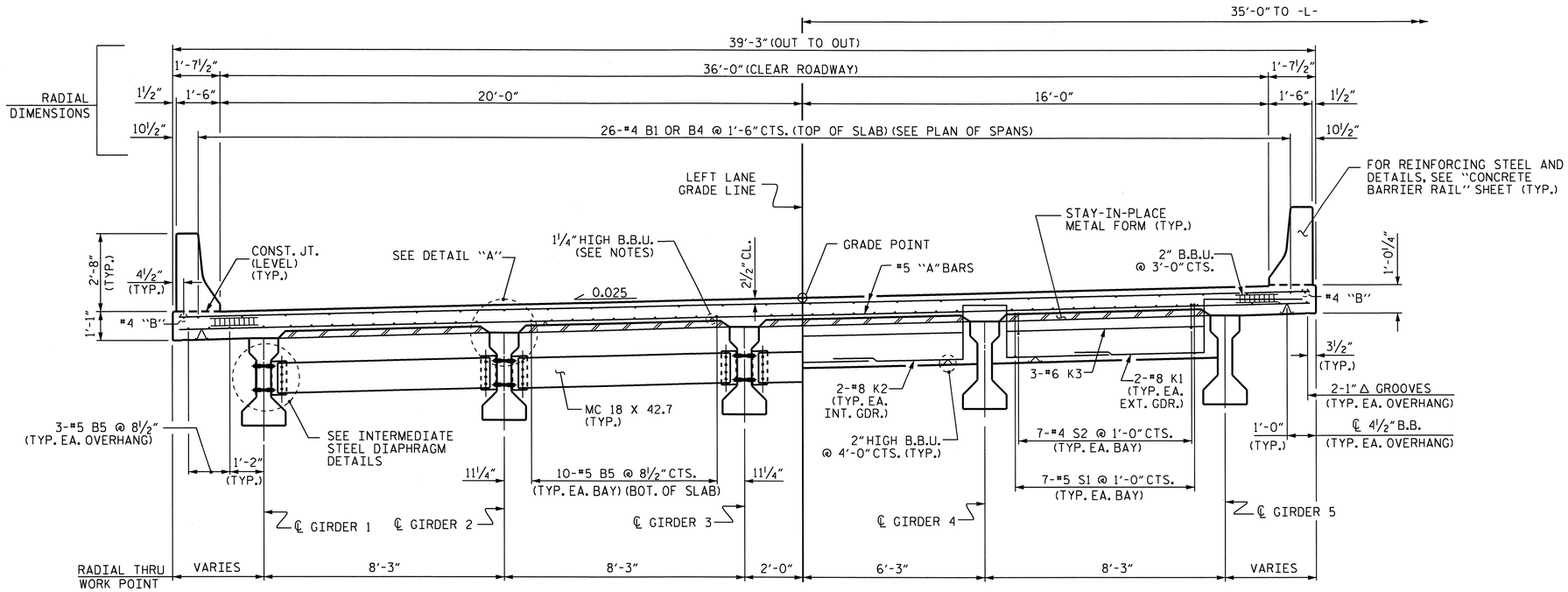

HALF TYPICAL SECTION

SHOWING INTERMEDIATE DIAPHRAGMS

HALF TYPICAL SECTION

SHOWING END BENT DIAPHRAGMS

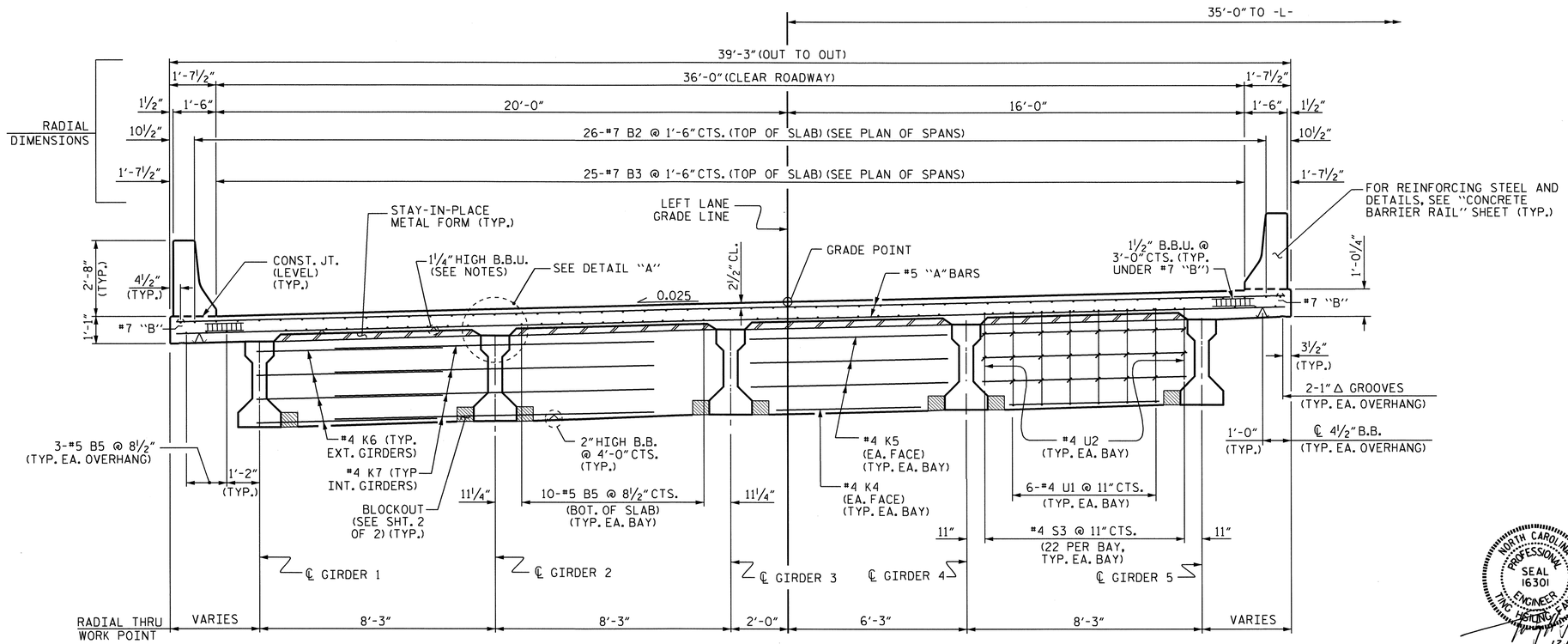

TYPICAL SECTION

SHOWING BENT DIAPHRAGMS

NOTES

PROVIDE 1¼" HIGH BEAM BOLSTERS UPPER AT 4'-0" CTS. ATOP THE METAL STAY-IN-PLACE FORMS TO SUPPORT THE BOTTOM MAT OF 'A' BARS. WHEN USING REMOVABLE FORMS, PROVIDE CONTINUOUS HIGH CHAIRS FOR METAL DECK (C.H.C.M.) @ 4'-0" CTS. WITH A HEIGHT TO SUPPORT THE BOTTOM MAT OF "A" BARS A CLEAR DISTANCE OF 2½" ABOVE THE TOP OF THE REMOVABLE FORMS.

LONGITUDINAL STEEL MAY BE SHIFTED SLIGHTLY, AS NECESSARY, TO AVOID INTERFERENCE WITH STIRRUPS IN PRESTRESSED CONCRETE GIRDERS.

PREVIOUSLY CAST CONCRETE IN A CONTINUOUS UNIT SHALL HAVE ATTAINED A MINIMUM COMPRESSIVE STRENGTH OF 3,000 PSI BEFORE ADDITIONAL CONCRETE IS CAST IN THE UNIT.

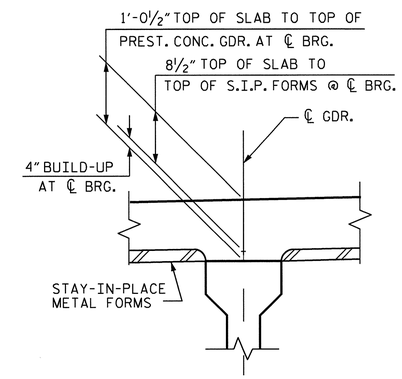

DETAIL "A"

PROJECT NO. R-2510C

BEAUFORT COUNTY

STATION: 54+34.00 -L-

SHEET 1 OF 2

STATE OF NORTH CAROLINA
DEPARTMENT OF TRANSPORTATION
RALEIGH

SUPERSTRUCTURE

TYPICAL SECTION

(LEFT LANE)

NORTH CAROLINA PROFESSIONAL SEAL 16301 ENGINEER HARISH SHAH 12/8/10

REVISIONS								SHEET NO.
NO.	BY:	DATE:	NO.	BY:	DATE:			S-5
1			3					TOTAL SHEETS
2			4					134

STR. #1

DRAWN BY : HARISH SHAH DATE : 12/08
CHECKED BY : O.T. NGUYEN DATE : 4/09

08-DEC-2010 11:01
Y:\TIPProjects-R\R2510c\Structures\r2510c\FinalPlans\STRI\r-2510c_sd_ts_01.dgn
qtnguyen

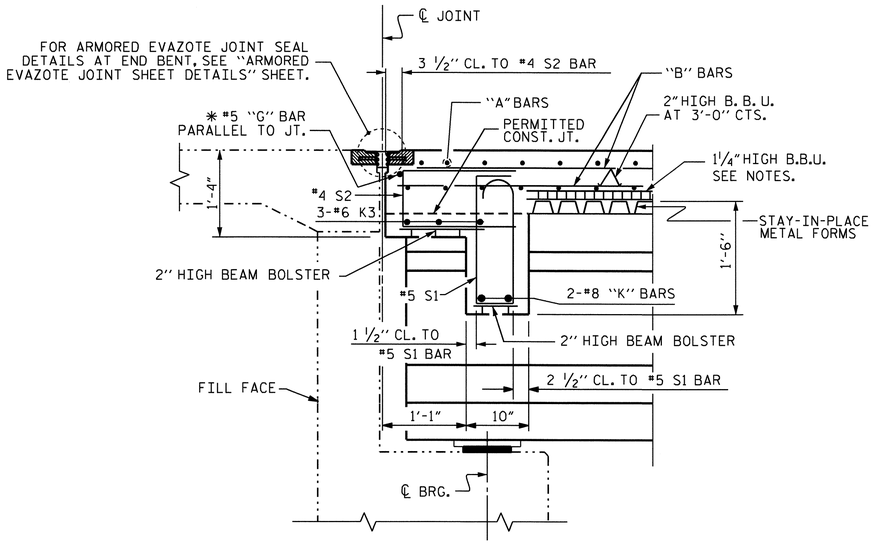

SECTION THRU END BENT DIAPHRAGMS

* #5 "G" BAR MAY BE SHIFTED SLIGHTLY AS NECESSARY TO CLEAR REINFORCING STEEL AND STIRRUPS.

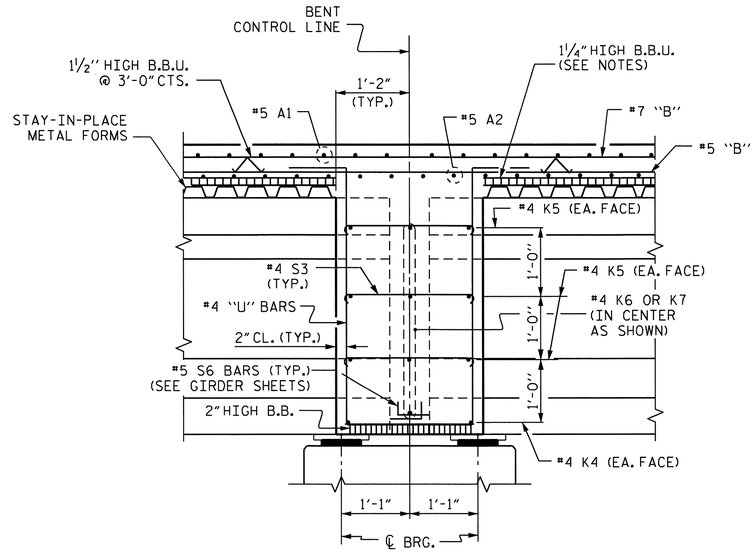

SECTION THRU BENT DIAPHRAGMS

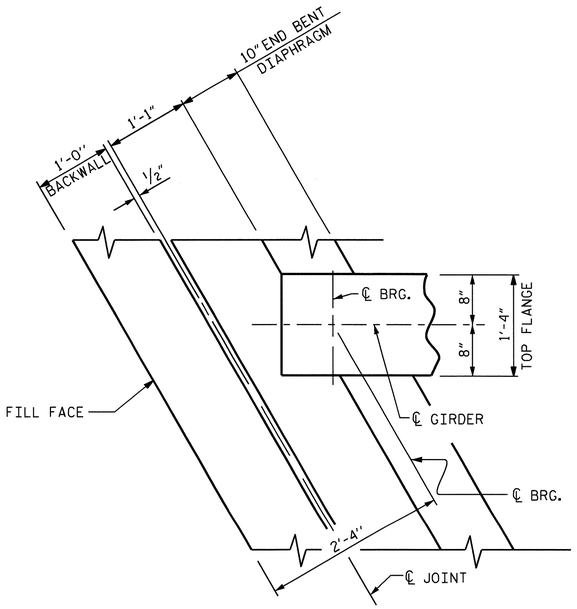

PLAN VIEW OF END BENT DIAPHRAGM

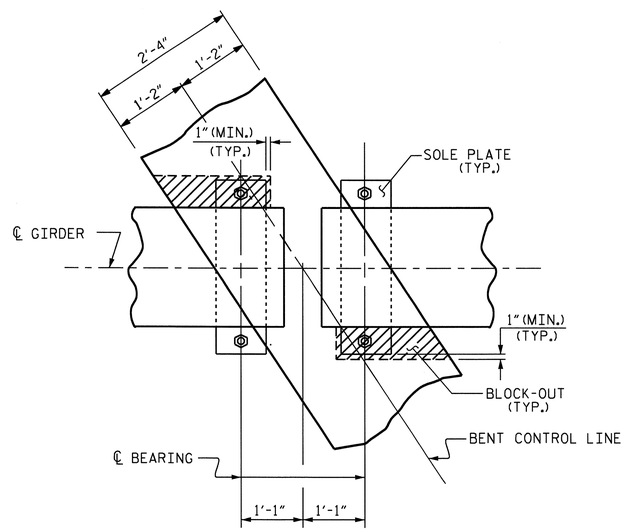

PLAN

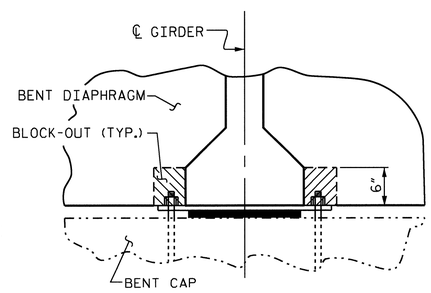

SECTION

BENT DIAPHRAGM BLOCK-OUT DETAIL

NORTH CAROLINA PROFESSIONAL SEAL 16301 ENGINEER TING HSIUNG FANG

10/11/10

PROJECT NO. R-2510C

BEAUFORT COUNTY

STATION: 54+34.00 -L-

SHEET 2 OF 2

STATE OF NORTH CAROLINA
DEPARTMENT OF TRANSPORTATION
RALEIGH

SUPERSTRUCTURE

TYPICAL SECTION DETAILS

(LEFT LANE)

REVISIONS						SHEET NO.
NO.	BY:	DATE:	NO.	BY:	DATE:	S-6
1			3			TOTAL SHEETS
2			4			134

STR. #1

DRAWN BY : HARISH SHAH DATE : 12/08
CHECKED BY : Q.T. NGUYEN DATE : 4/09

11-OCT-2010 12:54
Y:\TIPProjects-R\R2510c\Structures\r2510c\FinalPlans\STR1\r-2510c_sd_ts_01.dgn
qtnguyen

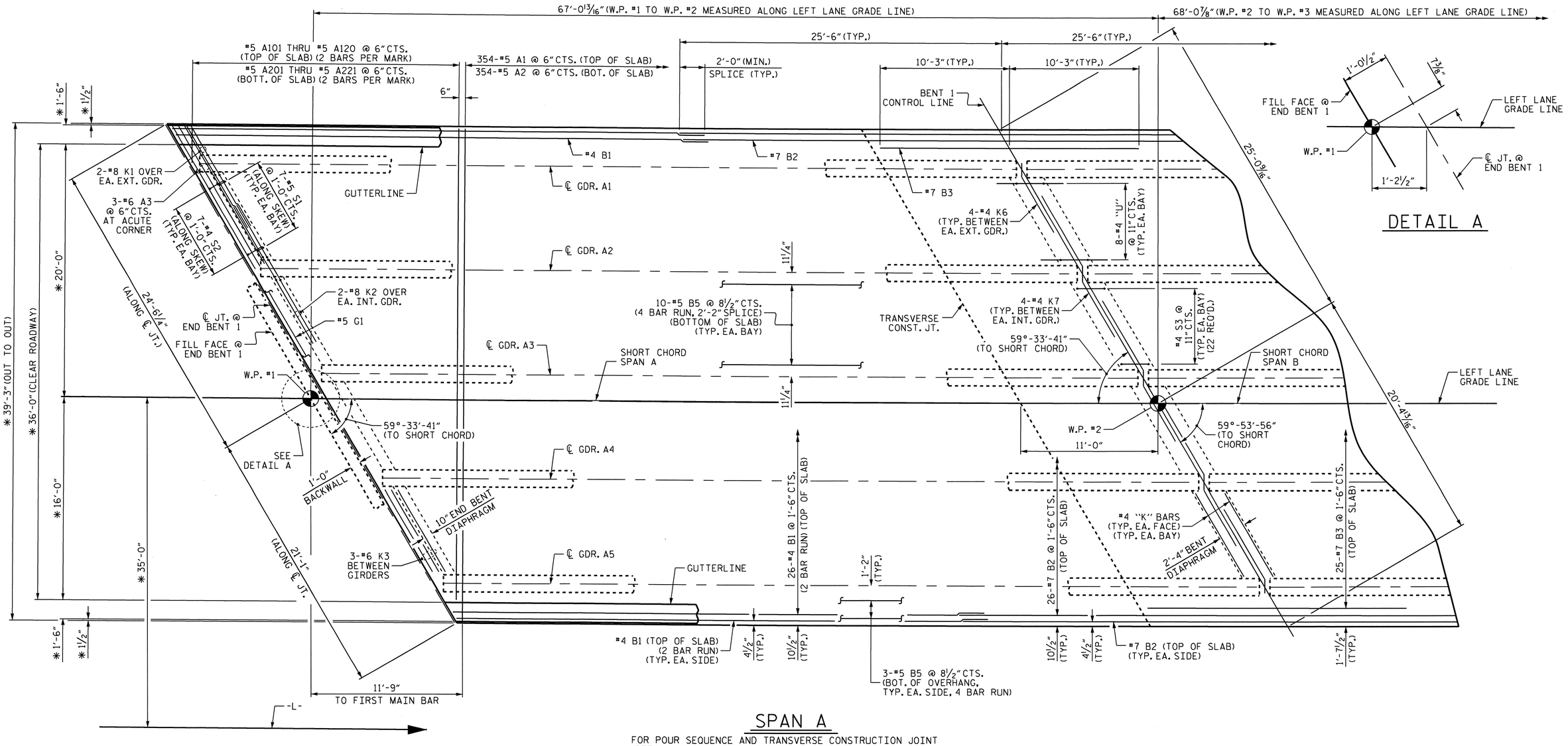

SPAN A

FOR POUR SEQUENCE AND TRANSVERSE CONSTRUCTION JOINT DETAIL, SEE "SUPERSTRUCTURE BILL OF MATERIAL" SHEET.

* RADIAL DIMENSIONS

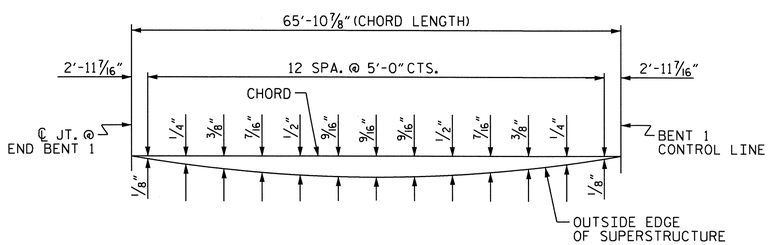

LEFT OUTSIDE EDGE

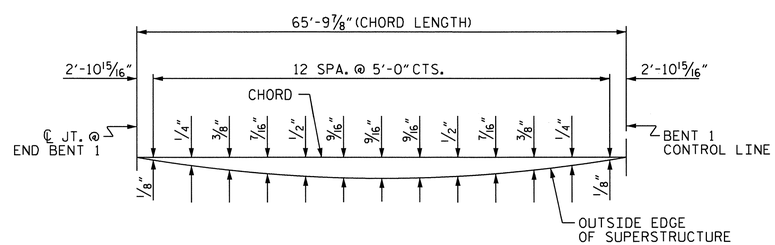

RIGHT OUTSIDE EDGE

ARC OFFSETS

NORTH CAROLINA PROFESSIONAL SEAL 16301 ENGINEER TING HSIEH FANG
12/8/10

PROJECT NO. R-2510C
BEAUFORT COUNTY
STATION: 54+34.00 -L-

SHEET 1 OF 3

STATE OF NORTH CAROLINA
DEPARTMENT OF TRANSPORTATION
RALEIGH

SUPERSTRUCTURE

PLAN OF SPANS

(LEFT LANE)

REVISIONS						SHEET NO.
NO.	BY:	DATE:	NO.	BY:	DATE:	S-7
1			3			TOTAL SHEETS
2			4			134

DRAWN BY : E.C. LOCKLEAR DATE : 8-31-10
CHECKED BY : T. H. FANG DATE : 9-24-10

08-DEC-2010 11:01
Y:\TIPProjects-R\R2510c\Structures\r2510c\FinalPlans\STRI\r-2510c_sd_ps_01.dgn
qtnguyen

STR. #1

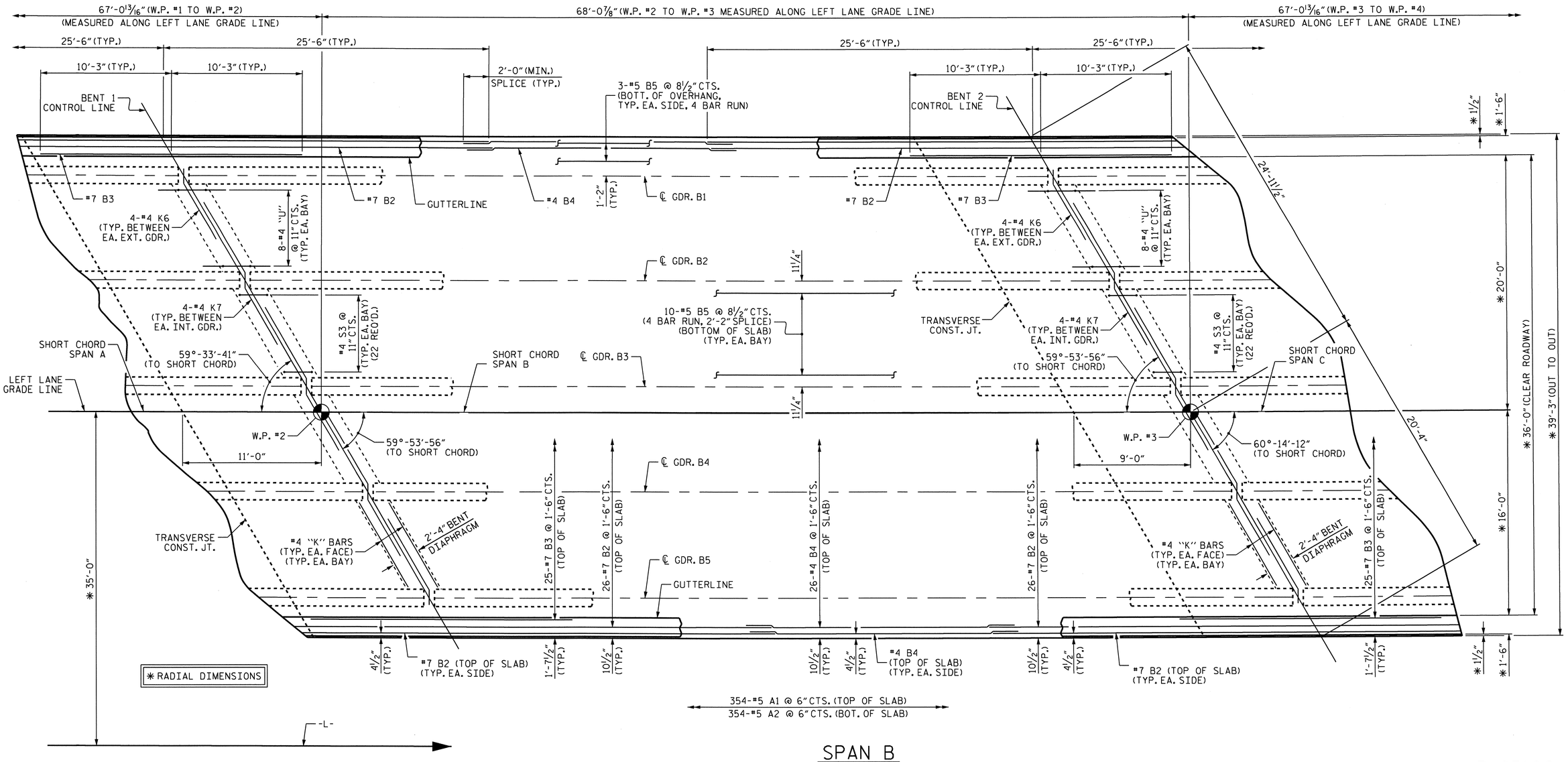

SPAN B

FOR POUR SEQUENCE AND TRANSVERSE CONSTRUCTION JOINT DETAIL, SEE "SUPERSTRUCTURE BILL OF MATERIAL" SHEET.

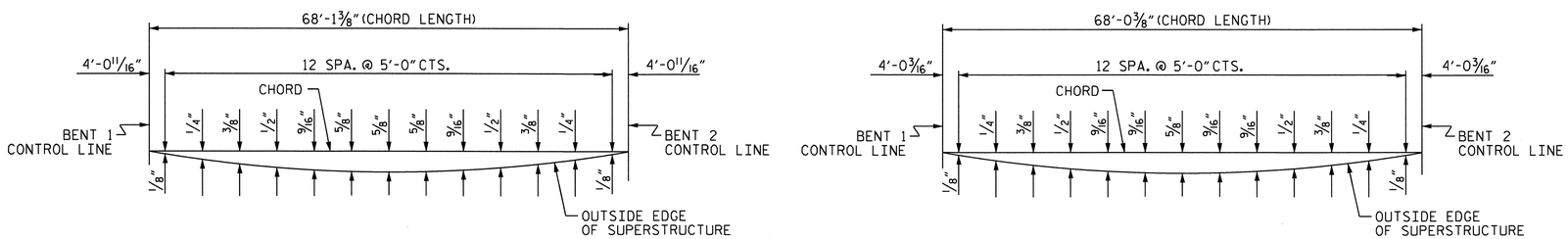

LEFT OUTSIDE EDGE

RIGHT OUTSIDE EDGE

ARC OFFSETS

PROJECT NO. R-2510C

BEAUFORT COUNTY

STATION: 54+34.00 -L-

SHEET 2 OF 3

STATE OF NORTH CAROLINA
DEPARTMENT OF TRANSPORTATION
RALEIGH

SUPERSTRUCTURE

PLAN OF SPANS

(LEFT LANE)

NORTH CAROLINA PROFESSIONAL SEAL 16301 ENGINEER T.H. FANG

12/8/10

REVISIONS								SHEET NO.
NO.	BY:	DATE:	NO.	BY:	DATE:			S-8
1			3					TOTAL SHEETS
2			4					134

DRAWN BY : E.C. LOCKLEAR DATE : 8-31-10
CHECKED BY : T. H. FANG DATE : 9-24-10

08-DEC-2010 11:01
Y:\TIPProjects-R\R2510c\Structures\r2510c\Final Plans\STRI\r-2510c_sd_ps_01.dgn
qtnguyen

STR. #1

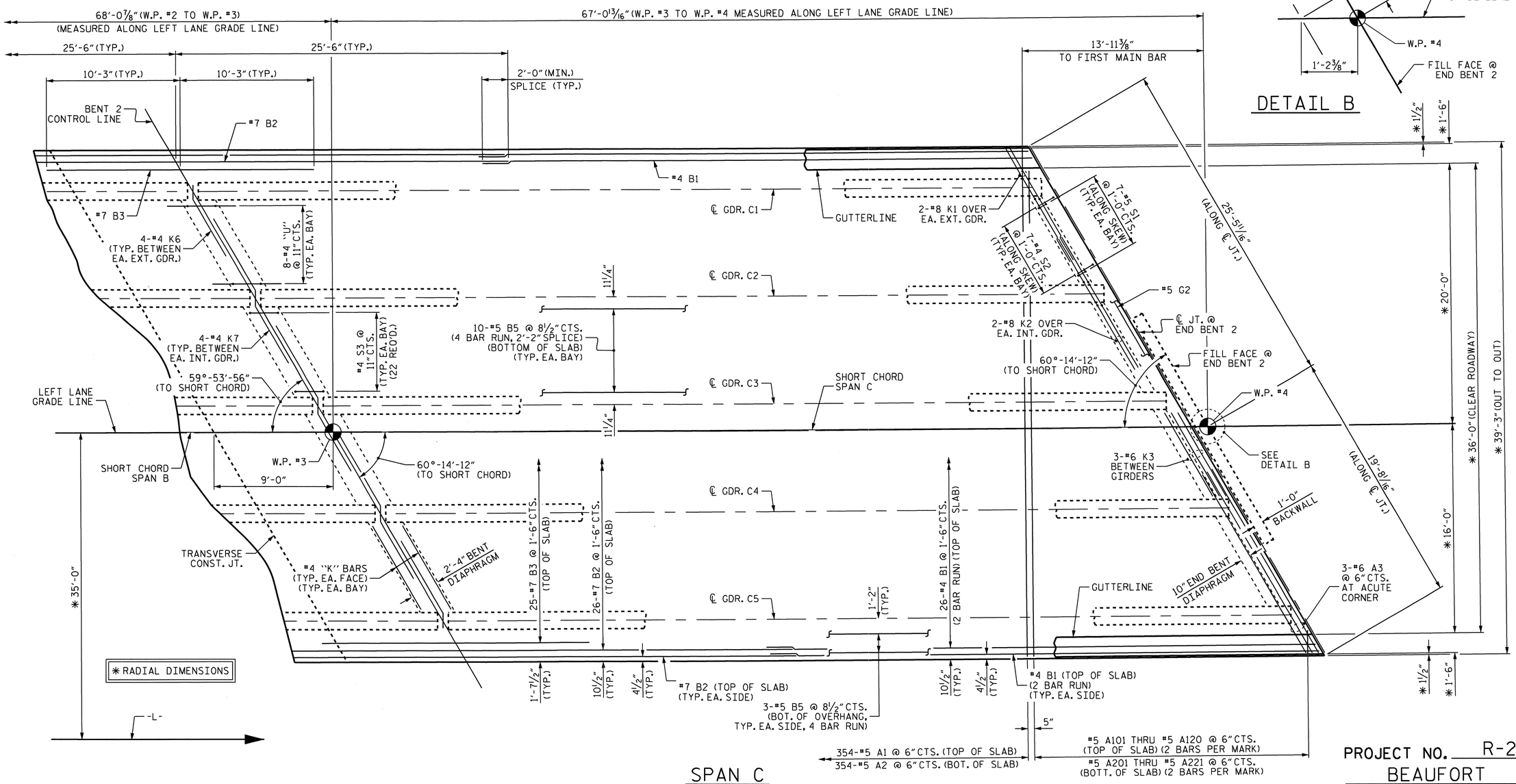

SPAN C

FOR POUR SEQUENCE AND TRANSVERSE CONSTRUCTION JOINT DETAIL, SEE "SUPERSTRUCTURE BILL OF MATERIAL" SHEET.

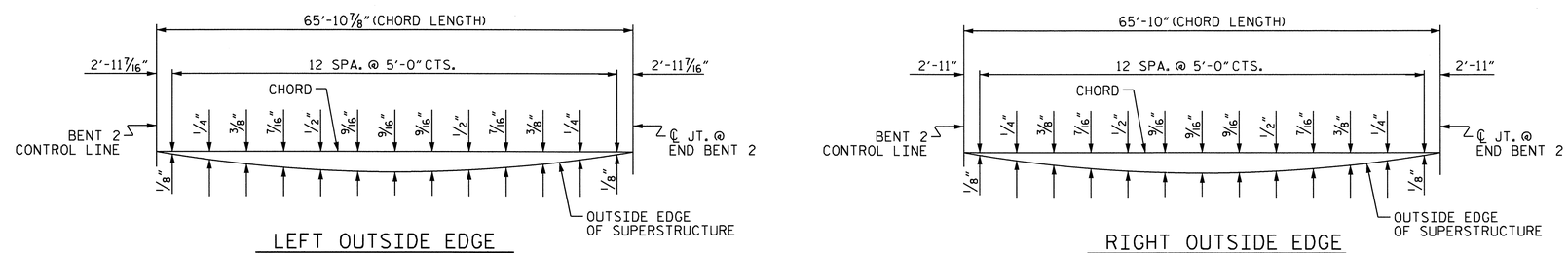

LEFT OUTSIDE EDGE

RIGHT OUTSIDE EDGE

ARC OFFSETS

PROJECT NO. R-2510C

BEAUFORT COUNTY

STATION: 54+34.00 -L-

SHEET 3 OF 3

STATE OF NORTH CAROLINA
DEPARTMENT OF TRANSPORTATION
RALEIGH

SUPERSTRUCTURE

PLAN OF SPANS

(LEFT LANE)

NORTH CAROLINA PROFESSIONAL SEAL 16301 ENGINEER TING HSIUNG FANG

12/8/10

REVISIONS						SHEET NO.
NO.	BY:	DATE:	NO.	BY:	DATE:	S-9
1			3			TOTAL SHEETS
2			4			134

DRAWN BY : E.C. LOCKLEAR DATE : 8-31-10
CHECKED BY : T. H. FANG DATE : 9-24-10

08-DEC-2010 11:01
Y:\TIPProjects-R\R2510c\Structures\r2510c\FinalPlans\STRI\r-2510c_sd_ps_01.dgn
qtnguyen

STR. #1

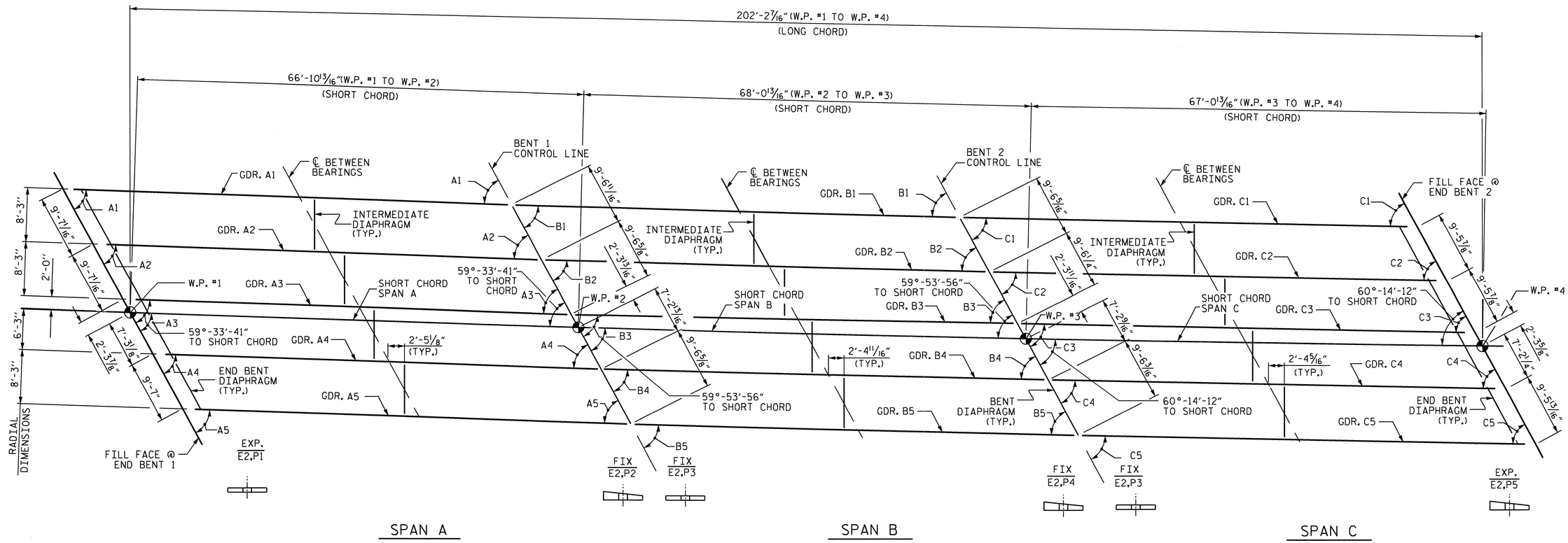

FRAMING PLAN

GIRDER SKEW ANGLES						
GIRDER No.	SPAN A		SPAN B		SPAN C	
1	A1	59°-30'-25"	B1	59°-50'-43"	C1	60°-11'-01"
2	A2	59°-31'-52"	B2	59°-52'-09"	C2	60°-12'-26"
3	A3	59°-33'-20"	B3	59°-53'-35"	C3	60°-13'-51"
4	A4	59°-34'-47"	B4	59°-55'-01"	C4	60°-15'-16"
5	A5	59°-36'-14"	B5	59°-56'-27"	C5	60°-16'-41"

PROJECT NO. R-2510C
BEAUFORT COUNTY
STATION: 54+34.00 -L-

NORTH CAROLINA PROFESSIONAL SEAL 16301 ENGINEER YING HSIUNG CHANG
10/11/10

STATE OF NORTH CAROLINA
DEPARTMENT OF TRANSPORTATION
RALEIGH

SUPERSTRUCTURE

FRAMING PLAN

(LEFT LANE)

REVISIONS						SHEET NO.
NO.	BY:	DATE:	NO.	BY:	DATE:	S-10
1			3			TOTAL SHEETS
2			4			134

DRAWN BY : HARISH SHAH DATE : 01/09
CHECKED BY : O.T. NGUYEN DATE : 04/09

11-OCT-2010 12:54
Y:\TIPProjects-R\R2510c\Structures\r2510c\FinalPlans\STR1\R-2510C_sd_FP_01.dgn
qtnguyen

STR. #1

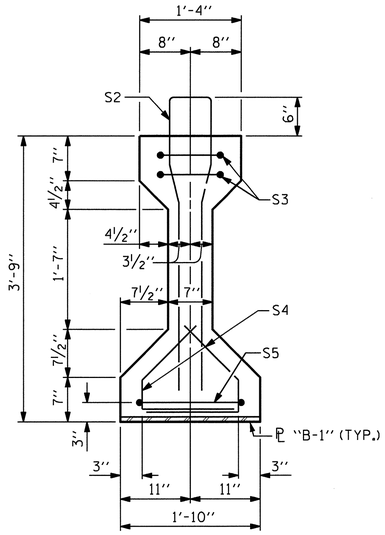

SECTION A-A

(FOR EMBEDDED ℄ "B-1" DETAILS SEE SHEET 4 OF 4)

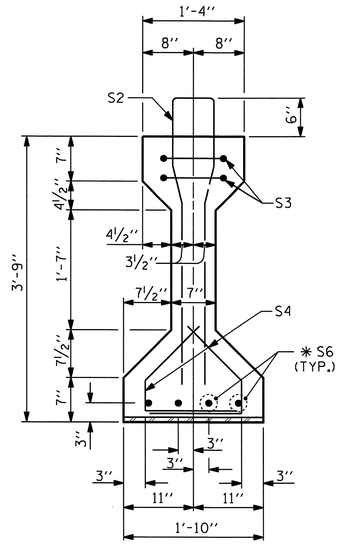

SECTION B-B

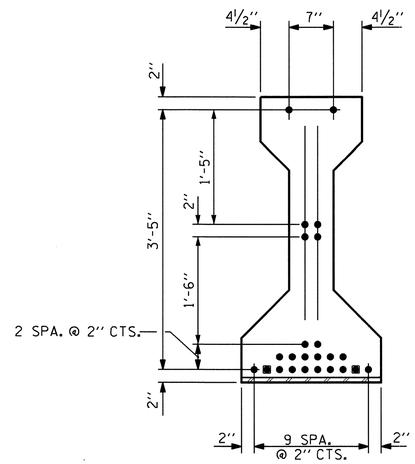

AT END OF GIRDER

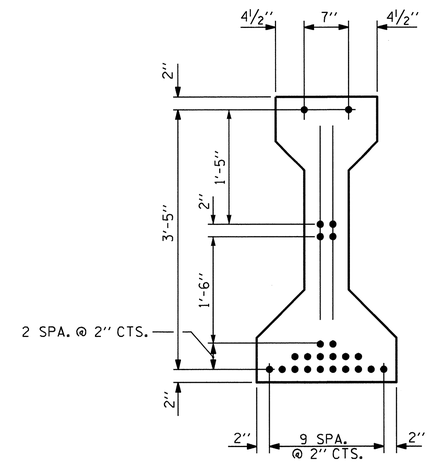

AT ℄ OF GIRDER

0.6"Ø LOW RELAXATION STRAND LAYOUT

(24 STRANDS, ALL STRAIGHT, 2 DEBONDED STRANDS)
■ STRANDS DEBONDED FOR 4'-0" FROM END OF GIRDER

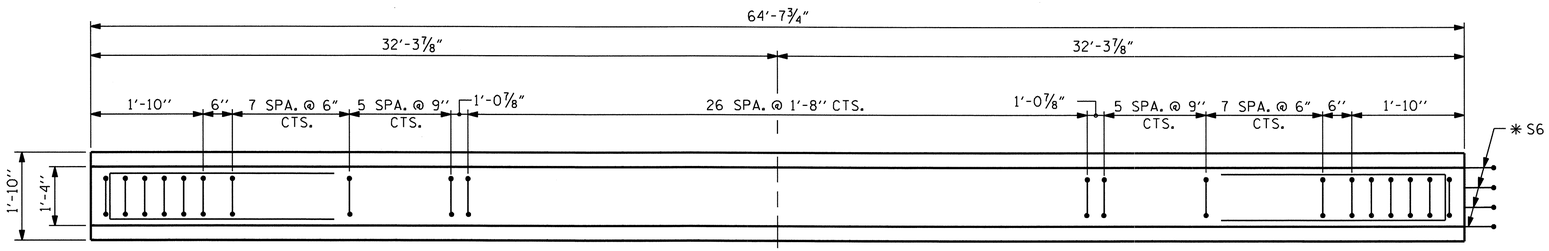

PLAN OF GIRDER

NO BEVEL REQUIRED AT END OF GIRDERS, ALL DIMENSIONS SHOWN ARE HORIZONTAL DISTANCE.

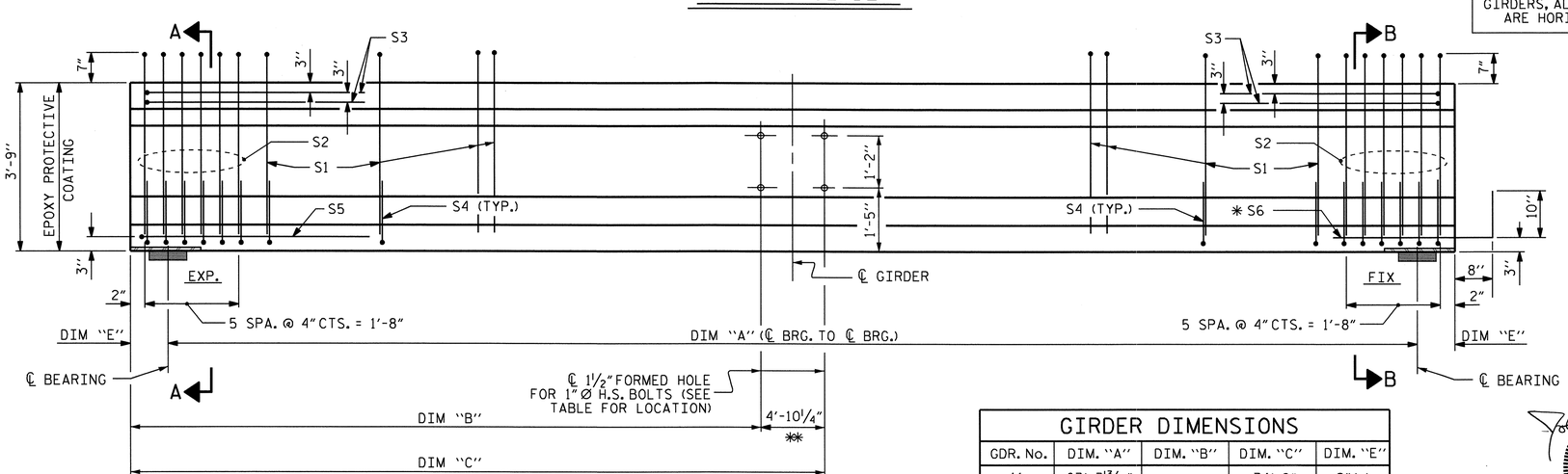

✱✱ FOR INTERIOR GIRDERS ONLY, SEE "FRAMING PLAN" SHEET.

ELEVATION OF GIRDER

(SEE PARTIAL ELEVATION OF 1½"Ø FORMED HOLES FOR ADDITIONAL "S" BARS IN THE INTERMEDIATE DIAPHRAGM AREA ON SHEET 4 OF 4)

GIRDER DIMENSIONS

GDR. No.	DIM. "A"	DIM. "B"	DIM. "C"	DIM. "E"
A1	63'-3 13/16"	-	34'-9"	8"(-)
A2	63'-3⅝"	29'-10¾"	34'-9"	8 1/16"
A3	63'-3 7/16"	29'-10¾"	34'-9"	8 3/16"(-)
A4	63'-3¼"	29'-10¾"	34'-9"	8¼"
A5	63'-3"	29'-10 13/16"	-	8⅜"

0.6"Ø L. R. GRADE 270 STRANDS

AREA (SQUARE INCHES)	ULTIMATE STRENGTH (LBS. PER STRAND)	APPLIED PRESTRESS (LBS. PER STRAND)
0.217	58,600	43,950

REINFORCING STEEL FOR ONE GIRDER

	BAR	NUMBER	SIZE	TYPE	LENGTH	WEIGHT
	S1	53	#4	1	8'-8"	307
	S2	12	#6	1	8'-8"	156
	S3	4	#4	3	8'-8"	23
	S4	56	#4	2	2'-9"	103
	S5	1	#4	3	9'-6"	6
	✱ S6	4	#5	STR	3'-8"	15
EXT. GDR.	S7	2	#5	3	7'-2"	15
INT. GDR.	S7	4	#5	3	7'-2"	30
EXT. GDR.	S8	5	#4	STR	7'-0"	23
INT. GDR.	S9	5	#4	STR	11'-10"	40

✱ S6 BARS SHALL BE BENT BEFORE SHIPMENT. HEAT BENDING SHALL NOT BE ALLOWED.

BAR TYPES

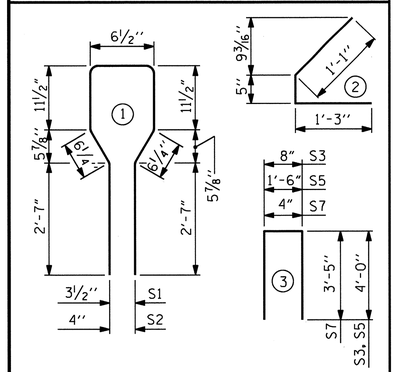

ALL BAR DIMENSIONS ARE OUT-TO-OUT

QUANTITIES FOR ONE GIRDER

	REINFORCING STEEL	7000 PSI CONCRETE	0.6"Ø L. R. STRANDS
	LB.	C.Y.	No.
EXT. GDR.	648	9.303	24
INT. GDR.	680	9.303	24

GIRDERS REQUIRED

NUMBER	LENGTH	TOTAL LENGTH
5	64'-7¾"	323.23'

PROJECT NO. R-2510C

BEAUFORT COUNTY

STATION: 54+34.00 -L-

SHEET 1 OF 4

STATE OF NORTH CAROLINA
DEPARTMENT OF TRANSPORTATION
RALEIGH

STANDARD

AASHTO TYPE III
PRESTRESSED CONCRETE GIRDER
CONTINUOUS FOR LIVE LOAD

SPAN A
(LEFT LANE)

NORTH CAROLINA PROFESSIONAL SEAL 32492 ENGINEER JOHN A. YANNACCONE
12/9/10

ASSEMBLED BY : HARISH SHAH	DATE : 01/09
CHECKED BY : O.T. NGUYEN	DATE : 04/09
DRAWN BY : ELR 8/91	REV. 7/17/98 RWW/LES
CHECKED BY : GRP 8/91	REV. 10/17/00R RWW/LES
	REV. 5/1/06 TLA/GM

REVISIONS

NO.	BY:	DATE:	NO.	BY:	DATE:
1			3		
2			4		

SHEET NO. S-11

TOTAL SHEETS 134

08-DEC-2010 11:09
Y:\TIPProjects-R\R2510c\Structures\r2510c\FinalPlans\STR1\R-2510C_sd_G_01.dgn
qtnguyen

STR. #1

STD. NO. PCG5 (Sht. 1)

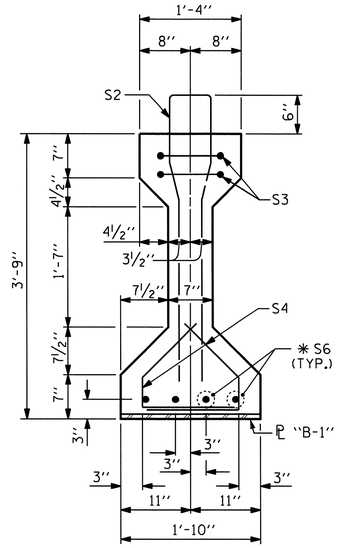

SECTION B-B

(FOR EMBEDDED ℄ "B-1" DETAILS SEE SHEET 4 OF 4)

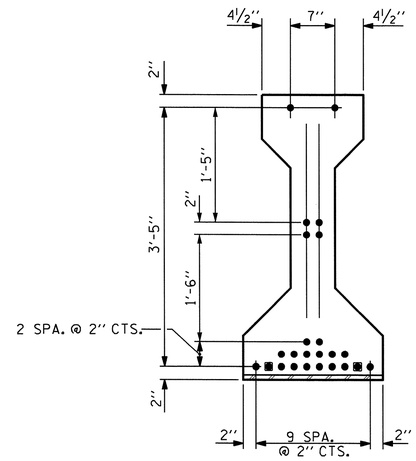

AT END OF GIRDER

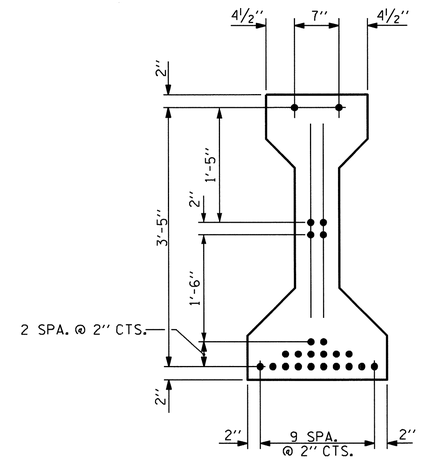

AT ℄ OF GIRDER

0.6" Ø LOW RELAXATION STRAND LAYOUT

(24 STRANDS, ALL STRAIGHT, 2 DEBONDED STRANDS)
■ STRANDS DEBONDED FOR 4'-0" FROM END OF GIRDER

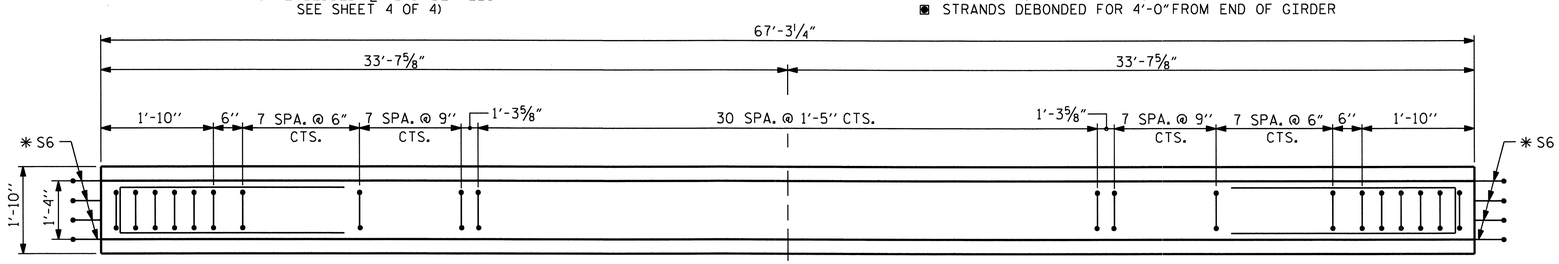

PLAN OF GIRDER

NO BEVEL REQUIRED AT END OF GIRDERS, ALL DIMENSIONS SHOWN ARE HORIZONTAL DISTANCE.

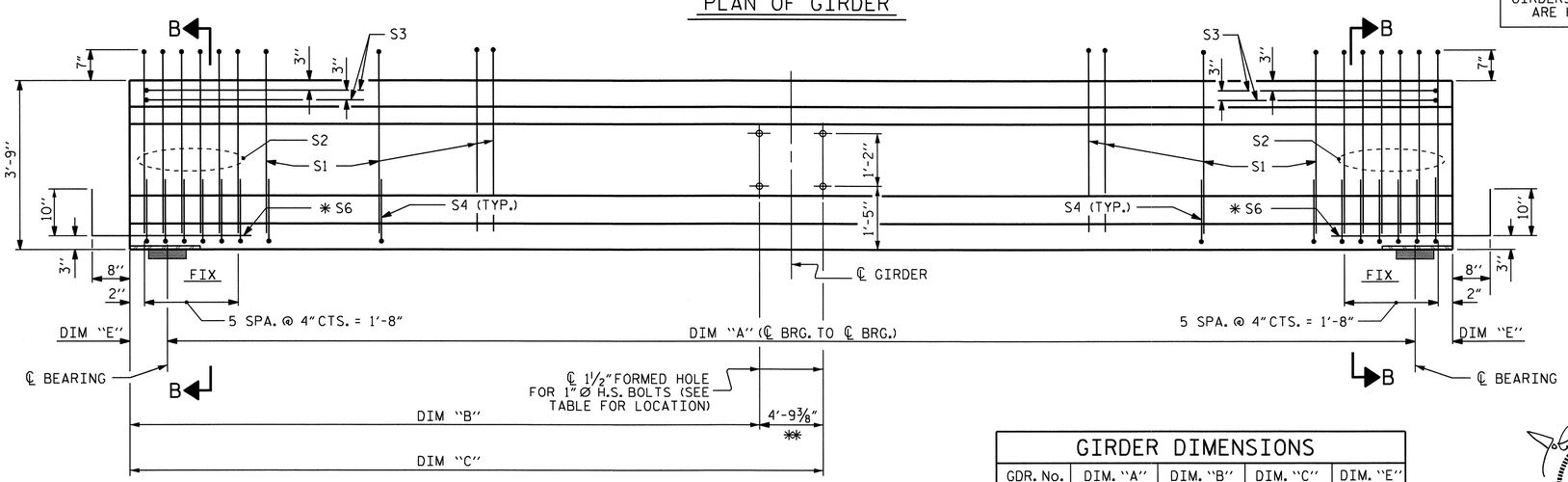

✱✱ FOR INTERIOR GIRDERS ONLY, SEE "FRAMING PLAN" SHEET.

ELEVATION OF GIRDER

(SEE PARTIAL ELEVATION OF 1½" Ø FORMED HOLES FOR ADDITIONAL "S" BARS IN THE INTERMEDIATE DIAPHRAGM AREA ON SHEET 4 OF 4)

GIRDER DIMENSIONS

GDR. No.	DIM. "A"	DIM. "B"	DIM. "C"	DIM. "E"
B1	65'-11¼"	-	36'-0¼"	8"
B2	65'-11 1/16"	31'-2⅞"	36'-0¼"	8 1/16" (+)
B3	65'-10⅞"	31'-2 15/16"	36'-0 5/16"	8 3/16"
B4	65'-10 11/16"	31'-2 15/16"	36'-0 5/16"	8 5/16" (-)
B5	65'-10½"	31'-3"	-	8⅜"

0.6" Ø L. R. GRADE 270 STRANDS

AREA (SQUARE INCHES)	ULTIMATE STRENGTH (LBS. PER STRAND)	APPLIED PRESTRESS (LBS. PER STRAND)
0.217	58,600	43,950

REINFORCING STEEL FOR ONE GIRDER

	BAR	NUMBER	SIZE	TYPE	LENGTH	WEIGHT
	S1	61	#4	1	8'-8"	353
	S2	12	#6	1	8'-8"	156
	S3	4	#4	3	8'-8"	23
	S4	56	#4	2	2'-9"	103
	✱ S6	8	#5	STR	3'-8"	31
EXT. GDR.	S7	2	#5	3	7'-2"	15
INT. GDR.	S7	4	#5	3	7'-2"	30
EXT. GDR.	S8	5	#4	STR	7'-0"	23
INT. GDR.	S9	5	#4	STR	11'-10"	40

✱ S6 BARS SHALL BE BENT BEFORE SHIPMENT. HEAT BENDING SHALL NOT BE ALLOWED.

BAR TYPES

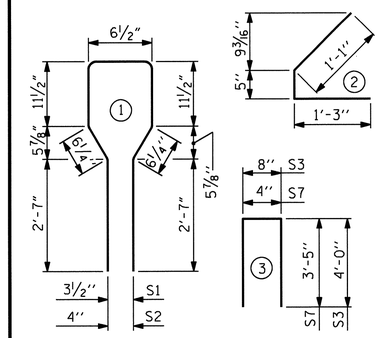

ALL BAR DIMENSIONS ARE OUT-TO-OUT

QUANTITIES FOR ONE GIRDER

	REINFORCING STEEL LB.	7000 PSI CONCRETE C.Y.	0.6" Ø L.R. STRANDS No.
EXT. GDR.	704	9.681	24
INT. GDR.	736	9.681	24

GIRDERS REQUIRED

NUMBER	LENGTH	TOTAL LENGTH
5	67'-3¼"	336.35'

PROJECT NO. R-2510C
BEAUFORT COUNTY
STATION: 54+34.00 -L-

SHEET 2 OF 4

STATE OF NORTH CAROLINA
DEPARTMENT OF TRANSPORTATION
RALEIGH

STANDARD
AASHTO TYPE III
PRESTRESSED CONCRETE GIRDER
CONTINUOUS FOR LIVE LOAD
SPAN B
(LEFT LANE)

NORTH CAROLINA PROFESSIONAL SEAL 32492 ENGINEER JOHN A. YANNACCONE
12/9/10

REVISIONS						SHEET NO.
NO.	BY:	DATE:	NO.	BY:	DATE:	S-12
1			3			TOTAL SHEETS
2			4			134

ASSEMBLED BY : HARISH SHAH DATE : 01/09	
CHECKED BY : Q.T. NGUYEN DATE : 04/09	
DRAWN BY : ELR 8/91	REV. 7/17/98 RWW/LES
CHECKED BY : GRP 8/91	REV. 10/17/00R RWW/LES
	REV. 5/1/06 TLA/GM

08-DEC-2010 11:09
Y:\TIPProjects-R\R2510c\Structures\r2510c\FinalPlans\STR1\R-2510C_sd_G_01.dgn
qtnguyen

STR. #1

STD. NO. PCG5 (Sht. 1)

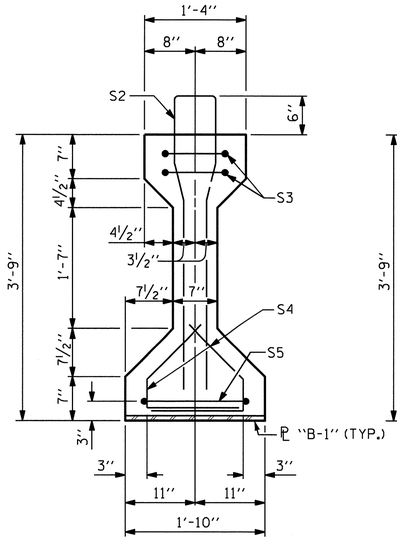

SECTION A-A

(FOR EMBEDDED ℄ "B-1" DETAILS SEE SHEET 4 OF 4)

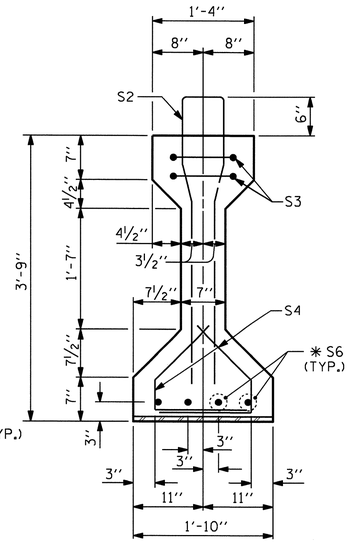

SECTION B-B

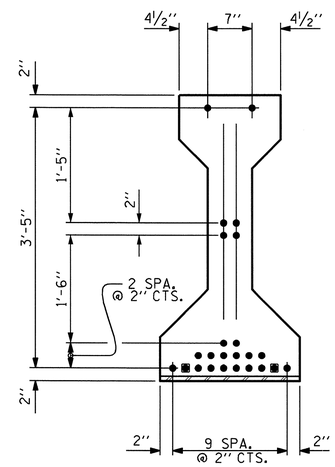

AT END OF GIRDER

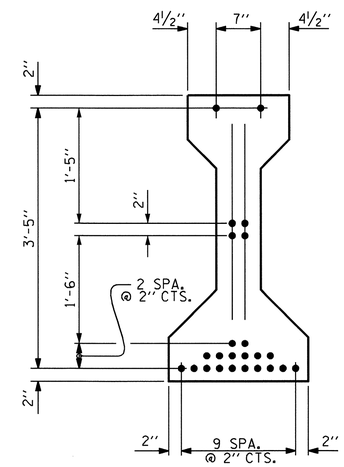

AT ℄ OF GIRDER

0.6"Ø LOW RELAXATION STRAND LAYOUT

(24 STRANDS, ALL STRAIGHT, 2 DEBONDED STRANDS)
■ STRANDS DEBONDED FOR 4'-0" FROM END OF GIRDER

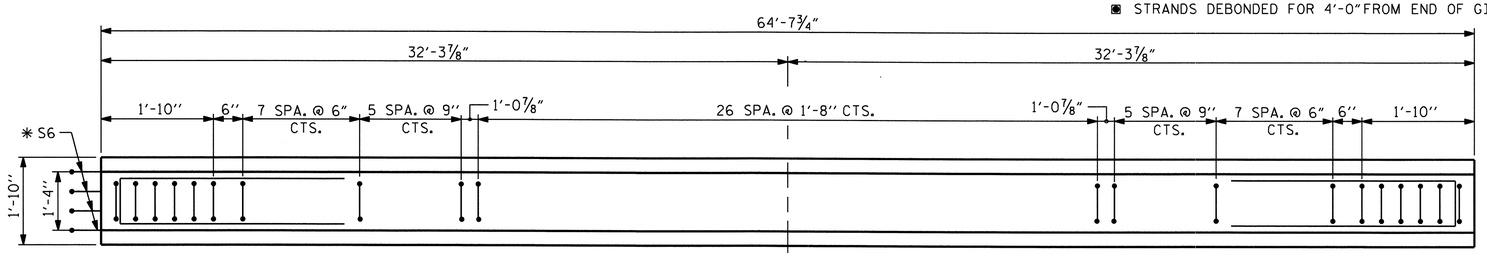

PLAN OF GIRDER

NO BEVEL REQUIRED AT END OF GIRDERS, ALL DIMENSIONS SHOWN ARE HORIZONTAL DISTANCE.

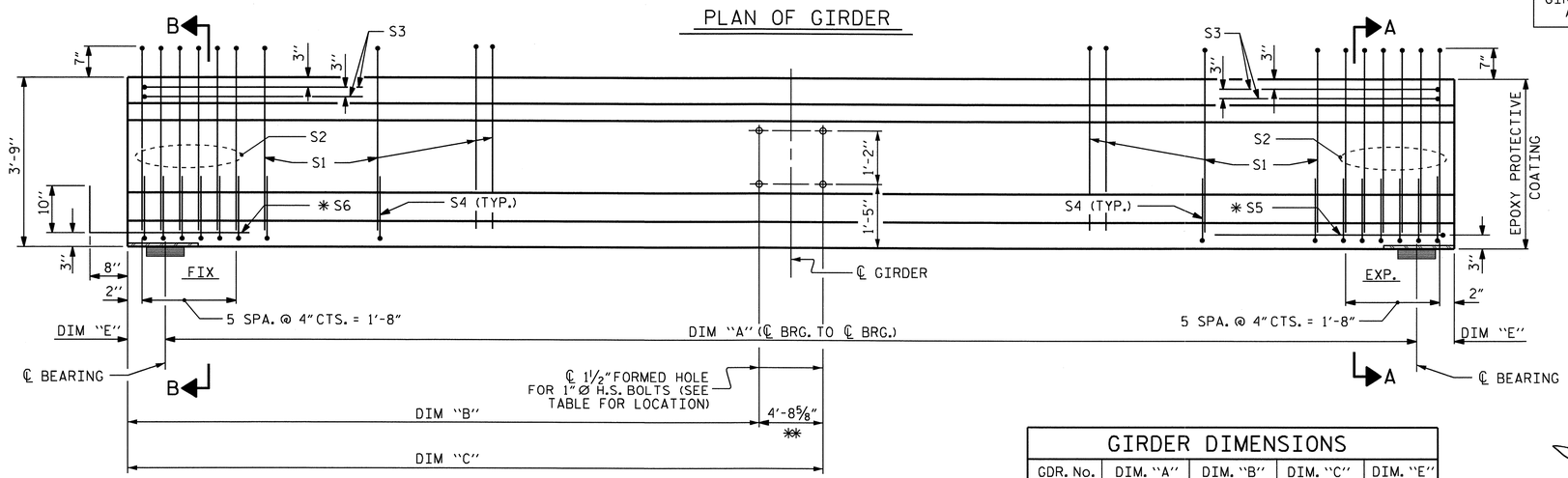

✱✱ FOR INTERIOR GIRDERS ONLY, SEE "FRAMING PLAN" SHEET.

ELEVATION OF GIRDER

(SEE PARTIAL ELEVATION OF 1½"Ø FORMED HOLES FOR ADDITIONAL "S" BARS IN THE INTERMEDIATE DIAPHRAGM AREA ON SHEET 4 OF 4)

GIRDER DIMENSIONS

GDR. No.	DIM. "A"	DIM. "B"	DIM. "C"	DIM. "E"
C1	63'-3 15/16"	-	34'-8⅛"	7⅞" (+)
C2	63'-3¾"	29'-11 9/16"	34'-8 3/16"	8"
C3	63'-3 9/16"	29'-11 9/16"	34'-8 3/16"	8 1/16" (+)
C4	63'-3⅜"	29'-11 9/16"	34'-8 3/16"	8 3/16"
C5	63'-3¼"	29'-11⅝"	-	8¼"

0.6"Ø L. R. GRADE 270 STRANDS

AREA (SQUARE INCHES)	ULTIMATE STRENGTH (LBS. PER STRAND)	APPLIED PRESTRESS (LBS. PER STRAND)
0.217	58,600	43,950

REINFORCING STEEL FOR ONE GIRDER

	BAR	NUMBER	SIZE	TYPE	LENGTH	WEIGHT
	S1	53	#4	1	8'-8"	307
	S2	12	#6	1	8'-8"	156
	S3	4	#4	3	8'-8"	23
	S4	56	#4	2	2'-9"	103
	S5	1	#4	3	9'-6"	6
	✱ S6	4	#5	STR	3'-8"	15
EXT. GDR.	S7	2	#5	3	7'-2"	15
INT. GDR.	S7	4	#5	3	7'-2"	30
EXT. GDR.	S8	5	#4	STR	7'-0"	23
INT. GDR.	S9	5	#4	STR	11'-10"	40

✱ S6 BARS SHALL BE BENT BEFORE SHIPMENT. HEAT BENDING SHALL NOT BE ALLOWED.

BAR TYPES

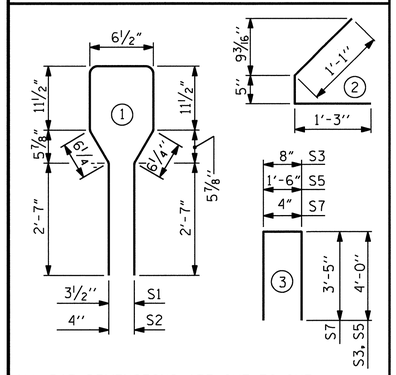

ALL BAR DIMENSIONS ARE OUT-TO-OUT

QUANTITIES FOR ONE GIRDER

	REINFORCING STEEL	7000 PSI CONCRETE	0.6"Ø L. R. STRANDS
	LB.	C.Y.	No.
EXT. GDR.	648	9.303	24
INT. GDR.	680	9.303	24

GIRDERS REQUIRED

NUMBER	LENGTH	TOTAL LENGTH
5	64'-7¾"	323.23'

PROJECT NO. R-2510C

BEAUFORT COUNTY

STATION: 54+34.00 -L-

SHEET 3 OF 4

STATE OF NORTH CAROLINA
DEPARTMENT OF TRANSPORTATION
RALEIGH

STANDARD

AASHTO TYPE III
PRESTRESSED CONCRETE GIRDER
CONTINUOUS FOR LIVE LOAD

SPAN C
(LEFT LANE)

NORTH CAROLINA PROFESSIONAL SEAL 32492 ENGINEER JOHN A. YANNACCONE
12/9/10

REVISIONS						SHEET NO.
NO.	BY:	DATE:	NO.	BY:	DATE:	S-13
1			3			TOTAL SHEETS
2			4			134

ASSEMBLED BY : HARISH SHAH	DATE : 01/09		
CHECKED BY : Q.T. NGUYEN	DATE : 04/09		
DRAWN BY : ELR 8/91	REV. 7/17/98	RWW/LES	
CHECKED BY : GRP 8/91	REV. 10/17/00R	RWW/LES	
	REV. 5/1/06	TLA/GM	

08-DEC-2010 11:09
Y:\TIPProjects-R\R2510c\Structures\r2510c\FinalPlans\STRI\R-2510C_sd_G_01.dgn
qtnguyen

STR. #1

STD. NO. PCG5 (Sht. 1)

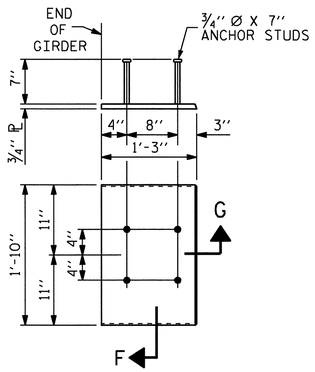

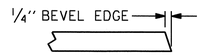

SECTION "G"

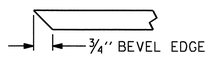

SECTION "F"
(SEE NOTES)

EMBEDDED PLATE "B-1" DETAILS FOR AASHTO TYPE III GIRDER
(2 REQ'D PER GIRDER)

SPAN	DIMENSION
A	4'-10 1/4"
B	4'-9 3/8"
C	4'-8 5/8"

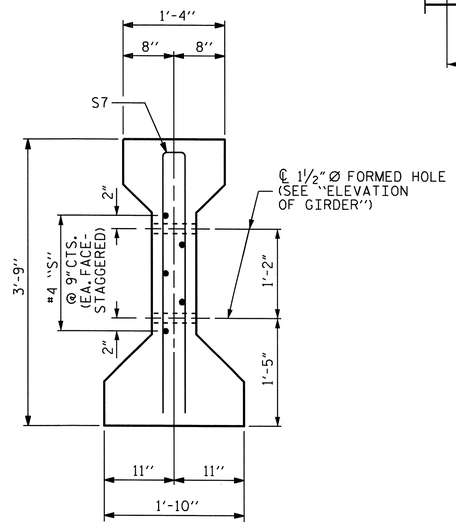

SECTION C-C
(S1 BARS NOT SHOWN)

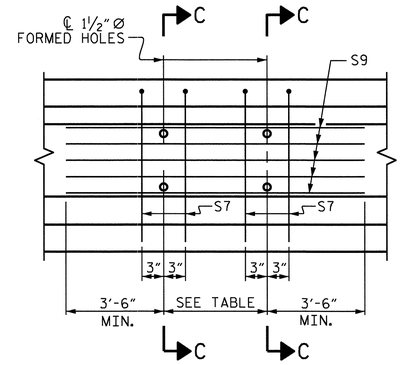

INTERIOR GIRDERS

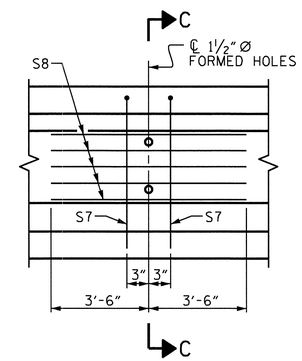

EXTERIOR GIRDERS

PARTIAL ELEVATION OF 1 1/2" Ø FORMED HOLES

NOTES

ALL PRESTRESSING STRANDS SHALL BE 7-WIRE LOW-RELAXATION GRADE 270 STRANDS AND SHALL CONFORM TO AASHTO M203 EXCEPT FOR SAMPLING REQUIREMENTS WHICH SHALL BE IN ACCORDANCE WITH THE STANDARD SPECIFICATIONS.

ALL REINFORCING STEEL SHALL BE GRADE 60.

APPLY EPOXY PROTECTIVE COATING TO END OF GIRDER SURFACES INDICATED IN ELEVATION VIEW.

EMBEDDED PLATE "B-1" SHALL BE GALVANIZED IN ACCORDANCE WITH THE STANDARD SPECIFICATIONS. BEVEL EDGES OF PLATE "B-1" TO GIVE CLOSE FIT BUT NOT TIGHT FIT TO STEEL CASTING FORM.

ANCHOR STUDS SHALL CONFORM TO AASHTO M169 GRADES 1010 THROUGH 1020 OR APPROVED EQUAL, AND SHALL MEET THE TYPE "B" REQUIREMENTS OF SUBSECTION 7.3 OF THE ANSI/AASHTO/AWS D1.5 BRIDGE WELDING CODE.

AT ENDS OF GIRDERS TO BE EMBEDDED IN CONCRETE DIAPHRAGMS OR END WALLS, PRESTRESSING STRANDS MAY EXTEND A MAXIMUM OF 2" BEYOND THE GIRDER ENDS. OTHERWISE, PRESTRESSING STRANDS SHALL BE CUT FLUSH WITH THE GIRDER ENDS.

THE TRANSFER OF LOAD FROM THE ANCHORAGES TO THE GIRDER SHALL BE DONE WHEN CONCRETE HAS REACHED A COMPRESSIVE STRENGTH OF NOT LESS THAN 5400 PSI FOR ALL SPAN A, B & C GIRDERS.

DEPENDING ON THE TYPE OF SYSTEM USED TO SUPPORT THE DECK SLAB FORMS, PRESET ANCHORS MAY BE NECESSARY IN THE PRESTRESSED CONCRETE GIRDER.

THE TOP SURFACE OF THE GIRDER, EXCLUDING THE OUTSIDE 4", SHALL BE RAKED TO A DEPTH OF 1/4".

FOR PRESTRESSED CONCRETE MEMBERS, SEE SPECIAL PROVISIONS.

DEAD LOAD DEFLECTION TABLE

SPAN A

0.6" Ø LOW RELAXATION	GIRDERS 1 & 5											GIRDERS 2 THRU 4										
TENTH POINTS	0	.1	.2	.3	.4	.5	.6	.7	.8	.9	0	0	.1	.2	.3	.4	.5	.6	.7	.8	.9	0
CAMBER (GIRDER ALONE IN PLACE) ↑	0	0.057	0.108	0.148	0.174	0.183	0.174	0.148	0.108	0.057	0	0	0.057	0.108	0.148	0.174	0.183	0.174	0.148	0.108	0.057	0
* DEFLECTION DUE TO SUPERIMPOSED D.L. ↓	0	0.019	0.036	0.049	0.058	0.060	0.058	0.049	0.036	0.019	0	0	0.020	0.038	0.052	0.061	0.064	0.061	0.052	0.038	0.020	0
FINAL CAMBER ↑	0	7/16"	7/8"	1 3/16"	1 3/8"	1 7/16"	1 3/8"	1 3/16"	7/8"	7/16"	0	0	7/16"	1 3/16"	1 1/8"	1 3/8"	1 7/16"	1 3/8"	1 1/8"	1 3/16"	7/16"	0

SPAN B

0.6" Ø LOW RELAXATION	GIRDERS 1 & 5											GIRDERS 2 THRU 4										
TENTH POINTS	0	.1	.2	.3	.4	.5	.6	.7	.8	.9	0	0	.1	.2	.3	.4	.5	.6	.7	.8	.9	0
CAMBER (GIRDER ALONE IN PLACE) ↑	0	0.060	0.113	0.155	0.182	0.191	0.182	0.155	0.113	0.060	0	0	0.060	0.113	0.155	0.182	0.191	0.182	0.155	0.113	0.060	0
* DEFLECTION DUE TO SUPERIMPOSED D.L. ↓	0	0.022	0.042	0.058	0.068	0.071	0.068	0.058	0.042	0.022	0	0	0.024	0.045	0.061	0.072	0.076	0.072	0.061	0.045	0.024	0
FINAL CAMBER ↑	0	7/16"	7/8"	1 3/16"	1 3/8"	1 7/16"	1 3/8"	1 3/16"	7/8"	7/16"	0	0	7/16"	1 3/16"	1 1/8"	1 5/16"	1 3/8"	1 5/16"	1 1/8"	1 3/16"	7/16"	0

SPAN C

0.6" Ø LOW RELAXATION	GIRDERS 1 & 5											GIRDERS 2 THRU 4										
TENTH POINTS	0	.1	.2	.3	.4	.5	.6	.7	.8	.9	0	0	.1	.2	.3	.4	.5	.6	.7	.8	.9	0
CAMBER (GIRDER ALONE IN PLACE) ↑	0	0.057	0.108	0.148	0.174	0.183	0.174	0.149	0.108	0.057	0	0	0.057	0.108	0.148	0.174	0.183	0.174	0.148	0.108	0.057	0
* DEFLECTION DUE TO SUPERIMPOSED D.L. ↓	0	0.019	0.036	0.049	0.058	0.060	0.058	0.049	0.036	0.019	0	0	0.020	0.038	0.052	0.061	0.064	0.061	0.052	0.038	0.020	0
FINAL CAMBER ↑	0	7/16"	7/8"	1 3/16"	1 3/8"	1 7/16"	1 3/8"	1 3/16"	7/8"	7/16"	0	0	7/16"	1 3/16"	1 1/8"	1 3/8"	1 7/16"	1 3/8"	1 1/8"	1 3/16"	7/16"	0

* INCLUDES FUTURE WEARING SURFACE

ALL VALUES ARE SHOWN IN FEET (DECIMAL FORM), EXCEPT "FINAL CAMBER", WHICH IS GIVEN IN INCHES (FRACTION FORM).

NORTH CAROLINA PROFESSIONAL SEAL 32492 ENGINEER JOHN A. YANNACCONE
12/9/10

PROJECT NO. R-2510C
BEAUFORT COUNTY
STATION: 54+34.00 -L-

SHEET 4 OF 4

STATE OF NORTH CAROLINA
DEPARTMENT OF TRANSPORTATION
RALEIGH

STANDARD

PRESTRESSED CONCRETE GIRDER CONTINUOUS FOR LIVE LOAD DETAILS

(LEFT LANE)

REVISIONS						SHEET NO.
NO.	BY:	DATE:	NO.	BY:	DATE:	S-14
1			3			TOTAL SHEETS
2			4			134

ASSEMBLED BY : HARISH SHAH	DATE : 01/09
CHECKED BY : O.T. NGUYEN	DATE : 04/09
DRAWN BY : ELR 11/91	REV. 10/17/00 RWW/LES
CHECKED BY : GRP 11/91	REV. 7/10/01RR LES/RDR
	REV. 5/1/06 TLA/GM

08-DEC-2010 13:26
Y:\TIPProjects-R\R2510c\Structures\r2510c\FinalPlans\STRI\R-2510C_sd_DL-01.dgn
ctnguyen

STR. #1

STD.No.PCG11

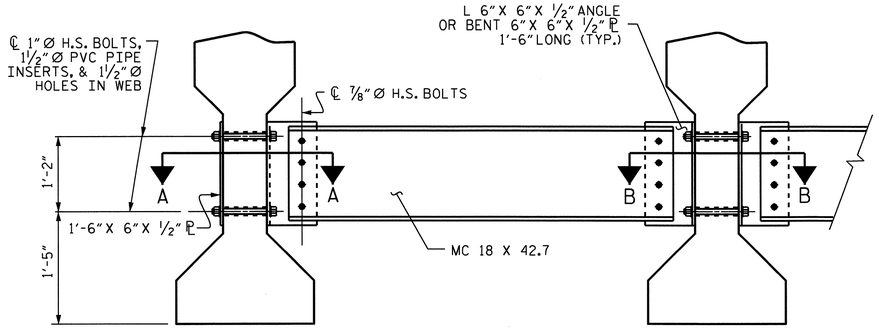

EXTERIOR GIRDER

INTERIOR GIRDER

PART SECTION AT INTERMEDIATE DIAPHRAGM

(TYPICAL FOR EACH BAY)

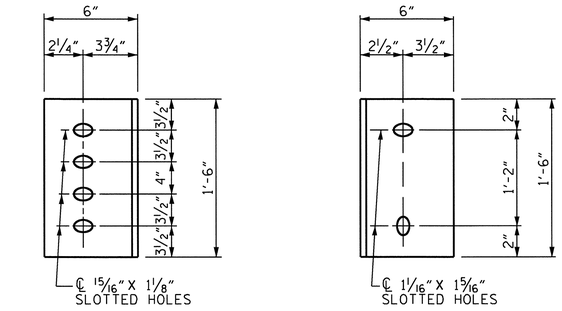

DIAPHRAGM FACE

WEB FACE

CONNECTOR PLATE DETAILS

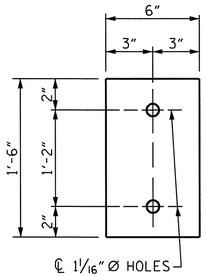

PLATE DETAILS

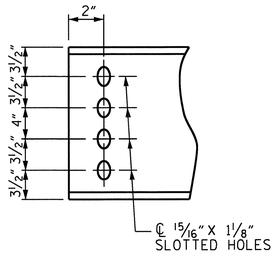

CHANNEL END

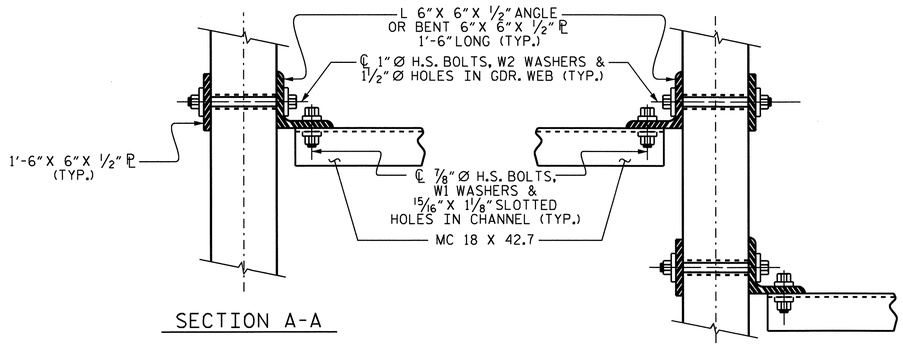

SECTION A-A

SECTION B-B

CONNECTION DETAILS

FOR LOCATION OF INTERMEDIATE DIAPHRAGMS, SEE "FRAMING PLAN" SHEET.

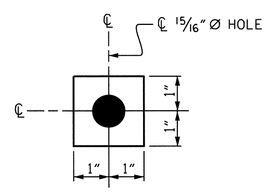

W1

ℙ 7/16"X 2"X 2"

USE WITH ⅞"Ø HVY. HEX NUTS & DIRECT TENSION INDICATOR WASHERS AT DIAPHRAGM CHANNEL TO CONNECTOR PLATE CONNECTIONS

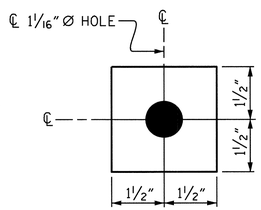

W2

ℙ 7/16"X 3"X 3"

USE WITH 1"Ø HVY. HEX NUTS AT CONNECTOR PLATE TO GIRDER CONNECTIONS

WASHER DETAILS

STRUCTURAL STEEL NOTES

ALL INTERMEDIATE DIAPHRAGM STEEL, CONNECTOR PLATES AND PLATE WASHERS SHALL BE AASHTO M270 GRADE 50 OR APPROVED EQUAL.

TENSION ON THE AASHTO M164 BOLTS THROUGH THE CHANNEL MEMBER SHALL BE CALIBRATED USING DIRECT TENSION INDICATOR WASHERS IN ACCORDANCE WITH THE STANDARD SPECIFICATIONS. FOR DIRECT TENSION INDICATORS, SEE SPECIAL PROVISIONS.

TENSION ON THE AASHTO M164 BOLTS THROUGH THE GIRDER WEB SHALL BE SNUG TIGHTENED FOLLOWED BY AN ADDITIONAL ¼ TURN.

THE PLATES, BENT PLATES, CHANNELS, ANGLES, AND PLATE WASHERS SHALL BE GALVANIZED OR METALLIZED IN ACCORDANCE WITH THE STANDARD SPECIFICATIONS. FOR THERMAL SPRAYED COATINGS (METALLIZATION), SEE SPECIAL PROVISIONS.

FOR METALLIZATION, APPLY AN 8 MIL THICK 99.99 PERCENT ZINC (W-Zn-1) THERMAL SPRAYED COATING WITH A 0.5 MIL THICK SEAL COAT TO ALL STEEL DIAPHRAGM SURFACES IN ACCORDANCE WITH THE THERMAL SPRAYED COATINGS SPECIAL PROVISIONS AND SECTION 442 OF THE STANDARD SPECIFICATIONS.

GALVANIZE THE HIGH STRENGTH BOLTS, NUTS, AND WASHERS AND DIRECT TENSION INDICATORS IN ACCORDANCE WITH THE STANDARD SPECIFICATIONS. FOR HIGH STRENGTH BOLTS, SEE SPECIAL PROVISIONS.

USE A MINIMUM 7/16" THICK PLATE WASHER WITH STANDARD HOLES UNDER EACH BOLT HEAD AND NUT. THE PLATE WASHERS SHALL HAVE SUFFICIENT SIZE TO COVER THE HOLES AFTER INSTALLATION. HARDENED WASHERS AND DIRECT TENSION INDICATORS ARE TO BE USED IN CONJUNCTION WITH THE PLATE WASHERS IN THE CHANNEL MEMBER CONNECTION.

FOR BOLTS THROUGH THE GIRDER WEB, PROVIDE SUFFICIENT LENGTH OF ALL BOLTS TO ACCOMMODATE WASHERS, AND THE THICKNESS OF CONNECTING MEMBER PLUS AT LEAST ¼" PROJECTION BEYOND THE NUT.

INTERMEDIATE DIAPHRAGM ASSEMBLY SHALL COMPLY WITH SECTION 1072 OF THE STANDARD SPECIFICATIONS.

CONTRACTOR SHALL SUBMIT TWO SETS OF WORKING DRAWINGS FOR THE INTERMEDIATE DIAPHRAGM ASSEMBLY FOR REVIEW, COMMENTS AND ACCEPTANCE. AFTER REVIEW, COMMENTS, AND ACCEPTANCE, SUBMIT SEVEN SETS FOR DISTRIBUTION.

IN THE EXTERIOR BAYS, TEMPORARY STRUTS SHALL BE PLACED BETWEEN PRESTRESSED GIRDERS ADJACENT TO THE STEEL DIAPHRAGMS. STRUTS SHALL REMAIN IN PLACE 3 DAYS AFTER CONCRETE IS PLACED. ALL AASHTO M164 H.S. BOLTS SHALL BE FULLY TIGHTENED AFTER THE STRUTS HAVE BEEN REMOVED.

THE COST OF THE STEEL DIAPHRAGMS AND ASSEMBLIES SHALL BE INCLUDED IN THE UNIT PRICE BID FOR PRESTRESSED CONCRETE GIRDERS.

PROJECT NO. R-2510C

BEAUFORT COUNTY

STATION: 54+34.00 -L-

NORTH CAROLINA PROFESSIONAL SEAL 32492 ENGINEER JOHN A. YANNACCONE

10/11/10

STATE OF NORTH CAROLINA
DEPARTMENT OF TRANSPORTATION
RALEIGH

STANDARD

INTERMEDIATE STEEL DIAPHRAGMS FOR TYPE III PRESTRESSED CONCRETE GIRDERS

(LEFT LANE)

REVISIONS						SHEET NO.
NO.	BY:	DATE:	NO.	BY:	DATE:	S-15
1			3			TOTAL SHEETS
2			4			134

STR. #1

STD. NO. PCG12

ASSEMBLED BY : HARISH SHAH		DATE : 01/09	
CHECKED BY : O.T. NGUYEN		DATE : 04/09	
DRAWN BY : TLA 6/05	ADDED 10/21/05		
CHECKED BY : VC 6/05	REV. 5/1/06R KMM/GM		

11-OCT-2010 12:54
Y:\TIPProjects-R\R2510c\Structures\r2510c\FinalPlans\STR1\R-2510C_sd_G_01.dgn
qtnguyen

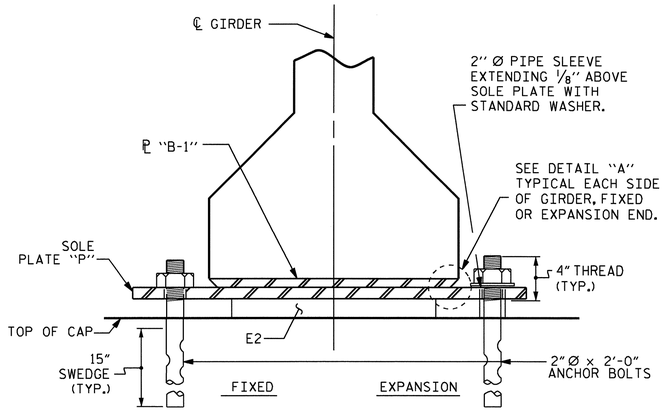

SECTION E-E

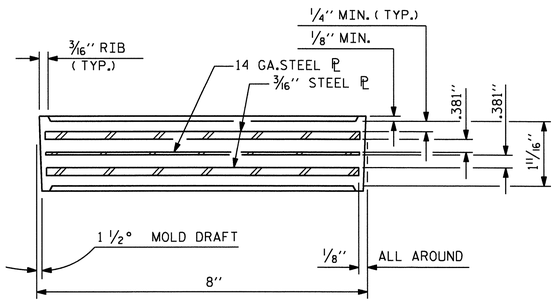

TYPICAL SECTION OF ELASTOMERIC BEARINGS

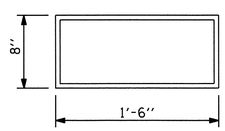

E2 (30 REQ'D)

PLAN VIEW OF ELASTOMERIC BEARING

TYPE III

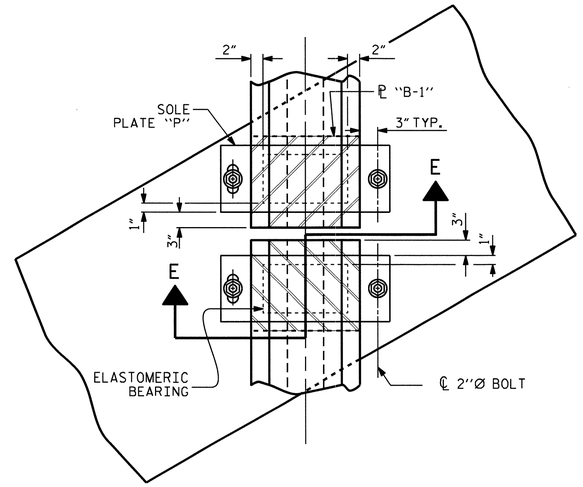

TYPICAL HALF-PLAN (EXPANSION)

TYPICAL HALF-PLAN (FIXED)

ELASTOMER IN ALL BEARINGS SHALL BE 60 DUROMETER HARDNESS

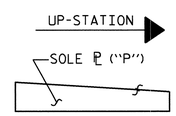

SOLE ℗ PLACEMENT DETAIL

NOTES

AT ALL FIXED POINTS OF SUPPORT, NUTS FOR ANCHOR BOLTS ARE TO BE TIGHTENED FINGER TIGHT AND THEN BACKED OFF 1/2 TURN. THE THREAD OF THE NUT AND BOLT SHALL THEN BE BURRED WITH A SHARP POINTED TOOL.

THE 2" Ø PIPE SLEEVE SHALL BE CUT FROM SCHEDULE 40 PVC PLASTIC PIPE. THE PVC PLASTIC PIPE SHALL MEET THE REQUIREMENTS OF ASTM D1785.

STEEL SOLE PLATES, ANCHOR BOLTS, NUTS, AND WASHERS SHALL BE GALVANIZED IN ACCORDANCE WITH THE STANDARD SPECIFICATIONS.

PRIOR TO WELDING, GRIND THE GALVANIZED SURFACE OF THE PORTION OF THE EMBEDDED PLATE AND SOLE PLATE THAT ARE TO BE WELDED. AFTER WELDING, DAMAGED GALVANIZED SURFACES SHALL BE REPAIRED IN ACCORDANCE WITH THE STANDARD SPECIFICATIONS.

WHEN WELDING THE SOLE PLATE TO THE EMBEDDED PLATE IN THE GIRDER, USE TEMPERATURE INDICATING WAX PENS, OR OTHER SUITABLE MEANS, TO ENSURE THAT THE TEMPERATURE OF THE SOLE PLATE DOES NOT EXCEED 300°F. TEMPERATURES ABOVE THIS MAY DAMAGE THE ELASTOMER.

SOLE PLATE "P", BOLTS, NUTS, WASHERS, AND PIPE SLEEVE SHALL BE INCLUDED IN THE PAY ITEM FOR PRESTRESSED CONCRETE GIRDERS.

ANCHOR BOLTS SHALL MEET THE REQUIREMENTS OF ASTM A449. NUTS SHALL MEET THE REQUIREMENTS OF AASHTO M291-DH OR AASHTO M292-2H. WASHERS SHALL MEET THE REQUIREMENTS OF AASHTO M293. SHOP DRAWINGS ARE NOT REQUIRED FOR ANCHOR BOLT, NUTS AND WASHERS. SHOP INSPECTION IS REQUIRED.

ALL SURFACES OF BEARING PLATES SHALL BE SMOOTH AND STRAIGHT.

LOAD RATINGS	
	MAX.D.L.+L.L.
45"PCG -TYPE III	115 K

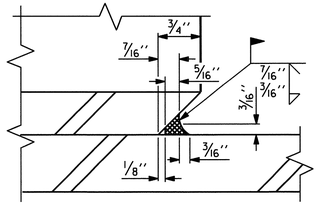

DETAIL "A"

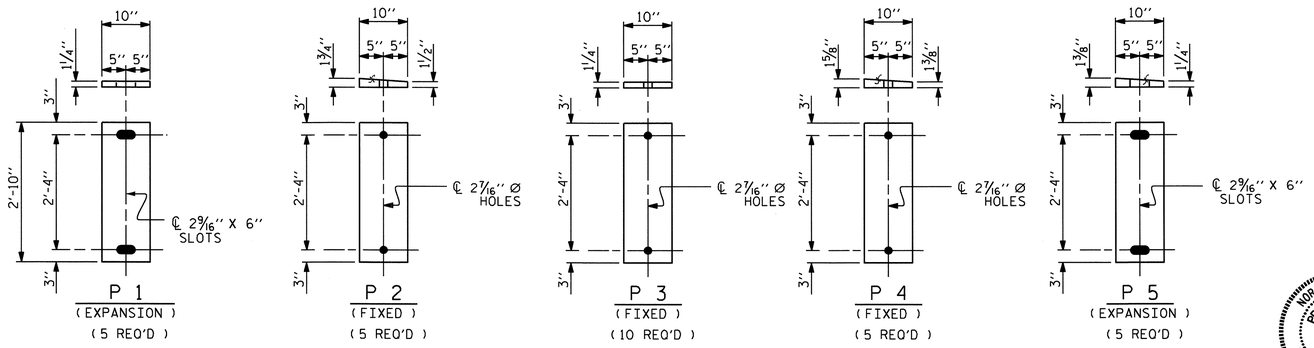

SOLE PLATE DETAILS ("P")

NORTH CAROLINA PROFESSIONAL SEAL 16301 ENGINEER HARISH SHAH
10/11/10

PROJECT NO. R-2510C
BEAUFORT COUNTY
STATION: 54+34.00 -L-

STATE OF NORTH CAROLINA
DEPARTMENT OF TRANSPORTATION
RALEIGH
STANDARD
ELASTOMERIC BEARING DETAILS
PRESTRESSED CONCRETE GIRDER SUPERSTRUCTURE
(LEFT LANE)

REVISIONS						SHEET NO.
NO.	BY:	DATE:	NO.	BY:	DATE:	S-16
1			3			TOTAL SHEETS
2			4			134

ASSEMBLED BY : HARISH SHAH	DATE : 01/09		
CHECKED BY : O.T. NGUYEN	DATE : 04/09		
DRAWN BY : WJH 8/89	REV. 10/17/00	RWW/LES	
CHECKED BY : CRK 8/89	REV. 7/10/01	RWW/LES	
	REV. 5/1/06	TLA/GM	

STR. #1

STD. NO. EB3

11-OCT-2010 12:54
Y:\TIPProjects-R\R2510c\Structures\r2510c\FinalPlans\STRI\R-2510C_sd_BG_01.dgn
atnguyen

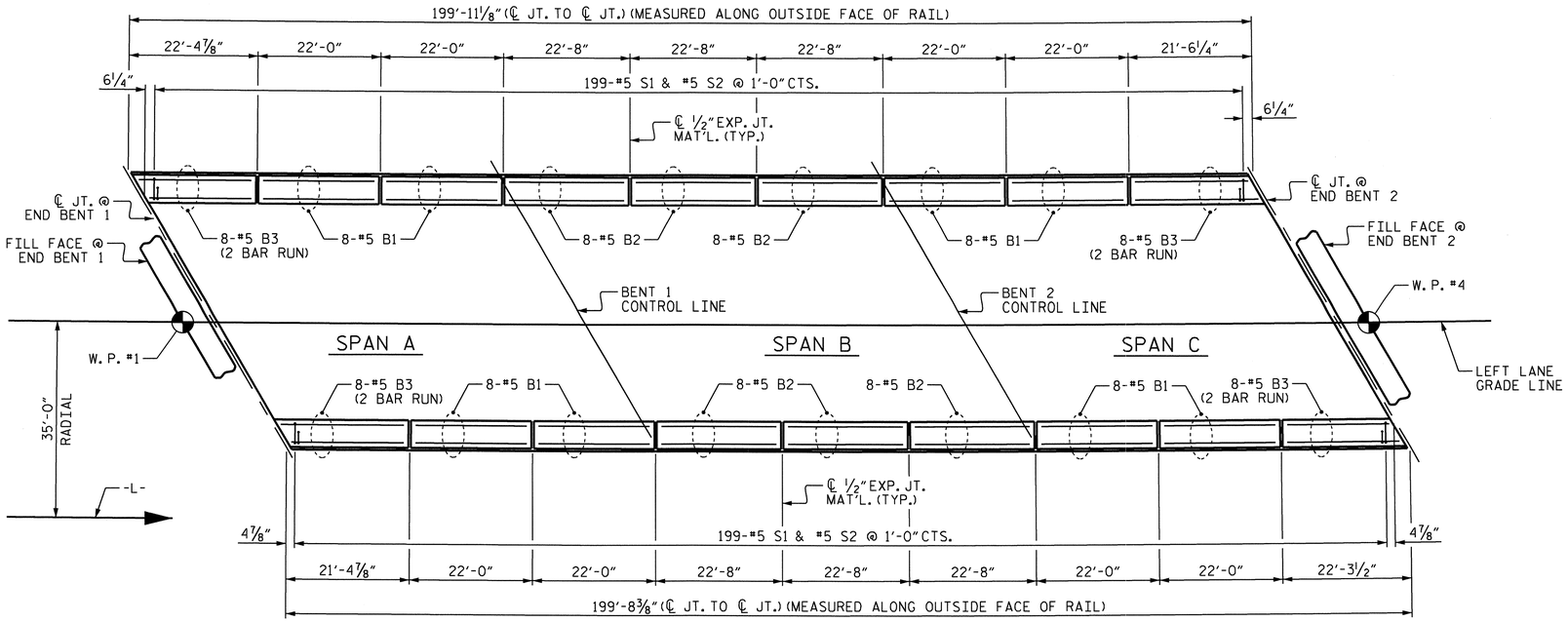

PLAN OF BARRIER RAIL

BAR TYPES

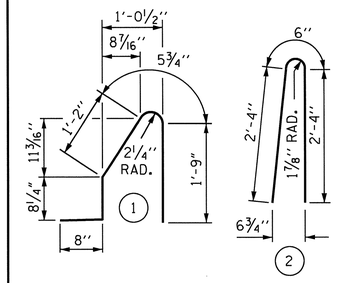

ALL BAR DIMENSIONS ARE OUT TO OUT

BILL OF MATERIAL

FOR CONCRETE BARRIER RAIL ONLY

BAR	NO.	SIZE	TYPE	LENGTH	WEIGHT
* B1	64	#5	STR	21'-8"	1146
* B2	48	#5	STR	22'-4"	1118
* B3	64	#5	STR	12'-9"	851
* S1	398	#5	1	4'-9"	1972
* S2	398	#5	2	5'-2"	2145

* EPOXY COATED REINFORCING STEEL	7,532 LBS.
CLASS AA CONCRETE	40.1 CU. YDS.
CONCRETE BARRIER RAIL	399.62 LIN. FT.

NOTES

THE BARRIER RAIL IN A CONTINUOUS UNIT SHALL NOT BE CAST UNTIL ALL SLAB CONCRETE IN THAT UNIT HAS BEEN CAST AND HAS REACHED A MINIMUM COMPRESSIVE STRENGTH OF 3,000 PSI.

ALL REINFORCING STEEL IN BARRIER RAILS SHALL BE EPOXY COATED.

VERTICAL GROOVED CONTRACTION JOINTS, ½" IN DEPTH, SHALL BE TOOLED IN ALL EXPOSED FACES OF THE BARRIER RAIL AND IN ACCORDANCE WITH ARTICLE 825-10(B) OF THE STANDARD SPECIFICATIONS. THE CONTRACTION JOINT SHALL BE LOCATED AT EACH THIRD POINT BETWEEN BARRIER RAIL EXPANSION JOINTS. ONLY ONE CONTRACTION JOINT IS REQUIRED AT MIDPOINT OF BARRIER RAIL SEGMENTS LESS THAN 20 FEET IN LENGTH AND NO CONTRACTION JOINTS ARE REQUIRED FOR THOSE SEGMENTS LESS THAN 10 FEET IN LENGTH.

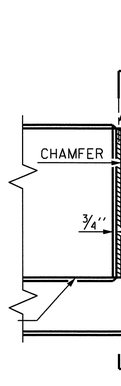

ELEVATION AT EXPANSION JOINTS

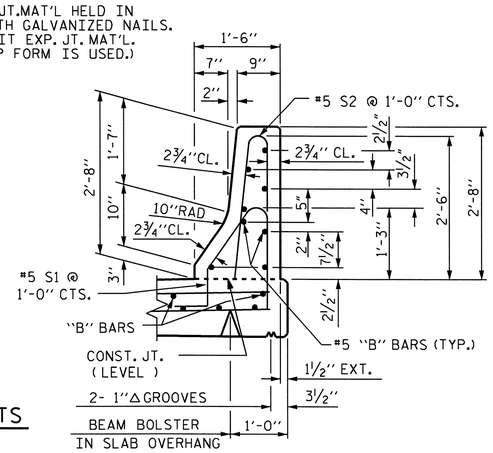

SECTION THRU RAIL

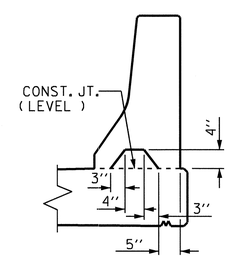

SECTION S-S

AT DAM IN OPEN JOINT (THIS IS TO BE USED ONLY WHEN SLIP FORM IS USED)

BARRIER RAIL DETAILS

NORTH CAROLINA PROFESSIONAL SEAL 16301 ENGINEER TIMOTHY A. HOLING

12/8/10

PROJECT NO. R-2510C

BEAUFORT COUNTY

STATION: 54+34.00 -L-

STATE OF NORTH CAROLINA
DEPARTMENT OF TRANSPORTATION
RALEIGH

STANDARD

CONCRETE BARRIER RAIL

(LEFT LANE)

REVISIONS								SHEET NO.
NO.	BY:	DATE:	NO.	BY:	DATE:			S-17
1			3					TOTAL SHEETS
2			4					134

ASSEMBLED BY : HARISH SHAH	DATE : 02/09		
CHECKED BY : O.T. NGUYEN	DATE : 04/09		
DRAWN BY : ARB 5/87	REV. 10/17/00	RWW/LES	
CHECKED BY : SJD 9/87	REV. 5/7/03R	RWW/JTE	
	REV. 5/1/06	TLA/GM	

08-DEC-2010 11:41
Y:\TIPProjects-R\R2510c\Structures\r2510c\Final Plans\STR1\R-2510C_sd_BR_01.dgn
qtnguyen

STR. #1

STD. NO. CBR1 (SHT. 3)

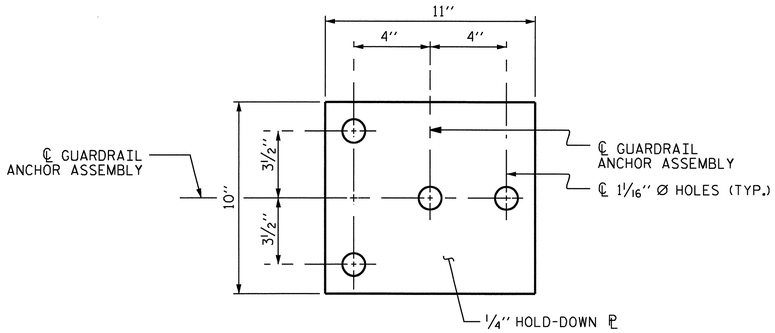

PLAN

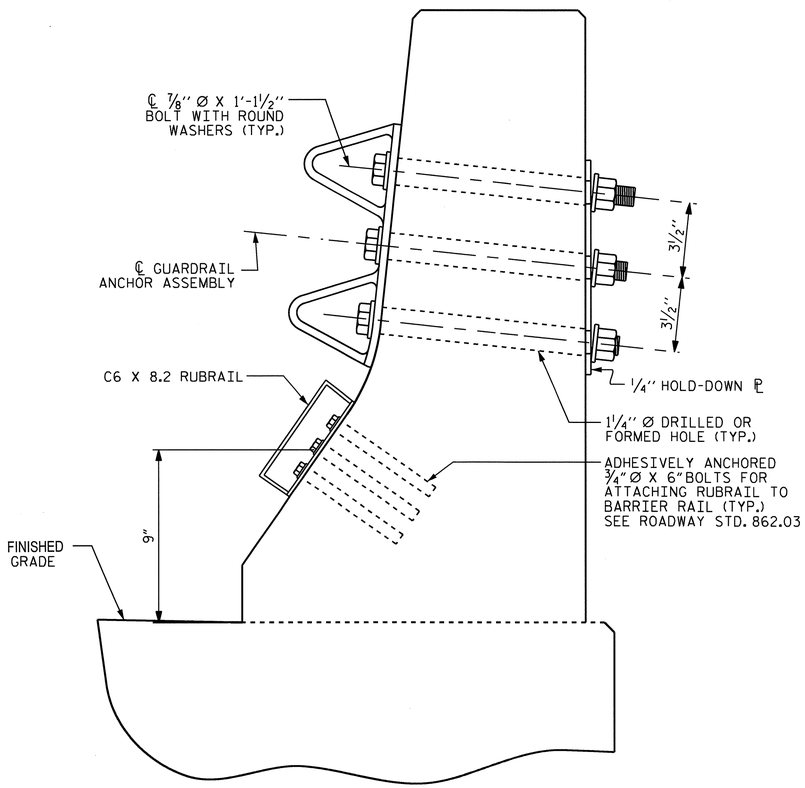

SECTION E-E

GUARDRAIL ANCHOR ASSEMBLY DETAILS

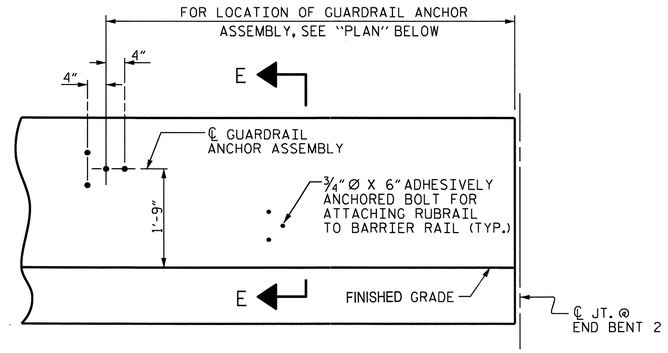

ELEVATION

FOR LOCATION OF RUBRAIL, SEE ROADWAY STD. 862.03

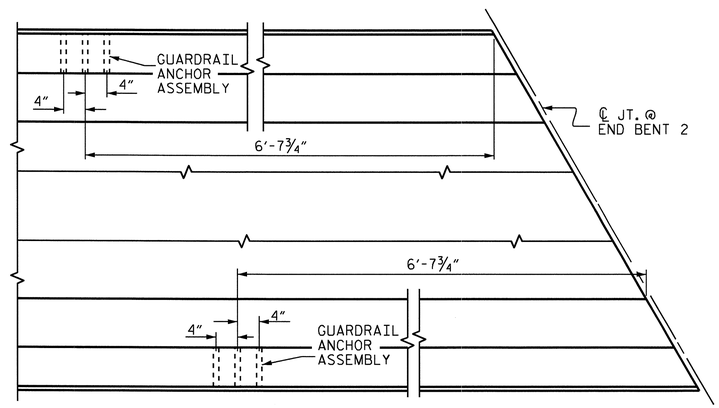

PLAN

LOCATION OF ANCHORS FOR GUARDRAIL

END BENT 2 SHOWN, END BENT 1 SIMILAR.

NOTES

THE GUARDRAIL ANCHOR ASSEMBLY SHALL CONSIST OF A 1/4" HOLD DOWN PLATE AND 4 - 7/8" Ø BOLTS WITH NUTS AND WASHERS, RUBRAIL, AND ADHESIVELY ANCHORED BOLTS.

THE HOLD-DOWN PLATE SHALL CONFORM TO AASHTO M270 GRADE 36. AFTER FABRICATION, THE HOLD-DOWN PLATE SHALL BE HOT-DIP GALVANIZED IN ACCORDANCE WITH AASHTO M111.

BOLTS SHALL CONFORM TO THE REQUIREMENTS OF ASTM A307 AND NUTS SHALL CONFORM TO THE REQUIREMENTS OF AASHTO M291. BOLTS, NUTS AND WASHERS SHALL BE GALVANIZED. (AT THE CONTRACTOR'S OPTION, STAINLESS STEEL BOLTS, NUTS AND WASHERS MAY BE USED AS AN ALTERNATE FOR THE 7/8" Ø GALVANIZED BOLTS, NUTS AND WASHERS. THEY SHALL CONFORM TO OR EXCEED THE MECHANICAL REQUIREMENTS OF ASTM A307. THE USE OF THIS ALTERNATE SHALL BE APPROVED BY THE ENGINEER.)

THE GUARDRAIL ANCHOR ASSEMBLY IS REQUIRED AT ALL POINTS WHERE APPROACH GUARDRAIL IS TO BE ATTACHED TO THE END OF BARRIER RAIL. FOR POINTS OF ATTACHMENT, SEE SKETCH.

AFTER INSTALLATION, THE EXPOSED THREAD OF THE BOLT SHALL BE BURRED WITH A SHARP POINTED TOOL.

THE COST OF THE GUARDRAIL ANCHOR ASSEMBLY SHALL BE INCLUDED IN THE UNIT CONTRACT PRICE BID FOR CONCRETE BARRIER RAIL.

THE 1 1/4" Ø HOLES SHALL BE FORMED OR DRILLED WITH A CORE BIT. IMPACT TOOLS WILL NOT BE PERMITTED. ANY CONCRETE DAMAGED BY THIS WORK SHALL BE REPAIRED TO THE SATISFACTION OF THE ENGINEER.

THE C6 X 8.2 RUBRAIL IS TO BE ADHESIVELY ANCHORED TO THE RAIL USING THREE 3/4" Ø X 6" BOLTS WITH WASHERS. LEVEL ONE FIELD TESTING IS REQUIRED, AND THE YIELD LOAD OF THE 3/4" Ø BOLT IS 12 KIPS. FOR ADHESIVELY ANCHORED BOLTS OR DOWELS, SEE SPECIAL PROVISIONS. SEE ROADWAY STANDARD 862.03 FOR DETAILS AND LOCATION OF THE RUBRAIL.

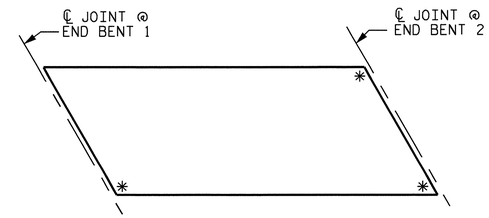

SKETCH SHOWING POINTS OF ATTACHMENTS

* DENOTES GUARDRAIL ANCHOR ASSEMBLY

PROJECT NO. R-2510C

BEAUFORT COUNTY

STATION: 54+34.00 -L-

STATE OF NORTH CAROLINA
DEPARTMENT OF TRANSPORTATION
RALEIGH

STANDARD

GUARDRAIL ANCHORAGE FOR BARRIER RAIL

(LEFT LANE)

NORTH CAROLINA PROFESSIONAL SEAL 16301 ENGINEER TING HSIUNG FANG

10/11/10

ASSEMBLED BY : HARISH SHAH	DATE : 9/08
CHECKED BY : O. T. NGUYEN	DATE : 4/09
DRAWN BY : TLA 5/06	ADDED 5/1/06
CHECKED BY : GM 5/06	

REVISIONS						SHEET NO.
NO.	BY:	DATE:	NO.	BY:	DATE:	S-18
1			3			TOTAL SHEETS
2			4			134

11-OCT-2010 12:54
Y:\TIPProjects-R\R2510c\Structures\r2510c\FinalPlans\STR1\r-2510c_sd_gr_01.dgn
atnguyen

STR. #1 (SHT. 1) STD. NO. GRA2

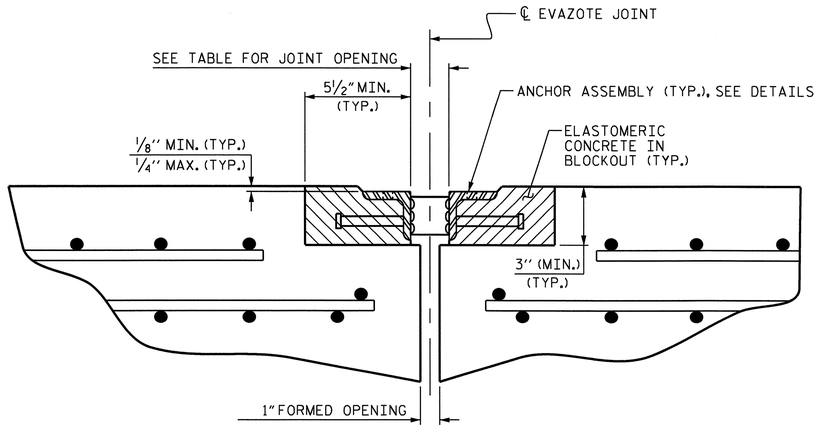

ARMORED JOINT DETAILS

SECTION NORMAL TO JOINT AT END BENT

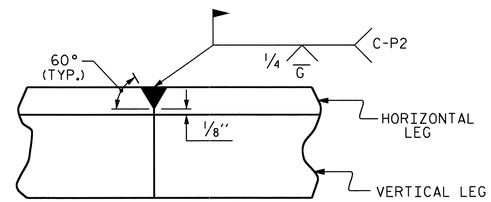

DETAIL- FIELD WELD SPLICE OF ANGLE

NOTES

ANGLES SHALL CONFORM TO AASHTO M270 GRADE 36 STEEL OR APPROVED EQUAL. ALL STUD ANCHORS SHALL CONFORM TO AASHTO M169 GRADES 1010 THRU 1020 OR APPROVED EQUAL.

STUD ANCHORS SHALL BE SHOP WELDED AND ALL HOLES SHALL BE SHOP DRILLED AS SHOWN ON THE PLANS. STUD ANCHORS SHALL BE ELECTRIC ARC END WELDED WITH COMPLETE FUSION.

UPON COMPLETION OF SHOP FABRICATION, THE ENTIRE ANCHOR ASSEMBLY SHALL BE METALLIZED. THE ½" Ø STUD ANCHORS AND ANCHOR TABS NEED NOT BE METALLIZED. SEE SPECIAL PROVISION FOR THERMAL SPRAYED COATINGS (METALLIZATION).

ANCHOR ASSEMBLY SHALL BE MADE CONTINUOUS THE LENGTH OF THE JOINT FROM GUTTER TO GUTTER. FOR FIELD SPLICES AT ALL CROWN BREAK POINTS, THE ENDS OF THE STEEL ANGLES SHALL BE CUT PARALLEL TO THE BRIDGE CENTERLINE. FINISHED FIELD WELDS SHALL BE GROUND SMOOTH AND COATED WITH A MINIMUM THICKNESS OF 4 DRY MILS OF ZINC-RICH PAINT IN ACCORDANCE WITH THE STANDARD SPECIFICATIONS.

ANCHOR ASSEMBLY SEGMENTS SHALL NOT BE LESS THAN 12 FEET NOR MORE THAN 20 FEET IN LENGTH. SHORTER SEGMENTS MAY BE USED AT THE EDGE OF ROADWAY OR AT POINTS OF STAGED CONSTRUCTION.

THE ANCHOR ASSEMBLY SHALL BE SECURED AND LEVELED AS SHOWN IN THE "ARMORED JOINT ANCHOR ASSEMBLY DETAILS". NO SUBMITTALS ARE REQUIRED FOR ⅜" Ø EXPANSION ANCHORS, NUTS OR WASHERS. THE CONTRACTOR MAY SUBMIT FOR APPROVAL AN ALTERNATE METHOD OF ALIGNING AND LEVELING THE ANGLES. THE ALTERNATE METHOD SHALL NOT INCLUDE ANY WELDING TO THE OUTSIDE FACE OF THE ANGLES.

AFTER THE ELASTOMERIC CONCRETE HAS BEEN CAST ON BOTH SIDES OF THE JOINT, REMOVE ANY EXCESS CONCRETE THAT COMES THROUGH THE WEEP HOLES AND THOROUGHLY CLEAN THE ANGLES. ANY DAMAGED STEEL SHALL BE COATED WITH A MINIMUM OF 4 MILS OF ZINC-RICH PAINT IN ACCORDANCE WITH THE STANDARD SPECIFICATIONS.

SEE SPECIAL PROVISIONS FOR EVAZOTE JOINT SEALS.

SEE SPECIAL PROVISIONS FOR ELASTOMERIC CONCRETE.

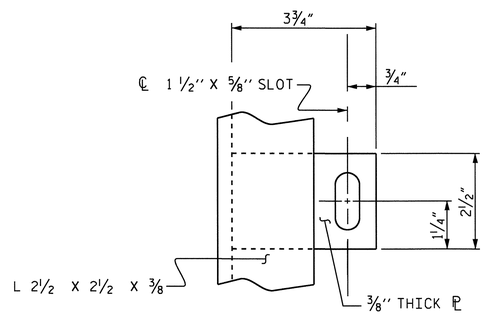

PLAN VIEW OF TAB

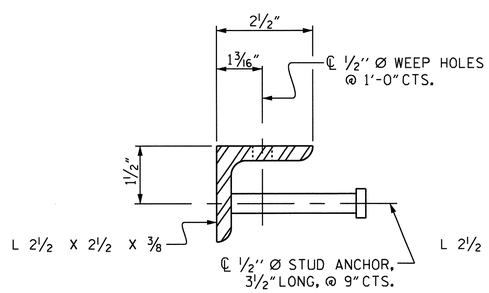

SECTION VIEW OF STUD

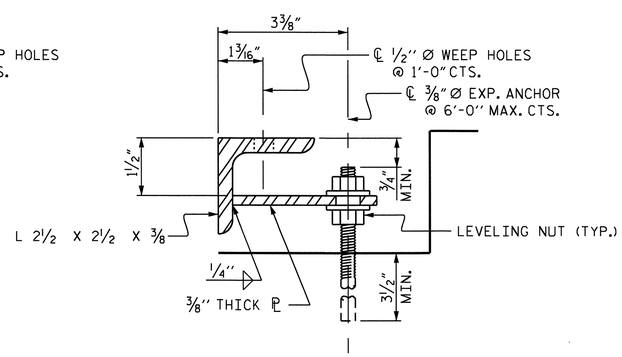

SECTION VIEW OF TAB

ARMORED JOINT ANCHOR ASSEMBLY DETAILS

MOVEMENT AND SETTING AT EVAZOTE JOINT

END BENT	SKEW ANGLE	NOMINAL UNCOMPRESSED SEAL WIDTH	TOTAL MOVEMENT (ALONG ℄ RDWY)	PERPENDICULAR JOINT OPENING AT 45° F	PERPENDICULAR JOINT OPENING AT 60° F	PERPENDICULAR JOINT OPENING AT 90° F
1	59°-23'-37"	2½"	11/16"	2⅛"	2"	1¾"
2	60°-24'-15"	2½"	11/16"	2⅛"	2"	1¾"

TOTAL MOVEMENT IS CALCULATED ALONG THE CENTERLINE OF ROADWAY.
JOINT OPENINGS ARE MEASURED PERPENDICULAR TO THE JOINT.

BILL OF MATERIAL

END BENT	ELASTOMERIC CONCRETE * (CU. FT.)	TOTAL LENGTH OF ANGLE (FT)
1	9.6	83'-6"
2	9.5	82'-11¼"

* BASED ON THE MINIMUM BLOCKOUT SHOWN.

PROJECT NO. R-2510C
BEAUFORT COUNTY
STATION: 54+34.00 -L-

STATE OF NORTH CAROLINA
DEPARTMENT OF TRANSPORTATION
RALEIGH

STANDARD

ARMORED EVAZOTE JOINT DETAILS

(LEFT LANE)

NORTH CAROLINA PROFESSIONAL SEAL 16301 ENGINEER TING-HSIUNG LANG
10/11/10

REVISIONS						SHEET NO.
NO.	BY:	DATE:	NO.	BY:	DATE:	S-19
1			3			TOTAL SHEETS
2			4			134

STR. #1 STD. NO. AEJ1

ASSEMBLED BY : HARISH SHAH	DATE : 04/09		
CHECKED BY : Q.T. NGUYEN	DATE : 04/09		
DRAWN BY : EEM 1/96	REV. 7/10/01 LES/RDR		
CHECKED BY : RGW 1/96	REV. 5/7/03RR RWW/JTE		
	REV. 5/1/06 TLA/GM		

11-OCT-2010 12:54
Y:\TIPProjects-R\R2510c\Structures\r2510c\FinalPlans\STRI\R-2510C_sd_AEJ_01.dgn
qtnguyen

SUPERSTRUCTURE REINFORCING STEEL LENGTHS ARE BASED ON THE FOLLOWING MINIMUM SPLICE LENGTHS					
BAR SIZE	SUPERSTRUCTURE EXCEPT APPROACH SLABS, PARAPET, AND BARRIER RAIL		APPROACH SLABS		PARAPET AND BARRIER RAIL
	EPOXY COATED	UNCOATED	EPOXY COATED	UNCOATED	
#4	2'-0"	1'-9"	2'-0"	1'-9"	2'-9"
#5	2'-6"	2'-2"	2'-6"	2'-2"	3'-5"
#6	3'-0"	2'-7"	3'-10"	2'-7"	4'-4"
#7	5'-3"	3'-6"			
#8	6'-10"	4'-7"			

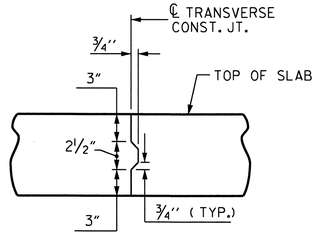

TRANSVERSE CONSTRUCTION JOINT DETAIL

NOTE: REINFORCING STEEL IN SLAB NOT SHOWN. LONGITUDINAL REINFORCING STEEL SHALL BE CONTINUOUS THRU JOINT

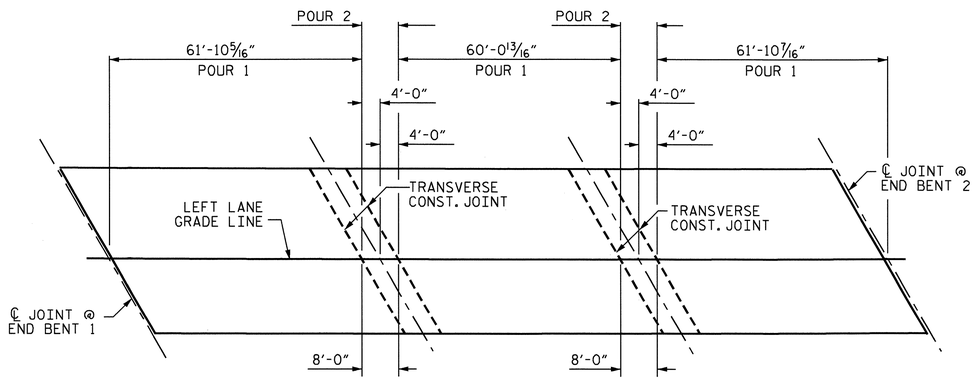

OPTIONAL POURING SEQUENCE

POUR 2 CANNOT BE STARTED UNTIL BOTH ADJACENT POUR 1 REACH A MINIMUM OF 3000 PSI.
ALL DIMENSIONS ARE MEASURED ALONG LEFT LANE GRADE LINE.

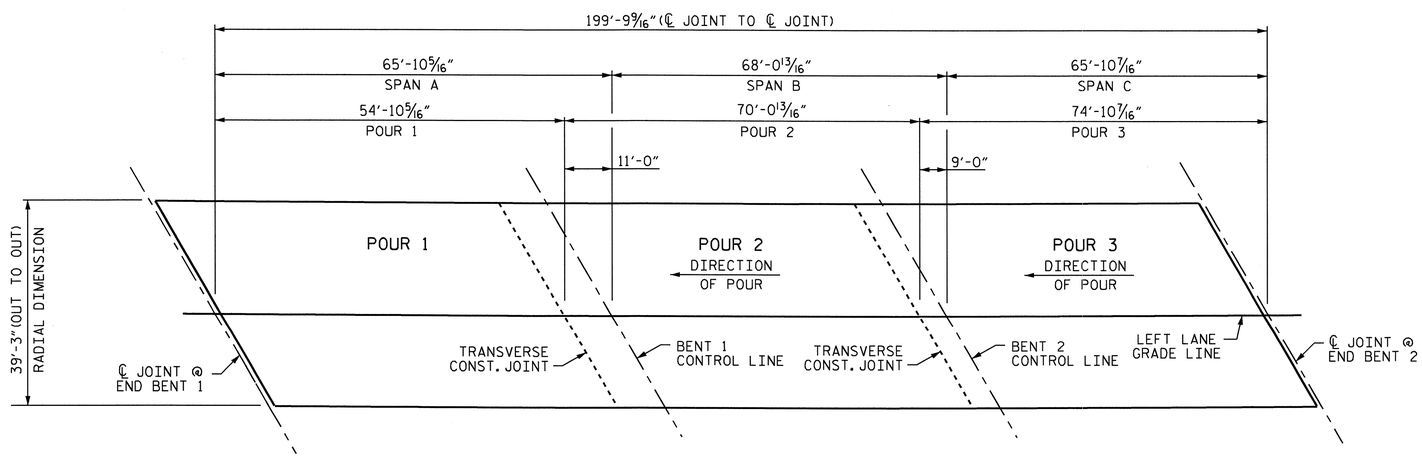

POURING SEQUENCE AND LAYOUT FOR COMPUTING AREA OF REINFORCED CONCRETE DECK SLAB

(SQ. FT. = 7,842)

ALL DIMENSIONS ARE MEASURED ALONG LEFT LANE GRADE LINE UNLESS OTHERWISE NOTED.

BILL OF MATERIAL

BAR	NO.	SIZE	TYPE	LENGTH	WEIGHT	BAR	NO.	SIZE	TYPE	LENGTH	WEIGHT
* A1	354	#5	STR	38'-11"	14369	A216	4	#5	STR	11'-6"	48
A2	354	#5	STR	38'-11"	14369	A217	4	#5	STR	9'-9"	41
* A3	6	#6	STR	13'-10"	125	A218	4	#5	STR	8'-0"	33
						A219	4	#5	STR	6'-3"	26
* A101	4	#5	STR	36'-4"	152	A220	4	#5	STR	4'-6"	19
* A102	4	#5	STR	34'-7"	144	A221	4	#5	STR	2'-10"	12
* A103	4	#5	STR	32'-11"	137						
* A104	4	#5	STR	31'-2"	130	* B1	112	#4	STR	21'-11"	1640
* A105	4	#5	STR	29'-6"	123	* B2	56	#7	STR	51'-0"	5838
* A106	4	#5	STR	27'-9"	116	* B3	50	#7	STR	20'-6"	2095
* A107	4	#5	STR	26'-0"	108	* B4	28	#4	STR	21'-2"	396
* A108	4	#5	STR	24'-4"	102	B5	184	#5	STR	51'-6"	9883
* A109	4	#5	STR	22'-7"	94						
* A110	4	#5	STR	20'-10"	87	* G1	1	#5	STR	45'-2"	47
* A111	4	#5	STR	19'-2"	80	* G2	1	#5	STR	44'-9"	47
* A112	4	#5	STR	17'-5"	73						
* A113	4	#5	STR	15'-8"	65	* K1	8	#8	1	13'-3"	283
* A114	4	#5	STR	13'-11"	58	* K2	12	#8	2	20'-2"	646
* A115	4	#5	STR	12'-2"	51	* K3	24	#6	STR	7'-6"	270
* A116	4	#5	STR	10'-6"	44	K4	16	#4	STR	5'-8"	61
* A117	4	#5	STR	8'-9"	37	K5	48	#4	STR	7'-6"	240
* A118	4	#5	STR	7'-0"	29	K6	16	#4	3	6'-4"	68
* A119	4	#5	STR	5'-3"	22	K7	24	#4	4	12'-4"	198
* A120	4	#5	STR	3'-6"	15						
						* S1	56	#5	5	5'-1"	297
A201	4	#5	STR	37'-4"	156	* S2	56	#4	6	3'-9"	140
A202	4	#5	STR	35'-7"	148	S3	176	#4	7	3'-1"	363
A203	4	#5	STR	33'-11"	142						
A204	4	#5	STR	32'-2"	134	U1	48	#4	8	13'-5"	430
A205	4	#5	STR	30'-6"	127	U2	16	#4	8	11'-5"	122
A206	4	#5	STR	28'-9"	120						
A207	4	#5	STR	27'-0"	113						
A208	4	#5	STR	25'-4"	106						
A209	4	#5	STR	23'-7"	98						
A210	4	#5	STR	21'-10"	91						
A211	4	#5	STR	20'-2"	84						
A212	4	#5	STR	18'-5"	77						
A213	4	#5	STR	16'-8"	70						
A214	4	#5	STR	14'-11"	62	REINFORCING STEEL = 27,496 LBS					
A215	4	#5	STR	13'-2"	55	* EPOXY COATED REINF. STEEL = 27,860 LBS					

* DENOTES EPOXY COATED REINFORCING STEEL

BAR TYPES

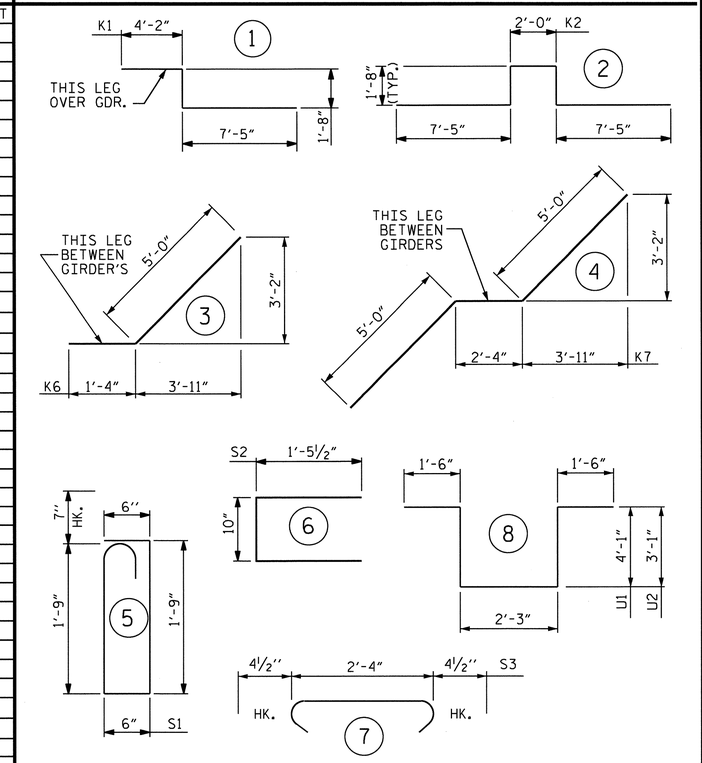

ALL BAR DIMENSIONS ARE OUT TO OUT

GROOVING BRIDGE FLOORS		
APPROACH SLABS	1,557	SQ.FT.
BRIDGE DECK	6,540	SQ.FT.
TOTAL	8,097	SQ.FT.

SUPERSTRUCTURE BILL OF MATERIAL			
SPANS A, B, & C	CLASS AA CONCRETE	REINFORCING STEEL	EPOXY COATED REINFORCING STEEL
	(CU. YDS.)	(LBS.)	(LBS.)
POUR 1	72.9		
POUR 2	102.6		
POUR 3	110.6		
TOTAL **	286.1	27,496	27,860

** QUANTITIES FOR BARRIER RAIL ARE NOT INCLUDED

PROJECT NO. U-2510C
BEAUFORT COUNTY
STATION: 54+34.00 -L-

NORTH CAROLINA PROFESSIONAL SEAL 16301 ENGINEER TING-SILING FANG
12/8/10

STATE OF NORTH CAROLINA
DEPARTMENT OF TRANSPORTATION
RALEIGH

STANDARD
SUPERSTRUCTURE BILL OF MATERIAL
(LEFT LANE)

ASSEMBLED BY : HARISH SHAH DATE : 9/08	
CHECKED BY : T. H. FANG DATE : 8/10	
DRAWN BY : JMB 5/87	REV. 6/1/94 EEM/GRP
CHECKED BY : SJD 9/87	REV. 8/16/99 RWW/LES
	REV. 5/1/06 TLA/GM

REVISIONS								SHEET NO.
NO.	BY:	DATE:	NO.	BY:	DATE:			S-20
1			3					TOTAL SHEETS
2			4					134

STR. #1 STD. NO. BOM2

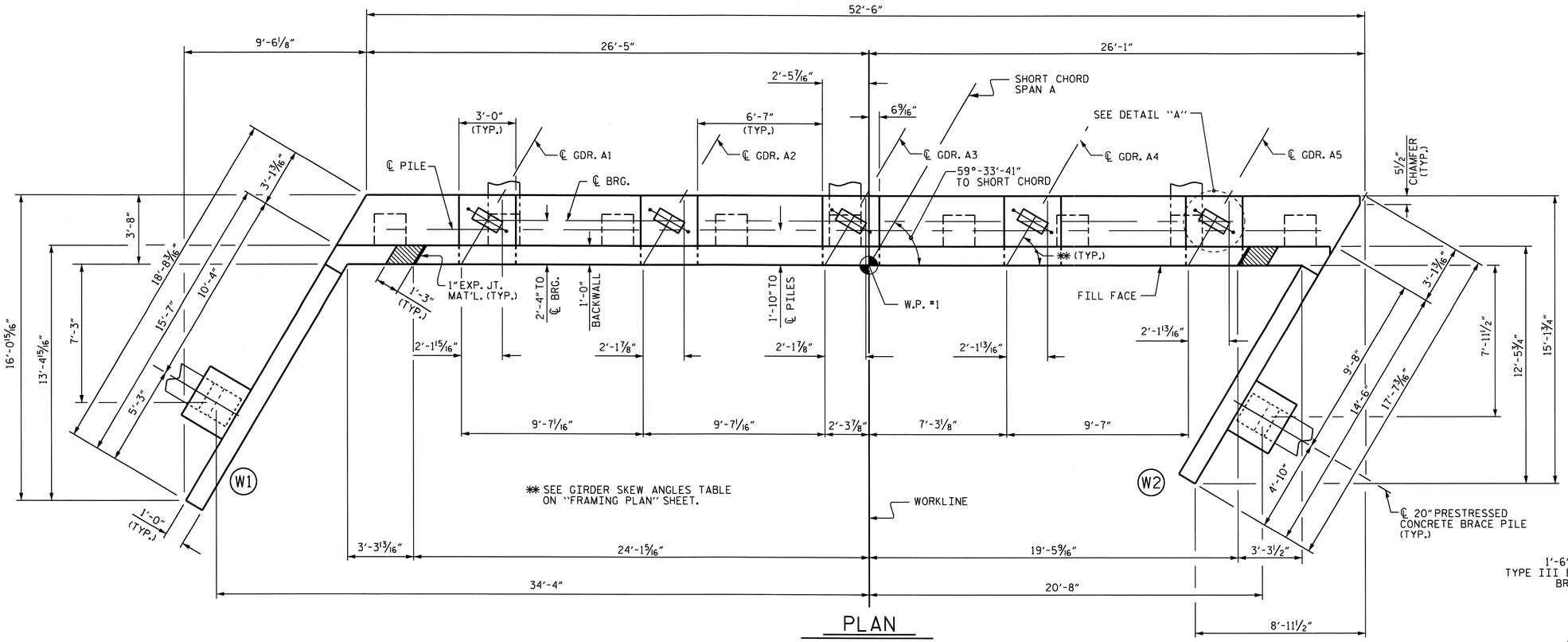

PLAN

(LEFT LANE GRADE LINE NOT SHOWN FOR CLARITY)

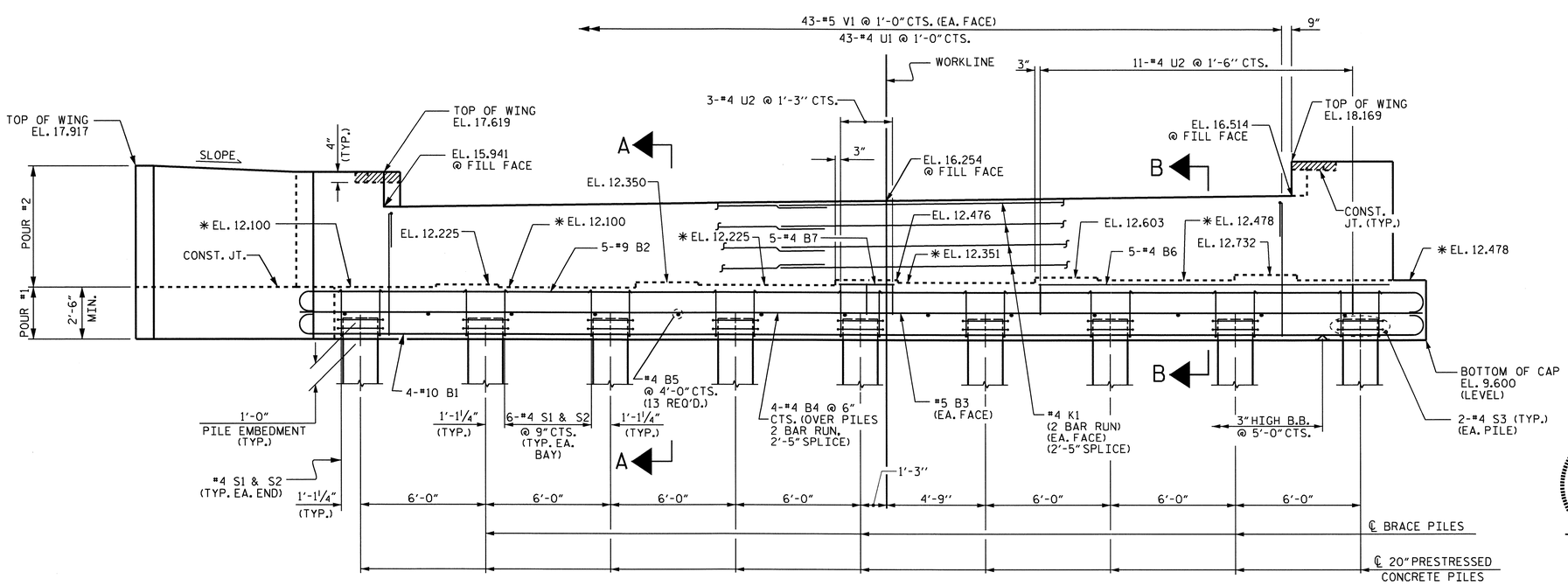

ELEVATION

BRACE PILE IN WING WALLS AND DETAILS OF WING WALL W2 NOT SHOWN FOR CLARITY.

✱ FOR LOCATION OF ELEVATIONS BETWEEN BRIDGE SEAT BUILD-UPS, SEE SHEET 3 OF 3.

NOTES

STIRRUPS IN CAP MAY BE SHIFTED AS NECESSARY TO CLEAR ANCHOR BOLTS.

BACKWALL SHALL BE PLACED BEFORE APPLYING THE EPOXY PROTECTIVE COATING.

THE TOP SURFACE AREAS OF THE END BENT CAPS SHALL BE CURED IN ACCORDANCE WITH THE STANDARD SPECIFICATIONS EXCEPT THAT THE MEMBRANE CURING COMPOUND METHOD SHALL NOT BE USED.

✱ THE TOP SURFACE OF THE END BENT CAP EXCEPT THE BRIDGE SEAT BUILDUPS SHALL BE SLOPED TRANSVERSELY FROM THE FILL FACE TO THE BACK FACE AT THE RATE OF 2%.

THE CONTRACTOR SHALL PROVIDE FOR INSTALLATION OF THE 4" DIAMETER DRAIN PIPE THROUGH THE WING WALL AS REQUIRED FOR REINFORCED BRIDGE APPROACH FILLS. SEE THE ROADWAY PLANS. REINFORCING STEEL IN THE WING WALL MAY BE SHIFTED AS NECESSARY TO CLEAR THE DRAIN PIPE.

THE CONCRETE IN THE SHADED AREA OF THE WING SHALL BE POURED AFTER THE BARRIER IS CAST IF SLIP FORMING IS USED.

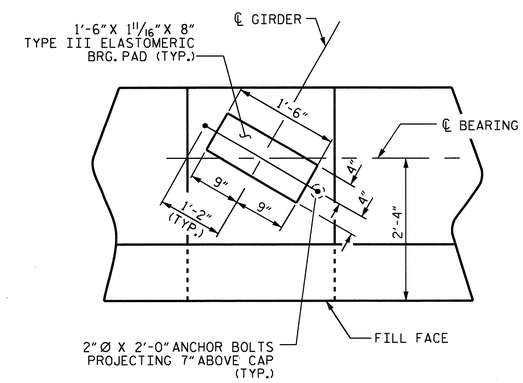

DETAIL "A"

(TYP. EA. GDR.)

PROJECT NO. R-2510C

BEAUFORT COUNTY

STATION: 54+34.00 -L-

SHEET 1 OF 3

STATE OF NORTH CAROLINA
DEPARTMENT OF TRANSPORTATION
RALEIGH

SUBSTRUCTURE

END BENT 1

(LEFT LANE)

NORTH CAROLINA PROFESSIONAL SEAL 16301 ENGINEER TING HSIUNG FANG
12/8/10

REVISIONS						SHEET NO.
NO.	BY:	DATE:	NO.	BY:	DATE:	S-21
1			3			TOTAL SHEETS
2			4			134

DRAWN BY : HARISH SHAH DATE : 03-09
CHECKED BY : E.C. LOCKLEAR DATE : 4-21-09

08-DEC-2010 13:29
Y:\TIPProjects-R\R2510c\Structures\r2510c\FinalPlans\STRI\r-2510c_sd_eb*-01.dgn
qtnguyen

STR. #1

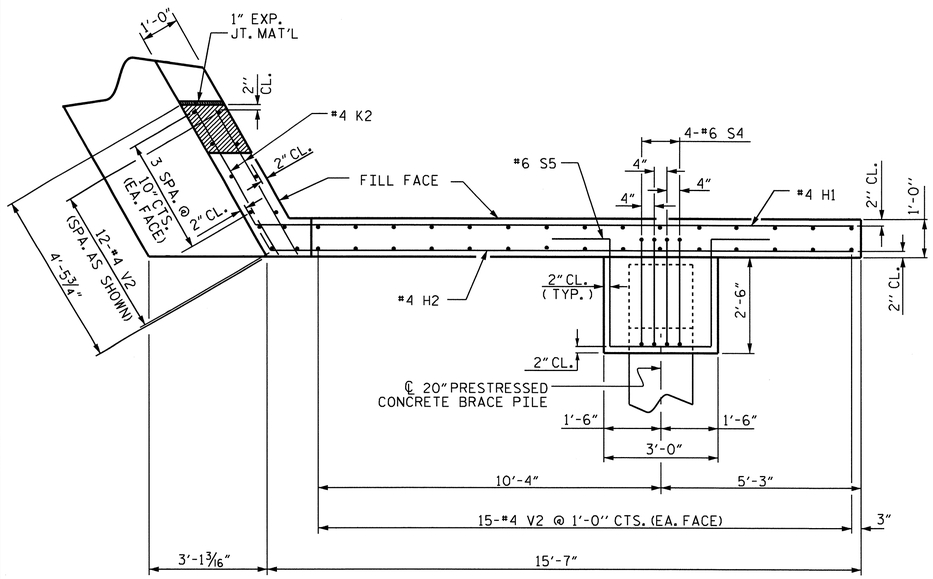

PLAN OF WING (W1)

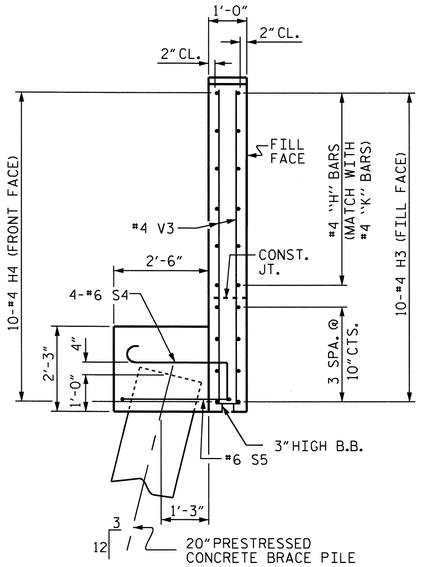

SECTION X-X

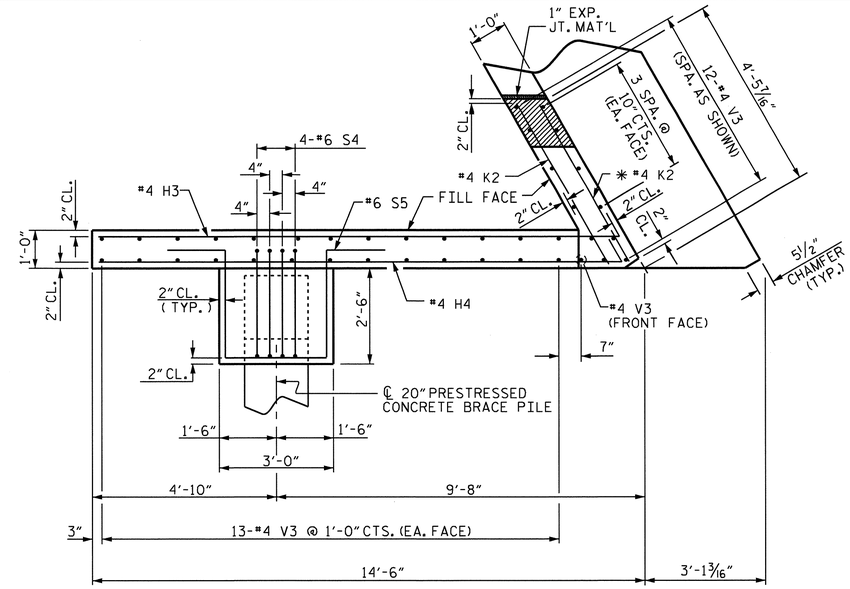

PLAN OF WING (W2)

* #4 K2 FIELD CUT AS NECESSARY TO GIVE 2" MIN. CLEARANCE FROM CHAMFER.

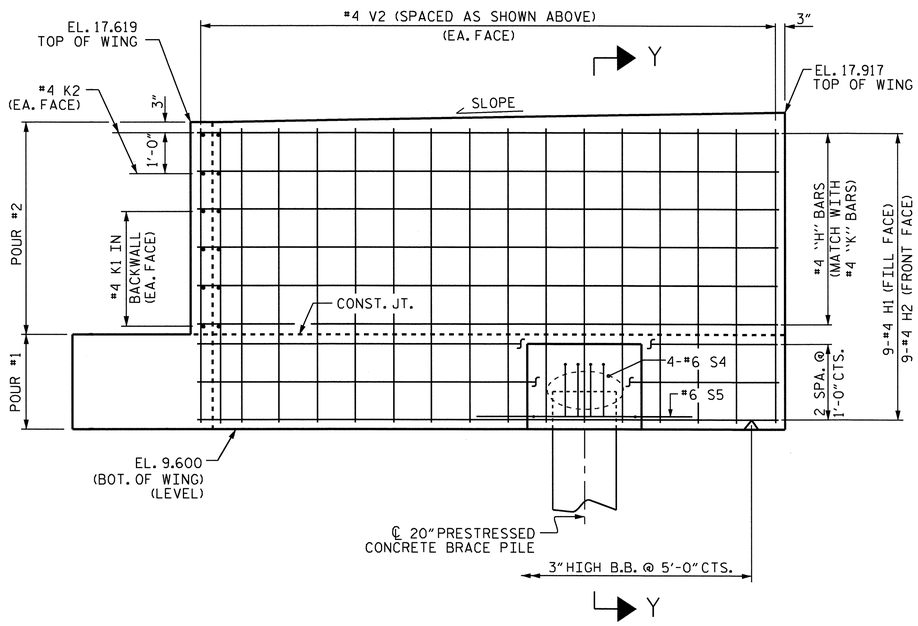

ELEVATION OF WING (W1)

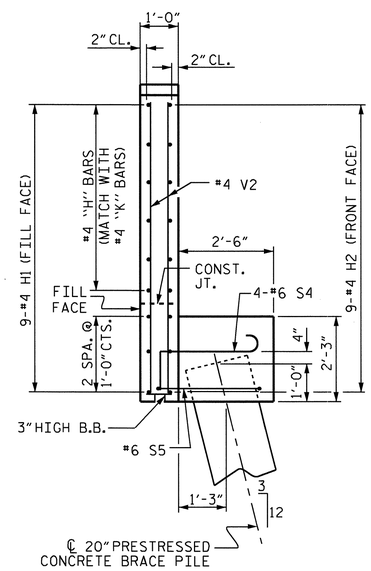

SECTION Y-Y

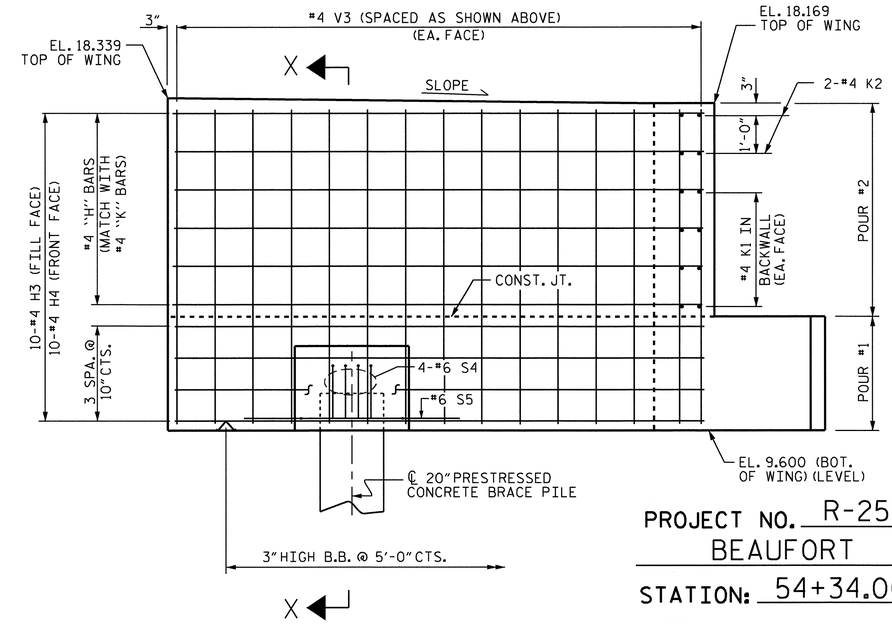

ELEVATION OF WING (W2)

PROJECT NO. R-2510C

BEAUFORT COUNTY

STATION: 54+34.00 -L-

SHEET 2 OF 3

STATE OF NORTH CAROLINA
DEPARTMENT OF TRANSPORTATION
RALEIGH

SUBSTRUCTURE

END BENT 1

(LEFT LANE)

NORTH CAROLINA PROFESSIONAL SEAL 16301 ENGINEER TING HSIUNG FANG

12/8/10

REVISIONS								SHEET NO.
NO.	BY:	DATE:	NO.	BY:	DATE:			S-22
1			3					TOTAL SHEETS
2			4					134

DRAWN BY : HARISH SHAH DATE : 10/08
CHECKED BY : E.C. LOCKLEAR DATE : 4/21/09

08-DEC-2010 13:54
Y:\TIPProjects-R\R2510c\Structures\r2510c\FinalPlans\STR1\r-2510c_sd_eb*-01.dgn
qtnguyen

STR. #1

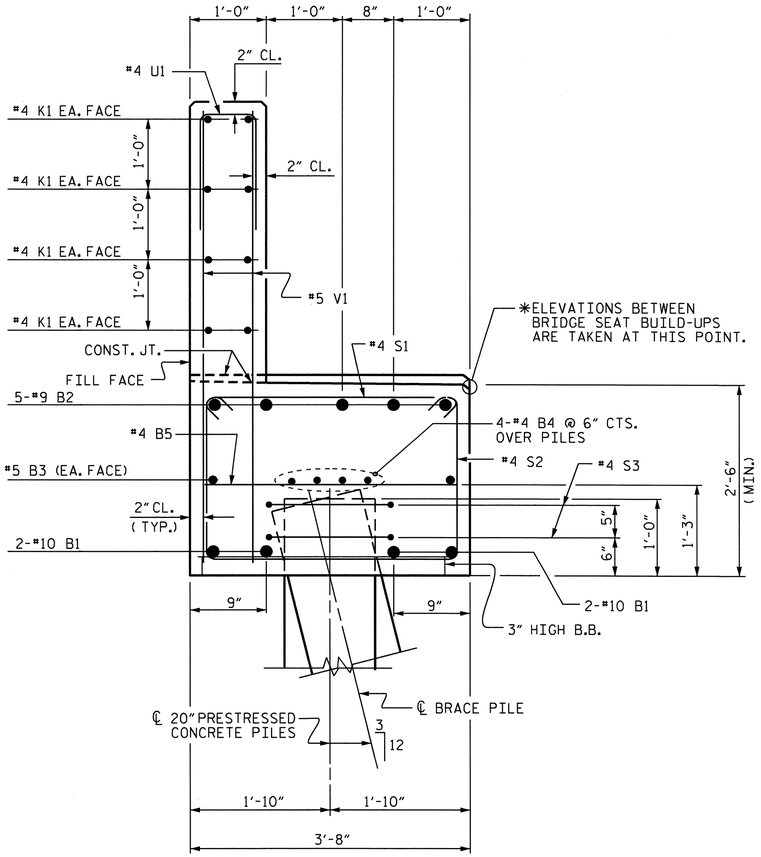

SECTION A-A

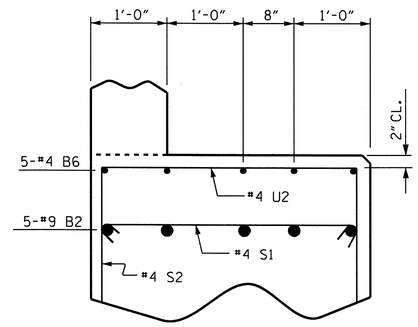

PARTIAL SECTION B-B

#5 V1 BARS NOT SHOWN FOR CLARITY.

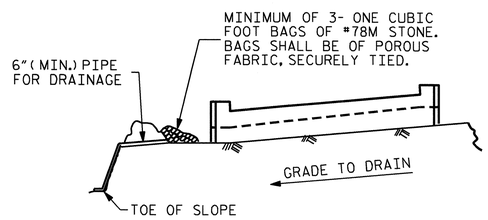

BAGGED STONE AND PIPE SHALL BE PLACED IMMEDIATELY AFTER COMPLETION OF END BENT EXCAVATION. PIPE MAY BE EITHER CONCRETE, CORRUGATED STEEL, CORRUGATED ALUMINUM ALLOY, OR CORRUGATED PLASTIC. PERFORATED PIPE WILL NOT BE ALLOWED.

BAGGED STONE SHALL REMAIN IN PLACE UNTIL THE ENGINEER DIRECTS THAT IT BE REMOVED. THE CONTRACTOR SHALL REMOVE AND DISPOSE OF SILT ACCUMULATIONS AT BAGGED STONE WHEN SO DIRECTED BY THE ENGINEER. BAGS SHALL BE REMOVED AND REPLACED WHENEVER THE ENGINEER DETERMINES THAT THEY HAVE DETERIORATED AND LOST THEIR EFFECTIVENESS.

NO SEPARATE PAYMENT WILL BE MADE FOR THIS WORK AND THE ENTIRE COST OF THIS WORK SHALL BE INCLUDED IN THE UNIT CONTRACT PRICE BID FOR THE SEVERAL PAY ITEMS.

TEMPORARY DRAINAGE AT END BENT

BAR TYPES

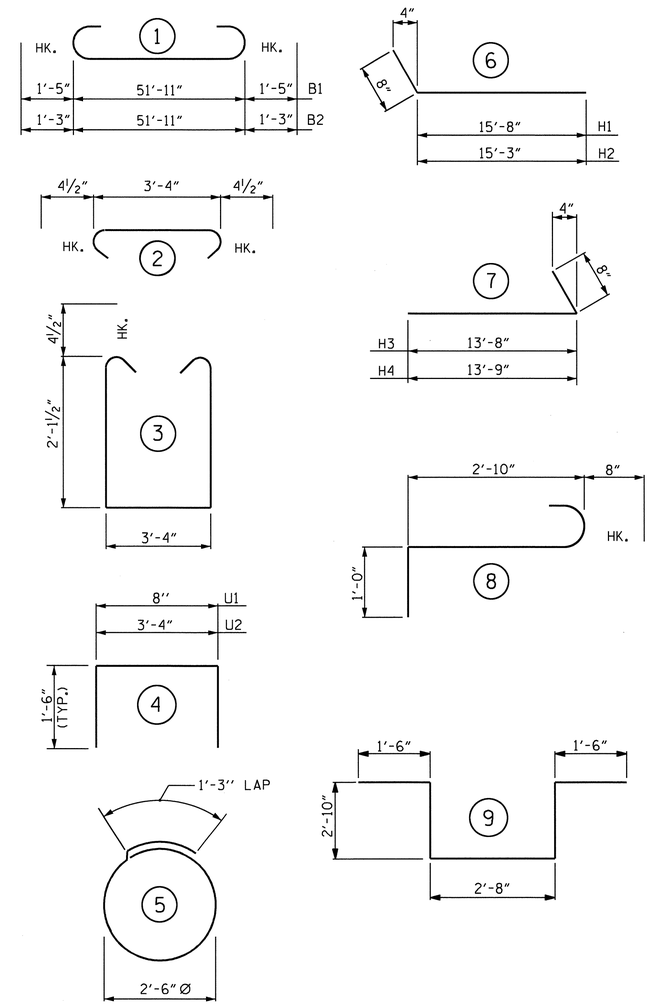

ALL BAR DIMENSIONS ARE OUT TO OUT.

BILL OF MATERIAL

END BENT 1

BAR	NO.	SIZE	TYPE	LENGTH	WEIGHT
B1	4	#10	1	54'-9"	942
B2	5	#9	1	54'-5"	925
B3	2	#5	STR	52'-2"	109
B4	8	#4	STR	27'-4"	146
B5	13	#4	STR	3'-4"	29
B6	5	#4	STR	16'-7"	55
B7	5	#4	STR	2'-8"	9
H1	9	#4	6	16'-4"	98
H2	9	#4	6	15'-11"	96
H3	10	#4	7	14'-4"	96
H4	10	#4	7	14'-5"	96
K1	16	#4	STR	27'-4"	292
K2	8	#4	STR	4'-2"	22
S1	50	#4	2	4'-1"	136
S2	50	#4	3	8'-4"	278
S3	18	#4	5	9'-2"	110
S4	8	#6	8	4'-6"	54
S5	2	#6	9	11'-4"	34
U1	43	#4	4	3'-8"	105
U2	14	#4	4	6'-4"	59
V1	86	#5	STR	6'-0"	538
V2	42	#4	STR	7'-8"	215
V3	39	#4	STR	8'-3"	215
REINFORCING STEEL					4,659 LBS

CLASS A CONCRETE

POUR 1 (CAP, LOWER WINGS & WING BRACE PILE CAP)	22.0 C.Y.
POUR 2 (BACKWALL & UPPER WINGS)	14.4 C.Y.
TOTAL	36.4 C.Y.

20" PRESTRESSED CONCRETE PILES

NUMBER = 11	LIN. FT. = 330
PILE REDRIVES	EACH 5

NOTE: CONCRETE DISPLACED BY 20" PRESTRESSED CONCRETE PILES HAS BEEN DEDUCTED FROM THE CONCRETE QUANTITY.

PROJECT NO. R-2510C
BEAUFORT COUNTY
STATION: 54+34.00 -L-

SHEET 3 OF 3

NORTH CAROLINA PROFESSIONAL SEAL 16301 ENGINEER HSIANG-LING LANG
12/8/10

STATE OF NORTH CAROLINA
DEPARTMENT OF TRANSPORTATION
RALEIGH

SUBSTRUCTURE

END BENT 1

(LEFT LANE)

REVISIONS						SHEET NO.
NO.	BY:	DATE:	NO.	BY:	DATE:	S-23
1			3			TOTAL SHEETS
2			4			134

DRAWN BY : HARISH SHAH DATE : 10/08
CHECKED BY : A.R. CHESSON DATE : 02/09

08-DEC-2010 14:00
Y:\TIPProjects-R\R2510c\Structures\r2510c\FinalPlans\STR1\r-2510c_sd_eb#-01.dgn
qtnguyen

STR. #1

NOTE

STIRRUPS IN CAP MAY BE SHIFTED AS NECESSARY TO CLEAR ANCHOR BOLTS.

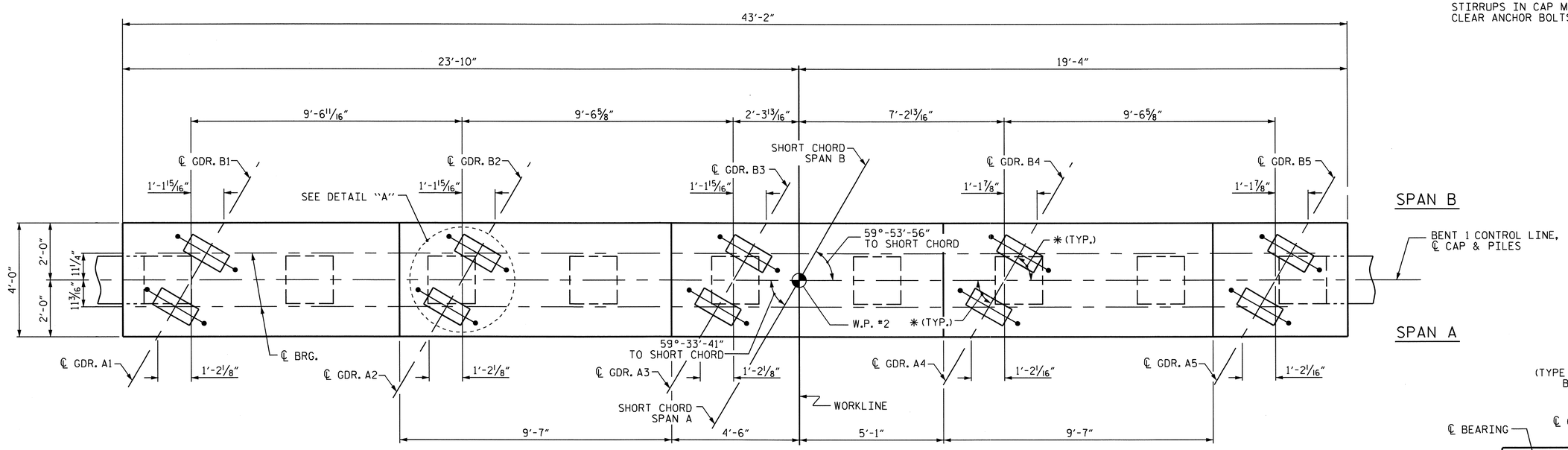

✱ SEE GIRDER SKEW ANGLES TABLE ON "FRAMING PLAN" SHEET.

PLAN

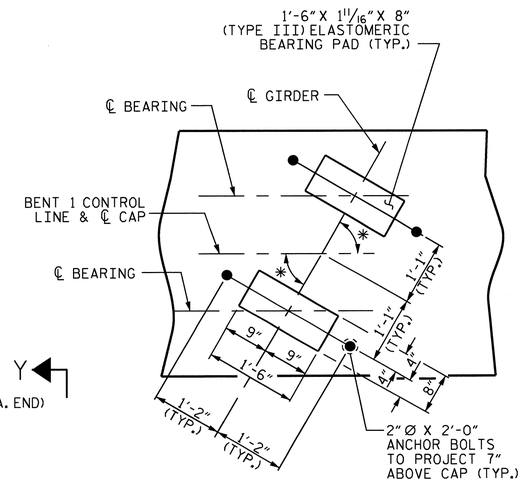

DETAIL "A"

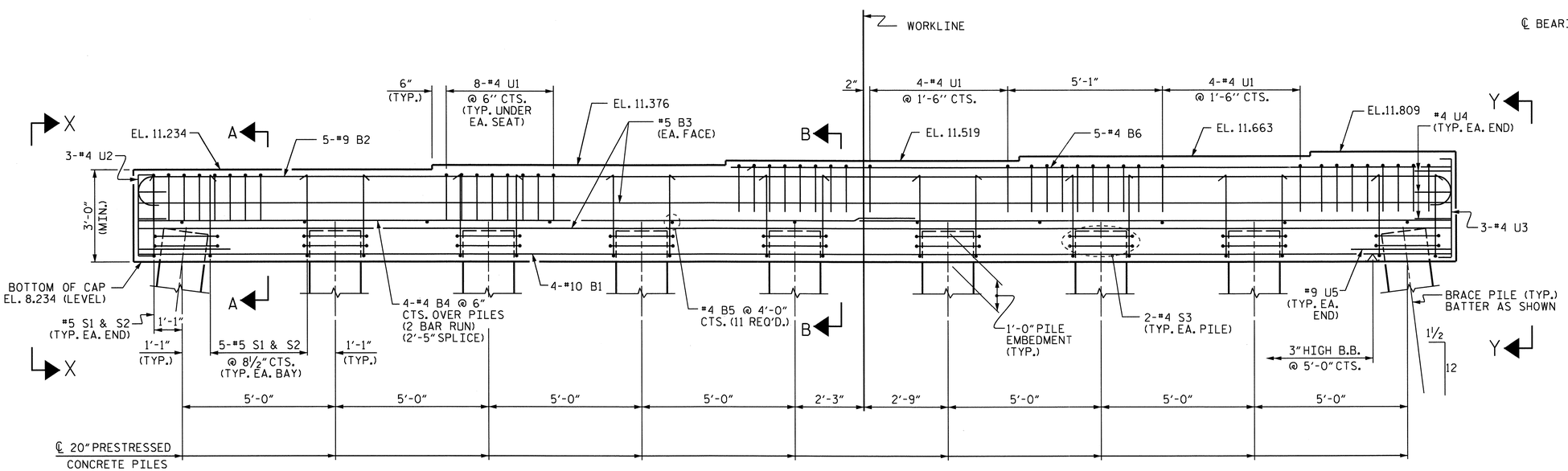

ELEVATION

PROJECT NO. R-2510C

BEAUFORT COUNTY

STATION: 54+34.00 -L-

SHEET 1 OF 2

STATE OF NORTH CAROLINA
DEPARTMENT OF TRANSPORTATION
RALEIGH

SUBSTRUCTURE

BENT 1

(LEFT LANE)

NORTH CAROLINA PROFESSIONAL SEAL 16301 ENGINEER

12/8/10

REVISIONS						SHEET NO.
NO.	BY:	DATE:	NO.	BY:	DATE:	S-24
1			3			TOTAL SHEETS
2			4			134

DRAWN BY : HARISH SHAH DATE : 3/09
CHECKED BY : E.C. LOCKLEAR DATE : 5/09

08-DEC-2010 14:45
Y:\TIPProjects-R\R2510c\Structures\r2510c\FinalPlans\STR1\R-2510C_sd_B*-01.dgn
qtnguyen

STR. #1

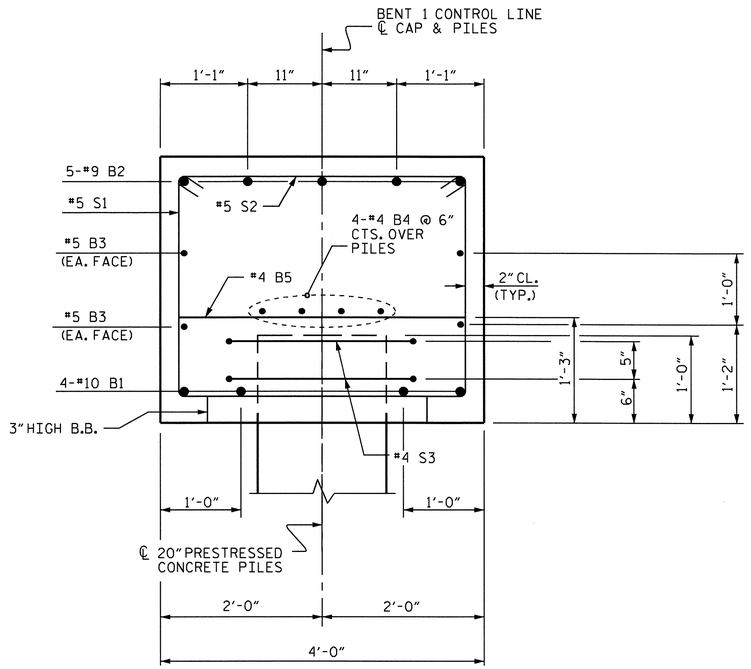

SECTION A-A

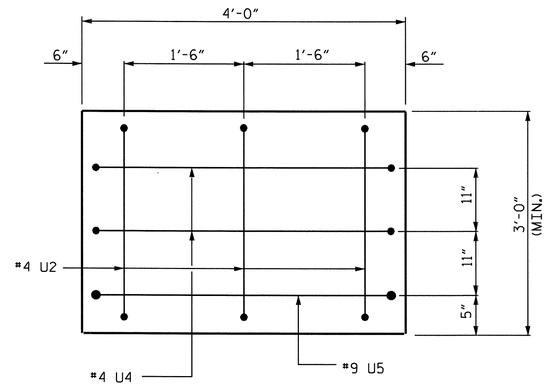

VIEW X-X

CENTER U2 BAR BOTTOM LEG MAY BE CUT AS REQUIRED TO PROVIDE 2" CLEARANCE BETWEEN END OF BAR AND PILE.

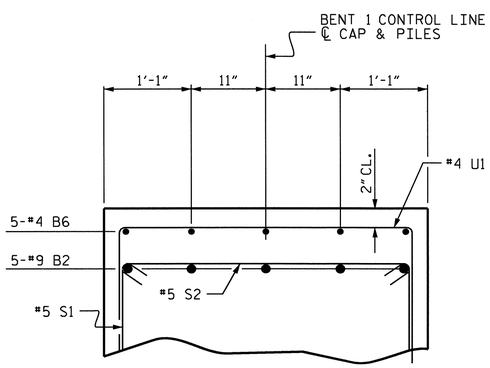

PARTIAL SECTION B-B

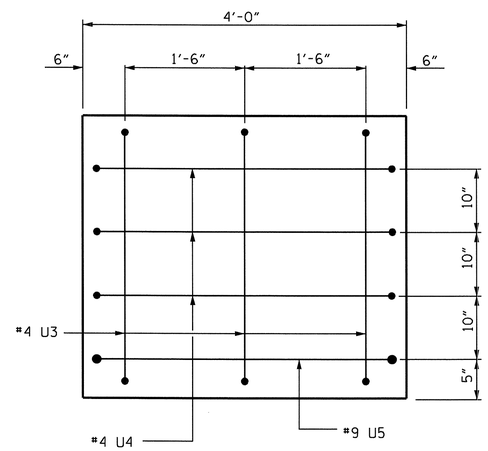

VIEW Y-Y

CENTER U3 BAR BOTTOM LEG MAY BE CUT AS REQUIRED TO PROVIDE 2" CLEARANCE BETWEEN END OF BAR AND PILE.

BAR TYPES

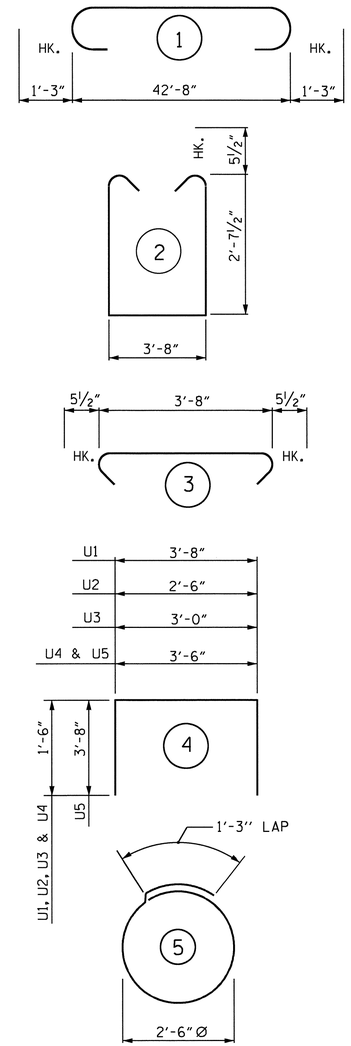

ALL BAR DIMENSIONS ARE OUT TO OUT.

BILL OF MATERIAL

BENT 1

BAR	NO.	SIZE	TYPE	LENGTH	WEIGHT
B1	4	#10	STR	42'-10"	737
B2	5	#9	1	45'-2"	768
B3	4	#5	STR	42'-10"	179
B4	8	#4	STR	22'-8"	121
B5	11	#4	STR	3'-8"	27
B6	5	#4	STR	23'-6"	78
S1	42	#5	2	9'-10"	431
S2	42	#5	3	4'-7"	201
S3	18	#4	5	9'-2"	110
U1	48	#4	4	6'-8"	214
U2	3	#4	4	5'-6"	11
U3	3	#4	4	6'-0"	12
U4	5	#4	4	6'-6"	22
U5	2	#9	4	10'-10"	74

REINFORCING STEEL 2,985 LBS.

CLASS A CONCRETE
CAP 19.9 C.Y.

20" PRESTRESSED CONCRETE PILES
NO. 9 LIN. FT. 540
PILE REDRIVES EACH 4

NOTE: CONCRETE DISPLACED BY 20" PRESTRESSED CONCRETE PILES HAS BEEN DEDUCTED FROM THE CONCRETE QUANTITY.

FOR 20" PRESTRESSED CONCRETE PILES DETAILS, SEE "STANDARD 20" PRESTRESSED CONCRETE PILES" SHEET.

PROJECT NO. R-2510C
BEAUFORT COUNTY
STATION: 54+34.00 -L-

SHEET 2 OF 2

STATE OF NORTH CAROLINA
DEPARTMENT OF TRANSPORTATION
RALEIGH

SUBSTRUCTURE

BENT 1

(LEFT LANE)

NORTH CAROLINA PROFESSIONAL SEAL 16301 ENGINEER TING HSIUNG FANG
10/11/10

REVISIONS						SHEET NO.
NO.	BY:	DATE:	NO.	BY:	DATE:	S-25
1			3			TOTAL SHEETS
2			4			134

DRAWN BY : HARISH SHAH DATE : 3/09
CHECKED BY : E.C. LOCKLEAR DATE : 5/09

11-OCT-2010 12:54
Y:\TIPProjects-R\R2510c\Structures\r2510c\FinalPlans\STRI\R-2510C_sd_B*-01.dgn
qtnguyen

STR. #1

NOTE

STIRRUPS IN CAP MAY BE SHIFTED AS NECESSARY TO CLEAR ANCHOR BOLTS.

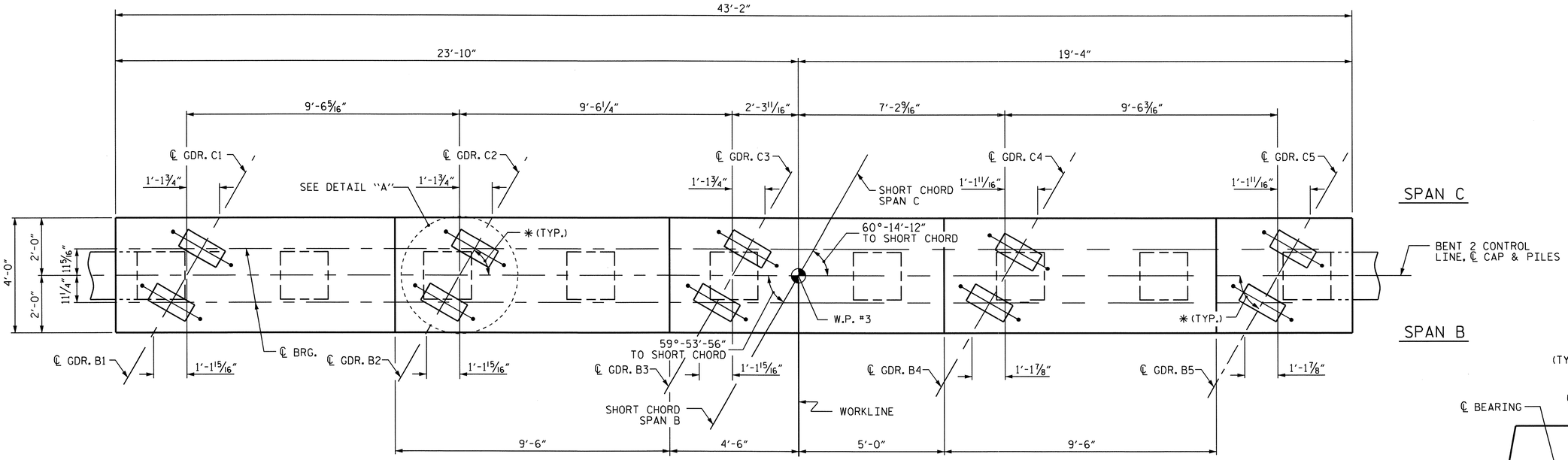

PLAN

✱ SEE GIRDER SKEW ANGLES TABLE ON "FRAMING PLAN" SHEET.

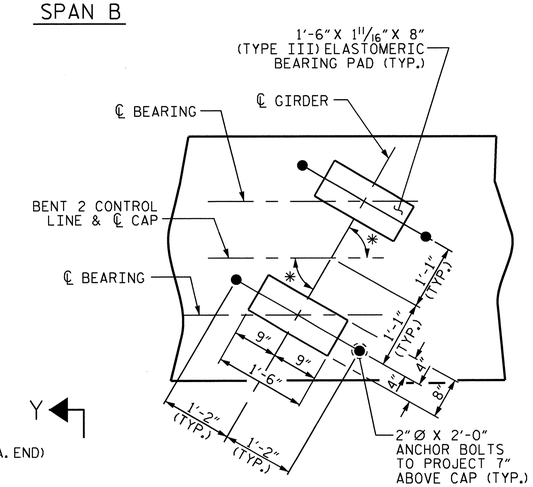

DETAIL "A"

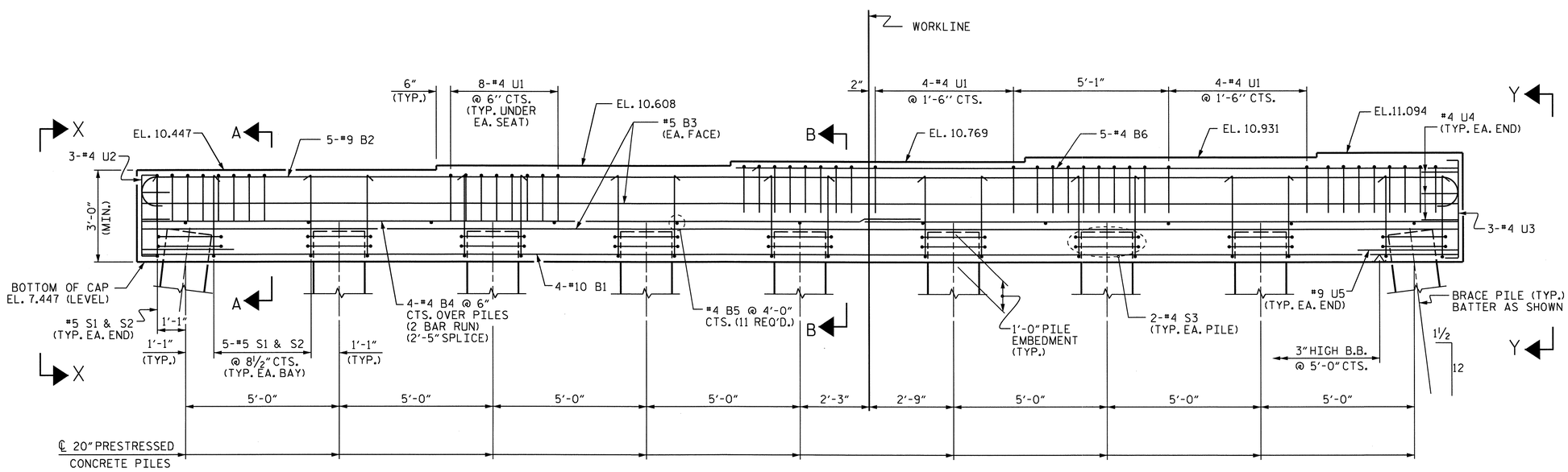

ELEVATION

NORTH CAROLINA PROFESSIONAL SEAL 16301 ENGINEER HARISH SHAH

12/8/10

PROJECT NO. R-2510C

BEAUFORT COUNTY

STATION: 54+34.00 -L-

SHEET 1 OF 2

STATE OF NORTH CAROLINA
DEPARTMENT OF TRANSPORTATION
RALEIGH

SUBSTRUCTURE

BENT 2

(LEFT LANE)

REVISIONS						SHEET NO.
NO.	BY:	DATE:	NO.	BY:	DATE:	S-26
1			3			TOTAL SHEETS
2			4			134

DRAWN BY : HARISH SHAH DATE : 3/09
CHECKED BY : E.C. LOCKLEAR DATE : 5/09

08-DEC-2010 15:24
H:\R2510c\Structures\r2510c\Final Plans\STR1\R-2510C_sd_B*-01.dgn
tfang

STR. #1

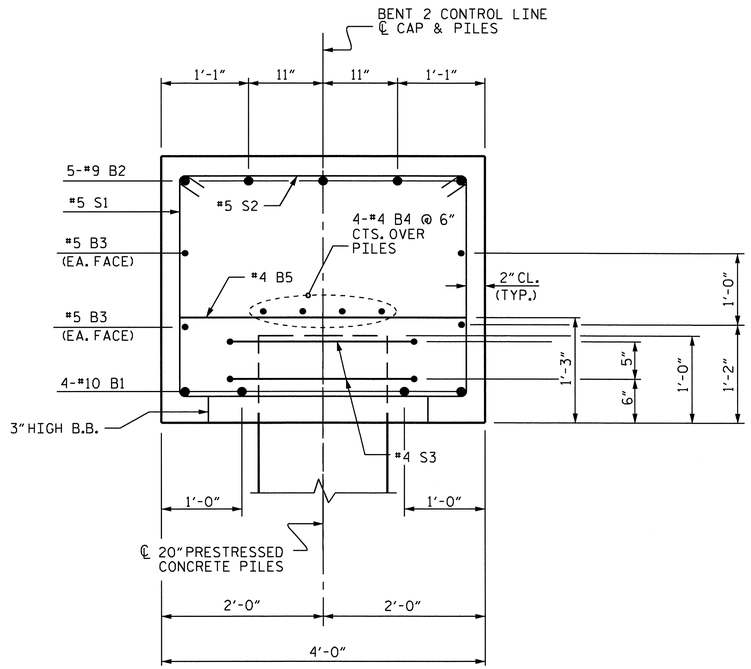

SECTION A-A

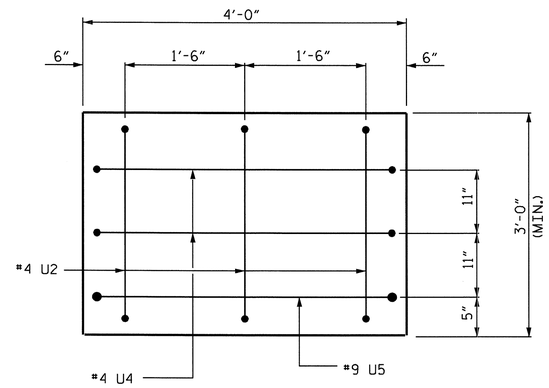

VIEW X-X

CENTER U2 BAR BOTTOM LEG MAY BE CUT AS REQUIRED TO PROVIDE 2" CLEARANCE BETWEEN END OF BAR AND PILE.

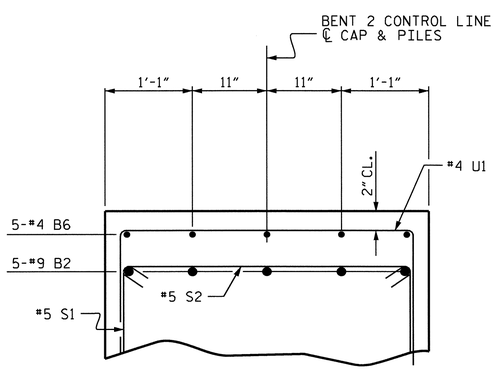

PARTIAL SECTION B-B

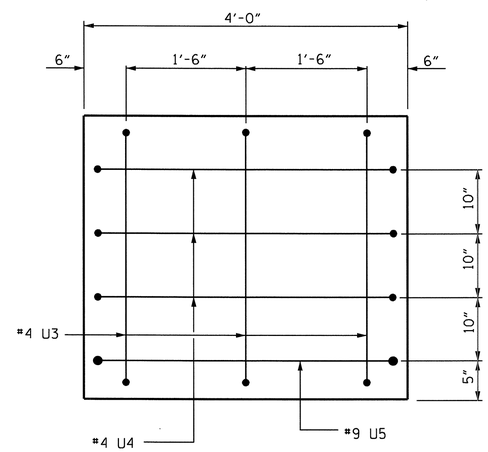

VIEW Y-Y

CENTER U3 BAR BOTTOM LEG MAY BE CUT AS REQUIRED TO PROVIDE 2" CLEARANCE BETWEEN END OF BAR AND PILE.

BAR TYPES

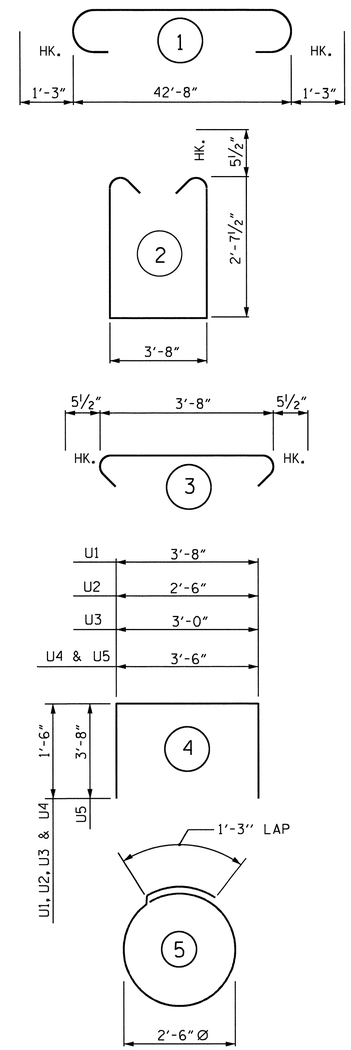

ALL BAR DIMENSIONS ARE OUT TO OUT.

BILL OF MATERIAL

BENT 2

BAR	NO.	SIZE	TYPE	LENGTH	WEIGHT
B1	4	#10	STR	42'-10"	737
B2	5	#9	1	45'-2"	768
B3	4	#5	STR	42'-10"	179
B4	8	#4	STR	22'-8"	121
B5	11	#4	STR	3'-8"	27
B6	5	#4	STR	23'-6"	78
S1	42	#5	2	9'-10"	431
S2	42	#5	3	4'-7"	201
S3	18	#4	5	9'-2"	110
U1	48	#4	4	6'-8"	214
U2	3	#4	4	5'-6"	11
U3	3	#4	4	6'-0"	12
U4	5	#4	4	6'-6"	22
U5	2	#9	4	10'-10"	74

REINFORCING STEEL 2,985 LBS.

CLASS A CONCRETE
CAP 20.1 C.Y.

20" PRESTRESSED CONCRETE PILES
NO. 9 LIN. FT. 450
PILE REDRIVES EACH 4

NOTE: CONCRETE DISPLACED BY 20" PRESTRESSED CONCRETE PILES HAS BEEN DEDUCTED FROM THE CONCRETE QUANTITY.

PROJECT NO. R-2510C
BEAUFORT COUNTY
STATION: 54+34.00 -L-

SHEET 2 OF 2

STATE OF NORTH CAROLINA
DEPARTMENT OF TRANSPORTATION
RALEIGH

SUBSTRUCTURE

BENT 2

(LEFT LANE)

NORTH CAROLINA PROFESSIONAL SEAL 16301 ENGINEER TING HSIUNG FANG
10/11/10

REVISIONS						SHEET NO.
NO.	BY:	DATE:	NO.	BY:	DATE:	S-27
1			3			TOTAL SHEETS
2			4			134

DRAWN BY : HARISH SHAH DATE : 3/09
CHECKED BY : E.C. LOCKLEAR DATE : 5/09

11-OCT-2010 12:54
Y:\TIPProjects-R\R2510c\Structures\r2510c\FinalPlans\STR1\R-2510C_sd_B*-01.dgn
qtnguyen

STR. #1

NOTES

STIRRUPS IN CAP MAY BE SHIFTED AS NECESSARY TO CLEAR ANCHOR BOLTS.

BACKWALL SHALL BE PLACED BEFORE APPLYING THE EPOXY PROTECTIVE COATING.

THE TOP SURFACE AREAS OF THE END BENT CAPS SHALL BE CURED IN ACCORDANCE WITH THE STANDARD SPECIFICATIONS EXCEPT THAT THE MEMBRANE CURING COMPOUND METHOD SHALL NOT BE USED.

✱ THE TOP SURFACE OF THE END BENT CAP EXCEPT THE BRIDGE SEAT BUILDUPS SHALL BE SLOPED TRANSVERSELY FROM THE FILL FACE TO THE BACK FACE AT THE RATE OF 2%.

THE CONTRACTOR SHALL PROVIDE FOR INSTALLATION OF THE 4" DIAMETER DRAIN PIPE THROUGH THE WING WALL AS REQUIRED FOR REINFORCED BRIDGE APPROACH FILLS. SEE THE ROADWAY PLANS. REINFORCING STEEL IN THE WING WALL MAY BE SHIFTED AS NECESSARY TO CLEAR THE DRAIN PIPE.

THE CONCRETE IN THE SHADED AREA OF THE WING SHALL BE POURED AFTER THE BARRIER IS CAST IF SLIP FORMING IS USED.

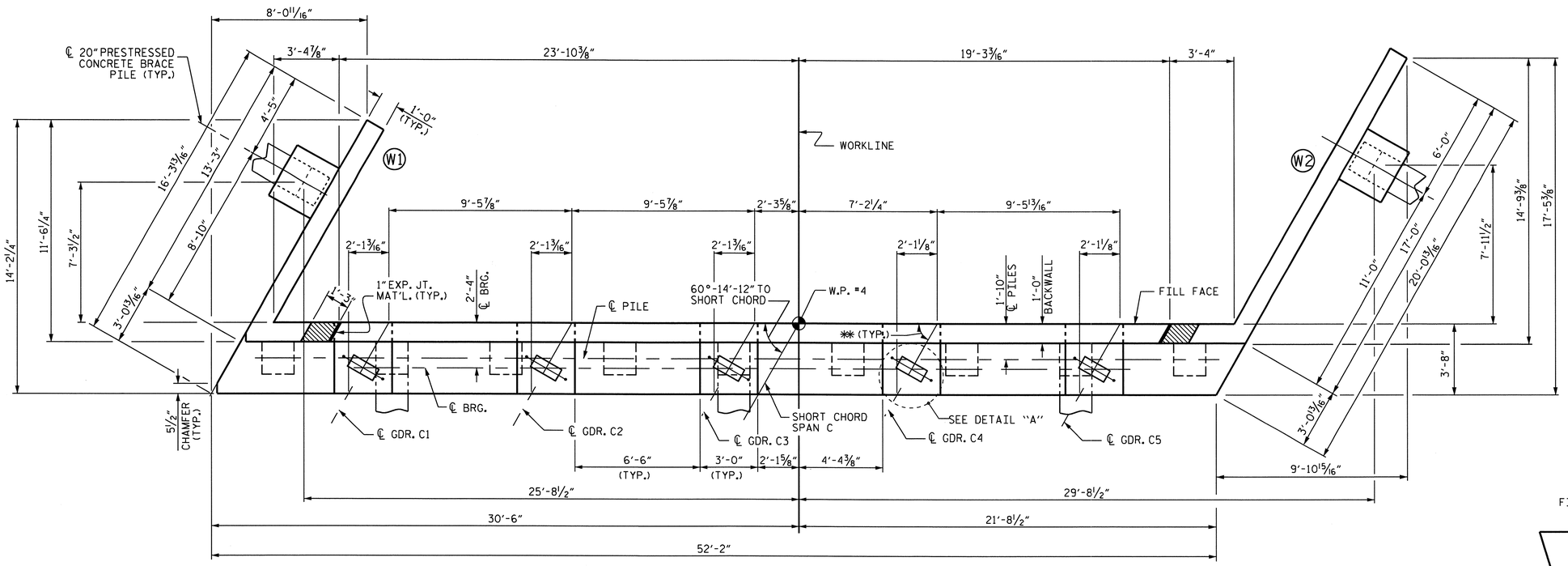

PLAN

(LEFT LANE GRADE LINE NOT SHOWN FOR CLARITY)

✱✱ SEE SHORT CHORD ANGLES TABLE ON "FRAMING PLAN" SHEET.

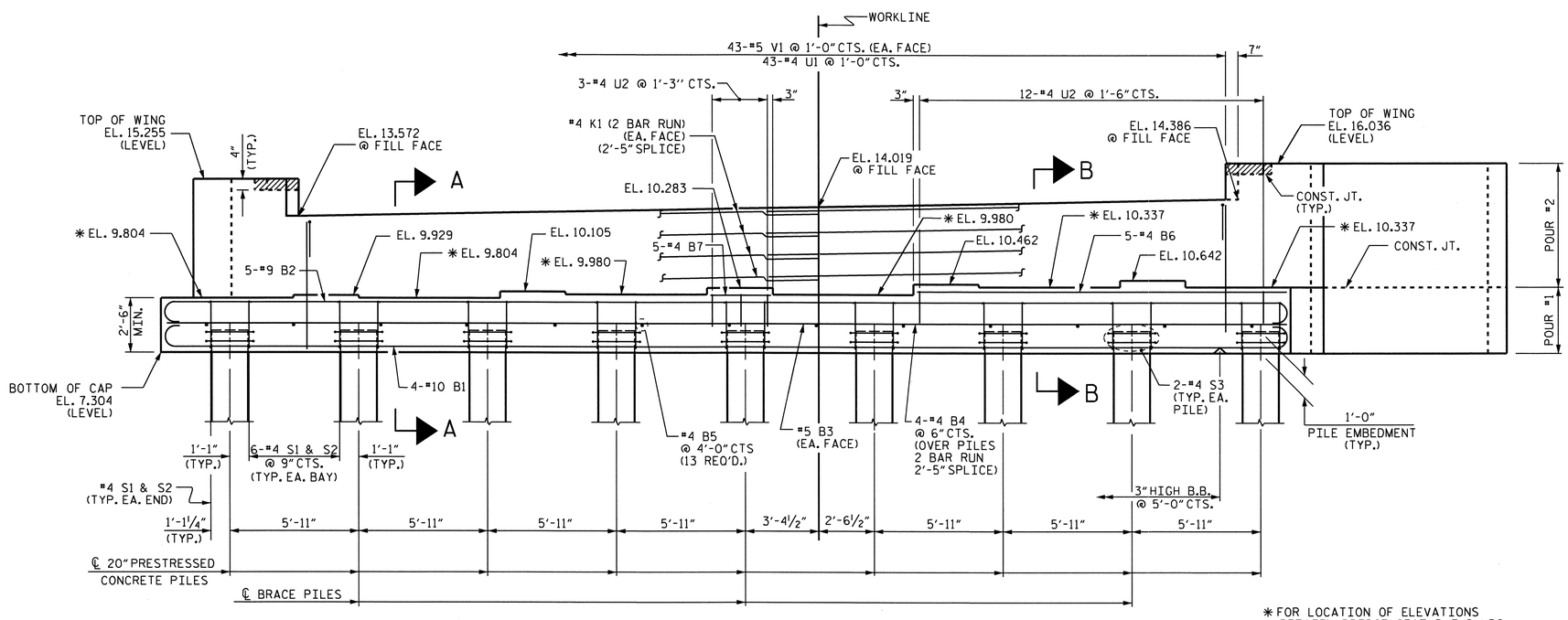

✱ FOR LOCATION OF ELEVATIONS BETWEEN BRIDGE SEAT BUILD-UPS, SEE SHEET 3 OF 3.

ELEVATION

BRACE PILE IN WING WALLS AND DETAILS OF WING WALL W1 NOT SHOWN FOR CLARITY.

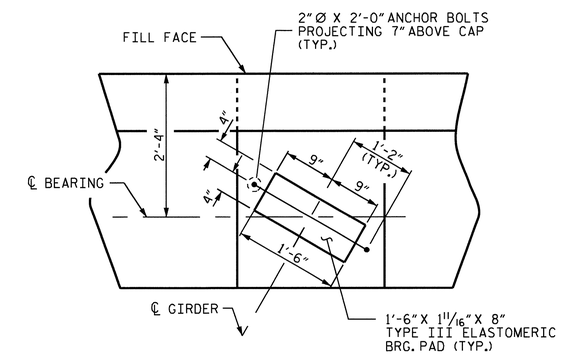

DETAIL "A"

(TYP. EA. GDR.)

PROJECT NO. R-2510C

BEAUFORT COUNTY

STATION: 54+34.00 -L-

SHEET 1 OF 3

STATE OF NORTH CAROLINA
DEPARTMENT OF TRANSPORTATION
RALEIGH

SUBSTRUCTURE

END BENT 2

(LEFT LANE)

NORTH CAROLINA PROFESSIONAL SEAL 16301 ENGINEER TING HSIONG FANG

12/8/10

REVISIONS						SHEET NO.
NO.	BY:	DATE:	NO.	BY:	DATE:	S-28
1			3			TOTAL SHEETS
2			4			134

DRAWN BY : HARISH SHAH DATE : 3/09
CHECKED BY : E.C. LOCKLEAR DATE : 4/09

08-DEC-2010 14:11
Y:\TIPProjects-R\R2510c\Structures\r2510c\FinalPlans\STR1\r-2510c_sd_eb#-01.dgn
qtnguyen

STR. #1

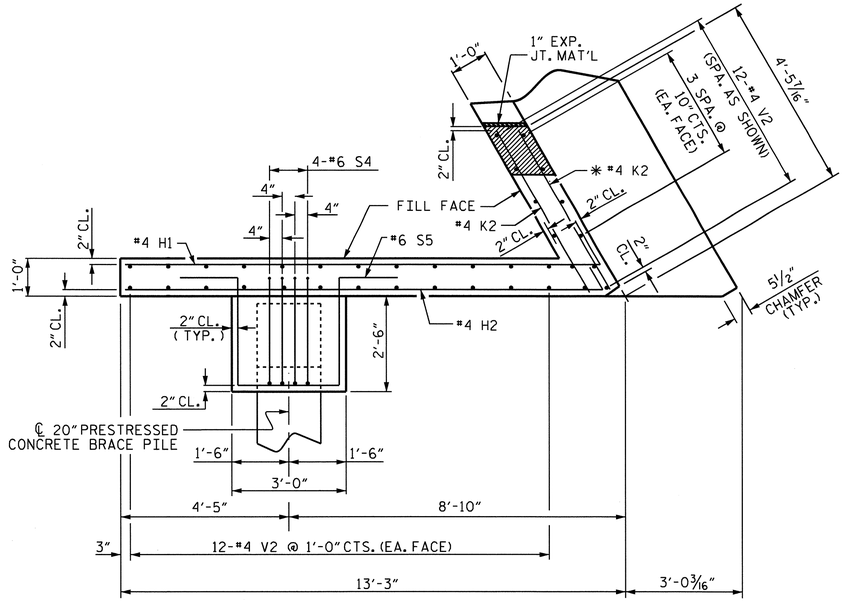

PLAN OF WING (W1)

✱ #4 K2 FIELD CUT AS NECESSARY TO GIVE 2" MIN. CLEARANCE FROM CHAMFER.

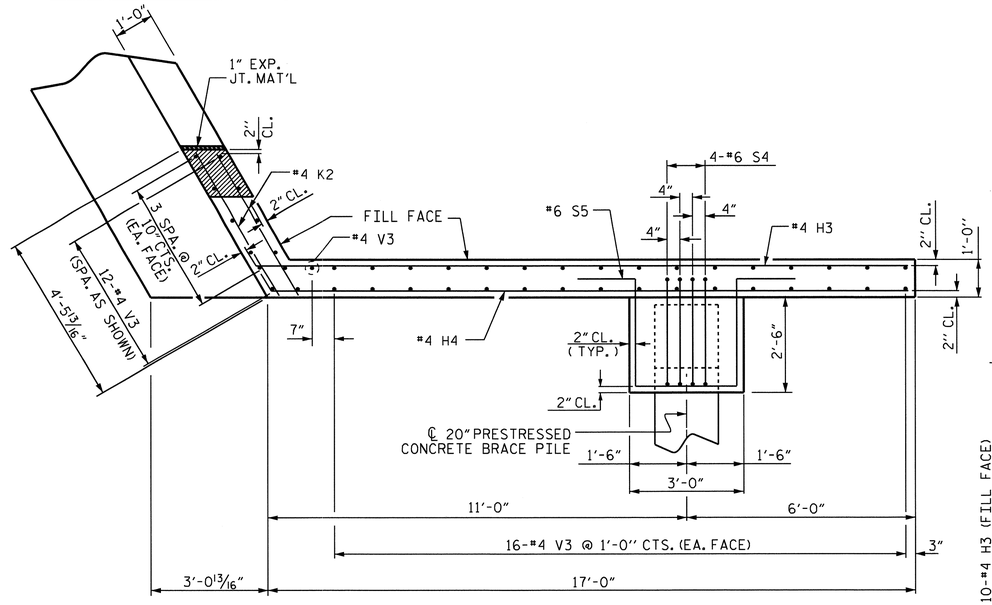

PLAN OF WING (W2)

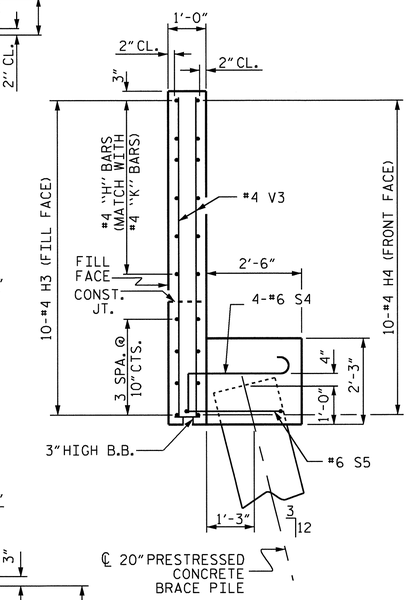

SECTION Y-Y

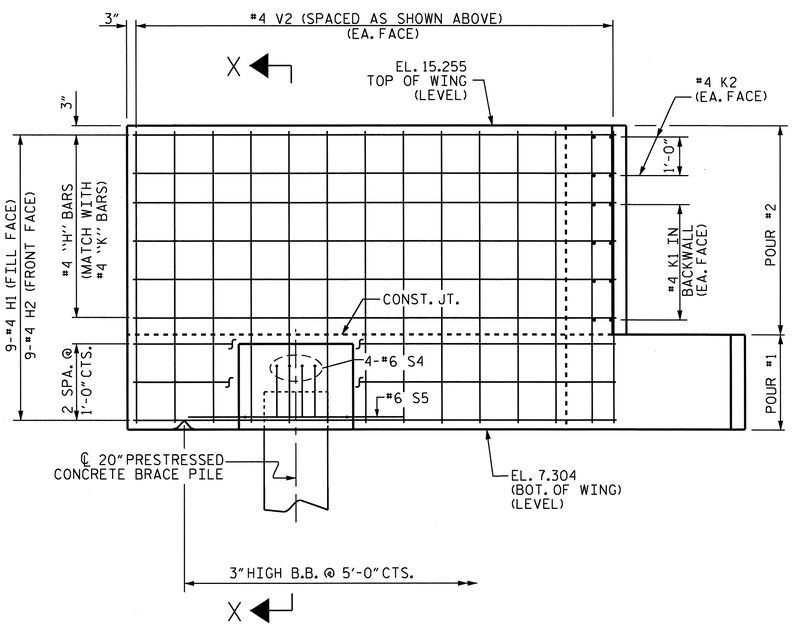

ELEVATION OF WING (W1)

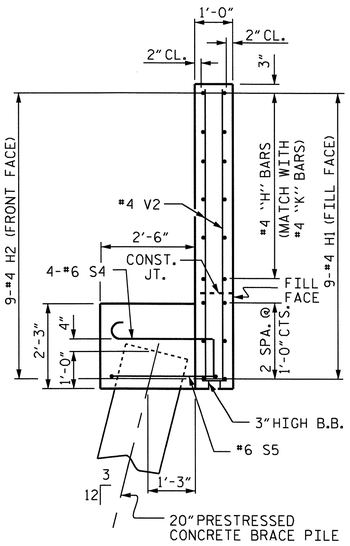

SECTION X-X

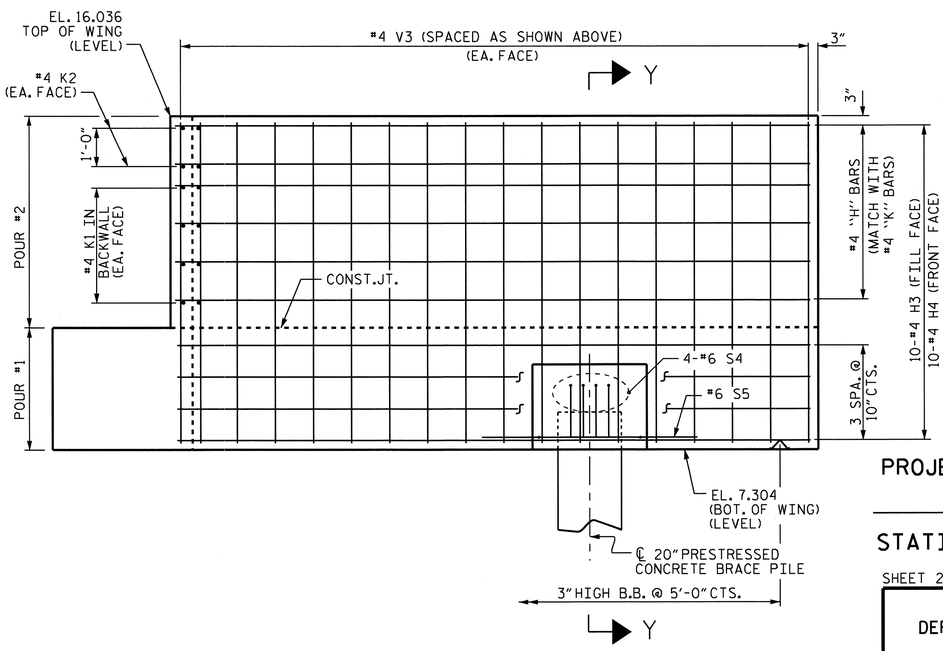

ELEVATION OF WING (W2)

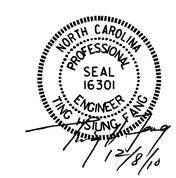

PROJECT NO. R-2510C

BEAUFORT COUNTY

STATION: 54+34.00 -L-

SHEET 2 OF 3

STATE OF NORTH CAROLINA
DEPARTMENT OF TRANSPORTATION
RALEIGH

SUBSTRUCTURE

END BENT 2

(LEFT LANE)

REVISIONS						SHEET NO.
NO.	BY:	DATE:	NO.	BY:	DATE:	S-29
1			3			TOTAL SHEETS
2			4			134

DRAWN BY : HARISH SHAH DATE : 10/08
CHECKED BY : E.C. LOCKLEAR DATE : 4/09

08-DEC-2010 14:24
Y:\TIPProjects-R\R2510c\Structures\r2510c\FinalPlans\STR1\r-2510c_sd_eb*-01.dgn
qtnguyen

STR. #1

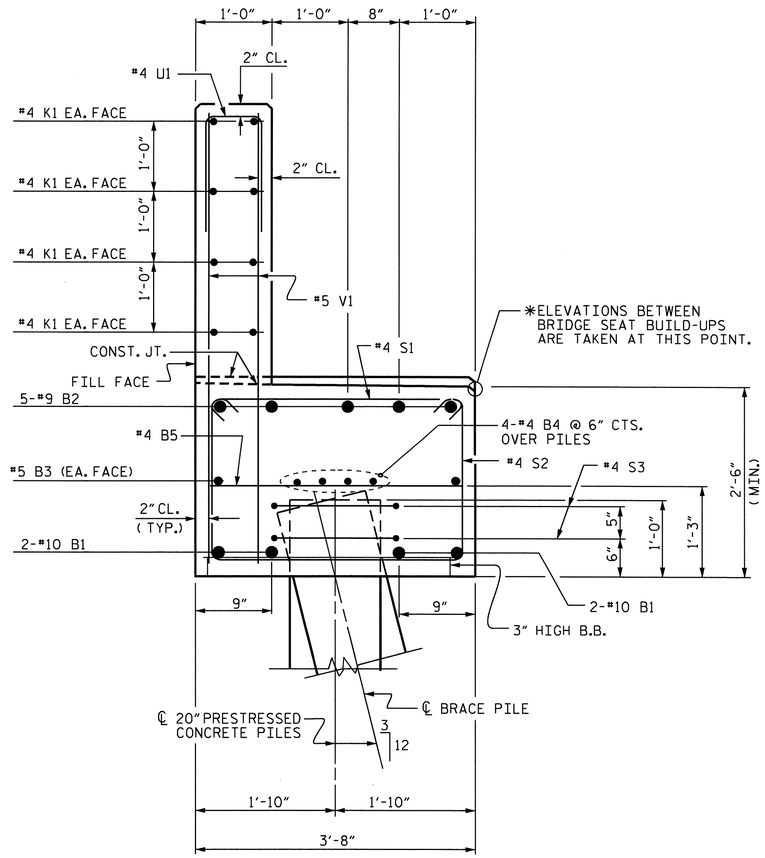

SECTION A-A

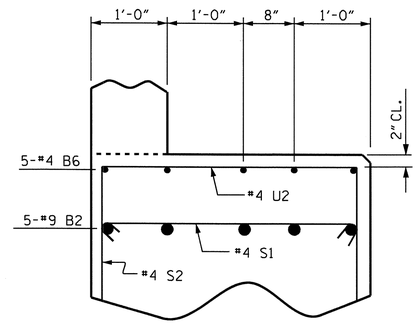

PARTIAL SECTION B-B

#5 V1 BARS NOT SHOWN FOR CLARITY.

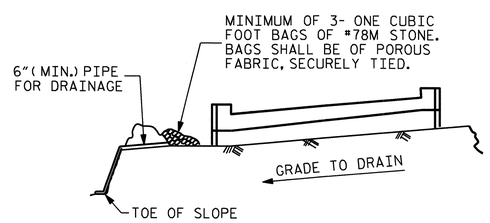

BAGGED STONE AND PIPE SHALL BE PLACED IMMEDIATELY AFTER COMPLETION OF END BENT EXCAVATION. PIPE MAY BE EITHER CONCRETE, CORRUGATED STEEL, CORRUGATED ALUMINUM ALLOY, OR CORRUGATED PLASTIC. PERFORATED PIPE WILL NOT BE ALLOWED.

BAGGED STONE SHALL REMAIN IN PLACE UNTIL THE ENGINEER DIRECTS THAT IT BE REMOVED. THE CONTRACTOR SHALL REMOVE AND DISPOSE OF SILT ACCUMULATIONS AT BAGGED STONE WHEN SO DIRECTED BY THE ENGINEER. BAGS SHALL BE REMOVED AND REPLACED WHENEVER THE ENGINEER DETERMINES THAT THEY HAVE DETERIORATED AND LOST THEIR EFFECTIVENESS.

NO SEPARATE PAYMENT WILL BE MADE FOR THIS WORK AND THE ENTIRE COST OF THIS WORK SHALL BE INCLUDED IN THE UNIT CONTRACT PRICE BID FOR THE SEVERAL PAY ITEMS.

TEMPORARY DRAINAGE AT END BENT

BAR TYPES

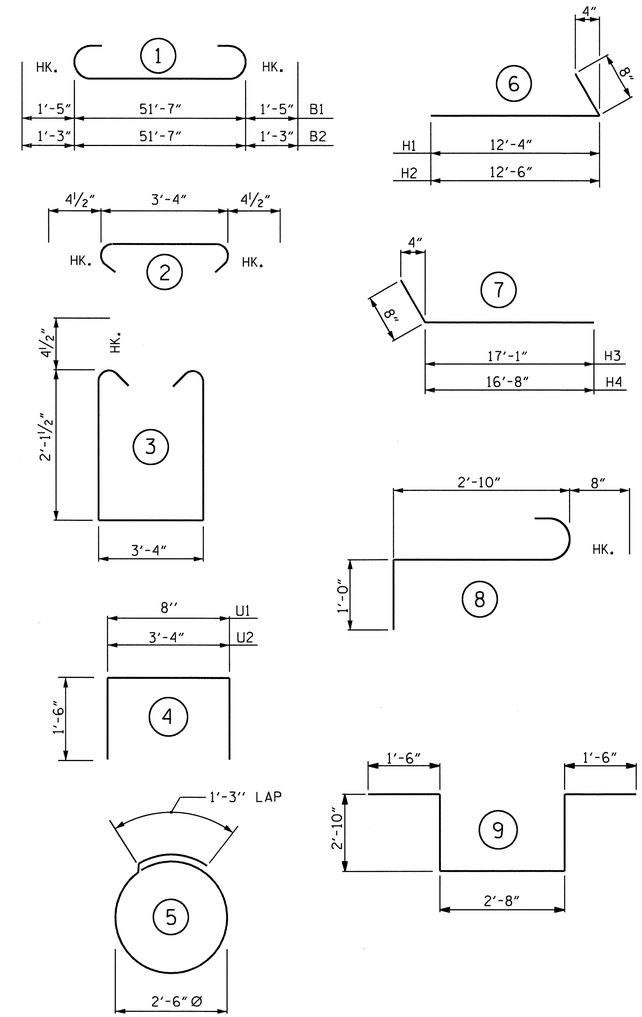

ALL BAR DIMENSIONS ARE OUT TO OUT.

BILL OF MATERIAL

END BENT 2

BAR	NO.	SIZE	TYPE	LENGTH	WEIGHT
B1	4	#10	1	54'-5"	937
B2	5	#9	1	54'-1"	919
B3	2	#5	STR	51'-10"	108
B4	8	#4	STR	27'-2"	145
B5	13	#4	STR	3'-4"	29
B6	5	#4	STR	17'-0"	57
B7	5	#4	STR	2'-8"	9
H1	9	#4	6	13'-0"	78
H2	9	#4	6	13'-2"	79
H3	10	#4	7	17'-9"	119
H4	10	#4	7	17'-4"	116
K1	16	#4	STR	27'-2"	290
K2	8	#4	STR	4'-0"	21
S1	50	#4	2	4'-1"	136
S2	50	#4	3	8'-4"	278
S3	18	#4	5	9'-2"	110
S4	8	#6	8	4'-6"	54
S5	2	#6	9	11'-4"	34
U1	43	#4	4	3'-8"	105
U2	15	#4	4	6'-4"	63
V1	86	#5	STR	5'-11"	531
V2	36	#4	STR	7'-7"	182
V3	45	#4	STR	8'-4"	251
REINFORCING STEEL					4,651 LBS

CLASS A CONCRETE

POUR 1 (CAP, LOWER WINGS & WING BRACE PILE CAP)	22.3	C.Y.
POUR 2 (BACKWALL & UPPER WINGS)	14.3	C.Y.
TOTAL	36.6	C.Y.

20" PRESTRESSED CONCRETE PILES

NUMBER = 11	LIN. FT. =	330
PILE REDRIVES	EACH	5

NOTE: CONCRETE DISPLACED BY 20" PRESTRESSED CONCRETE PILES HAS BEEN DEDUCTED FROM THE CONCRETE QUANTITY.

PROJECT NO. R-2510C

BEAUFORT COUNTY

STATION: 54+34.00 -L-

SHEET 3 OF 3

STATE OF NORTH CAROLINA
DEPARTMENT OF TRANSPORTATION
RALEIGH

SUBSTRUCTURE

END BENT 2

(LEFT LANE)

NORTH CAROLINA PROFESSIONAL SEAL 16301 ENGINEER TING HSHANG FANG

12/8/10

REVISIONS						SHEET NO.
NO.	BY:	DATE:	NO.	BY:	DATE:	S-30
1			3			TOTAL SHEETS
2			4			134

DRAWN BY : HARISH SHAH DATE : 3/09
CHECKED BY : E.C. LOCKLEAR DATE : 4/09

08-DEC-2010 14:24
Y:\TIPProjects-R\R2510c\Structures\r2510c\FinalPlans\STR1\r-2510c_sd_eb*-01.dgn
qtnguyen

STR. #1

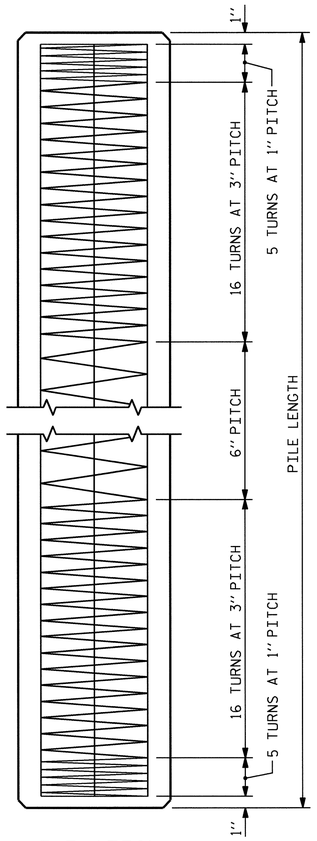

ELEVATION

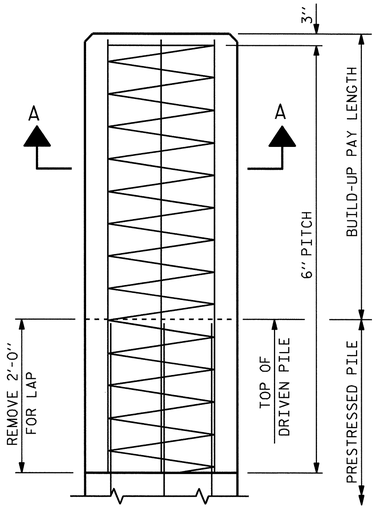

BUILD-UP

WITHOUT DRIVING

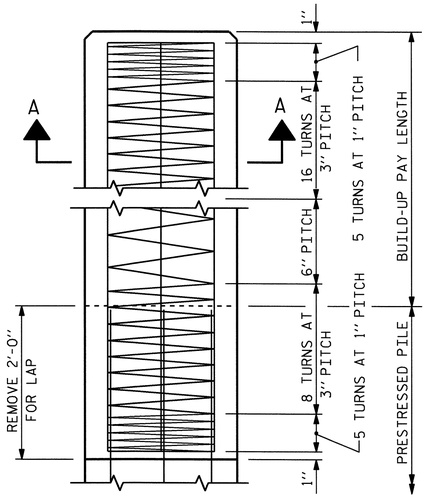

BUILD-UP

WITH DRIVING

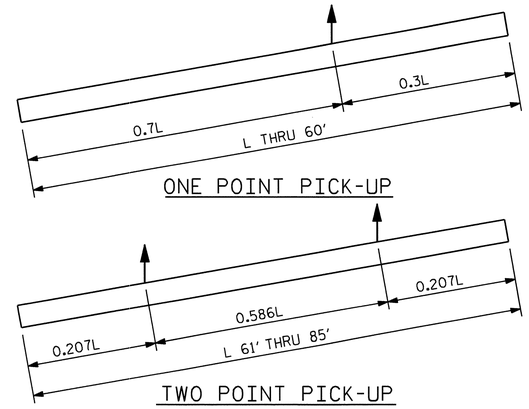

PICK-UP POINTS

NOTES

CONCRETE DESIGN DATA : f'c= 5,000 PSI ;fc= 2,000 PSI

IMPACT IN HANDLING = 50%

IN DRIVING PILES, A METHOD APPROVED BY THE ENGINEER SHALL BE USED, WHEREBY THE HEAD OF THE PILE IS NOT DAMAGED.

PROPOSED DEVICES FOR LIFTING PILES, RECESS DETAILS, AND PATCHING MATERIAL SHALL BE DETAILED IN SHOP DRAWINGS. AFTER ATTACHMENTS HAVE BEEN REMOVED, OPENINGS SHALL BE REPAIRED SUCH THAT THE APPEARANCE OF THE PILE IS UNIFORM.

THE CONTRACTOR SHALL USE THE FOLLOWING STRAND TYPE:

SIZE	GRADE	NUMBER OF STRANDS	AREA	ULTIMATE STRENGTH	APPLIED PRESTRESS FORCE
½''	270 L.R.	12	0.153	41,300# PER STRAND	30,980# PER STRAND

STRANDS SHALL BE EQUALLY SPACED AS SHOWN IN THE "TYPICAL SECTION".

A CIRCULAR STRAND PATTERN SHALL NOT BE PERMITTED.

THE SLIP-FORM METHOD OF CASTING PILES WILL NOT BE PERMITTED.

IF STRAND STRESS IS RELIEVED BY BURNING, THE STRANDS SHALL BE BURNED IN OPPOSITE PAIRS AS INDICATED IN THE TYPICAL PATTERN SHOWN. FOR ANY NUMBER OF STRANDS BURN IN OPPOSITE PAIRS AND SYMMETRICAL ABOUT BOTH VERTICAL AND HORIZONTAL AXES, STRANDS 1-1 SHALL BE BURNED BEFORE 2-2, ETC. NOT MORE THAN 4 STRANDS, SAY 5-5 AND 6-6, MAY BE BURNED AT ANY ONE SECTION BEFORE THESE SAME PAIRS OF STRANDS ARE BURNED AT BOTH ENDS OF THE BED AND BETWEEN EACH PAIR OF PILES IN THE BED.

BUILD-UPS SHALL BE OF 'CLASS A' CONCRETE WITH 20% ADDITIONAL CEMENT. NO DRIVING OF THE BUILT-UP PILE WILL BE PERMITTED UNTIL THE CONCRETE HAS REACHED A COMPRESSIVE STRENGTH OF 3,000 P.S.I. AND UNTIL A PERIOD OF SEVEN DAYS HAS ELAPSED SINCE CASTING OF THE BUILD-UP.

ALL PRESTRESSING STRANDS SHALL BE 7-WIRE LOW-RELAXATION GRADE 270 STRANDS AND SHALL CONFORM TO AASHTO M203 EXCEPT FOR SAMPLING REQUIREMENTS WHICH SHALL BE IN ACCORDANCE WITH STANDARD SPECIFICATIONS.

THE TRANSFER OF LOAD FROM THE ANCHORAGES TO THE PILE SHALL BE DONE WHEN THE CONCRETE HAS REACHED A COMPRESSIVE STRENGTH OF NOT LESS THAN 3500 PSI.

FOR PRESTRESSED CONCRETE MEMBERS, SEE SPECIAL PROVISIONS.

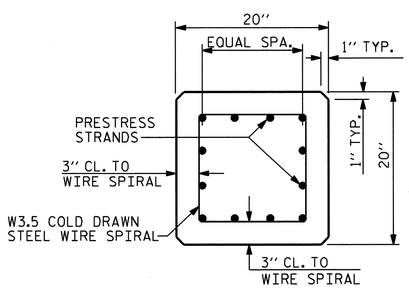

TYPICAL SECTION

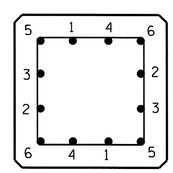

TYPICAL PATTERN FOR BURNING STRANDS

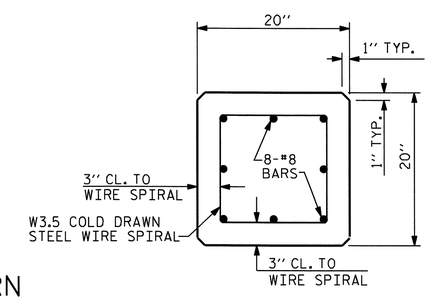

SECTION A-A

QUANTITIES FOR ONE 20'' SQUARE PILE						
	CONCRETE	PILE WT.	ONE PICK-UP POINTS		TWO PICK-UP POINTS	
LENGTH	CU. YDS.	TONS	0.3L	0.7L	0.207L	0.586L
25'-0''	2.56	5.18	7'-6''	17'-6''		
30'-0''	3.07	6.22	9'-0''	21'-0''		
35'-0''	3.58	7.26	10'-6''	24'-6''		
40'-0''	4.09	8.29	12'-0''	28'-0''		
45'-0''	4.61	9.33	13'-6''	31'-6''		
50'-0''	5.12	10.36	15'-0''	35'-0''		
55'-0''	5.63	11.40	16'-6''	38'-6''		
60'-0''	6.14	12.44	18'-0''	42'-0''		
65'-0''	6.65	13.47			13'-5½''	38'-1''
70'-0''	7.17	14.51			14'-6''	41'-0''
75'-0''	7.68	15.55			15'-6½''	43'-11''
80'-0''	8.19	16.58			16'-6½''	46'-11''
85'-0''	8.70	17.62			17'-7''	49'-10''

NORTH CAROLINA PROFESSIONAL SEAL 16301 ENGINEER TING HSIANG FANG

10/11/10

PROJECT NO. R-2510C

BEAUFORT COUNTY

STATION: 54+34.00 -L-

STATE OF NORTH CAROLINA
DEPARTMENT OF TRANSPORTATION
RALEIGH

STANDARD

20'' PRESTRESSED CONCRETE PILE

(LEFT LANE)

ASSEMBLED BY : HARISH SHAH	DATE : 05/09
CHECKED BY : E.C. LOCKLEAR	DATE : 05/09

DRAWN BY : WJH 1/89	REV. 6/1/94	EEM/GRP
CHECKED BY : CRK 3/89	REV. 8/16/99R	RAL/LES
	REV. 5/1/06	TLA/GM

REVISIONS								SHEET NO.
NO.	BY:	DATE:	NO.	BY:	DATE:			S-31
1			3					TOTAL SHEETS
2			4					134

STR. #1

STD. NO. PCP3

11-OCT-2010 12:53
Y:\TIPProjects-R\R2510c\Structures\r2510c\FinalPlans\STR1\r-2510c_sd_eb*-01.dgn
qtnguyen

ESTIMATED QUANTITIES		
BRIDGE @ STA. 54+34.00 -L- (LEFT LANE)	RIP RAP CLASS II (TONS)	FILTER FABRIC FOR DRAINAGE (SQ. YARDS)
END BENT 1	125	140
END BENT 2	205	225
TOTAL	330	365

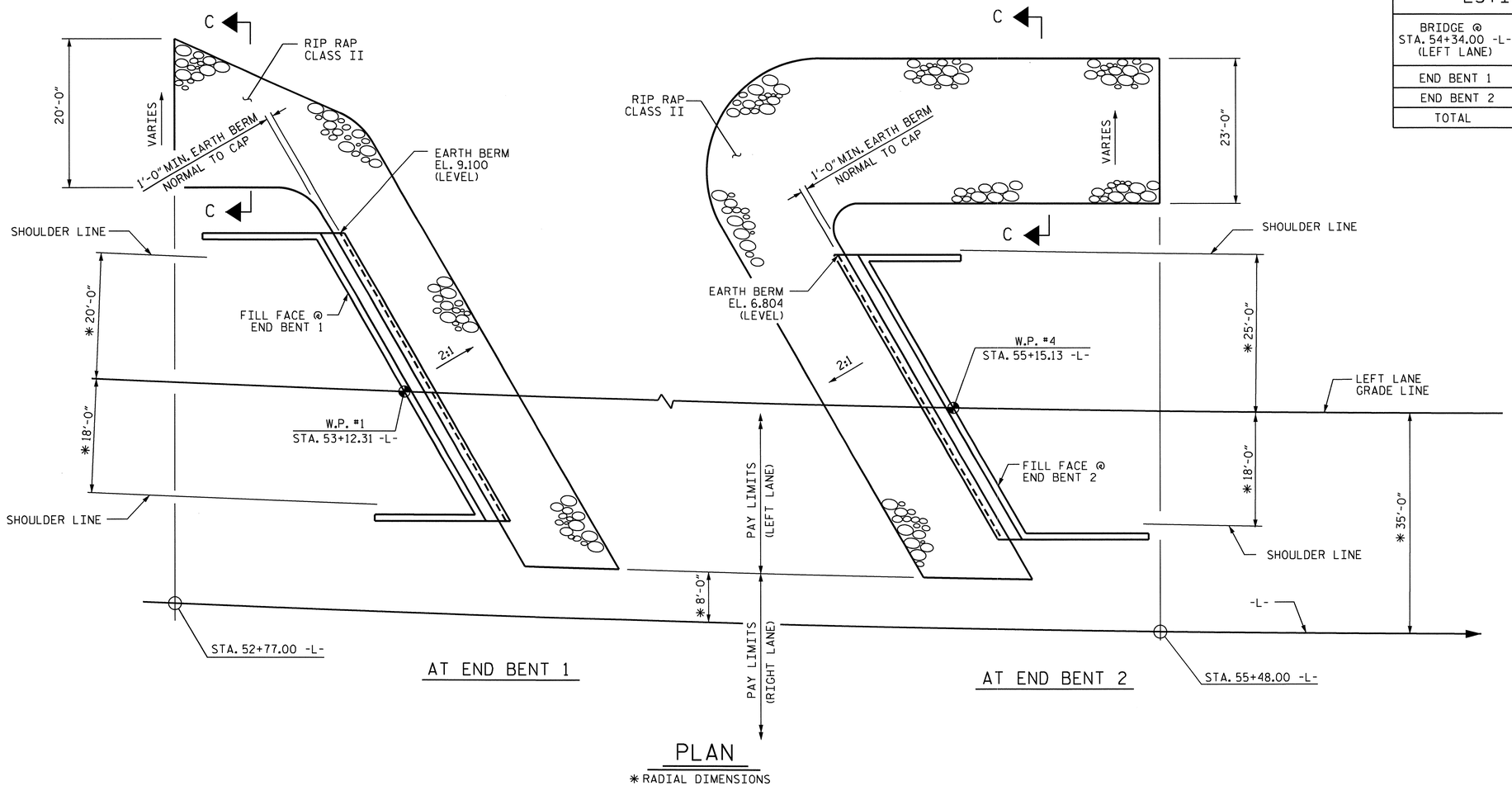

PLAN

* RADIAL DIMENSIONS

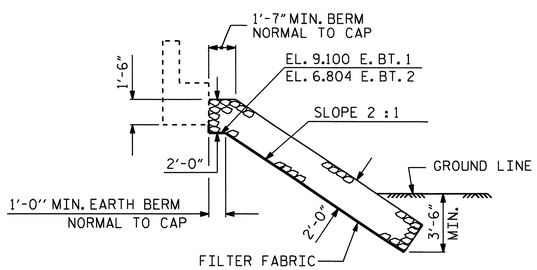

℄ SECTION

BERM RIP RAPPED

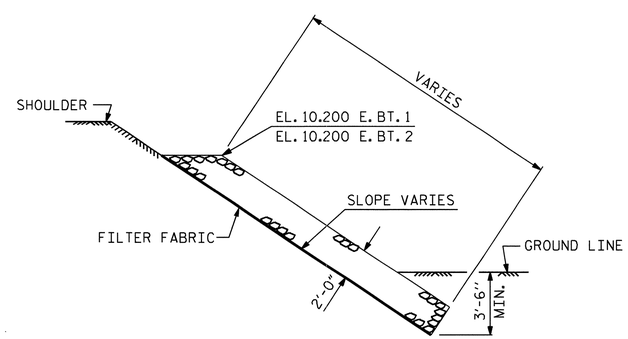

SECTION C-C

PROJECT NO. R-2510C

BEAUFORT COUNTY

STATION: 54+34.00 -L-

STATE OF NORTH CAROLINA
DEPARTMENT OF TRANSPORTATION
RALEIGH

RIP RAP DETAILS

(LEFT LANE)

NORTH CAROLINA PROFESSIONAL SEAL 16301 ENGINEER TING HSILING FANG

10/11/10

REVISIONS						
NO.	BY:	DATE:	NO.	BY:	DATE:	
1			3			
2			4			

SHEET NO. S-32

TOTAL SHEETS 134

DRAWN BY : HARISH SHAH DATE : 04/09

CHECKED BY : E.C. LOCKLEAR DATE : 5/19/09

11-OCT-2010 12:53
Y:\TIPProjects-R\R2510c\Structures\r2510c\FinalPlans\STR1\R-2510C_sd_RR_01.dgn
qtnguyen

STR. #1

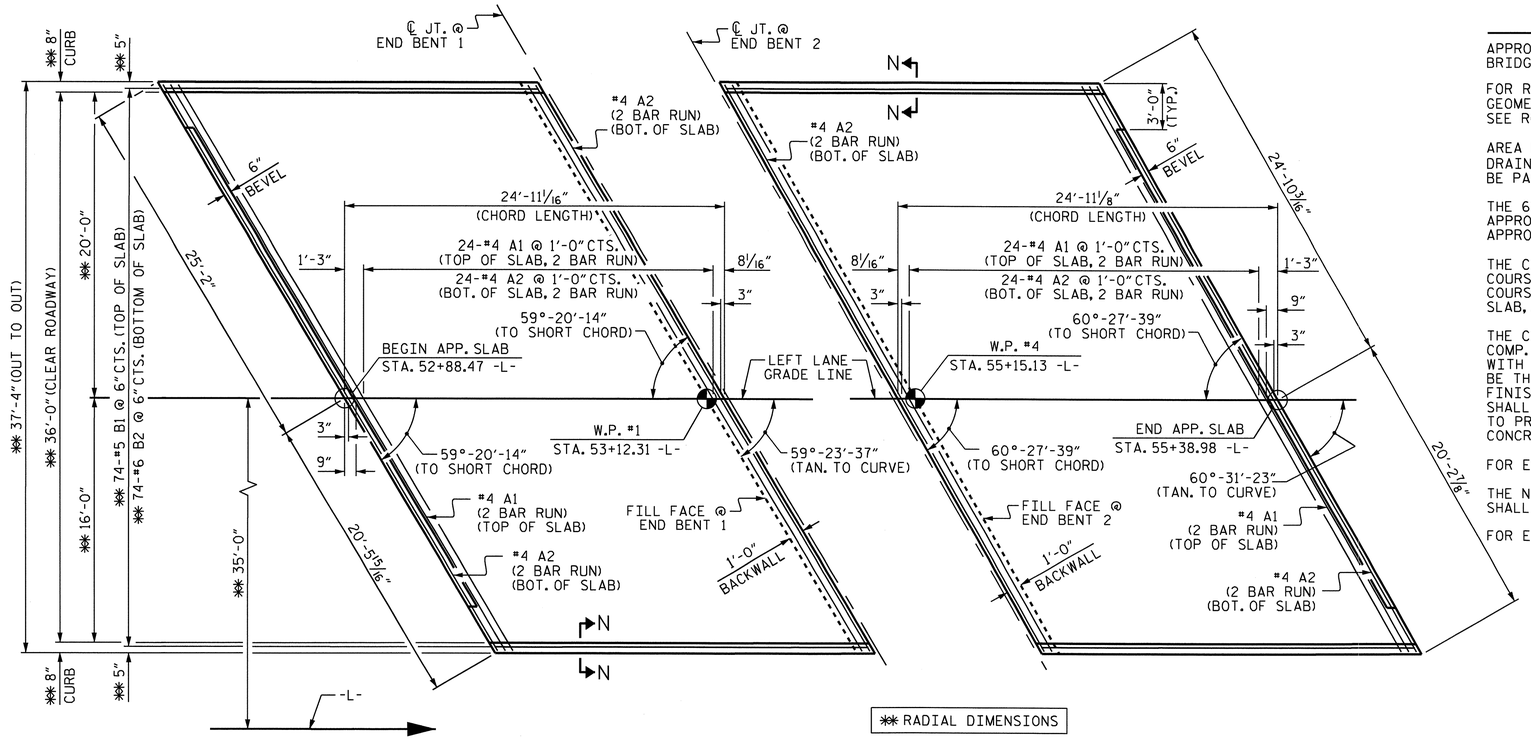

✱✱ RADIAL DIMENSIONS

AT END BENT 1

AT END BENT 2

PLAN

DIMENSIONS SHOWN ARE TYPICAL FOR BOTH APPROACH SLABS.
ARC OFFSETS ARE NEGLIGIBLE.

NOTES

APPROACH SLAB SHALL NOT BE CONSTRUCTED PRIOR TO COMPLETION OF THE BRIDGE DECK.

FOR REINFORCED BRIDGE APPROACH FILL INCLUDING FABRIC, IMPERMEABLE GEOMEMBRANE, 4" Ø DRAINAGE PIPE, #78M STONE, AND SELECT MATERIAL, SEE ROADWAY PLANS.

AREA BETWEEN THE WINGWALL AND APPROACH SLAB SHALL BE GRADED TO DRAIN THE WATER AWAY FROM THE FILL FACE OF THE BRIDGE AND SHALL BE PAVED. SEE ROADWAY PLANS.

THE 6" COMP. A.B.C. SHALL BE FLUSH WITH THE ROADWAY END OF THE APPROACH SLAB AND SHALL EXTEND 1'-0" OUTSIDE EACH EDGE OF THE APPROACH SLAB.

THE CONTRACTOR MAY USE 4" TYPE B-25.0B ASPHALT CONCRETE BASE COURSE IN LIEU OF 6" COMP. A.B.C. IF THIS OPTION IS USED, THE BASE COURSE SHALL BE FLUSH WITH THE ROADWAY END OF THE APPROACH SLAB, AND THE WIDTH SHALL BE THE SAME AS THAT OF THE APPROACH SLAB.

THE CONTRACTOR MAY USE 5" CLASS "A" CONCRETE BASE IN LIEU OF 6" COMP. A.B.C. IF THIS OPTION IS USED, THE CONCRETE BASE SHALL BE FLUSH WITH THE ROADWAY END OF THE APPROACH SLAB, AND THE WIDTH SHALL BE THE SAME AS THAT OF THE APPROACH SLAB. THE CONCRETE SHALL BE FINISHED TO A SMOOTH SURFACE AND A LAYER OF 30 LB ROOFING FELT SHALL BE PLACED BETWEEN THE CONCRETE BASE AND THE APPROACH SLAB TO PREVENT BOND. THE APPROACH SLAB SHALL NOT BE CAST UNTIL THE CONCRETE BASE HAS REACHED AN AGE OF THREE CURING DAYS.

FOR EVAZOTE JOINT SEALS, SEE SPECIAL PROVISIONS.

THE NOMINAL UNCOMPRESSED SEAL WIDTH OF THE EVAZOTE JOINT SEAL SHALL BE 2½".

FOR ELASTOMERIC CONCRETE, SEE SPECIAL PROVISIONS.

BILL OF MATERIAL

AT END BENT 1

BAR	NO.	SIZE	TYPE	LENGTH	WEIGHT
✱ A1	50	#4	STR	22'-6"	751
A2	52	#4	STR	22'-4"	776
✱ B1	74	#5	STR	23'-5"	1807
B2	74	#6	STR	24'-7"	2732
REINFORCING STEEL				LBS.	3508
✱ EPOXY COATED REINFORCING STEEL				LBS.	2558
CLASS AA CONCRETE				C. Y.	35.3

AT END BENT 2

BAR	NO.	SIZE	TYPE	LENGTH	WEIGHT
✱ A1	50	#4	STR	22'-3"	743
A2	52	#4	STR	22'-2"	770
✱ B1	74	#5	STR	23'-5"	1807
B2	74	#6	STR	24'-7"	2732
REINFORCING STEEL				LBS.	3502
✱ EPOXY COATED REINFORCING STEEL				LBS.	2550
CLASS AA CONCRETE				C. Y.	35.3

SPLICE CHART	
#4 A1	2'-0"
#4 A2	1'-9"

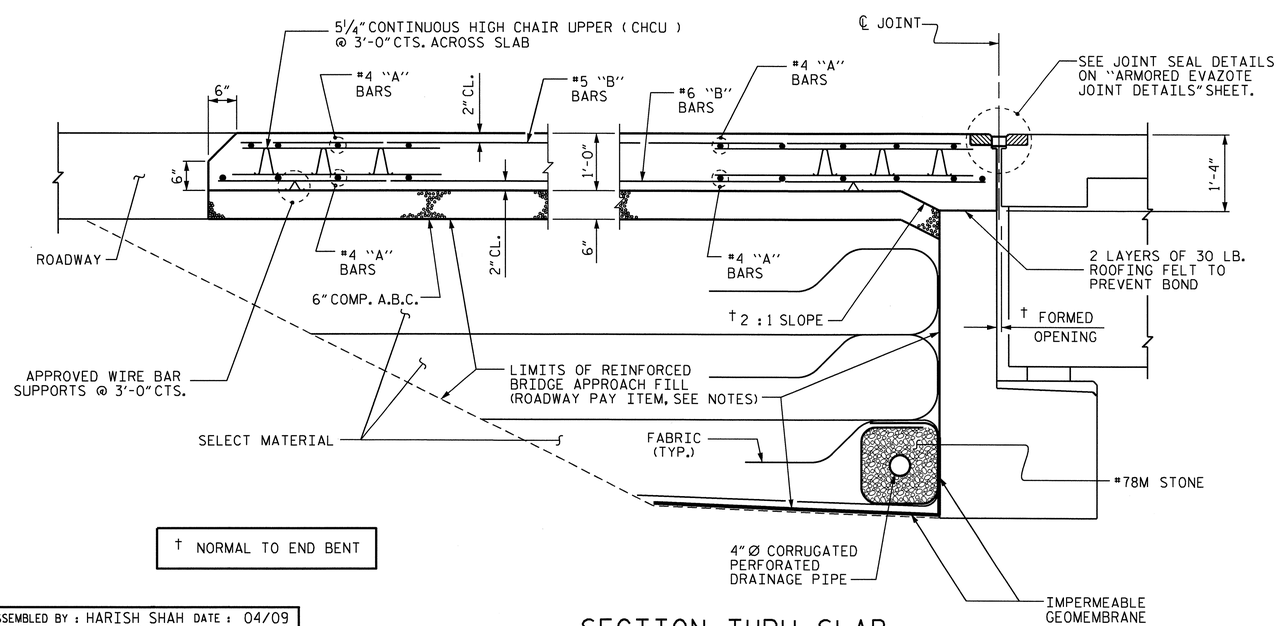

† NORMAL TO END BENT

SECTION THRU SLAB

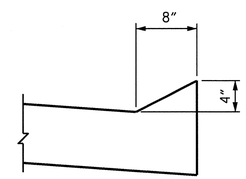

SECTION N-N

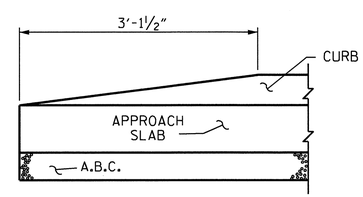

END OF CURB WITHOUT SHOULDER BERM GUTTER

CURB DETAILS

NORTH CAROLINA PROFESSIONAL SEAL 16301 ENGINEER TING-YUNG FANG
12/8/10

PROJECT NO. R-2510C
BEAUFORT COUNTY
STATION: 54+34.00 -L-

SHEET 1 OF 2

STATE OF NORTH CAROLINA
DEPARTMENT OF TRANSPORTATION
RALEIGH

STANDARD

BRIDGE APPROACH SLAB FOR FLEXIBLE PAVEMENT

(LEFT LANE)

REVISIONS						SHEET NO.
NO.	BY:	DATE:	NO.	BY:	DATE:	S-33
1			3			TOTAL SHEETS
2			4			134

ASSEMBLED BY : HARISH SHAH	DATE : 04/09		
CHECKED BY : O.T. NGUYEN	DATE : 04/09		
DRAWN BY : EEM 3/95	REV. 7/10/01	LES/RDR	
CHECKED BY : VAP 3/95	REV. 5/7/03R	RWW/JTE	
	REV. 5/1/06R	KMM/GM	

08-DEC-2010 15:26
H:\R2510c\Structures\r2510c\Final Plans\STR1\R-2510C_sd_AS_01.dgn
tfang

STR. #1

STD. NO. BAS4 (SHT 6)

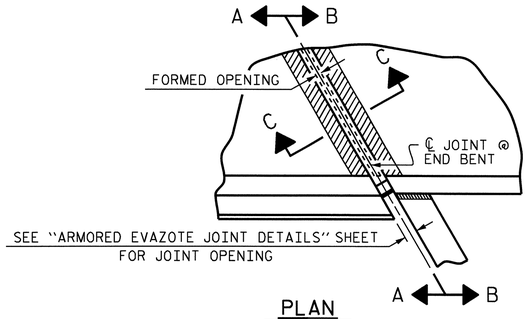

PLAN

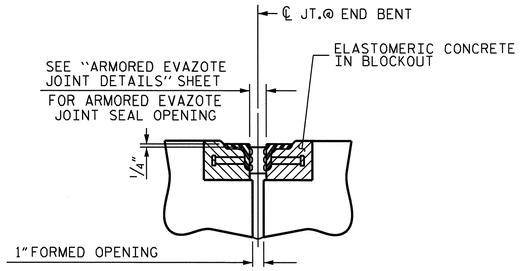

SECTION C-C

ARMORED EVAZOTE JOINT SEAL FOR QUANTITIES OF ELASTOMERIC CONCRETE IN BLOCKOUT SEE "ARMORED EVAZOTE JOINT DETAILS" SHEET.

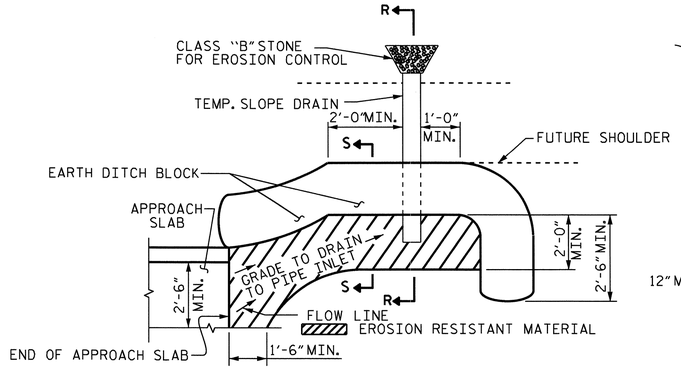

NOTE: IMMEDIATELY AFTER THE CONSTRUCTION OF THE APPROACH SLAB, THE CONTRACTOR SHALL PROVIDE TEMPORARY BERM AND SLOPE DRAIN. CONTRACTOR SHALL GRADE TO PIPE INLET AND PROVIDE EROSION RESISTANT MATERIAL AS SHOWN. THE EROSION RESISTANT MATERIAL SHALL BE EITHER 1) ASPHALT PLANT MIX, TYPE 1 OR TYPE 2, MIN. 2" DEPTH, 2) EROSION CONTROL MAT, OR 3) CONCRETE, AS DIRECTED BY THE ENGINEER. THE SLOPE DRAIN SHALL CONSIST OF A NON-PERFORATED TEMPORARY DRAINAGE PIPE, 12 INCHES IN DIAMETER.

PLAN VIEW

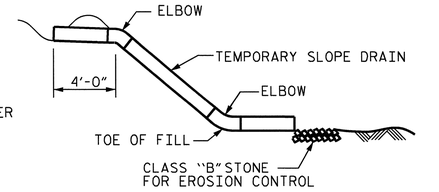

SECTION R-R

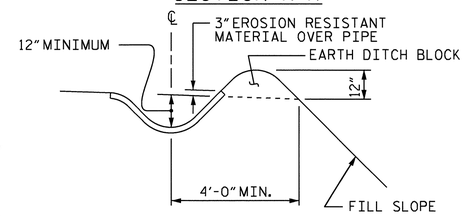

SECTION S-S

TEMPORARY BERM AND SLOPE DRAIN DETAILS

(TO BE USED WHEN SHOULDER BERM GUTTER IS REQUIRED)

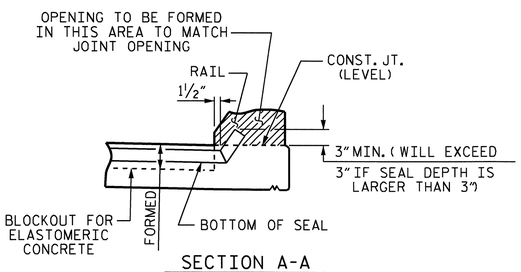

SECTION A-A

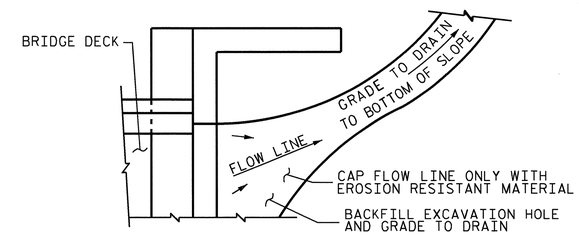

NOTE: IF THE APPROACH SLAB IS NOT CONSTRUCTED IMMEDIATELY AFTER THE BACKFILLING OF THE END BENT EXCAVATION, GRADE TO DRAIN TO THE BOTTOM OF THE SLOPE AND PROVIDE EROSION RESISTANT MATERIAL, SUCH AS FIBERGLASS ROVING OR AS DIRECTED BY THE ENGINEER TO PREVENT SOIL EROSION AND TO PROTECT THE AREA ADJACENT TO THE STRUCTURE. THE CONTRACTOR WILL BE REQUIRED TO REMOVE THESE MATERIALS PRIOR TO CONSTRUCTION OF THE APPROACH SLAB.

TEMPORARY DRAINAGE DETAIL

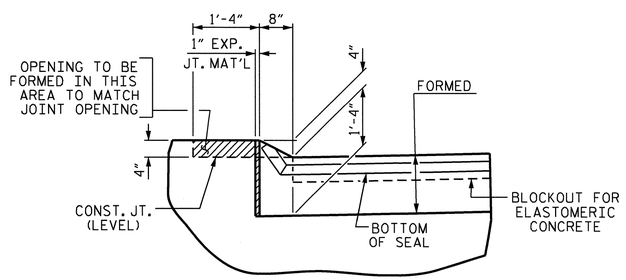

SECTION B-B

JOINT SEAL DETAILS @ END BENT

EVAZOTE JOINT SEAL TO BE CUT, HEAT WELDED AND TURNED UP PARALLEL TO SLOPED FACE OF THE BARRIER RAIL.

PROJECT NO. R-2510C
BEAUFORT COUNTY
STATION: 54+34.00 -L-

SHEET 2 OF 2

STATE OF NORTH CAROLINA
DEPARTMENT OF TRANSPORTATION
RALEIGH

STANDARD

BRIDGE APPROACH SLAB DETAILS

(LEFT LANE)

NORTH CAROLINA PROFESSIONAL SEAL 16301 ENGINEER YING HSIUANG TANG
10/11/10

REVISIONS						
NO.	BY:	DATE:	NO.	BY:	DATE:	
1			3			
2			4			

SHEET NO. S-34
TOTAL SHEETS 134

STR.#1 STD. NO. BAS10

ASSEMBLED BY : HARISH SHAH		DATE : 4-09-09	
CHECKED BY : O.T. NGUYEN		DATE : 4-27-09	
DRAWN BY : FCJ	11/88	REV. 10/17/00	RWW/LES
CHECKED BY : ARB	11/88	REV. 5/7/03	RWW/JTE
		REV. 5/1/06R	MAA/KMM

11-OCT-2010 12:53
Y:\TIPProjects-R\R2510c\Structures\r2510c\FinalPlans\STR1\R-2510C_sd_AS_01.dgn
qtnguyen

OVERHANG BRACKET CALCULATION INSTRUCTIONS

AASHTO SHAPES - TYPES III, IV, V, AND VI

1. RECORD KNOWN INFORMATION ON "BRIDGE OVERHANG BRACKET SUMMARY" ON SHEET 2
2. CALCULATE THE MAXIMUM SCREED LOAD PER BRACKET (SLPB) WITH AN ESTIMATED R = 1.5. SLPB = R X W. ROUND VALUE UP TO NEAREST SLPB VALUE INDICATED ON APPROPRIATE TABLE 1-1, 1-2, 1-3, OR 1-4.
3. WITH THE ESTIMATED SLPB, OVERHANG SLAB THICKNESS, "K" VALUE, AND 45° HANGER SAFE WORKING LOAD (SWL), ENTER THE APPROPRIATE TABLE 1-1, 1-2, 1-3, OR 1-4 (BASED ON OVERHANG DIMENSION) AND DETERMINE THE BRACKET SPACING, S.
4. CALCULATE S/D1 AND S/D2, ROUNDING UP TO NEAREST VALUE IN TABLE 2. ENTER TABLE 2 AND DETERMINE R VALUE.
5. CALCULATE REVISED SLPB. ROUND VALUE UP TO NEAREST SLPB VALUE INDICATED ON APPROPRIATE TABLE 1-1, 1-2, 1-3, OR 1-4.
6. WITH THE REVISED SLPB, OVERHANG SLAB THICKNESS, "K" VALUE AND 45 HANGER SAFE WORKING LOAD (SWL), ENTER THE APPROPRIATE TABLE 1-1, 1-2, 1-3 OR 1-4 (BASED ON OVERHANG DIMENSION) AND DETERMINE REVISED BRACKET SPACING, S.
7. CONTINUE ITERATIONS OF STEPS 4-6 UNTIL THE REVISED BRACKET SPACING, S, IS THE SAME AS THE PREVIOUS S VALUE.
8. CHECK LUMBER JOIST SPACING: WITH BRACKET SPACING VALUE, S, ROUND THIS VALUE UP TO THE NEAREST VALUE OF ALLOWABLE SPAN LENGTH OF JOIST OF TABLE 3. USING THIS VALUE, ALONG WITH THE AVERAGE OVERHANG SLAB THICKNESS AND THE LUMBER JOIST SIZE, DETERMINE JOIST SPACING FROM TABLE 3. IF NECESSARY, ADJUST LUMBER JOIST SIZE AND/OR JOIST SPACING TO MEET ALLOWABLE SPAN LENGTH OF JOIST.
9. CONVERSELY, IF THE DESIRED JOIST SPACING IS KNOWN, USE THIS ALONG WITH THE AVERAGE OVERHANG SLAB THICKNESS AND THE LUMBER JOIST SIZE TO DETERMINE IF ALLOWABLE SPAN LENGTH OF JOIST IS GREATER THAN THE BRACKET SPACING, S. IF NECESSARY, ADJUST LUMBER JOIST SIZE TO MEET REQUIREMENTS OF ALLOWABLE SPAN LENGTH OF JOIST AND JOIST SPACING.
10. RECORD REMAINING INFORMATION ON "BRIDGE OVERHANG BRACKET SUMMARY" FORM.
11. SUBMIT FORM AND CALCULATIONS FOR REVIEW AND APPROVAL.

TABLE 1-1

(FOR USE ON **UP TO 2'-0" OVERHANG Ⓛ** & 54" HORIZONTAL LEG LENGTH OF THE OVERHANG BRACKET)

AVG. SLAB THICKNESS Ⓣ (in)	BRACKET Ⓚ DIMENSION (in)	SCREED LOAD PER BRACKET 2500 lbs.	2250 lbs.	2000 lbs.	1750 lbs.	1500 lbs.	1250 lbs.	1000 lbs.	750 lbs.	0 lbs.	45° HANGER SWL (lbs)
		BRACKET SPACING									
10	30				2'-1"	2'-7"	3'-2"	3'-8"	4'-2"	5'-9"	4000
		3'-6"	4'-0"	4'-5"	4'-9"	5'-1"	5'-3"	5'-5"	5'-7"	6'-7"	6000
	40				2'-1"	2'-7"	3'-2"	3'-8"	4'-2"	5'-9"	4000
		3'-6"	4'-0"	4'-5"	4'-9"	5'-1"	5'-3"	5'-5"	5'-7"	6'-7"	6000
	50				2'-1"	2'-7"	3'-2"	3'-8"	4'-2"	5'-9"	4000
		3'-6"	4'-0"	4'-5"	4'-9"	5'-1"	5'-3"	5'-5"	5'-7"	6'-7"	6000
12	30					2'-4"	2'-10"	3'-4"	3'-9"	5'-2"	4000
		3'-2"	3'-7"	4'-1"	4'-7"	5'-0"	5'-2"	5'-4"	5'-7"	6'-5"	6000
	40					2'-4"	2'-10"	3'-4"	3'-9"	5'-2"	4000
		3'-2"	3'-7"	4'-1"	4'-7"	5'-0"	5'-2"	5'-4"	5'-7"	6'-5"	6000
	50					2'-4"	2'-10"	3'-4"	3'-9"	5'-2"	4000
		3'-2"	3'-7"	4'-1"	4'-7"	5'-0"	5'-2"	5'-4"	5'-7"	6'-5"	6000
14	30					2'-2"	2'-7"	3'-0"	3'-5"	4'-9"	4000
		2'-10"	3'-4"	3'-9"	4'-2"	4'-7"	5'-0"	5'-4"	5'-7"	6'-4"	6000
	40					2'-2"	2'-7"	3'-0"	3'-5"	4'-9"	4000
		2'-10"	3'-4"	3'-9"	4'-2"	4'-7"	5'-0"	5'-4"	5'-7"	6'-4"	6000
	50					2'-2"	2'-7"	3'-0"	3'-5"	4'-9"	4000
		2'-10"	3'-4"	3'-9"	4'-2"	4'-7"	5'-0"	5'-4"	5'-7"	6'-4"	6000
16	30					2'-0"	2'-4"	2'-9"	3'-2"	4'-4"	4000
		2'-8"	3'-0"	3'-5"	3'-10"	4'-3"	4'-7"	5'-0"	5'-5"	6'-3"	6000
	40					2'-0"	2'-4"	2'-9"	3'-2"	4'-4"	4000
		2'-8"	3'-0"	3'-5"	3'-10"	4'-3"	4'-7"	5'-0"	5'-5"	6'-3"	6000
	50					2'-0"	2'-4"	2'-9"	3'-2"	4'-4"	4000
		2'-8"	3'-0"	3'-5"	3'-10"	4'-3"	4'-7"	5'-0"	5'-5"	6'-3"	6000

TABLE 1-2

(FOR USE ON **OVER 2'-0" TO 2'-6" OVERHANG Ⓛ** & 54" HORIZONTAL LEG LENGTH OF THE OVERHANG BRACKET)

AVG. SLAB THICKNESS Ⓣ (in)	BRACKET Ⓚ DIMENSION (in)	SCREED LOAD PER BRACKET 2500 lbs.	2250 lbs.	2000 lbs.	1750 lbs.	1500 lbs.	1250 lbs.	1000 lbs.	750 lbs.	0 lbs.	45° HANGER SWL (lbs)
		BRACKET SPACING									
10	30					2'-4"	2'-9"	3'-3"	3'-8"	5'-1"	4000
		3'-1"	3'-6"	4'-0"	4'-5"	4'-11"	5'-3"	5'-5"	5'-7"	6'-7"	6000
	40					2'-4"	2'-9"	3'-3"	3'-8"	5'-1"	4000
		3'-1"	3'-6"	4'-0"	4'-5"	4'-11"	5'-3"	5'-5"	5'-7"	6'-7"	6000
	50					2'-4"	2'-9"	3'-3"	3'-8"	5'-1"	4000
		3'-1"	3'-6"	4'-0"	4'-5"	4'-11"	5'-3"	5'-5"	5'-7"	6'-7"	6000
12	30					2'-1"	2'-6"	2'-11"	3'-4"	4'-6"	4000
		2'-9"	3'-2"	3'-7"	4'-0"	4'-5"	4'-10"	5'-3"	5'-7"	6'-5"	6000
	40					2'-1"	2'-6"	2'-11"	3'-4"	4'-6"	4000
		2'-9"	3'-2"	3'-7"	4'-0"	4'-5"	4'-10"	5'-3"	5'-7"	6'-5"	6000
	50					2'-1"	2'-6"	2'-11"	3'-4"	4'-6"	4000
		2'-9"	3'-2"	3'-7"	4'-0"	4'-5"	4'-10"	5'-3"	5'-7"	6'-5"	6000
14	30						2'-3"	2'-7"	3'-0"	4'-1"	4000
		2'-6"	2'-10"	3'-3"	3'-7"	4'-0"	4'-4"	4'-9"	5'-1"	6'-3"	6000
	40						2'-3"	2'-7"	3'-0"	4'-1"	4000
		2'-6"	2'-10"	3'-3"	3'-7"	4'-0"	4'-4"	4'-9"	5'-1"	6'-3"	6000
	50						2'-3"	2'-7"	3'-0"	4'-1"	4000
		2'-6"	2'-10"	3'-3"	3'-7"	4'-0"	4'-4"	4'-9"	5'-1"	6'-3"	6000
16	30						2'-1"	2'-5"	2'-9"	3'-9"	4000
		2'-3"	2'-7"	2'-11"	3'-4"	3'-8"	4'-0"	4'-4"	4'-8"	5'-8"	6000
	40						2'-1"	2'-5"	2'-9"	3'-9"	4000
		2'-3"	2'-7"	2'-11"	3'-4"	3'-8"	4'-0"	4'-4"	4'-8"	5'-8"	6000
	50						2'-1"	2'-5"	2'-9"	3'-9"	4000
		2'-3"	2'-7"	2'-11"	3'-4"	3'-8"	4'-0"	4'-4"	4'-8"	5'-8"	6000

TABLE 1-3

(FOR USE ON **OVER 2'-6" TO 3'-0" OVERHANG Ⓛ** & 54" HORIZONTAL LEG LENGTH OF THE OVERHANG BRACKET)

AVG. SLAB THICKNESS Ⓣ (in)	BRACKET Ⓚ DIMENSION (in)	SCREED LOAD PER BRACKET 2500 lbs.	2250 lbs.	2000 lbs.	1750 lbs.	1500 lbs.	1250 lbs.	1000 lbs.	750 lbs.	0 lbs.	45° HANGER SWL (lbs)
		BRACKET SPACING									
10	30					2'-1"	2'-6"	2'-11"	3'-4"	4'-6"	4000
						4'-5"	4'-10"	5'-3"	5'-7"	6'-7"	6000
	40					2'-1"	2'-6"	2'-11"	3'-4"	4'-6"	4000
		2'-9"	3'-2"	3'-7"	4'-0"	4'-5"	4'-10"	5'-3"	5'-7"	6'-7"	6000
	50					2'-1"	2'-6"	2'-11"	3'-4"	4'-6"	4000
		2'-9"	3'-2"	3'-7"	4'-0"	4'-5"	4'-10"	5'-3"	5'-7"	6'-7"	6000
12	30						2'-2"	2'-7"	2'-11"	4'-0"	4000
						3'-11"	4'-3"	4'-8"	5'-0"	6'-1"	6000
	40						2'-2"	2'-7"	2'-11"	4'-0"	4000
		2'-5"	2'-10"	3'-2"	3'-6"	3'-11"	4'-3"	4'-8"	5'-0"	6'-1"	6000
	50						2'-2"	2'-7"	2'-11"	4'-0"	4000
		2'-5"	2'-10"	3'-2"	3'-6"	3'-11"	4'-3"	4'-8"	5'-0"	6'-1"	6000
14	30						2'-0"	2'-4"	2'-8"	3'-8"	4000
					3'-2"	3'-6"	3'-10"	4'-2"	4'-6"	5'-6"	6000
	40						2'-0"	2'-4"	2'-8"	3'-8"	4000
		2'-2"	2'-6"	2'-10"	3'-2"	3'-6"	3'-10"	4'-2"	4'-6"	5'-6"	6000
	50						2'-0"	2'-4"	2'-8"	3'-8"	4000
		2'-2"	2'-6"	2'-10"	3'-2"	3'-6"	3'-10"	4'-2"	4'-6"	5'-6"	6000
16	30							2'-1"	2'-5"	3'-4"	4000
					2'-11"	3'-2"	3'-6"	3'-10"	4'-1"	5'-0"	6000
	40							2'-1"	2'-5"	3'-4"	4000
		2'-0"	2'-4"	2'-7"	2'-11"	3'-2"	3'-6"	3'-10"	4'-1"	5'-0"	6000
	50							2'-1"	2'-5"	3'-4"	4000
		2'-0"	2'-4"	2'-7"	2'-11"	3'-2"	3'-6"	3'-10"	4'-1"	5'-0"	6000

TABLE 1-4

(FOR USE ON **OVER 3'-0" TO 3'-6" OVERHANG Ⓛ** & 54" HORIZONTAL LEG LENGTH OF THE OVERHANG BRACKET)

AVG. SLAB THICKNESS Ⓣ (in)	BRACKET Ⓚ DIMENSION (in)	SCREED LOAD PER BRACKET 2500 lbs.	2250 lbs.	2000 lbs.	1750 lbs.	1500 lbs.	1250 lbs.	1000 lbs.	750 lbs.	0 lbs.	45° HANGER SWL (lbs)
		BRACKET SPACING									
10	30						2'-1"	2'-5"	2'-9"	3'-10"	4000
						2'-3"	2'-11"	3'-7"	4'-3"	5'-9"	6000
	40						2'-1"	2'-5"	2'-9"	3'-10"	4000
				2'-4"	3'-0"	3'-7"	4'-1"	4'-5"	4'-9"	5'-9"	6000
	50						2'-1"	2'-5"	2'-9"	3'-10"	4000
		2'-4"	2'-8"	3'-0"	3'-4"	3'-8"	4'-1"	4'-5"	4'-9"	5'-9"	6000
12	30							2'-2"	2'-6"	3'-5"	4000
						2'-1"	2'-8"	3'-4"	3'-11"	5'-2"	6000
	40							2'-2"	2'-6"	3'-5"	4000
				2'-2"	2'-9"	3'-4"	3'-7"	3'-11"	4'-3"	5'-2"	6000
	50							2'-2"	2'-6"	3'-5"	4000
		2'-1"	2'-4"	2'-8"	3'-0"	3'-4"	3'-7"	3'-11"	4'-3"	5'-2"	6000
14	30								2'-3"	3'-1"	4000
						2'-0"	2'-6"	3'-1"	3'-8"	4'-8"	6000
	40								2'-3"	3'-1"	4000
				2'-0"	2'-7"	3'-0"	3'-3"	3'-6"	3'-10"	4'-8"	6000
	50								2'-3"	3'-1"	4000
			2'-2"	2'-5"	2'-8"	3'-0"	3'-3"	3'-6"	3'-10"	4'-8"	6000
16	30								2'-0"	2'-9"	4000
							2'-4"	2'-10"	3'-5"	4'-3"	6000
	40								2'-0"	2'-9"	4000
					2'-5"	2'-8"	2'-11"	3'-3"	3'-6"	4'-3"	6000
	50								2'-0"	2'-9"	4000
				2'-2"	2'-5"	2'-8"	2'-11"	3'-3"	3'-6"	4'-3"	6000

DEFINITIONS

SLPB = SCREED LOAD PER BRACKET (R x W)
R = SCREED LOAD FACTOR, OBTAINED FROM TABLE 2
W = WHEEL LOAD
S = BRACKET SPACING
T = AVERAGE SLAB THICKNESS
SWL = SAFE WORKING LOAD
K = DIMENSION DEFINED ON "BRIDGE OVERHANG BRACKET SUMMARY" ON SHEET 2
L = OVERHANG MEASURED FROM EDGE OF TOP FLANGE TO EDGE OF SUPERSTRUCTURE

NORTH CAROLINA PROFESSIONAL SEAL 18788 ENGINEER CHANG-CHUAN VICTOR CHAO

Chang-Chuan Victor Chao
10-11-2010

PROJECT NO. R-2510C
BEAUFORT COUNTY
STATION: 54+34.00 -L-

SHEET 1 OF 3

STATE OF NORTH CAROLINA
DEPARTMENT OF TRANSPORTATION
RALEIGH

STANDARD OVERHANG FALSEWORK

AASHTO TYPES
III, IV, V, AND VI

(LEFT LANE)

REVISIONS						SHEET NO.
NO.	BY:	DATE:	NO.	BY:	DATE:	S-35
1			3			TOTAL SHEETS
2			4			134

ASSEMBLED BY:	DATE:
CHECKED BY:	DATE:
DRAWN BY: R. WRIGHT 06/04	REV.
CHECKED BY: C. V. CHAO 06/04	

11-OCT-2010 12:53
Y:\TIPProjects-R\R2510c\Structures\r2510c\FinalPlans\STRI\R-2510C_sd_oh_01.dgn
qtnguyen

STR #1

OF1

BRIDGE OVERHANG BRACKET SUMMARY

TOTAL SCREED WEIGHT = _____ LBS.
NUMBER OF SCREED WHEELS = _____
SCREED WHEEL LOAD (W) = _____ LBS.
SCREED LOAD PER BRACKET = _____ LBS.

PROJECT No. : _____
COUNTY : _____
STATION : _____
DESCRIPTION : _____

DATE : _____
DESIGN BY : _____
CHECK BY : _____

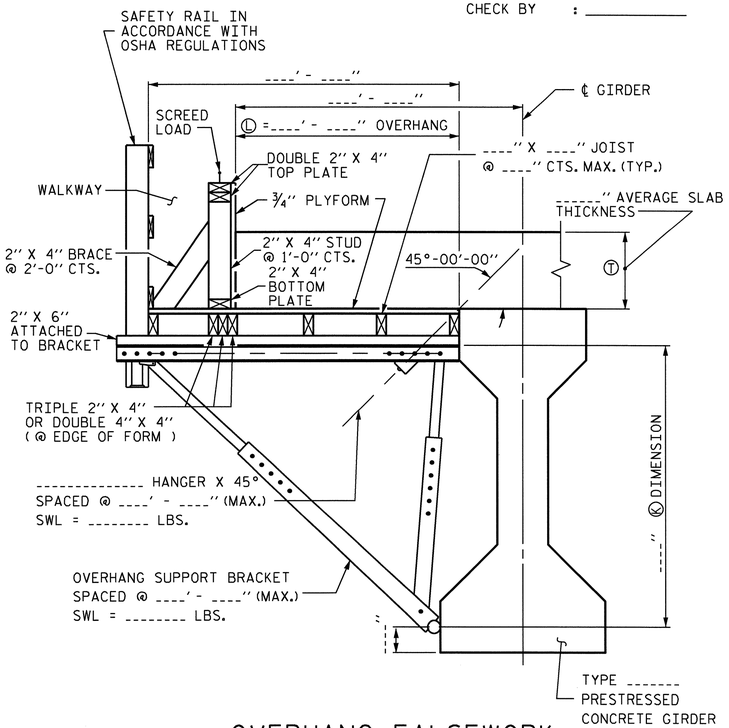

OVERHANG FALSEWORK

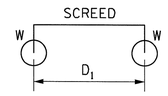

4-WHEEL MACHINE

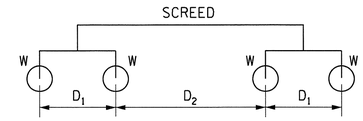

8-WHEEL MACHINE

4 WHEEL MACHINE	
S/D1	R
<= 1.0	1.00
1.1	1.09
1.2	1.17
1.3	1.23
1.4	1.29
1.5	1.33
1.6	1.38
1.7	1.41
1.8	1.44
1.9	1.47
2.0	1.50
2.2	1.55
2.4	1.58
2.6	1.62
2.8	1.64
3.0	1.67
3.5	1.71
4.0	1.75

TABLE 2: SCREED LOAD FACTOR "R"

		THE SCREED LOAD FACTOR R (FOR 8 WHEEL MACHINE)																	
		S/D_2																	
		<= 1.0	1.1	1.2	1.3	1.4	1.5	1.6	1.7	1.8	1.9	2.0	2.2	2.4	2.6	2.8	3.0	3.5	4.0
S/D_1	<= 1.0	1.00	1.09	1.17	1.23	1.29	1.33	1.38	1.41	1.44	1.47	1.50	1.55	1.58	1.62	1.64	1.67	1.71	1.75
	1.1	1.09	1.18	1.26	1.32	1.38	1.42	1.47	1.50	1.54	1.56	1.59	1.64	1.67	1.71	1.73	1.76	1.81	1.84
	1.2	1.17	1.26	1.33	1.40	1.45	1.50	1.54	1.58	1.61	1.64	1.67	1.71	1.75	1.78	1.81	1.83	1.88	1.92
	1.3	1.23	1.32	1.40	1.46	1.52	1.56	1.61	1.64	1.68	1.70	1.73	1.78	1.81	1.85	1.87	1.90	1.95	1.98
	1.4	1.29	1.38	1.45	1.52	1.57	1.62	1.66	1.70	1.73	1.76	1.79	1.83	1.87	1.90	1.93	1.95	2.00	2.07
	1.5	1.33	1.42	1.50	1.56	1.62	1.67	1.71	1.75	1.78	1.81	1.83	1.88	1.92	1.95	1.98	2.00	2.10	2.17
	1.6	1.38	1.47	1.54	1.61	1.66	1.71	1.75	1.79	1.82	1.85	1.88	1.92	1.96	1.99	2.04	2.08	2.18	2.25
	1.7	1.41	1.50	1.58	1.64	1.70	1.75	1.79	1.82	1.86	1.89	1.91	1.96	2.00	2.05	2.11	2.16	2.25	2.32
	1.8	1.44	1.54	1.61	1.68	1.73	1.78	1.82	1.86	1.89	1.92	1.94	1.99	2.06	2.12	2.17	2.22	2.32	2.39
	1.9	1.47	1.56	1.64	1.70	1.76	1.81	1.85	1.89	1.92	1.95	1.97	2.04	2.11	2.18	2.23	2.28	2.38	2.45
	2.0	1.50	1.59	1.67	1.73	1.79	1.83	1.88	1.91	1.94	1.97	2.00	2.09	2.17	2.23	2.29	2.33	2.43	2.50
	2.2	1.55	1.64	1.71	1.78	1.83	1.88	1.92	1.96	1.99	2.04	2.09	2.18	2.26	2.32	2.38	2.42	2.52	2.59
	2.4	1.58	1.67	1.75	1.81	1.87	1.92	1.96	2.00	2.06	2.11	2.17	2.26	2.33	2.40	2.45	2.50	2.60	2.67
	2.6	1.62	1.71	1.78	1.85	1.90	1.95	1.99	2.05	2.12	2.18	2.23	2.32	2.40	2.46	2.52	2.56	2.66	2.73
	2.8	1.64	1.73	1.81	1.87	1.93	1.98	2.04	2.11	2.17	2.23	2.29	2.38	2.45	2.52	2.57	2.62	2.71	2.79
	3.0	1.67	1.76	1.83	1.90	1.95	2.00	2.08	2.16	2.22	2.28	2.33	2.42	2.50	2.56	2.62	2.67	2.76	2.83
	3.5	1.71	1.81	1.88	1.95	2.00	2.10	2.18	2.25	2.32	2.38	2.43	2.52	2.60	2.66	2.71	2.76	2.86	2.93
	4.0	1.75	1.84	1.92	1.98	2.07	2.17	2.25	2.32	2.39	2.45	2.50	2.59	2.67	2.73	2.79	2.83	2.93	3.00

TABLE 3: ALLOWABLE SPAN LENGTH OF JOISTS AND JOIST SPACINGS

AVG. SLAB THICKNESS Ⓣ (IN)	LUMBER JOIST SIZE (IN X IN)	JOIST SPACINGS			
		15 IN	12 IN	10 IN	8 IN
		THE ALLOWABLE SPAN LENGTH OF JOISTS			
10	2 X 4	———	4' - 6"	4' - 9"	5' - 0"
	4 X 4	5' - 9"	6' - 3"	6' - 6"	6' - 7"
12	2 X 4	———	4' - 3"	4' - 9"	5' - 0"
	4 X 4	5' - 3"	6' - 0"	6' - 3"	6' - 5"
14	2 X 4	———	4' - 0"	4' - 6"	5' - 0"
	4 X 4	———	5' - 6"	6' - 0"	6' - 4"
16	2 X 4	———	4' - 0"	4' - 3"	4' - 9"
	4 X 4	———	5' - 3"	5' - 9"	6' - 3"

NOTES

DESIGN INCLUDES CONSTRUCTION LIVE LOAD 20 PSF ON THE AREA SUPPORTED AND 75 PLF AT THE OUTSIDE DECK OF OVERHANGS.

REQUIRED MINIMUM DIAGONAL LEG CAPACITY: 3600 LB WORKING LOAD

THE CONTRACTOR HAS THE OPTION OF SUBMITTING HIS OWN DESIGN FOR OVERHANG FALSEWORK IN ACCORDANCE WITH THE SPECIAL PROVISIONS.

SUBMITTALS UTILIZING THE INSTRUCTIONS AND PROCEDURES DESCRIBED ON SHEET 1 OF 3 SHALL BE IN ACCORDANCE WITH THE APPLICABLE SECTIONS OF THE SPECIFICATIONS AND SPECIAL PROVISIONS, EXCEPT THAT CALCULATIONS FOR OVERHANG FALSEWORK NEED NOT BE SEALED BY A REGISTERED ENGINEER.

FOR OVERHANG FALSEWORK BRACING DESIGN, SEE SHEET 3 OF 3.

PROJECT NO. R-2510C
BEAUFORT COUNTY
STATION: 54+34.00 -L-

SHEET 2 OF 3

STATE OF NORTH CAROLINA
DEPARTMENT OF TRANSPORTATION
RALEIGH

STANDARD OVERHANG FALSEWORK

AASHTO TYPES
III, IV, V, AND VI

(LEFT LANE)

NORTH CAROLINA PROFESSIONAL SEAL 18788 ENGINEER CHUNG-CHUAN VICTOR CHAO
Chung-Chuan V. Chao
10-11-2010

ASSEMBLED BY:	DATE:
CHECKED BY:	DATE:
DRAWN BY: R. WRIGHT 06/04	REV.
CHECKED BY: C. V. CHAO 06/04	

REVISIONS						SHEET NO.
NO.	BY:	DATE:	NO.	BY:	DATE:	S-36
1			3			TOTAL SHEETS
2			4			134

11-OCT-2010 12:53
Y:\TIPProjects-R\R2510c\Structures\r2510c\FinalPlans\STRI\R-2510C_sd_oh_01.dgn
qtnguyen

STR #1

OF2

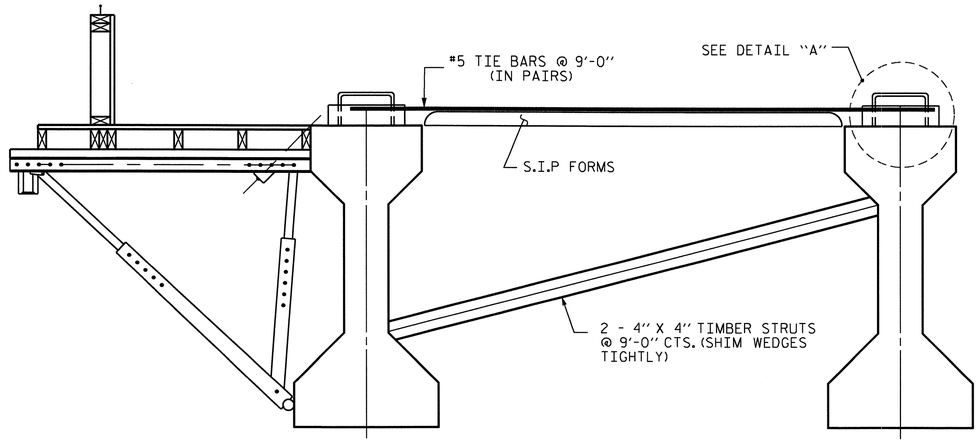

EXTERIOR GIRDER INTERIOR GIRDER

DETAIL OF REQUIRED OVERHANG FALSEWORK BRACING SYSTEM

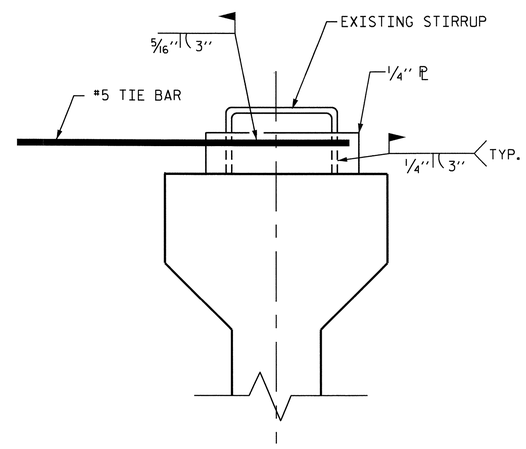

DETAIL "A"

NOTES:

EACH #5 TIE BAR SHALL BE WELDED TO ONE STIRRUP LOOP AS SHOWN IN DETAIL "A". #5 TIE BARS SHALL BE WELDED TO TWO ADJACENT STIRRUPS OF THE EXTERIOR GIRDER AND THE ADJACENT INTERIOR GIRDER BETWEEN PERMANENT DIAPHRAGMS. WELD STEEL PLATES IN BETWEEN THE TIE BARS AND THE STIRRUP LOOP. WELDING TWO TIE BARS TO THE SAME STIRRUP LOOP SHALL NOT BE PERMITTED.

MAXIMUM SPACING BETWEEN THE BRACING (TIE BARS-TIMBER STRUT) IS 9'-0" CTS. #5 TIE BARS SHALL BE LOCATED OVER A TIMBER STRUT.

INSTALL TIE BARS AND TIMBER STRUTS PRIOR TO PLACEMENT OF CONCRETE OR SCREED WEIGHT ONTO THE OVERHANG FALSEWORK.

PROJECT NO. R-2510C
BEAUFORT COUNTY
STATION: 54+34.00 -L-

SHEET 3 OF 3

STATE OF NORTH CAROLINA
DEPARTMENT OF TRANSPORTATION
RALEIGH

STANDARD OVERHANG FALSEWORK

AASHTO TYPES
III, IV, V, AND VI

(LEFT LANE)

NORTH CAROLINA PROFESSIONAL SEAL 18788 ENGINEER CHANG-CHUAN VICTOR CHAO

Chang-Chuan V. Chao
10-11-2010

REVISIONS						SHEET NO.
NO.	BY:	DATE:	NO.	BY:	DATE:	S-37
1			3			TOTAL SHEETS
2			4			134

DRAWN BY: R. WRIGHT 06/04 DATE :
CHECKED BY: C. V. CHAO 06/04 DATE :

11-OCT-2010 12:53
Y:\TIPProjects-R\R2510c\Structures\r2510c\FinalPlans\STR1\R-2510C_sd_oh_01.dgn
qtnguyen

STR #1 OF 3

F.A. PROJECT NO. NHF-0017(87)

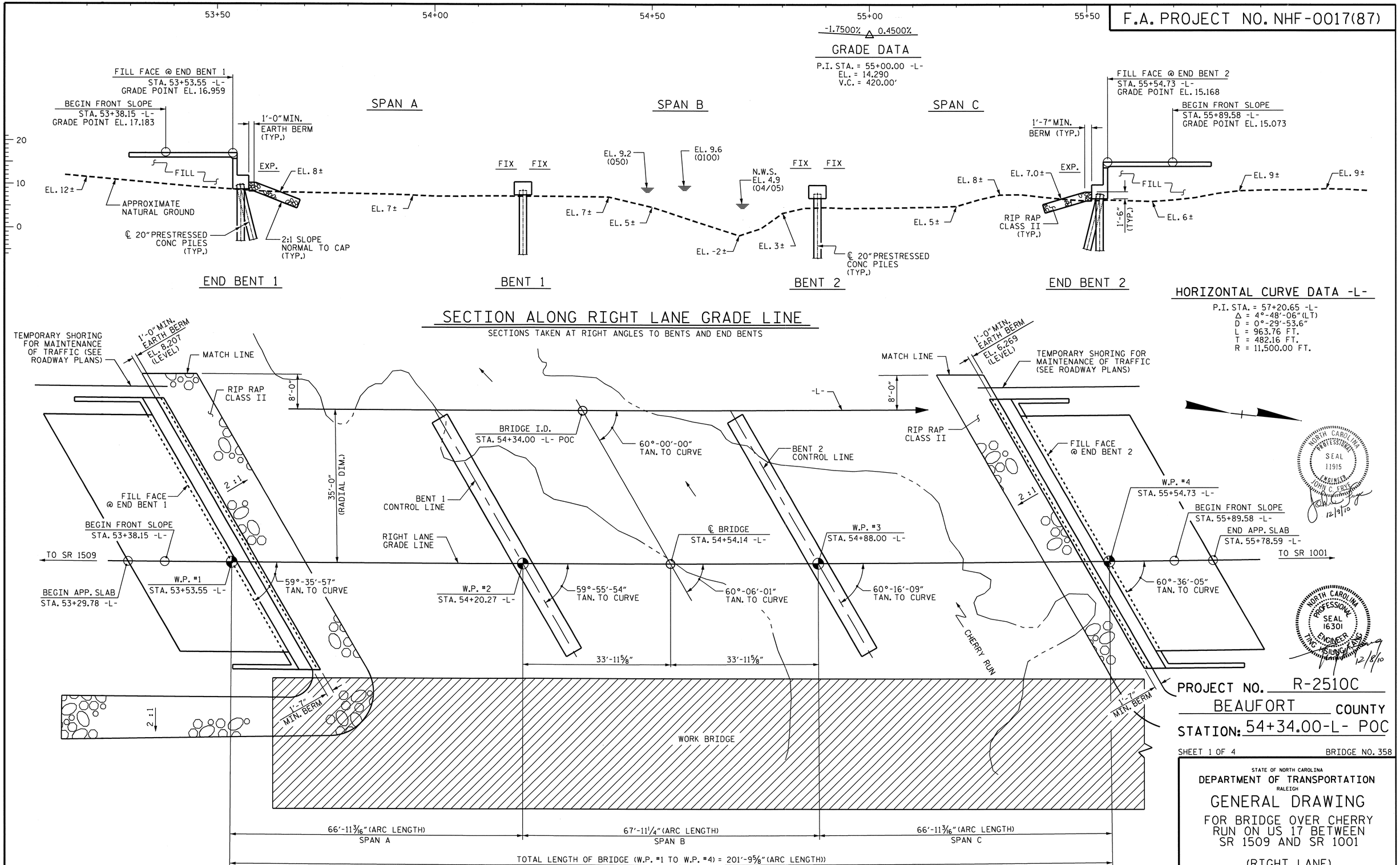

NORTH CAROLINA PROFESSIONAL SEAL 11915 ENGINEER JOHN C. FRYE
12/9/10

NORTH CAROLINA PROFESSIONAL SEAL 16301 ENGINEER TING-HSUNG KANG
12/8/10

PROJECT NO. R-2510C

BEAUFORT COUNTY

STATION: 54+34.00-L- POC

SHEET 1 OF 4 BRIDGE NO. 358

STATE OF NORTH CAROLINA
DEPARTMENT OF TRANSPORTATION
RALEIGH

GENERAL DRAWING

FOR BRIDGE OVER CHERRY RUN ON US 17 BETWEEN SR 1509 AND SR 1001

(RIGHT LANE)

REVISIONS						SHEET NO.
NO.	BY:	DATE:	NO.	BY:	DATE:	S-38
1			3			TOTAL SHEETS
2			4			134

STR. #2

DRAWN BY : S. DOMBROWSKI DATE : 05/09
CHECKED BY : Q.T. NGUYEN DATE : 06/09

08-DEC-2010 13:55
Y:\TIPProjects-R\R2510c\Structures\r2510c\FinalPlans\STR2\r-2510c_sd_gd_02.dgn
qtnguyen

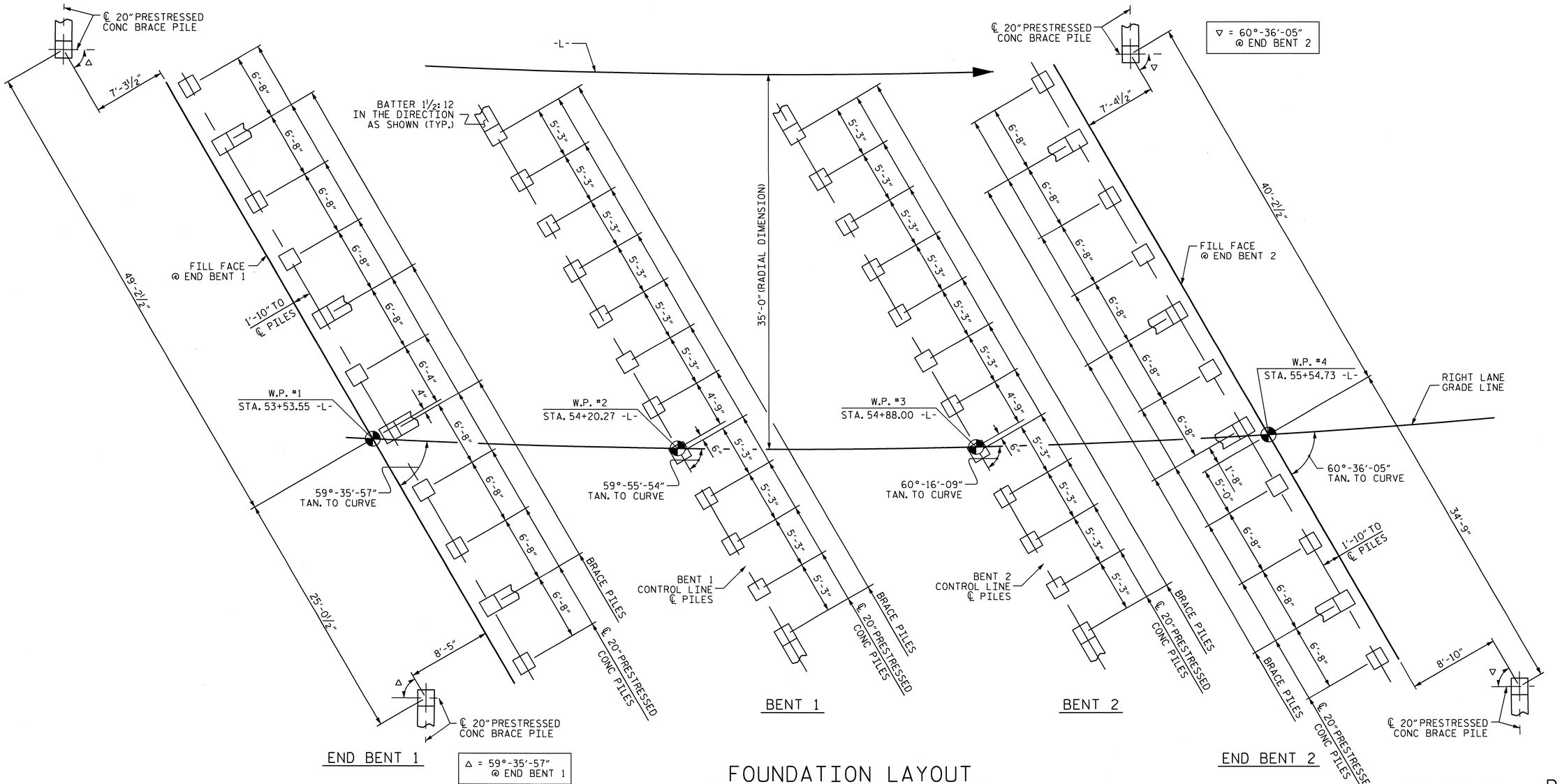

FOUNDATION LAYOUT

DIMENSIONS LOCATING PILES ARE SHOWN TO PILE CENTERLINE AND MEASURED AT CAP BOTTOM.
BRACE PILES AT END BENTS ARE BATTERED 3 :12 BRACE PILES AT BENTS ARE BATTERED 1½:12

PROJECT NO. R-2510C
BEAUFORT COUNTY
STATION: 54+34.00-L- POC

SHEET 2 OF 4

NOTES

DRIVE PILES AT END BENTS 1 AND 2 TO A REQUIRED BEARING CAPACITY OF 120 TONS PER PILE. THE REQUIRED BEARING CAPACITY IS EQUAL TO THE ALLOWABLE BEARING CAPACITY WITH A MINIMUM FACTOR OF SAFETY OF TWO.

THE ALLOWABLE BEARING CAPACITY FOR PILES AT END BENT 1 IS 60 TONS PER PILE.

THE ALLOWABLE BEARING CAPACITY FOR PILES AT END BENT 2 IS 60 TONS PER PILE.

DRIVE PILES AT BENTS 1 AND 2 TO A REQUIRED BEARING CAPACITY OF 180 TONS PER PILE. THE REQUIRED BEARING CAPACITY IS EQUAL TO THE ALLOWABLE BEARING CAPACITY WITH A MINIMUM FACTOR OF SAFETY OF TWO PLUS ANY ADDITIONAL CAPACITY TO ACCOUNT FOR DOWN DRAG OR NEGATIVE SKIN FRICTION AND SCOUR.

THE ALLOWABLE BEARING CAPACITY FOR PILES AT BENTS 1 AND 2 IS 80 TONS PER PILE.

INSTALL PILES AT BENTS 1 AND 2 TO A TIP ELEVATION NO HIGHER THAN -35 FT.

THE SCOUR CRITICAL ELEVATION FOR BENT 1 IS ELEVATION -5 FT. SCOUR CRITICAL ELEVATIONS ARE USED TO MONITOR POSSIBLE SCOUR PROBLEMS DURING THE LIFE OF THE STRUCTURE.

THE SCOUR CRITICAL ELEVATION FOR BENT 2 IS ELEVATION -8 FT. SCOUR CRITICAL ELEVATIONS ARE USED TO MONITOR POSSIBLE SCOUR PROBLEMS DURING THE LIFE OF THE STRUCTURE.

IT HAS BEEN ESTIMATED THAT A HAMMER WITH AN EQUIVALENT RATED ENERGY IN THE RANGE OF 30,000 FT-LB TO 55,000 FT-LB PER BLOW WILL BE REQUIRED TO DRIVE PILES. THIS ESTIMATED ENERGY RANGE DOES NOT RELEASE THE CONTRACTOR FROM ARTICLE 450-5 OF THE STANDARD SPECIFICATIONS.

FOR PILES, SEE SPECIAL PROVISIONS.

NORTH CAROLINA PROFESSIONAL SEAL 16301 ENGINEER TING HSIUNG FANG
12/16/10

STATE OF NORTH CAROLINA
DEPARTMENT OF TRANSPORTATION
RALEIGH

GENERAL DRAWING

FOR BRIDGE OVER CHERRY RUN ON US 17 BETWEEN SR 1509 AND SR 1001

(RIGHT LANE)

REVISIONS						SHEET NO.
NO.	BY:	DATE:	NO.	BY:	DATE:	S-39
1			3			TOTAL SHEETS
2			4			134

STR. #2

DRAWN BY : S. DOMBROWSKI DATE : 05/09
CHECKED BY : Q.T. NGUYEN DATE : 06/09

16-DEC-2010 14:37
Y:\TIPProjects-R\R2510c\Structures\r2510c\FinalPlans\STR2\r-2510c_sd_gd_02.dgn
qtnguyen

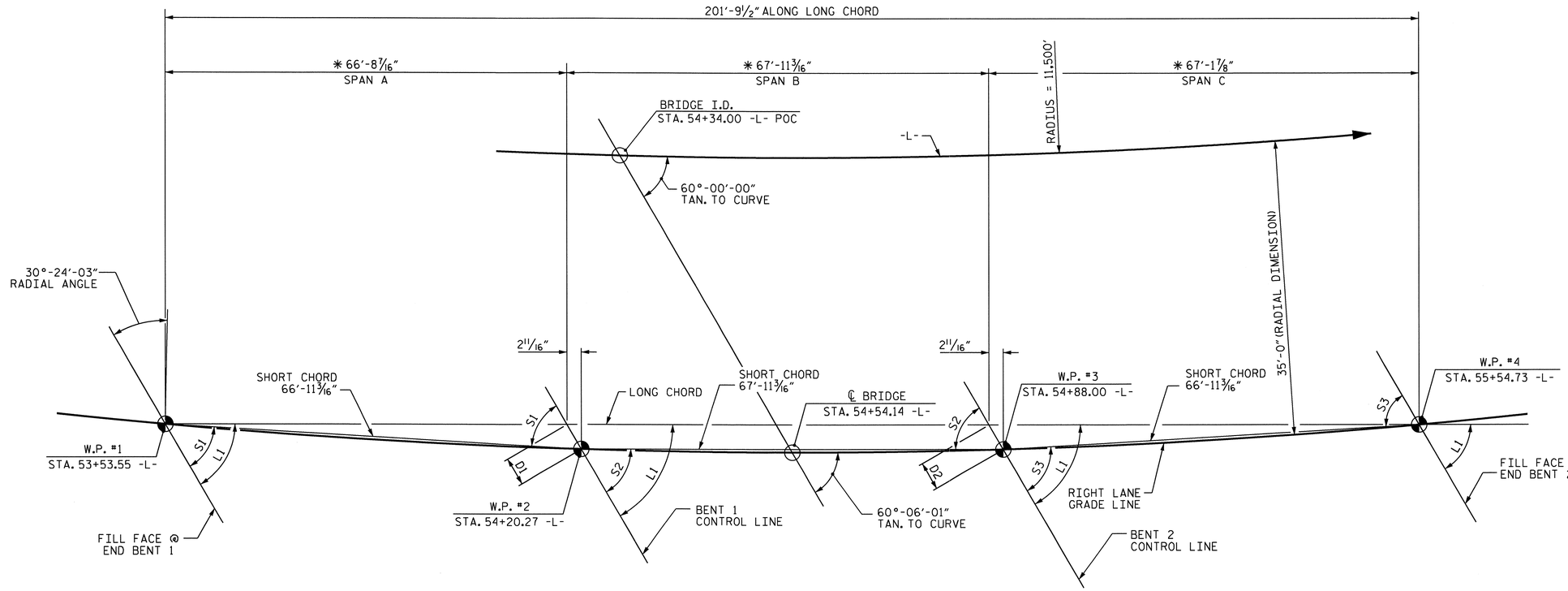

ANGLES				OFFSETS	
LONG CHORD		SHORT CHORD			
L1	60°-06'-01"	S1	59°-45'-55"	D1	5 7/16"
		S2	60°-06'-01"	D2	5 7/16"
		S3	60°-26'-07"		

LONG CHORD LAYOUT

ALL BENT CONTROL LINES AND END BENT FILL FACE LINES ARE PLACED RADIALLY TO RIGHT LANE GRADE LINE
✱ ALONG LONG CHORD.

HORIZONTAL CURVE DATA -L-

P.I. STA. = 57+20.65 -L-
Δ = 4°-48'-06" (LT)
D = 0°-29'-53.6"
L = 963.76 FT.
T = 482.16 FT.
R = 11,500.00 FT.

NORTH CAROLINA PROFESSIONAL SEAL 16301 ENGINEER TING HSIONG CHANG
12/8/10

PROJECT NO. R-2510C
BEAUFORT COUNTY
STATION: 54+34.00-L- POC

SHEET 3 OF 4

STATE OF NORTH CAROLINA
DEPARTMENT OF TRANSPORTATION
RALEIGH

GENERAL DRAWING

FOR BRIDGE OVER CHERRY RUN ON US 17 BETWEEN SR 1509 AND SR 1001

(RIGHT LANE)

REVISIONS						SHEET NO.
NO.	BY:	DATE:	NO.	BY:	DATE:	S-40
1			3			TOTAL SHEETS
2			4			134

STR. #2

DRAWN BY : S. DOMBROWSKI DATE : 05/09
CHECKED BY : Q.T. NGUYEN DATE : 06/09

08-DEC-2010 13:55
Y:\TIPProjects-R\R2510c\Structures\r2510c\FinalPlans\STR2\r-2510c_sd_gd_02.dgn
qtnguyen

BM #1: RR SPIKE IN BASE OF 28" PINE TREE, 176.42' RT. OF STA. 58+18.72 -L-, EL. 12.90

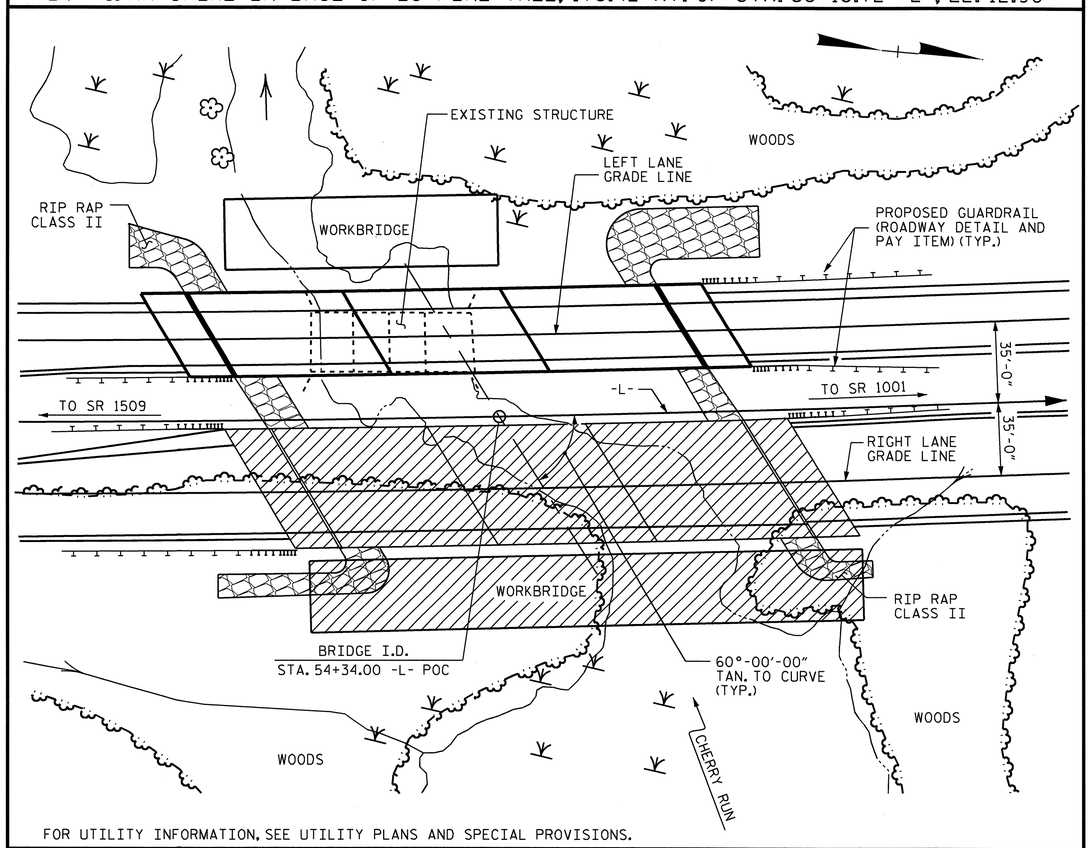

FOR UTILITY INFORMATION, SEE UTILITY PLANS AND SPECIAL PROVISIONS.

LOCATION SKETCH

HYDRAULIC DATA

DESIGN DISCHARGE	=	1,700 C.F.S.
FREQUENCY OF DESIGN FLOOD	=	50 YRS.
DESIGN HIGH WATER ELEVATION	=	9.20
DRAINAGE AREA	=	8.1 SQ. MI.
BASIC DISCHARGE (Q100)	=	2,000 C.F.S.
BASIC HIGH WATER ELEVATION	=	9.60

OVERTOPPING FLOOD DATA

OVERTOPPING DISCHARGE	=	7,100 C.F.S.
FREQUENCY OF OVERTOPPING FLOOD	=	500 YRS.+
OVERTOPPING FLOOD ELEVATION	=	15.30

NOTES

ASSUMED LIVE LOAD = HS20 OR ALTERNATE LOADING, EXCEPT THAT THE GIRDERS HAVE BEEN DESIGNED FOR HS25.

FOR OTHER DESIGN DATA AND GENERAL NOTES, SEE SHEET SN.

FOR EROSION CONTROL MEASURES SEE EROSION CONTROL PLANS.

THIS STRUCTURE HAS BEEN DESIGNED IN ACCORDANCE WITH HEC 18, "EVALUATING SCOUR AT BRIDGES", MAY, 2001.

THIS BRIDGE HAS BEEN DESIGNED BY THE STRENGTH DESIGN METHOD AS SPECIFIED IN AASHTO STANDARD SPECIFICATIONS.

THIS BRIDGE HAS BEEN DESIGNED IN ACCORDANCE WITH THE REQUIREMENTS OF THE AASHTO STANDARD SPECIFICATIONS FOR SEISMIC DESIGN OF HIGHWAY BRIDGES FOR SEISMIC PERFORMANCE CATEGORY A.

PRESTRESSED CONCRETE DECK PANELS MAY BE USED IN LIEU OF METAL STAY-IN-PLACE FORMS IN ACCORDANCE WITH ARTICLE 420-3 OF THE STANDARD SPECIFICATIONS.

REMOVABLE FORMS MAY BE USED IN LIEU OF METAL STAY-IN-PLACE FORMS IN ACCORDANCE WITH ARTICLE 420-3 OF THE STANDARD SPECIFICATIONS.

THE CONTRACTOR SHALL PROVIDE INDEPENDENT ASSURANCE SAMPLES OF REINFORCING STEEL AS FOLLOWS: FOR PROJECTS REQUIRING UP TO 400 TONS OF REINFORCING STEEL, ONE 30 INCH SAMPLE OF EACH SIZE BAR USED, AND FOR PROJECTS REQUIRING OVER 400 TONS OF REINFORCING STEEL, TWO 30 INCH SAMPLES OF EACH SIZE BAR USED. THE BARS FROM WHICH THE SAMPLES ARE TAKEN MUST THEN BE SPLICED WITH REPLACEMENT BARS OF THE SIZE AND LENGTH OF THE SAMPLE, PLUS A MINIMUM LAP SPLICE OF THIRTY BAR DIAMETERS.

NEEDLE BEAMS WILL NOT BE ALLOWED UNLESS OTHERWISE CALLED FOR ON THE PLANS OR APPROVED BY THE ENGINEER.

FOR CONSTRUCTION MAINTENANCE & REMOVAL OF TEMPORARY ACCESS, SEE SPECIAL PROVISION.

FOR LIMITS OF TEMPORARY SHORING FOR MAINTENANCE OF TRAFFIC, SEE TRAFFIC CONTROL PLANS, FOR TEMPORARY SHORING PAY ITEM, SEE ROADWAY PLANS.

FOR SUBMITTAL OF WORKING DRAWINGS, SEE SPECIAL PROVISIONS.

FOR CURING CONCRETE, SEE SPECIAL PROVISIONS.

FOR PLACING LOAD ON STRUCTURE MEMBERS, SEE SPECIAL PROVISIONS.

FOR PRESTRESSED CONCRETE MEMBERS, SEE SPECIAL PROVISIONS.

FOR FALSEWORK AND FORMWORK, SEE SPECIAL PROVISIONS.

FOR CRANE SAFETY, SEE SPECIAL PROVISIONS.

FOR GROUT FOR STRUCTURES, SEE SPECIAL PROVISIONS.

TOTAL BILL OF MATERIAL

	CONSTRUCTION, MAINTENANCE AND REMOVAL OF TEMPORARY ACCESS	REINFORCED CONCRETE DECK SLAB	GROOVING BRIDGE FLOORS	CLASS A CONCRETE	BRIDGE APPROACH SLABS	REINFORCING STEEL	45" PRESTRESSED CONCRETE GIRDERS		20" PRESTRESSED CONC PILES		PILE REDRIVES	CONCRETE BARRIER RAIL	RIP RAP CLASS II (2'-0" THICK)	FILTER FABRIC FOR DRAINAGE	ELASTOMERIC BEARINGS	EVAZOTE JOINT SEALS
	LUMP SUM	SQ.FT.	SQ.FT.	CU.YDS.	LUMP SUM	LBS.	NO.	LIN. FT.	NO.	LIN. FT.	EACH	LIN. FT.	TON	SQ. YD.	LUMP SUM	LUMP SUM
SUPERSTRUCTURE		11,166	12,201				18	1177.50				398.86				
END BENT 1				48.7		6,783			13	390	5		160	175		
BENT 1				30.0		5,107			12	600	5					
BENT 2				30.3		5,107			12	600	5					
END BENT 2				49.3		6,755			13	390	5		85	95		
TOTAL	LUMP SUM	11,166	12,201	158.3	LUMP SUM	23,752	18	1177.50	50	1980	20	398.86	245	270	LUMP SUM	LUMP SUM

NORTH CAROLINA PROFESSIONAL SEAL 16301 ENGINEER
12/16/10

PROJECT NO. R-2510C
BEAUFORT COUNTY
STATION: 54+34.00-L- POC

SHEET 4 OF 4

STATE OF NORTH CAROLINA
DEPARTMENT OF TRANSPORTATION
RALEIGH

GENERAL DRAWING

FOR BRIDGE OVER CHERRY RUN ON US 17 BETWEEN SR 1509 AND SR 1001

(RIGHT LANE)

REVISIONS						SHEET NO.
NO.	BY:	DATE:	NO.	BY:	DATE:	S-41
1			3			TOTAL SHEETS
2			4			134

STR. #2

DRAWN BY : S. DOMBROWSKI DATE : 05/09
CHECKED BY : O.T. NGUYEN DATE : 06/09

16-DEC-2010 14:37
Y:\TIPProjects-R\R2510c\Structures\r2510c\FinalPlans\STR2\r-2510c_sd_gd_02.dgn
qtnguyen

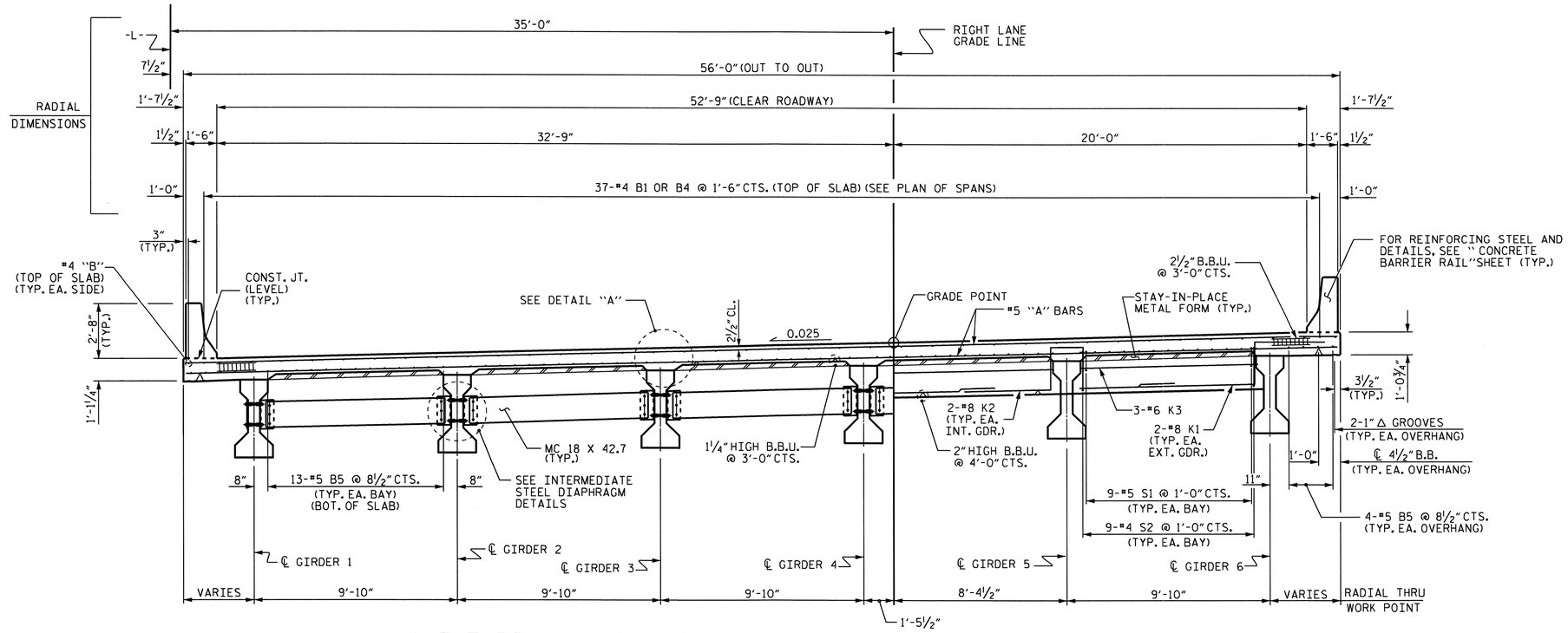

HALF TYPICAL SECTION

SHOWING INTERMEDIATE DIAPHRAGMS

HALF TYPICAL SECTION

SHOWING END BENT DIAPHRAGMS

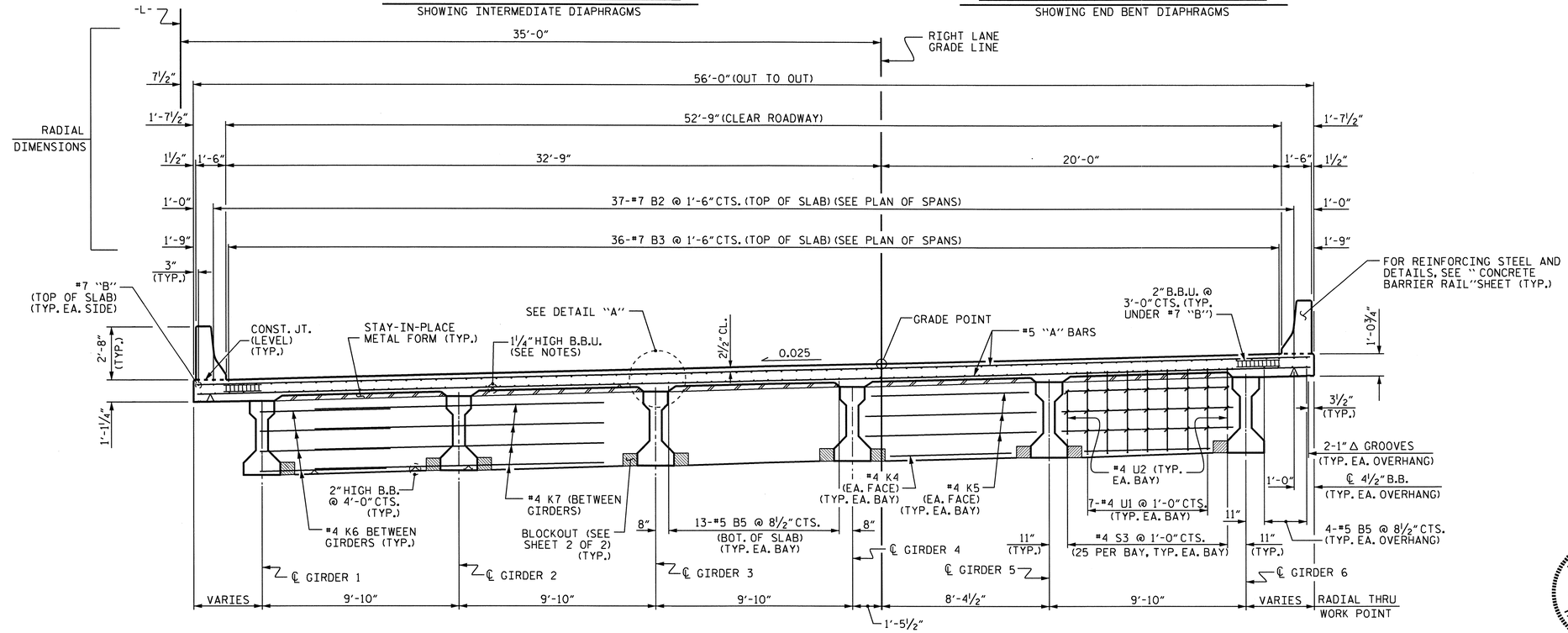

TYPICAL SECTION

SHOWING BENT DIAPHRAGMS

NOTES

PROVIDE 1¼" HIGH BEAM BOLSTERS UPPER AT 4'-0" CTS. ATOP THE METAL STAY-IN-PLACE FORMS TO SUPPORT THE BOTTOM MAT OF 'A' BARS. WHEN USING REMOVABLE FORMS, PROVIDE CONTINUOUS HIGH CHAIRS FOR METAL DECK (C.H.C.M.) @ 4'-0" CTS. WITH A HEIGHT TO SUPPORT THE BOTTOM MAT OF "A" BARS A CLEAR DISTANCE OF 2½" ABOVE THE TOP OF THE REMOVABLE FORMS.

LONGITUDINAL STEEL MAY BE SHIFTED SLIGHTLY, AS NECESSARY, TO AVOID INTERFERENCE WITH STIRRUPS IN PRESTRESSED CONCRETE GIRDERS.

PREVIOUSLY CAST CONCRETE IN A CONTINUOUS UNIT SHALL HAVE ATTAINED A MINIMUM COMPRESSIVE STRENGTH OF 3,000 PSI BEFORE ADDITIONAL CONCRETE IS CAST IN THE UNIT.

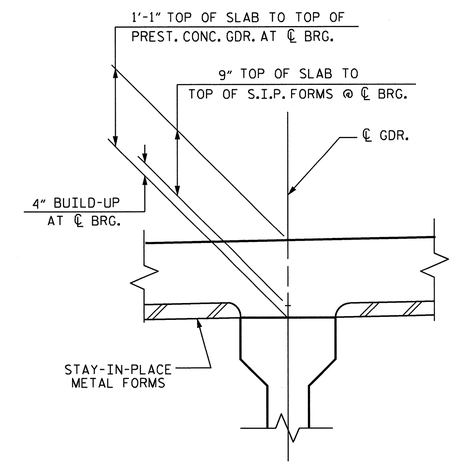

DETAIL "A"

PROJECT NO. R-2510C

BEAUFORT COUNTY

STATION: 54+34.00 -L-

SHEET 1 OF 2

STATE OF NORTH CAROLINA
DEPARTMENT OF TRANSPORTATION
RALEIGH

SUPERSTRUCTURE

TYPICAL SECTION

(RIGHT LANE)

NORTH CAROLINA PROFESSIONAL SEAL 16301 ENGINEER HSIEHING PANG INC.

12/8/10

REVISIONS							SHEET NO.
NO.	BY:	DATE:	NO.	BY:	DATE:		S-42
1			3				TOTAL SHEETS
2			4				134

STR. #2

DRAWN BY : HARISH SHAH DATE : 01/09

CHECKED BY : O.T. NGUYEN DATE : 04/09

08-DEC-2010 13:55
Y:\TIPProjects-R\R2510c\Structures\r2510c\FinalPlans\STR2\r-2510c_sd_ts_02.dgn
qtnguyen

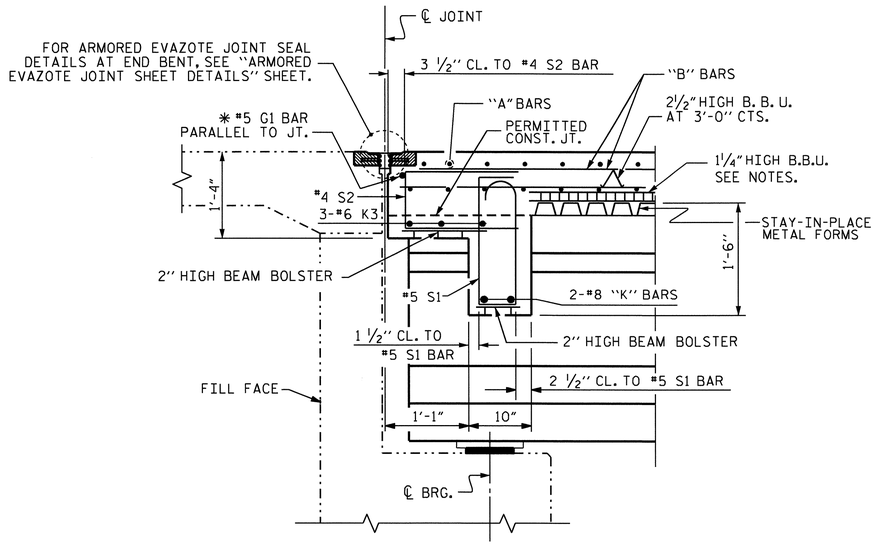

SECTION THRU END BENT DIAPHRAGMS

✱ #5 G1 BAR MAY BE SHIFTED SLIGHTLY AS NECESSARY TO CLEAR REINFORCING STEEL AND STIRRUPS.

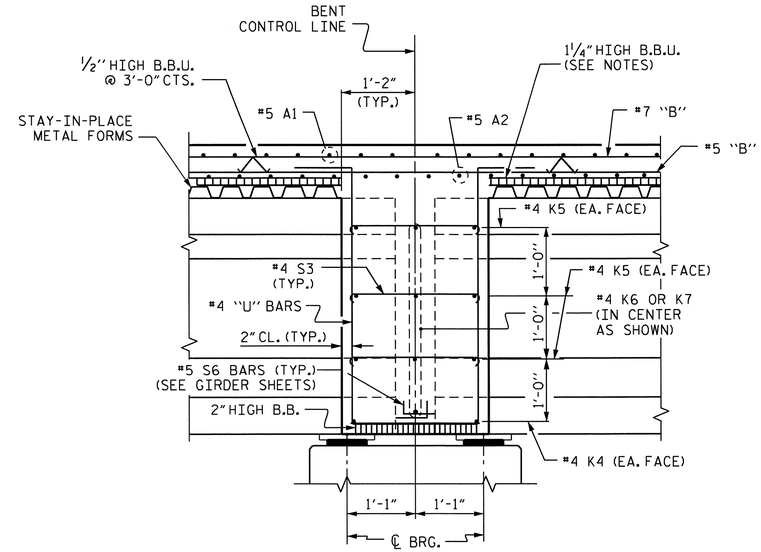

SECTION THRU BENT DIAPHRAGMS

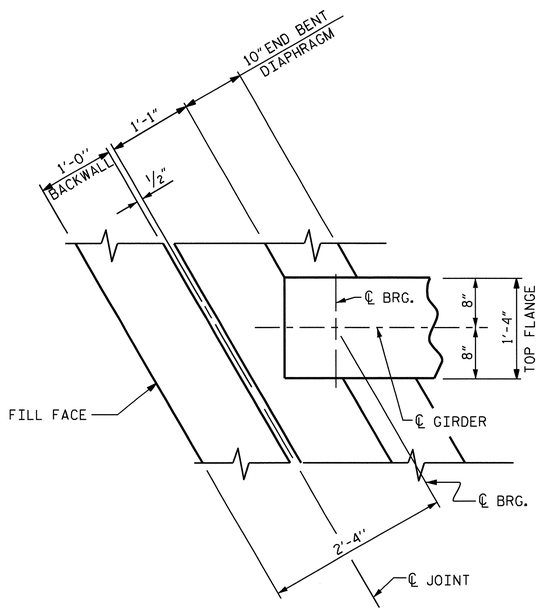

PLAN VIEW OF END BENT DIAPHRAGM

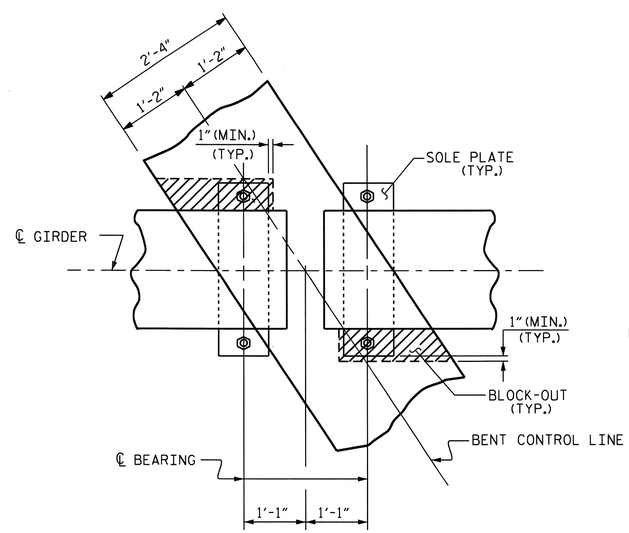

PLAN

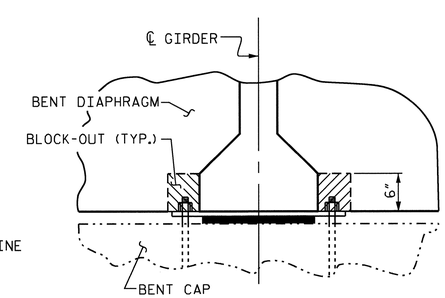

SECTION

BENT DIAPHRAGM BLOCK-OUT DETAIL

NORTH CAROLINA PROFESSIONAL SEAL 16301 ENGINEER TING HSING CHANG

10/1/10

PROJECT NO. R-2510C

BEAUFORT COUNTY

STATION: 54+34.00 -L-

SHEET 2 OF 2

STATE OF NORTH CAROLINA
DEPARTMENT OF TRANSPORTATION
RALEIGH

SUPERSTRUCTURE

TYPICAL SECTION DETAILS

(RIGHT LANE)

REVISIONS						SHEET NO.
NO.	BY:	DATE:	NO.	BY:	DATE:	S-43
1			3			TOTAL SHEETS
2			4			134

STR. #2

DRAWN BY : HARISH SHAH DATE : 12/08
CHECKED BY : Q.T. NGUYEN DATE : 4/09

11-OCT-2010 12:55
Y:\TIPProjects-R\R2510c\Structures\r2510c\FinalPlans\STR2\r-2510c_sd_ts_02.dgn
qtnguyen

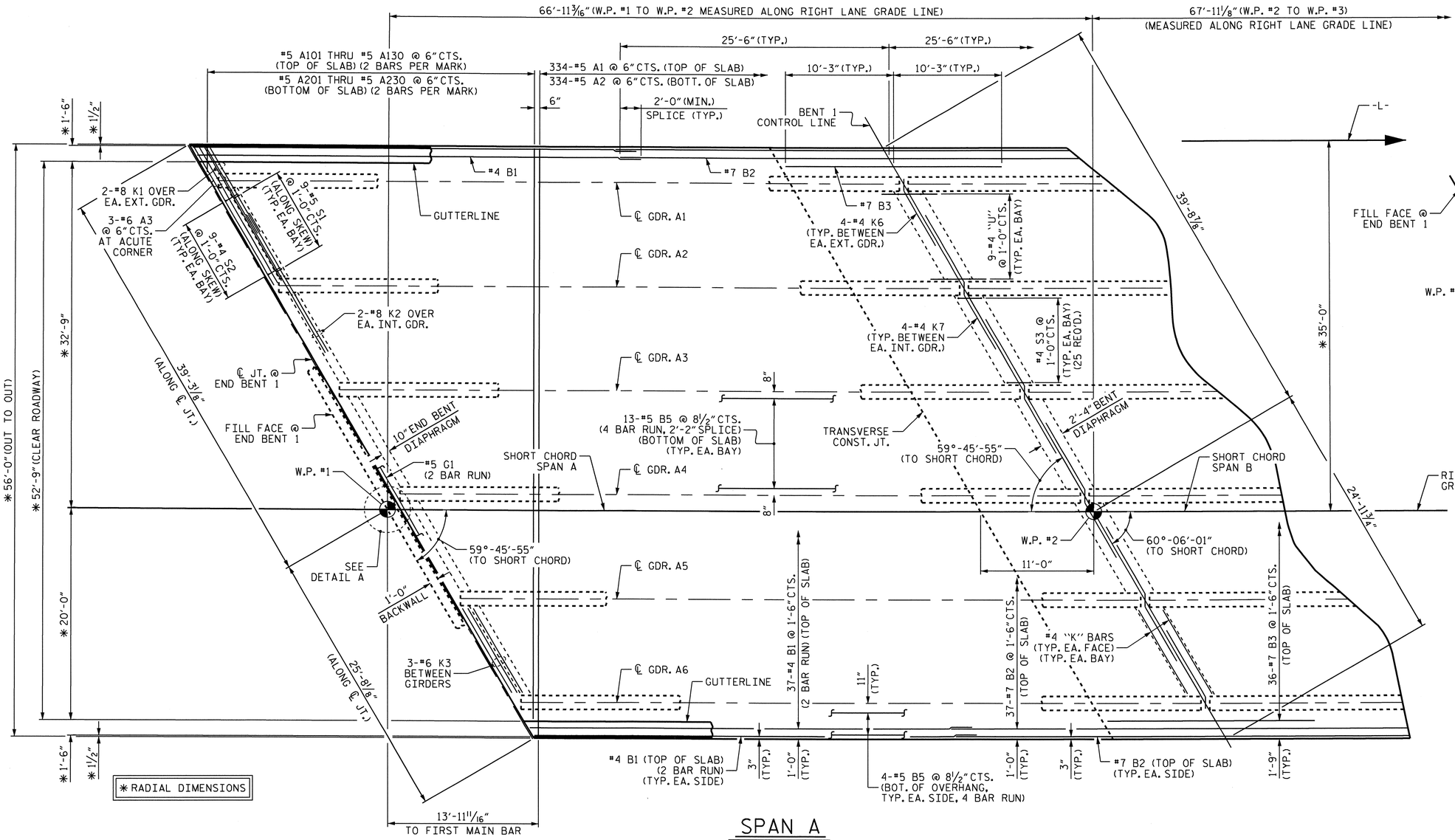

SPAN A

FOR POUR SEQUENCE AND TRANSVERSE CONSTRUCTION JOINT
SEE "SUPERSTRUCTURE BILL OF MATERIAL" SHEET.

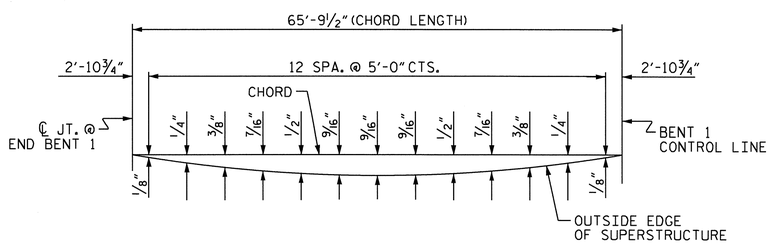

LEFT OUTSIDE EDGE

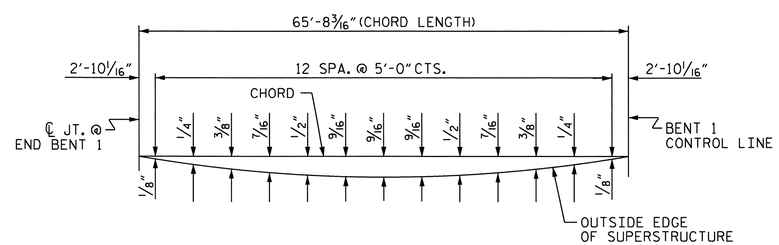

RIGHT OUTSIDE EDGE

ARC OFFSETS

NORTH CAROLINA PROFESSIONAL SEAL 32492 ENGINEER JOHN A. YANNACCONE
12/8/10

PROJECT NO. R-2510C
BEAUFORT COUNTY
STATION: 54+34.00 -L-

SHEET 1 OF 3

STATE OF NORTH CAROLINA
DEPARTMENT OF TRANSPORTATION
RALEIGH

SUPERSTRUCTURE

PLAN OF SPANS

(RIGHT LANE)

REVISIONS						SHEET NO.
NO.	BY:	DATE:	NO.	BY:	DATE:	S-44
1			3			TOTAL SHEETS
2			4			128

DRAWN BY : E.C. LOCKLEAR DATE : 9-2-10
CHECKED BY : J.A. YANNACONE DATE : 9-19-10

08-DEC-2010 14:05
Y:\TIPProjects-R\R2510c\Structures\r2510c\FinalPlans\STR2\r-2510c_sd_ps_02.dgn
qtnguyen

STR. #2

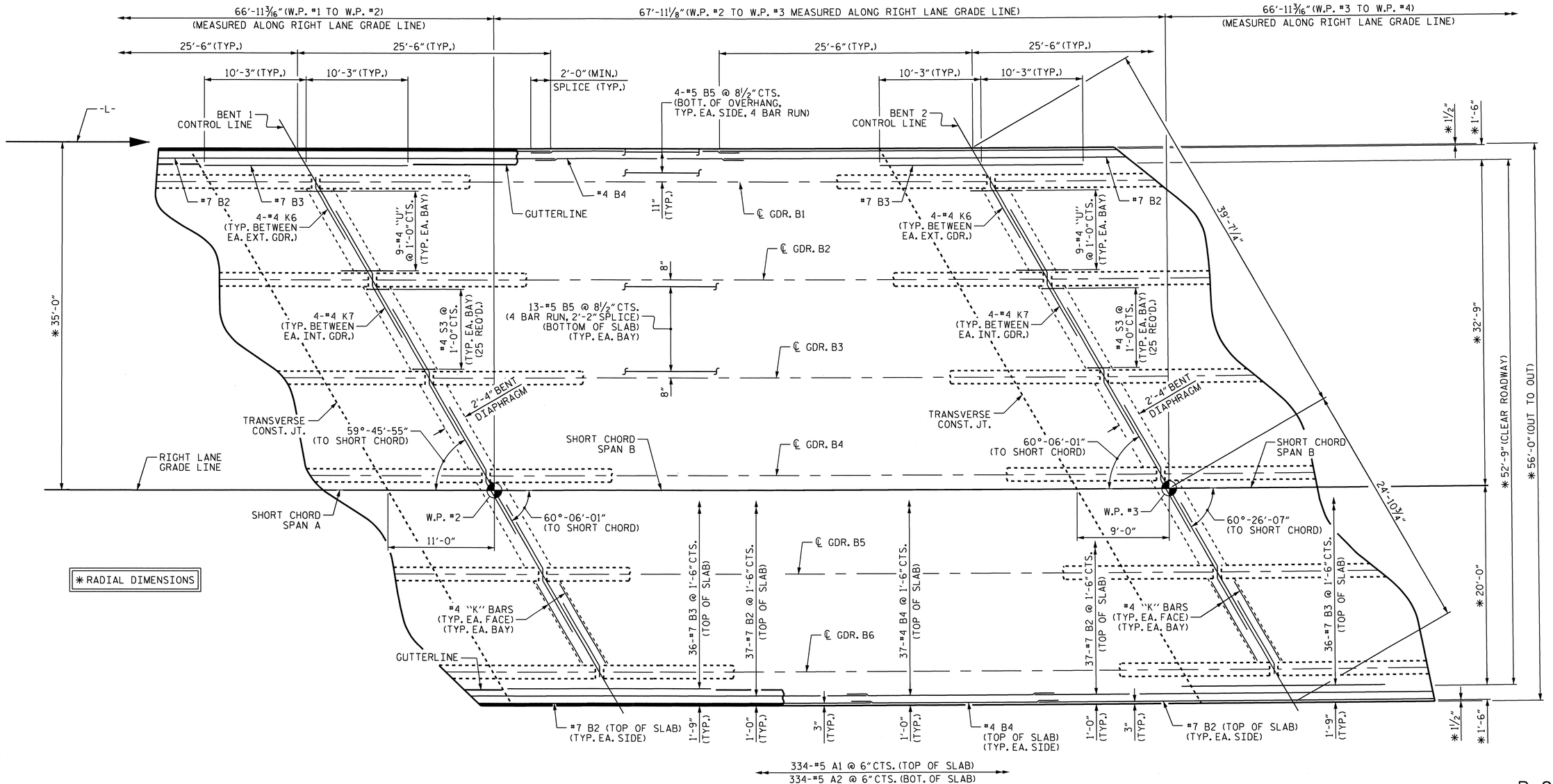

* RADIAL DIMENSIONS

SPAN B

FOR POUR SEQUENCE AND TRANSVERSE CONSTRUCTION JOINT SEE "SUPERSTRUCTURE BILL OF MATERIAL" SHEET.

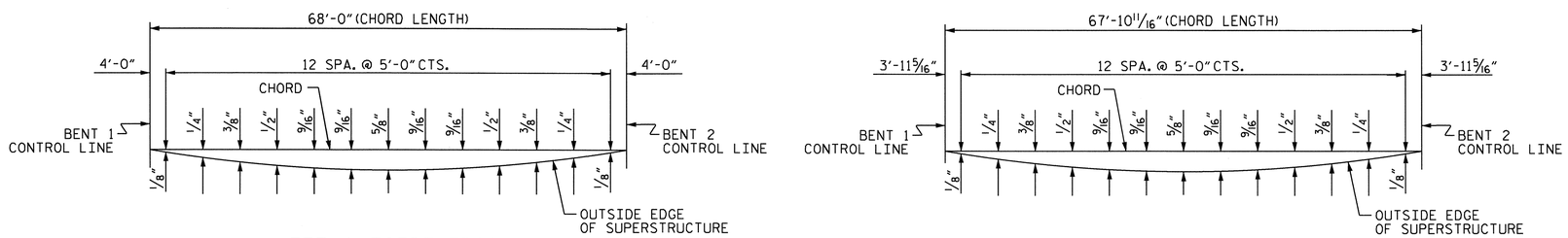

LEFT OUTSIDE EDGE

ARC OFFSETS

RIGHT OUTSIDE EDGE

NORTH CAROLINA PROFESSIONAL SEAL 32492 ENGINEER JOHN A. YANNACONE 12/8/10

PROJECT NO. R-2510C

BEAUFORT COUNTY

STATION: 54+34.00 -L-

SHEET 2 OF 3

STATE OF NORTH CAROLINA
DEPARTMENT OF TRANSPORTATION
RALEIGH

SUPERSTRUCTURE

PLAN OF SPANS

(RIGHT LANE)

REVISIONS						SHEET NO.
NO.	BY:	DATE:	NO.	BY:	DATE:	S-45
1			3			TOTAL SHEETS
2			4			128

STR. #2

DRAWN BY : E.C. LOCKLEAR DATE : 9-2-10
CHECKED BY : J.A. YANNACONE DATE : 9-19-10

08-DEC-2010 14:05
Y:\TIPProjects-R\R2510c\Structures\r2510c\FinalPlans\STR2\r-2510c_sd_ps_02.dgn
qtnguyen

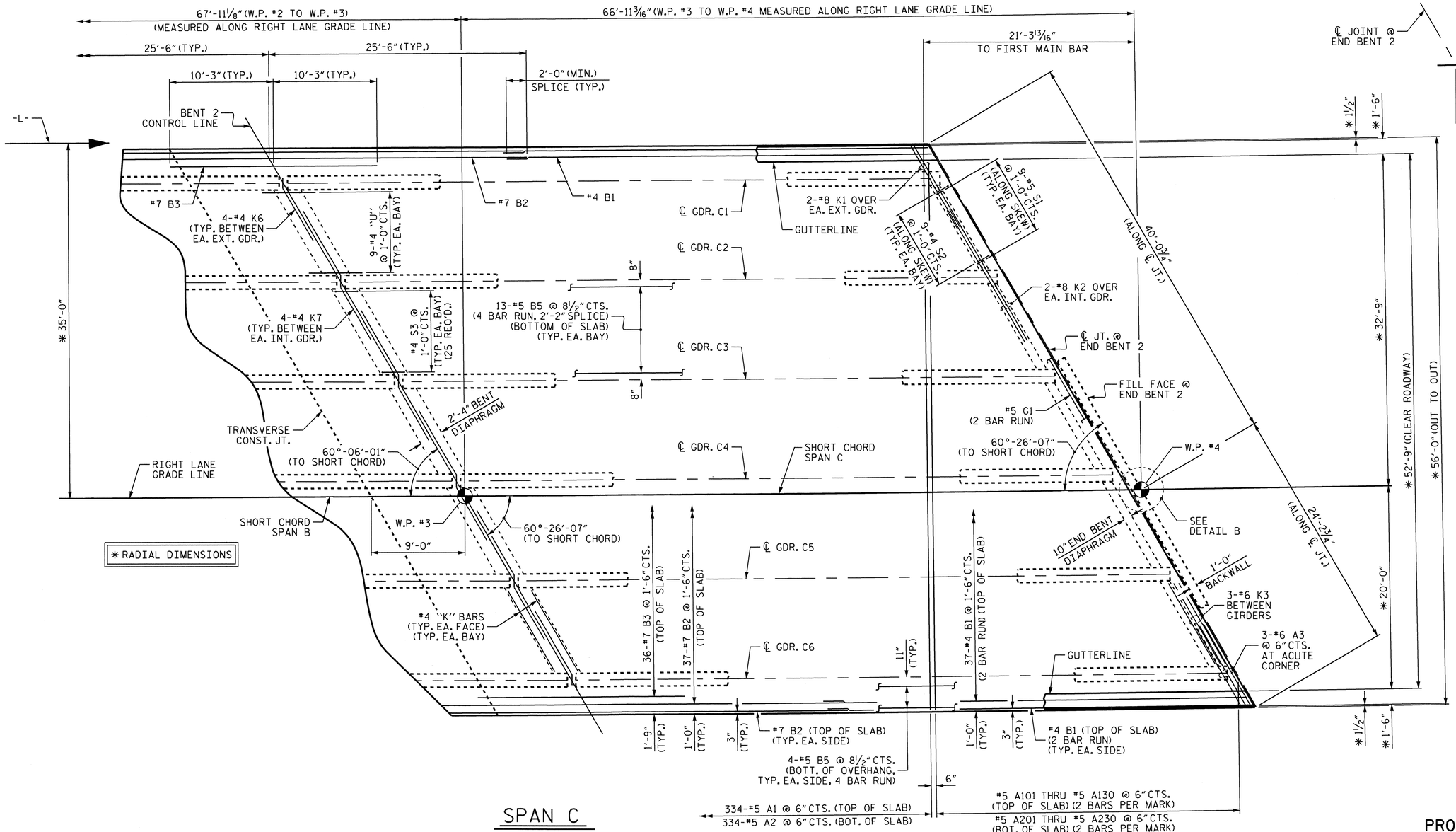

SPAN C

FOR POUR SEQUENCE AND TRANSVERSE CONSTRUCTION JOINT SEE "SUPERSTRUCTURE BILL OF MATERIAL" SHEET.

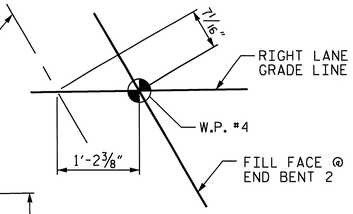

DETAIL B

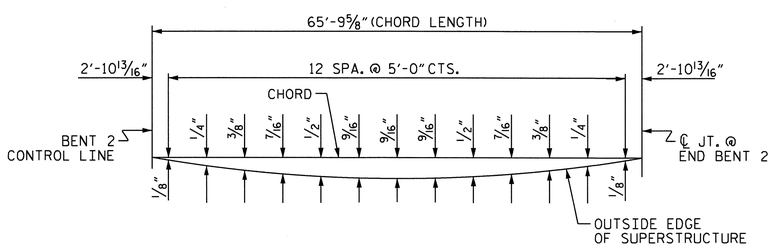

LEFT OUTSIDE EDGE

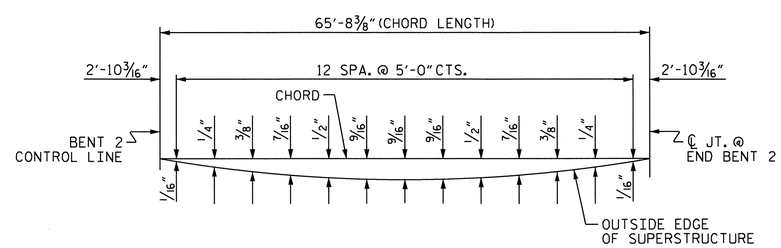

RIGHT OUTSIDE EDGE

ARC OFFSETS

PROJECT NO. R-2510C

BEAUFORT COUNTY

STATION: 54+34.00 -L-

SHEET 3 OF 3

STATE OF NORTH CAROLINA
DEPARTMENT OF TRANSPORTATION
RALEIGH

SUPERSTRUCTURE

PLAN OF SPANS

(RIGHT LANE)

NORTH CAROLINA PROFESSIONAL SEAL 32492 ENGINEER JOHN A. YANNACCONE

12/8/10

REVISIONS						SHEET NO.
NO.	BY:	DATE:	NO.	BY:	DATE:	S-46
1			3			TOTAL SHEETS
2			4			128

STR. #2

DRAWN BY : E.C. LOCKLEAR DATE : 9-2-10
CHECKED BY : J.A. YANNACONE DATE : 9-19-10

08-DEC-2010 14:06
Y:\TIPProjects-R\R2510c\Structures\r2510c\FinalPlans\STR2\r-2510c_sd_ps_02.dgn
qtnguyen

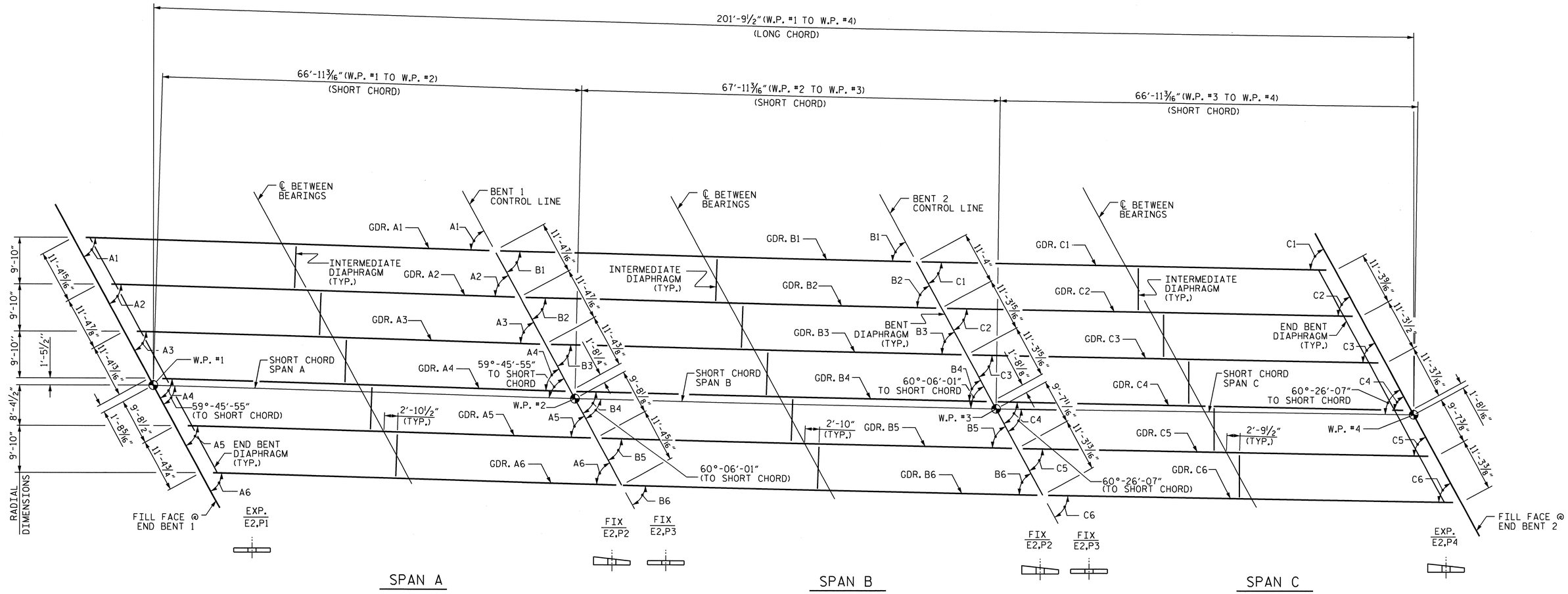

FRAMING PLAN

GIRDER SKEW ANGLES						
GIRDER No.	SPAN A		SPAN B		SPAN C	
1	A1	59°-40'-32"	B1	60°-00'-42"	C1	60°-20'-52"
2	A2	59°-42'-15"	B2	60°-02'-24"	C2	60°-22'-32"
3	A3	59°-43'-58"	B3	60°-04'-05"	C3	60°-24'-12"
4	A4	59°-45'-40"	B4	60°-05'-46"	C4	60°-25'-52"
5	A5	59°-47'-23"	B5	60°-07'-27"	C5	60°-27'-32"
6	A6	59°-49'-05"	B6	60°-09'-08"	C6	60°-29'-11"

PROJECT NO. R-2510C
BEAUFORT COUNTY
STATION: 54+34.00 -L-

STATE OF NORTH CAROLINA
DEPARTMENT OF TRANSPORTATION
RALEIGH

SUPERSTRUCTURE

FRAMING PLAN

(RIGHT LANE)

NORTH CAROLINA PROFESSIONAL SEAL 16301 ENGINEER
12/8/10

REVISIONS						SHEET NO.
NO.	BY:	DATE:	NO.	BY:	DATE:	S-47
1			3			TOTAL SHEETS
2			4			134

DRAWN BY : HARISH SHAH DATE : 01/09
CHECKED BY : Q.T. NGUYEN DATE : 04/09

08-DEC-2010 14:59
Z:\Structures\r2510c\Final Plans\STR2\R-2510C_sd_FP_02.dgn
Hshah

STR. #2

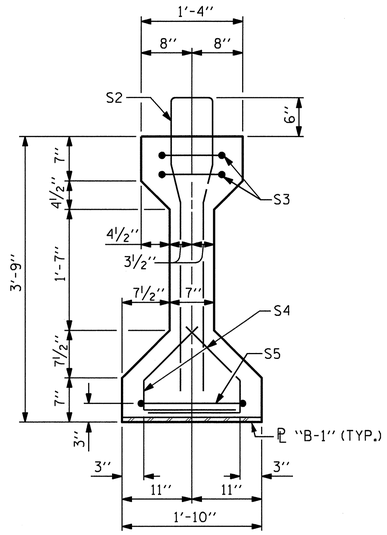

SECTION A-A

(FOR EMBEDDED ℄ "B-1" DETAILS SEE SHEET 4 OF 4)

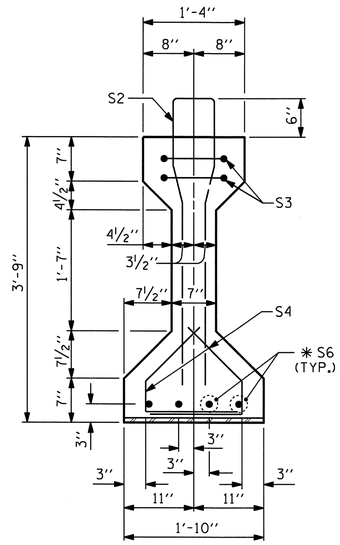

SECTION B-B

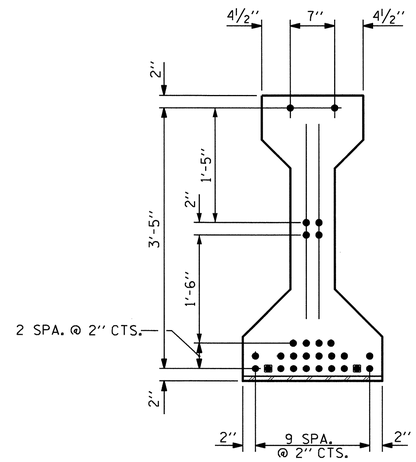

AT END OF GIRDER

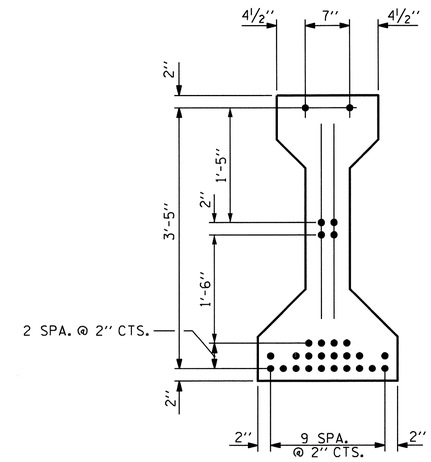

AT ℄ OF GIRDER

0.6"Ø LOW RELAXATION STRAND LAYOUT

(28 STRANDS, ALL STRAIGHT, 2 DEBONDED STRANDS)
✱ STRANDS DEBONDED FOR 4'-0" FROM END OF GIRDER

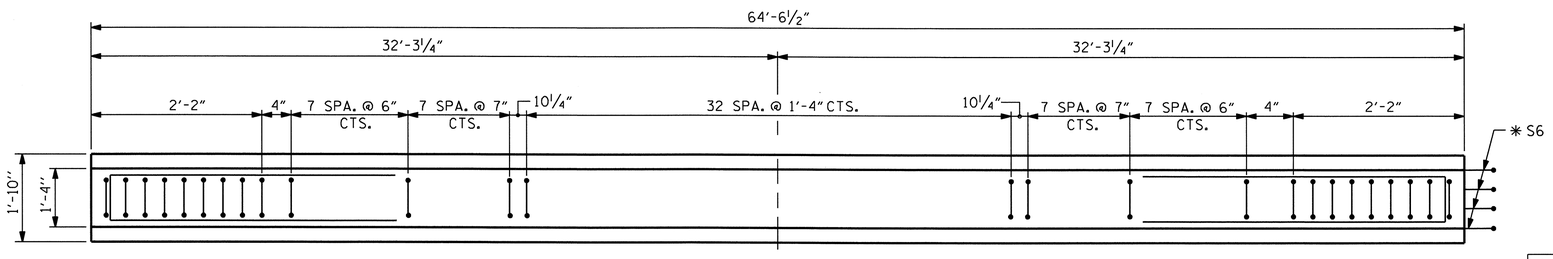

PLAN OF GIRDER

NO BEVEL REQUIRED AT END OF GIRDERS, ALL DIMENSIONS SHOWN ARE HORIZONTAL DISTANCE.

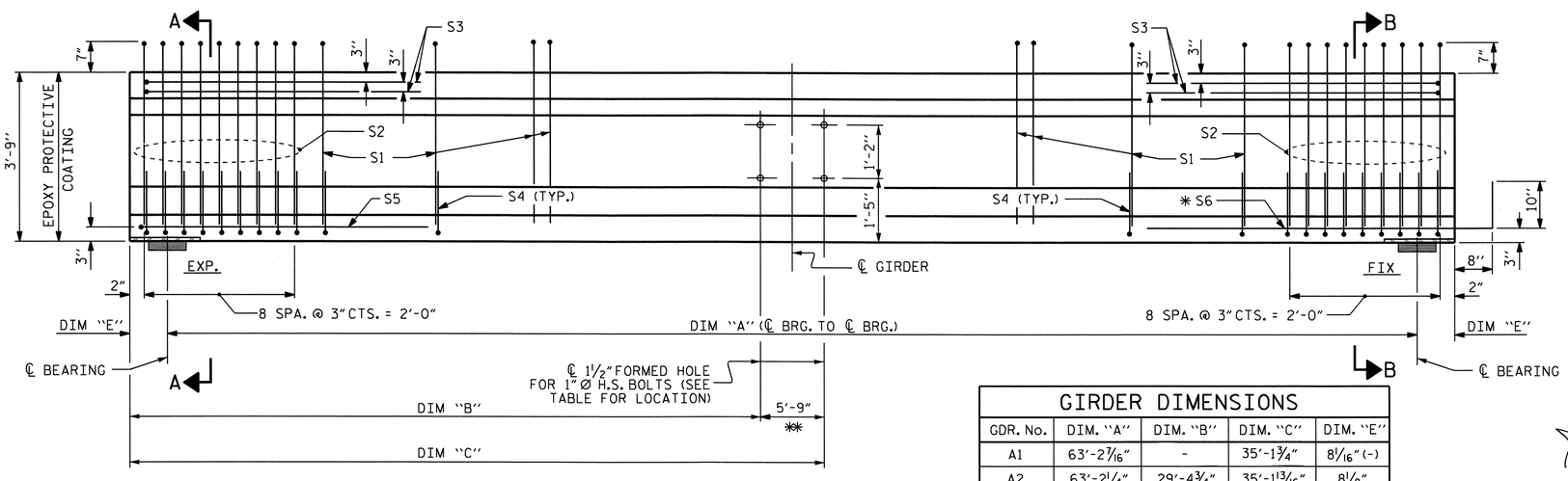

✱✱ FOR INTERIOR GIRDERS ONLY, SEE "FRAMING PLAN" SHEET.

ELEVATION OF GIRDER

(SEE PARTIAL ELEVATION OF 1½"Ø FORMED HOLES FOR ADDITIONAL "S" BARS IN THE INTERMEDIATE DIAPHRAGM AREA ON SHEET 4 OF 4)

GIRDER DIMENSIONS

GDR. No.	DIM. "A"	DIM. "B"	DIM. "C"	DIM. "E"
A1	63'-2 7/16"	-	35'-1 3/4"	8 1/16" (-)
A2	63'-2 1/4"	29'-4 3/4"	35'-1 13/16"	8 1/8"
A3	63'-2"	29'-4 13/16"	35'-1 13/16"	8 1/4"
A4	63'-1 13/16"	29'-4 7/8"	35'-1 7/8"	8 3/8" (-)
A5	63'-1 9/16"	29'-4 7/8"	35'-1 7/8"	8 1/2" (-)
A6	63'-1 3/8"	29'-4 15/16"	-	8 9/16"

0.6"Ø L. R. GRADE 270 STRANDS

AREA (SQUARE INCHES)	ULTIMATE STRENGTH (LBS. PER STRAND)	APPLIED PRESTRESS (LBS. PER STRAND)
0.217	58,600	43,950

REINFORCING STEEL FOR ONE GIRDER

	BAR	NUMBER	SIZE	TYPE	LENGTH	WEIGHT
	S1	63	#4	1	8'-8"	365
	S2	18	#6	1	8'-8"	234
	S3	4	#4	3	8'-8"	23
	S4	68	#4	2	2'-9"	125
	S5	1	#4	3	9'-6"	6
	✱ S6	4	#5	STR	3'-8"	15
EXT. GDR.	S7	2	#5	3	7'-2"	15
INT. GDR.	S7	4	#5	3	7'-2"	30
EXT. GDR.	S8	5	#4	STR	7'-0"	23
INT. GDR.	S9	5	#4	STR	12'-9"	43

✱ S6 BARS SHALL BE BENT BEFORE SHIPMENT. HEAT BENDING SHALL NOT BE ALLOWED.

BAR TYPES

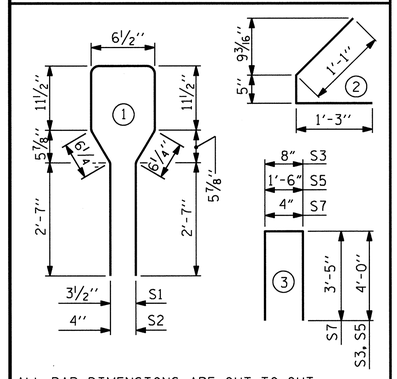

ALL BAR DIMENSIONS ARE OUT-TO-OUT

QUANTITIES FOR ONE GIRDER

	REINFORCING STEEL	8000 PSI CONCRETE	0.6"Ø L.R. STRANDS
	LB.	C.Y.	No.
EXT. GDR.	806	9.288	28
INT. GDR.	841	9.288	28

GIRDERS REQUIRED

NUMBER	LENGTH	TOTAL LENGTH
6	64'-6½"	387.25'

PROJECT NO. R-2510C

BEAUFORT COUNTY

STATION: 54+34.00 -L-

SHEET 1 OF 4

STATE OF NORTH CAROLINA
DEPARTMENT OF TRANSPORTATION
RALEIGH

STANDARD

AASHTO TYPE III
PRESTRESSED CONCRETE GIRDER
CONTINUOUS FOR LIVE LOAD

SPAN A
(RIGHT LANE)

NORTH CAROLINA PROFESSIONAL SEAL 32492 ENGINEER JOHN A. YANNACCONE 12/8/10

REVISIONS						SHEET NO.
NO.	BY:	DATE:	NO.	BY:	DATE:	S-48
1			3			TOTAL SHEETS
2			4			134

ASSEMBLED BY : HARISH SHAH	DATE : 01/09		
CHECKED BY : Q.T. NGUYEN	DATE : 04/09		
DRAWN BY : ELR 8/91	REV. 7/17/98	RWW/LES	
CHECKED BY : GRP 8/91	REV. 10/17/00R	RWW/LES	
	REV. 5/1/06	TLA/GM	

08-DEC-2010 15:00
Z:\Structures\r2510c\Final Plans\STR2\R-2510C_sd_G_02.dgn
Hshah

STR. #2

STD. NO. PCG5 (Sht. 1)

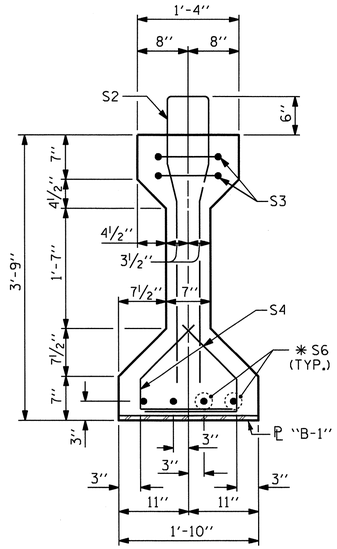

SECTION B-B

(FOR EMBEDDED ℄ "B-1" DETAILS SEE SHEET 4 OF 4)

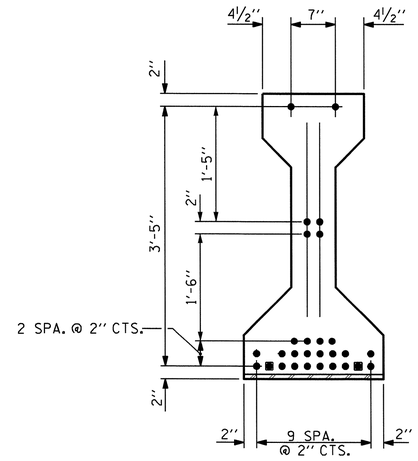

AT END OF GIRDER

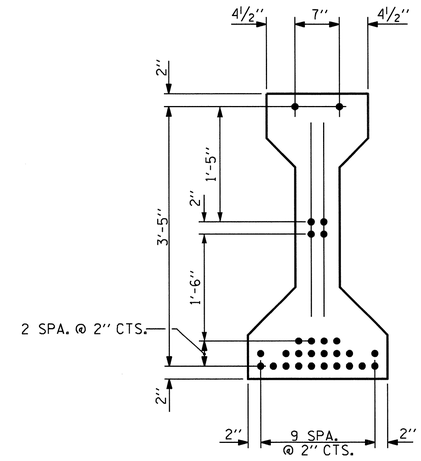

AT ℄ OF GIRDER

0.6"Ø LOW RELAXATION STRAND LAYOUT

(28 STRANDS, ALL STRAIGHT, 2 DEBONDED STRANDS)
■ STRANDS DEBONDED FOR 4'-0" FROM END OF GIRDER

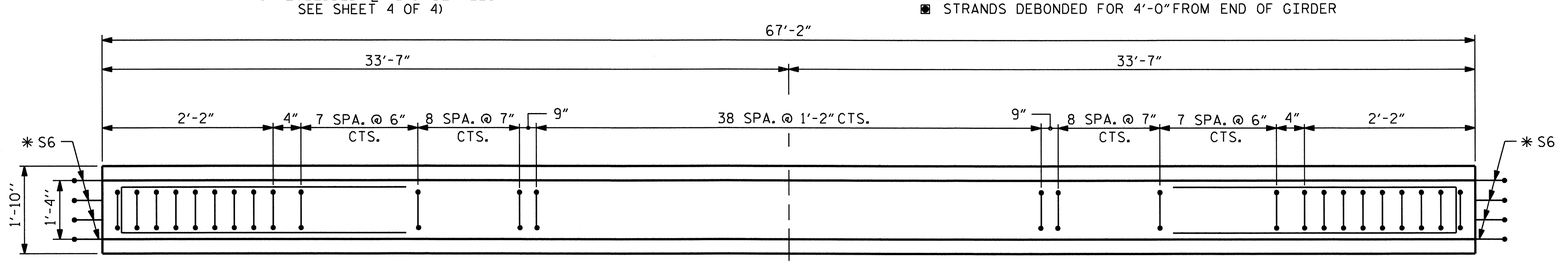

PLAN OF GIRDER

NO BEVEL REQUIRED AT END OF GIRDERS, ALL DIMENSIONS SHOWN ARE HORIZONTAL DISTANCE.

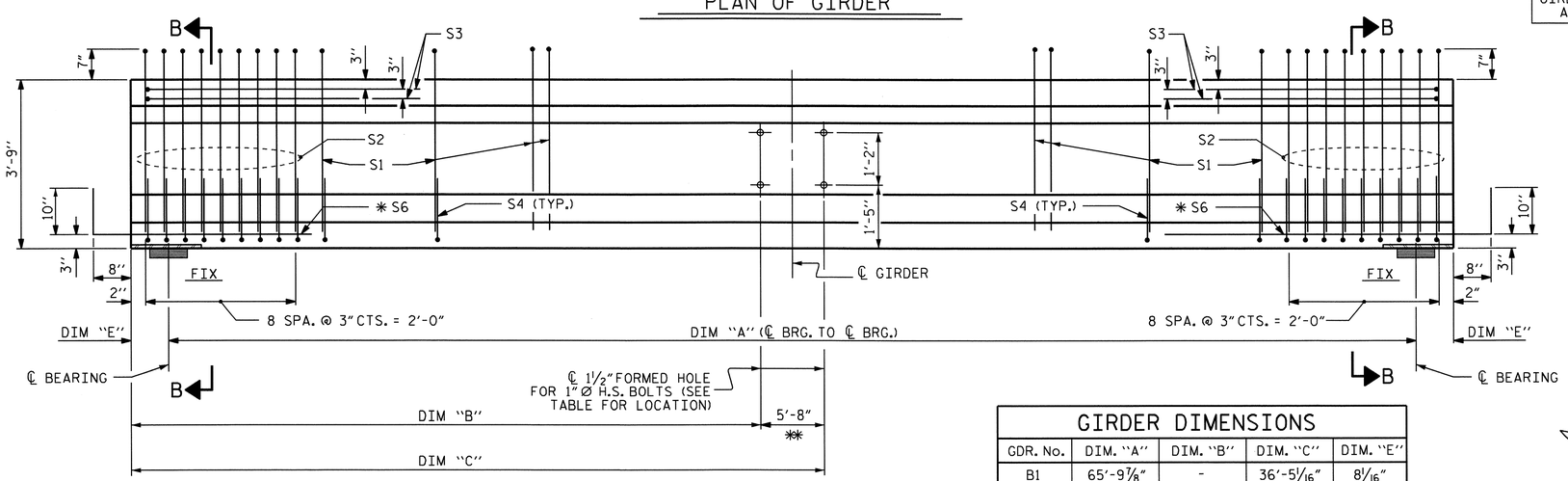

✱✱ FOR INTERIOR GIRDERS ONLY, SEE "FRAMING PLAN" SHEET.

ELEVATION OF GIRDER

(SEE PARTIAL ELEVATION OF 1½" Ø FORMED HOLES FOR ADDITIONAL "S" BARS IN THE INTERMEDIATE DIAPHRAGM AREA ON SHEET 4 OF 4)

GIRDER DIMENSIONS				
GDR. No.	DIM. "A"	DIM. "B"	DIM. "C"	DIM. "E"
B1	65'-9 7/8"	-	36'-5 1/16"	8 1/16"
B2	65'-9 11/16"	30'-9"	36'-5"	8 3/16"
B3	65'-9 7/16"	30'-9 1/16"	36'-5 1/16"	8 5/16" (-)
B4	65'-9 3/16"	30'-9 1/16"	36'-5 1/16"	8 7/16" (-)
B4	65'-9"	30'-9 1/8"	36'-5 1/8"	8 1/2"
B6	65'-8 3/4"	30'-9 1/8"	-	8 5/8"

0.6" Ø L. R. GRADE 270 STRANDS		
AREA (SQUARE INCHES)	ULTIMATE STRENGTH (LBS. PER STRAND)	APPLIED PRESTRESS (LBS. PER STRAND)
0.217	58,600	43,950

REINFORCING STEEL FOR ONE GIRDER

	BAR	NUMBER	SIZE	TYPE	LENGTH	WEIGHT
	S1	71	#4	1	8'-8"	411
	S2	18	#6	1	8'-8"	234
	S3	4	#4	3	8'-8"	23
	S4	68	#4	2	2'-9"	125
	✱ S6	8	#5	STR	3'-8"	31
EXT. GDR.	S7	2	#5	3	7'-2"	15
INT. GDR.	S7	4	#5	3	7'-2"	30
EXT. GDR.	S8	5	#4	STR	7'-0"	23
INT. GDR.	S9	5	#4	STR	12'-9"	43

✱ S6 BARS SHALL BE BENT BEFORE SHIPMENT. HEAT BENDING SHALL NOT BE ALLOWED.

BAR TYPES

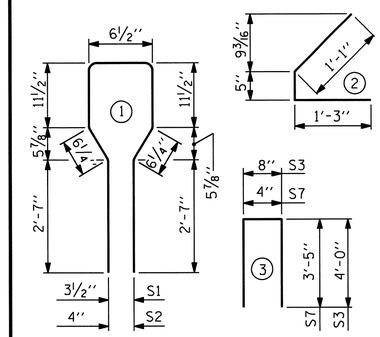

ALL BAR DIMENSIONS ARE OUT-TO-OUT

QUANTITIES FOR ONE GIRDER

	REINFORCING STEEL	8000 PSI CONCRETE	0.6" Ø L. R. STRANDS
	LB.	C.Y.	No.
EXT. GDR.	862	9.666	28
INT. GDR.	897	9.666	28

GIRDERS REQUIRED

NUMBER	LENGTH	TOTAL LENGTH
6	67'-2"	403.00'

PROJECT NO. R-2510C

BEAUFORT COUNTY

STATION: 54+34.00 -L-

SHEET 2 OF 4

STATE OF NORTH CAROLINA
DEPARTMENT OF TRANSPORTATION
RALEIGH

STANDARD

AASHTO TYPE III
PRESTRESSED CONCRETE GIRDER
CONTINUOUS FOR LIVE LOAD

SPAN B
(RIGHT LANE)

NORTH CAROLINA PROFESSIONAL SEAL 32492 ENGINEER JOHN A. YANNACCONE
12/8/10

REVISIONS						SHEET NO.
NO.	BY:	DATE:	NO.	BY:	DATE:	S-49
1			3			TOTAL SHEETS
2			4			134

STR. #2

STD. NO. PCG5 (Sht. 1)

ASSEMBLED BY : HARISH SHAH DATE : 01/09	
CHECKED BY : O.T. NGUYEN DATE : 04/09	
DRAWN BY : ELR 8/91	REV. 7/17/98 RWW/LES
CHECKED BY : GRP 8/91	REV. 10/17/00R RWW/LES
	REV. 5/1/06 TLA/GM

08-DEC-2010 15:00
Z:\Structures\R2510c\Final Plans\STR2\R-2510C_sd_G_02.dgn
Hshah

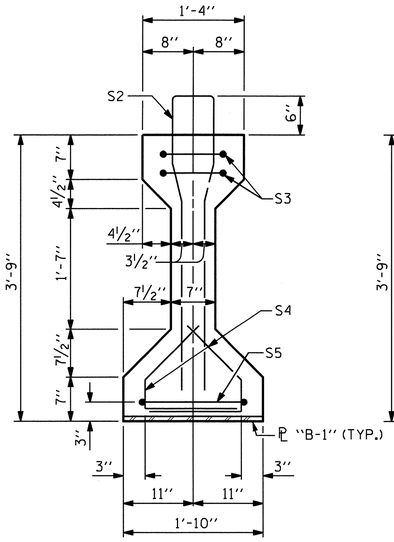

SECTION A-A

(FOR EMBEDDED ℄ "B-1" DETAILS SEE SHEET 4 OF 4)

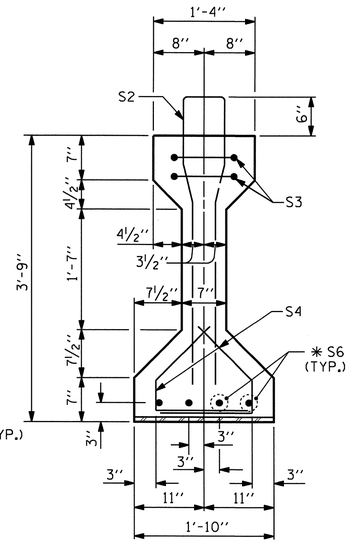

SECTION B-B

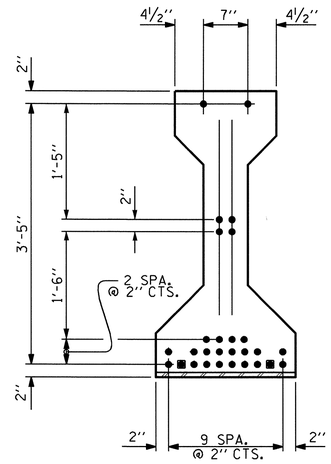

AT END OF GIRDER

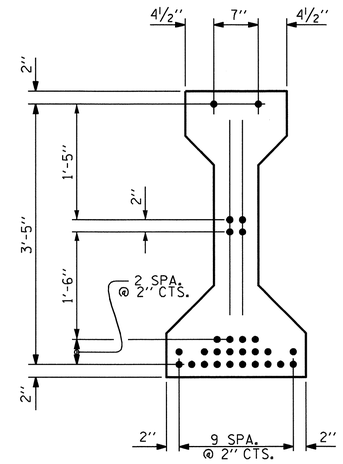

AT ℄ OF GIRDER

0.6"Ø LOW RELAXATION STRAND LAYOUT

(28 STRANDS, ALL STRAIGHT, 2 DEBONDED STRANDS)
■ STRANDS DEBONDED FOR 4'-0" FROM END OF GIRDER

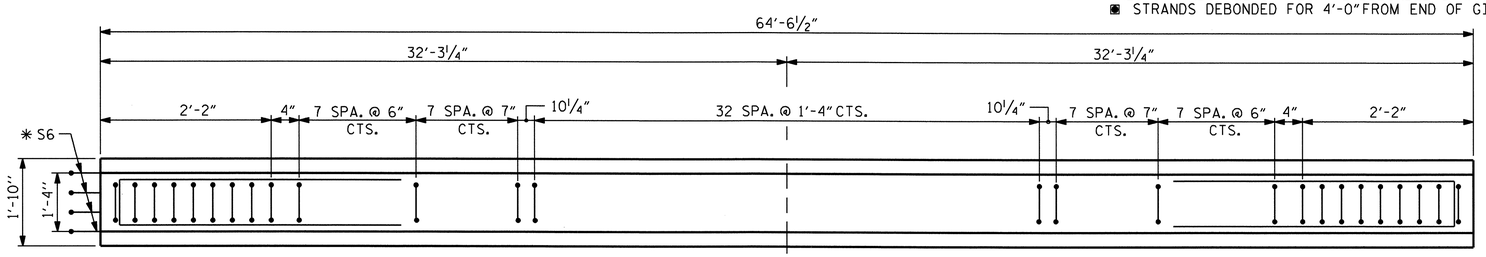

PLAN OF GIRDER

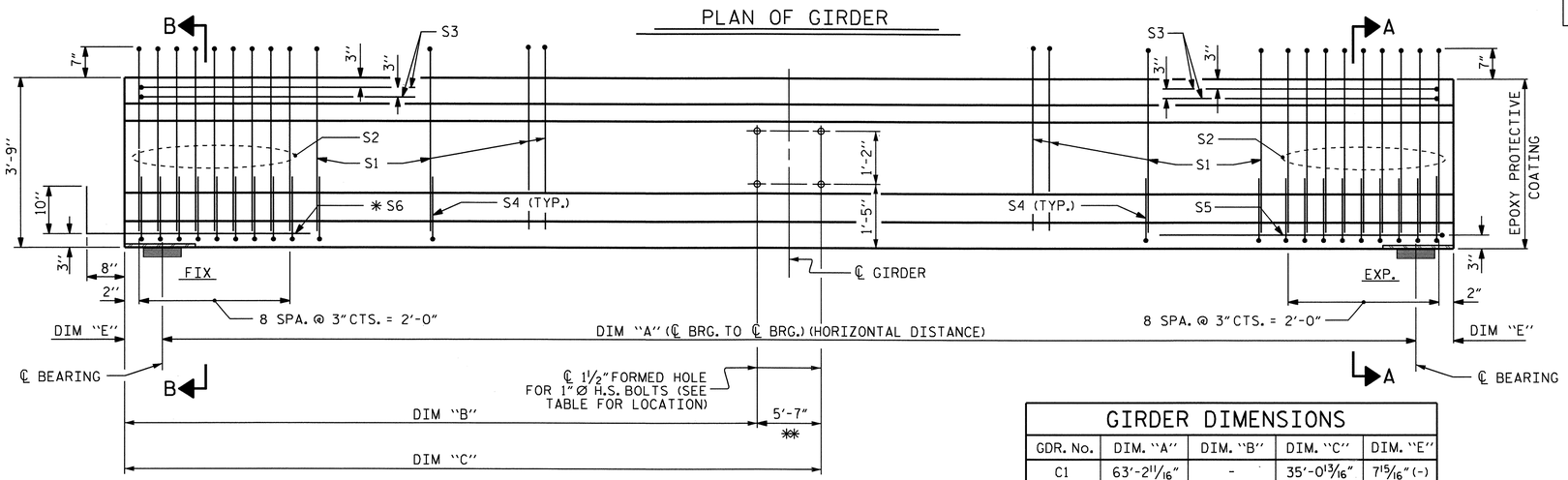

✱✱ FOR INTERIOR GIRDERS ONLY, SEE "FRAMING PLAN" SHEET.

ELEVATION OF GIRDER

(SEE PARTIAL ELEVATION OF 1½" Ø FORMED HOLES FOR ADDITIONAL "S" BARS IN THE INTERMEDIATE DIAPHRAGM AREA ON SHEET 4 OF 4)

NO BEVEL REQUIRED AT END OF GIRDERS, ALL DIMENSIONS SHOWN ARE HORIZONTAL DISTANCE.

GIRDER DIMENSIONS

GDR. No.	DIM. "A"	DIM. "B"	DIM. "C"	DIM. "E"
C1	63'-2 11/16"	-	35'-0 13/16"	7 15/16" (-)
C2	63'-2 1/2"	29'-5 11/16"	35'-0 11/16"	8"
C3	63'-2 1/4"	29'-5 3/4"	35'-0 3/4"	8 1/8"
C4	63'-2 1/16"	29'-5 3/4"	35'-0 3/4"	8 1/4" (-)
C5	63'-1 13/16"	29'-5 13/16"	35'-0 13/16"	8 3/8" (-)
C6	63'-1 5/8"	29'-5 3/4"	-	8 7/16"

0.6" Ø L. R. GRADE 270 STRANDS

AREA (SQUARE INCHES)	ULTIMATE STRENGTH (LBS. PER STRAND)	APPLIED PRESTRESS (LBS. PER STRAND)
0.217	58,600	43,950

REINFORCING STEEL FOR ONE GIRDER

	BAR	NUMBER	SIZE	TYPE	LENGTH	WEIGHT
	S1	63	#4	1	8'-8"	365
	S2	18	#6	1	8'-8"	234
	S3	4	#4	3	8'-8"	23
	S4	68	#4	2	2'-9"	125
	S5	1	#4	3	9'-6"	6
	✱ S6	4	#5	STR	3'-8"	15
EXT. GDR.	S7	2	#5	3	7'-2"	15
INT. GDR.	S7	4	#5	3	7'-2"	30
EXT. GDR.	S8	5	#4	STR	7'-0"	23
INT. GDR.	S9	5	#4	STR	12'-9"	43

✱ S6 BARS SHALL BE BENT BEFORE SHIPMENT. HEAT BENDING SHALL NOT BE ALLOWED.

BAR TYPES

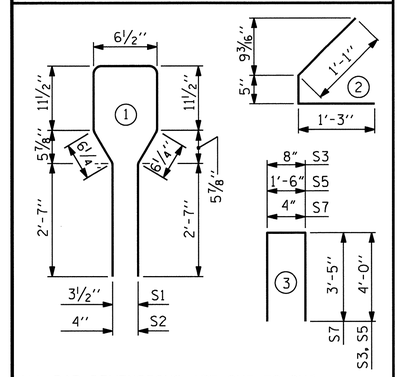

ALL BAR DIMENSIONS ARE OUT-TO-OUT

QUANTITIES FOR ONE GIRDER

	REINFORCING STEEL	8000 PSI CONCRETE	0.6" Ø L. R. STRANDS
	LB.	C.Y.	No.
EXT. GDR.	806	9.288	28
INT. GDR.	841	9.288	28

GIRDERS REQUIRED

NUMBER	LENGTH	TOTAL LENGTH
6	64'-6½"	387.25'

PROJECT NO. R-2510C

BEAUFORT COUNTY

STATION: 54+34.00 -L-

SHEET 3 OF 4

STATE OF NORTH CAROLINA
DEPARTMENT OF TRANSPORTATION
RALEIGH

STANDARD
AASHTO TYPE III
PRESTRESSED CONCRETE GIRDER
CONTINUOUS FOR LIVE LOAD
SPAN C
(RIGHT LANE)

NORTH CAROLINA PROFESSIONAL SEAL 32492 ENGINEER JOHN A. YANNACCONE
12/8/10

REVISIONS						
NO.	BY:	DATE:	NO.	BY:	DATE:	
1			3			
2			4			

SHEET NO. S-50

TOTAL SHEETS 134

ASSEMBLED BY : HARISH SHAH	DATE : 01/09		
CHECKED BY : O.T. NGUYEN	DATE : 04/09		
DRAWN BY : ELR 8/91	REV. 7/17/98 RWW/LES		
CHECKED BY : GRP 8/91	REV. 10/17/00R RWW/LES		
	REV. 5/1/06 TLA/GM		

08-DEC-2010 15:00
Z:\Structures\r2510c\Final Plans\STR2\R-2510C_sd_G_02.dgn
Hshah

STR. #2

STD. NO. PCG5 (Sht. 1)

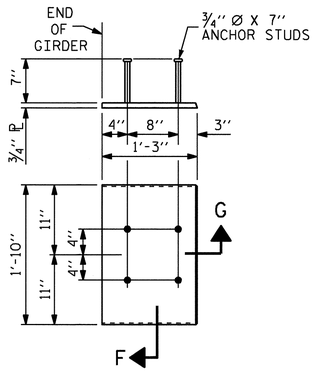

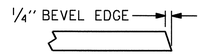

SECTION "G"

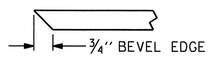

SECTION "F"
(SEE NOTES)

EMBEDDED PLATE "B-1" DETAILS
FOR AASHTO TYPE III GIRDER
(2 REQ'D PER GIRDER)

SPAN	DIMENSION
A	5'-9"
B	5'-8"
C	5'-7"

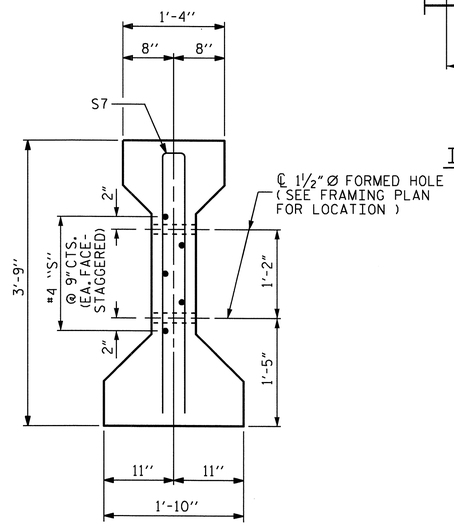

SECTION C-C
(S1 BARS NOT SHOWN)

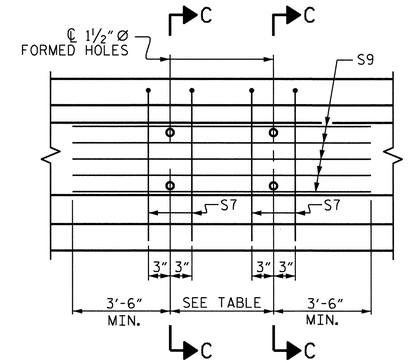

INTERIOR GIRDERS 2 THRU 5

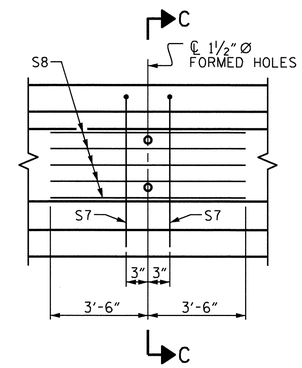

EXTERIOR GIRDERS 1 & 6

PARTIAL ELEVATION OF 1 1/2" Ø FORMED HOLES

NOTES

ALL PRESTRESSING STRANDS SHALL BE 7-WIRE LOW-RELAXATION GRADE 270 STRANDS AND SHALL CONFORM TO AASHTO M203 EXCEPT FOR SAMPLING REQUIREMENTS WHICH SHALL BE IN ACCORDANCE WITH THE STANDARD SPECIFICATIONS.

ALL REINFORCING STEEL SHALL BE GRADE 60.

APPLY EPOXY PROTECTIVE COATING TO END OF GIRDER SURFACES INDICATED IN ELEVATION VIEW.

EMBEDDED PLATE "B-1" SHALL BE GALVANIZED IN ACCORDANCE WITH THE STANDARD SPECIFICATIONS. BEVEL EDGES OF PLATE "B-1" TO GIVE CLOSE FIT BUT NOT TIGHT FIT TO STEEL CASTING FORM.

ANCHOR STUDS SHALL CONFORM TO AASHTO M169 GRADES 1010 THROUGH 1020 OR APPROVED EQUAL, AND SHALL MEET THE TYPE "B" REQUIREMENTS OF SUBSECTION 7.3 OF THE ANSI/AASHTO/AWS D1.5 BRIDGE WELDING CODE.

AT ENDS OF GIRDERS TO BE EMBEDDED IN CONCRETE DIAPHRAGMS OR END WALLS, PRESTRESSING STRANDS MAY EXTEND A MAXIMUM OF 2" BEYOND THE GIRDER ENDS. OTHERWISE, PRESTRESSING STRANDS SHALL BE CUT FLUSH WITH THE GIRDER ENDS.

THE TRANSFER OF LOAD FROM THE ANCHORAGES TO THE GIRDER SHALL BE DONE WHEN CONCRETE HAS REACHED A COMPRESSIVE STRENGTH OF NOT LESS THAN 6400 PSI FOR SPAN A, B & C GIRDERS.

DEPENDING ON THE TYPE OF SYSTEM USED TO SUPPORT THE DECK SLAB FORMS, PRESET ANCHORS MAY BE NECESSARY IN THE PRESTRESSED CONCRETE GIRDER.

THE TOP SURFACE OF THE GIRDER, EXCLUDING THE OUTSIDE 4", SHALL BE RAKED TO A DEPTH OF 1/4".

FOR PRESTRESSED CONCRETE MEMBERS, SEE SPECIAL PROVISIONS.

DEAD LOAD DEFLECTION TABLE

SPAN A

1/2" Ø LOW RELAXATION	GIRDERS 1 & 6											GIRDERS 2 THRU 5										
TENTH POINTS	0	.1	.2	.3	.4	.5	.6	.7	.8	.9	0	0	.1	.2	.3	.4	.5	.6	.7	.8	.9	0
CAMBER (GIRDER ALONE IN PLACE) ↑	0	0.070	0.133	0.182	0.214	0.224	0.214	0.182	0.133	0.070	0	0	0.070	0.133	0.182	0.214	0.224	0.214	0.182	0.133	0.070	0
* DEFLECTION DUE TO SUPERIMPOSED D.L. ↓	0	0.021	0.039	0.053	0.062	0.065	0.062	0.053	0.039	0.021	0	0	0.023	0.043	0.059	0.069	0.073	0.069	0.059	0.043	0.023	0
FINAL CAMBER ↑	0	5/8"	1 1/8"	1 9/16"	1 13/16"	1 15/16"	1 13/16"	1 9/16"	1 1/8"	5/8"	0	0	9/16"	1 1/16"	1 1/2"	1 3/4"	1 13/16"	1 3/4"	1 1/2"	1 1/16"	9/16"	0

SPAN B

1/2" Ø LOW RELAXATION	GIRDERS 1 & 6											GIRDERS 2 THRU 5										
TENTH POINTS	0	.1	.2	.3	.4	.5	.6	.7	.8	.9	0	0	.1	.2	.3	.4	.5	.6	.7	.8	.9	0
CAMBER (GIRDER ALONE IN PLACE) ↑	0	0.074	0.141	0.193	0.226	0.237	0.226	0.193	0.141	0.074	0	0	0.074	0.141	0.193	0.226	0.237	0.226	0.193	0.141	0.074	0
* DEFLECTION DUE TO SUPERIMPOSED D.L. ↓	0	0.024	0.046	0.063	0.073	0.077	0.073	0.063	0.046	0.024	0	0	0.027	0.051	0.069	0.081	0.085	0.081	0.069	0.051	0.027	0
FINAL CAMBER ↑	0	5/8"	1 1/8"	1 9/16"	1 13/16"	1 15/16"	1 13/16"	1 9/16"	1 1/8"	5/8"	0	0	9/16"	1 1/16"	1 1/2"	1 3/4"	1 13/16"	1 3/4"	1 1/2"	1 1/16"	9/16"	0

SPAN C

1/2" Ø LOW RELAXATION	GIRDERS 1 & 6											GIRDERS 2 THRU 5										
TENTH POINTS	0	.1	.2	.3	.4	.5	.6	.7	.8	.9	0	0	.1	.2	.3	.4	.5	.6	.7	.8	.9	0
CAMBER (GIRDER ALONE IN PLACE) ↑	0	0.070	0.133	0.182	0.213	0.224	0.213	0.182	0.133	0.070	0	0	0.070	0.133	0.182	0.214	0.224	0.214	0.182	0.133	0.070	0
* DEFLECTION DUE TO SUPERIMPOSED D.L. ↓	0	0.021	0.039	0.053	0.063	0.066	0.063	0.053	0.039	0.021	0	0	0.023	0.043	0.059	0.069	0.073	0.069	0.059	0.043	0.023	0
FINAL CAMBER ↑	0	5/8"	1 1/8"	1 9/16"	1 13/16"	1 15/16"	1 13/16"	1 9/16"	1 1/8"	5/8"	0	0	9/16"	1 1/16"	1 1/2"	1 3/4"	1 13/16"	1 3/4"	1 1/2"	1 1/16"	9/16"	0

* INCLUDES FUTURE WEARING SURFACE

ALL VALUES ARE SHOWN IN FEET (DECIMAL FORM), EXCEPT "FINAL CAMBER", WHICH IS GIVEN IN INCHES (FRACTION FORM).

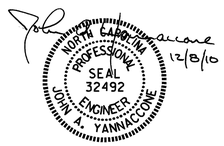

PROJECT NO. R-2510C
BEAUFORT COUNTY
STATION: 54+34.00 -L-

SHEET 4 OF 4

STATE OF NORTH CAROLINA
DEPARTMENT OF TRANSPORTATION
RALEIGH

STANDARD

PRESTRESSED CONCRETE GIRDER
CONTINUOUS FOR LIVE LOAD
DETAILS

(RIGHT LANE)

REVISIONS						SHEET NO.
NO.	BY:	DATE:	NO.	BY:	DATE:	S-51
1			3			TOTAL SHEETS
2			4			134

ASSEMBLED BY : HARISH SHAH DATE : 01/09
CHECKED BY : O.T. NGUYEN DATE : 04/09
DRAWN BY : ELR 11/91
CHECKED BY : GRP 11/91
REV. 10/17/00 RWW/LES
REV. 7/10/01RR LES/RDR
REV. 5/1/06 TLA/GM

08-DEC-2010 15:01
Z:\Structures\r2510c\Final Plans\STR2\R-2510C_sd_DL_02.dgn
Mehsh

STR. #2

STD.No.PCG11

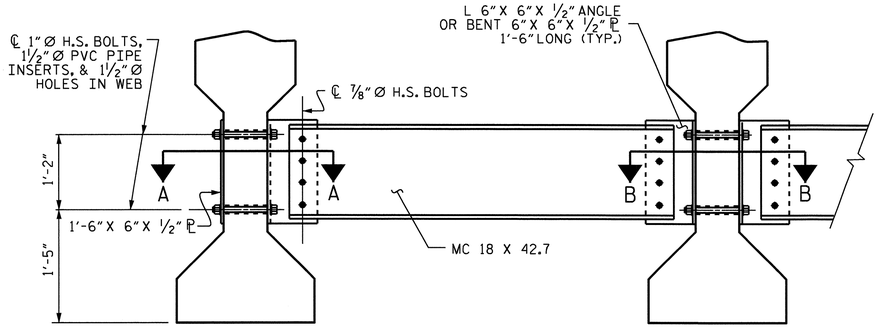

EXTERIOR GIRDER

INTERIOR GIRDER

PART SECTION AT INTERMEDIATE DIAPHRAGM

(TYPICAL FOR EACH BAY)

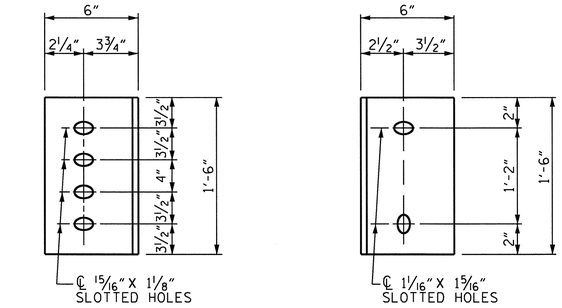

DIAPHRAGM FACE

WEB FACE

CONNECTOR PLATE DETAILS

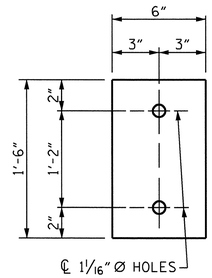

PLATE DETAILS

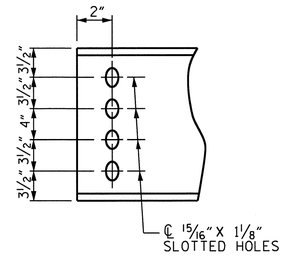

CHANNEL END

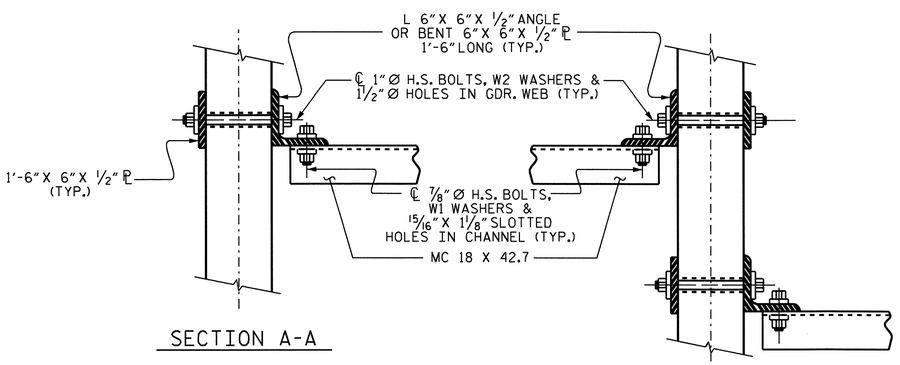

SECTION A-A

SECTION B-B

CONNECTION DETAILS

FOR LOCATION OF INTERMEDIATE DIAPHRAGMS, SEE "FRAMING PLAN" SHEET.

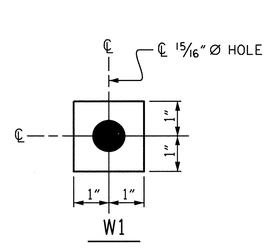

W1

ℙ 7/16" X 2" X 2"

USE WITH ⅞" Ø HVY. HEX NUTS & DIRECT TENSION INDICATOR WASHERS AT DIAPHRAGM CHANNEL TO CONNECTOR PLATE CONNECTIONS

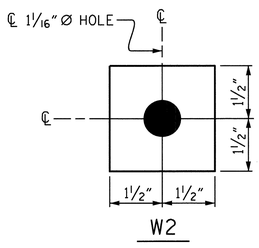

W2

ℙ 7/16" X 3" X 3"

USE WITH 1" Ø HVY. HEX NUTS AT CONNECTOR PLATE TO GIRDER CONNECTIONS

WASHER DETAILS

STRUCTURAL STEEL NOTES

ALL INTERMEDIATE DIAPHRAGM STEEL, CONNECTOR PLATES AND PLATE WASHERS SHALL BE AASHTO M270 GRADE 50 OR APPROVED EQUAL.

TENSION ON THE AASHTO M164 BOLTS THROUGH THE CHANNEL MEMBER SHALL BE CALIBRATED USING DIRECT TENSION INDICATOR WASHERS IN ACCORDANCE WITH THE STANDARD SPECIFICATIONS. FOR DIRECT TENSION INDICATORS, SEE SPECIAL PROVISIONS.

TENSION ON THE AASHTO M164 BOLTS THROUGH THE GIRDER WEB SHALL BE SNUG TIGHTENED FOLLOWED BY AN ADDITIONAL ¼ TURN.

THE PLATES, BENT PLATES, CHANNELS, ANGLES, AND PLATE WASHERS SHALL BE GALVANIZED OR METALLIZED IN ACCORDANCE WITH THE STANDARD SPECIFICATIONS. FOR THERMAL SPRAYED COATINGS (METALLIZATION), SEE SPECIAL PROVISIONS.

FOR METALLIZATION, APPLY AN 8 MIL THICK 99.99 PERCENT ZINC (W-Zn-1) THERMAL SPRAYED COATING WITH A 0.5 MIL THICK SEAL COAT TO ALL STEEL DIAPHRAGM SURFACES IN ACCORDANCE WITH THE THERMAL SPRAYED COATINGS SPECIAL PROVISIONS AND SECTION 442 OF THE STANDARD SPECIFICATIONS.

GALVANIZE THE HIGH STRENGTH BOLTS, NUTS, AND WASHERS AND DIRECT TENSION INDICATORS IN ACCORDANCE WITH THE STANDARD SPECIFICATIONS. FOR HIGH STRENGTH BOLTS, SEE SPECIAL PROVISIONS.

USE A MINIMUM 7/16" THICK PLATE WASHER WITH STANDARD HOLES UNDER EACH BOLT HEAD AND NUT. THE PLATE WASHERS SHALL HAVE SUFFICIENT SIZE TO COVER THE HOLES AFTER INSTALLATION. HARDENED WASHERS AND DIRECT TENSION INDICATORS ARE TO BE USED IN CONJUNCTION WITH THE PLATE WASHERS IN THE CHANNEL MEMBER CONNECTION.

FOR BOLTS THROUGH THE GIRDER WEB, PROVIDE SUFFICIENT LENGTH OF ALL BOLTS TO ACCOMMODATE WASHERS, AND THE THICKNESS OF CONNECTING MEMBER PLUS AT LEAST ¼" PROJECTION BEYOND THE NUT.

INTERMEDIATE DIAPHRAGM ASSEMBLY SHALL COMPLY WITH SECTION 1072 OF THE STANDARD SPECIFICATIONS.

CONTRACTOR SHALL SUBMIT TWO SETS OF WORKING DRAWINGS FOR THE INTERMEDIATE DIAPHRAGM ASSEMBLY FOR REVIEW, COMMENTS AND ACCEPTANCE. AFTER REVIEW, COMMENTS, AND ACCEPTANCE, SUBMIT SEVEN SETS FOR DISTRIBUTION.

IN THE EXTERIOR BAYS, TEMPORARY STRUTS SHALL BE PLACED BETWEEN PRESTRESSED GIRDERS ADJACENT TO THE STEEL DIAPHRAGMS. STRUTS SHALL REMAIN IN PLACE 3 DAYS AFTER CONCRETE IS PLACED. ALL AASHTO M164 H.S. BOLTS SHALL BE FULLY TIGHTENED AFTER THE STRUTS HAVE BEEN REMOVED.

THE COST OF THE STEEL DIAPHRAGMS AND ASSEMBLIES SHALL BE INCLUDED IN THE UNIT PRICE BID FOR PRESTRESSED CONCRETE GIRDERS.

PROJECT NO. R-2510C

BEAUFORT COUNTY

STATION: 54+34.00 -L-

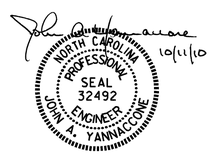

STATE OF NORTH CAROLINA
DEPARTMENT OF TRANSPORTATION
RALEIGH

STANDARD

INTERMEDIATE STEEL DIAPHRAGMS FOR TYPE III PRESTRESSED CONCRETE GIRDERS

(RIGHT LANE)

REVISIONS						SHEET NO.
NO.	BY:	DATE:	NO.	BY:	DATE:	S-52
1			3			TOTAL SHEETS
2			4			134

STR. #2 STD. NO. PCG12

ASSEMBLED BY : HARISH SHAH		DATE : 01/09	
CHECKED BY : O.T. NGUYEN		DATE : 04/09	
DRAWN BY : TLA 6/05	ADDED 10/21/05		
CHECKED BY : VC 6/05	REV. 5/1/06R KMM/GM		

11-OCT-2010 12:55
Y:\TIPProjects-R\R2510c\Structures\r2510c\FinalPlans\STR2\R-2510C_sd_G_02.dgn
qtnguyen

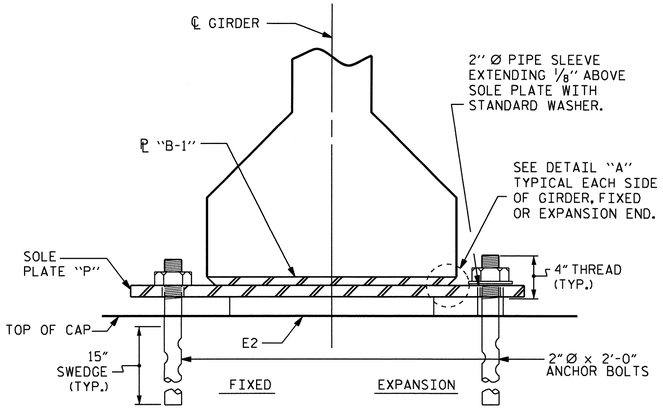

SECTION E-E

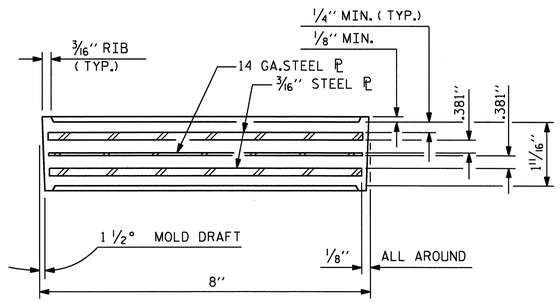

TYPICAL SECTION OF ELASTOMERIC BEARINGS

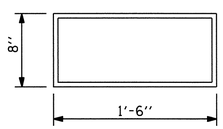

E2 (36 REQ'D)

PLAN VIEW OF ELASTOMERIC BEARING

TYPE III

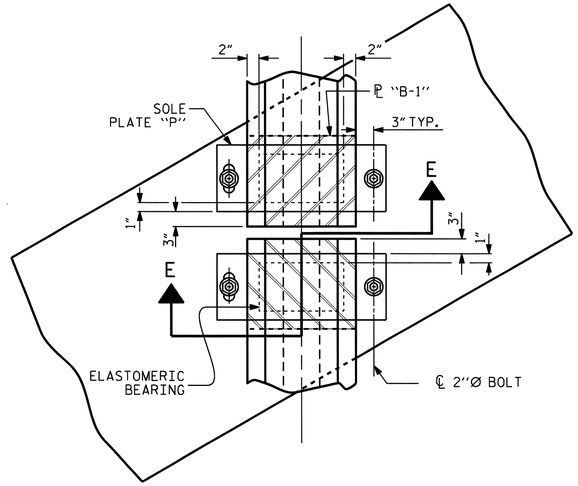

TYPICAL HALF-PLAN (EXPANSION)

TYPICAL HALF-PLAN (FIXED)

ELASTOMER IN ALL BEARINGS SHALL BE 60 DUROMETER HARDNESS

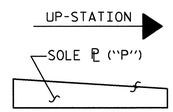

SOLE ℗ PLACEMENT DETAIL

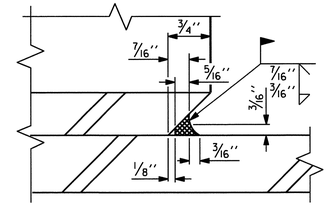

DETAIL "A"

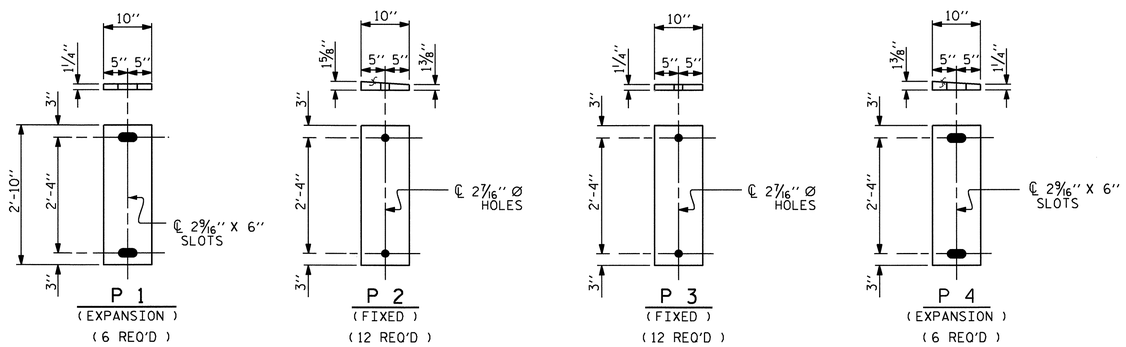

SOLE PLATE DETAILS ("P")

NOTES

AT ALL FIXED POINTS OF SUPPORT, NUTS FOR ANCHOR BOLTS ARE TO BE TIGHTENED FINGER TIGHT AND THEN BACKED OFF 1/2 TURN. THE THREAD OF THE NUT AND BOLT SHALL THEN BE BURRED WITH A SHARP POINTED TOOL.

THE 2" Ø PIPE SLEEVE SHALL BE CUT FROM SCHEDULE 40 PVC PLASTIC PIPE. THE PVC PLASTIC PIPE SHALL MEET THE REQUIREMENTS OF ASTM D1785.

STEEL SOLE PLATES, ANCHOR BOLTS, NUTS, AND WASHERS SHALL BE GALVANIZED IN ACCORDANCE WITH THE STANDARD SPECIFICATIONS.

PRIOR TO WELDING, GRIND THE GALVANIZED SURFACE OF THE PORTION OF THE EMBEDDED PLATE AND SOLE PLATE THAT ARE TO BE WELDED. AFTER WELDING, DAMAGED GALVANIZED SURFACES SHALL BE REPAIRED IN ACCORDANCE WITH THE STANDARD SPECIFICATIONS.

WHEN WELDING THE SOLE PLATE TO THE EMBEDDED PLATE IN THE GIRDER, USE TEMPERATURE INDICATING WAX PENS, OR OTHER SUITABLE MEANS, TO ENSURE THAT THE TEMPERATURE OF THE SOLE PLATE DOES NOT EXCEED 300°F. TEMPERATURES ABOVE THIS MAY DAMAGE THE ELASTOMER.

SOLE PLATE "P", BOLTS, NUTS, WASHERS, AND PIPE SLEEVE SHALL BE INCLUDED IN THE PAY ITEM FOR PRESTRESSED CONCRETE GIRDERS.

ANCHOR BOLTS SHALL MEET THE REQUIREMENTS OF ASTM A449. NUTS SHALL MEET THE REQUIREMENTS OF AASHTO M291-DH OR AASHTO M292-2H. WASHERS SHALL MEET THE REQUIREMENTS OF AASHTO M293. SHOP DRAWINGS ARE NOT REQUIRED FOR ANCHOR BOLT, NUTS AND WASHERS. SHOP INSPECTION IS REQUIRED.

ALL SURFACES OF BEARING PLATES SHALL BE SMOOTH AND STRAIGHT.

— LOAD RATINGS —	
	MAX.D.L.+L.L.
45" PCG -TYPE III	115 K

PROJECT NO. R-2510C
BEAUFORT COUNTY
STATION: 54+34.00 -L-

STATE OF NORTH CAROLINA
DEPARTMENT OF TRANSPORTATION
RALEIGH

STANDARD
ELASTOMERIC BEARING DETAILS
PRESTRESSED CONCRETE GIRDER SUPERSTRUCTURE
(RIGHT LANE)

NORTH CAROLINA PROFESSIONAL SEAL 16301 ENGINEER TING-HSUNG FANG
10/11/10

REVISIONS						SHEET NO.
NO.	BY:	DATE:	NO.	BY:	DATE:	S-53
1			3			TOTAL SHEETS
2			4			134

STR. #2 STD. NO. EB3

ASSEMBLED BY : HARISH SHAH	DATE : 01/09		
CHECKED BY : O.T. NGUYEN	DATE : 04/09		
DRAWN BY : WJH 8/89	REV. 10/17/00	RWW/LES	
CHECKED BY : CRK 8/89	REV. 7/10/01	RWW/LES	
	REV. 5/1/06	TLA/GM	

11-OCT-2010 12:55
Y:\TIPProjects-R\R2510c\Structures\r2510c\Final Plans\STR2\R-2510C_sd_BG_02.dgn
qtnguyen

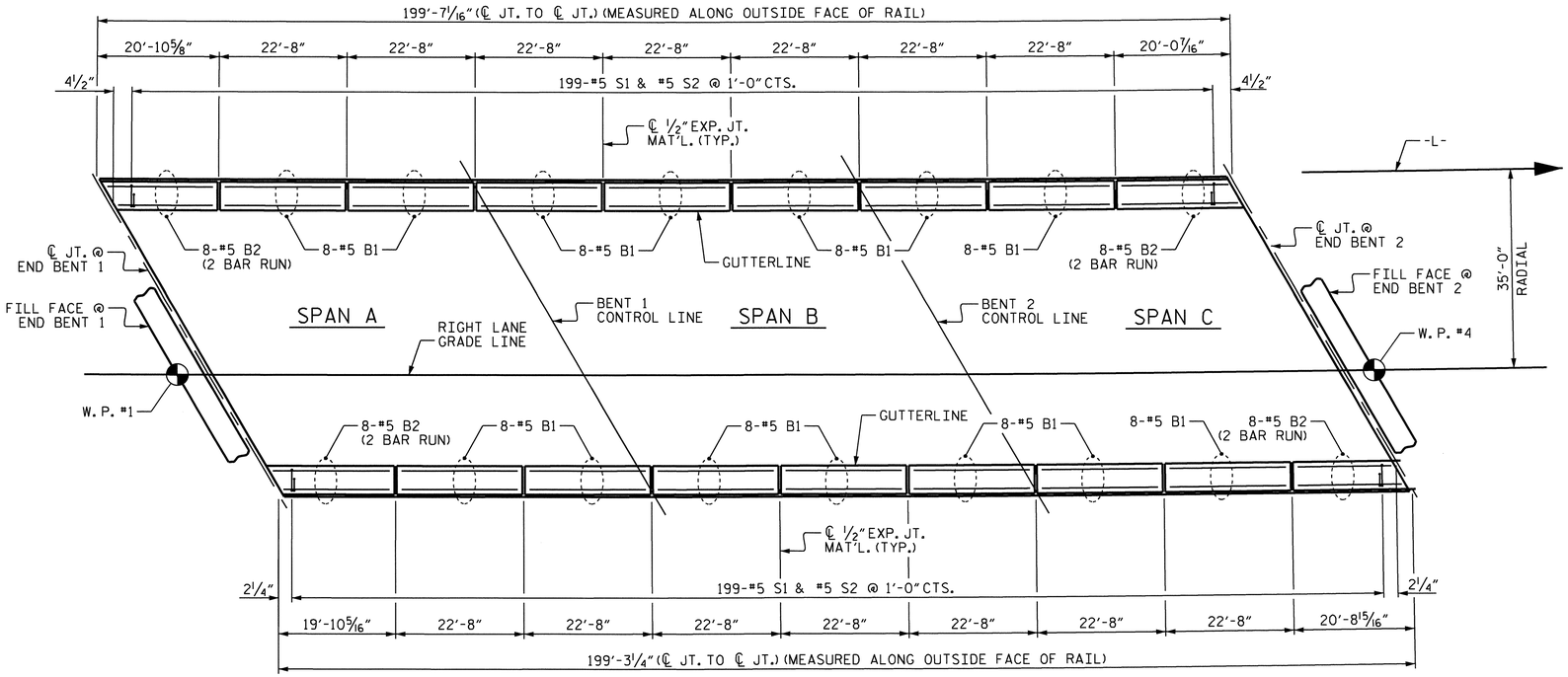

PLAN OF BARRIER RAIL

BAR TYPES

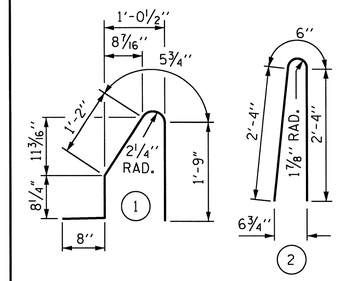

ALL BAR DIMENSIONS ARE OUT TO OUT

BILL OF MATERIAL

FOR CONCRETE BARRIER RAIL ONLY

BAR	NO.	SIZE	TYPE	LENGTH	WEIGHT
* B1	112	#5	STR	22'-4"	2609
* B2	64	#5	STR	12'-3"	818
* S1	398	#5	1	4'-9"	1972
* S2	398	#5	2	5'-2"	2145
* EPOXY COATED REINFORCING STEEL					7,544 LBS.
CLASS AA CONCRETE					40.0 CU. YDS.
CONCRETE BARRIER RAIL					398.86 LIN. FT.

NOTES

THE BARRIER RAIL IN CONTINUOUS UNIT SHALL NOT BE CAST UNTIL ALL SLAB CONCRETE IN THAT UNIT HAS BEEN CAST AND HAS REACHED A MINIMUM COMPRESSIVE STRENGTH OF 3,000 PSI.

ALL REINFORCING STEEL IN BARRIER RAILS SHALL BE EPOXY COATED.

VERTICAL GROOVED CONTRACTION JOINTS, 1/2" IN DEPTH, SHALL BE TOOLED IN ALL EXPOSED FACES OF THE BARRIER RAIL AND IN ACCORDANCE WITH ARTICLE 825-10(B) OF THE STANDARD SPECIFICATIONS. THE CONTRACTION JOINT SHALL BE LOCATED AT EACH THIRD POINT BETWEEN BARRIER RAIL EXPANSION JOINTS. ONLY ONE CONTRACTION JOINT IS REQUIRED AT MIDPOINT OF BARRIER RAIL SEGMENTS LESS THAN 20 FEET IN LENGTH AND NO CONTRACTION JOINTS ARE REQUIRED FOR THOSE SEGMENTS LESS THAN 10 FEET IN LENGTH.

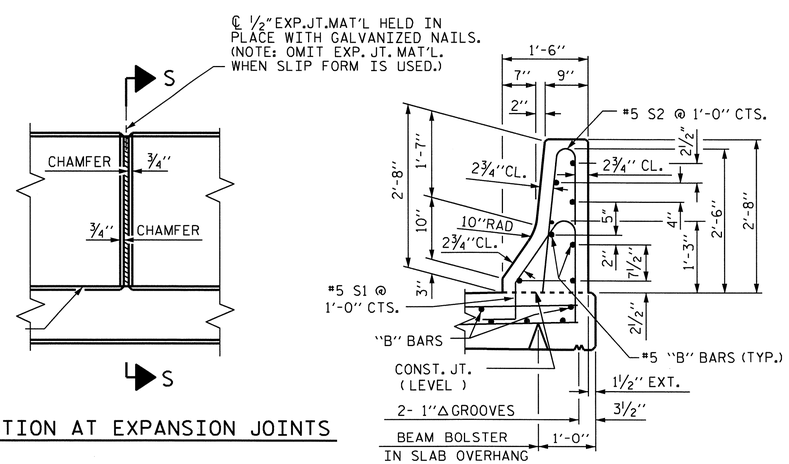

ELEVATION AT EXPANSION JOINTS

SECTION THRU RAIL

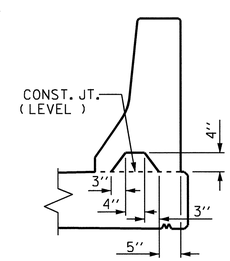

SECTION S-S

AT DAM IN OPEN JOINT
(THIS IS TO BE USED ONLY WHEN SLIP FORM IS USED)

BARRIER RAIL DETAILS

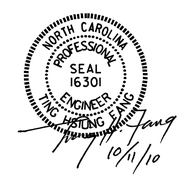

PROJECT NO. R-2510C

BEAUFORT COUNTY

STATION: 54+34.00 -L-

STATE OF NORTH CAROLINA
DEPARTMENT OF TRANSPORTATION
RALEIGH

STANDARD

CONCRETE BARRIER RAIL

(RIGHT LANE)

REVISIONS						SHEET NO.
NO.	BY:	DATE:	NO.	BY:	DATE:	S-54
1			3			TOTAL SHEETS
2			4			134

ASSEMBLED BY : HARISH SHAH	DATE : 02/09		
CHECKED BY : Q.T. NGUYEN	DATE : 04/09		
DRAWN BY : ARB 5/87	REV. 10/17/00	RWW/LES	
CHECKED BY : SJD 9/87	REV. 5/7/03R	RWW/JTE	
	REV. 5/1/06	TLA/GM	

STR. #2 STD. NO. CBR1 (SHT. 3)

11-OCT-2010 12:55
Y:\TIPProjects-R\R2510c\Structures\r2510c\FinalPlans\STR2\R-2510C_sd_BR_02.dgn
qtnguyen

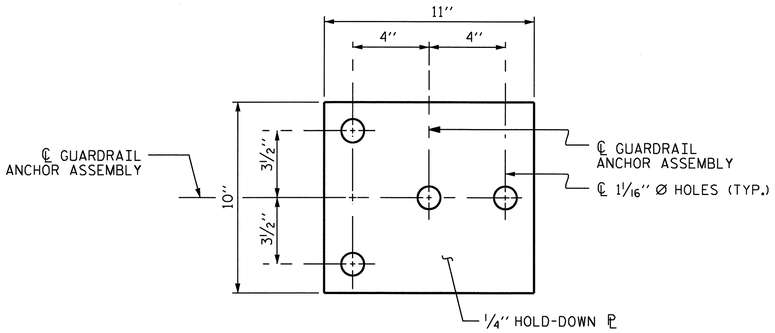

PLAN

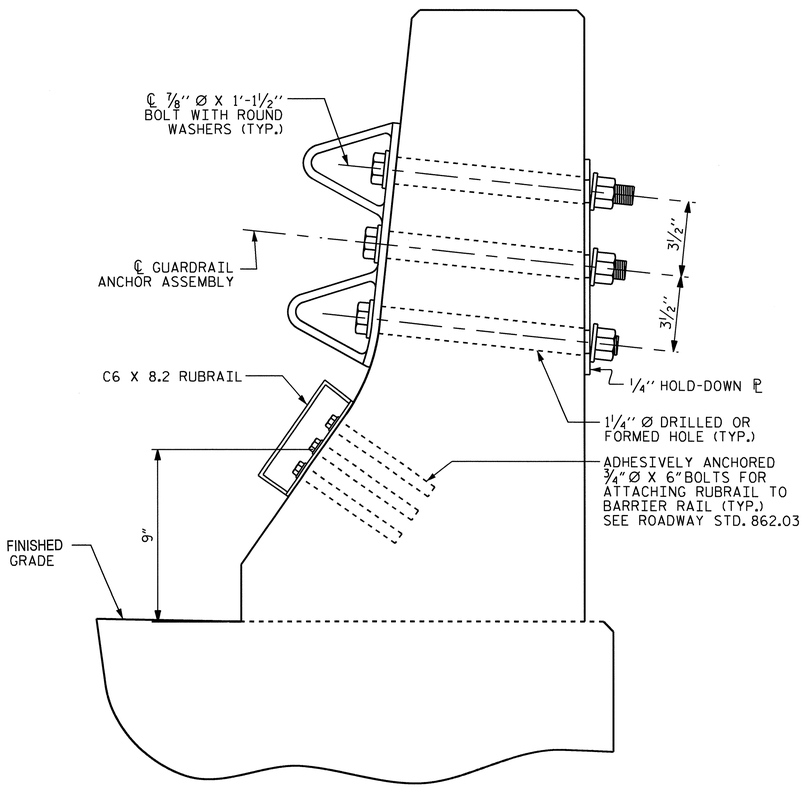

SECTION E-E

GUARDRAIL ANCHOR ASSEMBLY DETAILS

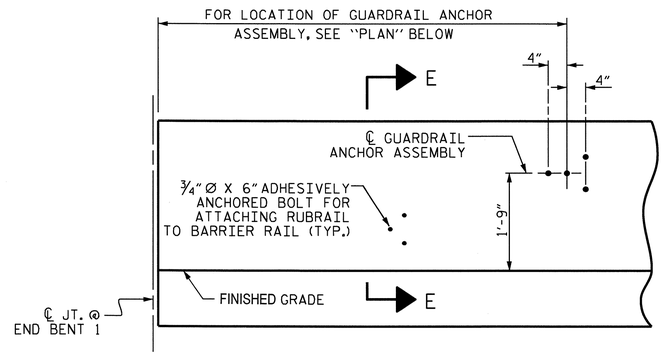

ELEVATION

FOR LOCATION OF RUBRAIL, SEE ROADWAY STD. 862.03

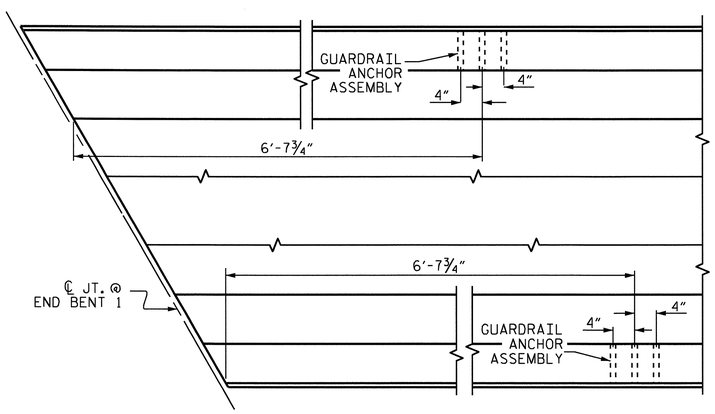

PLAN

LOCATION OF ANCHORS FOR GUARDRAIL

END BENT 1 SHOWN, END BENT 2 SIMILAR.

NOTES

THE GUARDRAIL ANCHOR ASSEMBLY SHALL CONSIST OF A 1/4" HOLD DOWN PLATE AND 4 - 7/8" Ø BOLTS WITH NUTS AND WASHERS, RUBRAIL, AND ADHESIVELY ANCHORED BOLTS.

THE HOLD-DOWN PLATE SHALL CONFORM TO AASHTO M270 GRADE 36. AFTER FABRICATION, THE HOLD-DOWN PLATE SHALL BE HOT-DIP GALVANIZED IN ACCORDANCE WITH AASHTO M111.

BOLTS SHALL CONFORM TO THE REQUIREMENTS OF ASTM A307 AND NUTS SHALL CONFORM TO THE REQUIREMENTS OF AASHTO M291. BOLTS, NUTS AND WASHERS SHALL BE GALVANIZED. (AT THE CONTRACTOR'S OPTION, STAINLESS STEEL BOLTS, NUTS AND WASHERS MAY BE USED AS AN ALTERNATE FOR THE 7/8" Ø GALVANIZED BOLTS, NUTS AND WASHERS. THEY SHALL CONFORM TO OR EXCEED THE MECHANICAL REQUIREMENTS OF ASTM A307. THE USE OF THIS ALTERNATE SHALL BE APPROVED BY THE ENGINEER.)

THE GUARDRAIL ANCHOR ASSEMBLY IS REQUIRED AT ALL POINTS WHERE APPROACH GUARDRAIL IS TO BE ATTACHED TO THE END OF BARRIER RAIL. FOR POINTS OF ATTACHMENT, SEE SKETCH.

AFTER INSTALLATION, THE EXPOSED THREAD OF THE BOLT SHALL BE BURRED WITH A SHARP POINTED TOOL.

THE COST OF THE GUARDRAIL ANCHOR ASSEMBLY SHALL BE INCLUDED IN THE UNIT CONTRACT PRICE BID FOR CONCRETE BARRIER RAIL.

THE 1 1/4" Ø HOLES SHALL BE FORMED OR DRILLED WITH A CORE BIT. IMPACT TOOLS WILL NOT BE PERMITTED. ANY CONCRETE DAMAGED BY THIS WORK SHALL BE REPAIRED TO THE SATISFACTION OF THE ENGINEER.

THE C6 X 8.2 RUBRAIL IS TO BE ADHESIVELY ANCHORED TO THE RAIL USING THREE 3/4" Ø X 6" BOLTS WITH WASHERS. LEVEL ONE FIELD TESTING IS REQUIRED, AND THE YIELD LOAD OF THE 3/4" Ø BOLT IS 12 KIPS. FOR ADHESIVELY ANCHORED BOLTS OR DOWELS, SEE SPECIAL PROVISIONS. SEE ROADWAY STANDARD 862.03 FOR DETAILS AND LOCATION OF THE RUBRAIL.

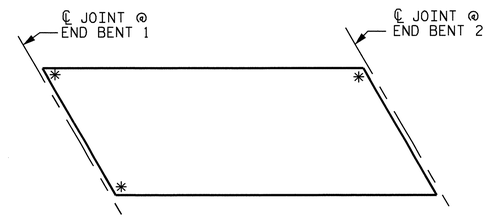

SKETCH SHOWING POINTS OF ATTACHMENTS

✱ DENOTES GUARDRAIL ANCHOR ASSEMBLY

PROJECT NO. R-2510C

BEAUFORT COUNTY

STATION: 54+34.00 -L-

STATE OF NORTH CAROLINA
DEPARTMENT OF TRANSPORTATION
RALEIGH

STANDARD

GUARDRAIL ANCHORAGE FOR BARRIER RAIL

(RIGHT LANE)

NORTH CAROLINA PROFESSIONAL SEAL 16301 ENGINEER TING HSIUNG FANG

10/11/10

REVISIONS						SHEET NO.
NO.	BY:	DATE:	NO.	BY:	DATE:	S-55
1			3			TOTAL SHEETS
2			4			134

ASSEMBLED BY : HARISH SHAH DATE : 9/08	
CHECKED BY : Q. T. NGUYEN DATE : 4/09	
DRAWN BY : TLA 5/06	ADDED 5/1/06
CHECKED BY : GM 5/06	

11-OCT-2010 12:55
Y:\TIPProjects-R\R2510c\Structures\r2510c\FinalPlans\STR2\r-2510c_sd_gr_02.dgn
qtnguyen

STR. #2 (SHT. 1) STD. NO. GRA2

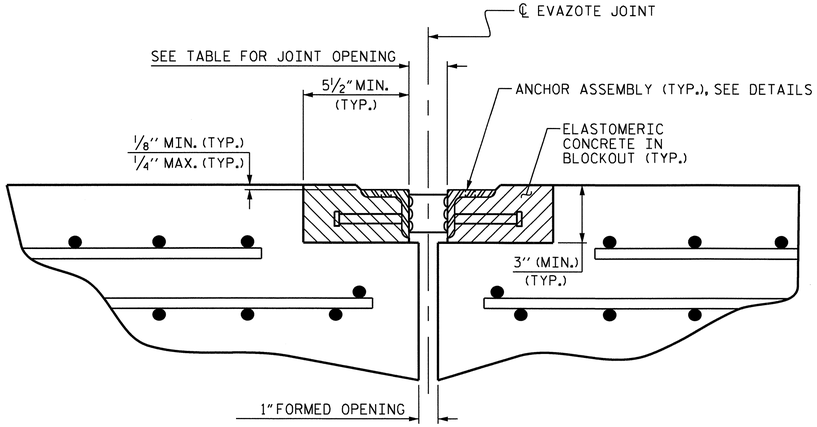

ARMORED JOINT DETAILS

SECTION NORMAL TO JOINT AT END BENT

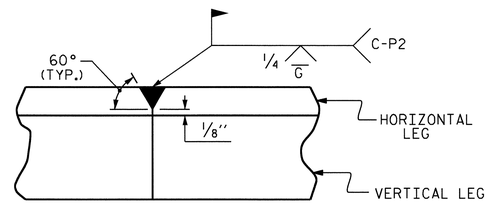

DETAIL- FIELD WELD SPLICE OF ANGLE

NOTES

ANGLES SHALL CONFORM TO AASHTO M270 GRADE 36 STEEL OR APPROVED EQUAL. ALL STUD ANCHORS SHALL CONFORM TO AASHTO M169 GRADES 1010 THRU 1020 OR APPROVED EQUAL.

STUD ANCHORS SHALL BE SHOP WELDED AND ALL HOLES SHALL BE SHOP DRILLED AS SHOWN ON THE PLANS. STUD ANCHORS SHALL BE ELECTRIC ARC END WELDED WITH COMPLETE FUSION.

UPON COMPLETION OF SHOP FABRICATION, THE ENTIRE ANCHOR ASSEMBLY SHALL BE METALLIZED. THE ½" Ø STUD ANCHORS AND ANCHOR TABS NEED NOT BE METALLIZED. SEE SPECIAL PROVISION FOR THERMAL SPRAYED COATINGS (METALLIZATION).

ANCHOR ASSEMBLY SHALL BE MADE CONTINUOUS THE LENGTH OF THE JOINT FROM GUTTER TO GUTTER. FOR FIELD SPLICES AT ALL CROWN BREAK POINTS, THE ENDS OF THE STEEL ANGLES SHALL BE CUT PARALLEL TO THE BRIDGE CENTERLINE. FINISHED FIELD WELDS SHALL BE GROUND SMOOTH AND COATED WITH A MINIMUM THICKNESS OF 4 DRY MILS OF ZINC-RICH PAINT IN ACCORDANCE WITH THE STANDARD SPECIFICATIONS.

ANCHOR ASSEMBLY SEGMENTS SHALL NOT BE LESS THAN 12 FEET NOR MORE THAN 20 FEET IN LENGTH. SHORTER SEGMENTS MAY BE USED AT THE EDGE OF ROADWAY OR AT POINTS OF STAGED CONSTRUCTION.

THE ANCHOR ASSEMBLY SHALL BE SECURED AND LEVELED AS SHOWN IN THE "ARMORED JOINT ANCHOR ASSEMBLY DETAILS". NO SUBMITTALS ARE REQUIRED FOR ⅜" Ø EXPANSION ANCHORS, NUTS OR WASHERS. THE CONTRACTOR MAY SUBMIT FOR APPROVAL AN ALTERNATE METHOD OF ALIGNING AND LEVELING THE ANGLES. THE ALTERNATE METHOD SHALL NOT INCLUDE ANY WELDING TO THE OUTSIDE FACE OF THE ANGLES.

AFTER THE ELASTOMERIC CONCRETE HAS BEEN CAST ON BOTH SIDES OF THE JOINT, REMOVE ANY EXCESS CONCRETE THAT COMES THROUGH THE WEEP HOLES AND THOROUGHLY CLEAN THE ANGLES. ANY DAMAGED STEEL SHALL BE COATED WITH A MINIMUM OF 4 MILS OF ZINC-RICH PAINT IN ACCORDANCE WITH THE STANDARD SPECIFICATIONS.

SEE SPECIAL PROVISIONS FOR EVAZOTE JOINT SEALS.

SEE SPECIAL PROVISIONS FOR ELASTOMERIC CONCRETE.

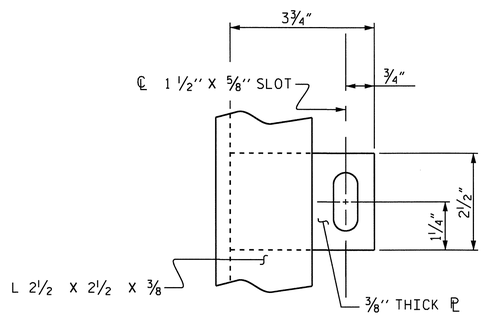

PLAN VIEW OF TAB

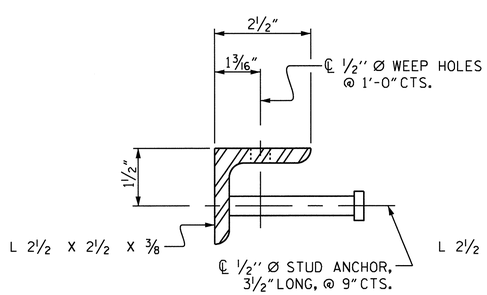

SECTION VIEW OF STUD

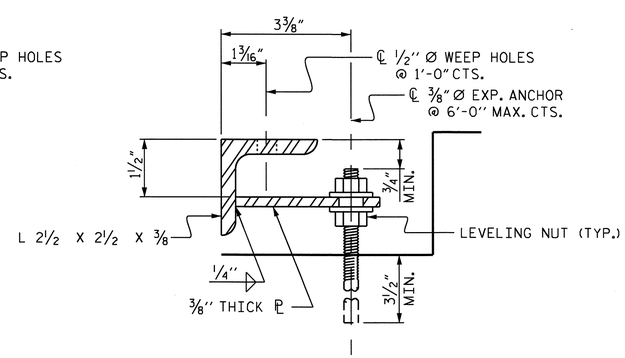

SECTION VIEW OF TAB

ARMORED JOINT ANCHOR ASSEMBLY DETAILS

MOVEMENT AND SETTING AT EVAZOTE JOINT

END BENT	SKEW ANGLE	NOMINAL UNCOMPRESSED SEAL WIDTH	TOTAL MOVEMENT (ALONG ℄ RDWY)	PERPENDICULAR JOINT OPENING AT 45° F	PERPENDICULAR JOINT OPENING AT 60° F	PERPENDICULAR JOINT OPENING AT 90° F
1	59°-35'-57"	2½"	11/16"	2⅛"	2"	1¾"
2	60°-36'-05"	2½"	11/16"	2⅛"	2"	1¾"

TOTAL MOVEMENT IS CALCULATED ALONG THE CENTERLINE OF ROADWAY.
JOINT OPENINGS ARE MEASURED PERPENDICULAR TO THE JOINT.

BILL OF MATERIAL

END BENT	ELASTOMERIC CONCRETE * (CU. FT.)	TOTAL LENGTH OF ANGLE (FT)
1	14.0	122'-3¾"
2	13.9	122'-1¼"

* BASED ON THE MINIMUM BLOCKOUT SHOWN.

PROJECT NO. R-2510C
BEAUFORT COUNTY
STATION: 54+34.00 -L-

STATE OF NORTH CAROLINA
DEPARTMENT OF TRANSPORTATION
RALEIGH
STANDARD

ARMORED EVAZOTE JOINT DETAILS

(RIGHT LANE)

NORTH CAROLINA PROFESSIONAL SEAL 16301 ENGINEER TING HSIUNG FANG
10/11/10

REVISIONS						SHEET NO.
NO.	BY:	DATE:	NO.	BY:	DATE:	S-56
1			3			TOTAL SHEETS
2			4			134

STR. #2 STD. NO. AEJ1

ASSEMBLED BY : HARISH SHAH	DATE : 04/09		
CHECKED BY : O.T. NGUYEN	DATE : 05/09		
DRAWN BY : EEM 1/96	REV. 7/10/01 LES/RDR		
CHECKED BY : RGW 1/96	REV. 5/7/03RR RWW/JTE		
	REV. 5/1/06 TLA/GM		

11-OCT-2010 12:55
Y:\TIPProjects-R\R2510c\Structures\r2510c\FinalPlans\STR2\R-2510C_SD_AEJ_02.dgn
qtnguyen

SUPERSTRUCTURE REINFORCING STEEL LENGTHS ARE BASED ON THE FOLLOWING MINIMUM SPLICE LENGTHS					
BAR SIZE	SUPERSTRUCTURE EXCEPT APPROACH SLABS, PARAPET, AND BARRIER RAIL		APPROACH SLABS		PARAPET AND BARRIER RAIL
	EPOXY COATED	UNCOATED	EPOXY COATED	UNCOATED	
#4	2'-0"	1'-9"	2'-0"	1'-9"	2'-9"
#5	2'-6"	2'-2"	2'-6"	2'-2"	3'-5"
#6	3'-0"	2'-7"	3'-10"	2'-7"	4'-4"
#7	5'-3"	3'-6"			
#8	6'-10"	4'-7"			

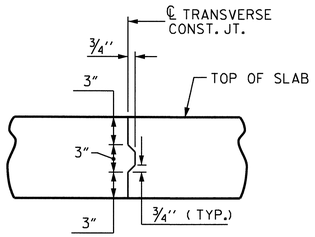

TRANSVERSE CONSTRUCTION JOINT DETAIL

NOTE: REINFORCING STEEL IN SLAB NOT SHOWN. LONGITUDINAL REINFORCING STEEL SHALL BE CONTINUOUS THRU JOINT

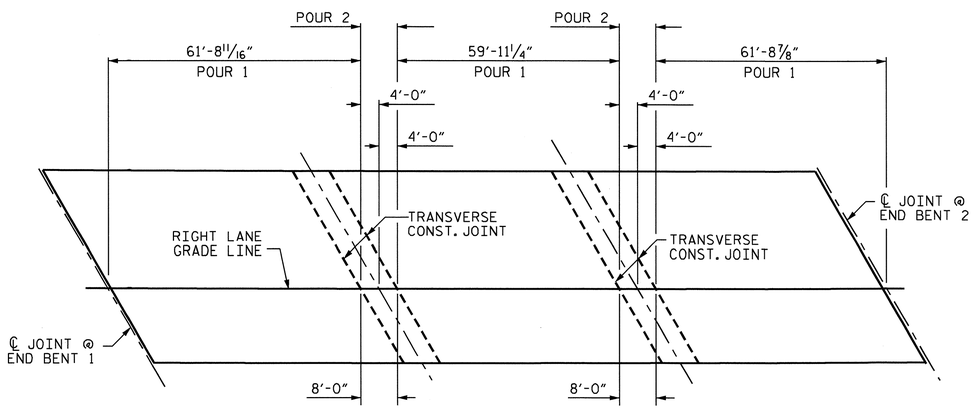

OPTIONAL POURING SEQUENCE

POUR 2 CANNOT BE STARTED UNTIL BOTH ADJACENT POUR 1 REACH A MINIMUM OF 3000 PSI.
ALL DIMENSIONS ARE MEASURED ALONG RIGHT LANE GRADE LINE.

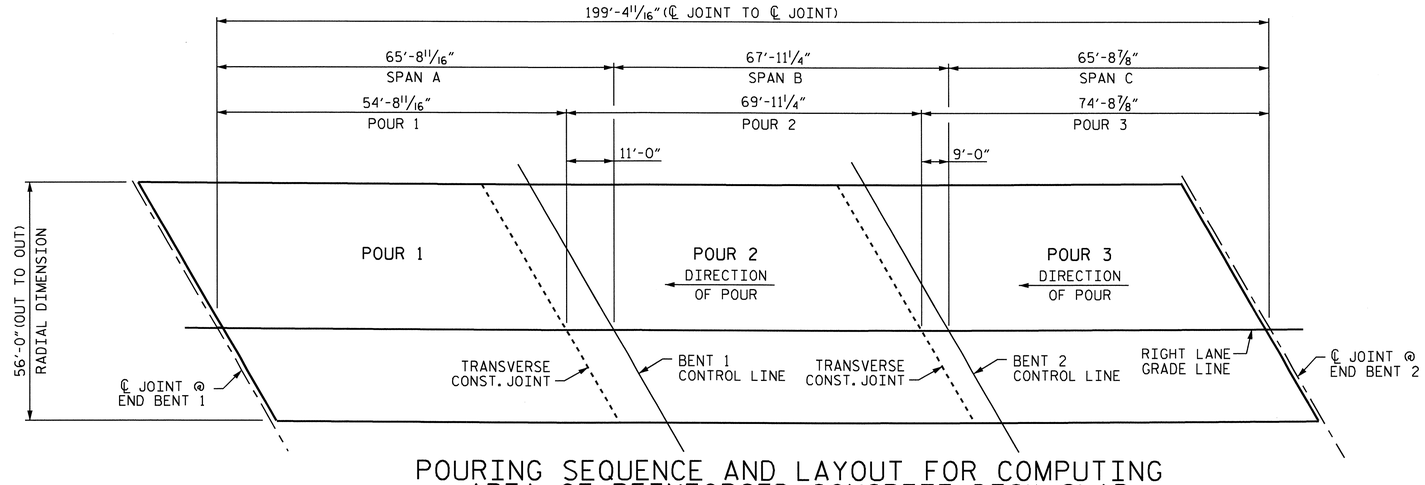

POURING SEQUENCE AND LAYOUT FOR COMPUTING AREA OF REINFORCED CONCRETE DECK SLAB

(SQ. FT. = 11,166)

ALL DIMENSIONS ARE MEASURED ALONG RIGHT LANE GRADE LINE.

BILL OF MATERIAL

BAR	NO.	SIZE	TYPE	LENGTH	WEIGHT	BAR	NO.	SIZE	TYPE	LENGTH	WEIGHT
* A1	334	#5	STR	55'-8"	19392	A212	4	#5	STR	35'-0"	146
A2	334	#5	STR	55'-8"	19392	A213	4	#5	STR	33'-4"	139
* A3	6	#6	STR	13'-10"	125	A214	4	#5	STR	31'-7"	132
						A215	4	#5	STR	29'-10"	124
* A101	4	#5	STR	53'-1"	221	A216	4	#5	STR	28'-1"	117
* A102	4	#5	STR	51'-4"	214	A217	4	#5	STR	26'-5"	110
* A103	4	#5	STR	49'-7"	207	A218	4	#5	STR	24'-8"	103
* A104	4	#5	STR	47'-10"	200	A219	4	#5	STR	22'-11"	96
* A105	4	#5	STR	46'-2"	193	A220	4	#5	STR	21'-2"	88
* A106	4	#5	STR	44'-5"	185	A221	4	#5	STR	19'-5"	81
* A107	4	#5	STR	42'-8"	178	A222	4	#5	STR	17'-8"	74
* A108	4	#5	STR	40'-11"	171	A223	4	#5	STR	15'-11"	66
* A109	4	#5	STR	39'-3"	164	A224	4	#5	STR	14'-2"	59
* A110	4	#5	STR	37'-6"	156	A225	4	#5	STR	12'-5"	52
* A111	4	#5	STR	35'-9"	149	A226	4	#5	STR	10'-8"	45
* A112	4	#5	STR	34'-0"	142	A227	4	#5	STR	8'-11"	37
* A113	4	#5	STR	32'-4"	135	A228	4	#5	STR	7'-2"	30
* A114	4	#5	STR	30'-7"	128	A229	4	#5	STR	5'-5"	23
* A115	4	#5	STR	28'-10"	120	A230	4	#5	STR	3'-8"	15
* A116	4	#5	STR	27'-1"	113						
* A117	4	#5	STR	25'-4"	106	* B1	156	#4	STR	22'-1"	2301
* A118	4	#5	STR	23'-8"	99	* B2	78	#7	STR	51'-0"	8131
* A119	4	#5	STR	21'-11"	91	* B3	72	#7	STR	20'-6"	3017
* A120	4	#5	STR	20'-2"	84	* B4	39	#4	STR	21'-0"	547
* A121	4	#5	STR	18'-5"	77	B5	292	#5	STR	51'-6"	15685
* A122	4	#5	STR	16'-8"	70						
* A123	4	#5	STR	14'-11"	62	* G1	4	#5	STR	33'-7"	140
* A124	4	#5	STR	13'-2"	55						
* A125	4	#5	STR	11'-5"	48	* K1	8	#8	1	14'-1"	301
* A126	4	#5	STR	9'-8"	40	* K2	16	#8	2	21'-10"	933
* A127	4	#5	STR	7'-11"	33	* K3	30	#6	STR	9'-5"	424
* A128	4	#5	STR	6'-2"	26	K4	20	#4	STR	7'-7"	101
* A129	4	#5	STR	4'-5"	18	K5	60	#4	STR	9'-5"	377
* A130	4	#5	STR	2'-8"	11	K6	16	#4	3	7'-1"	76
						K7	32	#4	4	13'-10"	296
A201	4	#5	STR	54'-1"	226						
A202	4	#5	STR	52'-4"	218	* S1	90	#5	5	5'-1"	477
A203	4	#5	STR	50'-7"	211	* S2	90	#4	6	3'-9"	225
A204	4	#5	STR	48'-10"	204	S3	250	#4	7	3'-1"	515
A205	4	#5	STR	47'-2"	197						
A206	4	#5	STR	45'-5"	189	U1	70	#4	8	13'-5"	627
A207	4	#5	STR	43'-8"	182	U2	20	#4	8	11'-5"	153
A208	4	#5	STR	41'-11"	175						
A209	4	#5	STR	40'-3"	168						
A210	4	#5	STR	38'-6"	161	REINFORCING STEEL = 40,843 LBS					
A211	4	#5	STR	36'-9"	153	* EPOXY COATED REINF. STEEL= 39,509 LBS					

BAR TYPES

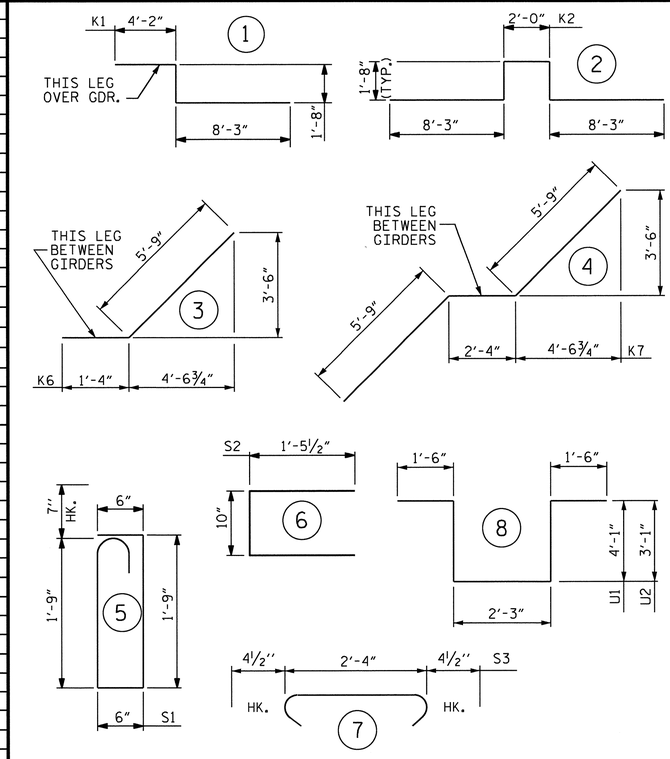

ALL BAR DIMENSIONS ARE OUT TO OUT

SUPERSTRUCTURE BILL OF MATERIAL			
SPANS A, B, & C	CLASS AA CONCRETE	REINFORCING STEEL	EPOXY COATED REINFORCING STEEL
	(CU. YDS.)	(LBS.)	(LBS.)
POUR 1	110.3		
POUR 2	151.1		
POUR 3	161.6		
TOTAL **	423.0	40,843	39,509

** QUANTITIES FOR BARRIER RAIL ARE NOT INCLUDED

GROOVING BRIDGE FLOORS		
APPROACH SLABS	2,361	SQ.FT.
BRIDGE DECK	9,840	SQ.FT.
TOTAL	12,201	SQ.FT.

PROJECT NO. U-2510C
BEAUFORT COUNTY
STATION: 54+34.00 -L-

STATE OF NORTH CAROLINA
DEPARTMENT OF TRANSPORTATION
RALEIGH

STANDARD
SUPERSTRUCTURE BILL OF MATERIAL
(RIGHT LANE)

NORTH CAROLINA PROFESSIONAL SEAL 32492 ENGINEER JOHN A. YANNACCONE
12/8/10

ASSEMBLED BY : HARISH SHAH	DATE : 9/08
CHECKED BY : T. H. FANG	DATE : 8/10
DRAWN BY : JMB 5/87	REV. 6/1/94 EEM/GRP
CHECKED BY : SJD 9/87	REV. 8/16/99 RWW/LES
	REV. 5/1/06 TLA/GM

REVISIONS						SHEET NO.
NO.	BY:	DATE:	NO.	BY:	DATE:	S-57
1			3			TOTAL SHEETS
2			4			134

STR. #2

STD. NO. BOM2

NOTES

STIRRUPS IN CAP MAY BE SHIFTED AS NECESSARY TO CLEAR ANCHOR BOLTS.

BACKWALL SHALL BE PLACED BEFORE APPLYING THE EPOXY PROTECTIVE COATING.

THE TOP SURFACE AREAS OF THE END BENT CAPS SHALL BE CURED IN ACCORDANCE WITH THE STANDARD SPECIFICATIONS EXCEPT THAT THE MEMBRANE CURING COMPOUND METHOD SHALL NOT BE USED.

* THE TOP SURFACE OF THE END BENT CAP EXCEPT THE BRIDGE SEAT BUILDUPS SHALL BE SLOPED TRANSVERSELY FROM THE FILL FACE TO THE BACK FACE AT THE RATE OF 2%.

THE CONTRACTOR SHALL PROVIDE FOR INSTALLATION OF THE 4" DIAMETER DRAIN PIPE THROUGH THE WING WALL AS REQUIRED FOR REINFORCED BRIDGE APPROACH FILLS. SEE THE ROADWAY PLANS. REINFORCING STEEL IN THE WING WALL MAY BE SHIFTED AS NECESSARY TO CLEAR THE DRAIN PIPE.

THE CONCRETE IN THE SHADED AREA OF THE WING SHALL BE POURED AFTER THE BARRIER IS CAST IF SLIP FORMING IS USED.

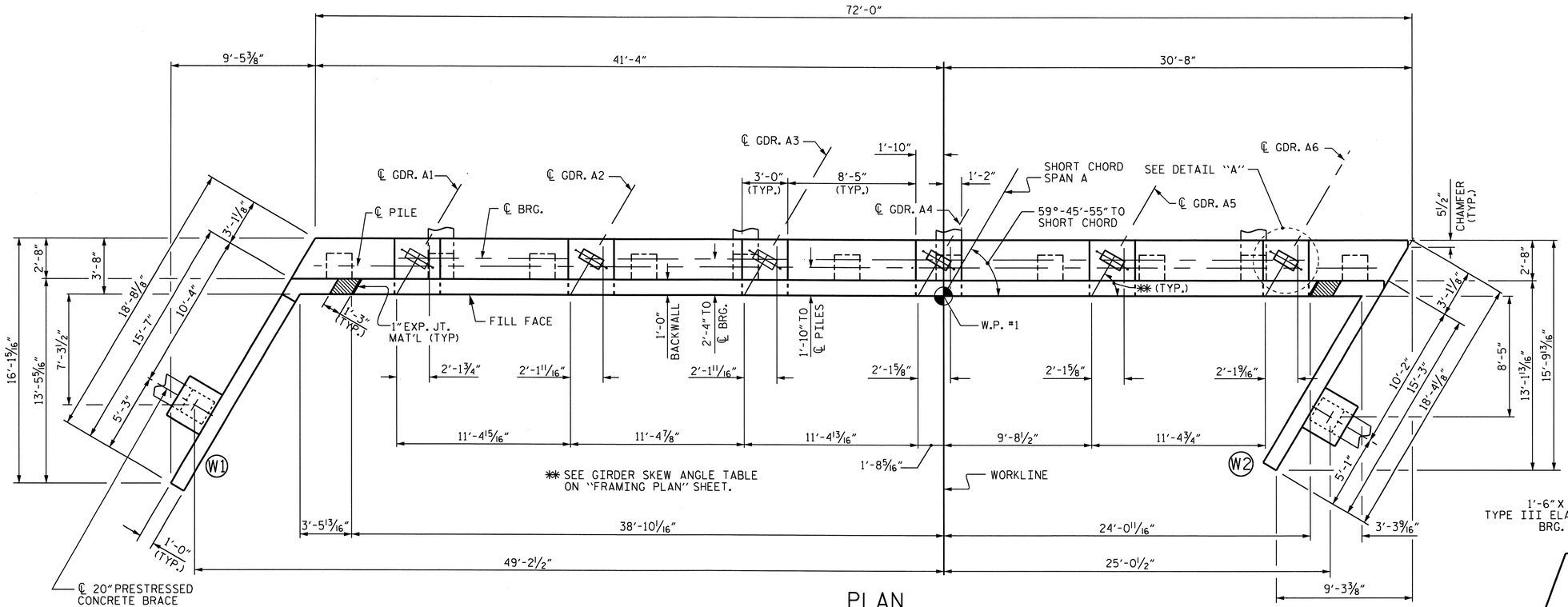

PLAN

RIGHT LANE GRADE LINE NOT SHOWN FOR CLARITY.

** SEE SHORT CHORD ANGLE TABLE ON "FRAMING PLAN" SHEET.

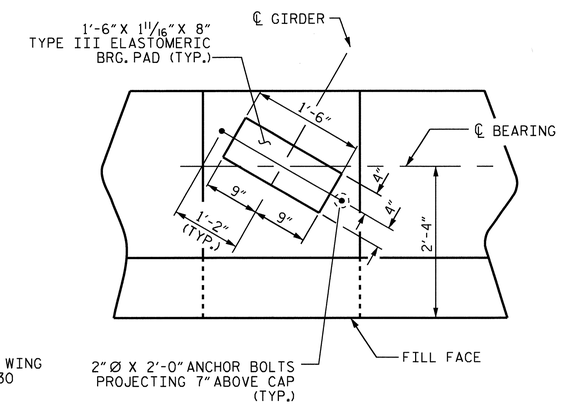

DETAIL "A"

(TYP. EA. GDR.)

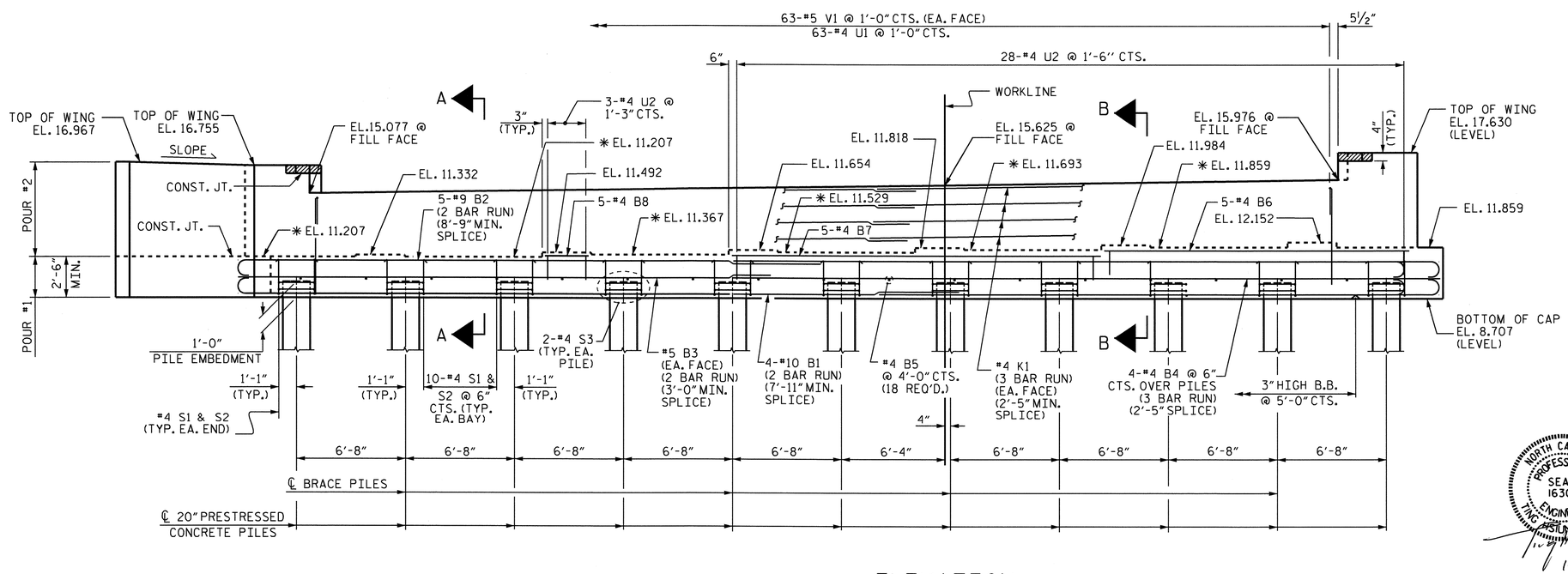

ELEVATION

BRACE PILE IN WING WALLS AND DETAIL OF WING WALL W2 NOT SHOWN FOR CLARITY

* FOR LOCATION OF ELEVATIONS BETWEEN BRIDGE SEAT BUILD-UPS, SEE SHEET 3 OF 3.

NORTH CAROLINA PROFESSIONAL SEAL 16301 ENGINEER TING-HSIUNG FANG

12/16/10

PROJECT NO. R-2510C

BEAUFORT COUNTY

STATION: 54+34.00 -L-

SHEET 1 OF 3

STATE OF NORTH CAROLINA
DEPARTMENT OF TRANSPORTATION
RALEIGH

SUBSTRUCTURE

END BENT 1

(RIGHT LANE)

REVISIONS						SHEET NO.
NO.	BY:	DATE:	NO.	BY:	DATE:	S-58
1			3			TOTAL SHEETS
2			4			134

DRAWN BY : HARISH SHAH DATE : 3/09
CHECKED BY : E.C. LOCKLEAR DATE : 4/27/09

16-DEC-2010 14:27
Y:\TIPProjects-R\R2510c\Structures\r2510c\FinalPlans\STR2\r-2510c_sd_eb*_02.dgn
qtnguyen

STR. #2

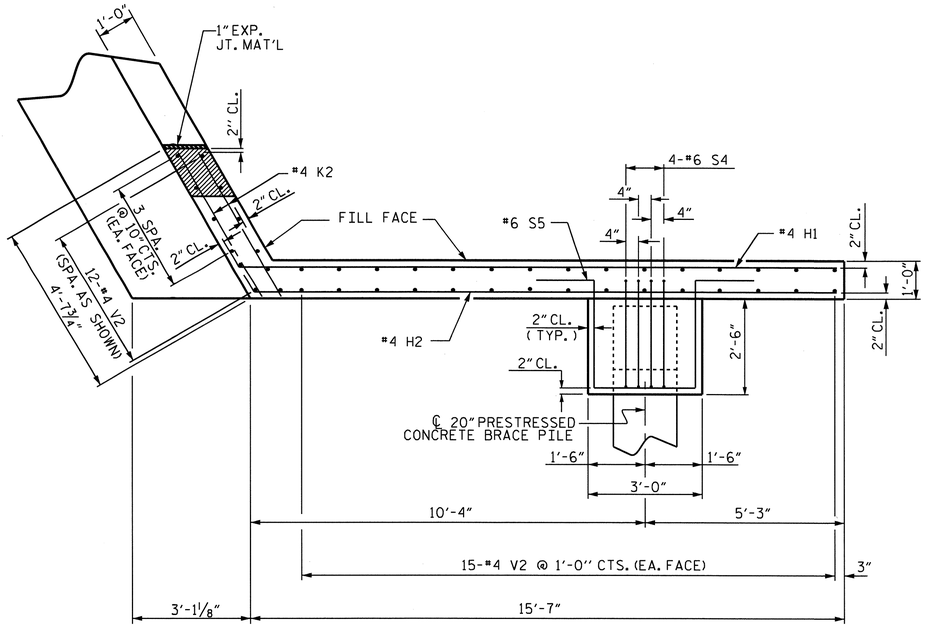

PLAN OF WING (W1)

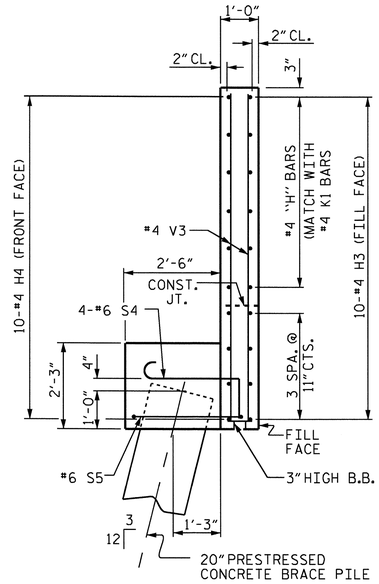

SECTION Y-Y

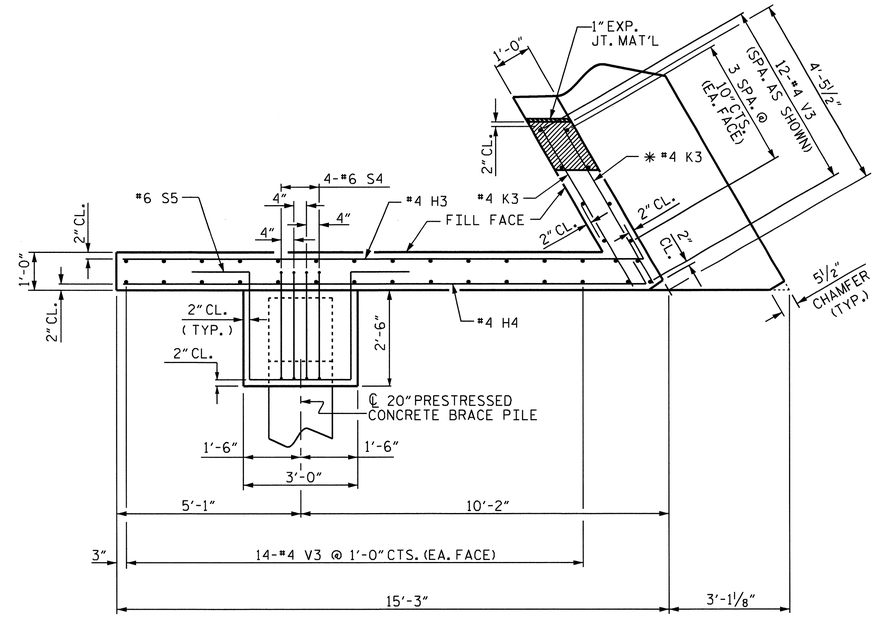

PLAN OF WING (W2)

✱ #4 K3 FIELD CUT AS NECESSRY TO GIVE 2" MIN. CLEARANCE FROM CHAMFER.

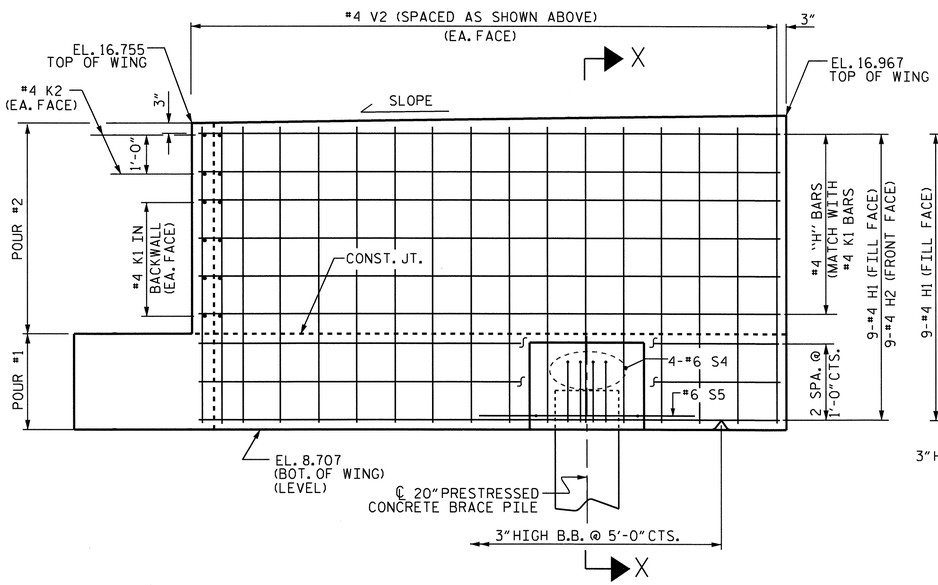

ELEVATION OF WING (W1)

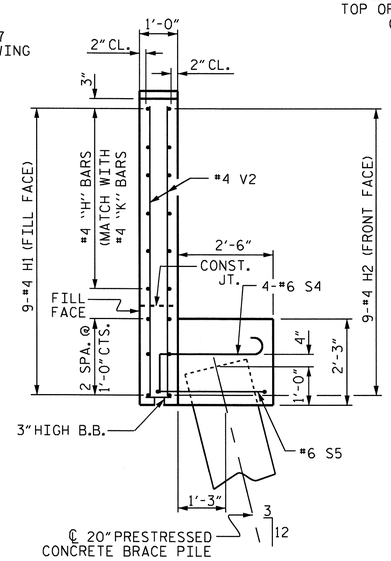

SECTION X-X

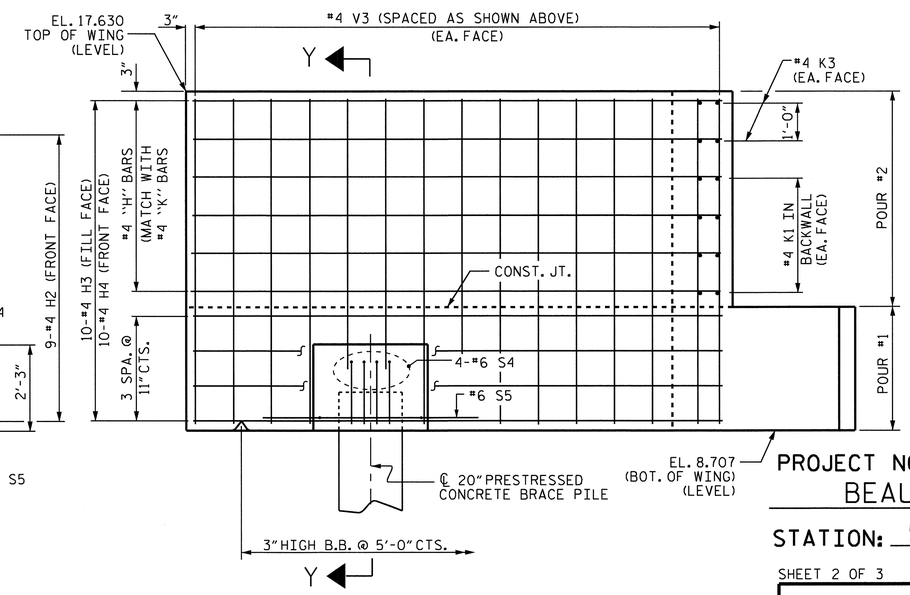

ELEVATION OF WING (W2)

PROJECT NO. R-2510C
BEAUFORT COUNTY
STATION: 54+34.00 -L-

SHEET 2 OF 3

STATE OF NORTH CAROLINA
DEPARTMENT OF TRANSPORTATION
RALEIGH

SUBSTRUCTURE

END BENT 1

(RIGHT LANE)

NORTH CAROLINA PROFESSIONAL SEAL 32492 ENGINEER JOHN A. YANNACCONE
12/9/10

REVISIONS						SHEET NO.
NO.	BY:	DATE:	NO.	BY:	DATE:	S-59
1			3			TOTAL SHEETS
2			4			134

STR. #2

DRAWN BY : HARISH SHAH DATE : 10/08
CHECKED BY : E.C. LOCKLEAR DATE : 4/27/09

09-DEC-2010 10:33
H:\R2510c\Structures\r2510c\Final Plans\STR2\r-2510c_sd_eb*_02.dgn
ttang

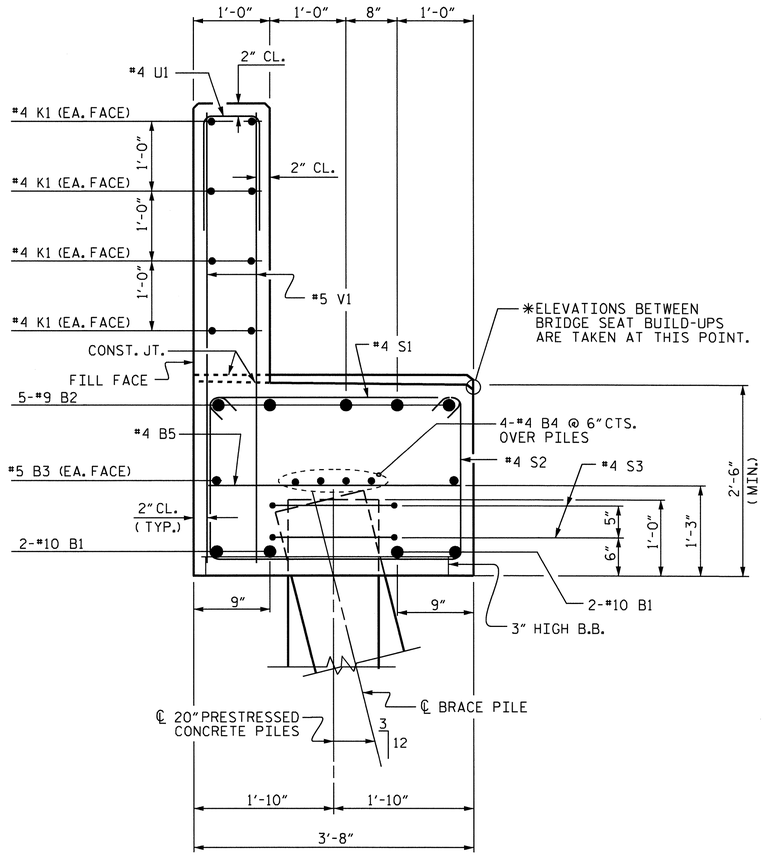

SECTION A-A

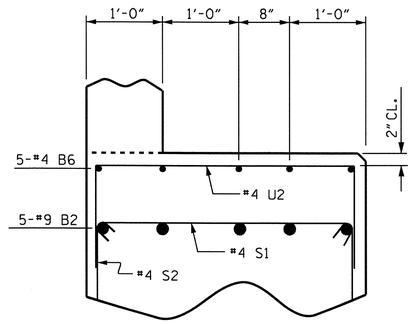

PARTIAL SECTION B-B

#5 V1 BARS NOT SHOWN FOR CLARITY.

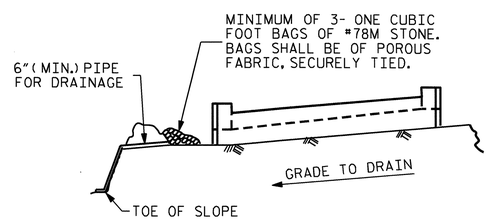

BAGGED STONE AND PIPE SHALL BE PLACED IMMEDIATELY AFTER COMPLETION OF END BENT EXCAVATION. PIPE MAY BE EITHER CONCRETE, CORRUGATED STEEL, CORRUGATED ALUMINUM ALLOY, OR CORRUGATED PLASTIC. PERFORATED PIPE WILL NOT BE ALLOWED.

BAGGED STONE SHALL REMAIN IN PLACE UNTIL THE ENGINEER DIRECTS THAT IT BE REMOVED. THE CONTRACTOR SHALL REMOVE AND DISPOSE OF SILT ACCUMULATIONS AT BAGGED STONE WHEN SO DIRECTED BY THE ENGINEER. BAGS SHALL BE REMOVED AND REPLACED WHENEVER THE ENGINEER DETERMINES THAT THEY HAVE DETERIORATED AND LOST THEIR EFFECTIVENESS.

NO SEPARATE PAYMENT WILL BE MADE FOR THIS WORK AND THE ENTIRE COST OF THIS WORK SHALL BE INCLUDED IN THE UNIT CONTRACT PRICE BID FOR THE SEVERAL PAY ITEMS.

TEMPORARY DRAINAGE AT END BENT

BAR TYPES

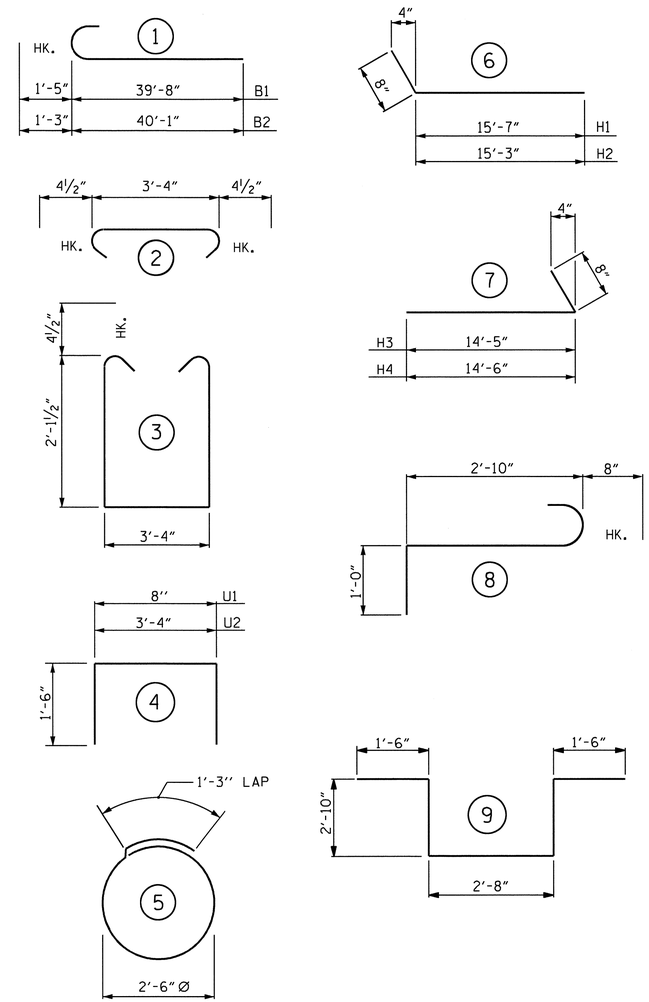

ALL BAR DIMENSIONS ARE OUT TO OUT.

BILL OF MATERIAL

END BENT 1

BAR	NO.	SIZE	TYPE	LENGTH	WEIGHT
B1	8	#10	1	41'-1"	1414
B2	10	#9	1	41'-4"	1405
B3	4	#5	STR	37'-4"	156
B4	12	#4	STR	25'-6"	204
B5	18	#4	STR	3'-4"	40
B6	5	#4	STR	18'-9"	63
B7	5	#4	STR	22'-8"	76
B8	5	#4	STR	2'-8"	9
H1	9	#4	6	16'-3"	98
H2	9	#4	6	15'-11"	96
H3	10	#4	7	15'-1"	101
H4	10	#4	7	15'-2"	101
K1	24	#4	STR	25'-6"	409
K2	4	#4	STR	4'-2"	11
K3	4	#4	STR	4'-0"	11
S1	102	#4	2	4'-1"	278
S2	102	#4	3	8'-4"	568
S3	22	#4	5	9'-2"	135
S4	8	#6	8	4'-6"	54
S5	2	#6	9	11'-4"	34
U1	63	#4	4	3'-8"	154
U2	31	#4	4	6'-4"	131
V1	126	#5	STR	6'-0"	789
V2	42	#4	STR	7'-9"	217
V3	40	#4	STR	8'-7"	229
REINFORCING STEEL					6,783 LBS

CLASS A CONCRETE

POUR 1 (CAP, LOWER WINGS & WING BRACE PILE CAP)	30.1 C.Y.
POUR 2 (BACKWALL & UPPER WINGS)	18.6 C.Y.
TOTAL	48.7 C.Y.

20" PRESTRESSED CONCRETE PILES

NUMBER = 13	LIN. FT. = 390
PILE REDRIVES	EACH 5

NOTE: CONCRETE DISPLACED BY 20" PRESTRESSED CONCRETE PILES HAS BEEN DEDUCTED FROM THE CONCRETE QUANTITY.

PROJECT NO. R-2510C
BEAUFORT COUNTY
STATION: 54+34.00 -L-

SHEET 3 OF 3

STATE OF NORTH CAROLINA
DEPARTMENT OF TRANSPORTATION
RALEIGH

SUBSTRUCTURE

END BENT 1

(RIGHT LANE)

NORTH CAROLINA PROFESSIONAL SEAL 16301 ENGINEER TING HSIUNG FANG
12/16/10

REVISIONS								SHEET NO.
NO.	BY:	DATE:	NO.	BY:	DATE:			S-60
1			3					TOTAL SHEETS
2			4					134

DRAWN BY : HARISH SHAH DATE : 10/08
CHECKED BY : A.R. CHESSON DATE : 02/09

16-DEC-2010 14:27
Y:\TIPProjects-R\R2510c\Structures\r2510c\FinalPlans\STR2\r-2510c_sd_eb*_02.dgn
qtnguyen

STR. #2

NOTE

STIRRUPS IN CAP MAY BE SHIFTED AS NECESSARY TO CLEAR ANCHOR BOLTS.

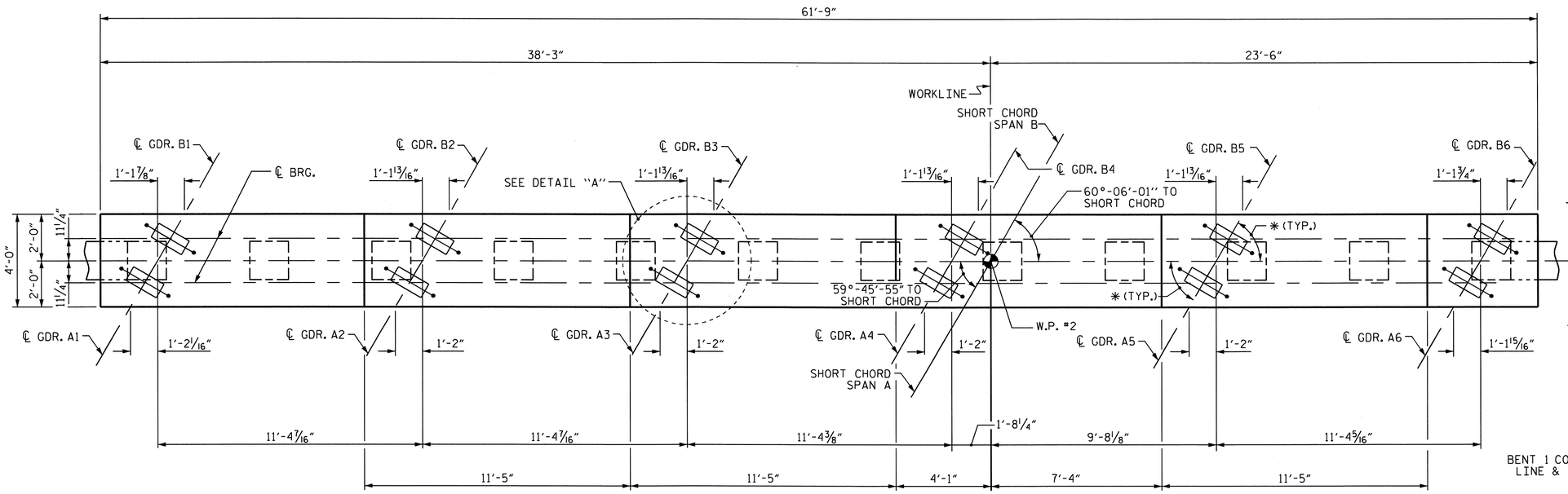

PLAN

* SEE GIRDER SKEW ANGLES TABLE ON "FRAMING PLAN" SHEET.

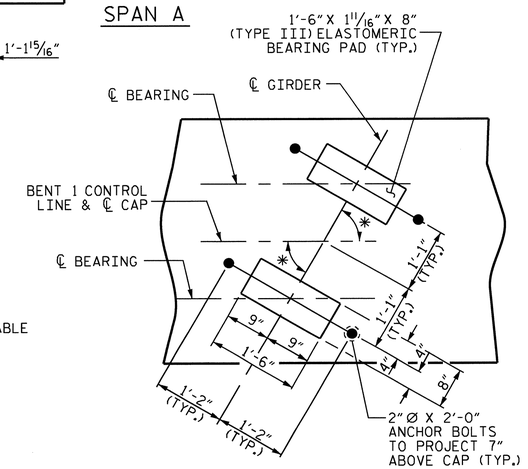

DETAIL "A"

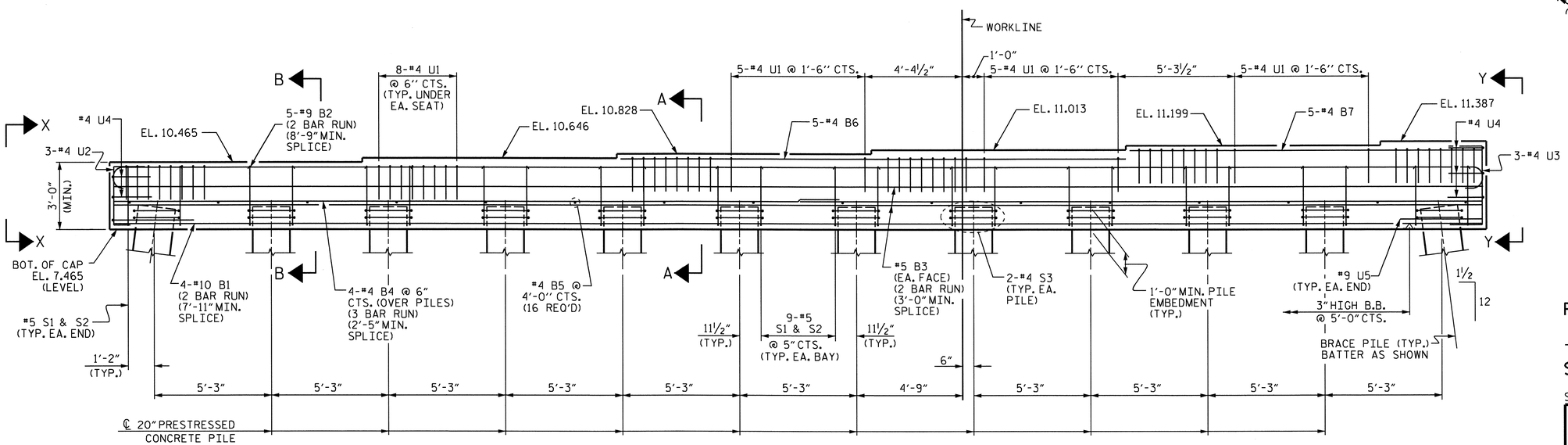

ELEVATION

PROJECT NO. R-2510C

BEAUFORT COUNTY

STATION: 54+34.00 -L-

SHEET 1 OF 2

STATE OF NORTH CAROLINA
DEPARTMENT OF TRANSPORTATION
RALEIGH

SUBSTRUCTURE

BENT 1

(RIGHT LANE)

NORTH CAROLINA PROFESSIONAL SEAL 16301 ENGINEER TING HSIUNG FANG

12/16/10

REVISIONS						SHEET NO.
NO.	BY:	DATE:	NO.	BY:	DATE:	S-61
1			3			TOTAL SHEETS
2			4			134

STR. #2

DRAWN BY : HARISH SHAH DATE : 4/09
CHECKED BY : E.C. LOCKLEAR DATE : 5/09

16-DEC-2010 14:27
Y:\TIPProjects-R\R2510c\Structures\r2510c\FinalPlans\STR2\R-2510C_sd_B*_02.dgn
qtnguyen

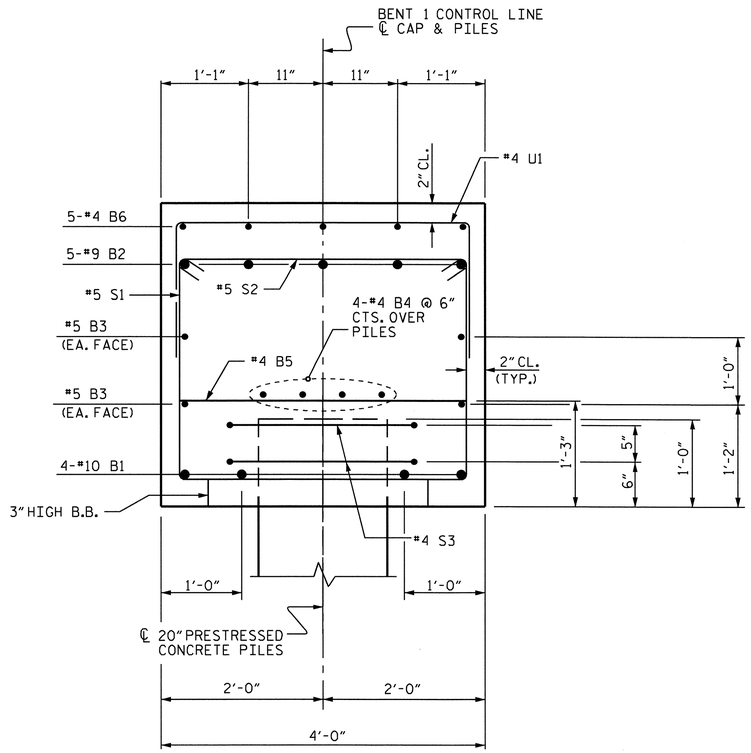

SECTION A-A

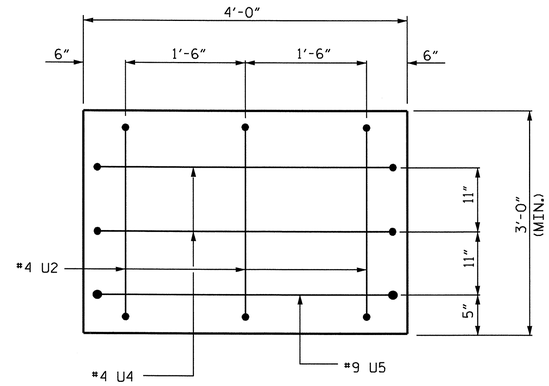

VIEW X-X

CENTER U2 BAR BOTTOM LEG MAY BE CUT AS REQUIRED TO PROVIDE 2"CLEARANCE BETWEEN END OF BAR AND PILE.

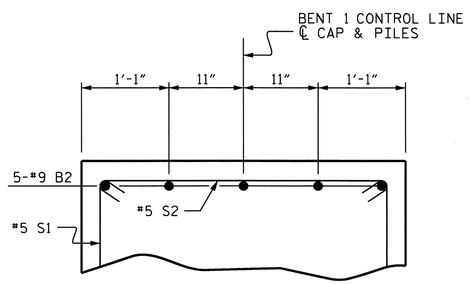

PARTIAL SECTION B-B

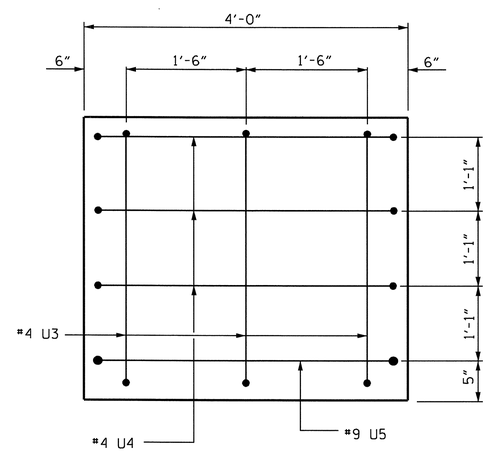

VIEW Y-Y

CENTER U3 BAR BOTTOM LEG MAY BE CUT AS REQUIRED TO PROVIDE 2"CLEARANCE BETWEEN END OF BAR AND PILE.

BAR TYPES

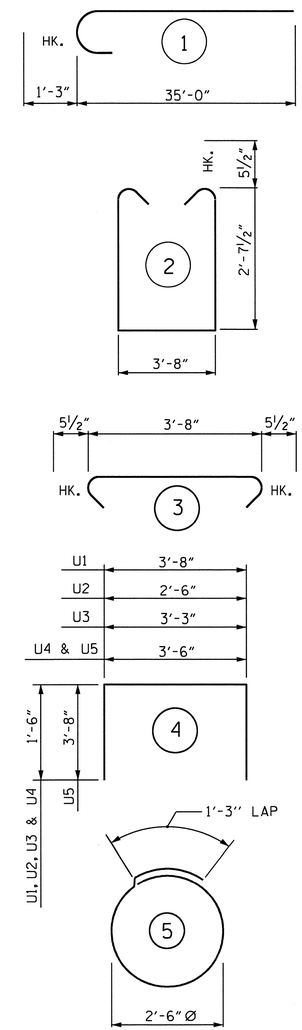

ALL BAR DIMENSIONS ARE OUT TO OUT.

BILL OF MATERIAL

BENT 1

BAR	NO.	SIZE	TYPE	LENGTH	WEIGHT
B1	8	#10	STR	34'-8"	1193
B2	10	#9	1	36'-3"	1233
B3	8	#5	STR	32'-3"	269
B4	12	#4	STR	22'-1"	177
B5	16	#4	STR	3'-8"	39
B6	5	#4	STR	22'-8"	76
B7	5	#4	STR	15'-10"	53
S1	101	#5	2	9'-10"	1036
S2	101	#5	3	4'-7"	483
S3	24	#4	5	9'-2"	147
U1	63	#4	4	6'-8"	281
U2	3	#4	4	5'-6"	11
U3	3	#4	4	6'-3"	13
U4	5	#4	4	6'-6"	22
U5	2	#9	4	10'-10"	74

REINFORCING STEEL 5,107 LBS.

CLASS A CONCRETE
CAP 30.0 C.Y.

20"PRESTRESSED CONCRETE PILES
NO. 12 LIN. FT. 600
PILE REDRIVES EACH 5

NOTE: CONCRETE DISPLACED BY 20"PRESTRESSED CONCRETE PILES HAS BEEN DEDUCTED FROM THE CONCRETE QUANTITY.

FOR 20"PRESTRESSED CONCRETE PILES DETAILS, SEE "STANDARD 20"PRESTRESSED CONCRETE PILES" SHEET.

PROJECT NO. R-2510C
BEAUFORT COUNTY
STATION: 54+34.00 -L-

SHEET 2 OF 2

NORTH CAROLINA PROFESSIONAL SEAL 16301 ENGINEER TING HSIUNG FANG
12/16/10

STATE OF NORTH CAROLINA
DEPARTMENT OF TRANSPORTATION
RALEIGH

SUBSTRUCTURE

BENT 1

(RIGHT LANE)

REVISIONS						SHEET NO.
NO.	BY:	DATE:	NO.	BY:	DATE:	S-62
1			3			TOTAL SHEETS
2			4			134

DRAWN BY : HARISH SHAH DATE : 3/09
CHECKED BY : E.C. LOCKLEAR DATE : 5/09

16-DEC-2010 14:27
Y:\TIPProjects-R\R2510c\Structures\r2510c\FinalPlans\STR2\R-2510C_sd_B*_02.dgn
qtnguyen

STR. #2

NOTE

STIRRUPS IN CAP MAY BE SHIFTED AS NECESSARY TO CLEAR ANCHOR BOLTS.

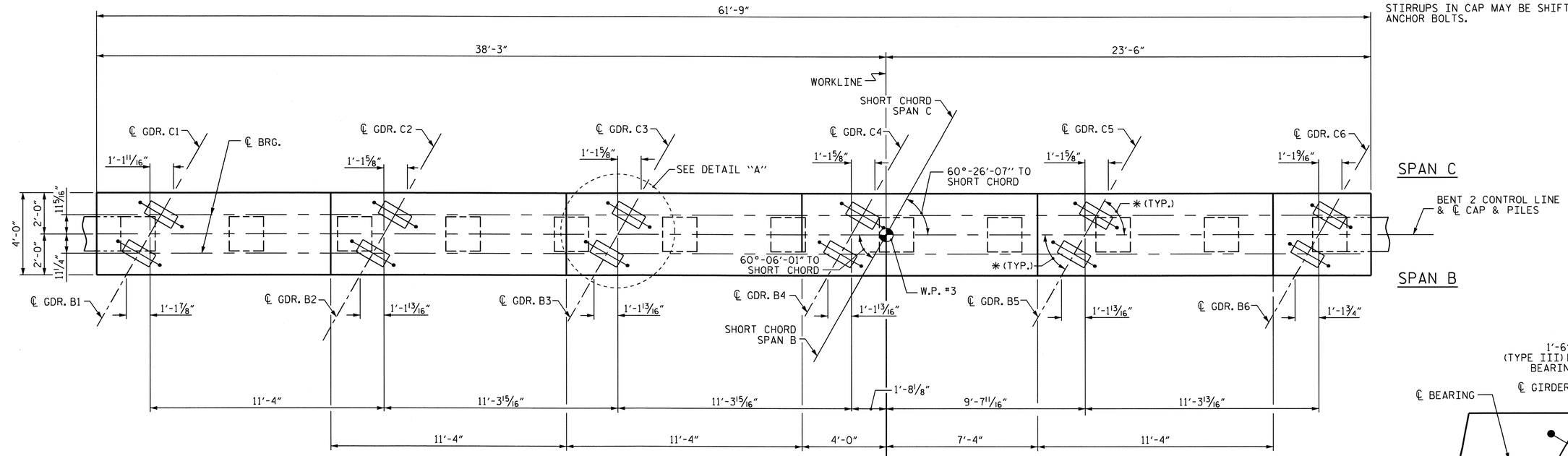

PLAN

* SEE GIRDER SKEW ANGLES TABLE ON "FRAMING PLAN" SHEET.

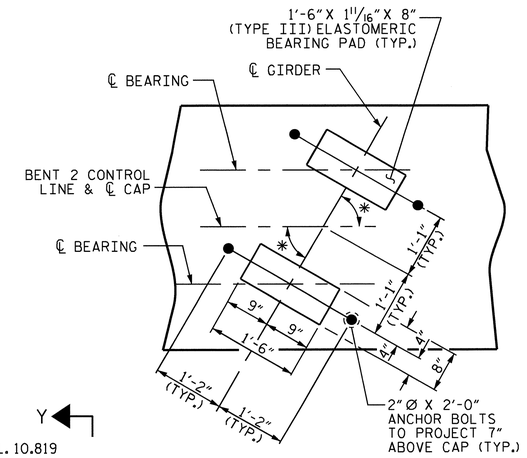

DETAIL "A"

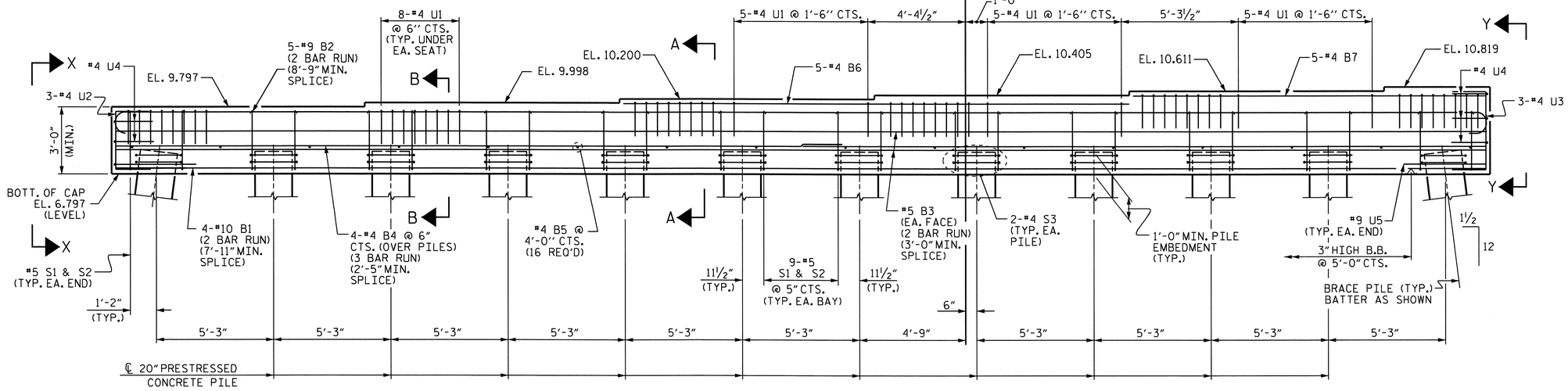

ELEVATION

PROJECT NO. R-2510C

BEAUFORT COUNTY

STATION: 54+34.00 -L-

SHEET 1 OF 2

STATE OF NORTH CAROLINA
DEPARTMENT OF TRANSPORTATION
RALEIGH

SUBSTRUCTURE

BENT 2

(RIGHT LANE)

NORTH CAROLINA PROFESSIONAL SEAL 16301 ENGINEER TING-HSIUNG FANG

12/16/10

REVISIONS						SHEET NO.
NO.	BY:	DATE:	NO.	BY:	DATE:	S-63
1			3			TOTAL SHEETS
2			4			134

DRAWN BY : HARISH SHAH DATE : 04/09
CHECKED BY : E.C. LOCKLEAR DATE : 05/09

16-DEC-2010 14:45
H:\R2510c\Structures\r2510c\Final Plans\STR2\R-2510C_sd_B*_02.dgn
tfang

STR. #2

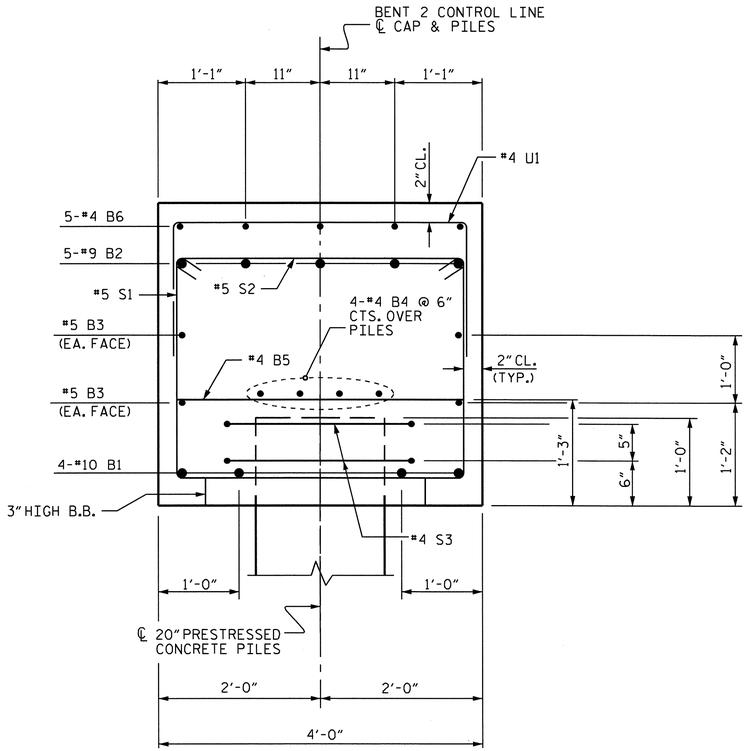

SECTION A-A

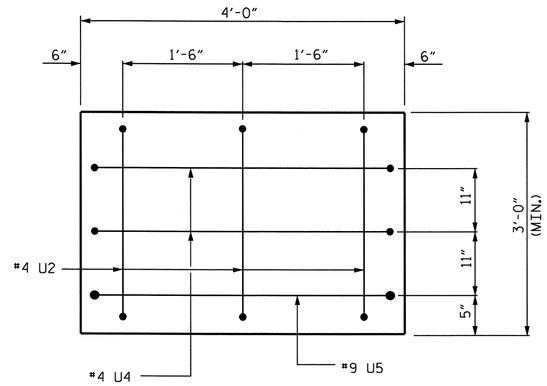

VIEW X-X

CENTER U2 BAR BOTTOM LEG MAY BE CUT AS REQUIRED TO PROVIDE 2"CLEARANCE BETWEEN END OF BAR AND PILE.

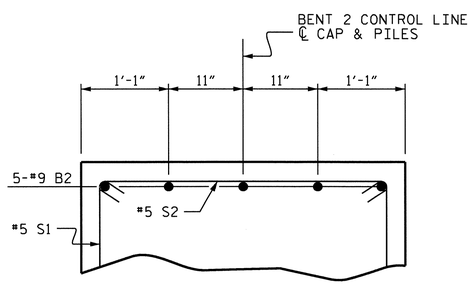

PARTIAL SECTION B-B

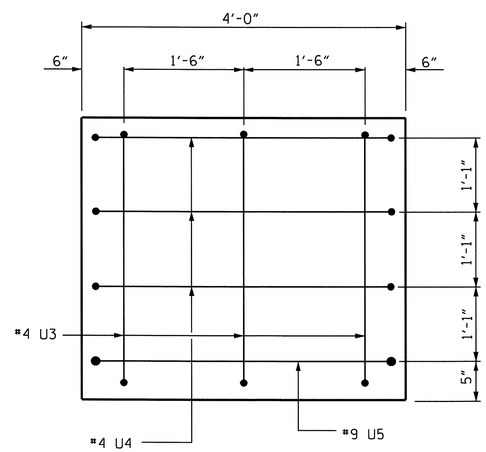

VIEW Y-Y

CENTER U3 BAR BOTTOM LEG MAY BE CUT AS REQUIRED TO PROVIDE 2"CLEARANCE BETWEEN END OF BAR AND PILE.

BAR TYPES

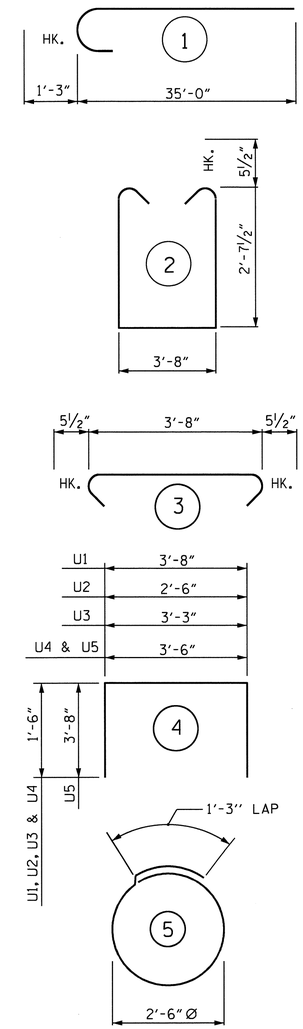

ALL BAR DIMENSIONS ARE OUT TO OUT.

BILL OF MATERIAL

BENT 2

BAR	NO.	SIZE	TYPE	LENGTH	WEIGHT
B1	8	#10	STR	34'-8"	1193
B2	10	#9	1	36'-3"	1233
B3	8	#5	STR	32'-3"	269
B4	12	#4	STR	22'-1"	177
B5	16	#4	STR	3'-8"	39
B6	5	#4	STR	22'-8"	76
B7	5	#4	STR	15'-10"	53
S1	101	#5	2	9'-10"	1036
S2	101	#5	3	4'-7"	483
S3	24	#4	5	9'-2"	147
U1	63	#4	4	6'-8"	281
U2	3	#4	4	5'-6"	11
U3	3	#4	4	6'-3"	13
U4	5	#4	4	6'-6"	22
U5	2	#9	4	10'-10"	74

REINFORCING STEEL 5,107 LBS.

CLASS A CONCRETE
CAP 30.3 C.Y.

20"PRESTRESSED CONCRETE PILES
12 LIN. FT. 600
PILE REDRIVES EACH 5

NOTE: CONCRETE DISPLACED BY 20"PRESTRESSED CONCRETE PILES HAS BEEN DEDUCTED FROM THE CONCRETE QUANTITY.

FOR 20"PRESTRESSED CONCRETE PILES DETAILS, SEE "STANDARD 20"PRESTRESSED CONCRETE PILES" SHEET.

PROJECT NO. R-2510C
BEAUFORT COUNTY
STATION: 54+34.00 -L-

SHEET 2 OF 2

STATE OF NORTH CAROLINA
DEPARTMENT OF TRANSPORTATION
RALEIGH

SUBSTRUCTURE

BENT 2

(RIGHT LANE)

NORTH CAROLINA PROFESSIONAL SEAL 16301 ENGINEER TING-HSIUNG FANG
12/16/10

REVISIONS						SHEET NO.
NO.	BY:	DATE:	NO.	BY:	DATE:	S-64
1			3			TOTAL SHEETS
2			4			134

DRAWN BY : HARISH SHAH DATE : 3/09
CHECKED BY : E.C. LOCKLEAR DATE : 5/09

16-DEC-2010 14:27
Y:\TIPProjects-R\R2510c\Structures\r2510c\FinalPlans\STR2\R-2510C_sd_B*_02.dgn
qtnguyen

STR. #2

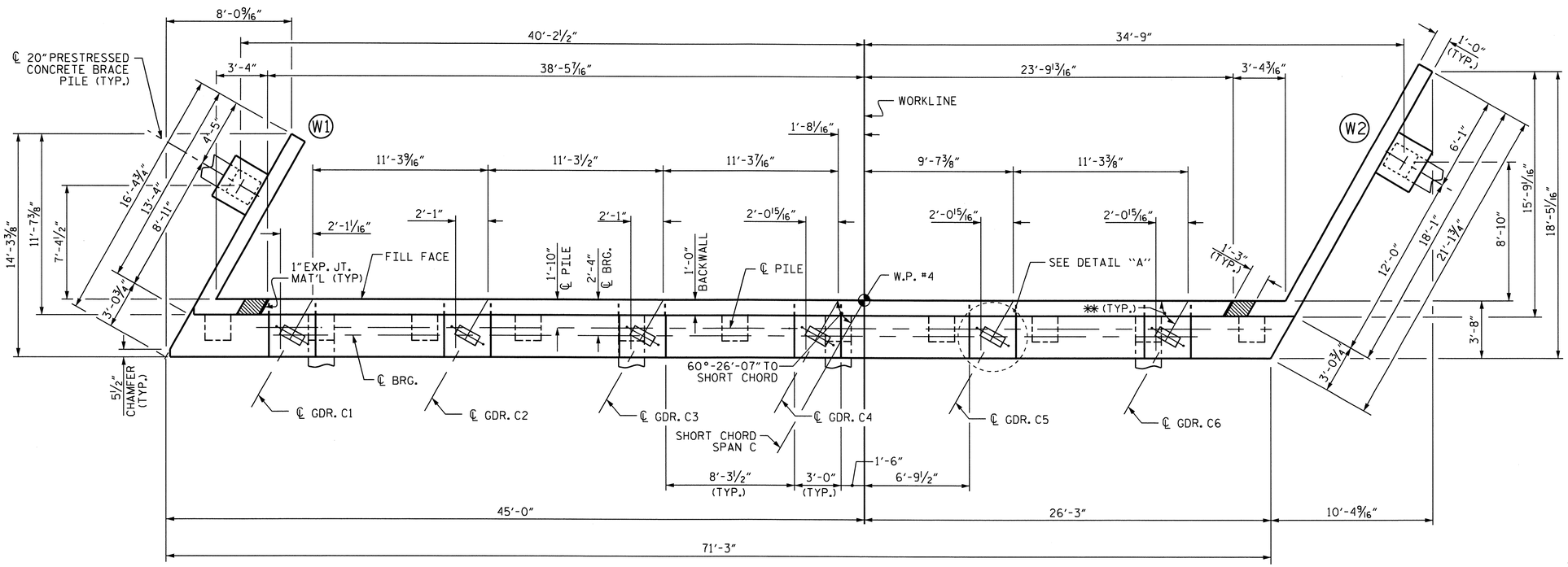

PLAN

RIGHT LANE GRADE LINE NOT SHOWN FOR CLARITY.

✱✱ SEE GIRDER SKEW ANGLE TABLE ON "FRAMING PLAN" SHEET.

NOTES

STIRRUPS IN CAP MAY BE SHIFTED AS NECESSARY TO CLEAR ANCHOR BOLTS.

BACKWALL SHALL BE PLACED BEFORE APPLYING THE EPOXY PROTECTIVE COATING.

THE TOP SURFACE AREAS OF THE END BENT CAPS SHALL BE CURED IN ACCORDANCE WITH THE STANDARD SPECIFICATIONS EXCEPT THAT THE MEMBRANE CURING COMPOUND METHOD SHALL NOT BE USED.

✱ THE TOP SURFACE OF THE END BENT CAP EXCEPT THE BRIDGE SEAT BUILDUPS SHALL BE SLOPED TRANSVERSELY FROM THE FILL FACE TO THE BACK FACE AT THE RATE OF 2%.

THE CONTRACTOR SHALL PROVIDE FOR INSTALLATION OF THE 4" DIAMETER DRAIN PIPE THROUGH THE WING WALL AS REQUIRED FOR REINFORCED BRIDGE APPROACH FILLS, SEE THE ROADWAY PLANS. REINFORCING STEEL IN THE WING WALL MAY BE SHIFTED AS NECESSARY TO CLEAR THE DRAIN PIPE.

THE CONCRETE IN THE SHADED AREA OF THE WING SHALL BE POURED AFTER THE BARRIER IS CAST IF SLIP FORMING IS USED.

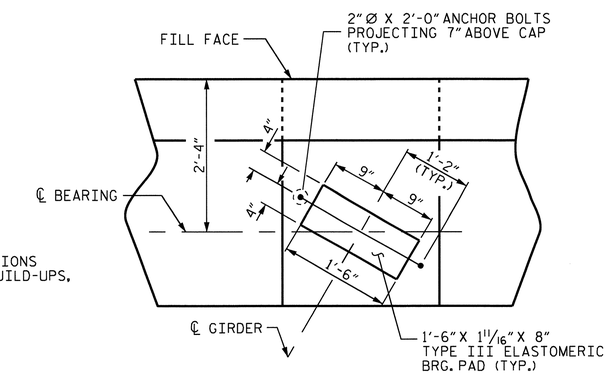

DETAIL "A"

(TYP. EA. GDR.)

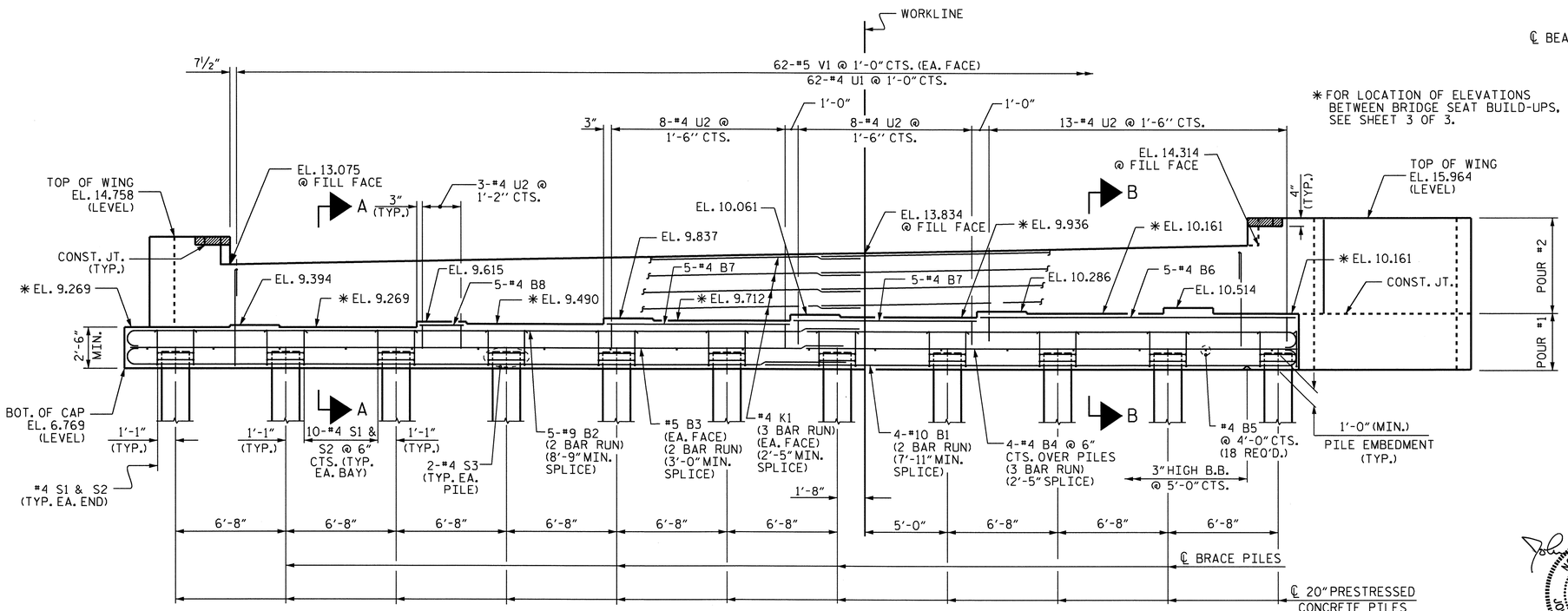

ELEVATION

BRACE PILE IN WING WALLS AND DETAIL OF WING WALL W1 NOT SHOWN FOR CLARITY

PROJECT NO. R-2510C

BEAUFORT COUNTY

STATION: 54+34.00 -L-

SHEET 1 OF 3

STATE OF NORTH CAROLINA
DEPARTMENT OF TRANSPORTATION
RALEIGH

SUBSTRUCTURE

END BENT 2

(RIGHT LANE)

NORTH CAROLINA PROFESSIONAL SEAL 32492 ENGINEER JOHN A. YANNACCONE 12/9/10

REVISIONS						SHEET NO.
NO.	BY:	DATE:	NO.	BY:	DATE:	S-65
1			3			TOTAL SHEETS
2			4			134

DRAWN BY : HARISH SHAH DATE : 03/09
CHECKED BY : E.C. LOCKLEAR DATE : 4/28/09

09-DEC-2010 10:32
H:\R2510c\Structures\r2510c\Final Plans\STR2\r-2510c_sd_eb*_02.dgn
tfang

STR. #2

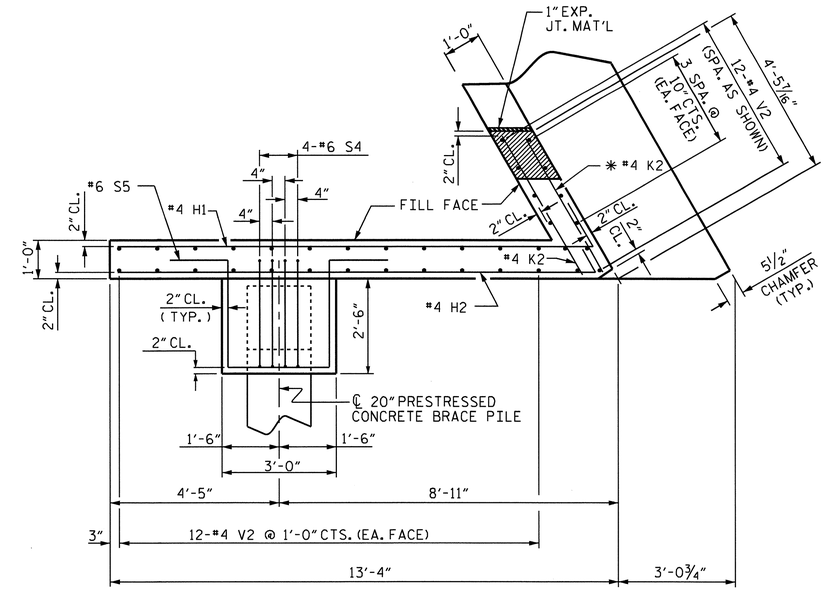

PLAN OF WING (W1)

✱ #4 K2 FIELD CUT AS NECESSRY TO GIVE 2" MIN. CLEARANCE FROM CHAMFER.

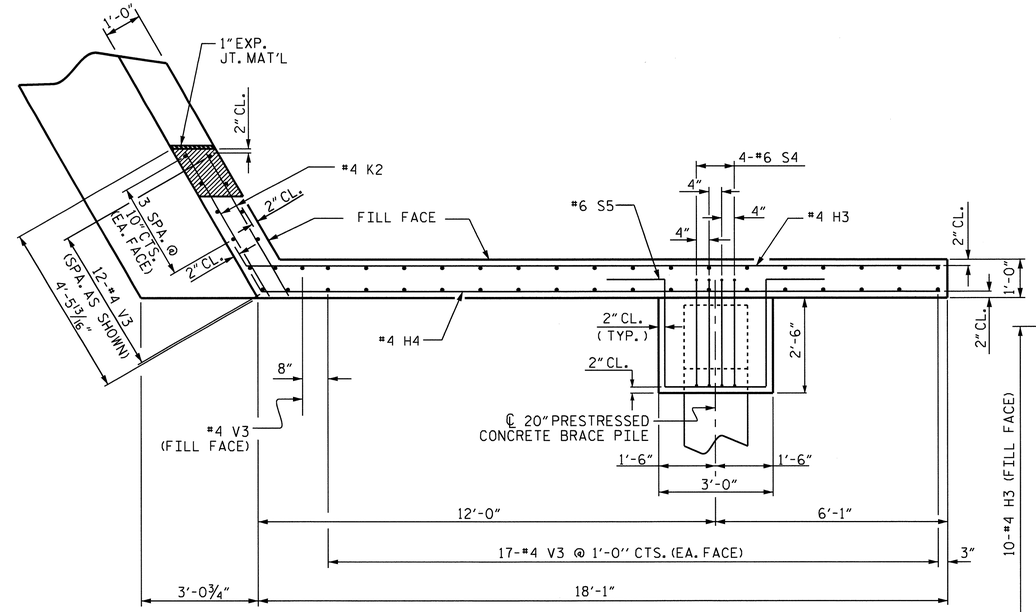

PLAN OF WING (W2)

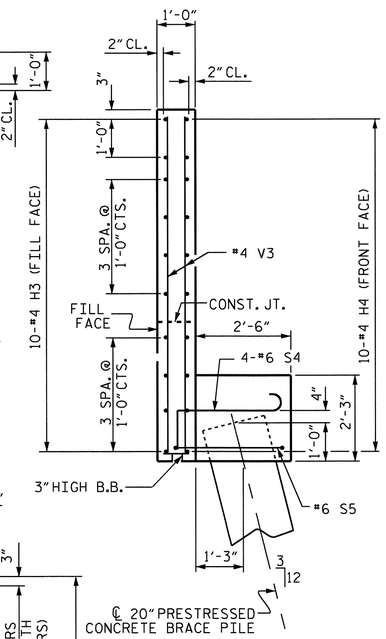

SECTION Y-Y

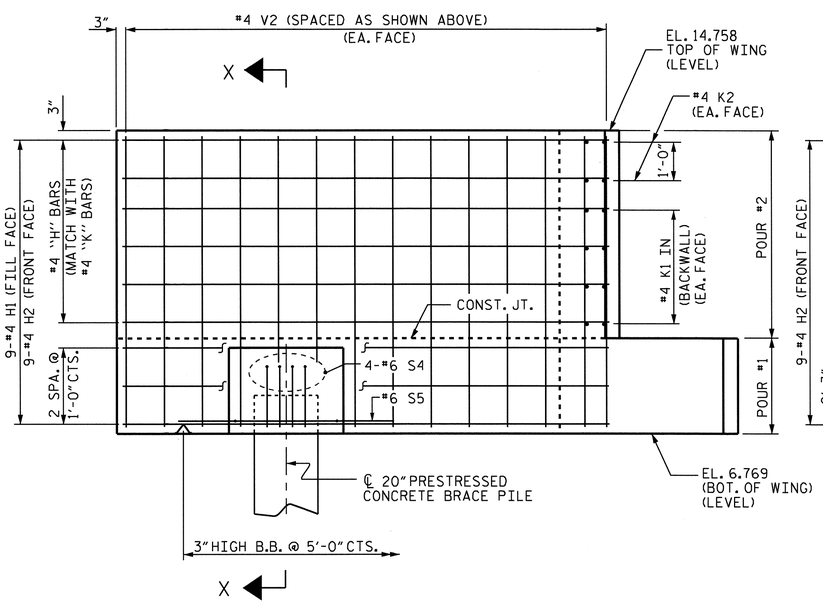

ELEVATION OF WING (W1)

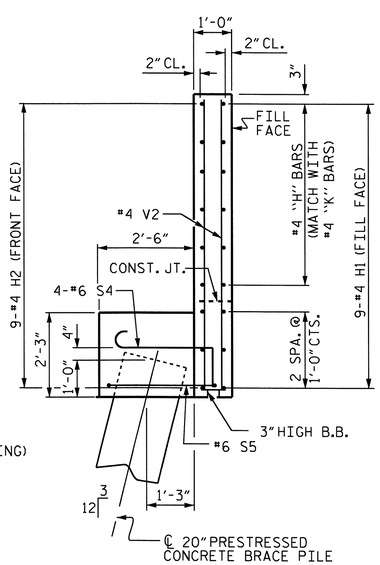

SECTION X-X

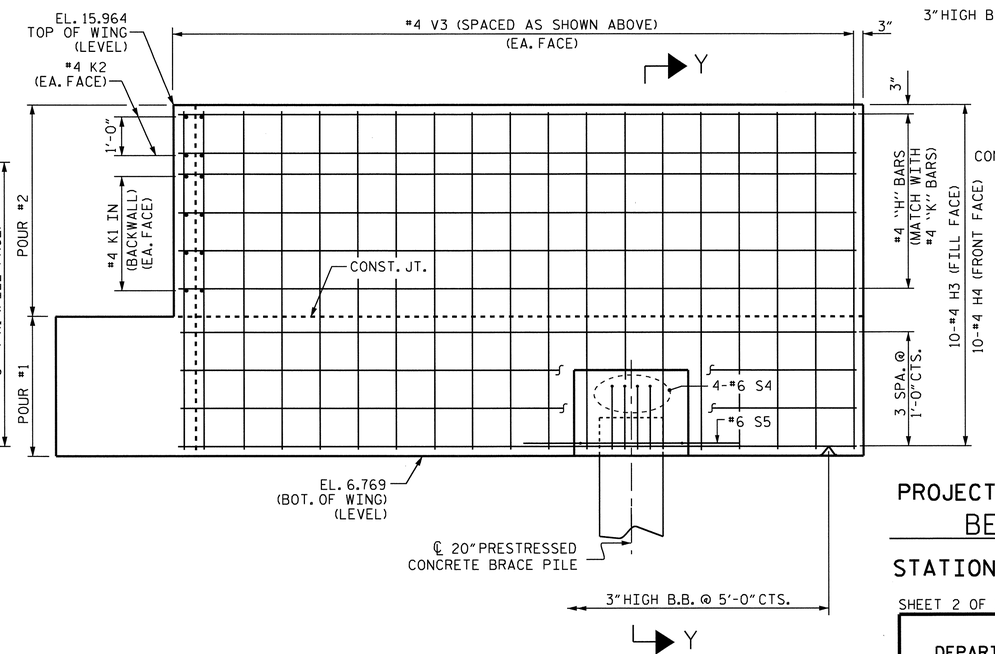

ELEVATION OF WING (W2)

PROJECT NO. R-2510C

BEAUFORT COUNTY

STATION: 54+34.00 -L-

SHEET 2 OF 3

STATE OF NORTH CAROLINA
DEPARTMENT OF TRANSPORTATION
RALEIGH

SUBSTRUCTURE

END BENT 2

(RIGHT LANE)

NORTH CAROLINA PROFESSIONAL SEAL 32492 ENGINEER JOHN A. YANNACCONE 12/9/10

REVISIONS						SHEET NO.
NO.	BY:	DATE:	NO.	BY:	DATE:	S-66
1			3			TOTAL SHEETS
2			4			134

DRAWN BY : HARISH SHAH DATE : 10/08
CHECKED BY : E.C. LOCKLEAR DATE : 4/28/09

09-DEC-2010 10:32
H:\R2510c\Structures\r2510c\Final Plans\STR2\r-2510c_sd_eb*_02.dgn
ttang

STR. #2

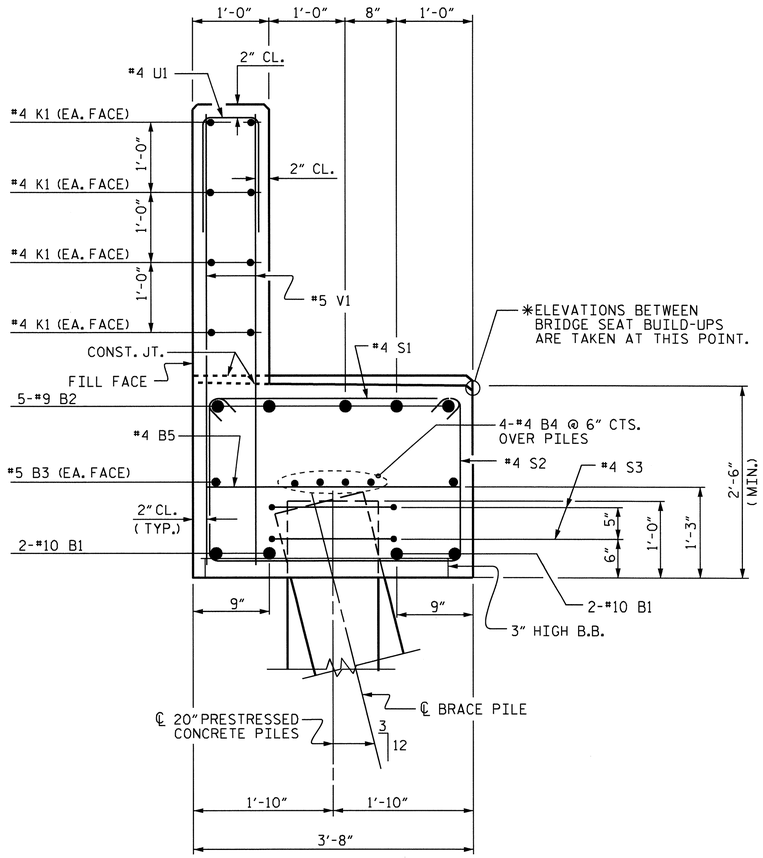

SECTION A-A

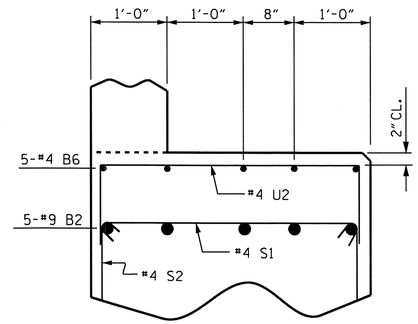

PARTIAL SECTION B-B

#5 V1 BARS NOT SHOWN FOR CLARITY.

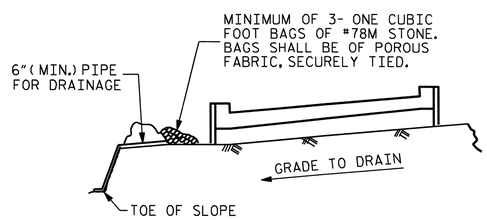

BAGGED STONE AND PIPE SHALL BE PLACED IMMEDIATELY AFTER COMPLETION OF END BENT EXCAVATION. PIPE MAY BE EITHER CONCRETE, CORRUGATED STEEL, CORRUGATED ALUMINUM ALLOY, OR CORRUGATED PLASTIC. PERFORATED PIPE WILL NOT BE ALLOWED.

BAGGED STONE SHALL REMAIN IN PLACE UNTIL THE ENGINEER DIRECTS THAT IT BE REMOVED. THE CONTRACTOR SHALL REMOVE AND DISPOSE OF SILT ACCUMULATIONS AT BAGGED STONE WHEN SO DIRECTED BY THE ENGINEER. BAGS SHALL BE REMOVED AND REPLACED WHENEVER THE ENGINEER DETERMINES THAT THEY HAVE DETERIORATED AND LOST THEIR EFFECTIVENESS.

NO SEPARATE PAYMENT WILL BE MADE FOR THIS WORK AND THE ENTIRE COST OF THIS WORK SHALL BE INCLUDED IN THE UNIT CONTRACT PRICE BID FOR THE SEVERAL PAY ITEMS.

TEMPORARY DRAINAGE AT END BENT

BAR TYPES

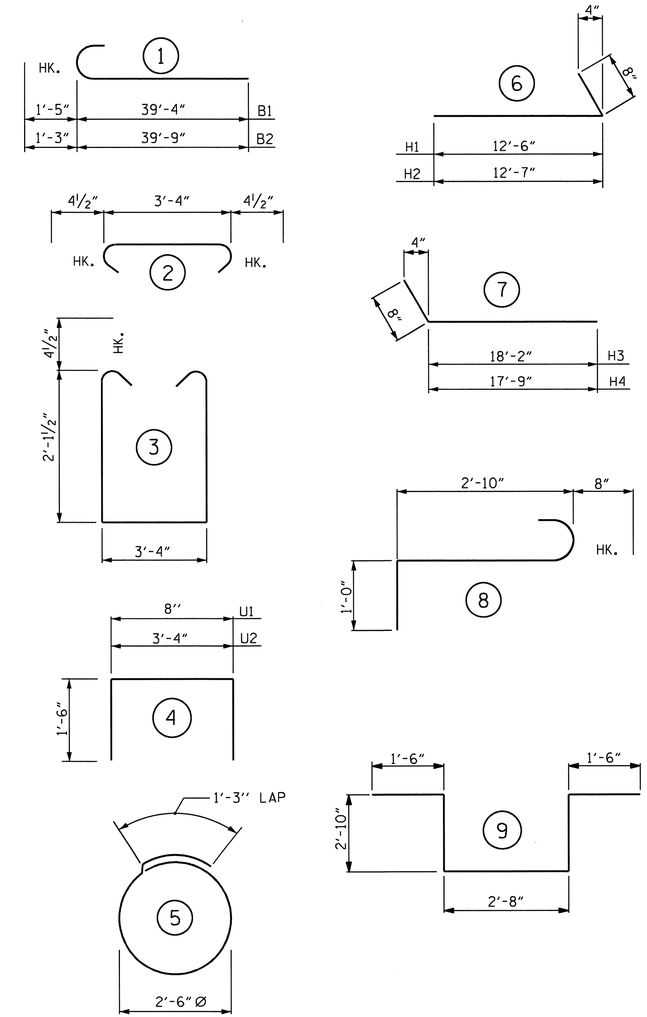

ALL BAR DIMENSIONS ARE OUT TO OUT.

BILL OF MATERIAL

END BENT 2

BAR	NO.	SIZE	TYPE	LENGTH	WEIGHT
B1	8	#10	1	40'-9"	1403
B2	10	#9	1	41'-0"	1394
B3	4	#5	STR	36'-11"	154
B4	12	#4	STR	25'-3"	202
B5	18	#4	STR	3'-4"	40
B6	5	#4	STR	19'-3"	64
B7	10	#4	STR	11'-1"	74
B8	5	#4	STR	2'-8"	9
H1	9	#4	6	13'-2"	79
H2	9	#4	6	13'-3"	80
H3	10	#4	7	18'-10"	126
H4	10	#4	7	18'-5"	123
K1	24	#4	STR	25'-3"	405
K2	8	#4	STR	4'-1"	22
S1	102	#4	2	4'-1"	278
S2	102	#4	3	8'-4"	568
S3	22	#4	5	9'-2"	135
S4	8	#6	8	4'-6"	54
S5	2	#6	9	11'-4"	34
U1	62	#4	4	3'-8"	152
U2	32	#4	4	6'-4"	135
V1	124	#5	STR	5'-11"	765
V2	36	#4	STR	7'-7"	182
V3	47	#4	STR	8'-10"	277
REINFORCING STEEL					6,755 LBS

CLASS A CONCRETE

POUR 1 (CAP, LOWER WINGS & WING BRACE PILE CAP)	30.9 C.Y.
POUR 2 (BACKWALL & UPPER WINGS)	18.4 C.Y.
TOTAL	49.3 C.Y.

20" PRESTRESSED CONCRETE PILES

NUMBER = 13	LIN. FT. =	390
PILE REDRIVES	EACH	5

NOTE: CONCRETE DISPLACED BY 20" PRESTRESSED CONCRETE PILES HAS BEEN DEDUCTED FROM THE CONCRETE QUANTITY.

PROJECT NO. R-2510C

BEAUFORT COUNTY

STATION: 54+34.00 -L-

SHEET 3 OF 3

NORTH CAROLINA PROFESSIONAL SEAL 32492 ENGINEER JOHN A. YANNIACCONE

12/9/10

STATE OF NORTH CAROLINA
DEPARTMENT OF TRANSPORTATION
RALEIGH

SUBSTRUCTURE

END BENT 2

(RIGHT LANE)

REVISIONS						SHEET NO.
NO.	BY:	DATE:	NO.	BY:	DATE:	S-67
1			3			TOTAL SHEETS
2			4			134

DRAWN BY : HARISH SHAH DATE : 3/09
CHECKED BY : E.C. LOCKLEAR DATE : 4/09

09-DEC-2010 10:32
H:\R2510c\Structures\r2510c\FinalPlans\STR2\r-2510c_sd_eb*_02.dgn
ttang

STR. #2

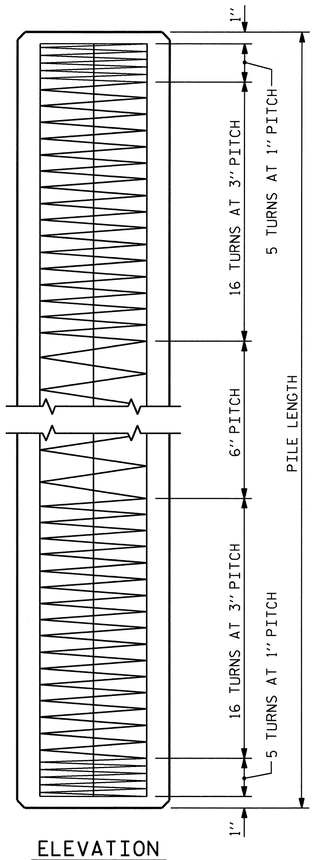

ELEVATION

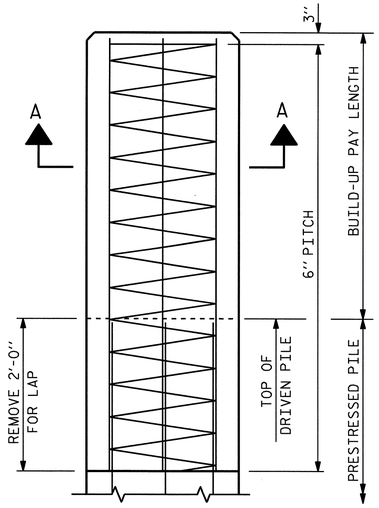

BUILD-UP
WITHOUT DRIVING

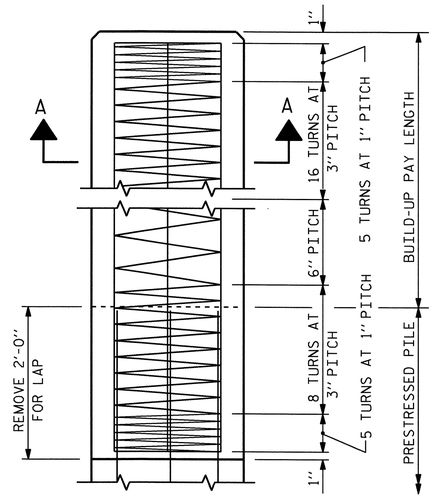

BUILD-UP
WITH DRIVING

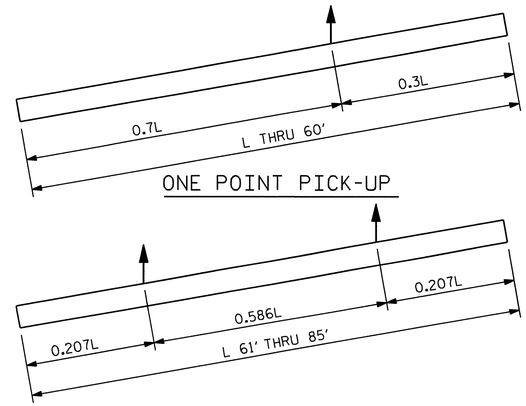

PICK-UP POINTS

NOTES

CONCRETE DESIGN DATA : f'c= 5,000 PSI ;fc= 2,000 PSI

IMPACT IN HANDLING = 50%

IN DRIVING PILES, A METHOD APPROVED BY THE ENGINEER SHALL BE USED, WHEREBY THE HEAD OF THE PILE IS NOT DAMAGED.

PROPOSED DEVICES FOR LIFTING PILES, RECESS DETAILS, AND PATCHING MATERIAL SHALL BE DETAILED IN SHOP DRAWINGS. AFTER ATTACHMENTS HAVE BEEN REMOVED, OPENINGS SHALL BE REPAIRED SUCH THAT THE APPEARANCE OF THE PILE IS UNIFORM.

THE CONTRACTOR SHALL USE THE FOLLOWING STRAND TYPE:

SIZE	GRADE	NUMBER OF STRANDS	AREA	ULTIMATE STRENGTH	APPLIED PRESTRESS FORCE
½"	270 L.R.	12	0.153	41,300# PER STRAND	30,980# PER STRAND

STRANDS SHALL BE EQUALLY SPACED AS SHOWN IN THE "TYPICAL SECTION".

A CIRCULAR STRAND PATTERN SHALL NOT BE PERMITTED.

THE SLIP-FORM METHOD OF CASTING PILES WILL NOT BE PERMITTED.

IF STRAND STRESS IS RELIEVED BY BURNING, THE STRANDS SHALL BE BURNED IN OPPOSITE PAIRS AS INDICATED IN THE TYPICAL PATTERN SHOWN. FOR ANY NUMBER OF STRANDS BURN IN OPPOSITE PAIRS AND SYMMETRICAL ABOUT BOTH VERTICAL AND HORIZONTAL AXES, STRANDS 1-1 SHALL BE BURNED BEFORE 2-2, ETC. NOT MORE THAN 4 STRANDS, SAY 5-5 AND 6-6, MAY BE BURNED AT ANY ONE SECTION BEFORE THESE SAME PAIRS OF STRANDS ARE BURNED AT BOTH ENDS OF THE BED AND BETWEEN EACH PAIR OF PILES IN THE BED.

BUILD-UPS SHALL BE OF 'CLASS A' CONCRETE WITH 20% ADDITIONAL CEMENT. NO DRIVING OF THE BUILT-UP PILE WILL BE PERMITTED UNTIL THE CONCRETE HAS REACHED A COMPRESSIVE STRENGTH OF 3,000 P.S.I. AND UNTIL A PERIOD OF SEVEN DAYS HAS ELAPSED SINCE CASTING OF THE BUILD-UP.

ALL PRESTRESSING STRANDS SHALL BE 7-WIRE LOW-RELAXATION GRADE 270 STRANDS AND SHALL CONFORM TO AASHTO M203 EXCEPT FOR SAMPLING REQUIREMENTS WHICH SHALL BE IN ACCORDANCE WITH STANDARD SPECIFICATIONS.

THE TRANSFER OF LOAD FROM THE ANCHORAGES TO THE PILE SHALL BE DONE WHEN THE CONCRETE HAS REACHED A COMPRESSIVE STRENGTH OF NOT LESS THAN 3500 PSI.

FOR PRESTRESSED CONCRETE MEMBERS, SEE SPECIAL PROVISIONS.

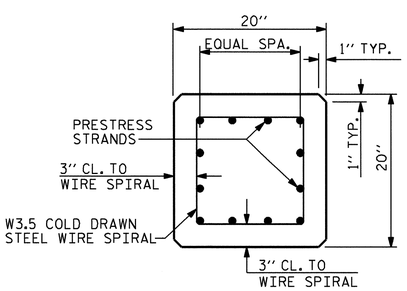

TYPICAL SECTION

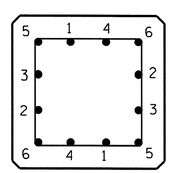

TYPICAL PATTERN FOR BURNING STRANDS

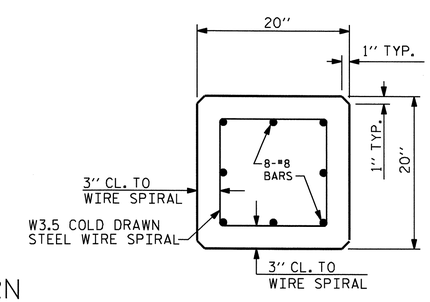

SECTION A-A

QUANTITIES FOR ONE 20" SQUARE PILE						
	CONCRETE	PILE WT.	ONE PICK-UP POINTS		TWO PICK-UP POINTS	
LENGTH	CU. YDS.	TONS	0.3L	0.7L	0.207L	0.586L
25'-0"	2.56	5.18	7'-6"	17'-6"		
30'-0"	3.07	6.22	9'-0"	21'-0"		
35'-0"	3.58	7.26	10'-6"	24'-6"		
40'-0"	4.09	8.29	12'-0"	28'-0"		
45'-0"	4.61	9.33	13'-6"	31'-6"		
50'-0"	5.12	10.36	15'-0"	35'-0"		
55'-0"	5.63	11.40	16'-6"	38'-6"		
60'-0"	6.14	12.44	18'-0"	42'-0"		
65'-0"	6.65	13.47			13'-5½"	38'-1"
70'-0"	7.17	14.51			14'-6"	41'-0"
75'-0"	7.68	15.55			15'-6½"	43'-11"
80'-0"	8.19	16.58			16'-6½"	46'-11"
85'-0"	8.70	17.62			17'-7"	49'-10"

NORTH CAROLINA PROFESSIONAL SEAL 32492 ENGINEER JOHN A. YANNACCONE
10/11/10

PROJECT NO. R-2510C
BEAUFORT COUNTY
STATION: 54+34.00 -L-

STATE OF NORTH CAROLINA
DEPARTMENT OF TRANSPORTATION
RALEIGH
STANDARD

20" PRESTRESSED CONCRETE PILE

(RIGHT LANE)

REVISIONS						SHEET NO.
NO.	BY:	DATE:	NO.	BY:	DATE:	S-68
1			3			TOTAL SHEETS
2			4			134

ASSEMBLED BY : HARISH SHAH DATE : 05/09
CHECKED BY : E.C. LOCKLEAR DATE : 05/09
DRAWN BY : WJH 1/89
CHECKED BY : CRK 3/89
REV. 6/1/94 EEM/GRP
REV. 8/16/99R RAL/LES
REV. 5/1/06 TLA/GM

11-OCT-2010 12:55
Y:\TIPProjects-R\R2510c\Structures\r2510c\FinalPlans\STR2\r-2510c_sd_eb*_02.dgn
qtnguyen

STR. #2

STD. NO. PCP3

ESTIMATED QUANTITIES		
BRIDGE @ STA. 54+34.00 -L- (RIGHT LANE)	RIP RAP CLASS II (TONS)	FILTER FABRIC FOR DRAINAGE (SQ. YARDS)
END BENT 1	160	175
END BENT 2	85	95
TOTAL	245	270

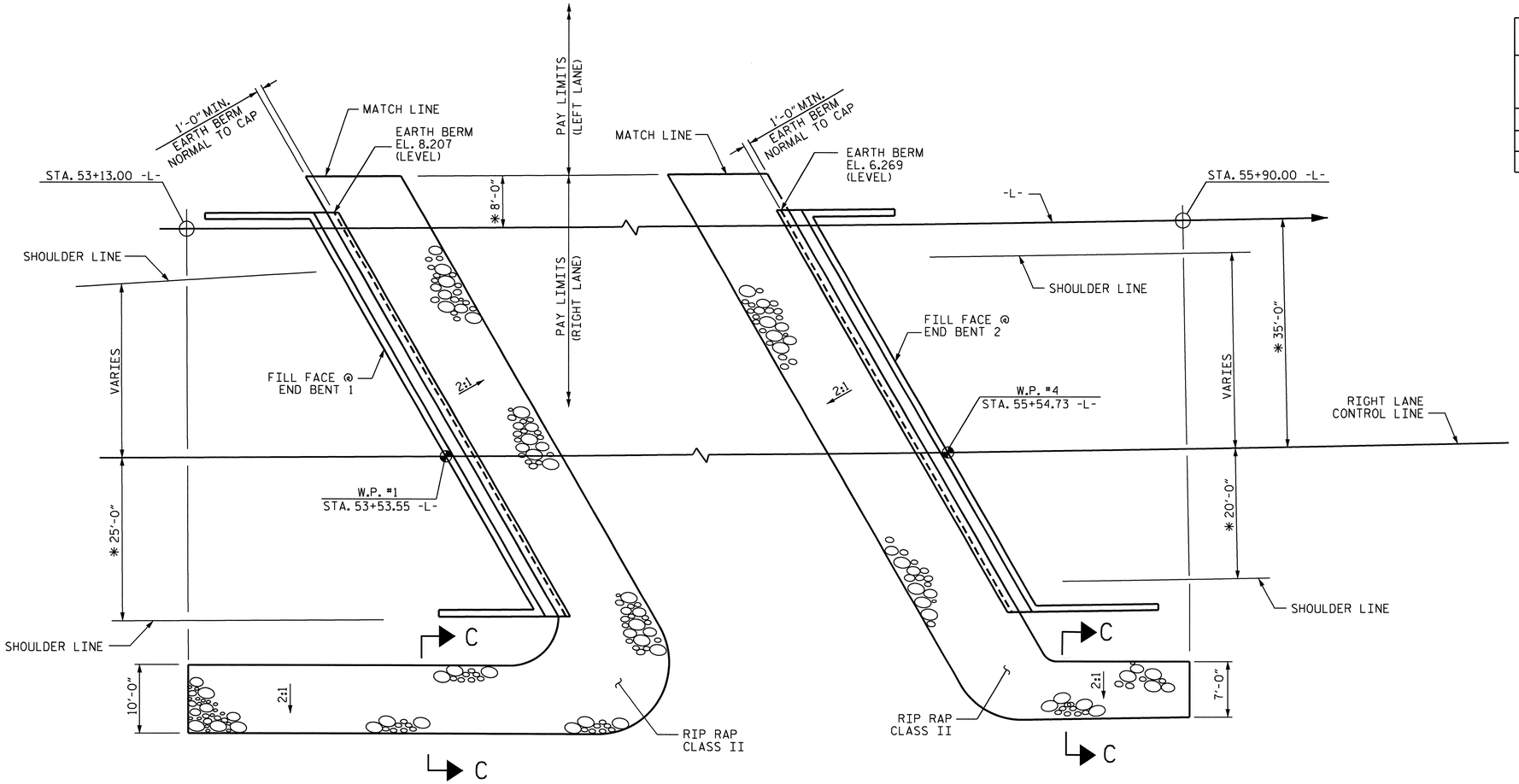

AT END BENT 1

AT END BENT 2

PLAN

* RADIAL DIMENSIONS

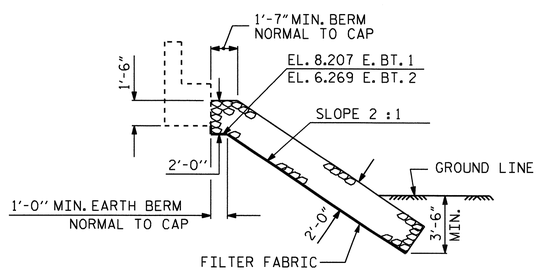

℄ SECTION

BERM RIP RAPPED

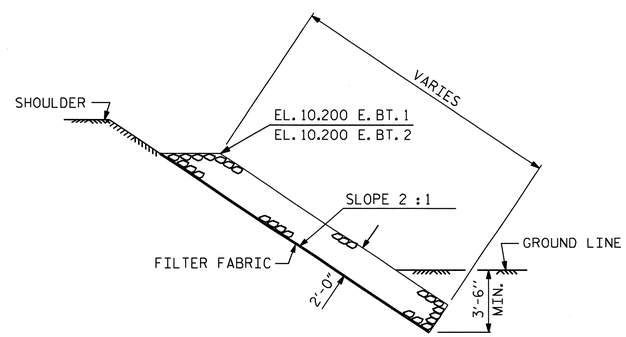

SECTION C-C

PROJECT NO. R-2510C

BEAUFORT COUNTY

STATION: 54+34.00 -L-

STATE OF NORTH CAROLINA
DEPARTMENT OF TRANSPORTATION
RALEIGH

RIP RAP DETAILS

(RIGHT LANE)

NORTH CAROLINA PROFESSIONAL SEAL 16301 ENGINEER TING HSIANG FANG

10/11/10

REVISIONS								SHEET NO.
NO.	BY:	DATE:	NO.	BY:	DATE:			S-69
1			3					TOTAL SHEETS
2			4					134

DRAWN BY : HARISH SHAH DATE : 04/09
CHECKED BY : E.C. LOCKLEAR DATE : 5/19/09

11-OCT-2010 12:55
Y:\TIPProjects-R\R2510c\Structures\r2510c\FinalPlans\STR2\R-2510C_sd_rr_02.dgn
qtnguyen

STR. #2

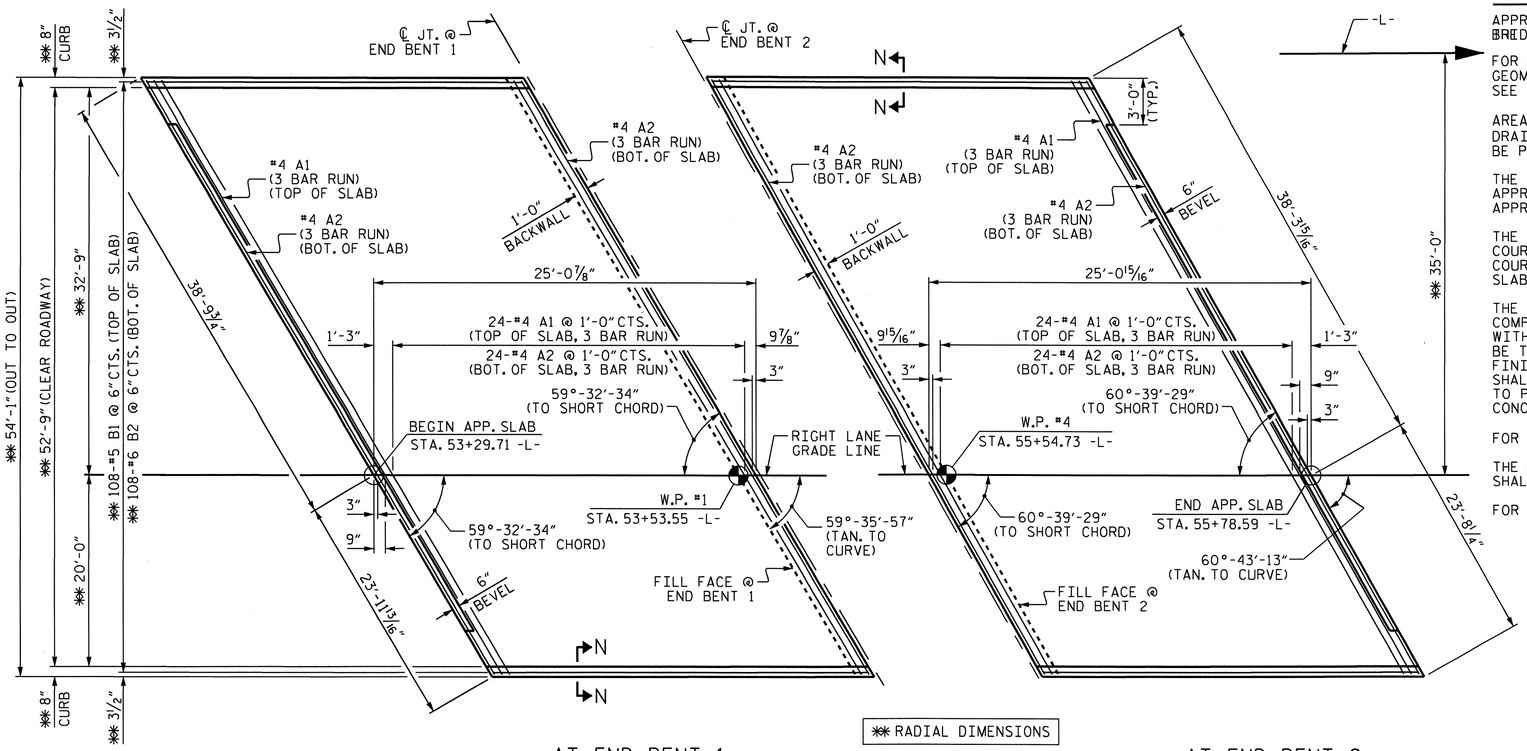

AT END BENT 1

AT END BENT 2

PLAN

DIMENSIONS SHOWN ARE TYPICAL FOR BOTH APPROACH SLABS.
ARC OFFSETS ARE NEGLIGIBLE.

NOTES

APPROACH SLAB SHALL NOT BE CONSTRUCTED PRIOR TO COMPLETION OF THE BRIDGE DECK.

FOR REINFORCED BRIDGE APPROACH FILL INCLUDING FABRIC, IMPERMEABLE GEOMEMBRANE, 4" Ø DRAINAGE PIPE, #78M STONE, AND SELECT MATERIAL, SEE ROADWAY PLANS.

AREA BETWEEN THE WINGWALL AND APPROACH SLAB SHALL BE GRADED TO DRAIN THE WATER AWAY FROM THE FILL FACE OF THE BRIDGE AND SHALL BE PAVED. SEE ROADWAY PLANS.

THE 6" COMP. A.B.C. SHALL BE FLUSH WITH THE ROADWAY END OF THE APPROACH SLAB AND SHALL EXTEND 1'-0" OUTSIDE EACH EDGE OF THE APPROACH SLAB.

THE CONTRACTOR MAY USE 4" TYPE B-25.0B ASPHALT CONCRETE BASE COURSE IN LIEU OF 6" COMP. A.B.C. IF THIS OPTION IS USED, THE BASE COURSE SHALL BE FLUSH WITH THE ROADWAY END OF THE APPROACH SLAB, AND THE WIDTH SHALL BE THE SAME AS THAT OF THE APPROACH SLAB.

THE CONTRACTOR MAY USE 5" CLASS "A" CONCRETE BASE IN LIEU OF 6" COMP. A.B.C. IF THIS OPTION IS USED, THE CONCRETE BASE SHALL BE FLUSH WITH THE ROADWAY END OF THE APPROACH SLAB, AND THE WIDTH SHALL BE THE SAME AS THAT OF THE APPROACH SLAB. THE CONCRETE SHALL BE FINISHED TO A SMOOTH SURFACE AND A LAYER OF 30 LB ROOFING FELT SHALL BE PLACED BETWEEN THE CONCRETE BASE AND THE APPROACH SLAB TO PREVENT BOND. THE APPROACH SLAB SHALL NOT BE CAST UNTIL THE CONCRETE BASE HAS REACHED AN AGE OF THREE CURING DAYS.

FOR EVAZOTE JOINT SEALS, SEE SPECIAL PROVISIONS.

THE NOMINAL UNCOMPRESSED SEAL WIDTH OF THE EVAZOTE JOINT SEAL SHALL BE 2½".

FOR ELASTOMERIC CONCRETE, SEE SPECIAL PROVISIONS.

BILL OF MATERIAL

AT END BENT 1

BAR	NO.	SIZE	TYPE	LENGTH	WEIGHT
✱ A1	75	#4	STR	22'-2"	1111
A2	78	#4	STR	22'-0"	1146
✱ B1	108	#5	STR	23'-6"	2647
B2	108	#6	STR	24'-7"	3988
REINFORCING STEEL				LBS.	5134
✱ EPOXY COATED REINFORCING STEEL				LBS.	3758
CLASS AA CONCRETE				C. Y.	51.1

AT END BENT 2

BAR	NO.	SIZE	TYPE	LENGTH	WEIGHT
✱ A1	75	#4	STR	21'-11"	1098
A2	78	#4	STR	21'-9"	1133
✱ B1	108	#5	STR	23'-5"	2647
B2	108	#6	STR	24'-7"	3988
REINFORCING STEEL				LBS.	5121
✱ EPOXY COATED REINFORCING STEEL				LBS.	3745
CLASS AA CONCRETE				C. Y.	51.1

SPLICE CHART

#4 A1	2'-0"
#4 A2	1'-9"

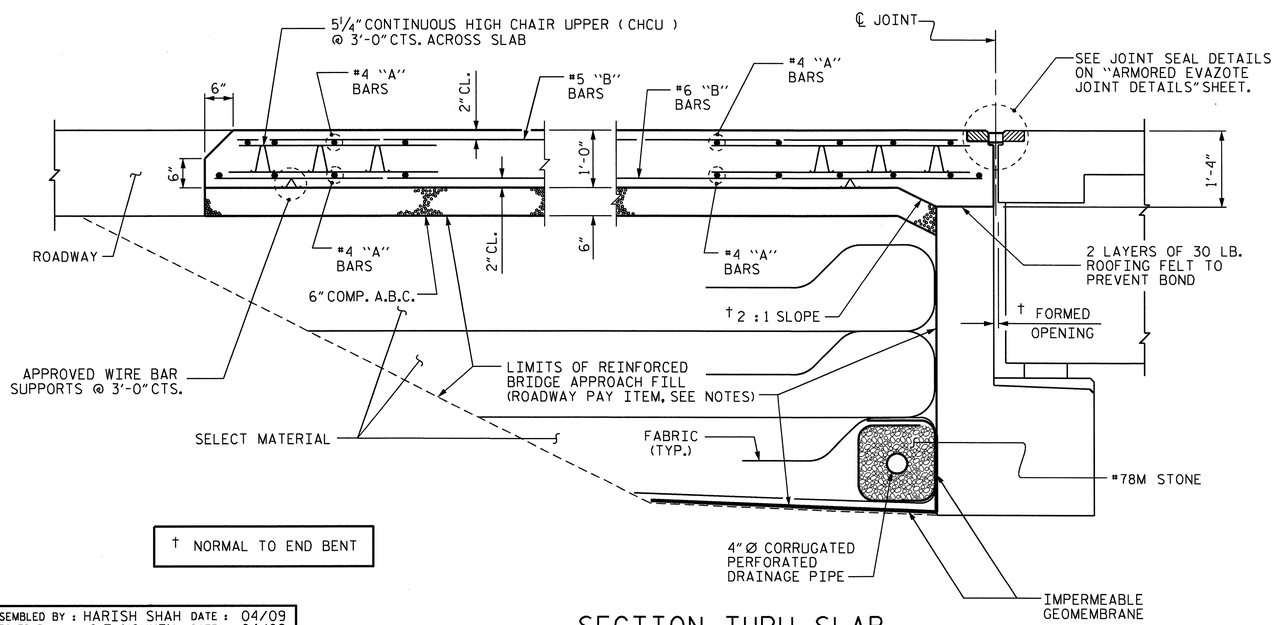

† NORMAL TO END BENT

SECTION THRU SLAB

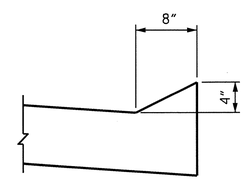

SECTION N-N

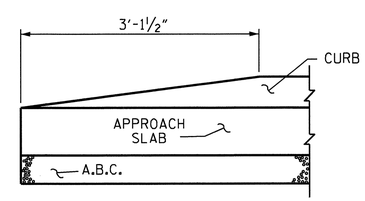

END OF CURB WITHOUT SHOULDER BERM GUTTER

CURB DETAILS

NORTH CAROLINA PROFESSIONAL SEAL 16301 ENGINEER TING-HSIONG FANG
12/9/10

PROJECT NO. R-2510C
BEAUFORT COUNTY
STATION: 54+34.00 -L-

SHEET 1 OF 2

STATE OF NORTH CAROLINA
DEPARTMENT OF TRANSPORTATION
RALEIGH

STANDARD

BRIDGE APPROACH SLAB FOR FLEXIBLE PAVEMENT

(RIGHT LANE)

REVISIONS						SHEET NO.
NO.	BY:	DATE:	NO.	BY:	DATE:	S-70
1			3			TOTAL SHEETS
2			4			134

ASSEMBLED BY : HARISH SHAH DATE : 04/09	
CHECKED BY : O.T. NGUYEN DATE : 04/09	
DRAWN BY : EEM 3/95	REV. 7/10/01 LES/RDR
CHECKED BY : VAP 3/95	REV. 5/7/03R RWW/JTE
	REV. 5/1/06R KMW/GM

09-DEC-2010 09:21
H:\R2510c\Structures\r2510c\Final Plans\STR2\R-2510C_sd_AS_02.dgn
ttfang

STR. #2

STD. NO. BAS4 (SHT 6)

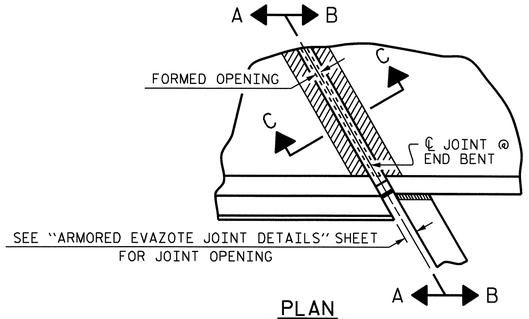

PLAN

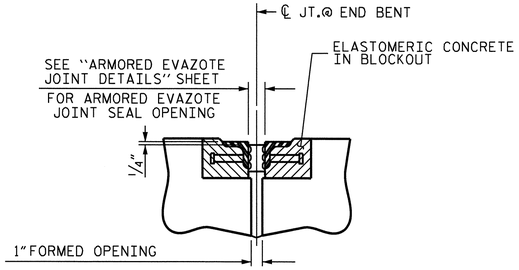

SECTION C-C

ARMORED EVAZOTE JOINT SEAL FOR QUANTITIES OF ELASTOMERIC CONCRETE IN BLOCKOUT SEE "ARMORED EVAZOTE JOINT DETAILS" SHEET.

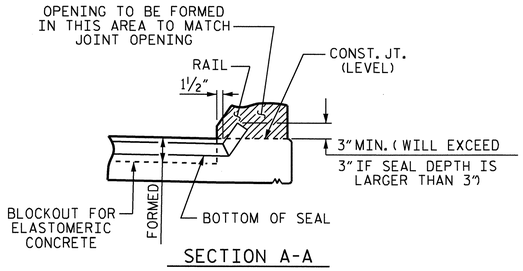

SECTION A-A

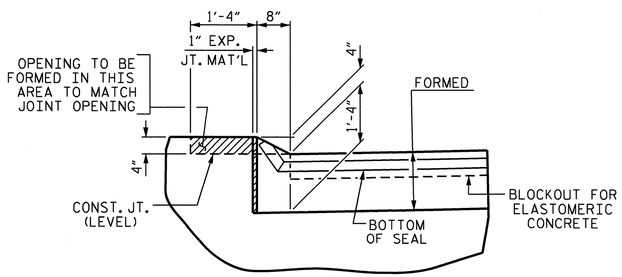

SECTION B-B

JOINT SEAL DETAILS @ END BENT

EVAZOTE JOINT SEAL TO BE CUT, HEAT WELDED AND TURNED UP PARALLEL TO SLOPED FACE OF THE BARRIER RAIL.

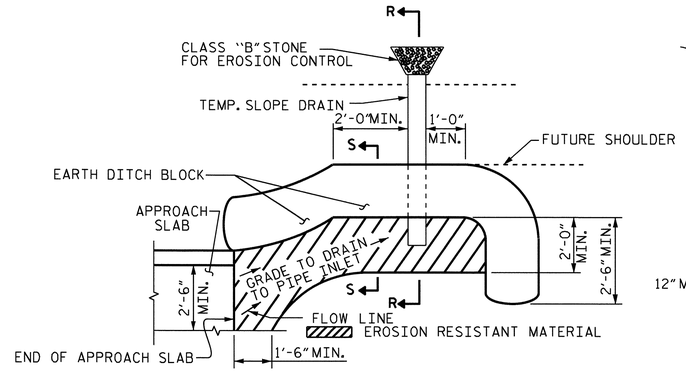

NOTE: IMMEDIATELY AFTER THE CONSTRUCTION OF THE APPROACH SLAB, THE CONTRACTOR SHALL PROVIDE TEMPORARY BERM AND SLOPE DRAIN. CONTRACTOR SHALL GRADE TO PIPE INLET AND PROVIDE EROSION RESISTANT MATERIAL AS SHOWN. THE EROSION RESISTANT MATERIAL SHALL BE EITHER 1) ASPHALT PLANT MIX, TYPE 1 OR TYPE 2, MIN. 2" DEPTH, 2) EROSION CONTROL MAT, OR 3) CONCRETE, AS DIRECTED BY THE ENGINEER. THE SLOPE DRAIN SHALL CONSIST OF A NON-PERFORATED TEMPORARY DRAINAGE PIPE, 12 INCHES IN DIAMETER.

PLAN VIEW

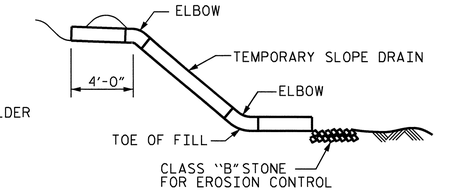

SECTION R-R

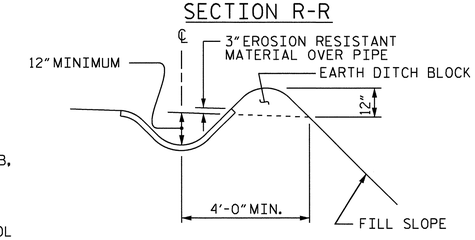

SECTION S-S

TEMPORARY BERM AND SLOPE DRAIN DETAILS

(TO BE USED WHEN SHOULDER BERM GUTTER IS REQUIRED)

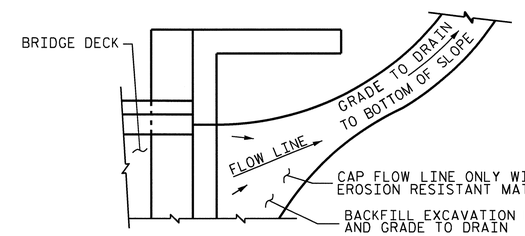

NOTE: IF THE APPROACH SLAB IS NOT CONSTRUCTED IMMEDIATELY AFTER THE BACKFILLING OF THE END BENT EXCAVATION, GRADE TO DRAIN TO THE BOTTOM OF THE SLOPE AND PROVIDE EROSION RESISTANT MATERIAL, SUCH AS FIBERGLASS ROVING OR AS DIRECTED BY THE ENGINEER TO PREVENT SOIL EROSION AND TO PROTECT THE AREA ADJACENT TO THE STRUCTURE. THE CONTRACTOR WILL BE REQUIRED TO REMOVE THESE MATERIALS PRIOR TO CONSTRUCTION OF THE APPROACH SLAB.

TEMPORARY DRAINAGE DETAIL

PROJECT NO. R-2510C
BEAUFORT COUNTY
STATION: 54+34.00 -L-

SHEET 2 OF 2

NORTH CAROLINA PROFESSIONAL SEAL 16301 ENGINEER TING HSIUNG FANG

Ting H Fang 10/11/10

STATE OF NORTH CAROLINA
DEPARTMENT OF TRANSPORTATION
RALEIGH

STANDARD

BRIDGE APPROACH SLAB DETAILS

(RIGHT LANE)

REVISIONS						SHEET NO.
NO.	BY:	DATE:	NO.	BY:	DATE:	S-71
1			3			TOTAL SHEETS
2			4			134

STR. #2 STD. NO. BAS10

ASSEMBLED BY : HARISH SHAH		DATE : 4-09-09	
CHECKED BY : O.T. NGUYEN		DATE : 4-27-09	
DRAWN BY : FCJ	11/88	REV. 10/17/00	RWW/LES
CHECKED BY : ARB	11/88	REV. 5/7/03	RWW/JTE
		REV. 5/1/06R	MAA/KMM

11-OCT-2010 12:55
Y:\TIPProjects-R\R2510c\Structures\r2510c\FinalPlans\STR2\R-2510C_sd_A5_02.dgn
qtnguyen

OVERHANG BRACKET CALCULATION INSTRUCTIONS

AASHTO SHAPES - TYPES III, IV, V, AND VI

1. RECORD KNOWN INFORMATION ON "BRIDGE OVERHANG BRACKET SUMMARY" ON SHEET 2
2. CALCULATE THE MAXIMUM SCREED LOAD PER BRACKET (SLPB) WITH AN ESTIMATED R = 1.5. SLPB = R X W. ROUND VALUE UP TO NEAREST SLPB VALUE INDICATED ON APPROPRIATE TABLE 1-1, 1-2, 1-3, OR 1-4.
3. WITH THE ESTIMATED SLPB, OVERHANG SLAB THICKNESS, "K" VALUE, AND 45° HANGER SAFE WORKING LOAD (SWL), ENTER THE APPROPRIATE TABLE 1-1, 1-2, 1-3, OR 1-4 (BASED ON OVERHANG DIMENSION) AND DETERMINE THE BRACKET SPACING, S.
4. CALCULATE S/D1 AND S/D2, ROUNDING UP TO NEAREST VALUE IN TABLE 2. ENTER TABLE 2 AND DETERMINE R VALUE.
5. CALCULATE REVISED SLPB. ROUND VALUE UP TO NEAREST SLPB VALUE INDICATED ON APPROPRIATE TABLE 1-1, 1-2, 1-3, OR 1-4.
6. WITH THE REVISED SLPB, OVERHANG SLAB THICKNESS, "K" VALUE AND 45 HANGER SAFE WORKING LOAD (SWL), ENTER THE APPROPRIATE TABLE 1-1, 1-2, 1-3 OR 1-4 (BASED ON OVERHANG DIMENSION) AND DETERMINE REVISED BRACKET SPACING, S.
7. CONTINUE ITERATIONS OF STEPS 4-6 UNTIL THE REVISED BRACKET SPACING, S, IS THE SAME AS THE PREVIOUS S VALUE.
8. CHECK LUMBER JOIST SPACING: WITH BRACKET SPACING VALUE, S, ROUND THIS VALUE UP TO THE NEAREST VALUE OF ALLOWABLE SPAN LENGTH OF JOIST OF TABLE 3. USING THIS VALUE, ALONG WITH THE AVERAGE OVERHANG SLAB THICKNESS AND THE LUMBER JOIST SIZE, DETERMINE JOIST SPACING FROM TABLE 3. IF NECESSARY, ADJUST LUMBER JOIST SIZE AND/OR JOIST SPACING TO MEET ALLOWABLE SPAN LENGTH OF JOIST.
9. CONVERSELY, IF THE DESIRED JOIST SPACING IS KNOWN, USE THIS ALONG WITH THE AVERAGE OVERHANG SLAB THICKNESS AND THE LUMBER JOIST SIZE TO DETERMINE IF ALLOWABLE SPAN LENGTH OF JOIST IS GREATER THAN THE BRACKET SPACING, S. IF NECESSARY, ADJUST LUMBER JOIST SIZE TO MEET REQUIREMENTS OF ALLOWABLE SPAN LENGTH OF JOIST AND JOIST SPACING.
10. RECORD REMAINING INFORMATION ON "BRIDGE OVERHANG BRACKET SUMMARY" FORM.
11. SUBMIT FORM AND CALCULATIONS FOR REVIEW AND APPROVAL.

TABLE 1-1

(FOR USE ON **UP TO 2'-0" OVERHANG Ⓛ** & 54" HORIZONTAL LEG LENGTH OF THE OVERHANG BRACKET)

AVG. SLAB THICKNESS Ⓣ (in)	BRACKET Ⓚ DIMENSION (in)	SCREED LOAD PER BRACKET									45° HANGER SWL (lbs)
		2500 lbs.	2250 lbs.	2000 lbs.	1750 lbs.	1500 lbs.	1250 lbs.	1000 lbs.	750 lbs.	0 lbs.	
		BRACKET SPACING									
10	30				2'-1"	2'-7"	3'-2"	3'-8"	4'-2"	5'-9"	4000
		3'-6"	4'-0"	4'-5"	4'-9"	5'-1"	5'-3"	5'-5"	5'-7"	6'-7"	6000
	40				2'-1"	2'-7"	3'-2"	3'-8"	4'-2"	5'-9"	4000
		3'-6"	4'-0"	4'-5"	4'-9"	5'-1"	5'-3"	5'-5"	5'-7"	6'-7"	6000
	50				2'-1"	2'-7"	3'-2"	3'-8"	4'-2"	5'-9"	4000
		3'-6"	4'-0"	4'-5"	4'-9"	5'-1"	5'-3"	5'-5"	5'-7"	6'-7"	6000
12	30					2'-4"	2'-10"	3'-4"	3'-9"	5'-2"	4000
		3'-2"	3'-7"	4'-1"	4'-7"	5'-0"	5'-2"	5'-4"	5'-7"	6'-5"	6000
	40					2'-4"	2'-10"	3'-4"	3'-9"	5'-2"	4000
		3'-2"	3'-7"	4'-1"	4'-7"	5'-0"	5'-2"	5'-4"	5'-7"	6'-5"	6000
	50					2'-4"	2'-10"	3'-4"	3'-9"	5'-2"	4000
		3'-2"	3'-7"	4'-1"	4'-7"	5'-0"	5'-2"	5'-4"	5'-7"	6'-5"	6000
14	30					2'-2"	2'-7"	3'-0"	3'-5"	4'-9"	4000
		2'-10"	3'-4"	3'-9"	4'-2"	4'-7"	5'-0"	5'-4"	5'-7"	6'-4"	6000
	40					2'-2"	2'-7"	3'-0"	3'-5"	4'-9"	4000
		2'-10"	3'-4"	3'-9"	4'-2"	4'-7"	5'-0"	5'-4"	5'-7"	6'-4"	6000
	50					2'-2"	2'-7"	3'-0"	3'-5"	4'-9"	4000
		2'-10"	3'-4"	3'-9"	4'-2"	4'-7"	5'-0"	5'-4"	5'-7"	6'-4"	6000
16	30					2'-0"	2'-4"	2'-9"	3'-2"	4'-4"	4000
		2'-8"	3'-0"	3'-5"	3'-10"	4'-3"	4'-7"	5'-0"	5'-5"	6'-3"	6000
	40					2'-0"	2'-4"	2'-9"	3'-2"	4'-4"	4000
		2'-8"	3'-0"	3'-5"	3'-10"	4'-3"	4'-7"	5'-0"	5'-5"	6'-3"	6000
	50					2'-0"	2'-4"	2'-9"	3'-2"	4'-4"	4000
		2'-8"	3'-0"	3'-5"	3'-10"	4'-3"	4'-7"	5'-0"	5'-5"	6'-3"	6000

TABLE 1-2

(FOR USE ON **OVER 2'-0" TO 2'-6" OVERHANG Ⓛ** & 54" HORIZONTAL LEG LENGTH OF THE OVERHANG BRACKET)

AVG. SLAB THICKNESS Ⓣ (in)	BRACKET Ⓚ DIMENSION (in)	SCREED LOAD PER BRACKET									45° HANGER SWL (lbs)
		2500 lbs.	2250 lbs.	2000 lbs.	1750 lbs.	1500 lbs.	1250 lbs.	1000 lbs.	750 lbs.	0 lbs.	
		BRACKET SPACING									
10	30					2'-4"	2'-9"	3'-3"	3'-8"	5'-1"	4000
		3'-1"	3'-6"	4'-0"	4'-5"	4'-11"	5'-3"	5'-5"	5'-7"	6'-7"	6000
	40					2'-4"	2'-9"	3'-3"	3'-8"	5'-1"	4000
		3'-1"	3'-6"	4'-0"	4'-5"	4'-11"	5'-3"	5'-5"	5'-7"	6'-7"	6000
	50					2'-4"	2'-9"	3'-3"	3'-8"	5'-1"	4000
		3'-1"	3'-6"	4'-0"	4'-5"	4'-11"	5'-3"	5'-5"	5'-7"	6'-7"	6000
12	30					2'-1"	2'-6"	2'-11"	3'-4"	4'-6"	4000
		2'-9"	3'-2"	3'-7"	4'-0"	4'-5"	4'-10"	5'-3"	5'-7"	6'-5"	6000
	40					2'-1"	2'-6"	2'-11"	3'-4"	4'-6"	4000
		2'-9"	3'-2"	3'-7"	4'-0"	4'-5"	4'-10"	5'-3"	5'-7"	6'-5"	6000
	50					2'-1"	2'-6"	2'-11"	3'-4"	4'-6"	4000
		2'-9"	3'-2"	3'-7"	4'-0"	4'-5"	4'-10"	5'-3"	5'-7"	6'-5"	6000
14	30						2'-3"	2'-7"	3'-0"	4'-1"	4000
		2'-6"	2'-10"	3'-3"	3'-7"	4'-0"	4'-4"	4'-9"	5'-1"	6'-3"	6000
	40						2'-3"	2'-7"	3'-0"	4'-1"	4000
		2'-6"	2'-10"	3'-3"	3'-7"	4'-0"	4'-4"	4'-9"	5'-1"	6'-3"	6000
	50						2'-3"	2'-7"	3'-0"	4'-1"	4000
		2'-6"	2'-10"	3'-3"	3'-7"	4'-0"	4'-4"	4'-9"	5'-1"	6'-3"	6000
16	30						2'-1"	2'-5"	2'-9"	3'-9"	4000
		2'-3"	2'-7"	2'-11"	3'-4"	3'-8"	4'-0"	4'-4"	4'-8"	5'-8"	6000
	40						2'-1"	2'-5"	2'-9"	3'-9"	4000
		2'-3"	2'-7"	2'-11"	3'-4"	3'-8"	4'-0"	4'-4"	4'-8"	5'-8"	6000
	50						2'-1"	2'-5"	2'-9"	3'-9"	4000
		2'-3"	2'-7"	2'-11"	3'-4"	3'-8"	4'-0"	4'-4"	4'-8"	5'-8"	6000

TABLE 1-3

(FOR USE ON **OVER 2'-6" TO 3'-0" OVERHANG Ⓛ** & 54" HORIZONTAL LEG LENGTH OF THE OVERHANG BRACKET)

AVG. SLAB THICKNESS Ⓣ (in)	BRACKET Ⓚ DIMENSION (in)	SCREED LOAD PER BRACKET									45° HANGER SWL (lbs)
		2500 lbs.	2250 lbs.	2000 lbs.	1750 lbs.	1500 lbs.	1250 lbs.	1000 lbs.	750 lbs.	0 lbs.	
		BRACKET SPACING									
10	30					2'-1"	2'-6"	2'-11"	3'-4"	4'-6"	4000
						4'-5"	4'-10"	5'-3"	5'-7"	6'-7"	6000
	40					2'-1"	2'-6"	2'-11"	3'-4"	4'-6"	4000
		2'-9"	3'-2"	3'-7"	4'-0"	4'-5"	4'-10"	5'-3"	5'-7"	6'-7"	6000
	50					2'-1"	2'-6"	2'-11"	3'-4"	4'-6"	4000
		2'-9"	3'-2"	3'-7"	4'-0"	4'-5"	4'-10"	5'-3"	5'-7"	6'-7"	6000
12	30						2'-2"	2'-7"	2'-11"	4'-0"	4000
						3'-11"	4'-3"	4'-8"	5'-0"	6'-1"	6000
	40						2'-2"	2'-7"	2'-11"	4'-0"	4000
		2'-5"	2'-10"	3'-2"	3'-6"	3'-11"	4'-3"	4'-8"	5'-0"	6'-1"	6000
	50						2'-2"	2'-7"	2'-11"	4'-0"	4000
		2'-5"	2'-10"	3'-2"	3'-6"	3'-11"	4'-3"	4'-8"	5'-0"	6'-1"	6000
14	30						2'-0"	2'-4"	2'-8"	3'-8"	4000
					3'-2"	3'-6"	3'-10"	4'-2"	4'-6"	5'-6"	6000
	40						2'-0"	2'-4"	2'-8"	3'-8"	4000
		2'-2"	2'-6"	2'-10"	3'-2"	3'-6"	3'-10"	4'-2"	4'-6"	5'-6"	6000
	50						2'-0"	2'-4"	2'-8"	3'-8"	4000
		2'-2"	2'-6"	2'-10"	3'-2"	3'-6"	3'-10"	4'-2"	4'-6"	5'-6"	6000
16	30							2'-1"	2'-5"	3'-4"	4000
					2'-11"	3'-2"	3'-6"	3'-10"	4'-1"	5'-0"	6000
	40							2'-1"	2'-5"	3'-4"	4000
		2'-0"	2'-4"	2'-7"	2'-11"	3'-2"	3'-6"	3'-10"	4'-1"	5'-0"	6000
	50							2'-1"	2'-5"	3'-4"	4000
		2'-0"	2'-4"	2'-7"	2'-11"	3'-2"	3'-6"	3'-10"	4'-1"	5'-0"	6000

TABLE 1-4

(FOR USE ON **OVER 3'-0" TO 3'-6" OVERHANG Ⓛ** & 54" HORIZONTAL LEG LENGTH OF THE OVERHANG BRACKET)

AVG. SLAB THICKNESS Ⓣ (in)	BRACKET Ⓚ DIMENSION (in)	SCREED LOAD PER BRACKET									45° HANGER SWL (lbs)
		2500 lbs.	2250 lbs.	2000 lbs.	1750 lbs.	1500 lbs.	1250 lbs.	1000 lbs.	750 lbs.	0 lbs.	
		BRACKET SPACING									
10	30						2'-1"	2'-5"	2'-9"	3'-10"	4000
						2'-3"	2'-11"	3'-7"	4'-3"	5'-9"	6000
	40						2'-1"	2'-5"	2'-9"	3'-10"	4000
				2'-4"	3'-0"	3'-7"	4'-1"	4'-5"	4'-9"	5'-9"	6000
	50						2'-1"	2'-5"	2'-9"	3'-10"	4000
		2'-4"	2'-8"	3'-0"	3'-4"	3'-8"	4'-1"	4'-5"	4'-9"	5'-9"	6000
12	30							2'-2"	2'-6"	3'-5"	4000
						2'-1"	2'-8"	3'-4"	3'-11"	5'-2"	6000
	40							2'-2"	2'-6"	3'-5"	4000
				2'-2"	2'-9"	3'-4"	3'-7"	3'-11"	4'-3"	5'-2"	6000
	50							2'-2"	2'-6"	3'-5"	4000
		2'-1"	2'-4"	2'-8"	3'-0"	3'-4"	3'-7"	3'-11"	4'-3"	5'-2"	6000
14	30								2'-3"	3'-1"	4000
						2'-0"	2'-6"	3'-1"	3'-8"	4'-8"	6000
	40								2'-3"	3'-1"	4000
				2'-0"	2'-7"	3'-0"	3'-3"	3'-6"	3'-10"	4'-8"	6000
	50								2'-3"	3'-1"	4000
			2'-2"	2'-5"	2'-8"	3'-0"	3'-3"	3'-6"	3'-10"	4'-8"	6000
16	30								2'-0"	2'-9"	4000
							2'-4"	2'-10"	3'-5"	4'-3"	6000
	40								2'-0"	2'-9"	4000
					2'-5"	2'-8"	2'-11"	3'-3"	3'-6"	4'-3"	6000
	50								2'-0"	2'-9"	4000
				2'-2"	2'-5"	2'-8"	2'-11"	3'-3"	3'-6"	4'-3"	6000

DEFINITIONS

SLPB = SCREED LOAD PER BRACKET (R x W)
R = SCREED LOAD FACTOR, OBTAINED FROM TABLE 2
W = WHEEL LOAD
S = BRACKET SPACING
T = AVERAGE SLAB THICKNESS
SWL = SAFE WORKING LOAD
K = DIMENSION DEFINED ON "BRIDGE OVERHANG BRACKET SUMMARY" ON SHEET 2
L = OVERHANG MEASURED FROM EDGE OF TOP FLANGE TO EDGE OF SUPERSTRUCTURE

NORTH CAROLINA PROFESSIONAL SEAL 18788 ENGINEER CHANG-CHUAN VICTOR CHAO

Chang-Chuan V. Chao
10-11-2010

PROJECT NO. R-2510C
BEAUFORT COUNTY
STATION: 54+34.00 -L-

SHEET 1 OF 3

STATE OF NORTH CAROLINA
DEPARTMENT OF TRANSPORTATION
RALEIGH

STANDARD OVERHANG FALSEWORK

AASHTO TYPES
III, IV, V, AND VI

(RIGHT LANE)

REVISIONS						SHEET NO.
NO.	BY:	DATE:	NO.	BY:	DATE:	S-72
1			3			TOTAL SHEETS
2			4			134

STR #2

OF1

ASSEMBLED BY:	DATE:
CHECKED BY:	DATE:
DRAWN BY: R. WRIGHT 06/04	REV.
CHECKED BY: C. V. CHAO 06/04	

11-OCT-2010 12:55
Y:\TIPProjects-R\R2510c\Structures\r2510c\FinalPlans\STR2\R-2510_sd_oh_02.dgn
qtnguyen

BRIDGE OVERHANG BRACKET SUMMARY

TOTAL SCREED WEIGHT = _____ LBS.
NUMBER OF SCREED WHEELS = _____
SCREED WHEEL LOAD (W) = _____ LBS.
SCREED LOAD PER BRACKET = _____ LBS.

PROJECT No. : _____
COUNTY : _____
STATION : _____
DESCRIPTION : _____

DATE : _____
DESIGN BY : _____
CHECK BY : _____

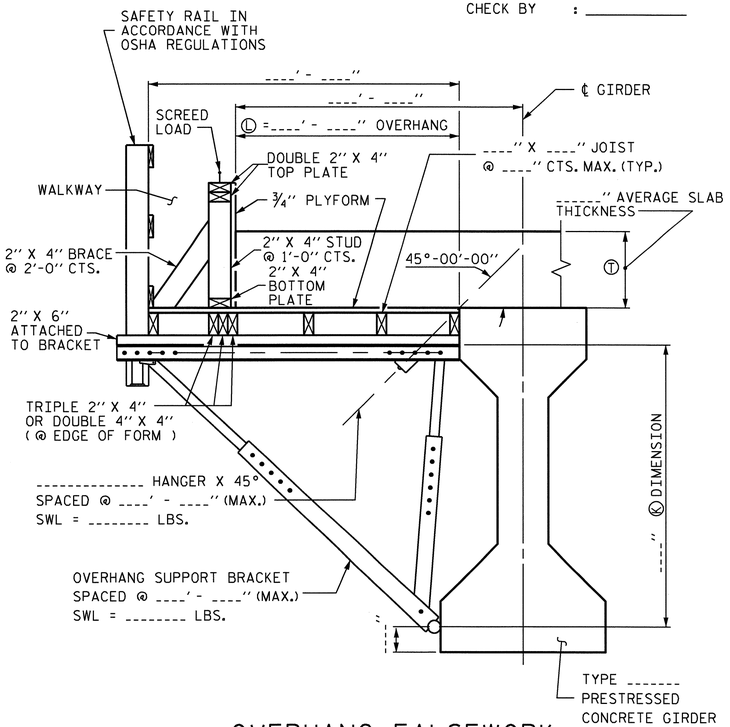

OVERHANG FALSEWORK

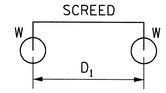

4-WHEEL MACHINE

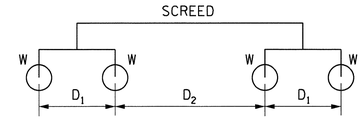

8-WHEEL MACHINE

4 WHEEL MACHINE	
S/D1	R
<= 1.0	1.00
1.1	1.09
1.2	1.17
1.3	1.23
1.4	1.29
1.5	1.33
1.6	1.38
1.7	1.41
1.8	1.44
1.9	1.47
2.0	1.50
2.2	1.55
2.4	1.58
2.6	1.62
2.8	1.64
3.0	1.67
3.5	1.71
4.0	1.75

TABLE 2: SCREED LOAD FACTOR "R"

		THE SCREED LOAD FACTOR R (FOR 8 WHEEL MACHINE)																	
		S/D_2																	
		<= 1.0	1.1	1.2	1.3	1.4	1.5	1.6	1.7	1.8	1.9	2.0	2.2	2.4	2.6	2.8	3.0	3.5	4.0
S/D_1	<= 1.0	1.00	1.09	1.17	1.23	1.29	1.33	1.38	1.41	1.44	1.47	1.50	1.55	1.58	1.62	1.64	1.67	1.71	1.75
	1.1	1.09	1.18	1.26	1.32	1.38	1.42	1.47	1.50	1.54	1.56	1.59	1.64	1.67	1.71	1.73	1.76	1.81	1.84
	1.2	1.17	1.26	1.33	1.40	1.45	1.50	1.54	1.58	1.61	1.64	1.67	1.71	1.75	1.78	1.81	1.83	1.88	1.92
	1.3	1.23	1.32	1.40	1.46	1.52	1.56	1.61	1.64	1.68	1.70	1.73	1.78	1.81	1.85	1.87	1.90	1.95	1.98
	1.4	1.29	1.38	1.45	1.52	1.57	1.62	1.66	1.70	1.73	1.76	1.79	1.83	1.87	1.90	1.93	1.95	2.00	2.07
	1.5	1.33	1.42	1.50	1.56	1.62	1.67	1.71	1.75	1.78	1.81	1.83	1.88	1.92	1.95	1.98	2.00	2.10	2.17
	1.6	1.38	1.47	1.54	1.61	1.66	1.71	1.75	1.79	1.82	1.85	1.88	1.92	1.96	1.99	2.04	2.08	2.18	2.25
	1.7	1.41	1.50	1.58	1.64	1.70	1.75	1.79	1.82	1.86	1.89	1.91	1.96	2.00	2.05	2.11	2.16	2.25	2.32
	1.8	1.44	1.54	1.61	1.68	1.73	1.78	1.82	1.86	1.89	1.92	1.94	1.99	2.06	2.12	2.17	2.22	2.32	2.39
	1.9	1.47	1.56	1.64	1.70	1.76	1.81	1.85	1.89	1.92	1.95	1.97	2.04	2.11	2.18	2.23	2.28	2.38	2.45
	2.0	1.50	1.59	1.67	1.73	1.79	1.83	1.88	1.91	1.94	1.97	2.00	2.09	2.17	2.23	2.29	2.33	2.43	2.50
	2.2	1.55	1.64	1.71	1.78	1.83	1.88	1.92	1.96	1.99	2.04	2.09	2.18	2.26	2.32	2.38	2.42	2.52	2.59
	2.4	1.58	1.67	1.75	1.81	1.87	1.92	1.96	2.00	2.06	2.11	2.17	2.26	2.33	2.40	2.45	2.50	2.60	2.67
	2.6	1.62	1.71	1.78	1.85	1.90	1.95	1.99	2.05	2.12	2.18	2.23	2.32	2.40	2.46	2.52	2.56	2.66	2.73
	2.8	1.64	1.73	1.81	1.87	1.93	1.98	2.04	2.11	2.17	2.23	2.29	2.38	2.45	2.52	2.57	2.62	2.71	2.79
	3.0	1.67	1.76	1.83	1.90	1.95	2.00	2.08	2.16	2.22	2.28	2.33	2.42	2.50	2.56	2.62	2.67	2.76	2.83
	3.5	1.71	1.81	1.88	1.95	2.00	2.10	2.18	2.25	2.32	2.38	2.43	2.52	2.60	2.66	2.71	2.76	2.86	2.93
	4.0	1.75	1.84	1.92	1.98	2.07	2.17	2.25	2.32	2.39	2.45	2.50	2.59	2.67	2.73	2.79	2.83	2.93	3.00

TABLE 3: ALLOWABLE SPAN LENGTH OF JOISTS AND JOIST SPACINGS

AVG. SLAB THICKNESS Ⓣ (IN)	LUMBER JOIST SIZE (IN X IN)	JOIST SPACINGS			
		15 IN	12 IN	10 IN	8 IN
		THE ALLOWABLE SPAN LENGTH OF JOISTS			
10	2 X 4	———	4' - 6"	4' - 9"	5' - 0"
	4 X 4	5' - 9"	6' - 3"	6' - 6"	6' - 7"
12	2 X 4	———	4' - 3"	4' - 9"	5' - 0"
	4 X 4	5' - 3"	6' - 0"	6' - 3"	6' - 5"
14	2 X 4	———	4' - 0"	4' - 6"	5' - 0"
	4 X 4	———	5' - 6"	6' - 0"	6' - 4"
16	2 X 4	———	4' - 0"	4' - 3"	4' - 9"
	4 X 4	———	5' - 3"	5' - 9"	6' - 3"

NOTES

DESIGN INCLUDES CONSTRUCTION LIVE LOAD 20 PSF ON THE AREA SUPPORTED AND 75 PLF AT THE OUTSIDE DECK OF OVERHANGS.

REQUIRED MINIMUM DIAGONAL LEG CAPACITY: 3600 LB WORKING LOAD

THE CONTRACTOR HAS THE OPTION OF SUBMITTING HIS OWN DESIGN FOR OVERHANG FALSEWORK IN ACCORDANCE WITH THE SPECIAL PROVISIONS.

SUBMITTALS UTILIZING THE INSTRUCTIONS AND PROCEDURES DESCRIBED ON SHEET 1 OF 3 SHALL BE IN ACCORDANCE WITH THE APPLICABLE SECTIONS OF THE SPECIFICATIONS AND SPECIAL PROVISIONS, EXCEPT THAT CALCULATIONS FOR OVERHANG FALSEWORK NEED NOT BE SEALED BY A REGISTERED ENGINEER.

FOR OVERHANG FALSEWORK BRACING DESIGN, SEE SHEET 3 OF 3.

PROJECT NO. R-2510C
BEAUFORT COUNTY
STATION: 54+34.00 -L-

SHEET 2 OF 3

STATE OF NORTH CAROLINA
DEPARTMENT OF TRANSPORTATION
RALEIGH

STANDARD OVERHANG FALSEWORK

AASHTO TYPES
III, IV, V, AND VI

(RIGHT LANE)

NORTH CAROLINA PROFESSIONAL SEAL 18788 ENGINEER CHANG-CHUAN VICTOR CHAO
Chang-Chuan V. Chao
10-11-2010

REVISIONS						SHEET NO.
NO.	BY:	DATE:	NO.	BY:	DATE:	S-73
1			3			TOTAL SHEETS
2			4			134

ASSEMBLED BY:	DATE:
CHECKED BY:	DATE:
DRAWN BY: R. WRIGHT 06/04	REV.
CHECKED BY: C. V. CHAO 06/04	

11-OCT-2010 12:55
Y:\TIPProjects-R\R2510c\Structures\r2510c\FinalPlans\STR2\R-2510_sd_oh_02.dgn
qtnguyen

STR #2

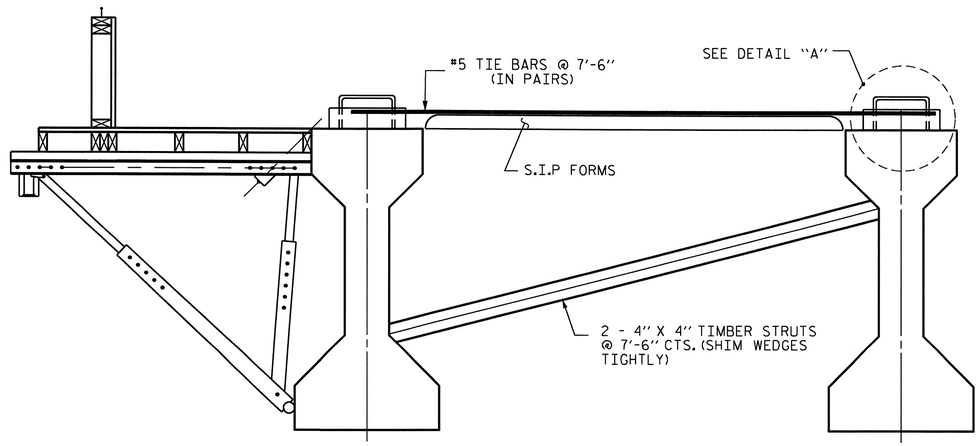

EXTERIOR GIRDER

INTERIOR GIRDER

DETAIL OF REQUIRED OVERHANG FALSEWORK BRACING SYSTEM

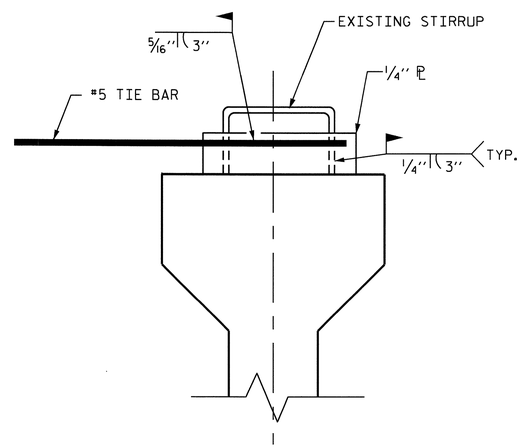

DETAIL "A"

NOTES:

EACH #5 TIE BAR SHALL BE WELDED TO ONE STIRRUP LOOP AS SHOWN IN DETAIL "A". #5 TIE BARS SHALL BE WELDED TO TWO ADJACENT STIRRUPS OF THE EXTERIOR GIRDER AND THE ADJACENT INTERIOR GIRDER BETWEEN PERMANENT DIAPHRAGMS. WELD STEEL PLATES IN BETWEEN THE TIE BARS AND THE STIRRUP LOOP. WELDING TWO TIE BARS TO THE SAME STIRRUP LOOP SHALL NOT BE PERMITTED.

MAXIMUM SPACING BETWEEN THE BRACING (TIE BARS-TIMBER STRUT) IS 7'-6" CTS. #5 TIE BARS SHALL BE LOCATED OVER A TIMBER STRUT.

INSTALL TIE BARS AND TIMBER STRUTS PRIOR TO PLACEMENT OF CONCRETE OR SCREED WEIGHT ONTO THE OVERHANG FALSEWORK.

PROJECT NO. R-2510C
BEAUFORT COUNTY
STATION: 54+34.00 -L-

SHEET 3 OF 3

STATE OF NORTH CAROLINA
DEPARTMENT OF TRANSPORTATION
RALEIGH

STANDARD OVERHANG FALSEWORK

AASHTO TYPES
III, IV, V, AND VI

(RIGHT LANE)

NORTH CAROLINA PROFESSIONAL SEAL 18788 ENGINEER CHANG-CHUAN VICTOR CHAO

Chang-Chuan V. Chao
10-11-2010

REVISIONS						SHEET NO.
NO.	BY:	DATE:	NO.	BY:	DATE:	S-74
1			3			TOTAL SHEETS
2			4			134

DRAWN BY: R. WRIGHT 06/04 DATE :
CHECKED BY: C. V. CHAO 06/04 DATE :

11-OCT-2010 12:55
Y:\TIPProjects-R\R2510c\Structures\r2510c\FinalPlans\STR2\R-2510_sd_oh_02.dgn
qtnguyen

F.A. PROJECT NO. NHF-0017(87)

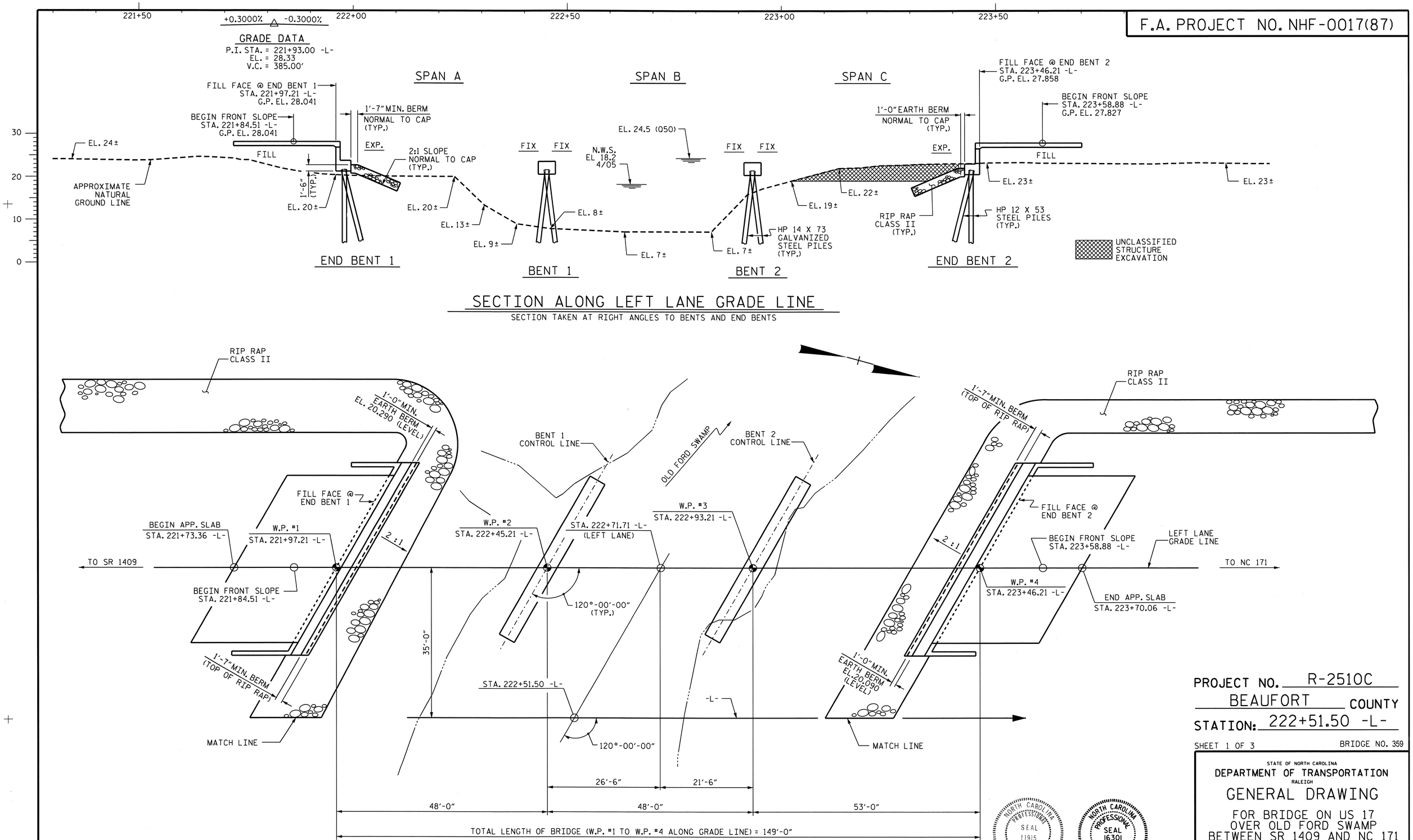

SECTION ALONG LEFT LANE GRADE LINE

SECTION TAKEN AT RIGHT ANGLES TO BENTS AND END BENTS

PLAN

(PILES NOT SHOWN FOR CLARITY)

PROJECT NO. R-2510C

BEAUFORT COUNTY

STATION: 222+51.50 -L-

SHEET 1 OF 3 BRIDGE NO. 359

STATE OF NORTH CAROLINA
DEPARTMENT OF TRANSPORTATION
RALEIGH

GENERAL DRAWING

FOR BRIDGE ON US 17
OVER OLD FORD SWAMP
BETWEEN SR 1409 AND NC 171
(LEFT LANE)

NORTH CAROLINA PROFESSIONAL SEAL 11915 ENGINEER JOHN C. FRYE 12/7/10

NORTH CAROLINA PROFESSIONAL SEAL 16301 ENGINEER TING HSIUNG FANG 11/29/10

REVISIONS						SHEET NO.
NO.	BY:	DATE:	NO.	BY:	DATE:	S-75
1			3			TOTAL SHEETS
2			4			134

STR #3

DRAWN BY : HARISH SHAH DATE : 9/08
CHECKED BY : A.R. CHESSON DATE : 12/08

30-NOV-2010 14:19
W:\Structures\r2510c\FinalPlans\STR3\r-2510c_sd_gd_03.dgn
Hshah

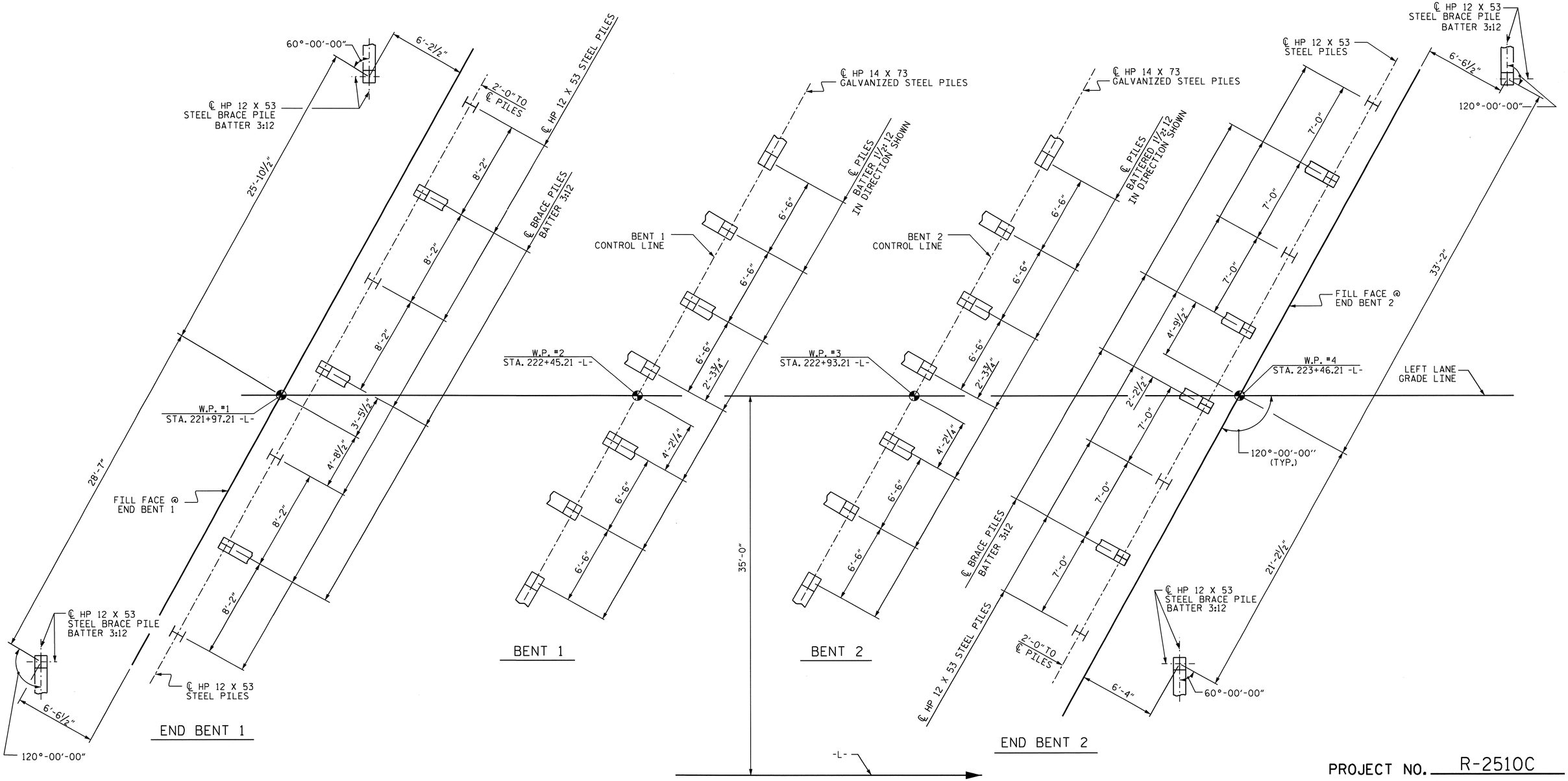

FOUNDATION LAYOUT

(DIMENSIONS LOCATING PILES ARE SHOWN TO THE PILE CENTERLINE)

NOTES:

DRIVE PILES AT END BENTS 1 AND 2 TO A REQUIRED BEARING CAPACITY OF 120 TONS PER PILE. THE REQUIRED BEARING CAPACITY IS EQUAL TO THE ALLOWABLE BEARING CAPACITY WITH A MINIMUM FACTOR OF SAFETY OF TWO.

THE ALLOWABLE BEARING CAPACITY FOR PILES AT END BENTS 1 AND 2 IS 60 TONS PER PILE.

DRIVE PILES AT BENT 1 TO A REQUIRED BEARING CAPACITY OF 170 TONS PER PILE. THE REQUIRED BEARING CAPACITY IS EQUAL TO THE ALLOWABLE BEARING CAPACITY WITH A MINIMUM FACTOR OF SAFETY OF TWO PLUS ANY ADDITIONAL CAPACITY TO ACCOUNT FOR DOWNDRAG OR NEGATIVE SKIN FRICTION OR SCOUR.

DRIVE PILES AT BENT 2 TO A REQUIRED BEARING CAPACITY OF 165 TONS PER PILE. THE REQUIRED BEARING CAPACITY IS EQUAL TO THE ALLOWABLE BEARING CAPACITY WITH A MINIMUM FACTOR OF SAFETY OF TWO PLUS ANY ADDITIONAL CAPACITY TO ACCOUNT FOR DOWNDRAG OR NEGATIVE SKIN FRICTION OR SCOUR.

THE ALLOWABLE BEARING CAPACITY FOR PILES AT BENTS 1 AND 2 IS 75 TONS PER PILE.

INSTALL PILES AT BENT 1 TO A TIP ELEVATION NO HIGHER THAN -30 FT.

INSTALL PILES AT BENT 2 TO A TIP ELEVATION NO HIGHER THAN -16 FT.

THE SCOUR CRITICAL ELEVATION FOR BENT 1 AND BENT 2 IS -3 FT AND 5 FT RESPECTIVELY. THE SCOUR CRITICAL ELEVATIONS ARE USED TO MONITOR POSSIBLE SCOUR PROBLEMS DURING THE LIFE OF THE STRUCTURE.

TESTING PILES WITH THE PILE DRIVING ANALYZER (PDA) FOR LRFD MAY BE REQUIRED AT BENT 1 OR BENT 2. SEE PILE DRIVING ANALYZER FOR LRFD SPECIAL PROVISION.

FOR PILES, SEE SPECIAL PROVISIONS.

NORTH CAROLINA PROFESSIONAL SEAL 16301 ENGINEER HSIANG-LING LANG

10/6/10

PROJECT NO. R-2510C
BEAUFORT COUNTY
STATION: 222+51.50 -L-

SHEET 2 OF 3

STATE OF NORTH CAROLINA
DEPARTMENT OF TRANSPORTATION
RALEIGH

GENERAL DRAWING
BRIDGE ON US 17
OVER OLD FORD SWAMP
BETWEEN SR 1409 AND NC 171
(LEFT LANE)

REVISIONS						SHEET NO.
NO.	BY:	DATE:	NO.	BY:	DATE:	S-76
1			3			TOTAL SHEETS
2			4			134

DRAWN BY : HARISH SHAH DATE : 09/08
CHECKED BY : A.R. CHESSON DATE : 12/08

06-OCT-2010 13:48
Y:\TIPProjects-R\R2510c\Structures\r2510c\FinalPlans\STR3\r-2510c_sd_gd_03.dgn
qtnguyen

STR. #3

BENCH MARK: #7 RR SPIKE IN 24" JUNIPER TREE, -L- STA 223+43.46, LEFT 88.08', EL. 22.96

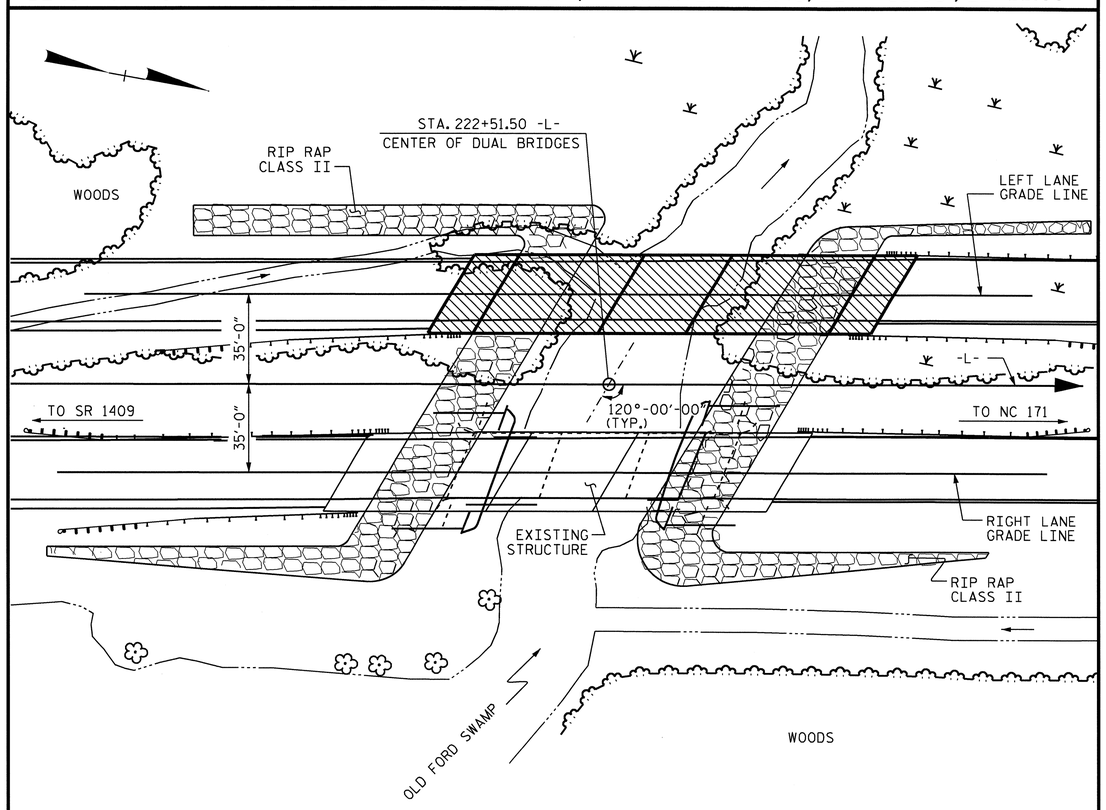

FOR UTILITY INFORMATION, SEE UTILITY PLANS AND SPECIAL PROVISIONS.

LOCATION SKETCH

HYDRAULIC DATA

DESIGN DISCHARGE	=	2,300 C.F.S.
FREQUENCY OF DESIGN FLOOD	=	50 YRS.
DESIGN HIGH WATER ELEVATION	=	24.5 FT.
DRAINAGE AREA	=	23.3 SQ. MI.
BASIC DISCHARGE (Q100)	=	2,856 C.F.S.
BASIC HIGH WATER ELEVATION	=	25.2 FT.

OVERTOPPING FLOOD DATA

OVERTOPPING DISCHARGE	=	6,550 C.F.S.
FREQUENCY OF OVERTOPPING FLOOD	=	500 YRS.+
OVERTOPPING FLOOD ELEVATION	=	27.4 FT.

NOTES

ASSUMED LIVE LOAD = HS20 OR ALTERNATE LOADING, EXCEPT THAT THE GIRDERS HAVE BEEN DESIGNED FOR HS25.

FOR OTHER DESIGN DATA AND GENERAL NOTES, SEE SHEET SN.

FOR EROSION CONTROL MEASURES, SEE EROSION CONTROL PLANS.

THIS BRIDGE HAS BEEN DESIGNED IN ACCORDANCE WITH THE REQUIREMENTS OF THE STANDARD SPECIFICATIONS FOR SEISMIC DESIGN OF HIGHWAY BRIDGES FOR SEISMIC PERFORMANCE CATEGORY A.

THIS STRUCTURE HAS BEEN DESIGNED IN ACCORDANCE WITH HEC 18, "EVALUATING SCOUR AT BRIDGES", MAY, 2001.

THIS BRIDGE HAS BEEN DESIGNED BY THE STRENGTH DESIGN METHOD AS SPECIFIED IN AASHTO STANDARD SPECIFICATIONS.

THE CONTRACTOR SHALL PROVIDE INDEPENDENT ASSURANCE SAMPLES OF REINFORCING STEEL AS FOLLOWS: FOR PROJECTS REQUIRING UP TO 400 TONS OF REINFORCING STEEL, ONE 30 INCH SAMPLE OF EACH SIZE BAR USED, AND FOR PROJECTS REQUIRING OVER 400 TONS OF REINFORCING STEEL, TWO 30 INCH SAMPLES OF EACH SIZE BAR USED. THE BARS FROM WHICH THE SAMPLES ARE TAKEN MUST THEN BE SPLICED WITH REPLACEMENT BARS OF THE SIZE AND LENGTH OF THE SAMPLE, PLUS A MINIMUM LAP SPLICE OF THIRTY BAR DIAMETERS.

REMOVABLE FORMS MAY BE USED IN LIEU OF METAL STAY-IN-PLACE FORMS IN ACCORDANCE WITH ARTICLE 420-3 OF THE STANDARD SPECIFICATIONS.

THE MATERIAL SHOWN IN THE CROSS-HATCHED AREA SHALL BE EXCAVATED FOR A DISTANCE OF 45 FT. LEFT AT END BENT 1 AND 70 FT. LEFT AT END BENT 2 OF CENTERLINE ROADWAY AS DIRECTED BY THE ENGINEER. THIS WORK WILL BE PAID FOR AT THE CONTRACT LUMP SUM PRICE FOR UNCLASSIFIED STRUCTURE EXCAVATION. SEE SECTION 412 OF THE STANDARD SPECIFICATIONS.

FOR INTERIOR BENTS, PARTIAL GALVANIZING OF PILES IS REQUIRED. SEE BENT SHEETS FOR DETAILS.

NEEDLE BEAMS WILL NOT BE ALLOWED UNLESS OTHERWISE CALLED FOR ON THE PLANS OR APPROVED BY THE ENGINEER.

FOR SUBMITTAL OF WORKING DRAWINGS, SEE SPECIAL PROVISIONS.

FOR FALSEWORK AND FORMWORK, SEE SPECIAL PROVISIONS.

FOR CRANE SAFETY, SEE SPECIAL PROVISIONS.

FOR GROUT FOR STRUCTURES, SEE SPECIAL PROVISIONS.

FOR PRESTRESSED CONCRETE MEMBERS, SEE SPECIAL PROVISIONS.

FOR CURING CONCRETE, SEE SPECIAL PROVISIONS.

FOR PLACING LOAD ON STRUCTURE MEMBERS, SEE SPECIAL PROVISIONS.

NORTH CAROLINA PROFESSIONAL SEAL 16301 ENGINEER TING HSIUNG LANG

11/29/10

TOTAL BILL OF MATERIAL

	PDA ASSISTANCE	UNCLASSIFIED STRUCTURE EXCAVATION	REINFORCED CONCRETE DECK SLAB	GROOVING BRIDGE FLOORS	CLASS A CONCRETE	BRIDGE APPROACH SLABS	REINFORCING STEEL	36" PRESTRESSED CONCRETE GIRDERS		HP 12 X 53 STEEL PILES		HP 14 X 73 GALVANIZED STEEL PILES		PILE REDRIVES	CONCRETE BARRIER RAIL	RIP RAP CLASS II (2'-0" THICK)	FILTER FABRIC FOR DRAINAGE	ELASTOMERIC BEARINGS	EVAZOTE JOINT SEALS
	EACH	LUMP SUM	SQ.FT.	SQ.FT.	CU.YDS.	LUMP SUM	LBS.	NO.	LIN. FT.	NO.	LIN. FT.	NO.	LIN. FT.	EACH	LIN. FT.	TON	SQ. YD.	LUMP SUM	LUMP SUM
SUPERSTRUCTURE			5,754	6,342				15	716.40						293.19			LUMP SUM	LUMP SUM
END BENT 1					32.0		4,236			9	630			4		140	155		
BENT 1					20.1		2,923					7	490	2					
BENT 2					20.1		2,923					7	630	2					
END BENT 2					32.8		4,262			10	650			4		165	185		
TOTAL	1	LUMP SUM	5,754	6,342	105.0	LUMP SUM	14,344	15	716.40	19	1,280	14	1,120	12	293.19	305	340	LUMP SUM	LUMP SUM

PROJECT NO. R-2510C
BEAUFORT COUNTY
STATION: 222+51.50 -L-

SHEET 3 OF 3

STATE OF NORTH CAROLINA
DEPARTMENT OF TRANSPORTATION
RALEIGH

GENERAL DRAWING
FOR BRIDGE ON US 17
OVER OLD FORD SWAMP
BETWEEN SR 1409 AND NC 171
(LEFT LANE)

REVISIONS						SHEET NO.
NO.	BY:	DATE:	NO.	BY:	DATE:	S-77
1			3			TOTAL SHEETS
2			4			134

STR. #3

DRAWN BY : HARISH SHAH DATE : 9/08
CHECKED BY : A.R. CHESSON DATE : 12/08

30-NOV-2010 14:22
W:\Structures\r2510c\Final Plans\STR3\r-2510c_sd_gd_03.dgn
Hshah

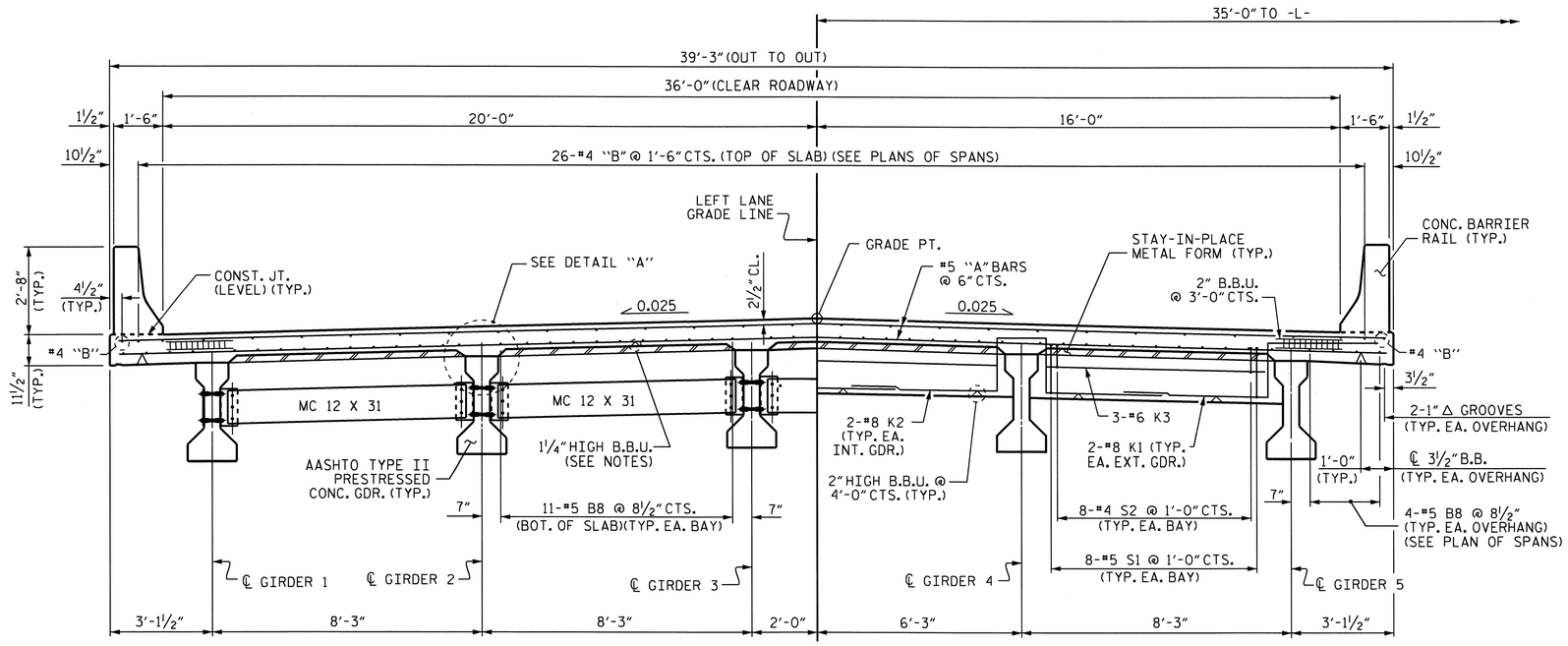

HALF TYPICAL SECTION

SHOWING INTERMEDIATE DIAPHRAGMS

HALF TYPICAL SECTION

SHOWING END BENT DIAPHRAGMS

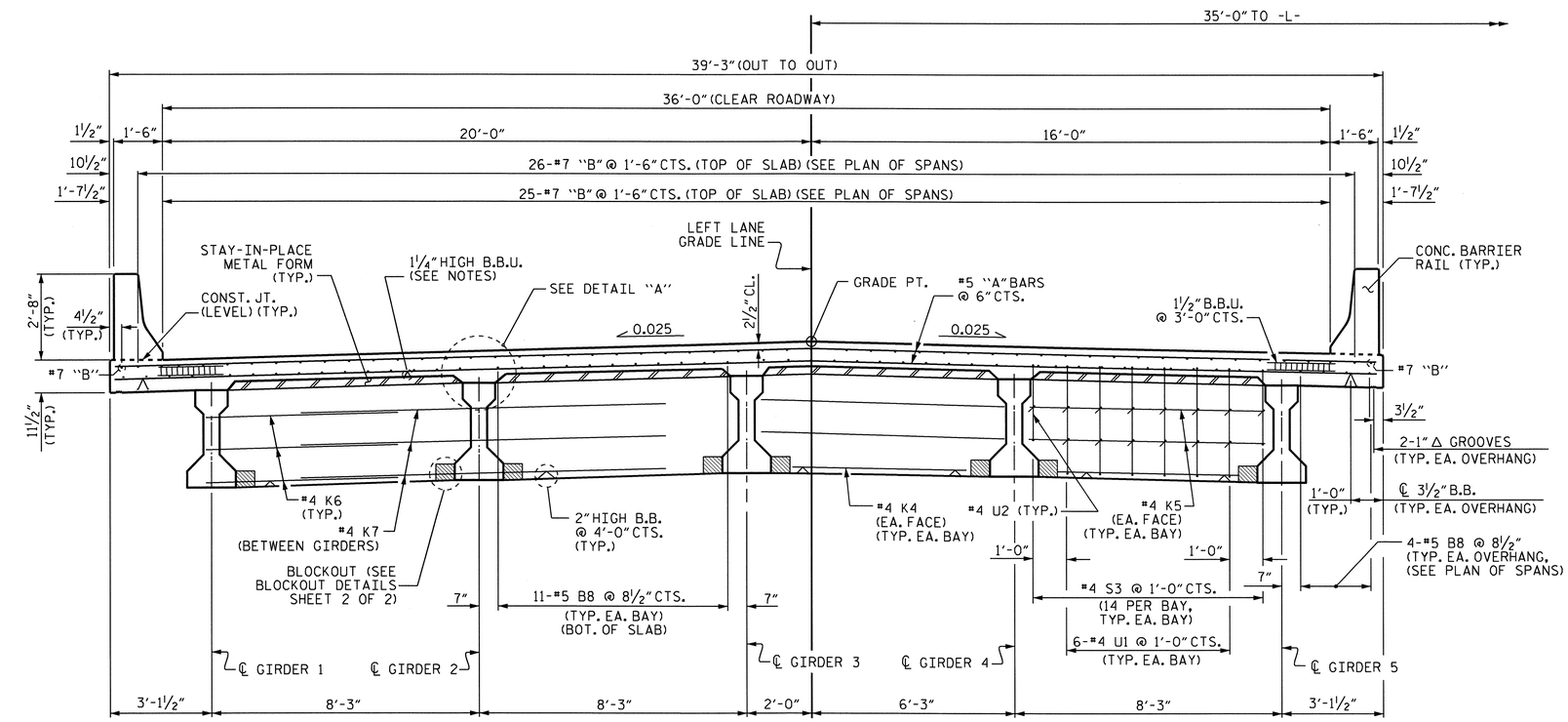

TYPICAL SECTION

SHOWING BENT DIAPHRAGMS

NOTES

PROVIDE 1¼" HIGH BEAM BOLSTERS UPPER AT 4'-0" CTS. ATOP THE METAL STAY-IN-PLACE FORMS TO SUPPORT THE BOTTOM MAT OF "A" BARS. WHEN USING REMOVABLE FORMS, PROVIDE CONTINUOUS HIGH CHAIRS FOR METAL DECK (C.H.C.M.) @ 4'-0" CTS. WITH A HEIGHT TO SUPPORT THE BOTTOM MAT OF "A" BARS A CLEAR DISTANCE OF 2½" ABOVE THE TOP OF THE REMOVABLE FORM.

LONGITUDINAL STEEL MAY BE SHIFTED SLIGHTLY, AS NECESSARY, TO AVOID INTERFERENCE WITH STIRRUPS IN PRESTRESSED CONCRETE GIRDERS.

PREVIOUSLY CAST CONCRETE IN A CONTINUOUS UNIT SHALL HAVE ATTAINED A MINIMUM COMPRESSIVE STRENGTH OF 3,000 PSI BEFORE ADDITIONAL CONCRETE IS CAST IN THE UNIT.

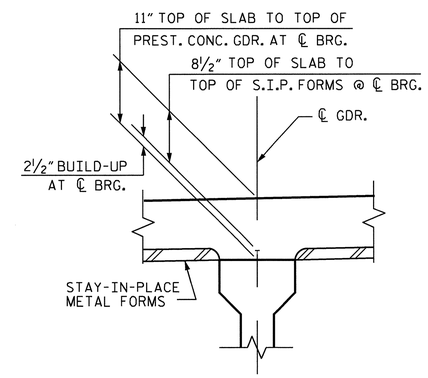

DETAIL "A"

PROJECT NO. R-2510C

BEAUFORT COUNTY

STATION: 222+51.50 -L-

SHEET 1 OF 2

STATE OF NORTH CAROLINA
DEPARTMENT OF TRANSPORTATION
RALEIGH

SUPERSTRUCTURE

TYPICAL SECTION

(LEFT LANE)

NORTH CAROLINA PROFESSIONAL SEAL 16301 ENGINEER TING-HSIUNG FANG

11/30/10

REVISIONS						SHEET NO.
NO.	BY:	DATE:	NO.	BY:	DATE:	S-78
1			3			TOTAL SHEETS
2			4			134

STR. #3

DRAWN BY : HARISH SHAH DATE : 8/08
CHECKED BY : A.R. CHESSON DATE : 12/08

30-NOV-2010 14:36
W:\Structures\r2510c\FinalPlans\STR3\r-2510c_sd_ts_03.dgn

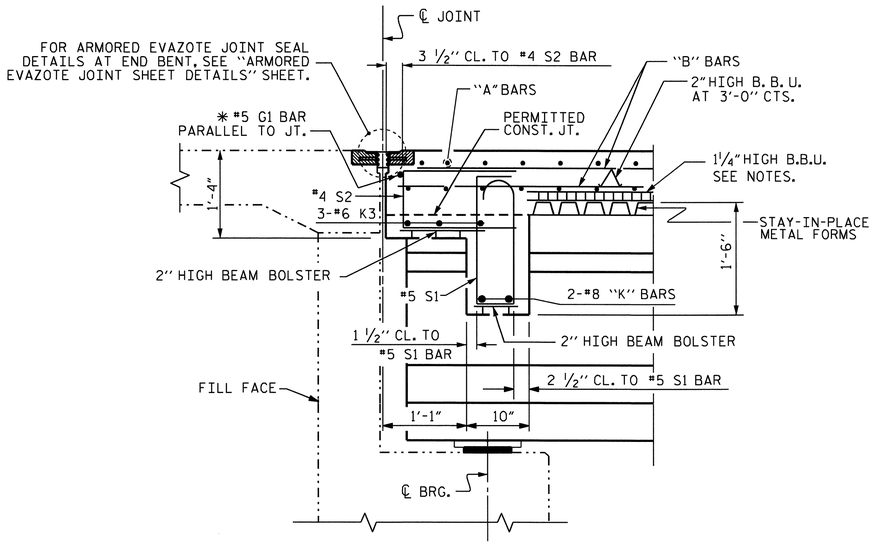

SECTION THRU END BENT DIAPHRAGMS

* #5 G1 BAR MAY BE SHIFTED SLIGHTLY AS NECESSARY TO CLEAR REINFORCING STEEL AND STIRRUPS.

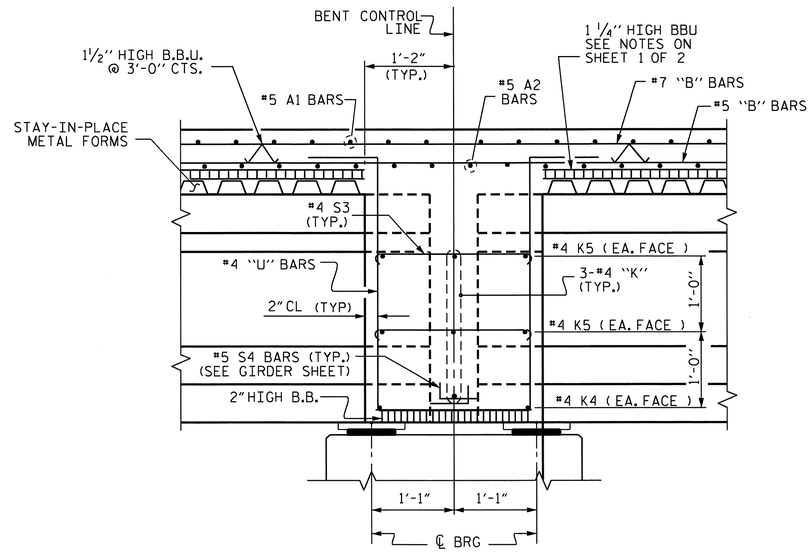

SECTION THRU BENT DIAPHRAGMS

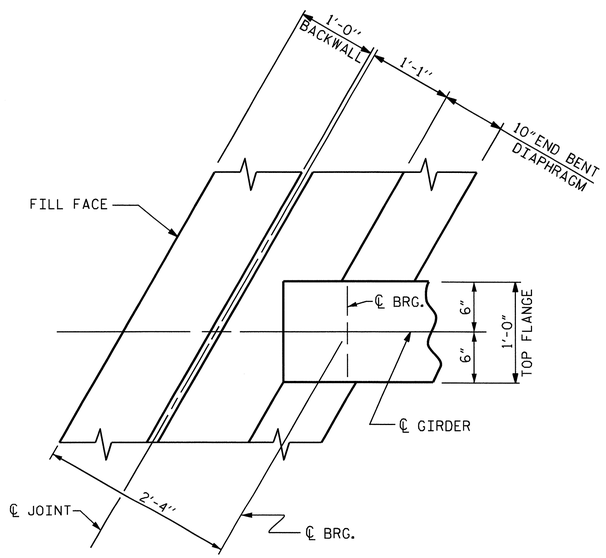

PLAN VIEW OF END BENT DIAPHRAGM

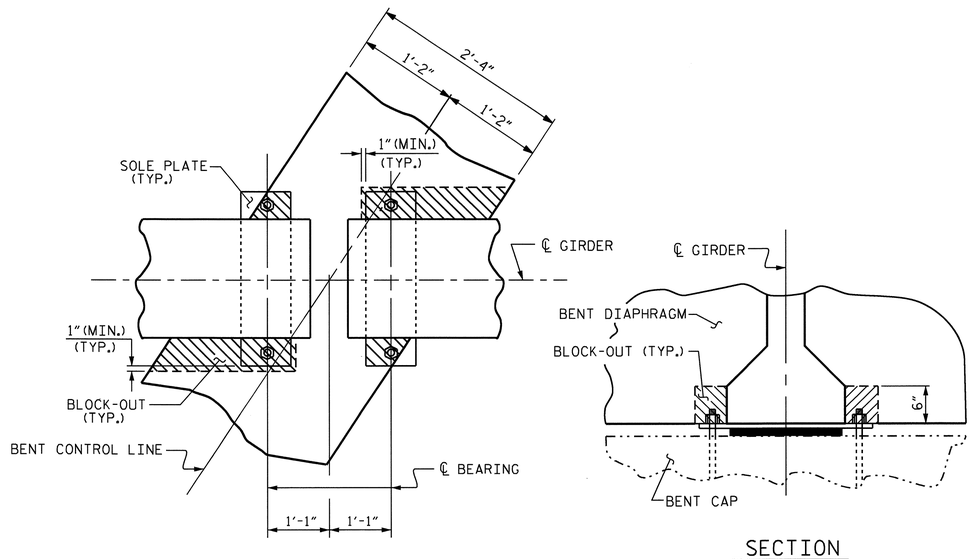

PLAN

SECTION

BENT DIAPHRAGM BLOCK-OUT DETAIL

NORTH CAROLINA PROFESSIONAL SEAL 16301 ENGINEER TING HSIUNG SANG

10/6/10

PROJECT NO. R-2510C

BEAUFORT COUNTY

STATION: 222+51.50 -L-

SHEET 2 OF 2

STATE OF NORTH CAROLINA
DEPARTMENT OF TRANSPORTATION
RALEIGH

SUPERSTRUCTURE

TYPICAL SECTION DETAILS

(LEFT LANE)

REVISIONS						SHEET NO.
NO.	BY:	DATE:	NO.	BY:	DATE:	S-79
1			3			TOTAL SHEETS
2			4			134

DRAWN BY : HARISH SHAH DATE : 08/08
CHECKED BY : A.R. CHESSON DATE : 1/09

Y:\TIPProjects-R\R2510c\Structures\r2510c\Final Plans\STR3\r-2510c_sd_ts_03.dgn

STR. #3

48'-0"(W.P. #1 TO W.P. #2)
48'-0"(W.P. #2 TO W.P. #3)
14'-1⅞" TO FIRST MAIN BAR
19'-6"(TYP.)
19'-6"(TYP.)
2'-0" SPLICE
7'-3"(TYP.)
7'-3"(TYP.)
2'-0" SPLICE
℄ JT. @ END BENT 1
FOR BARRIER RAIL REINFORCING STEEL & DETAILS, SEE "CONCRETE BARRIER RAIL" SHEET (TYP.)
#7 B2 (TOP OF SLAB) (TYP. EA. SIDE)
BENT 1 CONTROL LINE
4½" (TYP.)
1'-6"
1½"
25'-6⅞"(ALONG ℄ JT.)
8-#4 S2 @ 1'-0"CTS. ALONG SKEW (TYP. EA. BAY)
2-#8 K1 OVER EA. EXT. GDR.
GUTTERLINE (TYP.)
℄ GIRDER A1
3-#4 K6 (TYP. EA. EXT. GDR. CENTER OF DIAPHRAGM)
#7 B3
8-#4 "U" @ 1'-0"CTS. (TYP. EA. BAY)
8-#5 S1 @ 1'-0"CTS. ALONG SKEW (TYP. EA. BAY)
7" (TYP.)
℄ GIRDER A2
20'-0"
FILL FACE @ END BENT 1
11-#5 B8 @ 8½" CTS. (3 BAR RUN) (BOTTOM OF SLAB) (TYP. EA. BAY)
TRANSVERSE CONST. JOINT
2-#8 K2 OVER EA. INT. GDR.
5'-0"
#4 S3 @ 1'-0" CTS. (14 REQ'D) (TYP. EA. BAY)
24'-11⅝"
39'-3"(OUT TO OUT)
36'-0"(CLEAR ROADWAY)
W.P. #1
#6 K3 (TYP. EA. BAY)
SEE DETAIL A
℄ GIRDER A3
LEFT LANE GRADE LINE
1'-0" BACKWALL
120°-00'-00" (TYP.)
#5 A1 OR #5 A2
3-#4 K7 (TYP. EA. INT. GDR. CENTER OF DIAPHRAGM)
W.P. #2
26-#4 B1 @ 1'-6"CTS. (TOP OF SLAB)
26-#7 B2 @ 1'-6"CTS. (TOP OF SLAB)
25-#7 B3 @ 1'-6"CTS. (TOP OF SLAB)
26-#4 B4 @ 1'-6"CTS. (TOP OF SLAB)
19'-9"(ALONG ℄ JT.)
16'-0"
#5 G1
℄ GIRDER A4
10"END BENT DIAPHRAGM
#5 A101 OR #5 A201
#4 "K" BARS (TYP. EA. FACE) (TYP. EA. BAY)
3-#6 A3 @ 6"CTS. AT ACUTE CORNER
℄ GIRDER A5
7" (TYP.)
2'-4" BENT DIAPHRAGM (TYP.)
20'-4¼"
35'-0"
1'-6"
1½"
4½" (TYP.)
10½" (TYP.)
10½" (TYP.)
1'-7½" (TYP.)
4½" (TYP.)
10½" (TYP.)
#4 B4 (TOP OF SLAB) (TYP. EA. SIDE)
#5 A101 THRU A121 @ 6"CTS. (TOP OF SLAB) (2 BARS PER MARK)
#5 A201 THRU A221 @ 6"CTS. (BOTTOM OF SLAB) (2 BARS PER MARK)
6"
#4 B1 (TOP OF SLAB) (TYP. EA. SIDE)
4-#5 B8 @ 8½" CTS. (3 BAR RUN) (BOT. OF SLAB) (TYP. EA. OVERHANG)
247-#5 A1 @ 6"CTS. (TOP OF SLAB)
247-#5 A2 @ 6"CTS. (BOT. OF SLAB)
-L-

SPAN A

FOR POUR SEQUENCE AND TRANSVERSE CONSTRUCTION JOINT DETAIL, SEE "SUPERSTRUCTURE BILL OF MATERIAL" SHEET.

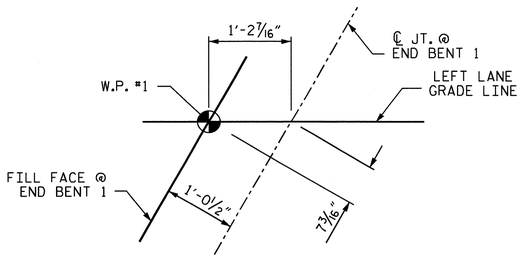

DETAIL A

PROJECT NO. R-2510C
BEAUFORT COUNTY
STATION: 222+51.50 -L-

SHEET 1 OF 3

STATE OF NORTH CAROLINA
DEPARTMENT OF TRANSPORTATION
RALEIGH

SUPERSTRUCTURE

PLAN OF SPANS

(LEFT LANE)

NORTH CAROLINA PROFESSIONAL SEAL 16301 ENGINEER TING HSIONG FANG
11/30/10

REVISIONS						SHEET NO.
NO.	BY:	DATE:	NO.	BY:	DATE:	S-80
1			3			TOTAL SHEETS
2			4			134

STR. #3

DRAWN BY : HARISH SHAH DATE : 9/08
CHECKED BY : A.R. CHESSON DATE : 1/09

30-NOV-2010 14:24
W:\Structures\r2510c\FinalPlans\STR3\r-2510c_sd_ps_03.dgn
Hshah

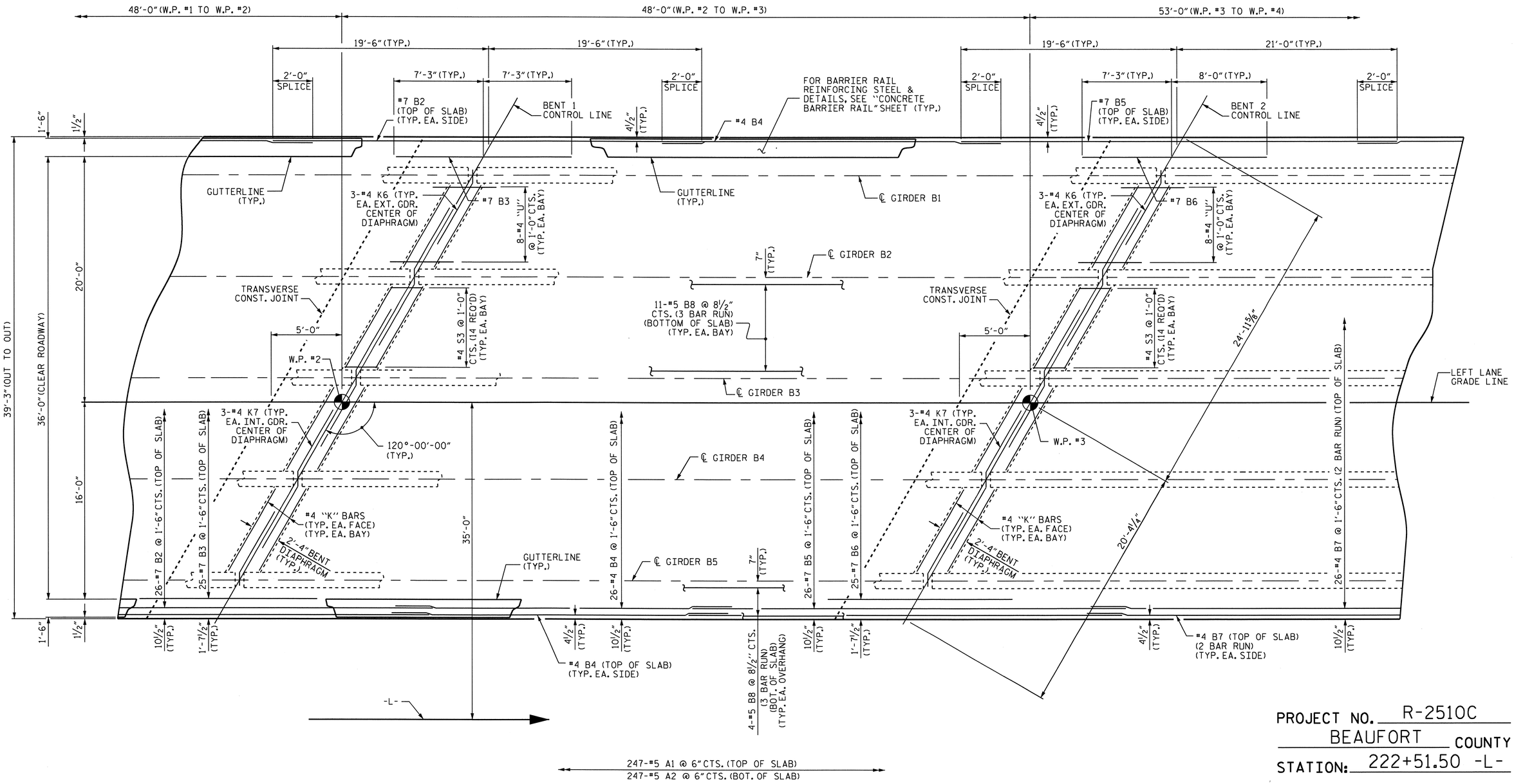

SPAN B

FOR POUR SEQUENCE AND TRANSVERSE CONSTRUCTION JOINT DETAIL, SEE "SUPERSTRUCTURE BILL OF MATERIAL" SHEET.

PROJECT NO. R-2510C

BEAUFORT COUNTY

STATION: 222+51.50 -L-

SHEET 2 OF 3

STATE OF NORTH CAROLINA
DEPARTMENT OF TRANSPORTATION
RALEIGH

SUPERSTRUCTURE

PLAN OF SPANS

(LEFT LANE)

NORTH CAROLINA PROFESSIONAL SEAL 16301 ENGINEER TING HSIUNG FANG

11/30/10

REVISIONS						SHEET NO.
NO.	BY:	DATE:	NO.	BY:	DATE:	S-81
1			3			TOTAL SHEETS
2			4			134

DRAWN BY : HARISH SHAH DATE : 9/08
CHECKED BY : A.R. CHESSON DATE : 1/09

30-NOV-2010 14:24
W:\Structures\r2510c\FinalPlans\STR3\r-2510c_sd_ps_03.dgn
Hshah

STR. #3

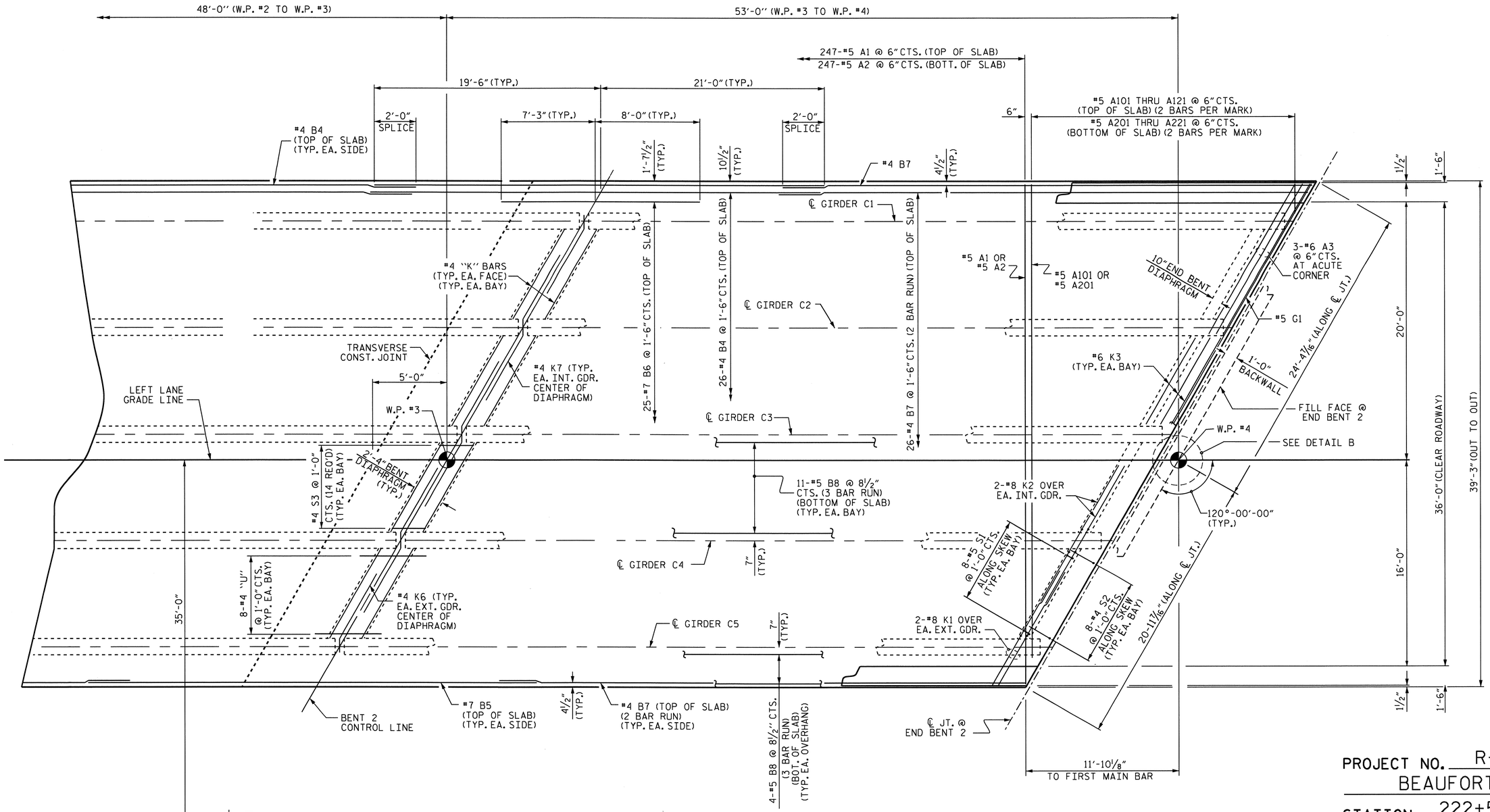

SPAN C

FOR POUR SEQUENCE AND TRANSVERSE CONSTRUCTION JOINT DETAIL, SEE "SUPERSTRUCTURE BILL OF MATERIAL" SHEET.

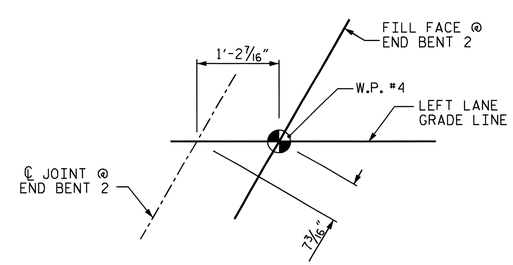

DETAIL B

PROJECT NO. R-2510C
BEAUFORT COUNTY
STATION: 222+51.50 -L-

SHEET 3 OF 3

STATE OF NORTH CAROLINA
DEPARTMENT OF TRANSPORTATION
RALEIGH

SUPERSTRUCTURE

PLAN OF SPANS

(LEFT LANE)

NORTH CAROLINA PROFESSIONAL SEAL 16301 ENGINEER TING-HSIUNG FANG
11/30/10

REVISIONS						SHEET NO.
NO.	BY:	DATE:	NO.	BY:	DATE:	S-82
1			3			TOTAL SHEETS
2			4			134

STR. #3

DRAWN BY : HARISH SHAH DATE : 9/08
CHECKED BY : A.R. CHESSON DATE : 1/09

30-NOV-2010 14:25
W:\Structures\r2510c\Final Plans\STR3\r-2510c_sd_ps_03.dgn
Hshah

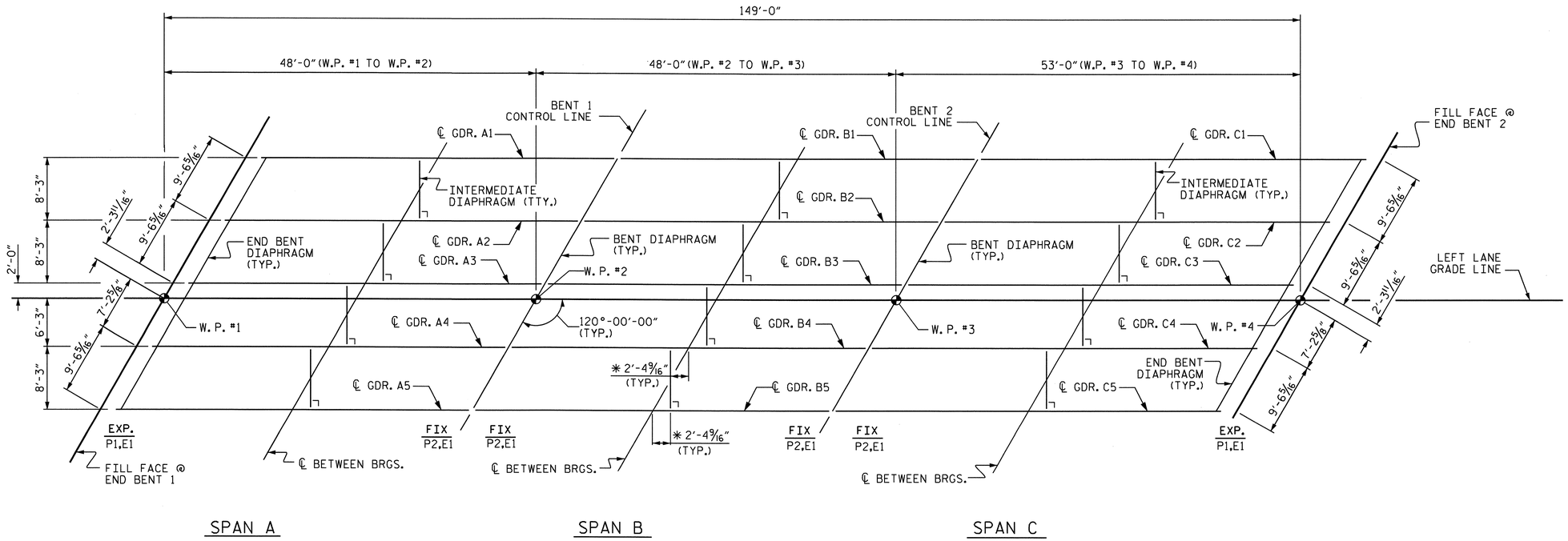

FRAMING PLAN

* DIMENSIONS MEASURING INTERMEDIATE DIAPHRAGMS ARE SHOWN TO THE BACK FACE OF CHANNEL.

PROJECT NO. R-2510C
BEAUFORT COUNTY
STATION: 222+51.50 -L-

STATE OF NORTH CAROLINA
DEPARTMENT OF TRANSPORTATION
RALEIGH

FRAMING PLAN

(LEFT LANE)

NORTH CAROLINA PROFESSIONAL SEAL 16301 ENGINEER TING HSIANG FANG
11/30/10

REVISIONS						SHEET NO.
NO.	BY:	DATE:	NO.	BY:	DATE:	S-83
1			3			TOTAL SHEETS
2			4			134

DRAWN BY : HARISH SHAH DATE : 08/08
CHECKED BY : A.R. CHESSON DATE : 1/09

30-NOV-2010 14:26
W:\Structures\r2510c\Final Plans\STR3\r-2510c_sd_fp_03.dgn
Hshah

STR. #3

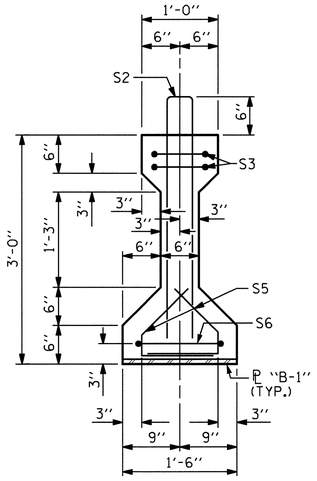

SECTION A-A

(FOR EMBEDDED ℄ "B-1" DETAILS SEE SHEET 4 OF 4)

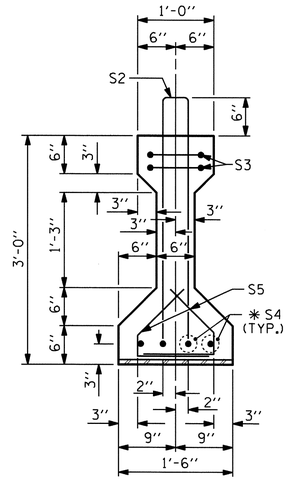

SECTION B-B

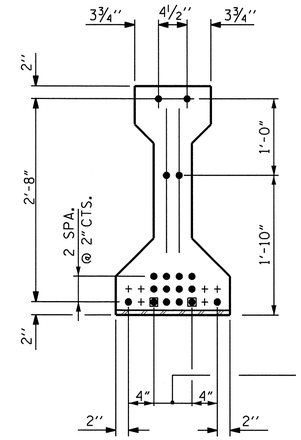

AT END OF GIRDER

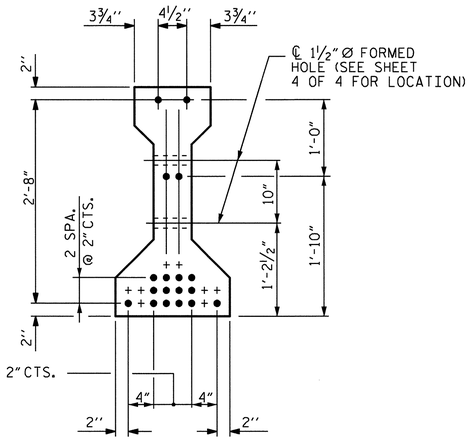

AT ℄ OF GIRDER

0.6" Ø LOW RELAXATION STRAND LAYOUT

(18 STRANDS, ALL STRAIGHT, 2 DEBONDED STRANDS)
■ STRANDS DEBONDED FOR 12'-0" FROM END OF GIRDER

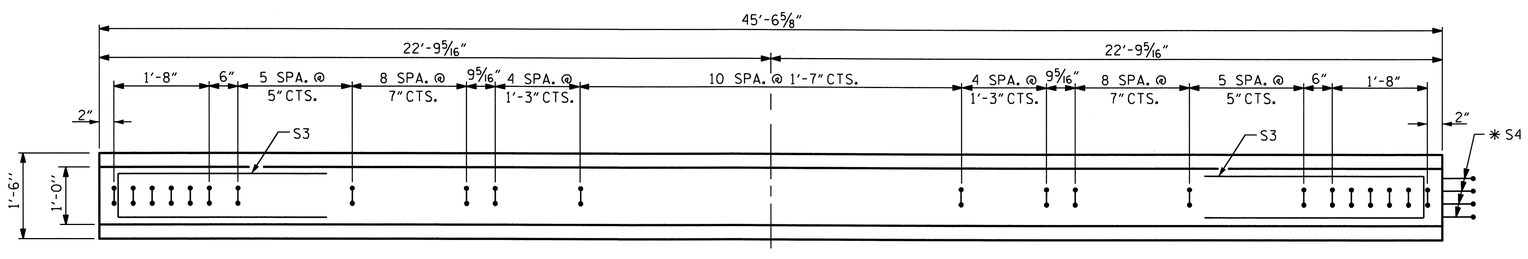

PLAN OF GIRDER

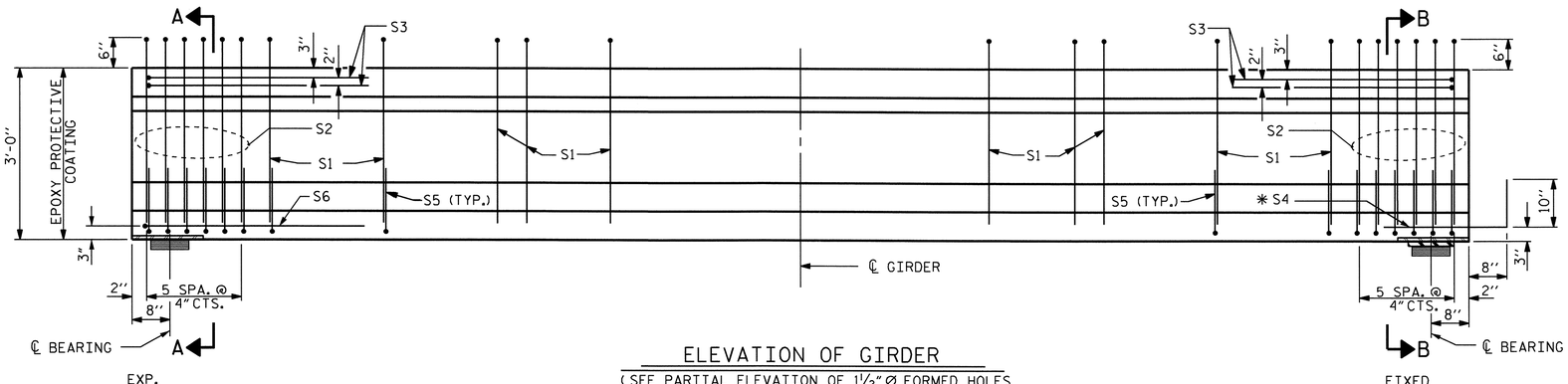

ELEVATION OF GIRDER

(SEE PARTIAL ELEVATION OF 1½" Ø FORMED HOLES FOR ADDITIONAL "S" BARS IN THE INTERMEDIATE DIAPHRAGM AREA ON SHEET 4 OF 4)

0.6" Ø L. R. GRADE 270 STRANDS

AREA (SQUARE INCHES)	ULTIMATE STRENGTH (LBS. PER STRAND)	APPLIED PRESTRESS (LBS. PER STRAND)
0.217	58,600	43,950

REINFORCING STEEL FOR ONE GIRDER

	BAR	NUMBER	SIZE	TYPE	LENGTH	WEIGHT
	S1	47	#4	1	6'-10"	215
	S2	12	#5	1	6'-10"	86
	S3	4	#4	3	8'-8"	23
	✱ S4	4	#5	STR	3'-8"	15
	S5	48	#4	2	2'-4"	75
	S6	1	#4	3	9'-2"	6
EXT. GDR.	S7	2	#5	3	5'-8"	12
INT. GDR.	S7	4	#5	3	5'-8"	24
EXT. GDR.	S8	5	#4	STR	7'-0"	23
INT. GDR.	S9	5	#4	STR	11'-10"	40

✱ S4 BARS SHALL BE BENT BEFORE SHIPMENT. HEAT BENDING SHALL NOT BE ALLOWED.

BAR TYPES

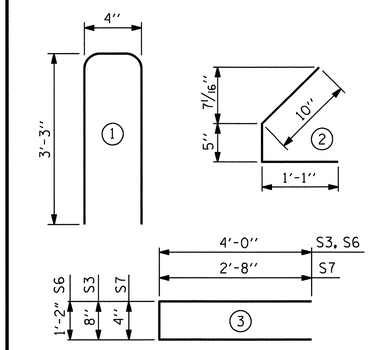

ALL BAR DIMENSIONS ARE OUT-TO-OUT

QUANTITIES FOR ONE GIRDER

	REINFORCING STEEL LB.	6800 PSI CONCRETE C.Y.	0.6" Ø L.R. STRANDS No.
EXT. GDR.	455	4.3	18
INT. GDR.	484	4.3	18

GIRDERS REQUIRED

NUMBER	LENGTH	TOTAL LENGTH
5	45'-6⅝"	227.76'

PROJECT NO. R-2510C
BEAUFORT COUNTY
STATION: 222+51.50 -L-

SHEET 1 OF 4

STATE OF NORTH CAROLINA
DEPARTMENT OF TRANSPORTATION
RALEIGH

STANDARD
AASHTO TYPE II
PRESTRESSED CONCRETE GIRDER
CONTINUOUS FOR LIVE LOAD
SPAN A
(LEFT LANE)

NORTH CAROLINA PROFESSIONAL SEAL 16301 ENGINEER TING-HSIUNG FANG

11/30/10

REVISIONS						SHEET NO.
NO.	BY:	DATE:	NO.	BY:	DATE:	S-84
1			3			TOTAL SHEETS
2			4			134

STR. #3 STD. NO. PCG4

ASSEMBLED BY : HARISH SHAH DATE : 02/09
CHECKED BY : A.R. CHESSON DATE : 02/09

DRAWN BY : ELR 8/91
CHECKED BY : GRP 8/91

REV. 8/16/99 RWW/LES
REV. 10/17/00R RWW/LES
REV. 5/1/06 TLA/GM

30-NOV-2010 14:27
W:\Structures\r2510c\Final Plans\STR3\r-2510c_sd_g_03.dgn
Hshah

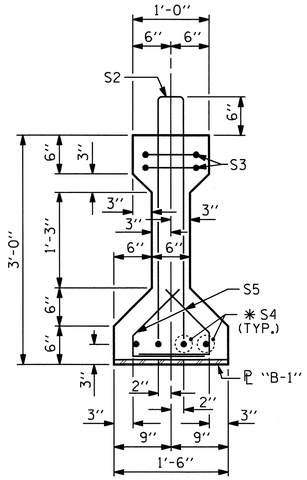

SECTION B-B

(FOR EMBEDDED ℄ "B-1" DETAILS SEE SHEET 4 OF 4)

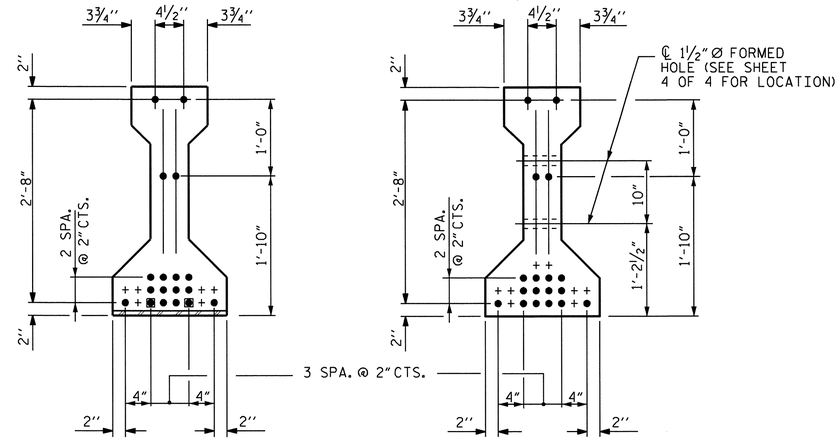

AT END OF GIRDER

AT ℄ OF GIRDER

0.6" Ø LOW RELAXATION STRAND LAYOUT

(18 STRANDS, ALL STRAIGHT, 2 DEBONDED STRANDS)
▩ STRANDS DEBONDED FOR 12'-0" FROM END OF GIRDER

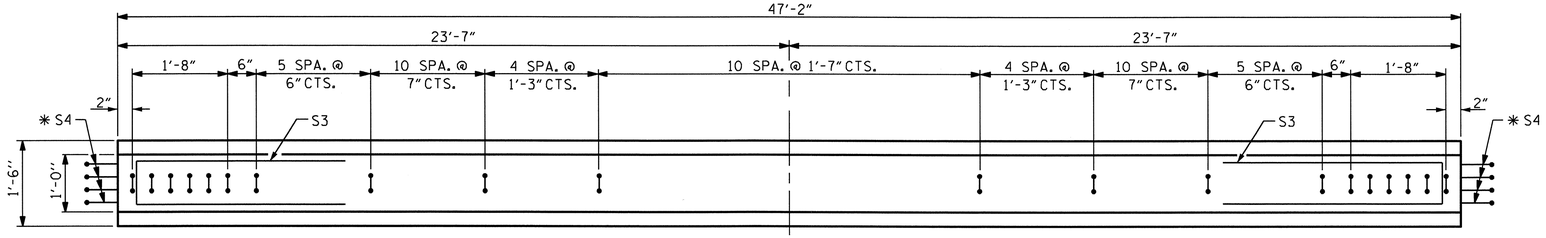

PLAN OF GIRDER

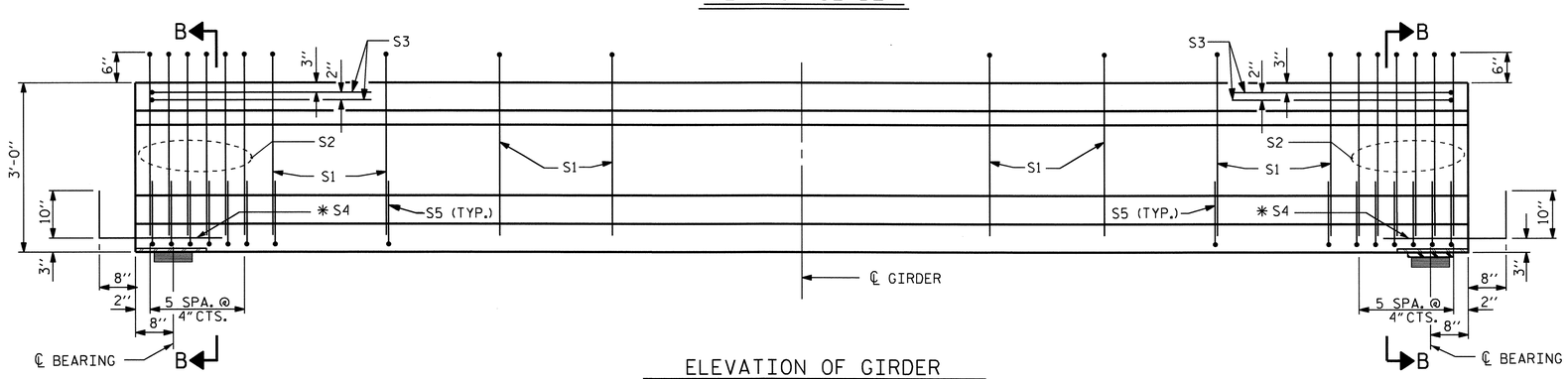

ELEVATION OF GIRDER

(SEE PARTIAL ELEVATION OF 1½" Ø FORMED HOLES FOR ADDITIONAL "S" BARS IN THE INTERMEDIATE DIAPHRAGM AREA ON SHEET 4 OF 4)

0.6" Ø L. R. GRADE 270 STRANDS

AREA (SQUARE INCHES)	ULTIMATE STRENGTH (LBS. PER STRAND)	APPLIED PRESTRESS (LBS. PER STRAND)
0.217	58,600	43,950

REINFORCING STEEL FOR ONE GIRDER

	BAR	NUMBER	SIZE	TYPE	LENGTH	WEIGHT
	S1	49	#4	1	6'-10"	224
	S2	12	#5	1	6'-10"	86
	S3	4	#4	3	8'-8"	23
	✱ S4	8	#5	STR	3'-8"	31
	S5	48	#4	2	2'-4"	75
EXT. GDR.	S7	2	#5	3	5'-8"	12
INT. GDR.	S7	4	#5	3	5'-8"	24
EXT. GDR.	S8	5	#4	STR	7'-0"	23
INT. GDR.	S9	5	#4	STR	11'-10"	40

✱ S4 BARS SHALL BE BENT BEFORE SHIPMENT. HEAT BENDING SHALL NOT BE ALLOWED.

BAR TYPES

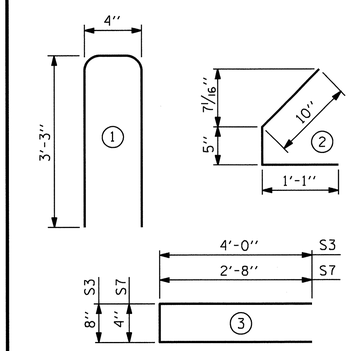

ALL BAR DIMENSIONS ARE OUT-TO-OUT

QUANTITIES FOR ONE GIRDER

	REINFORCING STEEL LB.	6800 PSI CONCRETE C.Y.	0.6" Ø L.R. STRANDS No.
EXT. GDR.	474	4.3	18
INT. GDR.	503	4.3	18

GIRDERS REQUIRED

NUMBER	LENGTH	TOTAL LENGTH
5	47'-2"	235.83'

PROJECT NO. R-2510C

BEAUFORT COUNTY

STATION: 222+51.50 -L-

SHEET 2 OF 4

STATE OF NORTH CAROLINA
DEPARTMENT OF TRANSPORTATION
RALEIGH

STANDARD
AASHTO TYPE II
PRESTRESSED CONCRETE GIRDER
CONTINUOUS FOR LIVE LOAD
SPAN B
(LEFT LANE)

NORTH CAROLINA PROFESSIONAL SEAL 16301 ENGINEER TING HSIUNG FANG

11/30/10

REVISIONS						SHEET NO.
NO.	BY:	DATE:	NO.	BY:	DATE:	S-85
1			3			TOTAL SHEETS
2			4			134

STR. #3 STD. NO. PCG4

ASSEMBLED BY : HARISH SHAH DATE : 02/09
CHECKED BY : A.R. CHESSON DATE : 02/09

DRAWN BY : ELR 8/91
CHECKED BY : GRP 8/91

REV. 8/16/99 RWW/LES
REV. 10/17/00R RWW/LES
REV. 5/1/06 TLA/GM

30-NOV-2010 14:27
W:\Structures\r-2510c\Final Plans\STR3\r-2510c_sd_g_03.dgn
Hshah

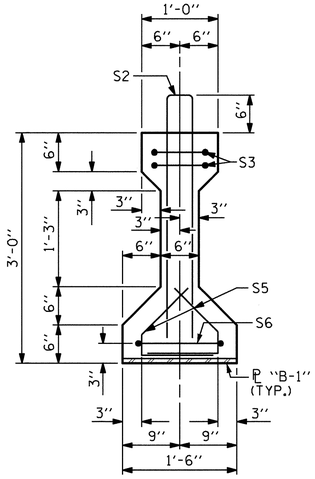

SECTION A-A

(FOR EMBEDDED ℄ "B-1" DETAILS SEE SHEET 4 OF 4)

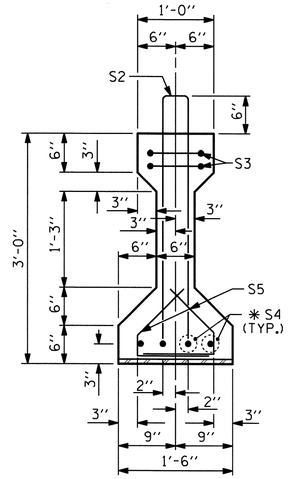

SECTION B-B

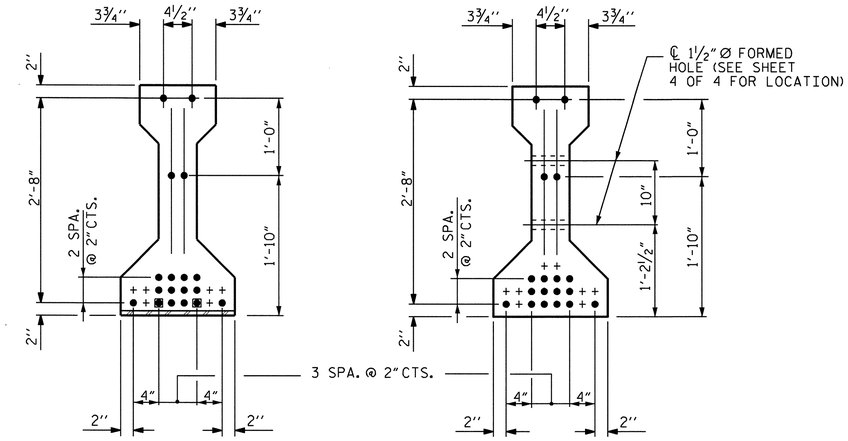

AT END OF GIRDER

AT ℄ OF GIRDER

0.6" Ø LOW RELAXATION STRAND LAYOUT

(18 STRANDS, ALL STRAIGHT, 2 DEBONDED STRANDS)
◉ STRANDS DEBONDED FOR 12'-0" FROM END OF GIRDER

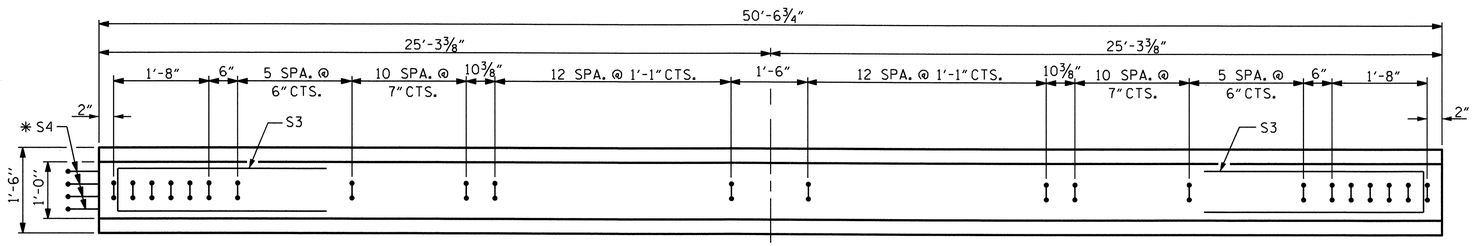

PLAN OF GIRDER

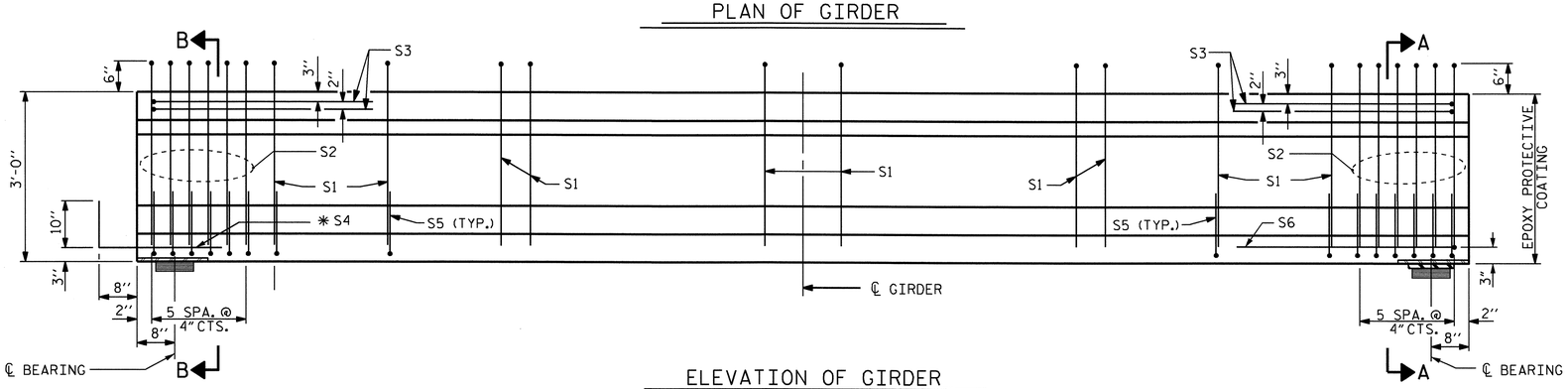

ELEVATION OF GIRDER

(SEE PARTIAL ELEVATION OF 1½" Ø FORMED HOLES FOR ADDITIONAL "S" BARS IN THE INTERMEDIATE DIAPHRAGM AREA ON SHEET 4 OF 4)

0.6" Ø L. R. GRADE 270 STRANDS

AREA (SQUARE INCHES)	ULTIMATE STRENGTH (LBS. PER STRAND)	APPLIED PRESTRESS (LBS. PER STRAND)
0.217	58,600	43,950

REINFORCING STEEL FOR ONE GIRDER

	BAR	NUMBER	SIZE	TYPE	LENGTH	WEIGHT
	S1	58	#4	1	6'-10"	265
	S2	12	#5	1	6'-10"	86
	S3	4	#4	3	8'-8"	23
	✱ S4	4	#5	STR	3'-8"	15
	S5	48	#4	2	2'-4"	75
	S6	1	#4	3	9'-2"	6
EXT. GDR.	S7	2	#5	3	5'-8"	12
INT. GDR.	S7	4	#5	3	5'-8"	24
EXT. GDR.	S8	5	#4	STR	7'-0"	23
INT. GDR.	S9	5	#4	STR	11'-10"	40

✱ S4 BARS SHALL BE BENT BEFORE SHIPMENT. HEAT BENDING SHALL NOT BE ALLOWED.

BAR TYPES

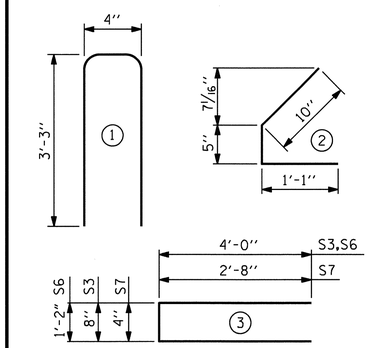

ALL BAR DIMENSIONS ARE OUT-TO-OUT

QUANTITIES FOR ONE GIRDER

	REINFORCING STEEL LB.	6800 PSI CONCRETE C.Y.	0.6" Ø L.R. STRANDS No.
EXT. GDR.	505	4.8	18
INT. GDR.	534	4.8	18

GIRDERS REQUIRED

NUMBER	LENGTH	TOTAL LENGTH
5	50'-6¾"	252.81'

PROJECT NO. R-2510C

BEAUFORT COUNTY

STATION: 222+51.50 -L-

SHEET 3 OF 4

STATE OF NORTH CAROLINA
DEPARTMENT OF TRANSPORTATION
RALEIGH

STANDARD
AASHTO TYPE II
PRESTRESSED CONCRETE GIRDER
CONTINUOUS FOR LIVE LOAD
SPAN C
(LEFT LANE)

NORTH CAROLINA PROFESSIONAL SEAL 16301 ENGINEER TING HSIUNG FANG

11/30/10

REVISIONS						SHEET NO.
NO.	BY:	DATE:	NO.	BY:	DATE:	S-86
1			3			TOTAL SHEETS
2			4			134

STR. #3 STD. NO. PCG4

ASSEMBLED BY : HARISH SHAH	DATE : 02/09		
CHECKED BY : A.R. CHESSON	DATE : 02/09		
DRAWN BY : ELR 8/91	REV. 8/16/99	RWW/LES	
CHECKED BY : GRP 8/91	REV. 10/17/00	RWW/LES	
	REV. 5/1/06	TLA/GM	

30-NOV-2010 14:27
W:\Structures\r2510c\Final Plans\STR3\r-2510c_sd_g_03.dgn
Hshah

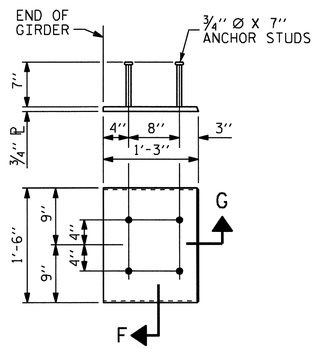

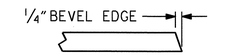

SECTION "G"

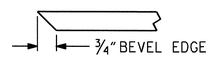

SECTION "F"
(SEE NOTES)

EMBEDDED PLATE "B-1" DETAILS
FOR AASHTO TYPE II GIRDER
(2 REQ'D PER GIRDER)

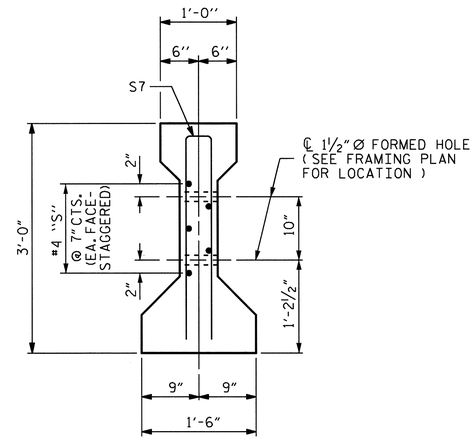

SECTION C-C
(S1 BARS NOT SHOWN)

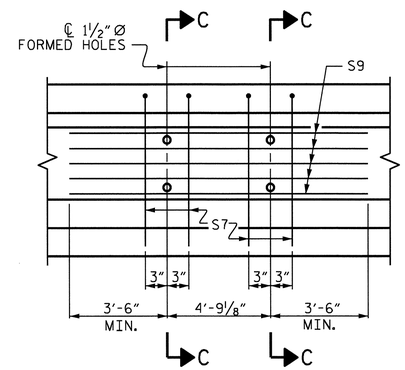

INTERIOR GIRDERS 2, 3 & 4

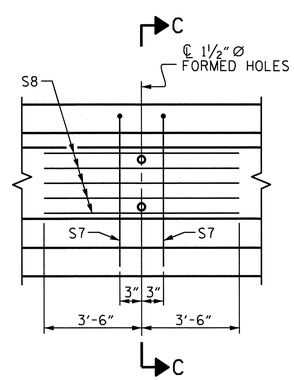

EXTERIOR GIRDERS 1 & 5

PARTIAL ELEVATION OF 1 1/2" Ø FORMED HOLES

NOTES

ALL PRESTRESSING STRANDS SHALL BE 7-WIRE LOW-RELAXATION GRADE 270 STRANDS AND SHALL CONFORM TO AASHTO M203 EXCEPT FOR SAMPLING REQUIREMENTS WHICH SHALL BE IN ACCORDANCE WITH THE STANDARD SPECIFICATIONS.

ALL REINFORCING STEEL SHALL BE GRADE 60.

APPLY EPOXY PROTECTIVE COATING TO END OF GIRDER SURFACES INDICATED IN ELEVATION VIEW.

EMBEDDED PLATE "B-1" SHALL BE GALVANIZED IN ACCORDANCE WITH THE STANDARD SPECIFICATIONS. BEVEL EDGES OF PLATE "B-1" TO GIVE CLOSE FIT BUT NOT TIGHT FIT TO STEEL CASTING FORM.

ANCHOR STUDS SHALL CONFORM TO AASHTO M169 GRADES 1010 THROUGH 1020 OR APPROVED EQUAL, AND SHALL MEET THE TYPE "B" REQUIREMENTS OF SUBSECTION 7.3 OF THE ANSI/AASHTO/AWS D1.5 BRIDGE WELDING CODE.

AT ENDS OF GIRDERS TO BE EMBEDDED IN CONCRETE DIAPHRAGMS OR END WALLS, PRESTRESSING STRANDS MAY EXTEND A MAXIMUM OF 2" BEYOND THE GIRDER ENDS. OTHERWISE, PRESTRESSING STRANDS SHALL BE CUT FLUSH WITH THE GIRDER ENDS.

THE TRANSFER OF LOAD FROM THE ANCHORAGES TO THE GIRDER SHALL BE DONE WHEN CONCRETE HAS REACHED A COMPRESSIVE STRENGTH OF NOT LESS THAN 5300 PSI .

DEPENDING ON THE TYPE OF SYSTEM USED TO SUPPORT THE DECK SLAB FORMS, PRESET ANCHORS MAY BE NECESSARY IN THE PRESTRESSED CONCRETE GIRDER.

THE TOP SURFACE OF THE GIRDER, EXCLUDING THE OUTSIDE 4", SHALL BE RAKED TO A DEPTH OF 1/4".

FOR PRESTRESSED CONCRETE MEMBERS, SEE SPECIAL PROVISIONS.

DEAD LOAD DEFLECTION TABLE

SPAN A											
0.6 "Ø LOW RELAXATION	GIRDERS 1 THRU 5										
TENTH POINTS	0	.1	.2	.3	.4	.5	.6	.7	.8	.9	0
CAMBER (GIRDER ALONE IN PLACE) ↑	0	0.039	0.074	0.102	0.119	0.125	0.119	0.102	0.074	0.039	0
* DEFLECTION DUE TO SUPERIMPOSED D.L. ↓	0	0.012	0.023	0.031	0.036	0.038	0.036	0.031	0.023	0.012	0
FINAL CAMBER ↑	0	5/16"	5/8"	7/8"	1"	1 1/16"	1"	7/8"	5/8"	5/16"	0
SPAN B											
0.6 "Ø LOW RELAXATION	GIRDERS 1 THRU 5										
TENTH POINTS	0	.1	.2	.3	.4	.5	.6	.7	.8	.9	0
CAMBER (GIRDER ALONE IN PLACE) ↑	0	0.041	0.078	0.107	0.125	0.132	0.125	0.107	0.078	0.041	0
* DEFLECTION DUE TO SUPERIMPOSED D.L. ↓	0	0.014	0.026	0.036	0.042	0.044	0.042	0.036	0.026	0.014	0
FINAL CAMBER ↑	0	5/16"	5/8"	7/8"	1"	1 1/16"	1"	7/8"	5/8"	5/16"	0
SPAN C											
0.6 "Ø LOW RELAXATION	GIRDERS 1 THRU 5										
TENTH POINTS	0	.1	.2	.3	.4	.5	.6	.7	.8	.9	0
CAMBER (GIRDER ALONE IN PLACE) ↑	0	0.046	0.087	0.119	0.139	0.146	0.139	0.119	0.087	0.046	0
* DEFLECTION DUE TO SUPERIMPOSED D.L. ↓	0	0.018	0.035	0.048	0.056	0.058	0.056	0.048	0.035	0.018	0
FINAL CAMBER ↑	0	5/16"	5/8"	7/8"	1"	1 1/16"	1"	7/8"	5/8"	5/16"	0

* INCLUDES FUTURE WEARING SURFACE
ALL VALUES ARE SHOWN IN FEET (DECIMAL FORM), EXCEPT "FINAL CAMBER", WHICH IS GIVEN IN INCHES (FRACTION FORM).

PROJECT NO. R-2510C
BEAUFORT COUNTY
STATION: 222+51.50 -L-

SHEET 4 OF 4

NORTH CAROLINA PROFESSIONAL SEAL 16301 ENGINEER TING-HSIUNG LANG
11/30/10

STATE OF NORTH CAROLINA
DEPARTMENT OF TRANSPORTATION
RALEIGH

STANDARD

PRESTRESSED CONCRETE GIRDER CONTINUOUS FOR LIVE LOAD DETAILS

(LEFT LANE)

REVISIONS						SHEET NO.
NO.	BY:	DATE:	NO.	BY:	DATE:	S-87
1			3			TOTAL SHEETS
2			4			134

STR. #3

STD.No.PCG11

ASSEMBLED BY : HARISH SHAH	DATE : 9/08		
CHECKED BY : A.R. CHESSON	DATE : 1/09		
DRAWN BY : ELR 11/91	REV. 10/17/00 RWW/LES		
CHECKED BY : GRP 11/91	REV. 7/10/01RR LES/RDR		
	REV. 5/1/06 TLA/GM		

30-NOV-2010 14:28
W:\Structures\r2510c\Final Plans\STR3\r-2510c_sd_dl_03.dgn
Mehmh

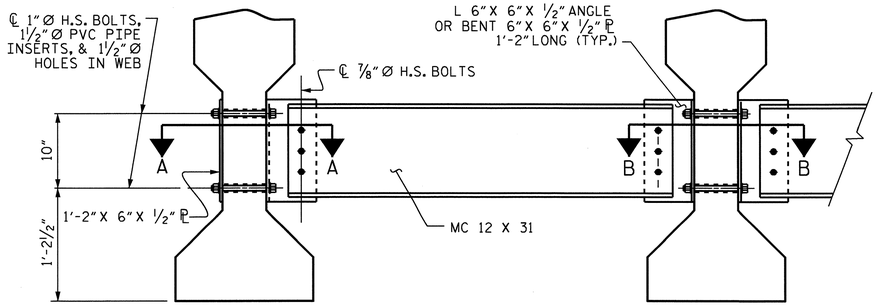

EXTERIOR GIRDER

INTERIOR GIRDER

PART SECTION AT INTERMEDIATE DIAPHRAGM

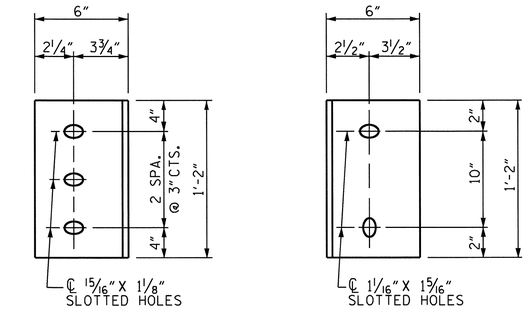

DIAPHRAGM FACE

WEB FACE

CONNECTOR PLATE DETAILS

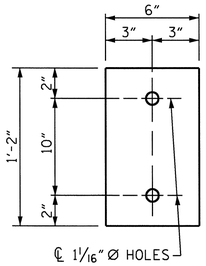

PLATE DETAILS

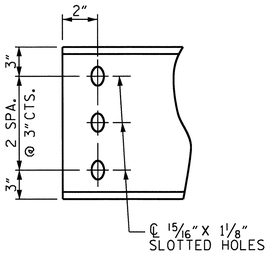

CHANNEL END

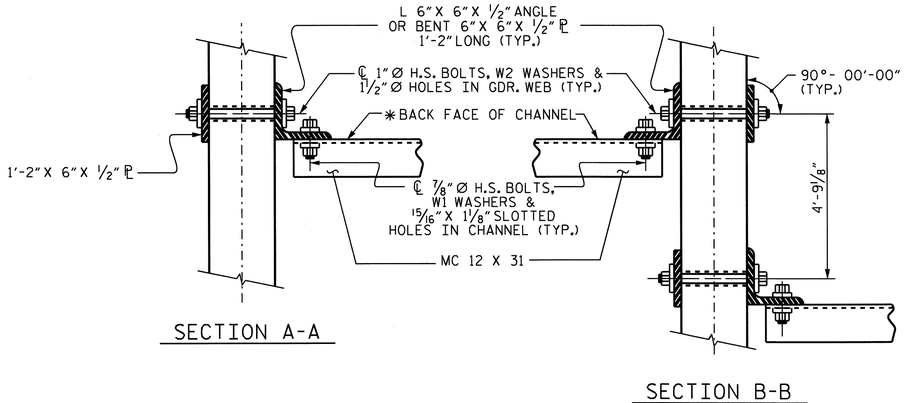

SECTION A-A

SECTION B-B

CONNECTION DETAILS

✱FOR LOCATION OF INTERMEDIATE DIAPHRAGMS, SEE "FRAMING PLAN" SHEET.

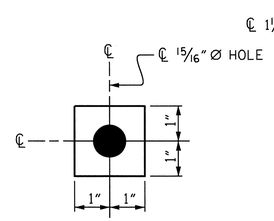

W1

ℙ 7/16"X 2"X 2"

USE WITH ⅞"Ø HVY. HEX NUTS & DIRECT TENSION INDICATOR WASHERS AT DIAPHRAGM CHANNEL TO CONNECTOR PLATE CONNECTIONS

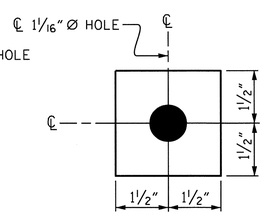

W2

ℙ 7/16"X 3"X 3"

USE WITH 1"Ø HVY. HEX NUTS & DIRECT TENSION INDICATOR WASHERS AT CONNECTOR PLATE TO GIRDER CONNECTIONS

WASHER DETAILS

STRUCTURAL STEEL NOTES

ALL INTERMEDIATE DIAPHRAGM STEEL, CONNECTOR PLATES AND PLATE WASHERS SHALL BE AASHTO M270 GRADE 50 OR APPROVED EQUAL.

TENSION ON THE AASHTO M164 BOLTS THROUGH THE CHANNEL MEMBER SHALL BE CALIBRATED USING DIRECT TENSION INDICATOR WASHERS IN ACCORDANCE WITH THE STANDARD SPECIFICATIONS. FOR DIRECT TENSION INDICATORS, SEE SPECIAL PROVISIONS.

TENSION ON THE AASHTO M164 BOLTS THROUGH THE GIRDER WEB SHALL BE SNUG TIGHTENED FOLLOWED BY AN ADDITIONAL ¼ TURN.

THE PLATES, BENT PLATES, CHANNELS, ANGLES, AND PLATE WASHERS SHALL BE GALVANIZED OR METALLIZED IN ACCORDANCE WITH THE STANDARD SPECIFICATIONS. FOR THERMAL SPRAYED COATINGS (METALLIZATION), SEE SPECIAL PROVISIONS.

FOR METALLIZATION, APPLY AN 8 MIL THICK 99.99 PERCENT ZINC (W-Zn-1) THERMAL SPRAYED COATING WITH A 0.5 MIL THICK SEAL COAT TO ALL STEEL DIAPHRAGM SURFACES IN ACCORDANCE WITH THE THERMAL SPRAYED COATINGS SPECIAL PROVISIONS AND SECTION 442 OF THE STANDARD SPECIFICATIONS.

GALVANIZE THE HIGH STRENGTH BOLTS, NUTS, AND WASHERS AND DIRECT TENSION INDICATORS IN ACCORDANCE WITH THE STANDARD SPECIFICATIONS. FOR HIGH STRENGTH BOLTS, SEE SPECIAL PROVISIONS.

USE A MINIMUM 7/16" THICK PLATE WASHER WITH STANDARD HOLES UNDER EACH BOLT HEAD AND NUT. THE PLATE WASHERS SHALL HAVE SUFFICIENT SIZE TO COVER THE HOLES AFTER INSTALLATION. HARDENED WASHERS AND DIRECT TENSION INDICATORS ARE TO BE USED IN CONJUNCTION WITH THE PLATE WASHERS IN THE CHANNEL MEMBER CONNECTION.

FOR BOLTS THROUGH THE GIRDER WEB, PROVIDE SUFFICIENT LENGTH OF ALL BOLTS TO ACCOMMODATE WASHERS, AND THE THICKNESS OF CONNECTING MEMBER PLUS AT LEAST ¼" PROJECTION BEYOND THE NUT.

INTERMEDIATE DIAPHRAGM ASSEMBLY SHALL COMPLY WITH SECTION 1072 OF THE STANDARD SPECIFICATIONS.

CONTRACTOR SHALL SUBMIT TWO SETS OF WORKING DRAWINGS FOR THE INTERMEDIATE DIAPHRAGM ASSEMBLY FOR REVIEW, COMMENTS AND ACCEPTANCE. AFTER REVIEW, COMMENTS, AND ACCEPTANCE, SUBMIT SEVEN SETS FOR DISTRIBUTION.

IN THE EXTERIOR BAYS, TEMPORARY STRUTS SHALL BE PLACED BETWEEN PRESTRESSED GIRDERS ADJACENT TO THE STEEL DIAPHRAGMS. STRUTS SHALL REMAIN IN PLACE 3 DAYS AFTER CONCRETE IS PLACED. ALL AASHTO M164 H.S. BOLTS SHALL BE FULLY TIGHTENED AFTER THE STRUTS HAVE BEEN REMOVED.

THE COST OF THE STEEL DIAPHRAGMS AND ASSEMBLIES SHALL BE INCLUDED IN THE UNIT PRICE BID FOR PRESTRESSED CONCRETE GIRDERS.

PROJECT NO. R-2510C
BEAUFORT COUNTY
STATION: 222+51.50 -L-

NORTH CAROLINA PROFESSIONAL SEAL 16301 ENGINEER HSIANG-TING HSIEH
10/6/10

STATE OF NORTH CAROLINA
DEPARTMENT OF TRANSPORTATION
RALEIGH

INTERMEDIATE STEEL DIAPHRAGMS FOR TYPE II PRESTRESSED CONCRETE GIRDERS

(LEFT LANE)

REVISIONS						SHEET NO.
NO.	BY:	DATE:	NO.	BY:	DATE:	S-88
1			3			TOTAL SHEETS
2			4			134

ASSEMBLED BY : HARISH SHAH	DATE : 9/08
CHECKED BY : A.R. CHESSON	DATE : 1/09
DRAWN BY : TLA 6/05	ADDED 10/21/05
CHECKED BY : VC 6/05	REV. 5/1/06R KMM/GM

06-OCT-2010 13:48
Y:\TIPProjects-R\R2510c\Structures\r2510c\FinalPlans\STR3\r-2510c_sd_g_03.dgn
qtnguyen

STR. #3

STD. NO. PCG12

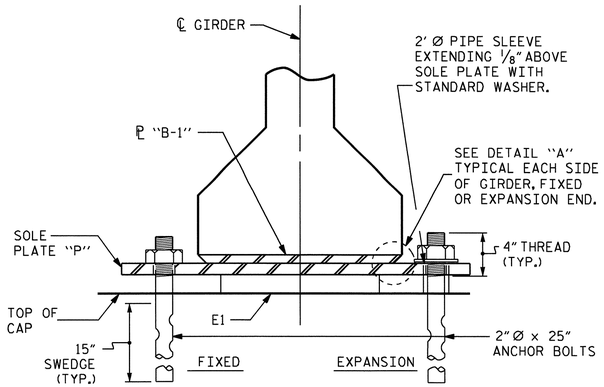

SECTION E-E

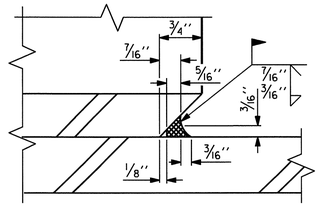

DETAIL "A"

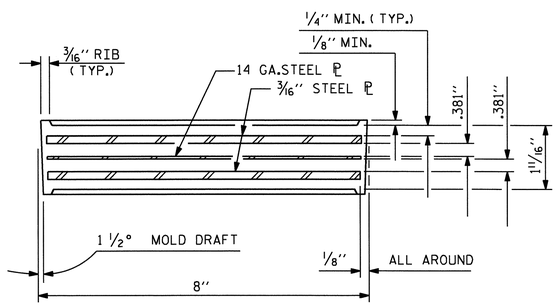

TYPICAL SECTION OF ELASTOMERIC BEARINGS

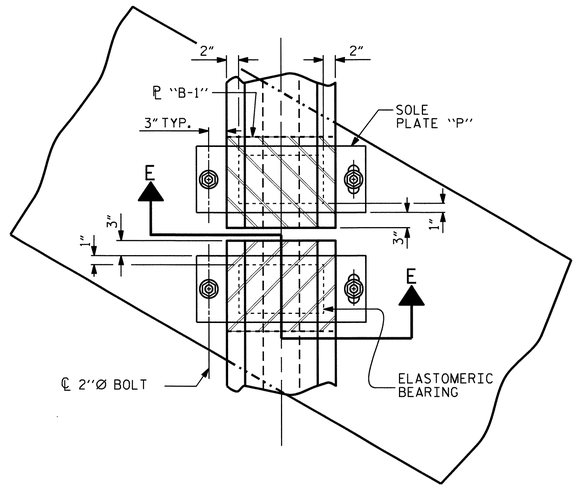

TYPICAL HALF-PLAN (FIXED)

TYPICAL HALF-PLAN (EXPANSION)

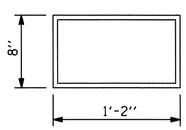

E1 (30 REQ'D)

PLAN VIEW OF ELASTOMERIC BEARING

TYPE II

ELASTOMER IN ALL BEARINGS SHALL BE 60 DUROMETER HARDNESS

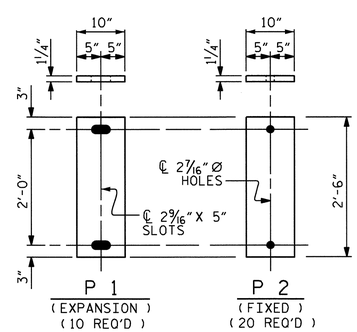

SOLE PLATE DETAILS ("P")

NOTES

AT ALL FIXED POINTS OF SUPPORT, NUTS FOR ANCHOR BOLTS ARE TO BE TIGHTENED FINGER TIGHT AND THEN BACKED OFF 1/2 TURN. THE THREAD OF THE NUT AND BOLT SHALL THEN BE BURRED WITH A SHARP POINTED TOOL.

THE 2" Ø PIPE SLEEVE SHALL BE CUT FROM SCHEDULE 40 PVC PLASTIC PIPE. THE PVC PLASTIC PIPE SHALL MEET THE REQUIREMENTS OF ASTM D1785.

STEEL SOLE PLATES, ANCHOR BOLTS, NUTS, AND WASHERS SHALL BE GALVANIZED IN ACCORDANCE WITH THE STANDARD SPECIFICATIONS.

PRIOR TO WELDING, GRIND THE GALVANIZED SURFACE OF THE PORTION OF THE EMBEDDED PLATE AND SOLE PLATE THAT ARE TO BE WELDED. AFTER WELDING, DAMAGED GALVANIZED SURFACES SHALL BE REPAIRED IN ACCORDANCE WITH THE STANDARD SPECIFICATIONS.

WHEN WELDING THE SOLE PLATE TO THE EMBEDDED PLATE IN THE GIRDER, USE TEMPERATURE INDICATING WAX PENS, OR OTHER SUITABLE MEANS, TO ENSURE THAT THE TEMPERATURE OF THE SOLE PLATE DOES NOT EXCEED 300°F. TEMPERATURES ABOVE THIS MAY DAMAGE THE ELASTOMER.

SOLE PLATE "P", BOLTS, NUTS, WASHERS, AND PIPE SLEEVE SHALL BE INCLUDED IN THE PAY ITEM FOR PRESTRESSED CONCRETE GIRDERS.

ANCHOR BOLTS SHALL MEET THE REQUIREMENTS OF ASTM A449. NUTS SHALL MEET THE REQUIREMENTS OF AASHTO M291-DH OR AASHTO M292-2H. WASHERS SHALL MEET THE REQUIREMENTS OF AASHTO M293. SHOP DRAWINGS ARE NOT REQUIRED FOR ANCHOR BOLT, NUTS AND WASHERS. SHOP INSPECTION IS REQUIRED.

ALL SURFACES OF BEARING PLATES SHALL BE SMOOTH AND STRAIGHT.

LOAD RATINGS	
	MAX.D.L.+L.L.
36"PCG -TYPE II	82K

PROJECT NO. R-2510C
BEAUFORT COUNTY
STATION: 222+51.50 -L-

NORTH CAROLINA PROFESSIONAL SEAL 16301 ENGINEER HING HSIENG FANG
10/6/10

STATE OF NORTH CAROLINA
DEPARTMENT OF TRANSPORTATION
RALEIGH

STANDARD
ELASTOMERIC BEARING DETAILS

PRESTRESSED CONCRETE GIRDER SUPERSTRUCTURE (LEFT LANE)

REVISIONS						SHEET NO.
NO.	BY:	DATE:	NO.	BY:	DATE:	S-89
1			3			TOTAL SHEETS
2			4			134

STR. #3 STD. NO. EB3

ASSEMBLED BY : HARISH SHAH		DATE : 9/08	
CHECKED BY : A.R. CHESSON		DATE : 1/09	
DRAWN BY : WJH 8/89	REV. 10/17/00	RWW/LES	
CHECKED BY : CRK 8/89	REV. 7/10/01	RWW/LES	
	REV. 5/1/06	TLA/GM	

06-OCT-2010 13:48
Y:\TIPProjects-R\R2510c\Structures\r2510c\FinalPlans\STR3\r-2510c_sd_bg_03.dgn
qtnguyen

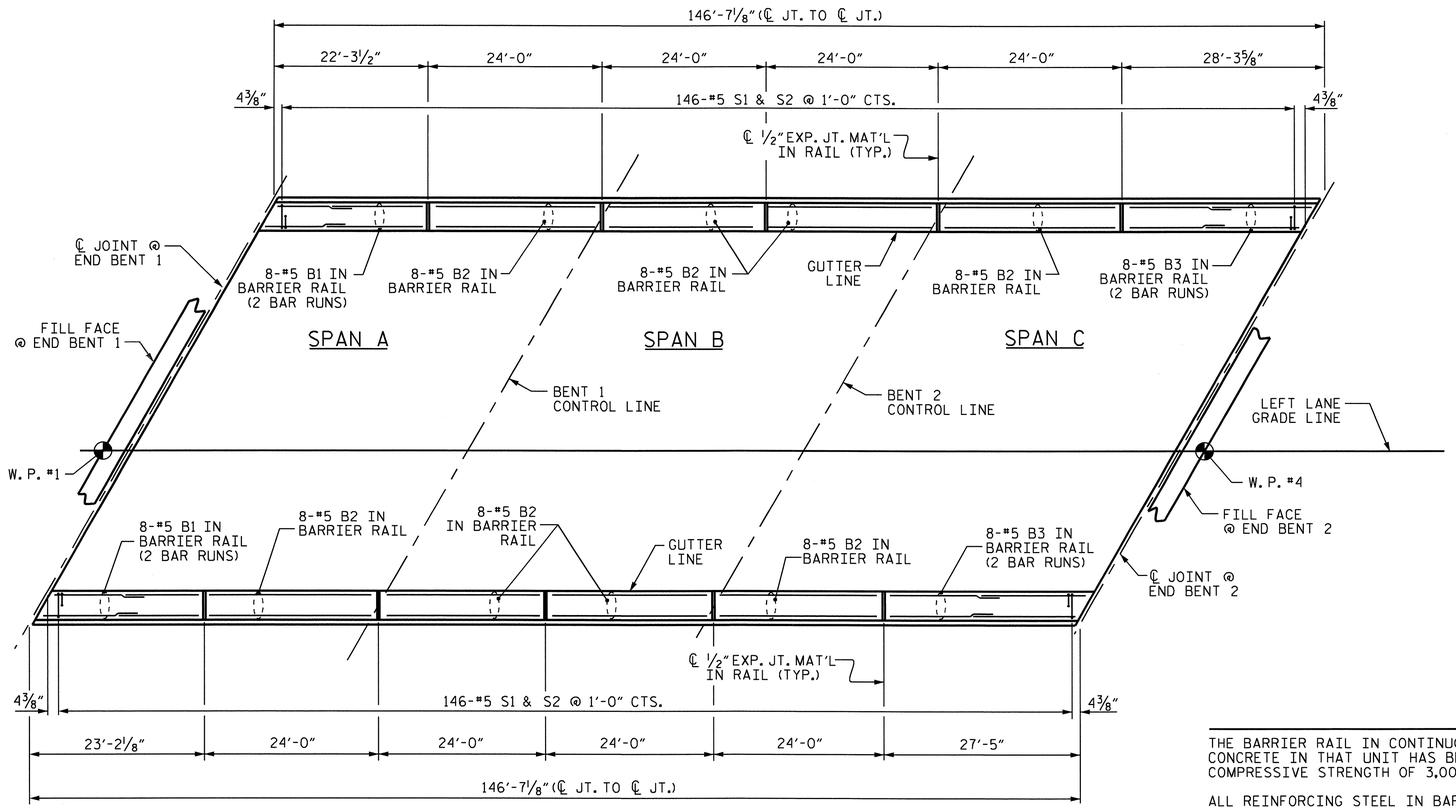

PLAN OF BARRIER RAIL

BAR TYPES

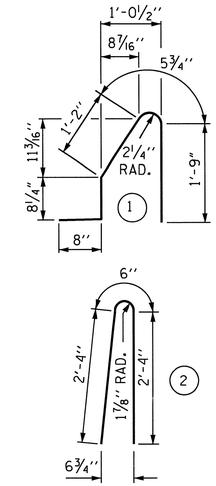

ALL BAR DIMENSIONS ARE OUT TO OUT

BILL OF MATERIAL

FOR CONCRETE BARRIER RAIL ONLY

BAR	NO.	SIZE	TYPE	LENGTH	WEIGHT
* B1	32	#5	STR	13'-0"	434
* B2	64	#5	STR	23'-8"	1580
* B3	32	#5	STR	15'-6"	517
* S1	292	#5	1	4'-9"	1447
* S2	292	#5	2	5'-2"	1574

*EPOXY COATED REINFORCING STEEL	5,552	LBS.
CLASS AA CONCRETE	29.4	CU. YDS.
CONCRETE BARRIER RAIL	293.19	LIN. FT.

NOTES

THE BARRIER RAIL IN CONTINUOUS UNIT SHALL NOT BE CAST UNTIL ALL SLAB CONCRETE IN THAT UNIT HAS BEEN CAST AND HAS REACHED A MINIMUM COMPRESSIVE STRENGTH OF 3,000 PSI.

ALL REINFORCING STEEL IN BARRIER RAILS SHALL BE EPOXY COATED.

VERTICAL GROOVED CONTRACTION JOINTS, 1/2" IN DEPTH, SHALL BE TOOLED IN ALL EXPOSED FACES OF THE BARRIER RAIL AND IN ACCORDANCE WITH ARTICLE 825-10(B) OF THE STANDARD SPECIFICATIONS. THE CONTRACTION JOINT SHALL BE LOCATED AT EACH THIRD POINT BETWEEN BARRIER RAIL EXPANSION JOINTS. ONLY ONE CONTRACTION JOINT IS REQUIRED AT MIDPOINT OF BARRIER RAIL SEGMENTS LESS THAN 20 FEET IN LENGTH AND NO CONTRACTION JOINTS ARE REQUIRED FOR THOSE SEGMENTS LESS THAN 10 FEET IN LENGTH.

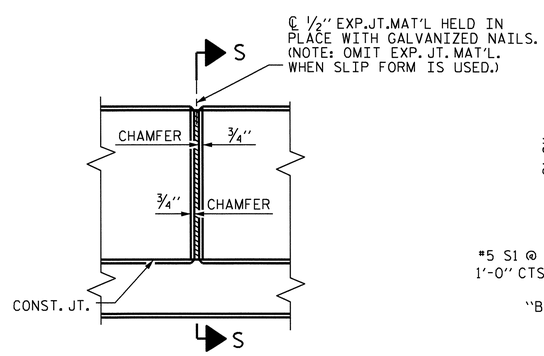

ELEVATION AT EXPANSION JOINTS

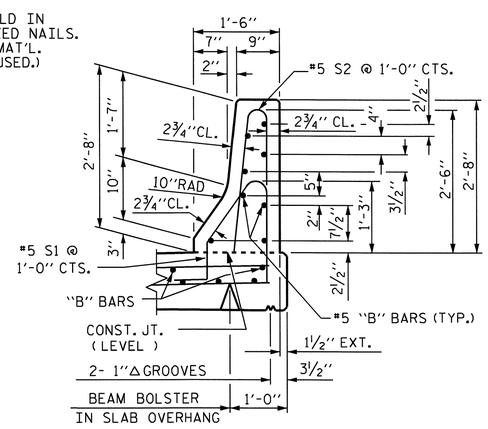

SECTION THRU RAIL

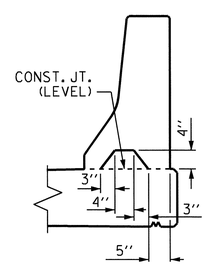

SECTION S-S

AT DAM IN OPEN JOINT
(THIS IS TO BE USED ONLY WHEN SLIP FORM IS USED)

BARRIER RAIL DETAILS

NORTH CAROLINA PROFESSIONAL SEAL 16301 ENGINEER TING HSIUNG FANG
12/6/10

PROJECT NO. R-2510C
BEAUFORT COUNTY
STATION: 222+51.50 -L-

STATE OF NORTH CAROLINA
DEPARTMENT OF TRANSPORTATION
RALEIGH

STANDARD
CONCRETE BARRIER RAIL
(LEFT LANE)

REVISIONS						SHEET NO.
NO.	BY:	DATE:	NO.	BY:	DATE:	S-90
1			3			TOTAL SHEETS
2			4			134

STR. #3 STD. NO. CBR1

ASSEMBLED BY : HARISH SHAH	DATE : 02/09		
CHECKED BY : A.R. CHESSON	DATE : 02/09		
DRAWN BY : ARB 5/87	REV. 10/17/00	RWW/LES	
CHECKED BY : SJD 9/87	REV. 5/7/03R	RWW/JTE	
	REV. 5/1/06	TLA/GM	

06-OCT-2010 13:48
Y:\TIPProjects-R\R2510c\Structures\r2510c\FinalPlans\STR3\r-2510c_sd_br_03.dgn
qtnguyen

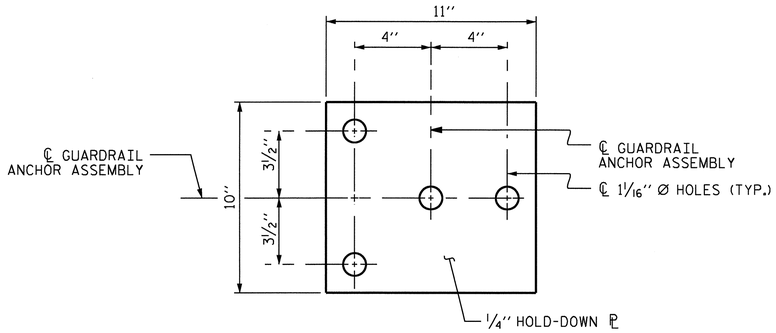

PLAN

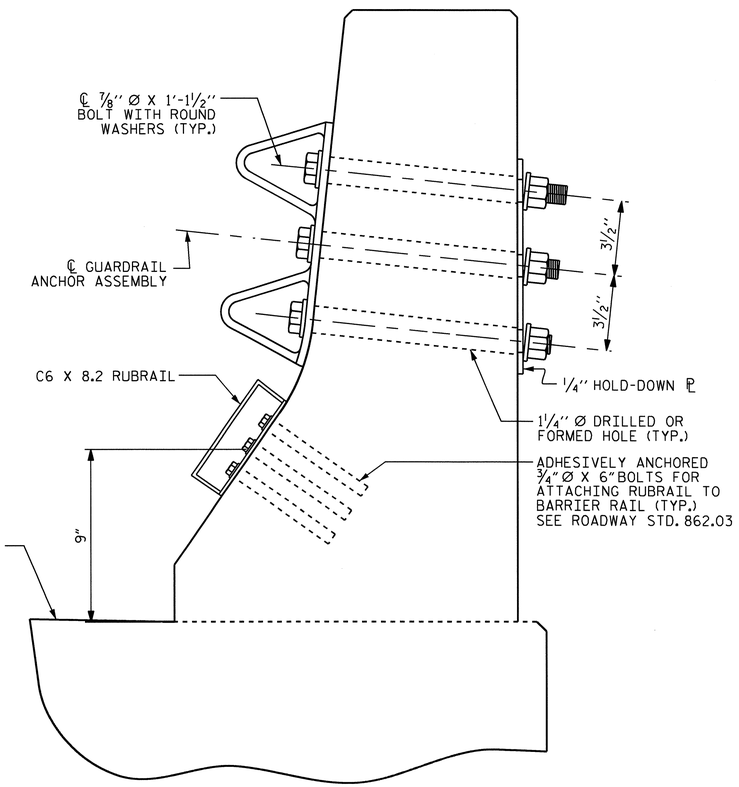

SECTION E-E

GUARDRAIL ANCHOR ASSEMBLY DETAILS

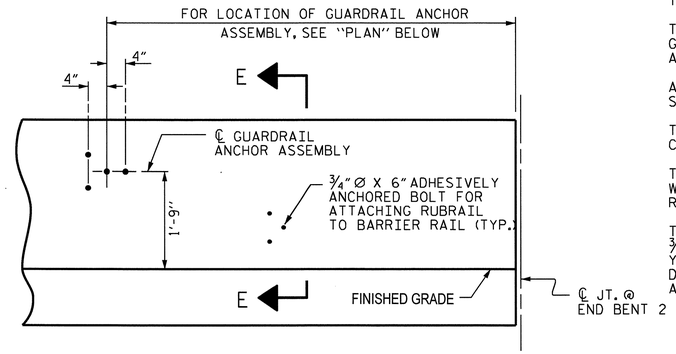

ELEVATION

FOR LOCATION OF RUBRAIL, SEE ROADWAY STD. 862.03

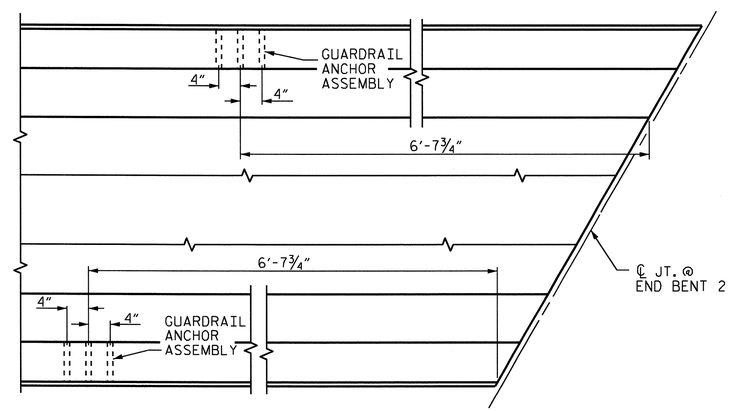

PLAN

LOCATION OF ANCHORS FOR GUARDRAIL

END BENT 2 SHOWN, END BENT 1 SIMILAR.

NOTES

THE GUARDRAIL ANCHOR ASSEMBLY SHALL CONSIST OF A 1/4" HOLD DOWN PLATE AND 4 - 7/8" Ø BOLTS WITH NUTS AND WASHERS, RUBRAIL, AND ADHESIVELY ANCHORED BOLTS.

THE HOLD-DOWN PLATE SHALL CONFORM TO AASHTO M270 GRADE 36. AFTER FABRICATION, THE HOLD-DOWN PLATE SHALL BE HOT-DIP GALVANIZED IN ACCORDANCE WITH AASHTO M111.

BOLTS SHALL CONFORM TO THE REQUIREMENTS OF ASTM A307 AND NUTS SHALL CONFORM TO THE REQUIREMENTS OF AASHTO M291. BOLTS, NUTS AND WASHERS SHALL BE GALVANIZED. (AT THE CONTRACTOR'S OPTION, STAINLESS STEEL BOLTS, NUTS AND WASHERS MAY BE USED AS AN ALTERNATE FOR THE 7/8" Ø GALVANIZED BOLTS, NUTS AND WASHERS. THEY SHALL CONFORM TO OR EXCEED THE MECHANICAL REQUIREMENTS OF ASTM A307. THE USE OF THIS ALTERNATE SHALL BE APPROVED BY THE ENGINEER.)

THE GUARDRAIL ANCHOR ASSEMBLY IS REQUIRED AT ALL POINTS WHERE APPROACH GUARDRAIL IS TO BE ATTACHED TO THE END OF BARRIER RAIL. FOR POINTS OF ATTACHMENT, SEE SKETCH.

AFTER INSTALLATION, THE EXPOSED THREAD OF THE BOLT SHALL BE BURRED WITH A SHARP POINTED TOOL.

THE COST OF THE GUARDRAIL ANCHOR ASSEMBLY SHALL BE INCLUDED IN THE UNIT CONTRACT PRICE BID FOR CONCRETE BARRIER RAIL.

THE 1 1/4" Ø HOLES SHALL BE FORMED OR DRILLED WITH A CORE BIT. IMPACT TOOLS WILL NOT BE PERMITTED. ANY CONCRETE DAMAGED BY THIS WORK SHALL BE REPAIRED TO THE SATISFACTION OF THE ENGINEER.

THE C6 X 8.2 RUBRAIL IS TO BE ADHESIVELY ANCHORED TO THE RAIL USING THREE 3/4" Ø X 6" BOLTS WITH WASHERS. LEVEL ONE FIELD TESTING IS REQUIRED, AND THE YIELD LOAD OF THE 3/4" Ø BOLT IS 12 KIPS. FOR ADHESIVELY ANCHORED BOLTS OR DOWELS, SEE SPECIAL PROVISIONS. SEE ROADWAY STANDARD 862.03 FOR DETAILS AND LOCATION OF THE RUBRAIL.

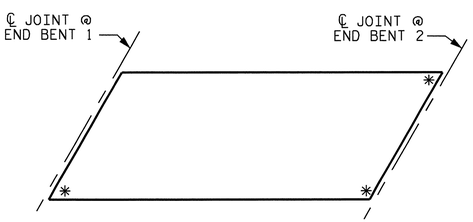

SKETCH SHOWING POINTS OF ATTACHMENTS

* DENOTES GUARDRAIL ANCHOR ASSEMBLY

PROJECT NO. R-2510C

BEAUFORT COUNTY

STATION: 222+51.50 -L-

STATE OF NORTH CAROLINA
DEPARTMENT OF TRANSPORTATION
RALEIGH

STANDARD

GUARDRAIL ANCHORAGE FOR BARRIER RAIL

(LEFT LANE)

NORTH CAROLINA PROFESSIONAL SEAL 16301 ENGINEER TING HSILING FANG

10/6/10

REVISIONS						SHEET NO.
NO.	BY:	DATE:	NO.	BY:	DATE:	S-91
1			3			TOTAL SHEETS
2			4			134

ASSEMBLED BY : HARISH SHAH DATE : 9/08	
CHECKED BY : A.R. CHESSON DATE : 1/09	
DRAWN BY : TLA 5/06	ADDED 5/1/06
CHECKED BY : GM 5/06	

06-OCT-2010 13:48
Y:\TIPProjects-R\R2510c\Structures\r2510c\FinalPlans\STR3\r-2510c_sd_gr_03.dgn
qtnguyen

STR. #3 (SHT. 3) STD. NO. GRA2

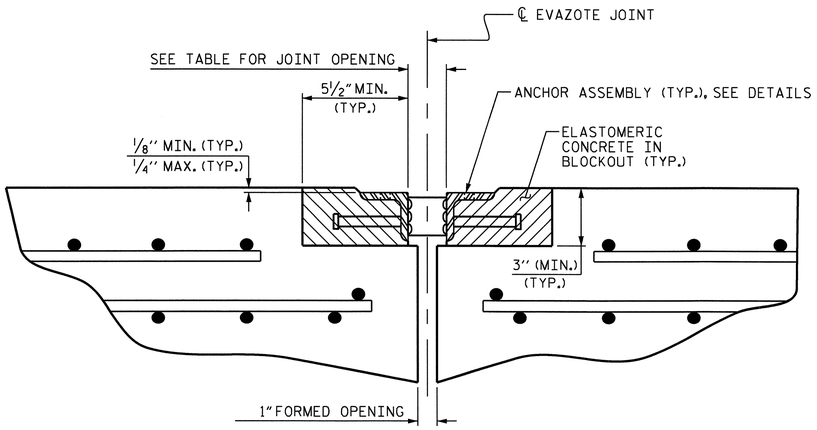

ARMORED JOINT DETAILS

SECTION NORMAL TO JOINT AT END BENT

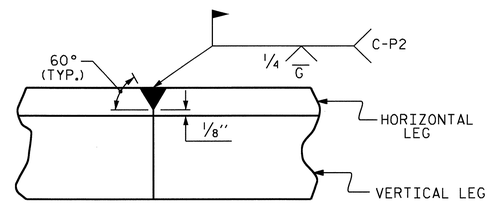

DETAIL- FIELD WELD SPLICE OF ANGLE

NOTES

ANGLES SHALL CONFORM TO AASHTO M270 GRADE 36 STEEL OR APPROVED EQUAL. ALL STUD ANCHORS SHALL CONFORM TO AASHTO M169 GRADES 1010 THRU 1020 OR APPROVED EQUAL.

STUD ANCHORS SHALL BE SHOP WELDED AND ALL HOLES SHALL BE SHOP DRILLED AS SHOWN ON THE PLANS. STUD ANCHORS SHALL BE ELECTRIC ARC END WELDED WITH COMPLETE FUSION.

UPON COMPLETION OF SHOP FABRICATION, THE ENTIRE ANCHOR ASSEMBLY SHALL BE METALLIZED. THE ½" Ø STUD ANCHORS AND ANCHOR TABS NEED NOT BE METALLIZED. SEE SPECIAL PROVISION FOR THERMAL SPRAYED COATINGS (METALLIZATION).

ANCHOR ASSEMBLY SHALL BE MADE CONTINUOUS THE LENGTH OF THE JOINT FROM GUTTER TO GUTTER. FOR FIELD SPLICES AT ALL CROWN BREAK POINTS, THE ENDS OF THE STEEL ANGLES SHALL BE CUT PARALLEL TO THE BRIDGE CENTERLINE. FINISHED FIELD WELDS SHALL BE GROUND SMOOTH AND COATED WITH A MINIMUM THICKNESS OF 4 DRY MILS OF ZINC-RICH PAINT IN ACCORDANCE WITH THE STANDARD SPECIFICATIONS.

ANCHOR ASSEMBLY SEGMENTS SHALL NOT BE LESS THAN 12 FEET NOR MORE THAN 20 FEET IN LENGTH. SHORTER SEGMENTS MAY BE USED AT THE EDGE OF ROADWAY OR AT POINTS OF STAGED CONSTRUCTION.

THE ANCHOR ASSEMBLY SHALL BE SECURED AND LEVELED AS SHOWN IN THE "ARMORED JOINT ANCHOR ASSEMBLY DETAILS". NO SUBMITTALS ARE REQUIRED FOR ⅜" Ø EXPANSION ANCHORS, NUTS OR WASHERS. THE CONTRACTOR MAY SUBMIT FOR APPROVAL AN ALTERNATE METHOD OF ALIGNING AND LEVELING THE ANGLES. THE ALTERNATE METHOD SHALL NOT INCLUDE ANY WELDING TO THE OUTSIDE FACE OF THE ANGLES.

AFTER THE ELASTOMERIC CONCRETE HAS BEEN CAST ON BOTH SIDES OF THE JOINT, REMOVE ANY EXCESS CONCRETE THAT COMES THROUGH THE WEEP HOLES AND THOROUGHLY CLEAN THE ANGLES. ANY DAMAGED STEEL SHALL BE COATED WITH A MINIMUM OF 4 MILS OF ZINC-RICH PAINT IN ACCORDANCE WITH THE STANDARD SPECIFICATIONS.

SEE SPECIAL PROVISIONS FOR EVAZOTE JOINT SEALS.

SEE SPECIAL PROVISIONS FOR ELASTOMERIC CONCRETE.

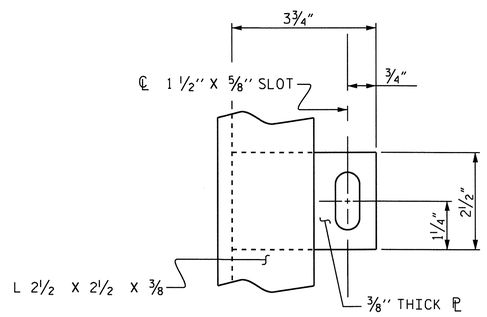

PLAN VIEW OF TAB

MOVEMENT AND SETTING AT EVAZOTE JOINT						
END BENT NO.	SKEW ANGLE	NOMINAL UNCOMPRESSED SEAL WIDTH	TOTAL MOVEMENT (ALONG ℄ RDWY)	PERPENDICULAR JT. OPENING AT 45° F	PERPENDICULAR JT. OPENING AT 60° F	PERPENDICULAR JT. OPENING AT 90° F
1	120°-00'-00"	2½"	9/16"	2⅛"	2"	1 13/16"
2	120°-00'-00"	2½"	9/16"	2⅛"	2"	1 13/16"

TOTAL MOVEMENT IS CALCULATED ALONG THE CENTERLINE OF ROADWAY.
JOINT OPENINGS ARE MEASURED PERPENDICULAR TO THE JOINT.

BILL OF MATERIAL		
END BENT NO.	ELASTOMERIC CONCRETE * (CU. FT.)	TOTAL LENGTH OF ANGLE (FT)
1	9.5	83'-1 11/16"
2	9.5	83'-1 11/16"

* BASED ON THE MINIMUM BLOCKOUT SHOWN.

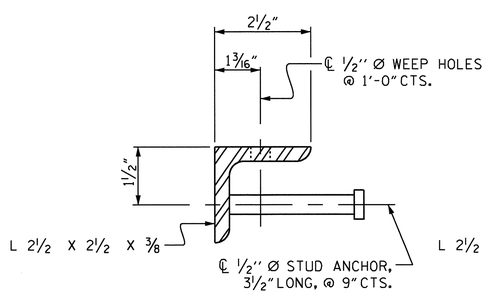

SECTION VIEW OF STUD

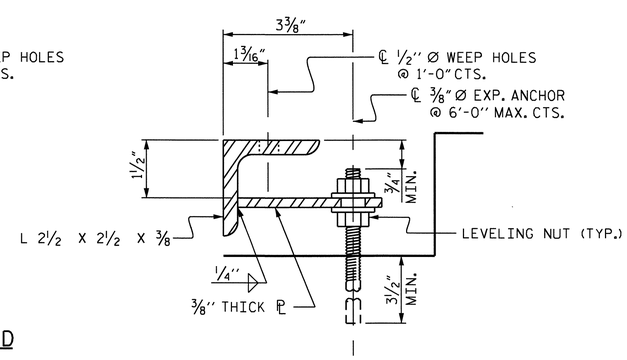

SECTION VIEW OF TAB

ARMORED JOINT ANCHOR ASSEMBLY DETAILS

PROJECT NO. R-2510C
BEAUFORT COUNTY
STATION: 222+51.50 -L-

STATE OF NORTH CAROLINA
DEPARTMENT OF TRANSPORTATION
RALEIGH

STANDARD
ARMORED EVAZOTE JOINT DETAILS
(LEFT LANE)

NORTH CAROLINA PROFESSIONAL SEAL 16301 ENGINEER TING HSING FANG
10/6/10

REVISIONS						SHEET NO.
NO.	BY:	DATE:	NO.	BY:	DATE:	S-92
1			3			TOTAL SHEETS
2			4			134

ASSEMBLED BY : HARISH SHAH	DATE : 07/09		
CHECKED BY : O.T. NGUYEN	DATE : 08/09		
DRAWN BY : EEM 1/96	REV. 7/10/01	LES/RDR	
CHECKED BY : RGW 1/96	REV. 5/7/03RR	RWW/JTE	
	REV. 5/1/06	TLA/GM	

06-OCT-2010 13:48
Y:\TIPProjects-R\R2510c\Structures\r2510c\FinalPlans\STR3\R-2510C_sd_AEJ1_03.dgn
qtnguyen

STR. #3

STD. NO. AEJ1

SUPERSTRUCTURE REINFORCING STEEL LENGTHS ARE BASED ON THE FOLLOWING MINIMUM SPLICE LENGTHS					
BAR SIZE	SUPERSTRUCTURE EXCEPT APPROACH SLABS, PARAPET, AND BARRIER RAIL		APPROACH SLABS		PARAPET AND BARRIER RAIL
	EPOXY COATED	UNCOATED	EPOXY COATED	UNCOATED	
#4	2'-0"	1'-9"	2'-0"	1'-9"	2'-9"
#5	2'-6"	2'-2"	2'-6"	2'-2"	3'-5"
#6	3'-0"	2'-7"	3'-10"	2'-7"	4'-4"
#7	5'-3"	3'-6"			
#8	6'-10"	4'-7"			

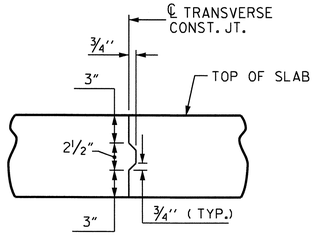

TRANSVERSE CONSTRUCTION JOINT DETAIL

NOTE: REINFORCING STEEL IN SLAB NOT SHOWN. LONGITUDINAL REINFORCING STEEL SHALL BE CONTINUOUS THRU JOINT

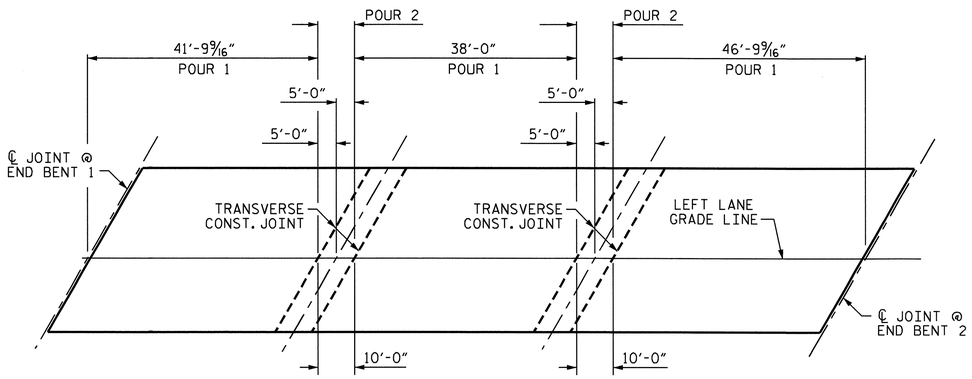

OPTIONAL POURING SEQUENCE

POUR 2 CANNOT BE STARTED UNTIL BOTH ADJACENT POUR 1 REACH A MINIMUM OF 3000 PSI.

BILL OF MATERIAL

BAR	NO.	SIZE	TYPE	LENGTH	WEIGHT	BAR	NO.	SIZE	TYPE	LENGTH	WEIGHT
* A1	247	#5	STR	38'-11"	10026	A213	4	#5	STR	16'-10"	70
A2	247	#5	STR	38'-11"	10026	A214	4	#5	STR	15'-2"	63
* A3	6	#6	STR	13'-6"	122	A215	4	#5	STR	13'-5"	56
						A216	4	#5	STR	11'-8"	49
* A101	4	#5	STR	36'-8"	153	A217	4	#5	STR	9'-11"	41
* A102	4	#5	STR	34'-11"	146	A218	4	#5	STR	8'-2"	34
* A103	4	#5	STR	33'-2"	138	A219	4	#5	STR	6'-6"	27
* A104	4	#5	STR	31'-5"	131	A220	4	#5	STR	4'-9"	20
* A105	4	#5	STR	29'-9"	124	A221	4	#5	STR	3'-0"	13
* A106	4	#5	STR	28'-0"	117						
* A107	4	#5	STR	26'-3"	110						
* A108	4	#5	STR	24'-6"	102	* B1	28	#4	STR	29'-1"	544
* A109	4	#5	STR	22'-10"	95	* B2	28	#7	STR	39'-0"	2232
* A110	4	#5	STR	22'-1"	88	* B3	25	#7	STR	14'-6"	741
* A111	4	#5	STR	19'-4"	81	* B4	28	#4	STR	13'-0"	243
* A112	4	#5	STR	17'-7"	73	* B5	28	#7	STR	40'-6"	2318
* A113	4	#5	STR	15'-10"	66	* B6	25	#7	STR	15'-3"	779
* A114	4	#5	STR	14'-2"	59	* B7	56	#4	STR	17'-4"	648
* A115	4	#5	STR	12'-5"	52	B8	156	#5	STR	50'-2"	8162
* A116	4	#5	STR	10'-8"	45						
* A117	4	#5	STR	8'-11"	37	* G1	2	#5	STR	44'-11"	94
* A118	4	#5	STR	7'-2"	30						
* A119	4	#5	STR	5'-6"	23	* K1	8	#8	1	13'-0"	278
* A120	4	#5	STR	3'-9"	16	* K2	12	#8	2	19'-7"	627
* A121	4	#5	STR	2'-0"	8	* K3	24	#6	STR	7'-11"	285
						K4	16	#4	STR	6'-0"	64
						K5	32	#4	STR	8'-6"	182
A201	4	#5	STR	37'-8"	157	K6	12	#4	3	6'-0"	48
A202	4	#5	STR	35'-11"	150	K7	18	#4	4	11'-10"	142
A203	4	#5	STR	34'-2"	143						
A204	4	#5	STR	32'-5"	135	* S1	64	#5	5	4'-11"	328
A205	4	#5	STR	30'-9"	128	* S2	64	#4	6	3'-9"	160
A206	4	#5	STR	29'-0"	121	S3	112	#4	7	3'-1"	231
A207	4	#5	STR	27'-3"	114						
A208	4	#5	STR	25'-6"	106	U1	48	#4	8	11'-11"	382
A209	4	#5	STR	23'-10"	99	U2	16	#4	8	9'-11"	106
A210	4	#5	STR	22'-1"	92						
A211	4	#5	STR	20'-4"	85	REINFORCING STEEL = 21,125 LBS					
A212	4	#5	STR	18'-7"	78	* EPOXY COATED REINF. STEEL= 21,119 LBS					

* DENOTES EPOXY COATED REINFORCING STEEL

BAR TYPES

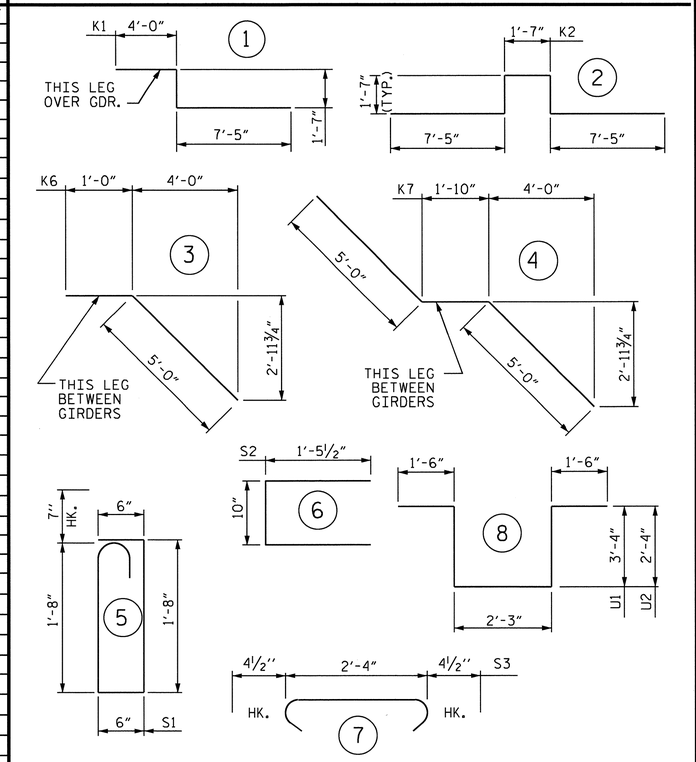

ALL BAR DIMENSIONS ARE OUT TO OUT

GROOVING BRIDGE FLOORS		
APPROACH SLABS	1,552	SQ.FT.
BRIDGE DECK	4,790	SQ.FT.
TOTAL	6,342	SQ.FT.

SUPERSTRUCTURE BILL OF MATERIAL			
SPANS A, B, & C	CLASS AA CONCRETE	REINFORCING STEEL	* EPOXY COATED REINFORCING STEEL
	(CU. YDS.)	(LBS.)	(LBS.)
POUR 1	54.5		
POUR 2	69.8		
POUR 3	83.0		
TOTAL **	207.3	21,125	21,119

** QUANTITIES FOR BARRIER RAIL ARE NOT INCLUDED

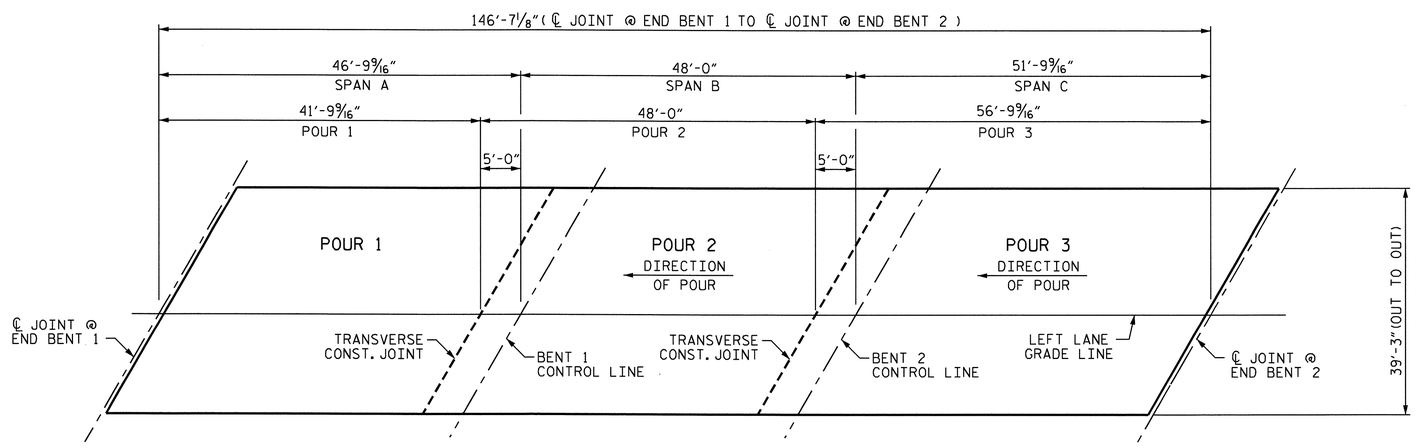

POURING SEQUENCE AND LAYOUT FOR COMPUTING AREA OF REINFORCED CONCRETE DECK SLAB

(SQ. FT. = 5,754)

PROJECT NO. R-2510C
BEAUFORT COUNTY
STATION: 222+51.50 -L-

STATE OF NORTH CAROLINA
DEPARTMENT OF TRANSPORTATION
RALEIGH

STANDARD
SUPERSTRUCTURE BILL OF MATERIAL
(LEFT LANE)

NORTH CAROLINA PROFESSIONAL SEAL 16301 ENGINEER TING-HSIUNG FANG
12/8/10

ASSEMBLED BY : HARISH SHAH DATE : 9/08		
CHECKED BY : T. H. FANG DATE : 8/10		
DRAWN BY : JMB 5/87	REV. 6/1/94	EEM/GRP
CHECKED BY : SJD 9/87	REV. 8/16/99	RWW/LES
	REV. 5/1/06	TLA/GM

REVISIONS							
NO.	BY:	DATE:	NO.	BY:	DATE:	SHEET NO.	S-93
1			3			TOTAL SHEETS	134
2			4				

08-DEC-2010 10:09
Y:\TIPProjects-R\R2510c\Structures\r2510c\Final Plans\STR3\r-2510c_sd_bm_03.dgn
qtnguyen

STR #3 STD. NO. BOM2

NOTES

STIRRUPS IN CAP MAY BE SHIFTED AS NECESSARY TO CLEAR ANCHOR BOLTS.

BACKWALL SHALL BE PLACED BEFORE APPLYING THE EPOXY PROTECTIVE COATING.

THE TOP SURFACE AREAS OF THE END BENT CAPS SHALL BE CURED IN ACCORDANCE WITH THE STANDARD SPECIFICATIONS EXCEPT THAT THE MEMBRANE CURING COMPOUND METHOD SHALL NOT BE USED.

* THE TOP SURFACE OF THE END BENT CAP EXCEPT THE BRIDGE SEAT BUILDUPS SHALL BE SLOPED TRANSVERSELY FROM THE FILL FACE TO THE BACK FACE AT THE RATE OF 2%.

THE CONTRACTOR SHALL PROVIDE FOR INSTALLATION OF THE 4" DIAMETER DRAIN PIPE THROUGH THE WING WALL AS REQUIRED FOR REINFORCED BRIDGE APPROACH FILLS. SEE THE ROADWAY PLANS. REINFORCING STEEL IN THE WING WALL MAY BE SHIFTED AS NECESSARY TO CLEAR THE DRAIN PIPE.

THE CONCRETE IN THE SHADED AREA OF THE WING SHALL BE POURED AFTER THE BARRIER IS CAST IF SLIP FORMING IS USED.

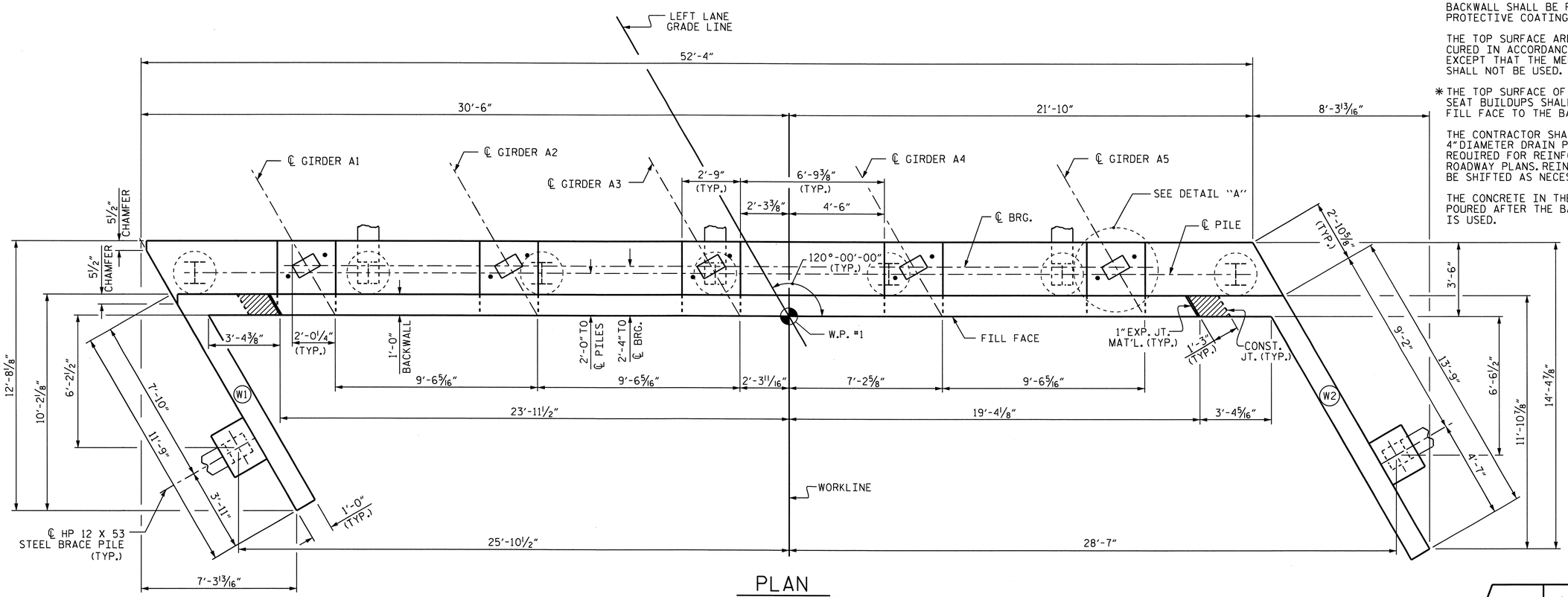

PLAN

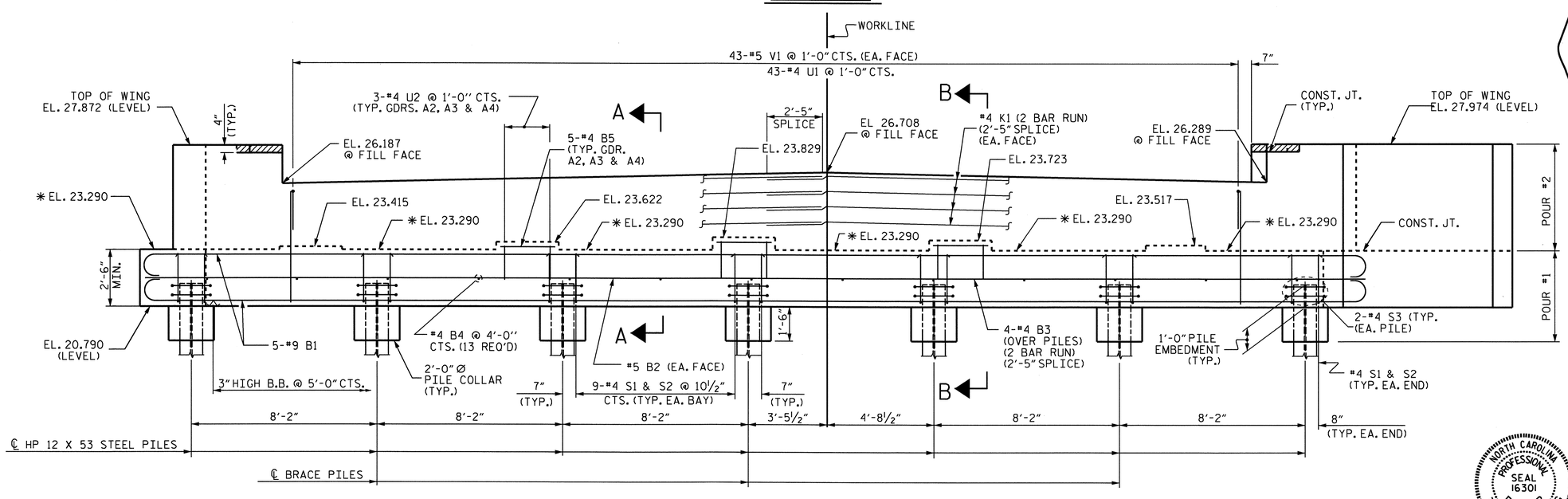

ELEVATION

BRACE PILES IN WING WALLS AND DETAILS OF WING WALLS NOT SHOWN FOR CLARITY. LEFT WING NOT SHOWN FOR CLARITY

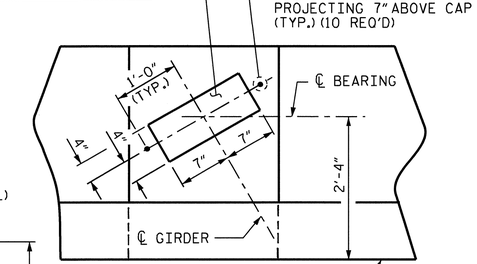

DETAIL "A"

(TYP. EA. GDR.)

PROJECT NO. R-2510C

BEAUFORT COUNTY

STATION: 222+51.50 -L-

SHEET 1 OF 3

STATE OF NORTH CAROLINA
DEPARTMENT OF TRANSPORTATION
RALEIGH

SUBSTRUCTURE

END BENT 1

(LEFT LANE)

NORTH CAROLINA PROFESSIONAL SEAL 16301 ENGINEER JING HSIANG FANG

11/30/10

REVISIONS						SHEET NO.
NO.	BY:	DATE:	NO.	BY:	DATE:	S-94
1			3			TOTAL SHEETS
2			4			134

DRAWN BY : HARISH SHAH DATE : 10/21/08
CHECKED BY : A.R. CHESSON DATE : 2/09

30-NOV-2010 14:30
W:\Structures\r2510c\Final Plans\STR3\r-2510c_sd_e*_03.dgn
Hshah

STR. #3

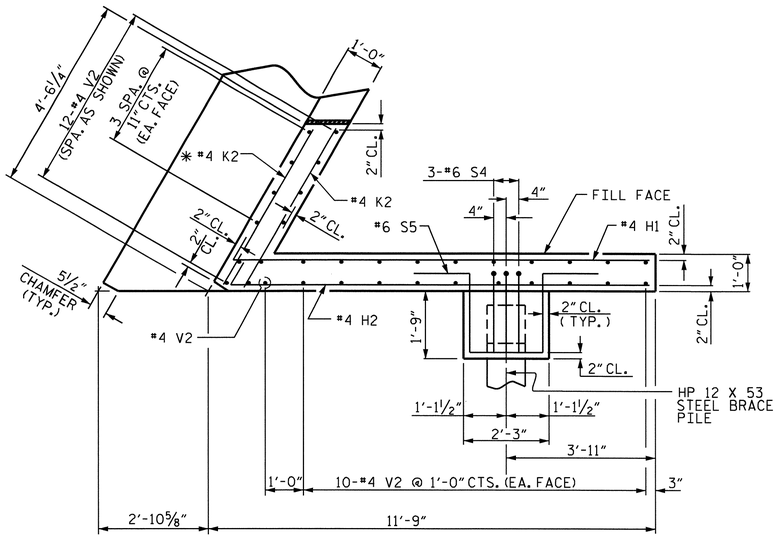

PLAN OF WING (W1)

*#4 K2 FIELD CUT AS NECESSARY TO GIVE 2" MIN. CLEARANCE FROM CHAMFER.

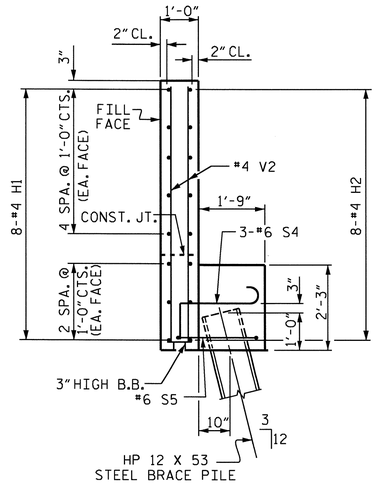

SECTION X-X

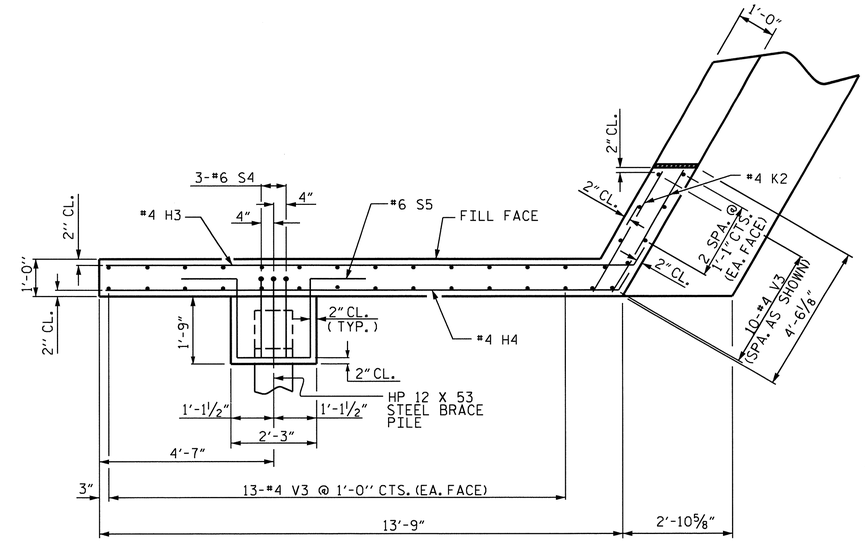

PLAN OF WING (W2)

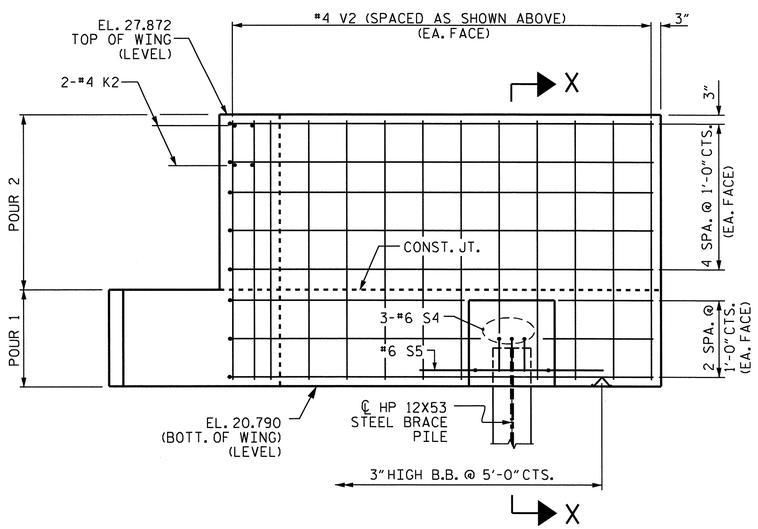

ELEVATION OF WING (W1)

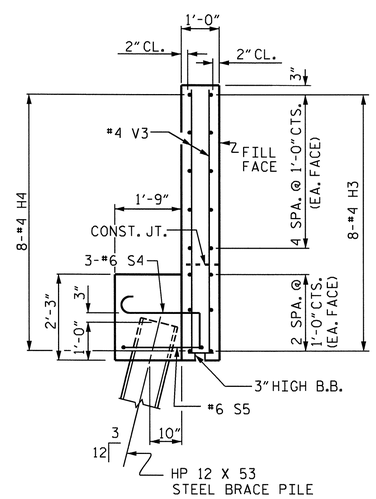

SECTION Y-Y

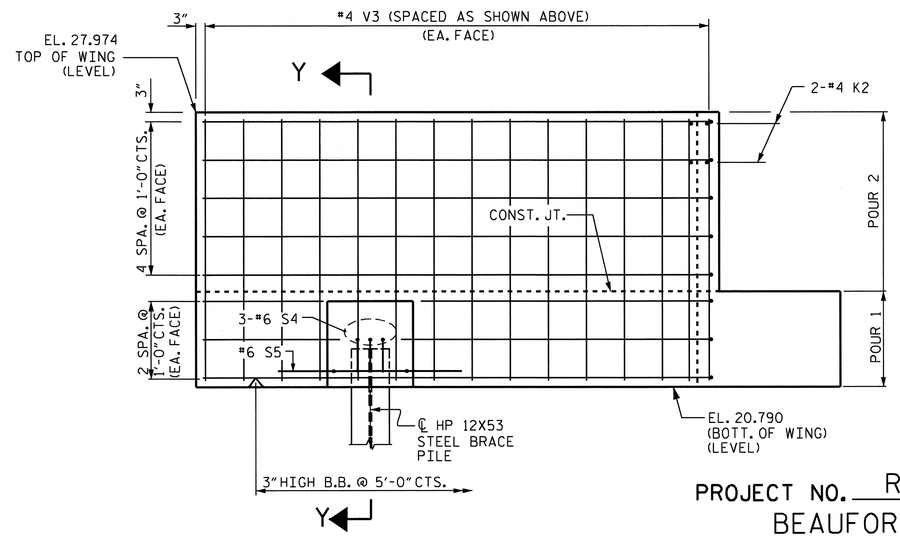

ELEVATION OF WING (W2)

PROJECT NO. R-2510C

BEAUFORT COUNTY

STATION: 222+51.50 -L-

SHEET 2 OF 3

STATE OF NORTH CAROLINA
DEPARTMENT OF TRANSPORTATION
RALEIGH

SUBSTRUCTURE

END BENT 1

(LEFT LANE)

NORTH CAROLINA PROFESSIONAL SEAL 16301 ENGINEER TING HSIUNG FANG

10/6/10

REVISIONS						SHEET NO.
NO.	BY:	DATE:	NO.	BY:	DATE:	S-95
1			3			TOTAL SHEETS
2			4			134

STR. #3

DRAWN BY : HARISH SHAH DATE : 10/08
CHECKED BY : A.R. CHESSON DATE : 02/09

06-OCT-2010 13:47
Y:\TIPProjects-R\R2510c\Structures\r2510c\FinalPlans\STR3\r-2510c_sd_e*_03.dgn
qtnguyen

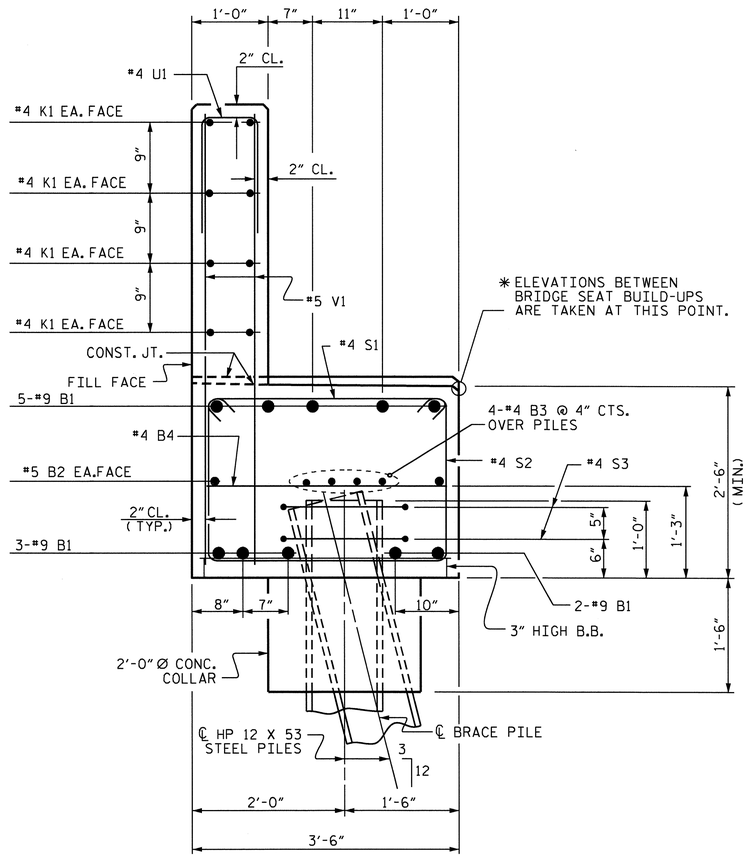

SECTION A-A

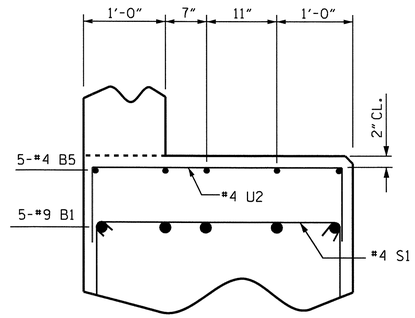

PARTIAL SECTION B-B

#5 V1 BARS NOT SHOWN FOR CLARITY.

BAR TYPES

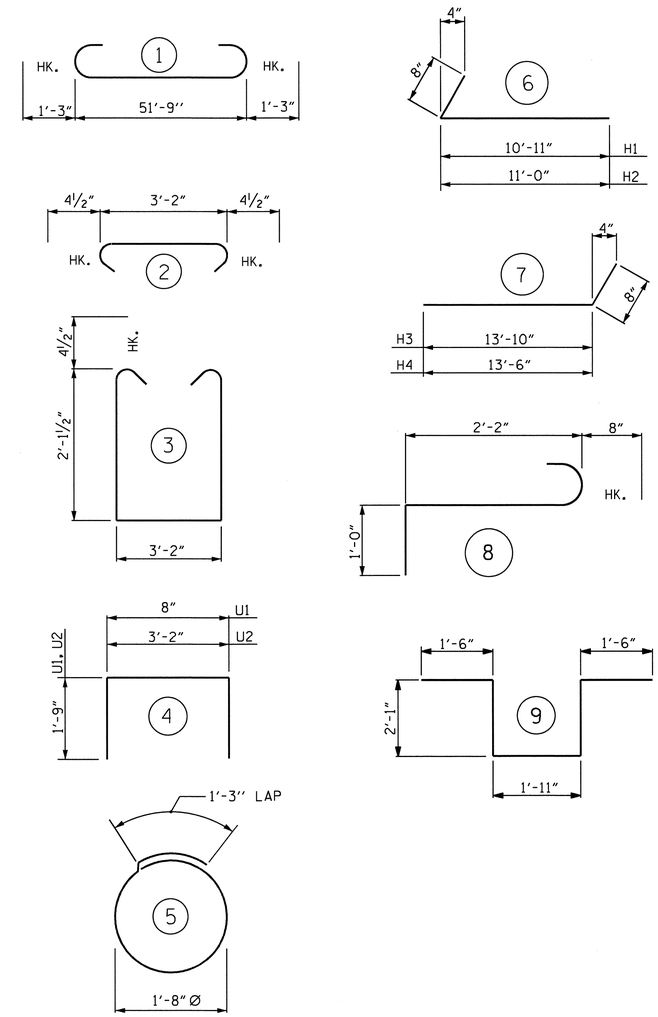

ALL BAR DIMENSIONS ARE OUT TO OUT.

BILL OF MATERIAL

END BENT 1

BAR	NO.	SIZE	TYPE	LENGTH	WEIGHT
B1	10	#9	1	54'-3"	1845
B2	2	#5	STR	51'-9"	108
B3	8	#4	STR	27'-3"	146
B4	13	#4	STR	3'-2"	27
B5	15	#4	STR	2'-5"	24
H1	8	#4	6	11'-7"	62
H2	8	#4	6	11'-8"	62
H3	8	#4	7	14'-6"	77
H4	8	#4	7	14'-2"	76
K1	16	#4	STR	27'-3"	291
K2	8	#4	STR	4'-2"	22
S1	56	#4	2	3'-11"	147
S2	56	#4	3	8'-2"	305
S3	14	#4	5	6'-6"	61
S4	6	#6	8	3'-10"	35
S5	2	#6	9	9'-1"	27
U1	43	#4	4	4'-2"	120
U2	9	#4	4	6'-8"	40
V1	86	#5	STR	5'-0"	448
V2	33	#4	STR	6'-9"	149
V3	36	#4	STR	6'-10"	164
REINFORCING STEEL					4,236 LBS

CLASS A CONCRETE

POUR 1 (CAP & LOWER WINGS & COLLARS)	21.4 C.Y.
POUR 2 (BACKWALL & UPPER WINGS)	10.6 C.Y.
TOTAL	32.0 C.Y.

HP 12 X 53 STEEL PILES

NUMBER = 9	LIN. FT. = 630
PILE REDRIVES	EACH 4

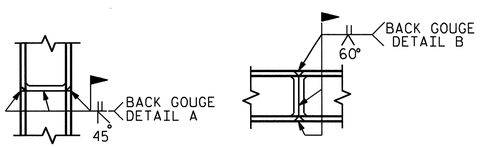

**PILE VERTICAL **PILE HORIZONTAL OR VERTICAL

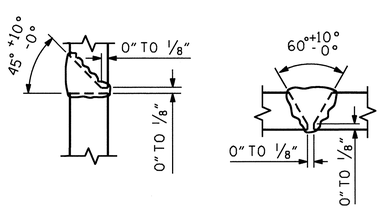

DETAIL A DETAIL B

PILE SPLICE DETAILS

**POSITION OF PILE DURING WELDING.

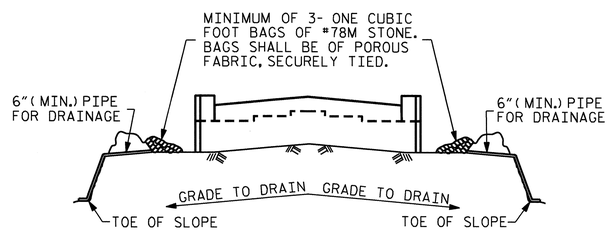

BAGGED STONE AND PIPE SHALL BE PLACED IMMEDIATELY AFTER COMPLETION OF END BENT EXCAVATION. PIPE MAY BE EITHER CONCRETE, CORRUGATED STEEL, CORRUGATED ALUMINUM ALLOY, OR CORRUGATED PLASTIC. PERFORATED PIPE WILL NOT BE ALLOWED.

BAGGED STONE SHALL REMAIN IN PLACE UNTIL THE ENGINEER DIRECTS THAT IT BE REMOVED. THE CONTRACTOR SHALL REMOVE AND DISPOSE OF SILT ACCUMULATIONS AT BAGGED STONE WHEN SO DIRECTED BY THE ENGINEER. BAGS SHALL BE REMOVED AND REPLACED WHENEVER THE ENGINEER DETERMINES THAT THEY HAVE DETERIORATED AND LOST THEIR EFFECTIVENESS.

NO SEPARATE PAYMENT WILL BE MADE FOR THIS WORK AND THE ENTIRE COST OF THIS WORK SHALL BE INCLUDED IN THE UNIT CONTRACT PRICE BID FOR THE SEVERAL PAY ITEMS.

TEMPORARY DRAINAGE AT END BENT

PROJECT NO. R-2510C
BEAUFORT COUNTY
STATION: 222+51.50 -L-

SHEET 3 OF 3

STATE OF NORTH CAROLINA
DEPARTMENT OF TRANSPORTATION
RALEIGH

SUBSTRUCTURE

END BENT 1

(LEFT LANE)

NORTH CAROLINA PROFESSIONAL SEAL 16301 ENGINEER
11/30/10

REVISIONS							SHEET NO.
NO.	BY:	DATE:	NO.	BY:	DATE:		S-96
1			3				TOTAL SHEETS
2			4				134

DRAWN BY : HARISH SHAH DATE : 10/08
CHECKED BY : A.R. CHESSON DATE : 02/09

30-NOV-2010 14:31
W:\Structures\r2510c\Final Plans\STR3\r-2510c_sd_e*_03.dgn
Hshah

STR. #3

NOTES

STIRRUPS IN CAP MAY BE SHIFTED AS NECESSARY TO CLEAR ANCHOR BOLTS.

GALVANIZE THE TOP 35 FT OF EACH PILE FOR BENT 1 AND 25 FT OF EACH PILE FOR BENT 2, IN ACCORDANCE WITH SECTION 1076 OF THE STANDARD SPECIFICATIONS.

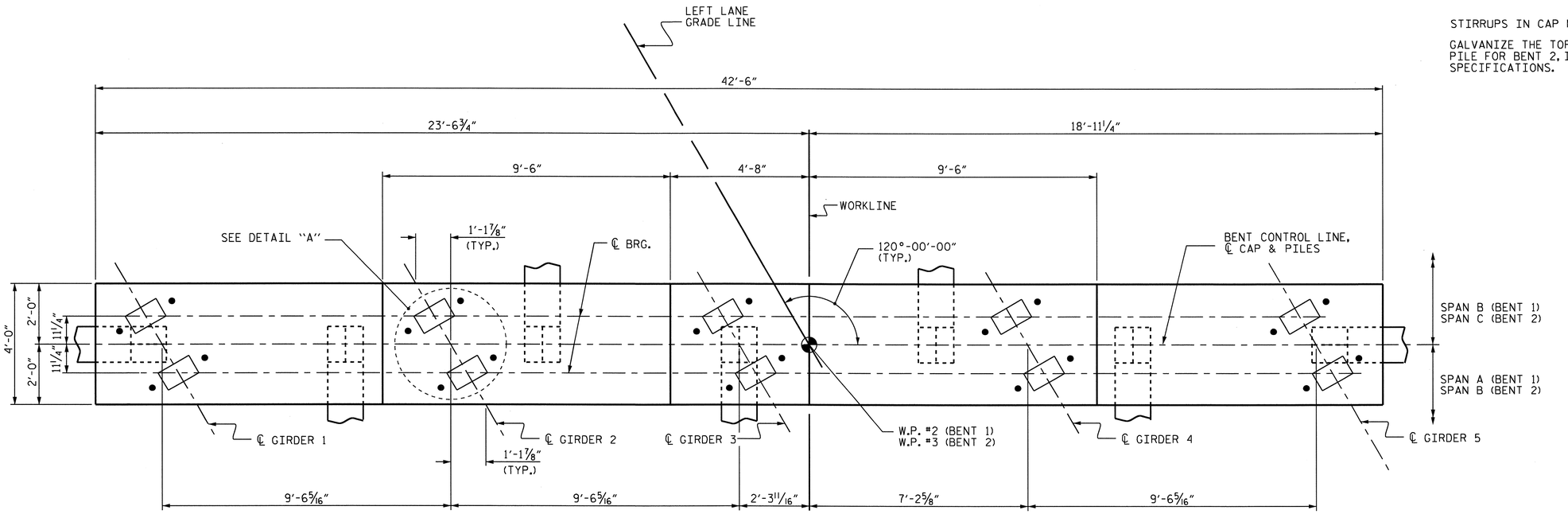

PLAN

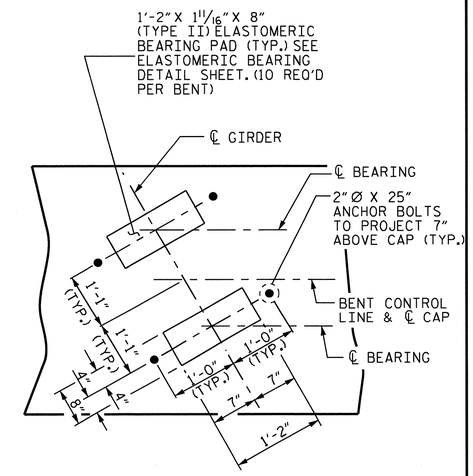

DETAIL "A"

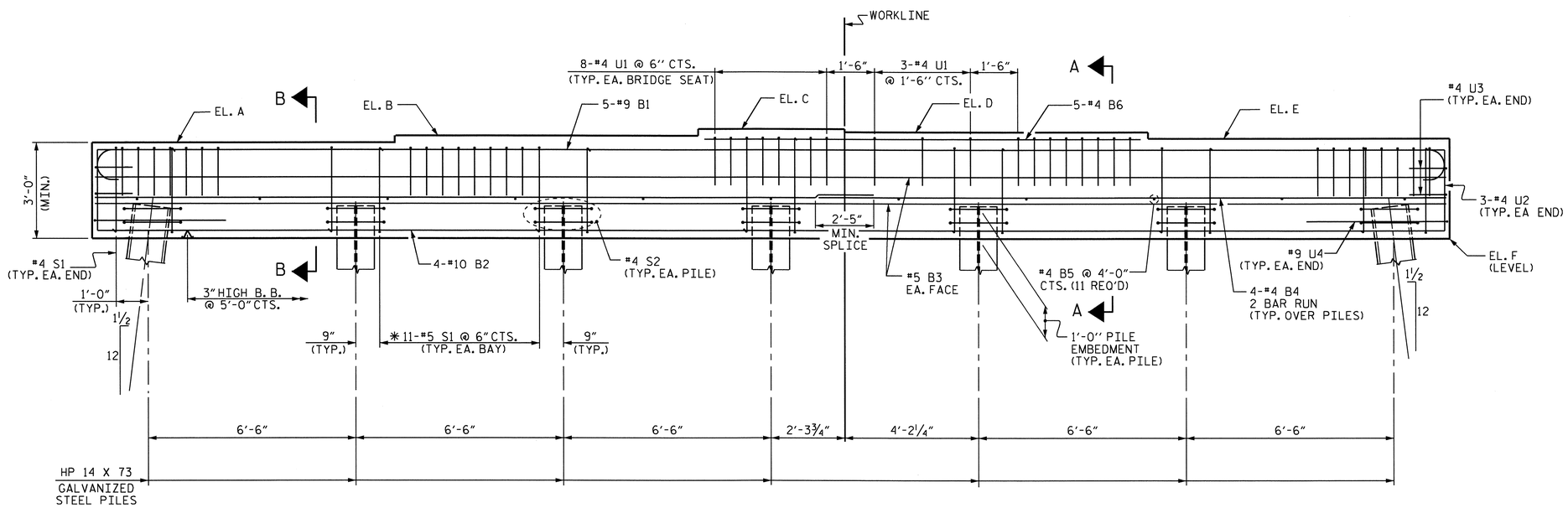

*INVERT ALTERNATE STIRRUPS

ELEVATION

ALL PILES BATTERED 1½:12 IN DIRECTION SHOWN IN PLAN VIEW.

ELEVATIONS		
POINT	BENT 1	BENT 2
EL. A	23.385	23.320
EL. B	23.596	23.534
EL. C	23.807	23.748
EL. D	23.704	23.649
EL. E	23.502	23.450
EL. F	20.385	20.320

PROJECT NO. R-2510C

BEAUFORT COUNTY

STATION: 222+51.50 -L-

SHEET 1 OF 2

STATE OF NORTH CAROLINA
DEPARTMENT OF TRANSPORTATION
RALEIGH

SUBSTRUCTURE

BENTS 1 AND 2

(LEFT LANE)

NORTH CAROLINA PROFESSIONAL SEAL 16301 ENGINEER TING HSIUNG FANG

11/30/10

REVISIONS						SHEET NO.
NO.	BY:	DATE:	NO.	BY:	DATE:	S-97
1			3			TOTAL SHEETS
2			4			134

DRAWN BY : HARISH SHAH DATE : 12/08
CHECKED BY : A.R. CHESSON DATE : 2/09

30-NOV-2010 14:32
W:\Structures\r2510c\FinalPlans\STR3\r-2510c_sd_b*_03.dgn
Hshah

STR. #3

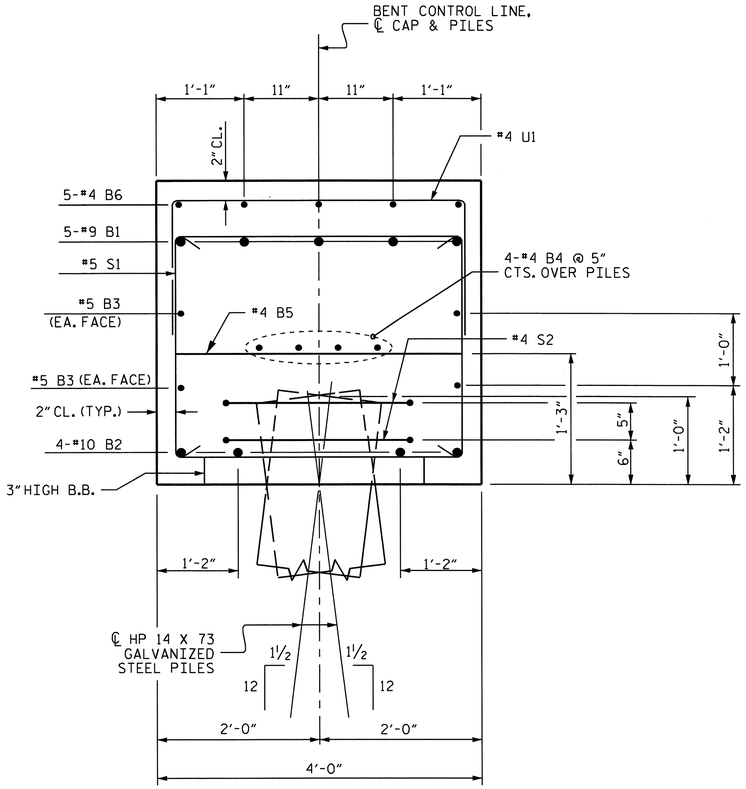

SECTION A-A

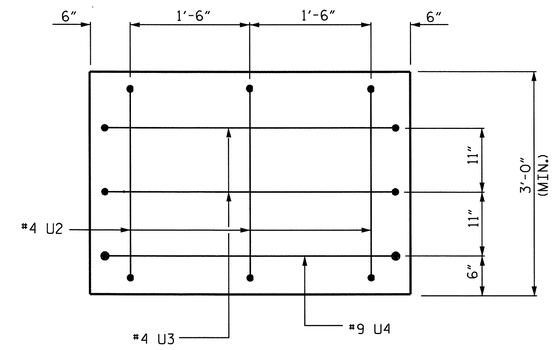

END VIEW

CENTER U2 BAR BOTTOM LEG MAY BE CUT AS REQUIRED TO PROVIDE 2" CLEARANCE BETWEEN END OF BAR AND PILE.

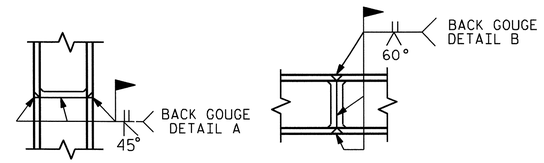

** PILE VERTICAL

** PILE HORIZONTAL OR VERTICAL

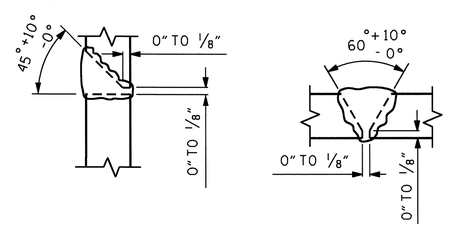

DETAIL A

DETAIL B

PILE SPLICE DETAILS

** POSITION OF PILE DURING WELDING.

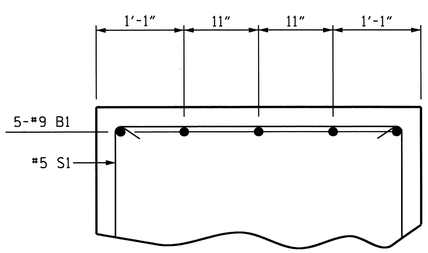

PARTIAL SECTION B-B

BAR TYPES

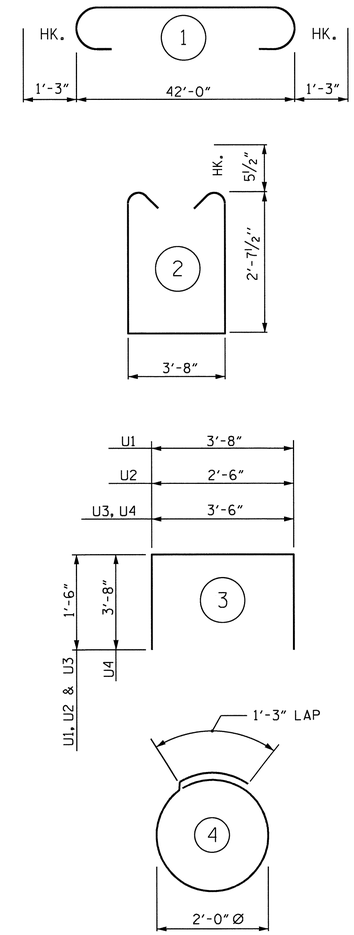

ALL BAR DIMENSIONS ARE OUT TO OUT.

BILL OF MATERIAL

BENT 1

BAR	NO.	SIZE	TYPE	LENGTH	WEIGHT
B1	5	#9	1	44'-6"	757
B2	4	#10	STR	42'-2"	726
B3	4	#5	STR	42'-2"	176
B4	8	#4	STR	22'-4"	119
B5	11	#4	STR	3'-8"	27
B6	5	#4	STR	13'-10"	46
S1	68	#5	2	9'-10"	697
S2	14	#4	4	7'-6"	70
U1	43	#4	3	6'-8"	191
U2	6	#4	3	5'-6"	22
U3	4	#4	3	6'-6"	17
U4	2	#9	3	10'-10"	74

REINFORCING STEEL 2923 LBS.

CLASS A CONCRETE 20.1 C.Y.

HP 14 X 73 GALVANIZED STEEL PILES
NO. 7 490 LIN. FT.
PILE REDRIVES 2 EACH

BENT 2

BAR	NO.	SIZE	TYPE	LENGTH	WEIGHT
B1	5	#9	1	44'-6"	757
B2	4	#10	STR	42'-2"	726
B3	4	#5	STR	42'-2"	176
B4	8	#4	STR	22'-4"	119
B5	11	#4	STR	3'-8"	27
B6	5	#4	STR	13'-9"	46
S1	68	#5	2	9'-10"	697
S2	14	#4	4	7'-6"	70
U1	43	#4	3	6'-8"	191
U2	6	#4	3	5'-6"	22
U3	4	#4	3	6'-6"	17
U4	2	#9	3	10'-10"	74

REINFORCING STEEL 2923 LBS.

CLASS A CONCRETE 20.1 C.Y.

HP 14 X 73 GALVANIZED STEEL PILES
NO. 7 630 LIN. FT.
PILE REDRIVES 2 EACH

PROJECT NO. R-2510C
BEAUFORT COUNTY
STATION: 222+51.50 -L-

SHEET 2 OF 2

STATE OF NORTH CAROLINA
DEPARTMENT OF TRANSPORTATION
RALEIGH

SUBSTRUCTURE

BENTS 1 AND 2

(LEFT LANE)

NORTH CAROLINA PROFESSIONAL SEAL 16301 ENGINEER HSIUNG TING FANG

10/8/10

REVISIONS						SHEET NO.
NO.	BY:	DATE:	NO.	BY:	DATE:	S-98
1			3			TOTAL SHEETS
2			4			134

DRAWN BY : HARISH SHAH DATE : 12/08
CHECKED BY : A.R. CHESSON DATE : 2/09

08-OCT-2010 10:58
H:\R2510c\Structures\r2510c\Final Plans\STR3\r-2510c_sd_b*_03.dgn
tfang

STR. #3

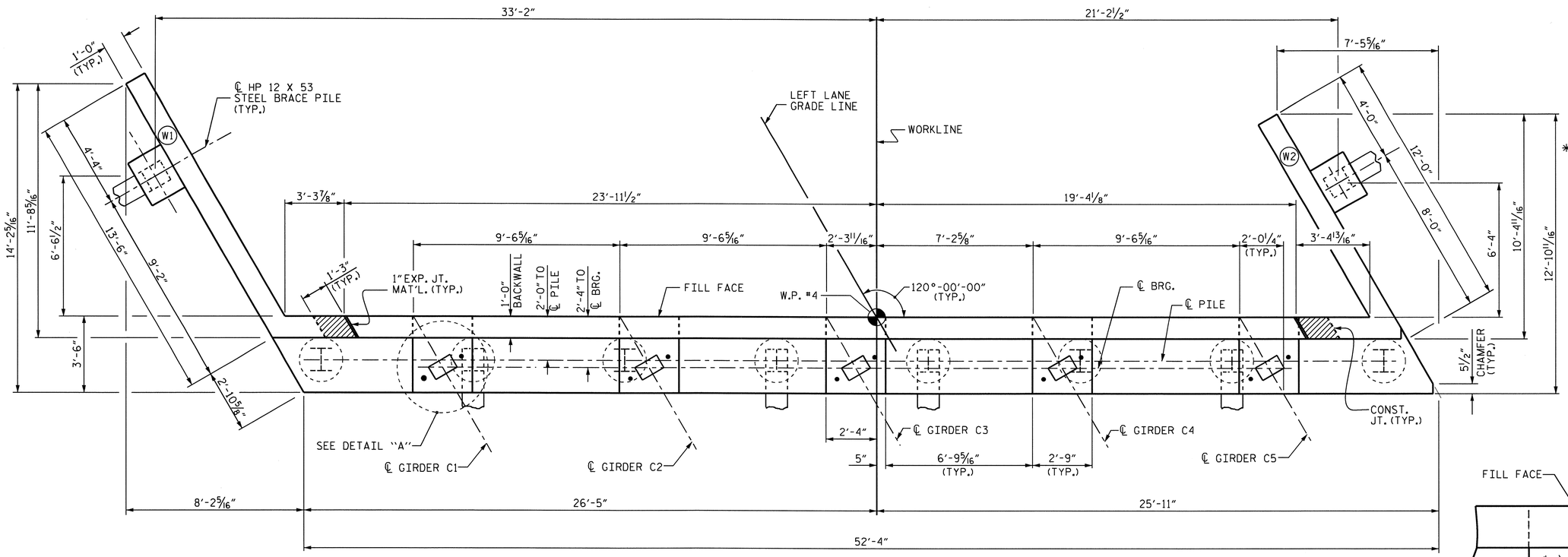

PLAN

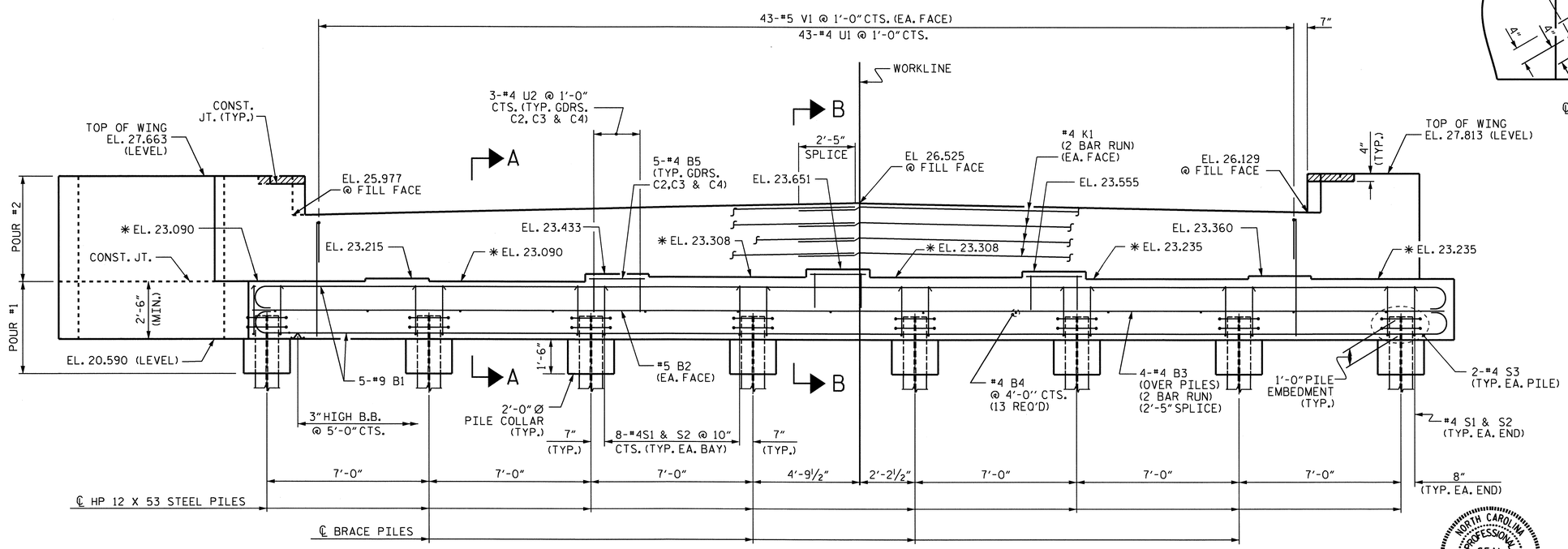

ELEVATION

BRACE PILES IN WING WALLS AND DETAILS OF WING WALLS NOT SHOWN FOR CLARITY.

NOTES

STIRRUPS IN CAP MAY BE SHIFTED AS NECESSARY TO CLEAR ANCHOR BOLTS.

BACKWALL SHALL BE PLACED BEFORE APPLYING THE EPOXY PROTECTIVE COATING.

THE TOP SURFACE AREAS OF THE END BENT CAPS SHALL BE CURED IN ACCORDANCE WITH THE STANDARD SPECIFICATIONS EXCEPT THAT THE MEMBRANE CURING COMPOUND METHOD SHALL NOT BE USED.

✱ THE TOP SURFACE OF THE END BENT CAP EXCEPT THE BRIDGE SEAT BUILDUPS SHALL BE SLOPED TRANSVERSELY FROM THE FILL FACE TO THE BACK FACE AT THE RATE OF 2%.

THE CONTRACTOR SHALL PROVIDE FOR INSTALLATION OF THE 4" DIAMETER DRAIN PIPE THROUGH THE WING WALL AS REQUIRED FOR REINFORCED BRIDGE APPROACH FILLS, SEE THE ROADWAY PLANS. REINFORCING STEEL IN THE WING WALL MAY BE SHIFTED AS NECESSARY TO CLEAR THE DRAIN PIPE.

THE CONCRETE IN THE SHADED AREA OF THE WING SHALL BE POURED AFTER THE JOINT BETWEEN THE DECK AND THE APPROACH SLAB HAS BEEN SAWED AND THE BARRIER IS CAST IF SLIP FORMING IS USED.

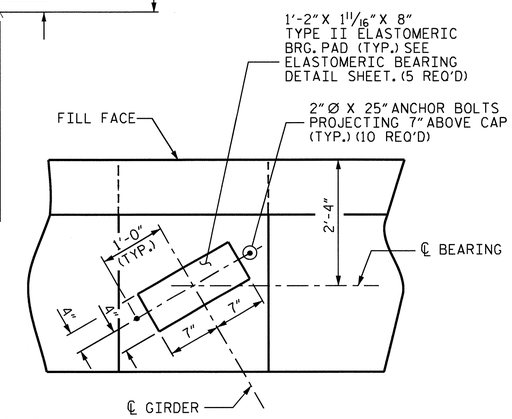

DETAIL "A"

(TYP. EA. GDR.)

PROJECT NO. R-2510C

BEAUFORT COUNTY

STATION: 222+51.50 -L-

SHEET 1 OF 3

STATE OF NORTH CAROLINA
DEPARTMENT OF TRANSPORTATION
RALEIGH

SUBSTRUCTURE

END BENT 2

(LEFT LANE)

NORTH CAROLINA PROFESSIONAL SEAL 16301 ENGINEER HSIANG-TING HSIEH FANG
11/30/10

REVISIONS						SHEET NO.
NO.	BY:	DATE:	NO.	BY:	DATE:	S-99
1			3			TOTAL SHEETS
2			4			134

STR. #3

DRAWN BY : HARISH SHAH DATE : 11/08
CHECKED BY : A.R. CHESSON DATE : 2/09

30-NOV-2010 14:31
W:\Structures\r2510c\Final Plans\STR3\r-2510c_sd_e*_03.dgn
Hshah

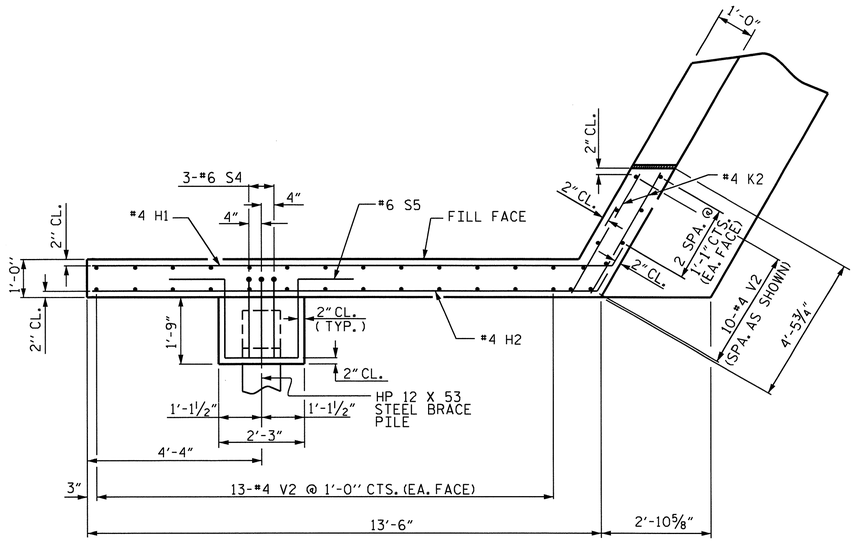

PLAN OF WING (W1)

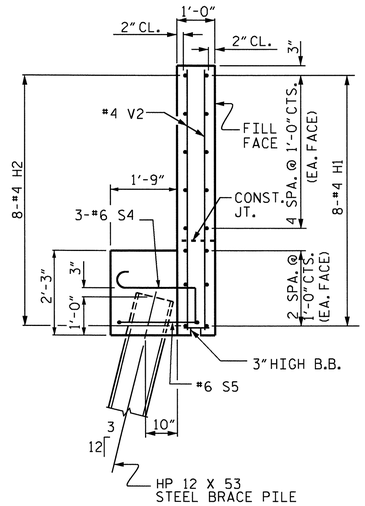

SECTION X-X

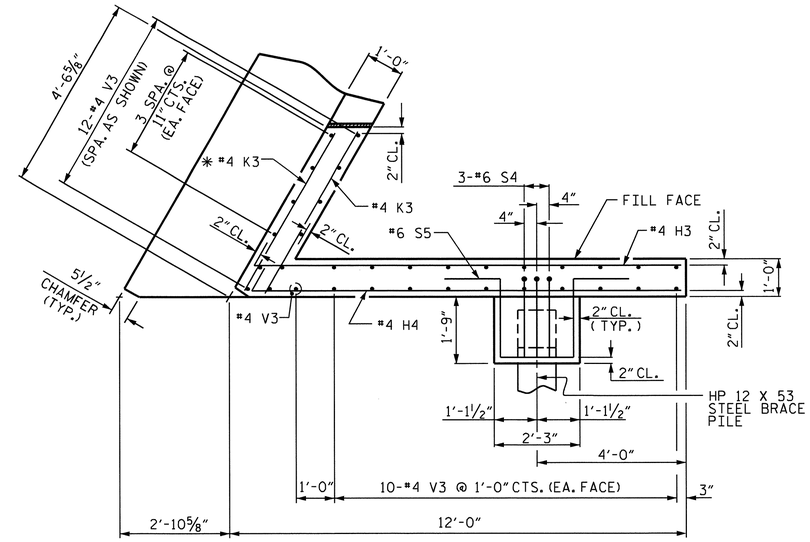

PLAN OF WING (W2)

* #4 K3 FIELD CUT AS NECESSARY TO GIVE 2" MIN. CLEARANCE FROM CHAMFER.

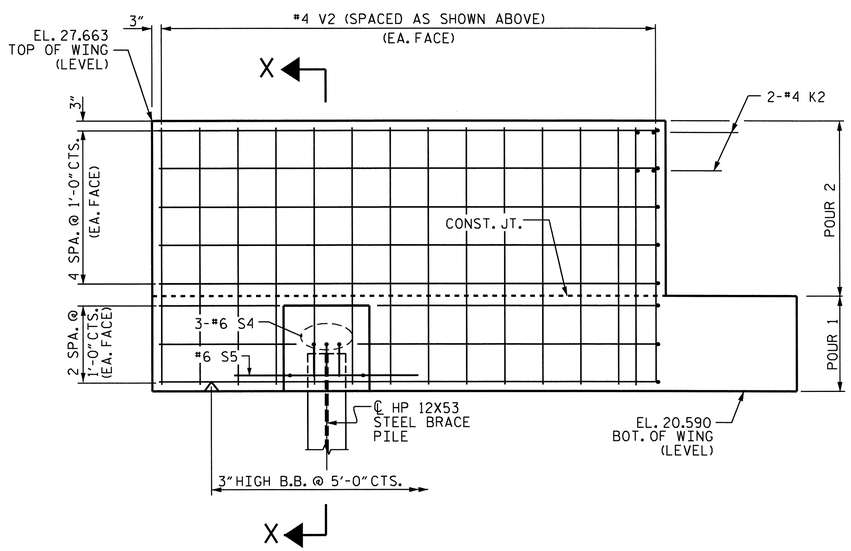

ELEVATION OF WING (W1)

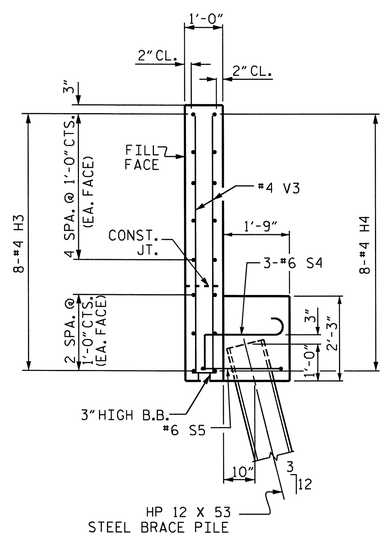

SECTION Y-Y

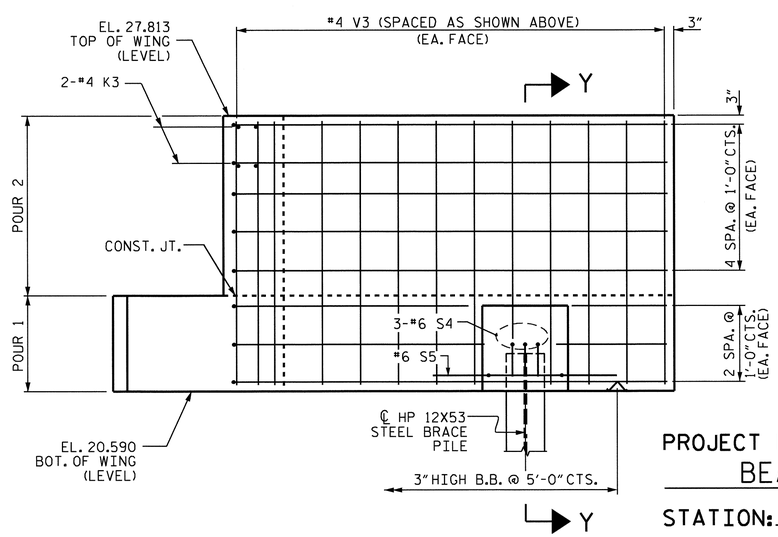

ELEVATION OF WING (W2)

PROJECT NO. R-2510C

BEAUFORT COUNTY

STATION: 222+51.50 -L-

SHEET 2 OF 3

STATE OF NORTH CAROLINA
DEPARTMENT OF TRANSPORTATION
RALEIGH

SUBSTRUCTURE

END BENT 2

(LEFT LANE)

NORTH CAROLINA PROFESSIONAL SEAL 16301 ENGINEER TING HSIUNG FANG

10/6/10

REVISIONS						SHEET NO.
NO.	BY:	DATE:	NO.	BY:	DATE:	S-100
1			3			TOTAL SHEETS
2			4			134

STR. #3

DRAWN BY : HARISH SHAH DATE : 11/08
CHECKED BY : A.R. CHESSON DATE : 2/09

06-OCT-2010 13:47
Y:\TIPProjects-R\R2510c\Structures\r2510c\FinalPlans\STR3\r-2510c_sd_e*_03.dgn
qtnguyen

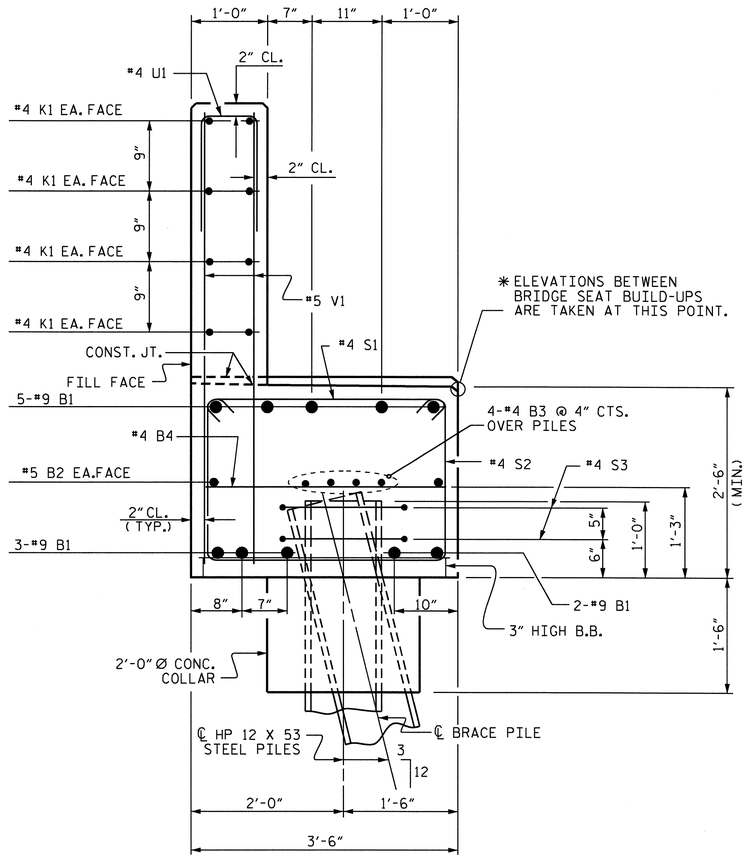

SECTION A-A

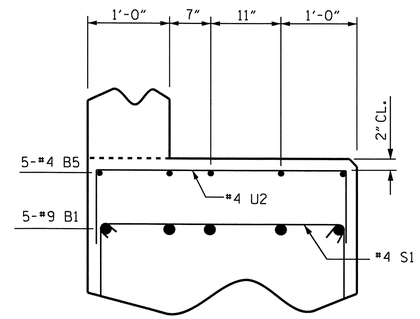

PARTIAL SECTION B-B

#5 V1 BARS NOT SHOWN FOR CLARITY.

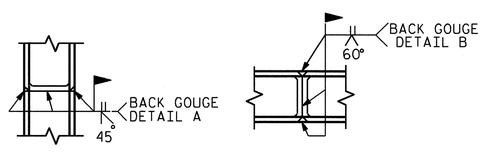

**PILE VERTICAL **PILE HORIZONTAL OR VERTICAL

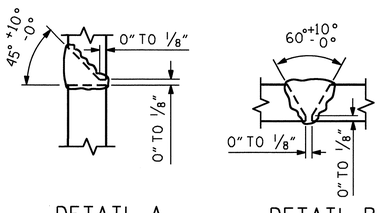

DETAIL A DETAIL B

PILE SPLICE DETAILS

**POSITION OF PILE DURING WELDING.

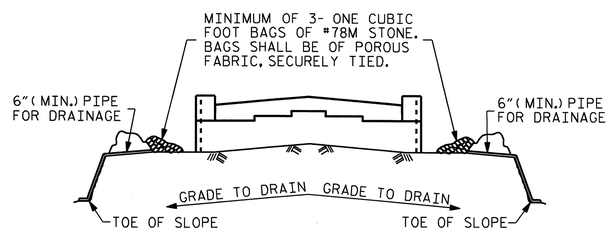

BAGGED STONE AND PIPE SHALL BE PLACED IMMEDIATELY AFTER COMPLETION OF END BENT EXCAVATION. PIPE MAY BE EITHER CONCRETE, CORRUGATED STEEL, CORRUGATED ALUMINUM ALLOY, OR CORRUGATED PLASTIC. PERFORATED PIPE WILL NOT BE ALLOWED.

BAGGED STONE SHALL REMAIN IN PLACE UNTIL THE ENGINEER DIRECTS THAT IT BE REMOVED. THE CONTRACTOR SHALL REMOVE AND DISPOSE OF SILT ACCUMULATIONS AT BAGGED STONE WHEN SO DIRECTED BY THE ENGINEER. BAGS SHALL BE REMOVED AND REPLACED WHENEVER THE ENGINEER DETERMINES THAT THEY HAVE DETERIORATED AND LOST THEIR EFFECTIVENESS.

NO SEPARATE PAYMENT WILL BE MADE FOR THIS WORK AND THE ENTIRE COST OF THIS WORK SHALL BE INCLUDED IN THE UNIT CONTRACT PRICE BID FOR THE SEVERAL PAY ITEMS.

TEMPORARY DRAINAGE AT END BENT

BAR TYPES

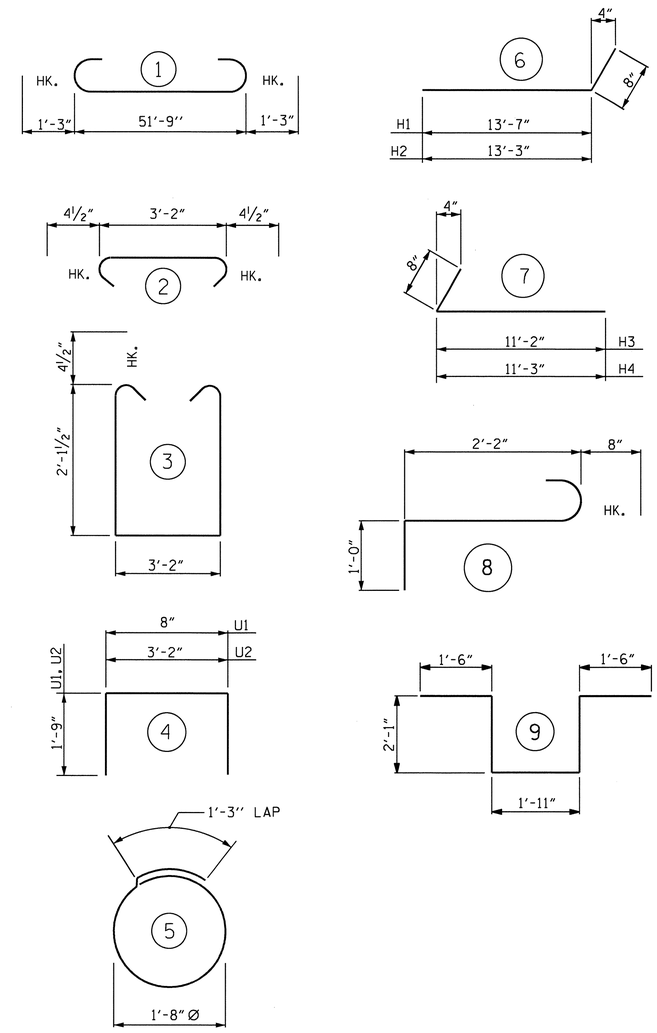

ALL BAR DIMENSIONS ARE OUT TO OUT.

BILL OF MATERIAL

END BENT 2

BAR	NO.	SIZE	TYPE	LENGTH	WEIGHT
B1	10	#9	1	54'-3"	1845
B2	2	#5	STR	51'-9"	108
B3	8	#4	STR	27'-3"	146
B4	13	#4	STR	3'-2"	27
B5	15	#4	STR	2'-5"	24
H1	8	#4	6	14'-3"	76
H2	8	#4	6	13'-11"	74
H3	8	#4	7	11'-10"	63
H4	8	#4	7	11'-11"	64
K1	16	#4	STR	27'-3"	291
K2	4	#4	STR	4'-1"	11
K3	4	#4	STR	4'-2"	11
S1	58	#4	2	3'-11"	152
S2	58	#4	3	8'-2"	316
S3	16	#4	5	6'-6"	69
S4	6	#6	8	3'-10"	35
S5	2	#6	9	9'-1"	27
U1	43	#4	4	4'-2"	120
U2	9	#4	4	6'-8"	40
V1	86	#5	STR	5'-0"	448
V2	36	#4	STR	6'-9"	162
V3	33	#4	STR	6'-10"	152
REINFORCING STEEL					4,262 LBS

CLASS A CONCRETE

POUR 1 (CAP & LOWER WINGS & COLLARS)	22.1	C.Y.
POUR 2 (BACKWALL & UPPER WINGS)	10.7	C.Y.
TOTAL	32.8	C.Y.

HP 12 X 53 STEEL PILES

NUMBER = 10	LIN. FT. =	650
PILE REDRIVES	EACH	4

PROJECT NO. R-2510C

BEAUFORT COUNTY

STATION: 222+51.50 -L-

SHEET 3 OF 3

STATE OF NORTH CAROLINA
DEPARTMENT OF TRANSPORTATION
RALEIGH

SUBSTRUCTURE

END BENT 2

(LEFT LANE)

NORTH CAROLINA PROFESSIONAL SEAL 16301 ENGINEER HSIUNG TING FANG

11/30/10

REVISIONS						SHEET NO.
NO.	BY:	DATE:	NO.	BY:	DATE:	S-101
1			3			TOTAL SHEETS
2			4			134

STR. #3

DRAWN BY : HARISH SHAH DATE : 10/08
CHECKED BY : A.R. CHESSON DATE : 02/09

30-NOV-2010 14:31
W:\Structures\r2510c\Final Plans\STR3\r-2510c_sd_e*_03.dgn
Hshah

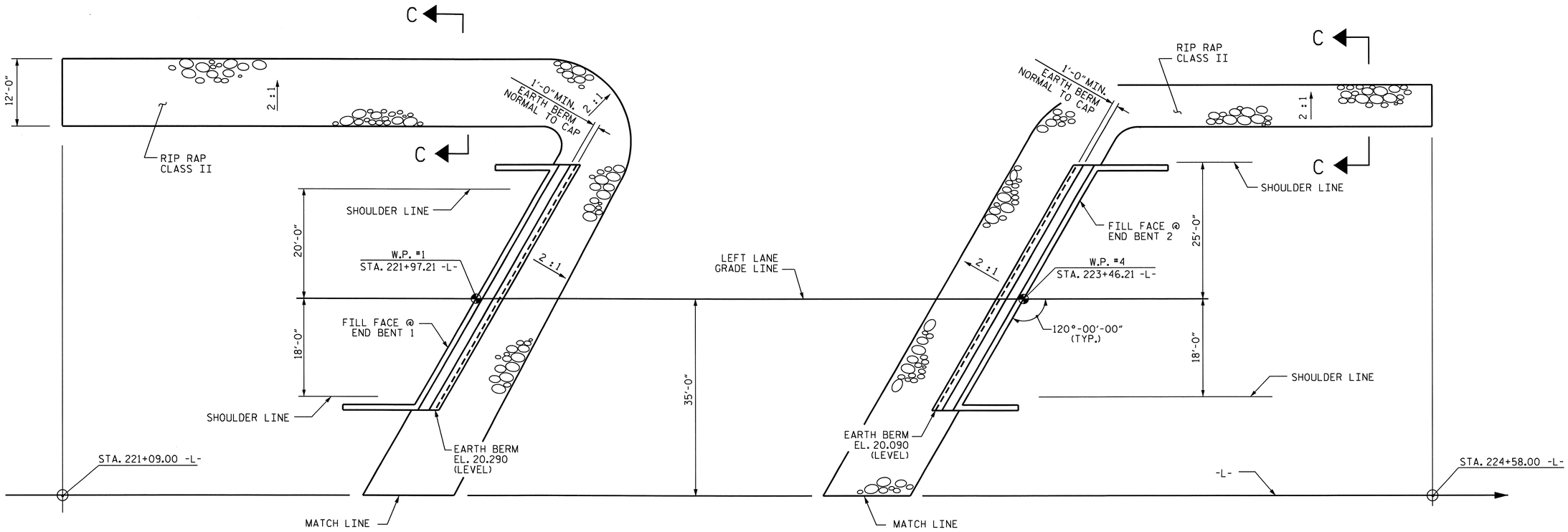

END BENT 1

END BENT 2

PLAN

ESTIMATED QUANTITIES		
BRIDGE @ STA. 222+51.50 -L- (LEFT LANE)	RIP RAP CLASS II (TONS)	FILTER FABRIC FOR DRAINAGE (SQ. YARDS)
END BENT 1	140	155
END BENT 2	165	185
TOTAL	305	340

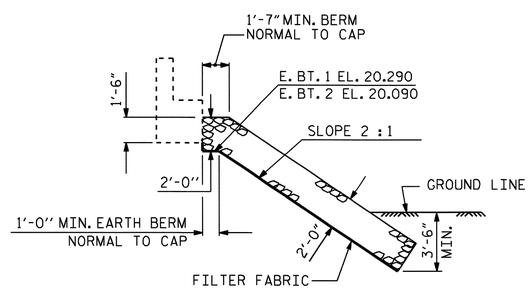

℄ SECTION

BERM RIP RAPPED

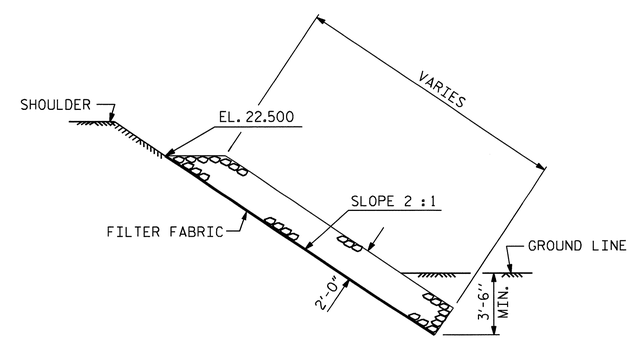

SECTION C-C

PROJECT NO. R-2510C

BEAUFORT COUNTY

STATION: 222+51.50 -L-

STATE OF NORTH CAROLINA
DEPARTMENT OF TRANSPORTATION
RALEIGH

RIP RAP DETAILS

(LEFT LANE)

NORTH CAROLINA PROFESSIONAL SEAL 16301 ENGINEER TING HSIUNG FANG

10/6/10

REVISIONS						SHEET NO.
NO.	BY:	DATE:	NO.	BY:	DATE:	S-102
1			3			TOTAL SHEETS
2			4			134

STR. #3

DRAWN BY : HARISH SHAH DATE : 12/08
CHECKED BY : A.R. CHESSON DATE : 5/09

06-OCT-2010 13:47
Y:\TIPProjects-R\R2510c\Structures\r2510c\Final Plans\STR3\R-2510C_sd_rr_03.dgn
qtnguyen

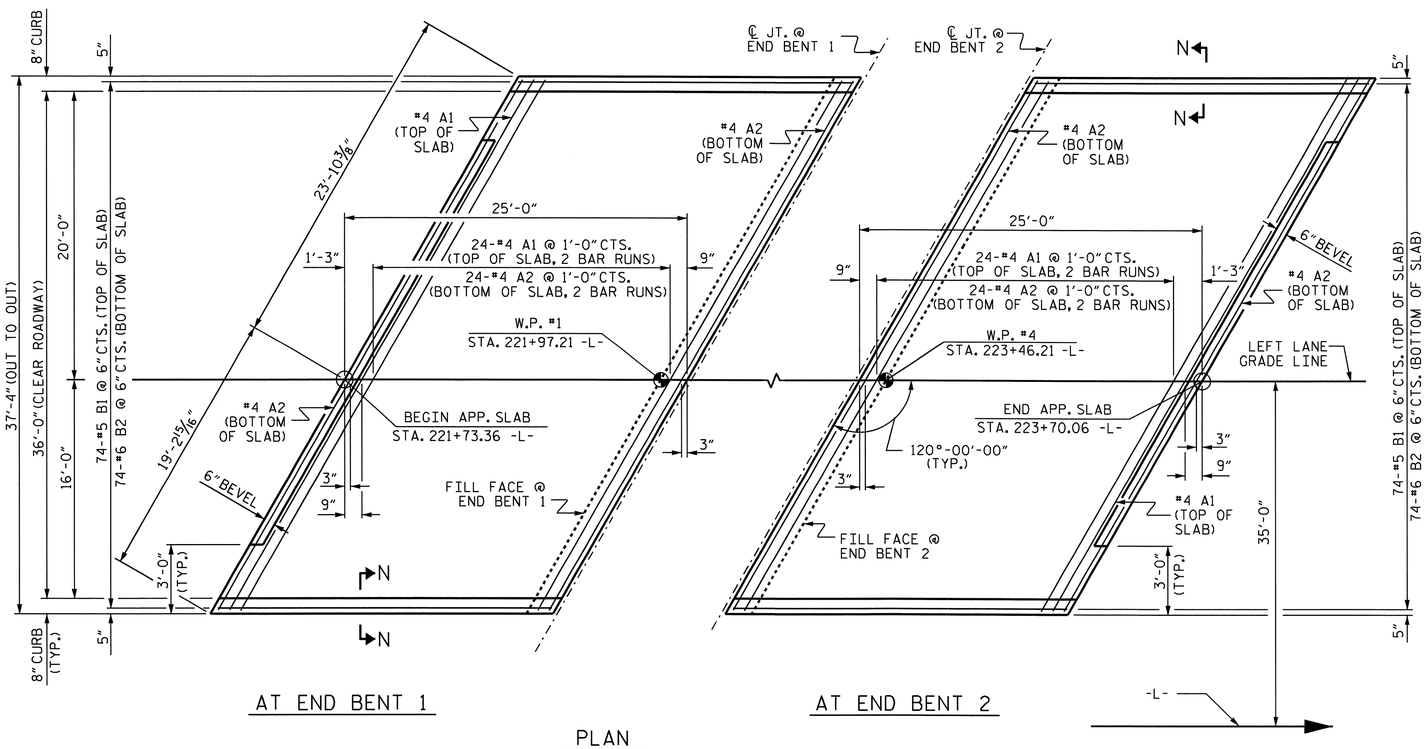

PLAN

DIMENSIONS SHOWN ARE TYPICAL FOR BOTH APPROACH SLABS

NOTES

APPROACH SLAB SHALL NOT BE CONSTRUCTED PRIOR TO COMPLETION OF THE BRIDGE DECK.

FOR REINFORCED BRIDGE APPROACH FILL INCLUDING FABRIC, IMPERMEABLE GEOMEMBRANE, 4" Ø DRAINAGE PIPE, #78M STONE, AND SELECT MATERIAL, SEE ROADWAY PLANS.

AREA BETWEEN THE WINGWALL AND APPROACH SLAB SHALL BE GRADED TO DRAIN THE WATER AWAY FROM THE FILL FACE OF THE BRIDGE AND SHALL BE PAVED. SEE ROADWAY PLANS.

THE 6" COMP. A.B.C. SHALL BE FLUSH WITH THE ROADWAY END OF THE APPROACH SLAB AND SHALL EXTEND 1'-0" OUTSIDE EACH EDGE OF THE APPROACH SLAB.

THE CONTRACTOR MAY USE 4" TYPE B-25.0B ASPHALT CONCRETE BASE COURSE IN LIEU OF 6" COMP. A.B.C. IF THIS OPTION IS USED, THE BASE COURSE SHALL BE FLUSH WITH THE ROADWAY END OF THE APPROACH SLAB, AND THE WIDTH SHALL BE THE SAME AS THAT OF THE APPROACH SLAB.

THE CONTRACTOR MAY USE 5" CLASS "A" CONCRETE BASE IN LIEU OF 6" COMP. A.B.C. IF THIS OPTION IS USED, THE CONCRETE BASE SHALL BE FLUSH WITH THE ROADWAY END OF THE APPROACH SLAB, AND THE WIDTH SHALL BE THE SAME AS THAT OF THE APPROACH SLAB. THE CONCRETE SHALL BE FINISHED TO A SMOOTH SURFACE AND A LAYER OF 30 LB ROOFING FELT SHALL BE PLACED BETWEEN THE CONCRETE BASE AND THE APPROACH SLAB TO PREVENT BOND. THE APPROACH SLAB SHALL NOT BE CAST UNTIL THE CONCRETE BASE HAS REACHED AN AGE OF THREE CURING DAYS.

FOR ARMORED EVAZOTE JOINT SEALS, SEE SPECIAL PROVISIONS.

THE NOMINAL UNCOMPRESSED SEAL WIDTH OF THE EVAZOTE JOINT SEAL SHALL BE 2½" @ END BENT 1 AND END BENT 2.

FOR ELASTOMERIC CONCRETE, SEE SPECIAL PROVISIONS.

BILL OF MATERIAL

FOR ONE APPROACH SLAB (2 REQ'D.)

BAR	NO.	SIZE	TYPE	LENGTH	WEIGHT
* A1	50	#4	STR	22'-4"	746
A2	52	#4	STR	22'-3"	773
* B1	74	#5	STR	23'-5"	1807
B2	74	#6	STR	24'-7"	2732
REINFORCING STEEL				LBS.	3,505
* EPOXY COATED REINFORCING STEEL				LBS.	2,553
CLASS AA CONCRETE				C. Y.	35.3

SPLICE CHART	
#4 A1	2'-0"
#4 A2	1'-9"

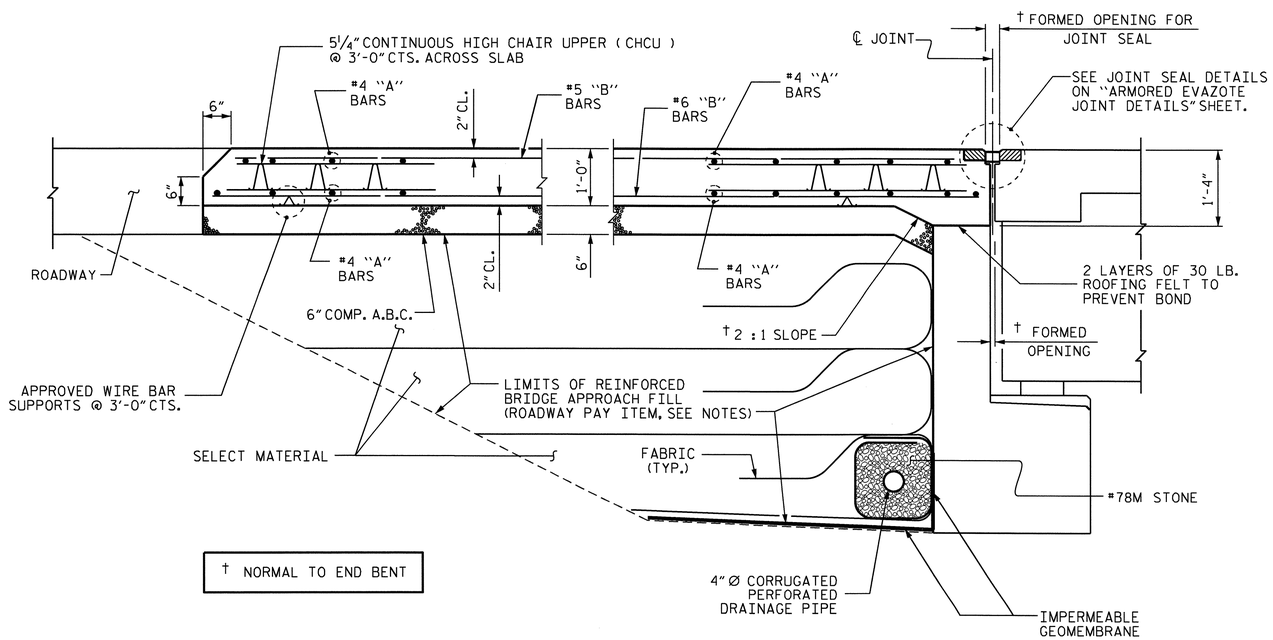

† NORMAL TO END BENT

SECTION THRU SLAB

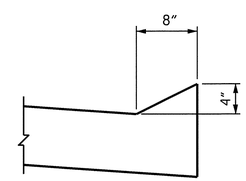

SECTION N-N

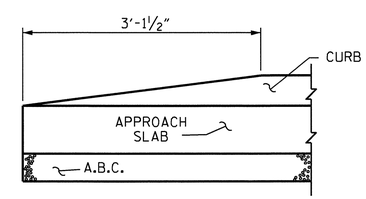

END OF CURB WITHOUT SHOULDER BERM GUTTER

CURB DETAILS

NORTH CAROLINA PROFESSIONAL SEAL 16301 ENGINEER TING HSING FANG

10/8/10

PROJECT NO. R-2510C

BEAUFORT COUNTY

STATION: 222+51.50 -L-

SHEET 1 OF 2

STATE OF NORTH CAROLINA
DEPARTMENT OF TRANSPORTATION
RALEIGH

STANDARD

BRIDGE APPROACH SLAB FOR FLEXIBLE PAVEMENT

(LEFT LANE)

REVISIONS						SHEET NO.
NO.	BY:	DATE:	NO.	BY:	DATE:	S-103
1			3			TOTAL SHEETS
2			4			134

ASSEMBLED BY : HARISH SHAH	DATE : 12/08		
CHECKED BY : A.R. CHESSON	DATE : 5/09		
DRAWN BY : EEM 3/95	REV. 7/10/01	LES/RDR	
CHECKED BY : VAP 3/95	REV. 5/7/03R	RWW/JTE	
	REV. 5/1/06R	KMM/GM	

08-OCT-2010 10:29
H:\R2510c\Structures\r2510c\Final Plans\STR3\R-2510C_sd_as_03.dgn
ttfang

STR. #3

STD. NO. BAS4 (SHT 5)

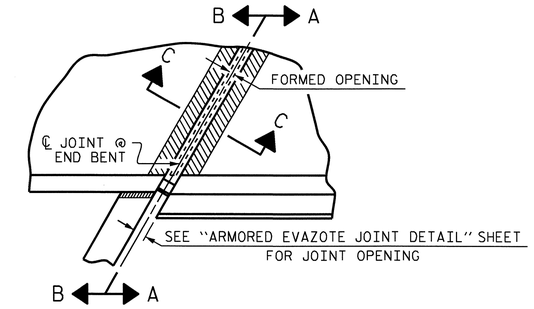

PLAN

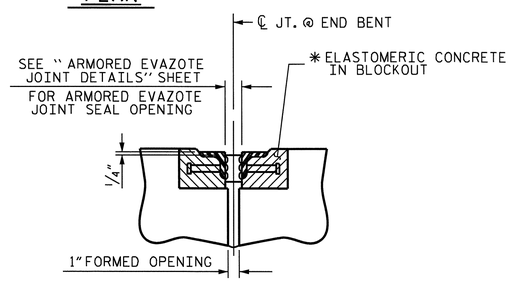

SECTION C-C

ARMORED EVAZOTE JOINT SEAL

* FOR QUANTITIES OF ELASTOMERIC CONCRETE IN BLOCKOUT SEE "ARMORED EVAZOTE JOINT DETAILS" SHEET.

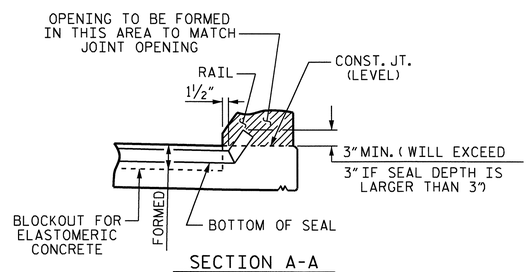

SECTION A-A

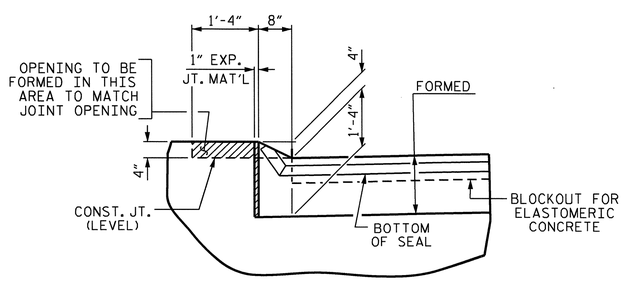

SECTION B-B

JOINT SEAL DETAILS @ END BENT

EVAZOTE JOINT SEAL TO BE CUT, HEAT WELDED AND TURNED UP PARALLEL TO SLOPED FACE OF THE BARRIER RAIL.

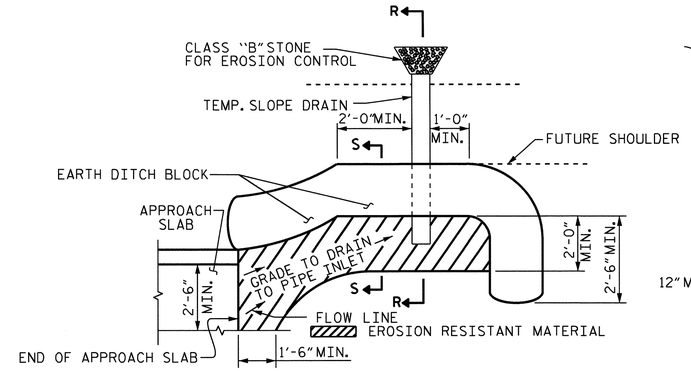

NOTE: IMMEDIATELY AFTER THE CONSTRUCTION OF THE APPROACH SLAB, THE CONTRACTOR SHALL PROVIDE TEMPORARY BERM AND SLOPE DRAIN. CONTRACTOR SHALL GRADE TO PIPE INLET AND PROVIDE EROSION RESISTANT MATERIAL AS SHOWN. THE EROSION RESISTANT MATERIAL SHALL BE EITHER 1) ASPHALT PLANT MIX, TYPE 1 OR TYPE 2, MIN. 2" DEPTH, 2) EROSION CONTROL MAT, OR 3) CONCRETE, AS DIRECTED BY THE ENGINEER. THE SLOPE DRAIN SHALL CONSIST OF A NON-PERFORATED TEMPORARY DRAINAGE PIPE, 12 INCHES IN DIAMETER.

PLAN VIEW

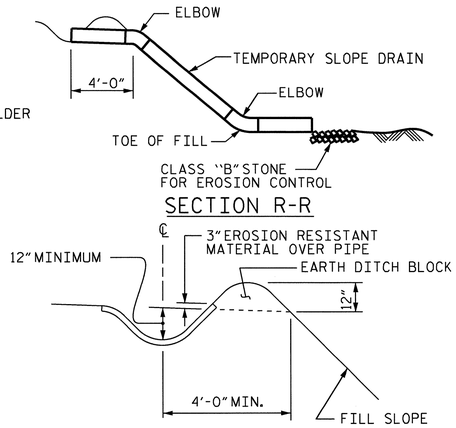

SECTION R-R

SECTION S-S

TEMPORARY BERM AND SLOPE DRAIN DETAILS

(TO BE USED WHEN SHOULDER BERM GUTTER IS REQUIRED)

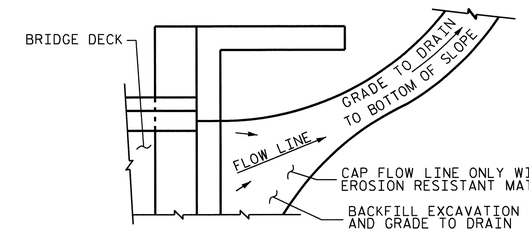

NOTE: IF THE APPROACH SLAB IS NOT CONSTRUCTED IMMEDIATELY AFTER THE BACKFILLING OF THE END BENT EXCAVATION, GRADE TO DRAIN TO THE BOTTOM OF THE SLOPE AND PROVIDE EROSION RESISTANT MATERIAL, SUCH AS FIBERGLASS ROVING OR AS DIRECTED BY THE ENGINEER TO PREVENT SOIL EROSION AND TO PROTECT THE AREA ADJACENT TO THE STRUCTURE. THE CONTRACTOR WILL BE REQUIRED TO REMOVE THESE MATERIALS PRIOR TO CONSTRUCTION OF THE APPROACH SLAB.

TEMPORARY DRAINAGE DETAIL

PROJECT NO. R-2510C

BEAUFORT COUNTY

STATION: 222+51.50 -L-

SHEET 2 OF 2

NORTH CAROLINA PROFESSIONAL SEAL 16301 ENGINEER TING-HSIUNG FANG

10/6/10

STATE OF NORTH CAROLINA
DEPARTMENT OF TRANSPORTATION
RALEIGH

STANDARD

BRIDGE APPROACH SLAB DETAILS

(LEFT LANE)

REVISIONS						SHEET NO.
NO.	BY:	DATE:	NO.	BY:	DATE:	S-104
1			3			TOTAL SHEETS
2			4			134

ASSEMBLED BY :	HARISH SHAH	DATE :	12/08
CHECKED BY :	A.R. CHESSON	DATE :	05/09
DRAWN BY : FCJ	11/88	REV. 10/17/00	RWW/LES
CHECKED BY : ARB	11/88	REV. 5/7/03	RWW/JTE
		REV. 5/1/06R	MAA/KMM

06-OCT-2010 13:47
Y:\TIPProjects-R\R2510c\Structures\r2510c\FinalPlans\STR3\R-2510C_sd_AS_03.dgn
qtnguyen

STR. #3 STD. NO. BAS10 (SHT 1)

F.A. PROJECT NO. NHF-0017(87)

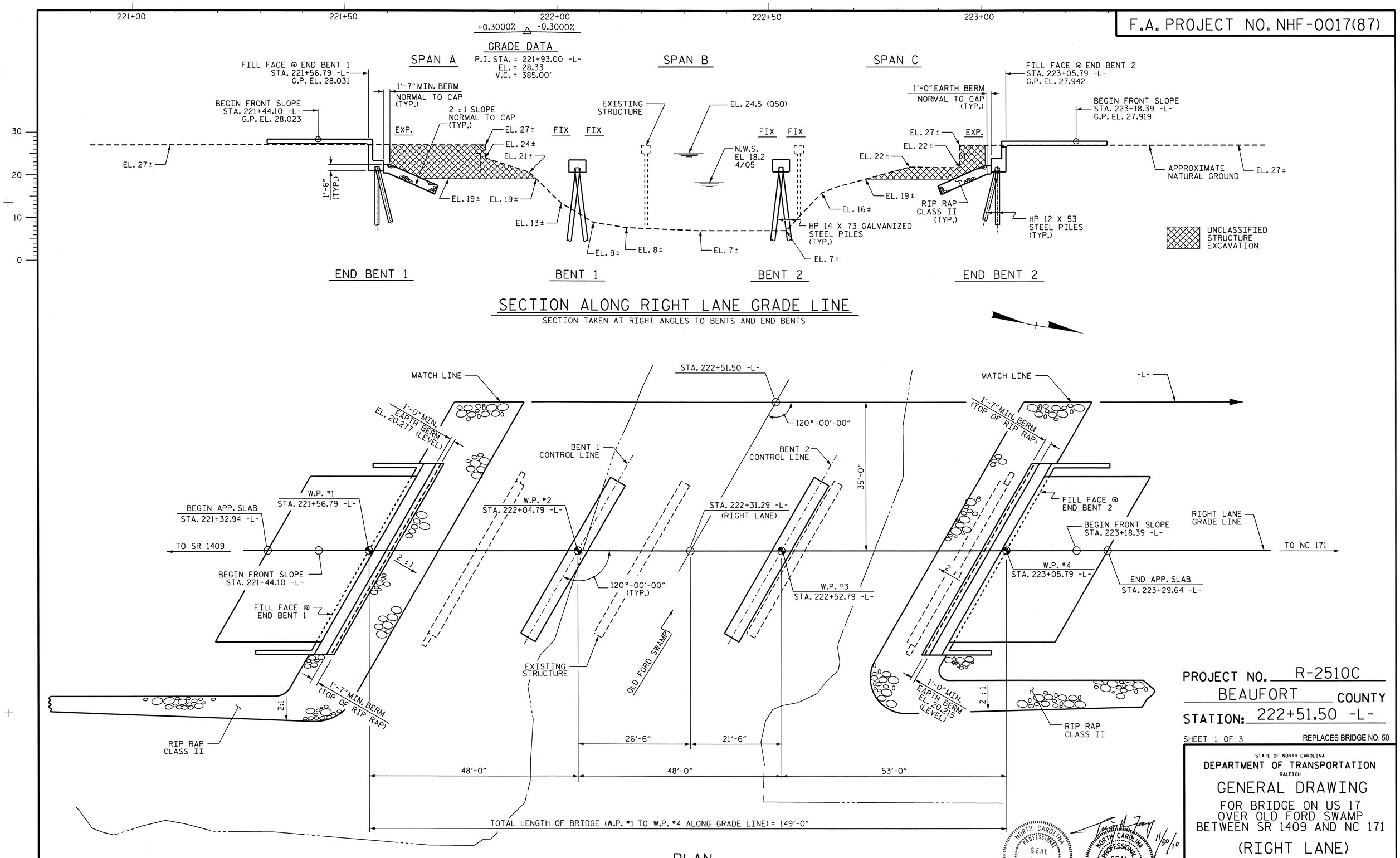

PROJECT NO. R-2510C

BEAUFORT COUNTY

STATION: 222+51.50 -L-

SHEET 1 OF 3 REPLACES BRIDGE NO. 50

STATE OF NORTH CAROLINA
DEPARTMENT OF TRANSPORTATION
RALEIGH

GENERAL DRAWING
FOR BRIDGE ON US 17
OVER OLD FORD SWAMP
BETWEEN SR 1409 AND NC 171
(RIGHT LANE)

REVISIONS						SHEET NO.
NO.	BY:	DATE:	NO.	BY:	DATE:	S-105
1			3			TOTAL SHEETS
2			4			134

NORTH CAROLINA PROFESSIONAL SEAL 11915 ENGINEER JOHN C. MAYE 12/7/10

NORTH CAROLINA PROFESSIONAL SEAL 16301 ENGINEER TING HSIUNG FANG 11/30/10

DRAWN BY : HARISH SHAH DATE : 9/08
CHECKED BY : O.T. NGUYEN DATE : 6/09

30-NOV-2010 14:54
W:\Structures\r2510c\FinalPlans\STR4\r-2510c_sd_gd_04.dgn
Hshah

STR. #4

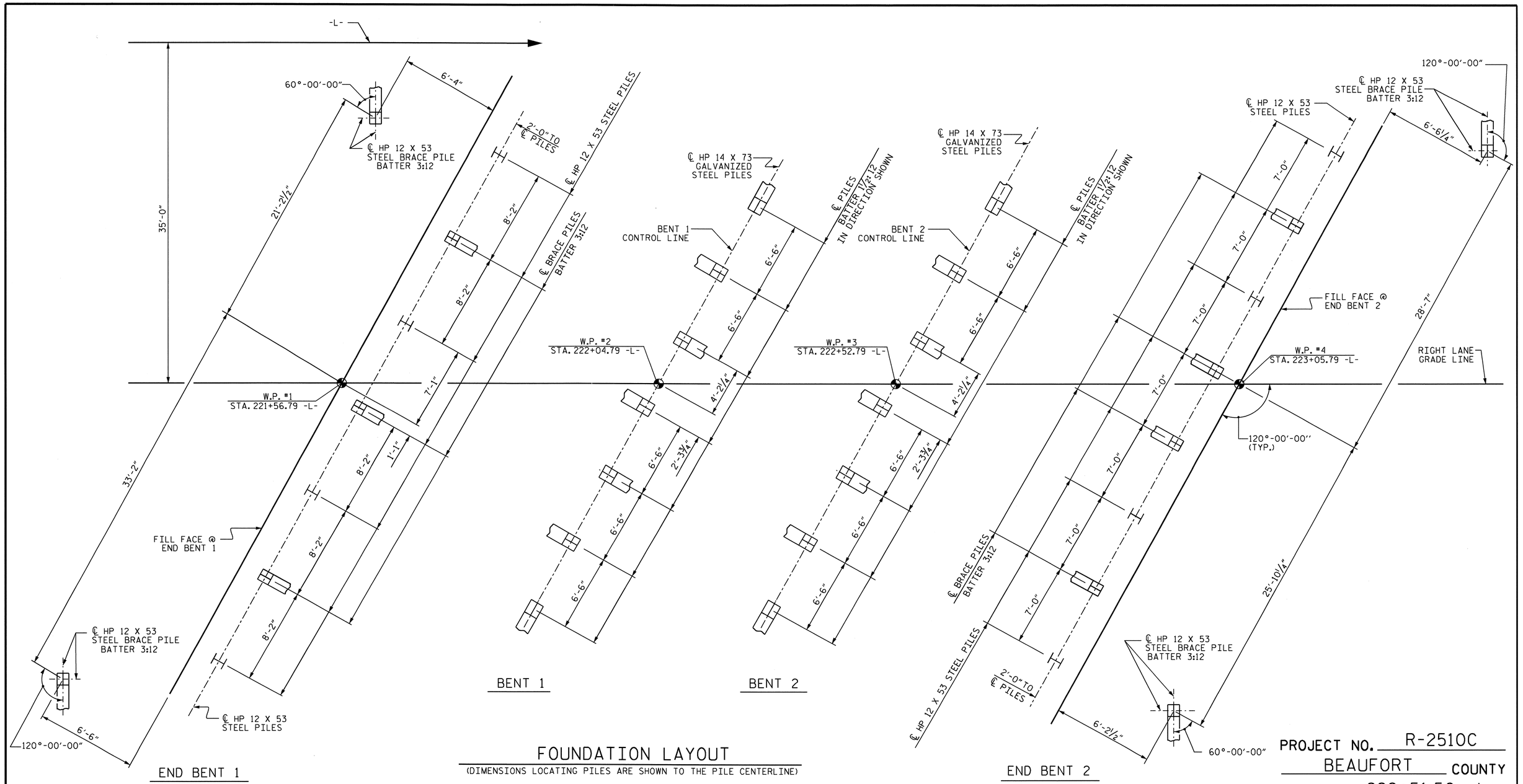

FOUNDATION LAYOUT

(DIMENSIONS LOCATING PILES ARE SHOWN TO THE PILE CENTERLINE)

PROJECT NO. R-2510C

BEAUFORT COUNTY

STATION: 222+51.50 -L-

SHEET 2 OF 3

NOTES:

DRIVE PILES AT END BENTS 1 AND 2 TO A REQUIRED BEARING CAPACITY OF 120 TONS PER PILE. THE REQUIRED BEARING CAPACITY IS EQUAL TO THE ALLOWABLE BEARING CAPACITY WITH A MINIMUM FACTOR OF SAFETY OF TWO.

THE ALLOWABLE BEARING CAPACITY FOR PILES AT END BENTS 1 AND 2 IS 60 TONS PER PILE.

DRIVE PILES AT BENT 1 TO A REQUIRED BEARING CAPACITY OF 165 TONS PER PILE. THE REQUIRED BEARING CAPACITY IS EQUAL TO THE ALLOWABLE BEARING CAPACITY WITH A MINIMUM FACTOR OF SAFETY OF TWO PLUS ANY ADDITIONAL CAPACITY TO ACCOUNT FOR DOWNDRAG OR NEGATIVE SKIN FRICTION OR SCOUR.

DRIVE PILES AT BENT 2 TO A REQUIRED BEARING CAPACITY OF 170 TONS PER PILE. THE REQUIRED BEARING CAPACITY IS EQUAL TO THE ALLOWABLE BEARING CAPACITY WITH A MINIMUM FACTOR OF SAFETY OF TWO PLUS ANY ADDITIONAL CAPACITY TO ACCOUNT FOR DOWNDRAG OR NEGATIVE SKIN FRICTION OR SCOUR.

THE ALLOWABLE BEARING CAPACITY FOR PILES AT BENTS 1 AND 2 IS 75 TONS PER PILE.

INSTALL PILES AT BENT 1 TO A TIP ELEVATION NO HIGHER THAN -30 FT.

INSTALL PILES AT BENT 2 TO A TIP ELEVATION NO HIGHER THAN -23 FT.

THE SCOUR CRITICAL ELEVATION FOR BENT 1 IS 1 FT AND BENT 2 IS -3 FT. THE SCOUR CRITICAL ELEVATIONS ARE USED TO MONITOR POSSIBLE SCOUR PROBLEMS DURING THE LIFE OF THE STRUCTURE.

TESTING PILES WITH THE PILE DRIVING ANALYZER (PDA) FOR LRFD MAY BE REQUIRED AT BENT 1 OR BENT 2. SEE PILE DRIVING ANALYZER FOR LRFD SPECIAL PROVISION.

FOR PILES, SEE SPECIAL PROVISIONS.

NORTH CAROLINA PROFESSIONAL SEAL 16301 ENGINEER TING-HSIUNG FANG

12/1/10

DRAWN BY : HARISH SHAH DATE : 9/08

CHECKED BY : Q.T. NGUYEN DATE : 6/09

30-NOV-2010 15:10
W:\Structures\r2510c\Final Plans\STR4\r-2510c_sd_gd_04.dgn
Hshah

STATE OF NORTH CAROLINA
DEPARTMENT OF TRANSPORTATION
RALEIGH

GENERAL DRAWING

BRIDGE ON US 17
OVER OLD FORD SWAMP
BETWEEN SR 1409 AND NC 171

(RIGHT LANE)

REVISIONS						SHEET NO.
NO.	BY:	DATE:	NO.	BY:	DATE:	S-106
1			3			TOTAL SHEETS
2			4			134

STR. #4

BENCH MARK: #7 RR SPIKE IN 24" JUNIPER TREE, -L- STA 223+43.46, LEFT 88.08', EL. 22.96

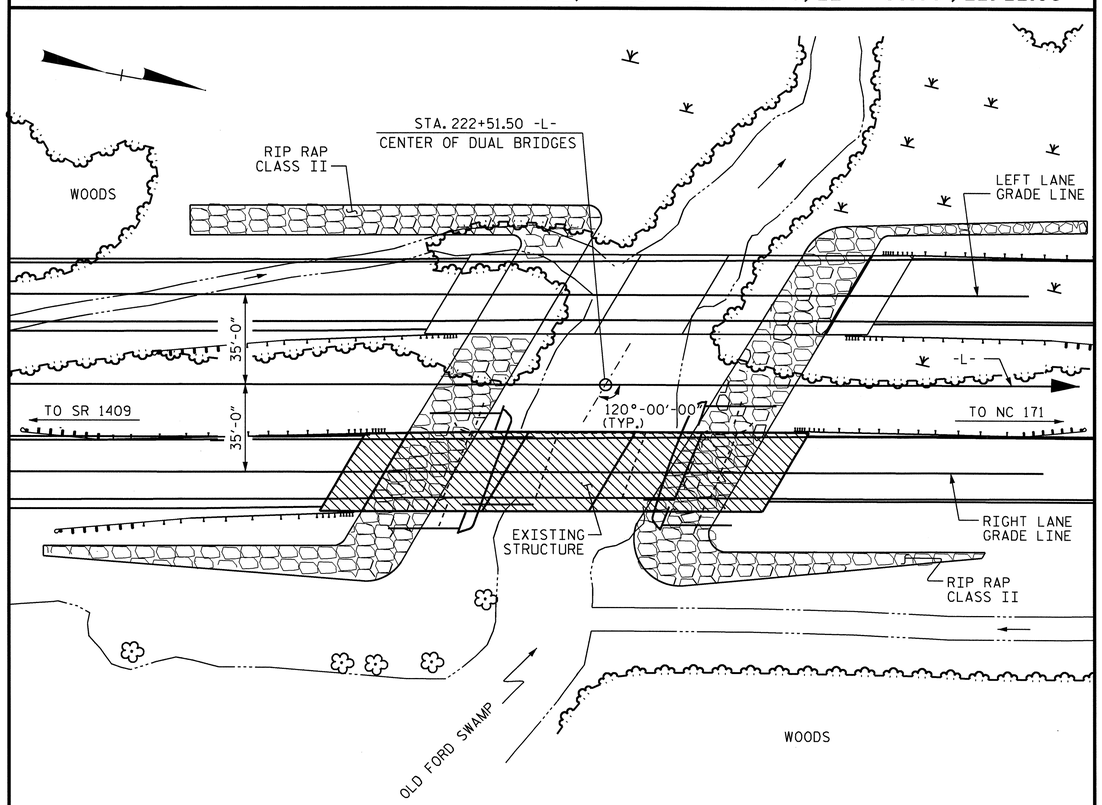

FOR UTILITY INFORMATION, SEE UTILITY PLANS AND SPECIAL PROVISIONS.

LOCATION SKETCH

HYDRAULIC DATA

DESIGN DISCHARGE	=	2,300 C.F.S.
FREQUENCY OF DESIGN FLOOD	=	50 YRS.
DESIGN HIGH WATER ELEVATION	=	24.5 FT.
DRAINAGE AREA	=	23.3 SQ. MI.
BASIC DISCHARGE (Q100)	=	2,856 C.F.S.
BASIC HIGH WATER ELEVATION	=	25.2 FT.

OVERTOPPING FLOOD DATA

OVERTOPPING DISCHARGE	=	6,550 C.F.S.
FREQUENCY OF OVERTOPPING FLOOD	=	500 YRS.+
OVERTOPPING FLOOD ELEVATION	=	27.4 FT.

NOTES

ASSUMED LIVE LOAD = HS20 OR ALTERNATE LOADING, EXCEPT THAT THE GIRDERS HAVE BEEN DESIGNED FOR HS25.

FOR OTHER DESIGN DATA AND GENERAL NOTES, SEE SHEET SN.

FOR EROSION CONTROL MEASURES, SEE EROSION CONTROL PLANS.

THIS BRIDGE HAS BEEN DESIGNED IN ACCORDANCE WITH THE REQUIREMENTS OF THE STANDARD SPECIFICATIONS FOR SEISMIC DESIGN OF HIGHWAY BRIDGES FOR SEISMIC PERFORMANCE CATEGORY A.

THIS STRUCTURE HAS BEEN DESIGNED IN ACCORDANCE WITH HEC 18, "EVALUATING SCOUR AT BRIDGES", MAY, 2001.

THIS BRIDGE HAS BEEN DESIGNED BY THE STRENGTH DESIGN METHOD AS SPECIFIED IN AASHTO STANDARD SPECIFICATIONS.

THE CONTRACTOR SHALL PROVIDE INDEPENDENT ASSURANCE SAMPLES OF REINFORCING STEEL AS FOLLOWS: FOR PROJECTS REQUIRING UP TO 400 TONS OF REINFORCING STEEL, ONE 30 INCH SAMPLE OF EACH SIZE BAR USED, AND FOR PROJECTS REQUIRING OVER 400 TONS OF REINFORCING STEEL, TWO 30 INCH SAMPLES OF EACH SIZE BAR USED. THE BARS FROM WHICH THE SAMPLES ARE TAKEN MUST THEN BE SPLICED WITH REPLACEMENT BARS OF THE SIZE AND LENGTH OF THE SAMPLE, PLUS A MINIMUM LAP SPLICE OF THIRTY BAR DIAMETERS.

REMOVABLE FORMS MAY BE USED IN LIEU OF METAL STAY-IN-PLACE FORMS IN ACCORDANCE WITH ARTICLE 420-3 OF THE STANDARD SPECIFICATIONS.

AFTER SERVING AS A TEMPORARY STRUCTURE, THE EXISTING STRUCTURE CONSISTS OF 4 18X25 REINFORCED CONCRETE DECK GIRDERS @ 8'-0" CENTERS IN 3 SPANS @ 37'-6" WITH ASPHALT WEARING SURFACE, WITH A CLEARROADWAY WIDTH OF 28'-2". THE SUBSTRUCTURE; END BENTS: RC CAP ON TIMBER PILES, INTERIOR BENTS: RCP&B WITH PILE FOOTINGS AND LOCATED AT THE SITE OF PROPOSED STRUCTURE SHALL BE REMOVED. THE EXISTING BRIDGE IS PRESENTLY NOT POSTED FOR LOAD LIMIT. SHOULD THE STRUCTURAL INTEGRITY OF THE BRIDGE DETERIORATE A LOAD LIMIT MAY BE POSTED AND MAY BE REDUCED AS FOUND NECESSARY DURING THE LIFE OF THE PROJECT.

REMOVAL OF THE EXISTING BRIDGE SHALL BE PERFORMED SO AS NOT TO ALLOW DEBRIS TO FALL INTO THE WATER. THE CONTRACTOR SHALL REMOVE THE BRIDGE AND SUBMIT PLANS FOR DEMOLITION IN ACCORDANCE WITH ARTICLE 402-2 OF THE STANDARD SPECIFICATIONS.

THE SUBSTRUCTURE OF THE EXISTING BRIDGE INDICATED ON THE PLANS IS FROM THE BEST INFORMATION AVAILABLE. SINCE THIS INFORMATION IS SHOWN FOR THE CONVENIENCE OF THE CONTRACTOR, THE CONTRACTOR SHALL HAVE NO CLAIM WHATSOEVER AGAINST THE DEPARTMENT OF TRANSPORTATION FOR ANY DELAYS OR ADDITIONAL COST INCURRED BASED ON DIFFERENCES BETWEEN THE EXISTING BRIDGE SUBSTRUCTURE SHOWN ON THE PLANS AND THE ACTUAL CONDITIONS AT THE PROJECT SITE.

THE MATERIAL SHOWN IN THE CROSS-HATCHED AREA AT END BENTS 1 & 2 SHALL BE EXCAVATED FOR A DISTANCE OF 70 FT. RIGHT OF CENTERLINE ROADWAY AS DIRECTED BY THE ENGINEER. THIS WORK WILL BE PAID FOR AT THE CONTRACT LUMP SUM PRICE FOR UNCLASSIFIED STRUCTURE EXCAVATION. SEE SECTION 412 OF THE STANDARD SPECIFICATIONS.

FOR INTERIOR BENTS, PARTIAL GALVANIZING OF PILES IS REQUIRED. SEE BENT SHEETS FOR DETAILS.

NEEDLE BEAMS WILL NOT BE ALLOWED UNLESS OTHERWISE CALLED FOR ON THE PLANS OR APPROVED BY THE ENGINEER.

FOR SUBMITTAL OF WORKING DRAWINGS, SEE SPECIAL PROVISIONS.

FOR FALSEWORK AND FORMWORK, SEE SPECIAL PROVISIONS.

FOR CRANE SAFETY, SEE SPECIAL PROVISIONS.

FOR GROUT FOR STRUCTURES, SEE SPECIAL PROVISIONS.

FOR PRESTRESSED CONCRETE MEMBERS, SEE SPECIAL PROVISIONS.

FOR CURING CONCRETE, SEE SPECIAL PROVISIONS.

FOR PLACING LOAD ON STRUCTURE MEMBERS, SEE SPECIAL PROVISIONS.

NORTH CAROLINA PROFESSIONAL SEAL 16301 ENGINEER YSHONG CHANG

12/1/10

TOTAL BILL OF MATERIAL

	REMOVAL OF EXISTING STRUCTURE	PDA ASSISTANCE	UNCLASSIFIED STRUCTURE EXCAVATION	REINFORCED CONCRETE DECK SLAB	GROOVING BRIDGE FLOORS	CLASS A CONCRETE	BRIDGE APPROACH SLABS	REINFORCING STEEL	36" PRESTRESSED CONCRETE GIRDERS		HP 12 X 53 STEEL PILES		HP 14 X 73 GALVANIZED STEEL PILES		PILE REDRIVES	CONCRETE BARRIER RAIL	RIP RAP CLASS II (2'-0" THICK)	FILTER FABRIC FOR DRAINAGE	ELASTOMERIC BEARINGS	EVAZOTE JOINT SEALS
	LUMP SUM	EACH	LUMP SUM	SQ.FT.	SQ.FT.	CU.YDS.	LUMP SUM	LBS.	NO.	LIN. FT.	NO.	LIN. FT.	NO.	LIN. FT.	EACH	LIN. FT.	TON	SQ. YD.	LUMP SUM	LUMP SUM
SUPERSTRUCTURE				5,754	6,342				15	716.40						293.19				
END BENT 1						32.1		4,254			9	585			4		160	175		
BENT 1						20.0		2,922					7	490	2					
BENT 2						20.0		2,922					7	630	2					
END BENT 2						32.4		4,259			10	600			4		135	150		
TOTAL	LUMP SUM	1	LUMP SUM	5,754	6,342	104.5	LUMP SUM	14,357	15	716.40	19	1,185	14	1120	12	293.19	295	325	LUMP SUM	LUMP SUM

PROJECT NO. R-2510C
BEAUFORT COUNTY
STATION: 222+51.50 -L-

SHEET 3 OF 3

STATE OF NORTH CAROLINA
DEPARTMENT OF TRANSPORTATION
RALEIGH

GENERAL DRAWING
FOR BRIDGE ON US 17
OVER OLD FORD SWAMP
BETWEEN SR 1409 AND NC 171
(RIGHT LANE)

REVISIONS						SHEET NO.
NO.	BY:	DATE:	NO.	BY:	DATE:	S-107
1			3			TOTAL SHEETS
2			4			134

DRAWN BY : HARISH SHAH DATE : 9/08
CHECKED BY : O.T. NGUYEN DATE : 6/09

30-NOV-2010 14:55
W:\Structures\r2510c\Final Plans\STR4\r-2510c_sd_gd_04.dgn
Hshah

STR. #4

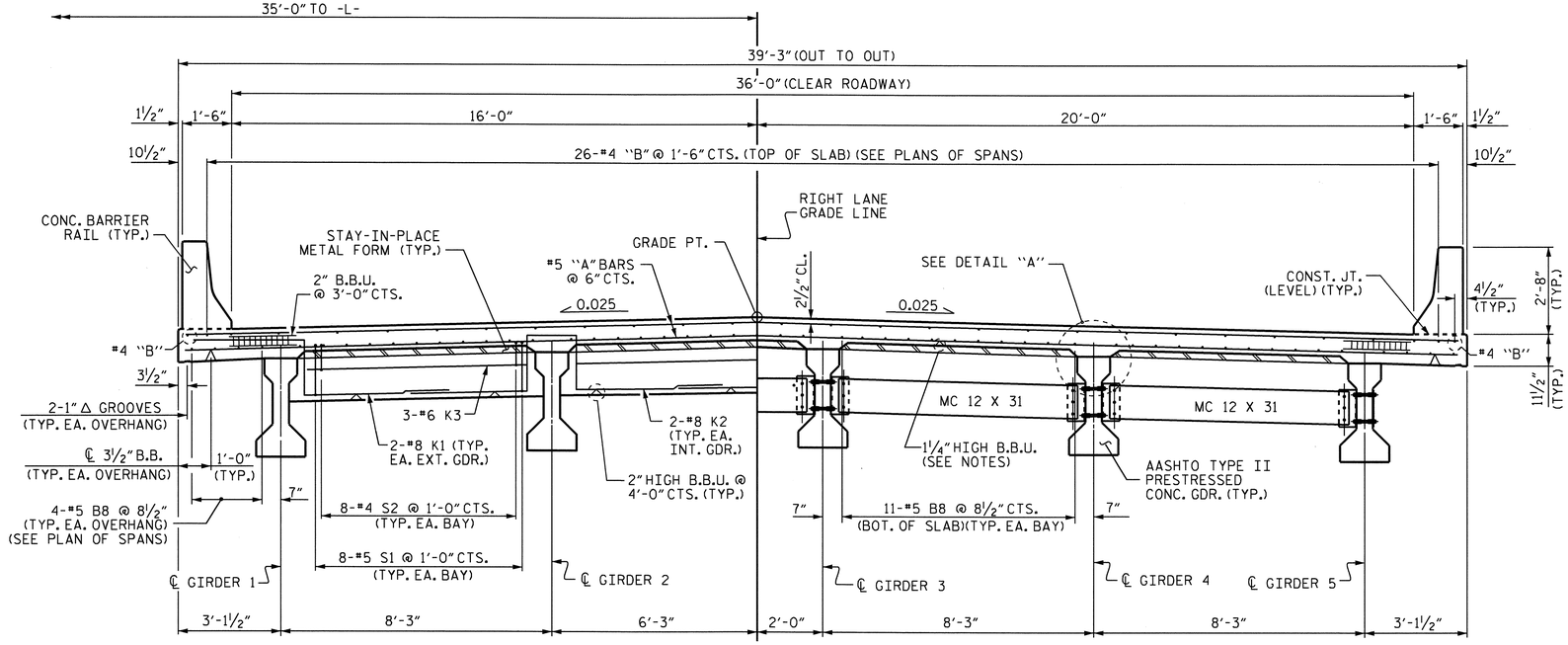

HALF TYPICAL SECTION

SHOWING END BENT DIAPHRAGMS

HALF TYPICAL SECTION

SHOWING INTERMEDIATE DIAPHRAGMS

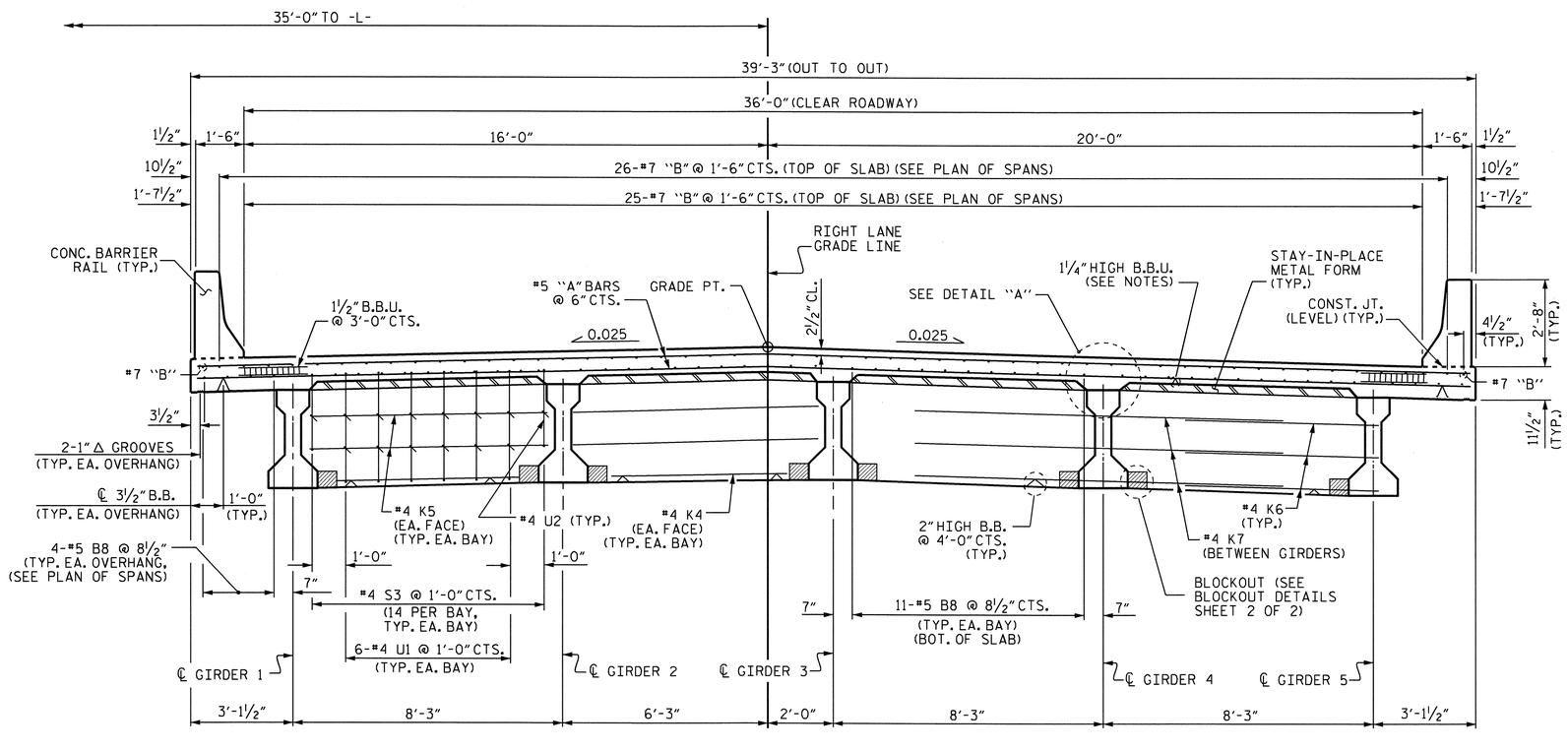

TYPICAL SECTION

SHOWING BENT DIAPHRAGMS

NOTES

PROVIDE 1¼" HIGH BEAM BOLSTERS UPPER AT 4'-0" CTS. ATOP THE METAL STAY-IN-PLACE FORMS TO SUPPORT THE BOTTOM MAT OF "A" BARS. WHEN USING REMOVABLE FORMS, PROVIDE CONTINUOUS HIGH CHAIRS FOR METAL DECK (C.H.C.M.) @ 4'-0" CTS. WITH A HEIGHT TO SUPPORT THE BOTTOM MAT OF "A" BARS A CLEAR DISTANCE OF 2½" ABOVE THE TOP OF THE REMOVABLE FORM.

LONGITUDINAL STEEL MAY BE SHIFTED SLIGHTLY, AS NECESSARY, TO AVOID INTERFERENCE WITH STIRRUPS IN PRESTRESSED CONCRETE GIRDERS.

PREVIOUSLY CAST CONCRETE IN A CONTINUOUS UNIT SHALL HAVE ATTAINED A MINIMUM COMPRESSIVE STRENGTH OF 3,000 PSI BEFORE ADDITIONAL CONCRETE IS CAST IN THE UNIT.

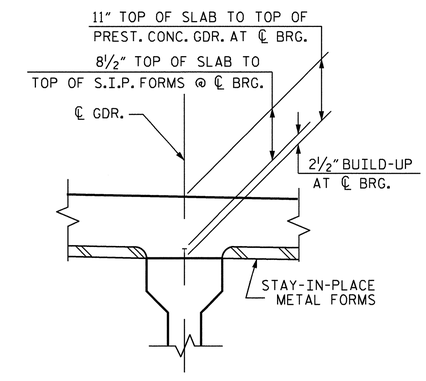

DETAIL "A"

PROJECT NO. R-2510C

BEAUFORT COUNTY

STATION: 222+51.50 -L-

SHEET 1 OF 2

STATE OF NORTH CAROLINA
DEPARTMENT OF TRANSPORTATION
RALEIGH

SUPERSTRUCTURE

TYPICAL SECTION

(RIGHT LANE)

NORTH CAROLINA PROFESSIONAL SEAL 16301 ENGINEER TING HSIUNG SHANG
12/1/10

REVISIONS								SHEET NO.
NO.	BY:	DATE:	NO.	BY:	DATE:			S-108
1			3					TOTAL SHEETS
2			4					134

DRAWN BY : HARISH SHAH DATE : 8/08

CHECKED BY : A.R. CHESSON DATE : 12/08

30-NOV-2010 14:55
R:\Structures\r2510c\FinalPlans\STR4\r-2510c_sd_ts_04.dgn
Hahsh

STR. #4

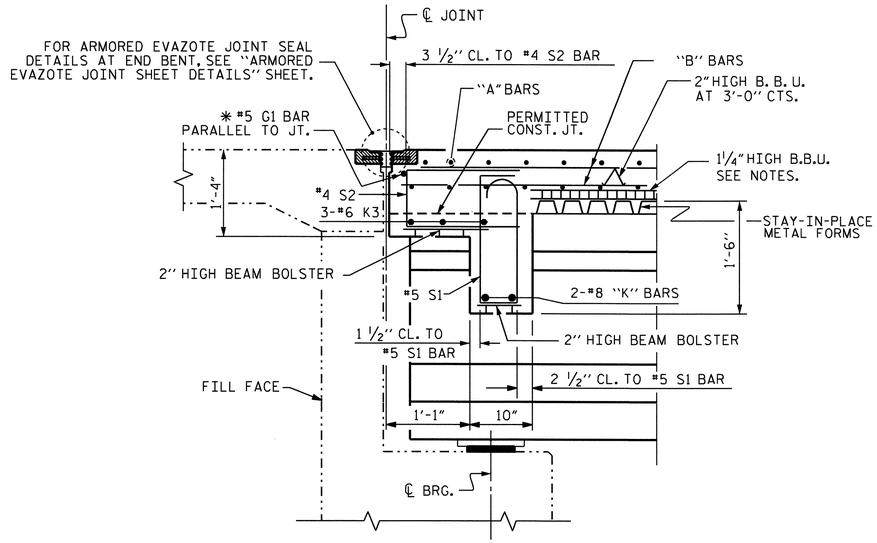

SECTION THRU END BENT DIAPHRAGMS

✱ #5 G1 BAR MAY BE SHIFTED SLIGHTLY AS NECESSARY TO CLEAR REINFORCING STEEL AND STIRRUPS.

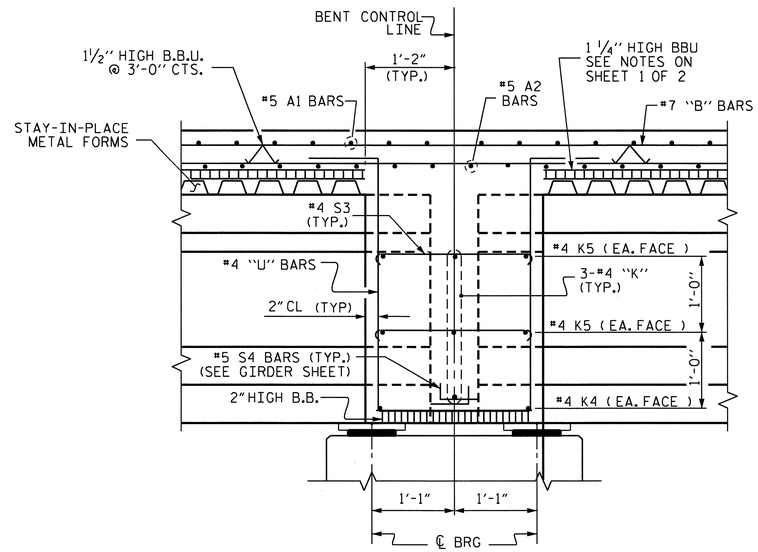

SECTION THRU BENT DIAPHRAGMS

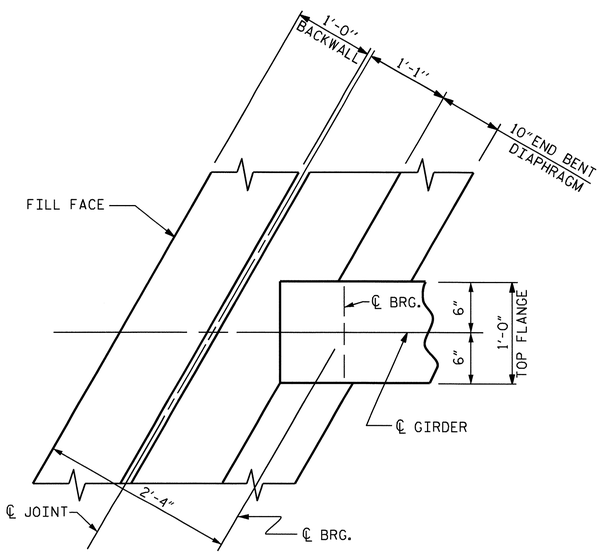

PLAN VIEW OF END BENT DIAPHRAGM

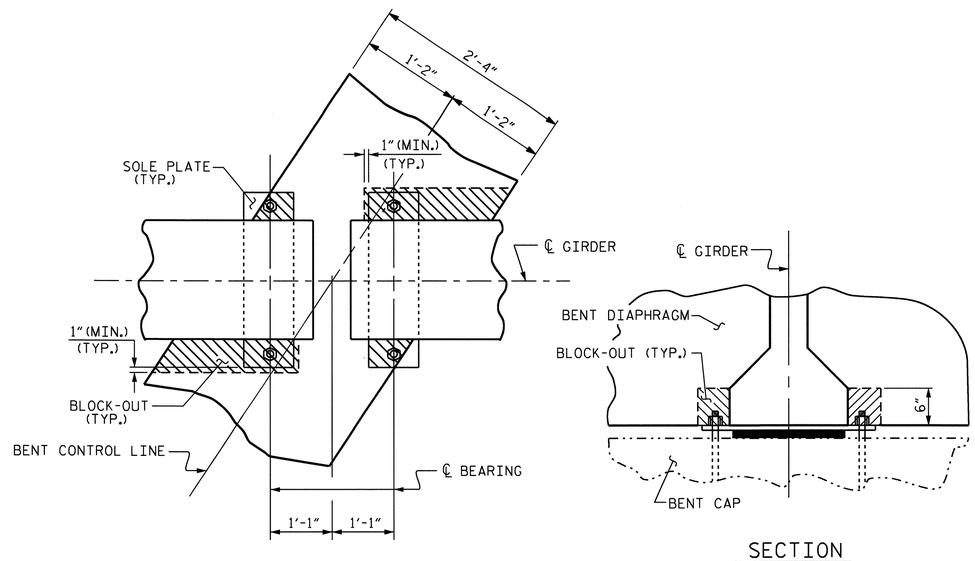

BENT DIAPHRAGM BLOCK-OUT DETAIL

NORTH CAROLINA PROFESSIONAL SEAL 16301 ENGINEER HARISH SHAH

10/7/10

PROJECT NO. R-2510C

BEAUFORT COUNTY

STATION: 222+51.50 -L-

SHEET 2 OF 2

STATE OF NORTH CAROLINA
DEPARTMENT OF TRANSPORTATION
RALEIGH

SUPERSTRUCTURE

TYPICAL SECTION DETAILS

(RIGHT LANE)

REVISIONS						SHEET NO.
NO.	BY:	DATE:	NO.	BY:	DATE:	S-109
1			3			TOTAL SHEETS
2			4			134

DRAWN BY : HARISH SHAH DATE : 08/08
CHECKED BY : A.R. CHESSON DATE : 1/09

07-OCT-2010 12:33
Y:\TIPProjects-R\R2510c\Structures\r2510c\FinalPlans\STR4\r-2510c_sd_ts_04.dgn
qtnguyen

STR. #4

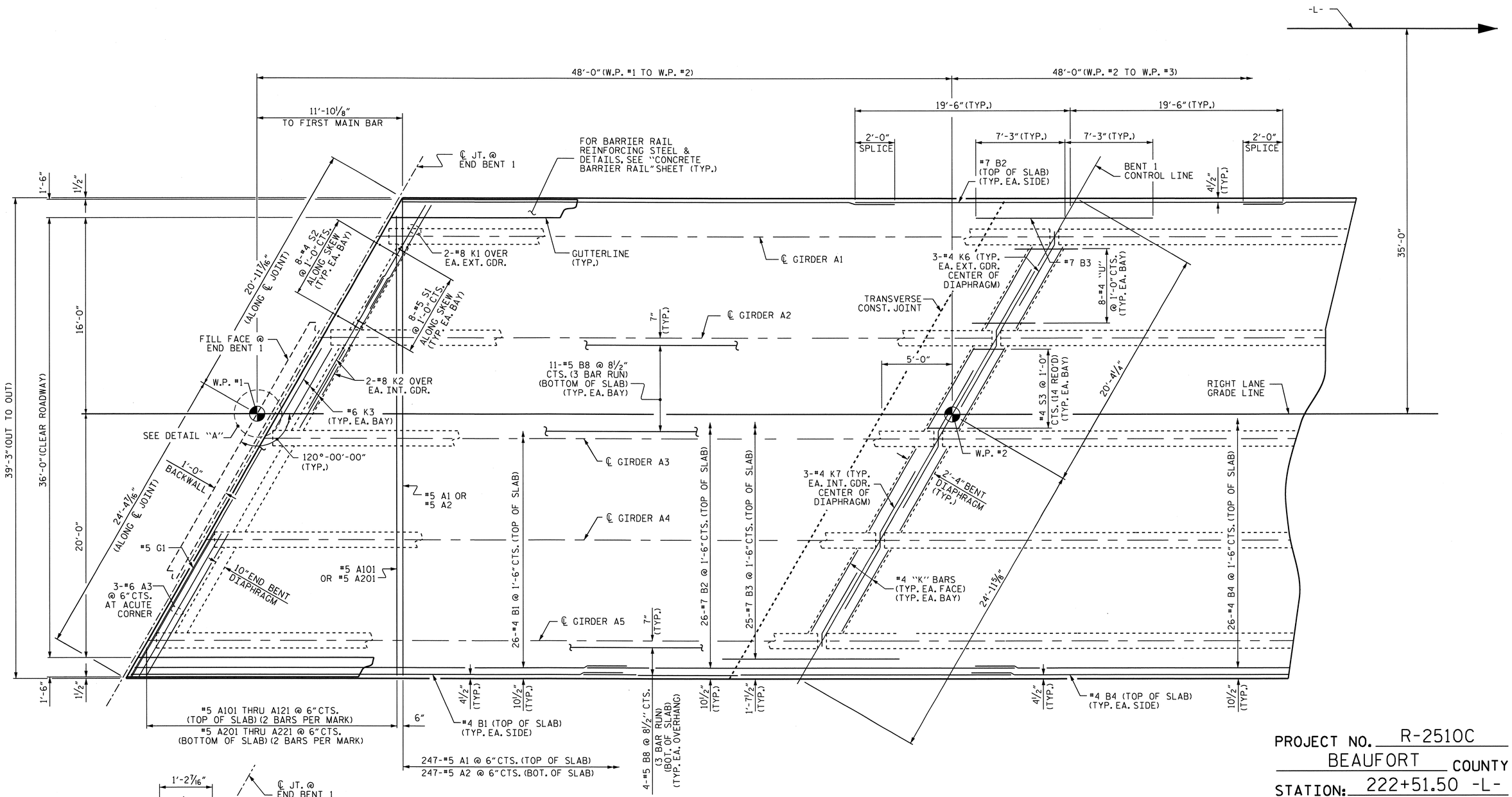

SPAN A

FOR POUR SEQUENCE AND TRANSVERSE CONSTRUCTION JOINT DETAIL, SEE "SUPERSTRUCTURE BILL OF MATERIAL" SHEET.

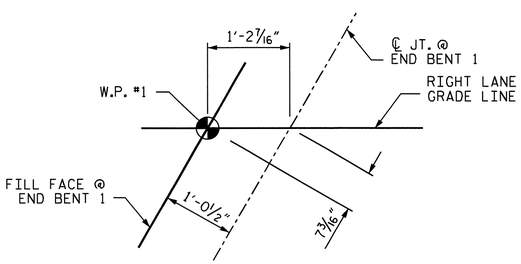

DETAIL A

PROJECT NO. R-2510C

BEAUFORT COUNTY

STATION: 222+51.50 -L-

SHEET 1 OF 3

STATE OF NORTH CAROLINA
DEPARTMENT OF TRANSPORTATION
RALEIGH

SUPERSTRUCTURE

PLAN OF SPANS

(RIGHT LANE)

NORTH CAROLINA PROFESSIONAL SEAL 16301 ENGINEER HSIANG-TING FANG

12/1/10

REVISIONS						SHEET NO.
NO.	BY:	DATE:	NO.	BY:	DATE:	S-110
1			3			TOTAL SHEETS
2			4			134

STR. #4

DRAWN BY : HARISH SHAH DATE : 9/08
CHECKED BY : A.R. CHESSON DATE : 1/09

30-NOV-2010 14:56
W:\Structures\r2510c\Final Plans\STR4\r-2510c_sd_ps_04.dgn
Hshah

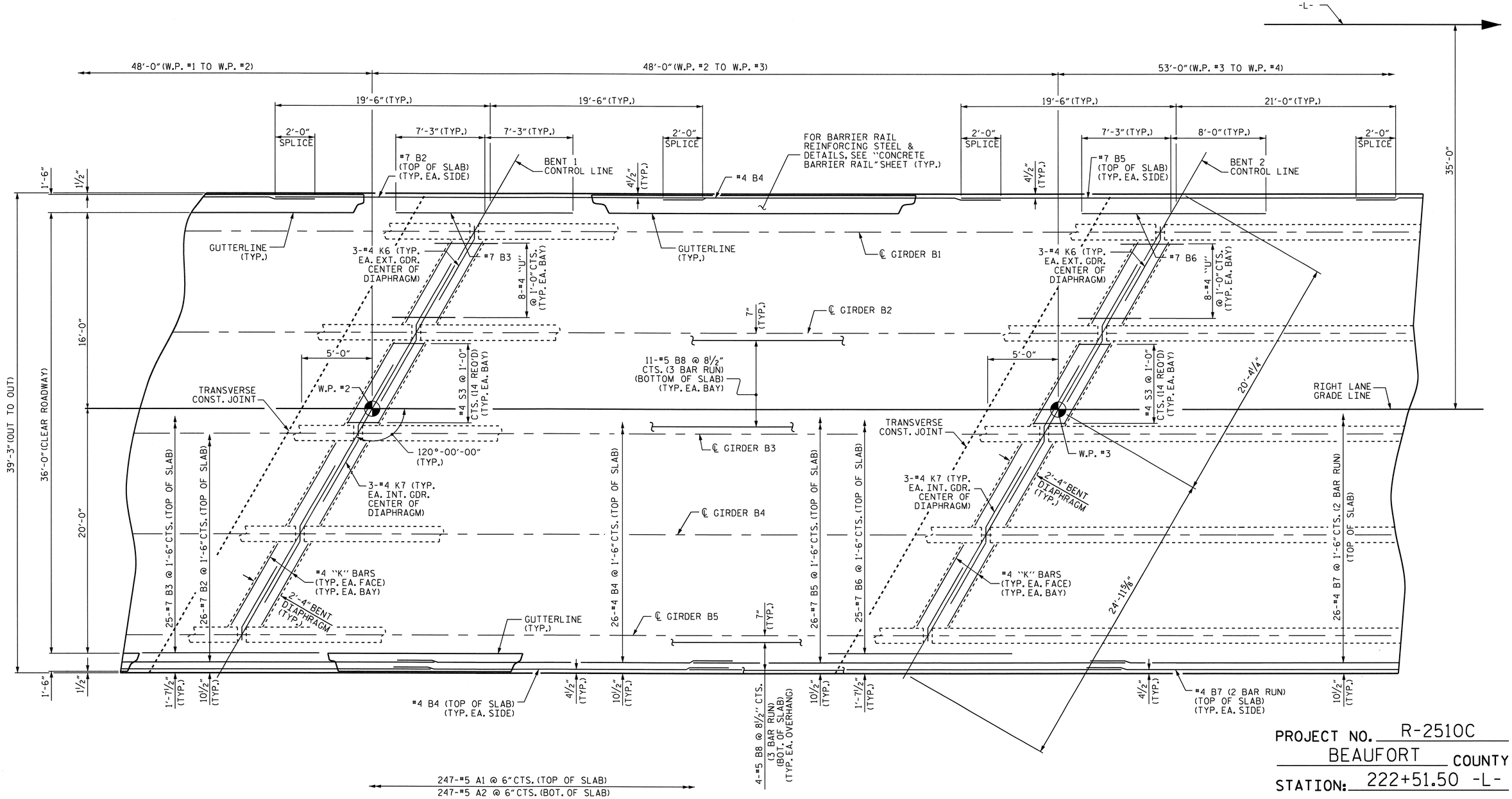

SPAN B

FOR POUR SEQUENCE AND TRANSVERSE CONSTRUCTION JOINT DETAIL, SEE "SUPERSTRUCTURE BILL OF MATERIAL" SHEET.

PROJECT NO. R-2510C
BEAUFORT COUNTY
STATION: 222+51.50 -L-

SHEET 2 OF 3

STATE OF NORTH CAROLINA
DEPARTMENT OF TRANSPORTATION
RALEIGH

SUPERSTRUCTURE

PLAN OF SPANS

(RIGHT LANE)

NORTH CAROLINA PROFESSIONAL SEAL 16301 ENGINEER
12/1/10

REVISIONS						SHEET NO.
NO.	BY:	DATE:	NO.	BY:	DATE:	S-111
1			3			TOTAL SHEETS
2			4			134

DRAWN BY : HARISH SHAH DATE : 9/08
CHECKED BY : A.R. CHESSON DATE : 1/09

30-NOV-2010 14:57
W:\Structures\r2510c\Final Plans\STR4\r-2510c_sd_ps_04.dgn
Hshah

STR. #4

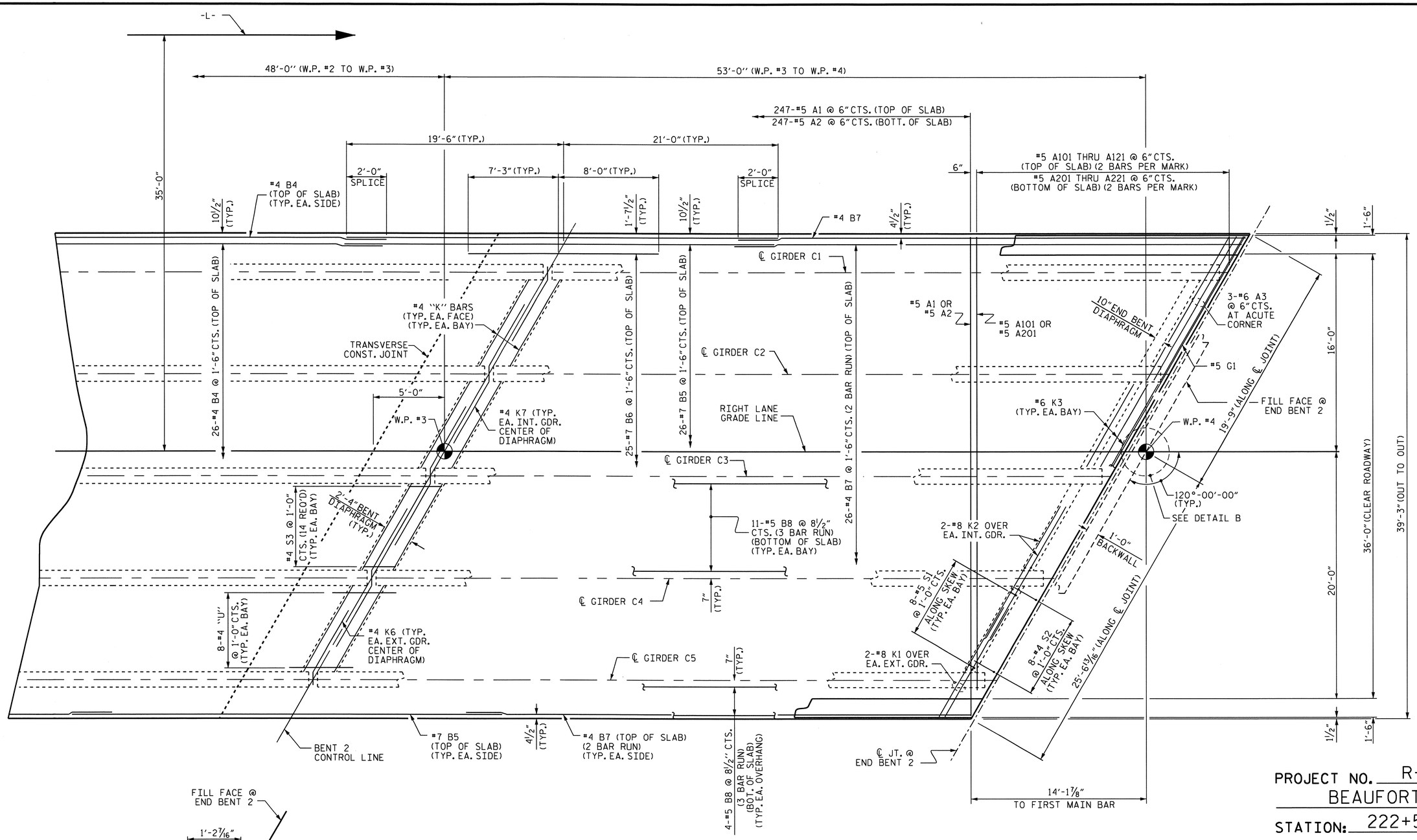

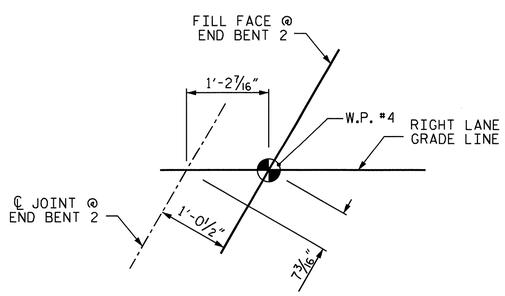

DETAIL B

SPAN C

FOR POUR SEQUENCE AND TRANSVERSE CONSTRUCTION JOINT DETAIL, SEE "SUPERSTRUCTURE BILL OF MATERIAL" SHEET.

PROJECT NO. R-2510C
BEAUFORT COUNTY
STATION: 222+51.50 -L-

SHEET 3 OF 3

STATE OF NORTH CAROLINA
DEPARTMENT OF TRANSPORTATION
RALEIGH

SUPERSTRUCTURE

PLAN OF SPANS

(RIGHT LANE)

NORTH CAROLINA PROFESSIONAL SEAL 16301 ENGINEER TING-YUNG LANG
12/1/10

REVISIONS						SHEET NO.
NO.	BY:	DATE:	NO.	BY:	DATE:	S-112
1			3			TOTAL SHEETS
2			4			134

DRAWN BY : HARISH SHAH DATE : 9/08
CHECKED BY : A.R. CHESSON DATE : 1/09

30-NOV-2010 14:57
W:\Structures\r2510c\Final Plans\STR4\r-2510c_sd_ps_04.dgn
Hshah

STR. #4

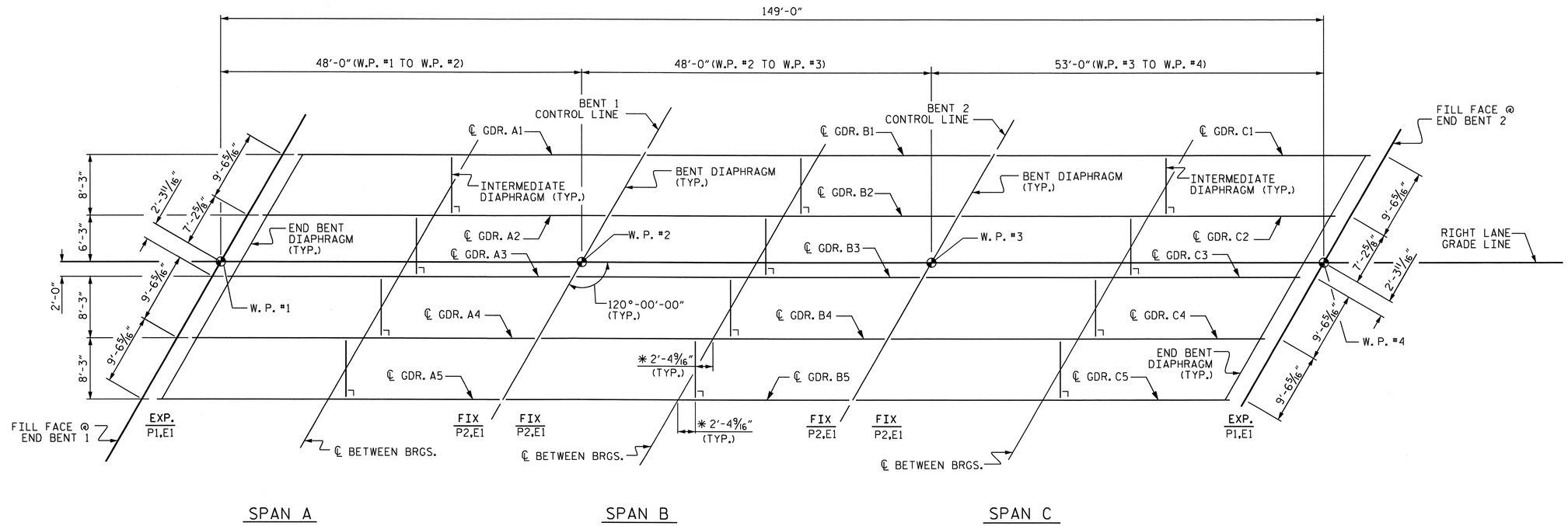

FRAMING PLAN

* DIMENSIONS MEASURING INTERMEDIATE DIAPHRAGMS ARE SHOWN TO THE BACK FACE OF CHANNEL.

PROJECT NO. R-2510C
BEAUFORT COUNTY
STATION: 222+51.50 -L-

STATE OF NORTH CAROLINA
DEPARTMENT OF TRANSPORTATION
RALEIGH

SUPERSTRUCTURE

FRAMING PLAN

(RIGHT LANE)

NORTH CAROLINA PROFESSIONAL SEAL 16301 ENGINEER HARISH SHAH
12/1/10

REVISIONS						SHEET NO.
NO.	BY:	DATE:	NO.	BY:	DATE:	S-113
1			3			TOTAL SHEETS
2			4			134

DRAWN BY : HARISH SHAH DATE : 08/08
CHECKED BY : A.R. CHESSON DATE : 1/09

30-NOV-2010 15:00
W:\Structures\r2510c\Final Plans\STR4\r-2510c_sd_fp_04.dgn
Hshah

STR. #4

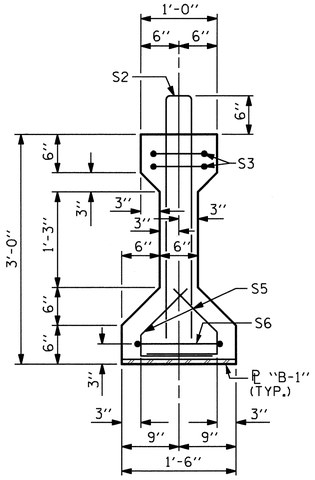

SECTION A-A

(FOR EMBEDDED ℄ "B-1" DETAILS SEE SHEET 4 OF 4)

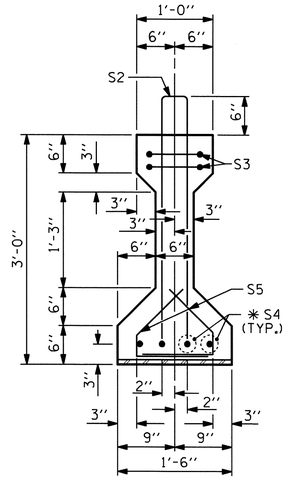

SECTION B-B

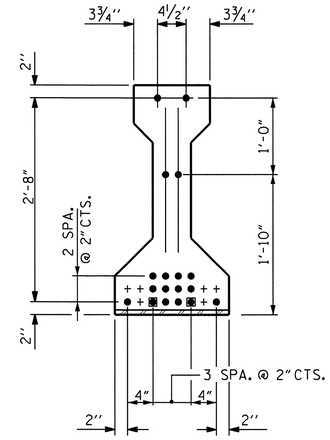

AT END OF GIRDER

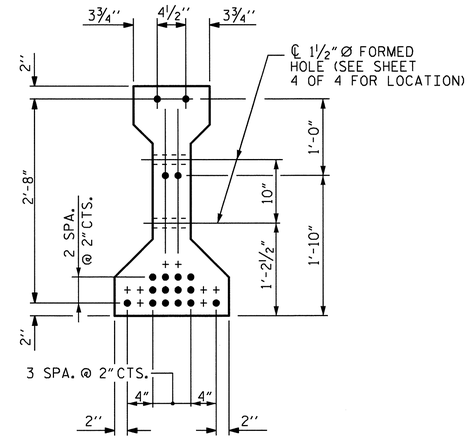

AT ℄ OF GIRDER

0.6" Ø LOW RELAXATION STRAND LAYOUT

(18 STRANDS, ALL STRAIGHT, 2 DEBONDED STRANDS)
■ STRANDS DEBONDED FOR 12'-0" FROM END OF GIRDER

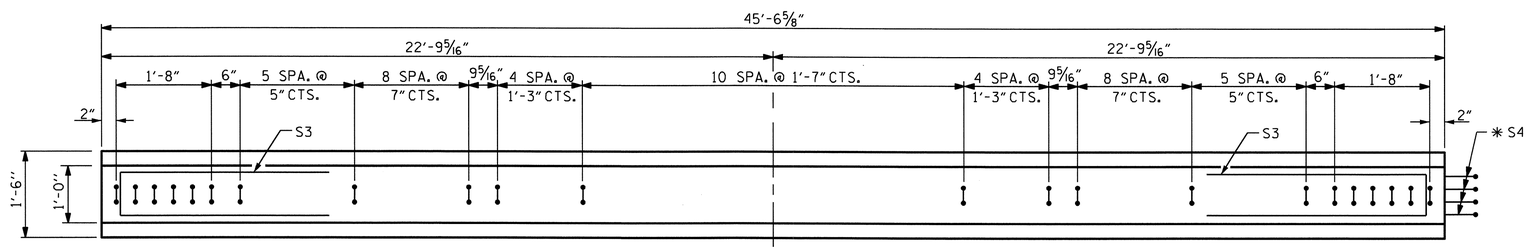

PLAN OF GIRDER

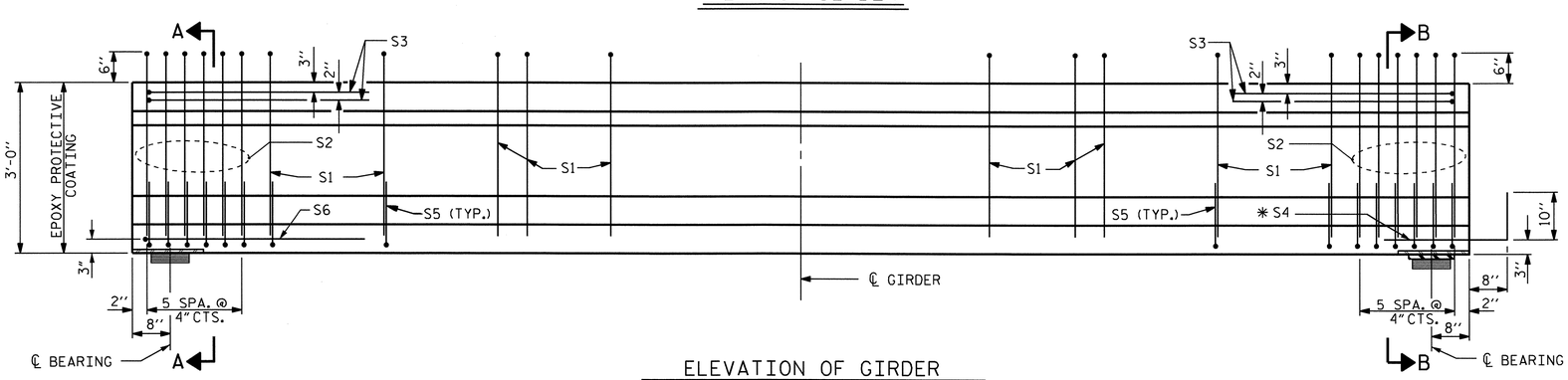

ELEVATION OF GIRDER

(SEE PARTIAL ELEVATION OF 1½" Ø FORMED HOLES FOR ADDITIONAL "S" BARS IN THE INTERMEDIATE DIAPHRAGM AREA ON SHEET 4 OF 4)

0.6" Ø L. R. GRADE 270 STRANDS

AREA (SQUARE INCHES)	ULTIMATE STRENGTH (LBS. PER STRAND)	APPLIED PRESTRESS (LBS. PER STRAND)
0.217	58,600	43,950

REINFORCING STEEL FOR ONE GIRDER

	BAR	NUMBER	SIZE	TYPE	LENGTH	WEIGHT
	S1	47	#4	1	6'-10"	215
	S2	12	#5	1	6'-10"	86
	S3	4	#4	3	8'-8"	23
	✱ S4	4	#5	STR	3'-8"	15
	S5	48	#4	2	2'-4"	75
	S6	1	#4	3	9'-2"	6
EXT. GDR.	S7	2	#5	3	5'-8"	12
INT. GDR.	S7	4	#5	3	5'-8"	24
EXT. GDR.	S8	5	#4	STR	7'-0"	23
INT. GDR.	S9	5	#4	STR	11'-10"	40

✱ S4 BARS SHALL BE BENT BEFORE SHIPMENT. HEAT BENDING SHALL NOT BE ALLOWED.

BAR TYPES

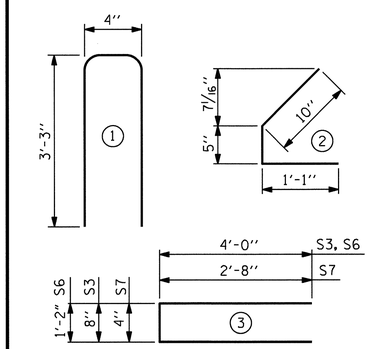

ALL BAR DIMENSIONS ARE OUT-TO-OUT

QUANTITIES FOR ONE GIRDER

	REINFORCING STEEL LB.	6800 PSI CONCRETE C.Y.	0.6" Ø L.R. STRANDS No.
EXT. GDR.	455	4.3	18
INT. GDR.	484	4.3	18

GIRDERS REQUIRED

NUMBER	LENGTH	TOTAL LENGTH
5	45'-6⅝"	227.76'

PROJECT NO. R-2510C
BEAUFORT COUNTY
STATION: 222+51.50 -L-

SHEET 1 OF 4

STATE OF NORTH CAROLINA
DEPARTMENT OF TRANSPORTATION
RALEIGH

STANDARD
AASHTO TYPE II
PRESTRESSED CONCRETE GIRDER
CONTINUOUS FOR LIVE LOAD
SPAN A
(RIGHT LANE)

NORTH CAROLINA PROFESSIONAL SEAL 16301 ENGINEER TING-HSUNG FANG
12/1/10

REVISIONS						SHEET NO.
NO.	BY:	DATE:	NO.	BY:	DATE:	S-114
1			3			TOTAL SHEETS
2			4			134

STR. #4 STD. NO. PCG4

ASSEMBLED BY : HARISH SHAH DATE : 02/09
CHECKED BY : A.R. CHESSON DATE : 02/09

DRAWN BY : ELR 8/91
CHECKED BY : GRP 8/91

REV. 8/16/99 RWW/LES
REV. 10/17/00R RWW/LES
REV. 5/1/06 TLA/GM

30-NOV-2010 15:01
W:\Structures\r2510c\Final Plans\STR4\r-2510c_sd_g_04.dgn
Hshah

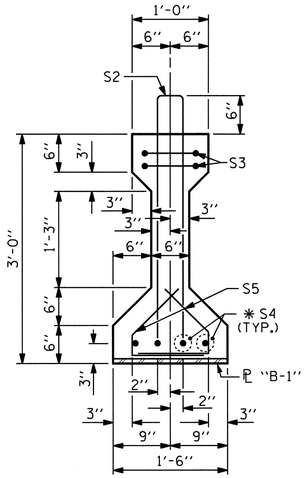

SECTION B-B

(FOR EMBEDDED ℄ "B-1" DETAILS SEE SHEET 4 OF 4)

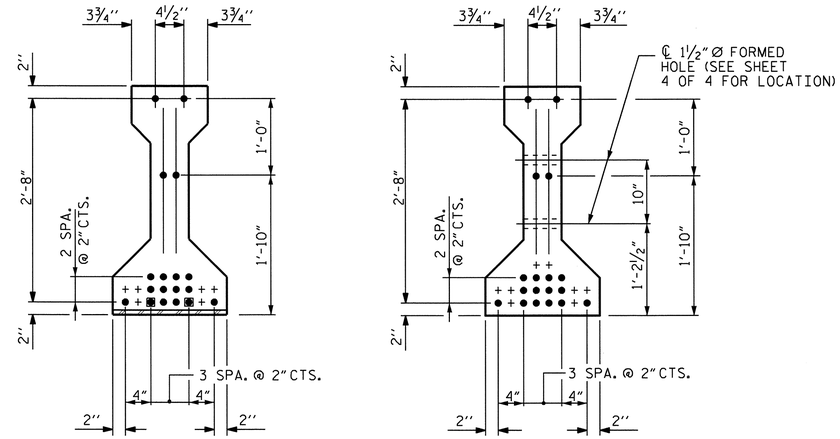

AT END OF GIRDER

AT ℄ OF GIRDER

0.6" Ø LOW RELAXATION STRAND LAYOUT

(18 STRANDS, ALL STRAIGHT, 2 DEBONDED STRANDS)
▩ STRANDS DEBONDED FOR 12'-0" FROM END OF GIRDER

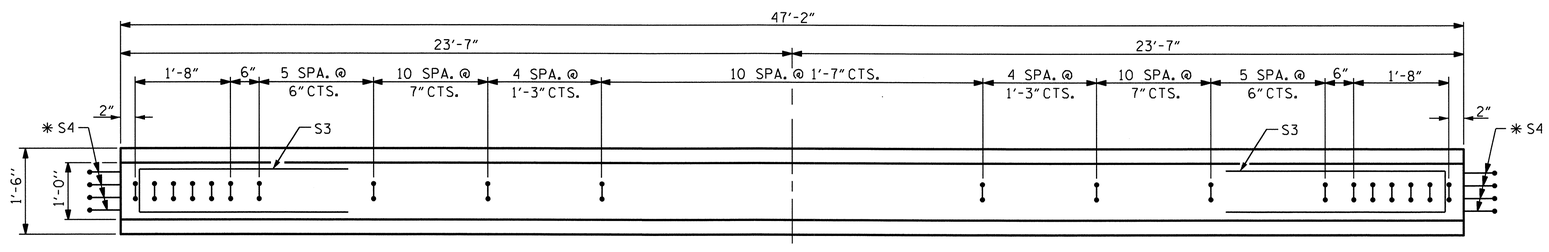

PLAN OF GIRDER

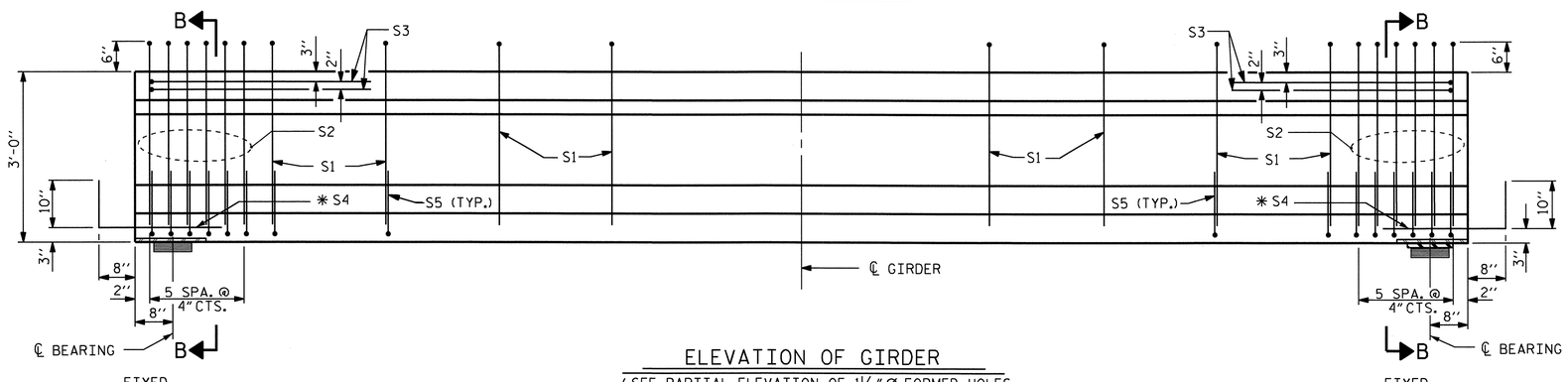

ELEVATION OF GIRDER

(SEE PARTIAL ELEVATION OF 1½" Ø FORMED HOLES FOR ADDITIONAL "S" BARS IN THE INTERMEDIATE DIAPHRAGM AREA ON SHEET 4 OF 4)

0.6" Ø L. R. GRADE 270 STRANDS

AREA (SQUARE INCHES)	ULTIMATE STRENGTH (LBS. PER STRAND)	APPLIED PRESTRESS (LBS. PER STRAND)
0.217	58,600	43,950

REINFORCING STEEL FOR ONE GIRDER

	BAR	NUMBER	SIZE	TYPE	LENGTH	WEIGHT
	S1	49	#4	1	6'-10"	224
	S2	12	#5	1	6'-10"	86
	S3	4	#4	3	8'-8"	23
	✱ S4	8	#5	STR	3'-8"	31
	S5	48	#4	2	2'-4"	75
EXT. GDR.	S7	2	#5	3	5'-8"	12
INT. GDR.	S7	4	#5	3	5'-8"	24
EXT. GDR.	S8	5	#4	STR	7'-0"	23
INT. GDR.	S9	5	#4	STR	11'-10"	40

✱ S4 BARS SHALL BE BENT BEFORE SHIPMENT. HEAT BENDING SHALL NOT BE ALLOWED.

BAR TYPES

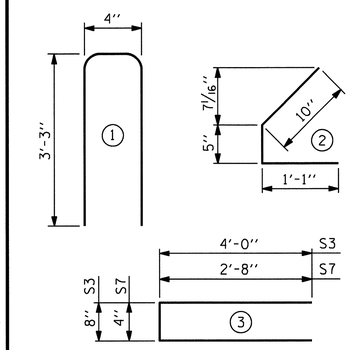

ALL BAR DIMENSIONS ARE OUT-TO-OUT

QUANTITIES FOR ONE GIRDER

	REINFORCING STEEL LB.	6800 PSI CONCRETE C.Y.	0.6" Ø L.R. STRANDS No.
EXT. GDR.	474	4.3	18
INT. GDR.	503	4.3	18

GIRDERS REQUIRED

NUMBER	LENGTH	TOTAL LENGTH
5	47'-2"	235.83'

PROJECT NO. R-2510C

BEAUFORT COUNTY

STATION: 222+51.50 -L-

SHEET 2 OF 4

STATE OF NORTH CAROLINA
DEPARTMENT OF TRANSPORTATION
RALEIGH

STANDARD
AASHTO TYPE II
PRESTRESSED CONCRETE GIRDER
CONTINUOUS FOR LIVE LOAD
SPAN B
(RIGHT LANE)

NORTH CAROLINA PROFESSIONAL SEAL 16301 ENGINEER TING HSIONG FANG

12/1/10

REVISIONS							SHEET NO.
NO.	BY:	DATE:	NO.	BY:	DATE:		S-115
1			3				TOTAL SHEETS
2			4				134

STR. #4 STD. NO. PCG4

ASSEMBLED BY : HARISH SHAH DATE : 02/09
CHECKED BY : A.R. CHESSON DATE : 02/09

DRAWN BY : ELR 8/91
CHECKED BY : GRP 8/91

REV. 8/16/99 RWW/LES
REV. 10/17/00R RWW/LES
REV. 5/1/06 TLA/GM

30-NOV-2010 15:01
W:\Structures\r2510c\Final Plans\STR4\r-2510c_sd_g_04.dgn
Hshah

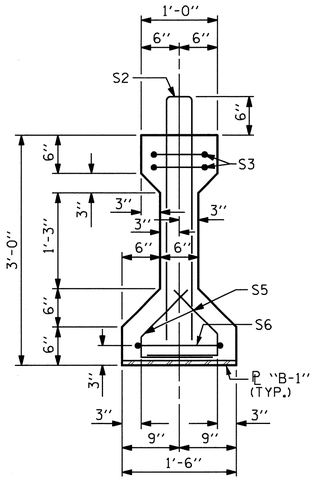

SECTION A-A

(FOR EMBEDDED ℄ "B-1" DETAILS SEE SHEET 4 OF 4)

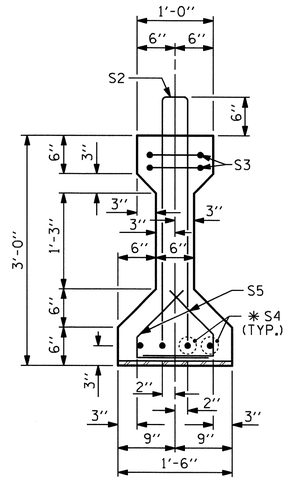

SECTION B-B

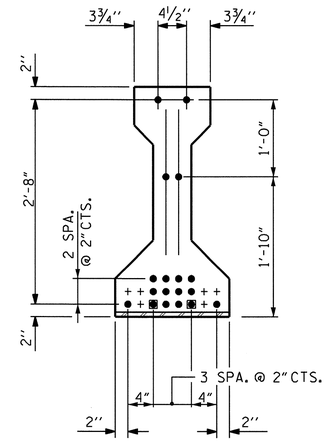

AT END OF GIRDER

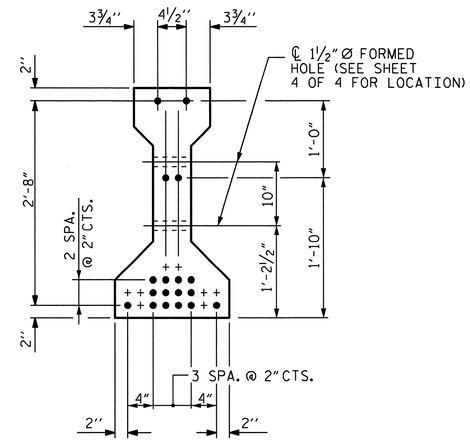

AT ℄ OF GIRDER

0.6" Ø LOW RELAXATION STRAND LAYOUT

(18 STRANDS, ALL STRAIGHT, 2 DEBONDED STRANDS)
◉ STRANDS DEBONDED FOR 12'-0" FROM END OF GIRDER

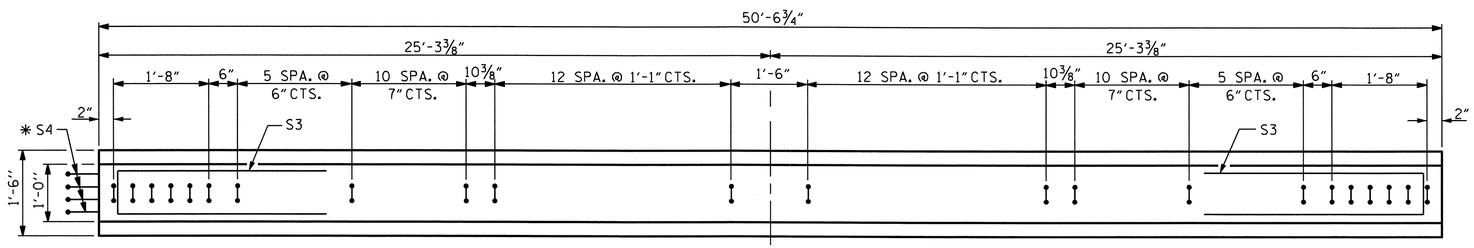

PLAN OF GIRDER

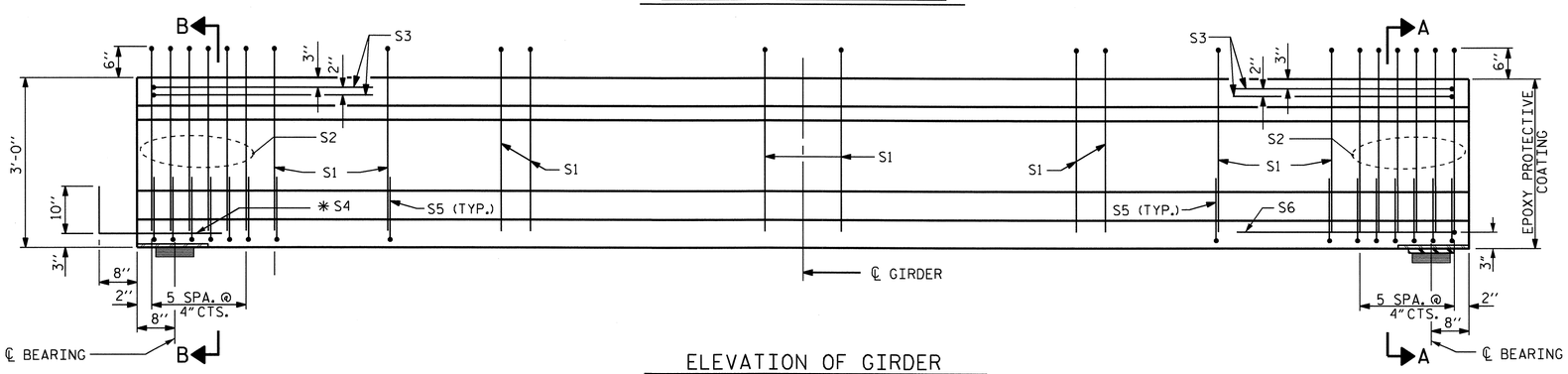

FIXED

EXP.

ELEVATION OF GIRDER

(SEE PARTIAL ELEVATION OF 1½" Ø FORMED HOLES FOR ADDITIONAL "S" BARS IN THE INTERMEDIATE DIAPHRAGM AREA ON SHEET 4 OF 4)

0.6" Ø L. R. GRADE 270 STRANDS

AREA (SQUARE INCHES)	ULTIMATE STRENGTH (LBS. PER STRAND)	APPLIED PRESTRESS (LBS. PER STRAND)
0.217	58,600	43,950

REINFORCING STEEL FOR ONE GIRDER

	BAR	NUMBER	SIZE	TYPE	LENGTH	WEIGHT
	S1	58	#4	1	6'-10"	265
	S2	12	#5	1	6'-10"	86
	S3	4	#4	3	8'-8"	23
	✱S4	4	#5	STR	3'-8"	15
	S5	48	#4	2	2'-4"	75
	S6	1	#4	3	9'-2"	6
EXT. GDR.	S7	2	#5	3	5'-8"	12
INT. GDR.	S7	4	#5	3	5'-8"	24
EXT. GDR.	S8	5	#4	STR	7'-0"	23
INT. GDR.	S9	5	#4	STR	11'-10"	40

✱S4 BARS SHALL BE BENT BEFORE SHIPMENT. HEAT BENDING SHALL NOT BE ALLOWED.

BAR TYPES

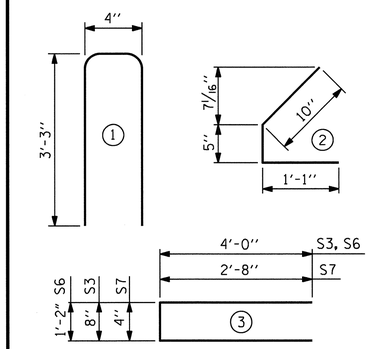

ALL BAR DIMENSIONS ARE OUT-TO-OUT

QUANTITIES FOR ONE GIRDER

	REINFORCING STEEL LB.	6800 PSI CONCRETE C.Y.	0.6" Ø L.R. STRANDS No.
EXT. GDR.	505	4.8	18
INT. GDR.	534	4.8	18

GIRDERS REQUIRED

NUMBER	LENGTH	TOTAL LENGTH
5	50'-6¾"	252.81'

PROJECT NO. R-2510C
BEAUFORT COUNTY
STATION: 222+51.50 -L-

SHEET 3 OF 4

STATE OF NORTH CAROLINA
DEPARTMENT OF TRANSPORTATION
RALEIGH

STANDARD
AASHTO TYPE II
PRESTRESSED CONCRETE GIRDER
CONTINUOUS FOR LIVE LOAD
SPAN C
(RIGHT LANE)

NORTH CAROLINA PROFESSIONAL SEAL 16301 ENGINEER HSIUNG-CHANG HANG
12/1/10

REVISIONS						SHEET NO.
NO.	BY:	DATE:	NO.	BY:	DATE:	S-116
1			3			TOTAL SHEETS
2			4			134

ASSEMBLED BY : HARISH SHAH	DATE : 02/09		
CHECKED BY : A.R. CHESSON	DATE : 02/09		
DRAWN BY : ELR 8/91	REV. 8/16/99	RWW/LES	
CHECKED BY : GRP 8/91	REV. 10/17/00R	RWW/LES	
	REV. 5/1/06	TLA/GM	

30-NOV-2010 15:02
W:\Structures\r2510c\Final Plans\STR4\r-2510c_sd_g_04.dgn
Hshah

STR. #4

STD. NO. PCG4

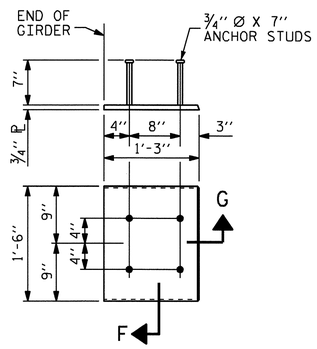

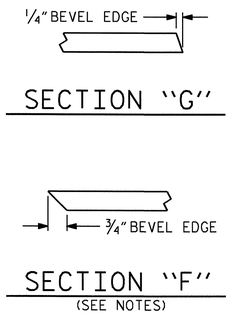

EMBEDDED PLATE "B-1" DETAILS FOR AASHTO TYPE II GIRDER

(2 REQ'D PER GIRDER)

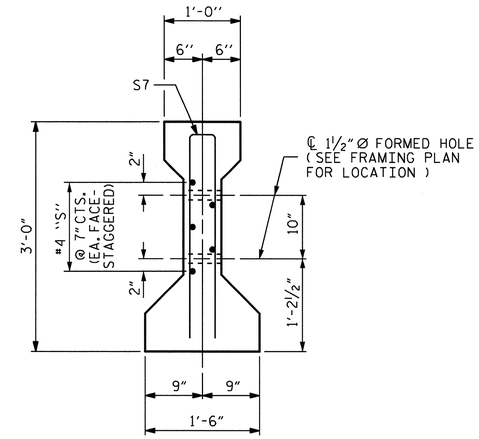

SECTION C-C

(S1 BARS NOT SHOWN)

NOTES

ALL PRESTRESSING STRANDS SHALL BE 7-WIRE LOW-RELAXATION GRADE 270 STRANDS AND SHALL CONFORM TO AASHTO M203 EXCEPT FOR SAMPLING REQUIREMENTS WHICH SHALL BE IN ACCORDANCE WITH THE STANDARD SPECIFICATIONS.

ALL REINFORCING STEEL SHALL BE GRADE 60.

APPLY EPOXY PROTECTIVE COATING TO END OF GIRDER SURFACES INDICATED IN ELEVATION VIEW.

EMBEDDED PLATE "B-1" SHALL BE GALVANIZED IN ACCORDANCE WITH THE STANDARD SPECIFICATIONS. BEVEL EDGES OF PLATE "B-1" TO GIVE CLOSE FIT BUT NOT TIGHT FIT TO STEEL CASTING FORM.

ANCHOR STUDS SHALL CONFORM TO AASHTO M169 GRADES 1010 THROUGH 1020 OR APPROVED EQUAL, AND SHALL MEET THE TYPE "B" REQUIREMENTS OF SUBSECTION 7.3 OF THE ANSI/AASHTO/AWS D1.5 BRIDGE WELDING CODE.

AT ENDS OF GIRDERS TO BE EMBEDDED IN CONCRETE DIAPHRAGMS OR END WALLS, PRESTRESSING STRANDS MAY EXTEND A MAXIMUM OF 2" BEYOND THE GIRDER ENDS. OTHERWISE, PRESTRESSING STRANDS SHALL BE CUT FLUSH WITH THE GIRDER ENDS.

THE TRANSFER OF LOAD FROM THE ANCHORAGES TO THE GIRDER SHALL BE DONE WHEN CONCRETE HAS REACHED A COMPRESSIVE STRENGTH OF NOT LESS THAN 5300 PSI .

DEPENDING ON THE TYPE OF SYSTEM USED TO SUPPORT THE DECK SLAB FORMS, PRESET ANCHORS MAY BE NECESSARY IN THE PRESTRESSED CONCRETE GIRDER.

THE TOP SURFACE OF THE GIRDER, EXCLUDING THE OUTSIDE 4", SHALL BE RAKED TO A DEPTH OF 1/4".

FOR PRESTRESSED CONCRETE MEMBERS, SEE SPECIAL PROVISIONS.

DEAD LOAD DEFLECTION TABLE

SPAN A											
0.6 "Ø LOW RELAXATION	GIRDERS 1 THRU 5										
TENTH POINTS	0	.1	.2	.3	.4	.5	.6	.7	.8	.9	0
CAMBER (GIRDER ALONE IN PLACE) ↑	0	0.039	0.074	0.102	0.119	0.125	0.119	0.102	0.074	0.039	0
✱ DEFLECTION DUE TO SUPERIMPOSED D.L. ↓	0	0.012	0.023	0.031	0.036	0.038	0.036	0.031	0.023	0.012	0
FINAL CAMBER ↑	0	5/16"	5/8"	7/8"	1"	1 1/16"	1"	7/8"	5/8"	5/16"	0
SPAN B											
0.6 "Ø LOW RELAXATION	GIRDERS 1 THRU 5										
TENTH POINTS	0	.1	.2	.3	.4	.5	.6	.7	.8	.9	0
CAMBER (GIRDER ALONE IN PLACE) ↑	0	0.041	0.078	0.107	0.125	0.132	0.125	0.107	0.078	0.041	0
✱ DEFLECTION DUE TO SUPERIMPOSED D.L. ↓	0	0.014	0.026	0.036	0.042	0.044	0.042	0.036	0.026	0.014	0
FINAL CAMBER ↑	0	5/16"	5/8"	7/8"	1"	1 1/16"	1"	7/8"	5/8"	5/16"	0
SPAN C											
0.6 "Ø LOW RELAXATION	GIRDERS 1 THRU 5										
TENTH POINTS	0	.1	.2	.3	.4	.5	.6	.7	.8	.9	0
CAMBER (GIRDER ALONE IN PLACE) ↑	0	0.046	0.087	0.119	0.139	0.146	0.139	0.119	0.087	0.046	0
✱ DEFLECTION DUE TO SUPERIMPOSED D.L. ↓	0	0.018	0.035	0.048	0.056	0.058	0.056	0.048	0.035	0.018	0
FINAL CAMBER ↑	0	5/16"	5/8"	7/8"	1"	1 1/16"	1"	7/8"	5/8"	5/16"	0

✱ INCLUDES FUTURE WEARING SURFACE

ALL VALUES ARE SHOWN IN FEET (DECIMAL FORM), EXCEPT "FINAL CAMBER", WHICH IS GIVEN IN INCHES (FRACTION FORM).

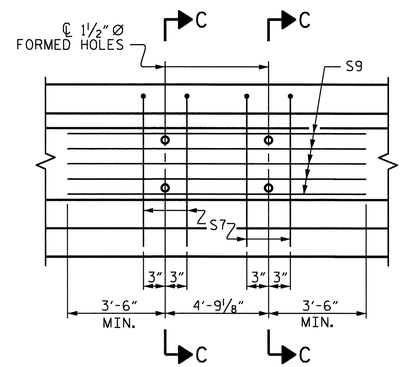

INTERIOR GIRDERS 2, 3 & 4

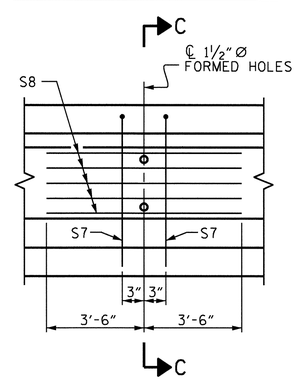

EXTERIOR GIRDERS 1 & 5

PARTIAL ELEVATION OF 1 1/2" Ø FORMED HOLES

NORTH CAROLINA PROFESSIONAL SEAL 16301 ENGINEER HING HSIANG LANG

12/1/10

PROJECT NO. R-2510C

BEAUFORT COUNTY

STATION: 222+51.50 -L-

SHEET 4 OF 4

STATE OF NORTH CAROLINA
DEPARTMENT OF TRANSPORTATION
RALEIGH

STANDARD

PRESTRESSED CONCRETE GIRDER CONTINUOUS FOR LIVE LOAD DETAILS

(RIGHT LANE)

REVISIONS						SHEET NO.
NO.	BY:	DATE:	NO.	BY:	DATE:	S-117
1			3			TOTAL SHEETS
2			4			134

ASSEMBLED BY : HARISH SHAH		DATE : 9/08	
CHECKED BY : A.R. CHESSON		DATE : 1/09	
DRAWN BY : ELR 11/91	REV. 10/17/00 RWW/LES		
CHECKED BY : GRP 11/91	REV. 7/10/01RR LES/RDR		
	REV. 5/1/06 TLA/GM		

30-NOV-2010 15:03
W:\Structures\r2510c\Final Plans\STR4\r-2510c_sd_dl_04.dgn
Hsiang

STR. #4

STD.No.PCG11

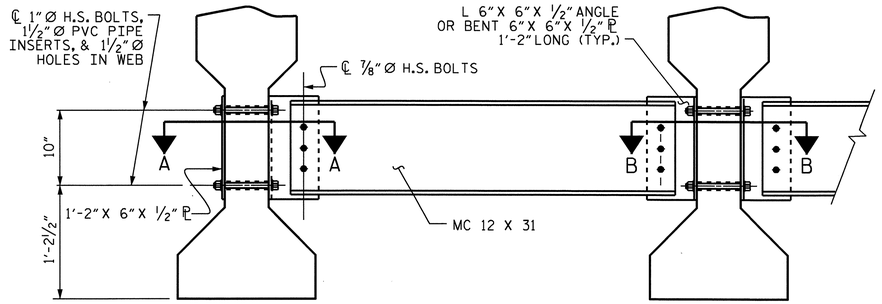

EXTERIOR GIRDER

INTERIOR GIRDER

PART SECTION AT INTERMEDIATE DIAPHRAGM

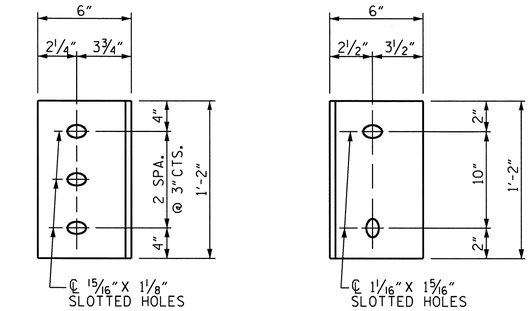

DIAPHRAGM FACE

WEB FACE

CONNECTOR PLATE DETAILS

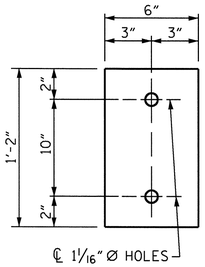

PLATE DETAILS

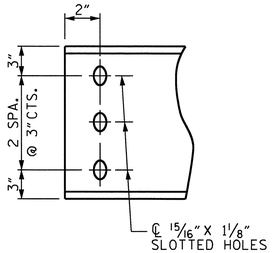

CHANNEL END

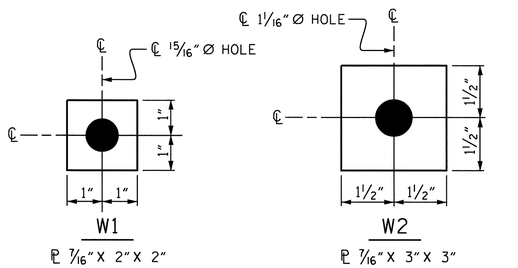

℄ 7/16" X 2" X 2"

USE WITH ⅞"Ø HVY. HEX NUTS & DIRECT TENSION INDICATOR WASHERS AT DIAPHRAGM CHANNEL TO CONNECTOR PLATE CONNECTIONS

℄ 7/16" X 3" X 3"

USE WITH 1"Ø HVY. HEX NUTS & DIRECT TENSION INDICATOR WASHERS AT CONNECTOR PLATE TO GIRDER CONNECTIONS

WASHER DETAILS

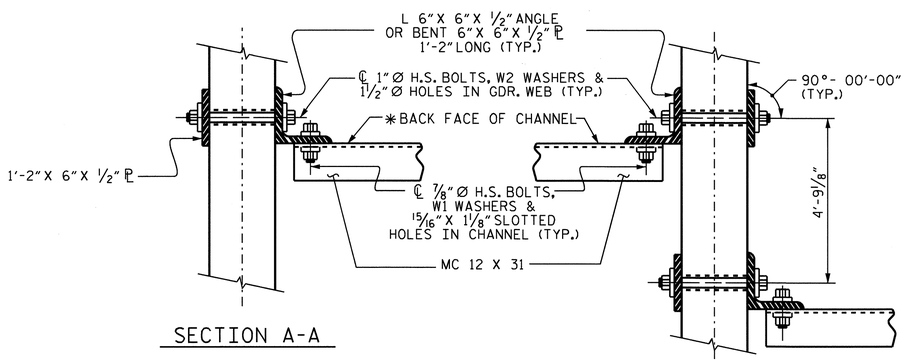

SECTION A-A

SECTION B-B

CONNECTION DETAILS

✱ FOR LOCATION OF INTERMEDIATE DIAPHRAGMS, SEE "FRAMING PLAN" SHEET.

STRUCTURAL STEEL NOTES

ALL INTERMEDIATE DIAPHRAGM STEEL, CONNECTOR PLATES AND PLATE WASHERS SHALL BE AASHTO M270 GRADE 50 OR APPROVED EQUAL.

TENSION ON THE AASHTO M164 BOLTS THROUGH THE CHANNEL MEMBER SHALL BE CALIBRATED USING DIRECT TENSION INDICATOR WASHERS IN ACCORDANCE WITH THE STANDARD SPECIFICATIONS. FOR DIRECT TENSION INDICATORS, SEE SPECIAL PROVISIONS.

TENSION ON THE AASHTO M164 BOLTS THROUGH THE GIRDER WEB SHALL BE SNUG TIGHTENED FOLLOWED BY AN ADDITIONAL ¼ TURN.

THE PLATES, BENT PLATES, CHANNELS, ANGLES, AND PLATE WASHERS SHALL BE GALVANIZED OR METALLIZED IN ACCORDANCE WITH THE STANDARD SPECIFICATIONS. FOR THERMAL SPRAYED COATINGS (METALLIZATION), SEE SPECIAL PROVISIONS.

FOR METALLIZATION, APPLY AN 8 MIL THICK 99.99 PERCENT ZINC (W-Zn-1) THERMAL SPRAYED COATING WITH A 0.5 MIL THICK SEAL COAT TO ALL STEEL DIAPHRAGM SURFACES IN ACCORDANCE WITH THE THERMAL SPRAYED COATINGS SPECIAL PROVISIONS AND SECTION 442 OF THE STANDARD SPECIFICATIONS.

GALVANIZE THE HIGH STRENGTH BOLTS, NUTS, AND WASHERS AND DIRECT TENSION INDICATORS IN ACCORDANCE WITH THE STANDARD SPECIFICATIONS. FOR HIGH STRENGTH BOLTS, SEE SPECIAL PROVISIONS.

USE A MINIMUM 7/16" THICK PLATE WASHER WITH STANDARD HOLES UNDER EACH BOLT HEAD AND NUT. THE PLATE WASHERS SHALL HAVE SUFFICIENT SIZE TO COVER THE HOLES AFTER INSTALLATION. HARDENED WASHERS AND DIRECT TENSION INDICATORS ARE TO BE USED IN CONJUNCTION WITH THE PLATE WASHERS IN THE CHANNEL MEMBER CONNECTION.

FOR BOLTS THROUGH THE GIRDER WEB, PROVIDE SUFFICIENT LENGTH OF ALL BOLTS TO ACCOMMODATE WASHERS, AND THE THICKNESS OF CONNECTING MEMBER PLUS AT LEAST ¼" PROJECTION BEYOND THE NUT.

INTERMEDIATE DIAPHRAGM ASSEMBLY SHALL COMPLY WITH SECTION 1072 OF THE STANDARD SPECIFICATIONS.

CONTRACTOR SHALL SUBMIT TWO SETS OF WORKING DRAWINGS FOR THE INTERMEDIATE DIAPHRAGM ASSEMBLY FOR REVIEW, COMMENTS AND ACCEPTANCE. AFTER REVIEW, COMMENTS, AND ACCEPTANCE, SUBMIT SEVEN SETS FOR DISTRIBUTION.

IN THE EXTERIOR BAYS, TEMPORARY STRUTS SHALL BE PLACED BETWEEN PRESTRESSED GIRDERS ADJACENT TO THE STEEL DIAPHRAGMS. STRUTS SHALL REMAIN IN PLACE 3 DAYS AFTER CONCRETE IS PLACED. ALL AASHTO M164 H.S. BOLTS SHALL BE FULLY TIGHTENED AFTER THE STRUTS HAVE BEEN REMOVED.

THE COST OF THE STEEL DIAPHRAGMS AND ASSEMBLIES SHALL BE INCLUDED IN THE UNIT PRICE BID FOR PRESTRESSED CONCRETE GIRDERS.

PROJECT NO. R-2510C
BEAUFORT COUNTY
STATION: 222+51.50 -L-

NORTH CAROLINA PROFESSIONAL SEAL 16301 ENGINEER HSIUNG FANG
12/1/10

STATE OF NORTH CAROLINA
DEPARTMENT OF TRANSPORTATION
RALEIGH

INTERMEDIATE STEEL DIAPHRAGMS FOR TYPE II PRESTRESSED CONCRETE GIRDERS

(RIGHT LANE)

REVISIONS						SHEET NO.
NO.	BY:	DATE:	NO.	BY:	DATE:	S-118
1			3			TOTAL SHEETS
2			4			134

ASSEMBLED BY : HARISH SHAH	DATE : 9/08
CHECKED BY : A.R. CHESSON	DATE : 1/09
DRAWN BY : TLA 6/05	ADDED 10/21/05
CHECKED BY : VC 6/05	REV. 5/1/06R KMM/GM

30-NOV-2010 15:03
W:\Structures\r2510c\Final Plans\STR4\r-2510c_sd_g_04.dgn
Hshah

STR. #4

STD. NO. PCG12

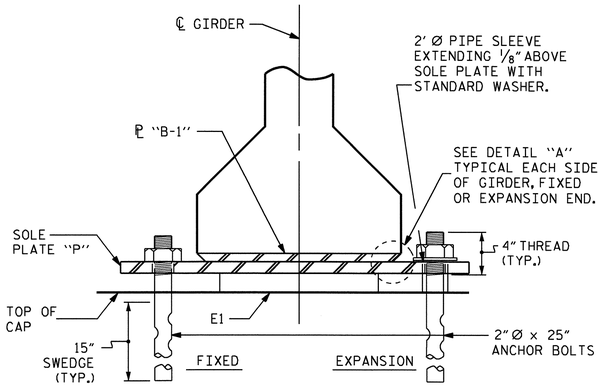

SECTION E-E

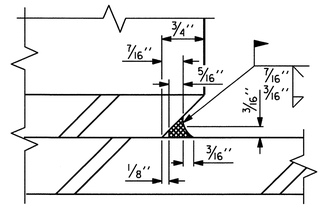

DETAIL "A"

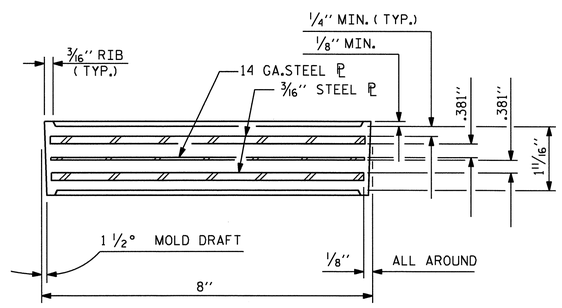

TYPICAL SECTION OF ELASTOMERIC BEARINGS

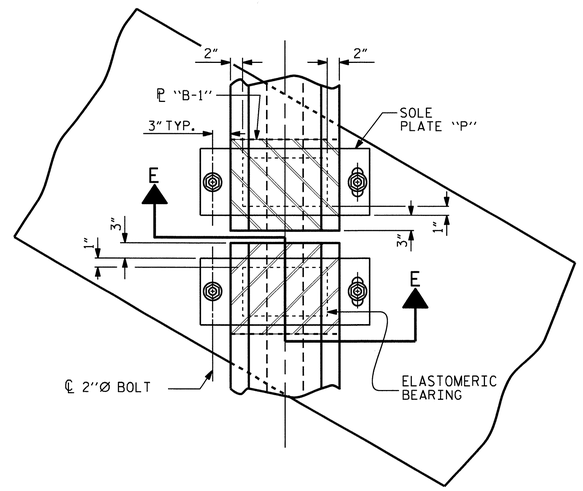

TYPICAL HALF-PLAN (FIXED)

TYPICAL HALF-PLAN (EXPANSION)

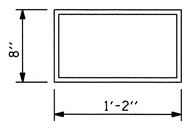

E1 (30 REQ'D)

PLAN VIEW OF ELASTOMERIC BEARING

TYPE II

ELASTOMER IN ALL BEARINGS SHALL BE 60 DUROMETER HARDNESS

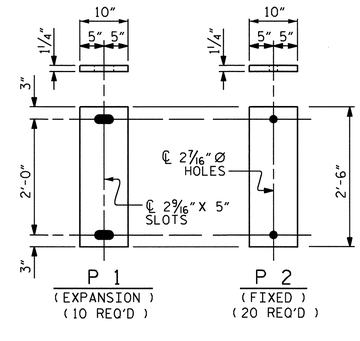

SOLE PLATE DETAILS ("P")

NOTES

AT ALL FIXED POINTS OF SUPPORT, NUTS FOR ANCHOR BOLTS ARE TO BE TIGHTENED FINGER TIGHT AND THEN BACKED OFF 1/2 TURN. THE THREAD OF THE NUT AND BOLT SHALL THEN BE BURRED WITH A SHARP POINTED TOOL.

THE 2" Ø PIPE SLEEVE SHALL BE CUT FROM SCHEDULE 40 PVC PLASTIC PIPE. THE PVC PLASTIC PIPE SHALL MEET THE REQUIREMENTS OF ASTM D1785.

STEEL SOLE PLATES, ANCHOR BOLTS, NUTS, AND WASHERS SHALL BE GALVANIZED IN ACCORDANCE WITH THE STANDARD SPECIFICATIONS.

PRIOR TO WELDING, GRIND THE GALVANIZED SURFACE OF THE PORTION OF THE EMBEDDED PLATE AND SOLE PLATE THAT ARE TO BE WELDED. AFTER WELDING, DAMAGED GALVANIZED SURFACES SHALL BE REPAIRED IN ACCORDANCE WITH THE STANDARD SPECIFICATIONS.

WHEN WELDING THE SOLE PLATE TO THE EMBEDDED PLATE IN THE GIRDER, USE TEMPERATURE INDICATING WAX PENS, OR OTHER SUITABLE MEANS, TO ENSURE THAT THE TEMPERATURE OF THE SOLE PLATE DOES NOT EXCEED 300°F. TEMPERATURES ABOVE THIS MAY DAMAGE THE ELASTOMER.

SOLE PLATE "P", BOLTS, NUTS, WASHERS, AND PIPE SLEEVE SHALL BE INCLUDED IN THE PAY ITEM FOR PRESTRESSED CONCRETE GIRDERS.

ANCHOR BOLTS SHALL MEET THE REQUIREMENTS OF ASTM A449. NUTS SHALL MEET THE REQUIREMENTS OF AASHTO M291-DH OR AASHTO M292-2H. WASHERS SHALL MEET THE REQUIREMENTS OF AASHTO M293. SHOP DRAWINGS ARE NOT REQUIRED FOR ANCHOR BOLT, NUTS AND WASHERS. SHOP INSPECTION IS REQUIRED.

ALL SURFACES OF BEARING PLATES SHALL BE SMOOTH AND STRAIGHT.

— LOAD RATINGS —	
	MAX.D.L.+L.L.
36"PCG -TYPE II	82K

PROJECT NO. R-2510C
BEAUFORT COUNTY
STATION: 222+51.50 -L-

NORTH CAROLINA PROFESSIONAL SEAL 16301 ENGINEER TING-HSIUNG FANG
10/7/10

STATE OF NORTH CAROLINA
DEPARTMENT OF TRANSPORTATION
RALEIGH

STANDARD
ELASTOMERIC BEARING DETAILS

PRESTRESSED CONCRETE GIRDER SUPERSTRUCTURE (RIGHT LANE)

REVISIONS						SHEET NO.
NO.	BY:	DATE:	NO.	BY:	DATE:	S-119
1			3			TOTAL SHEETS
2			4			134

ASSEMBLED BY : HARISH SHAH	DATE : 9/08		
CHECKED BY : A.R. CHESSON	DATE : 1/09		
DRAWN BY : WJH 8/89	REV. 10/17/00	RWW/LES	
CHECKED BY : CRK 8/89	REV. 7/10/01	RWW/LES	
	REV. 5/1/06	TLA/GM	

07-OCT-2010 12:33
Y:\TIPProjects-R\R2510c\Structures\r2510c\Final Plans\STR4\r-2510c_sd_bg_04.dgn
qtnguyen

STR. #4

STD. NO. EB3

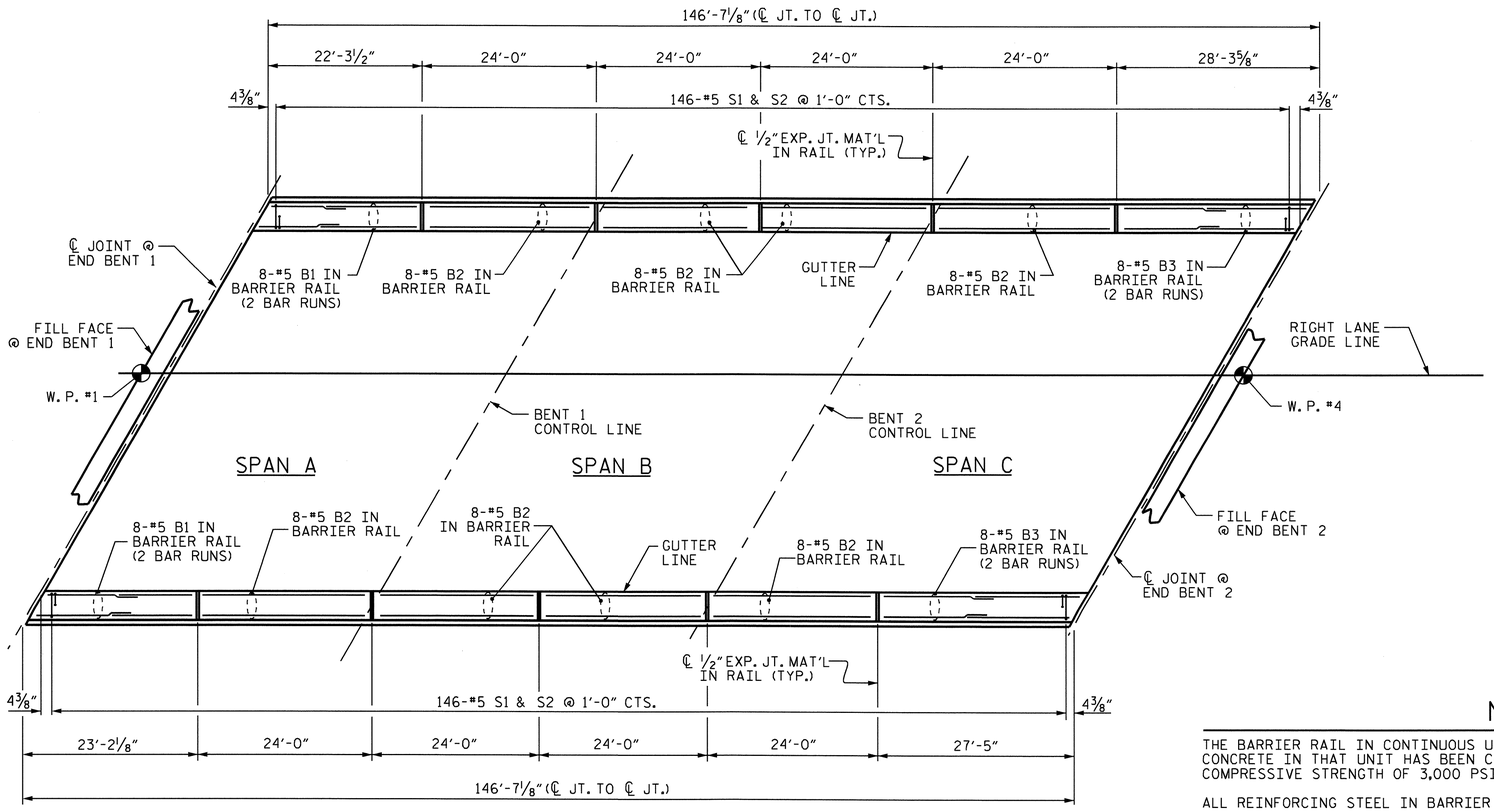

PLAN OF BARRIER RAIL

NOTES

THE BARRIER RAIL IN CONTINUOUS UNIT SHALL NOT BE CAST UNTIL ALL SLAB CONCRETE IN THAT UNIT HAS BEEN CAST AND HAS REACHED A MINIMUM COMPRESSIVE STRENGTH OF 3,000 PSI.

ALL REINFORCING STEEL IN BARRIER RAILS SHALL BE EPOXY COATED.

VERTICAL GROOVED CONTRACTION JOINTS, 1/2" IN DEPTH, SHALL BE TOOLED IN ALL EXPOSED FACES OF THE BARRIER RAIL AND IN ACCORDANCE WITH ARTICLE 825-10(B) OF THE STANDARD SPECIFICATIONS. THE CONTRACTION JOINT SHALL BE LOCATED AT EACH THIRD POINT BETWEEN BARRIER RAIL EXPANSION JOINTS. ONLY ONE CONTRACTION JOINT IS REQUIRED AT MIDPOINT OF BARRIER RAIL SEGMENTS LESS THAN 20 FEET IN LENGTH AND NO CONTRACTION JOINTS ARE REQUIRED FOR THOSE SEGMENTS LESS THAN 10 FEET IN LENGTH.

BAR TYPES

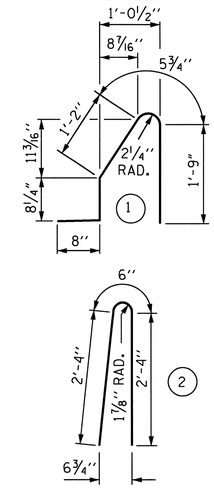

ALL BAR DIMENSIONS ARE OUT TO OUT

BILL OF MATERIAL

FOR CONCRETE BARRIER RAIL ONLY

BAR	NO.	SIZE	TYPE	LENGTH	WEIGHT
* B1	32	#5	STR	13'-0"	434
* B2	64	#5	STR	23'-8"	1580
* B3	32	#5	STR	15'-6"	517
* S1	292	#5	1	4'-9"	1447
* S2	292	#5	2	5'-2"	1574

*EPOXY COATED REINFORCING STEEL	5,552	LBS.
CLASS AA CONCRETE	29.4	CU. YDS.
CONCRETE BARRIER RAIL	293.19	LIN. FT.

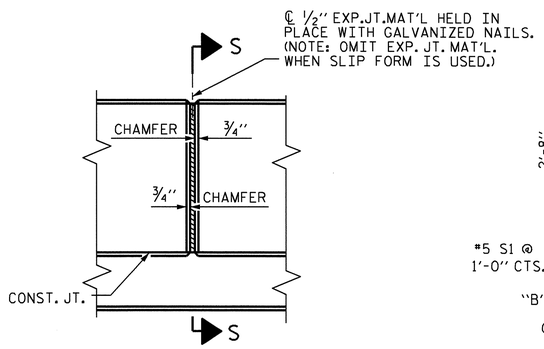

ELEVATION AT EXPANSION JOINTS

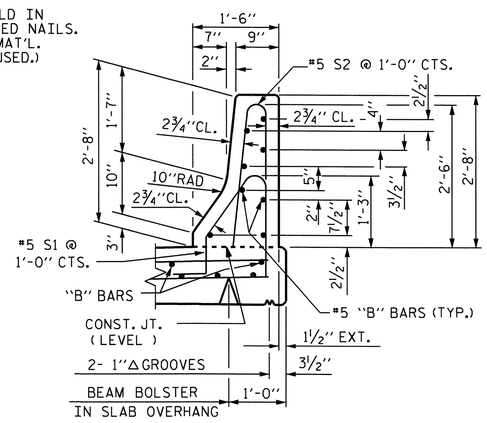

SECTION THRU RAIL

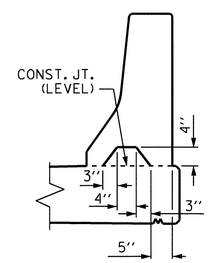

SECTION S-S

AT DAM IN OPEN JOINT
(THIS IS TO BE USED ONLY WHEN SLIP FORM IS USED)

BARRIER RAIL DETAILS

NORTH CAROLINA PROFESSIONAL SEAL 16301 ENGINEER TING-HSUNG YANG

12/1/10

PROJECT NO. R-2510C

BEAUFORT COUNTY

STATION: 222+51.50 -L-

STATE OF NORTH CAROLINA
DEPARTMENT OF TRANSPORTATION
RALEIGH

STANDARD

CONCRETE BARRIER RAIL

(RIGHT LANE)

REVISIONS						SHEET NO.
NO.	BY:	DATE:	NO.	BY:	DATE:	S-120
1			3			TOTAL SHEETS
2			4			134

STR. #4

STD. NO. CBR1

ASSEMBLED BY : HARISH SHAH	DATE : 02/09		
CHECKED BY : A.R. CHESSON	DATE : 02/09		
DRAWN BY : ARB 5/87	REV. 10/17/00	RWW/LES	
CHECKED BY : SJD 9/87	REV. 5/7/03R	RWW/JTE	
	REV. 5/1/06	TLA/GM	

30-NOV-2010 15:12
W:\Structures\r2510c\FinalPlans\STR4\r-2510c_sd_br_04.dgn
Hshah

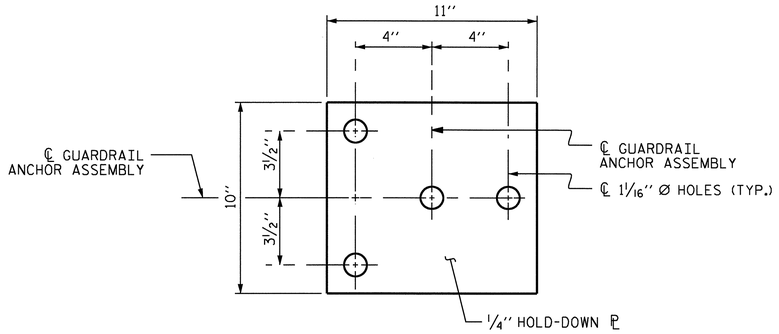

PLAN

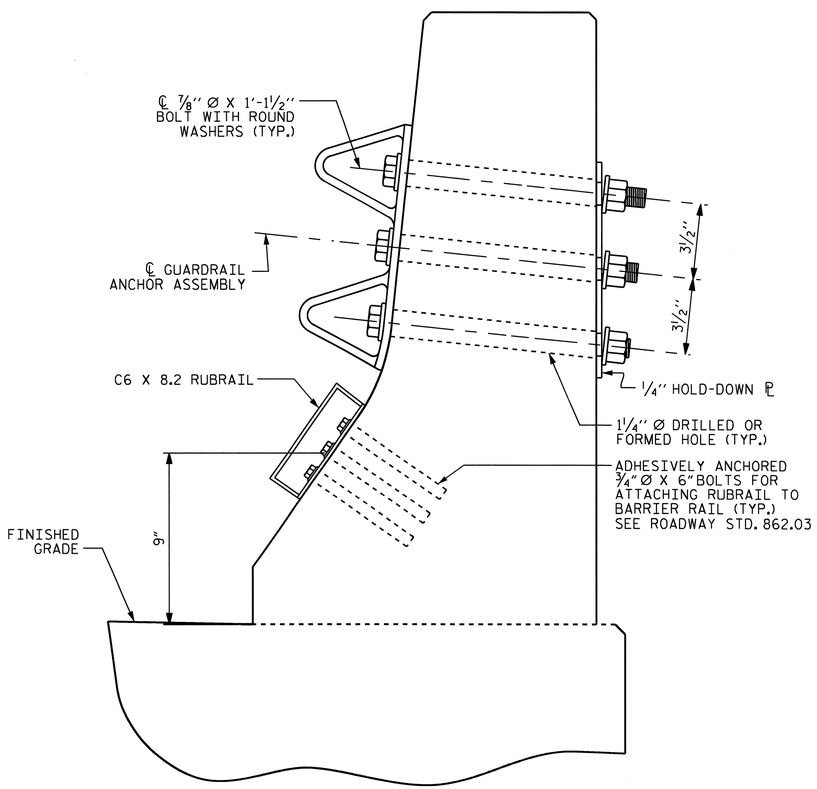

SECTION E-E

GUARDRAIL ANCHOR ASSEMBLY DETAILS

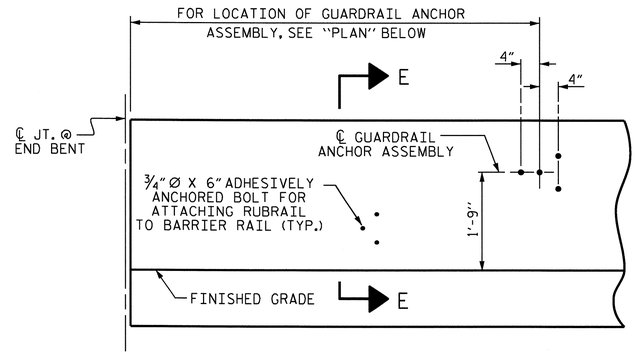

ELEVATION

FOR LOCATION OF RUBRAIL, SEE ROADWAY STD. 862.03

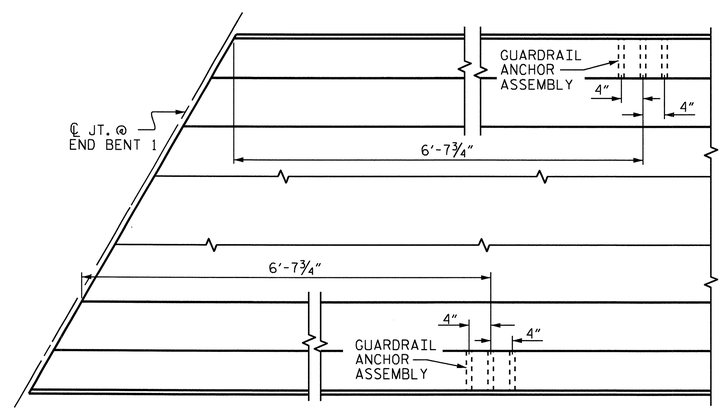

PLAN

LOCATION OF ANCHORS FOR GUARDRAIL

END BENT 1 SHOWN, END BENT 2 SIMILAR.

NOTES

THE GUARDRAIL ANCHOR ASSEMBLY SHALL CONSIST OF A 1/4" HOLD DOWN PLATE AND 4 - 7/8" Ø BOLTS WITH NUTS AND WASHERS, RUBRAIL, AND ADHESIVELY ANCHORED BOLTS.

THE HOLD-DOWN PLATE SHALL CONFORM TO AASHTO M270 GRADE 36. AFTER FABRICATION, THE HOLD-DOWN PLATE SHALL BE HOT-DIP GALVANIZED IN ACCORDANCE WITH AASHTO M111.

BOLTS SHALL CONFORM TO THE REQUIREMENTS OF ASTM A307 AND NUTS SHALL CONFORM TO THE REQUIREMENTS OF AASHTO M291. BOLTS, NUTS AND WASHERS SHALL BE GALVANIZED. (AT THE CONTRACTOR'S OPTION, STAINLESS STEEL BOLTS, NUTS AND WASHERS MAY BE USED AS AN ALTERNATE FOR THE 7/8" Ø GALVANIZED BOLTS, NUTS AND WASHERS. THEY SHALL CONFORM TO OR EXCEED THE MECHANICAL REQUIREMENTS OF ASTM A307. THE USE OF THIS ALTERNATE SHALL BE APPROVED BY THE ENGINEER.)

THE GUARDRAIL ANCHOR ASSEMBLY IS REQUIRED AT ALL POINTS WHERE APPROACH GUARDRAIL IS TO BE ATTACHED TO THE END OF BARRIER RAIL. FOR POINTS OF ATTACHMENT, SEE SKETCH.

AFTER INSTALLATION, THE EXPOSED THREAD OF THE BOLT SHALL BE BURRED WITH A SHARP POINTED TOOL.

THE COST OF THE GUARDRAIL ANCHOR ASSEMBLY SHALL BE INCLUDED IN THE UNIT CONTRACT PRICE BID FOR CONCRETE BARRIER RAIL.

THE 1 1/4" Ø HOLES SHALL BE FORMED OR DRILLED WITH A CORE BIT. IMPACT TOOLS WILL NOT BE PERMITTED. ANY CONCRETE DAMAGED BY THIS WORK SHALL BE REPAIRED TO THE SATISFACTION OF THE ENGINEER.

THE C6 X 8.2 RUBRAIL IS TO BE ADHESIVELY ANCHORED TO THE RAIL USING THREE 3/4" Ø X 6" BOLTS WITH WASHERS. LEVEL ONE FIELD TESTING IS REQUIRED, AND THE YIELD LOAD OF THE 3/4" Ø BOLT IS 12 KIPS. FOR ADHESIVELY ANCHORED BOLTS OR DOWELS, SEE SPECIAL PROVISIONS. SEE ROADWAY STANDARD 862.03 FOR DETAILS AND LOCATION OF THE RUBRAIL.

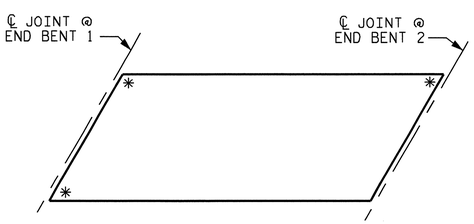

SKETCH SHOWING POINTS OF ATTACHMENTS

* DENOTES GUARDRAIL ANCHOR ASSEMBLY

PROJECT NO. R-2510C

BEAUFORT COUNTY

STATION: 222+51.50 -L-

NORTH CAROLINA PROFESSIONAL SEAL 16301 ENGINEER TING-HSUNG FANG

12/1/10

STATE OF NORTH CAROLINA
DEPARTMENT OF TRANSPORTATION
RALEIGH

STANDARD

GUARDRAIL ANCHORAGE FOR BARRIER RAIL

(RIGHT LANE)

REVISIONS						SHEET NO.
NO.	BY:	DATE:	NO.	BY:	DATE:	S-121
1			3			TOTAL SHEETS
2			4			134

ASSEMBLED BY : HARISH SHAH DATE : 9/08	
CHECKED BY : A.R. CHESSON DATE : 1/09	
DRAWN BY : TLA 5/06	ADDED 5/1/06
CHECKED BY : GM 5/06	

30-NOV-2010 15:13
W:\Structures\r2510c\Final Plans\STR4\r-2510c_sd_gr_04.dgn
Hshah

STR. #4

STD. NO. GRA2

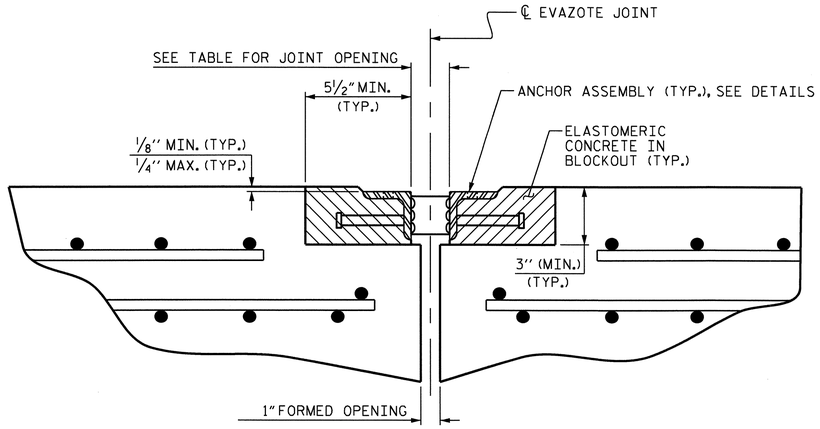

ARMORED JOINT DETAILS

SECTION NORMAL TO JOINT AT END BENT

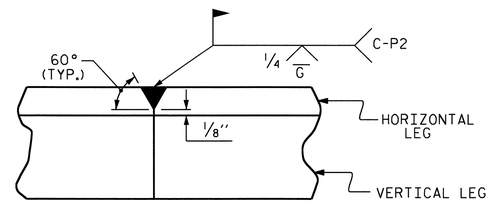

DETAIL- FIELD WELD SPLICE OF ANGLE

NOTES

ANGLES SHALL CONFORM TO AASHTO M270 GRADE 36 STEEL OR APPROVED EQUAL. ALL STUD ANCHORS SHALL CONFORM TO AASHTO M169 GRADES 1010 THRU 1020 OR APPROVED EQUAL.

STUD ANCHORS SHALL BE SHOP WELDED AND ALL HOLES SHALL BE SHOP DRILLED AS SHOWN ON THE PLANS. STUD ANCHORS SHALL BE ELECTRIC ARC END WELDED WITH COMPLETE FUSION.

UPON COMPLETION OF SHOP FABRICATION, THE ENTIRE ANCHOR ASSEMBLY SHALL BE METALLIZED. THE ½" Ø STUD ANCHORS AND ANCHOR TABS NEED NOT BE METALLIZED. SEE SPECIAL PROVISION FOR THERMAL SPRAYED COATINGS (METALLIZATION).

ANCHOR ASSEMBLY SHALL BE MADE CONTINUOUS THE LENGTH OF THE JOINT FROM GUTTER TO GUTTER. FOR FIELD SPLICES AT ALL CROWN BREAK POINTS, THE ENDS OF THE STEEL ANGLES SHALL BE CUT PARALLEL TO THE BRIDGE CENTERLINE. FINISHED FIELD WELDS SHALL BE GROUND SMOOTH AND COATED WITH A MINIMUM THICKNESS OF 4 DRY MILS OF ZINC-RICH PAINT IN ACCORDANCE WITH THE STANDARD SPECIFICATIONS.

ANCHOR ASSEMBLY SEGMENTS SHALL NOT BE LESS THAN 12 FEET NOR MORE THAN 20 FEET IN LENGTH. SHORTER SEGMENTS MAY BE USED AT THE EDGE OF ROADWAY OR AT POINTS OF STAGED CONSTRUCTION.

THE ANCHOR ASSEMBLY SHALL BE SECURED AND LEVELED AS SHOWN IN THE "ARMORED JOINT ANCHOR ASSEMBLY DETAILS". NO SUBMITTALS ARE REQUIRED FOR ⅜" Ø EXPANSION ANCHORS, NUTS OR WASHERS. THE CONTRACTOR MAY SUBMIT FOR APPROVAL AN ALTERNATE METHOD OF ALIGNING AND LEVELING THE ANGLES. THE ALTERNATE METHOD SHALL NOT INCLUDE ANY WELDING TO THE OUTSIDE FACE OF THE ANGLES.

AFTER THE ELASTOMERIC CONCRETE HAS BEEN CAST ON BOTH SIDES OF THE JOINT, REMOVE ANY EXCESS CONCRETE THAT COMES THROUGH THE WEEP HOLES AND THOROUGHLY CLEAN THE ANGLES. ANY DAMAGED STEEL SHALL BE COATED WITH A MINIMUM OF 4 MILS OF ZINC-RICH PAINT IN ACCORDANCE WITH THE STANDARD SPECIFICATIONS.

SEE SPECIAL PROVISIONS FOR EVAZOTE JOINT SEALS.

SEE SPECIAL PROVISIONS FOR ELASTOMERIC CONCRETE.

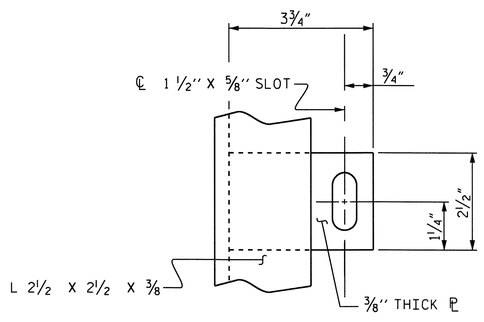

PLAN VIEW OF TAB

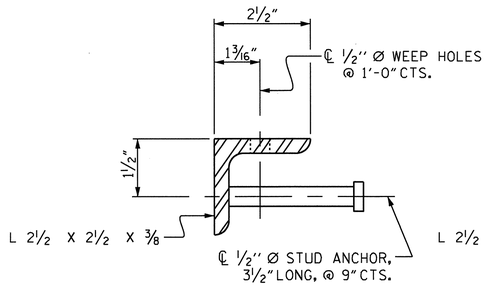

SECTION VIEW OF STUD

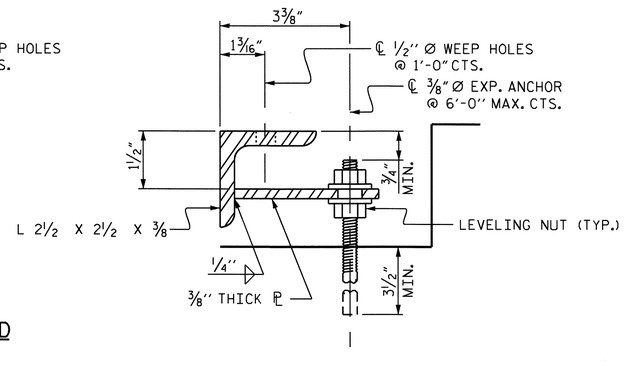

SECTION VIEW OF TAB

ARMORED JOINT ANCHOR ASSEMBLY DETAILS

MOVEMENT AND SETTING AT EVAZOTE JOINT

END BENT	SKEW ANGLE	NOMINAL UNCOMPRESSED SEAL WIDTH	TOTAL MOVEMENT (ALONG ℄ RDWY)	PERPENDICULAR JT. OPENING AT 45° F	PERPENDICULAR JT. OPENING AT 60° F	PERPENDICULAR JT. OPENING AT 90° F
1	120°-00'-00"	2½"	9⁄16"	2⅛"	2"	1¹³⁄₁₆"
2	120°-00'-00"	2½"	9⁄16"	2⅛"	2"	1¹³⁄₁₆"

TOTAL MOVEMENT IS CALCULATED ALONG THE CENTERLINE OF ROADWAY.
JOINT OPENINGS ARE MEASURED PERPENDICULAR TO THE JOINT.

BILL OF MATERIAL

END BENT	ELASTOMERIC CONCRETE ✱ (CU. FT.)	TOTAL LENGTH OF ANGLE (FT)
1	9.5	83'-1¹¹⁄₁₆"
2	9.5	83'-1¹¹⁄₁₆"

✱ BASED ON THE MINIMUM BLOCKOUT SHOWN.

PROJECT NO. R-2510C
BEAUFORT COUNTY
STATION: 222+51.50 -L-

NORTH CAROLINA PROFESSIONAL SEAL 16301 ENGINEER TING HSIANG FANG
12/1/10

STATE OF NORTH CAROLINA
DEPARTMENT OF TRANSPORTATION
RALEIGH

STANDARD
ARMORED EVAZOTE JOINT DETAILS
(RIGHT LANE)

REVISIONS						
NO.	BY:	DATE:	NO.	BY:	DATE:	
1			3			
2			4			

SHEET NO. S-122
TOTAL SHEETS 134

ASSEMBLED BY : HARISH SHAH	DATE : 07/09		
CHECKED BY : O.T. NGUYEN	DATE : 08/09		
DRAWN BY : EEM 1/96	REV. 7/10/01 LES/RDR		
CHECKED BY : RGW 1/96	REV. 5/7/03RR RWW/JTE		
	REV. 5/1/06 TLA/GM		

30-NOV-2010 15:13
W:\Structures\r2510c\Final Plans\STR4\R-2510C_sd_AEJ_04.dgn
Hshah

STR. #4

STD. NO. AEJ1

SUPERSTRUCTURE REINFORCING STEEL LENGTHS ARE BASED ON THE FOLLOWING MINIMUM SPLICE LENGTHS

BAR SIZE	SUPERSTRUCTURE EXCEPT APPROACH SLABS, PARAPET, AND BARRIER RAIL		APPROACH SLABS		PARAPET AND BARRIER RAIL
	EPOXY COATED	UNCOATED	EPOXY COATED	UNCOATED	
#4	2'-0"	1'-9"	2'-0"	1'-9"	2'-9"
#5	2'-6"	2'-2"	2'-6"	2'-2"	3'-5"
#6	3'-0"	2'-7"	3'-10"	2'-7"	4'-4"
#7	5'-3"	3'-6"			
#8	6'-10"	4'-7"			

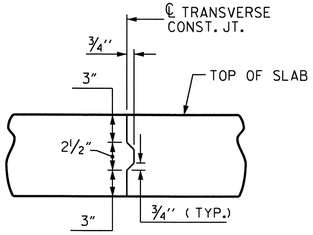

TRANSVERSE CONSTRUCTION JOINT DETAIL

NOTE: REINFORCING STEEL IN SLAB NOT SHOWN. LONGITUDINAL REINFORCING STEEL SHALL BE CONTINUOUS THRU JOINT

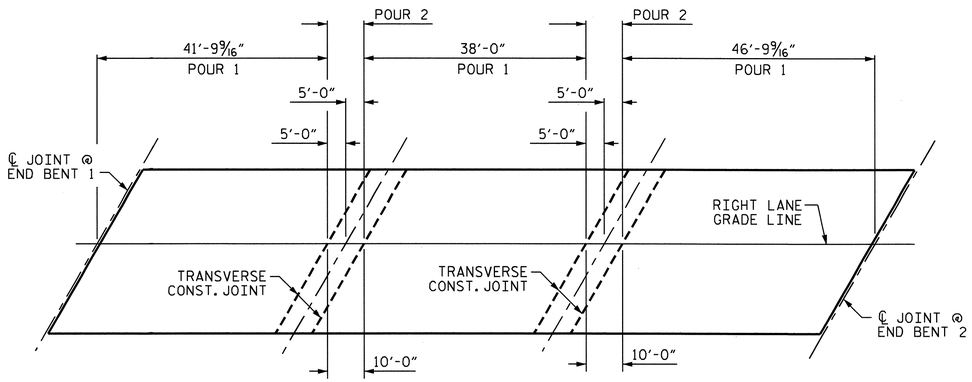

OPTIONAL POURING SEQUENCE

POUR 2 CANNOT BE STARTED UNTIL BOTH ADJACENT POUR 1 REACH A MINIMUM OF 3000 PSI.

BILL OF MATERIAL

BAR	NO.	SIZE	TYPE	LENGTH	WEIGHT	BAR	NO.	SIZE	TYPE	LENGTH	WEIGHT
✱ A1	247	#5	STR	38'-11"	10026	A213	4	#5	STR	16'-10"	70
A2	247	#5	STR	38'-11"	10026	A214	4	#5	STR	15'-2"	63
✱ A3	6	#6	STR	13'-6"	122	A215	4	#5	STR	13'-5"	56
						A216	4	#5	STR	11'-8"	49
✱ A101	4	#5	STR	36'-8"	153	A217	4	#5	STR	9'-11"	41
✱ A102	4	#5	STR	34'-11"	146	A218	4	#5	STR	8'-2"	34
✱ A103	4	#5	STR	33'-2"	138	A219	4	#5	STR	6'-6"	27
✱ A104	4	#5	STR	31'-5"	131	A220	4	#5	STR	4'-9"	20
✱ A105	4	#5	STR	29'-9"	124	A221	4	#5	STR	3'-0"	13
✱ A106	4	#5	STR	28'-0"	117						
✱ A107	4	#5	STR	26'-3"	110						
✱ A108	4	#5	STR	24'-6"	102	✱ B1	28	#4	STR	29'-1"	544
✱ A109	4	#5	STR	22'-10"	95	✱ B2	28	#7	STR	39'-0"	2232
✱ A110	4	#5	STR	22'-1"	88	✱ B3	25	#7	STR	14'-6"	741
✱ A111	4	#5	STR	19'-4"	81	✱ B4	28	#4	STR	13'-0"	243
✱ A112	4	#5	STR	17'-7"	73	✱ B5	28	#7	STR	40'-6"	2318
✱ A113	4	#5	STR	15'-10"	66	✱ B6	25	#7	STR	15'-3"	779
✱ A114	4	#5	STR	14'-2"	59	✱ B7	56	#4	STR	17'-4"	648
✱ A115	4	#5	STR	12'-5"	52	B8	156	#5	STR	50'-2"	8162
✱ A116	4	#5	STR	10'-8"	45						
✱ A117	4	#5	STR	8'-11"	37	✱ G1	2	#5	STR	44'-11"	94
✱ A118	4	#5	STR	7'-2"	30						
✱ A119	4	#5	STR	5'-6"	23	✱ K1	8	#8	1	13'-0"	278
✱ A120	4	#5	STR	3'-9"	16	✱ K2	12	#8	2	19'-7"	627
✱ A121	4	#5	STR	2'-0"	8	✱ K3	24	#6	STR	7'-11"	285
						K4	16	#4	STR	6'-0"	64
						K5	32	#4	STR	8'-6"	182
A201	4	#5	STR	37'-8"	157	K6	12	#4	3	6'-0"	48
A202	4	#5	STR	35'-11"	150	K7	18	#4	4	11'-10"	142
A203	4	#5	STR	34'-2"	143						
A204	4	#5	STR	32'-5"	135	✱ S1	64	#5	5	4'-11"	328
A205	4	#5	STR	30'-9"	128	✱ S2	64	#4	6	3'-9"	160
A206	4	#5	STR	29'-0"	121	S3	112	#4	7	3'-1"	231
A207	4	#5	STR	27'-3"	114						
A208	4	#5	STR	25'-6"	106	U1	48	#4	8	11'-11"	382
A209	4	#5	STR	23'-10"	99	U2	16	#4	8	9'-11"	106
A210	4	#5	STR	22'-1"	92						
A211	4	#5	STR	20'-4"	85	REINFORCING STEEL = 21,125 LBS					
A212	4	#5	STR	18'-7"	78	✱ EPOXY COATED REINF. STEEL= 21,119 LBS					

✱ DENOTES EPOXY COATED REINFORCING STEEL

BAR TYPES

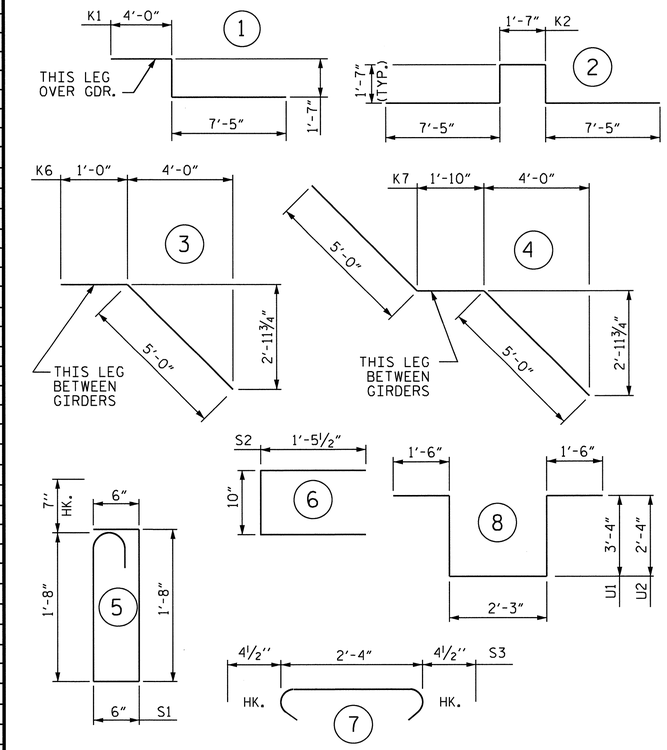

ALL BAR DIMENSIONS ARE OUT TO OUT

GROOVING BRIDGE FLOORS

APPROACH SLABS	1,552	SQ.FT.
BRIDGE DECK	4,790	SQ.FT.
TOTAL	6,342	SQ.FT.

SUPERSTRUCTURE BILL OF MATERIAL

SPANS A, B, & C	CLASS AA CONCRETE	REINFORCING STEEL	✱ EPOXY COATED REINFORCING STEEL
	(CU. YDS.)	(LBS.)	(LBS.)
POUR 1	54.5		
POUR 2	69.8		
POUR 3	83.0		
TOTAL ✱✱	207.3	21,125	21,119

✱✱ QUANTITIES FOR BARRIER RAIL ARE NOT INCLUDED

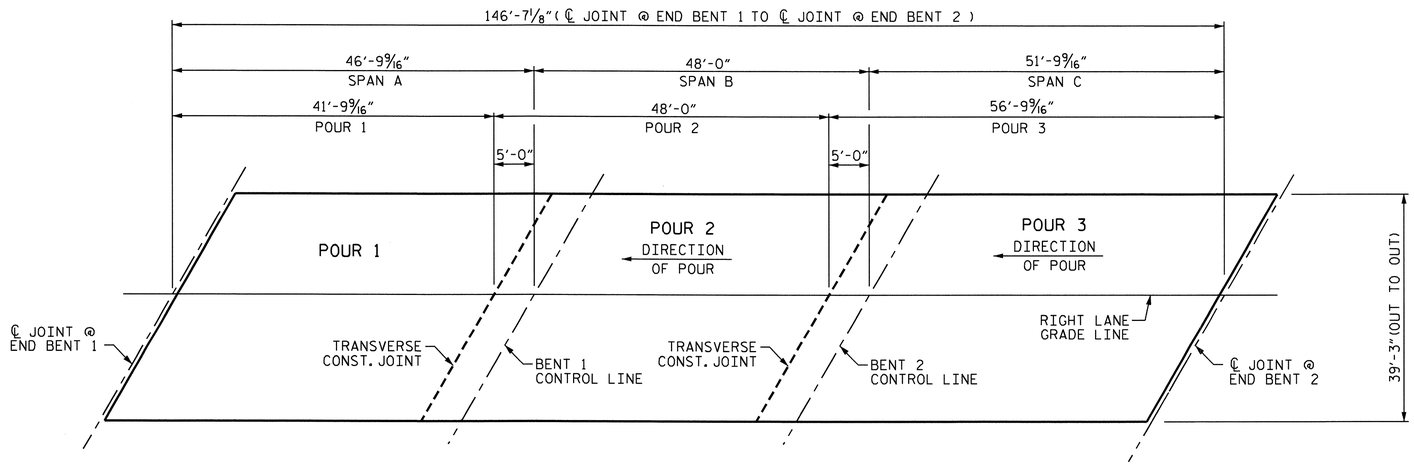

POURING SEQUENCE AND LAYOUT FOR COMPUTING AREA OF REINFORCED CONCRETE DECK SLAB

(SQ. FT. = 5,754)

PROJECT NO. R-2510C
BEAUFORT COUNTY
STATION: 222+51.50 -L-

STATE OF NORTH CAROLINA
DEPARTMENT OF TRANSPORTATION
RALEIGH

STANDARD
SUPERSTRUCTURE BILL OF MATERIAL
(RIGHT LANE)

NORTH CAROLINA PROFESSIONAL SEAL 16301 ENGINEER TING YSIUNG FANG
12/8/10

ASSEMBLED BY : HARISH SHAH	DATE : 9/08		
CHECKED BY : T. H. FANG	DATE : 8/10		
DRAWN BY : JMB 5/87	REV. 6/1/94	EEM/GRP	
CHECKED BY : SJD 9/87	REV. 8/16/99	RWW/LES	
	REV. 5/1/06	TLA/GM	

REVISIONS								SHEET NO.
NO.	BY:	DATE:	NO.	BY:	DATE:			S-123
1			3					TOTAL SHEETS
2			4					134

08-DEC-2010 10:09
Y:\TIPProjects-R\R2510c\Structures\r2510c\FinalPlans\STR4\r-2510c_sd_bm_04.dgn
qtnguyen

STR #4 STD. NO. BOM2

NOTES

STIRRUPS IN CAP MAY BE SHIFTED AS NECESSARY TO CLEAR ANCHOR BOLTS.

BACKWALL SHALL BE PLACED BEFORE APPLYING THE EPOXY PROTECTIVE COATING.

THE TOP SURFACE AREAS OF THE END BENT CAPS SHALL BE CURED IN ACCORDANCE WITH THE STANDARD SPECIFICATIONS EXCEPT THAT THE MEMBRANE CURING COMPOUND METHOD SHALL NOT BE USED.

* THE TOP SURFACE OF THE END BENT CAP EXCEPT THE BRIDGE SEAT BUILDUPS SHALL BE SLOPED TRANSVERSELY FROM THE FILL FACE TO THE BACK FACE AT THE RATE OF 2%.

THE CONTRACTOR SHALL PROVIDE FOR INSTALLATION OF THE 4" DIAMETER DRAIN PIPE THROUGH THE WING WALL AS REQUIRED FOR REINFORCED BRIDGE APPROACH FILLS, SEE THE ROADWAY PLANS. REINFORCING STEEL IN THE WING WALL MAY BE SHIFTED AS NECESSARY TO CLEAR THE DRAIN PIPE.

THE CONCRETE IN THE SHADED AREA OF THE WING SHALL BE POURED AFTER THE BARRIER IS CAST IF SLIP FORMING IS USED.

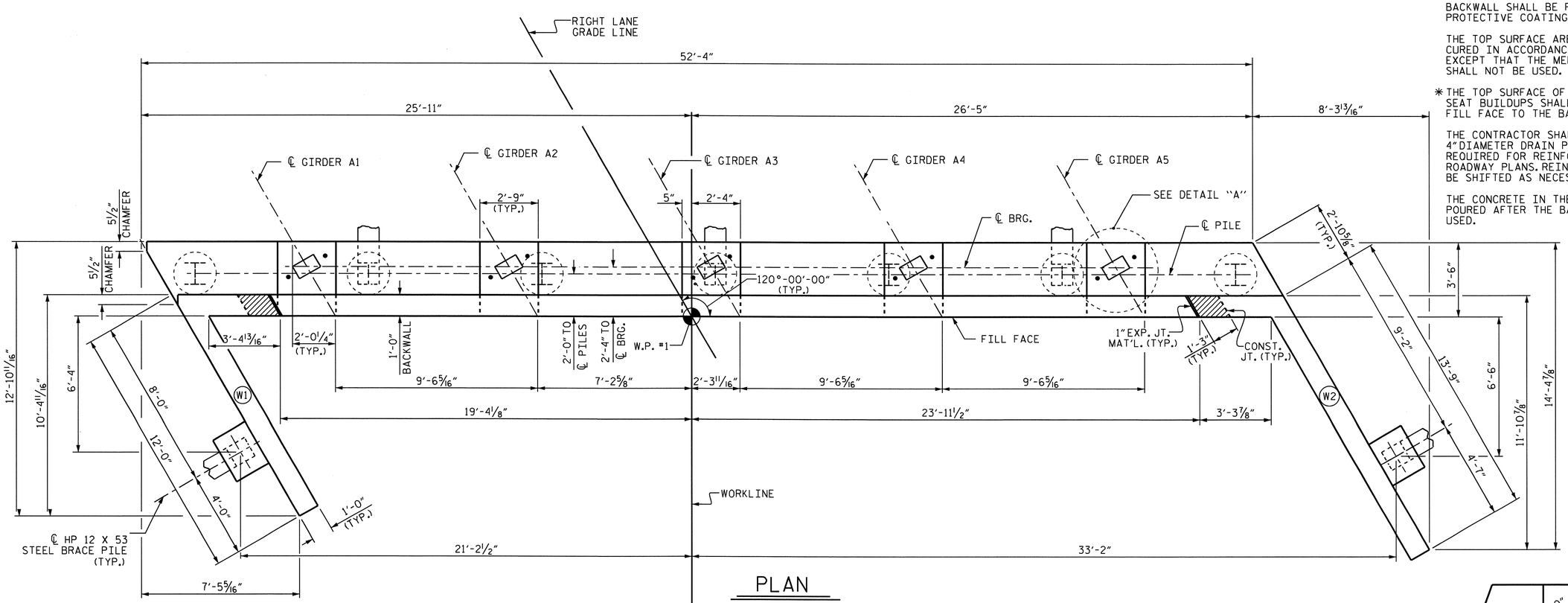

PLAN

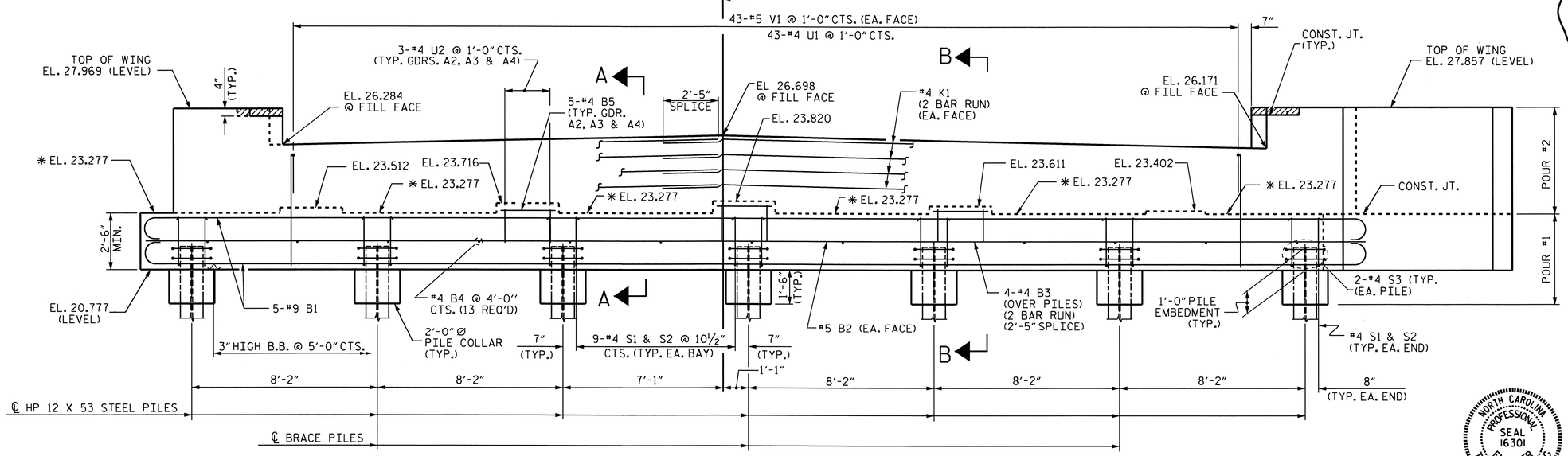

ELEVATION

BRACE PILES IN WING WALLS AND DETAILS OF WING WALLS NOT SHOWN FOR CLARITY. (LEFT WING NOT SHOWN FOR CLARITY)

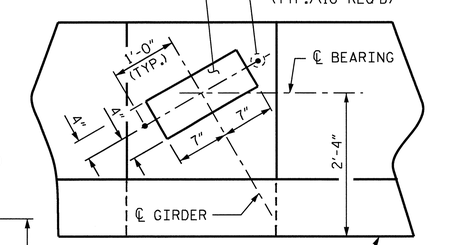

DETAIL "A"

(TYP. EA. GDR.)

PROJECT NO. R-2510C

BEAUFORT COUNTY

STATION: 222+51.50 -L-

SHEET 1 OF 3

STATE OF NORTH CAROLINA
DEPARTMENT OF TRANSPORTATION
RALEIGH

SUBSTRUCTURE

END BENT 1

(RIGHT LANE)

NORTH CAROLINA PROFESSIONAL SEAL 16301 ENGINEER TING-HSIANG FANG

12/1/10

REVISIONS						SHEET NO.
NO.	BY:	DATE:	NO.	BY:	DATE:	S-124
1			3			TOTAL SHEETS
2			4			134

DRAWN BY : HARISH SHAH DATE : 10/21/08
CHECKED BY : A.R. CHESSON DATE : 2/09

30-NOV-2010 15:07
W:\Structures\r2510c\Final Plans\STR4\r-2510c_sd_e*_04.dgn
Hshah

STR. #4

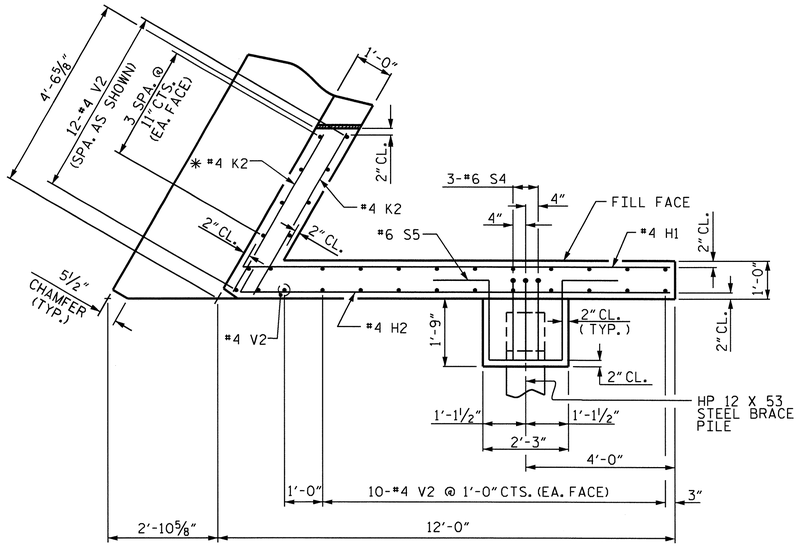

PLAN OF WING (W2)

*#4 K2 FIELD CUT AS NECESSARY TO GIVE 2" MIN. CLEARANCE FROM CHAMFER.

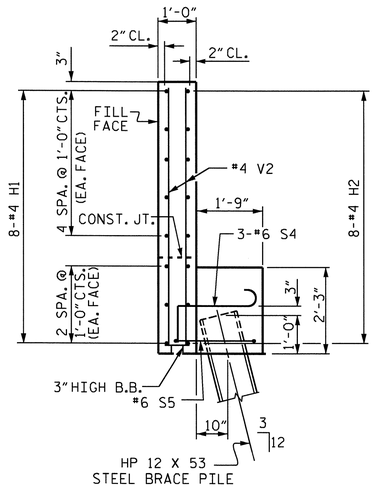

SECTION X-X

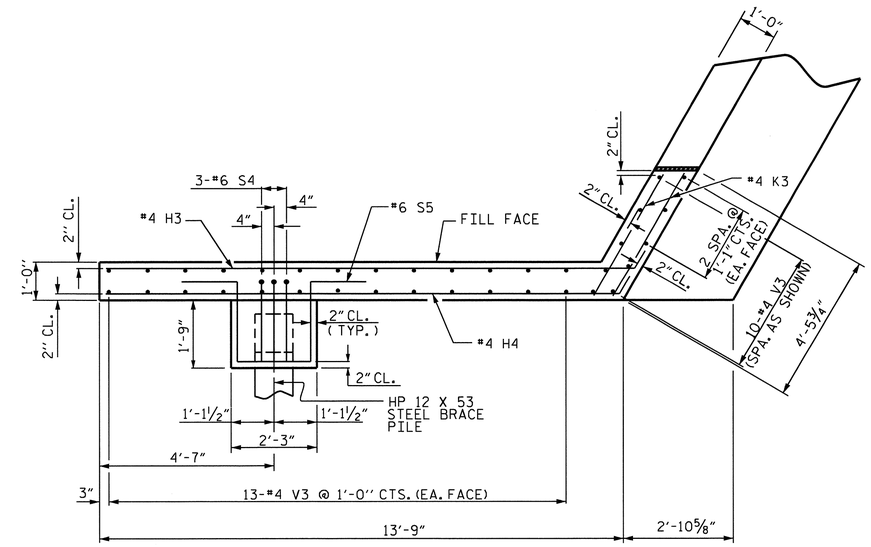

PLAN OF WING (W2)

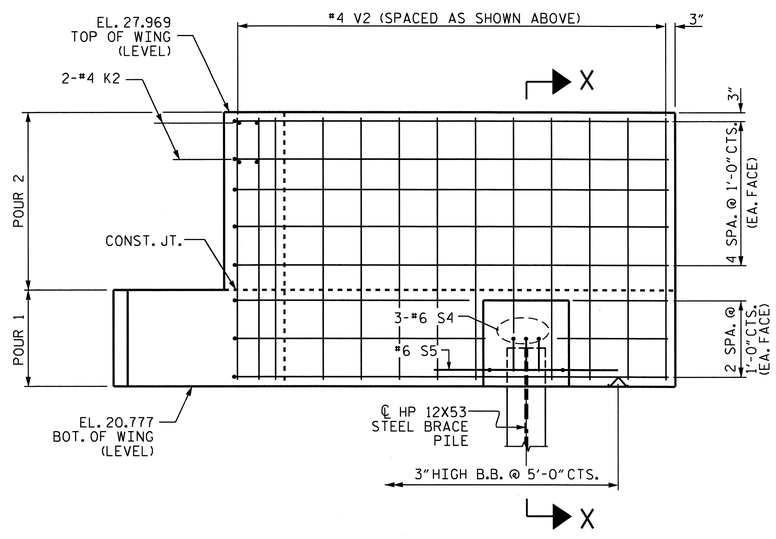

ELEVATION OF WING (W1)

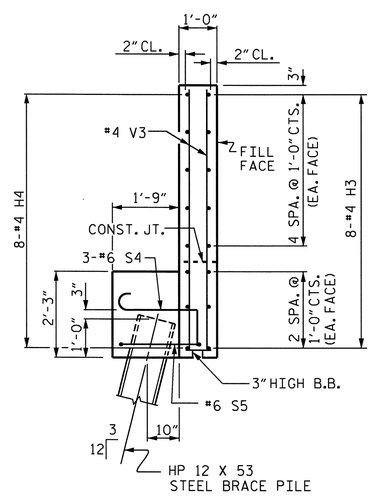

SECTION Y-Y

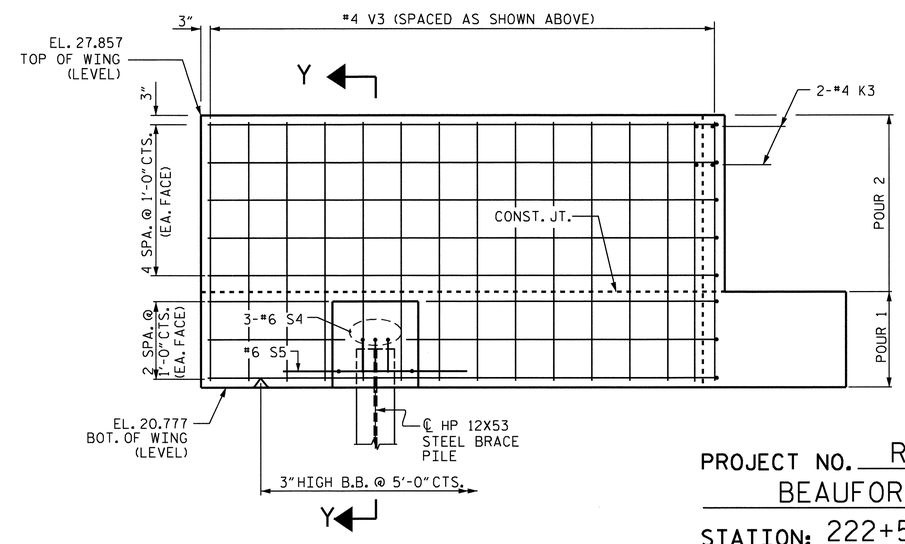

ELEVATION OF WING (W2)

PROJECT NO. R-2510C

BEAUFORT COUNTY

STATION: 222+51.50 -L-

SHEET 2 OF 3

STATE OF NORTH CAROLINA
DEPARTMENT OF TRANSPORTATION
RALEIGH

SUBSTRUCTURE

END BENT 1

(RIGHT LANE)

NORTH CAROLINA PROFESSIONAL SEAL 16301 ENGINEER TING HSIUNG SHAH

12/1/10

REVISIONS						SHEET NO.
NO.	BY:	DATE:	NO.	BY:	DATE:	S-125
1			3			TOTAL SHEETS
2			4			134

DRAWN BY : HARISH SHAH DATE : 10/08

CHECKED BY : A.R. CHESSON DATE : 02/09

30-NOV-2010 15:14
W:\Structures\r2510c\Final Plans\STR4\r-2510c_sd_e*_04.dgn
Hshah

STR. #4

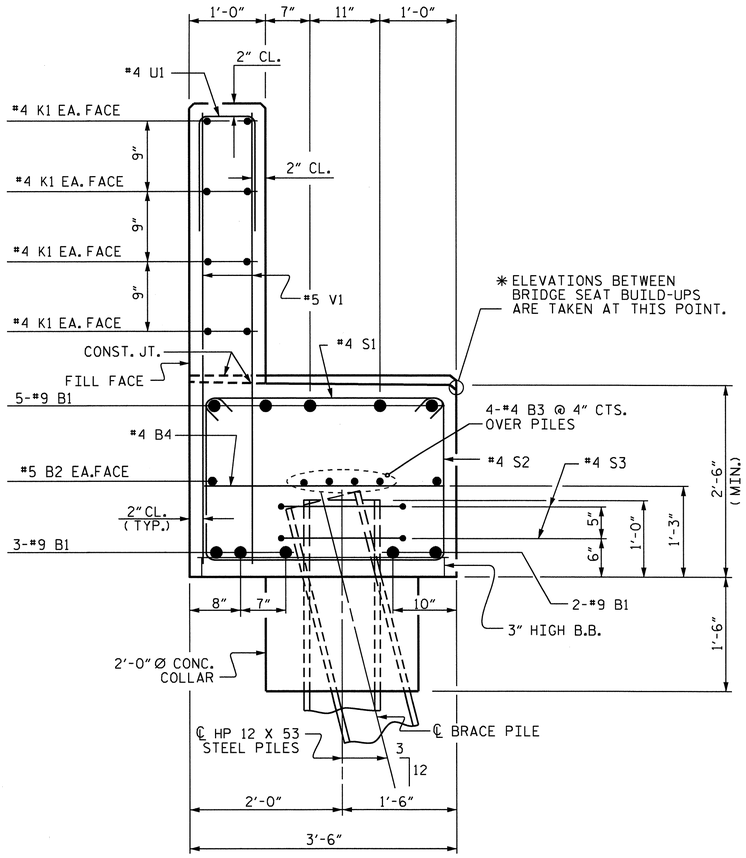

SECTION A-A

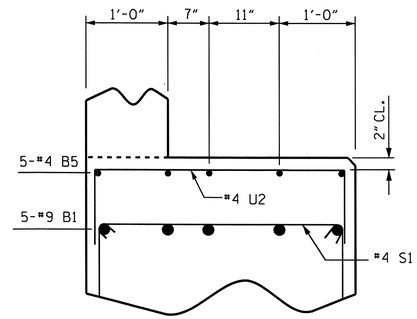

PARTIAL SECTION B-B

#5 V1 BARS NOT SHOWN FOR CLARITY.

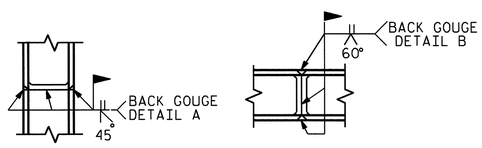

**PILE VERTICAL **PILE HORIZONTAL OR VERTICAL

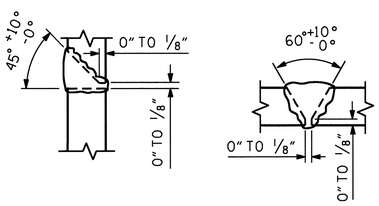

DETAIL A DETAIL B

PILE SPLICE DETAILS

✱✱POSITION OF PILE DURING WELDING.

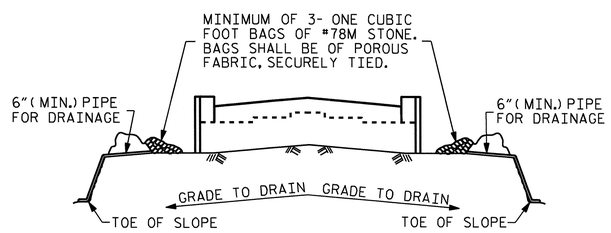

BAGGED STONE AND PIPE SHALL BE PLACED IMMEDIATELY AFTER COMPLETION OF END BENT EXCAVATION. PIPE MAY BE EITHER CONCRETE, CORRUGATED STEEL, CORRUGATED ALUMINUM ALLOY, OR CORRUGATED PLASTIC. PERFORATED PIPE WILL NOT BE ALLOWED.

BAGGED STONE SHALL REMAIN IN PLACE UNTIL THE ENGINEER DIRECTS THAT IT BE REMOVED. THE CONTRACTOR SHALL REMOVE AND DISPOSE OF SILT ACCUMULATIONS AT BAGGED STONE WHEN SO DIRECTED BY THE ENGINEER. BAGS SHALL BE REMOVED AND REPLACED WHENEVER THE ENGINEER DETERMINES THAT THEY HAVE DETERIORATED AND LOST THEIR EFFECTIVENESS.

NO SEPARATE PAYMENT WILL BE MADE FOR THIS WORK AND THE ENTIRE COST OF THIS WORK SHALL BE INCLUDED IN THE UNIT CONTRACT PRICE BID FOR THE SEVERAL PAY ITEMS.

TEMPORARY DRAINAGE AT END BENT

BAR TYPES

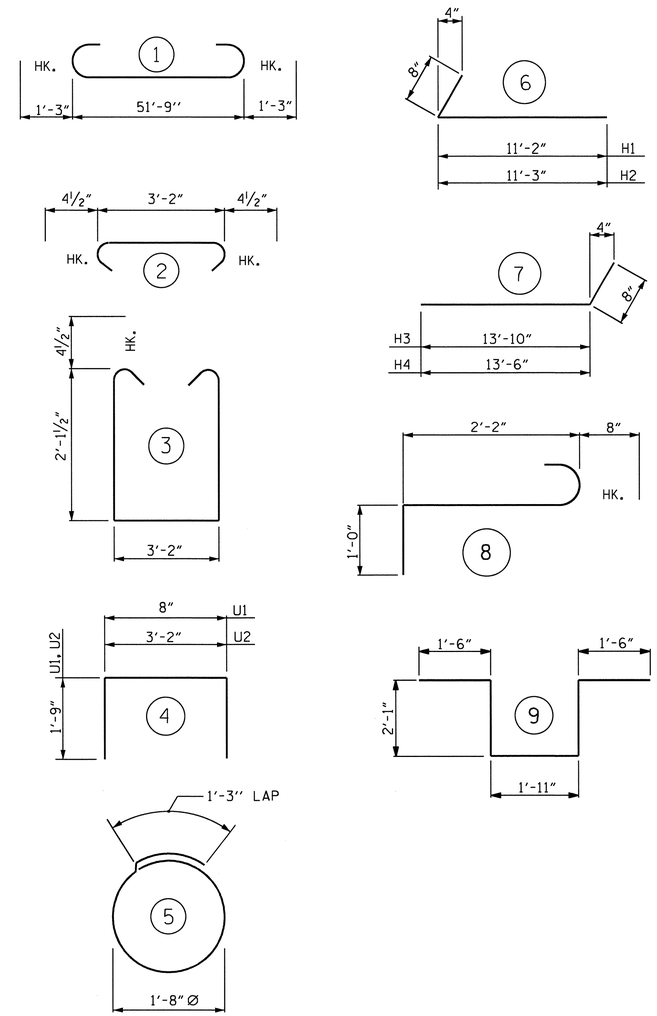

ALL BAR DIMENSIONS ARE OUT TO OUT.

BILL OF MATERIAL

END BENT 1

BAR	NO.	SIZE	TYPE	LENGTH	WEIGHT
B1	10	#9	1	54'-3"	1845
B2	2	#5	STR	51'-9"	108
B3	8	#4	STR	27'-3"	146
B4	13	#4	STR	3'-2"	27
B5	15	#4	STR	2'-5"	24
H1	8	#4	6	11'-10"	63
H2	8	#4	6	11'-11"	64
H3	8	#4	7	14'-6"	77
H4	8	#4	7	14'-2"	76
K1	16	#4	STR	27'-3"	291
K2	4	#4	STR	4'-1"	11
K3	4	#4	STR	4'-2"	11
S1	56	#4	2	3'-11"	147
S2	56	#4	3	8'-2"	305
S3	14	#4	5	6'-6"	61
S4	6	#6	8	3'-10"	35
S5	2	#6	9	9'-1"	27
U1	43	#4	4	4'-2"	120
U2	9	#4	4	6'-8"	40
V1	86	#5	STR	5'-2"	463
V2	33	#4	STR	6'-10"	151
V3	36	#4	STR	6'-9"	162

REINFORCING STEEL 4,254 LBS

CLASS A CONCRETE

POUR 1 (CAP & LOWER WINGS & COLLARS)	21.4	C.Y.
POUR 2 (BACKWALL & UPPER WINGS)	10.7	C.Y.
TOTAL	32.1	C.Y.

HP 12 X 53 STEEL PILES

NUMBER = 9	LIN. FT. =	585
PILE REDRIVES	EACH	4

PROJECT NO. R-2510C

BEAUFORT COUNTY

STATION: 222+51.50 -L-

SHEET 3 OF 3

STATE OF NORTH CAROLINA
DEPARTMENT OF TRANSPORTATION
RALEIGH

SUBSTRUCTURE

END BENT 1

(RIGHT LANE)

NORTH CAROLINA PROFESSIONAL SEAL 16301 ENGINEER TING HSIUNG FANG

12/1/10

REVISIONS						SHEET NO.
NO.	BY:	DATE:	NO.	BY:	DATE:	S-126
1			3			TOTAL SHEETS
2			4			134

DRAWN BY : HARISH SHAH DATE : 10/08

CHECKED BY : A.R. CHESSON DATE : 02/09

30-NOV-2010 15:08
W:\Structures\r2510c\Final Plans\STR4\r-2510c_sd_e*_04.dgn
Hshah

STR. #4

NOTES

STIRRUPS IN CAP MAY BE SHIFTED AS NECESSARY TO CLEAR ANCHOR BOLTS.

GALVANIZE THE TOP 35 FT FOR BENT 1 AND 25 FT FOR BENT 2 MIN. OF EACH PILE IN ACCORDANCE WITH SECTION 1076 OF THE STANDARD SPECIFICATIONS.

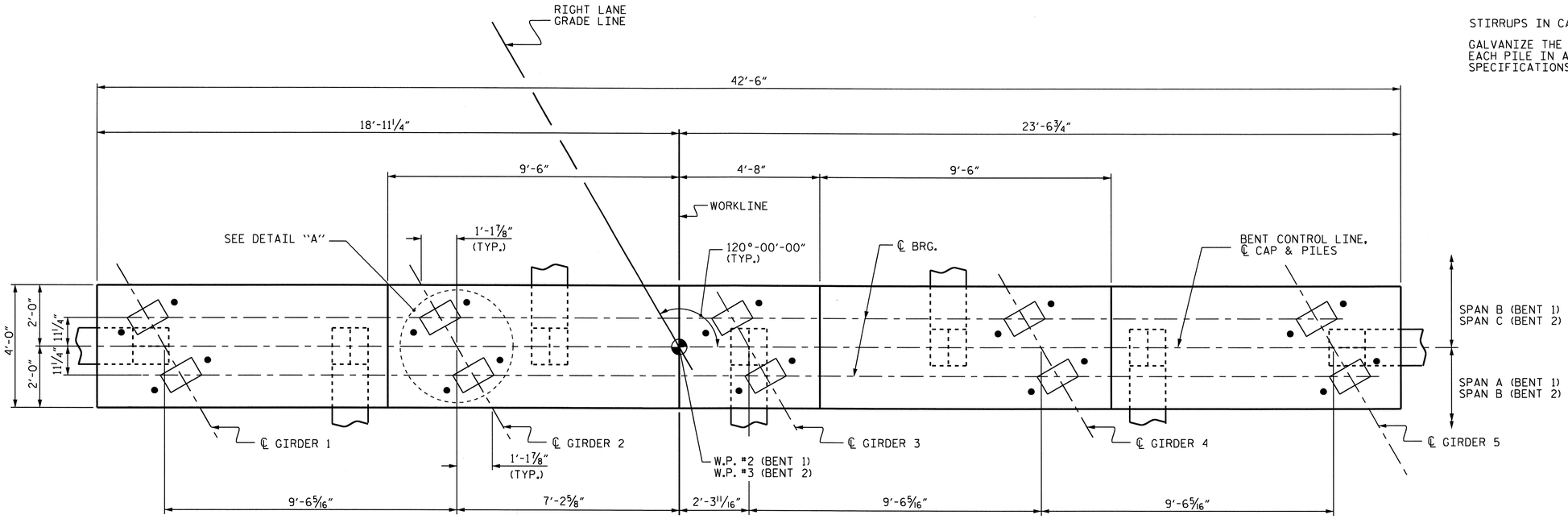

PLAN

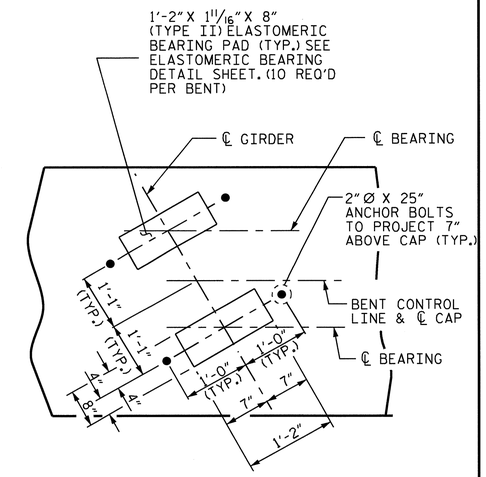

DETAIL "A"

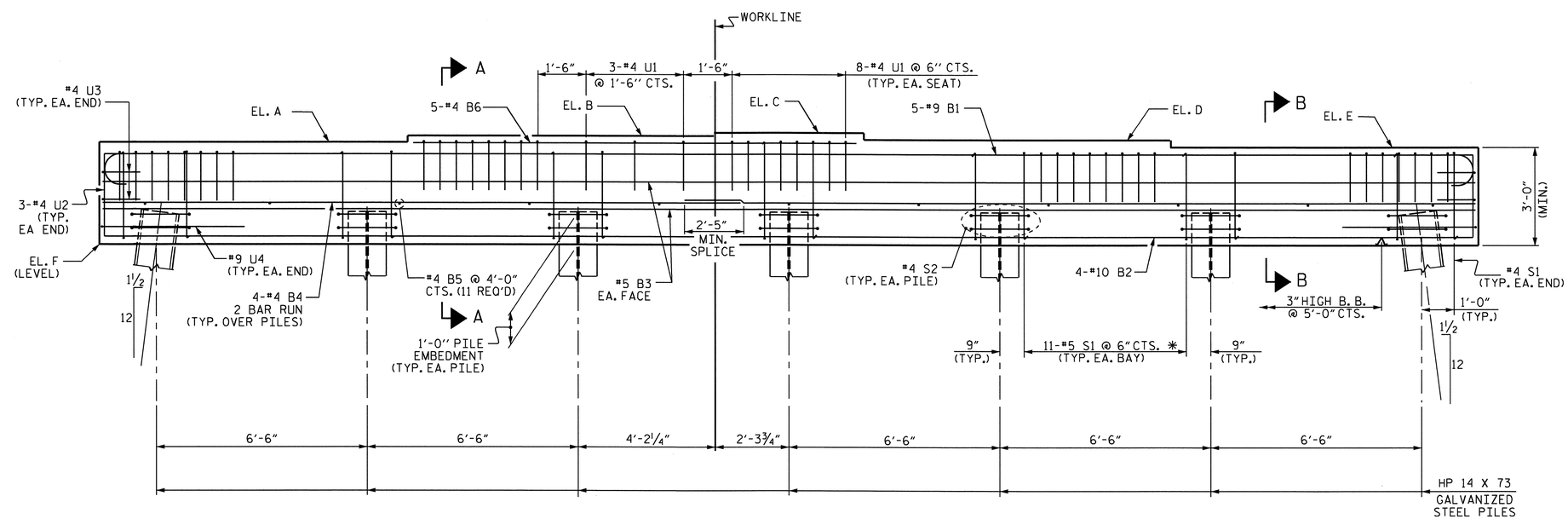

*INVERT ALTERNATE STIRRUPS

ELEVATION

ALL PILES BATTERED 1½ :12 IN DIRECTION SHOWN IN PLAN VIEW.

ELEVATIONS		
POINT	BENT 1	BENT 2
EL. A	23.514	23.480
EL. B	23.721	23.691
EL. C	23.829	23.802
EL. D	23.623	23.600
EL. E	23.417	23.398
EL. F	20.417	20.398

PROJECT NO. R-2510C

BEAUFORT COUNTY

STATION: 222+51.50 -L-

SHEET 1 OF 2

STATE OF NORTH CAROLINA
DEPARTMENT OF TRANSPORTATION
RALEIGH

SUBSTRUCTURE

BENTS 1 AND 2

(RIGHT LANE)

NORTH CAROLINA PROFESSIONAL SEAL 16301 ENGINEER TING-HSIUNG FANG

12/1/10

REVISIONS						SHEET NO.
NO.	BY:	DATE:	NO.	BY:	DATE:	S-127
1			3			TOTAL SHEETS
2			4			134

DRAWN BY : HARISH SHAH DATE : 12/08
CHECKED BY : A.R. CHESSON DATE : 2/09

30-NOV-2010 15:05
W:\Structures\r2510c\Final Plans\STR4\r-2510c_sd_b*_04.dgn
Hshah

STR. #4

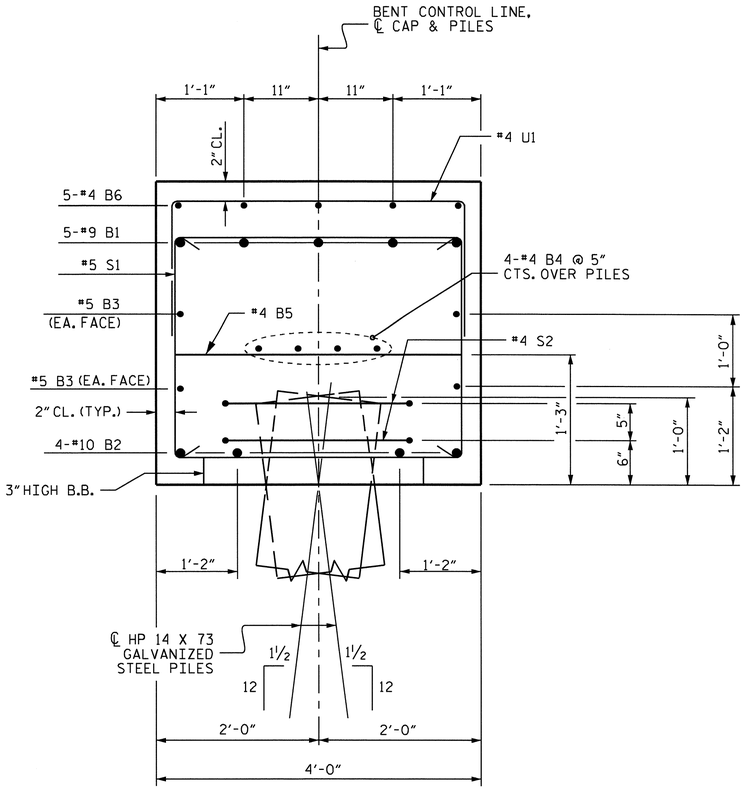

SECTION A-A

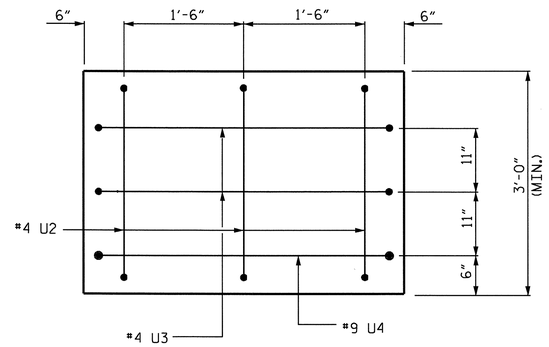

END VIEW

CENTER U2 BAR BOTTOM LEG MAY BE CUT AS REQUIRED TO PROVIDE 2" CLEARANCE BETWEEN END OF BAR AND PILE.

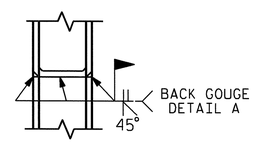

** PILE VERTICAL

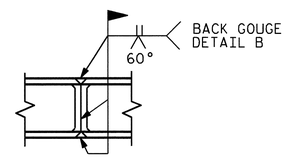

** PILE HORIZONTAL OR VERTICAL

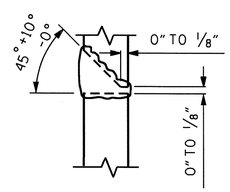

DETAIL A

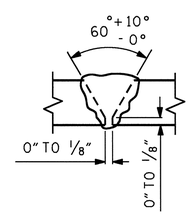

DETAIL B

PILE SPLICE DETAILS

** POSITION OF PILE DURING WELDING.

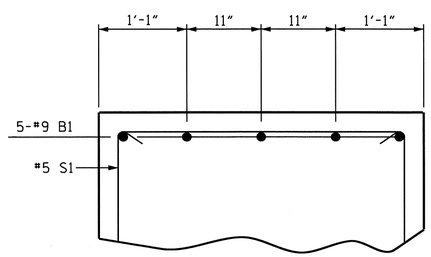

PARTIAL SECTION B-B

BAR TYPES

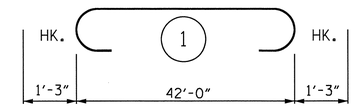

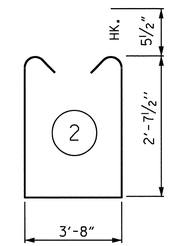

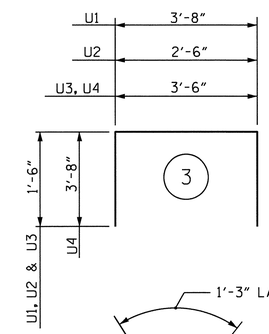

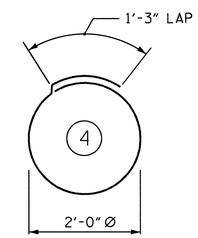

ALL BAR DIMENSIONS ARE OUT TO OUT.

BILL OF MATERIAL

BENT 1

BAR	NO.	SIZE	TYPE	LENGTH	WEIGHT
B1	5	#9	1	44'-6"	757
B2	4	#10	STR	42'-2"	726
B3	4	#5	STR	42'-2"	176
B4	8	#4	STR	22'-4"	119
B5	11	#4	STR	3'-8"	27
B6	5	#4	STR	13'-10"	46
S1	68	#5	2	9'-10"	697
S2	14	#4	4	7'-6"	70
U1	43	#4	3	6'-8"	191
U2	6	#4	3	5'-6"	22
U3	4	#4	3	6'-6"	17
U4	2	#9	3	10'-10"	74

REINFORCING STEEL 2922 LBS.

CLASS A CONCRETE 20.0 C.Y.

HP 14 X 73 GALVANIZED STEEL PILES
NO. 7 490 LIN. FT.
PILE REDRIVES 2 EACH

BENT 2

BAR	NO.	SIZE	TYPE	LENGTH	WEIGHT
B1	5	#9	1	44'-6"	757
B2	4	#10	STR	42'-2"	726
B3	4	#5	STR	42'-2"	176
B4	8	#4	STR	22'-4"	119
B5	11	#4	STR	3'-8"	27
B6	5	#4	STR	13'-9"	46
S1	68	#5	2	9'-10"	697
S2	14	#4	4	7'-6"	70
U1	43	#4	3	6'-8"	191
U2	6	#4	3	5'-6"	22
U3	4	#4	3	6'-6"	17
U4	2	#9	3	10'-10"	74

REINFORCING STEEL 2922 LBS.

CLASS A CONCRETE 20.0 C.Y.

HP 14 X 73 GALVANIZED STEEL PILES
NO. 7 630 LIN. FT.
PILE REDRIVES 2 EACH

PROJECT NO. R-2510C
BEAUFORT COUNTY
STATION: 222+51.50 -L-

SHEET 2 OF 2

STATE OF NORTH CAROLINA
DEPARTMENT OF TRANSPORTATION
RALEIGH

SUBSTRUCTURE

BENTS 1 AND 2

(RIGHT LANE)

NORTH CAROLINA PROFESSIONAL SEAL 16301 ENGINEER TING HSIUNG FANG

10/8/10

REVISIONS								SHEET NO.
NO.	BY:	DATE:	NO.	BY:	DATE:			S-128
1			3					TOTAL SHEETS
2			4					134

DRAWN BY : HARISH SHAH DATE : 12/08
CHECKED BY : A.R. CHESSON DATE : 2/09

08-OCT-2010 10:59
H:\R2510c\Structures\r2510c\Final Plans\STR4\r-2510c_sd_b*_04.dgn
ttfang

STR. #4

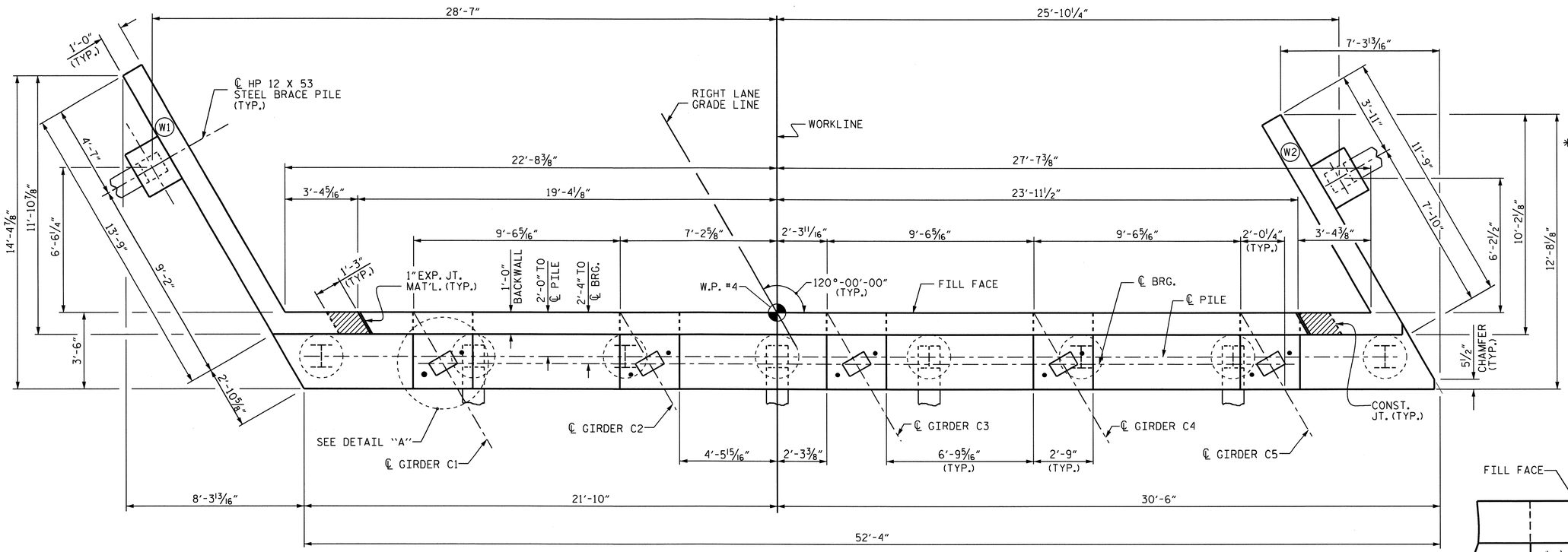

PLAN

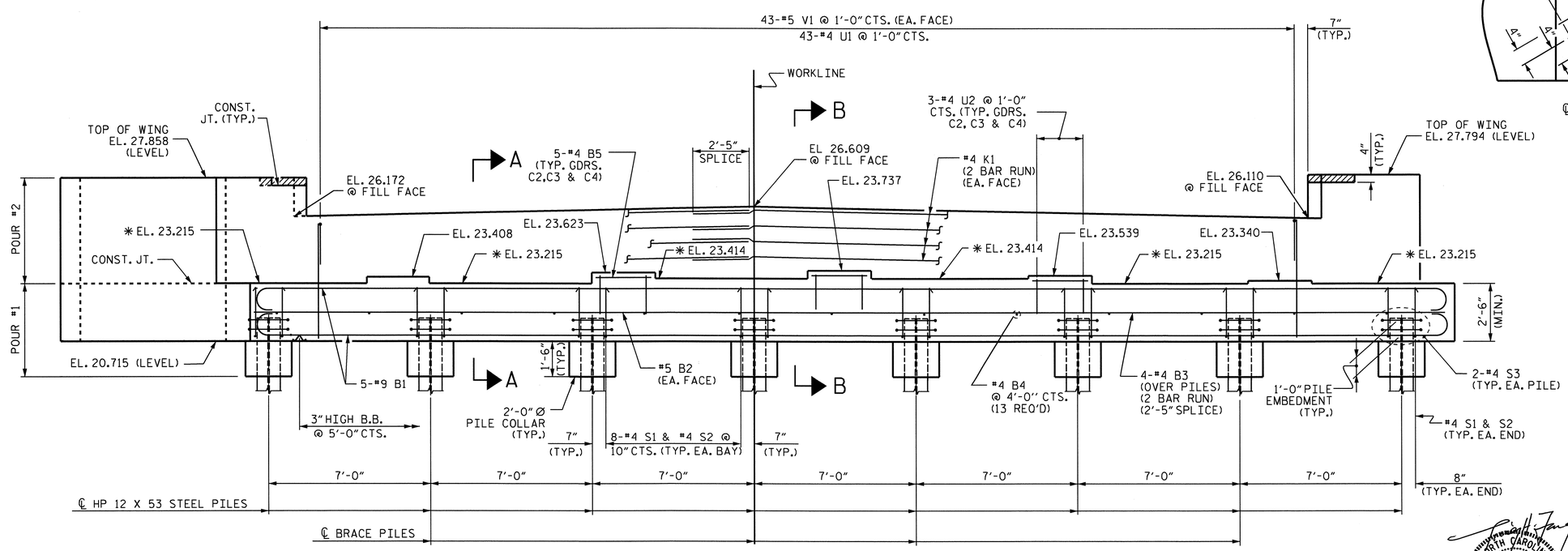

ELEVATION

BRACE PILES IN WING WALLS AND DETAILS OF WING WALLS NOT SHOWN FOR CLARITY.

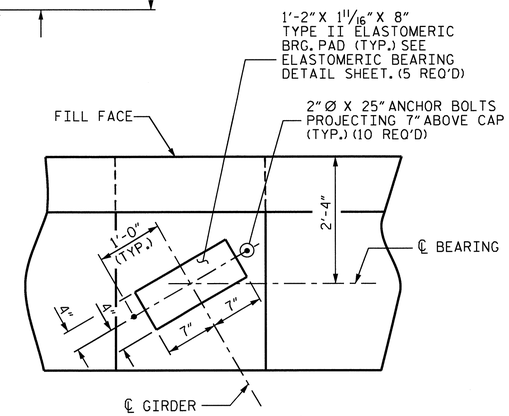

DETAIL "A"

(TYP. EA. GDR.)

NOTES

STIRRUPS IN CAP MAY BE SHIFTED AS NECESSARY TO CLEAR ANCHOR BOLTS.

BACKWALL SHALL BE PLACED BEFORE APPLYING THE EPOXY PROTECTIVE COATING.

THE TOP SURFACE AREAS OF THE END BENT CAPS SHALL BE CURED IN ACCORDANCE WITH THE STANDARD SPECIFICATIONS EXCEPT THAT THE MEMBRANE CURING COMPOUND METHOD SHALL NOT BE USED.

✱ THE TOP SURFACE OF THE END BENT CAP EXCEPT THE BRIDGE SEAT BUILDUPS SHALL BE SLOPED TRANSVERSELY FROM THE FILL FACE TO THE BACK FACE AT THE RATE OF 2%.

THE CONTRACTOR SHALL PROVIDE FOR INSTALLATION OF THE 4" DIAMETER DRAIN PIPE THROUGH THE WING WALL AS REQUIRED FOR REINFORCED BRIDGE APPROACH FILLS, SEE THE ROADWAY PLANS. REINFORCING STEEL IN THE WING WALL MAY BE SHIFTED AS NECESSARY TO CLEAR THE DRAIN PIPE.

THE CONCRETE IN THE SHADED AREA OF THE WING SHALL BE POURED AFTER THE JOINT BETWEEN THE DECK AND THE APPROACH SLAB HAS BEEN SAWED AND THE BARRIER IS CAST IF SLIP FORMING IS USED.

PROJECT NO. R-2510C
BEAUFORT COUNTY
STATION: 222+51.50 -L-

SHEET 1 OF 3

STATE OF NORTH CAROLINA
DEPARTMENT OF TRANSPORTATION
RALEIGH

SUBSTRUCTURE

END BENT 2

(RIGHT LANE)

NORTH CAROLINA PROFESSIONAL SEAL 16301 ENGINEER TING HSIUNG FANG
12/1/10

REVISIONS						SHEET NO.
NO.	BY:	DATE:	NO.	BY:	DATE:	S-129
1			3			TOTAL SHEETS
2			4			134

STR. #4

DRAWN BY : HARISH SHAH DATE : 11/08
CHECKED BY : A.R. CHESSON DATE : 2/09

30-NOV-2010 15:08
W:\Structures\r2510c\Final Plans\STR4\r-2510c_sd_e*_04.dgn
Hshah

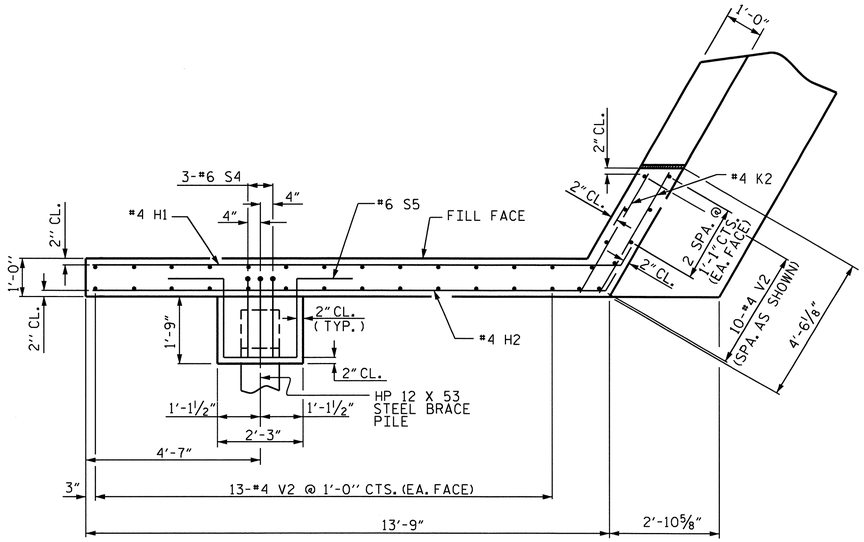

PLAN OF WING (W1)

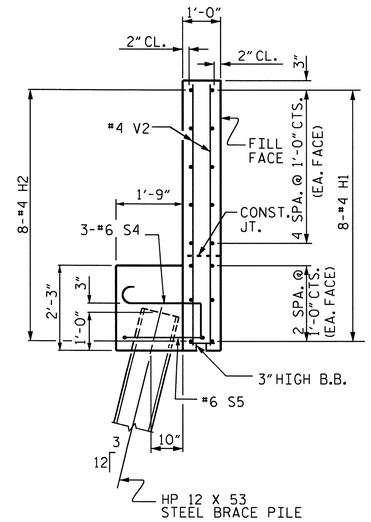

SECTION X-X

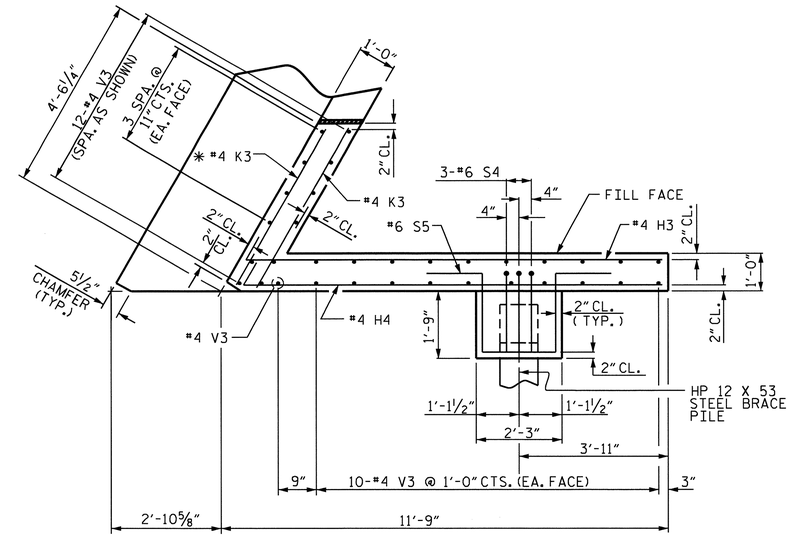

PLAN OF WING (W2)

*#4 K3 FIELD CUT AS NECESSARY TO GIVE 2" MIN. CLEARANCE FROM CHAMFER.

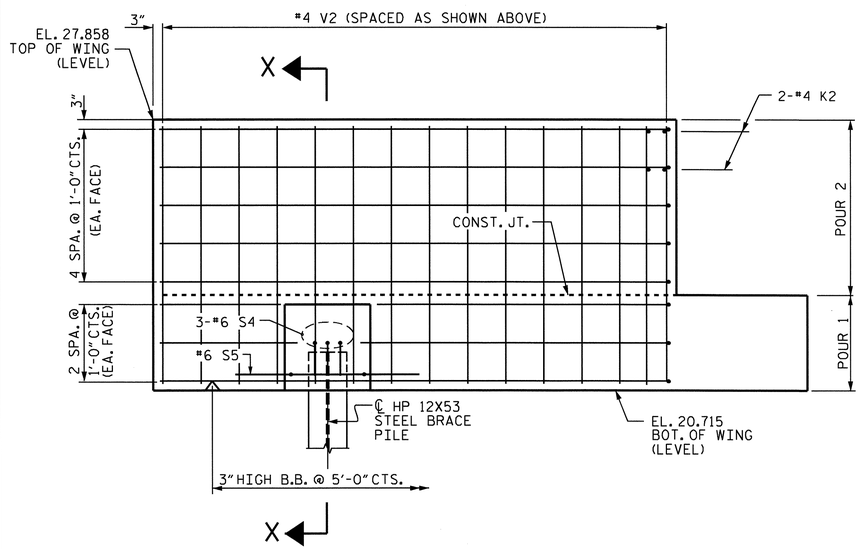

ELEVATION OF WING (W1)

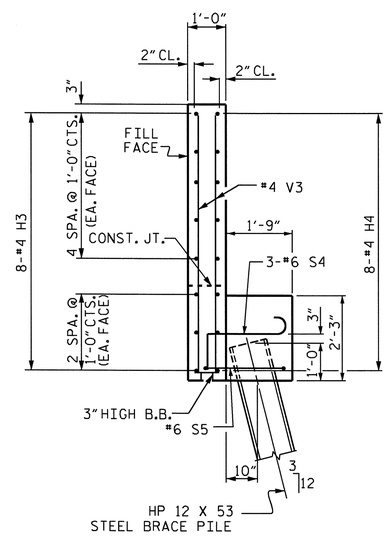

SECTION Y-Y

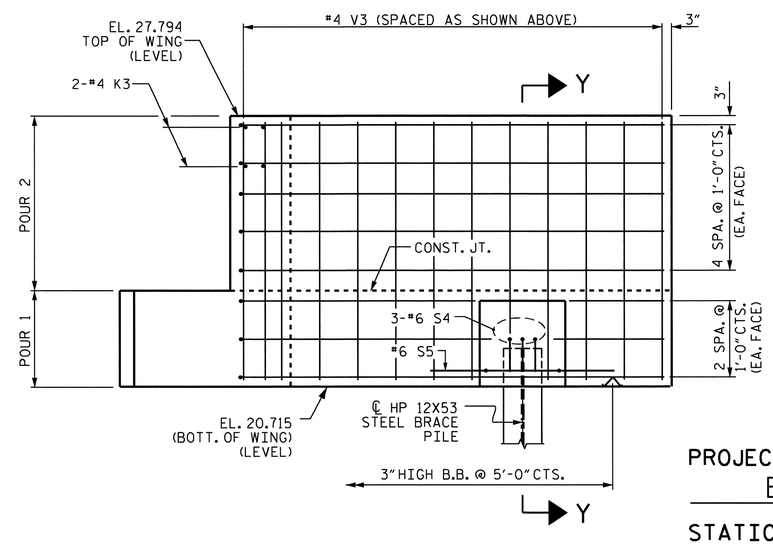

ELEVATION OF WING (W2)

PROJECT NO. R-2510C
BEAUFORT COUNTY
STATION: 222+51.50 -L-

SHEET 2 OF 3

STATE OF NORTH CAROLINA
DEPARTMENT OF TRANSPORTATION
RALEIGH

SUBSTRUCTURE

END BENT 2

(RIGHT LANE)

NORTH CAROLINA PROFESSIONAL SEAL 16301 ENGINEER HSIUNG FANG
10/7/10

REVISIONS						SHEET NO.
NO.	BY:	DATE:	NO.	BY:	DATE:	S-130
1			3			TOTAL SHEETS
2			4			134

STR. #4

DRAWN BY : HARISH SHAH DATE : 11/08
CHECKED BY : A.R. CHESSON DATE : 2/09

07-OCT-2010 12:32
Y:\TIPProjects-R\R2510c\Structures\r2510c\FinalPlans\STR4\r-2510c_sd_e*_04.dgn
qtnguyen

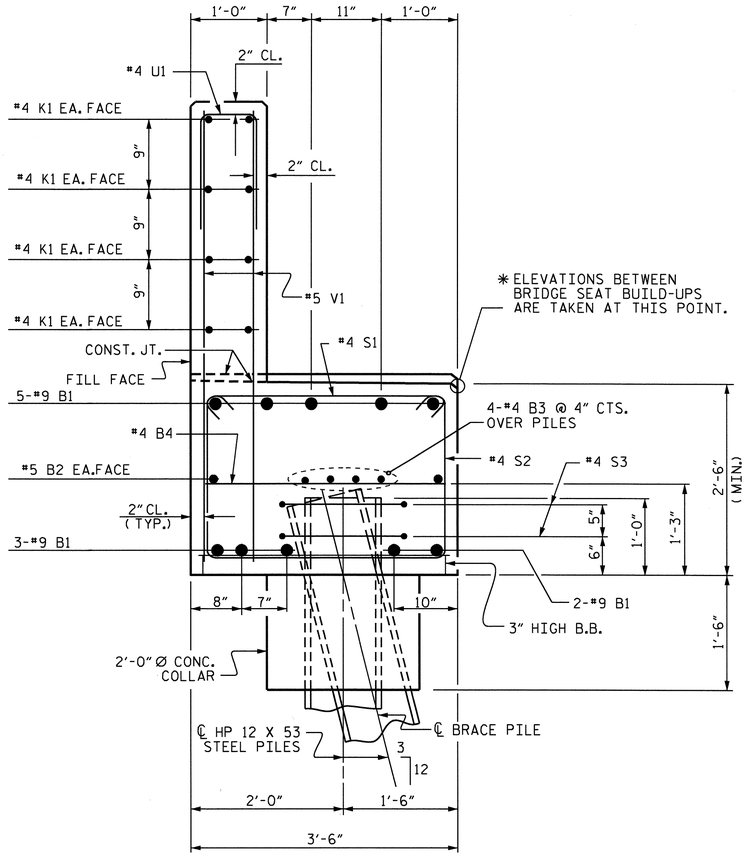

SECTION A-A

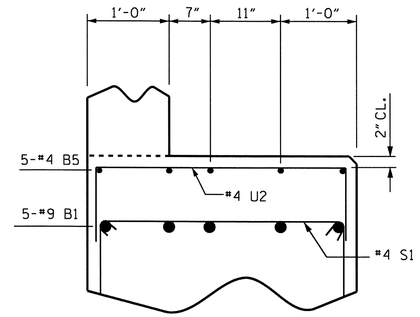

PARTIAL SECTION B-B

#5 V1 BARS NOT SHOWN FOR CLARITY.

BAR TYPES

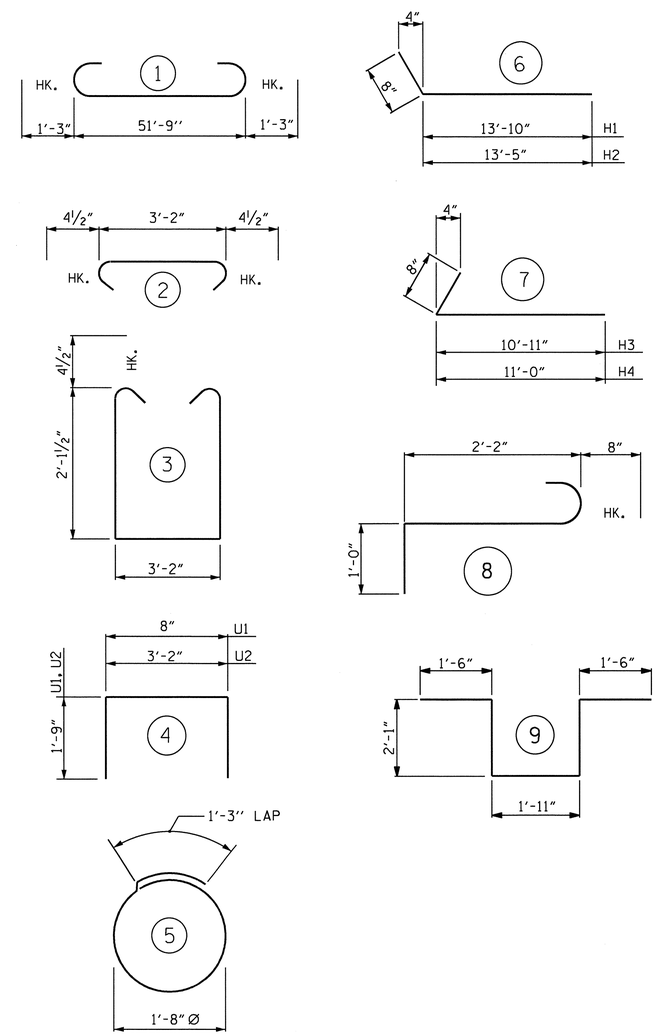

ALL BAR DIMENSIONS ARE OUT TO OUT.

BILL OF MATERIAL

END BENT 2

BAR	NO.	SIZE	TYPE	LENGTH	WEIGHT
B1	10	#9	1	54'-3"	1845
B2	2	#5	STR	51'-9"	108
B3	8	#4	STR	27'-3"	146
B4	13	#4	STR	3'-2"	27
B5	15	#4	STR	2'-5"	24
H1	8	#4	6	14'-6"	77
H2	8	#4	6	14'-1"	75
H3	8	#4	7	11'-7"	62
H4	8	#4	7	11'-8"	62
K1	16	#4	STR	27'-3"	291
K2	4	#4	STR	4'-1"	11
K3	4	#4	STR	4'-2"	11
S1	58	#4	2	3'-11"	152
S2	58	#4	3	8'-2"	316
S3	16	#4	5	6'-6"	69
S4	6	#6	8	3'-10"	35
S5	2	#6	9	9'-1"	27
U1	43	#4	4	4'-2"	120
U2	9	#4	4	6'-8"	40
V1	86	#5	STR	5'-0"	448
V2	36	#4	STR	6'-10"	164
V3	33	#4	STR	6'-9"	149
REINFORCING STEEL					4,259 LBS

CLASS A CONCRETE

POUR 1 (CAP & LOWER WINGS & COLLARS)	21.8	C.Y.
POUR 2 (BACKWALL & UPPER WINGS)	10.6	C.Y.
TOTAL	32.4	C.Y.

HP 12 X 53 STEEL PILES

NUMBER = 10	LIN. FT. =	600
PILE REDRIVES	EACH	4

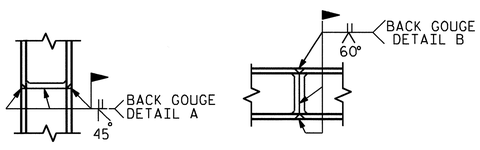

**PILE VERTICAL **PILE HORIZONTAL OR VERTICAL

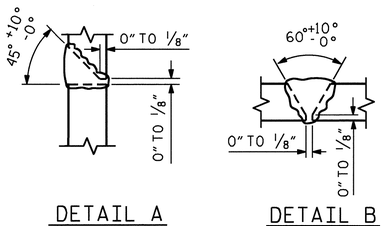

DETAIL A DETAIL B

PILE SPLICE DETAILS

✱✱POSITION OF PILE DURING WELDING.

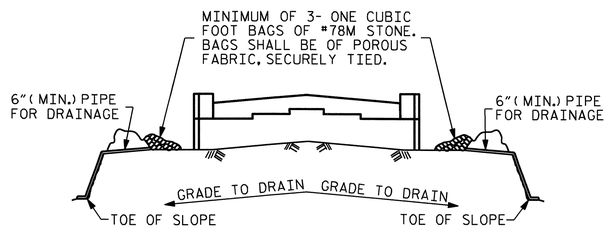

BAGGED STONE AND PIPE SHALL BE PLACED IMMEDIATELY AFTER COMPLETION OF END BENT EXCAVATION. PIPE MAY BE EITHER CONCRETE, CORRUGATED STEEL, CORRUGATED ALUMINUM ALLOY, OR CORRUGATED PLASTIC. PERFORATED PIPE WILL NOT BE ALLOWED.

BAGGED STONE SHALL REMAIN IN PLACE UNTIL THE ENGINEER DIRECTS THAT IT BE REMOVED. THE CONTRACTOR SHALL REMOVE AND DISPOSE OF SILT ACCUMULATIONS AT BAGGED STONE WHEN SO DIRECTED BY THE ENGINEER. BAGS SHALL BE REMOVED AND REPLACED WHENEVER THE ENGINEER DETERMINES THAT THEY HAVE DETERIORATED AND LOST THEIR EFFECTIVENESS.

NO SEPARATE PAYMENT WILL BE MADE FOR THIS WORK AND THE ENTIRE COST OF THIS WORK SHALL BE INCLUDED IN THE UNIT CONTRACT PRICE BID FOR THE SEVERAL PAY ITEMS.

TEMPORARY DRAINAGE AT END BENT

PROJECT NO. R-2510C
BEAUFORT COUNTY
STATION: 222+51.50 -L-

SHEET 3 OF 3

STATE OF NORTH CAROLINA
DEPARTMENT OF TRANSPORTATION
RALEIGH

SUBSTRUCTURE

END BENT 2

(RIGHT LANE)

NORTH CAROLINA PROFESSIONAL SEAL 16301 ENGINEER TING-YUNG LIANG
12/1/10

REVISIONS						SHEET NO.
NO.	BY:	DATE:	NO.	BY:	DATE:	S-131
1			3			TOTAL SHEETS
2			4			134

DRAWN BY : HARISH SHAH DATE : 10/08
CHECKED BY : A.R. CHESSON DATE : 02/09

30-NOV-2010 15:08
W:\Structures\r2510c\Final Plans\STR4\r-2510c_sd_e*_04.dgn
Hshah

STR. #4

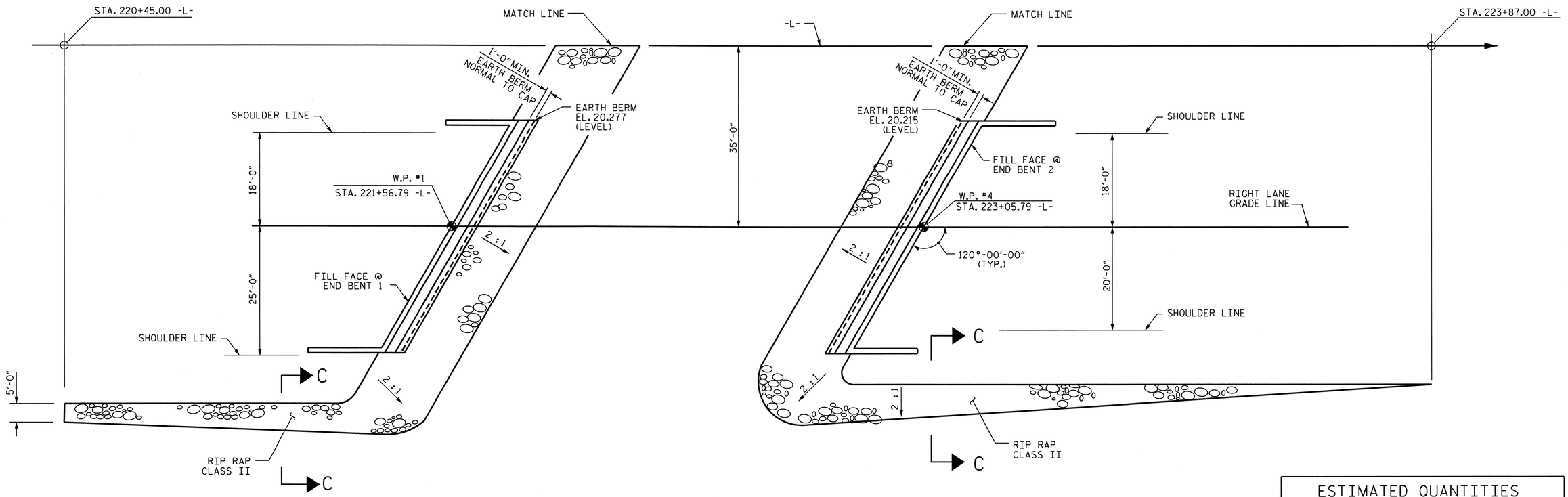

END BENT 1

END BENT 2

PLAN

ESTIMATED QUANTITIES		
BRIDGE @ STA. 222+51.50 -L- (RIGHT LANE)	RIP RAP CLASS II (TONS)	FILTER FABRIC FOR DRAINAGE (SQ. YARDS)
END BENT 1	160	175
END BENT 2	135	150
TOTAL	295	325

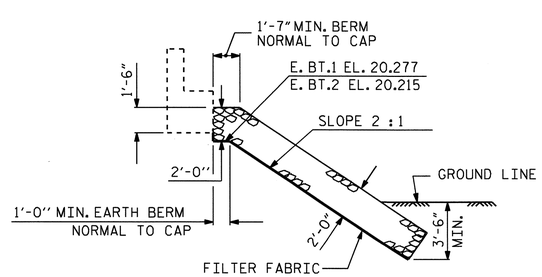

℄ SECTION

BERM RIP RAPPED

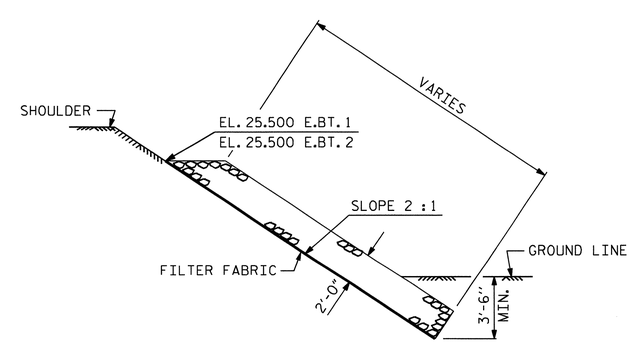

SECTION C-C

PROJECT NO. R-2510C

BEAUFORT COUNTY

STATION: 222+51.50 -L-

STATE OF NORTH CAROLINA
DEPARTMENT OF TRANSPORTATION
RALEIGH

RIP RAP DETAILS

(RIGHT LANE)

NORTH CAROLINA PROFESSIONAL SEAL 16301 ENGINEER TING HSIUNG FANG

12/1/10

REVISIONS						SHEET NO.
NO.	BY:	DATE:	NO.	BY:	DATE:	S-132
1			3			TOTAL SHEETS
2			4			134

DRAWN BY : HARISH SHAH DATE : 12/08
CHECKED BY : T. H. FANG DATE : 9/10

30-NOV-2010 15:06
W:\Structures\r2510c\Final Plans\STR4\R-2510C_sd_rr_04.dgn
Hshah

STR. #4

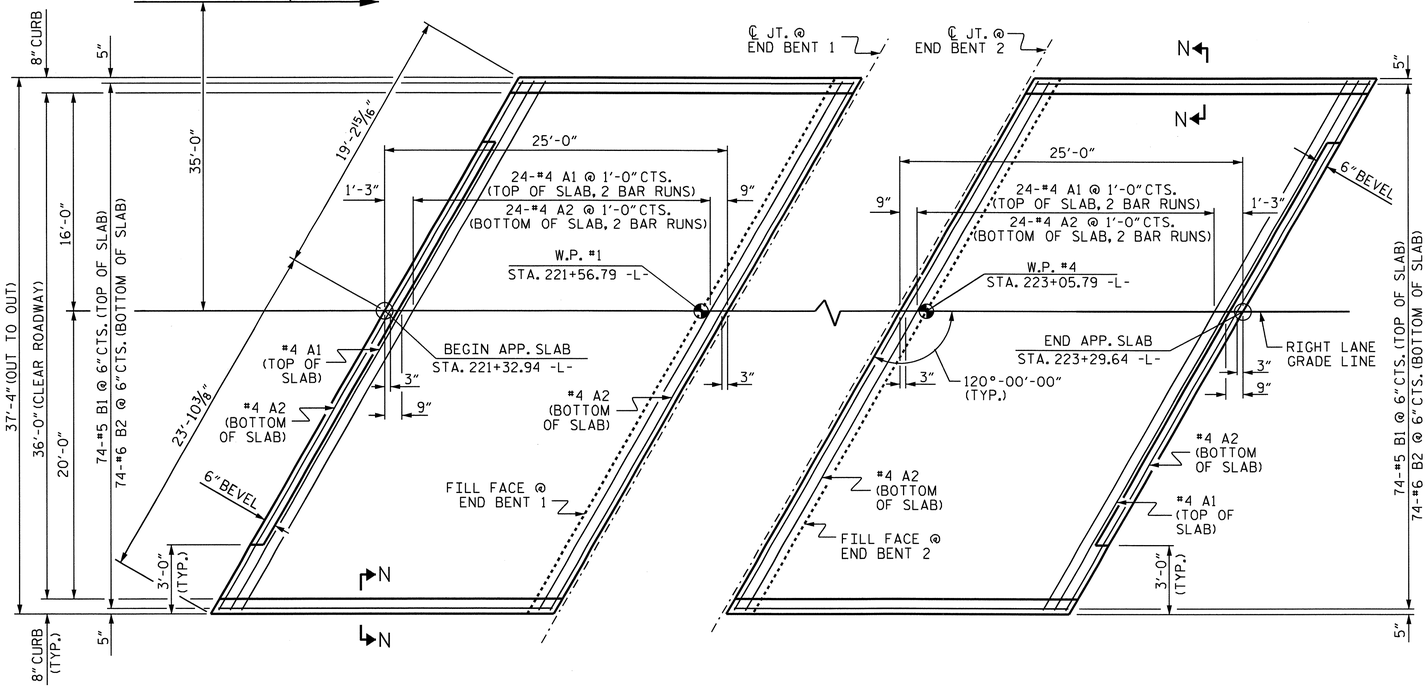

AT END BENT 1

AT END BENT 2

PLAN

DIMENSIONS SHOWN ARE TYPICAL FOR BOTH APPROACH SLABS

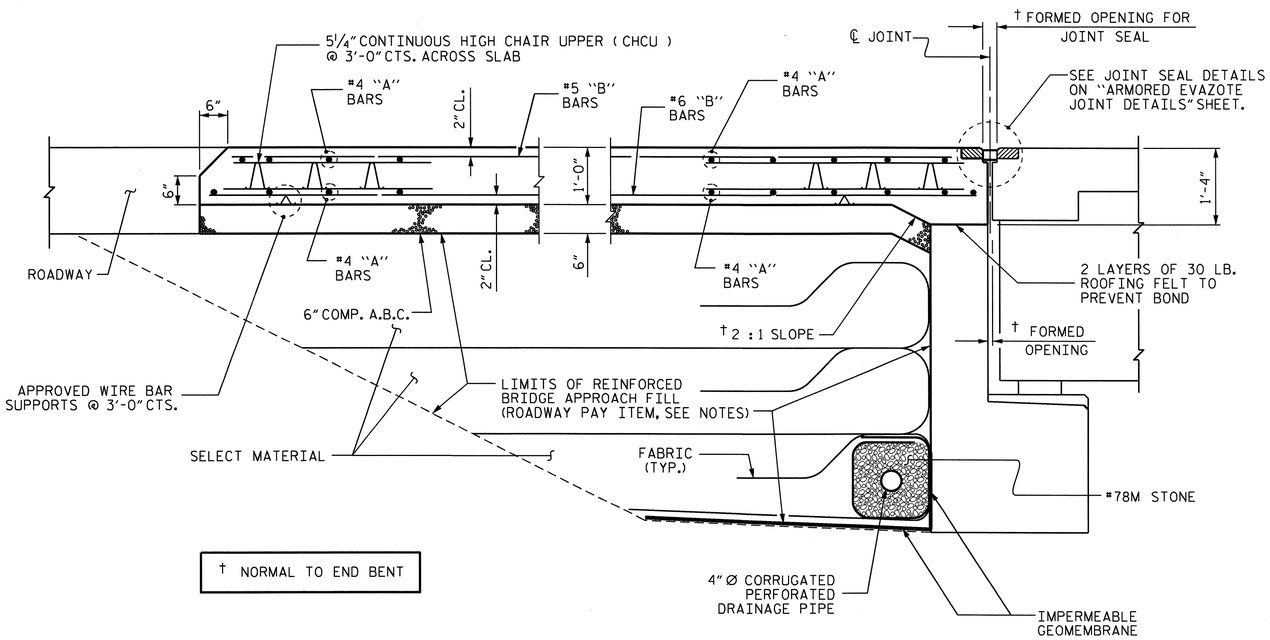

SECTION THRU SLAB

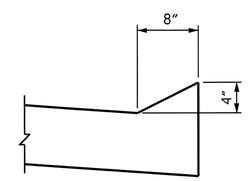

SECTION N-N

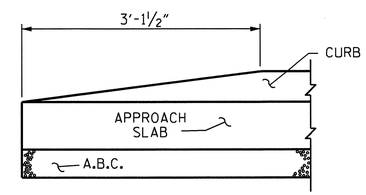

END OF CURB WITHOUT SHOULDER BERM GUTTER

CURB DETAILS

NOTES

APPROACH SLAB SHALL NOT BE CONSTRUCTED PRIOR TO COMPLETION OF THE BRIDGE DECK.

FOR REINFORCED BRIDGE APPROACH FILL INCLUDING FABRIC, IMPERMEABLE GEOMEMBRANE, 4" Ø DRAINAGE PIPE, #78M STONE, AND SELECT MATERIAL, SEE ROADWAY PLANS.

AREA BETWEEN THE WINGWALL AND APPROACH SLAB SHALL BE GRADED TO DRAIN THE WATER AWAY FROM THE FILL FACE OF THE BRIDGE AND SHALL BE PAVED. SEE ROADWAY PLANS.

THE 6" COMP. A.B.C. SHALL BE FLUSH WITH THE ROADWAY END OF THE APPROACH SLAB AND SHALL EXTEND 1'-0" OUTSIDE EACH EDGE OF THE APPROACH SLAB.

THE CONTRACTOR MAY USE 4" TYPE B-25.0B ASPHALT CONCRETE BASE COURSE IN LIEU OF 6" COMP. A.B.C. IF THIS OPTION IS USED, THE BASE COURSE SHALL BE FLUSH WITH THE ROADWAY END OF THE APPROACH SLAB, AND THE WIDTH SHALL BE THE SAME AS THAT OF THE APPROACH SLAB.

THE CONTRACTOR MAY USE 5" CLASS "A" CONCRETE BASE IN LIEU OF 6" COMP. A.B.C. IF THIS OPTION IS USED, THE CONCRETE BASE SHALL BE FLUSH WITH THE ROADWAY END OF THE APPROACH SLAB, AND THE WIDTH SHALL BE THE SAME AS THAT OF THE APPROACH SLAB. THE CONCRETE SHALL BE FINISHED TO A SMOOTH SURFACE AND A LAYER OF 30 LB ROOFING FELT SHALL BE PLACED BETWEEN THE CONCRETE BASE AND THE APPROACH SLAB TO PREVENT BOND. THE APPROACH SLAB SHALL NOT BE CAST UNTIL THE CONCRETE BASE HAS REACHED AN AGE OF THREE CURING DAYS.

FOR ARMORED EVAZOTE JOINT SEALS, SEE SPECIAL PROVISIONS.

THE NOMINAL UNCOMPRESSED SEAL WIDTH OF THE EVAZOTE JOINT SEAL SHALL BE 2 1/2" @ END BENT 1 AND END BENT 2.

FOR ELASTOMERIC CONCRETE, SEE SPECIAL PROVISIONS.

BILL OF MATERIAL

FOR ONE APPROACH SLAB (2 REQ'D.)

BAR	NO.	SIZE	TYPE	LENGTH	WEIGHT
* A1	50	#4	STR	22'-4"	746
A2	52	#4	STR	22'-3"	773
* B1	74	#5	STR	23'-5"	1807
B2	74	#6	STR	24'-7"	2732
REINFORCING STEEL				LBS.	3,505
* EPOXY COATED REINFORCING STEEL				LBS.	2,553
CLASS AA CONCRETE				C. Y.	35.3

SPLICE CHART	
#4 A1	2'-0"
#4 A2	1'-9"

NORTH CAROLINA PROFESSIONAL SEAL 16301 ENGINEER HARISH SHAH

12/1/10

PROJECT NO. R-2510C

BEAUFORT COUNTY

STATION: 222+51.50 -L-

SHEET 1 OF 2

STATE OF NORTH CAROLINA
DEPARTMENT OF TRANSPORTATION
RALEIGH

STANDARD

BRIDGE APPROACH SLAB FOR FLEXIBLE PAVEMENT

(RIGHT LANE)

REVISIONS						SHEET NO.
NO.	BY:	DATE:	NO.	BY:	DATE:	S-133
1			3			TOTAL SHEETS
2			4			134

ASSEMBLED BY : HARISH SHAH	DATE : 12/08		
CHECKED BY : A.R. CHESSON	DATE : 5/09		
DRAWN BY : EEM 3/95	REV. 7/10/01	LES/RDR	
CHECKED BY : VAP 3/95	REV. 5/7/03R	RWW/JTE	
	REV. 5/1/06R	KMM/GM	

30-NOV-2010 15:16
W:\Structures\R2510c\Final Plans\STR4\R-2510C_sd_as_04.dgn
Hshah

STR. #4

STD. NO. BAS4 (SHT 5)

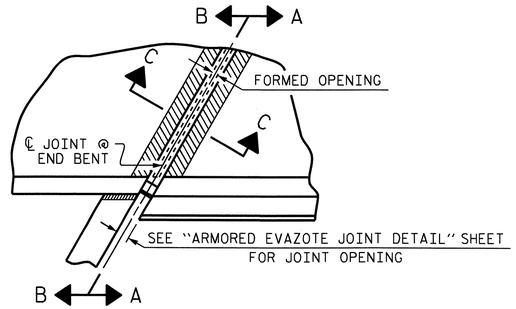

PLAN

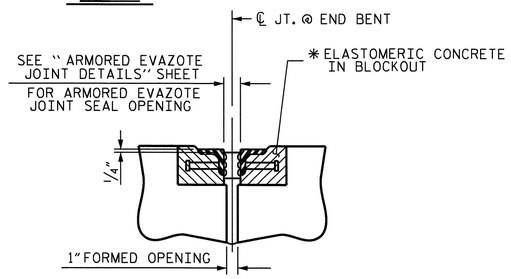

SECTION C-C

ARMORED EVAZOTE JOINT SEAL

* FOR QUANTITIES OF ELASTOMERIC CONCRETE IN BLOCKOUT SEE "ARMORED EVAZOTE JOINT DETAILS" SHEET.

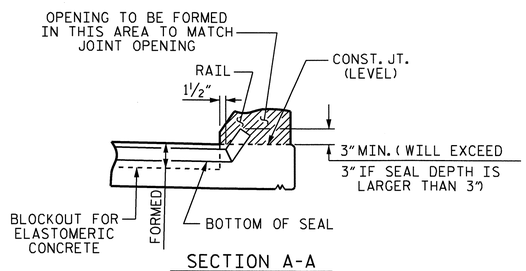

SECTION A-A

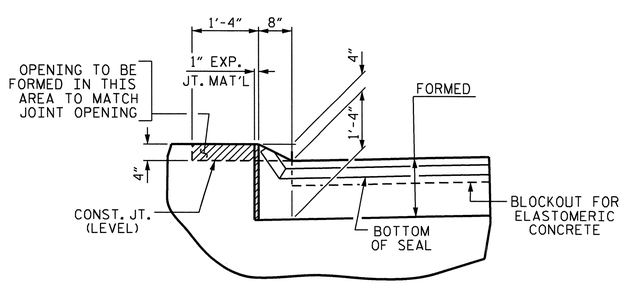

SECTION B-B

JOINT SEAL DETAILS @ END BENT

EVAZOTE JOINT SEAL TO BE CUT, HEAT WELDED AND TURNED UP PARALLEL TO SLOPED FACE OF THE BARRIER RAIL.

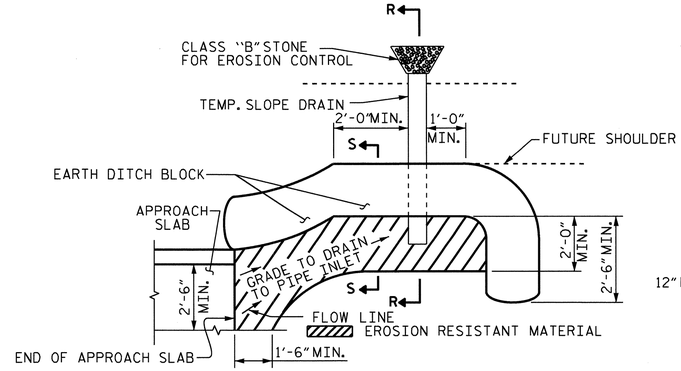

NOTE: IMMEDIATELY AFTER THE CONSTRUCTION OF THE APPROACH SLAB, THE CONTRACTOR SHALL PROVIDE TEMPORARY BERM AND SLOPE DRAIN. CONTRACTOR SHALL GRADE TO PIPE INLET AND PROVIDE EROSION RESISTANT MATERIAL AS SHOWN. THE EROSION RESISTANT MATERIAL SHALL BE EITHER 1) ASPHALT PLANT MIX, TYPE 1 OR TYPE 2, MIN. 2" DEPTH, 2) EROSION CONTROL MAT, OR 3) CONCRETE, AS DIRECTED BY THE ENGINEER. THE SLOPE DRAIN SHALL CONSIST OF A NON-PERFORATED TEMPORARY DRAINAGE PIPE, 12 INCHES IN DIAMETER.

PLAN VIEW

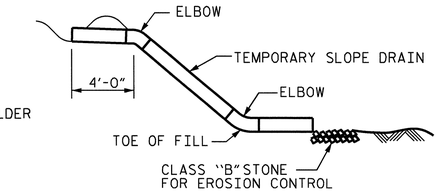

SECTION R-R

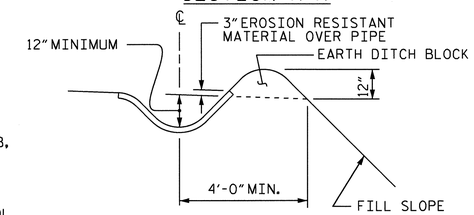

SECTION S-S

TEMPORARY BERM AND SLOPE DRAIN DETAILS

(TO BE USED WHEN SHOULDER BERM GUTTER IS REQUIRED)

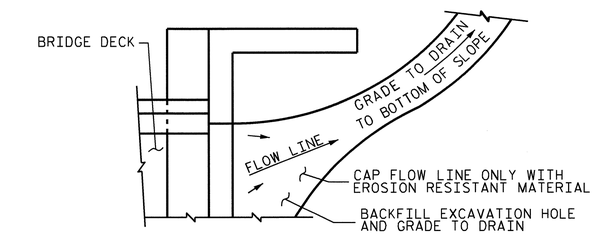

NOTE: IF THE APPROACH SLAB IS NOT CONSTRUCTED IMMEDIATELY AFTER THE BACKFILLING OF THE END BENT EXCAVATION, GRADE TO DRAIN TO THE BOTTOM OF THE SLOPE AND PROVIDE EROSION RESISTANT MATERIAL, SUCH AS FIBERGLASS ROVING OR AS DIRECTED BY THE ENGINEER TO PREVENT SOIL EROSION AND TO PROTECT THE AREA ADJACENT TO THE STRUCTURE. THE CONTRACTOR WILL BE REQUIRED TO REMOVE THESE MATERIALS PRIOR TO CONSTRUCTION OF THE APPROACH SLAB.

TEMPORARY DRAINAGE DETAIL

PROJECT NO. R-2510C

BEAUFORT COUNTY

STATION: 222+51.50 -L-

SHEET 2 OF 2

NORTH CAROLINA PROFESSIONAL SEAL 16301 ENGINEER HSIUNG FANG

12/1/10

STATE OF NORTH CAROLINA
DEPARTMENT OF TRANSPORTATION
RALEIGH

STANDARD

BRIDGE APPROACH SLAB DETAILS

(RIGHT LANE)

REVISIONS						SHEET NO.
NO.	BY:	DATE:	NO.	BY:	DATE:	S-134
1			3			TOTAL SHEETS
2			4			134

ASSEMBLED BY :	HARISH SHAH	DATE :	12/08
CHECKED BY :	A.R. CHESSON	DATE :	05/09
DRAWN BY : FCJ	11/88	REV. 10/17/00	RWW/LES
CHECKED BY : ARB	11/88	REV. 5/7/03	RWW/JTE
		REV. 5/1/06R	MAA/KMM

30-NOV-2010 15:16
W:\Structures\r2510c\Final Plans\STR4\R-2510C_sd_as_04.dgn
Hshah

STR. #4 STD. NO. BAS10 (SHT 1)

STANDARD NOTES

DESIGN DATA:

SPECIFICATIONS	A.A.S.H.T.O. (CURRENT)
LIVE LOAD	SEE PLANS
IMPACT ALLOWANCE	SEE A.A.S.H.T.O.
STRESS IN EXTREME FIBER OF	
STRUCTURAL STEEL - AASHTO M270 GRADE 36	20,000 LBS. PER SQ. IN.
- AASHTO M270 GRADE 50W	27,000 LBS. PER SQ. IN.
- AASHTO M270 GRADE 50	27,000 LBS. PER SQ. IN.
REINFORCING STEEL IN TENSION GRADE 60	24,000 LBS. PER SQ. IN.
CONCRETE IN COMPRESSION	1,200 LBS. PER SQ. IN.
CONCRETE IN SHEAR	SEE A.A.S.H.T.O.
STRUCTURAL TIMBER - TREATED OR UNTREATED - EXTREME FIBER STRESS	1,800 LBS. PER SQ. IN.
COMPRESSION PERPENDICULAR TO GRAIN OF TIMBER	375 LBS. PER SQ. IN.
EQUIVALENT FLUID PRESSURE OF EARTH	30 LBS. PER CU. FT. (MINIMUM)

MATERIAL AND WORKMANSHIP:

EXCEPT AS MAY OTHERWISE BE SPECIFIED ON PLANS OR IN THE SPECIAL PROVISIONS, ALL MATERIAL AND WORKMANSHIP SHALL BE IN ACCORDANCE WITH THE 2006 "STANDARD SPECIFICATIONS FOR ROADS AND STRUCTURES" OF THE N. C. DEPARTMENT OF TRANSPORTATION.

STEEL SHEET PILING FOR PERMANENT OR TEMPORARY APPLICATIONS SHALL BE HOT ROLLED.

CONCRETE:

UNLESS OTHERWISE REQUIRED ON PLANS, CLASS A CONCRETE SHALL BE USED FOR ALL PORTIONS OF ALL STRUCTURES WITH THE EXCEPTION THAT: CLASS AA CONCRETE SHALL BE USED IN BRIDGE SUPERSTRUCTURES, ABUTMENT BACKWALLS, AND APPROACH SLABS; AND CLASS B CONCRETE SHALL BE USED FOR SLOPE PROTECTION AND RIP RAP.

CONCRETE CHAMFERS:

UNLESS OTHERWISE NOTED ON THE PLANS, ALL EXPOSED CORNERS ON STRUCTURES SHALL BE CHAMFERED 3/4" WITH THE FOLLOWING EXCEPTIONS: TOP CORNERS OF CURBS MAY BE ROUNDED TO 1-1/2" RADIUS WHICH IS BUILT INTO CURB FORMS; CORNERS OF TRANSVERSE FLOOR EXPANSION JOINTS SHALL BE ROUNDED WITH A 1/4" FINISHING TOOL UNLESS OTHERWISE REQUIRED ON PLANS; AND CORNERS OF EXPANSION JOINTS IN THE ROADWAY FACES AND TOPS OF CURBS AND SIDEWALKS SHALL BE ROUNDED TO A 1/4" RADIUS WITH A FINISHING STONE OR TOOL UNLESS OTHERWISE REQUIRED ON PLANS.

DOWELS:

DOWELS WHEN INDICATED ON PLANS AS FOR CULVERT EXTENSIONS, SHALL BE EMBEDDED AT LEAST 12" INTO THE OLD CONCRETE AND GROUTED INTO PLACE WITH 1:2 CEMENT MORTAR.

ALLOWANCE FOR DEAD LOAD DEFLECTION, SETTLEMENT, ETC. IN CASTING SUPERSTRUCTURES:

BRIDGES SHALL BE BUILT ON THE GRADE OR VERTICAL CURVE SHOWN ON PLANS. SLABS, CURBS AND PARAPETS SHALL CONFORM TO THE GRADE OR CURVE.

ALL DIMENSIONS WHICH ARE GIVEN IN SECTION AND ARE AFFECTED BY DEAD LOAD DEFLECTIONS ARE DIMENSIONS AT CENTER LINE OF BEARING UNLESS OTHERWISE NOTED ON PLANS. IN SETTING FORMS FOR STEEL BEAM BRIDGES AND PRESTRESSED CONCRETE GIRDER BRIDGES, ADJUSTMENTS SHALL BE MADE DUE TO THE DEAD LOAD DEFLECTIONS FOR THE ELEVATIONS SHOWN. WHERE BLOCKS ARE SHOWN OVER BEAMS FOR BUILDING UP TO THE SLAB, THE VERTICAL DIMENSIONS OF THE BLOCKS SHALL BE ADJUSTED BETWEEN BEARINGS TO COMPENSATE FOR DEAD LOAD DEFLECTIONS, VERTICAL CURVE ORDINATE, AND ACTUAL BEAM CAMBER. WHERE BOTTOM OF SLAB IS IN LINE WITH BOTTOM OF TOP FLANGES, DEPTH OF SLAB BETWEEN BEARINGS SHALL BE ADJUSTED TO COMPENSATE FOR DEAD LOAD DEFLECTION, VERTICAL CURVE ORDINATE, AND ACTUAL BEAM CAMBER.

IN SETTING FALSEWORK AND FORMS FOR REINFORCED CONCRETE SPANS, AN ALLOWANCE SHALL BE MADE FOR DEAD LOAD DEFLECTIONS, SETTLEMENT OF FALSEWORK, AND PERMANENT CAMBER WHICH SHALL BE PROVIDED FOR IN ADDITION TO THE ELEVATIONS SHOWN. AFTER REMOVAL OF THE FALSEWORK, THE FINISHED STRUCTURES SHALL CONFORM TO THE PROFILE AND ELEVATIONS SHOWN ON THE PLANS AND CONSTRUCTION ELEVATIONS FURNISHED BY THE ENGINEER.

DETAILED DRAWINGS FOR FALSEWORK OR FORMS FOR BRIDGE SUPERSTRUCTURE AND ANY STRUCTURE OR PARTS OF A STRUCTURE AS NOTED ON THE PLANS SHALL BE SUBMITTED TO THE ENGINEER FOR APPROVAL BEFORE CONSTRUCTION OF THE FALSEWORK OR FORMS IS STARTED.

REINFORCING STEEL:

ALL REINFORCING STEEL SHALL BE DEFORMED. DIMENSIONS RELATIVE TO PLACEMENT OF REINFORCING ARE TO CENTERS OF BARS UNLESS OTHERWISE INDICATED IN THE PLANS. DIMENSIONS ON BAR DETAILS ARE TO CENTERS OF BARS OR ARE OUT TO OUT AS INDICATED ON PLANS.

WIRE BAR SUPPORTS SHALL BE PROVIDED FOR REINFORCING STEEL WHERE INDICATED ON THE PLANS. WHEN BAR SUPPORT PIECES ARE PLACED IN CONTINUOUS LINES, THEY SHALL BE SO PLACED THAT THE ENDS OF THE SUPPORTING WIRES SHALL BE LAPPED TO LOCK LEGS ON ADJOINING PIECES.

STRUCTURAL STEEL:

AT THE CONTRACTOR'S OPTION, HE MAY SUBSTITUTE 7/8" Ø SHEAR STUDS FOR THE 3/4" Ø STUDS SPECIFIED ON THE PLANS. THIS SUBSTITUTION SHALL BE MADE AT THE RATE OF 3 - 7/8" Ø STUDS FOR 4 - 3/4" Ø STUDS, AND STUD SPACING CHANGES SHALL BE MADE AS NECESSARY TO PROVIDE THE SAME EQUIVALENT NUMBER OF 7/8" Ø STUDS ALONG THE BEAM AS SHOWN FOR 3/4" Ø STUDS BASED ON THE RATIO OF 3 - 7/8" Ø STUDS FOR 4 - 3/4" Ø STUDS. STUDS OF THE LENGTH SPECIFIED ON THE PLANS MUST BE PROVIDED. THE MAXIMUM SPACING SHALL BE 2'-0".

EXCEPT AT THE INTERIOR SUPPORTS OF CONTINUOUS BEAMS WHERE THE COVER PLATE IS IN CONTACT WITH BEARING PLATE, THE CONTRACTOR MAY, AT HIS OPTION, SUBSTITUTE FOR THE COVER PLATES DESIGNATED ON THE PLANS COVER PLATES OF THE EQUIVALENT AREA PROVIDED THESE PLATES ARE AT LEAST 5/16" IN THICKNESS AND DO NOT EXCEED A WIDTH EQUAL TO THE FLANGE WIDTH LESS 2" OR A THICKNESS EQUAL TO 2 TIMES THE FLANGE THICKNESS. THE SIZE OF FILLET WELDS SHALL CONFORM TO THE REQUIREMENTS OF THE CURRENT ANSI/AASHTO/AWS "BRIDGE WELDING CODE". ELECTROSLAG WELDING WILL NOT BE PERMITTED.

WITH THE SOLE EXCEPTION OF EDGES AT SURFACES WHICH BEAR ON OTHER SURFACES, ALL SHARP EDGES AND ENDS OF SHAPES AND PLATES SHALL BE SLIGHTLY ROUNDED BY SUITABLE MEANS TO A RADIUS OF APPROXIMATELY 1/16 INCH OR EQUIVALENT FLAT SURFACE AT A SUITABLE ANGLE PRIOR TO PAINTING, GALVANIZING, OR METALLIZING.

HANDRAILS AND POSTS:

METAL STANDARDS AND FACES OF THE CONCRETE END POSTS FOR THE METAL RAIL SHALL BE SET NORMAL TO THE GRADE OF THE CURB, UNLESS OTHERWISE SHOWN ON PLANS. THE METAL RAIL AND TOPS OF CONCRETE POSTS USED WITH THE ALUMINUM RAIL SHALL BE BUILT PARALLEL TO THE GRADE OF THE CURB.

METAL HANDRAILS SHALL BE IN ACCORDANCE WITH THE PLANS. RAILS SHALL BE AS MANUFACTURED FOR BRIDGE RAILING. CASTINGS SHALL BE OF A UNIFORM APPEARANCE. FINS AND OTHER DEFORMATIONS RESULTING FROM CASTING OR OTHERWISE SHALL BE REMOVED IN A MANNER SO THAT A UNIFORM COLORING OF THE COMPLETED CASTING SHALL BE OBTAINED. CASTINGS WITH DISCOLORATIONS OR OF NON-UNIFORM COLORING WILL NOT BE ACCEPTED. CERTIFIED MILL REPORTS ARE REQUIRED FOR METAL RAILS AND POSTS.

SPECIAL NOTES:

GENERALLY, IN CASE OF DISCREPANCY, THIS STANDARD SHEET OF NOTES SHALL GOVERN OVER THE SPECIFICATIONS, BUT THE REMAINDER OF THE PLANS SHALL GOVERN OVER NOTES HEREON, AND SPECIAL PROVISIONS SHALL GOVERN OVER ALL. SEE SPECIFICATIONS ARTICLE 105-4.

ENGLISH

JANUARY, 1990

STD. NO. SN