TIP PROJECT: R-2233AB

STATE	STATE PROJECT REFERENCE NO.	SHEET NO.	TOTAL SHEETS
N.C.	R-2233AB	EC-1	

STATE PROJ. NO.	F. A. PROJ. NO.	DESCRIPTION

STATE OF NORTH CAROLINA
DIVISION OF HIGHWAYS

PLAN FOR PROPOSED
HIGHWAY EROSION CONTROL

RUTHERFORD COUNTY

LOCATION: US 221 FROM SOUTH OF FLOYD'S CREEK TO NORTH OF US 74 BYPASS

TYPE OF WORK: GRADING, DRAINAGE, PAVING, STRUCTURES, and SIGNALS

NAD 83/93

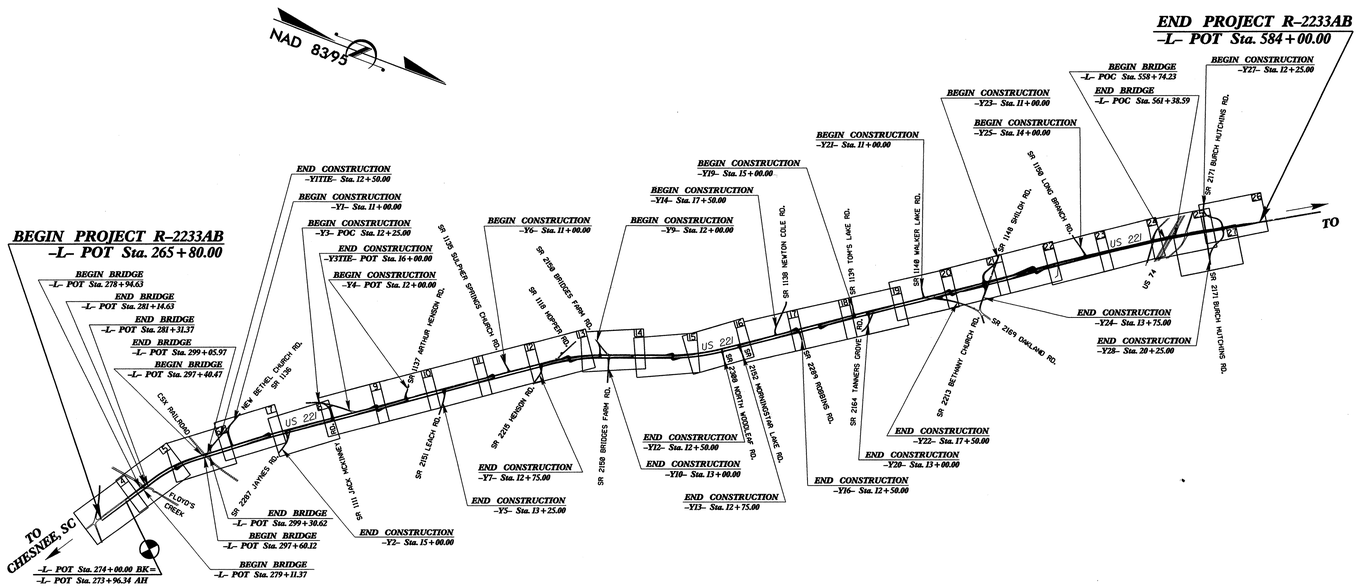

EROSION AND SEDIMENT CONTROL MEASURES

Std. #	Description	Symbol
1630.03	Temporary Silt Ditch	TSD
1630.05	Temporary Diversion	TD
1605.01	Temporary Silt Fence	
1606.01	Special Sediment Control Fence	
1622.01	Temporary Berms and Slope Drains	
	Silt Basin Type B	
1633.01	Temporary Rock Silt Check Type-A	
	Temporary Rock Silt Check Type-A with Matting and Polyacrylamide (PAM)	
	Temporary Rock Silt Check Type-B	
	Wattle / Coir Fiber Wattle	
	Wattle / Coir Fiber Wattle with Polyacrylamide (PAM)	
1634.01	Temporary Rock Sediment Dam Type-A	
1634.02	Temporary Rock Sediment Dam Type-B	
1635.01	Rock Pipe Inlet Sediment Trap Type-A	
1635.02	Rock Pipe Inlet Sediment Trap Type-B	
1630.04	Stilling Basin	
1630.06	Special Stilling Basin	
	Rock Inlet Sediment Trap:	
1632.01	Type A	A
1632.02	Type B	B
1632.03	Type C	C
	Skimmer Basin	
	Tiered Skimmer Basin	
	Infiltration Basin	

THIS PROJECT CONTAINS EROSION CONTROL PLANS FOR CLEARING AND GRUBBING PHASE OF CONSTRUCTION.

GRAPHIC SCALE

0
PLANS
0
PROFILE (HORIZONTAL)
0
PROFILE (VERTICAL)

ROADSIDE ENVIRONMENTAL UNIT
DIVISION OF HIGHWAYS
STATE OF NORTH CAROLINA

Prepared In the Office of:

ROADSIDE ENVIRONMENTAL UNIT
1 South Wilmington St.
Raleigh, NC 27611

2006 STANDARD SPECIFICATIONS

Roadway Standard Drawings

The following roadway english standards as appear in "Roadway Standard Drawings"– Roadway Design Unit – N. C. Department of Transportation – Raleigh, N. C., dated July 18, 2006 and the latest revison thereto are applicable to this project and by reference hereby are considered a part of these plans.

1605.01	Temporary Silt Fence	1632.01	Rock Inlet Sediment Trap Type A
1606.01	Special Sediment Control Fence	1632.02	Rock Inlet Sediment Trap Type B
1607.01	Gravel Construction Entrance	1632.03	Rock Inlet Sediment Trap Type C
1622.01	Temporary Berms and Slope Drains	1633.01	Temporary Rock Silt Check Type A
1630.03	Temporary Silt Ditch	1634.02	Temporary Rock Sediment Dam Type B
1630.04	Stilling Basin	1635.01	Rock Pipe Inlet Sediment Trap Type A
1630.05	Temporary Diversion	1635.02	Rock Pipe Inlet Sediment Trap Type B
1630.06	Special Stilling Basin		

03-AUG-2010 15:37
R:\Environmental\Highway\r2233ab_rdu_tsh.dgn
rdunn
41 REV 12.02.02

PROJECT REFERENCE NO.	SHEET NO.
R-2233AB	EC-2
RW SHEET NO.	
ROADWAY DESIGN ENGINEER	HYDRAULICS ENGINEER

MATTING INSTALLATION DETAIL

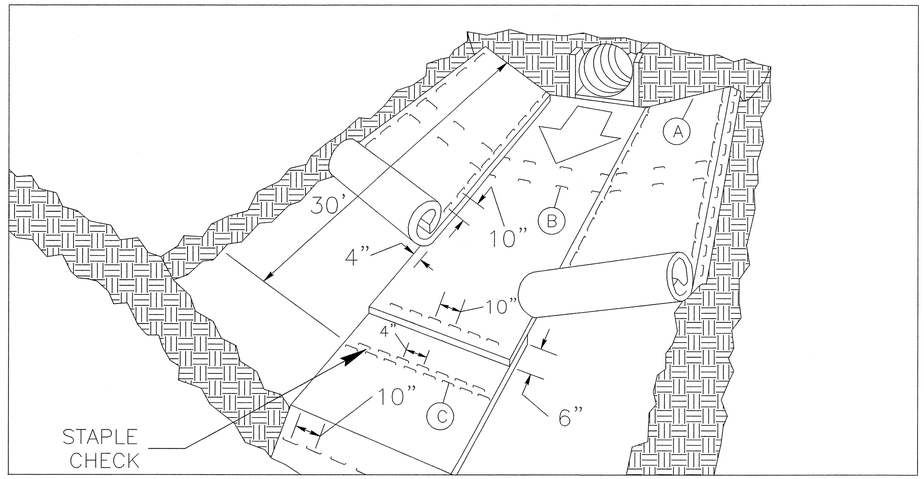

MATTING IN DITCHES

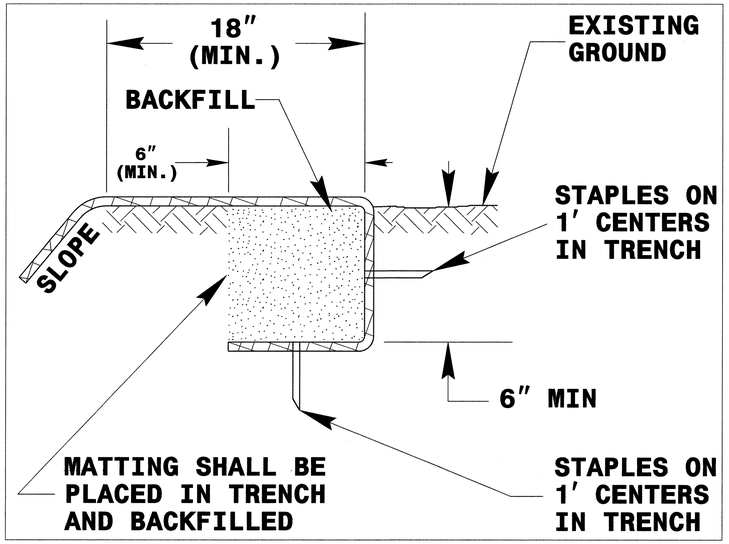

DIAGRAM (A)

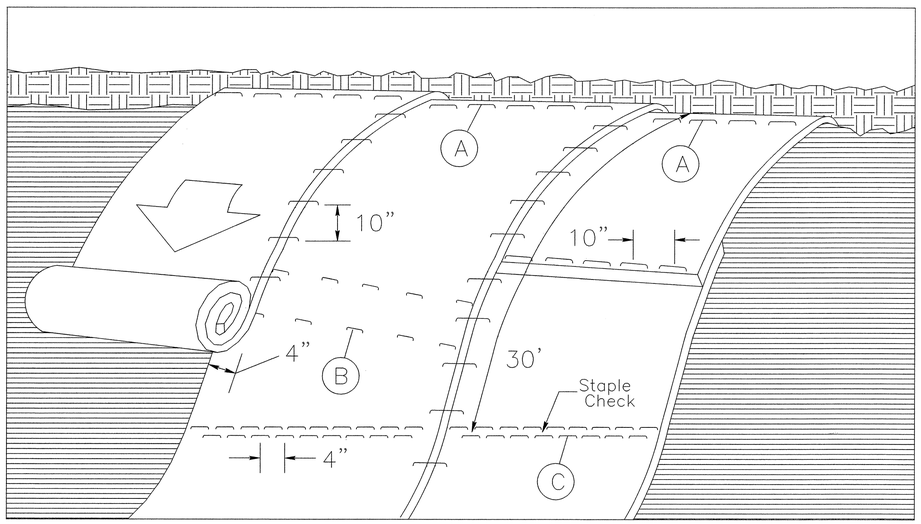

MATTING ON SLOPES

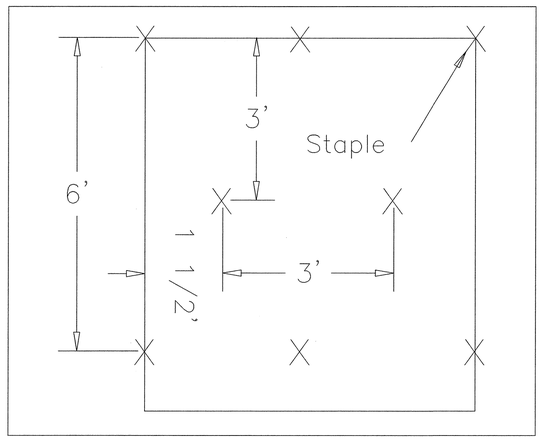

DIAGRAM (B)

Staple Check Pattern

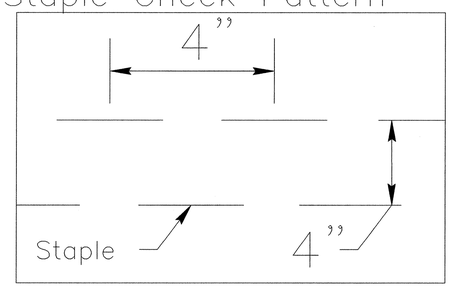

DIAGRAM (C)

NOTES:

THIS DETAIL APPLIES TO STRAW, EXCELSIOR, AND PERMANENT SOIL REINFORCEMENT MAT (PSRM) INSTALLATION.

STAPLES SHALL BE NO. 11 GAUGE STEEL WIRE FORMED INTO A "U" SHAPE WITH A MINIMUM THROAT WIDTH OF 1 INCH AND NOT LESS THAN 6 INCHES IN LENGTH.

NOT TO SCALE

PROJECT REFERENCE NO.	SHEET NO.
R-2233AB	EC-2A
R/W SHEET NO.	
ROADWAY DESIGN ENGINEER	HYDRAULICS ENGINEER

COIR FIBER BAFFLE DETAIL

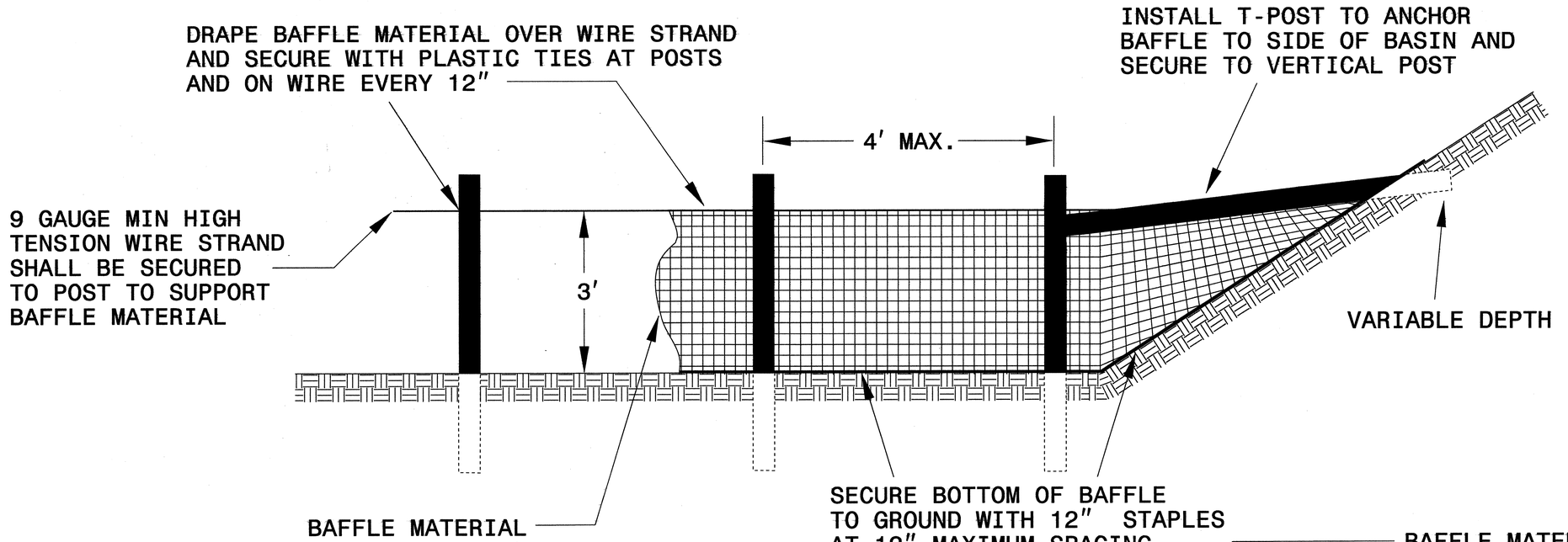

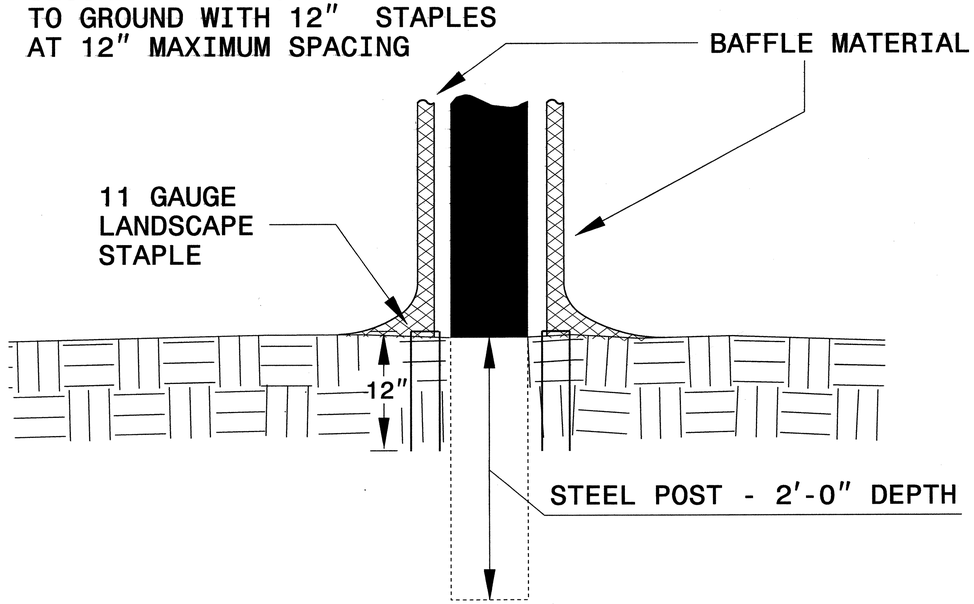

BAFFLE MATERIAL SHALL BE SECURED TO THE BOTTOM AND SIDES OF BASIN USING 12″ LANDSCAPE STAPLES

NOTES:

1. INSTALL THREE(3) COIR FIBER BAFFLES IN SILT BASINS AND SEDIMENT DAMS AT DRAINAGE OUTLETS WITH A SPACING OF ¼ THE BASIN LENGTH.

2. TWO(2) COIR FIBER BAFFLES CAN BE INSTALLED IN SILT BASINS AND DAMS LESS THAN 20 FT. IN LENGTH WITH A SPACING OF 1/3 THE BASIN LENGTH.

3. TOP HEIGHT OF COIR FIBER BAFFLES SHALL NOT BE BELOW BASE OF EMERGENCY SPILLWAY ELEVATION.

PROJECT REFERENCE NO.	SHEET NO.
R-2233AB	EC-2B
R/W SHEET NO.	
ROADWAY DESIGN ENGINEER	HYDRAULICS ENGINEER

SKIMMER BASIN WITH BAFFLES DETAIL

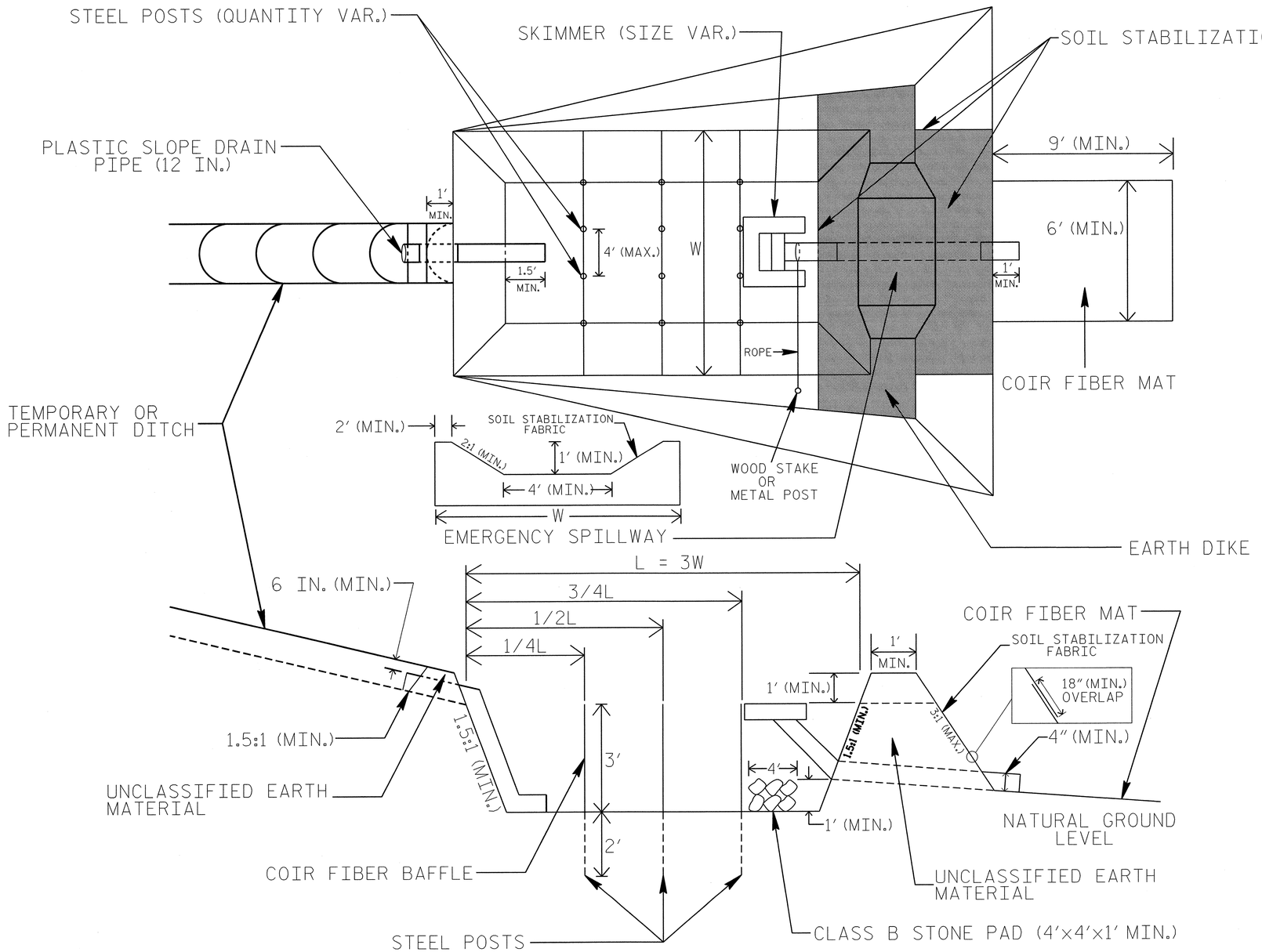

2" x 2" (nominal) WOODEN STAKE

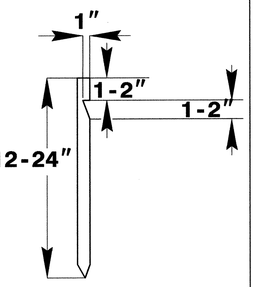

#10 STEEL REINFORCEMENT BAR

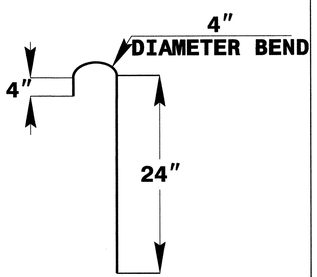

1" (nominal) STAPLE

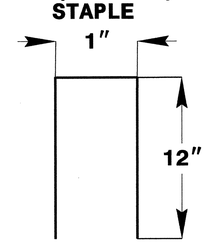

COIR FIBER MAT ANCHOR OPTIONS

NOTES

1. SEED AND PLACE MATTING FOR EROSION CONTROL ON INTERIOR AND EXTERIOR SIDESLOPES.
2. LIMIT EARTH DIKE HEIGHT TO 5 FT.
3. FOR BASIN DEPTH OF 3 FT., THE MINIMUM BASIN WIDTH SHALL BE 9 FT.
4. DETERMINE EMERGENCY SPILLWAY LENGTH (FT.) USING Q/0.8, WHERE Q IS FLOW RATE (CFS) INTO BASIN.
5. PLASTIC SLOPE DRAIN PIPE AT INLET OF BASIN MAY BE REPLACED BY FILTER FABRIC AS DIRECTED.
6. SOIL STABILIZATION FABRIC FOR EMERGENCY SPILLWAY SHALL BE ONE CONTINUOUS PIECE OF MATERIAL OR OVERLAPPED 18" AS SHOWN.

NOT TO SCALE

PROJECT REFERENCE NO.	SHEET NO.
R-2233AB	EC-2C
R/W SHEET NO.	
ROADWAY DESIGN ENGINEER	HYDRAULICS ENGINEER

TIERED SKIMMER BASIN DETAIL

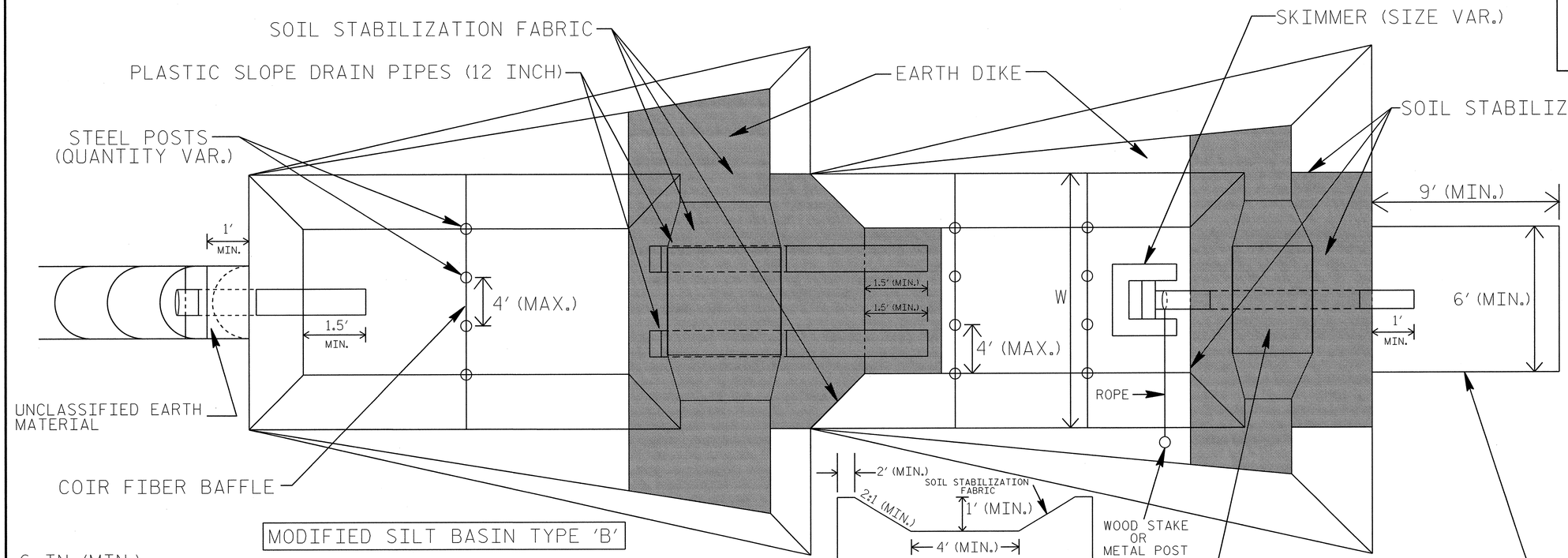

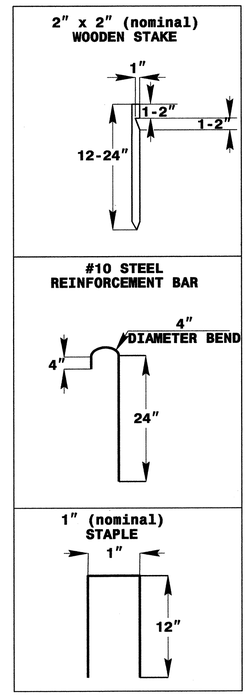

COIR FIBER MAT ANCHOR OPTIONS

NOTES

1. SEED AND PLACE MATTING FOR EROSION CONTROL ON INTERIOR AND EXTERIOR SIDESLOPES OF BASINS.
2. LIMIT HEIGHT OF EARTH DIKES TO 5 FT.
3. ADDITIONAL MODIFIED SILT BASINS TYPE 'B' MAY BE NEEDED DEPENDING ON SLOPE.
4. FOR BASIN DEPTHS OF 3FT., THE MINIMUM BASIN WIDTHS SHALL BE 9 FT.
5. DETERMINE EMERGENCY SPILLWAY LENGTHS (FT.) USING Q/0.8, WHERE Q IS FLOW RATE (CFS) INTO UPPER BASIN.
6. SOIL STABILIZATION FABRIC FOR EMERGENCY SPILLWAYS SHALL BE ONE CONTINUOUS PIECE OF MATERIAL OR OVERLAPPED 18" (MIN.) AS SHOWN.

NOT TO SCALE

PROJECT REFERENCE NO.	SHEET NO.
R-2233AB	EC-2D
R/W SHEET NO.	
ROADWAY DESIGN ENGINEER	HYDRAULICS ENGINEER

SILT BASIN 'B' DETAIL

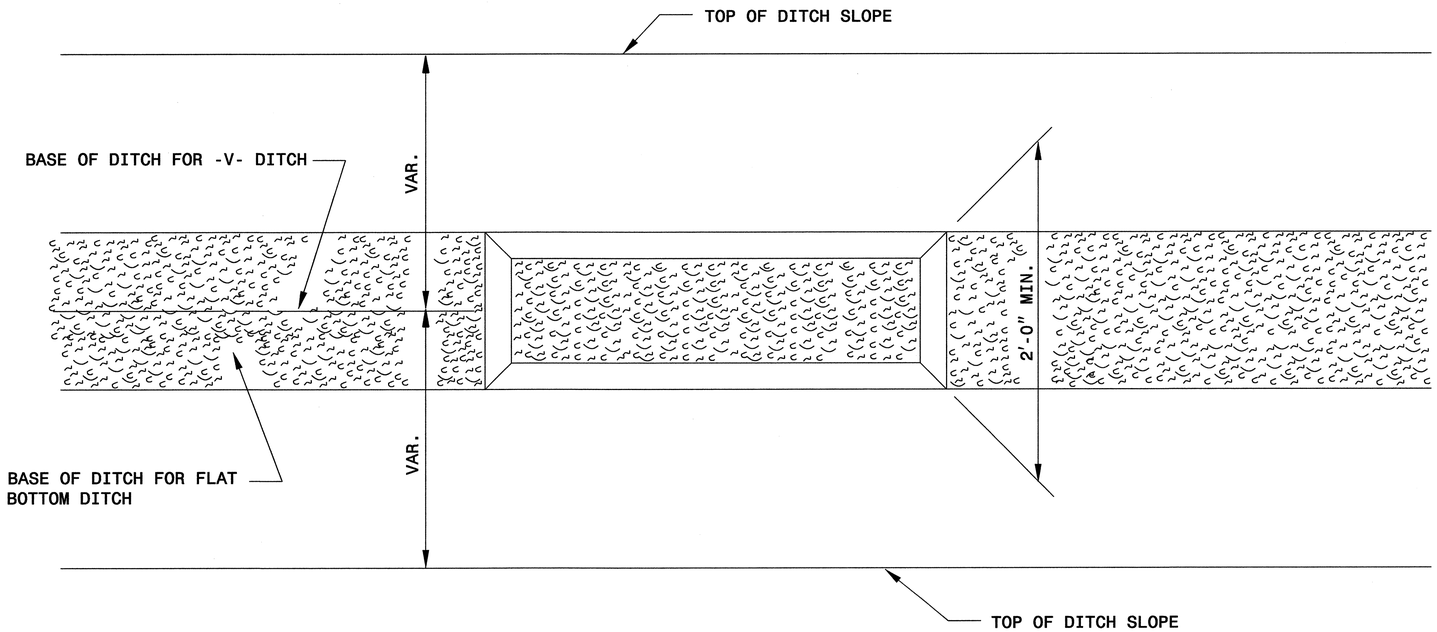

PLAN

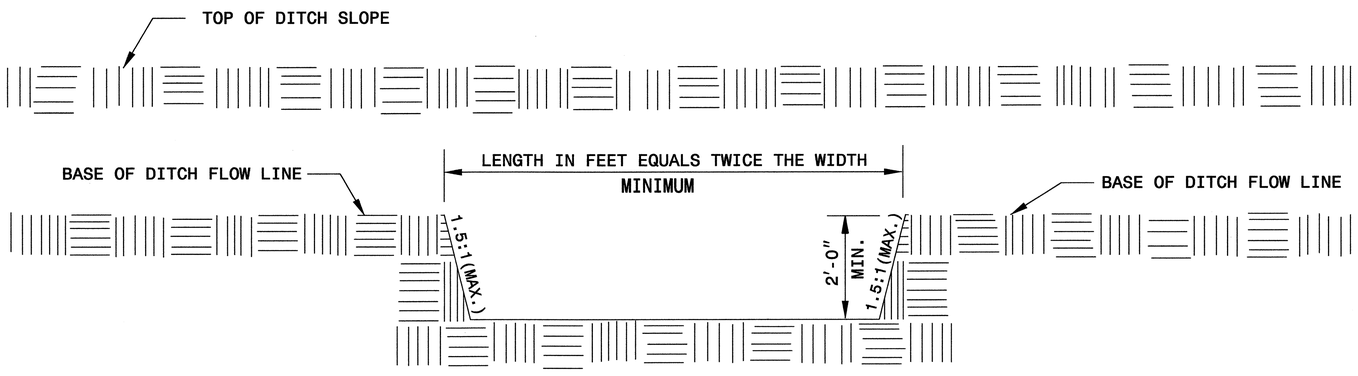

ELEVATION

PROJECT REFERENCE NO.	SHEET NO.
R-2233AB	EC-2E
RW SHEET NO.	
ROADWAY DESIGN ENGINEER	HYDRAULICS ENGINEER

WATTLE WITH POLYACRYLAMIDE (PAM) DETAIL

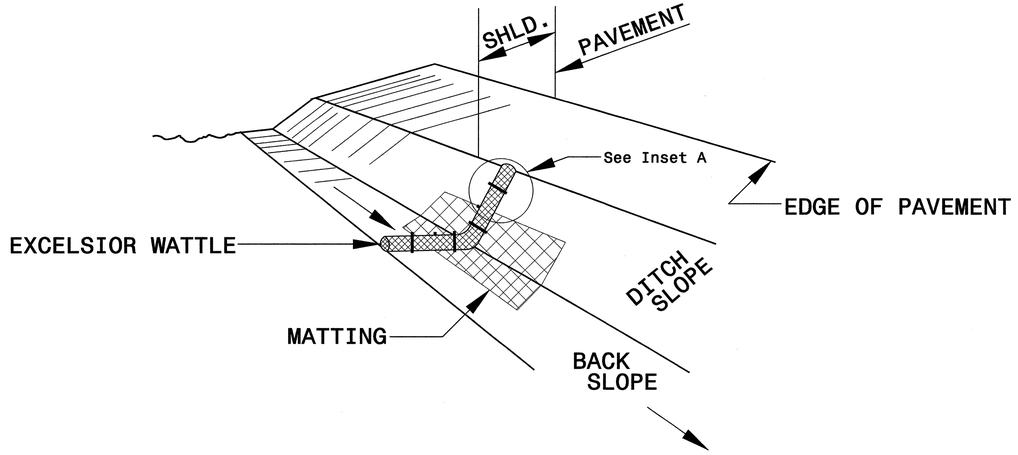

ISOMETRIC VIEW

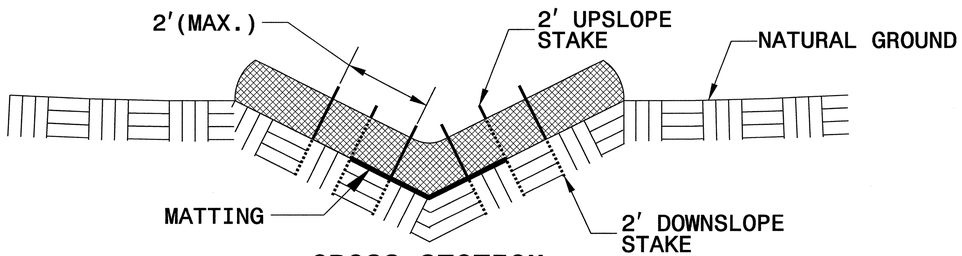

CROSS SECTION VEE DITCH

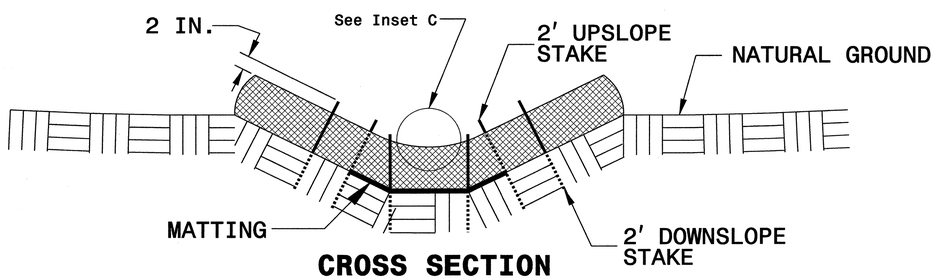

CROSS SECTION TRAPEZOIDAL DITCH

NOTES:

USE MINIMUM 12 IN. DIAMETER EXCELSIOR WATTLE.

USE 2 FT. WOODEN STAKES WITH A 2 IN. BY 2 IN. NOMINAL CROSS SECTION.

ONLY INSTALL WATTLE(S) TO A HEIGHT IN DITCH SO FLOW WILL NOT WASH AROUND WATTLE AND SCOUR DITCH SLOPES AND AS DIRECTED.

INSTALL A MINIMUM OF 2 UPSLOPE STAKES AND 4 DOWNSLOPE STAKES AT AN ANGLE TO WEDGE WATTLE TO BOTTOM OF DITCH.

PROVIDE STAPLES MADE OF 0.125 IN. DIAMETER STEEL WIRE FORMED INTO A U SHAPE NOT LESS THAN 12″ IN LENGTH.

INSTALL STAPLES APPROXIMATELY EVERY 1 LINEAR FOOT ON BOTH SIDES OF WATTLE AND AT EACH END TO SECURE IT TO THE SOIL.

INSTALL MATTING IN ACCORDANCE WITH SECTION 1631 OF THE STANDARD SPECIFICATIONS.

PRIOR TO POLYACRYLAMIDE (PAM) APPLICATION, OBTAIN A SOIL SAMPLE FROM PROJECT LOCATION, AND FROM OFFSITE MATERIAL, AND ANALYZE FOR APPROPRIATE PAM FLOCCULANT TO BE APPLIED TO EACH WATTLE.

INITIALLY APPLY 2 OUNCES OF ANIONIC OR NEUTRALLY CHARGED PAM OVER WATTLE WHERE WATER WILL FLOW AND 1 OUNCE OF PAM ON MATTING ON EACH SIDE OF WATTLE. REAPPLY PAM AFTER EVERY RAINFALL EVENT THAT IS EQUAL TO OR EXCEEDS 0.50 IN.

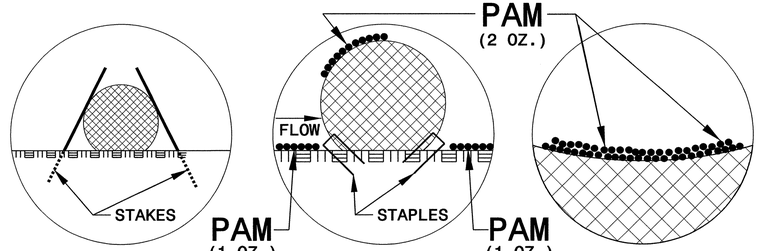

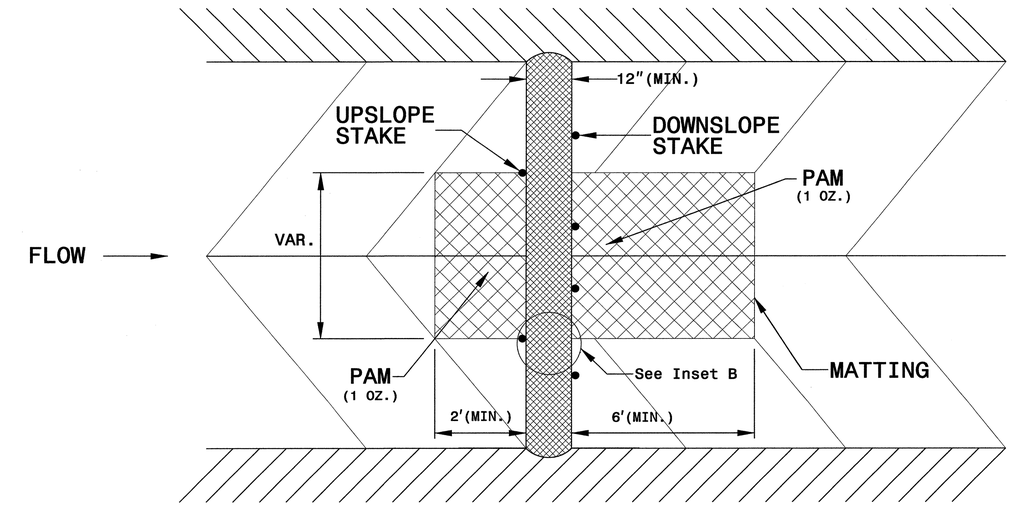

TOP VIEW

PROJECT REFERENCE NO.	SHEET NO.
R-2233AB	EC-2F
R/W SHEET NO.	
ROADWAY DESIGN ENGINEER	HYDRAULICS ENGINEER

TEMPORARY ROCK SILT CHECK TYPE 'A' WITH EXCELSIOR MATTING AND POLYACRYLAMIDE (PAM)

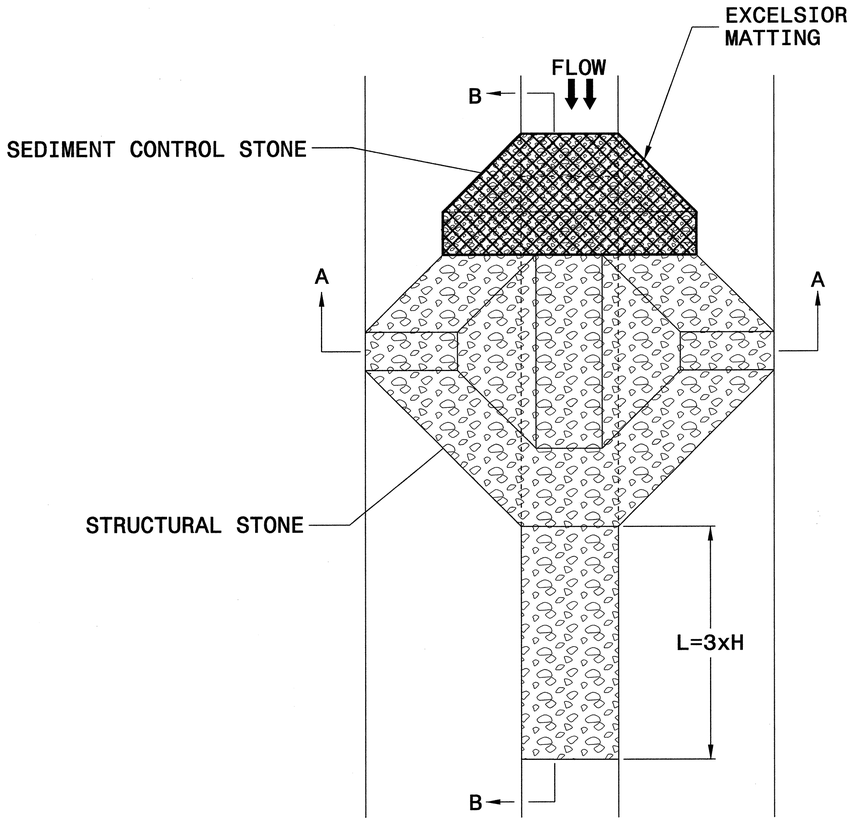

PLAN

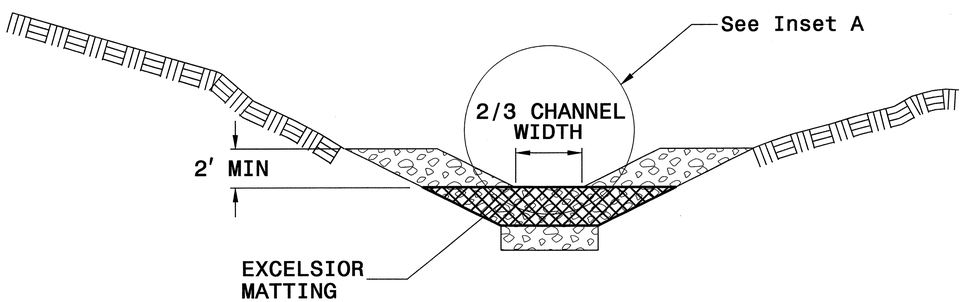

SECTION A-A

NOTES

USE EXCELSIOR FOR MATTING MATERIAL AND ANCHOR MATTING SECTION AT TOP AND BOTTOM WITH CLASS B STONE.

PRIOR TO POLYACRYLAMIDE (PAM) APPLICATION, OBTAIN A SOIL SAMPLE FROM PROJECT LOCATION, AND FROM OFFSITE MATERIAL, AND ANALYZE FOR APPROPRIATE PAM FLOCCULANT TO BE APPLIED TO EACH ROCK SILT CHECK.

INITIALLY APPLY 3.5 OUNCES OF POLYACRYLAMIDE (PAM) TO TOP OF MATTING SECTION AND AFTER EVERY RAINFALL EVENT THAT EQUALS OR EXCEEDS 0.50 INCHES.

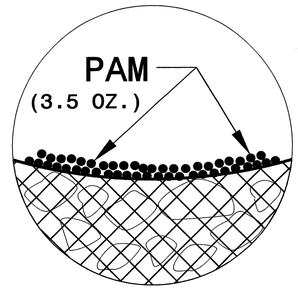

INSET A

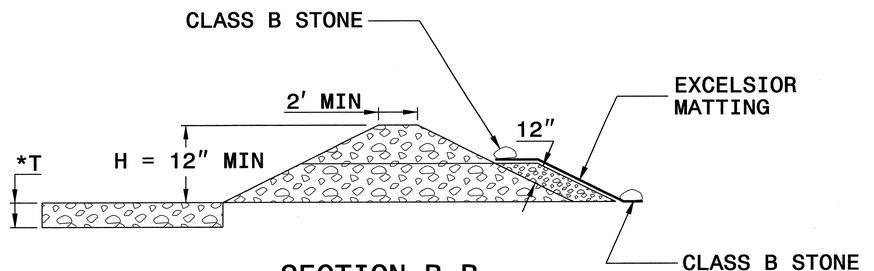

SECTION B-B

*T = 12" MIN., 18" MAX.

NOT TO SCALE

PROJECT REFERENCE NO.	SHEET NO.
R-2233AB	EC-3
ROADWAY DESIGN ENGINEER	HYDRAULICS ENGINEER

DIVISION OF HIGHWAYS
STATE OF NORTH CAROLINA

SOIL STABILIZATION SUMMARY SHEET

MATTING FOR EROSION CONTROL

CONST SHEET NO.	LINE	FROM STATION	TO STATION	SIDE	ESTIMATE (SY)
5	-L-	276+50	278+50	RT	420
5	-L-	281+50	283+50	LT	370
5	-L-	282+00	286+21	RT	775
6	-L-	300+00	305+50	LT	1010
7	-L-	306+50	309+50	RT	690
7	-L-	307+50	311+00	LT	645
7	-L-	312+50	317+50	LT	920
8	-L-	319+00	322+00	LT	550
9	-Y3-	12+50	18+00	RT	770
9	-Y3-	12+50	18+00	LT	770
9	-L-	333+50	337+00	LT	485
9	-L-	334+00	338+50	RT	645
10	-L-	351+00	352+50	LT	310
10	-L-	352+50	363+00	RT	2140
11	-L-	363+00	366+50	LT	535
14	-Y9-	12+50	14+00	LT	210
14	-L-	405+50	407+50	RT	370
14	-L-	409+50	410+50	LT	140
17	-L-	448+00	452+00	RT	735
17	-L-	452+00	455+50	LT	590
18	-L-	459+50	465+00	RT	755
19	-L-	471+00	477+00	RT	1100
19	-L-	475+00	477+00	LT	340
19	-L-	480+50	483+50	LT	510
19	-L-	485+50	487+00	LT	225
20	-Y22-	12+00	17+00	RT	920
20	-Y21-	11+50	13+00	LT	210
20	-Y21-	11+50	13+00	RT	160
20	-L-	496+00	499+50	LT	645
21	-L-	502+00	508+00	RT	920

MATTING FOR EROSION CONTROL

CONST SHEET NO.	LINE	FROM STATION	TO STATION	SIDE	ESTIMATE (SY)
21	-Y24-	11+00	13+50	LT	350
21	-Y24-	11+00	13+50	RT	265
21	-Y23-	13+00	17+50	LT	620
21	-Y23-	13+00	16+50	RT	485
21	-DR3-	10+50	13+50	LT	150
21	-DR3-	12+00	13+50	RT	75
22	-L-	514+00	521+00	RT	965
22	-L-	515+00	522+00	LT	965
24	-L-	543+50	549+50	RT	1285
24	-RAMPC-	17+50	19+50	LT	405
24	-L-	556+00	558+50	LT	335
25	-L-	562+00	564+00	LT	405
25	-L-	562+50	563+50	RT	135
25	-L-	564+50	566+00	RT	140
25	-RAMPB-	14+50	16+00	RT	305
25	-L-	570+00	573+50	LT	645
25	-L-	565+00	568+50	RT	485
26	-L-	570+00	573+50	RT	645
				SUBTOTAL	27110
MISCELLANEOUS MATTING TO BE INSTALLED AS DIRECTED BY THE ENGINEER					110335
				TOTAL	137445
				SAY	140000

PROJECT REFERENCE NO.	SHEET NO.
R-2233AB	EC-3A
ROADWAY DESIGN ENGINEER	HYDRAULICS ENGINEER

DIVISION OF HIGHWAYS
STATE OF NORTH CAROLINA

SOIL STABILIZATION SUMMARY SHEET

PERMANENT SOIL REINFORCEMENT MAT

CONST SHEET NO.	LINE	FROM STATION	TO STATION	SIDE	ESTIMATE (SY)
7	-Y1-	11+50	18+00	RT	910
7	-Y1-	12+50	17+00	LT	630
22	-L-	522+50	526+50	RT	485
22	-L-	526+50	532+50	LT	160
23	-L-	537+50	541+00	RT	550
23	-Y25-	14+50	16+00	LT	460
23	-L-	538+00	541+00	LT	495
23	-L-	541+00	543+50	LT	495
25	-RAMPA-	17+00	19+00	LT	550
25	-RAMPA-	17+00	19+00	RT	825
				SUBTOTAL	5560
		ADDITIONAL	PSRM TO BE	INSTALLED	2888
				TOTAL	8448
				SAY	9000

PERMANENT SOIL REINFORCEMENT MAT

CONST SHEET NO.	LINE	FROM STATION	TO STATION	SIDE	ESTIMATE (SY)

PROJECT REFERENCE NO.	SHEET NO.
R-2233AB	EC-4/CONST.4
R/W SHEET NO.	
ROADWAY DESIGN ENGINEER	HYDRAULICS ENGINEER

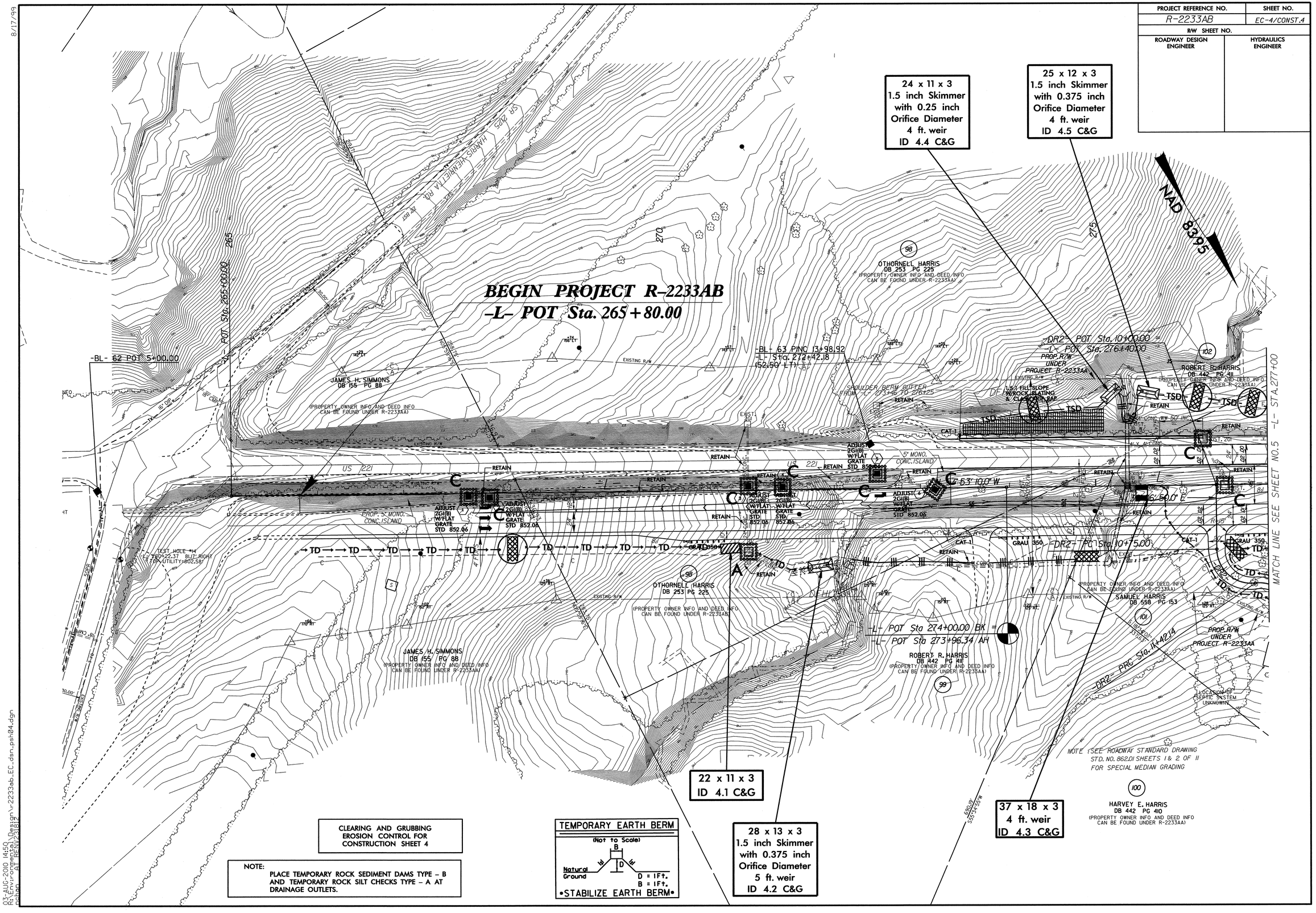

CLEARING AND GRUBBING EROSION CONTROL FOR CONSTRUCTION SHEET 4

NOTE:
PLACE TEMPORARY ROCK SEDIMENT DAMS TYPE – B AND TEMPORARY ROCK SILT CHECKS TYPE – A AT DRAINAGE OUTLETS.

TEMPORARY EARTH BERM
(Not to Scale)
Natural Ground
D = 1Ft.
B = 1Ft.
•STABILIZE EARTH BERM•

8/17/99

03-AUG-2010 14:50
R:\Environmental\Design\r2233ab_EC_dsn_psh04.dgn
nchan AT RENV231812

PROJECT REFERENCE NO.	SHEET NO.
R-2233AB	EC-5/CONST.5
R/W SHEET NO.	
ROADWAY DESIGN ENGINEER	HYDRAULICS ENGINEER

CLEARING AND GRUBBING EROSION CONTROL FOR CONSTRUCTION SHEET 5

NOTE: PLACE TEMPORARY ROCK SEDIMENT DAMS TYPE – B AND TEMPORARY ROCK SILT CHECKS TYPE – A AT DRAINAGE OUTLETS.

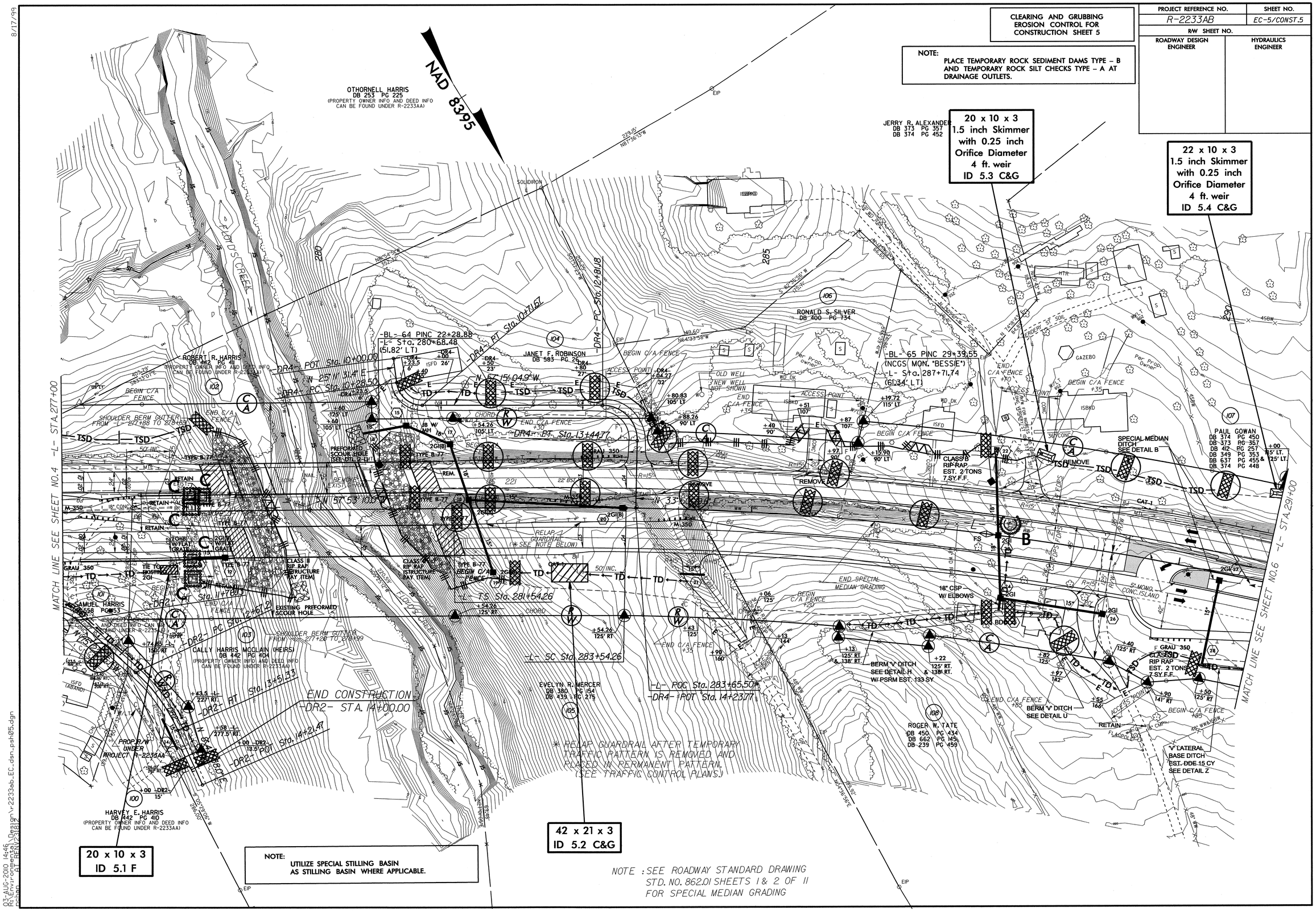

NOTE: UTILIZE SPECIAL STILLING BASIN AS STILLING BASIN WHERE APPLICABLE.

NOTE : SEE ROADWAY STANDARD DRAWING STD. NO. 862.01 SHEETS 1 & 2 OF 11 FOR SPECIAL MEDIAN GRADING

8/17/99

03-AUG-2010 14:46
R:\Environmental\Design\r2233ab_EC_dsn_psh05.dgn
nchan AT RENV231812

8/17/99

ROADWAY DESIGN ENGINEER	HYDRAULICS ENGINEER	PROJECT REFERENCE NO.	SHEET NO.
		R-2233AB	EC-6/CONST.6
		RW SHEET NO.	

TEMPORARY EARTH BERM
(Not to Scale)

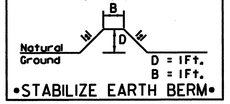

•STABILIZE EARTH BERM•

22 x 10 x 3
1.5 inch Skimmer with 0.25 inch Orifice Diameter
4 ft. weir
ID 5.4 C&G

60 x 12 x 3
1.5 inch Skimmer with 0.75 inch Orifice Diameter
7 ft. weir
ID 6.1 C&G

20 x 9 x 3
ID 6.2 C&G

NAD 83/95

WILLIAM JOSEPH ALEXANDER
DB 656 PG 323
PB 12 PG 86

N 26°00'45.5" E
205.48' EIP SOLIDNON
15.58' EIP SOLCOR
N84°21'45"W

POND
WE 775'

W/L

GAZEBO

48" WW&ISBW

PAUL GOWAN
DB 374 PG 450
DB 373 PG 357
DB 412 PG 257
DB 349 PG 353
DB 637 PG 455
DB 374 PG 448

PROVIDE 6" DECK DRAINS ON RIGHT SIDE OF THE SOUTHBOUND BRIDGE AT 10' CENTERS FROM STA 297+63 +/- TO STA 298+18 +/- -L- AND STA 298+31 +/- TO STA 299+00 +/- -L-

-L- POT Sta 298+34.21
-Y- POS Sta 16+76.57

+00 115' LT. & 125' LT.

CLASS I RIP RAP
EST. 7 TONS
17 SY F.F.

+16.01 125' LT

+68.01 125' LT

TOE PROTECTION
CLASS B RIPRAP
EST. 92 TONS
259 SY F.F.
SEE DETAIL G

SHOULDER BERM GUTTER
FROM -L- STA 298+62 TO STA 297+02

SHOULDER BERM GUTTER
FROM -L- STA 297+02 TO STA 297+88

BEGIN SHOULDER BERM GUTTER -L- STA 297+91

JB W/ MANHOLE COVER

CHORD

-L- CS Sta. 294+16.01

SHOULDER BERM GUTTER
FROM -L- STA 297+34 TO STA 297+50

PREFORMED SCOUR HOLE (SBD DETAIL 2-L)
B=4
W=4'
D=1.5' d=0.5'

+16.01 125' RT.

+60 125' RT. & 142' RT.

+15 125' RT. & 138' RT.

-BL- 66 PINC 39+23.33=
-BY- POT 5+00.00
-L- Sta. 297+45.99
(51.91' LT.)

-L- ST Sta. 296+16.01

-Y- SC Sta. 18+42.44

+83.78 125' RT

ROGER W. TATE
DB 450 PG 434
DB 662 PG 145
DB 239 PG 459

BEGIN SPECIAL MEDIAN GRADING

WELL HOUSE

'V' LATERAL BASE DITCH
EST. DDE 15 CY
SEE DETAIL Z

NOTE : SEE ROADWAY STANDARD DRAWING STD. NO. 862.01 SHEETS 1 & 2 OF 11 FOR SPECIAL MEDIAN GRADING

48" WW&ISBW
48" WD RAIL
SOIL

52 x 26 x 3
1.5 inch Skimmer with 1.0 inch Orifice Diameter
18 ft. weir
ID 6.3 C&G

PROVIDE 6" DECK DRAINS ON LEFT SIDE OF THE NORTHBOUND BRIDGE AT 10' CENTERS FROM STA 297+80 +/- TO STA 298+36 +/- -L- AND STA 298+52 +/- TO STA 299+18 +/- -L-

CLEARING AND GRUBBING EROSION CONTROL FOR CONSTRUCTION SHEET 6

NOTE:
PLACE TEMPORARY ROCK SEDIMENT DAMS TYPE – B AND TEMPORARY ROCK SILT CHECKS TYPE – A AT DRAINAGE OUTLETS.

MATCH LINE SEE SHEET NO.5 -L- STA.291+00

-YITIE- PC Sta.15+34.92

RONALD KEITH CANTRELL
DB 659 PG 58
DB 341 PG 361
PB 12 PG 86

-BY- 105 PINC 21+49.26
-YITIE- Sta. 15+34.64
(23.08' RT.)

-BY- 229 PINC 5+59.25
-L- Sta. 297+70.59
(105.82' LT.)

-BY- 230 PINC 6+27.19
-L- Sta. 298+38.45
(103.02' LT.)

SPECIAL CUT DITCH SEE DETAIL C

GRADE TO DRAIN

REMOVE 18.97' 90° LT

HEAD W/ DITCH SEE DETAILE

PLUG & FILL W/ FLOWABLE FILL

TERM. END SECTION

REMOVE

RETAIN

-YITIE- PT Sta.16+40.09

NCDOT

ISBKD

CONC

SEPTIC

SEPTIC DRAIN LINES

ACCESS POINT

Per Prop. Owner

ERNEST D. DILLS
DB 974 PG 48
PB 6 PG 91

ERNEST D. DILLS
DB 273 PG 211
PB 6 PG 91

BETTY B. STACEY & DIANNE STACEY
DB 910 PG 440
RB 56 PG 91

ALLESS POINT

BEGIN C/A FENCE

END C/A FENCE

PLANTER

REMOVE

18" CSP W/ ELBOWS

B

R=15'

SPECIAL CUT DITCH SEE DETAIL G

NEW BETHEL BAPTIST CHURCH
DB 232 PG 345

NEW BETHEL CHURCH CEMETERY

-YITIE- PT Sta. 11+77.50

+77.50 30' LT & 40' LT

+BYI- 11 PINC 18+23.18
(GPS POINT "R2233AB-11")
-YITIE- Sta. 12+08.69
(13.66' RT.)

END CONSTRUCTION
-YITIE- STA 12+50.00

MATCH LINE SEE SHEET NO.7 -YITIE- STA. 11+00

-YITIE- Sta. 12+42.44

S 69°48'03" E

N54°41'39"W 208'

N 38°19'16.0" W

M-350

RELAY GUARDRAIL (SEE NOTE BELOW)

JB W/ MANHOLE COVER

CLASS I RIP RAP
EST. 10 TONS
23 SY F.F.

TOE PROTECTION
CLASS B RIPRAP
EST. 181 TONS
464 SY F.F.
SEE DETAIL G

ROBERT L. TATE
DB 241 PG 146
DB 274 PG 007
DB 459 PG 294

5' TAIL BASE DITCH W/ CLASS I RIP RAP
EST. 55 TONS
99 SY F.F.
DDE 65 CY
SEE DETAIL D

-BL- 67 PINC 42+36.96=
-BY- POT 8+52.72=
-BYI- POT 23+43.66
(NCGS MON. "BEHELPER 1985")
-L- Sta. 300+59.55
(58.47' LT.)

* RELAY GUARDRAIL AFTER TEMPORARY TRAFFIC PATTERN IS REMOVED AND PLACED IN PERMANENT PATTERN. (SEE TRAFFIC CONTROL PLANS.)

-Y- PTSta. 21+83.89

MATCH LINE SEE SHEET NO.7 -L- STA.305+00

FOR PREFORMED SCOUR HOLE DETAIL SEE SHEET NO. 2-L

03-AUG-2010 14:15
R:\Environmental\Design\r-2233ab_EC_dsn_psh06.dgn
mshan AT REN/23812

8/17/99

PROJECT REFERENCE NO.	SHEET NO.
R-2233AB	EC-7/CONST.7
R/W SHEET NO.	
ROADWAY DESIGN ENGINEER	HYDRAULICS ENGINEER

CLEARING AND GRUBBING
EROSION CONTROL FOR
CONSTRUCTION SHEET 7

NOTE:
PLACE TEMPORARY ROCK SEDIMENT DAMS TYPE – B AND TEMPORARY ROCK SILT CHECKS TYPE – A AT DRAINAGE OUTLETS.

NAD 83/95

30 x 14 x 3
1.5 inch Skimmer
with 0.5 inch
Orifice Diameter
6 ft. weir
ID 7.1 C&G

34 x 17 x 3
ID 7.9 C&G

Modified Silt Basin
Type 'B'
20 x 13 x 3
(See Tiered Skimmer
Basin Detail)
ID 7.4 C&G

20 x 13 x 3
1.5 inch Skimmer
with 0.375 inch
Orifice Diameter
5 ft. weir
(See Tiered Skimmer
Basin Detail)
ID 7.4 & 7.5 C&G

Modified Silt Basin
Type 'B'
20 x 13 x 3
(See Tiered Skimmer
Basin Detail)
ID 7.4 C&G

Modified Silt Basin
Type 'B'
21 x 13 x 3
(See Tiered Skimmer
Basin Detail)
ID 7.6 C&G

21 x 13 x 3
1.5 inch Skimmer
with 0.5 inch
Orifice Diameter
6 ft. weir
(See Tiered Skimmer
Basin Detail)
ID 7.6 C&G

20 x 12 x 3
1.5 inch Skimmer
with 0.375 inch
Orifice Diameter
4 ft. weir
(See Tiered Skimmer
Basin Detail)
ID 7.8 C&G

Modified Silt Basin
Type 'B'
20 x 12 x 3
(See Tiered Skimmer
Basin Detail)
ID 7.8 C&G

MATCH LINE SEE SHEET NO.6 -L- STA.305+00

MATCH LINE SEE SHEET NO.8 -L- STA.319+00

8/17/99

INSTALL DRIVEWAY PIPE DURING CLEARING & GRUBBING PHASE

CLEARING AND GRUBBING EROSION CONTROL FOR CONSTRUCTION SHEET 8

NOTE: PLACE TEMPORARY ROCK SEDIMENT DAMS TYPE – B AND TEMPORARY ROCK SILT CHECKS TYPE – A AT DRAINAGE OUTLETS.

PROJECT REFERENCE NO.	SHEET NO.
R-2233AB	EC-8/CONST.8
R/W SHEET NO.	
ROADWAY DESIGN ENGINEER	HYDRAULICS ENGINEER

36 x 18 x 3
1.5 inch Skimmer
with 0.625 inch
Orifice Diameter
10 ft. weir
ID 8.1 C&G

44 x 22 x 3
1.5 inch Skimmer
with 0.875 inch
Orifice Diameter
14 ft. weir
ID 8.2 C&G

31 x 14 x 3
1.5 inch Skimmer
with 0.5 inch
Orifice Diameter
6 ft. weir
ID 8.6 C&G

38 x 19 x 3
1.5 inch Skimmer
with 0.625 inch
Orifice Diameter
11 ft. weir
ID 8.4 C&G

46 x 23 x 3
1.5 inch Skimmer
with 0.875 inch
Orifice Diameter
15 ft. weir
ID 8.3 C&G

NAD 83/95

BEGIN CONSTRUCTION -Y3- STA. 12+25.00

-Y3- POT Sta. 10+67.40

-Y3- PC Sta. 12+40.00

-Y3- RETAIN

-Y3- PT Sta. 13+04.17 (13.84' LT.)

-L- PT Sta. 320+99.58 (153.80' LT)

-Y2- POT Sta. 10+00.00

-L- POC Sta. 320+42.81

-Y2- PC Sta. 11+00.00

-BL- 69 PINC 63+52.47±

-BY2- POT 5+00.00

-L- Sta. 321+72.47 (138')

-BL- 70 PINC 73+90.25

-L- Sta. 332+10.18 (49.84' LT)

-Y2- Sta. 12+99.40 (13.25' LT.)

MATCH LINE SEE SHEET NO.7 -L- STA 319+00

MATCH LINE SEE SHEET NO.9 -L- STA 333+00

MATCH LINE -A- -Y2- STA 13+40

END CONSTRUCTION -Y2- STA 15+00.00

-Y2- Sta. 15+19.36

-Y2- Sta. 15+68.99

-Y2- Sta. 13+49.68

-Y2- Sta. 13+33.06

S 71° 19' 06.7" E

N 35° 27' 00.0" W

N 24° 07' 10.0" W

N 26° 00' 14" W

N 24° 30' 54" W

N 15° 51' 15" W

N 9° 38' 10" W

S 89° 28' 01" W

S 66° 43' 34" W

ALBERT DANIEL WARE JR. DB 582 PG 159

JAMES FREI AND WIFE ELIZABETH KALLAI DB 952 PG 300

BOBBY RAY STACEY DB 715 PG 595

DONALD H. HENSON DB 286 PG 374

EARL REID GAULTNEY DB 640 PG 225

LULA S. WOOD

PHILLIP RAY DUFFEY DB 671/86 804

SHELVY PADGETT DB 972 PG 756

LINDA DUCKETT BURGESS DB 771 PG 538

SUSAN J. LONG DB 984 PG 524

ROBERT L. TATE DB 241 PG 155 ORSED 4 DB 459

JOHN LEE SANFORD DB 863 PG 630

GORDON SOUTHER DB 761 PG 690

PATRICIA LEWIS DB 734 PG 622

ENVIRONMENTAL LIABILITY TRANSFER, INC. DB 917 PG 683

JUDY HENSON ESTATE BK DBE PG 172 DB 197 PG 325 DB 541 PG 106

BOBBY E. DAVIS DB 558 PG 172 DB 580 PG 678

L.C. WRIGHT DB 411 PG 473

CEPHER MCDOWELL, HEIRS DB 238 PG 180 DB 190 PG 006

SPECIAL LATERAL "V" DITCH EST. DDE 10 CY SEE DETAIL O

SPECIAL CUT DITCH SEE DETAIL C

SPECIAL MEDIAN DITCH SEE DETAIL B

2' LATERAL BASE DITCH EST. DDE 105 CY SEE DETAIL A

3' LATERAL BASE DITCH W/ CLASS 'B' RIP RAP EST. 89 TONS 187 SY F.F. DDE 60 CY SEE DETAIL P

2' LATERAL BASE DITCH W/ CLASS 'B' RIP RAP EST. 150 TONS 424 SY F.F. DDE 440 CY SEE DETAIL J

5' LATERAL BASE DITCH W/ CLASS 'I' RIPRAP EST. 200 TONS 361 SY F.F. DDE 350 CY SEE DETAIL M

5' LATERAL BASE DITCH W/ CLASS 'I' RIPRAP EST. 174 TONS 314 SY F.F. DDE 305 CY SEE DETAIL N

6' NARROW BASE DITCH W/ CLASS 'I' RIP RAP EST. 102 TONS 306 SY F.F. DDE 240 CY SEE DETAIL EE

TOE PROTECTION CLASS B RIPRAP EST. 61 TONS 170 SY F.F. SEE DETAIL G

CL. B RIP RAP EST. 3 TONS 10 SY F.F.

CLASS B RIP RAP EST. 2 TONS 7 SY F.F.

CLASS I RIP RAP ON BANK EST. 3 TONS 10 SY F.F.

LINE EXIST DITCH W/ CLASS I RIP RAP AND FILTER FABRIC

REMOVE AS NEEDED PLUG REMAINING W/ FLOWABLE FILL

REMOVE

JB W/ MANHOLE COVER (SEE DETAIL 2-U)

JB W/ MANHOLE COVER

TOE PROTECTION CLASS B RIPRAP

EXIST TOP OF BANK

ACCESS POINT

GATE

END C/A FENCE

BEGIN C/A FENCE

CAR PORT

ISFD

ISMTL BUS

CONC

GR

BST

HTR

HWR

WTR

SWR

FES

CSP

RCP

DFH

SOIL

GRAD 380

200' TAPER

50' TAPER

R=15'

R=80'

R=100'

R=120'

R=130'

R=140'

R=150'

R=160'

R=170'

R=180'

R=190'

R=200'

R=210'

R=220'

R=230'

R=240'

R=250'

R=260'

R=270'

R=280'

R=290'

R=300'

R=310'

R=320'

R=330'

R=340'

R=350'

R=360'

R=370'

R=380'

R=390'

R=400'

R=410'

R=420'

R=430'

R=440'

R=450'

R=460'

R=470'

R=480'

R=490'

R=500'

R=510'

R=520'

R=530'

R=540'

R=550'

R=560'

R=570'

R=580'

R=590'

R=600'

R=610'

R=620'

R=630'

R=640'

R=650'

R=660'

R=670'

R=680'

R=690'

R=700'

R=710'

R=720'

R=730'

R=740'

R=750'

R=760'

R=770'

R=780'

R=790'

R=800'

R=810'

R=820'

R=830'

R=840'

R=850'

R=860'

R=870'

R=880'

R=890'

R=900'

R=910'

R=920'

R=930'

R=940'

R=950'

R=960'

R=970'

R=980'

R=990'

R=1000'

R=1010'

R=1020'

R=1030'

R=1040'

R=1050'

R=1060'

R=1070'

R=1080'

R=1090'

R=1100'

R=1110'

R=1120'

R=1130'

R=1140'

R=1150'

R=1160'

R=1170'

R=1180'

R=1190'

R=1200'

R=1210'

R=1220'

R=1230'

R=1240'

R=1250'

R=1260'

R=1270'

R=1280'

R=1290'

R=1300'

R=1310'

R=1320'

R=1330'

R=1340'

R=1350'

R=1360'

R=1370'

R=1380'

R=1390'

R=1400'

R=1410'

R=1420'

R=1430'

R=1440'

R=1450'

R=1460'

R=1470'

R=1480'

R=1490'

R=1500'

R=1510'

R=1520'

R=1530'

R=1540'

R=1550'

R=1560'

R=1570'

R=1580'

R=1590'

R=1600'

R=1610'

R=1620'

R=1630'

R=1640'

R=1650'

R=1660'

R=1670'

R=1680'

R=1690'

R=1700'

R=1710'

R=1720'

R=1730'

R=1740'

R=1750'

R=1760'

R=1770'

R=1780'

R=1790'

R=1800'

R=1810'

R=1820'

R=1830'

R=1840'

R=1850'

R=1860'

R=1870'

R=1880'

R=1890'

R=1900'

R=1910'

R=1920'

R=1930'

R=1940'

R=1950'

R=1960'

R=1970'

R=1980'

R=1990'

R=2000'

R=2010'

R=2020'

R=2030'

R=2040'

R=2050'

R=2060'

R=2070'

R=2080'

R=2090'

R=2100'

R=2110'

R=2120'

R=2130'

R=2140'

R=2150'

R=2160'

R=2170'

R=2180'

R=2190'

R=2200'

R=2210'

R=2220'

R=2230'

R=2240'

R=2250'

R=2260'

R=2270'

R=2280'

R=2290'

R=2300'

R=2310'

R=2320'

R=2330'

R=2340'

R=2350'

R=2360'

R=2370'

R=2380'

R=2390'

R=2400'

R=2410'

R=2420'

R=2430'

R=2440'

R=2450'

R=2460'

R=2470'

R=2480'

R=2490'

R=2500'

R=2510'

R=2520'

R=2530'

R=2540'

R=2550'

R=2560'

R=2570'

R=2580'

R=2590'

R=2600'

R=2610'

R=2620'

R=2630'

R=2640'

R=2650'

R=2660'

R=2670'

R=2680'

R=2690'

R=2700'

R=2710'

R=2720'

R=2730'

R=2740'

R=2750'

R=2760'

R=2770'

R=2780'

R=2790'

R=2800'

R=2810'

R=2820'

R=2830'

R=2840'

R=2850'

R=2860'

R=2870'

R=2880'

R=2890'

R=2900'

R=2910'

R=2920'

R=2930'

R=2940'

R=2950'

R=2960'

R=2970'

R=2980'

R=2990'

R=3000'

R=3010'

R=3020'

R=3030'

R=3040'

R=3050'

R=3060'

R=3070'

R=3080'

R=3090'

R=3100'

R=3110'

R=3120'

R=3130'

R=3140'

R=3150'

R=3160'

R=3170'

R=3180'

R=3190'

R=3200'

R=3210'

R=3220'

R=3230'

R=3240'

R=3250'

R=3260'

R=3270'

R=3280'

R=3290'

R=3300'

R=3310'

R=3320'

R=3330'

R=3340'

R=3350'

R=3360'

R=3370'

R=3380'

R=3390'

R=3400'

R=3410'

R=3420'

R=3430'

R=3440'

R=3450'

R=3460'

R=3470'

R=3480'

R=3490'

R=3500'

R=3510'

R=3520'

R=3530'

R=3540'

R=3550'

R=3560'

R=3570'

R=3580'

R=3590'

R=3600'

R=3610'

R=3620'

R=3630'

R=3640'

R=3650'

R=3660'

R=3670'

R=3680'

R=3690'

R=3700'

R=3710'

R=3720'

R=3730'

R=3740'

R=3750'

R=3760'

R=3770'

R=3780'

R=3790'

R=3800'

R=3810'

R=3820'

R=3830'

R=3840'

R=3850'

R=3860'

R=3870'

R=3880'

R=3890'

R=3900'

R=3910'

R=3920'

R=3930'

R=3940'

R=3950'

R=3960'

R=3970'

R=3980'

R=3990'

R=4000'

R=4010'

R=4020'

R=4030'

R=4040'

R=4050'

R=4060'

R=4070'

R=4080'

R=4090'

R=4100'

R=4110'

R=4120'

R=4130'

R=4140'

R=4150'

R=4160'

R=4170'

R=4180'

R=4190'

R=4200'

R=4210'

R=4220'

R=4230'

R=4240'

R=4250'

R=4260'

R=4270'

R=4280'

R=4290'

R=4300'

R=4310'

R=4320'

R=4330'

R=4340'

R=4350'

R=4360'

R=4370'

R=4380'

R=4390'

R=4400'

R=4410'

R=4420'

R=4430'

R=4440'

R=4450'

R=4460'

R=4470'

R=4480'

R=4490'

R=4500'

R=4510'

R=4520'

R=4530'

R=4540'

R=4550'

R=4560'

R=4570'

R=4580'

R=4590'

R=4600'

R=4610'

R=4620'

R=4630'

R=4640'

R=4650'

R=4660'

R=4670'

R=4680'

R=4690'

R=4700'

R=4710'

R=4720'

R=4730'

R=4740'

R=4750'

R=4760'

R=4770'

R=4780'

R=4790'

R=4800'

R=4810'

R=4820'

R=4830'

R=4840'

R=4850'

R=4860'

R=4870'

R=4880'

R=4890'

R=4900'

R=4910'

R=4920'

R=4930'

R=4940'

R=4950'

R=4960'

R=4970'

R=4980'

R=4990'

R=5000'

8/17/99

PROJECT REFERENCE NO.	SHEET NO.
R-2233AB	EC-9/CONST.9
R/W SHEET NO.	
ROADWAY DESIGN ENGINEER	HYDRAULICS ENGINEER

INSTALL DRIVEWAY PIPE DURING CLEARING & GRUBBING PHASE

CLEARING AND GRUBBING EROSION CONTROL FOR CONSTRUCTION SHEET 9

NOTE: PLACE TEMPORARY ROCK SEDIMENT DAMS TYPE – B AND TEMPORARY ROCK SILT CHECKS TYPE – A AT DRAINAGE OUTLETS.

NAD 83/95

TEMPORARY EARTH BERM
(Not to Scale)
Natural Ground
D = 1Ft.
B = 1Ft.
•STABILIZE EARTH BERM•

•STABILIZE EARTH B

MATCH LINE SEE SHEET NO.8 -L- STA.333+00

MATCH LINE SEE SHEET 10 -L- STA.347+00

LULA S. WOOD DB 250 PG 46 (132A)

CHARISE G. SMITH AND JASON K. SMITH DB 925 PG 243 (133A)

-BY3- 110 PINC 10+27.87
-Y3- Sta. 14+90.08
(91.19' LT.)

-Y3TIE- PT Sta.11+73.89

-Y3TIE- PC Sta.12+50.95

MARGARET COLE DB 431 PG 691 (134A)

-DR5- POT Sta. 10+00.00=
-Y3TIE- POT Sta. 15+27.50

ADAM KERTZ DB 874 PG 209 (136)

END CONSTRUCTION
-Y3TIE- POT STA.16+00.00

BROAD RIVER WATER AUTHORITY DB 766 PG 503

CLYDE H. ROBBINS DB 988 PG 575

-Y3TIE- PC Sta.10+43.89

-N 57° 28' 22.0" W

-Y3- POC Sta.15+25.00

-Y3TIE- POT Sta.10+00.00

-Y3- PT Sta. 16+40.31

SHELVY PADGETT DB 872 PG 756 (130)

SPECIAL CUT DITCH SEE DETAIL C

-Y3- POT Sta. 18+63.61=
-L- POT Sta. 333+12.81

-Y3TIE- POT Sta.16+40.31

RETAIN

TEST HOLE #15 625+85.28 67.78' LEFT TOP UTILITY=932.87

9' TAIL BASE DITCH SLOPE = 4.5% EST. DDE 33 CY SEE DETAIL W

RUTHERFORD MARKETEER, INC. DB 764 PG 312 (138)

ENVIRONMENTAL LIABILITY TRANSFER, INC. DB 917 PG 683 (129)

TERM. END SECTION

TEST HOLE #8 624+00.14 54.01' LEFT TOP UTILITY=932.45

TEST HOLE #9 624+40.40 42.53' LEFT TOP UTILITY=933.15

GRADE TO DRAIN

8' X 18" CURB

2 PUMPS

BEGIN C/A FENCE

END 8' X 18" CURB 343+60

REMOVE

PREFORMED SCOUR HOLE (SEE DETAIL 2-L) B=4' W=4' D=1.5' d=0.5'

HELEN S. BOWMAN DB 609 PG 780 (140)

CLYDE H. ROBBINS DB 988 PG 575 (141)

5' MONO. CONC. ISLAND

200' TAPER

N 35° 27' 00.0" W

ENVIRONMENTAL LIABILITY TRANSFER, INC. DB 917 PG 683 (129)

JUDY HENSON ESTATE BK 086 PG 72 DB 197 PG 325 DB 541 PG 106 (131)

WELL HOUSE

GRAU 350

SPECIAL CUT DITCH SEE DETAIL C

TAIL 'V' DITCH SLOPE = 0.5% EST. DDE 6 CY SEE DETAIL E

-BL- 71 PINC 80+13.29=
-BY3- POT 16+24.50
(NCGS MON. "KWIK")
-L- Sta. 338+33.21
(53.05' LT)

BM #3 STATION 79+37 188' RIGHT ELEVATION = 939.19

CAT-1

WHITE CEDAR LOG HOMES, INC. DB 940 PG 478 (139)

WHITE CEDAR LOG HOMES OF ASHEVILLE, NC, INC. DB 952 PG 75 (142)

MARGARET E. BIGGERMAN DB 621 PG 463 (144)

CHARLES ROBERT ARROWOOD DB 448 PG 94 (143)

BOBBY E. DAVIS DB 558 PG 172 DB 580 PG 678

35 x 17 x 3
ID 9.3 C&G

61 x 21 x 3
1.5 inch Skimmer
with 0.625 inch
Orifice Diameter
12 ft. weir
ID 7.4 C&G

38 x 19 x 3
1.5 inch Skimmer
with 0.625 inch
Orifice Diameter
11 ft. weir
ID 9.5 C&G

NOTE:

FOR 2GI'S ALONG MONOLITHIC ISLANDS SEE DETAIL ON SHEET 2-V FOR CURB AND GUTTER TRANSITION FROM 1'-6" CURB AND GUTTER TO 2'-6" CURB AND GUTTER

8/17/99

PROJECT REFERENCE NO.	SHEET NO.
R-2233AB	EC-10/CONST.10
R/W SHEET NO.	
ROADWAY DESIGN ENGINEER	HYDRAULICS ENGINEER

CLEARING AND GRUBBING
EROSION CONTROL FOR
CONSTRUCTION SHEET 10

NOTE:
PLACE TEMPORARY ROCK SEDIMENT DAMS TYPE – B AND TEMPORARY ROCK SILT CHECKS TYPE – A AT DRAINAGE OUTLETS.

34 x 16 x 3
1.5 inch Skimmer
with 0.5 inch
Orifice Diameter
8 ft. weir
ID 10.1 C&G

64 x 32 x 3
1.5 inch Skimmer
with 1.25 inch
Orifice Diameter
24 ft. weir
ID 10.5 C&G

42 x 21 x 3
1.5 inch Skimmer
with 0.75 inch
Orifice Diameter
13 ft. weir
ID 10.3 C&G

NAD 83/95

-BY4- III POT 5+00.00

-Y4- POT Sta. 10+00.00

BEGIN CONSTRUCTION
-Y4- POT STA. 12+00.00

-Y4- PT Sta. 12+32.13

-Y4- PCS Sta. 13+07.96

-Y4- POT Sta. 14+97.74=
-L- POT Sta. 353+42.81

-BL- 72 PINC 94+03.62=
-BY4- POT 10+92.70
-L- Sta. 353+23.54
(53.31' LT)

-Y4- PT Sta. 14+24.98

MATCH LINE SEE SHEET 9 -L- STA. 347+00

MATCH LINE SEE SHEET 11 -L- STA. 361+00

5' TAIL DITCH
WITH PSRM EST. 174 SY
DDE 60 CY
SEE DETAIL R

5' SPECIAL LATERAL BASE DITCH
WITH PSRM EST. 293 SY
DDE 180 CY
SEE DETAIL Q

2' LATERAL BASE DITCH
W/ PSRM EST. 644 SY
DDE 455 CY
SEE DETAIL K

CLASS "I" RIP RAP
EST. 15 TONS
30 SY F.F

PREFORMED SCOUR HOLE
(SEE DETAIL 2-L)
D=5' W=4'
D=2' E=0.5'

SPECIAL MEDIAN DITCH
SEE DETAIL B

685.44'
N35°11'58"W

N 35° 27' 00.0" W

S 86° 29' 30.2" E
1436.56'

N 83° 40' 43.5" E

CLYDE H. ROBBINS
DB 988 PG 575
(141)

CLYDE H. ROBBINS, JR.
DB 988 PG 575
(147)

CHARLES ROBERT ARROWOOD
DB 448 PG 94
(143)

MARGARET E. BIGGERMAN
DB 621 PG 463
(144)

FAIRWAY OIL COMPANY, INC.
DB 913 PG 670
DB 835 PG 691
(145)

ITE CEDAR LOG HOMES, INC.
DB 952 PG 75

284.16'
N03°59'30"W

NOTE:
FOR 2GI'S ALONG MONOLITHIC ISLANDS SEE DETAIL ON SHEET 2-V FOR CURB AND GUTTER TRANSITION FROM 1'-6" CURB AND GUTTER TO 2'-6" CURB AND GUTTER

34 x 16 x 3
ID 10.2 C&G

8/17/99

PROJECT REFERENCE NO.	SHEET NO.
R-2233AB	EC-II/CONST.II
R/W SHEET NO.	
ROADWAY DESIGN ENGINEER	HYDRAULICS ENGINEER

INSTALL DRIVEWAY PIPE DURING CLEARING & GRUBBING PHASE

NOTE: PLACE TEMPORARY ROCK SEDIMENT DAMS TYPE – B AND TEMPORARY ROCK SILT CHECKS TYPE – A AT DRAINAGE OUTLETS.

CLEARING AND GRUBBING EROSION CONTROL FOR CONSTRUCTION SHEET 11

NAD 83/95

44 x 22 x 3 1.5 inch Skimmer with 0.875 inch Orifice Diameter 14 ft. weir ID 11.6 C&G

MATCH LINE SEE SHEET 10 -L- STA.361+00

MATCH LINE SEE SHEET 12 -L- STA.375+00

623.21' S65°06'05"W

378.85' S75°10'46"W

CLYDE H. ROBBINS, JR. DB 988 PG 575 (147)

CLYDE H. ROBBINS, JR. DB 988 PG 575 (149A)

NANCY M. ROBBINS DB 867 PG 223 (151)

MELISSA P. ROBBINS DB 992 PG 193 (150)

FAIRWAY OIL COMPANY, INC. DB 913 PG 670 DB 835 PG 691 (145)

2' LATERAL BASE DITCH W/ CLASS 'B' RIP RAP EST. 71 TONS 200 SY F.F. DDE 110 CY SEE DETAIL J

-Y5- POT Sta. 10+00.00= -L- POT Sta. 363+42.81

-BL- 73 PINC 106+04.04 -BY5- POT 5+00.00 -L- Sta. 364+23.96 (56.21' LT)

-BL- 13 PINC 111+33.75 (GPS POINT "R2233AB-13") -L- Sta. 369+51.76 (11.23' LT)

-Y5- PC Sta. 10+66.71

-Y5- PCC Sta. 11+81.75

-Y5- PT Sta. 14+26.43

-Y5- END CONSTRUCTION STA.13+25.00

SPECIAL MEDIAN DITCH SEE DETAIL B

SPECIAL CUT DITCH SEE DETAIL C

SPECIAL LATERAL 'V' DITCH TIE TO EXSITING DITCH SEE DETAIL O

TAIL 'V' DITCH SLOPE = 0.5% EST. DDE 12 CY SEE DETAIL E

PREFORMED SCOUR HOLE (SEE DETAIL 2-L) B=5' W=5' D=2' d=0.5'

PREFORMED SCOUR HOLE (SEE DETAIL 2-L) B=4' W=4' D=1.5' d=0.5'

CLASS B RIP RAP EST. 1 TON .5 SY F.F.

3' LATERAL BASE DITCH W/CLASS 'B' RIP RAP EST. 63 TONS 173 SY F.F. DDE 25 CY SEE DETAIL S

JB W/ MH COVER

JB W/ MANHOLE COVER

18" CSP W/ ELBOWS

SEPTIC DRAIN LINES

SEPTIC TANK

TEST HOLE #3 L 85+98.21 44.07' RIGHT TOP UTILITY=947.73'

TEST HOLE #4 L 85+98.21 80.68' RIGHT TOP UTILITY=951.87'

TEST HOLE #5 L 85+98.21 116.68' RIGHT TOP UTILITY=950.97'

5' MONO. CONC. ISLAND

2SMTL BUS

ISFD

ISBKD

WD DK

RETAIN

REMOVE

Modified Silt Basin Type 'B' 18 x 12 x 3 (See Tiered Skimmer Basin Detail) ID 11.3 C&G

18 x 12 x 3 1.5 inch Skimmer with 0.375 inch Orifice Diameter 4 ft. weir (See Tiered Skimmer Basin Detail) ID 11.3 &11.4 C&G

Modified Silt Basin Type 'B' 18 x 12 x 3 (See Tiered Skimmer Basin Detail) ID 11.4 C&G

25 x 12 x 3 1.5 inch Skimmer with 0.375 inch Orifice Diameter 4 ft. weir ID 11.2 C&G

61 x 20 x 3 1.5 inch Skimmer with 1.0 inch Orifice Diameter 12 ft. weir ID 11.5 C&G

40 x 17 x 3 1.5 inch Skimmer with 0.75 inch Orifice Diameter 11 ft. weir ID 11.7 C&G

8/17/99

PROJECT REFERENCE NO.	SHEET NO.
R-2233AB	EC-12/CONST.12
RW SHEET NO.	
ROADWAY DESIGN ENGINEER	HYDRAULICS ENGINEER

NOTE:

FOR 2GI'S ALONG MONOLITHIC ISLANDS SEE DETAIL ON SHEET 2-V FOR CURB AND GUTTER TRANSITION FROM 1'-6" CURB AND GUTTER TO 2'-6" CURB AND GUTTER

NOTE:

PLACE TEMPORARY ROCK SEDIMENT DAMS TYPE – B AND TEMPORARY ROCK SILT CHECKS TYPE – A AT DRAINAGE OUTLETS.

CLEARING AND GRUBBING EROSION CONTROL FOR CONSTRUCTION SHEET 12

NAD 83/95

30 x 14 x 3
1.5 inch Skimmer
with 0.5 inch
Orifice Diameter
6 ft. weir
ID 12.2 C&G

MATCH LINE SEE SHEET 11 -L- STA.375+00

MATCH LINE SEE SHEET 13 -L- STA.389+00

-Y6- POT Sta. 10+00.00

BM #5
-BL- STATION 122+65
315' LEFT
ELEVATION = 969.23'

SR 1135 SULPHER SPRINGS CHURCH RD

BEGIN CONSTRUCTION
-Y6- STA.11+00.00

-Y6- POT Sta. 13+78.09=
-L- POT Sta 381+59.11

-Y6- POT Sta. 13+00.20

NANCY M. ROBBINS
DB 867 PG 223

SADIE R. BRANCH
DB 328 PG 52

MELISSA P. ROBBINS
DB 552 PG 193
DB 552 PG 147
DB 566 PG 745
DB 622 PG 15

RUTHERFORD COUNTY
DB 845 PG 550

SPECIAL CUT DITCH
SEE DETAIL C

SPECIAL MEDIAN DITCH
SEE DETAIL B

SPECIAL CUT DITCH
SEE DETAIL C
-BL- 14 PINC 123+92.54
(GPS POINT "R2233AB-14")
-L- Sta. 382+09.52
(62.18' LT)

TAIL 'V' DITCH
SLOPE = 0.5%
EST. DDE 8 CY
SEE DETAIL E

PREFORMED
SCOUR HOLE
(SEE DETAIL 2-L)
B=4' W=4'
D=1.5' d=0.5'

SPECIAL MEDIAN DITCH
SEE DETAIL B

3' LATERAL BASE DITCH
W/ CLASS B RIP RAP
EST. 125 TONS
345 SY F.F.
DDE 135 CY
SEE DETAIL S

SPECIAL CUT DITCH
SEE DETAIL C

52 x 26 x 3
ID 12.1 C&G

34 x 17 x 3
ID 12.3 C&G

5' MONO. CONC. ISLAND

50PR

12" CMP

15" CMP

BEGIN C/A FENCE +00 53'

END C/A FENCE +37 -Y6- 45' LT

BEGIN C/A FENCE +00 30' LT & 45' LT

END C/A FENCE +47

BEGIN C/A FENCE +07

END C/A FENCE +25

BEGIN C/A FENCE +95

ACCESS POINT

MTL GATE

REMOVE

GR 200' TAPER

290' TAPER

SR 2215 HENSON RD

S 77 50' 40" E

PROJECT REFERENCE NO.	SHEET NO.
R-2233AB	EC-13/CONST.13
R/W SHEET NO.	
ROADWAY DESIGN ENGINEER	HYDRAULICS ENGINEER

INSTALL DRIVEWAY PIPE DURING CLEARING & GRUBBING PHASE

CLEARING AND GRUBBING EROSION CONTROL FOR CONSTRUCTION SHEET 13

NOTE:
PLACE TEMPORARY ROCK SEDIMENT DAMS TYPE – B AND TEMPORARY ROCK SILT CHECKS TYPE – A AT DRAINAGE OUTLETS.

NOTE:
FOR 2GI'S ALONG MONOLITHIC ISLANDS SEE DETAIL ON SHEET 2-V FOR CURB AND GUTTER TRANSITION FROM 1'-6" CURB AND GUTTER TO 2'-6" CURB AND GUTTER

TEMPORARY EARTH BERM
(Not to Scale)
Natural Ground
D = 1Ft.
B = 1Ft.
•STABILIZE EARTH BERM•

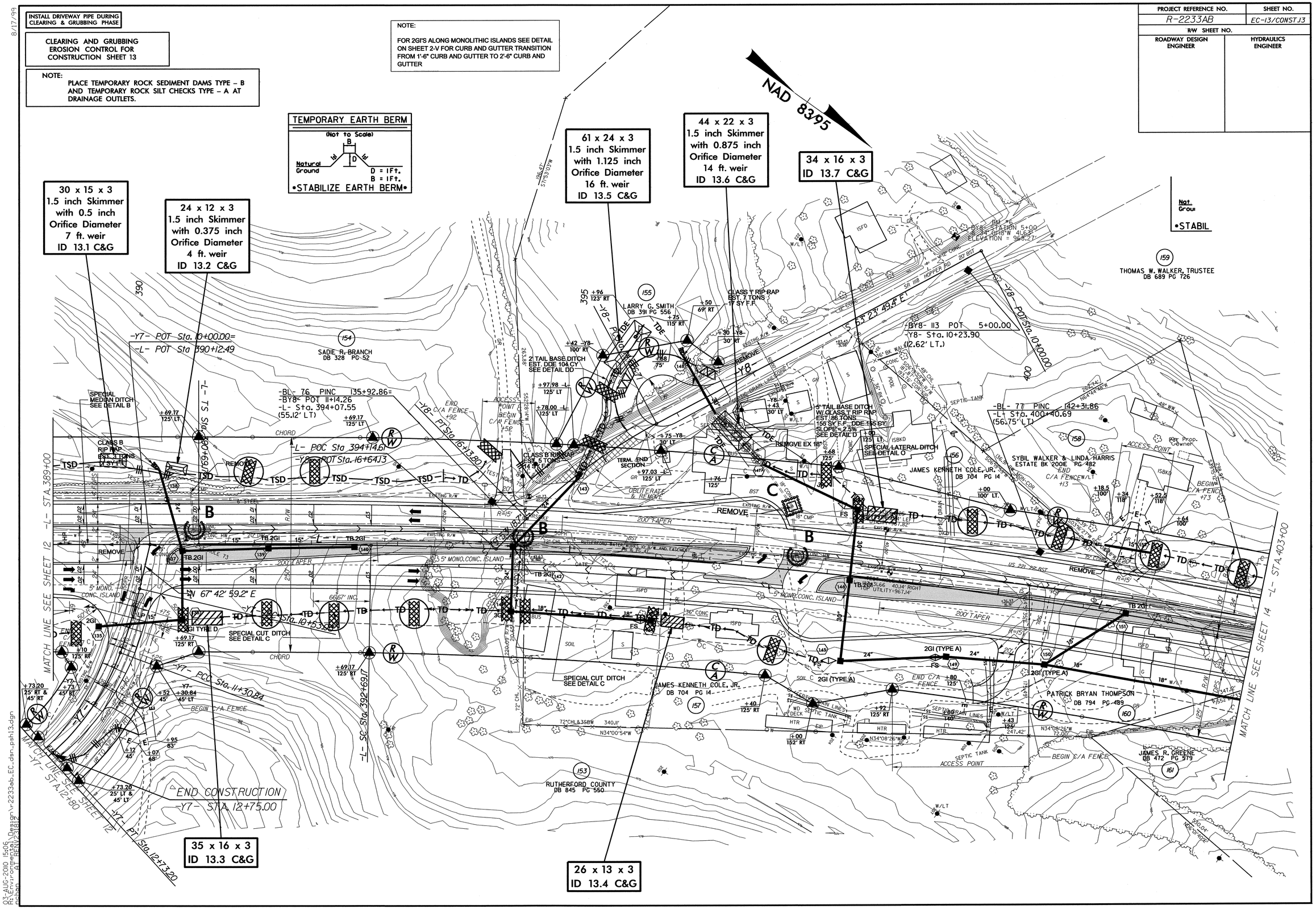

8/17/99

03-AUG-2010 15:06
R:\Environmental\Design\r2233ab_EC_dsn_psh13.dgn

8/17/99

PROJECT REFERENCE NO.	SHEET NO.
R-2233AB	EC-14/CONST.14
R/W SHEET NO.	
ROADWAY DESIGN ENGINEER	HYDRAULICS ENGINEER

INSTALL DRIVEWAY PIPE DURING CLEARING & GRUBBING PHASE

CLEARING AND GRUBBING EROSION CONTROL FOR CONSTRUCTION SHEET 14

NOTE: PLACE TEMPORARY ROCK SEDIMENT DAMS TYPE – B AND TEMPORARY ROCK SILT CHECKS TYPE – A AT DRAINAGE OUTLETS.

NOTE: FOR 2GI'S ALONG MONOLITHIC ISLANDS SEE DETAIL ON SHEET 2-V FOR CURB AND GUTTER TRANSITION FROM 1'-6" CURB AND GUTTER TO 2'-6" CURB AND GUTTER

NAD 83/95

-BY9- 114 POT 5+00.00

-Y9- POT Sta. 10+00.00

-Y9- PC Sta. 10+65.66

-Y9- PRC Sta. 12+17.18

BEGIN CONSTRUCTION
-Y9- STA. 12+00.00

-Y9- PT Sta. 14+57.90

-Y9- POT Sta. 16+26.31 =
-L- POS Sta. 405+80.00

-Y10- POT Sta. 10+00.00
-L- POT Sta 408+01.79

-BL- 78 PINC 150+31.07=
-BY9- POT 11+73.24=
-GY10- POT 5+00.00
-L-/ Sta. 408+34.03
(68.84' LT)

END CONSTRUCTION
-Y10- STA. 13+00.00

-Y10- PT Sta.

MATCH LINE SEE SHEET 13 -L- STA 403+00

MATCH LINE SEE SHEET 15 -L- STA 417+00

39 x 19 x 3
1.5 inch Skimmer
with 0.75 inch
Orifice Diameter
11 ft. weir
ID 14.3 C&G

35 x 15 x 3
1.5 inch Skimmer
with 0.5 inch
Orifice Diameter
7 ft. weir
ID 14.2 C&G

34 x 17 x 3
1.5 inch Skimmer
with 0.625 inch
Orifice Diameter
9 ft. weir
ID 14.1 C&G

34 x 17 x 3
ID 14.4 C&G

RUBY ESTELLE FOWLER
DB 628 PG 478

THOMAS W. WALKER, TRUSTEE
DB 689 PG 726

JAMES R. GREENE
DB 472 PG 579

WINBURN SCOTT BRIDGES
DB 526 PG 684

FRANCES H. HAMRICK
DB 364 PG 697

PATRICK K. SMITH
DB 364 PG 399
DB 612 PG 12

THOMAS DWIGHT HAMRICK
DB 676 PG 139

RUTHERFORD COUNTY BOARD OF EDUCATION
DB 489 PG 444
DB 399 PG 521

SHIRLEY ZYSKOWSKI
DB 514 PG 512

R. WAYNE HARRIS
DB 706 PG 697

JERRY MAURICE EAVES
DB 691 PG 521

CLASS B RIP RAP
EST. 2 TONS
7 SY F.F.

CLASS B RIP RAP
EST. 3 TONS
10 SY F.F.

2' LATERAL BASE DITCH
W/ CLASS 'B' RIP RAP
EST. 80 TONS, 169 SY F.F.
DDE 95 CY
SEE DETAIL J

SPECIAL LATERAL 'V' DITCH
SEE DETAIL O

SPECIAL CUT DITCH
SEE DETAIL C

SPECIAL MEDIAN DITCH
SEE DETAIL B

3' TAIL
BASE DITCH
SLOPE = 4.5%
EST. DDE 37 CY
SEE DETAIL W

LATERAL 'V' DITCH
EST. DDE 350 CY
SEE DETAIL T

TAIL V DITCH
EST. DDE 8 CY
SEE DETAIL E
SLOPE = 2.8%

GRADE TO DRAIN

REMOVE

RETAIN

OBLITERATE & REMOVE

BEGIN C/A FENCE

END C/A FENCE

ACCESS POINT

TEST HOLE #5
EL=80.15 5.28' RIGHT
TOP UTILITY=973.92

TEST HOLE #6
EL=80.16 2.80' RIGHT
TOP UTILITY=973.02

BM #7
STATION B+88
33' RIGHT
ELEVATION = 975.75

N 20° 54' 40.0" W

N 69° 03' 59.9" E

N 77° 45' 32.8" E

S 16° 39' 08" E

N 22° 18' 39" E

N 27° 16' 06" W

S 67° 20' 51" E

CONCMON

EIP

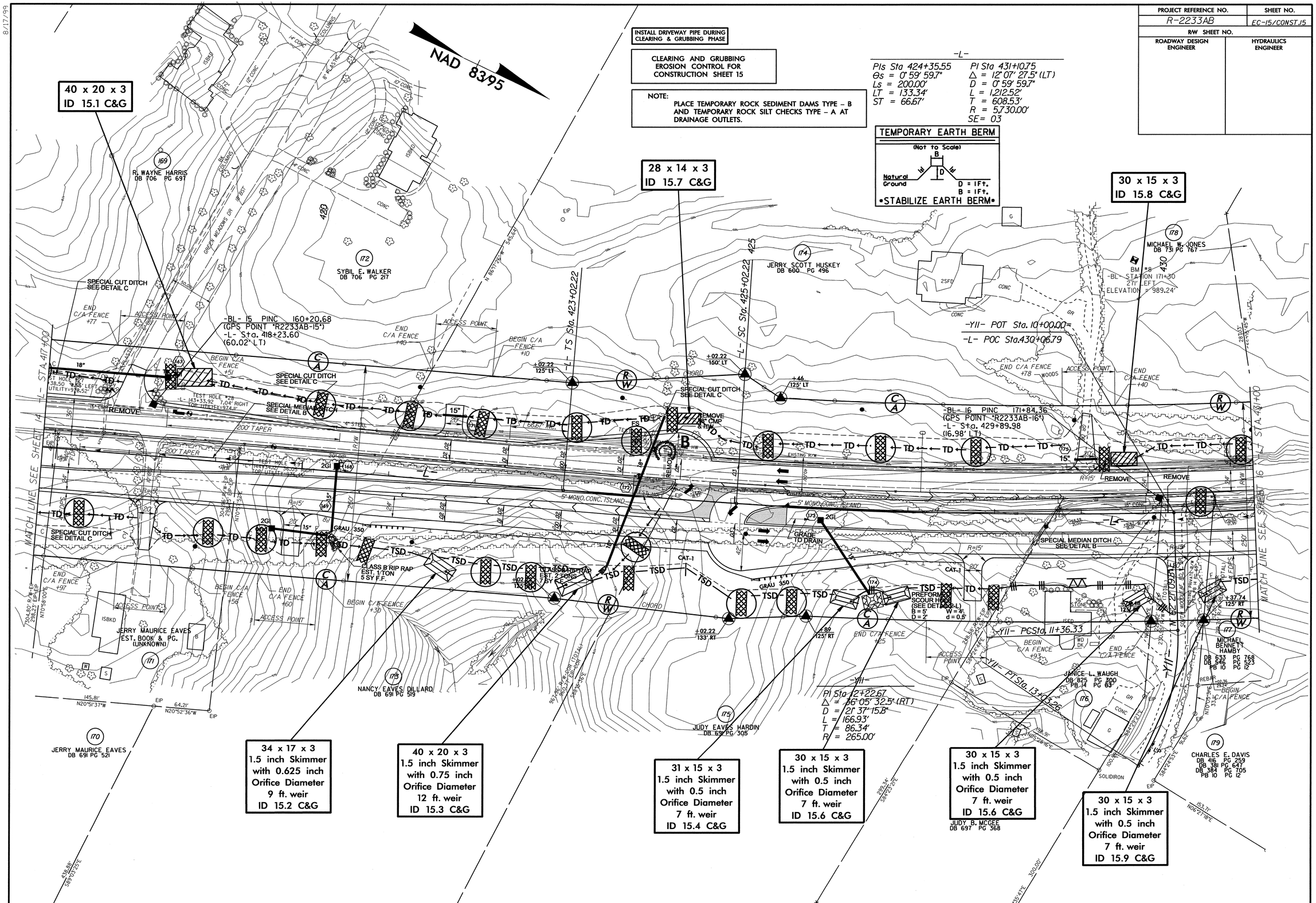

PROJECT REFERENCE NO.
R-2233AB
SHEET NO.
EC-15/CONST.15
R/W SHEET NO.
ROADWAY DESIGN ENGINEER
HYDRAULICS ENGINEER
INSTALL DRIVEWAY PIPE DURING CLEARING & GRUBBING PHASE
CLEARING AND GRUBBING EROSION CONTROL FOR CONSTRUCTION SHEET 15
NOTE: PLACE TEMPORARY ROCK SEDIMENT DAMS TYPE - B AND TEMPORARY ROCK SILT CHECKS TYPE - A AT DRAINAGE OUTLETS.
-L-
PIs Sta 424+35.55
Θs = 0° 59' 59.7"
Ls = 200.00'
LT = 133.34'
ST = 66.67'
PI Sta 431+10.75
Δ = 12° 07' 27.5" (LT)
D = 0° 59' 59.7"
L = 1,212.52'
T = 608.53'
R = 5,730.00'
SE= 03
TEMPORARY EARTH BERM
(Not to Scale)
Natural Ground
D = 1Ft.
B = 1Ft.
•STABILIZE EARTH BERM•
NAD 83/95
40 x 20 x 3
ID 15.1 C&G
28 x 14 x 3
ID 15.7 C&G
30 x 15 x 3
ID 15.8 C&G
34 x 17 x 3
1.5 inch Skimmer
with 0.625 inch
Orifice Diameter
9 ft. weir
ID 15.2 C&G
40 x 20 x 3
1.5 inch Skimmer
with 0.75 inch
Orifice Diameter
12 ft. weir
ID 15.3 C&G
31 x 15 x 3
1.5 inch Skimmer
with 0.5 inch
Orifice Diameter
7 ft. weir
ID 15.4 C&G
30 x 15 x 3
1.5 inch Skimmer
with 0.5 inch
Orifice Diameter
7 ft. weir
ID 15.6 C&G
30 x 15 x 3
1.5 inch Skimmer
with 0.5 inch
Orifice Diameter
7 ft. weir
ID 15.6 C&G
30 x 15 x 3
1.5 inch Skimmer
with 0.5 inch
Orifice Diameter
7 ft. weir
ID 15.9 C&G
R. WAYNE HARRIS
DB 706 PG 697
SYBIL E. WALKER
DB 706 PG 217
JERRY SCOTT HUSKEY
DB 600 PG 496
MICHAEL W. JONES
DB 731 PG 767
-BL- 15 PINC 160+20.68
(GPS POINT "R2233AB-15")
-L- Sta. 418+23.60
(60.02' LT)
-BL- 16 PINC 171+84.36
(GPS POINT "R2233AB-16")
-L- Sta. 429+89.98
(16.98' LT)
-YII- POT Sta. 10+00.00=
-L- POC Sta.430+06.79
-L- TS Sta. 423+02.22
-L- SC Sta. 425+02.22
-L- STA. 417+00
-L- STA. 431+00
MATCH LINE SEE SHEET 14
MATCH LINE SEE SHEET 16
SPECIAL CUT DITCH SEE DETAIL C
SPECIAL MEDIAN DITCH SEE DETAIL B
CLASS B RIP RAP EST. 1 TON 5 SY F.F.
CLASS B RIP RAP EST. 2 TONS 7 SY F.F.
PREFORMED SCOUR HOLE (SEE DETAIL 2-L)
B = 5' W = 4'
D = 2' d = 0.5'
GRADE TO DRAIN
5' MONO. CONC. ISLAND
REMOVE
200' TAPER
JERRY MAURICE EAVES EST. BOOK & PG. (UNKNOWN)
NANCY EAVES DILLARD
DB 691 PG 519
JERRY MAURICE EAVES
DB 691 PG 521
JUDY EAVES HARDIN
DB 691 PG 305
JANICE L. WAUGH
DB 825 PG 300
PB 14 PG 63
MICHAEL BENNETT HAMBY
DB 633 PG 768
DB 546 PG 523
PB 10 PG 12
CHARLES E. DAVIS
DB 416 PG 259
DB 381 PG 647
DB 384 PG 705
PB 10 PG 12
JUDY B. MCGEE
DB 697 PG 368
-YII- PI Sta 12+22.67
Δ = 36° 05' 32.5" (RT)
D = 21° 37' 15.8"
L = 166.93'
T = 86.34'
R = 265.00'
-YII- PCSta. 11+36.33
-YII- PTSta. 13+03.26

PROJECT REFERENCE NO.	SHEET NO.
R-2233AB	EC-16/CONST.16
R/W SHEET NO.	
ROADWAY DESIGN ENGINEER	HYDRAULICS ENGINEER

8/17/99

INSTALL DRIVEWAY PIPE DURING CLEARING & GRUBBING PHASE

CLEARING AND GRUBBING EROSION CONTROL FOR CONSTRUCTION SHEET 16

NOTE: PLACE TEMPORARY ROCK SEDIMENT DAMS TYPE – B AND TEMPORARY ROCK SILT CHECKS TYPE – A AT DRAINAGE OUTLETS.

TEMPORARY EARTH BERM
(Not to Scale)
D = 1Ft.
B = 1Ft.
•STABILIZE EARTH BERM•

8/17/99

PROJECT REFERENCE NO.	SHEET NO.
R-2233AB	EC-17/CONST.17
RW SHEET NO.	
ROADWAY DESIGN ENGINEER	HYDRAULICS ENGINEER

INSTALL DRIVEWAY PIPE DURING CLEARING & GRUBBING PHASE

CLEARING AND GRUBBING EROSION CONTROL FOR CONSTRUCTION SHEET 17

NOTE: PLACE TEMPORARY ROCK SEDIMENT DAMS TYPE – B AND TEMPORARY ROCK SILT CHECKS TYPE – A AT DRAINAGE OUTLETS.

NAD 8395

30 x 15 x 3
1.5 inch Skimmer
with 0.5 inch
Orifice Diameter
7 ft. weir
ID 17.2 C&G

36 x 18 x 3
1.5 inch Skimmer
with 0.625 inch
Orifice Diameter
10 ft. weir
ID 17.1 C&G

30 x 15 x 3
ID 17.6 C&G

-L- STA 445+00

-L- STA 459+00

MATCH LINE SEE SHEET 16 -L-

MATCH LINE SEE SHEET 18 -L-

-BY14- 117 PINC 10+46.78
-Y14- Sta. 51+99.49
(27.67' RT.)

-Y14- PCSta. 16+15.40

-Y14- PCCSta. 16+96.85

-Y14- PCCSta. 18+13.45

-Y14- PTSta. 18+93.47

BEGIN CONSTRUCTION
-Y14- STA 17+50.00

-Y15- PCSta. 11+55.52

-Y15- PI Sta. 12+70.52

-Y14- PTSta. 19+85.90=
-L- POT Sta. 452+81.72

-Y15-
PI Sta 12+13.12
Δ = 8° 14' 11.0" (RT)
D = 7° 09' 43.1"
L = 115.00'
T = 57.60'
R = 800.00'

DAVID MICHAEL MOSLEY
DB 766 PG 726
DB 765 PG 202

RICHARD W. HOLLAND
DB 965 PG 683

G. SUSANNE PRICE
DB 747 PG 554
DB 588 PG 366
PB 18 PG 13

JERRY L. THOMPSON
DB 711 PG 719
PB 18 PG 13

FAYE EVELYN HOPPER
DB 493 PG 557
PB 18 PG 13

STROUD COMPANY, LLC
DB 941 PG 184

LEE ROBBINS, HEIRS
DB 228 PG 294

TAMMY TONEY SKIPPER
DB 635 PG 126

PUBLIC SERVICE CO. OF NC, INC.
DB 332 PG 132

HELEN BAGWELL ESTATE BOOK 02E PG 241

SANDRA HOWARD
DB 785 PG 449

MARTHA TONEY
DB 252 PG 3
DB 307 PG 276

GRANT EMIL HARDIN
DB 691 PG 205

SULPHUR SPRINGS CONGREGATIONAL HOLINESS CHURCH
DB 438 PG 63
DB 201 PG 446

TERESA S. HEAD BENSON
DB 582 PG 675-53
DB 820 PG 741-72
PB 6 PG 134

JACQUELINE LL HENSON ESTATE BK 104E PG 408

ENERGY DISSIPATOR BASIN W/ CLASS I RIP RAP SEE DETAIL ON SHEET 24M W=2.0 FT

-BL- 83 PINC 194+46.74-
-BY14- POT 14+16.83
-L- Sta. 452+55.47
(22.34' LT.)

BM #9
-BL- STATION 193+94
229' RIGHT
ELEVATION = 991.90

Modified Silt Basin Type 'B'
21 x 14 x 3
(See Tiered Skimmer Basin Detail)
ID 17.4 C&G

21 x 14 x 3
1.5 inch Skimmer
with 0.5 inch
Orifice Diameter
6 ft. weir
(See Tiered Skimmer Basin Detail)
ID 17.4 C&G

20 x 13 x 3
1.5 inch Skimmer
with 0.375 inch
Orifice Diameter
5 ft. weir
(See Tiered Skimmer Basin Detail)
ID 17.5 C&G

Modified Silt Basin Type 'B'
20 x 13 x 3
(See Tiered Skimmer Basin Detail)
ID 17.5 C&G

SPECIAL CUT DITCH SEE DETAIL C

TAIL 'V' DITCH SLOPES = 0.5% EST. DDE 9 CY SEE DETAIL E

CLASS B RIP RAP EST. 2 TONS 7 SY F.F.

ACCESS POINT

BEGIN C/A FENCE

END C/A FENCE

GRADE TO DRAIN

5' MONO. CONC. ISLAND

REMOVE

TD

TSD

FS

2GI

S 85°57'46.6" E

S 82°53'15.3" E

N 87°37'06.6" W

N 34°59'15" E 315.26'

N 55°36'35.7" E

S 50°04'24" W 158.30'

S 44°18'05" E 72.46'

N 24°37'27" E 352.23'

N 65°05'51" W

N 34°47'59" W 84.28'

N 65°48'32" W 350.78'

S 36°48'11" E 114.85'

S 64°23'41" W 61.36'

8/17/99

PROJECT REFERENCE NO.	SHEET NO.
R-2233AB	EC-18/CONST18
R/W SHEET NO.	
ROADWAY DESIGN ENGINEER	HYDRAULICS ENGINEER

INSTALL DRIVEWAY PIPE DURING CLEARING & GRUBBING PHASE

CLEARING AND GRUBBING
EROSION CONTROL FOR
CONSTRUCTION SHEET 18

NOTE:
PLACE TEMPORARY ROCK SEDIMENT DAMS TYPE – B AND TEMPORARY ROCK SILT CHECKS TYPE – A AT DRAINAGE OUTLETS.

NAD 8395

MATCH LINE SEE SHEET 17 -L- STA.459+00

MATCH LINE SEE SHEET 19 -L- STA.473+00

ROBERT N. TAYLOR DB 764 PG 452 PB 18 PG 60

TONI REDIFER DB 786 PG 127 PB 18 PG 60

-BY17- 118 POT 5+00.00
-Y17- Sta. 11+91.68 (10.57' LT.)

-Y17- PCSta. 10+00.00

-Y17- PTSta. 11+99.16

-BL- 85 PINC 206+04.24
-BY17- POT 8+24.40
-L- Sta. 464+12.78 (4.96' RT.)

RETAIN

NELLIE SOUTHERLIN DB 856 PG 387 PB 18 PG 13

PHILIP SHANER DB 688 PG 222 PB 18 PG 13

GROSS PROPERTIES, LLC DB 974 PG 636

BARRY ROBBINS, ET AL EST BK. 09E PG 264

THOMAS G. COLLINS, III DB 808 PG 543

RAUL A. CHAPMAN DB 317 PG 243

P & M CHAPMAN, LP DB 928 PG 572

KAREN LEIGH TOMS CONNER ESTATE BK 04E PG 509

TIMOTHY E. BRACKETT DB 711 PG 51 Owner

SHILOH DANIEL TOWN OAKLAND FIRE DEPT DB 521 PG 171 DB 767 PG 239

HUGH CROOK DB 879 PG 366 PB 18 PG 13

-BL- 84 PINC 201+19.41
-L- Sta. 459+28.12 (117.59' LT.)

5' HEAD BASE DITCH EST. DDE 12 CY SEE DETAIL Y W/ ELBOWS

TAIL 'V' DITCH SLOPE = 0.54% EST. DDE 32 CY SEE DETAIL E

-Y19- 91.5 176' LT
-Y19- 0.02 138' RT
-Y19- 14.5 182.5' RT
-Y19- 24.5 153'

-Y16- POT Sta. 10+06.50
-L- POT Sta 459+06.10

-L- POT Sta 464+47.95
-Y18- POT Sta. 100.00

SPECIAL CUT DITCH SEE DETAIL C

SPECIAL CUT DITCH SEE DETAIL D

TERM. END SECTION

-Y18- 10.82 30' LT

-Y18- 10.82 30' RT

-Y18- 75.81 30' LT

TONEY MICHAEL WEASE DB 927 PG 626 PB 6 PG 134

-Y16- BCSta. 11+28.43

-Y17- POT Sta. 14+25.27 = -L- POT Sta 461+77.43

-Y18- POTSta. 13+02.25

-Y16- PTSta. 12+63.43

END CONSTRUCTION -Y16- STA. 12+50.00

DANNIE L. GETTYS DB 929 PG 500 DB 485 PG 511 PB 6 PG 134

DANNIE L. GETTYS DB 485 PG 511

GERALD E. ALLEN DB 459 PG 418 PB 6 PG 134

GREGORY NORMAN TREVITZ DB 390 PG 189 PB 6 PG 134

JACK C. RHODES DB 452 PG 355 PB 6 PG 134

VIRGIL A. BAYNARD DB 318 PG 67 PB 6 PG 134

WACHOVIA BANK, N. A. DB 951 PG 630 PB 6 PG 134

ANNIE GREENE COLE DB 278 PG 101 PB 6 PG 134

BILLY FRANKLIN MELTON DB 610 PG 620 PB 6 PG 134

WELDON P. BLANTON DB 551 PG 38 PB 6 PG 134

KAY PREWITT GIVENS DB 652 PG 63 PB 6 PG 134

DAVID GREEN DB 806 PG 699 PB 6 PG 134

JOSE MEFIA DB 729 PB 189 PB 6 PG 134

PAUL A. CHAPMAN DB 265 PG 283 DB 259 PG 152 PB 6 PG 134

LARSTON EARL HAMES DB 746 PG 436 PB 6 PG 134

GENE P. FITE DB 323 PG 672 DB 257 PG 455 PB 6 PG 134

ELBERT EL HOLLAND DB 733 PG 38 PB 6 PG 134

34 x 16 x 3
ID 18.2 C&G

PROJECT REFERENCE NO.	SHEET NO.
R-2233AB	EC-19/CONST.19
R/W SHEET NO.	
ROADWAY DESIGN ENGINEER	HYDRAULICS ENGINEER

CLEARING AND GRUBBING
EROSION CONTROL FOR
CONSTRUCTION SHEET 19

NOTE:
PLACE TEMPORARY ROCK SEDIMENT DAMS TYPE - B AND TEMPORARY ROCK SILT CHECKS TYPE - A AT DRAINAGE OUTLETS.

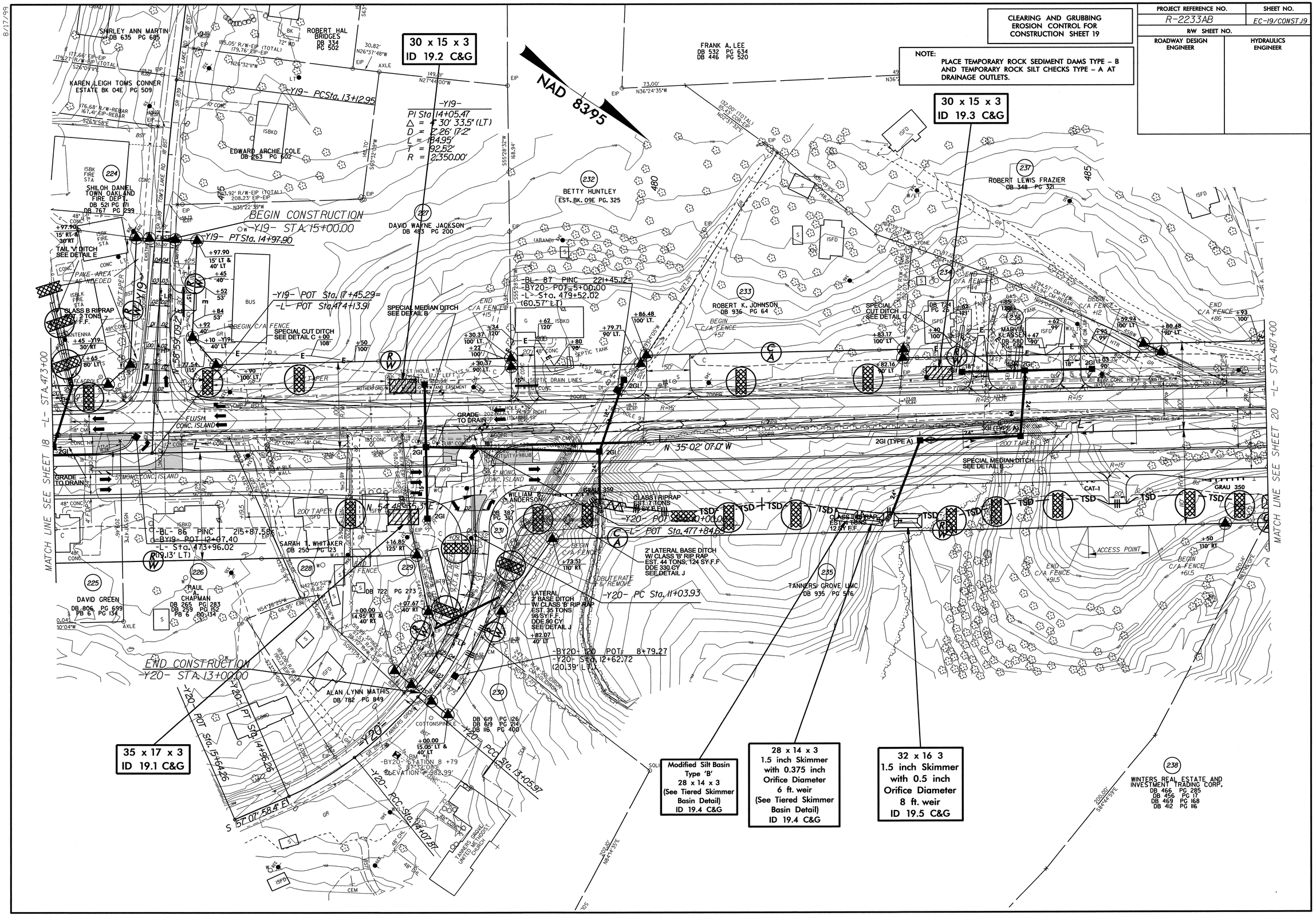

PROJECT REFERENCE NO.	SHEET NO.
R-2233AB	EC-20/CONST.20
R/W SHEET NO.	
ROADWAY DESIGN ENGINEER	HYDRAULICS ENGINEER

CLEARING AND GRUBBING EROSION CONTROL FOR CONSTRUCTION SHEET 20

NOTE: PLACE TEMPORARY ROCK SEDIMENT DAMS TYPE – B AND TEMPORARY ROCK SILT CHECKS TYPE – A AT DRAINAGE OUTLETS.

NAD 83/95

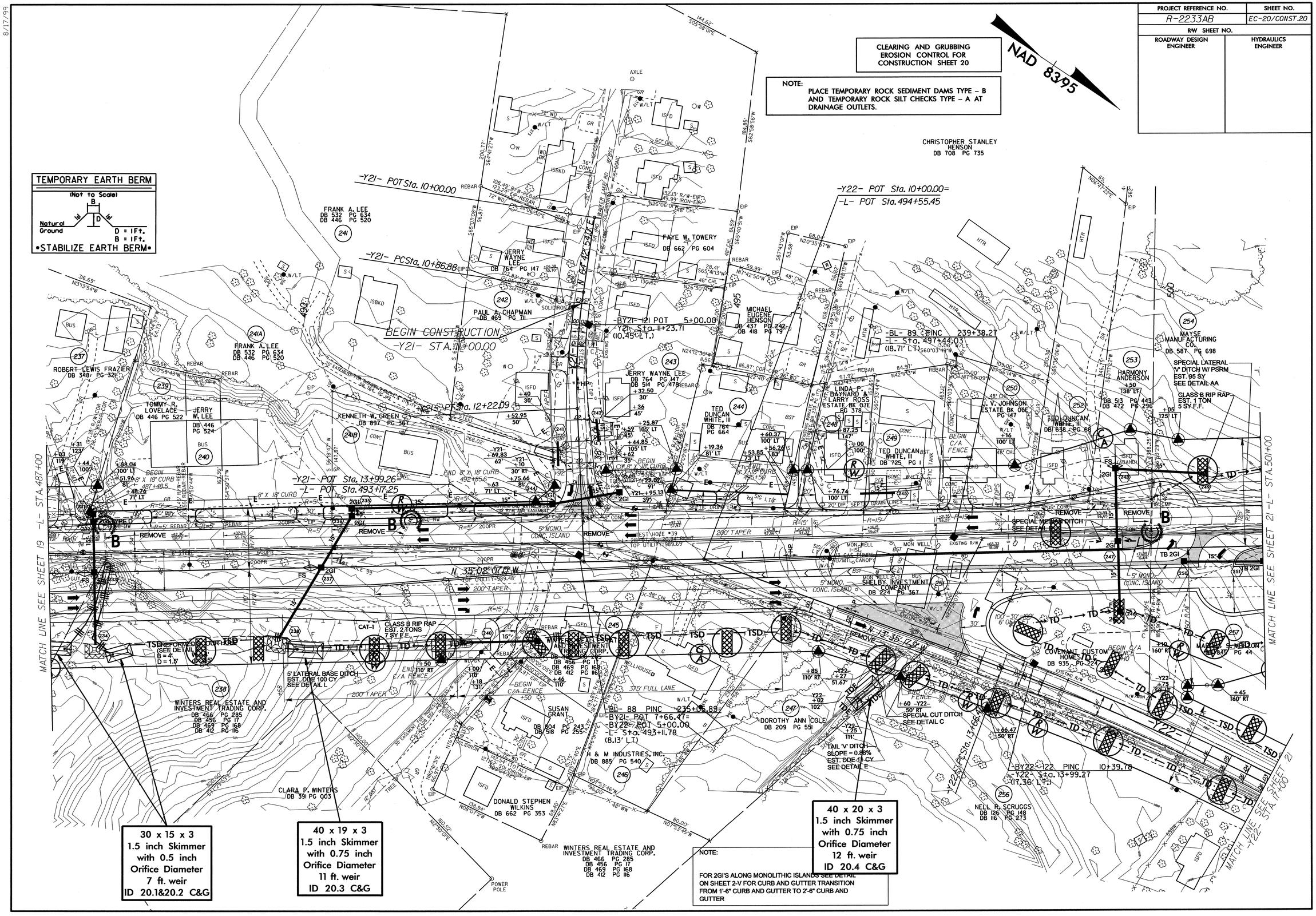

NOTE:

FOR 2GI'S ALONG MONOLITHIC ISLANDS SEE DETAIL ON SHEET 2-V FOR CURB AND GUTTER TRANSITION FROM 1'-6" CURB AND GUTTER TO 2'-6" CURB AND GUTTER

8/17/99

R/W SHEET NO.	ROADWAY DESIGN ENGINEER	HYDRAULICS ENGINEER	PROJECT REFERENCE NO.	SHEET NO.
			R-2233AB	EC-21/CONST.21

NOTE:

FOR 2GI'S ALONG MONOLITHIC ISLANDS SEE DETAIL ON SHEET 2-V FOR CURB AND GUTTER TRANSITION FROM 1'-6" CURB AND GUTTER TO 2'-6" CURB AND GUTTER

CLEARING AND GRUBBING EROSION CONTROL FOR CONSTRUCTION SHEET 21

NOTE:

PLACE TEMPORARY ROCK SEDIMENT DAMS TYPE – B AND TEMPORARY ROCK SILT CHECKS TYPE – A AT DRAINAGE OUTLETS.

74 x 25 x 3
1.5 inch Skimmer
with 1.25 inch
Orifice Diameter
17 ft. weir
ID 21.1 C&G

76 x 38 x 3
1.5 inch Skimmer
with 1.5 inch
Orifice Diameter
30 ft. weir
ID 21.2 C&G

25 x 11 x 3
ID 21.3 C&G

NAD 8395

MATCH LINE SEE SHEET 20 -Y22- STA.17+50

MATCH LINE SEE SHEET 20 -L- STA.501+00

MATCH LINE SEE SHEET 22 -L- STA.515+00

-BL- 90 PINC 245+26.90
-L- Sta. 503+00.86
(20.16' LT) CLASS B RIP RAP EST. 25 TONS 7 SY F.F.

2' TAIL BASE DITCH SLOPE=0.60% EST. DDE 80 CY SEE DETAIL BB

SPECIAL LATERAL 'V' DITCH W/PSRM EST. 95 SY. SEE DETAIL AA

TAPER PROP. 5' BASE DITCH TO TIE TO THE EXIST. 2' BASE DITCH

5' LATERAL BASE DITCH W/ CLASS B RIP RAP EST. 174 TONS 465 SY F.F. DDE 265 CY SEE DETAIL F

-Y23- POT Sta. 19+09.73=
-Y24- POT Sta. 10+00.00
-L- POT Sta. 509+54.83

-Y23- PC Sta. 16+03.82

-Y23- PT Sta. 11+79.73

-Y23- PT Sta. 14+03.82

-Y23- PC Sta. 11+86.86

BEGIN CONSTRUCTION
-Y23- STA. 11+00.00

-BY24- 125 PINC 9+80.08
-L- Sta. 512+26.90
(270.08' LT.)

-L- PC Sta. 514+08.15

-DR3- POT Sta. 13+80.58

-DR3- PT Sta. 12+91.95

-DR3- PC Sta. 12+14.50

-DR3- PT Sta. 11+33.00

-DR3- PC Sta. 10+51.00

-Y24- PCSta. 13+66.71

-Y24- PCSta. 10+77.61

-Y24- PI Sta 12+45.82

END CONSTRUCTION
-Y22- STA. 17+50.00

END CONSTRUCTION
-Y24- STA. 13+75.00

PI Sta 11+64.40
Δ = 34° 47' 38.0" (RT)
D = 20° 41' 03.8"
L = 168.21'
T = 86.79'
R = 277.00'
SE = SEE PLANS

PI Sta 14+83.05
Δ = 4° 40' 31.0" (LT)
D = 2° 00' 37.4"
L = 232.56'
T = 116.34'
R = 2,850.00'

PI Sta 20+70.25
Δ = 31° 55' 51.0" (RT)
D = 2° 19' 44.7"
L = 1,370.95'
T = 703.79'
R = 2,460.00'
SE = SEE PLANS

N 89° 24' 47.8" E

N 69° 57' 53.8" E

N 54° 57' 53.0" E

N 35° 02' 07.0" W

N 0° 14' 29.0" W

N 85° 47' 36.9" W

N 89° 45' 51.0" E

BEGIN 8"X 18" CURB #6+78

BEGIN 8" X 18" CURB #8+45

REMOVE 35' OF EX. 12" PLASTIC PIPE

180' R, 45° R, 180° R 8' OFFSET

100' TAPER

100' CURVE WIDENING RT. 13.5' TO 12'

100' CURVE WIDENING LT. 12' TO 16'

OBLITERATE & REMOVE

SPECIAL CUT DITCH SEE DETAIL C

GRADE TO DRAIN

SPECIAL GRADE DITCH -L- STA 14+50 RT TO 15+50 RT

CLASS B RIP RAP EST. 2 TONS 7 SY F.F.

SPECIAL CUT DITCH, SEE DETAIL C

BEGIN EXPRESSWAY GUTTER 507+00

END EXPRESSWAY GUTTER 511+50

BEGIN EXPRESSWAY GUTTER 513+45

END 45' RT EXPRESSWAY GUTTER -Y24- 40' RT

RETAIN

RETAIN Per Prop. Owner

ISMTLBUS

MAYSE MANUFACTURING CO.
DB 587 PG 698

CECIL L. GEER, III
DB 743 PG 364
DB 686 PG 351

RUTHERFORD WATER WORKS 30' R/W AND EASEMENT PB 16 PGS 47 & 62

RUTHERFORD COUNTY DB 809 PG 363

MARCUS S. MELTON
DB 845 PG 44

NELL R. SCRUGGS
DB 126 PG 148
DB 116 PG 273

ISM DANIELTOWN BAPTIST CHURCH

DANIELTOWN BAPTIST TRUSTEES
DB 514 PG 40

ISFO

MTL RESTROOM

SEPTIC DRAIN LINES

ACCESS POINT

BEGIN C/A FENCE +45

END C/A FENCE +55

BEGIN C/A FENCE +08.15

END C/A FENCE +48.15

BEGIN C/A FENCE +45.82

END C/A FENCE

TEST HOLE #42 86.74' LT. -L- 535+60.53 TOP UTILITY=1019.86'

TEST HOLE #41 86.05' LEFT -L- 535+60.53 TOP UTILITY=1015.60'

TEST HOLE #15 TOP UTILITY=1018.32'

REMOVE

TB 2GI

2GI (TYPE A)

3GI

5' MONO. CONC. ISLAND

51' MONO. CONC. ISLAND

SR 1169 OAKLAND RD

SR 1229 BETHANY RD

US 221 or BST

SPECIAL CUT DITCH SEE DETAIL C

SPECIAL CUT DITCH SEE DETAIL C

PROJECT REFERENCE NO.	SHEET NO.
R-2233AB	EC-22/CONST.22
R/W SHEET NO.	
ROADWAY DESIGN ENGINEER	HYDRAULICS ENGINEER

NOTE:

FOR 2GI'S ALONG MONOLITHIC ISLANDS SEE DETAIL ON SHEET 2-V FOR CURB AND GUTTER TRANSITION FROM 1'-6" CURB AND GUTTER TO 2'-6" CURB AND GUTTER

CLEARING AND GRUBBING EROSION CONTROL FOR CONSTRUCTION SHEET 22

NOTE:
PLACE TEMPORARY ROCK SEDIMENT DAMS TYPE – B AND TEMPORARY ROCK SILT CHECKS TYPE – A AT DRAINAGE OUTLETS.

20 x 40 x 3
1.5 inch Skimmer
with 0.75 inch
Orifice Diameter
12 ft. weir
ID 22.2 C&G

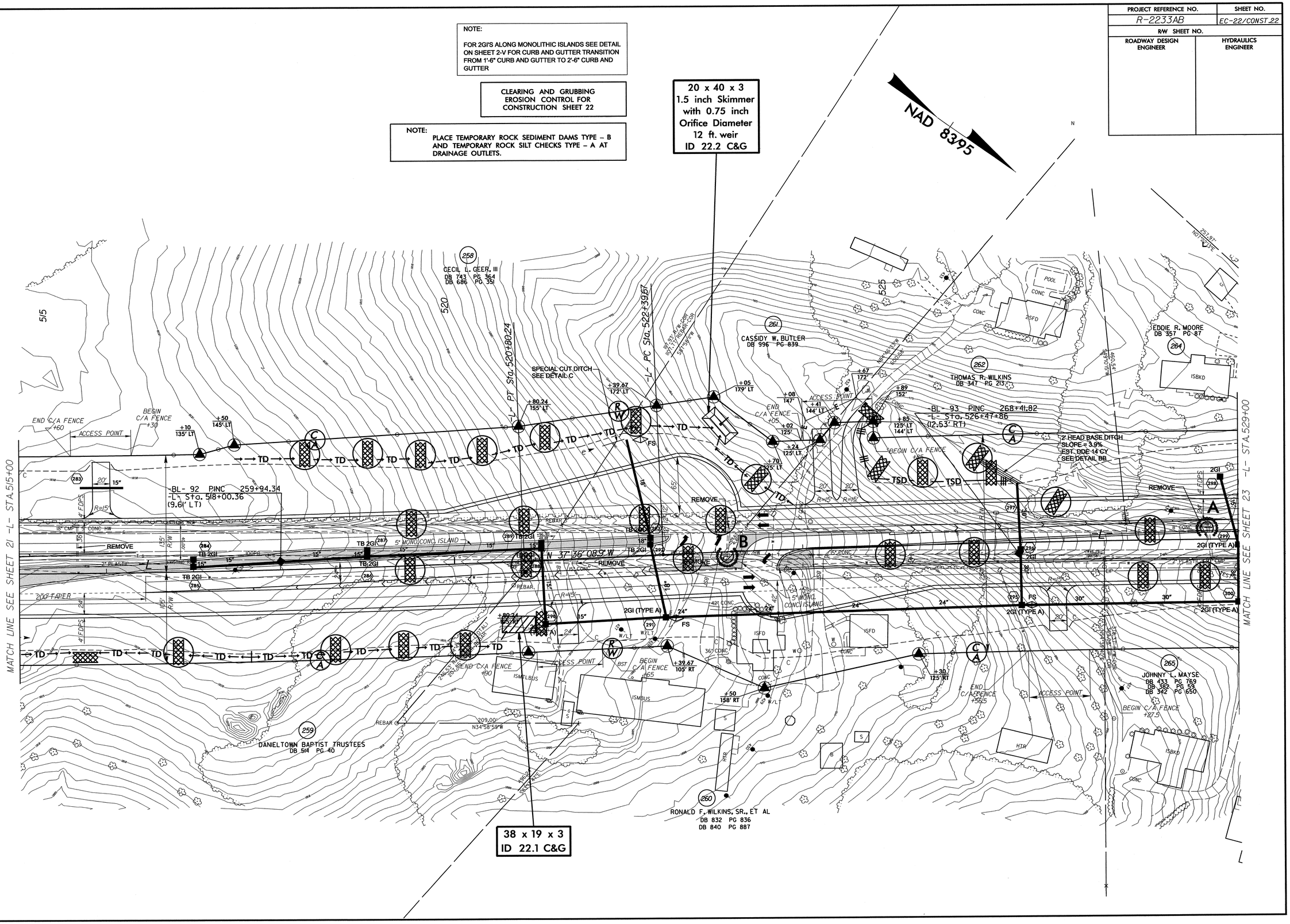

38 x 19 x 3
ID 22.1 C&G

PROJECT REFERENCE NO.	SHEET NO.
R-2233AB	EC-23/CONST.23
R/W SHEET NO.	
ROADWAY DESIGN ENGINEER	HYDRAULICS ENGINEER

NOTE:
PLACE TEMPORARY ROCK SEDIMENT DAMS TYPE – B AND TEMPORARY ROCK SILT CHECKS TYPE – A AT DRAINAGE OUTLETS.

CLEARING AND GRUBBING EROSION CONTROL FOR CONSTRUCTION SHEET 23

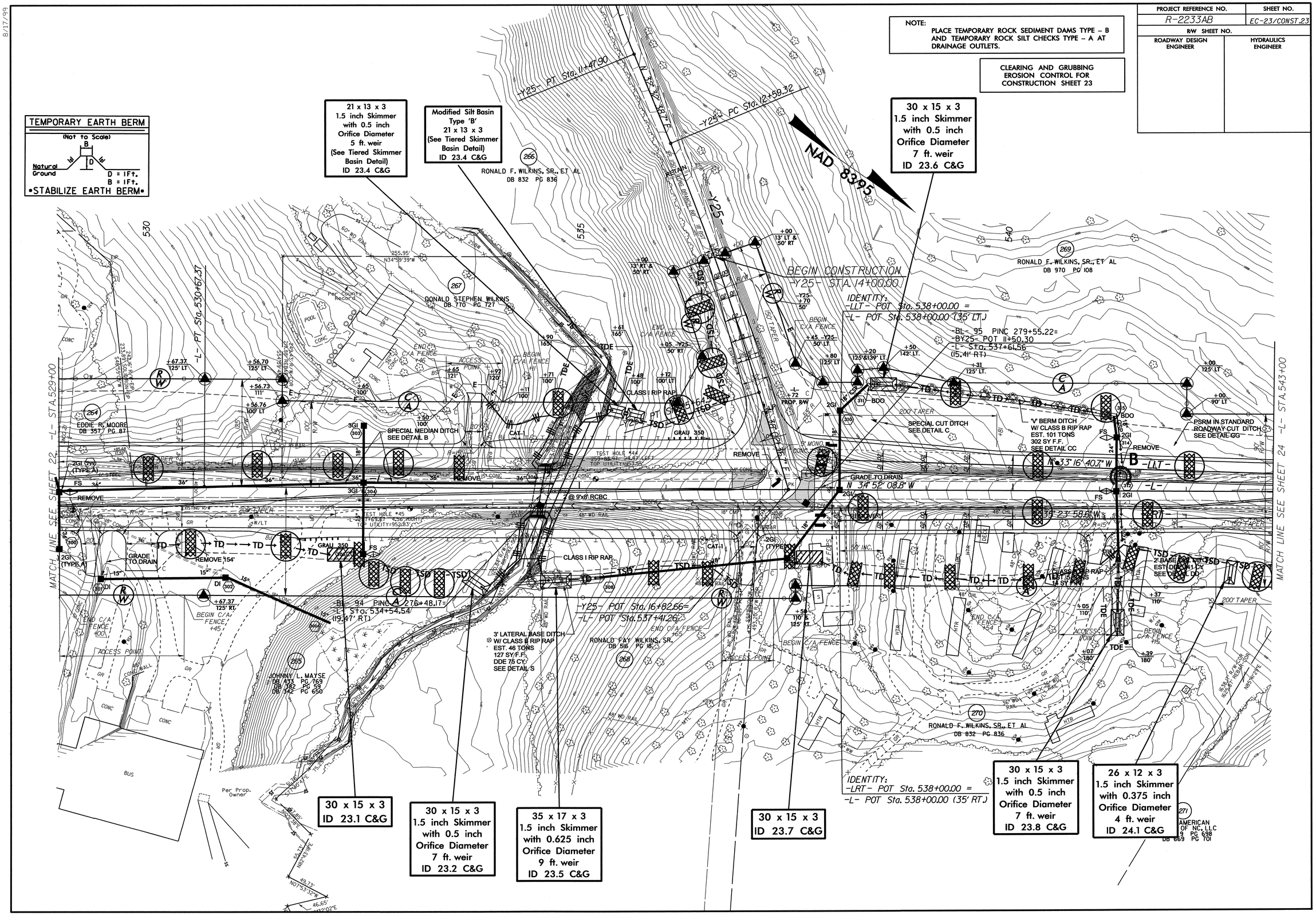

8/17/99

CULVERT CONSTRUCTION SEQUENCE STA. 534+79 –L–
SHEET 1 OF 2

PROJECT REFERENCE NO.	SHEET NO.
R-2233AB	EC-24/CONST-23
R/W SHEET NO.	
ROADWAY DESIGN ENGINEER	HYDRAULICS ENGINEER

PHASE I

1. CONSTRUCT STILLING BASIN 1 (45 CY).
2. CONSTRUCT IMPERVIOUS DIKES A AND INSTALL 72 INCH TEMPORARY CSP WITH ELBOWS, DIVERTING FLOW.
3. PLUG NORTHERN BARREL OF EXISTING CULVERT AND AREA AROUND 72 INCH TEMPORARY CSP AT THE SOUTHERN BARREL.
4. INSTALL TEMPORARY SHORING AND CONSTRUCT PORTION OF PROPOSED CULVERT.
5. REMOVE STILLING BASIN 1.

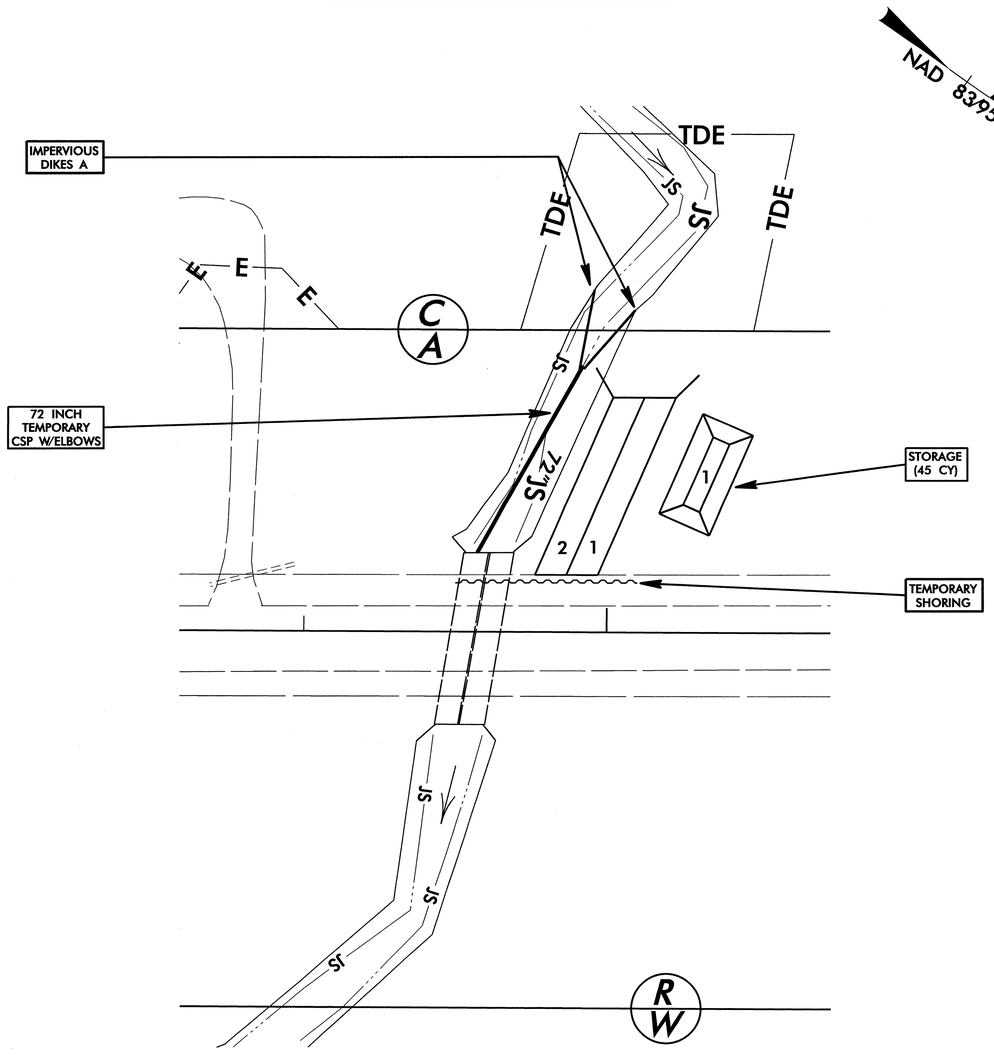

PHASE II

6. CONSTRUCT PROPOSED SOUTHBOUND LANES AND SHIFT TRAFFIC.
7. CONSTRUCT STILLING BASIN 2 (45 CY).
8. REMOVE APPROXIMATELY 40 FT. OF NORTHERN BARREL OF EXISTING CULVERT AND FILL REMAINDER OF NORTHERN BARREL WITH FLOWABLE FILL.
9. COMPLETE BARREL 1 OF PROPOSED CULVERT.

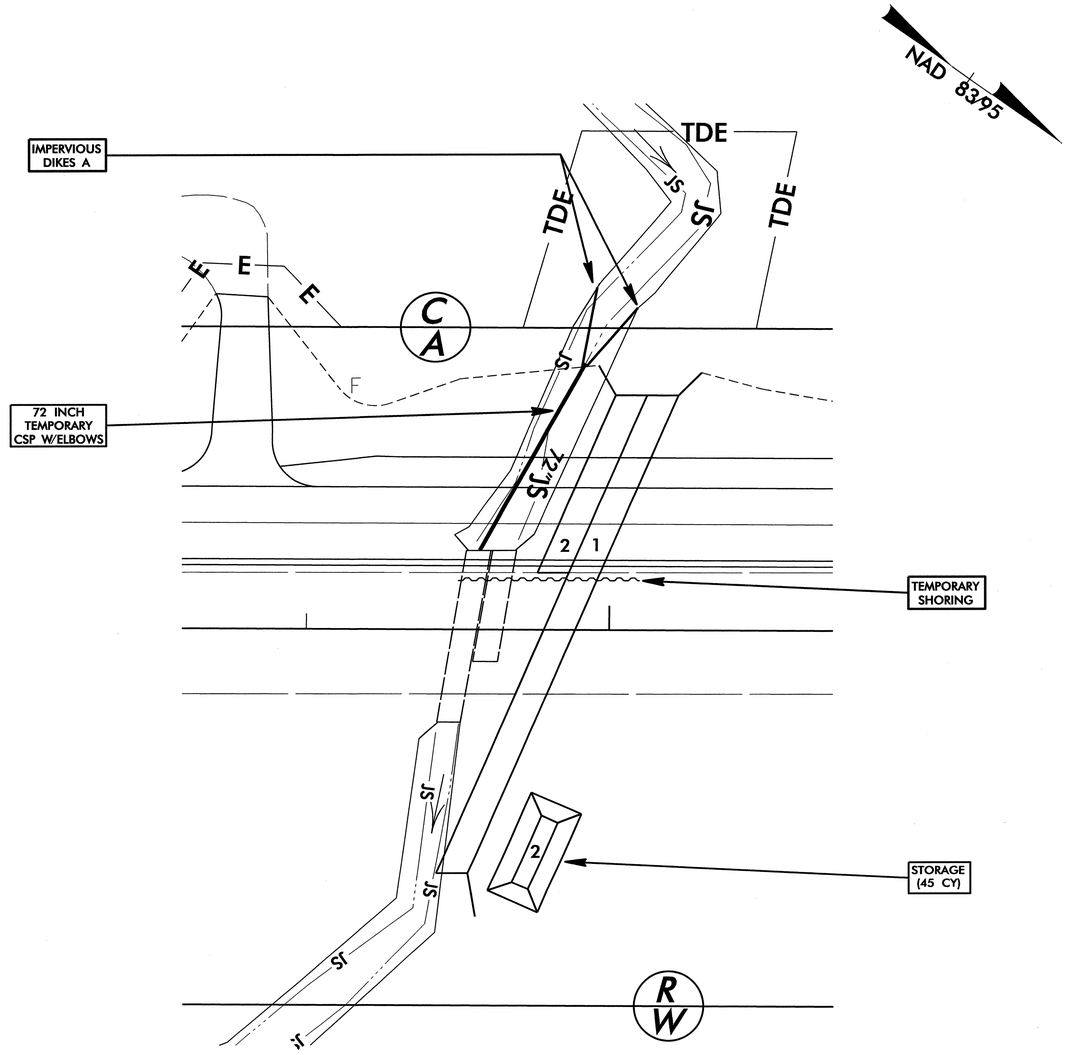

CULVERT CONSTRUCTION SEQUENCE STA. 534+79 –L–
SHEET 2 OF 2

PROJECT REFERENCE NO.	SHEET NO.
R-2233AB	EC-25/CONST.23
R/W SHEET NO.	
ROADWAY DESIGN ENGINEER	HYDRAULICS ENGINEER

PHASE III

10. CONSTRUCT UPSTREAM CHANNEL CHANGE.
11. CONSTRUCT IMPERVIOUS DIKE B AND REMOVE IMPERVIOUS DIKES A, DIVERTING FLOW INTO COMPLETED BARREL 1 OF PROPOSED CULVERT.
12. FILL REMAINDER OF EXISTING CULVERT AND 72 INCH TEMPORARY CSP WITH FLOWABLE FILL.
13. CONSTRUCT REMAINDER OF BARREL 2 OF PROPOSED CULVERT AND OUTLET CHANNEL CHANGE.

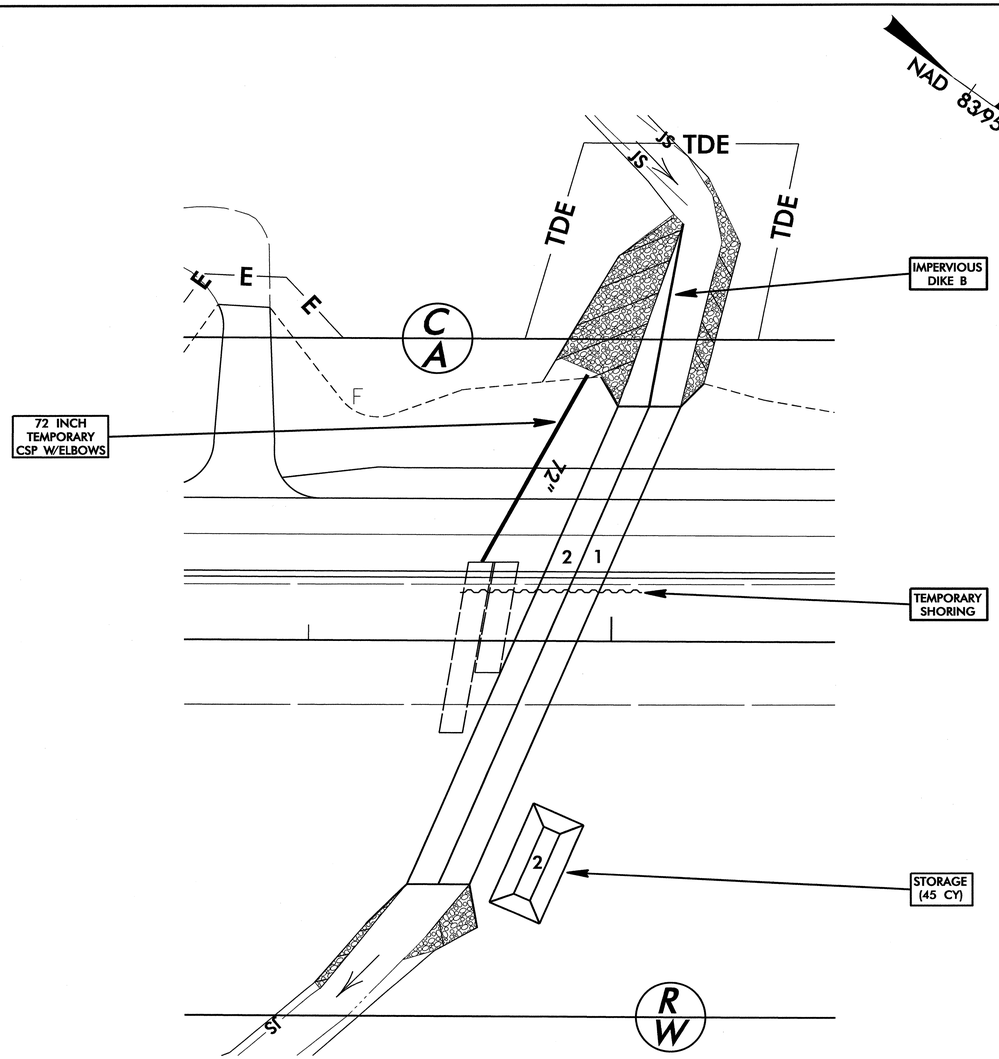

PHASE IV

14. REMOVE IMPERVIOUS DIKE B, ALLOWING FLOW AT THE FINAL STREAM PATTERN.
15. CONSTRUCT ANY REMAINING PROPOSED CULVERT BAFFLES AND/OR SILLS.
16. REMOVE STILLING BASIN 2.
17. REMOVE TEMPORARY SHORING AND COMPLETE ROADWAY.

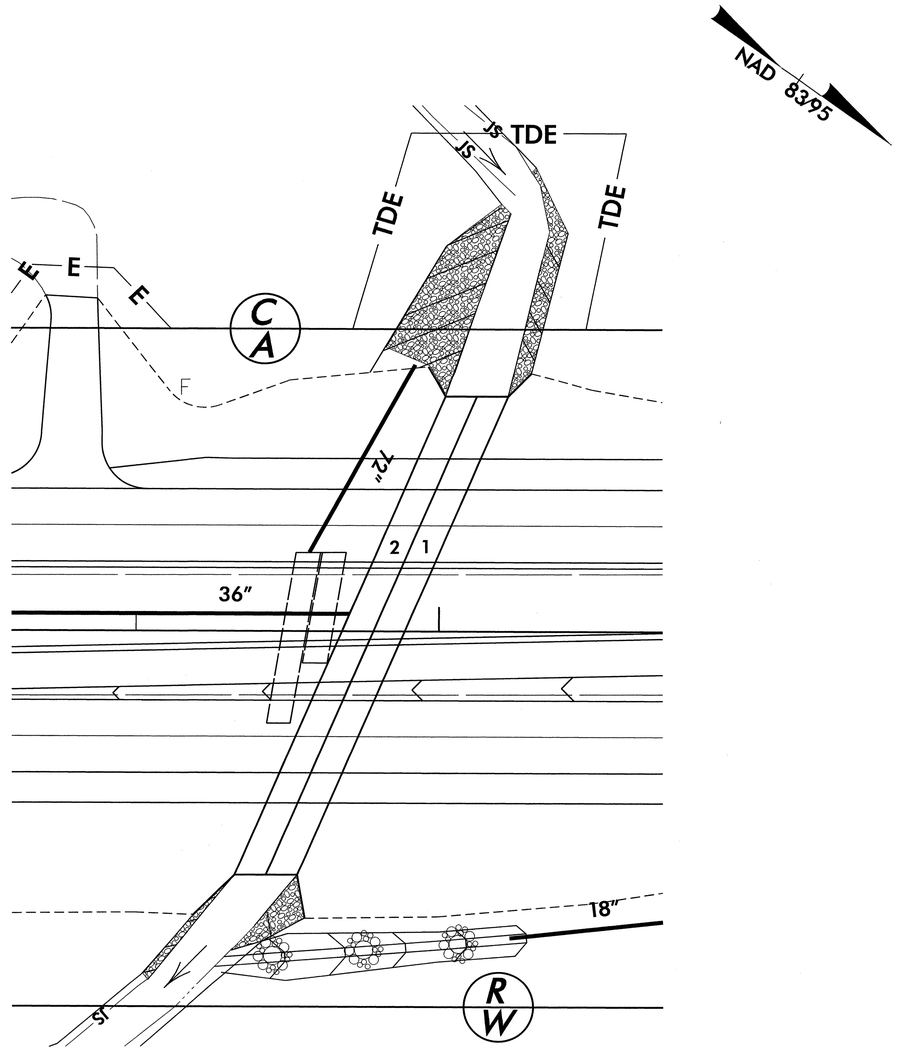

8/17/99

PROJECT REFERENCE NO.	SHEET NO.
R-2233AB	EC-26/CONST.24
RW SHEET NO.	
ROADWAY DESIGN ENGINEER	HYDRAULICS ENGINEER

NOTE:

FOR 2GI'S ALONG MONOLITHIC ISLANDS SEE DETAIL ON SHEET 2-V FOR CURB AND GUTTER TRANSITION FROM 1'-6" CURB AND GUTTER TO 2'-6" CURB AND GUTTER

CLEARING AND GRUBBING EROSION CONTROL FOR CONSTRUCTION SHEET 24

NOTE:
PLACE TEMPORARY ROCK SEDIMENT DAMS TYPE – B AND TEMPORARY ROCK SILT CHECKS TYPE – A AT DRAINAGE OUTLETS.

NAD 83/95

36 x 18 x 3
1.5 inch Skimmer
with 0.625 inch
Orifice Diameter
10 ft. weir
ID 24.3C&G

30 x 15 x 3
ID 24.6C&G

30 x 15 x 3
ID 24.2C&G

24 x 12 x 3
1.5 inch Skimmer
with 0.372 inch
Orifice Diameter
4 ft. weir
ID 24.4 C&G

26 x 13 x 3
1.5 inch Skimmer
with 0.375 inch
Orifice Diameter
5 ft. weir
ID 24.5C&G

MATCH LINE SEE SHEET 23 -L- STA.543+00

MATCH LINE SEE SHEET 25 -L- STA.557+00

IDENTITY:
-LLT- POT Sta. 543+40.21 =
-L- POT Sta. 543+40.00 (20' LT.)

IDENTITY:
-LRT- POT Sta. 543+40.02 =
-L- POT Sta. 543+40.00 (30' RT.)

-L- POC Sta. 547+75.07

BEGIN CONSTRUCTION
-RAMPC- STA. 17+50.00

-RAMPC- PT Sta. 19+02.00

-RAMPC- POT Sta. 20+90.11=
-L- POC Sta. 555+44.02

-RAMPD- POT Sta. 16+86.39=
-L- POC Sta. 555+59.02

BEGIN CONSTRUCTION
-RAMPD- STA. 14+50.00

-L-
PI Sta 554+77.38
Δ = 4° 14' 33.0" (RT)
D = 0° 15' 00.0"
L = 1,697.00'
T = 848.89'
R = 22,918.31'

-BL- 96 PINC 288+60.03
-L- Sta. 546+65.21
(26.61' LT) PSRM IN STANDARD ROADWAY CUT DITCH SEE DETAIL GG

SPECIAL CUT DITCH W/ PSRM EST. 108 SY SEE DETAIL HH

-BL- 97 PINC 298+08.18=
-RPC- POT 13+67.20=
-RPD- POT 5+00.00
-L- Sta. 556+12.34
(43.29' LT)

RONALD F. WILKINS, SR., ET AL DB 970 PG 108

JOSEPH W. WRIGHT, JR. DB 978 PG 70

RONALD F. WILKINS, SR., ET AL DB 974 PG 569

ALL AMERICAN HOMES OF NC, LLC DB 669 PG 698 DB 669 PG 701

TEST HOLE #46 273+02.84 55.68' RIGHT TOP UTILITY=1004.40

TEST HOLE #47 274+83.11 54.80' RIGHT TOP UTILITY=1000.30'

EXISTING R/W PER STATE PROJECT #'s 6.880108, 8.880403, & 6.839908

CLASS B RIP RAP EST. 1 TON 5 SY F.F.

CLASS B RIP RAP EST. 155 TONS 428 SY F.F. DDE 375 CY SEE DETAIL S

CLASS B RIP RAP EST. 1 TON 5 SY F.F.

75 TONS CLASS B RIP RAP

RETAIN

PREFORMED SCOUR HOLE (SEE DETAIL 2-U) B = 5' W = 4' D = 0.5'

TIE TO EXISTING FENCE

TIE TO EXIST. GUARDRAIL

REMOVE EXIST. GUARDRAIL

REMOVE

6" CONC. CURB & GUTTER

1'-6" CONC. CURB & GUTTER

5' MONO. CONC. ISLAND

MONO. CONC. ISLAND

DW HTR BUS

2 S LOG BUS

RAMP

WD DECK

LANDSCAPING

CONC

ISBKD

BST

ACCESS POINT

BEGIN C/A FENCE +23

END C/A FENCE +29

END C/A FENCE +40

BEGIN C/A FENCE #60

END C/A FENCE #60

BEGIN C/A FENCE #41

END C/A FENCE #41

BEGIN CONTROL OF ACCESS

TEST STATION

DIRECTIONAL

USERS

REBAR

EIP

PC Sta. 546+28.50

PI Sta. 554+77.38

PL EX. R/W

EXISTING R/W

R/W MON

MTL

GR

WD

ISBW

TSD

SD

TD

TB 2GI

2GI

CAT-1

S. 04°45'28" W 970.59'

S. 04°45'27" W 17.23'

S. 04°43'27" W 81.10'

S. 55°58'57" W 556.12'

S. 85°25'15" W

N 34° 52' 08.8" W

N 40°06'33" W 250.00'

N 26°19'36" W 354.91'

N 88°08'08" E

360' TAPER LT. 32' TO 23'

100' TAPER

200' TAPER

50' TAPER

545

550

555

8/17/99

ROADWAY DESIGN ENGINEER	HYDRAULICS ENGINEER	PROJECT REFERENCE NO.	SHEET NO.
		R-2233AB	EC-27/CONST.25
		RW SHEET NO.	

CLEARING AND GRUBBING
EROSION CONTROL FOR
CONSTRUCTION SHEET 25

NOTE:
PLACE TEMPORARY ROCK SEDIMENT DAMS TYPE – B AND TEMPORARY ROCK SILT CHECKS TYPE – A AT DRAINAGE OUTLETS.

NAD 83/95

-Y26- POT Sta. 10+00.00

-RAMPC- POT Sta. 10+00.00

S 81° 25' 46.4" E

S 64° 40' 23.5" E 223.00'

-RAMPC-

-RPC- 133 POT 5+00.00
-RAMPC- Sta. 10+35.33
(9.87' LT.)

RETAIN

BEGIN CONSTRUCTION
-RAMPB- STA. 14+00.00

-BL- 19 PINC 305+64.25±
-RPA- POT 5+00.00=
-RPB- POT 16+71.52
(GPS POINT "R2233AB-19")
-L- Sta. 563+67.58
(36.80' LT.)

36 x 18 x 3
ID 25.2C&G

-RAMPB-

N 86° 58' 36" E

-RAMPC- T.S Sta. 14+94.60

MATCH LINE SEE SHEET 24 -RAMPC- STA 17+00

-BY26- 131 PINC 13+44.94
-Y26- Sta. 16+43.61
(5.96' LT.)

CLASS B RIP RAP
EST. 1 TON
5 SY F.F.

-L- POC Sta. 560+00.35=
-Y26- POT Sta. 18+27.14

-BL- POT 302+28.03±
-BY26- POT 14+85.24
(POINT NOT SET)

-RAMPC- SC Sta. 16+44.60

15" CSP W/ ELBOWS

REMOVE EXISTING GUARDRAIL

REMOVE

JB W/ CLOSED COVER

TYPE B-83

GRADE TO DRAIN 350

TB 2GI

TYPE B-77

CAT-1

CLASS B RIP RAP
EST. 1 TON
5 SY F.F.

-RAMPA- PT Sta. 19+36.07

BEGIN CONSTRUCTION
-RAMPA- STA. 17+00.00

-RAMPA- SC Sta. 16+67.82

-RAMPA-

PLACE 6" DECK DRAINS ON 10' CENTERS FROM STA. 558+33 TO STA. 558+82 -L- RT AND FROM STA. 560+33 TO STA. 560+82 -L- RT

MATCH LINE SEE SHEET 24 -L- STA. 557+00

S 81° 25' 46.4" E

S 83° 50' 09.3" W

N 26° 46.0' W

N 30° 37' 35.8" W

TIE TO EXISTING C/A FENCE

TIE TO EXISTING C/N FENCE

RUINS

-RAMPB- POT Sta. 16+54.41
-L- POT Sta. 564+07.10

+07.54
125' LT

375' FULL RT. TURN LANE

REMOVE

END CONTROL OF ACCESS

200' TAPER

GRADE TO DRAIN
+84.78
125' LT

2GI (TYPE D)

-RAMPA- POT Sta. 20+07.86=
-L- POT Sta. 564+22.11

530' LEFT TURN LANE

+84
125'

CLASS B RIP RAP
EST. 3 TONS
10 SY F.F.

+18.41
125' RT

'V' TAIL DITCH
SLOPE = 0.56%
EST. DDE 23 CY
SEE DETAIL E

SUE SPARKS FAMILY REAL ESTATE, LLC
DB 839 PG 381

END C/A FENCE +18.41

OBLITERATE & REMOVE

+15.24
250'

+78.43
125' RT
BEGIN C/N FENCE +78.43

CROW FAMILY TRUST
DB 850 PG 55

36 x 18 x 3
ID 25.1C&G

MATCH LINE SEE SHEET 26 -L- STA. 571+00

BEGIN CONSTRUCTION
-Y27- STA. 12+25.00

CLASS B RIP RAP
EST. 2 TONS
7 SY F.F.

-RAMPB- POT Sta. 10+00.00

-RPB- 135 PINC 10+94.19
-RAMPB- Sta. 10+67.24
(15.95' RT.)

MARJORIE HUSKEY
DB 403 PG 284
DB 568 PG 287

-BY27- 127 PINC 5+00.00
-Y27- Sta. 14+10.44
(49.30' RT.)

CARL R. BAYNARD
DB 201 PG 186

MARJORIE HUSKEY
DB 403 PG 284
DB 568 PG 287

OBLITERATE & REMOVE

Per County Records
-BL- 99 PINC 311+92.05±
-BY27- POT 9+68.39
-BY28- POT 5+00.00
-L- Sta. 569+94.84
(27.65' LT)

+24.76
125' LT

JOE J. WELLS
DB 595 PG 752

-Y27- POC Sta. 12+94.23

+64.93
44' RT

+94.23
30' & 44' RT

+94.45
60' RT

+67
107.01' RT.

REMOVE
+78
30'

+94.23
30' & 60'

MATCH LINE SEE SHEET 26 -Y27- STA. 15+50

6" STEEL
TEST
TOP UTIL

48" CMP

ISBKD

W/LT

PLACE 6" DECK DRAINS ON 10' CENTERS FROM STA. 558+33 TO STA. 558+82 -L- RT AND FROM STA. 560+33 TO STA. 560+82 -L- RT

8/17/99

PROJECT REFERENCE NO.	SHEET NO.
R-2233AB	EC-28/CONST.26
R/W SHEET NO.	
ROADWAY DESIGN ENGINEER	HYDRAULICS ENGINEER

CLEARING AND GRUBBING EROSION CONTROL FOR CONSTRUCTION SHEET 26

NOTE: PLACE TEMPORARY ROCK SEDIMENT DAMS TYPE – B AND TEMPORARY ROCK SILT CHECKS TYPE – A AT DRAINAGE OUTLETS.

NAD 83/95

r2233aaab 118 119

R2233AAAB 119 120

MATCH LINE SEE SHEET 25 -L- STA.15+50

MATCH LINE SEE SHEET 27 -Y28- STA.12+00

MATCH LINE SEE SHEET 25 -L- STA.57+00

-Y27- PT Sta. 16+21.33

-Y27- PC Sta. 17+54.66

-L- PC Sta. 57+95.64

-L- PT Sta. 20+30.64

-Y28- PC Sta. 11+00.00

-Y27- POT Sta. 21+24.43=
-Y28- POT Sta. 9+97.99
-L- POC Sta. 574+12.99

-L- POT Sta. 584+00.00

END PROJECT R-2233AB

36 x 17 x 3
ID 26.2C&G

55 x 27 x 3
1.5 inch Skimmer
with 1.25 inch
Orifice Diameter
19 ft. weir
ID 26.4 C&G

37 x 18 x 3
ID 26.1C&G

40 x 20 x 3
ID 26.5C&G

30 x 15 x 3
ID 26.6C&G

Modified Silt Basin
Type 'B'
18 x 12 x 3
(See Tiered Skimmer
Basin Detail)
ID 26.3C&G

18 x 12 x 3
1.5 inch Skimmer
with 0.250 inch
Orifice Diameter
4 ft. weir
(See Tiered Skimmer
Basin Detail)
ID 26.3C&G

275 JOE J. WELLS DB 595 PG 752

279 MAX RAY HAMRICK DB 464 PG 458 DB 344 PG 434

277 CROW FAMILY TRUST DB 850 PG 55

278 JOHNATHAN R. WARD DB 379 PG 74

JAMES LARRY CROWE DB 465 PG 547 DB 492 PG 310

PSRM IN STANDARD ROADWAY CUT DITCH EST. 354 SY SEE DETAIL GG

PSRM IN STANDARD ROADWAY CUT DITCH EST. 400 SY SEE DETAIL GG

SPECIAL CUT DITCH WITH PSRM EST. 51 SY SEE DETAIL HH

SPECIAL CUT DITCH SEE DETAIL C

SPECIAL CUT DITCH WITH PSRM EST. 128 SY SEE DETAIL GG

6' LATERAL BASE DITCH W/ CLASS I RIP RAP EST. 236 TONS 420 SY F.F. DDE 245 CY SEE DETAIL EE

2' LATERAL BASE DITCH EST. DDE 115 CY SEE DETAIL A

4' LATERAL BASE DITCH W/ CLASS B RIP RAP EST. 83 TONS 228 SY F.F. DDE 90 CY SEE DETAIL V

10' STANDARD BASE DITCH W/ CLASS B RIP RAP EST. 61 TONS, 154 SY F.F. DDE 170 CY SEE DETAIL FF

CLASS B RIP RAP EST. 2 TONS 7 SY F.F.

CLASS B RIP RAP EST. 5 TONS 14 SY F.F.

PREFORMED SCOUR HOLE (SEE DETAIL 2-L) D=1.5' W=4' d=0.5'

-L- 101 PINC 316+11.45 (23.27 RT)

-L- 101 PINC 326+30.97= -Y- 277 POT 5+00 ELEV=979.82 -L- Sta. 584+33.74 (9.70 LT)

-L- 101 PINC 336+49.45 -BL- STATION 335+30 ELEVATION=972.92

-Y4- 315 POT 16+66.24 ELEV=968.98 NAIL SET

-L- 101 PINC 316+11.45 (23.27 RT)

-L- Sta. 574+44.22

N 59° 26' 01.3" E

N 59° 26' 01.3" E

N 9° 18' 56.7" W

N 30° 25' 03.1" W

CAT-1

GRAU 350

COLLAR

JB W/ MHC

REMOVE

RETAIN

CROW FAMILY TRUST DB 850 PG 55

WOODS

RUINS

END C/A FENCE

EXISTING R/W

R/W MON

EIP

EIPF

CMP

ISFD

WD OK

Per County Record

180.00' N30°31'24"W

5' MONO CONC ISLAND

575' MEDIAN TAPER

600' MEDIAN TAPER

200' TAPER

250' LT. TAPER

530' LEFT TURN LANE

300'

360'

390'

400'

500'

580

585

575

8/17/99

REVISIONS

PROJECT REFERENCE NO.	SHEET NO.
R-2233AB	EC-29/CONST.27
R/W SHEET NO.	
ROADWAY DESIGN ENGINEER	HYDRAULICS ENGINEER

CLEARING AND GRUBBING EROSION CONTROL FOR CONSTRUCTION SHEET 27

NOTE:
PLACE TEMPORARY ROCK SEDIMENT DAMS TYPE – B AND TEMPORARY ROCK SILT CHECKS TYPE – A AT DRAINAGE OUTLETS.

NAD 83/95

MATCH LINE SEE SHEET 26 -Y28- STA.12+00

-Y28- PT Sta. 13+38.71

INSTALL DRIVEWAY PIPE DURING CLEARING & GRUBBING PHASE

27 x 12 x 3
ID 27.2C&G

28 x 14 x 3
1.5 inch Skimmer
with 0.375 inch
Orifice Diameter
6 ft. weir
ID 27.1C&G

25 x 12 x 3
ID 27.3C&G

-BY28- 128 PINC 8+77.66
-Y28- Sta. 16+10.80
(148.44' RT.)

-BY28- 151 POT 12+63.18
-Y28- Sta. 19+28.19
(11.15' LT.)

-Y28- PC Sta. 14+72.04

-Y28- PT Sta. 19+93.67

END CONSTRUCTION
-Y28- STA. 20+25.00

-Y28- PC Sta. 20+98.63

-Y28- PT Sta. 21+42.22

-Y28- POT Sta. 21+91.39

SPECIAL CUT DITCH SEE DETAIL C

CLASS B RIP RAP EST. 2 TONS 7 SY F.F.

5 TONS CLASS B RIP RAP

CLASS B RIP RAP EST. 3 TONS 10 SY F.F.

2-TAIL DITCH SLOPE = 3.2% EST. DDE 84CY SEE DETAIL BB

GRADE TO DRAIN

CROW FAMILY TRUST DB 850 PG 55 (277)

SUE SPARKS FAMILY REAL ESTATE, LLC DB 839 PG 381 (276)

DONNA LYNN WARD DB 795 PG 366 (282)

SIDNEY B. CROW AND WIFE, CRISTINE P. CROW DB 669 PG 757 (281)

JAMES B. CROW AND THELMA M. CROW, TRUSTEES OF THE CROW FAMILY TRUST DB 850 PG 52

JAMES B. CROW AND THELMA M. CROW DB 853 PG 759 (283)

PI Sta 12+31.36	PI Sta 17+58.25	PI Sta 21+20.43
Δ = 59° 27' 56.1" (RT)	Δ = 58° 36' 06.8" (LT)	Δ = 1° 14' 55.1" (RT)
D = 24° 54' 40.4"	D = 11° 14' 04.1"	D = 2° 51' 53.2"
L = 238.71'	L = 521.63'	L = 43.59'
T = 131.36'	T = 286.21'	T = 21.79'
R = 230.00'	R = 510.00'	R = 2,000.00'
SE = SEE PLANS	SE = SEE PLANS	

8/17/99

PROJECT REFERENCE NO.	SHEET NO.
R-2233AB	EC-30/CONST.4
R/W SHEET NO.	
ROADWAY DESIGN ENGINEER	HYDRAULICS ENGINEER

BEGIN PROJECT R-2233AB
-L- POT Sta. 265+80.00

-BL- 62 POT 5+00.00

POT Sta. 265+00.00

-BL- 63 PINC 13+98.92
-L- Sta. 272+42.18
(52.50' LT)

-DR2- POT Sta. 10+00.00 =
-L- POT Sta. 276+40.00

-L- POT Sta 274+00.00 BK =
-L- POT Sta 273+96.34 AH

-DR2- PC Sta. 10+75.00

-DR2- PRC Sta. 11+42.14

-L- STA.277+00

MATCH LINE SEE SHEET NO.5

NAD 83/95

24 x 11 x 3
1.5 inch Skimmer
with 0.25 inch
Orifice Diameter
4 ft. weir
ID 4.4 C&G

25 x 12 x 3
1.5 inch Skimmer
with 0.375 inch
Orifice Diameter
4 ft. weir
ID 4.5 C&G

22 x 11 x 3
ID 4.1 C&G

28 x 13 x 3
1.5 inch Skimmer
with 0.375 inch
Orifice Diameter
5 ft. weir
ID 4.2 C&G

20 x 10 x 3
1.5 inch Skimmer
with 0.25 inch
Orifice Diameter
4 ft. weir
ID 4.6 F

98 OTHORNELL HARRIS
DB 253 PG 225
(PROPERTY OWNER INFO AND DEED INFO CAN BE FOUND UNDER R-2233AA)

JAMES H. SIMMONS
DB 155 PG 88
(PROPERTY OWNER INFO AND DEED INFO CAN BE FOUND UNDER R-2233AA)

99 ROBERT R. HARRIS
DB 442 PG 411
(PROPERTY OWNER INFO AND DEED INFO CAN BE FOUND UNDER R-2233AA)

100 HARVEY E. HARRIS
DB 442 PG 410
(PROPERTY OWNER INFO AND DEED INFO CAN BE FOUND UNDER R-2233AA)

101 SAMUEL HARRIS
DB 558 PG 153
(PROPERTY OWNER INFO AND DEED INFO CAN BE FOUND UNDER R-2233AA)

102 ROBERT R. HARRIS
DB 442 PG 411
(PROPERTY OWNER INFO AND DEED INFO CAN BE FOUND UNDER R-2233AA)

PROP. R/W UNDER PROJECT R-2233AA

SR 2125 HARRIS-HENRIETTA RD.

US 221

NOTE : SEE ROADWAY STANDARD DRAWING STD. NO. 862.01 SHEETS 1 & 2 OF 11 FOR SPECIAL MEDIAN GRADING

LOCATION OF SEPTIC SYSTEM UNKNOWN

TEST HOLE #14
-L- 260+22.37 81.17' RIGHT
TOP UTILITY=802.58'

03-AUG-2010 13:05
R3-Environmental\Design\r-2233ab_EC_dsn_psh04.dgn
pshan AT RPN/23812

8/17/99

PROJECT REFERENCE NO.	SHEET NO.
R-2233AB	EC-31/CONST.5
R/W SHEET NO.	
ROADWAY DESIGN ENGINEER	HYDRAULICS ENGINEER

NAD 83/95

OTHORNELL HARRIS
DB 253 PG 225
(PROPERTY OWNER INFO AND DEED INFO CAN BE FOUND UNDER R-2233AA)

JERRY R. ALEXANDER
DB 373 PG 357
DB 374 PG 452

20 x 10 x 3
1.5 inch Skimmer
with 0.25 inch
Orifice Diameter
4 ft. weir
ID 5.3 C&G

22 x 10 x 3
1.5 inch Skimmer
with 0.25 inch
Orifice Diameter
4 ft. weir
ID 5.4 C&G

SOLIDIRON

FLOYD'S CREEK

ROBERT R. HARRIS
DB 442 PG 411
(PROPERTY OWNER INFO AND DEED INFO CAN BE FOUND UNDER R-2233AA)

JANET F. ROBINSON
DB 583 PG 26

RONALD S. SILVER
DB 400 PG 734

-BL- 64 PINC 22+28.88
-L- Sta. 280+68.48
(51.82' LT)

-BL- 65 PINC 29+39.55
(NCGS MON. "BESSIE")
-L- Sta. 287+71.74
(61.34' LT)

-DR4- POT Sta. 10+00.09
N 25° 11' 31.4" E
-DR4- PC Sta. 10+28.50
-DR4- PT Sta. 10+71.67
N 57° 15' 04.9" W
-DR4- PC Sta. 12+81.18

BEGIN C/A FENCE
END C/A FENCE
ACCESS POINT
OLD WELL
NEW WELL
NOT SHOWN
GAZEBO
HTR
ISBKD
WD DK
ISFD
SHOULDER BERM GUTTER FROM -L- 277+88 TO 278+69
PREFORMED SCOUR HOLE (SEE DTL 2 U)
CHORD
-DR4- PT Sta. 13+44.77
GRAU 350
CLASS II RIP RAP (STRUCTURE PAY ITEM)
EXISTING PREFORMED SCOUR HOLE
TIE TO 2GI EXISTING
RETAIN EXIST. G-RAIL
REMOVE EXIST. G-RAIL
REMOVE
RELAP GUARDRAIL (* SEE NOTE BELOW)
-L- TS Sta. 281+54.26
-L- SC Sta. 283+54.26
-L- POC Sta. 283+65.50
-DR4- POT Sta. 14+23.77
-DR2- PC Sta. 12+67.21
-DR2- PT Sta. 13+51.33
END CONSTRUCTION
-DR2- STA. 14+00.00
-DR2- POT Sta. 14+21.47
PROP. R/W UNDER PROJECT R-2233AA
SPECIAL MEDIAN GRADING
BERM 'V' DITCH SEE DETAIL H & W/ PSRM EST. 133 SY
BERM 'V' DITCH SEE DETAIL U
SPECIAL MEDIAN DITCH SEE DETAIL B
CLASS II RIP-RAP EST. 2 TONS 7 SY F.F.
'V' LATERAL BASE DITCH EST. DDE 15 CY SEE DETAIL Z
5' MONO. CONC. ISLAND
FLAGPOLE
RETAIN
ACCESS POINT

SAMUEL HARRIS
DB 455 PG 353
(PROPERTY OWNER INFO AND DEED INFO CAN BE FOUND UNDER R-2233AA)

CALLY HARRIS MCCLAIN (HEIRS)
DB 442 PG 404
(PROPERTY OWNER INFO AND DEED INFO CAN BE FOUND UNDER R-2233AA)

EVELYN R. MERCER
DB 380 PG 154
DB 439 PG 275

ROGER W. TATE
DB 450 PG 434
DB 662 PG 145
DB 239 PG 459

PAUL GOWAN
DB 374 PG 450
DB 373 PG 357
DB 412 PG 257
DB 349 PG 353
DB 637 PG 455 &
DB 374 PG 448

HARVEY E. HARRIS
DB 442 PG 410
(PROPERTY OWNER INFO AND DEED INFO CAN BE FOUND UNDER R-2233AA)

20 x 10 x 3
ID 5.1 F

42 x 21 x 3
ID 5.2 C&G

NOTE:
UTILIZE SPECIAL STILLING BASIN AS STILLING BASIN WHERE APPLICABLE.

* RELAP GUARDRAIL AFTER TEMPORARY TRAFFIC PATTERN IS REMOVED AND PLACED IN PERMANENT PATTERN. (SEE TRAFFIC CONTROL PLANS.)

NOTE: SEE ROADWAY STANDARD DRAWING STD. NO. 862.01 SHEETS 1 & 2 OF 11 FOR SPECIAL MEDIAN GRADING

MATCH LINE SEE SHEET NO.4 -L- STA.277+00

MATCH LINE SEE SHEET NO.6 -L- STA.291+00

03-AUG-2010 14:47
C:\Environments\...\Design\2233ab_EC_dsn_psh05.dgn
Active RENV 2181

8/17/99

ROADWAY DESIGN ENGINEER	HYDRAULICS ENGINEER	PROJECT REFERENCE NO.	SHEET NO.
		R-2233AB	EC-32/CONST.6
		RW SHEET NO.	

NAD 83/95

22 x 10 x 3
1.5 inch Skimmer
with 0.25 inch
Orifice Diameter
4 ft. weir
ID 5.4 C&G

60 x 12 x 3
1.5 inch Skimmer
with 0.75 inch
Orifice Diameter
7 ft. weir
ID 6.1 C&G

20 x 9 x 3
ID 6.2 C&G

52 x 26 x 3
1.5 inch Skimmer
with 1.0 inch
Orifice Diameter
18 ft. weir
ID 6.3 C&G

WILLIAM JOSEPH ALEXANDER
DB 656 PG 323
PB 12 PG 86

RONALD KEITH CANTRELL
DB 659 PG 58
DB 341 PG 361
PB 12 PG 86

PAUL GOWAN
DB 374 PG 450
DB 373 PG 357
DB 412 PG 257
DB 349 PG 353
DB 637 PG 455
DB 374 PG 448

ROGER W. TATE
DB 450 PG 434
DB 662 PG 145
DB 239 PG 459

NEW BETHEL BAPTIST CHURCH
DB 232 PG 343

NEW BETHEL CEMETARY

BETTY R. STACEY
& DIANNE STACEY
DB 910 PG 440
PB 6 PG 91

ERNEST D. DILLS
DB 974 PG 48
PB 6 PG 91

ERNEST D. DILLS
DB 273 PG 211
PB 6 PG 91

ROBERT L. TATE
DB 241 PG 146
DB 274 PG 007
DB 459 PG 294

NCDOT

-BL- STATION 39+10
34' LEFT
ELEVATION = 832.55

-YITIE- PC Sta.15+34.92

-YITIE- PT Sta. 11+77.50

-BYI- 11 PINC 18+23.18
(GPS POINT "R2233AB-11")
-YITIE- Sta. 12+08.69
(13.66' RT.)

END CONSTRUCTION
-YITIE- STA. 12+50.00

-YITIE- PT Sta.16+40.99

-BYI- 105 PINC 21+49.26
-YITIE- Sta. 15+34.64
(23.08' RT.)

-BY- 229 PINC 5+59.25
-L- Sta. 297+70.59
(105.82' LT.)

-BY- 230 PINC 6+27.19
-L- Sta. 298+38.4
(103.02' LT.)

-L- POT Sta 298+34.21
-Y- POS Sta 16+76.57

-Y- TSSta.14+42.44

-Y- SC Sta.18+42.44

-L- ST Sta. 296+16.01

-BL- 66 PINC 39+23.33=
-BY- POT 5+00.00
-L- Sta. 297+45.99
(51.91' LT)

-BL- 67 PINC 42+36.96=
-BY- POT 8+52.72=
-BYI- POT 23+43.66
(NCGS MON. "BEHELPER 1985")
-L- Sta. 300+59.55
(58.47' LT)

-Y- PTSta. 21+83.89

S 28°00'45" E 235.75'

N 28°00'45" E

S 69°48'03" E

N 38°19'16.0" W

PROVIDE 6" DECK DRAINS ON RIGHT SIDE OF THE SOUTHBOUND BRIDGE AT 10' CENTERS FROM STA 297+63 +/- TO STA 298+18 +/- -L- AND STA 298+31 +/- TO STA 299+00 +/- -L-

PROVIDE 6" DECK DRAINS ON LEFT SIDE OF THE NORTHBOUND BRIDGE AT 10' CENTERS FROM STA 297+80 +/- TO STA 298+36 +/- -L- AND STA 298+52 +/- TO STA 299+18 +/- -L-

CLASS I RIP RAP
EST. 7 TONS
17 SY F.F.

CLASS B RIPRAP
EST. 92 TONS
259 SY F.F.
SEE DETAIL G

TOE PROTECTION
CLASS B RIPRAP
EST. 92 TONS
259 SY F.F.
SEE DETAIL G

CLASS I RIP RAP
EST. 10 TONS
23 SY F.F.

TOE PROTECTION
CLASS B RIPRAP
EST. 161 TONS
454 SY F.F.
SEE DETAIL G

"V" LATERAL BASE DITCH
EST. DDE 15 CY
SEE DETAIL Z

5' TAIL BASE DITCH
W/ CLASS I RIP RAP
EST. 55 TONS
99 SY F.F.
DDE 65 CY
SEE DETAIL D

HEAD
"V" DITCH
SEE DETAIL E

SPECIAL
CUT DITCH
SEE DETAIL C

SPECIAL CUT DITCH
SEE DETAIL C

GRADE
TO DRAIN

TERM.
END
SECTION

OBLITERATE
& REMOVE

REMOVE

RETAIN

RELAP
GUARDRAIL
(* SEE NOTE BELOW)

BEGIN
SHOULDER BERM
GUTTER
-L- STA.291+91

SHOULDER BERM GUTTER
FROM -L- STA.296+82 TO STA.297+02

SHOULDER BERM GUTTER
FROM -L- STA.297+05 TO STA.297+18.4

SHOULDER BERM GUTTER
FROM -L- STA.297+24 TO STA.297+34.4

SHOULDER BERM GUTTER
STA.297+50

PREFORMED
SCOUR HOLE
SEE DETAIL 2-L
W=4
D=1.5' d=0.5'

BEGIN SPECIAL
MEDIAN GRADING

NOTE : SEE ROADWAY STANDARD DRAWING
STD. NO. 862.01 SHEETS 1 & 2 OF 11
FOR SPECIAL MEDIAN GRADING

Place Matting for Erosion Control
on Slope as Work Allows.

* RELAP GUARDRAIL AFTER TEMPORARY
TRAFFIC PATTERN IS REMOVED AND
PLACED IN PERMANENT PATTERN.
(SEE TRAFFIC CONTROL PLANS.)

MATCH LINE SEE SHEET NO.5 -L- STA.291+00

MATCH LINE SEE SHEET NO.7 -L- STA.305+00

MATCH LINE SEE SHEET NO.7 -YITIE- STA.11+00

FOR PREFORMED SCOUR HOLE DETAIL SEE SHEET NO. 2-L

03-AUG-2010 14:16
n:\environmental\Design\r-2233ab_EC_dsn_psh06.dgn
dgn_lib_ITPEN_2010.dgn

8/17/99

PROJECT REFERENCE NO.	SHEET NO.
R-2233AB	EC-33/CONST.7
R/W SHEET NO.	
ROADWAY DESIGN ENGINEER	HYDRAULICS ENGINEER

NAD 83/95

BEGIN CONSTRUCTION -Y1- STA. 11+00.00

-Y1- PC Sta. 10+40.51

-Y1- PC Sta. 12+22.77

-Y1- POT Sta. 10+00.00

-Y1- POC Sta. 14+50.00

-Y1- PT Sta. 15+26.89

-YITIE- PC Sta. 10+40.51

-YITIE- POT Sta. 10+00.00=

-YITIE- POC Sta. 14+50.00

-YI- POT Sta. 18+74.34=

-L- POC Sta. 305+82.81

-L- PC Sta. 309+51.05

-L- POT Sta. 53+18.94=

-BL- 68 PINC Sta. 511+41.07 (54.88' LT)

MATCH LINE SEE SHEET NO.6 -L- STA. 305+00

MATCH LINE SEE SHEET NO.8 -L- STA. 319+00

RONALD KEITH CANTRELL DB 659 PG 58, DB 341 PG 361, PB 12 PG 86 (109)

NEW BETHEL BAPTIST CHURCH DB 232 PG 343 (112)

JEFFREY STEPHEN ESTEP DB 830 PG 871, PB 6 PG 91

MICHAEL S. ESTEP AND WIFE, JUDY TATE ESTEP DB 342 PG 393, PB 6 PG 91

ERNEST D. DILLS DB 974 PG 48, PB 6 PG 91 (113)

ERNEST D. DILLS DB 273 PG 211, PB 6 PG 91 (114)

LEWIS EDWARD WALLACE, JR. DB 708 PG 320, PB 6 PG 91 (118)

HERBERT D. TATE DB 317 PG 541, DB 296 PG 401, PB 6 PG 91

CURTIS M. RODDY DB 245 PG 692, DB 278 PG 569, PB 6 PG 91 (117)

ROBERT BOYCE HARRILL DB 693 PG 438, DB 362 PG 247, DB 317 PG 157, PB 6 PG 91 (119)

ALBERT DANIEL MARE DB 887 PG 170 (120)

ROBERT L. TATE DB 241 PG 146, DB 274 PG 007, DB 459 PG 294 (115)

30 x 14 x 3
1.5 inch Skimmer with 0.5 inch Orifice Diameter
6 ft. weir
ID 7.1 C&G

28 x 14 x 3
ID 7.2 F

31 x 15 x 3
ID 7.7F

34 x 17 x 3
ID 7.9 C&G

22 x 11 x 3
ID 7.3 F

Modified Silt Basin Type 'B'
20 x 13 x 3
(See Tiered Skimmer Basin Detail)
ID 7.4 C&G

20 x 13 x 3
1.5 inch Skimmer with 0.375 inch Orifice Diameter
5 ft. weir
(See Tiered Skimmer Basin Detail)
ID 7.4 & 7.5 C&G

Modified Silt Basin Type 'B'
20 x 13 x 3
(See Tiered Skimmer Basin Detail)
ID 7.4 C&G

Modified Silt Basin Type 'B'
21 x 13 x 3
(See Tiered Skimmer Basin Detail)
ID 7.6 C&G

21 x 13 x 3
1.5 inch Skimmer with 0.5 inch Orifice Diameter
6 ft. weir
(See Tiered Skimmer Basin Detail)
ID 7.6 C&G

20 x 12 x 3
1.5 inch Skimmer with 0.375 inch Orifice Diameter
4 ft. weir
(See Tiered Skimmer Basin Detail)
ID 7.8 C&G

Modified Silt Basin Type 'B'
20 x 12 x 3
(See Tiered Skimmer Basin Detail)
ID 7.8 C&G

Place Matting for Erosion Control on Slope as Work Allows.

CLASS B RIP RAP EST. 1 TON 5 SY F.F.

CLASS B RIP RAP EST. 3 TONS 10 SY F.F.

4' LATERAL BASE DITCH W/ CLASS 'B' RIP RAP EST. 41 TONS 111 SY F.F. DDE 25 CY SEE DETAIL V

2' LATERAL BASE DITCH W/ CLASS 'B' RIP RAP EST. 21 TONS 59 SY F.F. DDE 25 CY SEE DETAIL J

SPECIAL CUT DITCH SEE DETAIL C

CLASS B RIP RAP EST. 161 TONS 454 SY F.F. SEE DETAIL G

CL. B RIP RAP EST. 1 TON 5 SY F.F.

BERM 'V' DITCH SEE DETAIL U

CONVERT DI TO JB W/ MANHOLE COVER (SEE DETAIL 2-T)

REMOVE EXISTING R/W

GRADE TO DRAIN

3/5

DFHL

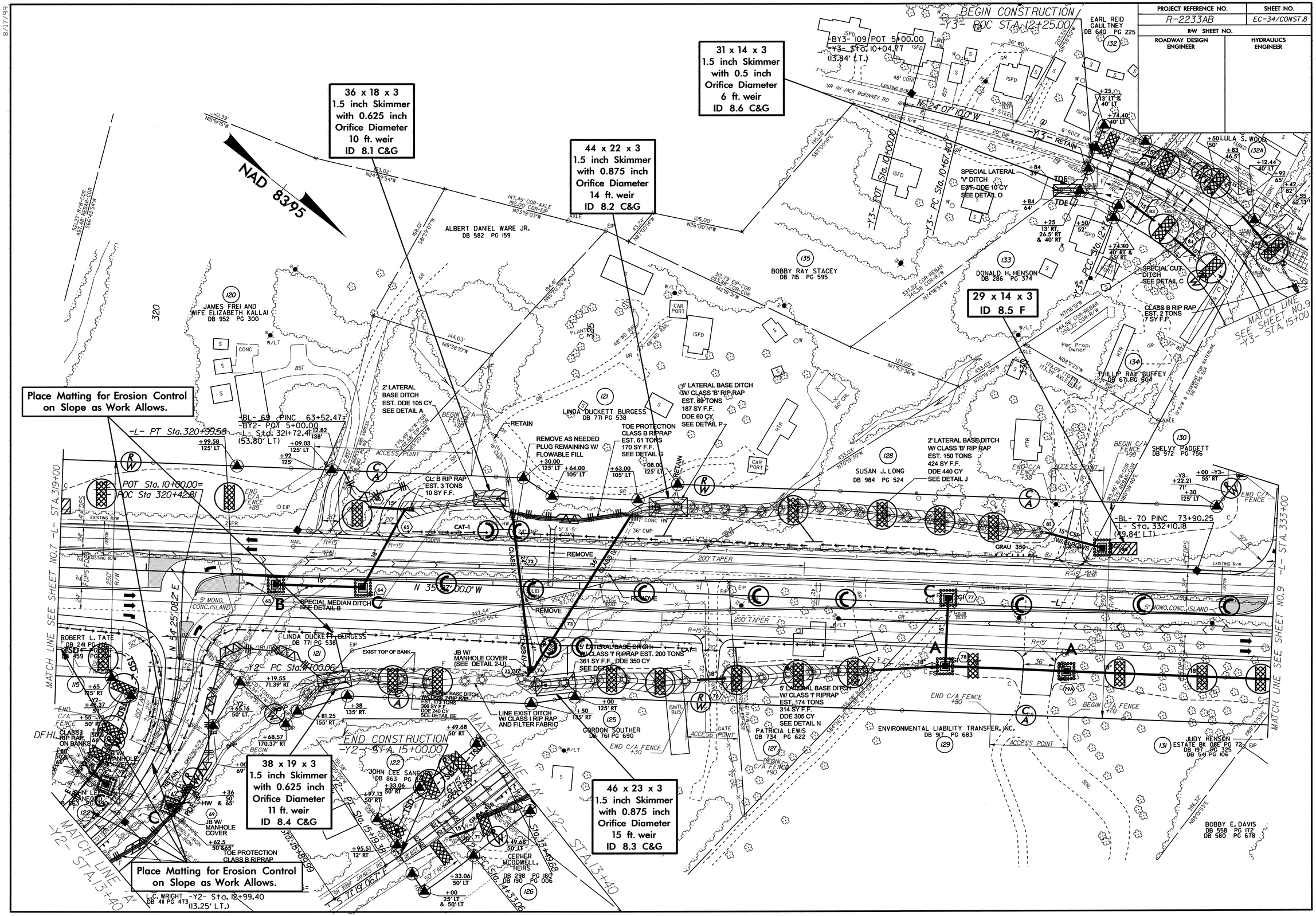

PROJECT REFERENCE NO.
R-2233AB
SHEET NO.
EC-34/CONST.8
R/W SHEET NO.
ROADWAY DESIGN ENGINEER
HYDRAULICS ENGINEER
8/17/99
NAD 83/95
36 x 18 x 3
1.5 inch Skimmer
with 0.625 inch
Orifice Diameter
10 ft. weir
ID 8.1 C&G
44 x 22 x 3
1.5 inch Skimmer
with 0.875 inch
Orifice Diameter
14 ft. weir
ID 8.2 C&G
31 x 14 x 3
1.5 inch Skimmer
with 0.5 inch
Orifice Diameter
6 ft. weir
ID 8.6 C&G
29 x 14 x 3
ID 8.5 F
38 x 19 x 3
1.5 inch Skimmer
with 0.625 inch
Orifice Diameter
11 ft. weir
ID 8.4 C&G
46 x 23 x 3
1.5 inch Skimmer
with 0.875 inch
Orifice Diameter
15 ft. weir
ID 8.3 C&G
Place Matting for Erosion Control on Slope as Work Allows.
Place Matting for Erosion Control on Slope as Work Allows.
BEGIN CONSTRUCTION
-Y3- POC STA. 12+25.00
END CONSTRUCTION
-Y2- STA. 15+00.00
MATCH LINE SEE SHEET NO.7 -L- STA. 319+00
MATCH LINE SEE SHEET NO.9 -L- STA. 333+00
MATCH LINE SEE SHEET NO.9 -Y3- STA. 15+00
MATCH LINE -A- -Y2- STA. 13+40
-L- PT Sta. 320+99.58
-Y2- POT Sta. 10+00.00= POC Sta 320+42.81
-Y2- PC Sta. 11+00.06
-Y3- POT Sta. 10+00.00
-Y3- PC Sta. 10+67.40
-Y3- PCC Sta. 12+74.40
-BL- 69 PINC 63+52.47= -BY2- POT 5+00.00 -L- Sta. 321+72.41 (53.80' LT)
-BL- 70 PINC 73+90.25 -L- Sta. 332+10.18 (49.84' LT)
-BY3- 109 POT 5+00.00 -Y3- Sta. 10+04.77 (13.84' LT.)
ALBERT DANIEL WARE JR. DB 582 PG 159
JAMES FREI AND WIFE ELIZABETH KALLAI DB 952 PG 300
BOBBY RAY STACEY DB 715 PG 595
DONALD H. HENSON DB 286 PG 374
EARL REID GAULTNEY DB 640 PG 225
LULA S. WOOD
PHILLIP RAY GUFFEY DB 671 PG 604
SHELVY PADGETT DB 972 PG 756
SUSAN J. LONG DB 984 PG 524
LINDA DUCKETT BURGESS DB 771 PG 538
ROBERT L. TATE DB 241 PG 259
GORDON SOUTHER DB 761 PG 690
PATRICIA LEWIS DB 734 PG 622
ENVIRONMENTAL LIABILITY TRANSFER, INC. DB 917 PG 683
JUDY HENSON ESTATE BK 088 PG 72 DB 197 PG 325 DB 541 PG 106
BOBBY E. DAVIS DB 558 PG 172 DB 580 PG 678
CEPHER MCDOWELL, HEIRS DB 298 PG 180 DB 190 PG 006
L.C. WRIGHT -Y2- Sta. 12+99.40 DB 411 PG 473 (13.25' LT.)
SPECIAL LATERAL 'V' DITCH EST. DDE 10 CY SEE DETAIL O
SPECIAL CUT DITCH SEE DETAIL C
CLASS B RIP RAP EST. 2 TONS 7 SY F.F.
2' LATERAL BASE DITCH EST. DDE 105 CY SEE DETAIL A
4' LATERAL BASE DITCH W/ CLASS 'B' RIP RAP EST. 69 TONS 187 SY F.F. DDE 60 CY SEE DETAIL P
TOE PROTECTION CLASS B RIPRAP EST. 61 TONS 170 SY F.F. SEE DETAIL G
REMOVE AS NEEDED PLUG REMAINING W/ FLOWABLE FILL
CL. B RIP RAP EST. 3 TONS 10 SY F.F.
2' LATERAL BASE DITCH W/ CLASS 'B' RIP RAP EST. 150 TONS 424 SY F.F. DDE 440 CY SEE DETAIL J
SPECIAL MEDIAN DITCH SEE DETAIL B
5' LATERAL BASE DITCH W/ CLASS 'I' RIPRAP EST. 200 TONS 361 SY F.F. DDE 350 CY SEE DETAIL N
5' LATERAL BASE DITCH W/ CLASS 'I' RIPRAP EST. 174 TONS 314 SY F.F. DDE 305 CY SEE DETAIL N
LINE EXIST DITCH W/ CLASS I RIP RAP AND FILTER FABRIC
JB W/ MANHOLE COVER (SEE DETAIL 2-U)
JB W/ MANHOLE COVER
TOE PROTECTION CLASS B RIPRAP
CLASS I RIP RAP ON BANKS
EXIST TOP OF BANK
200' TAPER
N 35°27'00.0" W
N 24°07'10.0" W
N 54°25'08.2" E

8/17/99

PROJECT REFERENCE NO.	SHEET NO.
R-2233AB	EC-35/CONST.9
R/W SHEET NO.	
ROADWAY DESIGN ENGINEER	HYDRAULICS ENGINEER

NAD 83/95

26 x 12 x 3
ID 9.1 F

37 x 14 x 3
ID 9.2 F

35 x 17 x 3
ID 9.3 C&G

61 x 21 x 3
1.5 inch Skimmer
with 0.625 inch
Orifice Diameter
12 ft. weir
ID 7.4 C&G

38 x 19 x 3
1.5 inch Skimmer
with 0.625 inch
Orifice Diameter
11 ft. weir
ID 9.5 C&G

NOTE:

FOR 2GI'S ALONG MONOLITHIC ISLANDS SEE DETAIL ON SHEET 2-V FOR CURB AND GUTTER TRANSITION FROM 1'-6" CURB AND GUTTER TO 2'-6" CURB AND GUTTER

LULA S. WOOD
DB 250 PG 46
132A

CHARISE G. SMITH AND
JASON K. SMITH
DB 925 PG 243
133A

MARGARET COLE
DB 431 PG 691
134A

ADAM KERTZ
DB 874 PG 209
136

SHELVY PADGETT
DB 972 PG 756
130

ENVIRONMENTAL LIABILITY
TRANSFER, INC.
DB 917 PG 683
129

BROAD RIVER WATER AUTHORITY
DB 766 PG 503

CLYDE H. ROBBINS
DB 988 PG 575

RUTHERFORD MARKETER, INC.
DB 764 PG 312
138

HELEN S. BOWMAN
DB 609 PG 780
140

CLYDE H. ROBBINS
DB 988 PG 575
141

WHITE CEDAR LOG HOMES, INC.
DB 940 PG 478
139

WHITE CEDAR LOG HOMES OF
ASHEVILLE, NC, INC.
DB 952 PG 75
142

MARGARET E. BIGGERMAN
DB 621 PG 463
144

CHARLES ROBERT
ARROWOOD
DB 448 PG 94
143

JUDY HENSON
ESTATE BK OBE PG 72
DB 197 PG 325
DB 541 PG 106
131

BOBBY E. DAVIS
DB 558 PG 172
DB 580 PG 678

MATCH LINE SEE SHEET NO.8 -L- STA.333+00

MATCH LINE SEE SHEET 10 -L- STA.347+00

-BY3- 110 PINC 10+27.87
-Y3- Sta. 14+90.08
(91.19' LT.)

-Y3TIE- PT Sta.11+73.89

-Y3TIE- PC Sta.12+50.95

-DR5- POT Sta. 10+00.00=
-Y3TIE- POT Sta. 15+27.50

END CONSTRUCTION
-Y3TIE- POT STA.16+00.00

-Y3TIE- PC Sta.10+39.00

-N 57° 28' 22.0" W

-Y3- POC Sta.15+25.00

-Y3TIE- POT Sta.10+00.00

-Y3- PT Sta. 16+40.31

-Y3TIE- PT Sta.14+47.21

-Y3TIE- POT Sta. 16+62.50

-POT Sta. 18+63.61=
-L- POT Sta. 333+12.61

-L- Sta. 10+65.98

-L- Sta. 11+91.22

-BL- 71 PINC 80+13.29=
-BY3- POT 16+24.50
(NCGS MON. "KWIK")
-L- Sta. 338+33.21
(53.05' LT)

-BL- STATION 79+37
138' RIGHT
ELEVATION = 939.11

BM #3

PREFORMED SCOUR HOLE
(SEE DETAIL 2-L)
B=4' W=4'
D=1.5' d=0.5'

SPECIAL CUT DITCH
SEE DETAIL C

3' TAIL BASE DITCH
SLOPE = 4.5%
EST. DDE 33 CY
SEE DETAIL W

SPECIAL CUT DITCH
SEE DETAIL E

SPECIAL CUT DITCH
SEE DETAIL C

GRADE TO DRAIN

REMOVE

RETAIN

BEGIN 8' X 18' CURB
339+35

END 8' X 18' CURB
343+00

BEGIN C/A FENCE

END C/A FENCE

ACCESS POINT

5' MONO. CONC. ISLAND

5' CONC HW

18" CMP

15" RCP

12" PVC

200' TAPER

100' TAPER

ENVIRONMENTAL LIABILITY TRANSFER, INC.
DB 917 PG 683

TEST HOLE #15
629+85.28 67.78' LEFT
TOP UTILITY=932.87'

TEST HOLE #16
631+00.14 54.01' LEFT
TOP UTILITY=932.45'

TEST HOLE #17
634+40.15 42.54' LEFT
TOP UTILITY=933.76'

TERM. END SECTION
OUTFALL REMOVE

GRAU 350

CAT-1

TSD

2 PUMPS

BUS

POOL

FS

HTR

ISFD

ISBKD

ABAND

WELLHOUSE

TANK

LANDSCAPE TIMBERS

WATER TOWER

CONC

REBAR

EIP

EIP-COR

CMP

RCP

PVC

TB

HW

BST

GR

W/LT

W/RT

ACCESS R/W PER DB 766 PG 503

RUTHERFORD COUNTY PUBLIC WORKS R/W AND EASEMENT DB 625 PG 47-50

60' R/A TOB

60' R/A TOP

N89°27'24"E 339.56' EIP
339.25' EIP

N89°27'24"E 339.56' EIP
339.25' EIP

203.57' EIP
180.65' EIP-COR
N89°29'31"E

233.97' COR-EIP
210.64' EIP-COR
N89°29'31"E

186.27' EIP-COR
N08°42'02"W

103.38'
N01°01'02"W

176.30'
N09°31'40"W

N 35° 27' 00.0" W

N 54° 33' 01.6" E

N 54° 33' 00.0" E

N 57° 28' 22.0" W

N 25° 55' 01" W

N 64° 04' 45" W

S 60° 25' 30" W

N 34° 54' 54" W

S 53° 20' 16" E

S 68° 42' 02" W

N 25° 54' 12" W

S 89° 15' 15" W

N 89° 15' 15" E

N 68° 13' 52" E

N 04° 37' 48" E

N 63° 30' 00" E

S 66° 03' 55" W

N 25° 24' 49" E

S 58° 09' 25" W

N 08° 04' 00" W

S 64° 04' 45" E

N 08° 04' 00" E

S 25° 55' 01" E

S 89° 15' 15" W

S 68° 13' 52" W

S 04° 37' 48" W

S 63° 30' 00" W

N 25° 55' 01" W

S 25° 55' 01" E

N 64° 04' 45" W

S 08° 04' 00" W

N 25° 54' 12" W

S 53° 20' 16" W

S 34° 54' 54" E

S 60° 25' 30" E

S 54° 33' 01.6" W

S 35° 27' 00.0" E

S 54° 33' 00.0" W

S 57° 28' 22.0" E

PROJECT REFERENCE NO.	SHEET NO.
R-2233AB	EC-36/CONST.10
R/W SHEET NO.	
ROADWAY DESIGN ENGINEER	HYDRAULICS ENGINEER

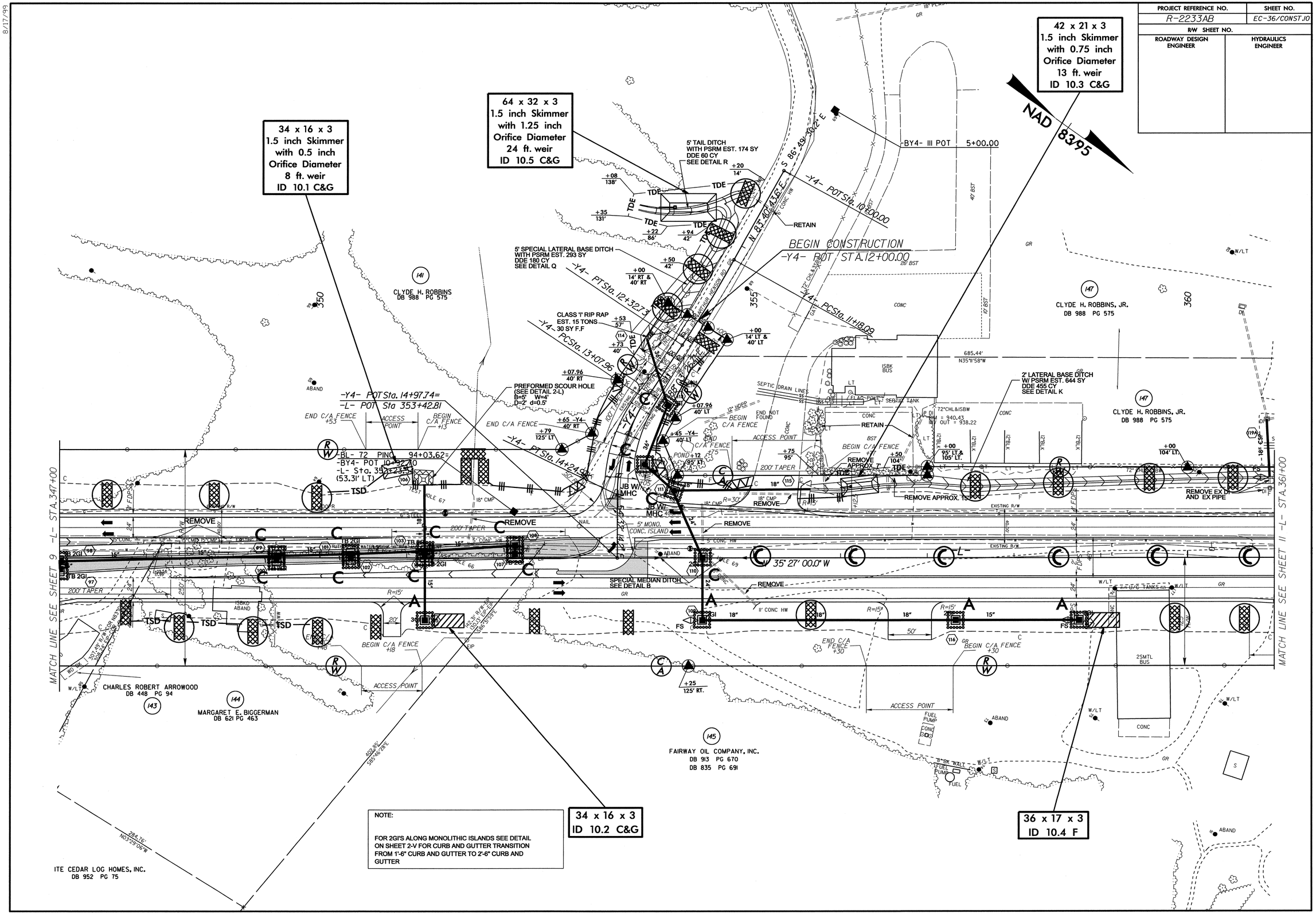

NOTE:

FOR 2GI'S ALONG MONOLITHIC ISLANDS SEE DETAIL ON SHEET 2-V FOR CURB AND GUTTER TRANSITION FROM 1'-6" CURB AND GUTTER TO 2'-6" CURB AND GUTTER

34 x 16 x 3
ID 10.2 C&G

36 x 17 x 3
ID 10.4 F

8/17/99

8/17/99

PROJECT REFERENCE NO.	SHEET NO.
R-2233AB	EC-37/CONST JI
R/W SHEET NO.	
ROADWAY DESIGN ENGINEER	HYDRAULICS ENGINEER

NAD 83/95

24 x 12 x 3
ID 11.1 F

44 x 22 x 3
1.5 inch Skimmer
with 0.875 inch
Orifice Diameter
14 ft. weir
ID 11.6 C&G

MATCH LINE SEE SHEET 10 -L- STA.361+00

MATCH LINE SEE SHEET 12 -L- STA.375+00

CLYDE H. ROBBINS, JR.
DB 988 PG 575
147

CLYDE H. ROBBINS, JR.
DB 988 PG 575
149A

NANCY M. ROBBINS
DB 867 PG 223
151

MELISSA P. ROBBINS
DB 592 PG 193
150

FAIRWAY OIL COMPANY, INC.
DB 913 PG 670
DB 835 PG 691
145

2SMTL BUS

2' LATERAL BASE DITCH
W/ CLASS 'B' RIP RAP
EST. 71 TONS
200 SY F.F.
DDE 110 CY
SEE DETAIL J

-Y5- POT Sta. 10+00.00= -L- POT Sta 363+42.81

-BL- 73 PINC 106+04.04
-BY5- POT 5+00.00
-L- Sta. 364+23.96
(56.2' LT)

-BL- 13 PINC 111+33.75
(GPS POINT "R2233AB-13")
-L- Sta. 369+51.76
(11.2' LT)

-Y5- PC Sta. 10+66.71

-Y5- PCC Sta. 11+81.75

-Y5- PT Sta. 14+26.43

END CONSTRUCTION
-Y5- STA.13+25.00

SPECIAL CUT DITCH
SEE DETAIL C

SPECIAL LATERAL 'V' DITCH
TIE TO EXISITING DITCH
SEE DETAIL O

SPECIAL MEDIAN DITCH
SEE DETAIL B

TAIL 'V' DITCH
SLOPE = 0.5%
EST. DDE 12 CY
SEE DETAIL E

PREFORMED SCOUR HOLE
(SEE DETAIL 2-L)
B=4' W=4'
D=1.5' d=0.5'

CLASS B RIP RAP
EST. 1 TON
5 SY F.F.

PREFORMED SCOUR HOLE
(SEE DETAIL 2-L)
B=5' W=4
D=2' d=0.5'

3' LATERAL BASE DITCH
W/ CLASS 'B' RIP RAP
EST. 63 TONS
173 SY F.F.
DDE 25 CY
SEE DETAIL S

Modified Silt Basin
Type 'B'
18 x 12 x 3
(See Tiered Skimmer
Basin Detail)
ID 11.3 C&G

18 x 12 x 3
1.5 inch Skimmer
with 0.375 inch
Orifice Diameter
4 ft. weir
(See Tiered Skimmer
Basin Detail)
ID 11.3 &11.4 C&G

Modified Silt Basin
Type 'B'
18 x 12 x 3
(See Tiered Skimmer
Basin Detail)
ID 11.4 C&G

25 x 12 x 3
1.5 inch Skimmer
with 0.375 inch
Orifice Diameter
4 ft. weir
ID 11.2 C&G

61 x 20 x 3
1.5 inch Skimmer
with 1.0 inch
Orifice Diameter
12 ft. weir
ID 11.5 C&G

40 x 17 x 3
1.5 inch Skimmer
with 0.75 inch
Orifice Diameter
11 ft. weir
ID 11.7 C&G

TEST HOLE #9
-L- 85+98.34 44.07' RIGHT
TOP UTILITY=947.73'

TEST HOLE #10
-L- 86+00.68' RIGHT
TOP UTILITY=951.57'

SEPTIC DRAIN LINES
SEPTIC TANK
BUS
ISFD
ISBKD
WD
DK
GR
S
W
E
F
EIP
CAT-1
GRAU 350
ACCESS POINT
BEGIN C/A FENCE +00
END C/A FENCE +83
BEGIN C/A FENCE +32
END C/A FENCE +72
END C/A FENCE +87
BEGIN C/A FENCE +17
END C/A FENCE +28
BEGIN C/A FENCE +88
200' TAPER
EXISTING R/W
RETAIN
REMOVE
TSD
TDE
PDE
365
370
375

PROJECT REFERENCE NO.	SHEET NO.
R-2233AB	EC-38/CONST.12
R/W SHEET NO.	
ROADWAY DESIGN ENGINEER	HYDRAULICS ENGINEER

NOTE:

FOR 2GI'S ALONG MONOLITHIC ISLANDS SEE DETAIL ON SHEET 2-V FOR CURB AND GUTTER TRANSITION FROM 1'-6" CURB AND GUTTER TO 2'-6" CURB AND GUTTER

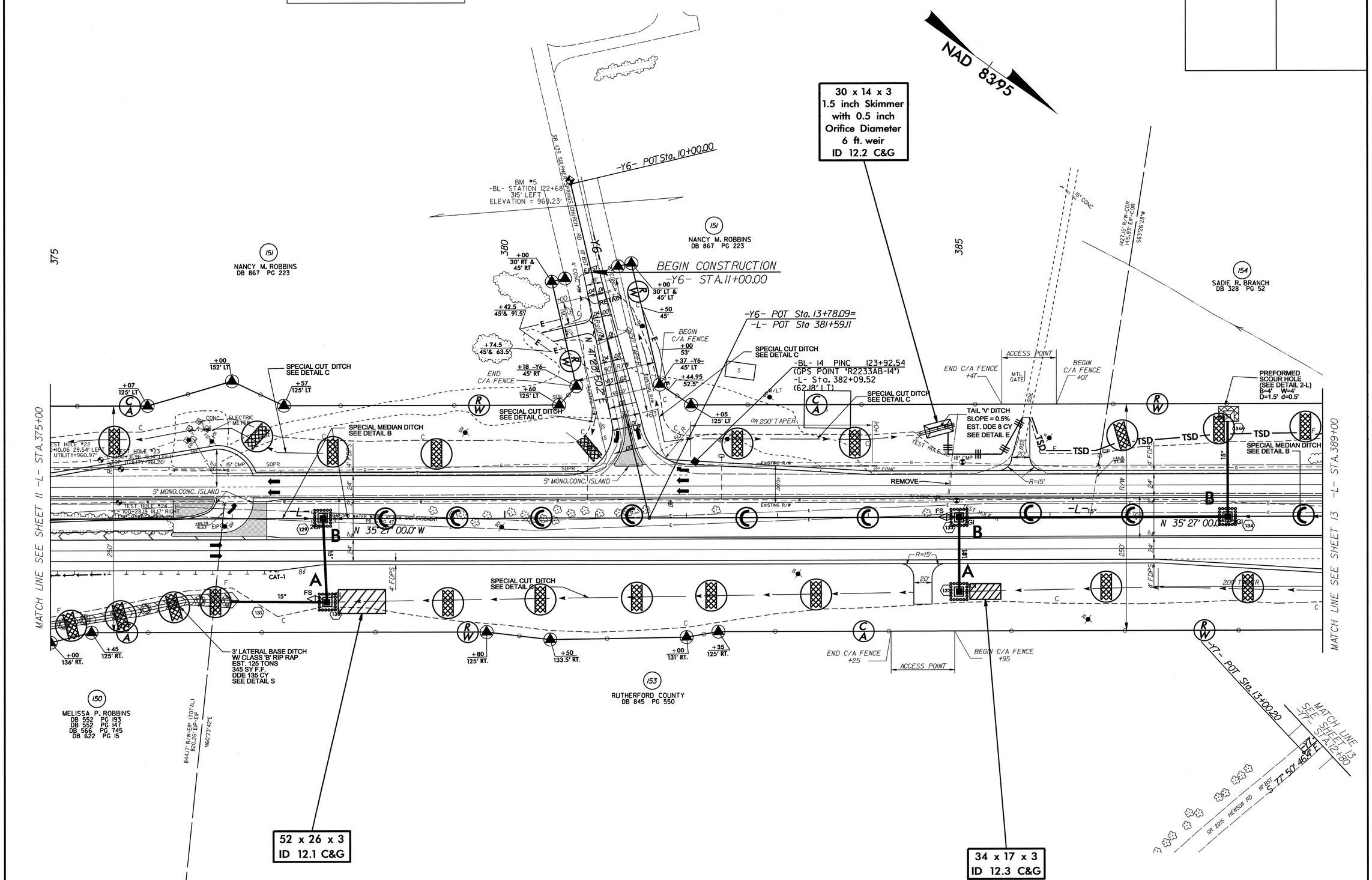

8/17/99

PROJECT REFERENCE NO.	SHEET NO.
R-2233AB	EC-39/CONSTJ3
R/W SHEET NO.	
ROADWAY DESIGN ENGINEER	HYDRAULICS ENGINEER

NOTE:

FOR 2GI'S ALONG MONOLITHIC ISLANDS SEE DETAIL ON SHEET 2-V FOR CURB AND GUTTER TRANSITION FROM 1'-6" CURB AND GUTTER TO 2'-6" CURB AND GUTTER

NAD 8395

30 x 15 x 3
1.5 inch Skimmer
with 0.5 inch
Orifice Diameter
7 ft. weir
ID 13.1 C&G

24 x 12 x 3
1.5 inch Skimmer
with 0.375 inch
Orifice Diameter
4 ft. weir
ID 13.2 C&G

61 x 24 x 3
1.5 inch Skimmer
with 1.125 inch
Orifice Diameter
16 ft. weir
ID 13.5 C&G

44 x 22 x 3
1.5 inch Skimmer
with 0.875 inch
Orifice Diameter
14 ft. weir
ID 13.6 C&G

34 x 16 x 3
ID 13.7 C&G

35 x 16 x 3
ID 13.3 C&G

26 x 13 x 3
ID 13.4 C&G

-Y7- POT Sta. 10+00.00=
-L- POT Sta 390+12.49

-BL- 76 PINC 135+92.86=
-BY8- POT 11+14.26
-L- Sta. 394+07.55
(55.12' LT)

-BL- 77 PINC 142+31.86
-L- Sta. 400+40.69
(56.75' LT)

-BY8- 113 POT 5+00.00
-Y8- Sta. 10+23.90
(12.62' LT.)

-Y8- POT Sta. 10+00.00

-L- TS Sta. 389+69.17

-L- POC Sta 394+14.61
-Y8- POT Sta. 16+64.13

-Y8- PI Sta. 16+13.90

-L- SC Sta. 392+69.17

-Y7- POC Sta. 11+30.84

-Y7- PI Sta. 12+73.20

-Y7- STA. 12+80

END CONSTRUCTION
-Y7- STA. 12+75.00

-L- STA. 399+00

-L- STA. 403+00

MATCH LINE SEE SHEET 12

MATCH LINE SEE SHEET 14

S 63° 23' 49.4" E

N 67° 42' 59.2" E

154 SADIE R. BRANCH DB 328 PG 52

155 LARRY G. SMITH DB 391 PG 556

153 RUTHERFORD COUNTY DB 845 PG 550

157 JAMES KENNETH COLE, JR. DB 704 PG 14

156 JAMES KENNETH COLE, JR. DB 704 PG 14

158 SYBIL WALKER & LINDA HARRIS ESTATE BK 2006E PG 482

159 THOMAS W. WALKER, TRUSTEE DB 689 PG 726

160 PATRICK BRYAN THOMPSON DB 794 PG 489

161 JAMES R. GREENE DB 472 PG 579

BM #6
-BY8- STATION 5+00
S 34° 01'48"W 41.63'
ELEVATION = 968.27'

SR 1118 HOPPER RD 20' BST

US 221 22' BST

CLASS 'I' RIP-RAP EST. 7 TONS 17 SY F.F.

2' TAIL BASE DITCH EST. DDE 104 CY SEE DETAIL DD

5' TAIL BASE DITCH W/ CLASS 'I' RIP RAP EST. 86 TONS 155 SY F.F. DDE 155 CY SLOPE = 2.5% SEE DETAIL D

SPECIAL LATERAL DITCH SEE DETAIL O

CLASS B RIP RAP EST. 4 TONS 8 SY F.F.

SPECIAL CUT DITCH SEE DETAIL C

SPECIAL MEDIAN DITCH SEE DETAIL B

CLASS B RIP RAP EST. 5 TONS 14 SY F.F.

TERM. END SECTION

REMOVE EX 18" CMP

REMOVE -Y8-

OBLITERATE & REMOVE

5' MONO. CONC. ISLAND

200' TAPER

66.67' INC.

SEPTIC DRAIN LINES

SEPTIC TANK

ACCESS POINT

BEGIN C/A FENCE

END C/A FENCE

2GI TYPE D

2GI (TYPE A)

3GI

TB 2GI

ISFD

25FD

ISBKD

POOL

HTR

WD DECK

BUS

BST

EIP

72"CHL&3SBW 340.11'
N34°00'54"W

N34°08'26"W 72.00'

N64°44'48"W 262.74'

N67°16'27"W 207.00'

N34°08'26"W 247.42'

N00°01'40"E 530.04'

S35°55'51"E 238.97'

03-AUG-2010 13:22
R3-EUC-v01.prm
Default
C:\Projects\2233ab\Design\v2233ab_EC_dsn_psh13.dgn

PROJECT REFERENCE NO.	SHEET NO.
R-2233AB	EC-40/CONST.14
R/W SHEET NO.	
ROADWAY DESIGN ENGINEER	HYDRAULICS ENGINEER

NOTE:

FOR 2GI'S ALONG MONOLITHIC ISLANDS SEE DETAIL ON SHEET 2-V FOR CURB AND GUTTER TRANSITION FROM 1'-6" CURB AND GUTTER TO 2'-6" CURB AND GUTTER

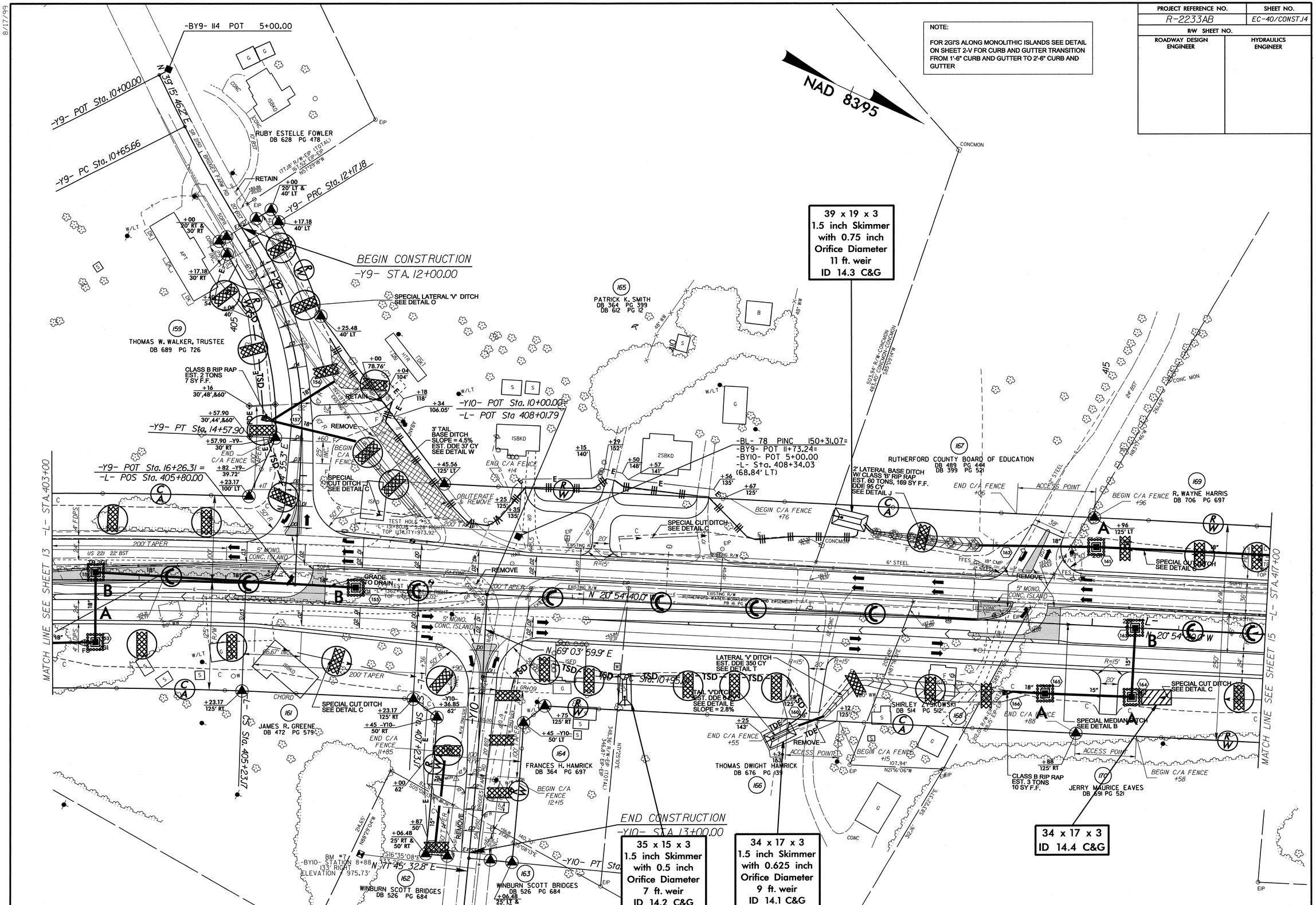

PROJECT REFERENCE NO.	SHEET NO.
R-2233AB	EC-41/CONST.15
R/W SHEET NO.	
ROADWAY DESIGN ENGINEER	HYDRAULICS ENGINEER

8/17/99

NAD 8395

-L-

PIs Sta 424+35.55
Θs = 0° 59' 59.7"
Ls = 200.00'
LT = 133.34'
ST = 66.67'

PI Sta 431+10.75
Δ = 12° 07' 27.5" (LT)
D = 0° 59' 59.7"
L = 1,212.52'
T = 608.53'
R = 5,730.00'
SE = 03

40 x 20 x 3
ID 15.1 C&G

28 x 14 x 3
ID 15.7 C&G

30 x 15 x 3
ID 15.8 C&G

169 R. WAYNE HARRIS DB 706 PG 697

172 SYBIL E. WALKER DB 706 PG 217

174 JERRY SCOTT HUSKEY DB 600 PG 496

178 MICHAEL W. JONES DB 731 PG 767

BM #8 -BL- STATION 171+30 27' LEFT ELEVATION = 989.24'

-BL- 15 PINC 160+20.68
(GPS POINT "R2233AB-15")
-L- Sta. 418+23.60
(60.02' LT)

-BL- 16 PINC 171+84.36
(GPS POINT "R2233AB-16")
-L- Sta. 429+89.98
(16.98' LT)

-Y11- POT Sta. 10+00.00
-L- POC Sta.430+06.79

-Y11- PCSta 11+36.33

-Y11- PTSta. 13+03.26

-L- TS Sta. 423+02.22

-L- SC Sta. 425+02.22

425

430

MATCH LINE SEE SHEET 14 -L- STA.417+00

MATCH LINE SEE SHEET 16 -L- STA.431+00

SPECIAL CUT DITCH SEE DETAIL C

SPECIAL MEDIAN DITCH SEE DETAIL B

REMOVE 18" CMP & HW

REMOVE 15" CMP & HW

REMOVE 24" CMP & HW

REMOVE

200' TAPER

5' MONO. CONC. ISLAND

GRADE TO DRAIN

CLASS B RIP RAP EST. 1 TON 5 SY F.F.

CLASS B RIP RAP EST. 2 TONS 7 SY F.F.

TSD PREFORMED SCOUR HOLE (SEE DETAIL-L) D = 5' D = 2' W = 4' d = 0.5'

CHORD

-Y11-
PI Sta 12+22.67
Δ = 36° 05' 32.5" (RT)
D = 21° 37' 15.8"
L = 166.93'
T = 86.34'
R = 265.00'

JERRY MAURICE EAVES EST. BOOK & PG. (UNKNOWN)

171

170 JERRY MAURICE EAVES DB 691 PG 521

173 NANCY EAVES DILLARD DB 691 PG 519

175 JUDY EAVES HARDIN DB 691 PG 305

JUDY B. MCGEE DB 697 PG 368

176 JANICE L. WAUGH DB 825 PG 300 PB 14 PG 63

177 MICHAEL BENNETT HAMBY DB 633 PG 768 DB 546 PG 523 PB 10 PG 12

179 CHARLES E. DAVIS DB 416 PG 259 DB 381 PG 627 DB 384 PG 705 PB 10 PG 12

2SFD

ISBKD

34 x 17 x 3
1.5 inch Skimmer
with 0.625 inch
Orifice Diameter
9 ft. weir
ID 15.2 C&G

40 x 20 x 3
1.5 inch Skimmer
with 0.75 inch
Orifice Diameter
12 ft. weir
ID 15.3 C&G

31 x 15 x 3
1.5 inch Skimmer
with 0.5 inch
Orifice Diameter
7 ft. weir
ID 15.4 C&G

30 x 15 x 3
1.5 inch Skimmer
with 0.5 inch
Orifice Diameter
7 ft. weir
ID 15.6 C&G

30 x 15 x 3
1.5 inch Skimmer
with 0.5 inch
Orifice Diameter
7 ft. weir
ID 15.9 C&G

8/17/99

nchen AT RENV231812

8/17/99

PROJECT REFERENCE NO.	SHEET NO.
R-2233AB	EC-43/CONST.17
R/W SHEET NO.	
ROADWAY DESIGN ENGINEER	HYDRAULICS ENGINEER

NAD 83'95

30 x 15 x 3
1.5 inch Skimmer
with 0.5 inch
Orifice Diameter
7 ft. weir
ID 17.2 C&G

36 x 18 x 3
1.5 inch Skimmer
with 0.625 inch
Orifice Diameter
10 ft. weir
ID 17.1 C&G

30 x 15 x 3
ID 17.6 C&G

28 x 13 x 3
ID 17.3 F

Modified Silt Basin
Type 'B'
21 x 14 x 3
(See Tiered Skimmer
Basin Detail)
ID 17.4 C&G

21 x 14 x 3
1.5 inch Skimmer
with 0.5 inch
Orifice Diameter
6 ft. weir
(See Tiered Skimmer
Basin Detail)
ID 17.4 C&G

20 x 13 x 3
1.5 inch Skimmer
with 0.375 inch
Orifice Diameter
5 ft. weir
(See Tiered Skimmer
Basin Detail)
ID 17.5 C&G

Modified Silt Basin
Type 'B'
20 x 13 x 3
(See Tiered Skimmer
Basin Detail)
ID 17.5 C&G

-L- STA.445+00

MATCH LINE SEE SHEET 16 -L- STA.445+00

MATCH LINE SEE SHEET 18 -L- STA.459+00

BEGIN CONSTRUCTION
-Y14- STA.17+50.00

-Y14- PCSta. 16+15.40
-Y14- PCCSta. 16+96.85
-Y14- PCCSta. 18+13.45
-Y14- PTSta. 18+93.47

-BY14- 117 PINC 10+46.78
-Y14- Sta. 51+99.49
(27.67' RT.)

-BL- 83 PINC 194+46.74=
-BY14- POT 14+16.83
-L- Sta. 452+55.47
(22.34' LT.)

-BL- STATION 193+94
229' RIGHT
ELEVATION = 991.90

-Y14- PTSta. 19+85.90=
-L- POT Sta. 452+81.72

-Y15- PCSta. 11+55.52

-Y15- PTSta. 12+70.52

-Y15-
PI Sta 12+13.12
Δ = 8° 14' 11.0" (RT)
D = 7° 09' 43.1"
L = 115.00'
T = 57.60'
R = 800.00'

-L- Sta 434+37.29

-L- Sta 459+00.00

DAVID MICHAEL MOSLEY
DB 766 PG 765
DB 765 PG 2025

RICHARD W. HOLLAND
DB 965 PG 683

G. SUSANNE PRICE
DB 747 PG 554
DB 688 PG 166
PB 18 PG 13

JERRY L. THOMPSON
DB 711 PG 719
PB 18 PG 13

FAYE EVELYN HOPPER
DB 493 PG 557
PB 18 PG 13

STROUD COMPANY, LLC
DB 941 PG 184

LEE ROBBINS HEIRS
DB 228 PG 294

TAMMY TONEY SKIPPER
DB 635 PG 126

PUBLIC SERVICE CO. OF NC, INC./
DB 332 PG 132

SANDRA HOWARD
DB 785 PG 449

HELEN BAGWELL
ESTATE BOOK 02E PG 241

MARTHA TONEY
DB 252 PG 3
DB 307 PG 276

GRANT EMIL HARDIN
DB 691 PG 205

SULPHUR SPRINGS CONGREGATIONAL HOLINESS CHURCH
DB 438 PG 63
DB 201 PG 446

TERESA S. HEAD BENSON
DB 582 PG 676/53
DB 820 PG 74/472
PB 6 PG 134

JACQUELINE L. HENSON
ESTATE BK 04E PG 408

ENERGY DISSIPATOR BASIN
W/ CLASS I RIP RAP
SEE DETAIL ON SHEET 2M
V=2.0 FT/S

SPECIAL CUT DITCH SEE DETAIL C

TAIL 'V' DITCH
SLOPE = 0.5%
EST. DDE 9 CY
SEE DETAIL E

CLASS B RIP RAP
EST. 2 TONS
7 SY F.F.

RETAIN

REMOVE

GRADE TO DRAIN

N. 55° 36' 33.7" E

N. 87° 37' 06.8" W

S. 82° 53' 15.3" E

S. 85° 57' 46.6" E

N27°15'26"W 342.97'

S56°47'58"W 219.98'

N35°02'37"W 124.99'

N 35°01'36" W 124.99'

N 35°03'28" W 124.98'

S54°57'24"W 241.56'

N65°35'52"W 455.20'

S 36°45'11" E 114.85'

S 68°23'41" W 61.36'

S 50°04'24" W 158.30'

S 44°18'05" E 72.46'

S 34°59'15" E 315.26'

N 24°37'27" E 302.93'

N 65°05'57" W 131.01'

N 65°48'11" W 84.28'

N 65°48'32" W 350.78'

S 46°00'14" W 364.43'

N 52°27'12" W 99.56'

N 43°57'

S 68°1

Per County Record

PROJECT REFERENCE NO.	SHEET NO.
R-2233AB	EC-44/CONST.18
R/W SHEET NO.	
ROADWAY DESIGN ENGINEER	HYDRAULICS ENGINEER

8/17/99

NAD 83/95

MATCH LINE SEE SHEET 17 -L- STA.459+00

MATCH LINE SEE SHEET 19 -L- STA.473+00

-Y17- PCSta. 10+00.00

-BY17- 118 POT 5+00.00
-Y17- Sta. 11+91.68
(10.57' LT.)

-Y17- PTSta. 11+99.16

BL- 85 PINC 208+04.24
-BY17- POT 8+24.80
-L- Sta. 464+12.78
(4.96' Under)

BL- 84 PINC 201+19.4
-L- Sta. 459+28.12
(17.59' LT.)

-Y16- POT Sta. 10+06.94
-L- POT Sta 459+06.10

-Y16- BCSta. 11+28.43

-Y16- PCSta. 12+63.43

-Y16- STA. 13+50.00

-Y18- POTSta. 13+02.25

-Y17- POT Sta. 14+25.27=
-L- POT Sta 461+77.43

-L- PC Sta 464+47.95
-Y18- POTSta. 10+00.00

-Y18- POT Sta. 10+00.00

-Y19- +91.5 176' RT
-Y19- +14.5 182.5' RT
TAIL 'V' DITCH SLOPE = 0.54% EST. DDE 32 CY SEE DETAIL E

-Y19- +02 198' RT
-Y19- +24.5 153'

ROBERT N. TAYLOR
DB 764 PG 452
PB 18 PG 60

TONI REDIFER
DB 786 PG 127
PB 18 PG 60

NELLIE SOUTHERLIN
DB 856 PG 387
PB 18 PG 13

HUGH CROOK
DB 879 PG 366
PB 18 PG 13

PHILIP SHANER
DB 688 PG 222
PB 18 PG 13

GROSS PROPERTIES, LLC
DB 974 PG 636

BARRY ROBBINS, ET AL
EST BK. 09E PG 256

THOMAS G. COLLINS, III
DB 808 PG 543

KAREN LEIGH TOMS CONNER
ESTATE BK 04E PG 509

PAUL A. CHAPMAN
DB 317 PG 243

P & M CHAPMAN, LP
DB 928 PG 572

TIMOTHY E. BRACKETT
DB 711 PG 51

SHILOH DANIEL TOWN OAKLAND FIRE DEPT.
DB 521 PG 171
DB 767 PG 299

TONEY MICHAEL WEASE
DB 927 PG 626
PB 6 PG 134

DANNIE L. GETTYS
DB 929 PG 500
DB 485 PG 511
PB 6 PG 134

ELBERT EL HOLLAND
DB 735 PG 38
PB 6 PG 134

DANNIE L. GETTYS
DB 485 PG 511

GREGORY NORMAN TREVITZ
DB 390 PG 189
PB 6 PG 134

GERALD E. ALLEN
DB 459 PG 416
PB 6 PG 134

JACK C. RHODES
DB 452 PG 355
PB 6 PG 134

VIRGIL A. BAYNARD
DB 318 PG 57
PB 6 PG 134

WACHOVIA BANK, N. A.
DB 951 PG 630
PB 6 PG 134

ANNIE GREENE COLE
DB 278 PG 101
PB 6 PG 134

BILLY FRANKLIN MELTON
DB 610 PG 625
PB 6 PG 134

WELDON P. BLANTON
DB 551 PG 38
PB 6 PG 134

KAY PREWITT GIVENS
DB 652 PG 63
PB 6 PG 134

DAVID GREEN
DB 806 PG 699
PB 6 PG 134

JOSE MEFIA
DB 779 PB 189
PB 6 PG 134

GENE P. FITE
DB 333 PG 572
DB 267 PG 455
PB 6 PG 134

LARSTON EARL HAMES
DB 746 PG 436
PB 6 PG 134

PAUL A. CHAPMAN
DB 265 PG 283
DB 259 PG 152
PB 6 PG 134

34 x 16 x 3
ID 18.2 C&G

END CONSTRUCTION

RETAIN

RETAIN

SPECIAL CUT DITCH SEE DETAIL C

SPECIAL CUT DITCH SEE DETAIL C

5' HEAD BASE DITCH EST. DDE 12 CY SEE DETAIL Y W/ ELBOWS

GRADE TO DRAIN

GRADE TO DRAIN

TERM. END SECTION

REMOVE

200' TAPER

SR 2242 PRICE RD 20' BST

SR 2236 BROOKMONT AVE

SR 2239 ROBBINS RD 20' BST

US 221 22' BST

SR 2240 22' BST

8/17/99

PROJECT REFERENCE NO.	SHEET NO.
R-2233AB	EC-45/CONST.19
R/W SHEET NO.	
ROADWAY DESIGN ENGINEER	HYDRAULICS ENGINEER

30 x 15 x 3
ID 19.2 C&G

30 x 15 x 3
ID 19.3 C&G

35 x 17 x 3
ID 19.1 C&G

Modified Silt Basin Type 'B'
28 x 14 x 3
(See Tiered Skimmer Basin Detail)
ID 19.4 C&G

28 x 14 x 3
1.5 inch Skimmer with 0.375 inch Orifice Diameter
6 ft. weir
(See Tiered Skimmer Basin Detail)
ID 19.4 C&G

32 x 16 3
1.5 inch Skimmer with 0.5 inch Orifice Diameter
8 ft. weir
ID 19.5 C&G

NAD 83/95

-Y19- PCSta. 13+12.95

-Y19-
PI Sta 14+05.47
Δ = 4° 30' 33.5" (LT)
D = 2° 26' 17.2"
L = 184.95'
T = 92.52'
R = 2,350.00'

-Y19- PTSta. 14+97.90

BEGIN CONSTRUCTION
ON -Y19- STA. 15+00.00

-Y19- POT Sta. 17+45.29=
-L- POT Sta.474+13.91

-BL- 87 PINC 221+45.12
-BY20- POT 5+00.00
-L- Sta. 479+52.02
(60.57' LT)

-BL- 86 PINC 215+87.58
-BY19- POT 12+67.40
-L- Sta. 473+96.02
(19.13' LT)

-Y20- POT Sta. 15+64.26

-Y20- PT Sta. 14+96.26

-Y20- PCC Sta. 13+05.97

-Y20- PC Sta. 11+03.93

-Y20- POT 2[illegible]0+00.00
-L- POT Sta. 477+84.83

-BY20- 120 POT 8+79.27
-Y20- Sta. 12+62.72
(20.39' LT)

-Y20- Sta. 14+07.87

END CONSTRUCTION
-Y20- STA. 13+00.00

MATCH LINE SEE SHEET 18 -L- STA. 473+00

MATCH LINE SEE SHEET 20 -L- STA. 487+00

SHIRLEY ANN MARTIN
DB 635 PG 685

ROBERT HAL BRIDGES
DB 334 PG 502

KAREN LEIGH TOMS CONNER
ESTATE BK 04E PG 509

EDWARD ARCHIE COLE
DB 263 PG 602

SHILOH DANIEL TOWN OAKLAND FIRE DEPT.
DB 521 PG 171
DB 767 PG 299

DAVID WAYNE JACKSON
DB 485 PG 200

BETTY HUNTLEY
EST. BK. 09E PG. 325

FRANK A. LEE
DB 532 PG 634
DB 446 PG 520

ROBERT LEWIS FRAZIER
DB 348 PG 321

ROBERT K. JOHNSON
DB 936 PG 64

MARVIN KLASSEN
DB 580 PG 586
DB 724 PG 25

WILLIAM B. ANDERSON
DB 307 PG 310

SARAH T. WHITAKER
DB 250 PG 123

PAUL A. CHAPMAN
DB 265 PG 283
DB 259 PG 152
PB 6 PG 134

DAVID GREEN
DB 806 PG 699
PB 6 PG 134

ALAN LYNN MATHIS
DB 782 PG 849

TANNERS GROVE UMC
DB 935 PG 576

WINTERS REAL ESTATE AND INVESTMENT TRADING CORP.
DB 466 PG 285
DB 456 PG 17
DB 469 PG 168
DB 412 PG 116

SPECIAL MEDIAN DITCH SEE DETAIL B

SPECIAL CUT DITCH SEE DETAIL C

2' LATERAL BASE DITCH W/ CLASS 'B' RIP RAP EST. 44 TONS, 124 SY F.F DDE 330 CY SEE DETAIL J

LATERAL 2' BASE DITCH W/ CLASS 'B' RIP RAP EST. 35 TONS 98 SY F.F. DDE 90 CY SEE DETAIL J

CLASS B RIPRAP EST. 2 TONS 7 SY F.F.

CLASS I RIPRAP EST. 24 TONS 12 SY F.F.

TAIL 'V' DITCH SEE DETAIL E

GRADE TO DRAIN

FLUSH CONC. ISLAND

5' MONO. CONC. ISLAND

200' TAPER

150' TAPER

ACCESS POINT

PAVE AREA AS NEEDED

TEST HOLE #35
TEST HOLE #36
TEST HOLE #37
TEST HOLE #38
TEST HOLE #39

SEPTIC DRAIN LINE

RUTHERFORD WATER AND SEWER EASEMENT

UTILITY=98U18

2GI (TYPE A)

GRAU 350

CAT-1

TSD

ISFD

ISBKD

ISBK FIRE STA

ISBLK FIRE STA

SEPTIC TANK

BUS

STONE

CEM

TANNERS GROVE METHODIST CHURCH

COTTONSPINDLE

SOLIBRON

BEGIN C/A FENCE

END C/A FENCE

SPECIAL CUT DITCH SEE DETAIL C +00 108'

+97.90 15' LT & 40' LT

+45 40'

+52 53'

+84 53'

+92 40'

+10 -Y19- 40' LT

+45 -Y19- 30' RT

+65 80' LT

+90 100' LT

+50 100'

+30.37 100' LT.

+22 100'

+34 120'

+62 120'

+80 90'

+79.71 90' LT.

+86.48 100' LT.

+30.37 90' LT.

+83.17 100' LT

+82.16 90' LT

+40 100'

+85 120'

+62 99'

+95 99'

+59.94 100' LT

+86.48 90' LT

+93 100'

+16.85 125' RT

+73.51 110' RT

+50 110' RT

+00.00 14.95' RT & 40' RT

+07.67 40' LT

+82.07 40' LT

+00.00 15.05' LT & 40' LT

OBLITERATE & REMOVE

BEGIN C/A FENCE +57

END C/A FENCE +15

END C/A FENCE +86

BEGIN C/A FENCE +12

END C/A FENCE +91.5

BEGIN C/A FENCE +61.5

294.57' CM-R/W
383.15' CM-REBAR
N09°04'27"W

63.70' R/W-SPIKE
62.07' EIP-STONE
N03°47'30"E

132.00' (TOTAL)
15.72' CORE-EIP
N02°37'32"E

N05°49'W
176.40'

N35°22'39"W
208.23' EIP-EIP
215.92' R/W-EIP (TOTAL)

N26°32'11"W
179.76' EIP-EIP
185.05' R/W-EIP (TOTAL)

177.66' EIP-EIP
179.27' R/W-EIP (TOTAL)
S26°09'11"E

176.68' R/W-REBAR
167.41' EIP-REBAR
S26°11'58"E

149.19'
N27°44'00"W

30.82'
N26°37'48"W

73.00'
N36°24'35"W

S 77°54' 11" E

S 58° 59' 09" E

S 5° 02' 07.0" W

N 54° 48' 35.3" E

S 5° 07' 58.4" E

S 87°32'08"E
ELEVATION = 982.99'

N54°36'25"W 616.95'

N42°50'52"W 19.82'

S09°17'51"W

N54°48'59"E 200.00'

S54°48'59"W 200.00'

S63°12'09"W 148.70'

S55°28'32"W 168.94'

S 07° 04' 05" W 227.29'

N 07° 04' 05" E 194.94'

S 63° 12' 09" W 148.70'

S 26° 32' 11" E 179.76'

S 26° 09' 11" E 179.27'

N 26° 32' 11" W 185.05'

N 27° 44' 00" W 149.19'

N 26° 37' 48" W 30.82'

N 36° 24' 35" W 73.00'

N 36° 12' 49" W 491'

N 05° 49' 19" E 176.40'

N 03° 47' 30" E 132.00'

N 09° 04' 27" W 294.57'

N 54° 48' 59" E 200.00'

S 54° 48' 59" W 200.00'

N 54° 36' 25" W 616.95'

N 42° 50' 52" W 19.82'

S 09° 17' 51" W

N 35° 22' 39" W 208.23'

S 55° 28' 32" W 168.94'

S 63° 12' 09" W 148.70'

S 26° 32' 11" E 179.76'

S 26° 09' 11" E 179.27'

N 26° 32' 11" W 185.05'

N 27° 44' 00" W 149.19'

N 26° 37' 48" W 30.82'

N 36° 24' 35" W 73.00'

N 36° 12' 49" W 491'

N 05° 49' 19" E 176.40'

N 03° 47' 30" E 132.00'

N 09° 04' 27" W 294.57'

S 54° 48' 59" W 200.00'

N 54° 48' 59" E 200.00'

S 07° 04' 05" W 227.29'

N 07° 04' 05" E 194.94'

S 55° 28' 32" W 168.94'

S 63° 12' 09" W 148.70'

S 5° 02' 07.0" W

S 5° 07' 58.4" E

N 54° 48' 35.3" E

S 87° 32' 08" E

N 54° 36' 25" W 616.95'

N 42° 50' 52" W 19.82'

S 09° 17' 51" W

N 35° 22' 39" W 208.23'

PROJECT REFERENCE NO.	SHEET NO.
R-2233AB	EC-46/CONST.20
R/W SHEET NO.	
ROADWAY DESIGN ENGINEER	HYDRAULICS ENGINEER

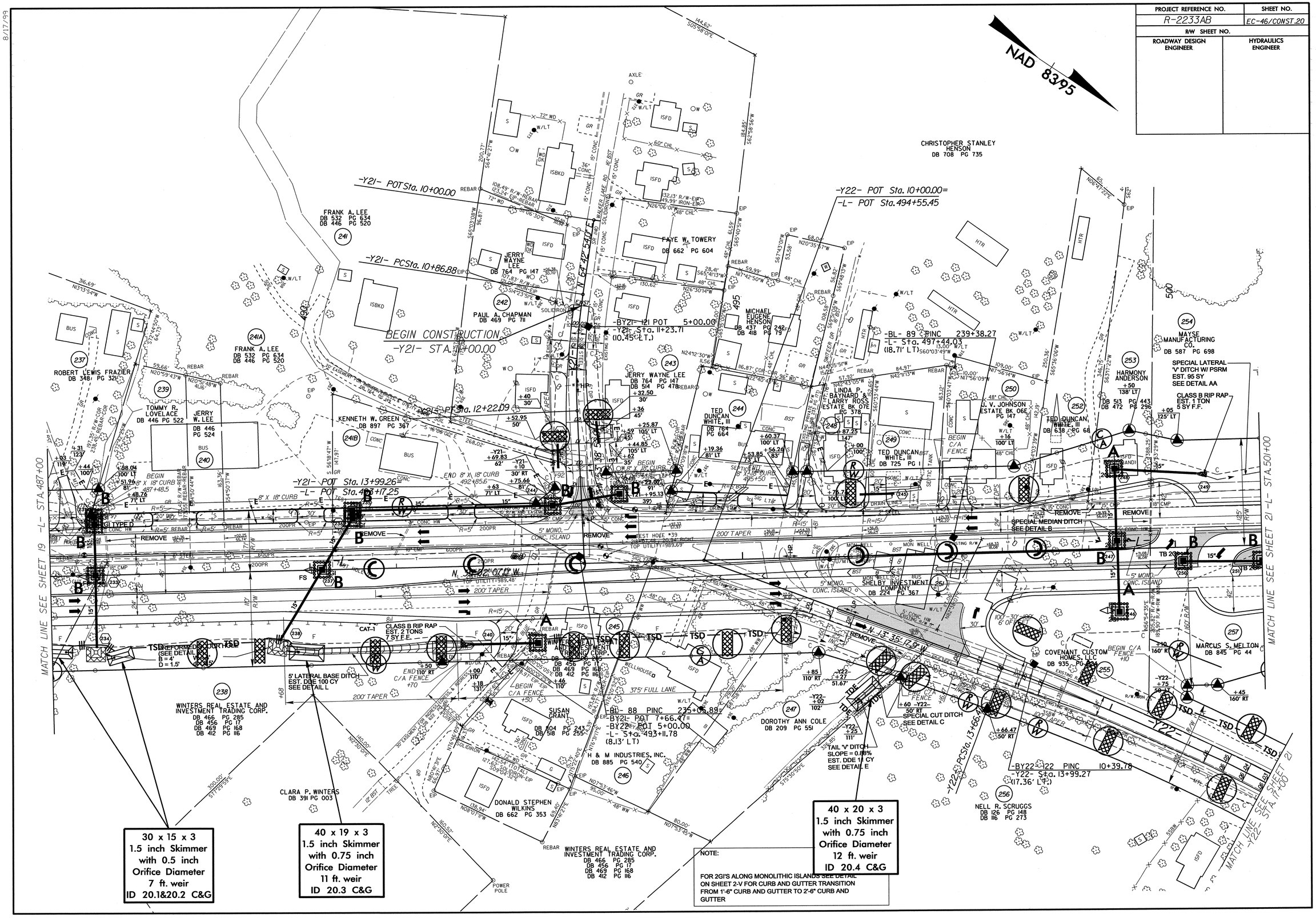

NOTE:

FOR 2GI'S ALONG MONOLITHIC ISLANDS SEE DETAIL ON SHEET 2-V FOR CURB AND GUTTER TRANSITION FROM 1'-6" CURB AND GUTTER TO 2'-6" CURB AND GUTTER

8/17/99

8/17/99

RW SHEET NO.	ROADWAY DESIGN ENGINEER	HYDRAULICS ENGINEER	PROJECT REFERENCE NO.	SHEET NO.
			R-2233AB	EC-47/CONST.21

NOTE:

FOR 2GI'S ALONG MONOLITHIC ISLANDS SEE DETAIL ON SHEET 2-V FOR CURB AND GUTTER TRANSITION FROM 1'-6" CURB AND GUTTER TO 2'-6" CURB AND GUTTER

74 x 25 x 3
1.5 inch Skimmer
with 1.25 inch
Orifice Diameter
17 ft. weir
ID 21.1 C&G

76 x 38 x 3
1.5 inch Skimmer
with 1.5 inch
Orifice Diameter
30 ft. weir
ID 21.2 C&G

25 x 11 x 3
ID 21.3 C&G

NAD 8395

-BL- 90 PINC 245+26.90
-L- Sta. 503+21.66
(20.16' LT) CLASS B RIP RAP

-BL- 129 PINC 254+21.87=
-BY23- POT 5+00.00=
-BY24- POT 12+30.50
-L- Sta. 512+27.63
(20.47' LT)

-BY24- 125 PINC 9+80.08
-L- Sta. 512+26.90
(270.08' LT.)

-Y23- PC Sta. 16+03.82

-Y23- PT Sta. 14+03.82

-Y23- PC Sta. 11+86.86

BEGIN CONSTRUCTION
-Y23- STA. 11+00.00

END CONSTRUCTION
-Y22- STA. 17+50.00

END CONSTRUCTION
-Y24- STA. 13+75.00

-Y23- POT Sta. 19+09.73=
-Y24- POT Sta. 10+00.00
-L- POT Sta. 509+54.83

-Y23- PT Sta. 17+79.73

-Y24- PCSta. 10+77.61

-Y24- PCSta. 12+45.82

-DR3- POT Sta. 10+00.00=
-Y24- POT Sta. 12+92.55

-DR3- POT Sta. 13+80.58

-DR3- PT Sta. 12+91.95

-DR3- PC Sta. 12+14.50

-DR3- PT Sta. 11+33.00

-DR3- PC Sta. 10+51.00

-Y24- PCSta. 13+66.71

PI Sta 11+64.40
Δ = 34° 47' 38.0" (RT)
D = 20° 41' 03.8"
L = 168.21'
T = 86.79'
R = 277.00'
SE = SEE PLANS

PI Sta 14+83.05
Δ = 4° 40' 31.0" (LT)
D = 2° 00' 37.4"
L = 232.56'
T = 116.34'
R = 2,850.00'

PI Sta 20+70.25
Δ = 31° 55' 51.0" (RT)
D = 2° 19' 44.7"
L = 1,370.95'
T = 703.79'
R = 2,460.00'
SE = SEE PLANS

-L- STA. 5+14+08.15 PC

-L- STA. 5+15+00 PT

-L- STA. 5+20+00 PT

-L- STA. 5+22+00 PT

-L- STA 14+50 RT TO 15+50 RT

MATCH LINE SEE SHEET 20 -L- STA. 5+01+00

MATCH LINE SEE SHEET 22 -L- STA. 5+15+00

MATCH LINE SEE SHEET 20 -Y22- STA. 17+50.00

2' TAIL BASE DITCH
SLOPE=0.60%
EST. DDE 80 CY
SEE DETAIL BB

SPECIAL LATERAL
"V" DITCH W/PSRM
EST. 95 SY
SEE DETAIL AA

TAPER PROP. 5' BASE
DITCH TO TIE TO THE
EXIST. 2' BASE DITCH

5' LATERAL BASE DITCH
W/ CLASS B RIP RAP
EST. 174 TONS
465 SY F.F.
DDE 265 CY
SEE DETAIL F

CLASS B
RIP RAP
EST. 2 TONS
7 SY F.F.

SPECIAL CUT
DITCH, SEE
DETAIL C

SPECIAL CUT DITCH
SEE DETAIL C

SPECIAL GRADE DITCH

GRADE
TO DRAIN

REMOVE 35' OF EX.
12" PLASTIC PIPE

REMOVE
18" CMP

REMOVE
US 221 22' BST

OBLITERATE
& REMOVE

RETAIN

RETAIN
Per Prop
Owner

254
MAYSE MANUFACTURING CO.
DB 587 PG 698

ISMTLBUS

257
MARCUS S. MELTON
DB 845 PG 44

257A
RUTHERFORD COUNTY
DB 809 PG 363

258
CECIL L. GEER, III
DB 743 PG 364
DB 686 PG 351

259
DANIELTOWN BAPTIST TRUSTEES
DB 514 PG 40

ISM
DANIELTOWN BAPTIST
CHURCH

ISFD

256
NELL R. SCRUGGS
DB 126 PG 148
DB 116 PG 273

RUTHERFORD WATER WORKS IO R/W AND EASEMENT
PB 46 PG 94 & 95

SR 1269 OAKLAND RD

BETHANY RD

TEST HOLE #42
TOP UTILITY=1019.86'

TEST HOLE #41
TOP UTILITY=1015.29'

TEST HOLE #45
TOP UTILITY=1018.32'

TEST HOLE #44
TOP UTILITY=1018.32'

5/0

5/5

8/17/99

PROJECT REFERENCE NO.	SHEET NO.
R-2233AB	EC-48/CONST.22
R/W SHEET NO.	
ROADWAY DESIGN ENGINEER	HYDRAULICS ENGINEER

NOTE:

FOR 2GI'S ALONG MONOLITHIC ISLANDS SEE DETAIL ON SHEET 2-V FOR CURB AND GUTTER TRANSITION FROM 1'-6" CURB AND GUTTER TO 2'-6" CURB AND GUTTER

NAD 8395

40 x 20 x 3
ID 22.3 F

Place Matting for Erosion Control on Slope as Work Allows.

MATCH LINE SEE SHEET 21 -L- STA.515+00

MATCH LINE SEE SHEET 23 -L- STA.529+00

-L- PT Sta. 520+80.24

-L- PC Sta. 522+39.67

SPECIAL CUT DITCH SEE DETAIL C

-BL- 92 PINC 259+94.36
-L- Sta. 518+00.36
(9.6' LT)

-BL- 93 PINC 268+41.82
-L- Sta. 526+47+86
(12.53' RT)

2' HEAD BASE DITCH
SLOPE = 3.9%
EST. DDE 14 CY
SEE DETAIL BB

38 x 19 x 3
ID 22.1 C&G

258 CECIL L. GEER, III
DB 743 PG 394
DB 686 PG 351

259 DANIELTOWN BAPTIST TRUSTEES
DB 514 PG 40

260 RONALD F. WILKINS, SR., ET AL
DB 832 PG 836
DB 840 PG 887

261 CASSIDY W. BUTLER
DB 996 PG 839

262 THOMAS R. WILKINS
DB 347 PG 213

264 EDDIE R. MOORE
DB 357 PG 87

265 JOHNNY L. MAYSE
DB 433 PG 769
DB 382 PG 49
DB 342 PG 650

END C/A FENCE +60
ACCESS POINT
BEGIN C/A FENCE +30
+10 135' LT
+50 145' LT
+80.24 155' LT
+39.67 172' LT
+05 179' LT
+08 147'
+41 144' LT
END C/A FENCE +05
+02 125'
+24 125' LT
+70 125' LT
+67 172'
+89 152'
+85 125' LT 144' LT
BEGIN C/A FENCE +85
+39.67 105' RT
+50 158' RT
+30 125' RT
END C/A FENCE +56.5
BEGIN C/A FENCE +27.5
END C/A FENCE +90
BEGIN C/A FENCE +65

REMOVE
5' MONO. CONC. ISLAND
5' MONO. CONC. ISLAND
2GI (TYPE A)
2GI (TYPE A) 24"
2GI (TYPE A) 30"
TB 2GI
18" CMPT
18" CMP
15" CONC
42" CONC
36" CONC
8" CONC HW
2' PLASTIC
4' FDPS
200' TAPER
REBAR
209.00' N34°58'59"W
246.55' R/W FROM TOTAL 201.38' RETAIN REBAR
N37°36'08.9"W 409.27'
S87°58'41"E 409.27'
N87°46'33"W 600.58'
S87°58'41"W 1257.97'
N37°36'08.9"W 1353.54'
S69°05'54"E 1460.54'
N37°36'08.9"W 1353.54'
N87°46'33"W 600.58'
ISMTLBUS
ISMBUS
ISFD
HTR
ISBKD
POOL
CONC
2SFD
TSD
ACCESS POINT
BST
W/LT
FS
R/W
C/A

8/17/99

PROJECT REFERENCE NO.	SHEET NO.
R-2233AB	EC-49/CONST.23
R/W SHEET NO.	
ROADWAY DESIGN ENGINEER	HYDRAULICS ENGINEER

38 x 18 x 3
ID 23.3 F

21 x 13 x 3
1.5 inch Skimmer
with 0.5 inch
Orifice Diameter
5 ft. weir
(See Tiered Skimmer
Basin Detail)
ID 23.4 C&G

Modified Silt Basin
Type 'B'
21 x 13 x 3
(See Tiered Skimmer
Basin Detail)
ID 23.4 C&G

30 x 15 x 3
1.5 inch Skimmer
with 0.5 inch
Orifice Diameter
7 ft. weir
ID 23.6 C&G

25 x 12 x 3
ID 23.9 F

-Y25- PT Sta. 11+47.90

-Y25 PC Sta. 12+59.32

N 32°37'38.7" E

NAD 83/95

-L- PT Sta. 530+67.37

-L- Sta. 529+00

-L- Sta. 543+00

BEGIN CONSTRUCTION
-Y25- STA. 14+00.00

IDENTITY:
-LLT- POT Sta. 538+00.00 =
-L- POT Sta. 538+00.00 (35' LT)

-BL- 95 PINC 279+55.22=
-BY25- POT 11+50.30
-L- Sta. 537+61.56
(15.41' RT)

-BL- 94 PINC 276+48.17=
-L- Sta. 534+54.54
(19.47' RT)

-Y25- POT Sta. 16+82.66=
-L- POT Sta. 537+41.26

IDENTITY:
-LRT- POT Sta. 538+00.00 =
-L- POT Sta. 538+00.00 (35' RT)

N 33° 16' 40.7" W

N 34° 52' 08" W

N 35° 23' 58.6" W

-LLT-

-LRT-

MATCH LINE SEE SHEET 22

MATCH LINE SEE SHEET 24

RONALD F. WILKINS, SR., ET AL
DB 832 PG 836 — (266)

DONALD STEPHEN WILKINS
DB 770 PG 727 — (267)

RONALD F. WILKINS, SR., ET AL
DB 970 PG 108 — (269)

RONALD F. WILKINS, SR., ET AL
DB 832 PG 836 — (270)

RONALD FAY WILKINS, SR.
DB 516 PG 18 — (268)

JOHNNY L. MAYSE
DB 433 PG 769
DB 382 PG 69
DB 342 PG 690 — (265)

BOOKER R. MOORE
DB 357 PG 87 — (264)

AMERICAN TOWER OF NC, LLC
DB 9 PG 698
DB 669 PG 701 — (271)

Per County Record

Per Prop. Owner

SPECIAL MEDIAN DITCH
SEE DETAIL

SPECIAL CUT DITCH
SEE DETAIL C

'V' BERM DITCH
W/ CLASS B RIP RAP
EST. 101 TONS
302 SY F.F.
SEE DETAIL CC

PSRM IN STANDARD
ROADWAY CUT DITCH
SEE DETAIL GG

3' LATERAL BASE DITCH
W/ CLASS B RIP RAP
EST. 46 TONS
127 SY F.F.
DDE 75 CY
SEE DETAIL S

2' BASE EXT DITCH
EST DDE 341 CY
SEE DETAIL DD

CLASS I RIP RAP

CLASS B RIP RAP
EST. 15 TONS
14 SY F.F.

30 x 15 x 3
ID 23.1 C&G

30 x 15 x 3
1.5 inch Skimmer
with 0.5 inch
Orifice Diameter
7 ft. weir
ID 23.2 C&G

35 x 17 x 3
1.5 inch Skimmer
with 0.625 inch
Orifice Diameter
9 ft. weir
ID 23.5 C&G

30 x 15 x 3
ID 23.7 C&G

30 x 15 x 3
1.5 inch Skimmer
with 0.5 inch
Orifice Diameter
7 ft. weir
ID 23.8 C&G

26 x 12 x 3
1.5 inch Skimmer
with 0.375 inch
Orifice Diameter
4 ft. weir
ID 24.1 C&G

PROJECT REFERENCE NO.	SHEET NO.
R-2233AB	EC-50/CONST.24
R/W SHEET NO.	
ROADWAY DESIGN ENGINEER	HYDRAULICS ENGINEER

NOTE:

FOR 2GI'S ALONG MONOLITHIC ISLANDS SEE DETAIL ON SHEET 2-V FOR CURB AND GUTTER TRANSITION FROM 1'-6" CURB AND GUTTER TO 2'-6" CURB AND GUTTER

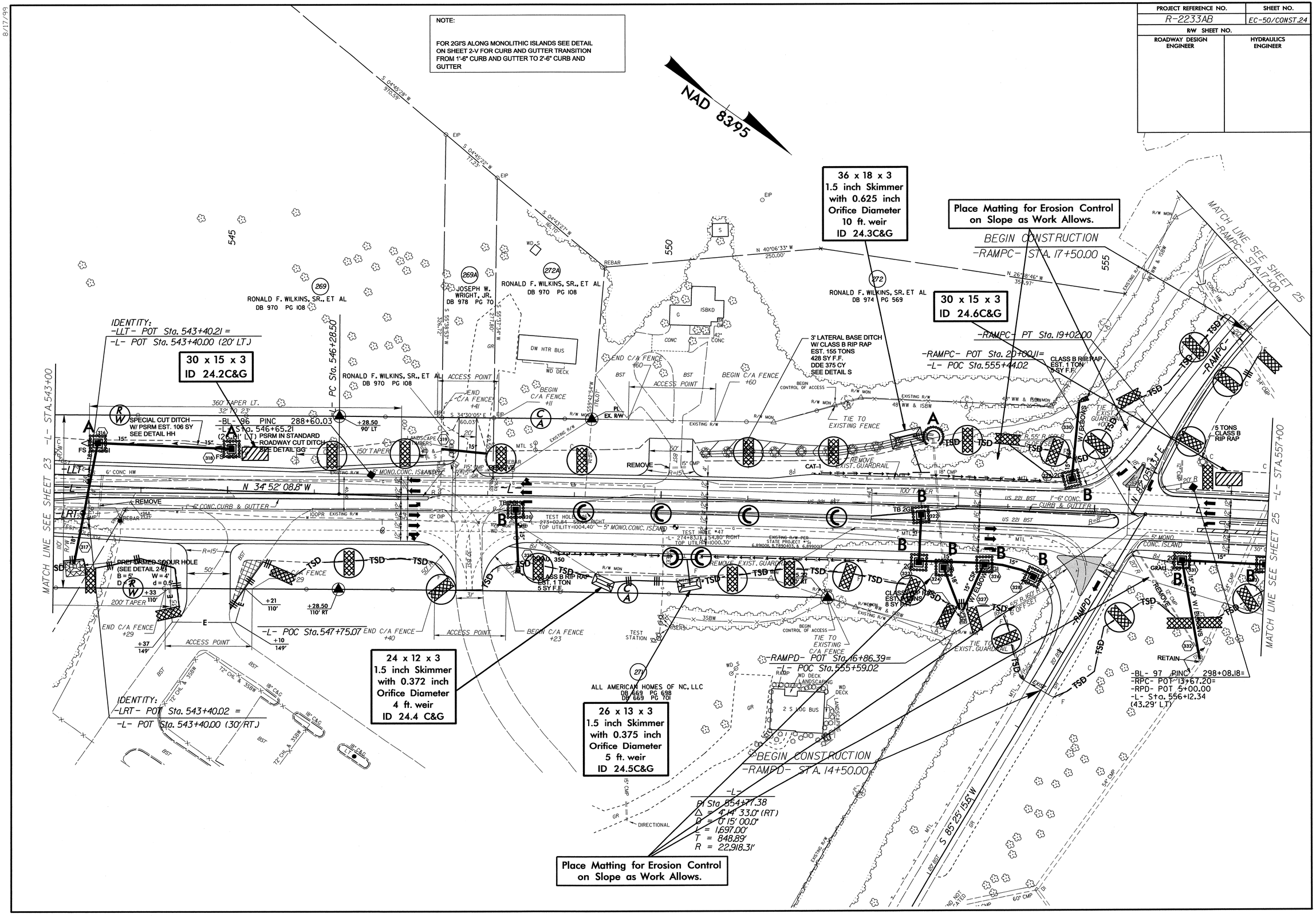

8/17/99

ROADWAY DESIGN ENGINEER	HYDRAULICS ENGINEER	PROJECT REFERENCE NO.	SHEET NO.
		R-2233AB	EC-51/CONST.25
		R/W SHEET NO.	

NAD 83/95

-Y26- POT Sta. 10+00.00

-RAMPC- POT Sta. 10+00.00

S 64° 40' 23.55" E 223.00'

S 81° 25' 46.4" E

-RPC- 133 POT 5+00.00
-RAMPC- Sta. 10+35.33
(9.87' LT.)

-RAMPC-

-RAMPC- TS Sta. 11+94.60

MATCH LINE SEE SHEET 24 -RAMPC- STA.17+00

-BY26- 131 PINC 13+44.94
-Y26- Sta. 16+43.61
(5.96' LT.)

-L- POC Sta.560+00.35=
-Y26- POT Sta.18+27.14

-RAMPC- SC Sta. 16+44.60

-BL- POT 302+28.03=
-BY26- POT 14+85.24
(POINT NOT SET)

S 81° 25' 46.4" E

-L- AT Sta. 563+25.49

-BL- 19 PINC 305+64.25=
-RPA- POT 5+00.00=
-RPB- POT 16+71.52
(GPS POINT "R2233AB-19")
-L- Sta. 563+67.58
(36.80' LT)

36 x 18 x 3
ID 25.2C&G

BEGIN CONSTRUCTION
-RAMPB- STA. 14+00.00

N 86° 58' 36" E

-RAMPB-

-RAMPB- POT Sta. 16+54.41=
-L- POT Sta. 564+07.10

-RPB- 135 PINC 10+94.19
-RAMPB- Sta. 10+67.24
(15.95' RT.)

-BY27- 127 PINC 5+00.00
-Y27- Sta. 14+10.44
(49.30' RT.)

-BL- 99 PINC 311+92.05=
-BY27- POT 9+68.39
-BY28- POT 5+00.00
-L- Sta. 569+94.84
(27.65' LT)

BEGIN CONSTRUCTION
-Y27- STA. 12+25.00

-Y27- PCC Sta. 12+94.23

MATCH LINE SEE SHEET 26 -Y27- STA.15+50

MATCH LINE SEE SHEET 24 -L- STA.557+00

MATCH LINE SEE SHEET 26 -L- STA.571+00

-RAMPA- PT Sta. 19+36.03

-RAMPA- POT Sta. 20+07.86=
-L- POT Sta. 564+22.11

BEGIN CONSTRUCTION
-RAMPA- STA. 17+00.00

-RAMPA- SC Sta. 16+67.82

36 x 18 x 3
ID 25.1C&G

CLASS B RIP RAP
EST. 1 TON
5 SY F.F.

CLASS B RIP RAP
EST. 1 TON
5 SY F.F.

CLASS B RIP RAP
EST. 3 TONS
10 SY F.F.

PLACE 9" DECK DRAINS ON 10' CENTERS FROM STA. 558+33 TO STA. 558+82 -L- RT. AND FROM STA. 560+33 TO STA. 560+98 -L- RT.

RETAIN

REMOVE

REMOVE EXISTING GUARDRAIL

OBLITERATE & REMOVE

GRADE TO DRAIN

TIE TO EXISTING C/A FENCE

273 MARJORIE HUSKEY
DB 403 PG 284
DB 568 PG 287

274 CARL R. BAYNARD
DB 201 PG 186

275 JOE J. WELLS
DB 595 PG 752

276 SUE SPARKS FAMILY REAL ESTATE, LLC
DB 839 PG 381

277 CROW FAMILY TRUST
DB 850 PG 55

'V' TAIL DITCH
SLOPE = 0.56%
EST. DDE 23 CY
SEE DETAIL E

375' FULL RT. TURN LANE

530' LEFT TURN LANE

200' TAPER

600' TAPER

5° MONO. CONC. ISLAND

7'-6" CONC. CURB & GUTTER

150' R/150' R/150' R OUTSIDE CURB OFFSET

US 74 EBL 24' BST

US 74 WBL 24' BST

-Y26-

-RAMPA-

8/17/99

PROJECT REFERENCE NO.	SHEET NO.
R-2233AB	EC-52/CONST.26
R/W SHEET NO.	
ROADWAY DESIGN ENGINEER	HYDRAULICS ENGINEER

NAD 8395

WOODS

r2233aaab 118 119

RUINS

MATCH LINE SEE SHEET 25 -Y27- STA.15+50

-Y27- PT Sta. 16+21.33

-Y27- PC Sta. 17+54.66

+21.33 60' LT

+54.66 60' LT

150' CURVE WIDENING 15' TO 24'

N 9° 18' 56.7" W

100' CURVE WIDENING RT.

+21.33 50' RT

+25 60'

+54.66 60' RT

+35 65'

+95 125' LT. TAPER

+40 -Y27- 60' RT

+45.30 65'

+20 125' LT

+95.64 125' LT

WOODS

END C/A FENCE

SPECIAL CUT DITCH WITH PSRM EST. 51 SY SEE DETAIL HH

-L- PC Sta. 571+95.64

-Y27- PT Sta. 20+30.64

SPECIAL CUT DITCH SEE DETAIL C

200' TAPER

600' MEDIAN TAPER

R/W MON

+00 R/W

MATCH LINE SEE SHEET 25 -L- STA.571+00

5' MONO. CONC. ISLAND

EXISTING R/W

EXISTING R/W PER STATE PROJECTS 6.891008, 8.7890403

5' FLAT TURN LANE

+95.64 125' RT

+30 125' RT

277 CROW FAMILY TRUST DB 850 PG 55

END C/A FENCE

-Y28- +00 50' RT

MATCH LINE SEE SHEET 27 -Y28- STA.12+00

275 JOE J. WELLS DB 595 PG 752

PSRM IN STANDARD ROADWAY CUT DITCH EST. 354 SY SEE DETAIL GG

PSRM IN STANDARD ROADWAY CUT DITCH EST. 400 SY SEE DETAIL GG

575

-Y27- POT Sta. 21+24.43=
-Y28- POT Sta. 9+97.99
-L- POC Sta. 574+12.99

BEGIN C/A FENCE

+80 -Y27- 60' LT

+90 125' LT

-BL- 100 PINC 316+41.45
-L- Sta. 574+44.22
(23.22' LT)

6' LATERAL BASE DITCH W/ CLASS I RIP RAP EST. 236 TONS 420 SY F.F. DDE 245 CY SEE DETAIL EE

2' LATERAL BASE DITCH EST. DDE 115 CY SEE DETAIL A

300'

250' LT. TAPER

575' MEDIAN TAPER

END C/A FENCE +36

N 59° 26' 01.3" E

CAT-1

COLLAR

GRAU 350

24" CMP

15" CSP

N 59° 26' 01.3" E

CLASS B RIP RAP EST. 2 TONS 7 SY F.F.

-Y28- PC Sta. 11+00.00

-L-

+90 125' RT

C/A

+45 -Y 50'

ISFD

WD OR

CONC

Per County Record

278 JOHNATHAN B WARD DB 379 PG 74

180.00' N30°31'24"W

EIP

SPECIAL CUT DITCH WITH PSRM EST. 128 SY SEE DETAIL GG

15" CONC

REMOVE

GRAU 350

JB W/ MHC

TSD

CLASS B RIP RAP EST. 5 TONS 14 SY F.F.

4' LATERAL BASE DITCH W/ CLASS B RIP RAP EST. 83 TONS 228 SY F.F. DDE 90 CY SEE DETAIL V

+18.01 125' RT

N59°25'42"W 1946.87' EIP-COR

106.46' S70°51'42"W

277 CROW FAMILY TRUST DB 850 PG 55

279 MAX RAY HAMRICK DB 464 PG 458 DB 344 PG 434

R-2233 AA/AB 118-119

R2233AAAB 119 120

580

585

40 x 20 x 3 ID 26.5C&G

END PROJECT R-2233AB
-L- POT Sta. 584+00.00

10' STANDARD BASE DITCH W/ CLASS B RIP RAP EST. 61 TONS, 154 SY F.F. DDE 170 CY SEE DETAIL FF

OVER FLOW PIPE

ACCESS POINT

-L- Sta. 582+90.45

BM #7 138' LEFT ELEVATION = 982.92'

-BL- STATION 325+30 138' LEFT

+90.45 125' LT

+00 125' LT

BEGIN C/A FENCE +96

END C/A FENCE +00

+00 48'

+48 48'

+00 20' LT

RETAIN W 30° 25' 03.1" W

+00 L020' RT

+00 125' RT

+90.45 125' RT

-BL- 101 PINC 326+30.97=
-T4- 277 POT 5+00
ELEV=979.82
-L- Sta. 584+33.74
(19.70' LT)

PREFORMED SCOUR HOLE (SEE DETAIL 2-L) W = 4' D = 1.5' d = 0.5'

-T4- 315 POT 6+66.24
ELEV=968.98
NAIL SET

JAMES LARRY CROWE DB 465 PG 547 DB 497 PG 310

37 x 18 x 3 ID 26.1C&G

36 x 17 x 3 ID 26.2C&G

55 x 27 x 3 1.5 inch Skimmer with 1.25 inch Orifice Diameter 19 ft. weir ID 26.4 C&G

Modified Silt Basin Type 'B' 18 x 12 x 3 (See Tiered Skimmer Basin Detail) ID 26.3C&G

18 x 12 x 3 1.5 inch Skimmer with 0.250 inch Orifice Diameter 4 ft. weir (See Tiered Skimmer Basin Detail) ID 26.3C&G

30 x 15 x 3 ID 26.6C&G

PROJECT REFERENCE NO.	SHEET NO.
R-2233AB	EC-53/CONST.27
R/W SHEET NO.	
ROADWAY DESIGN ENGINEER	HYDRAULICS ENGINEER

REVISIONS

NAD 8395

MATCH LINE SEE SHEET 26 -Y28- STA.12+00

-Y28- PT Sta.13+38.71

-Y28- PC Sta.14+72.04

-Y28- PT Sta. 19+93.67

-Y28- PC Sta. 20+98.63

-Y28- PT Sta. 21+42.22

-Y28- POT Sta. 21+91.39

END CONSTRUCTION
-Y28- STA. 20+25.00

-Y28-
PI Sta 12+31.36
Δ = 59° 27' 56.1" (RT)
D = 24° 54' 40.4"
L = 238.71'
T = 131.36'
R = 230.00'
SE = SEE PLANS

PI Sta 17+58.25
Δ = 58° 36' 06.8" (LT)
D = 11° 14' 04.1"
L = 521.63'
T = 286.21'
R = 510.00'
SE = SEE PLANS

PI Sta 21+20.43
Δ = 1° 14' 55.1" (RT)
D = 2° 51' 53.2"
L = 43.59'
T = 21.79'
R = 2,000.00'

28 x 14 x 3
1.5 inch Skimmer
with 0.375 inch
Orifice Diameter
6 ft. weir
ID 27.1C&G

27 x 12 x 3
ID 27.2C&G

25 x 12 x 3
ID 27.3C&G

SPECIAL CUT DITCH SEE DETAIL C

5 TONS CLASS B RIP RAP

CLASS B RIP RAP EST. 3 TONS 10 SY F.F.

2 TAIL DITCH SLOPE=3.2% EST. DDE=8 CY SEE DETAIL BB

CLASS B RIP RAP EST. 2 TONS 7 SY F.F.

GRADE TO DRAIN

CROW FAMILY TRUST DB 850 PG 55 (277)

SUE SPARKS FAMILY REAL ESTATE, LLC DB 839 PG 381 (276)

SIDNEY B. CROW AND WIFE, CRISTINE P. CROW DB 669 PG 757 (281)

DONNA LYNN WARD DB 795 PG 366 (282)

JAMES B. CROW AND WIFE, THELMA CROW DB 853 PG 759 (283)

JAMES B. CROW AND THELMA M. CROW, TRUSTEES OF THE CROW FAMILY TRUST DB 850 PG 52

-BY28- I28 PINC 8+77.66
-Y28- Sta. 16+10.80
(148.44' RT.)

-BY28- I51 POT 12+63.18
-Y28- Sta. 19+28.19
(11.15' LT.)

OBLITERATE & REMOVE

REMOVE

SECONDARY GROWTH

GRASS

WOODS

WHEEL CHAIR RAMP

SEPTIC TANK & DRAIN FIELD

IS BR D

48' CONC. WALK

STEPS

ISFD

ISBKD

CONC PARKING

METAL CANOPY

WELL

DK

S

EIP

EIP #4

RRSPIKE

EXISTING R/W

15" CMP

50' PIPE

18" RCP

24" RCP

CURVE WIDENING TO 13.5'

249.15' R/W-COR
250.69' RRSPIKE-COR
S 45°08'41" E

266.08'
S 45°08'41" E

88.86'
N 44°50'24" E

216.49' R/W-EIP
229.36' EIP-EIP
S 28°50'02" E

321.19' R/W-COR
321.50' EIP-COR
351.44' RRSPIKE-COR
N 30°00'24" W

148.63'
N 30°00'24" W

278.70'
N 30°02'10" W

191.48'
N 30°02'10" W

199.84'
S 60°16'51" W

S 28°44'05" W
141.19'

1241.11' R/W-COR
1240.89' EIP-COR
N 29°54'05" W

N 61° 32' 45.8" E

+50 50' RT
+00 64' LT
+38.71 50' RT
+72.04 50' RT
+87 50' & 63'
+08 50' & 63'
+38.71 50' LT
+72.04 50' LT
+16.53 50' RT
+42 102.39' RT
+30 34.24' & 45'
+50 45'
+46.78 32.29'
+10 40'
+25 30' RT
+24.22 49'
+24.92 50' LT
+75 39'
+28.12 26.01' LT
+80 49'
+13 48'
+25 30' LT
+99.60 30.00'
+32.33 30.00'

R = 230.00'
R = 510.00'
R = 2,000.00'
T = 131.36'
T = 286.21'
T = 21.79'
L = 238.71'
L = 521.63'
L = 43.59'
D = 24° 54' 40.4"
D = 11° 14' 04.1"
D = 2° 51' 53.2"
Δ = 59° 27' 56.1" (RT)
Δ = 58° 36' 06.8" (LT)
Δ = 1° 14' 55.1" (RT)
C = 227.95'
C = 498.98'
C = 43.58'
100'
150'
200'
18"
24"
15"
50'
R/W
C
E
F
S
W
N