09/08/99

TIP PROJECT: U-4007B

STATE	STATE PROJECT REFERENCE NO.	SHEET NO.	TOTAL SHEETS
N.C.	U-4007B		

WBS NO.	F. A. PROJ. NO.	DESCRIPTION
35008.1.1	STPNHF-17(31)	PE
35008.3.4	NHF-0017(77)	ROW & UTILS.
35008.2.STI	STM-0017(111)	CONSTR.

STATE OF NORTH CAROLINA
DIVISION OF HIGHWAYS

ONSLOW COUNTY

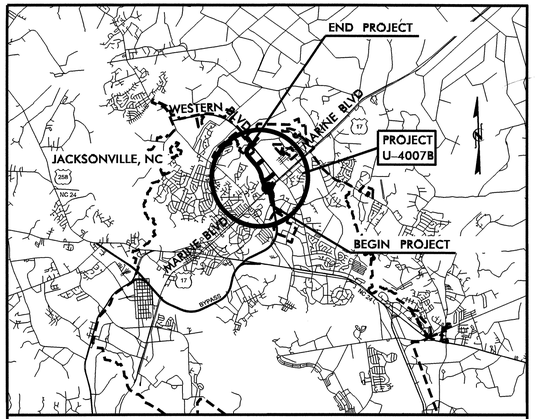

VICINITY MAP

LOCATION: WESTERN PARKWAY FROM APPROXIMATELY 1300' SOUTH OF COUNTRY CLUB RD. TO WESTERN BLVD.

TYPE OF WORK: GRADING, PAVING, DRAINAGE, SIGNALS CURB, GUTTER, STRUCTURES, & CULVERT.

END TIP PROJECT U-4007B
POT Sta. 76+58.49 L-LINE

NC GRID NAD 83

POC 50+54.90 NBL-RAMP BK
SC 50+81.79 SBL-RAMP BK
POC 10+00.00 L-LINE AH'D

END TIP PROJECT U-4007A
POT Sta. 62+00.00 Y-2

BEGIN TIP PROJECT U-4007B
POT Sta. 61+99.05 Y-2
PC Sta. 10+00.00 SBL-RAMP

BEGIN CONSTRUCTION
POT Sta. 50+00.00 Y-2

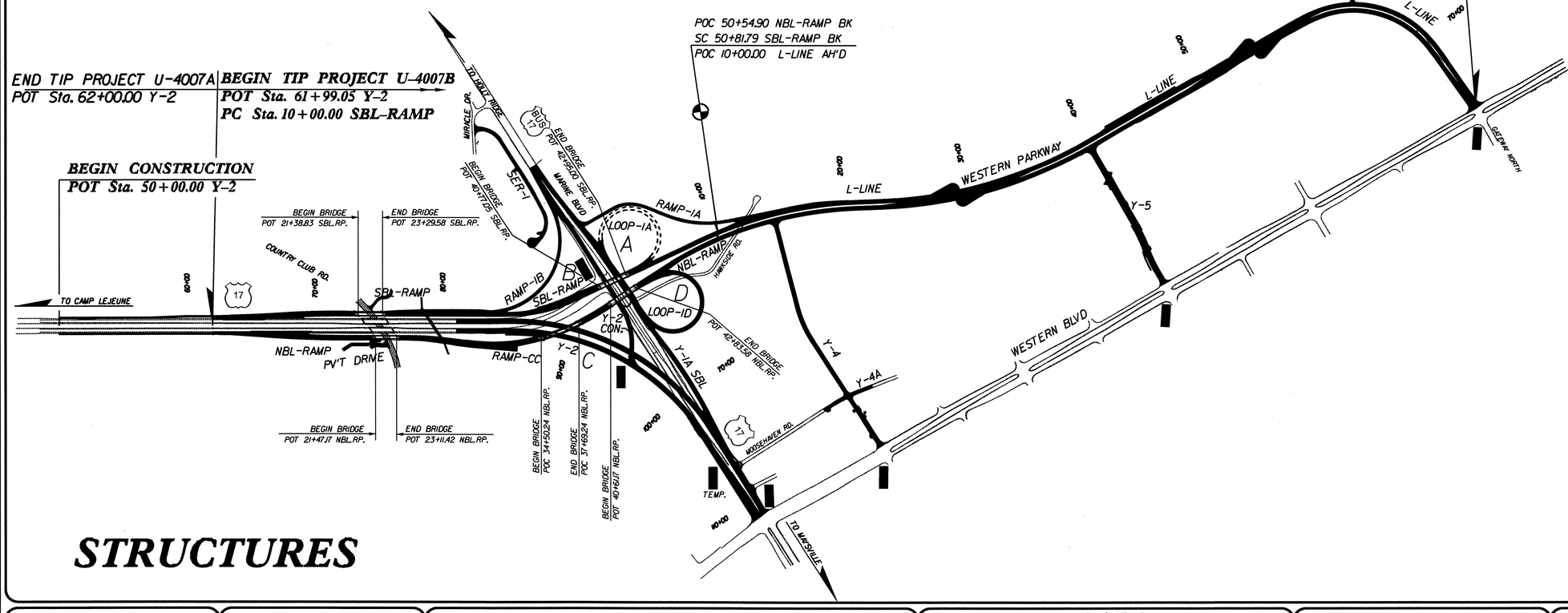

STRUCTURES

CONTRACT C202558

23-AUG-2010 15:19
$$$$$$$$$$$$$$$$DGN$$$$$$$$$$$$$$$$$$
taverette

STATE OF NORTH CAROLINA DEPARTMENT OF TRANSPORTATION

DESIGN DATA

ADT 2011 = 36,300
ADT 2031 = 57,600
DHV = 10 %
D = 60 %
T = 8 % *
V = 50 MPH
(* TTST 3% + DUAL 5%)
FUNC. CLASS: FWY./EXPWY.

PROJECT LENGTH

LENGTH OF ROADWAY T.I.P. PROJECT U-4007B	=	1.177 MI.
LENGTH OF STRUCTURE T.I.P. PROJECT U-4007B	=	0.857 MI
TOTAL LENGTH OF T.I.P. PROJECT U-4007B	=	2.034 MI

Prepared in the Office of:
DIVISION OF HIGHWAYS
1000 Birch Ridge Dr.
Raleigh, NC 27610

2006 STANDARD SPECIFICATIONS

LETTING DATE:
OCTOBER 19, 2010

OMAR R. AZIZI, PE
PROJECT ENGINEER

EMILY E. MURRAY, P.E.
PROJECT DESIGN ENGINEER

STRUCTURE DESIGN UNIT
1000 BIRCH RIDGE DRIVE
RALEIGH, N.C. 27610

DIVISION OF HIGHWAYS
STATE OF NORTH CAROLINA

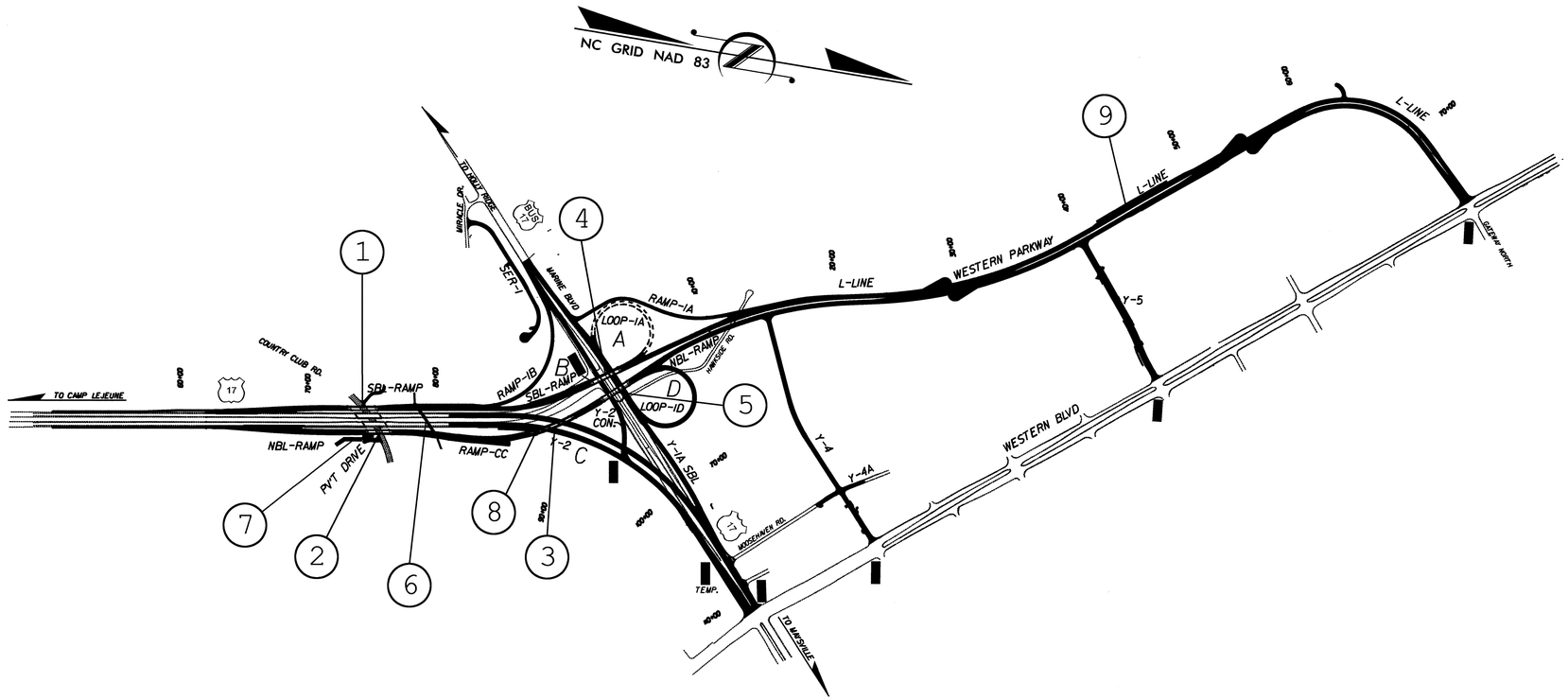

INDEX

STR. NO.	STATION	DESCRIPTION	SHEETS
1	22+41.58 –SBL RAMP–	BRIDGE OVER COUNTRY CLUB ROAD	S–1 THRU S–24
2	22+34.67 –NBL RAMP–	BRIDGE OVER COUNTRY CLUB ROAD	S–25 THRU S–48
3	36+17.74 –NBL RAMP–	BRIDGE OVER MARTIN LUTHER KING JR. HWY	S–49 THRU S–86
4	42+27.41 –SBL RAMP–	BRIDGE OVER MARINE BLVD.	S–87 THRU S–114
5	42+15.92 –NBL RAMP–	BRIDGE OVER MARINE BLVD.	S–115 THRU S–142
6	79+25.50 –Y2–	DOUBLE 6' X 7' RCBC EXTENSION	C–1 THRU C–10
7	18+91.50 –NBL RAMP–	MSE RETAINING WALL #1 @ STR. #2 (END BENT #1)	RW–1 THRU RW–2
8	88+34.44 –Y2–	MSE RETAINING WALL #2 @ STR. #3 (END BENT #1)	RW–3 THRU RW–4
9	41+85.00 –L–	SOUND BARRIER WALL	SW–1 THRU SW–2

PROJECT NO. U-4007B

ONSLOW COUNTY

STATE OF NORTH CAROLINA
DEPARTMENT OF TRANSPORTAION
RALEIGH

INDEX

REVISIONS

NO.	BY:	DATE:	NO.	BY:	DATE:
1			3		
2			4		

F.A. PROJECT NO. STM-0017(111)

GRADE DATA

(+)2.2740% △ (-)2.9571%

PI STA. 23+50.00 -SBL RAMP-
EL. 68.25'
VC = 1000'

SPAN A

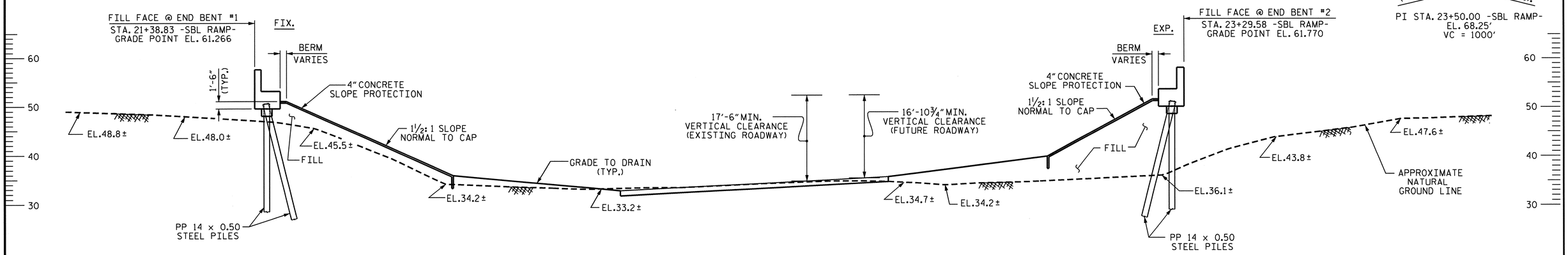

END BENT #1

SECTION ALONG -SBL RAMP-

SECTION TAKEN AT RIGHT ANGLES TO END BENTS

END BENT #2

HORIZONTAL ALIGNMENT

PI STA. 16+46.26 -YO-
Δ = 33°-28'-04.2" (RT.)
D = 5°-55'-11.7"
L = 565.34'
T = 290.99'
R = 967.85'

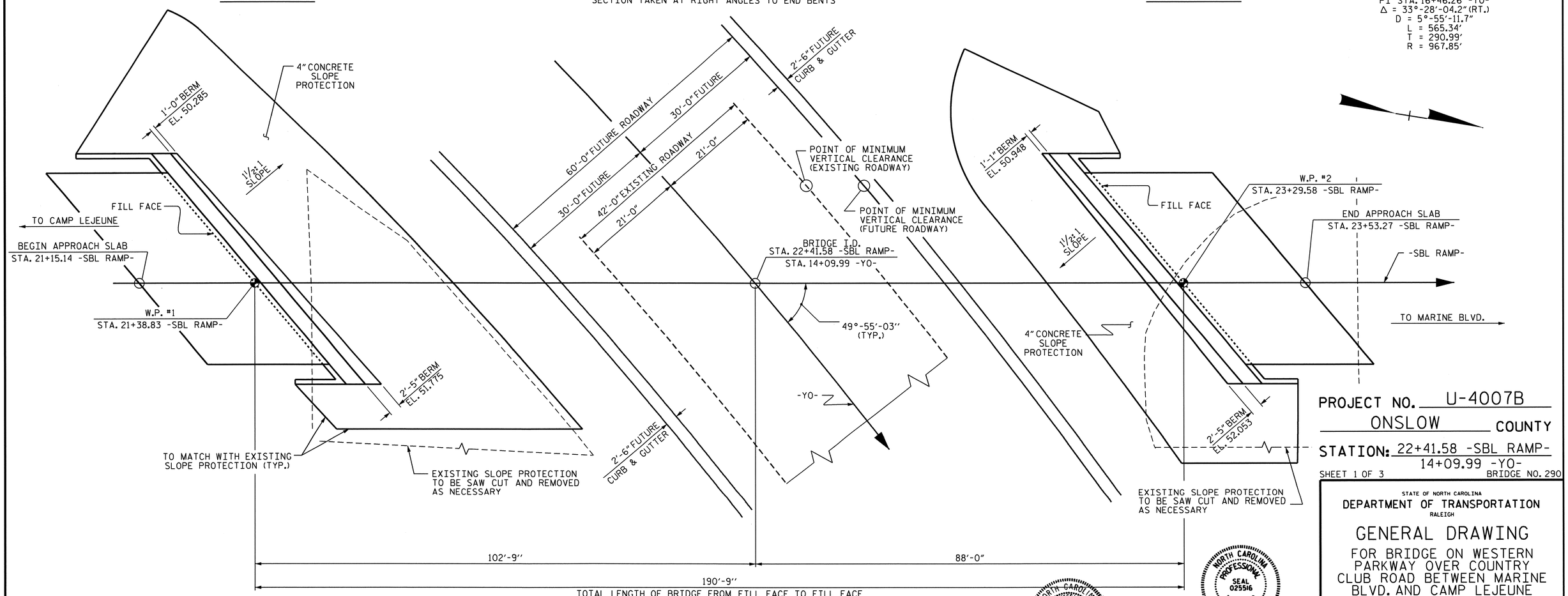

PLAN

PILES NOT SHOWN FOR CLARITY

NORTH CAROLINA PROFESSIONAL SEAL 12274 ENGINEER OMAR B. AZIZ
8/24/10

NORTH CAROLINA PROFESSIONAL SEAL 025516 ENGINEER EMILY E. MURRAY
8/24/10

PROJECT NO. U-4007B
ONSLOW COUNTY
STATION: 22+41.58 -SBL RAMP-
14+09.99 -YO-
SHEET 1 OF 3
BRIDGE NO. 290

STATE OF NORTH CAROLINA
DEPARTMENT OF TRANSPORTATION
RALEIGH

GENERAL DRAWING

FOR BRIDGE ON WESTERN PARKWAY OVER COUNTRY CLUB ROAD BETWEEN MARINE BLVD. AND CAMP LEJEUNE

REVISIONS								SHEET NO.
NO.	BY:	DATE:	NO.	BY:	DATE:			S-1
1			3					TOTAL SHEETS
2			4					142

STR. #1

DRAWN BY :	M.GUDLAUGSSON	DATE :	3/17/10
CHECKED BY :	PEGGY PARISI	DATE :	6/16/10

23-AUG-2010 15:18
G:\TIPProjects-U\U4007b\Structures\Final Plans\Str. #1\U-4007B_SD_GD_01.dgn
taverette

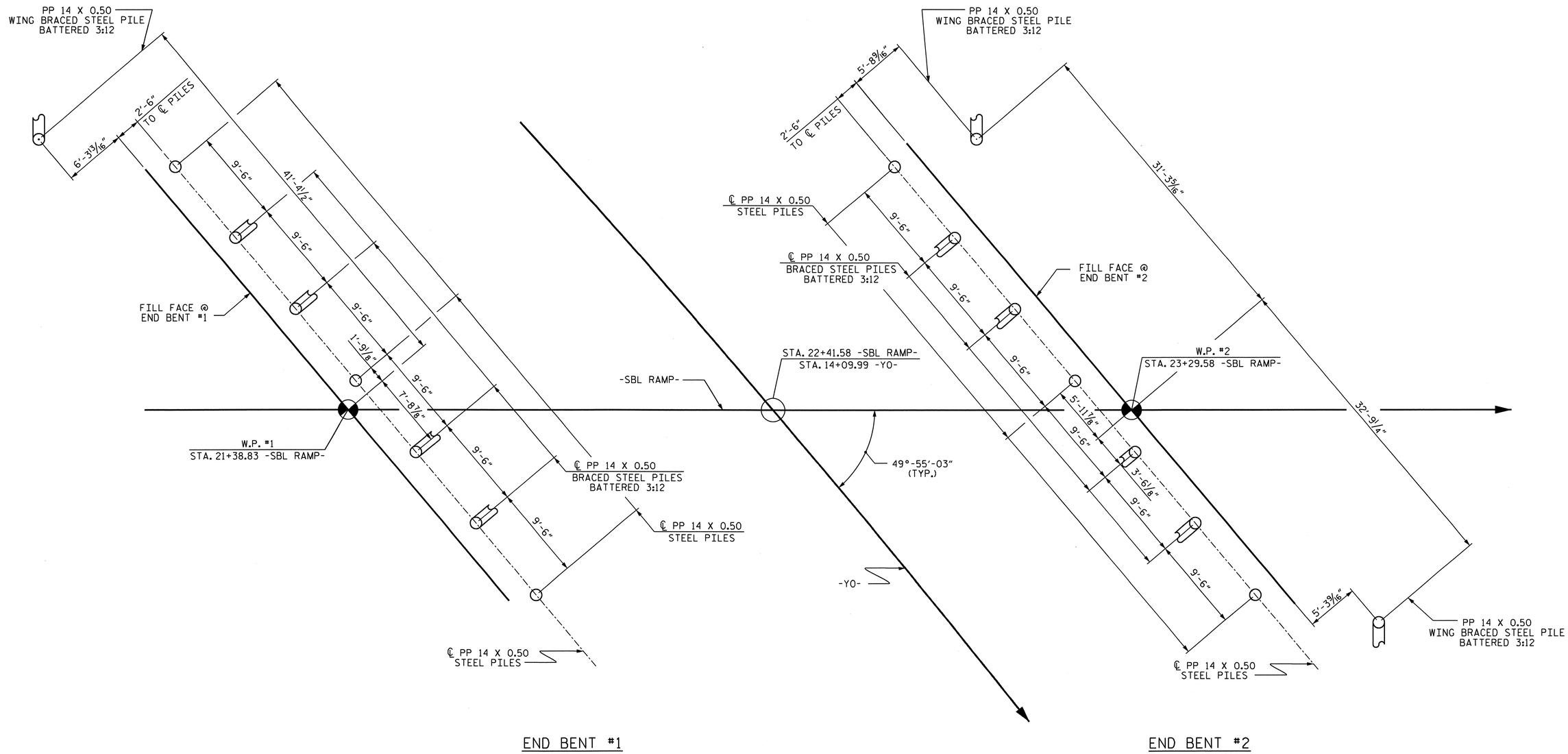

END BENT #1

END BENT #2

FOUNDATION LAYOUT

DIMENSIONS LOCATING PILES ARE SHOWN TO THE PILE CENTERLINE.

FOR PILES, SEE SPECIAL PROVISIONS.

PILES AT END BENT NO. 1 AND END BENT NO. 2 ARE DESIGNED FOR A FACTORED RESISTANCE OF 165 TONS PER PILE. DRIVE PILES TO A REQUIRED DRIVING RESISTANCE OF 275 TONS PER PILE.

TESTING PILES WITH THE PILE DRIVING ANALYZER (PDA) DURING DRIVING, RESTRIKING, OR REDRIVING MAY BE REQUIRED. THE ENGINEER WILL DETERMINE THE NEED FOR PDA TESTING. FOR PILE DRIVING ANALYZER, SEE PILES SPECIAL PROVISION.

PIPE PILE PLATES ARE REQUIRED FOR PIPE PILES AT END BENT NO.1 AND END BENT NO. 2. USE PIPE PILE PLATES WITH A DIAMETER EQUAL TO THE PIPE PILE DIAMETER.

NORTH CAROLINA PROFESSIONAL SEAL 025516 ENGINEER EMILY E. MURRAY
8/20/10

PROJECT NO. U-4007B
ONSLOW COUNTY
STATION: 22+41.58 -SBL RAMP-
14+09.99 -YO-

SHEET 2 OF 3

STATE OF NORTH CAROLINA
DEPARTMENT OF TRANSPORTATION
RALEIGH

GENERAL DRAWING

FOR BRIDGE ON WESTERN PARKWAY OVER COUNTRY CLUB ROAD BETWEEN MARINE BLVD. AND CAMP LEJEUNE

REVISIONS						SHEET NO.
NO.	BY:	DATE:	NO.	BY:	DATE:	S-2
1			3			TOTAL SHEETS
2			4			142

STR. #1

DRAWN BY : M.GUDLAUGSSON DATE : 3/17/10
CHECKED BY : PEGGY PARISI DATE : 6/16/10

24-AUG-2010 07:47
G:\TIPProjects-U\U4007b\Structures\FinalPlans\Str. #1\U-4007B_SD_GD_01.dgn
taverette

BM: 30" #5 REBAR WITH ALUMINUM TRAVERSE CAPS, 153.55' RIGHT OF STA. 24+80.11, EL. 60.330

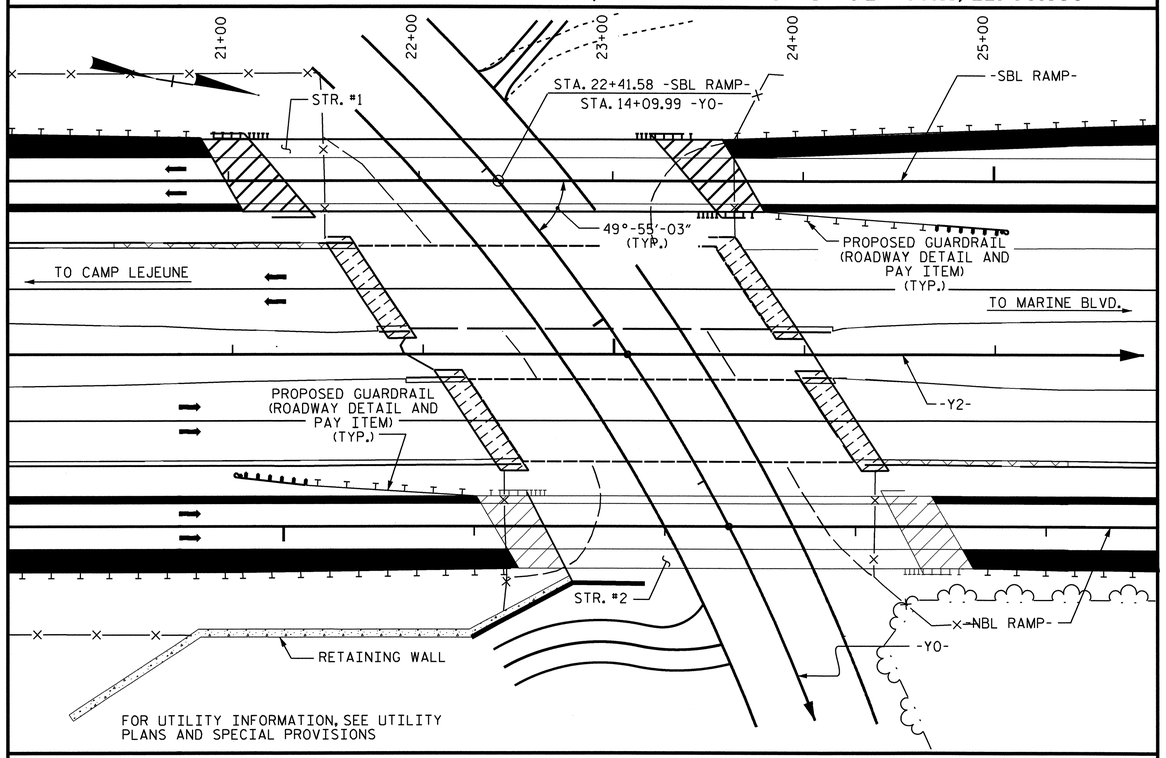

LOCATION SKETCH

NOTES

ASSUMED LIVE LOAD = HL-93 OR ALTERNATE LOADING.

FOR OTHER DESIGN DATA AND GENERAL NOTES, SEE SHEET SN.

FOR EROSION CONTROL MEASURES SEE EROSION CONTROL PLANS.

THIS BRIDGE HAS BEEN DESIGNED IN ACCORDANCE WITH THE AASHTO LRFD BRIDGE DESIGN SPECIFICATIONS.

ALL STRUCTURAL STEEL SHALL BE AASHTO M270 GRADE 50W AND PAINTED IN ACCORDANCE WITH SYSTEM 4 OF ARTICLE 442-7 OF THE STANDARD SPECIFICATIONS UNLESS OTHERWISE NOTED ON THE PLANS.

REMOVABLE FORMS MAY BE USED IN LIEU OF METAL STAY-IN-PLACE FORMS IN ACCORDANCE WITH ARTICLE 420-3 OF THE STANDARD SPECIFICATIONS.

THE CONTRACTOR SHALL PROVIDE INDEPENDENT ASSURANCE SAMPLES OF REINFORCING STEEL AS FOLLOWS: FOR PROJECTS REQUIRING UP TO 400 TONS OF REINFORCING STEEL, ONE 30 INCH SAMPLE OF EACH SIZE BAR USED, AND FOR PROJECTS REQUIRING OVER 400 TONS OF REINFORCING STEEL, TWO 30 INCH SAMPLES OF EACH SIZE BAR USED. THE BARS FROM WHICH THE SAMPLES ARE TAKEN MUST THEN BE SPLICED WITH REPLACEMENT BARS OF THE SIZE AND LENGTH OF THE SAMPLE, PLUS A MINIMUM LAP SPLICE OF THIRTY BAR DIAMETERS.

FOR MAINTENANCE AND PROTECTION OF TRAFFIC BENEATH PROPOSED STRUCTURE, SEE SPECIAL PROVISIONS.

NEEDLE BEAMS WILL NOT BE ALLOWED UNLESS OTHERWISE CALLED FOR ON THE PLANS OR APPROVED BY THE ENGINEER.

FOR SUBMITTAL OF WORKING DRAWINGS, SEE SPECIAL PROVISIONS.

FOR FALSEWORK AND FORMWORK, SEE SPECIAL PROVISIONS.

FOR CRANE SAFETY, SEE SPECIAL PROVISIONS.

FOR SHIPPING STEEL STRUCTURAL MEMBERS, SEE SPECIAL PROVISIONS.

FOR GROUT FOR STRUCTURES, SEE SPECIAL PROVISIONS.

FOR CURING CONCRETE, SEE SPECIAL PROVISIONS.

FOR FORMS FOR CONCRETE BRIDGE DECKS, SEE SPECIAL PROVISIONS.

THE COST OF REMOVAL OF ANY EXISTING CONCRETE SLOPE PROTECTION NECESSARY FOR CONSTRUCTION OF NEW CONCRETE SLOPE PROTECTION IS INCIDENTAL TO THE PAY ITEM FOR 4" SLOPE PROTECTION.

FOR PLACING LOAD ON STRUCTURE MEMBERS, SEE SPECIAL PROVISIONS.

TOTAL BILL OF MATERIAL

	PDA TESTING	PDA ASSISTANCE	REINFORCED CONCRETE DECK SLAB	GROOVING BRIDGE FLOORS	CLASS A CONCRETE	BRIDGE APPROACH SLABS	REINFORCING STEEL	STRUCTURAL STEEL	PP 14 x 0.50 STEEL PILES		PIPE PILE PLATES	PILE REDRIVES	CONCRETE BARRIER RAIL	4" SLOPE PROTECTION	ELASTOMERIC BEARINGS	EVAZOTE JOINT SEALS
	EACH	EACH	SQ.FT.	SQ.FT.	CU.YDS.	LUMP SUM	LBS.	APPROX. LBS.	NO.	LIN.FT.	EACH	EACH	LIN.FT.	SQ.FT.	LUMP SUM	LUMP SUM
SUPERSTRUCTURE			7755	8164		LUMP SUM		428,000					376.01		LUMP SUM	LUMP SUM
END BENT 1					60.2		8727		8	440	8	8		460		
END BENT 2					60.2		8734		9	495	9	9		340		
TOTAL	1	1	7755	8164	120.4	LUMP SUM	17461	428,000	17	935	17	17	376.01	800	LUMP SUM	LUMP SUM

PROJECT NO. U-4007B

ONSLOW COUNTY

STATION: 22+41.58 -SBL RAMP-
14+09.99 -YO-

SHEET 3 OF 3

STATE OF NORTH CAROLINA
DEPARTMENT OF TRANSPORTATION
RALEIGH

GENERAL DRAWING
FOR BRIDGE ON WESTERN PARKWAY OVER COUNTRY CLUB ROAD BETWEEN MARINE BLVD. AND CAMP LEJEUNE

NORTH CAROLINA PROFESSIONAL SEAL 025516 ENGINEER ELMAY E. MURRAY
8/24/10

REVISIONS						SHEET NO.
NO.	BY:	DATE:	NO.	BY:	DATE:	S-3
1			3			TOTAL SHEETS
2			4			142

DRAWN BY : M.GUDLAUGSSON DATE : 3/17/10
CHECKED BY : PEGGY PARISI DATE : 6/16/10

23-AUG-2010 15:18
G:\TIPProjects-U\U4007b\Structures\Final Plans\Str. #1\U-4007B_SD_GD_01.dgn
taverette

STR. #1

LOAD AND RESISTANCE FACTOR RATING (LRFR) SUMMARY FOR STEEL GIRDERS

LEVEL		VEHICLE	WEIGHT (W) (TONS)	CONTROLLING LOAD RATING (#)	MINIMUM RATING FACTORS (RF)	TONS = W × RF	STRENGTH I LIMIT STATE											SERVICE II LIMIT STATE						COMMENT NUMBER
							LIVE-LOAD FACTORS (γ_{LL})	MOMENT					SHEAR					LIVE-LOAD FACTORS (γ_{LL})	MOMENT					
								DISTRIBUTION FACTORS (DF)	RATING FACTOR	SPAN	GIRDER LOCATION	DISTANCE FROM LEFT END OF SPAN (ft)	DISTRIBUTION FACTORS (DF)	RATING FACTOR	SPAN	GIRDER LOCATION	DISTANCE FROM LEFT END OF SPAN (ft)		DISTRIBUTION FACTORS (DF)	RATING FACTOR	SPAN	GIRDER LOCATION	DISTANCE FROM LEFT END OF SPAN (ft)	
DESIGN LOAD RATING		HL-93 (INVENTORY)	N/A	1	1.11	--	1.75	0.776	1.11	A	EL	92.11	0.849	1.19	A	I	165.80	1.30	0.776	1.29	A	EL	92.11	
		HL-93 (OPERATING)	N/A		1.44	--	1.35	0.776	1.44	A	EL	92.11	0.849	1.54	A	I	165.80	1.00	0.776	1.68	A	EL	92.11	
		HS-20 (INVENTORY)	36.00	2	1.87	67.320	1.75	0.776	1.87	A	EL	92.11	0.849	1.88	A	I	18.420	1.30	0.776	3.45	A	EL	92.11	
		HS-20 (OPERATING)	36.00		2.42	87.120	1.35	0.776	2.42	A	EL	92.11	0.849	2.43	A	I	18.420	1.00	0.776	4.48	A	EL	92.11	
LEGAL LOAD RATING	SINGLE VEHICLE (SV)	SNSH	13.500		5.42	73.170	1.40	0.776	5.84	A	EL	92.11	0.849	6.02	A	I	18.420	1.30	0.776	5.42	A	EL	92.11	
		SNGARBS2	20.000		3.79	75.800	1.40	0.776	4.09	A	EL	92.11	0.849	4.15	A	I	18.420	1.30	0.776	3.79	A	EL	92.11	
		SNAGRIS2	22.000		3.50	77.000	1.40	0.776	3.77	A	EL	92.11	0.849	3.79	A	I	165.80	1.30	0.776	3.50	A	EL	92.11	
		SNCOTTS3	27.250		2.69	73.303	1.40	0.776	2.90	A	EL	92.11	0.849	2.99	A	I	18.420	1.30	0.776	2.69	A	EL	92.11	
		SNAGGRS4	34.925		2.15	75.089	1.40	0.776	2.32	A	EL	92.11	0.849	2.39	A	I	18.420	1.30	0.776	2.15	A	EL	92.11	
		SNS5A	35.550		2.11	75.011	1.40	0.776	2.27	A	EL	92.11	0.849	2.38	A	I	165.80	1.30	0.776	2.11	A	EL	92.11	
		SNS6A	39.950		1.90	75.905	1.40	0.776	2.05	A	EL	92.11	0.849	2.13	A	I	18.420	1.30	0.776	1.90	A	EL	92.11	
		SNS7B	42.000		1.81	76.020	1.40	0.776	1.95	A	EL	92.11	0.849	2.05	A	I	18.420	1.30	0.776	1.81	A	EL	92.11	
	TRUCK TRACTOR SEMI-TRAILER (TTST)	TNAGRIT3	33.000		2.31	76.230	1.40	0.776	2.48	A	EL	92.11	0.849	2.56	A	I	165.80	1.30	0.776	2.31	A	EL	92.11	
		TNT4A	33.075		2.31	76.403	1.40	0.776	2.49	A	EL	92.11	0.849	2.54	A	I	165.80	1.30	0.776	2.31	A	EL	92.11	
		TNT6A	41.600		1.85	76.960	1.40	0.776	2.00	A	EL	92.11	0.849	2.10	A	I	165.80	1.30	0.776	1.85	A	EL	92.11	
		TNT7A	42.000		1.84	77.280	1.40	0.776	1.99	A	EL	92.11	0.849	2.08	A	I	165.80	1.30	0.776	1.84	A	EL	92.11	
		TNT7B	42.000		1.86	78.120	1.40	0.776	2.01	A	EL	92.11	0.849	2.03	A	I	165.80	1.30	0.776	1.86	A	EL	92.11	
		TNAGRIT4	43.000		1.80	77.400	1.40	0.776	1.94	A	EL	92.11	0.849	1.98	A	I	18.420	1.30	0.776	1.80	A	EL	92.11	
		TNAGT5A	45.000		1.72	77.400	1.40	0.776	1.85	A	EL	92.11	0.849	1.92	A	I	165.80	1.30	0.776	1.72	A	EL	92.11	
		TNAGT5B	45.000	3	1.71	76.950	1.40	0.776	1.84	A	EL	92.11	0.849	1.89	A	I	18.420	1.30	0.776	1.71	A	EL	92.11	
FATIGUE		HL-93 (INVENTORY)	γ_{LL}=0.75																					

LOAD FACTORS:

DESIGN LOAD RATING FACTORS	LIMIT STATE	γ_{DC}	γ_{DW}
	STRENGTH I	1.25	1.50
	SERVICE II	1.00	1.00

	YEAR	ADTT
CURRENT	2011	490
FUTURE	2031	774

NOTES:

MINIMUM RATING FACTORS ARE BASED ON THE STRENGTH I AND SERVICE II LIMIT STATES.

ALLOWABLE STRESS FOR SERVICE II LIMIT STATE ARE AS REQUIRED FOR DESIGN.

COMMENTS:

1.
2.
3.
4.

(#) CONTROLLING LOAD RATING

(1) DESIGN LOAD RATING (HL-93) **

(2) DESIGN LOAD RATING (HS-20) **

(3) LEGAL LOAD RATING **

** SEE CHART FOR VEHICLE TYPE

GIRDER LOCATION

I - INTERIOR GIRDER
EL - EXTERIOR LEFT GIRDER
ER - EXTERIOR RIGHT GIRDER

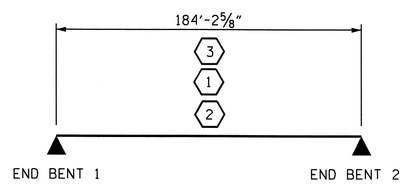

LRFR SUMMARY

PROJECT NO. U-4007B
ONSLOW COUNTY
STATION: 22+41.58 -SBL RAMP-

STATE OF NORTH CAROLINA
DEPARTMENT OF TRANSPORTATION
RALEIGH

STANDARD

LRFR SUMMARY FOR STEEL GIRDERS
(NON-INTERSTATE TRAFFIC)

NORTH CAROLINA PROFESSIONAL SEAL 025516 ENGINEER
E. M. Y. & MURRAY
8/29/10

REVISIONS						SHEET NO.
NO.	BY:	DATE:	NO.	BY:	DATE:	S-4
1			3			TOTAL SHEETS
2			4			142

ASSEMBLED BY: M.GUDLAUGSSON DATE : 7/6/10
CHECKED BY : M. RORIE DATE : 7/9/10
DRAWN BY : MAA 1/08
CHECKED BY : GM/DI 2/08
REV. 11/12/08RR MAA/GM

23-AUG-2010 15:18
G:\TIPProjects-U\U4007b\Structures\FinalPlans\Str. #1\U-4007B_SD_LRFR_01.dgn
taverette

STR. #1 STD. NO. LRFR3

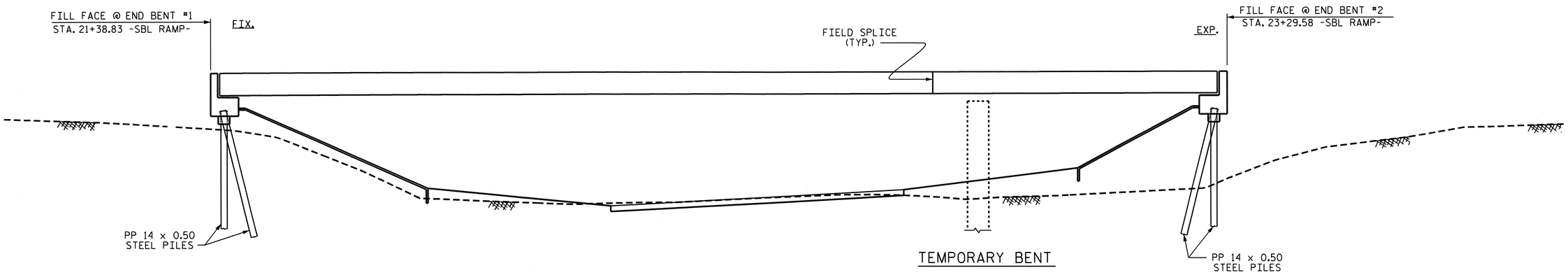

-SECTION ALONG -SBL RAMP-

SCHEMATIC ELEVATION VIEW

ERECTION NOTES

INITIAL SET WILL REQUIRE PLACEMENT OF TWO ADJACENT GIRDERS WITH DIAPHRAGMS.

THE STRUCTURAL STEEL SHALL BE SUPPORTED DURING ERECTION IN ITS CAMBERED POSITION. ONE TEMPORARY BENT MAY BE USED IN SPAN "A".

IF USED, THE TEMPORARY BENT SHALL SUPPORT ALL GIRDERS IN THE TYPICAL SECTION.

TEMPORARY BENT SHALL REMAIN IN PLACE UNTIL ALL CROSSFRAMES ARE IN PLACE AND HIGH STRENGTH BOLTS ARE TIGHTENED.

TEMPORARY BENT SHALL BE LOCATED AT CONNECTOR PLATES.

THE CONTRACTOR'S ERECTION PLANS SHALL INCLUDE A METHOD OF TEMPORARY BENT REMOVAL THAT WILL UNIFORMLY APPLY THE STRUCTURAL STEEL WEIGHT TO THE GIRDERS AND DIAPHRAGMS.

THE CONTRACTOR MAY SUBMIT ALTERNATE ERECTION METHODS. PLANS FOR SUCH ERECTION METHODS SHALL BE APPROVED BY THE ENGINEER.

PLANS FOR TEMPORARY BENT, ERECTION SEQUENCE, AND TEMPORARY BENT REMOVAL SHALL BE SUBMITTED TO THE ENGINEER FOR REVIEW.

DURING THE GIRDER ERECTION PROCEDURE, THE CONTRACTOR IS RESPONSIBLE FOR PROVIDING TEMPORARY LATERAL BRACING AND OTHER MEANS OF SUPPORT, AS REQUIRED, TO ENSURE STABILITY OF THE GIRDERS, TO AVOID UPLIFT OF THE GIRDERS AT THE TEMPORARY BENT AND TO MAINTAIN PLUMBNESS OF THE GIRDER WEBS.

THE CONTRACTOR IS RESPONSIBLE FOR DESIGNING THE TEMPORARY BENT. THE DESIGNS SHALL FOLLOW THE AASHTO GUIDE DESIGN SPECIFICATIONS FOR BRIDGE TEMPORARY WORKS, 1995 AND SHALL BE COMPLETED BY A PROFESSIONAL ENGINEER REGISTERED IN NORTH CAROLINA. THE CONTRACTOR SHALL SUBMIT SIGNED AND SEALED WORKING DRAWINGS AND CALCULATIONS FOR APPROVAL BY THE ENGINEER.

NO SEPARATE MEASUREMENT OR PAYMENT WILL BE MADE FOR PROVIDING THE TEMPORARY BENT. THE COST FOR ALL MATERIALS, EQUIPMENT, TOOLS, LABOR AND ANY INCIDENTALS NECESSARY TO PROVIDE THE TEMPORARY BENT SHALL BE CONSIDERED INCIDENTAL TO THE LUMP SUM BID PRICE FOR STRUCTURAL STEEL.

NORTH CAROLINA PROFESSIONAL SEAL 025516 ENGINEER EMILY E. MURRAY
8/24/10

PROJECT NO. U-4007B
ONSLOW COUNTY
STATION: 22+41.58 -SBL RAMP-

STATE OF NORTH CAROLINA
DEPARTMENT OF TRANSPORTATION
RALEIGH

GIRDER ERECTION DETAILS

REVISIONS						SHEET NO.
NO.	BY:	DATE:	NO.	BY:	DATE:	S-4A
1			3			TOTAL SHEETS
2			4			142

DRAWN BY : M.GUDLAUGSSON DATE : 8/20/10
CHECKED BY : E. MURRAY DATE : 8/20/10

23-AUG-2010 15:17
G:\TIPProjects-U\U4007b\Structures\Final Plans\Str. #1\U-4007B_SD_GD_01.dgn
taverette

STR. #1

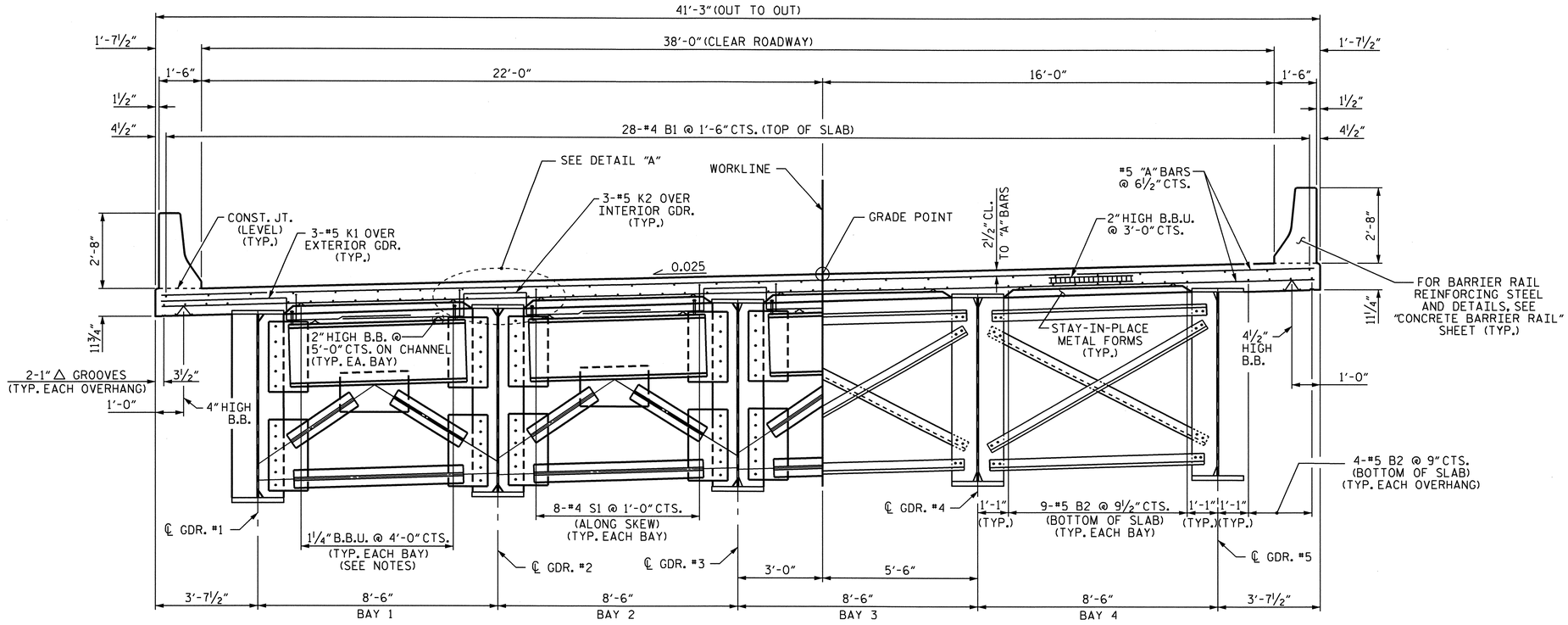

SHOWING END BENT DIAPHRAGM

SHOWING INTERMEDIATE DIAPHRAGM

TYPICAL SECTION

NOTES:

PROVIDE 1¼" HIGH BEAM BOLSTERS UPPER AT 4'-0" CTS. ATOP THE METAL STAY-IN-PLACE FORMS TO SUPPORT THE BOTTOM MAT OF 'A' BARS. WHEN USING REMOVABLE FORMS, PROVIDE CONTINUOUS HIGH CHAIRS FOR METAL DECK (C.H.C.M.) @ 4'-0" CTS. WITH A HEIGHT TO SUPPORT THE BOTTOM MAT OF 'A' BARS A CLEAR DISTANCE OF 2½" ABOVE THE TOP OF THE REMOVABLE FORM.

BARRIER RAIL IN SPAN SHALL NOT BE CAST UNTIL ALL SLAB CONCRETE IN THE SPAN HAS BEEN CAST AND HAS REACHED A MINIMUM COMPRESSIVE STRENGTH OF 3,000 PSI.

THE CONTRACTOR MAY, WHEN NECESSARY, PROPOSE A SCHEME FOR AVOIDING INTERFERENCE BETWEEN METAL STAY-IN-PLACE FORM SUPPORTS OR FORMS AND GIRDER STIFFENERS OR CONNECTOR PLATES. THE PROPOSAL SHALL BE INDICATED, AS APPROPRIATE, ON EITHER THE STEEL WORKING DRAWINGS OR THE METAL STAY-IN-PLACE FORM WORKING DRAWINGS.

DIRECTION OF CASTING DECK CONCRETE SHALL BE FROM THE FIXED BEARING END TOWARD THE EXPANSION BEARING END OF THE SPAN.

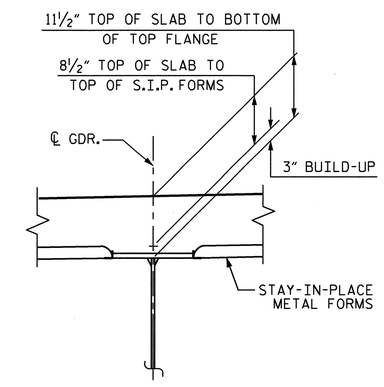

DETAIL "A"

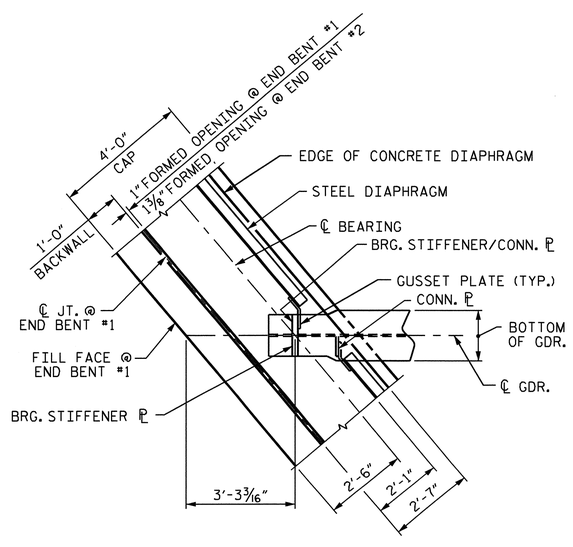

PLAN OF GIRDER @ END BENT

END BENT #1 SHOWN, END BENT #2 SIMILAR.

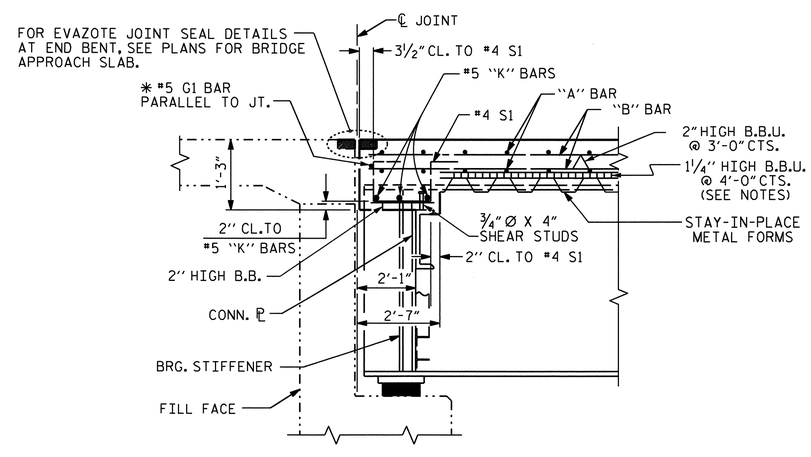

SECTION @ END BENT

✱ #5 G1 BAR MAY BE SHIFTED SLIGHTLY, AS NECESSARY, TO CLEAR REINFORCING STEEL AND STIRRUPS.

PROJECT NO. U-4007B
ONSLOW COUNTY
STATION: 22+41.58 -SBL RAMP

STATE OF NORTH CAROLINA
DEPARTMENT OF TRANSPORTATION
RALEIGH

SUPERSTRUCTURE

TYPICAL SECTION

NORTH CAROLINA PROFESSIONAL SEAL 025516 ENGINEER EMILY E. MURRAY
9/16/10

REVISIONS						SHEET NO.
NO.	BY:	DATE:	NO.	BY:	DATE:	S-5
1			3			TOTAL SHEETS
2			4			142

DRAWN BY : PEGGY PARISI DATE : 1-11-10
CHECKED BY : B.N. BARODAWALA DATE : 4-19-10

16-SEP-2010 14:47
Z:\TIPProjects-U\U4007b\Structures\FinalPlans\Str. #1\u-4007b_sd_ts_01.dgn
padkins

STR. #1

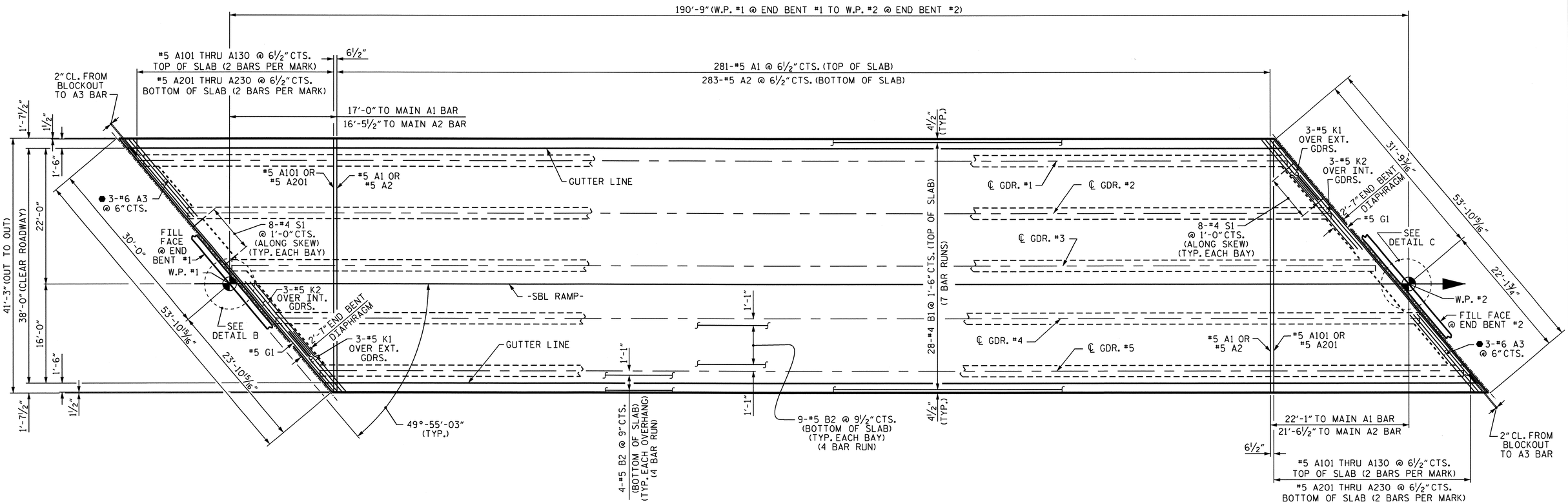

● #6 A3 BARS ARE POSITIONED ONLY AT THE ACUTE CORNERS OF DECK SLAB. PLACE BARS UNDER TOP "B" BARS.

PLAN OF SPAN

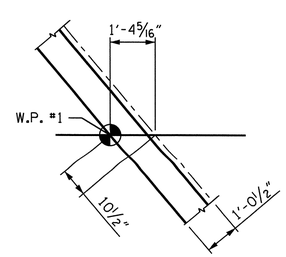

DETAIL B

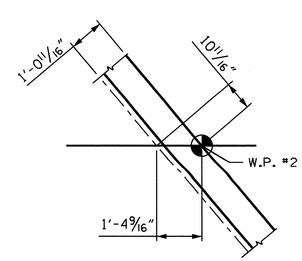

DETAIL C

PROJECT NO. U-4007B

ONSLOW COUNTY

STATION: 22+41.58 -SBL RAMP-

STATE OF NORTH CAROLINA
DEPARTMENT OF TRANSPORTATION
RALEIGH

SUPERSTRUCTURE

PLAN OF SPAN

NORTH CAROLINA PROFESSIONAL SEAL 025516 ENGINEER EMILY E. MURRAY
8/24/10

REVISIONS						SHEET NO.
NO.	BY:	DATE:	NO.	BY:	DATE:	S-6
1			3			TOTAL SHEETS
2			4			142

DRAWN BY : PEGGY PARISI DATE : 1-6-10
CHECKED BY : B.N. BARODAWALA DATE : 4-19-10

23-AUG-2010 15:16
G:\TIPProjects-U\U4007b\Structures\FinalPlans\Str. #1\u-4007b_sd_PS_01.dgn
toverette

STR. #1

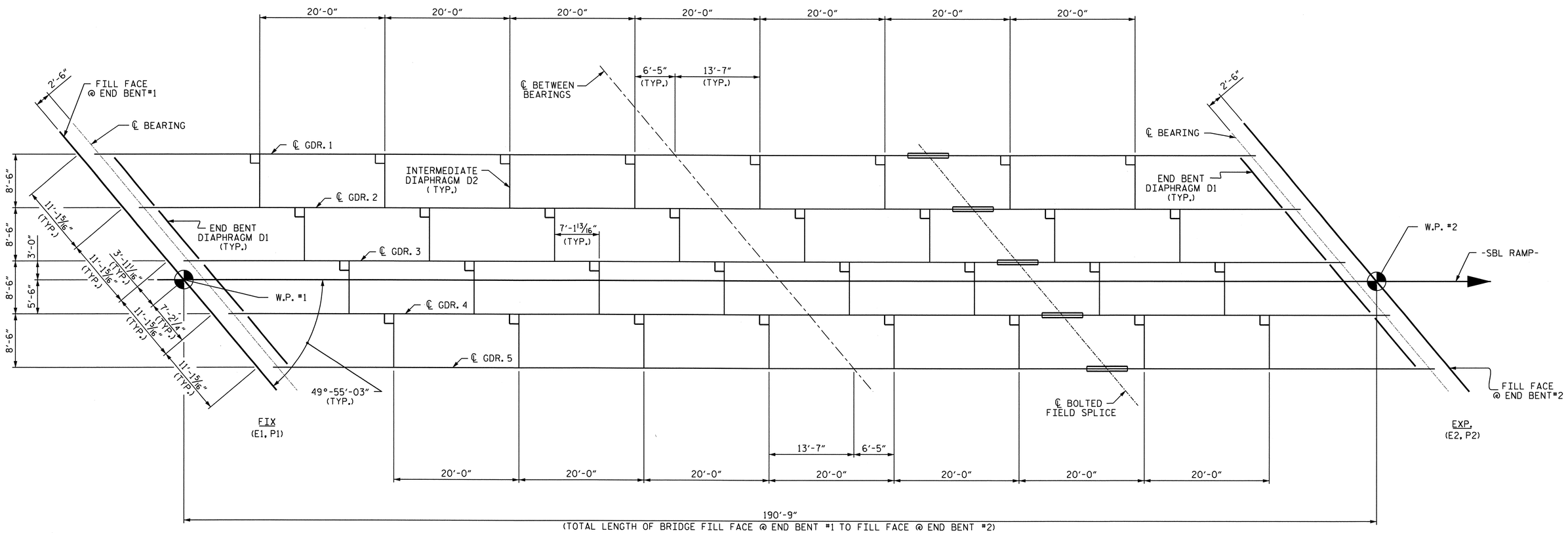

FRAMING PLAN

DIMENSIONS ARE TYPICAL FOR EACH GIRDER.

PROJECT NO. U-4007B

ONSLOW COUNTY

STATION: 22+41.58 -SBL RAMP-

STATE OF NORTH CAROLINA
DEPARTMENT OF TRANSPORTATION
RALEIGH

SUPERSTRUCTURE
FRAMING PLAN

NORTH CAROLINA PROFESSIONAL SEAL 025516 ENGINEER EMILY E. MURRAY
8/24/10

REVISIONS							SHEET NO.
NO.	BY:	DATE:	NO.	BY:	DATE:		S-7
1			3				TOTAL SHEETS
2			4				142

DRAWN BY : PEGGY PARISI DATE : 2-22-10
CHECKED BY : B.N. BARODAWALA DATE : 4-19-10

23-AUG-2010 15:16
G:\TIPProjects-U\U4007b\Structures\Final Plans\Str. #1\u-4007b_sd_FP_01.dgn
taverette

STR. #1

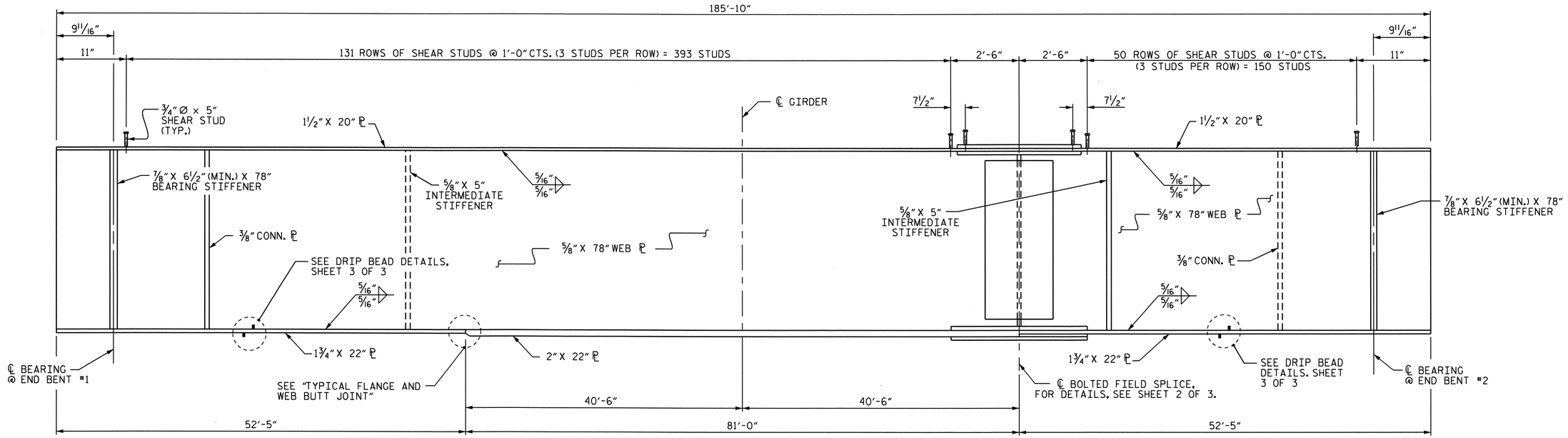

GIRDER ELEVATION

FOR ADDITIONAL STUDS IN BOLTED FIELD SPLICE AREA, SEE "BOLTED FIELD SPLICE DETAILS," SHEET 2 OF 3.

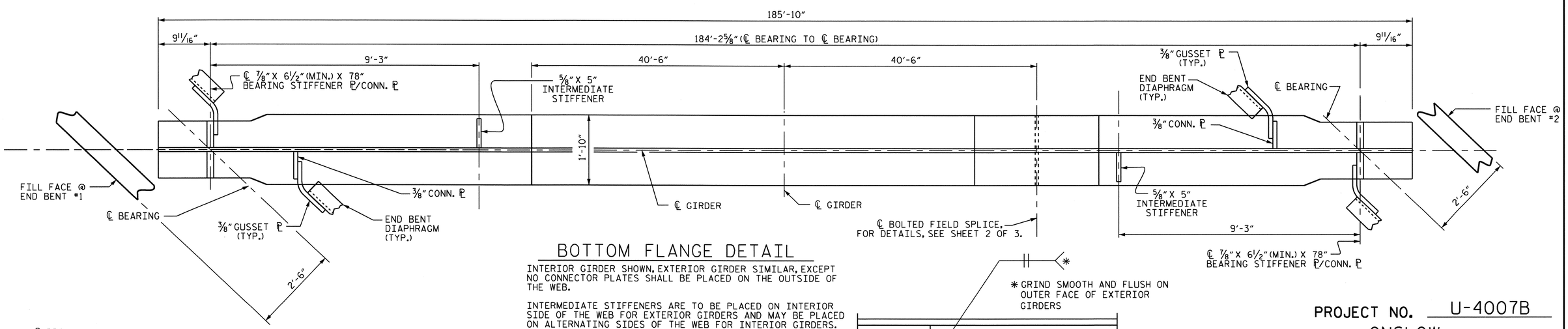

BOTTOM FLANGE DETAIL

INTERIOR GIRDER SHOWN, EXTERIOR GIRDER SIMILAR, EXCEPT NO CONNECTOR PLATES SHALL BE PLACED ON THE OUTSIDE OF THE WEB.

INTERMEDIATE STIFFENERS ARE TO BE PLACED ON INTERIOR SIDE OF THE WEB FOR EXTERIOR GIRDERS AND MAY BE PLACED ON ALTERNATING SIDES OF THE WEB FOR INTERIOR GIRDERS.

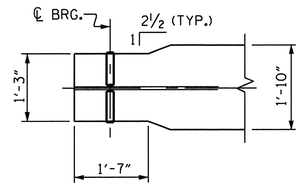

BOTTOM FLANGE TAPER DETAIL

(TYP. EACH END)

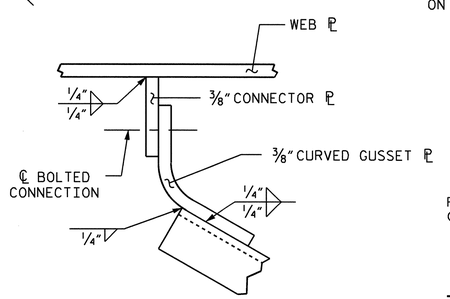

CONNECTOR PL WELD DETAIL

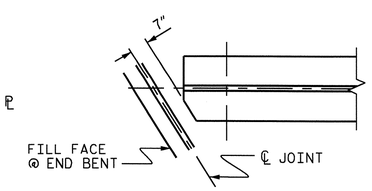

TOP FLANGE CLIP DETAIL

(TYP. AT BOTH ENDS OF GIRDER)

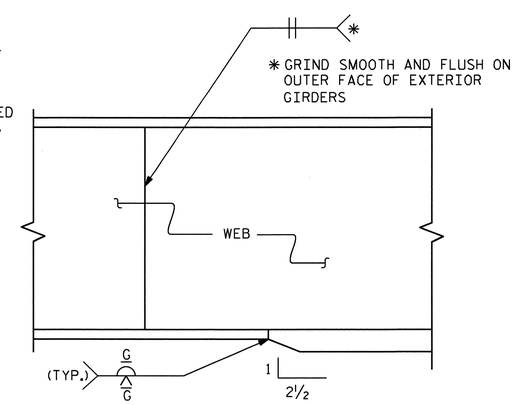

ELEVATION

TYPICAL FLANGE AND WEB BUTT JOINT

PROJECT NO. U-4007B

ONSLOW COUNTY

STATION: 22+41.58 -SBL RAMP-

SHEET 1 OF 3

STATE OF NORTH CAROLINA
DEPARTMENT OF TRANSPORTATION
RALEIGH

SUPERSTRUCTURE
STRUCTURAL STEEL DETAILS

NORTH CAROLINA PROFESSIONAL SEAL 025516 ENGINEER EMILY E. MURRAY
8/29/10

REVISIONS							SHEET NO.
NO.	BY:	DATE:	NO.	BY:	DATE:		S-8
1			3				TOTAL SHEETS
2			4				142

DRAWN BY : PEGGY PARISI DATE : 2-24-10
CHECKED BY : B.N. BARODAWALA DATE : 4-19-10

23-AUG-2010 15:15
G:\TIPProjects-U\U4007b\Structures\FinalPlans\Str. #1\u-4007b_sd_SS_01.dgn
taverette

STR. #1

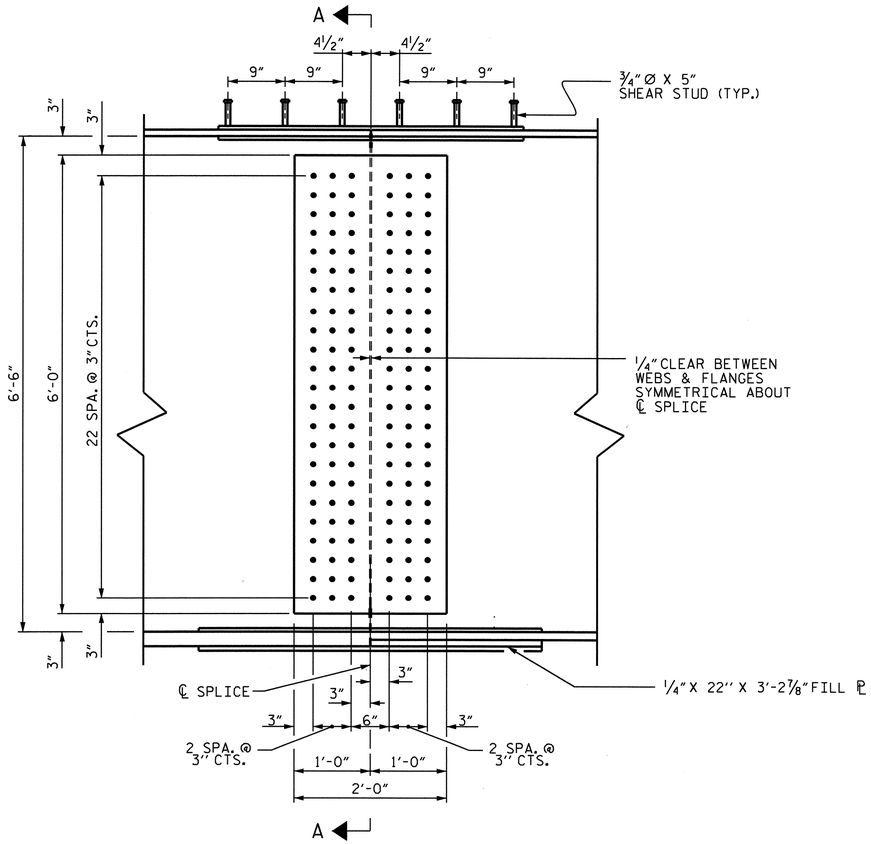

ELEVATION

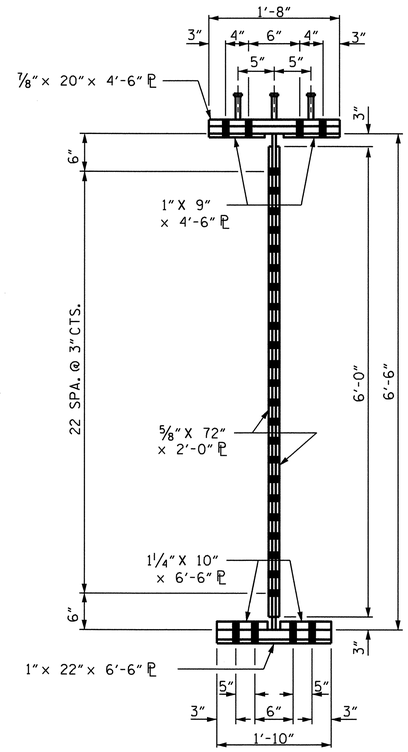

SECTION A-A

NOTES :

ALL STRUCTURAL STEEL SHALL BE AASHTO M270 GRADE 50W AND PAINTED IN ACCORDANCE WITH SYSTEM 4 OF ARTICLE 442-7 OF THE STANDARD SPECIFICATIONS UNLESS OTHERWISE NOTED ON THE PLANS.

ALL DIMENSIONS SHOWN ARE HORIZONTAL OR VERTICAL, UNLESS OTHERWISE NOTED.

ALL FIELD CONNECTIONS TO BE ⅞" DIA. HIGH STRENGTH BOLTS UNLESS OTHERWISE NOTED. FOR HIGH STRENGTH BOLTS, SEE SPECIAL PROVISIONS.

BEARING STIFFENERS ARE TO BE PLACED NORMAL TO THE WEB OF THE GIRDER AND SHALL BE PLUMB.

A CHARPY V-NOTCH TEST IS REQUIRED FOR WEB PLATES, BOTTOM FLANGE PLATES, BOTTOM FLANGE SPLICE PLATES AND WEB SPLICE PLATES FOR ALL GIRDERS AND IN ACCORDANCE WITH ARTICLE 1072-9 OF THE STANDARD SPECIFICATIONS.

SHOP SPLICES ARE PERMITTED TO LIMIT THE MAXIMUM REQUIRED FLANGE PIECE LENGTHS TO 60 FEET AND WEB PIECE LENGTHS TO 45 FEET. PERMITTED FLANGE AND WEB SHOP SPLICES SHALL NOT BE LOCATED WITHIN 15 FEET OF MAXIMUM DEAD LOAD DEFLECTION NOR WITHIN 15 FEET OF INTERMEDIATE BEARINGS OF CONTINUOUS UNITS. KEEP 2 FEET MINIMUM BETWEEN WEB AND FLANGE SHOP SPLICES. KEEP 6" MINIMUM BETWEEN CONNECTOR PLATE OR TRANSVERSE STIFFENER WELDS AND WEB OR FLANGE SHOP SPLICES.

STUDS ON GIRDERS MAY BE SHIFTED UP TO 1" IF NECESSARY TO CLEAR FLANGE SPLICE WELD.

TENSION ON THE AASHTO M164 BOLTS SHALL BE CALIBRATED USING DIRECT TENSION INDICATOR WASHERS. FOR DIRECT TENSION INDICATORS, SEE SPECIAL PROVISIONS.

END OF GIRDERS SHALL BE PLUMB.

SHEAR STUDS ARE TO BE SHOP WELDED ON TOP OF PLATE BEFORE FIELD ASSEMBLY.

FOR SHIPPING STEEL STRUCTURAL MEMBERS, SEE SPECIAL PROVISIONS.

BEARING STIFFENER MAY REQUIRE COPING IF WIDER THAN BOTTOM FLANGE TO AVOID INTERFERENCE WITH THE ANCHOR BOLT.

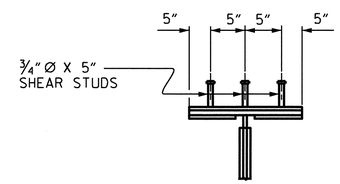

SHEAR STUD DETAIL
FOR TOP FLANGE SPLICE PLATE

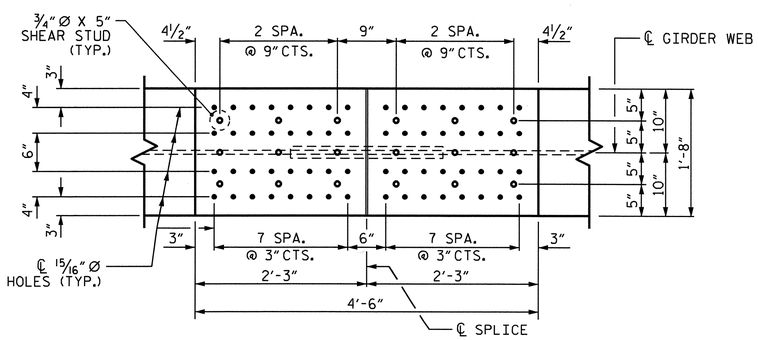

PLAN (TOP OF TOP FLANGE)

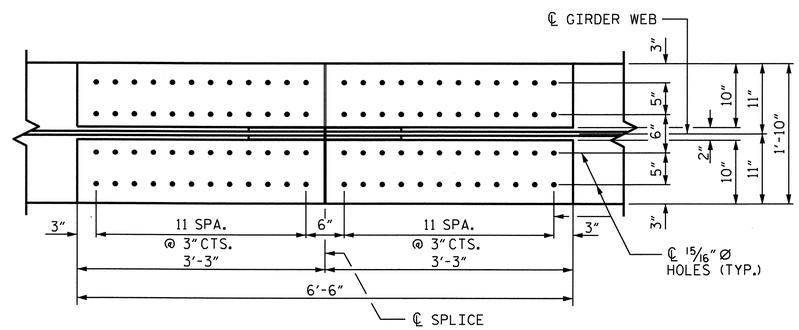

PLAN (TOP OF BOTTOM FLANGE)

BOLTED FIELD SPLICE DETAILS

(TYPICAL EACH FIELD SPLICE)

PROJECT NO. U-4007B
ONSLOW COUNTY
STATION: 22+41.58 -SBL RAMP-

SHEET 2 OF 3

STATE OF NORTH CAROLINA
DEPARTMENT OF TRANSPORTATION
RALEIGH

SUPERSTRUCTURE
STRUCTURAL STEEL DETAILS
BOLTED FIELD SPLICE

NORTH CAROLINA PROFESSIONAL SEAL 025516 ENGINEER LANCY E. MURRAY
8/24/10

REVISIONS						SHEET NO.
NO.	BY:	DATE:	NO.	BY:	DATE:	S-9
1			3			TOTAL SHEETS
2			4			142

DRAWN BY : PEGGY PARISI DATE : 2-24-10
CHECKED BY : B.N. BARODAWALA DATE : 4-19-10

23-AUG-2010 15:15
G:\TIPProjects-U\U4007b\Structures\FinalPlans\Str. #1\u-4007b_sd_SS_01.dgn
toverette

STR. #1

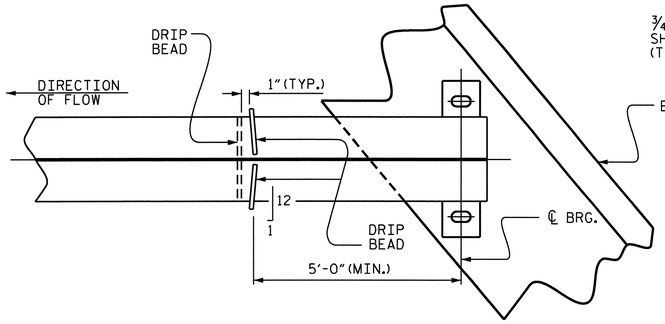

PART PLAN - BOTTOM FLANGE

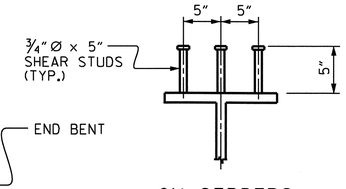

ON GIRDERS

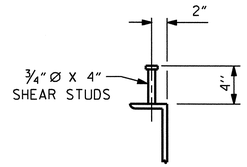

ON CHANNELS

SHEAR STUD DETAILS

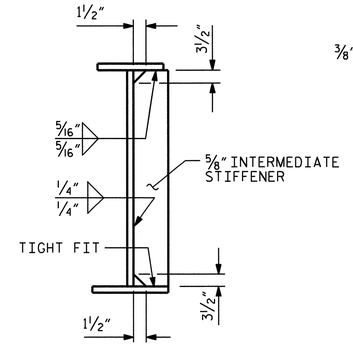

INTERMEDIATE STIFFENER DETAILS

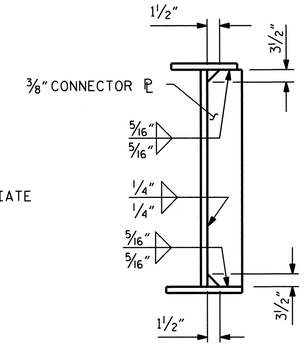

@ INTERMEDIATE DIAPHRAGM

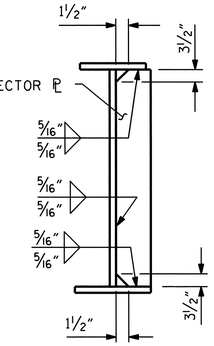

@ END BENT DIAPHRAGM

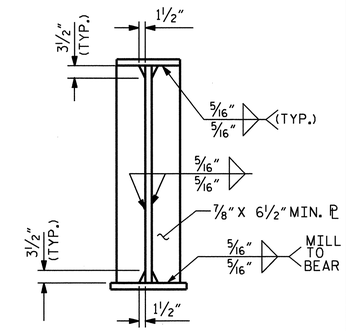

BEARING STIFFENER PLATE DETAILS

NOTE: THE BEARING STIFFENER SHALL BE WELDED TO THE BOTTOM FLANGE ONLY WHEN USED AS A CONNECTOR PL.

CONNECTOR PLATE DETAILS

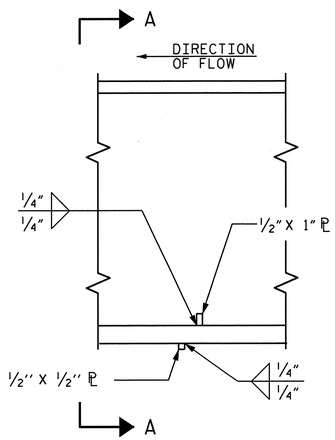

SECTION

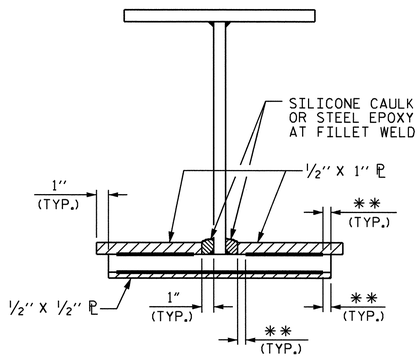

VIEW A-A

**SEE "WELD TERMINATION DETAILS"

DRIP BEAD DETAILS

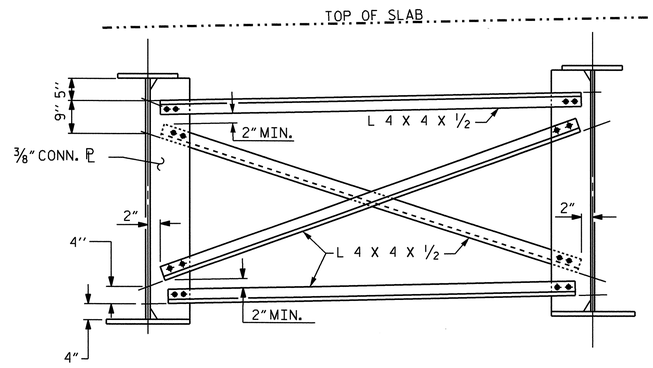

TYPICAL INTERMEDIATE CROSSFRAME (D2)

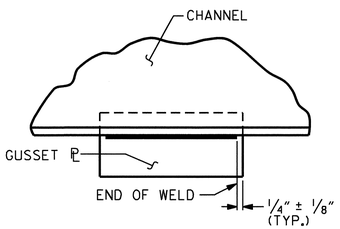

TYPICAL GUSSET PLATE CONNECTION

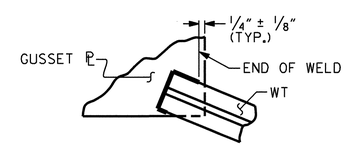

TYPICAL "TEE" TO GUSSET PLATE CONNECTION

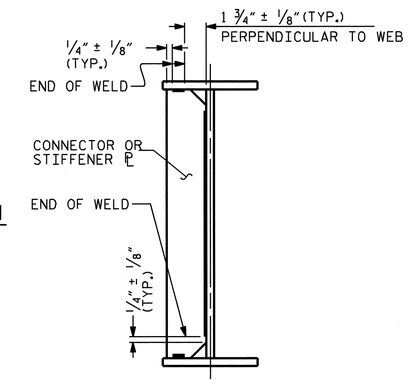

TYPICAL STIFFENER OR CONNECTOR PLATE CONNECTIONS

WELD TERMINATION DETAILS

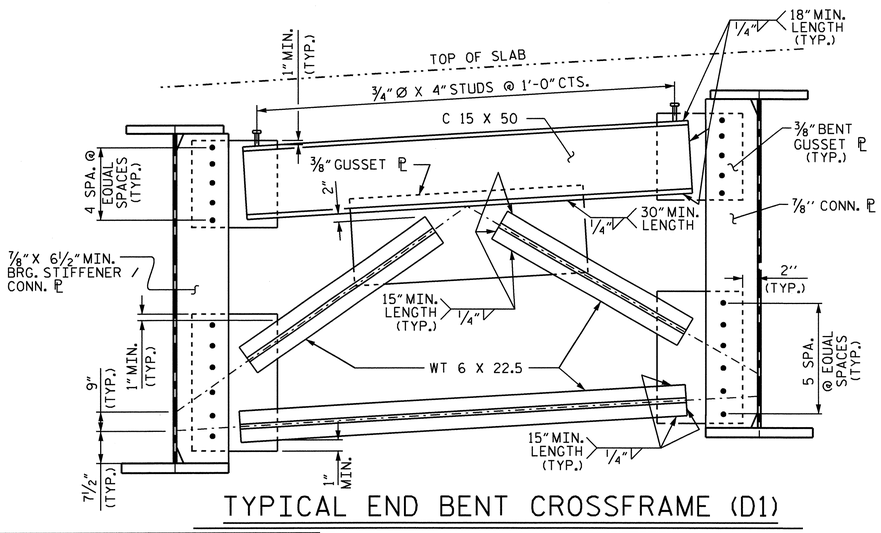

TYPICAL END BENT CROSSFRAME (D1)

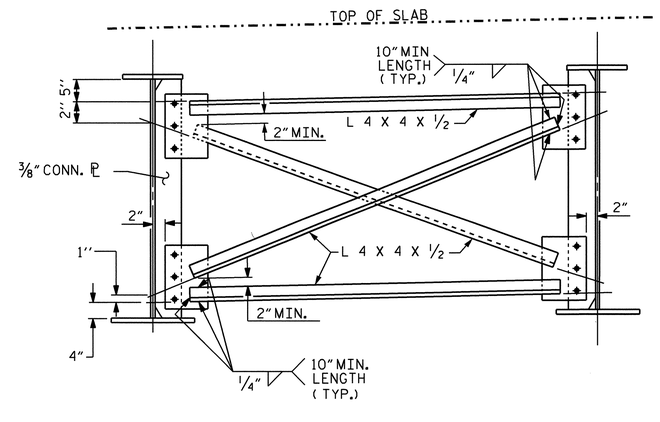

TYPICAL OPTIONAL INTERMEDIATE CROSSFRAME

PROJECT NO. U-4007B

ONSLOW COUNTY

STATION: 22+41.58 -SBL RAMP-

SHEET 3 OF 3

STATE OF NORTH CAROLINA
DEPARTMENT OF TRANSPORTATION
RALEIGH

SUPERSTRUCTURE
STRUCTURAL STEEL DETAILS

NORTH CAROLINA PROFESSIONAL SEAL 025516 ENGINEER EMILY E. MURRAY
9/16/10

REVISIONS						SHEET NO.
NO.	BY:	DATE:	NO.	BY:	DATE:	S-10
1			3			TOTAL SHEETS
2			4			142

DRAWN BY : PEGGY PARISI DATE : 2-24-10
CHECKED BY : B.N. BARODAWALA DATE : 4-19-10

16-SEP-2010 14:46
Z:\TIPProjects-U\U4007b\Structures\FinalPlans\Str. #1\u-4007b_sd_SS_01.dgn
pdkins

STR. #1

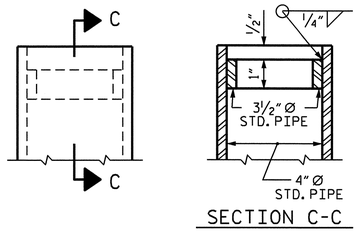

DETAIL "A"

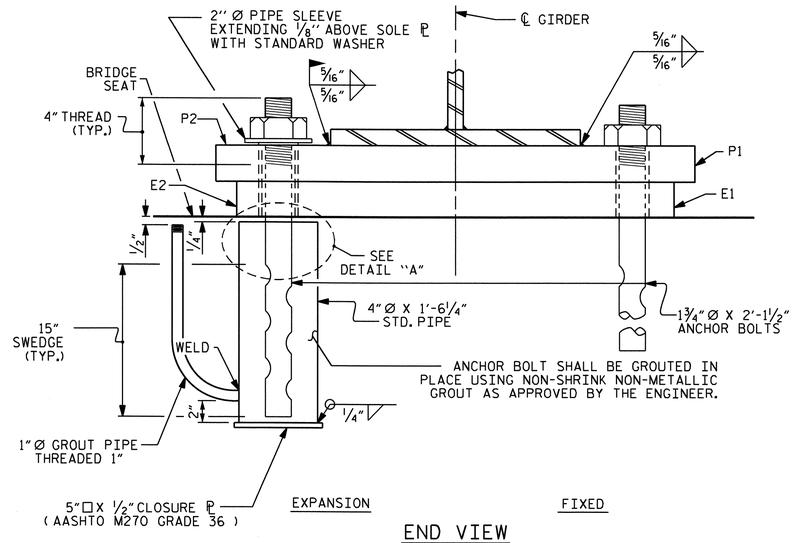

END VIEW

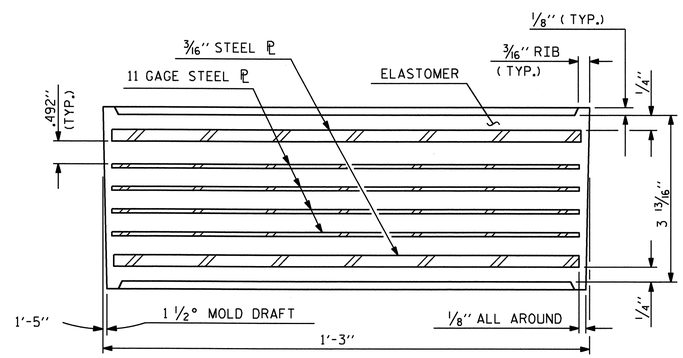

TYPICAL SECTION OF ELASTOMERIC BEARING
(60 DUROMETER HARDNESS)

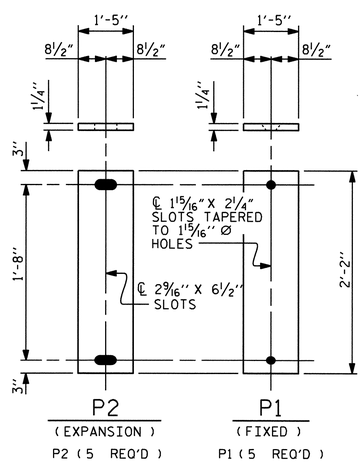

SOLE PLATE DETAILS ("P")

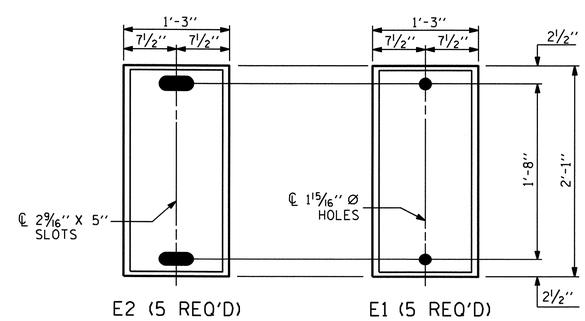

PLAN VIEW OF ELASTOMERIC BEARING

TYPE VI

NOTES

AT ALL FIXED POINTS OF SUPPORT, NUTS FOR ANCHOR BOLTS ARE TO BE TIGHTENED FINGER TIGHT AND THEN BACKED OFF 1/2 TURN. THE THREAD OF THE NUT AND BOLT SHALL THEN BE BURRED WITH A SHARP POINTED TOOL.

THE 2" Ø PIPE SLEEVE SHALL BE CUT FROM SCHEDULE 40 PVC PLASTIC PIPE. THE PVC PLASTIC PIPE SHALL MEET THE REQUIREMENTS OF ASTM D1785.

THE PAYMENT FOR THE PIPE SLEEVES SHALL BE INCLUDED IN THE SEVERAL PAY ITEMS.

FOR AASHTO M270 GRADE 50W STRUCTURAL STEEL, SOLE PLATE SHALL BE AASHTO M270 GRADE 50W AND SHALL NOT BE GALVANIZED. ANCHOR BOLTS, NUTS AND WASHERS SHALL BE GALVANIZED IN ACCORDANCE WITH THE STANDARD SPECIFICATIONS.

ANCHOR BOLTS SHALL MEET THE REQUIREMENTS OF ASTM A449. NUTS SHALL MEET THE REQUIREMENTS OF AASHTO M291-DH OR AASHTO M292-2H. WASHERS SHALL MEET THE REQUIREMENTS OF AASHTO M293. SHOP DRAWINGS ARE NOT REQUIRED FOR ANCHOR BOLTS, NUTS AND WASHERS. SHOP INSPECTION IS REQUIRED.

WHEN FIELD WELDING THE SOLE PLATE TO THE GIRDER FLANGE, USE TEMPERATURE INDICATING WAX PENS, OR OTHER SUITABLE MEANS, TO ENSURE THAT THE TEMPERATURE OF THE SOLE PLATE DOES NOT EXCEED 300°F. TEMPERATURES ABOVE THIS MAY DAMAGE THE ELASTOMER.

ALL SURFACES OF BEARING PLATES SHALL BE SMOOTH AND STRAIGHT.

THE CLOSURE PLATE, GROUT PIPE AND STANDARD PIPE FOR THE EXPANSION ASSEMBLY NEED NOT BE GALVANIZED.

ELASTOMER IN ALL BEARINGS SHALL BE 60 DUROMETER HARDNESS.

THE CONTRACTOR'S ATTENTION IS CALLED TO THE FOLLOWING PROCEDURE, WHICH MAY BE REQUIRED BY THE ENGINEER, TO RESET ELASTOMERIC BEARINGS DUE TO GIRDER TRANSLATION AND END ROTATION:

1. ONCE THE DECK HAS CURED, THE GIRDERS SHALL BE JACKED THEN THE ANCHOR BOLTS AND ELASTOMERIC BEARING SLOTS CENTERED AS NEARLY AS PRACTICAL ABOUT THE BEARING STIFFENER. THIS OPERATION SHALL BE PERFORMED AT APPROXIMATELY 60° F.
2. AFTER CENTERING THE ELASTOMERIC BEARING SLOTS AND ANCHOR BOLTS, THE ANCHOR BOLTS SHALL BE GROUTED.

THE CONTRACTOR MAY PROPOSE ALTERNATE METHODS, PROVIDED DETAILS ARE SUBMITTED TO THE ENGINEER FOR REVIEW AND APPROVAL.

—LOAD RATINGS—	
	MAX.D.L.+ L.L.
TYPE VI	352 k

PROJECT NO. U-4007B
ONSLOW COUNTY
STATION: 22+41.58 -SBL RAMP-

NORTH CAROLINA PROFESSIONAL SEAL 025516 ENGINEER EMILY E. MURRAY
8/24/10

STATE OF NORTH CAROLINA
DEPARTMENT OF TRANSPORTATION
RALEIGH
STANDARD
ELASTOMERIC BEARING DETAILS
(STEEL SUPERSTRUCTURE)

REVISIONS								SHEET NO.
NO.	BY:	DATE:	NO.	BY:	DATE:			S-11
1			3					TOTAL SHEETS
2			4					142

ASSEMBLED BY : PEGGY PARISI	DATE : 2-25-10		
CHECKED BY : B.N. BARODAWALA	DATE : 4-19-10		
DRAWN BY : EEM 10/95	REV. 10/17/00	RWW/LES	
CHECKED BY : PEK 10/95	REV. 7/10/01	LES/RDR	
	REV. 5/1/06	TLA/GM	

23-AUG-2010 15:14
G:\TIPProjects-U\U4007b\Structures\FinalPlans\Str. #1\u-4007b_sd_BG_01.dgn
taverette

STR. #1 STD. NO. EB2 (SHT 3b)

G:\TIPProjects-U\U4007b\Structures\FinalPlans\Str. #1\u-40
taverette

DEAD LOAD DEFLECTION TABLE FOR GIRDERS - SPAN "A"

	ALL GIRDERS																				
@ TWENTIETH POINTS BETWEEN ℄ BEARINGS	0	.05	.10	.15	.20	.25	.30	.35	.40	.45	.50	.55	.60	.65	.70	.75	.80	.85	.90	.95	0
DEFLECTION DUE TO WEIGHT OF GIRDER	0.000	0.042	0.083	0.122	0.157	0.189	0.215	0.236	0.251	0.260	0.263	0.260	0.251	0.236	0.215	0.189	0.157	0.122	0.083	0.042	0.000
DEFLECTION DUE TO WEIGHT OF SLAB *	0.000	0.081	0.163	0.240	0.309	0.371	0.423	0.465	0.495	0.513	0.519	0.513	0.495	0.465	0.423	0.371	0.309	0.240	0.163	0.081	0.000
DEFLECTION DUE TO WEIGHT OF BARRIER RAIL	0.000	0.010	0.019	0.028	0.036	0.043	0.049	0.053	0.057	0.059	0.060	0.059	0.057	0.053	0.049	0.043	0.036	0.028	0.019	0.010	0.000
TOTAL DEAD LOAD DEFLECTION	0.000	0.133	0.265	0.390	0.502	0.603	0.687	0.754	0.803	0.832	0.842	0.832	0.803	0.754	0.687	0.603	0.502	0.390	0.265	0.133	0.000
VERTICAL CURVE ORDINATE	0.000	0.042	0.080	0.113	0.142	0.166	0.186	0.202	0.213	0.220	0.222	0.220	0.213	0.202	0.186	0.166	0.142	0.113	0.080	0.042	0.000
REQUIRED CAMBER	0	2 1/8"	4 1/8"	6 1/16"	7 3/4"	9 1/4"	10 1/2"	11 1/2"	12 3/16"	12 5/8"	12 3/4"	12 5/8"	12 3/16"	11 1/2"	10 1/2"	9 1/4"	7 3/4"	6 1/16"	4 1/8"	2 1/8"	0

* INCLUDES SLAB, BUILDUPS & STAY-IN-PLACE FORMS.
ALL VALUES ARE SHOWN IN FEET EXCEPT "REQUIRED CAMBER", WHICH IS GIVEN IN INCHES (FRACTION FORM).

PROJECT NO. U-4007B
ONSLOW COUNTY
STATION: 22+41.58 -SBL RAMP-

NORTH CAROLINA PROFESSIONAL SEAL 025516 ENGINEER EMILY E. MURRAY
8/24/10

STATE OF NORTH CAROLINA
DEPARTMENT OF TRANSPORTATION
RALEIGH

SUPERSTRUCTURE

DEAD LOAD DEFLECTIONS

REVISIONS						SHEET NO.
NO.	BY:	DATE:	NO.	BY:	DATE:	S-12
1			3			TOTAL SHEETS
2			4			142

DRAWN BY : PEGGY PARISI DATE : 3-4-10
CHECKED BY : B.N. BARODAWALA DATE : 4-19-10

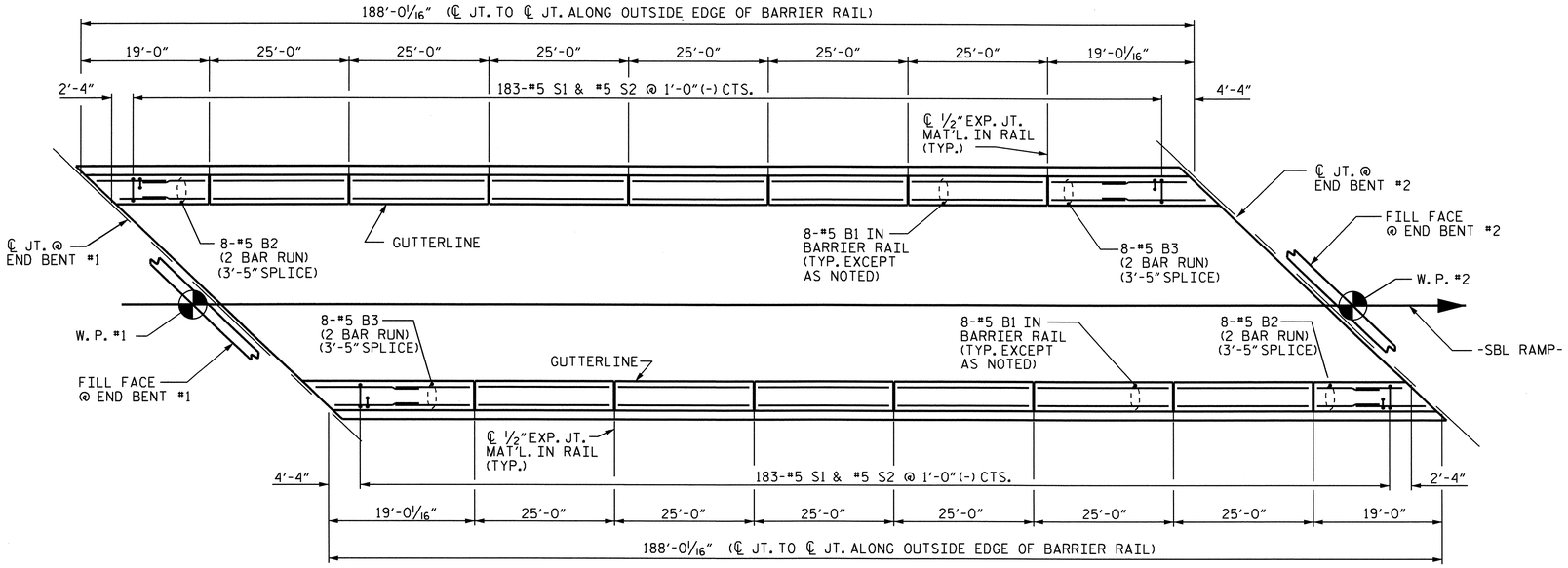

PLAN

NOTES

THE BARRIER RAIL IN EACH SPAN SHALL NOT BE CAST UNTIL ALL SLAB CONCRETE IN THAT SPAN HAS BEEN CAST AND HAS REACHED A MINIMUM COMPRESSIVE STRENGTH OF 3,000 PSI.

WHEN EVAZOTE JOINT SEAL IS REQUIRED, THE JOINT IN THE DECK SHALL BE SAWED PRIOR TO THE CASTING OF BARRIER RAIL.

ALL REINFORCING STEEL IN BARRIER RAILS SHALL BE EPOXY COATED.

THE #5 S3 AND #5 S4 BARS SHALL BE INSTALLED, USING AN ADHESIVE ANCHORING SYSTEM, AFTER SAWING THE JOINT. THE YIELD LOAD FOR THE #5 S3 AND #5 S4 BARS IS 18.6 KIPS. FIELD TESTING FOR THE ADHESIVE BONDING SYSTEM IS NOT REQUIRED.

VERTICAL GROOVED CONTRACTION JOINTS, 1/2" IN DEPTH, SHALL BE TOOLED IN ALL EXPOSED FACES OF THE BARRIER RAIL AND IN ACCORDANCE WITH ARTICLE 825-10(B) OF THE STANDARD SPECIFICATIONS. THE CONTRACTION JOINT SHALL BE LOCATED AT EACH THIRD POINT BETWEEN BARRIER RAIL EXPANSION JOINTS. ONLY ONE CONTRACTION JOINT IS REQUIRED AT MIDPOINT OF BARRIER RAIL SEGMENTS LESS THAN 20 FEET IN LENGTH AND NO CONTRACTION JOINTS ARE REQUIRED FOR THOSE SEGMENTS LESS THAN 10 FEET IN LENGTH.

BAR TYPES

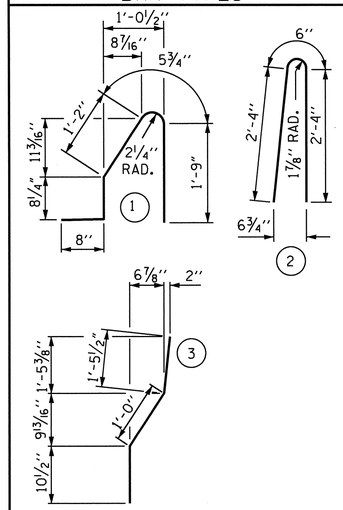

ALL BAR DIMENSIONS ARE OUT TO OUT

BILL OF MATERIAL

FOR CONCRETE BARRIER RAIL ONLY

BAR	NO.	SIZE	TYPE	LENGTH	WEIGHT
* B1	96	#5	STR	24'-7"	2461
* B2	32	#5	STR	10'-11"	364
* B3	32	#5	STR	11'-6"	384
* S1	366	#5	1	4'-9"	1813
* S2	366	#5	2	5'-2"	1972
* S3	12	#5	3	3'-4"	42
* S4	12	#5	STR	3'-2"	40
* EPOXY COATED REINFORCING STEEL				7076	LBS.
CLASS AA CONCRETE				37.6	CU. YDS.
CONCRETE BARRIER RAIL				376.01	LIN. FT.

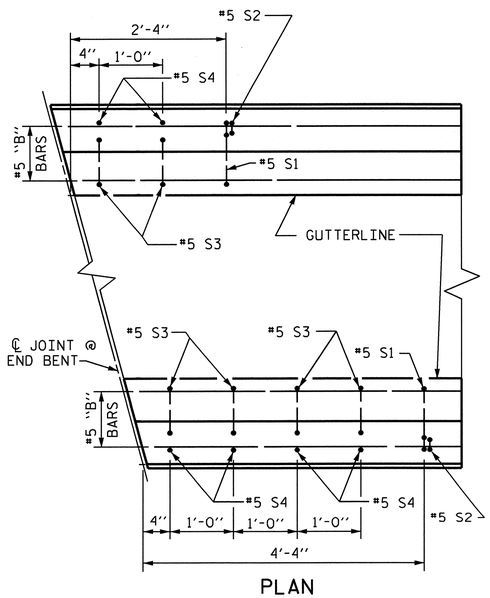

PLAN

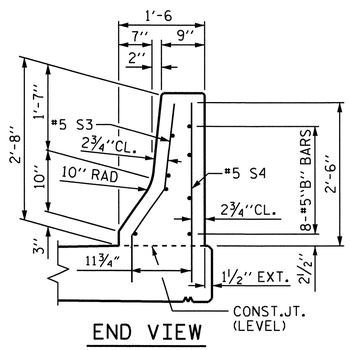

END VIEW

END OF RAIL DETAILS

FOR ADHESIVE ANCHORING AT SAWED JOINTS

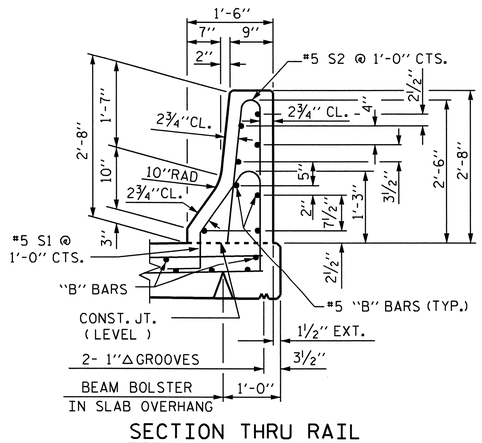

SECTION THRU RAIL

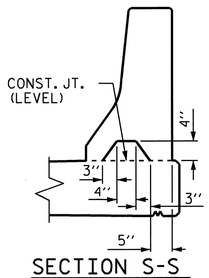

SECTION S-S

AT DAM IN OPEN JOINT (THIS IS TO BE USED ONLY WHEN SLIP FORM IS USED)

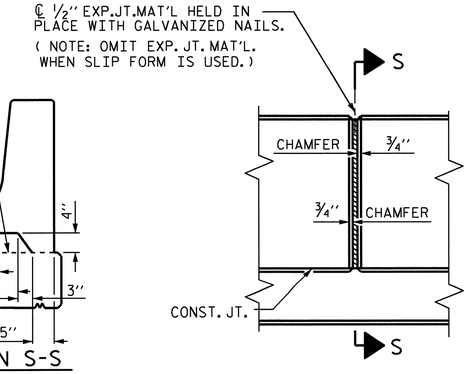

ELEVATION AT EXPANSION JOINTS

BARRIER RAIL DETAILS

NORTH CAROLINA PROFESSIONAL SEAL 025516 ENGINEER EMILY E. MURRAY
8/24/10

PROJECT NO. U-4007B

ONSLOW COUNTY

STATION: 22+41.58 -SBL RAMP-

STATE OF NORTH CAROLINA
DEPARTMENT OF TRANSPORTATION
RALEIGH

STANDARD

CONCRETE BARRIER RAIL

REVISIONS						SHEET NO.
NO.	BY:	DATE:	NO.	BY:	DATE:	S-13
1			3			TOTAL SHEETS
2			4			142

ASSEMBLED BY : PEGGY PARISI DATE : 3-3-10
CHECKED BY : B.N. BARODAWALA DATE : 4-19-10

DRAWN BY : ARB 5/87
CHECKED BY : SJD 9/87

REV. 10/17/00 RWW/LES
REV. 5/7/03R RWW/JTE
REV. 5/1/06R TLA/GM

23-AUG-2010 15:13
G:\TIPProjects-U\U4007b\Structures\FinalPlans\Str. #1\u-4007b_sd_BR_01.dgn
taverette

STR. #1 STD. NO. CBR1

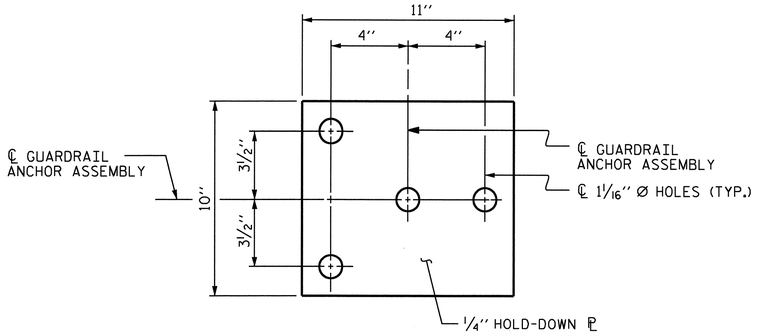

PLAN

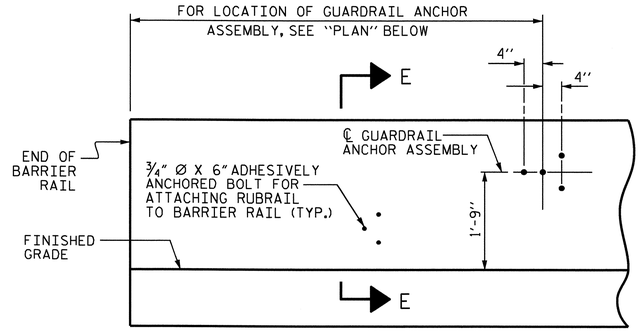

ELEVATION

FOR LOCATION OF RUBRAIL, SEE ROADWAY STD. 862.03

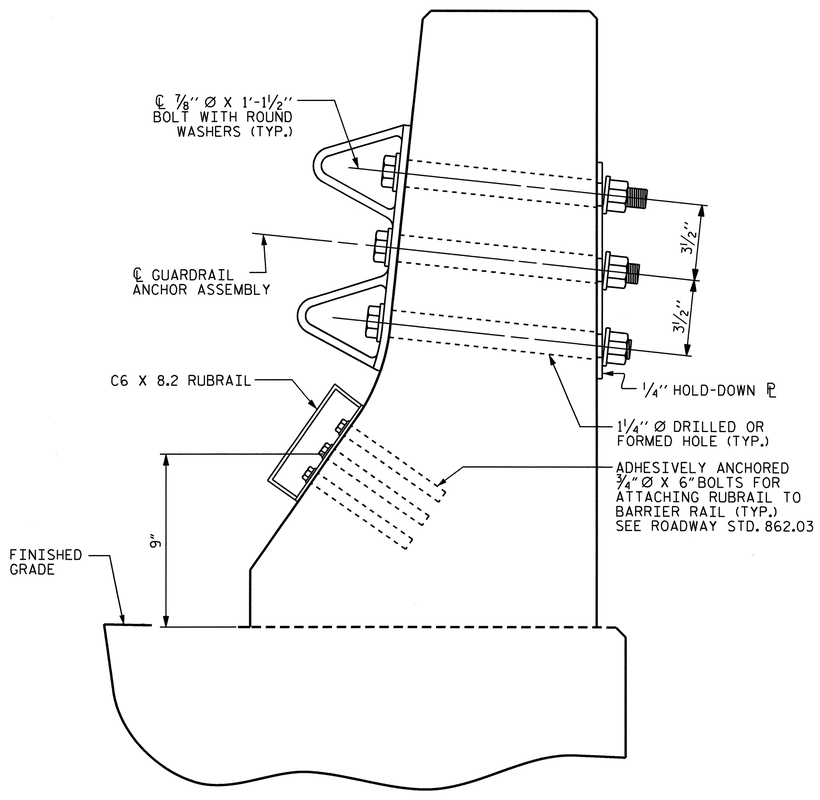

SECTION E-E

GUARDRAIL ANCHOR ASSEMBLY DETAILS

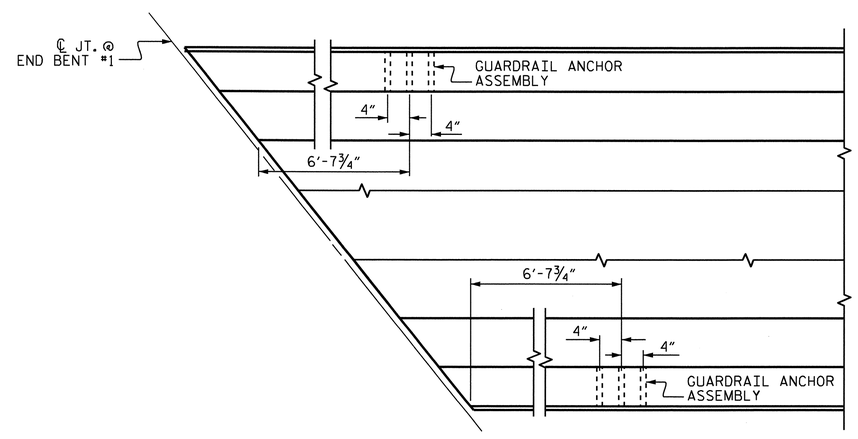

PLAN

LOCATION OF ANCHORS FOR GUARDRAIL

END BENT #1 SHOWN, END BENT #2 SIMILAR.

NOTES

THE GUARDRAIL ANCHOR ASSEMBLY SHALL CONSIST OF A 1/4" HOLD DOWN PLATE AND 4 - 7/8" Ø BOLTS WITH NUTS AND WASHERS, RUBRAIL, AND ADHESIVELY ANCHORED BOLTS.

THE HOLD-DOWN PLATE SHALL CONFORM TO AASHTO M270 GRADE 36. AFTER FABRICATION, THE HOLD-DOWN PLATE SHALL BE HOT-DIP GALVANIZED IN ACCORDANCE WITH AASHTO M111.

BOLTS SHALL CONFORM TO THE REQUIREMENTS OF ASTM A307 AND NUTS SHALL CONFORM TO THE REQUIREMENTS OF AASHTO M291. BOLTS, NUTS AND WASHERS SHALL BE GALVANIZED. (AT THE CONTRACTOR'S OPTION, STAINLESS STEEL BOLTS, NUTS AND WASHERS MAY BE USED AS AN ALTERNATE FOR THE 7/8" Ø GALVANIZED BOLTS, NUTS AND WASHERS. THEY SHALL CONFORM TO OR EXCEED THE MECHANICAL REQUIREMENTS OF ASTM A307. THE USE OF THIS ALTERNATE SHALL BE APPROVED BY THE ENGINEER.)

THE GUARDRAIL ANCHOR ASSEMBLY IS REQUIRED AT ALL POINTS WHERE APPROACH GUARDRAIL IS TO BE ATTACHED TO THE END OF BARRIER RAIL. FOR POINTS OF ATTACHMENT, SEE SKETCH.

AFTER INSTALLATION, THE EXPOSED THREAD OF THE BOLT SHALL BE BURRED WITH A SHARP POINTED TOOL.

THE COST OF THE GUARDRAIL ANCHOR ASSEMBLY SHALL BE INCLUDED IN THE UNIT CONTRACT PRICE BID FOR CONCRETE BARRIER RAIL.

THE 1 1/4" Ø HOLES SHALL BE FORMED OR DRILLED WITH A CORE BIT. IMPACT TOOLS WILL NOT BE PERMITTED. ANY CONCRETE DAMAGED BY THIS WORK SHALL BE REPAIRED TO THE SATISFACTION OF THE ENGINEER.

THE C6 X 8.2 RUBRAIL IS TO BE ADHESIVELY ANCHORED TO THE RAIL USING THREE 3/4" Ø X 6" BOLTS WITH WASHERS. LEVEL ONE FIELD TESTING IS REQUIRED, AND THE YIELD LOAD OF THE 3/4" Ø BOLT IS 12 KIPS. FOR ADHESIVELY ANCHORED ANCHOR BOLTS OR DOWELS, SEE SPECIAL PROVISIONS. SEE ROADWAY STANDARD 862.03 FOR DETAILS AND LOCATION OF THE RUBRAIL.

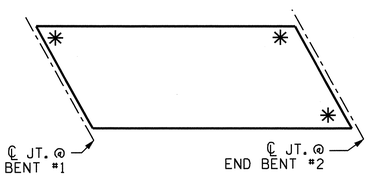

SKETCH SHOWING POINTS OF ATTACHMENTS

✳ DENOTES B-77 GUARDRAIL ANCHOR ASSEMBLY

PROJECT NO. U-4007B

ONSLOW COUNTY

STATION: 22+41.58 -SBL RAMP-

NORTH CAROLINA PROFESSIONAL SEAL 025516 ENGINEER EMILY E. MURRAY

8/29/10

STATE OF NORTH CAROLINA
DEPARTMENT OF TRANSPORTATION
RALEIGH

STANDARD

GUARDRAIL ANCHORAGE FOR BARRIER RAIL

REVISIONS						SHEET NO.
NO.	BY:	DATE:	NO.	BY:	DATE:	S-14
1			3			TOTAL SHEETS
2			4			142

STR. #1 STD. NO. GRA2

ASSEMBLED BY : PEGGY PARISI	DATE : 3-2-10
CHECKED BY : B.N. BARODAWALA	DATE : 4-19-10
DRAWN BY : TLA 5/06	ADDED 5/1/06R KMM/GM
CHECKED BY : GM 5/06	

23-AUG-2010 15:13
G:\TIPProjects-U\U4007b\Structures\FinalPlans\Str. #1\u-4007b_sd_BR_01.dgn
taverette

SUPERSTRUCTURE REINFORCING STEEL LENGTHS ARE BASED ON THE FOLLOWING MINIMUM SPLICE LENGTHS					
BAR SIZE	SUPERSTRUCTURE EXCEPT APPROACH SLABS, PARAPET, AND BARRIER RAIL		APPROACH SLABS		PARAPET AND BARRIER RAIL
	EPOXY COATED	UNCOATED	EPOXY COATED	UNCOATED	
#4	2'-0"	1'-9"	2'-0"	1'-9"	2'-9"
#5	2'-6"	2'-2"	2'-6"	2'-2"	3'-5"
#6	3'-0"	2'-7"	3'-10"	2'-7"	4'-4"
#7	5'-3"	3'-6"			
#8	6'-10"	4'-7"			

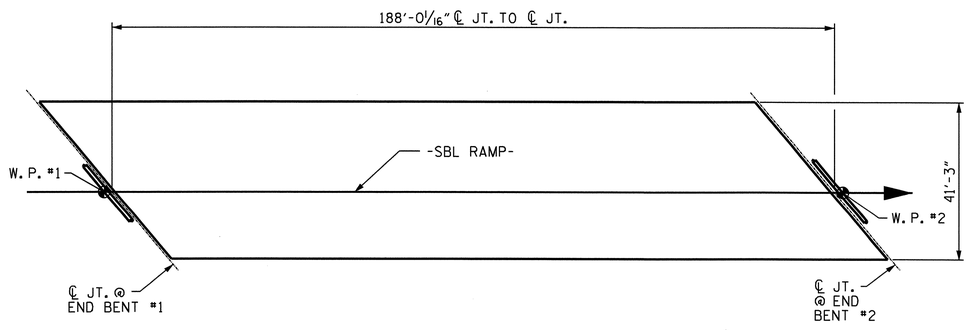

LAYOUT FOR COMPUTING AREA OF REINFORCED CONCRETE DECK SLAB (SQ. FT. = 7755)

BILL OF MATERIAL

BAR	NO.	SIZE	TYPE	LENGTH	WEIGHT
* A1	281	#5	STR	40'-11"	11992
A2	283	#5	STR	40'-11"	12077
* A3	6	#6	STR	16'-3"	146
* A101	4	#5	STR	39'-8"	165
* A102	4	#5	STR	38'-4"	160
* A103	4	#5	STR	37'-1"	155
* A104	4	#5	STR	35'-9"	149
* A105	4	#5	STR	34'-6"	144
* A106	4	#5	STR	33'-3"	139
* A107	4	#5	STR	31'-11"	133
* A108	4	#5	STR	30'-8"	128
* A109	4	#5	STR	29'-4"	122
* A110	4	#5	STR	28'-1"	117
* A111	4	#5	STR	26'-9"	112
* A112	4	#5	STR	25'-6"	106
* A113	4	#5	STR	24'-2"	101
* A114	4	#5	STR	22'-11"	96
* A115	4	#5	STR	21'-8"	90
* A116	4	#5	STR	20'-4"	85
* A117	4	#5	STR	19'-1"	80
* A118	4	#5	STR	17'-9"	74
* A119	4	#5	STR	16'-6"	69
* A120	4	#5	STR	15'-2"	63
* A121	4	#5	STR	13'-11"	58
* A122	4	#5	STR	12'-7"	52
* A123	4	#5	STR	11'-4"	47
* A124	4	#5	STR	10'-1"	42
* A125	4	#5	STR	8'-9"	37
* A126	4	#5	STR	7'-6"	31
* A127	4	#5	STR	6'-2"	26
* A128	4	#5	STR	4'-11"	21
* A129	4	#5	STR	3'-7"	15
* A130	4	#5	STR	2'-4"	10

BILL OF MATERIAL

BAR	NO.	SIZE	TYPE	LENGTH	WEIGHT
A201	4	#5	STR	39'-8"	165
A202	4	#5	STR	38'-4"	160
A203	4	#5	STR	37'-1"	155
A204	4	#5	STR	35'-9"	149
A205	4	#5	STR	34'-6"	144
A206	4	#5	STR	33'-3"	139
A207	4	#5	STR	31'-11"	133
A208	4	#5	STR	30'-8"	128
A209	4	#5	STR	29'-4"	122
A210	4	#5	STR	28'-1"	117
A211	4	#5	STR	26'-9"	112
A212	4	#5	STR	25'-6"	106
A213	4	#5	STR	24'-2"	101
A214	4	#5	STR	22'-11"	96
A215	4	#5	STR	21'-8"	90
A216	4	#5	STR	20'-4"	85
A217	4	#5	STR	19'-1"	80
A218	4	#5	STR	17'-9"	74
A219	4	#5	STR	16'-6"	69
A220	4	#5	STR	15'-2"	63
A221	4	#5	STR	13'-11"	58
A222	4	#5	STR	12'-7"	52
A223	4	#5	STR	11'-4"	47
A224	4	#5	STR	10'-1"	42
A225	4	#5	STR	8'-9"	37
A226	4	#5	STR	7'-6"	31
A227	4	#5	STR	6'-2"	26
A228	4	#5	STR	4'-11"	21
A229	4	#5	STR	3'-7"	15
A230	4	#5	STR	2'-4"	10
* B1	196	#4	STR	28'-6"	3731
B2	176	#5	STR	48'-6"	8903
* G1	2	#5	STR	53'-6"	112
* K1	12	#5	1	12'-1"	151
* K2	18	#5	2	15'-1"	283
* S1	64	#4	3	4'-7"	196

REINFORCING STEEL 23607 LBS.

* EPOXY COATED REINFORCING STEEL 19238 LBS.

BAR TYPES

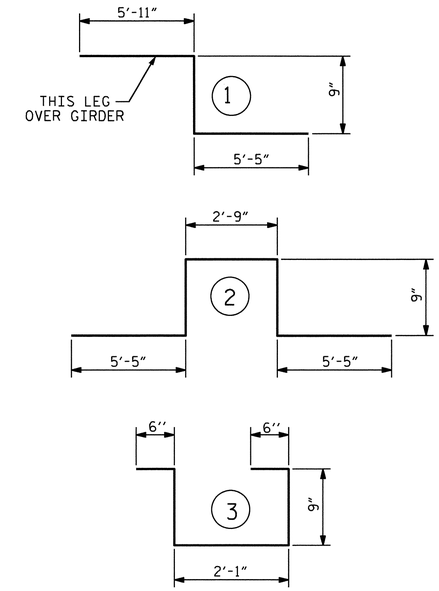

ALL BAR DIMENSIONS ARE OUT TO OUT

SUPERSTRUCTURE BILL OF MATERIAL

	CLASS AA CONCRETE	REINFORCING STEEL	EPOXY COATED REINFORCING STEEL
	(CU.YDS.)	(LBS.)	(LBS.)
SPAN "A"	245.8	23607	19238
TOTALS**	245.8	23607	19238

** QUANTITIES FOR BARRIER RAIL ARE NOT INCLUDED

GROOVING BRIDGE FLOORS		
APPROACH SLABS	1647	SQ.FT.
BRIDGE DECK	6517	SQ.FT.
TOTAL	8164	SQ.FT.

PROJECT NO. U-4007B
ONSLOW COUNTY
STATION: 22+41.58 -SBL RAMP-

NORTH CAROLINA PROFESSIONAL SEAL 025516 ENGINEER EMILY E. MURRAY
8/24/10

STATE OF NORTH CAROLINA
DEPARTMENT OF TRANSPORTATION
RALEIGH

STANDARD
SUPERSTRUCTURE
BILL OF MATERIAL

ASSEMBLED BY : PEGGY PARISI DATE : 2-24-10
CHECKED BY : B.N. BARODAWALA DATE : 4-19-10

DRAWN BY : JMB 5/87
CHECKED BY : SJD 9/87

REV. 6/1/94 EEM/GRP
REV. 8/16/99 RWW/LES
REV. 5/1/06 TLA/GM

REVISIONS						SHEET NO.
NO.	BY:	DATE:	NO.	BY:	DATE:	S-15
1			3			TOTAL SHEETS
2			4			142

STR. #1 STD. NO. BOM1

23-AUG-2010 15:13
G:\TIPProjects-U\U4007b\Structures\FinalPlans\Str. #1\u-4007b_sd_BM_01.dgn
taverette

NOTES

STIRRUPS IN CAP MAY BE SHIFTED AS NECESSARY TO CLEAR ANCHOR BOLTS.

BACKWALL SHALL BE PLACED BEFORE APPLYING THE EPOXY PROTECTIVE COATING.

THE TOP SURFACE AREAS OF THE END BENT CAPS SHALL BE CURED IN ACCORDANCE WITH THE STANDARD SPECIFICATIONS EXCEPT THE MEMBRANE CURING COMPOUND METHOD SHALL NOT BE USED.

THE TOP SURFACE OF THE END BENT CAP EXCEPT THE BRIDGE SEAT BUILDUPS SHALL BE SLOPED TRANSVERSELY FROM THE FILL FACE TO THE BACK FACE AT HE RATE OF 2%.

THE CONTRACTOR SHALL PROVIDE FOR THE INSTALLATION OF THE 4"Ø DRAIN PIPE THROUGH THE WING WALL AS REQUIRED FOR REINFORCED BRIDGE APPROACH FILLS. SEE THE ROADWAY PLANS. REINFORCING STEEL IN THE WING WALL MAY BE SHIFTED AS NECESSARY TO CLEAR THE DRAIN PIPE.

THE CONCRETE IN THE SHADED AREA OF THE WING SHALL BE POURED AFTER THE JOINT BETWEEN THE DECK AND APPROACH SLAB HAS BEEN SAWED AND THE BARRIER RAIL IS CAST IF SLIP FORMING IS USED.

PIPE PILES SHALL BE IN ACCORDANCE WITH SECTION 1084 OF THE STANDARD SPECIFICATIONS.

PIPE PILE PLATES SHALL BE IN ACCORDANCE WITH SECTION 450 OF THE STANDARD SPECIFICATIONS.

REMOVE AND REPLACE OR REPAIR TO THE SATISFACTION OF THE ENGINEER PILES THAT ARE DAMAGED, DEFORMED OR COLLAPSED DURING INSTALLATION OR DRIVING.

PILE SPLICES SHALL BE IN ACCORDANCE WITH THE STANDARD SPECIFICATIONS AND AWS D1.1.

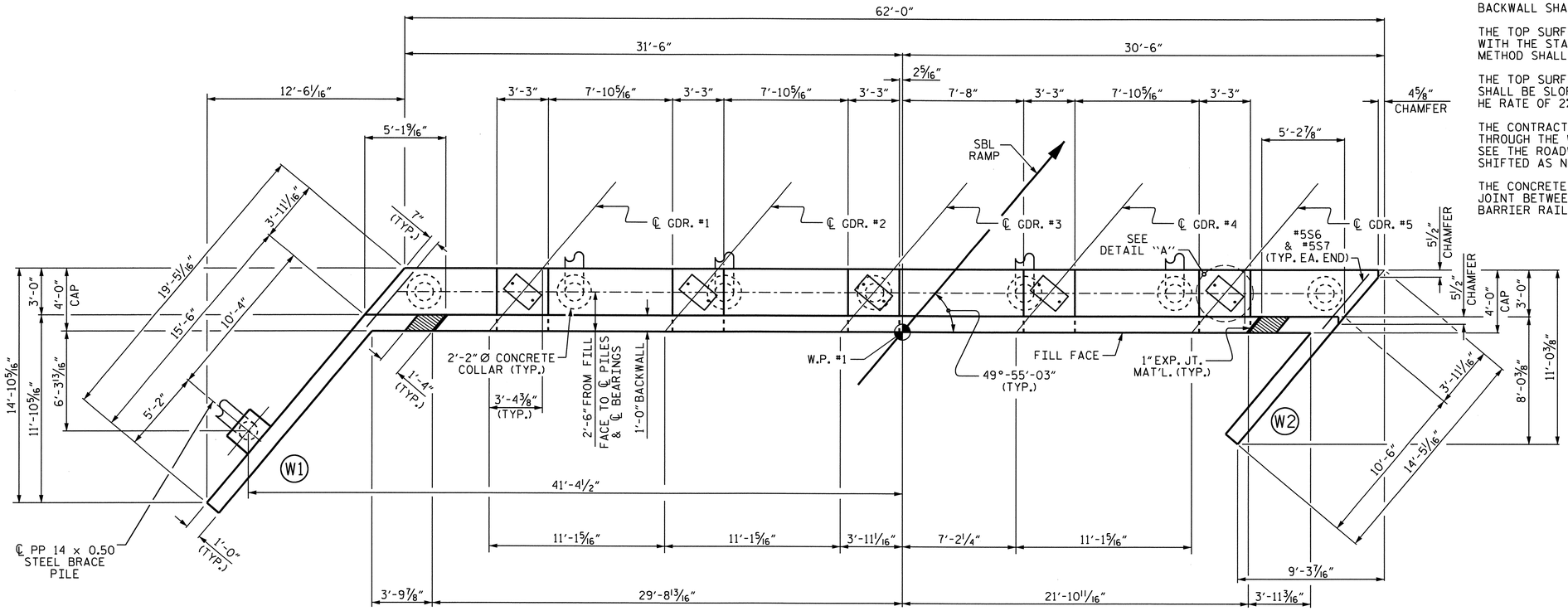

PLAN

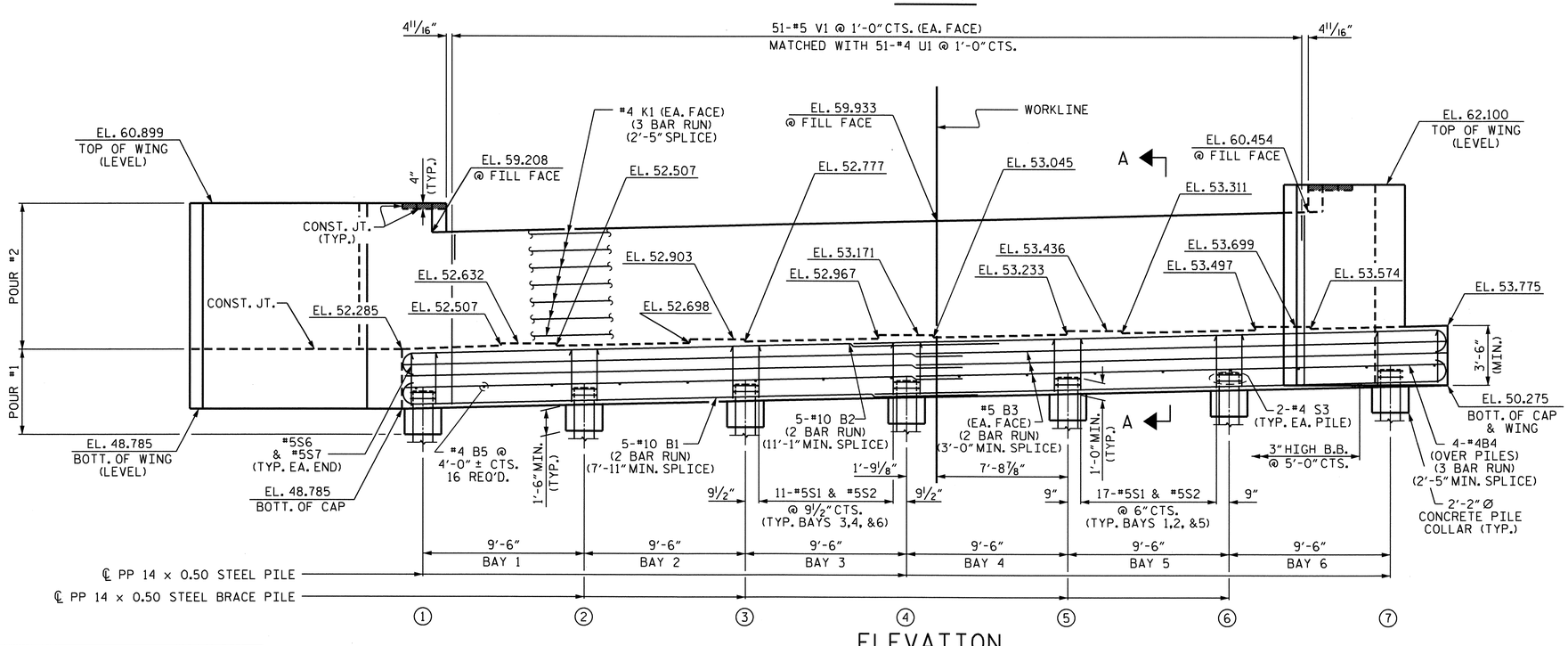

ELEVATION

WING BRACE PILE NOT SHOWN FOR CLARITY.

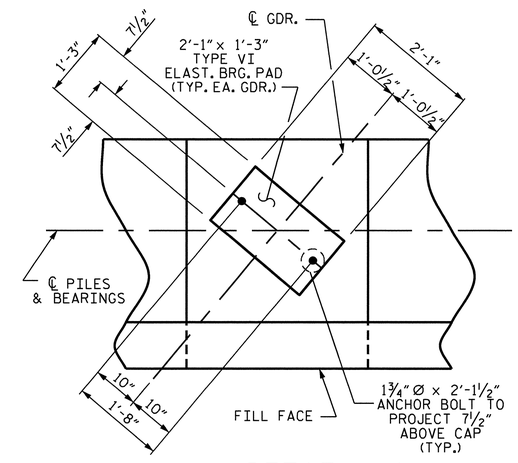

DETAIL "A"

(TYP. EA. BRG.)

TOP OF PILE ELEVATION CHART	
PILE	ELEVATION
#1	49.830
#2	50.058
#3	50.286
#4	50.514
#5	50.742
#6	50.971
#7	51.199

PROJECT NO. U-4007B

ONSLOW COUNTY

STATION: 22+41.58 -SBL RAMP-

SHEET 1 OF 3

STATE OF NORTH CAROLINA
DEPARTMENT OF TRANSPORTATION
RALEIGH

SUBSTRUCTURE

END BENT #1

NORTH CAROLINA PROFESSIONAL SEAL 025516 ENGINEER EMILY E. MURRAY 8/24/10

REVISIONS							SHEET NO.
NO.	BY:	DATE:	NO.	BY:	DATE:		S-16
1			3				TOTAL SHEETS
2			4				142

DRAWN BY : J.B. WILSON DATE : 2/08/10
CHECKED BY : M. GUDLAUGSSON DATE : 2/22/10

23-AUG-2010 15:12
G:\TIPProjects-U\U4007b\Structures\Final Plans\Str. #1\u4007b_sd_eb#1.dgn
taverette

STR. #1

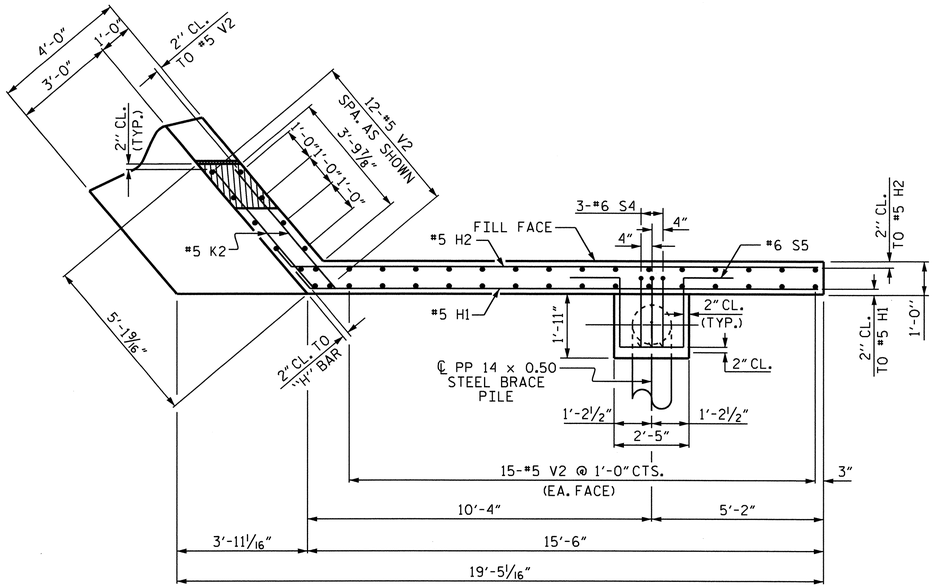

PLAN OF LEFT WING (W1)

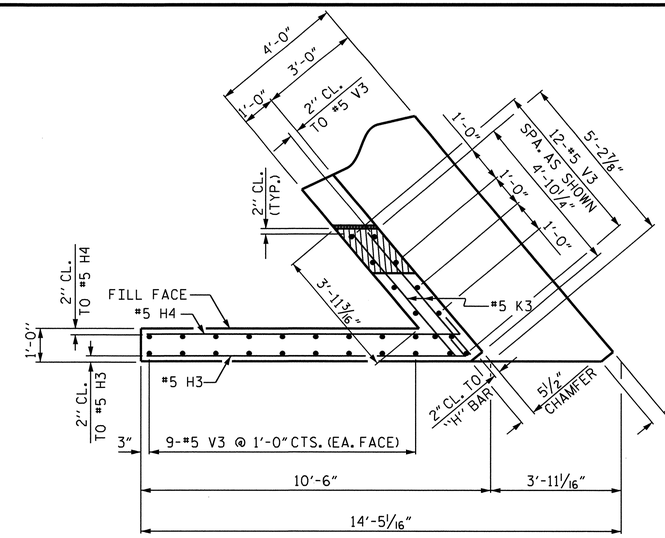

PLAN OF RIGHT WING (W2)

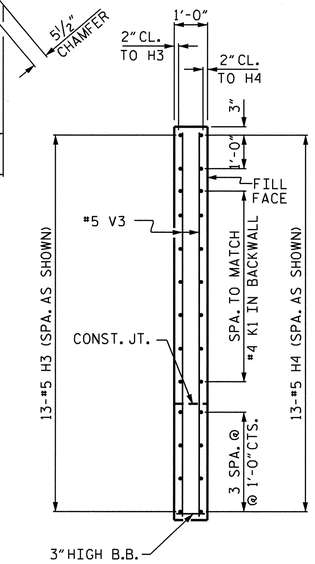

SECTION Y-Y

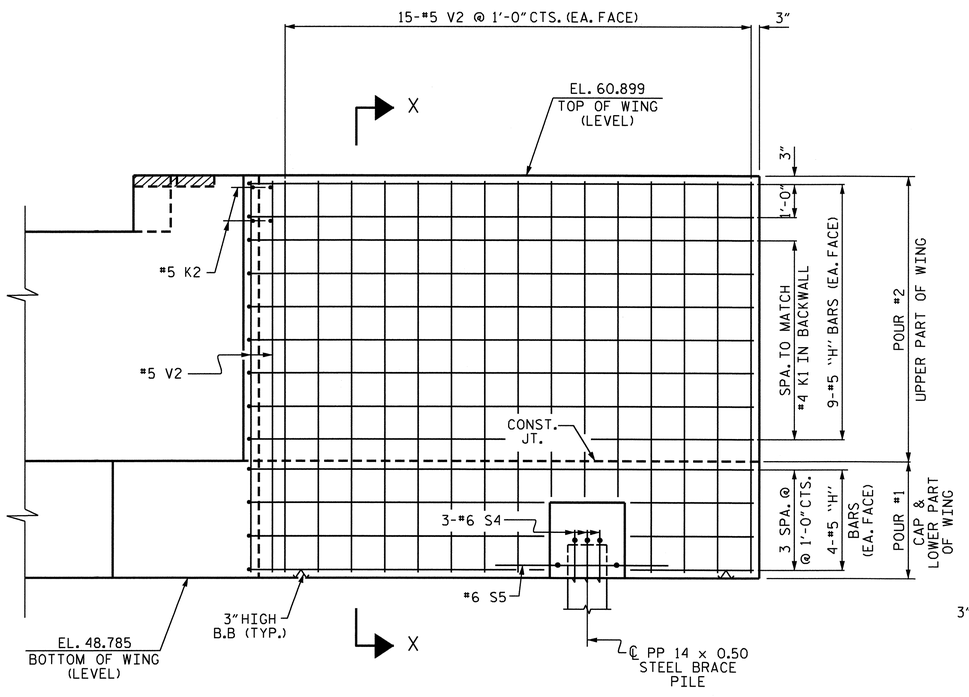

ELEVATION OF LEFT WING (W1)

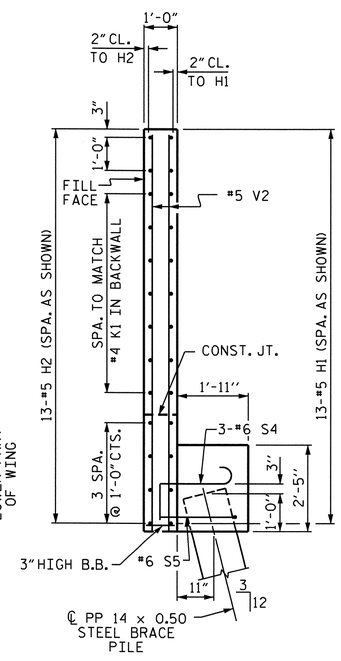

SECTION X-X

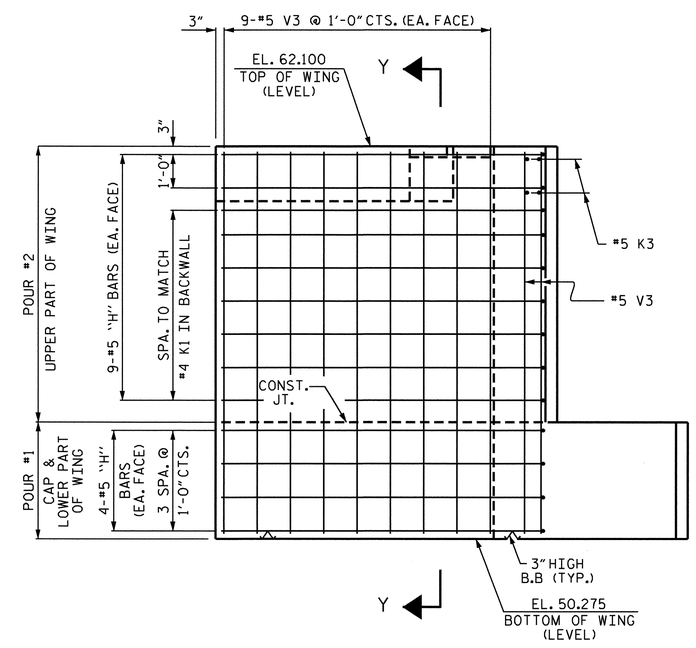

ELEVATION OF RIGHT WING (W2)

NORTH CAROLINA PROFESSIONAL SEAL 025516 ENGINEER ELMER E. MURRAY 8/24/10

PROJECT NO. U-4007B

ONSLOW COUNTY

STATION: 22+41.58 -SBL RAMP-

SHEET 2 OF 3

STATE OF NORTH CAROLINA
DEPARTMENT OF TRANSPORTATION
RALEIGH

SUBSTRUCTURE
END BENT #1

REVISIONS							SHEET NO.
NO.	BY:	DATE:	NO.	BY:	DATE:		S-17
1			3				TOTAL SHEETS
2			4				142

DRAWN BY : J.B. WILSON DATE : 2/09/10
CHECKED BY : M.GUDLAUGSSON DATE : 2/22/10

23-AUG-2010 15:12
G:\TIPProjects-U\U4007b\Structures\FinalPlans\Str. #1\u4007b_sd_eb#1.dgn
taverette

STR. #1

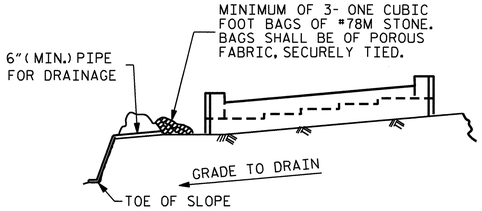

BAGGED STONE AND PIPE SHALL BE PLACED IMMEDIATELY AFTER COMPLETION OF END BENT EXCAVATION. PIPE MAY BE EITHER CONCRETE, CORRUGATED STEEL, CORRUGATED ALUMINUM ALLOY, OR CORRUGATED PLASTIC. PERFORATED PIPE WILL NOT BE ALLOWED.

BAGGED STONE SHALL REMAIN IN PLACE UNTIL THE ENGINEER DIRECTS THAT IT BE REMOVED. THE CONTRACTOR SHALL REMOVE AND DISPOSE OF SILT ACCUMULATIONS AT BAGGED STONE WHEN SO DIRECTED BY THE ENGINEER. BAGS SHALL BE REMOVED AND REPLACED WHENEVER THE ENGINEER DETERMINES THAT THEY HAVE DETERIORATED AND LOST THEIR EFFECTIVENESS.

NO SEPARATE PAYMENT WILL BE MADE FOR THIS WORK AND THE ENTIRE COST OF THIS WORK SHALL BE INCLUDED IN THE UNIT CONTRACT PRICE BID FOR THE SEVERAL PAY ITEMS.

TEMPORARY DRAINAGE AT END BENT

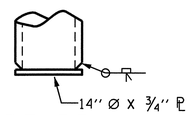

PIPE PILE PLATE DETAIL

(IF APPLICABLE)

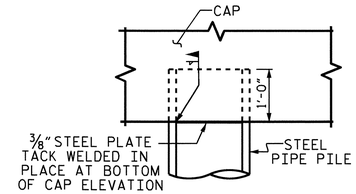

PIPE PILE IN CAP DETAIL

THE CONTRACTOR MAY PROPOSE AN ALTERNATE METHOD FOR PLUGGING THE STEEL PIPE PILE, SUBJECT TO APPROVAL BY THE ENGINEER.

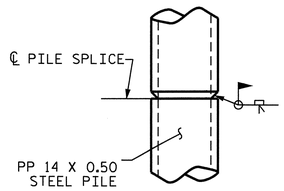

PIPE PILE SPLICE DETAIL

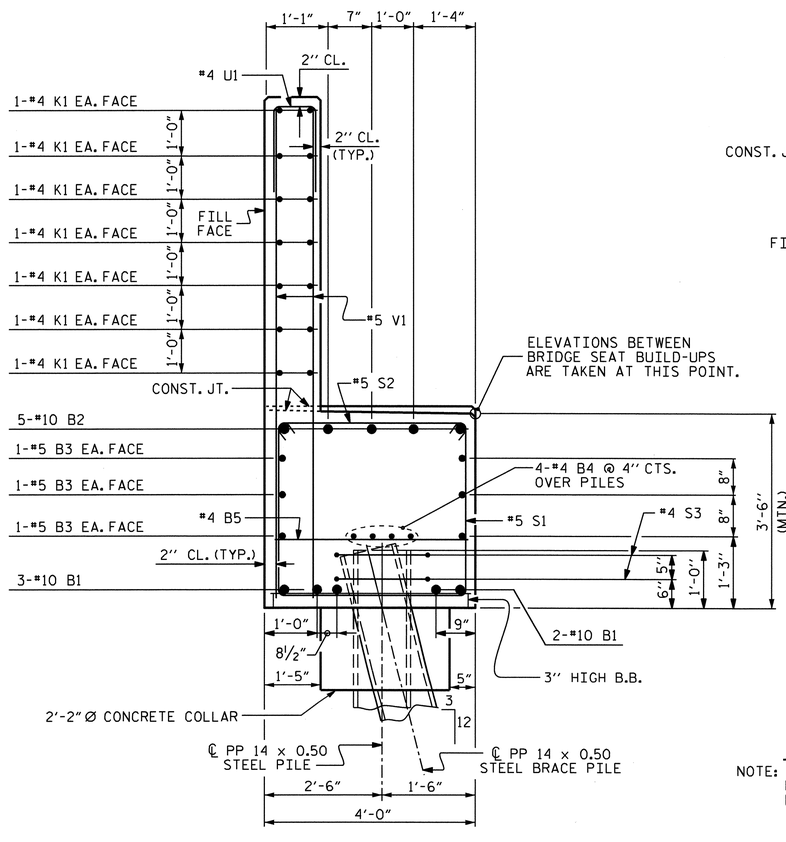

SECTION A-A

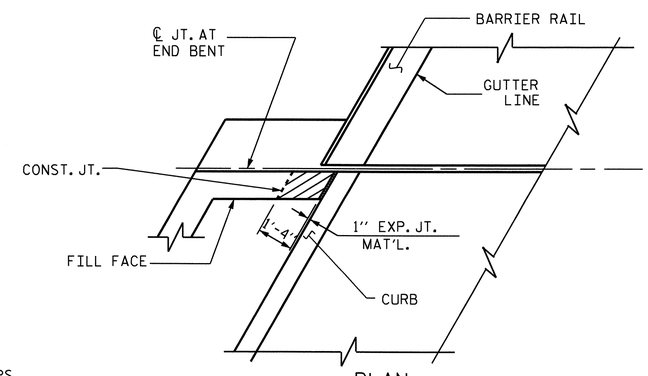

PLAN

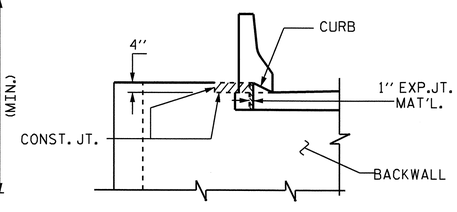

ELEVATION

BLOCKOUT IN WING WALL

NOTE: THE CONCRETE IN THE SHADED AREA OF THE WING SHALL BE POURED AFTER THE JOINT BETWEEN THE DECK AND APPROACH SLAB HAS BEEN SAWED AND THE BARRIER RAIL IS CAST IF SLIP FORMING IS USED.

BAR TYPES

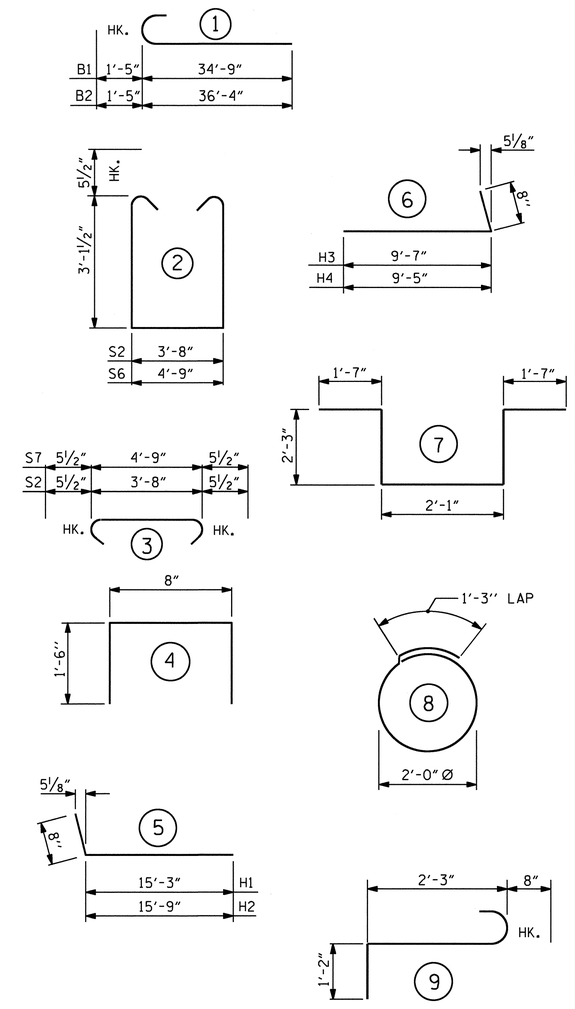

ALL BAR DIMENSIONS ARE OUT TO OUT.

BILL OF MATERIAL

END BENT #1

BAR	NO.	SIZE	TYPE	LENGTH	WEIGHT
B1	10	#10	1	36'-2"	1556
B2	10	#10	1	37'-9"	1624
B3	12	#5	STR	32'-4"	405
B4	12	#4	STR	22'-2"	178
B5	16	#4	STR	3'-8"	39
H1	13	#5	5	15'-11"	216
H2	13	#5	5	16'-5"	223
H3	13	#5	6	10'-3"	139
H4	13	#5	6	10'-1"	137
K1	42	#4	STR	22'-2"	622
K2	4	#5	STR	4'-8"	19
K3	4	#5	STR	4'-9"	20
S1	84	#5	2	10'-10"	949
S2	84	#5	3	4'-7"	402
S3	14	#4	8	7'-7"	71
S4	3	#6	9	4'-1"	18
S5	1	#6	7	9'-9"	15
S6	2	#5	2	11'-11"	25
S7	2	#5	3	5'-8"	12
U1	51	#4	4	3'-8"	125
V1	102	#5	STR	10'-0"	1064
V2	42	#5	STR	11'-8"	511
V3	30	#5	STR	11'-5"	357
REINFORCING STEEL					= 8727 LBS

CLASS "A" CONCRETE BREAKDOWN

POUR #1
CAP, LOWER PART OF WINGS, & CONCRETE PILE COLLARS — 36.6 C.Y.
POUR #2
BACKWALL & UPPER PART OF WINGS — 23.6 C.Y.

CLASS "A" CONCRETE TOTAL — 60.2 C.Y.

PP 14 x 0.50 STEEL PILES
NO. 8 LIN. FT. 440

PIPE PILE PLATES — NO. 8

PILE REDRIVES — NO. 8

PROJECT NO. U-4007B
ONSLOW COUNTY
STATION: 22+41.58 -SBL RAMP-

SHEET 3 OF 3

STATE OF NORTH CAROLINA
DEPARTMENT OF TRANSPORTATION
RALEIGH

SUBSTRUCTURE
END BENT #1

NORTH CAROLINA PROFESSIONAL SEAL 025516 ENGINEER EMILY E. McGRAW
8/24/10

REVISIONS						SHEET NO.
NO.	BY:	DATE:	NO.	BY:	DATE:	S-18
1			3			TOTAL SHEETS
2			4			142

DRAWN BY : J.B. WILSON DATE : 2/09/10
CHECKED BY : M.GUDLAUGSSON DATE : 2/22/10

NOTES

STIRRUPS IN CAP MAY BE SHIFTED AS NECESSARY TO CLEAR ANCHOR BOLTS.

BACKWALL SHALL BE PLACED BEFORE APPLYING THE EPOXY PROTECTIVE COATING.

THE TOP SURFACE AREAS OF THE END BENT CAPS SHALL BE CURED IN ACCORDANCE WITH THE STANDARD SPECIFICATIONS EXCEPT THE MEMBRANE CURING COMPOUND METHOD SHALL NOT BE USED.

THE TOP SURFACE OF THE END BENT CAP EXCEPT THE BRIDGE SEAT BUILDUPS SHALL BE SLOPED TRANSVERSELY FROM THE FILL FACE TO THE BACK FACE AT HE RATE OF 2%.

THE CONTRACTOR SHALL PROVIDE FOR THE INSTALLATION OF THE 4"Ø DRAIN PIPE THROUGH THE WING WALL AS REQUIRED FOR REINFORCED BRIDGE APPROACH FILLS, SEE THE ROADWAY PLANS. REINFORCING STEEL IN THE WING WALL MAY BE SHIFTED AS NECESSARY TO CLEAR THE DRAIN PIPE.

THE CONCRETE IN THE SHADED AREA OF THE WING SHALL BE POURED AFTER THE JOINT BETWEEN THE DECK AND THE APPROACH SLAB HAS BEEN SAWED AND THE BARRIER RAIL IS CAST IF SLIP FORMING IS USED.

EPOXY COAT THE END BENT CAP AFTER ADJUSTMENTS ARE MADE TO BEARINGS AND ANCHOR BOLTS ARE GROUTED.

PIPE PILES SHALL BE IN ACCORDANCE WITH SECTION 1084 OF THE STANDARD SPECIFICATIONS.

PIPE PILE PLATES SHALL BE IN ACCORDANCE WITH SECTION 450 OF THE STANDARD SPECIFICATIONS.

REMOVE AND REPLACE OR REPAIR TO THE SATISFACTION OF THE ENGINEER PILES THAT ARE DAMAGED, DEFORMED OR COLLAPSED DURING INSTALLATION OR DRIVING.

PILE SPLICES SHALL BE IN ACCORDANCE WITH THE STANDARD SPECIFICATIONS AND AWS D1.1.

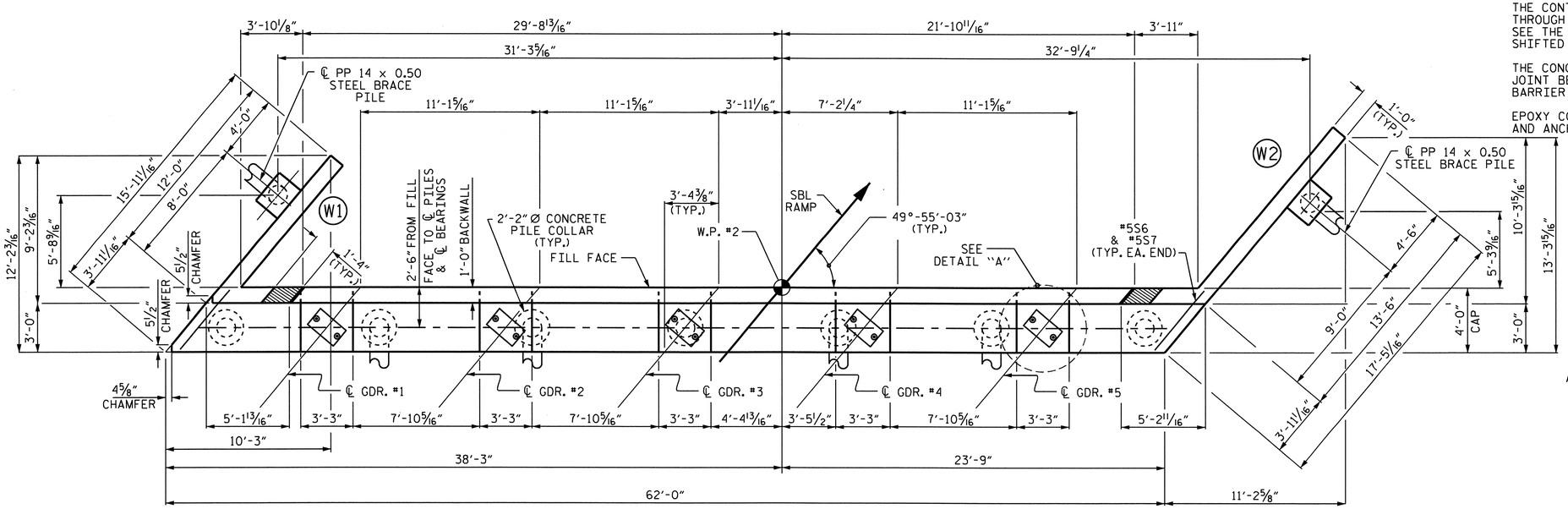

PLAN

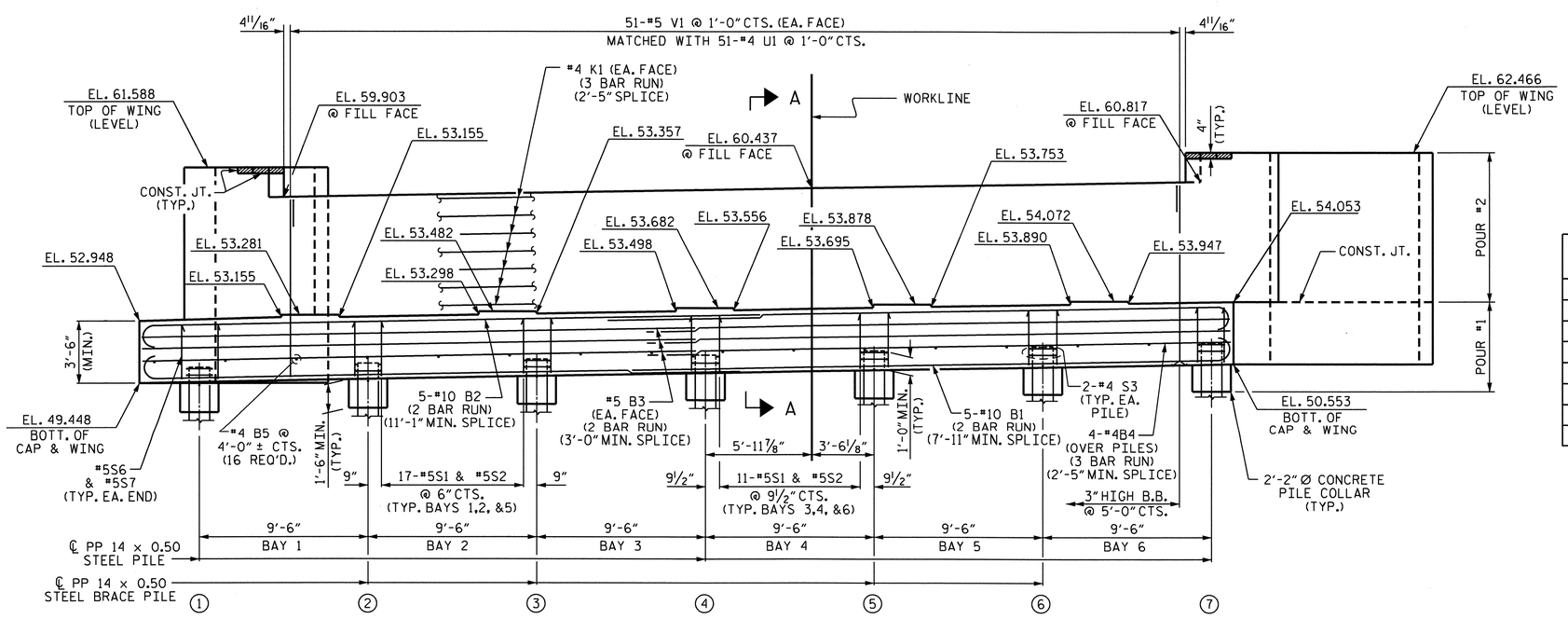

ELEVATION

WING BRACE PILE NOT SHOWN FOR CLARITY.

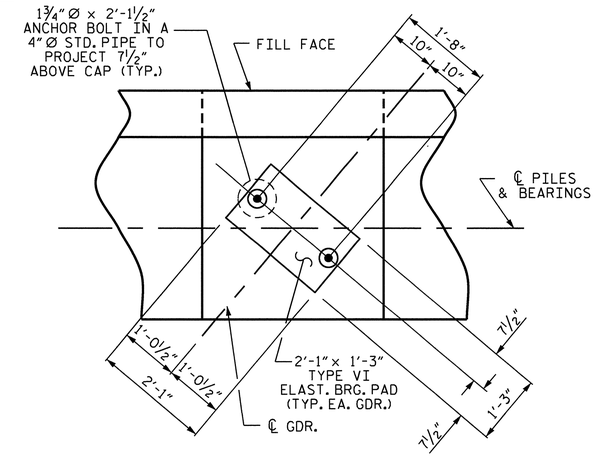

DETAIL "A"

(TYP. EA. BRG.)

TOP OF PILE ELEVATION CHART	
PILE	ELEVATION
#1	50.526
#2	50.695
#3	50.864
#4	51.033
#5	51.203
#6	51.372
#7	51.541

PROJECT NO. U-4007B

ONSLOW COUNTY

STATION: 22+41.58 -SBL RAMP-

SHEET 1 OF 3

STATE OF NORTH CAROLINA
DEPARTMENT OF TRANSPORTATION
RALEIGH

SUBSTRUCTURE

END BENT #2

NORTH CAROLINA PROFESSIONAL SEAL 025516 ENGINEER EMILY E. MURRAY

8/24/10

REVISIONS							SHEET NO.
NO.	BY:	DATE:	NO.	BY:	DATE:		S-19
1			3				TOTAL SHEETS
2			4				142

DRAWN BY : J.B. WILSON DATE : 2/16/10
CHECKED BY : M. GUDLAUGSSON DATE : 2/22/10

23-AUG-2010 15:11
G:\TIPProjects-U\U4007b\Structures\FinalPlans\Str. #1\u4007b_sd_eb#1.dgn
taverette

STR. #1

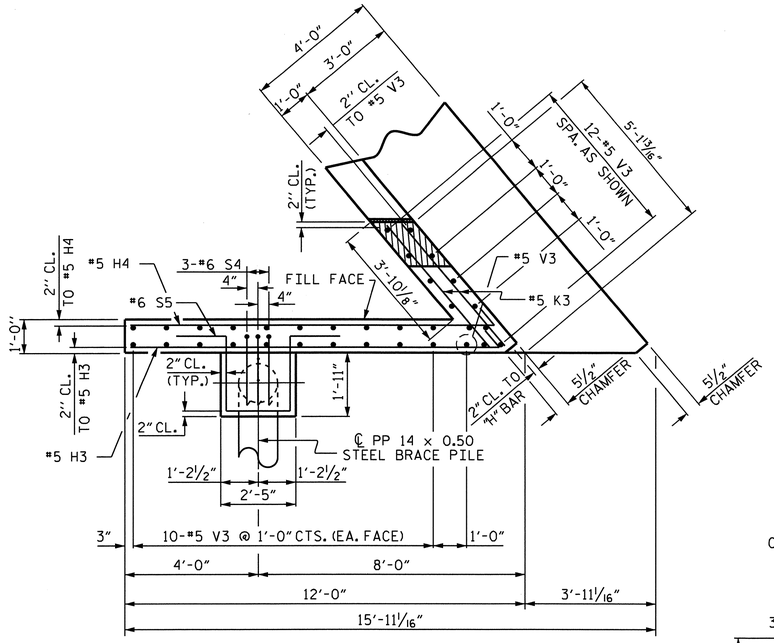

PLAN OF LEFT WING (W1)

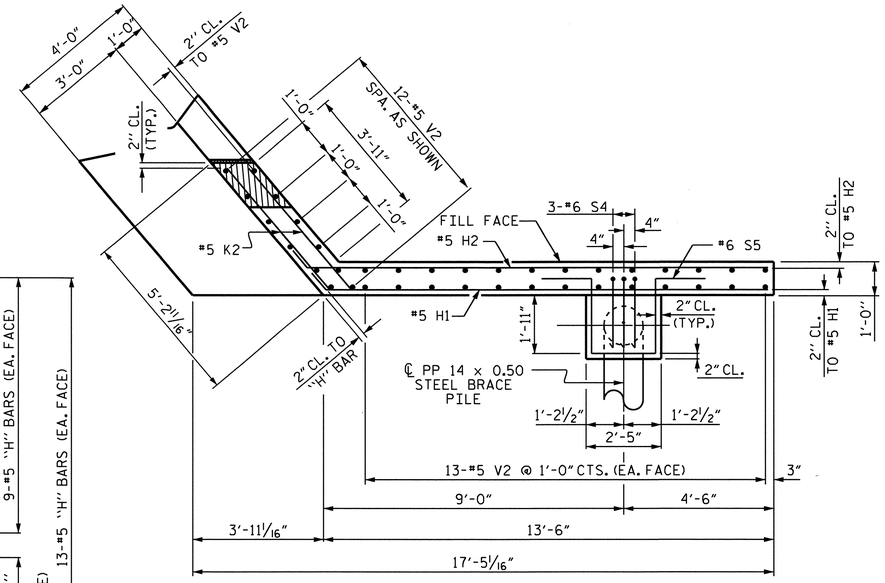

PLAN OF RIGHT WING (W2)

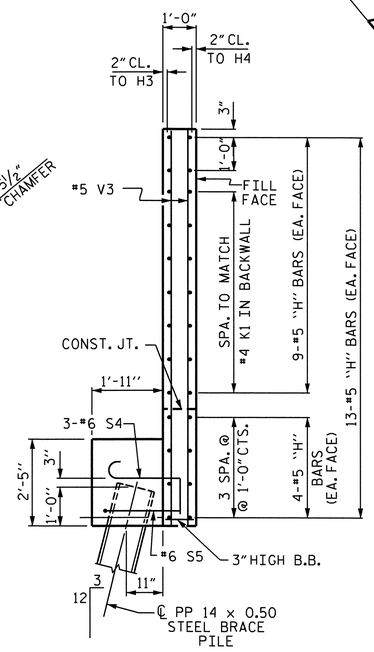

SECTION Y-Y

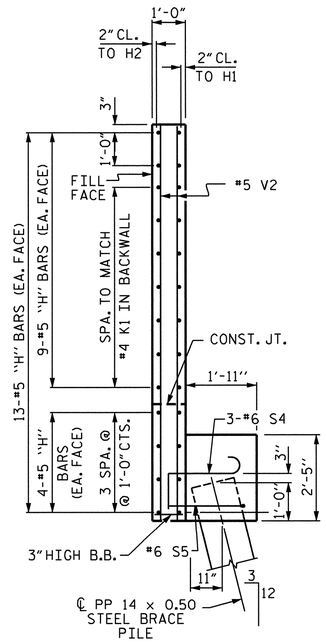

SECTION X-X

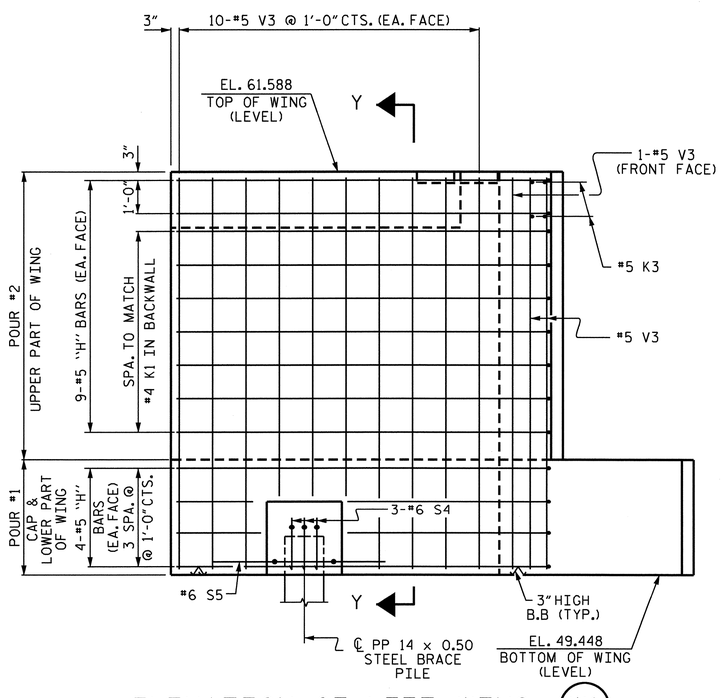

ELEVATION OF LEFT WING (W1)

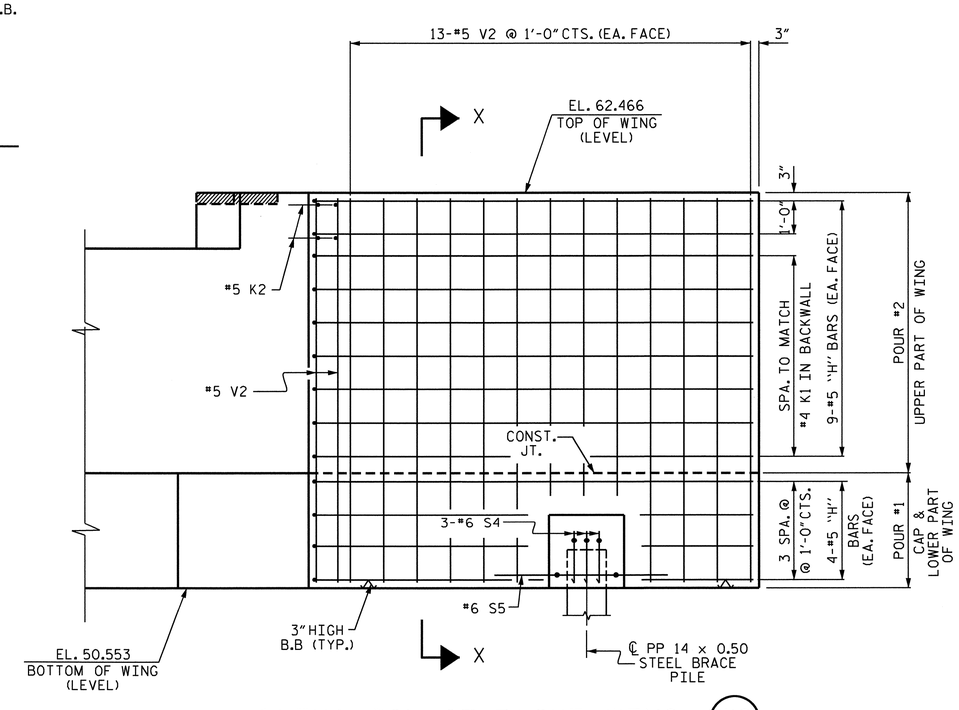

ELEVATION OF RIGHT WING (W2)

NORTH CAROLINA PROFESSIONAL SEAL 025516 ENGINEER EMILY E. SMARRAY
8/24/10

PROJECT NO. U-4007B
ONSLOW COUNTY
STATION: 22+41.58 -SBL RAMP-

SHEET 2 OF 3

STATE OF NORTH CAROLINA
DEPARTMENT OF TRANSPORTATION
RALEIGH

SUBSTRUCTURE
END BENT #2

REVISIONS						SHEET NO.
NO.	BY:	DATE:	NO.	BY:	DATE:	S-20
1			3			TOTAL SHEETS
2			4			142

DRAWN BY : J.B. WILSON DATE : 2/09/10
CHECKED BY : M.GUDLAUGSSON DATE : 2/22/10

23-AUG-2010 15:11
G:\TIPProjects-U\U4007b\Structures\FinalPlans\Str. #1\u4007b_sd_eb#1.dgn
toverette

STR. #1

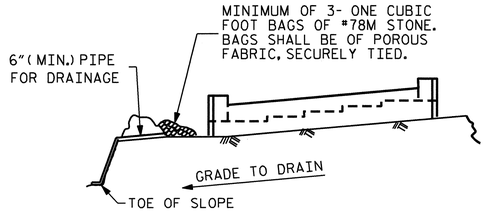

BAGGED STONE AND PIPE SHALL BE PLACED IMMEDIATELY AFTER COMPLETION OF END BENT EXCAVATION. PIPE MAY BE EITHER CONCRETE, CORRUGATED STEEL, CORRUGATED ALUMINUM ALLOY, OR CORRUGATED PLASTIC. PERFORATED PIPE WILL NOT BE ALLOWED.

BAGGED STONE SHALL REMAIN IN PLACE UNTIL THE ENGINEER DIRECTS THAT IT BE REMOVED. THE CONTRACTOR SHALL REMOVE AND DISPOSE OF SILT ACCUMULATIONS AT BAGGED STONE WHEN SO DIRECTED BY THE ENGINEER. BAGS SHALL BE REMOVED AND REPLACED WHENEVER THE ENGINEER DETERMINES THAT THEY HAVE DETERIORATED AND LOST THEIR EFFECTIVENESS.

NO SEPARATE PAYMENT WILL BE MADE FOR THIS WORK AND THE ENTIRE COST OF THIS WORK SHALL BE INCLUDED IN THE UNIT CONTRACT PRICE BID FOR THE SEVERAL PAY ITEMS.

TEMPORARY DRAINAGE AT END BENT

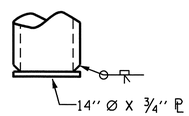

PIPE PILE PLATE DETAIL

(IF APPLICABLE)

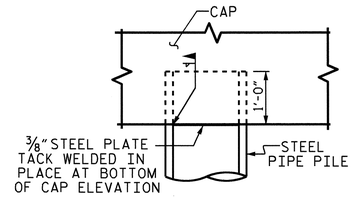

PIPE PILE IN CAP DETAIL

THE CONTRACTOR MAY PROPOSE AN ALTERNATE METHOD FOR PLUGGING THE STEEL PIPE PILE, SUBJECT TO APPROVAL BY THE ENGINEER.

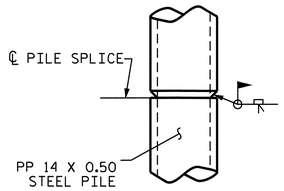

PIPE PILE SPLICE DETAIL

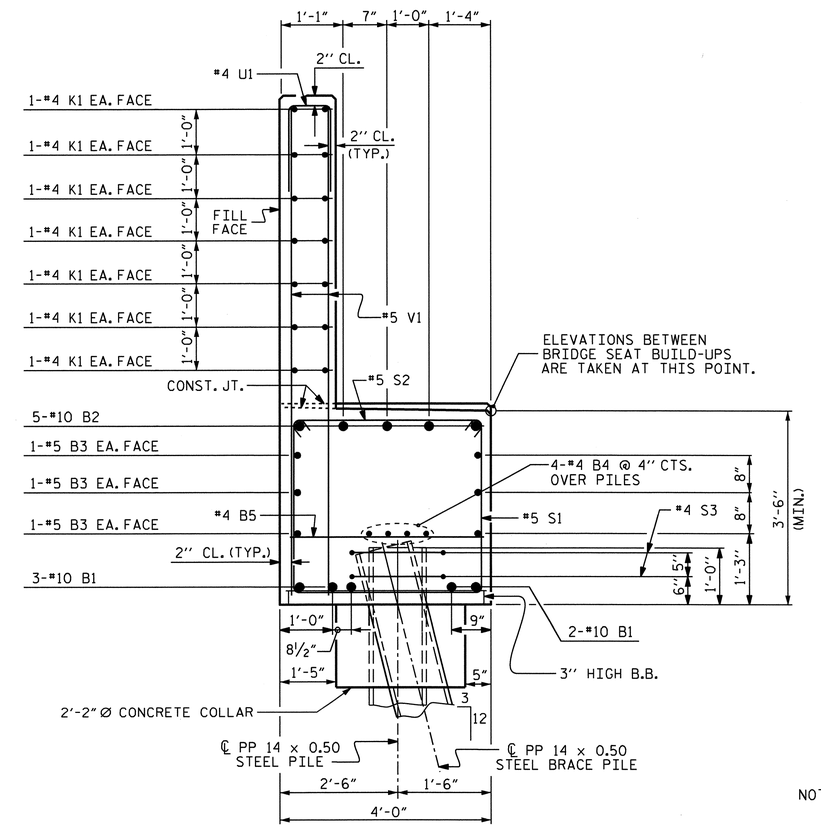

SECTION A-A

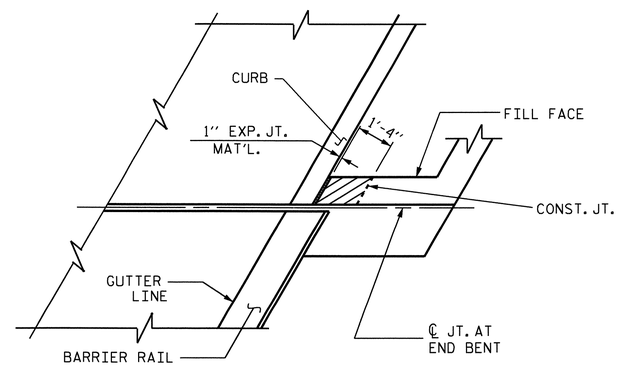

PLAN

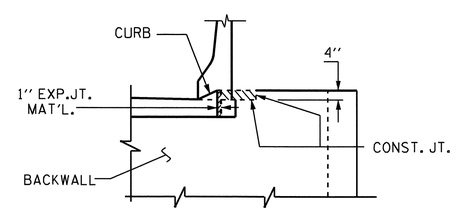

ELEVATION

BLOCKOUT IN WING WALL

NOTE: THE CONCRETE IN THE SHADED AREA OF THE WING SHALL BE POURED AFTER THE JOINT BETWEEN THE DECK AND APPROACH SLAB HAS BEEN SAWED AND THE BARRIER RAIL IS CAST IF SLIP FORMING IS USED.

BAR TYPES

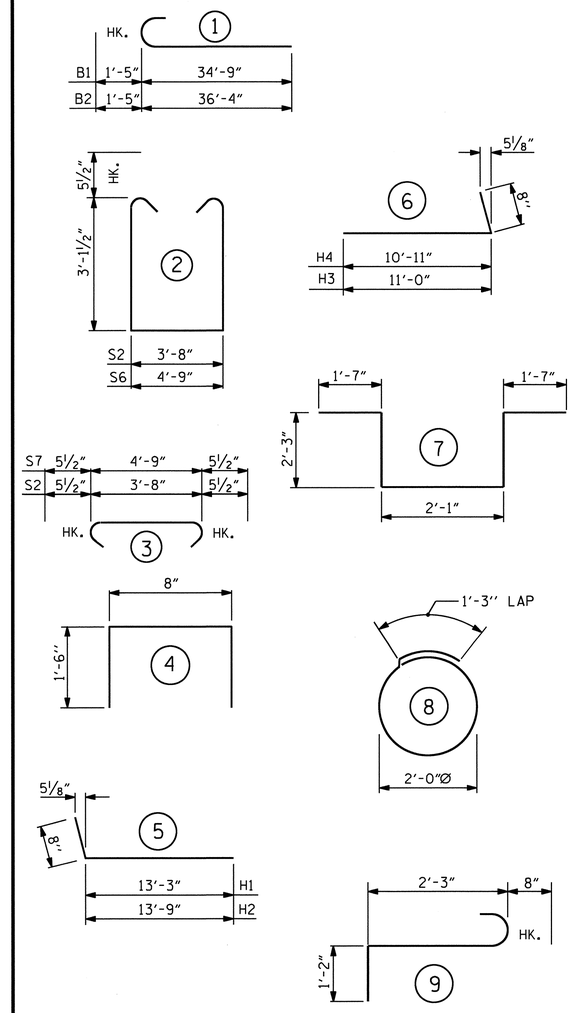

ALL BAR DIMENSIONS ARE OUT TO OUT.

BILL OF MATERIAL

END BENT #2

BAR	NO.	SIZE	TYPE	LENGTH	WEIGHT
B1	10	#10	1	36'-2"	1556
B2	10	#10	1	37'-9"	1624
B3	12	#5	STR	32'-4"	405
B4	12	#4	STR	22'-2"	178
B5	16	#4	STR	3'-8"	39
H1	13	#5	5	13'-11"	189
H2	13	#5	5	14'-5"	195
H3	13	#5	6	11'-8"	158
H4	13	#5	6	11'-7"	157
K1	42	#4	STR	22'-2"	622
K2	4	#5	STR	4'-9"	20
K3	4	#5	STR	4'-8"	19
S1	84	#5	2	10'-10"	949
S2	84	#5	3	4'-7"	402
S3	14	#4	8	7'-7"	71
S4	6	#6	9	4'-1"	37
S5	2	#6	7	9'-9"	29
S6	2	#5	2	11'-11"	25
S7	2	#5	3	5'-8"	12
U1	51	#4	4	3'-8"	125
V1	102	#5	STR	10'-0"	1064
V2	38	#5	STR	11'-6"	456
V3	33	#5	STR	11'-8"	402
REINFORCING STEEL					= 8734 LBS

CLASS "A" CONCRETE BREAKDOWN

POUR #1
CAP, LOWER PART OF WINGS, & CONCRETE PILE COLLAR 36.9 C.Y.

POUR #2
BACKWALL & UPPER PART OF WINGS 23.3 C.Y.

CLASS "A" CONCRETE TOTAL 60.2 C.Y.

PP 14 x 0.50 STEEL PILES
NO. 9 LIN. FT. 495

PIPE PILE PLATES NO. 9

PILE REDRIVES NO. 9

PROJECT NO. U-4007B
ONSLOW COUNTY
STATION: 22+41.58 -SBL RAMP-

SHEET 3 OF 3

STATE OF NORTH CAROLINA
DEPARTMENT OF TRANSPORTATION
RALEIGH

SUBSTRUCTURE
END BENT #2

NORTH CAROLINA PROFESSIONAL SEAL 025516 ENGINEER EMILY E. MURRAY
4/29/10

REVISIONS						SHEET NO.
NO.	BY:	DATE:	NO.	BY:	DATE:	S-21
1			3			TOTAL SHEETS
2			4			142

DRAWN BY : J.B. WILSON DATE : 2/09/10
CHECKED BY : M.GUDLAUGSSON DATE : 2/22/10

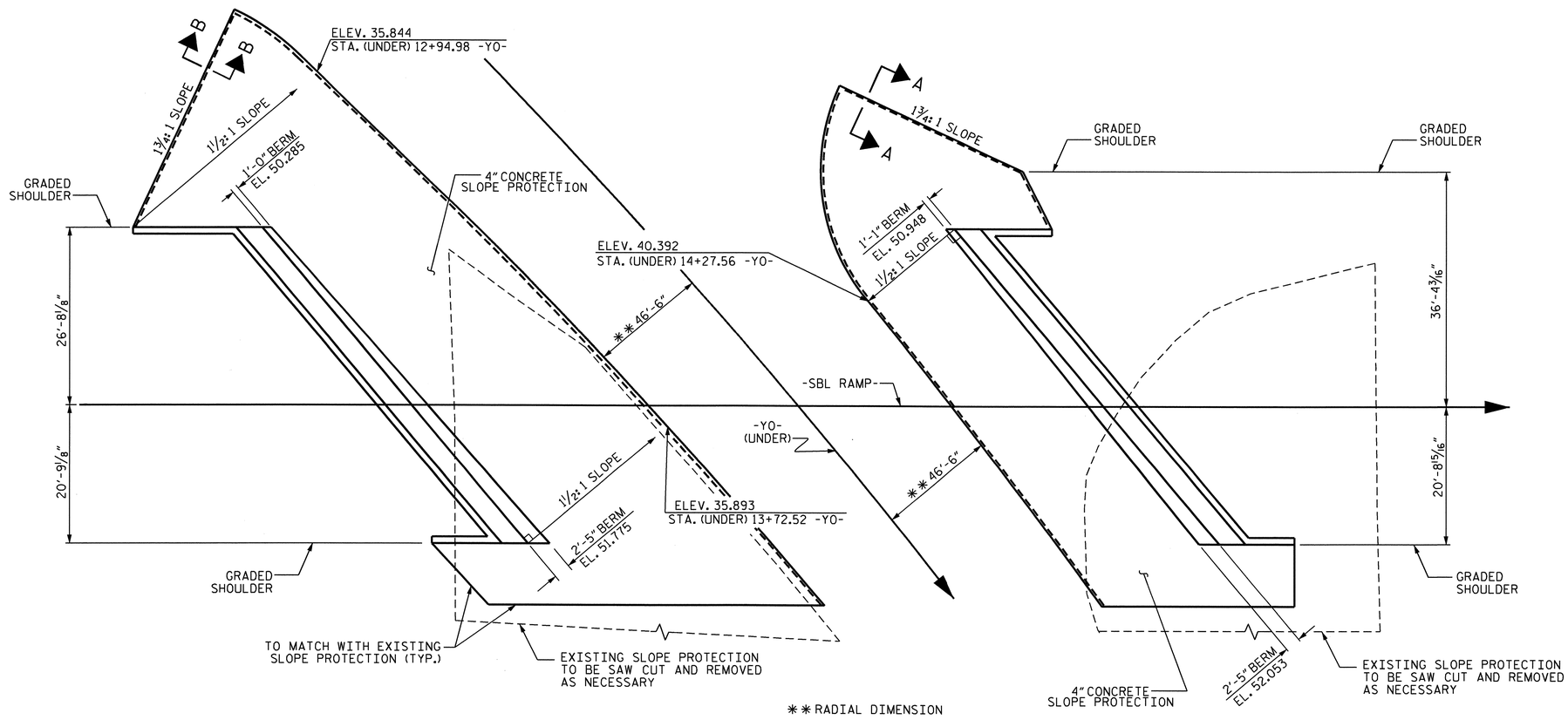

GENERAL NOTES

SLOPE PROTECTION SHALL BE PLACED UNDER THE ENDS OF THE BRIDGE AS SHOWN IN THE DETAILS. STRAIGHT EDGING WILL NOT BE REQUIRED UNLESS, IN THE OPINION OF THE ENGINEER, VISUAL INSPECTION INDICATES A NEED FOR IT. MEASUREMENT AND PAYMENT SHALL BE AS PRESCRIBED IN SECTION 462 OF THE STANDARD SPECIFICATIONS.

ALTERNATE "A"

ALTERNATE "A" SHALL CONSIST OF 4" POURED-IN-PLACE CONCRETE PAVING AS SHOWN IN THE DETAILS ON THIS SHEET. CONCRETE SHALL BE CLASS "B". THE CONCRETE SURFACE SHALL BE FLOATED WITH A WOODEN FLOAT AND FINISHED. WELDED WIRE FABRIC REINFORCING SHALL BE 6 X 6 - W1.4 X W1.4, 60" WIDE. SLOPE PROTECTION SHALL BE POURED IN 5' STRIPS AS SHOWN IN THE "POURING DETAIL" WITH 2'-0" LONG #4 BARS PLACED ALONG THE SLOPE BETWEEN STRIPS AT 1'-6" MAXIMUM SPACING. SLOPE PROTECTION MAY BE POURED IN ALTERNATE 4' AND 5' STRIPS AS SHOWN IN THE "OPTIONAL POURING DETAIL" WITH ADJACENT RUNS OF WELDED WIRE FABRIC LAPPING AT LEAST 6". THE COST OF THE WELDED WIRE FABRIC AND #4 BARS, IF USED, SHALL BE INCLUDED IN THE CONTRACT UNIT PRICE BID PER SQUARE YARD FOR SLOPE PROTECTION.

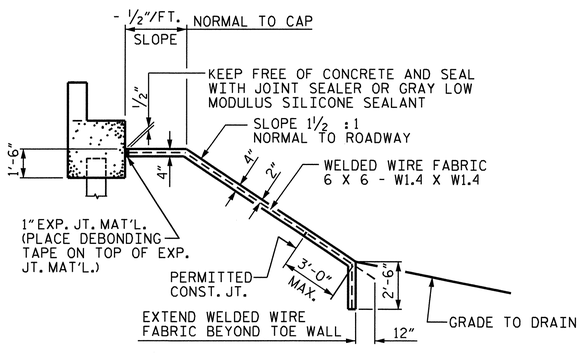

SECTION ALONG ℄ ROADWAY

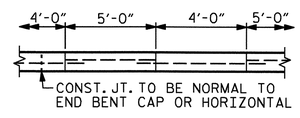

POUR A 4'-0" STRIP FIRST. STRIP WIDTHS MAY VARY IN CURVED PORTION.

OPTIONAL POURING DETAIL

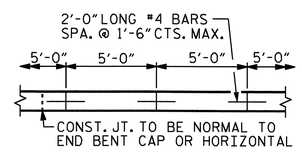

STRIP WIDTHS MAY VARY IN CURVED PORTION.

POURING DETAIL

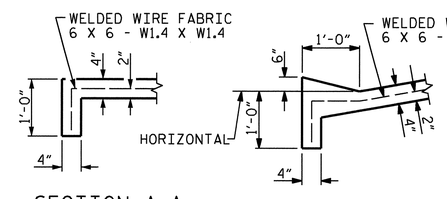

SECTION A-A

SECTION B-B

BRIDGE @ STA. 22+41.58 -SBL RAMP-	4" INCH SLOPE PROTECTION	* WELDED WIRE FABRIC 60 INCHES WIDE
	SQUARE YARDS	APPROX. L.F.
END BENT 1	460	920
END BENT 2	340	680

* QUANTITY SHOWN IS BASED ON 5' POURS.

DETAILS FOR ALTERNATE "A"

PROJECT NO. U-4007B

ONSLOW COUNTY

STATION: 22+41.58-SBL RAMP-

STATE OF NORTH CAROLINA
DEPARTMENT OF TRANSPORTATION
RALEIGH

STANDARD

SLOPE PROTECTION DETAILS

NORTH CAROLINA PROFESSIONAL SEAL 025516 ENGINEER EMILY E. MURRAY
8/24/10

REVISIONS						SHEET NO.
NO.	BY:	DATE:	NO.	BY:	DATE:	S-22
1			3			TOTAL SHEETS
2			4			142

STR. #1

DRAWN BY : M.D.PISO DATE : 6-28-10
CHECKED BY : M.GUDLAUGSSON DATE : 6-30-10

23-AUG-2010 15:10
G:\TIPProjects-U\U4007b\Structures\FinalPlans\Str. #1\U-4007B_SD_SP.dgn
taverette

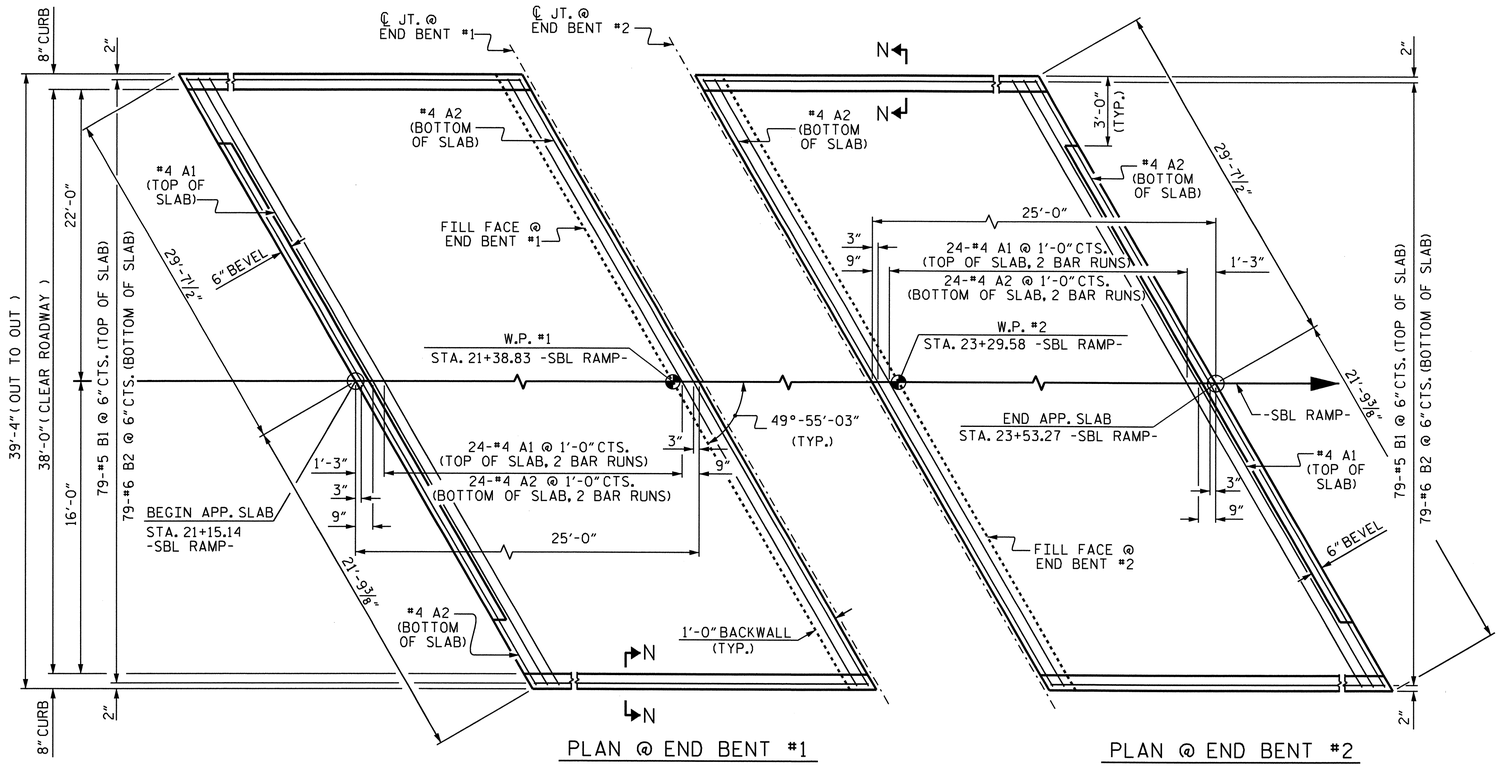

PLAN @ END BENT #1

PLAN @ END BENT #2

DIMENSIONS SHOWN ARE TYPICAL FOR BOTH APPROACH SLABS

NOTES

APPROACH SLAB SHALL NOT BE CONSTRUCTED PRIOR TO COMPLETION OF THE BRIDGE DECK.

FOR REINFORCED BRIDGE APPROACH FILL INCLUDING FABRIC, IMPERMEABLE GEOMEMBRANE, 4" Ø DRAINAGE PIPE, #78M STONE, AND SELECT MATERIAL, SEE ROADWAY PLANS.

AREA BETWEEN THE WINGWALL AND APPROACH SLAB SHALL BE GRADED TO DRAIN THE WATER AWAY FROM THE FILL FACE OF THE BRIDGE AND SHALL BE PAVED. SEE ROADWAY PLANS.

THE 6" COMP. A.B.C. SHALL BE FLUSH WITH THE ROADWAY END OF THE APPROACH SLAB AND SHALL EXTEND 1'-0" OUTSIDE EACH EDGE OF THE APPROACH SLAB.

THE CONTRACTOR MAY USE 4" TYPE B-25.0B ASPHALT CONCRETE BASE COURSE IN LIEU OF 6" COMP. A.B.C. IF THIS OPTION IS USED, THE BASE COURSE SHALL BE FLUSH WITH THE ROADWAY END OF THE APPROACH SLAB, AND THE WIDTH SHALL BE THE SAME AS THAT OF THE APPROACH SLAB.

THE CONTRACTOR MAY USE 5" CLASS "A" CONCRETE BASE IN LIEU OF 6" COMP. A.B.C. IF THIS OPTION IS USED, THE CONCRETE BASE SHALL BE FLUSH WITH THE ROADWAY END OF THE APPROACH SLAB, AND THE WIDTH SHALL BE THE SAME AS THAT OF THE APPROACH SLAB. THE CONCRETE SHALL BE FINISHED TO A SMOOTH SURFACE AND A LAYER OF 30 LB ROOFING FELT SHALL BE PLACED BETWEEN THE CONCRETE BASE AND THE APPROACH SLAB TO PREVENT BOND. THE APPROACH SLAB SHALL NOT BE CAST UNTIL THE CONCRETE BASE HAS REACHED AN AGE OF THREE CURING DAYS.

FOR EVAZOTE JOINT SEALS, SEE SPECIAL PROVISIONS.

THE NOMINAL UNCOMPRESSED SEAL WIDTH OF THE EVAZOTE JOINT SEAL SHALL BE 2½" FOR END BENT #1 AND 3/8" FOR END BENT #2.

FOR ELASTOMERIC CONCRETE, SEE SPECIAL PROVISIONS.

THE JOINT SHALL BE SAWED PRIOR TO THE CASTING OF THE BARRIER RAIL.

BILL OF MATERIAL

APPROACH SLAB AT EB #1

BAR	NO.	SIZE	TYPE	LENGTH	WEIGHT
* A1	50	#4	STR	26'-6"	885
A2	52	#4	STR	26'-5"	918
* B1	79	#5	STR	23'-8"	1950
B2	79	#6	STR	24'-8"	2927
REINFORCING STEEL				LBS.	3845
* EPOXY COATED REINFORCING STEEL				LBS.	2835
CLASS AA CONCRETE				C. Y.	37.2

APPROACH SLAB AT EB #2

BAR	NO.	SIZE	TYPE	LENGTH	WEIGHT
* A1	50	#4	STR	26'-6"	885
A2	52	#4	STR	26'-5"	918
* B1	79	#5	STR	23'-8"	1950
B2	79	#6	STR	24'-8"	2927
REINFORCING STEEL				LBS.	3845
* EPOXY COATED REINFORCING STEEL				LBS.	2835
CLASS AA CONCRETE				C. Y.	37.2

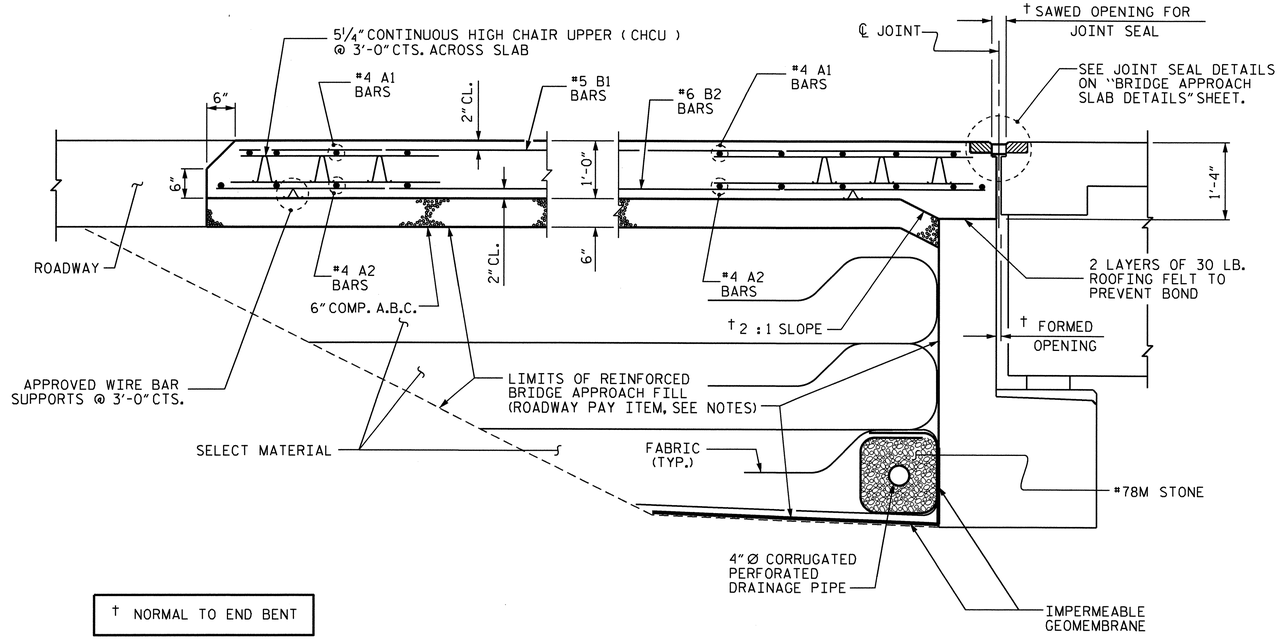

† NORMAL TO END BENT

SECTION THRU SLAB

SHOWING SECTION WITHOUT CONCRETE WEARING SURFACE

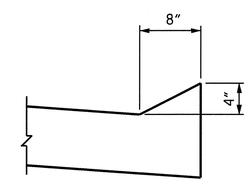

SECTION N-N

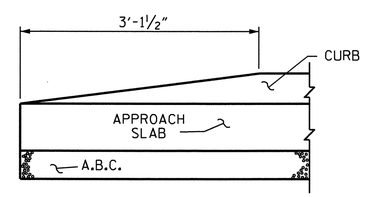

END OF CURB WITHOUT SHOULDER BERM GUTTER

CURB DETAILS

PROJECT NO. U-4007B

ONSLOW COUNTY

STATION: 22+41.58 -SBL RAMP-

SHEET 1 OF 2

STATE OF NORTH CAROLINA
DEPARTMENT OF TRANSPORTATION
RALEIGH

STANDARD

BRIDGE APPROACH SLAB FOR FLEXIBLE PAVEMENT

NORTH CAROLINA PROFESSIONAL SEAL 025516 ENGINEER EMILY E. McMURRAY 8/29/10

REVISIONS						SHEET NO.
NO.	BY:	DATE:	NO.	BY:	DATE:	S-23
1			3			TOTAL SHEETS
2			4			142

ASSEMBLED BY : M.D.PISO DATE : 02/18/10
CHECKED BY : B.N.BARODAWALA DATE : 03/04/10

DRAWN BY : EEM 3/95 — REV. 7/10/01 LES/RDR
CHECKED BY : VAP 3/95 — REV. 5/7/03R RWW/JTE
REV. 5/1/06R KMM/GM

STR. #1

STD. NO. BAS4 (SHT 6)

23-AUG-2010 15:10
G:\TIPProjects-U\U4007b\Structures\FinalPlans\Str. #1\u-4007b_sd_as_01.dgn
taverette

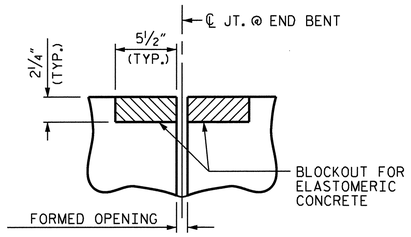

SECTION C-C
EVAZOTE JOINT SEAL
(PRE-SAWED ELASTOMERIC
CONCRETE DIMENSIONS)

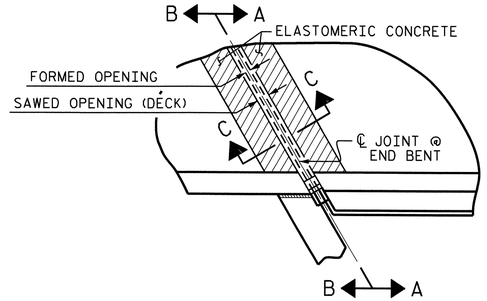

PLAN

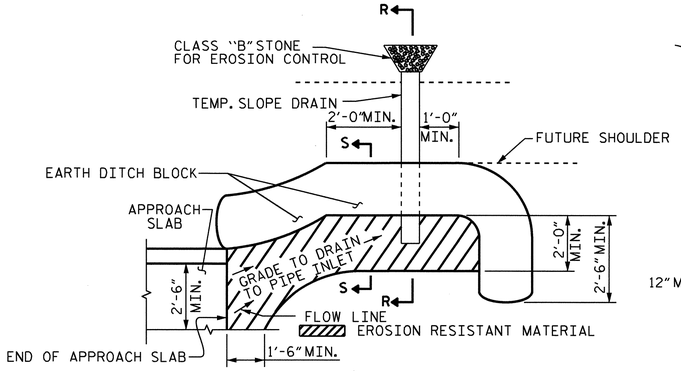

NOTE: IMMEDIATELY AFTER THE CONSTRUCTION OF THE APPROACH SLAB, THE CONTRACTOR SHALL PROVIDE TEMPORARY BERM AND SLOPE DRAIN. CONTRACTOR SHALL GRADE TO PIPE INLET AND PROVIDE EROSION RESISTANT MATERIAL AS SHOWN. THE EROSION RESISTANT MATERIAL SHALL BE EITHER 1) ASPHALT PLANT MIX, TYPE 1 OR TYPE 2, MIN. 2" DEPTH, 2) EROSION CONTROL MAT, OR 3) CONCRETE, AS DIRECTED BY THE ENGINEER. THE SLOPE DRAIN SHALL CONSIST OF A NON-PERFORATED TEMPORARY DRAINAGE PIPE, 12 INCHES IN DIAMETER.

PLAN VIEW

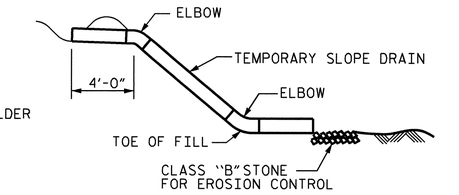

SECTION R-R

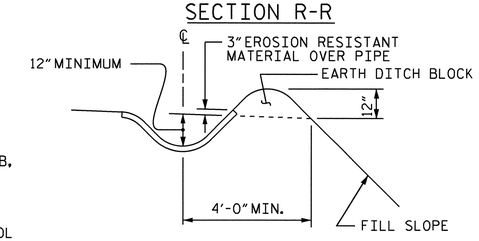

SECTION S-S

TEMPORARY BERM AND SLOPE DRAIN DETAILS

(TO BE USED WHEN SHOULDER BERM GUTTER IS REQUIRED)

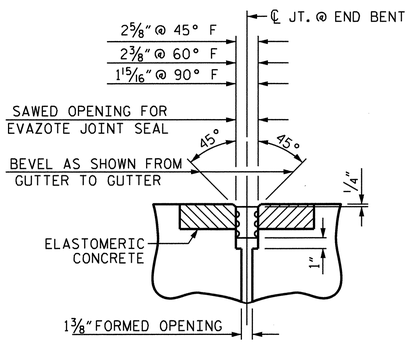

SECTION C-C
EVAZOTE JOINT SEAL
(EXPANSION)
AT END BENT #2

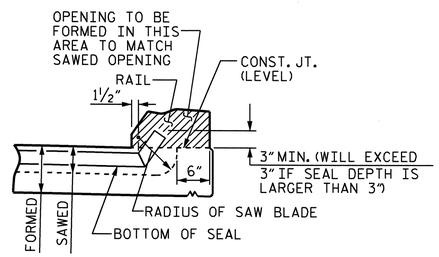

SECTION A-A

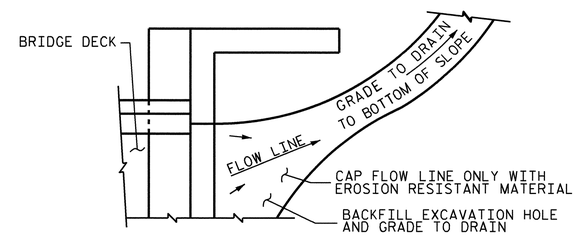

NOTE: IF THE APPROACH SLAB IS NOT CONSTRUCTED IMMEDIATELY AFTER THE BACKFILLING OF THE END BENT EXCAVATION, GRADE TO DRAIN TO THE BOTTOM OF THE SLOPE AND PROVIDE EROSION RESISTANT MATERIAL, SUCH AS FIBERGLASS ROVING OR AS DIRECTED BY THE ENGINEER TO PREVENT SOIL EROSION AND TO PROTECT THE AREA ADJACENT TO THE STRUCTURE. THE CONTRACTOR WILL BE REQUIRED TO REMOVE THESE MATERIALS PRIOR TO CONSTRUCTION OF THE APPROACH SLAB.

TEMPORARY DRAINAGE DETAIL

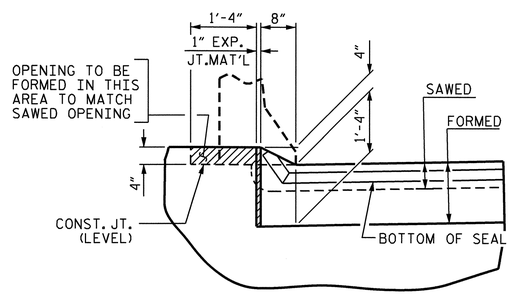

SECTION B-B

JOINT SEAL DETAILS @ END BENT

EVAZOTE JOINT SEAL TO BE CUT, HEAT WELDED AND TURNED UP PARALLEL TO SLOPED FACE OF THE BARRIER RAIL.

THE JOINT SHALL BE SAWED PRIOR TO THE CASTING OF THE BARRIER RAIL.

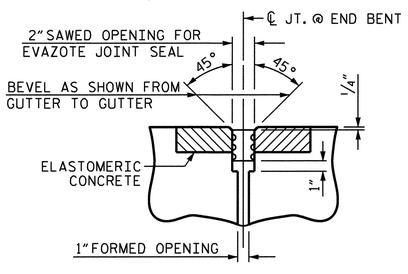

SECTION C-C
EVAZOTE JOINT SEAL
(FIXED)
AT END BENT #1

ELASTOMERIC CONCRETE	
END BENT NO.	ELASTOMERIC CONCRETE * (CU. FT.)
1	8.5
2	8.5
TOTAL	17.0

* BASED ON THE MINIMUM BLOCKOUT SHOWN.

NORTH CAROLINA PROFESSIONAL SEAL 025516 ENGINEER EMILY E. MURRAY
8/24/10

PROJECT NO. U-4007B
ONSLOW COUNTY
STATION: 22+41.58 -SBL RAMP-

SHEET 2 OF 2

STATE OF NORTH CAROLINA
DEPARTMENT OF TRANSPORTATION
RALEIGH

STANDARD

BRIDGE APPROACH
SLAB DETAILS

REVISIONS						SHEET NO.
NO.	BY:	DATE:	NO.	BY:	DATE:	S-24
1			3			TOTAL SHEETS
2			4			142

ASSEMBLED BY : M.D.PISO		DATE : 02/18/10	
CHECKED BY : B.N.BARODAWALA		DATE : 03/04/10	
DRAWN BY : FCJ	11/88	REV. 10/17/00	RWW/LES
CHECKED BY : ARB	11/88	REV. 5/7/03	RWW/JTE
		REV. 5/1/06R	MAA/KMM

23-AUG-2010 15:10
G:\TIPProjects-U\U4007b\Structures\FinalPlans\Str. #1\u-4007b_sd_as_01.dgn
taverette

STR. #1

STD. NO. BAS10 (SHT 4)

F.A. PROJECT NO. STM-0017(111)

GRADE DATA

(+)2.2380% (-)1.7229%

PI STA. 21+00.00 -NBL RAMP-
EL. 65.31'
VC = 850'

SPAN A

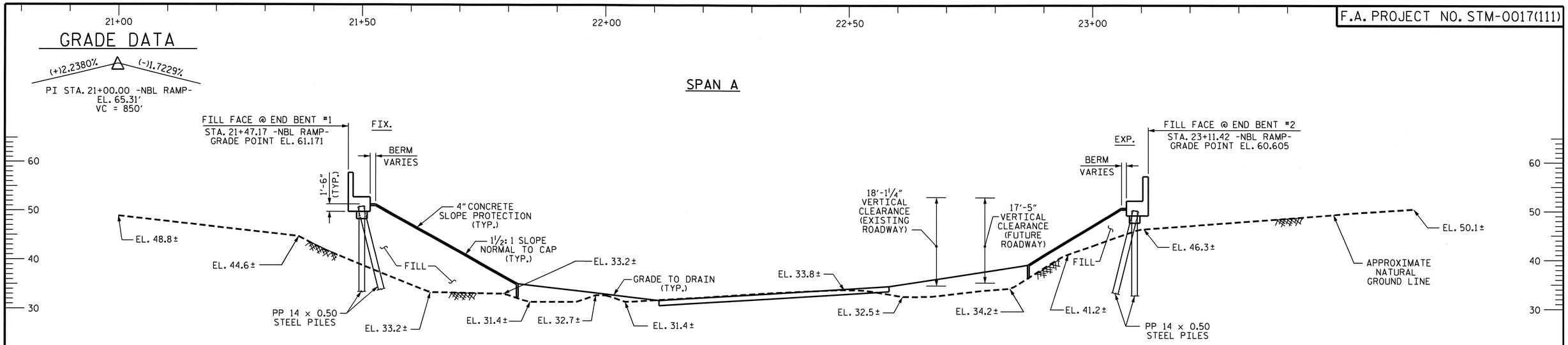

END BENT #1

SECTION ALONG -NBL RAMP-

SECTION TAKEN AT RIGHT ANGLES TO END BENTS

END BENT #2

HORIZONTAL ALIGNMENT

PI STA. 16+46.26 -YO-
Δ = 33°-28'-04.2" (RT.)
D = 5°-55'-11.7"
L = 565.34'
T = 290.99'
R = 967.85'

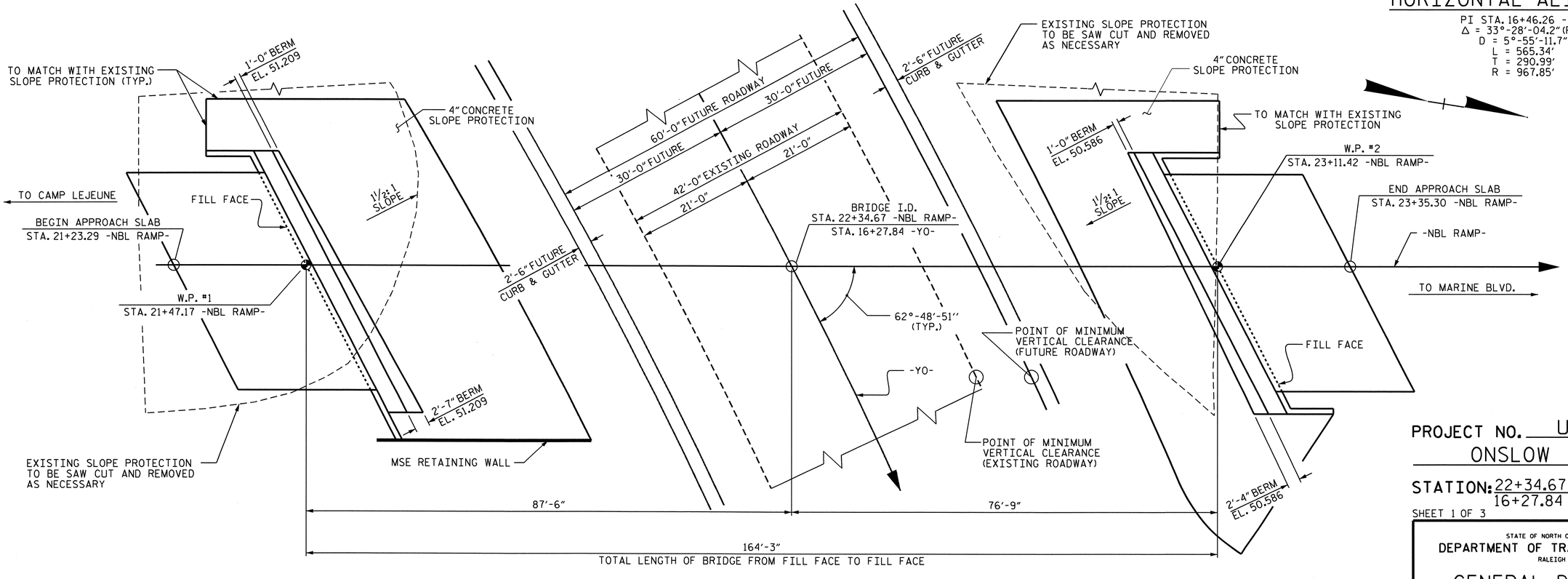

PLAN

PILES NOT SHOWN FOR CLARITY

NORTH CAROLINA PROFESSIONAL SEAL 12274 ENGINEER OMAR R. AZIZI
8/24/10

NORTH CAROLINA PROFESSIONAL SEAL 025516 ENGINEER EMILY E. MURRAY
8/24/10

PROJECT NO. U-4007B
ONSLOW COUNTY
STATION: 22+34.67 -NBLRAMP-
16+27.84 -YO-

SHEET 1 OF 3 BRIDGE #291

STATE OF NORTH CAROLINA
DEPARTMENT OF TRANSPORTATION
RALEIGH

GENERAL DRAWING
FOR BRIDGE ON WESTERN PARKWAY OVER COUNTRY CLUB ROAD BETWEEN MARINE BLVD. AND CAMP LEJEUNE

REVISIONS						SHEET NO.
NO.	BY:	DATE:	NO.	BY:	DATE:	S-25
1			3			TOTAL SHEETS
2			4			142

STR. #2

DRAWN BY : M.GUDLAUGSSON DATE : 3/17/10
CHECKED BY : PEGGY PARISI DATE : 6/17/10

24-AUG-2010 07:41
G:\TIPProjects-U\U4007b\Structures\FinalPlans\Str. #2\U-4007B_SD_GD_02.dgn
taverette

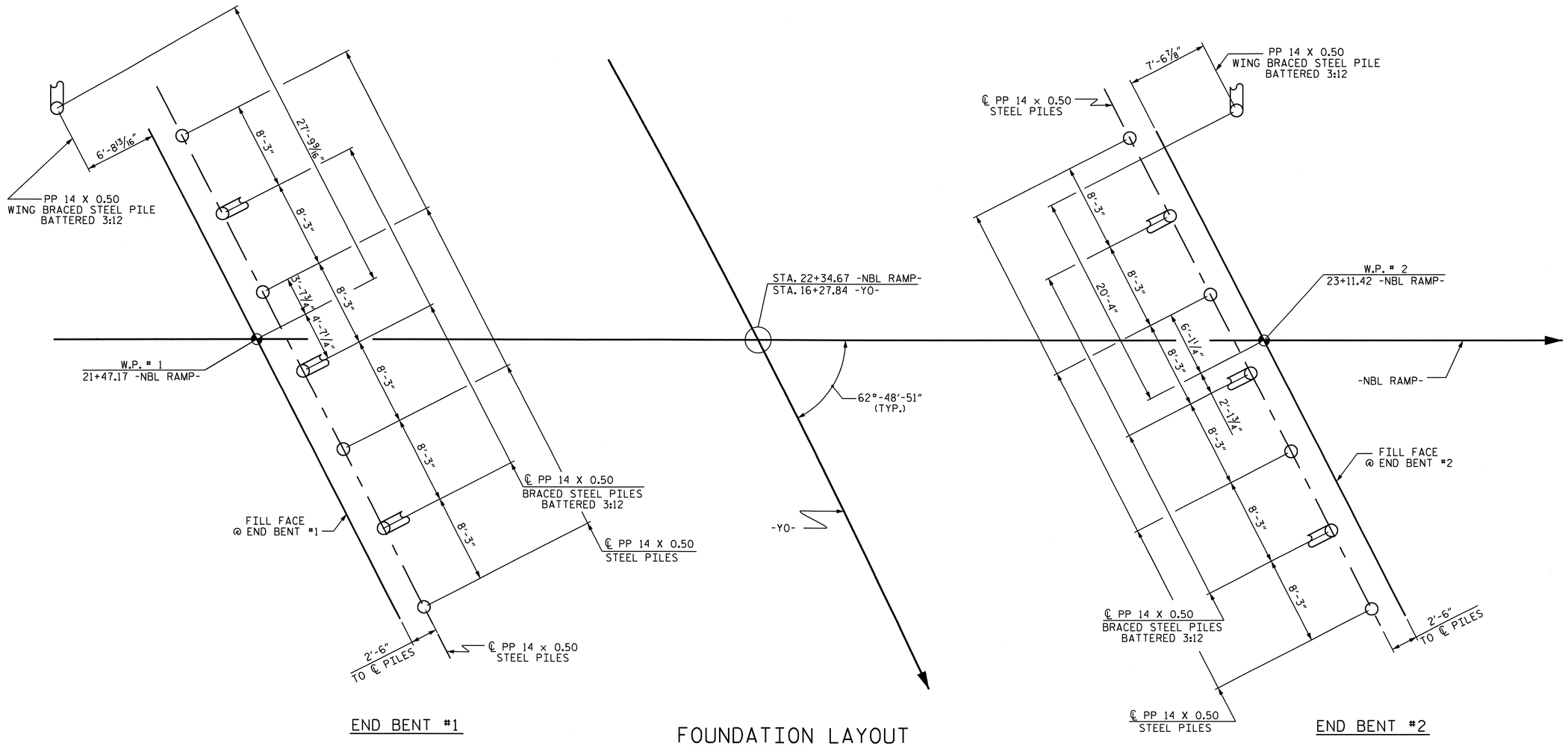

END BENT #1

END BENT #2

FOUNDATION LAYOUT

DIMENSIONS LOCATING PILES ARE SHOWN TO THE PILE CENTERLINE.

FOR PILES, SEE SPECIAL PROVISIONS.

PILES AT END BENT NO. 1 AND END BENT NO. 2 ARE DESIGNED FOR A FACTORED RESISTANCE OF 145 TONS PER PILE. DRIVE PILES TO A REQUIRED DRIVING RESISTANCE OF 245 TONS PER PILE.

TESTING PILES WITH THE PILE DRIVING ANALYZER (PDA) DURING DRIVING, RESTRIKING, OR REDRIVING MAY BE REQUIRED. THE ENGINEER WILL DETERMINE THE NEED FOR PDA TESTING. FOR PILE DRIVING ANALYZER, SEE PILES SPECIAL PROVISION.

PIPE PILE PLATES ARE REQUIRED FOR PIPE PILES AT END BENT NO.1 AND END BENT NO. 2. USE PIPE PILE PLATES WITH A DIAMETER EQUAL TO THE PIPE PILE DIAMETER.

PROJECT NO. U-4007B
ONSLOW COUNTY
STATION: 22+34.67 -NBL RAMP-
16+27.84 -YO-
SHEET 2 OF 3

STATE OF NORTH CAROLINA
DEPARTMENT OF TRANSPORTATION
RALEIGH

GENERAL DRAWING

FOR BRIDGE ON WESTERN PARKWAY OVER COUNTRY CLUB ROAD BETWEEN MARINE BLVD. AND CAMP LEJEUNE

NORTH CAROLINA PROFESSIONAL SEAL 025516 ENGINEER EMILY E. MURRAY
6/24/10

REVISIONS						SHEET NO.
NO.	BY:	DATE:	NO.	BY:	DATE:	S-26
1			3			TOTAL SHEETS
2			4			142

DRAWN BY : M.GUDLAUGSSON DATE : 3/17/10
CHECKED BY : PEGGY PARISI DATE : 6/17/10

24-AUG-2010 07:41
G:\TIPProjects-U\U4007b\Structures\Final Plans\Str. #2\U-4007B_SD_GD_02.dgn
taverette

STR. #2

BM: 30" #5 REBAR WITH ALUMINUM TRAVERSE CAPS, 27.46' LEFT OF STA. 23+52.77, EL. 60.330

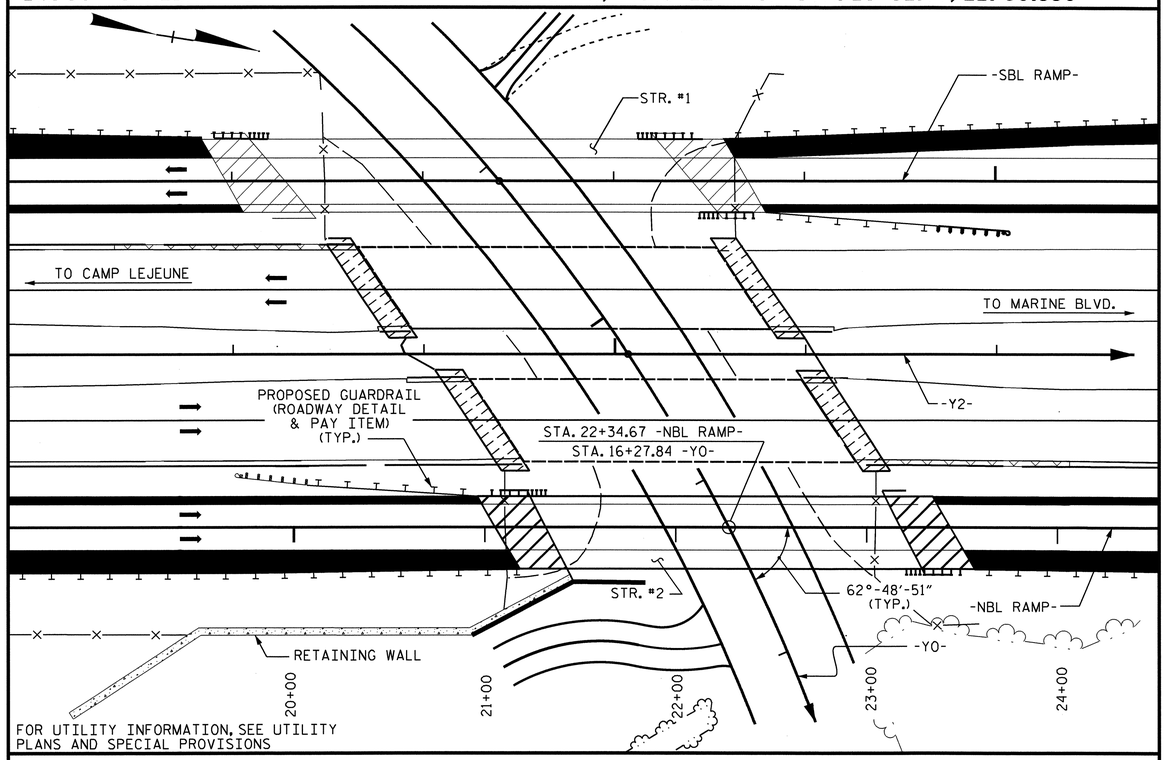

LOCATION SKETCH

NOTES

ASSUMED LIVE LOAD = HL-93 OR ALTERNATE LOADING.

FOR OTHER DESIGN DATA AND GENERAL NOTES, SEE SHEET SN.

FOR EROSION CONTROL MEASURES SEE EROSION CONTROL PLANS.

ALL STRUCTURAL STEEL SHALL BE AASHTO M270 GRADE 50W AND PAINTED IN ACCORDANCE WITH SYSTEM 4 OF ARTICLE 442-7 OF THE STANDARD SPECIFICATIONS UNLESS OTHERWISE NOTED ON THE PLANS.

REMOVABLE FORMS MAY BE USED IN LIEU OF METAL STAY-IN-PLACE FORMS IN ACCORDANCE WITH ARTICLE 420-3 OF THE STANDARD SPECIFICATIONS.

THE CONTRACTOR SHALL PROVIDE INDEPENDENT ASSURANCE SAMPLES OF REINFORCING STEEL AS FOLLOWS: FOR PROJECTS REQUIRING UP TO 400 TONS OF REINFORCING STEEL, ONE 30 INCH SAMPLE OF EACH SIZE BAR USED, AND FOR PROJECTS REQUIRING OVER 400 TONS OF REINFORCING STEEL, TWO 30 INCH SAMPLES OF EACH SIZE BAR USED. THE BARS FROM WHICH THE SAMPLES ARE TAKEN MUST THEN BE SPLICED WITH REPLACEMENT BARS OF THE SIZE AND LENGTH OF THE SAMPLE, PLUS A MINIMUM LAP SPLICE OF THIRTY BAR DIAMETERS.

FOR MAINTENANCE AND PROTECTION OF TRAFFIC BENEATH PROPOSED STRUCTURE, SEE SPECIAL PROVISIONS.

NEEDLE BEAMS WILL NOT BE ALLOWED UNLESS OTHERWISE CALLED FOR ON THE PLANS OR APPROVED BY THE ENGINEER.

FOR SUBMITTAL OF WORKING DRAWINGS, SEE SPECIAL PROVISIONS.

FOR FALSEWORK AND FORMWORK, SEE SPECIAL PROVISIONS.

FOR CRANE SAFETY, SEE SPECIAL PROVISIONS.

FOR GROUT FOR STRUCTURES, SEE SPECIAL PROVISIONS.

FOR SHIPPING STEEL STRUCTURAL MEMBERS, SEE SPECIAL PROVISIONS.

FOR CURING CONCRETE, SEE SPECIAL PROVISIONS.

FOR FORMS FOR CONCRETE BRIDGE DECKS, SEE SPECIAL PROVISIONS.

THIS BRIDGE HAS BEEN DESIGNED IN ACCORDANCE WITH THE AASHTO LRFD BRIDGE DESIGN SPECIFICATIONS.

FOR MSE RETAINING WALL, SEE SPECIAL PROVISIONS AND WALL #1 PLANS.

FOR PLACING LOAD ON STRUCTURE MEMBERS, SEE SPECIAL PROVISIONS.

THE COST OF REMOVAL OF ANY EXISTING CONCRETE SLOPE PROTECTION NECESSARY FOR THE CONSTRUCTION OF NEW CONCRETE SLOPE PROTECTION IS INCIDENTAL TO THE PAY ITEM FOR 4" SLOPE PROTECTION.

TOTAL BILL OF MATERIAL

	PDA TESTING	PDA ASSISTANCE	REINFORCED CONCRETE DECK SLAB	GROOVING BRIDGE FLOORS	CLASS A CONCRETE	BRIDGE APPROACH SLABS	REINFORCING STEEL	STRUCTURAL STEEL	PP 14 x 0.50 STEEL PILES		PIPE PIPE PLATES	PILE REDRIVES	CONCRETE BARRIER RAIL	4" SLOPE PROTECTION	ELASTOMERIC BEARINGS	EVAZOTE JOINT SEALS
	EACH	EACH	SQ.FT.	SQ.FT.	CU.YDS.	LUMP SUM	LBS.	APPROX. LBS.	NO.	LIN.FT.	EACH	EACH	LIN.FT.	SQ.FT.	LUMP SUM	LUMP SUM
SUPERSTRUCTURE			6678	7386				329,000					323.79		LUMP SUM	LUMP SUM
END BENT 1					51.3		6976		8	400	8	8		298		
END BENT 2					53.6		7314		8	400	8	8		285		
TOTAL	1	1	6678	7386	104.9	LUMP SUM	14290	329,000	16	800	16	16	323.79	583	LUMP SUM	LUMP SUM

PROJECT NO. U-4007B
ONSLOW COUNTY
STATION: 22+34.67 -NBL RAMP-
16+27.84 -Y0-
SHEET 3 OF 3

STATE OF NORTH CAROLINA
DEPARTMENT OF TRANSPORTATION
RALEIGH

GENERAL DRAWING
FOR BRIDGE ON WESTERN PARKWAY OVER COUNTRY CLUB ROAD BETWEEN MARINE BLVD. AND CAMP LEJEUNE

NORTH CAROLINA PROFESSIONAL SEAL 025516 ENGINEER EMILY E. MURRAY
8/24/10

REVISIONS						SHEET NO.
NO.	BY:	DATE:	NO.	BY:	DATE:	S-27
1			3			TOTAL SHEETS
2			4			142

DRAWN BY : M.GUDLAUGSSON DATE : 3/17/10
CHECKED BY : PEGGY PARISI DATE : 6/17/10

24-AUG-2010 09:10
G:\TIPProjects-U\U4007b\Structures\Final Plans\Str. #2\U-4007B_SD_GD_02.dgn
taverette

STR. #2

LOAD AND RESISTANCE FACTOR RATING (LRFR) SUMMARY FOR STEEL GIRDERS

LEVEL		VEHICLE	WEIGHT (W) (TONS)	CONTROLLING LOAD RATING (#)	MINIMUM RATING FACTORS (RF)	TONS = W × RF	STRENGTH I LIMIT STATE												SERVICE II LIMIT STATE						COMMENT NUMBER
							LIVE-LOAD FACTORS (γ_{LL})	MOMENT					SHEAR					LIVE-LOAD FACTORS (γ_{LL})	MOMENT					
								DISTRIBUTION FACTORS (DF)	RATING FACTOR	SPAN	GIRDER LOCATION	DISTANCE FROM LEFT END OF SPAN (ft)	DISTRIBUTION FACTORS (DF)	RATING FACTOR	SPAN	GIRDER LOCATION	DISTANCE FROM LEFT END OF SPAN (ft)		DISTRIBUTION FACTORS (DF)	RATING FACTOR	SPAN	GIRDER LOCATION	DISTANCE FROM LEFT END OF SPAN (ft)	
DESIGN LOAD RATING		HL-93 (INVENTORY)	N/A	1	1.09	--	1.75	0.776	1.41	A	ER	79.32	0.849	1.09	A	I	158.63	1.30	0.776	1.23	A	ER	79.32	
		HL-93 (OPERATING)	N/A		1.41	--	1.35	0.776	1.83	A	ER	79.32	0.849	1.41	A	I	158.63	1.00	0.776	1.60	A	ER	79.32	
		HS-20 (INVENTORY)	36.00	2	1.71	61.560	1.75	0.776	2.24	A	ER	79.32	0.849	1.71	A	I	158.63	1.30	0.776	1.95	A	ER	79.32	
		HS-20 (OPERATING)	36.00		2.21	79.560	1.35	0.776	2.91	A	ER	79.32	0.849	2.21	A	I	158.63	1.00	0.776	2.54	A	ER	79.32	
LEGAL LOAD RATING	SINGLE VEHICLE (SV)	SNSH	13.500		4.86	65.610	1.40	0.776	6.97	A	ER	79.32	0.849	5.43	A	I	158.63	1.30	0.776	4.86	A	ER	79.32	
		SNGARBS2	20.000		3.42	68.400	1.40	0.776	4.90	A	ER	79.32	0.849	3.75	A	I	158.63	1.30	0.776	3.42	A	ER	79.32	
		SNAGRIS2	22.000		3.17	69.740	1.40	0.776	4.54	A	ER	79.32	0.849	3.43	A	I	158.63	1.30	0.776	3.17	A	ER	79.32	
		SNCOTTS3	27.250		2.42	65.945	1.40	0.776	3.45	A	ER	79.32	0.849	2.70	A	I	158.63	1.30	0.776	2.42	A	ER	79.32	
		SNAGGRS4	34.925		1.94	67.755	1.40	0.776	2.78	A	ER	79.32	0.849	2.16	A	I	158.63	1.30	0.776	1.94	A	ER	79.32	
		SNS5A	35.550		1.90	67.545	1.40	0.776	2.72	A	ER	79.32	0.849	2.15	A	I	158.63	1.30	0.776	1.90	A	ER	79.32	
		SNS6A	39.950		1.72	68.714	1.40	0.776	2.45	A	ER	79.32	0.849	1.92	A	I	158.63	1.30	0.776	1.72	A	ER	79.32	
		SNS7B	42.000		1.63	68.460	1.40	0.776	2.33	A	ER	79.32	0.849	1.85	A	I	158.63	1.30	0.776	1.63	A	ER	79.32	
	TRUCK TRACTOR SEMI-TRAILER (TTST)	TNAGRIT3	33.000		2.08	68.640	1.40	0.776	2.98	A	ER	79.32	0.849	2.32	A	I	158.63	1.30	0.776	2.08	A	ER	79.32	
		TNT4A	33.075		2.08	68.796	1.40	0.776	2.98	A	ER	79.32	0.849	2.29	A	I	158.63	1.30	0.776	2.08	A	ER	79.32	
		TNT6A	41.600		1.68	69.888	1.40	0.776	2.40	A	ER	79.32	0.849	1.91	A	I	158.63	1.30	0.776	1.68	A	ER	79.32	
		TNT7A	42.000		1.67	70.140	1.40	0.776	2.39	A	ER	79.32	0.849	1.89	A	I	158.63	1.30	0.776	1.67	A	ER	79.32	
		TNT7B	42.000		1.69	70.980	1.40	0.776	2.43	A	ER	79.32	0.849	1.84	A	I	158.63	1.30	0.776	1.69	A	ER	79.32	
		TNAGRIT4	43.000		1.64	70.520	1.40	0.776	2.35	A	ER	79.32	0.849	1.79	A	I	158.63	1.30	0.776	1.64	A	ER	79.32	
		TNAGT5A	45.000	3	1.55	69.750	1.40	0.776	2.23	A	ER	79.32	0.849	1.73	A	I	158.63	1.30	0.776	1.55	A	ER	79.32	
		TNAGT5B	45.000		1.55	69.750	1.40	0.776	2.22	A	ER	79.32	0.849	1.71	A	I	158.63	1.30	0.776	1.55	A	ER	79.32	
FATIGUE		HL-93 (INVENTORY)	γ_{LL}=0.75																					

LOAD FACTORS:

DESIGN LOAD RATING FACTORS	LIMIT STATE	γ_{DC}	γ_{DW}
	STRENGTH I	1.25	1.50
	SERVICE II	1.00	1.00

	YEAR	ADTT
CURRENT	2011	490
FUTURE	2031	774

NOTES:

MINIMUM RATING FACTORS ARE BASED ON THE STRENGTH I AND SERVICE II LIMIT STATES.

ALLOWABLE STRESS FOR SERVICE II LIMIT STATE ARE AS REQUIRED FOR DESIGN.

COMMENTS:

1.
2.
3.
4.

(#) CONTROLLING LOAD RATING
(1) DESIGN LOAD RATING (HL-93) **
(2) DESIGN LOAD RATING (HS-20) **
(3) LEGAL LOAD RATING **
** SEE CHART FOR VEHICLE TYPE

GIRDER LOCATION
I - INTERIOR GIRDER
EL - EXTERIOR LEFT GIRDER
ER - EXTERIOR RIGHT GIRDER

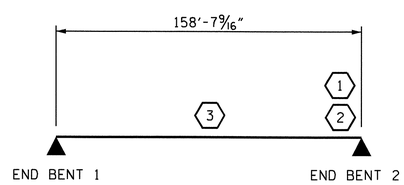

LRFR SUMMARY

PROJECT NO. U-4007B
ONSLOW COUNTY
STATION: 22+34.67 -NBL RAMP-

STATE OF NORTH CAROLINA
DEPARTMENT OF TRANSPORTATION
RALEIGH

STANDARD

LRFR SUMMARY FOR STEEL GIRDERS
(NON-INTERSTATE TRAFFIC)

NORTH CAROLINA PROFESSIONAL SEAL 025516 ENGINEER EMILY E. MURRAY
8/24/10

REVISIONS						SHEET NO.
NO.	BY:	DATE:	NO.	BY:	DATE:	S-28
1			3			TOTAL SHEETS
2			4			142

ASSEMBLED BY: M.GUDLAUGSSON DATE : 7/6/10
CHECKED BY : M.RORIE DATE : 7/9/10
DRAWN BY : MAA 1/08
CHECKED BY : GM/DI 2/08
REV. 11/12/08RR MAA/GM

24-AUG-2010 07:40
G:\TIPProjects-U\U4007b\Structures\Final Plans\Str. #2\U-4007B_SD_LRFR_02.dgn
taverette

STR. #2 STD. NO. LRFR3

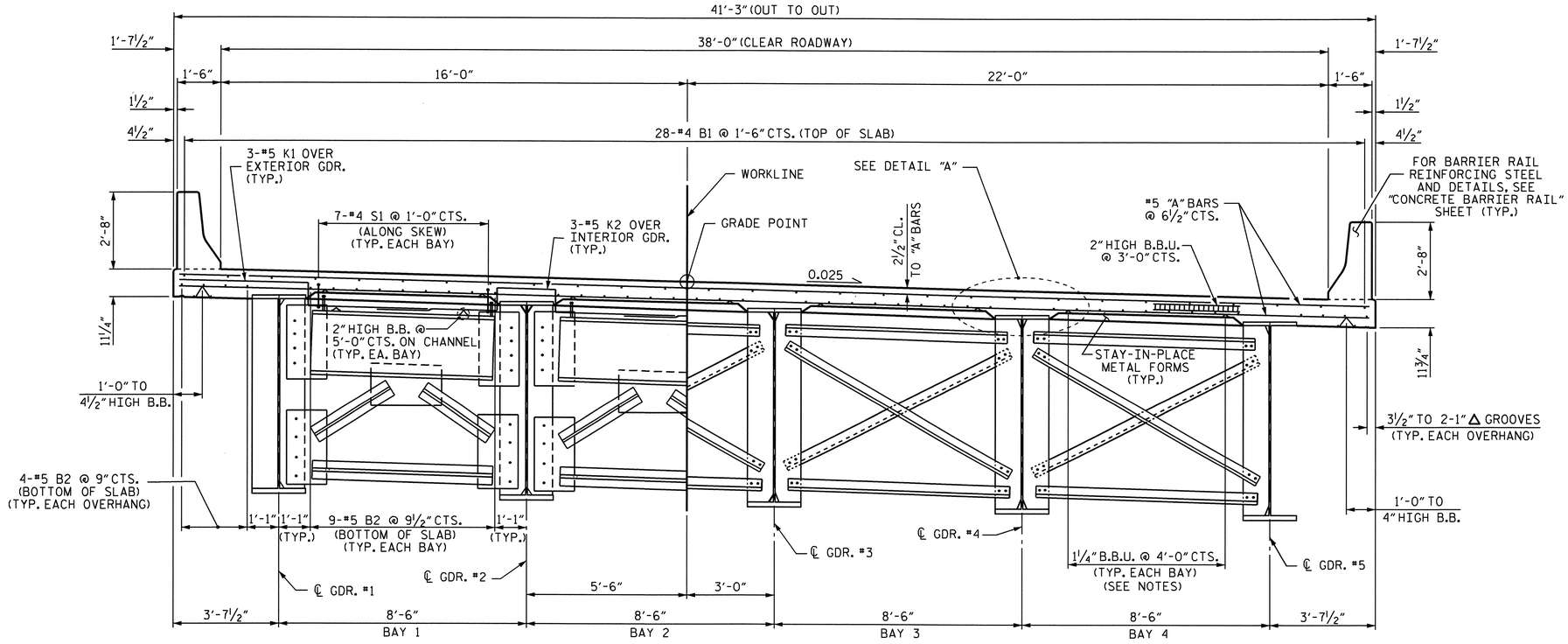

SHOWING END BENT DIAPHRAGM

SHOWING INTERMEDIATE DIAPHRAGM

TYPICAL SECTION

NOTES:

PROVIDE 1¼" HIGH BEAM BOLSTERS UPPER AT 4'-0" CTS. ATOP THE METAL STAY-IN-PLACE FORMS TO SUPPORT THE BOTTOM MAT OF 'A' BARS. WHEN USING REMOVABLE FORMS, PROVIDE CONTINUOUS HIGH CHAIRS FOR METAL DECK (C.H.C.M.) @ 4'-0" CTS. WITH A HEIGHT TO SUPPORT THE BOTTOM MAT OF 'A' BARS A CLEAR DISTANCE OF 2½" ABOVE THE TOP OF THE REMOVABLE FORM.

BARRIER RAIL IN THE SPAN SHALL NOT BE CAST UNTIL ALL SLAB CONCRETE IN THE SPAN HAS BEEN CAST AND HAS REACHED A MINIMUM COMPRESSIVE STRENGTH OF 3,000 PSI.

THE CONTRACTOR MAY, WHEN NECESSARY, PROPOSE A SCHEME FOR AVOIDING INTERFERENCE BETWEEN METAL STAY-IN-PLACE FORM SUPPORTS OR FORMS AND GIRDER STIFFENERS OR CONNECTOR PLATES. THE PROPOSAL SHALL BE INDICATED, AS APPROPRIATE, ON EITHER THE STEEL WORKING DRAWINGS OR THE METAL STAY-IN-PLACE FORM WORKING DRAWINGS.

DIRECTION OF CASTING DECK CONCRETE SHALL BE FROM THE FIXED BEARING END TOWARD THE EXPANSION BEARING END OF THE SPAN.

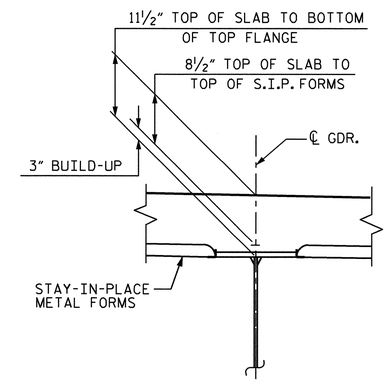

DETAIL "A"

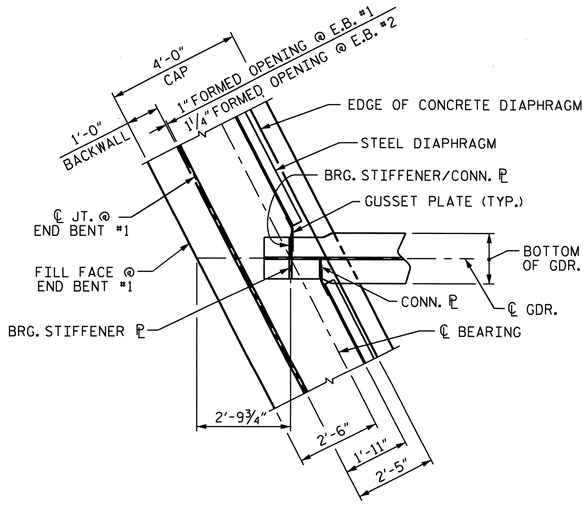

PLAN OF GIRDER @ END BENT

END BENT #1 SHOWN, END BENT #2 SIMILAR.

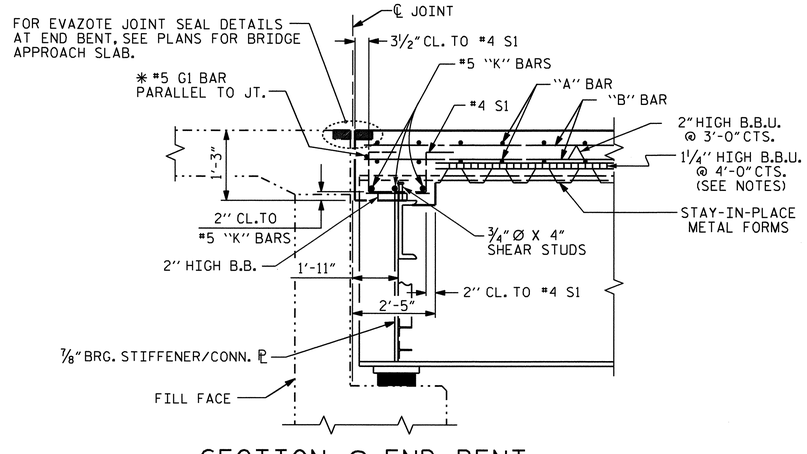

SECTION @ END BENT

* #5 G1 BAR MAY BE SHIFTED SLIGHTLY, AS NECESSARY, TO CLEAR REINFORCING STEEL AND STIRRUPS.

NORTH CAROLINA PROFESSIONAL SEAL 025516 ENGINEER EMILY E. MURRAY
8/24/10

PROJECT NO. U-4007B
ONSLOW COUNTY
STATION: 22+34.67 -NBL RAMP-

STATE OF NORTH CAROLINA
DEPARTMENT OF TRANSPORTATION
RALEIGH

SUPERSTRUCTURE

TYPICAL SECTION

REVISIONS						SHEET NO.
NO.	BY:	DATE:	NO.	BY:	DATE:	S-29
1			3			TOTAL SHEETS
2			4			142

DRAWN BY : PEGGY PARISI DATE : 1-11-09
CHECKED BY : B.N. BARODAWALA DATE : 5-7-10

24-AUG-2010 07:40
G:\TIPProjects-U\U4007b\Structures\Final Plans\Str. #2\u-4007b_sd_ts_02.dgn
taverette

STR. #2

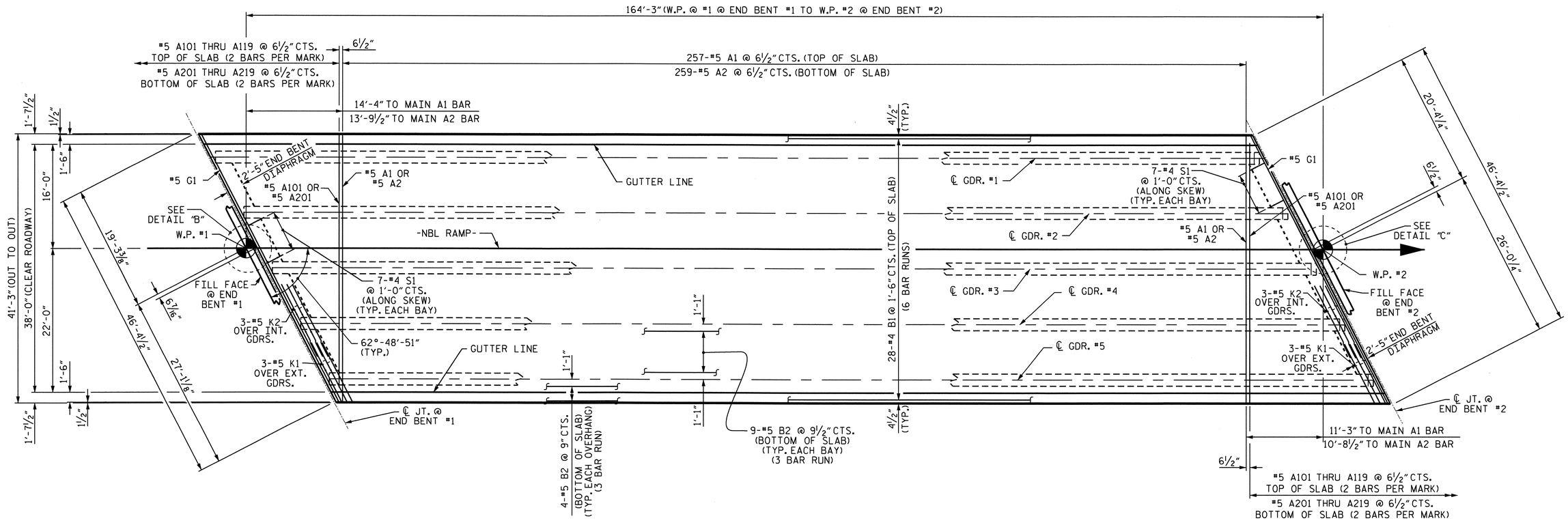

PLAN OF SPAN

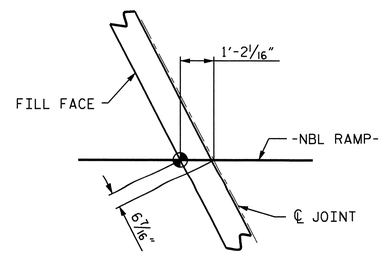

DETAIL "B"

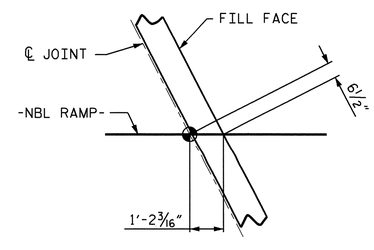

DETAIL "C"

PROJECT NO. U-4007B

ONSLOW COUNTY

STATION: 22+34.67 -NBL RAMP-

STATE OF NORTH CAROLINA
DEPARTMENT OF TRANSPORTATION
RALEIGH

SUPERSTRUCTURE

PLAN OF SPAN

NORTH CAROLINA PROFESSIONAL SEAL 025516 ENGINEER EARL E. MURRAY
8/24/10

REVISIONS						SHEET NO.
NO.	BY:	DATE:	NO.	BY:	DATE:	S-30
1			3			TOTAL SHEETS
2			4			142

DRAWN BY : PEGGY PARISI DATE : 3-5-10
CHECKED BY : B.N. BARODAWALA DATE : 5-7-10

24-AUG-2010 07:40
G:\TIPProjects-U\U4007b\Structures\FinalPlans\Str. #2\u-4007b_sd_ps_02.dgn
taverette

STR. #2

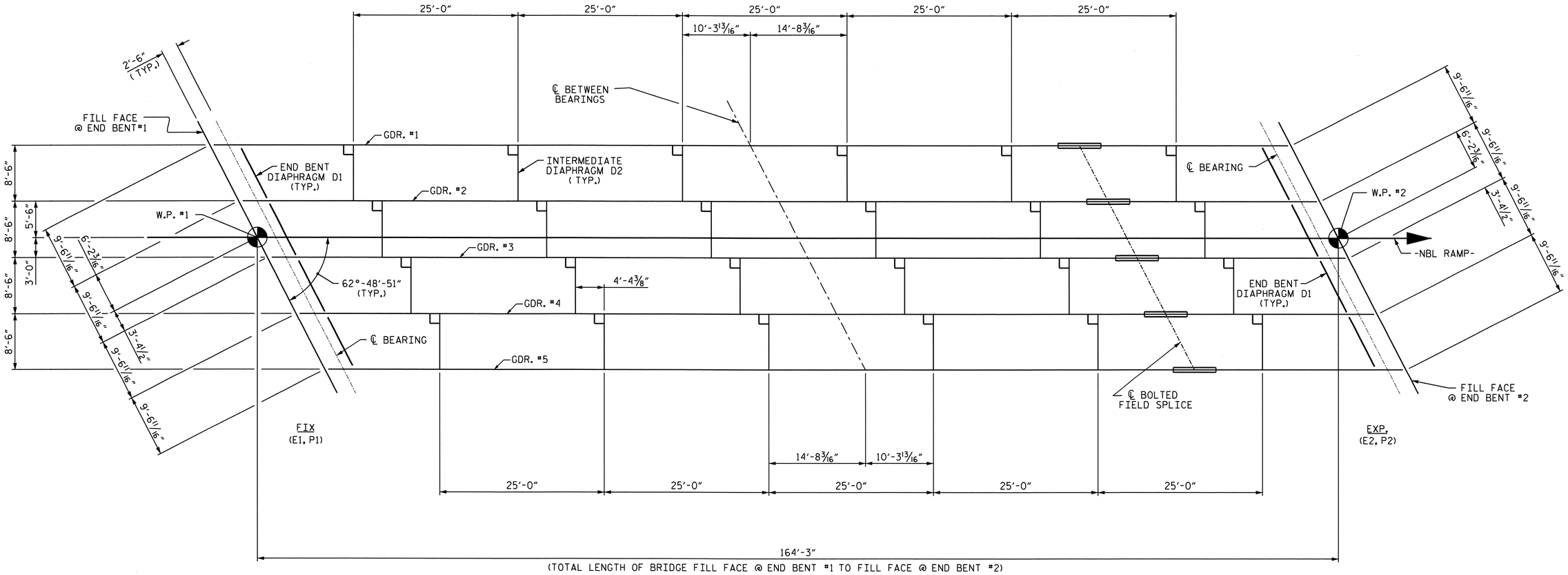

FRAMING PLAN

DIMENSIONS ARE TYPICAL FOR EACH GIRDER.

PROJECT NO. U-4007B

ONSLOW COUNTY

STATION: 22+34.67 -NBL RAMP-

STATE OF NORTH CAROLINA
DEPARTMENT OF TRANSPORTATION
RALEIGH

SUPERSTRUCTURE
FRAMING PLAN

NORTH CAROLINA PROFESSIONAL SEAL 025516 ENGINEER ELMY E. MURRAY
8/24/10

REVISIONS							SHEET NO.
NO.	BY:	DATE:	NO.	BY:	DATE:		S-31
1			3				TOTAL SHEETS
2			4				142

DRAWN BY : PEGGY PARISI DATE : 3-10-10
CHECKED BY : B.N. BARODAWALA DATE : 5-7-10

24-AUG-2010 07:39
G:\TIPProjects-U\U4007b\Structures\FinalPlans\Str. #2\u-4007b_sd_fp_02.dgn
taverette

STR. #2

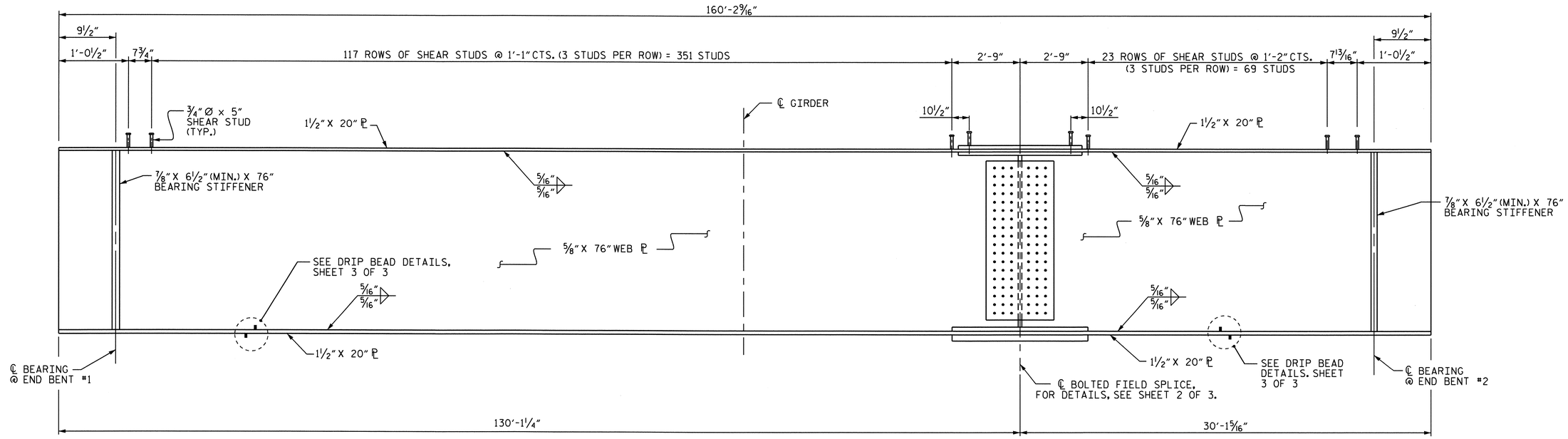

GIRDER ELEVATION

FOR ADDITIONAL STUDS IN BOLTED FIELD SPLICE AREA, SEE "BOLTED FIELD SPLICE DETAILS," SHEET 2 OF 3.

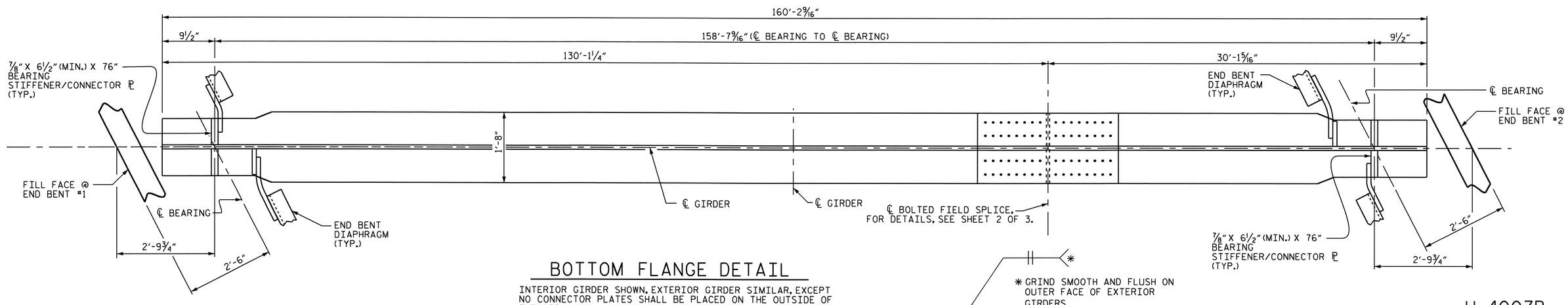

BOTTOM FLANGE DETAIL

INTERIOR GIRDER SHOWN, EXTERIOR GIRDER SIMILAR, EXCEPT NO CONNECTOR PLATES SHALL BE PLACED ON THE OUTSIDE OF THE WEB.

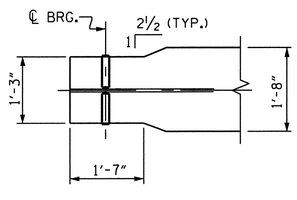

BOTTOM FLANGE TAPER DETAIL

(TYP. EACH END)

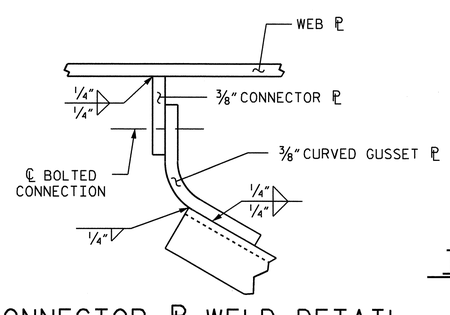

CONNECTOR PL WELD DETAIL

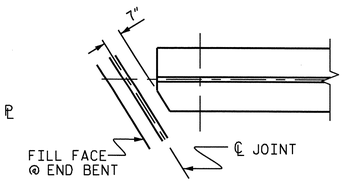

TOP FLANGE CLIP DETAIL

(TYP. AT BOTH ENDS OF GIRDER)

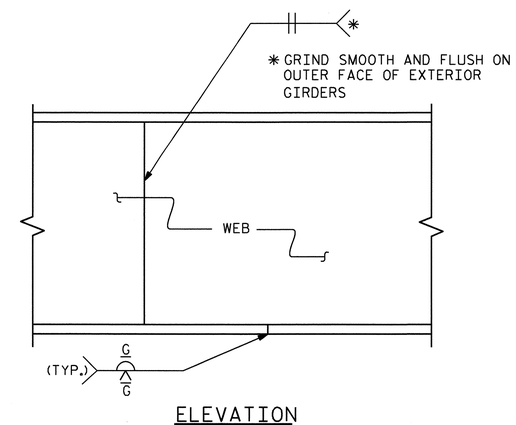

ELEVATION

TYPICAL FLANGE AND WEB BUTT JOINT

PROJECT NO. U-4007B

ONSLOW COUNTY

STATION: 22+34.67 -NBL RAMP-

SHEET 1 OF 3

STATE OF NORTH CAROLINA
DEPARTMENT OF TRANSPORTATION
RALEIGH

SUPERSTRUCTURE
STRUCTURAL STEEL DETAILS

NORTH CAROLINA PROFESSIONAL SEAL 025516 ENGINEER EMILY E. MURRAY 8/24/10

REVISIONS							SHEET NO.
NO.	BY:	DATE:	NO.	BY:	DATE:		S-32
1			3				TOTAL SHEETS
2			4				142

DRAWN BY : PEGGY PARISI DATE : 3-24-10
CHECKED BY : B.N. BARODAWALA DATE : 5-11-10

24-AUG-2010 07:38
G:\TIPProjects-U\U4007b\Structures\FinalPlans\Str. #2\u-4007b_sd_ss_02.dgn
taverette

STR. #2

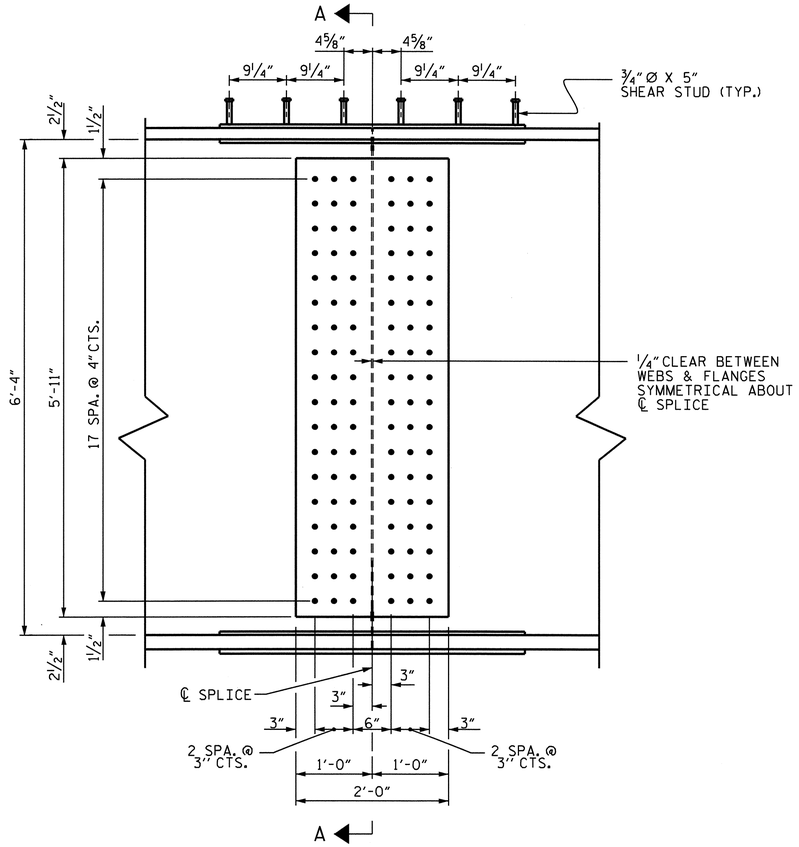

ELEVATION

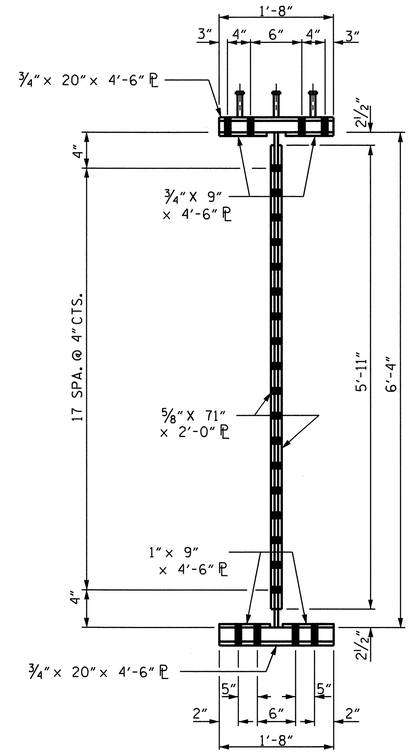

SECTION A-A

NOTES :

ALL STRUCTURAL STEEL SHALL BE AASHTO M270 GRADE 50W AND PAINTED IN ACCORDANCE WITH SYSTEM 4 OF ARTICLE 442-7 OF THE STANDARD SPECIFICATIONS UNLESS OTHERWISE NOTED ON THE PLANS.

ALL DIMENSIONS SHOWN ARE HORIZONTAL OR VERTICAL, UNLESS OTHERWISE NOTED.

ALL FIELD CONNECTIONS TO BE 7/8" DIA. HIGH STRENGTH BOLTS UNLESS OTHERWISE NOTED.

FOR HIGH STRENGTH BOLTS, SEE SPECIAL PROVISIONS.

BEARING STIFFENERS ARE TO BE PLACED NORMAL TO THE WEB OF THE GIRDER AND SHALL BE PLUMB.

A CHARPY V-NOTCH TEST IS REQUIRED FOR WEB PLATES, BOTTOM FLANGE PLATES, BOTTOM FLANGE SPLICE PLATES AND WEB SPLICE PLATES FOR ALL GIRDERS AND IN ACCORDANCE WITH ARTICLE 1072-9 OF THE STANDARD SPECIFICATIONS.

SHOP SPLICES ARE PERMITTED TO LIMIT THE MAXIMUM REQUIRED FLANGE PIECE LENGTHS TO 60 FEET AND WEB PIECE LENGTHS TO 45 FEET. PERMITTED FLANGE AND WEB SHOP SPLICES SHALL NOT BE LOCATED WITHIN 15 FEET OF MAXIMUM DEAD LOAD DEFLECTION NOR WITHIN 15 FEET OF INTERMEDIATE BEARINGS OF CONTINUOUS UNITS, KEEP 2 FEET MINIMUM BETWEEN WEB AND FLANGE SHOP SPLICES. KEEP 6" MINIMUM BETWEEN CONNECTOR PLATE OR TRANSVERSE STIFFENER WELDS AND WEB OR FLANGE SHOP SPLICES.

STUDS ON GIRDERS MAY BE SHIFTED UP TO 1" IF NECESSARY TO CLEAR FLANGE SPLICE WELD.

TENSION ON THE AASHTO M164 BOLTS SHALL BE CALIBRATED USING DIRECT TENSION INDICATOR WASHERS. FOR DIRECT TENSION INDICATORS, SEE SPECIAL PROVISIONS.

END OF GIRDERS SHALL BE PLUMB.

SHEAR STUDS ARE TO BE SHOP WELDED ON TOP OF PLATE BEFORE FIELD ASSEMBLY.

FOR SHIPPING STEEL STRUCTURAL MEMBERS, SEE SPECIAL PROVISIONS.

BEARING STIFFENER MAY REQUIRE COPING IF WIDER THAN BOTTOM FLANGE TO AVOID INTERFERENCE WITH THE ANCHOR BOLT.

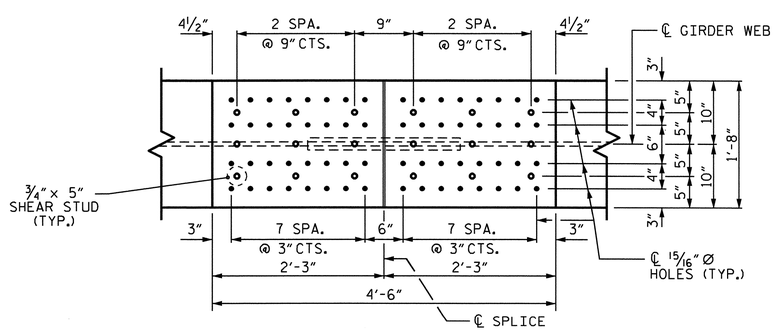

PLAN (TOP OF TOP FLANGE)

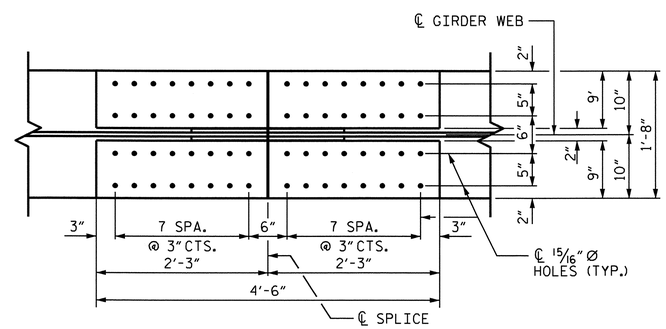

PLAN (TOP OF BOTTOM FLANGE)

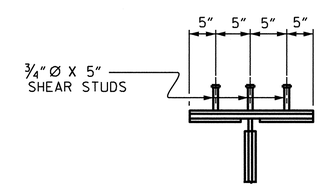

SHEAR STUD DETAIL FOR TOP FLANGE SPLICE PLATE

BOLTED FIELD SPLICE DETAILS

(TYPICAL EACH FIELD SPLICE)

PROJECT NO. U-4007B
ONSLOW COUNTY
STATION: 22+34.67 -NBL RAMP-

SHEET 2 OF 3

STATE OF NORTH CAROLINA
DEPARTMENT OF TRANSPORTATION
RALEIGH

SUPERSTRUCTURE
STRUCTURAL STEEL DETAILS
BOLTED FIELD SPLICE

NORTH CAROLINA PROFESSIONAL SEAL 025516 ENGINEER EMILY E. MURRAY
8/24/10

REVISIONS						SHEET NO.
NO.	BY:	DATE:	NO.	BY:	DATE:	S-33
1			3			TOTAL SHEETS
2			4			142

DRAWN BY : PEGGY PARISI DATE : 3-24-10
CHECKED BY : B.N. BARODAWALA DATE : 5-4-10

24-AUG-2010 07:38
G:\TIPProjects-U\U4007b\Structures\Final Plans\Str. #2\u-4007b_sd_ss_02.dgn
taverette

STR. #2

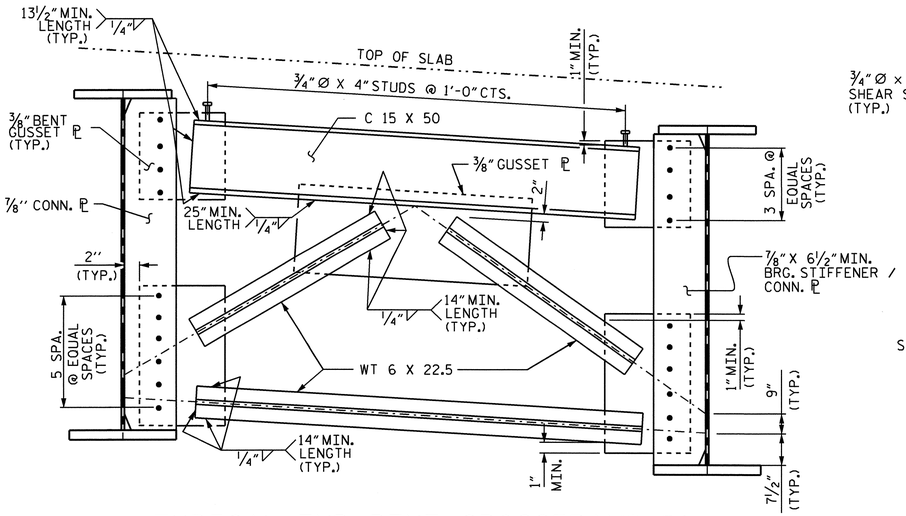

TYPICAL END BENT CROSSFRAME D1

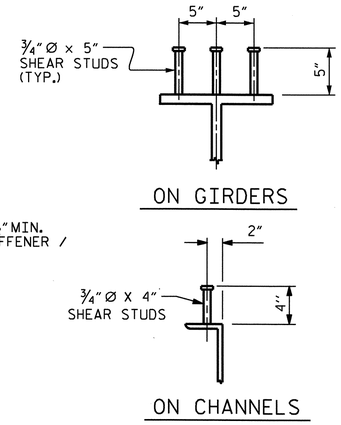

SHEAR STUD DETAILS

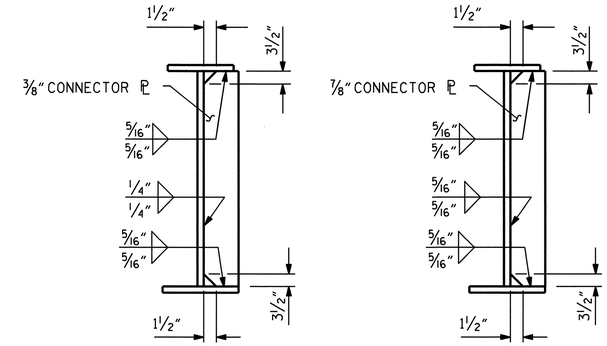

@ INTERMEDIATE DIAPHRAGM

@ END BENT DIAPHRAGM

CONNECTOR PLATE DETAILS

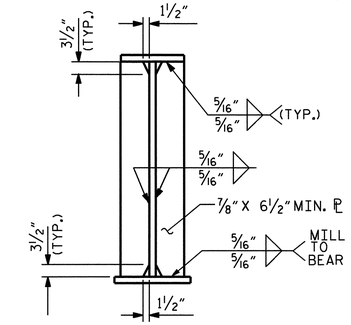

BEARING STIFFENER PLATE DETAILS

NOTE: THE BEARING STIFFENER SHALL BE WELDED TO THE BOTTOM FLANGE ONLY WHEN USED AS A CONNECTOR ℙ.

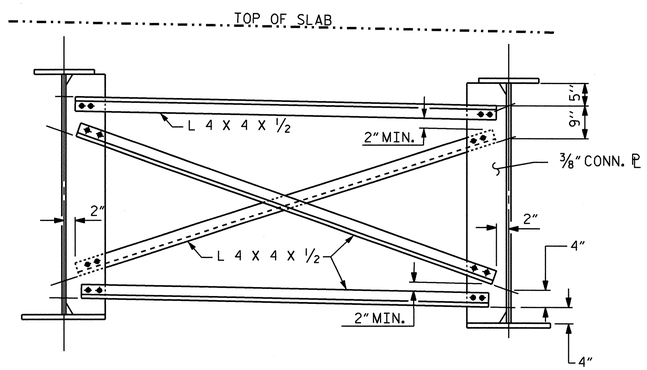

TYPICAL INTERMEDIATE CROSSFRAME D2

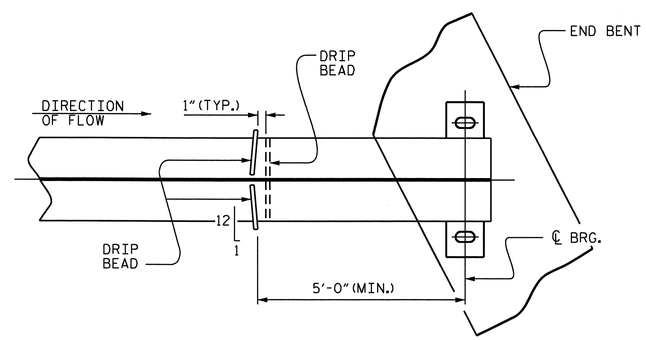

PART PLAN - BOTTOM FLANGE

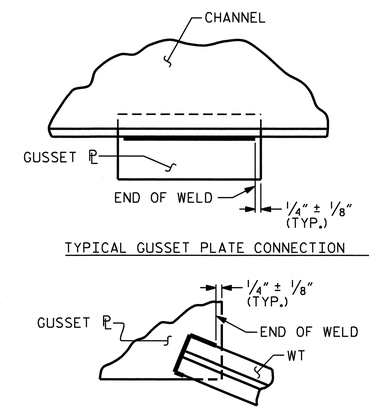

TYPICAL GUSSET PLATE CONNECTION

TYPICAL "TEE" TO GUSSET PLATE CONNECTION

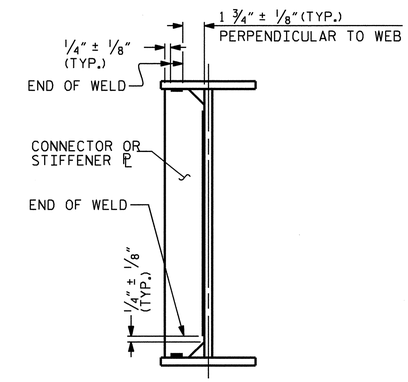

TYPICAL STIFFENER OR CONNECTOR PLATE CONNECTIONS

WELD TERMINATION DETAILS

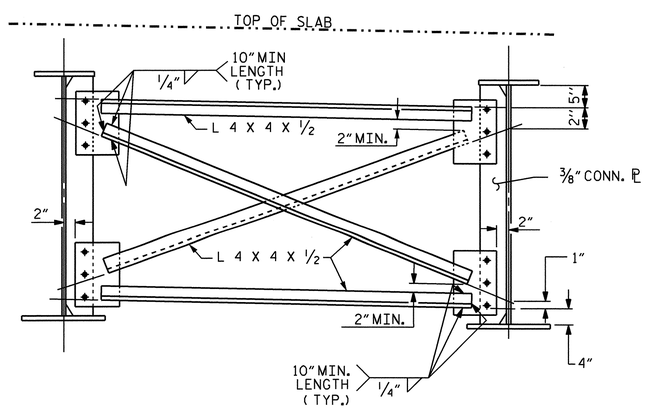

TYPICAL OPTIONAL INTERMEDIATE CROSSFRAME

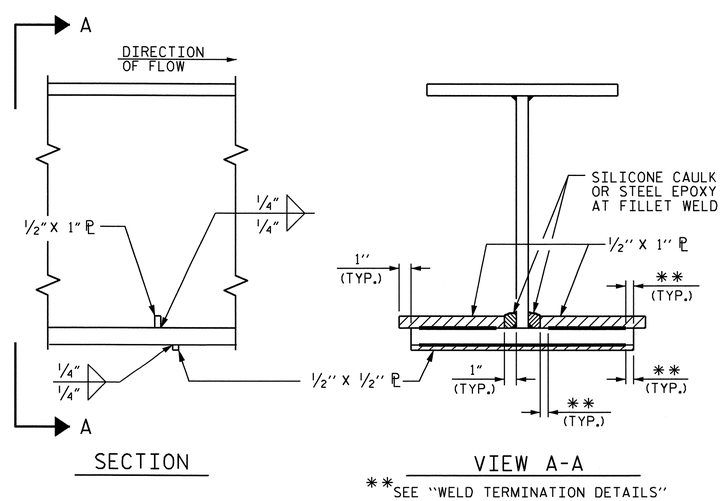

SECTION

VIEW A-A

**SEE "WELD TERMINATION DETAILS"

DRIP BEAD DETAILS

PROJECT NO. U-4007B

ONSLOW COUNTY

STATION: 22+34.67 -NBL RAMP-

SHEET 3 OF 3

STATE OF NORTH CAROLINA
DEPARTMENT OF TRANSPORTATION
RALEIGH

SUPERSTRUCTURE
STRUCTURAL STEEL DETAILS

NORTH CAROLINA PROFESSIONAL SEAL 025516 ENGINEER EMILY E. MURRAY
9/16/10

REVISIONS						SHEET NO.
NO.	BY:	DATE:	NO.	BY:	DATE:	S-34
1			3			TOTAL SHEETS
2			4			142

DRAWN BY : PEGGY PARISI DATE : 3-25-10
CHECKED BY : B.N. BARODAWALA DATE : 5-4-10

16-SEP-2010 14:47
Z:\TIPProjects-U\U4007b\Structures\FinalPlans\Str. #2\u-4007b_sd_ss_02.dgn
podkins

STR. #2

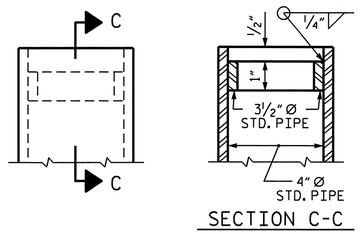

DETAIL "A"

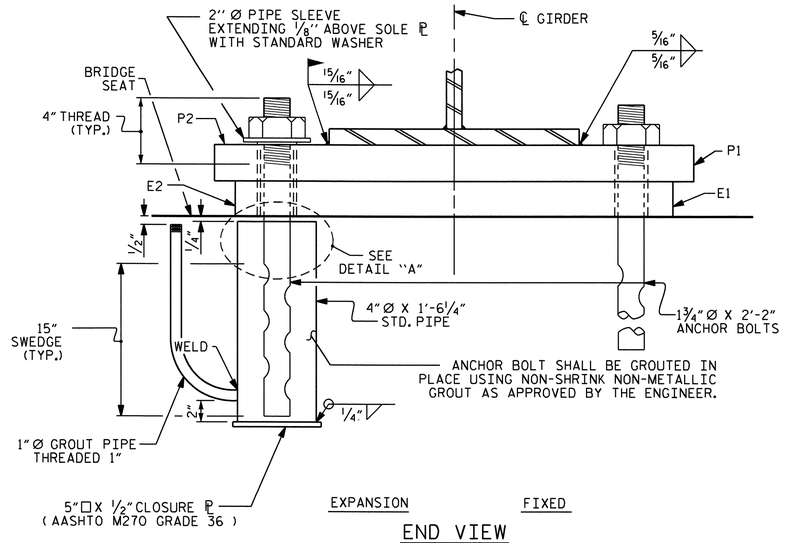

END VIEW

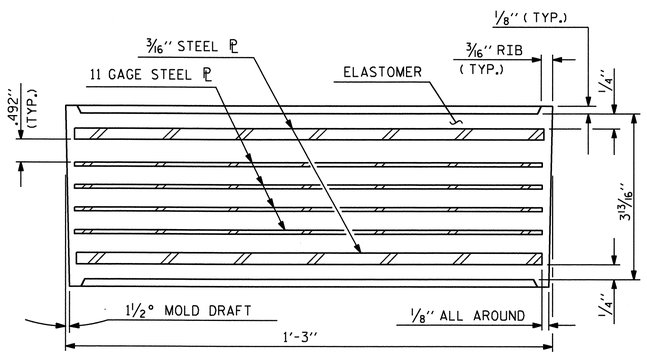

TYPICAL SECTION OF ELASTOMERIC BEARING

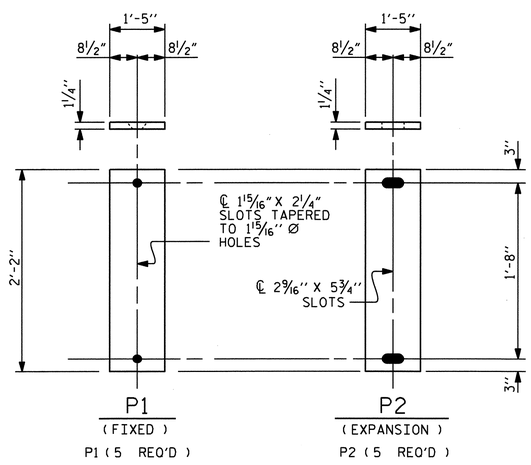

SOLE PLATE DETAILS ("P")

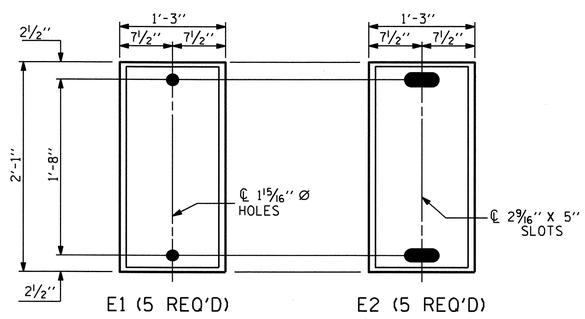

PLAN VIEW OF ELASTOMERIC BEARING

TYPE VI

NOTES

AT ALL FIXED POINTS OF SUPPORT, NUTS FOR ANCHOR BOLTS ARE TO BE TIGHTENED FINGER TIGHT AND THEN BACKED OFF 1/2 TURN. THE THREAD OF THE NUT AND BOLT SHALL THEN BE BURRED WITH A SHARP POINTED TOOL.

THE 2" Ø PIPE SLEEVE SHALL BE CUT FROM SCHEDULE 40 PVC PLASTIC PIPE. THE PVC PLASTIC PIPE SHALL MEET THE REQUIREMENTS OF ASTM D1785.

THE PAYMENT FOR THE PIPE SLEEVES SHALL BE INCLUDED IN THE SEVERAL PAY ITEMS.

FOR AASHTO M270 GRADE 50W STRUCTURAL STEEL, SOLE PLATE SHALL BE AASHTO M270 GRADE 50W AND SHALL NOT BE GALVANIZED. ANCHOR BOLTS, NUTS AND WASHERS SHALL BE GALVANIZED IN ACCORDANCE WITH THE STANDARD SPECIFICATIONS.

ANCHOR BOLTS SHALL MEET THE REQUIREMENTS OF ASTM A449. NUTS SHALL MEET THE REQUIREMENTS OF AASHTO M291-DH OR AASHTO M292-2H. WASHERS SHALL MEET THE REQUIREMENTS OF AASHTO M293. SHOP DRAWINGS ARE NOT REQUIRED FOR ANCHOR BOLTS, NUTS AND WASHERS. SHOP INSPECTION IS REQUIRED.

WHEN FIELD WELDING THE SOLE PLATE TO THE GIRDER FLANGE, USE TEMPERATURE INDICATING WAX PENS, OR OTHER SUITABLE MEANS, TO ENSURE THAT THE TEMPERATURE OF THE SOLE PLATE DOES NOT EXCEED 300°F. TEMPERATURES ABOVE THIS MAY DAMAGE THE ELASTOMER.

ALL SURFACES OF BEARING PLATES SHALL BE SMOOTH AND STRAIGHT.

THE CLOSURE PLATE, GROUT PIPE AND STANDARD PIPE FOR THE EXPANSION ASSEMBLY NEED NOT BE GALVANIZED.

THE CONTRACTOR'S ATTENTION IS CALLED TO THE FOLLOWING PROCEDURE, WHICH MAY BE REQUIRED BY THE ENGINEER, TO RESET ELASTOMERIC BEARINGS DUE TO GIRDER TRANSLATION AND END ROTATION:

1. ONCE THE DECK HAS CURED, THE GIRDERS SHALL BE JACKED THEN THE ANCHOR BOLTS AND ELASTOMERIC BEARING SLOTS CENTERED AS NEARLY AS PRACTICAL ABOUT THE BEARING STIFFENER. THIS OPERATION SHALL BE PERFORMED AT APPROXIMATELY 60° F.
2. AFTER CENTERING THE ELASTOMERIC BERARING SLOTS AND ANCHOR BOLTS, THE ANCHOR BOLTS SHALL BE GROUTED.

THE CONTRACTOR MAY PROPOSE ALTERNATE METHODS, PROVIDED DETAILS ARE SUBMITTED TO THE ENGINEER FOR REVIEW AND APPROVAL.

—LOAD RATINGS—	
	MAX.D.L.+ L.L.
TYPE VI	262 K

PROJECT NO. U-4007B
ONSLOW COUNTY
STATION: 22+34.67 -NBL RAMP-

STATE OF NORTH CAROLINA
DEPARTMENT OF TRANSPORTATION
RALEIGH
STANDARD
ELASTOMERIC BEARING DETAILS
(STEEL SUPERSTRUCTURE)

NORTH CAROLINA PROFESSIONAL SEAL 025516 ENGINEER EMILY E. MURRAY
8/24/10

REVISIONS								SHEET NO.
NO.	BY:	DATE:	NO.	BY:	DATE:			S-35
1			3					TOTAL SHEETS
2			4					142

ASSEMBLED BY : PEGGY PARISI	DATE : 3-26-10		
CHECKED BY : B.N. BARODAWALA	DATE : 5-12-10		
DRAWN BY : EEM 10/95	REV. 10/17/00	RWW/LES	
CHECKED BY : PEK 10/95	REV. 7/10/01	LES/RDR	
	REV. 5/1/06	TLA/GM	

24-AUG-2010 07:37
G:\TIPProjects-U\U4007b\Structures\FinalPlans\Str. #2\u-4007b_sd_bg_02.dgn
toverette

STR. #2 STD. NO. EB2 (SHT 3b)

DEAD LOAD DEFLECTION TABLE FOR GIRDERS - SPAN "A"

	ALL GIRDERS																				
@ TWENTIETH POINTS BETWEEN ℄ BEARINGS	0	.05	.10	.15	.20	.25	.30	.35	.40	.45	.50	.55	.60	.65	.70	.75	.80	.85	.90	.95	0
DEFLECTION DUE TO WEIGHT OF GIRDER	0.000	0.025	0.050	0.073	0.095	0.113	0.129	0.142	0.152	0.157	0.159	0.157	0.152	0.142	0.129	0.113	0.095	0.073	0.050	0.025	0.000
DEFLECTION DUE TO WEIGHT OF SLAB *	0.000	0.056	0.114	0.169	0.219	0.263	0.300	0.330	0.352	0.366	0.370	0.366	0.352	0.330	0.300	0.263	0.219	0.169	0.114	0.056	0.000
DEFLECTION DUE TO WEIGHT OF BARRIER RAIL	0.000	0.007	0.013	0.019	0.024	0.029	0.033	0.036	0.039	0.040	0.041	0.040	0.039	0.036	0.033	0.029	0.024	0.019	0.013	0.007	0.000
TOTAL DEAD LOAD DEFLECTION	0.000	0.088	0.177	0.261	0.338	0.405	0.462	0.508	0.543	0.563	0.570	0.563	0.543	0.508	0.462	0.405	0.338	0.261	0.177	0.088	0.000
VERTICAL CURVE ORDINATE	0.000	0.028	0.053	0.075	0.094	0.110	0.123	0.133	0.141	0.145	0.147	0.145	0.141	0.133	0.123	0.110	0.094	0.075	0.053	0.028	0.000
REQUIRED CAMBER	0	1 3/8"	2 3/4"	4 1/16"	5 3/16"	6 3/16"	7"	7 11/16"	8 3/16"	8 1/2"	8 5/8"	8 1/2"	8 3/16"	7 11/16"	7"	6 3/16"	5 3/16"	4 1/16"	2 3/4"	1 3/8"	0

* INCLUDES SLAB, BUILDUPS & STAY-IN-PLACE FORMS.
ALL VALUES ARE SHOWN IN FEET EXCEPT "REQUIRED CAMBER", WHICH IS GIVEN IN INCHES (FRACTION FORM).

PROJECT NO. U-4007B
ONSLOW COUNTY
STATION: 22+34.67 -NBL RAMP-

STATE OF NORTH CAROLINA
DEPARTMENT OF TRANSPORTATION
RALEIGH

SUPERSTRUCTURE

DEAD LOAD DEFLECTIONS

NORTH CAROLINA PROFESSIONAL SEAL 025516 ENGINEER EMILY E. MURRAY
8/24/10

REVISIONS						SHEET NO.
NO.	BY:	DATE:	NO.	BY:	DATE:	S-36
1			3			TOTAL SHEETS
2			4			142

DRAWN BY : PEGGY PARISI DATE : 3-24-10
CHECKED BY : B.N. BARODAWALA DATE : 5-11-10

24-AUG-2010 07:37
G:\TIPProjects-U\U4007b\Structures\FinalPlans\Str. #2\u-4007b_sd_dl_02.dgn
taverette

STR. #2

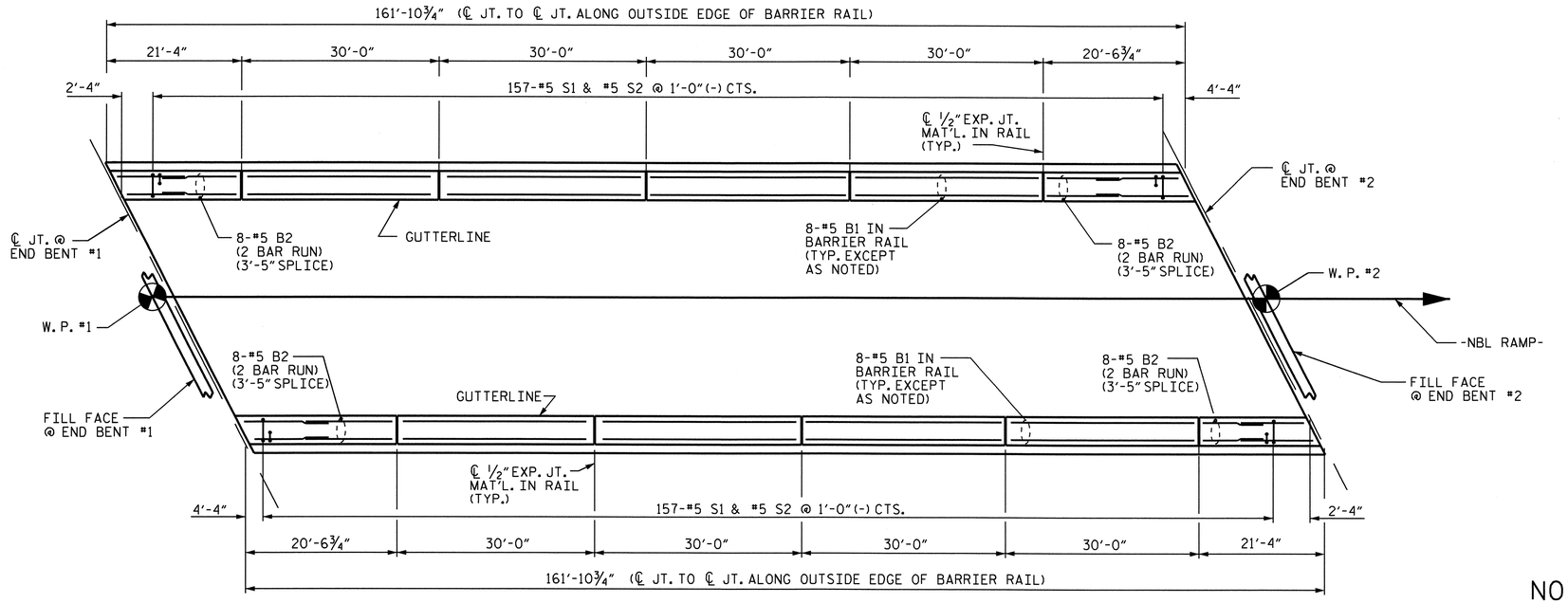

PLAN

BAR TYPES

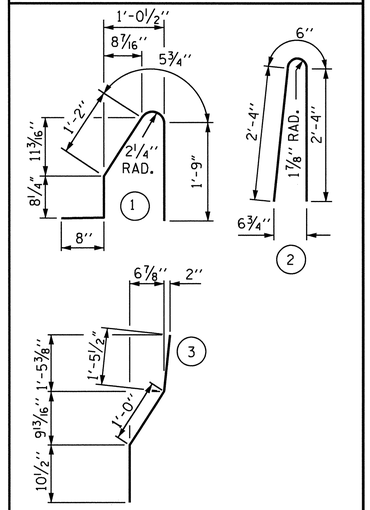

ALL BAR DIMENSIONS ARE OUT TO OUT

BILL OF MATERIAL

FOR CONCRETE BARRIER RAIL ONLY

BAR	NO.	SIZE	TYPE	LENGTH	WEIGHT
* B1	64	#5	STR	29'-7"	1975
* B2	64	#5	STR	12'-2"	812
* S1	314	#5	1	4'-9"	1556
* S2	314	#5	2	5'-2"	1692
* S3	12	#5	3	3'-4"	42
* S4	12	#5	STR	3'-2"	40
* EPOXY COATED REINFORCING STEEL				6117	LBS.
CLASS AA CONCRETE				32.4	CU. YDS.
CONCRETE BARRIER RAIL				323.79	LIN. FT.

NOTES

THE BARRIER RAIL IN THE SPAN SHALL NOT BE CAST UNTIL ALL SLAB CONCRETE IN THE SPAN HAS BEEN CAST AND HAS REACHED A MINIMUM COMPRESSIVE STRENGTH OF 3,000 PSI.

WHEN EVAZOTE JOINT SEAL IS REQUIRED, THE JOINT IN THE DECK SHALL BE SAWED PRIOR TO THE CASTING OF BARRIER RAIL.

ALL REINFORCING STEEL IN BARRIER RAILS SHALL BE EPOXY COATED.

THE #5 S3 AND #5 S4 BARS SHALL BE INSTALLED, USING AN ADHESIVE ANCHORING SYSTEM, AFTER SAWING THE JOINT. THE YIELD LOAD FOR THE #5 S3 AND #5 S4 BARS IS 18.6 KIPS. FIELD TESTING FOR THE ADHESIVE BONDING SYSTEM IS NOT REQUIRED.

GROOVED CONTRACTION JOINTS, ½" IN DEPTH, SHALL BE TOOLED IN ALL EXPOSED FACES OF THE BARRIER RAIL AND IN ACCORDANCE WITH ARTICLE 825-10(B) OF THE STANDARD SPECIFICATIONS. THE CONTRACTION JOINT SHALL BE LOCATED AT EACH THIRD POINT BETWEEN BARRIER RAIL EXPANSION JOINTS. ONLY ONE CONTRACTION JOINT IS REQUIRED AT MIDPOINT OF BARRIER RAIL SEGMENTS LESS THAN 20 FEET IN LENGTH AND NO CONTRACTION JOINTS ARE REQUIRED FOR THOSE SEGMENTS LESS THAN 10 FEET IN LENGTH.

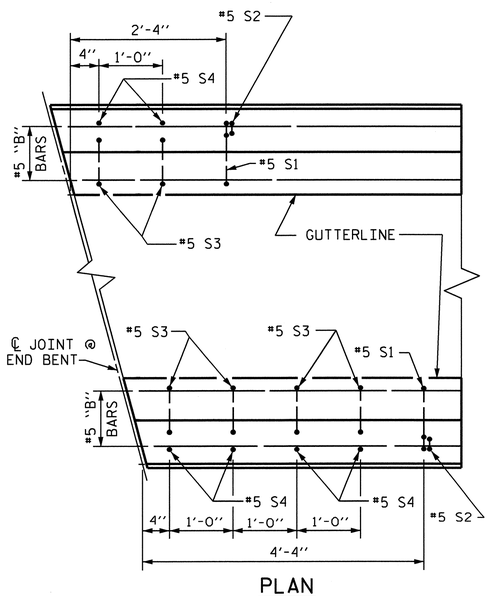

PLAN

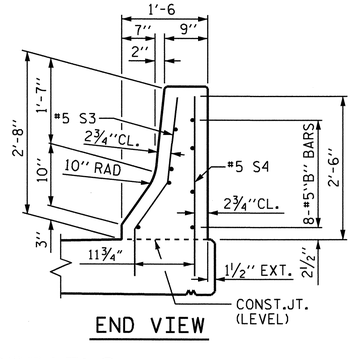

END VIEW

END OF RAIL DETAILS

FOR ADHESIVE ANCHORING AT SAWED JOINTS

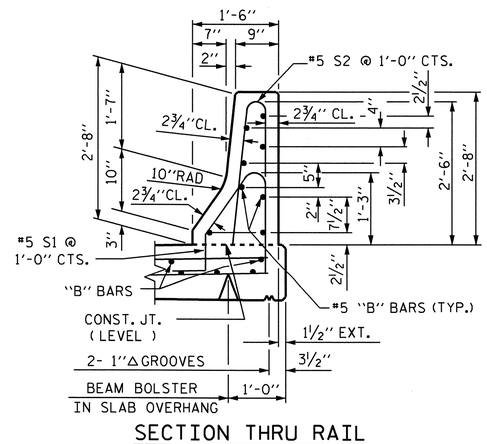

SECTION THRU RAIL

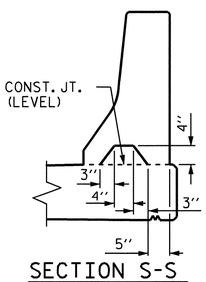

SECTION S-S

AT DAM IN OPEN JOINT (THIS IS TO BE USED ONLY WHEN SLIP FORM IS USED)

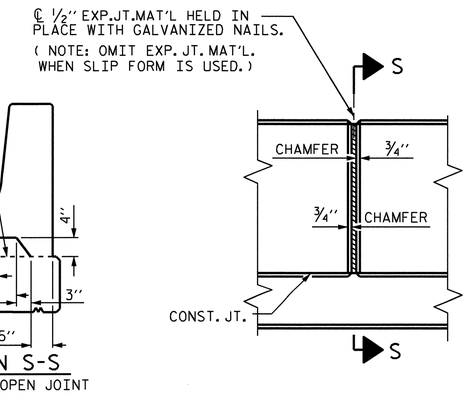

ELEVATION AT EXPANSION JOINTS

BARRIER RAIL DETAILS

NORTH CAROLINA PROFESSIONAL SEAL 025516 ENGINEER EMILY E. MURRAY

8/24/10

PROJECT NO. U-4007B

ONSLOW COUNTY

STATION: 22+34.67 -NBL RAMP-

STATE OF NORTH CAROLINA
DEPARTMENT OF TRANSPORTATION
RALEIGH

STANDARD

CONCRETE BARRIER RAIL

REVISIONS						SHEET NO.
NO.	BY:	DATE:	NO.	BY:	DATE:	S-37
1			3			TOTAL SHEETS
2			4			142

STR. #2 STD. NO. CBR1

ASSEMBLED BY : PEGGY PARISI DATE : 3-3-10
CHECKED BY : B.N. BARODAWALA DATE : 5-12-10

DRAWN BY : ARB 5/87
CHECKED BY : SJD 9/87

REV. 10/17/00 RWW/LES
REV. 5/7/03R RWW/JTE
REV. 5/1/06R TLA/GM

24-AUG-2010 07:37
G:\TIPProjects-U\U4007b\Structures\FinalPlans\Str. #2\u-4007b_sd_br_02.dgn
taverette

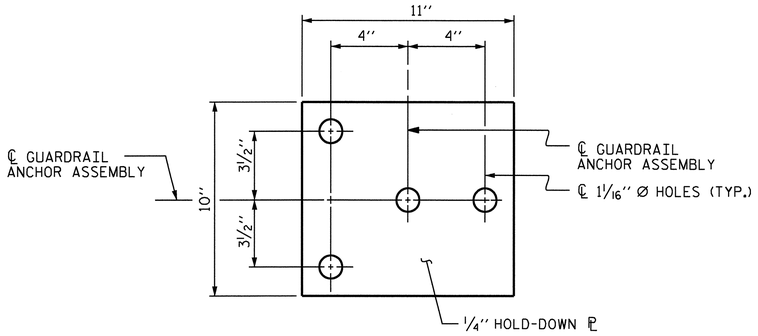

PLAN

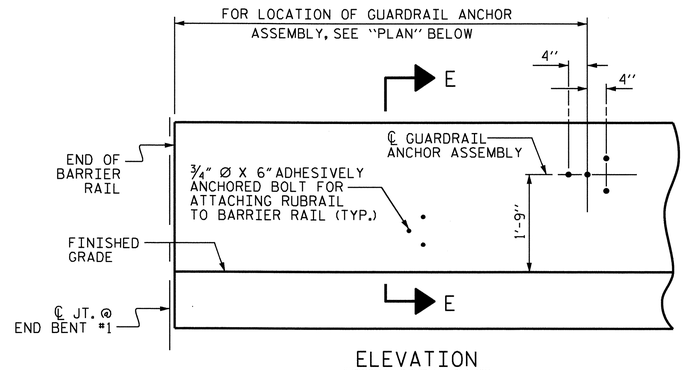

ELEVATION

FOR LOCATION OF RUBRAIL, SEE ROADWAY STD. 862.03

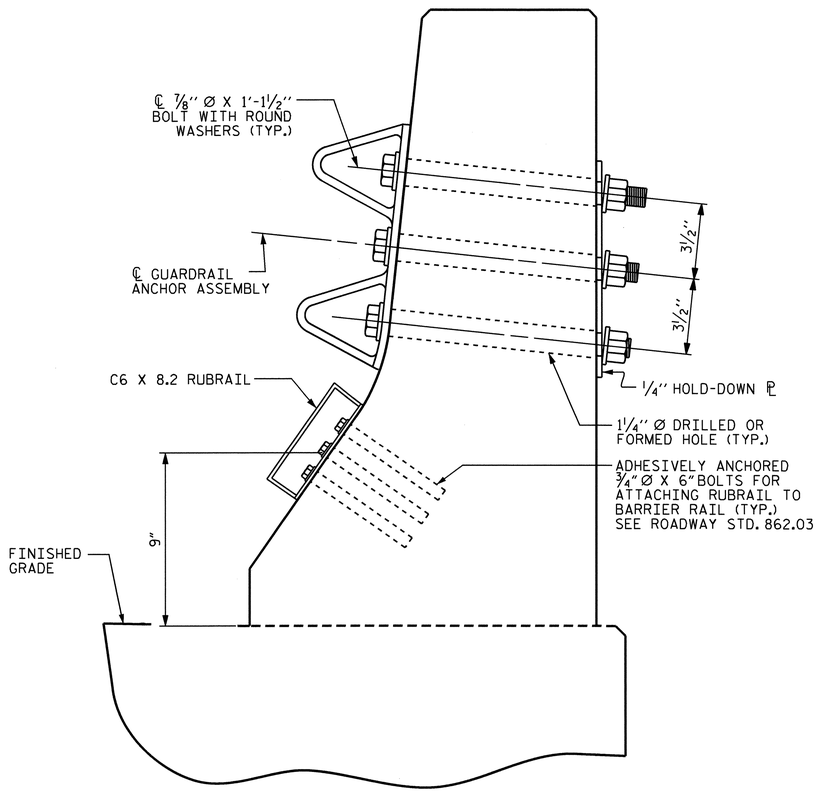

SECTION E-E

GUARDRAIL ANCHOR ASSEMBLY DETAILS

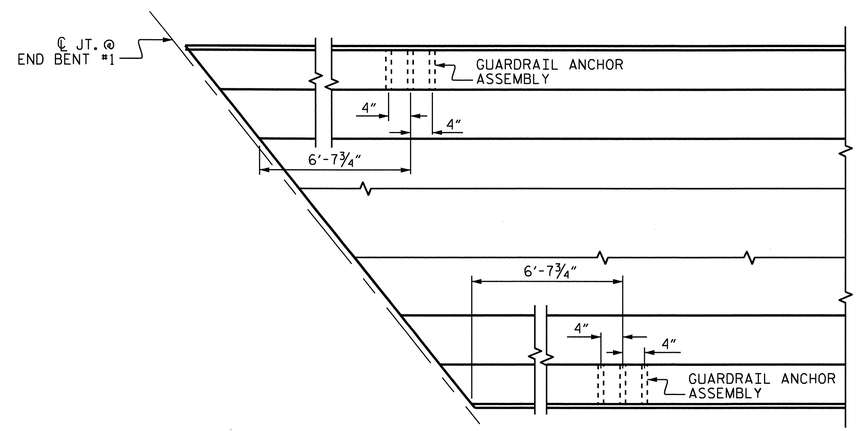

PLAN

LOCATION OF ANCHORS FOR GUARDRAIL

END BENT #1 SHOWN, END BENT #2 SIMILAR.

NOTES

THE GUARDRAIL ANCHOR ASSEMBLY SHALL CONSIST OF A 1/4'' HOLD DOWN PLATE AND 4 - 7/8'' Ø BOLTS WITH NUTS AND WASHERS, RUBRAIL, AND ADHESIVELY ANCHORED BOLTS.

THE HOLD-DOWN PLATE SHALL CONFORM TO AASHTO M270 GRADE 36. AFTER FABRICATION, THE HOLD-DOWN PLATE SHALL BE HOT-DIP GALVANIZED IN ACCORDANCE WITH AASHTO M111.

BOLTS SHALL CONFORM TO THE REQUIREMENTS OF ASTM A307 AND NUTS SHALL CONFORM TO THE REQUIREMENTS OF AASHTO M291. BOLTS, NUTS AND WASHERS SHALL BE GALVANIZED. (AT THE CONTRACTOR'S OPTION, STAINLESS STEEL BOLTS, NUTS AND WASHERS MAY BE USED AS AN ALTERNATE FOR THE 7/8'' Ø GALVANIZED BOLTS, NUTS AND WASHERS. THEY SHALL CONFORM TO OR EXCEED THE MECHANICAL REQUIREMENTS OF ASTM A307. THE USE OF THIS ALTERNATE SHALL BE APPROVED BY THE ENGINEER.)

THE GUARDRAIL ANCHOR ASSEMBLY IS REQUIRED AT ALL POINTS WHERE APPROACH GUARDRAIL IS TO BE ATTACHED TO THE END OF BARRIER RAIL. FOR POINTS OF ATTACHMENT, SEE SKETCH.

AFTER INSTALLATION, THE EXPOSED THREAD OF THE BOLT SHALL BE BURRED WITH A SHARP POINTED TOOL.

THE COST OF THE GUARDRAIL ANCHOR ASSEMBLY SHALL BE INCLUDED IN THE UNIT CONTRACT PRICE BID FOR CONCRETE BARRIER RAIL.

THE 1 1/4'' Ø HOLES SHALL BE FORMED OR DRILLED WITH A CORE BIT. IMPACT TOOLS WILL NOT BE PERMITTED. ANY CONCRETE DAMAGED BY THIS WORK SHALL BE REPAIRED TO THE SATISFACTION OF THE ENGINEER.

THE C6 X 8.2 RUBRAIL IS TO BE ADHESIVELY ANCHORED TO THE RAIL USING THREE 3/4''Ø X 6'' BOLTS WITH WASHERS. LEVEL ONE FIELD TESTING IS REQUIRED, AND THE YIELD LOAD OF THE 3/4''Ø BOLT IS 12 KIPS. FOR ADHESIVELY ANCHORED ANCHOR BOLTS OR DOWELS, SEE SPECIAL PROVISIONS. SEE ROADWAY STANDARD 862.03 FOR DETAILS AND LOCATION OF THE RUBRAIL.

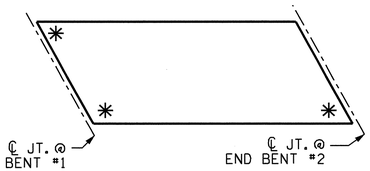

SKETCH SHOWING POINTS OF ATTACHMENTS

✳ DENOTES B-77 GUARDRAIL ANCHOR ASSEMBLY

PROJECT NO. U-4007B

ONSLOW COUNTY

STATION: 22+34.67 -NBL RAMP-

STATE OF NORTH CAROLINA
DEPARTMENT OF TRANSPORTATION
RALEIGH

STANDARD

GUARDRAIL ANCHORAGE FOR BARRIER RAIL

NORTH CAROLINA PROFESSIONAL SEAL 025516 ENGINEER ELMAY E. MURRAY 6/29/10

REVISIONS						SHEET NO.
NO.	BY:	DATE:	NO.	BY:	DATE:	S-38
1			3			TOTAL SHEETS
2			4			142

ASSEMBLED BY : PEGGY PARISI	DATE : 3-2-10
CHECKED BY : B.N. BARODAWALA	DATE : 5-7-10
DRAWN BY : TLA 5/06	ADDED 5/1/06R KMM/GM
CHECKED BY : GM 5/06	

24-AUG-2010 07:36
G:\TIPProjects-U\U4007b\Structures\FinalPlans\Str. #2\u-4007b_sd_br_02.dgn
taverette

STR. #2 STD. NO. GRA2 (SHT 3)

SUPERSTRUCTURE REINFORCING STEEL LENGTHS ARE BASED ON THE FOLLOWING MINIMUM SPLICE LENGTHS

BAR SIZE	SUPERSTRUCTURE EXCEPT APPROACH SLABS, PARAPET, AND BARRIER RAIL		APPROACH SLABS		PARAPET AND BARRIER RAIL
	EPOXY COATED	UNCOATED	EPOXY COATED	UNCOATED	
#4	2'-0"	1'-9"	2'-0"	1'-9"	2'-9"
#5	2'-6"	2'-2"	2'-6"	2'-2"	3'-5"
#6	3'-0"	2'-7"	3'-10"	2'-7"	4'-4"
#7	5'-3"	3'-6"			
#8	6'-10"	4'-7"			

REINFORCING STEEL BAR SCHEDULE

BAR	NO.	SIZE	TYPE	LENGTH	WEIGHT
✳ A1	257	#5	STR	40'-11"	10968
A2	259	#5	STR	40'-11"	11053
✳ A101	4	#5	STR	39'-3"	164
✳ A102	4	#5	STR	37'-2"	155
✳ A103	4	#5	STR	35'-0"	146
✳ A104	4	#5	STR	32'-11"	137
✳ A105	4	#5	STR	30'-10"	129
✳ A106	4	#5	STR	28'-8"	120
✳ A107	4	#5	STR	26'-7"	111
✳ A108	4	#5	STR	24'-6"	102
✳ A109	4	#5	STR	22'-4"	93
✳ A110	4	#5	STR	20'-3"	84
✳ A111	4	#5	STR	18'-2"	76
✳ A112	4	#5	STR	16'-1"	67
✳ A113	4	#5	STR	13'-11"	58
✳ A114	4	#5	STR	11'-10"	49
✳ A115	4	#5	STR	9'-9"	41
✳ A116	4	#5	STR	7'-7"	32
✳ A117	4	#5	STR	5'-6"	23
✳ A118	4	#5	STR	3'-5"	14
✳ A119	4	#5	STR	1'-3"	5

BAR	NO.	SIZE	TYPE	LENGTH	WEIGHT
A201	4	#5	STR	39'-3"	164
A202	4	#5	STR	37'-2"	155
A203	4	#5	STR	35'-0"	146
A204	4	#5	STR	32'-11"	137
A205	4	#5	STR	30'-10"	129
A206	4	#5	STR	28'-8"	120
A207	4	#5	STR	26'-7"	111
A208	4	#5	STR	24'-6"	102
A209	4	#5	STR	22'-4"	93
A210	4	#5	STR	20'-3"	84
A211	4	#5	STR	18'-2"	76
A212	4	#5	STR	16'-1"	67
A213	4	#5	STR	13'-11"	58
A214	4	#5	STR	11'-10"	49
A215	4	#5	STR	9'-9"	41
A216	4	#5	STR	7'-7"	32
A217	4	#5	STR	5'-6"	23
A218	4	#5	STR	3'-5"	14
A219	4	#5	STR	1'-3"	5
✳ B1	168	#4	STR	28'-5"	3189
B2	132	#5	STR	55'-3"	7607
✳ G1	2	#5	STR	46'-0"	96
✳ K1	12	#5	1	10'-10"	136
✳ K2	18	#5	2	13'-11"	261
✳ S1	56	#4	3	4'-5"	165

REINFORCING STEEL 20266 LBS.

✳ EPOXY COATED
REINFORCING STEEL 16421 LBS.

BAR TYPES

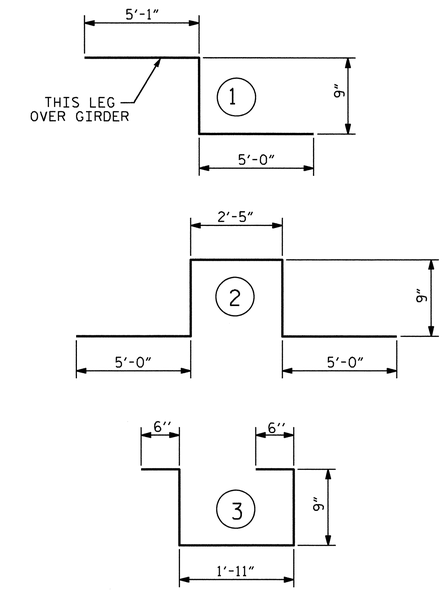

ALL BAR DIMENSIONS ARE OUT TO OUT

SUPERSTRUCTURE BILL OF MATERIAL

	CLASS AA CONCRETE	REINFORCING STEEL	EPOXY COATED REINFORCING STEEL
	(CU.YDS.)	(LBS.)	(LBS.)
SPAN "A"	215.1	20266	16421
TOTALS✳✳	215.1	20266	16421

✳✳QUANTITIES FOR BARRIER RAIL ARE NOT INCLUDED

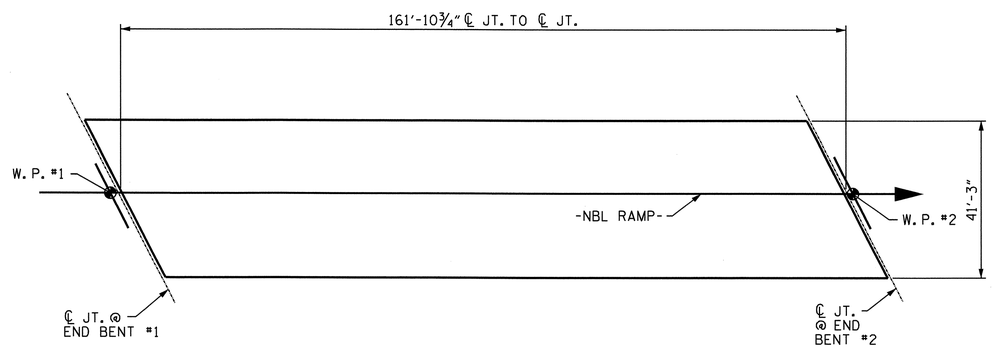

LAYOUT FOR COMPUTING AREA OF REINFORCED CONCRETE DECK SLAB (SQ. FT. = 6678)

GROOVING BRIDGE FLOORS

APPROACH SLABS	1737	SQ.FT.
BRIDGE DECK	5649	SQ.FT.
TOTAL	7386	SQ.FT.

PROJECT NO. U-4007B
ONSLOW COUNTY
STATION: 22+34.67 -NBL RAMP-

STATE OF NORTH CAROLINA
DEPARTMENT OF TRANSPORTATION
RALEIGH

STANDARD
SUPERSTRUCTURE
BILL OF MATERIAL

NORTH CAROLINA PROFESSIONAL SEAL 025516 ENGINEER EMILY E. MURRAY
8/24/10

REVISIONS								SHEET NO.
NO.	BY:	DATE:	NO.	BY:	DATE:			S-39
1			3					TOTAL SHEETS
2			4					142

ASSEMBLED BY : PEGGY PARISI DATE : 2-5-10
CHECKED BY : B.N. BARODAWALA DATE : 5-12-10

DRAWN BY : JMB 5/87
CHECKED BY : SJD 9/87

REV. 6/1/94 EEM/GRP
REV. 8/16/99 RWW/LES
REV. 5/1/06 TLA/GM

24-AUG-2010 07:36
G:\TIPProjects-U\U4007b\Structures\FinalPlans\Str. #2\u-4007b_sd_bm_02.dgn
taverette

STR. #2 STD. NO. BOM1

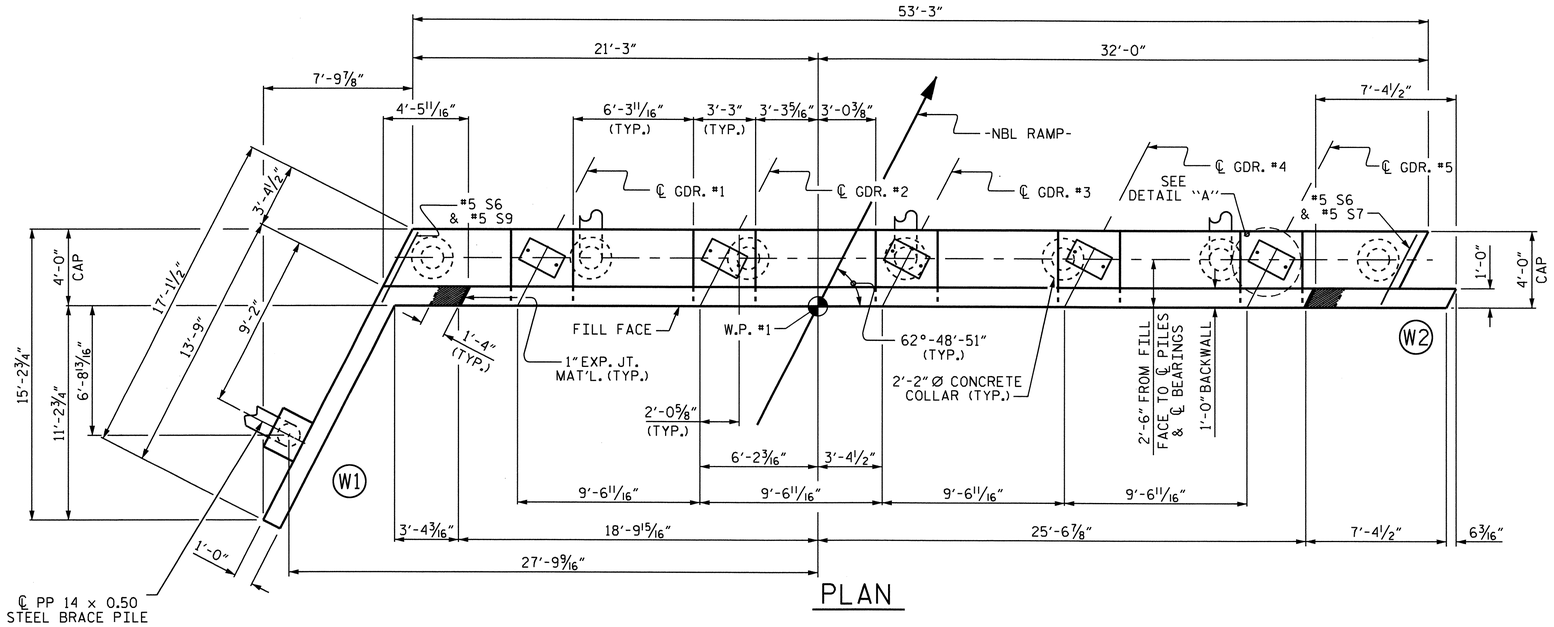

PLAN

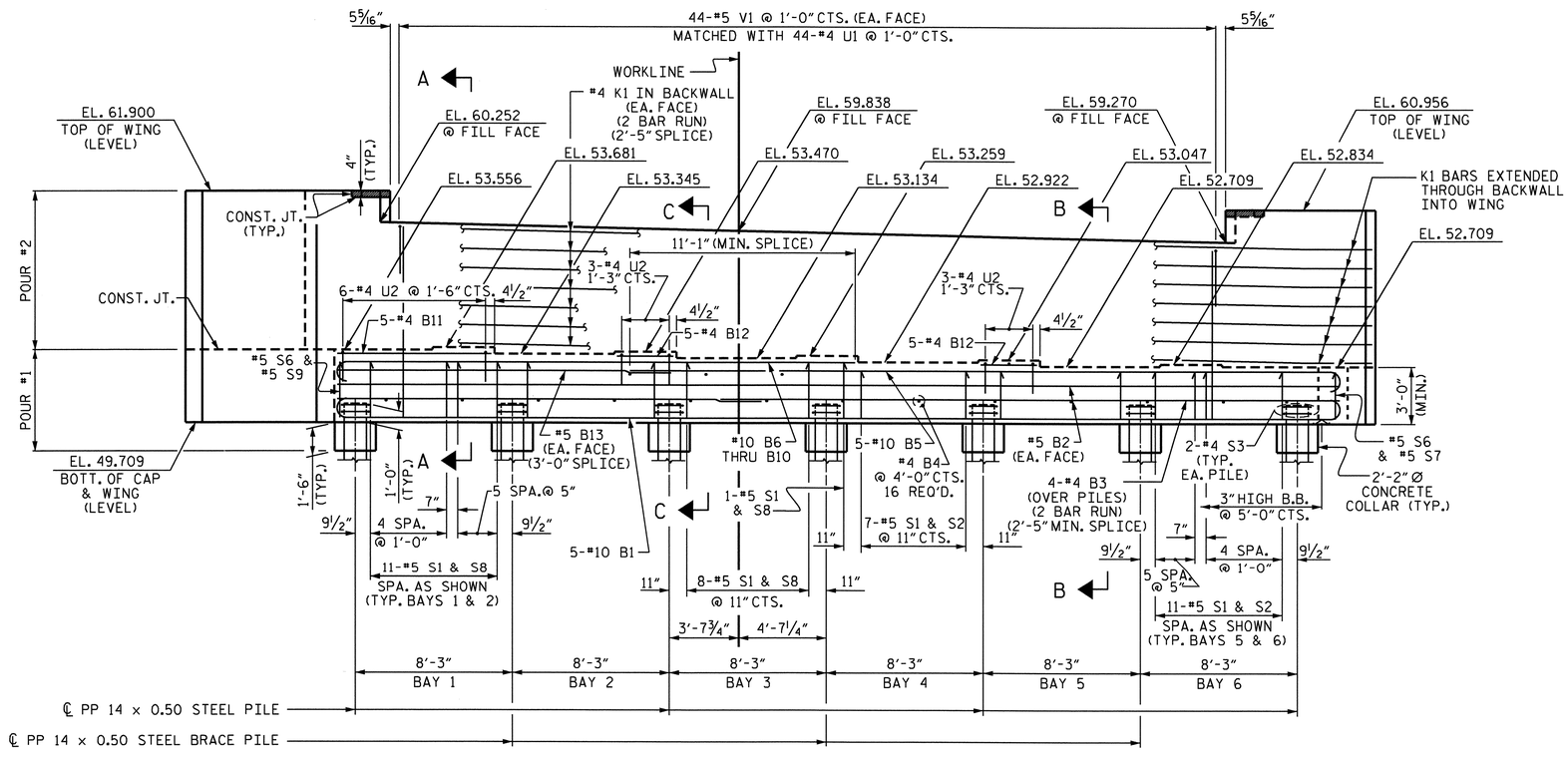

ELEVATION

(WING BRACE PILE NOT SHOWN FOR CLARITY.)

NOTES

STIRRUPS IN CAP MAY BE SHIFTED AS NECESSARY TO CLEAR ANCHOR BOLTS.

BACKWALL SHALL BE PLACED BEFORE APPLYING THE EPOXY PROTECTIVE COATING.

THE TOP SURFACE AREAS OF THE END BENT CAP SHALL BE CURED IN ACCORDANCE WITH THE STANDARD SPECIFICATIONS EXCEPT THE MEMBRANE CURING COMPOUND METHOD SHALL NOT BE USED.

THE CONTRACTOR SHALL PROVIDE FOR THE INSTALLATION OF THE 4"Ø DRAIN PIPE THROUGH THE WING WALL AS REQUIRED FOR REINFORCED BRIDGE APPROACH FILLS, SEE THE ROADWAY PLANS. REINFORCING STEEL IN THE WING WALL MAY BE SHIFTED AS NECESSARY TO CLEAR THE DRAIN PIPE.

THE TOP SURFACE OF THE END BENT CAP EXCEPT THE BRIDGE SEAT BUILDUPS SHALL BE SLOPED TRANSVERSELY FROM THE FILL FACE TO THE BACK FACE AT A RATE OF 2%.

THE CONCRETE IN THE SHADED AREA OF THE WING SHALL BE POURED AFTER THE JOINT BETWEEN THE DECK AND THE APPROACH SLAB HAS BEEN SAWED AND THE BARRIER RAIL IS CAST IF SLIP FORMING IS USED.

PIPE PILES SHALL BE IN ACCORDANCE WITH SECTION 1084 OF THE STANDARD SPECIFICATIONS.

PIPE PILE PLATES SHALL BE IN ACCORDANCE WITH SECTION 450 OF THE STANDARD SPECIFICATIONS.

REMOVE AND REPLACE OR REPAIR TO THE SATISFACTION OF THE ENGINEER PILES THAT ARE DAMAGED, DEFORMED OR COLLAPSED DURING INSTALLATION OR DRIVING.

PILE SPLICES SHALL BE IN ACCORDANCE WITH THE STANDARD SPECIFICATIONS AND AWS D1.1.

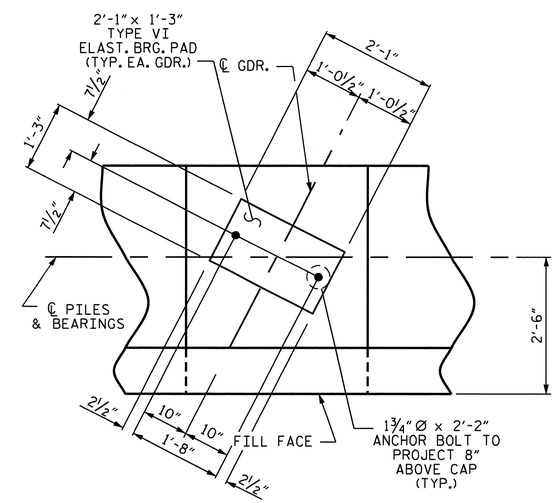

DETAIL "A"

(TYP. EA. BRG.)

PROJECT NO. U-4007B

ONSLOW COUNTY

STATION: 22+34.67 -NBL RAMP-

SHEET 1 OF 3

STATE OF NORTH CAROLINA
DEPARTMENT OF TRANSPORTATION
RALEIGH

SUBSTRUCTURE

END BENT #1

NORTH CAROLINA PROFESSIONAL SEAL 025516 ENGINEER EMILY E. MURRAY

8/24/10

REVISIONS							SHEET NO.
NO.	BY:	DATE:	NO.	BY:	DATE:		S-40
1			3				TOTAL SHEETS
2			4				142

DRAWN BY : J.B. WILSON DATE : 2/22/10
CHECKED BY : PEGGY PARISI DATE : 06/29/10

24-AUG-2010 07:35
G:\TIPProjects-U\U4007b\Structures\Final Plans\Str. #2\u4007b_sd_eb#2.dgn
taverette

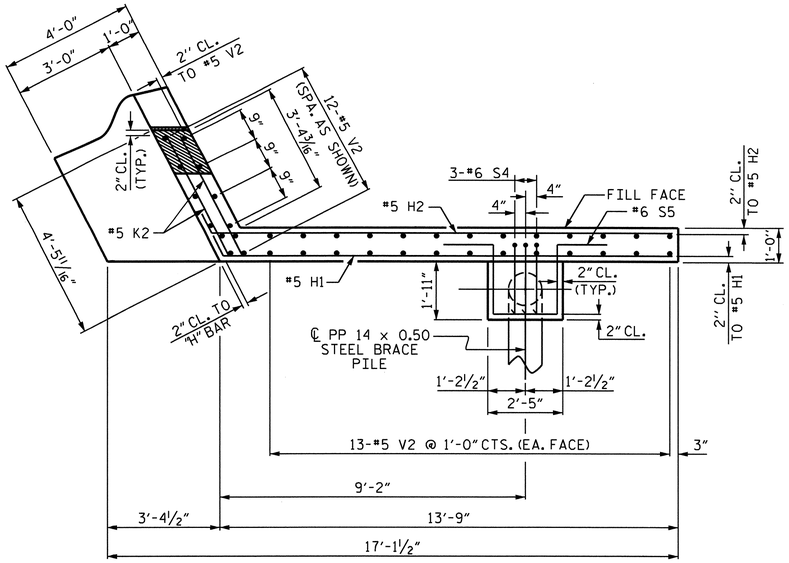

PLAN OF LEFT WING (W1)

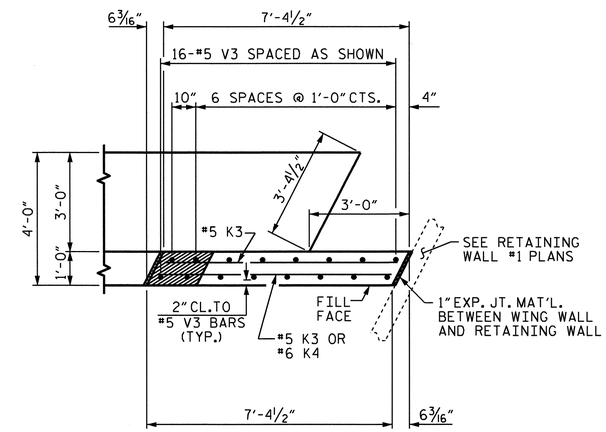

PLAN OF RIGHT WING (W2)

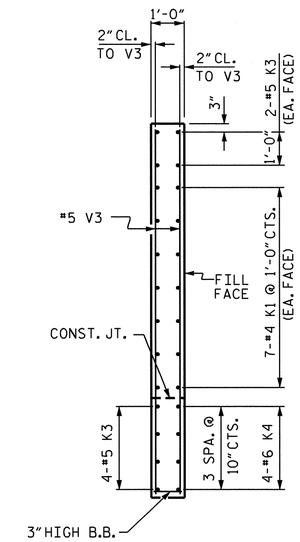

SECTION Y-Y

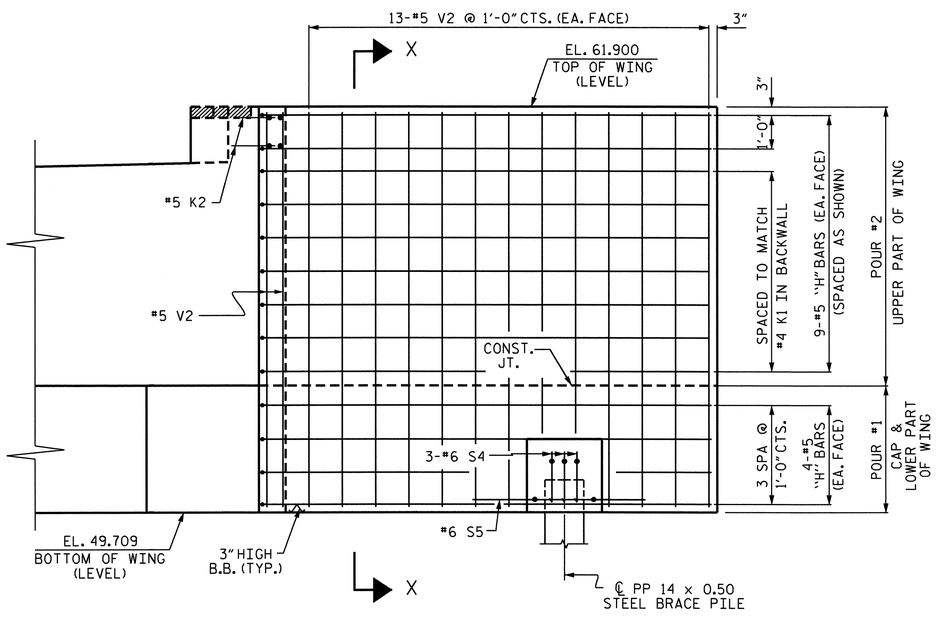

ELEVATION OF LEFT WING (W1)

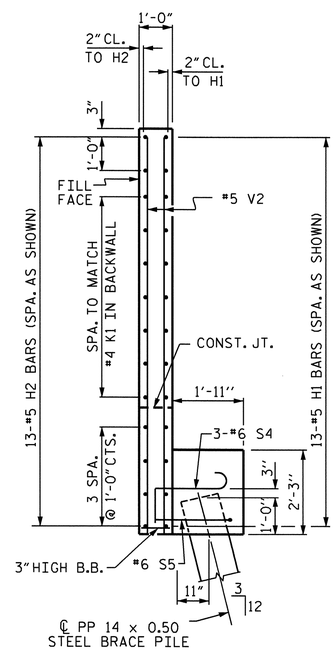

SECTION X-X

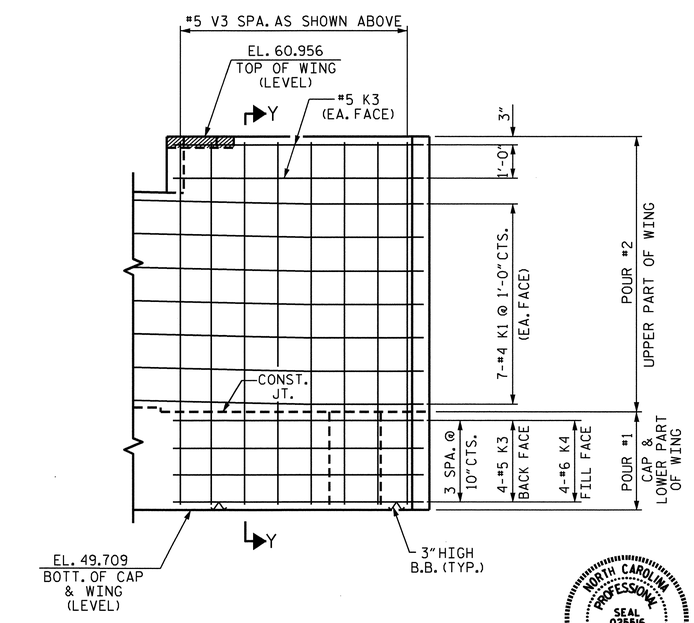

ELEVATION OF RIGHT WING (W2)

NORTH CAROLINA PROFESSIONAL SEAL 025516 ENGINEER EMILY E. MURRAY
8/24/10

PROJECT NO. U-4007B
ONSLOW COUNTY
STATION: 22+34.67 -NBL RAMP-

SHEET 2 OF 3

STATE OF NORTH CAROLINA
DEPARTMENT OF TRANSPORTATION
RALEIGH

SUBSTRUCTURE

END BENT #1

REVISIONS						SHEET NO.
NO.	BY:	DATE:	NO.	BY:	DATE:	S-41
1			3			TOTAL SHEETS
2			4			142

DRAWN BY : J.B. WILSON DATE : 2/23/10
CHECKED BY : PEGGY PARISI DATE : 06/29/10

24-AUG-2010 07:35
G:\TIPProjects-U\U4007b\Structures\FinalPlans\Str. #2\u4007b_sd_eb#2.dgn
taverette

STR. #2

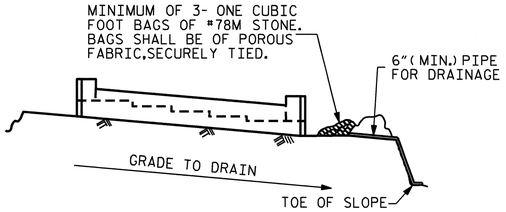

BAGGED STONE AND PIPE SHALL BE PLACED IMMEDIATELY AFTER COMPLETION OF END BENT EXCAVATION. PIPE MAY BE EITHER CONCRETE, CORRUGATED STEEL, CORRUGATED ALUMINUM ALLOY, OR CORRUGATED PLASTIC. PERFORATED PIPE WILL NOT BE ALLOWED.

BAGGED STONE SHALL REMAIN IN PLACE UNTIL THE ENGINEER DIRECTS THAT IT BE REMOVED. THE CONTRACTOR SHALL REMOVE AND DISPOSE OF SILT ACCUMULATIONS AT BAGGED STONE WHEN SO DIRECTED BY THE ENGINEER. BAGS SHALL BE REMOVED AND REPLACED WHENEVER THE ENGINEER DETERMINES THAT THEY HAVE DETERIORATED AND LOST THEIR EFFECTIVENESS.

NO SEPARATE PAYMENT WILL BE MADE FOR THIS WORK AND THE ENTIRE COST OF THIS WORK SHALL BE INCLUDED IN THE UNIT CONTRACT PRICE BID FOR THE SEVERAL PAY ITEMS.

TEMPORARY DRAINAGE AT END BENT

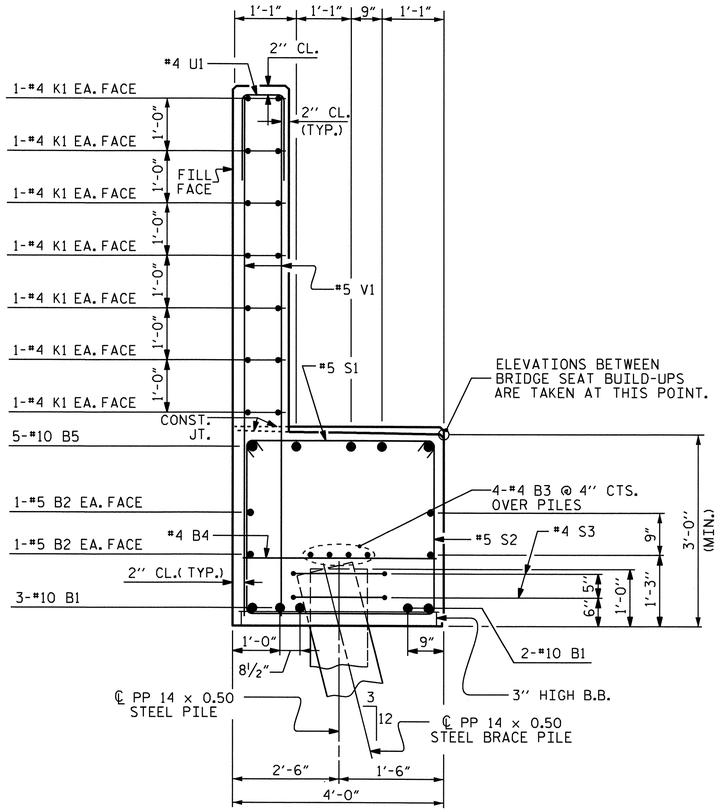

SECTION B-B

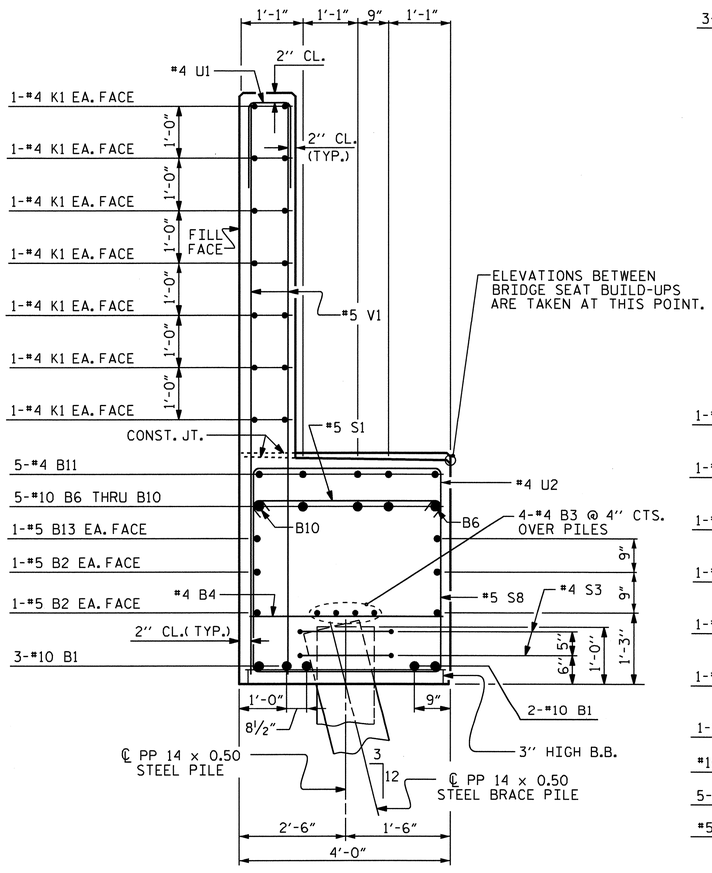

SECTION A-A

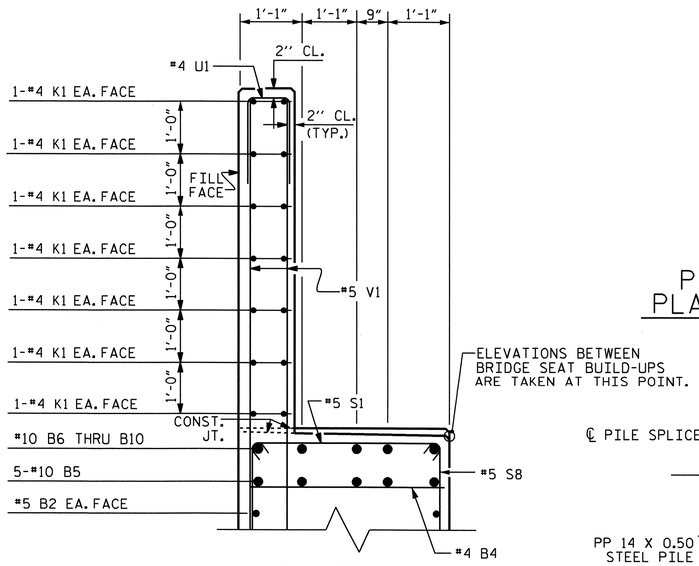

PARTIAL SECTION C-C

BAR TYPES

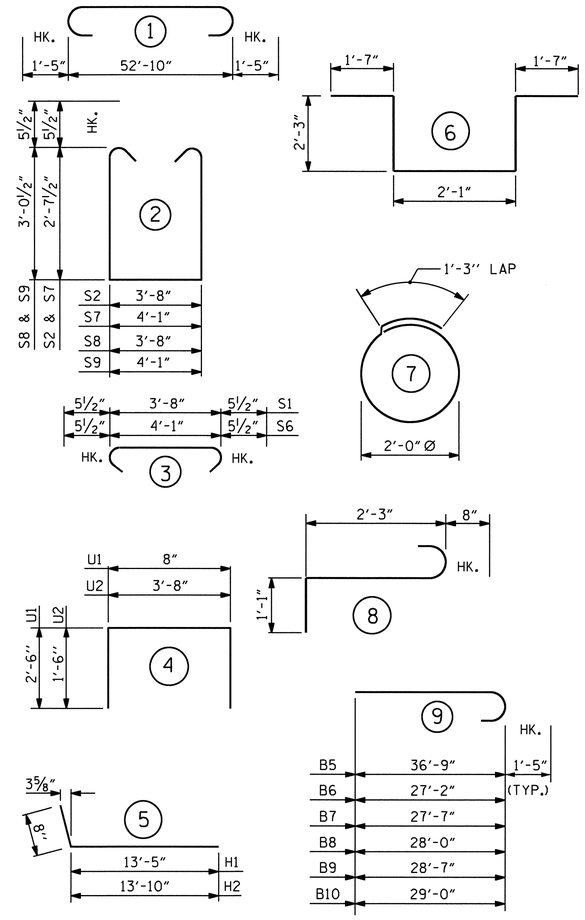

ALL BAR DIMENSIONS ARE OUT TO OUT.

BILL OF MATERIAL

END BENT #1

BAR	NO.	SIZE	TYPE	LENGTH	WEIGHT
B1	5	#10	1	55'-8"	1198
B2	4	#5	STR	52'-11"	221
B3	8	#4	STR	27'-8"	148
B4	16	#4	STR	3'-8"	39
B5	5	#10	9	38'-2"	821
B6	1	#10	9	28'-5"	123
B7	1	#10	9	29'-0"	125
B8	1	#10	9	29'-5"	127
B9	1	#10	9	30'-0"	129
B10	1	#10	9	30'-5"	131
B11	5	#4	STR	8'-1"	27
B12	10	#4	STR	2'-11"	19
B13	2	#5	STR	19'-2"	40
H1	13	#5	5	14'-1"	191
H2	13	#5	5	14'-6"	197
K1	28	#4	STR	29'-2"	546
K2	4	#5	STR	4'-0"	17
K3	8	#5	STR	6'-11"	58
K4	4	#6	STR	6'-11"	42
S1	60	#5	3	4'-7"	287
S2	29	#5	2	9'-10"	297
S3	14	#4	7	7'-7"	71
S4	3	#6	8	4'-0"	18
S5	1	#6	6	9'-9"	15
S6	2	#5	3	5'-0"	10
S7	1	#5	2	10'-3"	11
S8	31	#5	2	10'-8"	345
S9	1	#5	2	11'-1"	12
U1	44	#4	4	5'-8"	167
U2	12	#4	4	6'-8"	53
V1	88	#5	STR	9'-2"	841
V2	38	#5	STR	11'-10"	469
V3	16	#5	STR	10'-10"	181

REINFORCING STEEL = 6976 LBS

POUR #1
CAP, LOWER PART OF WINGS, & CONCRETE PILE COLLAR 30.5 C.Y.
POUR #2
BACKWALL & UPPER PART OF WINGS 20.8 C.Y.
CLASS "A" CONCRETE TOTAL 51.3 C.Y.

PP 14 X 0.50 STEEL PILE
NO. 8 LIN. FT. 400

PIPE PILE PLATES EA. 8

PILE REDRIVES EA. 8

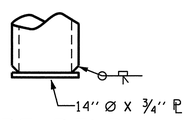

PIPE PILE PLATE DETAIL

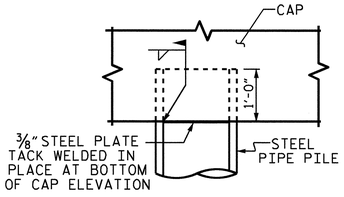

PIPE PILE IN CAP DETAIL

THE CONTRACTOR MAY PROPOSE AN ALTERNATE METHOD FOR PLUGGING THE STEEL PIPE PILE, SUBJECT TO APPROVAL BY THE ENGINEER.

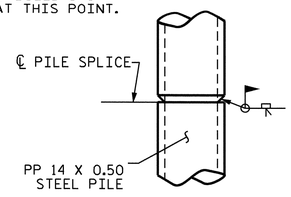

PIPE PILE SPLICE DETAIL

PROJECT NO. U-4007B
ONSLOW COUNTY
STATION: 22+34.67 -NBL RAMP-

SHEET 3 OF 3

STATE OF NORTH CAROLINA
DEPARTMENT OF TRANSPORTATION
RALEIGH

SUBSTRUCTURE
END BENT #1

NORTH CAROLINA PROFESSIONAL SEAL 025516 ENGINEER ELMER E. MURRAY
8/24/10

REVISIONS							SHEET NO.
NO.	BY:	DATE:	NO.	BY:	DATE:		S-42
1			3				TOTAL SHEETS
2			4				142

DRAWN BY : J.B. WILSON DATE : 2/24/10
CHECKED BY : PEGGY PARISI DATE : 06/29/10

24-AUG-2010 07:35
G:\TIPProjects-U\U4007b\Structures\FinalPlans\Str. #2\u4007b_sd_eb#2.dgn
taverette

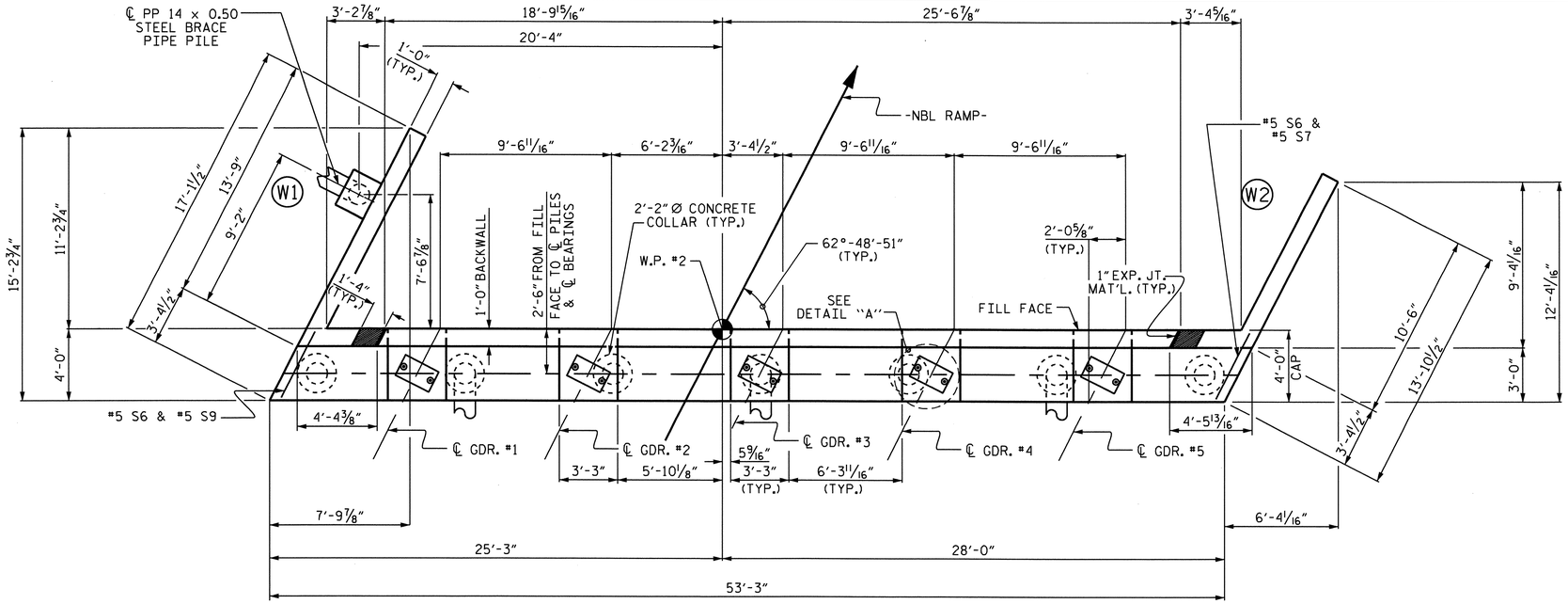

PLAN

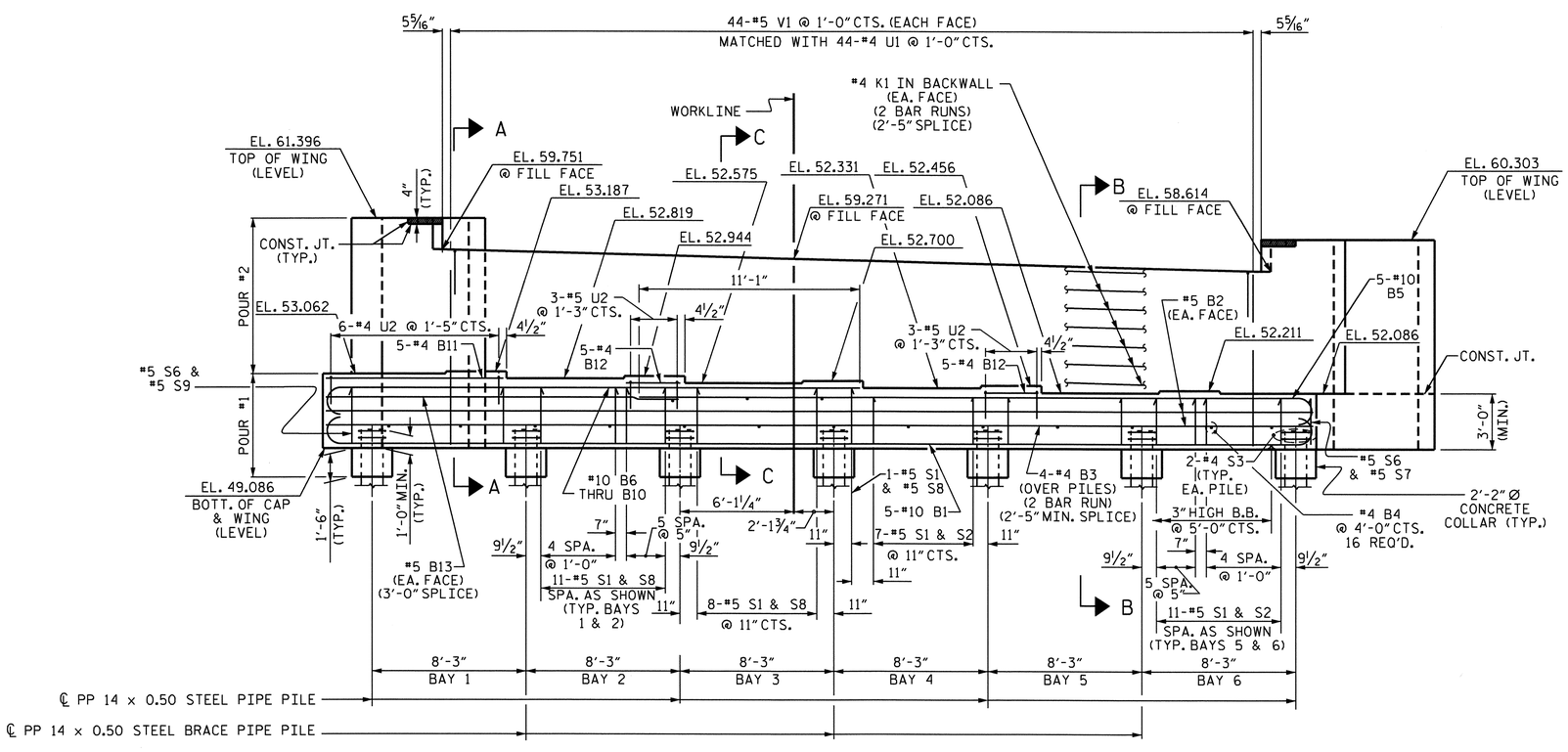

ELEVATION

(WING PILE NOT SHOWN FOR CLARITY.)

NOTES

STIRRUPS IN CAP MAY BE SHIFTED AS NECESSARY TO CLEAR ANCHOR BOLTS.

BACKWALL SHALL BE PLACED BEFORE APPLYING THE EPOXY PROTECTIVE COATING.

THE TOP SURFACE AREAS OF THE END BENT CAP SHALL BE CURED IN ACCORDANCE WITH THE STANDARD SPECIFICATIONS EXCEPT THE MEMBRANE CURING COMPOUND METHOD SHALL NOT BE USED.

THE CONTRACTOR SHALL PROVIDE FOR THE INSTALLATION OF THE 4"Ø DRAIN PIPE THROUGH THE WING WALL AS REQUIRED FOR REINFORCED BRIDGE APPROACH FILLS, SEE THE ROADWAY PLANS. REINFORCING STEEL IN THE WING WALL MAY BE SHIFTED AS NECESSARY TO CLEAR THE DRAIN PIPE.

THE TOP SURFACE OF THE END BENT CAP EXCEPT THE BRIDGE SEAT BUILDUPS SHALL BE SLOPED TRANSVERSELY FROM THE FILL FACE TO THE BACK FACE AT A RATE OF 2%.

THE CONCRETE IN THE SHADED AREA OF THE WING SHALL BE POURED AFTER THE JOINT BETWEEN THE DECK AND THE APPROACH SLAB HAS BEEN SAWED AND THE BARRIER RAIL IS CAST IF SLIP FORMING IS USED.

PIPE PILES SHALL BE IN ACCORDANCE WITH SECTION 1084 OF THE STANDARD SPECIFICATIONS.

PIPE PILE PLATES SHALL BE IN ACCORDANCE WITH SECTION 450 OF THE STANDARD SPECIFICATIONS.

REMOVE AND REPLACE OR REPAIR TO THE SATISFACTION OF THE ENGINEER PILES THAT ARE DAMAGED, DEFORMED OR COLLAPSED DURING INSTALLATION OR DRIVING.

PILE SPLICES SHALL BE IN ACCORDANCE WITH THE STANDARD SPECIFICATIONS AND AWS D1.1.

EPOXY COAT THE END BENT CAP AFTER ADJUSTMENTS ARE MADE TO BEARINGS AND ANCHOR BOLTS ARE GROUTED.

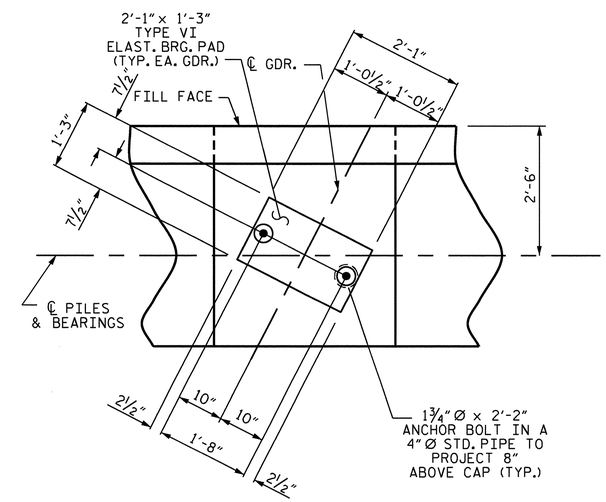

DETAIL "A"

(TYP. EA. BRG.)

PROJECT NO. U-4007B

ONSLOW COUNTY

STATION: 22+34.67 -NBL RAMP-

SHEET 1 OF 3

STATE OF NORTH CAROLINA
DEPARTMENT OF TRANSPORTATION
RALEIGH

SUBSTRUCTURE

END BENT #2

NORTH CAROLINA PROFESSIONAL SEAL 025516 ENGINEER EMILY E. MURRAY
8/24/10

REVISIONS						SHEET NO.
NO.	BY:	DATE:	NO.	BY:	DATE:	S-43
1			3			TOTAL SHEETS
2			4			142

DRAWN BY : J.B. WILSON DATE : 4/05/10
CHECKED BY : PEGGY PARISI DATE : 06/29/10

24-AUG-2010 07:35
G:\TIPProjects-U\U4007b\Structures\FinalPlans\Str. #2\u4007b_sd_eb#2.dgn
taverette

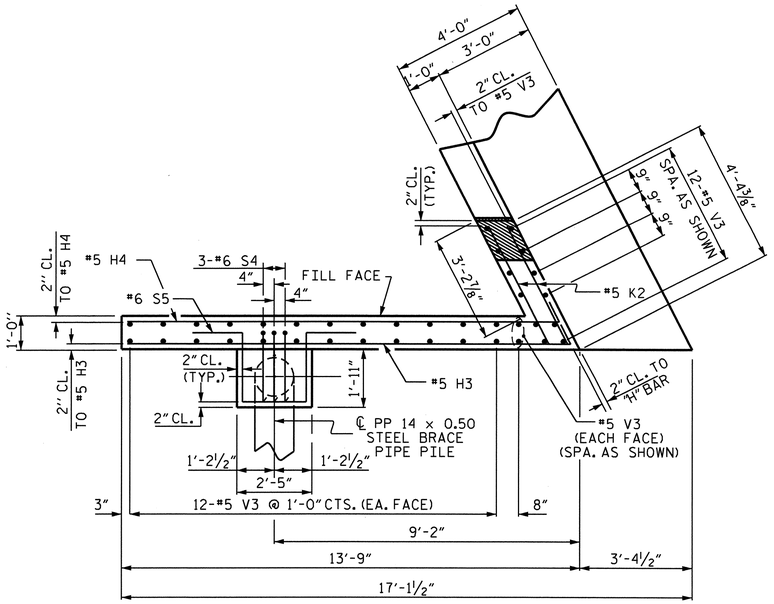

PLAN OF LEFT WING (W1)

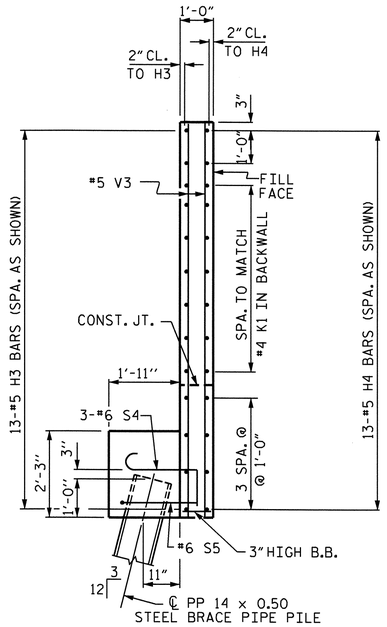

SECTION Y-Y

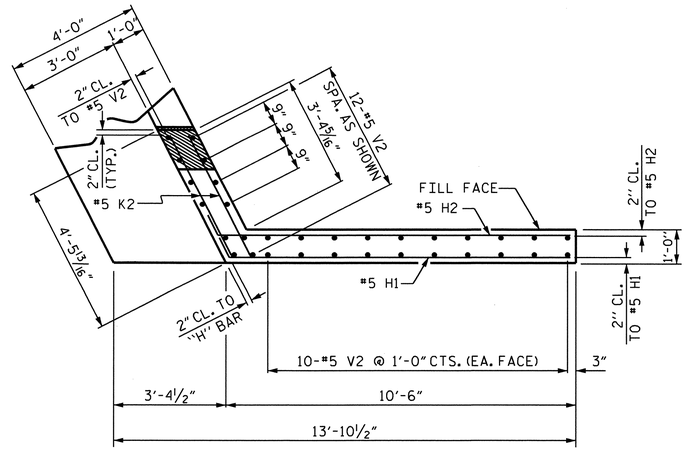

PLAN OF RIGHT WING (W2)

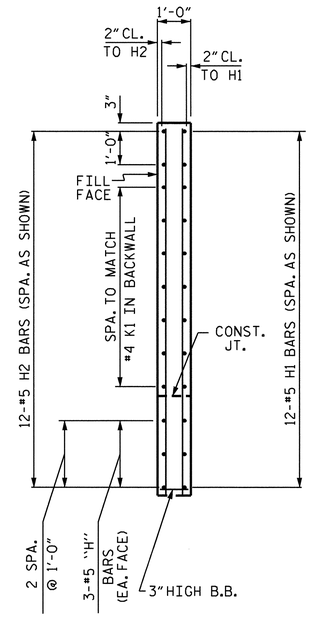

SECTION X-X

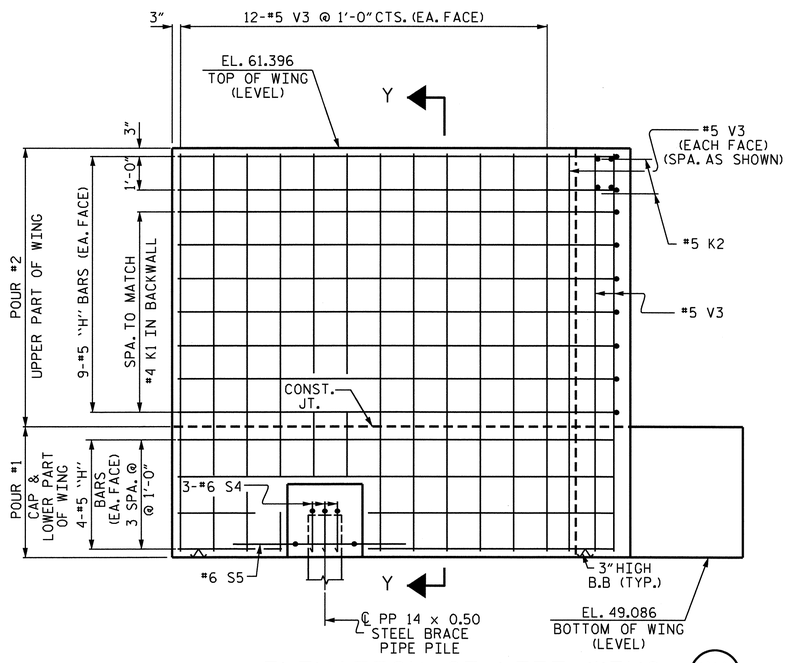

ELEVATION OF LEFT WING (W1)

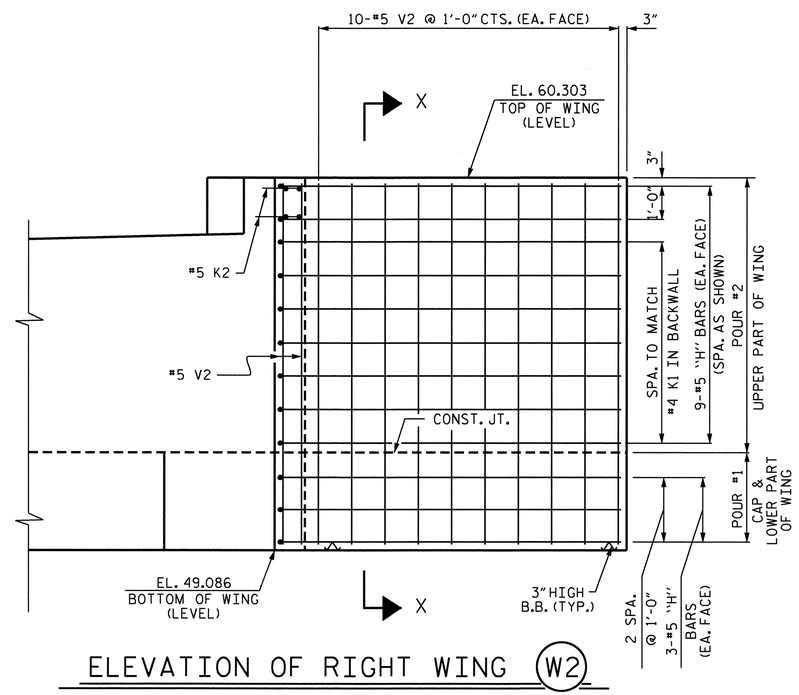

ELEVATION OF RIGHT WING (W2)

NORTH CAROLINA PROFESSIONAL SEAL 025516 ENGINEER EMILY E. MURRAY
8/24/10

PROJECT NO. U-4007B

ONSLOW COUNTY

STATION: 22+34.67 -NBL RAMP-

SHEET 2 OF 3

STATE OF NORTH CAROLINA
DEPARTMENT OF TRANSPORTATION
RALEIGH

SUBSTRUCTURE

END BENT #2

REVISIONS						SHEET NO.
NO.	BY:	DATE:	NO.	BY:	DATE:	S-44
1			3			TOTAL SHEETS
2			4			142

DRAWN BY : J.B. WILSON DATE : 04/05/10
CHECKED BY : PEGGY PARISI DATE : 6/29/10

24-AUG-2010 07:34
G:\TIPProjects-U\U4007b\Structures\Final Plans\Str. #2\u4007b_sd_eb#2.dgn
taverette

STR. #2

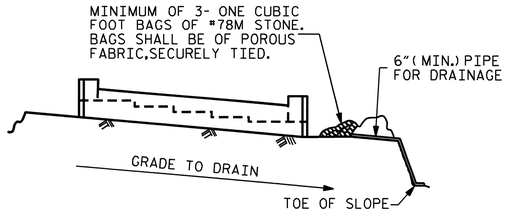

BAGGED STONE AND PIPE SHALL BE PLACED IMMEDIATELY AFTER COMPLETION OF END BENT EXCAVATION. PIPE MAY BE EITHER CONCRETE, CORRUGATED STEEL, CORRUGATED ALUMINUM ALLOY, OR CORRUGATED PLASTIC. PERFORATED PIPE WILL NOT BE ALLOWED.

BAGGED STONE SHALL REMAIN IN PLACE UNTIL THE ENGINEER DIRECTS THAT IT BE REMOVED. THE CONTRACTOR SHALL REMOVE AND DISPOSE OF SILT ACCUMULATIONS AT BAGGED STONE WHEN SO DIRECTED BY THE ENGINEER. BAGS SHALL BE REMOVED AND REPLACED WHENEVER THE ENGINEER DETERMINES THAT THEY HAVE DETERIORATED AND LOST THEIR EFFECTIVENESS.

NO SEPARATE PAYMENT WILL BE MADE FOR THIS WORK AND THE ENTIRE COST OF THIS WORK SHALL BE INCLUDED IN THE UNIT CONTRACT PRICE BID FOR THE SEVERAL PAY ITEMS.

TEMPORARY DRAINAGE AT END BENT

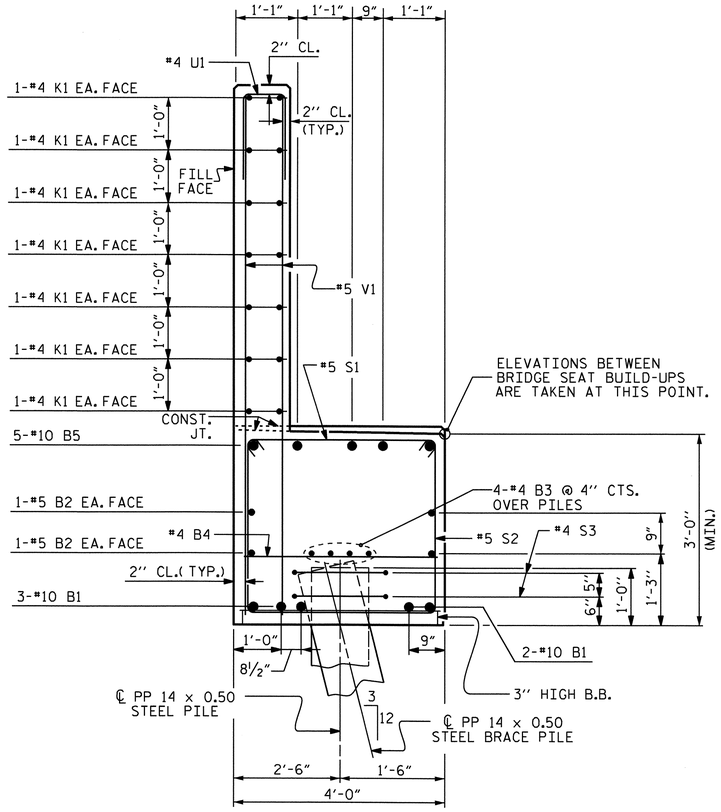

SECTION B-B

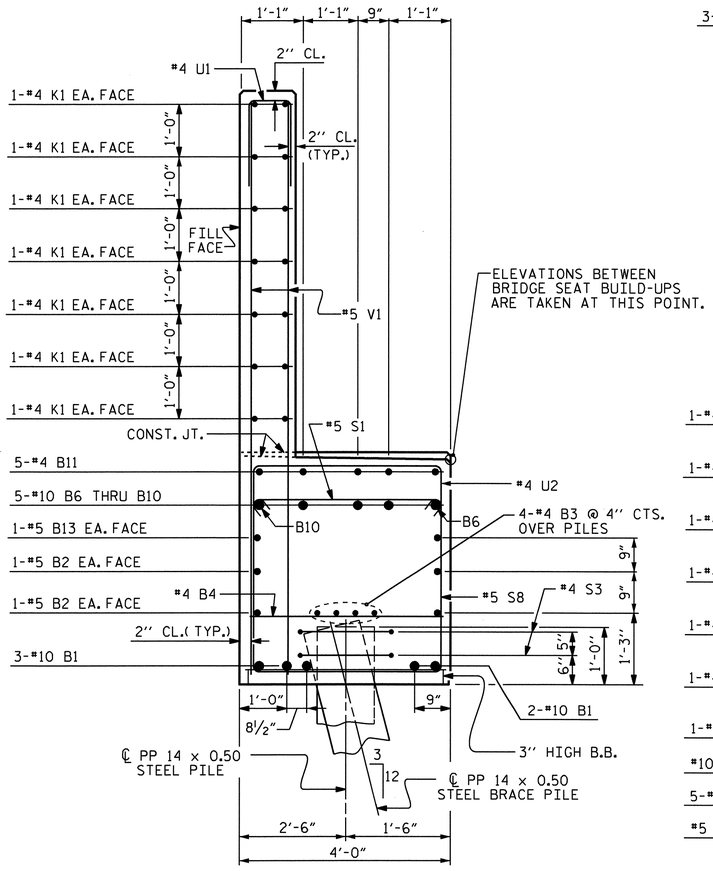

SECTION A-A

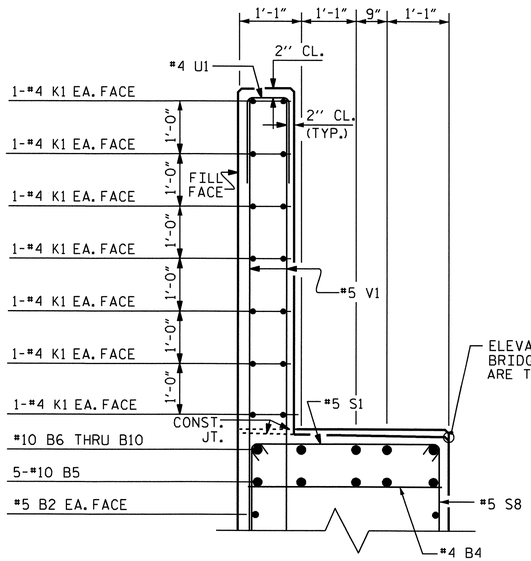

PARTIAL SECTION C-C

BAR TYPES

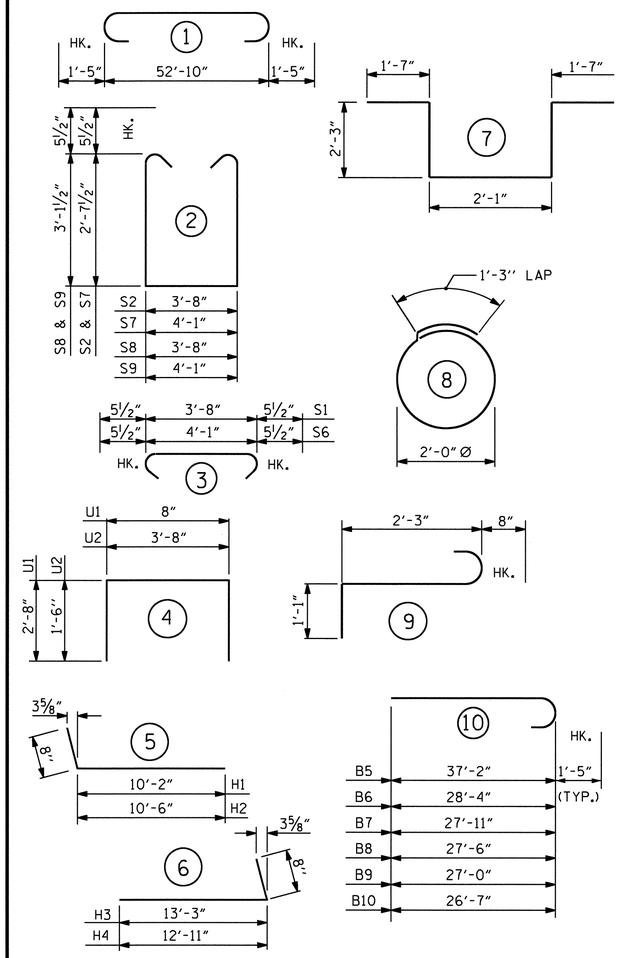

ALL BAR DIMENSIONS ARE OUT TO OUT.

BILL OF MATERIAL

END BENT #2

BAR	NO.	SIZE	TYPE	LENGTH	WEIGHT
B1	5	#10	1	55'-8"	1198
B2	4	#5	STR	52'-11"	221
B3	8	#4	STR	27'-8"	148
B4	16	#4	STR	3'-8"	39
B5	5	#10	10	38'-7"	830
B6	1	#10	10	29'-9"	128
B7	1	#10	10	29'-4"	126
B8	1	#10	10	28'-11"	124
B9	1	#10	10	28'-5"	122
B10	1	#10	10	28'-0"	120
B11	5	#4	STR	7'-7"	25
B12	10	#4	STR	2'-11"	19
B13	2	#5	STR	18'-8"	40
H1	12	#5	5	10'-10"	136
H2	12	#5	5	11'-2"	140
H3	13	#5	6	13'-11"	189
H4	13	#5	6	13'-7"	184
K1	28	#4	STR	27'-8"	517
K2	8	#5	STR	4'-0"	33
S1	60	#5	3	4'-7"	287
S2	29	#5	2	9'-10"	297
S3	14	#4	8	7'-7"	71
S4	3	#6	9	4'-0"	18
S5	1	#6	7	9'-9"	15
S6	2	#5	3	5'-0"	10
S7	1	#5	2	10'-3"	11
S8	31	#5	2	10'-10"	350
S9	1	#5	2	11'-3"	12
U1	44	#4	4	6'-0"	176
U2	12	#4	4	6'-8"	53
V1	88	#5	STR	9'-2"	841
V2	32	#5	STR	10'-10"	362
V3	38	#5	STR	11'-11"	472

REINFORCING STEEL = 7314 LBS

POUR #1
CAP, LOWER PART OF WINGS, & CONCRETE COLLAR — 33.1 C.Y.
POUR #2
BACKWALL & UPPER PART OF WINGS — 20.5 C.Y.
CLASS "A" CONCRETE TOTAL — 53.6 C.Y.

PP 14 X 0.50 STEEL PILE
NO. 8 LIN. FT. 400

PIPE PILE PLATES EA. 8

PILE REDRIVES EA. 8

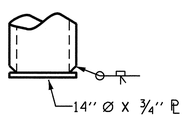

PIPE PILE PLATE DETAIL

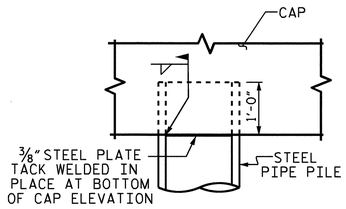

PIPE PILE IN CAP DETAIL

THE CONTRACTOR MAY PROPOSE AN ALTERNATE METHOD FOR PLUGGING THE STEEL PIPE PILE, SUBJECT TO APPROVAL BY THE ENGINEER.

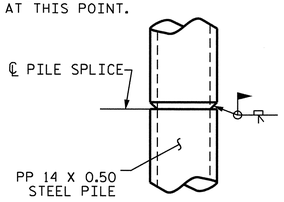

PIPE PILE SPLICE DETAIL

NORTH CAROLINA PROFESSIONAL SEAL 025516 ENGINEER EMILY E. MURRAY
8/24/10

PROJECT NO. U-4007B
ONSLOW COUNTY
STATION: 22+34.67 -NBL RAMP-

SHEET 3 OF 3

STATE OF NORTH CAROLINA
DEPARTMENT OF TRANSPORTATION
RALEIGH

SUBSTRUCTURE
END BENT #2

REVISIONS						SHEET NO.
NO.	BY:	DATE:	NO.	BY:	DATE:	S-45
1			3			TOTAL SHEETS
2			4			142

DRAWN BY : J.B. WILSON DATE : 4/05/10
CHECKED BY : PEGGY PARISI DATE : 6/29/10

24-AUG-2010 07:34
G:\TIPProjects-U\U4007b\Structures\FinalPlans\Str. *2\u4007b_sd_eb*2.dgn
toverette

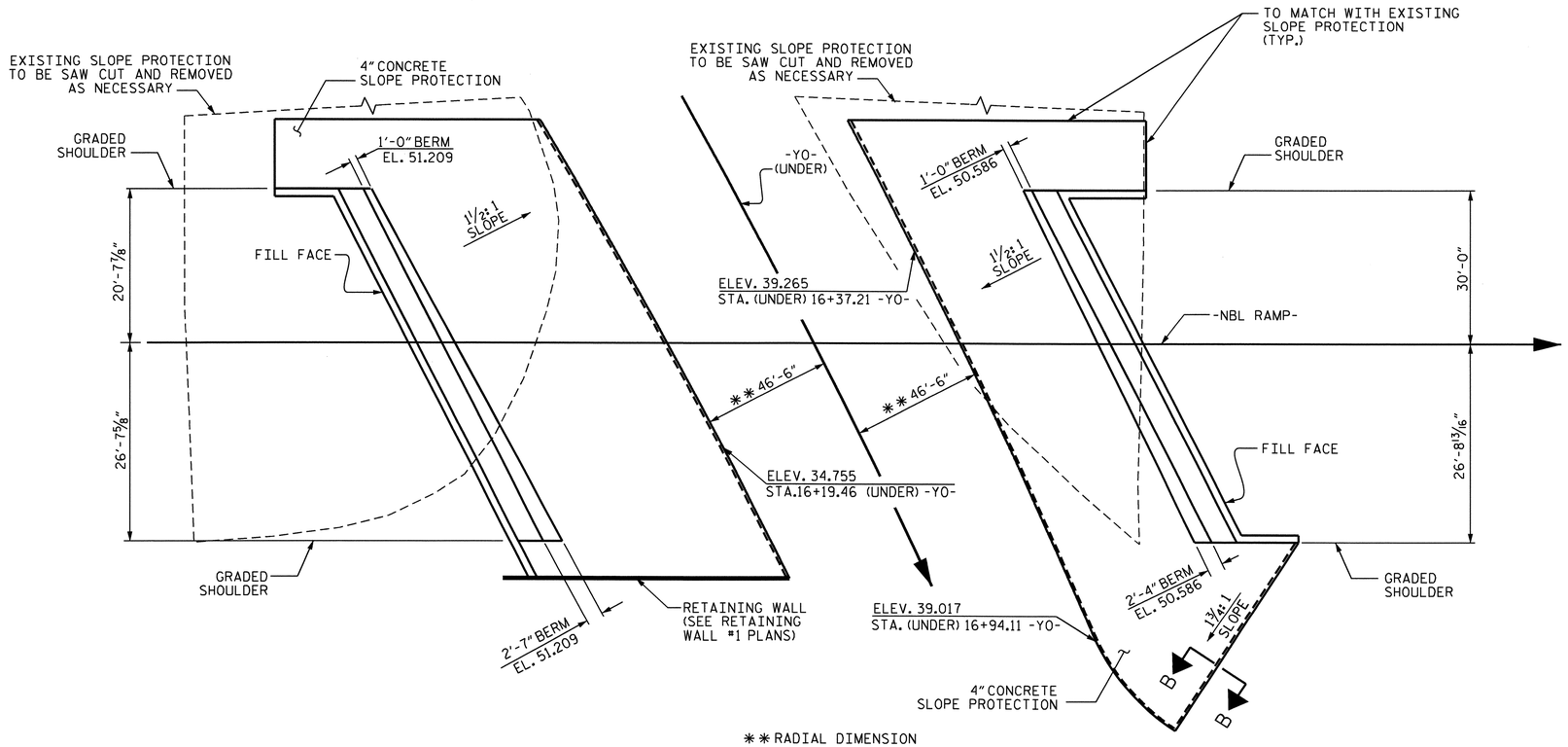

** RADIAL DIMENSION

GENERAL NOTES

SLOPE PROTECTION SHALL BE PLACED UNDER THE ENDS OF THE BRIDGE AS SHOWN IN THE DETAILS. STRAIGHT EDGING WILL NOT BE REQUIRED UNLESS, IN THE OPINION OF THE ENGINEER, VISUAL INSPECTION INDICATES A NEED FOR IT. MEASUREMENT AND PAYMENT SHALL BE AS PRESCRIBED IN SECTION 462 OF THE STANDARD SPECIFICATIONS.

ALTERNATE "A"

ALTERNATE "A" SHALL CONSIST OF 4" POURED-IN-PLACE CONCRETE PAVING AS SHOWN IN THE DETAILS ON THIS SHEET. CONCRETE SHALL BE CLASS "B". THE CONCRETE SURFACE SHALL BE FLOATED WITH A WOODEN FLOAT AND FINISHED. WELDED WIRE FABRIC REINFORCING SHALL BE 6 X 6 - W1.4 X W1.4, 60" WIDE. SLOPE PROTECTION SHALL BE POURED IN 5' STRIPS AS SHOWN IN THE "POURING DETAIL" WITH 2'-0" LONG #4 BARS PLACED ALONG THE SLOPE BETWEEN STRIPS AT 1'-6" MAXIMUM SPACING. SLOPE PROTECTION MAY BE POURED IN ALTERNATE 4' AND 5' STRIPS AS SHOWN IN THE "OPTIONAL POURING DETAIL" WITH ADJACENT RUNS OF WELDED WIRE FABRIC LAPPING AT LEAST 6". THE COST OF THE WELDED WIRE FABRIC AND #4 BARS, IF USED, SHALL BE INCLUDED IN THE CONTRACT UNIT PRICE BID PER SQUARE YARD FOR SLOPE PROTECTION.

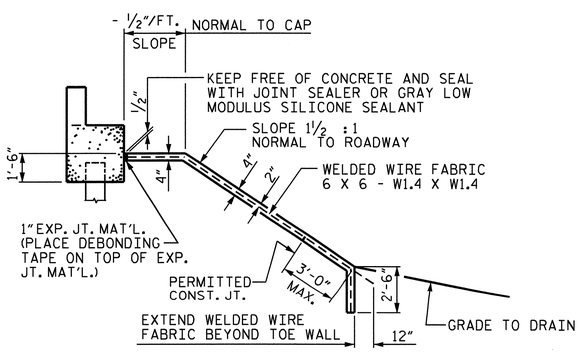

SECTION ALONG ℄ ROADWAY

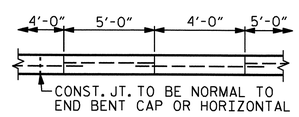

POUR A 4'-0" STRIP FIRST. STRIP WIDTHS MAY VARY IN CURVED PORTION.

OPTIONAL POURING DETAIL

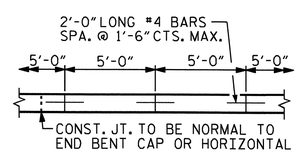

STRIP WIDTHS MAY VARY IN CURVED PORTION.

POURING DETAIL

BRIDGE @ STA. 22+34.67 -NBL RAMP-	4" INCH SLOPE PROTECTION	* WELDED WIRE FABRIC 60 INCHES WIDE
	SQUARE YARDS	APPROX. L.F.
END BENT 1	298	596
END BENT 2	285	570

* QUANTITY SHOWN IS BASED ON 5' POURS.

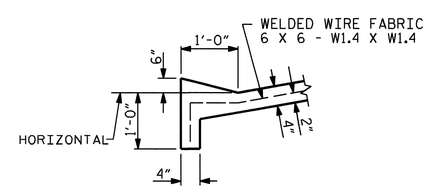

SECTION B-B

DETAILS FOR ALTERNATE "A"

PROJECT NO. U-4007B

ONSLOW COUNTY

STATION: 22+34.67 -NBL RAMP-

STATE OF NORTH CAROLINA
DEPARTMENT OF TRANSPORTATION
RALEIGH

STANDARD

SLOPE PROTECTION DETAILS

NORTH CAROLINA PROFESSIONAL SEAL 025516 ENGINEER EMILY E. MURRAY
6/29/10

REVISIONS								SHEET NO.
NO.	BY:	DATE:	NO.	BY:	DATE:			S-46
1			3					TOTAL SHEETS
2			4					142

STR. #2

DRAWN BY : M.D.PISO DATE : 6-28-10
CHECKED BY : M.GUDLAUGSSON DATE : 6-30-10

24-AUG-2010 07:34
G:\TIPProjects-U\U4007b\Structures\Final Plans\Str. #2\U-4007B_SD_SP.dgn
taverette

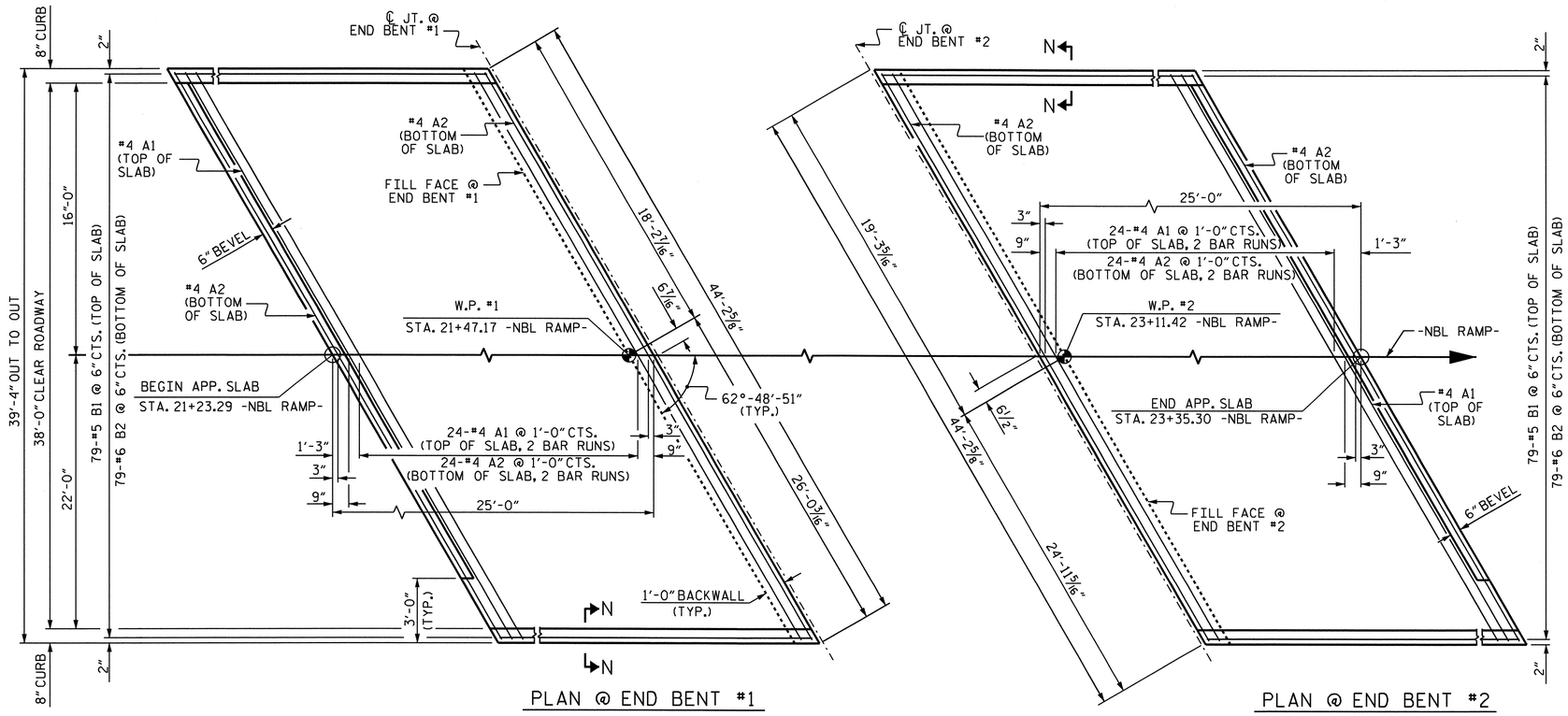

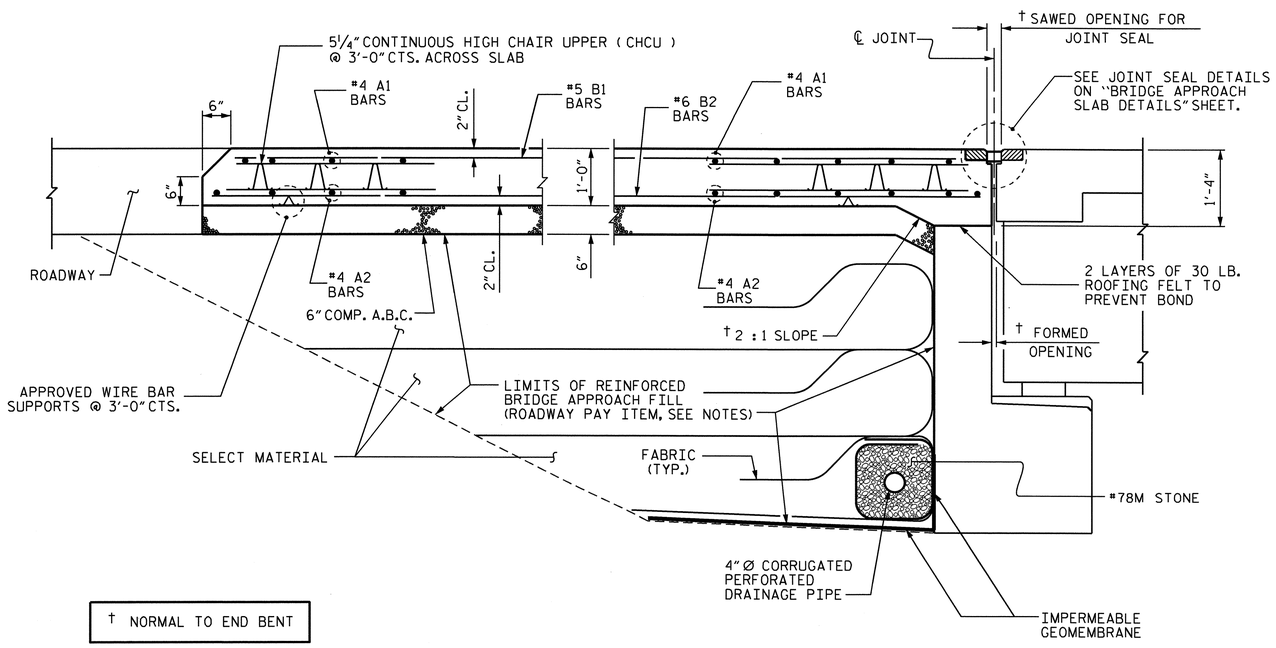

† NORMAL TO END BENT

SECTION THRU SLAB

SHOWING SECTION WITHOUT CONCRETE WEARING SURFACE

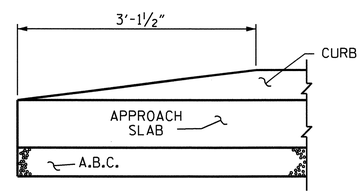

END OF CURB WITHOUT SHOULDER BERM GUTTER

CURB DETAILS

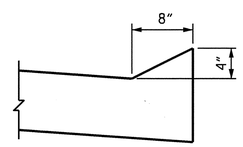

SECTION N-N

BILL OF MATERIAL

APPROACH SLAB AT EB #1

BAR	NO.	SIZE	TYPE	LENGTH	WEIGHT
* A1	50	#4	STR	22'-11"	765
A2	52	#4	STR	22'-10"	793
* B1	79	#5	STR	23'-9"	1957
B2	79	#6	STR	24'-8"	2927
REINFORCING STEEL				LBS.	3720
* EPOXY COATED REINFORCING STEEL				LBS.	2722
CLASS AA CONCRETE				C. Y.	36.9

APPROACH SLAB AT EB #2

BAR	NO.	SIZE	TYPE	LENGTH	WEIGHT
* A1	50	#4	STR	22'-11"	765
A2	52	#4	STR	22'-10"	793
* B1	79	#5	STR	23'-9"	1957
B2	79	#6	STR	24'-8"	2927
REINFORCING STEEL				LBS.	3720
* EPOXY COATED REINFORCING STEEL				LBS.	2722
CLASS AA CONCRETE				C. Y.	36.9

NOTES

APPROACH SLAB SHALL NOT BE CONSTRUCTED PRIOR TO COMPLETION OF THE BRIDGE DECK.

FOR REINFORCED BRIDGE APPROACH FILL INCLUDING FABRIC, IMPERMEABLE GEOMEMBRANE, 4" Ø DRAINAGE PIPE, #78M STONE, AND SELECT MATERIAL, SEE ROADWAY PLANS.

AREA BETWEEN THE WINGWALL AND APPROACH SLAB SHALL BE GRADED TO DRAIN THE WATER AWAY FROM THE FILL FACE OF THE BRIDGE AND SHALL BE PAVED. SEE ROADWAY PLANS.

THE 6" COMP. A.B.C. SHALL BE FLUSH WITH THE ROADWAY END OF THE APPROACH SLAB AND SHALL EXTEND 1'-0" OUTSIDE EACH EDGE OF THE APPROACH SLAB.

THE CONTRACTOR MAY USE 4" TYPE B-25.0B ASPHALT CONCRETE BASE COURSE IN LIEU OF 6" COMP. A.B.C. IF THIS OPTION IS USED, THE BASE COURSE SHALL BE FLUSH WITH THE ROADWAY END OF THE APPROACH SLAB, AND THE WIDTH SHALL BE THE SAME AS THAT OF THE APPROACH SLAB.

THE CONTRACTOR MAY USE 5" CLASS "A" CONCRETE BASE IN LIEU OF 6" COMP. A.B.C. IF THIS OPTION IS USED, THE CONCRETE BASE SHALL BE FLUSH WITH THE ROADWAY END OF THE APPROACH SLAB, AND THE WIDTH SHALL BE THE SAME AS THAT OF THE APPROACH SLAB. THE CONCRETE SHALL BE FINISHED TO A SMOOTH SURFACE AND A LAYER OF 30 LB ROOFING FELT SHALL BE PLACED BETWEEN THE CONCRETE BASE AND THE APPROACH SLAB TO PREVENT BOND. THE APPROACH SLAB SHALL NOT BE CAST UNTIL THE CONCRETE BASE HAS REACHED AN AGE OF THREE CURING DAYS.

FOR EVAZOTE JOINT SEALS, SEE SPECIAL PROVISIONS.

THE NOMINAL UNCOMPRESSED SEAL WIDTH OF THE EVAZOTE JOINT SEAL SHALL BE 2 1/2" FOR END BENT #1 AND 2 13/16" FOR END BENT #2.

FOR ELASTOMERIC CONCRETE, SEE SPECIAL PROVISIONS.

PROJECT NO. U-4007B
ONSLOW COUNTY
STATION: 22+34.67 -NBL RAMP-

SHEET 1 OF 2

STATE OF NORTH CAROLINA
DEPARTMENT OF TRANSPORTATION
RALEIGH

STANDARD

BRIDGE APPROACH SLAB FOR FLEXIBLE PAVEMENT

NORTH CAROLINA PROFESSIONAL SEAL 025516 ENGINEER EMILY E. MURRAY
8/24/10

REVISIONS							SHEET NO.
NO.	BY:	DATE:	NO.	BY:	DATE:		S-47
1			3				TOTAL SHEETS
2			4				142

STR. #2

STD. NO. BAS4 (SHT 6)

ASSEMBLED BY : M.D.PISO	DATE : 02/18/10		
CHECKED BY : B.N.BARODAWALA	DATE : 03/04/10		
DRAWN BY : EEM 3/95	REV. 7/10/01	LES/RDR	
CHECKED BY : VAP 3/95	REV. 5/7/03R	RWW/JTE	
	REV. 5/1/06R	KMM/GM	

23-AUG-2010 15:30
G:\TIPProjects-U\U4007b\Structures\FinalPlans\Str. #2\u-4007b_sd_as_02.dgn
taverette

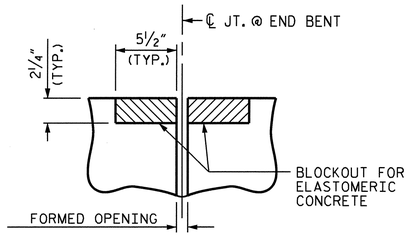

SECTION C-C
EVAZOTE JOINT SEAL
(PRE-SAWED ELASTOMERIC CONCRETE DIMENSIONS)

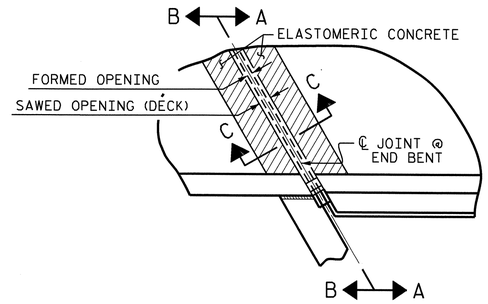

PLAN

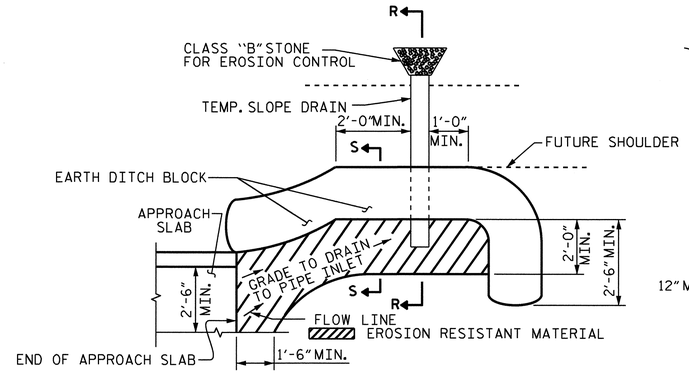

NOTE: IMMEDIATELY AFTER THE CONSTRUCTION OF THE APPROACH SLAB, THE CONTRACTOR SHALL PROVIDE TEMPORARY BERM AND SLOPE DRAIN. CONTRACTOR SHALL GRADE TO PIPE INLET AND PROVIDE EROSION RESISTANT MATERIAL AS SHOWN. THE EROSION RESISTANT MATERIAL SHALL BE EITHER 1) ASPHALT PLANT MIX, TYPE 1 OR TYPE 2, MIN. 2" DEPTH, 2) EROSION CONTROL MAT, OR 3) CONCRETE, AS DIRECTED BY THE ENGINEER. THE SLOPE DRAIN SHALL CONSIST OF A NON-PERFORATED TEMPORARY DRAINAGE PIPE, 12 INCHES IN DIAMETER.

PLAN VIEW

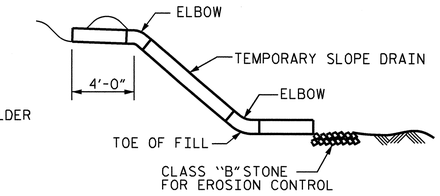

SECTION R-R

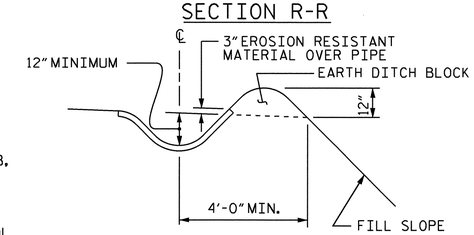

SECTION S-S

TEMPORARY BERM AND SLOPE DRAIN DETAILS

(TO BE USED WHEN SHOULDER BERM GUTTER IS REQUIRED)

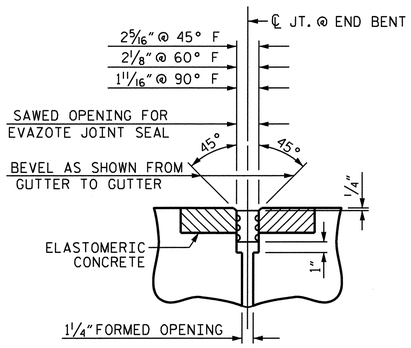

SECTION C-C
EVAZOTE JOINT SEAL
(EXPANSION)
AT END BENT #2

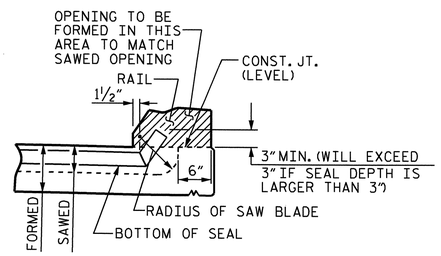

SECTION A-A

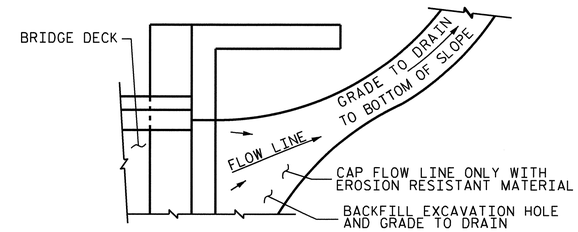

NOTE: IF THE APPROACH SLAB IS NOT CONSTRUCTED IMMEDIATELY AFTER THE BACKFILLING OF THE END BENT EXCAVATION, GRADE TO DRAIN TO THE BOTTOM OF THE SLOPE AND PROVIDE EROSION RESISTANT MATERIAL, SUCH AS FIBERGLASS ROVING OR AS DIRECTED BY THE ENGINEER TO PREVENT SOIL EROSION AND TO PROTECT THE AREA ADJACENT TO THE STRUCTURE. THE CONTRACTOR WILL BE REQUIRED TO REMOVE THESE MATERIALS PRIOR TO CONSTRUCTION OF THE APPROACH SLAB.

TEMPORARY DRAINAGE DETAIL

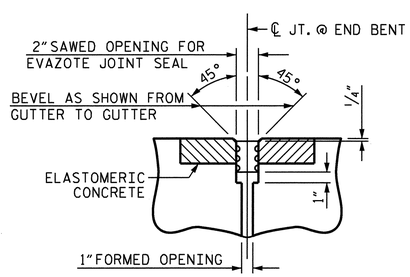

SECTION C-C
EVAZOTE JOINT SEAL
(FIXED)
AT END BENT #1

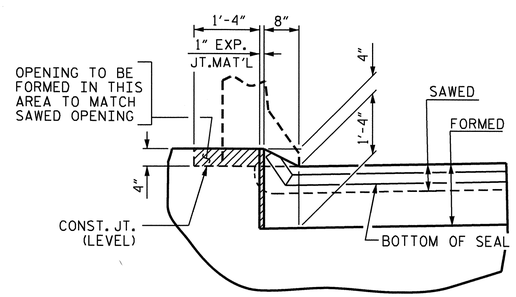

SECTION B-B

JOINT SEAL DETAILS @ END BENT

EVAZOTE JOINT SEAL TO BE CUT, HEAT WELDED AND TURNED UP PARALLEL TO SLOPED FACE OF THE BARRIER RAIL.

THE JOINT SHALL BE SAWED PRIOR TO THE CASTING OF THE BARRIER RAIL.

ELASTOMERIC CONCRETE	
END BENT NO.	ELASTOMERIC CONCRETE * (CU. FT.)
1	7.3
2	7.3
TOTAL	14.6

* BASED ON THE MINIMUM BLOCKOUT SHOWN.

NORTH CAROLINA PROFESSIONAL SEAL 025516 ENGINEER EMILY E. MURRAY
8/24/10

PROJECT NO. U-4007B
ONSLOW COUNTY
STATION: 22+34.67 -NBL RAMP-

SHEET 2 OF 2

STATE OF NORTH CAROLINA
DEPARTMENT OF TRANSPORTATION
RALEIGH

STANDARD

BRIDGE APPROACH SLAB DETAILS

REVISIONS						SHEET NO.
NO.	BY:	DATE:	NO.	BY:	DATE:	S-48
1			3			TOTAL SHEETS
2			4			142

ASSEMBLED BY : M.D.PISO		DATE : 02/18/10	
CHECKED BY : B.N.BARODAWALA		DATE : 03/04/10	
DRAWN BY : FCJ	11/88	REV. 10/17/00	RWW/LES
CHECKED BY : ARB	11/88	REV. 5/7/03	RWW/JTE
		REV. 5/1/06R	MAA/KMM

23-AUG-2010 15:30
G:\TIPProjects-U\U4007b\Structures\FinalPlans\Str. #2\u-4007b_sd_as_02.dgn
taverette

STR. #2 STD. NO. BAS10 (SHT 4)

F.A. PROJECT NO. STM-0017(111)

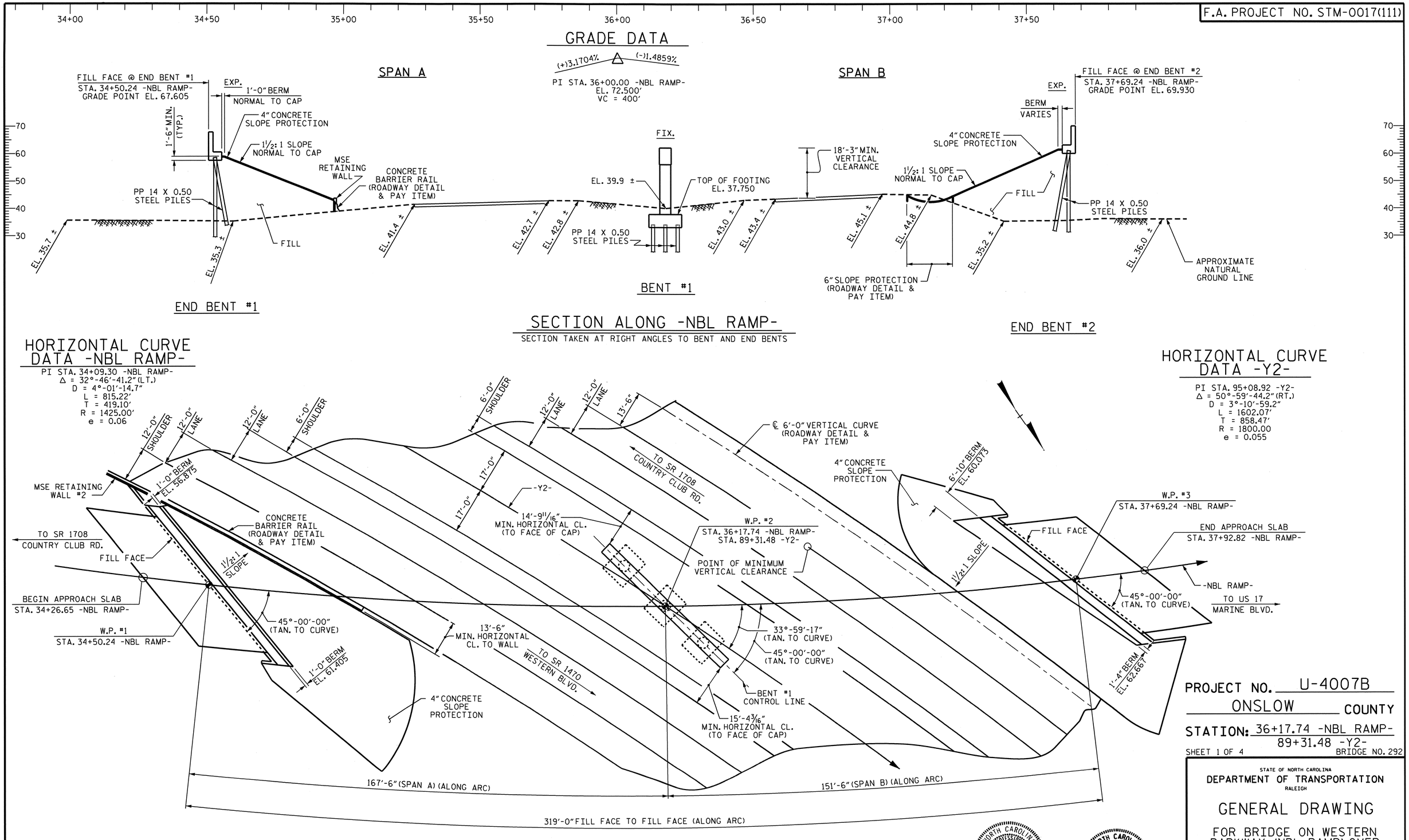

PLAN

PILES NOT SHOWN FOR CLARITY

PROJECT NO. U-4007B

ONSLOW COUNTY

STATION: 36+17.74 -NBL RAMP-
89+31.48 -Y2-

SHEET 1 OF 4

BRIDGE NO. 292

STATE OF NORTH CAROLINA
DEPARTMENT OF TRANSPORTATION
RALEIGH

GENERAL DRAWING

FOR BRIDGE ON WESTERN PARKWAY (NBL RAMP) OVER MARTIN LUTHER KING JR. HWY BETWEEN SR 1708 AND US 17

NORTH CAROLINA PROFESSIONAL SEAL 12274 ENGINEER OMAR R. AZIZI
8/24/10

NORTH CAROLINA PROFESSIONAL SEAL 025516 ENGINEER EMILY E. MURRAY
8/24/10

REVISIONS						SHEET NO.
NO.	BY:	DATE:	NO.	BY:	DATE:	S-49
1			3			TOTAL SHEETS
2			4			142

STR. #3

DRAWN BY : M.GUDLAUGSSON DATE : 4/20/10
CHECKED BY : PEGGY PARISI DATE : 6/22/10

23-AUG-2010 14:52
G:\TIPProjects-U\U4007b\Structures\FinalPlans\Str. #3\U-4007B_SD_GD_03.dgn
taverette

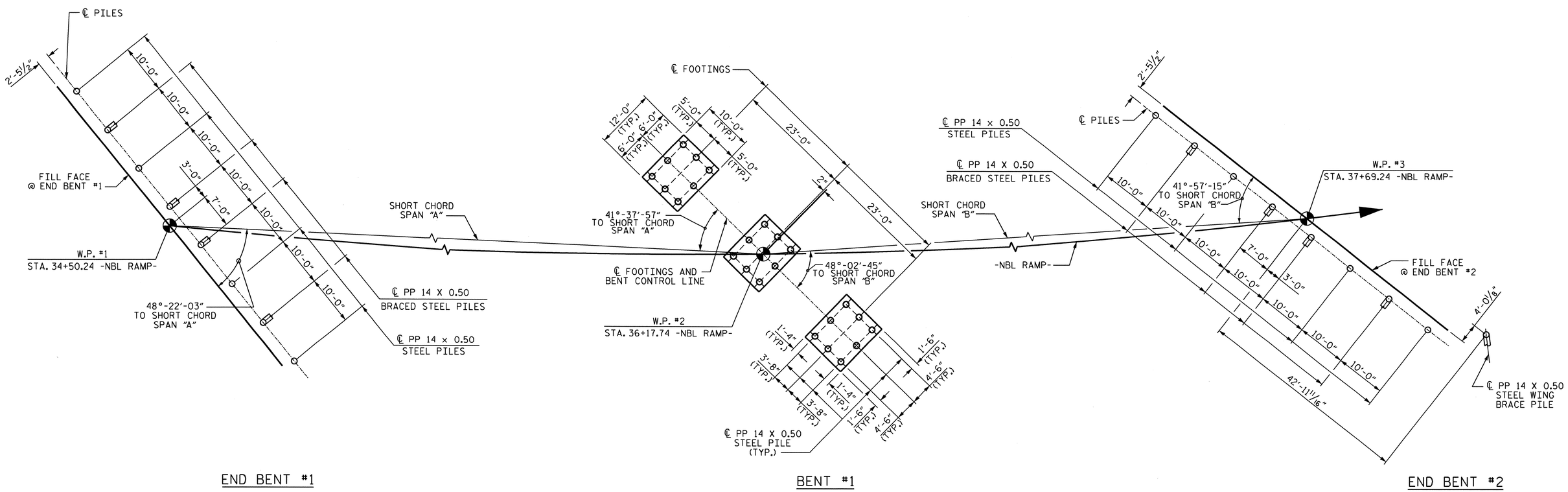

FOUNDATION LAYOUT

DIMENSIONS LOCATING PILES ARE SHOWN TO THE PILE CENTERLINE.

BRACE PILES AT END BENTS ARE TO BE BATTERED @ 3:12.

FOR PILES, SEE SPECIAL PROVISIONS.

PILES AT END BENT NO. 1 ARE DESIGNED FOR A FACTORED RESISTANCE OF 130 TONS PER PILE. DRIVE PILES TO A REQUIRED DRIVING RESISTANCE OF 220 TONS PER PILE.

PILES AT BENT NO. 1 ARE DESIGNED FOR A FACTORED RESISTANCE OF 135 TONS PER PILE. DRIVE PILES TO A REQUIRED DRIVING RESISTANCE OF 225 TONS PER PILE.

PILES AT END BENT NO. 2 ARE DESIGNED FOR A FACTORED RESISTANCE OF 120 TONS PER PILE. DRIVE PILES TO A REQUIRED DRIVING RESISTANCE OF 200 TONS PER PILE.

TESTING PILES WITH THE PILE DRIVING ANALYZER (PDA) DURING DRIVING, RESTRIKING, OR REDRIVING MAY BE REQUIRED. THE ENGINEER WILL DETERMINE THE NEED FOR PDA TESTING. FOR PILE DRIVING ANALYZER, SEE PILES SPECIAL PROVISION.

PIPE PILE PLATES ARE REQUIRED FOR PIPE PILES AT END BENT #1, BENT #1 AND END BENT #2. USE PIPE PILE PLATES WITH A DIAMETER EQUAL TO THE PIPE PILE DIAMETER.

NORTH CAROLINA PROFESSIONAL SEAL 025516 ENGINEER EMILY E. MURRAY
8/24/10

PROJECT NO. U-4007B
ONSLOW COUNTY
STATION: 36+17.74 -NBL RAMP-
89+31.48 -Y2-

SHEET 2 OF 4

STATE OF NORTH CAROLINA
DEPARTMENT OF TRANSPORTATION
RALEIGH

GENERAL DRAWING
FOR BRIDGE ON WESTERN PARKWAY (NBL RAMP) OVER MARTIN LUTHER KING JR. HWY BETWEEN SR 1708 AND US 17

REVISIONS						SHEET NO.
NO.	BY:	DATE:	NO.	BY:	DATE:	S-50
1			3			TOTAL SHEETS
2			4			142

DRAWN BY : M.GUDLAUGSSON DATE : 4/20/10
CHECKED BY : PEGGY PARISI DATE : 6/22/10

23-AUG-2010 14:51
G:\TIPProjects-U\U4007b\Structures\FinalPlans\Str. #3\U-4007B_SD_GD_03.dgn
taverette

STR. #3

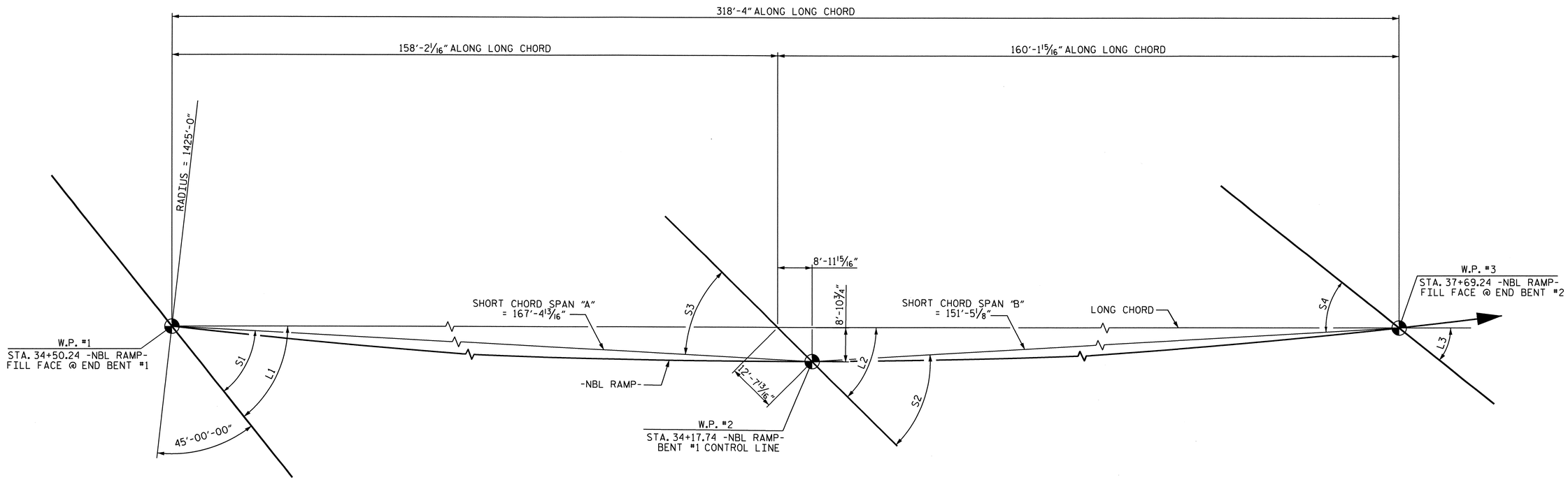

LONG CHORD LAYOUT

NOTE: BENTS ARE NOT PARALLEL.

HORIZONTAL CURVE DATA -NBL RAMP-

PI STA. 34+09.30 -NBL RAMP-
Δ = 32°-46'-41.2" (LT.)
D = 4°-01'-14.7"
L = 815.22'
T = 419.10'
R = 1425.00'
e = 0.06

ANGLES			
LONG CHORD		SHORT CHORD	
L1	51°-24'-47"	S1	48°-22'-03"
L2	44°-40'-42"	S2	48°-02'-45"
L3	38°-35'-13"	S3	41°-37'-57"
		S4	41°-57'-15"

PROJECT NO. U-4007B
ONSLOW COUNTY
STATION: 36+17.74 -NBL RAMP-
89+31.48 -Y2-

SHEET 3 OF 4

STATE OF NORTH CAROLINA
DEPARTMENT OF TRANSPORTATION
RALEIGH

GENERAL DRAWING

FOR BRIDGE ON WESTERN PARKWAY (NBL RAMP) OVER MARTIN LUTHER KING JR. HWY BETWEEN SR 1708 AND US 17

NORTH CAROLINA PROFESSIONAL SEAL 025516 ENGINEER EMILY E. MURRAY
8/24/10

REVISIONS						SHEET NO.
NO.	BY:	DATE:	NO.	BY:	DATE:	S-51
1			3			TOTAL SHEETS
2			4			142

DRAWN BY : M.GUDLAUGSSON DATE : 4/20/10
CHECKED BY : PEGGY PARISI DATE : 6/22/10

24-AUG-2010 08:09
G:\TIPProjects-U\U4007b\Structures\FinalPlans\Str. #3\U-4007B_SD_GD_03.dgn
taverette

STR. #3

BM: BL-5 30" #5 REBAR WITH ALUMINUM TRAVERSE CAPS, 73.12' LEFT OF STA. 34+81.15 -NBL RAMP-, EL. 41.440

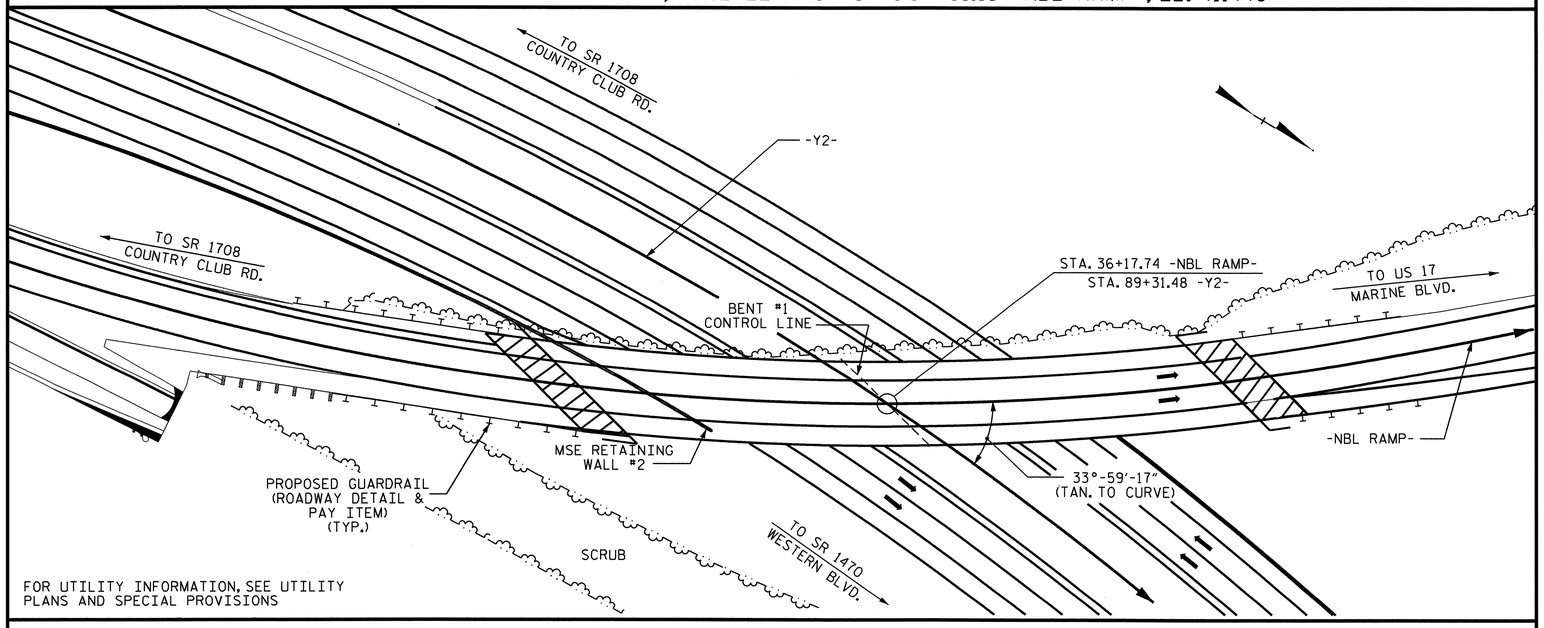

LOCATION SKETCH

NOTES

ASSUMED LIVE LOAD = HL-93 OR ALTERNATE LOADING.

FOR OTHER DESIGN DATA AND GENERAL NOTES, SEE SHEET SN.

FOR EROSION CONTROL MEASURES SEE EROSION CONTROL PLANS.

ALL STRUCTURAL STEEL SHALL BE AASHTO M270 GRADE 50W AND PAINTED IN ACCORDANCE WITH SYSTEM 4 OF ARTICLE 442-7 OF THE STANDARD SPECIFICATIONS UNLESS OTHERWISE NOTED ON THE PLANS.

REMOVABLE FORMS MAY BE USED IN LIEU OF METAL STAY-IN-PLACE FORMS IN ACCORDANCE WITH ARTICLE 420-3 OF THE STANDARD SPECIFICATIONS.

THE CONTRACTOR SHALL PROVIDE INDEPENDENT ASSURANCE SAMPLES OF REINFORCING STEEL AS FOLLOWS: FOR PROJECTS REQUIRING UP TO 400 TONS OF REINFORCING STEEL, ONE 30 INCH SAMPLE OF EACH SIZE BAR USED, AND FOR PROJECTS REQUIRING OVER 400 TONS OF REINFORCING STEEL, TWO 30 INCH SAMPLES OF EACH SIZE BAR USED. THE BARS FROM WHICH THE SAMPLES ARE TAKEN MUST THEN BE SPLICED WITH REPLACEMENT BARS OF THE SIZE AND LENGTH OF THE SAMPLE, PLUS A MINIMUM LAP SPLICE OF THIRTY BAR DIAMETERS.

FOR MAINTENANCE AND PROTECTION OF TRAFFIC BENEATH PROPOSED STRUCTURE, SEE SPECIAL PROVISIONS.

NEEDLE BEAMS WILL NOT BE ALLOWED UNLESS OTHERWISE CALLED FOR ON THE PLANS OR APPROVED BY THE ENGINEER.

FOR SUBMITTAL OF WORKING DRAWINGS, SEE SPECIAL PROVISIONS.

FOR FALSEWORK AND FORMWORK, SEE SPECIAL PROVISIONS.

FOR CRANE SAFETY, SEE SPECIAL PROVISIONS.

FOR GROUT FOR STRUCTURES, SEE SPECIAL PROVISIONS.

FOR SHIPPING STEEL STRUCTURAL MEMBERS, SEE SPECIAL PROVISIONS.

FOR CURING CONCRETE, SEE SPECIAL PROVISIONS.

FOR FORMS FOR CONCRETE BRIDGE DECKS, SEE SPECIAL PROVISIONS.

THIS BRIDGE HAS BEEN DESIGNED IN ACCORDANCE WITH THE AASHTO LRFD BRIDGE DESIGN SPECIFICATIONS.

FOR MSE RETAINING WALL, SEE SPECIAL PROVISIONS AND WALL #2 PLANS.

FOR PLACING LOAD ON STRUCTURE MEMBERS, SEE SPECIAL PROVISIONS.

FOR MASS CONCRETE AT BENT #1, SEE SPECIAL PROVISIONS.

TOTAL BILL OF MATERIAL

	FOUNDATION EXCAVATION FOR BENT	PDA TESTING	PDA ASSISTANCE	REINFORCED CONCRETE DECK SLAB	GROOVING BRIDGE FLOORS	CLASS A CONCRETE	BRIDGE APPROACH SLABS	REINFORCING STEEL	SPIRAL COLUMN REINFORCING STEEL	STRUCTURAL STEEL	PP 14 x 0.50 STEEL PILES		PIPE PILE PLATES	CONCRETE BARRIER RAIL	4" SLOPE PROTECTION	POT BEARINGS	ELASTOMERIC BEARINGS	EVAZOTE JOINT SEALS
	LUMP SUM	EACH	EACH	SQ.FT.	SQ.FT.	CU.YDS.	LUMP SUM	LBS.	LBS.	APPROX. LBS.	NO.	LIN.FT.	EACH	LIN.FT.	SQ.FT.	LUMP SUM	LUMP SUM	LUMP SUM
SUPERSTRUCTURE				14933	14965		LUMP SUM			839,500				632.10		LUMP SUM	LUMP SUM	LUMP SUM
END BENT #1						53.8		9515			8	440	8		430			
BENT #1	LUMP SUM					150.7		22134	1765		24	840	24					
END BENT #2						53.3		9362			9	540	9		475			
TOTAL	LUMP SUM	1	1	14933	14965	257.8	LUMP SUM	41011	1765	839,500	41	1820	41	632.10	905	LUMP SUM	LUMP SUM	LUMP SUM

PROJECT NO. U-4007B
ONSLOW COUNTY
STATION: 36+17.74 -NBL RAMP-
89+31.48 -Y2-
SHEET 4 OF 4

NORTH CAROLINA PROFESSIONAL SEAL 025516 ENGINEER EMILY E. MURRAY
8/24/10

STATE OF NORTH CAROLINA
DEPARTMENT OF TRANSPORTATION
RALEIGH

GENERAL DRAWING

FOR BRIDGE ON WESTERN PARKWAY (NBL RAMP) OVER MARTIN LUTHER KING JR. HWY BETWEEN SR 1708 AND US 17

REVISIONS						SHEET NO.
NO.	BY:	DATE:	NO.	BY:	DATE:	S-52
1			3			TOTAL SHEETS
2			4			142

DRAWN BY : M.GUDLAUGSSON DATE : 4/20/10
CHECKED BY : PEGGY PARISI DATE : 6/22/10

23-AUG-2010 14:50
G:\TIPProjects-U\U4007b\Structures\FinalPlans\Str. #3\U-4007B_SD_GD_03.dgn
taverette

STR. #3

LOAD AND RESISTANCE FACTOR RATING (LRFR) SUMMARY FOR STEEL GIRDERS

LEVEL		VEHICLE	WEIGHT (W) (TONS)	CONTROLLING LOAD RATING (#)	MINIMUM RATING FACTORS (RF)	TONS = W × RF	STRENGTH I LIMIT STATE												SERVICE II LIMIT STATE						COMMENT NUMBER
							LIVE-LOAD FACTORS (γ_{LL})	MOMENT					SHEAR						LIVE-LOAD FACTORS (γ_{LL})	MOMENT					
								DISTRIBUTION FACTORS (DF)	RATING FACTOR	SPAN	GIRDER LOCATION	DISTANCE FROM LEFT END OF SPAN (ft)	DISTRIBUTION FACTORS (DF)	RATING FACTOR	SPAN	GIRDER LOCATION	DISTANCE FROM LEFT END OF SPAN (ft)		DISTRIBUTION FACTORS (DF)	RATING FACTOR	SPAN	GIRDER LOCATION	DISTANCE FROM LEFT END OF SPAN (ft)	
DESIGN LOAD RATING		HL-93 (INVENTORY)	N/A	1	1.20	--	1.75		1.20	A	ER	67.41						1.30						
		HL-93 (OPERATING)	N/A		1.55	--	1.35		1.55	A	ER	67.41						1.00						
		HS-20 (INVENTORY)	36.00	2	1.06	38.160	1.75		1.06	A	ER	67.41						1.30						
		HS-20 (OPERATING)	36.00		1.37	49.320	1.35		1.37	A	ER	67.41						1.00						
LEGAL LOAD RATING	SINGLE VEHICLE (SV)	SNSH	13.500		5.80	78.300	1.40		5.80	A	ER	67.41						1.30						
		SNGARBS2	20.000		4.10	82.000	1.40		4.10	A	ER	67.41						1.30						
		SNAGRIS2	22.000		3.79	83.380	1.40		3.79	A	ER	67.41						1.30						
		SNCOTTS3	27.250		2.88	78.480	1.40		2.88	A	ER	67.41						1.30						
		SNAGGRS4	34.925		2.32	81.026	1.40		2.32	A	ER	67.41						1.30						
		SNS5A	35.550		2.28	81.054	1.40		2.28	A	ER	67.41						1.30						
		SNS6A	39.950		2.05	81.898	1.40		2.05	A	ER	67.41						1.30						
		SNS7B	42.000		1.95	81.900	1.40		1.95	A	ER	67.41						1.30						
	TRUCK TRACTOR SEMI-TRAILER (TTST)	TNAGRIT3	33.000		2.49	82.170	1.40		2.49	A	ER	67.41						1.30						
		TNT4A	33.075		2.49	82.357	1.40		2.49	A	ER	67.41						1.30						
		TNT6A	41.600		1.96	81.536	1.40		1.96	A	ER	67.41						1.30						
		TNT7A	42.000		1.86	78.120	1.40		1.86	A	ER	67.41						1.30						
		TNT7B	42.000	3	1.85	77.700	1.40		1.85	A	ER	67.41						1.30						
		TNAGRIT4	43.000		2.01	86.430	1.40		2.01	A	ER	67.41						1.30						
		TNAGT5A	45.000		2.00	90.000	1.40		2.00	A	ER	67.41						1.30						
		TNAGT5B	45.000		2.03	91.350	1.40		2.03	A	ER	67.41						1.30						
FATIGUE		HL-93 (INVENTORY)	γ_{LL}=0.75																					

LOAD FACTORS:

DESIGN LOAD RATING FACTORS	LIMIT STATE	γ_{DC}	γ_{DW}
	STRENGTH I	1.25	1.50
	SERVICE II	1.00	1.00

	YEAR	ADTT
CURRENT	2011	490
FUTURE	2031	774

NOTES:

MINIMUM RATING FACTORS ARE BASED ON THE STRENGTH I LIMIT STATE.

COMMENTS:

* 1. AVERAGE GIRDER LENGTH FOR SPAN USED.

2.

3.

4.

(#) CONTROLLING LOAD RATING

(1) DESIGN LOAD RATING (HL-93) **

(2) DESIGN LOAD RATING (HS-20) **

(3) LEGAL LOAD RATING **

** SEE CHART FOR VEHICLE TYPE

GIRDER LOCATION

I - INTERIOR GIRDER
EL - EXTERIOR LEFT GIRDER
ER - EXTERIOR RIGHT GIRDER

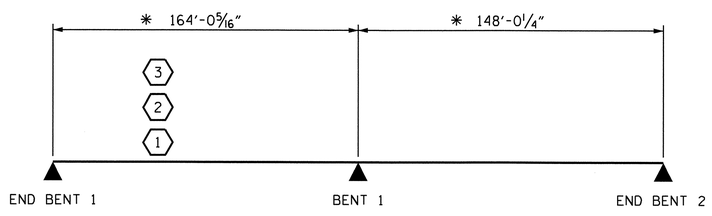

LRFR SUMMARY

PROJECT NO. U-4007B
ONSLOW COUNTY
STATION: 36+17.74 -NBL RAMP-

STATE OF NORTH CAROLINA
DEPARTMENT OF TRANSPORTATION
RALEIGH

STANDARD

LRFR SUMMARY FOR STEEL GIRDERS
(NON-INTERSTATE TRAFFIC)

NORTH CAROLINA PROFESSIONAL SEAL 025516 ENGINEER EMILY E. MURRAY
9/8/10

REVISIONS						SHEET NO.
NO.	BY:	DATE:	NO.	BY:	DATE:	S-53
1			3			TOTAL SHEETS
2			4			142

ASSEMBLED BY : PEGGY PARISI DATE : 6-21-10
CHECKED BY : T.L. AVERETTE DATE : 6-22-10
DRAWN BY : MAA 1/08
CHECKED BY : GM/DI 2/08
REV. 11/12/08RR MAA/GM

08-SEP-2010 14:28
R:\Structures\Final Plans\Str. #3\u-4007b_sd_LRFR_03.dgn
emurray

STR. #3 STD. NO. LRFR3

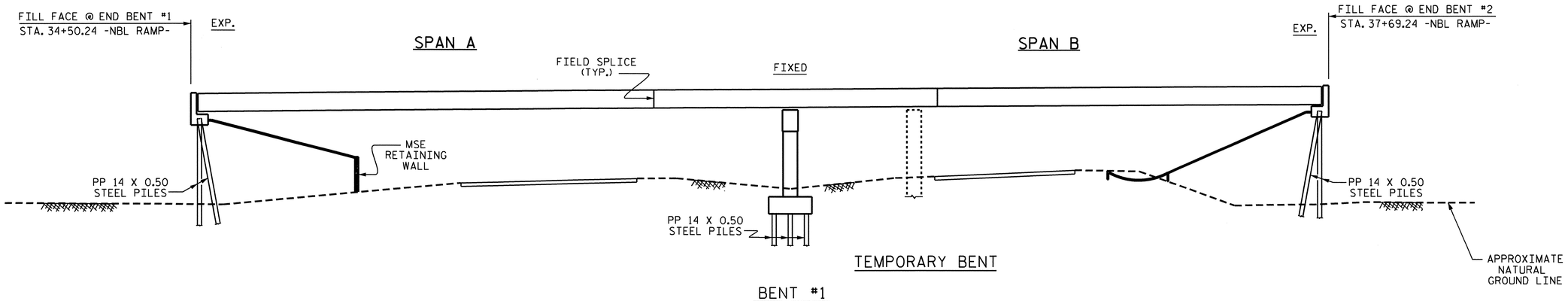

SECTION ALONG -NBL RAMP-

SCHEMATIC ELEVATION VIEW

ERECTION NOTES

INITIAL SET WILL REQUIRE PLACEMENT OF TWO ADJACENT GIRDERS WITH DIAPHRAGMS.

THE STRUCTURAL STEEL SHALL BE SUPPORTED DURING ERECTION IN ITS CAMBERED POSITION. ONE TEMPORARY BENT MAY BE USED IN SPAN "B".

TEMPORARY BENT SHALL SUPPORT ALL GIRDERS IN THE TYPICAL SECTION.

TEMPORARY BENT SHALL REMAIN IN PLACE UNTIL ALL CROSSFRAMES ARE IN PLACE AND HIGH STRENGTH BOLTS ARE TIGHTENED.

TEMPORARY BENT SHALL BE LOCATED AT CONNECTOR PLATES.

THE CONTRACTOR'S ERECTION PLANS SHALL INCLUDE A METHOD OF TEMPORARY BENT REMOVAL THAT WILL UNIFORMLY APPLY THE STRUCTURAL STEEL WEIGHT TO THE GIRDERS AND DIAPHRAGMS.

THE CONTRACTOR MAY SUBMIT ALTERNATE ERECTION METHODS. PLANS FOR SUCH ERECTION METHODS SHALL BE APPROVED BY THE ENGINEER.

PLANS FOR TEMPORARY BENT, ERECTION SEQUENCE, AND TEMPORARY BENT REMOVAL SHALL BE SUBMITTED TO THE ENGINEER FOR REVIEW.

DURING THE GIRDER ERECTION PROCEDURE, THE CONTRACTOR IS RESPONSIBLE FOR PROVIDING TEMPORARY LATERAL BRACING AND OTHER MEANS OF SUPPORT, AS REQUIRED, TO ENSURE STABILITY OF THE GIRDERS, TO AVOID UPLIFT OF THE GIRDERS AT THE TEMPORARY BENT AND TO MAINTAIN PLUMBNESS OF THE GIRDER WEBS.

THE CONTRACTOR IS RESPONSIBLE FOR DESIGNING THE TEMPORARY BENT. THE DESIGNS SHALL FOLLOW THE AASHTO GUIDE DESIGN SPECIFICATIONS FOR BRIDGE TEMPORARY WORKS, 1995 AND SHALL BE COMPLETED BY A PROFESSIONAL ENGINEER REGISTERED IN NORTH CAROLINA. THE CONTRACTOR SHALL SUBMIT SIGNED AND SEALED WORKING DRAWINGS AND CALCULATIONS FOR APPROVAL BY THE ENGINEER.

NO SEPARATE MEASUREMENT OR PAYMENT WILL BE MADE FOR PROVIDING THE TEMPORARY BENT. THE COST FOR ALL MATERIALS, EQUIPMENT, TOOLS, LABOR AND ANY INCIDENTALS NECESSARY TO PROVIDE THE TEMPORARY BENT SHALL BE CONSIDERED INCIDENTAL TO THE LUMP SUM BID PRICE FOR STRUCTURAL STEEL.

PROJECT NO. U-4007B
ONSLOW COUNTY
STATION: 36+17.74 -NBL RAMP-

NORTH CAROLINA PROFESSIONAL SEAL 025516 ENGINEER EMILY E. MURRAY
8/24/10

STATE OF NORTH CAROLINA
DEPARTMENT OF TRANSPORTATION
RALEIGH

GIRDER ERECTION DETAILS

REVISIONS						SHEET NO.
NO.	BY:	DATE:	NO.	BY:	DATE:	S-54
1			3			TOTAL SHEETS
2			4			142

STR. #3

DRAWN BY : M.GUDLAUGSSON DATE : 6/22/10
CHECKED BY : PEGGY PARISI DATE : 6/22/10

23-AUG-2010 14:48
G:\TIPProjects-U\U4007b\Structures\FinalPlans\Str. #3\U-4007B_SD_GD_03.dgn
taverette

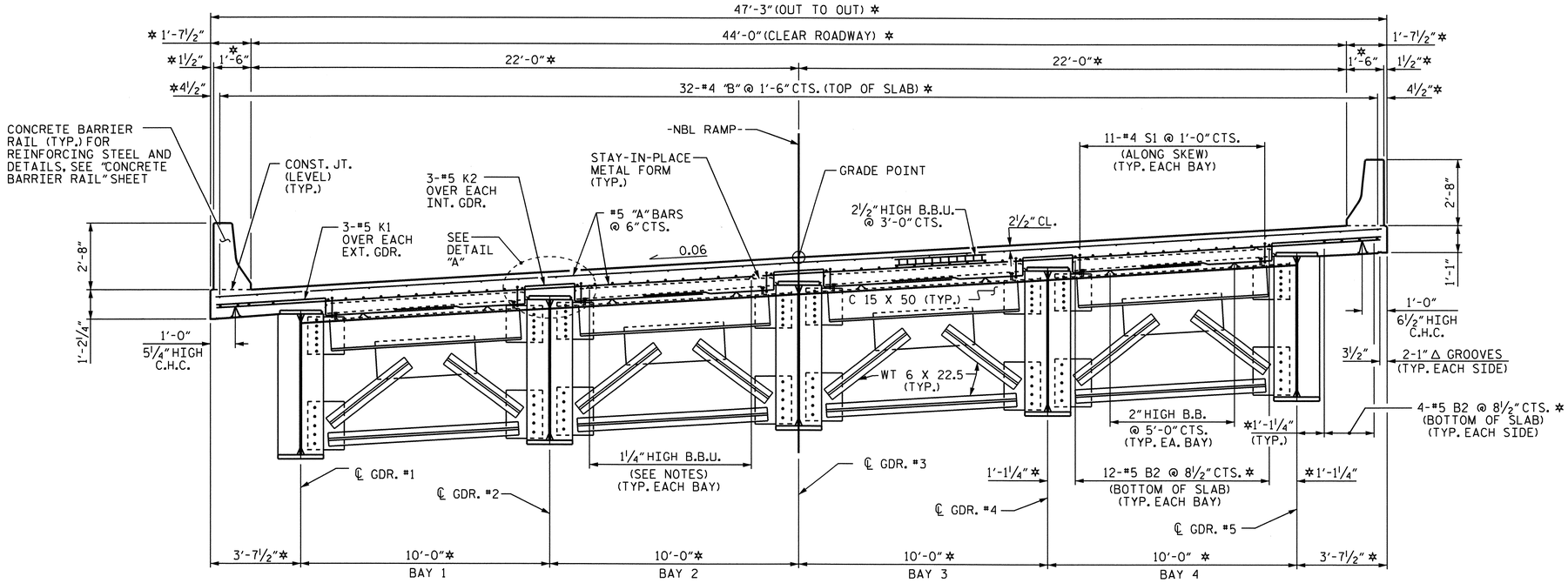

TYPICAL SECTION @ END BENT DIAPHRAGM

* RADIAL DIMENSIONS AND SPACES

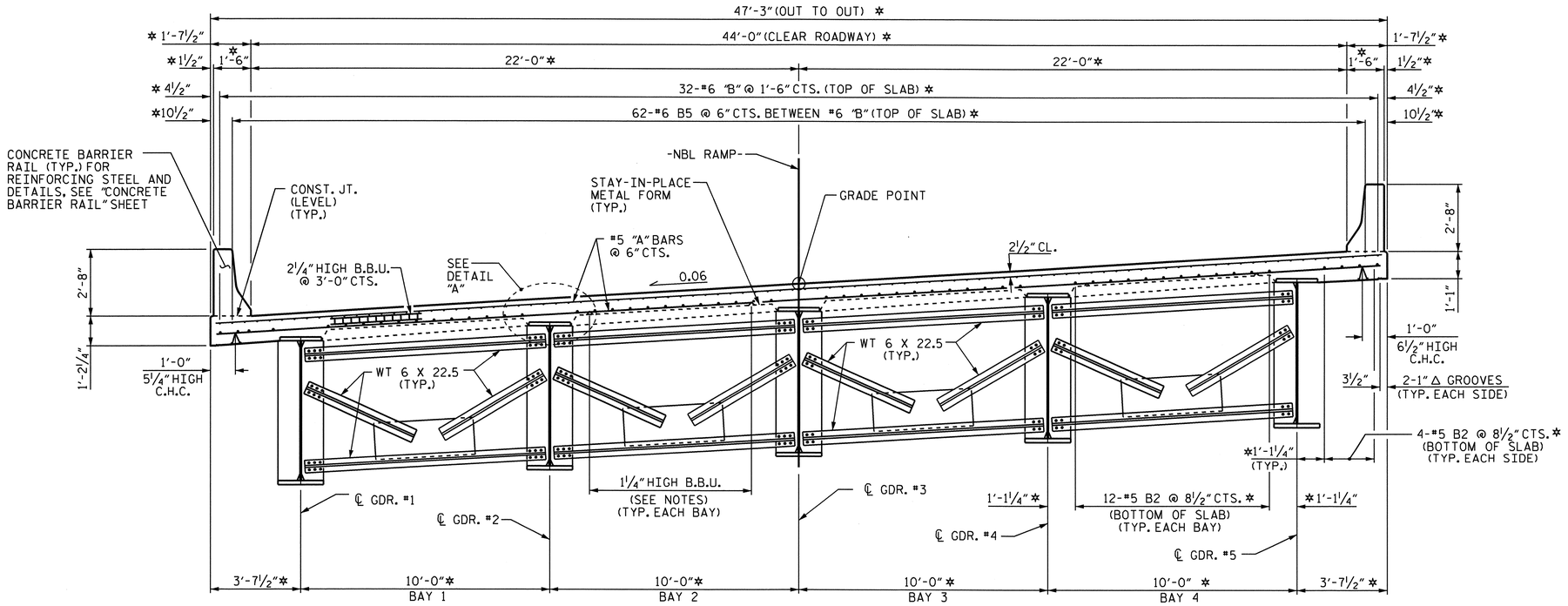

HALF TYPICAL SECTION @ BENT DIAPHRAGM

HALF TYPICAL SECTION @ INTERMEDIATE DIAPHRAGM

* RADIAL DIMENSIONS AND SPACES

NOTES

PROVIDE 1¼" HIGH BEAM BOLSTERS UPPER AT 4'-0" CTS. ATOP THE METAL STAY-IN-PLACE FORMS TO SUPPORT THE BOTTOM MAT OF 'A' BARS. WHEN USING REMOVABLE FORMS, PROVIDE CONTINUOUS HIGH CHAIRS FOR METAL DECK (C.H.C.M.) @ 4'-0" CTS. WITH A HEIGHT TO SUPPORT THE BOTTOM MAT OF 'A' BARS A CLEAR DISTANCE OF 2½" ABOVE THE TOP OF THE REMOVABLE FORM.

METAL STAY-IN-PLACE FORMS SHALL NOT BE WELDED TO GIRDER FLANGES IN THE ZONES REQUIRING CHARPY V-NOTCH TEST. SEE STRUCTURAL STEEL DETAIL SHEETS.

PREVIOUSLY CAST CONCRETE IN A CONTINUOUS UNIT SHALL HAVE ATTAINED A MINIMUM COMPRESSIVE STRENGTH OF 3,000 PSI BEFORE ADDITIONAL CONCRETE IS CAST IN THE UNIT.

BARRIER RAIL IN A CONTINUOUS UNIT SHALL NOT BE CAST UNTIL ALL SLAB CONCRETE IN THE UNIT HAS BEEN CAST AND HAS REACHED A MINIMUM COMPRESSIVE STRENGTH OF 3,000 PSI.

STRUCTURAL STEEL ERECTION IN A CONTINUOUS UNIT SHALL BE COMPLETE BEFORE FALSEWORK OR FORMS ARE PLACED ON THE UNIT.

THE CONTRACTOR MAY, WHEN NECESSARY, PROPOSE A SCHEME FOR AVOIDING INTERFERENCE BETWEEN METAL STAY-IN-PLACE FORM SUPPORTS OR FORMS AND GIRDER STIFFENERS OR CONNECTOR PLATES. THE PROPOSAL SHALL BE INDICATED, AS APPROPRIATE, ON EITHER THE STEEL WORKING DRAWINGS OR THE METAL STAY-IN-PLACE FORM WORKING DRAWINGS.

THE CONTRACTOR SHALL ADJUST THE GIRDER BUILDUPS AS NECESSARY TO INCORPORATE A MAXIMUM PERMISSIBLE VARIATION IN POT BEARING DEPTH OF ½", SEE SPECIAL PROVISION FOR POT BEARINGS.

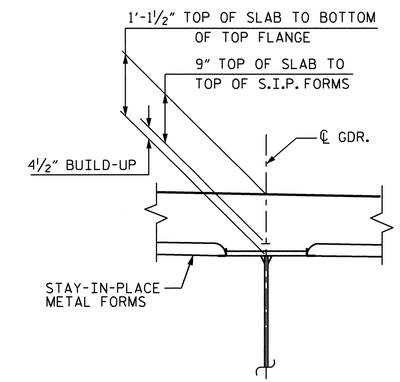

DETAIL "A"

PROJECT NO. U-4007B

ONSLOW COUNTY

STATION: 36+17.74 -NBL RAMP-

SHEET 1 OF 2

STATE OF NORTH CAROLINA
DEPARTMENT OF TRANSPORTATION
RALEIGH

SUPERSTRUCTURE
TYPICAL SECTION

NORTH CAROLINA PROFESSIONAL SEAL 025516 ENGINEER EMILY E. MURRAY
8/24/10

REVISIONS						SHEET NO.
NO.	BY:	DATE:	NO.	BY:	DATE:	S-55
1			3			TOTAL SHEETS
2			4			142

STR. #3

DRAWN BY : PEGGY PARISI DATE : 5-18-10
CHECKED BY : T.L. AVERETTE DATE : 6-9-10

23-AUG-2010 14:48
G:\TIPProjects-U\U4007b\Structures\FinalPlans\Str. #3\u-4007b_sd_ts_03.dgn
taverette

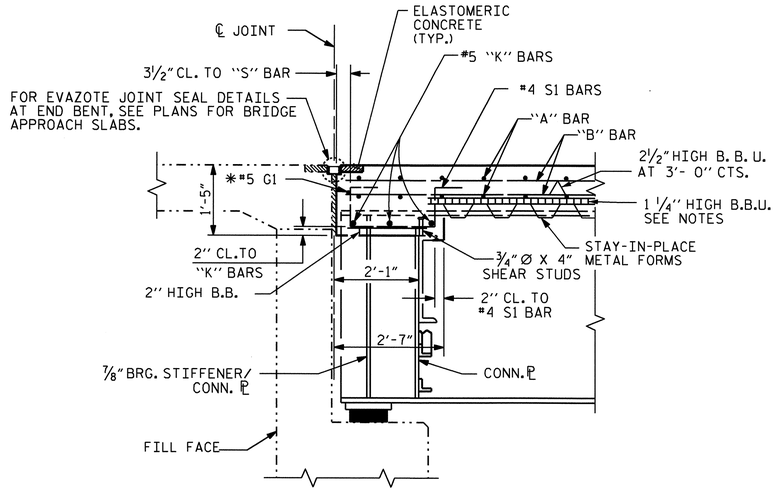

SECTION THRU END BENT DIAPHRAGM

* #5 "G" BAR MAY BE SHIFTED SLIGHTLY, AS NECESSARY, TO CLEAR DIAPHRAGM AND REINFORCING STEEL.

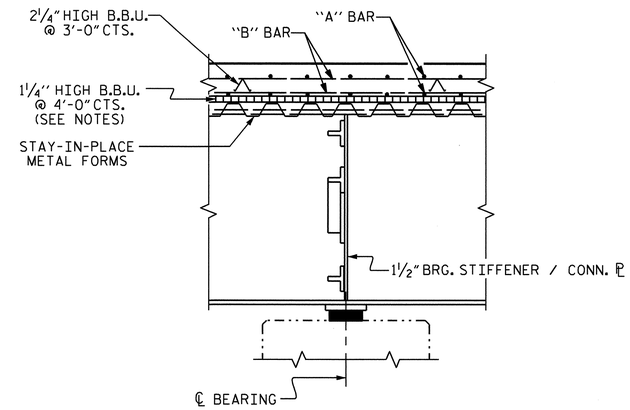

SECTION @ BENT

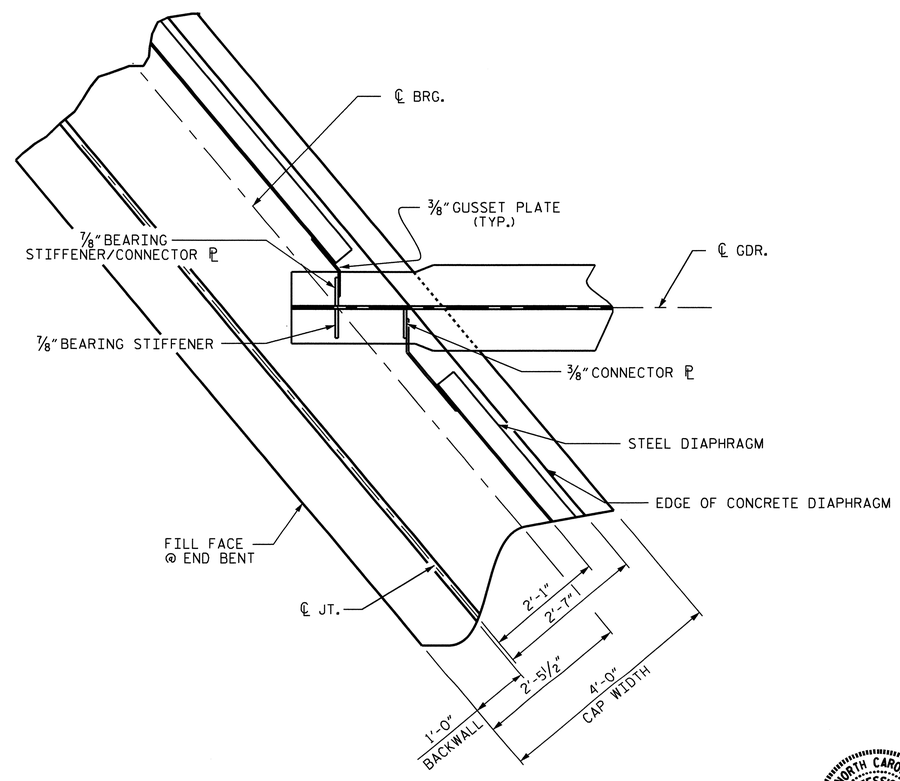

PLAN @ END BENT

END BENT #1 SHOWN, END BENT #2 SIMILAR

NORTH CAROLINA PROFESSIONAL SEAL 025516 ENGINEER EMILY E. MURRAY
8/24/10

PROJECT NO. U-4007B
ONSLOW COUNTY
STATION: 36+17.74 -NBL RAMP-

SHEET 2 OF 2

STATE OF NORTH CAROLINA
DEPARTMENT OF TRANSPORTATION
RALEIGH

SUPERSTRUCTURE
TYPICAL SECTION

REVISIONS						SHEET NO.
NO.	BY:	DATE:	NO.	BY:	DATE:	S-56
1			3			TOTAL SHEETS
2			4			142

DRAWN BY : PEGGY PARISI DATE : 5-18-10
CHECKED BY : T.L. AVERETTE DATE : 6-9-10

23-AUG-2010 14:47
G:\TIPProjects-U\U4007b\Structures\FinalPlans\Str. #3\u-4007b_sd_ts_03.dgn
taverette

STR. #3

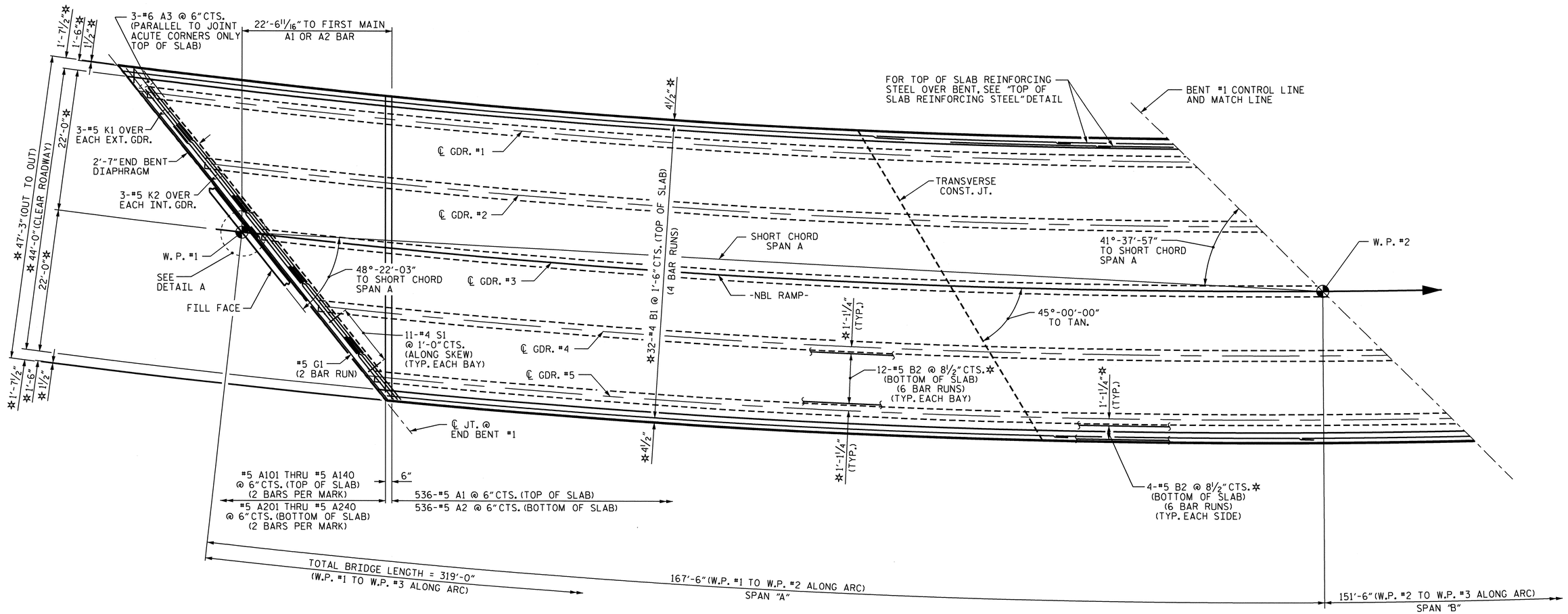

PLAN OF SPAN A

✱ RADIAL DIMENSIONS AND SPACES
"A" BARS ARE SPACED PERPENDICULAR TO LONG CHORD.
FOR LOCATION OF INTERMEDIATE DIAPHRAGMS, SEE "GIRDER LAYOUT" SHEET.
FOR LOCATION OF TRANSVERSE CONSTRUCTION JOINT, SEE POUR SEQUENCE.

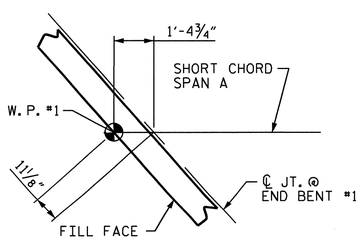

DETAIL A

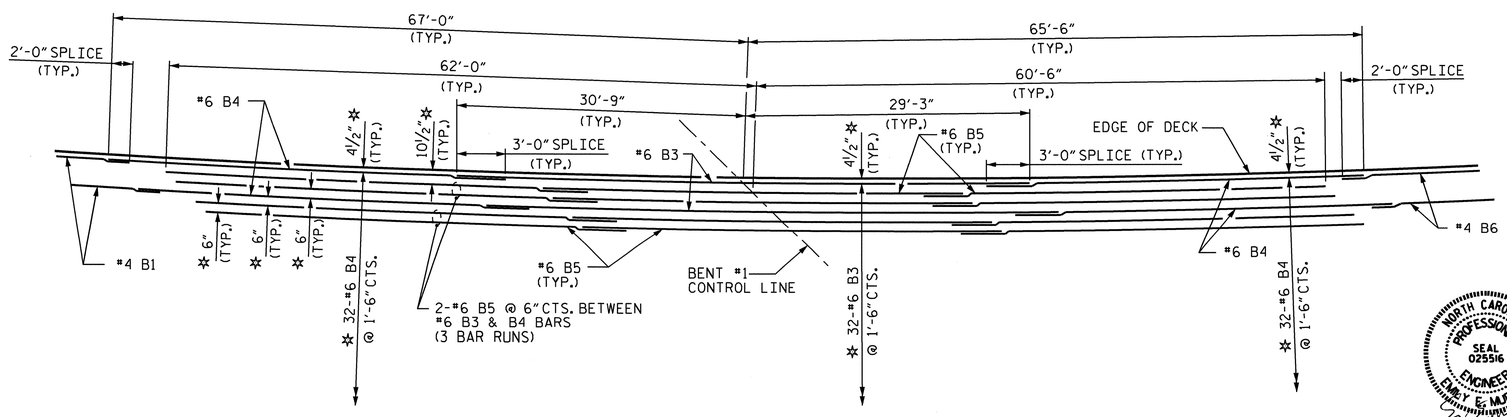

TOP OF SLAB REINFORCING STEEL

NORTH CAROLINA PROFESSIONAL SEAL 025516 ENGINEER EMILY E. MURRAY
8/24/10

PROJECT NO. U-4007B
ONSLOW COUNTY
STATION: 36+17.74 -NBL RAMP-
SHEET 1 OF 2

STATE OF NORTH CAROLINA
DEPARTMENT OF TRANSPORTATION
RALEIGH

SUPERSTRUCTURE
PLAN OF SPAN A

REVISIONS						SHEET NO.
NO.	BY:	DATE:	NO.	BY:	DATE:	S-57
1			3			TOTAL SHEETS
2			4			142

DRAWN BY : PEGGY PARISI DATE : 5-18-10
CHECKED BY : T.L. AVERETTE DATE : 6-9-10

23-AUG-2010 14:47
G:\TIPProjects-U\U4007b\Structures\FinalPlans\Str. #3\u-4007b_sd_PS_03.dgn
taverette

STR. #3

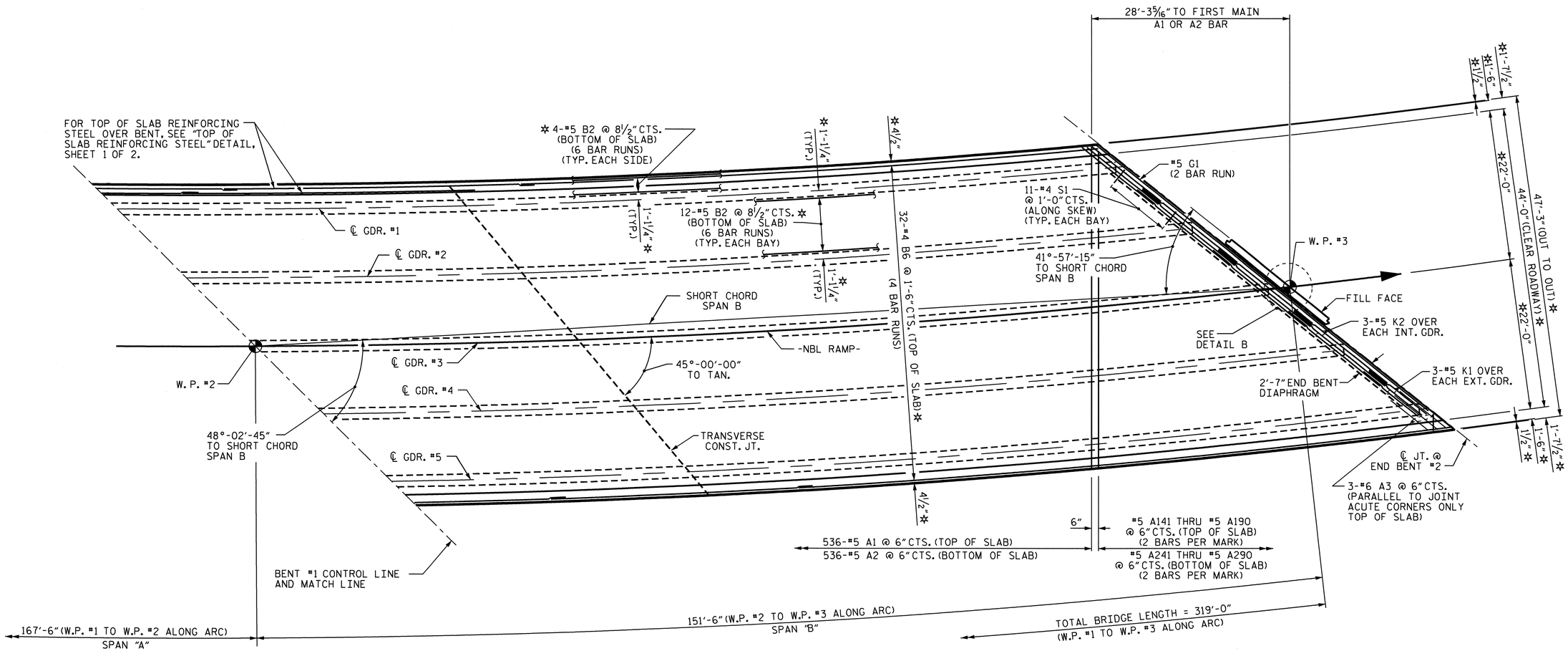

PLAN OF SPAN B

✲ RADIAL DIMENSIONS AND SPACES
"A" BARS ARE SPACED PERPENDICULAR TO LONG CHORD.
FOR LOCATION OF INTERMEDIATE DIAPHRAGMS, SEE "GIRDER LAYOUT" SHEET.
FOR LOCATION OF TRANSVERSE CONSTRUCTION JOINT, SEE POUR SEQUENCE.

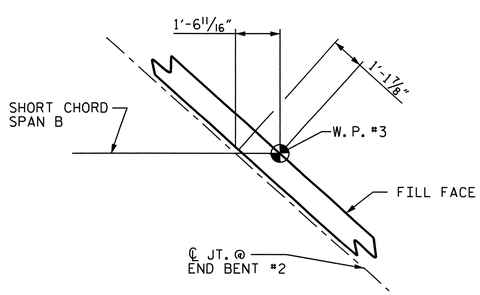

DETAIL B

PROJECT NO. U-4007B
ONSLOW COUNTY
STATION: 36+17.74 -NBL RAMP-
SHEET 2 OF 2

STATE OF NORTH CAROLINA
DEPARTMENT OF TRANSPORTATION
RALEIGH

SUPERSTRUCTURE

PLAN OF SPAN B

NORTH CAROLINA PROFESSIONAL SEAL 025516 ENGINEER EMILY E. MURRAY
8/24/10

REVISIONS						SHEET NO.
NO.	BY:	DATE:	NO.	BY:	DATE:	S-58
1			3			TOTAL SHEETS
2			4			142

DRAWN BY : PEGGY PARISI DATE : 5-18-10
CHECKED BY : T.L. AVERETTE DATE : 6-9-10

23-AUG-2010 14:47
G:\TIPProjects-U\U4007b\Structures\FinalPlans\Str. #3\u-4007b_sd_PS_03.dgn
taverette

STR. #3

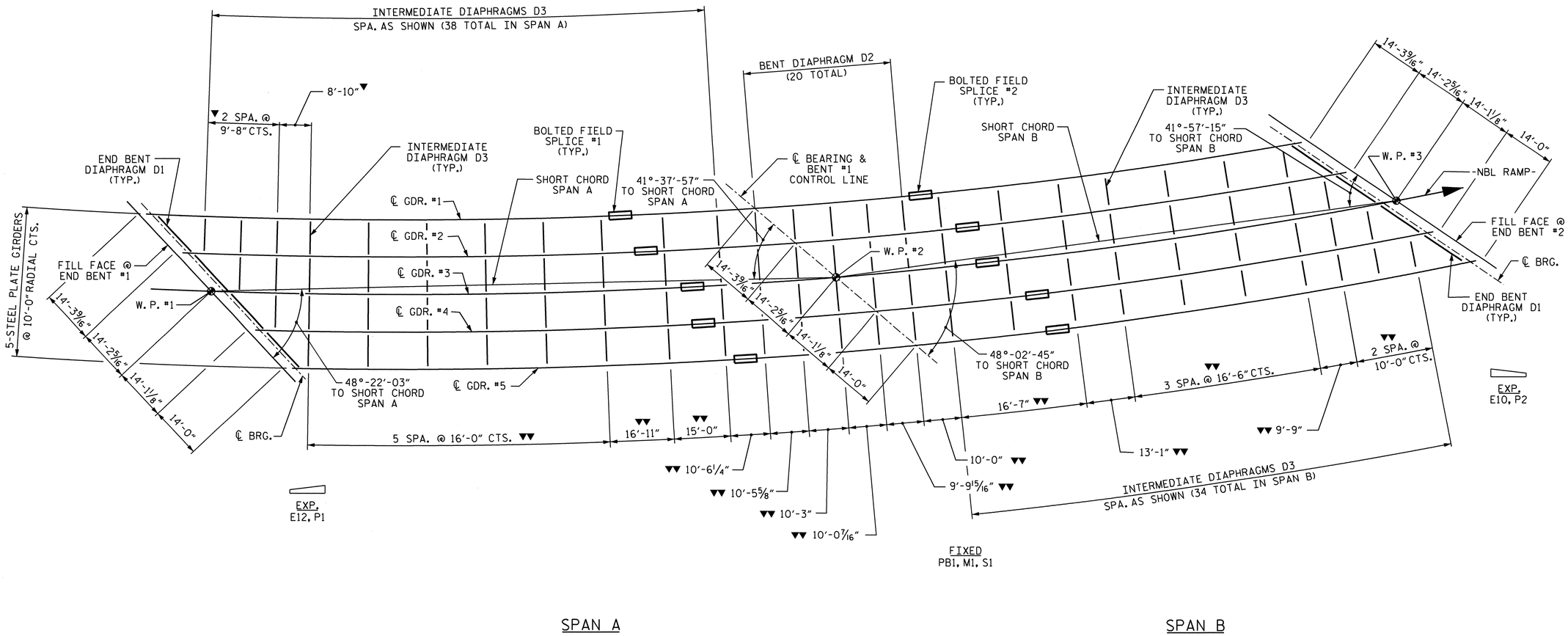

GIRDER LAYOUT

▼ DIMENSIONS ARE RADIAL ALONG ℄ GIRDER #1.

▼▼ DIMENSIONS ARE RADIAL ALONG ℄ GIRDER #5.

ALL BENT AND INTERMEDIATE DIAPHRAGMS ARE TO BE PLACED RADIALLY TO ℄ GIRDERS.

PROJECT NO. U-4007B

ONSLOW COUNTY

STATION: 36+17.74 -NBL RAMP-

STATE OF NORTH CAROLINA
DEPARTMENT OF TRANSPORTATION
RALEIGH

SUPERSTRUCTURE

GIRDER LAYOUT

NORTH CAROLINA PROFESSIONAL SEAL 025516 ENGINEER EMILY E. MURRAY
8/24/10

REVISIONS						SHEET NO.
NO.	BY:	DATE:	NO.	BY:	DATE:	S-59
1			3			TOTAL SHEETS
2			4			142

DRAWN BY : PEGGY PARISI DATE : 5-18-10
CHECKED BY : T.L. AVERETTE DATE : 6-9-10

23-AUG-2010 14:46
G:\TIPProjects-U\U4007b\Structures\FinalPlans\Str. #3\u-4007b_sd_FP_03.dgn
taverette

STR. #3

NC005

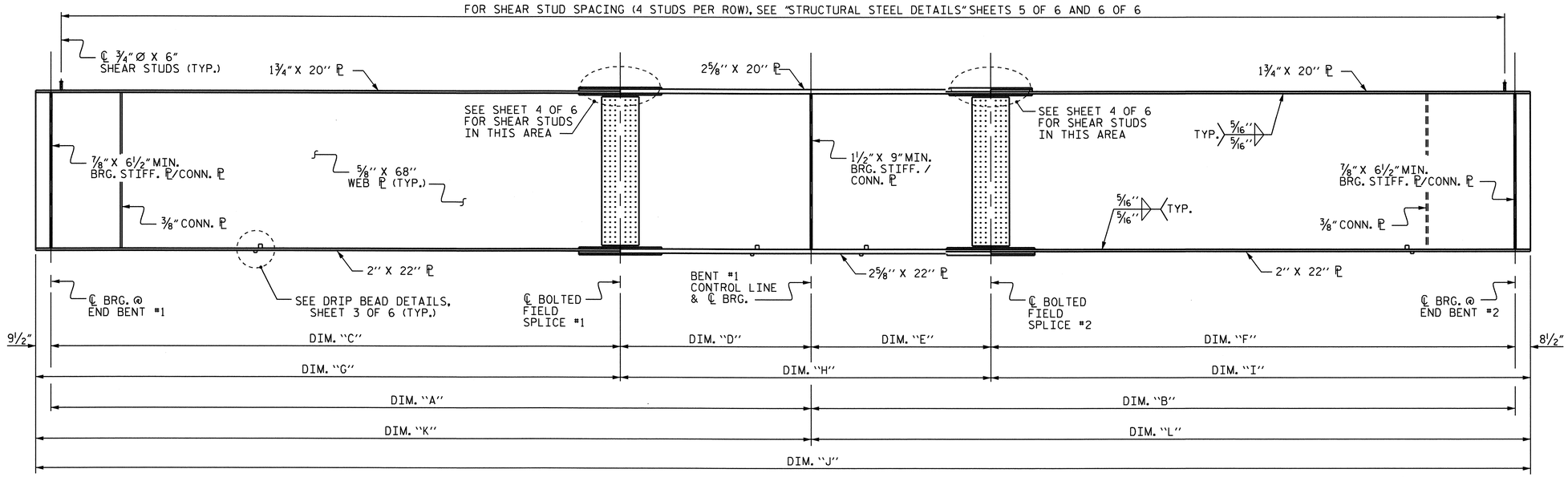

GIRDER ELEVATION

(DIMENSIONS ARE ALONG ℄ OF GIRDER)

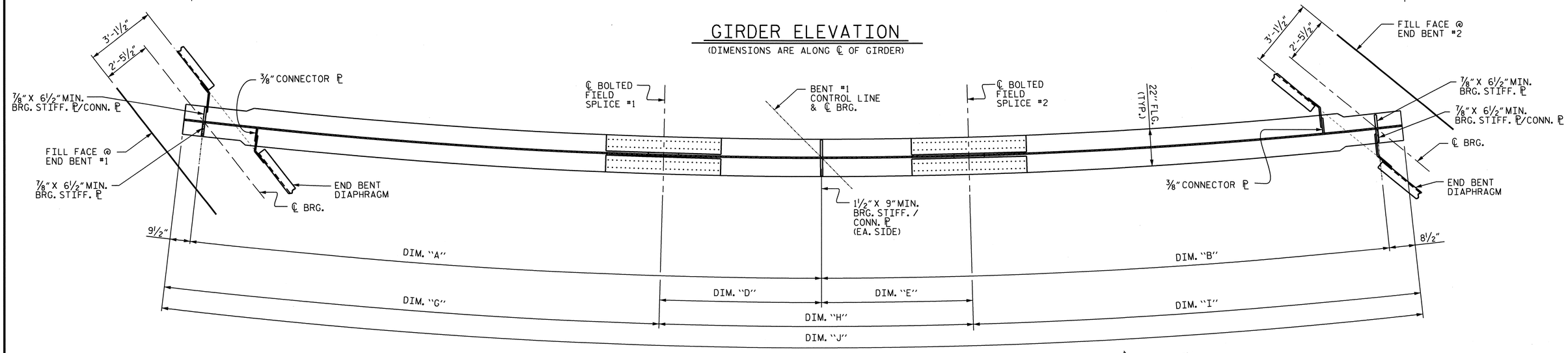

BOTTOM FLANGE DETAIL

INTERIOR GIRDER SHOWN, EXTERIOR GIRDER SIMILAR EXCEPT NO CONNECTOR ℙ'S SHALL BE PLACED ON THE OUTSIDE OF WEB.

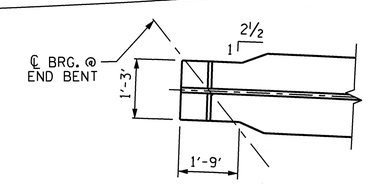

BOTTOM FLANGE TAPER DETAIL

(END BENT #1 SHOWN, END BENT #2 SIMILAR)

GIRDER DIMENSIONS

GIRDER	RADIUS	A	B	C	D	E	F	G	H	I	J	K	L
1	1405'-0"	161'-7½"	145'-10⅛"	125'-4⅜"	36'-3⅛"	44'-2³⁄₁₆"	101'-7¹⁵⁄₁₆"	126'-1⅞"	80'-5⁵⁄₁₆"	102'-4⁷⁄₁₆"	308'-11⅝"	162'-5"	146'-6⅝"
2	1415'-0"	162'-9¹⁵⁄₁₆"	146'-11³⁄₁₆"	122'-7¹⁄₁₆"	40'-2⅞"	46'-3³⁄₁₆"	100'-8"	123'-4⁹⁄₁₆"	86'-6¹⁄₁₆"	101'-4½"	311'-3⅛"	163'-7⁷⁄₁₆"	147'-7¹¹⁄₁₆"
3	1425'-0"	164'-0⁵⁄₁₆"	148'-0¼"	125'-5⅛"	38'-7³⁄₁₆"	40'-9¹¹⁄₁₆"	107'-2⁹⁄₁₆"	126'-2⅝"	79'-4⅞"	107'-11¹⁄₁₆"	313'-6⁹⁄₁₆"	164'-9¹³⁄₁₆"	148'-8¾"
4	1435'-0"	165'-2¾"	149'-1¼"	118'-10"	46'-4¾"	43'-4¾"	105'-8½"	119'-7½"	89'-9½"	106'-5"	315'-10"	166'-0¼"	149'-9¾"
5	1445'-0"	166'-5⅛"	150'-2⁵⁄₁₆"	120'-6⅞"	45'-10¼"	38'-2"	112'-0⁵⁄₁₆"	121'-4⅜"	84'-0¼"	112'-8¹³⁄₁₆"	318'-1⁷⁄₁₆"	167'-2⅝"	150'-10¹³⁄₁₆"

ALL GIRDER DIMENSIONS IN THE ABOVE TABLE ARE MEASURED ALONG ℄ OF GIRDER.

DRAWN BY : PEGGY PARISI DATE : 5-18-10
CHECKED BY : T.L. AVERETTE DATE : 6-9-10

23-AUG-2010 14:46
G:\TIPProjects-U\U4007b\Structures\FinalPlans\Str. #3\u-4007b_sd_SS_03.dgn
taveretteNORTH CAROLINA PROFESSIONAL SEAL 025516 ENGINEER E. MURRAY
8/24/10

PROJECT NO. U-4007B
ONSLOW COUNTY
STATION: 36+17.74 -NBL RAMP-

SHEET 1 OF 6

STATE OF NORTH CAROLINA
DEPARTMENT OF TRANSPORTATION
RALEIGH

SUPERSTRUCTURE

STRUCTURE STEEL DETAILS

REVISIONS						SHEET NO.
NO.	BY:	DATE:	NO.	BY:	DATE:	S-60
1			3			TOTAL SHEETS
2			4			142

STR. #3

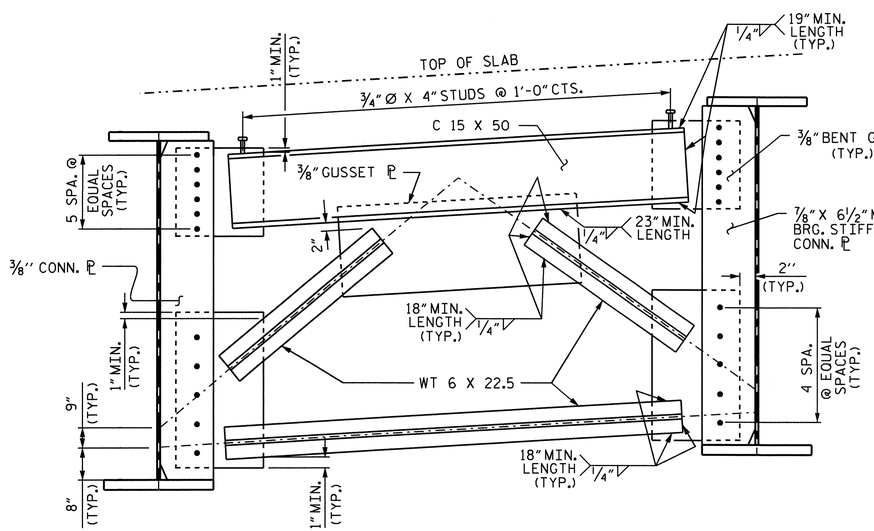

TYPICAL END BENT DIAPHRAGM D1

(LOOKING UPSTATION)
(8 TOTAL)

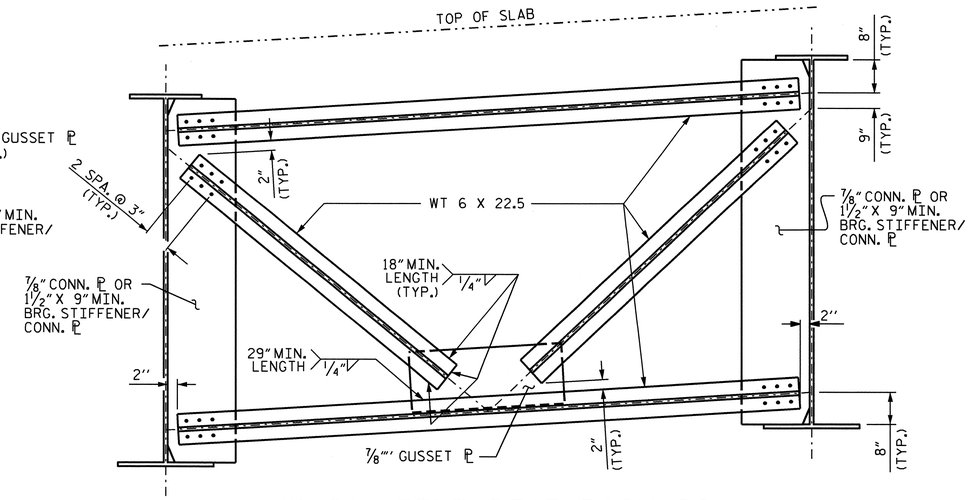

TYPICAL BENT DIAPHRAGM D2

(LOOKING UPSTATION)
(20 TOTAL)

NOTES

ALL STRUCTURAL STEEL SHALL BE AASHTO M270 GRADE 50W AND PAINTED IN ACCORDANCE WITH SYSTEM 4 OF ARTICLE 442-7 OF THE STANDARD SPECIFICATIONS UNLESS OTHERWISE NOTED ON THE PLANS.

ALL DIMENSIONS SHOWN ARE HORIZONTAL OR VERTICAL, UNLESS OTHERWISE NOTED.

ALL FIELD CONNECTIONS TO BE 7/8" DIA. HIGH STRENGTH BOLTS UNLESS OTHERWISE NOTED. FOR HIGH STRENGTH BOLTS, SEE SPECIAL PROVISIONS.

BEARING STIFFENERS ARE TO BE PLACED NORMAL TO THE WEB OF THE GIRDER AND SHALL BE PLUMB.

SHOP SPLICES ARE PERMITTED TO LIMIT THE MAXIMUM REQUIRED FLANGE PIECE LENGTHS TO 60 FEET AND WEB PIECE LENGTHS TO 45 FEET. PERMITTED FLANGE AND WEB SHOP SPLICES SHALL NOT BE LOCATED WITHIN 15 FEET OF MAXIMUM DEAD LOAD DEFLECTION (NOR WITHIN 15 FEET OF INTERMEDIATE BEARINGS OF CONTINUOUS UNITS). KEEP 2 FEET MINIMUM BETWEEN WEB AND FLANGE SHOP SPLICES. KEEP 6" MINIMUM BETWEEN CONNECTOR PLATE OR TRANSVERSE STIFFENER WELDS AND WEB OR FLANGE SHOP SPLICES.

STUDS ON GIRDERS MAY BE SHIFTED UP TO 1" IF NECESSARY TO CLEAR FLANGE SPLICE WELD.

TENSION ON THE AASHTO M164 BOLTS SHALL BE CALIBRATED USING DIRECT TENSION INDICATOR WASHERS. SEE SPECIAL PROVISIONS.

END OF GIRDERS SHALL BE PLUMB.

BEARING STIFFENER MAY REQUIRE COPING IF WIDER THAN BOTTOM FLANGE TO AVOID INTERFERENCE WITH THE ANCHOR BOLT.

FOR SHIPPING STEEL STRUCTURAL MEMBERS, SEE SPECIAL PROVISIONS.

THE CONTRACTOR SHALL MAINTAIN STABILITY OF THE CURVED GIRDERS UNTIL ALL BOLTED FIELD SPLICES AND DIAPHRAGM CONNECTIONS HAVE BEEN COMPLETED.

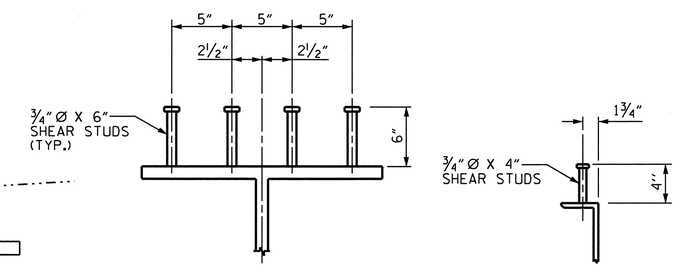

ON GIRDERS

ON CHANNELS

SHEAR STUD DETAILS

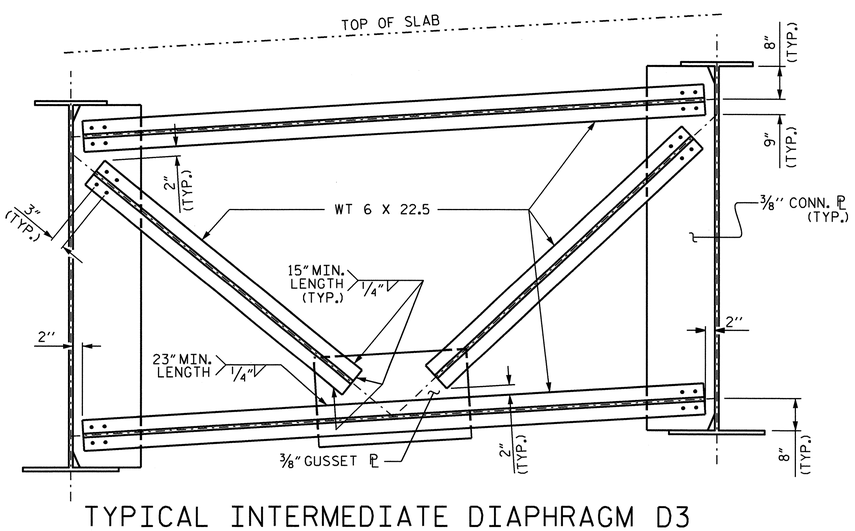

TYPICAL INTERMEDIATE DIAPHRAGM D3

(LOOKING UPSTATION)
(72 TOTAL)

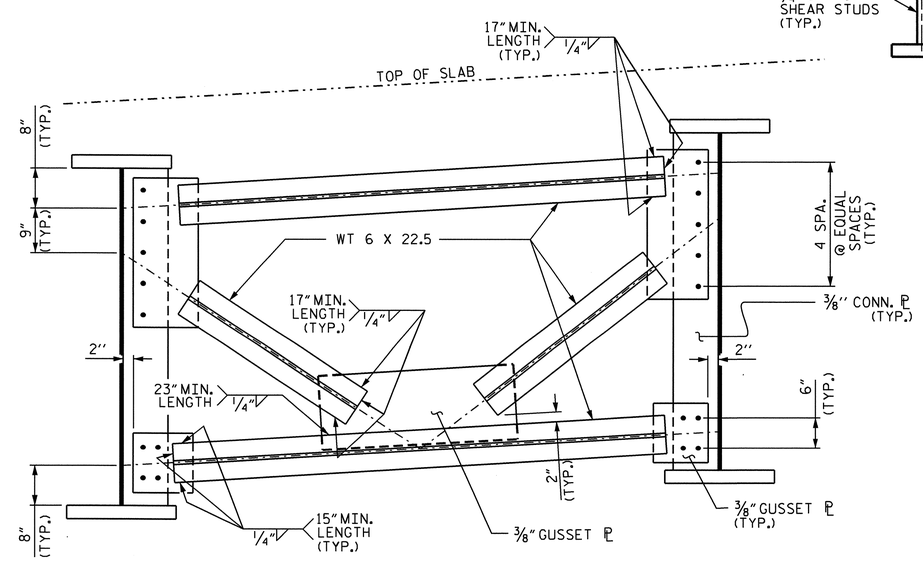

TYPICAL OPTIONAL INTERMEDIATE DIAPHRAGM

(LOOKING UPSTATION)

PROJECT NO. U-4007B
ONSLOW COUNTY
STATION: 36+17.74 -NBL
RAMP-

SHEET 2 OF 6

STATE OF NORTH CAROLINA
DEPARTMENT OF TRANSPORTATION
RALEIGH

SUPERSTRUCTURE

STRUCTURAL STEEL DETAILS

NORTH CAROLINA PROFESSIONAL SEAL 025516 ENGINEER EMILY E. MURRAY
8/24/10

REVISIONS						SHEET NO.
NO.	BY:	DATE:	NO.	BY:	DATE:	S-61
1			3			TOTAL SHEETS
2			4			142

DRAWN BY : PEGGY PARISI DATE : 5-18-10
CHECKED BY : T.L. AVERETTE DATE : 6-9-10

23-AUG-2010 14:46
G:\TIPProjects-U\U4007b\Structures\FinalPlans\Str. #3\u-4007b_sd_SS_03.dgn
tavarette

STR. #3

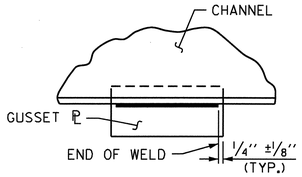

TYP. GUSSET ℙ CONNECTION

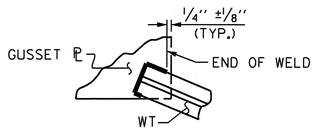

TYPICAL "TEE" TO GUSSET PLATE CONNECTION

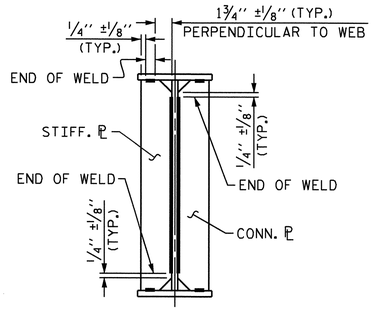

TYPICAL STIFFENER OR CONNECTOR PLATE CONNECTION

WELD TERMINATION DETAILS

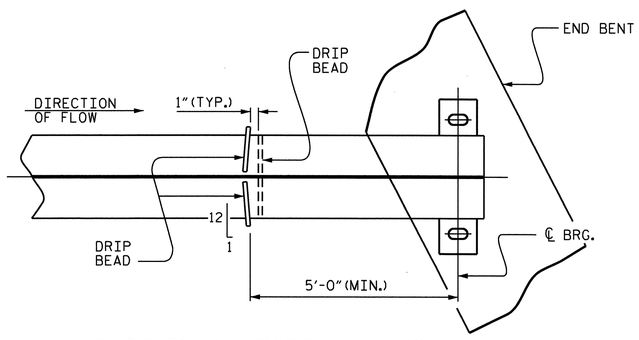

PART PLAN - BOTTOM FLANGE

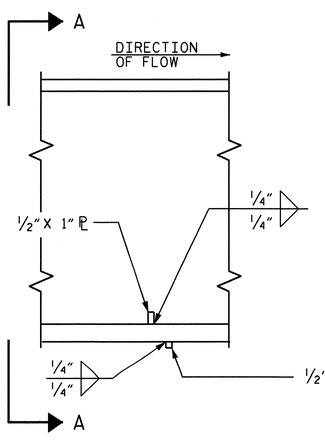

SECTION

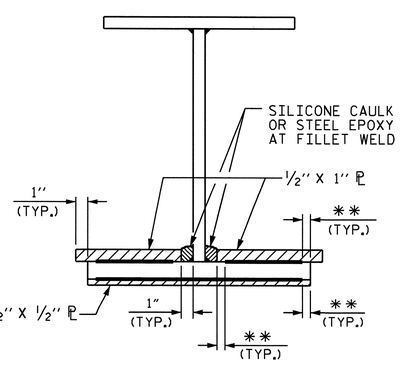

VIEW A-A

** SEE "WELD TERMINATION DETAILS"

DRIP BEAD DETAILS

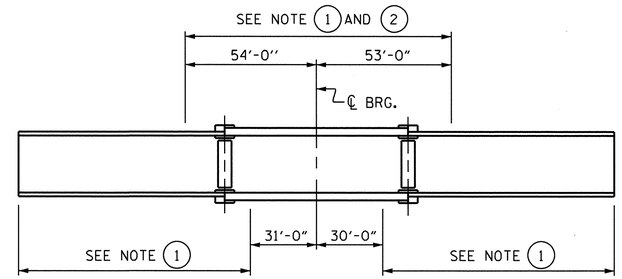

GIRDER MAKE UP

NOTE 1: CHARPY V-NOTCH TESTS ARE REQUIRED FOR TOP OR BOTTOM FLANGE PLATES WHICH FALL WITHIN THESE LIMITS. ALSO, CHARPY V-NOTCH TESTS WILL BE REQUIRED FOR ALL WEB PLATES, WEB SPLICE PLATES, FLANGE SPLICE PLATES, AND ALL MEMBERS IN THE DIAPHRAGMS. IF A PERMITTED SHOP FLANGE SPLICE IS NOT USED, CHARPY V-NOTCH TESTS WILL BE REQUIRED FOR THE ENTIRE FLANGE PLATE. FOR CHARPY V-NOTCH TESTS, SEE ARTICLE 1072-9 OF THE STANDARD SPECIFICATIONS.

NOTE 2: NO WELDING OF FORMS OR FALSEWORK TO THE TOP FLANGE WILL BE PERMITTED IN THIS REGION.

CHARPY V-NOTCH TESTS FOR CONTINUOUS PLATE GIRDERS

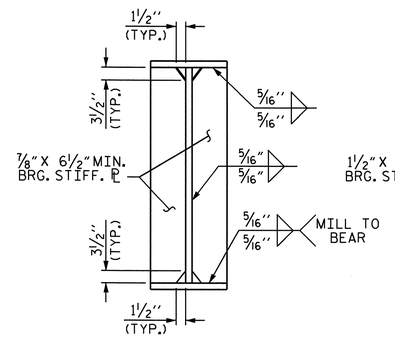

BEARING STIFFENER

(AT END BENT DIAPHRAGMS)

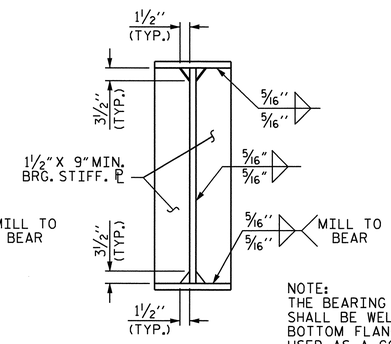

NOTE:
THE BEARING STIFFENER SHALL BE WELDED TO THE BOTTOM FLANGE ONLY WHEN USED AS A CONNECTOR ℙ.

BEARING STIFFENER

(AT BENT DIAPHRAGMS)

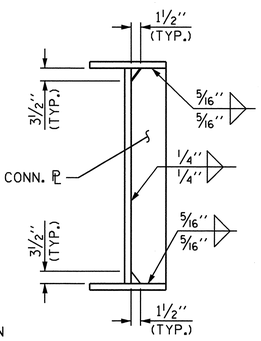

CONNECTOR PLATE

(AT END BENT AND INTERMEDIATE DIAPHRAGMS)

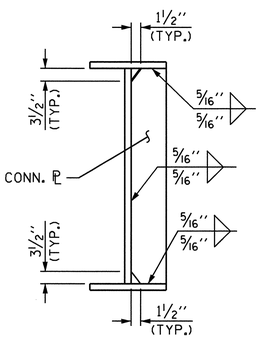

CONNECTOR PLATE

(AT BENT DIAPHRAGMS)

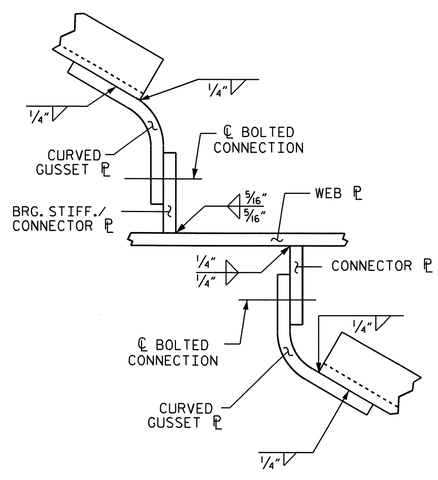

BENT GUSSET ℙ

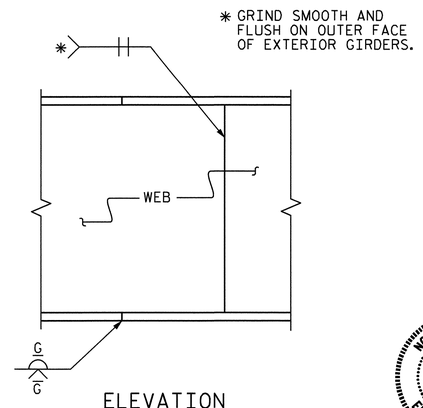

ELEVATION

TYPICAL FLANGE & WEB BUTT JOINT

NORTH CAROLINA PROFESSIONAL SEAL 025516 ENGINEER EMILY E. MURRAY
8/24/1

PROJECT NO. U-4007B
ONSLOW COUNTY
STATION: 36+17.74 -NBL RAMP-
SHEET 3 OF 6

STATE OF NORTH CAROLINA
DEPARTMENT OF TRANSPORTATION
RALEIGH

SUPERSTRUCTURE
STRUCTURAL STEEL DETAILS

REVISIONS						SHEET NO.
NO.	BY:	DATE:	NO.	BY:	DATE:	S-62
1			3			TOTAL SHEETS
2			4			142

STR. #3

DRAWN BY : PEGGY PARISI DATE : 5-18-10
CHECKED BY : T.L. AVERETTE DATE : 6-9-10

23-AUG-2010 14:46
G:\TIPProjects-U\U4007b\Structures\FinalPlans\Str. #3\u-4007b_sd_SS_03.dgn
taverette

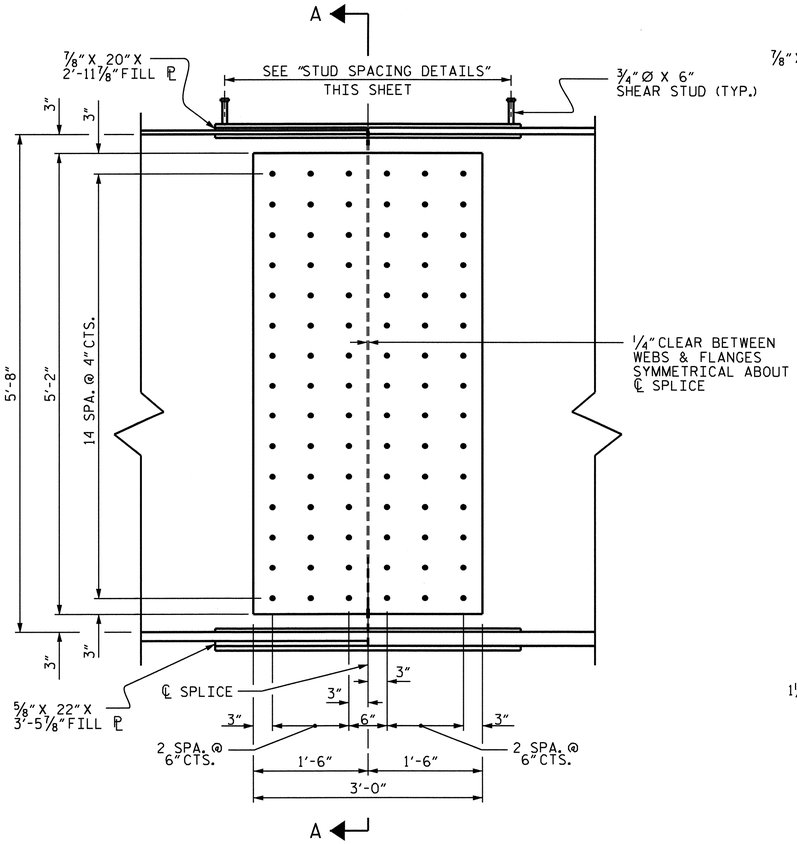

ELEVATION

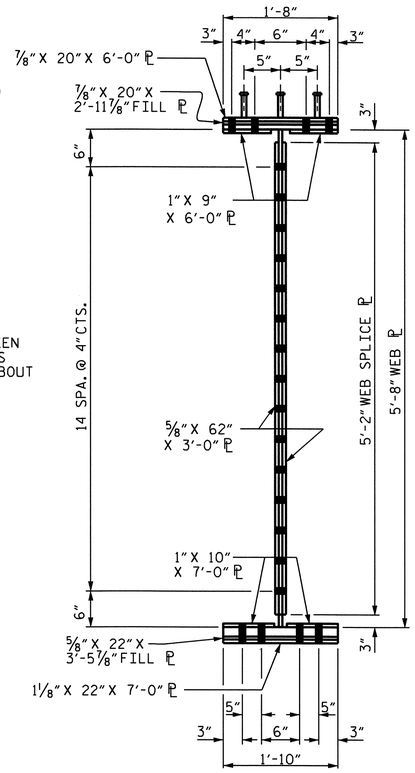

SECTION A-A

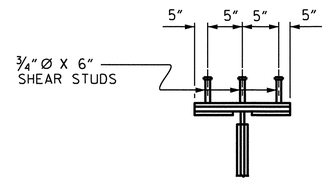

SHEAR STUD DETAIL
FOR TOP FLANGE SPLICE PLATE

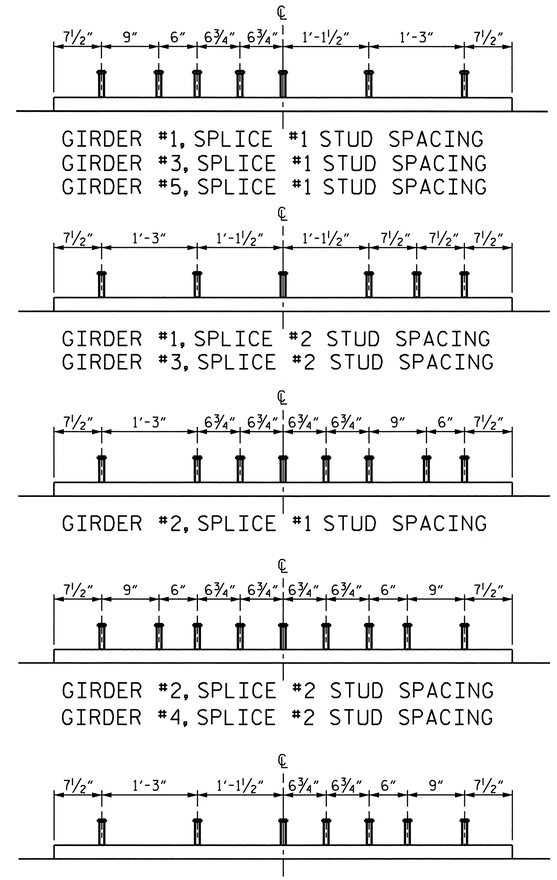

STUD SPACING DETAILS

UP STATION →

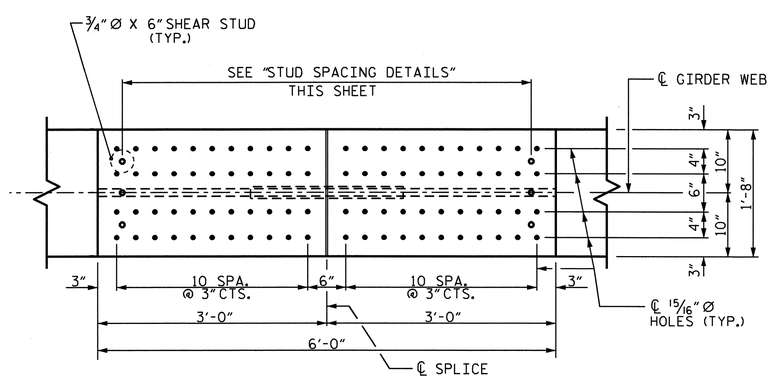

PLAN (TOP OF TOP FLANGE)

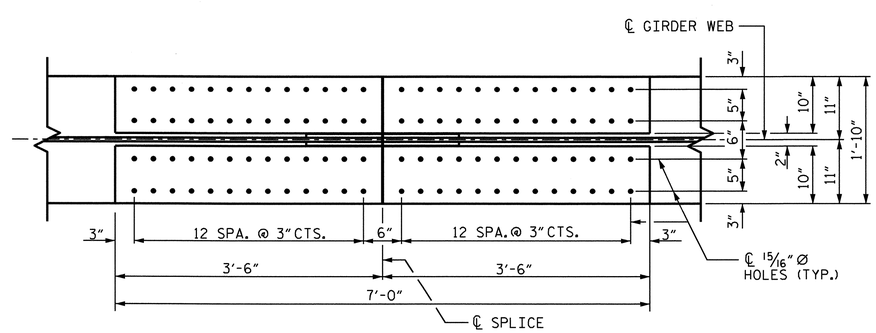

PLAN (TOP OF BOTTOM FLANGE)

BOLTED FIELD SPLICE DETAILS

(TYPICAL EACH FIELD SPLICE)

PROJECT NO. U-4007B
ONSLOW COUNTY
STATION: 36+17.74 -NBL RAMP-
SHEET 4 OF 6

STATE OF NORTH CAROLINA
DEPARTMENT OF TRANSPORTATION
RALEIGH

SUPERSTRUCTURE
STRUCTURAL STEEL DETAILS
BOLTED FIELD SPLICE

NORTH CAROLINA PROFESSIONAL SEAL 025516 ENGINEER EMILY E. MURPHY
8/24/10

REVISIONS						SHEET NO.
NO.	BY:	DATE:	NO.	BY:	DATE:	S-63
1			3			TOTAL SHEETS
2			4			142

DRAWN BY : PEGGY PARISI DATE : 5-18-10
CHECKED BY : T.L. AVERETTE DATE : 6-9-10

23-AUG-2010 14:45
G:\TIPProjects-U\U4007b\Structures\FinalPlans\Str. #3\u-4007b_sd_SS_03.dgn
taverette

STR. #3

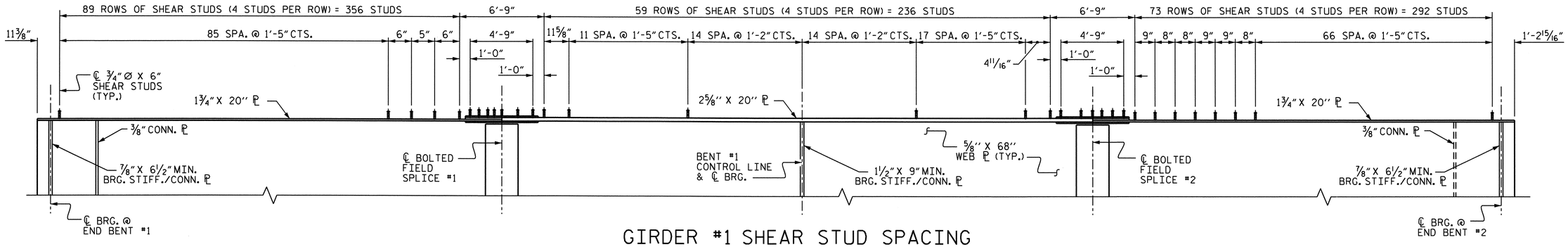

GIRDER #1 SHEAR STUD SPACING

FOR STUDS IN BOLTED FIELD SPLICE AREA, SEE "BOLTED FIELD SPLICE DETAILS" SHEET 4 OF 6.

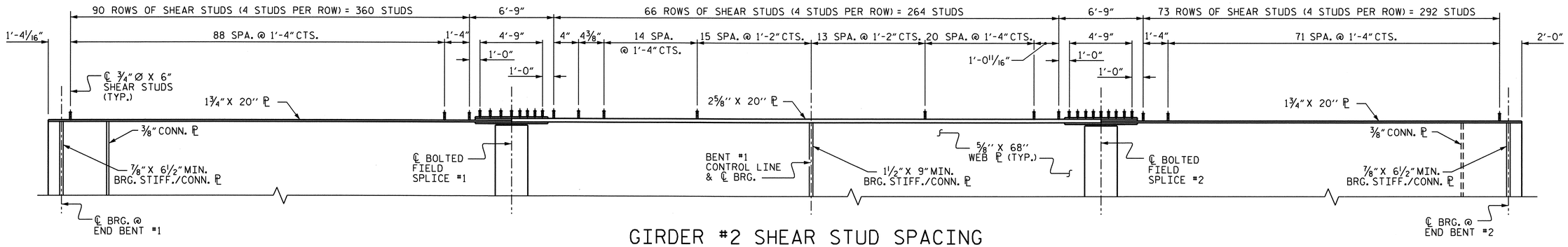

GIRDER #2 SHEAR STUD SPACING

FOR STUDS IN BOLTED FIELD SPLICE AREA, SEE "BOLTED FIELD SPLICE DETAILS" SHEET 4 OF 6.

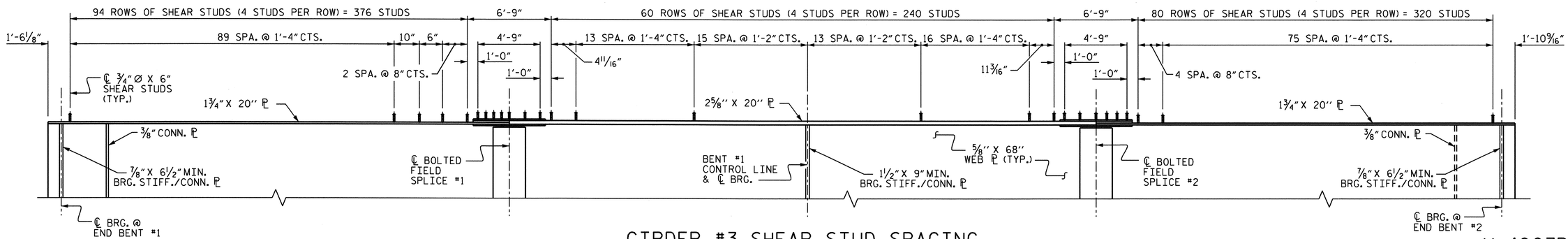

GIRDER #3 SHEAR STUD SPACING

FOR STUDS IN BOLTED FIELD SPLICE AREA, SEE "BOLTED FIELD SPLICE DETAILS" SHEET 4 OF 6.

PROJECT NO. U-4007B
ONSLOW COUNTY
STATION: 36+17.74 -NBL RAMP-

SHEET 5 OF 6

STATE OF NORTH CAROLINA
DEPARTMENT OF TRANSPORTATION
RALEIGH

SUPERSTRUCTURE

STRUCTURE STEEL DETAILS

NORTH CAROLINA PROFESSIONAL SEAL 025516 ENGINEER EMILY E. MURRAY
8/24/10

REVISIONS						SHEET NO.
NO.	BY:	DATE:	NO.	BY:	DATE:	S-64
1			3			TOTAL SHEETS
2			4			142

DRAWN BY : PEGGY PARISI DATE : 5-18-10
CHECKED BY : T.L. AVERETTE DATE : 6-9-10

23-AUG-2010 14:45
G:\TIPProjects-U\U4007b\Structures\FinalPlans\Str. #3\u-4007b_sd_SS_03.dgn
taverette

STR. #3

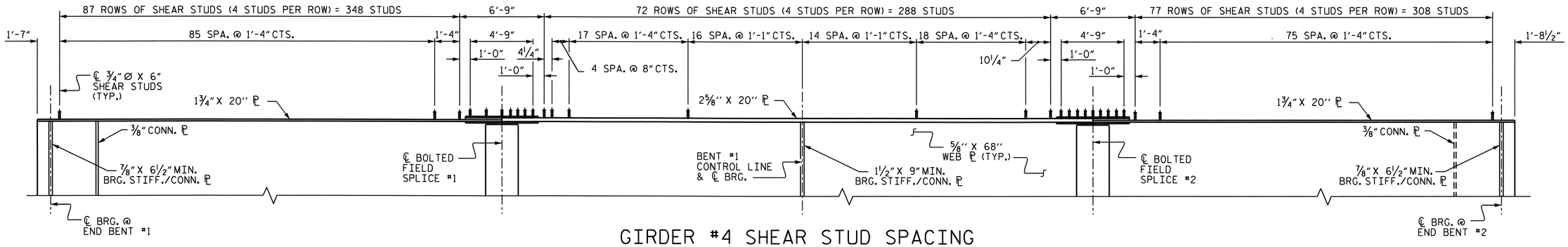

GIRDER #4 SHEAR STUD SPACING

FOR STUDS IN BOLTED FIELD SPLICE AREA, SEE "BOLTED FIELD SPLICE DETAILS" SHEET 4 OF 6.

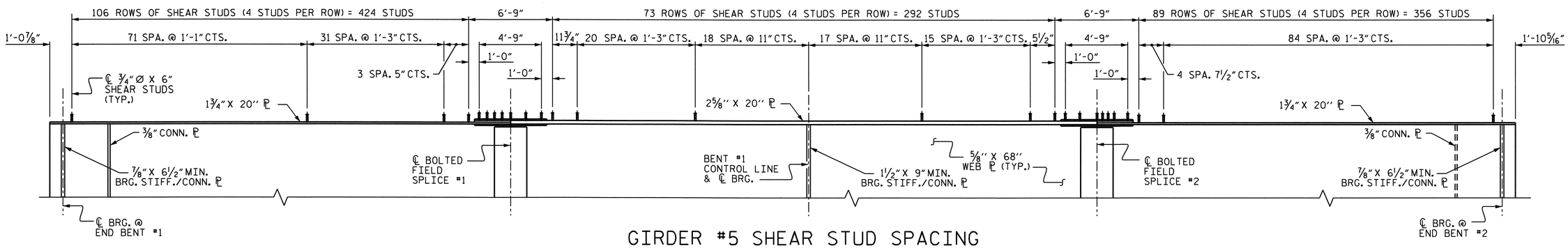

GIRDER #5 SHEAR STUD SPACING

FOR STUDS IN BOLTED FIELD SPLICE AREA, SEE "BOLTED FIELD SPLICE DETAILS" SHEET 4 OF 6.

PROJECT NO. U-4007B

ONSLOW COUNTY

STATION: 36+17.74 -NBL RAMP-

SHEET 6 OF 6

STATE OF NORTH CAROLINA
DEPARTMENT OF TRANSPORTATION
RALEIGH

SUPERSTRUCTURE

STRUCTURE STEEL DETAILS

NORTH CAROLINA PROFESSIONAL SEAL 025516 ENGINEER EMILY E. MURRAY
8/24/10

REVISIONS						SHEET NO.
NO.	BY:	DATE:	NO.	BY:	DATE:	S-65
1			3			TOTAL SHEETS
2			4			142

DRAWN BY : PEGGY PARISI DATE : 5-18-10
CHECKED BY : T.L. AVERETTE DATE : 6-9-10

23-AUG-2010 14:44
G:\TIPProjects-U\U4007b\Structures\FinalPlans\Str. #3\u-4007b_sd_SS_03.dgn
taverette

STR. #3

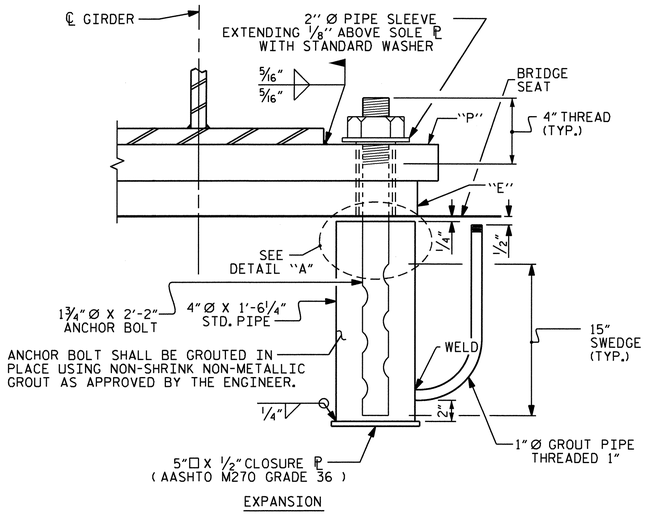

END VIEW

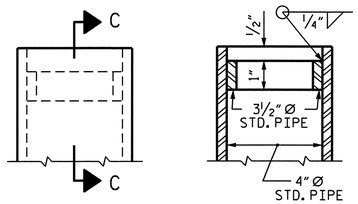

SECTION C-C

DETAIL "A"

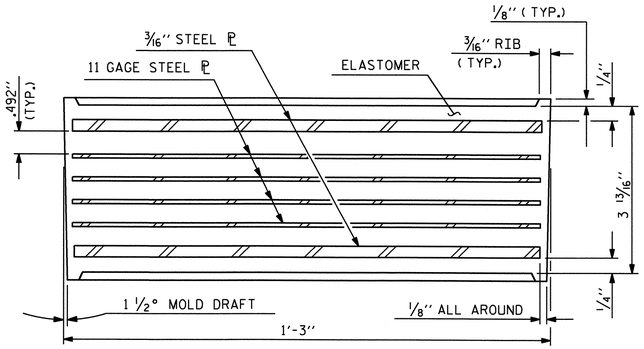

TYPICAL SECTION OF ELASTOMERIC BEARING

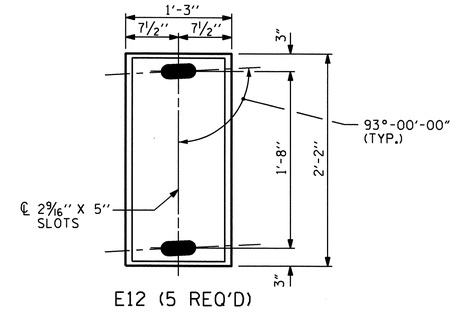

E12 (5 REQ'D)

PLAN VIEW OF ELASTOMERIC BEARING

TYPE VI

@ END BENT #1

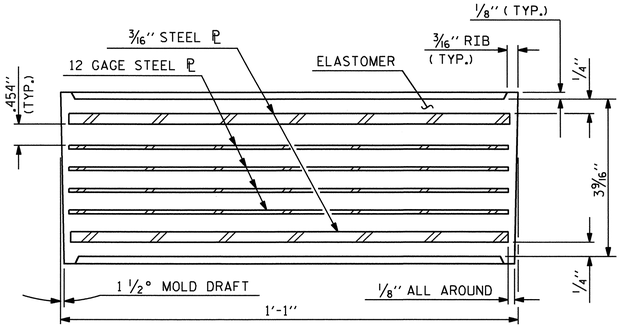

TYPICAL SECTION OF ELASTOMERIC BEARING

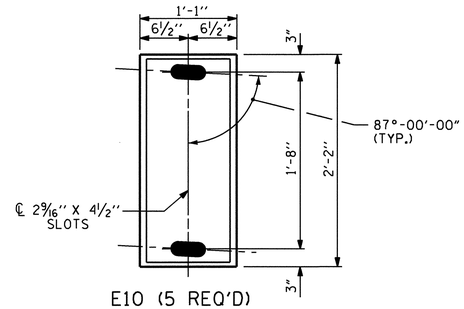

E10 (5 REQ'D)

PLAN VIEW OF ELASTOMERIC BEARING

TYPE V

@ END BENT #2

NOTES

THE 2" Ø PIPE SLEEVE SHALL BE CUT FROM SCHEDULE 40 PVC PLASTIC PIPE. THE PVC PLASTIC PIPE SHALL MEET THE REQUIREMENTS OF ASTM D1785.

THE PAYMENT FOR THE PIPE SLEEVES SHALL BE INCLUDED IN THE SEVERAL PAY ITEMS.

FOR PAINTED STRUCTURAL STEEL (EXCLUDING AASHTO M270 GRADE 50W), SOLE PLATES, ANCHOR BOLTS, NUTS AND WASHERS SHALL BE GALVANIZED IN ACCORDANCE WITH THE STANDARD SPECIFICATIONS.

FOR AASHTO M270 GRADE 50W STRUCTURAL STEEL, SOLE PLATE SHALL BE AASHTO M270 GRADE 50W AND SHALL NOT BE GALVANIZED. ANCHOR BOLTS, NUTS AND WASHERS SHALL BE GALVANIZED IN ACCORDANCE WITH THE STANDARD SPECIFICATIONS.

ANCHOR BOLTS SHALL MEET THE REQUIREMENTS OF ASTM A449. NUTS SHALL MEET THE REQUIREMENTS OF AASHTO M291-DH OR AASHTO M292-2H. WASHERS SHALL MEET THE REQUIREMENTS OF AASHTO M293. SHOP DRAWINGS ARE NOT REQUIRED FOR ANCHOR BOLTS, NUTS AND WASHERS. SHOP INSPECTION IS REQUIRED.

WHEN FIELD WELDING THE SOLE PLATE TO THE GIRDER FLANGE, USE TEMPERATURE INDICATING WAX PENS, OR OTHER SUITABLE MEANS, TO ENSURE THAT THE TEMPERATURE OF THE SOLE PLATE DOES NOT EXCEED 300°F. TEMPERATURES ABOVE THIS MAY DAMAGE THE ELASTOMER.

ALL SURFACES OF BEARING PLATES SHALL BE SMOOTH AND STRAIGHT.

THE CLOSURE PLATE, GROUT PIPE AND STANDARD PIPE FOR THE EXPANSION ASSEMBLY NEED NOT BE GALVANIZED.

THE CONTRACTOR'S ATTENTION IS CALLED TO THE FOLLOWING PROCEDURES TO ACCOMODATE GIRDER TRANSLATION AND END ROTATION:

1. ONCE THE DECK HAS CURED, THE GIRDERS SHALL BE JACKED AND THE ANCHOR BOLTS, SOLE PLATE, AND ELASTOMERIC BEARING SLOTS SHALL BE CENTERED AS NEARLY AS PRACTICAL ABOUT THE BEARING STIFFENER. THIS OPERATION SHALL BE PERFORMED AT APPROXIMATELY 60° F.
2. AFTER CENTERING THE SLOTS AND ANCHOR BOLTS, THE SOLE PLATES SHALL BE FIELD WELDED TO THE GIRDER FLANGES AND ANCHOR BOLTS GROUTED.

   THE CONTRACTOR MAY PROPOSE ALTERNATE METHODS, PROVIDED DETAILS ARE SUBMITTED TO THE ENGINEER FOR REVIEW AND APPROVAL.

ELASTOMER IN ALL BEARINGS SHALL BE 60 DUROMETER HARDNESS.

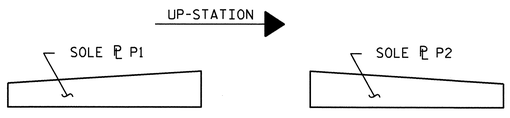

SOLE ℙ PLACEMENT DETAIL

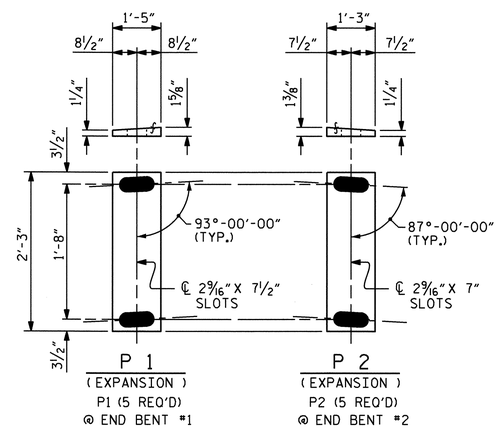

SOLE PLATE DETAILS ("P")

—LOAD RATINGS—	
	MAX.D.L.+ L.L.
TYPE V	318 K
TYPE VI	367 K

PROJECT NO. U-4007B

ONSLOW COUNTY

STATION: 36+17.74 -NBL

RAMP-

STATE OF NORTH CAROLINA
DEPARTMENT OF TRANSPORTATION
RALEIGH

STANDARD

ELASTOMERIC BEARING DETAILS

(STEEL SUPERSTRUCTURE)

NORTH CAROLINA PROFESSIONAL SEAL 025516 ENGINEER EMILY E. MARRIN
8/24/10

REVISIONS						SHEET NO.
NO.	BY:	DATE:	NO.	BY:	DATE:	S-66
1			3			TOTAL SHEETS
2			4			142

ASSEMBLED BY : PEGGY PARISI	DATE : 5-18-10	
CHECKED BY : T.L. AVERETTE	DATE : 6-9-10	
DRAWN BY : EEM 10/95	REV. 10/17/00	RWW/LES
CHECKED BY : PEK 10/95	REV. 7/10/01	LES/RDR
	REV. 5/1/06	TLA/GM

23-AUG-2010 14:41
G:\TIPProjects-U\U4007b\Structures\Final Plans\Str. #3\u-4007b_sd_BG_03.dgn
taverette

STR. #3

STD. NO. EB2 (SHT 2b)

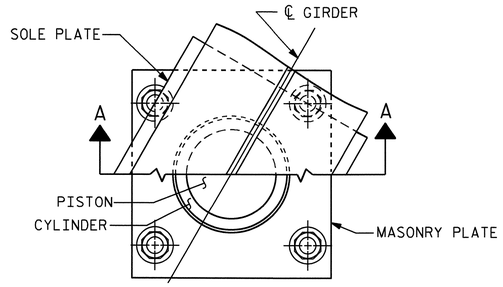

CUT-AWAY PLAN

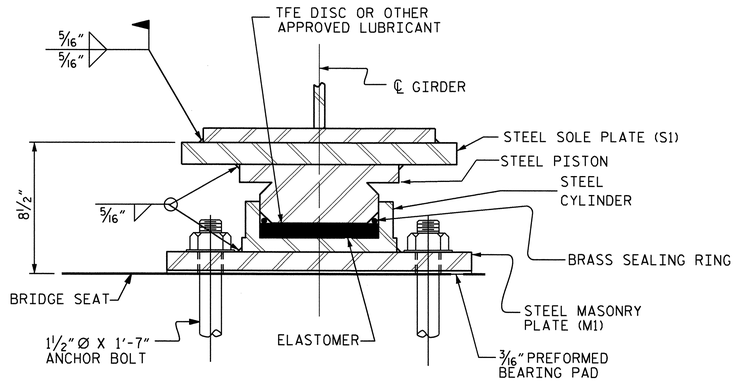

SECTION A-A

PB1, FIXED
(5 REQ'D. @ BENT #1)

POT BEARING DETAILS

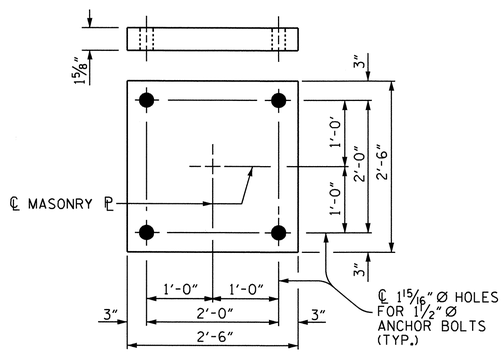

PLAN
M1 (5 REQ'D.)

MASONRY PLATE DETAILS

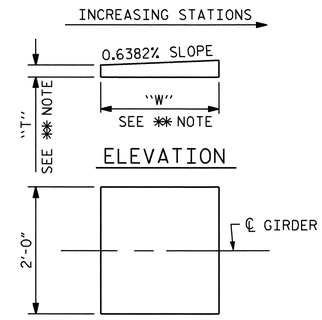

PLAN

✱✱ NOTE:
DIMENSIONS "W" AND "T" ARE TO BE DETERMINED BY THE MANUFACTURER.

S1 SOLE PLATE DETAILS

NOTES

FOR POT BEARINGS, SEE SPECIAL PROVISIONS.

AT ALL POINTS OF SUPPORT AT BENT #1, NUTS FOR ANCHOR BOLTS SHALL BE TIGHTENED FINGER TIGHT AND GIVEN AN ADDITIONAL 1/4 TURN. THE THREAD OF THE NUT AND BOLT SHALL THEN BE BURRED WITH A SHARP POINTED TOOL.

WHEN WELDING THE SOLE PLATE TO THE GIRDER, USE TEMPERATURE INDICATING WAX PENS, OR OTHER SUITABLE MEANS, TO ENSURE THAT THE TEMPERATURE OF THE BEARING DOES NOT EXCEED 250°F TEMPERATURES ABOVE THIS MAY DAMAGE THE TFE OR ELASTOMER.

SOLE PLATES SHOULD BE WELDED TO BEAM FLANGES BEFORE FALSEWORK IS PLACED.

ALL SURFACES OF BEARING PLATES SHALL BE SMOOTH AND STRAIGHT.

FOR THERMAL SPRAYED COATINGS (METALLIZATION), SEE SPECIAL PROVISIONS.

THE CONTRACTOR MAY SUBSTITUTE DISC BEARINGS FOR THE POT BEARINGS SHOWN. FOR OPTIONAL DISC BEARINGS, SEE SPECIAL PROVISIONS.

THE CONTRACTOR SHALL ADJUST THE GIRDER BUILDUPS AS NECESSARY TO INCORPORATE A MAXIMUM PERMISSIBLE VARIATION IN POT BEARING DEPTH OF 1/2", SEE SPECIAL PROVISION FOR POT BEARINGS.

TABLE FOR UNFACTORED LOADS AND MOVEMENT

BEARING	LOCATION	VERTICAL LOAD (KIPS)				LATERAL LOAD (KIPS)	TOTAL MOVEMENT (INCHES)
		DEAD		LIVE	TOTAL		
		DC	DW				
PB1 (FIXED)	BENT #1	465	58	305	828	124.2	0

PROJECT NO. U-4007B
ONSLOW COUNTY
STATION: 36+17.74 -NBL
RAMP-

STATE OF NORTH CAROLINA
DEPARTMENT OF TRANSPORTATION
RALEIGH

SUPERSTRUCTURE
POT BEARING DETAILS

NORTH CAROLINA PROFESSIONAL SEAL 025516 ENGINEER EMILY E. MURRAY
8/29/10

REVISIONS						SHEET NO.
NO.	BY:	DATE:	NO.	BY:	DATE:	S-67
1			3			TOTAL SHEETS
2			4			142

ASSEMBLED BY : PEGGY PARISI	DATE : 5-18-10
CHECKED BY : T.L. AVERETTE	DATE : 6-9-10
DRAWN BY : RWW 8/99	REV. 7/10/01 LES/RDR
CHECKED BY : LES 8/99	REV. 5/7/03 RWW/LTE
	REV. 5/1/06 TLA/GM

23-AUG-2010 14:41
G:\TIPProjects-U\U4007b\Structures\FinalPlans\Str. #3\u-4007b_sd_BG_03.dgn
taverette

STR. #3

DEAD LOAD DEFLECTION TABLE FOR GIRDER - SPAN "A"

	GIRDER 1																				
@ TWENTIETH POINTS BETWEEN ℄ BEARINGS	0	.05	.10	.15	.20	.25	.30	.35	.40	.45	.50	.55	.60	.65	.70	.75	.80	.85	.90	.95	0
DEFLECTION DUE TO WEIGHT OF GIRDER	0.000	0.014	0.028	0.041	0.052	0.062	0.070	0.075	0.078	0.078	0.077	0.072	0.067	0.059	0.050	0.040	0.030	0.021	0.012	0.005	0.000
DEFLECTION DUE TO WEIGHT OF SLAB *	0.000	0.044	0.086	0.126	0.161	0.190	0.213	0.229	0.238	0.240	0.234	0.222	0.204	0.180	0.153	0.123	0.092	0.063	0.037	0.015	0.000
DEFLECTION DUE TO WEIGHT OF BARRIER RAIL	0.000	0.004	0.007	0.010	0.013	0.015	0.017	0.019	0.019	0.020	0.019	0.019	0.017	0.015	0.013	0.011	0.008	0.006	0.003	0.001	0.000
TOTAL DEAD LOAD DEFLECTION	0.000	0.062	0.121	0.177	0.226	0.267	0.300	0.323	0.335	0.338	0.330	0.313	0.288	0.254	0.216	0.174	0.130	0.090	0.052	0.021	0.000
VERTICAL CURVE ORDINATE	0.000	0.074	0.141	0.199	0.250	0.293	0.329	0.356	0.375	0.387	0.391	0.387	0.375	0.356	0.329	0.293	0.250	0.199	0.141	0.074	0.000
ORDINATE DUE TO SUPERELEVATION	0.000	0.000	0.000	0.000	0.000	0.000	0.000	0.000	0.000	0.000	0.000	0.000	0.000	0.000	0.000	0.000	0.000	0.000	0.000	0.000	0.000
REQUIRED CAMBER	0	1 5/8"	3 1/8"	4 1/2"	5 11/16"	6 3/4"	7 9/16"	8 1/8"	8 1/2"	8 11/16"	8 5/8"	8 3/8"	7 15/16"	7 5/16"	6 9/16"	5 5/8"	4 9/16"	3 7/16"	2 5/16"	1 1/8"	0

* INCLUDES SLAB, BUILDUPS & STAY-IN-PLACE FORMS.
ALL VALUES ARE SHOWN IN FEET EXCEPT " REQUIRED CAMBER ", WHICH IS GIVEN IN INCHES (FRACTION FORM).

DEAD LOAD DEFLECTION TABLE FOR GIRDER - SPAN "A"

	GIRDER 2																				
@ TWENTIETH POINTS BETWEEN ℄ BEARINGS	0	.05	.10	.15	.20	.25	.30	.35	.40	.45	.50	.55	.60	.65	.70	.75	.80	.85	.90	.95	0
DEFLECTION DUE TO WEIGHT OF GIRDER	0.000	0.014	0.027	0.040	0.050	0.060	0.067	0.072	0.075	0.075	0.073	0.069	0.063	0.056	0.047	0.038	0.028	0.019	0.011	0.004	0.000
DEFLECTION DUE TO WEIGHT OF SLAB *	0.000	0.043	0.084	0.122	0.156	0.184	0.206	0.221	0.229	0.230	0.224	0.212	0.194	0.171	0.144	0.115	0.086	0.059	0.034	0.013	0.000
DEFLECTION DUE TO WEIGHT OF BARRIER RAIL	0.000	0.003	0.007	0.010	0.013	0.015	0.017	0.018	0.019	0.019	0.019	0.018	0.016	0.015	0.013	0.010	0.008	0.005	0.003	0.001	0.000
TOTAL DEAD LOAD DEFLECTION	0.000	0.060	0.118	0.172	0.219	0.259	0.290	0.311	0.323	0.324	0.316	0.299	0.273	0.242	0.204	0.163	0.122	0.083	0.048	0.018	0.000
VERTICAL CURVE ORDINATE	0.000	0.074	0.141	0.200	0.250	0.293	0.329	0.356	0.376	0.387	0.391	0.387	0.376	0.356	0.329	0.293	0.250	0.200	0.141	0.074	0.000
ORDINATE DUE TO SUPERELEVATION	0.000	0.000	0.000	0.000	0.000	0.000	0.000	0.000	0.000	0.000	0.000	0.000	0.000	0.000	0.000	0.000	0.000	0.000	0.000	0.000	0.000
REQUIRED CAMBER	0	1 5/8"	3 1/8"	4 7/16"	5 5/8"	6 5/16"	7 7/16"	8"	8 3/8"	8 9/16"	8 1/2"	8 1/4"	7 13/16"	7 3/16"	6 3/8"	5 1/2"	4 1/2"	3 3/8"	2 1/4"	1 1/8"	0

* INCLUDES SLAB, BUILDUPS & STAY-IN-PLACE FORMS.
ALL VALUES ARE SHOWN IN FEET EXCEPT " REQUIRED CAMBER ", WHICH IS GIVEN IN INCHES (FRACTION FORM).

DEAD LOAD DEFLECTION TABLE FOR GIRDER - SPAN "A"

	GIRDER 3																				
@ TWENTIETH POINTS BETWEEN ℄ BEARINGS	0	.05	.10	.15	.20	.25	.30	.35	.40	.45	.50	.55	.60	.65	.70	.75	.80	.85	.90	.95	0
DEFLECTION DUE TO WEIGHT OF GIRDER	0.000	0.014	0.027	0.040	0.051	0.060	0.067	0.072	0.074	0.075	0.073	0.068	0.063	0.055	0.046	0.037	0.027	0.018	0.010	0.004	0.000
DEFLECTION DUE TO WEIGHT OF SLAB *	0.000	0.043	0.084	0.122	0.156	0.183	0.205	0.220	0.228	0.228	0.222	0.209	0.191	0.167	0.141	0.111	0.082	0.055	0.031	0.012	0.000
DEFLECTION DUE TO WEIGHT OF BARRIER RAIL	0.000	0.003	0.007	0.010	0.013	0.015	0.017	0.018	0.019	0.019	0.019	0.018	0.016	0.015	0.012	0.010	0.007	0.005	0.003	0.001	0.000
TOTAL DEAD LOAD DEFLECTION	0.000	0.060	0.118	0.172	0.220	0.258	0.289	0.310	0.321	0.322	0.314	0.295	0.270	0.237	0.199	0.158	0.116	0.078	0.044	0.017	0.000
VERTICAL CURVE ORDINATE	0.000	0.074	0.141	0.200	0.251	0.294	0.329	0.356	0.376	0.388	0.392	0.388	0.376	0.356	0.329	0.294	0.251	0.200	0.141	0.074	0.000
ORDINATE DUE TO SUPERELEVATION	0.000	0.000	0.000	0.000	0.000	0.000	0.000	0.000	0.000	0.000	0.000	0.000	0.000	0.000	0.000	0.000	0.000	0.000	0.000	0.000	0.000
REQUIRED CAMBER	0	1 5/8"	3 1/8"	4 7/16"	5 5/8"	6 5/8"	7 7/16"	8"	8 3/8"	8 1/2"	8 7/16"	8 3/8"	7 3/4"	7 1/8"	6 5/16"	5 7/16"	4 7/16"	3 5/16"	2 3/16"	1 1/16"	0

* INCLUDES SLAB, BUILDUPS & STAY-IN-PLACE FORMS.
ALL VALUES ARE SHOWN IN FEET EXCEPT " REQUIRED CAMBER ", WHICH IS GIVEN IN INCHES (FRACTION FORM).

PROJECT NO. U-4007B
ONSLOW COUNTY
STATION: 36+17.74 -NBL RAMP-
SHEET 1 OF 4

NORTH CAROLINA PROFESSIONAL SEAL 025516 ENGINEER EMILY E. MURRAY
8/24/10

STATE OF NORTH CAROLINA
DEPARTMENT OF TRANSPORTATION
RALEIGH

SUPERSTRUCTURE

DEAD LOAD DEFLECTIONS

REVISIONS						SHEET NO.
NO.	BY:	DATE:	NO.	BY:	DATE:	S-68
1			3			TOTAL SHEETS
2			4			142

DRAWN BY : PEGGY PARISI DATE : 5-18-10
CHECKED BY : T.L. AVERETTE DATE : 6-9-10

23-AUG-2010 14:40
G:\TIPProjects-U\U4007b\Structures\FinalPlans\Str. *3\u-4007b_sd_DL_03.dgn
taverette

STR. #3

DEAD LOAD DEFLECTION TABLE FOR GIRDER - SPAN "A"

	GIRDER 4																				
@ TWENTIETH POINTS BETWEEN ℄ BEARINGS	0	.05	.10	.15	.20	.25	.30	.35	.40	.45	.50	.55	.60	.65	.70	.75	.80	.85	.90	.95	0
DEFLECTION DUE TO WEIGHT OF GIRDER	0.000	0.014	0.028	0.041	0.053	0.062	0.069	0.074	0.077	0.077	0.074	0.070	0.063	0.055	0.046	0.036	0.026	0.017	0.009	0.003	0.000
DEFLECTION DUE TO WEIGHT OF SLAB *	0.000	0.044	0.087	0.126	0.161	0.190	0.212	0.227	0.234	0.234	0.226	0.212	0.192	0.167	0.138	0.108	0.079	0.051	0.028	0.010	0.000
DEFLECTION DUE TO WEIGHT OF BARRIER RAIL	0.000	0.004	0.007	0.010	0.013	0.016	0.018	0.019	0.020	0.020	0.019	0.018	0.017	0.015	0.012	0.010	0.007	0.005	0.003	0.001	0.000
TOTAL DEAD LOAD DEFLECTION	0.000	0.062	0.122	0.177	0.227	0.268	0.299	0.320	0.331	0.331	0.320	0.300	0.272	0.237	0.196	0.154	0.112	0.073	0.040	0.014	0.000
VERTICAL CURVE ORDINATE	0.000	0.074	0.141	0.200	0.251	0.294	0.329	0.357	0.376	0.388	0.392	0.388	0.376	0.357	0.329	0.294	0.251	0.200	0.141	0.074	0.000
ORDINATE DUE TO SUPERELEVATION	0.000	0.000	0.000	0.000	0.000	0.000	0.000	0.000	0.000	0.000	0.000	0.000	0.000	0.000	0.000	0.000	0.000	0.000	0.000	0.000	0.000
REQUIRED CAMBER	0	1 5/8"	3 3/16"	4 1/2"	5 3/4"	6 3/4"	7 9/16"	8 1/8"	8 1/2"	8 5/8"	8 9/16"	8 1/4"	7 3/4"	7 1/8"	6 5/16"	5 3/8"	4 3/8"	3 1/4"	2 3/16"	1 1/16"	0

* INCLUDES SLAB, BUILDUPS & STAY-IN-PLACE FORMS.
ALL VALUES ARE SHOWN IN FEET EXCEPT "REQUIRED CAMBER", WHICH IS GIVEN IN INCHES (FRACTION FORM).

DEAD LOAD DEFLECTION TABLE FOR GIRDER - SPAN "A"

	GIRDER 5																				
@ TWENTIETH POINTS BETWEEN ℄ BEARINGS	0	.05	.10	.15	.20	.25	.30	.35	.40	.45	.50	.55	.60	.65	.70	.75	.80	.85	.90	.95	0
DEFLECTION DUE TO WEIGHT OF GIRDER	0.000	0.016	0.031	0.045	0.058	0.068	0.075	0.080	0.082	0.081	0.078	0.072	0.064	0.055	0.045	0.034	0.024	0.015	0.008	0.002	0.000
DEFLECTION DUE TO WEIGHT OF SLAB *	0.000	0.049	0.096	0.139	0.176	0.206	0.229	0.243	0.248	0.246	0.235	0.218	0.193	0.166	0.134	0.102	0.072	0.045	0.022	0.007	0.000
DEFLECTION DUE TO WEIGHT OF BARRIER RAIL	0.000	0.004	0.008	0.011	0.015	0.017	0.019	0.020	0.021	0.021	0.020	0.019	0.017	0.015	0.012	0.010	0.007	0.004	0.002	0.001	0.000
TOTAL DEAD LOAD DEFLECTION	0.000	0.069	0.135	0.195	0.249	0.291	0.323	0.343	0.351	0.348	0.333	0.309	0.274	0.236	0.191	0.146	0.103	0.064	0.032	0.010	0.000
VERTICAL CURVE ORDINATE	0.000	0.075	0.141	0.200	0.251	0.294	0.329	0.357	0.376	0.388	0.392	0.388	0.376	0.357	0.329	0.294	0.251	0.200	0.141	0.075	0.000
ORDINATE DUE TO SUPERELEVATION	0.000	0.000	0.000	0.000	0.000	0.000	0.000	0.000	0.000	0.000	0.000	0.000	0.000	0.000	0.000	0.000	0.000	0.000	0.000	0.000	0.000
REQUIRED CAMBER	0	1 3/4"	3 5/16"	4 3/4"	6"	7"	7 13/16"	8 3/8"	8 3/4"	8 13/16"	8 11/16"	8 3/8"	7 13/16"	7 1/8"	6 1/4"	5 5/16"	4 1/4"	3 3/16"	2 1/16"	1"	0

* INCLUDES SLAB, BUILDUPS & STAY-IN-PLACE FORMS.
ALL VALUES ARE SHOWN IN FEET EXCEPT "REQUIRED CAMBER", WHICH IS GIVEN IN INCHES (FRACTION FORM).

DEAD LOAD DEFLECTION TABLE FOR GIRDER - SPAN "B"

	GIRDER 1																				
@ TWENTIETH POINTS BETWEEN ℄ BEARINGS	0	.05	.10	.15	.20	.25	.30	.35	.40	.45	.50	.55	.60	.65	.70	.75	.80	.85	.90	.95	0
DEFLECTION DUE TO WEIGHT OF GIRDER	0.000	-0.002	-0.002	0.000	0.003	0.007	0.012	0.017	0.021	0.025	0.028	0.031	0.032	0.032	0.031	0.028	0.024	0.019	0.013	0.007	0.000
DEFLECTION DUE TO WEIGHT OF SLAB *	0.000	-0.006	-0.006	-0.001	0.008	0.020	0.033	0.047	0.061	0.073	0.083	0.091	0.095	0.095	0.091	0.083	0.072	0.058	0.041	0.021	0.000
DEFLECTION DUE TO WEIGHT OF BARRIER RAIL	0.000	0.000	0.000	0.000	0.001	0.002	0.004	0.005	0.006	0.007	0.008	0.008	0.008	0.008	0.008	0.007	0.006	0.005	0.003	0.002	0.000
TOTAL DEAD LOAD DEFLECTION	0.000	-0.008	-0.008	-0.001	0.012	0.029	0.049	0.069	0.088	0.105	0.119	0.130	0.135	0.135	0.130	0.118	0.102	0.082	0.057	0.030	0.000
VERTICAL CURVE ORDINATE	0.000	0.061	0.115	0.162	0.204	0.239	0.267	0.290	0.306	0.315	0.318	0.315	0.306	0.290	0.267	0.239	0.204	0.162	0.115	0.061	0.000
ORDINATE DUE TO SUPERELEVATION	0.000	0.000	0.000	0.000	0.000	0.000	0.000	0.000	0.000	0.000	0.000	0.000	0.000	0.000	0.000	0.000	0.000	0.000	0.000	0.000	0.000
REQUIRED CAMBER	0	5/8"	1 5/16"	1 15/16"	2 9/16"	3 3/16"	3 13/16"	4 5/16"	4 3/4"	5 1/16"	5 1/4"	5 5/16"	5 5/16"	5 1/8"	4 3/4"	4 5/16"	3 11/16"	2 15/16"	2 1/16"	1 1/16"	0

* INCLUDES SLAB, BUILDUPS & STAY-IN-PLACE FORMS.
ALL VALUES ARE SHOWN IN FEET EXCEPT "REQUIRED CAMBER", WHICH IS GIVEN IN INCHES (FRACTION FORM).

PROJECT NO. U-4007B
ONSLOW COUNTY
STATION: 36+17.74 -NBL RAMP-
SHEET 2 OF 4

NORTH CAROLINA PROFESSIONAL SEAL 025516 ENGINEER EMILY E. MURRAY
8/24/10

STATE OF NORTH CAROLINA
DEPARTMENT OF TRANSPORTATION
RALEIGH

SUPERSTRUCTURE

DEAD LOAD DEFLECTIONS

REVISIONS						SHEET NO.
NO.	BY:	DATE:	NO.	BY:	DATE:	S-69
1			3			TOTAL SHEETS
2			4			142

DRAWN BY : PEGGY PARISI DATE : 5-18-10
CHECKED BY : T.L. AVERETTE DATE : 6-9-10

23-AUG-2010 14:40
G:\TIPProjects-U\U4007b\Structures\FinalPlans\Str. #3\u-4007b_sd_DL_03.dgn
taverette

STR. #3

DEAD LOAD DEFLECTION TABLE FOR GIRDER - SPAN "B"

	GIRDER 2																				
@ TWENTIETH POINTS BETWEEN ℄ BEARINGS	0	.05	.10	.15	.20	.25	.30	.35	.40	.45	.50	.55	.60	.65	.70	.75	.80	.85	.90	.95	0
DEFLECTION DUE TO WEIGHT OF GIRDER	0.000	-0.001	0.000	0.002	0.006	0.010	0.015	0.020	0.024	0.028	0.031	0.034	0.035	0.034	0.032	0.030	0.025	0.021	0.014	0.007	0.000
DEFLECTION DUE TO WEIGHT OF SLAB *	0.000	-0.004	-0.002	0.005	0.016	0.029	0.043	0.058	0.072	0.084	0.094	0.101	0.104	0.104	0.100	0.091	0.079	0.063	0.044	0.023	0.000
DEFLECTION DUE TO WEIGHT OF BARRIER RAIL	0.000	0.000	0.000	0.001	0.002	0.003	0.004	0.005	0.007	0.008	0.009	0.009	0.009	0.009	0.009	0.008	0.007	0.005	0.004	0.002	0.000
TOTAL DEAD LOAD DEFLECTION	0.000	-0.005	-0.002	0.008	0.023	0.042	0.062	0.083	0.103	0.120	0.134	0.144	0.148	0.147	0.141	0.129	0.111	0.089	0.062	0.032	0.000
VERTICAL CURVE ORDINATE	0.000	0.061	0.115	0.163	0.204	0.239	0.268	0.290	0.306	0.315	0.319	0.315	0.306	0.290	0.268	0.239	0.204	0.163	0.115	0.061	0.000
ORDINATE DUE TO SUPERELEVATION	0.000	0.000	0.000	0.000	0.000	0.000	0.000	0.000	0.000	0.000	0.000	0.000	0.000	0.000	0.000	0.000	0.000	0.000	0.000	0.000	0.000
REQUIRED CAMBER	0	11/16"	1 3/8"	2 1/16"	2 3/4"	3 3/8"	3 15/16"	4 1/2"	4 15/16"	5 1/4"	5 7/16"	5 1/2"	5 7/16"	5 1/4"	4 7/8"	4 7/16"	3 3/4"	3"	2 1/8"	1 1/8"	0

* INCLUDES SLAB, BUILDUPS & STAY-IN-PLACE FORMS.
ALL VALUES ARE SHOWN IN FEET EXCEPT " REQUIRED CAMBER ", WHICH IS GIVEN IN INCHES (FRACTION FORM).

DEAD LOAD DEFLECTION TABLE FOR GIRDER - SPAN "B"

	GIRDER 3																				
@ TWENTIETH POINTS BETWEEN ℄ BEARINGS	0	.05	.10	.15	.20	.25	.30	.35	.40	.45	.50	.55	.60	.65	.70	.75	.80	.85	.90	.95	0
DEFLECTION DUE TO WEIGHT OF GIRDER	0.000	-0.001	0.001	0.004	0.008	0.013	0.018	0.024	0.028	0.033	0.036	0.038	0.039	0.039	0.037	0.033	0.029	0.023	0.016	0.008	0.000
DEFLECTION DUE TO WEIGHT OF SLAB *	0.000	-0.002	0.002	0.011	0.023	0.038	0.054	0.070	0.085	0.098	0.108	0.115	0.118	0.117	0.112	0.102	0.088	0.070	0.049	0.025	0.000
DEFLECTION DUE TO WEIGHT OF BARRIER RAIL	0.000	0.000	0.000	0.001	0.003	0.004	0.005	0.007	0.008	0.009	0.010	0.010	0.010	0.010	0.010	0.009	0.007	0.006	0.004	0.002	0.000
TOTAL DEAD LOAD DEFLECTION	0.000	-0.003	0.003	0.016	0.034	0.055	0.077	0.101	0.121	0.140	0.154	0.163	0.167	0.166	0.159	0.144	0.124	0.099	0.069	0.035	0.000
VERTICAL CURVE ORDINATE	0.000	0.061	0.115	0.163	0.204	0.239	0.268	0.290	0.306	0.316	0.319	0.316	0.306	0.290	0.268	0.239	0.204	0.163	0.115	0.061	0.000
ORDINATE DUE TO SUPERELEVATION	0.000	0.000	0.000	0.000	0.000	0.000	0.000	0.000	0.000	0.000	0.000	0.000	0.000	0.000	0.000	0.000	0.000	0.000	0.000	0.000	0.000
REQUIRED CAMBER	0	11/16"	1 7/16"	2 1/8"	2 7/8"	3 1/2"	4 1/8"	4 11/16"	5 1/8"	5 7/16"	5 11/16"	5 3/4"	5 11/16"	5 1/2"	5 1/8"	4 5/8"	3 15/16"	3 1/8"	2 3/16"	1 1/8"	0

* INCLUDES SLAB, BUILDUPS & STAY-IN-PLACE FORMS.
ALL VALUES ARE SHOWN IN FEET EXCEPT " REQUIRED CAMBER ", WHICH IS GIVEN IN INCHES (FRACTION FORM).

DEAD LOAD DEFLECTION TABLE FOR GIRDER - SPAN "B"

	GIRDER 4																				
@ TWENTIETH POINTS BETWEEN ℄ BEARINGS	0	.05	.10	.15	.20	.25	.30	.35	.40	.45	.50	.55	.60	.65	.70	.75	.80	.85	.90	.95	0
DEFLECTION DUE TO WEIGHT OF GIRDER	0.000	0.000	0.002	0.006	0.011	0.017	0.023	0.028	0.034	0.038	0.042	0.044	0.045	0.044	0.042	0.038	0.033	0.026	0.018	0.009	0.000
DEFLECTION DUE TO WEIGHT OF SLAB *	0.000	0.000	0.007	0.018	0.033	0.050	0.068	0.086	0.102	0.116	0.127	0.134	0.136	0.134	0.127	0.115	0.099	0.079	0.055	0.028	0.000
DEFLECTION DUE TO WEIGHT OF BARRIER RAIL	0.000	0.000	0.001	0.002	0.003	0.005	0.007	0.008	0.009	0.010	0.011	0.012	0.012	0.012	0.011	0.010	0.008	0.007	0.005	0.002	0.000
TOTAL DEAD LOAD DEFLECTION	0.000	0.000	0.010	0.026	0.047	0.072	0.098	0.122	0.146	0.164	0.180	0.190	0.193	0.190	0.180	0.163	0.140	0.112	0.078	0.039	0.000
VERTICAL CURVE ORDINATE	0.000	0.061	0.115	0.163	0.204	0.239	0.268	0.290	0.306	0.316	0.319	0.316	0.306	0.290	0.268	0.239	0.204	0.163	0.115	0.061	0.000
ORDINATE DUE TO SUPERELEVATION	0.000	0.000	0.000	0.000	0.000	0.000	0.000	0.000	0.000	0.000	0.000	0.000	0.000	0.000	0.000	0.000	0.000	0.000	0.000	0.000	0.000
REQUIRED CAMBER	0	3/4"	1 1/2"	2 1/4"	3"	3 3/4"	4 3/8"	4 15/16"	5 7/16"	5 3/4"	6"	6 1/16"	6"	5 3/4"	5 3/8"	4 13/16"	4 1/8"	3 5/16"	2 5/16"	1 3/16"	0

* INCLUDES SLAB, BUILDUPS & STAY-IN-PLACE FORMS.
ALL VALUES ARE SHOWN IN FEET EXCEPT " REQUIRED CAMBER ", WHICH IS GIVEN IN INCHES (FRACTION FORM).

PROJECT NO. U-4007B
ONSLOW COUNTY
STATION: 36+17.74 -NBL RAMP-
SHEET 3 OF 4

STATE OF NORTH CAROLINA
DEPARTMENT OF TRANSPORTATION
RALEIGH

SUPERSTRUCTURE

DEAD LOAD DEFLECTIONS

NORTH CAROLINA PROFESSIONAL SEAL 025516 ENGINEER EMILY E. MURRAY
8/24/10

REVISIONS						SHEET NO.
NO.	BY:	DATE:	NO.	BY:	DATE:	S-70
1			3			TOTAL SHEETS
2			4			142

DRAWN BY : PEGGY PARISI DATE : 5-18-10
CHECKED BY : T.L. AVERETTE DATE : 6-9-10

23-AUG-2010 14:40
G:\TIPProjects-U\U4007b\Structures\FinalPlans\Str. #3\u-4007b_sd_DL_03.dgn
taverette

STR. #3

DEAD LOAD DEFLECTION TABLE FOR GIRDER - SPAN "B"

	GIRDER 5																				
@ TWENTIETH POINTS BETWEEN ℄ BEARINGS	0	.05	.10	.15	.20	.25	.30	.35	.40	.45	.50	.55	.60	.65	.70	.75	.80	.85	.90	.95	0
DEFLECTION DUE TO WEIGHT OF GIRDER	0.000	0.001	0.004	0.009	0.015	0.022	0.029	0.036	0.042	0.047	0.050	0.052	0.053	0.051	0.048	0.043	0.037	0.029	0.020	0.010	0.000
DEFLECTION DUE TO WEIGHT OF SLAB *	0.000	0.003	0.013	0.027	0.045	0.065	0.087	0.107	0.126	0.141	0.151	0.158	0.159	0.155	0.146	0.131	0.111	0.088	0.060	0.031	0.000
DEFLECTION DUE TO WEIGHT OF BARRIER RAIL	0.000	0.000	0.001	0.003	0.005	0.006	0.008	0.010	0.011	0.013	0.013	0.014	0.014	0.013	0.012	0.011	0.009	0.007	0.005	0.003	0.000
TOTAL DEAD LOAD DEFLECTION	0.000	0.004	0.018	0.039	0.065	0.093	0.124	0.153	0.179	0.201	0.214	0.224	0.226	0.219	0.206	0.185	0.157	0.124	0.085	0.044	0.000
VERTICAL CURVE ORDINATE	0.000	0.061	0.115	0.163	0.204	0.239	0.268	0.291	0.306	0.316	0.319	0.316	0.306	0.291	0.268	0.239	0.204	0.163	0.115	0.061	0.000
ORDINATE DUE TO SUPERELEVATION	0.000	0.000	0.000	0.000	0.000	0.000	0.000	0.000	0.000	0.000	0.000	0.000	0.000	0.000	0.000	0.000	0.000	0.000	0.000	0.000	0.000
REQUIRED CAMBER	0	3/4"	1 5/8"	2 7/16"	3 1/4"	4"	4 11/16"	5 5/16"	5 13/16"	6 3/16'	6 7/16"	6 1/2"	6 3/8"	6 1/8"	5 11/16"	5 1/16"	4 5/16"	3 7/16"	2 3/8"	1 1/4"	0

* INCLUDES SLAB, BUILDUPS & STAY-IN-PLACE FORMS.
ALL VALUES ARE SHOWN IN FEET EXCEPT "REQUIRED CAMBER", WHICH IS GIVEN IN INCHES (FRACTION FORM).

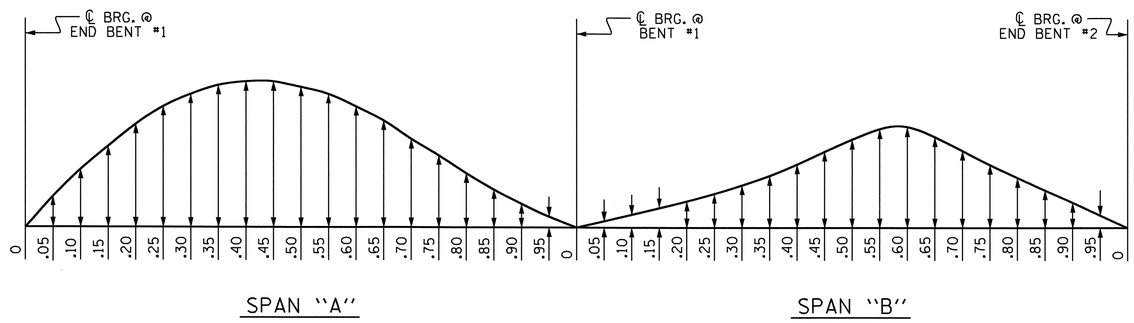

SCHEMATIC CAMBER ORDINATES

SLOPE FOR THE ZERO CAMBER BASE LINE VARIES.

PROJECT NO. U-4007B
ONSLOW COUNTY
STATION: 36+17.74 -NBL RAMP-

SHEET 4 OF 4

STATE OF NORTH CAROLINA
DEPARTMENT OF TRANSPORTATION
RALEIGH

SUPERSTRUCTURE

DEAD LOAD DEFLECTIONS

NORTH CAROLINA PROFESSIONAL SEAL 025516 ENGINEER EMILY E. MURRAY
8/24/10

REVISIONS						SHEET NO.
NO.	BY:	DATE:	NO.	BY:	DATE:	S-71
1			3			TOTAL SHEETS
2			4			142

DRAWN BY : PEGGY PARISI DATE : 5-18-10
CHECKED BY : T.L. AVERETTE DATE : 6-9-10

23-AUG-2010 14:40
G:\TIPProjects-U\U4007b\Structures\FinalPlans\Str. #3\u-4007b_sd_DL_03.dgn
taverette

STR. #3

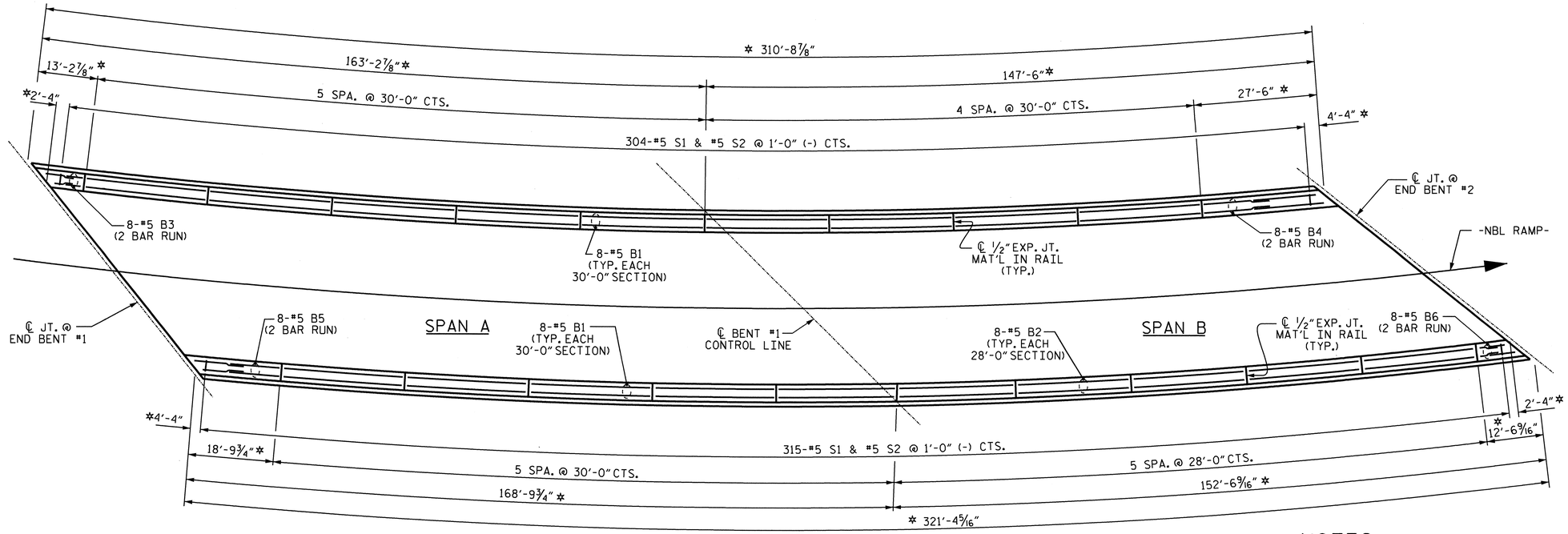

PLAN OF BARRIER RAIL

* ARC DIMENSION ALONG OUTSIDE EDGE OF BARRIER RAIL.

BAR TYPES

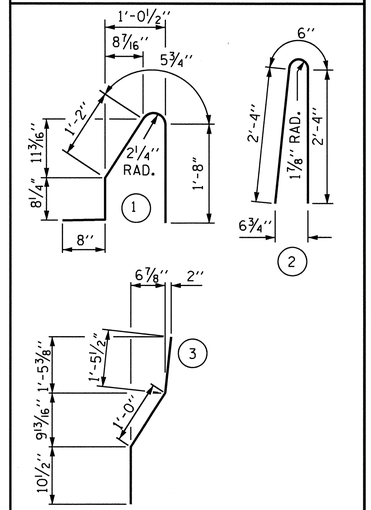

ALL BAR DIMENSIONS ARE OUT TO OUT

BILL OF MATERIAL

FOR CONCRETE BARRIER RAIL ONLY

BAR	NO.	SIZE	TYPE	LENGTH	WEIGHT
* B1	112	#5	STR	29'-7"	3456
* B2	40	#5	STR	27'-7"	1151
* B3	16	#5	STR	7'-11"	132
* B4	16	#5	STR	15'-10"	264
* B5	16	#5	STR	11'-7"	193
* B6	16	#5	STR	7'-7"	127
* S1	619	#5	1	4'-8"	3013
* S2	619	#5	2	5'-2"	3336
* S3	12	#5	3	3'-4"	42
* S4	12	#5	STR	3'-2"	40

* EPOXY COATED REINFORCING STEEL	11754	LBS.
CLASS AA CONCRETE	63.3	CU. YDS.
CONCRETE BARRIER RAIL	632.10	LIN. FT.

NOTES

BARRIER RAIL IN A CONTINUOUS UNIT SHALL NOT BE CAST UNTIL ALL SLAB CONCRETE IN THAT UNIT HAS BEEN CAST AND HAS REACHED A MINIMUM COMPRESSIVE STRENGTH OF 3,000 PSI.

WHEN EVAZOTE JOINT SEAL IS REQUIRED, THE JOINT IN THE DECK SHALL BE SAWED PRIOR TO THE CASTING OF BARRIER RAIL.

ALL REINFORCING STEEL IN BARRIER RAILS SHALL BE EPOXY COATED.

THE #5 S3 AND #5 S4 BARS SHALL BE INSTALLED, USING AN ADHESIVE ANCHORING SYSTEM, AFTER SAWING THE JOINT. THE YIELD LOAD FOR THE #5 S3 AND #5 S4 BARS IS 18.6 KIPS. FIELD TESTING FOR THE ADHESIVE BONDING SYSTEM IS NOT REQUIRED.

VERTICAL GROOVED CONTRACTION JOINTS, 1/2" IN DEPTH, SHALL BE TOOLED IN ALL EXPOSED FACES OF THE BARRIER RAIL AND IN ACCORDANCE WITH ARTICLE 825-10(B) OF THE STANDARD SPECIFICATIONS. THE CONTRACTION JOINT SHALL BE LOCATED AT EACH THIRD POINT BETWEEN BARRIER RAIL EXPANSION JOINTS. ONLY ONE CONTRACTION JOINT IS REQUIRED AT MIDPOINT OF BARRIER RAIL SEGMENTS LESS THAN 20 FEET IN LENGTH AND NO CONTRACTION JOINTS ARE REQUIRED FOR THOSE SEGMENTS LESS THAN 10 FEET IN LENGTH.

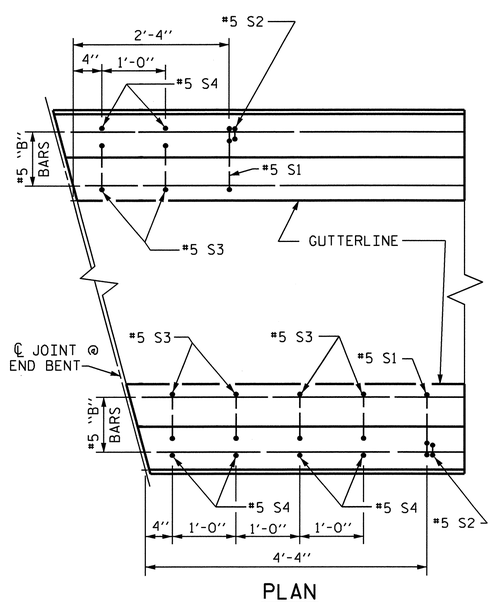

PLAN

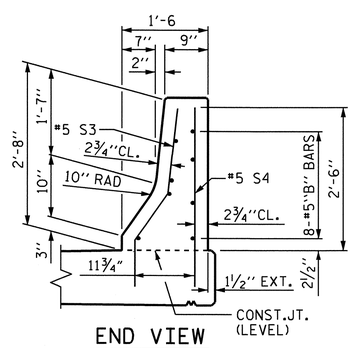

END VIEW

END OF RAIL DETAILS

FOR ADHESIVE ANCHORING AT SAWED JOINTS

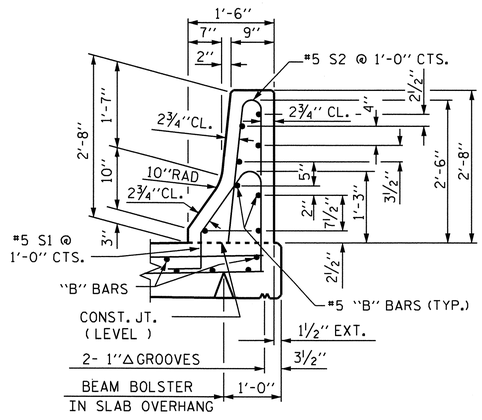

SECTION THRU RAIL

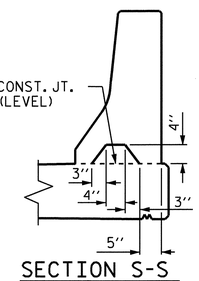

SECTION S-S

AT DAM IN OPEN JOINT (THIS IS TO BE USED ONLY WHEN SLIP FORM IS USED)

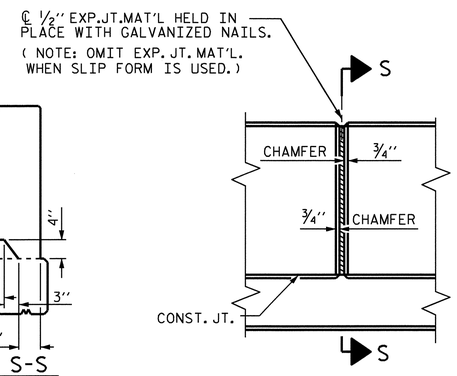

ELEVATION AT EXPANSION JOINTS

BARRIER RAIL DETAILS

NORTH CAROLINA PROFESSIONAL SEAL 025516 ENGINEER BARRY E. MURRAY 8/24/10

PROJECT NO. U-4007B

ONSLOW COUNTY

STATION: 36+17.74 -NBL RAMP-

STATE OF NORTH CAROLINA
DEPARTMENT OF TRANSPORTATION
RALEIGH

STANDARD

CONCRETE BARRIER RAIL

REVISIONS							
NO.	BY:	DATE:	NO.	BY:	DATE:		
1			3				
2			4				

SHEET NO. S-72

TOTAL SHEETS 142

STR. #3 STD. NO. CBR1

ASSEMBLED BY : PEGGY PARISI DATE : 5-18-10
CHECKED BY : T.L. AVERETTE DATE : 6-9-10

DRAWN BY : ARB 5/87
CHECKED BY : SJD 9/87

REV. 10/17/00 RWW/LES
REV. 5/7/03R RWW/JTE
REV. 5/1/06R TLA/GM

23-AUG-2010 14:40
G:\TIPProjects-U\U4007b\Structures\FinalPlans\Str. #3\u-4007b_sd_BR_03.dgn
taverette

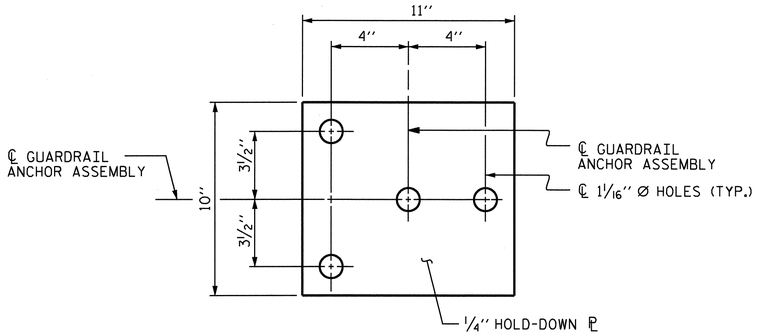

PLAN

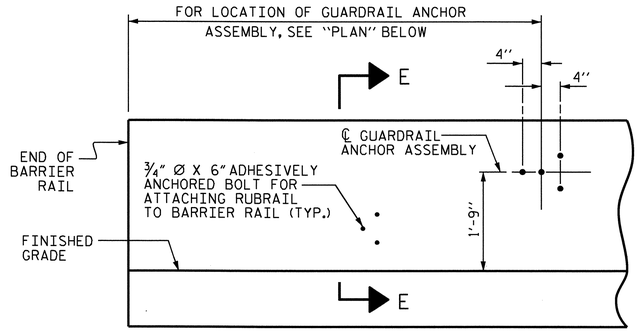

ELEVATION

FOR LOCATION OF RUBRAIL, SEE ROADWAY STD. 862.03

NOTES

THE GUARDRAIL ANCHOR ASSEMBLY SHALL CONSIST OF A 1/4" HOLD DOWN PLATE AND 4 - 7/8" Ø BOLTS WITH NUTS AND WASHERS, RUBRAIL, AND ADHESIVELY ANCHORED BOLTS.

THE HOLD-DOWN PLATE SHALL CONFORM TO AASHTO M270 GRADE 36. AFTER FABRICATION, THE HOLD-DOWN PLATE SHALL BE HOT-DIP GALVANIZED IN ACCORDANCE WITH AASHTO M111.

BOLTS SHALL CONFORM TO THE REQUIREMENTS OF ASTM A307 AND NUTS SHALL CONFORM TO THE REQUIREMENTS OF AASHTO M291. BOLTS, NUTS AND WASHERS SHALL BE GALVANIZED. (AT THE CONTRACTOR'S OPTION, STAINLESS STEEL BOLTS, NUTS AND WASHERS MAY BE USED AS AN ALTERNATE FOR THE 7/8" Ø GALVANIZED BOLTS, NUTS AND WASHERS. THEY SHALL CONFORM TO OR EXCEED THE MECHANICAL REQUIREMENTS OF ASTM A307. THE USE OF THIS ALTERNATE SHALL BE APPROVED BY THE ENGINEER.)

THE GUARDRAIL ANCHOR ASSEMBLY IS REQUIRED AT ALL POINTS WHERE APPROACH GUARDRAIL IS TO BE ATTACHED TO THE END OF BARRIER RAIL. FOR POINTS OF ATTACHMENT, SEE SKETCH.

AFTER INSTALLATION, THE EXPOSED THREAD OF THE BOLT SHALL BE BURRED WITH A SHARP POINTED TOOL.

THE COST OF THE GUARDRAIL ANCHOR ASSEMBLY SHALL BE INCLUDED IN THE UNIT CONTRACT PRICE BID FOR CONCRETE BARRIER RAIL.

THE 1 1/4" Ø HOLES SHALL BE FORMED OR DRILLED WITH A CORE BIT. IMPACT TOOLS WILL NOT BE PERMITTED. ANY CONCRETE DAMAGED BY THIS WORK SHALL BE REPAIRED TO THE SATISFACTION OF THE ENGINEER.

THE C6 X 8.2 RUBRAIL IS TO BE ADHESIVELY ANCHORED TO THE RAIL USING THREE 3/4" Ø X 6" BOLTS WITH WASHERS. LEVEL ONE FIELD TESTING IS REQUIRED, AND THE YIELD LOAD OF THE 3/4" Ø BOLT IS 12 KIPS. FOR ADHESIVELY ANCHORED ANCHOR BOLTS OR DOWELS, SEE SPECIAL PROVISIONS. SEE ROADWAY STANDARD 862.03 FOR DETAILS AND LOCATION OF THE RUBRAIL.

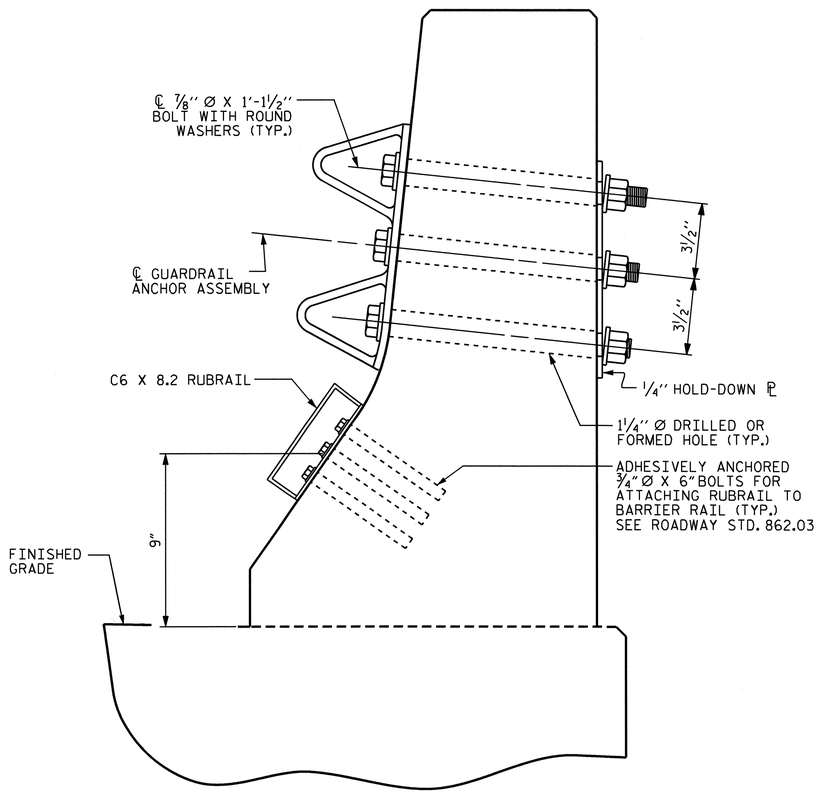

SECTION E-E

GUARDRAIL ANCHOR ASSEMBLY DETAILS

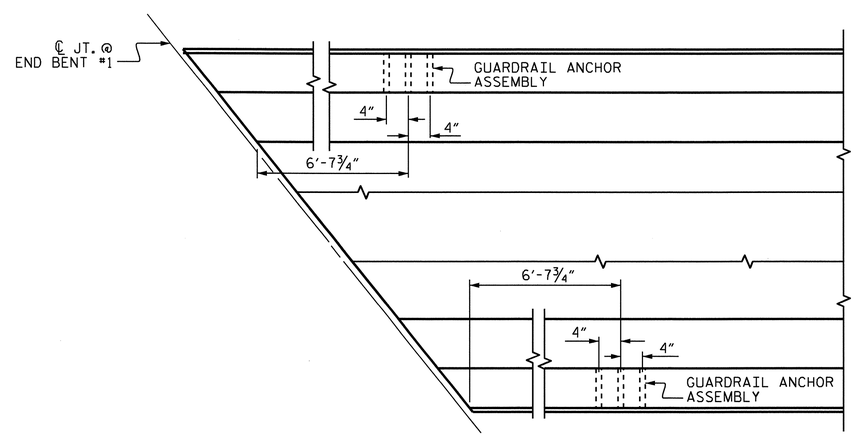

PLAN

LOCATION OF ANCHORS FOR GUARDRAIL

END BENT #1 SHOWN, END BENT #2 SIMILAR.

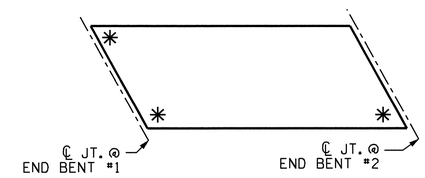

SKETCH SHOWING POINTS OF ATTACHMENTS

✳ DENOTES B-77 GUARDRAIL ANCHOR ASSEMBLY

PROJECT NO. U-4007B
ONSLOW COUNTY
STATION: 36+17.74 -NBL RAMP-

STATE OF NORTH CAROLINA
DEPARTMENT OF TRANSPORTATION
RALEIGH

STANDARD
GUARDRAIL ANCHORAGE FOR BARRIER RAIL

NORTH CAROLINA PROFESSIONAL SEAL 025516 ENGINEER EMILY E. MURRAY
8/24/10

REVISIONS						SHEET NO.
NO.	BY:	DATE:	NO.	BY:	DATE:	S-73
1			3			TOTAL SHEETS
2			4			142

STR. #3 STD. NO. GRA2

ASSEMBLED BY : PEGGY PARISI	DATE : 5-18-10
CHECKED BY : T.L. AVERETTE	DATE : 6-9-10
DRAWN BY : TLA 5/06	ADDED 5/1/06R KMM/GM
CHECKED BY : GM 5/06	

23-AUG-2010 14:39
G:\TIPProjects-U\U4007b\Structures\FinalPlans\Str. #3\u-4007b_sd_BR_03.dgn
taverette

BAR TYPES

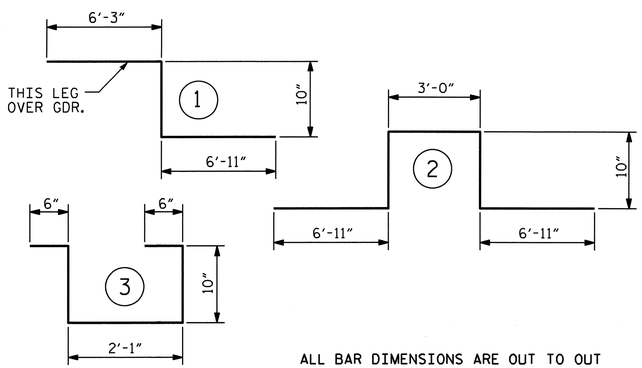

ALL BAR DIMENSIONS ARE OUT TO OUT

BILL OF MATERIAL

BAR	NO.	SIZE	TYPE	LENGTH	WEIGHT
* A1	536	#5	STR	46'-11"	26229
A2	536	#5	STR	46'-11"	26229
* A3	6	#6	STR	5'-3"	47
* A101	2	#5	STR	45'-5"	95
* A102	2	#5	STR	44'-3"	92
* A103	2	#5	STR	43'-1"	90
* A104	2	#5	STR	42'-0"	88
* A105	2	#5	STR	40'-10"	85
* A106	2	#5	STR	39'-8"	83
* A107	2	#5	STR	38'-6"	80
* A108	2	#5	STR	37'-4"	78
* A109	2	#5	STR	36'-2"	75
* A110	2	#5	STR	35'-1"	73
* A111	2	#5	STR	33'-11"	71
* A112	2	#5	STR	32'-9"	68
* A113	2	#5	STR	31'-7"	66
* A114	2	#5	STR	30'-6"	64
* A115	2	#5	STR	29'-4"	61
* A116	2	#5	STR	28'-2"	59
* A117	2	#5	STR	27'-0"	56
* A118	2	#5	STR	25'-11"	54
* A119	2	#5	STR	24'-9"	52
* A120	2	#5	STR	23'-7"	49
* A121	2	#5	STR	22'-6"	47
* A122	2	#5	STR	21'-4"	45
* A123	2	#5	STR	20'-2"	42
* A124	2	#5	STR	19'-1"	40
* A125	2	#5	STR	17'-11"	37
* A126	2	#5	STR	16'-9"	35
* A127	2	#5	STR	15'-8"	33
* A128	2	#5	STR	14'-6"	30
* A129	2	#5	STR	13'-5"	28
* A130	2	#5	STR	12'-3"	26
* A131	2	#5	STR	11'-1"	23
* A132	2	#5	STR	10'-0"	21
* A133	2	#5	STR	8'-10"	18
* A134	2	#5	STR	7'-9"	16
* A135	2	#5	STR	6'-7"	14
* A136	2	#5	STR	5'-5"	11

BAR	NO.	SIZE	TYPE	LENGTH	WEIGHT
* A137	2	#5	STR	4'-4"	9
* A138	2	#5	STR	3'-2"	7
* A139	2	#5	STR	2'-1"	4
* A140	2	#5	STR	1'-6"	3
* A141	2	#5	STR	45'-9"	95
* A142	2	#5	STR	44'-11"	94
* A143	2	#5	STR	44'-0"	92
* A144	2	#5	STR	43'-1"	90
* A145	2	#5	STR	42'-3"	88
* A146	2	#5	STR	41'-4"	86
* A147	2	#5	STR	40'-5"	84
* A148	2	#5	STR	39'-7"	83
* A149	2	#5	STR	38'-8"	81
* A150	2	#5	STR	37'-9"	79
* A151	2	#5	STR	36'-10"	77
* A152	2	#5	STR	36'-0"	75
* A153	2	#5	STR	35'-1"	73
* A154	2	#5	STR	34'-2"	71
* A155	2	#5	STR	33'-3"	69
* A156	2	#5	STR	32'-4"	67
* A157	2	#5	STR	31'-6"	66
* A158	2	#5	STR	30'-7"	64
* A159	2	#5	STR	29'-8"	62
* A160	2	#5	STR	28'-9"	60
* A161	2	#5	STR	27'-10"	58
* A162	2	#5	STR	27'-0"	56
* A163	2	#5	STR	26'-1"	54
* A164	2	#5	STR	25'-2"	52
* A165	2	#5	STR	24'-3"	51
* A166	2	#5	STR	23'-4"	49
* A167	2	#5	STR	22'-5"	47
* A168	2	#5	STR	21'-6"	45
* A169	2	#5	STR	20'-7"	43
* A170	2	#5	STR	19'-8"	41
* A171	2	#5	STR	18'-10"	39
* A172	2	#5	STR	17'-11"	37
* A173	2	#5	STR	17'-0"	35
* A174	2	#5	STR	16'-1"	34
* A175	2	#5	STR	15'-2"	32
* A176	2	#5	STR	14'-3"	30

BAR	NO.	SIZE	TYPE	LENGTH	WEIGHT
* A177	2	#5	STR	13'-4"	28
* A178	2	#5	STR	12'-5"	26
* A179	2	#5	STR	11'-6"	24
* A180	2	#5	STR	10'-7"	22
* A181	2	#5	STR	9'-8"	20
* A182	2	#5	STR	8'-9"	18
* A183	2	#5	STR	7'-10"	16
* A184	2	#5	STR	6'-11"	14
* A185	2	#5	STR	6'-0"	13
* A186	2	#5	STR	5'-1"	11
* A187	2	#5	STR	4'-2"	9
* A188	2	#5	STR	3'-3"	7
* A189	2	#5	STR	2'-4"	5
* A190	2	#5	STR	1'-4"	3
A201	2	#5	STR	46'-2"	96
A202	2	#5	STR	45'-0"	94
A203	2	#5	STR	43'-10"	91
A204	2	#5	STR	42'-8"	89
A205	2	#5	STR	41'-7"	87
A206	2	#5	STR	40'-5"	84
A207	2	#5	STR	39'-3"	82
A208	2	#5	STR	38'-1"	79
A209	2	#5	STR	36'-11"	77
A210	2	#5	STR	35'-10"	75
A211	2	#5	STR	34'-8"	72
A212	2	#5	STR	33'-6"	70
A213	2	#5	STR	32'-4"	67
A214	2	#5	STR	31'-3"	65
A215	2	#5	STR	30'-1"	63
A216	2	#5	STR	28'-11"	60
A217	2	#5	STR	27'-9"	58
A218	2	#5	STR	26'-8"	56
A219	2	#5	STR	25'-6"	53
A220	2	#5	STR	24'-4"	51
A221	2	#5	STR	23'-3"	48
A222	2	#5	STR	22'-1"	46
A223	2	#5	STR	20'-11"	44
A224	2	#5	STR	19'-10"	41
A225	2	#5	STR	18'-8"	39

BAR	NO.	SIZE	TYPE	LENGTH	WEIGHT
A226	2	#5	STR	17'-6"	37
A227	2	#5	STR	16'-5"	34
A228	2	#5	STR	15'-3"	32
A229	2	#5	STR	14'-1"	29
A230	2	#5	STR	13'-0"	27
A231	2	#5	STR	11'-10"	25
A232	2	#5	STR	10'-9"	22
A233	2	#5	STR	9'-7"	20
A234	2	#5	STR	8'-5"	18
A235	2	#5	STR	7'-4"	15
A236	2	#5	STR	6'-2"	13
A237	2	#5	STR	5'-1"	11
A238	2	#5	STR	3'-11"	8
A239	2	#5	STR	2'-10"	6
A240	2	#5	STR	1'-8"	3
A241	2	#5	STR	46'-5"	97
A242	2	#5	STR	45'-6"	95
A243	2	#5	STR	44'-7"	93
A244	2	#5	STR	43'-9"	91
A245	2	#5	STR	42'-10"	89
A246	2	#5	STR	41'-11"	87
A247	2	#5	STR	41'-0"	86
A248	2	#5	STR	40'-2"	84
A249	2	#5	STR	39'-3"	82
A250	2	#5	STR	38'-4"	80
A251	2	#5	STR	37'-5"	78
A252	2	#5	STR	36'-7"	76
A253	2	#5	STR	35'-8"	74
A254	2	#5	STR	34'-9"	72
A255	2	#5	STR	33'-10"	71
A256	2	#5	STR	32'-11"	69
A257	2	#5	STR	32'-1"	67
A258	2	#5	STR	31'-2"	65
A259	2	#5	STR	30'-3"	63
A260	2	#5	STR	29'-4"	61
A261	2	#5	STR	28'-5"	59
A262	2	#5	STR	27'-7"	58
A263	2	#5	STR	26'-8"	56
A264	2	#5	STR	25'-9"	54
A265	2	#5	STR	24'-10"	52

BAR	NO.	SIZE	TYPE	LENGTH	WEIGHT
A266	2	#5	STR	23'-11"	50
A267	2	#5	STR	23'-0"	48
A268	2	#5	STR	22'-1"	46
A269	2	#5	STR	21'-2"	44
A270	2	#5	STR	20'-4"	42
A271	2	#5	STR	19'-5"	41
A272	2	#5	STR	18'-6"	39
A273	2	#5	STR	17'-7"	37
A274	2	#5	STR	16'-8"	35
A275	2	#5	STR	15'-9"	33
A276	2	#5	STR	14'-10"	31
A277	2	#5	STR	13'-11"	29
A278	2	#5	STR	13'-0"	27
A279	2	#5	STR	12'-1"	25
A280	2	#5	STR	11'-2"	23
A281	2	#5	STR	10'-3"	21
A282	2	#5	STR	9'-4"	19
A283	2	#5	STR	8'-5"	18
A284	2	#5	STR	7'-6"	16
A285	2	#5	STR	6'-7"	14
A286	2	#5	STR	5'-8"	12
A287	2	#5	STR	4'-9"	10
A288	2	#5	STR	3'-10"	8
A289	2	#5	STR	2'-11"	6
A290	2	#5	STR	2'-0"	4
* B1	128	#4	STR	27'-5"	2344
B2	336	#5	STR	55'-3"	19362
* B3	32	#6	STR	60'-0"	2884
* B4	64	#6	STR	39'-3"	3773
* B5	186	#6	STR	42'-10"	11966
* B6	128	#4	STR	23'-9"	2031
* G1	4	#5	STR	34'-6"	144
* K1	12	#5	1	14'-0"	175
* K2	18	#5	2	18'-6"	347
* S1	88	#4	3	4'-9"	279

REINFORCING STEEL = 50115 LBS.

* EPOXY COATED REINF. STEEL = 54622 LBS.

SUPERSTRUCTURE BILL OF MATERIAL

	CONCRETE CLASS AA	REINFORCING STEEL	EPOXY COATED REINFORCING STEEL
	(CU. YDS.)	(LBS.)	(LBS.)
POUR #1	156.3	50115	54622
POUR #2	161.7		
POUR #3	196.4		
* * TOTALS	514.4		

* * QUANTITIES FOR BARRIER RAILS ARE NOT INCLUDED

SUPERSTRUCTURE REINFORCING STEEL LENGTHS ARE BASED ON THE FOLLOWING MINIMUM SPLICE LENGTHS

BAR SIZE	SUPERSTRUCTURE EXCEPT APPROACH SLABS, PARAPET, AND BARRIER RAIL		APPROACH SLABS		PARAPET AND BARRIER RAIL
	EPOXY COATED	UNCOATED	EPOXY COATED	UNCOATED	
#4	2'-0"	1'-9"	2'-0"	1'-9"	2'-9"
#5	2'-6"	2'-2"	2'-6"	2'-2"	3'-5"
#6	3'-0"	2'-7"	3'-10"	2'-7"	4'-4"
#7	5'-3"	3'-6"			
#8	6'-10"	4'-7"			

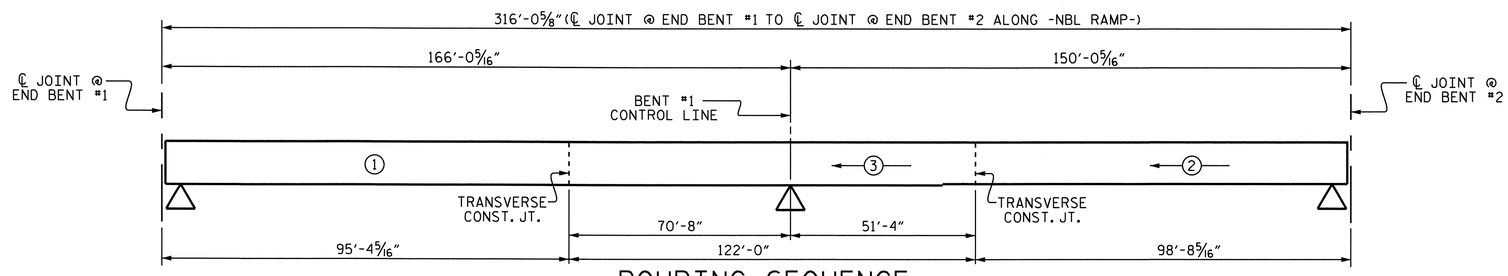

POURING SEQUENCE

DIMENSIONS GIVEN ALONG ARC OF -NBL RAMP-.
TRANSVERSE CONSTRUCTION JOINTS ARE AT A 45° ANGLE TO THE TANGENT, SEE PLAN OF SPANS.

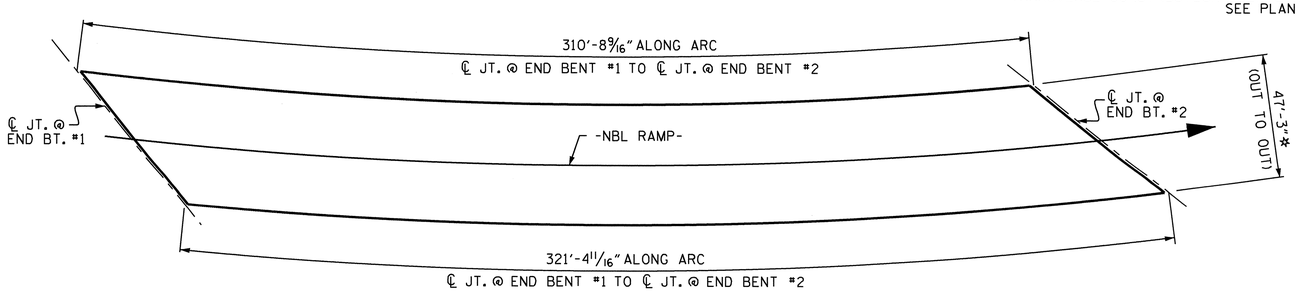

LAYOUT FOR COMPUTING AREA OF REINFORCED CONCRETE DECK SLAB (SQ. FT. = 14933)

* RADIAL DIMENSION

GROOVING BRIDGE FLOORS

APPROACH SLABS	2031	SQ.FT.
BRIDGE DECK	12934	SQ.FT.
TOTAL	14965	SQ.FT.

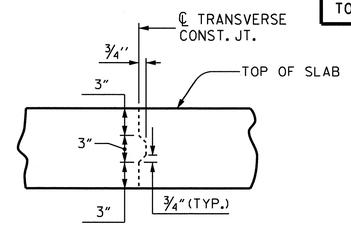

TRANSVERSE CONSTRUCTION JOINT DETAIL

REINFORCING STEEL IN SLAB NOT SHOWN. LONGITUDINAL REINFORCING STEEL SHALL BE CONTINUOUS THROUGH JOINT.

NORTH CAROLINA PROFESSIONAL SEAL 025516 ENGINEER EMILY E. MURRAY
8/24/10

PROJECT NO. U-4007B
ONSLOW COUNTY
STATION: 36+17.74 -NBL RAMP-

STATE OF NORTH CAROLINA
DEPARTMENT OF TRANSPORTATION
RALEIGH

SUPERSTRUCTURE
BILL OF MATERIAL

REVISIONS							
NO.	BY:	DATE:	NO.	BY:	DATE:	SHEET NO.	S-74
1			3			TOTAL SHEETS	142
2			4				

STR. #3

DRAWN BY : PEGGY PARISI DATE : 5-18-10
CHECKED BY : T.L. AVERETTE DATE : 6-9-10

23-AUG-2010 14:39
G:\TIPProjects-U\U4007b\Structures\Final Plans\Str. #3\u-4007b_sd_BM_03.dgn
taverette

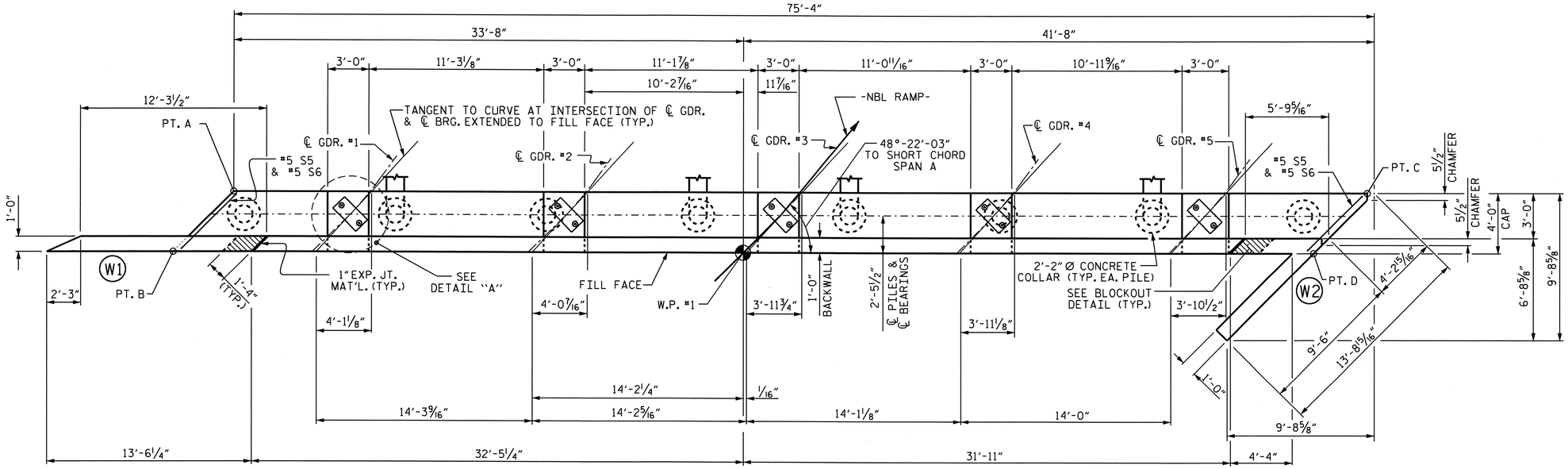

PLAN

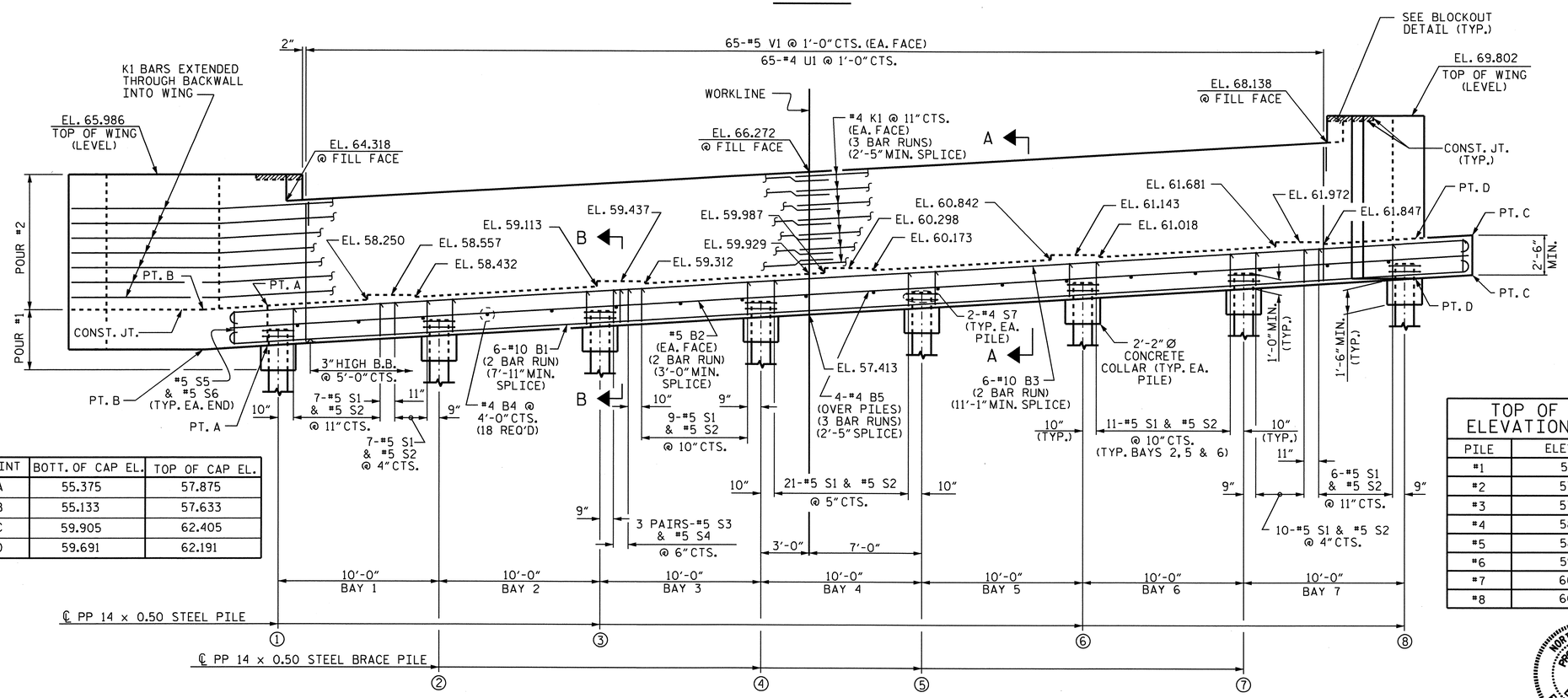

POINT	BOTT. OF CAP EL.	TOP OF CAP EL.
A	55.375	57.875
B	55.133	57.633
C	59.905	62.405
D	59.691	62.191

ELEVATION

NOTES:

STIRRUPS IN CAP MAY BE SHIFTED AS NECESSARY TO CLEAR ANCHOR BOLTS.

BACKWALL SHALL BE PLACED BEFORE APPLYING THE EPOXY PROTECTIVE COATING.

THE TOP SURFACE AREAS OF THE END BENT CAPS SHALL BE CURED IN ACCORDANCE WITH THE STANDARD SPECIFICATIONS EXCEPT THE MEMBRANE CURING COMPOUND METHOD SHALL NOT BE USED.

THE TOP SURFACE OF THE END BENT CAP EXCEPT THE BRIDGE SEAT BUILDUPS SHALL BE SLOPED TRANSVERSELY FROM THE FILL FACE TO THE BACK FACE AT A RATE OF 2%.

THE CONTRACTOR SHALL PROVIDE FOR THE INSTALLATION OF THE 4" Ø DRAIN PIPE THROUGH THE WING WALL AS REQUIRED FOR REINFORCED BRIDGE APPROACH FILL, SEE THE ROADWAY PLANS. REINFORCING STEEL IN THE WING WALL MAY BE SHIFTED AS NECESSARY TO CLEAR THE DRAIN PIPE.

THE CONCRETE IN THE SHADED AREA OF THE WING SHALL BE POURED AFTER THE JOINT BETWEEN THE DECK AND THE APPROACH SLAB HAS BEEN SAWED AND THE BARRIER RAIL IS CAST IF SLIP FORMING IS USED.

PIPE PILES SHALL BE IN ACCORDANCE WITH SECTION 1084 OF THE STANDARD SPECIFICATIONS.

PIPE PILE PLATES SHALL BE IN ACCORDANCE WITH SECTION 450 OF THE STANDARD SPECIFICATIONS.

REMOVE AND REPLACE OR REPAIR TO THE SATISFACTION OF THE ENGINEER PILES THAT ARE DAMAGED, DEFORMED OR COLLAPSED DURING INSTALLATION OR DRIVING.

PILE SPLICES SHALL BE IN ACCORDANCE WITH THE STANDARD SPECIFICATIONS AND AWS D1.1.

EPOXY COAT THE END BENT CAP AFTER ADJUSTMENTS ARE MADE TO BEARINGS AND ANCHOR BOLTS ARE GROUTED.

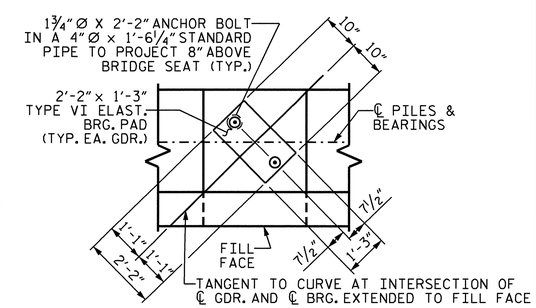

DETAIL "A"

(TYP. EA. BRG.)

TOP OF PILE ELEVATION CHART	
PILE	ELEVATION
#1	56.451
#2	57.057
#3	57.662
#4	58.267
#5	58.872
#6	59.477
#7	60.082
#8	60.687

PROJECT NO. U-4007B

ONSLOW COUNTY

STATION: 36+17.74 -NBL RAMP-

SHEET 1 OF 3

STATE OF NORTH CAROLINA
DEPARTMENT OF TRANSPORTATION
RALEIGH

SUBSTRUCTURE

END BENT #1

NORTH CAROLINA PROFESSIONAL SEAL 025516 ENGINEER EMILY E. MURRAY
8/24/10

REVISIONS								SHEET NO.
NO.	BY:	DATE:	NO.	BY:	DATE:			S-75
1			3					TOTAL SHEETS
2			4					142

STR. #3

DRAWN BY : B. N. BARODAWALA DATE : 3-5-10
CHECKED BY : M. D. PISO DATE : 3-16-10

23-AUG-2010 14:37
G:\TIPProjects-U\U4007b\Structures\FinalPlans\Str. #3\u-4007b_sd_eb_03.dgn
taverette

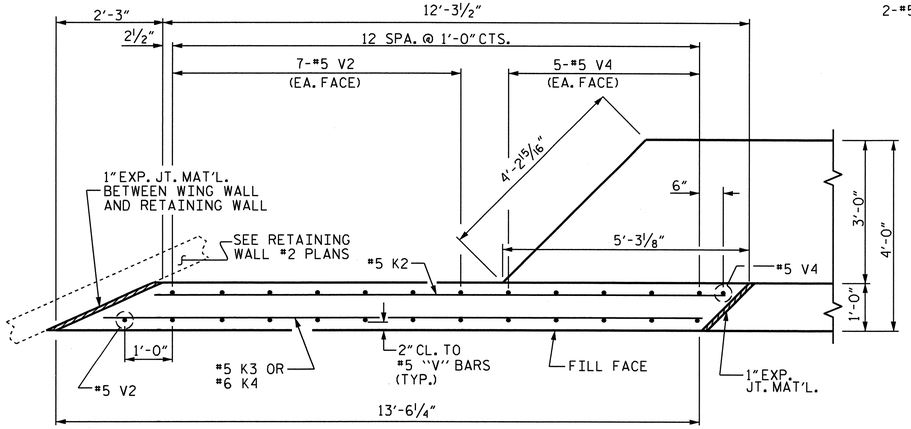

PLAN OF LEFT WING (W1)

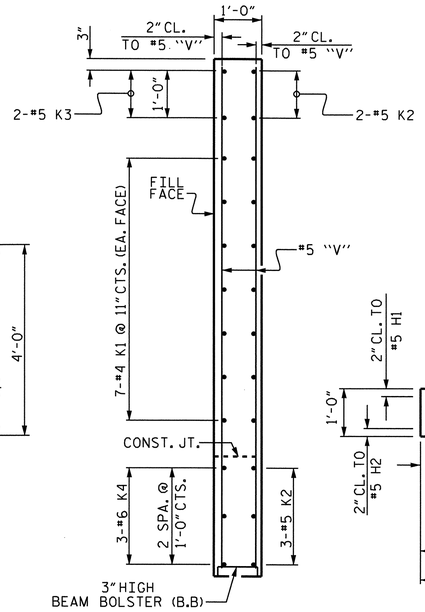

SECTION X-X

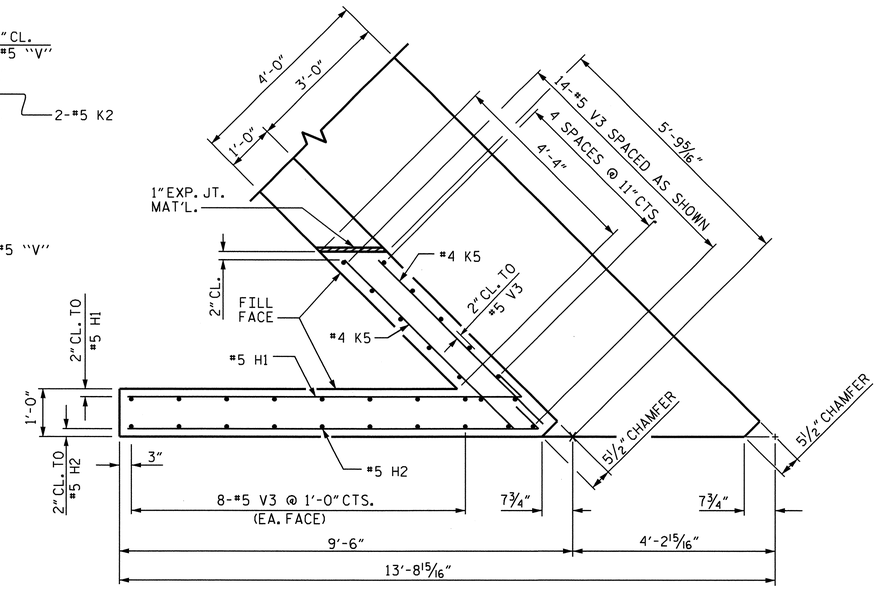

PLAN OF RIGHT WING (W2)

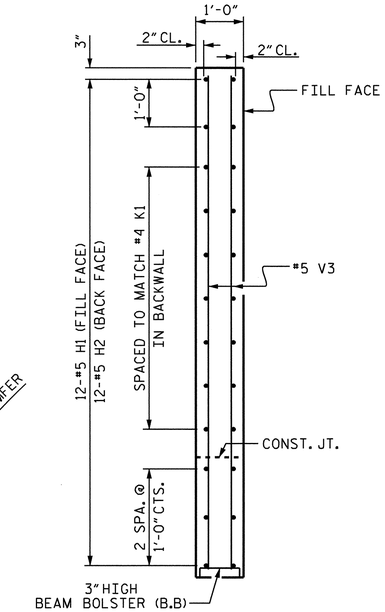

SECTION Y-Y

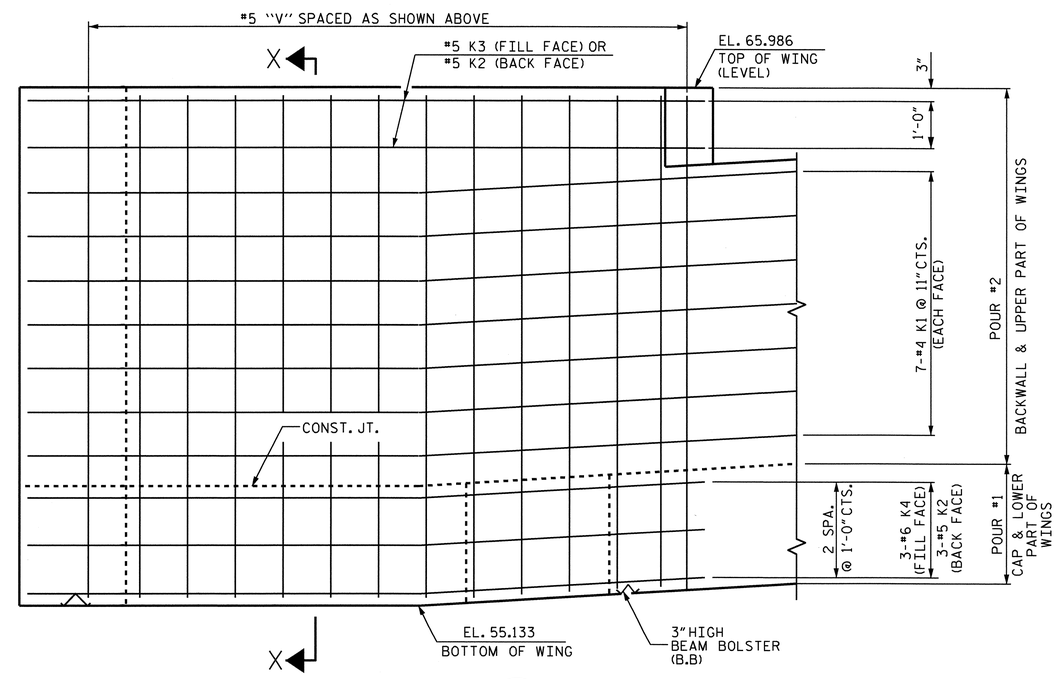

ELEVATION OF LEFT WING (W1)

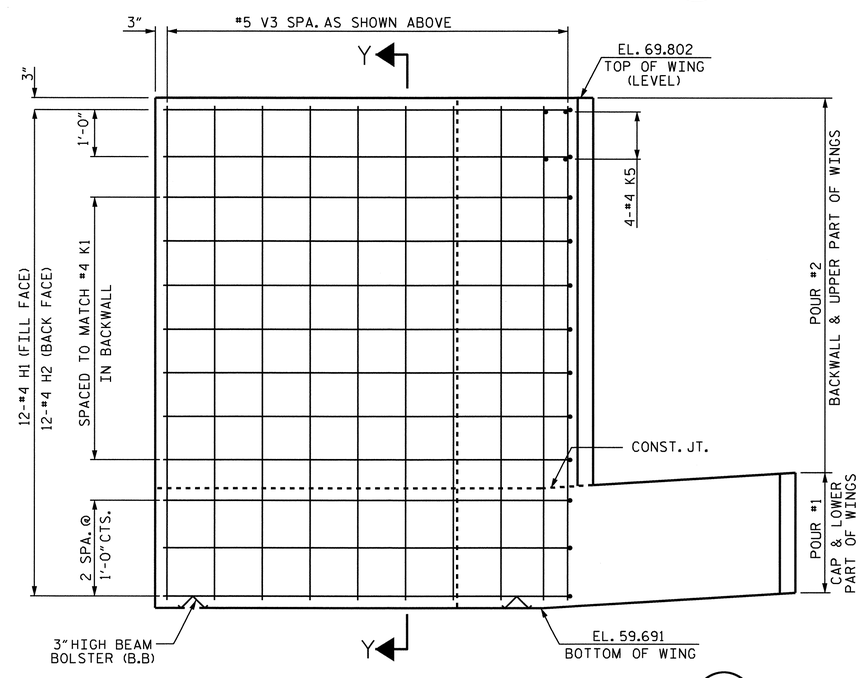

ELEVATION OF RIGHT WING (W2)

NORTH CAROLINA PROFESSIONAL SEAL 025516 ENGINEER EMILY E. MURRAY

8/24/10

PROJECT NO. U-4007B
ONSLOW COUNTY
STATION: 36+17.74 -NBL RAMP-

SHEET 2 OF 3

STATE OF NORTH CAROLINA
DEPARTMENT OF TRANSPORTATION
RALEIGH

SUBSTRUCTURE

END BENT #1

REVISIONS						SHEET NO.
NO.	BY:	DATE:	NO.	BY:	DATE:	S-76
1			3			TOTAL SHEETS
2			4			142

DRAWN BY : B. N. BARODAWALA DATE : 3-5-10
CHECKED BY : M. D. PISO DATE : 3-16-10

23-AUG-2010 14:37
G:\TIPProjects-U\U4007b\Structures\FinalPlans\Str. #3\u-4007b_sd_eb_03.dgn
taverette

STR. #3

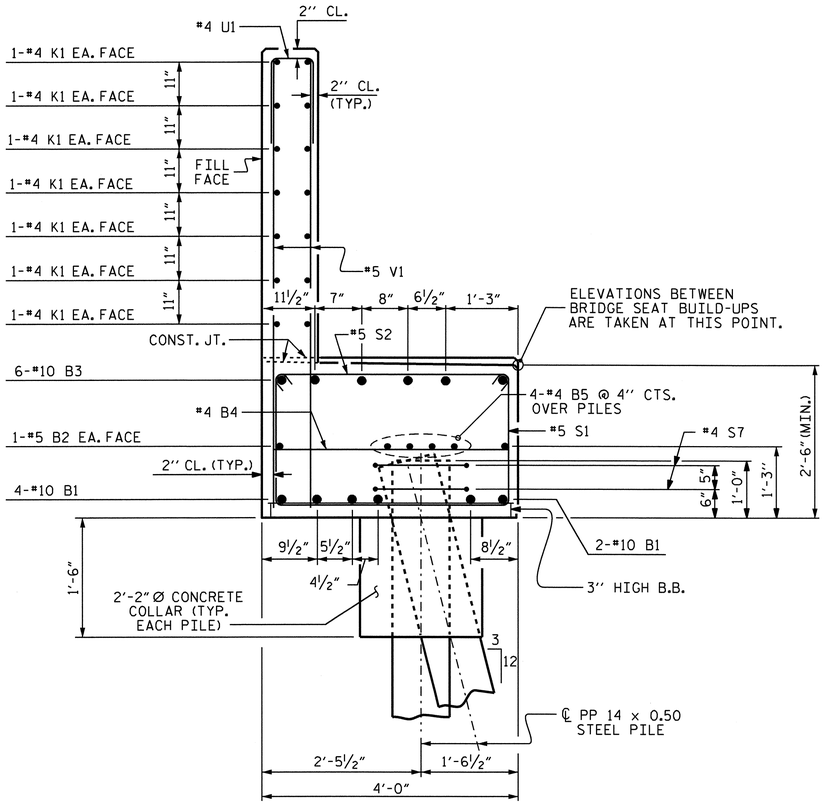

SECTION A-A

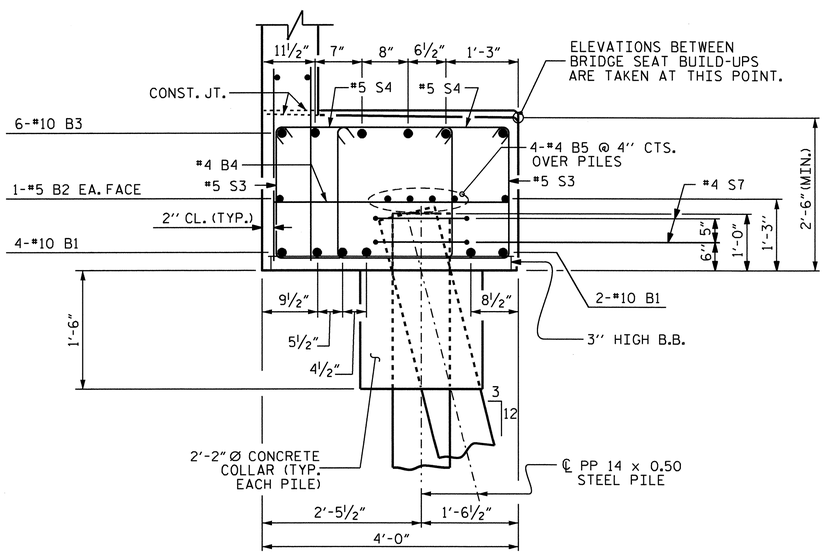

SECTION B-B

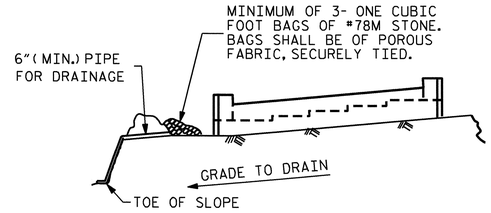

BAGGED STONE AND PIPE SHALL BE PLACED IMMEDIATELY AFTER COMPLETION OF END BENT EXCAVATION. PIPE MAY BE EITHER CONCRETE, CORRUGATED STEEL, CORRUGATED ALUMINUM ALLOY, OR CORRUGATED PLASTIC. PERFORATED PIPE WILL NOT BE ALLOWED.

BAGGED STONE SHALL REMAIN IN PLACE UNTIL THE ENGINEER DIRECTS THAT IT BE REMOVED. THE CONTRACTOR SHALL REMOVE AND DISPOSE OF SILT ACCUMULATIONS AT BAGGED STONE WHEN SO DIRECTED BY THE ENGINEER. BAGS SHALL BE REMOVED AND REPLACED WHENEVER THE ENGINEER DETERMINES THAT THEY HAVE DETERIORATED AND LOST THEIR EFFECTIVENESS.

NO SEPARATE PAYMENT WILL BE MADE FOR THIS WORK AND THE ENTIRE COST OF THIS WORK SHALL BE INCLUDED IN THE UNIT CONTRACT PRICE BID FOR THE SEVERAL PAY ITEMS.

TEMPORARY DRAINAGE AT END BENT

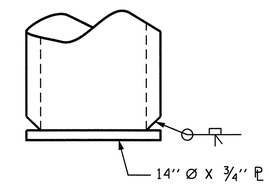

PIPE PILE PLATE DETAIL

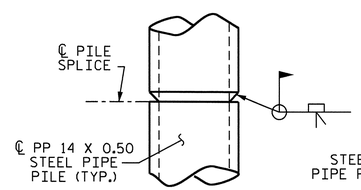

PIPE PILE SPLICE DETAIL

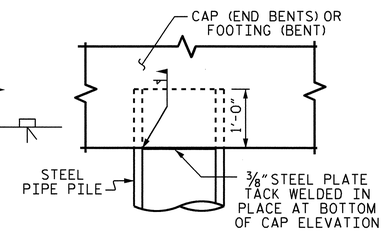

PIPE PILE IN CAP OR FOOTING DETAIL

THE CONTRACTOR MAY PROPOSE AN ALTERNATE METHOD FOR PLUGGING THE STEEL PIPE PILE, SUBJECT TO APPROVAL BY THE ENGINEER.

BAR TYPES

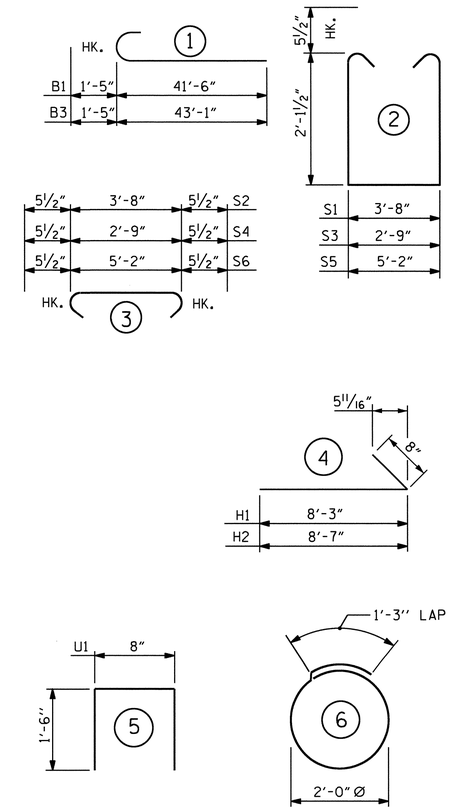

BILL OF MATERIAL

END BENT #1

BAR	NO.	SIZE	TYPE	LENGTH	WEIGHT
B1	12	#10	1	42'-11"	2216
B2	4	#5	STR	39'-0"	163
B3	12	#10	1	44'-6"	2298
B4	18	#4	STR	3'-8"	44
B5	12	#4	STR	26'-8"	214
H1	12	#5	4	8'-11"	112
H2	12	#5	4	9'-3"	116
K1	42	#4	STR	29'-2"	818
K2	5	#5	STR	11'-10"	62
K3	2	#5	STR	12'-5"	26
K4	3	#6	STR	12'-5"	56
K5	4	#4	STR	5'-0"	13
S1	93	#5	2	8'-10"	857
S2	93	#5	3	4'-7"	445
S3	6	#5	2	7'-11"	50
S4	6	#5	3	3'-8"	23
S5	2	#5	2	10'-4"	22
S6	2	#5	3	6'-1"	13
S7	16	#4	6	7'-7"	81
U1	65	#4	5	3'-8"	159
V1	130	#5	STR	8'-5"	1141
V2	15	#5	STR	10'-6"	164
V3	30	#5	STR	9'-9"	305
V4	11	#5	STR	10'-2"	117

REINFORCING STEEL = 9515 LBS.

CLASS "A" CONCRETE BREAKDOWN

POUR #1

CAP, LOWER PART OF WINGS, & CONCRETE PILE COLLARS 31.0 CU. YDS.

POUR #2

BACKWALL & UPPER PART OF WINGS 22.8 CU. YDS.

CLASS "A" CONCRETE TOTAL 53.8 CU. YDS.

PP 14 X 0.50 STEEL PILES

NO. 8 LIN. FT. 440

PIPE PILE PLATES EA. 8

ALL BAR DIMENSIONS ARE OUT TO OUT.

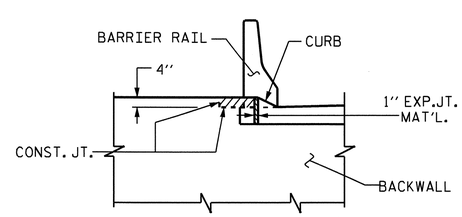

ELEVATION

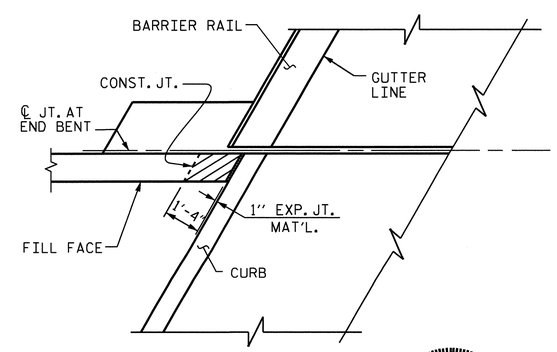

PLAN

BLOCKOUT IN WING WALL

NOTE: THE CONCRETE IN THE SHADED AREA OF THE WING SHALL BE POURED AFTER THE JOINT BETWEEN THE DECK AND APPROACH SLAB HAS BEEN SAWED AND THE BARRIER RAIL IS CAST IF SLIP FORMING IS USED.

NORTH CAROLINA PROFESSIONAL SEAL 025516 ENGINEER EMILY E. MURRAY

8/24/10

PROJECT NO. U-4007B

ONSLOW COUNTY

STATION: 36+17.74 -NBL RAMP-

SHEET 3 OF 3

STATE OF NORTH CAROLINA
DEPARTMENT OF TRANSPORTATION
RALEIGH

SUBSTRUCTURE

END BENT #1

REVISIONS						SHEET NO.
NO.	BY:	DATE:	NO.	BY:	DATE:	S-77
1			3			TOTAL SHEETS
2			4			142

DRAWN BY : B. N. BARODAWALA DATE : 3-5-10
CHECKED BY : M. D. PISO DATE : 3-16-10

23-AUG-2010 14:37
G:\TIPProjects-U\U4007b\Structures\Final Plans\Str. #3\u-4007b_sd_eb_03.dgn
taverette

STR. #3

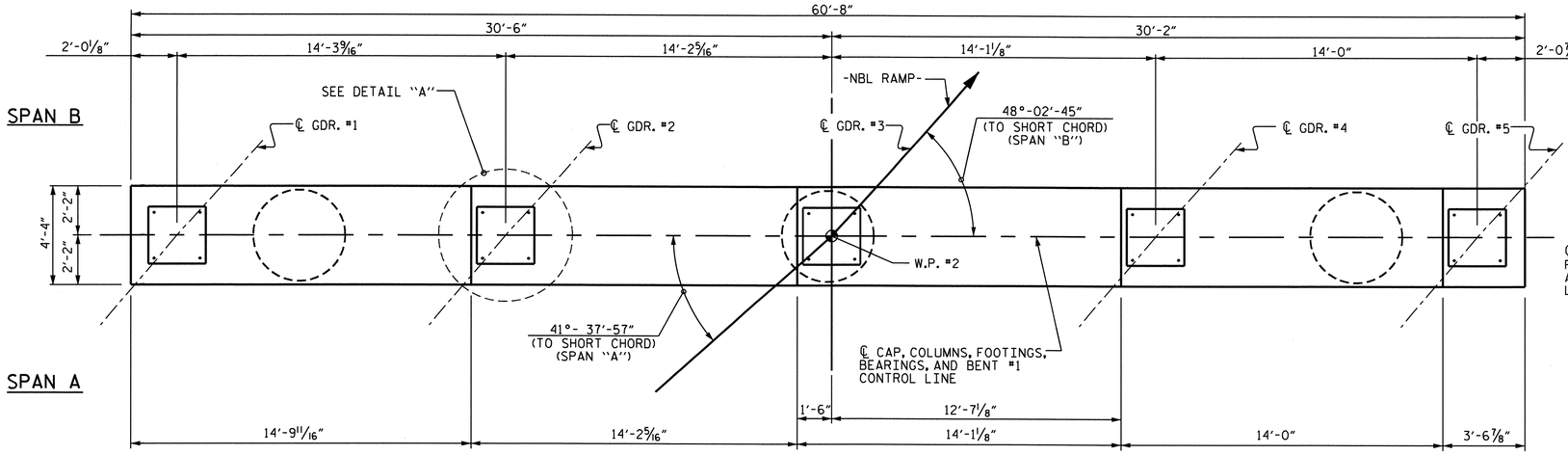

PLAN

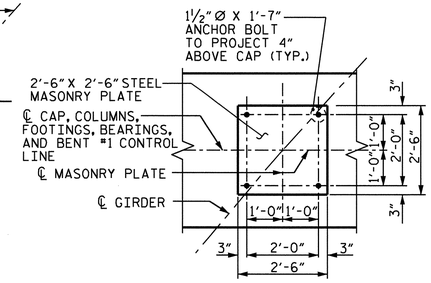

DETAIL "A"

(TYP. EA. BEARING)

NOTES

STIRRUPS IN CAP MAY BE SHIFTED AS NECESSARY TO CLEAR ANCHOR BOLTS.

HOOKS ON "V" BARS MAY BE TURNED AS NECESSARY FOR PLACING REINFORCING STEEL.

FOR PIPE PILE SPLICE AND PIPE PILE IN CAP OR FOOTING DETAIL, SEE END BENT #1, SHEET 3 OF 3.

PIPE PILES SHALL BE IN ACCORDANCE WITH SECTION 1084 OF THE STANDARD SPECIFICATIONS.

PIPE PILE PLATES SHALL BE IN ACCORDANCE WITH SECTION 450 OF THE STANDARD SPECIFICATIONS.

REMOVE AND REPLACE OR REPAIR TO THE SATISFACTION OF THE ENGINEER PILES THAT ARE DAMAGED, DEFORMED OR COLLAPSED DURING INSTALLATION OR DRIVING.

PILE SPLICES SHALL BE IN ACCORDANCE WITH THE STANDARD SPECIFICATIONS AND AWS D1.1.

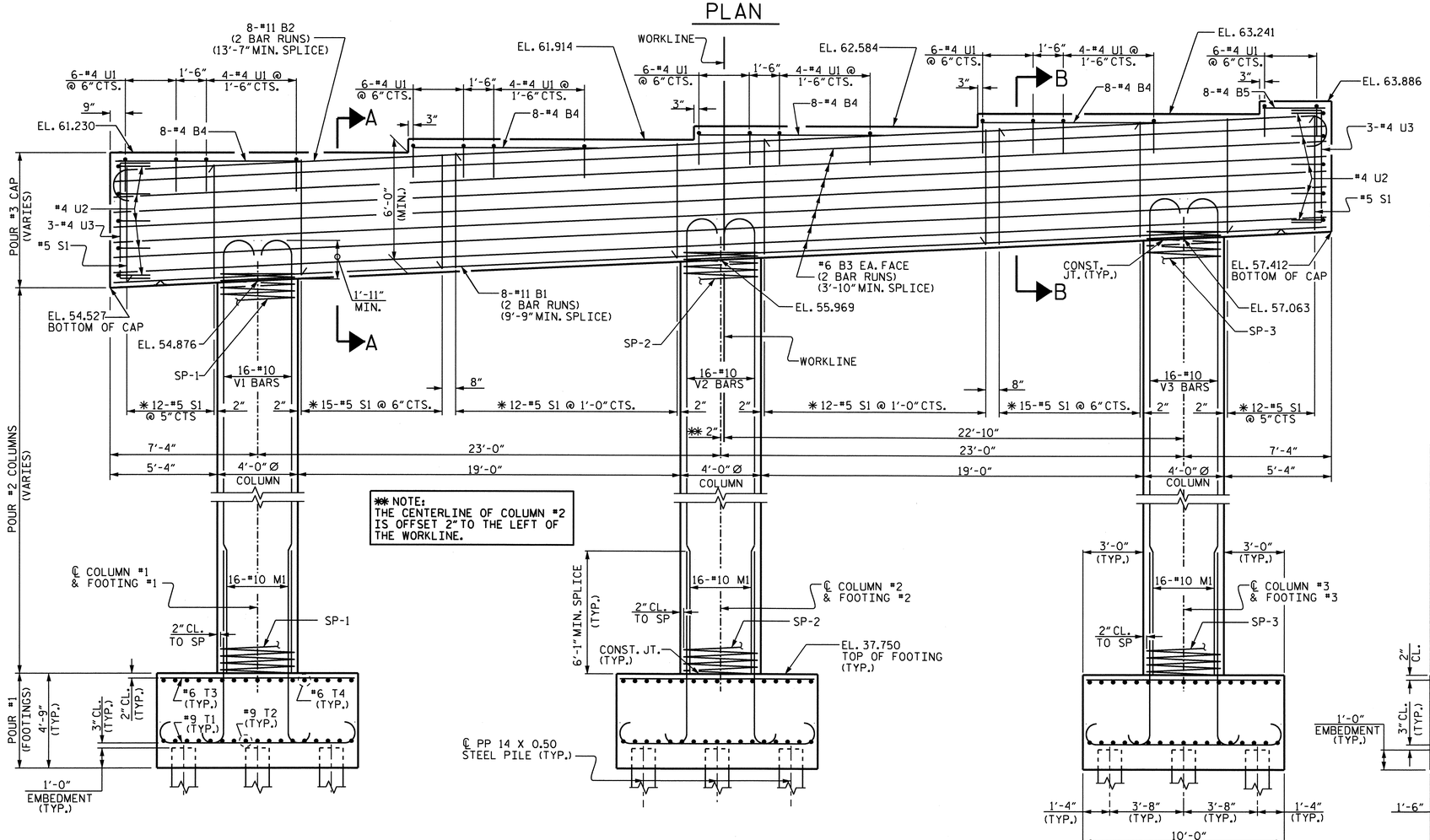

ELEVATION

* INVERT ALTERNATE STIRRUPS

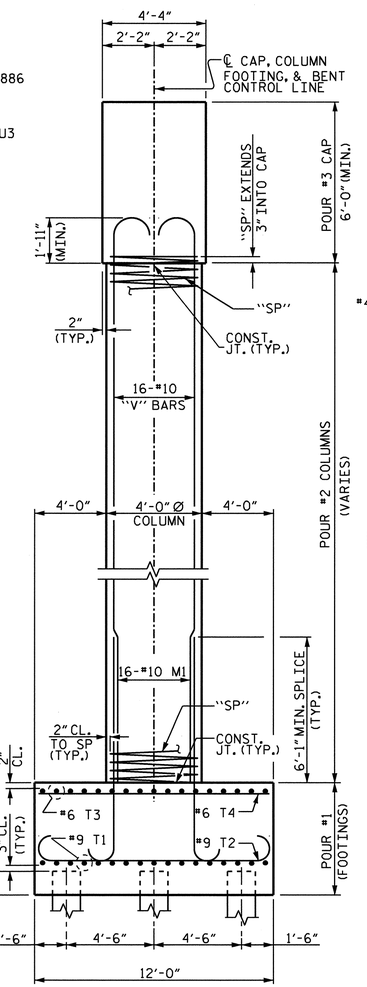

END ELEVATION

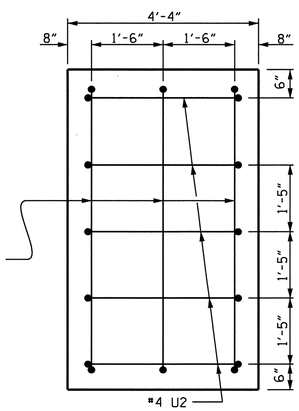

END VIEW

(TYP. EA. END)

NORTH CAROLINA PROFESSIONAL SEAL 025516 ENGINEER ELMER E. MURRAY JR.
8/24/10

PROJECT NO. U-4007B

ONSLOW COUNTY

STATION: 36+17.74 -NBL RAMP-

SHEET 1 OF 2

STATE OF NORTH CAROLINA
DEPARTMENT OF TRANSPORTATION
RALEIGH

SUBSTRUCTURE

BENT #1

REVISIONS								SHEET NO.
NO.	BY:	DATE:	NO.	BY:	DATE:			S-78
1			3					TOTAL SHEETS
2			4					142

DRAWN BY : M.D.PISO DATE : 04/05/10
CHECKED BY : M.GUDLAUGSSON DATE : 05/05/10

23-AUG-2010 14:37
G:\TIPProjects-U\U4007b\Structures\FinalPlans\Str. #3\U-4007B_SD_STR#3_B1.dgn
taverette

STR. #3

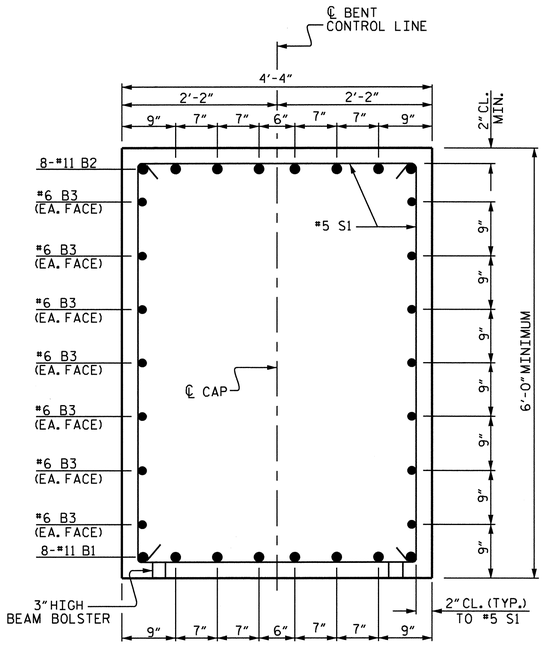

SECTION A-A

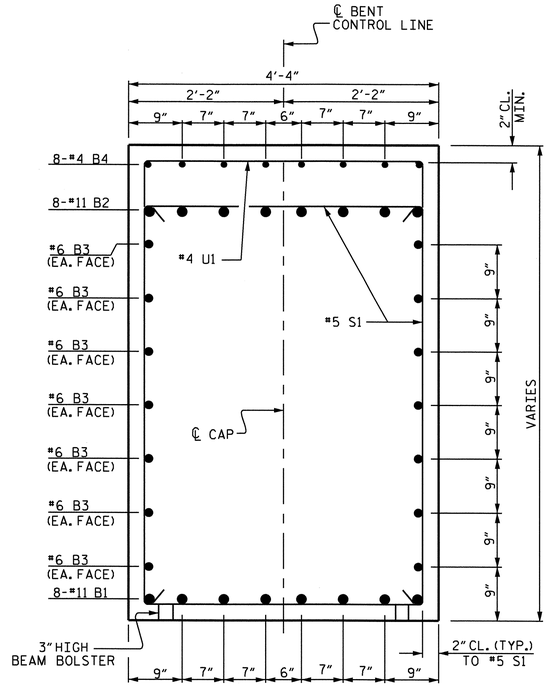

SECTION B-B

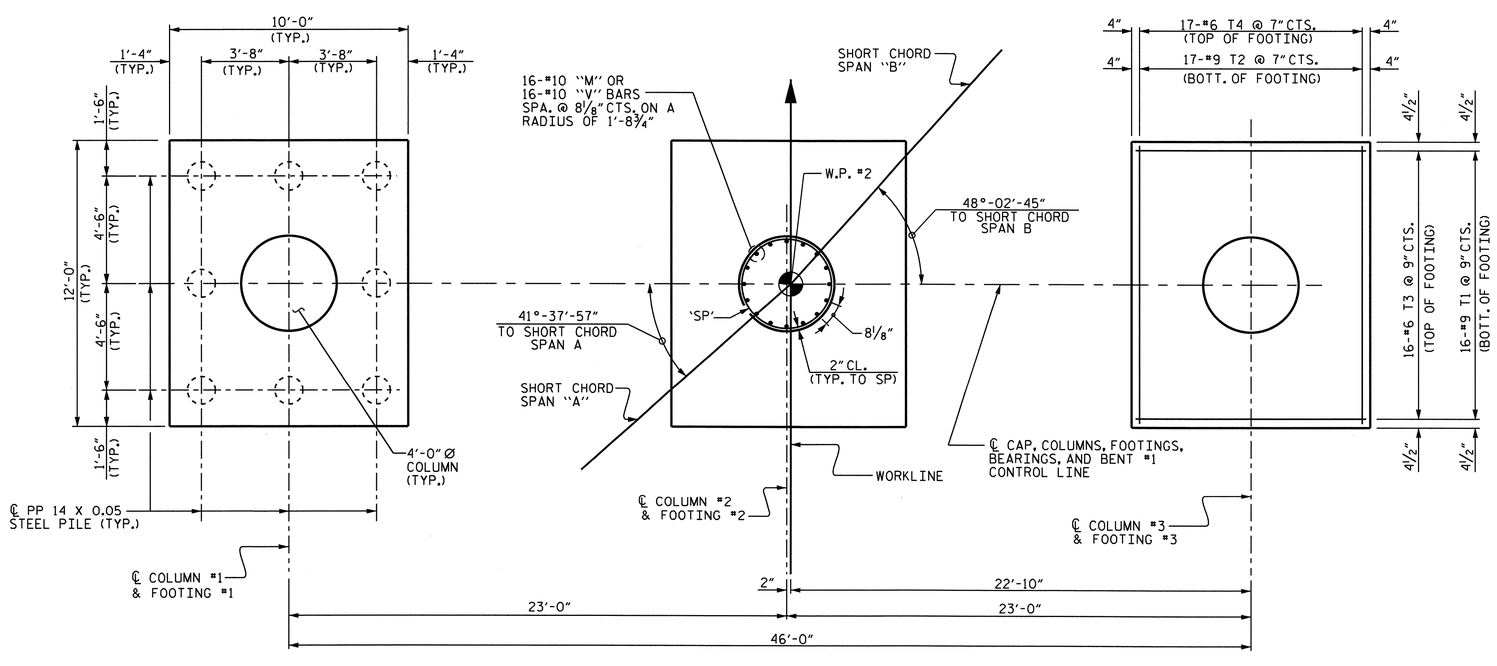

PLAN OF COLUMNS AND FOOTINGS

(ALL FOOTINGS, COLUMNS, PILES DIMENSIONS, AND REINFORCING STEEL ARE TYPICAL)

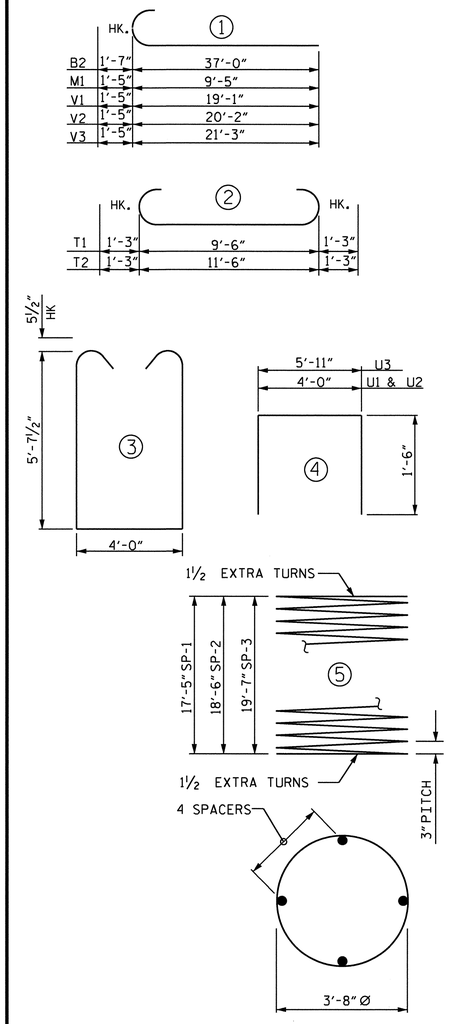

ALL BAR DIMENSIONS ARE OUT TO OUT.

BILL OF MATERIAL

BENT #1

BAR	NO.	SIZE	TYPE	LENGTH	WEIGHT
B1	16	11	STR.	35'-1"	2982
B2	16	11	1	38'-7"	3280
B3	28	6	STR.	32'-2"	1353
B4	32	4	STR.	9'-8"	207
B5	8	4	STR.	3'-2"	17
M1	48	10	1	10'-10"	2238
S1	80	5	3	16'-2"	1349
T1	48	9	2	12'-0"	1958
T2	51	9	2	14'-0"	2428
T3	48	6	STR.	9'-6"	685
T4	51	6	STR.	11'-6"	881
U1	46	4	4	7'-0"	215
U2	10	4	4	7'-0"	47
U3	6	4	4	8'-11"	36
V1	16	10	1	20'-6"	1411
V2	16	10	1	21'-7"	1486
V3	16	10	1	22'-8"	1561

REINFORCING STEEL 22134 LBS.

SPIRAL COLUMN REINFORCING STEEL

	NO.	SIZE	TYPE	LENGTH	WEIGHT
SP-1	1	*	5	831'-7"	555
SP-2	1	*	5	877'-2"	586
SP-3	1	*	5	934'-1"	624

SPIRAL COLUMN REINFORCING STEEL 1765 LBS.

CLASS A CONCRETE

POUR #1 FOOTINGS	63.3 CU. YDS.
POUR #2 COLUMNS	25.5 CU. YDS.
POUR #3 CAP	61.9 CU. YDS.
TOTAL CLASS A CONCRETE	150.7 CU. YDS.

PP 14 X 0.50 STEEL PILES

NO. 24 840 LIN. FT.

PIPE PILE PLATES EA. 24

FOUNDATION EXCAVATION LUMP SUM

* THE SP-1, SP-2, & SP-3 SPIRAL REINFORCING STEEL SHALL BE W20 OR D-20 COLD DRAWN WIRE OR #4 PLAIN OR DEFORMED BAR.

PROJECT NO. U-4007B

ONSLOW COUNTY

STATION: 36+17.74 -NBL RAMP-

SHEET 2 OF 2

STATE OF NORTH CAROLINA
DEPARTMENT OF TRANSPORTATION
RALEIGH

SUBSTRUCTURE

BENT #1

NORTH CAROLINA PROFESSIONAL SEAL 025516 ENGINEER EMILY E. MURRAY
8/24/10

REVISIONS						SHEET NO.
NO.	BY:	DATE:	NO.	BY:	DATE:	S-79
1			3			TOTAL SHEETS
2			4			142

STR. #3

DRAWN BY : M.D.PISO DATE : 04/05/10
CHECKED BY : M.GUDLAUGSSON DATE : 05/05/10

23-AUG-2010 14:36
G:\TIPProjects-U\U4007b\Structures\FinalPlans\Str. #3\U-4007B_SD_STR#3_B1.dgn
toverette

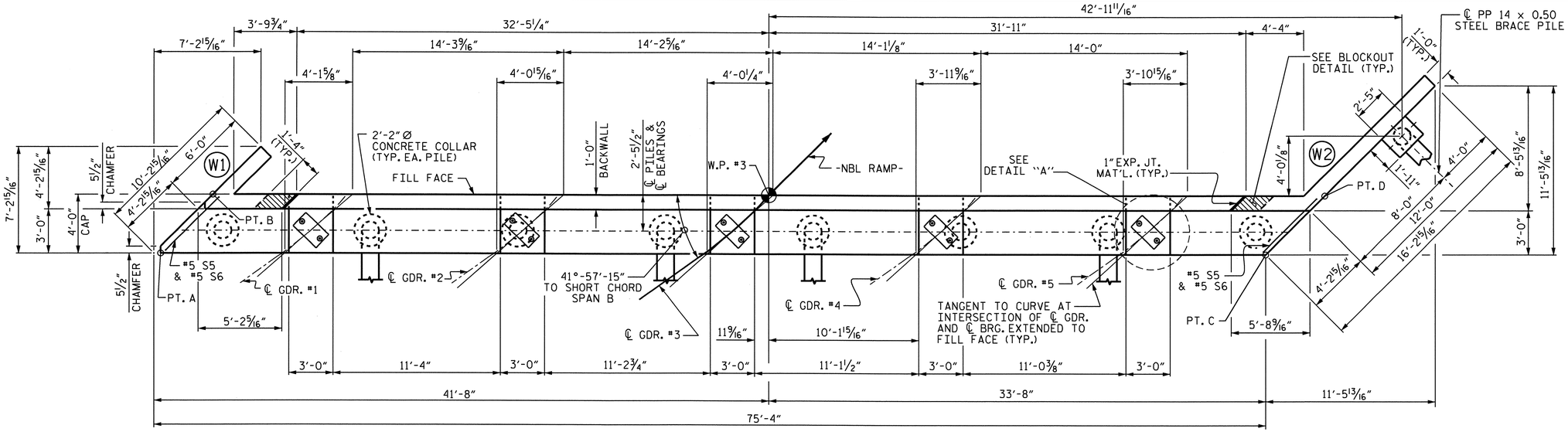

PLAN

POINT	BOTT. OF CAP EL.	TOP OF CAP EL.
A	58.573	61.073
B	58.696	61.196
C	61.167	63.667
D	61.306	63.806

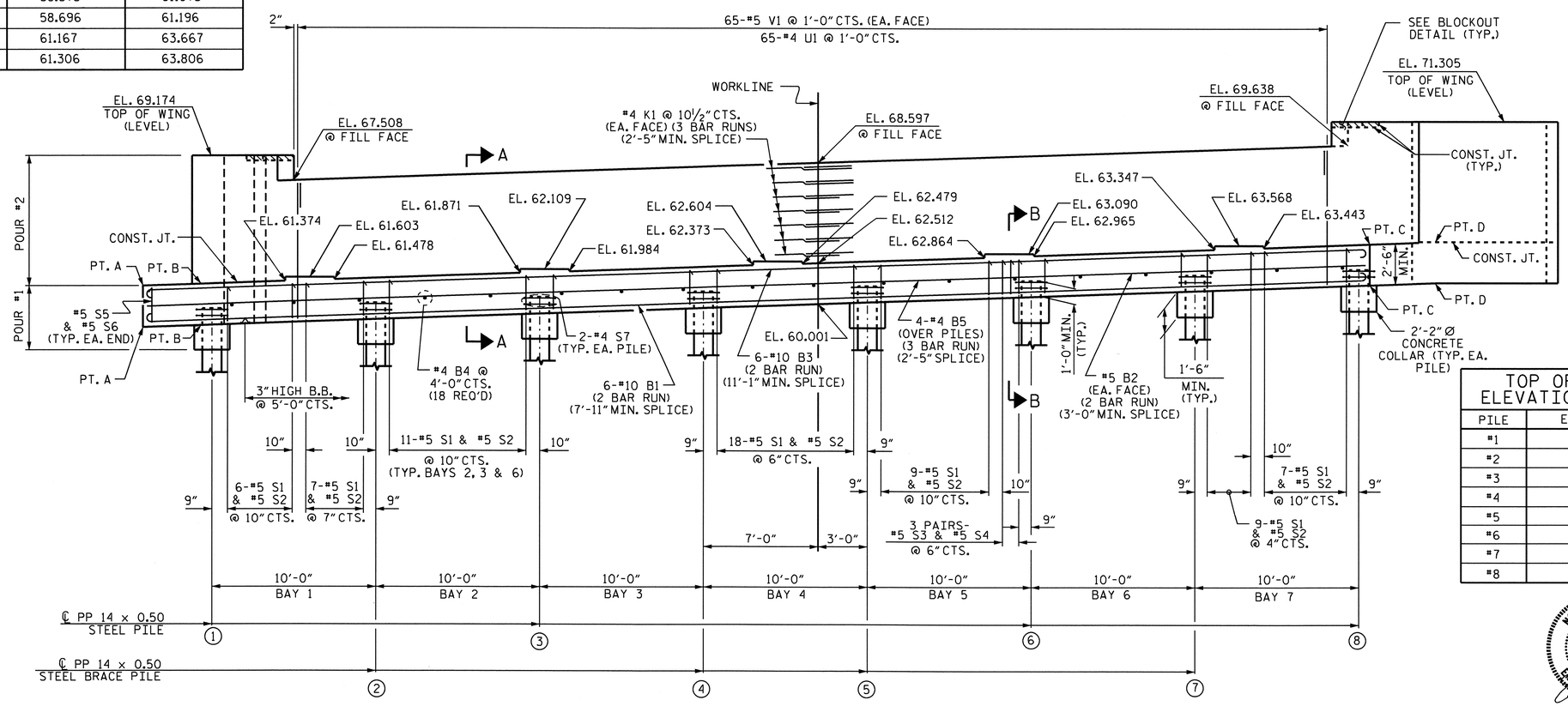

ELEVATION

WING BRACE PILE NOT SHOWN FOR CLARITY

NOTES:

STIRRUPS IN CAP MAY BE SHIFTED AS NECESSARY TO CLEAR ANCHOR BOLTS.

BACKWALL SHALL BE PLACED BEFORE APPLYING THE EPOXY PROTECTIVE COATING.

THE TOP SURFACE AREAS OF THE END BENT CAPS SHALL BE CURED IN ACCORDANCE WITH THE STANDARD SPECIFICATIONS EXCEPT THE MEMBRANE CURING COMPOUND METHOD SHALL NOT BE USED.

THE TOP SURFACE OF THE END BENT CAP EXCEPT THE BRIDGE SEAT BUILDUPS SHALL BE SLOPED TRANSVERSELY FROM THE FILL FACE TO THE BACK FACE AT A RATE OF 2%.

THE CONTRACTOR SHALL PROVIDE FOR THE INSTALLATION OF THE 4"Ø DRAIN PIPE THROUGH THE WING WALL AS REQUIRED FOR REINFORCED BRIDGE APPROACH FILL, SEE THE ROADWAY PLANS. REINFORCING STEEL IN THE WING WALL MAY BE SHIFTED AS NECESSARY TO CLEAR THE DRAIN PIPE.

THE CONCRETE IN THE SHADED AREA OF THE WING SHALL BE POURED AFTER THE JOINT BETWEEN THE DECK AND THE APPROACH SLAB HAS BEEN SAWED AND THE BARRIER RAIL IS CAST IF SLIP FORMING IS USED.

PIPE PILES SHALL BE IN ACCORDANCE WITH SECTION 1084 OF THE STANDARD SPECIFICATIONS.

PIPE PILE PLATES SHALL BE IN ACCORDANCE WITH SECTION 450 OF THE STANDARD SPECIFICATIONS.

REMOVE AND REPLACE OR REPAIR TO THE SATISFACTION OF THE ENGINEER PILES THAT ARE DAMAGED, DEFORMED OR COLLAPSED DURING INSTALLATION OR DRIVING.

PILE SPLICES SHALL BE IN ACCORDANCE WITH THE STANDARD SPECIFICATIONS AND AWS D1.1.

EPOXY COAT THE END BENT CAP AFTER ADJUSTMENTS ARE MADE TO BEARINGS AND ANCHOR BOLTS ARE GROUTED.

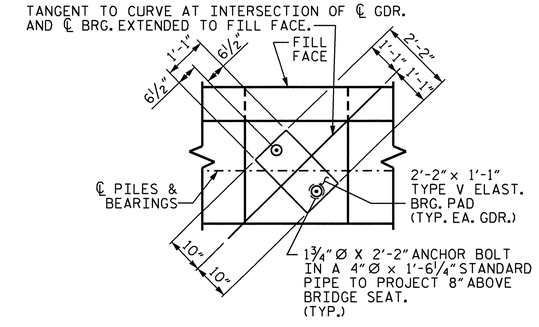

DETAIL "A"

(TYP. EA. BRG.)

TOP OF PILE ELEVATION CHART	
PILE	ELEVATION
#1	59.740
#2	60.086
#3	60.432
#4	60.779
#5	61.125
#6	61.472
#7	61.818
#8	62.164

PROJECT NO. U-4007B

ONSLOW COUNTY

STATION: 36+17.74 -NBL RAMP-

SHEET 1 OF 3

STATE OF NORTH CAROLINA
DEPARTMENT OF TRANSPORTATION
RALEIGH

SUBSTRUCTURE

END BENT #2

NORTH CAROLINA PROFESSIONAL SEAL 025516 ENGINEER EMILY E. MURRAY

8/24/10

REVISIONS							SHEET NO.
NO.	BY:	DATE:	NO.	BY:	DATE:		S-80
1			3				TOTAL SHEETS
2			4				142

DRAWN BY : B. N. BARODAWALA DATE : 3-5-10
CHECKED BY : M. D. PISO DATE : 3-16-10

23-AUG-2010 14:36
G:\TIPProjects-U\U4007b\Structures\FinalPlans\Str. #3\u-4007b_sd_eb_03.dgn
taverette

STR. #3

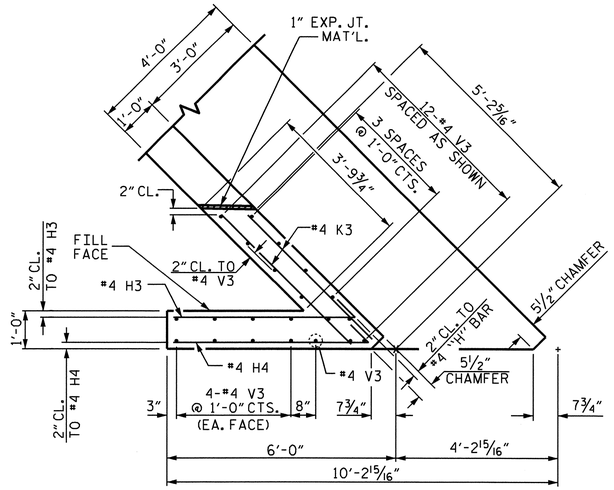

PLAN OF LEFT WING (W1)

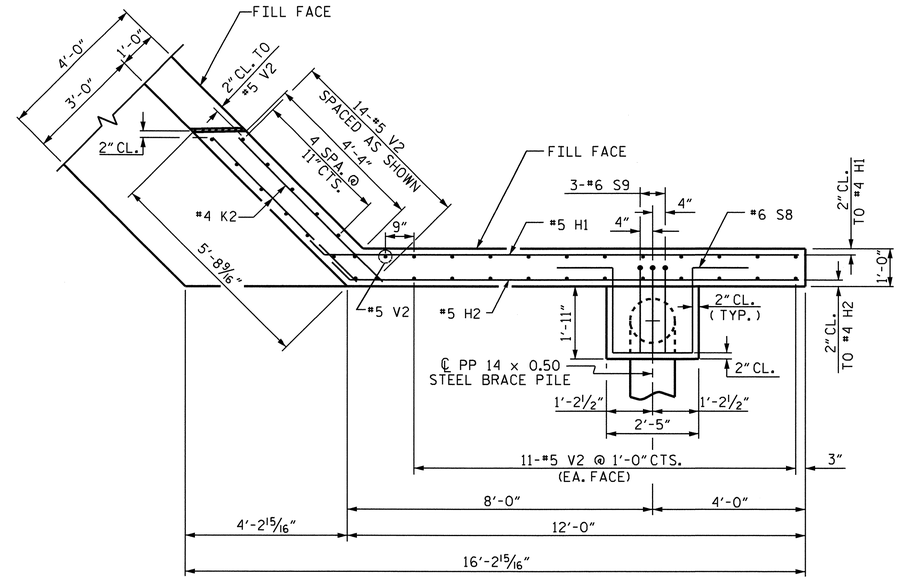

PLAN OF RIGHT WING (W2)

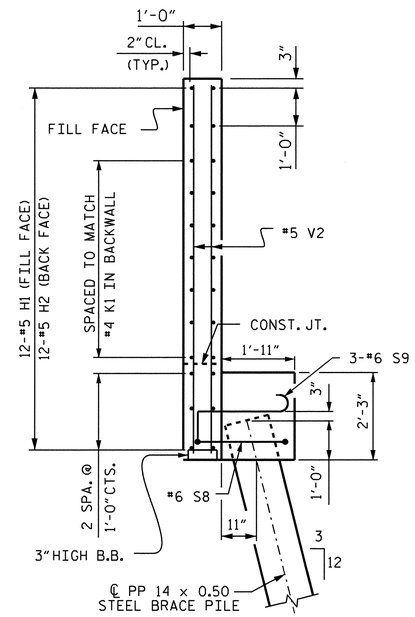

SECTION Y-Y

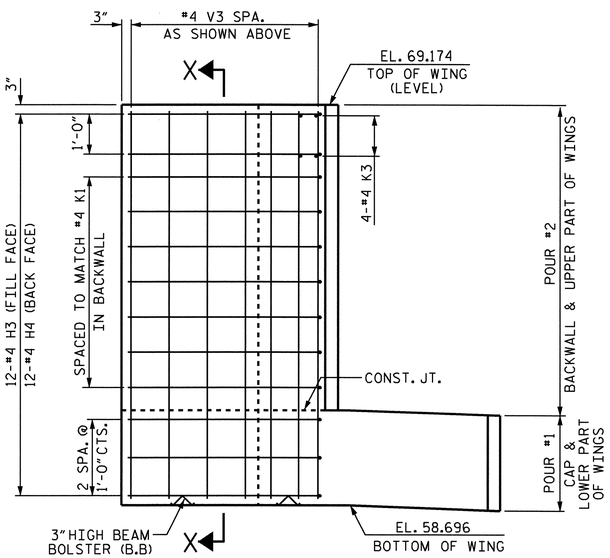

ELEVATION OF LEFT WING (W1)

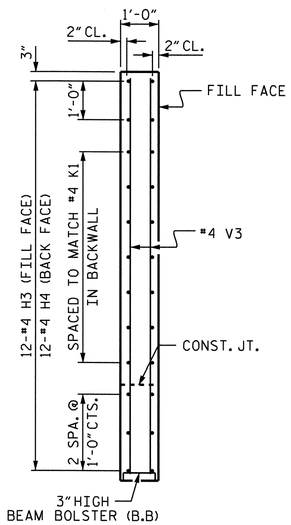

SECTION X-X

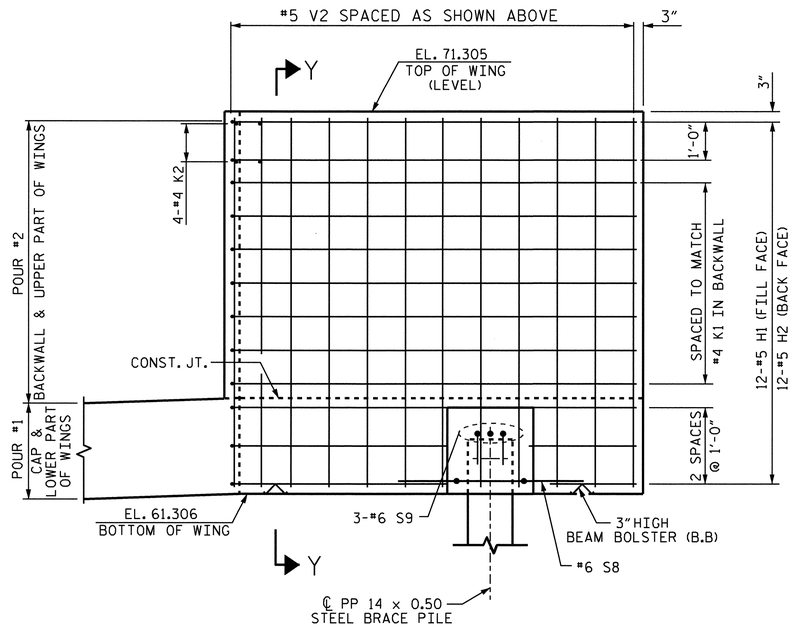

ELEVATION OF RIGHT WING (W2)

PROJECT NO. U-4007B

ONSLOW COUNTY

STATION: 36+17.74 -NBL RAMP-

SHEET 2 OF 3

STATE OF NORTH CAROLINA
DEPARTMENT OF TRANSPORTATION
RALEIGH

SUBSTRUCTURE

END BENT #2

NORTH CAROLINA PROFESSIONAL SEAL 025516 ENGINEER EMILY E. MURRAY

8/24/10

REVISIONS						SHEET NO.
NO.	BY:	DATE:	NO.	BY:	DATE:	S-81
1			3			TOTAL SHEETS
2			4			142

DRAWN BY : B. N. BARODAWALA DATE : 3-5-10
CHECKED BY : M. D. PISO DATE : 3-16-10

23-AUG-2010 14:36
G:\TIPProjects-U\U4007b\Structures\FinalPlans\Str. #3\u-4007b_sd_eb_03.dgn
taverette

STR. #3

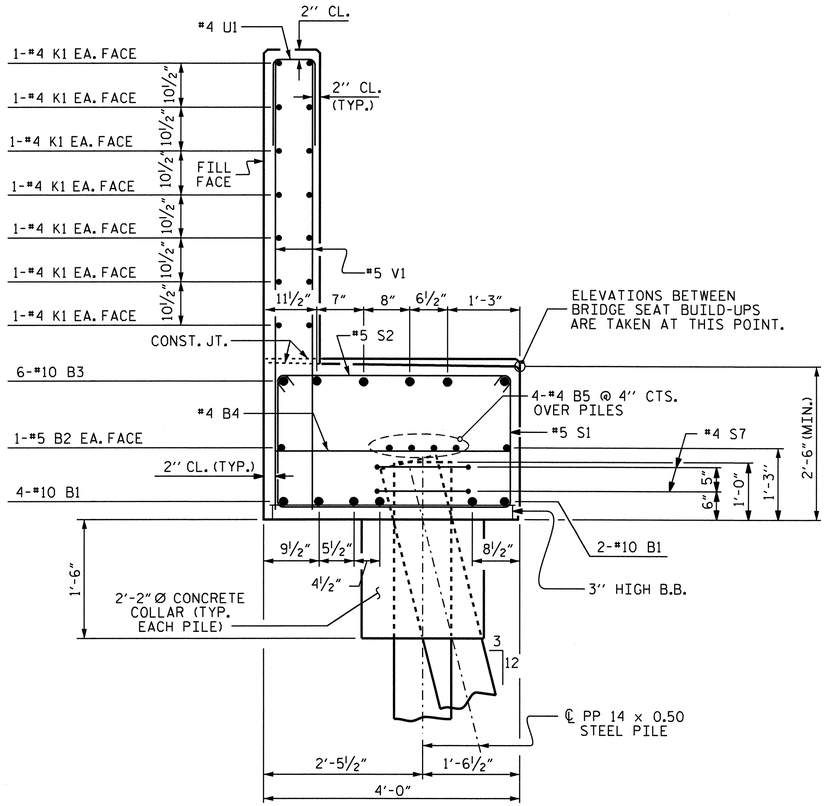

SECTION A-A

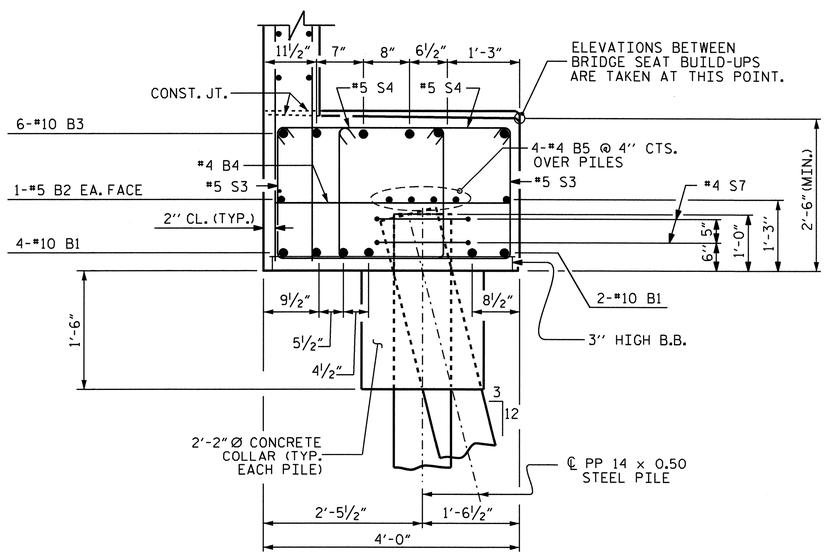

SECTION B-B

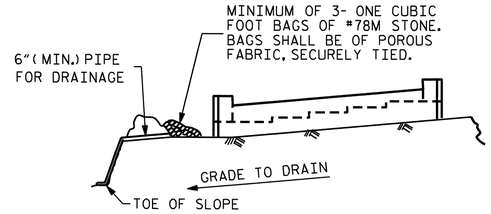

BAGGED STONE AND PIPE SHALL BE PLACED IMMEDIATELY AFTER COMPLETION OF END BENT EXCAVATION. PIPE MAY BE EITHER CONCRETE, CORRUGATED STEEL, CORRUGATED ALUMINUM ALLOY, OR CORRUGATED PLASTIC. PERFORATED PIPE WILL NOT BE ALLOWED.

BAGGED STONE SHALL REMAIN IN PLACE UNTIL THE ENGINEER DIRECTS THAT IT BE REMOVED. THE CONTRACTOR SHALL REMOVE AND DISPOSE OF SILT ACCUMULATIONS AT BAGGED STONE WHEN SO DIRECTED BY THE ENGINEER. BAGS SHALL BE REMOVED AND REPLACED WHENEVER THE ENGINEER DETERMINES THAT THEY HAVE DETERIORATED AND LOST THEIR EFFECTIVENESS.

NO SEPARATE PAYMENT WILL BE MADE FOR THIS WORK AND THE ENTIRE COST OF THIS WORK SHALL BE INCLUDED IN THE UNIT CONTRACT PRICE BID FOR THE SEVERAL PAY ITEMS.

TEMPORARY DRAINAGE AT END BENT

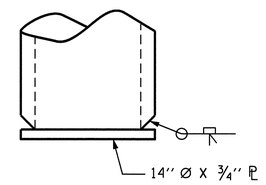

PIPE PILE PLATE DETAIL

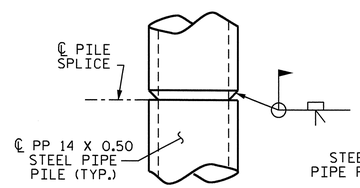

PIPE PILE SPLICE DETAIL

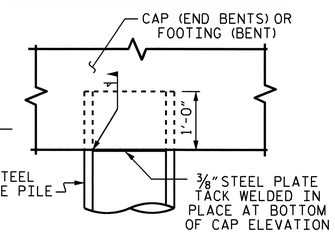

PIPE PILE IN CAP OR FOOTING DETAIL

THE CONTRACTOR MAY PROPOSE AN ALTERNATE METHOD FOR PLUGGING THE STEEL PIPE PILE. SUBJECT TO APPROVAL BY THE ENGINEER.

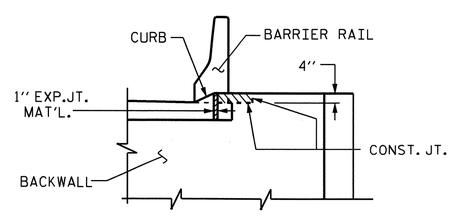

ELEVATION

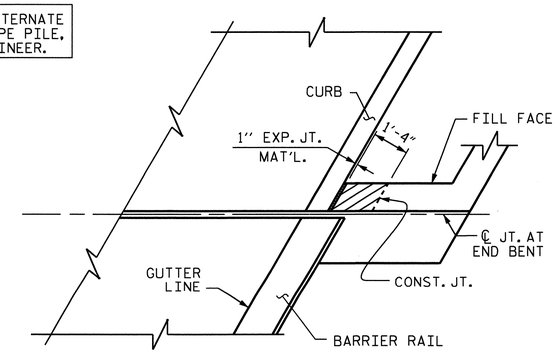

PLAN

BLOCKOUT IN WING WALL

NOTE: THE CONCRETE IN THE SHADED AREA OF THE WING SHALL BE POURED AFTER THE JOINT BETWEEN THE DECK AND APPROACH SLAB HAS BEEN SAWED AND THE BARRIER RAIL IS CAST IF SLIP FORMING IS USED.

BAR TYPES

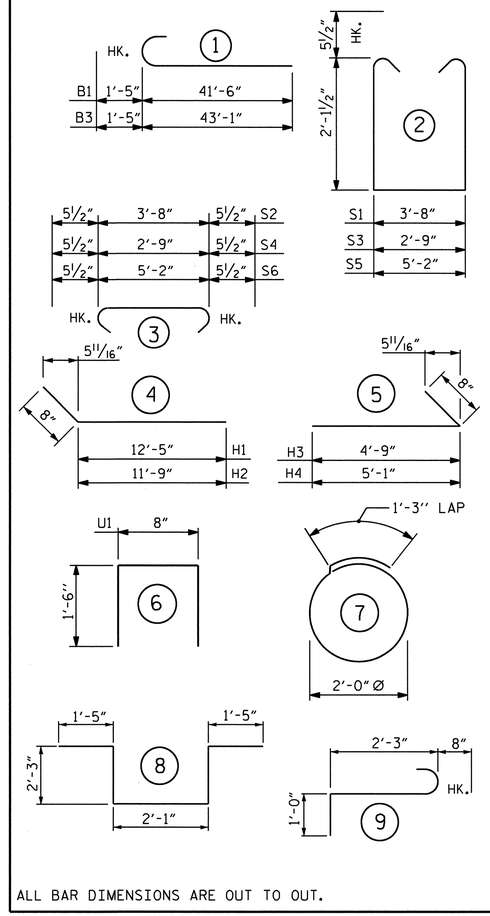

ALL BAR DIMENSIONS ARE OUT TO OUT.

BILL OF MATERIAL

END BENT #2

BAR	NO.	SIZE	TYPE	LENGTH	WEIGHT
B1	12	#10	1	42'-11"	2216
B2	4	#5	STR	39'-0"	163
B3	12	#10	1	44'-6"	2298
B4	18	#4	STR	3'-8"	44
B5	12	#4	STR	26'-8"	214
H1	12	#5	4	13'-1"	164
H2	12	#5	4	12'-5"	155
H3	12	#4	5	5'-5"	43
H4	12	#4	5	5'-9"	46
K1	42	#4	STR	26'-8"	748
K2	4	#4	STR	5'-2"	14
K3	4	#4	STR	4'-6"	12
S1	89	#5	2	8'-10"	820
S2	89	#5	3	4'-7"	425
S3	6	#5	2	7'-11"	50
S4	6	#5	3	3'-8"	23
S5	2	#5	2	10'-4"	22
S6	2	#5	3	6'-1"	13
S7	16	#4	7	7'-7"	81
S8	1	#6	8	9'-5"	14
S9	3	#6	9	3'-11"	18
U1	65	#4	6	3'-8"	159
V1	130	#5	STR	8'-2"	1107
V2	37	#5	STR	9'-8"	373
V3	21	#4	STR	10'-0"	140

REINFORCING STEEL = 9362 LBS.

CLASS "A" CONCRETE BREAKDOWN

POUR #1
CAP, LOWER PART OF WINGS, & CONCRETE PILE COLLAR — 31.2 CU. YDS.

POUR #2
BACKWALL & UPPER PART OF WINGS — 22.1 CU. YDS.

CLASS "A" CONCRETE TOTAL 53.3 CU. YDS.

PP 14 X 0.50 STEEL PILES
NO. 9 LIN. FT. 540

PIPE PILE PLATES EA. 9

PROJECT NO. U-4007B
ONSLOW COUNTY
STATION: 36+17.74 -NBL RAMP-

SHEET 3 OF 3

STATE OF NORTH CAROLINA
DEPARTMENT OF TRANSPORTATION
RALEIGH

SUBSTRUCTURE

END BENT #2

NORTH CAROLINA PROFESSIONAL SEAL 025516 ENGINEER EMILY E. MERRILL
8/24/10

REVISIONS								SHEET NO.
NO.	BY:	DATE:	NO.	BY:	DATE:			S-82
1			3					TOTAL SHEETS
2			4					142

STR. #3

DRAWN BY : B. N. BARODAWALA DATE : 3-5-10
CHECKED BY : M. D. PISO DATE : 3-16-10

23-AUG-2010 14:36
G:\TIPProjects-U\U4007b\Structures\Final Plans\Str. #3\u-4007b_sd_eb_03.dgn
taverette

GENERAL NOTES

SLOPE PROTECTION SHALL BE PLACED UNDER THE ENDS OF THE BRIDGE AS SHOWN IN THE DETAILS. STRAIGHT EDGING WILL NOT BE REQUIRED UNLESS, IN THE OPINION OF THE ENGINEER, VISUAL INSPECTION INDICATES A NEED FOR IT. FOR BERM WIDTH, SEE GENERAL DRAWING.

THE SLOPE PROTECTION SHALL CONSIST OF 4" POURED-IN-PLACE CONCRETE PAVING AS SHOWN IN THE DETAILS ON THIS SHEET. CONCRETE SHALL BE CLASS "B". THE CONCRETE SURFACE SHALL BE FLOATED WITH A WOODEN FLOAT AND FINISHED. WELDED WIRE FABRIC REINFORCING SHALL BE 6 X 6 - W1.4 X W1.4, 60" WIDE. SLOPE PROTECTION SHALL BE POURED IN 5' STRIPS AS SHOWN IN THE "POURING DETAIL" WITH 2'-0" LONG #4 BARS PLACED ALONG THE SLOPE BETWEEN STRIPS AT 1'-6" MAXIMUM SPACING. SLOPE PROTECTION MAY BE POURED IN ALTERNATE 4' AND 5' STRIPS AS SHOWN IN THE "OPTIONAL POURING DETAIL" WITH ADJACENT RUNS OF WELDED WIRE FABRIC LAPPING AT LEAST 6". THE COST OF THE WELDED WIRE FABRIC AND #4 BARS, IF USED, SHALL BE INCLUDED IN THE CONTRACT UNIT PRICE BID PER SQUARE YARD FOR SLOPE PROTECTION.

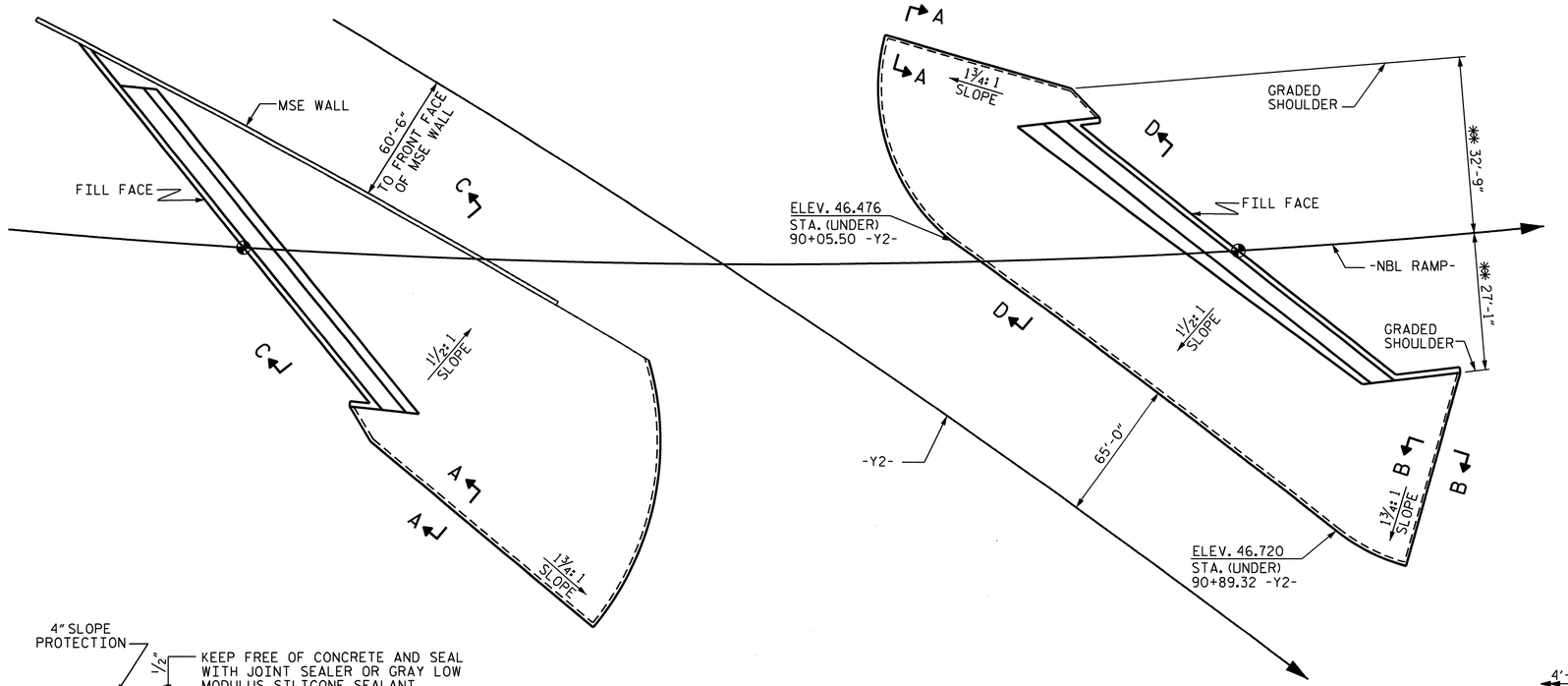

PLAN OF SLOPE PROTECTION

✱✱ RADIAL DIMENSIONS

BRIDGE @ STA. 36+17.74 -NBL RAMP-	4" INCH SLOPE PROTECTION	✱ WELDED WIRE FABRIC 60 INCHES WIDE
	SQUARE YARDS	APPROX. L.F.
END BENT 1	430	860
END BENT 2	475	950

✱ QUANTITY SHOWN IS BASED ON 5' POURS.

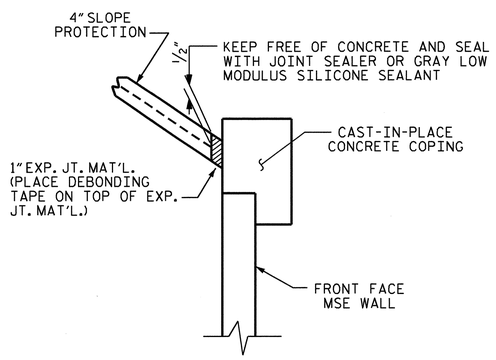

DETAIL "A"

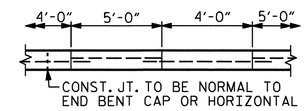

POUR A 4'-0" STRIP FIRST. STRIP WIDTHS MAY VARY IN CURVED PORTION.

OPTIONAL POURING DETAIL

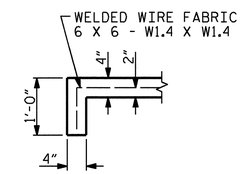

SECTION A-A

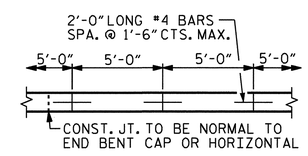

STRIP WIDTHS MAY VARY IN CURVED PORTION.

POURING DETAIL

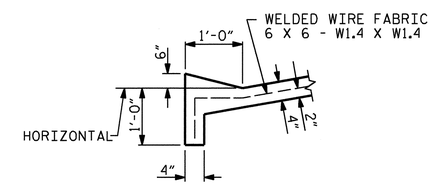

SECTION B-B

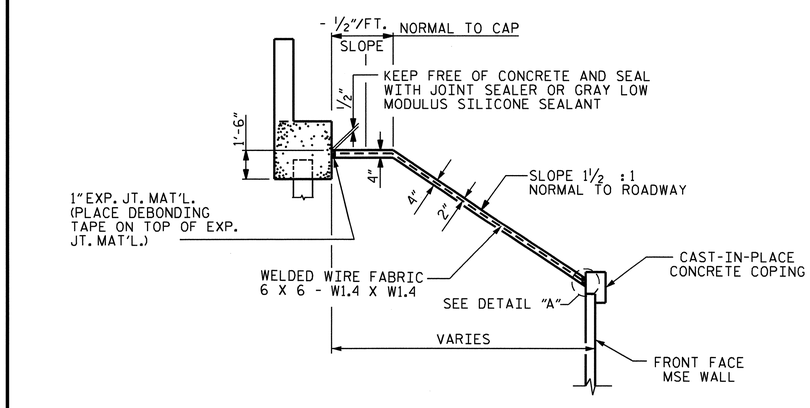

SECTION C-C

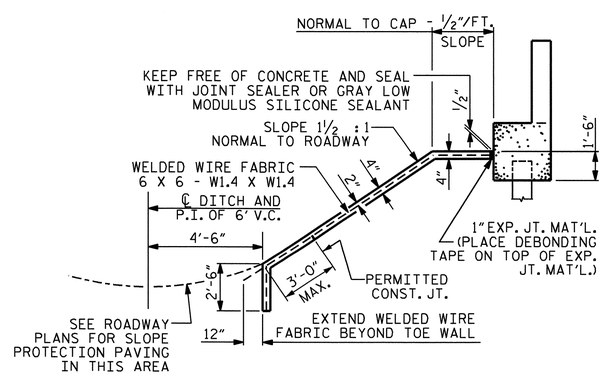

SECTION D-D

PROJECT NO. U-4007B

ONSLOW COUNTY

STATION: 36+17.74 -NBL RAMP-

STATE OF NORTH CAROLINA
DEPARTMENT OF TRANSPORTATION
RALEIGH

SLOPE PROTECTION DETAILS

NORTH CAROLINA PROFESSIONAL SEAL 025516 ENGINEER EMILY E. MURRAY

8/24/10

REVISIONS						SHEET NO.
NO.	BY:	DATE:	NO.	BY:	DATE:	S-83
1			3			TOTAL SHEETS
2			4			142

DRAWN BY : M.GUDLAUGSSON DATE : 6/7/10
CHECKED BY : T.L. AVERETTE DATE : 6/23/10

23-AUG-2010 14:35
G:\TIPProjects-U\U4007b\Structures\FinalPlans\Str. #3\U-4007B_SD_SP_03.dgn
taverette

STR. #3

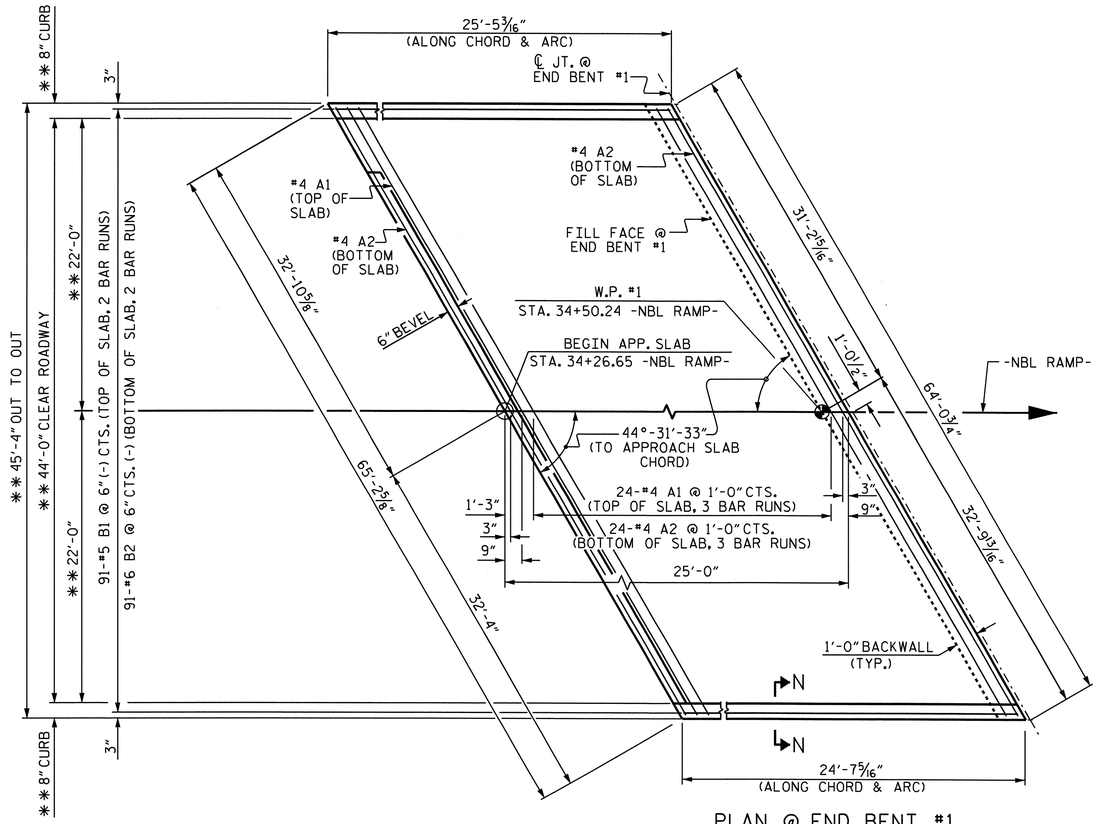

PLAN @ END BENT #1

**RADIAL DIMENSIONS

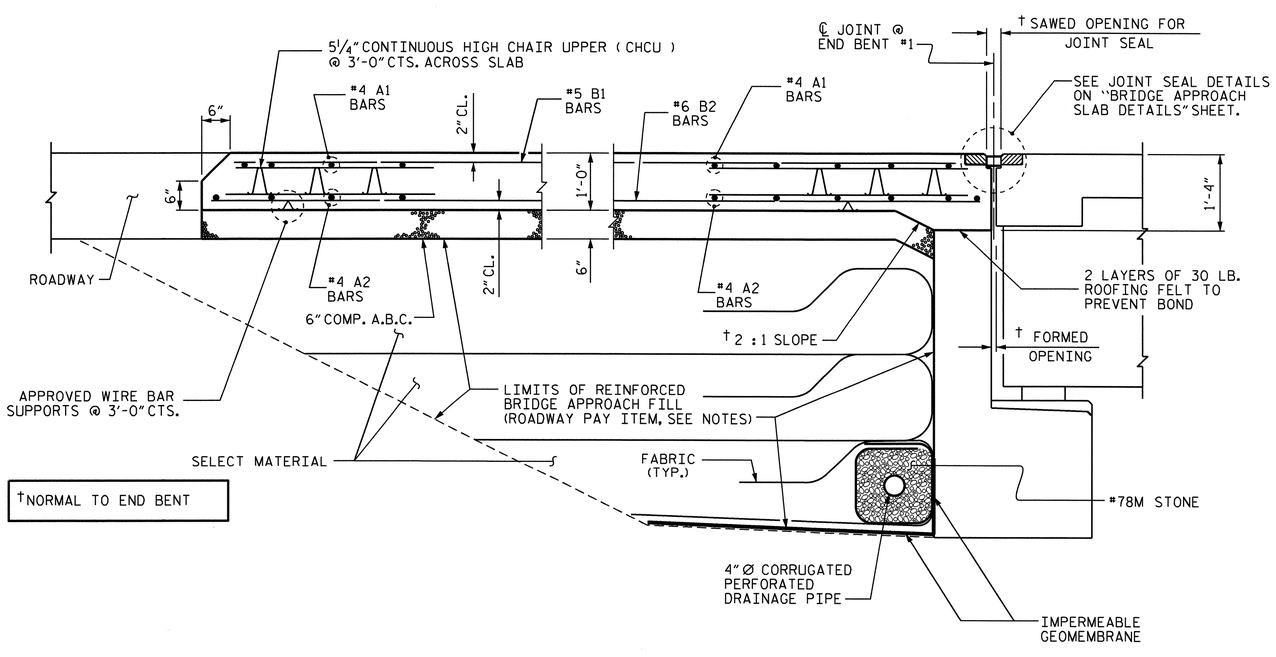

†NORMAL TO END BENT

SECTION THRU SLAB

NOTES

APPROACH SLAB SHALL NOT BE CONSTRUCTED PRIOR TO COMPLETION OF THE BRIDGE DECK.

FOR REINFORCED BRIDGE APPROACH FILL INCLUDING FABRIC, IMPERMEABLE GEOMEMBRANE, 4" Ø DRAINAGE PIPE, #78M STONE, AND SELECT MATERIAL, SEE ROADWAY PLANS.

AREA BETWEEN THE WINGWALL AND APPROACH SLAB SHALL BE GRADED TO DRAIN THE WATER AWAY FROM THE FILL FACE OF THE BRIDGE AND SHALL BE PAVED. SEE ROADWAY PLANS.

THE 6" COMP. A.B.C. SHALL BE FLUSH WITH THE ROADWAY END OF THE APPROACH SLAB AND SHALL EXTEND 1'-0" OUTSIDE EACH EDGE OF THE APPROACH SLAB.

THE CONTRACTOR MAY USE 4" TYPE B-25.0B ASPHALT CONCRETE BASE COURSE IN LIEU OF 6" COMP. A.B.C. IF THIS OPTION IS USED, THE BASE COURSE SHALL BE FLUSH WITH THE ROADWAY END OF THE APPROACH SLAB, AND THE WIDTH SHALL BE THE SAME AS THAT OF THE APPROACH SLAB.

THE CONTRACTOR MAY USE 5" CLASS "A" CONCRETE BASE IN LIEU OF 6" COMP. A.B.C. IF THIS OPTION IS USED, THE CONCRETE BASE SHALL BE FLUSH WITH THE ROADWAY END OF THE APPROACH SLAB, AND THE WIDTH SHALL BE THE SAME AS THAT OF THE APPROACH SLAB. THE CONCRETE SHALL BE FINISHED TO A SMOOTH SURFACE AND A LAYER OF 30 LB ROOFING FELT SHALL BE PLACED BETWEEN THE CONCRETE BASE AND THE APPROACH SLAB TO PREVENT BOND. THE APPROACH SLAB SHALL NOT BE CAST UNTIL THE CONCRETE BASE HAS REACHED AN AGE OF THREE CURING DAYS.

THE JOINT SHALL BE SAWED PRIOR TO THE CASTING OF THE BARRIER RAIL.

FOR EVAZOTE JOINT SEALS, SEE SPECIAL PROVISIONS.

THE NOMINAL UNCOMPRESSED SEAL WIDTH OF THE EVAZOTE JOINT SEAL SHALL BE 2 1/2".

FOR ELASTOMERIC CONCRETE, SEE SPECIAL PROVISIONS.

BILL OF MATERIAL

APPROACH SLAB AT EB #1

BAR	NO.	SIZE	TYPE	LENGTH	WEIGHT
* A1	75	#4	STR	22'-11"	1148
A2	78	#4	STR	22'-9"	1185
* B1	182	#5	STR	13'-5"	2547
B2	182	#6	STR	13'-9"	3759
REINFORCING STEEL				LBS.	4944
* EPOXY COATED REINFORCING STEEL				LBS.	3695
CLASS AA CONCRETE				C. Y.	42.6

SPLICE CHART

	EPOXY COATED	UNCOATED
#4	2'-0"	1'-9"
#5	2'-6"	2'-2"
#6	3'-10"	2'-7"

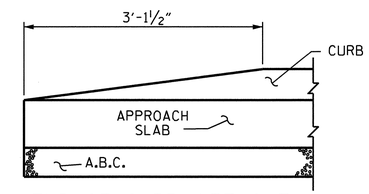

END OF CURB WITHOUT SHOULDER BERM GUTTER

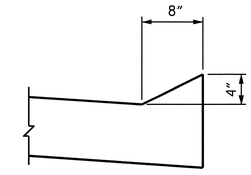

SECTION N-N

CURB DETAILS

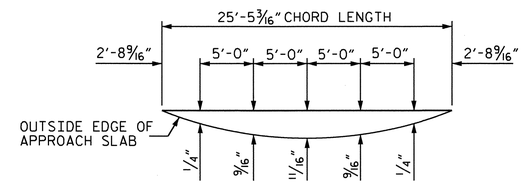

LEFT SIDE

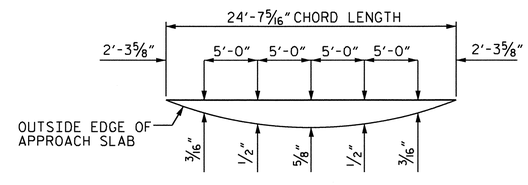

RIGHT SIDE

ARC OFFSETS

APPROACH SLAB @ END BENT #1

PROJECT NO. U-4007B

ONSLOW COUNTY

STATION: 36+17.74 -NBL RAMP-

SHEET 1 OF 3

STATE OF NORTH CAROLINA
DEPARTMENT OF TRANSPORTATION
RALEIGH

STANDARD

BRIDGE APPROACH SLAB FOR FLEXIBLE PAVEMENT

APPROACH SLAB @ END BENT #1

NORTH CAROLINA PROFESSIONAL SEAL 025516 ENGINEER EMILY E. MURRAY 8/24/10

REVISIONS							SHEET NO.
NO.	BY:	DATE:	NO.	BY:	DATE:		S-84
1			3				TOTAL SHEETS
2			4				142

ASSEMBLED BY : M.D.PISO	DATE : 03/01/10	
CHECKED BY : M.GUDLAUGSSON	DATE : 3/12/10	
DRAWN BY : EEM 3/95	REV. 7/10/01	LES/RDR
CHECKED BY : VAP 3/95	REV. 5/7/03R	RWW/JTE
	REV. 5/1/06R	KMM/GM

23-AUG-2010 14:33
G:\TIPProjects-U\U4007b\Structures\FinalPlans\Str. #3\u-4007b_sd_as03.dgn
taverette

STR. #3

STD. NO. BAS4 (SHT 6)

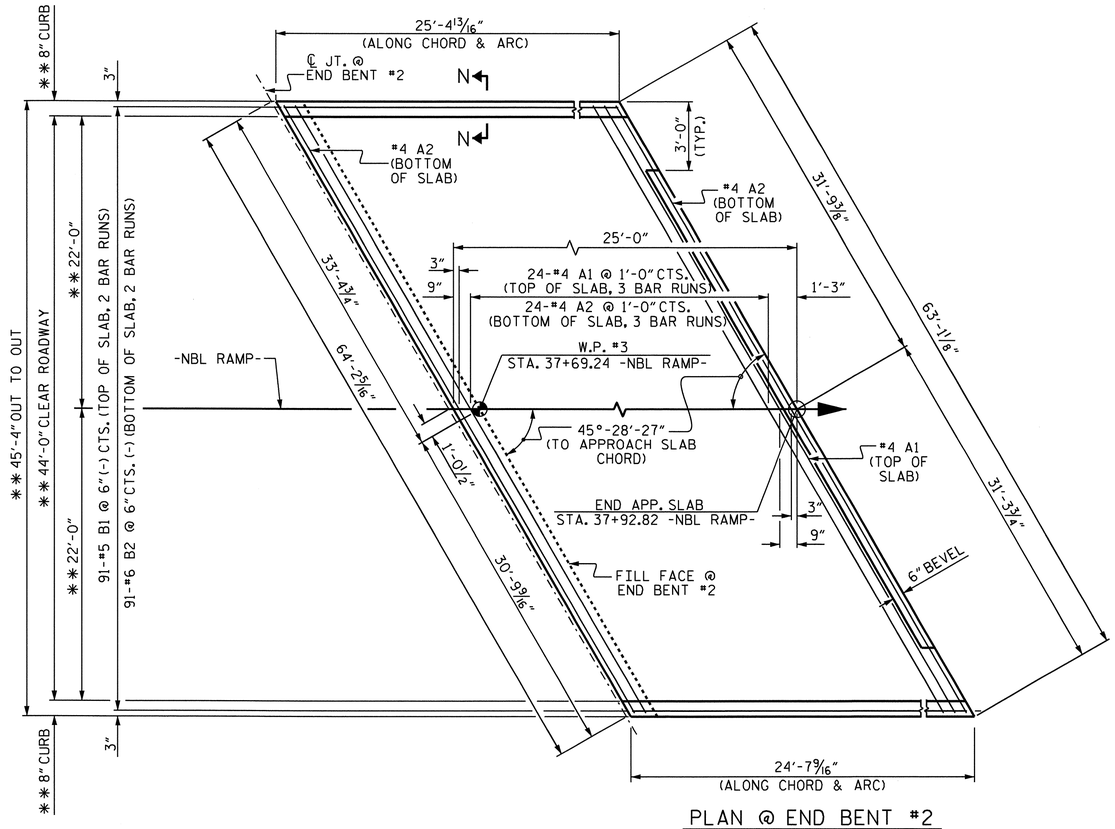

PLAN @ END BENT #2

**RADIAL DIMENSIONS

BILL OF MATERIAL

APPROACH SLAB AT EB #2

BAR	NO.	SIZE	TYPE	LENGTH	WEIGHT
* A1	75	#4	STR	22'-7"	1131
A2	78	#4	STR	22'-5"	1168
* B1	182	#5	STR	13'-5"	2547
B2	182	#6	STR	13'-9"	3759
REINFORCING STEEL				LBS.	4927
* EPOXY COATED REINFORCING STEEL				LBS.	3678
CLASS AA CONCRETE				C. Y.	42.6

SPLICE CHART

	EPOXY COATED	UNCOATED
#4	2'-0"	1'-9"
#5	2'-6"	2'-2"
#6	3'-10"	2'-7"

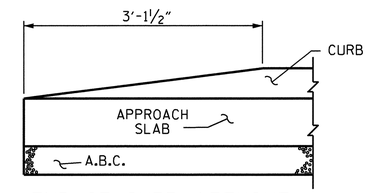

END OF CURB WITHOUT SHOULDER BERM GUTTER

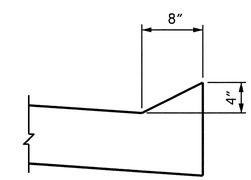

SECTION N-N

CURB DETAILS

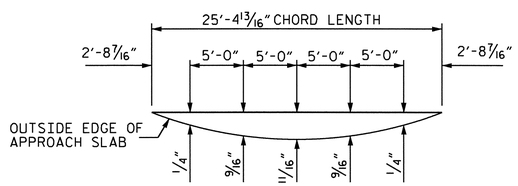

LEFT SIDE

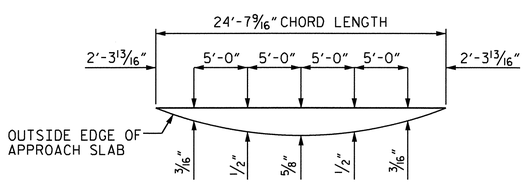

RIGHT SIDE

ARC OFFSETS

APPROACH SLAB @ END BENT #2

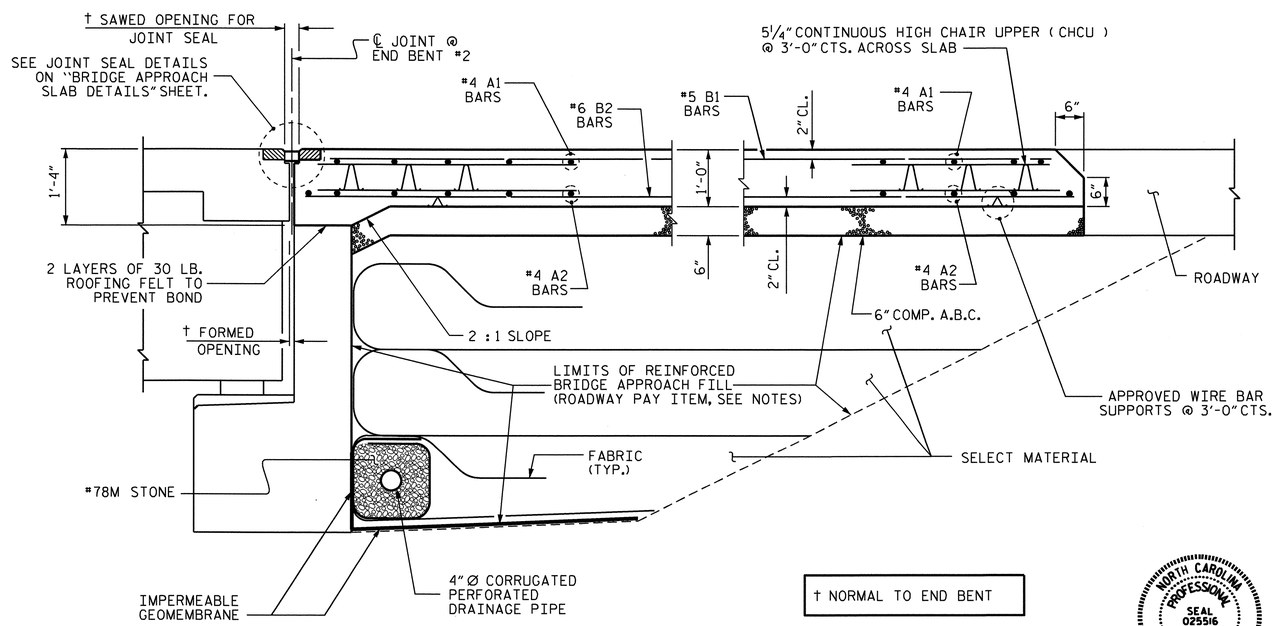

† NORMAL TO END BENT

SECTION THRU SLAB

PROJECT NO. U-4007B

ONSLOW COUNTY

STATION: 36+17.74 -NBL RAMP-

SHEET 2 OF 3

STATE OF NORTH CAROLINA
DEPARTMENT OF TRANSPORTATION
RALEIGH

STANDARD

BRIDGE APPROACH SLAB FOR FLEXIBLE PAVEMENT

APPROACH SLAB @ END BENT #2

NORTH CAROLINA PROFESSIONAL SEAL 025516 ENGINEER ELMER E. MURRAY
8/24/10

REVISIONS						SHEET NO.
NO.	BY:	DATE:	NO.	BY:	DATE:	S-85
1			3			TOTAL SHEETS
2			4			142

STR. #3

STD. NO. BAS4 (SHT 6)

ASSEMBLED BY : M.D.PISO		DATE : 03/01/10	
CHECKED BY : M.GUDLAUGSSON		DATE : 3/12/10	
DRAWN BY : EEM 3/95	REV. 7/10/01	LES/RDR	
CHECKED BY : VAP 3/95	REV. 5/7/03R	RWW/JTE	
	REV. 5/1/06R	KMM/GM	

23-AUG-2010 14:33
G:\TIPProjects-U\U4007b\Structures\FinalPlans\Str. #3\u-4007b_sd_as03.dgn
taverette

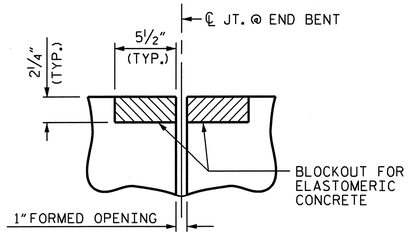

SECTION C-C

EVAZOTE JOINT SEAL
(PRE-SAWED ELASTOMERIC
CONCRETE DIMENSIONS)

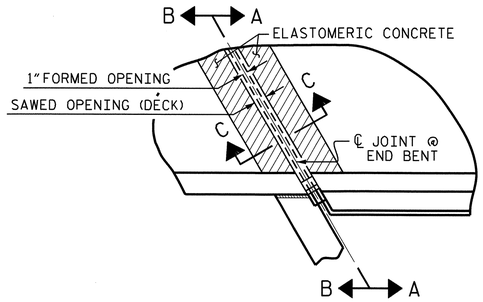

PLAN

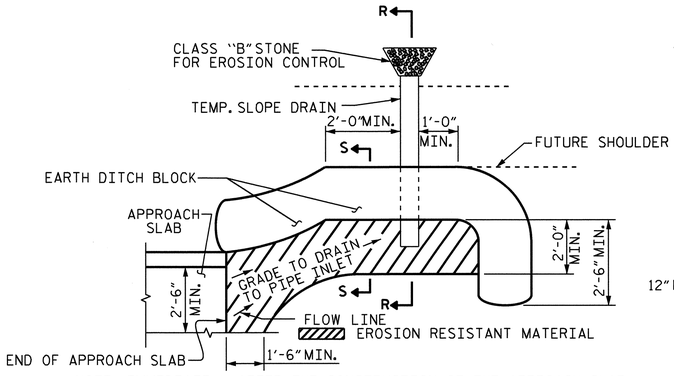

NOTE: IMMEDIATELY AFTER THE CONSTRUCTION OF THE APPROACH SLAB, THE CONTRACTOR SHALL PROVIDE TEMPORARY BERM AND SLOPE DRAIN. CONTRACTOR SHALL GRADE TO PIPE INLET AND PROVIDE EROSION RESISTANT MATERIAL AS SHOWN. THE EROSION RESISTANT MATERIAL SHALL BE EITHER 1) ASPHALT PLANT MIX, TYPE 1 OR TYPE 2, MIN. 2" DEPTH, 2) EROSION CONTROL MAT, OR 3) CONCRETE, AS DIRECTED BY THE ENGINEER. THE SLOPE DRAIN SHALL CONSIST OF A NON-PERFORATED TEMPORARY DRAINAGE PIPE, 12 INCHES IN DIAMETER.

PLAN VIEW

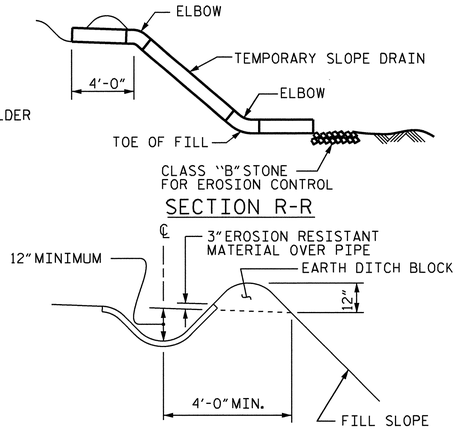

SECTION S-S

TEMPORARY BERM AND SLOPE DRAIN DETAILS

(TO BE USED WHEN SHOULDER BERM GUTTER IS REQUIRED)

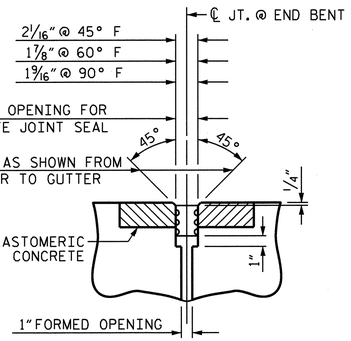

SECTION C-C

EVAZOTE JOINT SEAL
(EXPANSION)

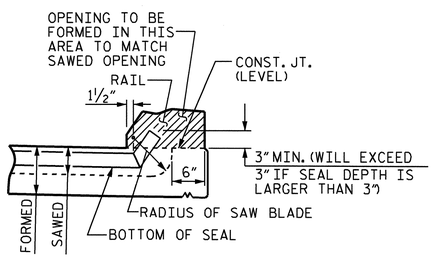

SECTION A-A

ELASTOMERIC CONCRETE	
END BENT NO.	ELASTOMERIC CONCRETE * (CU. FT.)
1	10.7
2	10.7
TOTAL	21.4

* BASED ON THE MINIMUM BLOCKOUT SHOWN.

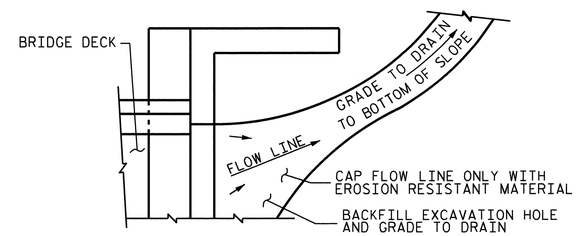

NOTE: IF THE APPROACH SLAB IS NOT CONSTRUCTED IMMEDIATELY AFTER THE BACKFILLING OF THE END BENT EXCAVATION, GRADE TO DRAIN TO THE BOTTOM OF THE SLOPE AND PROVIDE EROSION RESISTANT MATERIAL, SUCH AS FIBERGLASS ROVING OR AS DIRECTED BY THE ENGINEER TO PREVENT SOIL EROSION AND TO PROTECT THE AREA ADJACENT TO THE STRUCTURE. THE CONTRACTOR WILL BE REQUIRED TO REMOVE THESE MATERIALS PRIOR TO CONSTRUCTION OF THE APPROACH SLAB.

TEMPORARY DRAINAGE DETAIL

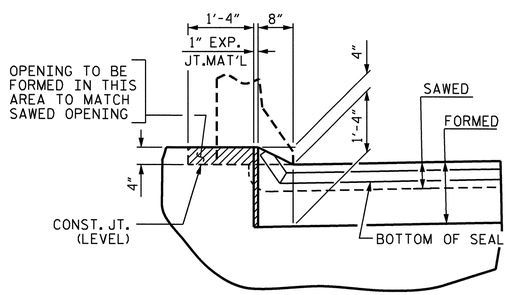

SECTION B-B

JOINT SEAL DETAILS @ END BENT

EVAZOTE JOINT SEAL TO BE CUT, HEAT WELDED AND TURNED UP PARALLEL TO SLOPED FACE OF THE BARRIER RAIL.

THE JOINT SHALL BE SAWED PRIOR TO THE CASTING OF THE BARRIER RAIL.

PROJECT NO. U-4007B

ONSLOW COUNTY

STATION: 36+17.74 -NBL RAMP-

SHEET 3 OF 3

STATE OF NORTH CAROLINA
DEPARTMENT OF TRANSPORTATION
RALEIGH

STANDARD

BRIDGE APPROACH
SLAB DETAILS

NORTH CAROLINA PROFESSIONAL SEAL 025516 ENGINEER EMILY E. MURRAY

8/24/10

ASSEMBLED BY :	M.D.PISO	DATE :	03/01/10
CHECKED BY :	M.GUDLAUGSSON	DATE :	3/12/10

DRAWN BY : FCJ	11/88	REV. 10/17/00	RWW/LES
CHECKED BY : ARB	11/88	REV. 5/7/03	RWW/JTE
		REV. 5/1/06R	MAA/KMM

REVISIONS							SHEET NO.
NO.	BY:	DATE:	NO.	BY:	DATE:		S-86
1			3				TOTAL SHEETS
2			4				142

23-AUG-2010 14:33
G:\TIPProjects-U\U4007b\Structures\FinalPlans\Str. #3\u-4007b_sd_as03.dgn
taverette

STR.#3 STD. NO. BAS10 (SHT 4)

F.A. PROJECT NO. STM-0017(111)

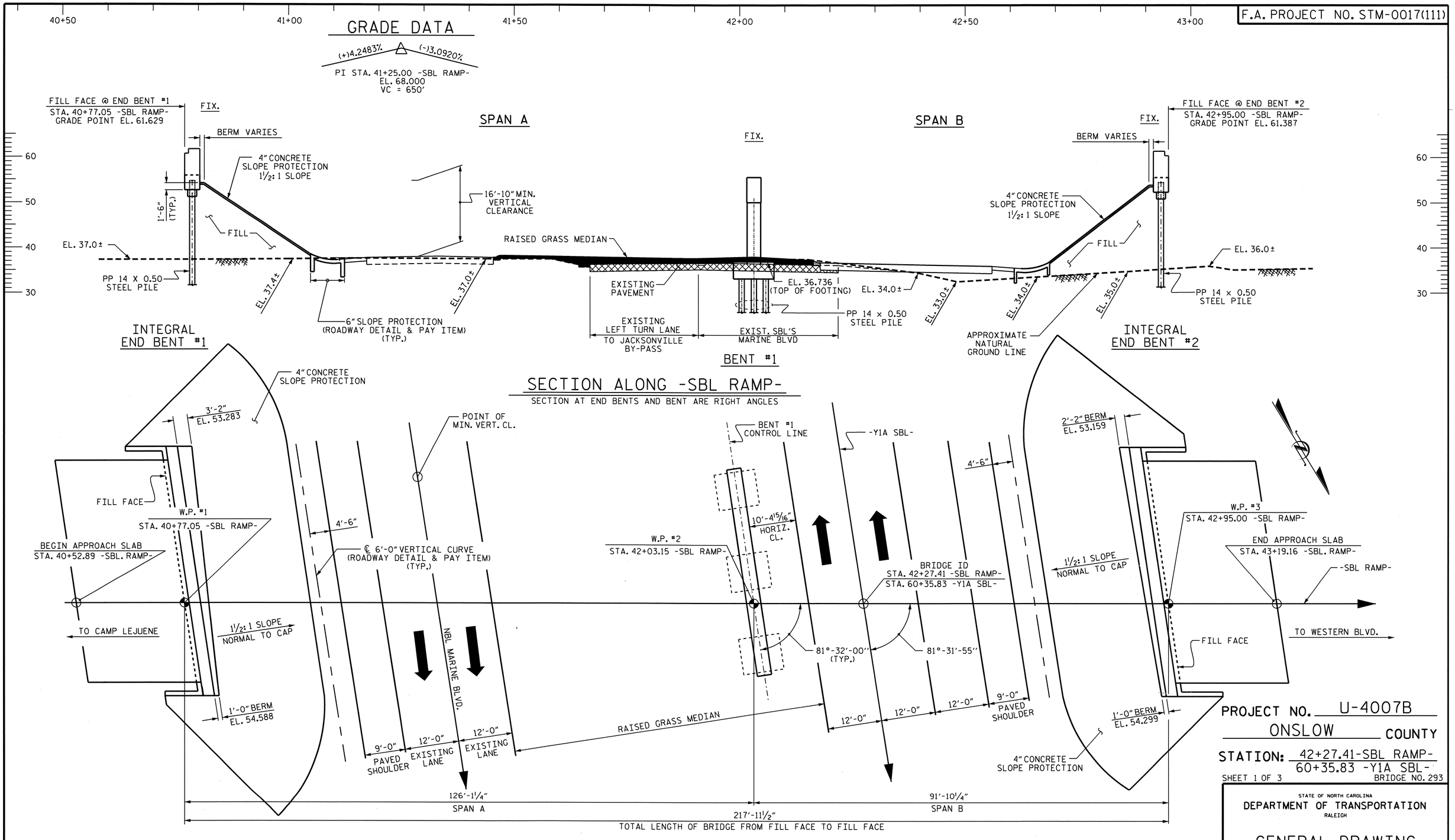

PLAN

PILES NOT SHOWN FOR CLARITY

PROJECT NO. U-4007B

ONSLOW COUNTY

STATION: 42+27.41-SBL RAMP-
60+35.83 -Y1A SBL-

SHEET 1 OF 3

BRIDGE NO. 293

STATE OF NORTH CAROLINA
DEPARTMENT OF TRANSPORTATION
RALEIGH

GENERAL DRAWING
FOR BRIDGE ON WESTERN PARKWAY OVER MARINE BLVD. BETWEEN HAWKSIDE ROAD AND COUNTRY CLUB ROAD

NORTH CAROLINA PROFESSIONAL SEAL 12274 ENGINEER OMAR R. AZIZ
8/24/10

NORTH CAROLINA PROFESSIONAL SEAL 025516 ENGINEER EMILY E. MORRAY
8/24/10

REVISIONS						SHEET NO.
NO.	BY:	DATE:	NO.	BY:	DATE:	S-87
1			3			TOTAL SHEETS
2			4			142

DRAWN BY : B. N. BARODAWALA DATE : 2-19-10
CHECKED BY : PEGGY PARISI DATE : 6-7-10

23-AUG-2010 15:34
Z:\TIPProjects-U\U4007b\Structures\Final Plans\Str. #4\u-4007b_sd_gd_04.dgn
PADKINS

STR. #4

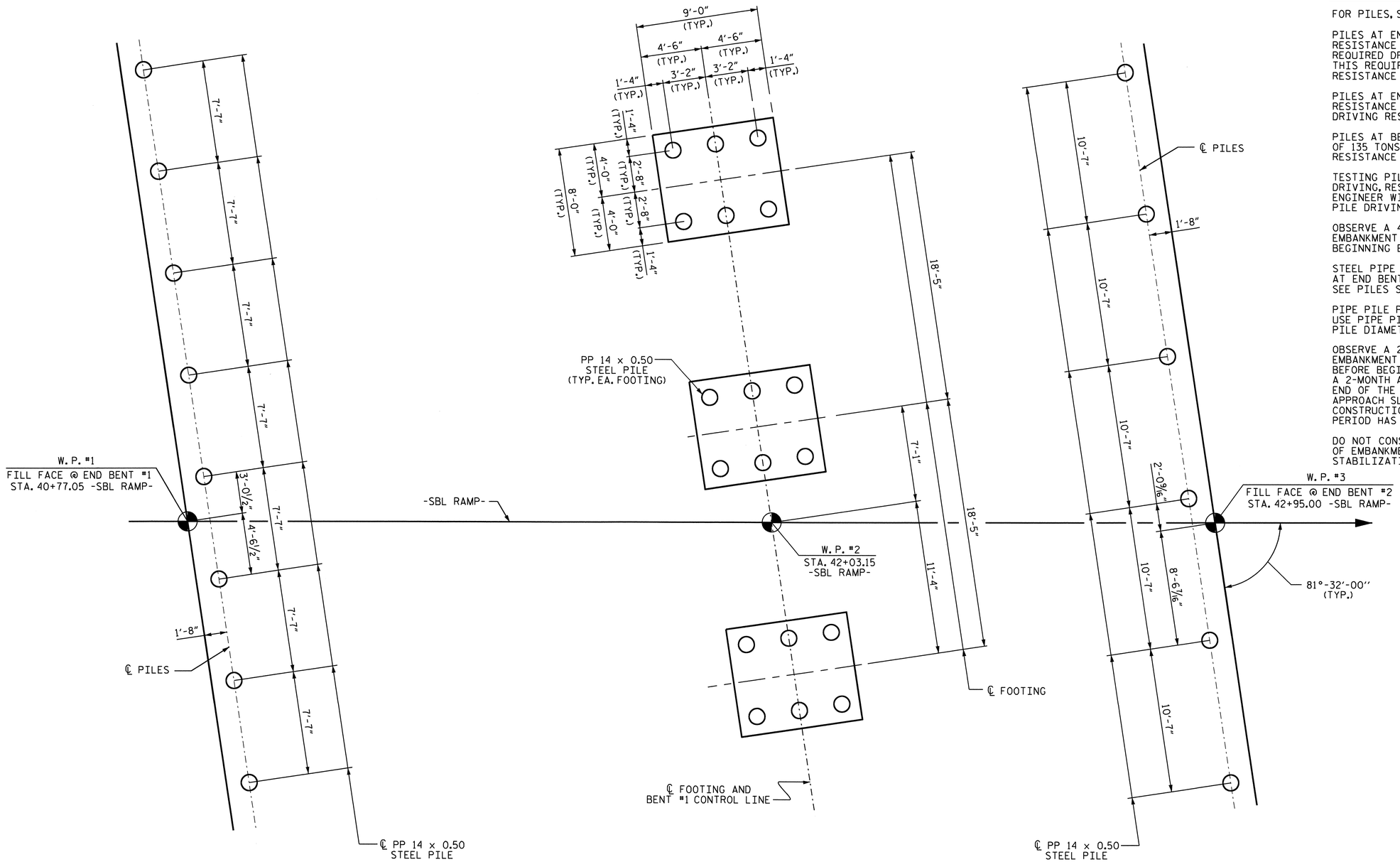

INTEGRAL
END BENT #1

BENT #1

INTEGRAL
END BENT #2

FOUNDATION LAYOUT PLAN

DIMENSIONS LOCATING PILES ARE SHOWN TO THE PILE CENTERLINE.
DIMENSIONS SHOWN ARE TYPICAL FOR EACH BENT FOOTING.

NOTES

FOR PILES, SEE SPECIAL PROVISIONS.

PILES AT END BENT NO. 1 ARE DESIGNED FOR A FACTORED RESISTANCE OF 120 TONS PER PILE. DRIVE PILES TO A REQUIRED DRIVING RESISTANCE OF 250 TONS PER PILE. THIS REQUIRED DRIVING RESISTANCE INCLUDES ADDITIONAL RESISTANCE FOR DOWNDRAG OR SCOUR.

PILES AT END BENT NO. 2 ARE DESIGNED FOR A FACTORED RESISTANCE OF 120 TONS PER PILE. DRIVE PILES TO A REQUIRED DRIVING RESISTANCE OF 200 TONS PER PILE.

PILES AT BENT NO. 1 ARE DESIGNED FOR A FACTORED RESISTANCE OF 135 TONS PER PILE. DRIVE PILES TO A REQUIRED DRIVING RESISTANCE OF 225 TONS PER PILE.

TESTING PILES WITH THE PILE DRIVING ANALYZER (PDA) DURING DRIVING, RESTRIKING OR REDRIVING MAY BE REQUIRED. THE ENGINEER WILL DETERMINE THE NEED FOR PDA TESTING. FOR PILE DRIVING ANALYZER, SEE PILES SPECIAL PROVISION.

OBSERVE A 4-MONTH WAITING PERIOD AFTER CONSTRUCTING THE EMBANKMENT TO WITHIN 2 FT. OF FINAL GRADE ELEVATION BEFORE BEGINNING END BENT CONSTRUCTION AT END BENT NO. 2.

STEEL PIPE PILE CONICAL POINTS ARE REQUIRED FOR PIPE PILES AT END BENT NO. 1 AND END BENT NO. 2. FOR STEEL PILE POINTS, SEE PILES SPECIAL PROVISION.

PIPE PILE PLATES ARE REQUIRED FOR PIPE PILES AT BENT NO. 1. USE PIPE PILE PLATES WITH A DIAMETER EQUAL TO THE PIPE PILE DIAMETER.

OBSERVE A 2-MONTH WAITING PERIOD AFTER CONSTRUCTING THE EMBANKMENT TO WITHIN 2 FT. OF FINAL GRADE ELEVATION BEFORE BEGINNING END BENT CONSTRUCTION AT END BENT NO. 1. A 2-MONTH ADDITIONAL WAITING PERIOD IS REQUIRED FROM THE END OF THE INITIAL WAITING PERIOD BEFORE BEGINNING APPROACH SLAB CONSTRUCTION AT END BENT NO. 1. END BENT CONSTRUCTION MAY BEGIN AFTER THE INITIAL 2-MONTH WAITING PERIOD HAS ENDED.

DO NOT CONSTRUCT END BENT EMBANKMENTS PRIOR TO PLACEMENT OF EMBANKMENT STABILIZATION FABRIC. FOR EMBANKMENT STABILIZATION FABRIC, SEE ROADWAY PLANS.

PROJECT NO. U-4007B
ONSLOW COUNTY
STATION: 42+27.41-SBL RAMP-
60+35.83 -Y1A SBL-

SHEET 2 OF 3

STATE OF NORTH CAROLINA
DEPARTMENT OF TRANSPORTATION
RALEIGH

GENERAL DRAWING

FOR BRIDGE ON WESTERN PARKWAY OVER MARINE BLVD. BETWEEN HAWKSIDE ROAD AND COUNTRY CLUB ROAD

NORTH CAROLINA PROFESSIONAL SEAL 025516 ENGINEER EMILY E. MURRAY
9/24/10

REVISIONS						SHEET NO.
NO.	BY:	DATE:	NO.	BY:	DATE:	S-88
1			3			TOTAL SHEETS
2			4			142

DRAWN BY : B.N. BARODAWALA DATE : 2-22-10
CHECKED BY : PEGGY PARISI DATE : 6-7-10

23-AUG-2010 15:33
Z:\TIPProjects-U\U4007b\Structures\Final Plans\Str. #4\u-4007b_sd_gd_04.dgn
PADKINS

STR. #4

BM: 30" #5 REBAR WITH ALUMINUM TRAVERSE CAPS, 22.54' LEFT OF STA. 40+89.96 -SBL RAMP-, EL. 38.810

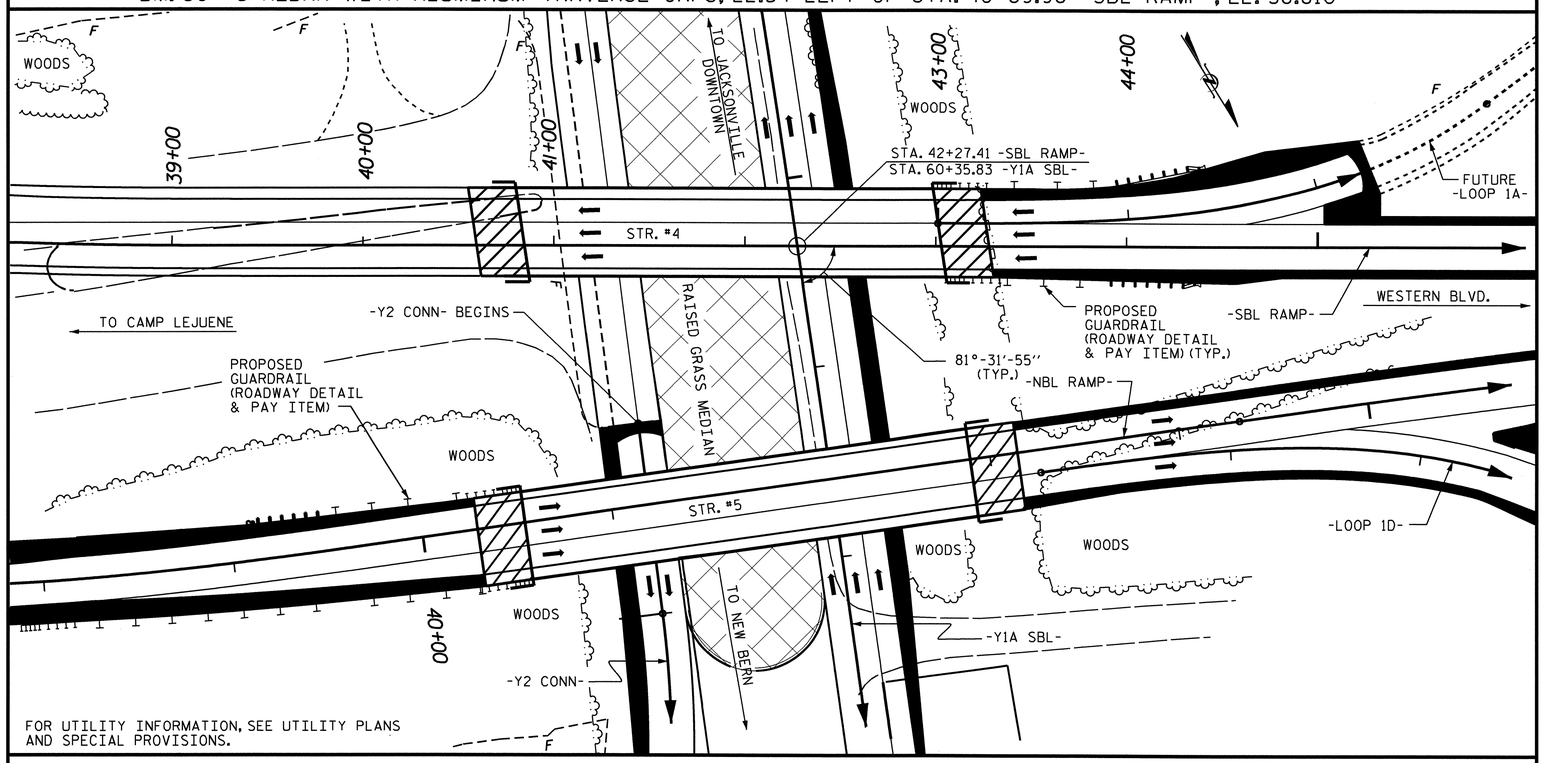

LOCATION SKETCH

NOTES

ASSUMED LIVE LOAD = HL-93 OR ALTERNATE LOADING.

FOR OTHER DESIGN DATA AND GENERAL NOTES, SEE SHEET SN.

THIS BRIDGE HAS BEEN DESIGNED IN ACCORDANCE WITH THE AASHTO LRFD BRIDGE DESIGN SPECIFICATIONS.

ALL STRUCTURAL STEEL SHALL BE AASHTO M270 GRADE 50W.

REMOVABLE FORMS MAY BE USED IN LIEU OF METAL STAY-IN-PLACE FORMS IN ACCORDANCE WITH ARTICLE 420-3 OF THE STANDARD SPECIFICATIONS.

FOR MAINTENANCE AND PROTECTION OF TRAFFIC BENEATH PROPOSED STRUCTURE, SEE SPECIAL PROVISIONS.

THE CONTRACTOR SHALL PROVIDE INDEPENDENT ASSURANCE SAMPLES OF REINFORCING STEEL AS FOLLOWS: FOR PROJECTS REQUIRING UP TO 400 TONS OF REINFORCING STEEL, ONE 30 INCH SAMPLE OF EACH SIZE BAR USED, AND FOR PROJECTS REQUIRING OVER 400 TONS OF REINFORCING STEEL, TWO 30 INCH SAMPLES OF EACH SIZE BAR USED. THE BARS FROM WHICH THE SAMPLES ARE TAKEN MUST THEN BE SPLICED WITH REPLACEMENT BARS OF THE SIZE AND LENGTH OF THE SAMPLE, PLUS A MINIMUM LAP SPLICE OF THIRTY BAR DIAMETERS.

NEEDLE BEAMS WILL NOT BE ALLOWED UNLESS OTHERWISE CALLED FOR ON THE PLANS OR APPROVED BY THE ENGINEER.

FOR SUBMITTAL OF WORKING DRAWINGS, SEE SPECIAL PROVISIONS.

FOR FALSEWORK AND FORMWORK, SEE SPECIAL PROVISIONS.

FOR CRANE SAFETY, SEE SPECIAL PROVISIONS.

FOR GROUT FOR STRUCTURES, SEE SPECIAL PROVISIONS.

FOR CURING CONCRETE, SEE SPECIAL PROVISIONS.

FOR FORMS FOR CONCRETE BRIDGE DECKS, SEE SPECIAL PROVISIONS.

FOR PLACING LOAD ON STRUCTURE MEMBERS, SEE SPECIAL PROVISIONS.

FOR EROSION CONTROL MEASURES SEE EROSION CONTROL PLANS.

FOR SHIPPING STRUCTURAL STEEL MEMBERS, SEE SPECIAL PROVISIONS.

THE EXISTING PAVEMENT WITHIN THE AREA OF THE END BENT PILES SHALL BE REMOVED AND THE ROADBED SCARIFIED TO A MINIMUM DEPTH OF 2'-0".

TOTAL BILL OF MATERIAL

	FOUNDATION EXCAVATION	PDA TESTING	PDA ASSISTANCE	REINFORCED CONCRETE DECK SLAB	GROOVING BRIDGE FLOORS	CLASS A CONCRETE	BRIDGE APPROACH SLABS	REINFORCING STEEL	SPIRAL COLUMN REINFORCING STEEL	STRUCTURAL STEEL	PP 14 x 0.50 STEEL PILES		STEEL PILE POINTS	PIPE PILE PLATES	CONCRETE BARRIER RAIL	4" SLOPE PROTECTION	POT BEARINGS	ELASTOMERIC BEARINGS	EVAZOTE JOINT SEALS
	LUMP SUM	EACH	EACH	SQ.FT.	SQ.FT.	CU.YDS.	LUMP SUM	LBS.	LBS.	APPROX. LBS.	NO.	LIN.FT.	EACH	EACH	LIN.FT.	SQ.FT.	LUMP SUM	LUMP SUM	LUMP SUM
SUPERSTRUCTURE				10734	11243					349,400					432.5			LUMP SUM	LUMP SUM
END BENT 1						25.3		4792			8	400	8			307			
BENT 1	LUMP SUM					70.0		10914	943		18	630		18			LUMP SUM		
END BENT 2						24.7		4752			6	300	6			336			
TOTAL	LUMP SUM	2	2	10734	11243	120.0	LUMP SUM	20458	943	349,400	32	1330	14	18	432.5	643	LUMP SUM	LUMP SUM	LUMP SUM

PROJECT NO. U-4007B
ONSLOW COUNTY
STATION: 42+27.41-SBL RAMP-
60+35.83 -Y1A SBL-

SHEET 3 OF 3

STATE OF NORTH CAROLINA
DEPARTMENT OF TRANSPORTATION
RALEIGH

GENERAL DRAWING
FOR BRIDGE ON WESTERN PARKWAY OVER MARINE BLVD. BETWEEN HAWKSIDE ROAD AND COUNTRY CLUB ROAD

NORTH CAROLINA PROFESSIONAL SEAL 025516 ENGINEER EMILY E. MURRAY
8/29/10

REVISIONS						SHEET NO.
NO.	BY:	DATE:	NO.	BY:	DATE:	S-89
1			3			TOTAL SHEETS
2			4			142

DRAWN BY : B. N. BARODAWALA DATE : 2-19-10
CHECKED BY : PEGGY PARISI DATE : 6-7-10

24-AUG-2010 14:30
Z:\TIPProjects-U\U4007b\Structures\FinalPlans\Str. #4\u-4007b_sd_gd_04.dgn
pdkins

STR. #4

LOAD AND RESISTANCE FACTOR RATING (LRFR) SUMMARY FOR STEEL GIRDERS

LEVEL		VEHICLE	WEIGHT (W) (TONS)	CONTROLLING LOAD RATING (#)	MINIMUM RATING FACTORS (RF)	TONS = W × RF	STRENGTH I LIMIT STATE											SERVICE II LIMIT STATE						COMMENT NUMBER
							LIVE-LOAD FACTORS (γ_{LL})	MOMENT					SHEAR					LIVE-LOAD FACTORS (γ_{LL})	MOMENT					
								DISTRIBUTION FACTORS (DF)	RATING FACTOR	SPAN	GIRDER LOCATION	DISTANCE FROM LEFT END OF SPAN (ft)	DISTRIBUTION FACTORS (DF)	RATING FACTOR	SPAN	GIRDER LOCATION	DISTANCE FROM LEFT END OF SPAN (ft)		DISTRIBUTION FACTORS (DF)	RATING FACTOR	SPAN	GIRDER LOCATION	DISTANCE FROM LEFT END OF SPAN (ft)	
DESIGN LOAD RATING		HL-93 (INVENTORY)	N/A	1	1.26	--	1.75	0.857	1.26	A	EL	124.42	0.985	1.59	A	I	124.42	1.30	0.857	1.39	A	EL	124.42	
		HL-93 (OPERATING)	N/A		1.63	--	1.35	0.857	1.63	A	EL	124.42	0.985	2.06	A	I	124.42	1.00	0.857	1.80	A	EL	124.42	
		HS-20 (INVENTORY)	36.00	2	1.81	65.16	1.75	0.857	1.81	A	EL	49.77	0.985	2.43	A	I	124.42	1.30	0.857	2.21	A	EL	49.77	
		HS-20 (OPERATING)	36.00		2.35	84.60	1.35	0.857	2.35	A	EL	49.77	0.985	3.15	A	I	124.42	1.00	0.857	2.87	A	EL	49.77	
LEGAL LOAD RATING	SINGLE VEHICLE (SV)	SNSH	13.500		5.28	71.28	1.40	0.857	5.40	A	EL	49.77	0.985	7.85	A	I	124.42	1.30	0.857	5.28	A	EL	49.77	
		SNGARBS2	20.000		3.80	76.00	1.40	0.857	3.89	A	EL	49.77	0.985	5.37	A	I	124.42	1.30	0.857	3.80	A	EL	49.77	
		SNAGRIS2	22.000		3.54	77.88	1.40	0.857	3.63	A	EL	49.77	0.985	4.91	A	I	124.42	1.30	0.857	3.54	A	EL	49.77	
		SNCOTTS3	27.250		2.63	71.67	1.40	0.857	2.69	A	EL	49.77	0.985	3.90	A	I	124.42	1.30	0.857	2.63	A	EL	49.77	
		SNAGGRS4	34.925		2.15	75.09	1.40	0.857	2.20	A	EL	49.77	0.985	3.08	A	I	124.42	1.30	0.857	2.15	A	EL	49.77	
		SNS5A	35.550		2.11	75.01	1.40	0.857	2.16	A	EL	49.77	0.985	3.06	A	I	124.42	1.30	0.857	2.11	A	EL	49.77	
		SNS6A	39.950		1.91	76.30	1.40	0.857	1.96	A	EL	49.77	0.985	2.74	A	I	124.42	1.30	0.857	1.91	A	EL	49.77	
		SNS7B	42.000		1.83	76.86	1.40	0.857	1.88	A	EL	49.77	0.985	2.62	A	I	124.42	1.30	0.857	1.83	A	EL	49.77	
	TRUCK TRACTOR SEMI-TRAILER (TTST)	TNAGRIT3	33.000		2.34	77.22	1.40	0.857	2.40	A	EL	49.77	0.985	3.30	A	I	124.42	1.30	0.857	2.34	A	EL	49.77	
		TNT4A	33.075		2.33	77.06	1.40	0.857	2.39	A	EL	49.77	0.985	3.28	A	I	124.42	1.30	0.857	2.33	A	EL	49.77	
		TNT6A	41.600		1.89	78.62	1.40	0.857	1.94	A	EL	49.77	0.985	2.68	A	I	124.42	1.30	0.857	1.89	A	EL	49.77	
		TNT7A	42.000		1.89	79.38	1.40	0.857	1.93	A	EL	49.77	0.985	2.66	A	I	124.42	1.30	0.857	1.89	A	EL	49.77	
		TNT7B	42.000		1.92	80.64	1.40	0.857	1.96	A	EL	49.77	0.985	2.61	A	I	124.42	1.30	0.857	1.92	A	EL	49.77	
		TNAGRIT4	43.000		1.85	79.55	1.40	0.857	1.90	A	EL	49.77	0.985	2.54	A	I	124.42	1.30	0.857	1.85	A	EL	49.77	
		TNAGT5A	45.000		1.76	79.20	1.40	0.857	1.81	A	EL	49.77	0.985	2.45	A	I	124.42	1.30	0.857	1.76	A	EL	49.77	
		TNAGT5B	45.000	3	1.74	78.30	1.40	0.857	1.78	A	EL	49.77	0.985	2.43	A	I	124.42	1.30	0.857	1.74	A	EL	49.77	
FATIGUE		HL-93 (INVENTORY)	γ_{LL}=0.75																					

LOAD FACTORS:

DESIGN LOAD RATING FACTORS	LIMIT STATE	γ_{DC}	γ_{DW}
	STRENGTH I	1.25	1.50
	SERVICE II	1.00	1.00

	YEAR	ADTT
CURRENT	13,600	490
FUTURE	21,500	774

NOTES:

MINIMUM RATING FACTORS ARE BASED ON THE STRENGTH I AND SERVICE II LIMIT STATES.

ALLOWABLE STRESS FOR SERVICE II LIMIT STATE ARE AS REQUIRED FOR DESIGN.

COMMENTS:

1.
2.
3.
4.

(#) CONTROLLING LOAD RATING

(1) DESIGN LOAD RATING (HL-93) **
(2) DESIGN LOAD RATING (HS-20) **
(3) LEGAL LOAD RATING **
** SEE CHART FOR VEHICLE TYPE

GIRDER LOCATION

I - INTERIOR GIRDER
EL - EXTERIOR LEFT GIRDER
ER - EXTERIOR RIGHT GIRDER

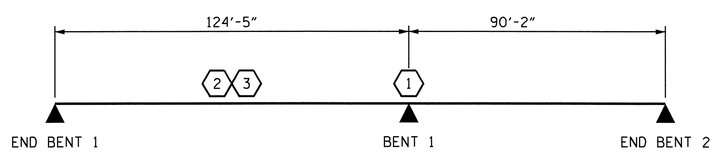

LRFR SUMMARY

PROJECT NO. U-4007B
ONSLOW COUNTY
STATION: 42+27.41 -SBL RAMP-

STATE OF NORTH CAROLINA
DEPARTMENT OF TRANSPORTATION
RALEIGH

STANDARD

LRFR SUMMARY FOR STEEL GIRDERS
(NON-INTERSTATE TRAFFIC)

NORTH CAROLINA PROFESSIONAL SEAL 025516 ENGINEER EMILY E. MURRAY
8/24/10

REVISIONS						
NO.	BY:	DATE:	NO.	BY:	DATE:	
1			3			
2			4			

SHEET NO. S-90
TOTAL SHEETS 142

ASSEMBLED BY : A.M. LEE DATE : 7-6-10
CHECKED BY : N. RUFFIN DATE : 7-6-10
DRAWN BY : MAA 1/08
CHECKED BY : GM/DI 2/08
REV. 11/12/08RR MAA/GM

23-AUG-2010 15:33
Z:\TIPProjects-U\U4007b\Structures\FinalPlans\Str. #4\U4007B_SD_LRFR_04.dgn
PADKINS

STR. #4 STD. NO. LRFR3

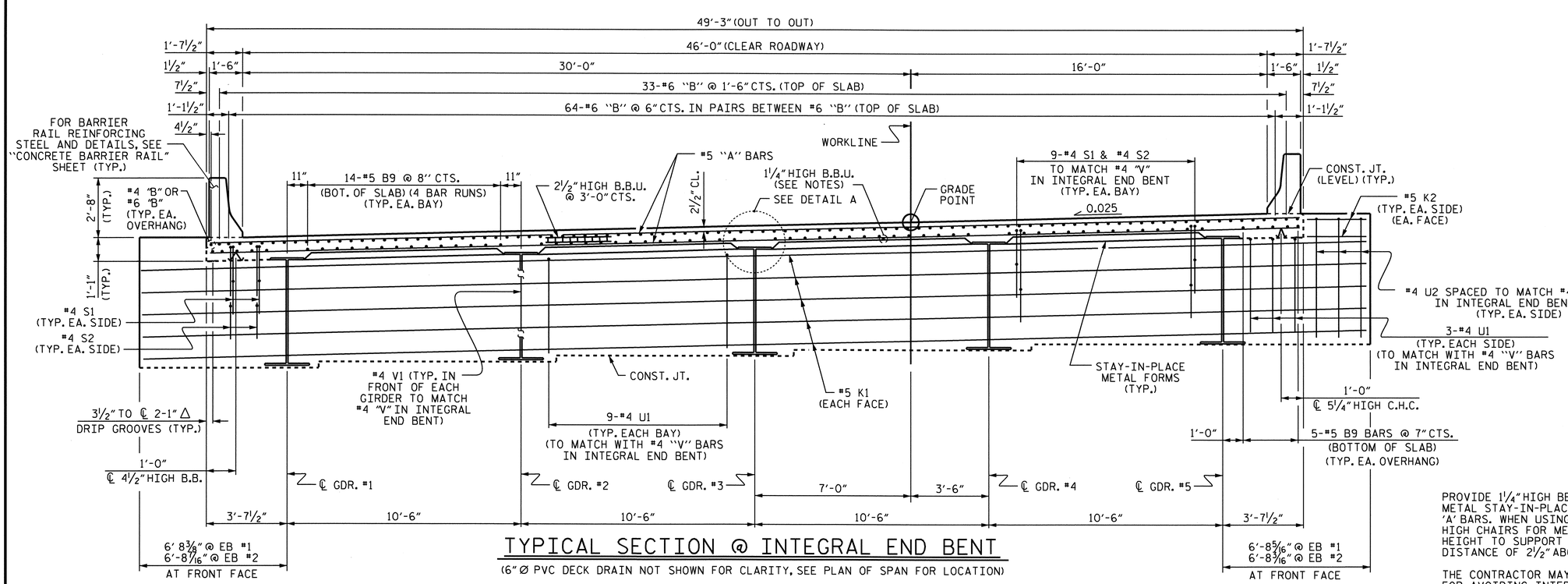

TYPICAL SECTION @ INTEGRAL END BENT

(6" Ø PVC DECK DRAIN NOT SHOWN FOR CLARITY, SEE PLAN OF SPAN FOR LOCATION)

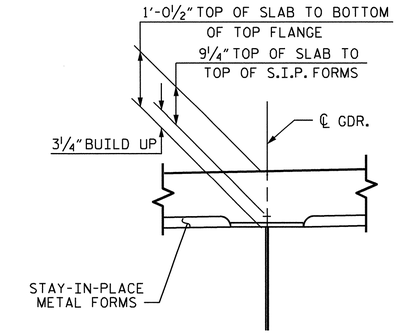

DETAIL A

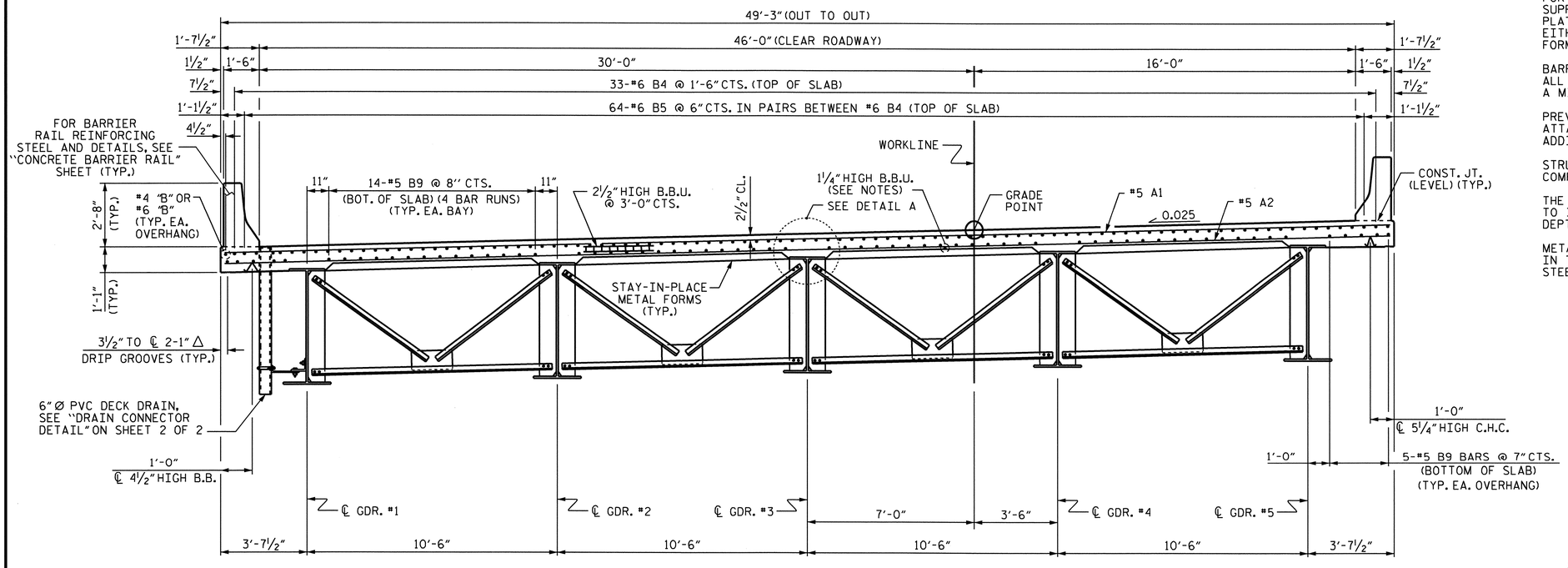

TYPICAL SECTION @ BENT DIAPHRAGMS

NOTES

PROVIDE 1¼" HIGH BEAM BOLSTERS UPPER AT 4'-0" CTS. ATOP THE METAL STAY-IN-PLACE FORMS TO SUPPORT THE BOTTOM MAT OF 'A' BARS. WHEN USING REMOVABLE FORMS, PROVIDE CONTINUOUS HIGH CHAIRS FOR METAL DECK (C.H.C.M.) @ 4'-0" CTS. WITH A HEIGHT TO SUPPORT THE BOTTOM MAT OF 'A' BARS A CLEAR DISTANCE OF 2½" ABOVE THE TOP OF THE REMOVABLE FORM.

THE CONTRACTOR MAY, WHEN NECESSARY, PROPOSE A SCHEME FOR AVOIDING INTERFERENCE BETWEEN METAL STAY-IN-PLACE FORM SUPPORTS OR FORMS AND GIRDER STIFFENERS OR CONNECTOR PLATES. THE PROPOSAL SHALL BE INDICATED, AS APPROPRIATE, ON EITHER THE STEEL WORKING DRAWINGS OR THE METAL STAY-IN-PLACE FORM WORKING DRAWINGS.

BARRIER RAIL IN A CONTINUOUS UNIT SHALL NOT BE CAST UNTIL ALL SLAB CONCRETE IN THE UNIT HAS BEEN CAST AND HAS REACHED A MINIMUM COMPRESSIVE STRENGTH OF 3,000 PSI.

PREVIOUSLY CAST CONCRETE IN A CONTINUOUS UNIT SHALL HAVE ATTAINED A MINIMUM COMPRESSIVE STRENGTH OF 3000 PSI BEFORE ADDITIONAL CONCRETE IS CAST IN THE UNIT.

STRUCTURE STEEL ERECTION IN A CONTINUOUS UNIT SHALL BE COMPLETE BEFORE FALSEWORK OR FORMS ARE PLACED ON THE UNIT.

THE CONTRACTOR SHALL ADJUST THE GIRDER BUILDUPS AS NECESSARY TO INCORPORATE A MAXIMUM PERMISSIBLE VARIATION IN POT BEARING DEPTH OF ½". SEE SPECIAL PROVISION FOR POT BEARINGS.

METAL STAY-IN-PLACE FORMS SHALL NOT BE WELDED TO GIRDER FLANGES IN THE ZONES REQUIRING CHARPY V-NOTCH TEST. SEE STRUCTURAL STEEL DETAIL SHEETS.

PROJECT NO. U-4007B
ONSLOW COUNTY
STATION: 42+27.41 -SBL RAMP-

SHEET 1 OF 2

STATE OF NORTH CAROLINA
DEPARTMENT OF TRANSPORTATION
RALEIGH

SUPERSTRUCTURE

TYPICAL SECTION

NORTH CAROLINA PROFESSIONAL SEAL 025516 ENGINEER EMILY E. MURRAY
8/29/10

REVISIONS						SHEET NO.
NO.	BY:	DATE:	NO.	BY:	DATE:	S-91
1			3			TOTAL SHEETS
2			4			142

STR. #4

DRAWN BY : B.N.BARODAWALA DATE : 12-29-09
CHECKED BY : PEGGY PARISI DATE : 5-5-10

23-AUG-2010 15:33
Z:\TIPProjects-U\U4007b\Structures\Final Plans\Str. #4\U-4007b_sd_TS_04*.dgn
PADKINS

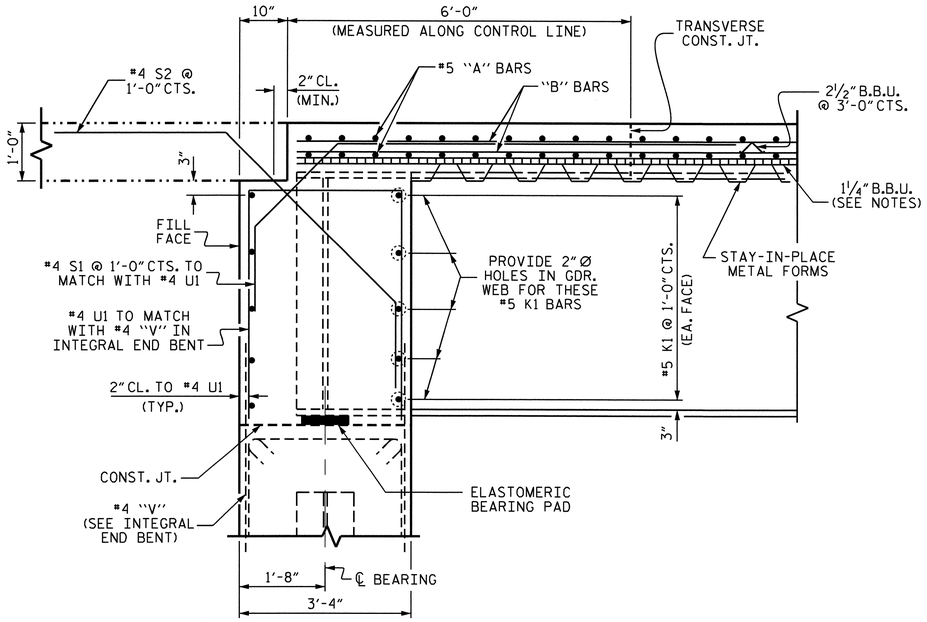

END OF GIRDER DETAIL AT INTEGRAL END BENT

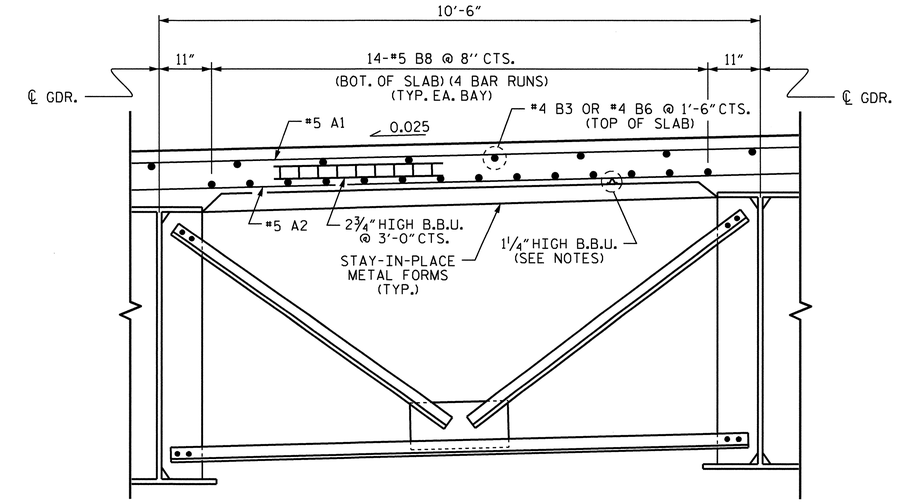

PARTIAL TYPICAL SECTION @ INTERMEDIATE DIAPHRAGMS

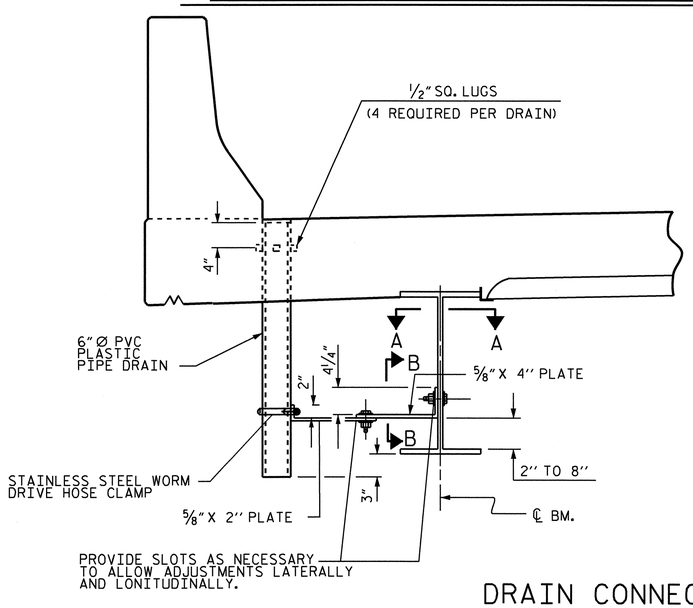

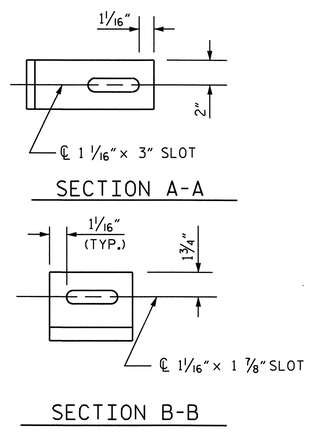

DRAIN CONNECTOR DETAIL

(11 DRAINS REQUIRED)

COUPLING IN DRAIN PIPE WILL BE PERMITTED AS APPROVED BY THE ENGINEER.

TOP OF FLOOR DRAIN TO BE SET ⅜" BELOW SURFACE OF SLAB.

4 - ½" SQUARE LUGS TO BE GLUED TO THE PVC PLASTIC PIPE AT EQUAL SPACES AROUND THE PIPE DRAIN APPROXIMATELY 4" FROM THE TOP OF THE PIPE.

BOLT SIZE TO BE SAME AS DIAPHRAGM AND CROSSFRAME CONNECTIONS. STAINLESS STEEL WORM DRIVE HOSE CLAMP SHALL BE COMMERCIAL QUALITY.

THE 6" Ø PVC PLASTIC PIPE AND FITTINGS SHALL BE SCHEDULE 40 AND CONFORM TO ASTM D1785.

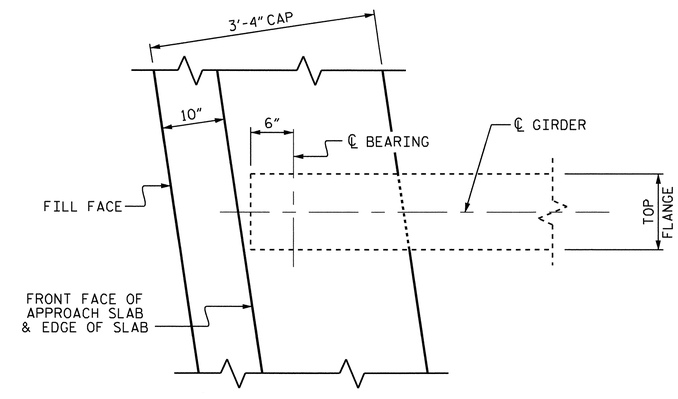

PLAN OF GIRDER AT INTEGRAL END BENT

PROJECT NO. U-4007B
ONSLOW COUNTY
STATION: 42+27.41 -SBL RAMP-

SHEET 2 OF 2

STATE OF NORTH CAROLINA
DEPARTMENT OF TRANSPORTATION
RALEIGH

SUPERSTRUCTURE

TYPICAL SECTION DETAILS

NORTH CAROLINA PROFESSIONAL SEAL 025516 ENGINEER EMILY E. MURRAY
8/29/10

REVISIONS						SHEET NO.
NO.	BY:	DATE:	NO.	BY:	DATE:	S-92
1			3			TOTAL SHEETS
2			4			142

STR. #4

DRAWN BY : B.N.BARODAWALA DATE : 12-30-09
CHECKED BY : PEGGY PARISI DATE : 5-5-10

23-AUG-2010 15:32
Z:\TIPProjects-U\U4007b\Structures\Final Plans\Str. #4\U-4007b_sd_TS_04#.dgn
PADKINS

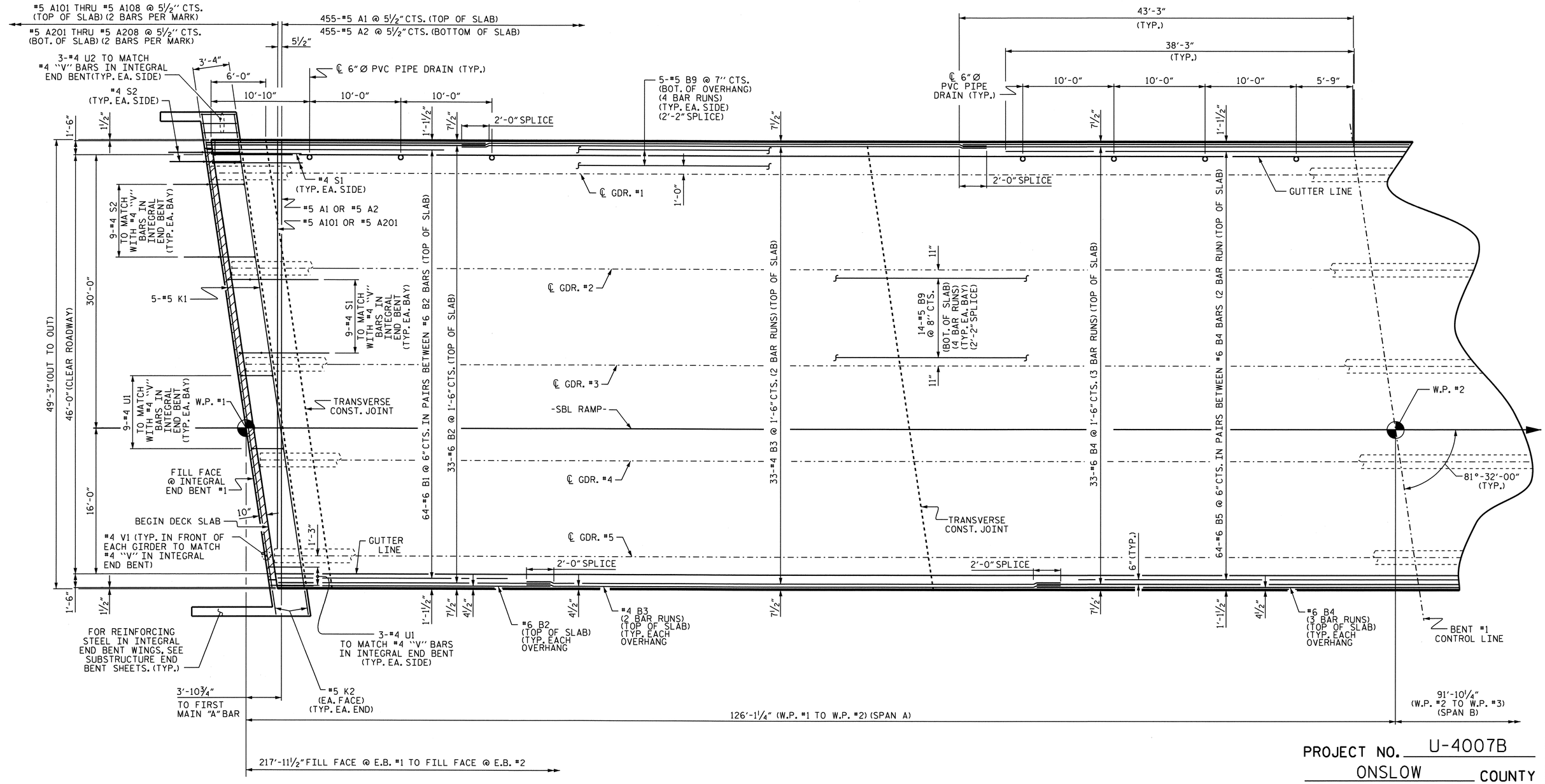

PROJECT NO. U-4007B

ONSLOW COUNTY

STATION: 42+27.41 -SBL RAMP-

SHEET 1 OF 2

STATE OF NORTH CAROLINA
DEPARTMENT OF TRANSPORTATION
RALEIGH

SUPERSTRUCTURE

PLAN OF SPAN A

FOR LOCATION OF INTERMEDIATE DIAPHRAGMS, SEE "FRAMING PLAN."
FOR LOCATION OF TRANSVERSE CONSTRUCTION JOINT, SEE "SUPERSTRUCTURE BILL OF MATERIAL" SHEET.

PLAN OF SPANS

NORTH CAROLINA PROFESSIONAL SEAL 025516 ENGINEER EMILY E. MURRAY
8/24/10

REVISIONS						SHEET NO.
NO.	BY:	DATE:	NO.	BY:	DATE:	S-93
1			3			TOTAL SHEETS
2			4			142

DRAWN BY : B.N.BARODAWALA DATE : 12-4-09
CHECKED BY : PEGGY PARISI DATE : 5-5-10

23-AUG-2010 15:32
Z:\TIPProjects-U\U4007b\Structures\FinalPlans\Str. #4\U-4007b_sd_PS_04*.dgn
PADKINS

STR. #4

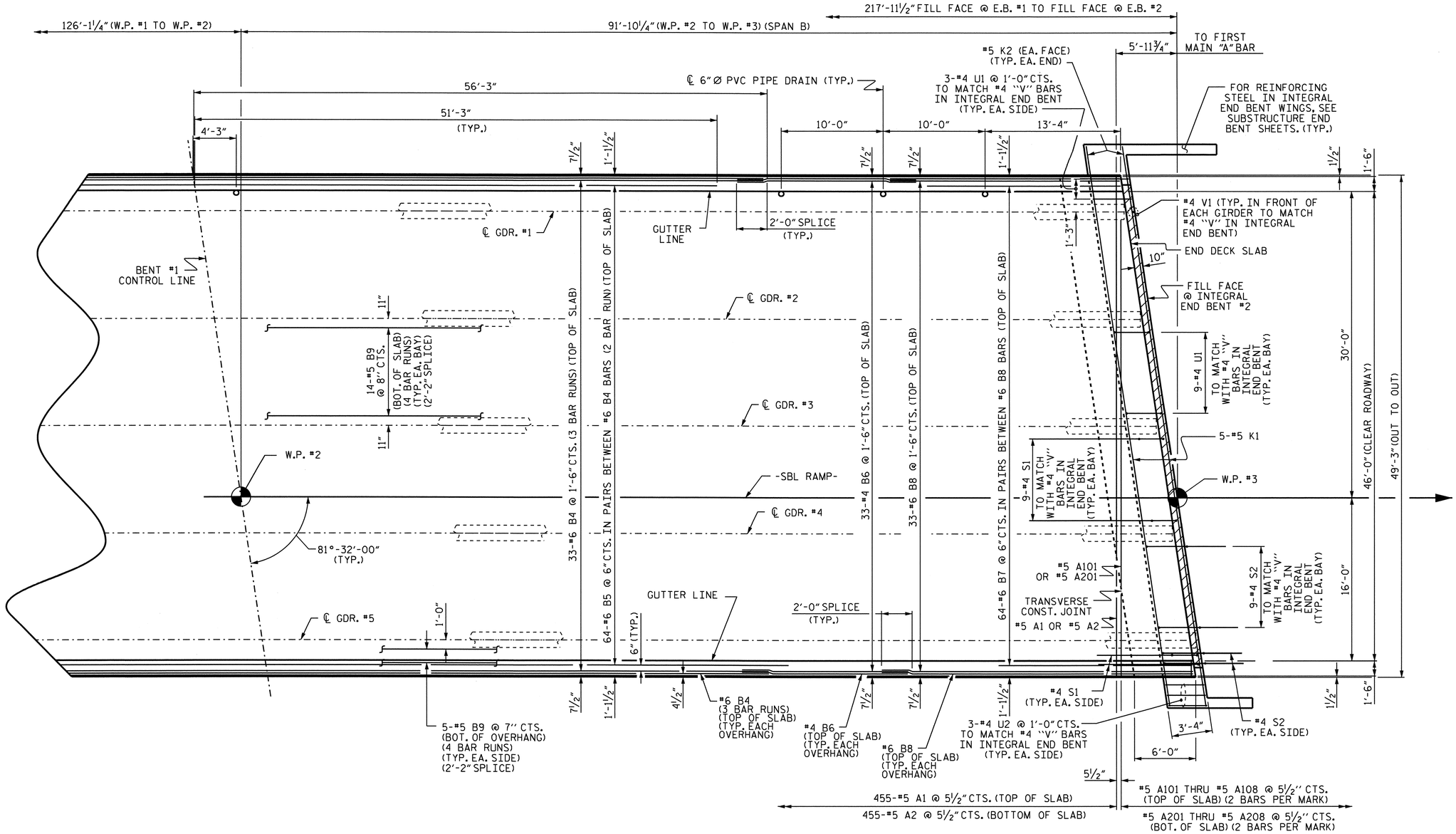

PLAN OF SPAN B

FOR LOCATION OF INTERMEDIATE DIAPHRAGMS, SEE "FRAMING PLAN."
FOR LOCATION OF TRANSVERSE CONSTRUCTION JOINT, SEE "SUPERSTRUCTURE BILL OF MATERIAL" SHEET.

PROJECT NO. U-4007B
ONSLOW COUNTY
STATION: 42+27.41 -SBL RAMP-

SHEET 2 OF 2

STATE OF NORTH CAROLINA
DEPARTMENT OF TRANSPORTATION
RALEIGH

SUPERSTRUCTURE

PLAN OF SPANS

NORTH CAROLINA PROFESSIONAL SEAL 025516 ENGINEER EMILY E. MURRAY
8/24/10

REVISIONS						SHEET NO.
NO.	BY:	DATE:	NO.	BY:	DATE:	S-94
1			3			TOTAL SHEETS
2			4			142

DRAWN BY : B.N.BARODAWALA DATE : 12-4-09
CHECKED BY : PEGGY PARISI DATE : 5-5-10

23-AUG-2010 15:32
Z:\TIPProjects-U\U4007b\Structures\FinalPlans\Str. #4\U-4007b_sd_PS_04*.dgn
PADKINS

STR. #4

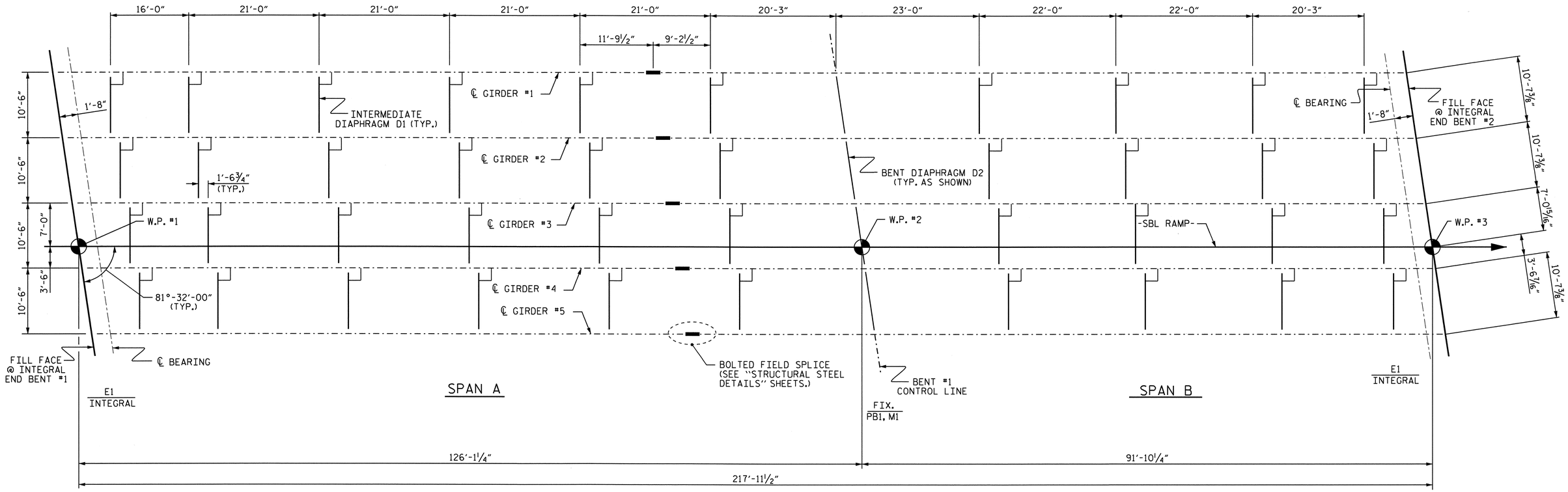

FRAMING PLAN

PROJECT NO. U-4007B

ONSLOW COUNTY

STATION: 42+27.41 -SBL RAMP-

STATE OF NORTH CAROLINA
DEPARTMENT OF TRANSPORTATION
RALEIGH

SUPERSTRUCTURE

FRAMING PLAN

NORTH CAROLINA PROFESSIONAL SEAL 025516 ENGINEER EMILY E. MURRAY
8/24/10

REVISIONS						SHEET NO.
NO.	BY:	DATE:	NO.	BY:	DATE:	S-95
1			3			TOTAL SHEETS
2			4			142

DRAWN BY : B.N.BARODAWALA DATE : 4-13-10
CHECKED BY : PEGGY PARISI DATE : 5-5-10

23-AUG-2010 15:27
Z:\TIPProjects-U\U4007b\Structures\FinalPlans\Str. #4\U-4007b_sd_FP_04#.dgn
PADKINS

STR. #4

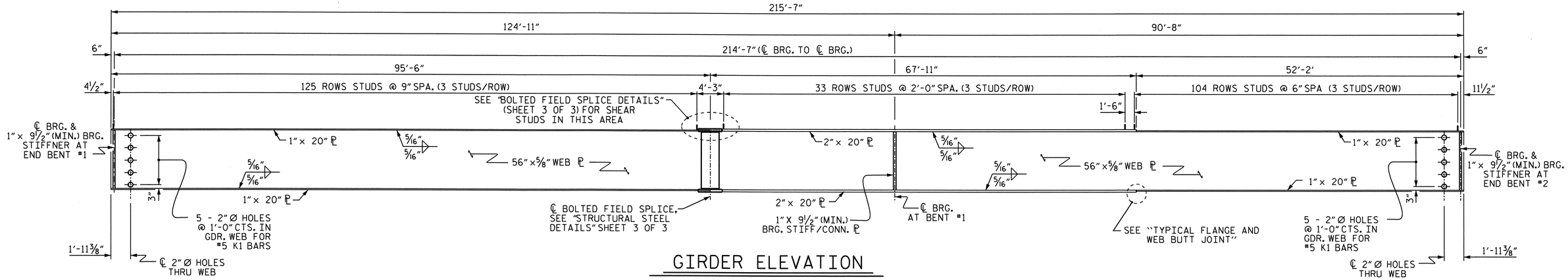

GIRDER ELEVATION

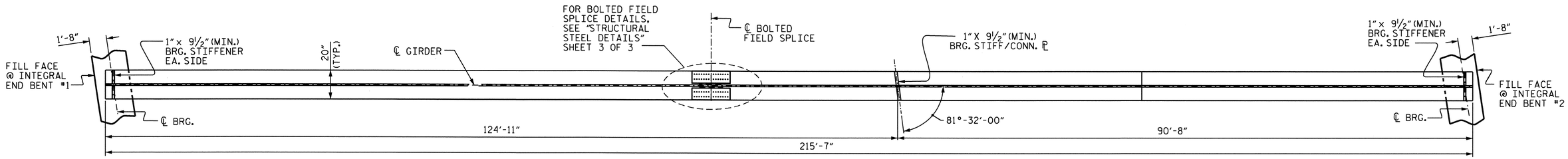

BOTTOM FLANGE DETAIL

(FOR CLARITY, INTERMEDIATE DIAPHRAGMS NOT SHOWN)
INTERIOR GIRDER SHOWN, EXTERIOR GIRDER SIMILAR, EXCEPT NO CONNECTOR PLATES SHALL BE PLACED ON THE OUTSIDE OF THE WEB

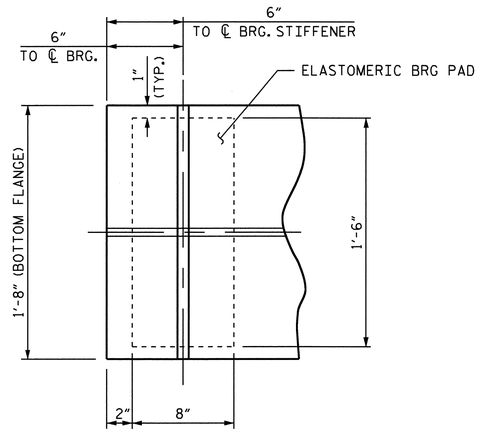

END OF GIRDER DETAIL

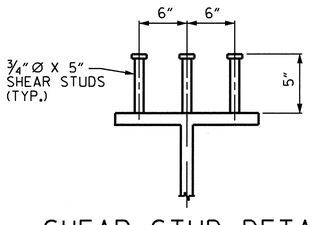

SHEAR STUD DETAIL

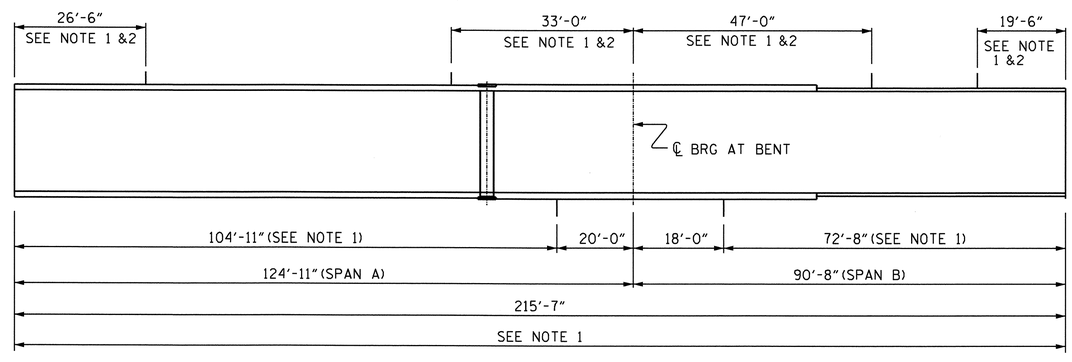

GIRDER MAKE UP

FOR CHARPY V-NOTCH TEST

NOTE ①: CHARPY V-NOTCH TESTS ARE REQUIRED FOR TOP FLANGE PLATES WHICH FALL WITHIN THE LIMITS SHOWN, ALL BOTTOM FLANGE PLATES, ALL WEB PLATES, AND SPLICE PLATES. IF A PERMITTED SHOP FLANGE SPLICE IS NOT USED, CHARPY V-NOTCH TESTS WILL BE REQUIRED FOR THE ENTIRE FLANGE PLATE. FOR CHARPY V-NOTCH TESTS, SEE ARTICLE 1072-9 OF THE STANDARD SPECIFICATIONS.

NOTE ②: NO WELDING OF FORMS OR FALSEWORK TO THE TOP FLANGE WILL BE PERMITTED IN THIS REGION.

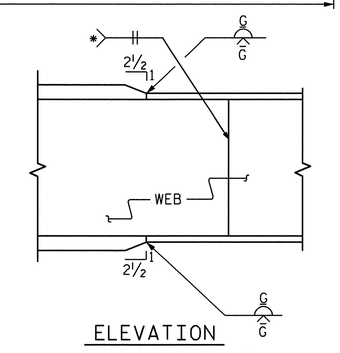

TYPICAL FLANGE AND WEB BUTT JOINT

* GRIND SMOOTH AND FLUSH ON OUTSIDE OF EXTERIOR GIRDERS

PROJECT NO. U-4007B
ONSLOW COUNTY
STATION: 42+27.41 -SBL RAMP-

SHEET 1 OF 3

STATE OF NORTH CAROLINA
DEPARTMENT OF TRANSPORTATION
RALEIGH

SUPERSTRUCTURE

STRUCTURAL STEEL DETAILS

NORTH CAROLINA PROFESSIONAL SEAL 025516 ENGINEER EMILY E. MURRAY
8/24/10

REVISIONS						SHEET NO.
NO.	BY:	DATE:	NO.	BY:	DATE:	S-96
1			3			TOTAL SHEETS
2			4			142

STR. #4

DRAWN BY : B.N.BARODAWALA DATE : 4-13-10
CHECKED BY : PEGGY PARISI DATE : 5-5-10

23-AUG-2010 15:26
Z:\TIPProjects-U\U4007b\Structures\FinalPlans\Str. #4\U-4007b_sd_SS_04#.dgn
PADKINS

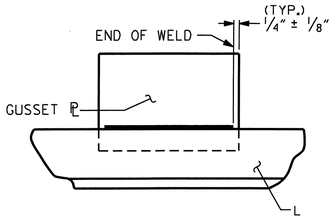

TYPICAL GUESSET PLATE CONNECTION

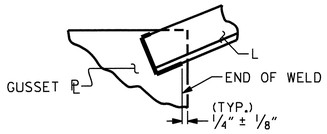

TYPICAL "L" TO GUSSET PLATE CONNECTION

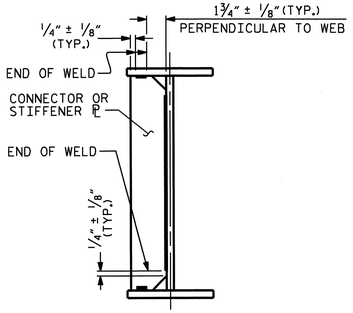

TYPICAL STIFFENER OR
CONNECTOR PLATE CONNECTIONS

WELD TERMINATION DETAILS

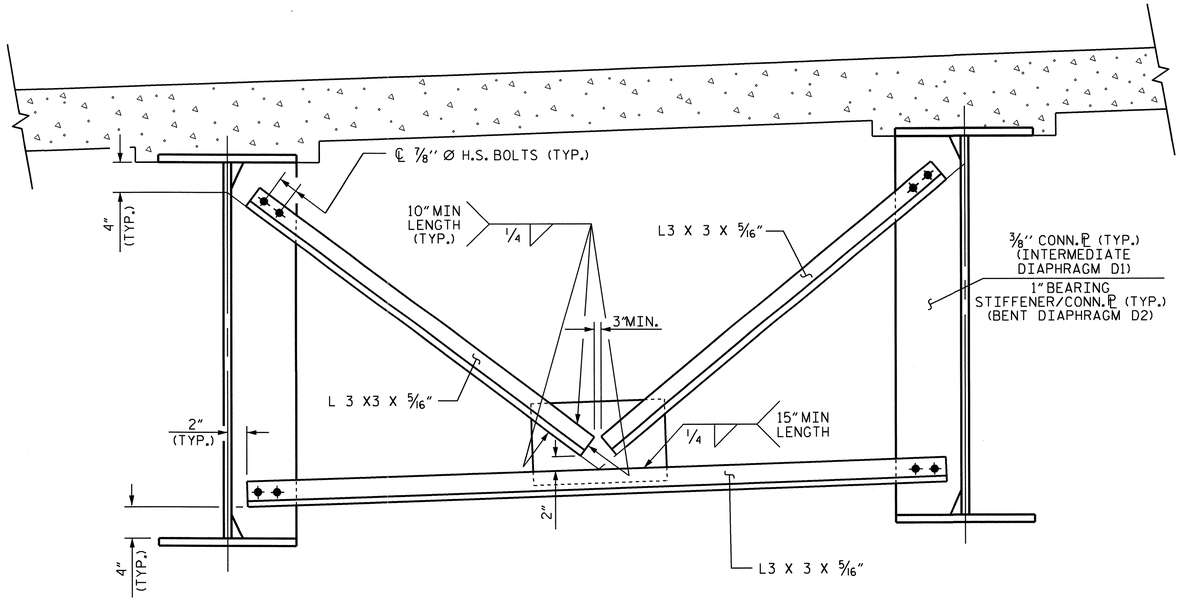

INTERMEDIATE DIAPHRAGM (D1)
BENT DIAPHRAGM (D2)

(LOOKING UPSTATION)

NOTES:

ALL STRUCTURAL STEEL SHALL BE AASHTO M270 GRADE 50W.

ALL DIMENSIONS SHOWN ARE HORIZONTAL OR VERTICAL, UNLESS OTHERWISE NOTED.

ALL FIELD CONNECTIONS TO BE 7/8" DIA. HIGH STRENGTH BOLTS UNLESS OTHERWISE NOTED. FOR HIGH STRENGTH BOLTS, SEE SPECIAL PROVISIONS.

BEARING STIFFENERS ARE TO BE PLACED NORMAL TO THE WEB OF THE GIRDER AND SHALL BE PLUMB.

SHOP SPLICES ARE PERMITTED TO LIMIT THE MAXIMUM REQUIRED FLANGE PIECE LENGTHS TO 60 FEET AND WEB PIECE LENGTHS TO 45 FEET. PERMITTED FLANGE AND WEB SHOP SPLICES SHALL NOT BE LOCATED WITHIN 15 FEET OF MAXIMUM DEAD LOAD DEFLECTION (NOR WITHIN 15 FEET OF INTERMEDIATE BEARINGS OF CONTINUOUS UNITS). KEEP 2 FEET MINIMUM BETWEEN WEB AND FLANGE SHOP SPLICES. KEEP 6" MINIMUM BETWEEN CONNECTOR PLATE OR TRANSVERSE STIFFENER WELDS AND WEB OR FLANGE SHOP SPLICES.

STUDS ON GIRDERS MAY BE SHIFTED UP TO 1" IF NECESSARY TO CLEAR FLANGE SPLICE WELD.

TENSION ON THE AASHTO M164 BOLTS SHALL BE CALIBRATED USING DIRECT TENSION INDICATOR WASHERS. FOR DIRECT TENSION INDICATORS, SEE SPECIAL PROVISIONS.

END OF GIRDERS SHALL BE PLUMB.

FOR SHIPPING STEEL STRUCTURAL MEMBERS, SEE SPECIAL PROVISIONS.

— LOAD RATINGS —	
	MAX.D.L.+L.L.
56" STEEL PLATE GIRDER	115 K

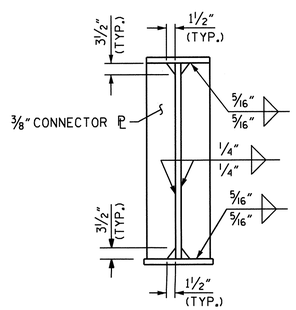

CONNECTOR PLATE DETAILS

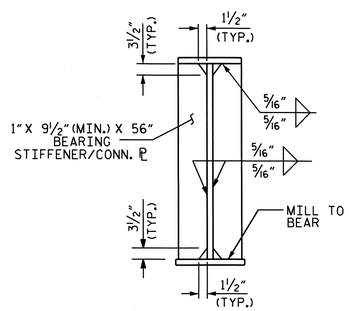

BEARING STIFFENER

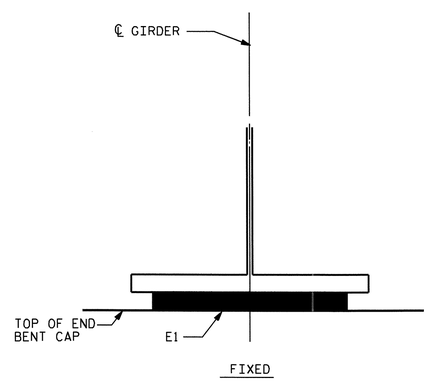

END VIEW

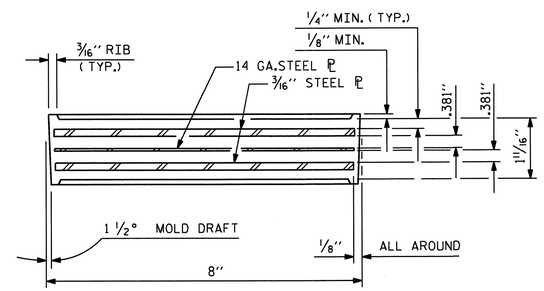

TYPICAL SECTION OF ELASTOMERIC BEARINGS

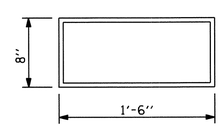

E1 (10 REQ'D)

PLAN VIEW OF ELASTOMERIC BEARING

ELASTOMERIC BEARING PAD DETAILS

ALL SURFACES OF BEARING PADS SHALL BE SMOOTH AND STRAIGHT.

PROJECT NO. U-4007B
ONSLOW COUNTY
STATION: 42+27.41 -SBL RAMP-

SHEET 2 OF 3

STATE OF NORTH CAROLINA
DEPARTMENT OF TRANSPORTATION
RALEIGH

SUPERSTRUCTURE

STRUCTURAL STEEL DETAILS

NORTH CAROLINA PROFESSIONAL SEAL 025516 ENGINEER EMILY E. MURRAY
10/1/10

REVISIONS						SHEET NO.
NO.	BY:	DATE:	NO.	BY:	DATE:	S-97
1			3			TOTAL SHEETS
2			4			142

STR. #4

DRAWN BY : B.N.BARODAWALA DATE : 4-13-10
CHECKED BY : PEGGY PARISI DATE : 5-5-10

04-OCT-2010 09:26
R:\Structures\Final Plans\Str. #4\U-4007b_sd_SS_04*.dgn
emurray

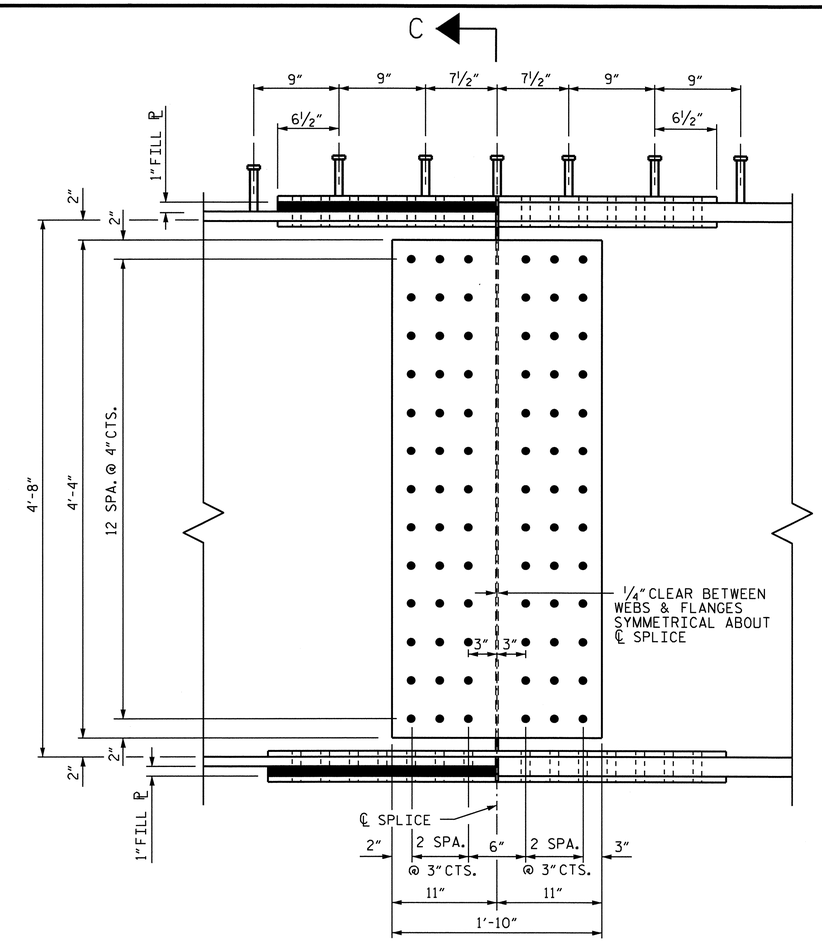

ELEVATION

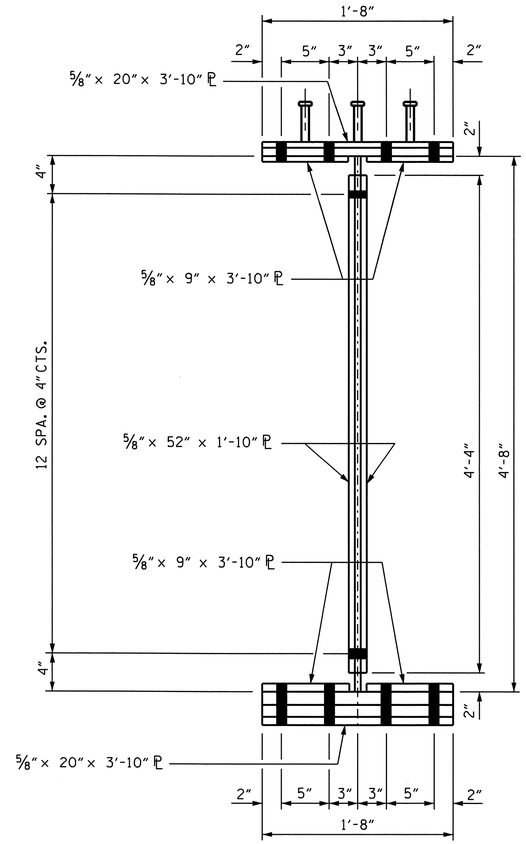

SECTION C-C

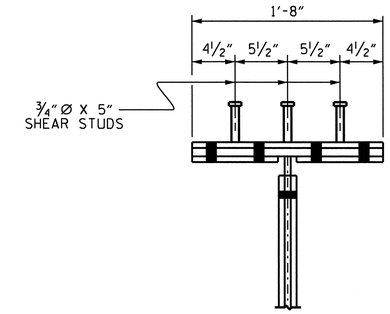

SHEAR STUD DETAIL FOR TOP FLANGE SPLICE PLATE

BOLTED FIELD SPLICE DETAILS

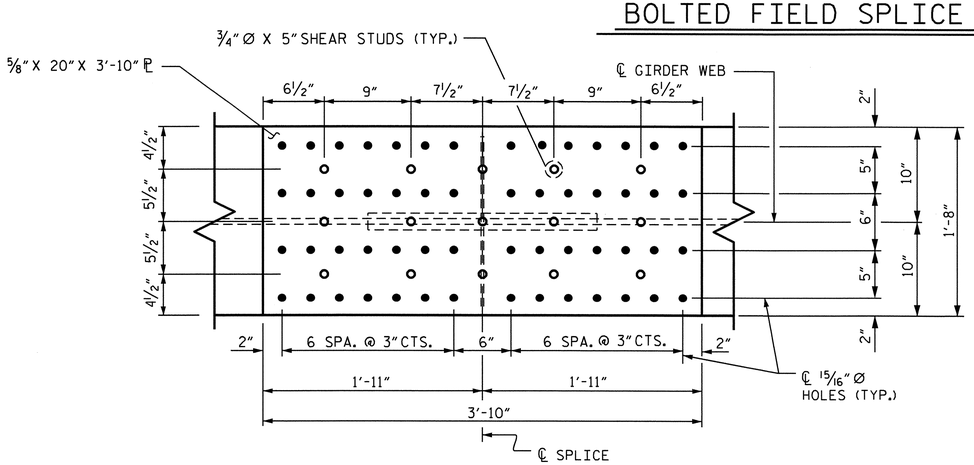

PLAN OF TOP FLANGE

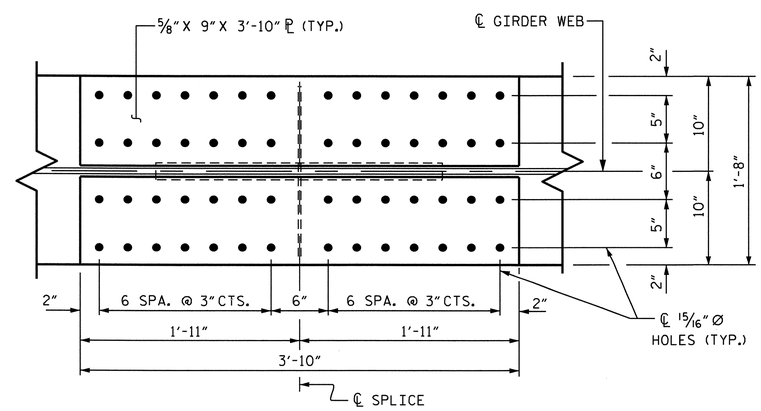

PLAN OF TOP OF BOTTOM FLANGE

PROJECT NO. U-4007B
ONSLOW COUNTY
STATION: 42+27.41 -SBL RAMP-

SHEET 3 OF 3

STATE OF NORTH CAROLINA
DEPARTMENT OF TRANSPORTATION
RALEIGH

SUPERSTRUCTURE

STRUCTURAL STEEL DETAILS
BOLTED FIELD SPLICE

REVISIONS						SHEET NO.
NO.	BY:	DATE:	NO.	BY:	DATE:	S-98
1			3			TOTAL SHEETS
2			4			142

NORTH CAROLINA PROFESSIONAL SEAL 025516 ENGINEER EMILY E. MURRAY
8/24/10

DRAWN BY : B.N.BARODAWALA DATE : 4-13-10
CHECKED BY : PEGGY PERISI DATE : 5-5-10

23-AUG-2010 15:26
Z:\TIPProjects-U\U4007b\Structures\Final Plans\Str. #4\U-4007b_sd_SS_04#.dgn
PADKINS

STR. #4

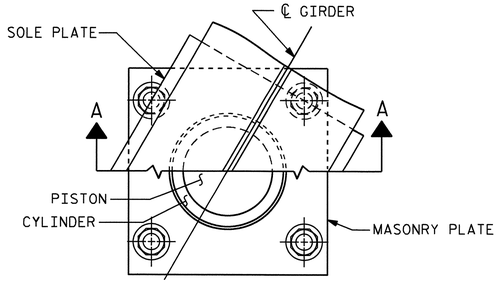

CUT-AWAY PLAN

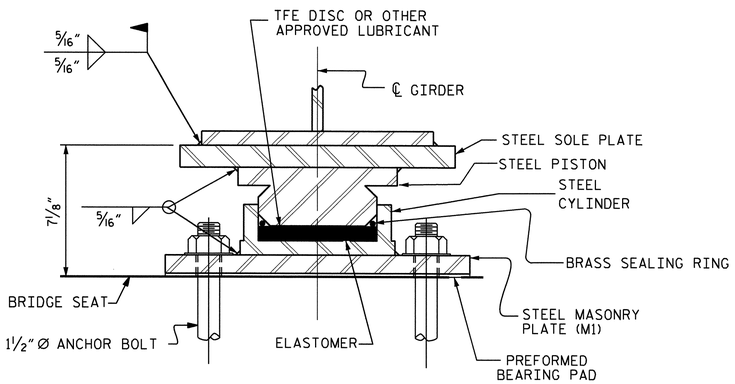

SECTION A-A

PB1, FIXED
(5 REQ'D.)

POT BEARING DETAILS

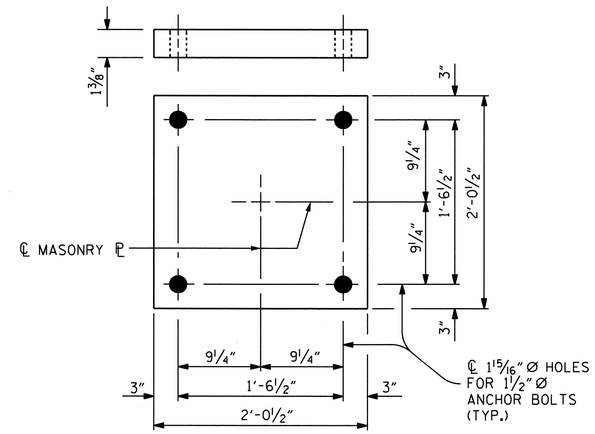

PLAN

M1 (5 REQ'D.)

MASONRY PLATE DETAILS

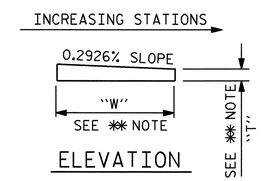

ELEVATION

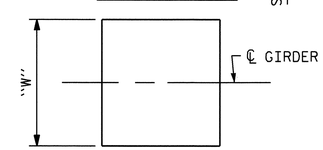

PLAN

✱✱ NOTE:
DIMENSIONS "W" AND "T" ARE TO BE DETERMINED BY THE MANUFACTURER.

SOLE PLATE DETAILS

NOTES

FOR POT BEARINGS, SEE SPECIAL PROVISIONS.

AT ALL POINTS OF SUPPORT IN SPANS "A" AND "B", NUTS FOR ANCHOR BOLTS SHALL BE TIGHTENED FINGER TIGHT AND GIVEN AN ADDITIONAL 1/4 TURN. THE THREAD OF THE NUT AND BOLT SHALL THEN BE BURRED WITH A SHARP POINTED TOOL.

WHEN WELDING THE SOLE PLATE TO THE GIRDER, USE TEMPERATURE INDICATING WAX PENS, OR OTHER SUITABLE MEANS, TO ENSURE THAT THE TEMPERATURE OF THE BEARING DOES NOT EXCEED 250°F TEMPERATURES ABOVE THIS MAY DAMAGE THE TFE OR ELASTOMER.

SOLE PLATES SHOULD BE WELDED TO BEAM FLANGES AND ANCHOR BOLTS SHOULD BE GROUTED BEFORE FALSEWORK IS PLACED.

ALL SURFACES OF BEARING PLATES SHALL BE SMOOTH AND STRAIGHT.

FOR THERMAL SPRAYED COATINGS (METALLIZATION), SEE SPECIAL PROVISIONS.

THE CONTRACTOR MAY SUBSTITUTE DISC BEARINGS FOR THE POT BEARINGS SHOWN. FOR OPTIONAL DISC BEARINGS, SEE SPECIAL PROVISIONS.

THE CONTRACTOR SHALL ADJUST THE GIRDER BUILDUPS AS NECESSARY TO INCORPORATE A MAXIMUM PERMISSIBLE VARIATION IN POT BEARING DEPTH OF 1/2", SEE SPECIAL PROVISION FOR POT BEARINGS.

TABLE FOR LOADS AND MOVEMENTS

BEARING	LOCATION	VERTICAL LOAD (KIPS)				LATERAL LOAD (KIPS)	TOTAL MOVEMENT (INCHES)
		DEAD		LIVE	TOTAL		
		DC	DW				
PB1 (FIXED)	BENT 1	279.1	45.8	227.2	552.1	82.8	0

PROJECT NO. U-4007B
ONSLOW COUNTY
STATION: 42+27.41 -SBL RAMP-

STATE OF NORTH CAROLINA
DEPARTMENT OF TRANSPORTATION
RALEIGH

STANDARD

POT BEARING DETAILS

NORTH CAROLINA PROFESSIONAL SEAL 025516 ENGINEER EMILY E. MURRAY
8/29/10

REVISIONS						SHEET NO.
NO.	BY:	DATE:	NO.	BY:	DATE:	S-99
1			3			TOTAL SHEETS
2			4			142

STR. #4

STD. NO. PB1

ASSEMBLED BY : B.N.BARODAWALA DATE : 4-6-10
CHECKED BY : PEGGY PARISI DATE : 5-5-10

DRAWN BY : RWW 8/99
CHECKED BY : LES 8/99

REV. 7/10/01 LES/RDR
REV. 5/7/03 RWW/JTE
REV. 5/1/06 TLA/GM

23-AUG-2010 15:41
Z:\TIPProjects-U\U4007b\Structures\FinalPlans\Str. #4\U-4007b_sd_BG_04#.dgn
PADKINS

DEAD LOAD DEFLECTION TABLE FOR GIRDERS

	SPAN A - GIRDERS 1 THRU 5.																				
TWENTIETH POINTS	0	.05	.10	.15	.20	.25	.30	.35	.40	.45	.50	.55	.60	.65	.70	.75	.80	.85	.90	.95	0
DEFLECTION DUE TO WEIGHT OF GIRDER ↓	0.0	0.011	0.021	0.030	0.038	0.045	0.050	0.054	0.056	0.056	0.054	0.051	0.047	0.041	0.035	0.028	0.021	0.015	0.009	0.004	0.0
* DEFLECTION DUE TO WEIGHT OF SLAB ↓	0.0	0.039	0.077	0.112	0.143	0.168	0.188	0.202	0.209	0.210	0.205	0.194	0.177	0.157	0.133	0.108	0.082	0.058	0.035	0.015	0.0
DEFLECTION DUE TO WEIGHT OF BARRIER RAIL ↓	0.0	0.003	0.006	0.009	0.011	0.013	0.014	0.016	0.016	0.016	0.016	0.015	0.014	0.012	0.011	0.009	0.007	0.005	0.003	0.001	0.0
TOTAL DEAD LOAD DEFLECTION ↓	0.0	0.053	0.104	0.150	0.191	0.226	0.253	0.271	0.281	0.282	0.275	0.260	0.238	0.210	0.179	0.145	0.110	0.077	0.046	0.020	0.0
VERTICAL CURVE ORDINATE	0.0	0.042	0.079	0.111	0.140	0.164	0.184	0.199	0.210	0.216	0.219	0.216	0.210	0.199	0.184	0.164	0.140	0.111	0.079	0.042	0.0
REQUIRED CAMBER ↑	0	1 1/8"	2 3/16"	3 1/8"	4"	4 11/16"	5 1/4"	5 5/8"	5 7/8"	6"	5 15/16"	5 11/16"	5 3/8"	4 15/16"	4 3/8"	3 11/16"	3"	2 1/4"	1 1/2"	0 3/4"	0

* INCLUDES SLAB, BUILDUPS & STAY-IN-PLACE FORMS.
ALL VALUES ARE SHOWN IN FEET (DECIMAL FORM), EXCEPT "REQUIRED CAMBER", WHICH IS GIVEN IN INCHES (FRACTION FORM).

DEAD LOAD DEFLECTION TABLE FOR GIRDERS

	SPAN B - GIRDERS 1 THRU 5																				
TWENTIETH POINTS	0	.05	.10	.15	.20	.25	.30	.35	.40	.45	.50	.55	.60	.65	.70	.75	.80	.85	.90	.95	0
DEFLECTION DUE TO WEIGHT OF GIRDER ↓	0.0	-0.002	-0.003	-0.003	-0.003	-0.003	-0.002	-0.001	0.000	0.001	0.002	0.003	0.004	0.004	0.004	0.004	0.004	0.003	0.002	0.001	0.0
* DEFLECTION DUE TO WEIGHT OF SLAB ↓	0.0	-0.007	-0.012	-0.015	-0.015	-0.015	-0.013	-0.010	-0.007	-0.004	0.000	0.003	0.006	0.008	0.009	0.009	0.009	0.008	0.006	0.003	0.0
DEFLECTION DUE TO WEIGHT OF BARRIER RAIL ↓	0.0	-0.001	-0.001	-0.001	-0.001	-0.001	-0.001	-0.001	0.000	0.000	0.000	0.000	0.001	0.001	0.001	0.001	0.001	0.001	0.001	0.000	0.0
TOTAL DEAD LOAD DEFLECTION ↓	0.0	-0.010	-0.016	-0.019	-0.020	-0.018	-0.016	-0.012	-0.007	-0.003	0.002	0.006	0.010	0.013	0.014	0.015	0.014	0.011	0.008	0.004	0.0
VERTICAL CURVE ORDINATE	0.0	0.022	0.041	0.059	0.073	0.086	0.096	0.104	0.110	0.114	0.115	0.114	0.110	0.104	0.096	0.086	0.073	0.059	0.041	0.022	0.0
REQUIRED CAMBER ↑	0	1/8"	5/16"	1/2"	5/8"	13/16"	1"	1 1/8"	1 1/4"	1 5/16"	1 3/8"	1 7/16"	1 7/16"	1 3/8"	1 5/16"	1 3/16"	1 1/16"	13/16"	5/8"	5/16"	0

* INCLUDES SLAB, BUILDUPS & STAY-IN-PLACE FORMS.
ALL VALUES ARE SHOWN IN FEET (DECIMAL FORM), EXCEPT "REQUIRED CAMBER", WHICH IS GIVEN IN INCHES (FRACTION FORM).

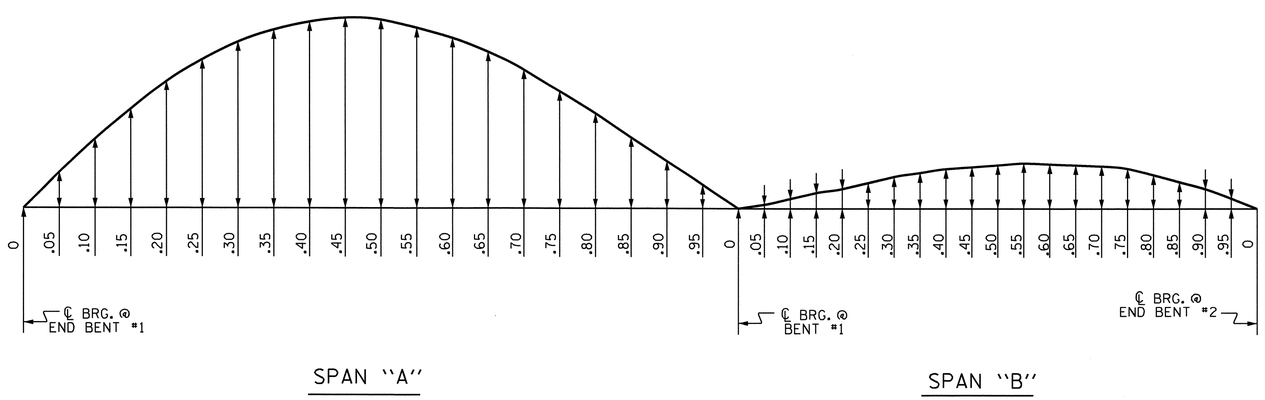

SCHEMATIC CAMBER ORDINATES

SLOPE FOR THE ZERO CAMBER BASE LINE VARIES.

PROJECT NO. U-4007B
ONSLOW COUNTY
STATION: 42+27.41 -SBL RAMP-

STATE OF NORTH CAROLINA
DEPARTMENT OF TRANSPORTATION
RALEIGH

SUPERSTRUCTURE

DEAD LOAD DEFLECTIONS

NORTH CAROLINA PROFESSIONAL SEAL 025516 ENGINEER EMILY E. MURRAY
8/24/10

REVISIONS						SHEET NO.
NO.	BY:	DATE:	NO.	BY:	DATE:	S-100
1			3			TOTAL SHEETS
2			4			142

DRAWN BY : B.N.BARODAWALA DATE : 4-29-10
CHECKED BY : PEGGY PARISI DATE : 5-5-10

23-AUG-2010 15:25
Z:\TIPProjects-U\U4007b\Structures\FinalPlans\Str. #4\U-4007b_sd_DL_04#.dgn
PADKINS

STR. #4

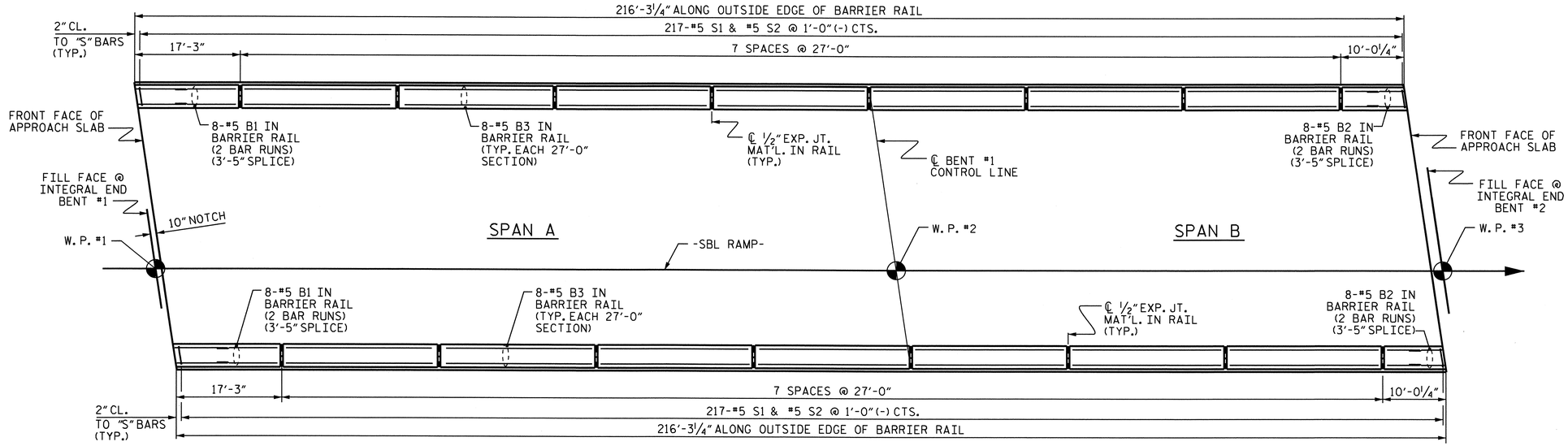

PLAN OF BARRIER RAIL

BAR TYPES

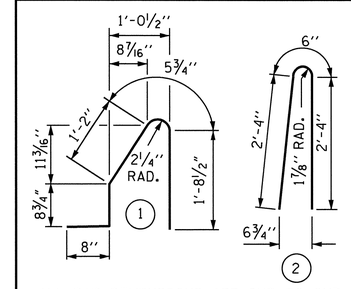

ALL BAR DIMENSIONS ARE OUT TO OUT

BILL OF MATERIAL

FOR CONCRETE BARRIER RAIL ONLY

BAR	NO.	SIZE	TYPE	LENGTH	WEIGHT
* B1	32	#5	STR	10'-2"	339
* B2	32	#5	STR	6'-7"	220
* B3	112	#5	STR	26'-6"	3096
* S1	434	#5	1	4'-9"	2150
* S2	434	#5	2	5'-2"	2339

* EPOXY COATED REINFORCING STEEL	8144 LBS.
CLASS AA CONCRETE	43.3 CU. YDS.
CONCRETE BARRIER RAIL	432.5 LIN. FT.

NOTES

THE BARRIER RAIL IN A CONTINUOUS UNIT SHALL NOT BE CAST UNTIL ALL SLAB CONCRETE IN THE UNIT HAS BEEN CAST AND HAS REACHED A MINIMUM COMPRESSIVE STRENGTH OF 3,000 PSI.

ALL REINFORCING STEEL IN BARRIER RAILS SHALL BE EPOXY COATED.

THE #5 S1 AND #5 S2 BARS MAY BE SHIFTED SLIGHTLY IN ORDER TO MAINTAIN A 2" MINIMUM CLEARANCE TO ½" EXPANSION JOINT MATERIAL IN THE BARRIER RAIL.

VERTICAL GROOVED CONTRACTION JOINTS, ½" IN DEPTH, SHALL BE TOOLED IN ALL EXPOSED FACES OF THE BARRIER RAIL AND IN ACCORDANCE WITH ARTICLE 825-10(B) OF THE STANDARD SPECIFICATIONS. THE CONTRACTION JOINT SHALL BE LOCATED AT EACH THIRD POINT BETWEEN BARRIER RAIL EXPANSION JOINTS. ONLY ONE CONTRACTION JOINT IS REQUIRED AT MIDPOINT OF BARRIER RAIL SEGMENTS LESS THAN 20 FEET IN LENGTH AND NO CONTRACTION JOINTS ARE REQUIRED FOR THOSE SEGMENTS LESS THAN 10 FEET IN LENGTH.

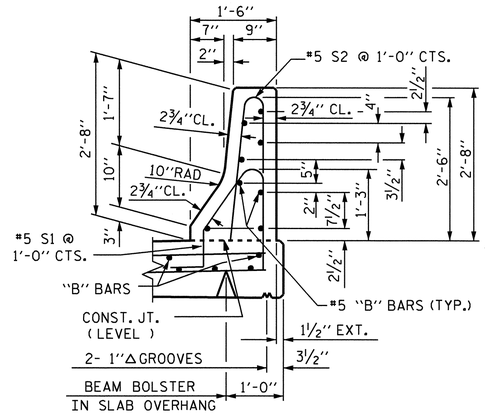

SECTION THRU RAIL

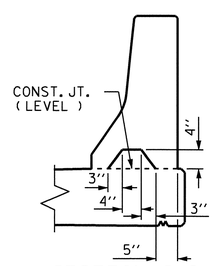

SECTION S-S

AT DAM IN OPEN JOINT
(THIS IS TO BE USED ONLY WHEN SLIP FORM IS USED)

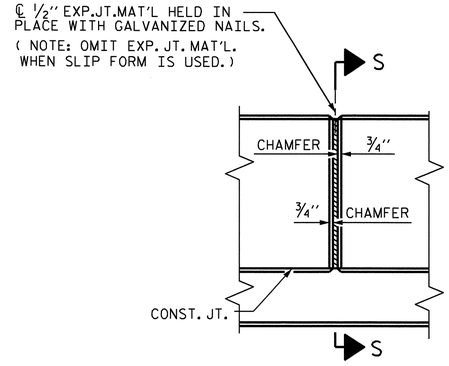

ELEVATION AT EXPANSION JOINTS

BARRIER RAIL DETAILS

PROJECT NO. U-4007B

ONSLOW COUNTY

STATION: 42+27.41 -SBL RAMP-

SHEET 1 OF 2

STATE OF NORTH CAROLINA
DEPARTMENT OF TRANSPORTATION
RALEIGH

STANDARD

CONCRETE BARRIER RAIL

NORTH CAROLINA PROFESSIONAL SEAL 025516 ENGINEER EMILY E. MURRAY
8/24/10

REVISIONS								SHEET NO.
NO.	BY:	DATE:	NO.	BY:	DATE:			S-101
1			3					TOTAL SHEETS
2			4					142

STR. #4

STD. NO. CBR1

ASSEMBLED BY : B.N. BARODAWALA	DATE : 1-4-10		
CHECKED BY : PEGGY PARISI	DATE : 5-5-10		
DRAWN BY : ARB 5/87	REV. 10/17/00	RWW/LES	
CHECKED BY : SJD 9/87	REV. 5/7/03R	RWW/JTE	
	REV. 5/1/06	TLA/GM	

23-AUG-2010 15:25
Z:\TIPProjects-U\U4007b\Structures\FinalPlans\Str. #4\U-4007b_sd_BR_04#.dgn
PADKINS

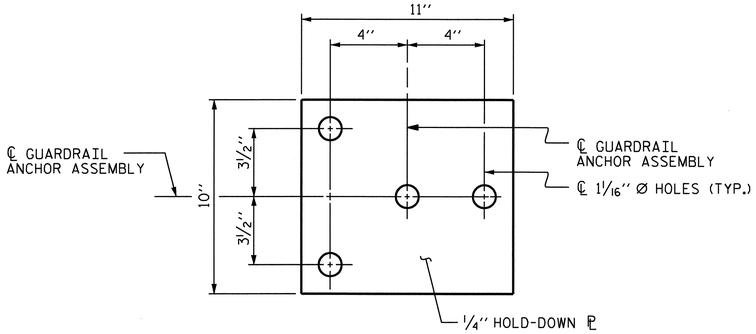

PLAN

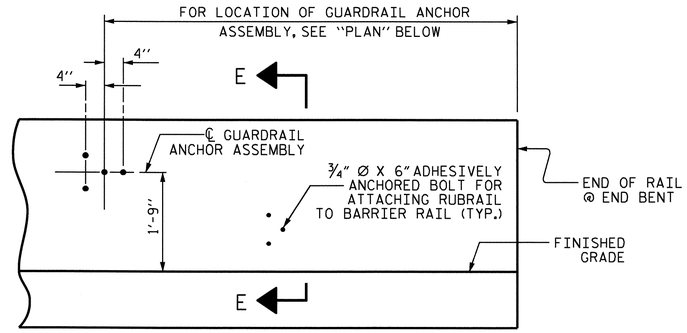

ELEVATION

FOR LOCATION OF RUBRAIL, SEE ROADWAY STD. 862.03

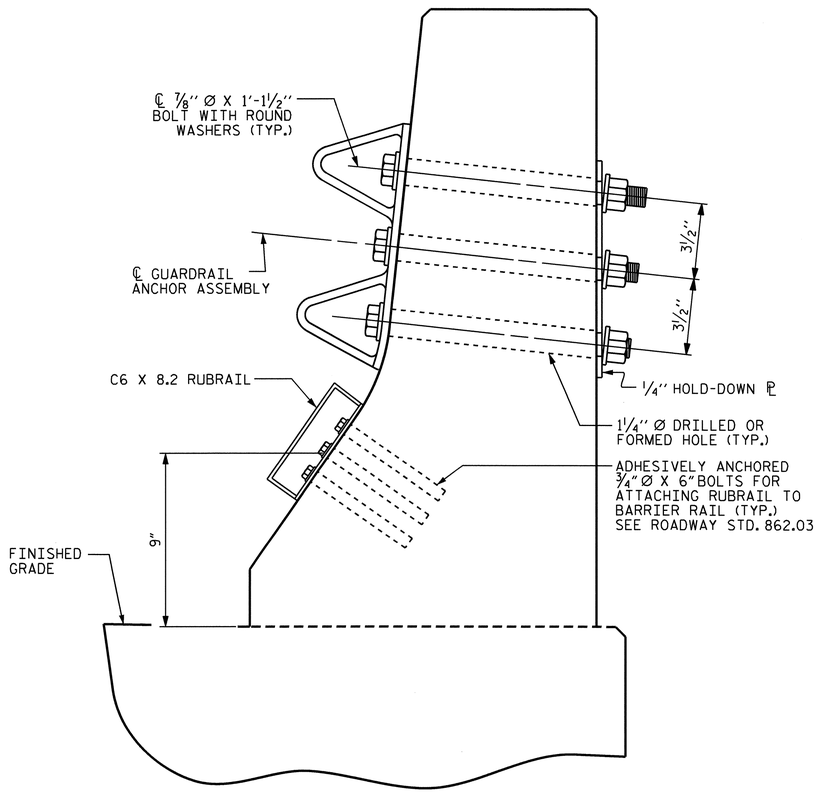

SECTION E-E

GUARDRAIL ANCHOR ASSEMBLY DETAILS

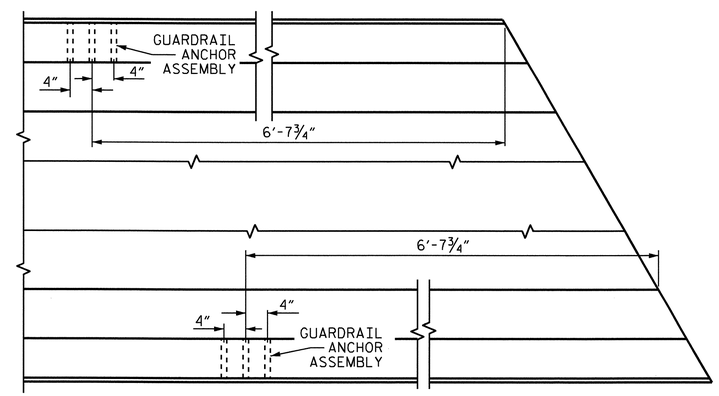

PLAN

LOCATION OF ANCHORS FOR GUARDRAIL

AT END BENT #2.

NOTES

THE GUARDRAIL ANCHOR ASSEMBLY SHALL CONSIST OF A 1/4" HOLD DOWN PLATE AND 4 - 7/8" Ø BOLTS WITH NUTS AND WASHERS, RUBRAIL, AND ADHESIVELY ANCHORED BOLTS.

THE HOLD-DOWN PLATE SHALL CONFORM TO AASHTO M270 GRADE 36. AFTER FABRICATION, THE HOLD-DOWN PLATE SHALL BE HOT-DIP GALVANIZED IN ACCORDANCE WITH AASHTO M111.

BOLTS SHALL CONFORM TO THE REQUIREMENTS OF ASTM A307 AND NUTS SHALL CONFORM TO THE REQUIREMENTS OF AASHTO M291. BOLTS, NUTS AND WASHERS SHALL BE GALVANIZED. (AT THE CONTRACTOR'S OPTION, STAINLESS STEEL BOLTS, NUTS AND WASHERS MAY BE USED AS AN ALTERNATE FOR THE 7/8" Ø GALVANIZED BOLTS, NUTS AND WASHERS. THEY SHALL CONFORM TO OR EXCEED THE MECHANICAL REQUIREMENTS OF ASTM A307. THE USE OF THIS ALTERNATE SHALL BE APPROVED BY THE ENGINEER.)

THE GUARDRAIL ANCHOR ASSEMBLY IS REQUIRED AT ALL POINTS WHERE APPROACH GUARDRAIL IS TO BE ATTACHED TO THE END OF BARRIER RAIL. FOR POINTS OF ATTACHMENT, SEE SKETCH.

AFTER INSTALLATION, THE EXPOSED THREAD OF THE BOLT SHALL BE BURRED WITH A SHARP POINTED TOOL.

THE COST OF THE GUARDRAIL ANCHOR ASSEMBLY SHALL BE INCLUDED IN THE UNIT CONTRACT PRICE BID FOR CONCRETE BARRIER RAIL.

THE 1 1/4" Ø HOLES SHALL BE FORMED OR DRILLED WITH A CORE BIT. IMPACT TOOLS WILL NOT BE PERMITTED. ANY CONCRETE DAMAGED BY THIS WORK SHALL BE REPAIRED TO THE SATISFACTION OF THE ENGINEER.

THE C6 X 8.2 RUBRAIL IS TO BE ADHESIVELY ANCHORED TO THE RAIL USING THREE 3/4" Ø X 6" BOLTS WITH WASHERS. LEVEL ONE FIELD TESTING IS REQUIRED, AND THE YIELD LOAD OF THE 3/4" Ø BOLT IS 12 KIPS. FOR ADHESIVELY ANCHORED ANCHOR BOLTS OR DOWELS, SEE SPECIAL PROVISIONS. SEE ROADWAY STANDARD 862.03 FOR DETAILS AND LOCATION OF THE RUBRAIL.

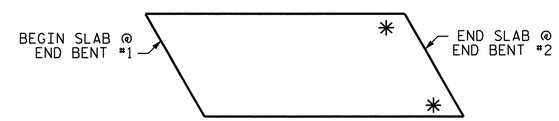

SKETCH SHOWING POINTS OF ATTACHMENTS

✳ DENOTES GUARDRAIL ANCHOR ASSEMBLY

PROJECT NO. U-4007B

ONSLOW COUNTY

STATION: 42+27.41 -SBL RAMP-

SHEET 2 OF 2

STATE OF NORTH CAROLINA
DEPARTMENT OF TRANSPORTATION
RALEIGH

STANDARD

GUARDRAIL ANCHORAGE FOR BARRIER RAIL

NORTH CAROLINA PROFESSIONAL SEAL 025516 ENGINEER EMILY E. MURRAY
8/24/10

REVISIONS						SHEET NO.
NO.	BY:	DATE:	NO.	BY:	DATE:	S-102
1			3			TOTAL SHEETS
2			4			142

ASSEMBLED BY : B.N. BARODAWALA DATE : 1-4-10
CHECKED BY : PEGGY PARISI DATE : 5-5-10
DRAWN BY : TLA 5/06
CHECKED BY : GM 5/06
ADDED 5/1/06R KMM/GM

23-AUG-2010 15:24
Z:\TIPProjects-U\U4007b\Structures\Final Plans\Str. #4\U-4007b_sd_BR_04#.dgn
PADKINS

STR. #4 (SHT 3) STD. NO. GRA2

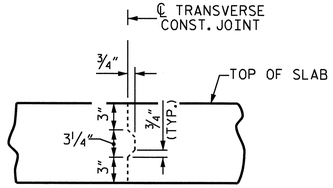

TRANSVERSE CONSTRUCTION JOINT DETAIL

NOTE: REINFORCING STEEL IN SLAB NOT SHOWN. LONGITUDINAL REINFORCING STEEL SHALL BE CONTINUOUS THROUGH JOINT.

SUPERSTRUCTURE REINFORCING STEEL LENGTHS ARE BASED ON THE FOLLOWING MINIMUM SPLICE LENGTHS					
BAR SIZE	SUPERSTRUCTURE EXCEPT APPROACH SLABS, PARAPET, AND BARRIER RAIL		APPROACH SLABS		PARAPET AND BARRIER RAIL
	EPOXY COATED	UNCOATED	EPOXY COATED	UNCOATED	
#4	2'-0"	1'-9"	2'-0"	1'-9"	2'-9"
#5	2'-6"	2'-2"	2'-6"	2'-2"	3'-5"
#6	3'-0"	2'-7"	3'-10"	2'-7"	4'-4"
#7	5'-3"	3'-6"			
#8	6'-10"	4'-7"			

GROOVING BRIDGE FLOORS		
APPROACH SLABS	1943	SQ.FT.
BRIDGE DECK	9300	SQ.FT.
TOTAL	11243	SQ.FT.

BILL OF MATERIAL

BAR	NO.	SIZE	TYPE	LENGTH	WEIGHT
✳ A1	455	#5	STR	48'-11"	23214
✳ A101	4	#5	STR	44'-8"	186
✳ A102	4	#5	STR	38'-6"	161
✳ A103	4	#5	STR	32'-4"	135
✳ A104	4	#5	STR	26'-2"	109
✳ A105	4	#5	STR	20'-0"	83
✳ A106	4	#5	STR	13'-10"	58
✳ A107	4	#5	STR	7'-8"	32
✳ A108	4	#5	STR	1'-7"	7
A2	455	#5	STR	48'-11"	23214
A201	4	#5	STR	44'-8"	186
A202	4	#5	STR	38'-6"	161
A203	4	#5	STR	32'-4"	135
A204	4	#5	STR	26'-2"	109
A205	4	#5	STR	20'-0"	83
A206	4	#5	STR	13'-10"	58
A207	4	#5	STR	7'-8"	32
A208	4	#5	STR	1'-7"	7
✳ B1	64	#6	STR	26'-3"	2523
✳ B2	35	#6	STR	31'-3"	1643
✳ B3	70	#4	STR	28'-4"	1325
✳ B4	105	#6	STR	35'-2"	5546
✳ B5	128	#6	STR	46'-3"	8892
✳ B6	35	#4	STR	14'-11"	349
✳ B7	64	#6	STR	18'-9"	1802
✳ B8	35	#6	STR	23'-9"	1249
B9	264	#5	STR	55'-8"	15328
K1	20	#5	STR	55'-0"	1147
K2	16	#5	STR	2'-8"	45
✳ S1	80	#4	1	11'-8"	623
✳ S2	80	#4	1	9'-9"	521
U1	84	#4	2	12'-0"	673
U2	12	#4	2	14'-0"	112
V1	10	#4	STR	4'-6"	30
REINFORCING STEEL = 41320 LBS					
✳ EPOXY COATED REINF. STEEL = 48458 LBS					

BAR TYPES

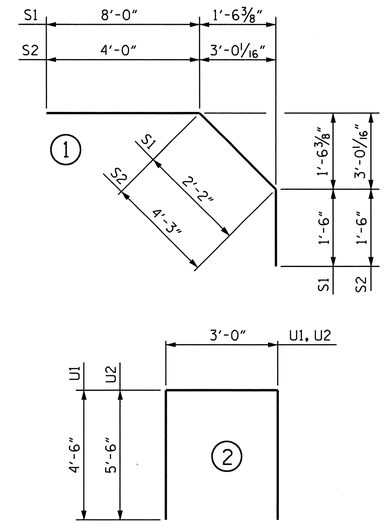

ALL BAR DIMENSIONS ARE OUT TO OUT

	CLASS AA CONCRETE	REINFORCING STEEL	EPOXY COATED REINFORCING STEEL
	(CU.YDS.)	(LBS.)	(LBS.)
		41320	48458
POUR #1	223.4		
POUR #2	112.4		
POUR #3	96.2		
✳✳ TOTALS	432.0	41320	48458

✳✳ QUANTITIES DO NOT INCLUDE BARRIER RAIL. POUR #3 INCLUDES UPPER POUR OF WINGS AND INTEGRAL END BENT.

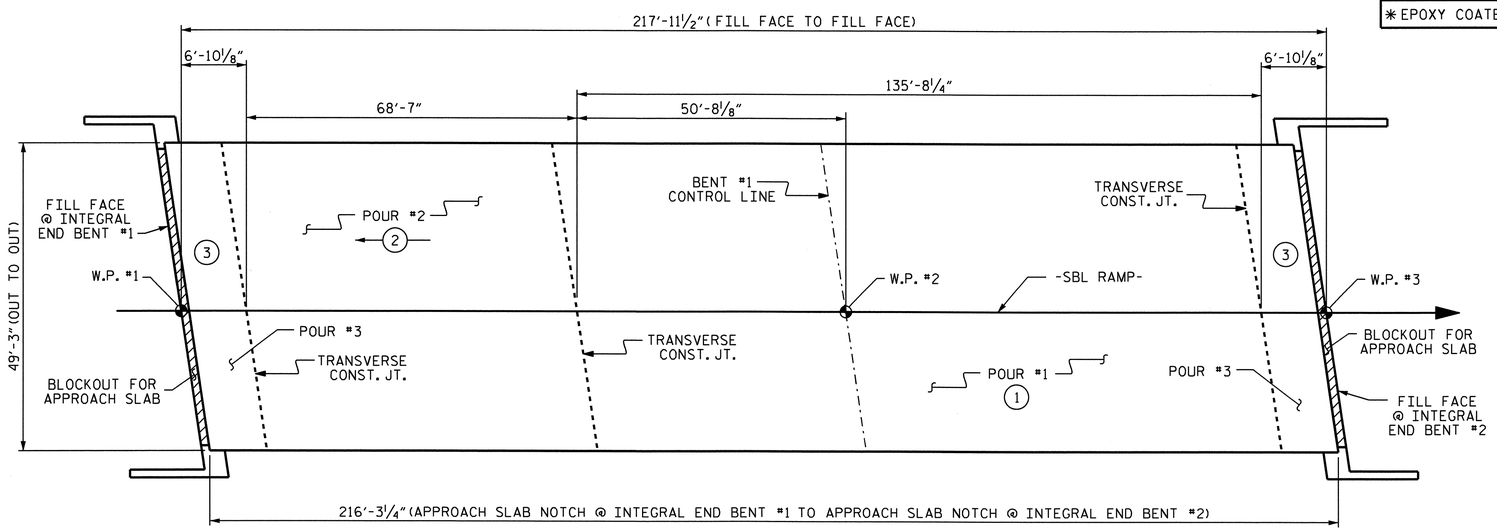

LAYOUT FOR COMPUTING AREA OF REINFORCED CONCRETE DECK SLAB (SQ. FT. = 10,734)

PROJECT NO. U-4007B
ONSLOW COUNTY
STATION: 42+27.41 -SBL RAMP-

STATE OF NORTH CAROLINA
DEPARTMENT OF TRANSPORTATION
RALEIGH

STANDARD

SUPERSTRUCTURE BILL OF MATERIAL

NORTH CAROLINA PROFESSIONAL SEAL 025516 ENGINEER EMILY E. MURRAY
8/24/10

REVISIONS								SHEET NO.
NO.	BY:	DATE:	NO.	BY:	DATE:			S-103
1			3					TOTAL SHEETS
2			4					142

ASSEMBLED BY : B.N.BARODAWALA	DATE : 1-12-10		
CHECKED BY : PEGGY PARISI	DATE : 5-5-10		
DRAWN BY : JMB 5/87	REV. 6/1/94	EEM/GRP	
CHECKED BY : SJD 9/87	REV. 8/16/99	RWW/LES	
	REV. 5/1/06	TLA/GM	

23-AUG-2010 15:24
Z:\TIPProjects-U\U4007b\Structures\FinalPlans\Str. #4\U-4007b_sd_BM_04#.dgn
PADKINS

STR. #4

STD. NO. BOM1

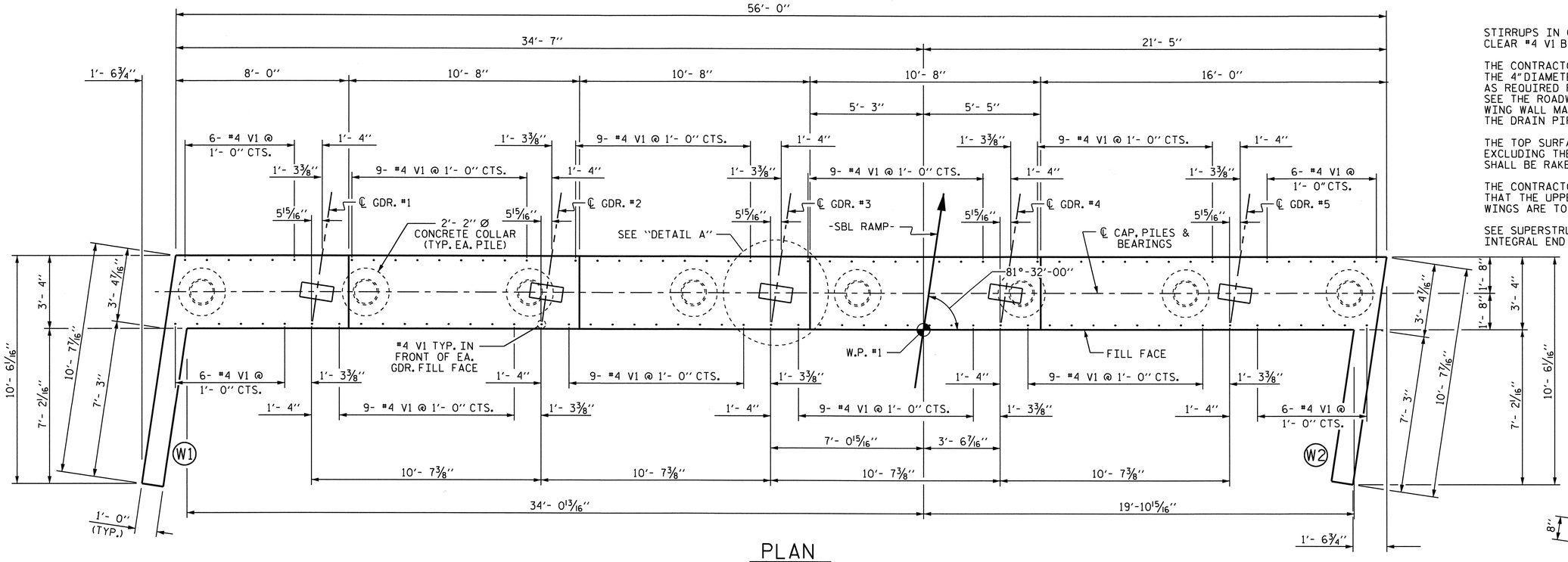

PLAN

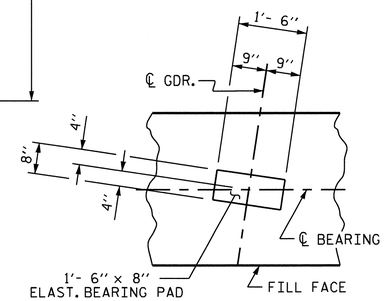

DETAIL A

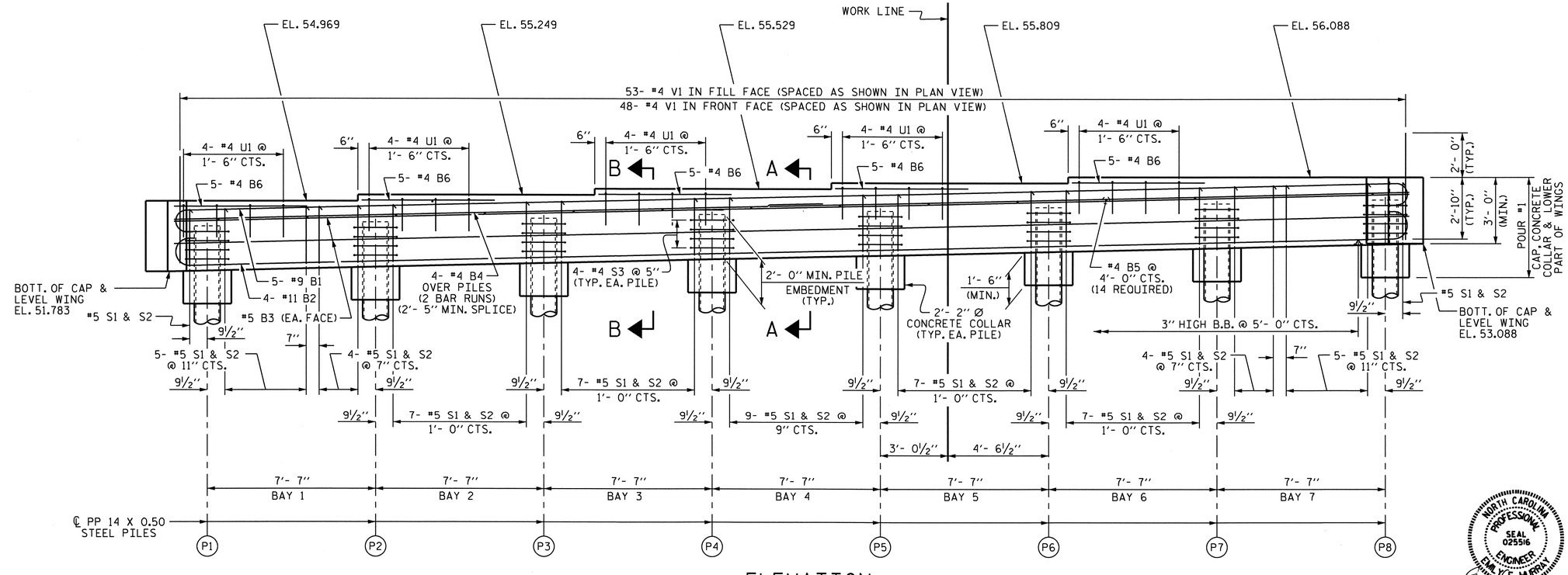

ELEVATION

(FOR WING REINFORCING STEEL AND DETAILS, SEE SHEET 2 OF 3)

NOTES

STIRRUPS IN CAP MAY BE SHIFTED AS NECESSARY TO CLEAR #4 V1 BARS.

THE CONTRACTOR SHALL PROVIDE FOR INSTALLATION OF THE 4" DIAMETER DRAIN PIPE THROUGH THE WING WALL AS REQUIRED FOR REINFORCED BRIDGE APPROACH FILLS. SEE THE ROADWAY PLANS. REINFORCING STEEL IN THE WING WALL MAY BE SHIFTED AS NECESSARY TO CLEAR THE DRAIN PIPE.

THE TOP SURFACE OF THE END BENT CAP AND WINGS, EXCLUDING THE OUTSIDE 4" AND THE BEARING AREA, SHALL BE RAKED TO A DEPTH OF 1/4".

THE CONTRACTOR'S ATTENTION IS CALLED TO THE FACT THAT THE UPPER PART OF INTEGRAL END BENT AND WINGS ARE TO BE POURED WITH THE SUPERSTRUCTURE.

SEE SUPERSTRUCTURE SHEET FOR UPPER PART OF INTEGRAL END BENT DETAIL.

PIPE PILES SHALL BE IN ACCORDANCE WITH SECTION 1084 OF THE STANDARD SPECIFICATIONS.

REMOVE AND REPLACE OR REPAIR TO THE SATISFACTION OF THE ENGINEER PILES THAT ARE DAMAGED, DEFORMED OR COLLAPSED DURING INSTALLATION OR DRIVING.

PILE SPLICES SHALL BE IN ACCORDANCE WITH THE STANDARD SPECIFICATIONS AND AWS D1.1.

TOP OF PILE ELEVATION	
P1 53.825	P5 54.532
P2 54.002	P6 54.709
P3 54.178	P7 54.885
P4 54.355	P8 55.062

PROJECT NO. U-4007B

ONSLOW COUNTY

STATION: 42+27.41 -SBL RAMP-

SHEET 1 OF 3

STATE OF NORTH CAROLINA
DEPARTMENT OF TRANSPORTATION
RALEIGH

SUBSTRUCTURE

INTEGRAL END BENT #1

NORTH CAROLINA PROFESSIONAL SEAL 025516 ENGINEER EMILYCE MURRAY
8/23/10

REVISIONS						SHEET NO.
NO.	BY:	DATE:	NO.	BY:	DATE:	S-104
1			3			TOTAL SHEETS
2			4			142

DRAWN BY : D. A. GLADDEN DATE : 3-4-10
CHECKED BY : B. N. BARODAWALA DATE : 3-22-10

23-AUG-2010 15:24
Z:\TIPProjects-U\U4007b\Structures\FinalPlans\Str. #4\u4007b_sd_str4eb.dgn
PADKINS

STR. #4

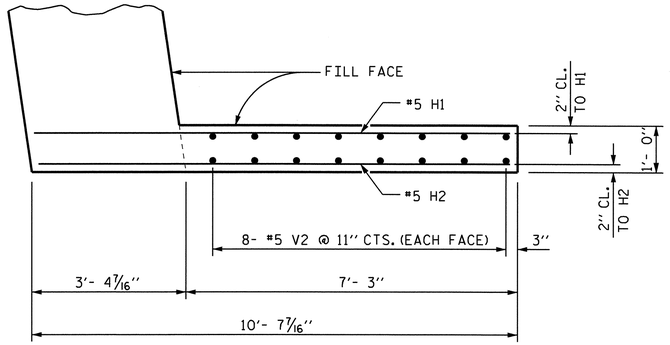

PLAN OF LEFT WING (W1)

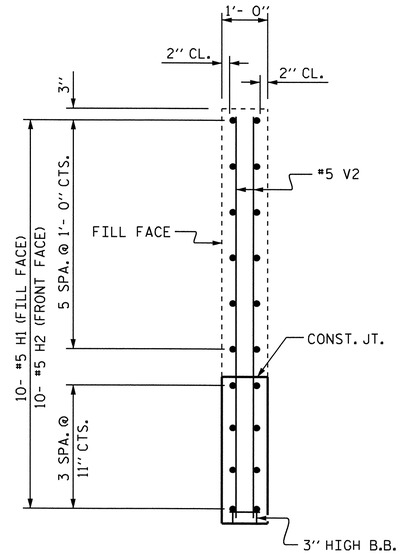

SECTION X-X

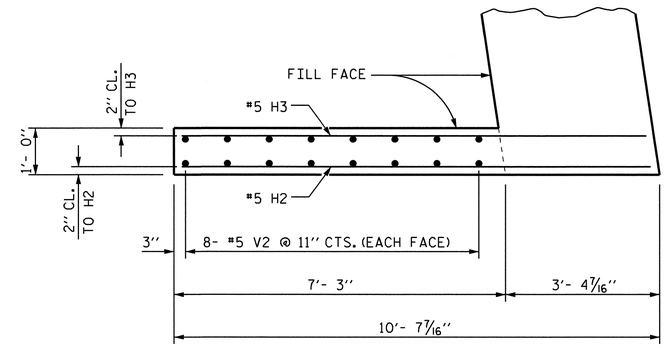

PLAN OF RIGHT WING (W2)

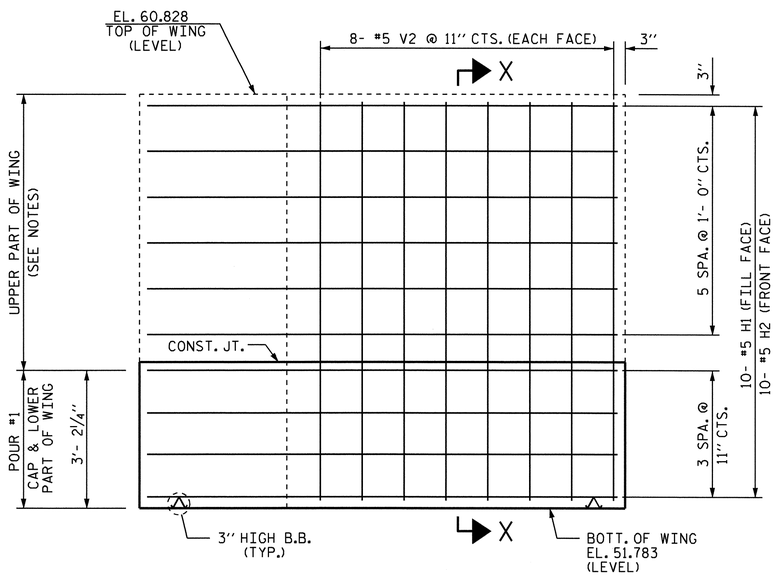

ELEVATION OF LEFT WING (W1)

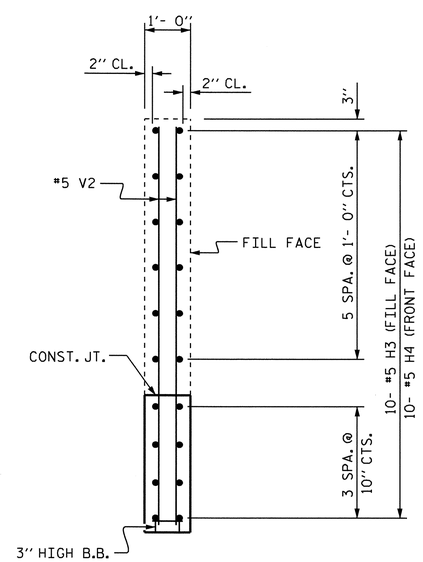

SECTION Y-Y

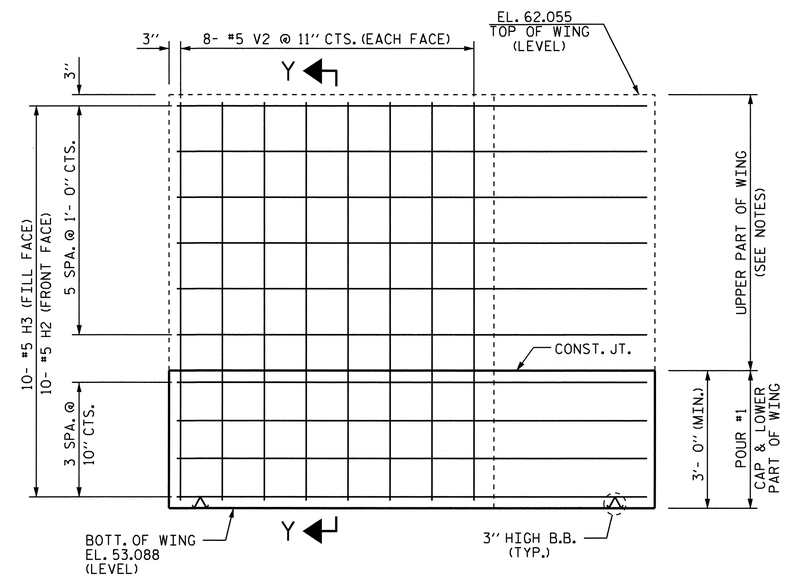

ELEVATION OF RIGHT WING (W2)

PROJECT NO. U-4007B

ONSLOW COUNTY

STATION: 42+27.41 -SBL RAMP-

SHEET 2 OF 3

STATE OF NORTH CAROLINA
DEPARTMENT OF TRANSPORTATION
RALEIGH

SUBSTRUCTURE

INTEGRAL
END BENT #1

NORTH CAROLINA PROFESSIONAL SEAL 025516 ENGINEER EMILY B. MURRAY
8/24/10

REVISIONS							SHEET NO.
NO.	BY:	DATE:	NO.	BY:	DATE:		S-105
1			3				TOTAL SHEETS
2			4				142

DRAWN BY : D. A. GLADDEN DATE : 3-4-10
CHECKED BY : B. N. BARODAWALA DATE : 3-22-10

23-AUG-2010 15:23
Z:\TIPProjects-U\U4007b\Structures\Final Plans\Str. #4\u4007b_sd_str4eb.dgn
PADKINS

STR. #4

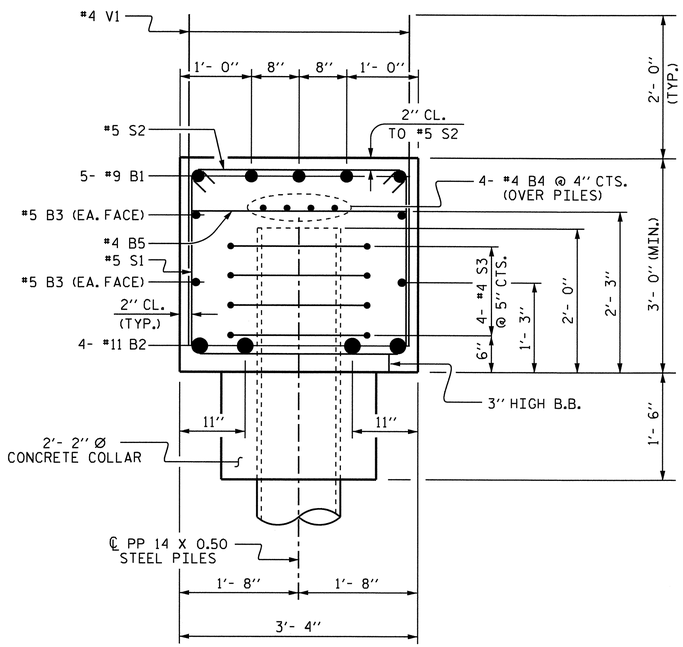

SECTION A-A

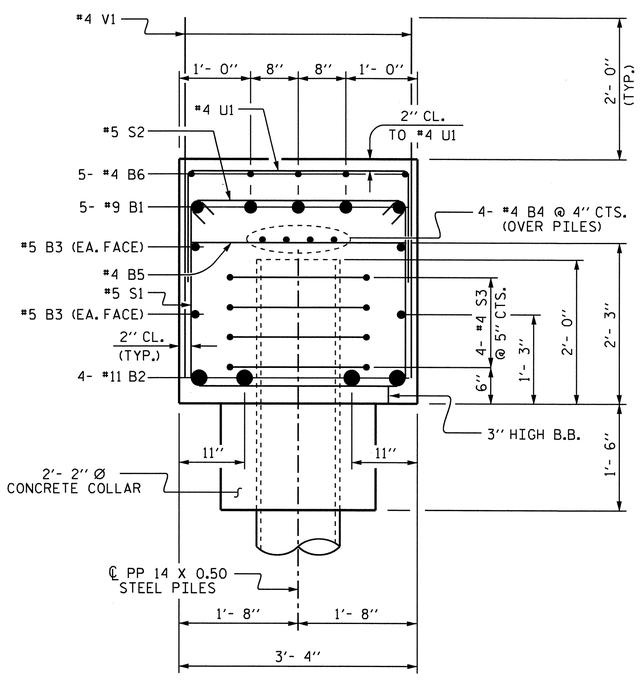

SECTION B-B

BAR TYPES

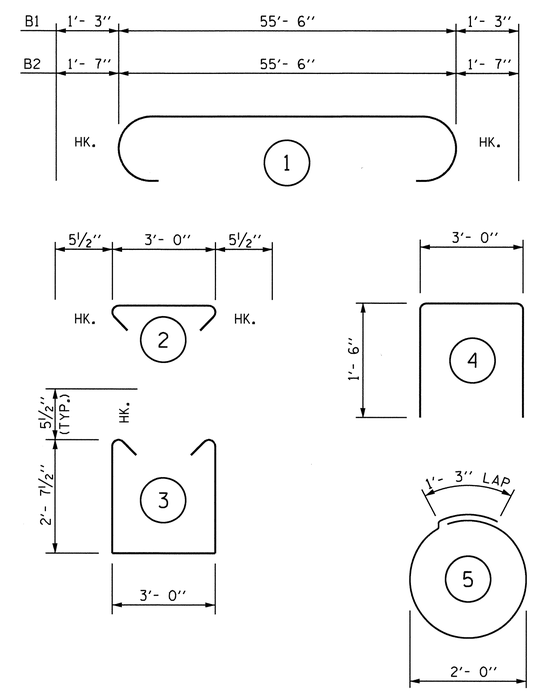

ALL BAR DIMENSIONS ARE OUT TO OUT.

BILL OF MATERIAL

BAR	NO.	SIZE	TYPE	LENGTH	WEIGHT
B1	5	#9	1	58'- 0"	986
B2	4	#11	1	58'- 8"	1247
B3	4	#5	STR	55'- 8"	232
B4	8	#4	STR	29'- 1"	155
B5	14	#4	STR	3'- 0"	28
B6	25	#4	STR	5'- 0"	84
H1	10	#5	STR	10'- 4"	108
H2	20	#5	STR	10'- 3"	214
H3	10	#5	STR	10'- 2"	106
S1	57	#5	3	9'- 2"	545
S2	57	#5	2	3'-11"	233
S3	32	#4	5	7'- 7"	162
U1	20	#4	4	6'- 0"	80
V1	101	#4	STR	4'-10"	326
V2	32	#5	STR	8'- 7"	286

REINFORCING STEEL 4792 LBS

CLASS A CONCRETE BREAKDOWN

POUR #1 (CAP, CONCRETE COLLAR & LOWER PART OF WINGS) = 25.3 C.Y.

PP 14 X 0.50 STEEL PILES
NO. 8 LIN. FT. 400

STEEL PILE POINTS NO. 8

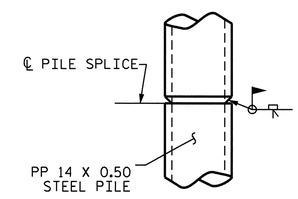

PIPE PILE SPLICE DETAIL

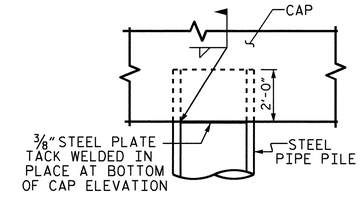

PIPE PILE IN CAP DETAIL

THE CONTRACTOR MAY PROPOSE AN ALTERNATE METHOD FOR PLUGGING THE STEEL PIPE PILE, SUBJECT TO APPROVAL BY THE ENGINEER.

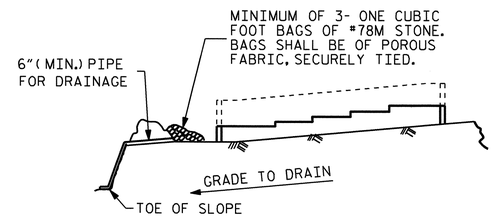

BAGGED STONE AND PIPE SHALL BE PLACED IMMEDIATELY AFTER COMPLETION OF END BENT EXCAVATION. PIPE MAY BE EITHER CONCRETE, CORRUGATED STEEL, CORRUGATED ALUMINUM ALLOY, OR CORRUGATED PLASTIC. PERFORATED PIPE WILL NOT BE ALLOWED.

BAGGED STONE SHALL REMAIN IN PLACE UNTIL THE ENGINEER DIRECTS THAT IT BE REMOVED. THE CONTRACTOR SHALL REMOVE AND DISPOSE OF SILT ACCUMULATIONS AT BAGGED STONE WHEN SO DIRECTED BY THE ENGINEER. BAGS SHALL BE REMOVED AND REPLACED WHENEVER THE ENGINEER DETERMINES THAT THEY HAVE DETERIORATED AND LOST THEIR EFFECTIVENESS.

NO SEPARATE PAYMENT WILL BE MADE FOR THIS WORK AND THE ENTIRE COST OF THIS WORK SHALL BE INCLUDED IN THE UNIT CONTRACT PRICE BID FOR THE SEVERAL PAY ITEMS.

TEMPORARY DRAINAGE AT END BENT

PROJECT NO. U-4007B
ONSLOW COUNTY
STATION: 42+27.41 -SBL RAMP-

SHEET 3 OF 3

STATE OF NORTH CAROLINA
DEPARTMENT OF TRANSPORTATION
RALEIGH

SUBSTRUCTURE

INTEGRAL END BENT #1

NORTH CAROLINA PROFESSIONAL SEAL 025516 ENGINEER EMILY E. MURRAY
8/24/10

REVISIONS						SHEET NO.
NO.	BY:	DATE:	NO.	BY:	DATE:	S-106
1			3			TOTAL SHEETS
2			4			142

DRAWN BY : D. A. GLADDEN DATE : 3-4-10
CHECKED BY : B. N. BARODAWALA DATE : 3-22-10

23-AUG-2010 15:23
Z:\TIPProjects-U\U4007b\Structures\FinalPlans\Str. #4\u4007b_sd_str4eb.dgn
PADKINS

STR. #4

NOTES

STIRRUPS IN CAP MAY BE SHIFTED AS NECESSARY TO CLEAR ANCHOR BOLTS.

HOOKS ON "V" BARS MAY BE TURNED AS NECESSARY FOR PLACING REINFORCING STEEL.

PIPE PILES SHALL BE IN ACCORDANCE WITH SECTION 1084 OF THE STANDARD SPECIFICATIONS.

PIPE PILE PLATES SHALL BE IN ACCORDANCE WITH THE SECTION 450 OF THE STANDARD SPECIFICATIONS.

REMOVE AND REPLACE OR REPAIR TO THE SATISFATION OF THE ENGINEER PILES THAT ARE DAMAGED, DEFORMED OR COLLAPSED DURING INSTALLATION OR DRIVING.

PILE SPLICES SHALL BE IN ACCORDANCE WITH THE STANDARD SPECIFICATIONS AND AWS D1.1.

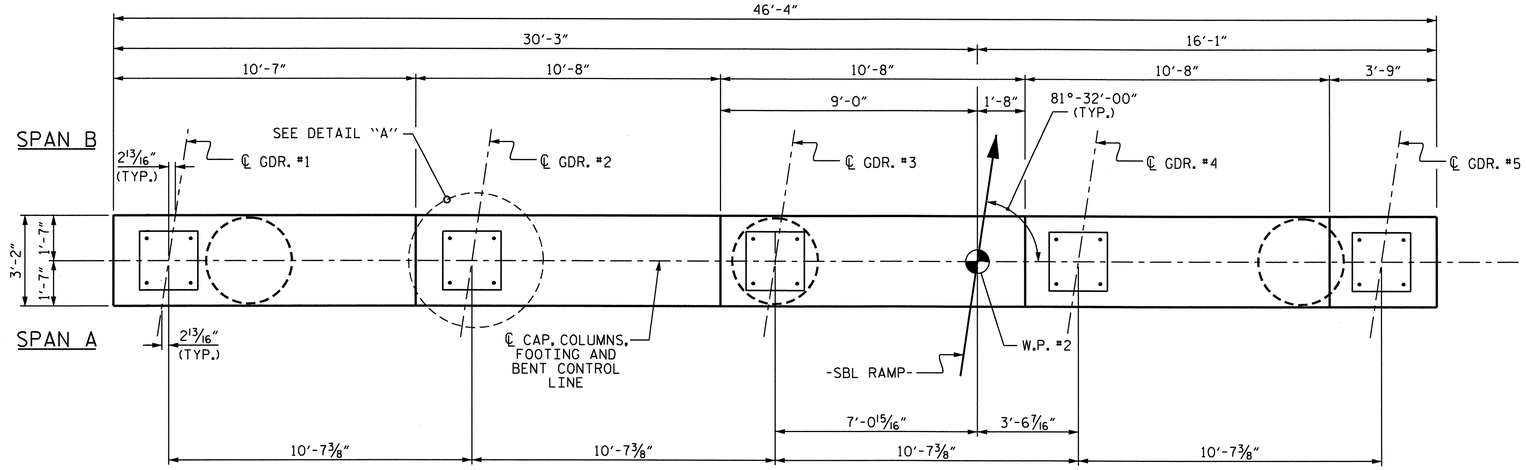

PLAN

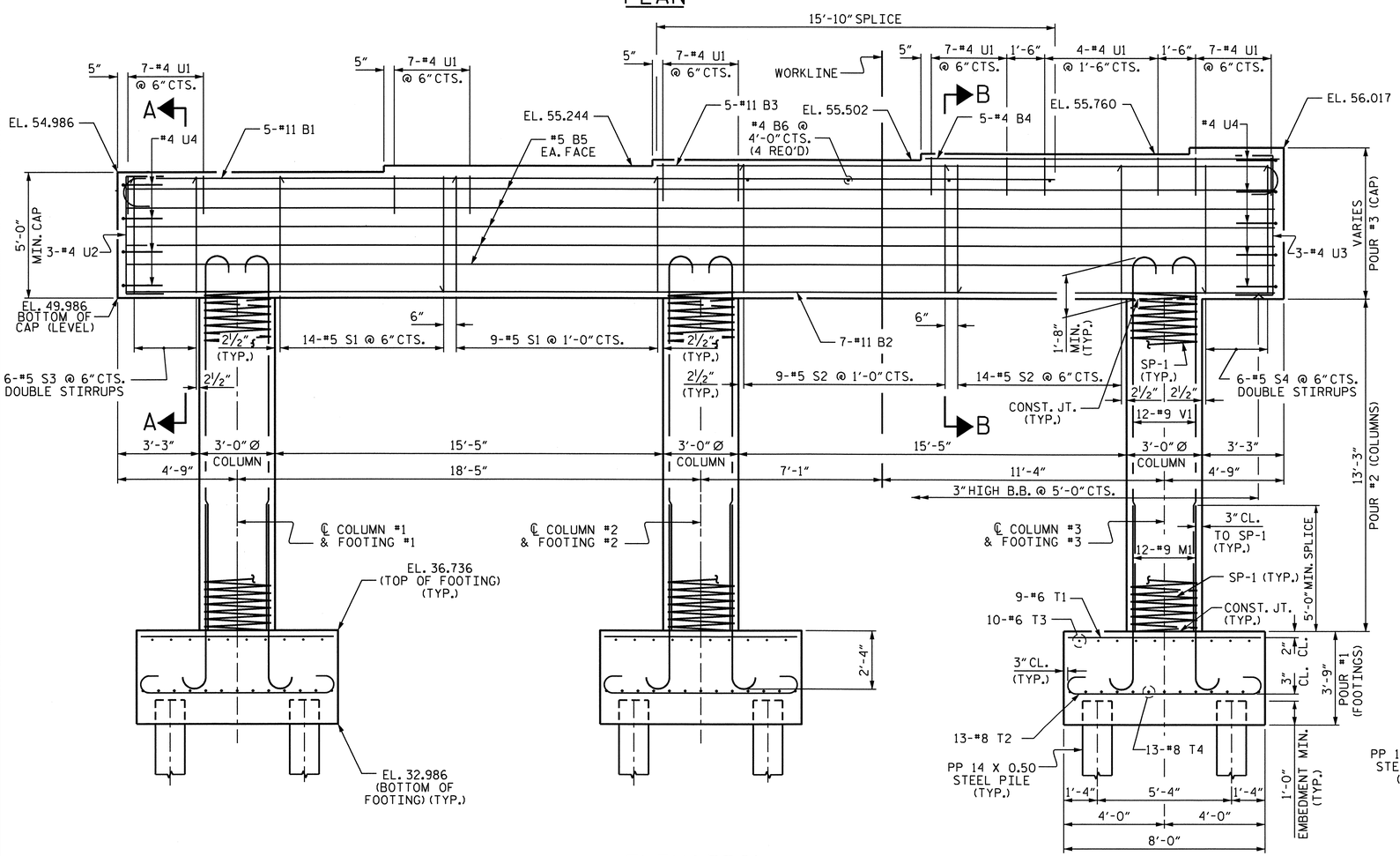

ELEVATION

COLUMN AND FOOTING INFORMATION IS TYPICAL UNLESS OTHERWISE NOTED.

INVERT ALTERNATE STIRRUPS (TYP.)

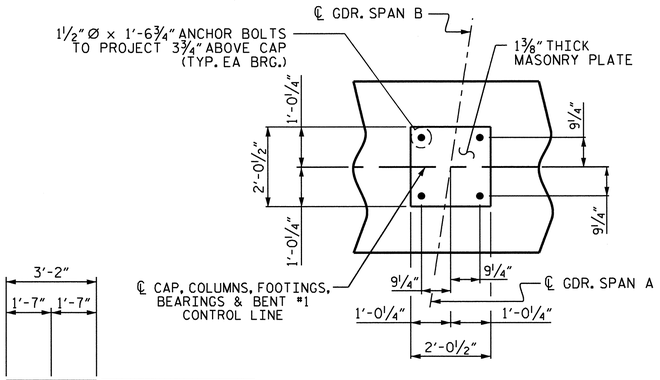

DETAIL "A"

(TYP. EA. GDR.)

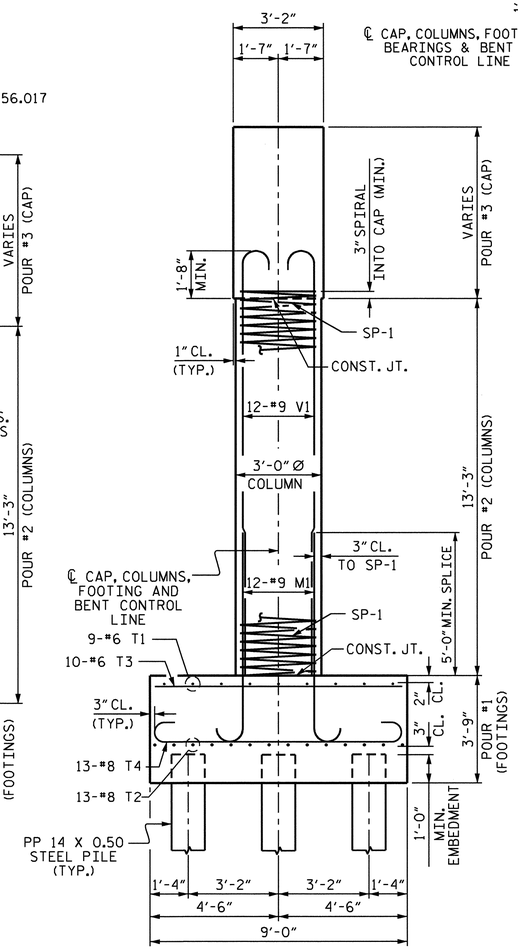

END ELEVATION

NORTH CAROLINA PROFESSIONAL SEAL 025516 ENGINEER EMILY E. MURRAY 8/24/10

PROJECT NO. U-4007B

ONSLOW COUNTY

STATION: 42+27.41 -SBL RAMP-

SHEET 1 OF 2

STATE OF NORTH CAROLINA
DEPARTMENT OF TRANSPORTATION
RALEIGH

SUBSTRUCTURE

BENT #1

REVISIONS						SHEET NO.
NO.	BY:	DATE:	NO.	BY:	DATE:	S-107
1			3			TOTAL SHEETS
2			4			142

STR. #4

DRAWN BY : H. T. BARBOUR DATE : 3-15-10
CHECKED BY : B. N. BARODAWALA DATE : 3-23-10

23-AUG-2010 15:23
Z:\TIPProjects-U\U4007b\Structures\FinalPlans\Str. #4\u40007b_sd_b1_04.dgn
PADKINS

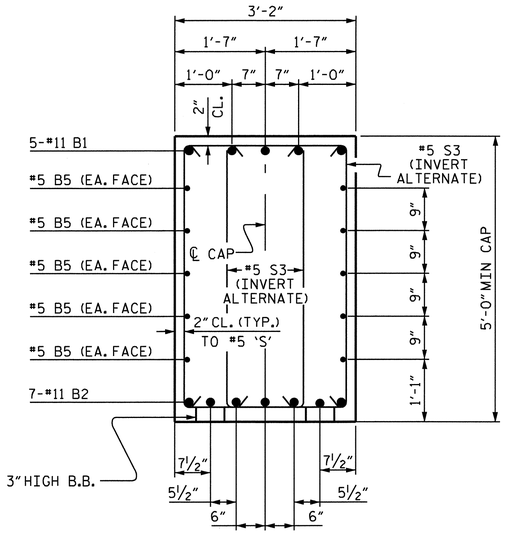

SECTION A-A

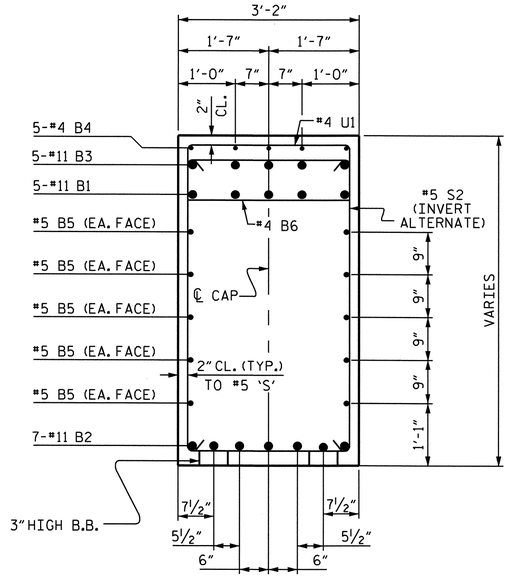

SECTION B-B

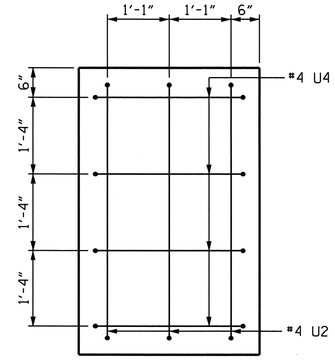

LEFT END VIEW

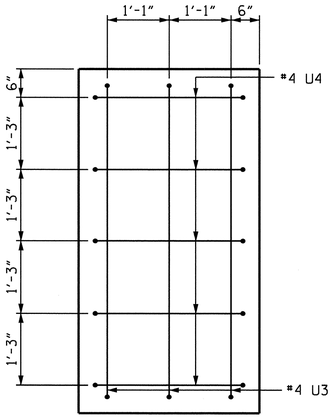

RIGHT END VIEW

BAR TYPES

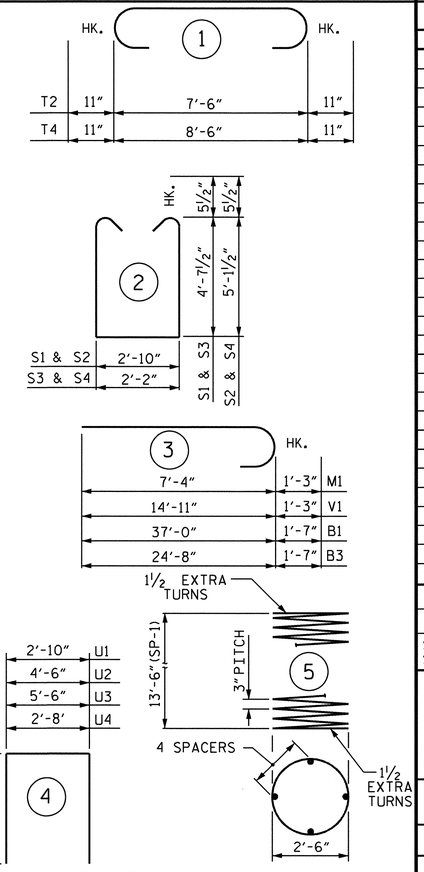

ALL BAR DIMENSIONS ARE OUT TO OUT.

BILL OF MATERIAL

BENT #1

BAR	NO.	SIZE	TYPE	LENGTH	WEIGHT
B1	5	#11	3	38'-7"	1025
B2	7	#11	STR	45'-10"	1705
B3	5	#11	3	26'-3"	697
B4	5	#4	STR	14'-1"	47
B5	10	#5	STR	46'-0"	480
B6	4	#4	STR	2'-10"	8
S1	23	#5	2	13'-0"	312
S2	23	#5	2	14'-0"	336
S3	12	#5	2	12'-4"	154
S4	12	#5	2	13'-4"	167
M1	36	#9	3	8'-7"	1051
T1	27	#6	STR	7'-6"	304
T2	39	#8	1	9'-4"	972
T3	30	#6	STR	8'-6"	383
T4	39	#8	1	10'-4"	1076
U1	39	#4	4	5'-10"	152
U2	3	#4	4	7'-6"	15
U3	3	#4	4	8'-6"	17
U4	9	#4	4	5'-8"	34
V1	36	#9	3	16'-2"	1979
REINFORCING STEEL				=	10914 LBS.
SP-1	3	*	5	470'-4"	943 LBS.
SPIRAL COLUMN REINFORCING STEEL					943 LBS.

CLASS A CONCRETE BREAKDOWN

POUR #1 FOOTINGS	CU. YD.	30.0
POUR #2 COLUMNS	CU. YD.	10.4
POUR #3 CAP	CU. YD.	29.6
TOTAL CLASS A CONCRETE	CU. YD.	70.0

PP 14 x 0.50 STEEL PILES
No. 18 LIN. FT. 630

PIPE PILE PLATES EA. 18

FOUNDATION EXCAVATION LUMP SUM

*THE SP-1 SPIRAL REINFORCING STEEL SHALL BE W20 OR D-20 COLD DRAWN WIRE OR #4 PLAIN OR DEFORMED BAR.

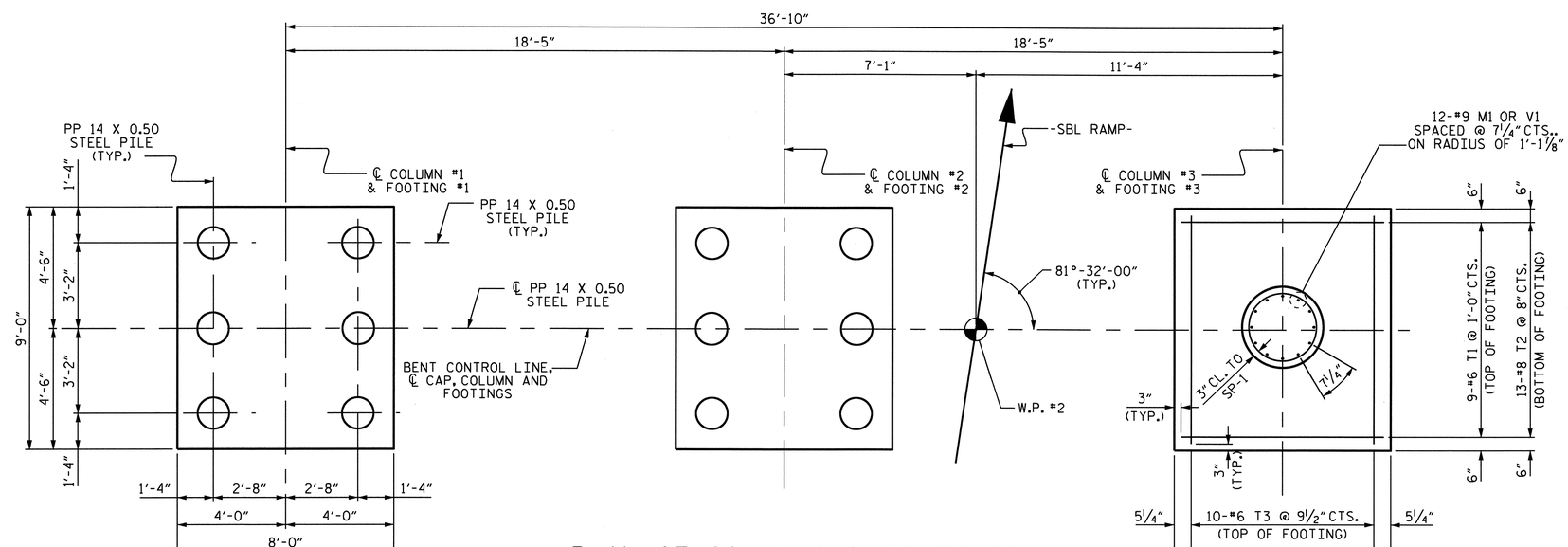

PLAN OF COLUMNS & FOOTINGS

(FOOTING DIMENSIONS, REINFORCING STEEL & PILES ARE TYPICAL EACH FOOTING)

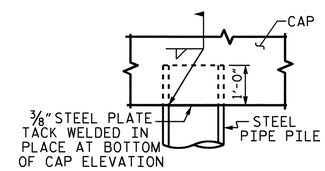

PIPE PILE IN FOOTING DETAIL

THE CONTRACTOR MAY PROPOSE AN ALTERNATE METHOD FOR PLUGGING THE STEEL PIPE PILE, SUBJECT TO APPROVAL BY THE ENGINEER.

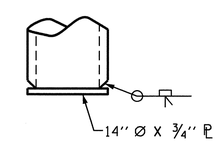

PIPE PILE PLATE DETAIL

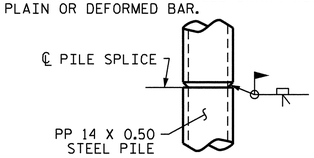

PIPE PILE SPLICE DETAIL

PROJECT NO. U-4007B

ONSLOW COUNTY

STATION: 42+27.41 -SBL RAMP-

SHEET 2 OF 2

STATE OF NORTH CAROLINA
DEPARTMENT OF TRANSPORTATION
RALEIGH

SUBSTRUCTURE

BENT #1

NORTH CAROLINA PROFESSIONAL SEAL 025516 ENGINEER EMIL Y. E. MURRAY
8/24/10

REVISIONS								SHEET NO.
NO.	BY:	DATE:	NO.	BY:	DATE:			S-108
1			3					TOTAL SHEETS
2			4					142

STR. #4

DRAWN BY : H. T. BARBOUR DATE : 3-15-10
CHECKED BY : B. N. BARODAWALA DATE : 3-23-10

23-AUG-2010 15:23
Z:\TIPProjects-U\U4007b\Structures\Final Plans\Str. #4\u40007b_sd_bl_04.dgn
PADKINS

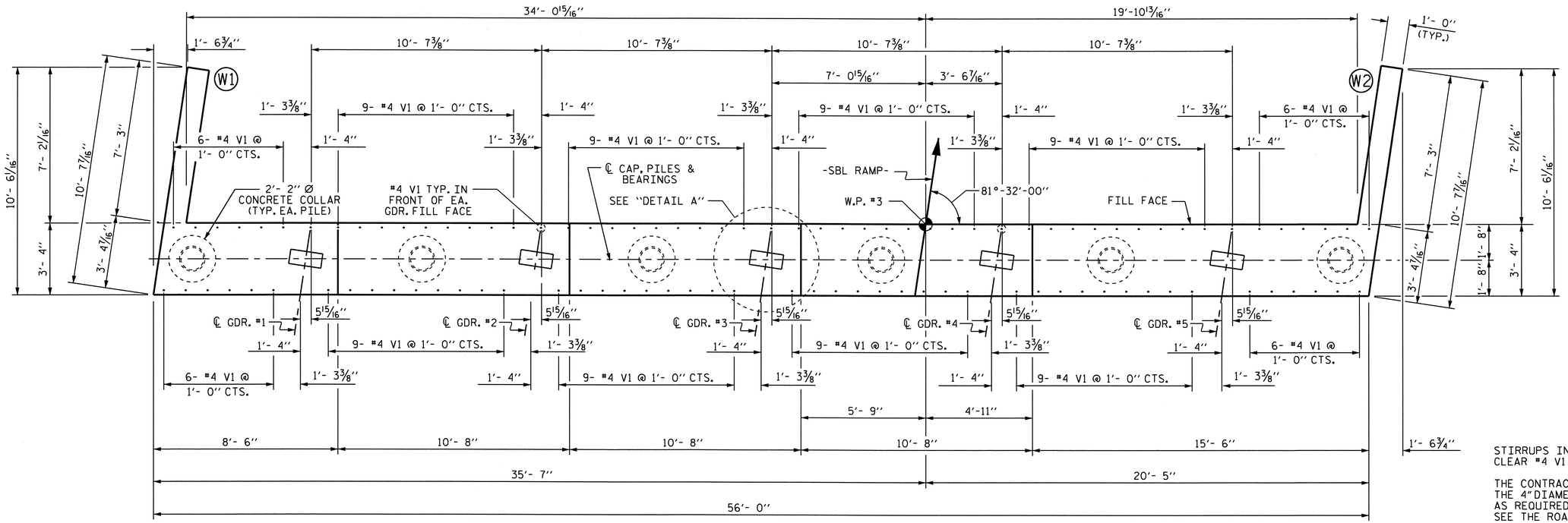

PLAN

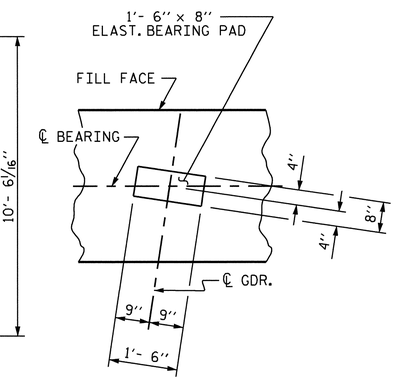

DETAIL A

NOTES

STIRRUPS IN CAP MAY BE SHIFTED AS NECESSARY TO CLEAR #4 V1 BARS.

THE CONTRACTOR SHALL PROVIDE FOR INSTALLATION OF THE 4" DIAMETER DRAIN PIPE THROUGH THE WING WALL AS REQUIRED FOR REINFORCED BRIDGE APPROACH FILLS, SEE THE ROADWAY PLANS. REINFORCING STEEL IN THE WING WALL MAY BE SHIFTED AS NECESSARY TO CLEAR THE DRAIN PIPE.

THE TOP SURFACE OF THE END BENT CAP AND WINGS, EXCLUDING THE OUTSIDE 4" AND THE BEARING AREA, SHALL BE RAKED TO A DEPTH OF 1/4".

THE CONTRACTOR'S ATTENTION IS CALLED TO THE FACT THAT THE UPPER PART OF INTEGRAL END BENT AND WINGS ARE TO BE POURED WITH THE SUPERSTRUCTURE.

SEE SUPERSTRUCTURE SHEET FOR UPPER PART OF INTEGRAL END BENT DETAIL.

PIPE PILES SHALL BE IN ACCORDANCE WITH SECTION 1084 OF THE STANDARD SPECIFICATIONS.

REMOVE AND REPLACE OR REPAIR TO THE SATISFACTION OF THE ENGINEER PILES THAT ARE DAMAGED, DEFORMED OR COLLAPSED DURING INSTALLATION OR DRIVING.

PILE SPLICES SHALL BE IN ACCORDANCE WITH THE STANDARD SPECIFICATIONS AND AWS D1.1.

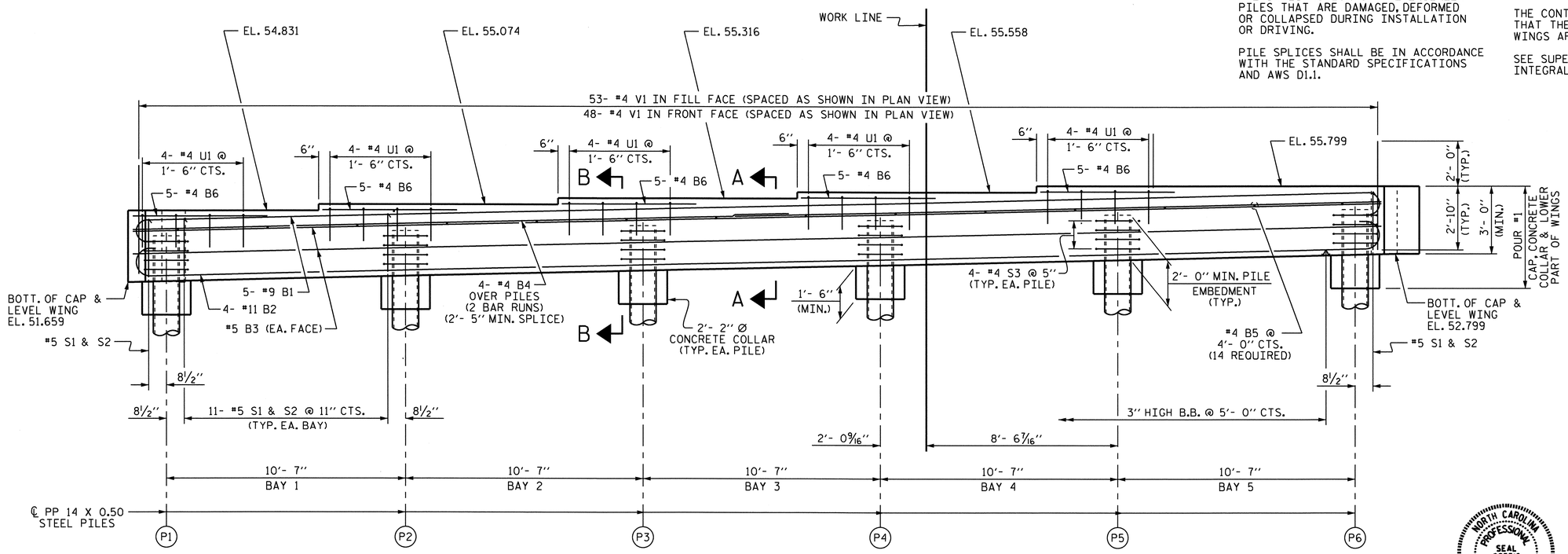

ELEVATION

(FOR WING REINFORCING STEEL AND DETAILS, SEE SHEET 2 OF 3)

TOP OF PILE ELEVATION			
P1	53.718	P4	54.358
P2	53.931	P5	54.571
P3	54.144	P6	54.785

PROJECT NO. U-4007B

ONSLOW COUNTY

STATION: 42+27.41 -SBL RAMP-

SHEET 1 OF 3

STATE OF NORTH CAROLINA
DEPARTMENT OF TRANSPORTATION
RALEIGH

SUBSTRUCTURE

INTEGRAL END BENT #2

NORTH CAROLINA PROFESSIONAL SEAL 025516 ENGINEER EMILY E. MURRAY
5/24/10

REVISIONS								SHEET NO.
NO.	BY:	DATE:	NO.	BY:	DATE:			S-109
1			3					TOTAL SHEETS
2			4					142

DRAWN BY : D. A. GLADDEN DATE : 3-4-10
CHECKED BY : B. N. BARODAWALA DATE : 3-22-10

23-AUG-2010 15:22
2:\TIPProjects-U\U4007b\Structures\FinalPlans\Str. #4\u4007b_sd_str4eb.dgn
PADKINS

STR. #4

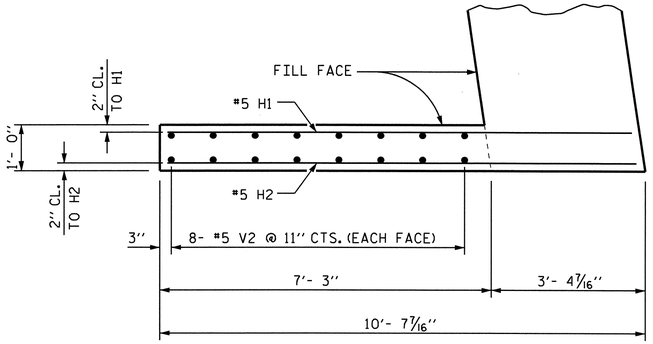

PLAN OF LEFT WING (W1)

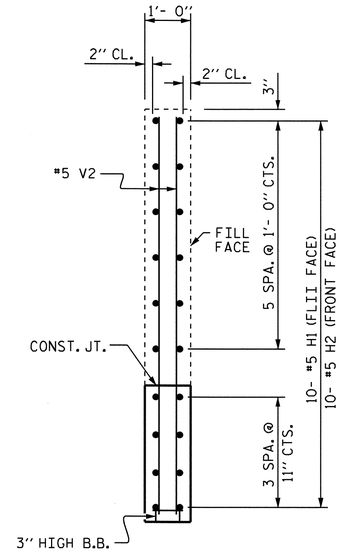

SECTION X-X

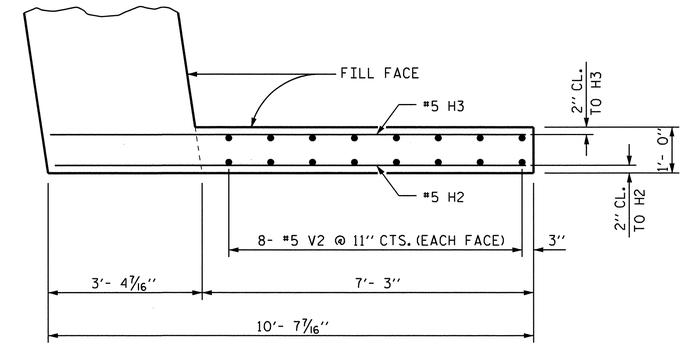

PLAN OF RIGHT WING (W2)

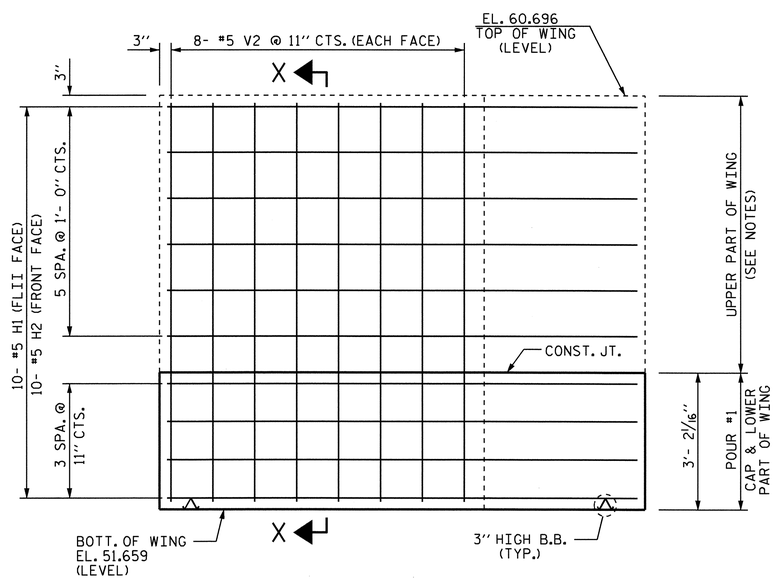

ELEVATION OF LEFT WING (W1)

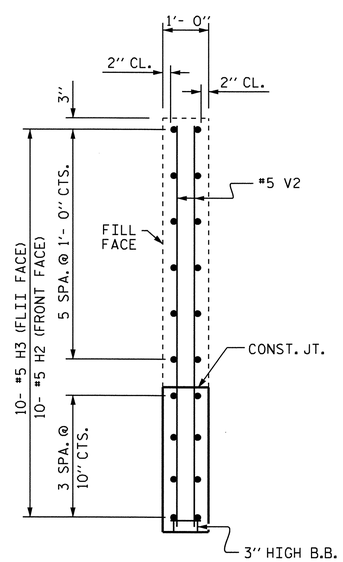

SECTION Y-Y

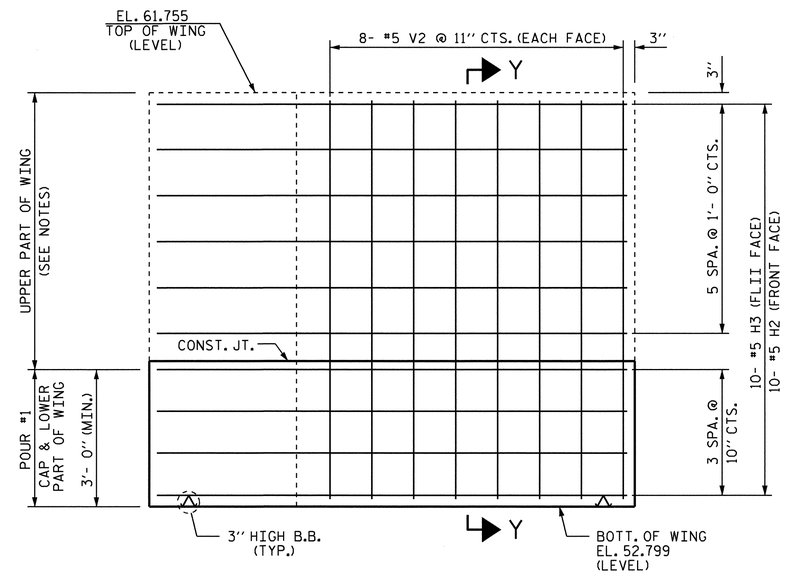

ELEVATION OF RIGHT WING (W2)

PROJECT NO. U-4007B

ONSLOW COUNTY

STATION: 42+27.41 -SBL RAMP-

SHEET 2 OF 3

STATE OF NORTH CAROLINA
DEPARTMENT OF TRANSPORTATION
RALEIGH

SUBSTRUCTURE

INTEGRAL
END BENT #2

NORTH CAROLINA PROFESSIONAL SEAL 025516 ENGINEER EMILY E. MURRAY

REVISIONS						SHEET NO.
NO.	BY:	DATE:	NO.	BY:	DATE:	S-110
1			3			TOTAL SHEETS
2			4			142

DRAWN BY : D. A. GLADDEN DATE : 3-4-10
CHECKED BY : B. N. BARODAWALA DATE : 3-22-10

23-AUG-2010 15:22
Z:\TIPProjects-U\U4007b\Structures\FinalPlans\Str. #4\u4007b_sd_str4eb.dgn
PADKINS

STR. #4

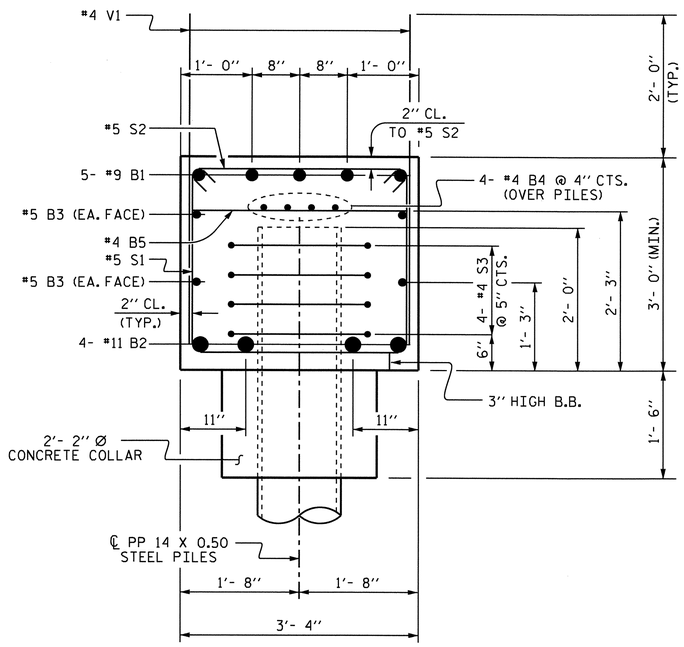

SECTION A-A

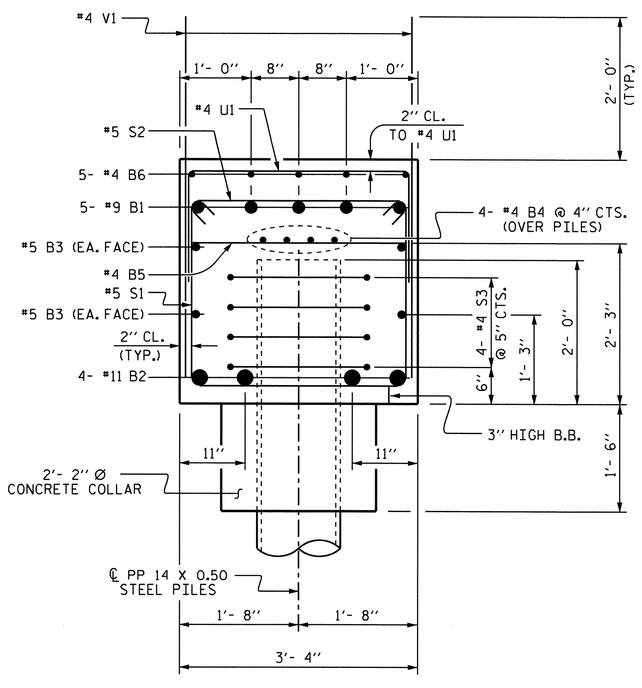

SECTION B-B

BAR TYPES

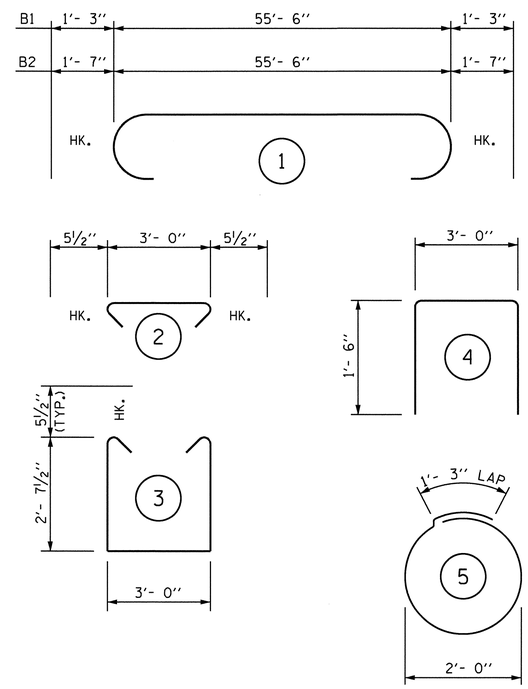

ALL BAR DIMENSIONS ARE OUT TO OUT.

BILL OF MATERIAL

BAR	NO.	SIZE	TYPE	LENGTH	WEIGHT
B1	5	#9	1	58'- 0"	986
B2	4	#11	1	58'- 8"	1247
B3	4	#5	STR	55'- 8"	232
B4	8	#4	STR	29'- 1"	155
B5	14	#4	STR	3'- 0"	28
B6	25	#4	STR	5'- 0"	84
H1	10	#5	STR	10'- 2"	106
H2	20	#5	STR	10'- 3"	214
H3	10	#5	STR	10'- 4"	108
S1	57	#5	3	9'- 2"	545
S2	57	#5	2	3'-11"	233
S3	24	#4	5	7'- 7"	122
U1	20	#4	4	6'- 0"	80
V1	101	#4	STR	4'-10"	326
V2	32	#5	STR	8'- 7"	286

REINFORCING STEEL 4752 LBS

CLASS A CONCRETE BREAKDOWN

POUR #1 (CAP, CONCRETE COLLAR & LOWER PART OF WINGS) = 24.7 C.Y.

PP 14 X 0.50 STEEL PILES

NO. 6 LIN. FT. 300

STEEL PILE POINTS NO. 6

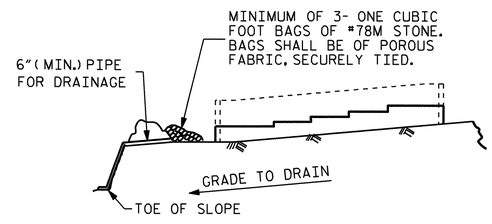

BAGGED STONE AND PIPE SHALL BE PLACED IMMEDIATELY AFTER COMPLETION OF END BENT EXCAVATION. PIPE MAY BE EITHER CONCRETE, CORRUGATED STEEL, CORRUGATED ALUMINUM ALLOY, OR CORRUGATED PLASTIC. PERFORATED PIPE WILL NOT BE ALLOWED.

BAGGED STONE SHALL REMAIN IN PLACE UNTIL THE ENGINEER DIRECTS THAT IT BE REMOVED. THE CONTRACTOR SHALL REMOVE AND DISPOSE OF SILT ACCUMULATIONS AT BAGGED STONE WHEN SO DIRECTED BY THE ENGINEER. BAGS SHALL BE REMOVED AND REPLACED WHENEVER THE ENGINEER DETERMINES THAT THEY HAVE DETERIORATED AND LOST THEIR EFFECTIVENESS.

NO SEPARATE PAYMENT WILL BE MADE FOR THIS WORK AND THE ENTIRE COST OF THIS WORK SHALL BE INCLUDED IN THE UNIT CONTRACT PRICE BID FOR THE SEVERAL PAY ITEMS.

TEMPORARY DRAINAGE AT END BENT

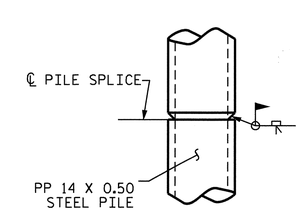

PIPE PILE SPLICE DETAIL

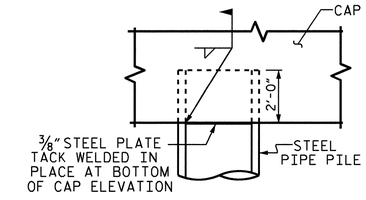

PIPE PILE IN CAP DETAIL

THE CONTRACTOR MAY PROPOSE AN ALTERNATE METHOD FOR PLUGGING THE STEEL PIPE PILE, SUBJECT TO APPROVAL BY THE ENGINEER.

PROJECT NO. U-4007B

ONSLOW COUNTY

STATION: 42+27.41 -SBL RAMP-

SHEET 3 OF 3

STATE OF NORTH CAROLINA
DEPARTMENT OF TRANSPORTATION
RALEIGH

SUBSTRUCTURE

INTEGRAL END BENT #2

NORTH CAROLINA PROFESSIONAL SEAL 025516 ENGINEER EMILY E. MURRAY 8/24/10

REVISIONS						SHEET NO.
NO.	BY:	DATE:	NO.	BY:	DATE:	S-111
1			3			TOTAL SHEETS
2			4			142

DRAWN BY : D. A. GLADDEN DATE : 3-4-10
CHECKED BY : B. N. BARODAWALA DATE : 3-22-10

23-AUG-2010 15:22
Z:\TIPProjects-U\U4007b\Structures\Final Plans\Str. #4\u4007b_sd_str4eb.dgn
PADKINS

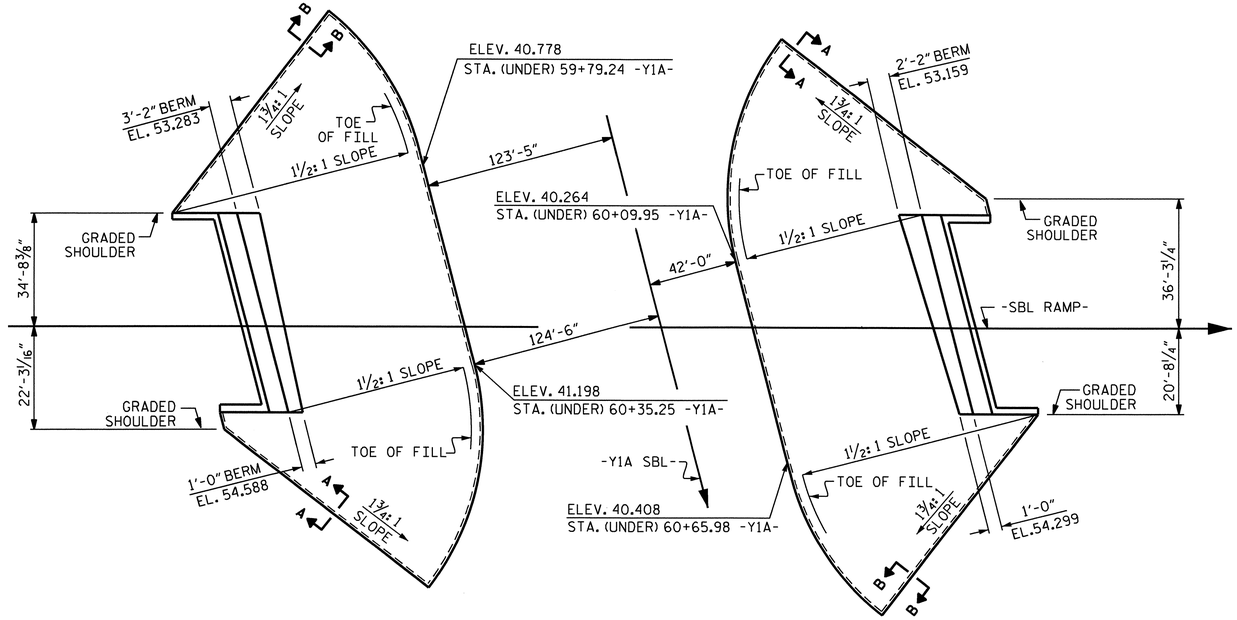

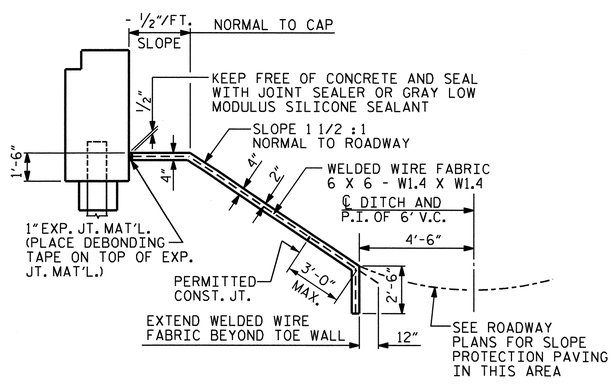

SECTION ALONG ℄ ROADWAY WHEN FILL CATCHES IN DITCH

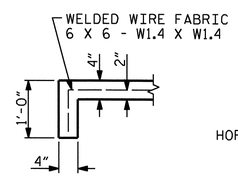

SECTION A-A

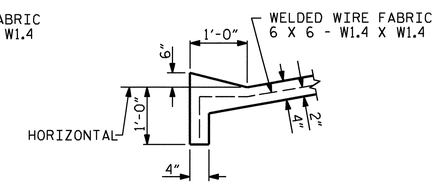

SECTION B-B

DETAILS FOR ALTERNATE "A"

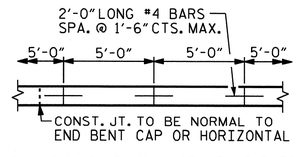

STRIP WIDTHS MAY VARY IN CURVED PORTION.

POURING DETAIL

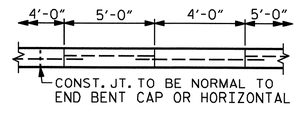

POUR A 4'-0" STRIP FIRST. STRIP WIDTHS MAY VARY IN CURVED PORTION.

OPTIONAL POURING DETAIL

GENERAL NOTES

SLOPE PROTECTION SHALL BE PLACED UNDER THE ENDS OF THE BRIDGE AS SHOWN IN THE DETAILS. STRAIGHT EDGING WILL NOT BE REQUIRED UNLESS, IN THE OPINION OF THE ENGINEER, VISUAL INSPECTION INDICATES A NEED FOR IT. MEASUREMENT AND PAYMENT SHALL BE AS PRESCRIBED IN SECTION 462 OF THE STANDARD SPECIFICATIONS.

ALTERNATE "A"

ALTERNATE "A" SHALL CONSIST OF 4" POURED-IN-PLACE CONCRETE PAVING AS SHOWN IN THE DETAILS ON THIS SHEET. CONCRETE SHALL BE CLASS "B". THE CONCRETE SURFACE SHALL BE FLOATED WITH A WOODEN FLOAT AND FINISHED. WELDED WIRE FABRIC REINFORCING SHALL BE 6 X 6 - W1.4 X W1.4, 60" WIDE. SLOPE PROTECTION SHALL BE POURED IN 5' STRIPS AS SHOWN IN THE "POURING DETAIL" WITH 2'-0" LONG #4 BARS PLACED ALONG THE SLOPE BETWEEN STRIPS AT 1'-6" MAXIMUM SPACING. SLOPE PROTECTION MAY BE POURED IN ALTERNATE 4' AND 5' STRIPS AS SHOWN IN THE "OPTIONAL POURING DETAIL" WITH ADJACENT RUNS OF WELDED WIRE FABRIC LAPPING AT LEAST 6". THE COST OF THE WELDED WIRE FABRIC AND #4 BARS, IF USED, SHALL BE INCLUDED IN THE CONTRACT UNIT PRICE BID PER SQUARE YARD FOR SLOPE PROTECTION.

BRIDGE @ STA. 42+27.41 -SBL RAMP-	4 INCH SLOPE PROTECTION	* WELDED WIRE FABRIC 60 INCHES WIDE
	SQUARE YARDS	APPROX. L.F.
END BENT 1	307	614
END BENT 2	336	672

* QUANTITY SHOWN IS BASED ON 5' POURS.

PROJECT NO. U-4007B
ONSLOW COUNTY
STATION: 42+27.41 -SBL RAMP-

STATE OF NORTH CAROLINA
DEPARTMENT OF TRANSPORTATION
RALEIGH

STANDARD
SLOPE PROTECTION DETAILS

NORTH CAROLINA PROFESSIONAL SEAL 025516 ENGINEER EMILY B. MURRAY
8/24/10

REVISIONS						SHEET NO.
NO.	BY:	DATE:	NO.	BY:	DATE:	S-112
1			3			TOTAL SHEETS
2			4			142

ASSEMBLED BY : M.GUDLAUGSSON DATE : 03/04/10
CHECKED BY : PEGGY PARISI DATE : 7-8-10

DRAWN BY : ELR 5/92
CHECKED BY : GRP 6/92

REV. 7/10/01 LES/RDR
REV. 5/7/03 RWW/JTE
REV. 5/1/06 TLA/GM

23-AUG-2010 15:21
Z:\TIPProjects-U\U4007b\Structures\FinalPlans\Str. #4\U-4007B_SD_SP_04.dgn
PADKINS

STR. #4

STD. NO. SP1 (SHT 5)

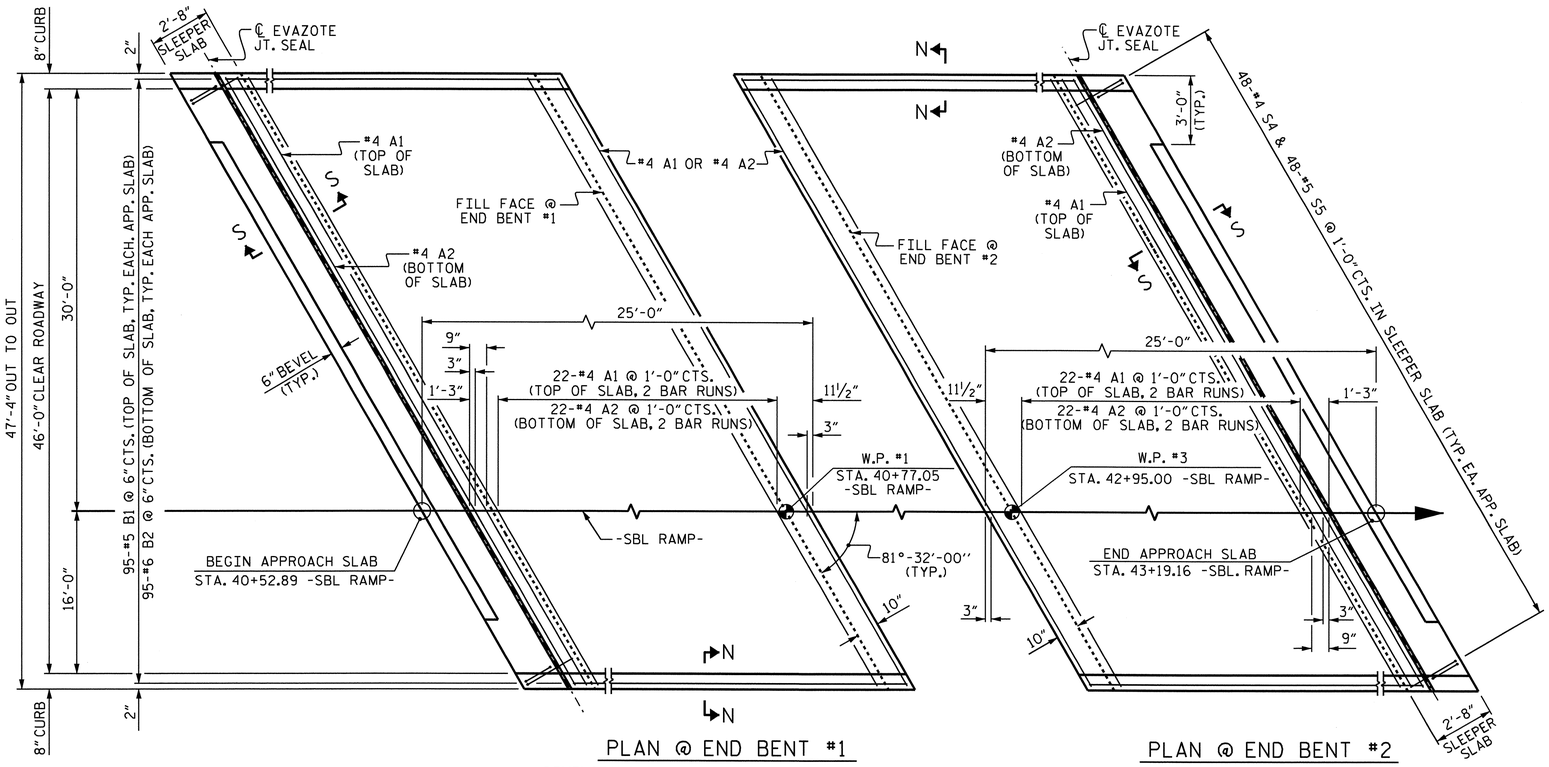

PLAN @ END BENT #1

PLAN @ END BENT #2

DIMENSIONS SHOWN ARE TYPICAL FOR BOTH APPROACH SLABS. #4 A1 BARS IN SLEEPER SLAB NOT SHOWN FOR CLARITY.

NOTES

APPROACH SLAB SHALL NOT BE CONSTRUCTED PRIOR TO COMPLETION OF THE BRIDGE DECK.

FOR REINFORCED BRIDGE APPROACH FILL INCLUDING FABRIC, IMPERMEABLE GEOMEMBRANE, 4" Ø DRAINAGE PIPE, #78M STONE, AND SELECT MATERIAL, SEE ROADWAY PLANS.

AREA BETWEEN THE WINGWALL AND APPROACH SLAB SHALL BE GRADED TO DRAIN THE WATER AWAY FROM THE FILL FACE OF THE BRIDGE AND SHALL BE PAVED. SEE ROADWAY PLANS.

THE 6" COMP. A.B.C. SHALL BE FLUSH WITH THE SLEEPER SLAB AND SHALL EXTEND 1'-0" OUTSIDE OF EACH EDGE OF THE APPROACH SLAB.

THE CONTRACTOR MAY USE 4" TYPE B-25.0B ASPHALT CONCRETE BASE COURSE IN LIEU OF 6" COMP. A.B.C. IF THIS OPTION IS USED, THE BASE COURSE SHALL BE FLUSH WITH THE SLEEPER SLAB, AND THE WIDTH SHALL BE THE SAME AS THAT OF THE APPROACH SLAB.

THE CONTRACTOR MAY USE 5" CLASS "A" CONCRETE BASE IN LIEU OF 6" COMP. A.B.C. IF THIS OPTION IS USED, THE CONCRETE BASE SHALL BE FLUSH WITH THE SLEEPER SLAB, AND THE WIDTH SHALL BE THE SAME AS THAT OF THE APPROACH SLAB. THE CONCRETE SHALL BE FINISHED TO A SMOOTH SURFACE AND A LAYER OF 30 LB ROOFING FELT SHALL BE PLACED BETWEEN THE CONCRETE BASE AND THE APPROACH SLAB TO PREVENT BOND. THE APPROACH SLAB SHALL NOT BE CAST UNTIL THE CONCRETE BASE HAS REACHED AN AGE OF THREE CURING DAYS.

THE VERTICAL JOINT ON THE RIGHT AND LEFT SIDE OF THE APPROACH SLAB AT THE ENDS OF THE EVAZOTE JOINT SHALL BE FILLED WITH SILICONE OR OTHER APPROVED MATERIAL IN ORDER TO PREVENT BACKFILL FROM ENTERING THE JOINT OPENING.

THE JOINT OPENING AT THE APPROACH SLAB/DECK INTERFACE SHALL BE SAWED NO MORE THAN 12 HOURS AFTER THE APPROACH SLAB IS CAST. THE JOINT SHALL BE CLEANED OF ALL DEBRIS BEFORE THE SEALANT IS APPLIED. THE JOINT SEALER MATERIAL SHALL CONFORM TO THE REQUIREMENTS OF TYPE SL LOW MODULUS SILICONE SEALANT.

WITH EVAZOTE JOINT SEAL

FOR EVAZOTE JOINT SEALS, SEE SPECIAL PROVISIONS.

THE NOMINAL UNCOMPRESSED SEAL WIDTH OF THE EVAZOTE JOINT SEAL SHALL BE 2½".

FOR ELASTOMERIC CONCRETE, SEE SPECIAL PROVISIONS.

BILL OF MATERIAL

FOR ONE APPROACH SLAB (2 REQ'D)

BAR	NO.	SIZE	TYPE	LENGTH	WEIGHT
* A1	62	#4	STR	24'-9"	1025
A2	48	#4	STR	24'-8"	791
* B1	95	#5	STR	22'-5"	2221
B2	95	#6	STR	22'-10"	3258
* S4	48	#4	1	3'-11"	126
S5	48	#5	2	2'-11"	146
REINFORCING STEEL				LBS.	4195
* EPOXY COATED REINFORCING STEEL				LBS.	3372
CLASS AA CONCRETE					
POUR #1 - SLAB & CURB				C. Y.	41.2
POUR #2 - SLEEPER SLAB				C. Y.	4.9
TOTAL				C. Y.	46.1

BAR TYPES

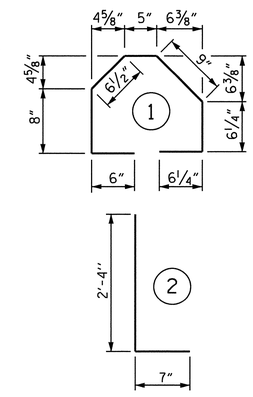

ALL BAR DIMENSIONS ARE OUT TO OUT

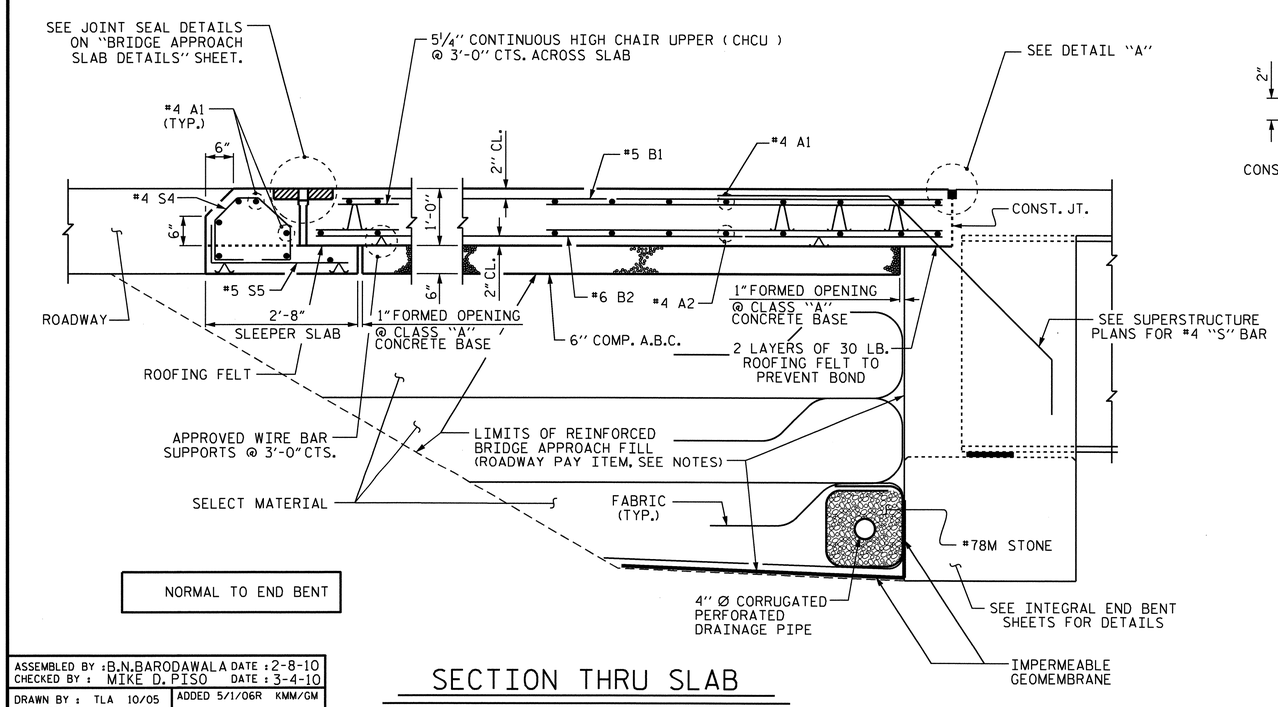

NORMAL TO END BENT

SECTION THRU SLAB

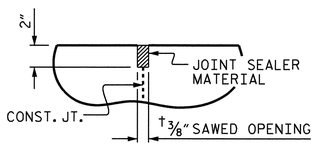

DETAIL "A"

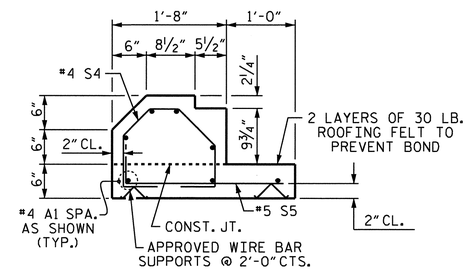

SECTION S-S

SHOWING SLEEPER SLAB

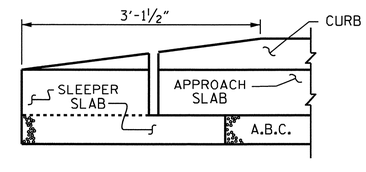

END OF CURB WITHOUT SHOULDER BERM GUTTER

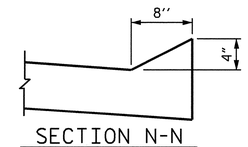

SECTION N-N

PROJECT NO. U-4007B

ONSLOW COUNTY

STATION: 42+27.41 SBL RAMP-

SHEET 1 OF 2

STATE OF NORTH CAROLINA
DEPARTMENT OF TRANSPORTATION
RALEIGH

STANDARD

BRIDGE APPROACH SLAB FOR INTEGRAL ABUTMENT

NORTH CAROLINA PROFESSIONAL SEAL 025516 ENGINEER EMILY E. MURRAY
8/29/10

REVISIONS						SHEET NO.
NO.	BY:	DATE:	NO.	BY:	DATE:	S-113
1			3			TOTAL SHEETS
2			4			142

STR. #4

STD. NO. BAS11 (SHT 12)

ASSEMBLED BY : B.N.BARODAWALA DATE : 2-8-10
CHECKED BY : MIKE D. PISO DATE : 3-4-10
DRAWN BY : TLA 10/05
CHECKED BY : GM 5/06
ADDED 5/1/06R KMM/GM

23-AUG-2010 15:21
Z:\TIPProjects-U\U4007b\Structures\FinalPlans\Str. #4\U-4007B_sd_AS_04.dgn
PADKINS

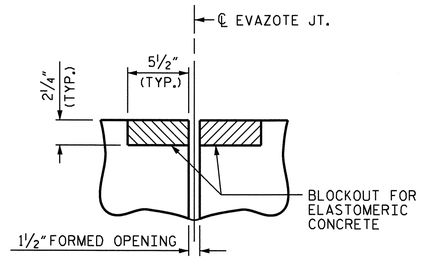

SECTION C-C

EVAZOTE JOINT SEAL
(PRE-SAWED ELASTOMERIC
CONCRETE DIMENSIONS)

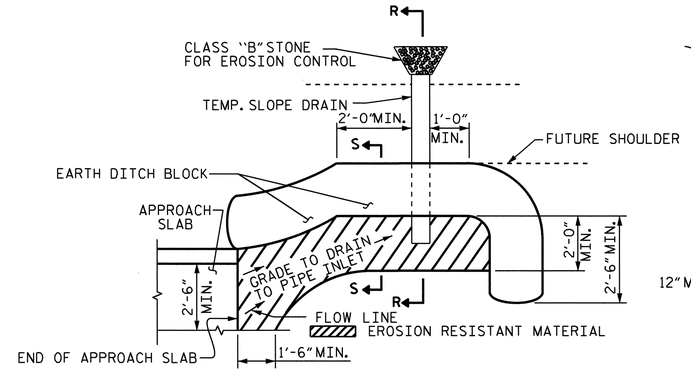

NOTE: IMMEDIATELY AFTER THE CONSTRUCTION OF THE APPROACH SLAB, THE CONTRACTOR SHALL PROVIDE TEMPORARY BERM AND SLOPE DRAIN. CONTRACTOR SHALL GRADE TO PIPE INLET AND PROVIDE EROSION RESISTANT MATERIAL AS SHOWN. THE EROSION RESISTANT MATERIAL SHALL BE EITHER 1) ASPHALT PLANT MIX, TYPE 1 OR TYPE 2, MIN. 2" DEPTH, 2) EROSION CONTROL MAT, OR 3) CONCRETE, AS DIRECTED BY THE ENGINEER. THE SLOPE DRAIN SHALL CONSIST OF A NON-PERFORATED TEMPORARY DRAINAGE PIPE, 12 INCHES IN DIAMETER.

PLAN VIEW

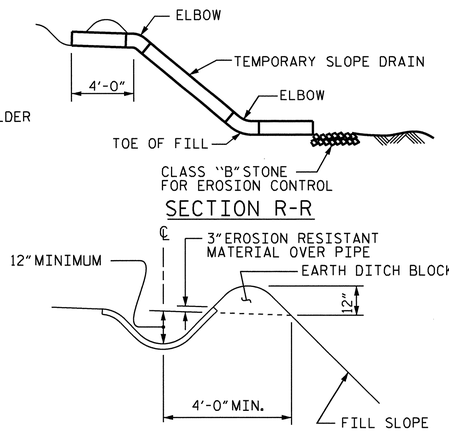

TEMPORARY BERM AND SLOPE DRAIN DETAILS

(TO BE USED WHEN SHOULDER BERM GUTTER IS REQUIRED)

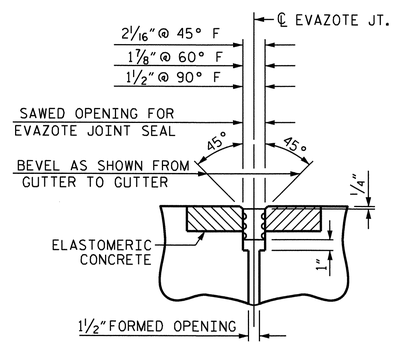

SECTION C-C

EVAZOTE JOINT SEAL
AT APPROACH SLABS @
END BENTS #1 & #2

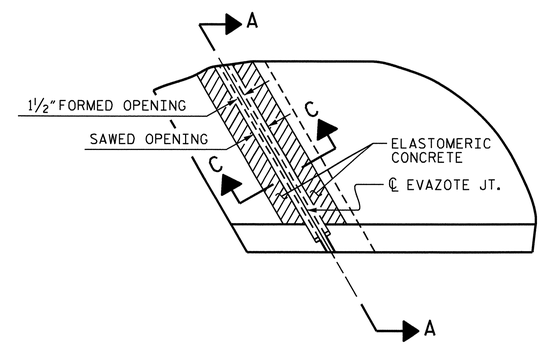

PLAN

(APPROACH SLAB @
END BENT #1 SHOWN)

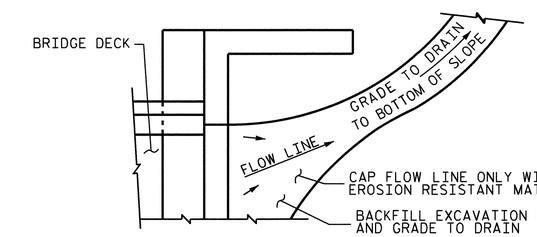

NOTE: IF THE APPROACH SLAB IS NOT CONSTRUCTED IMMEDIATELY AFTER THE BACKFILLING OF THE END BENT EXCAVATION, GRADE TO DRAIN TO THE BOTTOM OF THE SLOPE AND PROVIDE EROSION RESISTANT MATERIAL, SUCH AS FIBERGLASS ROVING OR AS DIRECTED BY THE ENGINEER TO PREVENT SOIL EROSION AND TO PROTECT THE AREA ADJACENT TO THE STRUCTURE. THE CONTRACTOR WILL BE REQUIRED TO REMOVE THESE MATERIALS PRIOR TO CONSTRUCTION OF THE APPROACH SLAB.

TEMPORARY DRAINAGE DETAIL

ELASTOMERIC CONCRETE	
END BENT NO.	ELASTOMERIC CONCRETE * (CU. FT.)
1	8.0
2	8.0
TOTAL	16.0

* BASED ON THE MINIMUM BLOCKOUT SHOWN.

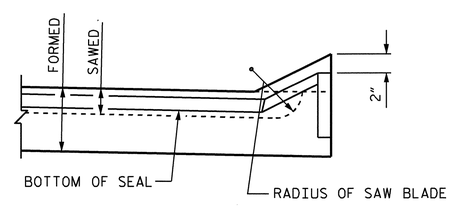

SECTION A-A

PROJECT NO. U-4007B
ONSLOW COUNTY
STATION: 42+27.41 -SBL RAMP-

SHEET 2 OF 2

STATE OF NORTH CAROLINA
DEPARTMENT OF TRANSPORTATION
RALEIGH

STANDARD

BRIDGE APPROACH
SLAB DETAILS

NORTH CAROLINA PROFESSIONAL SEAL 025516 ENGINEER EMILY E. MURRAY
8/24/10

REVISIONS						
NO.	BY:	DATE:	NO.	BY:	DATE:	
1			3			
2			4			

SHEET NO. S-114
TOTAL SHEETS 142

ASSEMBLED BY : B.N.BARODAWALA		DATE : 2-8-10	
CHECKED BY : MIKE D. PISO		DATE : 3-4-10	
DRAWN BY : FCJ	11/88	REV. 10/17/00	RWW/LES
CHECKED BY : ARB	11/88	REV. 5/7/03	RWW/JTE
		REV. 5/1/06R	MAA/KMM

23-AUG-2010 15:21
Z:\TIPProjects-U\U4007b\Structures\FinalPlans\Str. #4\U-4007B_sd_AS_04.dgn
PADKINS

STR. #4

STD. NO. BAS10 (SHT 8)

F.A. PROJECT NO. STM-0017(111)

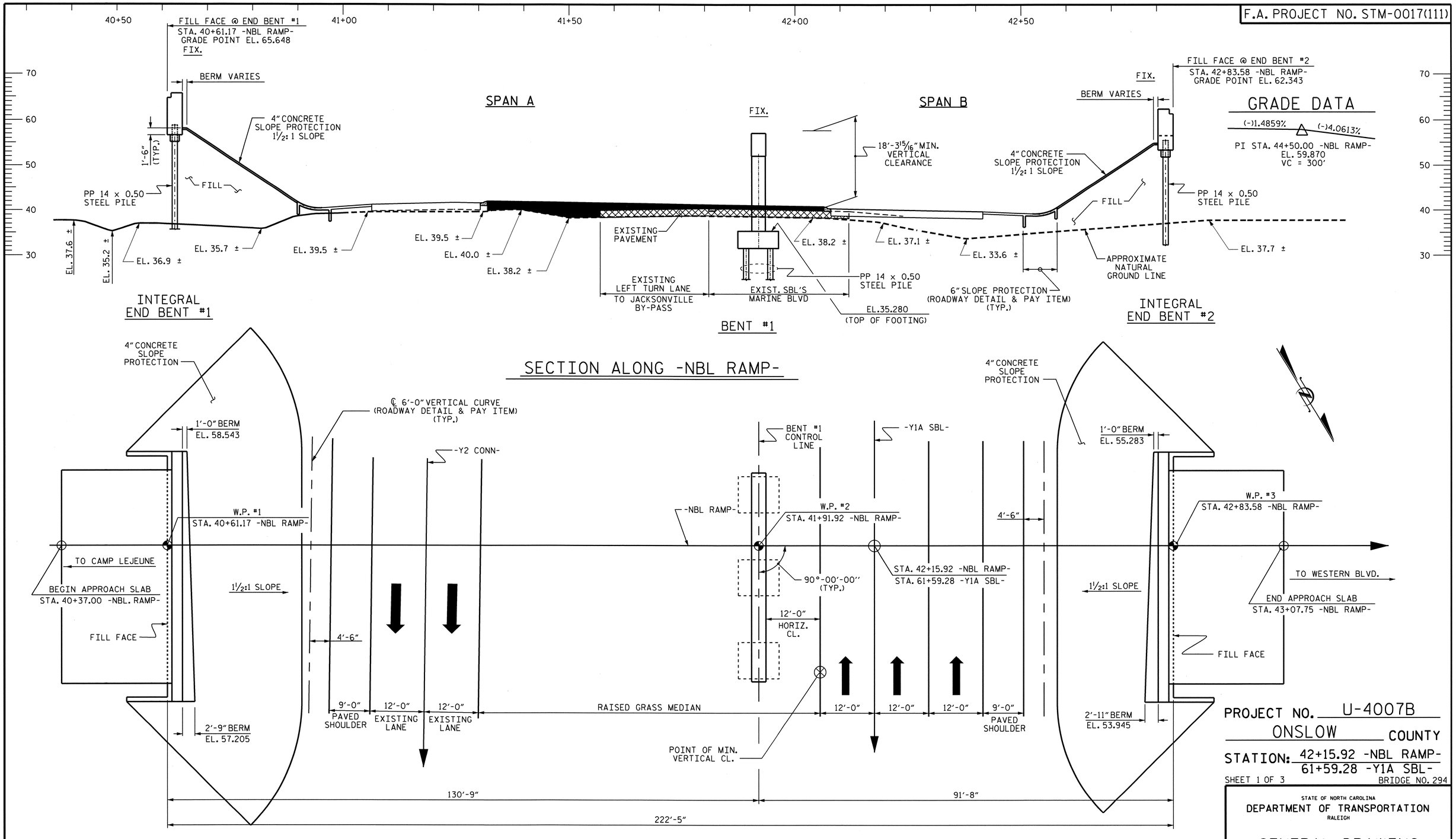

PLAN

PILES NOT SHOWN FOR CLARITY

PROJECT NO. U-4007B

ONSLOW COUNTY

STATION: 42+15.92 -NBL RAMP-
61+59.28 -Y1A SBL-

SHEET 1 OF 3

BRIDGE NO. 294

STATE OF NORTH CAROLINA
DEPARTMENT OF TRANSPORTATION
RALEIGH

GENERAL DRAWING

FOR BRIDGE ON WESTERN PARKWAY OVER MARINE BLVD. BETWEEN HAWKSIDE ROAD AND COUNTRY CLUB ROAD

NORTH CAROLINA PROFESSIONAL SEAL 12274 ENGINEER OMAR R. AZIZ
8/24/10

NORTH CAROLINA PROFESSIONAL SEAL 025516 ENGINEER EMILY E. MURRAY
8/24/10

REVISIONS						SHEET NO.
NO.	BY:	DATE:	NO.	BY:	DATE:	S-115
1			3			TOTAL SHEETS
2			4			142

DRAWN BY : B. N. BARODAWALA DATE : 2/25/10
CHECKED BY : PEGGY PARISI DATE : 6-7-10

23-AUG-2010 15:20
Z:\TIPProjects-U\U4007b\Structures\FinalPlans\Str. #5\U-4007b_sd_gd_05.dgn
PADKINS

STR. #5

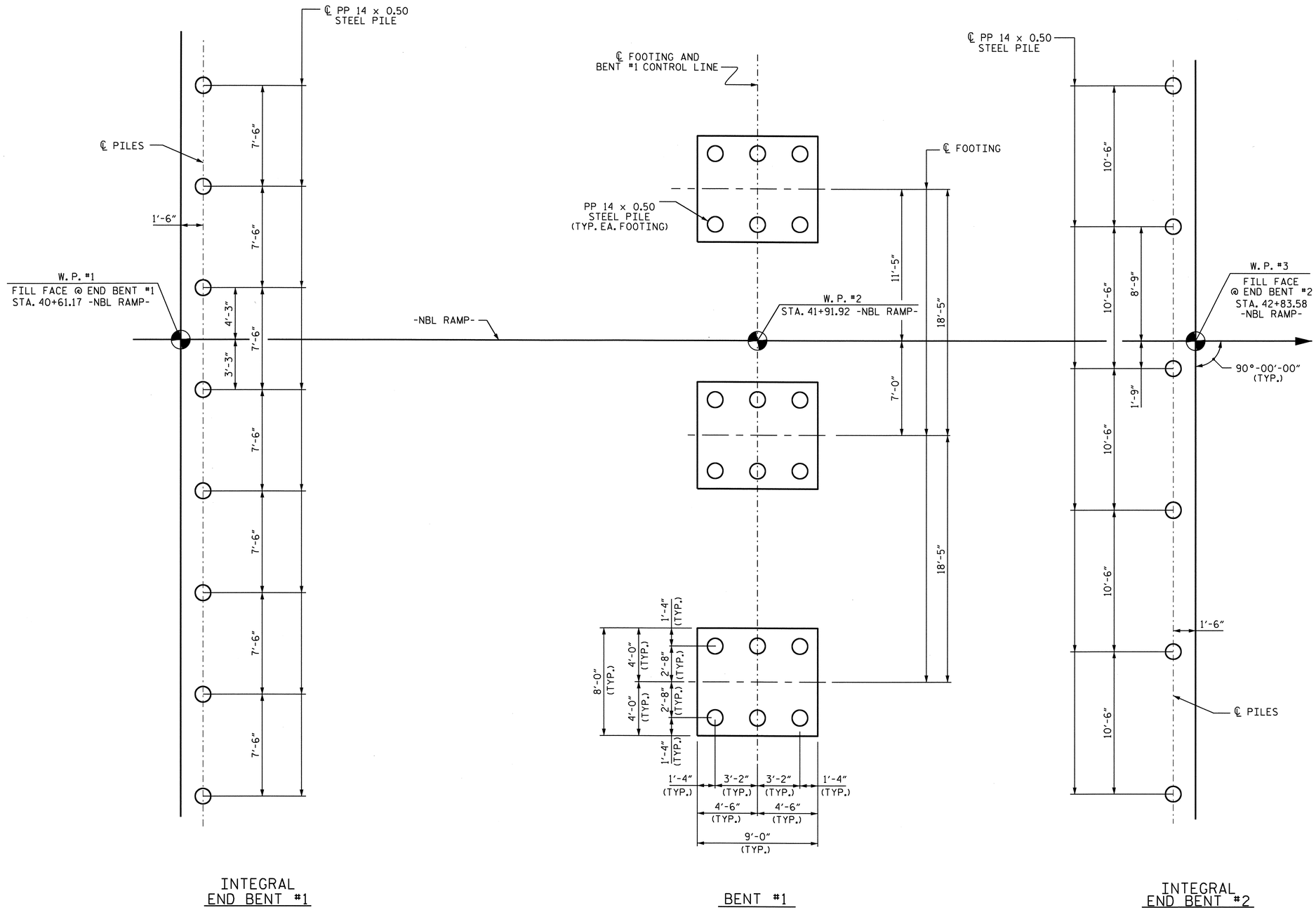

INTEGRAL
END BENT #1

BENT #1

INTEGRAL
END BENT #2

FOUNDATION LAYOUT PLAN

DIMENSIONS LOCATING PILES ARE SHOWN TO THE PILE CENTERLINE.
DIMENSIONS SHOWN ARE TYPICAL FOR EACH BENT FOOTING.

NOTES

FOR PILES, SEE SPECIAL PROVISIONS.

PILES AT END BENT NO. 1 ARE DESIGNED FOR A FACTORED RESISTANCE OF 120 TONS PER PILE. DRIVE PILES TO A REQUIRED DRIVING RESISTANCE OF 250 TONS PER PILE. THIS REQUIRED DRIVING RESISTANCE INCLUDES ADDITIONAL RESISTANCE FOR DOWNDRAG OR SCOUR.

PILES AT END BENT NO. 2 ARE DESIGNED FOR A FACTORED RESISTANCE OF 120 TONS PER PILE. DRIVE PILES TO A REQUIRED DRIVING RESISTANCE OF 200 TONS PER PILE.

PILES AT BENT NO. 1 ARE DESIGNED FOR A FACTORED RESISTANCE OF 140 TONS PER PILE. DRIVE PILES TO A REQUIRED DRIVING RESISTANCE OF 235 TONS PER PILE.

TESTING PILES WITH THE PILE DRIVING ANALYZER (PDA) DURING DRIVING, RESTRIKING OR REDRIVING MAY BE REQUIRED. THE ENGINEER WILL DETERMINE THE NEED FOR PDA TESTING. FOR PILE DRIVING ANALYZER, SEE PILES SPECIAL PROVISIONS.

OBSERVE A 4-MONTH WAITING PERIOD AFTER CONSTRUCTING THE EMBANKMENT TO WITHIN 2 FT. OF FINAL GRADE ELEVATION BEFORE BEGINNING END BENT CONSTRUCTION AT END BENT NO. 2.

OBSERVE A 2-MONTH WAITING PERIOD AFTER CONSTRUCTING THE EMBANKMENT TO WITHIN 2 FT. OF FINAL GRADE ELEVATION BEFORE BEGINNING END BENT CONSTRUCTION AT END BENT NO. 1. A 2-MONTH ADDITIONAL WAITING PERIOD IS REQUIRED FROM THE END OF THE INITIAL WAITING PERIOD BEFORE BEGINNING APPROACH SLAB CONSTRUCTION AT END BENT NO. 1. END BENT CONSTRUCTION MAY BEGIN AFTER THE INITIAL 2-MONTH WAITING PERIOD HAS ENDED.

DO NOT CONSTRUCT END BENT EMBANKMENTS PRIOR TO PLACEMENT OF EMBANKMENT STABILIZATION FABRIC. FOR EMBANKMENT STABILIZATION FABRIC, SEE ROADWAY PLANS.

STEEL PIPE PILE CONICAL POINTS ARE REQUIRED FOR PIPE PILES AT END BENT NO. 1 AND END BENT NO. 2. FOR STEEL PILE POINTS, SEE PILES SPECIAL PROVISION.

PIPE PILE PLATES ARE REQUIRED FOR PIPE PILES AT BENT NO. 1. USE PIPE PILE PLATES WITH A DIAMETER EQUAL TO THE PIPE PILE DIAMETER.

PROJECT NO. U-4007B
ONSLOW COUNTY
STATION: 42+15.92 -NBL RAMP-
61+59.28 -Y1A SBL-

SHEET 2 OF 3

STATE OF NORTH CAROLINA
DEPARTMENT OF TRANSPORTATION
RALEIGH

GENERAL DRAWING

FOR BRIDGE ON WESTERN PARKWAY OVER MARINE BLVD. BETWEEN HAWKSIDE ROAD AND COUNTRY CLUB ROAD

NORTH CAROLINA PROFESSIONAL SEAL 025516 ENGINEER EMILY E. MURRAY
8/24/10

REVISIONS						SHEET NO.
NO.	BY:	DATE:	NO.	BY:	DATE:	S-116
1			3			TOTAL SHEETS
2			4			142

STR. #5

DRAWN BY : B.N. BARODAWALA DATE : 2-22-10
CHECKED BY : PEGGY PARISI DATE : 6-7-10

23-AUG-2010 15:20
Z:\TIPProjects-U\U4007b\Structures\FinalPlans\Str. #5\U-4007b_sd_gd_05.dgn
PADKINS

BY4-17: 30" #5 REBAR WITH ALUMINUM TRAVERSE CAPS, 22.54' LEFT OF STA. 40+89.96 -NBL RAMP-, EL. 38.810

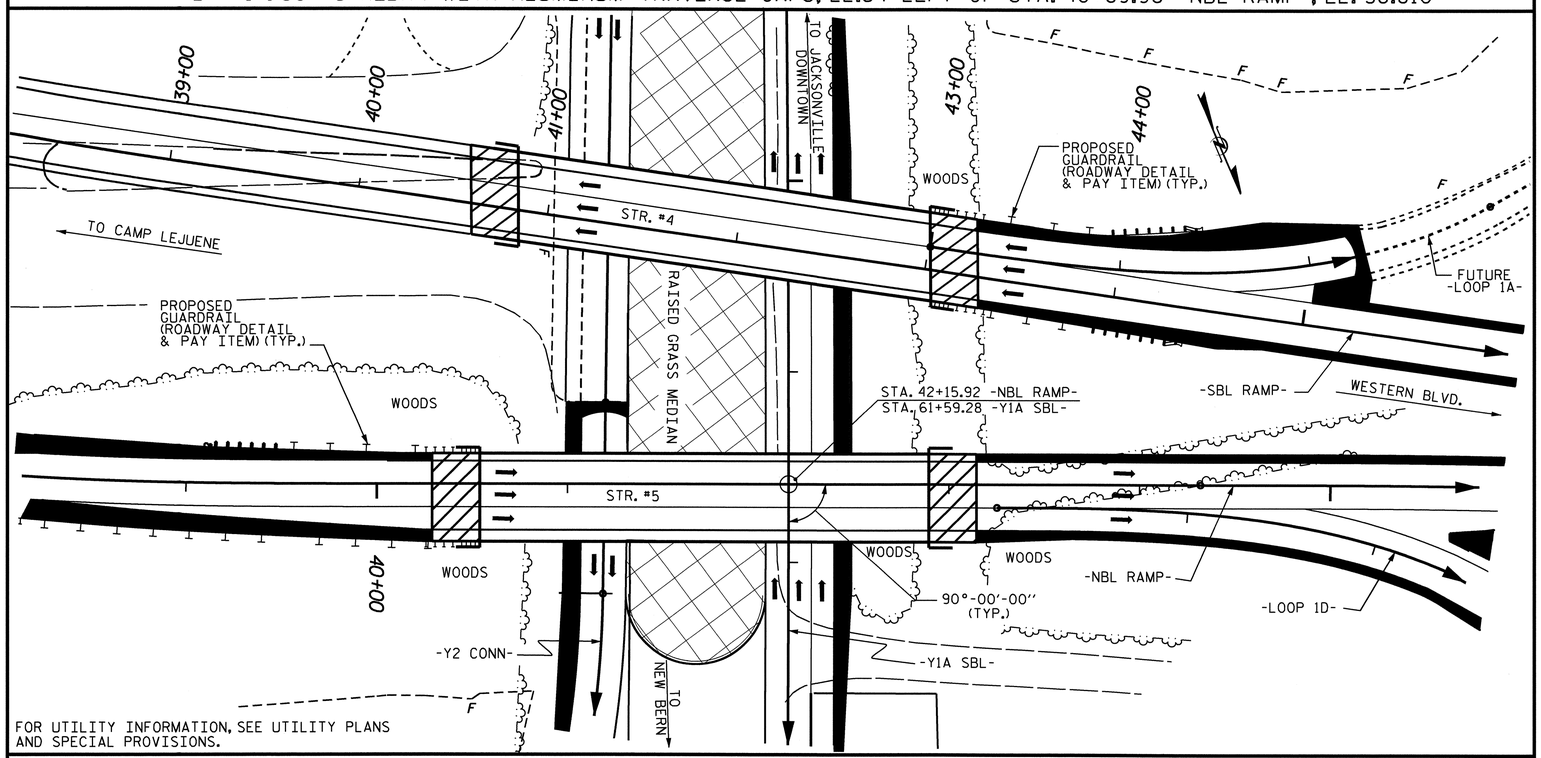

LOCATION SKETCH

NOTES

ASSUMED LIVE LOAD = HL-93 OR ALTERNATE LOADING.

FOR OTHER DESIGN DATA AND GENERAL NOTES, SEE SHEET SN.

THIS BRIDGE HAS BEEN DESIGNED IN ACCORDANCE WITH THE AASHTO LRFD BRIDGE DESIGN SPECIFICATIONS.

ALL STRUCTURAL STEEL SHALL BE AASHTO M270 GRADE 50W.

REMOVABLE FORMS MAY BE USED IN LIEU OF METAL STAY-IN-PLACE FORMS IN ACCORDANCE WITH ARTICLE 420-3 OF THE STANDARD SPECIFICATIONS.

FOR MAINTENANCE AND PROTECTION OF TRAFFIC BENEATH PROPOSED STRUCTURE, SEE SPECIAL PROVISIONS.

THE CONTRACTOR SHALL PROVIDE INDEPENDENT ASSURANCE SAMPLES OF REINFORCING STEEL AS FOLLOWS: FOR PROJECTS REQUIRING UP TO 400 TONS OF REINFORCING STEEL, ONE 30 INCH SAMPLE OF EACH SIZE BAR USED, AND FOR PROJECTS REQUIRING OVER 400 TONS OF REINFORCING STEEL, TWO 30 INCH SAMPLES OF EACH SIZE BAR USED. THE BARS FROM WHICH THE SAMPLES ARE TAKEN MUST THEN BE SPLICED WITH REPLACEMENT BARS OF THE SIZE AND LENGTH OF THE SAMPLE, PLUS A MINIMUM LAP SPLICE OF THIRTY BAR DIAMETERS.

NEEDLE BEAMS WILL NOT BE ALLOWED UNLESS OTHERWISE CALLED FOR ON THE PLANS OR APPROVED BY THE ENGINEER.

FOR SUBMITTAL OF WORKING DRAWINGS, SEE SPECIAL PROVISIONS.

FOR FALSEWORK AND FORMWORK, SEE SPECIAL PROVISIONS.

FOR CRANE SAFETY, SEE SPECIAL PROVISIONS.

FOR GROUT FOR STRUCTURES, SEE SPECIAL PROVISIONS.

FOR CURING CONCRETE, SEE SPECIAL PROVISIONS.

FOR FORMS FOR CONCRETE BRIDGE DECKS, SEE SPECIAL PROVISIONS.

FOR PLACING LOAD ON STRUCTURE MEMBERS, SEE SPECIAL PROVISIONS.

FOR EROSION CONTROL MEASURES SEE EROSION CONTROL PLANS.

FOR SHIPPING STRUCTURAL STEEL MEMBERS, SEE SPECIAL PROVISIONS.

TOTAL BILL OF MATERIAL

	FOUNDATION EXCAVATION FOR BENT	PDA TESTING	PDA ASSISTANCE	REINFORCED CONCRETE DECK SLAB	GROOVING BRIDGE FLOORS	CLASS A CONCRETE	BRIDGE APPROACH SLABS	REINFORCING STEEL	SPIRAL COLUMN REINFORCING STEEL	STRUCTURAL STEEL	PP 14 x 0.50 STEEL PILES		STEEL PILE POINTS	PIPE PILE PLATES	CONCRETE BARRIER RAIL	4" SLOPE PROTECTION	POT BEARINGS	ELASTOMERIC BEARINGS	EVAZOTE JOINT SEALS
	LUMP SUM	EACH	EACH	SQ.FT.	SQ.FT.	CU.YDS.	LUMP SUM	LBS.	LBS.	APPROX. LBS.	NO.	LIN.FT.	EACH	EACH	LIN.FT.	SQ.FT.	LUMP SUM	LUMP SUM	LUMP SUM
SUPERSTRUCTURE				10954	11418					361,300					441.5				LUMP SUM
END BENT 1						22.7		4729			8	440	8			339			
BENT 1	LUMP SUM					72.4		11287	1069		18	630		18			LUMP SUM		
END BENT 2						21.8		4610			6	300	6			275			
TOTAL	LUMP SUM	2	2	10954	11418	116.9	LUMP SUM	20626	1069	361,300	32	1370	14	18	441.5	614	LUMP SUM	LUMP SUM	LUMP SUM

PROJECT NO. U-4007B
ONSLOW COUNTY
STATION: 42+15.92-NBL RAMP-
61+59.28 -Y1A SBL-
SHEET 3 OF 3

STATE OF NORTH CAROLINA
DEPARTMENT OF TRANSPORTATION
RALEIGH

GENERAL DRAWING
FOR BRIDGE ON WESTERN PARKWAY OVER MARINE BLVD. BETWEEN HAWKSIDE ROAD AND COUNTRY CLUB ROAD

NORTH CAROLINA PROFESSIONAL SEAL 025516 ENGINEER EMILY E. MURRAY
8/24/10

REVISIONS						SHEET NO.
NO.	BY:	DATE:	NO.	BY:	DATE:	S-117
1			3			TOTAL SHEETS
2			4			142

DRAWN BY : B. N. BARODAWALA DATE : 2-19-10
CHECKED BY : PEGGY PARISI DATE : 6-7-10

23-AUG-2010 15:20
Z:\TIPProjects-U\U4007b\Structures\Final Plans\Str. #5\U-4007b_sd_gd_05.dgn
PADKINS

STR. #5

LOAD AND RESISTANCE FACTOR RATING (LRFR) SUMMARY FOR STEEL GIRDERS

LEVEL		VEHICLE	WEIGHT (W) (TONS)	CONTROLLING LOAD RATING (#)	MINIMUM RATING FACTORS (RF)	TONS = W x RF	STRENGTH I LIMIT STATE											SERVICE II LIMIT STATE						COMMENT NUMBER
							LIVE-LOAD FACTORS (γ_{LL})	MOMENT					SHEAR					LIVE-LOAD FACTORS (γ_{LL})	MOMENT					
								DISTRIBUTION FACTORS (DF)	RATING FACTOR	SPAN	GIRDER LOCATION	DISTANCE FROM LEFT END OF SPAN (ft)	DISTRIBUTION FACTORS (DF)	RATING FACTOR	SPAN	GIRDER LOCATION	DISTANCE FROM LEFT END OF SPAN (ft)		DISTRIBUTION FACTORS (DF)	RATING FACTOR	SPAN	GIRDER LOCATION	DISTANCE FROM LEFT END OF SPAN (ft)	
DESIGN LOAD RATING		HL-93 (INVENTORY)	N/A	1	1.05	--	1.75	0.857	1.05	A	EL	129.25	0.985	1.54	A	I	129.25	1.30	0.857	1.25	A	EL	129.25	
		HL-93 (OPERATING)	N/A		1.36	--	1.35	0.857	1.36	A	EL	129.25	0.985	1.99	A	I	129.25	1.00	0.857	1.62	A	EL	129.25	
		HS-20 (INVENTORY)	36.00	2	1.84	66.240	1.75	0.857	1.84	A	EL	129.25	0.985	2.37	A	I	129.25	1.30	0.857	2.48	A	EL	51.70	
		HS-20 (OPERATING)	36.00		2.39	86.040	1.35	0.857	2.39	A	EL	129.25	0.985	3.08	A	I	129.25	1.00	0.857	3.22	A	EL	51.70	
LEGAL LOAD RATING	SINGLE VEHICLE (SV)	SNSH	13.500		5.20	70.200	1.40	0.857	5.38	A	EL	51.70	0.985	8.04	A	I	129.25	1.30	0.857	5.20	A	EL	51.70	
		SNGARBS2	20.000		3.31	66.200	1.40	0.857	3.31	A	EL	129.25	0.985	5.26	A	I	129.25	1.30	0.857	3.45	A	EL	51.70	
		SNAGRIS2	22.000		3.01	66.220	1.40	0.857	3.01	A	EL	129.25	0.985	4.81	A	I	129.25	1.30	0.857	3.21	A	EL	51.70	
		SNCOTTS3	27.250		2.38	64.855	1.40	0.857	2.41	A	EL	129.25	0.985	3.83	A	I	129.25	1.30	0.857	2.38	A	EL	51.70	
		SNAGGRS4	34.925		1.89	66.008	1.40	0.857	1.89	A	EL	129.25	0.985	3.02	A	I	129.25	1.30	0.857	1.94	A	EL	51.70	
		SNS5A	35.550		1.86	66.123	1.40	0.857	1.86	A	EL	129.25	0.985	2.99	A	I	129.25	1.30	0.857	1.91	A	EL	51.70	
		SNS6A	39.950		1.66	66.317	1.40	0.857	1.66	A	EL	129.25	0.985	2.68	A	I	129.25	1.30	0.857	1.73	A	EL	51.70	
		SNS7B	42.000		1.58	66.360	1.40	0.857	1.58	A	EL	129.25	0.985	2.57	A	I	129.25	1.30	0.857	1.65	A	EL	51.70	
	TRUCK TRACTOR SEMI-TRAILER (TTST)	TNAGRIT3	33.000		2.02	66.660	1.40	0.857	2.02	A	EL	129.25	0.985	3.23	A	I	129.25	1.30	0.857	2.11	A	EL	51.70	
		TNT4A	33.075		2.01	66.480	1.40	0.857	2.01	A	EL	129.25	0.985	3.21	A	I	129.25	1.30	0.857	2.10	A	EL	51.70	
		TNT6A	41.600		1.61	66.976	1.40	0.857	1.61	A	EL	129.25	0.985	2.62	A	I	129.25	1.30	0.857	1.70	A	EL	51.70	
		TNT7A	42.000		1.59	66.780	1.40	0.857	1.59	A	EL	129.25	0.985	2.59	A	I	129.25	1.30	0.857	1.70	A	EL	51.70	
		TNT7B	42.000		1.98	83.160	1.40	0.857	1.98	A	EL	129.25	0.985	2.56	A	I	129.25	1.30	0.857	2.14	A	EL	51.70	
		TNAGRIT4	43.000		1.92	82.560	1.40	0.857	1.92	A	EL	129.25	0.985	2.48	A	I	129.25	1.30	0.857	2.08	A	EL	51.70	
		TNAGT5A	45.000		1.49	67.050	1.40	0.857	1.49	A	EL	129.25	0.985	2.40	A	I	129.25	1.30	0.857	1.60	A	EL	51.70	
		TNAGT5B	45.000	3	1.48	66.600	1.40	0.857	1.48	A	EL	129.25	0.985	2.38	A	I	129.25	1.30	0.857	1.58	A	EL	51.70	
FATIGUE		HL-93 (INVENTORY)	γ_{LL}=0.75																					

LOAD FACTORS:

DESIGN LOAD RATING FACTORS	LIMIT STATE	γ_{DC}	γ_{DW}
	STRENGTH I	1.25	1.50
	SERVICE II	1.00	1.00

	YEAR	ADTT
CURRENT	13,600	490
FUTURE	21,500	774

NOTES:

MINIMUM RATING FACTORS ARE BASED ON THE STRENGTH I AND SERVICE II LIMIT STATES.

ALLOWABLE STRESS FOR SERVICE II LIMIT STATE ARE AS REQUIRED FOR DESIGN.

COMMENTS:

1.
2.
3.
4.

(#) CONTROLLING LOAD RATING

(1) DESIGN LOAD RATING (HL-93) **

(2) DESIGN LOAD RATING (HS-20) **

(3) LEGAL LOAD RATING **

** SEE CHART FOR VEHICLE TYPE

GIRDER LOCATION

I - INTERIOR GIRDER
EL - EXTERIOR LEFT GIRDER
ER - EXTERIOR RIGHT GIRDER

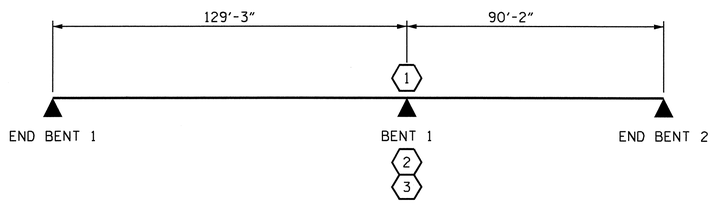

LRFR SUMMARY

PROJECT NO. U-4007B
ONSLOW COUNTY
STATION: 42+15.92 -NBL RAMP-

STATE OF NORTH CAROLINA
DEPARTMENT OF TRANSPORTATION
RALEIGH

STANDARD

LRFR SUMMARY FOR STEEL GIRDERS
(NON-INTERSTATE TRAFFIC)

NORTH CAROLINA PROFESSIONAL SEAL 025516 ENGINEER EMILY SHAFFRAY
8/24/10

REVISIONS						SHEET NO.
NO.	BY:	DATE:	NO.	BY:	DATE:	S-118
1			3			TOTAL SHEETS
2			4			142

ASSEMBLED BY : A.M. LEE DATE : 7-6-10
CHECKED BY : N. RUFFIN DATE : 7-6-10
DRAWN BY : MAA 1/08
CHECKED BY : GM/DI 2/08
REV. 11/12/08RR MAA/GM

23-AUG-2010 14:52
Z:\TIPProjects-U\U4007b\Structures\FinalPlans\Str. #5\U4007B_SD_LRFR_05.dgn
PADKINS

STR. #5 STD. NO. LRFR3

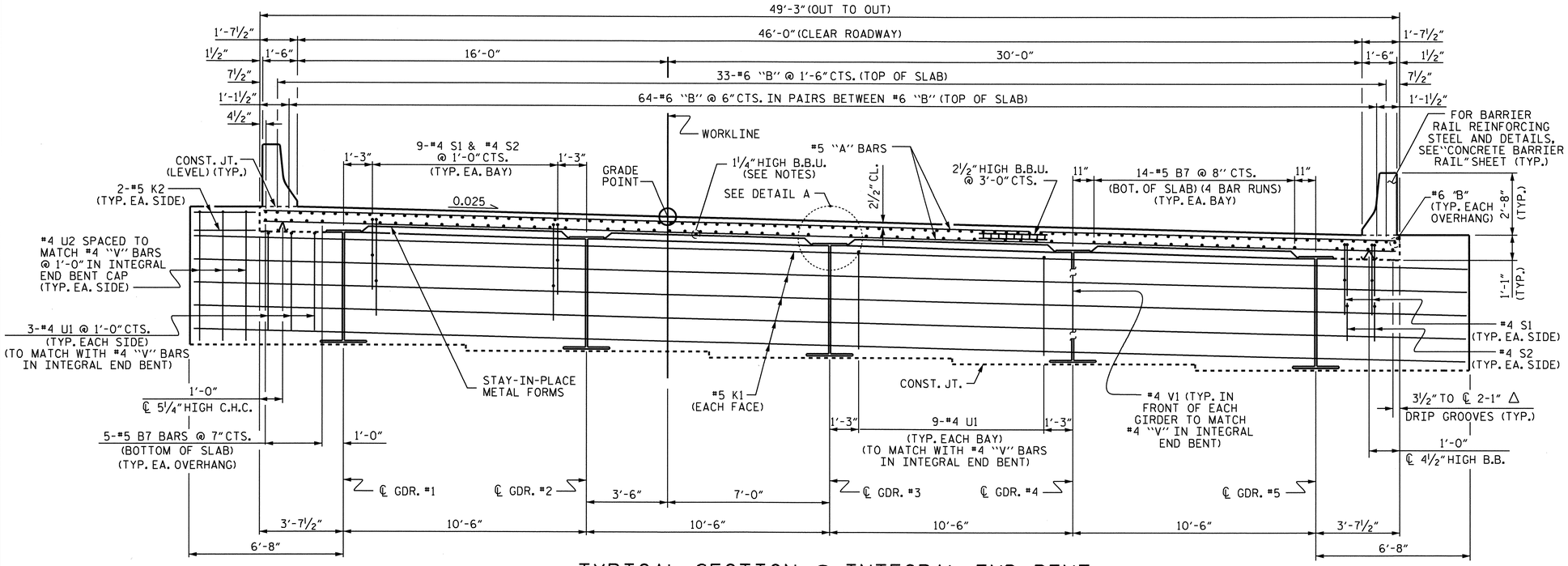

TYPICAL SECTION @ INTEGRAL END BENT

(6" Ø PVC DECK DRAIN NOT SHOWN FOR CLARITY, SEE PLAN OF SPAN FOR LOCATION)

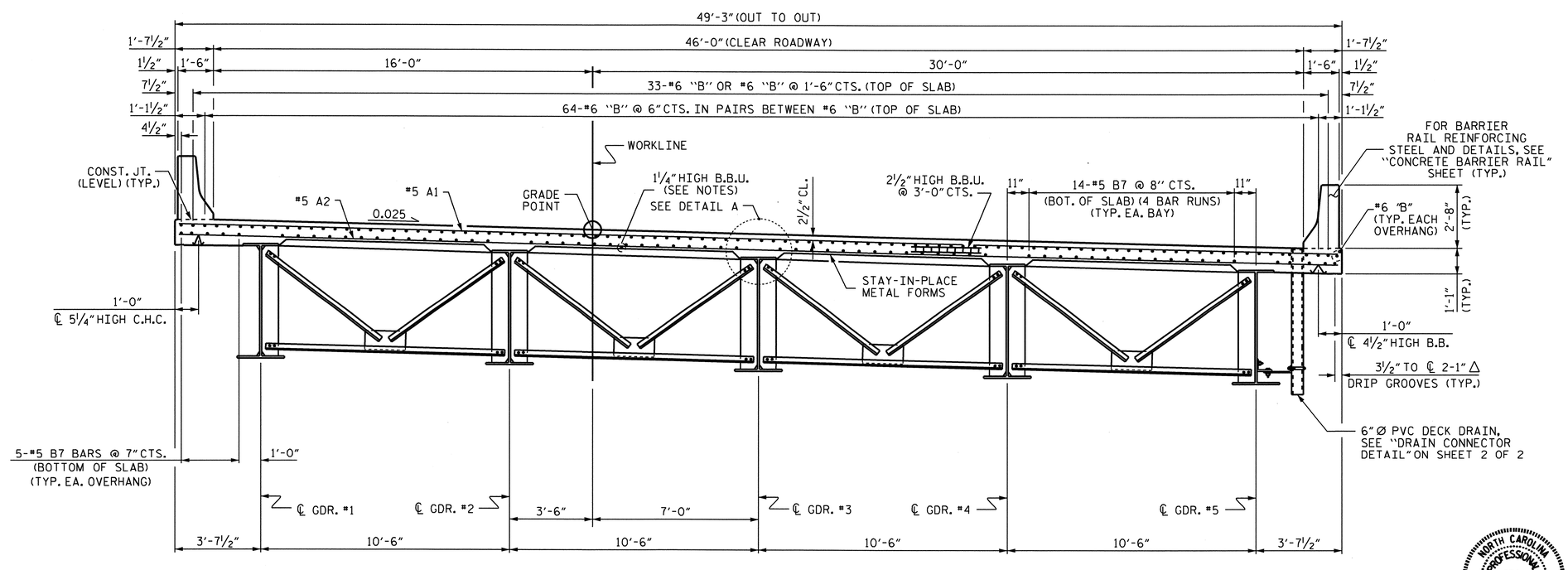

TYPICAL SECTION @ BENT DIAPHRAGMS

NOTES

PROVIDE 1¼" HIGH BEAM BOLSTERS UPPER AT 4'-0" CTS. ATOP THE METAL STAY-IN-PLACE FORMS TO SUPPORT THE BOTTOM MAT OF 'A' BARS. WHEN USING REMOVABLE FORMS, PROVIDE CONTINUOUS HIGH CHAIRS FOR METAL DECK (C.H.C.M.) @ 4'-0" CTS. WITH A HEIGHT TO SUPPORT THE BOTTOM MAT OF 'A' BARS A CLEAR DISTANCE OF 2½" ABOVE THE TOP OF THE REMOVABLE FORM.

THE CONTRACTOR MAY, WHEN NECESSARY, PROPOSE A SCHEME FOR AVOIDING INTERFERENCE BETWEEN METAL STAY-IN-PLACE FORM SUPPORTS OR FORMS AND GIRDER STIFFENERS OR CONNECTOR PLATES. THE PROPOSAL SHALL BE INDICATED, AS APPROPRIATE, ON EITHER THE STEEL WORKING DRAWINGS OR THE METAL STAY-IN-PLACE FORM WORKING DRAWINGS.

BARRIER RAIL IN A CONTINUOUS UNIT SHALL NOT BE CAST UNTIL ALL SLAB CONCRETE IN THE UNIT HAS BEEN CAST AND HAS REACHED A MINIMUM COMPRESSIVE STRENGTH OF 3,000 PSI.

PREVIOUSLY CAST CONCRETE IN A CONTINUOUS UNIT SHALL HAVE ATTAINED A MINIMUM COMPRESSIVE STRENGTH OF 3000 PSI BEFORE ADDITIONAL CONCRETE IS CAST IN THE UNIT.

STRUCTURE STEEL ERECTION SHALL BE COMPLETE BEFORE FALSEWORK OR FORMS ARE PLACED ON THE UNIT.

THE CONTRACTOR SHALL ADJUST THE GIRDER BUILDUPS AS NECESSARY TO INCORPORATE A MAXIMUM PERMISSIBLE VARIATION IN POT BEARING DEPTH OF 1/2", SEE SPECIAL PROVISION FOR POT BEARINGS.

METAL STAY-IN-PLACE FORMS SHALL NOT BE WELDED TO BEAM OR GIRDER FLANGES IN THE ZONES REQUIRING CHARPY V-NOTCH TEST. SEE STRUCTURAL STEEL DETAIL SHEETS.

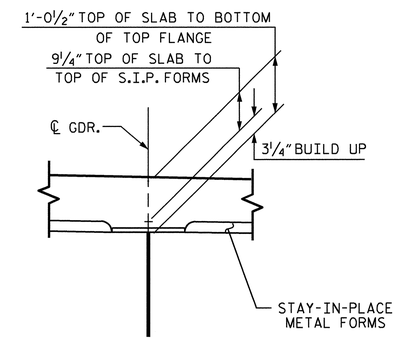

DETAIL A

PROJECT NO. U-4007B

ONSLOW COUNTY

STATION: 42+15.92 -NBL RAMP-

SHEET 1 OF 2

STATE OF NORTH CAROLINA
DEPARTMENT OF TRANSPORTATION
RALEIGH

SUPERSTRUCTURE

TYPICAL SECTION

REVISIONS						SHEET NO.
NO.	BY:	DATE:	NO.	BY:	DATE:	S-119
1			3			TOTAL SHEETS
2			4			142

NORTH CAROLINA PROFESSIONAL SEAL 025516 ENGINEER EMILY E. MURRAY 5/24/10

DRAWN BY : B.N.BARODAWALA DATE : 1-7-10
CHECKED BY : PEGGY PARISI DATE : 5-18-10

24-AUG-2010 09:57
Z:\TIPProjects-U\U4007b\Structures\FinalPlans\Str. #5\U-4007b_sd_TS_05#.dgn
podkins

STR. #5

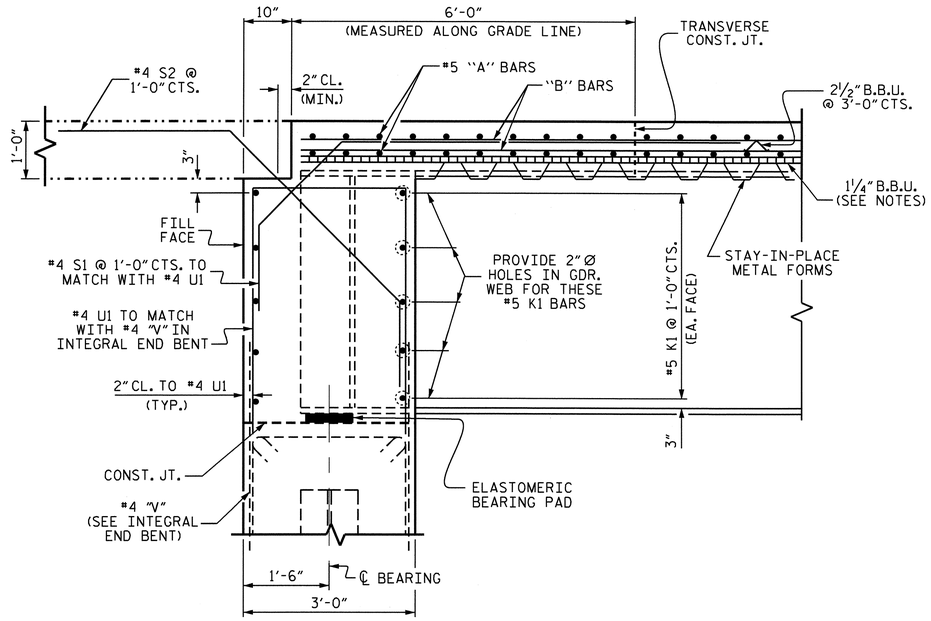

END OF GIRDER DETAIL AT INTEGRAL END BENT

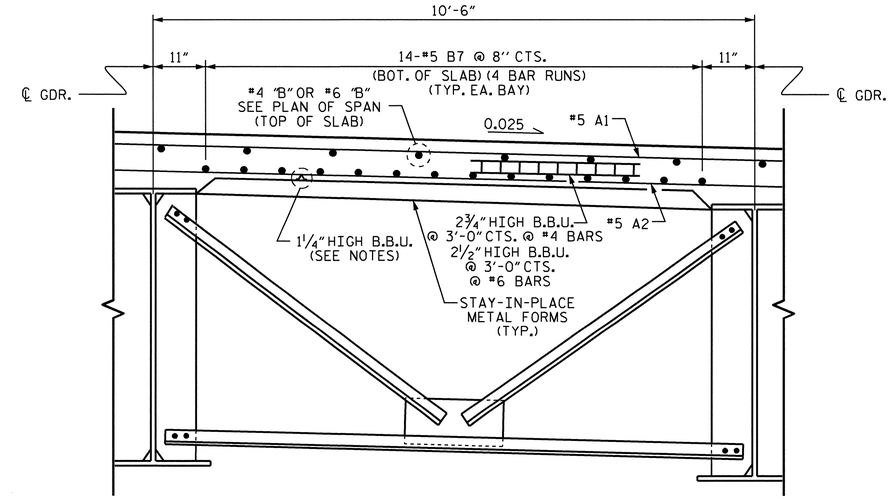

PARTIAL TYPICAL SECTION @ INTERMEDIATE DIAPHRAGMS

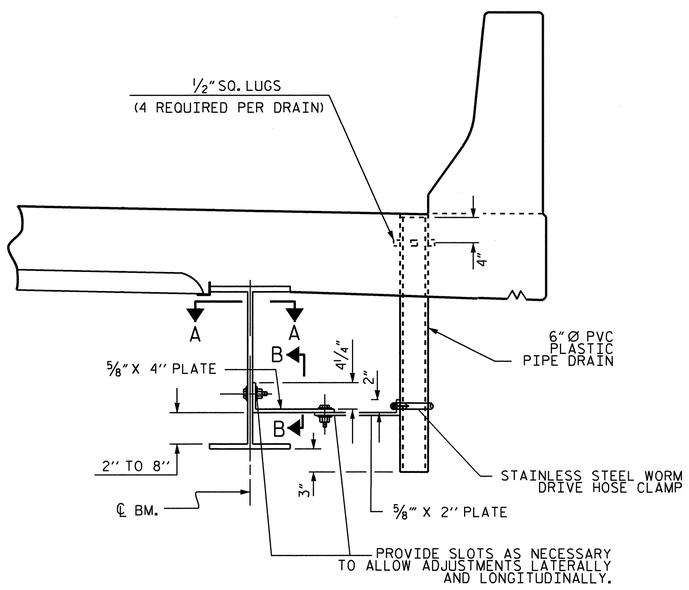

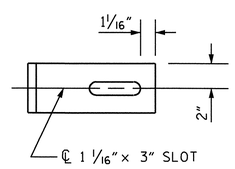

SECTION A-A

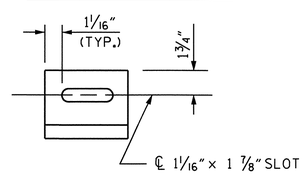

SECTION B-B

DRAIN CONNECTOR DETAIL

(10 DRAINS REQUIRED)

COUPLING IN DRAIN PIPE WILL BE PERMITTED AS APPROVED BY THE ENGINEER.

TOP OF FLOOR DRAIN TO BE SET ⅜" BELOW SURFACE OF SLAB.

4 - ½" SQUARE LUGS TO BE GLUED TO THE PVC PLASTIC PIPE AT EQUAL SPACES AROUND THE PIPE DRAIN APPROXIMATELY 4" FROM THE TOP OF THE PIPE.

BOLT SIZE TO BE SAME AS DIAPHRAGM AND CROSSFRAME CONNECTIONS. STAINLESS STEEL WORM DRIVE HOSE CLAMP SHALL BE COMMERCIAL QUALITY.

THE 6" Ø PVC PLASTIC PIPE AND FITTINGS SHALL BE SCHEDULE 40 AND CONFORM TO ASTM D1785.

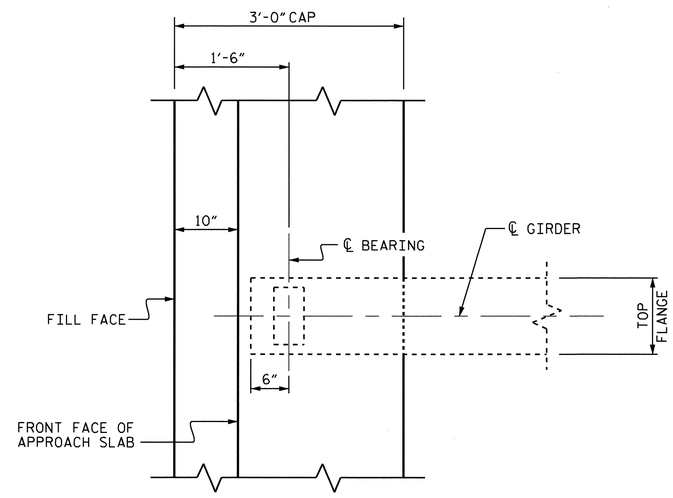

PLAN OF GIRDER AT INTEGRAL END BENT

PROJECT NO. U-4007B
ONSLOW COUNTY
STATION: 42+15.92 -NBL RAMP-

SHEET 2 OF 2

STATE OF NORTH CAROLINA
DEPARTMENT OF TRANSPORTATION
RALEIGH

SUPERSTRUCTURE

TYPICAL SECTION DETAILS

NORTH CAROLINA PROFESSIONAL SEAL 025516 ENGINEER CHRIS E. MURRAY
8/24/10

REVISIONS						SHEET NO.
NO.	BY:	DATE:	NO.	BY:	DATE:	S-120
1			3			TOTAL SHEETS
2			4			142

STR. #5

DRAWN BY : B.N.BARODAWALA DATE : 4-29-10
CHECKED BY : PEGGY PARISI DATE : 5-18-10

23-AUG-2010 15:02
Z:\TIPProjects-U\U4007b\Structures\FinalPlans\Str. #5\U-4007b_sd_TS_05#.dgn
PADKINS

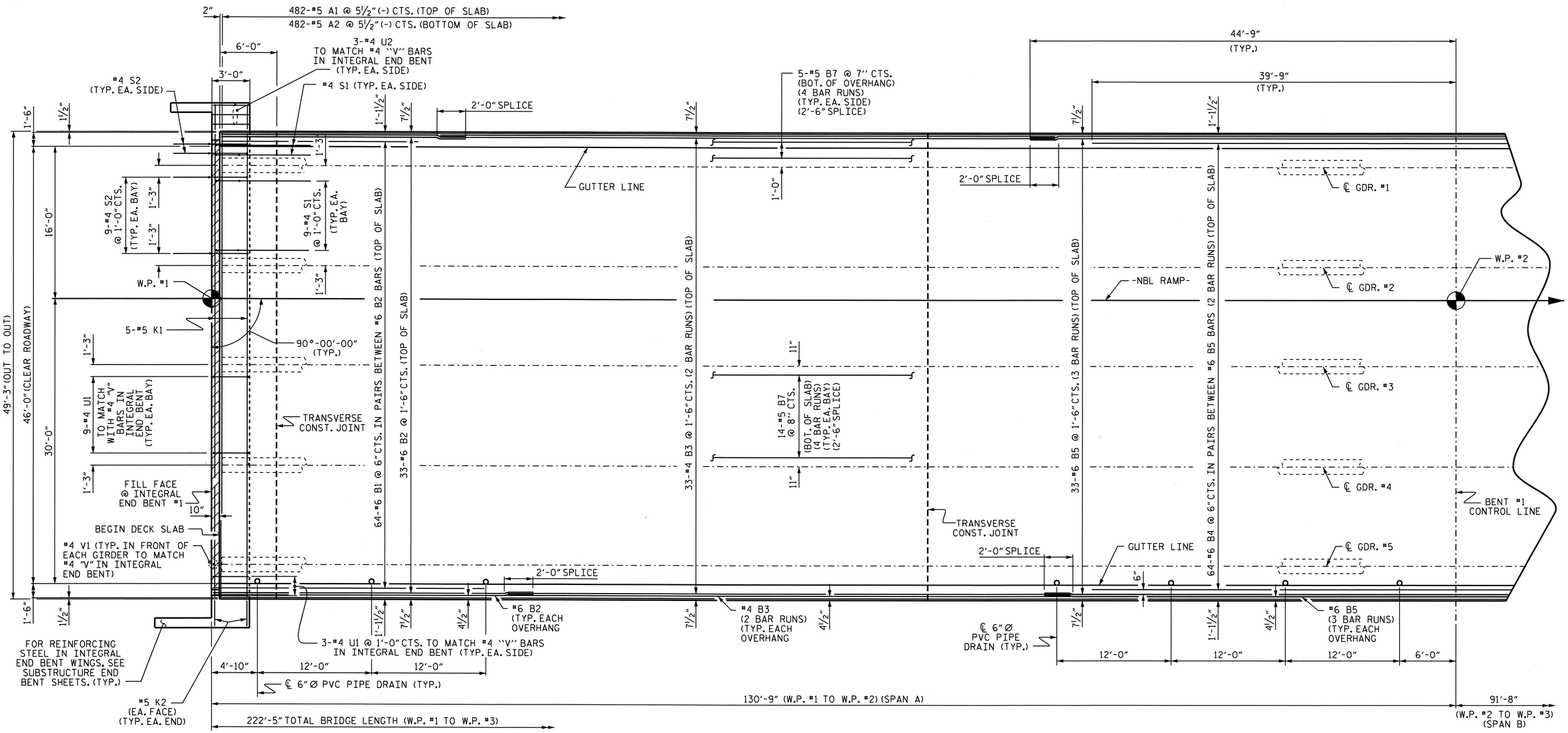

PLAN OF SPAN A

FOR LOCATION OF INTERMEDIATE DIAPHRAGMS, SEE "FRAMING PLAN."
FOR LOCATION OF TRANSVERSE CONSTRUCTION JOINT, SEE "SUPERSTRUCTURE BILL OF MATERIAL" SHEET.

PROJECT NO. U-4007B
ONSLOW COUNTY
STATION: 42+15.92 -NBL RAMP-

SHEET 1 OF 2

STATE OF NORTH CAROLINA
DEPARTMENT OF TRANSPORTATION
RALEIGH

SUPERSTRUCTURE

PLAN OF SPANS

NORTH CAROLINA PROFESSIONAL SEAL 025516 ENGINEER EMILY E. MURRAY
8/24/10

REVISIONS						SHEET NO.
NO.	BY:	DATE:	NO.	BY:	DATE:	S-121
1			3			TOTAL SHEETS
2			4			142

DRAWN BY : B.N.BARODAWALA DATE : 12-4-09
CHECKED BY : PEGGY PARISI DATE : 5-18-10

23-AUG-2010 14:59
Z:\TIPProjects-U\U4007b\Structures\FinalPlans\Str. #5\U-4007b_sd_PS_05#.dgn
PADKINS

STR. #5

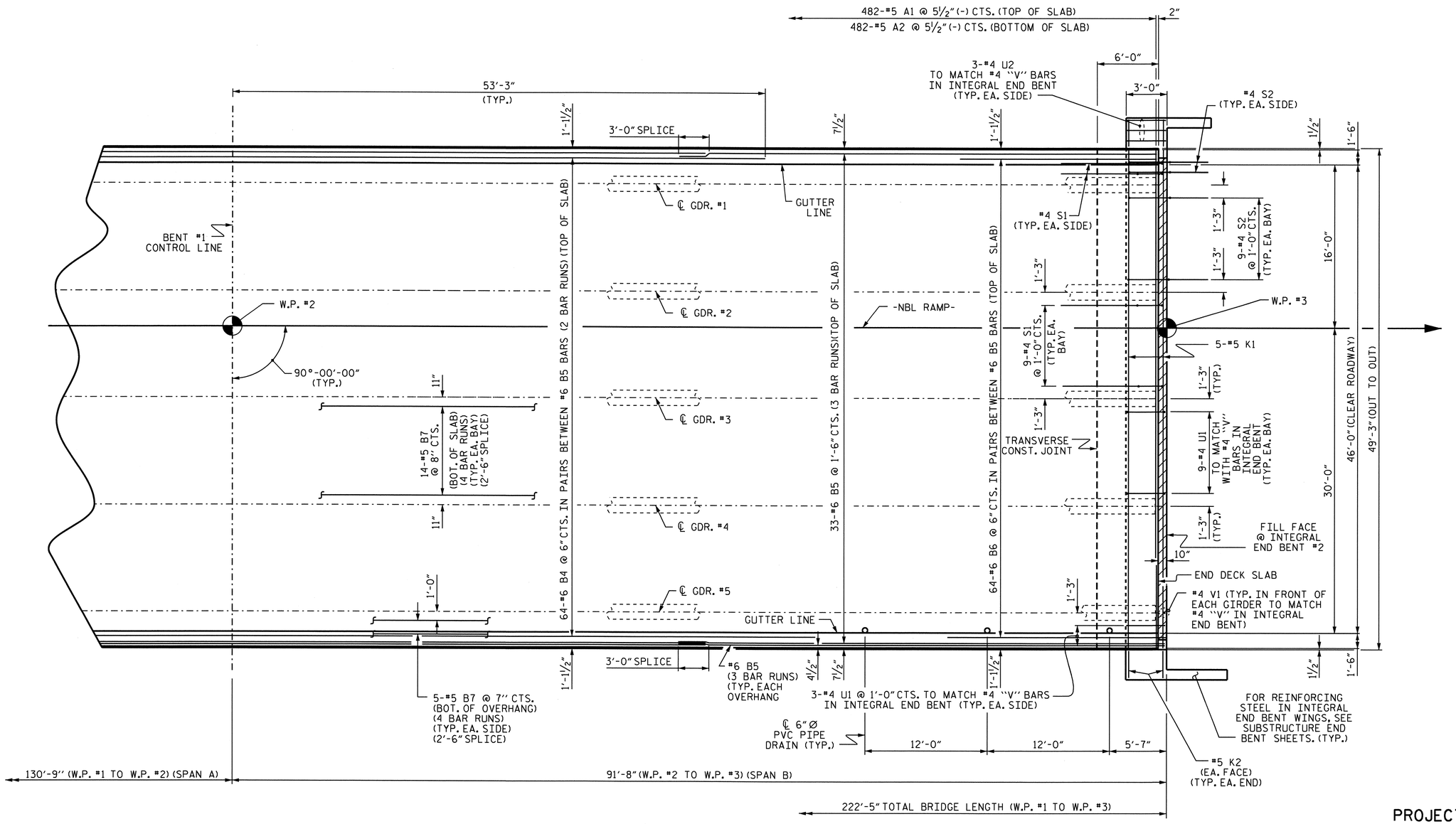

PLAN OF SPAN B

FOR LOCATION OF INTERMEDIATE DIAPHRAGMS, SEE "FRAMING PLAN."
FOR LOCATION OF TRANSVERSE CONSTRUCTION JOINT, SEE "SUPERSTRUCTURE BILL OF MATERIAL" SHEET.

PROJECT NO. U-4007B
ONSLOW COUNTY
STATION: 42+15.92 -NBL RAMP-

SHEET 2 OF 2

STATE OF NORTH CAROLINA
DEPARTMENT OF TRANSPORTATION
RALEIGH

SUPERSTRUCTURE

PLAN OF SPANS

NORTH CAROLINA PROFESSIONAL SEAL 025516 ENGINEER EMILY E. MURRAY
8/24/10

REVISIONS						SHEET NO.
NO.	BY:	DATE:	NO.	BY:	DATE:	S-122
1			3			TOTAL SHEETS
2			4			142

STR. #5

DRAWN BY : B.N.BARODAWALA DATE : 12-4-09
CHECKED BY : PEGGY PARISI DATE : 5-18-10

23-AUG-2010 14:59
Z:\TIPProjects-U\U4007b\Structures\FinalPlans\Str. #5\U-4007b_sd_PS_05#.dgn
PADKINS

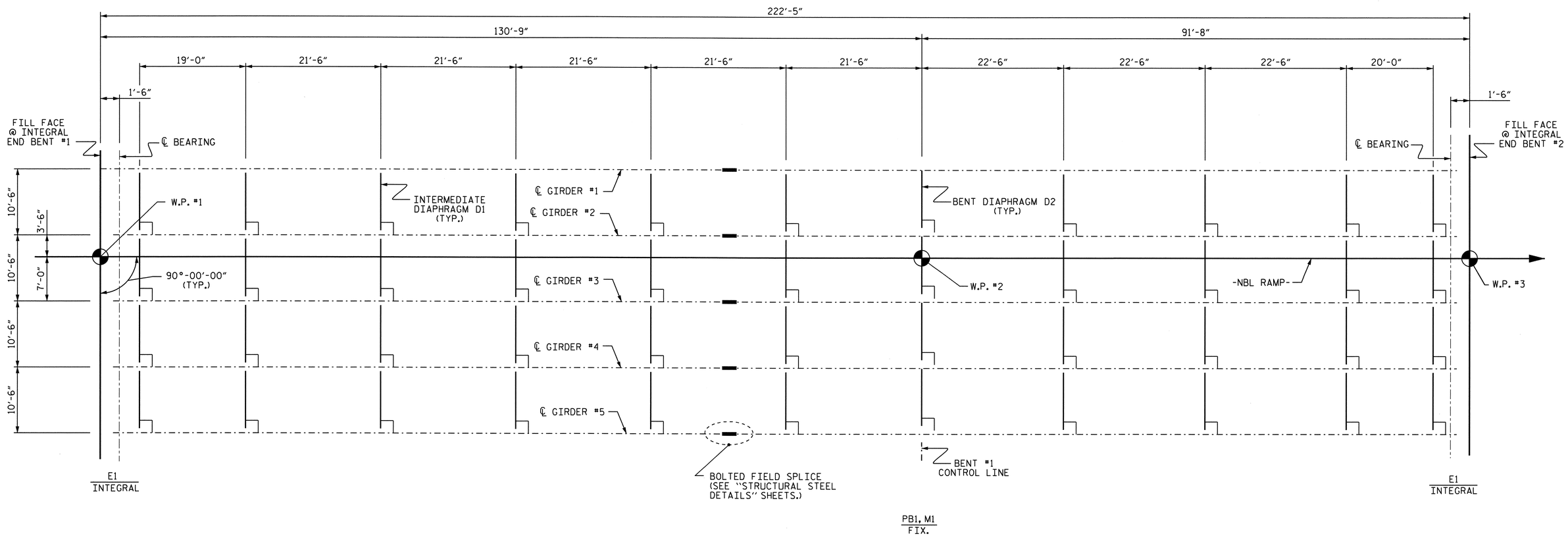

SPAN A

SPAN B

FRAMING PLAN

PROJECT NO. U-4007B

ONSLOW COUNTY

STATION: 42+15.92 -NBL RAMP-

STATE OF NORTH CAROLINA
DEPARTMENT OF TRANSPORTATION
RALEIGH

SUPERSTRUCTURE

FRAMING PLAN

NORTH CAROLINA PROFESSIONAL SEAL 025516 ENGINEER EMILY E. MURRAY

8/24/10

REVISIONS						SHEET NO.
NO.	BY:	DATE:	NO.	BY:	DATE:	S-123
1			3			TOTAL SHEETS
2			4			142

DRAWN BY : B.N.BARODAWALA DATE : 1-12-10
CHECKED BY : PEGGY PARISI DATE : 5-18-10

23-AUG-2010 14:59
Z:\TIPProjects-U\U4007b\Structures\FinalPlans\Str. #5\U-4007b_sd_FP_05#.dgn
PADKINS

STR. #5

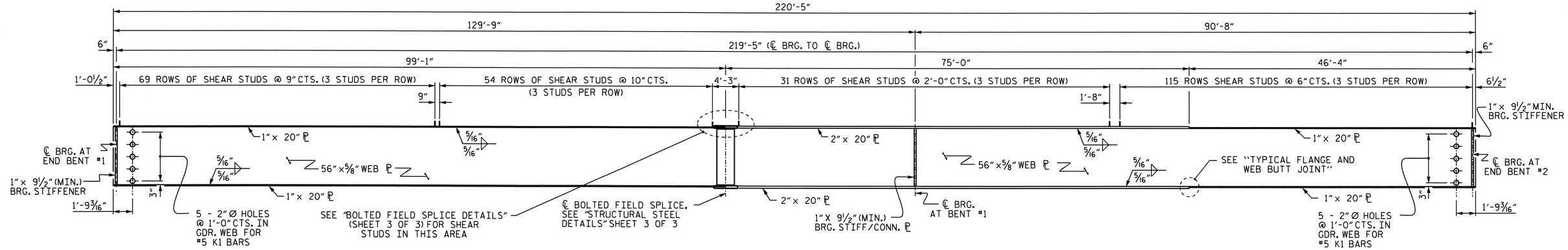

GIRDER ELEVATION

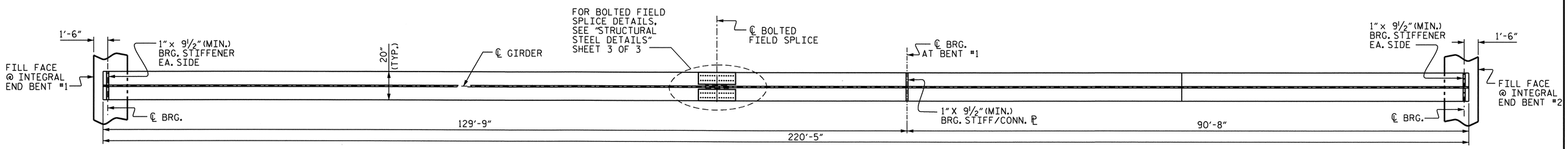

BOTTOM FLANGE DETAIL

(FOR CLARITY, INTERMEDIATE DIAPHRAGMS NOT SHOWN)
INTERIOR GIRDER SHOWN, EXTERIOR GIRDER SIMILAR, EXCEPT NO CONNECTOR PLATES SHALL BE PLACED ON THE OUTSIDE OF THE WEB

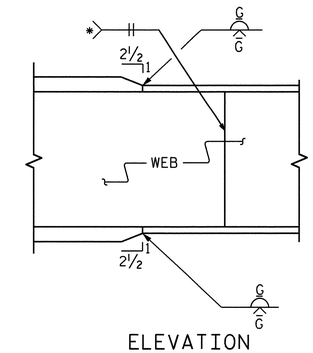

ELEVATION

TYPICAL FLANGE AND WEB BUTT JOINT

* GRIND SMOOTH AND FLUSH ON OUTSIDE OF EXTERIOR GIRDERS

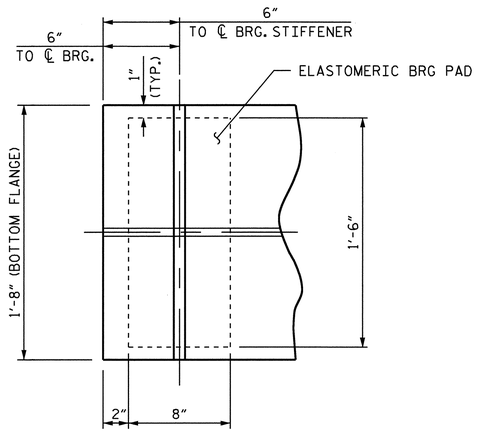

END OF GIRDER DETAIL

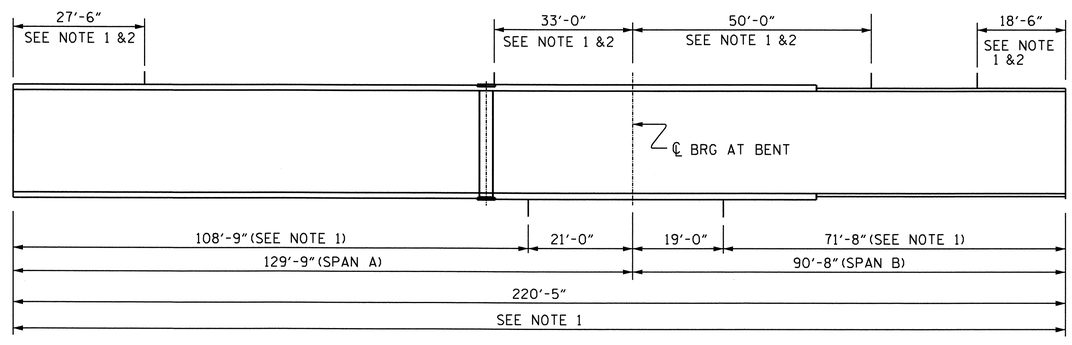

GIRDER MAKE UP

FOR CHARPY V-NOTCH TEST

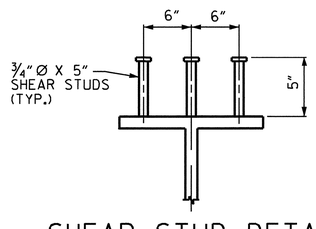

SHEAR STUD DETAIL

NOTE ①: CHARPY V-NOTCH TESTS ARE REQUIRED FOR TOP FLANGE PLATES WHICH FALL WITHIN THE LIMITS SHOWN, ALL BOTTOM FLANGE PLATES, ALL WEB PLATES, AND SPLICE PLATES. IF A PERMITTED SHOP FLANGE SPLICE IS NOT USED, CHARPY V-NOTCH TESTS WILL BE REQUIRED FOR THE ENTIRE FLANGE PLATE. FOR CHARPY V-NOTCH TESTS, SEE ARTICLE 1072-9 OF THE STANDARD SPECIFICATIONS.

NOTE ②: NO WELDING OF FORMS OR FALSEWORK TO THE TOP FLANGE WILL BE PERMITTED IN THIS REGION.

NORTH CAROLINA PROFESSIONAL SEAL 025516 ENGINEER EMILY E. MURRAY
8/24/10

PROJECT NO. U-4007B
ONSLOW COUNTY
STATION: 42+15.92 -NBL RAMP-

SHEET 1 OF 3

STATE OF NORTH CAROLINA
DEPARTMENT OF TRANSPORTATION
RALEIGH

SUPERSTRUCTURE

STRUCTURAL STEEL DETAILS

REVISIONS						SHEET NO.
NO.	BY:	DATE:	NO.	BY:	DATE:	S-124
1			3			TOTAL SHEETS
2			4			142

DRAWN BY : B.N.BARODAWALA DATE : 4-6-10
CHECKED BY : PEGGY PARISI DATE : 5-18-10

23-AUG-2010 15:00
Z:\TIPProjects-U\U4007b\Structures\FinalPlans\Str. #5\U-4007b_sd_S5_05#.dgn
PADKINS

STR. #5

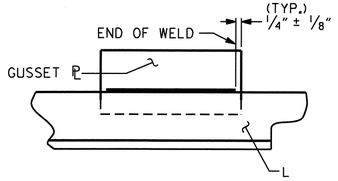

TYPICAL GUESSET PLATE CONNECTION

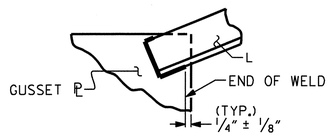

TYPICAL "L" TO GUSSET PLATE CONNECTION

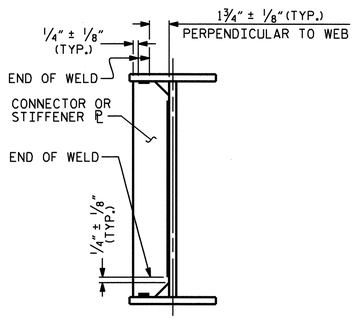

TYPICAL STIFFENER OR
CONNECTOR PLATE CONNECTIONS

WELD TERMINATION DETAILS

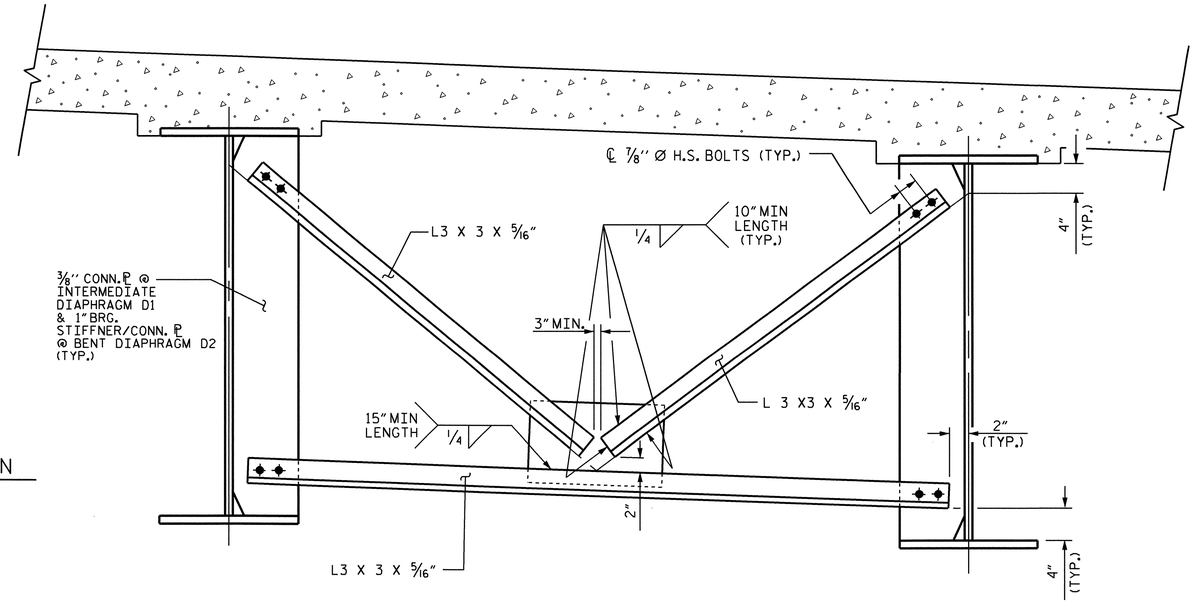

INTERMEDIATE DIAPHRAGM D1
BENT DIAPHRAGM D2

(LOOKING UPSTATION)

NOTES:

ALL STRUCTURAL STEEL SHALL BE AASHTO M270 GRADE 50W.

ALL DIMENSIONS SHOWN ARE HORIZONTAL OR VERTICAL, UNLESS OTHERWISE NOTED.

ALL FIELD CONNECTIONS TO BE 7/8" DIA. HIGH STRENGTH BOLTS UNLESS OTHERWISE NOTED. FOR HIGH STRENGTH BOLTS, SEE SPECIAL PROVISIONS.

BEARING STIFFENERS ARE TO BE PLACED NORMAL TO THE WEB OF THE GIRDER AND SHALL BE PLUMB.

SHOP SPLICES ARE PERMITTED TO LIMIT THE MAXIMUM REQUIRED FLANGE PIECE LENGTHS TO 60 FEET AND WEB PIECE LENGTHS TO 45 FEET. PERMITTED FLANGE AND WEB SHOP SPLICES SHALL NOT BE LOCATED WITHIN 15 FEET OF MAXIMUM DEAD LOAD DEFLECTION. KEEP 2 FEET MINIMUM BETWEEN WEB AND FLANGE SHOP SPLICES. KEEP 6" MINIMUM BETWEEN CONNECTOR PLATE AND WEB OR FLANGE SHOP SPLICES.

STUDS ON GIRDERS MAY BE SHIFTED UP TO 1" IF NECESSARY TO CLEAR FLANGE SPLICE WELD.

TENSION ON THE AASHTO M164 BOLTS SHALL BE CALIBRATED USING DIRECT TENSION INDICATOR. FOR DIRECT TENSION INDICATORS, SEE SPECIAL PROVISIONS.

END OF GIRDERS SHALL BE PLUMB.

FOR SHIPPING STEEL STRUCTURAL MEMBERS, SEE SPECIAL PROVISIONS.

LOAD RATINGS	
	MAX.D.L.+L.L.
56" STEEL PLATE GIRDER	115 K

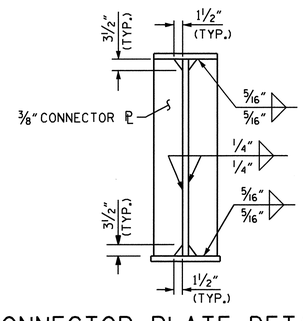

CONNECTOR PLATE DETAILS

@ INTERMEDIATE DIAPHGRAM

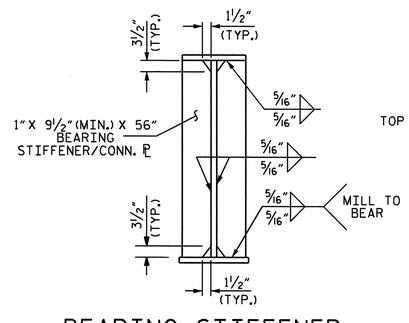

BEARING STIFFENER

@ END BENTS & BENT DIAPHGRAM

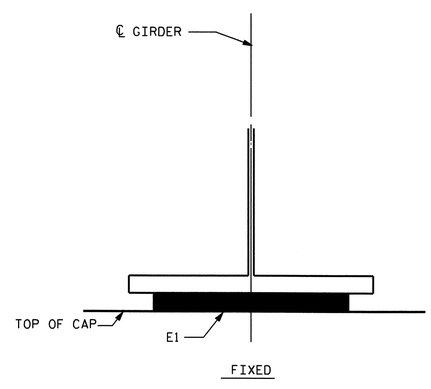

END VIEW

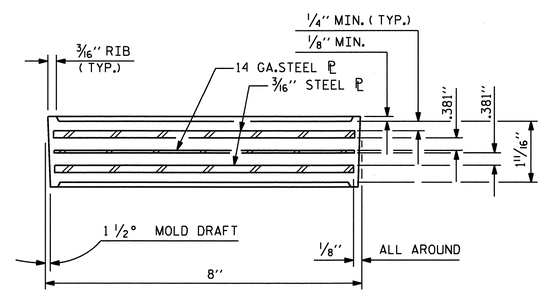

TYPICAL SECTION OF ELASTOMERIC BEARINGS

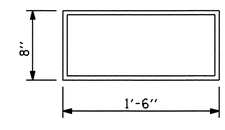

E1 (10 REQ'D)

PLAN VIEW OF ELASTOMERIC BEARING

ELASTOMERIC BEARING PAD DETAILS

ALL SURFACES OF BEARING PADS SHALL BE SMOOTH AND STRAIGHT.

PROJECT NO. U-4007B
ONSLOW COUNTY
STATION: 42+15.92 -NBL RAMP-

SHEET 2 OF 3

STATE OF NORTH CAROLINA
DEPARTMENT OF TRANSPORTATION
RALEIGH

SUPERSTRUCTURE

STRUCTURAL STEEL DETAILS

NORTH CAROLINA PROFESSIONAL SEAL 025516 ENGINEER ELMAY E. MURRAY
8/24/10

REVISIONS								SHEET NO.
NO.	BY:	DATE:	NO.	BY:	DATE:			S-125
1			3					TOTAL SHEETS
2			4					142

DRAWN BY : B.N.BARODAWALA DATE : 12-30-09
CHECKED BY : PEGGY PARISI DATE : 5-18-10

23-AUG-2010 15:00
Z:\TIPProjects-U\U4007b\Structures\FinalPlans\Str. #5\U-4007b_sd_SS_05#.dgn
PADKINS

STR. #5

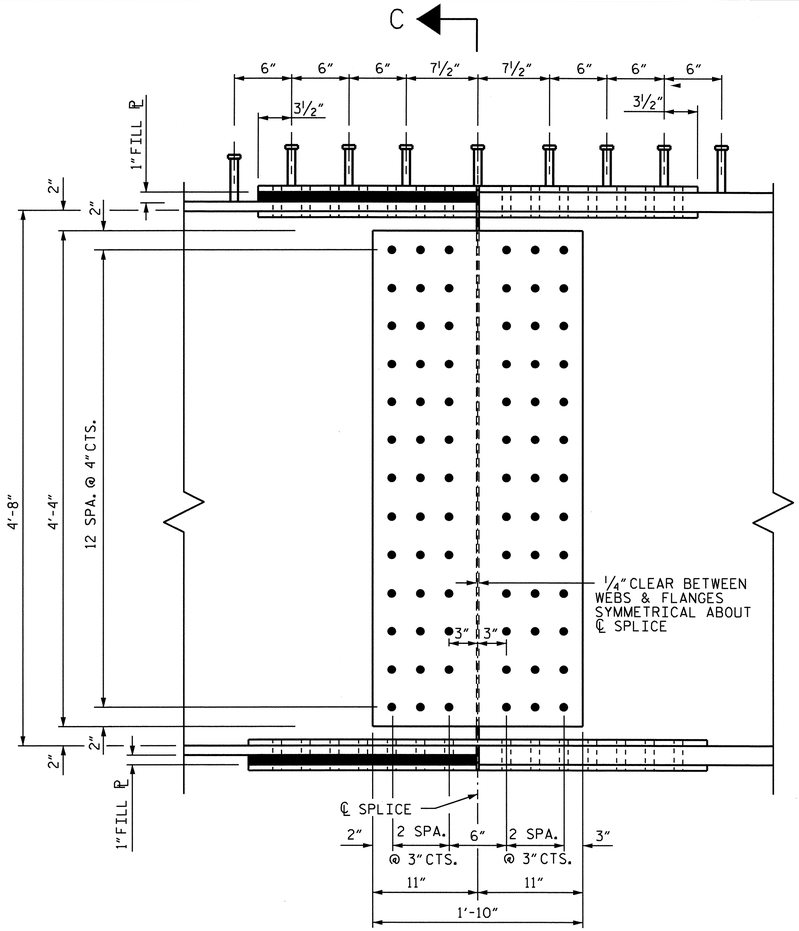

ELEVATION

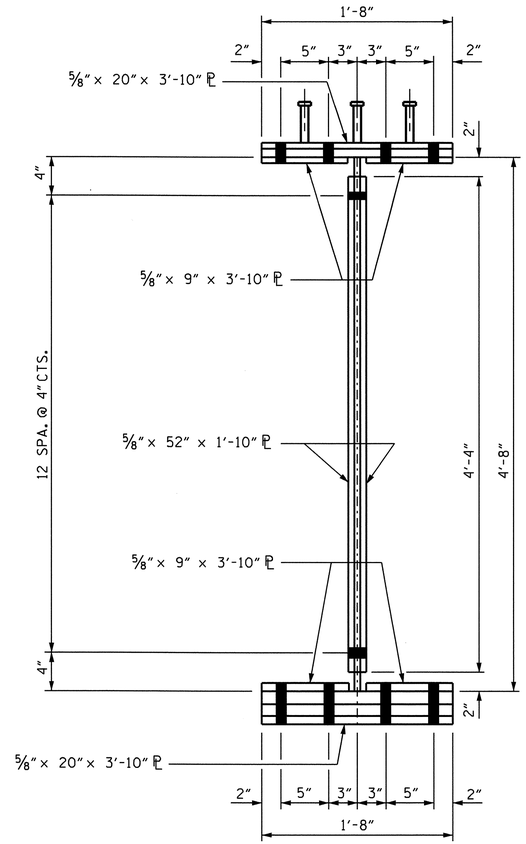

SECTION C-C

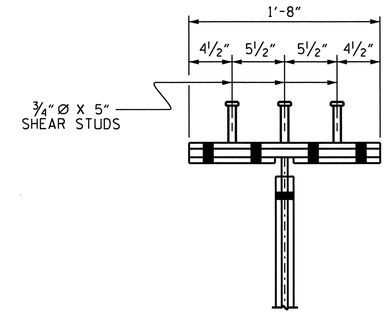

SHEAR STUD DETAIL FOR TOP FLANGE SPLICE PLATE

BOLTED FIELD SPLICE DETAILS

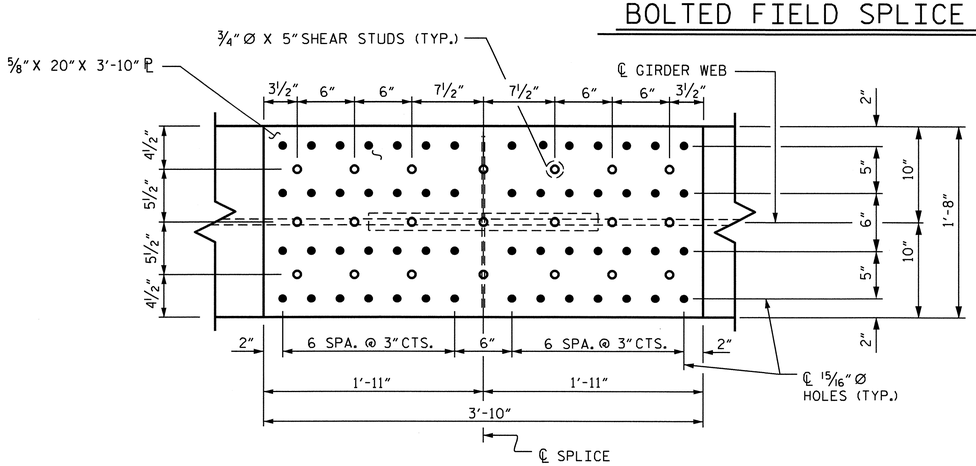

PLAN OF TOP FLANGE

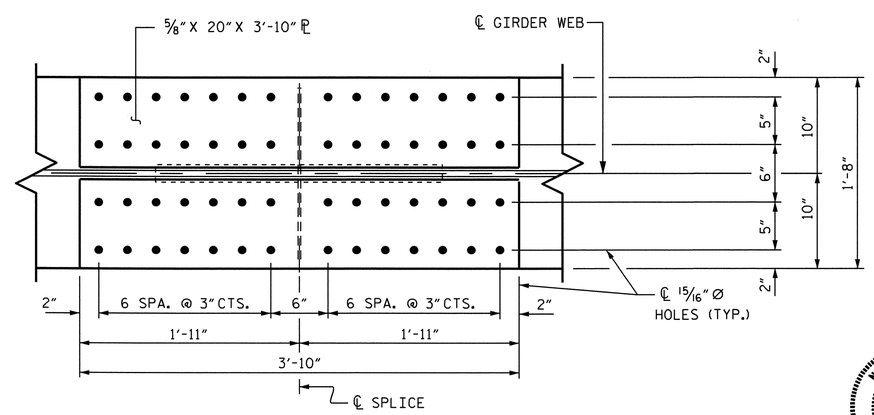

PLAN OF TOP OF BOTTOM FLANGE

PROJECT NO. U-4007B
ONSLOW COUNTY
STATION: 42+15.92 -NBL RAMP-

SHEET 3 OF 3

STATE OF NORTH CAROLINA
DEPARTMENT OF TRANSPORTATION
RALEIGH

SUPERSTRUCTURE
STRUCTURAL STEEL DETAILS
BOLTED FIELD SPLICE

NORTH CAROLINA PROFESSIONAL SEAL 025516 ENGINEER EMILY E. GARRAN
8/24/16

REVISIONS						SHEET NO.
NO.	BY:	DATE:	NO.	BY:	DATE:	S-126
1			3			TOTAL SHEETS
2			4			142

DRAWN BY : B.N.BARODAWALA DATE : 4-5-10
CHECKED BY : PEGGY PARISI DATE : 5-18-10

23-AUG-2010 15:00
Z:\TIPProjects-U\U4007b\Structures\FinalPlans\Str. #5\U-4007b_sd_SS_05*.dgn
PADKINS

STR. #5

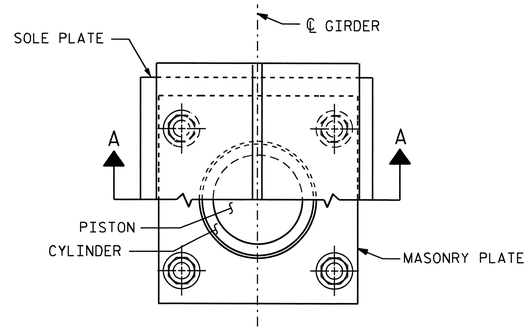

CUT-AWAY PLAN

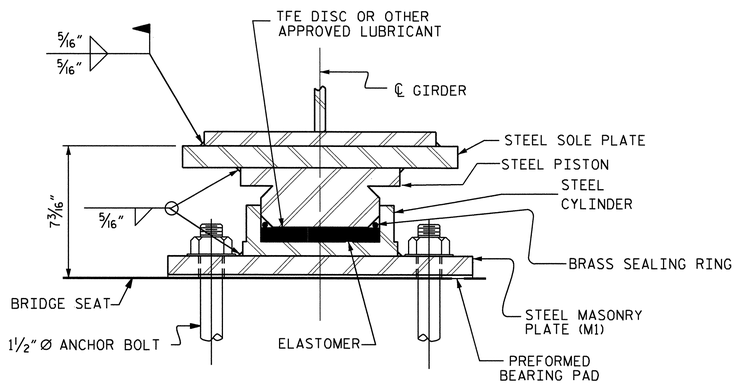

SECTION A-A

PB1, FIXED
(5 REQ'D.)

POT BEARING DETAILS

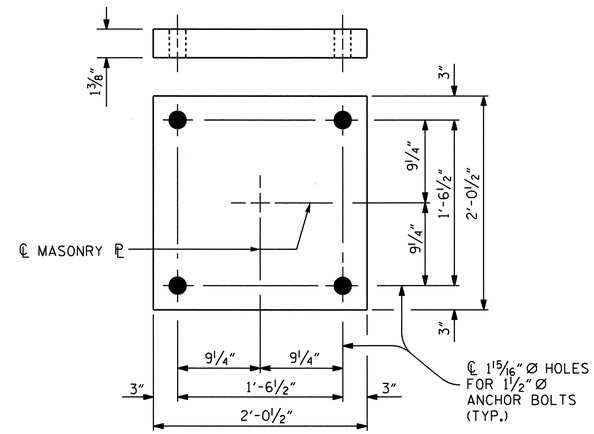

PLAN
M1 (5 REQ'D.)

MASONRY PLATE DETAILS

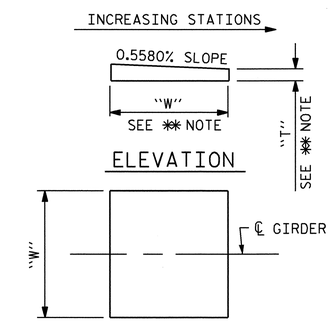

ELEVATION

PLAN

✻✻ NOTE:
DIMENSIONS "W" AND "T" ARE TO BE DETERMINED BY THE MANUFACTURER.

SOLE PLATE DETAILS

NOTES

FOR POT BEARINGS, SEE SPECIAL PROVISIONS.

AT ALL POINTS OF SUPPORT NUTS FOR ANCHOR BOLTS SHALL BE TIGHTENED FINGER TIGHT AND GIVEN AN ADDITIONAL 1/4 TURN. THE THREAD OF THE NUT AND BOLT SHALL THEN BE BURRED WITH A SHARP POINTED TOOL.

WHEN WELDING THE SOLE PLATE TO THE GIRDER, USE TEMPERATURE INDICATING WAX PENS, OR OTHER SUITABLE MEANS, TO ENSURE THAT THE TEMPERATURE OF THE BEARING DOES NOT EXCEED 250°F TEMPERATURES ABOVE THIS MAY DAMAGE THE TFE OR ELASTOMER.

SOLE PLATES SHOULD BE WELDED TO BEAM FLANGES AND ANCHOR BOLTS SHOULD BE GROUTED BEFORE FALSEWORK IS PLACED.

ALL SURFACES OF BEARING PLATES SHALL BE SMOOTH AND STRAIGHT.

FOR THERMAL SPRAYED COATINGS (METALLIZATION), SEE SPECIAL PROVISIONS.

THE CONTRACTOR MAY SUBSTITUTE DISC BEARINGS FOR THE POT BEARINGS SHOWN. FOR OPTIONAL DISC BEARINGS, SEE SPECIAL PROVISIONS.

THE CONTRACTOR SHALL ADJUST THE GIRDER BUILDUPS AS NECESSARY TO INCORPORATE A MAXIMUM PERMISSIBLE VARIATION IN POT BEARING DEPTH OF 1/2". SEE SPECIAL PROVISION FOR POT BEARINGS.

TABLE FOR LOADS AND MOVEMENTS

BEARING	LOCATION	VERTICAL LOAD (KIPS)				LATERAL LOAD (KIPS)	TOTAL MOVEMENT (INCHES)
		DEAD		LIVE	TOTAL		
		DC	DW				
PB1 (FIXED)	BENT 1	287.6	40.1	230.6	553.3	83.7	0

PROJECT NO. U-4007B
ONSLOW COUNTY
STATION: 42+15.92 -NBL RAMP-

STATE OF NORTH CAROLINA
DEPARTMENT OF TRANSPORTATION
RALEIGH

STANDARD

POT BEARING DETAILS

NORTH CAROLINA PROFESSIONAL SEAL 025516 ENGINEER EMILY E. MURRAY
8/24/10

REVISIONS						SHEET NO.
NO.	BY:	DATE:	NO.	BY:	DATE:	S-127
1			3			TOTAL SHEETS
2			4			142

ASSEMBLED BY : B.N.BARODAWALA DATE : 4-6-10
CHECKED BY : PEGGY PARISI DATE : 5-18-10

DRAWN BY : RWW 8/99
CHECKED BY : LES 8/99

REV. 7/10/01 LES/RDR
REV. 5/7/03 RWW/JTE
REV. 5/1/06 TLA/GM

23-AUG-2010 15:44
Z:\TIPProjects-U\U4007b\Structures\FinalPlans\Str. #5\U-4007b_sd_BG_05#.dgn
PADKINS

STR. #5

STD. NO. PB1

DEAD LOAD DEFLECTION TABLE FOR GIRDERS

	SPAN A - GIRDERS 1 THRU 5.																				
TWENTIETH POINTS	0	.05	.10	.15	.20	.25	.30	.35	.40	.45	.50	.55	.60	.65	.70	.75	.80	.85	.90	.95	0
DEFLECTION DUE TO WEIGHT OF GIRDER	0.0	0.012	0.024	0.035	0.045	0.053	0.059	0.063	0.065	0.066	0.064	0.060	0.055	0.049	0.041	0.033	0.025	0.018	0.011	0.005	0.0
* DEFLECTION DUE TO WEIGHT OF SLAB	0.0	0.047	0.092	0.133	0.170	0.201	0.224	0.241	0.250	0.251	0.245	0.232	0.213	0.188	0.160	0.130	0.099	0.070	0.042	0.018	0.0
DEFLECTION DUE TO WEIGHT OF BARRIER RAIL	0.0	0.004	0.007	0.010	0.013	0.015	0.017	0.018	0.019	0.019	0.019	0.018	0.016	0.015	0.013	0.010	0.008	0.005	0.003	0.001	0.0
TOTAL DEAD LOAD DEFLECTION	0.0	0.063	0.123	0.178	0.227	0.268	0.300	0.322	0.334	0.336	0.327	0.310	0.284	0.252	0.214	0.173	0.132	0.093	0.056	0.024	0.0
REQUIRED CAMBER	0	3/4"	1 1/2"	2 1/8"	2 3/4"	3 1/4"	3 5/8"	3 7/8"	4"	4"	3 7/8"	3 3/4"	3 7/16"	3"	2 9/16"	2 1/16"	1 9/16"	1 1/8"	11/16"	5/16"	0

* INCLUDES SLAB, BUILDUPS & STAY-IN-PLACE FORMS.
ALL VALUES ARE SHOWN IN FEET (DECIMAL FORM), EXCEPT "REQUIRED CAMBER", WHICH IS GIVEN IN INCHES (FRACTION FORM).

DEAD LOAD DEFLECTION TABLE FOR GIRDERS

	SPAN B - GIRDERS 1 THRU 5																				
TWENTIETH POINTS	0	.05	.10	.15	.20	.25	.30	.35	.40	.45	.50	.55	.60	.65	.70	.75	.80	.85	.90	.95	0
DEFLECTION DUE TO WEIGHT OF GIRDER	0.0	0.000	0.000	0.000	0.000	0.000	0.000	0.000	0.000	0.000	0.001	0.002	0.002	0.003	0.003	0.003	0.003	0.003	0.002	0.001	0.0
* DEFLECTION DUE TO WEIGHT OF SLAB	0.0	0.000	0.000	0.000	0.000	0.000	0.000	0.000	0.000	0.000	0.000	0.000	0.000	0.002	0.004	0.005	0.005	0.005	0.004	0.002	0.0
DEFLECTION DUE TO WEIGHT OF BARRIER RAIL	0.0	0.000	0.000	0.000	0.000	0.000	0.000	0.000	0.000	0.000	0.000	0.000	0.000	0.000	0.001	0.001	0.001	0.000	0.000	0.000	0.0
TOTAL DEAD LOAD DEFLECTION	0.0	0.000	0.000	0.000	0.000	0.000	0.000	0.000	0.000	0.000	0.001	0.002	0.003	0.005	0.008	0.009	0.009	0.008	0.006	0.003	0.0
REQUIRED CAMBER	0	0	0	0	0	0	0	0	0	0	0	0	0	1/16"	1/16"	1/8"	1/8"	1/16"	1/16"	1/16"	0

* INCLUDES SLAB, BUILDUPS & STAY-IN-PLACE FORMS.
ALL VALUES ARE SHOWN IN FEET (DECIMAL FORM), EXCEPT "REQUIRED CAMBER", WHICH IS GIVEN IN INCHES (FRACTION FORM).

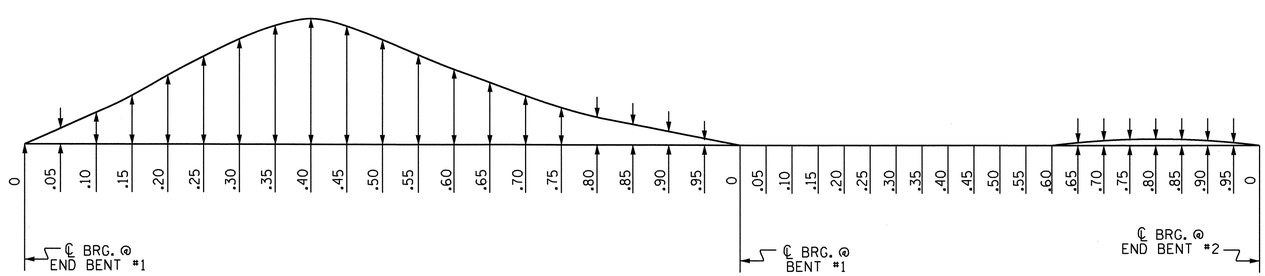

SCHEMATIC CAMBER ORDINATES

SLOPE FOR THE ZERO CAMBER BASE LINE VARIES.

PROJECT NO. U-4007B
ONSLOW COUNTY
STATION: 42+15.92 -NBL RAMP-

STATE OF NORTH CAROLINA
DEPARTMENT OF TRANSPORTATION
RALEIGH

SUPERSTRUCTURE

DEAD LOAD DEFLECTIONS

NORTH CAROLINA PROFESSIONAL SEAL 025516 ENGINEER EMILY E. MURRAY
8/24/10

REVISIONS						SHEET NO.
NO.	BY:	DATE:	NO.	BY:	DATE:	S-128
1			3			TOTAL SHEETS
2			4			142

DRAWN BY : B.N.BARODAWALA DATE : 1-4-10
CHECKED BY : PEGGY PARISI DATE : 5-18-10

23-AUG-2010 14:58
Z:\TIPProjects-U\U4007b\Structures\FinalPlans\Str. #5\U-4007b_sd_DL_05#.dgn
PADKINS

STR. #5

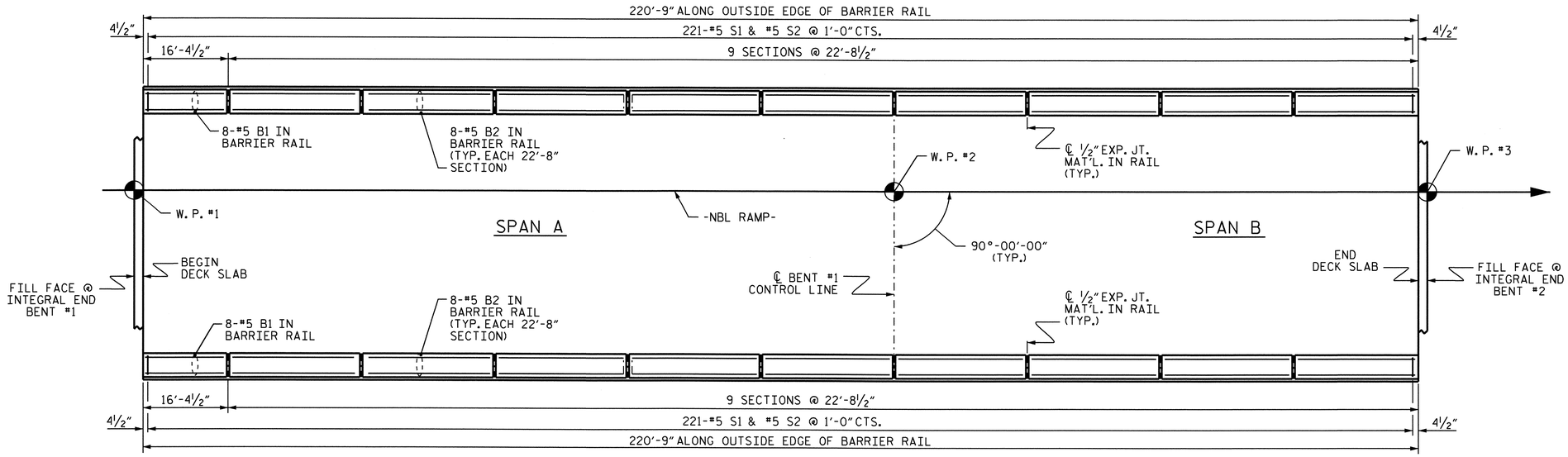

PLAN OF BARRIER RAIL

BAR TYPES

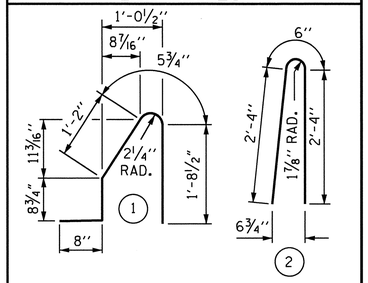

ALL BAR DIMENSIONS ARE OUT TO OUT

BILL OF MATERIAL

FOR CONCRETE BARRIER RAIL ONLY

BAR	NO.	SIZE	TYPE	LENGTH	WEIGHT
* B1	16	#5	STR	16'-0"	267
* B2	144	#5	STR	22'-4"	3354
* S1	442	#5	1	4'-9"	2190
* S2	442	#5	2	5'-2"	2382
* EPOXY COATED REINFORCING STEEL					8193 LBS.
CLASS AA CONCRETE					44.2 CU. YDS.
CONCRETE BARRIER RAIL					441.5 LIN. FT.

NOTES

THE BARRIER RAIL SHALL NOT BE CAST UNTIL ALL SLAB CONCRETE HAS BEEN CAST AND HAS REACHED A MINIMUM COMPRESSIVE STRENGTH OF 3,000 PSI.

ALL REINFORCING STEEL IN BARRIER RAILS SHALL BE EPOXY COATED.

THE #5 S1 AND #5 S2 BARS MAY BE SHIFTED SLIGHTLY IN ORDER TO MAINTAIN A 2" MINIMUM CLEARANCE TO ½" EXPANSION JOINT MATERIAL IN THE BARRIER RAIL.

VERTICAL GROOVED CONTRACTION JOINTS, ½" IN DEPTH, SHALL BE TOOLED IN ALL EXPOSED FACES OF THE BARRIER RAIL AND IN ACCORDANCE WITH ARTICLE 825-10(B) OF THE STANDARD SPECIFICATIONS. THE CONTRACTION JOINT SHALL BE LOCATED AT EACH THIRD POINT BETWEEN BARRIER RAIL EXPANSION JOINTS. ONLY ONE CONTRACTION JOINT IS REQUIRED AT MIDPOINT OF BARRIER RAIL SEGMENTS LESS THAN 20 FEET IN LENGTH AND NO CONTRACTION JOINTS ARE REQUIRED FOR THOSE SEGMENTS LESS THAN 10 FEET IN LENGTH.

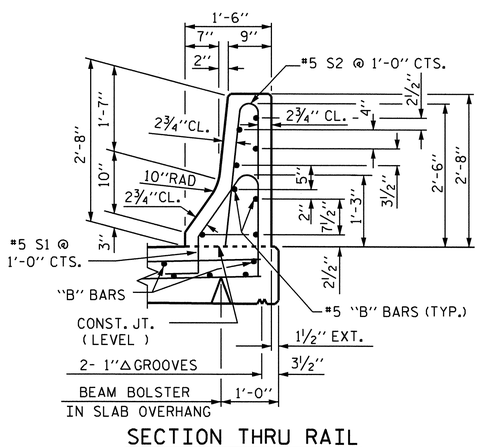

SECTION THRU RAIL

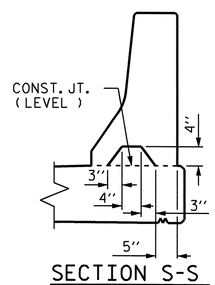

SECTION S-S

AT DAM IN OPEN JOINT
(THIS IS TO BE USED ONLY WHEN SLIP FORM IS USED)

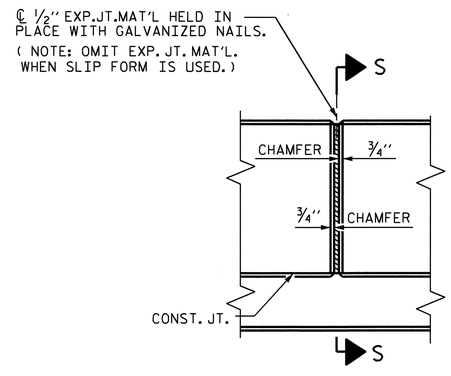

ELEVATION AT EXPANSION JOINTS

BARRIER RAIL DETAILS

PROJECT NO. U-4007B
ONSLOW COUNTY
STATION: 42+15.92 -NBL RAMP-

SHEET 1 OF 2

STATE OF NORTH CAROLINA
DEPARTMENT OF TRANSPORTATION
RALEIGH

STANDARD

CONCRETE BARRIER RAIL

NORTH CAROLINA PROFESSIONAL SEAL 025516 ENGINEER EMILY E. MURRAY
8/29/10

REVISIONS						SHEET NO.
NO.	BY:	DATE:	NO.	BY:	DATE:	S-129
1			3			TOTAL SHEETS
2			4			142

ASSEMBLED BY : B.N. BARODAWALA DATE : 1-12-10
CHECKED BY : PEGGY PARISI DATE : 5-18-10

DRAWN BY : ARB 5/87
CHECKED BY : SJD 9/87

REV. 10/17/00 RWW/LES
REV. 5/7/03R RWW/JTE
REV. 5/1/06 TLA/GM

23-AUG-2010 14:58
Z:\TIPProjects-U\U4007b\Structures\FinalPlans\Str. #5\U-4007b_sd_BR_05".dgn
PADKINS

STR. #5

STD. NO. CBR1

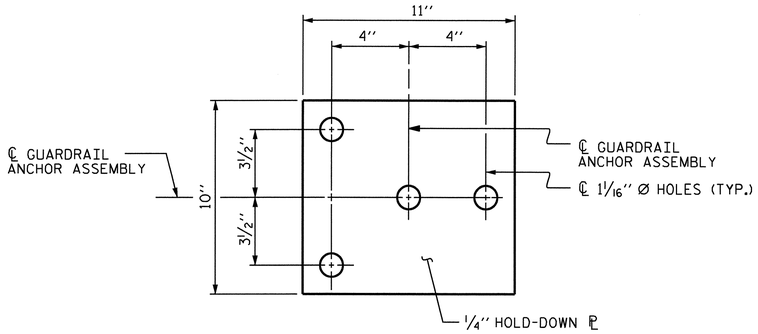

PLAN

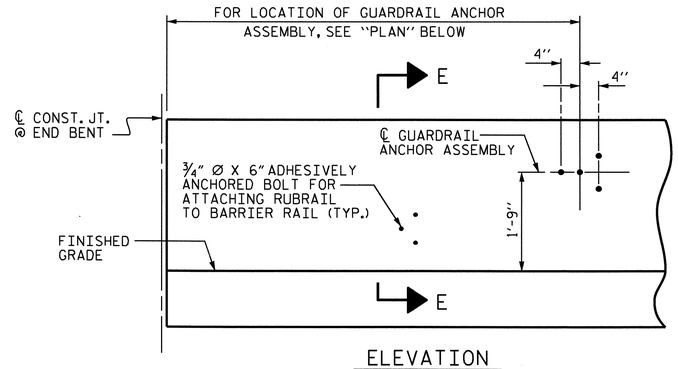

ELEVATION

FOR LOCATION OF RUBRAIL, SEE ROADWAY STD. 862.03

NOTES

THE GUARDRAIL ANCHOR ASSEMBLY SHALL CONSIST OF A 1/4" HOLD DOWN PLATE AND 4 - 7/8" Ø BOLTS WITH NUTS AND WASHERS, RUBRAIL, AND ADHESIVELY ANCHORED BOLTS.

THE HOLD-DOWN PLATE SHALL CONFORM TO AASHTO M270 GRADE 36. AFTER FABRICATION, THE HOLD-DOWN PLATE SHALL BE HOT-DIP GALVANIZED IN ACCORDANCE WITH AASHTO M111.

BOLTS SHALL CONFORM TO THE REQUIREMENTS OF ASTM A307 AND NUTS SHALL CONFORM TO THE REQUIREMENTS OF AASHTO M291. BOLTS, NUTS AND WASHERS SHALL BE GALVANIZED. (AT THE CONTRACTOR'S OPTION, STAINLESS STEEL BOLTS, NUTS AND WASHERS MAY BE USED AS AN ALTERNATE FOR THE 7/8" Ø GALVANIZED BOLTS, NUTS AND WASHERS. THEY SHALL CONFORM TO OR EXCEED THE MECHANICAL REQUIREMENTS OF ASTM A307. THE USE OF THIS ALTERNATE SHALL BE APPROVED BY THE ENGINEER.)

THE GUARDRAIL ANCHOR ASSEMBLY IS REQUIRED AT ALL POINTS WHERE APPROACH GUARDRAIL IS TO BE ATTACHED TO THE END OF BARRIER RAIL. FOR POINTS OF ATTACHMENT, SEE SKETCH.

AFTER INSTALLATION, THE EXPOSED THREAD OF THE BOLT SHALL BE BURRED WITH A SHARP POINTED TOOL.

THE COST OF THE GUARDRAIL ANCHOR ASSEMBLY SHALL BE INCLUDED IN THE UNIT CONTRACT PRICE BID FOR CONCRETE BARRIER RAIL.

THE 1 1/4" Ø HOLES SHALL BE FORMED OR DRILLED WITH A CORE BIT. IMPACT TOOLS WILL NOT BE PERMITTED. ANY CONCRETE DAMAGED BY THIS WORK SHALL BE REPAIRED TO THE SATISFACTION OF THE ENGINEER.

THE C6 X 8.2 RUBRAIL IS TO BE ADHESIVELY ANCHORED TO THE RAIL USING THREE 3/4" Ø X 6" BOLTS WITH WASHERS. LEVEL ONE FIELD TESTING IS REQUIRED, AND THE YIELD LOAD OF THE 3/4" Ø BOLT IS 12 KIPS. FOR ADHESIVELY ANCHORED ANCHOR BOLTS OR DOWELS, SEE SPECIAL PROVISIONS. SEE ROADWAY STANDARD 862.03 FOR DETAILS AND LOCATION OF THE RUBRAIL.

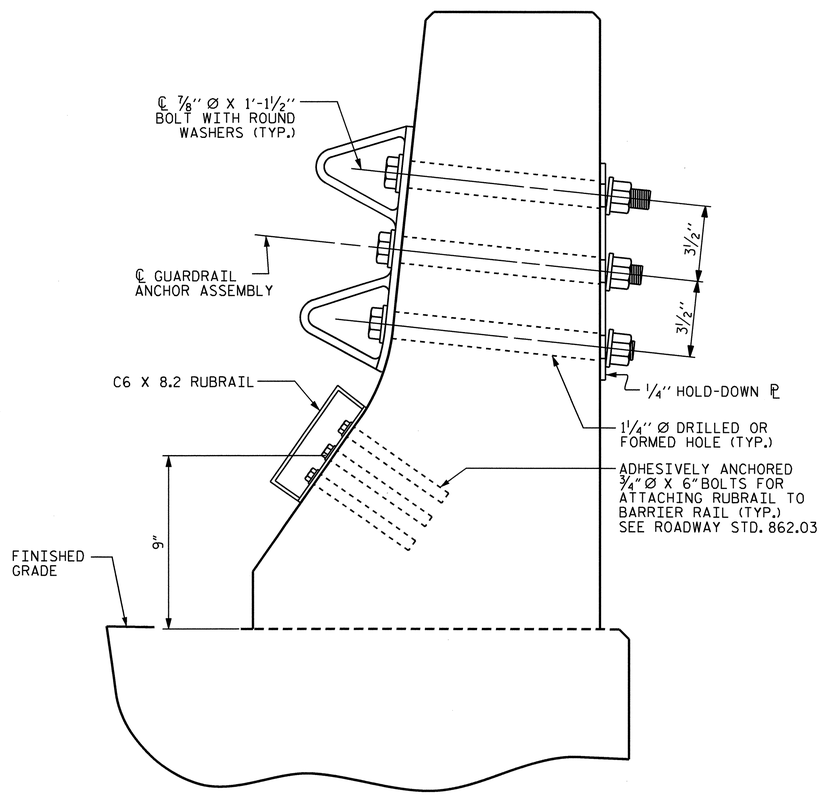

SECTION E-E

GUARDRAIL ANCHOR ASSEMBLY DETAILS

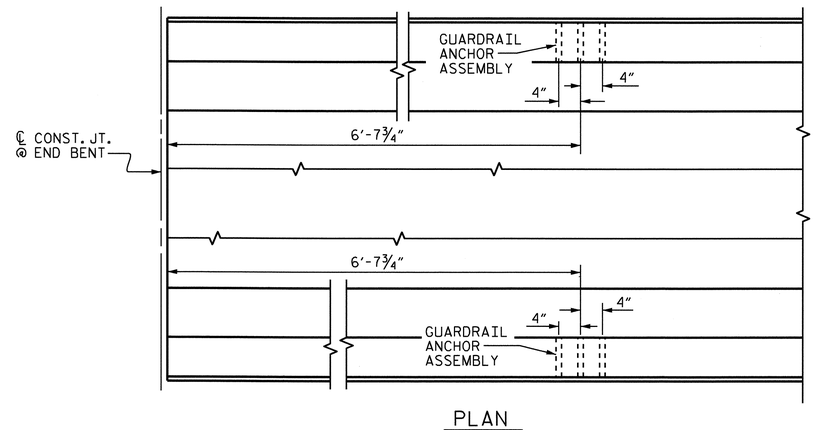

PLAN

LOCATION OF ANCHORS FOR GUARDRAIL

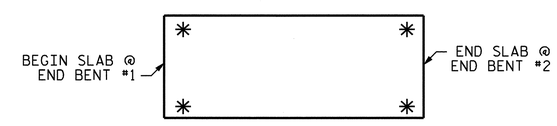

SKETCH SHOWING POINTS OF ATTACHMENTS

✳ DENOTES GUARDRAIL ANCHOR ASSEMBLY

PROJECT NO. U-4007B

ONSLOW COUNTY

STATION: 42+15.92 -NBL RAMP-

SHEET 2 OF 2

STATE OF NORTH CAROLINA
DEPARTMENT OF TRANSPORTATION
RALEIGH

STANDARD

GUARDRAIL ANCHORAGE FOR BARRIER RAIL

NORTH CAROLINA PROFESSIONAL SEAL 025516 ENGINEER EMILY E. MURRAY

8/24/10

REVISIONS						SHEET NO.
NO.	BY:	DATE:	NO.	BY:	DATE:	S-130
1			3			TOTAL SHEETS
2			4			142

STR. #5

STD. NO. GRA2

ASSEMBLED BY : B.N. BARODAWALA DATE : 1-4-10
CHECKED BY : PEGGY PARISI DATE : 5-18-10

DRAWN BY : TLA 5/06
CHECKED BY : GM 5/06

ADDED 5/1/06R KMM/GM

23-AUG-2010 14:58
Z:\TIPProjects-U\U4007b\Structures\FinalPlans\Str. #5\U-4007b_sd_BR_05*.dgn
PADKINS

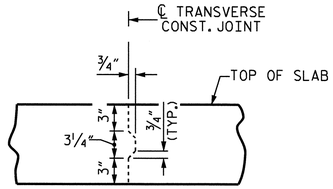

TRANSVERSE CONSTRUCTION JOINT DETAIL

NOTE: REINFORCING STEEL IN SLAB NOT SHOWN. LONGITUDINAL REINFORCING STEEL SHALL BE CONTINUOUS THROUGH JOINT.

SUPERSTRUCTURE REINFORCING STEEL LENGTHS ARE BASED ON THE FOLLOWING MINIMUM SPLICE LENGTHS					
BAR SIZE	SUPERSTRUCTURE EXCEPT APPROACH SLABS, PARAPET, AND BARRIER RAIL		APPROACH SLABS		PARAPET AND BARRIER RAIL
	EPOXY COATED	UNCOATED	EPOXY COATED	UNCOATED	
#4	2'-0"	1'-9"	2'-0"	1'-9"	2'-9"
#5	2'-6"	2'-2"	2'-6"	2'-2"	3'-5"
#6	3'-0"	2'-7"	3'-10"	2'-7"	4'-4"
#7	5'-3"	3'-6"			
#8	6'-10"	4'-7"			

GROOVING BRIDGE FLOORS		
APPROACH SLABS	1940	SQ.FT.
BRIDGE DECK	9478	SQ.FT.
TOTAL	11418	SQ.FT.

BILL OF MATERIAL

BAR	NO.	SIZE	TYPE	LENGTH	WEIGHT
* A1	482	#5	STR	48'-11"	24592
A2	482	#5	STR	48'-11"	24592
* B1	64	#6	STR	27'-0"	2595
* B2	35	#6	STR	32'-0"	1682
* B3	70	#4	STR	29'-6"	1379
* B4	128	#6	STR	48'-0"	9228
* B5	105	#6	STR	47'-2"	7439
* B6	64	#6	STR	18'-9"	1802
B7	264	#5	STR	57'-0"	15695
K1	20	#5	STR	54'-11"	1146
K2	16	#5	STR	2'-8"	45
* S1	80	#4	1	11'-8"	623
* S2	80	#4	1	9'-9"	521
U1	84	#4	2	11'-8"	655
U2	12	#4	2	13'-8"	110
V1	10	#4	STR	4'-6"	30
REINFORCING STEEL = 42273 LBS					
* EPOXY COATED REINF. STEEL = 49861 LBS					

BAR TYPES

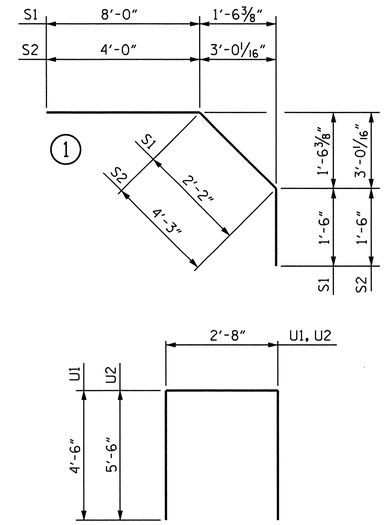

ALL BAR DIMENSIONS ARE OUT TO OUT

	CLASS AA CONCRETE	REINFORCING STEEL	EPOXY COATED REINFORCING STEEL
	(CU.YDS.)	(LBS.)	(LBS.)
		42273	49861
POUR #1	226.4		
POUR #2	120.6		
POUR #3	82.1		
** TOTALS	429.1	42273	49861

** QUANTITIES DO NOT INCLUDE BARRIER RAIL. POUR #3 INCLUDES UPPER POUR OF WINGS AND INTEGRAL END BENT.

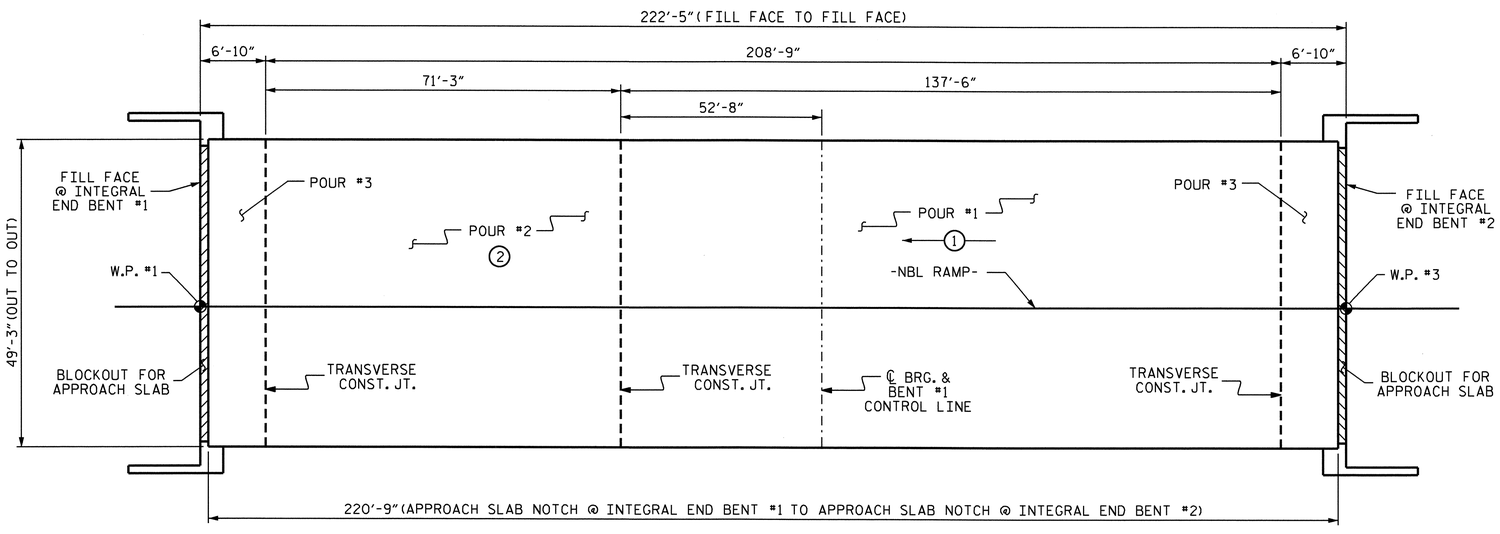

LAYOUT FOR COMPUTING AREA OF REINFORCED CONCRETE DECK SLAB (SQ. FT. = 10,954)

PROJECT NO. U-4007B
ONSLOW COUNTY
STATION: 42+15.92 -NBL RAMP-

STATE OF NORTH CAROLINA
DEPARTMENT OF TRANSPORTATION
RALEIGH

STANDARD

SUPERSTRUCTURE BILL OF MATERIAL

NORTH CAROLINA PROFESSIONAL SEAL 025516 ENGINEER EMILY E. MURRAY
8/24/10

REVISIONS						SHEET NO.
NO.	BY:	DATE:	NO.	BY:	DATE:	S-131
1			3			TOTAL SHEETS
2			4			142

ASSEMBLED BY : B.N.BARODAWALA	DATE : 1-12-10		
CHECKED BY : PEGGY PERISI	DATE : 6-3-10		
DRAWN BY : JMB 5/87	REV. 6/1/94	EEM/GRP	
CHECKED BY : SJD 9/87	REV. 8/16/99	RWW/LES	
	REV. 5/1/06	TLA/GM	

23-AUG-2010 14:58
Z:\TIPProjects-U\U4007b\Structures\FinalPlans\Str. #5\U-4007b_sd_BM_05*.dgn
PADKINS

STR. #5 STD. NO. BOM1

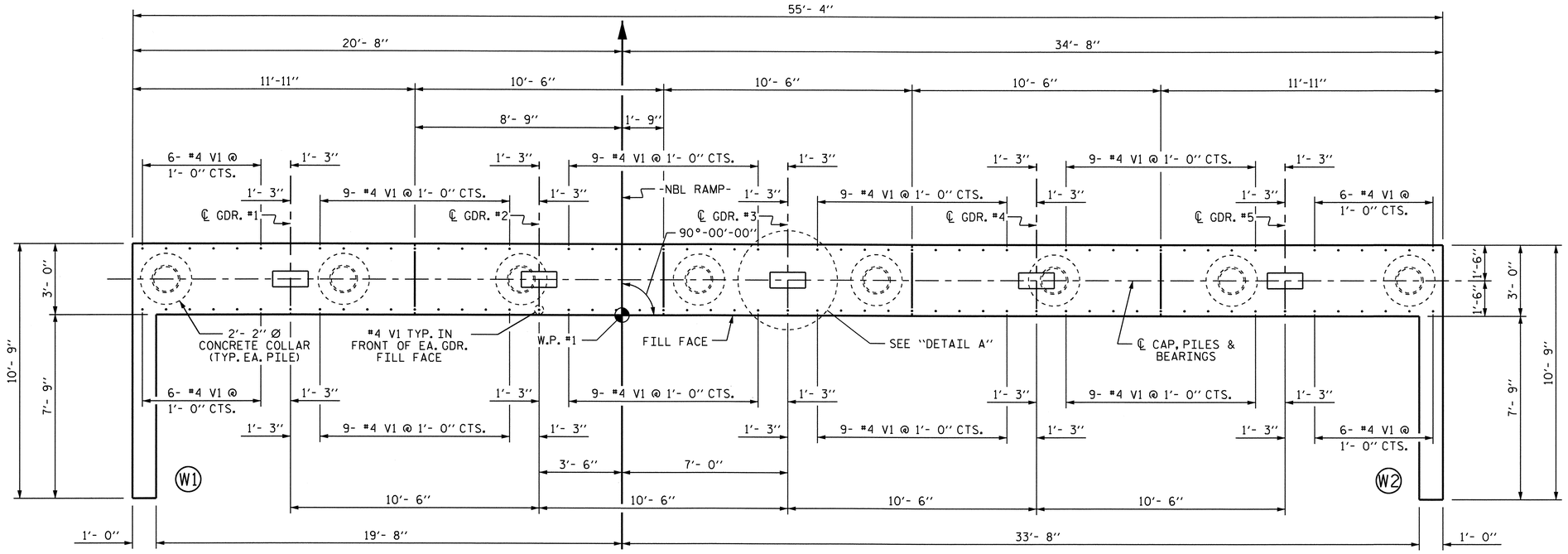

PLAN

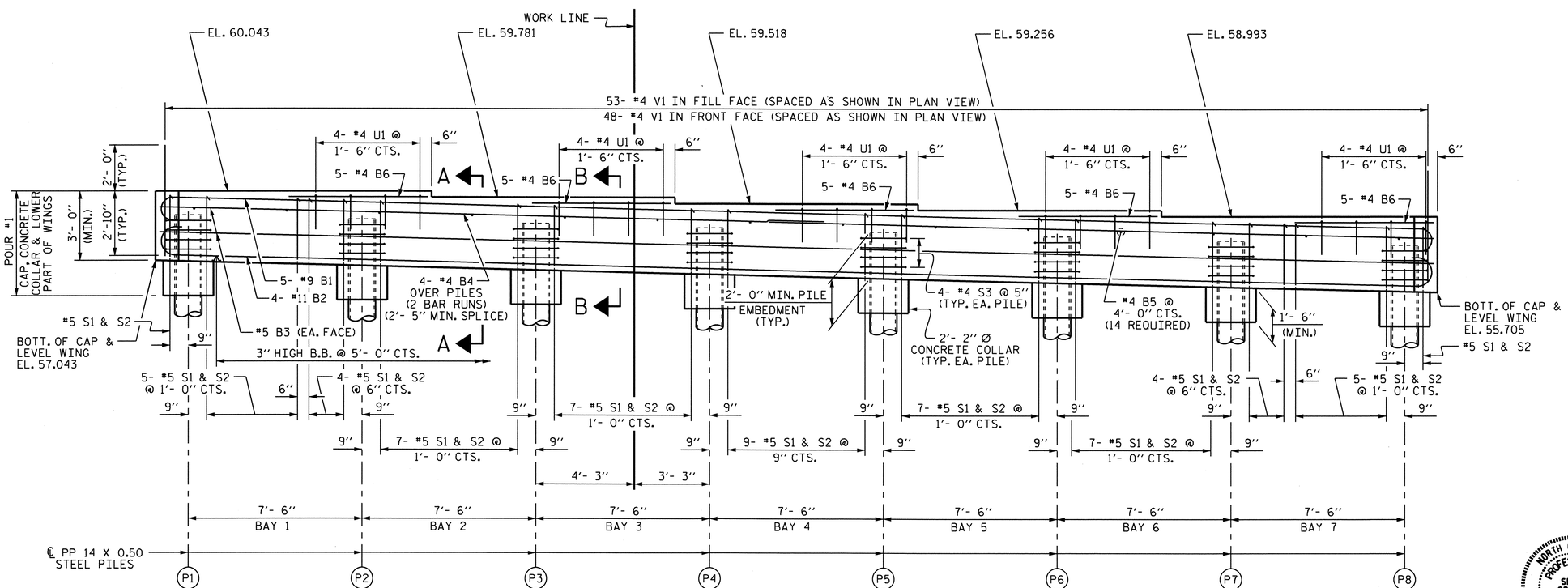

ELEVATION

(FOR WING REINFORCING STEEL AND DETAILS, SEE SHEET 2 OF 3)

NOTES

STIRRUPS IN CAP MAY BE SHIFTED AS NECESSARY TO CLEAR #4 V1 BARS.

THE CONTRACTOR SHALL PROVIDE FOR INSTALLATION OF THE 4" DIAMETER DRAIN PIPE THROUGH THE WING WALL AS REQUIRED FOR REINFORCED BRIDGE APPROACH FILLS. SEE THE ROADWAY PLANS. REINFORCING STEEL IN THE WING WALL MAY BE SHIFTED AS NECESSARY TO CLEAR THE DRAIN PIPE.

THE TOP SURFACE OF THE END BENT CAP AND WINGS, EXCLUDING THE OUTSIDE 4" AND THE BEARING AREA, SHALL BE RAKED TO A DEPTH OF 1/4".

THE CONTRACTOR'S ATTENTION IS CALLED TO THE FACT THAT THE UPPER PART OF INTEGRAL END BENT AND WINGS ARE TO BE POURED WITH THE SUPERSTRUCTURE.

SEE SUPERSTRUCTURE SHEET FOR UPPER PART OF INTEGRAL END BENT DETAIL.

PIPE PILES SHALL BE IN ACCORDANCE WITH SECTION 1084 OF THE STANDARD SPECIFICATIONS.

REMOVE AND REPLACE OR REPAIR TO THE SATISFACTION OF THE ENGINEER PILES THAT ARE DAMAGED, DEFORMED OR COLLAPSED DURING INSTALLATION OR DRIVING.

PILE SPLICES SHALL BE IN ACCORDANCE WITH THE STANDARD SPECIFICATIONS AND AWS D1.1.

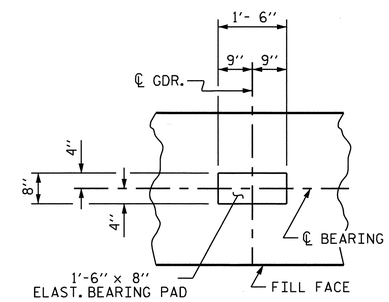

DETAIL A

(TYP. EACH GDR.)

TOP OF PILE ELEVATION			
P1	59.023	P5	58.297
P2	58.841	P6	58.116
P3	58.660	P7	57.935
P4	58.479	P8	57.753

PROJECT NO. U-4007B

ONSLOW COUNTY

STATION: 42+15.92 -NBL RAMP-

SHEET 1 OF 3

STATE OF NORTH CAROLINA
DEPARTMENT OF TRANSPORTATION
RALEIGH

SUBSTRUCTURE

INTEGRAL END BENT #1

NORTH CAROLINA PROFESSIONAL SEAL 025516 ENGINEER EMILY E. McMURRAY 8/24/10

REVISIONS							SHEET NO.
NO.	BY:	DATE:	NO.	BY:	DATE:		S-132
1			3				TOTAL SHEETS
2			4				142

DRAWN BY : D. A. GLADDEN DATE : 3-4-10
CHECKED BY : B. N. BARODAWALA DATE : 3-22-10

23-AUG-2010 15:02
Z:\TIPProjects-U\U4007b\Structures\FinalPlans\Str. #5\U-4007B_sd_str5eb.dgn
PADKINS

STR. #5

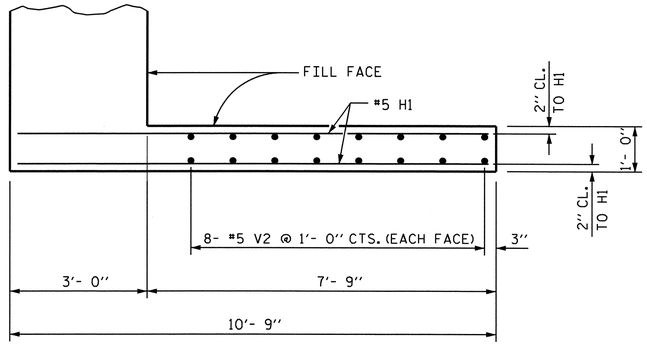

PLAN OF LEFT WING (W1)

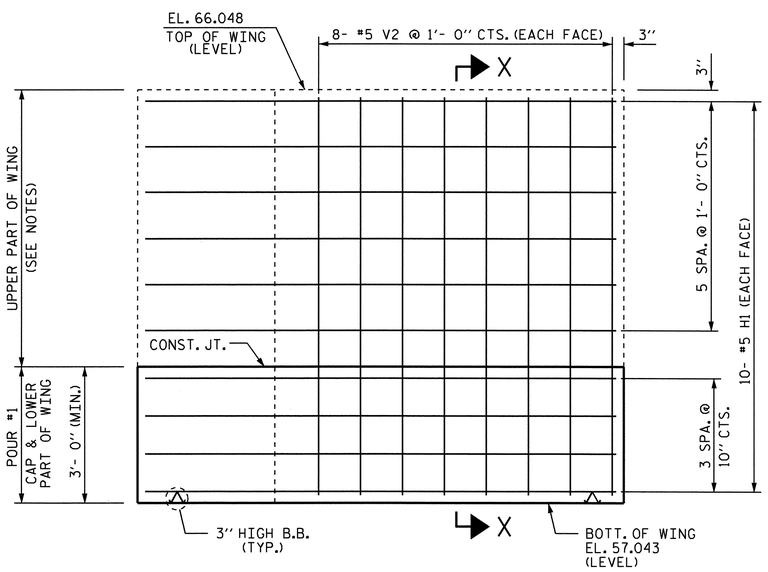

ELEVATION OF LEFT WING (W1)

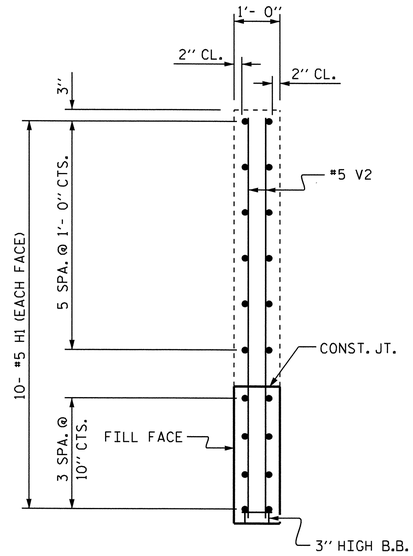

SECTION X-X

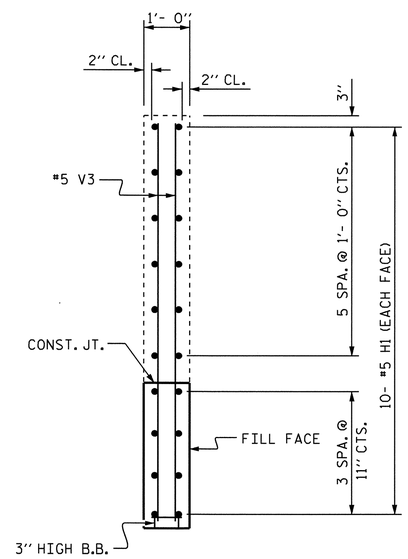

SECTION Y-Y

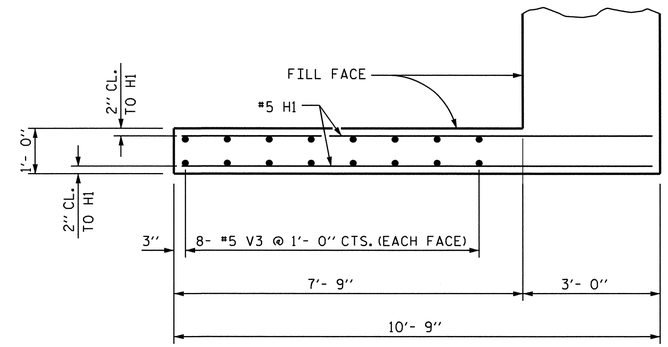

PLAN OF RIGHT WING (W2)

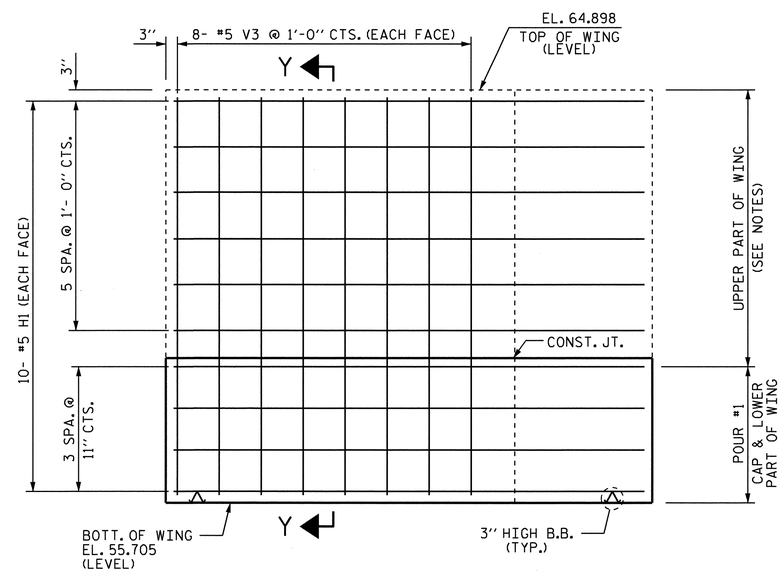

ELEVATION OF RIGHT WING (W2)

PROJECT NO. U-4007B

ONSLOW COUNTY

STATION: 42+15.92 -NBL RAMP-

SHEET 2 OF 3

STATE OF NORTH CAROLINA
DEPARTMENT OF TRANSPORTATION
RALEIGH

SUBSTRUCTURE

INTEGRAL
END BENT #1

NORTH CAROLINA PROFESSIONAL SEAL 025516 ENGINEER EMILY E. MURRAY
8/24/10

REVISIONS								SHEET NO.
NO.	BY:	DATE:	NO.	BY:	DATE:			S-133
1			3					TOTAL SHEETS
2			4					142

DRAWN BY : D. A. GLADDEN DATE : 3-4-10
CHECKED BY : B. N. BARODAWALA DATE : 3-22-10

23-AUG-2010 15:01
Z:\TIPProjects-U\U4007b\Structures\FinalPlans\Str. #5\U-4007B_sd_str5eb.dgn
PADKINS

STR. #5

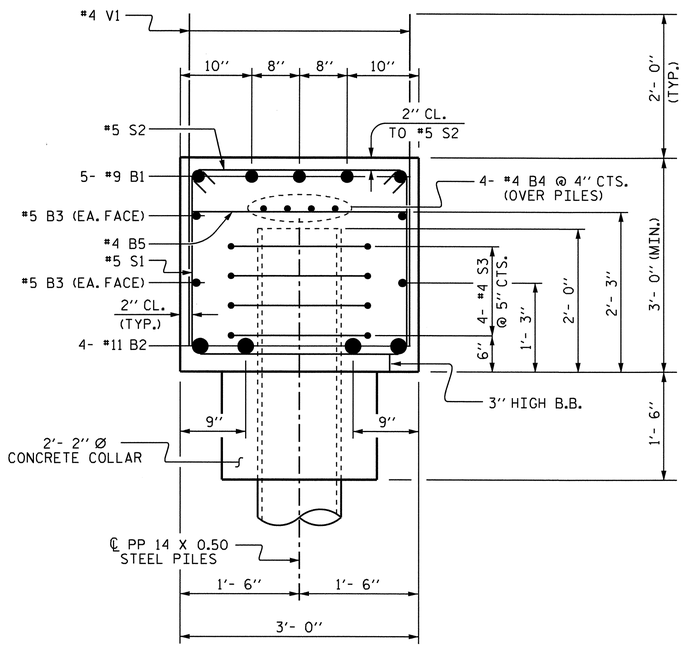

SECTION A-A

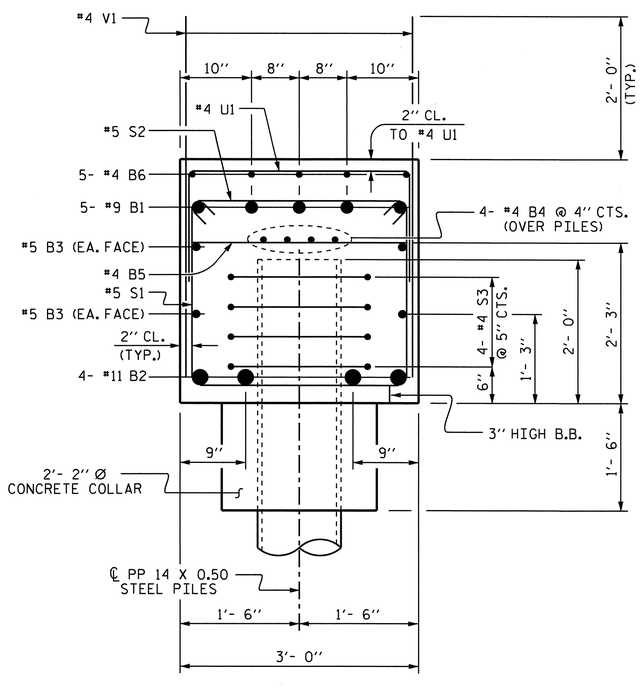

SECTION B-B

BAR TYPES

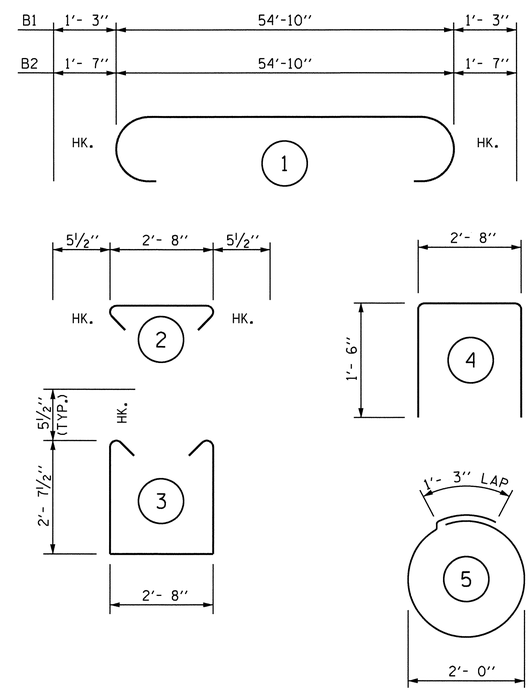

ALL BAR DIMENSIONS ARE OUT TO OUT.

BILL OF MATERIAL

BAR	NO.	SIZE	TYPE	LENGTH	WEIGHT
B1	5	#9	1	57'- 4''	975
B2	4	#11	1	58'- 0''	1233
B3	4	#5	STR	55'- 0''	229
B4	8	#4	STR	28'- 9''	154
B5	14	#4	STR	2'- 8''	25
B6	25	#4	STR	5'- 0''	84
H1	40	#5	STR	10'- 5''	435
S1	57	#5	3	8'-10''	525
S2	57	#5	2	3'- 7''	213
S3	32	#4	5	7'- 7''	162
U1	20	#4	4	5'- 8''	76
V1	101	#4	STR	4'-10''	326
V2	16	#5	STR	8'- 8''	145
V3	16	#5	STR	8'-10''	147

REINFORCING STEEL 4729 LBS

CLASS A CONCRETE BREAKDOWN

POUR #1 (CAP, CONCRETE COLLAR & LOWER PART OF WINGS) = 22.7 C.Y.

PP 14 X 0.50 STEEL PILES

NO. 8 440 LIN. FT.

STEEL PILE POINTS NO. 8

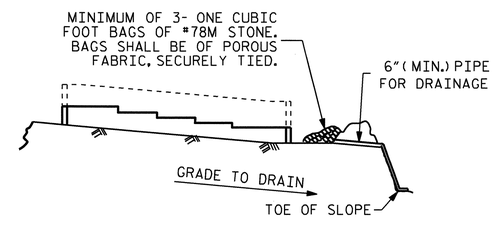

BAGGED STONE AND PIPE SHALL BE PLACED IMMEDIATELY AFTER COMPLETION OF END BENT EXCAVATION. PIPE MAY BE EITHER CONCRETE, CORRUGATED STEEL, CORRUGATED ALUMINUM ALLOY, OR CORRUGATED PLASTIC. PERFORATED PIPE WILL NOT BE ALLOWED.

BAGGED STONE SHALL REMAIN IN PLACE UNTIL THE ENGINEER DIRECTS THAT IT BE REMOVED. THE CONTRACTOR SHALL REMOVE AND DISPOSE OF SILT ACCUMULATIONS AT BAGGED STONE WHEN SO DIRECTED BY THE ENGINEER. BAGS SHALL BE REMOVED AND REPLACED WHENEVER THE ENGINEER DETERMINES THAT THEY HAVE DETERIORATED AND LOST THEIR EFFECTIVENESS.

NO SEPARATE PAYMENT WILL BE MADE FOR THIS WORK AND THE ENTIRE COST OF THIS WORK SHALL BE INCLUDED IN THE UNIT CONTRACT PRICE BID FOR THE SEVERAL PAY ITEMS.

TEMPORARY DRAINAGE AT END BENT

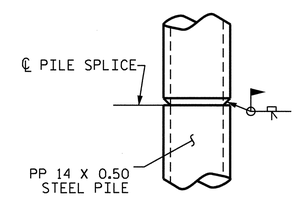

PIPE PILE SPLICE DETAIL

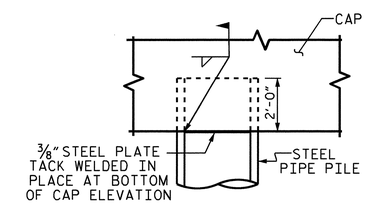

PIPE PILE IN CAP DETAIL

THE CONTRACTOR MAY PROPOSE AN ALTERNATE METHOD FOR PLUGGING THE STEEL PIPE PILE, SUBJECT TO APPROVAL BY THE ENGINEER.

PROJECT NO. U-4007B

ONSLOW COUNTY

STATION: 42+15.92 -NBL RAMP-

SHEET 3 OF 3

STATE OF NORTH CAROLINA
DEPARTMENT OF TRANSPORTATION
RALEIGH

SUBSTRUCTURE

INTEGRAL END BENT #1

NORTH CAROLINA PROFESSIONAL SEAL 025516 ENGINEER EMILY E. MURRAY
8/24/10

REVISIONS						SHEET NO.
NO.	BY:	DATE:	NO.	BY:	DATE:	S-134
1			3			TOTAL SHEETS
2			4			142

STR. #5

DRAWN BY : D. A. GLADDEN DATE : 3-4-10
CHECKED BY : B. N. BARODAWALA DATE : 3-22-10

23-AUG-2010 15:01
Z:\TIPProjects-U\U4007b\Structures\FinalPlans\Str. #5\U-4007B_sd_str5eb.dgn
FADKINS

NOTES

STIRRUPS IN CAP MAY BE SHIFTED AS NECESSARY TO CLEAR ANCHOR BOLTS.

HOOKS ON "V" BARS MAY BE TURNED AS NECESSARY FOR PLACING REINFORCING STEEL.

PIPE PILES SHALL BE IN ACCORDANCE WITH SECTION 1084 OF THE STANDARD SPECIFICATIONS.

PIPE PILE PLATES SHALL BE IN ACCORDANCE WITH THE SECTION 450 OF THE STANDARD SPECIFICATIONS.

REMOVE AND REPLACE OR REPAIR TO THE SATISFATION OF THE ENGINEER PILES THAT ARE DAMAGED, DEFORMED OR COLLAPSED DURING INSTALLATION OR DRIVING.

PILE SPLICES SHALL BE IN ACCORDANCE WITH THE STANDARD SPECIFICATIONS AND AWS D1.1.

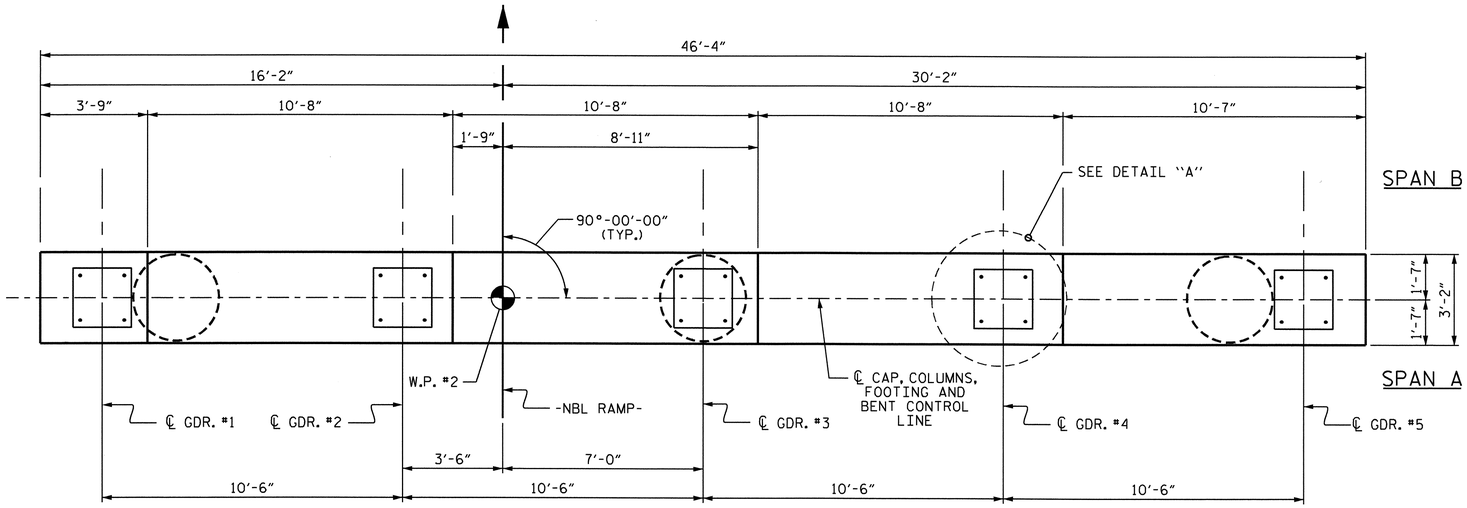

PLAN

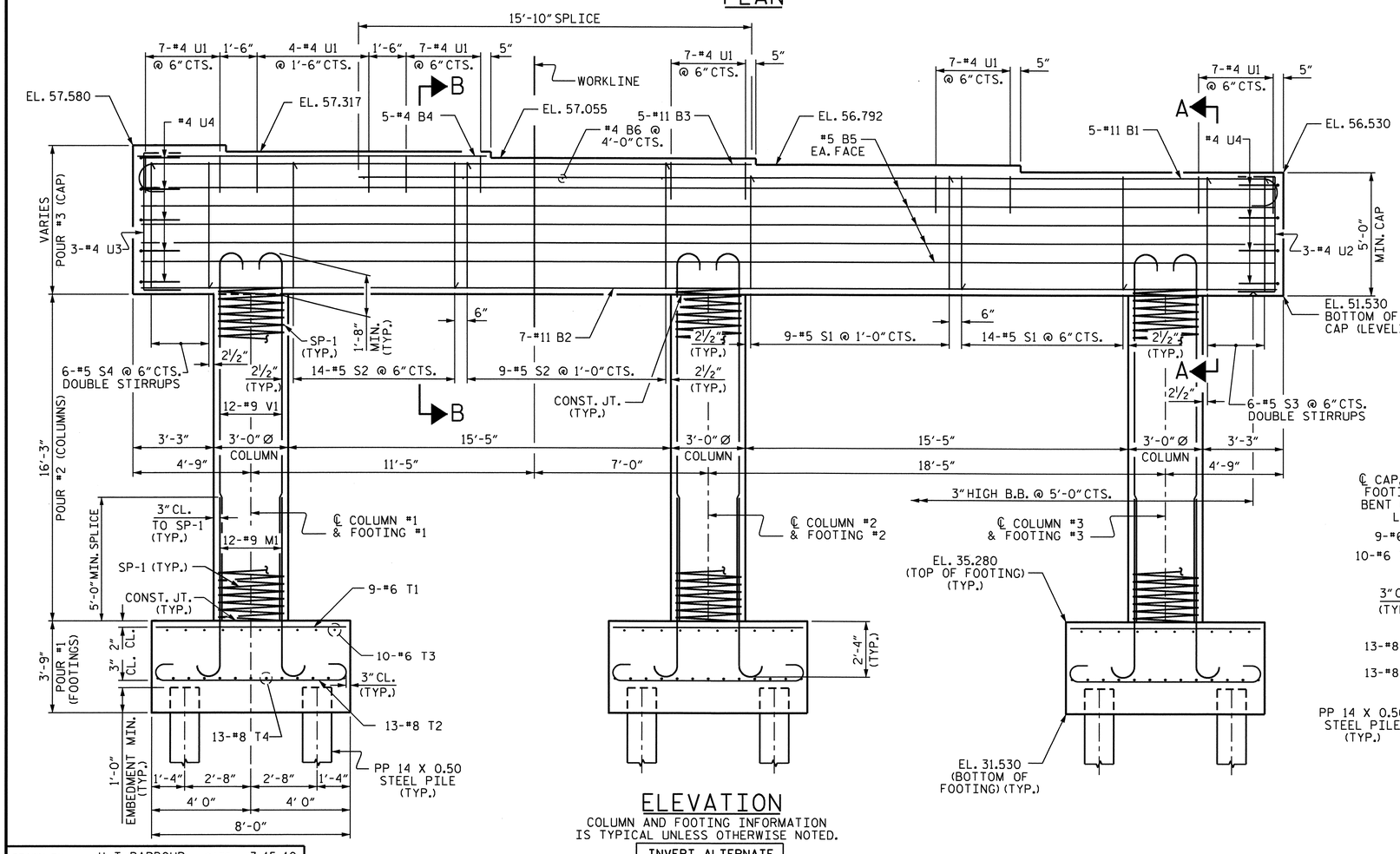

ELEVATION

COLUMN AND FOOTING INFORMATION IS TYPICAL UNLESS OTHERWISE NOTED.

INVERT ALTERNATE STIRRUPS (TYP.)

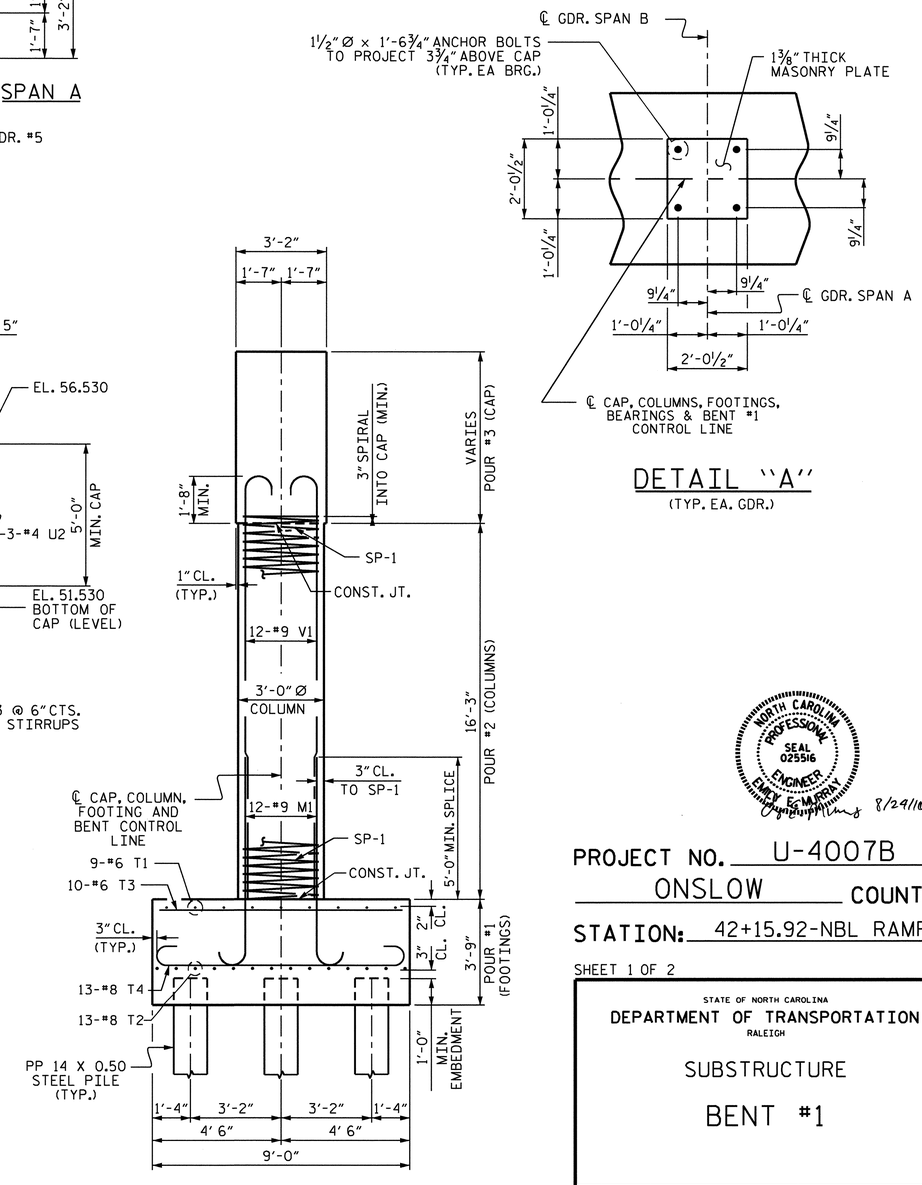

DETAIL "A"

(TYP. EA. GDR.)

END ELEVATION

NORTH CAROLINA PROFESSIONAL SEAL 025516 ENGINEER EMILY E. MURRAY 8/24/10

PROJECT NO. U-4007B

ONSLOW COUNTY

STATION: 42+15.92-NBL RAMP-

SHEET 1 OF 2

STATE OF NORTH CAROLINA
DEPARTMENT OF TRANSPORTATION
RALEIGH

SUBSTRUCTURE

BENT #1

REVISIONS						SHEET NO.
NO.	BY:	DATE:	NO.	BY:	DATE:	S-135
1			3			TOTAL SHEETS
2			4			142

DRAWN BY : H. T. BARBOUR DATE : 3-15-10
CHECKED BY : B. N. BARODAWALA DATE : 3-23-10

23-AUG-2010 14:52
Z:\TIPProjects-U\U4007b\Structures\FinalPlans\Str. #5\u40007b_sd_b1_05.dgn
PADKINS

STR. #5

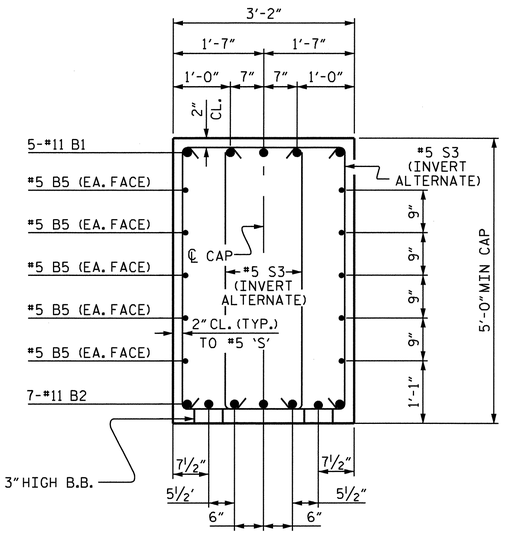

SECTION A-A

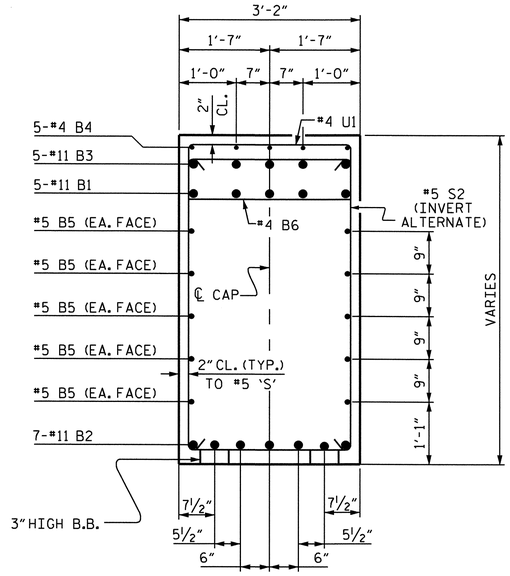

SECTION B-B

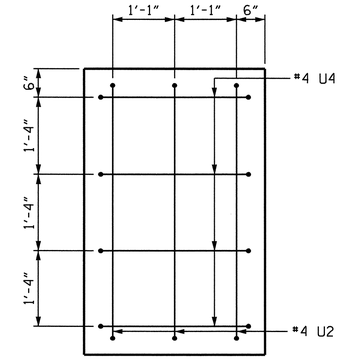

LEFT END VIEW

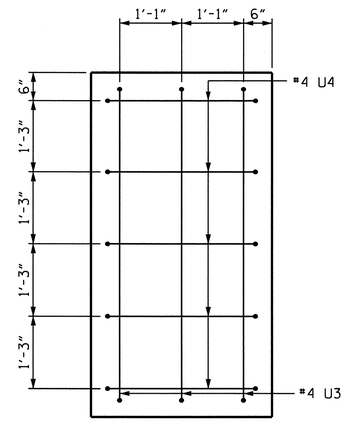

RIGHT END VIEW

BAR TYPES

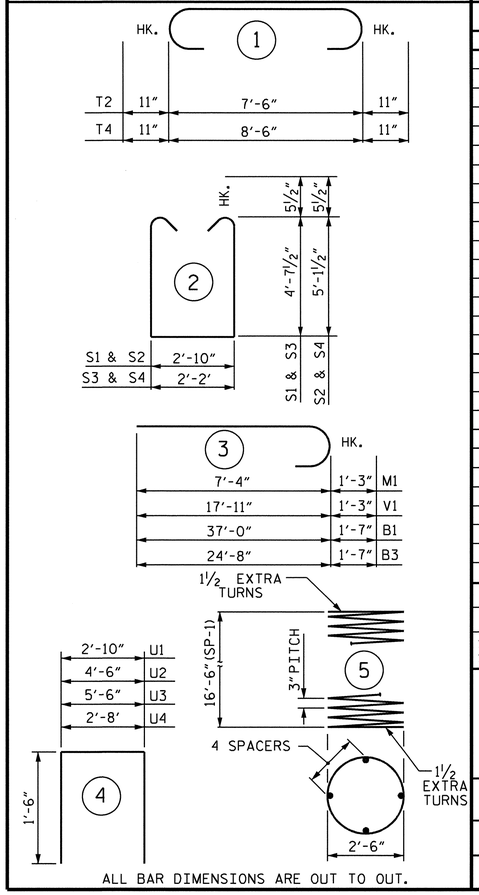

ALL BAR DIMENSIONS ARE OUT TO OUT.

BILL OF MATERIAL

BENT #1

BAR	NO.	SIZE	TYPE	LENGTH	WEIGHT
B1	5	#11	3	38'-7"	1025
B2	7	#11	1	46'-0"	1711
B3	5	#11	3	26'-3"	697
B4	5	#4	STR	14'-1"	47
B5	10	#5	STR	46'-0"	480
B6	4	#4	STR	2'-10"	8
S1	23	#5	2	13'-0"	312
S2	23	#5	2	14'-0"	336
S3	12	#5	2	12'-4"	154
S4	12	#5	2	13'-4"	167
M1	36	#9	3	8'-7"	1051
T1	27	#6	STR	7'-6"	304
T2	39	#8	1	9'-4"	972
T3	30	#6	STR	8'-6"	383
T4	39	#8	1	10'-4"	1076
U1	39	#4	4	5'-10"	152
U2	3	#4	4	7'-6"	15
U3	3	#4	4	8'-6"	17
U4	9	#4	4	5'-8"	34
V1	36	#9	3	19'-2"	2346

REINFORCING STEEL = 11287 LBS.

SP-1	3	*	5	533'-3"	1069 LBS.

SPIRAL COLUMN REINFORCING STEEL 1069 LBS.

CLASS A CONCRETE BREAKDOWN

POUR #1 FOOTINGS	CU. YD.	30.0
POUR #2 COLUMNS	CU. YD.	12.8
POUR #3 CAP	CU. YD.	29.6
TOTAL CLASS A CONCRETE	CU. YD.	72.4

PP 14 x 0.50 STEEL PILES
NO. 18 LIN. FT. 630

PIPE PILE PLATES NO. 18

FOUNDATION EXCAVATION LUMP SUM

* THE SP-1 SPIRAL REINFORCING STEEL SHALL BE W20 OR D-20 COLD DRAWN WIRE OR #4 PLAIN OR DEFORMED BAR.

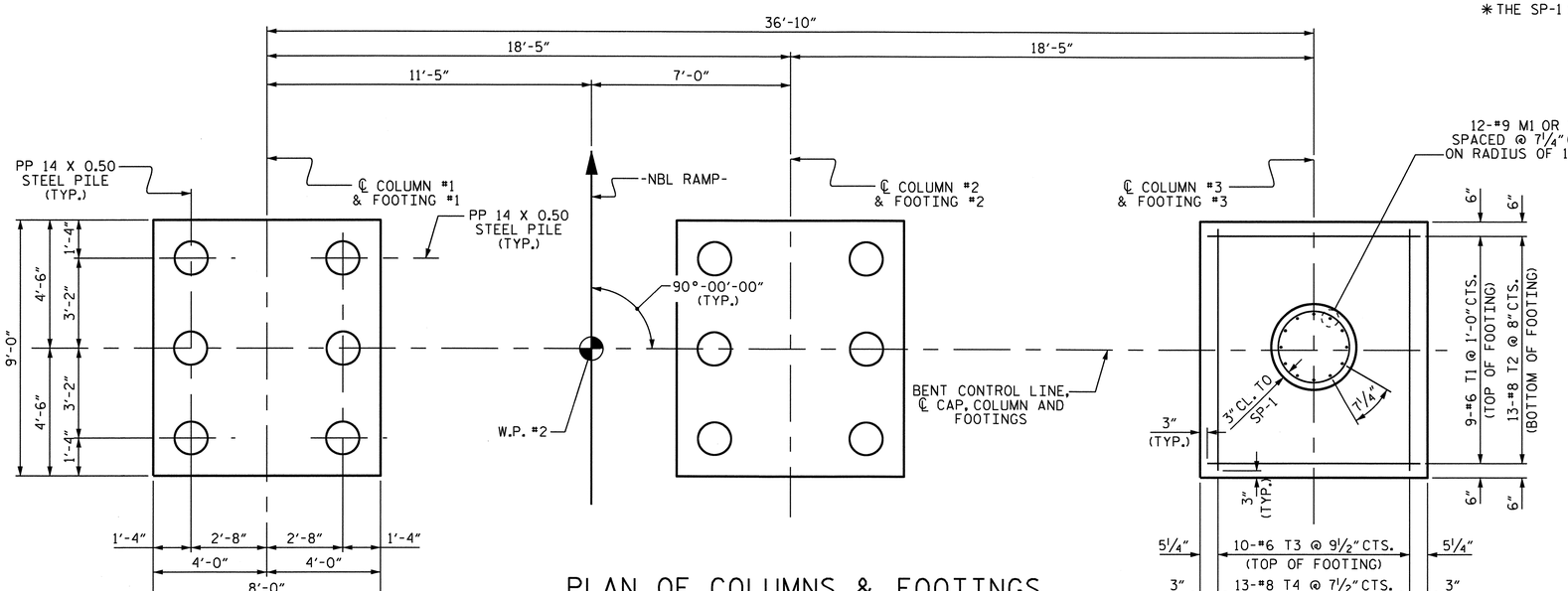

PLAN OF COLUMNS & FOOTINGS

(FOOTING DIMENSIONS, REINFORCING STEEL & PILES ARE TYPICAL EACH FOOTING)

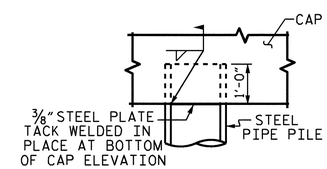

PIPE PILE IN FOOTING DETAIL

THE CONTRACTOR MAY PROPOSE AN ALTERNATE METHOD FOR PLUGGING THE STEEL PIPE PILE, SUBJECT TO APPROVAL BY THE ENGINEER.

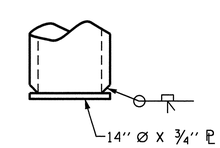

PIPE PILE PLATE DETAIL

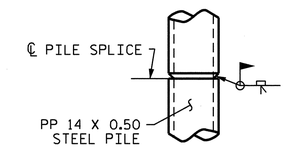

PIPE PILE SPLICE DETAIL

PROJECT NO. U-4007B

ONSLOW COUNTY

STATION: 42+15.92-NBL RAMP-

SHEET 2 OF 2

STATE OF NORTH CAROLINA
DEPARTMENT OF TRANSPORTATION
RALEIGH

SUBSTRUCTURE

BENT #1

NORTH CAROLINA PROFESSIONAL SEAL 025516 ENGINEER EMILY E. MURRAY

8/24/10

REVISIONS						SHEET NO.
NO.	BY:	DATE:	NO.	BY:	DATE:	S-136
1			3			TOTAL SHEETS
2			4			142

DRAWN BY : H. T. BARBOUR DATE : 3-15-10
CHECKED BY : B. N. BARODAWALA DATE : 3-23-10

23-AUG-2010 14:53
Z:\TIPProjects-U\U4007b\Structures\FinalPlans\Str. #5\u40007b_sd_b1_05.dgn
PADKINS

STR. #5

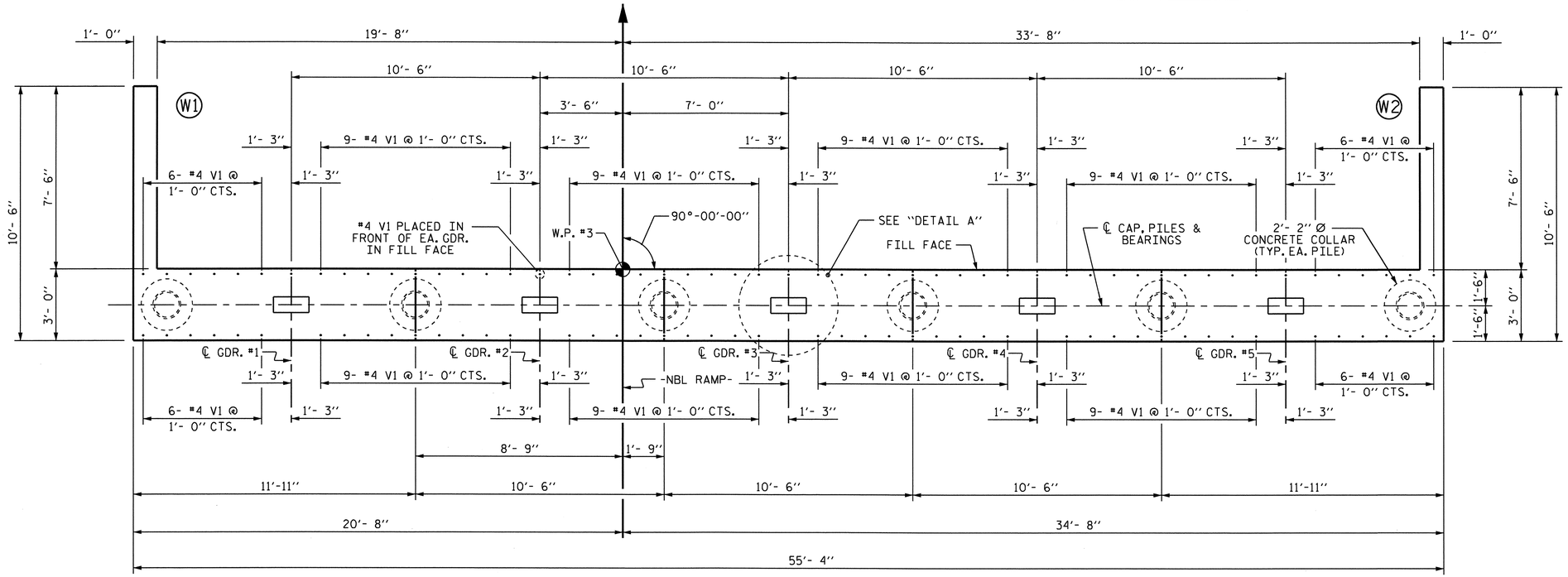

PLAN

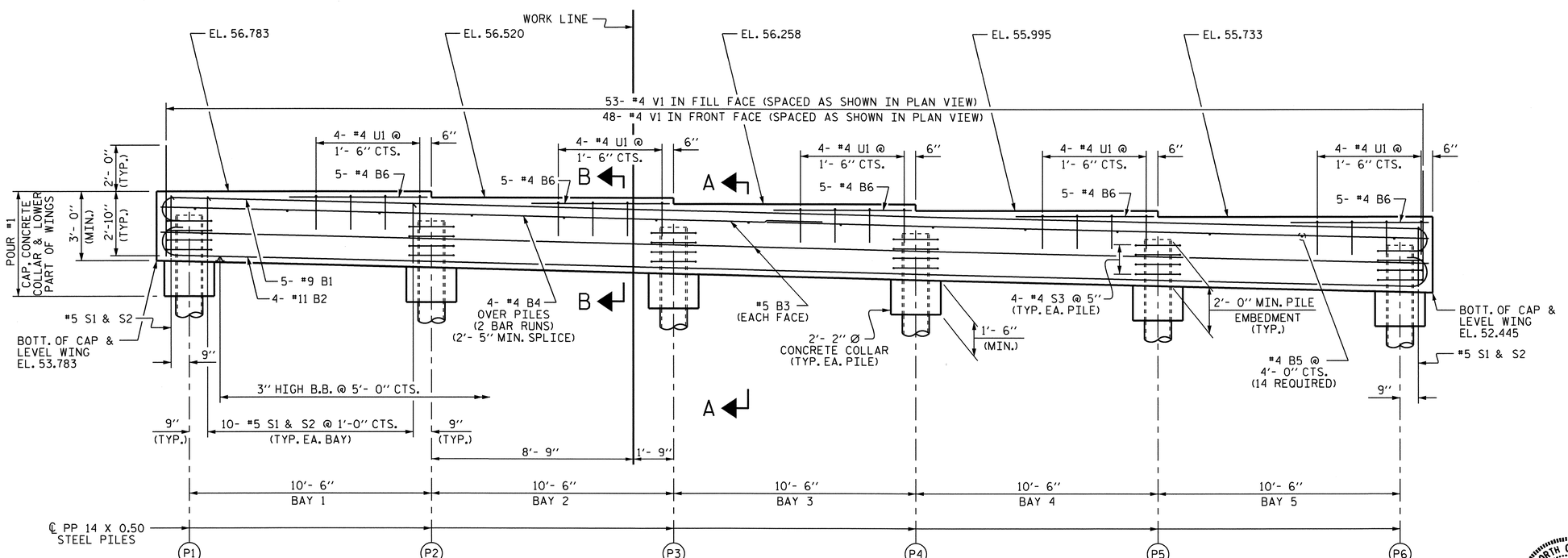

ELEVATION

(FOR WING REINFORCING STEEL AND DETAILS, SEE SHEET 2 OF 3)

NOTES

STIRRUPS IN CAP MAY BE SHIFTED AS NECESSARY TO CLEAR #4 V1 BARS.

THE CONTRACTOR SHALL PROVIDE FOR INSTALLATION OF THE 4"DIAMETER DRAIN PIPE THROUGH THE WING WALL AS REQUIRED FOR REINFORCED BRIDGE APPROACH FILLS, SEE THE ROADWAY PLANS. REINFORCING STEEL IN THE WING WALL MAY BE SHIFTED AS NECESSARY TO CLEAR THE DRAIN PIPE.

THE TOP SURFACE OF THE END BENT CAP AND WINGS, EXCLUDING THE OUTSIDE 4" AND THE BEARING AREA, SHALL BE RAKED TO A DEPTH OF 1/4".

THE CONTRACTOR'S ATTENTION IS CALLED TO THE FACT THAT THE UPPER PART OF INTEGRAL END BENT AND WINGS ARE TO BE POURED WITH THE SUPERSTRUCTURE.

SEE SUPERSTRUCTURE SHEET FOR UPPER PART OF INTEGRAL END BENT DETAIL.

PIPE PILES SHALL BE IN ACCORDANCE WITH SECTION 1084 OF THE STANDARD SPECIFICATIONS.

REMOVE AND REPLACE OR REPAIR TO THE SATISFACTION OF THE ENGINEER PILES THAT ARE DAMAGED, DEFORMED OR COLLAPSED DURING INSTALLATION OR DRIVING.

PILE SPLICES SHALL BE IN ACCORDANCE WITH THE STANDARD SPECIFICATIONS AND AWS D1.1.

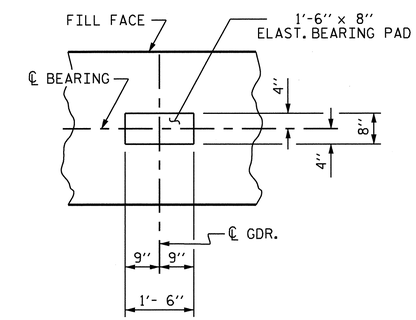

DETAIL A

TOP OF PILE ELEVATION	
P1 55.763	P4 55.001
P2 55.509	P5 54.747
P3 55.255	P6 54.493

PROJECT NO. U-4007B

ONSLOW COUNTY

STATION: 42+15.92 -NBL RAMP-

SHEET 1 OF 3

STATE OF NORTH CAROLINA
DEPARTMENT OF TRANSPORTATION
RALEIGH

SUBSTRUCTURE

INTEGRAL END BENT #2

NORTH CAROLINA PROFESSIONAL SEAL 025516 ENGINEER EMILY E. MURRAY
8/29/10

REVISIONS						SHEET NO.
NO.	BY:	DATE:	NO.	BY:	DATE:	S-137
1			3			TOTAL SHEETS
2			4			142

STR. #5

DRAWN BY : D. A. GLADDEN DATE : 3-4-10
CHECKED BY : B. N. BARODAWALA DATE : 3-22-10

23-AUG-2010 15:01
Z:\TIPProjects-U\U4007b\Structures\FinalPlans\Str. #5\U-4007B_sd_str5eb.dgn
PADKINS

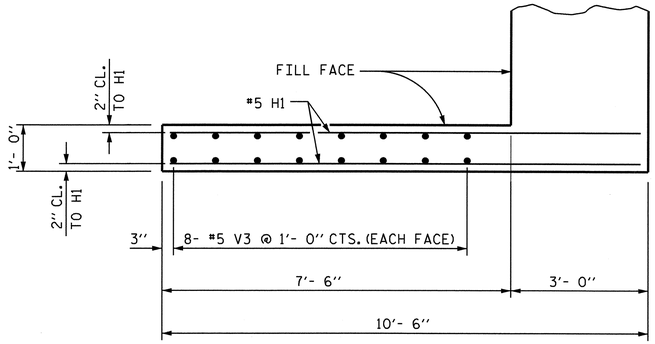

PLAN OF LEFT WING (W1)

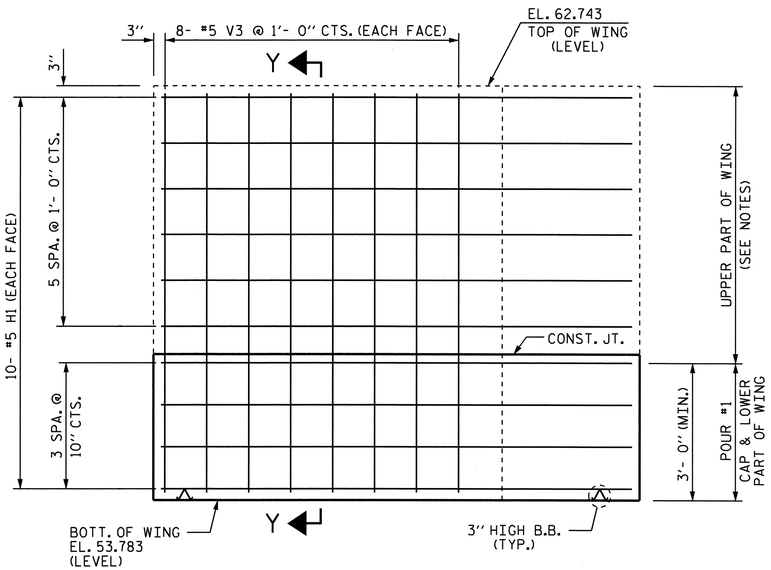

ELEVATION OF LEFT WING (W1)

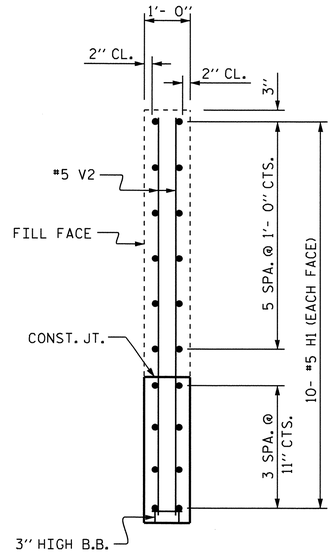

SECTION X-X

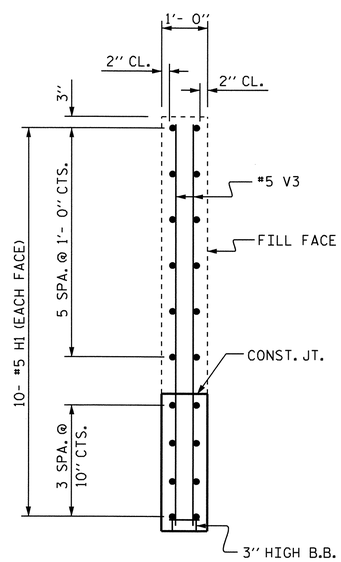

SECTION Y-Y

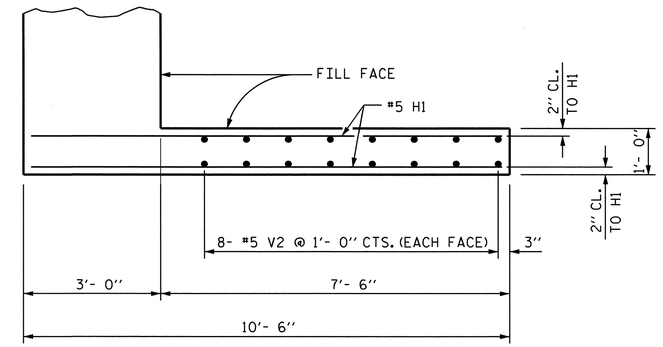

PLAN OF RIGHT WING (W2)

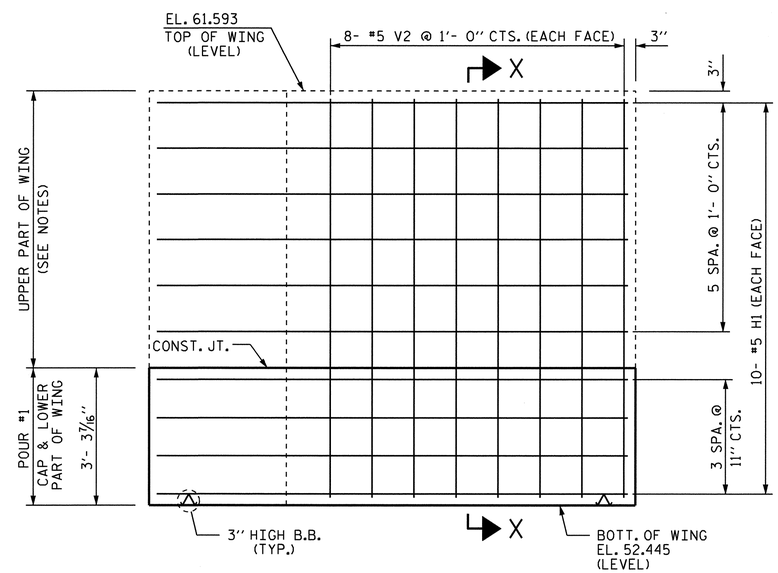

ELEVATION OF RIGHT WING (W2)

PROJECT NO. U-4007B

ONSLOW COUNTY

STATION: 42+15.92 -NBL RAMP-

SHEET 2 OF 3

STATE OF NORTH CAROLINA
DEPARTMENT OF TRANSPORTATION
RALEIGH

SUBSTRUCTURE

INTEGRAL
END BENT #2

NORTH CAROLINA PROFESSIONAL SEAL 025516 ENGINEER EMILY E. MURRAY
8/24/10

REVISIONS							SHEET NO.
NO.	BY:	DATE:	NO.	BY:	DATE:		S-138
1			3				TOTAL SHEETS
2			4				142

DRAWN BY : D. A. GLADDEN DATE : 3-4-10
CHECKED BY : B. N. BARODAWALA DATE : 3-22-10

23-AUG-2010 15:01
Z:\TIPProjects-U\U4007b\Structures\Final Plans\Str. #5\U-4007B_sd_str5eb.dgn
PADKINS

STR. #5

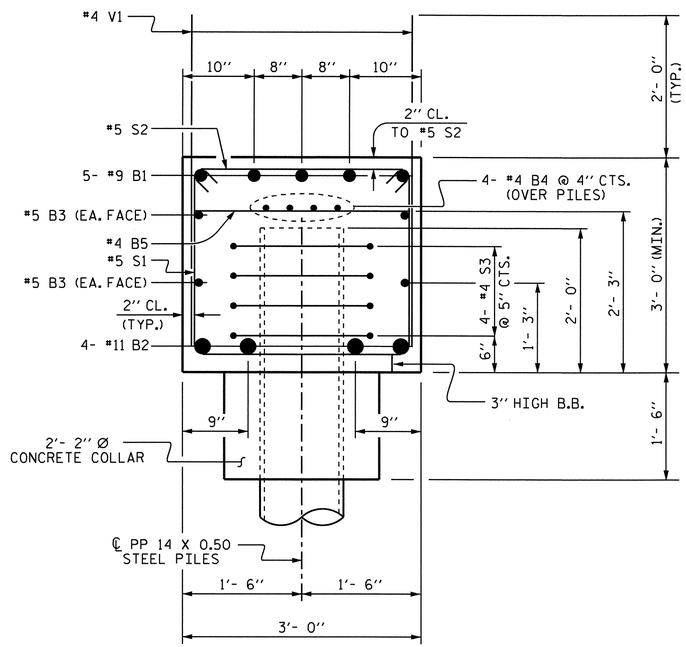

SECTION A-A

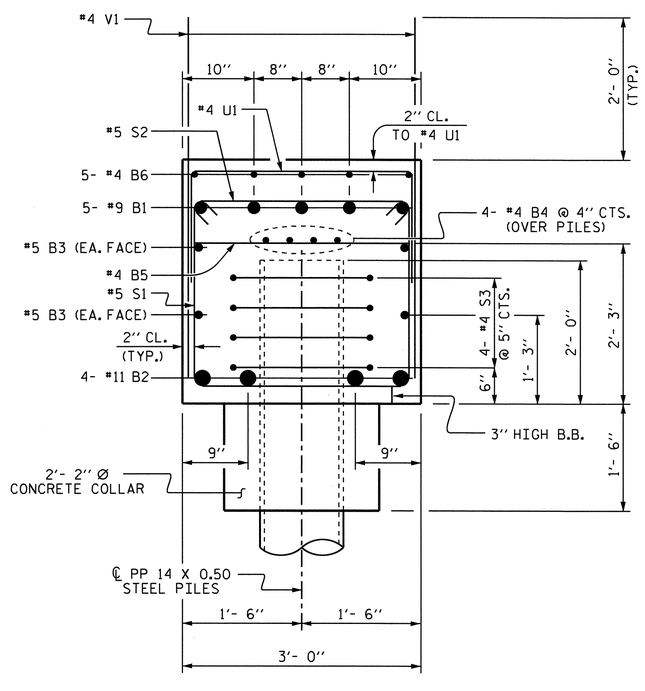

SECTION B-B

BAR TYPES

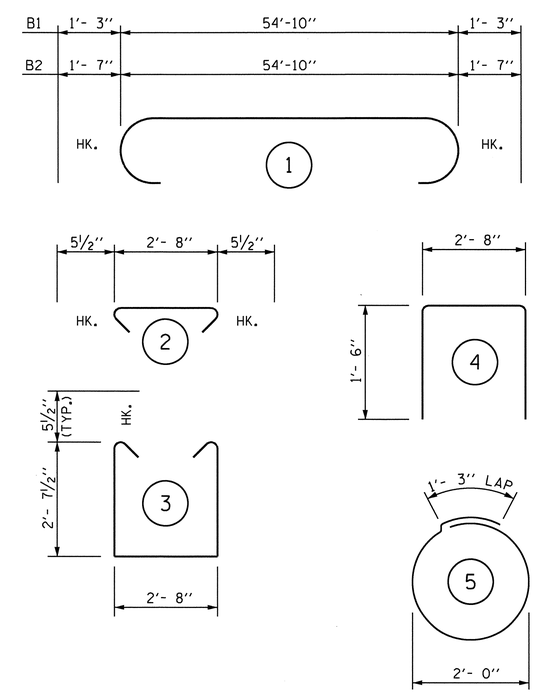

ALL BAR DIMENSIONS ARE OUT TO OUT.

BILL OF MATERIAL

BAR	NO.	SIZE	TYPE	LENGTH	WEIGHT
B1	5	#9	1	57'- 4''	975
B2	4	#11	1	58'- 0''	1233
B3	4	#5	STR	55'- 0''	229
B4	8	#4	STR	28'- 9''	154
B5	14	#4	STR	2'- 8''	25
B6	25	#4	STR	5'- 0''	84
H1	40	#5	STR	10'- 2''	424
S1	52	#5	3	8'-10''	479
S2	52	#5	2	3'- 7''	194
S3	24	#4	5	7'- 7''	122
U1	20	#4	4	5'- 8''	76
V1	101	#4	STR	4'-10''	326
V2	16	#5	STR	8'- 9''	146
V3	16	#5	STR	8'- 7''	143

REINFORCING STEEL 4610 LBS

CLASS A CONCRETE BREAKDOWN

POUR #1 (CAP CONCRETE COLLAR & LOWER PART OF WING) = 21.8 C.Y.

PP 14 X 0.50 STEEL PILES

NO. 6 300 LIN. FT.

STEEL PILE POINTS NO. 6

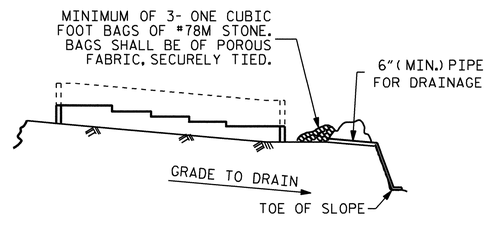

BAGGED STONE AND PIPE SHALL BE PLACED IMMEDIATELY AFTER COMPLETION OF END BENT EXCAVATION. PIPE MAY BE EITHER CONCRETE, CORRUGATED STEEL, CORRUGATED ALUMINUM ALLOY, OR CORRUGATED PLASTIC. PERFORATED PIPE WILL NOT BE ALLOWED.

BAGGED STONE SHALL REMAIN IN PLACE UNTIL THE ENGINEER DIRECTS THAT IT BE REMOVED. THE CONTRACTOR SHALL REMOVE AND DISPOSE OF SILT ACCUMULATIONS AT BAGGED STONE WHEN SO DIRECTED BY THE ENGINEER. BAGS SHALL BE REMOVED AND REPLACED WHENEVER THE ENGINEER DETERMINES THAT THEY HAVE DETERIORATED AND LOST THEIR EFFECTIVENESS.

NO SEPARATE PAYMENT WILL BE MADE FOR THIS WORK AND THE ENTIRE COST OF THIS WORK SHALL BE INCLUDED IN THE UNIT CONTRACT PRICE BID FOR THE SEVERAL PAY ITEMS.

TEMPORARY DRAINAGE AT END BENT

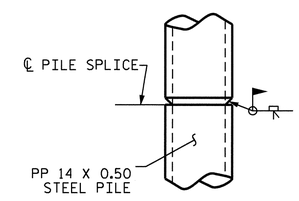

PIPE PILE SPLICE DETAIL

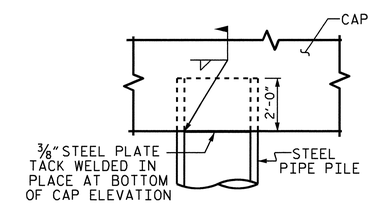

PIPE PILE IN CAP DETAIL

THE CONTRACTOR MAY PROPOSE AN ALTERNATE METHOD FOR PLUGGING THE STEEL PIPE PILE, SUBJECT TO APPROVAL BY THE ENGINEER.

PROJECT NO. U-4007B

ONSLOW COUNTY

STATION: 42+15.92 -NBL RAMP-

SHEET 3 OF 3

STATE OF NORTH CAROLINA
DEPARTMENT OF TRANSPORTATION
RALEIGH

SUBSTRUCTURE

INTEGRAL END BENT #2

NORTH CAROLINA PROFESSIONAL SEAL 025516 ENGINEER EMIL Y. E. MURRAY
8/24/10

REVISIONS						SHEET NO.
NO.	BY:	DATE:	NO.	BY:	DATE:	S-139
1			3			TOTAL SHEETS
2			4			142

DRAWN BY : D. A. GLADDEN DATE : 3-4-10
CHECKED BY : B. N. BARODAWALA DATE : 3-22-10

23-AUG-2010 15:01
z:\TIPProjects-U\U4007b\Structures\FinalPlans\Str. #5\U-4007B_sd_str5eb.dgn
PADKINS

STR. #5

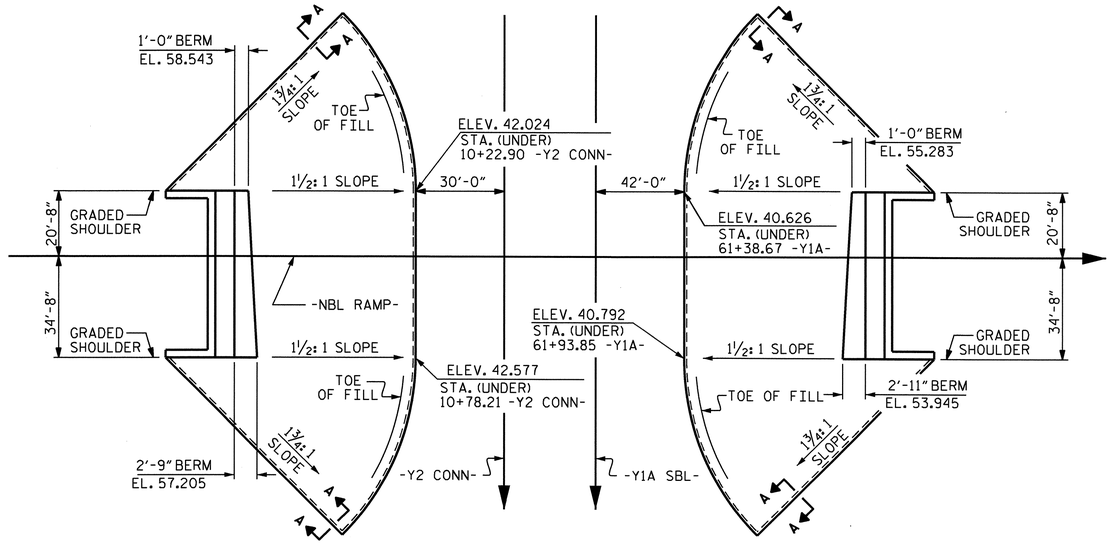

GENERAL NOTES

SLOPE PROTECTION SHALL BE PLACED UNDER THE ENDS OF THE BRIDGE AS SHOWN IN THE DETAILS. STRAIGHT EDGING WILL NOT BE REQUIRED UNLESS, IN THE OPINION OF THE ENGINEER, VISUAL INSPECTION INDICATES A NEED FOR IT. MEASUREMENT AND PAYMENT SHALL BE AS PRESCRIBED IN SECTION 462 OF THE STANDARD SPECIFICATIONS.

ALTERNATE "A"

ALTERNATE "A" SHALL CONSIST OF 4" POURED-IN-PLACE CONCRETE PAVING AS SHOWN IN THE DETAILS ON THIS SHEET. CONCRETE SHALL BE CLASS "B". THE CONCRETE SURFACE SHALL BE FLOATED WITH A WOODEN FLOAT AND FINISHED. WELDED WIRE FABRIC REINFORCING SHALL BE 6 X 6 - W1.4 X W1.4, 60" WIDE. SLOPE PROTECTION SHALL BE POURED IN 5' STRIPS AS SHOWN IN THE "POURING DETAIL" WITH 2'-0" LONG #4 BARS PLACED ALONG THE SLOPE BETWEEN STRIPS AT 1'-6" MAXIMUM SPACING. SLOPE PROTECTION MAY BE POURED IN ALTERNATE 4' AND 5' STRIPS AS SHOWN IN THE "OPTIONAL POURING DETAIL" WITH ADJACENT RUNS OF WELDED WIRE FABRIC LAPPING AT LEAST 6". THE COST OF THE WELDED WIRE FABRIC AND #4 BARS, IF USED, SHALL BE INCLUDED IN THE CONTRACT UNIT PRICE BID PER SQUARE YARD FOR SLOPE PROTECTION.

BRIDGE @ STA. 42+15.92 -NBL RAMP-	4 INCH SLOPE PROTECTION	* WELDED WIRE FABRIC 60 INCHES WIDE
	SQUARE YARDS	APPROX. L.F.
END BENT 1	339	678
END BENT 2	275	550

* QUANTITY SHOWN IS BASED ON 5' POURS.

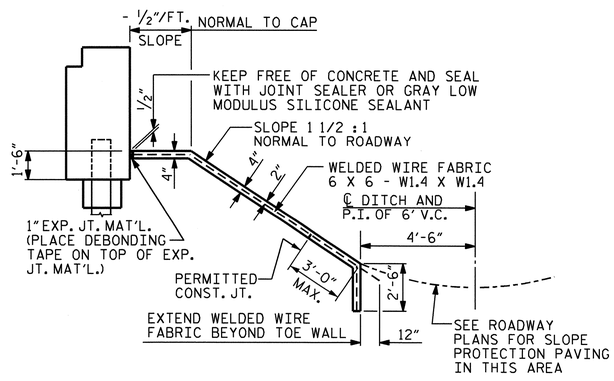

SECTION ALONG ℄ ROADWAY WHEN FILL CATCHES IN DITCH

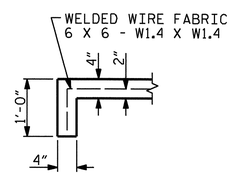

SECTION A-A

DETAILS FOR ALTERNATE "A"

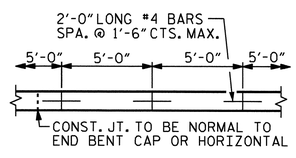

STRIP WIDTHS MAY VARY IN CURVED PORTION.

POURING DETAIL

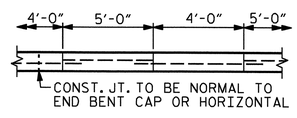

POUR A 4'-0" STRIP FIRST. STRIP WIDTHS MAY VARY IN CURVED PORTION.

OPTIONAL POURING DETAIL

PROJECT NO. U-4007B
ONSLOW COUNTY
STATION: 42+15.92 -NBL RAMP-

STATE OF NORTH CAROLINA
DEPARTMENT OF TRANSPORTATION
RALEIGH

STANDARD
SLOPE PROTECTION DETAILS

NORTH CAROLINA PROFESSIONAL SEAL 025516 ENGINEER EMILY E. MURRAY
8/29/10

REVISIONS						SHEET NO.
NO.	BY:	DATE:	NO.	BY:	DATE:	S-140
1			3			TOTAL SHEETS
2			4			142

STR. #5 STD. NO. SP1

ASSEMBLED BY : M.GUDLAUGSSON DATE : 03/04/10	
CHECKED BY : PEGGY PARISI DATE : 6/24/10	
DRAWN BY : ELR 5/92	REV. 7/10/01 LES/RDR
CHECKED BY : GRP 6/92	REV. 5/7/03 RWW/JTE
	REV. 5/1/06 TLA/GM

23-AUG-2010 15:00
Z:\TIPProjects-U\U4007b\Structures\FinalPlans\Str. #5\U-4007B_SD_SP_05.dgn
PADKINS

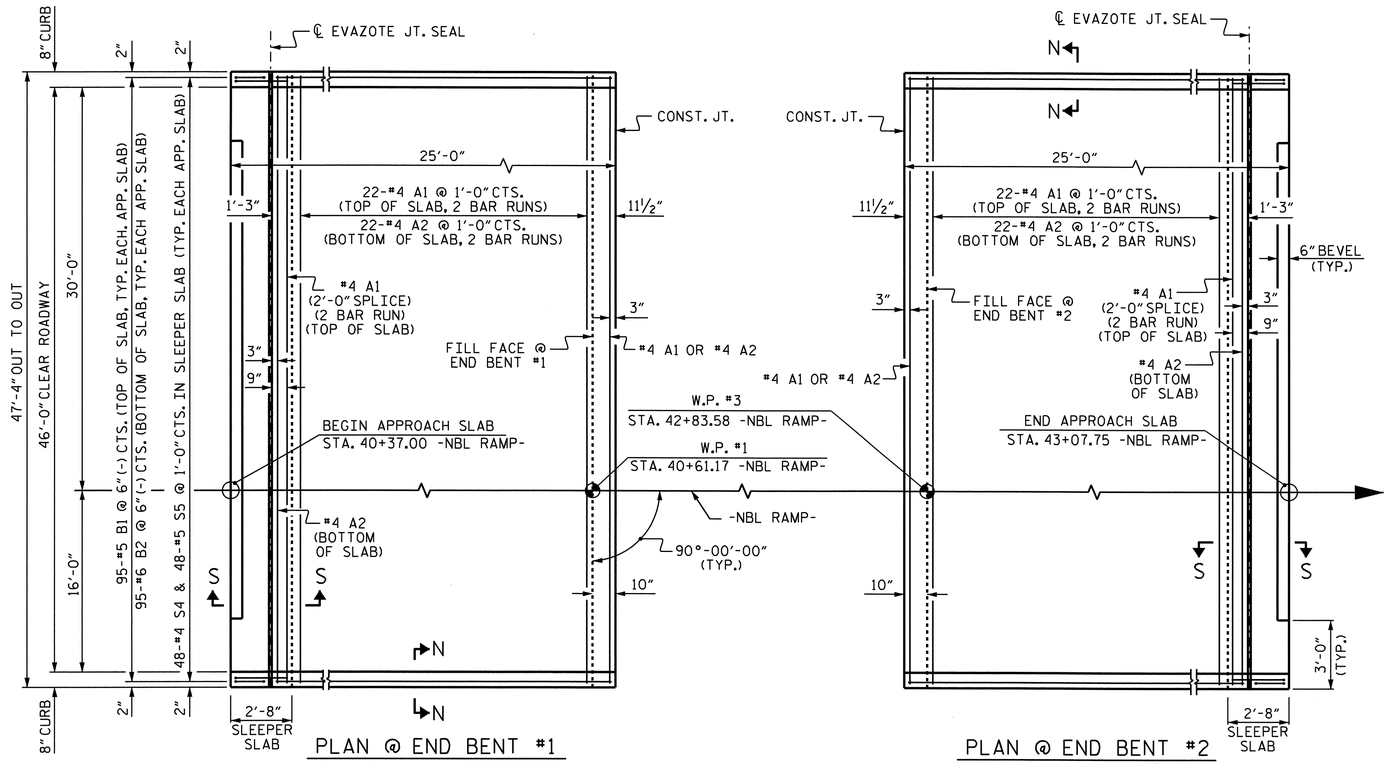

PLAN @ END BENT #1

PLAN @ END BENT #2

DIMENSIONS SHOWN ARE TYPICAL FOR BOTH APPROACH SLABS. #4 A1 BARS IN SLEEPER SLAB NOT SHOWN FOR CLARITY.

NOTES

APPROACH SLAB SHALL NOT BE CONSTRUCTED PRIOR TO COMPLETION OF THE BRIDGE DECK.

FOR REINFORCED BRIDGE APPROACH FILL INCLUDING FABRIC, IMPERMEABLE GEOMEMBRANE, 4" Ø DRAINAGE PIPE, #78M STONE, AND SELECT MATERIAL, SEE ROADWAY PLANS.

AREA BETWEEN THE WINGWALL AND APPROACH SLAB SHALL BE GRADED TO DRAIN THE WATER AWAY FROM THE FILL FACE OF THE BRIDGE AND SHALL BE PAVED. SEE ROADWAY PLANS.

THE 6" COMP. A.B.C. SHALL BE FLUSH WITH THE SLEEPER SLAB AND SHALL EXTEND 1'-0" OUTSIDE OF EACH EDGE OF THE APPROACH SLAB.

THE CONTRACTOR MAY USE 4" TYPE B-25.0B ASPHALT CONCRETE BASE COURSE IN LIEU OF 6" COMP. A.B.C. IF THIS OPTION IS USED, THE BASE COURSE SHALL BE FLUSH WITH THE SLEEPER SLAB, AND THE WIDTH SHALL BE THE SAME AS THAT OF THE APPROACH SLAB.

THE CONTRACTOR MAY USE 5" CLASS "A" CONCRETE BASE IN LIEU OF 6" COMP. A.B.C. IF THIS OPTION IS USED, THE CONCRETE BASE SHALL BE FLUSH WITH THE SLEEPER SLAB, AND THE WIDTH SHALL BE THE SAME AS THAT OF THE APPROACH SLAB. THE CONCRETE SHALL BE FINISHED TO A SMOOTH SURFACE AND A LAYER OF 30 LB ROOFING FELT SHALL BE PLACED BETWEEN THE CONCRETE BASE AND THE APPROACH SLAB TO PREVENT BOND. THE APPROACH SLAB SHALL NOT BE CAST UNTIL THE CONCRETE BASE HAS REACHED AN AGE OF THREE CURING DAYS.

THE VERTICAL JOINT ON THE RIGHT AND LEFT SIDE OF THE APPROACH SLAB AT THE ENDS OF THE EVAZOTE JOINT SHALL BE FILLED WITH SILICONE OR OTHER APPROVED MATERIAL IN ORDER TO PREVENT BACKFILL FROM ENTERING THE JOINT OPENING.

THE JOINT OPENING AT THE APPROACH SLAB/DECK INTERFACE SHALL BE SAWED NO MORE THAN 12 HOURS AFTER THE APPROACH SLAB IS CAST. THE JOINT SHALL BE CLEANED OF ALL DEBRIS BEFORE THE SEALANT IS APPLIED. THE JOINT SEALER MATERIAL SHALL CONFORM TO THE REQUIREMENTS OF TYPE SL LOW MODULUS SILICONE SEALANT.

WITH EVAZOTE JOINT SEAL

FOR EVAZOTE JOINT SEALS, SEE SPECIAL PROVISIONS.

THE NOMINAL UNCOMPRESSED SEAL WIDTH OF THE EVAZOTE JOINT SEAL SHALL BE 2½".

FOR ELASTOMERIC CONCRETE, SEE SPECIAL PROVISIONS.

BILL OF MATERIAL

FOR ONE APPROACH SLAB (2 REQ'D)

BAR	NO.	SIZE	TYPE	LENGTH	WEIGHT
* A1	62	#4	STR	24'-6"	1015
A2	48	#4	STR	24'-5"	783
* B1	95	#5	STR	22'-5"	2221
B2	95	#6	STR	22'-10"	3258
* S4	48	#4	1	3'-11"	126
S5	48	#5	2	2'-11"	146
REINFORCING STEEL				LBS.	4187
* EPOXY COATED REINFORCING STEEL				LBS.	3362
CLASS AA CONCRETE					
POUR #1 - SLAB & CURB				C. Y.	41.0
POUR #2 - SLEEPER SLAB				C. Y.	4.9
TOTAL				C. Y.	45.9

BAR TYPES

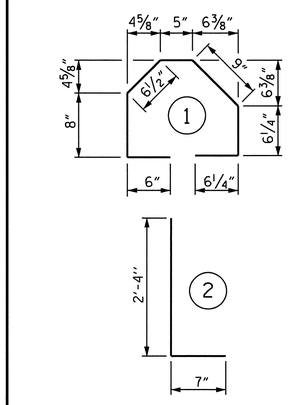

ALL BAR DIMENSIONS ARE OUT TO OUT

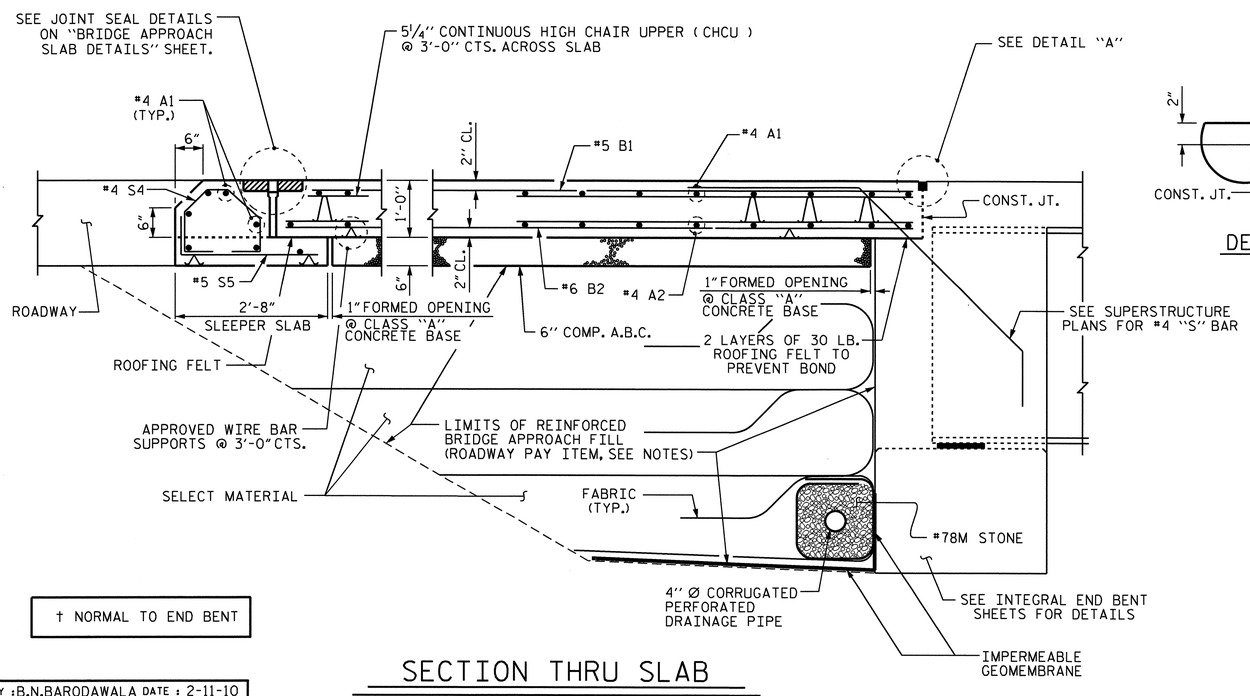

† NORMAL TO END BENT

SECTION THRU SLAB

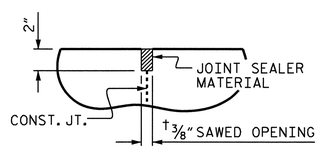

DETAIL "A"

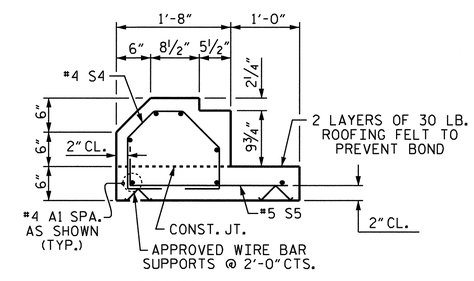

SECTION S-S

SHOWING SLEEPER SLAB

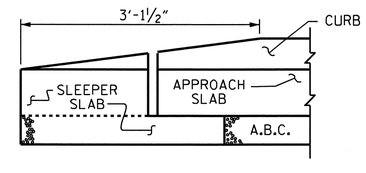

END OF CURB WITHOUT SHOULDER BERM GUTTER

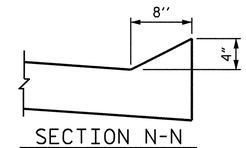

SECTION N-N

PROJECT NO. U-4007B

ONSLOW COUNTY

STATION: 42+15.92 -NBL RAMP-

SHEET 1 OF 2

STATE OF NORTH CAROLINA
DEPARTMENT OF TRANSPORTATION
RALEIGH

STANDARD

BRIDGE APPROACH SLAB FOR INTEGRAL ABUTMENT

NORTH CAROLINA PROFESSIONAL SEAL 025516 ENGINEER
ELMER V. BUSHRAN
8/24/10

REVISIONS						SHEET NO.
NO.	BY:	DATE:	NO.	BY:	DATE:	S-141
1			3			TOTAL SHEETS
2			4			142

STR. #5 STD. NO. BAS11

ASSEMBLED BY : B.N. BARODAWALA DATE : 2-11-10
CHECKED BY : M. D. PISO DATE : 3-3-10
DRAWN BY : TLA 10/05
CHECKED BY : GM 5/06
ADDED 5/1/06R KMM/GM

23-AUG-2010 14:57
Z:\TIPProjects-U\U4007b\Structures\FinalPlans\Str. #5\U-4007B_sd_AS_05.dgn
PADKINS

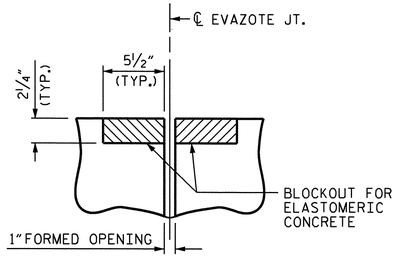

SECTION C-C
EVAZOTE JOINT SEAL
(PRE-SAWED ELASTOMERIC CONCRETE DIMENSIONS)

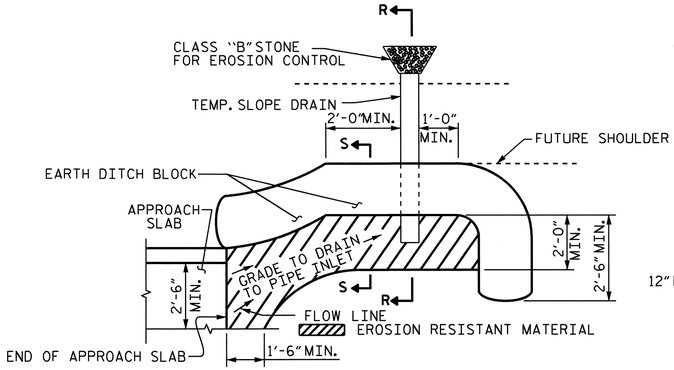

NOTE: IMMEDIATELY AFTER THE CONSTRUCTION OF THE APPROACH SLAB, THE CONTRACTOR SHALL PROVIDE TEMPORARY BERM AND SLOPE DRAIN. CONTRACTOR SHALL GRADE TO PIPE INLET AND PROVIDE EROSION RESISTANT MATERIAL AS SHOWN. THE EROSION RESISTANT MATERIAL SHALL BE EITHER 1) ASPHALT PLANT MIX, TYPE 1 OR TYPE 2, MIN. 2" DEPTH, 2) EROSION CONTROL MAT, OR 3) CONCRETE, AS DIRECTED BY THE ENGINEER. THE SLOPE DRAIN SHALL CONSIST OF A NON-PERFORATED TEMPORARY DRAINAGE PIPE, 12 INCHES IN DIAMETER.

PLAN VIEW

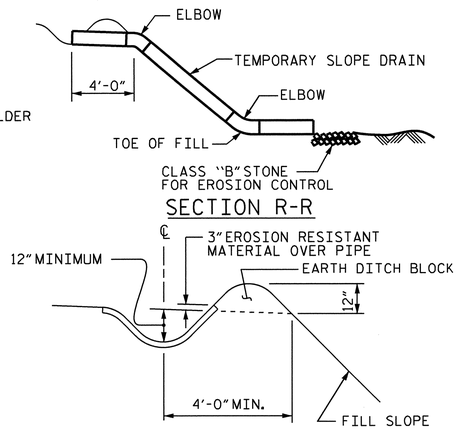

TEMPORARY BERM AND SLOPE DRAIN DETAILS

(TO BE USED WHEN SHOULDER BERM GUTTER IS REQUIRED)

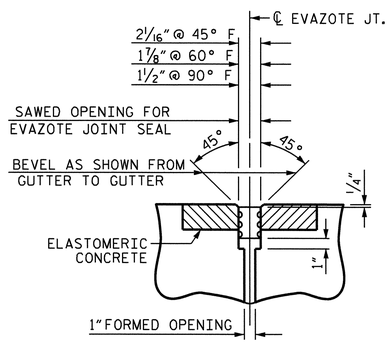

SECTION C-C
EVAZOTE JOINT SEAL
AT END BENT #1 & #2

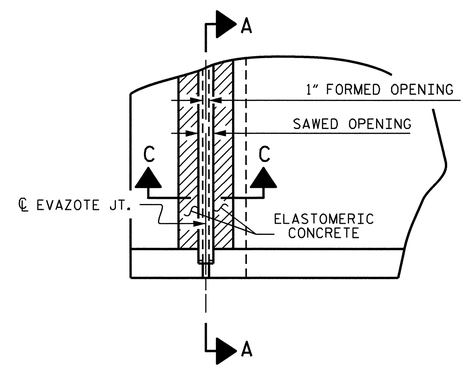

PLAN FOR APPROACH SLAB @ END BENT #1

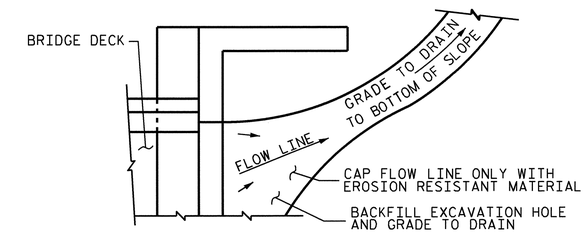

NOTE: IF THE APPROACH SLAB IS NOT CONSTRUCTED IMMEDIATELY AFTER THE BACKFILLING OF THE END BENT EXCAVATION, GRADE TO DRAIN TO THE BOTTOM OF THE SLOPE AND PROVIDE EROSION RESISTANT MATERIAL, SUCH AS FIBERGLASS ROVING OR AS DIRECTED BY THE ENGINEER TO PREVENT SOIL EROSION AND TO PROTECT THE AREA ADJACENT TO THE STRUCTURE. THE CONTRACTOR WILL BE REQUIRED TO REMOVE THESE MATERIALS PRIOR TO CONSTRUCTION OF THE APPROACH SLAB.

TEMPORARY DRAINAGE DETAIL

ELASTOMERIC CONCRETE	
APPROACH SLAB NO.	ELASTOMERIC CONCRETE * (CU. FT.)
1	7.9
2	7.9
TOTAL	15.8

* BASED ON THE MINIMUM BLOCKOUT SHOWN.

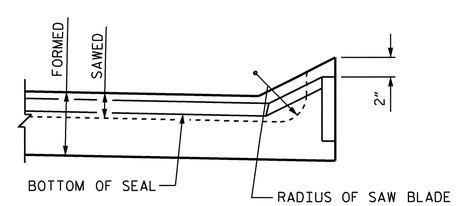

SECTION A-A

JOINT SEAL DETAILS @ SLEEPER SLAB

PROJECT NO. U-4007B
ONSLOW COUNTY
STATION: 42+15.92 -NBL RAMP-

SHEET 2 OF 2

STATE OF NORTH CAROLINA
DEPARTMENT OF TRANSPORTATION
RALEIGH

STANDARD

BRIDGE APPROACH SLAB DETAILS

NORTH CAROLINA PROFESSIONAL SEAL 025516 ENGINEER EMILY E. MURRAY
8/24/10

REVISIONS								SHEET NO. S-142
NO.	BY:	DATE:	NO.	BY:	DATE:			TOTAL SHEETS 142
1			3					
2			4					

ASSEMBLED BY : B.N. BARODAWALA		DATE : 2-11-10	
CHECKED BY : M. D. PISO		DATE : 3-3-10	
DRAWN BY : FCJ	11/88	REV. 10/17/00	RWW/LES
CHECKED BY : ARB	11/88	REV. 5/7/03	RWW/JTE
		REV. 5/1/06R	MAA/KMM

23-AUG-2010 14:57
2:\TIPProjects-U\U4007b\Structures\FinalPlans\Str. #5\U-4007B_sd_AS_05.dgn
PADKINS

STR. #5 STD. NO. BAS10

GPS U4007-4 30" #5 REBAR WITH ALUMINUM TRAVERSE CAPS STA. 23+52.77 -NBL-RAMP-, 27.46 LT, ELEV. 60.33.

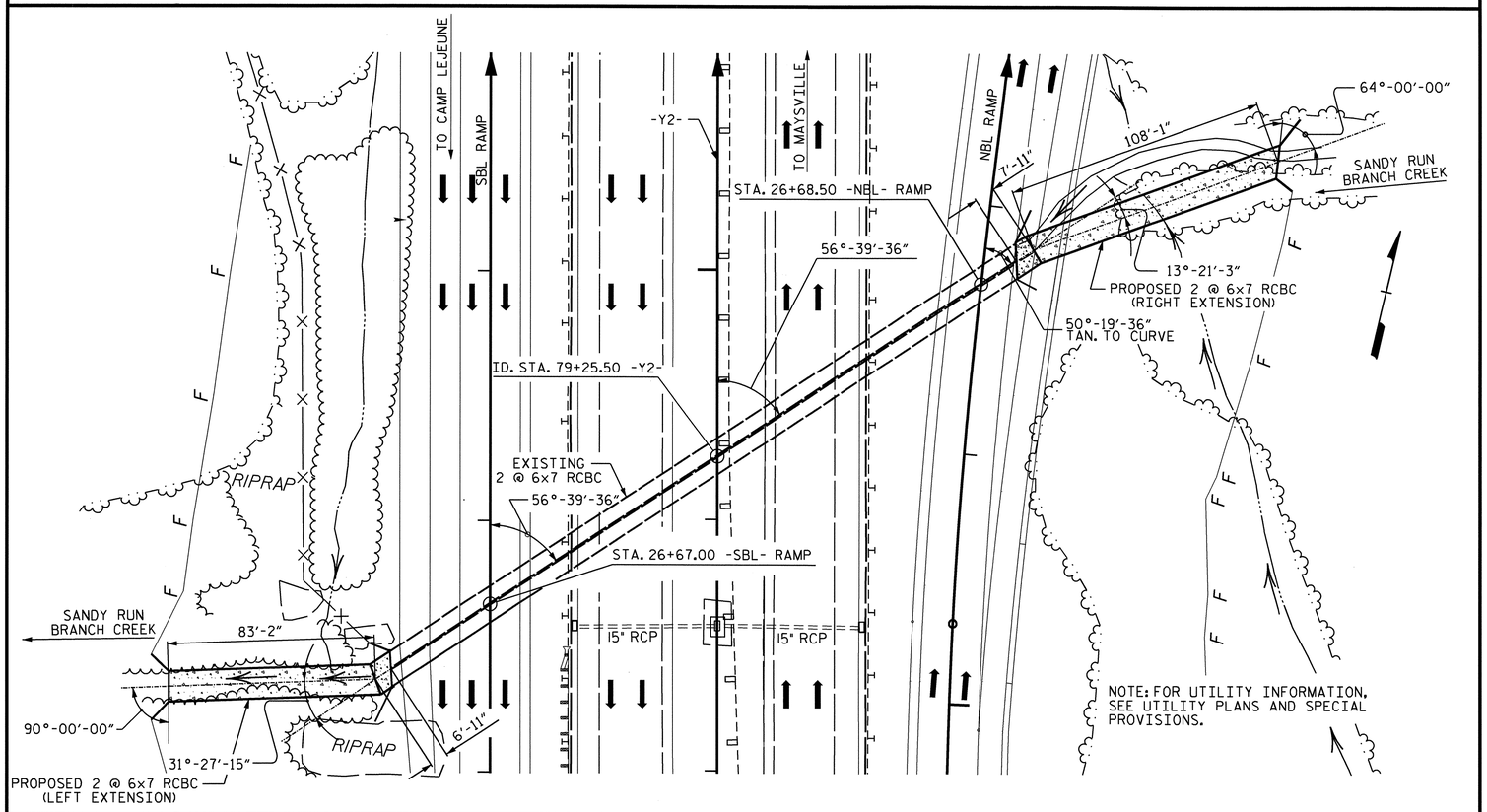

LOCATION SKETCH

F.A. PROJECT NO. STM-0017(111)

NOTES

ASSUMED LIVE LOAD ----------HS20-44 OR ALTERNATE LOADING.

DESIGN FILL (RIGHT EXTENSION)---------- 30.47'

DESIGN FILL (LEFT EXTENSION)---------- 27.72'

FOR OTHER DESIGN DATA AND NOTES SEE STANDARD NOTE SHEET.

3" Ø WEEP HOLES INDICATED TO BE IN ACCORDANCE WITH THE SPECIFICATIONS.

CONCRETE IN STAGES I AND II TO BE POURED IN THE FOLLOWING ORDER:

1. STAGE I WING FOOTINGS AND FLOOR SLAB INCLUDING 4" OF ALL VERTICAL WALLS AS INDICATED IN THE CONSTRUCTION SEQUENCE.
2. THE REMAINING PORTIONS OF THE STAGE I WALLS AND WINGS FULL HEIGHT.
3. STAGE II WING FOOTINGS AND FLOOR SLAB INCLUDING 4" OF VERTICAL WALL AS INDICATED IN THE CONSTRUCTION SEQUENCE.
4. THE REMAINING PORTIONS OF THE STAGE II WALLS AND WINGS FULL HEIGHT FOLLOWED BY ROOF SLAB AND HEADWALLS.

THE RESIDENT ENGINEER SHALL CHECK THE LENGTH OF CULVERT BEFORE STAKING IT OUT TO MAKE CERTAIN THAT IT WILL PROPERLY TAKE CARE OF THE FILL.

DIMENSIONS FOR WING LAYOUT AS WELL AS ADDITIONAL REINFORCING STEEL EMBEDDED IN BARREL ARE SHOWN ON WING SHEETS.

TRANSVERSE CONSTRUCTION JOINTS SHALL BE USED IN THE BARREL, SPACED TO LIMIT THE POURS TO A MAXIMUM OF 70 FT. LOCATION OF JOINTS SHALL BE SUBJECT TO APPROVAL OF THE ENGINEER.

AT THE CONTRACTOR'S OPTION, HE MAY SPLICE THE VERTICAL REINFORCING STEEL IN THE INTERIOR FACE OF EXTERIOR WALL AND BOTH FACES OF INTERIOR WALLS ABOVE LOWER WALL CONSTRUCTION JOINT. THE SPLICE LENGTH SHALL BE AS PROVIDED IN THE SPLICE LENGTH CHART SHOWN ON THE PLANS. EXTRA WEIGHT OF STEEL DUE TO THE SPLICES SHALL BE PAID FOR BY THE CONTRACTOR.

FOR CULVERT DIVERSION DETAILS AND PAY ITEM, SEE EROSION CONTROL PLANS.

A 3 FOOT STRIP OF FILTER FABRIC SHALL BE ATTACHED TO THE FILL FACE OF THE WING COVERING THE ENTIRE LENGTH OF THE EXPANSION JOINT.

FOR SUBMITTAL OF WORKING DRAWINGS, SEE SPECIAL PROVISIONS.

FOR FALSEWORK AND FORMWORK, SEE SPECIAL PROVISIONS.

NO PRECAST REINFORCED BOX CULVERT OPTION WILL BE ALLOWED.

FOR GROUT FOR STRUCTURES, SEE SPECIAL PROVISIONS.

FOR CRANE SAFETY, SEE SPECIAL PROVISIONS.

DOWELS SHALL BE USED TO CONNECT THE CULVERT EXTENSION TO THE EXISTING CULVERT AS SHOWN. FOR NOTE REGARDING SETTING OF DOWELS, SEE SHEET SN.

IF APPROVED BY THE ENGINEER, THE CONTRACTOR MAY USE THE EXISTING WINGS AS TEMPORARY SHORING FOR THE CONSTRUCTION OF THE CULVERT EXTENSIONS. IN THIS CASE, THE BOTTOM SLAB OF THE EXTENSION SHALL BE POURED AT LEAST 72 HOURS PRIOR TO CUTTING THE WINGS. THE WINGS MAY BE CUT EARLIER PROVIDED THE SLAB CONCRETE STRENGTH HAS REACHED A MINIMUM COMPRESSIVE STRENGTH OF 1500 PSI.

THE CONTRACTOR SHALL PROVIDE INDEPENDENT ASSURANCE SAMPLES OF REINFORCING STEEL AS FOLLOWS: FOR PROJECTS REQUIRING UP TO 400 TONS OF REINFORCING STEEL, ONE 30 INCH SAMPLE OF EACH SIZE BAR USED, AND FOR PROJECTS REQUIRING OVER 400 TONS OF REINFORCING STEEL, TWO 30 INCH SAMPLES OF EACH SIZE BAR USED. THE BARS FROM WHICH THE SAMPLES ARE TAKEN MUST THEN BE SPLICED WITH REPLACEMENT BARS OF THE SIZE AND LENGTH OF THE SAMPLE, PLUS A MINIMUM LAP SPLICE OF THIRTY BAR DIAMETERS.

FOR MAINTENANCE OF TRAFFIC, SEE TRAFFIC CONTROL PLANS.

GRADE DATA -SBL- RAMP

GRADE POINT ELEV. @
STA. 26+67.00 -SBL- RAMP = 58.56
ROADWAY SLOPES = 3 : 1

GRADE DATA -NBL- RAMP

GRADE POINT ELEV. @
STA. 26+68.50 -NBL- RAMP = 56.10
ROADWAY SLOPES = 3 : 1

HYDRAULIC DATA

DESIGN DISCHARGE	= 625 CFS
FREQUENCY OF DESIGN FLOOD	= 50 YRS.
DESIGN HIGH WATER ELEVATION	= 33.2 FT.
DRAINAGE AREA	= 333 AC
BASIC DISCHARGE (Q100)	= 820 CFS
BASIC HIGH WATER ELEVATION	= 34.9 FT.

OVERTOPPING FLOOD DATA

OVERTOPPING DISCHARGE	= < 820 CFS
FREQUENCY OF OVERTOPPING FLOOD	= < 100 YRS.
OVERTOPPING FLOOD ELEVATION	= 34.5 FT.

TOTAL STRUCTURE QUANTITIES

MATERIALS	CLASS A CONCRETE	REINFORCING STEEL	FOUNDATION COND. MAT'L.
(UNITS)	CU. YDS.	LBS.	TONS
STAGE I	155.8	24257	121
STAGE II	227.6	28305	83
TOTAL	383.4	52562	204
CULVERT EXCAVATION ---------- LUMP SUM			

PROJECT NO. U-4007B
ONSLOW COUNTY
STATION: 79+25.50 -Y2-

SHEET 1 OF 10

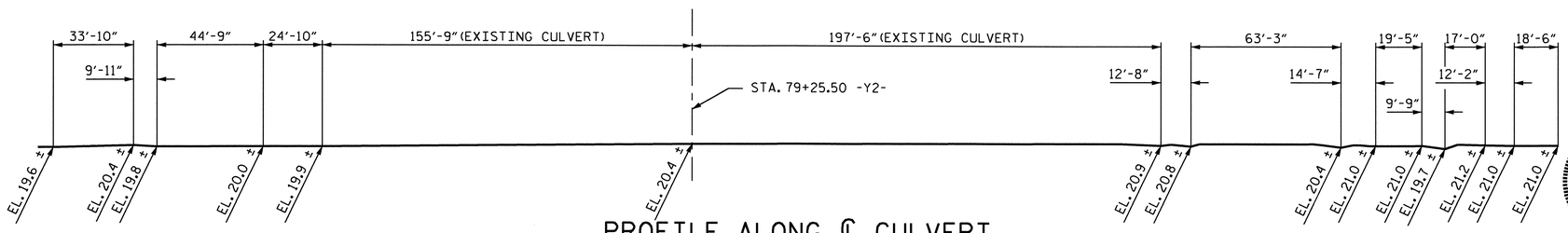

PROFILE ALONG ℄ CULVERT

NORTH CAROLINA PROFESSIONAL SEAL 12274 ENGINEER OMAR R. AZIZI
8-24-10

NORTH CAROLINA PROFESSIONAL SEAL 025516 ENGINEER EMILY E. MURDAY
8/24/16

STATE OF NORTH CAROLINA
DEPARTMENT OF TRANSPORTATION
RALEIGH

BARREL STANDARD
DOUBLE 6 FT. X 7 FT.
CONC. BOX CULVERT
LEFT AND RIGHT EXTENSIONS

REVISIONS								SHEET NO.
NO.	BY:	DATE:	NO.	BY:	DATE:			C-1
1			3					TOTAL SHEETS
2			4					10

DRAWN BY : J.B. WILSON DATE : 7/9/10
CHECKED BY : NEIL RUFFIN DATE : 7/13/10

24-AUG-2010 14:50
G:\TIPProjects-U\U4007b\Structures\FinalPlans\Str. #6\U4007B_SD_CU_06.dgn
taverette

STR. #6

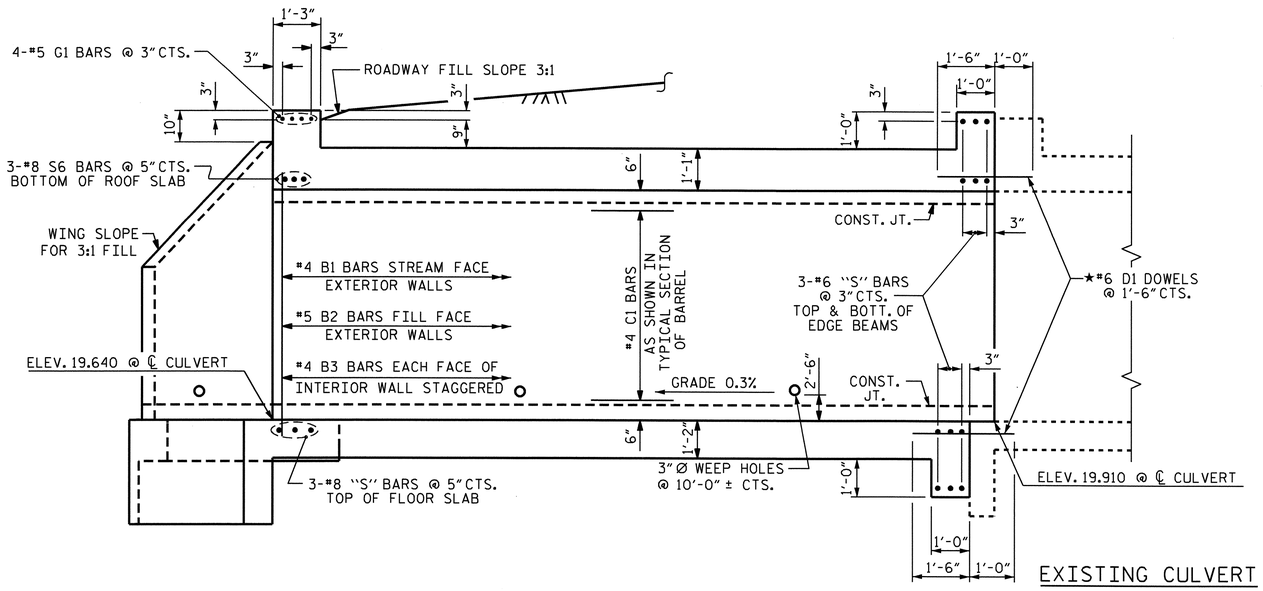

CULVERT SECTION NORMAL TO ROADWAY

LEFT EXTENSION

★ #6 D1 DOWELS SHALL BE PLACED @ 1'-6"CTS. IN THE ROOF SLAB, FLOOR SLAB, AND EXTERIOR WALLS TO CONNECT THE CULVERT EXTENSION TO THE EXISTING CULVERT.

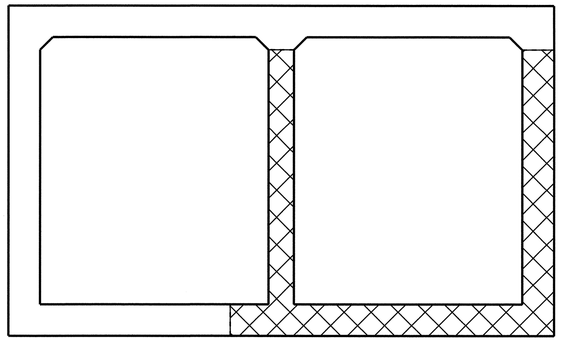

CONSTRUCTION SEQUENCE

STAGE 1 - CROSS HATCH AREA

SECTION IS LOOKING UPSTREAM

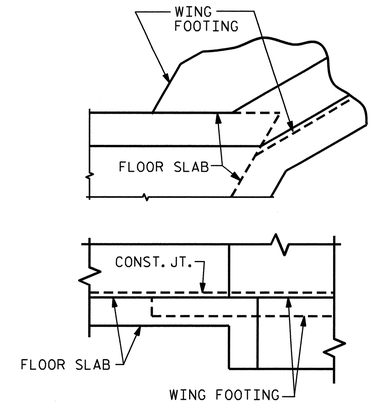

DETAIL

CONNECTION OF WING FOOTING AND FLOOR SLAB WHEN SLAB IS THICKER THAN FOOTING

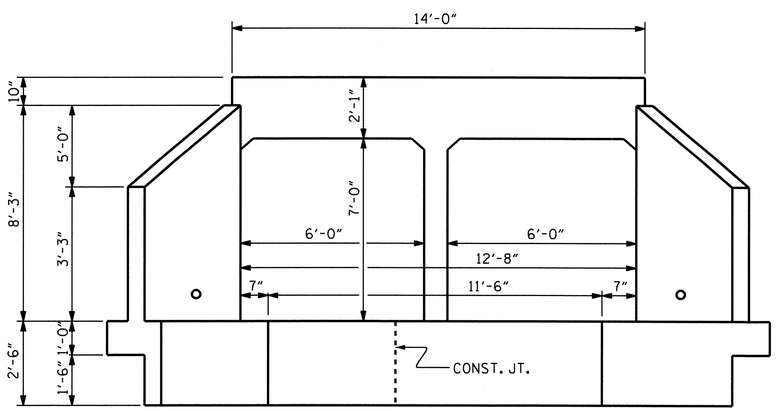

OUTLET END ELEVATION NORMAL TO SKEW

LEFT EXTENSION

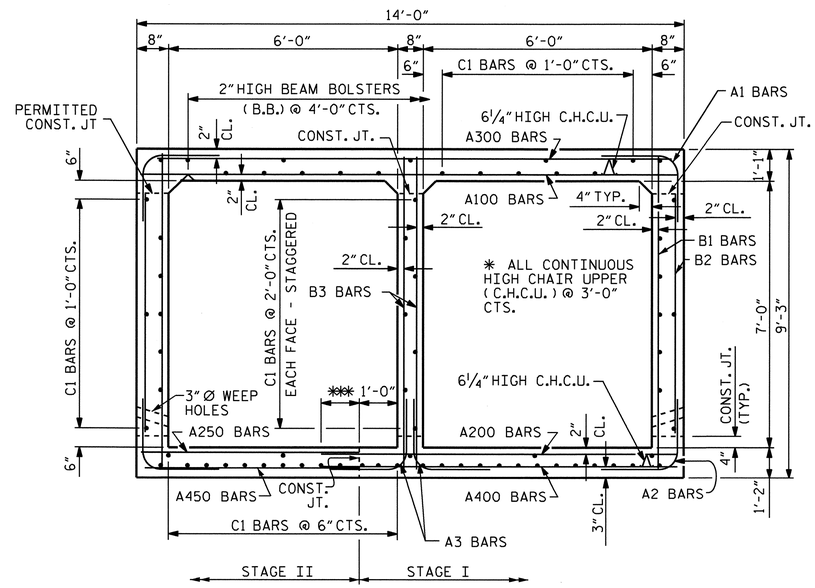

RIGHT ANGLE SECTION OF BARREL

THERE ARE 71 C1 BARS IN SECTION OF BARREL.
SECTION IS LOOKING UPSTREAM.
✳✳✳ FOR SPLICE LENGTH, SEE CHART, SHEET 8 OF 10.

PROJECT NO. U-4007B
ONSLOW COUNTY
STATION: 79+25.50 -Y2-

SHEET 2 OF 10

STATE OF NORTH CAROLINA
DEPARTMENT OF TRANSPORTATION
RALEIGH

DOUBLE 6 FT. X 7 FT. CONCRETE BOX CULVERT

LEFT EXTENSION

NORTH CAROLINA PROFESSIONAL SEAL 025516 ENGINEER EMILY E. MURRAY
8/24/10

REVISIONS						SHEET NO.
NO.	BY:	DATE:	NO.	BY:	DATE:	C-2
1			3			TOTAL SHEETS
2			4			10

DRAWN BY : J.B. WILSON DATE : 7/10/10
CHECKED BY : NEIL RUFFIN DATE : 7/13/10

24-AUG-2010 09:04
Z:\TIPProjects-U\U4007b\Structures\Final Plans\Str. #6\U4007B_SD_CU_06.dgn
padkins

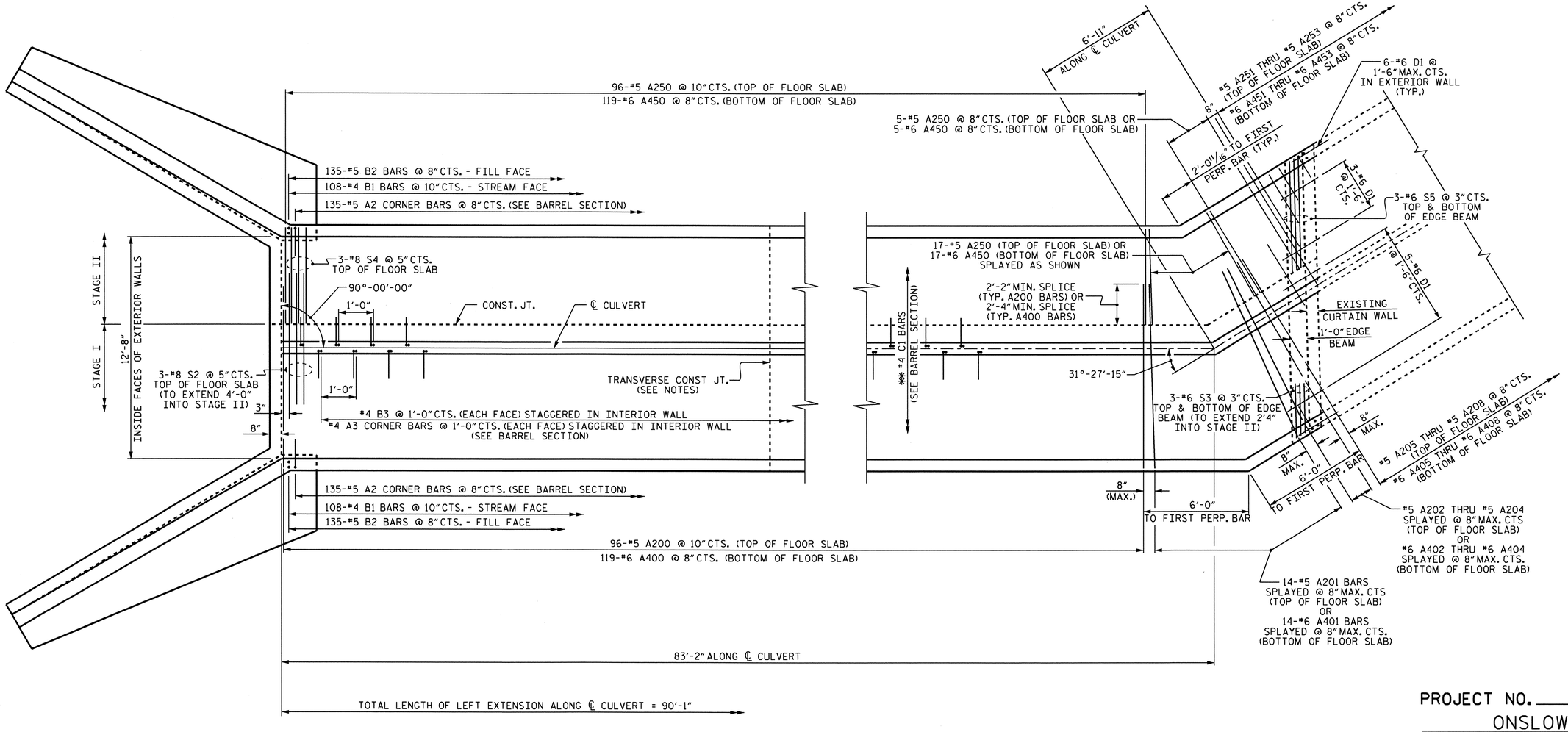

PLAN - FLOOR SLAB

LEFT EXTENSION

** C1 BARS ARE 4 BAR RUNS. FIELD BEND C1 BARS AS NECESSARY DUE TO BENDS IN CULVERT.

PROJECT NO. U-4007B

ONSLOW COUNTY

STATION: 79+25.50 -Y2-

SHEET 3 OF 10

STATE OF NORTH CAROLINA
DEPARTMENT OF TRANSPORTATION
RALEIGH

DOUBLE 6 FT. x 7 FT. CONCRETE BOX CULVERT
LEFT EXTENSION

NORTH CAROLINA PROFESSIONAL SEAL 025516 ENGINEER EMILY E. MURRAY
8/24/10

REVISIONS						SHEET NO.
NO.	BY:	DATE:	NO.	BY:	DATE:	C-3
1			3			TOTAL SHEETS
2			4			10

DRAWN BY : J.B. WILSON/TLA DATE : 6/25/10
CHECKED BY : NEIL RUFFIN DATE : 7/02/10

24-AUG-2010 09:04
Z:\TIPProjects-U\U4007b\Structures\Final Plans\Str. #6\U4007B_SD_CU_06.dgn
padkins

STR. #6

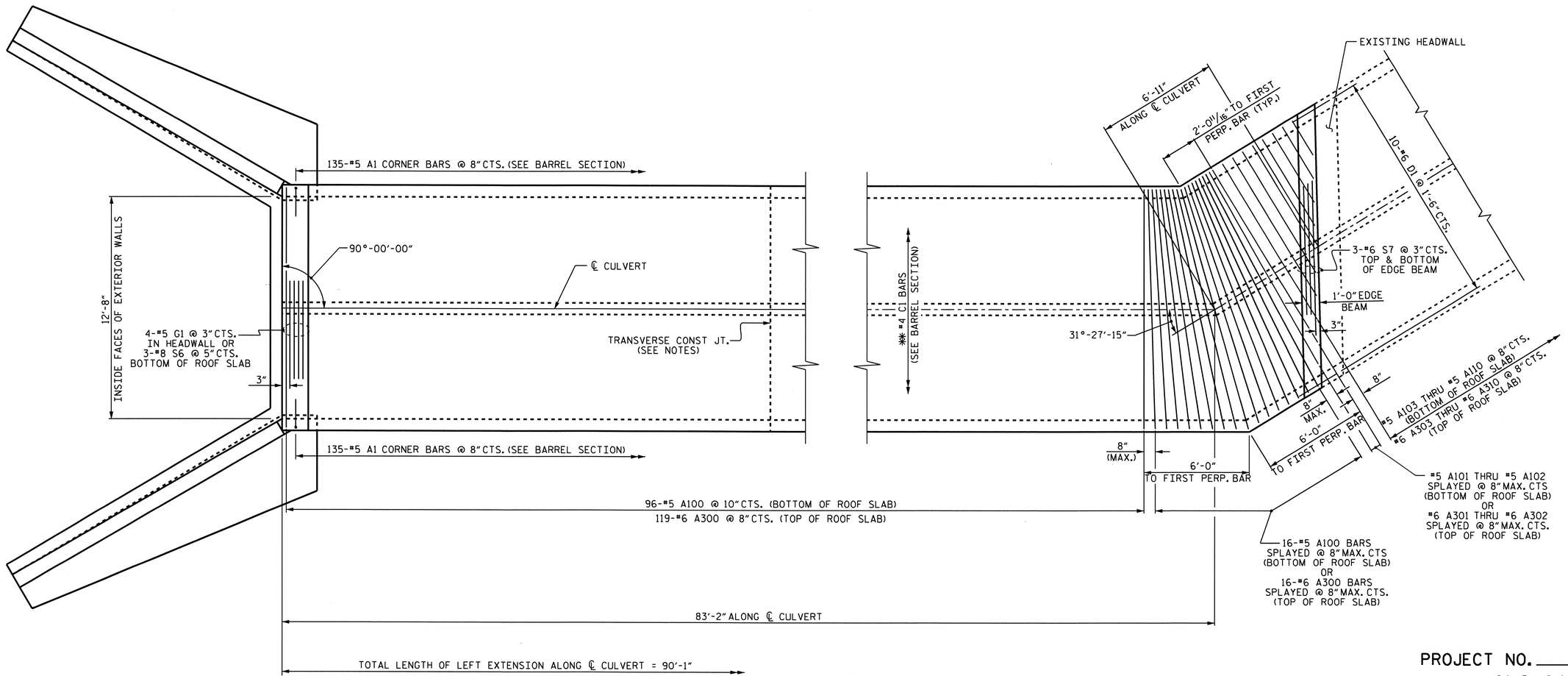

PLAN - ROOF SLAB

LEFT EXTENSION

✱✱ C1 BARS ARE 4 BAR RUNS. FIELD BEND C1 BARS AS NECESSARY DUE TO BENDS IN CULVERT.

PROJECT NO. U-4007B

ONSLOW COUNTY

STATION: 79+25.50 -Y2-

SHEET 4 OF 10

STATE OF NORTH CAROLINA
DEPARTMENT OF TRANSPORTATION
RALEIGH

DOUBLE 6 FT. x 7 FT. CONCRETE BOX CULVERT LEFT EXTENSION

NORTH CAROLINA PROFESSIONAL SEAL 025516 ENGINEER EMILY E. MURRAY
8/24/10

REVISIONS						SHEET NO.
NO.	BY:	DATE:	NO.	BY:	DATE:	C-4
1			3			TOTAL SHEETS
2			4			10

DRAWN BY : J.B. WILSON/TLA DATE : 6/25/10
CHECKED BY : NEIL RUFFIN DATE : 7/02/10

24-AUG-2010 09:03
Z:\TIPProjects-U\U4007b\Structures\Final Plans\Str. #6\U4007B_SD_CU_06.dgn
pdkins

STR. #6

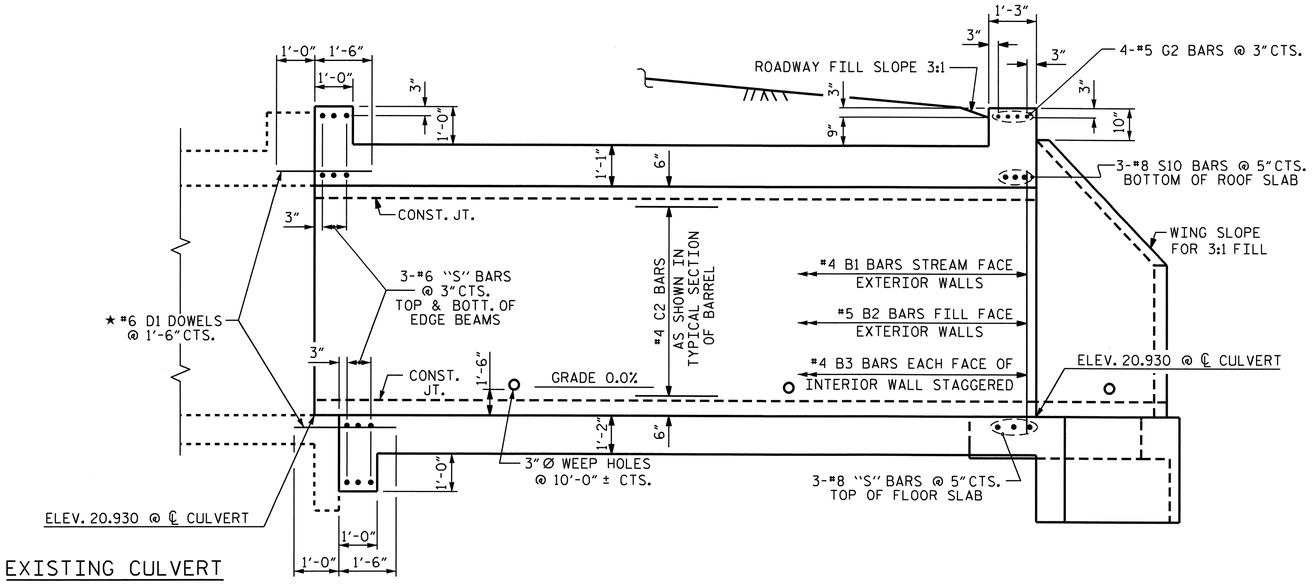

EXISTING CULVERT

CULVERT SECTION NORMAL TO ROADWAY

RIGHT EXTENSION

★ #6 D1 DOWELS SHALL BE PLACED @ 1'-6" CTS. IN THE ROOF SLAB, FLOOR SLAB, AND EXTERIOR WALLS TO CONNECT THE CULVERT EXTENSION TO THE EXISTING CULVERT.

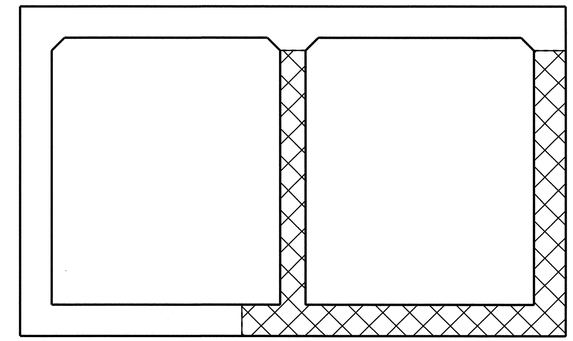

CONSTRUCTION SEQUENCE

STAGE 1 - CROSS HATCH AREA

SECTION IS LOOKING UPSTREAM

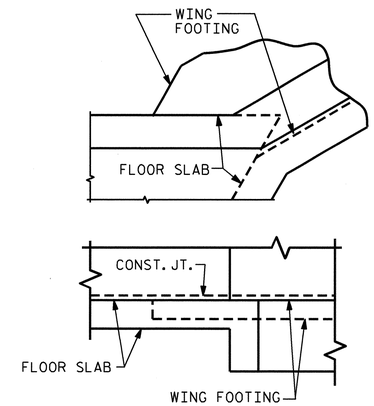

DETAIL

CONNECTION OF WING FOOTING AND FLOOR SLAB WHEN SLAB IS THICKER THAN FOOTING

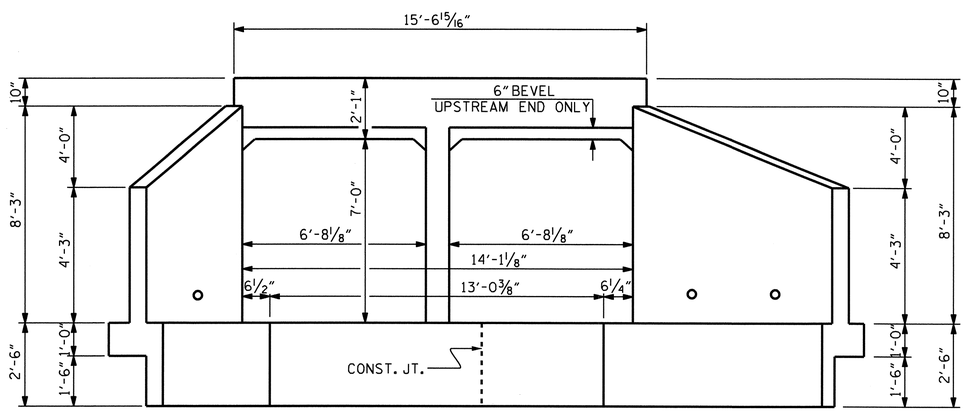

INLET END ELEVATION NORMAL TO SKEW

RIGHT EXTENSION

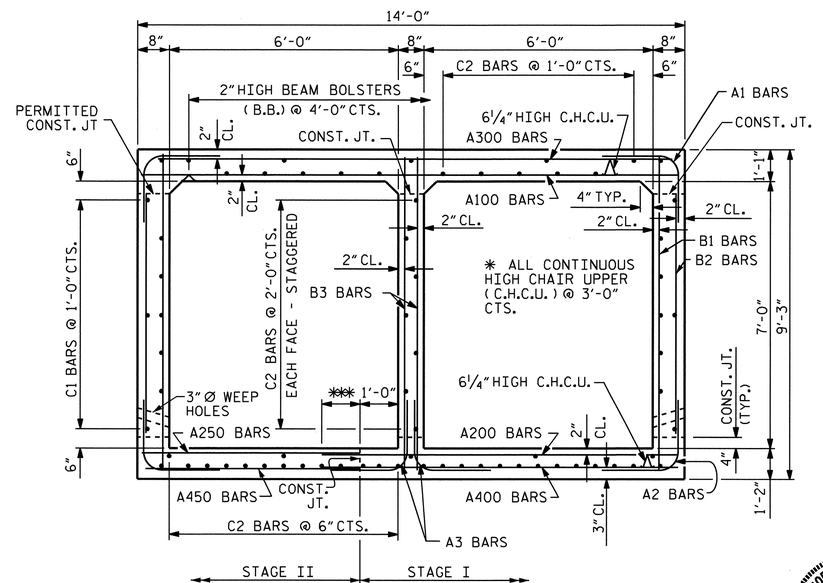

RIGHT ANGLE SECTION OF BARREL

THERE ARE 71 C2 BARS IN SECTION OF BARREL.
SECTION IS LOOKING UPSTREAM.
✱✱✱ FOR SPLICE LENGTH, SEE CHART, SHEET 8 OF 10.

NORTH CAROLINA PROFESSIONAL SEAL 025516 ENGINEER EMILY E. MURRAY
8/24/10

PROJECT NO. U-4007B
ONSLOW COUNTY
STATION: 79+25.50 -Y2-

SHEET 5 OF 10

STATE OF NORTH CAROLINA
DEPARTMENT OF TRANSPORTATION
RALEIGH

DOUBLE 6 FT. X 7 FT. CONCRETE BOX CULVERT

RIGHT EXTENSION

REVISIONS						SHEET NO.
NO.	BY:	DATE:	NO.	BY:	DATE:	C-5
1			3			TOTAL SHEETS
2			4			10

DRAWN BY : J.B. WILSON/TLA DATE : 7/10/10
CHECKED BY : NEIL RUFFIN DATE : 7/13/10

24-AUG-2010 09:03
Z:\TIPProjects-U\U4007b\Structures\Final Plans\Str. #6\U4007B_SD_CU_06.dgn
pdkins

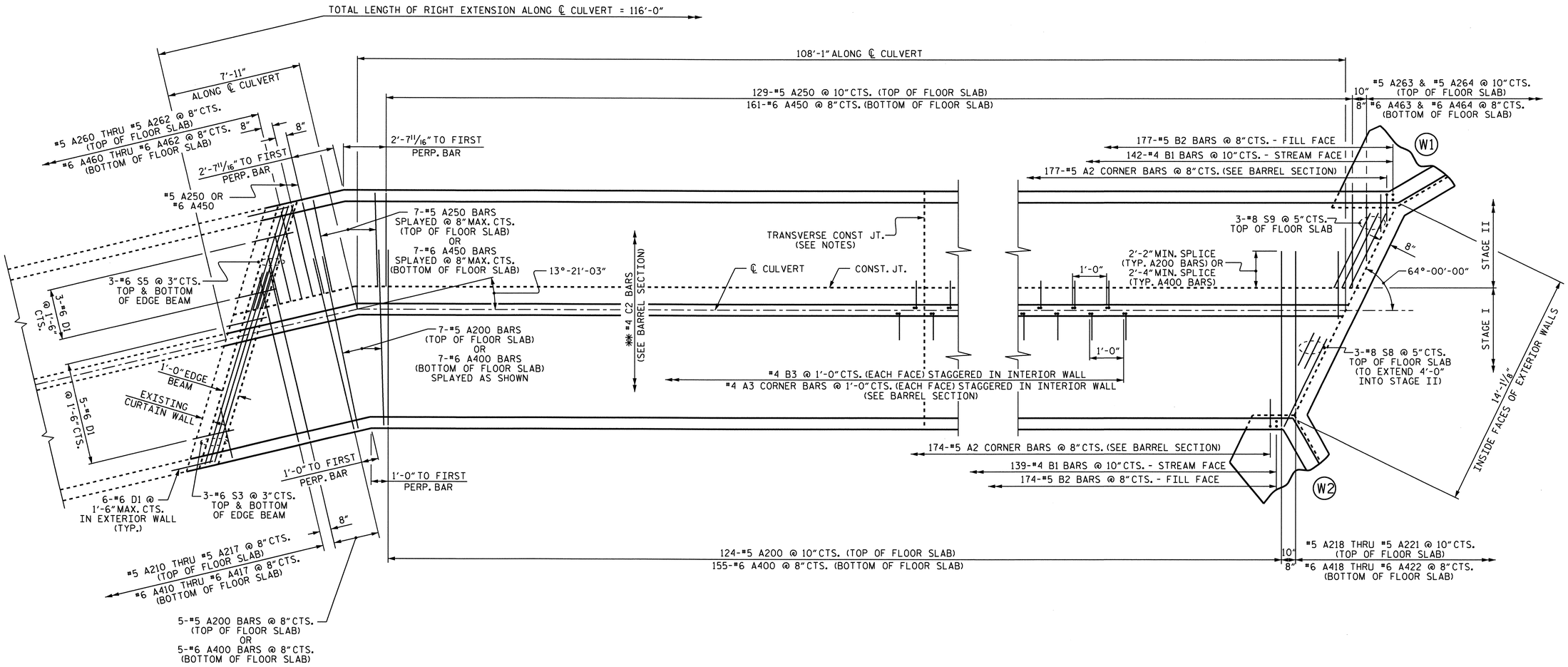

PLAN - FLOOR SLAB

RIGHT EXTENSION

** C2 BARS ARE 5 BAR RUNS. FIELD BEND C2 BARS AS NECESSARY DUE TO BENDS IN CULVERT.

PROJECT NO. U-4007B

ONSLOW COUNTY

STATION: 79+25.50 -Y2-

SHEET 6 OF 10

STATE OF NORTH CAROLINA
DEPARTMENT OF TRANSPORTATION
RALEIGH

DOUBLE 6 FT. x 7 FT. CONCRETE BOX CULVERT
RIGHT EXTENSION

NORTH CAROLINA PROFESSIONAL SEAL 025516 ENGINEER EMILY E. MURRAY
8/24/10

REVISIONS						SHEET NO.
NO.	BY:	DATE:	NO.	BY:	DATE:	C-6
1			3			TOTAL SHEETS
2			4			10

DRAWN BY : J.B. WILSON/TLA DATE : 6/25/10
CHECKED BY : NEIL RUFFIN DATE : 7/02/10

24-AUG-2010 09:03
Z:\TIPProjects-U\U4007b\Structures\Final Plans\Str. #6\U4007B_SD_CU_06.dgn
padkins

STR. #6

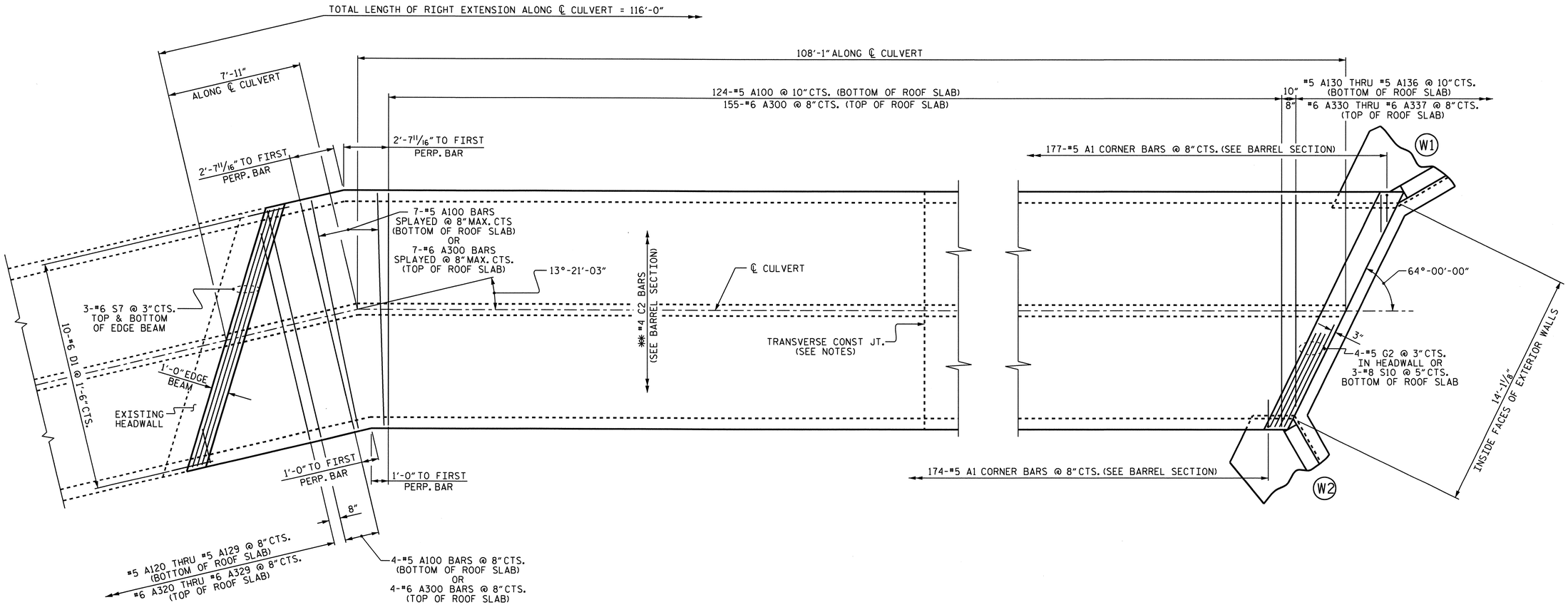

PLAN - ROOF SLAB

RIGHT EXTENSION

** C2 BARS ARE 5 BAR RUNS. FIELD BEND C2 BARS AS NECESSARY DUE TO BENDS IN CULVERT.

PROJECT NO. U-4007B

ONSLOW COUNTY

STATION: 79+25.50 -Y2-

SHEET 7 OF 10

STATE OF NORTH CAROLINA
DEPARTMENT OF TRANSPORTATION
RALEIGH

DOUBLE 6 FT. x 7 FT. CONCRETE BOX CULVERT
RIGHT EXTENSION

NORTH CAROLINA PROFESSIONAL SEAL 025516 ENGINEER EMILY E. MURRAY
8/24/10

REVISIONS						SHEET NO.
NO.	BY:	DATE:	NO.	BY:	DATE:	C-7
1			3			TOTAL SHEETS
2			4			10

DRAWN BY : J.B. WILSON/TLA DATE : 6/25/10
CHECKED BY : NEIL RUFFIN DATE : 7/02/10

24-AUG-2010 09:03
Z:\TIPProjects-U\U4007b\Structures\FinalPlans\Str. #6\U4007B_SD_CU_06.dgn
padkins

STR. #6

REINFORCING STEEL SCHEDULE FOR CULVERT BARREL

STAGE I

LEFT EXTENSION

BAR	NO.	SIZE	TYPE	LENGTH	WEIGHT
A1	135	#5	1	4'-10"	681
A2	135	#5	1	4'-10"	681
A3	182	#4	1	4'-10"	588
A200	96	#5	STR	10'-4"	1035
A201	14	#5	STR	10'-8"	156
A202	1	#5	STR	10'-2"	11
A203	1	#5	STR	8'-11"	9
A204	1	#5	STR	7'-10"	8
A205	1	#5	STR	6'-10"	7
A206	1	#5	STR	5'-8"	6
A207	1	#5	STR	4'-6"	5
A208	1	#5	STR	3'-4"	3
A400	119	#6	STR	10'-6"	1877
A401	14	#6	STR	10'-10"	228
A402	1	#6	STR	10'-4"	16
A403	1	#6	STR	9'-1"	14
A404	1	#6	STR	8'-0"	12
A405	1	#6	STR	7'-0"	11
A406	1	#6	STR	5'-10"	9
A407	1	#6	STR	4'-8"	7
A408	1	#6	STR	3'-6"	5
B1	108	#4	STR	8'-9"	631
B2	135	#5	STR	6'-4"	892
B3	182	#4	STR	8'-9"	1064
C1	136	#4	STR	24'-0"	2180
D1	11	#6	STR	2'-6"	41
S2	3	#8	STR	12'-2"	97
S3	6	#6	STR	11'-10"	107

REINFORCING STEEL LBS. 10381

RIGHT EXTENSION

BAR	NO.	SIZE	TYPE	LENGTH	WEIGHT
A1	174	#5	1	4'-10"	877
A2	174	#5	1	4'-10"	877
A3	234	#4	1	4'-10"	756
A200	136	#5	STR	10'-4"	1466
A210	1	#5	STR	9'-11"	10
A211	1	#5	STR	8'-9"	9
A212	1	#5	STR	7'-7"	8
A213	1	#5	STR	6'-5"	7
A214	1	#5	STR	5'-4"	6
A215	1	#5	STR	4'-2"	4
A216	1	#5	STR	3'-0"	3
A217	1	#5	STR	1'-10"	2
A218	1	#5	STR	9'-2"	10
A219	1	#5	STR	7'-5"	8
A220	1	#5	STR	5'-9"	6
A221	1	#5	STR	4'-0"	4
A400	167	#6	STR	10'-6"	2634
A410	1	#6	STR	9'-11"	15
A411	1	#6	STR	8'-9"	13
A412	1	#6	STR	7'-7"	11
A413	1	#6	STR	6'-5"	10
A414	1	#6	STR	5'-4"	8
A415	1	#6	STR	4'-2"	6
A416	1	#6	STR	3'-0"	5
A417	1	#6	STR	1'-10"	3
A418	1	#6	STR	9'-4"	14
A419	1	#6	STR	8'-0"	12
A420	1	#6	STR	6'-7"	10
A421	1	#6	STR	5'-3"	8
A422	1	#6	STR	3'-10"	6
B1	139	#4	STR	8'-9"	812
B2	174	#5	STR	6'-4"	1149
B3	234	#4	STR	8'-9"	1368
C2	170	#4	STR	23'-7"	2678
D1	11	#6	STR	2'-6"	41
S3	6	#6	STR	11'-10"	107
S8	3	#8	STR	13'-2"	105

REINFORCING STEEL LBS. 13068

STAGE II

LEFT EXTENSION

BAR	NO.	SIZE	TYPE	LENGTH	WEIGHT
A1	135	#5	1	4'-10"	681
A2	135	#5	1	4'-10"	681
A100	112	#5	STR	13'-8"	1596
A101	1	#5	STR	12'-6"	13
A102	1	#5	STR	11'-6"	12
A103	1	#5	STR	10'-4"	11
A104	1	#5	STR	9'-2"	10
A105	1	#5	STR	8'-0"	8
A106	1	#5	STR	6'-10"	7
A107	1	#5	STR	5'-8"	6
A108	1	#5	STR	4'-6"	5
A109	1	#5	STR	3'-5"	4
A110	1	#5	STR	2'-3"	2
A250	118	#5	STR	5'-6"	677
A251	1	#5	STR	4'-4"	5
A252	1	#5	STR	3'-2"	3
A253	1	#5	STR	2'-1"	2
A300	135	#6	STR	13'-8"	2771
A301	1	#6	STR	12'-6"	19
A302	1	#6	STR	11'-6"	17
A303	1	#6	STR	10'-4"	16
A304	1	#6	STR	9'-2"	14
A305	1	#6	STR	8'-0"	12
A306	1	#6	STR	6'-10"	10
A307	1	#6	STR	5'-8"	9
A308	1	#6	STR	4'-6"	7
A309	1	#6	STR	3'-5"	5
A310	1	#6	STR	2'-3"	3
A450	141	#6	STR	5'-6"	1165
A451	1	#6	STR	4'-4"	7
A452	1	#6	STR	3'-2"	5
A453	1	#6	STR	2'-1"	3
B1	108	#4	STR	8'-9"	631
B2	135	#5	STR	6'-4"	892
C1	148	#4	STR	24'-0"	2373
D1	19	#6	STR	2'-6"	71
G1	4	#5	STR	13'-8"	57
S4	3	#8	STR	5'-6"	44
S5	6	#6	STR	6'-4"	57
S6	3	#8	STR	13'-8"	109
S7	6	#6	STR	15'-9"	142

REINFORCING STEEL LBS. 12161

RIGHT EXTENSION

BAR	NO.	SIZE	TYPE	LENGTH	WEIGHT
A1	177	#5	1	4'-10"	892
A2	177	#5	1	4'-10"	892
A100	135	#5	STR	13'-8"	1924
A120	1	#5	STR	12'-5"	13
A121	1	#5	STR	11'-3"	12
A122	1	#5	STR	10'-1"	11
A123	1	#5	STR	8'-11"	9
A124	1	#5	STR	7'-9"	8
A125	1	#5	STR	6'-8"	7
A126	1	#5	STR	5'-6"	6
A127	1	#5	STR	4'-4"	5
A128	1	#5	STR	3'-2"	3
A129	1	#5	STR	2'-0"	2
A130	1	#5	STR	12'-5"	13
A131	1	#5	STR	10'-9"	11
A132	1	#5	STR	9'-0"	9
A133	1	#5	STR	7'-4"	8
A134	1	#5	STR	5'-7"	6
A135	1	#5	STR	3'-11"	4
A136	1	#5	STR	2'-2"	2
A250	138	#5	STR	5'-6"	792
A260	1	#5	STR	5'-3"	5
A261	1	#5	STR	4'-1"	4
A262	1	#5	STR	2'-11"	3
A263	1	#5	STR	3'-11"	4
A264	1	#5	STR	2'-2"	2
A300	166	#6	STR	13'-8"	3408
A320	1	#6	STR	12'-5"	19
A321	1	#6	STR	11'-3"	17
A322	1	#6	STR	10'-1"	15
A323	1	#6	STR	8'-11"	13
A324	1	#6	STR	7'-9"	12
A325	1	#6	STR	6'-8"	10
A326	1	#6	STR	5'-6"	8
A327	1	#6	STR	4'-4"	7
A328	1	#6	STR	3'-2"	5
A329	1	#6	STR	2'-0"	3
A330	1	#6	STR	12'-5"	19
A331	1	#6	STR	11'-1"	17
A332	1	#6	STR	9'-8"	15
A333	1	#6	STR	8'-4"	13
A334	1	#6	STR	7'-0"	11
A335	1	#6	STR	5'-7"	8
A336	1	#6	STR	4'-3"	6
A337	1	#6	STR	2'-10"	4
A450	170	#6	STR	5'-6"	1404
A460	1	#6	STR	5'-3"	8
A461	1	#6	STR	4'-1"	6
A462	1	#6	STR	2'-11"	4
A463	1	#6	STR	4'-3"	6
A464	1	#6	STR	2'-10"	4
B1	142	#4	STR	8'-9"	830
B2	177	#5	STR	6'-4"	1169
C2	185	#4	STR	23'-7"	2914
D1	19	#6	STR	2'-6"	71
G2	4	#5	STR	15'-2"	63
S5	6	#6	STR	6'-4"	57
S7	6	#6	STR	15'-9"	142
S9	3	#8	STR	6'-1"	49
S10	3	#8	STR	15'-2"	121

REINFORCING STEEL LBS. 15105

BAR TYPE

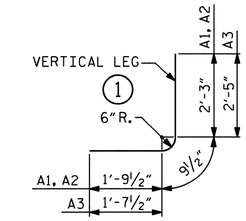

BAR DIMENSIONS ARE OUT TO OUT

SPLICE LENGTHS CHART

BAR	SIZE	SPLICE LENGTH
A200	#5	2'-2"
A400	#6	2'-4"
"B"	#4	1'-9"
C1	#4	1'-11"
"S"	#6	2'-4"
"S"	#8	4'-0"

STRUCTURE QUANTITIES

MATERIAL	ELEMENT	STAGE I LEFT EXTENSION	STAGE I RIGHT EXTENSION	STAGE II LEFT EXTENSION	STAGE II RIGHT EXTENSION
CLASS A CONCRETE (CU. YDS.)	BARRELS	62.1	79.7	93.1	116.8
	HEADWALLS, EDGE BEAMS, & CURTAIN WALL	0.8	0.9	1.8	1.9
	WINGS	6.8	5.5	6.8	9.8
	TOTAL	69.7	86.1	99.1	128.5
REINFORCING STEEL (LBS.)	CULVERT BARREL	10381	13068	12161	15105
	WINGS	436	372	436	603
	TOTAL	10817	13440	12597	15708
FOUNDATION COND. MAT'L. (TONS)	———	53	68	36	47
CULVERT EXCAVATION (LUMP SUM)	———	LUMP SUM	LUMP SUM	LUMP SUM	LUMP SUM

PROJECT NO. U-4007B
ONSLOW COUNTY
STATION: 79+25.50 -Y2-

SHEET 8 OF 10

STATE OF NORTH CAROLINA
DEPARTMENT OF TRANSPORTATION
RALEIGH

DOUBLE 6 FT. x 7 FT. CONCRETE BOX CULVERT

LEFT & RIGHT EXTENSIONS

NORTH CAROLINA PROFESSIONAL SEAL 025516 ENGINEER EMILY S. MURRAY
8/24/10

REVISIONS						SHEET NO.
NO.	BY:	DATE:	NO.	BY:	DATE:	C-8
1			3			TOTAL SHEETS
2			4			10

DRAWN BY : J.B. WILSON/TLA DATE : 7/09/10
CHECKED BY : NEIL RUFFIN DATE : 7/12/10

24-AUG-2010 14:50
G:\TIPProjects-U\U4007b\Structures\FinalPlans\Str. #6\U4007B_SD_CU_06.dgn
taverette

STR. #6

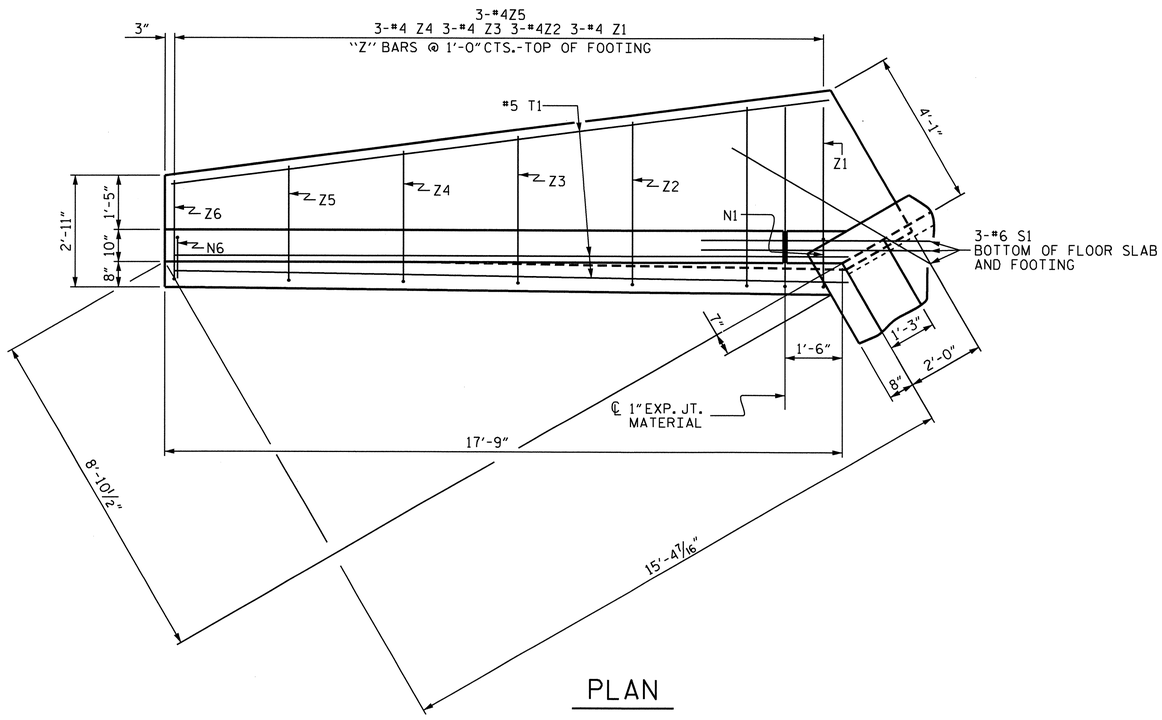

PLAN

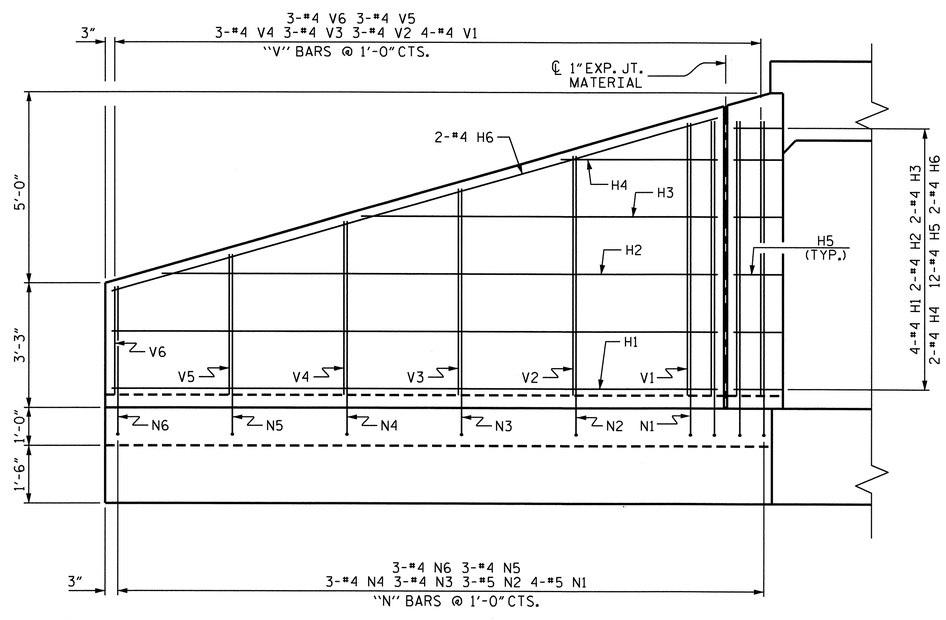

ELEVATION

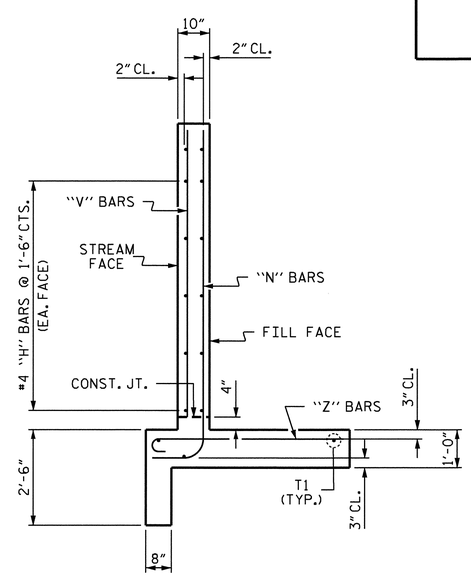

TYPICAL WING SECTION

BAR TYPES

ALL BAR DIMENSIONS ARE OUT TO OUT.

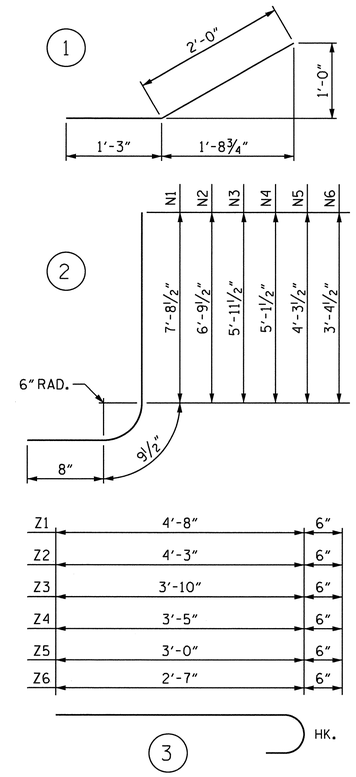

BILL OF MATERIAL FOR ONE WING

BAR	NO.	SIZE	TYPE	LENGTH	WEIGHT
H1	4	#4	STR	15'-10"	42
H2	2	#4	STR	14'-6"	19
H3	2	#4	STR	9'-4"	12
H4	2	#4	STR	4'-1"	5
H5	12	#4	1	3'-3"	26
H6	2	#4	STR	16'-6"	22
N1	4	#5	2	9'-2"	38
N2	3	#5	2	8'-3"	26
N3	3	#4	2	7'-5"	15
N4	3	#4	2	6'-7"	13
N5	3	#4	2	5'-9"	12
N6	3	#4	2	4'-10"	10
S1	3	#6	STR	6'-0"	27
T1	3	#5	STR	17'-4"	54
V1	4	#4	STR	7'-1"	19
V2	3	#4	STR	6'-3"	13
V3	3	#4	STR	5'-4"	11
V4	3	#4	STR	4'-6"	9
V5	3	#4	STR	3'-8"	7
V6	3	#4	STR	2'-9"	6
Z1	3	#4	3	5'-2"	10
Z2	3	#4	3	4'-9"	10
Z3	3	#4	3	4'-4"	9
Z4	3	#4	3	3'-11"	8
Z5	3	#4	3	3'-6"	7
Z6	3	#4	3	3'-1"	6

TOTAL REINFORCING STEEL FOR 1 WING 436 LBS

BILL OF MATERIAL STAGE I

TOTAL REINFORCING STEEL FOR 1 WING 436 LBS

CLASS A CONCRETE
1 WING 6.8 CY
1 END CURTAIN WALL 0.4 CY
TOTAL 7.2 CY

BILL OF MATERIAL STAGE II

TOTAL REINFORCING STEEL FOR 1 WING 436 LBS

CLASS A CONCRETE
1 WING 6.8 CY
1 HEADWALL 0.6 CY
1 END CURTAIN WALL 0.3 CY
TOTAL 7.7 CY

PROJECT NO. U-4007B
ONSLOW COUNTY
STATION: 79+25.50 -Y2-

SHEET 9 OF 10

STATE OF NORTH CAROLINA
DEPARTMENT OF TRANSPORTATION
RALEIGH

WINGS FOR LEFT EXTENSION CONCRETE BOX CULVERT

H = 7'-0" SLOPE = 3:1
90° SKEW

NORTH CAROLINA PROFESSIONAL SEAL 025516 ENGINEER EMILY E. MURRAY
8/24/10

REVISIONS						SHEET NO.
NO.	BY:	DATE:	NO.	BY:	DATE:	C-9
1			3			TOTAL SHEETS
2			4			10

STR. #6

ASSEMBLED BY : M. L. RORIE DATE : 7-7-10
CHECKED BY : A. M. LEE DATE : 7-12-10

DRAWN BY : CCJ 10/99
CHECKED BY : RWW 03/00

BAR TYPES

ALL BAR DIMENSIONS ARE OUT TO OUT.

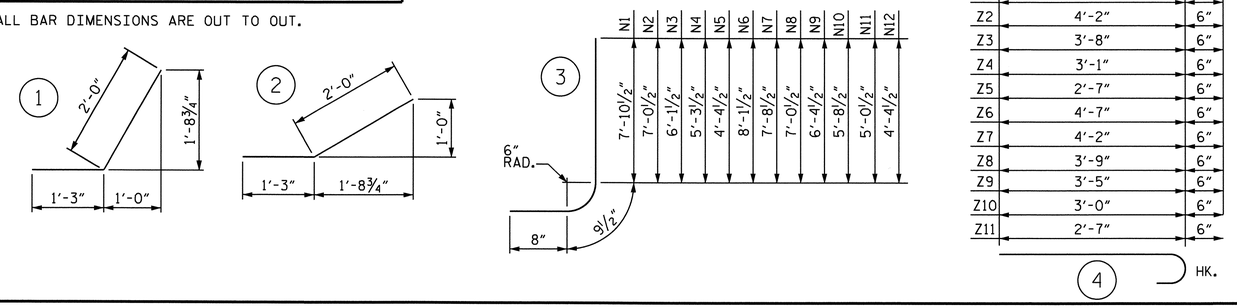

STAGE I BILL OF MATERIAL

BAR	NO.	SIZE	TYPE	LENGTH	WEIGHT
H1	6	#4	STR	12'-1"	48
H2	2	#4	STR	9'-1"	12
H3	2	#4	STR	4'-0"	5
H4	12	#4	1	3'-3"	26
H5	2	#4	STR	12'-7"	17
N1	3	#5	3	9'-4"	29
N2	3	#5	3	8'-6"	27
N3	3	#4	3	7'-7"	15
N4	3	#4	3	6'-9"	14
N5	3	#4	3	5'-10"	12
S1	3	#6	STR	6'-0"	27
T1	3	#5	STR	13'-7"	43
V1	3	#4	STR	7'-4"	15
V2	3	#4	STR	6'-5"	13
V3	3	#4	STR	5'-6"	11
V4	3	#4	STR	4'-8"	9
V5	3	#4	STR	3'-9"	8
Z1	3	#4	4	5'-3"	11
Z2	3	#4	4	4'-8"	9
Z3	3	#4	4	4'-2"	8
Z4	3	#4	4	3'-7"	7
Z5	3	#4	4	3'-1"	6

REINFORCING STEEL
FOR 1 WING 372 LBS

CLASS A CONCRETE
1 WING 5.5 CY
1 END CURTAIN WALL 0.5 CY
TOTAL 6.0 CY

STAGE II BILL OF MATERIAL

BAR	NO.	SIZE	TYPE	LENGTH	WEIGHT
H6	6	#4	STR	22'-7"	91
H7	2	#4	STR	17'-3"	23
H8	2	#4	STR	8'-4"	11
H9	12	#4	2	3'-3"	26
H10	2	#4	STR	22'-11"	31
N6	3	#5	3	9'-7"	30
N7	3	#5	3	9'-2"	29
N8	4	#4	3	8'-6"	23
N9	4	#4	3	7'-10"	21
N10	4	#4	3	7'-2"	19
N11	4	#4	3	6'-6"	17
N12	4	#4	3	5'-10"	16
S1	3	#6	STR	6'-0"	27
T2	3	#5	STR	23'-10"	75
V6	3	#4	STR	7'-6"	15
V7	3	#4	STR	7'-1"	14
V8	4	#4	STR	6'-5"	17
V9	4	#4	STR	5'-9"	15
V10	4	#4	STR	5'-1"	14
V11	4	#4	STR	4'-5"	12
V12	4	#4	STR	3'-9"	10
Z6	5	#4	4	5'-1"	17
Z7	4	#4	4	4'-8"	12
Z8	4	#4	4	4'-3"	11
Z9	4	#4	4	3'-11"	10
Z10	4	#4	4	3'-6"	9
Z11	4	#4	4	3'-1"	8

REINFORCING STEEL
FOR 1 WING 603 LBS

CLASS A CONCRETE
1 WING 9.8 CY
1 HEADWALL 0.7 CY
1 END CURTAIN WALL 0.3 CY
TOTAL 10.8 CY

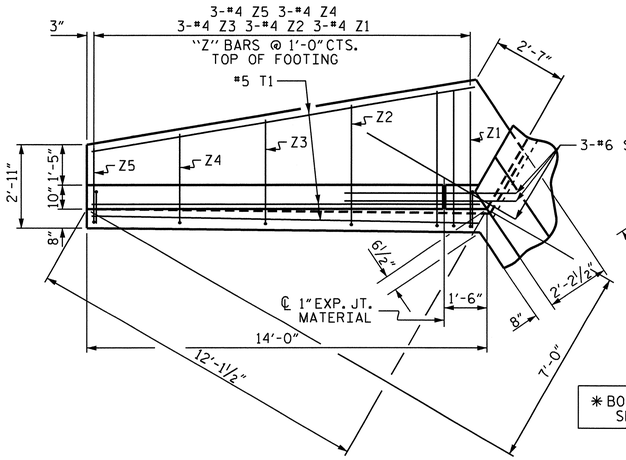

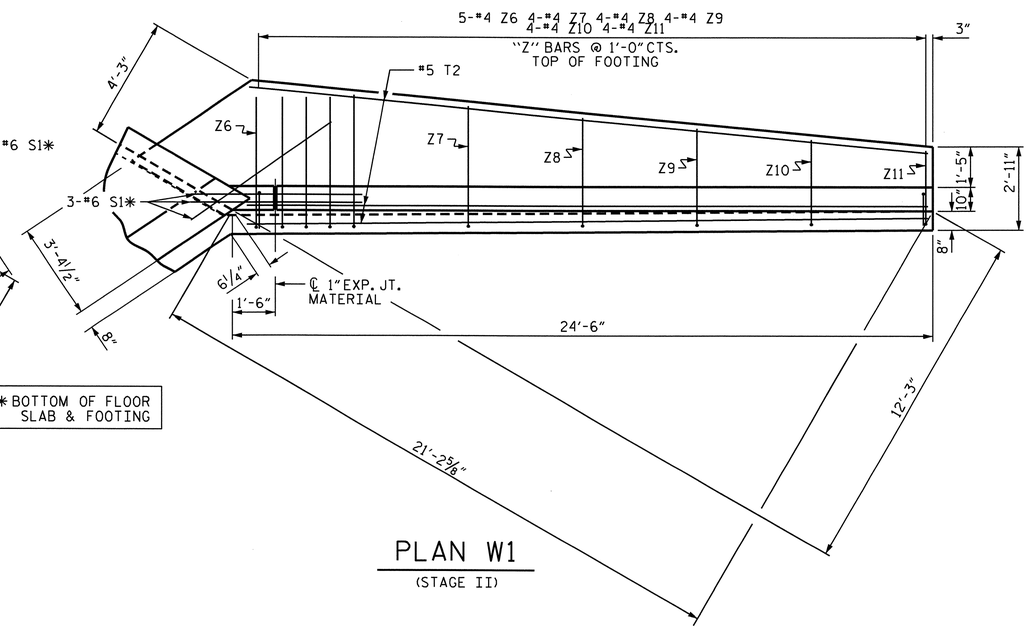

* BOTTOM OF FLOOR SLAB & FOOTING

PLAN W2

(STAGE I)

PLAN W1

(STAGE II)

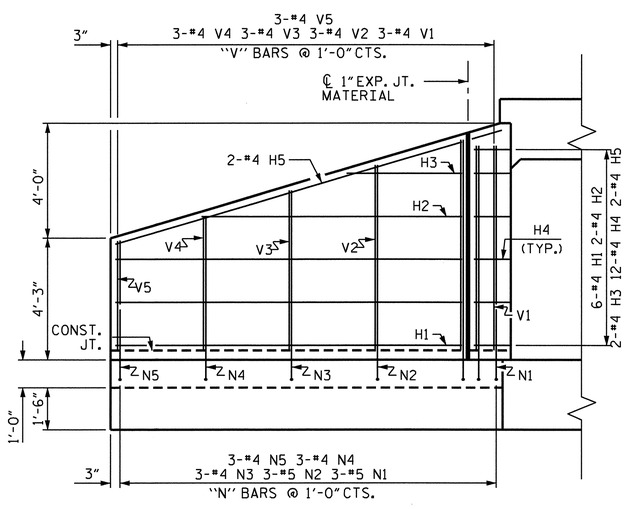

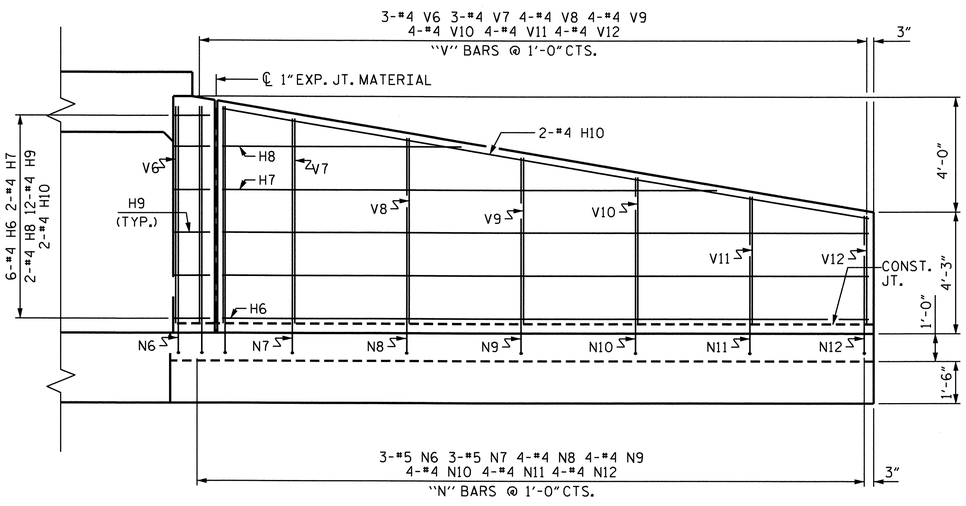

ELEVATION W2

(STAGE I)

ELEVATION W1

(STAGE II)

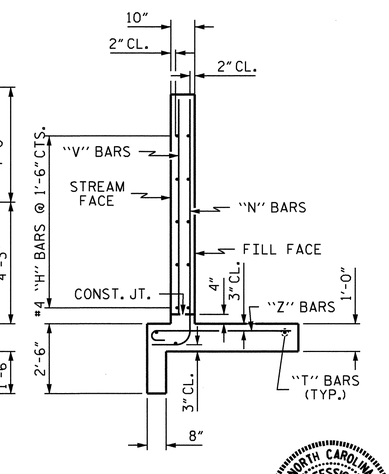

TYPICAL WING SECTION

NORTH CAROLINA PROFESSIONAL SEAL 025516 ENGINEER EMILY E. MURRAY
8/29/14

PROJECT NO. U-4007B
ONSLOW COUNTY
STATION: 79+25.50 -Y2-

SHEET 10 OF 10

STATE OF NORTH CAROLINA
DEPARTMENT OF TRANSPORTATION
RALEIGH

WINGS FOR RIGHT EXTENSION CONCRETE BOX CULVERT

H = 7'-0" SLOPE = 3:1
64° SKEW

REVISIONS						SHEET NO.
NO.	BY:	DATE:	NO.	BY:	DATE:	C-10
1			3			TOTAL SHEETS
2			4			10

ASSEMBLED BY : M. L. RORIE DATE : 7-7-10
CHECKED BY : A. M. LEE DATE : 7-12-10

DRAWN BY : CCJ 11/99
CHECKED BY : RWW 03/00

24-AUG-2010 09:02
Z:\TIPProjects-U\U4007b\Structures\FinalPlans\Str. #6\U4007B_SD_CU_06.dgn
pdkins

STR. #6

GEOTECHNICAL ENGINEER	ENGINEER
NORTH CAROLINA PROFESSIONAL SEAL 027869 ENGINEER DAVID L. TEAGUE — SIGNATURE: David L. Teague DATE: 8/10/10	SIGNATURE DATE

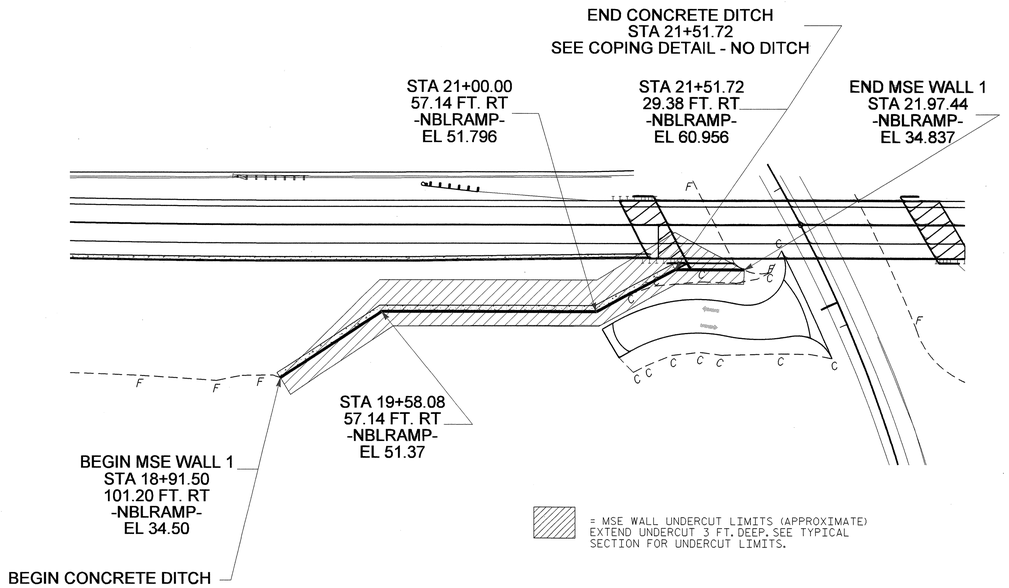

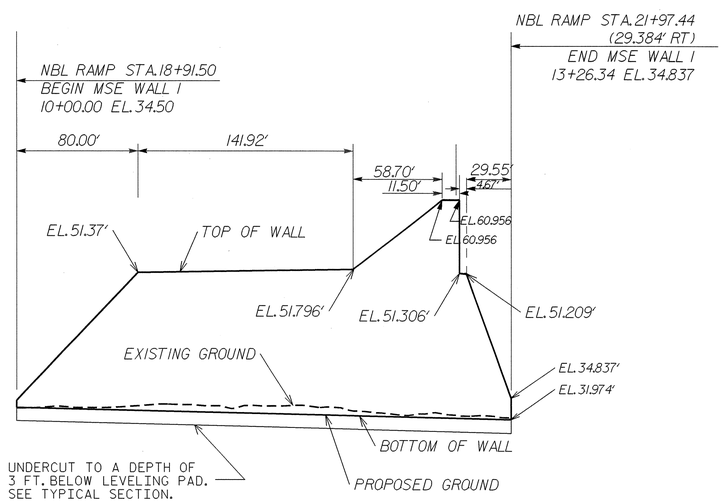

MSE RETAINING WALL 1

RT OF NBL RAMP

NOTES:

FOR MECHANICALLY STABILIZED EARTH (MSE) RETAINING WALLS, SEE MECHANICALLY STABILIZED EARTH RETAINING WALLS PROVISION.

DO NOT USE STANDARD SIZE NO. 2S OR 2MS FOR SELECT MATERIAL FOR RETAINING WALL NO. 1.

DO NOT USE AN MSE WALL SYSTEM WITH SEGMENTAL RETAINING WALL UNITS FOR RETAINING WALL NO. 1.

CAST-IN-PLACE REINFORCED CONCRETE COPING IS REQUIRED FOR RETAINING WALL NO 1.

A DRAIN IS REQUIRED FOR RETAINING WALL NO. 1.

BEFORE BEGINNING MSE WALL DESIGN FOR RETAINING WALL NO. 1, SURVEY WALL LOCATION AND SUBMIT A REVISED WALL PROFILE VIEW (WALL ENVELOPE) FOR REVIEW. DO NOT START WALL DESIGN OR CONSTRUCTION UNTIL THE REVISED WALL ENVELOPE IS ACCEPTED.

DESIGN RETAINING WALL NO. 1 FOR WALL HEIGHTS EQUAL TO THE DESIGN HEIGHT (DIFFERENCE BETWEEN GRADE ELEVATION AND BOTTOM OF WALL ELEVATION) PLUS EMBEDMENT (DIFFERENCE BETWEEN BOTTOM OF WALL ELEVATION AND TOP OF LEVELING PAD ELEVATION).

DESIGN RETAINING WALL NO. 1 FOR THE FOLLOWING:
1) MINIMUM SERVICE LIFE = 100 YEARS
2) ALLOWABLE BEARING CAPACITY = 5000 PSF
3) MINIMUM REINFORCEMENT RATIO (L/H) = 1.0
4) SELECT MATERIAL PARAMETERS:

MATERIAL STANDARD SIZE NO. (IN ACCORDANCE WITH SECTIONS 1005 AND 1014 OF THE STANDARD SPECIFICATIONS)	UNIT WEIGHT (γ) PCF	FRICTION ANGLE (ϕ) DEGREES	COHESION (c) PSF
57, 67 AND 78M	110	38	0

6) IN-SITU ASSUMED MATERIAL PARAMETERS:

MATERIAL TYPE	UNIT WEIGHT (γ) PCF	FRICTION ANGLE (ϕ) DEGREES	COHESION (c) PSF
BACKFILL	120	30	0
FOUNDATION	110	30	0

FOUNDATIONS FOR END BENT NO. 1 LOCATED AT STATION 21+47.17 -NBLRAMP- WILL INTERFERE WITH REINFORCEMENT FOR RETAINING WALL NO. 1. SEE "FOUNDATION LAYOUT" SHEET FOR FOUNDATION LOCATIONS.

DO NOT PLACE LEVELING PAD CONCRETE, SELECT MATERIAL OR REINFORCEMENT FOR RETAINING WALL NO. 1 UNTIL OBTAINING APPROVAL OF THE EXCAVATION DEPTH AND FOUNDATION MATERIAL.

DESIGN THE WALL PANELS TO BE RECTANGULAR IN SHAPE. THE JOINTS BETWEEN ALL ROWS OF PANELS SHOULD LINE UP IN THE VERTICAL DIRECTION. HORIZONTAL JOINTS SHOULD BE STAGGERED.

UNDERCUT TO A DEPTH OF 3 FT. BELOW THE LEVELING PAD FOR THE LENGTH OF THE WALL. THE LIMITS OF UNDERCUT ARE FROM THE LEVELING PAD TO THE LIMITS OF REINFORCEMENT. UNDERCUT WILL BE CONSIDERED INCIDENTAL TO THE COST OF THE MSE WALL. NO SEPARATE PAYMENT WILL BE MADE.

THE BASE OF THE UNDERCUT SHALL BE INSPECTED BY THE ENGINEER PRIOR TO BACKFILLING.

BACKFILL THE UNDERCUT WITH AGGREGATE MATERIAL TO MATCH THE REINFORCED ZONE OF THE WALL. PLACE AND COMPACT THE AGGREGATE IN ACCORDANCE WITH THE MSE RETAINING WALL SPECIAL PROVISION.

ESTIMATED QUANTITY MSE WALL .....6,500 SQ. FT.

PROJECT NO.: U-4007B (35008.1.1)
ONSLOW ***COUNTY***
STATION: 18+91.50 -NBLRAMP- TO 21+97.44
SHEET 1 OF 2 -NBLRAMP-

PREPARED BY: D. TEAGUE	DATE: 7/10
REVIEWED BY: E. WILLIAMS	DATE: 7/10

GEOTECHNICAL ENGINEERING UNIT

☐ ***EASTERN REGIONAL OFFICE***
☐ ***WESTERN REGIONAL OFFICE***
☒ ***CONTRACT OFFICE***

STATE OF NORTH CAROLINA
DEPARTMENT OF TRANSPORTATION
RALEIGH

MSE WALL 1 - PLAN VIEW, WALL ENVELOPE, NOTES

REVISIONS							SHEET NO.
NO.	BY	DATE	NO.	BY	DATE		W-1
1			3				TOTAL SHEETS
2			4				4

GEOTECHNICAL ENGINEER	ENGINEER
NORTH CAROLINA PROFESSIONAL SEAL 027869 ENGINEER DAVID L. TEAGUE — D. L. Teague 8/10/10	
SIGNATURE / DATE	SIGNATURE / DATE

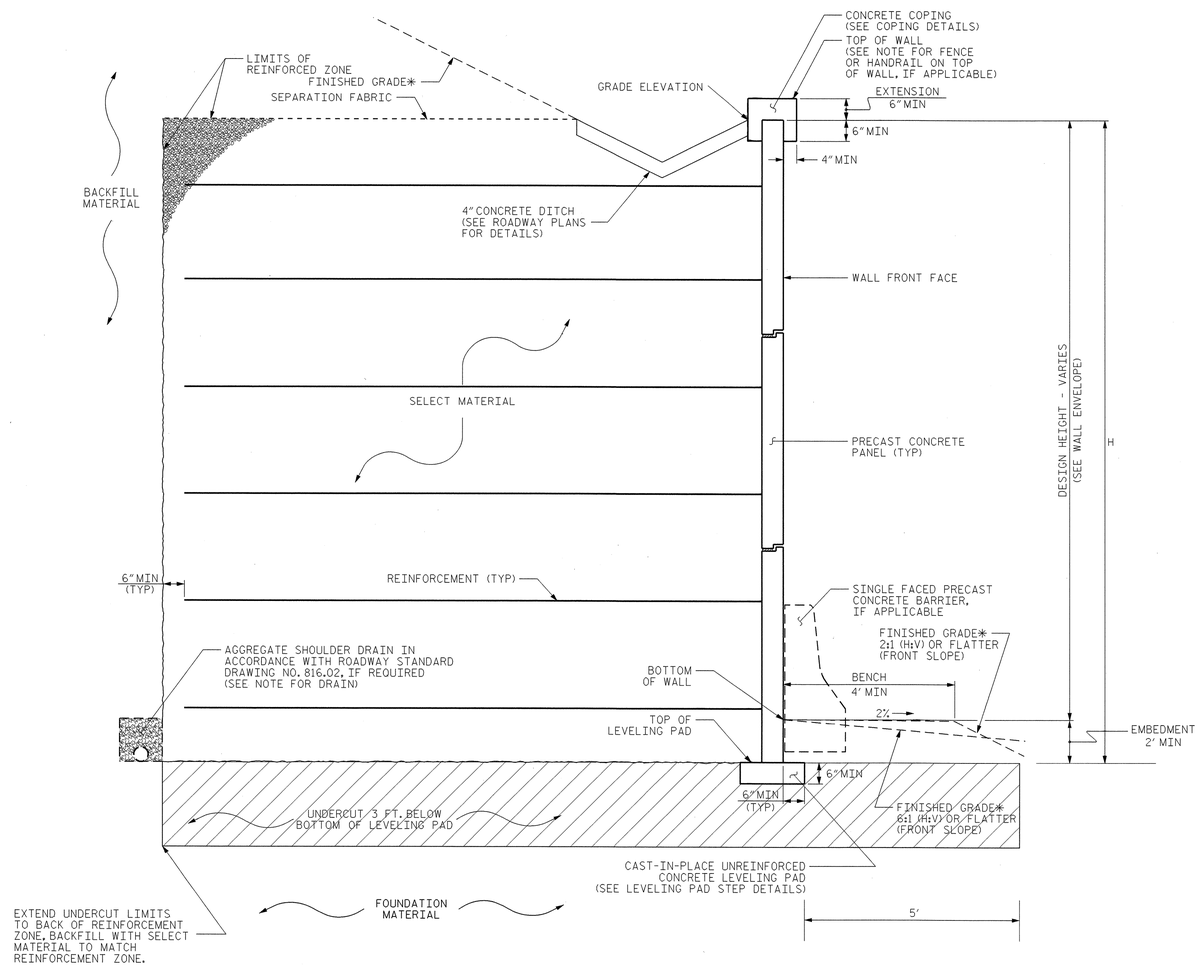

MSE WALL WITH PRECAST PANELS - TYPICAL SECTION

*SEE ROADWAY PLANS FOR FINISHED GRADE AND DITCH DETAILS.

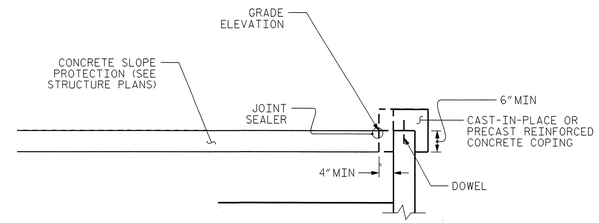

COPING DETAIL - NO DITCH

AT THE CONTRACTOR'S OPTION, CONNECT COPING TO PANELS WITH DOWELS OR EXTEND COPING DOWN BACK OF PANELS.
*SEE ROADWAY PLANS FOR FINISHED GRADE AND DITCH DETAILS.

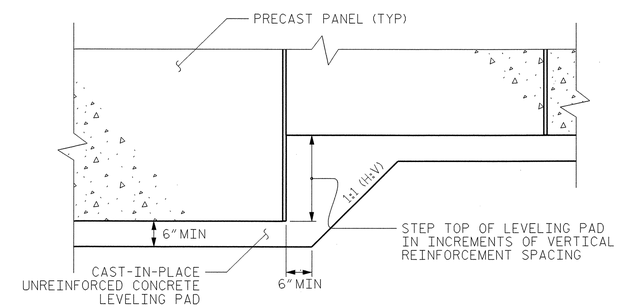

PRECAST CONCRETE PANELS

LEVELING PAD STEP DETAILS

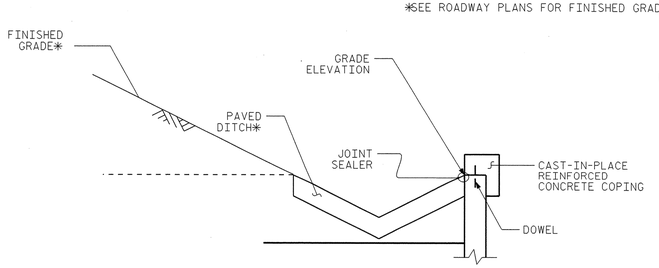

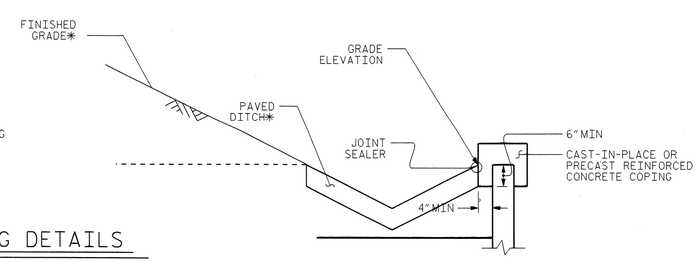

COPING DETAILS

AT THE CONTRACTOR'S OPTION, CONNECT COPING TO PANELS WITH DOWELS OR EXTEND COPING DOWN BACK OF PANELS.
*SEE ROADWAY PLANS FOR FINISHED GRADE AND DITCH DETAILS.

PROJECT NO.: U-4007B (35008.1.1)
ONSLOW **COUNTY**
STATION: 18+91.50 -NBLRAMP- TO 21+97.44
SHEET 2 OF 2 -NBLRAMP-

GEOTECHNICAL ENGINEERING UNIT

☐ EASTERN REGIONAL OFFICE
☐ WESTERN REGIONAL OFFICE
☒ CONTRACT OFFICE

STATE OF NORTH CAROLINA DEPARTMENT OF TRANSPORTATION RALEIGH

MSE WALL 1 - TYPICAL SECTION AND DETAILS

REVISIONS						SHEET NO.
NO.	BY	DATE	NO.	BY	DATE	W-2
1			3			TOTAL SHEETS
2			4			4

PREPARED BY:	D. TEAGUE	DATE:	7/10
REVIEWED BY:	E. WILLIAMS	DATE:	7/10

GEOTECHNICAL ENGINEER	ENGINEER
NORTH CAROLINA PROFESSIONAL SEAL 027869 ENGINEER DAVID L. TEAGUE — D.L. Teague 8/10/10	
SIGNATURE DATE	SIGNATURE DATE

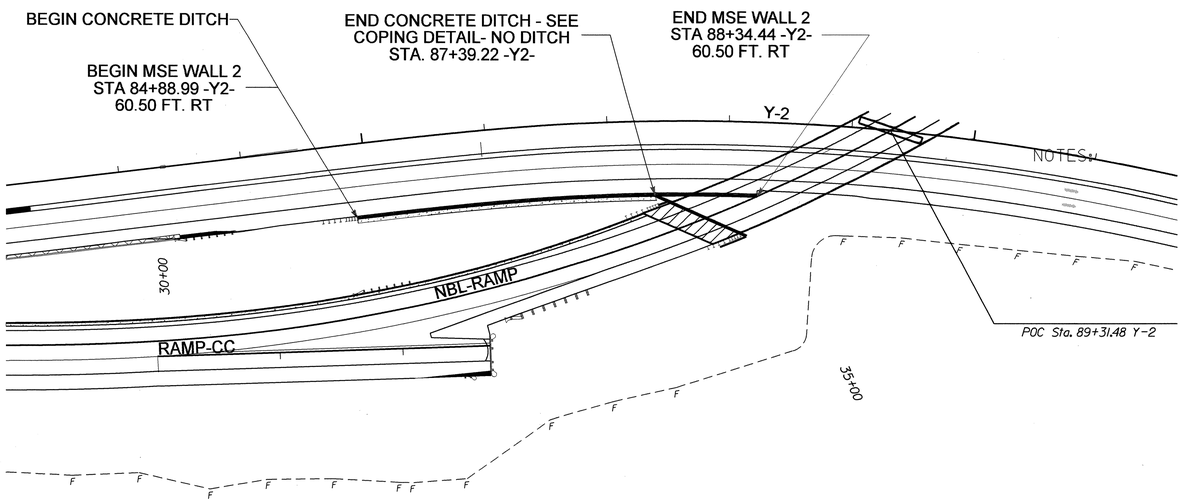

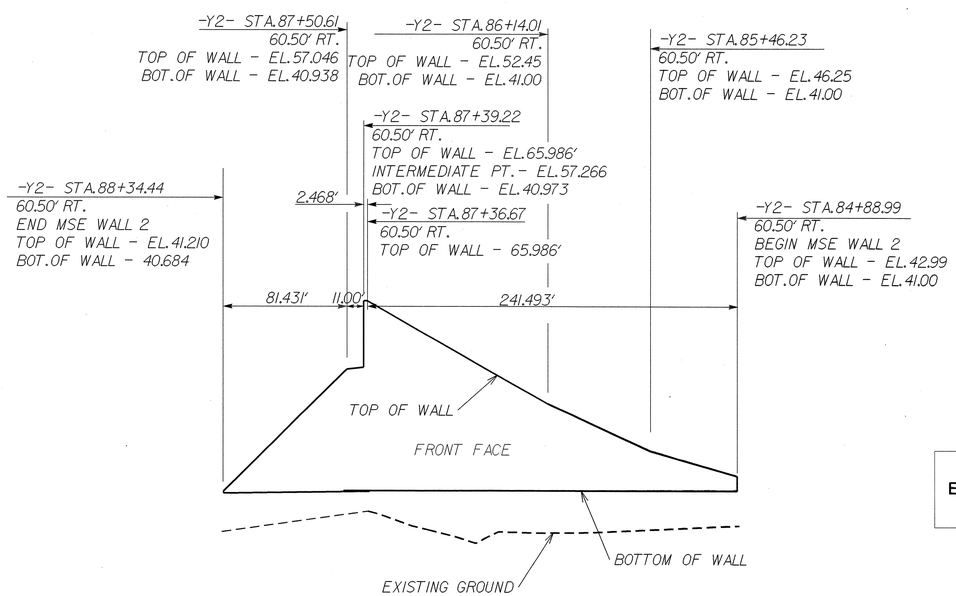

MSE RETAINING WALL 2

LT OF NBL RAMP

NOTES:

FOR MECHANICALLY STABILIZED EARTH (MSE) RETAINING WALLS, SEE MECHANICALLY STABILIZED EARTH RETAINING WALLS PROVISION.

DO NOT USE STANDARD SIZE NO. 2S OR 2MS FOR SELECT MATERIAL FOR RETAINING WALL NO. 2.

DO NOT USE AN MSE WALL SYSTEM WITH SEGMENTAL RETAINING WALL UNITS FOR RETAINING WALL NO 2.

CAST-IN-PLACE REINFORCED CONCRETE COPING IS REQUIRED FOR RETAINING WALL NO 2.

A DRAIN IS REQUIRED FOR RETAINING WALL NO. 2.

BEFORE BEGINNING MSE WALL DESIGN FOR RETAINING WALL NO. 2, SURVEY WALL LOCATION AND SUBMIT A REVISED WALL PROFILE VIEW (WALL ENVELOPE) FOR REVIEW. DO NOT START WALL DESIGN OR CONSTRUCTION UNTIL THE REVISED WALL ENVELOPE IS ACCEPTED.

DESIGN RETAINING WALL NO. 2 FOR WALL HEIGHTS EQUAL TO THE DESIGN HEIGHT (DIFFERENCE BETWEEN GRADE ELEVATION AND BOTTOM OF WALL ELEVATION) PLUS EMBEDMENT (DIFFERENCE BETWEEN BOTTOM OF WALL ELEVATION AND TOP OF LEVELING PAD ELEVATION).

DESIGN RETAINING WALL NO. 2 FOR THE FOLLOWING:
1) MINIMUM SERVICE LIFE = 100 YEARS
2) ALLOWABLE BEARING CAPACITY = 4000 PSF
3) MINIMUM REINFORCEMENT RATIO (L/H) = 1.0
4) SELECT MATERIAL PARAMETERS:

MATERIAL STANDARD SIZE NO. (IN ACCORDANCE WITH SECTIONS 1005 AND 1014 OF THE STANDARD SPECIFICATIONS)	UNIT WEIGHT (γ) PCF	FRICTION ANGLE (ϕ) DEGREES	COHESION (c) PSF
57, 67 AND 78M	110	38	0

6) IN-SITU ASSUMED MATERIAL PARAMETERS:

MATERIAL TYPE	UNIT WEIGHT (γ) PCF	FRICTION ANGLE (ϕ) DEGREES	COHESION (c) PSF
BACKFILL	120	30	0
FOUNDATION	120	30	0

FOUNDATIONS FOR END BENT NO. 1 LOCATED AT STATION 34+50.24 -NBLRAMP- WILL INTERFERE WITH REINFORCEMENT FOR RETAINING WALL NO. 2. SEE "FOUNDATION LAYOUT" SHEET FOR FOUNDATION LOCATIONS.

DO NOT PLACE LEVELING PAD CONCRETE, SELECT MATERIAL OR REINFORCEMENT FOR RETAINING WALL NO. 2 UNTIL OBTAINING APPROVAL OF THE EXCAVATION DEPTH AND FOUNDATION MATERIAL.

DESIGN THE WALL PANELS TO BE RECTANGULAR IN SHAPE. THE JOINTS BETWEEN ALL ROWS OF PANELS SHOULD LINE UP IN THE VERTICAL DIRECTION. HORIZONTAL JOINTS SHOULD BE STAGGERED.

ESTIMATED QUANTITY MSE WALL .....3,900 SQ. FT.

PROJECT NO.: U-4007B (35008.1.1)
ONSLOW **COUNTY**
STATION: 84+88.99 -Y2- TO 88+34.44 -Y2-
SHEET 1 OF 2

PREPARED BY: D. TEAGUE	DATE: 7/10
REVIEWED BY: E. WILLIAMS	DATE: 7/10

GEOTECHNICAL ENGINEERING UNIT

☐ *EASTERN REGIONAL OFFICE*
☐ *WESTERN REGIONAL OFFICE*
☒ *CONTRACT OFFICE*

STATE OF NORTH CAROLINA
DEPARTMENT OF TRANSPORTATION
RALEIGH

MSE WALL 2 - PLAN VIEW, WALL ENVELOPE, NOTES

REVISIONS						SHEET NO.
NO.	BY	DATE	NO.	BY	DATE	W-3
1			3			TOTAL SHEETS
2			4			4

GEOTECHNICAL ENGINEER	ENGINEER
NORTH CAROLINA PROFESSIONAL SEAL 027869 ENGINEER DAVID L. TEAGUE — D. L. Teague 8/10/10	
SIGNATURE DATE	SIGNATURE DATE

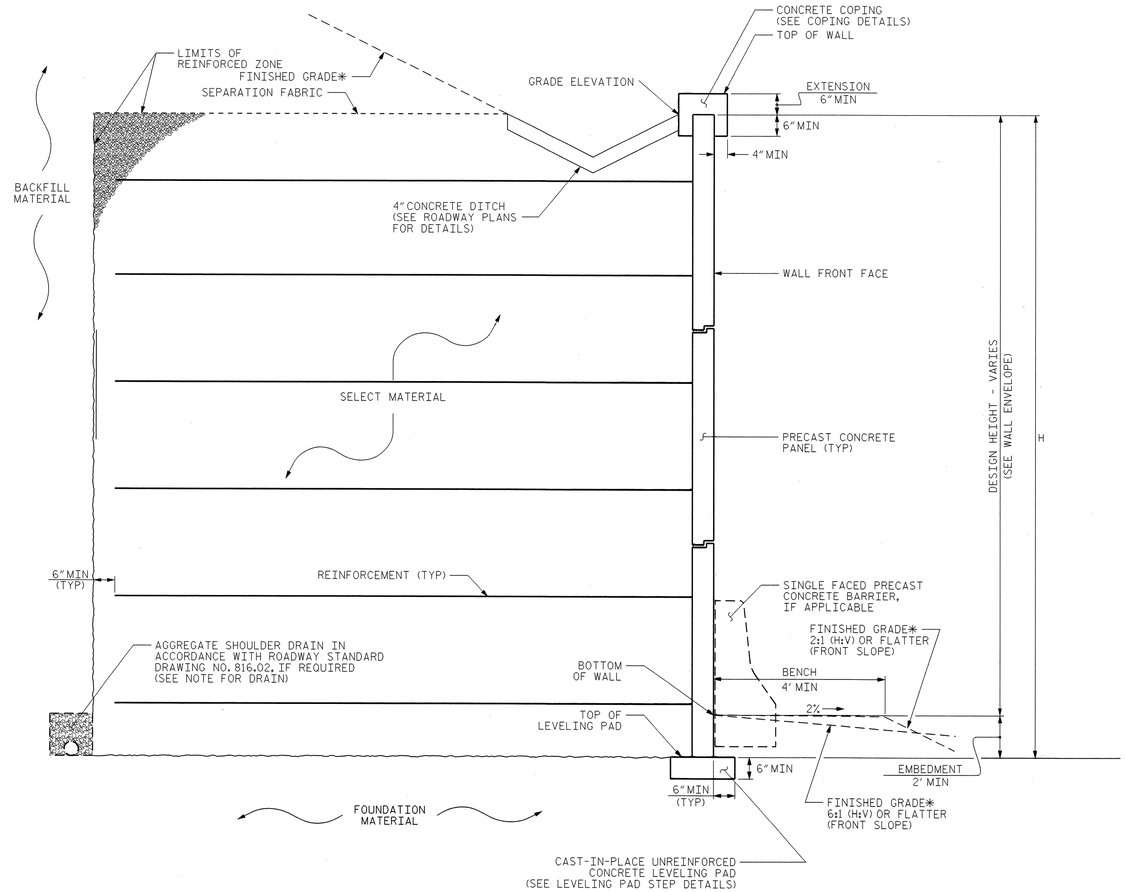

MSE WALL WITH PRECAST PANELS - TYPICAL SECTION

*SEE ROADWAY PLANS FOR FINISHED GRADE AND DITCH DETAILS.

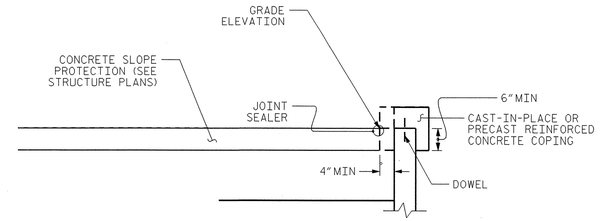

COPING DETAIL - NO DITCH

AT THE CONTRACTOR'S OPTION, CONNECT COPING TO PANELS WITH DOWELS OR EXTEND COPING DOWN BACK OF PANELS.
*SEE ROADWAY PLANS FOR FINISHED GRADE AND DITCH DETAILS.

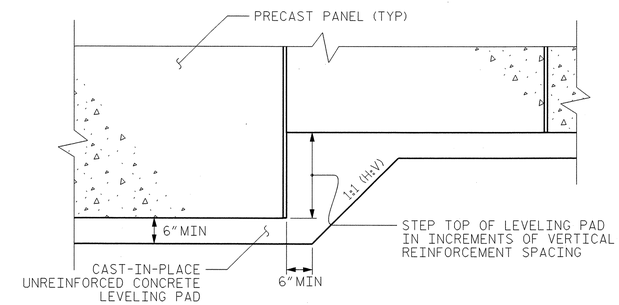

PRECAST CONCRETE PANELS

LEVELING PAD STEP DETAILS

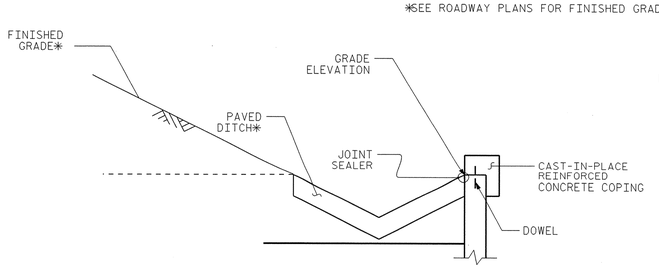

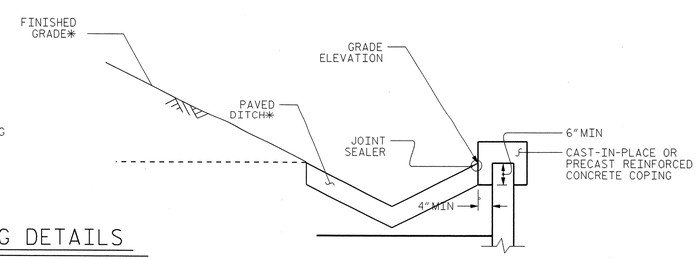

COPING DETAILS

AT THE CONTRACTOR'S OPTION, CONNECT COPING TO PANELS WITH DOWELS OR EXTEND COPING DOWN BACK OF PANELS.
*SEE ROADWAY PLANS FOR FINISHED GRADE AND DITCH DETAILS.

PREPARED BY:	D. TEAGUE	DATE:	7/10
REVIEWED BY:	E. WILLIAMS	DATE:	7/10

PROJECT NO.: U-4007B (35008.1.1)
ONSLOW **COUNTY**
STATION: 84+88.99 -Y2- TO 88+34.44 -Y2-
SHEET 2 OF 2 -NBLRAMP-

GEOTECHNICAL ENGINEERING UNIT

☐ *EASTERN REGIONAL OFFICE*
☐ *WESTERN REGIONAL OFFICE*
☒ *CONTRACT OFFICE*

STATE OF NORTH CAROLINA DEPARTMENT OF TRANSPORTATION RALEIGH

MSE WALL 2 - TYPICAL SECTION AND DETAILS

REVISIONS						SHEET NO.
NO.	BY	DATE	NO.	BY	DATE	W-4
1			3			TOTAL SHEETS
2			4			4

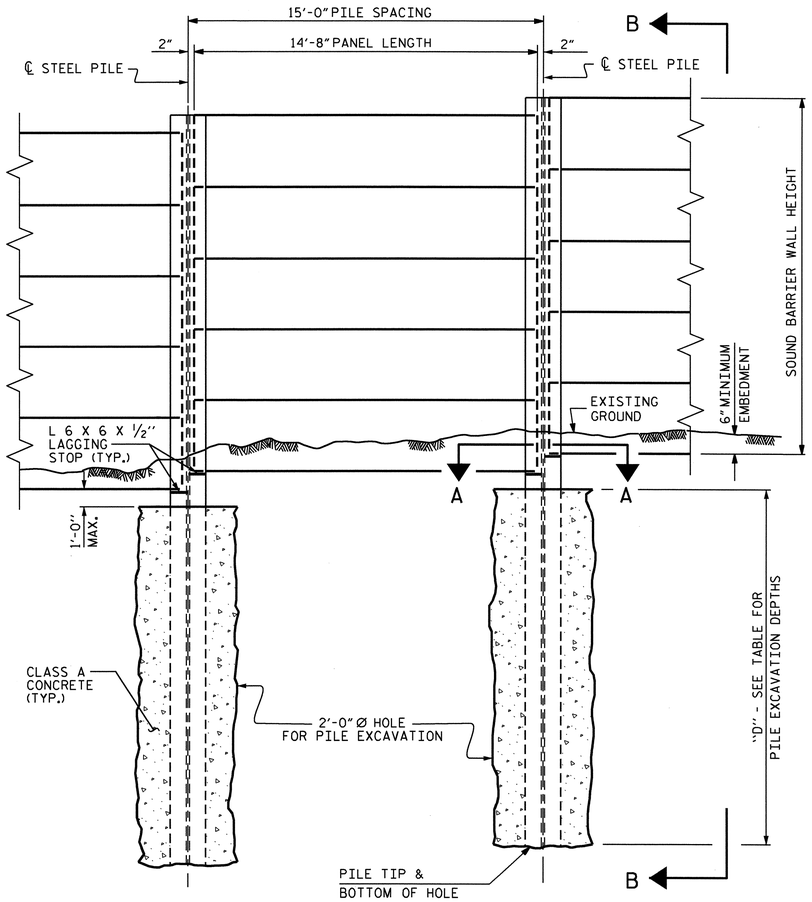

ELEVATION

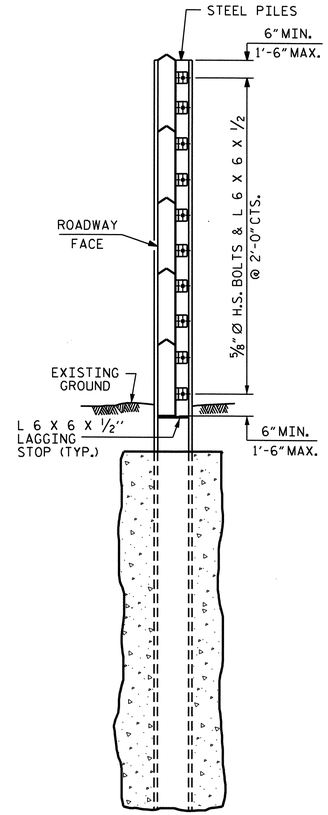

SECTION B-B

PILE EXCAVATION

WALL #1	WALL STATIONS FROM : STA. 41+85.00 -L- (49.0' LEFT) TO : STA. 48+25.00 -L- (49.0' LEFT)	
PILE SPACING	HOLE Ø	DEPTH "D"
15'-0"	2'-0"	23'-0"

NOTES

FOR SOUND BARRIER WALL, SEE SPECIAL PROVISIONS.

CONSTRUCT SOUND BARRIER WALL TO LINES AND GRADES SHOWN ON THE ROADWAY PLANS.

PROVIDE PANELS WITH A FLAT BOTTOM.

USE STEEL PILES, ANGLES, AND LAGGING STOPS MEETING THE REQUIREMENTS OF AASHTO M270, GRADE 50. GALVANIZE ALL STEEL COMPONENTS INCLUDING PILES, ANGLES, LAGGING STOPS, BOLTS, NUTS, AND WASHERS IN ACCORDANCE WITH SECTION 1076 OF THE STANDARD SPECIFICATIONS. REPAIR ANY DAMAGED GALVANIZATION IN ACCORDANCE WITH ARTICLE 1076-6 OF THE STANDARD SPECIFICATIONS.

VERIFY THE LOCATION OF UNDERGROUND UTILITIES BEFORE DRILLING HOLES TO ENSURE SUFFICIENT CLEARANCE IS AVAILABLE.

AT THE CONTRACTOR'S OPTION, USE AN APPROVED NON-SHRINK NON-METALLIC GROUT BETWEEN THE FLANGES OF THE STEEL PILES TO SUPPORT THE BOTTOM PANEL IN LIEU OF LAGGING STOPS.

AT THE CONTRACTOR'S OPTION, USE CONTINUOUS FLIGHT AUGER PILES IN LIEU OF PILE EXCAVATION FOR SOUND BARRIER WALL FOUNDATION. SEE CONTINUOUS FLIGHT AUGER PILES FOR SOUND BARRIER WALLS SPECIAL PROVISION.

ADJUST PILE EXCAVATION ELEVATIONS TO MAINTAIN 6" MINIMUM EMBEDMENT OF THE BOTTOM PANEL.

USE CLASS AA AND CLASS A CONCRETE FOR PANELS AND PILE EXCAVATION BACKFILL, RESPECTIVELY, IN ACCORDANCE WITH ARTICLE 1000-4 OF THE STANDARD SPECIFICATIONS.

PROVIDE PLATES AND ANGLES TO SECURE PANELS 6" LONG AS MEASURED ALONG THE STEEL PILE.

AT THE CONTRACTOR'S OPTION, USE EITHER 'W' OR 'HP' PILES THAT SATISFY THE MINIMUM PILE SIZE REQUIRED IN THE "EXPOSURE CATEGORY" TABLE. PILES SMALLER THAN W12 OR HP12 ARE NOT PERMITTED.

DO NOT SPLICE STEEL PILES.

FOR SOUND BARRIER WALL STATIONS, OFFSETS, AND WALL ENVELOPE, SEE ROADWAY PLANS.

EXPOSURE CATEGORY D

DESIGN WIND PRESSURE =
62 PSF (0' < H ≤ 14'); 71 PSF (14' < H ≤ 29')

PILE SPACING	MAXIMUM WALL HEIGHT (H)	MINIMUM W SIZE STEEL PILES	MINIMUM HP SIZE STEEL PILES
15'-0"	H ≤ 15'	W 12 X 40 W 14 X 48	HP 12 X 53 HP 14 X 73
	15' < H ≤ 20'	W 12 X 65 W 14 X 61	HP 12 X 63 HP 14 X 73

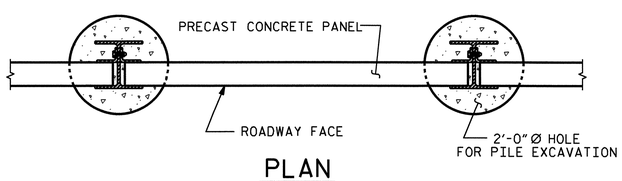

PLAN

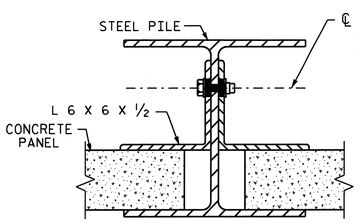

CONNECTION DETAIL

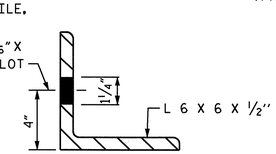

ANGLE DETAIL

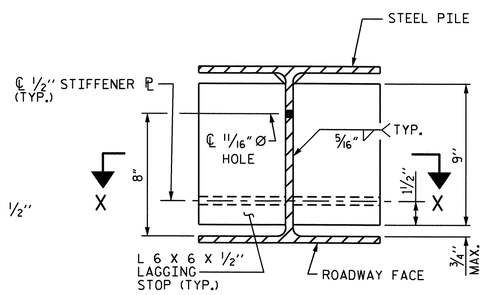

SECTION A-A

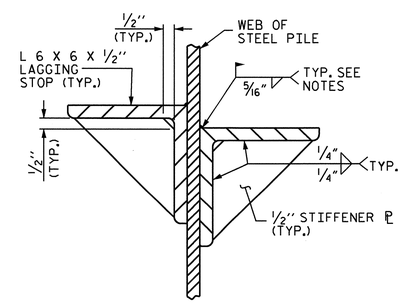

SECTION X-X

PROJECT NO. U-4007B
ONSLOW COUNTY
STATION: 41+85.00 -L- TO 48+25.00 -L-
SHEET 1 OF 2

STATE OF NORTH CAROLINA
DEPARTMENT OF TRANSPORTATION
RALEIGH
STANDARD
SOUND BARRIER WALL

NORTH CAROLINA PROFESSIONAL SEAL 025516 ENGINEER
8/24/10

REVISIONS							SHEET NO.
NO.	BY:	DATE:	NO.	BY:	DATE:		SW-1
1			3				TOTAL SHEETS
2			4				2

ASSEMBLED BY : B. N. BARODAWALA	DATE : 5-13-10		
CHECKED BY : T. L. COGGINS	DATE : 6-24-10		
DRAWN BY : JAD 5/01	REV. 2/4/03	RWW/CVC	
CHECKED BY : RDR 5/01	REV. 5/7/03	RWW/JTE	
	REV. 5/1/06RR	KMM/GM	

11-AUG-2010 10:52
Z:\TIPProjects-U\U4007b\Structures\Final Plans\Str. #9\u-4007b_sd_SBW.dgn
amurray

(SHT 4) STD. NO. SBW1

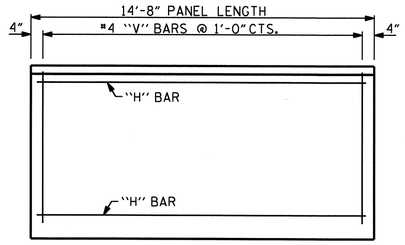

FRONT ELEVATION
OF UPPER PRECAST PANELS

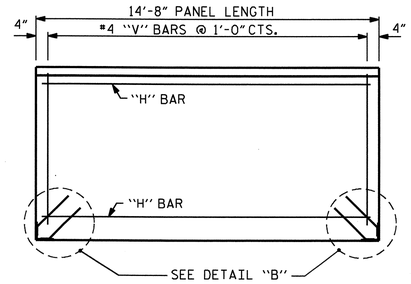

FRONT ELEVATION
OF BOTTOM PRECAST PANEL

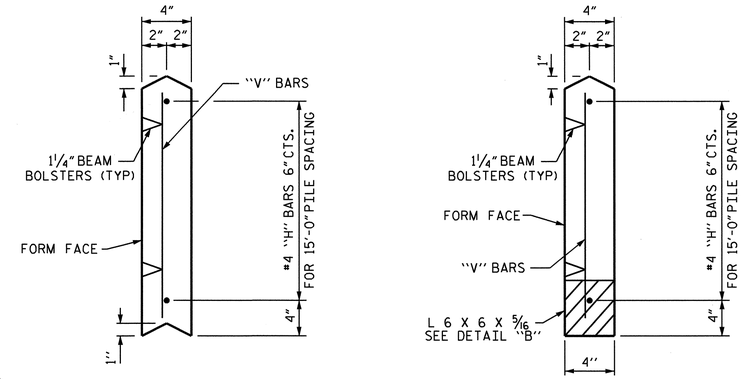

SECTION THROUGH PRECAST PANELS

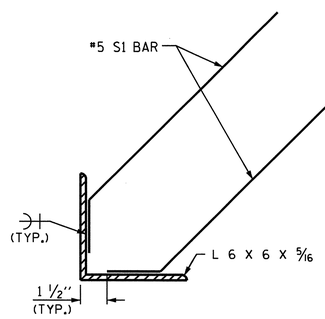

DETAIL "B"

ADDITIONAL BARS FOR ONE BOTTOM PANEL					
NO.	BAR	SIZE	TYPE	LENGTH	WEIGHT (lb)
4	S1	#5	1	1'-6"	6

BAR TYPE

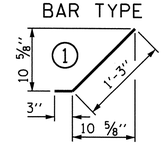

QUANTITIES FOR ONE PRECAST PANEL (FOR 15'-0" PILE SPACING)													
PANEL HEIGHT	CLASS AA CONCRETE	BAR TYPES											
		HORIZONTAL						VERTICAL					
	C.Y.	NO.	BAR	SIZE	TYPE	LENGTH	WEIGHT (lb)	NO.	BAR	SIZE	TYPE	LENGTH	WEIGHT (lb)
3'-0"	0.54	6	H1	#4	STR	14'-4"	57	15	V1	#4	STR	2'-8"	27
4'-0"	0.72	8	H2	#4	STR	14'-4"	77	15	V2	#4	STR	3'-8"	37
5'-0"	0.91	10	H3	#4	STR	14'-4"	96	15	V3	#4	STR	4'-8"	47
6'-0"	1.09	12	H4	#4	STR	14'-4"	115	15	V4	#4	STR	5'-8"	57

BILL OF MATERIAL	
SOUND BARRIER WALL	10,080 S.F.
QUANTITIES PROVIDED ARE APPROXIMATE AND ARE FOR BID PURPOSES ONLY.	

PROJECT NO. U-4007B

ONSLOW COUNTY

STATION: 41+85.00 -L- TO 48+25.00 -L-

SHEET 2 OF 2

STATE OF NORTH CAROLINA
DEPARTMENT OF TRANSPORTATION
RALEIGH

STANDARD

SOUND BARRIER WALL DETAILS

NORTH CAROLINA PROFESSIONAL SEAL 025516 ENGINEER EMILY E. MURRAY
8/24/10

REVISIONS						SHEET NO.
NO.	BY:	DATE:	NO.	BY:	DATE:	SW-2
1			3			TOTAL SHEETS
2			4			2

STD. NO. SBW2

ASSEMBLED BY : B. N. BARODAWALA DATE : 5-13-10			
CHECKED BY : T. L. COGGINS DATE : 6-24-10			
DRAWN BY : JAD 5/01	REV. 7/10/01	RWW/LES	
CHECKED BY : RDR 5/01	REV. 5/7/03	RWW/JTE	
	REV. 5/1/06R	KMM/GM	

11-AUG-2010 10:53
Z:\TIPProjects-U\U4007b\Structures\FinalPlans\Str. #9\u-4007b_sd_SBW.dgn
emurray

STANDARD NOTES

DESIGN DATA:

SPECIFICATIONS	A.A.S.H.T.O. (CURRENT)
LIVE LOAD	SEE PLANS
IMPACT ALLOWANCE	SEE A.A.S.H.T.O.
STRESS IN EXTREME FIBER OF	
STRUCTURAL STEEL - AASHTO M270 GRADE 36	20,000 LBS. PER SQ. IN.
- AASHTO M270 GRADE 50W	27,000 LBS. PER SQ. IN.
- AASHTO M270 GRADE 50	27,000 LBS. PER SQ. IN.
REINFORCING STEEL IN TENSION	
GRADE 60	24,000 LBS. PER SQ. IN.
CONCRETE IN COMPRESSION	1,200 LBS. PER SQ. IN.
CONCRETE IN SHEAR	SEE A.A.S.H.T.O.
STRUCTURAL TIMBER - TREATED OR	
UNTREATED - EXTREME FIBER STRESS	1,800 LBS. PER SQ. IN.
COMPRESSION PERPENDICULAR TO GRAIN OF TIMBER	375 LBS. PER SQ. IN.
EQUIVALENT FLUID PRESSURE OF EARTH	30 LBS. PER CU. FT. (MINIMUM)

MATERIAL AND WORKMANSHIP:

EXCEPT AS MAY OTHERWISE BE SPECIFIED ON PLANS OR IN THE SPECIAL PROVISIONS, ALL MATERIAL AND WORKMANSHIP SHALL BE IN ACCORDANCE WITH THE 2006 "STANDARD SPECIFICATIONS FOR ROADS AND STRUCTURES" OF THE N. C. DEPARTMENT OF TRANSPORTATION.

STEEL SHEET PILING FOR PERMANENT OR TEMPORARY APPLICATIONS SHALL BE HOT ROLLED.

CONCRETE:

UNLESS OTHERWISE REQUIRED ON PLANS, CLASS A CONCRETE SHALL BE USED FOR ALL PORTIONS OF ALL STRUCTURES WITH THE EXCEPTION THAT: CLASS AA CONCRETE SHALL BE USED IN BRIDGE SUPERSTRUCTURES, ABUTMENT BACKWALLS, AND APPROACH SLABS; AND CLASS B CONCRETE SHALL BE USED FOR SLOPE PROTECTION AND RIP RAP.

CONCRETE CHAMFERS:

UNLESS OTHERWISE NOTED ON THE PLANS, ALL EXPOSED CORNERS ON STRUCTURES SHALL BE CHAMFERED 3/4" WITH THE FOLLOWING EXCEPTIONS: TOP CORNERS OF CURBS MAY BE ROUNDED TO 1-1/2" RADIUS WHICH IS BUILT INTO CURB FORMS; CORNERS OF TRANSVERSE FLOOR EXPANSION JOINTS SHALL BE ROUNDED WITH A 1/4" FINISHING TOOL UNLESS OTHERWISE REQUIRED ON PLANS; AND CORNERS OF EXPANSION JOINTS IN THE ROADWAY FACES AND TOPS OF CURBS AND SIDEWALKS SHALL BE ROUNDED TO A 1/4" RADIUS WITH A FINISHING STONE OR TOOL UNLESS OTHERWISE REQUIRED ON PLANS.

DOWELS:

DOWELS WHEN INDICATED ON PLANS AS FOR CULVERT EXTENSIONS, SHALL BE EMBEDDED AT LEAST 12" INTO THE OLD CONCRETE AND GROUTED INTO PLACE WITH 1:2 CEMENT MORTAR.

ALLOWANCE FOR DEAD LOAD DEFLECTION, SETTLEMENT, ETC. IN CASTING SUPERSTRUCTURES:

BRIDGES SHALL BE BUILT ON THE GRADE OR VERTICAL CURVE SHOWN ON PLANS. SLABS, CURBS AND PARAPETS SHALL CONFORM TO THE GRADE OR CURVE.

ALL DIMENSIONS WHICH ARE GIVEN IN SECTION AND ARE AFFECTED BY DEAD LOAD DEFLECTIONS ARE DIMENSIONS AT CENTER LINE OF BEARING UNLESS OTHERWISE NOTED ON PLANS. IN SETTING FORMS FOR STEEL BEAM BRIDGES AND PRESTRESSED CONCRETE GIRDER BRIDGES, ADJUSTMENTS SHALL BE MADE DUE TO THE DEAD LOAD DEFLECTIONS FOR THE ELEVATIONS SHOWN. WHERE BLOCKS ARE SHOWN OVER BEAMS FOR BUILDING UP TO THE SLAB, THE VERTICAL DIMENSIONS OF THE BLOCKS SHALL BE ADJUSTED BETWEEN BEARINGS TO COMPENSATE FOR DEAD LOAD DEFLECTIONS, VERTICAL CURVE ORDINATE, AND ACTUAL BEAM CAMBER. WHERE BOTTOM OF SLAB IS IN LINE WITH BOTTOM OF TOP FLANGES, DEPTH OF SLAB BETWEEN BEARINGS SHALL BE ADJUSTED TO COMPENSATE FOR DEAD LOAD DEFLECTION, VERTICAL CURVE ORDINATE, AND ACTUAL BEAM CAMBER.

IN SETTING FALSEWORK AND FORMS FOR REINFORCED CONCRETE SPANS, AN ALLOWANCE SHALL BE MADE FOR DEAD LOAD DEFLECTIONS, SETTLEMENT OF FALSEWORK, AND PERMANENT CAMBER WHICH SHALL BE PROVIDED FOR IN ADDITION TO THE ELEVATIONS SHOWN. AFTER REMOVAL OF THE FALSEWORK, THE FINISHED STRUCTURES SHALL CONFORM TO THE PROFILE AND ELEVATIONS SHOWN ON THE PLANS AND CONSTRUCTION ELEVATIONS FURNISHED BY THE ENGINEER.

DETAILED DRAWINGS FOR FALSEWORK OR FORMS FOR BRIDGE SUPERSTRUCTURE AND ANY STRUCTURE OR PARTS OF A STRUCTURE AS NOTED ON THE PLANS SHALL BE SUBMITTED TO THE ENGINEER FOR APPROVAL BEFORE CONSTRUCTION OF THE FALSEWORK OR FORMS IS STARTED.

REINFORCING STEEL:

ALL REINFORCING STEEL SHALL BE DEFORMED. DIMENSIONS RELATIVE TO PLACEMENT OF REINFORCING ARE TO CENTERS OF BARS UNLESS OTHERWISE INDICATED IN THE PLANS. DIMENSIONS ON BAR DETAILS ARE TO CENTERS OF BARS OR ARE OUT TO OUT AS INDICATED ON PLANS.

WIRE BAR SUPPORTS SHALL BE PROVIDED FOR REINFORCING STEEL WHERE INDICATED ON THE PLANS. WHEN BAR SUPPORT PIECES ARE PLACED IN CONTINUOUS LINES, THEY SHALL BE SO PLACED THAT THE ENDS OF THE SUPPORTING WIRES SHALL BE LAPPED TO LOCK LEGS ON ADJOINING PIECES.

STRUCTURAL STEEL:

AT THE CONTRACTOR'S OPTION, HE MAY SUBSTITUTE 7/8" Ø SHEAR STUDS FOR THE 3/4" Ø STUDS SPECIFIED ON THE PLANS. THIS SUBSTITUTION SHALL BE MADE AT THE RATE OF 3 - 7/8" Ø STUDS FOR 4 - 3/4" Ø STUDS, AND STUD SPACING CHANGES SHALL BE MADE AS NECESSARY TO PROVIDE THE SAME EQUIVALENT NUMBER OF 7/8" Ø STUDS ALONG THE BEAM AS SHOWN FOR 3/4" Ø STUDS BASED ON THE RATIO OF 3 - 7/8" Ø STUDS FOR 4 - 3/4" Ø STUDS. STUDS OF THE LENGTH SPECIFIED ON THE PLANS MUST BE PROVIDED. THE MAXIMUM SPACING SHALL BE 2'-0".

EXCEPT AT THE INTERIOR SUPPORTS OF CONTINUOUS BEAMS WHERE THE COVER PLATE IS IN CONTACT WITH BEARING PLATE, THE CONTRACTOR MAY, AT HIS OPTION, SUBSTITUTE FOR THE COVER PLATES DESIGNATED ON THE PLANS COVER PLATES OF THE EQUIVALENT AREA PROVIDED THESE PLATES ARE AT LEAST 5/16" IN THICKNESS AND DO NOT EXCEED A WIDTH EQUAL TO THE FLANGE WIDTH LESS 2" OR A THICKNESS EQUAL TO 2 TIMES THE FLANGE THICKNESS. THE SIZE OF FILLET WELDS SHALL CONFORM TO THE REQUIREMENTS OF THE CURRENT ANSI/AASHTO/AWS "BRIDGE WELDING CODE". ELECTROSLAG WELDING WILL NOT BE PERMITTED.

WITH THE SOLE EXCEPTION OF EDGES AT SURFACES WHICH BEAR ON OTHER SURFACES, ALL SHARP EDGES AND ENDS OF SHAPES AND PLATES SHALL BE SLIGHTLY ROUNDED BY SUITABLE MEANS TO A RADIUS OF APPROXIMATELY 1/16 INCH OR EQUIVALENT FLAT SURFACE AT A SUITABLE ANGLE PRIOR TO PAINTING, GALVANIZING, OR METALLIZING.

HANDRAILS AND POSTS:

METAL STANDARDS AND FACES OF THE CONCRETE END POSTS FOR THE METAL RAIL SHALL BE SET NORMAL TO THE GRADE OF THE CURB, UNLESS OTHERWISE SHOWN ON PLANS. THE METAL RAIL AND TOPS OF CONCRETE POSTS USED WITH THE ALUMINUM RAIL SHALL BE BUILT PARALLEL TO THE GRADE OF THE CURB.

METAL HANDRAILS SHALL BE IN ACCORDANCE WITH THE PLANS. RAILS SHALL BE AS MANUFACTURED FOR BRIDGE RAILING. CASTINGS SHALL BE OF A UNIFORM APPEARANCE. FINS AND OTHER DEFORMATIONS RESULTING FROM CASTING OR OTHERWISE SHALL BE REMOVED IN A MANNER SO THAT A UNIFORM COLORING OF THE COMPLETED CASTING SHALL BE OBTAINED. CASTINGS WITH DISCOLORATIONS OR OF NON-UNIFORM COLORING WILL NOT BE ACCEPTED. CERTIFIED MILL REPORTS ARE REQUIRED FOR METAL RAILS AND POSTS.

SPECIAL NOTES:

GENERALLY, IN CASE OF DISCREPANCY, THIS STANDARD SHEET OF NOTES SHALL GOVERN OVER THE SPECIFICATIONS, BUT THE REMAINDER OF THE PLANS SHALL GOVERN OVER NOTES HEREON, AND SPECIAL PROVISIONS SHALL GOVERN OVER ALL. SEE SPECIFICATIONS ARTICLE 105-4.

ENGLISH

JANUARY, 1990

STD. NO. SN