09/08/99

TIP PROJECT: U-3423

CONTRACT: C202435

See Sheet 1-A For Index of Sheets
See Sheet 1-B for Conventional Symbols
See Sheet 1-C for Survey Control Sheet

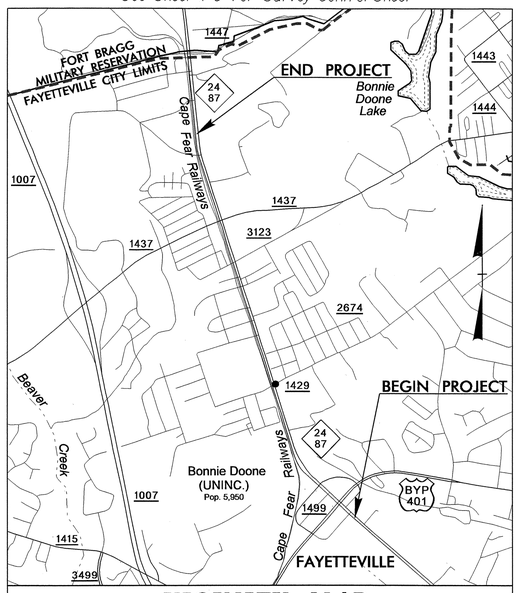

VICINITY MAP

STATE OF NORTH CAROLINA
DIVISION OF HIGHWAYS

CUMBERLAND COUNTY

STATE	STATE PROJECT REFERENCE NO.	SHEET NO.	TOTAL SHEETS
N.C.	U-3423	1	

STATE PROJ. NO.	F. A. PROJ. NO.	DESCRIPTION
34942.1.1	NHF-24(12)	PE
34942.2.2	NHF-24(12)	R/W & UTIL.
34942.3.2	NHF-0024(40)	CONST.

LOCATION: FAYETTEVILLE – NC 24 – 87 (BRAGG BOULEVARD) FROM THE US 401 BYPASS TO NORTH OF SR 1437 (SANTE FE DRIVE /SHAW ROAD)

TYPE OF WORK: GRADING, DRAINAGE, MILLING, PAVING, WIDENING, CURB & GUTTER, SIGNALS, AND OVERHEAD SIGNING

NAD 83/95

STA. 18+15.00 –L– BEGIN TIP PROJECT U-3423

STA. 105+57.51 –L– END TIP PROJECT U-3423

STA. 11+00.00 –L– BEGIN CONSTRUCTION

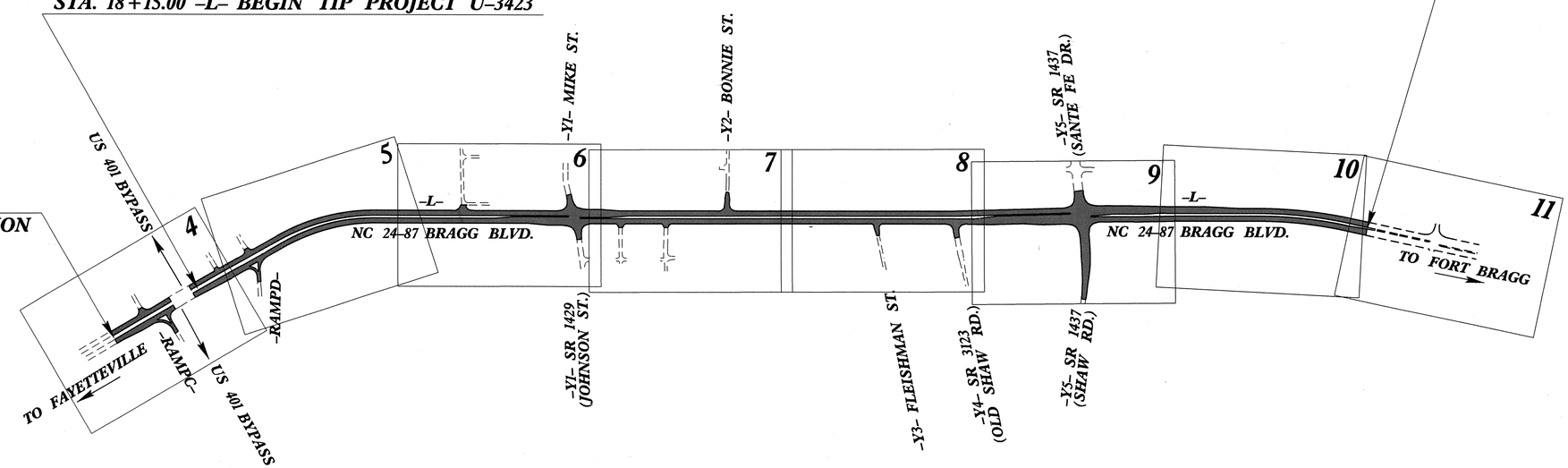

GRAPHIC SCALES

50 25 0 50 100 — PLANS

50 25 0 50 100 — PROFILE (HORIZONTAL)

10 5 0 10 20 — PROFILE (VERTICAL)

DESIGN DATA

ADT 2010 = 43,200
ADT 2030 = 49,700
DHV = 9 %
D = 50 %
T = 11 % *
V = 50 MPH
* TTST 4% + DUAL 7%
FUNC CLASS = ARTERIAL
STATEWIDE TIER

PROJECT LENGTH

LENGTH OF ROADWAY TIP PROJECT U-3423 = 1.656 MILES
TOTAL LENGTH OF TIP PROJECT U-3423 = 1.656 MILES

Prepared in the Office of:
DIVISION OF HIGHWAYS
1000 Birch Ridge Dr., Raleigh NC, 27610

2006 STANDARD SPECIFICATIONS

RIGHT OF WAY DATE: JUNE 20, 2008

LETTING DATE: JUNE 15, 2010

BRENDA MOORE, P.E.
PROJECT ENGINEER

JOYCE DREW
PROJECT DESIGN ENGINEER

HYDRAULICS ENGINEER

NORTH CAROLINA PROFESSIONAL SEAL 24897 ENGINEER JOHN W. TWISDALE, JR.

SIGNATURE: John W. Twisdale Jr. P.E. 3/26/10

ROADWAY DESIGN ENGINEER

NORTH CAROLINA PROFESSIONAL SEAL 19795 ENGINEER BRENDA L. MOORE

SIGNATURE: B. L. Moore P.E. 3/29/10

DIVISION OF HIGHWAYS
STATE OF NORTH CAROLINA

STATE OF NORTH CAROLINA DEPARTMENT OF TRANSPORTATION

Art McMillan P.E.
STATE HIGHWAY DESIGN ENGINEER

23-MAR-2010 12:14
r:\roadway\proj\u3423_rdy_tsh.dgn
$$$$USERNAME$$$$

PROJECT REFERENCE NO.	SHEET NO.
U-3423	1-A

ROADWAY DESIGN ENGINEER

NORTH CAROLINA PROFESSIONAL SEAL 19795 ENGINEER BRENDA L. MOORE

8/9/10

B.L. Moore

EFF. 07-18-06
REV. 01-02-07

INDEX OF SHEETS

SHEET NUMBER	SHEET
1	TITLE SHEET
1-A	INDEX OF SHEETS, GENERAL NOTES, AND LIST OF STANDARDS
1-B	CONVENTIONAL SYMBOLS
1-C	SURVEY CONTROL SHEET
2 THRU 2-D	TYPICAL SECTIONS AND PAVEMENT SCHEDULE
2-E	2'-9" CONCRETE CURB & GUTTER
2-F	SIDE BY SIDE HOODED CATCH BASIN WITH DOUBLE SIZE BOX
2-G	DETAIL OF CATCH BASIN FOR 2-42" X 54" X 24"
2-H	DETAIL OF SPECIAL MEDIAN DROP INLET
2-I THRU 2-J	DETAIL OF SPECIAL JUNCTION BOX
2-K	DETAIL OF SPECIAL CATCH BASIN
2-L	CONVERSION OF EXISTING DRAINAGE BOX TO SPECIAL CATCH BASIN
2-M	ANCHORAGE FOR FRAMES DETAIL
2-N THRU 2-O	METHOD OF PIPE INSTALLATION
2-P	DETAIL OF CONVERT EXISTING DROP INLET OR CATCH BASIN TO JUNCTION BOX (MANHOLE OPTIONAL)
2-Q	DETAIL TO CONVERT EXISTING DROP INLET OR CATCH BASIN TO TRAFFIC BEARING JUNCTION BOX (MANHOLE OPTIONAL)
2-R	DETAIL OF TEMPORARY 1" STEEL COVER OVER DRAINAGE STRUCTURE
2-S THRU 2-T	WHEELCHAIR RAMP DETAILS
3	SUMMARY OF QUANTITIES
3A TRHU 3-I	DRAINAGE SUMMARY
3J	GUARDRAIL SUMMARY, EARTHWORK SUMMARY, AND EXISTING ASPHALT PAVEMENT REMOVAL SUMMARY
3K	PARCEL INDEX SHEET
4 THRU 11	PLAN SHEETS
12 THRU 17	PROFILE SHEETS
TCP-1 THRU TCP-21	TRAFFIC CONTROL PLANS
PMP-1 THRU PMP-7	PAVEMENT MARKING PLANS
EC-1 THRU EC-19	EROSION CONTROL PLANS
SIGN-1 THRU SIGN-11	SIGNING PLANS
SIG-1 THRU SIG-31	SIGNAL PLANS
UC-1 THRU UC-10	UTILITIY CONSTRUCTION PLANS
UO-1 THRU UO-9	UTILITIES BY OTHERS PLANS
X-1A	CROSS-SECTION SUMMARY SHEET
X-1 THRU X-43	CROSS-SECTIONS

GENERAL NOTES:

2006 SPECIFICATIONS
EFFECTIVE: 07-18-06
REVISED: 07-30-08

GRADING AND SURFACING OR RESURFACING AND WIDENING:

THE GRADE LINES SHOWN DENOTE THE FINISHED ELEVATION OF THE PROPOSED SURFACING AT GRADE POINTS SHOWN ON THE TYPICAL SECTIONS. WHERE NO GRADE LINES ARE SHOWN, THE PROFILES SHOWN DENOTE THE TOP ELEVATION OF THE EXISTING PAVEMENT ALONG THE CENTER LINE OF SURVEY ON WHICH THE PROPOSED RESURFACING WILL BE PLACED. GRADE LINES MAY BE ADJUSTED BY THE ENGINEER IN ORDER TO SECURE A PROPER TIE-IN.

CLEARING:

CLEARING ON THIS PROJECT SHALL BE PERFORMED TO THE LIMITS ESTABLISHED BY METHOD II.

SUPERELEVATION:

ALL CURVES ON THIS PROJECT SHALL BE SUPERELEVATED IN ACCORDANCE WITH STD. NO. 225.04 USING THE RATE OF SUPERELEVATION AND RUNOFF SHOWN ON THE PLANS. SUPERELEVATION IS TO BE REVOLVED ABOUT THE GRADE POINTS SHOWN ON THE TYPICAL SECTIONS.

SHOULDER CONSTRUCTION:

ASPHALT, EARTH, AND CONCRETE SHOULDER CONSTRUCTION ON THE HIGH SIDE OF SUPERELEVATED CURVES SHALL BE IN ACCORDANCE WITH STD. NO. 560.01.

SIDE ROADS:

THE CONTRACTOR WILL BE REQUIRED TO DO ALL NECESSARY WORK TO PROVIDE SUITABLE CONNECTIONS WITH ALL ROADS, STREETS, AND DRIVES ENTERING THIS PROJECT. THIS WORK WILL BE PAID FOR AT THE CONTRACT UNIT PRICE FOR THE PARTICULAR ITEMS INVOLVED.

UNDERDRAINS:

UNDERDRAINS SHALL BE CONSTRUCTED IN ACCORDANCE WITH STD. NO. 815.03 AT LOCATIONS DIRECTED BY THE ENGINEER.

DRIVEWAYS:

DRIVEWAYS SHALL BE CONSTRUCTED IN ACCORDANCE WITH STD. 848.03 AT LOCATIONS SHOWN ON PLANS OR AS DIRECTED BY THE ENGINEER.

STREET TURNOUT:

STREET RETURNS SHALL BE CONSTRUCTED IN ACCORDANCE WITH STD. NO. 848.04 USING THE RADII NOTED ON PLANS.

GUARDRAIL:

THE GUARDRAIL LOCATIONS SHOWN ON THE PLANS MAY BE ADJUSTED DURING CONSTRUCTION AS DIRECTED BY THE ENGINEER. THE CONTRACTOR SHOULD CONSULT WITH THE ENGINEER PRIOR TO ORDERING GUARDRAIL MATERIAL.

TEMPORARY SHORING:

SHORING REQUIRED FOR THE MAINTENANCE OF TRAFFIC WILL BE PAID FOR AS "EXTRA WORK" IN ACCORDANCE WITH SECTION 104-7.

UTILITIES:

UTILITY OWNERS ON THIS PROJECT ARE Piedmont Natural Gas.

Progress Energy, Time Warner Cable, Fayetteville PWC Electric.

Fayetteville PWC Water/Sewer, Fayetteville PWC Fiber, and Century Link Telephone.

ANY RELOCATION OF EXISTING UTILITIES WILL BE ACCOMPLISHED BY OTHERS, EXCEPT AS SHOWN ON THE PLANS.

RIGHT-OF-WAY MARKERS:

ALL RIGHT-OF-WAY MARKERS ON THIS PROJECT SHALL BE PLACED BY OTHERS.

WHEELCHAIR RAMPS:

WHEELCHAIR RAMPS ARE SHOWN ON THE PLANS AT APPROXIMATE LOCATIONS. THE CONSTRUCTION OF ALL WHEELCHAIR RAMPS SHALL BE IN ACCORDANCE WITH THE DETAIL SHEETS 2-S & 2-T.

2006 ROADWAY ENGLISH STANDARD DRAWINGS

The following Roadway Standards as appear in "Roadway Standard Drawings" Highway Design Branch - N. C. Department of Transportation - Raleigh, N. C., Dated July 18, 2006 are applicable to this project and by reference hereby are considered a part of these plans:

STD.NO.	TITLE
DIVISION 2 - EARTHWORK	
200.02	Method of Clearing - Method II
225.02	Guide for Grading Subgrade - Secondary and Local
225.04	Method of Obtaining Superelevation - Two Lane Pavement
225.09	Guide for Shoulder and Ditch Transition at Grade Separations
DIVISION 5 - SUBGRADE, BASES AND SHOULDERS	
560.01	Method of Shoulder Construction - High Side of Superelevated Curve - Method I
DIVISION 6 - ASPHALT BASES AND PAVEMENTS	
654.01	Pavement Repairs
DIVISION 8 - INCIDENTALS	
815.03	Pipe Underdrain and Blind Drain
816.04	Markers for Drainage Structure and Concrete Pad
840.00	Concrete Base Pad for Drainage Structures
840.01	Brick Catch Basin - 12" thru 54" Pipe
840.02	Concrete Catch Basin - 12" thru 54" Pipe
840.03	Frame, Grates and Hood - for Use on Standard Catch Basin
840.14	Concrete Drop Inlet - 12" thru 30" Pipe
840.15	Brick Drop Inlet - 12" thru 30" Pipe
840.16	Drop Inlet Frame and Grates - for use with Std. Dwg 840.14 and 840.15
840.17	Concrete Grated Drop Inlet Type 'A' - 12" thru 72" Pipe
840.26	Brick Grated Drop Inlet Type 'A' - 12" thru 72" Pipe
840.29	Frames and Narrow Slot Flat Grates
840.31	Concrete Junction Box - 12" thru 66" Pipe
840.32	Brick Junction Box - 12" thru 66" Pipe
840.34	Traffic Bearing Junction Box - for Use with Pipes 42" and Under
840.45	Precast Drainage Structure
840.46	Traffic Bearing Precast Drainage Structure
840.54	Manhole Frame and Cover
840.66	Drainage Structure Steps
840.71	Concrete and Brick Pipe Plug
840.72	Pipe Collar
846.01	Concrete Curb, Gutter and Curb & Gutter
848.01	Concrete Sidewalk
848.03	Driveway Turnout - Drop Curb Type
852.01	Concrete Islands
852.04	Method for Placement of Drop Inlets in Grassed Median - Using 1'-6" Curb and Gutter
852.05	Median Curb for Catch Basin - for Use with 1'-6" Curb and Gutter
852.06	Method for Placement of Drop Inlets in Concrete Islands
852.10	Median Construction - with Curb and Gutter
862.01	Guardrail Placement
862.02	Guardrail Installation
876.02	Guide for Rip Rap at Pipe Outlets

04-MAY-2010 14:39
R:\Roadway\Proj\u-3432_rdy_sheet_1a.dgn
$$$$USERNAME$$$$

10/25/05

PROJECT REFERENCE NO.	SHEET NO.
U-3423	1-B

Note: Not to Scale

****S.U.E. = Subsurface Utility Engineering***

STATE OF NORTH CAROLINA
DIVISION OF HIGHWAYS

CONVENTIONAL PLAN SHEET SYMBOLS

BOUNDARIES AND PROPERTY:

- State Line
- County Line
- Township Line
- City Line
- Reservation Line
- Property Line
- Existing Iron Pin — EIP
- Property Corner
- Property Monument — ECM
- Parcel/Sequence Number — 123
- Existing Fence Line
- Proposed Woven Wire Fence
- Proposed Chain Link Fence
- Proposed Barbed Wire Fence
- Existing Wetland Boundary — WLB
- Proposed Wetland Boundary — WLB
- Existing Endangered Animal Boundary — EAB
- Existing Endangered Plant Boundary — EPB

BUILDINGS AND OTHER CULTURE:

- Gas Pump Vent or U/G Tank Cap
- Sign — S
- Well — W
- Small Mine
- Foundation
- Area Outline
- Cemetery
- Building
- School
- Church
- Dam

HYDROLOGY:

- Stream or Body of Water
- Hydro, Pool or Reservoir
- Jurisdictional Stream — JS
- Buffer Zone 1 — BZ 1
- Buffer Zone 2 — BZ 2
- Flow Arrow
- Disappearing Stream
- Spring
- Swamp Marsh
- Proposed Lateral, Tail, Head Ditch — FLOW
- False Sump

RAILROADS:

- Standard Gauge — CSX TRANSPORTATION
- RR Signal Milepost — MILEPOST 35
- Switch — SWITCH
- RR Abandoned
- RR Dismantled

RIGHT OF WAY:

- Baseline Control Point
- Existing Right of Way Marker
- Existing Right of Way Line
- Proposed Right of Way Line — RW
- Proposed Right of Way Line with Iron Pin and Cap Marker — RW
- Proposed Right of Way Line with Concrete or Granite Marker — RW
- Existing Control of Access — CA
- Proposed Control of Access — CA
- Existing Easement Line — E
- Proposed Temporary Construction Easement — E
- Proposed Temporary Drainage Easement — TDE
- Proposed Permanent Drainage Easement — PDE
- Proposed Permanent Utility Easement — PUE

ROADS AND RELATED FEATURES:

- Existing Edge of Pavement
- Existing Curb
- Proposed Slope Stakes Cut — C
- Proposed Slope Stakes Fill — F
- Proposed Wheel Chair Ramp — WCR
- Existing Metal Guardrail
- Proposed Guardrail
- Existing Cable Guiderail
- Proposed Cable Guiderail
- Equality Symbol
- Pavement Removal

VEGETATION:

- Single Tree
- Single Shrub
- Hedge
- Woods Line
- Orchard
- Vineyard — Vineyard

EXISTING STRUCTURES:

MAJOR:

- Bridge, Tunnel or Box Culvert — CONC
- Bridge Wing Wall, Head Wall and End Wall — CONC WW

MINOR:

- Head and End Wall — CONC HW
- Pipe Culvert
- Footbridge
- Drainage Box: Catch Basin, DI or JB — CB
- Paved Ditch Gutter
- Storm Sewer Manhole — S
- Storm Sewer — S

UTILITIES:

POWER:

- Existing Power Pole
- Proposed Power Pole
- Existing Joint Use Pole
- Proposed Joint Use Pole
- Power Manhole — P
- Power Line Tower
- Power Transformer
- U/G Power Cable Hand Hole — HH
- H-Frame Pole
- Recorded U/G Power Line — P
- Designated U/G Power Line (S.U.E.*) — P

TELEPHONE:

- Existing Telephone Pole
- Proposed Telephone Pole
- Telephone Manhole — T
- Telephone Booth
- Telephone Pedestal — T
- Telephone Cell Tower
- U/G Telephone Cable Hand Hole — HH
- Recorded U/G Telephone Cable — T
- Designated U/G Telephone Cable (S.U.E.*) — T
- Recorded U/G Telephone Conduit — TC
- Designated U/G Telephone Conduit (S.U.E.*) — TC
- Recorded U/G Fiber Optics Cable — T FO
- Designated U/G Fiber Optics Cable (S.U.E.*) — T FO

WATER:

- Water Manhole — W
- Water Meter
- Water Valve
- Water Hydrant
- Recorded U/G Water Line — W
- Designated U/G Water Line (S.U.E.*) — W
- Above Ground Water Line — A/G Water

TV:

- TV Satellite Dish
- TV Pedestal — C
- TV Tower
- U/G TV Cable Hand Hole — HH
- Recorded U/G TV Cable — TV
- Designated U/G TV Cable (S.U.E.*) — TV
- Recorded U/G Fiber Optic Cable — TV FO
- Designated U/G Fiber Optic Cable (S.U.E.*) — TV FO

GAS:

- Gas Valve
- Gas Meter
- Recorded U/G Gas Line — G
- Designated U/G Gas Line (S.U.E.*) — G
- Above Ground Gas Line — A/G Gas

SANITARY SEWER:

- Sanitary Sewer Manhole
- Sanitary Sewer Cleanout
- U/G Sanitary Sewer Line — SS
- Above Ground Sanitary Sewer — A/G Sanitary Sewer
- Recorded SS Forced Main Line — FSS
- Designated SS Forced Main Line (S.U.E.*) — FSS

MISCELLANEOUS:

- Utility Pole
- Utility Pole with Base
- Utility Located Object
- Utility Traffic Signal Box — S
- Utility Unknown U/G Line — ?UTL
- U/G Tank; Water, Gas, Oil
- A/G Tank; Water, Gas, Oil
- U/G Test Hole (S.U.E.*)
- Abandoned According to Utility Records — AATUR
- End of Information — E.O.I.

8/17/99

SURVEY CONTROL SHEET U-3423

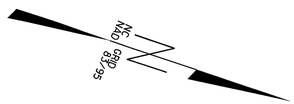

BL

POINT	DESC.	NORTH	EAST	ELEVATION	L STATION	OFFSET
1	U-3423A BL-1	486682.1980	2014449.2670	240.16	23+00.31	2.74 RT
2	U-3423A BL-2	487350.0380	2013922.6760	235.47	31+54.73	12.25 LT
3	U-3423 BL-3	488045.3300	2013690.1760	239.60	38+86.85	10.04 LT
4	U-3423A BL-4	488912.5550	2013425.9630	246.91	47+93.37	0.58 RT
5	U-3423A BL-5	489791.6690	2013138.1080	230.31	57+18.37	7.73 LT
6	U-3423A BL-6	490470.6960	2012928.2780	225.58	64+29.06	2.22 LT
7	U-3423A BL-7	490970.5480	2012770.7630	231.40	69+53.12	2.66 LT
8	U-3423A BL-8	491504.4410	2012608.4510	239.96	75+11.14	1.54 LT
9	U-3423A BL-9	492460.0460	2012304.3680	250.33	85+14.01	16.55 RT
10	U-3423A BL-10	493210.0890	2012054.1180	245.56	93+04.84	4.76 RT
11	U-3423A BL-11	494012.9380	2011831.8050	230.29	101+39.66	11.56 RT
12	U-3423B-GPS2	494896.1820	2011731.1930	234.17	110+29.92	8.18 RT
13	U-3423B BL-1	495765.7300	2011651.6640	234.61	OUTSIDE PROJECT LIMITS	

BY7

POINT	DESC.	NORTH	EAST	ELEVATION	Y5 STATION	OFFSET
20	U-3423A BY7-20	492087.2980	2011695.5400	241.46	10+18.32	38.12 RT
90	U-3423A BL-9	492460.0460	2012304.3680	250.33	17+27.37	49.54 LT
21	U-3423A BY7-21	492627.1400	2012881.6380	245.98	23+20.28	28.25 LT

BM80 ELEVATION = 231.53
N 487229 E 2014117
L STATION 29+53 104 RIGHT
R/R SPIKE IN BASE OF SIGN POLE

BM81 ELEVATION = 241.62
N 491629 E 2012695
L STATION 76+04 118 RIGHT
P/K NAIL IN BST PARKING LOT

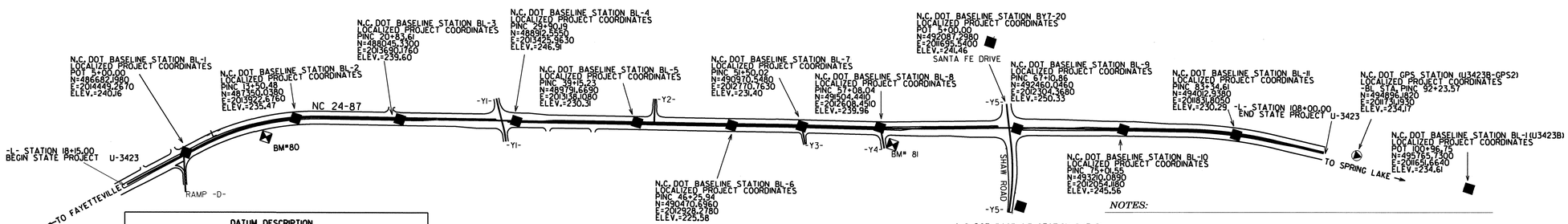

DATUM DESCRIPTION

THE LOCALIZED COORDINATE SYSTEM DEVELOPED FOR THIS PROJECT IS BASED ON THE STATE PLANE COORDINATES ESTABLISHED BY NCGS FOR MONUMENT "ACACIA"
WITH NAD 1983/95 STATE PLANE GRID COORDINATES OF
NORTHING: 466066.280(ft) EASTING: 1984258.880(ft)
THE AVERAGE COMBINED GRID FACTOR USED ON THIS PROJECT (GROUND TO GRID) IS: .999874730
THE N.C. LAMBERT GRID BEARING AND LOCALIZED HORIZONTAL GROUND DISTANCE FROM "ACACIA" TO -L- STATION 18+15.00 IS
N 56° 24' 51.9" E 36,660.89'
ALL LINEAR DIMENSIONS ARE LOCALIZED HORIZONTAL DISTANCES
VERTICAL DATUM USED IS NAVD 88

NOTE: DRAWING NOT TO SCALE

NOTES:

1. *THE CONTROL DATA FOR THIS PROJECT CAN BE FOUND ELECTRONICALLY BY SELECTING PROJECT CONTROL DATA AT:*
HTTP://WWW.DOH.DOT.STATE.NC.US/PRECONSTRUCT/HIGHWAY/LOCATION/PROJECT/

THE FILES TO BE FOUND ARE AS FOLLOWS:
U3423_LS_CONTROL_071119.TXT

SITE CALIBRATION INFORMATION HAS NOT BEEN PROVIDED FOR THIS PROJECT. IF FURTHER INFORMATION IS NEEDED, PLEASE CONTACT THE LOCATION AND SURVEYS UNIT.

© *INDICATES GEODETIC CONTROL MONUMENTS USED OR SET FOR HORIZONTAL PROJECT CONTROL BY THE NCDOT LOCATION AND SURVEYS UNIT.*
PROJECT CONTROL ESTABLISHED USING GLOBAL POSITIONING SYSTEM.
NETWORK ESTABLISHED FROM EXISTING HARN MONUMENTATION
SEE GPS CALIBRATION SHEET FOR HORIZONTAL AND VERTICAL COORDINATE VALUES.

04-MAR-2010 17:01
f:\roadway\prj\u3423_ls_1c_071119.dgn
$$$$USERNAME$$$$

PROJECT REFERENCE NO.	SHEET NO.
U-3423	2
ROADWAY DESIGN ENGINEER	PAVEMENT DESIGN ENGINEER

NORTH CAROLINA PROFESSIONAL SEAL 19795 ENGINEER BRENDA L. MOORE 3/29/10

NORTH CAROLINA PROFESSIONAL SEAL 22896 ENGINEER CLARK S. MORRISON 3/25/10

PAVEMENT SCHEDULE

(FINAL PAVEMENT DESIGN)

C1A	PROP. APPROX. 1½" ASPHALT CONCRETE SURFACE COURSE, TYPE S9.5C, AT AN AVERAGE RATE OF 168 LBS. PER SQ. YD.
C1	PROP. APPROX. 3" ASPHALT CONCRETE SURFACE COURSE, TYPE S9.5C, AT AN AVERAGE RATE OF 168 LBS. PER SQ. YD. IN EACH OF TWO LAYERS.
C2	PROP. VAR. DEPTH ASPHALT CONCRETE SURFACE COURSE, TYPE S9.5C, AT AN AVERAGE RATE OF 112 LBS. PER SQ. YD. PER 1" DEPTH. TO BE PLACED IN LAYERS NOT TO EXCEED 2" IN DEPTH.
D1	PROP. APPROX. 4" ASPHALT CONCRETE INTERMEDIATE COURSE, TYPE I19.0C, AT AN AVERAGE RATE OF 456 LBS. PER SQ. YD.
D2	PROP. VAR. DEPTH ASPHALT CONCRETE INTERMEDIATE COURSE, TYPE I19.0C, AT AN AVERAGE RATE OF 114 LBS. PER SQ. YD. PER 1" DEPTH, TO BE PLACED IN LAYERS NOT LESS THAN 2½" IN DEPTH OR GREATER THAN 4" IN DEPTH.
E1	PROP. APPROX. 4" ASPHALT CONCRETE BASE COURSE, TYPE B25.0C, AT AN AVERAGE RATE OF 456 LBS. PER SQ. YD.
E2	PROP. APPROX. 5" ASPHALT CONCRETE BASE COURSE, TYPE B25.0C, AT AN AVERAGE RATE OF 570 LBS. PER SQ. YD.
E3	PROP. VAR. DEPTH ASPHALT CONCRETE BASE COURSE, TYPE B25.0C, AT AN AVERAGE RATE OF 114 LBS. PER SQ. YD. PER 1" DEPTH. TO BE PLACED IN LAYERS NOT LESS THAN 3" IN DEPTH OR GREATER THAN 5½" IN DEPTH.
R1	1'-6" CONCRETE CURB AND GUTTER.
R2	2'-6" CONCRETE CURB AND GUTTER.
R3	2'-9" CONCRETE CURB AND GUTTER.
R4	5" MONOLITHIC CONCRETE ISLAND.
S	4" CONCRETE SIDEWALK.
T	EARTH MATERIAL.
U	EXISTING PAVEMENT.
V	MILLING ASPHALT PAVEMENT (SEE DETAIL THIS SHEET).
W1	VARIABLE DEPTH ASPHALT PAVEMENT (SEE WEDGING DETAIL 1).
W2	VARIABLE DEPTH ASPHALT PAVEMENT (SEE WEDGING DETAIL 2).
Y	NON-WOVEN FIBERGLASS/POLYESTER INTERLAYER PAVING MAT.

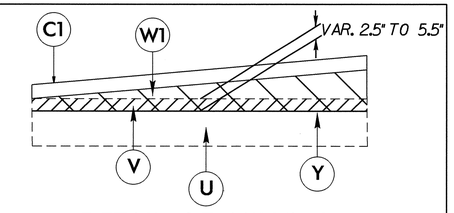

DETAIL OF MILLING

USE IN CONJUNCTION WITH -L- LINE TYPICAL SECTIONS

NOTE: MILL ENTIRE EXISTING SURFACE LAYER DOWN TO THE CONCRETE LAYER OR AS DIRECTED BY THE ENGINEER.

NOTE: PAVEMENT EDGE SLOPES ARE 1:1 UNLESS SHOWN OTHERWISE.

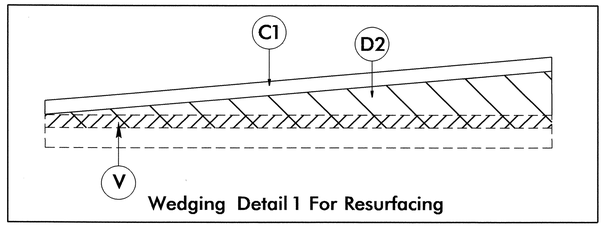

Wedging Detail 1 For Resurfacing

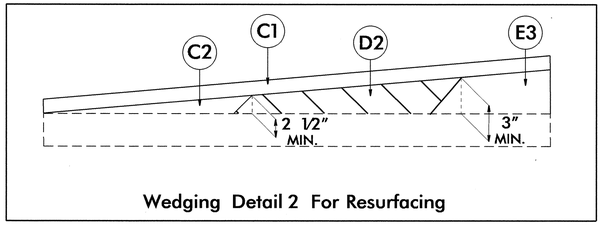

Wedging Detail 2 For Resurfacing

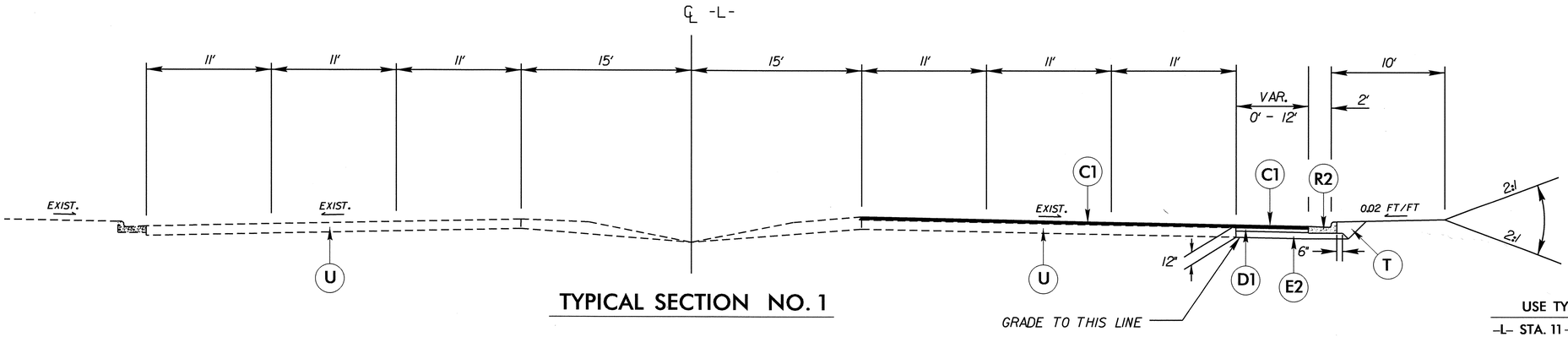

TYPICAL SECTION NO. 1

USE TYPICAL SECTION NO. 1

-L- STA. 11+00.00 TO STA. 15+89.49

6/2/99

25-MAR-2010 15:46
r:\roadway\proj\u3423_rdy_typ.dgn
$$$$USERNAME$$$$

PROJECT REFERENCE NO.	SHEET NO.
U-3423	2-A
ROADWAY DESIGN ENGINEER	PAVEMENT DESIGN ENGINEER

NORTH CAROLINA PROFESSIONAL SEAL 19795 ENGINEER BRENDA L. MOORE 3/29/10

NORTH CAROLINA PROFESSIONAL SEAL 22896 ENGINEER CLARK S. MORRISON 3/25/10

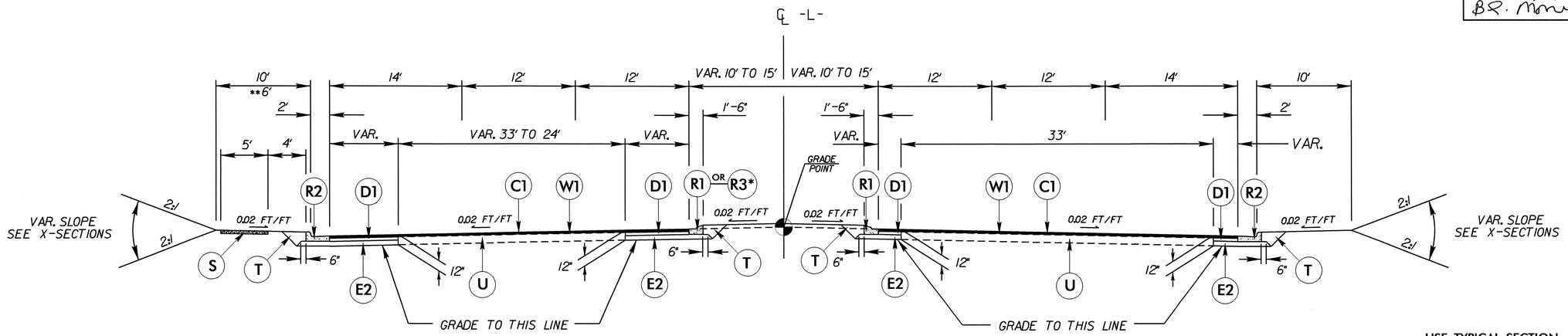

TYPICAL SECTION NO. 2

USE TYPICAL SECTION NO. 2

-L- STA. 17+79.50 TO STA. 95+50.00

* SEE PARTIAL SECTION NO. 2A

** SEE PARTIAL SECTION NO. 2B

NOTE: TRANSITION FROM 11' LANES TO 12' LANES STA. 23+91.82 TO STA. 28+86.82

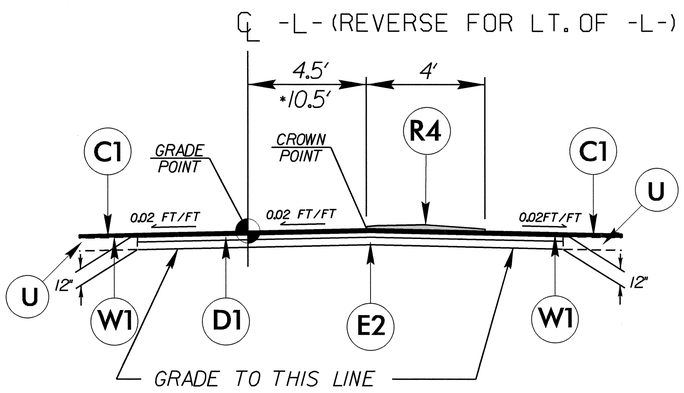

PARTIAL SECTION NO. 2

SUPERELEVATION TREATMENT ADJACENT TO PROPOSED CHANNELIZATION

-L- STA. 42+47.47 TO STA. 46+76.52 MED. (LT. OF -L-)
-L- STA. 47+60.77 TO STA. 49+85.77 MED. (RT. OF -L-)
* -L- STA. 77+62.99 TO STA. 83+80.76 MED. (LT. OF -L-)
-L- STA. 85+30.53 TO STA. 86+30.92 MED. (RT. OF -L-)

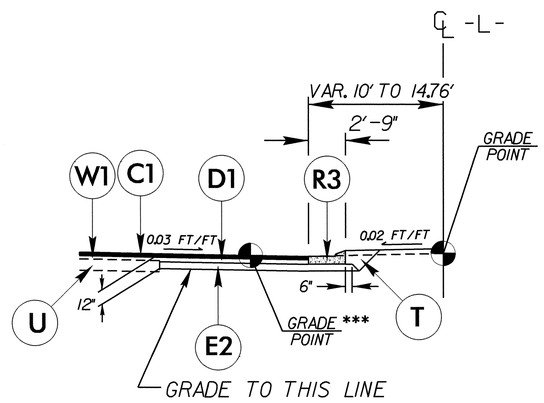

PARTIAL SECTION NO. 2A

USE IN CONJUNCTION WITH TYPICAL SECTION NO. 2 AND NO. 3

-L- STA. 24+00.00 TO STA. 34+50.00 MED. LT.
*** -L- STA. 97+00.00 TO STA. 105+50.00 MED. LT.

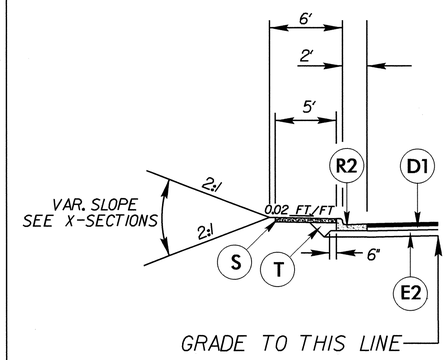

PARTIAL SECTION NO. 2B

USE IN CONJUNCTION WITH TYPICAL SECTION NO. 2

-L- STA. 17+79.50 TO STA. 19+89.92 LT.
-L- STA. 34+31.31 TO STA. 38+61.63 LT.

PAVEMENT SCHEDULE (FINAL PAVEMENT DESIGN)	
C1	3" S9.5C
C2	VAR. S9.5C
D1	4" I19.0C
D2	VAR. I19.0C
E1	4" B25.0C
E2	5" B25.0C
E3	VAR. B25.0C
R1	1'-6" C & G
R2	2'-6" C & G
R3	2'-9" C & G
R4	5" MON. CONC. ISL.
S	4" SIDEWALK
T	EARTH MATERIAL
U	EXIST. PAVEMENT
W1	WEDGING DETAIL 1
W2	WEDGING DETAIL 2

6/2/99
04-MAR-2010 17:01
r:\roadway\proj\u3423_rdy_typ.dgn
$$$$USERNAME$$$$

PROJECT REFERENCE NO.	SHEET NO.
U-3423	2-B
ROADWAY DESIGN ENGINEER	PAVEMENT DESIGN ENGINEER

NORTH CAROLINA PROFESSIONAL SEAL 19795 ENGINEER BRENDA L. MOORE 3/29/10

NORTH CAROLINA PROFESSIONAL SEAL 22896 ENGINEER CLARK S. MORRISON 3/25/10

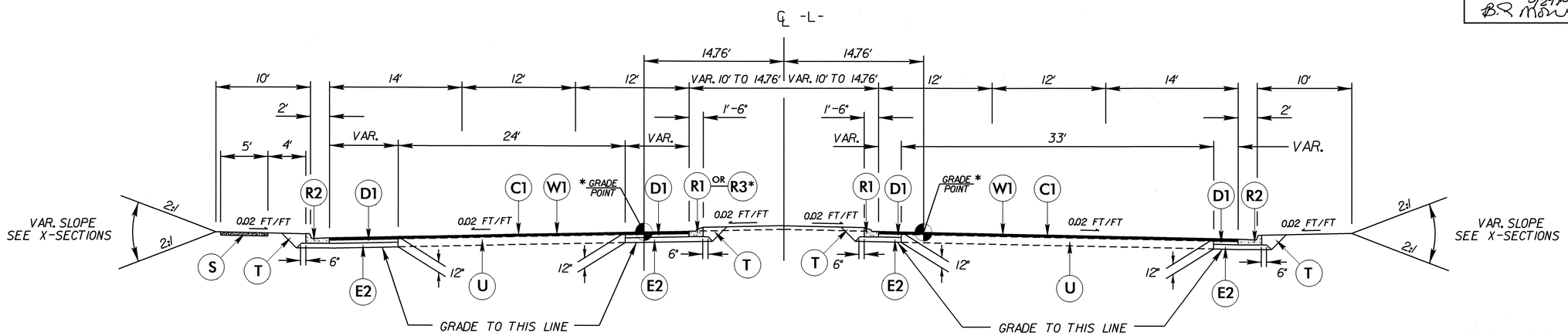

TYPICAL SECTION NO. 3

USE TYPICAL SECTION NO. 3

-L- STA. 95+50.00 TO STA. 103+57.51
* SEE PARTIAL SECTION NO. 2A

NOTE: TRANSITION FROM TYPICAL NO. 3 TO EXISTING STA. 103+57.51 TO STA. 105+57.51

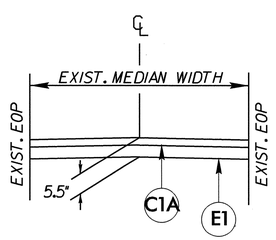

DETAIL SHOWING TEMPORARY PAVEMENT OVER MEDIAN

-L- STA. 25+90 TO -L- STA. 28+47
-L- STA. 41+45 TO -L- STA. 44+45
-L- STA. 58+85 TO -L- STA. 61+00
-L- STA. 72+40 TO -L- STA. 74+61

SEE TCP SHEET TCP 4

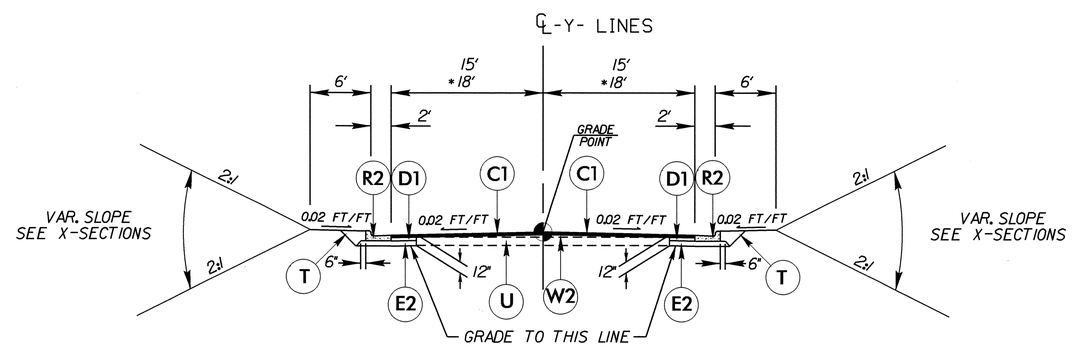

TYPICAL SECTION NO. 4

USE TYPICAL SECTION NO. 4

* -Y1- STA. 12+50.00 TO STA. 13+56.28
* -Y1- STA. 14+80.39 TO STA. 15+75.00
-Y2- STA. 11+25.00 TO STA. 12+08.32
* -Y4- STA. 10+49.11 TO STA. 11+50.00

PAVEMENT SCHEDULE (FINAL PAVEMENT DESIGN)	
C1A	1½" S9.5C
C1	3" S9.5C
C2	VAR. S9.5C
D1	4" I19.0C
D2	VAR. I19.0C
E1	4" B25.0C
E2	5" B25.0C
E3	VAR. B25.0C
R1	1'-6" C & G
R2	2'-6" C & G
R3	2'-9" C & G
R4	5" MON. CONC. ISL.
S	4" SIDEWALK
T	EARTH MATERIAL
U	EXIST. PAVEMENT
W1	WEDGING DETAIL 1
W2	WEDGING DETAIL 2

6/2/99
25-MAR-2010 13:28
f:\roadway\pfp\u3423_rdy_typ.dgn
$$$$USERNAME$$$$

PROJECT REFERENCE NO.	SHEET NO.
U-3423	2-C

ROADWAY DESIGN ENGINEER
NORTH CAROLINA PROFESSIONAL SEAL 19795 ENGINEER BRENDA L. MOORE
3/29/10

PAVEMENT DESIGN ENGINEER
NORTH CAROLINA PROFESSIONAL SEAL 22696 ENGINEER CLARK S. MORRISON
3/25/10

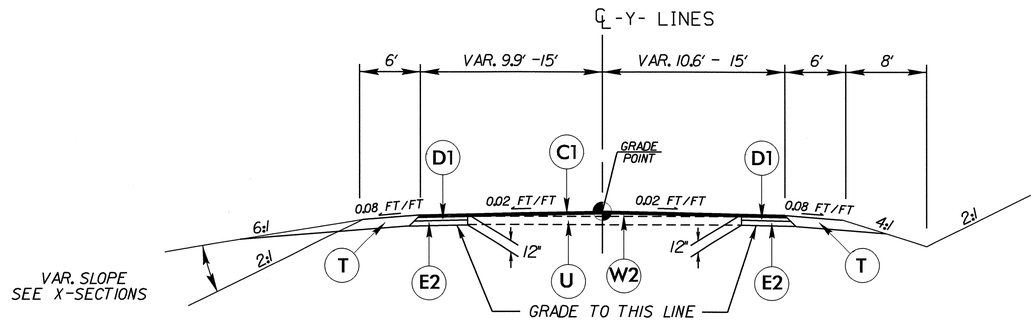

TYPICAL SECTION NO. 5

USE TYPICAL SECTION NO. 5
-Y2- STA. 10+75.00 TO STA. 11+25.00

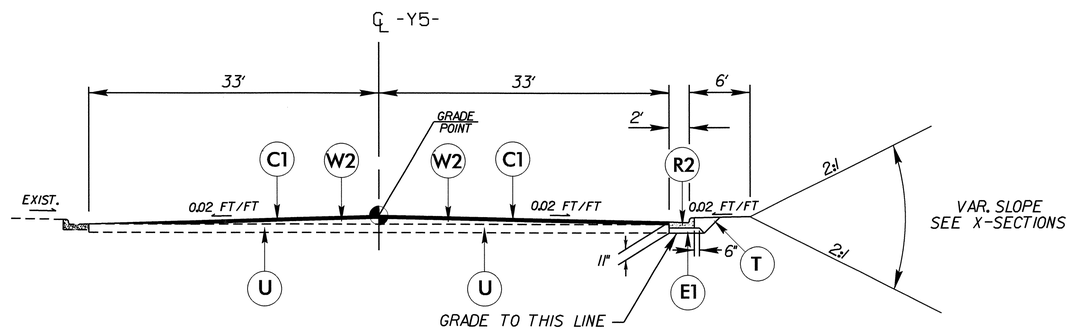

TYPICAL SECTION NO. 6

USE TYPICAL SECTION NO. 6
-Y5- STA. 13+86.36 TO STA. 16+35.00

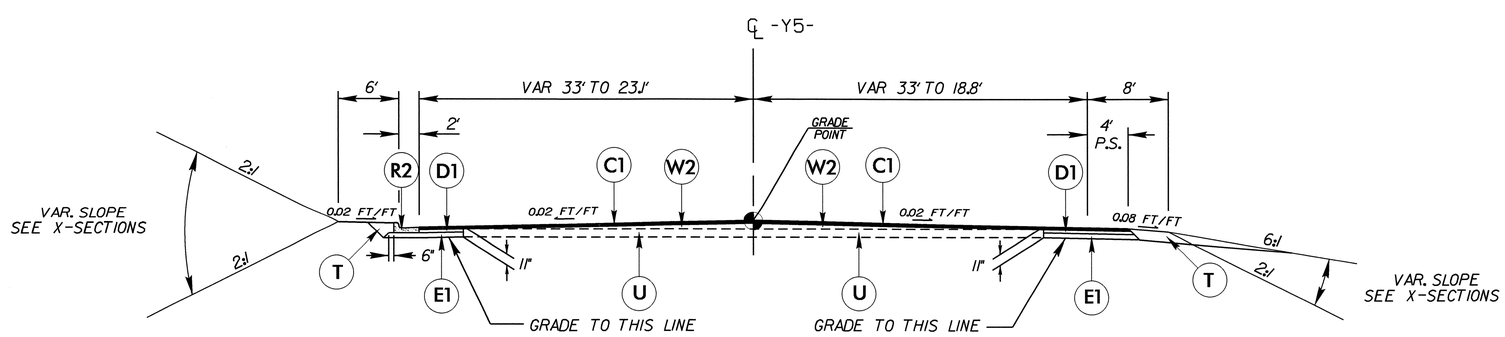

TYPICAL SECTION NO. 7

USE TYPICAL SECTION NO. 7
-Y5- STA. 17+71.31 TO STA. 22+00.00

PAVEMENT SCHEDULE (FINAL PAVEMENT DESIGN)	
C1	3" S9.5C
C2	VAR. S9.5C
D1	4" I19.0C
D2	VAR. I19.0C
E1	4" B25.0C
E2	5" B25.0C
E3	VAR. B25.0C
R1	1'-6" C & G
R2	2'-6" C & G
R3	2'-9" C & G
R4	5" MON. CONC. ISL.
S	4" SIDEWALK
T	EARTH MATERIAL
U	EXIST. PAVEMENT
W1	WEDGING DETAIL 1
W2	WEDGING DETAIL 2

6/2/99
04-MAR-2010 17:01
r:\roadway\proj\u3423_rdy_typ.dgn
$$$$USERNAME$$$$

PROJECT REFERENCE NO.	SHEET NO.
U-3423	2-D

ROADWAY DESIGN ENGINEER
NORTH CAROLINA PROFESSIONAL SEAL 19795 ENGINEER BRENDA L. MOORE
3/29/10

PAVEMENT DESIGN ENGINEER
NORTH CAROLINA PROFESSIONAL SEAL 22896 ENGINEER CLARK S. MORRISON
3/25/10

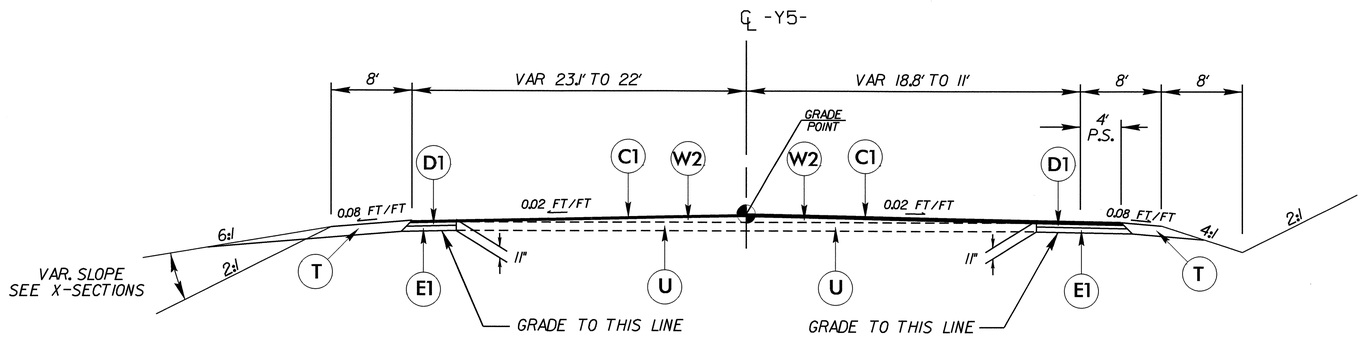

TYPICAL SECTION NO. 8

USE TYPICAL SECTION NO. 8
-Y5- STA. 22+00.00 TO STA. 23+25.00

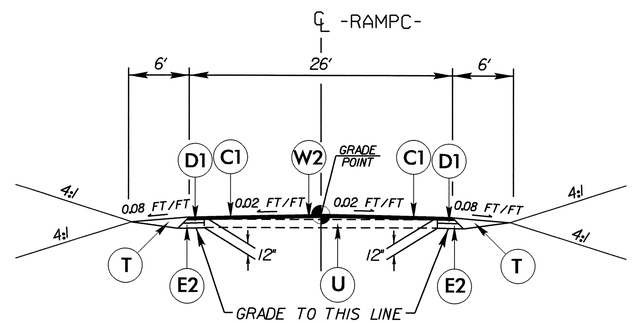

TYPICAL SECTION NO. 9

USE TYPICAL SECTION NO. 9
-RAMPC- STA. 10+48.62 TO STA. 12+00.00

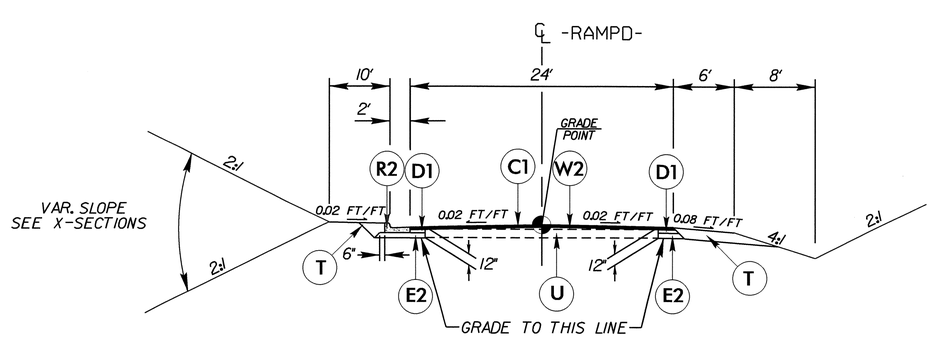

TYPICAL SECTION NO. 10

USE TYPICAL SECTION NO. 10
-RAMPD- STA. 10+59.47 TO STA. 12+25.00

PAVEMENT SCHEDULE (FINAL PAVEMENT DESIGN)	
C1	3" S9.5C
C2	VAR. S9.5C
D1	4" I19.0C
D2	VAR. I19.0C
E1	4" B25.0C
E2	5" B25.0C
E3	VAR. B25.0C
R1	1'-6" C & G
R2	2'-6" C & G
R3	2'-9" C & G
R4	5" MON. CONC. ISL.
S	4" SIDEWALK
T	EARTH MATERIAL
U	EXIST. PAVEMENT
W1	WEDGING DETAIL 1
W2	WEDGING DETAIL 2

6/2/99

04-MAR-2010 17:01
r:\roadway\proj\u3423_rdy_typ.dgn
$$$$USERNAME$$$$

PROJECT REFERENCE NO.	SHEET NO.
U-3423	2-E

STATE OF
NORTH CAROLINA
DEPT. OF TRANSPORTATION
DIVISION OF HIGHWAYS
RALEIGH, N.C.

ENGLISH DETAIL DRAWING FOR

2'-9" CONCRETE CURB & GUTTER

SHEET 1 OF 1

846D01

GENERAL NOTES:
- PLACE CONTRACTION JOINTS AT 10' INTERVALS, EXCEPT THAT A 15' SPACING MAY BE USED WHEN A MACHINE IS USED OR WHEN SATISFACTORY SUPPORT FOR THE FACE FORM CAN BE OBTAINED WITHOUT THE USE OF TEMPLATES AT 10' INTERVALS.
- JOINT SPACING MAY BE ALTERED IF REQUIRED BY THE ENGINEER.
- CONTRACTION JOINTS MAY BE INSTALLED WITH THE USE OF TEMPLATES OR FORMED BY OTHER APPROVED METHODS. MAKE NON-TEMPLATE FORMED JOINTS A MIN. OF 1½" DEEP.
- FILL ALL CONSTRUCTION JOINTS WITH JOINT FILLER AND SEALER.
- SPACE EXPANSION JOINTS AT 90' INTERVALS AND ADJACENT TO ALL RIGID OBJECTS.

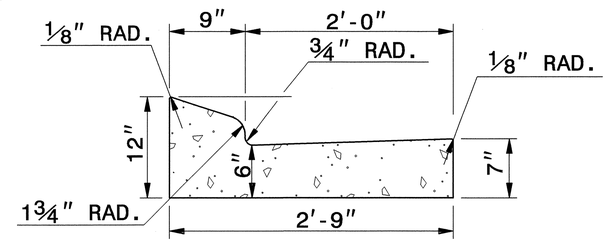

2'-9" CURB AND GUTTER

SECTION VIEW OF CURB AND GUTTER

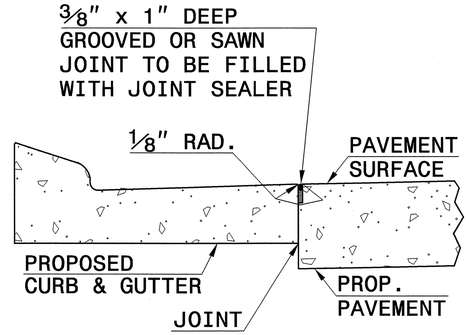

LONGITUDINAL JOINT

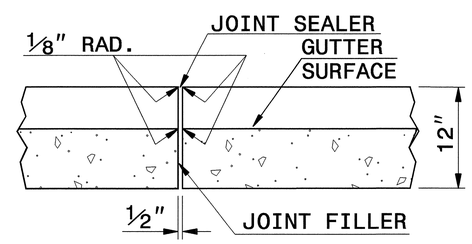

TRANSVERSE EXPANSION JOINT IN CURB AND GUTTER

SECTION VIEW OF JOINTS

STATE OF
NORTH CAROLINA
DEPT. OF TRANSPORTATION
DIVISION OF HIGHWAYS
RALEIGH, N.C.

ENGLISH DETAIL DRAWING FOR

2'-9" CONCRETE CURB & GUTTER

SHEET 1 OF 1

846D01

NORTH CAROLINA PROFESSIONAL SEAL ENGINEER CYNTHIA B. PERRY
8/10

PROJECT SERVICES UNIT
STANDARDS AND SPECIAL DESIGN
Office 919-250-4128 FAX 919-250-4119

SEE PLATE FOR TITLE

ORIGINAL BY: STD. 846.01 DATE:
MODIFIED BY: E.E. WARD DATE: 8-15-00
CHECKED BY: DATE: 2/17/10
FILE SPEC.: /usr/details/stand/c&g2'-9".dgn

16-FEB-2010 15:03
s:\contracts\special details\ericward\usr\details\stand\c&g2'-9.dgn
kkempf AT PS237489

PROJECT REFERENCE NO.	SHEET NO.
U-3423	2-F

STATE OF
NORTH CAROLINA
DEPT. OF TRANSPORTATION
DIVISION OF HIGHWAYS
RALEIGH, N.C.

ENGLISH DETAIL DRAWING FOR

SIDE BY SIDE HOODED CATCH BASIN WITH DOUBLE SIZE BOX

SHEET 1 OF 1

84002dbl

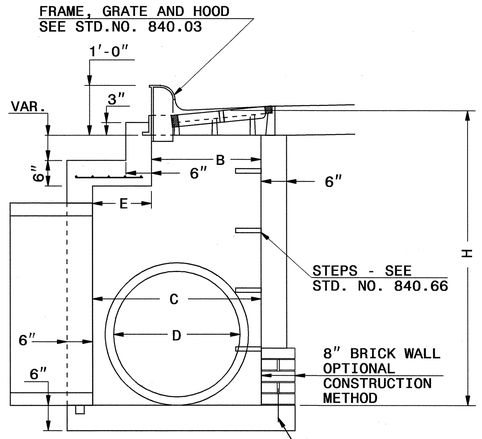

END ELEVATION
SECTION J-J

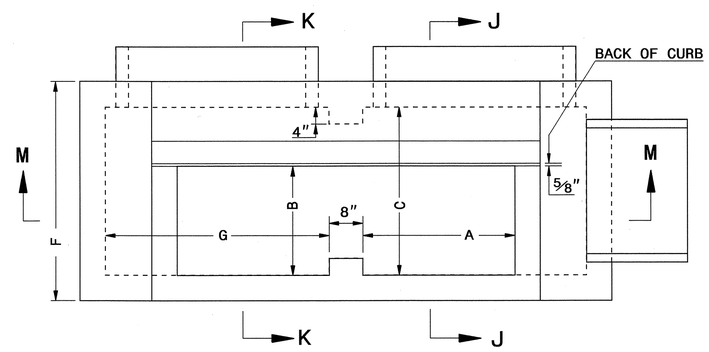

PLAN

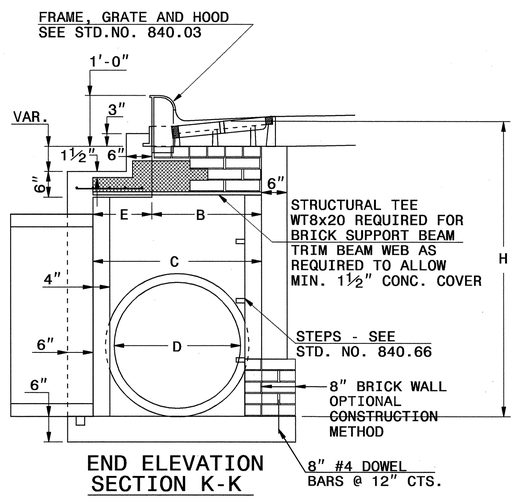

END ELEVATION
SECTION K-K

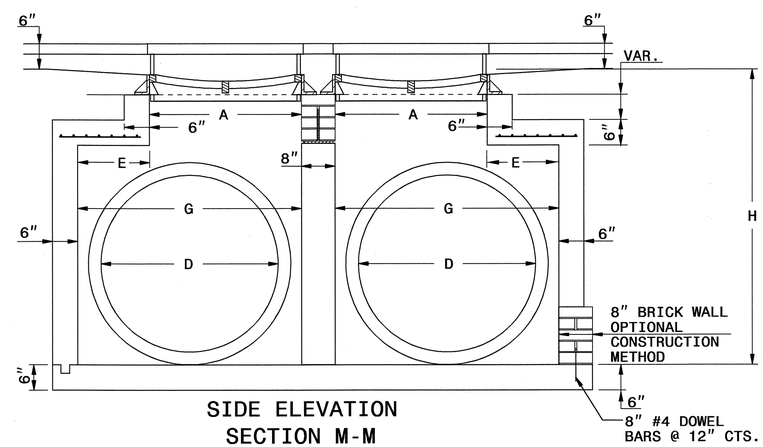

SIDE ELEVATION
SECTION M-M

GENERAL NOTES:

CLASS "B" CONCRETE TO BE USED THROUGHOUT.

ALL CATCH BASINS OVER 3'-6" IN DEPTH WILL BE PROVIDED WITH STEPS ON 12" CENTERS. SEE STD. DWG. NO. 840.66.

OPTIONAL CONSTRUCTION - MONOLITHIC POUR
2" KEY WAY OR #4 BAR DOWELS AT 12" CENTERS AND AS DIRECTED BY THE ENGINEER.

FORMS WILL BE USED IN THE CONSTRUCTION OF THE BOTTOM SLAB.

IF THE PIPE IS SET IN THE BASE SLAB OF THE BOX ADD TO THE BASE AS SHOWN ON STD DWG. NO. 840.00. USE TYPE "E", "F" AND "G" GRATES UNLESS OTHERWISE INDICATED.

WHEN BOX DEPTH IS 8' OR LESS USE 6" WALLS AND BOTTOM SLAB. WHEN DEPTH IS 8' TO 16' USE 8" WALLS AND BOTTOM SLAB. QUANTITIES SHALL BE ADJUSTED ACCORDINGLY.

SEE SHEET 2 OF STD. DWG. NO. 840.02 FOR DIMENSIONS.

SEE STD. DWG. NO. 840.01 FOR BRICK MASONRY CONSTRUCTION INFORMATION.

THE STRUCTURE SHALL BE CONSTRUCTED AND/OR MODIFIED BY THE DIRECTION OF THE ENGINEER.

STATE OF
NORTH CAROLINA
DEPT. OF TRANSPORTATION
DIVISION OF HIGHWAYS
RALEIGH, N.C.

ENGLISH DETAIL DRAWING FOR

SIDE BY SIDE HOODED CATCH BASIN WITH DOUBLE SIZE BOX

SHEET 1 OF 1

84002dbl

FOR 37 52 47 87 100 101

NORTH CAROLINA PROFESSIONAL SEAL 19761 ENGINEER CYNTHIA B. PERRY

5/10

PROJECT SERVICES UNIT
STANDARDS AND SPECIAL DESIGN
Office 919-250-4128 FAX 919-250-4119

SEE PLATE FOR TITLE

ORIGINAL BY: L.E.Robinson DATE: May 1993
MODIFIED BY: E.E. Wand DATE: Oct. 2004
CHECKED BY: DATE: 3/5/10
FILE SPEC.: DS9:usr/details/stand/84002dbl.dgn

5/14/99

03-MAR-2010 13:54
s:\contracts\contracts\special details\ericward\usr\ds9\stand\84002dbl.dgn
jhowerton AT PS237501

PROJECT REFERENCE NO.	SHEET NO.
U-3423	2-6

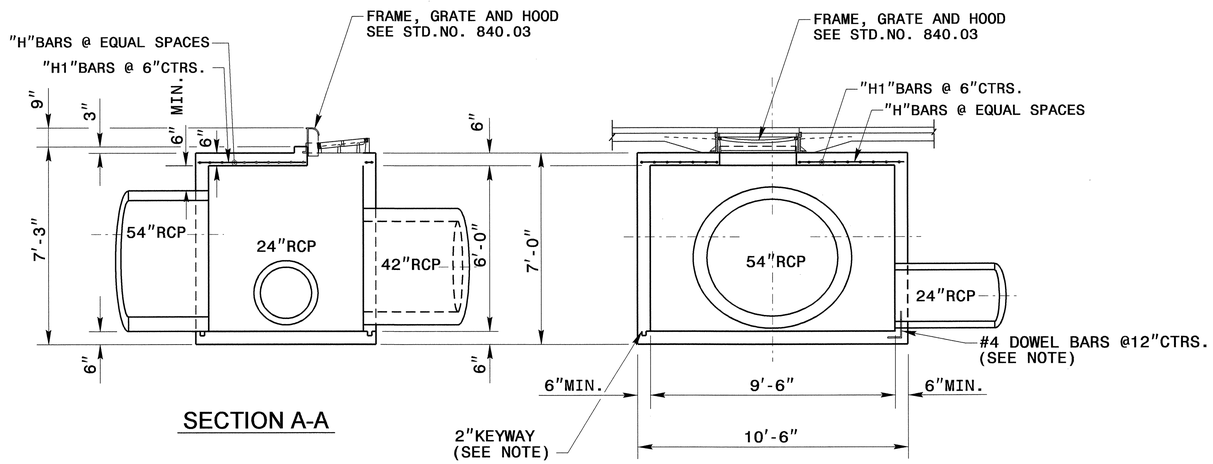

SECTION A-A

SECTION B-B

NOTES:

USE CLASS "B" CONCRETE THROUGHOUT.

ALL REINFORCING STEEL SHOULD BE ASTMA615-GRADE 60.

ALL REINFORCING STEEL SHOULD BE DEFORMED BARS. WHERE SPLICING OF REINFORCMENT IS NECESSARY, BARS ARE TO BE LAPPED 45 DIAMETERS. ALL DIMENSIONS RELATIVE TO REINFORCEMENT ARE TO CENTERS OF BARS.

REINFORCING STEEL TO BE CUT, BENT OR RELOCATED TO POSITION CATCH BASIN AS DIRECTED BY THE ENGINEER.

ALL EXPOSED CORNERS ARE TO BE CHAMFERED 1".

ALL MATERIAL AND WORKMANSHIP AS PER N.C.DEPARTMENT OF TRANSPORTATION STANDARD SPECIFICATIONS.

OPTIONAL CONSTRUCTION, MONOLITHIC POUR, 2" KEYWAY, OR #4 BAR DOWELS AT 12" CENTERS AS DIRECTED BY THE ENGINEER.

BILL OF MATERIAL

REINF. STEEL

BAR	SIZE	LENGTH	NO.	WEIGHT
H1	#4	7'-8"	24	183
H	#4	11'-8"	15	174
DOWEL (OPTION)			28	
REINF. STEEL LBS.				212
CON./R.C. CU. YDS.				5.4

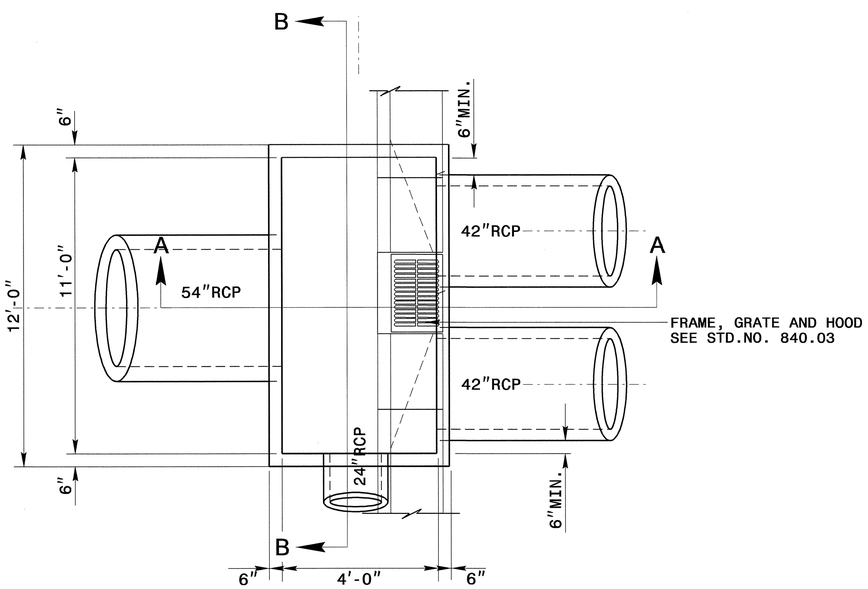

PLAN

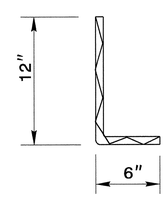

DOWEL

FOR 106

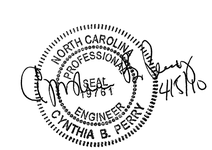

PROJECT SERVICES UNIT
STANDARDS AND SPECIAL DESIGN
Office 919-250-4128 FAX 919-250-4119

DETAIL OF CATCH BASIN FOR 2-42"X 54"X 24"

ORIGINAL BY: _____ DATE: _____
MODIFIED BY: kakempf DATE: 4-18-08
CHECKED BY: _____ DATE: 3/3/10
FILE SPEC.: details/kkempf/english/2-42x48x72 cb.dgn

03-MAR-2010 10:15
st-contracts\contracts\special details\kkempf\english\2-42x48x72 cb.dgn
jhowerton AT PS23750

PROJECT REFERENCE NO.	SHEET NO.
U-3423	2-H

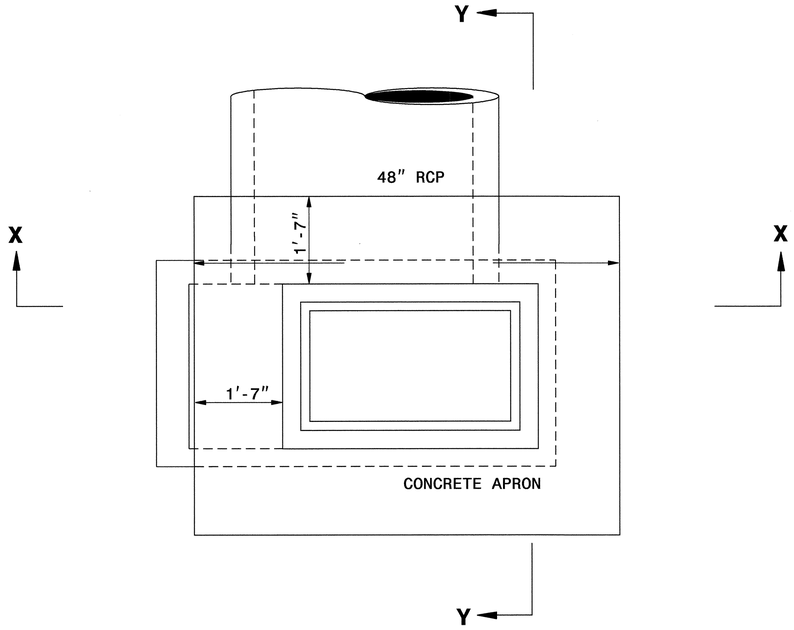

PLAN

GENERAL NOTES:

USE CLASS "B" CONCRETE THROUGHOUT.

PROVIDE ALL DROP INLETS OVER 3' IN DEPTH WITH STEPS 12" ON CENTER. USE STEPS WHICH COMPLY WITH STD. DRAWING 840.66.

OPTIONAL CONSTRUCTION - MONOLITHIC POUR, 2" KEYWAY, OR #4 BAR DOWELS AT 12" CENTERS AS DIRECTED BY THE ENGINEER.

USE FORMS FOR THE CONSTRUCTION OF THE BOTTOM SLAB.

IF REINFORCED CONCRETE PIPE IS SET IN BOTTOM SLAB OF BOX, ADD TO SLAB AS SHOWN ON STD. NO. 840.00.

WHEN PAYMENT FOR THE DROP INLET IS MADE ON APER EACH BASIS, THE CONCRETE APRON WILL BE CONSIDERED PART OF THE DROP INLET.

CONSTRUCT WITH PIPE CROWNS MATCHING.

USE STANDARD FRAMES AND GRATES 840.22 (SHOWN), 840.24(SHOWN), 840.20, 840.29, AND 840.33.

SEE STANDARD DRAWING 840.25 FOR ATTACHMENT OF FRAMES AND GRATES.

CHAMFER ALL EXPOSED CORNERS 1".

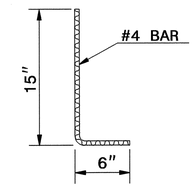

DOWEL "A"

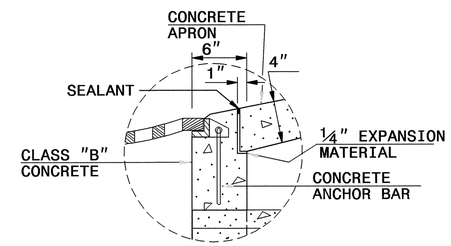

DETAIL

(APRON SUPPORT NOTCH)

BILL OF MATERIAL CONCRETE BOX				
BAR	NO.	SIZE	LENGTH	WEIGHT
G	4	5	2'	9
H	4	5	2'-4"	10
A	12	4	1'-8"	14
B3	12	4	3'	24
TOTAL REINF. STEEL (lbs)				57
CLASS "B" CONC. (yd^3)				1.7

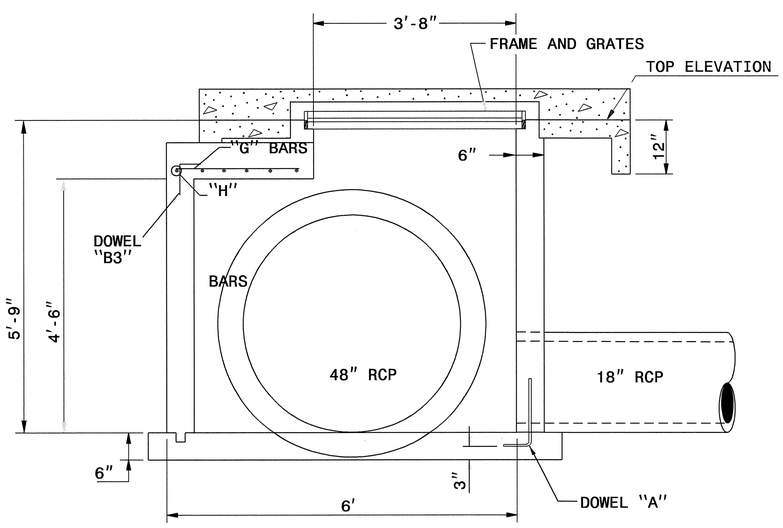

SECTION X-X

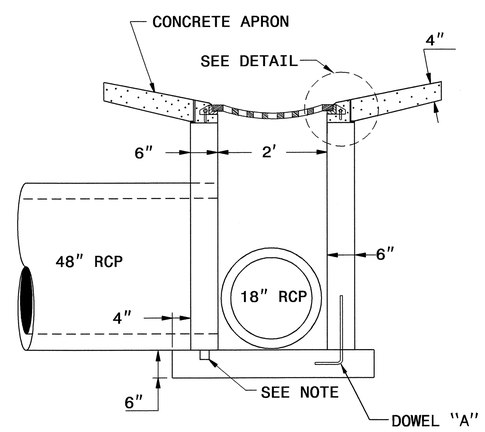

SECTION Y-Y

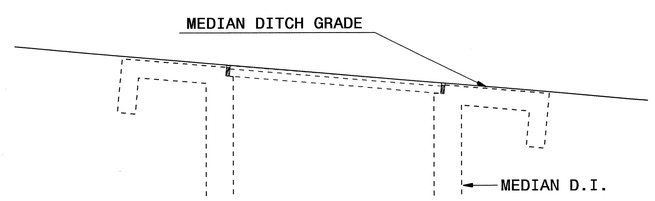

FOR 105

NORTH CAROLINA PROFESSIONAL SEAL 019761 ENGINEER CYNTHIA B. PERRY
4/15/10

PROJECT SERVICES UNIT STANDARDS AND SPECIAL DESIGN
Office 919-250-4128 FAX 919-250-4119

DETAIL OF SPECIAL MEDIAN DROP INLET

ORIGINAL BY: STD.840.17 DATE:
MODIFIED BY: T.S.Spell DATE: 11-7-02
CHECKED BY: DATE: 3/3/10
FILE SPEC.: w:\tspell/metric/840d17m x0002dd.dgn

03-MAR-2010 10:12
s:\contracts\contracts\special details\tspell\metric\840d17m_x0002dd.dgn
jhowerton AT PS237501

PROJECT REFERENCE NO.	SHEET NO.
U-3423	2-I

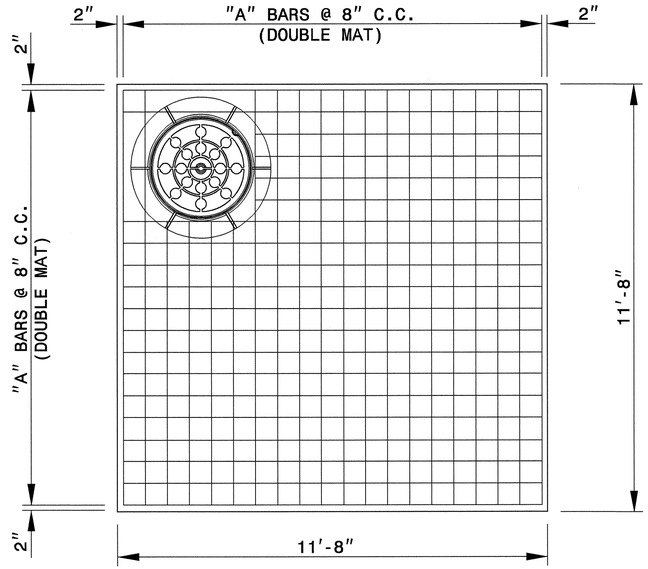

TOP SLAB

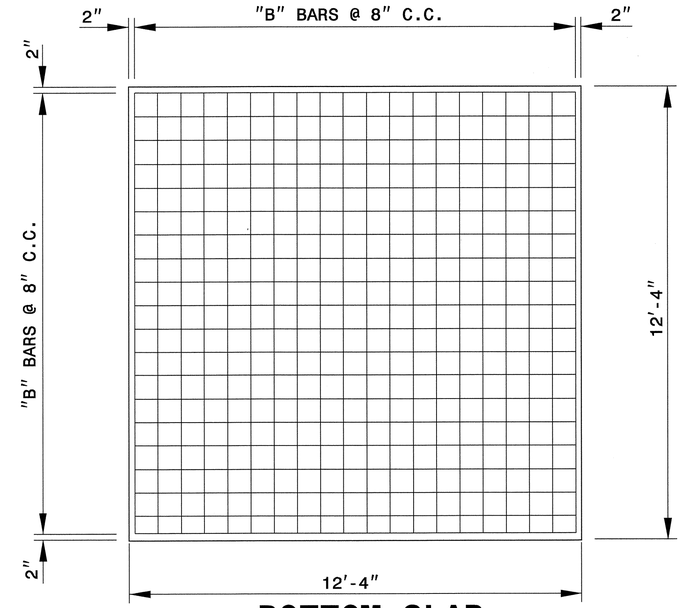

BOTTOM SLAB

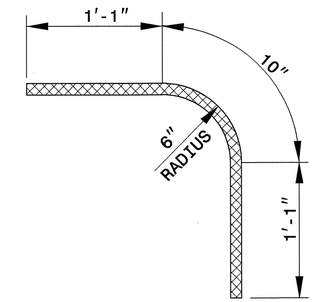

CORNER BARS "L"

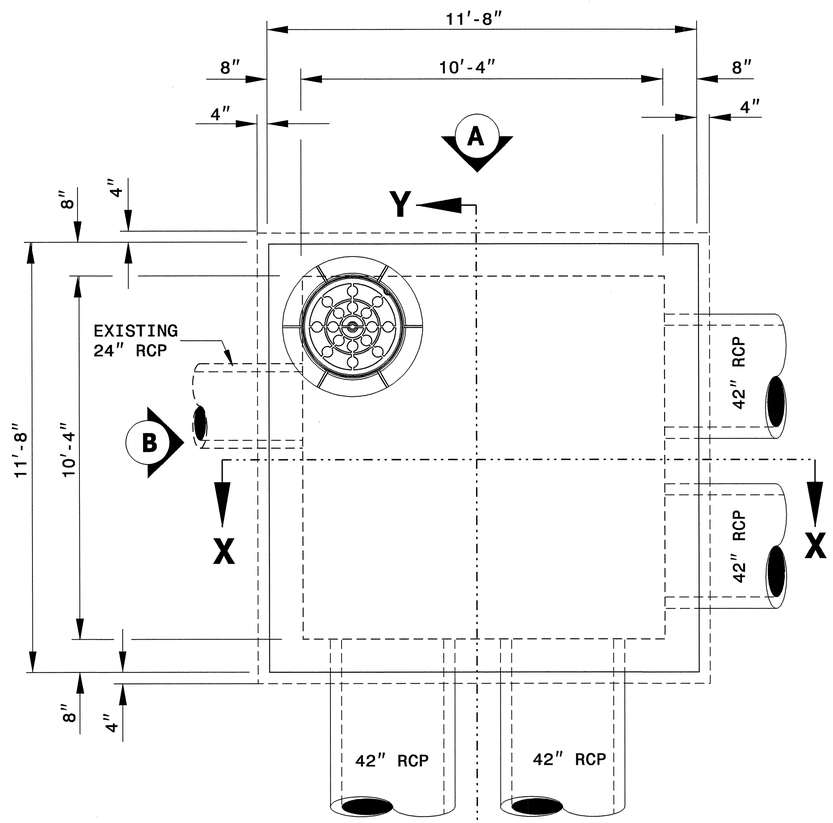

PLAN VIEW

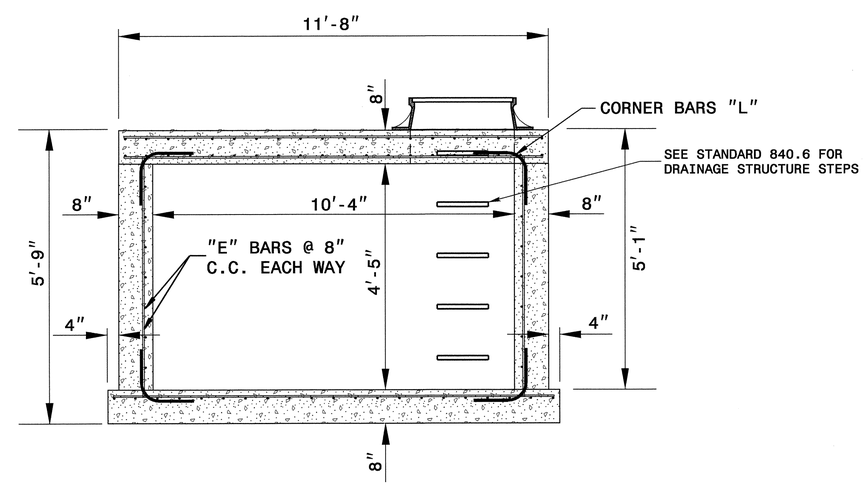

SECTION "X-X" & "Y-Y"

FOR 107

Sheet 1 of 2

PROJECT SERVICES UNIT
STANDARDS AND SPECIAL DESIGN
Office 919-250-4128 FAX 919-250-4119

DETAIL OF SPECIAL JUNCTION BOX

ORIGINAL BY: K. KEMPF DATE: DEC. 2007
MODIFIED BY: DATE:
CHECKED BY: DATE: 2/18/10
FILE SPEC.: Special Details\kkempf\english\jb_CB_u3423.dgn

NORTH CAROLINA PROFESSIONAL SEAL 019761 ENGINEER CYNTHIA B. PERRY 4/5/10

5/14/99

18-FEB-2010 13:39
s:\contracts\contracts\special details\kkempf\english\jb_cb_u3423.dgn
kkempf AT PS237489

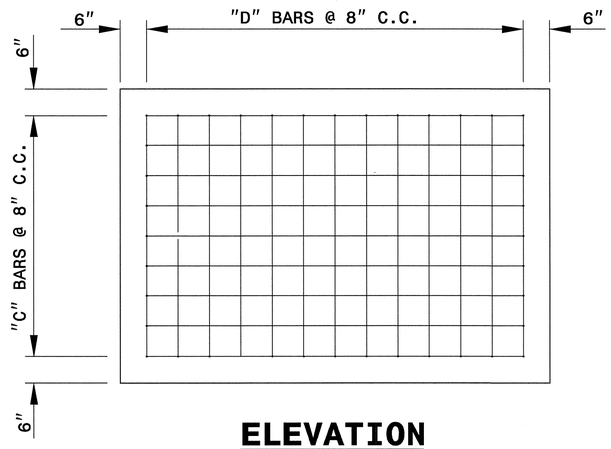

ELEVATION

VIEW "A"

VIEW "B"

GENERAL NOTES:

1. CLASS "B" CONCRETE TO BE USED THROUGHOUT.
2. CONCRETE BOX SHALL BE CONSTRUCTED IN ACCORDANCE WITH SECTION 825 OF THE STANDARD SPECIFICATIONS.
3. FORMS ARE TO BE USED FOR CONSTRUCTION OF THE BOTTOM SLAB.
4. ADJUST LENGTH OF STEEL BARS AS NEEDED TO COMPENSATE FOR PIPES AND GRATE OPENINGS.
5. REINFORCING STEEL SHALL CONFORM TO ASTM A 615, GRADE 400.
6. CUT OR BEND STEEL BARS AS NEEDED TO PROVIDE 50mm CLEARANCE AROUND PIPES AS DIRECTED BY THE ENGINEER.
7. FRAME AND GRATE SHALL BE LOCATED AS FIELD CONDITIONS DICTATE AND DIRECTED BY THE ENGINEER.
8. ALL EXPOSED CONCRETE CORNERS TO BE CHAMFERED 25mm.
9. THE BASE SLAB AND THE QUANTITIES ADJUSTED IN ACCORDANCE WITH STD. DWG. NO. 840.00.
10. STEPS, ON 12" CENTERS, SHALL BE PROVIDED IN ACCORDANCE WITH STD. DWG. NO. 840.66.

BILL OF MATERIAL

BAR	QTY	SIZE	LENGTH	WEIGHT
A	68	#6	11'-4"	1157.5
B	36	#5	12'-0"	450.6
C	32	#5	4'-9"	158.5
D	14	#5	10'-8"	155.8
TOTAL REINF. STEEL (lbs)				1922.4
CLASS "B" CONC. (ft^3)				11.9

NO DEDUCTIONS HAVE BEEN MADE FOR PIPES OR MANHOLE OPENINGS

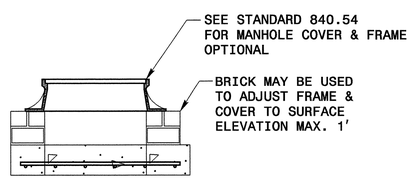

BRICK RISER

Sheet 2 of 2

PROJECT SERVICES UNIT
STANDARDS AND SPECIAL DESIGN
Office 919-250-4128 FAX 919-250-4119

DETAIL OF SPECIAL JUNCTION BOX

ORIGINAL BY: K. KEMPF DATE: DEC. 2007
MODIFIED BY: DATE:
CHECKED BY: DATE: 2/18/10
FILE SPEC.: Special Details\kkempf\english\jb CB U3423.dgn

5/14/99
18-FEB-2010 13:39
s:\contracts\contracts\special details\kkempf\english\jb_cb_u3423.dgn
kkempf AT PS237489

PROJECT REFERENCE NO.	SHEET NO.
U-3423	2-K

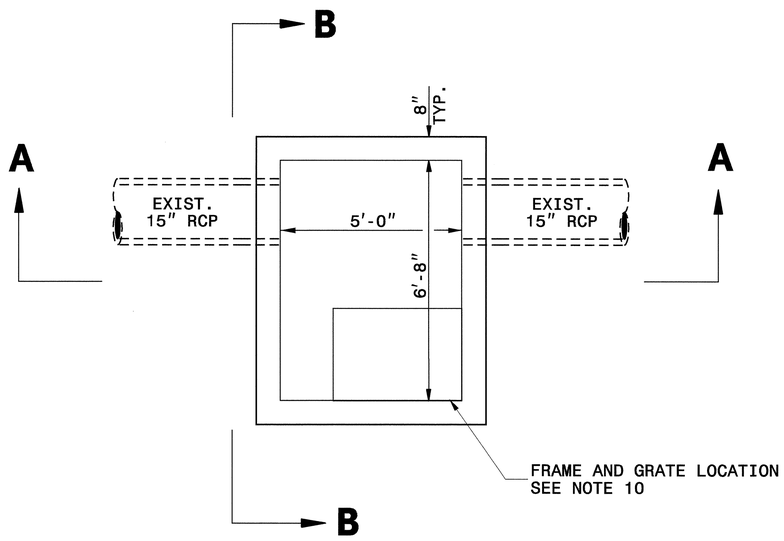

PLAN

NOTES:

1. USE CLASS 'B' CONCRETE THROUGHOUT.
2. CONSTRUCT CONCRETE BOX IN ACCORDANCE WITH SECTION 825 OF THE STANDARD SPECIFICATIONS AND MAY BE ADJUSTED TO FIT PIPE CONDITION.
3. USE FORMS FOR CONSTRUCTION OF THE BOTTOM SLAB.
4. ADJUST LENGTH OF STEEL BARS AS NEEDED TO COMPENSATE FOR PIPES.
5. CONFORM REINFORCING STEEL TO ASTM A615, GRADE 400.
6. CUT OR BEND STEEL BARS AS NEEDED TO PROVIDE 50mm CLEARANCE AROUND PIPES OR AS DIRECTED BY THE ENGINEER.
7. ADJUST HEIGHT, WIDTH AND DEPTH DIMENSIONS OF CATCH BASIN IN THE FIELD AS DIRECTED BY THE ENGINEER.
8. SLAB AND WALL THICKNESS CAN NOT BE ADJUSTED.
9. FRAME AND GRATE LOCATED AS FIELD CONDITION DICTATES AND DIRECTED BY THE ENGINEER.

BILL OF MATERIALS

BAR	NO.	SIZE	LENGTH	WEIGHT
A	73	#5	7'-8"	583
B	82	#5	6'-0"	513
C	36	#5	8'-3"	310
G	8	#5	2'-0"	17
TOTAL REINF. STEEL (kg)				1423
TOTAL CONC. (cu. m.)				8.5
DEDUCTIONS FOR ONE PIPE				
18" RCP				1.76

NO DEDUCTIONS HAVE BEEN MADE TO ACCOMODATE CATCH BASIN OPENING.

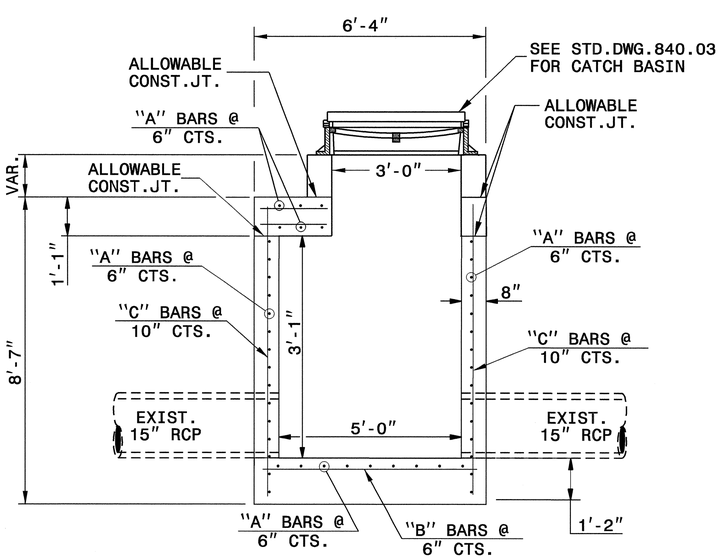

SECTION A-A

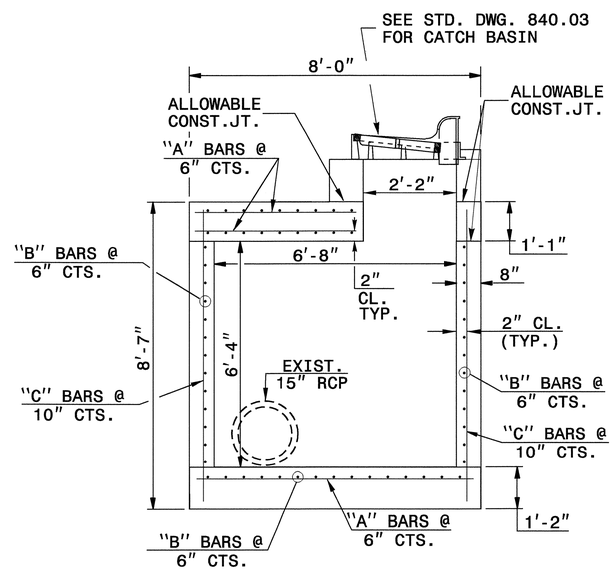

SECTION B-B

FOR 126

NORTH CAROLINA PROFESSIONAL SEAL 19761 ENGINEER CYNTHIA B. PERRY 9/5/16

PROJECT SERVICES UNIT
STANDARDS AND SPECIAL DESIGN
Office 919-250-4128 FAX 919-250-4119

DETAIL OF SPECIAL CATCH BASIN

ORIGINAL BY: T.S.Spell DATE: 6-18-02
MODIFIED BY: DATE:
CHECKED BY: DATE: 2/17/10
FILE SPEC.: kkempf\english\jb cb u3423.dgn

16-FEB-2010 14:09
s:\contracts\contracts\special details\kkempf\english\jbu3423.dgn
kkempf AT PS237489

PROJECT REFERENCE NO.	SHEET NO.
U-3423	2-L

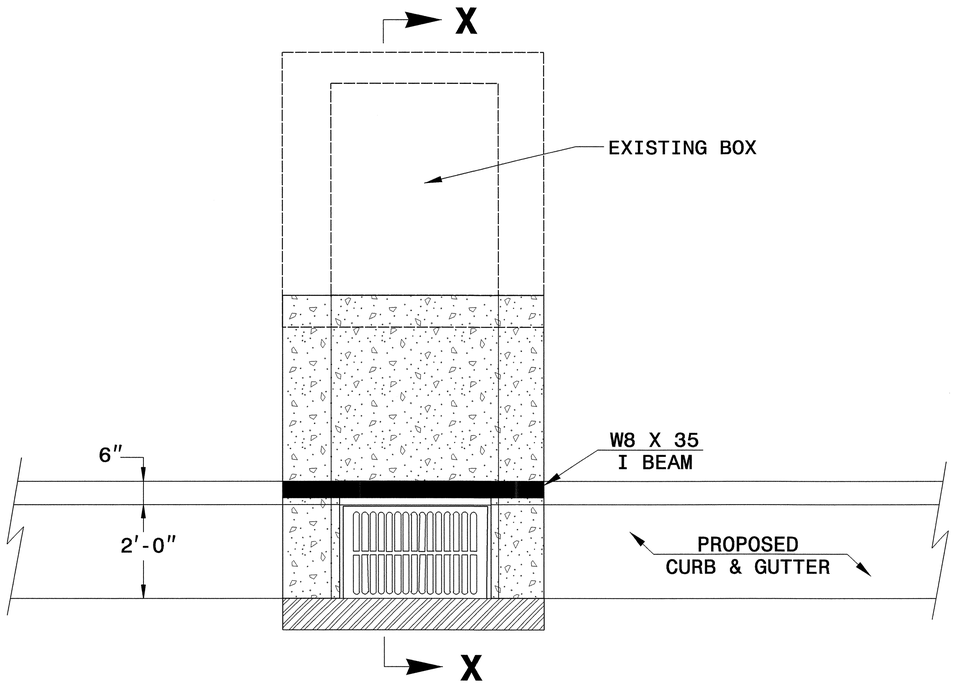

PLAN

NOTES:

MORTAR JOINTS ½" TO ¼" THICK.

USE CLASS "B" CONCRETE THROUGHOUT.

USE TYPE "E", "F" AND "G" GRATES UNLESS OTHERWISE INDICATED.

USE BRICK OR CONCRETE BLOCK WHICH COMPLIES WITH THE REQUIREMENTS OF SECTION 840 OF THE STANDARD SPECIFICATIONS.

CHAMFER ALL EXPOSED CORNERS 1".

DRAWING NOT TO SCALE.

ALL CONVERSIONS SHALL BE ACCORDANCE WITH SECTION 859 OF THE STANDARD SPECIFICATIONS.

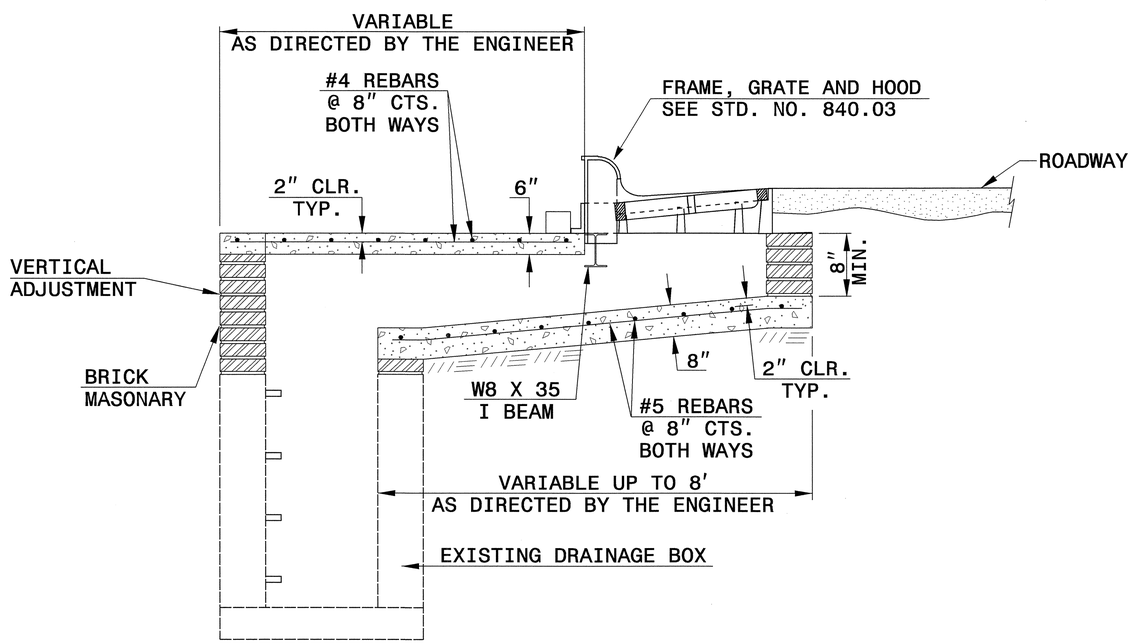

SECTION X-X

FOR 117

NORTH CAROLINA PROFESSIONAL SEAL 19761 ENGINEER CYNTHIA B. PERRY 4/5/10

PROJECT SERVICES UNIT STANDARDS AND SPECIAL DESIGN Office 919-250-4128 FAX 919-250-4119
CONVERSION OF EXISTING DRAINAGE BOX TO SPECIAL CATCH BASIN
ORIGINAL BY: E.E. WARD DATE: 1-24-02 MODIFIED BY: DATE: CHECKED BY: DATE: 2/17/10 FILE SPEC.: eric:w\usr\details\stand\840d06.dgn

16-FEB-2010 14:06
s:\contracts\contracts\special details\ericward\usr\details\stand\840d06.dgn
kkempf AT PS237489

PROJECT REFERENCE NO.	SHEET NO.
U-3423	2-M

STATE OF
NORTH CAROLINA
DEPT. OF TRANSPORTATION
DIVISION OF HIGHWAYS
RALEIGH, N.C.

ENGLISH DETAIL DRAWING FOR
ANCHORAGE FOR FRAMES
BRICK/CONCRETE/PRECAST CONCRETE

SHEET 1 OF 1
840D25

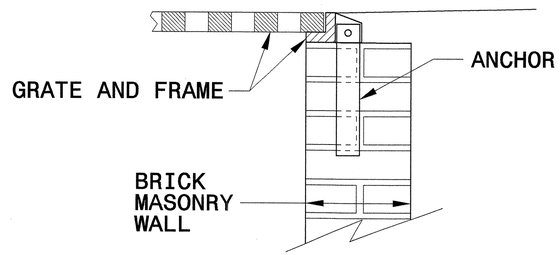

BRICK MASONRY CONSTRUCTION

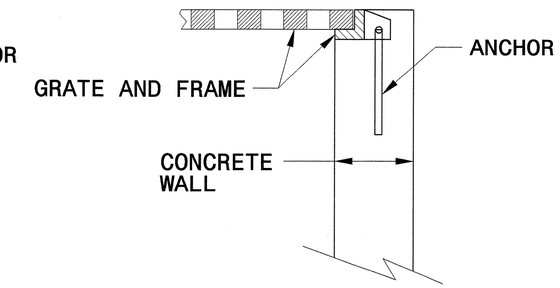

CONCRETE CONSTRUCTION

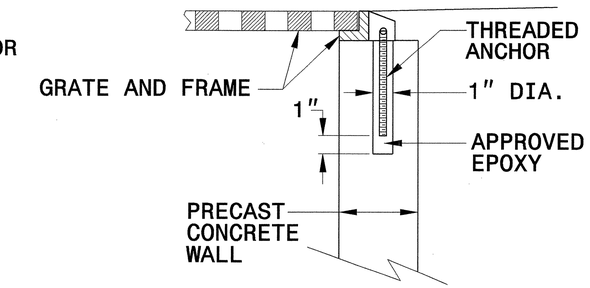

PRECAST CONCRETE CONSTRUCTION

DETAIL SHOWING ANCHORAGE OF FRAME FOR GRATED DROP INLET

NOTE:
CONSTRUCT GRATED DROP INLET TO COINCIDE WITH NORMAL OR SUPERELEVATED SHOULDER OR PAVEMENT SLOPE.

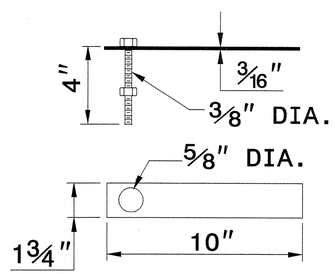

MASONRY ANCHOR
3/8" DIA. BOLT WITH PLATE

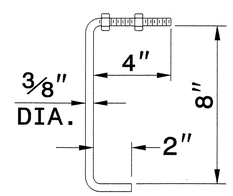

CONCRETE ANCHOR
3/8" DIA. BENT BAR

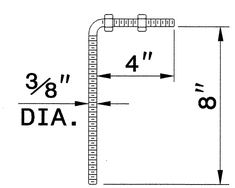

PRECAST CONCRETE ANCHOR
3/8" DIA. BENT BAR

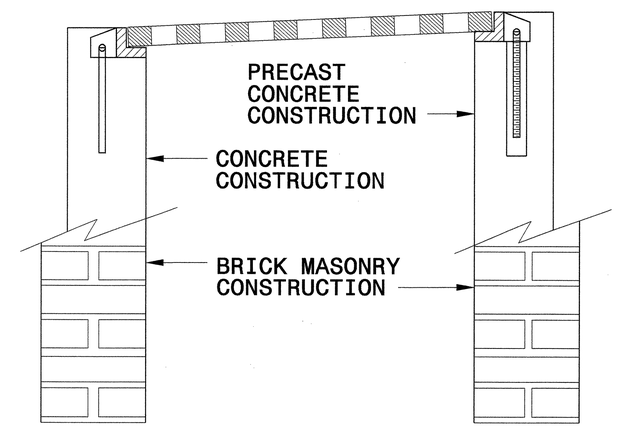

FRAME AND GRATE INSTALLATION FOR NORMAL CROWN AND SUPERELEVATED SECTIONS

STATE OF
NORTH CAROLINA
DEPT. OF TRANSPORTATION
DIVISION OF HIGHWAYS
RALEIGH, N.C.

ENGLISH DETAIL DRAWING FOR
ANCHORAGE FOR FRAMES
BRICK/CONCRETE/PRECAST CONCRETE

SHEET 1 OF 1
840D25

NORTH CAROLINA PROFESSIONAL SEAL 19761 ENGINEER CYNTHIA B. PERRY
4/5/10

PROJECT SERVICES UNIT
STANDARDS AND SPECIAL DESIGN
Office 919-250-4128 FAX 919-250-4119

SEE PLATE FOR TITLE

ORIGINAL BY: 2006 STD 840.25 DATE: 07/18/06
MODIFIED BY: E.E. WARD DATE: 9/25/06
CHECKED BY: [signature] DATE: 11/13/06
FILE SPEC.:

$$$$$$SYSTIME$$$$
$$$$$$$$$$$$$$$$DGN$$$$$$$$$$$$$$$$$$
$$$$$$USERNAME$$$$

30-JUL-2009 08:48
s:\contracts\contracts\special details\ericward\stds\06' stds to special details\30001\0300d01.dgn
jhowerton AT PS237501

5/14/99

STATE OF NORTH CAROLINA
DEPT. OF TRANSPORTATION
DIVISION OF HIGHWAYS
RALEIGH, N.C.

7-06

ENGLISH DETAIL DRAWING FOR
METHOD OF PIPE INSTALLATION
FLEXIBLE PIPE

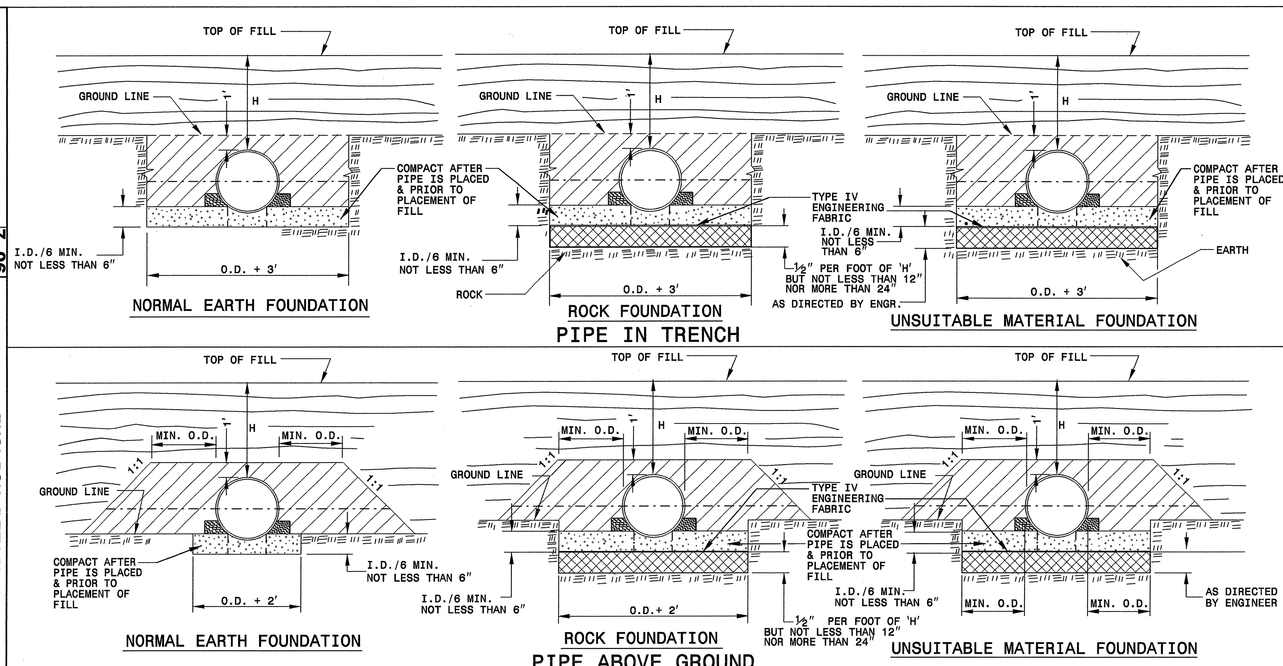

GENERAL NOTES:

I.D. = THE MAXIMUM HORIZONTAL INSIDE DIAMETER DIMENSION.

O.D. = THE MAXIMUM HORIZONTAL OUTSIDE DIAMETER DIMENSION.

H = THE FILL HEIGHT MEASURED VERTICALLY AT ANY POINT ALONG THE PIPE FROM THE TOP OF THE PIPE TO THE TOP OF THE EMBANKMENT AT THAT POINT.

TAKE CARE TO FULLY COMPACT HAUNCH ZONE OF PIPE BACKFILL.

LOOSELY PLACED SELECT MATERIAL CLASS III OR CLASS II, TYPE 1 FOR PIPE BEDDING. LEAVE SECTION DIRECTLY BENEATH PIPE UNCOMPACTED AS PIPE SEATING AND BACKFILL WILL ACCOMPLISH COMPACTION.

DO NOT OPERATE HEAVY EQUIPMENT OVER ANY PIPE CULVERT UNTIL THE PIPE CULVERT HAS BEEN PROPERLY BACKFILLED AND COVERED WITH AT LEAST 3 FEET OF APPROVED MATERIAL.

SPRINGLINE OF PIPE

SELECT BACKFILL MATERIAL CLASS III OR CLASS II, TYPE 1 ABOVE AND BELOW SPRINGLINE.

APPROVED SUITABLE LOCAL MATERIAL.

UNDISTURBED EARTH MATERIAL

SELECT MATERIAL CLASS V OR VI FOR FOUNDATION CONDITIONING. ENCAPSULATE WITH ENGINEERING FABRIC AS DIRECTED BY THE ENGINEER.

SHEET 1 OF 3
300D01

STATE OF NORTH CAROLINA
DEPT. OF TRANSPORTATION
DIVISION OF HIGHWAYS
RALEIGH, N.C.

7-06

ENGLISH DETAIL DRAWING FOR
METHOD OF PIPE INSTALLATION
RIGID PIPE

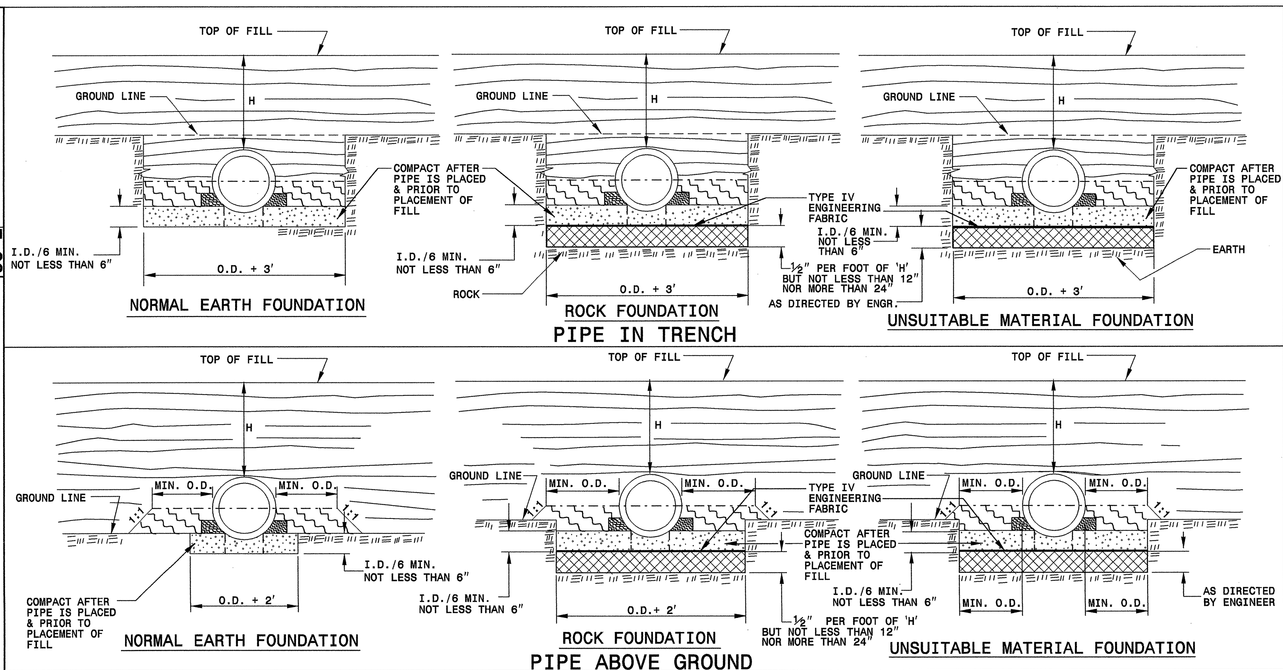

GENERAL NOTES:

I.D. = THE MAXIMUM HORIZONTAL INSIDE DIAMETER DIMENSION.

O.D. = THE MAXIMUM HORIZONTAL OUTSIDE DIAMETER DIMENSION.

H = THE FILL HEIGHT MEASURED VERTICALLY AT ANY POINT ALONG THE PIPE FROM THE TOP OF THE PIPE TO THE TOP OF THE EMBANKMENT AT THAT POINT.

TAKE CARE TO FULLY COMPACT HAUNCH ZONE OF PIPE BACKFILL.

LOOSELY PLACED SELECT MATERIAL CLASS III OR CLASS II, TYPE 1 FOR PIPE BEDDING. LEAVE SECTION DIRECTLY BENEATH PIPE UNCOMPACTED AS PIPE SEATING AND BACKFILL WILL ACCOMPLISH COMPACTION.

DO NOT OPERATE HEAVY EQUIPMENT OVER ANY PIPE CULVERT UNTIL THE PIPE CULVERT HAS BEEN PROPERLY BACKFILLED AND COVERED WITH AT LEAST 3 FEET OF APPROVED MATERIAL.

SPRINGLINE OF PIPE

SELECT BACKFILL MATERIAL CLASS III OR CLASS II, BELOW SPRINGLINE.

APPROVED SUITABLE LOCAL MATERIAL ABOVE SPRINGLINE.

UNDISTURBED EARTH MATERIAL

SELECT MATERIAL CLASS V OR VI FOR FOUNDATION CONDITIONING. ENCAPSULATE WITH ENGINEERING FABRIC AS DIRECTED BY THE ENGINEER.

SHEET 2 OF 3
300D01

PROJECT SERVICES UNIT
STANDARDS AND SPECIAL DESIGN
Office 919-250-4128 FAX 919-250-4119

SEE PLATE FOR TITLE

ORIGINAL BY: KKempf
MODIFIED BY: DATE: 5-15-09
CHECKED BY: DATE: 7/29/09
FILE SPEC: /ericward/stds/stdsdetails/30001/0300d01.dgn

NORTH CAROLINA PROFESSIONAL ENGINEER SEAL 19181 CHRISTOPHER B. PERRY
8/3/10

PROJECT REFERENCE NO. U-3423
SHEET NO. 2-N

STATE OF NORTH CAROLINA
DEPT. OF TRANSPORTATION
DIVISION OF HIGHWAYS
RALEIGH, N.C.

7-06

ENGLISH DETAIL DRAWING FOR
METHOD OF PIPE INSTALLATION

FILL HEIGHT TABLES

FLEXIBLE PIPE

Round Corrugated Steel Pipe
2 2/3 x ½ corrugation **

Diameter (inches)	Minimum cover (inches)	Maximum Height of Cover (feet) (Ga) 16	14	12	10	8
12	12	204	256			
15	12	162	204			
18	12	135	169	239		
21	12	115	145	204		
24	12	100	126	178		
30	12	79	100	142		
36	12	65	83	117	152	
42	12	55	70	100	130	160
48	12	48	61	87	113	139
54	12		54	77	100	123
60	12			69	90	111
66	12				81	100
72	12				74	91
78	12					81
84	12					69

Round Corrugated Aluminum Pipe
2 2/3 x ½ corrugation **

Diameter (inches)	Minimum cover (inches)	Maximum Height of Cover (feet) (Ga) 16	14	12	10	8
12	12	123	155	218	281	344
15	12	98	123	174	224	275
18	12	81	102	144	187	228
21	12	69	87	123	160	195
24	12	60	76	108	139	171
27	12		67	95	123	151
30	12		60	85	111	136
36	12		50	71	92	113
42	12			60	78	96
48	12			52	68	84
54	12			46	50	74
60	12				50	62
66	12					51
72	12					41

** FOR DIFFERENT CORRUGATIONS AND ARCH PIPES REFER TO ROADWAY DESIGN MANUAL OR MANUFACTURERS SPECIFICATION.

REFER TO THE FOLLOWING FOR PIPE SPECIFICATIONS

CSP - AASHTO M36
CAAP - AASHTO M196
HDPE - AASHTO M294
PVC - ASTM F949 or AASHTO M304

NOTES: FILL HEIGHTS SHOWN WERE CALCULATED USING AASHTO LRFD BRIDGE DESIGN SPECIFICATIONS

1' MINIMUM COVER FOR ALL SIDE DRAIN PIPE IN ACCORDANCE WITH THE STANDARD SPECIFICATIONS

HDPE - * (Minimum fill) 2' for pipe diameters ≥ 12" and ≤ 60"
* (Maximum fill) 20' for pipe diameters ≤ 24"
17' for pipe diameters ≥ 30" and ≤ 60"

PVC - * (Minimum fill) 2' for pipe diameters ≥ 12" and ≤ 36"
* (Maximum fill) 30' for pipe diameters ≥ 12" and ≤ 36"

* FILL HEIGHT IS MEASURED FROM THE TOP OF THE PIPE TO THE BOTTOM OF THE PAVEMENT STRUCTURE

RIGID PIPE

RCP - * (Minimum fill) 1' for Class IV & CLASS V
2' for Class III & Class II

* (Maximum fill) 10' - Class II pipe
20' - Class III pipe
30' - Class IV pipe
40' - Class V pipe

(For fills > 40' & < 80' use LRFD Direct Design Method)

* FILL HEIGHT IS MEASURED FROM THE TOP OF THE PIPE TO THE BOTTOM OF THE PAVEMENT STRUCTURE

REFER TO THE FOLLOWING FOR PIPE SPECIFICATIONS

RCP - AASHTO M170

NOTES: FILL HEIGHTS SHOWN WERE CALCULATED USING AASHTO LRFD BRIDGE DESIGN SPECIFICATIONS

1' MINIMUM COVER FOR ALL SIDE DRAIN PIPE IN ACCORDANCE WITH THE STANDARD SPECIFICATIONS

STATE OF NORTH CAROLINA
DEPT. OF TRANSPORTATION
DIVISION OF HIGHWAYS
RALEIGH, N.C.

7-06

ENGLISH DETAIL DRAWING FOR
METHOD OF PIPE INSTALLATION

FILL HEIGHT TABLES

SHEET 3 OF 3
300D01

SHEET 3 OF 3
300D01

PROJECT SERVICES UNIT
STANDARDS AND SPECIAL DESIGN
Office 919-250-4128 FAX 919-250-4119

SEE PLATE FOR TITLE

ORIGINAL BY: KKempf DATE: 5-15-09
MODIFIED BY: DATE:
CHECKED BY: DATE: 7/9/09
FILE SPEC/pcl/dgn/stds/stdstdetails/30001/0300d01.dgn

NORTH CAROLINA PROFESSIONAL SEAL 19161 ENGINEER CYNTHIA B. PERRY 6/5/09

PROJECT REFERENCE NO. U-3423
SHEET NO. 2-0

PROJECT REFERENCE NO.	SHEET NO.
U-3423	2-P

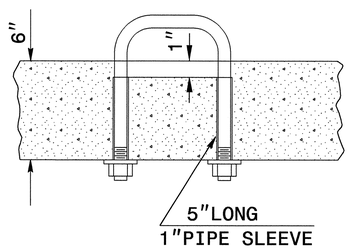

PARTIAL SECTION

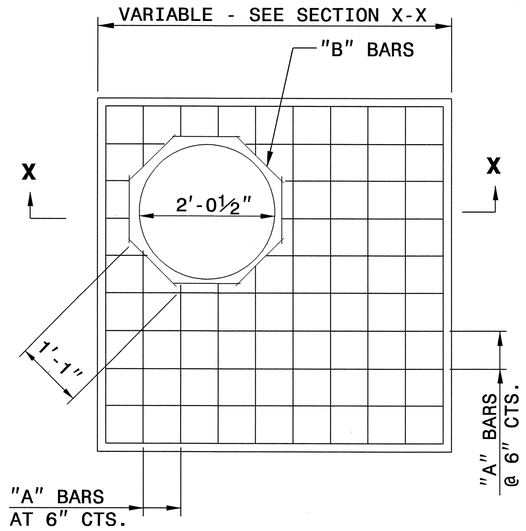

PLAN

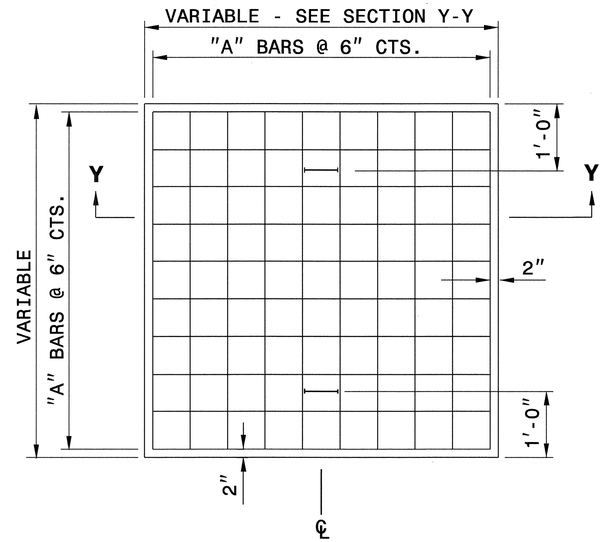

PLAN

GENERAL NOTES:

CONSTRUCT IN ACCORDANCE WITH SECTION 859 OF THE STANDARD SPECIFICATIONS.

FIELD VERIFY THE DIMENSIONS FOR THE EXISTING BOXES

DETAIL INTENDED FOR NON-TRAFFIC BEARING DRAINAGE STRUCTURES.

BILL OF MATERIALS

REINFORCING STEEL				
CODE	SIZE	QTY.	LENGTH	REINF. STEEL LBS.
A	#4	20	4'-6"	60.12
B	#4	8	1'-1"	5.79
TOTAL				65.91 *

MASONRY	CU YDS
TOP SLAB CONCRETE CLASS "B"	.433 *
BRICK MASONRY PER FT HT (MIN)	.4111

* NOTE:
QUANTITIES BASED ON 3'-6" X 3'-6" DRAINAGE STRUCTURE. ADJUST QUANTITIES FOR LARGER STRUCTURES AND MANHOLE CONSTRUCTION.

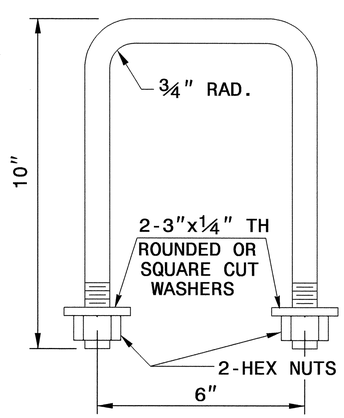

DETAIL OF HANDLE

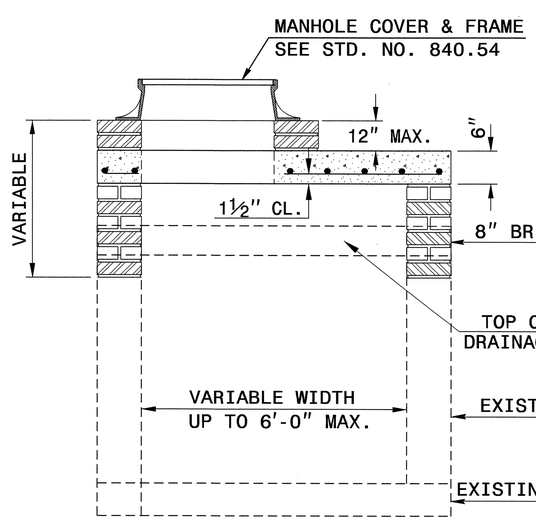

SECTION X-X

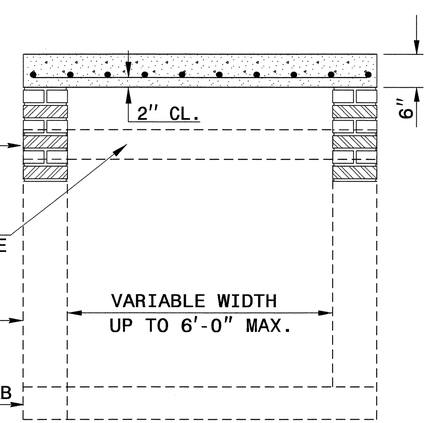

SECTION Y-Y

NORTH CAROLINA PROFESSIONAL SEAL 19761 ENGINEER CYNTHIA B. PERRY 4/5/10

PROJECT SERVICES UNIT
STANDARDS AND SPECIAL DESIGN
Office 919-250-4128 FAX 919-250-4119

DETAIL TO CONVERT EXISTING DROP INLET OR CATCH BASIN TO JUNCTION BOX (MANHOLE OPTIONAL)

ORIGINAL BY: T.S.S. DATE: NOV.1997
MODIFIED BY: E.E.M. DATE: 9-28-02
CHECKED BY: DATE: 3/5/10
FILE SPEC.: /usr/details/stand/boxtojbe.dgn

05-MAR-2010 14:02
s:\contracts\contracts\special details\ericward\usr\details\stand\cbtojbe.dgn
jhowerton AT PS237501

PROJECT REFERENCE NO.	SHEET NO.
U-3423	2-Q

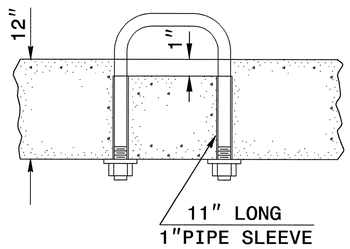

PARTIAL SECTION

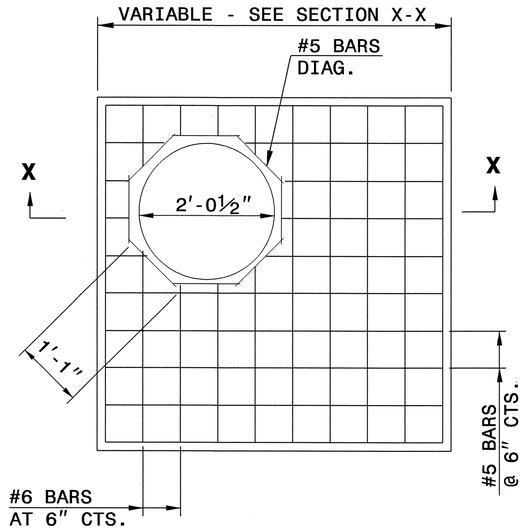

PLAN

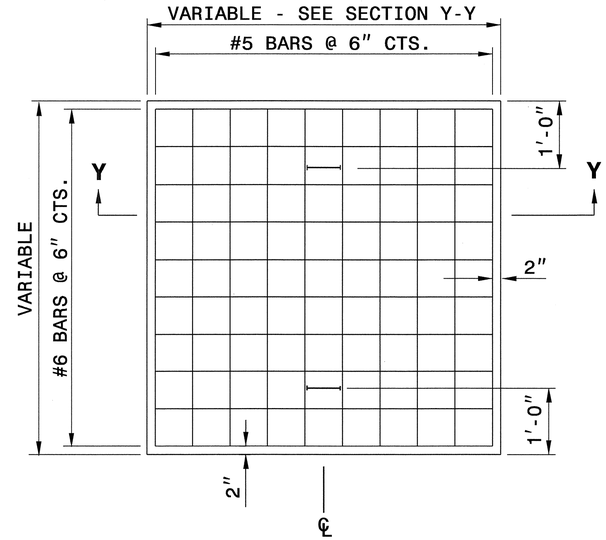

PLAN

GENERAL NOTES:

CONSTRUCT IN ACCORDANCE WITH SECTION 859 OF THE STANDARD SPECIFICATIONS.

FIELD VERIFY THE DIMENSIONS FOR THE EXISTING BOXES.

BILL OF MATERIALS

MASONRY	
TOP SLAB CONCRETE CLASS "A"	.037YDS^3 PER FT^2
BRICK MASONRY	.025YDS^3 PER FT^2
REINFORCING STEEL	7.64LBS PER FT^2

MANHOLE OPTION QUANTITIES

SIZE	QTY.	LENGTH	REINF. STEEL LBS.
#5 DIAG.	8	1'-1"	9.04

NOTE:

CONCRETE AND REINFORCING STEEL QUANTITIES BASED ON SQUARE FOOT AREA OF THE PROPOSED TOP SLAB FOR THE EXISTING DRAINAGE STRUCTURE.

BRICK MASONRY QUANTITY IS BASED ON THE TOTAL SQUARE FOOTAGE OF EXTERIOR WALL SURFACE AREA TO BE CONSTRUCTED.

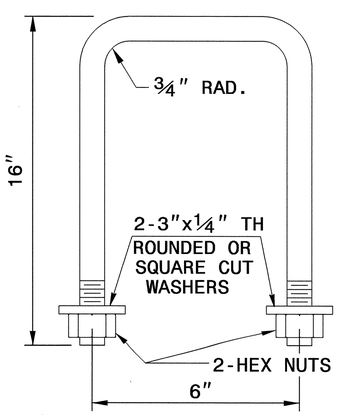

DETAIL OF HANDLE

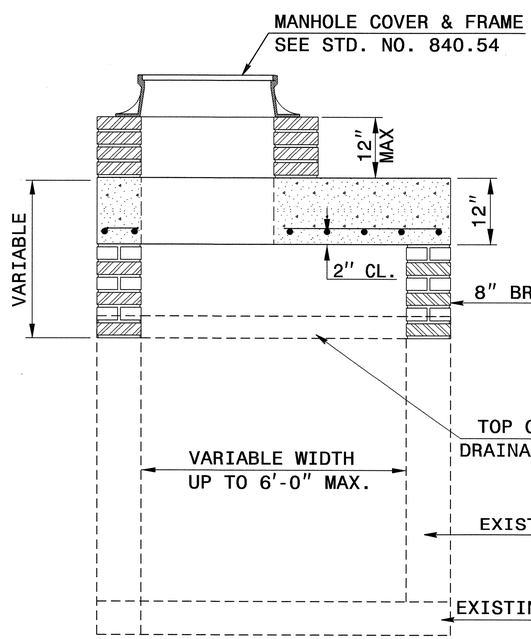

SECTION X-X

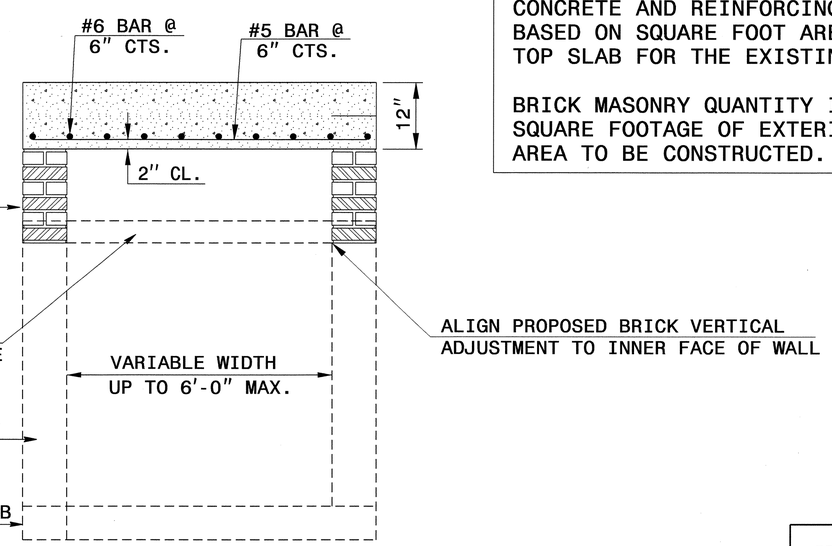

SECTION Y-Y

NORTH CAROLINA PROFESSIONAL SEAL 19761 ENGINEER CYNTHIA B. PERRY
4/5/10

PROJECT SERVICES UNIT
STANDARDS AND SPECIAL DESIGN
Office 919-250-4128 FAX 919-250-4119

DETAIL TO CONVERT EXISTING DROP INLET OR CATCH BASIN TO TRAFFIC BEARING JUNCTION BOX (MANHOLE OPTIONAL)

ORIGINAL BY: T.S.S. DATE: FEB.2000
MODIFIED BY: E.E.W. DATE: NOV.2001
CHECKED BY: DATE: 2/5/10
FILE SPEC.: w/ericward/usr/details/stand/boxtotbjbe.dgn

05-MAR-2010 11:56
s:\contracts\contracts\special details\ericward\usr\details\stand\boxtotbjbe.dgn
jhowerton AT PS237501

5/14/99

PROJECT REFERENCE NO.	SHEET NO.
U-3423	2-R

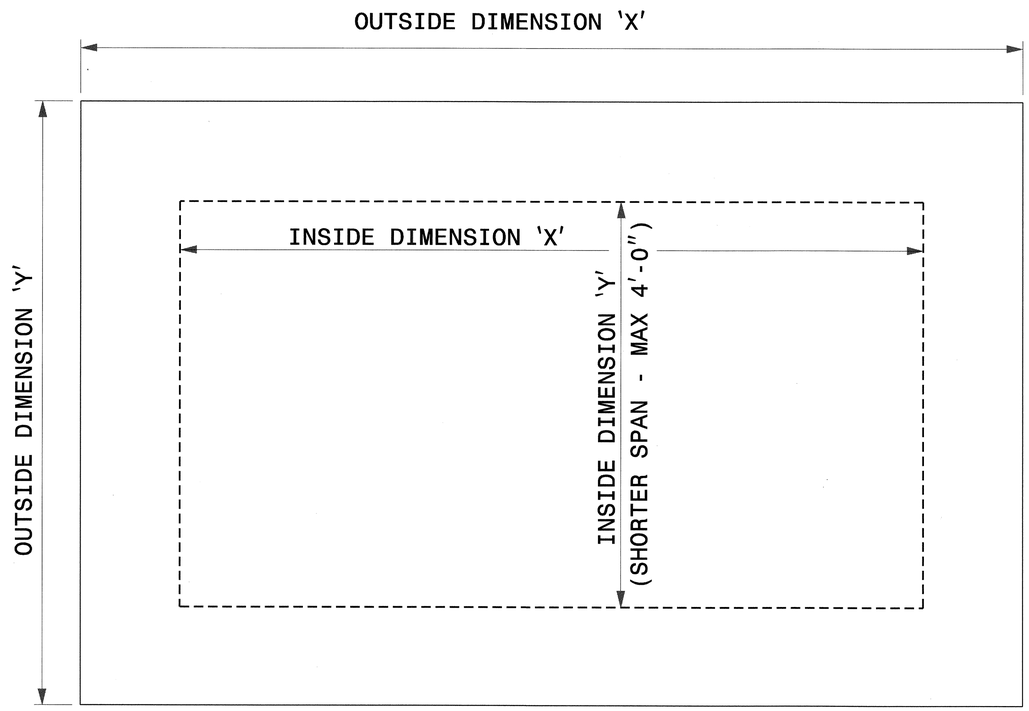

PLAN VIEWS

GENERAL NOTES:

-USE GRADE A36 STEEL
-STEEL COVERS ARE FOR TEMPORARY USE DURING PHASE CONSTRUCTION.
-FILL SHALL BE PLACED DIRECTLY OVER THE STEEL PLATES.
-SEE PROVISIONS FOR LOCATIONS
-QUANTITIES TO BE PAID FOR AT THE UNIT PRICE BID PER EACH.

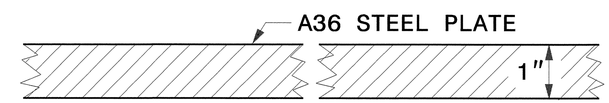

SECTION VIEW OF STEEL TOP PLATE

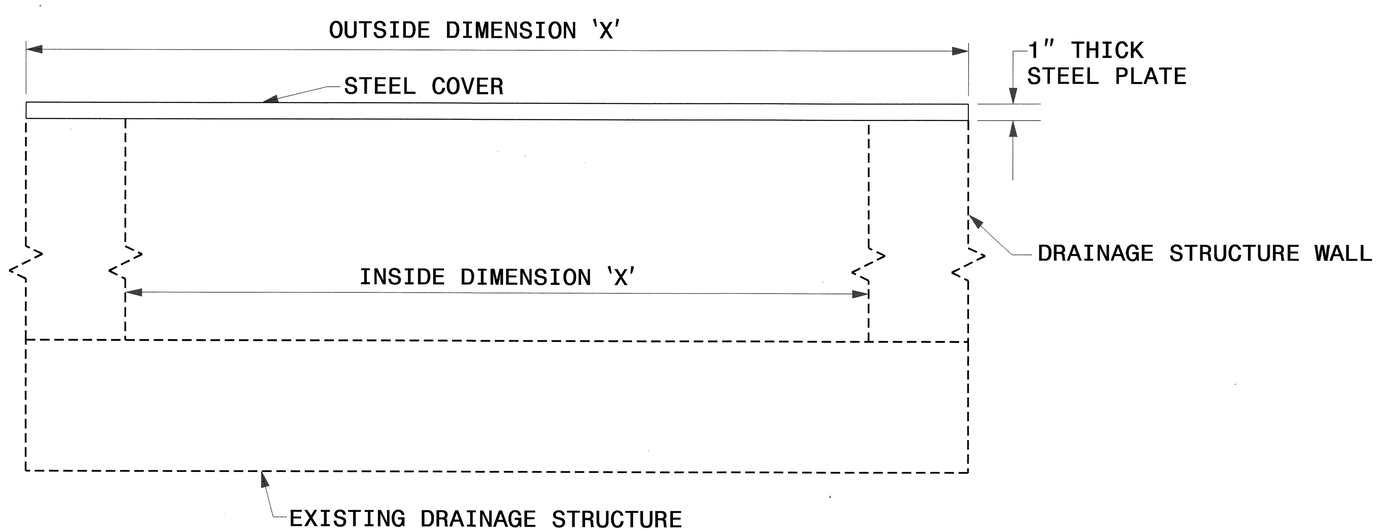

ELEVATION VIEWS

NORTH CAROLINA PROFESSIONAL SEAL 19761 ENGINEER CYNTHIA B. PERRY 4/5/10

PROJECT SERVICES UNIT
STANDARDS AND SPECIAL DESIGN
Office 919-250-4128 FAX 919-250-4119

DETAIL OF TEMPORARY 1" STEEL COVER OVER DRAINAGE STRUCTURE

ORIGINAL BY: _____ DATE: _____
MODIFIED BY: rnbritt DATE: 04-19-06
CHECKED BY: [signature] DATE: 3/5/10
FILE SPEC.: details/nbritt/english/misc/steelcover.dgn

5/14/99

05-MAR-2010 09:49
S:\contracts\contracts\special details\nbritt\english\misc\steel cover.dgn
jhowerton AT PS237501

22-APR-2010 09:59
S:\Contracts\Contracts\Special Details\ericward\stds\06' Stds to Special Details\84805 Prop. Wheelchair Ramp\0848d05.dgn
.tspell AT PS244552

STATE OF NORTH CAROLINA
DEPT. OF TRANSPORTATION
DIVISION OF HIGHWAYS
RALEIGH, N.C.

ENGLISH DETAIL DRAWING FOR
WHEELCHAIR RAMP
PROPOSED CURB AND GUTTER

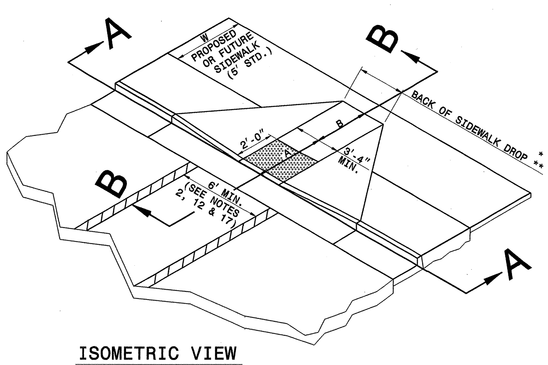

ISOMETRIC VIEW

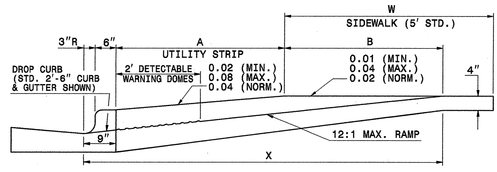

SECTION B-B

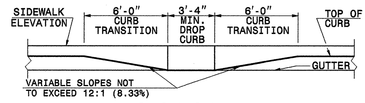

SECTION A-A

NOTES:
1. DETECTABLE WARNING DOMES SHALL COVER 2'-0" LENGTH AND FULL WIDTH OF THE RAMP FLOOR AS SHOWN ON THE DETAILS.
2. OBTAIN 70% CONTRAST VISIBILITY WITH ADJOINING SURFACE, EITHER LIGHT-ON-DARK, OR DARK-ON-LIGHT SEQUENCE COVERING THE ENTIRE RAMP.

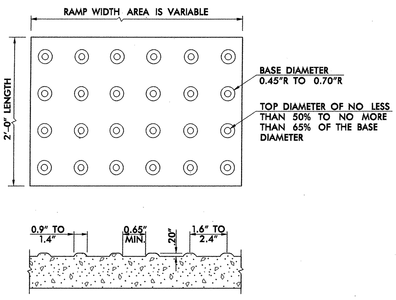

DETECTABLE WARNING DOMES

W	A	W+A+9"	X	B
5'	0.0'	5.8'	5.8'	5.0'*
6'	0.0'	6.8'	6.8'	6.0'**
7'	0.0'	7.8'	7.3'	6.5'**
8'	0.0'	8.8'	7.3'	6.5'**
5'	2.0'	7.8'	7.8'	5.0'
5'	2.5'	8.3'	8.1'	4.8'
5'	3.0'	8.8'	8.3'	4.4'
5'	3.5'	9.3'	8.4'	4.1'
5'	4.0'	9.8'	8.6'	3.8'
5'	4.5'	10.3'	8.7'	3.4'
5'	5.0'	10.8'	8.9'	3.1'

B = X-(A+9")
B = DISTANCE FROM FRONT EDGE OF SIDEWALK TO BACK POINT OF 12:1 (8.33%) SLOPE.
* BACK OF SIDEWALK DROP REQUIRED FOR ALL SIDEWALK SLOPES.
** BACK OF SIDEWALK DROP REQUIRED FOR SIDEWALK SLOPES 0.04.

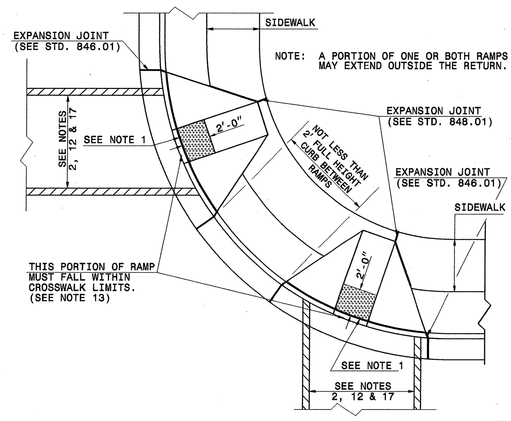

PLAN VIEW
DUAL RAMPS
ANY RADII
(40" MIN. FLOOR WIDTH)

SHEET 1 OF 3
848D05

STATE OF NORTH CAROLINA
DEPT. OF TRANSPORTATION
DIVISION OF HIGHWAYS
RALEIGH, N.C.

ENGLISH DETAIL DRAWING FOR
WHEELCHAIR RAMP
PROPOSED CURB AND GUTTER

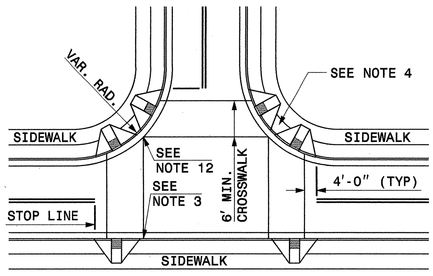

DETAIL SHOWING TYPICAL LOCATION OF WHEELCHAIR RAMPS, PEDESTRIAN CROSSWALKS AND STOP LINES FOR TEE INTERSECTIONS

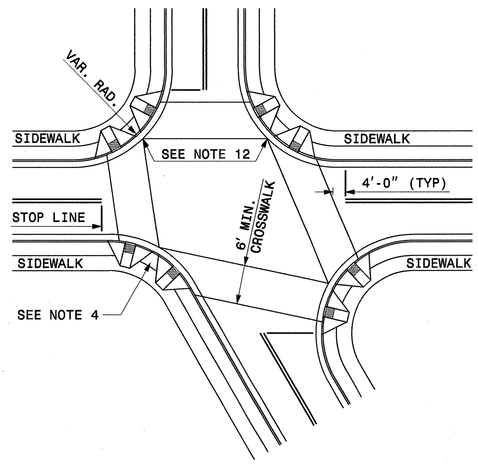

DETAIL SHOWING TYPICAL LOCATION OF WHEELCHAIR RAMPS, PEDESTRIAN CROSSWALKS AND STOP LINES

ROADWAY PLAN SYMBOL
WCR
FOR PROPOSED WHEELCHAIR RAMP

PROPOSED WHEELCHAIR RAMP
PROPOSED OR FUTURE SIDEWALK

ALLOWABLE LOCATIONS

DUAL RAMP RADII.....ANY

SHEET 2 OF 3
848D05

PROJECT SERVICES UNIT
STANDARDS AND SPECIAL DESIGN
Office 919-250-4128 FAX 919-250-4119

SEE PLATE FOR TITLE

ORIGINAL BY: STD. NO. 848.05 DATE: 4-22-10
MODIFIED BY: DATE:
CHECKED BY: DATE: 4/22/10
FILE SPEC.: S:\SpecialDetails\Ericward\STDS\848d05.dgn

NORTH CAROLINA PROFESSIONAL SEAL 022966 ENGINEER
4/22/10

PROJECT REFERENCE NO. U-3423
SHEET NO. 2-S

STATE OF
NORTH CAROLINA
DEPT. OF TRANSPORTATION
DIVISION OF HIGHWAYS
RALEIGH, N.C.

ENGLISH DETAIL DRAWING FOR

WHEELCHAIR RAMP

PROPOSED CURB AND GUTTER

SHEET 3 OF 3

848D05

NOTES:

1. CONSTRUCT THE WALKING SURFACE WITH SLIP RESISTANTANCE AND A 70% CONTRASTING COLOR TO THE SIDEWALK.
2. CROSSWALK WIDTHS AND CONFIGURATION VARY BUT MUST CONFORM TO TRAFFIC DESIGN STANDARDS.
3. NORTH CAROLINA GENERAL STATUTE 136-44.14 REQUIRES THAT ALL STREET CURBS BEING CONSTRUCTED OR RECONSTRUCTED FOR MAINTENANCE PROCEDURES, TRAFFIC OPERATIONS, REPAIRS, CORRECTION OF UTILTIES OR ALTERED FOR ANY REASON AFTER SEPTEMBER 1, 1973 SHALL PROVIDE WHEELCHAIR RAMPS FOR THE PHYSICALLY DISABLED AT ALL INTERSECTIONS WHERE BOTH CURB AND GUTTER AND SIDEWALKS ARE PROVIDED AND AT OTHER POINTS OF PEDESTRIAN FLOW.

   IN ADDITION, SECTION 228 OF THE 1973 FEDERAL AID HIGHWAY SAFETY ACT REQUIRES PROVISION OF CURB RAMPS ON ANY CURB CONSTRUCTION AFTER JULY 1,1976 WHETHER A SIDEWALK IS PROPOSED INITIALLY OR IS PLANNED FOR A FUTURE DATE.

   THE AMERICANS WITH DISABILITIES ACT (ADA) OF 1990 EXTENDS TO INDIVIDUALS WITH DISABILITIES. COMPREHENSIVE CIVIL RIGHTS PROTECTIONS SIMILIAR TO THOSE PROVIDED TO PERSONS ON THE BASIS OF RACE, SEX, NATIONAL ORIGIN AND RELIGION UNDER THE CIVIL RIGHTS ACT OF 1964. THESE CURB RAMPS HAVE BEEN DESIGNED TO COMPLY WITH THE CURRENT ADA STANDARDS.
4. PROVIDE WHEELCHAIR RAMPS AT LOCATIONS AS SHOWN ON THE PLANS OR AS DIRECTED BY THE ENGINEER. LOCATE WHEELCHAIR RAMPS AS DIRECTED BY THE ENGINEER WHERE EXISTING LIGHT POLES, FIRE HYDRANTS, DROP INLETS, ETC. AFFECT PLACEMENT. WHERE TWO RAMPS ARE INSTALLED PLACE NOT LESS THAN 2 FEET OF FULL HEIGHT CURB BETWEEN THE RAMPS. PLACE DUAL RAMPS AS NEAR PERPENDICULAR TO THE TRAVEL LANE BEING CROSSED AS POSSIBLE.
5. DO NOT EXCEED 0.08 (12:1) SLOPE ON THE WHEELCHAIR RAMP IN RELATIONSHIP TO THE GRADE OF THE STREET.
6. CONSTRUCT WHEELCHAIR RAMPS 40" (3'-4") OR GREATER FOR DUAL RAMPS.
7. USE CLASS "B" CONCRETE WITH A SIDEWALK FINISH IN ORDER TO OBTAIN A ROUGH NON-SKID TYPE SURFACE.
8. PLACE A ½" EXPANSION JOINT WHERE THE CONCRETE WHEELCHAIR RAMP JOINS THE CURB AND AS SHOWN ON STD. DWG. 848.01.
9. PLACE THE INSIDE PEDESTRIAN CROSSWALK LINES NO CLOSER IN THE INTERSECTION BY BISECTING THE INTERSECTION RADII, WITH ALLOWANCE OF A 4' CLEAR ZONE IN THE VEHICULAR TRAVELWAY WHEN ONE RAMP IS INSTALLED. (SEE NOTE 17)
10. COORDINATE THE CURB CUT AND THE PEDESTRIAN CROSSWALK LINES SO THE FLOOR OF THE WHEELCHAIR RAMP WILL FALL WITHIN THE PEDESTRIAN CROSSWALK LINES. PLACE DIAGONAL RAMPS WITH FLARED SIDES SO 24" OF FULL HEIGHT CURB FALLS WITHIN THE CROSSWALK MARKINGS ON EACH SIDE OF THE FLARES.
11. CONSTRUCT THE PEDESTRIAN CROSSWALK A MINIMUM OF 6 FEET. A CROSSWALK WIDTH OF 10 FEET OR GREATER IS DESIRABLE.
12. USE STOP LINES, NORMALLY PERPENDICULAR TO THE LANE LINES, WHERE IT IS IMPORTANT TO INDICATE THE POINT BEHIND WHICH VEHICLES ARE REQUIRED TO STOP IN COMPLIANCE WITH A TRAFFIC SIGNAL, STOP SIGN OR OTHER LEGAL REQUIREMENT. AN UNUSUAL APPROACH SKEW MAY REQUIRE THE PLACEMENT OF THE STOP LINE TO BE PARALLEL TO THE INTERSECTING ROADWAY.
13. TERMINATE PARKING A MINIMUM OF 20 FEET BACK OF PEDESTRIAN CROSSWALK.
14. PLACE ALL PAVEMENT MARKINGS IN ACCORDANCE WITH THE LATEST EDITION OF THE MANUAL OF UNIFORM TRAFFIC CONTROL DEVICES (MUTCD) PUBLISHED BY THE FEDERAL HIGHWAY ADMINISTRATION AND THE NORTH CAROLINA SUPPLEMENT TO THE MUTCD.

STATE OF
NORTH CAROLINA
DEPT. OF TRANSPORTATION
DIVISION OF HIGHWAYS
RALEIGH, N.C.

ENGLISH DETAIL DRAWING FOR

WHEELCHAIR RAMP

PROPOSED CURB AND GUTTER

SHEET 3 OF 3

848D05

PROJECT SERVICES UNIT
STANDARDS AND SPECIAL DESIGN
Office 919-250-4128 FAX 919-250-4119

SEE PLATE FOR TITLE

ORIGINAL BY: STD. NO. 848.05 DATE: 4-22-10
MODIFIED BY: DATE:
CHECKED BY: DATE: 4/22/10
FILE SPEC.: S:\Special Details\Ericward\STDS\848d05.dgn

NORTH CAROLINA PROFESSIONAL SEAL 022996 ENGINEER

4/22/10

PROJECT REFERENCE NO.	SHEET NO.
U-3423	2-T

5/28/99

PROJECT REFERENCE NO.	SHEET NO.
U-3423	3

(1 of 2)

STATE OF NORTH CAROLINA
DIVISION OF HIGHWAYS

SUMMARY OF QUANTITIES

STATE OF NORTH CAROLINA
DIVISION OF HIGHWAYS
ROADWAY SUMMARY OF QUANTITIES FOR CONTRACT - C202435

ItemNumber	Sec #	Quantity	Unit	Description
0000100000-N	800	Lump Sum		MOBILIZATION
0000400000-N	801	Lump Sum		CONSTRUCTION SURVEYING
0038000000-E	SP	1,966	CY	SHALLOW UNDERCUT
0043000000-N	226	Lump Sum		GRADING
0050000000-E	226	1	ACR	SUPPLEMENTARY CLEARING & GRUBBING
0057000000-E	226	350	CY	UNDERCUT EXCAVATION
0080000000-E	SP	4,760	TON	CLASS IV SUBGRADE STABILIZATION
0196000000-E	270	4,600	SY	FABRIC FOR SOIL STABILIZATION
0234000000-E	SP	600	CY	GENERIC GRADING ITEM SELECT GRANULAR MATERIAL
0320000000-E	SP	7,204	SY	FOUNDATION CONDITIONING FABRIC
0330000000-E	SP	1,887	TON	GENERIC DRAINAGE ITEM FOUNDATION CONDITIONING MATERIAL, MINOR STRS
0448200000-E	SP	5,816	LF	15" RC PIPE CULVERTS, CLASS IV
0448300000-E	SP	2,064	LF	18" RC PIPE CULVERTS, CLASS IV
0448400000-E	SP	2,820	LF	24" RC PIPE CULVERTS, CLASS IV
0448500000-E	SP	1,040	LF	30" RC PIPE CULVERTS, CLASS IV
0448600000-E	SP	440	LF	36" RC PIPE CULVERTS, CLASS IV
0986000000-E	SP	676	LF	GENERIC PIPE ITEM 15" SIDE DRAIN PIPE
0986000000-E	SP	72	LF	GENERIC PIPE ITEM 18" SIDE DRAIN PIPE
0986000000-E	SP	36	LF	GENERIC PIPE ITEM 24" SIDE DRAIN PIPE
0986000000-E	SP	320	LF	GENERIC PIPE ITEM 42" SIDE DRAIN PIPE
0986000000-E	SP	168	LF	GENERIC PIPE ITEM 48" RC PIPE CULVERTS, CLASS IV
0986000000-E	SP	24	LF	GENERIC PIPE ITEM 48" SIDE DRAIN PIPE
0986000000-E	SP	100	LF	GENERIC PIPE ITEM 54" RC PIPE CULVERTS, CLASS IV
0986000000-E	SP	8	LF	GENERIC PIPE ITEM 60" RC PIPE CULVERTS, CLASS IV
0995000000-E	340	2,985	LF	PIPE REMOVAL
0996000000-N	350	1	EA	PIPE CLEAN-OUT
1110000000-E	510	1,000	TON	STABILIZER AGGREGATE
1220000000-E	545	3,000	TON	INCIDENTAL STONE BASE
1308000000-E	607	59,550	SY	MILLING ASPHALT PAVEMENT, ***" TO *****" DEPTH (2-1/2" TO 5-1/2")
1491000000-E	610	11,060	TON	ASPHALT CONC BASE COURSE, TYPE B25.0C
1503000000-E	610	33,780	TON	ASPHALT CONC INTERMEDIATE COURSE, TYPE I19.0C
1523000000-E	610	16,390	TON	ASPHALT CONC SURFACE COURSE, TYPE S9.5C
1560000000-E	620	2,065	TON	ASPHALT BINDER FOR PLANT MIX, GRADE PG 64-22
1565000000-E	620	985	TON	ASPHALT BINDER FOR PLANT MIX, GRADE PG 70-22
1693000000-E	654	4,010	TON	ASPHALT PLANT MIX, PAVEMENT REPAIR
1891000000-E	SP	59,550	SY	GENERIC PAVING ITEM PAVEMENT FABRIC
2022000000-E	815	168	CY	SUBDRAIN EXCAVATION
2033000000-E	815	84	CY	SUBDRAIN FINE AGGREGATE
2044000000-E	815	500	LF	6" PERFORATED SUBDRAIN PIPE
2055000000-E	815	15	EA	6" SUBDRAIN PIPE WYES, TEES, & ELBOWS
2066000000-N	815	1	EA	CONCRETE PAD FOR SUBDRAIN PIPE OUTLET
2077000000-E	815	6	LF	6" OUTLET PIPE (SUBDRAINS)
2190000000-N	828	4	EA	TEMPORARY STEEL PLATE COVERS FOR MASONRY DRAINAGE STRUCTURE
2253000000-E	840	3	CY	PIPE COLLARS
2264000000-E	840	2.49	CY	PIPE PLUGS
2286000000-N	840	160	EA	MASONRY DRAINAGE STRUCTURES
2297000000-E	840	22.5	CY	MASONRY DRAINAGE STRUCTURES
2308000000-E	840	28	LF	MASONRY DRAINAGE STRUCTURES

ItemNumber	Sec #	Quantity	Unit	Description
2364000000-N	840	34	EA	FRAME WITH TWO GRATES, STD 840.16
2367000000-N	840	2	EA	FRAME WITH TWO GRATES, STD 840.29
2374000000-N	840	20	EA	FRAME WITH GRATE & HOOD, STD 840.03, TYPE ** (E)
2374000000-N	840	56	EA	FRAME WITH GRATE & HOOD, STD 840.03, TYPE ** (F)
2374000000-N	840	47	EA	FRAME WITH GRATE & HOOD, STD 840.03, TYPE ** (G)
2396000000-N	840	16	EA	FRAME WITH COVER, STD 840.54
2440000000-N	852	13	EA	CONCRETE TRANSITIONAL SECTION FOR CATCH BASIN
2451000000-N	852	4	EA	CONCRETE TRANSITIONAL SECTION FOR DROP INLETS
2535000000-E	846	6,460	LF	**"X **" CONCRETE CURB (8" X 18")
2538000000-E	846	1,690	LF	**'-**" CONCRETE CURB & GUTTER (2'-9")
2542000000-E	846	11,780	LF	1'-6" CONCRETE CURB & GUTTER
2549000000-E	846	19,720	LF	2'-6" CONCRETE CURB & GUTTER
2591000000-E	848	4,600	SY	4" CONCRETE SIDEWALK
2605000000-N	848	20	EA	CONCRETE WHEELCHAIR RAMPS
2612000000-E	848	1,790	SY	6" CONCRETE DRIVEWAY
2647000000-E	852	1,180	SY	5" MONOLITHIC CONCRETE ISLANDS (SURFACE MOUNTED)
2800000000-N	858	9	EA	ADJUSTMENT OF CATCH BASINS
2860000000-N	859	2	EA	CONVERT EXISTING CATCH BASIN TO JUNCTION BOX
2938000000-N	SP	2	EA	CONVERT EXISTING DROP INLET TO JUNCTION BOX WITH MANHOLE COVER
2995000000-N	SP	1	EA	GENERIC DRAINAGE ITEM CONVERT EXISTING CB to TBJB
2995000000-N	SP	1	EA	GENERIC DRAINAGE ITEM CONVERT EXISTING DROP INLET TO SPECIAL CATCH BASIN
3000000000-N	SP	1	EA	IMPACT ATTENUATOR UNIT, TYPE 350
3030000000-E	862	262.5	LF	STEEL BM GUARDRAIL
3060000000-E	862	12.5	LF	STEEL BM GUARDRAIL, DOUBLE FACED
3150000000-N	862	5	EA	ADDITIONAL GUARDRAIL POSTS
3210000000-N	862	1	EA	GUARDRAIL ANCHOR UNITS, TYPE CAT-1
3270000000-N	SP	1	EA	GUARDRAIL ANCHOR UNITS, TYPE 350
3285000000-N	SP	4	EA	GUARDRAIL ANCHOR UNITS, TYPE M-350
3360000000-E	863	7,440	LF	REMOVE EXISTING GUARDRAIL
3383000000-E	862	62.5	LF	TEMPORARY STEEL BM GUARDRAIL, DOUBLE FACED
3435000000-N	SP	5	EA	GENERIC GUARDRAIL ITEM TEMPORARY IMPACT ATTENUATOR, TYPE 350
3628000000-E	876	91	TON	RIP RAP, CLASS I
3649000000-E	876	6	TON	RIP RAP, CLASS B
3656000000-E	876	1,104	SY	FILTER FABRIC FOR DRAINAGE
4057000000-E	SP	51	CY	OVERHEAD FOOTING
4072000000-E	903	1,594	LF	SUPPORTS, 3-LB STEEL U-CHANNEL
4082100000-N	SP	Lump Sum		SUPPORTS, OVERHEAD SIGN STRUCTURE AT STA ****** (STA 13+50 -L-)
4082100000-N	SP	Lump Sum		SUPPORTS, OVERHEAD SIGN STRUCTURE AT STA ****** (STA 15+90 -L-)
4082100000-N	SP	Lump Sum		SUPPORTS, OVERHEAD SIGN STRUCTURE AT STA ****** (STA 20+22 -L-)
4082100000-N	SP	Lump Sum		SUPPORTS, OVERHEAD SIGN STRUCTURE AT STA ****** (STA 36+00 -L-)
4096000000-N	904	1	EA	SIGN ERECTION, TYPE D
4102000000-N	904	80	EA	SIGN ERECTION, TYPE E
4108000000-N	904	2	EA	SIGN ERECTION, TYPE F

ItemNumber	Sec #	Quantity	Unit	Description
4109000000-N	904	1	EA	SIGN ERECTION, TYPE *** (OVERHEAD) (A)
4116100000-N	904	5	EA	SIGN ERECTION, RELOCATE, TYPE **** (GROUND MOUNTED) (E)
4149000000-N	907	2	EA	DISPOSAL OF SIGN SYSTEM, OVERHEAD
4152000000-N	907	1	EA	DISPOSAL OF SIGN SYSTEM, STEEL BEAM
4155000000-N	907	99	EA	DISPOSAL OF SIGN SYSTEM, U-CHANNEL
4192000000-N	907	5	EA	DISPOSAL OF SUPPORT, U-CHANNEL
4234000000-N	907	1	EA	DISPOSAL OF SIGN, A OR B (OVERHEAD)
4400000000-E	1110	384	SF	WORK ZONE SIGNS (STATIONARY)
4405000000-E	1110	464	SF	WORK ZONE SIGNS (PORTABLE)
4410000000-E	1110	70	SF	WORK ZONE SIGNS (BARRICADE MOUNTED)
4415000000-N	1115	4	EA	FLASHING ARROW PANELS, TYPE C
4420000000-N	1120	5	EA	CHANGEABLE MESSAGE SIGN
4422000000-N	1120	60	DAY	CHANGEABLE MESSAGE SIGN (SHORT TERM)
4430000000-N	1130	425	EA	DRUMS
4435000000-N	1135	50	EA	CONES
4445000000-E	1145	120	LF	BARRICADES (TYPE III)
4455000000-N	1150	700	MD	FLAGGER
4480000000-N	1165	3	EA	TMIA
4510000000-N	SP	320	HR	LAW ENFORCEMENT
4516000000-N	1180	425	EA	SKINNY DRUM
4650000000-N	1251	930	EA	TEMPORARY RAISED PAVEMENT MARKERS
4685000000-E	1205	5,054	LF	THERMOPLASTIC PAVEMENT MARKING LINES (4", 90 MILS)
4686000000-E	1205	15,323	LF	THERMOPLASTIC PAVEMENT MARKING LINES (4", 120 MILS)
4695000000-E	1205	1,445	LF	THERMOPLASTIC PAVEMENT MARKING LINES (8", 90 MILS)
4697000000-E	1205	810	LF	THERMOPLASTIC PAVEMENT MARKING LINES (8", 120 MILS)
4710000000-E	1205	1,041	LF	THERMOPLASTIC PAVEMENT MARKING LINES (24", 120 MILS)
4721000000-E	1205	20	EA	THERMOPLASTIC PAVEMENT MARKING CHARACTER (120 MILS)
4725000000-E	1205	88	EA	THERMOPLASTIC PAVEMENT MARKING SYMBOL (90 MILS)
4770000000-E	1205	570	LF	COLD APPLIED PLASTIC PAVEMENT MARKING LINES, TYPE ** (4") (II)
4770000000-E	1205	2,200	LF	COLD APPLIED PLASTIC PAVEMENT MARKING LINES, TYPE ** (4") (IV)
4810000000-E	1205	337,360	LF	PAINT PAVEMENT MARKING LINES (4")
4820000000-E	1205	3,000	LF	PAINT PAVEMENT MARKING LINES (8")
4835000000-E	1205	2,700	LF	PAINT PAVEMENT MARKING LINES (24")
4850000000-E	1205	5,570	LF	REMOVAL OF PAVEMENT MARKING LINES (4")
4875000000-N	1205	3	EA	REMOVAL OF PAVEMENT MARKING SYMBOLS & CHARACTERS
4900000000-N	1251	15	EA	PERMANENT RAISED PAVEMENT MARKERS
4905000000-N	1253	691	EA	SNOWPLOWABLE PAVEMENT MARKERS
5255000000-N	1413	Lump Sum		PORTABLE LIGHTING
5325200000-E	1510	124	LF	2" WATER LINE
5325600000-E	1510	352	LF	6" WATER LINE
5325800000-E	1510	82	LF	8" WATER LINE
5326000000-E	1510	198	LF	10" WATER LINE
5326200000-E	1510	2,195	LF	12" WATER LINE
5326600000-E	1510	5,161	LF	16" WATER LINE
5536000000-E	1515	2	EA	2" VALVE
5540000000-E	1515	2	EA	6" VALVE

08-MAR-2010 10:47
R:\Roadway\Proj\u3423_rdy_sum.dgn
$$$$USERNAME$$$$

STATE OF NORTH CAROLINA
SUMMARY OF QUANTITIES

PROJECT REFERENCE No.	SHEET No.
U-3423	3 (2 of 2)

ItemNumber	Sec #	Quantity	Unit	Description
6024000000-E	1622	200	LF	TEMPORARY SLOPE DRAINS
6027000000-N	1622	4	EA	INLET PROTECTION AT TEMPORARY SLOPE DRAINS
6029000000-E	SP	300	LF	SAFETY FENCE
6030000000-E	1630	300	CY	SILT EXCAVATION
6036000000-E	1631	12,850	SY	MATTING FOR EROSION CONTROL
6042000000-E	1632	8,200	LF	1/4" HARDWARE CLOTH
6071010000-E	SP	450	LF	WATTLE
6071020000-E	SP	100	LB	POLYACRYLAMIDE (PAM)
6071030000-E	SP	700	LF	COIR FIBER BAFFLES
6084000000-E	1660	24	ACR	SEEDING & MULCHING
6087000000-E	1660	5	ACR	MOWING
6090000000-E	1661	250	LB	SEED FOR REPAIR SEEDING
6093000000-E	1661	0.75	TON	FERTILIZER FOR REPAIR SEEDING
6096000000-E	1662	550	LB	SEED FOR SUPPLEMENTAL SEEDING
6108000000-E	1665	16.25	TON	FERTILIZER TOPDRESSING
6114500000-N	SP	60	MHR	SPECIALIZED HAND MOWING
6117000000-N	SP	18	EA	RESPONSE FOR EROSION CONTROL
7000000000-E	1705	12	EA	PEDESTRIAN SIGNAL HEAD (**", ** SECTION) (16", 1 SECTION W/COUNTDOWN)
7060000000-E	1705	8,870	LF	SIGNAL CABLE
7120000000-E	1705	49	EA	VEHICLE SIGNAL HEAD (12", 3 SECTION)
7144000000-E	1705	10	EA	VEHICLE SIGNAL HEAD (12", 5 SECTION)
7264000000-E	1710	2,410	LF	MESSENGER CABLE (3/8")
7288000000-E	1715	303	LF	PAVED TRENCHING (**********) (1, 2")
7300000000-E	1715	1,818	LF	UNPAVED TRENCHING (**********) (1, 2")
7324000000-N	1716	16	EA	JUNCTION BOX (STANDARD SIZE)
7348000000-N	1716	2	EA	JUNCTION BOX (OVER-SIZED, HEAVY DUTY)
5546000000-E	1515	1	EA	8" VALVE
5552000000-E	1515	1	EA	10" VALVE
5558000000-E	1515	2	EA	12" VALVE
5558600000-E	1515	6	EA	16" VALVE
5571600000-E	1515	3	EA	6" TAPPING VALVE
5571800000-E	1515	1	EA	8" TAPPING VALVE
5572000000-E	1515	1	EA	10" TAPPING VALVE
5572200000-E	1515	2	EA	12" TAPPING VALVE
5572600000-E	1515	1	EA	16" TAPPING VALVE
5589200000-E	1515	1	EA	2" AIR RELEASE VALVE
5648000000-N	1515	31	EA	RELOCATE WATER METER
5649000000-N	1515	2	EA	RECONNECT WATER METER
5666000000-E	1515	2	EA	FIRE HYDRANT
5672000000-N	1515	2	EA	RELOCATE FIRE HYDRANT
5691300000-E	1520	60	LF	8" SANITARY GRAVITY SEWER
5801000000-E	1530	5,330	LF	ABANDON 8" UTILITY PIPE
5802000000-E	1530	118	LF	ABANDON 10" UTILITY PIPE
5804000000-E	1530	79	LF	ABANDON 12" UTILITY PIPE
5810000000-E	1530	5,081	LF	ABANDON 16" UTILITY PIPE
5882000000-N	SP	3	EA	GENERIC UTILITY ITEM 6' DIAMETER UTILITY MANHOLE
6000000000-E	1605	25,000	LF	TEMPORARY SILT FENCE
6006000000-E	1610	540	TON	STONE FOR EROSION CONTROL, CLASS A
6009000000-E	1610	405	TON	STONE FOR EROSION CONTROL, CLASS B
6012000000-E	1610	1,870	TON	SEDIMENT CONTROL STONE
6015000000-E	1615	20	ACR	TEMPORARY MULCHING
6018000000-E	1620	500	LB	SEED FOR TEMPORARY SEEDING
6021000000-E	1620	2	TON	FERTILIZER FOR TEMPORARY SEEDING

ItemNumber	Sec #	Quantity	Unit	Description
7360000000-N	1720	8	EA	WOOD POLE
7372000000-N	1721	16	EA	GUY ASSEMBLY
7408000000-E	1722	2	EA	1" RISER WITH WEATHERHEAD
7420000000-E	1722	8	EA	2" RISER WITH WEATHERHEAD
7432000000-E	1722	1	EA	2" RISER WITH HEAT SHRINK TUBING
7444000000-E	1725	6,865	LF	INDUCTIVE LOOP SAWCUT
7456000000-E	1726	18,490	LF	LEAD-IN CABLE (**********) (14-2)
7481000000-N	SP	2	EA	SITE SURVEY
7481200000-N	SP	4	EA	LUMINAIRE ARM FOR VIDEO SYSTEM
7481240000-N	SP	8	EA	CAMERA WITHOUT INTERNAL LOOP EMULATOR PROCESSING UNIT
7481260000-N	SP	2	EA	EXTERNAL LOOP EMULATOR PROCESSING UNIT
7481280000-N	SP	12	EA	RELOCATE CAMERA SENSOR UNIT
7552000000-N	1731	2	EA	INTERCONNECT CENTER
7564100000-N	1732	2	EA	FIBER-OPTIC TRANSCEIVER, SELF-HEALING RING
7576000000-N	SP	8	EA	METAL STRAIN SIGNAL POLE
7613000000-N	SP	8	EA	SOIL TEST
7614100000-E	SP	68	CY	DRILLED PIER FOUNDATION
7624000000-N	1743	1	EA	SIGNAL PEDESTAL WITH FOUNDATION
7636000000-N	1745	2	EA	SIGN FOR SIGNALS
7648000000-N	SP	2	EA	RELOCATE EXISTING SIGN
7684000000-N	1750	2	EA	SIGNAL CABINET FOUNDATION
7756000000-N	1751	2	EA	CONTROLLER WITH CABINET (TYPE 2070L, BASE MOUNTED)
7780000000-N	1751	34	EA	DETECTOR CARD (TYPE 2070L)
7901000000-N	1753	2	EA	CABINET BASE EXTENDER
7980000000-N	SP	1	EA	GENERIC SIGNAL ITEM CCTV ASSEMBLY
7980000000-N	SP	1	EA	GENERIC SIGNAL ITEM FIBER OPTIC VIDEO RECEIVER /DATA TRANSCEIVERS
7980000000-N	SP	1	EA	GENERIC SIGNAL ITEM FIBER OPTIC VIDEO TRANSMITTER /DATA TRANSCEIVERS
7980000000-N	SP	1	EA	GENERIC SIGNAL ITEM FIELD CCTV EQUIPMENT CABINET

RD238349

COMPUTED BY: BWJ DATE 2/8/2010

CHECKED BY: RP DATE 3/3/2010

PROJECT NO.	SHEET NO.
U-3423	3-A

NORTH CAROLINA DEPARTMENT OF TRANSPORTATION
DIVISION OF HIGHWAYS

LIST OF PIPES, ENDWALLS, ETC. (FOR PIPES 48 INCHES & UNDER)

STATION / SIZE / THICKNESS OR GAUGE	LOCATION (LT, RT, OR CL')	STRUCTURE NO. FROM	STRUCTURE NO. TO	TOP ELEVATION	INVERT ELEVATION	INVERT ELEVATION	SLOPE CRITICAL	SIDE DRAIN PIPE (RCP, CSP, CAAP, HDPE, or PVC) 12"	15"	18"	24"	30"	36"	42"	48"	DO NOT USE RCP	DO NOT USE CSP	DO NOT USE CAAP	DO NOT USE HDPE
-L- 12+91	RT	1	OUT	237.15	234.07														
-RPC- 11+53	RT	2		236.3	234.05														
-RPC- 11+53	RT	2	3		234.05	232.65			28								X	X	
-RPC- 11+69	RT	3		235.74	232.65														
-RPC- 11+69	RT	3	OUT		232.65	232.2													
-RPC- 11+69	RT	4	3		232.74	232.65													
-RPC- 11+69	LT	4		235.74	232.74														
-RPC- 11+69	LT	5	4		234.2	232.74													
-RPC- 11+34	LT	5		237.2	234.2														
-L- 14+00	LT																		
-L- 18+55	RT	6		240.4	237.4														
-L- 18+55	RT	6	7		237.4	233.05													
-L- 18+55	RT	7		240.03	233.05														
-L- 18+49	LT	8		240.48	237.4														
-L- 18+49	LT	8	9		237.4	235.27													
-L- 19+75	LT	9		240.93	235.27														
-L- 19+57	LT	10		240.26															
-L- 19+35	RT	11		240.8	233.7														
-L- 19+35	RT	12	11		237.7	233.7													
-L- 19+53	RT	12		240.69	237.7														
-L- 21+97	RT	13		240.8	237.8														
-L- 21+97	RT	13	14		237.8	235.83													
-L- 22+48	RT	14		241.53	235.83														
-L-22+48	RT	15	14		236.51	235.83													
-RPD- 11+10	RT	15		239.51	236.51														
-RPD- 11+10	RT	16	15		236.75	236.51			36								X	X	
-RPD- 11+44	RT	16		239.5	236.75														
-RPD- 11+10	RT	17	15		236.92	236.51													
-RPD- 11+09	LT	17		239.92	236.92														
-L- 22+47	CL	18		242.2	236.83														
-L- 22+23	LT	19		240.85	237.85														
-L- 22+23	LT	19	20		237.85	237.22			40								X	X	
-L- 22+45	LT	20		239.93	237.22														
-L- 22+45	LT	21	20		237.38	237.22			8								X	X	
-L- 22+53	LT	21		240.38	237.24														
-L- 22+53	LT	22	21		237.35	237.24													
-L- 22+90	LT	22		240.15	237.35														
-L- 22+90	LT	23	22		237.57	237.35			40								X	X	
-L- 23+18	LT	23		240.57	237.57														
-L-24+44	LT	24		239.45	236.82														
-L- 24+44	LT	24	34C		236.82	235.51													
-L-25+95	LT	34C		238.38	235.51														
-L-25+95	LT	34C	34B		235.51	233.21													
-L-26+92	LT	34B		237.74	233.21														
-L-26+92	LT	34B	34A		233.21	231.27													
-L-27+99	LT	34A		235.76	231.27														
-L-27+99	LT	34A	34		231.27	230.36													
-L- 25+23	RT	26		237.32	235.07														
-L-25+23	RT	26	27		235.07	232.36			32								X	X	
-L- 25+50	RT	27		238.17	232.36														
SHEET TOTALS									184										

STATION	FROM	TO	C.S. PIPE 12" .064	15" .064	18" .064	24" .064	30" .079	36" .079	42" .109	48" .109	R.C. PIPE CLASS III 12"	15"	18"	24"	30"	36"	42"	48"	R.C. PIPE CLASS IV 12"	15"	18"	24"	30"	36"	42"	48"	** " R.C. PIPE (CLASS V)	***" RC PIPE CULVERTS, CONTRACTOR DESIGN	***" RC PIPE CULVERTS, CONTRACTOR DESIGN	ENDWALLS STD. 838.01 OR STD. 838.11 (UNLESS NOTED OTHERWISE) CU. YARDS R.C.P.	C.S.P.
-L- 12+91	1	OUT																			8										
-RPC- 11+69	3	OUT																		58											
-RPC- 11+69	4	3																		32											
-RPC- 11+69	5	4																		36											
-L- 18+55	6	7																		20											
-L- 18+49	8	9																		128											
-L- 19+35	12	11																		20											
-L- 21+97	13	14																		52											
-L-22+48	15	14																		36											
-RPD- 11+10	17	15																		48											
-L- 22+53	22	21																		36											
SHEET TOTALS																				466	8										

STATION	FROM	TO	QUANTITIES FOR DRAINAGE STRUCTURES PER EACH (0' THRU 5.0')	*TOTAL L.F. FOR PAY QUANTITY SHALL BE COL. 'A' + (1.3 X COL.'B') LIN. FT. A 5.0' THRU 10.0'	B 10.0' AND ABOVE	C.B. STD. 840.01 OR STD. 840.02	FRAME, GRATES, AND HOOD STANDARD 840.03 TYPE OF GRATE E	F	G	CONCRETE TRANSITIONAL SECTION DROP INLET	CATCH BASIN
-L- 12+91	1	OUT	1			1			1		
-RPC- 11+53	2		1								
-RPC- 11+69	3		1			1		1			
-RPC- 11+69	4		1			1			1		
-RPC- 11+34	5		1			1		1			
-L- 18+55	6		1			1	1				
-L- 18+55	7		1	2							
-L- 18+49	8		1			1	1				
-L- 19+75	9		1	0.7		1	1				
-L- 19+53	12		1			1			1		
-L- 21+97	13		1			1		1			
-L- 22+48	14		1	0.7							
-RPD- 11+10	15		1			1	1				
-RPD- 11+44	16		1								
-RPD- 11+09	17		1			1	1				
-L- 22+23	19		1			1			1		
-L- 22+45	20		1								
-L- 22+53	21		1			1		1			
-L- 22+90	22		1			1		1			
-L- 23+18	23		1			1			1		
-L-24+44	24		1								
-L-25+95	34C		1								
-L-26+92	34B		1								
-L-27+99	34A		1								
-L- 25+23	26		1								
-L- 25+50	27		1	0.8		1		1			
SHEET TOTALS			26	4.2		16	5	6	5		

STATION	FROM	TO	D.I. STD. 840.14 OR STD. 840.15	D.I. FRAME WITH TWO GRATES STD. 840.16	G.D.I. TYPE "A" STD. 840.17 OR 840.26	G.D.I. FRAME WITH TWO GRATES STD. 840.29	J.B. STD. 840.31, 840.32 OR SPECIAL DETAIL	T.B.J.B. STD. 840.34	M.H. FRAME AND COVER STD. 840.54	ADJUSTMENT OF CATCH BASINS (0' - 2')	CONV. EXIST. C.B. TO J.B.	CONV. EXIST. D.I. TO J.B. W/M.H.	CONV. EXIST. D.I. TO SPECIAL C.B. (SEE DETAIL SHEET 2-L)	CONV. EXIST. C.B. TO T.B.J.B.	DOUBLE CATCH BASIN (SEE DETAIL SHEET 2-F)	SPECIAL C.B. (SEE DETAIL SHEET 2-K)
-RPC- 11+53	2		1	1												
-L- 18+55	7						1		1							
-L- 19+57	10								1			1				
-L- 19+35	11								1					1		
-L- 22+48	14						1		1							
-RPD- 11+44	16		1	1												
-L- 22+47	18								1			1				
-L- 22+45	20		1	1												
-L-24+44	24		1	1												
-L-25+95	34C		1	1												
-L-26+92	34B		1	1												
-L-27+99	34A		1	1												
-L- 25+23	26		1	1												
SHEET TOTALS			8	8			2		5			2		1		

STATION	FROM	TO	CONC. & BRICK PIPE PLUG, C.Y. STD. 840.71	CONC. COLLARS CL. "B" C.Y. STD. 840.72	PIPE REMOVAL LIN. FT.	REMARKS
-L- 12+91	1	OUT		0.4		
-L- 14+00						STORM DRAIN SYSTEM CLEAN OUT 114 LF
-L- 21+97	13	14			51.4	REMOVE 15" RCP
-L-22+48	15	14			36.8	REMOVE 15" RCP
-L- 22+53	21		0.13			PLUG 2 X 18" RCP
-L- 22+90	22				26.1	110' LT. REMOVE D.I. AND 15" RCP
-L-24+44	24					REPLACE C.B.
-L- 24+44	24	34C				RETAIN EXISTING 15" RCP
-L-25+95	34C					REPLACE C.B.
-L-25+95	34C	34B				RETAIN EXISTING 15" RCP
-L-26+92	34B					REPLACE C.B.
-L-26+92	34B	34A				RETAIN EXISTING 15" RCP
-L-27+99	34A					REPLACE C.B.
-L-27+99	34A	34				RETAIN EXISTING 15" RCP
SHEET TOTALS			0.13	0.4	114.3	

ABBREVIATIONS

C.B.	CATCH BASIN
N.D.I.	NARROW DROP INLET
D.I.	DROP INLET
G.D.I.	GRATED DROP INLET
G.D.I.(N.S.)	(NARROW SLOT)
J.B.	JUNCTION BOX
M.H.	MANHOLE
T.B.D.I.	TRAFFIC BEARING DROP INLET
T.B.J.B.	TRAFFIC BEARING JUNCTION BOX

RD238349

COMPUTED BY: BWJ DATE 2/8/2010

CHECKED BY: RP DATE 3/3/2010

NORTH CAROLINA DEPARTMENT OF TRANSPORTATION
DIVISION OF HIGHWAYS

PROJECT NO.	SHEET NO.
U-3423	3-B

LIST OF PIPES, ENDWALLS, ETC. (FOR PIPES 48 INCHES & UNDER)

STATION	LOCATION (LT, RT, OR CL)'	STRUCTURE NO. FROM	STRUCTURE NO. TO	TOP ELEVATION	INVERT ELEVATION	INVERT ELEVATION	SLOPE CRITICAL	SIDE DRAIN PIPE (RCP, CSP, CAAP, HDPE, or PVC) 12"	15"	18"	24"	30"	36"	42"	48"	DO NOT USE RCP	DO NOT USE CSP	DO NOT USE CAAP	DO NOT USE HDPE
-L- 24+59	LT	25		241	238														
-L- 24+59	LT	25	28A		238	236.61													
-L-25+75	LT	28A		239.61	236.61														
-L-25+75	LT	28A	28		236.61	233.27													
-L- 27+51	LT	28		236.27	233.27														
-L- 27+51	LT	28	32		233.27	231.62													
-L- 28+70	LT	32		234.62	231.62														
-L- 28+70	LT	32	36		231.62	227.46	X												
-L- 28+02	RT	29		232.14	229.82														
-L- 28+02	RT	29	30		229.82	227.62			16								X	X	
-L- 28+05	RT	30		233.44	227.62														
-L- 28+05	RT	30	31		227.62	226.72													
-L- 28+25	RT	31		233.8	226.72														
-L- 28+69	LT	33		234.4	231.4														
-L- 28+69	LT	33	34		231.4	230.36			24								X	X	
-L- 28+59	LT	34		234.62	230.36														
-L- 28+59	LT	34	35		230.36	227.78	X			72							X	X	
-L- 29+28	LT	35		234.03	227.78														
-L- 29+28	LT	35	36		227.78	227.46	X												
-L- 29+26	LT	36		234.4	227.46														
-L- 29+26	LT	36	37		227.46	225.28													
-L- 29+20	RT	37		232.58	225.28														
-L- 29+20	RT	37	38		225.28	224.9													
-L- 29+19	RT	38		233.2	223.9														
-L- 29+20	RT	39	37		226.93	225.28	X												
-L- 29+64	RT	39		232.65	226.93														
-L-29+26	LT	40	36		231.84	227.46	X												
-L- 30+12	LT	40		234.84	231.84														
-L- 30+12	LT	41	40		234.88	231.84													
-L- 32+00	LT	41		237.88	234.88														
-L- 32+62	RT	42		236.9															
-L- 35+70	LT	43		239.95	236.95														
-L- 35+70	LT	43	44		236.95	236.39													
-L- 37+54	LT	44		239.78	236.39														
-L- 37+54	LT	44	45		236.39	235.42													
-L- 38+08	LT	45		239.67	235.42														
-L- 38+08	LT	45	46		235.42	234.18													
-L- 38+11	LT	46		240.7	234.18														
-L- 38+11	LT	46	47		234.18	233.72													
-L- 38+22	RT	47		239.67	233.22														
-L- 38+22	RT	47	OUT		233.22	233								24			X	X	
-L- 37+74	RT	48		239.72	236.72														
-L- 38+22	RT	48	47		236.72	233.72													
SHEET TOTALS									40	72				24					

STATION	C.S. PIPE 12" .064	15" .064	18" .064	24" .064	30" .079	36" .079	42" .109	48" .109	R.C. PIPE CLASS III 12"	15"	18"	24"	30"	36"	42"	48"	R.C. PIPE CLASS IV 12"	15"	18"	24"	30"	36"	42"	48"	** " R.C. PIPE (CLASS V)	***" RC PIPE CULVERTS, CONTRACTOR DESIGN	***" RC PIPE CULVERTS, CONTRACTOR DESIGN	ENDWALLS STD. 838.01 OR STD. 838.11 (UNLESS NOTED OTHERWISE) CU. YARDS R.C.P.	C.S.P.
-L- 24+59																													
-L- 24+59																		120											
-L-25+75																													
-L-25+75																		180											
-L- 27+51																													
-L- 27+51																		120											
-L- 28+70																													
-L- 28+70																		56											
-L- 28+02																													
-L- 28+02																													
-L- 28+05																													
-L- 28+05																				20									
-L- 28+25																													
-L- 28+69																													
-L- 28+69																													
-L- 28+59																													
-L- 28+59																													
-L- 29+28																													
-L- 29+28																								80					
-L- 29+26																													
-L- 29+26																								60					
-L- 29+20																													
-L- 29+20																								12					
-L- 29+19																													
-L- 29+20																		36											
-L- 29+64																													
-L-29+26																		88											
-L- 30+12																													
-L- 30+12																		192											
-L- 32+00																													
-L- 32+62																													
-L- 35+70																													
-L- 35+70																		184											
-L- 37+54																													
-L- 37+54																		56											
-L- 38+08																													
-L- 38+08																					52								
-L- 38+11																													
-L- 38+11																					56								
-L- 38+22																													
-L- 38+22																													
-L- 37+74																													
-L- 38+22																		44											
SHEET TOTALS																		1032		20	108			152					

STATION	QUANTITIES FOR DRAINAGE STRUCTURES PER EACH (0' THRU 5.0')	*TOTAL L.F. FOR PAY QUANTITY SHALL BE COL. 'A' + (1.3 X COL.'B') LIN. FT. A 5.0' THRU 10.0'	B 10.0' AND ABOVE	C.B. STD. 840.01 OR STD. 840.02	FRAME, GRATES, AND HOOD STANDARD 840.03 TYPE OF GRATE E	F	G	CONCRETE TRANSITIONAL SECTION DROP INLET	CATCH BASIN	D.I. STD. 840.14 OR STD. 840.15	D.I. FRAME WITH TWO GRATES STD. 840.16	G.D.I. TYPE "A" STD. 840.17 OR 840.26	G.D.I. FRAME WITH TWO GRATES STD. 840.29	J.B. STD. 840.31, 840.32 OR SPECIAL DETAIL	T.B.J.B. STD. 840.34	M.H. FRAME AND COVER STD. 840.54	ADJUSTMENT OF CATCH BASINS (0' - 2')	CONV. EXIST. C.B. TO J.B.	CONV. EXIST. D.I. TO J.B. W/M.H.	CONV. EXIST. D.I. TO SPECIAL C.B. (SEE DETAIL SHEET 2-L)	CONV. EXIST. C.B. TO T.B.J.B.	DOUBLE CATCH BASIN (SEE DETAIL SHEET 2-F)	SPECIAL C.B. (SEE DETAIL SHEET 2-K)			CONC. & BRICK PIPE PLUG, C.Y. STD. 840.71	CONC. COLLARS CL. "B" C.Y. STD. 840.72	PIPE REMOVAL LIN. FT.	REMARKS
-L- 24+59	1			1		1			1																				
-L- 24+59																													
-L-25+75	1			1		1			1																				TEMP. STEEL PLATES
-L-25+75																													
-L- 27+51	1			1		1			1																				TEMP. STEEL PLATES
-L- 27+51																													
-L- 28+70	1			1		1			1																				TEMP. STEEL PLATES
-L- 28+70																													
-L- 28+02	1									1	1																		
-L- 28+02																													
-L- 28+05	1			1		1																							
-L- 28+05																													REMOVE 18" RCP
-L- 28+25	1	2.1												1		1													
-L- 28+69	1									1	1																		
-L- 28+69																													
-L- 28+59	1									1	1																		REMOVE C.B.
-L- 28+59																													REMOVE 15" RCP
-L- 29+28	1	1.3										1	1																REMOVE C.B.
-L- 29+28																												67.1	REMOVE 30" RCP
-L- 29+26	1	1.9		1	1				1																				TEMP. STEEL PLATES
-L- 29+26																												77.5	REMOVE 30" RCP
-L- 29+20	1	2.3			2																	1							
-L- 29+20																													
-L- 29+19	1	4.3												1		1													
-L- 29+20																												41.2	REMOVE 15" RCP
-L- 29+64	1	0.7		1			1																						
-L-29+26																													
-L- 30+12	1			1		1			1																				
-L- 30+12																													
-L- 32+00	1			1		1			1																				
-L- 32+62																	1												ADJUST C.B.
-L- 35+70	1			1		1																							
-L- 35+70																													
-L- 37+54	1			1			1																						
-L- 37+54																													
-L- 38+08	1			1	1																								
-L- 38+08																													REMOVE 18" RCP
-L- 38+11	1	1.5												1		1													
-L- 38+11																													REMOVE 18" RCP
-L- 38+22	1	1.5			2																	1							
-L- 38+22																													REMOVE 18" RCP
-L- 37+74	1			1		1																							
-L- 38+22																													
SHEET TOTALS	22	15.6		13	6	9	2		7	3	3	1	1	3		3	1					2						185.8	

STATION / SIZE / THICKNESS OR GAUGE

ABBREVIATIONS

C.B.	CATCH BASIN
N.D.I.	NARROW DROP INLET
D.I.	DROP INLET
G.D.I.	GRATED DROP INLET
G.D.I.(N.S.)	(NARROW SLOT)
J.B.	JUNCTION BOX
M.H.	MANHOLE
T.B.D.I.	TRAFFIC BEARING DROP INLET
T.B.J.B.	TRAFFIC BEARING JUNCTION BOX

COMPUTED BY: BWJ DATE 2/8/2010

CHECKED BY: RP DATE 3/3/2010

PROJECT NO.	SHEET NO.
U-3423	3-C

RD238349

NORTH CAROLINA DEPARTMENT OF TRANSPORTATION
DIVISION OF HIGHWAYS

LIST OF PIPES, ENDWALLS, ETC. (FOR PIPES 48 INCHES & UNDER)

STATION	LOCATION (LT, RT, OR CL)'	STRUCTURE NO. FROM	STRUCTURE NO. TO	TOP ELEVATION	INVERT ELEVATION	INVERT ELEVATION	SLOPE CRITICAL	SIDE DRAIN PIPE (RCP, CSP, CAAP, HDPE, or PVC) SIZE 12"	15"	18"	24"	30"	36"	42"	48"	DO NOT USE RCP	DO NOT USE CSP	DO NOT USE CAAP	DO NOT USE HDPE
THICKNESS OR GAUGE																			
-L- 38+22	RT	50	47		236.24	233.72	X												
-L- 39+11	RT	50		239.99	236.24														
-L- 39+11	RT	51	50		236.55	236.49			20								X	X	
-L- 39+11	RT	51		238.8	236.55														
-L- 38+08	LT	49	45		236.44	235.42													
-L- 38+42	LT	49		239.69	236.44														
-L- 38+42	LT	52	49		237.21	236.44	X												
-L- 39+66	LT	52		240.46	237.21														
-L- 39+66	LT	53	52		237.63	237.21			16								X	X	
-L- 39+75	LT	53		240.8	237.63														
-L- 39+11	RT	54	50		237.2	236.24													
-L- 40+08	RT	54		240.96	237.2														
-L- 40+08	RT	55	54		237.45	237.4			20								X	X	
-L- 40+08	RT	55		239.7	237.45														
-L- 40+08	RT	56	54		237.7	237.2													
-L- 40+68	RT	56		241.7	237.7														
-L- 40+68	RT	57	56		238.08	237.7	X		20								X	X	
-L- 40+68	RT	57		240.3	238.08														
-L-39+66	LT	58	52		239.99	237.21													
-L- 41+72	LT	58		242.99	239.99														
-L- 41+72	LT	59	58		242.5	239.99													
-L- 43+75	LT	59		245.5	242.5														
-L- 40+68	RT	60	56		238.8	237.7													
-L- 43+24	RT	60		244.87	238.8														
-L- 43+24	RT	61	60		241.9	238.8													
-L- 44+59	MED																		
-L- 46+06	RT	61		246.93	241.9														
-L- 46+06	RT	62	61		242.1	241.9			20								X	X	
-L- 46+06	RT	62		245.3	242.1														
-L- 46+06	RT	63	61		242.2	241.9	X												
-L- 46+73	RT	63		247.86	242.2														
-L- 46+73	RT	63	OUT		242.2														
-L- 46+73	RT	64	63		243.31	242.2													
-Y1-14+83	RT	64		247.8	243.31														
-L- 46+75	LT																		
-Y1- 14+83	RT	65	64		244.1	243.31													
-Y1- 15+33	RT	65		247.1	244.1														
-Y1- 12+69	RT	66		247.06	243.76														
-Y1- 12+69	RT	67	66		244.17	243.76													
-Y1- 12+75	LT	67		247.17	244.17														
-Y1- 15+18	LT	68		247.22	244.04														
-Y1- 15+18	LT	69	68		244.1	244.04													
-Y1- 15+33	LT	69		247.1	244.1														
SHEET TOTALS									96										

STATION	C.S. PIPE 12" .064	15" .064	18" .064	24" .079	30" .079	36" .109	42" .109	48"	R.C. PIPE CLASS III 12"	15"	18"	24"	30"	36"	42"	48"	R.C. PIPE CLASS IV 12"	15"	18"	24"	30"	36"	42"	48"
-L- 38+22																				92				
-L- 39+11																								
-L- 39+11																								
-L- 39+11																								
-L- 38+08																			36					
-L- 38+42																								
-L- 38+42																			124					
-L- 39+66																								
-L- 39+66																								
-L- 39+75																								
-L- 39+11																				100				
-L- 40+08																								
-L- 40+08																								
-L- 40+08																								
-L- 40+08																				60				
-L- 40+68																								
-L- 40+68																								
-L- 40+68																								
-L-39+66																		208						
-L- 41+72																								
-L- 41+72																		204						
-L- 43+75																								
-L- 40+68																				256				
-L- 43+24																								
-L- 43+24																			284					
-L- 44+59																								
-L- 46+06																								
-L- 46+06																								
-L- 46+06																								
-L- 46+06																			68					
-L- 46+73																								
-L- 46+73																			8					
-L- 46+73																		40						
-Y1-14+83																								
-L- 46+75																								
-Y1- 14+83																		48						
-Y1- 15+33																								
-Y1- 12+69																								
-Y1- 12+69																		44						
-Y1- 12+75																								
-Y1- 15+18																								
-Y1- 15+18																		16						
-Y1- 15+33																								
SHEET TOTALS																		544	520	508				

STATION	** R.C. PIPE (CLASS V)	**** RC PIPE CULVERTS, CONTRACTOR DESIGN	***** RC PIPE CULVERTS, CONTRACTOR DESIGN	ENDWALLS STD. 838.01 OR STD. 838.11 (UNLESS NOTED OTHERWISE) CU. YARDS R.C.P.	C.S.P.	QUANTITIES FOR DRAINAGE STRUCTURES PER EACH (0' THRU 5.0')	LIN. FT. A 5.0' THRU 10.0'	LIN. FT. B 10.0' AND ABOVE	*TOTAL L.F. FOR PAY QUANTITY SHALL BE COL. 'A' + (1.3 X COL.'B')	C.B. STD. 840.01 OR STD. 840.02	FRAME, GRATES, AND HOOD STANDARD 840.03 TYPE OF GRATE E	F	G	CONCRETE TRANSITIONAL SECTION DROP INLET	CATCH BASIN	D.I. STD. 840.14 OR STD. 840.15	D.I. FRAME WITH TWO GRATES STD. 840.16	G.D.I. TYPE "A" STD. 840.17 OR 840.26	G.D.I. FRAME WITH TWO GRATES STD. 840.29	J.B. STD. 840.31, 840.32 OR SPECIAL DETAIL	T.B.J.B. STD. 840.34	M.H. FRAME AND COVER STD. 840.54	ADJUSTMENT OF CATCH BASINS (0" - 2")	CONV. EXIST. C.B. TO J.B.	CONV. EXIST. D.I. TO J.B. W/M.H.	CONV. EXIST. D.I. TO SPECIAL C.B. (SEE DETAIL SHEET 2-L)	CONV. EXIST. C.B. TO T.B.J.B.	DOUBLE CATCH BASIN (SEE DETAIL SHEET 2-F)	SPECIAL C.B. (SEE DETAIL SHEET 2-K)	CONC. & BRICK PIPE PLUG, C.Y. STD. 840.71	CONC. COLLARS CL. "B" C.Y. STD. 840.72	PIPE REMOVAL LIN. FT.	REMARKS
-L- 38+22																																			243.3	REMOVE 18" RCP
-L- 39+11						1				1			1																							
-L- 39+11																	1	1																		
-L- 39+11						1																														
-L- 38+08																																				
-L- 38+42						1				1			1																							
-L- 38+42																																				
-L- 39+66						1							2																		1					
-L- 39+66																																				
-L- 39+75						1																														
-L- 39+11																																				
-L- 40+08						1				1			1																							
-L- 40+08																																				
-L- 40+08						1											1	1																		
-L- 40+08																																				
-L- 40+68						1				1			1																							
-L- 40+68																																			4.6	REMOVE 15" RCP
-L- 40+68						1											1	1																		
-L-39+66																																				
-L- 41+72						1				1			1																							
-L- 41+72																																				
-L- 43+75						1				1			1																							
-L- 40+68																																				REMOVE 15" RCP
-L- 43+24						1	1.1			1			1																							
-L- 43+24																																			277.8	REMOVE 15" AND 18" RCP
-L- 44+59																																	0.13			PLUG 2 X 18" RCP & REMOVE D.I. AND C.B.
-L- 46+06						1				1			1																							REMOVE D.I.
-L- 46+06																																				REMOVE 12" RCP
-L- 46+06						1											1	1																		
-L- 46+06																																			64.5	REMOVE 18" RCP
-L- 46+73						1	0.6			1			1																							
-L- 46+73																																		0.4		
-L- 46+73																																			36.5	REMOVE 15" RCP
-Y1-14+83						1															1	1														
-L- 46+75																																	0.135			PLUG 3 X 15" RCP & REMOVE 2 X C.B.
-Y1- 14+83																																				
-Y1- 15+33						1				1	1																									
-Y1- 12+69						1				1	1																									
-Y1- 12+69																																				
-Y1- 12+75						1				1	1																									
-Y1- 15+18						1				1			1																							
-Y1- 15+18																																				
-Y1- 15+33						1				1	1																									
SHEET TOTALS						19	1.7			12	3	5	6				5	5			1	1							1			0.265	0.4	626.7	

ABBREVIATIONS

C.B.	CATCH BASIN
N.D.I.	NARROW DROP INLET
D.I.	DROP INLET
G.D.I.	GRATED DROP INLET
G.D.I.(N.S.)	(NARROW SLOT)
J.B.	JUNCTION BOX
M.H.	MANHOLE
T.B.D.I.	TRAFFIC BEARING DROP INLET
T.B.J.B.	TRAFFIC BEARING JUNCTION BOX

COMPUTED BY:	BWJ	DATE	2/8/2010
CHECKED BY:	RP	DATE	3/3/2010

NORTH CAROLINA DEPARTMENT OF TRANSPORTATION
DIVISION OF HIGHWAYS

PROJECT NO.	SHEET NO.
U-3423	3-D

RD238349

LIST OF PIPES, ENDWALLS, ETC. (FOR PIPES 48 INCHES & UNDER)

STATION	LOCATION (LT, RT, OR CL)'	STRUCTURE NO. FROM	STRUCTURE NO. TO	TOP ELEVATION	INVERT ELEVATION	INVERT ELEVATION	SLOPE CRITICAL	SIDE DRAIN PIPE (RCP, CSP, CAAP, HDPE, or PVC) SIZE / THICKNESS OR GAUGE	12"	15"	18"	24"	30"	36"	42"	48"	DO NOT USE RCP	DO NOT USE CSP	DO NOT USE CAAP	DO NOT USE HDPE
-L- 48+65	RT	70		247.12	244.12															
-L- 48+65	RT	71	70		244.4	244.12				20								X	X	
-L- 48+64	RT	71		246.65	244.4															
-L- 48+65	RT	70	73		244.12	240.23														
-L- 50+22	RT	73		244.7	240.23															
-L- 50+44	RT	74		243.7																
-L- 48+62	RT	72		246.92	243.92															
-L- 48+62	LT	72	75		243.92	240.18														
-L- 50+86	LT	75		243.18	240.18															
-L- 50+98	RT	76		242.89	238.5															
-L- 50+98	RT	76	77		238.5	231.79														
-L- 53+51	RT	77		235.76	231.79															
-L- 53+51	RT	77	78		231.94	231.79	X			16								X	X	
-L- 53+51	RT	78		235.8	231.79															
-L- 53+51	RT	79	78		232.14	231.94	X			28								X	X	
-L- 53+76	RT	79		235.14	232.14															
-L- 50+86	LT	75	80		240.18	232.49														
-L- 53+62	LT	80		235.49	232.49															
-L- 53+62	LT	80	82		232.49	229.1														
-L- 55+51	LT	82		232.35	229.1															
-L- 55+51	LT	82	87		229.1	227														
-L- 57+66	LT	87		230.25	227															
-L- 53+66	MED																			
-L- 53+51	RT	77	81		231.79	229.78														
-L- 54+33	RT	81		234.03	229.78															
-L- 54+33	RT	81	83		229.78	227.2														
-L- 56+45	RT	83		231.45	227.2															
-L- 56+45	RT	83	84		227.2	228.3	X			16								X	X	
-L- 56+45	RT	84		230.55	228.3															
-L- 56+45	RT	83	85		227.2	226.43														
-L- 57+25	RT	85		230.68	226.43															
-L- 57+25	RT	86	85		227.15	226.43				16								X	X	
-L- 57+25	RT	86		229.4	226.43															
-L- 57+25	RT	85	88		226.43	225	X													
-L- 58+56	RT	88		229.44	225															
-L- 57+96	LT	88A																		
-L- 58+56	RT	88	89		225	224.55														
-L- 59+20	RT	89		228.82	224.55															
-L- 57+66	LT	87	90		227	224.85														
-L- 59+42	LT	90		228.6	224.85															
SHEET TOTALS										96										

STATION	C.S. PIPE SIZE / THICKNESS OR GAUGE	12"	15"	18"	24"	30"	36"	42"	48"
-L- 48+65									
-L- 48+65									
-L- 48+64									
-L- 48+65									
-L- 50+22									
-L- 50+44									
-L- 48+62									
-L- 48+62									
-L- 50+86									
-L- 50+98									
-L- 50+98									
-L- 53+51									
-L- 53+51									
-L- 53+51									
-L- 53+51									
-L- 53+76									
-L- 50+86									
-L- 53+62									
-L- 53+62									
-L- 55+51									
-L- 55+51									
-L- 57+66									
-L- 53+66									
-L- 53+51									
-L- 54+33									
-L- 54+33									
-L- 56+45									
-L- 56+45									
-L- 56+45									
-L- 56+45									
-L- 57+25									
-L- 57+25									
-L- 57+25									
-L- 58+56									
-L- 57+96									
-L- 58+56									
-L- 59+20									
-L- 57+66									
-L- 59+42									
SHEET TOTALS									

STATION	R.C. PIPE CLASS III SIZE	12"	15"	18"	24"	30"	36"	42"	48"
-L- 48+65									
-L- 48+65									
-L- 48+64									
-L- 48+65									
-L- 50+22									
-L- 50+44									
-L- 48+62									
-L- 48+62									
-L- 50+86									
-L- 50+98									
-L- 50+98									
-L- 53+51									
-L- 53+51									
-L- 53+51									
-L- 53+51									
-L- 53+76									
-L- 50+86									
-L- 53+62									
-L- 53+62									
-L- 55+51									
-L- 55+51									
-L- 57+66									
-L- 53+66									
-L- 53+51									
-L- 54+33									
-L- 54+33									
-L- 56+45									
-L- 56+45									
-L- 56+45									
-L- 56+45									
-L- 57+25									
-L- 57+25									
-L- 57+25									
-L- 58+56									
-L- 57+96									
-L- 58+56									
-L- 59+20									
-L- 57+66									
-L- 59+42									
SHEET TOTALS									

STATION	R.C. PIPE CLASS IV SIZE	12"	15"	18"	24"	30"	36"	42"	48"	** " R.C. PIPE (CLASS V)	**** RC PIPE CULVERTS, CONTRACTOR DESIGN	**** RC PIPE CULVERTS, CONTRACTOR DESIGN	ENDWALLS STD. 838.01 OR STD. 838.11 (UNLESS NOTED OTHERWISE) CU. YARDS R.C.P.	C.S.P.
-L- 48+65														
-L- 48+65														
-L- 48+64														
-L- 48+65			160											
-L- 50+22														
-L- 50+44														
-L- 48+62														
-L- 48+62			224											
-L- 50+86														
-L- 50+98														
-L- 50+98				256										
-L- 53+51														
-L- 53+51														
-L- 53+51														
-L- 53+51														
-L- 53+76														
-L- 50+86			276											
-L- 53+62														
-L- 53+62			192											
-L- 55+51														
-L- 55+51				212										
-L- 57+66														
-L- 53+66														
-L- 53+51					84									
-L- 54+33														
-L- 54+33					212									
-L- 56+45														
-L- 56+45														
-L- 56+45						80								
-L- 57+25														
-L- 57+25														
-L- 57+25						132								
-L- 58+56														
-L- 57+96														
-L- 58+56						64								
-L- 59+20														
-L- 57+66				172										
-L- 59+42														
SHEET TOTALS			852	640	296	276								

STATION	QUANTITIES FOR DRAINAGE STRUCTURES PER EACH (0' THRU 5.0')	"TOTAL L.F. FOR PAY QUANTITY SHALL BE COL. "A" + (1.3 X COL. "B") LIN. FT. A: 5.0' THRU 10.0'	B: 10.0' AND ABOVE	C.B. STD. 840.01 OR STD. 840.02	FRAME, GRATES, AND HOOD STANDARD 840.03 TYPE OF GRATE E	F	G	CONCRETE TRANSITIONAL SECTION DROP INLET	CATCH BASIN	D.I. STD. 840.14 OR STD. 840.15	D.I. FRAME WITH TWO GRATES STD. 840.16	G.D.I. TYPE "A" STD. 840.17 OR 840.26	G.D.I. FRAME WITH TWO GRATES STD. 840.29	J.B. STD. 840.31, 840.32 OR SPECIAL DETAIL	T.B.J.B. STD. 840.34	M.H. FRAME AND COVER STD. 840.54	ADJUSTMENT OF CATCH BASINS (0" - 2")	CONV. EXIST. C.B. TO J.B.	CONV. EXIST. D.I. TO J.B. W/M.H.	CONV. EXIST. D.I. TO SPECIAL C.B. (SEE DETAIL SHEET 2-L)	CONV. EXIST. C.B. TO T.B.J.B.	DOUBLE CATCH BASIN (SEE DETAIL SHEET 2-F)	SPECIAL C.B. (SEE DETAIL SHEET 2-K)	CONC. & BRICK PIPE PLUG, C.Y. STD. 840.71	CONC. COLLARS CL. "B" C.Y. STD. 840.72	PIPE REMOVAL LIN. FT.	REMARKS
-L- 48+65	1			1		1																	0.045			PLUG 1 X 15" RCP
-L- 48+65																										REMOVE 15" RCP
-L- 48+64	1									1	1															
-L- 48+65																										
-L- 50+22															1											ADJUST C.B.
-L- 50+44															1											ADJUST C.B.
-L- 48+62	1			1			1																			
-L- 48+62																										
-L- 50+86	1			1			1																			
-L- 50+98	1			1		1																				
-L- 50+98																									261	REMOVE 15" RCP
-L- 53+51	1			1		1																				
-L- 53+51																										
-L- 53+51	1									1	1															
-L- 53+51																										
-L- 53+76	1			1	1																				15.9	REMOVE 15" RCP
-L- 50+86																										
-L- 53+62	1			1			1																			
-L- 53+62																										
-L- 55+51	1			1			1																			
-L- 55+51																										
-L- 57+66	1						2														1					
-L- 53+66																										REMOVE D.I.
-L- 53+51																							0.09		62.7	PLUG 2X 15" RCP & REM. C.B. & 15" RCP
-L- 54+33	1			1		1																				REMOVE C.B.
-L- 54+33																									214.3	REMOVE 18" RCP
-L- 56+45	1			1		1																				
-L- 56+45																										REMOVE 12" RCP
-L- 56+45	1									1	1															
-L- 56+45																									208	REMOVE 18" RCP
-L- 57+25	1			1		1																				
-L- 57+25																										REMOVE 12" RCP
-L- 57+25	1									1	1															
-L- 57+25																										
-L- 58+56	1			1		1																				
-L- 57+96																							0.13		58	PLUG 2X18" RCP AND REM. D.I. & 15" RCP
-L- 58+56																									149.8	REMOVE 24" RCP
-L- 59+20	1												1													
-L- 57+66																										
-L- 59+42	1			1			1																			
SHEET TOTALS	19			13	1	7	7			4	4			1		2					1		0.265		969.7	

ABBREVIATIONS

C.B.	CATCH BASIN
N.D.I.	NARROW DROP INLET
D.I.	DROP INLET
G.D.I.	GRATED DROP INLET
G.D.I.(N.S.)	(NARROW SLOT)
J.B.	JUNCTION BOX
M.H.	MANHOLE
T.B.D.I.	TRAFFIC BEARING DROP INLET
T.B.J.B.	TRAFFIC BEARING JUNCTION BOX

RD238349

COMPUTED BY:	BWJ	DATE	2/8/2010
CHECKED BY:	RP	DATE	3/3/2010

NORTH CAROLINA DEPARTMENT OF TRANSPORTATION
DIVISION OF HIGHWAYS

PROJECT NO.	SHEET NO.
U-3423	3-E

LIST OF PIPES, ENDWALLS, ETC. (FOR PIPES 48 INCHES & UNDER)

STATION	LOCATION (LT, RT, OR CL)	STRUCTURE NO. FROM	STRUCTURE NO. TO	TOP ELEVATION	INVERT ELEVATION	INVERT ELEVATION	SLOPE CRITICAL	SIDE DRAIN PIPE (RCP, CSP, CAAP, HDPE, or PVC) 12"	15"	18"	24"	30"	36"	42"	48"	DO NOT USE RCP	DO NOT USE CSP	DO NOT USE CAAP	DO NOT USE HDPE
-L- 59+42	LT	90	95		224.85	223	X												
-L- 61+44	LT	95		226.75	223														
-L- 61+44	LT	95	99		223	222.42													
-L- 62+51	LT	99		226.17	222.42														
-L- 62+51	LT	99	100		222.42	221.2													
-L- 63+32	LT	100		226.03	221.2														
-L- 59+20	RT	89	91		224.55	223.73													
-L- 60+08	RT	91		227.98	223.73														
-L- 60+08	RT	92	91		224.55	224.51	X		16								X	X	
-L- 60+08	RT	92		226.8	224.55														
-L- 60+08	RT	91	93		223.73	222.66													
-L- 60+69	RT	93		227.41	222.66														
-L- 60+69	RT	94	93		224.35	224.31			16								X	X	
-L- 60+68	RT	94		226.6	224.35														
-L- 60+69	RT	93	96		222.66	221.7													
-L- 61+71	MED	96A		227.48	224.31														
-L- 61+71	MED	96A	96B		224.31	224.21													
-L- 61+87	MED	96B		227.38	224.21														
-L- 61+87	MED	96B	96		224.21	223.28													
-L- 61+90	RT	96		226.45	223.28														
-L- 61+90	RT	97	96		223.75	221.7			16								X	X	
-L- 61+89	RT	97		226	223.75														
-L- 61+89	RT	98	97		224.05	223.75			44								X	X	
-L- 61+46	RT	98		226.3	224.05														
-L- 61+90	RT	96	101		221.7	221													
-L-63+11	LT	101A		226.97	223.8														
-L-63+11	LT	101A	101B		223.8	223.72													
-L-63+33	MED	101B		226.97	223.72														
-L-63+33	MED	101B	101		223.72	221													
-L- 63+29	RT	101		226.03	221														
-L- 63+29	RT	102	101		223.21	221			16								X	X	
-L- 63+33	RT	102		225.46	223.21														
-L- 63+28	MED																		
-L- 63.29	RT	101	103		221	220.7													
-L- 63+94	RT	103		226.11	220.7														
-L- 63+94	RT	103	104		220.7	219.35													
-L- 65+07	RT	105	104		219.45	219.35									24		X	X	
-L- 65+07	RT	108	104		224.04	219.35													
-L- 66+69	RT	108		228.29															
-L- 66+69	RT	110	108		227.36	224.04													
-L- 69+06	RT	110		231.71															
-L-69+06	RT	110	111		227.54	227.36	X												
-Y3- 10+75	RT	111		230.54															
SHEET TOTALS									108						24				

STATION	LOC.	FROM	TO	C.S. PIPE 12" (.064)	15" (.064)	18" (.064)	24" (.064)	30" (.079)	36" (.079)	42" (.109)	48" (.109)	R.C. PIPE CLASS III 12"	15"	18"	24"	30"	36"	42"	48"	R.C. PIPE CLASS IV 12"	15"	18"	24"	30"	36"	42"	48"	** " R.C. PIPE (CLASS V)	***" RC PIPE CULVERTS, CONTRACTOR DESIGN	***" RC PIPE CULVERTS, CONTRACTOR DESIGN	ENDWALLS STD. 838.01 OR STD. 838.11 (UNLESS NOTED OTHERWISE) CU. YARDS R.C.P.	C.S.P.
-L- 59+42	LT	90	95																				204									
-L- 61+44	LT	95																														
-L- 61+44	LT	95	99																				108									
-L- 62+51	LT	99																														
-L- 62+51	LT	99	100																				80									
-L- 63+32	LT	100																														
-L- 59+20	RT	89	91																					92								
-L- 60+08	RT	91																														
-L- 60+08	RT	92	91																													
-L- 60+08	RT	92																														
-L- 60+08	RT	91	93																					60								
-L- 60+69	RT	93																														
-L- 60+69	RT	94	93																													
-L- 60+68	RT	94																														
-L- 60+69	RT	93	96																						124							
-L- 61+71	MED	96A																														
-L- 61+71	MED	96A	96B																		20											
-L- 61+87	MED	96B																														
-L- 61+87	MED	96B	96																		44											
-L- 61+90	RT	96																														
-L- 61+90	RT	97	96																													
-L- 61+89	RT	97																														
-L- 61+89	RT	98	97																													
-L- 61+46	RT	98																														
-L- 61+90	RT	96	101																						136							
-L-63+11	LT	101A																														
-L-63+11	LT	101A	101B																		30											
-L-63+33	MED	101B																														
-L-63+33	MED	101B	101																		44											
-L- 63+29	RT	101																														
-L- 63+29	RT	102	101																													
-L- 63+33	RT	102																														
-L- 63+28	MED																															
-L- 63.29	RT	101	103																						64							
-L- 63+94	RT	103																														
-L- 63+94	RT	103	104																						116							
-L- 65+07	RT	105	104																													
-L- 65+07	RT	108	104																					164								
-L- 66+69	RT	108																														
-L- 66+69	RT	110	108																					240								
-L- 69+06	RT	110																														
-L-69+06	RT	110	111																		36											
-Y3- 10+75	RT	111																														
SHEET TOTALS																					174		392	556	440							

STATION	LOC.	FROM	TO	QUANTITIES FOR DRAINAGE STRUCTURES PER EACH (0' THRU 5.0')	*TOTAL L.F. FOR PAY QUANTITY SHALL BE COL. 'A' + (1.3 X COL.'B') LIN. FT. A 5.0' THRU 10.0'	B 10.0' AND ABOVE	C.B. STD. 840.01 OR STD. 840.02	FRAME, GRATES, AND HOOD STANDARD 840.03 TYPE OF GRATE E	F	G	CONCRETE TRANSITIONAL SECTION DROP INLET	CATCH BASIN	D.I. STD. 840.14 OR STD. 840.15	D.I. FRAME WITH TWO GRATES STD. 840.16	G.D.I. TYPE "A" STD. 840.17 OR 840.26	G.D.I. FRAME WITH TWO GRATES STD. 840.29	J.B. STD. 840.31, 840.32 OR SPECIAL DETAIL	T.B.J.B. STD. 840.34	M.H. FRAME AND COVER STD. 840.54	ADJUSTMENT OF CATCH BASINS (0' - 2')	CONV. EXIST. C.B. TO J.B.	CONV. EXIST. D.I. TO J.B. W/M.H.	CONV. EXIST. D.I. TO SPECIAL C.B. (SEE DETAIL SHEET 2-L)	CONV. EXIST. C.B. TO T.B.J.B.	DOUBLE CATCH BASIN (SEE DETAIL SHEET 2-F)	SPECIAL C.B. (SEE DETAIL SHEET 2-K)			CONC. & BRICK PIPE PLUG, C.Y. STD. 840.71	CONC. COLLARS CL. "B" C.Y. STD. 840.72	PIPE REMOVAL LIN. FT.	REMARKS
-L- 59+42	LT	90	95																													
-L- 61+44	LT	95		1			1			1																						
-L- 61+44	LT	95	99																													
-L- 62+51	LT	99		1			1			1																						
-L- 62+51	LT	99	100																													
-L- 63+32	LT	100		1				2																	1							
-L- 59+20	RT	89	91																													
-L- 60+08	RT	91		1			1		1																							
-L- 60+08	RT	92	91																													REMOVE 12" RCP
-L- 60+08	RT	92		1									1	1																		
-L- 60+08	RT	91	93																												315.6	REMOVE 24" RCP
-L- 60+69	RT	93		1			1		1																							
-L- 60+69	RT	94	93																													REMOVE 15" RCP
-L- 60+68	RT	94		1									1	1																		
-L- 60+69	RT	93	96																													
-L- 61+71	MED	96A		1							1		1	1																		
-L- 61+71	MED	96A	96B																													
-L- 61+87	MED	96B		1							1		1	1																		
-L- 61+87	MED	96B	96																													
-L- 61+90	RT	96		1			1		1																							
-L- 61+90	RT	97	96																													REMOVE 12" RCP
-L- 61+89	RT	97		1									1	1																		
-L- 61+89	RT	98	97																													
-L- 61+46	RT	98		1									1	1																	5.8	REMOVE 12" RCP & D.I.
-L- 61+90	RT	96	101																													
-L-63+11	LT	101A		1							1		1	1																		
-L-63+11	LT	101A	101B																													
-L-63+33	MED	101B		1							1		1	1																		
-L-63+33	MED	101B	101																													
-L- 63+29	RT	101		1				2																	1							
-L- 63+29	RT	102	101																													
-L- 63+33	RT	102		1									1	1																		
-L- 63+28	MED																												0.55			PLUG 2X12",4X18"&2X24" RCP & REM. 3-D.I.
-L- 63.29	RT	101	103																													
-L- 63+94	RT	103		1	0.4		1			1																						
-L- 63+94	RT	103	104																													
-L- 65+07	RT	105	104																													REMOVE 30" RCP
-L- 65+07	RT	108	104																												485.3	REMOVE 24" RCP
-L- 66+69	RT	108		1			1			1																						
-L- 66+69	RT	110	108																													
-L- 69+06	RT	110		1			1			1																						
-L-69+06	RT	110	111																													
-Y3- 10+75	RT	111		1			1		1																							
SHEET TOTALS				20	0.4		9	4	4	5	4		9	9											2				0.55		806.7	

ABBREVIATIONS

C.B.	CATCH BASIN
N.D.I.	NARROW DROP INLET
D.I.	DROP INLET
G.D.I.	GRATED DROP INLET
G.D.I.(N.S.)	(NARROW SLOT)
J.B.	JUNCTION BOX
M.H.	MANHOLE
T.B.D.I.	TRAFFIC BEARING DROP INLET
T.B.J.B.	TRAFFIC BEARING JUNCTION BOX

RD238349

COMPUTED BY:	BWJ	DATE	2/8/2010
CHECKED BY:	RP	DATE	3/3/2010

NORTH CAROLINA DEPARTMENT OF TRANSPORTATION
DIVISION OF HIGHWAYS

PROJECT NO.	SHEET NO.
U-3423	3-F

LIST OF PIPES, ENDWALLS, ETC. (FOR PIPES 48 INCHES & UNDER)

Part 1 – Location, elevations and side drain pipe

STATION	LOCATION (LT, RT, OR CL)'	STRUCTURE NO. FROM	STRUCTURE NO. TO	TOP ELEVATION	INVERT ELEVATION	INVERT ELEVATION	SLOPE CRITICAL	SIDE DRAIN PIPE (RCP, CSP, CAAP, HDPE, or PVC) 12"	15"	18"	24"	30"	36"	42"	48"	DO NOT USE RCP	DO NOT USE CSP	DO NOT USE CAAP	DO NOT USE HDPE
-L- 69+06	RT	112	110																
-L- 69+85	RT	112																	
-L- 69+85	RT	113	112			228.15	X												
-L- 70+02	RT	113		233.1	228.15														
-L- 70+02	CL																		
-L- 65+06	LT	106	107		218.86	216.14								272			X	X	
-L- 64+97	LT	107	OUT		216.14	216.1								24			X	X	
-L- 65+06	LT	109	106		224.98	218.86													
-L- 67+00	LT	109		228.73	224.98														
-L- 67+00	LT	114	109		228.16	224.98													
-L- 69+19	LT	114		231.91	228.16														
-L- 69+19	LT	115	114		231.44	228.16													
-L- 71+12	LT	115		234.69	231.44														
-L- 71+12	LT	116	115		232.95	231.44			16								X	X	
-L- 71+12	LT	116		235.2	232.95														
-L- 71+12	LT	119	115		234.96	231.44													
-L- 73+55	LT	119		238.21	234.96														
-L- 73+55	LT	120	119		235.4	234.96			20								X	X	
-L- 73+55	LT	120		238.8	234.96														
-L- 73+55	LT	121	120		235.55	235.4	X		52								X	X	
-L- 73+05	LT	121		237.8	235.55														
-L- 73+55	LT	125	119		237.74	234.96													
-L- 75+30	LT	125		240.74	237.74														
-L- 75+30	LT	132	125		241.96	237.74													
-L- 78+30	LT	132		244.96	241.96														
-L- 78+30	LT	133	132		245.68	241.96													
-L- 80+95	LT	133		248.68	245.68														
-L- 71+51	RT	116A																	
-L- 73+52	RT	117		238.17	231.66														
-L- 73+52	RT	118	117		235.25	231.66	X		20								X	X	
-L- 73+51	RT	118		237.5	235.25														
-L- 73+96	RT	122																	
-L- 74+79	RT	123																	
-Y4- 10+80	RT	124		240.32															
-Y4- 11+32	LT	126		239.52															
-Y4-11+32	RT	126	127		239.52	235.4	X												
-L-75+41	LT	127A																	
-L-75+41	RT	127		241.08															
-L- 75+41	RT	128	127		235.4	237.2													
-L- 75+85	RT	128		241.54															
-L- 75+85	RT	128	129		239.38	237.2	X												
-L- 77+36	RT	129		243.65	237.2														
SHEET TOTALS									108					296					

Part 2 – C.S. pipe and R.C. pipe (SIZE / THICKNESS OR GAUGE)

STATION	C.S. PIPE 12" .064	15" .064	18" .064	24" .064	30" .079	36" .079	42" .109	48" .109	R.C. PIPE CLASS III 12"	15"	18"	24"	30"	36"	42"	48"	R.C. PIPE CLASS IV 12"	15"	18"	24"	30"	36"	42"	48"
-L- 69+06																					80			
-L- 69+85																								
-L- 69+85																					20			
-L- 70+02																								
-L- 70+02																								
-L- 65+06																								
-L- 64+97																								
-L- 65+06																				196				
-L- 67+00																								
-L- 67+00																				220				
-L- 69+19																								
-L- 69+19																				196				
-L- 71+12																								
-L- 71+12																								
-L- 71+12																								
-L- 71+12																			244					
-L- 73+55																								
-L- 73+55																								
-L- 73+55																								
-L- 73+55																								
-L- 73+05																								
-L- 73+55																		176						
-L- 75+30																								
-L- 75+30																		300						
-L- 78+30																								
-L- 78+30																		268						
-L- 80+95																								
-L- 71+51																				8				
-L- 73+52																								
-L- 73+52																								
-L- 73+51																								
-L- 73+96																				4				
-L- 74+79																								
-Y4- 10+80																								
-Y4- 11+32																								
-Y4-11+32																								
-L-75+41																								
-L-75+41																								
-L- 75+41																				48				
-L- 75+85																								
-L- 75+85																			152					
-L- 77+36																								
SHEET TOTALS																		744	396	672	100			

Part 3 – Endwalls, drainage structures, frames and grates

STATION	** " R.C. PIPE (CLASS V)	*** RC PIPE CULVERTS, CONTRACTOR DESIGN	*** RC PIPE CULVERTS, CONTRACTOR DESIGN	ENDWALLS STD. 838.01 OR STD. 838.11 (UNLESS NOTED OTHERWISE) CU. YARDS R.C.P.	C.S.P.	QUANTITIES FOR DRAINAGE STRUCTURES PER EACH (0' THRU 5.0')	*TOTAL L.F. FOR PAY QUANTITY SHALL BE COL. 'A' + (1.3 X COL.'B') LIN. FT. A 5.0' THRU 10.0'	B 10.0' AND ABOVE	C.B. STD. 840.01 OR STD. 840.02	FRAME, GRATES, AND HOOD STANDARD 840.03 TYPE OF GRATE E	F	G	CONCRETE TRANSITIONAL SECTION DROP INLET	CATCH BASIN
-L- 69+06														
-L- 69+85						1			1			1		
-L- 69+85														
-L- 70+02						1			1			1		
-L- 70+02														
-L- 65+06														
-L- 64+97														
-L- 65+06														
-L- 67+00						1			1		1			
-L- 67+00														
-L- 69+19						1			1		1			
-L- 69+19														
-L- 71+12						1			1		1			
-L- 71+12														
-L- 71+12						1								
-L- 71+12														
-L- 73+55						1			1		1			
-L- 73+55														
-L- 73+55						1								
-L- 73+55														
-L- 73+05						1								
-L- 73+55														
-L- 75+30						1			1		1			
-L- 75+30														
-L- 78+30						1			1		1			
-L- 78+30														
-L- 80+95						1			1		1			
-L- 71+51														
-L- 73+52												1		
-L- 73+52														
-L- 73+51						1								
-L- 73+96														
-L- 74+79														
-Y4- 10+80														
-Y4- 11+32						1						1		
-Y4-11+32														
-L-75+41														
-L-75+41						1								
-L- 75+41														
-L- 75+85						1			1			1		
-L- 75+85														
-L- 77+36						1			1			1		
SHEET TOTALS						17			11		7	6		

Part 4 – Inlets, junction boxes and conversions

STATION	D.I. STD. 840.14 OR STD. 840.15	D.I. FRAME WITH TWO GRATES STD. 840.16	G.D.I. TYPE "A" STD. 840.17 OR 840.26	G.D.I. FRAME WITH TWO GRATES STD. 840.29	J.B. STD. 840.31, 840.32 OR SPECIAL DETAIL	T.B.J.B. STD. 840.34	M.H. FRAME AND COVER STD. 840.54	ADJUSTMENT OF CATCH BASINS (0' - 2')	CONV. EXIST. C.B. TO J.B.	CONV. EXIST. D.I. TO J.B. W/M.H.	CONV. EXIST. D.I. TO SPECIAL C.B. (SEE DETAIL SHEET 2-L)	CONV. EXIST. C.B. TO T.B.J.B.	DOUBLE CATCH BASIN (SEE DETAIL SHEET 2-F)	SPECIAL C.B. (SEE DETAIL SHEET 2-K)		
-L- 69+06																
-L- 69+85																
-L- 69+85																
-L- 70+02																
-L- 70+02																
-L- 65+06																
-L- 64+97																
-L- 65+06																
-L- 67+00																
-L- 67+00																
-L- 69+19																
-L- 69+19																
-L- 71+12																
-L- 71+12																
-L- 71+12	1	1														
-L- 71+12																
-L- 73+55																
-L- 73+55																
-L- 73+55	1	1														
-L- 73+55																
-L- 73+05	1	1														
-L- 73+55																
-L- 75+30																
-L- 75+30																
-L- 78+30																
-L- 78+30																
-L- 80+95																
-L- 71+51																
-L- 73+52											1					
-L- 73+52																
-L- 73+51	1	1														
-L- 73+96																
-L- 74+79																
-Y4- 10+80								1								
-Y4- 11+32														1		
-Y4-11+32																
-L-75+41																
-L-75+41						1	1									
-L- 75+41																
-L- 75+85																
-L- 75+85																
-L- 77+36																
SHEET TOTALS	4	4				1	1	1			1			1		

Part 5 – Plugs, collars, pipe removal and remarks

STATION	CONC. & BRICK PIPE PLUG, C.Y. STD. 840.71	CONC. COLLARS CL. "B" C.Y. STD. 840.72	PIPE REMOVAL LIN. FT.	REMARKS
-L- 69+06				
-L- 69+85				
-L- 69+85				
-L- 70+02	0.232			PLUG 2X24" RCP
-L- 70+02				REMOVE DI
-L- 65+06				2 @ 42" RCP AND REMOVE 36" RCP
-L- 64+97				2 @ 42" RCP AND REMOVE 36" RCP
-L- 65+06				
-L- 67+00				
-L- 67+00				
-L- 69+19				
-L- 69+19				
-L- 71+12				
-L- 71+12				
-L- 71+12				
-L- 71+12				
-L- 73+55				
-L- 73+55				
-L- 73+55				
-L- 73+55				
-L- 73+05				
-L- 73+55				
-L- 75+30				
-L- 75+30				
-L- 78+30				
-L- 78+30				
-L- 80+95				
-L- 71+51		0.6		REMOVE C.B.
-L- 73+52				
-L- 73+52				
-L- 73+51				
-L- 73+96		0.6		REMOVE D.I.
-L- 74+79	0.065			PLUG 1X18" RCP & REMOVE D.I.
-Y4- 10+80				
-Y4- 11+32				
-Y4-11+32				
-L-75+41	0.065		31.6	PLUG 1X18" RCP & REMOVE 18" RCP & D.I.
-L-75+41	0.065		33	PLUG 1X18" RCP & REMOVE 15" RCP
-L- 75+41	0.065			PLUG 1X18" RCP
-L- 75+85				
-L- 75+85				
-L- 77+36	0.13		8.6	PLUG 2X18" RCP & REMOVE 12" RCP
SHEET TOTALS	0.506	1.2	73.2	

ABBREVIATIONS

C.B.	CATCH BASIN
N.D.I.	NARROW DROP INLET
D.I.	DROP INLET
G.D.I.	GRATED DROP INLET
G.D.I.(N.S.)	(NARROW SLOT)
J.B.	JUNCTION BOX
M.H.	MANHOLE
T.B.D.I.	TRAFFIC BEARING DROP INLET
T.B.J.B.	TRAFFIC BEARING JUNCTION BOX

RD248616

COMPUTED BY:	BWJ	DATE	2/8/2010
CHECKED BY:	RP	DATE	3/3/2010

NORTH CAROLINA DEPARTMENT OF TRANSPORTATION
DIVISION OF HIGHWAYS

PROJECT NO.	SHEET NO.
U-3423	3-G

LIST OF PIPES, ENDWALLS, ETC. (FOR PIPES 48 INCHES & UNDER)

ABBREVIATIONS

C.B.	CATCH BASIN
N.D.I.	NARROW DROP INLET
D.I.	DROP INLET
G.D.I.	GRATED DROP INLET
G.D.I.(N.S.)	(NARROW SLOT)
J.B.	JUNCTION BOX
M.H.	MANHOLE
T.B.D.I.	TRAFFIC BEARING DROP INLET
T.B.J.B.	TRAFFIC BEARING JUNCTION BOX

STATION / SIZE / THICKNESS OR GAUGE	LOCATION (LT, RT, OR CL)	STRUCTURE NO. FROM	STRUCTURE NO. TO	TOP ELEVATION	INVERT ELEVATION	INVERT ELEVATION	SLOPE CRITICAL	SIDE DRAIN PIPE (RCP, CSP, CAAP, HDPE, or PVC) 12"	15"	18"	24"	30"	36"	42"	48"	DO NOT USE RCP	DO NOT USE CSP	DO NOT USE CAAP	DO NOT USE HDPE
-L- 77+36	RT	130	129		241.97	239.4													
-L- 79+12	RT	130		246.18	241.97														
-L- 79+12	RT	131	130		245.45	241.97													
-L- 81+61	RT	131		249.18	245.45														
-Y5- 14+12	RT	134		248.13	243.51														
-Y5- 14+12	RT	135	134		245.43	243.51													
-Y5- 15+30	RT	135		248.43	245.43														
-Y5- 15+30	RT	136	135		245.98	245.43													
-Y5- 15+30	LT	136		248.98	245.98														
-Y5- 15+30	LT	137	136		246.46	245.98													
-Y5- 15+85	LT	137		249.46	246.46														
-Y5- 18+09	RT	138		249.67	246.92														
-Y5- 18+09	RT	138	139		246.92	245.48													
-Y5- 19+32	RT	139		248.48	245.48														
-Y5- 19+32	RT	139	OUT		245.48	245.1													
-L- 87+02	RT	141		250.04	247.04														
-L- 87+02	RT	141	142		247.04	246.28													
-L- 88+89	RT	142		249.28	246.28														
-L- 88+89	RT	142	143		246.28	244.5													
-L- 89+11	RT	143		249.8	244.5														
-L- 86+49	LT	144		250.03	247.03														
-L- 86+49	LT	144	145		247.03	245.97													
-L- 87+80	LT	145		248.97	245.97														
-L- 87+80	LT	145	146		245.97	245.46													
-L- 88+90	LT	146		248.46	245.46														
-L- 88+90	LT	146	147		245.46	244.85													
-L- 90+28	LT	147		247.85	244.85														
-L- 90+99	RT	148		248.62	245.62														
-L- 90+99	RT	148	149		245.62	242.77			12								X	X	
-L- 90+99	RT	149		247.4	242.77														
-L- 90+28	LT	147	150		244.85	243.64	X												
-L- 92+01	LT	150		246.84	243.64														
-L- 93+43	RT	151		245.36	242.36														
-L- 93+43	RT	151	152		242.36	240.5			16								X	X	
-L- 93+43	RT	152		245	240.5														
-L- 92+01	LT	150	153		243.64	239.07	X												
-L- 95+00	LT	153		242.32	239.07														
-L- 95+00	LT	154	153		240.23	239.07			16								X	X	
-L- 95+00	LT	154		243.4	240.23														
-L- 95+00	LT	153	155A		239.07	238.17													
SHEET TOTALS									44										

STATION	C.S. PIPE 12" .064	15" .064	18" .064	24" .064	30" .079	36" .079	42" .109	48" .109	R.C. PIPE CLASS III 12"	15"	18"	24"	30"	36"	42"	48"	R.C. PIPE CLASS IV 12"	15"	18"	24"	30"	36"	42"	48"	** " R.C. PIPE (CLASS V)	***" RC PIPE CULVERTS, CONTRACTOR DESIGN	***" RC PIPE CULVERTS, CONTRACTOR DESIGN
-L- 77+36																		180									
-L- 79+12																											
-L- 79+12																		252									
-L- 81+61																											
-Y5- 14+12																											
-Y5- 14+12																		120									
-Y5- 15+30																											
-Y5- 15+30																		80									
-Y5- 15+30																											
-Y5- 15+30																		56									
-Y5- 15+85																											
-Y5- 18+09																											
-Y5- 18+09																		120									
-Y5- 19+32																											
-Y5- 19+32																		56									
-L- 87+02																											
-L- 87+02																		188									
-L- 88+89																											
-L- 88+89																		24									
-L- 89+11																											
-L- 86+49																											
-L- 86+49																		132									
-L- 87+80																											
-L- 87+80																		112									
-L- 88+90																											
-L- 88+90																		140									
-L- 90+28																											
-L- 90+99																											
-L- 90+99																											
-L- 90+99																											
-L- 90+28																		172									
-L- 92+01																											
-L- 93+43																											
-L- 93+43																											
-L- 93+43																											
-L- 92+01																		300									
-L- 95+00																											
-L- 95+00																											
-L- 95+00																											
-L- 95+00																			52								
SHEET TOTALS																		1932	52								

STATION	ENDWALLS STD. 838.01 OR STD. 838.11 (UNLESS NOTED OTHERWISE) CU. YARDS R.C.P.	C.S.P.	QUANTITIES FOR DRAINAGE STRUCTURES PER EACH (0' THRU 5.0')	*TOTAL L.F. FOR PAY QUANTITY SHALL BE COL. 'A' + (1.3 X COL.'B') LIN. FT. A 5.0' THRU 10.0'	B 10.0' AND ABOVE	C.B. STD. 840.01 OR STD. 840.02	FRAME, GRATES, AND HOOD STANDARD 840.03 TYPE OF GRATE E	F	G	CONCRETE TRANSITIONAL SECTION DROP INLET	CATCH BASIN	D.I. STD. 840.14 OR STD. 840.15	D.I. FRAME WITH TWO GRATES STD. 840.16	G.D.I. TYPE "A" STD. 840.17 OR 840.26	G.D.I. FRAME WITH TWO GRATES STD. 840.29	J.B. STD. 840.31, 840.32 OR SPECIAL DETAIL	T.B.J.B. STD. 840.34	M.H. FRAME AND COVER STD. 840.54	ADJUSTMENT OF CATCH BASINS (0' - 2')	CONV. EXIST. C.B. TO J.B.	CONV. EXIST. D.I. TO J.B. W/M.H.	CONV. EXIST. D.I. TO SPECIAL C.B. (SEE DETAIL SHEET 2-L)	CONV. EXIST. C.B. TO T.B.J.B.	DOUBLE CATCH BASIN (SEE DETAIL SHEET 2-F)	SPECIAL C.B. (SEE DETAIL SHEET 2-K)			CONC. & BRICK PIPE PLUG, C.Y. STD. 840.71	CONC. COLLARS CL. "B" C.Y. STD. 840.72	PIPE REMOVAL LIN. FT.	REMARKS
-L- 77+36																															
-L- 79+12			1			1			1																			0.029		8	PLUG 1X12" RCP & REM. 12" RCP & C.B.
-L- 79+12																															
-L- 81+61			1			1			1																			0.029		10.9	PLUG 1X12" RCP & REM. 12" RCP & C.B.
-Y5- 14+12			1			1			1																						
-Y5- 14+12																															
-Y5- 15+30			1			1			1																						
-Y5- 15+30																															
-Y5- 15+30			1			1		1																							
-Y5- 15+30																															
-Y5- 15+85			1			1		1																							
-Y5- 18+09			1			1		1																							
-Y5- 18+09																															
-Y5- 19+32			1			1		1																							
-Y5- 19+32																															
-L- 87+02			1			1		1																							
-L- 87+02																															
-L- 88+89			1			1		1																							
-L- 88+89																															
-L- 89+11																		1		1											
-L- 86+49			1			1			1																						
-L- 86+49																															
-L- 87+80			1			1			1																						
-L- 87+80																															
-L- 88+90			1			1			1																						
-L- 88+90																															
-L- 90+28			1			1			1																						
-L- 90+99			1			1		1																							
-L- 90+99																															
-L- 90+99			1													1		1													
-L- 90+28																															
-L- 92+01			1			1			1																						
-L- 93+43			1			1		1																				0.13			PLUG 2x18" RCP & REMOVE MED. D.I.
-L- 93+43																															REMOVE 18" RCP
-L- 93+43																		1		1											
-L- 92+01																															
-L- 95+00			1			1			1																						
-L- 95+00																															
-L- 95+00			1									1	1																		
-L- 95+00																															
SHEET TOTALS			20			18		8	10			1	1			1		3		2								0.188		18.9	

RD248616

COMPUTED BY:	BWJ	DATE	2/8/2010
CHECKED BY:	RP	DATE	3/3/2010

NORTH CAROLINA DEPARTMENT OF TRANSPORTATION
DIVISION OF HIGHWAYS

PROJECT NO.	SHEET NO.
U-3423	3-H

LIST OF PIPES, ENDWALLS, ETC. (FOR PIPES 48 INCHES & UNDER)

STATION	LOCATION (LT, RT, OR CL)'	STRUCTURE NO. FROM	STRUCTURE NO. TO	TOP ELEVATION	INVERT ELEVATION	INVERT ELEVATION	SLOPE CRITICAL	SIDE DRAIN PIPE (RCP, CSP, CAAP, HDPE, or PVC) 12"	15"	18"	24"	30"	36"	42"	48"	DO NOT USE RCP	DO NOT USE CSP	DO NOT USE CAAP	DO NOT USE HDPE
-L- 95+50	LT	155A		241.42	238.17														
-L- 95+50	LT	155A	155		238.17	237.04													
-L- 96+02	LT	155		240.79	237.04														
-L- 97+01	RT	156		239.07	236.07														
-L- 97+01	RT	156	157		236.07	234.94													
-L- 97+60	RT	157		237.94	234.94														
-L- 97+60	RT	157	158		234.94	232.35													
-L- 97+60	RT	158		237.3	232.35														
-L- 97+54	RT	157A																	
-L-97+52	LT	157B	157A		235.12	234.47					36						X	X	
-L- 96+02	LT	155	159B		237.04	236.55													
-L-96+80	LT	159B		240.3	236.55														
-L-96+80	LT	159B	159A		236.55	236.24													
-L-97+06	LT	159A		239.99	236.24														
-L-97+06	LT	159A	159		236.24	235.82													
-L-97+52	LT	159		239.57	235.82														
-L- 97+52	LT	159	160		235.82	234.79													
-L- 97+52	LT	160		238.54	234.79														
-L- 97+52	LT	160	161A		234.79	232.02													
-L- 99+00	LT	161A		235.77	232.02														
-L-99+00	LT	161A	161		232.02	230.26													
-L-100+00	LT	161		234.01	230.26														
-L- 100+00	LT	161	162		230.26	227.69													
-L- 101+88	LT	162		231.44	227.69														
-L- 101+88	LT	162	163		227.69	226.29													
-L- 103+16	LT	163		230.04	226.29														
-L- 104+70	LT	163A		229.65	225.6														
-L-103+16	LT	163	163A		226.29	225.6	X												
-L- 99+13	RT	164		233.22	228.47														
-L- 99+13	RT	164	165		228.47	228.38													
-L- 99+13	RT	165		234.83	228.38														
-L- 99+13	RT	165	166		228.38	224.9													
-L- 103+00	RT	166		229.5	224.9														
-L- 103+00	RT	166	167		224.9	224.2													
-L- 104+45	RT	167		228.32	224.2														
-L- 104+65	RT																		
-L- 105+45	RT	168		229.12	223.37														
-L- 105+44	RT	169	OUT		223.3	223.22	X												
-L- 105+44	RT	169	OUT			223.22													
-L- 105+44	LT	170		230.65	224.2														
-L- 105+44	LT	171		231.54	224.5														
SHEET 3A TOTALS									184										
SHEET 3B TOTALS									40	72				24					
SHEET 3C TOTALS									96										
SHEET 3D TOTALS									96										
SHEET 3E TOTALS									108						24				
SHEET 3F TOTALS									108					296					
SHEET 3G TOTALS									44										
SHEET 3H TOTALS											36								
PROJECT TOTALS									676	72	36			320	24				

STATION	FROM	TO	C.S. PIPE 12" (.064)	15" (.064)	18" (.064)	24" (.064)	30" (.079)	36" (.079)	42" (.109)	48" (.109)	R.C. PIPE CLASS III 12"	15"	18"	24"	30"	36"	42"	48"	R.C. PIPE CLASS IV 12"	15"	18"	24"	30"	36"	42"	48"
-L- 95+50	155A																									
-L- 95+50	155A	155																			52					
-L- 96+02	155																									
-L- 97+01	156																									
-L- 97+01	156	157																		60						
-L- 97+60	157																									
-L- 97+60	157	158																		12						
-L- 97+60	158																									
-L- 97+54	157A																									
-L-97+52	157B	157A																								
-L- 96+02	155	159B																				80				
-L-96+80	159B																									
-L-96+80	159B	159A																				28				
-L-97+06	159A																									
-L-97+06	159A	159																				48				
-L-97+52	159																									
-L- 97+52	159	160																				56				
-L- 97+52	160																									
-L- 97+52	160	161A																				152				
-L- 99+00	161A																									
-L-99+00	161A	161																				100				
-L-100+00	161																									
-L- 100+00	161	162																				192				
-L- 101+88	162																									
-L- 101+88	162	163																				132				
-L- 103+16	163																									
-L- 104+70	163A																									
-L-103+16	163	163A																								
-L- 99+13	164																									
-L- 99+13	164	165																			12					
-L- 99+13	165																									
-L- 99+13	165	166																			384					
-L- 103+00	166																									
-L- 103+00	166	167																				144				
-L- 104+45	167																									
-L- 104+65																										
-L- 105+45	168																									
-L- 105+44	169	OUT																								
-L- 105+44	169	OUT																								16
-L- 105+44	170																									
-L- 105+44	171																									
SHEET 3A TOTALS																				466	8					
SHEET 3B TOTALS																				1032		20	108			152
SHEET 3C TOTALS																				544	520	508				
SHEET 3D TOTALS																				852	640	296	276			
SHEET 3E TOTALS																				174		392	556	440		
SHEET 3F TOTALS																				744	396	672	100			
SHEET 3G TOTALS																				1932	52					
SHEET 3H TOTALS																				72	448	932				16
PROJECT TOTALS																				5816	2064	2820	1040	440		168

STATION	FROM	TO	** " R.C. PIPE (CLASS V)	***" RC PIPE CULVERTS, CONTRACTOR DESIGN	***" RC PIPE CULVERTS, CONTRACTOR DESIGN	ENDWALLS STD. 838.01 OR STD. 838.11 (UNLESS NOTED OTHERWISE) CU. YARDS R.C.P.	C.S.P.	QUANTITIES FOR DRAINAGE STRUCTURES PER EACH (0' THRU 5.0')	*TOTAL L.F. FOR PAY QUANTITY SHALL BE COL. 'A' + (1.3 X COL.'B') LIN. FT. A 5.0' THRU 10.0'	B 10.0' AND ABOVE	C.B. STD. 840.01 OR STD. 840.02	FRAME, GRATES, AND HOOD STANDARD 840.03 TYPE OF GRATE E	F	G	CONCRETE TRANSITIONAL SECTION DROP INLET	CATCH BASIN
-L- 95+50	155A							1			1			1		
-L- 95+50	155A	155														
-L- 96+02	155							1			1			1		
-L- 97+01	156							1			1		1			
-L- 97+01	156	157														
-L- 97+60	157							1			1		1			
-L- 97+60	157	158														
-L- 97+60	158							1	0.3							
-L- 97+54	157A															
-L-97+52	157B	157A														
-L- 96+02	155	159B														
-L-96+80	159B							1			1			1		
-L-96+80	159B	159A														
-L-97+06	159A							1			1			1		
-L-97+06	159A	159														
-L-97+52	159							1			1			1		
-L- 97+52	159	160														
-L- 97+52	160							1			1		1			1
-L- 97+52	160	161A														
-L- 99+00	161A							1			1		1			1
-L-99+00	161A	161														
-L-100+00	161							1			1		1			1
-L- 100+00	161	162														
-L- 101+88	162							1			1		1			1
-L- 101+88	162	163														
-L- 103+16	163							1			1		1			1
-L- 104+70	163A															1
-L-103+16	163	163A														
-L- 99+13	164							1								
-L- 99+13	164	165														
-L- 99+13	165							1	1.5		1		1			
-L- 99+13	165	166														
-L- 103+00	166							1			1		1			
-L- 103+00	166	167														
-L- 104+45	167							1			1	1				
-L- 104+65																
-L- 105+45	168								0.8							
-L- 105+44	169	OUT														
-L- 105+44	169	OUT														
-L- 105+44	170								1.5							
-L- 105+44	171								2							
SHEET 3A TOTALS								26	4.2		16	5	6	5		
SHEET 3B TOTALS								22	15.6		13	6	9	2		7
SHEET 3C TOTALS								19	1.7		12	3	5	6		
SHEET 3D TOTALS								19			13	1	7	7		
SHEET 3E TOTALS								20	0.4		9	4	4	5	4	
SHEET 3F TOTALS								17			11		7	6		
SHEET 3G TOTALS								20			18		8	10		
SHEET 3H TOTALS								17	6.1		15	1	9	5		6
PROJECT TOTALS								160	28		107	20	55	46	4	13

STATION	FROM	TO	D.I. STD. 840.14 OR STD. 840.15	D.I. FRAME WITH TWO GRATES STD. 840.16	G.D.I. TYPE "A" STD. 840.17 OR 840.26	G.D.I. FRAME WITH TWO GRATES STD. 840.29	J.B. STD. 840.31, 840.32 OR SPECIAL DETAIL	T.B.J.B. STD. 840.34	M.H. FRAME AND COVER STD. 840.54	ADJUSTMENT OF CATCH BASINS (0' - 2')	CONV. EXIST. C.B. TO J.B.	CONV. EXIST. D.I. TO J.B. W/M.H.	CONV. EXIST. D.I. TO SPECIAL C.B. (SEE DETAIL SHEET 2-L)	CONV. EXIST. C.B. TO T.B.J.B.	DOUBLE CATCH BASIN (SEE DETAIL SHEET 2-F)	SPECIAL C.B. (SEE DETAIL SHEET 2-K)			CONC. & BRICK PIPE PLUG, C.Y. STD. 840.71	CONC. COLLARS CL. "B" C.Y. STD. 840.72	PIPE REMOVAL LIN. FT.	REMARKS
-L- 95+50	155A																					
-L- 95+50	155A	155																				
-L- 96+02	155																					
-L- 97+01	156																					
-L- 97+01	156	157																				
-L- 97+60	157																		0.045			PLUG 1X15" RCP
-L- 97+60	157	158																				REMOVE 15" RCP
-L- 97+60	158						1		1													
-L- 97+54	157A																		0.045		8.2	PLUG 1X15" RCP & REM. D.I., J.B. & 15" RCP
-L-97+52	157B	157A																			36	TEMPORARY PIPE
-L- 96+02	155	159B																				
-L-96+80	159B																					
-L-96+80	159B	159A																				
-L-97+06	159A																					
-L-97+06	159A	159																				
-L-97+52	159																					
-L- 97+52	159	160																				
-L- 97+52	160																					
-L- 97+52	160	161A																				
-L- 99+00	161A																					
-L-99+00	161A	161																				
-L-100+00	161																					
-L- 100+00	161	162																				
-L- 101+88	162																					
-L- 101+88	162	163																				
-L- 103+16	163																					
-L- 104+70	163A									2												
-L-103+16	163	163A																				RETAIN EXISTING SYSTEM
-L- 99+13	164						1		1													
-L- 99+13	164	165																	0.206			PLUG 2X15" & 1X24" RCP
-L- 99+13	165																				19	REMOVE 12" RCP & C.B.
-L- 99+13	165	166																	0.058			PLUG 2X12" RCP
-L- 103+00	166																		0.2			PLUG 2X24" RCP & REMOVE CB
-L- 103+00	166	167																				
-L- 104+45	167																					
-L- 104+65																						PLUG 1X24" & REMOVE C.B.
-L- 105+45	168									1												
-L- 105+44	169	OUT																			15	REMOVE 24" RCP & J.B. W/ M.H.
-L- 105+44	169	OUT																		1		CONCRETE COLLAR & EXTEND 48"
-L- 105+44	170									1												
-L- 105+44	171									1												
SHEET 3A TOTALS			8	8			2		5			2		1					0.13	0.4	114.3	
SHEET 3B TOTALS			3	3	1	1	3		3	1					2						185.8	
SHEET 3C TOTALS			5	5				1	1						1				0.265	0.4	626.7	
SHEET 3D TOTALS			4	4				1		2					1				0.265		969.7	
SHEET 3E TOTALS			9	9											2				0.55		806.7	
SHEET 3F TOTALS			4	4			0	1	1	1			1			1			0.506	1.2	73.2	
SHEET 3G TOTALS			1	1			1		3		2								0.188		18.9	
SHEET 3H TOTALS							2		2	5									0.586	1	78.2	
PROJECT TOTALS			34	34	1	1	8	3	15	9	2	2	1	1	6	1			2.49	3	2873.5	

ABBREVIATIONS

C.B.	CATCH BASIN
N.D.I.	NARROW DROP INLET
D.I.	DROP INLET
G.D.I.	GRATED DROP INLET
G.D.I.(N.S.)	(NARROW SLOT)
J.B.	JUNCTION BOX
M.H.	MANHOLE
T.B.D.I.	TRAFFIC BEARING DROP INLET
T.B.J.B.	TRAFFIC BEARING JUNCTION BOX

COMPUTED BY: BWJ DATE 2/8/2010

CHECKED BY: RP DATE 3/3/2010

RD238349

PROJECT NO.	SHEET NO.
U-3423	3-I

NORTH CAROLINA DEPARTMENT OF TRANSPORTATION
DIVISION OF HIGHWAYS

LIST OF PIPES, ENDWALLS, ETC. (FOR PIPES 54" & OVER)

STATION	LOCATION (LT, RT, OR CL)	STRUCTURE NO. FROM	STRUCTURE NO. TO	TOP ELEVATION	INVERT ELEVATION	INVERT ELEVATION	SLOPE CRITICAL	CLASS IV R.C. PIPE (UNLESS NOTED OTHERWISE) 54"	60"	66"	72"	78"	84"	BITUMINOUS COATED C.S. PIPE TYPE B (UNLESS NOTED OTHERWISE) 54" .109	54" .138	54" .168	54" SHOP ELONGATED .138	54" SHOP ELONGATED .168	60" .138	60" .168	66" .138	66" .168	72" .139	72" .168	STRUCTURAL PLATE PIPE 60" 12	60" 10	66" 12	66" 10	72" 12	72" 10
-L- 29+19	RT	38	OUT		223.9	223.7			8																					
-L- 65+07	RT	104		226.64	219.35																									
-L- 65+07	RT	104	106		219.35	218.86		100																						
-L- 65+06	LT	106		226.63	218.86																									
-L-65+07	RT	105		225.2	219.45																									
-L-64+97	LT	107		221.2	216.14																									
SHEET TOTALS								100	8																					

STATION	REINFORCED ENDWALLS WITH R.C. - C.Y.	REINFORCED ENDWALLS WITH C.S. - C.Y.	MASONRY DRAINAGE STRUCTURES CUBIC YARDS	C.B. STD. 840.01 OR 840.02	FRAMES, GRATES & HOOD STANDARD 840.03 TYPE OF GRATE E	F	G	CONCRETE TRANSITIONAL SECTION DROP INLET	CATCH BASIN	SEE DETAIL OF SPECIAL CATCH BASIN (SHEET 2-G)	SEE DETIAL OF SPECIAL JUNCTION BOX (SHEET 2-J)	M.D.I. SEE DETAIL SHEET 2-H	G.D.I. FRAME WITH TWO GRATES STD. 840.29	M.H. FRAME AND COVER STD. 840.54	REINF. CONC. FLARED END SECTIONS NO. & SIZE	CORR. STEEL FLARED END SECTIONS NO. & Size	CORR. STEEL ELBOWS NO. & SIZE	CONC. COLLARS CL. "B" C.Y. STD. 840.72	PIPE REMOVAL LIN. FT.	REMARKS
-L- 29+19																				
-L- 65+07			3.5	1			1													REMOVE C.B.
-L- 65+07																			107.9	REMOVE 30" RCP & 2 - D.I.
-L- 65+06			5.4			1				1										
-L-65+07			1.7									1	1							REMOVE C.B. AND D.I.
-L-64+97			11.9								1			1						
SHEET TOTALS			22.5	1		1	1			1	1	1	1	1					107.9	

ABBREVIATIONS

C.B.	CATCH BASIN
N.D.I.	NARROW DROP INLET
D.I.	DROP INLET
G.D.I.	GRATED DROP INLET
G.D.I.(N.S.)	GRATED DROP INLET (NARROW SLOT)
J.B.	JUNCTION BOX
M.H.	MANHOLE
T.B.D.I.	TRAFFIC BEARING DROP INLET
T.B.J.B.	TRAFFIC BEARING JUNCTION BOX

COMPUTED BY: BJ
CHECKED BY: CP

"N" = DISTANCE FROM EDGE OF LANE TO FACE OF GUARDRAIL.
TOTAL SHOULDER WIDTH = DISTANCE FROM EDGE OF TRAVEL LANE TO SHOULDER BREAK POINT.
FLARE LENGTH = DISTANCE FROM LAST SECTION OF PARALLEL GUARDRAIL TO END OF GUARDRAIL.
W = TOTAL WIDTH OF FLARE FROM BEGINNING OF TAPER TO END OF GUARDRAIL.
G = GATING IMPACT ATTENUATOR TYPE 350
NG = NON-GATING IMPACT ATTENUATOR TYPE 350

STATE OF NORTH CAROLINA
DIVISION OF HIGHWAYS

PROJECT REFERENCE NO.	SHEET NO.
U-3423	3-J

GUARDRAIL SUMMARY

SURVEY LINE	BEG. STA.	END STA.	LOCATION	LENGTH			WARRANT POINT		"N" DIST. FROM E.O.L.	TOTAL SHOUL. WIDTH	FLARE LENGTH		W		ANCHORS			TEMP IMPACT ATTENUATOR TYPE 350			IMPACT ATTENUATOR TYPE 350			REMOVE EXISTING GUARDRAIL	ADDITIONAL GUARDRAIL POSTS	REMARKS
				STRAIGHT	DOUBLE FACED	TEMP DOUBLE FACED	APPROACH END	TRAILING END			APPROACH END	TRAILING END	APPROACH END	TRAILING END	M-350	GRAU 350	CAT-1	EA	G	NG	EA	G	NG			
-L-	17+70.00	18+02.00+/-			12.5*																1		X			
-L-	17+78+/-	19+44+/-																						166		
-L-	18+61.91	20+24.41	RT	162.5			21+00		6		50		1			1	1									
-L-	20+48+/-	28+43+/-																						794		
-L-	25+50+/-					12.5*												1		X						SEE TRAFFIC CONTROL PLANS
-L-	29+00+/-	46+67+/-																						1766		
-L-	35+12.87	36+62.87	MEDIAN (RT)	150			36+00				37.5		4		2											
-L-	35+42.26	36+92.26	MEDIAN (LT)	150			36+00		3		37.5		4		2											
-L-	41+25+/-					12.5*												1		X						SEE TRAFFIC CONTROL PLANS
-L-	44+55+/-					12.5*												1		X						SEE TRAFFIC CONTROL PLANS
-L-	47+79+/-	57+90+/-																						1009		
-L-	58+91+/-	74+57+/-																						1564		
-L-	61+10+/-					12.5*												1		X						SEE TRAFFIC CONTROL PLANS
-L-	72+25+/-					12.5*												1		X						SEE TRAFFIC CONTROL PLANS
-L-	81+69+/-	83+76+/-																						208		
-L-	85+17+/-	97+29+/-																						1212		
-L-	98+33+/-	105+58+/-																						719		
		SUBTOTAL		462.5	12.5*	62.5*									4	1	1									
		LESS ANCHORS																								
		CAT-1	1 @ 6.25	-6.25																						
		GRAU-350	1 @ 50.0	-50.0																						
		M-350	4 @ 37.5	-150																						
			TOTAL	256.25	12.5*	62.5*									4	1	1	5			1			7438		
			SAY	262.5	12.5*	62.5*									4 EA	1 EA	1 EA	5			1			7440		

ADDITIONAL POSTS = 5 EACH

* CONTINGENCY STEEL BEAM GUARDRAIL, DOUBLE FACED, AS NEEDED TO FACILITATE THE ATTACHMENT OF THE IMPACT ATTENUATOR TO THE EXISTING DOUBLE FACED GUARDRAIL.

SUMMARY OF ASPHALT PAVEMENT BREAK-UP / REMOVAL

(IN SQUARE YARDS)

LINE	BEGIN STATION	END STATION	LOCATION	ASPHALT REMOVAL	ASPHALT BREAK-UP
-L-	15+33	15+53	RT	31.78	
-L-	18+15	23+16	LT-RT	941.89	
-L-	20+34	22+50	LT	70.22	
-L-	22+77	29+23	RT	568.22	
-L-	23+00	32+07	LT	1791.89	
-L-	23+00	32+07	LT	1791.89	
-L-	50+36	52+68	LT	98.22	
-L-	50+89	53+63	RT	61.67	
-L-	53+97	57+39	RT	127.56	
-L-	57+85	59+86	LT	193.67	
-L-	54+22	69+14	RT	407.56	
-L-	70+10	78+27	LT-RT	923.56	
-L-	85+50	105+57	LT-RT	2901.56	
-L-	85+62	105+57	RT	2758.89	
-L-	25+90	28+47	CL	1153.97	
-L-	41+45	44+45	CL	713.03	
-L-	58+85	61+00	CL	398.43	
-L-	72+40	74+61	CL	404.17	
			TOTAL	13546.27	
			SAY	13550	

SUMMARY OF EARTHWORK

(CUBIC YARDS)

LOCATION	UNCLASSIFIED EXCAVATION	UNDERCUT	EMBT+%	BORROW	WASTE
-L- STA. 11+00.00 TO 15+50.00	188		139		49
-L- STA. 18+00.00 TO 48+00.00	797		8898		121
-L- STA. 48+00.00 TO 78+00.00	2156		5511	3355	
-L- STA. 78+00.00 TO 105+50.00	3005		6975	3970	
PROJECT SUBTOTAL	6146		21523	15547	170
-Y1- STA. 12+75.00 TO 15+75.00	59		54		5
-Y2- STA. 10+00.00 TO 12+08.32	141		41		100
-Y4- STA. 10+49.11 TO 11+50.00	18		31	13	
-Y5- STA. 13+86.36 TO 23+25.00	656		231		425
PROJECT SUBTOTAL	874		357	13	530
-RpC- STA. 10+75.00 TO 12+00.00	121		44		77
-RpD- STA. 10+75.00 TO 12+00.00	93		79		14
PROJECT SUBTOTAL	214		123		92
TOTAL	7234		22002	15560	792
LOSS DUE TO CLEAR. & GRUB.	-3250			3250	
SHOULDER MATERIAL			188	188	
EARTH WASTE TO REPL. BORROW				-671	-671
PROJECT TOTAL	3984		22190	18327	721
EST. 5% TO REPLACE TOPSOIL ON BORROW PITS				916	
GRAND TOTAL	3984			19244	
SAY	4000			19300	

Note: Approximate quantities only. Unclassified Excavation, Borrow Excavation, Fine Grading, Clearing and Grubbing, and Removal of Existing Pavement will be paid for at the lump sum price for "Grading."

NOTE: Earthwork quantities are calculated by the Roadway Design Unit. These earthwork quantities are based in part on subsurface data provided by the Geotechnical Engineering Unit.

EST. UNDERCUT CONTINGENCY	350 CY
EST. SHALLOW UNDERCUT BY STATIONS	1466 CY
EST. SHALLOW UNDERCUT CONTINGENCY	500 CY
TOTAL SHALLOW UNDERCUT	1966 CY
CLASS IV SUBGRADE STABILIZATION	4760 TONS
SELECT GRANULAR MATERIAL	600 CY

5/28/99
05-APR-2010 08:24
r:\roadway\proj\u3423_rdy_sum.dgn
$$$$USERNAME$$$$

PROJ. REFERENCE NO.	SHEET NO.
U-3432	3-K

STATE OF NORTH CAROLINA
DIVISION OF HIGHWAYS

PARCEL INDEX SHEET

PARCEL No.	SHEET No.	PROPERTY OWNER NAME
1	4	MICHAEL J. KARAMAN
2	4	CECIL M. COATES
4	4	KELLY AND KELLY INVESTMENT COMPANY INC.
8	4	DAVID C. BROWN
9	5	BRAND X MOTOR COMPANY, INC.
10	5	JOHN FRED MCKENZIE
11	5	INWOOD LIMITED PARTNERSHIP PATRICIA HARRIS JONES
12	5	KELLY & KELLY INVESTMENT CO., INC.
13	5	CATHERINE BASILE KELLY
14	5	TLC PROPERTIES
15	5	YONG KIM
17	5	PEGGY PANCIONE
19	5	STERLING KEMP
20	5	THE RHUNELL JONES AND ARBUTUS JONES FAMILY TRUST
21	5	DWIGHT L. CURRIN
22	5	BRENTON ADAMS
23	6	THE RHUNELL JONES AND ARBUTUS JONES FAMILY TRUST
24	6	C.C. POWERS JR., S.B. SWAIN, E.L. SWAIN
25	6	SAMANTHA T. FASUL
25A	6	BETHEA AWNING AND CAMPER CO; INC.
25B	6	BAL PERAZIN INTERDENOMINATIONAL CHURCH
26	6	TIM GRABER
27	6	YAHYA ALSAIDI
29	6	LACY M. QUICK
30	6	ARENTHEA JONES BETHEA
31	6	NORCUTT ERIE McNEILL BELL
32	6	VALEREA RUSS
33	6	JACQUELINE HILL
34	6	RETHA M. JONES REVOCABLE TRUST
35	6,7	MAX E. NANCE JR.
37	6,7	FUAD S. ALSAIDI
38	7	ELI J. MONSOUR
39	7	LAVADA C. MONSOUR
40	7	MONSOUR INVESTMENTS
41	7	AMERICAN FLAG BRAGG BLVD. LLC
42	7	NANCE MANAGEMENT CO LLC
43	7,8	FIRST PINNACLE HOLDINGS, LLC
45	7	BLEECARR CORPORATION
46	7	A. B. & W. R. CARR, LLC
47	7	BONNIE DOONE BAPTIST CHURCH
48	7	S&F AMUSEMENT COMPANY
49	7	JAMES CHOI
50	7	CUMMINGS BROS. ENTERPRISES
51	7	SEUK JAE CHANG
52	7,8	EARL JONES JR.
53	8	HOLLIS H. BROADFOOT
54	8	ARECI, LLC
54A	8	AMERCO REAL ESTATE CO.
55	8	HOMELAND INC.
56	8	WILLIE JACKSON
57	8	WOMEN'S CENTER OF FAYETTEVILLE
58	8,9	BIJU GEORGE
59	8	ACME FENCE COMPANY, INC.
60	8	THERON L. LEDBETTER
62	8	JAY PAE
64	8	SHARON BRUMBLE
65	8	JUNIUS R. JACKSON
66	8	PRESSLEY FOLK
67	8	KYUNG KIM
68	8	CLARENCE DANIELS

PARCEL No.	SHEET No.	PROPERTY OWNER NAME
70	9,10,11	JOHN G. SHAW
70A	9,10	THE SHAW FAMILY OF CUMBERLAND COUNTY, LLC
71	8,9	PHOEBE WINSHIP DEE
71A	10	JOHN G. SHAW, et al
72	10	JOHN G. SHAW
73	10	DOHN BROADWELL, et al

PROJECT REFERENCE NO.	SHEET NO.
U-3423	4
R/W SHEET NO.	
ROADWAY DESIGN	HYDRAULICS

ENGINEER NORTH CAROLINA PROFESSIONAL SEAL 19795 ENGINEER BRENDA L. MOORE 3/29/10

ENGINEER NORTH CAROLINA PROFESSIONAL SEAL 24897 ENGINEER JOHN W. TWISDALE, JR. 3/26/10

NAD 83/95

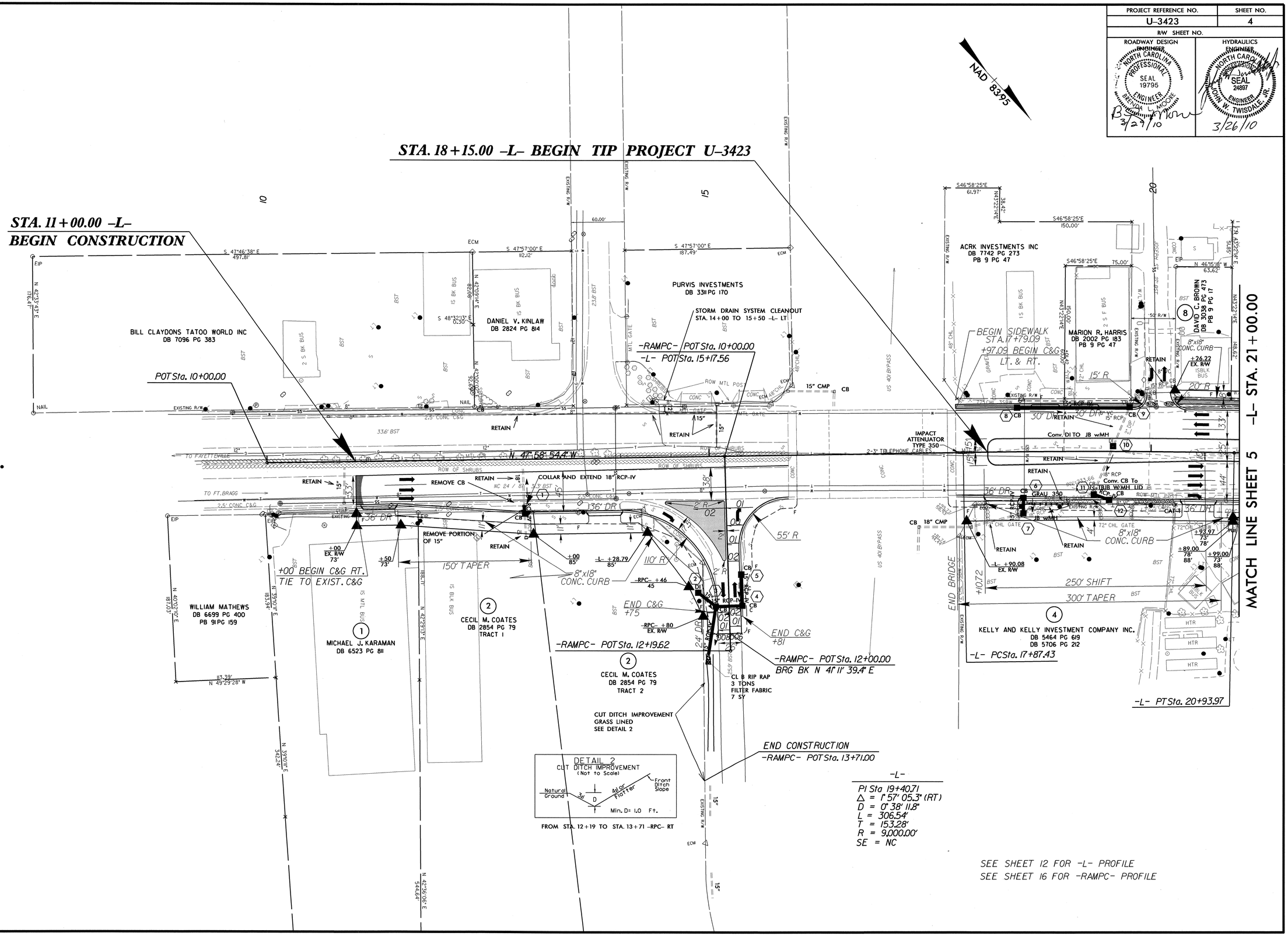

-L-

PI Sta 19+40.71
Δ = 1° 57' 05.3" (RT)
D = 0° 38' 11.8"
L = 306.54'
T = 153.28'
R = 9,000.00'
SE = NC

SEE SHEET 12 FOR -L- PROFILE
SEE SHEET 16 FOR -RAMPC- PROFILE

8/17/99

23-MAR-2010 12:14
R:\Roadway\Proj\U3423_rdy_psh4_t1.dgn
$$$$USERNAME$$$$

PROJECT REFERENCE NO.	SHEET NO.
U-3423	5
R/W SHEET NO.	
ROADWAY DESIGN ENGINEER	HYDRAULICS ENGINEER
NORTH CAROLINA PROFESSIONAL SEAL 19795 ENGINEER BRENDA L. MOORE 3/29/10 B.S. Moore	NORTH CAROLINA PROFESSIONAL SEAL 24897 ENGINEER JOHN W. TWISDALE, JR. 3/26/10

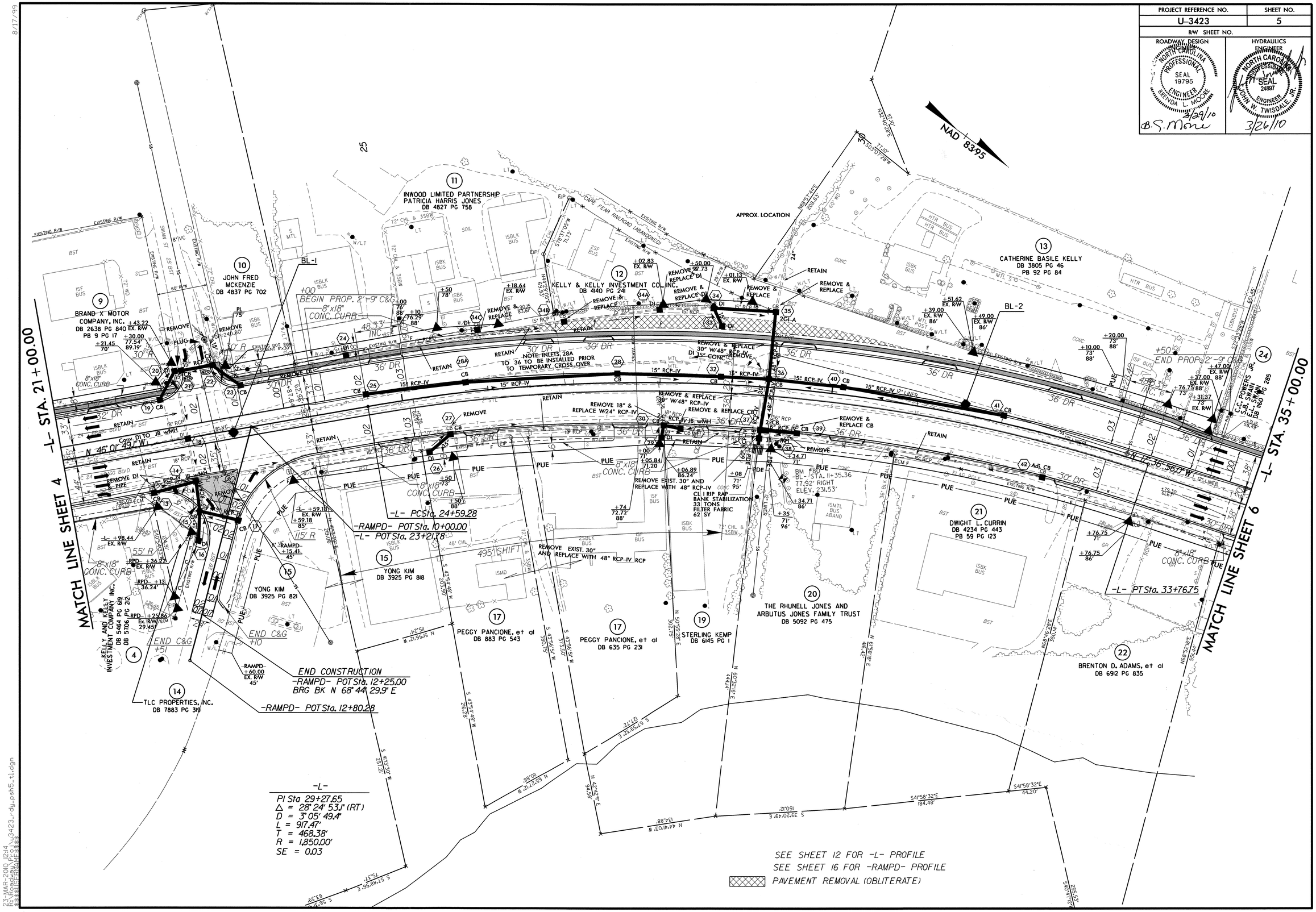

23-MAR-2010 12:14
R:\Roadway\Proj\U3423_rdy_psh15_t1.dgn

PROJECT REFERENCE NO.	SHEET NO.
U-3423	6
R/W SHEET NO.	

ROADWAY DESIGN ENGINEER
NORTH CAROLINA PROFESSIONAL SEAL 19795 ENGINEER BRENDA L. MOORE
3/29/10
B.L. Moore

HYDRAULICS ENGINEER
NORTH CAROLINA PROFESSIONAL SEAL 24897 ENGINEER JOHN W. TWISDALE, JR.
3/26/10

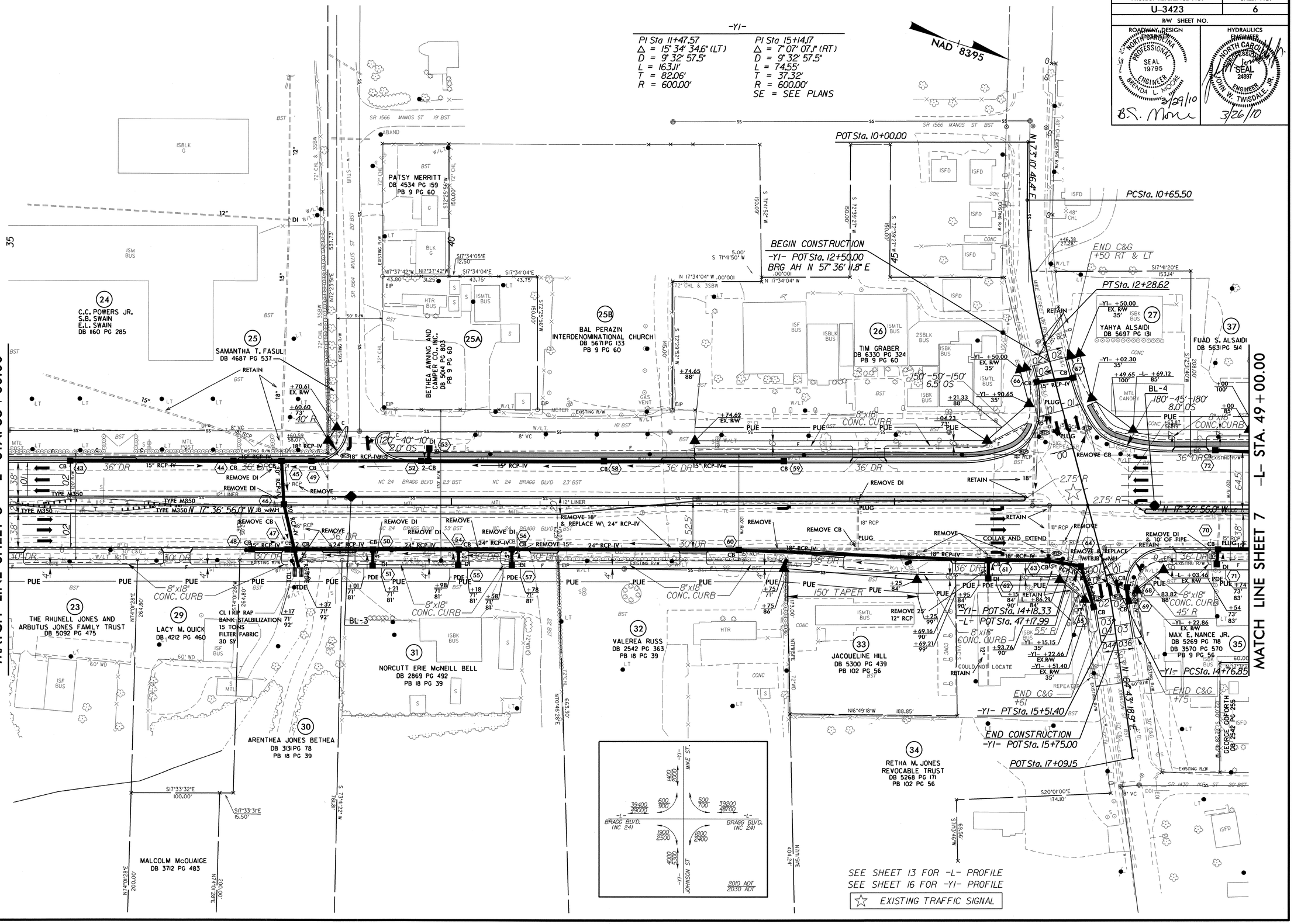

26-MAR-2010 14:11
R:\Roadway\Proj\u3423_rdy_psh6_tl.dgn
$$$$USERNAME$$$$

RD238349 3/26/2010 full 101209 JPS cpowell RD-Oce860-34

PROJECT REFERENCE NO.	SHEET NO.
U-3423	7
R/W SHEET NO.	

ROADWAY DESIGN ENGINEER
NORTH CAROLINA PROFESSIONAL SEAL 19795 ENGINEER BRENDA L. MOORE
3/29/10

HYDRAULICS ENGINEER
NORTH CAROLINA PROFESSIONAL SEAL 24697 ENGINEER JOHN W. TWISDALE, JR.
3/26/10

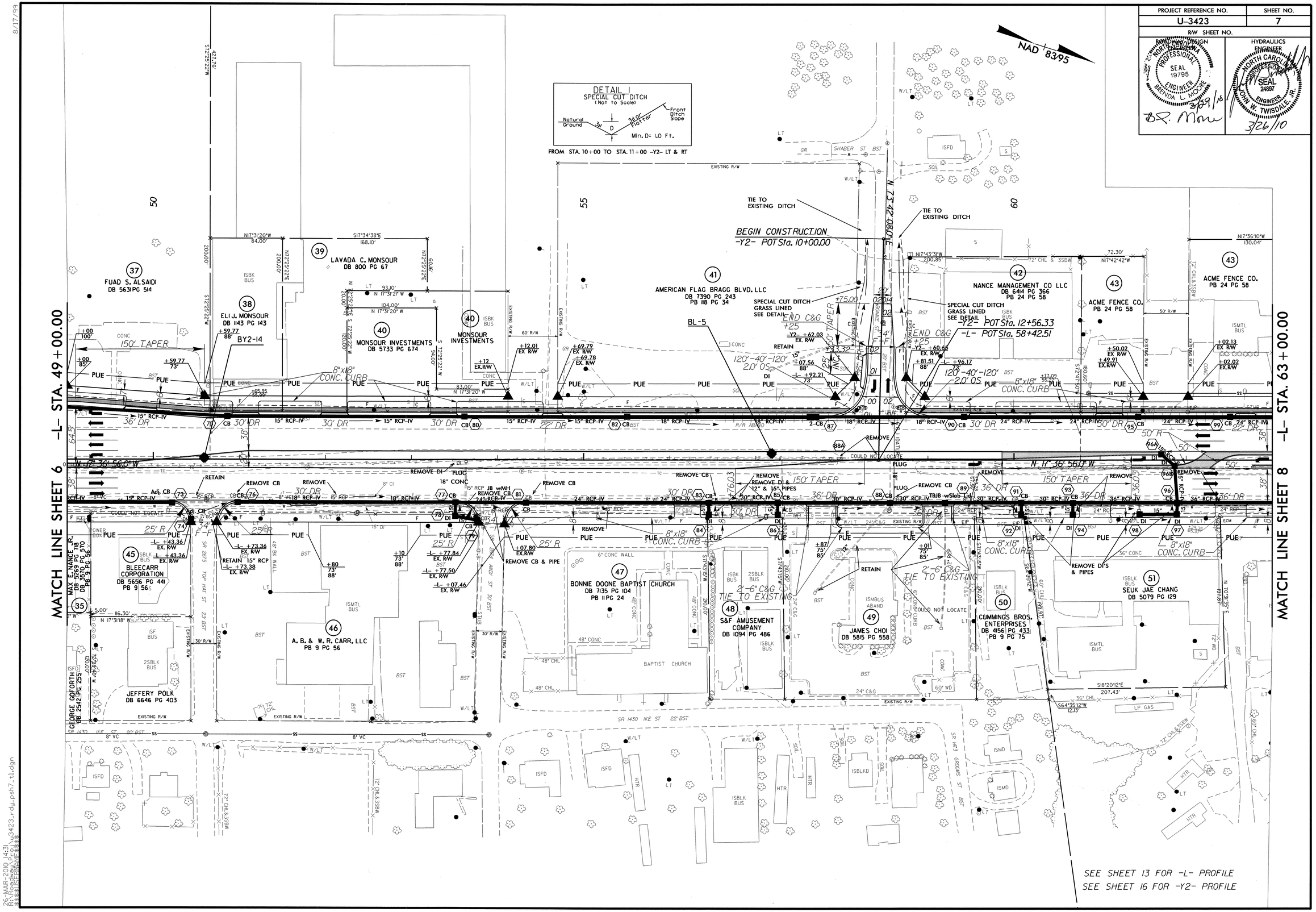

8/17/99

26-MAR-2010 14:31
R:\Roadway\Proj\u3423_rdy_psh7_tl.dgn
$$$$USERNAME$$$$

PROJECT REFERENCE NO.	SHEET NO.
U-3423	8
R/W SHEET NO.	

ROADWAY DESIGN ENGINEER
NORTH CAROLINA PROFESSIONAL SEAL 19795 ENGINEER BRENDA L. MOORE
B.L. Moore 3/29/10

HYDRAULICS ENGINEER
NORTH CAROLINA PROFESSIONAL SEAL 24897 ENGINEER JOHN W. TWISDALE, JR.
3/24/10

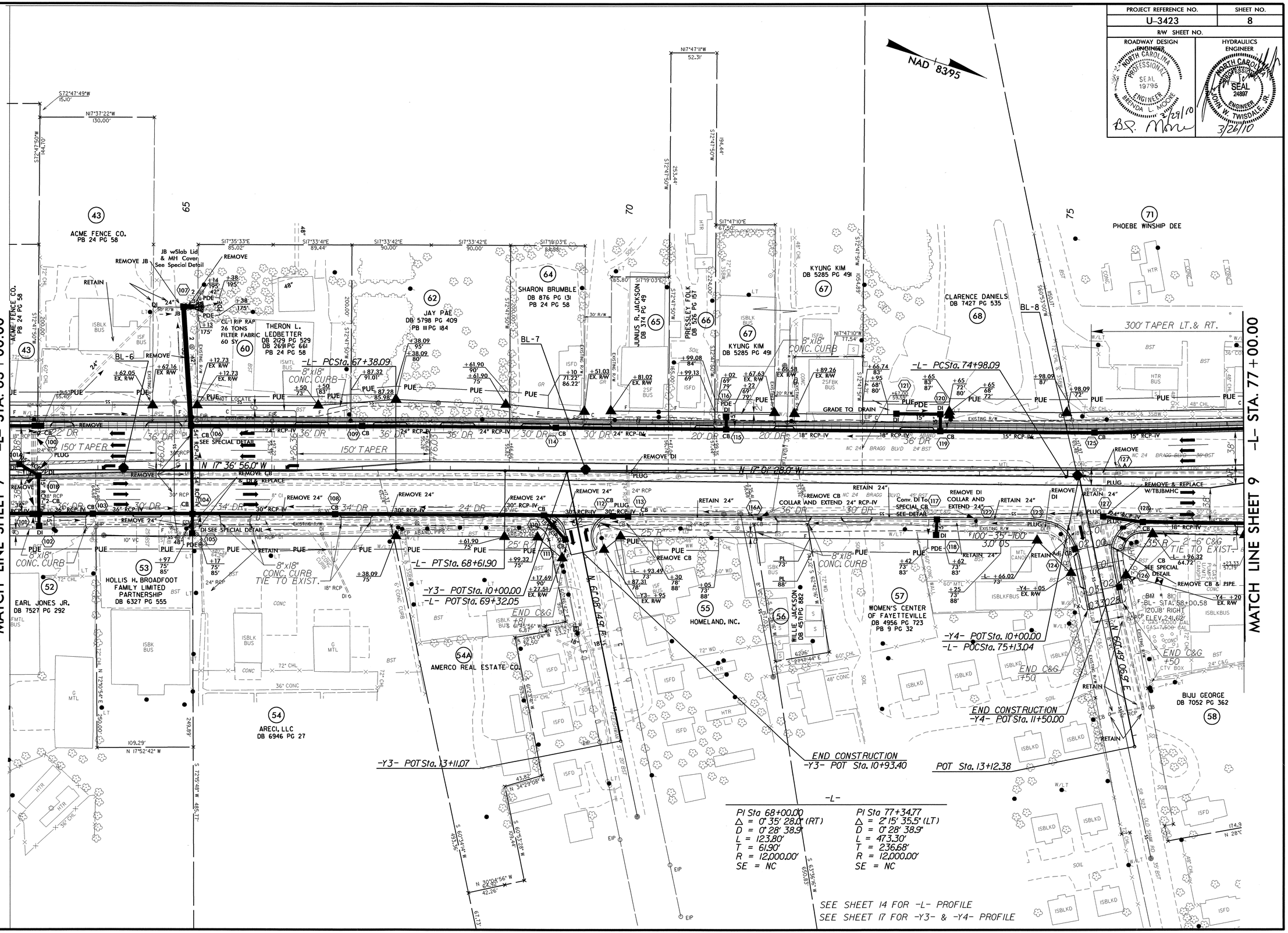

26-MAR-2010 14:32
H:\Roadway\Proj\u3423_rdy_psh8_tl.dgn
$$$$USERNAME$$$$

8/17/99

PROJECT REFERENCE NO.	SHEET NO.
U-3423	9
R/W SHEET NO.	
ROADWAY DESIGN ENGINEER	HYDRAULICS ENGINEER

NORTH CAROLINA PROFESSIONAL SEAL 19795 ENGINEER BRENDA L. MOORE 3/29/10 B.L. Moore

NORTH CAROLINA PROFESSIONAL SEAL 24897 ENGINEER JOHN W. TWISDALE, JR. 3/26/10

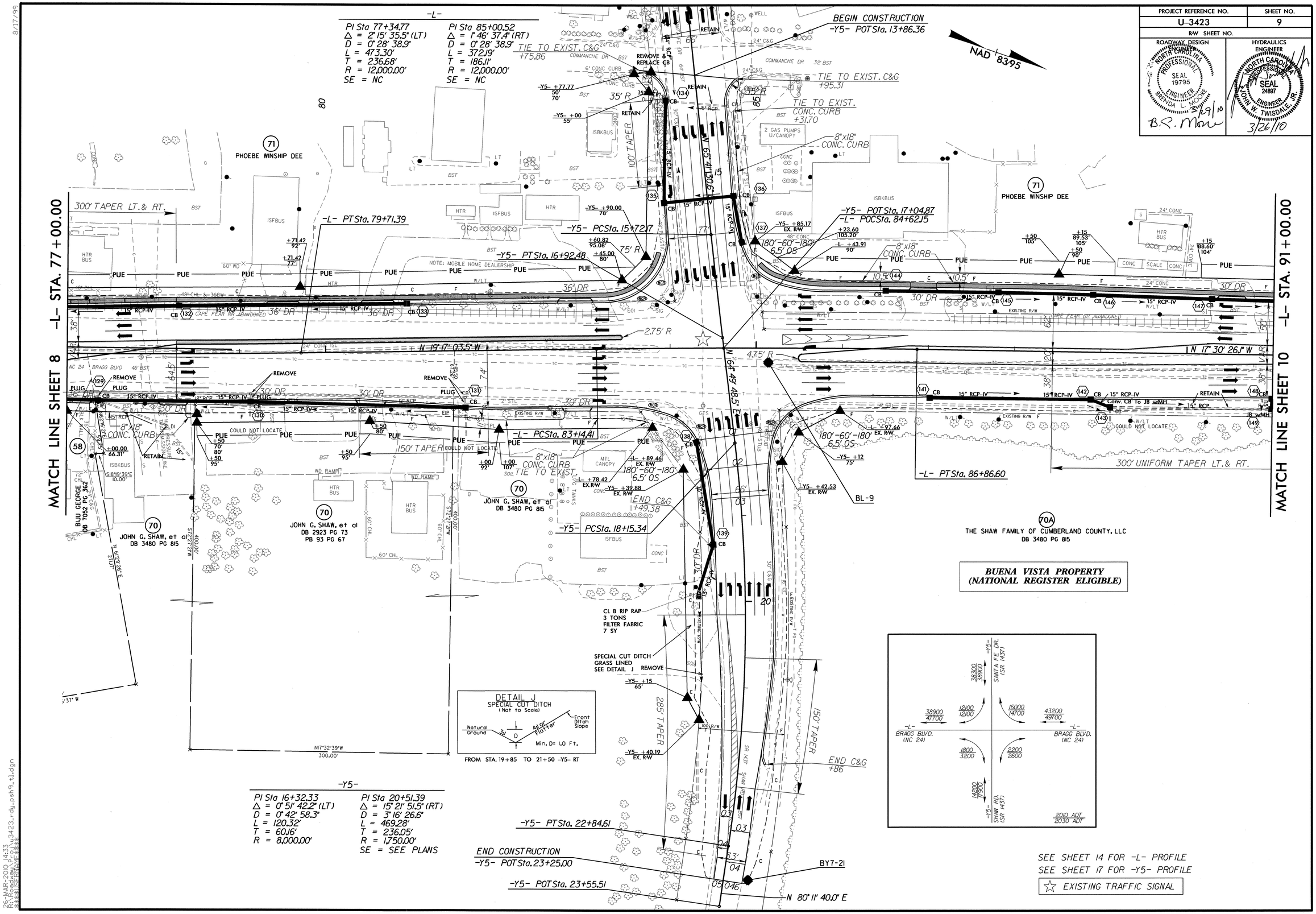

8/17/99

26-MAR-2010 14:33
R:\Roadway\Proj\u3423_rdy_psh9_t1.dgn
$$$$USERNAME$$$$

PROJECT REFERENCE NO.	SHEET NO.
U-3423	10
R/W SHEET NO.	

ROADWAY DESIGN ENGINEER
NORTH CAROLINA PROFESSIONAL SEAL 19795 ENGINEER BRENDA L. MOORE
3/29/10
B.L. Moore

HYDRAULICS ENGINEER
NORTH CAROLINA PROFESSIONAL SEAL 24897 ENGINEER JOHN W. TWISDALE, JR.
3/26/10

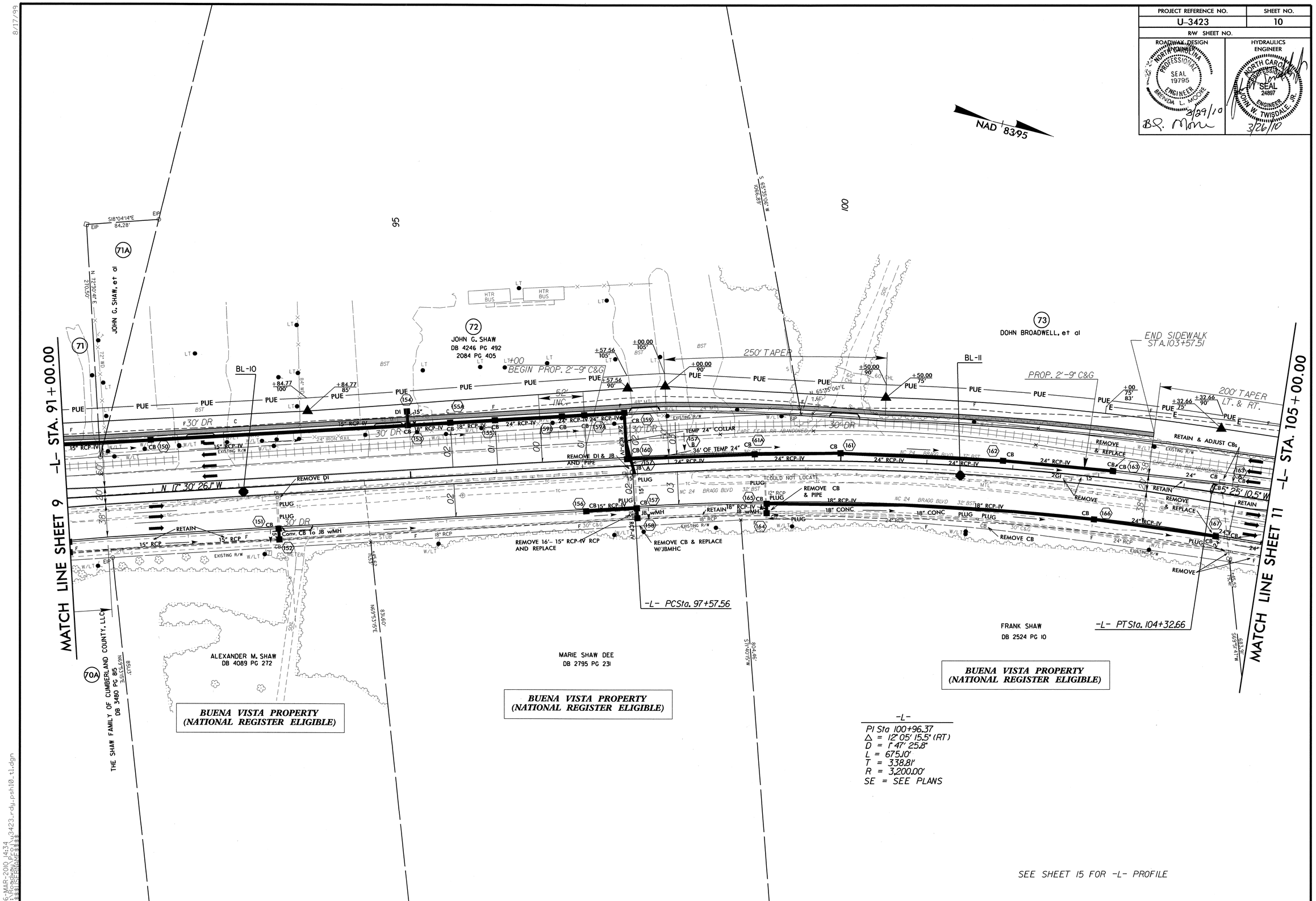

8/17/99

26-MAR-2010 14:34
R:\Roadway\Proj\u3423_rdy_psh10_ti.dgn
$$$$USERNAME$$$$

PROJECT REFERENCE NO.	SHEET NO.
U-3423	11
R/W SHEET NO.	

ROADWAY DESIGN ENGINEER
NORTH CAROLINA PROFESSIONAL SEAL 19795 ENGINEER BRENDA L. MOORE
3/29/10
B.L. Moore

HYDRAULICS ENGINEER
NORTH CAROLINA PROFESSIONAL SEAL 24897 ENGINEER JOHN W. TWISDALE, JR.
3/26/10

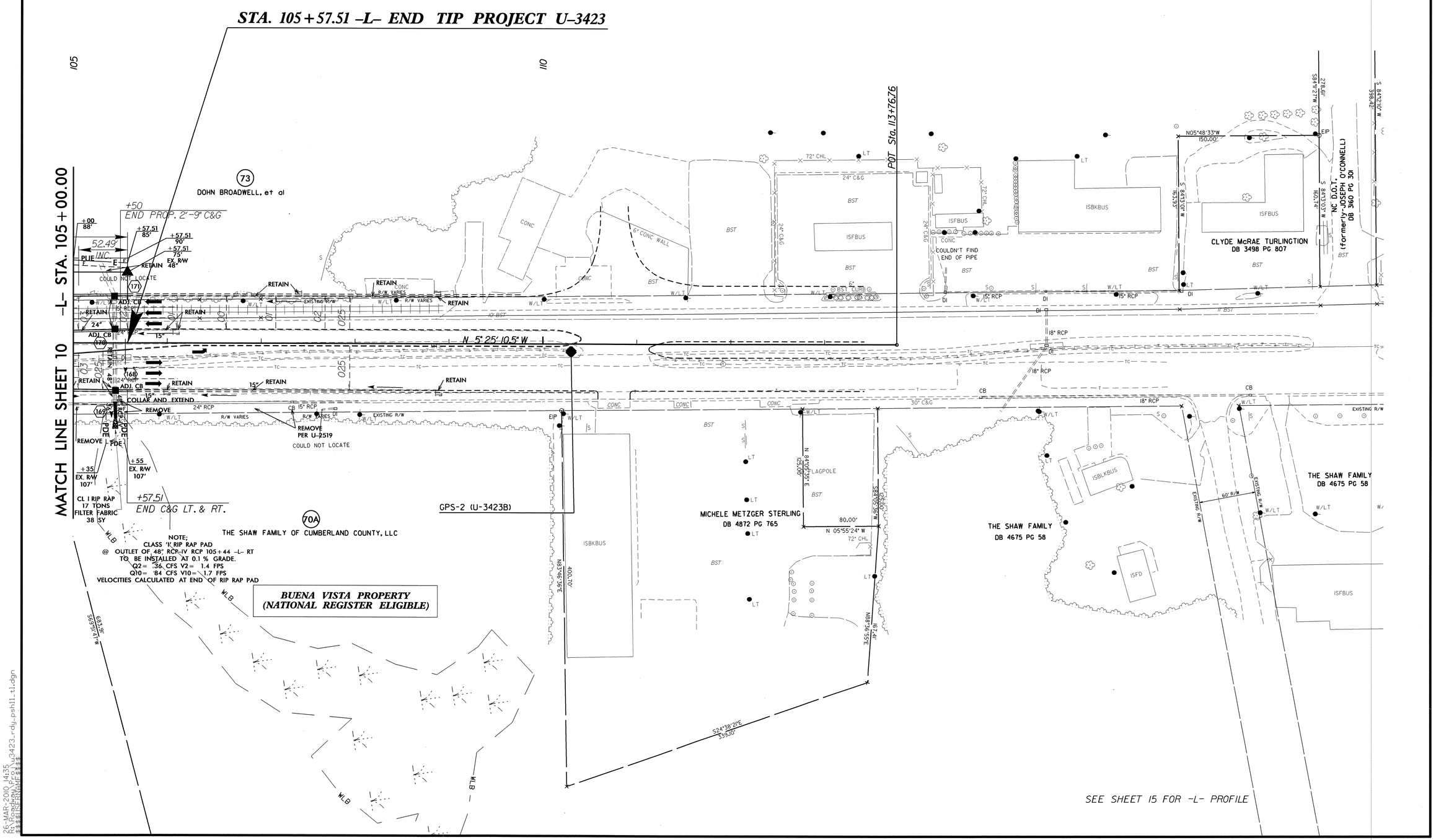

8/17/99

26-MAR-2010 14:35
R:\Roadway\Proj\u3423_rdy_psh11_tl.dgn
$$$$USERNAME$$$$

PROJECT REFERENCE NO.	SHEET NO.
U-3423	12
ROADWAY DESIGN ENGINEER	HYDRAULICS ENGINEER

NORTH CAROLINA PROFESSIONAL SEAL 19795 ENGINEER BRENDA L. MOORE 3/26/10 B.L. Moore

NORTH CAROLINA PROFESSIONAL SEAL 24897 ENGINEER JOHN W. TWISDALE, JR. 3/26/10

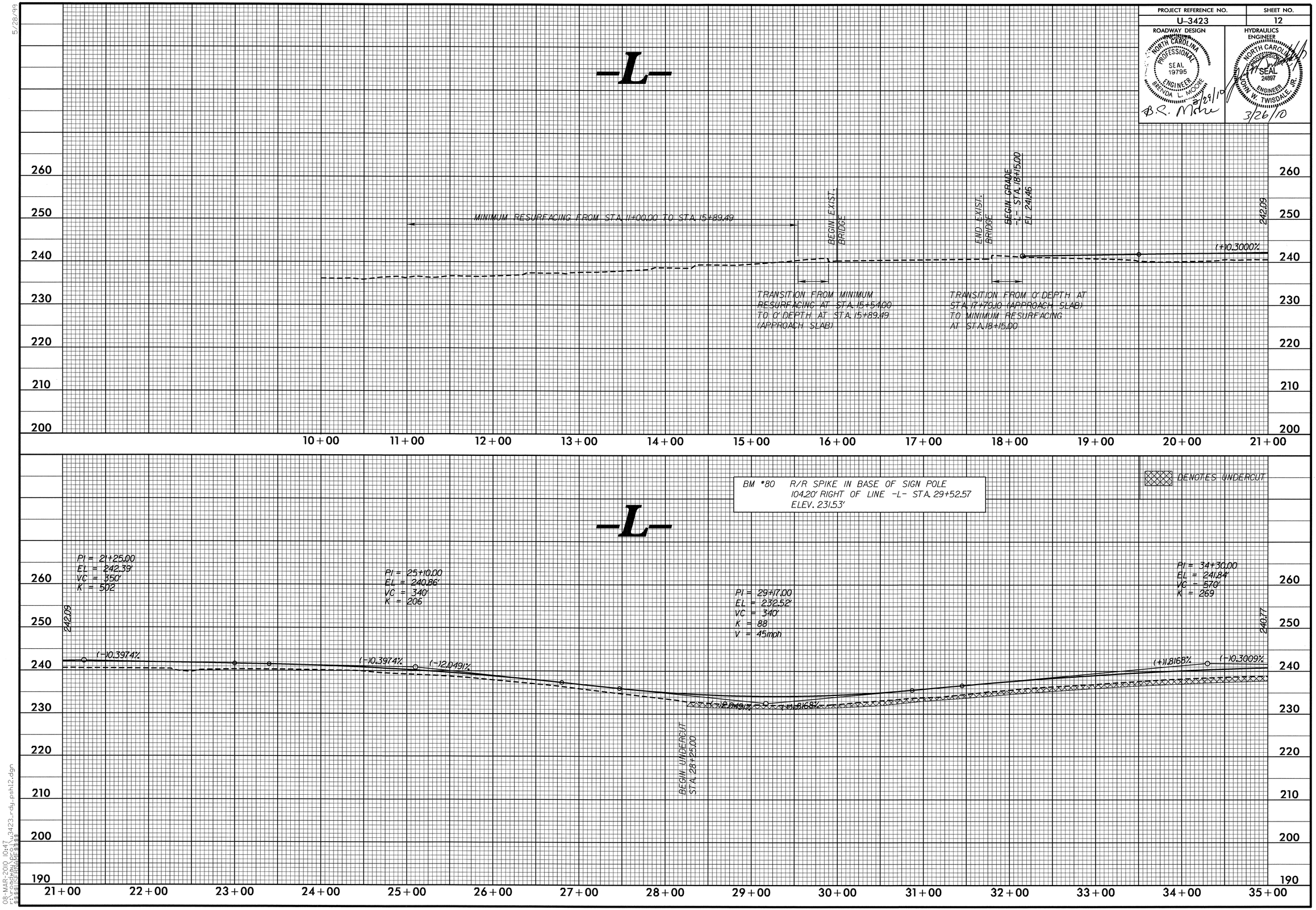

5/28/99

08-MAR-2010 10:47
r:\roadway\proj\u3423_rdy_pshl2.dgn
f:\ssf\ssfmap\ssf48

PROJECT REFERENCE NO.	SHEET NO.
U-3423	13

ROADWAY DESIGN ENGINEER
NORTH CAROLINA PROFESSIONAL SEAL 19795 ENGINEER BRENDA L. MOORE
3/29/10

HYDRAULICS ENGINEER
NORTH CAROLINA PROFESSIONAL SEAL 24897 ENGINEER JOHN W. TWISDALE, JR.
3/26/10

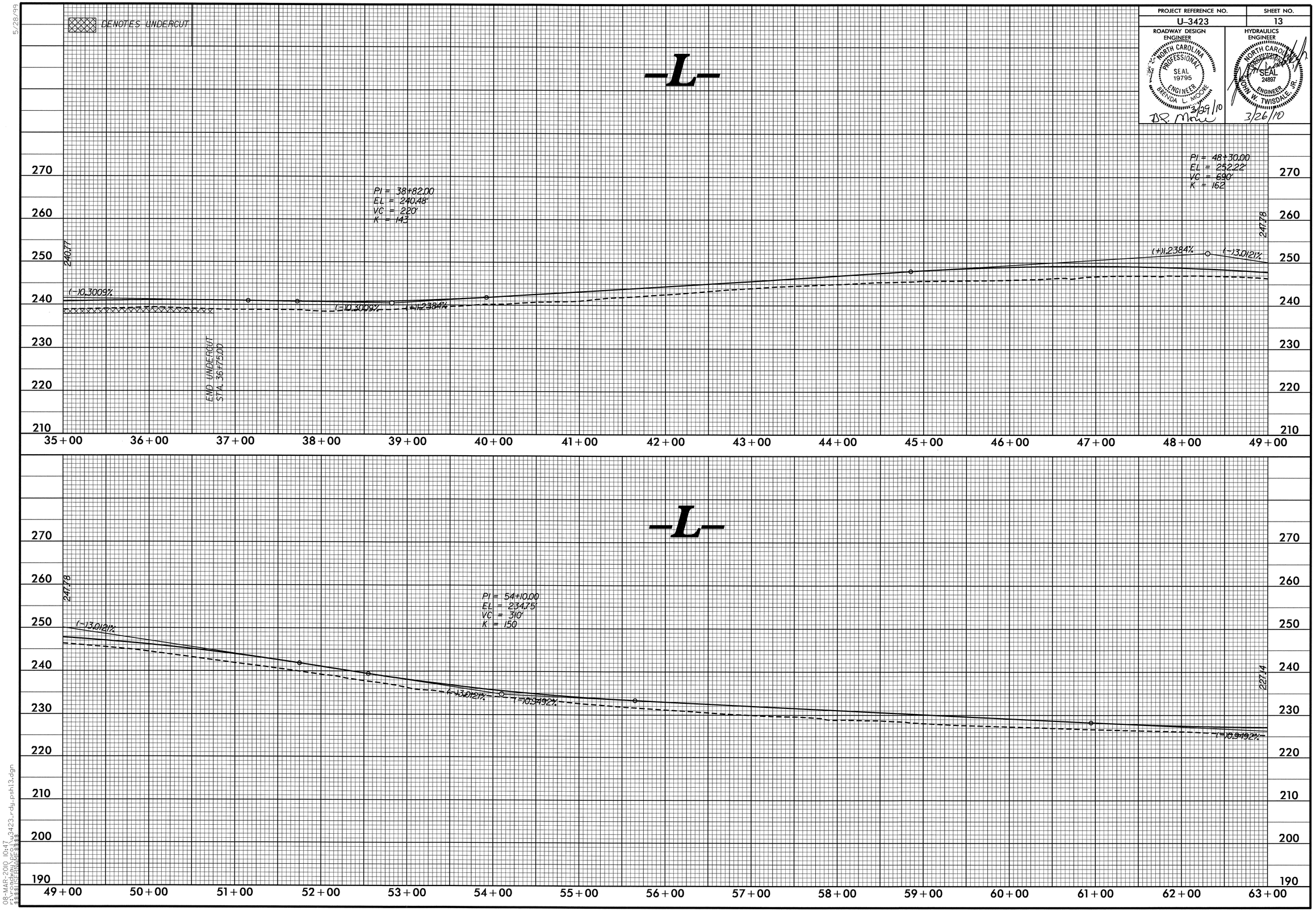

5/28/99

08-MAR-2010 10:47
f:\rdwy\rdwy\u3423_rdy_pshl3.dgn
$$USERNAME$$

PROJECT REFERENCE NO.	SHEET NO.
U-3423	14

ROADWAY DESIGN ENGINEER
NORTH CAROLINA PROFESSIONAL SEAL 19795 ENGINEER BRENDA L. MOORE
BL. Moore 3/26/10

HYDRAULICS ENGINEER
NORTH CAROLINA PROFESSIONAL SEAL 24897 ENGINEER JOHN W. TWISDALE, JR.
3/26/10

5/28/99

PIPE HYDRAULIC DATA

DRAINAGE STRUCTURE NO. 106 TO 104

DRAINAGE AREA	=	59.4	AC
DESIGN FREQUENCY	=	50	YRS
DESIGN DISCHARGE	=	130	CFS
DESIGN HW ELEVATION	=	224.62	FT
100 YEAR DISCHARGE	=	150	CFS
100 YEAR HW ELEVATION	=	225.34	FT
OVERTOPPING FREQUENCY	=	200YR+/-	YRS
OVERTOPPING DISCHARGE	=	185	CFS
OVERTOPPING ELEVATION	=	226.70	FT

BM *81 P/K NAIL IN BST PARKING LOT
118.08' RIGHT OF LINE -L- STA.76+03.95
ELEV. 241.62

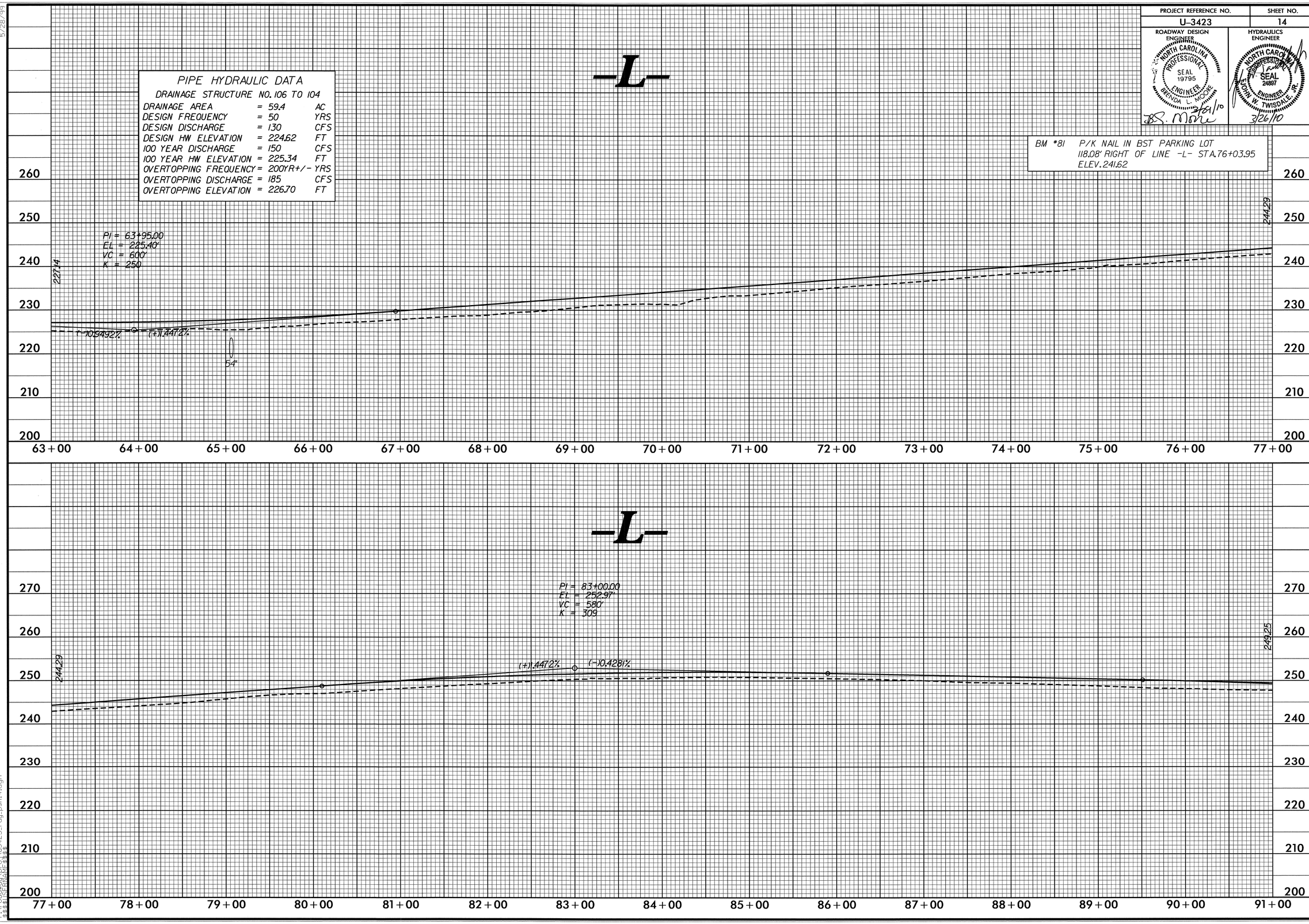

29-MAR-2010 09:30
r:\roadway\proj\3423_rdy_psh14.dgn
$$$$USER NAME$$$$

PROJECT REFERENCE NO.	SHEET NO.
U-3423	15

ROADWAY DESIGN ENGINEER
NORTH CAROLINA PROFESSIONAL SEAL 19795 ENGINEER BRENDA L. MOORE
3/29/10
B.L. Moore

HYDRAULICS ENGINEER
NORTH CAROLINA PROFESSIONAL SEAL 24897 ENGINEER JOHN W. TWISDALE, JR.
3/26/10

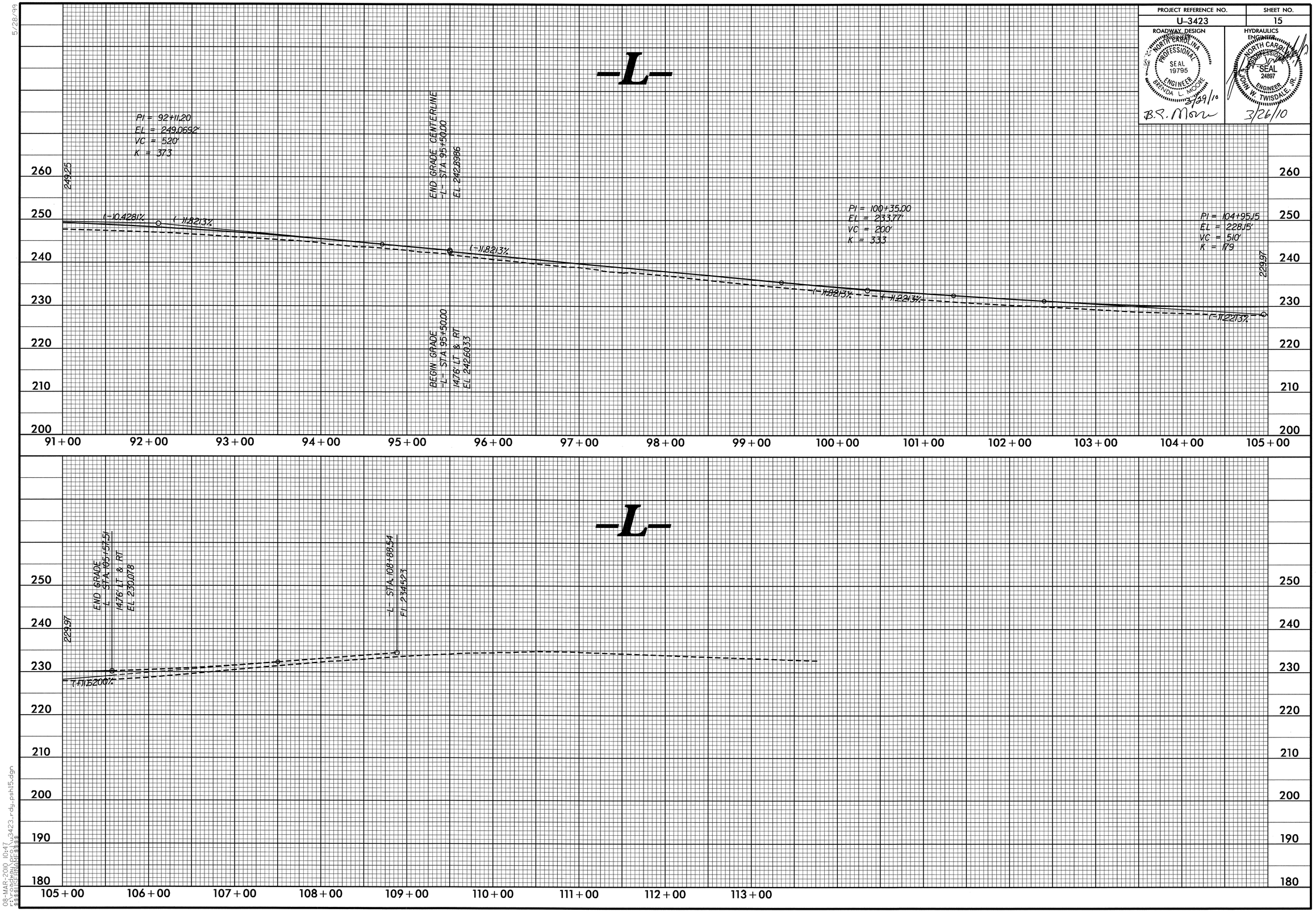

08-MAR-2010 10:47
f:\roadway\proj\u3423_rdy_psh15.dgn
$$USERNAME$$

PROJECT REFERENCE NO.	SHEET NO.
U-3423	16

ROADWAY DESIGN ENGINEER
NORTH CAROLINA PROFESSIONAL SEAL 19795 ENGINEER BRENDA L. MOORE
3/29/10
B.L. Moore

HYDRAULICS ENGINEER
NORTH CAROLINA PROFESSIONAL SEAL 24897 ENGINEER JOHN W. TWISDALE, JR.
3/26/10

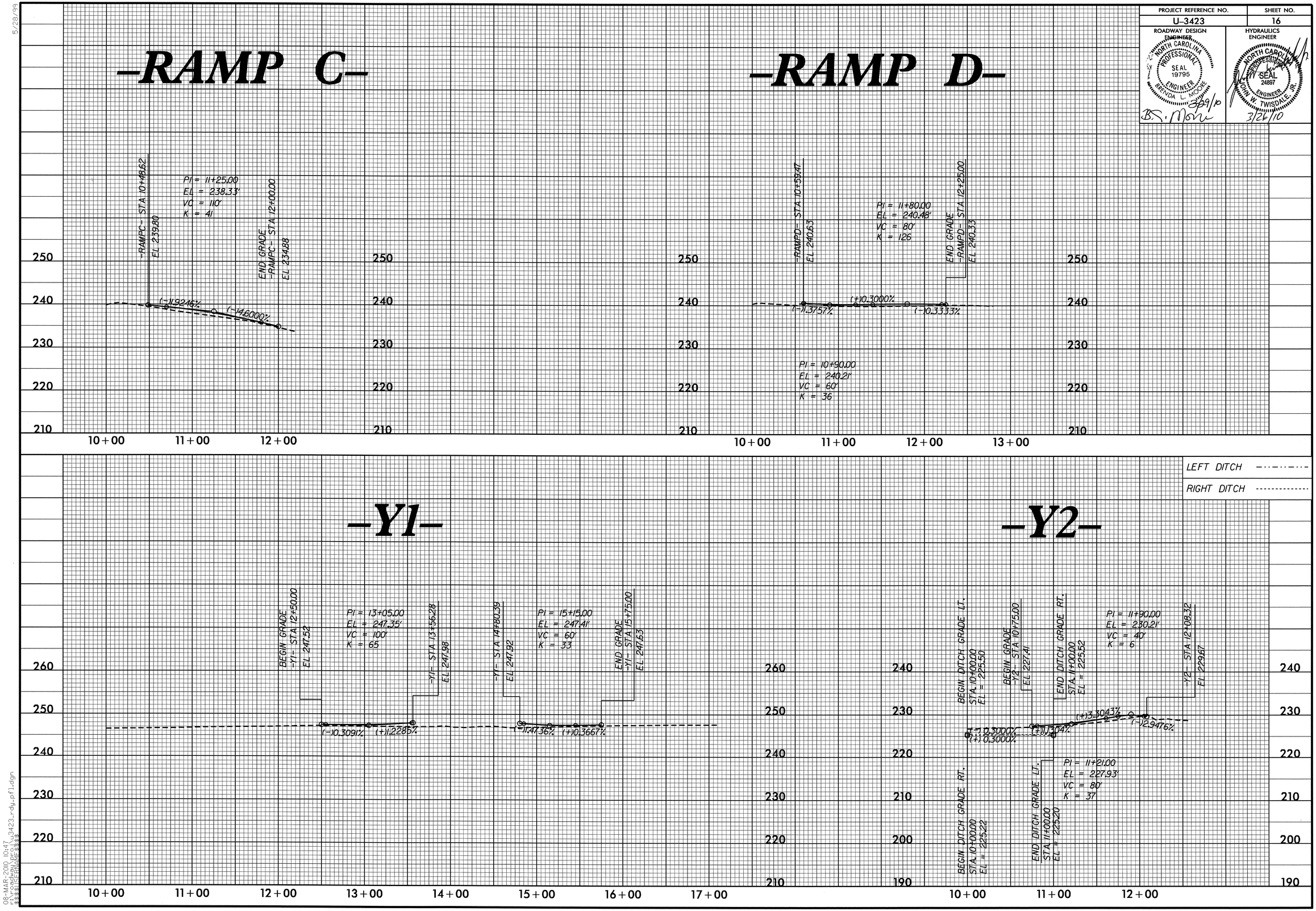

5/28/99

08-MAR-2010 10:47
r:\roadway\proj\u3423_rdy_pfl.dgn
$$$$USERNAME$$$$

PROJECT REFERENCE NO.	SHEET NO.
U-3423	17

ROADWAY DESIGN ENGINEER
NORTH CAROLINA PROFESSIONAL SEAL 19795 ENGINEER BRENDA L. MOORE
3/29/10
B.L. Moore

HYDRAULICS ENGINEER
NORTH CAROLINA PROFESSIONAL SEAL 24897 ENGINEER JOHN W. TWISDALE, JR.
3/26/10

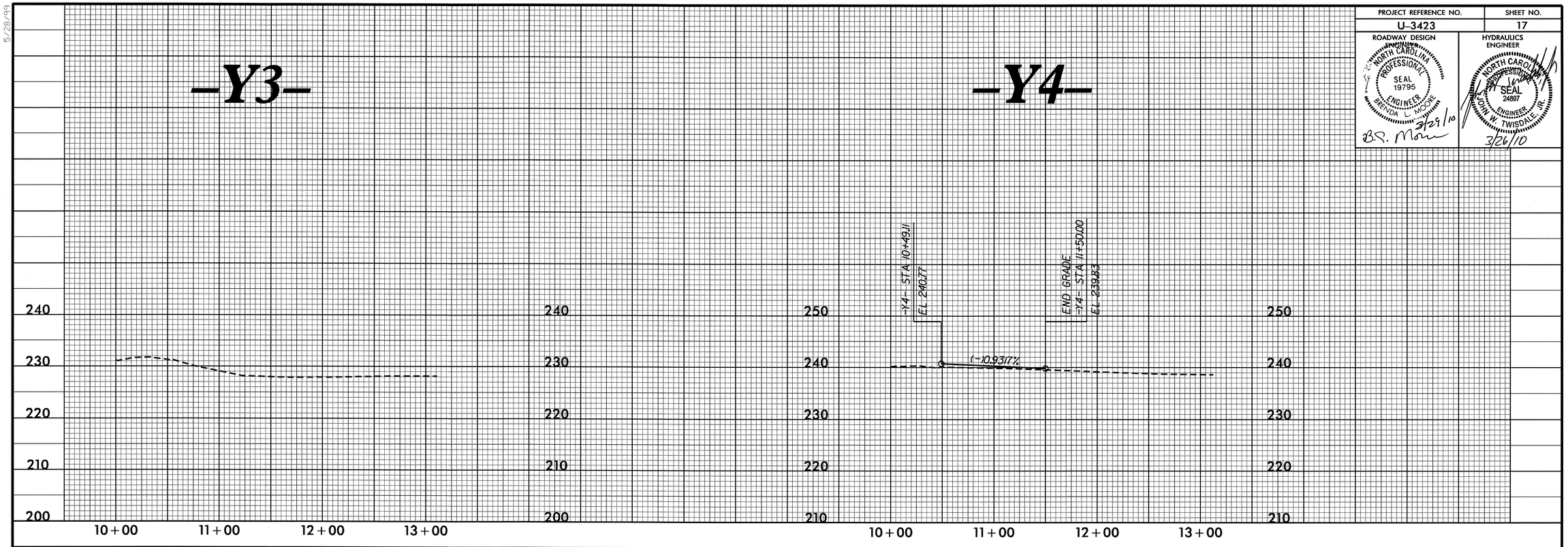

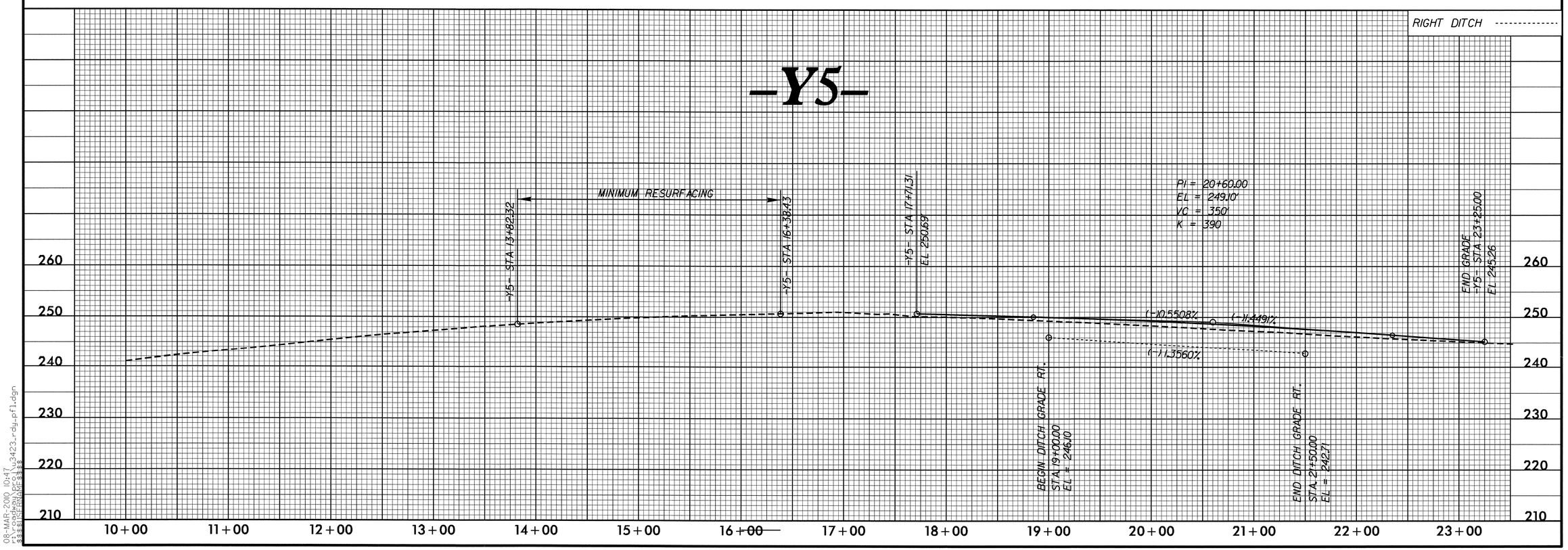

5/28/99

08-MAR-2010 10:47
R:\roadway\proj\u3423_rdy_pfl.dgn
$$$$USERNAME$$$$