TIP PROJECT: U-4703

CONTRACT: C202379

STRUCTURES

STATE OF NORTH CAROLINA
DIVISION OF HIGHWAYS

WAKE COUNTY

STATE	STATE PROJECT REFERENCE NO.		SHEET NO.	TOTAL SHEETS
N.C.	U-4703			
STATE PROJ. NO.	F. A. PROJ. NO.	DESCRIPTION		
35871.1.1	STP-0508(2)	PE		
35871.2.1	STP-0508(2)	R/W & UTILITIES		
35871.3.1	STPDA-0508(3)	CONST.		

LOCATION: TIMBER DRIVE EAST EXTENSION (SR 2812)
FROM NC 50 TO WHITE OAK ROAD (SR 2547) IN GARNER

TYPE OF WORK: GRADING, DRAINAGE, WIDENING, PAVING, CURB & GUTTER, STRUCTURES, AND SIGNALS

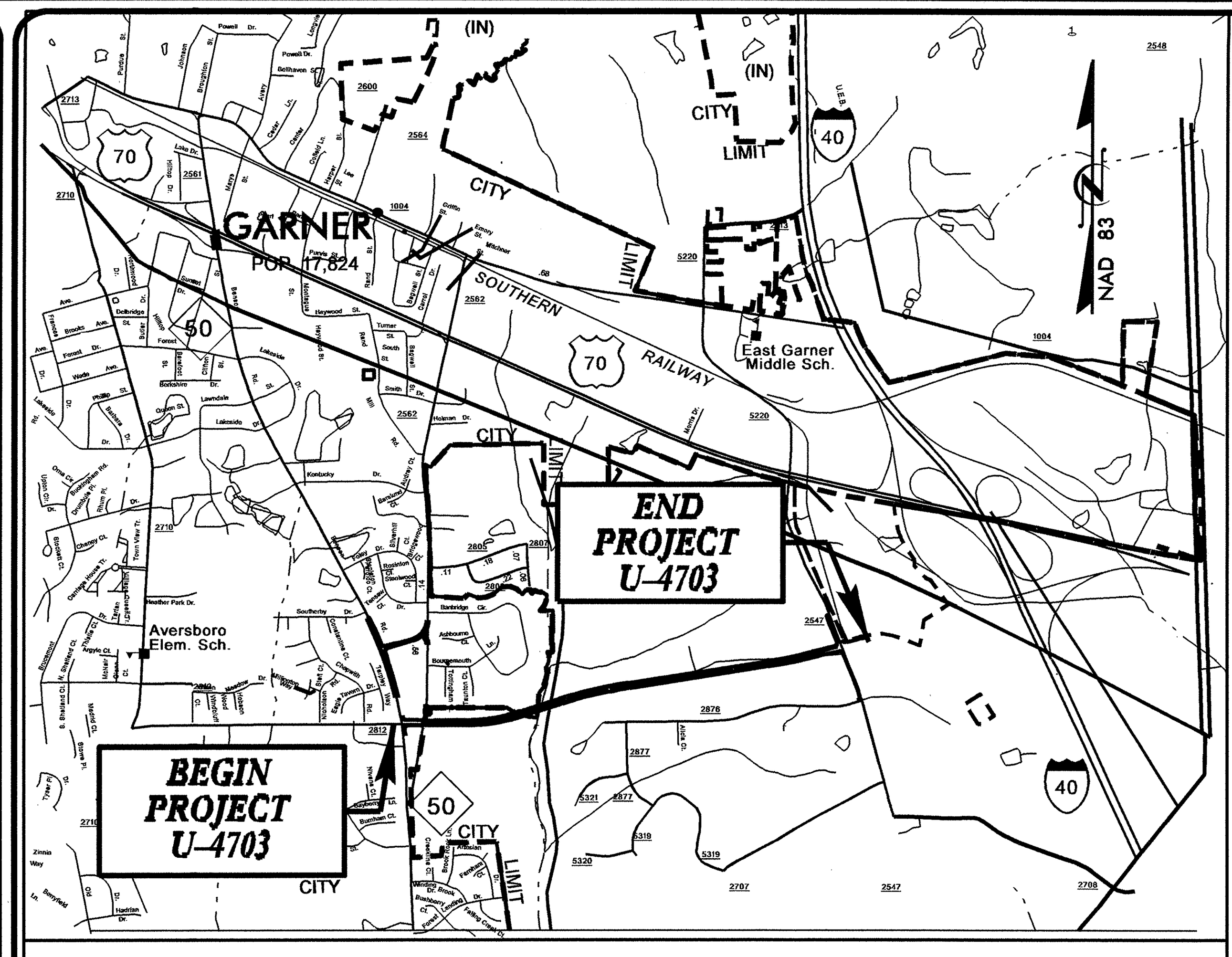

VICINITY MAP

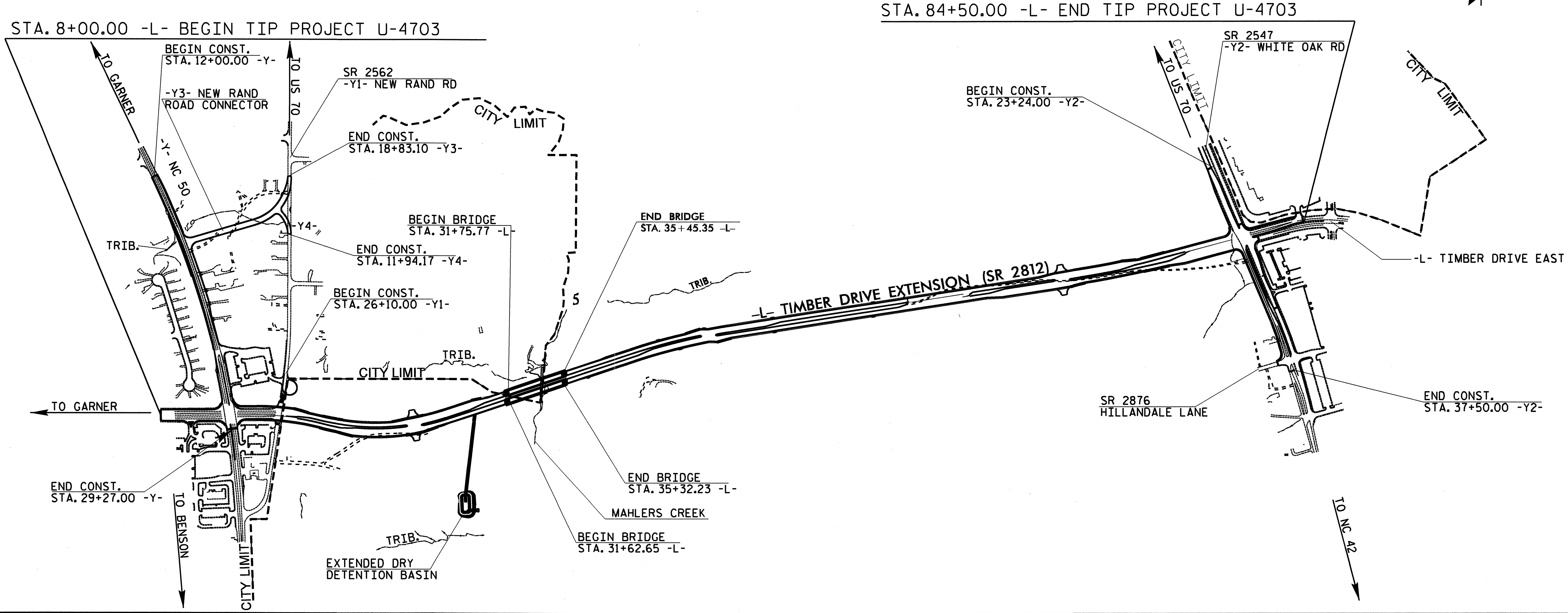

DESIGN DATA

ADT 2009 = 15,840
ADT 2030 = 24,000
DHV = 10 %
D ≐ 55 %
T = 6 % *
V = 50 MPH
* TTST 2% DUAL 4%

PROJECT LENGTH

LENGTH ROADWAY TIP PROJECT U-4703 = 1.379 mi.
LENGTH STRUCTURE OF TIP PROJECT U-4703 = 0.070 mi.
TOTAL LENGTH OF TIP PROJECT U-4703 = 1.449 mi.

Prepared in the Office of:
DIVISION OF HIGHWAYS
1000 Birch Ridge Dr., Raleigh, NC 27610

2006 STANDARD SPECIFICATIONS

LETTING DATE:
MAY 18, 2010

J. M. BAILEY, P.E.
PROJECT ENGINEER

D.A. DAVENPORT, JR., P.E.
PROJECT DESIGN ENGINEER

STRUCTURE DESIGN UNIT
1000 BIRCH RIDGE DR.
RALEIGH, NC 27610

DIVISION OF HIGHWAYS
STATE OF NORTH CAROLINA

P.E.
STATE DESIGN ENGINEER

DEPARTMENT OF TRANSPORTATION
FEDERAL HIGHWAY ADMINISTRATION

APPROVED
DIVISION ADMINISTRATOR *DATE*

09/08/99
22-MAR-2010 09:10
$$$$$$$$$$$$$$$$DGN$$$$$$$$$$$$$$$$$
dgladden

F.A. PROJECT No.: STPDA-0508(3)

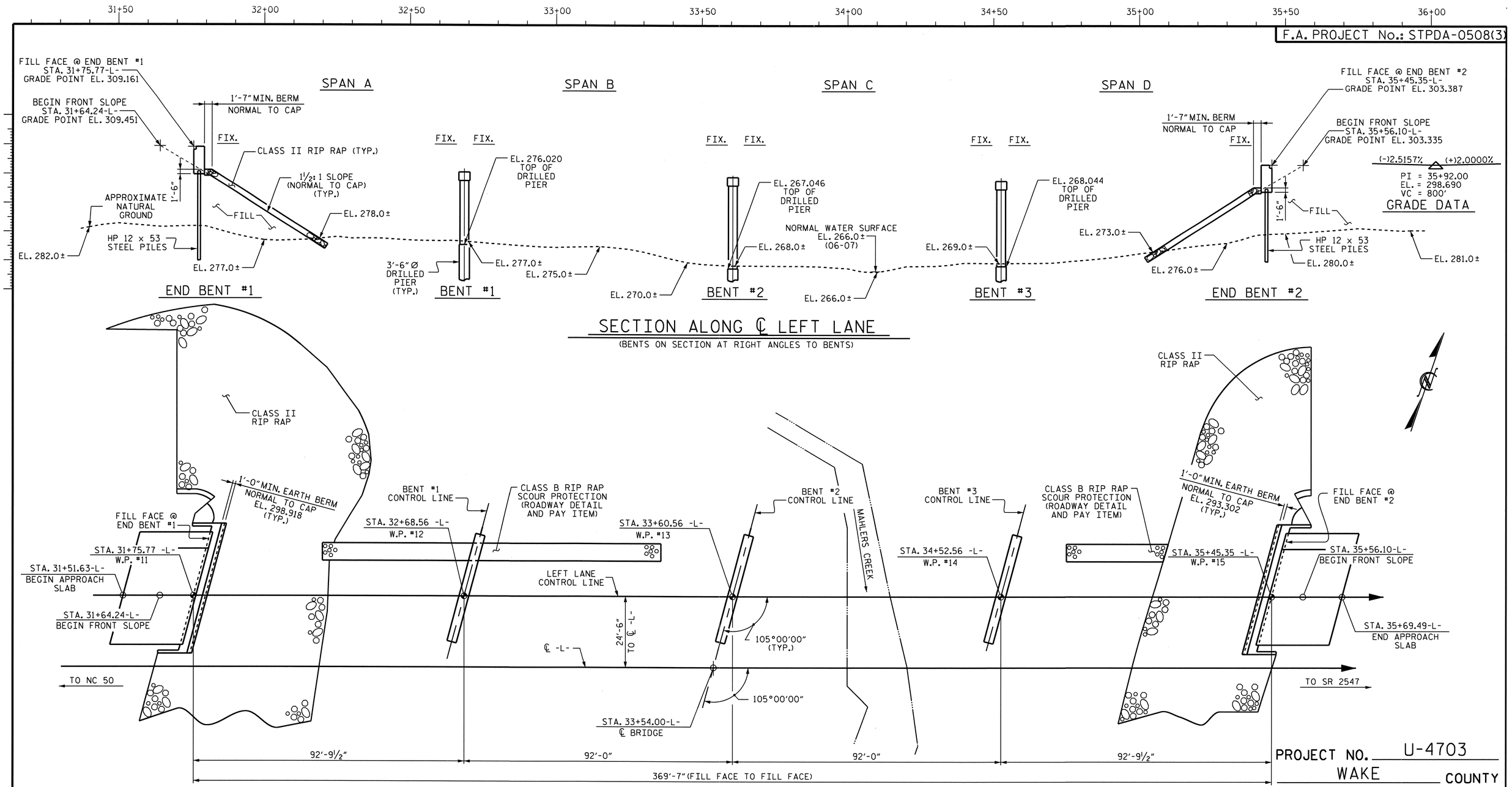

PLAN
(PILES AND COLUMNS NOT SHOWN IN PLAN VIEW)

PROJECT NO. U-4703
WAKE COUNTY
STATION: 33+54.00-L-

SHEET 1 OF 4
BRIDGE NO. 1206

STATE OF NORTH CAROLINA
DEPARTMENT OF TRANSPORTATION
RALEIGH

GENERAL DRAWING
FOR BRIDGE OVER
MAHLERS CREEK ON
SR 2812 BETWEEN
NC 50 AND SR 2547
(LEFT LANE)

NORTH CAROLINA PROFESSIONAL SEAL 022506 ENGINEER JESSE McARTHUR BAILEY
4/1/10

NORTH CAROLINA PROFESSIONAL SEAL 10730 ENGINEER D. ANDRE DAVENPORT
3-23-10

REVISIONS							SHEET NO.
NO.	BY:	DATE:	NO.	BY:	DATE:		S-1
1			3				TOTAL SHEETS
2			4				89

DRAWN BY : D. A. GLADDEN DATE : 9-10-09
CHECKED BY : D. A. DAVENPORT DATE : 12/09

23-MAR-2010 07:54
z:\structures\dgladden\microstation\u4703_sd_gd.dgn
ddavenport

STR. #1

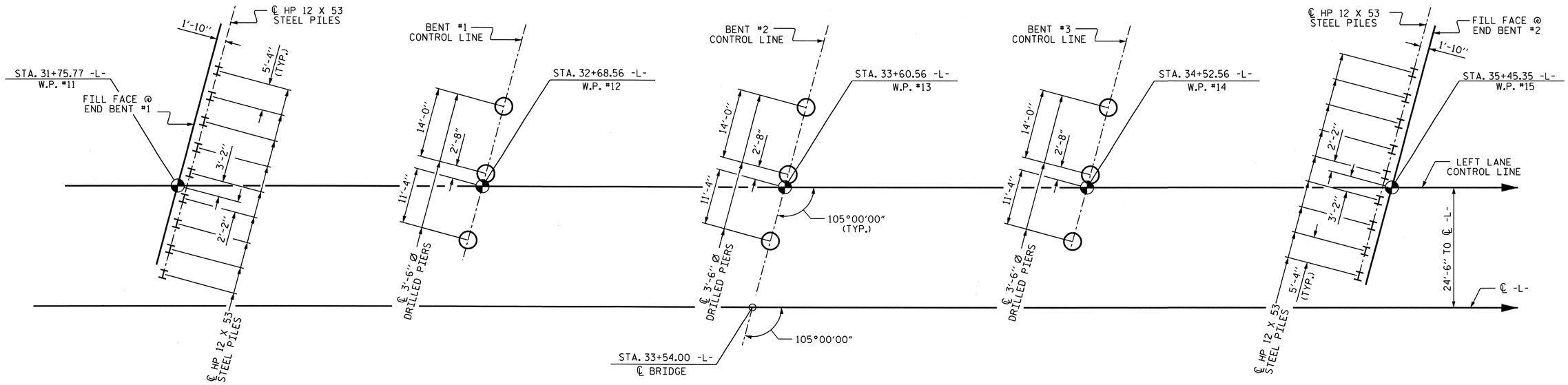

FOUNDATION LAYOUT

DIMENSIONS LOCATING PILES ARE TO PILE CENTERLINE

FOR DRILLED PIERS SEE SPECIAL PROVISIONS.

DRILLED PIERS AT BENT #1 AND BENT #2 ARE DESIGNED FOR BOTH SKIN FRICTION AND END BEARING. CHECK FIELD CONDITIONS FOR THE REQUIRED END BEARING CAPACITY OF 75 TSF.

DRILLED PIERS AT BENT #3 ARE DESIGNED FOR BOTH SKIN FRICTION AND END BEARING. CHECK FIELD CONDITIONS FOR THE REQUIRED END BEARING CAPACITY OF 50 TSF.

DRILLED PIERS AT BENT #1, BENT #2, AND BENT #3 ARE DESIGNED FOR AN APPLIED LOAD OF 177 TONS EACH, AT THE TOP OF THE COLUMN.

DRIVE PILES AT END BENT #1 AND END BENT #2 TO A REQUIRED BEARING CAPACITY OF 120 TONS PER PILE. THE REQUIRED BEARING CAPACITY IS EQUAL TO THE ALLOWABLE BEARING CAPACITY WITH A MINIMUM FACTOR OF SAFETY OF TWO.

THE ALLOWABLE BEARING CAPACITY FOR PILES AT END BENT #1 AND END BENT #2 IS 60 TONS PER PILE.

INSTALL DRILLED PIERS AT BENT #1 THAT EXTEND TO AN ELEVATION NO HIGHER THAN 252 FT., SATISFY THE REQUIRED END BEARING CAPACITY AND HAVE A MINIMUM PENETRATION OF 6 FT. INTO ROCK AS DEFINED BY DRILLED PIERS PROVISION.

FOR PILES, SEE SPECIAL PROVISIONS.

INSTALL DRILLED PIERS AT BENT #2 THAT EXTEND TO AN ELEVATION NO HIGHER THAN 256 FT. (LEFT), 248 FT. (CENTER) AND 248 FT. (RIGHT), SATISFY THE REQUIRED END BEARING CAPACITY AND HAVE A MINIMUM PENETRATION OF 6 FT. INTO ROCK AS DEFINED BY DRILLED PIERS PROVISION.

INSTALL DRILLED PIERS AT BENT #3 THAT EXTEND TO AN ELEVATION NO HIGHER THAN 245 FT., SATISFY THE REQUIRED END BEARING CAPACITY AND HAVE A MINIMUM PENETRATION OF 6 FT. INTO ROCK AS DEFINED BY DRILLED PIERS PROVISION.

THE SCOUR CRITICAL ELEVATION FOR BENT #1 IS ELEVATION 268 FT.. THE SCOUR CRITICAL ELEVATION IS USED TO MONITOR POSSIBLE SCOUR PROBLEMS DURING THE LIFE OF THE STRUCTURE.

THE SCOUR CRITICAL ELEVATION FOR BENT #2 IS ELEVATION 264 FT.. THE SCOUR CRITICAL ELEVATION IS USED TO MONITOR POSSIBLE SCOUR PROBLEMS DURING THE LIFE OF THE STRUCTURE.

THE SCOUR CRITICAL ELEVATION FOR BENT #3 IS ELEVATION 254 FT.. THE SCOUR CRITICAL ELEVATION IS USED TO MONITOR POSSIBLE SCOUR PROBLEMS DURING THE LIFE OF THE STRUCTURE.

SID INSPECTIONS MAY BE REQUIRED FOR DRILLED PIERS. THE ENGINEER WILL DETERMINE THE NEED FOR SID INSPECTIONS.

CSL TUBES ARE REQUIRED AND CSL TESTING MAY BE REQUIRED FOR DRILLED PIERS. THE ENGINEER WILL DETERMINE THE NEED FOR CSL TESTING. FOR CROSSHOLE SONIC LOGGING, SEE SPECIAL PROVISIONS.

PROJECT NO. U-4703
WAKE COUNTY
STATION: 33+54.00-L-

SHEET 2 OF 4

STATE OF NORTH CAROLINA
DEPARTMENT OF TRANSPORTATION
RALEIGH

GENERAL DRAWING FOR BRIDGE OVER MAHLERS CREEK ON SR 2812 BETWEEN NC 50 AND SR 2547 (LEFT LANE)

NORTH CAROLINA PROFESSIONAL SEAL 10730 ENGINEER D. ANDREW DAVENPORT, JR.
3-25-10

REVISIONS						SHEET NO.
NO.	BY:	DATE:	NO.	BY:	DATE:	S-2
1			3			TOTAL SHEETS
2			4			89

STR. #1

DRAWN BY : D. A. GLADDEN DATE : 9-10-09
CHECKED BY : D. A. DAVENPORT DATE : 12/09

22-MAR-2010 09:05
r:\structures\dgladden\microstation\u4703_sd_gd.dgn
dgladden

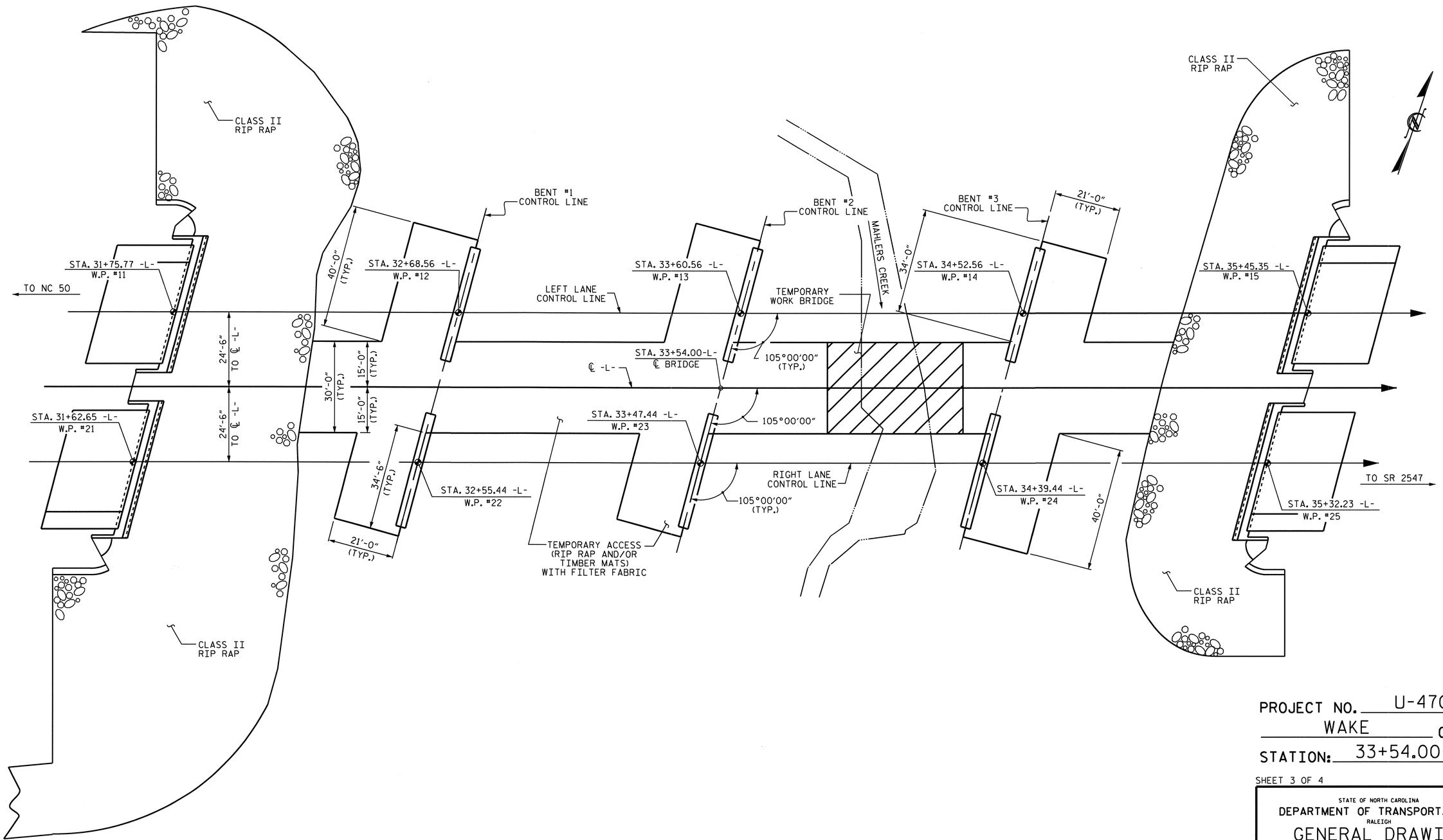

PLAN OF TEMPORARY ACCESS

PROJECT NO. U-4703

WAKE COUNTY

STATION: 33+54.00-L-

SHEET 3 OF 4

STATE OF NORTH CAROLINA
DEPARTMENT OF TRANSPORTATION
RALEIGH

GENERAL DRAWING FOR BRIDGE OVER MAHLERS CREEK ON SR 2812 BETWEEN NC 50 AND SR 2547 (LEFT LANE)

NORTH CAROLINA PROFESSIONAL SEAL 10730 ENGINEER D. ANDREW DAVENPORT, JR.

REVISIONS						SHEET NO.
NO.	BY:	DATE:	NO.	BY:	DATE:	S-3
1			3			TOTAL SHEETS
2			4			89

STR. #1

DRAWN BY : D. A. DAVENPORT DATE : 1/10
CHECKED BY : D.A. GLADDEN DATE : 2/10

08-FEB-2010 13:36
y:\structures\dgladden\microstation\u4703_sd_gd.dgn
ddavenport

BENCHMARK: BM #11 RAILROAD SPIKE IN BASE OF 14" Ø OAK TREE; STA. 29+94.00-L-, 62.00' LT. EL. 306.530

HYDRAULIC DATA

DESIGN DISCHARGE	= 880 C.F.S.
FREQUENCY OF DESIGN FLOOD	= 50 YR.
DESIGN HIGH WATER ELEVATION	= 272.000
DRAINAGE AREA	= 1.07 SQ. MI.
BASIC DISCHARGE (Q100)	= 1230 C.F.S.
BASIC HIGH WATER ELEVATION	= 272.700

OVERTOPPING FLOOD DATA

OVERTOPPING DISCHARGE	= 2480 C.F.S.
FREQUENCY OF OVERTOPPING FLOOD	= 500 YR. +
OVERTOPPING FLOOD ELEVATION	= 303.600

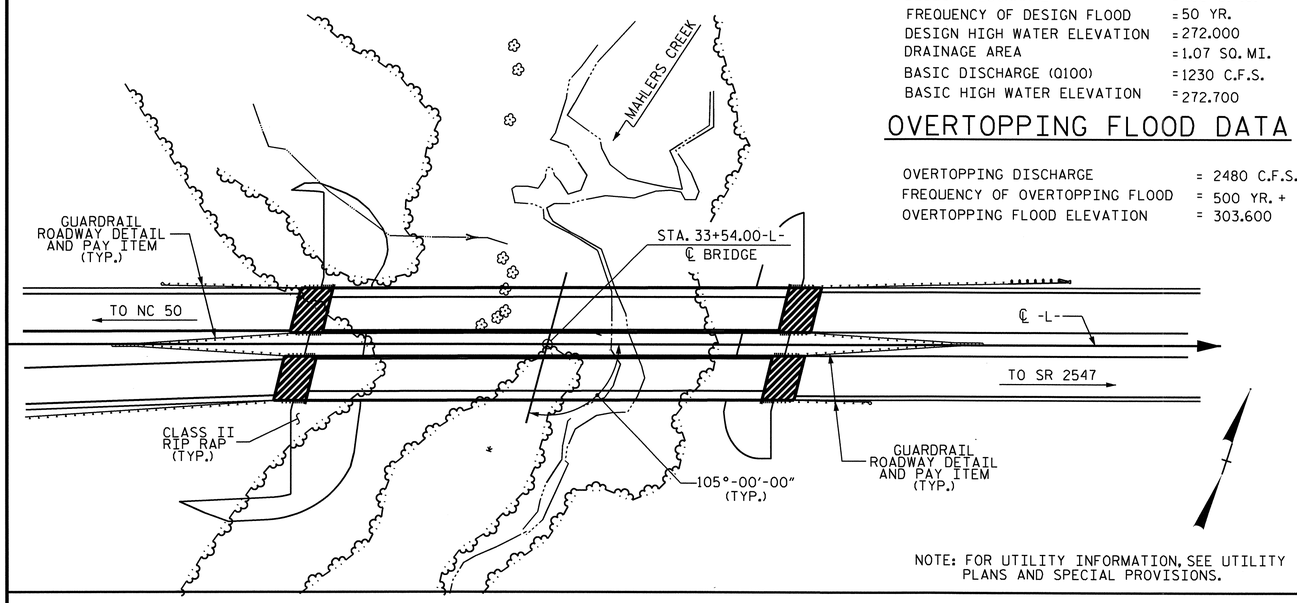

NOTE: FOR UTILITY INFORMATION, SEE UTILITY PLANS AND SPECIAL PROVISIONS.

LOCATION SKETCH

NOTES

ASSUMED LIVE LOAD = HS 20 OR ALTERNATE LOADING.

FOR OTHER DESIGN DATA AND GENERAL NOTES, SEE SHEET SN.

FOR EROSION CONTROL MEASURES SEE EROSION CONTROL PLANS.

THIS BRIDGE HAS BEEN DESIGNED BY THE STRENGTH DESIGN METHOD AS SPECIFIED IN AASHTO STANDARD SPECIFICATIONS.

REMOVABLE FORMS MAY BE USED IN LIEU OF METAL STAY-IN-PLACE FORMS IN ACCORDANCE WITH ARTICLE 420-3 OF THE STANDARD SPECIFICATIONS.

THE LOCATION OF THE CONSTRUCTION JOINT IN THE DRILLED PIERS IS BASED ON AN APPROXIMATE GROUND LINE ELEVATION. IF THE CONSTRUCTION JOINT IS ABOVE THE ACTUAL GROUND ELEVATION, THE CONTRACTOR SHALL PLACE THE CONSTRUCTION JOINT 1 FT. BELOW THE GROUND LINE.

THIS STRUCTURE HAS BEEN DESIGNED IN ACCORDANCE WITH HEC 18,"EVALUATING SCOUR AT BRIDGES", MAY, 2001.

THE CONTRACTOR SHALL PROVIDE INDEPENDENT ASSURANCE SAMPLES OF REINFORCING STEEL AS FOLLOWS: FOR PROJECTS REQUIRING UP TO 400 TONS OF REINFORCING STEEL, ONE 30 INCH SAMPLE OF EACH SIZE BAR USED, AND FOR PROJECTS REQUIRING OVER 400 TONS OF REINFORCING STEEL, TWO 30 INCH SAMPLES OF EACH SIZE BAR USED. THE BARS FROM WHICH THE SAMPLES ARE TAKEN MUST THEN BE SPLICED WITH REPLACEMENT BARS OF THE SIZE AND LENGTH OF THE SAMPLE, PLUS A MINIMUM LAP SPLICE OF THIRTY BAR DIAMETERS.

FOR SUBMITTAL OF WORKING DRAWINGS, SEE SPECIAL PROVISIONS.

FOR FALSEWORK AND FORMWORK, SEE SPECIAL PROVISIONS.

FOR CURING CONCRETE, SEE SPECIAL PROVISIONS.

THE CONTRACTOR MUST COORDINATE WITH THE RESIDENT ENGINEER TO MAXIMIZE THE USE OF TIMBER MATS IN WETLAND AND RIPARIAN BUFFER AREAS WHERE PRACTICABLE AND ONLY USE TEMPORARY FILL (I.E. RIP RAP) WHERE NECESSARY BECAUSE OF TERRAIN OR OTHER FACTORS FOR TEMPORARY ACCESS. FILTER FABRIC WILL BE REQUIRED UNDER THE TIMBER MAT AND RIP RAP OF THE TEMPORARY ACCESS. NO SEPARATE PAYMENT WILL BE MADE FOR THE FILTER FABRIC. SEE "CONSTRUCTION, MAINTENANCE AND REMOVAL OF TEMPORARY ACCESS AT STA. 33+54.00-L-" SPECIAL PROVISION.

NEEDLE BEAMS WILL NOT BE ALLOWED UNLESS OTHERWISE CALLED FOR ON THE PLANS OR APPROVED BY THE ENGINEER.

AT THE CONTRACTOR'S OPTION, AND UPON REMOVAL OF THE TEMPORARY ACCESS, THE CLASS II RIP RAP USED IN THE TEMPORARY ACCESS MAY BE PLACED AS RIP RAP SLOPE PROTECTION. SEE SPECIAL PROVISIONS FOR CONSTRUCTION, MAINTENANCE AND REMOVAL OF TEMPORARY ACCESS AT STATION 33+54.00-L-.

THE CLASS AA CONCRETE IN THE BRIDGE DECK SHALL CONTAIN FLY ASH OR GROUND GRANULATED BLAST FURNACE SLAG AT THE SUBSTITUTION RATE SPECIFIED IN ARTICLE 1024-1 AND IN ACCORDANCE WITH ARTICLES 1024-5 AND 1024-6 OF THE STANDARD SPECIFICATIONS. NO PAYMENT WILL BE MADE FOR THIS SUBSTITUTION AS IT IS CONSIDERED INCIDENTAL TO THE COST OF THE REINFORCED CONCRETE DECK SLAB.

FOR GROUT FOR STRUCTURES, SEE SPECIAL PROVISIONS.

FOR PLACING LOAD ON STRUCTURE MEMBERS, SEE SPECIAL PROVISIONS.

FOR CRANE SAFETY, SEE SPECIAL PROVISIONS.

FOR PRESTRESSED CONCRETE MEMBERS, SEE SPECIAL PROVISIONS.

NORTH CAROLINA PROFESSIONAL SEAL 10730 ENGINEER D. A. DAVENPORT

TOTAL BILL OF MATERIAL

	CONSTRUCTION, MAINTENANCE, & REMOVAL OF TEMPORARY ACCESS	3'-6" Ø DRILLED PIERS IN SOIL	3'-6" Ø DRILLED PIERS NOT IN SOIL	SID INSPECTION	CROSSHOLE SONIC LOGGING	REINFORCED CONCRETE DECK SLAB	GROOVING BRIDGE FLOORS	CLASS A CONCRETE	BRIDGE APPROACH SLABS	REINFORCING STEEL	SPIRAL COLUMN REINFORCING STEEL	54" PRESTRESSED CONCRETE GIRDERS	HP 12 X 53 STEEL PILES		THREE BAR METAL RAIL	CONCRETE BARRIER RAIL	RIP RAP CLASS II (2'- 0" THICK)	FILTER FABRIC FOR DRAINAGE	ELASTOMERIC BEARINGS	EVAZOTE JOINT SEALS
	LUMP SUM	LIN. FT.	LIN. FT.	EACH	EACH	SQ. FT.	SQ. FT.	CU. YDS.	LUMP SUM	LBS.	LBS.	LIN. FT.	NO.	LIN. FT.	LIN. FT.	LIN. FT.	TONS	SQ. YDS.	LUMP SUM	LUMP SUM
SUPERSTRUCTURE						14198	11109		LUMP SUM			1823.33			360.016	367.859			LUMP SUM	LUMP SUM
END BENT NO.1								25.5		3680			9	360			375	420		
BENT NO. 1		51.00	21.00					34.7		14207	2942									
BENT NO. 2		24.25	25.00					40.5		14569	2954									
BENT NO. 3		41.00	28.00					38.6		17491	3219									
END BENT NO.2								25.0		3629			9	180			335	370		
TOTAL	LUMP SUM	116.25	74.00	1	1	14198	11109	164.3	LUMP SUM	53576	9115	1823.33	18	540	360.016	367.859	710	790	LUMP SUM	LUMP SUM

DRAWN BY : D. A. GLADDEN DATE : 9-10-09
CHECKED BY : D. A. DAVENPORT DATE : 12/09

23-MAR-2010 08:08
Z:\Structures\dgladden\Microstation\U4703_SD_GD.dgn
ddavenport

PROJECT NO. U-4703
WAKE COUNTY
STATION: 33+54.00-L-

SHEET 4 OF 4

STATE OF NORTH CAROLINA
DEPARTMENT OF TRANSPORTATION
RALEIGH

GENERAL DRAWING FOR BRIDGE OVER MAHLERS CREEK ON SR 2812 BETWEEN NC 50 AND SR 2547 (LEFT LANE)

REVISIONS						SHEET NO.
NO.	BY:	DATE:	NO.	BY:	DATE:	S-4
1			3			TOTAL SHEETS
2			4			89

STR. #1

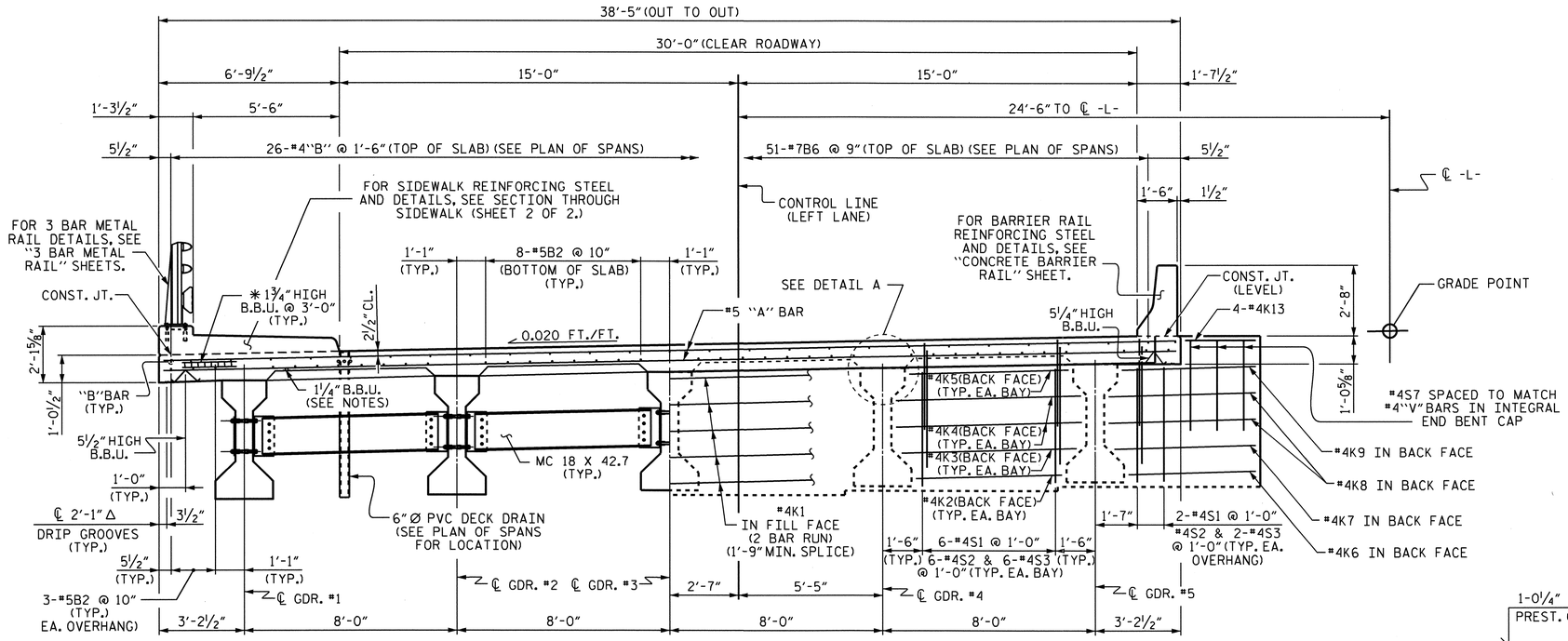

AT INTERMEDIATE DIAPHRAGMS

AT INTEGRAL END BENTS

TYPICAL SECTION

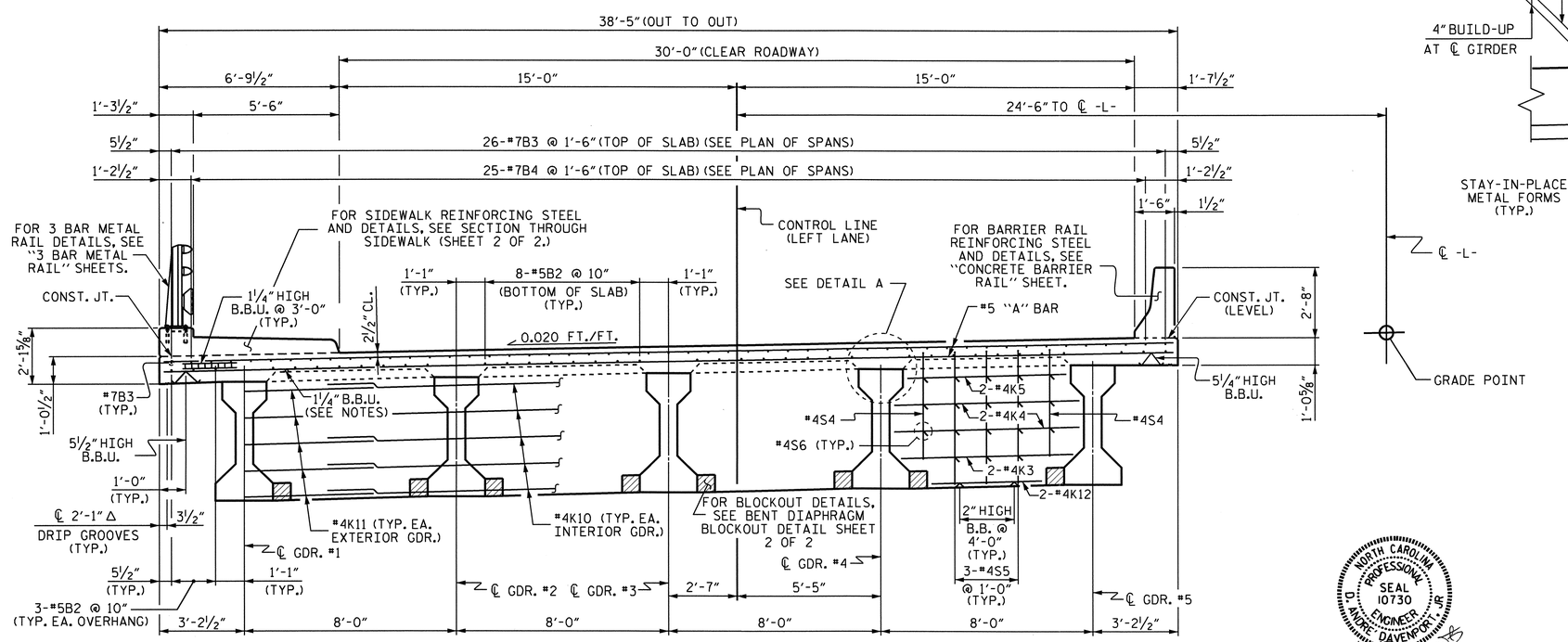

TYPICAL SECTION @ BENT DIAPHRAGM

NOTES

LONGITUDINAL STEEL MAY BE SHIFTED SLIGHTLY, AS NECESSARY, TO AVOID INTERFERENCE WITH STIRRUPS IN PRESTRESSED CONCRETE GIRDERS.

PREVIOUSLY CAST CONCRETE IN A CONTINUOUS UNIT SHALL HAVE ATTAINED A MINIMUM COMPRESSIVE STRENGTH OF 3,000 PSI BEFORE ADDITIONAL CONCRETE IS CAST IN THE UNIT.

BARRIER RAIL IN A CONTINUOUS UNIT SHALL NOT BE CAST UNTIL ALL SLAB CONCRETE IN THE UNIT HAS BEEN CAST AND HAS REACHED A MINIMUM COMPRESSIVE STRENGTH OF 3,000 PSI.

PROVIDE 1¼" HIGH BEAM BOLSTERS UPPER AT 4'-0" CTS. ATOP THE METAL STAY-IN-PLACE FORMS TO SUPPORT THE BOTTOM MAT OF 'A' BARS. WHEN USING REMOVABLE FORMS, PROVIDE CONTINUOUS HIGH CHAIRS FOR METAL DECK (C.H.C.M.) @ 4'-0" CTS. WITH A HEIGHT TO SUPPORT THE BOTTOM MAT OF 'A' BARS A CLEAR DISTANCE OF 2½" ABOVE THE TOP OF THE REMOVABLE FORM.

✱ USE THIS SIZE BAR SUPPORT IN THE AREAS WITH THE #4 "B" BARS. FOR OTHER AREAS WITH #7 "B" BARS, USE THE BAR SUPPORT AS SHOWN IN THE TYPICAL SECTION AT BENT.

COUPLING IN DRAIN PIPE WILL BE PERMITTED AS APPROVED BY THE ENGINEER.

TOP OF FLOOR DRAIN TO BE SET ⅜" BELOW SURFACE OF SLAB.

4 - ½" SQUARE LUGS TO BE GLUED TO THE PVC PLASTIC PIPE AT EQUAL SPACES AROUND THE PIPE DRAIN APPROXIMATELY 4" FROM THE TOP OF THE PIPE.

THE JOINT IN THE DECK SHALL BE SAWED PRIOR TO CASTING THE SIDEWALK.

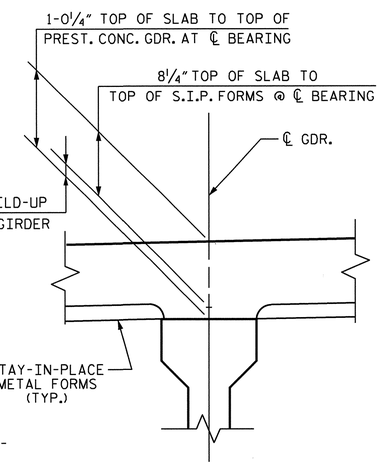

DETAIL A

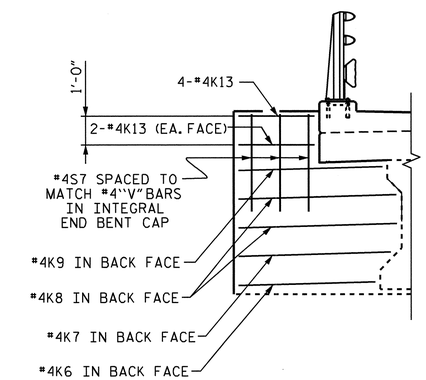

LEFT SIDE WITH SIDEWALK INTEGRAL END BENT DETAIL

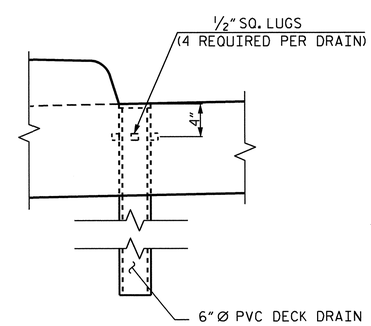

DRAIN DETAIL

(27 REQUIRED)

PROJECT NO. U-4703

WAKE COUNTY

STATION: 33+54.00-L-

SHEET 1 OF 2

STATE OF NORTH CAROLINA
DEPARTMENT OF TRANSPORTATION
RALEIGH

SUPERSTRUCTURE TYPICAL SECTION LEFT LANE

REVISIONS						SHEET NO.
NO.	BY:	DATE:	NO.	BY:	DATE:	S-5
1			3			TOTAL SHEETS
2			4			89

STR. #1

NORTH CAROLINA PROFESSIONAL SEAL 10730 ENGINEER D. ANDREW DAVENPORT, JR.

3-26-10

DRAWN BY : H. T. BARBOUR DATE : 10-05-07
CHECKED BY : M. G. SHAIKH DATE : 4-08

26-MAR-2010 09:45
J:\Structures\tbarbour\Microstation\str1\U4703_sd_TS.dgn
adavenport

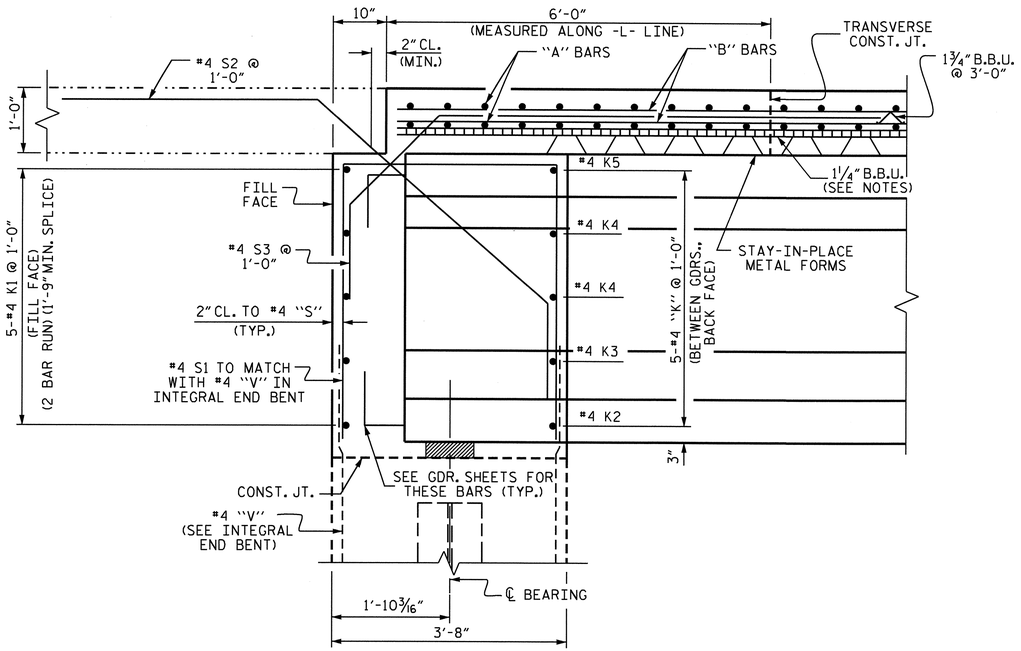

SECTION AT INTEGRAL END BENT

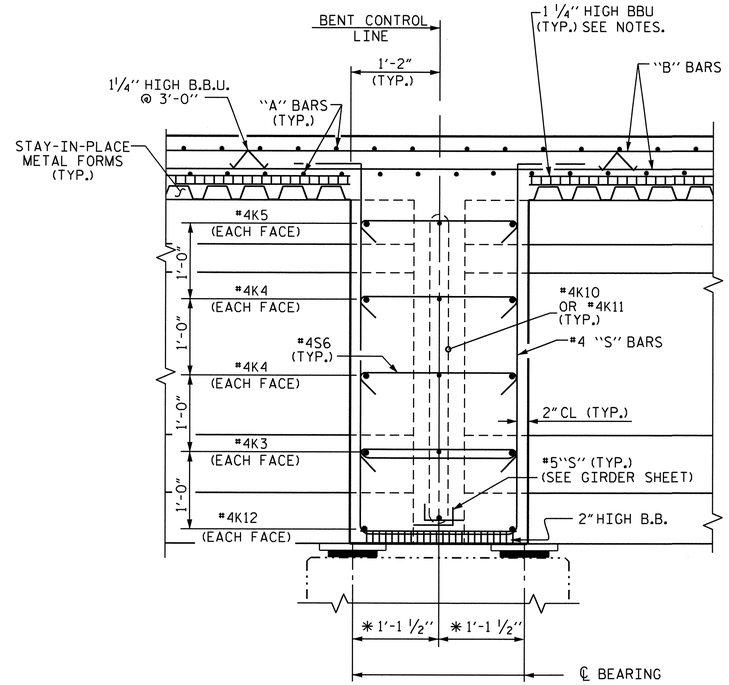

SECTION AT BENT DIAPHRAGM

✱ MEASURED ALONG ℄ GIRDER

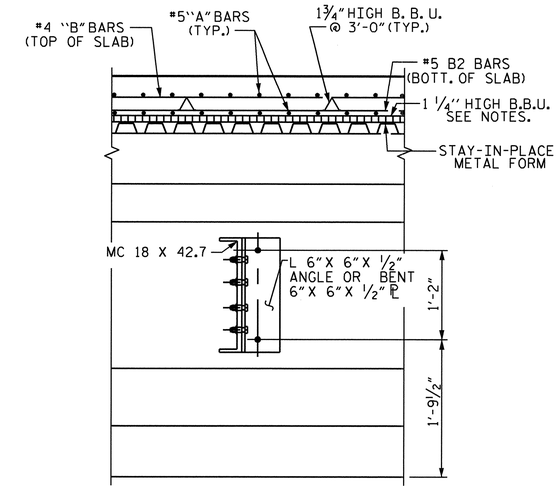

SECTION AT INTERMEDIATE STEEL DIAPHRAGM

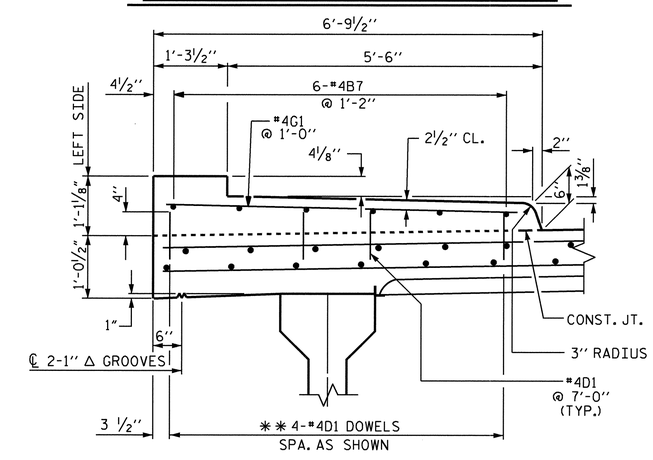

SECTION THROUGH SIDEWALK

✱✱ DOWELS MAY BE PUSHED INTO GREEN CONCRETE AFTER SPAN HAS BEEN SCREEDED OFF.

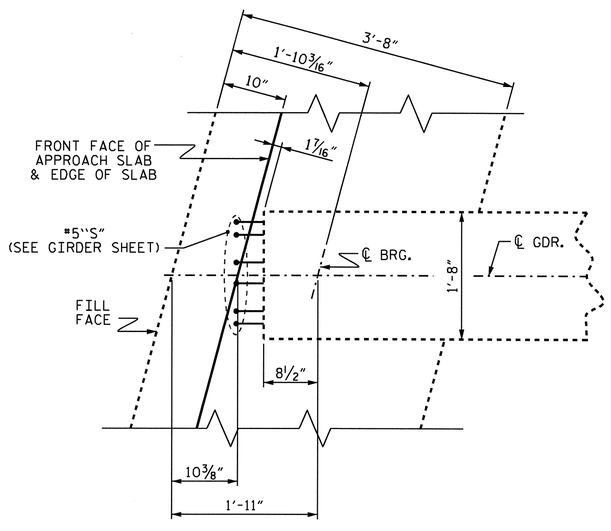

PLAN OF GIRDER AT INTEGRAL END BENT

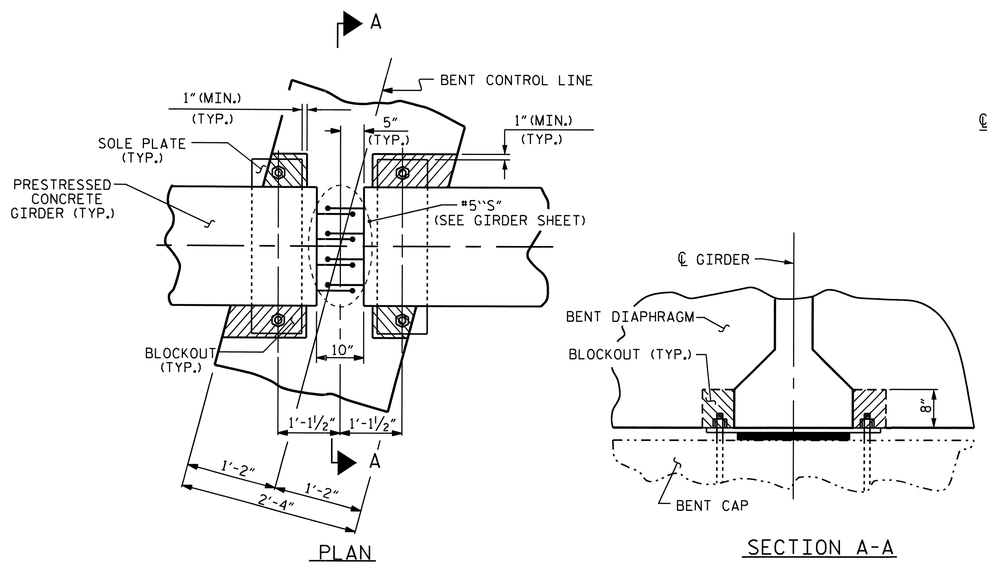

PLAN

SECTION A-A

BENT DIAPHRAGM BLOCKOUT DETAIL

PROJECT NO. U- 4703

WAKE COUNTY

STATION: 33+54.00-L-

SHEET 2 OF 2

STATE OF NORTH CAROLINA
DEPARTMENT OF TRANSPORTATION
RALEIGH

SUPERSTRUCTURE TYPICAL SECTION DETAILS LEFT LANE

NORTH CAROLINA PROFESSIONAL SEAL 10730 ENGINEER D. ANDRE DAVENPORT

REVISIONS							SHEET NO.
NO.	BY:	DATE:	NO.	BY:	DATE:		S-6
1			3				TOTAL SHEETS
2			4				89

DRAWN BY : H. T. BARBOUR DATE : 10-16-07
CHECKED BY : M. G. SHAIKH DATE : 4-08

03-FEB-2010 14:14
y:\structures\tbarbour\microstation\str1\u4703_sd_ts.dgn
ADAVENPORT

STR. #1

NOTES

SIDEWALK IN EACH CONTINUOUS UNIT SHALL NOT BE CAST UNTIL ALL SLAB CONCRETE IN THAT UNIT HAS BEEN CAST AND HAS REACHED A MINIMUM COMPRESSIVE STRENGTH OF 3,000 PSI.

ALL REINFORCING STEEL IN SIDEWALK SHALL BE EPOXY COATED.

#4D1 DOWELS MAY BE PUSHED INTO GREEN CONCRETE AFTER SPAN HAS BEEN SCREEDED OFF.

FOR END POST DETAILS AND REINFORCING STEEL SEE "RAIL POST SPACINGS AND END OF RAIL DETALIS".

GROOVED CONTRACTION JOINTS 1/2" IN DEPTH, SHALL BE TOOLED IN ALL EXPOSED FACES OF THE SIDEWALK IN ACCORDANCE WITH ARTICLE 825-10(B) OF THE STANDARD SPECIFICATIONS. THE CONTRACTION JOINTS SHALL BE LOCATED AT A SPACING OF 8 FEET TO 10 FEET BETWEEN EXPANSION JOINTS. NO CONTRACTION JOINTS WILL BE REQUIRED FOR SEGMENTS LESS THAN 10 FEET IN LENGTH.

NO SEPARATE PAYMENT WILL BE MADE FOR THE SIDEWALK AS IT IS INCLUDED WITH THE REINFORCED CONCRETE DECK SLAB PAY ITEM.

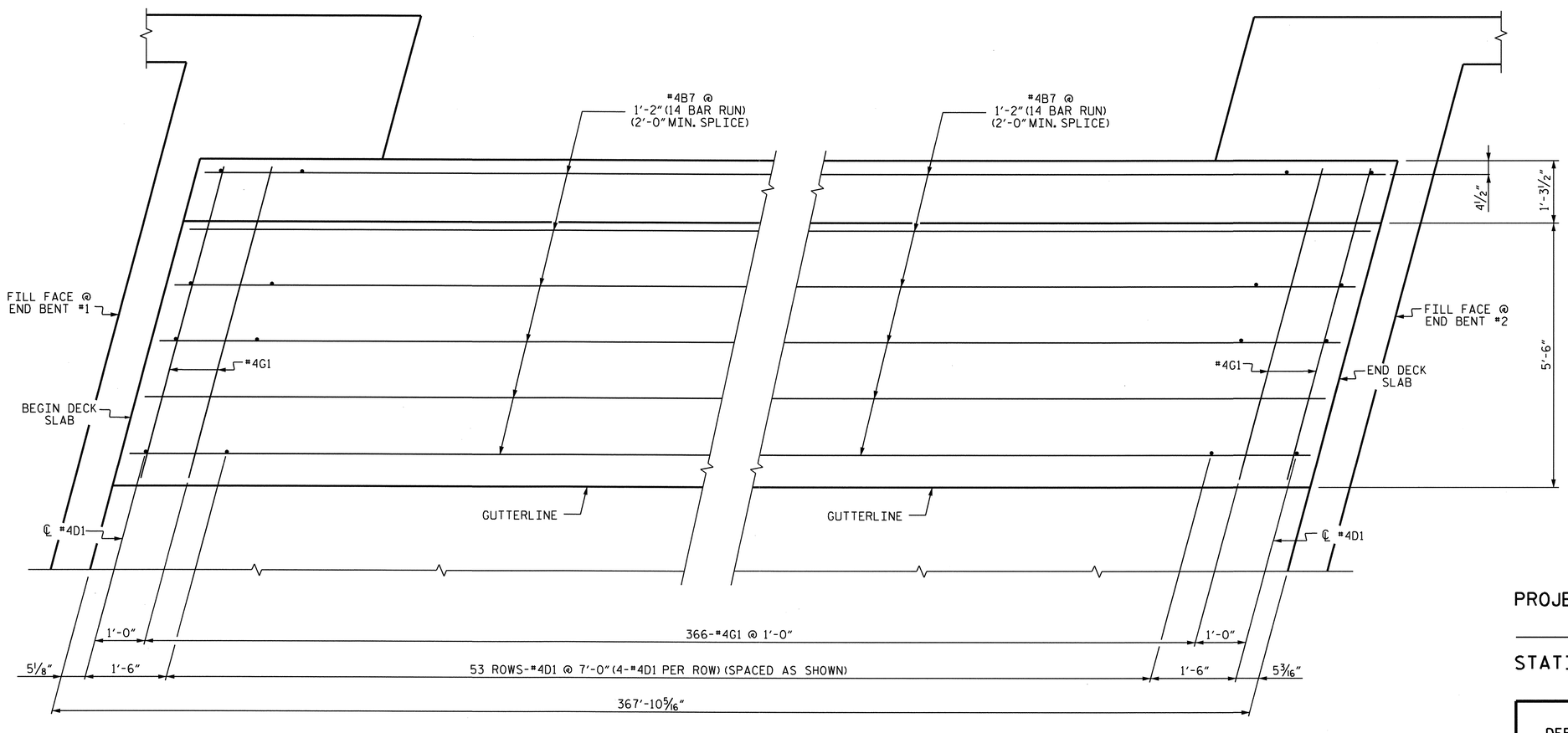

PLAN OF SIDEWALK

PROJECT NO. U-4703
WAKE COUNTY
STATION: 33+54.00-L-

STATE OF NORTH CAROLINA
DEPARTMENT OF TRANSPORTATION
RALEIGH

SUPERSTRUCTURE
SIDEWALK PLAN
LEFT LANE

NORTH CAROLINA PROFESSIONAL SEAL 10730 ENGINEER D. ANDRE DAVENPORT
D. André Davenport 3-26-10

REVISIONS						SHEET NO.
NO.	BY:	DATE:	NO.	BY:	DATE:	S-7
1			3			TOTAL SHEETS
2			4			S-89

DRAWN BY : H.T. BARBOUR DATE : 10-24-07
CHECKED BY : M.G. SHAIKH DATE : 4-08

23-MAR-2010 08:05
Z:\Structures\tbarbour\Microstation\str1\U4703_sd_TS.dgn
adavenport

STR. #1

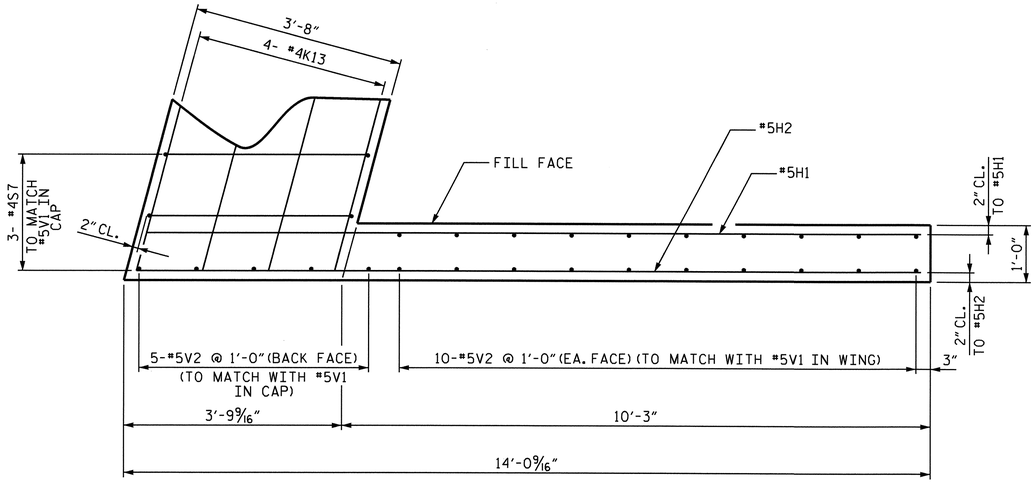

PLAN OF LEFT WING (W1)

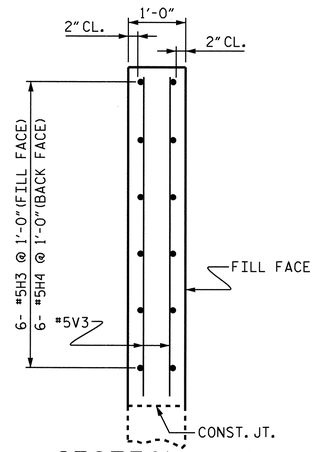

SECTION Y-Y

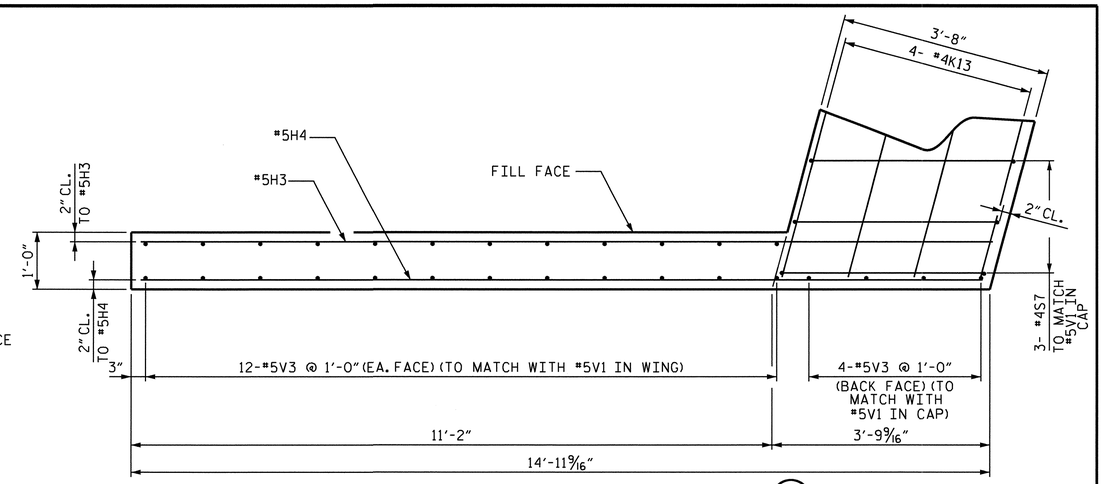

PLAN OF RIGHT WING (W2)

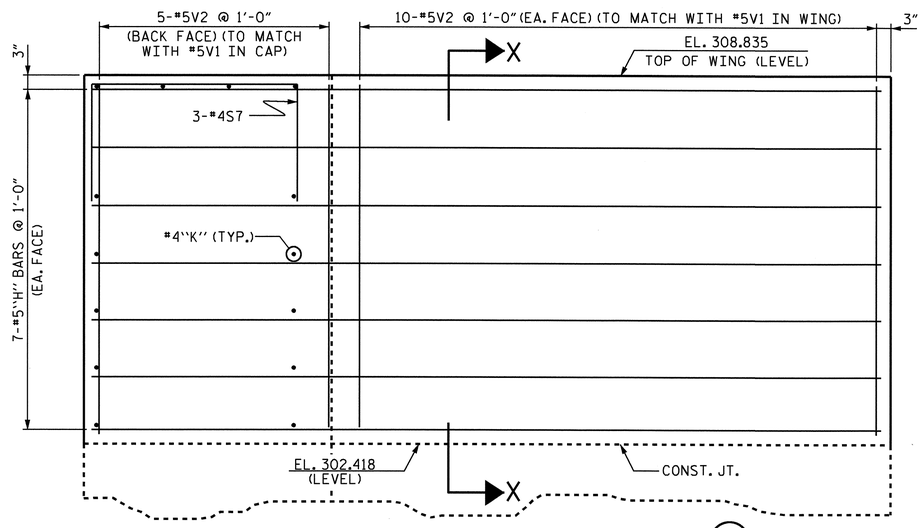

ELEVATION OF LEFT WING (W1)

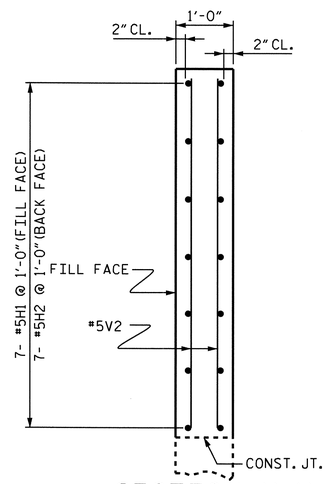

SECTION X-X

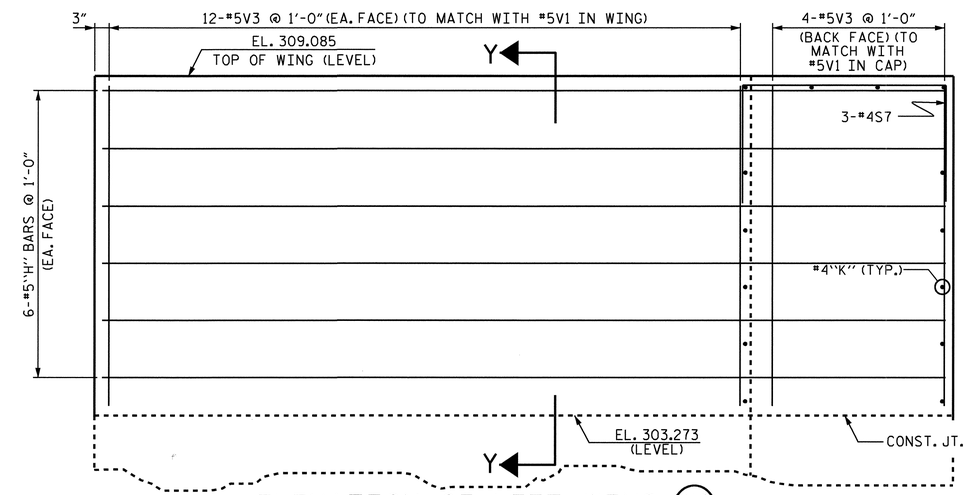

ELEVATION OF LEFT WING (W2)

PROJECT NO. U-4703

WAKE COUNTY

STATION: 33+54.00-L-

STATE OF NORTH CAROLINA
DEPARTMENT OF TRANSPORTATION
RALEIGH

SUPERSTRUCTURE
TOP OF WINGS
END BENT #1
(LEFT LANE)

NORTH CAROLINA PROFESSIONAL SEAL 10730 ENGINEER D. ANDRE DAVENPORT
2-3-10

REVISIONS						SHEET NO.
NO.	BY:	DATE:	NO.	BY:	DATE:	S-8
1			3			TOTAL SHEETS
2			4			89

DRAWN BY : H. T. BARBOUR DATE : 7-08-09
CHECKED BY : D.A. DAVENPORT DATE : 11/09

03-FEB-2010 12:09
Y:\Structures\tbarbour\Microstation\str1\U4703_sd_S*.dgn
ADAVENPORT

STR. #1

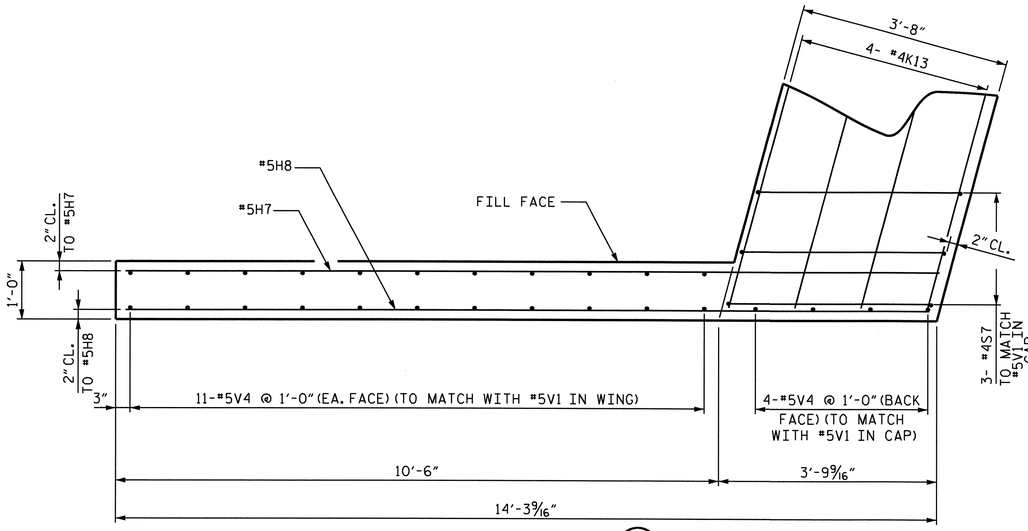

PLAN OF LEFT WING (W1)

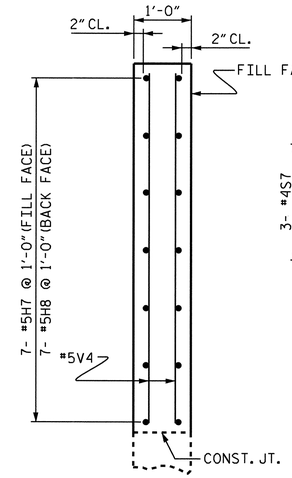

SECTION Y-Y

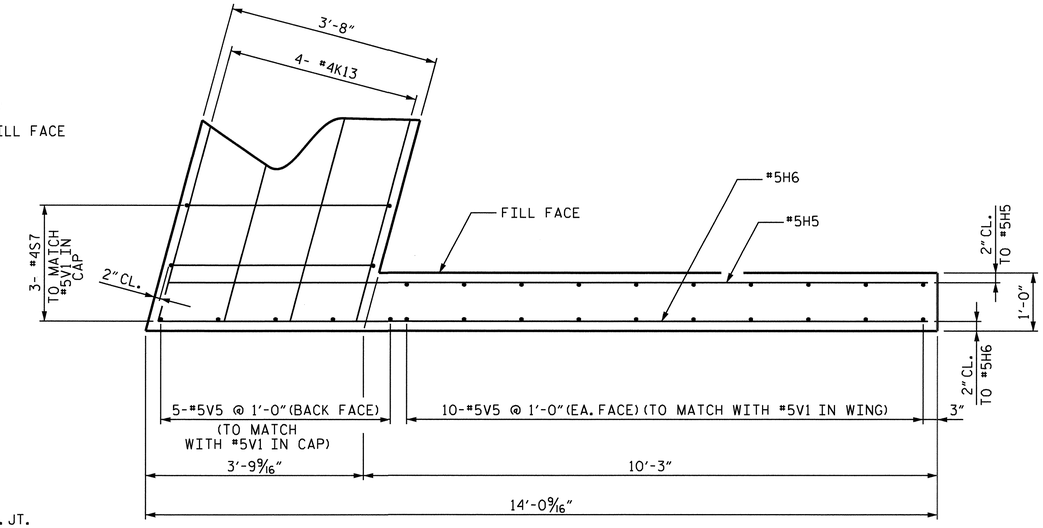

PLAN OF RIGHT WING (W2)

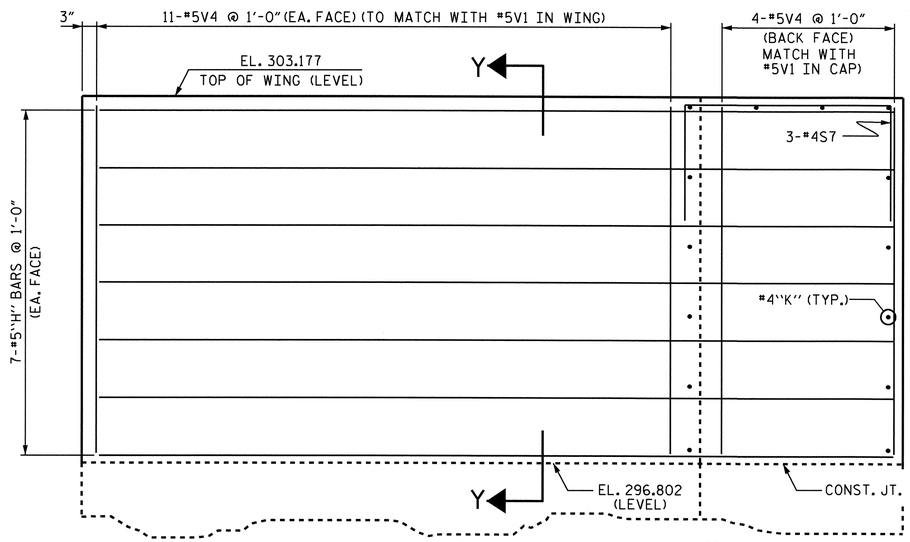

ELEVATION OF LEFT WING (W1)

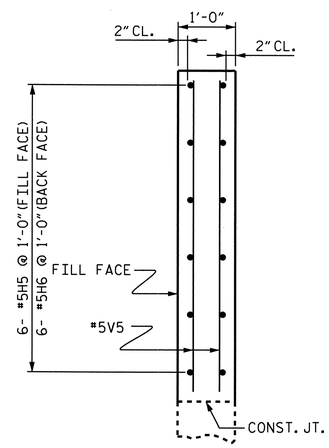

SECTION X-X

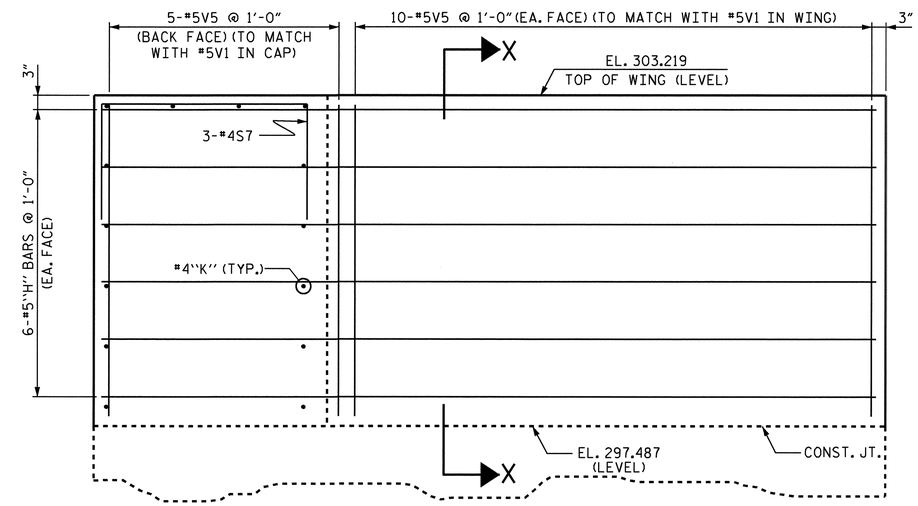

ELEVATION OF RIGHT WING (W2)

PROJECT NO. U-4703

WAKE COUNTY

STATION: 33+54.00-L-

STATE OF NORTH CAROLINA
DEPARTMENT OF TRANSPORTATION
RALEIGH

SUPERSTRUCTURE TOP OF WINGS END BENT #2 (LEFT LANE)

NORTH CAROLINA PROFESSIONAL SEAL 10730 ENGINEER D. ANDRE DAVENPORT

REVISIONS						SHEET NO.
NO.	BY:	DATE:	NO.	BY:	DATE:	S-9
1			3			TOTAL SHEETS
2			4			89

DRAWN BY : H. T. BARBOUR DATE : 7-08-09
CHECKED BY : D.A. DAVENPORT DATE : 11/09

03-FEB-2010 12:09
Y:\Structures\tbarbour\Microstation\str1\U4703_sd_S*.dgn
ADAVENPORT

STR. #1

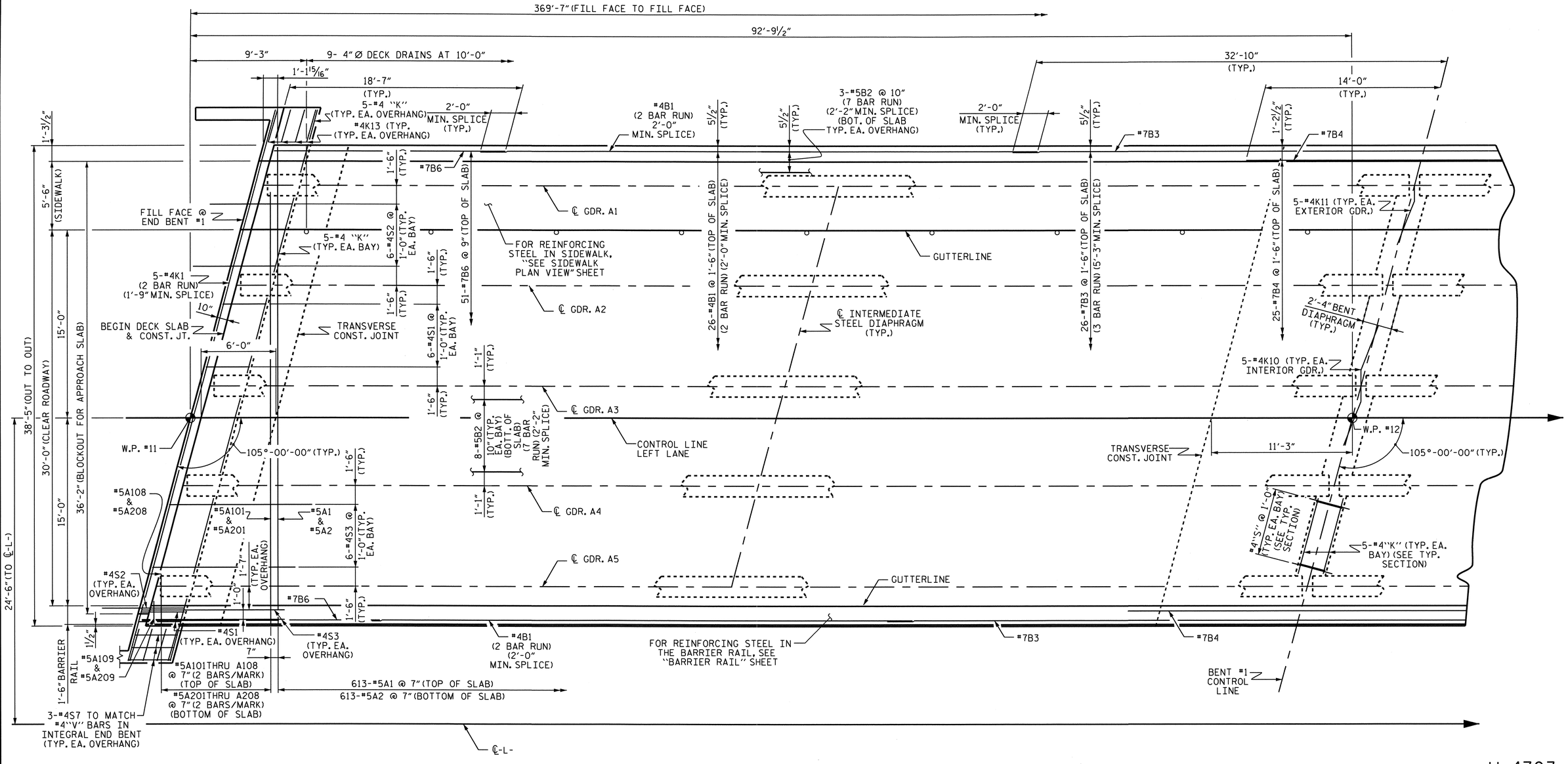

SPAN A

PROJECT NO. U-4703

WAKE COUNTY

STATION: 33+54.00-L-

SHEET 1 OF 4

STATE OF NORTH CAROLINA
DEPARTMENT OF TRANSPORTATION
RALEIGH

SUPERSTRUCTURE PLAN OF SPAN A (LEFT LANE)

NORTH CAROLINA PROFESSIONAL SEAL 10730 ENGINEER D. ANDREW DAVENPORT, JR.

REVISIONS						SHEET NO.
NO.	BY:	DATE:	NO.	BY:	DATE:	S-10
1			3			TOTAL SHEETS
2			4			89

DRAWN BY : H. T. BARBOUR DATE : 10-05-07
CHECKED BY : M. G. SHAIKH DATE : 4-08

04-FEB-2010 08:44
y:\structures\tbarbour\microstation\strl\u4703_sd_s*.dgn
ddavenport

STR. #1

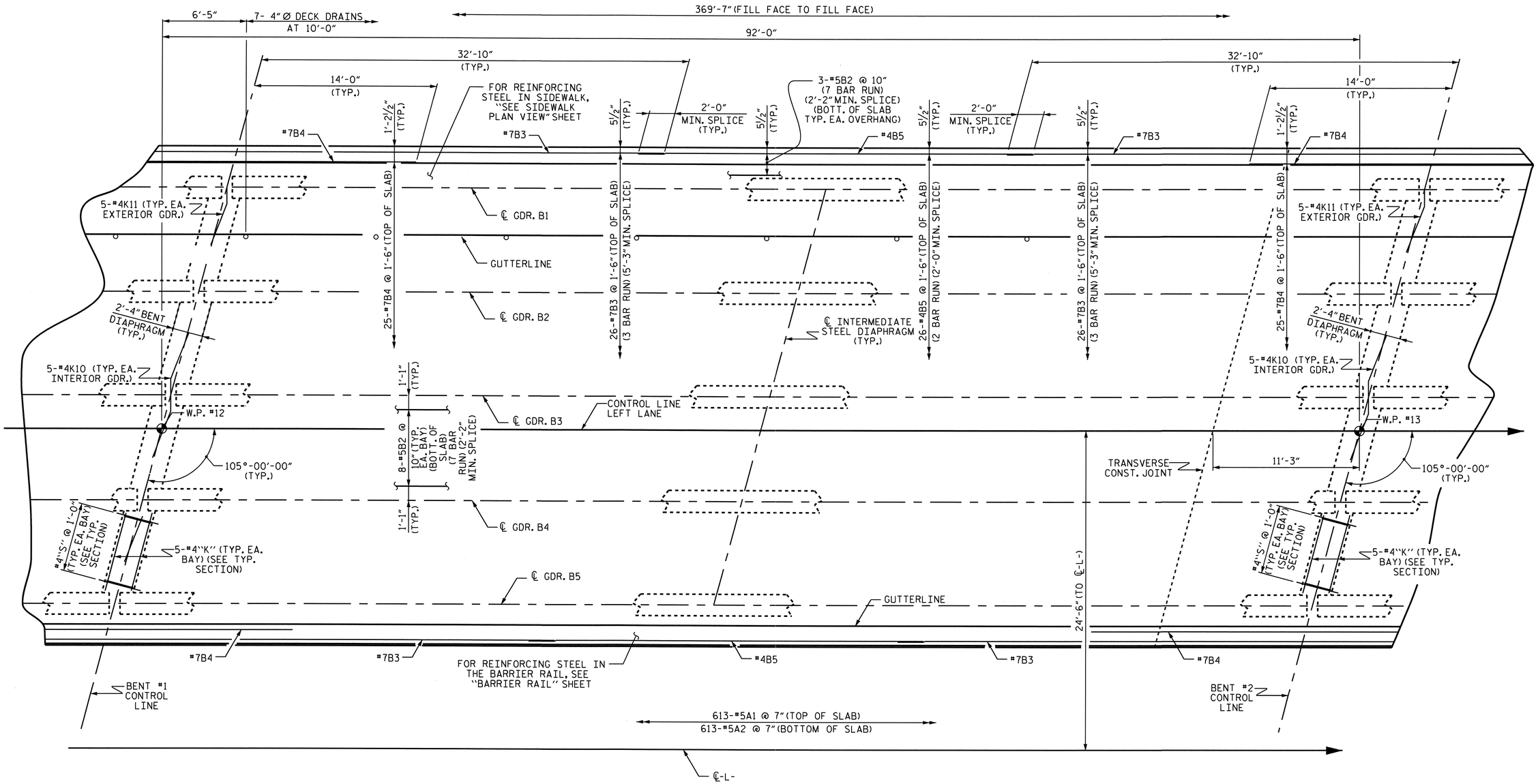

SPAN B

PROJECT NO. U-4703

WAKE COUNTY

STATION: 33+54.00-L-

SHEET 2 OF 4

STATE OF NORTH CAROLINA
DEPARTMENT OF TRANSPORTATION
RALEIGH

SUPERSTRUCTURE PLAN OF SPAN B (LEFT LANE)

NORTH CAROLINA PROFESSIONAL SEAL 10730 ENGINEER D. ANDRE' DAVENPORT

REVISIONS						SHEET NO.
NO.	BY:	DATE:	NO.	BY:	DATE:	S-11
1			3			TOTAL SHEETS
2			4			89

DRAWN BY : H. T. BARBOUR DATE : 10-05-07
CHECKED BY : M. G. SHAIKH DATE : 4-08

03-FEB-2010 12:08
Y:\Structures\tbarbour\Microstation\str1\U4703_sd_S*.dgn
ADAVENPORT

STR. #1

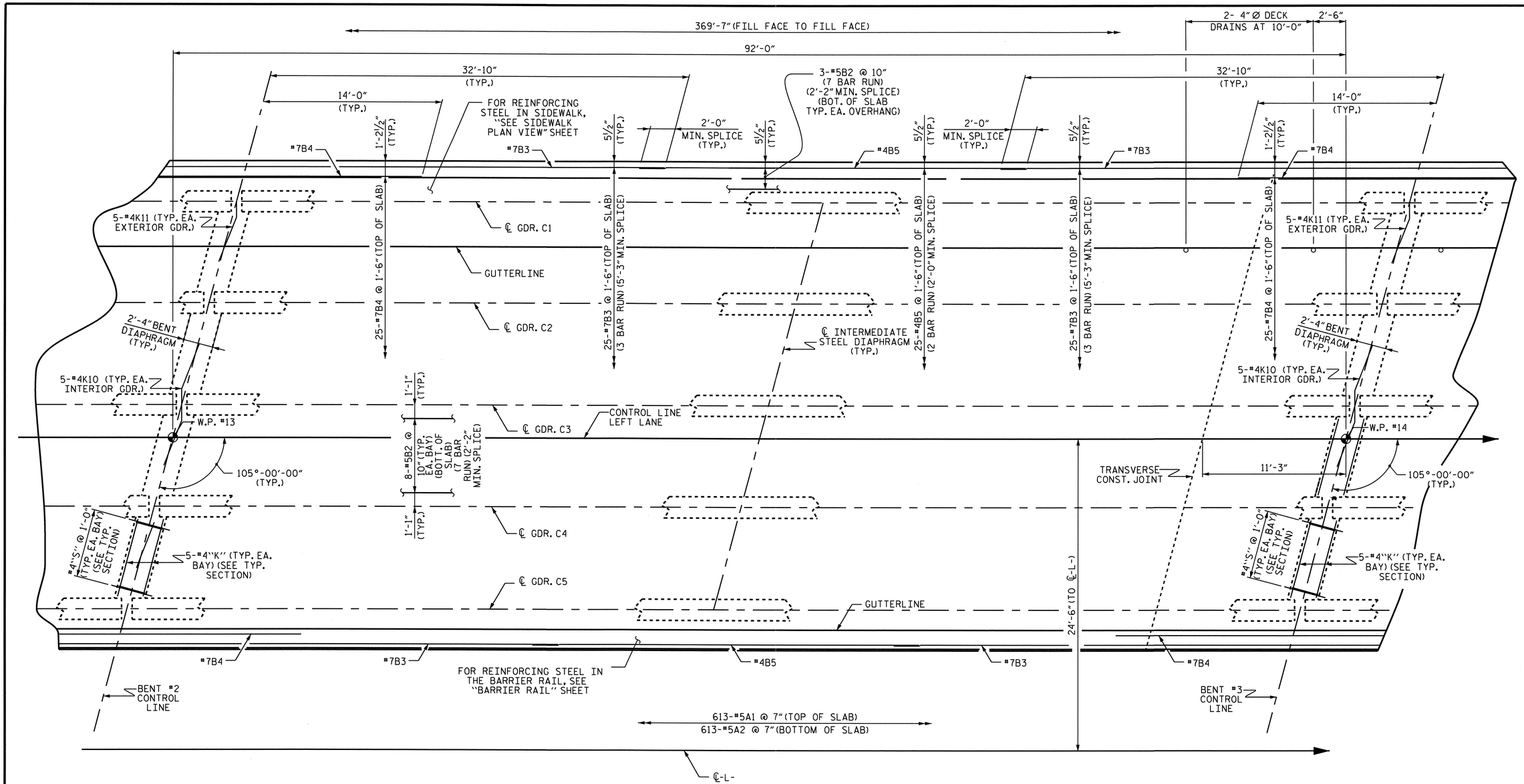

SPAN C

PROJECT NO. U-4703

WAKE COUNTY

STATION: 33+54.00-L-

SHEET 3 OF 4

STATE OF NORTH CAROLINA
DEPARTMENT OF TRANSPORTATION
RALEIGH

SUPERSTRUCTURE PLAN OF SPAN C (LEFT LANE)

NORTH CAROLINA PROFESSIONAL SEAL 10730 ENGINEER D. ANDREW DAVENPORT III

REVISIONS						SHEET NO.
NO.	BY:	DATE:	NO.	BY:	DATE:	S-12
1			3			TOTAL SHEETS
2			4			89

DRAWN BY : H. T. BARBOUR DATE : 10-05-07
CHECKED BY : M. G. SHAIKH DATE : 4-08

03-FEB-2010 12:08
Y:\Structures\tbarbour\Microstation\strl\U4703_sd_S*.dgn
ADAVENPORT

STR. #1

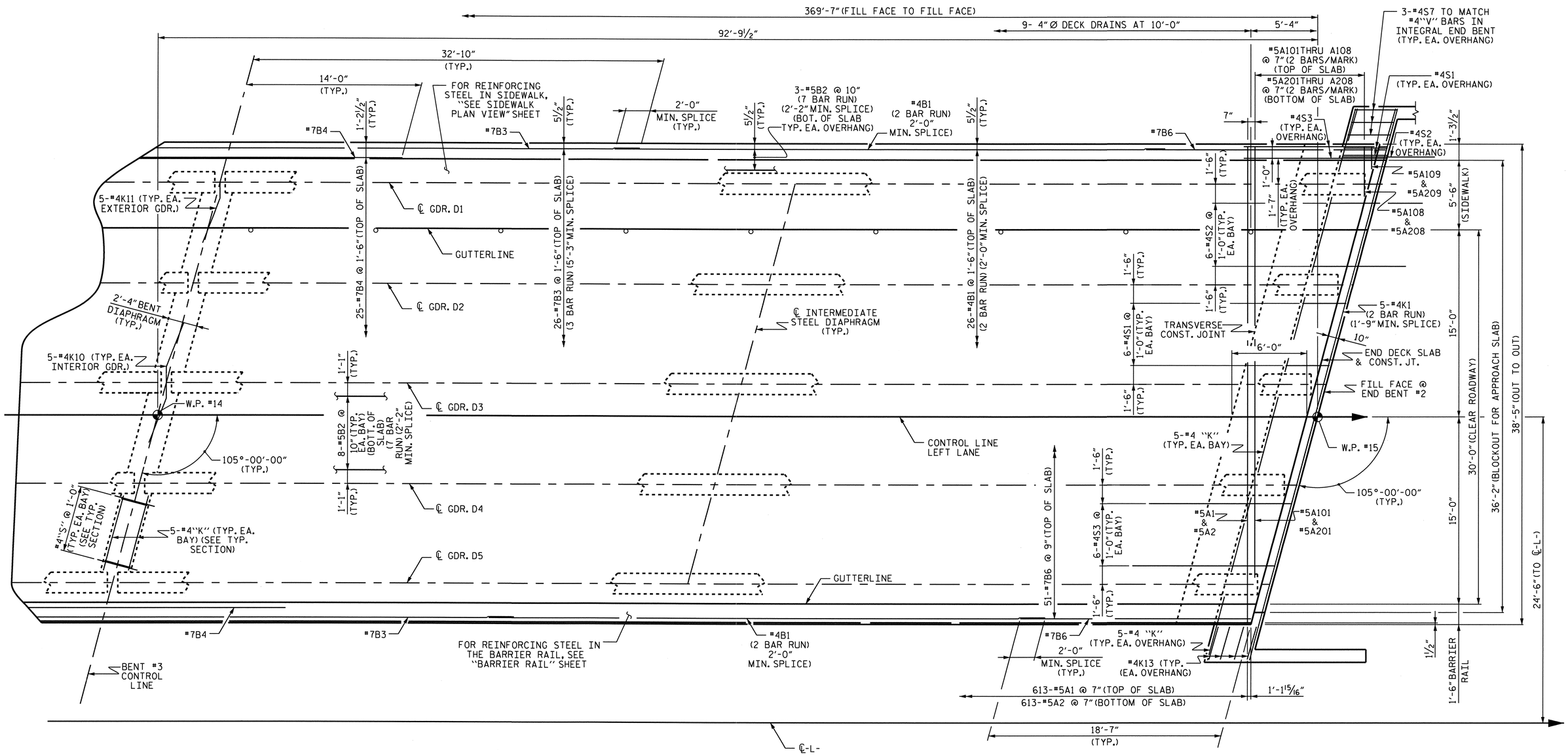

SPAN D

PROJECT NO. U-4703

WAKE COUNTY

STATION: 33+54.00-L-

SHEET 4 OF 4

STATE OF NORTH CAROLINA
DEPARTMENT OF TRANSPORTATION
RALEIGH

SUPERSTRUCTURE PLAN OF SPAN D (LEFT LANE)

NORTH CAROLINA PROFESSIONAL SEAL 10730 ENGINEER D. ANDREW DAVENPORT, JR.
2-5-10

REVISIONS						SHEET NO.
NO.	BY:	DATE:	NO.	BY:	DATE:	S-13
1			3			TOTAL SHEETS
2			4			89

DRAWN BY : H. T. BARBOUR DATE : 10-05-07
CHECKED BY : M. G. SHAIKH DATE : 4-08

05-FEB-2010 15:45
Y:\Structures\tbarbour\Microstation\str1\U4703_sd_S*.dgn
ADAVENPORT

STR. #1

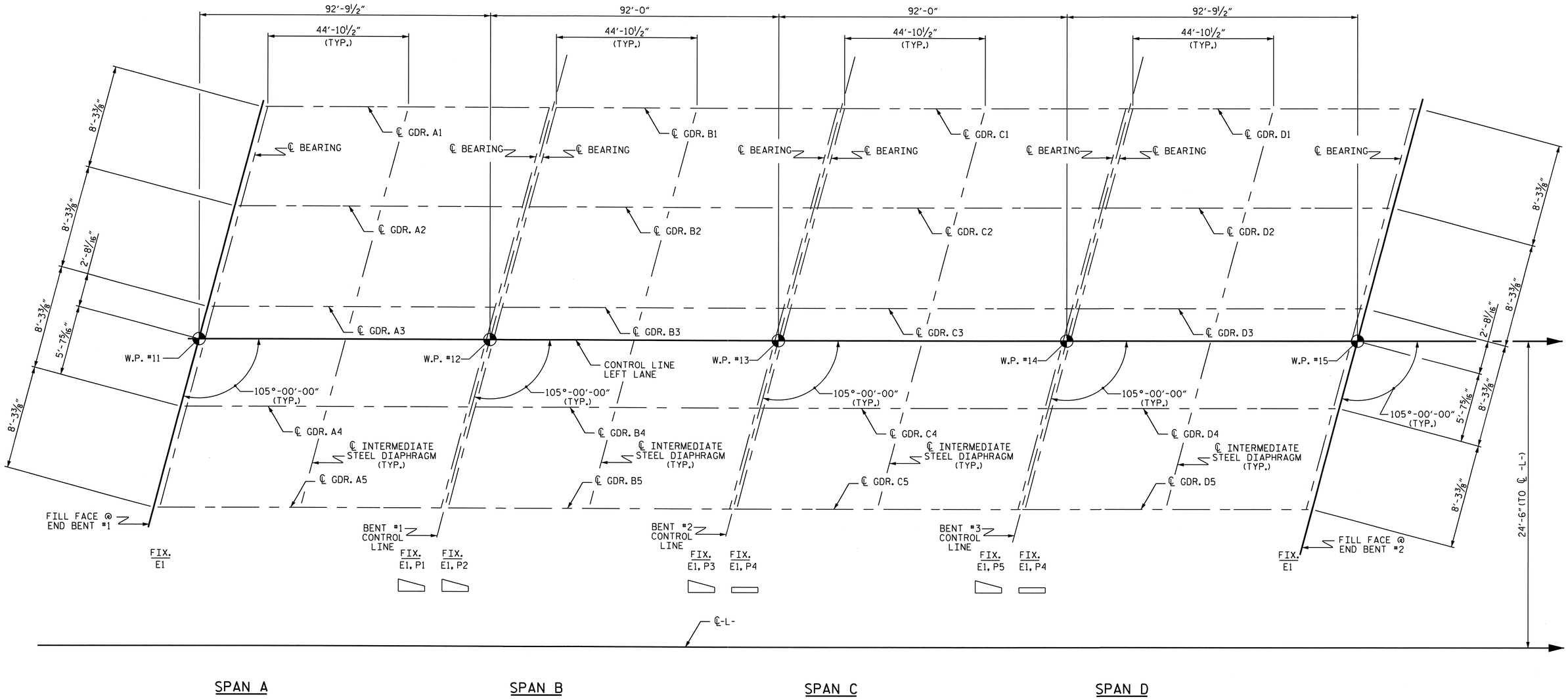

FRAMING PLAN

PROJECT NO. U-4703

WAKE COUNTY

STATION: 33+54.00-L-

STATE OF NORTH CAROLINA
DEPARTMENT OF TRANSPORTATION
RALEIGH

SUPERSTRUCTURE FRAMING PLAN (LEFT LANE)

NORTH CAROLINA PROFESSIONAL SEAL 10730 ENGINEER D. ANDREW DAVENPORT

D. Andrew Davenport 2-3-10

REVISIONS						SHEET NO.
NO.	BY:	DATE:	NO.	BY:	DATE:	S-14
1			3			TOTAL SHEETS
2			4			89

DRAWN BY : H. T. BARBOUR DATE : 10-26-07
CHECKED BY : M. G. SHAIKH DATE : 4-08

03-FEB-2010 12:04
Y:\Structures\tbarbour\Microstation\str1\U4703_sd_FP.dgn
ADAVENPORT

STR.#1

NCDOS

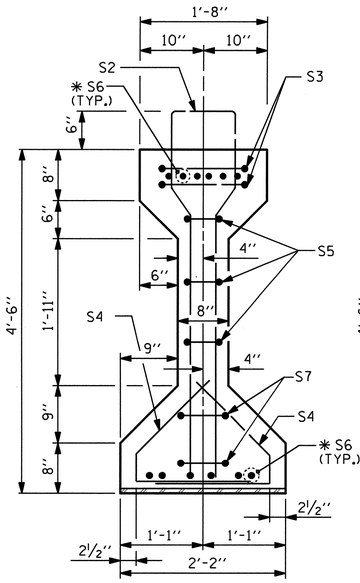

SECTION A-A

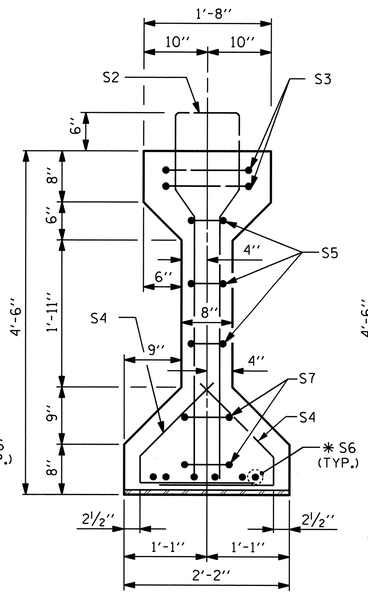

SECTION B-B

* FOR S6 BARS, SEE DETAIL "A" OF PRESTRESSED CONCRETE GIRDER CONTINUOUS FOR LIVE LOAD DETAILS SHEET

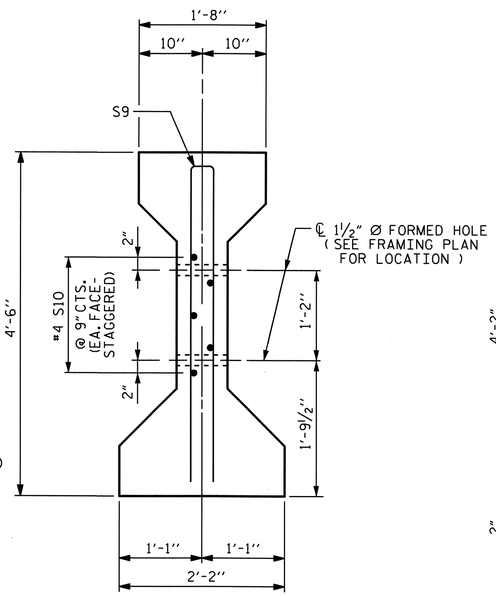

SECTION C-C

(S1 BARS NOT SHOWN)

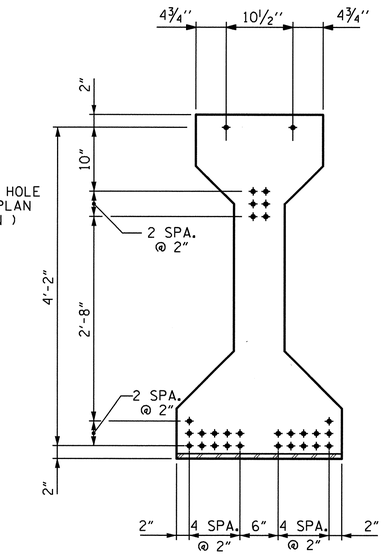

AT END OF GIRDER

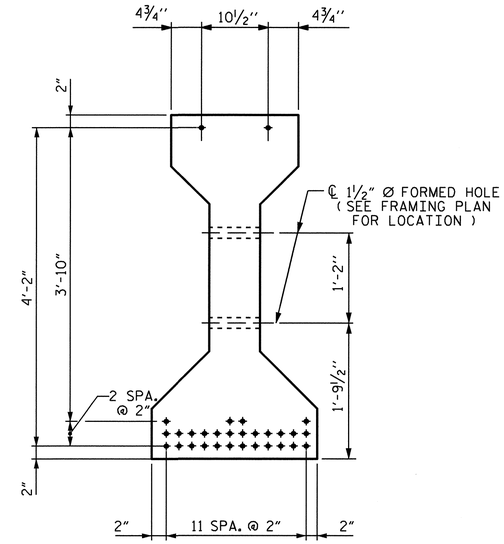

AT ℄ OF GIRDER

0.6" Ø LOW RELAXATION STRAND LAYOUT

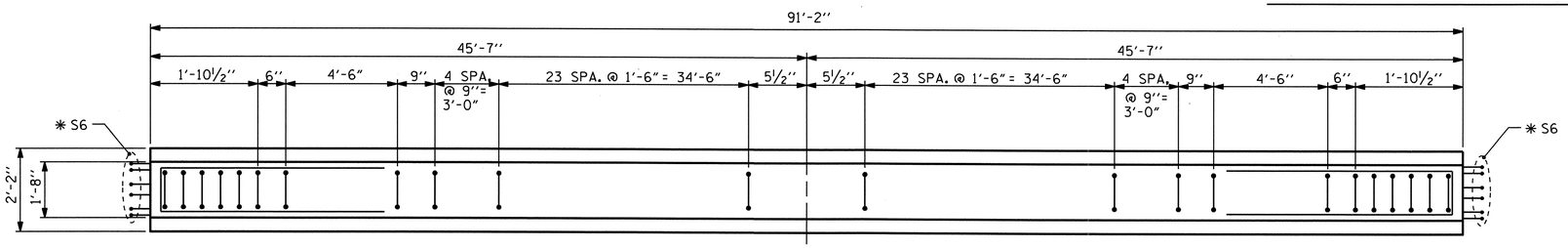

PLAN OF GIRDER

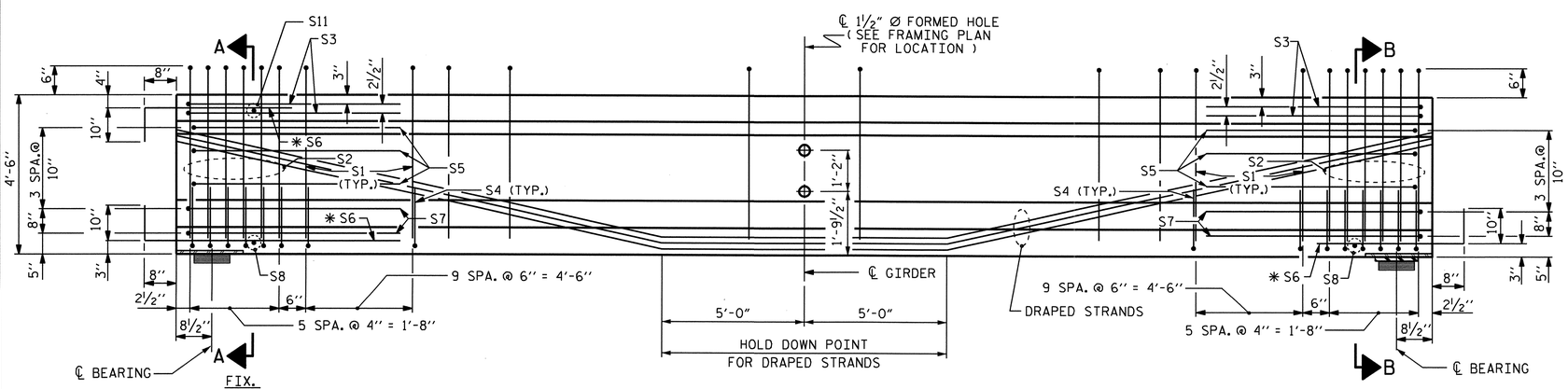

AT INTREGRAL END BENTS

ELEVATION OF GIRDER

(SEE PARTIAL ELEVATION FOR S9 AND S10 BARS)

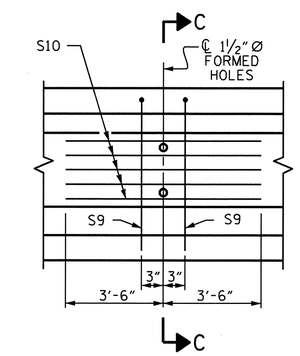

PARTIAL ELEVATION

0.6" Ø L. R. GRADE 270 STRANDS

AREA (SQUARE INCHES)	ULTIMATE STRENGTH (LBS. PER STRAND)	APPLIED PRESTRESS (LBS. PER STRAND)
0.217	58,600	43,950

REINFORCING STEEL FOR ONE GIRDER

BAR	NUMBER	SIZE	TYPE	LENGTH	WEIGHT
S1	76	#4	1	10'-8"	542
S2	12	#6	1	10'-8"	192
S3	4	#4	2	9'-1"	24
S4	64	#4	3	3'-5"	146
S5	6	#4	2	8'-5"	34
* S6	18	#5	STR	3'-8"	69
S7	4	#4	2	8'-7"	23
S8	2	#3	STR	1'-10"	1
S9	2	#5	2	8'-8"	18
S10	5	#4	STR	7'-0"	23
S11	1	#3	STR	1'-4"	1

* NOTE: S6 BARS SHALL BE BENT BEFORE SHIPMENT. HEAT BENDING SHALL NOT BE ALLOWED.

BAR TYPES

ALL BAR DIMENSIONS ARE OUT-TO-OUT

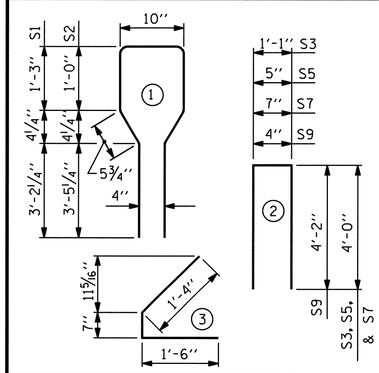

QUANTITIES FOR ONE GIRDER

	REINFORCING STEEL LB.	6000 PSI CONCRETE C.Y.	0.6" Ø L.R. STRANDS No.
GIRDERS 1-5	1073	18.5	30

GIRDERS REQUIRED

SPAN	NUMBER	LENGTH	TOTAL LENGTH
A	5	91.1667	455.833
D	5	91.1667	455.833
		TOTAL	911.666

PROJECT NO. U-4703

WAKE COUNTY

STATION: 33+54.00-L-

SHEET 1 OF 4

STATE OF NORTH CAROLINA
DEPARTMENT OF TRANSPORTATION
RALEIGH

AASHTO TYPE IV PRESTRESSED CONCRETE GIRDER CONTINUOUS FOR LIVE LOAD SPANS A & D (LT. LANE)

NORTH CAROLINA PROFESSIONAL SEAL 10730 ENGINEER D. ANDREW DAVENPORT, JR.

ASSEMBLED BY : H. T. BARBOUR	DATE : 12-05-07
CHECKED BY : M. G. SHAIKH	DATE : 4-08
DRAWN BY : ELR 8/91	REV. 2/6/97 EEM/RGW
CHECKED BY : GRP 8/91	REV. 7/17/98 RWW/LES
	REV. 10/17/00R RWW/LES

CADD STANDARD

REVISIONS								SHEET NO.
NO.	BY:	DATE:	NO.	BY:	DATE:			S-15
1			3					TOTAL SHEETS
2			4					89

STR. #1

22-MAR-2010 15:44
r:\structures\tbarbour\microstation\str1\u4703_sd_g*.dgn
dgladden

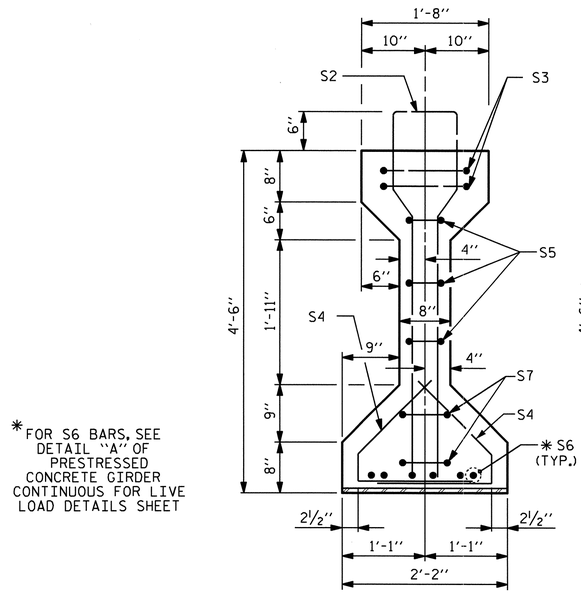

*FOR S6 BARS, SEE DETAIL "A" OF PRESTRESSED CONCRETE GIRDER CONTINUOUS FOR LIVE LOAD DETAILS SHEET

SECTION B-B

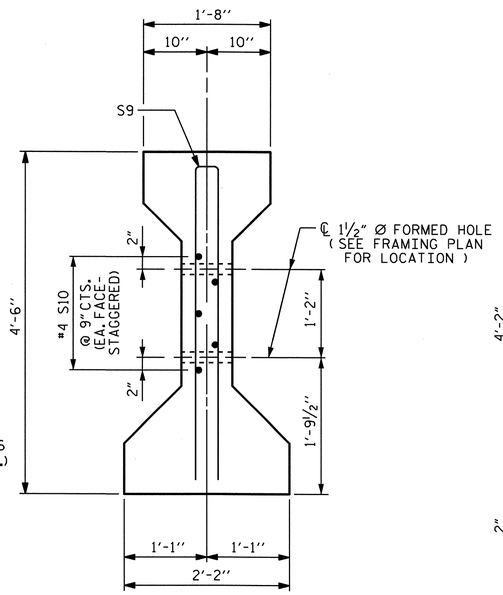

SECTION C-C

(S1 BARS NOT SHOWN)

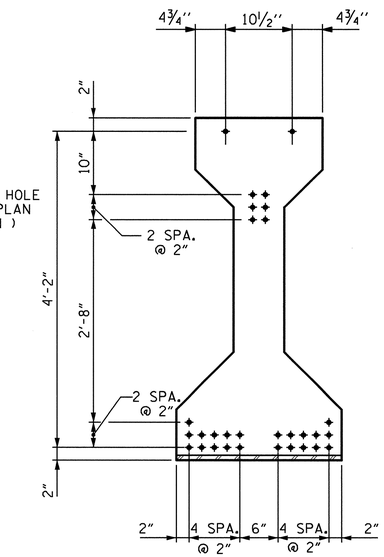

AT END OF GIRDER

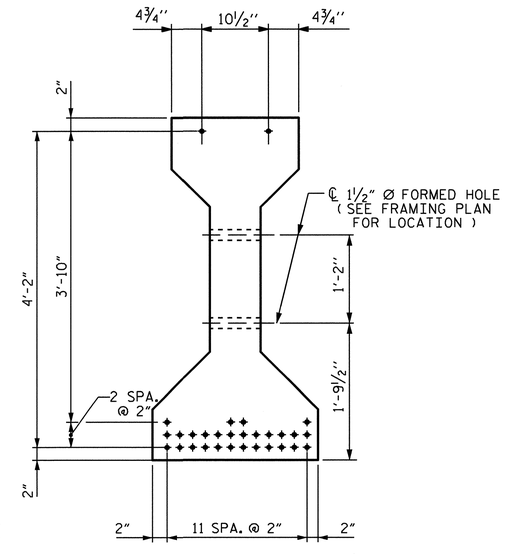

AT ℄ OF GIRDER

0.6" Ø LOW RELAXATION STRAND LAYOUT

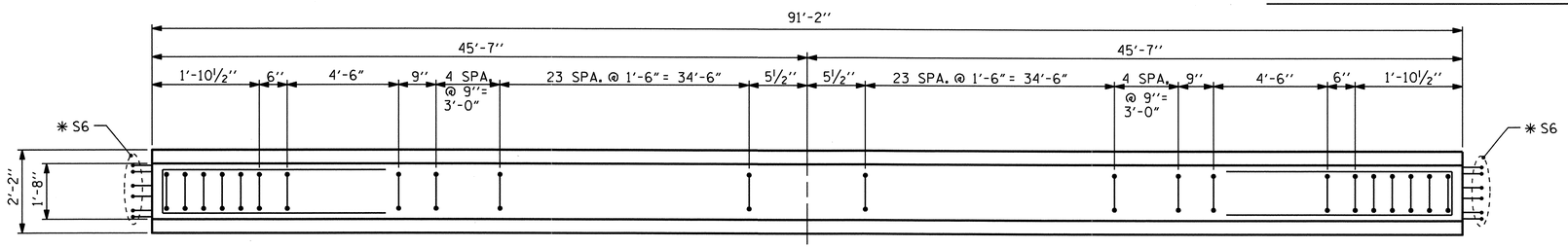

PLAN OF GIRDER

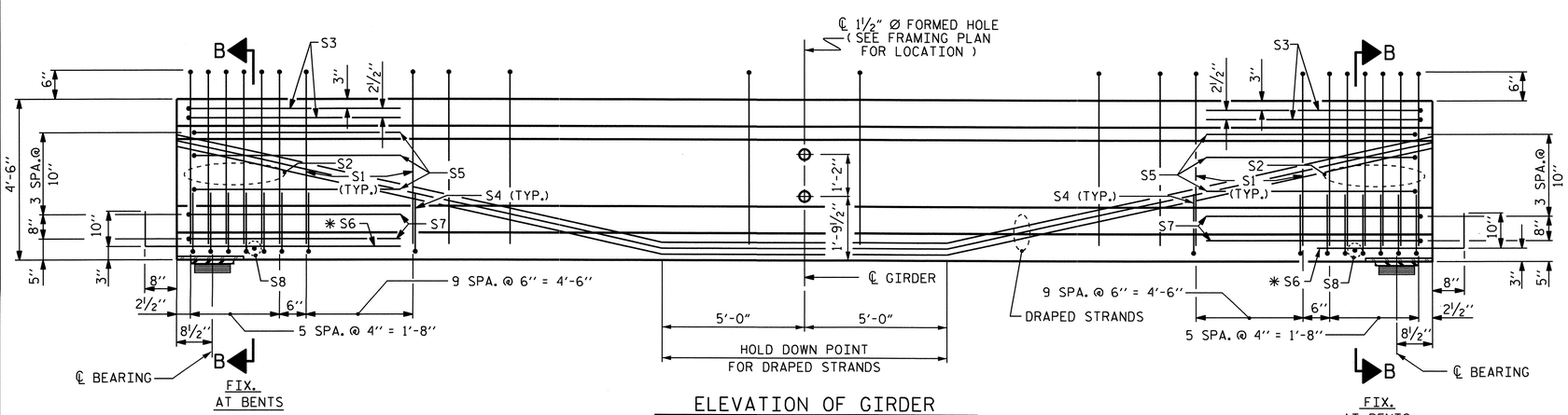

ELEVATION OF GIRDER

(SEE PARTIAL ELEVATION FOR S9 AND S10 BARS)

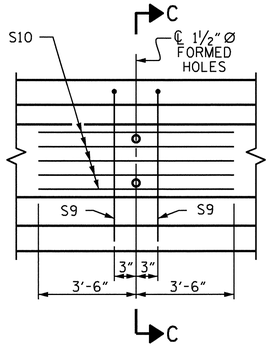

PARTIAL ELEVATION

0.6" Ø L. R. GRADE 270 STRANDS

AREA (SQUARE INCHES)	ULTIMATE STRENGTH (LBS. PER STRAND)	APPLIED PRESTRESS (LBS. PER STRAND)
0.217	58,600	43,950

REINFORCING STEEL FOR ONE GIRDER

BAR	NUMBER	SIZE	TYPE	LENGTH	WEIGHT
S1	76	#4	1	10'-8"	542
S2	12	#6	1	10'-8"	192
S3	4	#4	2	9'-1"	24
S4	64	#4	3	3'-5"	146
S5	6	#4	2	8'-5"	34
*S6	12	#5	STR	3'-8"	46
S7	4	#4	2	8'-7"	23
S8	2	#3	STR	1'-10"	1
S9	2	#5	2	8'-8"	18
S10	5	#4	STR	7'-0"	23

*NOTE: S6 BARS SHALL BE BENT BEFORE SHIPMENT. HEAT BENDING SHALL NOT BE ALLOWED.

BAR TYPES

ALL BAR DIMENSIONS ARE OUT-TO-OUT

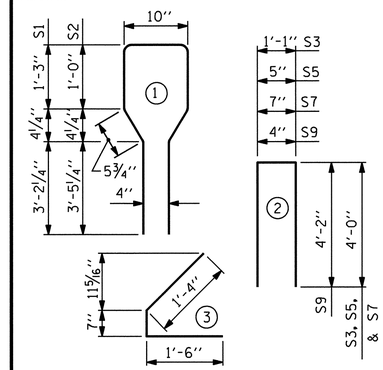

QUANTITIES FOR ONE GIRDER

	REINFORCING STEEL LB.	6000 PSI CONCRETE C.Y.	0.6" Ø L.R. STRANDS No.
GIRDERS 1-5	1049	18.5	30

GIRDERS REQUIRED

SPAN	NUMBER	LENGTH	TOTAL LENGTH
B	5	91.1667	455.83
C	5	91.1667	455.83
		TOTAL	911.666

PROJECT NO. U-4703

WAKE COUNTY

STATION: 33+54.00-L-

SHEET 2 OF 4

STATE OF NORTH CAROLINA
DEPARTMENT OF TRANSPORTATION
RALEIGH

AASHTO TYPE IV PRESTRESSED CONCRETE GIRDER CONTINUOUS FOR LIVE LOAD SPANS B & C (LT. LANE)

NORTH CAROLINA PROFESSIONAL SEAL 10730 ENGINEER D. ANDREW DAVENPORT, JR.

3/15/10

REVISIONS							SHEET NO.
NO.	BY:	DATE:	NO.	BY:	DATE:		S-16
1			3				TOTAL SHEETS
2			4				89

STR. #1

ASSEMBLED BY : H. T. BARBOUR	DATE : 12-05-07		CADD STANDARD
CHECKED BY : M. G. SHAIKH	DATE : 4-08		
DRAWN BY : ELR 8/91	REV. 2/6/97 EEM/RGW		
CHECKED BY : GRP 8/91	REV. 7/17/98 RWW/LES	REV. 10/17/00R RWW/LES	

22-MAR-2010 15:45
r:\structures\tbarbour\microstation\stri\u4703_sd_g*.dgn
dgladden

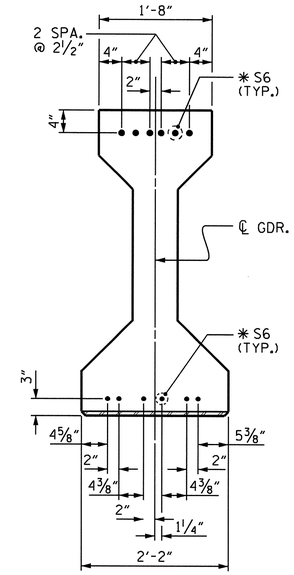

DETAIL "A"

(FOR AASHTO TYPE IV GIRDERS)

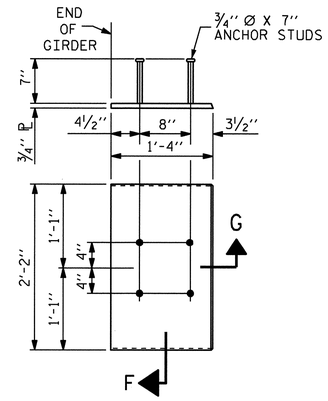

EMBEDDED PLATE "B-1" DETAILS FOR AASHTO TYPE IV GIRDER

(2 REQ'D PER GIRDER)

NOTES

ALL PRESTRESSING STRANDS SHALL BE 7-WIRE LOW-RELAXATION GRADE 270 STRANDS AND SHALL CONFORM TO AASHTO M203 EXCEPT FOR SAMPLING REQUIREMENTS WHICH SHALL BE IN ACCORDANCE WITH THE STANDARD SPECIFICATIONS.

ALL REINFORCING STEEL SHALL BE GRADE 60.

EMBEDDED PLATE "B-1" SHALL BE GALVANIZED IN ACCORDANCE WITH THE STANDARD SPECIFICATIONS. BEVEL EDGES OF PLATE "B-1" TO GIVE CLOSE FIT BUT NOT TIGHT FIT TO STEEL CASTING FORM.

ANCHOR STUDS SHALL CONFORM TO AASHTO M169 GRADES 1010 THROUGH 1020 OR APPROVED EQUAL, AND SHALL MEET THE TYPE "B" REQUIREMENTS OF SUBSECTION 7.3 OF THE ANSI/AASHTO/AWS D1.5 BRIDGE WELDING CODE.

AT ENDS OF GIRDERS TO BE EMBEDDED IN CONCRETE DIAPHRAGMS OR END WALLS, PRESTRESSING STRANDS MAY EXTEND A MAXIMUM OF 2" BEYOND THE GIRDER ENDS. OTHERWISE, PRESTRESSING STRANDS SHALL BE CUT FLUSH WITH THE GIRDER ENDS.

THE TRANSFER OF LOAD FROM THE ANCHORAGES TO THE GIRDER SHALL BE DONE WHEN CONCRETE HAS REACHED A COMPRESSIVE STRENGTH OF NOT LESS THAN 4600 PSI.

DEPENDING ON THE TYPE OF SYSTEM USED TO SUPPORT THE DECK SLAB FORMS, PRESET ANCHORS MAY BE NECESSARY IN THE PRESTRESSED CONCRETE GIRDER.

THE TOP SURFACE OF THE GIRDER, EXCLUDING THE OUTSIDE 4", SHALL BE RAKED TO A DEPTH OF ¼".

WHEN DRAPED STRANDS ARE DETAILED, THE LONGITUDINAL LOCATION OF THE HOLD DOWN DEVICES SHALL BE WITHIN 6" OF THE LOCATION SHOWN AND THE CENTER OF GRAVITY OF THE GROUP OF DRAPED STRANDS SHALL BE LOCATED WITHIN ½" OF THE THEORETICAL LOCATION SHOWN.

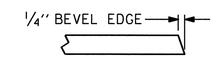

SECTION "G"

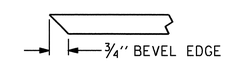

SECTION "F"

(SEE NOTES)

DEAD LOAD DEFLECTION TABLE FOR GIRDERS

0.6" Ø LOW RELAXATION	SPANS A, B, C & D										
	GIRDERS 1-5										
TENTH POINTS	0	.1	.2	.3	.4	.5	.6	.7	.8	.9	0
CAMBER (GIRDER ALONE IN PLACE) ↑	0.0	0.095	0.180	0.247	0.289	0.304	0.289	0.247	0.180	0.095	0.0
✱ DEFLECTION DUE TO SUPERIMPOSED D.L. ↓	0.0	0.040	0.075	0.103	0.120	0.126	0.120	0.103	0.075	0.040	0.0
FINAL CAMBER ↑	0.0	11/16"	1¼"	1¾"	2"	2⅛"	2"	1¾"	1¼"	11/16"	0.0

✱ INCLUDES FUTURE WEARING SURFACE IN SUPERIMPOSED DEAD LOAD.
ALL VALUES ARE SHOWN IN FEET (DECIMAL FORM), EXCEPT "FINAL CAMBER", WHICH IS GIVEN IN INCHES (FRACTION FORM).

PROJECT NO. U-4703
WAKE COUNTY
STATION: 33+54.00-L-

SHEET 3 OF 4

STATE OF NORTH CAROLINA
DEPARTMENT OF TRANSPORTATION
RALEIGH

PRESTRESSED CONCRETE GIRDER CONTINUOUS FOR LIVE LOAD DETAILS (LT. LANE)

NORTH CAROLINA PROFESSIONAL SEAL 10730 ENGINEER D. ANDREW DAVENPORT, JR.
D. Andrew Davenport 3-22-10

REVISIONS						SHEET NO.
NO.	BY:	DATE:	NO.	BY:	DATE:	S-17
1			3			TOTAL SHEETS
2			4			89

STR. #1

STD. NO. PCG11 (Sht. 3a)

ASSEMBLED BY : H. T. BARBOUR	DATE : 12-06-07
CHECKED BY : M. G. SHAIKH	DATE : 4-08
DRAWN BY : ELR 11/91	REV. 10/17/00 RWW/LES
CHECKED BY : GRP 11/91	REV. 7/10/01RR LES/RDR
	REV. 5/1/06 TLA/GM

22-MAR-2010 12:55
r:\structures\tbarbour\microstation\str1\u4703_sd_g*.dgn
dgladden

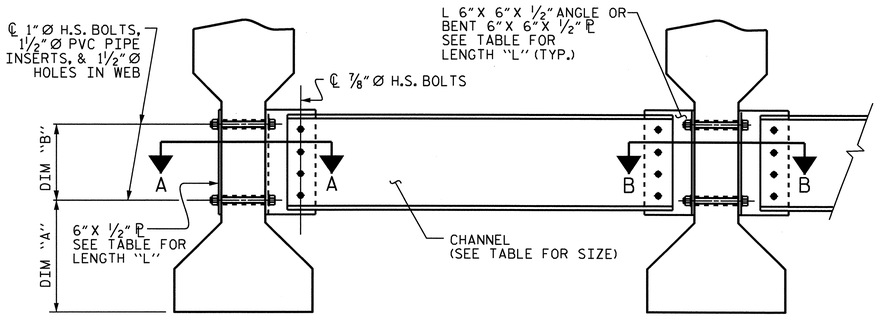

EXTERIOR GIRDER

INTERIOR GIRDER

PART SECTION AT INTERMEDIATE DIAPHRAGM

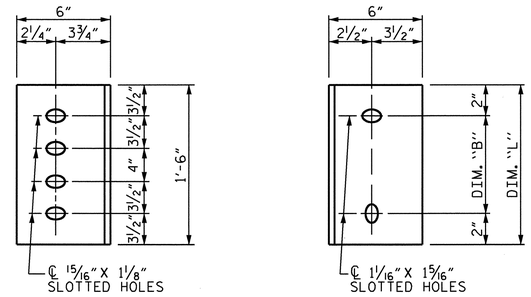

DIAPHRAGM FACE

WEB FACE

CONNECTOR PLATE DETAILS

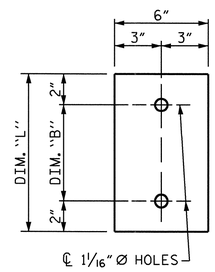

PLATE DETAILS

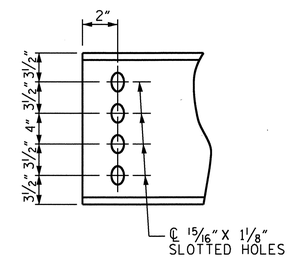

CHANNEL END

STRUCTURAL STEEL NOTES

ALL INTERMEDIATE DIAPHRAGM STEEL, CONNECTOR PLATES AND PLATE WASHERS SHALL BE AASHTO M270 GRADE 50 OR APPROVED EQUAL.

TENSION ON THE AASHTO M164 BOLTS THROUGH THE CHANNEL MEMBER SHALL BE CALIBRATED USING DIRECT TENSION INDICATOR WASHERS IN ACCORDANCE WITH THE STANDARD SPECIFICATIONS. FOR DIRECT TENSION INDICATORS, SEE SPECIAL PROVISIONS.

TENSION ON THE AASHTO M164 BOLTS THROUGH THE GIRDER WEB SHALL BE SNUG TIGHTENED FOLLOWED BY AN ADDITIONAL ¼ TURN.

THE CHANNELS, ANGLES, WASHERS, PLATE WASHERS, AND DIRECT TENSION INDICATORS SHALL BE GALVANIZED OR METALLIZED IN ACCORDANCE WITH THE STANDARD SPECIFICATIONS. FOR THERMAL SPRAYED COATINGS (METALLIZATION), SEE SPECIAL PROVISIONS.

FOR METALLIZATION, APPLY AN 8 MIL THICK 99.99 PERCENT ZINC (W-Zn-1) THERMAL SPRAYED COATING WITH A 0.5 MIL THICK SEAL COAT TO ALL STEEL DIAPHRAGM SURFACES IN ACCORDANCE WITH THE THERMAL SPRAYED COATINGS SPECIAL PROVISIONS AND SECTION 442 OF THE STANDARD SPECIFICATIONS.

GALVANIZE THE HIGH STRENGTH BOLTS, NUTS, AND WASHERS IN ACCORDANCE WITH THE STANDARD SPECIFICATIONS. FOR HIGH STRENGTH BOLTS, SEE SPECIAL PROVISIONS.

USE A MINIMUM 7/16" THICK PLATE WASHER WITH STANDARD HOLES UNDER EACH BOLT HEAD AND NUT. THE PLATE WASHERS SHALL HAVE SUFFICIENT SIZE TO COVER THE HOLES AFTER INSTALLATION. DIRECT TENSION INDICATORS ARE TO BE USED IN CONJUNCTION WITH THE PLATE WASHERS.

PROVIDE SUFFICIENT LENGTH OF ALL BOLTS TO ACCOMMODATE WASHERS, DIRECT TENSION INDICATORS, THE THICKNESS OF CONNECTING MEMBER PLUS AT LEAST ¼" PROJECTION BEYOND THE NUT.

INTERMEDIATE DIAPHRAGM ASSEMBLY SHALL COMPLY WITH SECTION 1072 OF THE STANDARD SPECIFICATIONS.

CONTRACTOR SHALL SUBMIT TWO SETS OF WORKING DRAWINGS FOR THE INTERMEDIATE DIAPHRAGM ASSEMBLY FOR REVIEW, COMMENTS AND ACCEPTANCE. AFTER REVIEW, COMMENTS, AND ACCEPTANCE, SUBMIT SEVEN SETS FOR DISTRIBUTION.

IN THE EXTERIOR BAYS, TEMPORARY STRUTS SHALL BE PLACED BETWEEN PRESTRESSED GIRDERS ADJACENT TO THE STEEL DIAPHRAGMS. STRUTS SHALL REMAIN IN PLACE 3 DAYS AFTER CONCRETE IS PLACED. ALL AASHTO M164 H.S. BOLTS SHALL BE FULLY TIGHTENED AFTER THE STRUTS HAVE BEEN REMOVED.

THE COST OF THE STEEL DIAPHRAGMS AND ASSEMBLIES SHALL BE INCLUDED IN THE UNIT PRICE BID FOR PRESTRESSED CONCRETE GIRDERS.

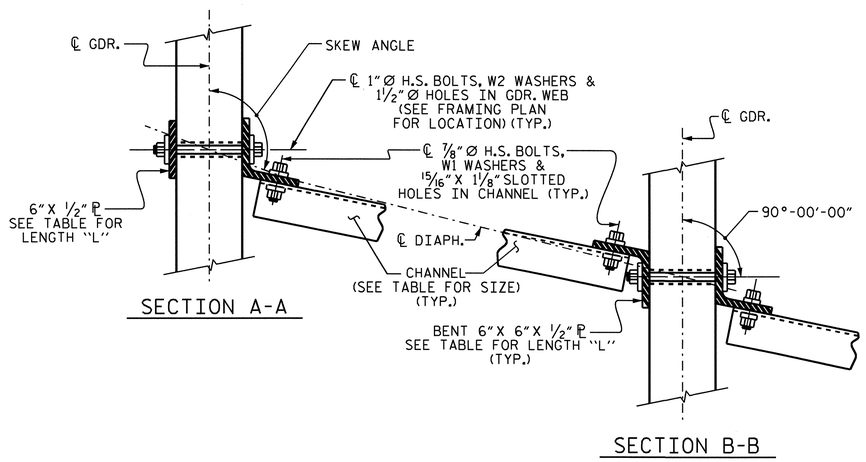

SECTION A-A

SECTION B-B

CONNECTION DETAILS

TABLE

GIRDER TYPE	CHANNEL SIZE	DIM "A"	DIM "B"	DIM "L"
IV	MC 18 x 42.7	1'-9½"	1'-2"	1'-6"

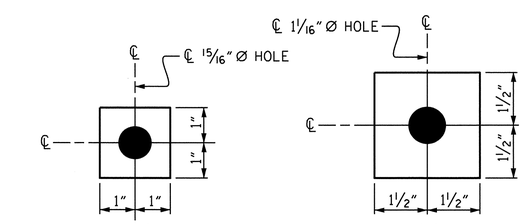

W1

ℙ 7/16"X 2"X 2"

USE WITH ⅞"Ø HVY. HEX NUTS & DIRECT TENSION INDICATOR WASHERS AT DIAPHRAGM CHANNEL TO CONNECTOR PLATE CONNECTIONS

W2

ℙ 7/16"X 3"X 3"

USE WITH 1"Ø HVY. HEX NUTS AT CONNECTOR PLATE TO GIRDER CONNECTIONS

WASHER DETAILS

PROJECT NO. U-4703

WAKE COUNTY

STATION: 33+54.00-L-

SHEET 4 OF 4

STATE OF NORTH CAROLINA
DEPARTMENT OF TRANSPORTATION
RALEIGH

INTERMEDIATE STEEL DIAPHRAGMS FOR TYPE IV PRESTRESSED CONCRETE GIRDERS (LEFT LANE)

NORTH CAROLINA PROFESSIONAL SEAL 10730 ENGINEER D. ANDRE DAVENPORT, JR.

REVISIONS						
NO.	BY:	DATE:	NO.	BY:	DATE:	
1			3			
2			4			

SHEET NO. S-18

TOTAL SHEETS 89

ASSEMBLED BY :	H. T. BARBOUR	DATE :	12-05-07
CHECKED BY :	M. G. SHAIKH	DATE :	4-08
DRAWN BY : TLA 6/05	ADDED 10/21/05		
CHECKED BY : VC 6/05	REV. 5/1/06R KMM/GM		

22-MAR-2010 14:31
r:\structures\tbarbour\microstation\str1\u4703_sd_fp.dgn
dgladden

STR.#1

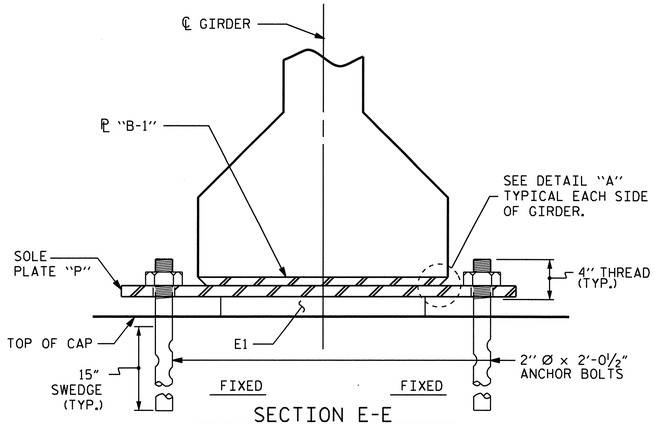

SECTION E-E

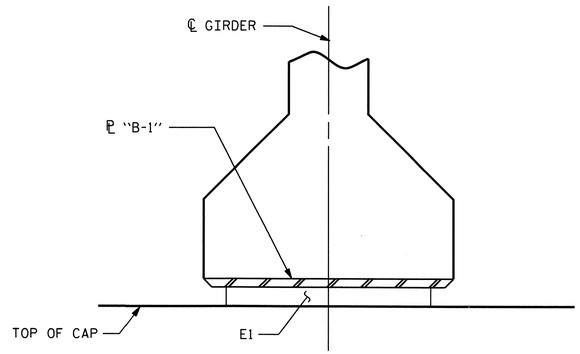

SECTION F-F

LOAD RATINGS	
	MAX.D.L.+ L.L.
TYPE V	180 K

NOTES

AT ALL FIXED POINTS OF SUPPORT, NUTS FOR ANCHOR BOLTS ARE TO BE TIGHTENED FINGER TIGHT AND THEN BACKED OFF ½ TURN. THE THREAD OF THE NUT AND BOLT SHALL THEN BE BURRED WITH A SHARP POINTED TOOL.

STEEL SOLE PLATES, ANCHOR BOLTS, NUTS, AND WASHERS SHALL BE GALVANIZED IN ACCORDANCE WITH THE STANDARD SPECIFICATIONS.

PRIOR TO WELDING, GRIND THE GALVANIZED SURFACE OF THE PORTION OF THE EMBEDDED PLATE AND SOLE PLATE THAT ARE TO BE WELDED. AFTER WELDING, DAMAGED GALVANIZED SURFACES SHALL BE REPAIRED IN ACCORDANCE WITH THE STANDARD SPECIFICATIONS.

WHEN WELDING THE SOLE PLATE TO THE EMBEDDED PLATE IN THE GIRDER, USE TEMPERATURE INDICATING WAX PENS, OR OTHER SUITABLE MEANS, TO ENSURE THAT THE TEMPERATURE OF THE SOLE PLATE DOES NOT EXCEED 300°F. TEMPERATURES ABOVE THIS MAY DAMAGE THE ELASTOMER.

SOLE PLATE "P", BOLTS, NUTS AND WASHERS SHALL BE INCLUDED IN THE PAY ITEM FOR PRESTRESSED CONCRETE GIRDERS.

ANCHOR BOLTS SHALL MEET THE REQUIREMENTS OF ASTM A449. NUTS SHALL MEET THE REQUIREMENTS OF AASHTO M291-DH OR AASHTO M292-2H. WASHERS SHALL MEET THE REQUIREMENTS OF AASHTO M293. NO SHOP DRAWINGS ARE REQUIRED FOR ANCHOR BOLTS, NUTS AND WASHERS. SHOP INSPECTION IS REQUIRED.

ALL SURFACES OF BEARING PLATES SHALL BE SMOOTH AND STRAIGHT.

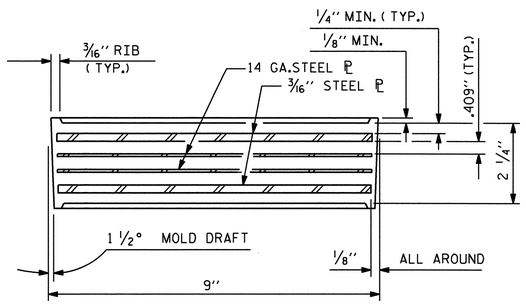

TYPICAL SECTION OF ELASTOMERIC BEARINGS

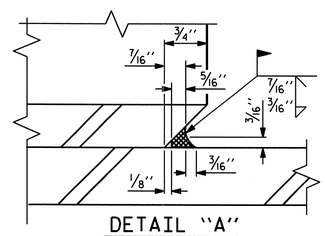

DETAIL "A"

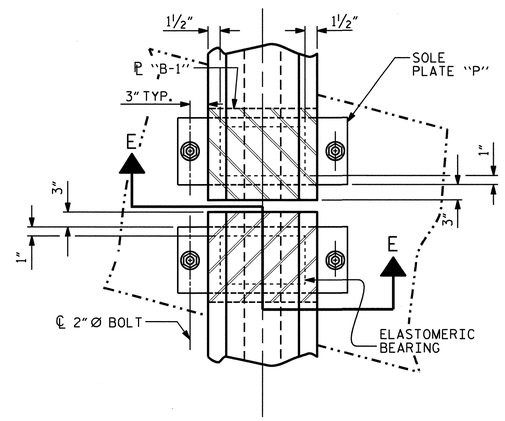

TYPICAL HALF-PLAN
(SHOWING CONTINUOUS BENT)

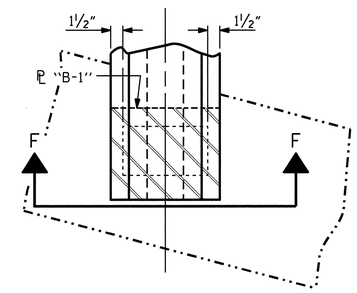

TYPICAL HALF-PLAN
(SHOWING INTEGRAL END BENT)

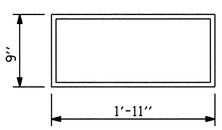

E1 (40 REQ'D)

PLAN VIEW OF ELASTOMERIC BEARING

TYPE V

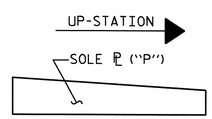

SOLE ℗ PLACEMENT DETAIL

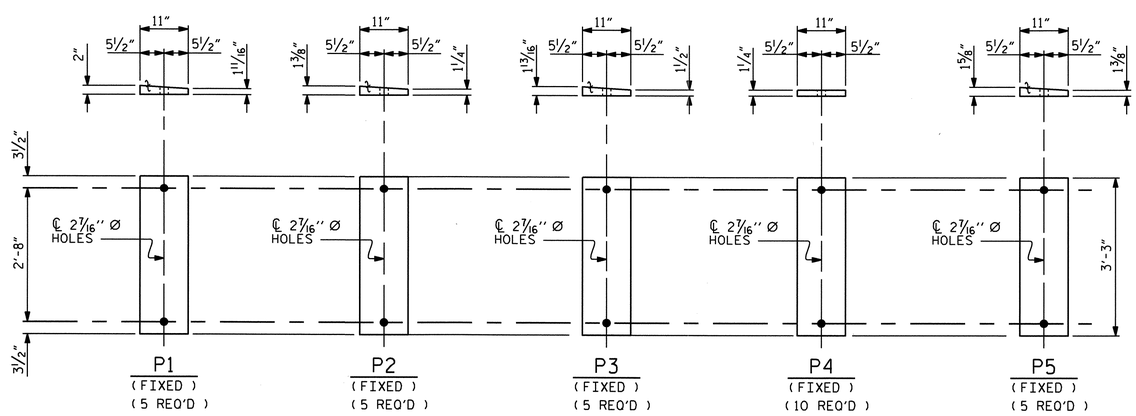

SOLE PLATE DETAILS ("P")

PROJECT NO. U-4703

WAKE COUNTY

STATION: 33+54.00-L-

STATE OF NORTH CAROLINA
DEPARTMENT OF TRANSPORTATION
RALEIGH

ELASTOMERIC BEARING DETAILS

PRESTRESSED CONCRETE GIRDER
SUPERSTRUCTURE LEFT LANE

NORTH CAROLINA PROFESSIONAL SEAL 10730 ENGINEER D. ANDRE DAVENPORT, JR.

REVISIONS						SHEET NO. S-19
NO.	BY:	DATE:	NO.	BY:	DATE:	TOTAL SHEETS 89
1			3			
2			4			

ASSEMBLED BY :	H. T. BARBOUR	DATE :	2-15-08
CHECKED BY :	M. G. SHAIKH	DATE :	4-08
DRAWN BY : EEM 2/97	REV. 8/16/99	RWW/LES	
CHECKED BY : VAP 2/97	REV. 10/17/00	RWW/LES	
	REV. 5/1/06	TLA/GM	

23-MAR-2010 08:17
Z:\Structures\tbarbour\Microstation\str1\U4703_sd_BG.dgn
adavenport

STD. NO. EB4 (SHT 2)

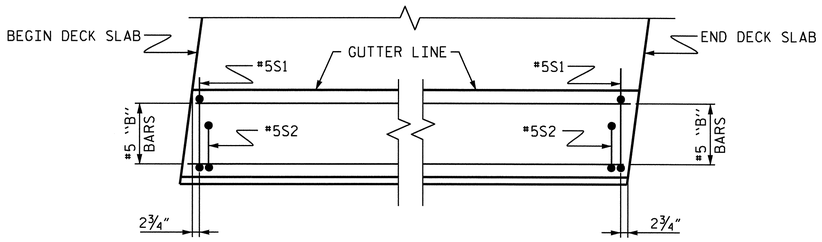

PLAN

END OF RAIL DETAILS

BILL OF MATERIAL

FOR CONCRETE BARRIER RAIL ONLY

BAR	NO.	SIZE	TYPE	LENGTH	WEIGHT
* S1	368	#5	1	4'-8"	1791
* S2	368	#5	2	5'-2"	1983
* B1	98	#5	STR	22'-7"	2308
* B2	14	#5	STR	13'-0"	190
* B3	14	#5	STR	13'-2"	192

* EPOXY COATED REINFORCING STEEL	6464 LBS.
CLASS AA CONCRETE	37.0 CU. YDS.
CONCRETE BARRIER RAIL	367'-10 5/16" LIN. FT.

BAR TYPES

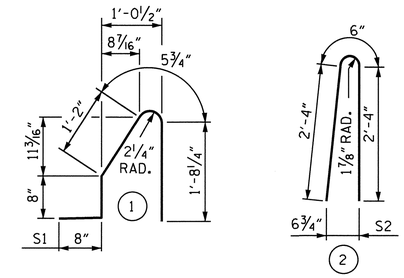

ALL BAR DIMENSIONS ARE OUT TO OUT

NOTES

THE BARRIER RAIL IN EACH CONTINUOUS UNIT SHALL NOT BE CAST UNTIL ALL SLAB CONCRETE IN THAT UNIT HAS BEEN CAST AND HAS REACHED A MINIMUM COMPRESSIVE STRENGTH OF 3,000 PSI.

ALL REINFORCING STEEL IN BARRIER RAILS SHALL BE EPOXY COATED.

VERTICAL GROOVED CONTRACTION JOINTS, ½" IN DEPTH, SHALL BE TOOLED IN ALL EXPOSED FACES OF THE BARRIER RAIL AND IN ACCORDANCE WITH ARTICLE 825-10(B) OF THE STANDARD SPECIFICATIONS. THE CONTRACTION JOINT SHALL BE LOCATED AT EACH THIRD POINT BETWEEN BARRIER RAIL EXPANSION JOINTS. ONLY ONE CONTRACTION JOINT IS REQUIRED AT MIDPOINT OF BARRIER RAIL SEGMENTS LESS THAN 20 FEET IN LENGTH AND NO CONTRACTION JOINTS ARE REQUIRED FOR THOSE SEGMENTS LESS THAN 10 FEET IN LENGTH.

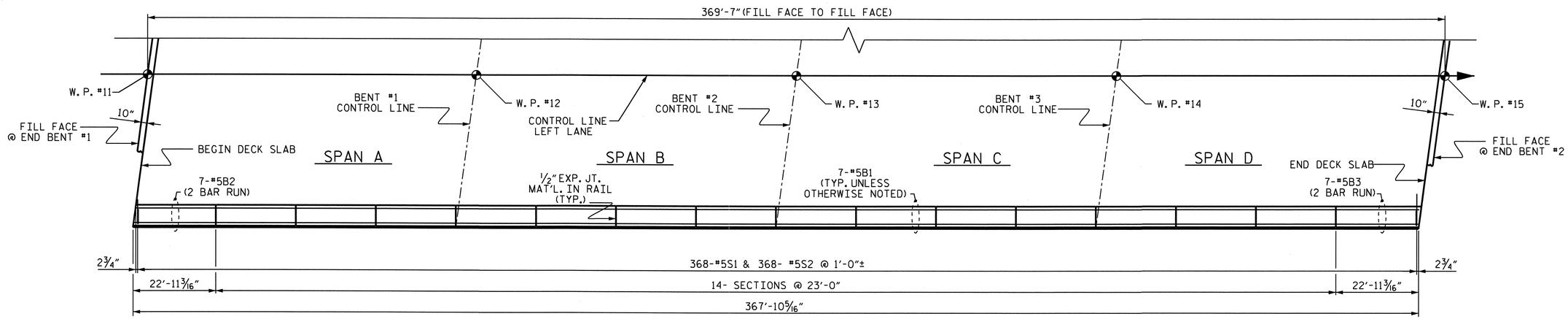

PLAN

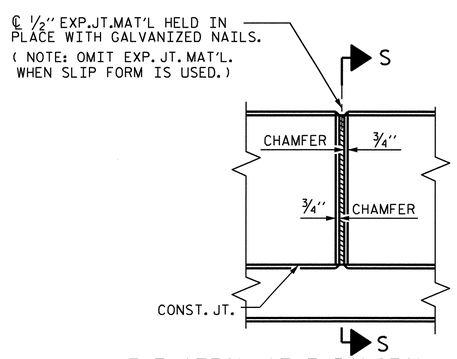

ELEVATION AT EXPANSION JOINTS

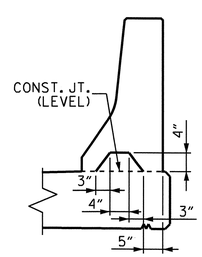

SECTION S-S

@ DAM IN OPEN JOINT (THIS IS TO BE USED ONLY WHEN SLIP FORM IS USED)

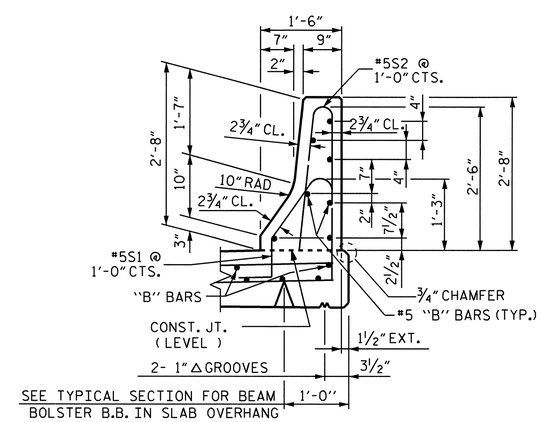

SECTION THRU RAIL

BARRIER RAIL DETAILS

PROJECT NO. U-4703

WAKE COUNTY

STATION: 33+54.00-L-

STATE OF NORTH CAROLINA
DEPARTMENT OF TRANSPORTATION
RALEIGH

CONCRETE BARRIER RAIL LEFT LANE

NORTH CAROLINA PROFESSIONAL SEAL 10730 ENGINEER D. ANDREW DAVENPORT, JR.

REVISIONS						SHEET NO.
NO.	BY:	DATE:	NO.	BY:	DATE:	S-20
1			3			TOTAL SHEETS
2			4			89

DRAWN BY : H. T. BARBOUR DATE : 2-15-08
CHECKED BY : M. G. SHAIKH DATE : 4-08

04-FEB-2010 11:37
Y:\Structures\tbarbour\Microstation\strl\U4703_sd_BR.dgn
ddavenport

STR. #1

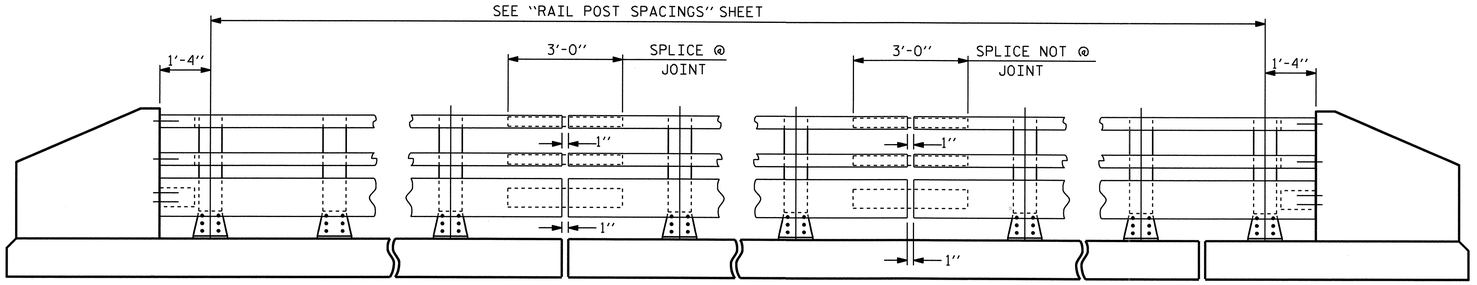

NOTE:
FOR ATTACHMENT OF METAL RAIL TO END POST, SEE SHEET S-23.

ELEVATION

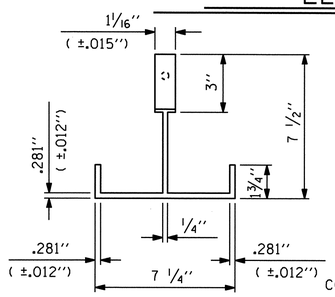

PLAN

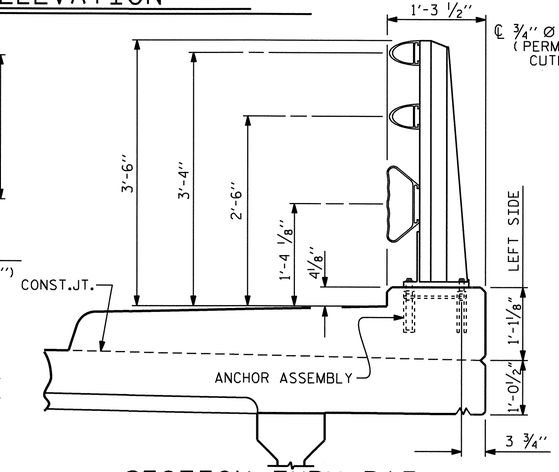

SECTION THRU RAIL

FOR ANCHOR ASSEMBLY, SEE "3 BAR METAL RAIL" SHEET S-22.

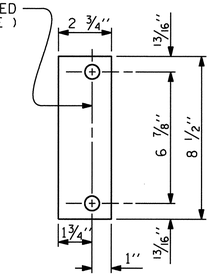

REAR PLATE

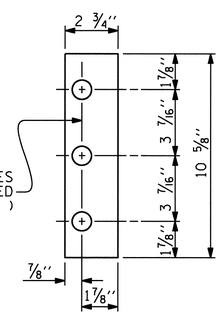

FRONT PLATE

SHIM DETAILS

NOTE :
SHIMS MAY BE CUT ALONG PERMITTED CUTLINE OR SLOTTED TO EDGE OF PLATE TO FACILITATE PLACEMENT.

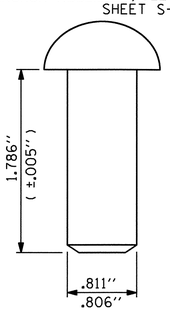

RIVET DETAIL

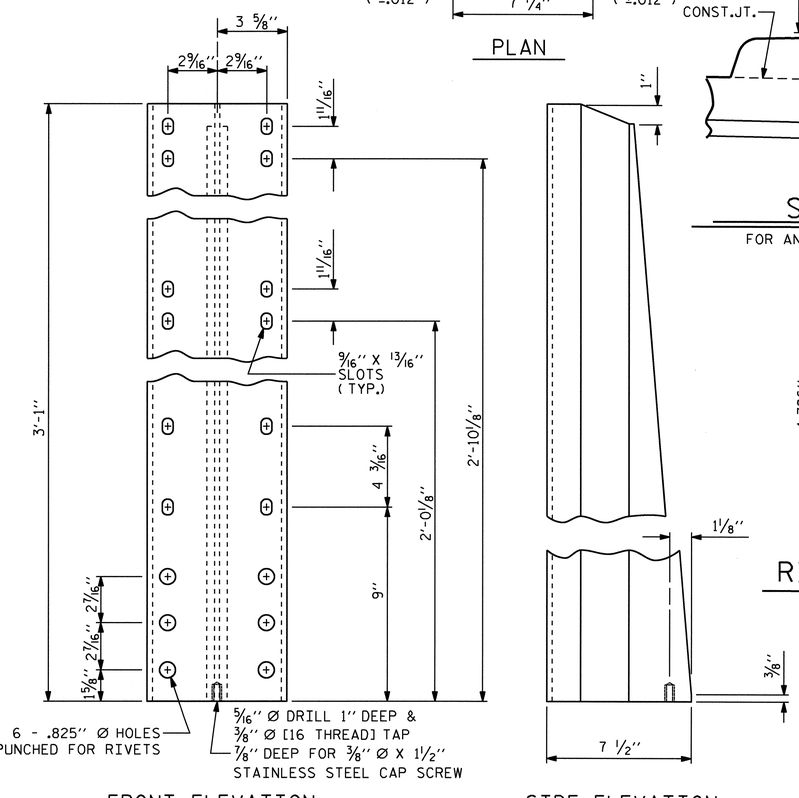

FRONT ELEVATION

SIDE ELEVATION

DETAILS OF POST

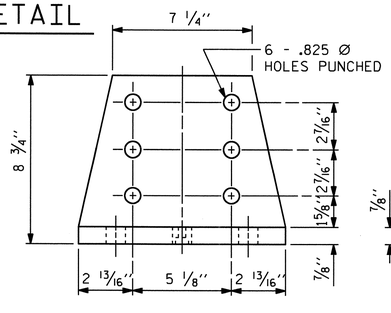

FRONT ELEVATION

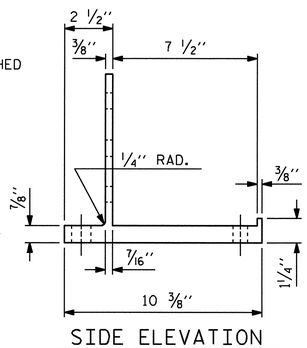

SIDE ELEVATION

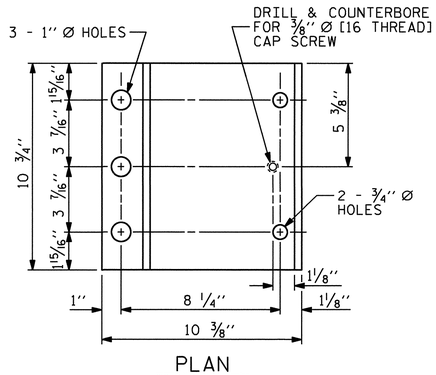

PLAN

POST BASE DETAILS

NOTES

AT THE CONTRACTOR'S OPTION, METAL RAIL MAY BE EITHER ALUMINUM OR GALVANIZED STEEL IN ACCORDANCE WITH THE REQUIREMENTS OF THE GENERAL NOTES AND THE FOLLOWING SPECIFICATIONS FOR THE ALTERNATE MATERIALS; HOWEVER, THE CONTRACTOR WILL BE REQUIRED TO USE THE SAME RAIL MATERIAL ON ALL STRUCTURES ON THE PROJECT FOR WHICH METAL RAIL IS DESIGNATED.

ALUMINUM RAILS

MATERIAL FOR POSTS, BASES AND RAILS, EXPANSION BARS AND CLAMP BARS SHALL BE ASTM B221 ALLOY 6061-T6.

MATERIAL FOR RIVETS SHALL BE ASTM B316 ALLOY 6061-T6. RIVETS SHALL BE STANDARD BUTTON HEAD AND CONE POINT COLD DRIVEN AS PER DRAWING.

THE BASE OF RAIL POSTS, OR ANY OTHER ALUMINUM SURFACE IN CONTACT WITH CONCRETE SHALL BE THOROUGHLY COATED WITH AN ALUMINUM IMPREGNATED CAULKING COMPOUND OF APPROVED QUALITY.

MATERIAL FOR SHIMS TO BE ASTM B209 ALLOY 6061-T6.

GALVANIZED STEEL RAILS

MATERIAL AND GALVANIZING ARE TO CONFORM TO THE FOLLOWING SPECIFICATIONS:

POST, POST BASES, RAILS, EXPANSION BARS AND CLAMP BARS : AASHTO M270 GRADE 36 STRUCTURAL STEEL - GALVANIZED TO AASHTO M111.

RIVETS: RIVETS SHALL MEET THE REQUIREMENTS OF ASTM A502 FOR GRADE 1 RIVETS.

THE CUT ENDS OF GALVANIZED STEEL RAILING, AFTER GRINDING SMOOTH SHALL BE GIVEN TWO COATS OF ZINC RICH PAINT MEETING THE REQUIREMENTS OF FEDERAL SPECIFICATION MIL-P-26915 USAF TYPE 1, OR OF FEDERAL SPECIFICATIONS TT-P-641.

SHIMS: SHIMS SHALL MEET THE REQUIREMENTS OF ASTM A570 FOR GRADE 33 OR A611 FOR GRADE C AND SHALL BE GALVANIZED IN ACCORDANCE WITH AASHTO M111.

RAIL CAPS: RAIL CAPS SHALL MEET THE REQUIREMENTS OF ASTM A570 FOR GRADE 33 OR A611 FOR GRADE C AND SHALL BE GALVANIZED IN ACCORDANCE WITH AASHTO M111.

GENERAL NOTES

RAILING SHALL BE CONTINUOUS FROM END POST TO END POST OF BRIDGE. EACH JOINT IN RAIL LENGTH SHALL BE SPLICED AS DETAILED. PANEL LENGTHS OF RAIL SHALL BE ATTACHED TO A MINIMUM OF THREE POSTS. PLACE ONE JOINT SPLICE JUST BEYOND THE 3RD RAIL POST FROM EACH END, TYPICALLY 14' FROM THE END. PLACE OTHER JOINTS AS NEEDED.

FOR END OF RAIL TO CLEAR FACE OF CONCRETE END POST DIMENSION, SEE SHEET S-23.

CAP SCREWS SHALL BE ASTM F593 ALLOY 305 STAINLESS STEEL. WASHERS FOR RAIL ATTACHMENT SHALL MEET THE REQUIREMENTS OF ASTM F844 EXCEPT THEY SHALL BE MADE FROM ALLOY 304 STAINLESS STEEL.

CERTIFIED MILL REPORTS ARE REQUIRED FOR RAILS AND POSTS. SHOP INSPECTION IS NOT REQUIRED.

METAL RAIL POSTS SHALL BE SET NORMAL TO CURB GRADE.

METHOD OF MEASUREMENT FOR METAL RAILS: FOR LENGTH OF METAL RAILS TO BE PAID FOR, SEE THE STANDARD SPECIFICATIONS.

CURVED RAIL USAGE: WHERE RAILS ARE TO BE USED ON BRIDGES ON HORIZONTAL AND/OR VERTICAL CURVATURE THE CONTRACTOR MAY, AT HIS OPTION, HAVE THE REQUIRED CURVATURE IN THE RAIL FORMED IN THE SHOP OR IN THE FIELD. IN EITHER EVENT, THE RAIL SHALL CONFORM WITHOUT BUCKLING OR KINKING TO THE REQUIRED CURVATURE IN A UNIFORM MANNER ACCEPTABLE TO THE ENGINEER.

TO INSURE FUTURE IDENTIFICATION OF THE FABRICATOR, A PERMANENT IDENTIFYING MARK SHALL BE PLACED ON EACH POST. THE METHOD OF MARKING AND LOCATION SHALL BE SUCH THAT IT DOES NOT DETRACT FROM THE APPEARANCE OF THE POST, BUT REMAIN VISIBLE AFTER RAIL PLACEMENT.

SHIMS SHALL BE USED AS NECESSARY FOR POST ALIGNMENT.

ALLOY 6351-T5 MAY BE SUBSTITUTED FOR ALLOY 6061-T6 WHERE APPLICABLE.

MINOR VARIATIONS IN DETAILS OF METAL RAIL WILL BE CONSIDERED. DETAILS OF SUCH VARIATIONS, IF DESIRED, SHALL BE SUBMITTED FOR APPROVAL.

PAY LENGTH = 360.016 LIN. FT.

NORTH CAROLINA PROFESSIONAL SEAL 10730 ENGINEER D. ANDREW DAVENPORT, JR. 2-5-10

PROJECT NO. U-4703
WAKE COUNTY
STATION: 33+54.00-L-

SHEET 1 OF 3

STATE OF NORTH CAROLINA
DEPARTMENT OF TRANSPORTATION
RALEIGH

3 BAR METAL RAIL LEFT LANE

ASSEMBLED BY :	H. T. BARBOUR		DATE :	12-05-07	
CHECKED BY :	M. G. SHAIKH		DATE :	4-08	
DRAWN BY : JMB	1/88	REV. 10/17/00	RWW/LES		
CHECKED BY : GGH	1/88	REV. 5/7/03	RWW/JTE		
		REV. 5/1/06	TLA/GM		

REVISIONS						SHEET NO.
NO.	BY:	DATE:	NO.	BY:	DATE:	S-21
1			3			TOTAL SHEETS
2			4			89

STR. #1

STD. NO. BMR5

04-FEB-2010 16:28
Y:\Structures\tbarbour\Microstation\str1\u4703_sd_3mr.dgn
ddavenport

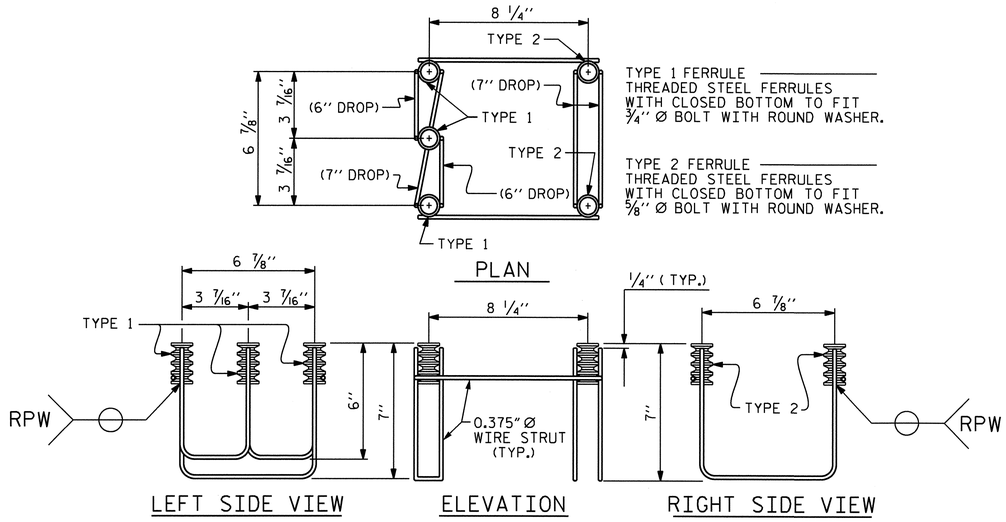

5-BOLT METAL RAIL ANCHOR ASSEMBLY

(58 ASSEMBLIES REQUIRED)

NOTES

STRUCTURAL CONCRETE ANCHOR ASSEMBLY

THE STRUCTURAL CONCRETE ANCHOR ASSEMBLY SHALL CONSIST OF THE FOLLOWING COMPONENTS:

A. FERRULES SHALL BE MADE FROM STEEL MEETING THE REQUIREMENTS OF AASHTO M169, GRADE 12L14 AND SHALL HAVE A MINIMUM LENGTH OF THREADS OF 2'' FOR 3/4'' FERRULES AND 1 3/4'' FOR 5/8'' FERRULES.

B. 3 - 3/4'' Ø X 2 1/2'' BOLTS WITH WASHERS. BOLTS SHALL CONFORM TO THE REQUIREMENTS OF ASTM A307. BOLTS AND WASHERS SHALL BE GALVANIZED. AT THE CONTRACTOR'S OPTION, STAINLESS STEEL BOLTS AND WASHERS MAY BE USED AS AN ALTERNATE FOR THE 3/4'' Ø X 2 1/2'' GALVANIZED BOLTS AND WASHERS. THEY SHALL CONFORM TO OR EXCEED THE MECHANICAL REQUIREMENTS OF ASTM A307. THE USE OF THIS ALTERNATE SHALL BE APPROVED BY THE ENGINEER.

C. 2 - 5/8'' Ø X 2 1/4'' BOLTS WITH WASHERS. BOLTS SHALL CONFORM TO THE REQUIREMENTS OF ASTM A307. BOLTS AND WASHERS SHALL BE GALVANIZED. AT THE CONTRACTOR'S OPTION, STAINLESS STEEL BOLTS AND WASHERS MAY BE USED AS AN ALTERNATE FOR THE 5/8'' Ø X 2 1/4'' GALVANIZED BOLTS AND WASHERS. THEY SHALL CONFORM TO OR EXCEED THE MECHANICAL REQUIREMENTS OF ASTM A307. THE USE OF THIS ALTERNATE SHALL BE APPROVED BY THE ENGINEER.

D. WIRE STRUT SHOWN IN THE CONCRETE ANCHOR ASSEMBLY DETAIL IS THE MINIMUM ALLOWABLE SIZE AND SHALL HAVE A MINIMUM TENSILE STRENGTH OF 100,000 PSI. AS AN OPTION, A 7/16'' Ø WIRE STRUT WITH A MINIMUM TENSILE STRENGTH OF 90,000 PSI IS ACCEPTABLE.

E. THE METAL RAIL ANCHOR ASSEMBLIES TO BE HOT DIPPED GALVANIZED TO CONFORM TO REQUIREMENTS OF AASHTO M111.

F. THE COST OF THE METAL RAIL ANCHOR ASSEMBLY WITH BOLTS AND WASHERS COMPLETE IN PLACE SHALL BE INCLUDED IN THE PRICE BID FOR LINEAR FEET OF METAL RAIL.

G. BOLTS TO BE TIGHTENED ONE-HALF TURN WITH A WRENCH FROM A FINGER-TIGHT POSITION.

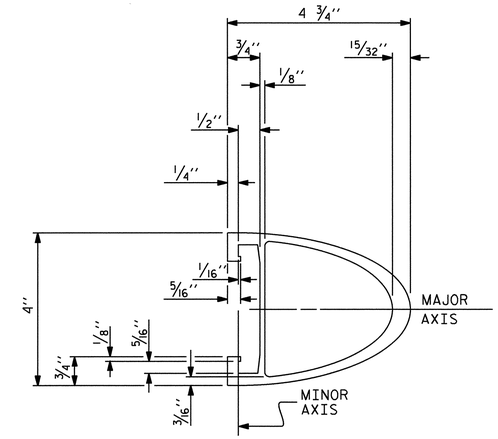

TOP & MIDDLE RAIL SECTION

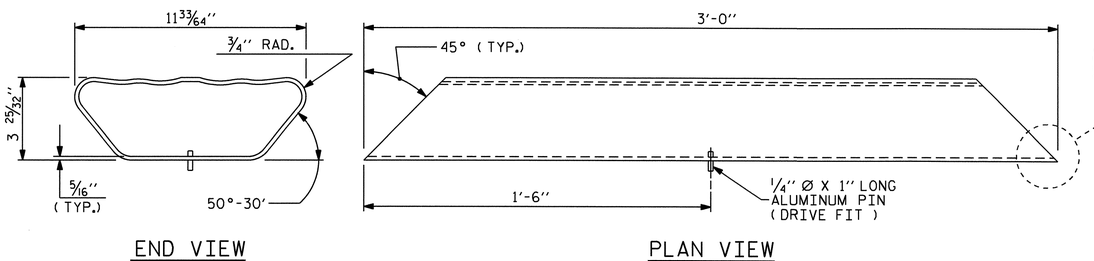

END VIEW

PLAN VIEW

BOTTOM RAIL EXPANSION BAR

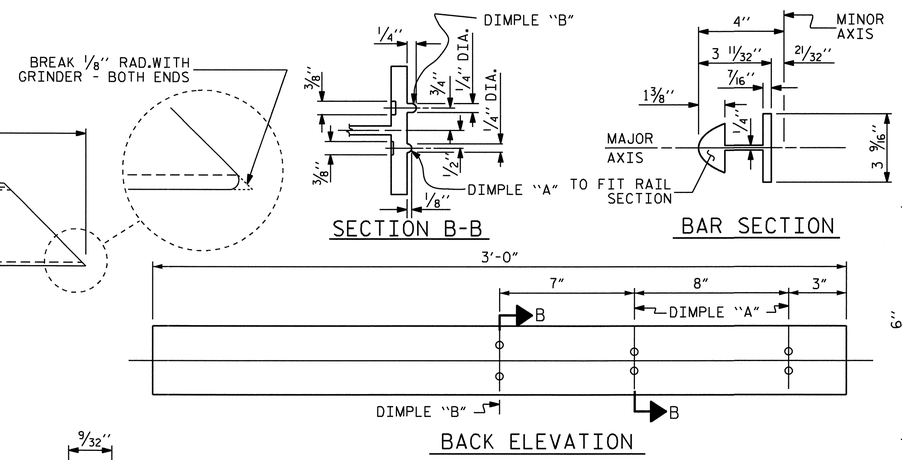

TOP & MIDDLE RAIL EXPANSION BAR

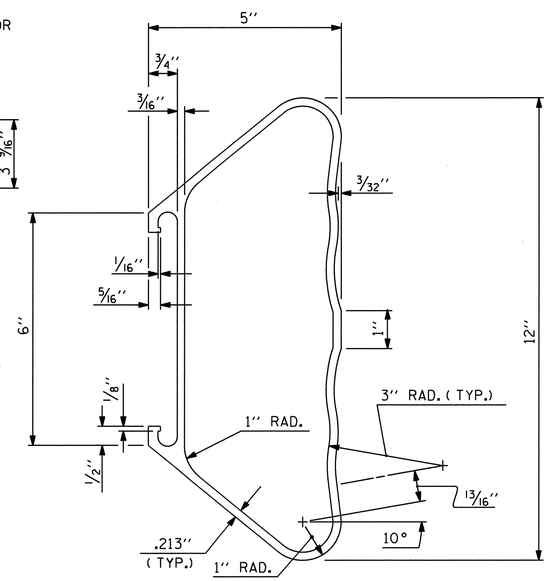

BOTTOM RAIL SECTION

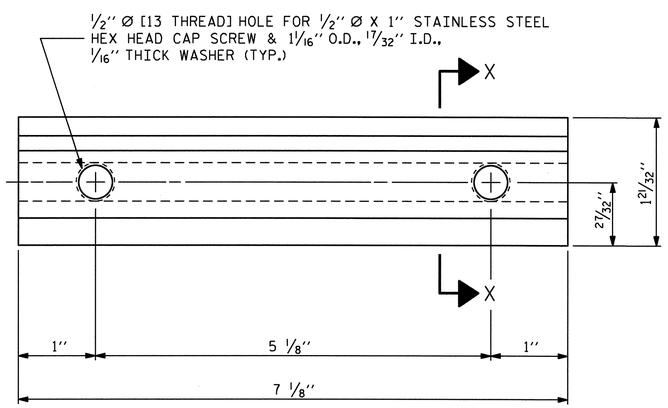

ELEVATION

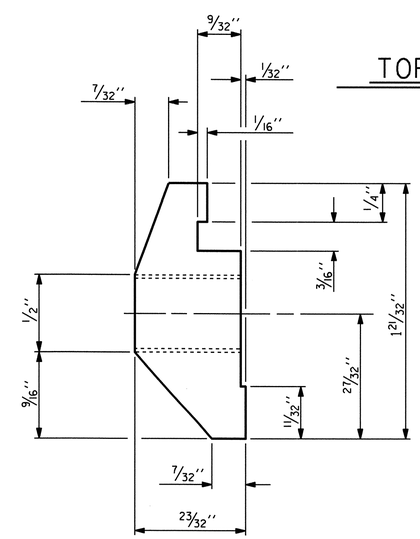

SECTION X-X

CLAMP BAR DETAIL

(6 REQUIRED PER POST)

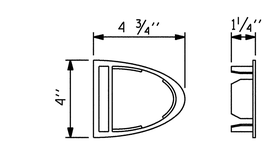

TOP & MIDDLE RAIL CAP

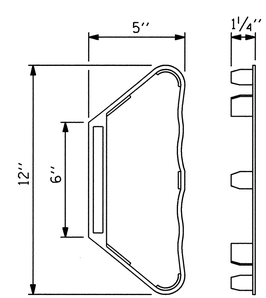

BOTTOM RAIL CAP

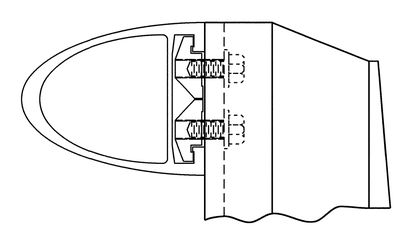

CLAMP ASSEMBLY

TOP RAIL SHOWN
(MIDDLE & BOTTOM RAIL ARE SIMILAR)

NORTH CAROLINA PROFESSIONAL SEAL 10730 ENGINEER D. ANDRE DAVENPORT, JR.
2-3-10

PROJECT NO. U-4703

WAKE COUNTY

STATION: 33+54.00-L-

SHEET 2 OF 3

STATE OF NORTH CAROLINA
DEPARTMENT OF TRANSPORTATION
RALEIGH

STANDARD

3 BAR METAL RAIL
LEFT LANE

REVISIONS								SHEET NO.
NO.	BY:	DATE:	NO.	BY:	DATE:			S-22
1			3					TOTAL SHEETS
2			4					89

ASSEMBLED BY : H. T. BARBOUR		DATE : 12-05-07	
CHECKED BY : M. G. SHAIKH		DATE : 4-08	
DRAWN BY : JMB 1/88	REV. 7/10/01	RWW/LES	
CHECKED BY : GGH 1/88	REV. 5/7/03	RWW/JTE	
	REV. 5/1/06	TLA/GM	

03-FEB-2010 12:02
Y:\Structures\tbarbour\Microstation\str1\u4703_sd_3mr.dgn
ADAVENPORT

STR. #1

STD. NO. BMR6

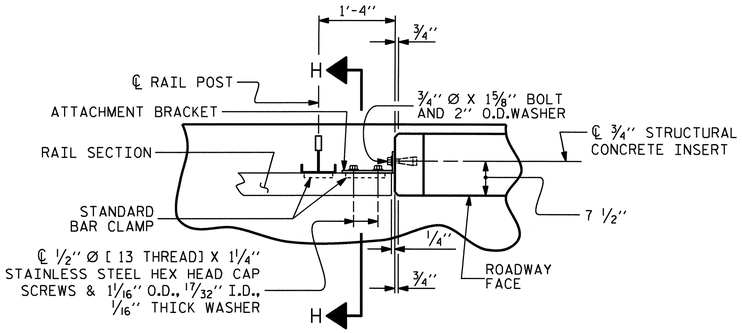

PLAN OF RAIL AND END POST

(STIFFENER ON 1/2" ℙ NOT SHOWN FOR CLARITY)

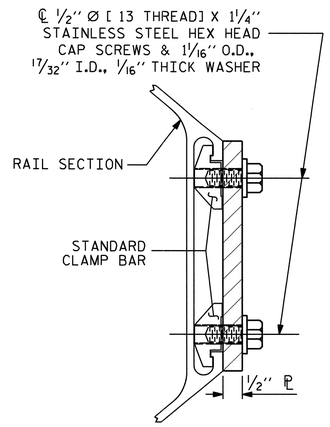

SECTION H-H

(FOR BOTTOM RAIL)

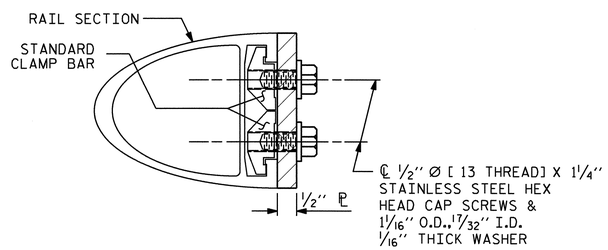

SECTION H-H

(FOR TOP & MIDDLE RAIL)

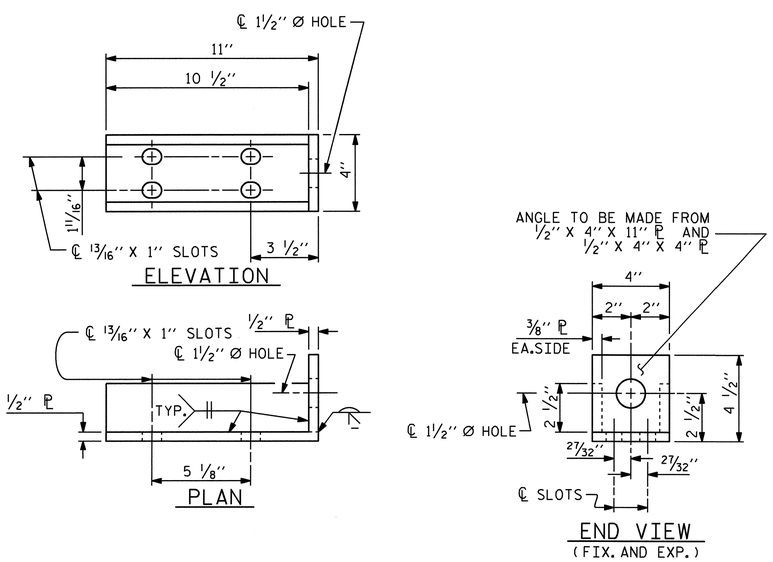

DETAILS FOR ATTACHMENT BRACKET

(TOP & MIDDLE RAIL ONLY)

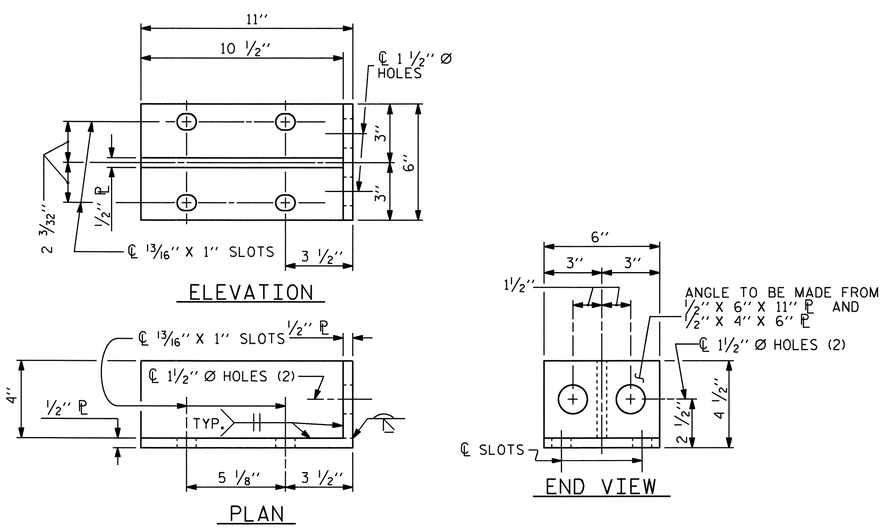

DETAILS FOR ATTACHMENT BRACKET

(BOTTOM RAIL ONLY)

NOTES

METAL RAIL TO END POST CONNECTION

THE METAL RAIL TO END POST CONNECTION SHALL CONSIST OF THE FOLLOWING COMPONENTS:

A. 1/2" PLATES SHALL CONFORM TO AASHTO M270 GRADE 36 AND SHALL BE GALVANIZED AFTER FABRICATION.

B. 3/4" STRUCTURAL CONCRETE INSERT SHALL HAVE A WORKING LOAD SHEAR CAPACITY OF 4800 LBS. THE FERRULES SHALL ENGAGE A 3/4" Ø X 1 5/8" BOLT WITH 2" O.D. WASHER IN PLACE. THE 3/4" Ø X 1 5/8" BOLT SHALL HAVE N. C. THREADS.

C. CAP SCREWS FOR RAIL ATTACHMENT TO ANGLE SHALL CONFORM TO THE REQUIREMENTS OF ASTM F593 ALLOY 305 STAINLESS STEEL. CAP SCREWS TO BE CENTERED IN SLOTS AT 60°F. WASHERS FOR RAIL ATTACHMENT SHALL MEET THE REQUIREMENTS OF ASTM F844 EXCEPT THEY SHALL BE MADE FROM ALLOY 304 STAINLESS STEEL.

D. STANDARD CLAMP BARS (STD. No. BMR6).

THE COST OF THE STANDARD CLAMP BARS AND CAP SCREWS USED IN THE METAL RAIL TO END POST CONNECTION SHALL BE INCLUDED IN THE UNIT CONTRACT PRICE BID FOR LINEAR FEET OF 3 BAR METAL RAIL.

THE 3/4" STRUCTURAL CONCRETE INSERT WITH BOLT SHALL BE ASSEMBLED IN THE SHOP.

THE COST OF THE 3/4" STRUCTURAL CONCRETE INSERT ASSEMBLY, AND THE 1/2" PLATES COMPLETE IN PLACE SHALL BE INCLUDED IN THE VARIOUS PAY ITEMS.

THE CONTRACTOR, AT HIS OPTION, MAY USE AN ADHESIVE BONDING SYSTEM IN LIEU OF THE STRUCTURAL CONCRETE INSERT EMBEDDED IN THE END POST. IF THE ADHESIVE BONDING SYSTEM IS USED, THE 3/4" Ø X 1 5/8" BOLT WITH WASHER SHALL BE REPLACED WITH A 3/4" Ø X 6 1/2" BOLT AND 2" O.D.WASHER. ALL SPECIFICATIONS THAT APPLY TO THE 3/4" Ø X 1 5/8" BOLT SHALL APPLY TO THE 3/4" Ø X 6 1/2" BOLT. FIELD TESTING OF THE ADHESIVE BONDING SYSTEM IS NOT REQUIRED.

NOTES

STRUCTURAL CONCRETE INSERT

THE STRUCTURAL CONCRETE INSERT ASSEMBLY SHALL CONSIST OF THE FOLLOWING COMPONENTS:

A. FERRULES SHALL BE MADE FROM STEEL MEETING THE REQUIREMENTS OF AASHTO M169, GRADE 12L14 AND SHALL HAVE A MINIMUM LENGTH OF THREADS OF 1 1/2".

B. 1 - 3/4" Ø X 1 5/8" BOLT WITH WASHER. BOLT SHALL CONFORM TO THE REQUIREMENTS OF ASTM A307. BOLT AND WASHER SHALL BE GALVANIZED. AT THE CONTRACTORS OPTION, STAINLESS STEEL BOLT AND WASHER MAY BE USED AS AN ALTERNATE FOR THE 3/4" Ø X 1 5/8" GALVANIZED BOLT AND WASHER. THEY SHALL CONFORM TO OR EXCEED THE MECHANICAL REQUIREMENTS OF ASTM A307. THE USE OF THIS ALTERNATE SHALL BE APPROVED BY THE ENGINEER.

C. WIRE STRUT SHOWN IN THE CONCRETE INSERT ASSEMBLY DETAIL IS THE MINIMUM ALLOWABLE SIZE AND SHALL HAVE A MINIMUM TENSILE STRENGTH OF 100,000 PSI. AS AN OPTION, A 7/16" Ø WIRE STRUT WITH A MINIMUM TENSILE STRENGTH OF 90,000 PSI IS ACCEPTABLE.

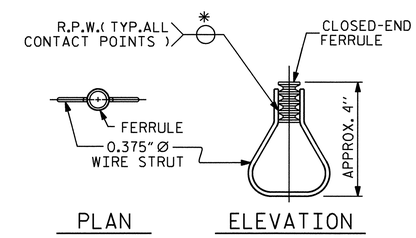

STRUCTURAL CONCRETE INSERT

* EACH WELDED ATTACHMENT OF WIRE TO FERRULE SHALL DEVELOP THE TENSILE STRENGTH OF THE WIRE.

PROJECT NO. U-4703

WAKE COUNTY

STATION: 33+54.00-L-

SHEET 3 OF 3

STATE OF NORTH CAROLINA
DEPARTMENT OF TRANSPORTATION
RALEIGH

STANDARD

3 BAR METAL RAIL
LEFT LANE

NORTH CAROLINA PROFESSIONAL SEAL 10730 ENGINEER D. ANDREW DAVENPORT, JR.
2-3-10

ASSEMBLED BY :	H. T. BARBOUR	DATE :	12-05-07
CHECKED BY :	M. G. SHAIKH	DATE :	4-08

DRAWN BY : JMB 1/88	REV. 7/10/01	RWW/LES
CHECKED BY : GGH 1/88	REV. 5/7/03	RWW/JTE
	REV. 5/1/06	TLA/GM

REVISIONS							SHEET NO.
NO.	BY:	DATE:	NO.	BY:	DATE:		S-23
1			3				TOTAL SHEETS
2			4				89

STR. #1

STD. NO. BMR7

03-FEB-2010 12:02
Y:\Structures\tbarbour\Microstation\str1\u4703_sd_3mr.dgn
ADAVENPORT

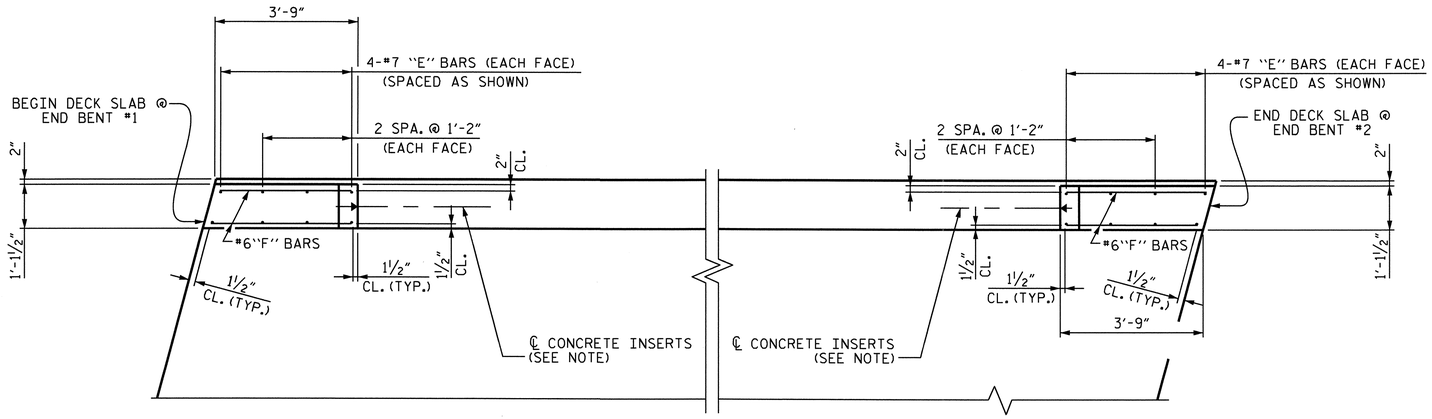

PLAN OF END POST

NOTE

FOR DETAILS OF CONCRETE INSERTS, AND GUARDRAILS ANCHOR ASSEMBLIES, SEE "GUARDRAIL ANCHORAGE DETAILS FOR METAL RAILS" & "3 BAR METAL RAIL" SHEETS.

NO ADDITIONAL PAYMENT SHALL BE MADE FOR THE CONCRETE END POST AS THIS IS CONSIDERED INCIDENTAL TO THE CONSTRUCTION OF THE 3 BAR METAL RAIL.

BILL FOR ONE END POST (2 REQUIRED)

BAR	NO.	SIZE	TYPE	LENGTH	WEIGHT
✱E1	2	#7	1	3'-5"	14
✱E2	2	#7	1	4'-0"	16
✱E3	2	#7	1	4'-7"	19
✱E4	2	#7	1	5'-1"	21
✱F1	2	#6	STR	3'-2"	10
✱F2	1	#6	STR	3'-6"	5
✱F3	2	#6	STR	3'-8"	11
✱F4	1	#6	STR	3'-11"	6
✱F5	2	#6	STR	3'-5"	10
✱EPOXY COATED REINFORCING STEEL					112
CLASS AA CONCRETE					0.5 CY

BAR TYPE

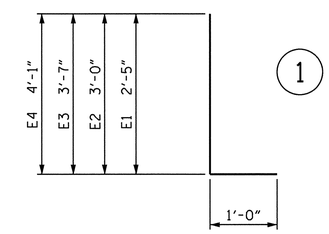

ALL BAR DIMENSIONS ARE OUT TO OUT

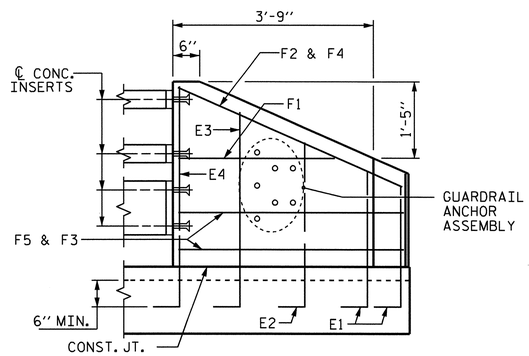

ELEVATION

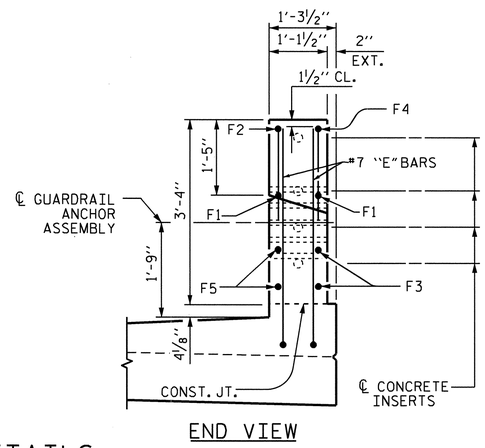

END VIEW

END POST DETAILS

@ END BENT #2, END BENT #1 SIMILAR

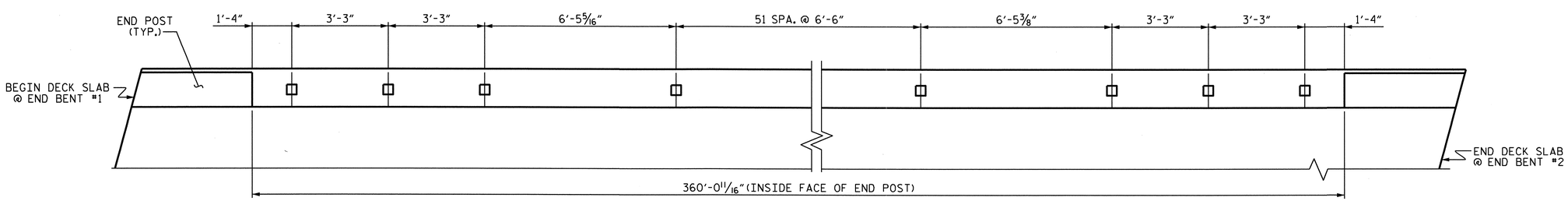

PLAN OF RAIL POST SPACING

PROJECT NO. U-4703
WAKE COUNTY
STATION: 33+54.00-L-

STATE OF NORTH CAROLINA
DEPARTMENT OF TRANSPORTATION
RALEIGH

RAIL POST SPACING AND END POST DETAILS LEFT LANE

NORTH CAROLINA PROFESSIONAL SEAL 10730 ENGINEER ANDREW DAVENPORT, JR.
3-26-10

REVISIONS						SHEET NO. S-24
NO.	BY:	DATE:	NO.	BY:	DATE:	TOTAL SHEETS 89
1			3			
2			4			

DRAWN BY : H. T. BARBOUR DATE : 12-06-07
CHECKED BY : M. G. SHAIKH DATE : 4-08

26-MAR-2010 09:22
z:\structures\tbarbour\microstation\strl\u4703_sd_3mr.dgn
adavenport

STR. #1

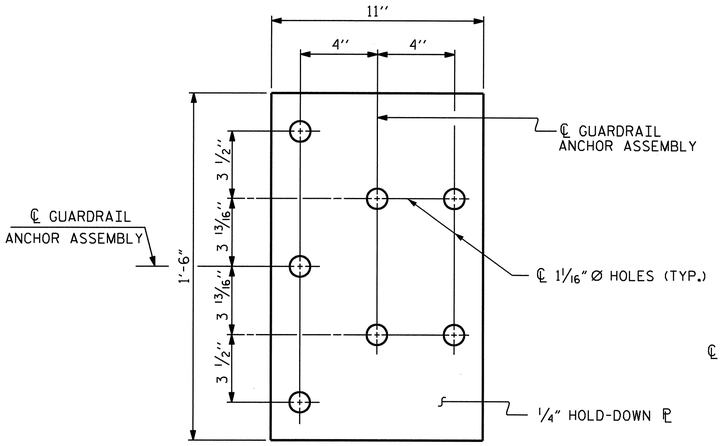

PLAN

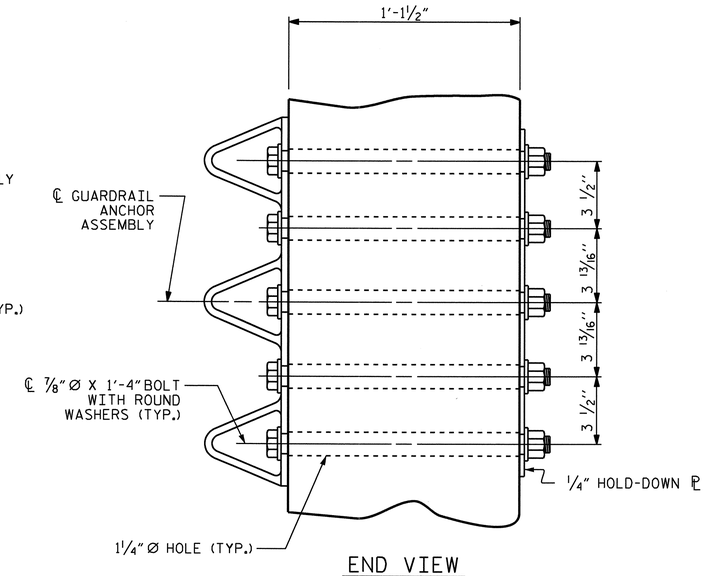

END VIEW

GUARDRAIL ANCHOR ASSEMBLY DETAILS

NOTES

THE GUARDRAIL ANCHOR ASSEMBLY SHALL CONSIST OF A 1/4'' HOLD DOWN PLATE AND 7 - 7/8'' Ø BOLTS WITH NUTS AND WASHERS.

THE HOLD-DOWN PLATE SHALL CONFORM TO AASHTO M270 GRADE 36. AFTER FABRICATION, THE HOLD-DOWN PLATE SHALL BE HOT-DIP GALVANIZED IN ACCORDANCE WITH AASHTO M111.

BOLTS SHALL CONFORM TO THE REQUIREMENTS OF ASTM A307 AND NUTS SHALL CONFORM TO THE REQUIREMENTS OF AASHTO M291. BOLTS, NUTS AND WASHERS SHALL BE GALVANIZED. AT THE CONTRACTOR'S OPTION, STAINLESS STEEL BOLTS, NUTS AND WASHERS MAY BE USED AS AN ALTERNATE FOR THE 7/8'' Ø GALVANIZED BOLTS, NUTS AND WASHERS. THEY SHALL CONFORM TO OR EXCEED THE MECHANICAL REQUIREMENTS OF ASTM A307. THE USE OF THIS ALTERNATE SHALL BE APPROVED BY THE ENGINEER.

AFTER INSTALLATION, THE EXPOSED THREAD OF THE BOLT SHALL BE BURRED WITH A SHARP POINTED TOOL.

THE COST OF THE GUARDRAIL ANCHOR ASSEMBLIES WITH BOLTS, NUTS AND WASHERS COMPLETE IN PLACE, SHALL BE INCLUDED IN THE VARIOUS PAY ITEMS.

THE VERTICAL REINFORCING BARS MAY BE SHIFTED SLIGHTLY IN THE END POST TO CLEAR ASSEMBLY BOLTS.

THE 1 1/4'' Ø HOLES SHALL BE FORMED OR DRILLED WITH A CORE BIT. IMPACT TOOLS WILL NOT BE PERMITTED. ANY CONCRETE DAMAGED BY THIS WORK SHALL BE REPAIRED TO THE SATISFACTION OF THE ENGINEER.

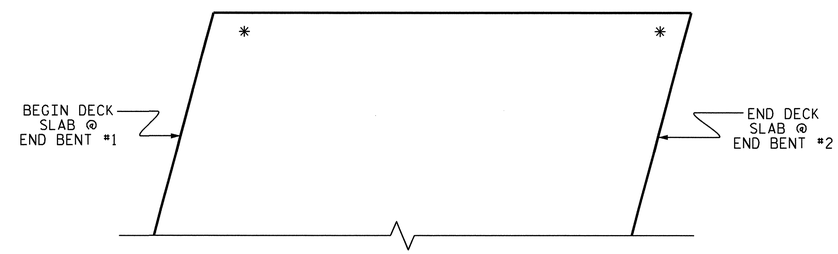

SKETCH SHOWING POINTS OF ATTACHMENT

* LOCATION OF GUARDRAIL ATTACHMENT FOR 3 BAR METAL RAIL

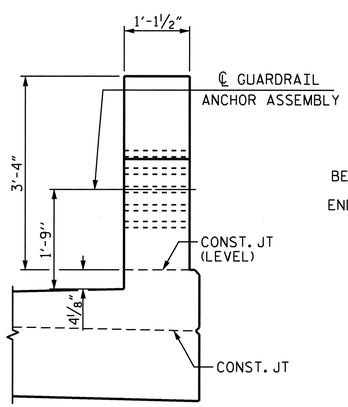

END VIEW
(THREE BAR METAL RAIL)

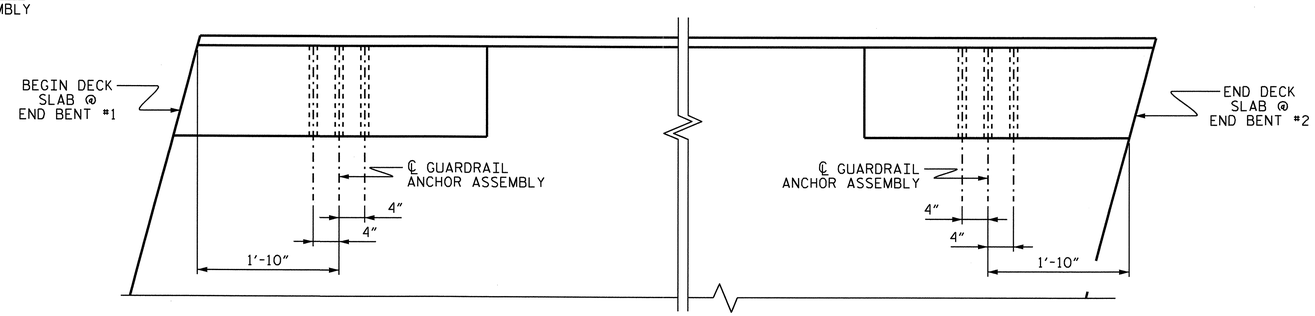

PLAN

LOCATION OF GUARDRAIL ANCHOR AT END POST

PROJECT NO. U-4703
WAKE COUNTY
STATION: 33+54.00-L-

SHEET 1 OF 2

STATE OF NORTH CAROLINA
DEPARTMENT OF TRANSPORTATION
RALEIGH

GUARDRAIL ANCHORAGE DETAILS FOR METAL RAILS LEFT LANE

NORTH CAROLINA PROFESSIONAL SEAL 10730 ENGINEER D. ANDREW DAVENPORT, JR. 2-3-10

REVISIONS						SHEET NO.
NO.	BY:	DATE:	NO.	BY:	DATE:	S-25
1			3			TOTAL SHEETS
2			4			89

STR. #1 STD. NO. BMR8

ASSEMBLED BY : H. T. BARBOUR		DATE : 2-14-08	
CHECKED BY : M. G. SHAIKH		DATE : 4-08	
DRAWN BY : EEM 6/94	REV. 10/17/00	RWW/LES	
CHECKED BY : RGW 6/94	REV. 5/7/03	RWW/JTE	
	REV. 5/1/06	TLA/GM	

03-FEB-2010 12:05
Y:\Structures\tbarbour\Microstation\str1\U4703_sd_GR.dgn
ADAVENPORT

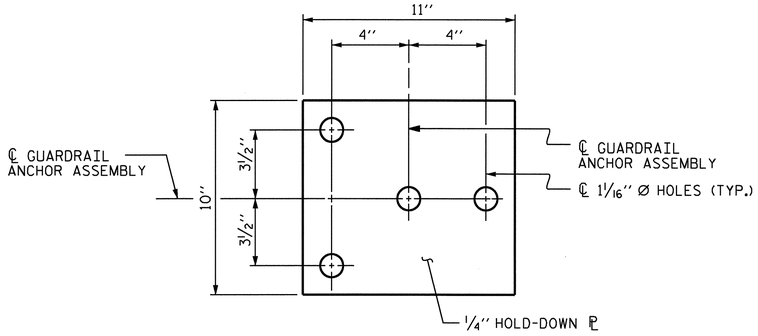

PLAN

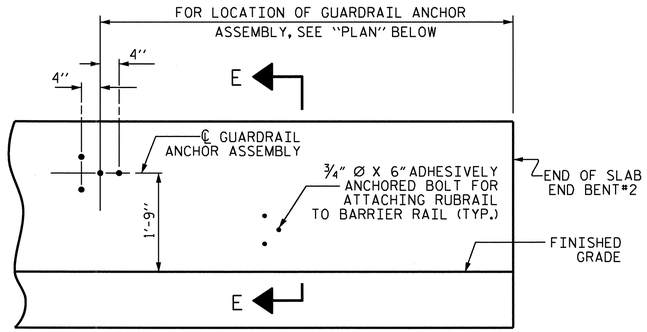

ELEVATION

FOR LOCATION OF RUBRAIL, SEE ROADWAY STD. 862.03

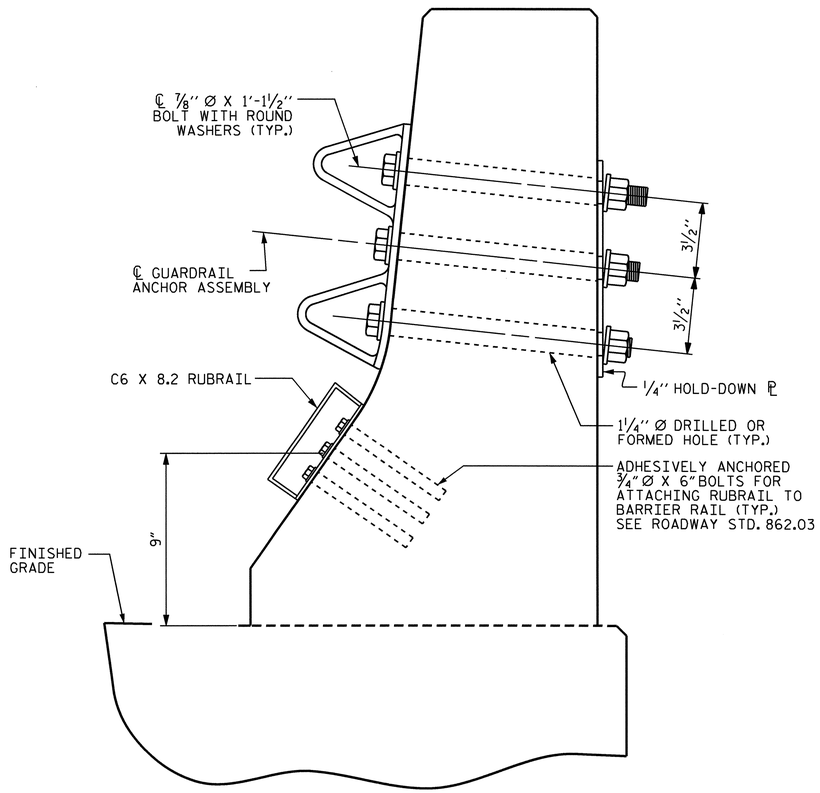

SECTION E-E

GUARDRAIL ANCHOR ASSEMBLY DETAILS

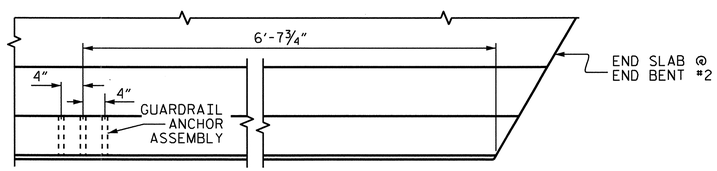

PLAN

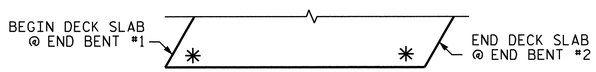

SKETCH SHOWING POINTS OF ATTACHMENTS

✳ DENOTES GUARDRAIL ANCHOR ASSEMBLY

LOCATION OF ANCHORS FOR GUARDRAIL

END BENT #2 SHOWN. END BENT #1 SIMILAR.

NOTES

THE GUARDRAIL ANCHOR ASSEMBLY SHALL CONSIST OF A 1/4'' HOLD DOWN PLATE AND 4 - 7/8'' Ø BOLTS WITH NUTS AND WASHERS, RUBRAIL, AND ADHESIVELY ANCHORED BOLTS.

THE HOLD-DOWN PLATE SHALL CONFORM TO AASHTO M270 GRADE 36. AFTER FABRICATION, THE HOLD-DOWN PLATE SHALL BE HOT-DIP GALVANIZED IN ACCORDANCE WITH AASHTO M111.

BOLTS SHALL CONFORM TO THE REQUIREMENTS OF ASTM A307 AND NUTS SHALL CONFORM TO THE REQUIREMENTS OF AASHTO M291. BOLTS, NUTS AND WASHERS SHALL BE GALVANIZED. (AT THE CONTRACTOR'S OPTION, STAINLESS STEEL BOLTS, NUTS AND WASHERS MAY BE USED AS AN ALTERNATE FOR THE 7/8'' Ø GALVANIZED BOLTS, NUTS AND WASHERS. THEY SHALL CONFORM TO OR EXCEED THE MECHANICAL REQUIREMENTS OF ASTM A307. THE USE OF THIS ALTERNATE SHALL BE APPROVED BY THE ENGINEER.)

THE GUARDRAIL ANCHOR ASSEMBLY IS REQUIRED AT ALL POINTS WHERE APPROACH GUARDRAIL IS TO BE ATTACHED TO THE END OF BARRIER RAIL. FOR POINTS OF ATTACHMENT, SEE SKETCH.

AFTER INSTALLATION, THE EXPOSED THREAD OF THE BOLT SHALL BE BURRED WITH A SHARP POINTED TOOL.

THE COST OF THE GUARDRAIL ANCHOR ASSEMBLY SHALL BE INCLUDED IN THE UNIT CONTRACT PRICE BID FOR CONCRETE BARRIER RAIL.

THE 1 1/4'' Ø HOLES SHALL BE FORMED OR DRILLED WITH A CORE BIT. IMPACT TOOLS WILL NOT BE PERMITTED. ANY CONCRETE DAMAGED BY THIS WORK SHALL BE REPAIRED TO THE SATISFACTION OF THE ENGINEER.

THE C6 X 8.2 RUBRAIL IS TO BE ADHESIVELY ANCHORED TO THE RAIL USING THREE 3/4''Ø X 6'' BOLTS WITH WASHERS. LEVEL ONE FIELD TESTING IS REQUIRED, AND THE YIELD LOAD OF THE 3/4''Ø BOLT IS 12 KIPS. FOR ADHESIVELY ANCHORED ANCHOR BOLTS OR DOWELS, SEE SPECIAL PROVISIONS. SEE ROADWAY STANDARD 862.03 FOR DETAILS AND LOCATION OF THE RUBRAIL.

PROJECT NO. U-4703
WAKE COUNTY
STATION: 33+54.00-L-

SHEET 2 OF 2

STATE OF NORTH CAROLINA
DEPARTMENT OF TRANSPORTATION
RALEIGH

GUARDRAIL ANCHORAGE FOR BARRIER RAIL LEFT LANE

NORTH CAROLINA PROFESSIONAL SEAL 10730 ENGINEER D. ANDRE DAVENPORT

REVISIONS						SHEET NO.
NO.	BY:	DATE:	NO.	BY:	DATE:	S-26
1			3			TOTAL SHEETS
2			4			89

ASSEMBLED BY : H. T. BARBOUR	DATE : 2-15-08
CHECKED BY : M. G. SHAIKH	DATE : 4-08
DRAWN BY : TLA 5/06	ADDED 5/1/06R KMM/GM
CHECKED BY : GM 5/06	

03-FEB-2010 12:06
Y:\Structures\tbarbour\Microstation\str1\U4703_sd_GR.dgn
ADAVENPORT

STR. #1

STD. NO. GRA2

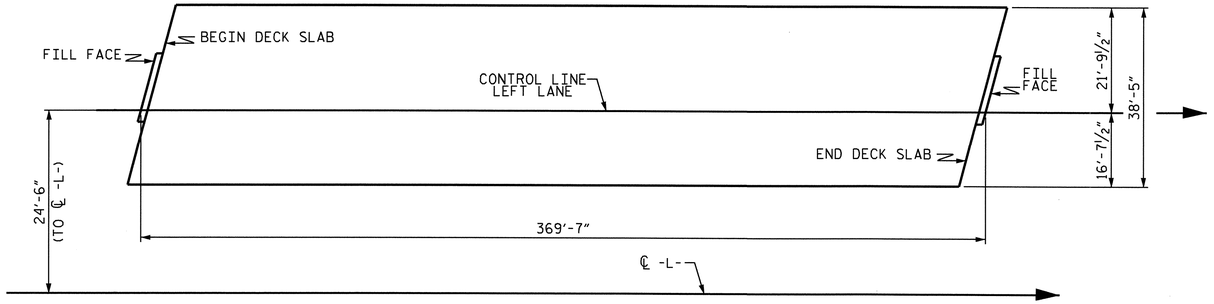

LAYOUT FOR COMPUTING AREA REINFORCED CONCRETE DECK SLAB (SQ. FT. = 14198)

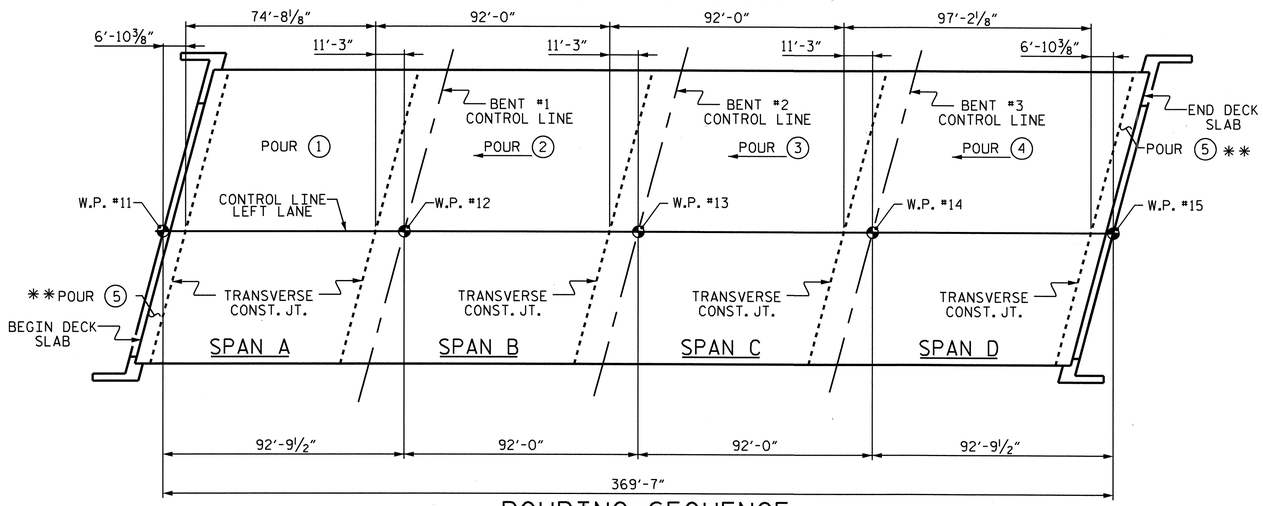

POURING SEQUENCE

** POUR INCLUDES UPPER PART OF INTEGRAL END BENT WINGS, UPPER PART OF THE INTEGRAL END BENT AND 6'-0" SECTION OF THE BRIDGE DECK.

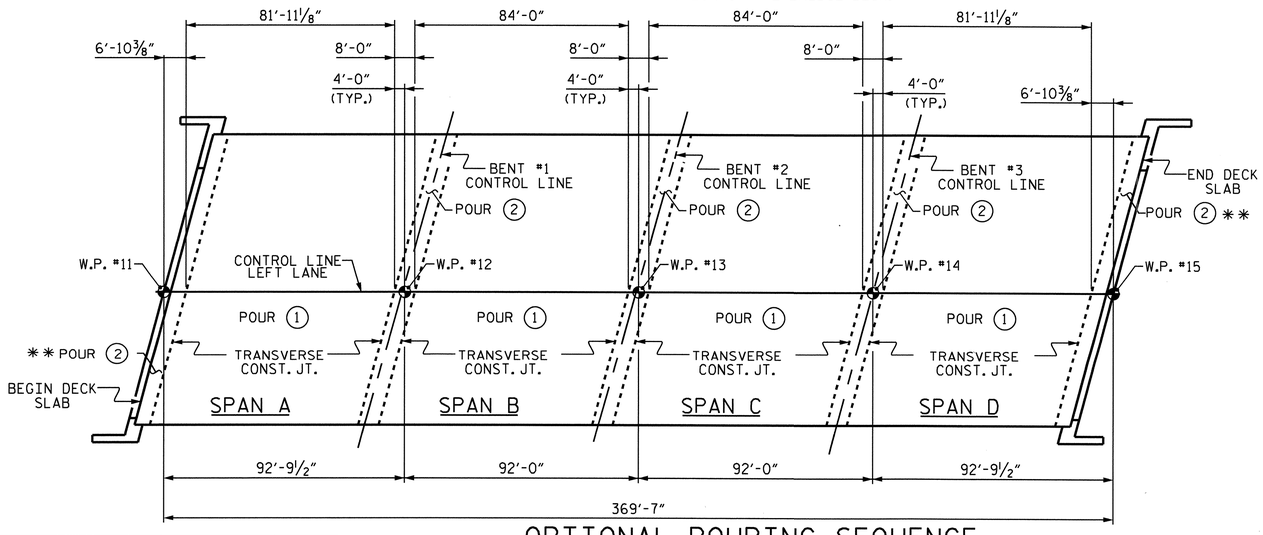

OPTIONAL POURING SEQUENCE

POUR (2) CAN NOT BE STARTED UNTIL BOTH ADJACENT (1) POURS REACH A MINIMUM OF 3000 PSI

**POUR INCLUDES UPPER PART OF INTEGRAL END BENT WINGS, UPPER PART OF THE INTEGRAL END BENT AND 6'-0" SECTION OF THE BRIDGE DECK.

REINFORCING BAR SCHEDULE

BAR	NO.	SIZE	TYPE	LENGTH	WEIGHT
* A1	613	#5	STR	38'-1"	24349
A2	613	#5	STR	38'-1"	24349
* A101	4	#5	STR	34'-3"	143
* A102	4	#5	STR	29'-11"	125
* A103	4	#5	STR	25'-7"	107
* A104	4	#5	STR	21'-2"	88
* A105	4	#5	STR	16'-10"	70
* A106	4	#5	STR	12'-6"	52
* A107	4	#5	STR	8'-2"	34
* A108	4	#5	STR	3'-9"	16
* A109	2	#5	STR	1'-7"	3
A201	4	#5	STR	34'-3"	143
A202	4	#5	STR	29'-11"	125
A203	4	#5	STR	25'-7"	107
A204	4	#5	STR	21'-2"	88
A205	4	#5	STR	16'-10"	70
A206	4	#5	STR	12'-6"	52
A207	4	#5	STR	8'-2"	34
A208	4	#5	STR	3'-9"	16
A209	2	#5	STR	1'-7"	3
* B1	104	#4	STR	23'-4"	1621
B2	266	#5	STR	54'-5"	15097
* B3	243	#7	STR	25'-5"	12624
* B4	75	#7	STR	28'-0"	4292
* B5	108	#4	STR	16'-2"	1166
* B6	102	#7	STR	18'-5"	3840
* B7	84	#4	STR	28'-2"	1580
* D1	220	#4	STR	1'-0"	147
* G1	368	#4	STR	6'-3"	1536
H1	7	#5	STR	13'-5"	98
H2	7	#5	STR	13'-7"	99
H3	6	#5	STR	14'-10"	93
H4	6	#5	STR	14'-8"	92
H5	6	#5	STR	13'-5"	84
H6	6	#5	STR	13'-7"	85
H7	7	#5	STR	14'-2"	103
H8	7	#5	STR	14'-0"	102
K1	20	#4	STR	23'-9"	317
K2	8	#4	STR	5'-8"	30
K3	32	#4	STR	6'-9"	144
K4	64	#4	STR	7'-3"	310
K5	32	#4	STR	6'-2"	132
K6	4	#4	STR	4'-11"	13
K7	4	#4	STR	5'-6"	15
K8	8	#4	STR	5'-8"	30
K9	4	#4	STR	5'-2"	14
K10	45	#4	5	10'-2"	306
K11	30	#4	6	5'-1"	102
K12	24	#4	STR	4'-3"	68
K13	20	#4	STR	2'-9"	37
S1	56	#4	1	12'-1"	452
* S2	52	#4	2	11'-1"	385
* S3	56	#4	2	11'-8"	436
S4	24	#4	3	11'-0"	176
S5	36	#4	3	13'-0"	313
S6	216	#4	4	2'-9"	397
S7	12	#4	1	9'-9"	78
V2	25	#5	STR	6'-1"	159
V3	28	#5	STR	5'-5"	158
V4	26	#5	STR	6'-0"	163
V5	25	#5	STR	5'-4"	139

REINFORCING STEEL = 44393 LBS
* EPOXY COATED REINF. STEEL = 52614 LBS

BAR TYPES

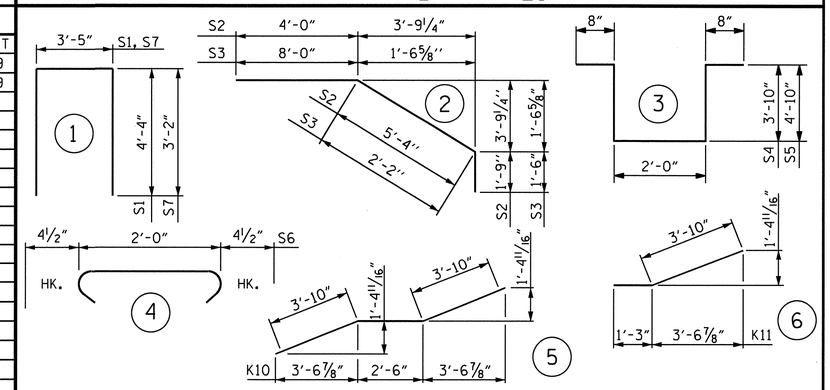

ALL BAR DIMENSIONS ARE OUT TO OUT

SUPERSTRUCTURE BILL OF MATERIAL

	CLASS AA CONCRETE	REINFORCING STEEL	* EPOXY COATED REINFORCING STEEL
	(CU.YDS.)	(LBS.)	(LBS.)
POUR 1	92.2		
POUR 2	126.2		
POUR 3	126.2		
POUR 4	132.6		
POUR 5	79.1		
SIDEWALK	64.2		
TOTALS***	620.5	44393	52614

***QUANTITIES FOR BARRIER RAIL ARE NOT INCLUDED

GROOVING BRIDGE FLOORS

BRIDGE DECK	9923	SQ.FT.
APPROACH SLAB	1186	SQ.FT.
TOTAL	11109	SQ.FT.

SUPERSTRUCTURE REINFORCING STEEL LENGTHS ARE BASED ON THE FOLLOWING MINIMUM SPLICE LENGTHS

BAR SIZE	SUPERSTRUCTURE EXCEPT APPROACH SLABS, PARAPET, AND BARRIER RAIL		APPROACH SLABS		PARAPET AND BARRIER RAIL
	EPOXY COATED	UNCOATED	EPOXY COATED	UNCOATED	
#4	2'-0"	1'-9"	2'-0"	1'-9"	2'-9"
#5	2'-6"	2'-2"	2'-6"	2'-2"	3'-5"
#6	3'-0"	2'-7"	3'-10"	2'-7"	4'-4"
#7	5'-3"	3'-6"			
#8	6'-10"	4'-7"			

PROJECT NO. U-4703
WAKE COUNTY
STATION: 33+54.00-L-

STATE OF NORTH CAROLINA
DEPARTMENT OF TRANSPORTATION
RALEIGH

SUPERSTRUCTURE BILL OF MATERIAL LEFT LANE

NORTH CAROLINA PROFESSIONAL SEAL 10730 ENGINEER D. ANDREW DAVENPORT, JR.
5/26/10

ASSEMBLED BY :	H. T. BARBOUR	DATE : 02-26-08
CHECKED BY :	M. G. SHAIKH	DATE : 4-08
DRAWN BY : JMB 5/87	REV. 6/1/94	EEM/GRP
CHECKED BY : SJD 9/87	REV. 8/16/99	RWW/LES

REVISIONS						SHEET NO.
NO.	BY:	DATE:	NO.	BY:	DATE:	S-27
1			3			TOTAL SHEETS
2			4			89

NOTES

SEE SUPERSTRUCTURE SHEETS FOR UPPER PART OF INTEGRAL END BENT DETAILS.

THE CONTRACTOR SHALL PROVIDE FOR INSTALLATION OF THE 4" DIAMETER DRAIN PIPE THROUGH THE WING WALL AS REQUIRED FOR REINFORCED BRIDGE APPROACH FILLS. SEE THE ROADWAY PLANS. REINFORCING STEEL IN THE WING WALL MAY BE SHIFTED AS NECESSARY TO CLEAR THE DRAIN PIPE.

THE CONTRACTOR'S ATTENTION IS CALLED TO THE FACT THAT THE UPPER PART OF THE END BENT WINGS ARE TO BE POURED WITH POUR #5 OF THE SUPERSTRUCTURE.

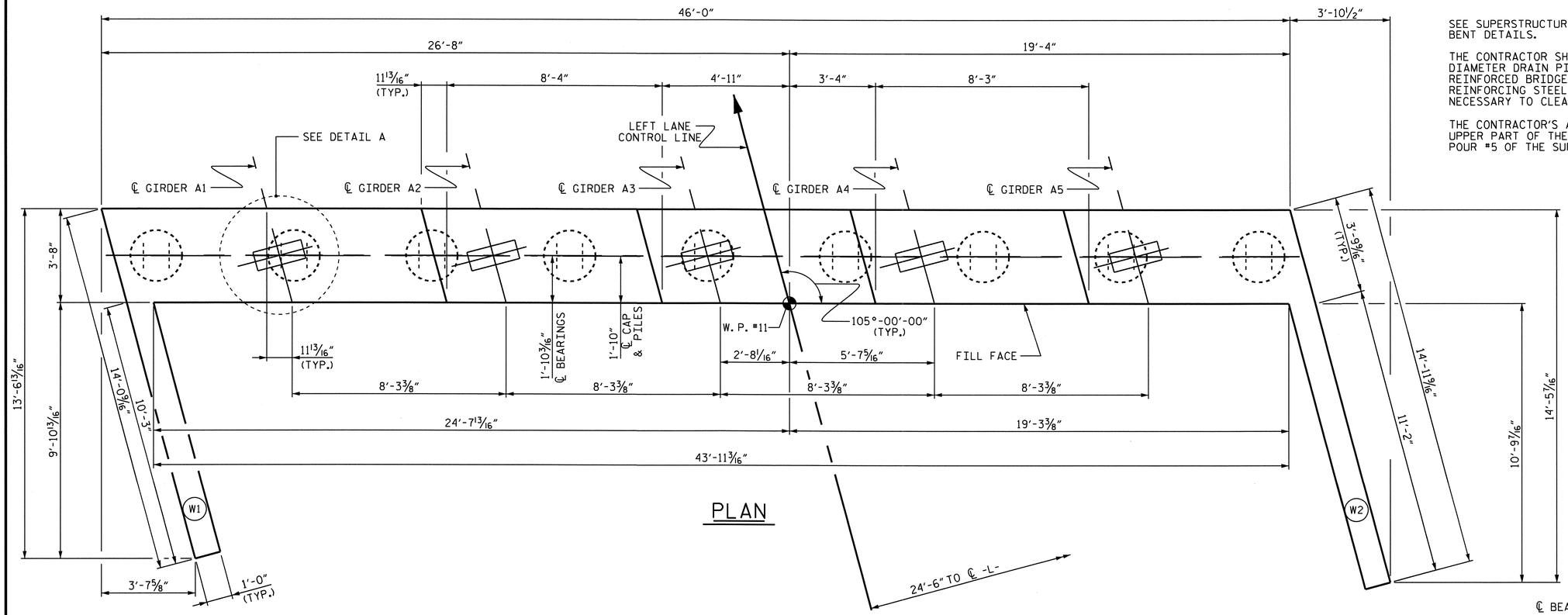

PLAN

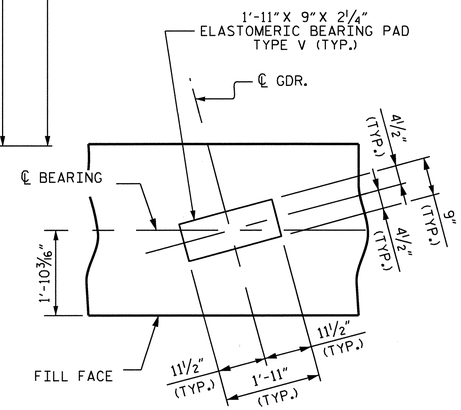

DETAIL A

PILES NOT SHOWN FOR CLARITY

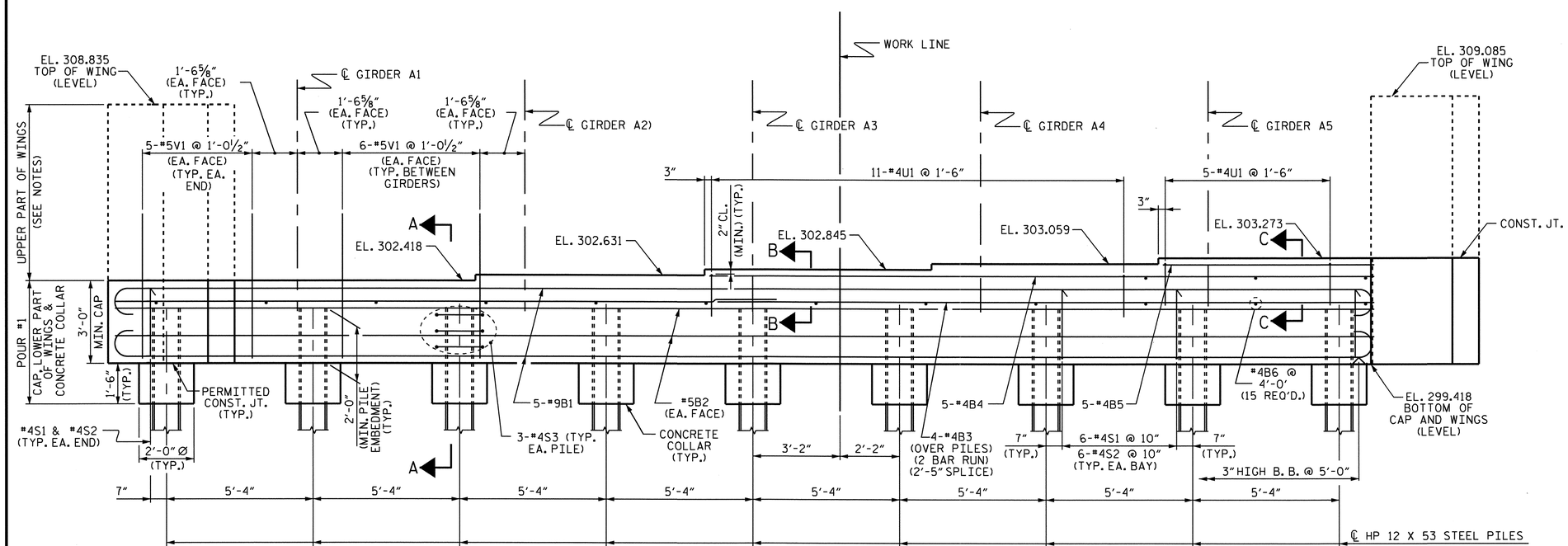

ELEVATION

PROJECT NO. U-4703

WAKE COUNTY

STATION: 33+54.00-L-

SHEET 1 OF 3

STATE OF NORTH CAROLINA
DEPARTMENT OF TRANSPORTATION
RALEIGH

SUBSTRUCTURE INTEGRAL END BENT #1 (LEFT LANE)

NORTH CAROLINA PROFESSIONAL SEAL 10730 ENGINEER ANDREW DAVENPORT, JR.
3-23-10

REVISIONS							SHEET NO.
NO.	BY:	DATE:	NO.	BY:	DATE:		S-28
1			3				TOTAL SHEETS
2			4				89

DRAWN BY : H. T. BARBOUR DATE : 7-01-09
CHECKED BY : M.G. SHAIKH DATE : 09/09/09

23-MAR-2010 08:35
Z:\Structures\tbarbour\Microstation\str1\u-4703_sd_e*.dgn
adavenport

STR. #1

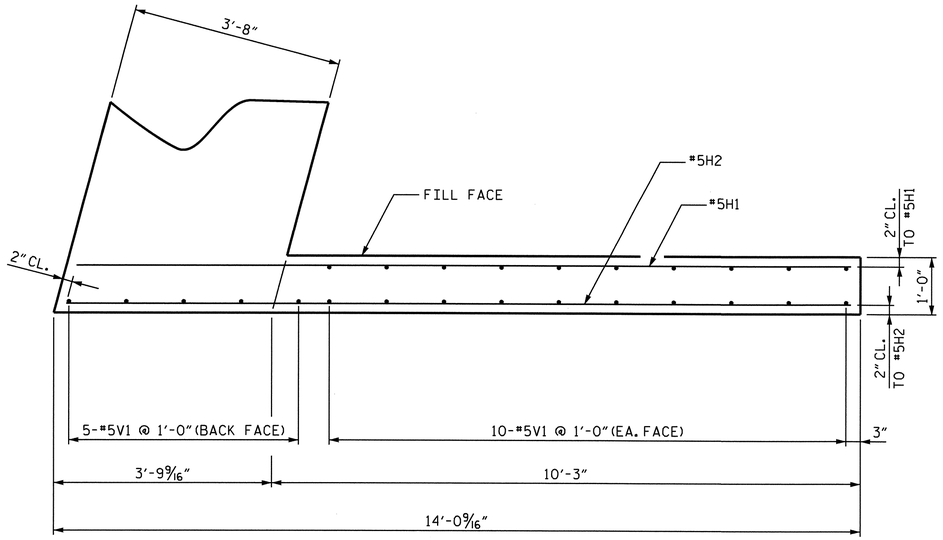

PLAN OF LEFT WING (W1)

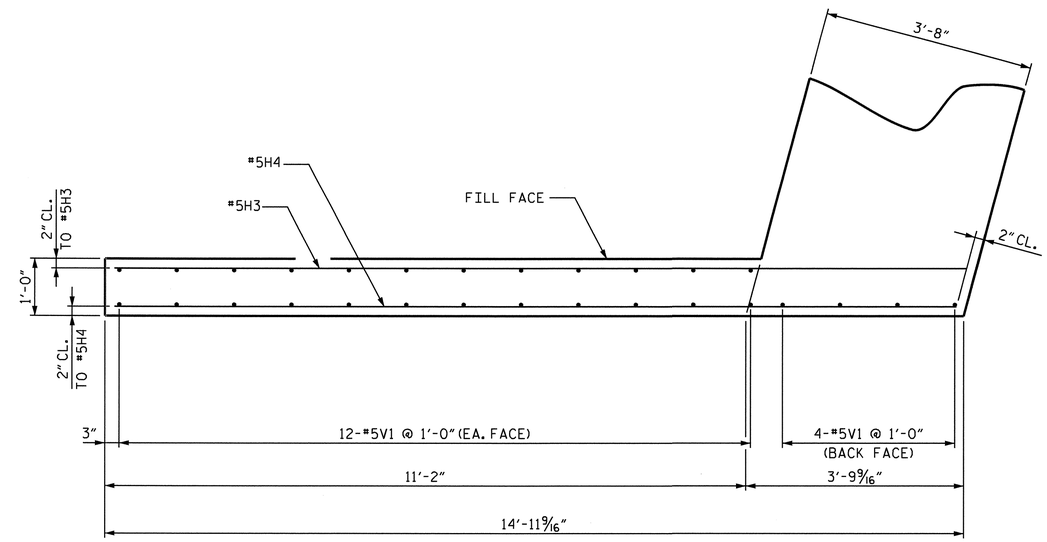

PLAN OF RIGHT WING (W2)

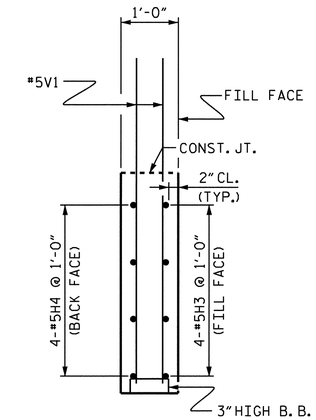

SECTION Y-Y

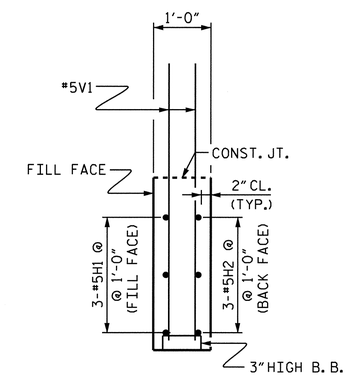

SECTION X-X

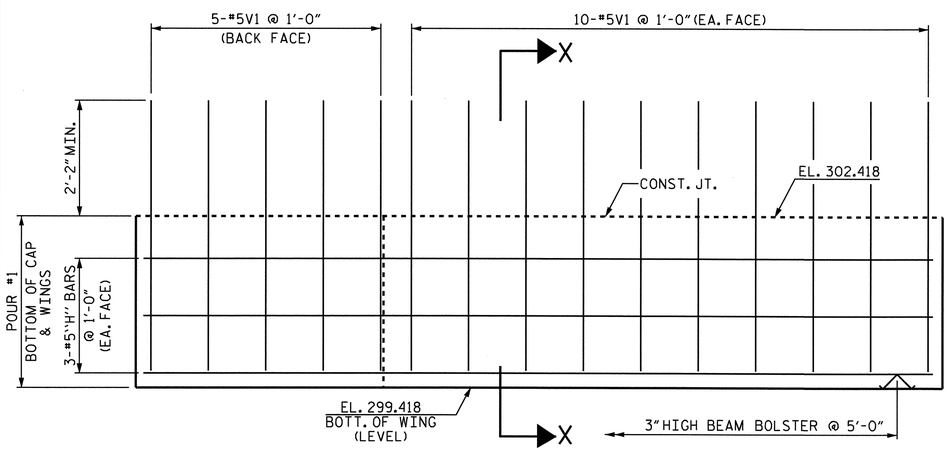

ELEVATION OF LEFT WING (W1)

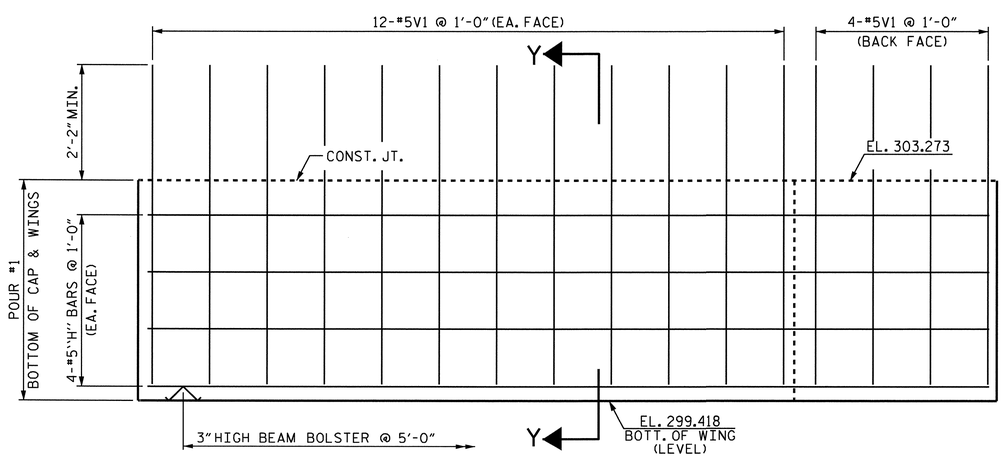

ELEVATION OF RIGHT WING (W2)

PROJECT NO. U-4703

WAKE COUNTY

STATION: 33+54.00-L-

SHEET 2 OF 3

STATE OF NORTH CAROLINA
DEPARTMENT OF TRANSPORTATION
RALEIGH

SUBSTRUCTURE INTEGRAL END BENT #1 (LEFT LANE)

NORTH CAROLINA PROFESSIONAL SEAL 10730 ENGINEER D. ANDRE DAVENPORT, JR.

2-25-10

REVISIONS						SHEET NO.
NO.	BY:	DATE:	NO.	BY:	DATE:	S-29
1			3			TOTAL SHEETS
2			4			89

DRAWN BY : H. T. BARBOUR DATE : 7-08-09
CHECKED BY : M.G. SHAIKH DATE : 09/09/09

03-FEB-2010 12:10
Y:\Structures\tbarbour\Microstation\str1\u-4703_sd_e*.dgn
ADAVENPORT

STR. #1

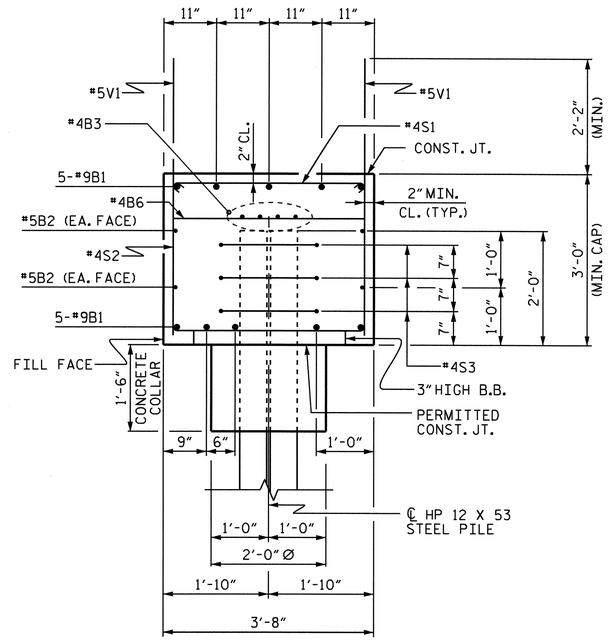

SECTION A-A

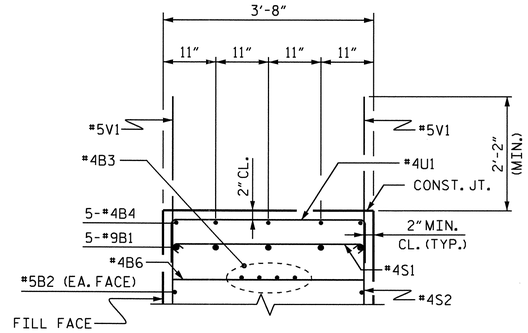

SECTION B-B

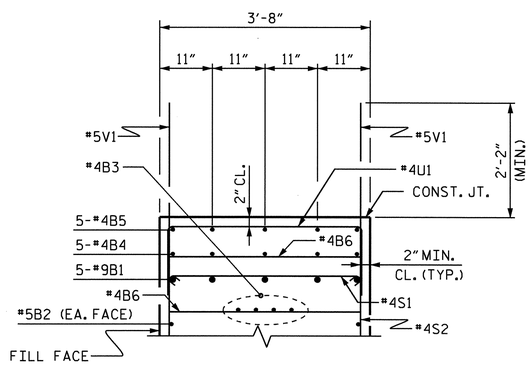

SECTION C-C

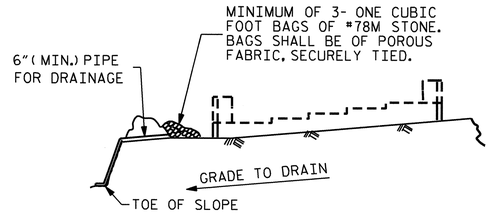

BAGGED STONE AND PIPE SHALL BE PLACED IMMEDIATELY AFTER COMPLETION OF END BENT EXCAVATION. PIPE MAY BE EITHER CONCRETE, CORRUGATED STEEL, CORRUGATED ALUMINUM ALLOY, OR CORRUGATED PLASTIC. PERFORATED PIPE WILL NOT BE ALLOWED.

BAGGED STONE SHALL REMAIN IN PLACE UNTIL THE ENGINEER DIRECTS THAT IT BE REMOVED. THE CONTRACTOR SHALL REMOVE AND DISPOSE OF SILT ACCUMULATIONS AT BAGGED STONE WHEN SO DIRECTED BY THE ENGINEER. BAGS SHALL BE REMOVED AND REPLACED WHENEVER THE ENGINEER DETERMINES THAT THEY HAVE DETERIORATED AND LOST THEIR EFFECTIVENESS.

NO SEPARATE PAYMENT WILL BE MADE FOR THIS WORK AND THE ENTIRE COST OF THIS WORK SHALL BE INCLUDED IN THE UNIT CONTRACT PRICE BID FOR THE SEVERAL PAY ITEMS.

TEMPORARY DRAINAGE AT END BENT

BAR TYPES

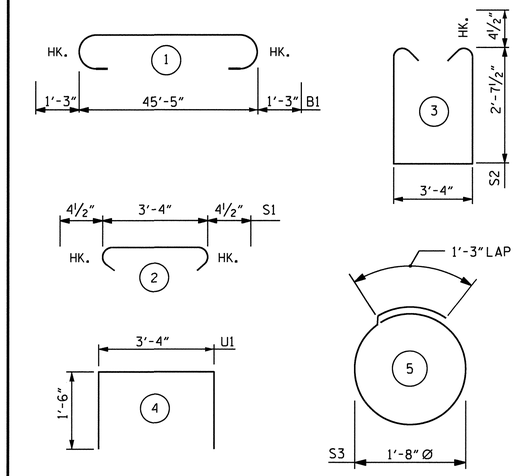

ALL BAR DIMENSIONS ARE OUT TO OUT.

* CONCRETE QUANTITY FOR UPPER PART OF WINGS IN POUR #5 ON SUPERSTRUCTURE.

BILL OF MATERIAL

END BENT #1

BAR	NO.	SIZE	TYPE	LENGTH	WEIGHT
B1	10	#9	1	47'-11"	1629
B2	4	#5	STR	45'-7"	190
B3	8	#4	STR	24'-1"	129
B4	5	#4	STR	24'-11"	83
B5	5	#4	STR	8'-5"	28
B6	15	#4	STR	3'-4"	33
H1	3	#5	STR	13'-5"	42
H2	3	#5	STR	13'-7"	43
H3	4	#5	STR	14'-10"	62
H4	4	#5	STR	14'-8"	61
S1	50	#4	2	4'-1"	136
S2	50	#4	3	9'-4"	312
S3	27	#4	5	6'-6"	117
U1	16	#4	4	6'-4"	68
V1	121	#5	STR	5'-11"	747

REINFORCING STEEL = 3680 LBS.

CLASS A CONCRETE
* POUR #1 (CAP, LOWER PART OF WINGS & CONCRETE COLLAR)
CU. YDS. 25.5
TOTAL CU. YDS. 25.5

HP 12 X 53 STEEL PILES
NO. 9 LIN. FT. 360

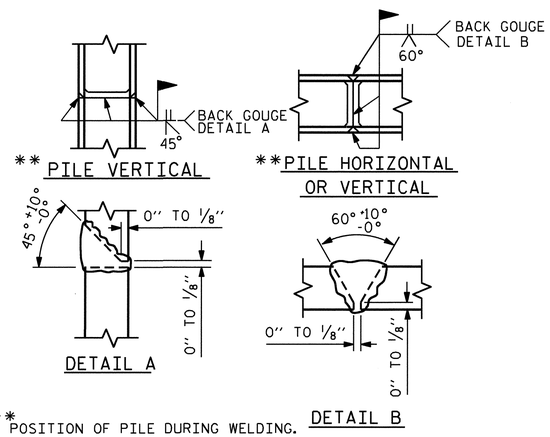

** POSITION OF PILE DURING WELDING.

PILE SPLICE DETAILS

PROJECT NO. U-4703
WAKE COUNTY
STATION: 33+54.00-L-

SHEET 3 OF 3

STATE OF NORTH CAROLINA
DEPARTMENT OF TRANSPORTATION
RALEIGH

SUBSTRUCTURE INTEGRAL END BENT #1 (LEFT LANE)

NORTH CAROLINA PROFESSIONAL SEAL 10730 ENGINEER D. ANDREW DAVENPORT
2-3-10

REVISIONS							SHEET NO.
NO.	BY:	DATE:	NO.	BY:	DATE:		S-30
1			3				TOTAL SHEETS
2			4				89

DRAWN BY : H. T. BARBOUR DATE : 7-08-09
CHECKED BY : M.G. SHAIKH DATE : 09/09/09

03-FEB-2010 12:10
Y:\Structures\tbarbour\Microstation\str1\u-4703_sd_e*.dgn
ADAVENPORT

STR. #1

NOTES

STIRRUPS IN CAP MAY BE SHIFTED AS NECESSARY TO CLEAR ANCHOR BOLTS.

FOR DRILLED PIERS, SEE SPECIAL PROVISIONS.

THE CONTRACTOR'S ATTENTION IS CALLED TO THE FACT THAT THE LONGITUDINAL REINFORCEMENT FOR THE DRILLED PIERS IS DETAILED WITH 3 FEET OF EXTRA LENGTH.

ALL STEEL IN THE DRILLED PIERS IS INCLUDED IN THE PAY ITEMS FOR "REINFORCING STEEL" AND "SPIRAL COLUMN REINFORCING STEEL."

HOOKS ON V1 BARS MAY BE TURNED AS NECESSARY FOR PLACING REINFORCING STEEL.

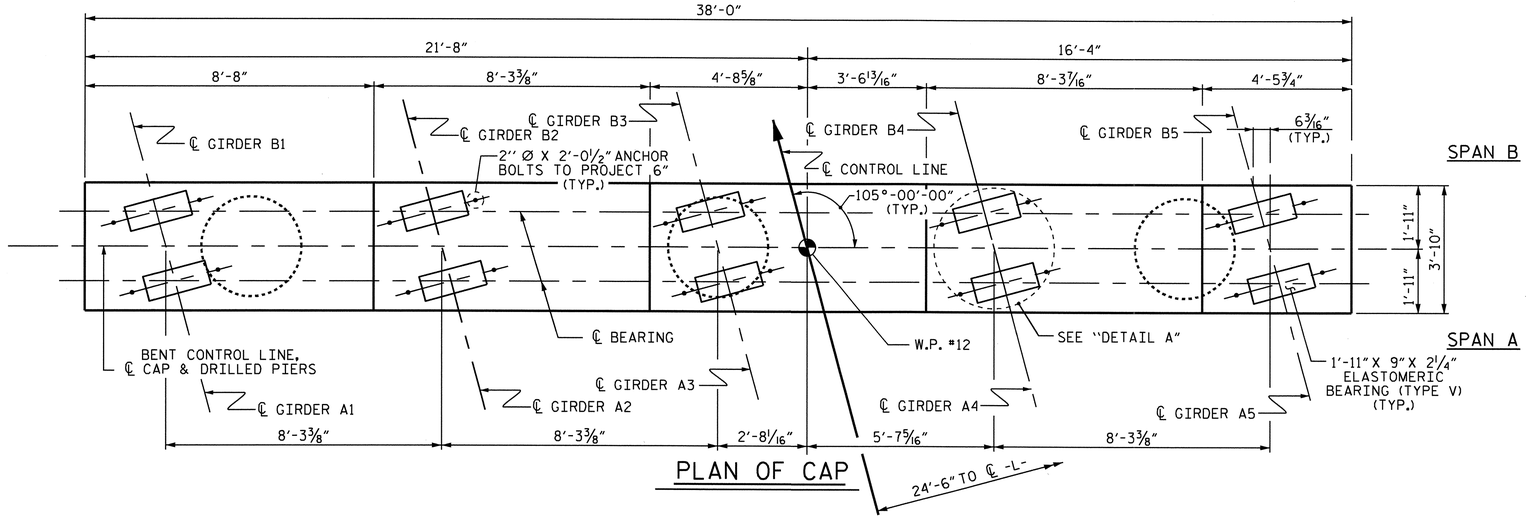

PLAN OF CAP

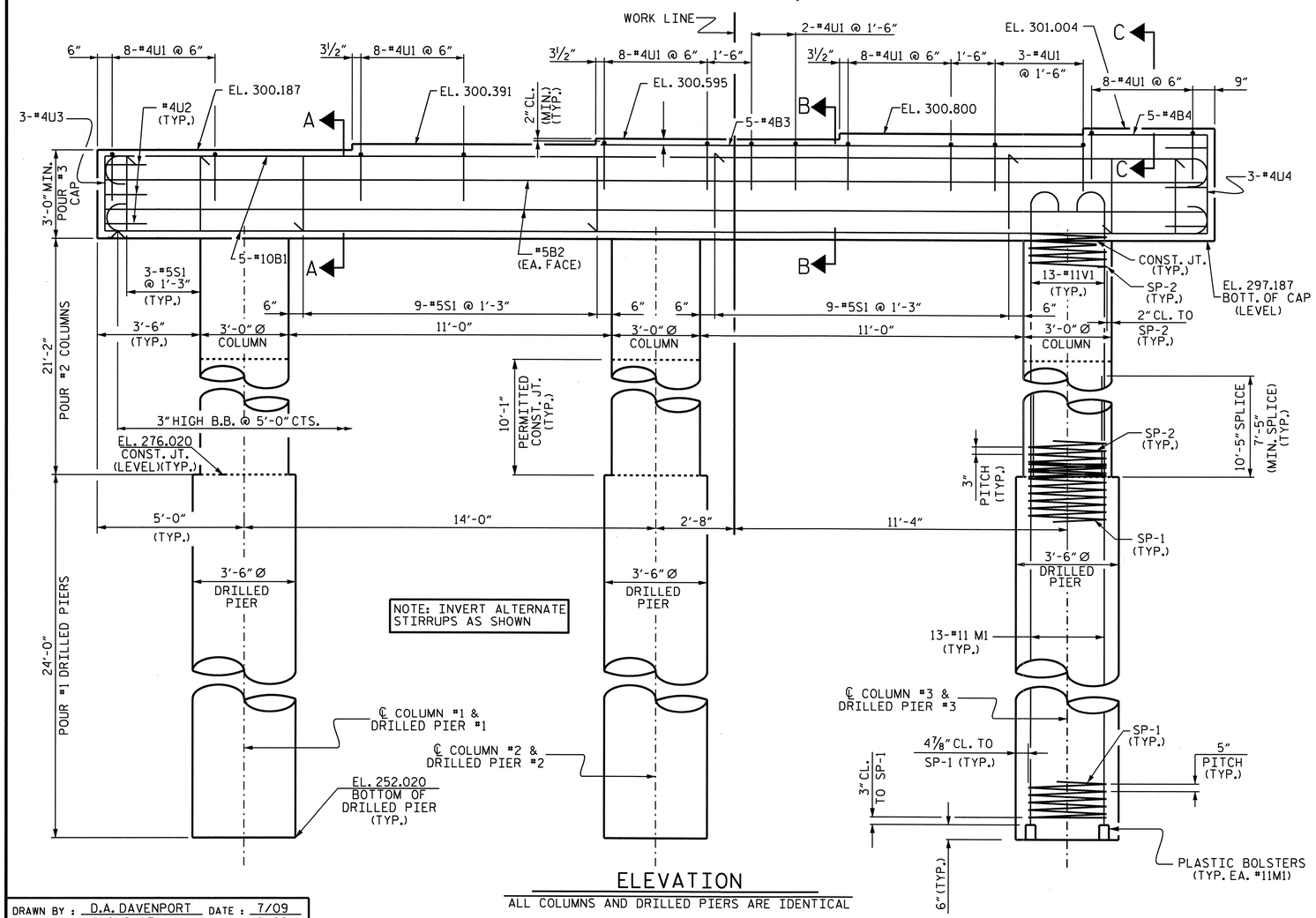

ELEVATION

ALL COLUMNS AND DRILLED PIERS ARE IDENTICAL

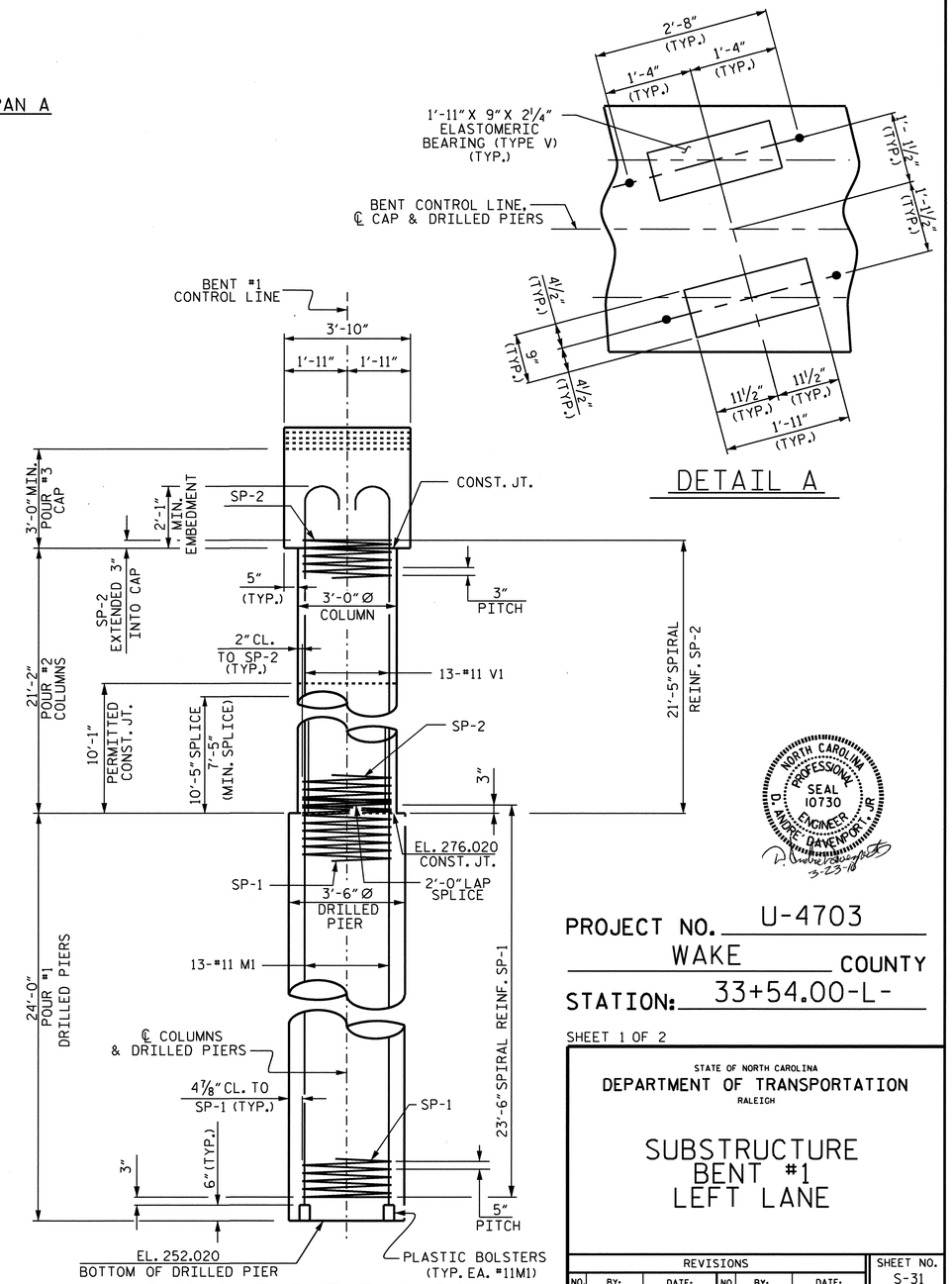

RIGHT END ELEVATION

NORTH CAROLINA PROFESSIONAL SEAL 10730 ENGINEER D. ANDREW DAVENPORT
5-23-18

PROJECT NO. U-4703

WAKE COUNTY

STATION: 33+54.00-L-

SHEET 1 OF 2

STATE OF NORTH CAROLINA
DEPARTMENT OF TRANSPORTATION
RALEIGH

SUBSTRUCTURE
BENT #1
LEFT LANE

REVISIONS							SHEET NO.
NO.	BY:	DATE:	NO.	BY:	DATE:		S-31
1			3				TOTAL SHEETS
2			4				89

DRAWN BY : D.A. DAVENPORT DATE : 7/09
CHECKED BY : M.G. SHAIKH DATE : 8/09

22-MAR-2010 15:09
r:\structures\ddavenport\microstation\u4703_sd_b*.dgn
dgladden

STR.#1

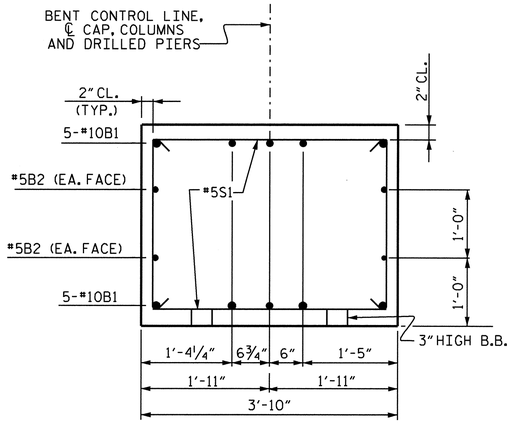

SECTION A-A

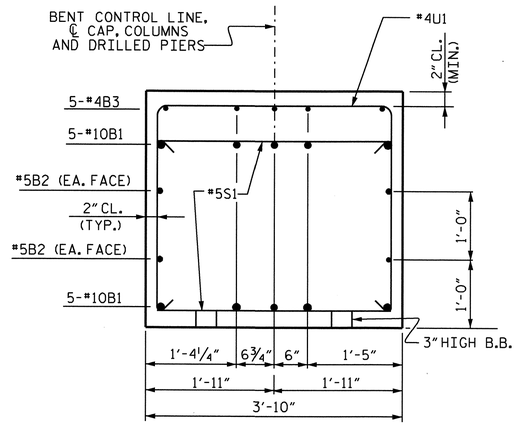

SECTION B-B

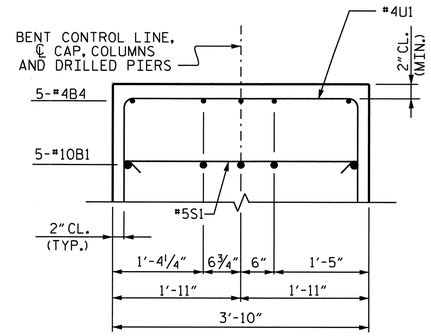

SECTION C-C

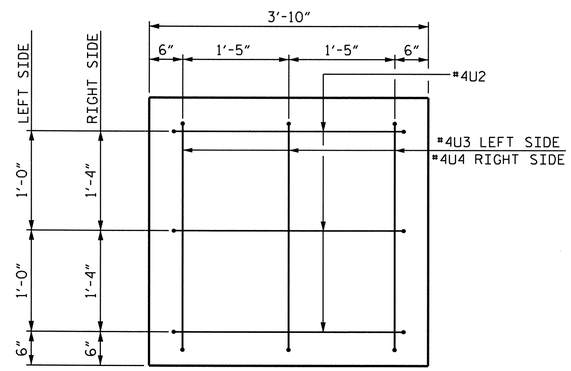

END VIEW

2" MIN. CONCRETE COVER FROM END OF CAP REQUIRED FOR ALL #4U3 AND #4U2 BARS.

#4U3 AND #4U2 BARS MAY BE SHIFTED UP TO 2" TO CLEAR "B" BARS.

BAR TYPES

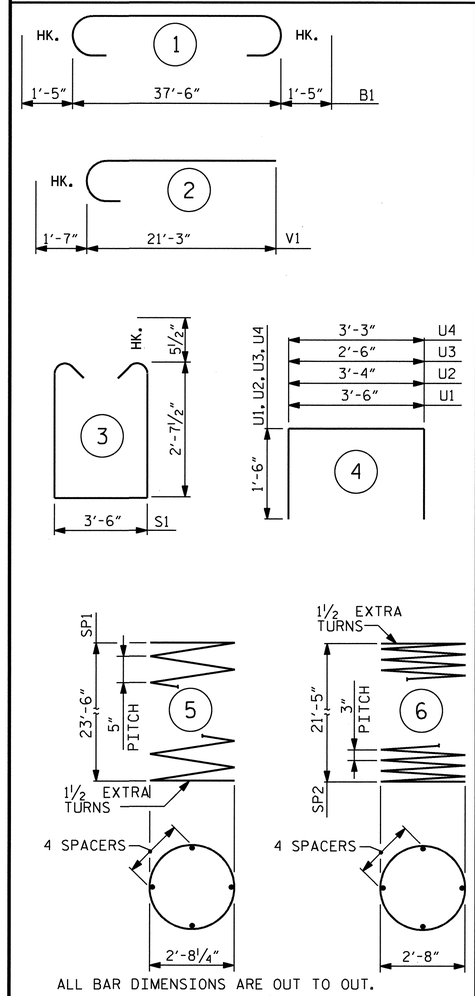

ALL BAR DIMENSIONS ARE OUT TO OUT.

BILL OF MATERIAL

BENT #1

BAR	NO.	SIZE	TYPE	LENGTH	WEIGHT
B1	10	#10	1	40'-4"	1736
B2	4	#5	STR.	37'-8"	157
B3	5	#4	STR.	16'-5"	55
B4	5	#4	STR.	4'-1"	14
M1	39	#11	STR.	33'-11"	7028
S1	24	#5	3	9'-8"	242
U1	45	#4	4	6'-6"	195
U2	6	#4	4	6'-4"	25
U3	3	#4	4	5'-6"	11
U4	3	#4	4	6'-3"	13
V1	39	#11	2	22'-10"	4731
REINFORCING STEEL (LBS.)					14207
SP-1	3	*	5	479'-11"	1502
SP-2	3	**	6	718'-6"	1440
SPIRAL REINFORCING STEEL (LBS.)					2942

CLASS A CONCRETE
POUR #2 (COLUMNS) 16.6 C.Y.
POUR #3 (CAP) 18.1 C.Y.
TOTAL 34.7 C.Y.

DRILLED PIERS

DRILLED PIER CONCRETE
POUR #1 (DRILLED PIERS) 25.7 C.Y.

3'-6" Ø DRILLED PIERS IN SOIL 51.0 FT.

3'-6" Ø DRILLED PIERS NOT IN SOIL 21.0 FT.

CSL TUBES 318.0 FT.

* THE SP-1 SPIRAL REINFORCING STEEL SHALL BE W31 OR D-31 COLD DRAWN WIRE OR #5 PLAIN OR DEFORMED BAR.

** THE SP-2 SPIRAL REINFORCING STEEL SHALL BE W20 OR D-20 COLD DRAWN WIRE OR #4 PLAIN OR DEFORMED BAR.

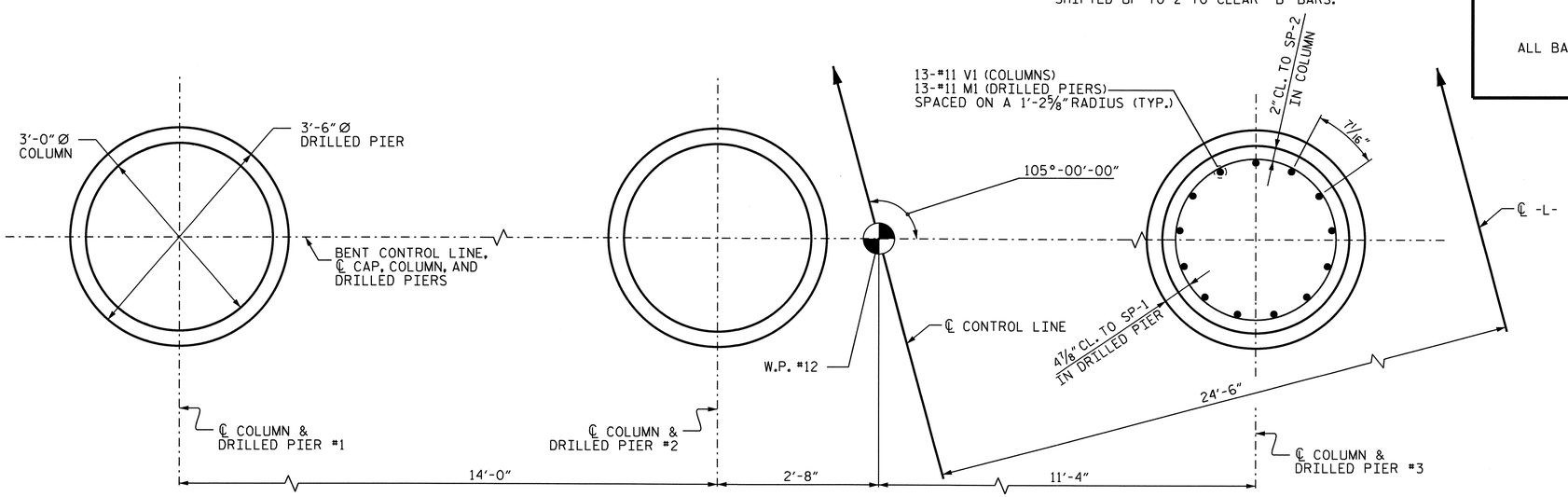

PLAN OF COLUMNS AND DRILLED PIERS

ALL COLUMNS AND DRILLED PIERS ARE IDENTICAL

PROJECT NO. U-4703
WAKE COUNTY
STATION: 33+54.00 -L-

SHEET 2 OF 2

STATE OF NORTH CAROLINA
DEPARTMENT OF TRANSPORTATION
RALEIGH

SUBSTRUCTURE
BENT #1
LEFT LANE

NORTH CAROLINA PROFESSIONAL SEAL 10730 ENGINEER D. ANDREW DAVENPORT, JR.
3-26-10

REVISIONS						SHEET NO.
NO.	BY:	DATE:	NO.	BY:	DATE:	S-32
1			3			TOTAL SHEETS
2			4			89

STR. #1

DRAWN BY : D.A. DAVENPORT DATE : 7/09
CHECKED BY : M.G. SHAIKH DATE : 8/09

26-MAR-2010 09:29
Z:\Structures\adavenport\Microstation\u4703_sd_b*.dgn
adavenport

NOTES

STIRRUPS IN CAP MAY BE SHIFTED AS NECESSARY TO CLEAR ANCHOR BOLTS.

FOR DRILLED PIERS, SEE SPECIAL PROVISIONS.

THE CONTRACTOR'S ATTENTION IS CALLED TO THE FACT THAT THE LONGITUDINAL REINFORCEMENT FOR THE DRILLED PIERS IS DETAILED WITH 3 FEET OF EXTRA LENGTH.

ALL STEEL IN THE DRILLED PIERS IS INCLUDED IN THE PAY ITEMS FOR "REINFORCING STEEL" AND "SPIRAL COLUMN REINFORCING STEEL."

HOOKS ON V1 BARS MAY BE TURNED AS NECESSARY FOR PLACING REINFORCING STEEL.

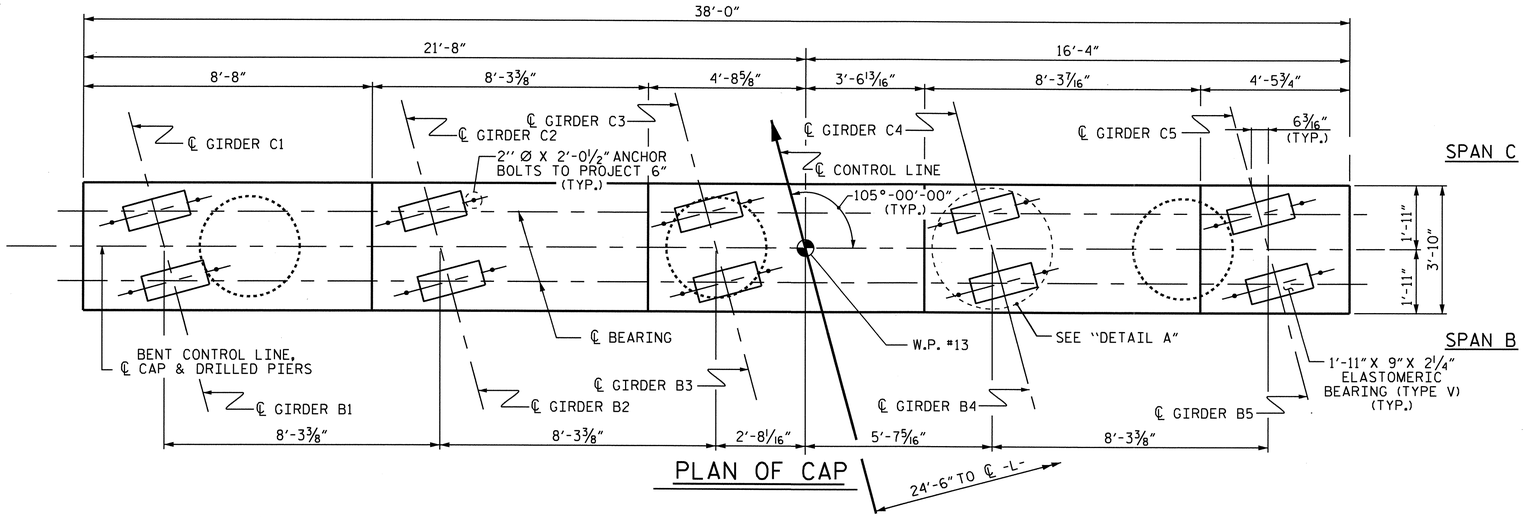

PLAN OF CAP

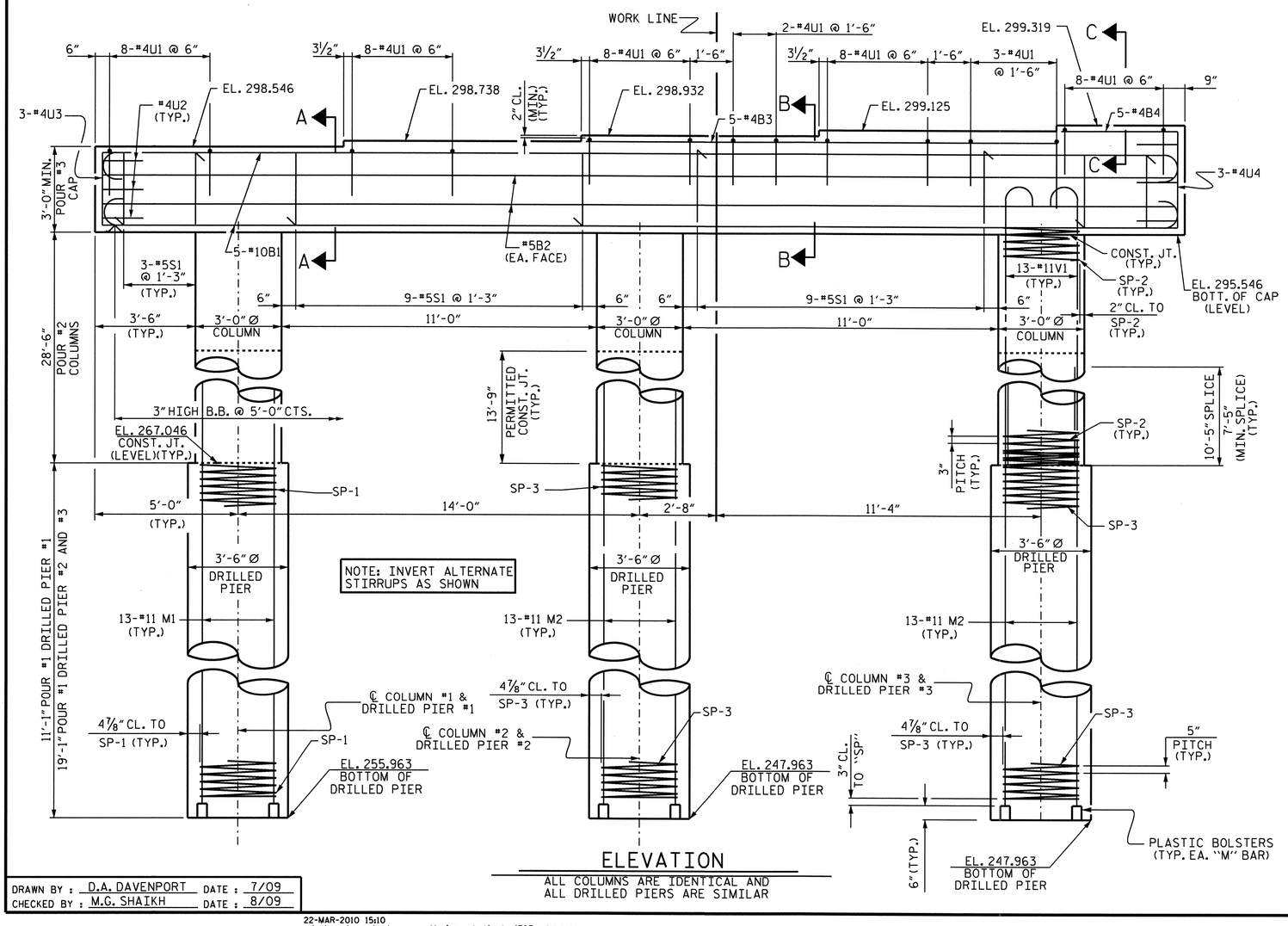

ELEVATION

ALL COLUMNS ARE IDENTICAL AND ALL DRILLED PIERS ARE SIMILAR

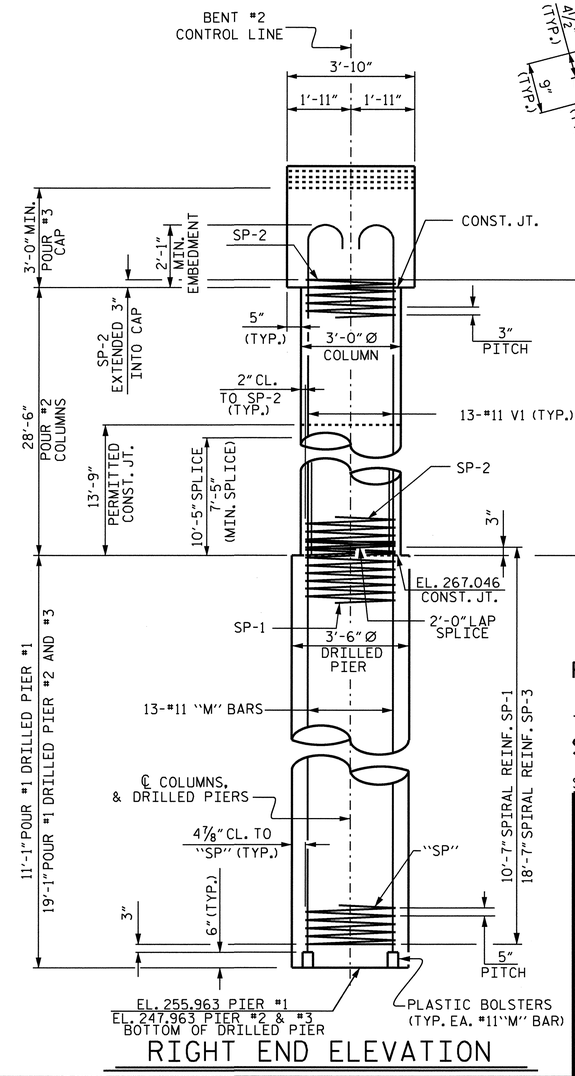

RIGHT END ELEVATION

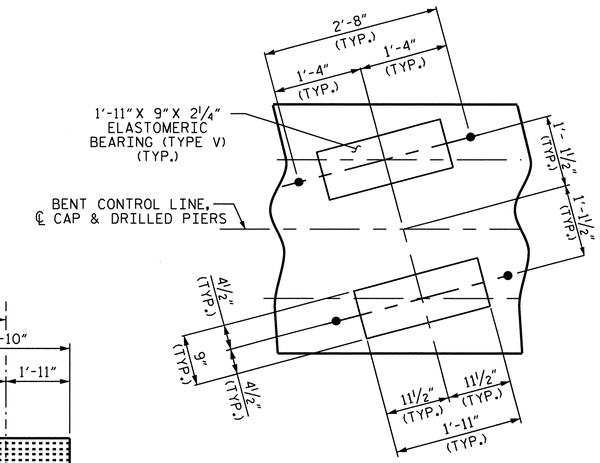

DETAIL A

NORTH CAROLINA PROFESSIONAL SEAL 10730 ENGINEER D. ANDRE DAVENPORT, JR.
3-23-10

PROJECT NO. U-4703

WAKE COUNTY

STATION: 33+54.00-L-

SHEET 1 OF 2

STATE OF NORTH CAROLINA
DEPARTMENT OF TRANSPORTATION
RALEIGH

SUBSTRUCTURE BENT #2 LEFT LANE

REVISIONS								SHEET NO.
NO.	BY:	DATE:	NO.	BY:	DATE:			S-33
1			3					TOTAL SHEETS
2			4					89

DRAWN BY : D.A. DAVENPORT DATE : 7/09
CHECKED BY : M.G. SHAIKH DATE : 8/09

22-MAR-2010 15:10
r:\structures\ddavenport\microstation\u4703_sd_b*.dgn
dgladden

STR.#1

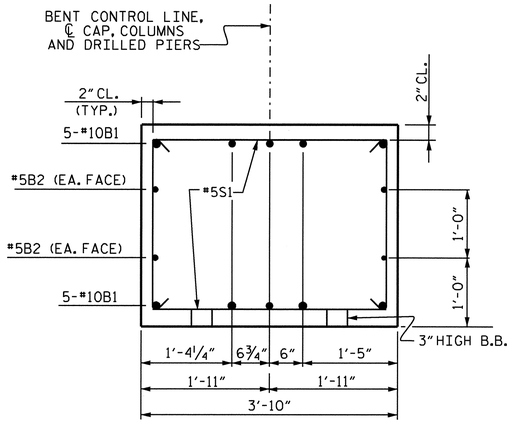

SECTION A-A

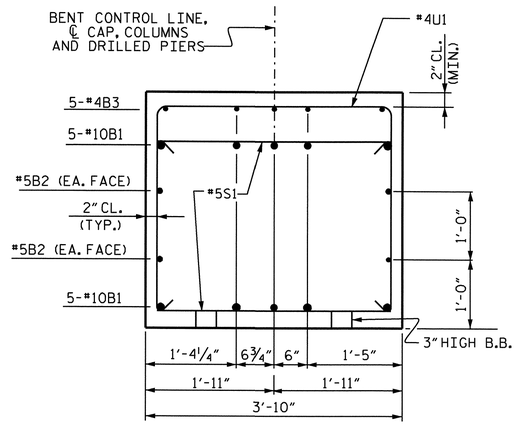

SECTION B-B

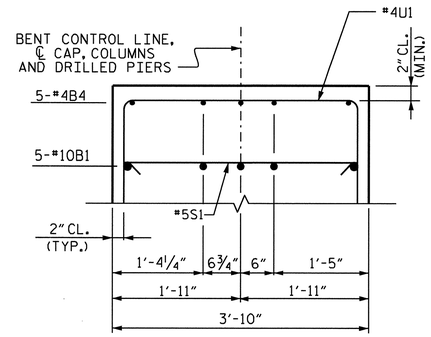

SECTION C-C

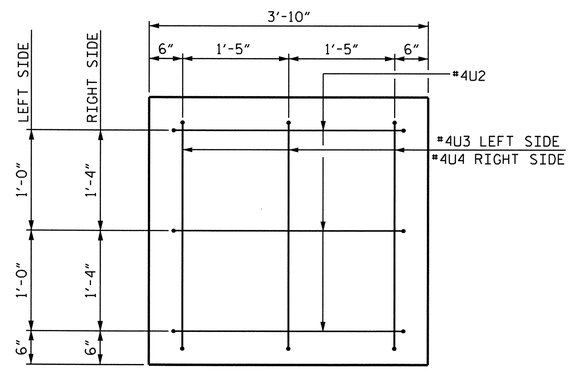

END VIEW

2" MIN. CONCRETE COVER FROM END OF CAP REQUIRED FOR ALL #4U3 AND #4U2 BARS.

#4U3 AND #4U2 BARS MAY BE SHIFTED UP TO 2" TO CLEAR "B" BARS.

BAR TYPES

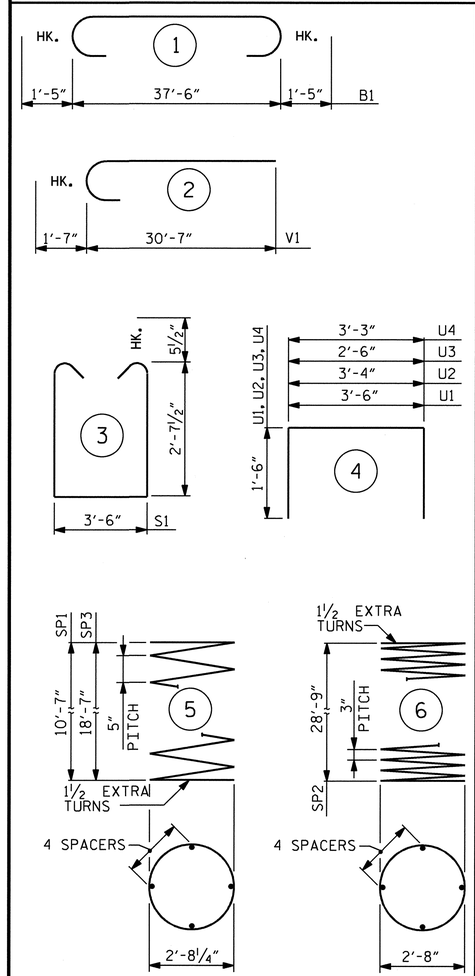

ALL BAR DIMENSIONS ARE OUT TO OUT.

BILL OF MATERIAL

BENT #2

BAR	NO.	SIZE	TYPE	LENGTH	WEIGHT
B1	10	#10	1	40'-4"	1736
B2	4	#5	STR.	37'-8"	157
B3	5	#4	STR.	16'-5"	55
B4	5	#4	STR.	4'-1"	14
M1	13	#11	STR.	21'-0"	1450
M2	26	#11	STR.	29'-0"	4006
S1	24	#5	3	9'-8"	242
U1	45	#4	4	6'-6"	195
U2	6	#4	4	6'-4"	25
U3	3	#4	4	5'-6"	11
U4	3	#4	4	6'-3"	13
V1	39	#11	2	32'-2"	6665
REINFORCING STEEL (LBS.)					14569
SP-1	1	*	5	223'-5"	233
SP-2	3	**	6	959'-4"	1923
SP-3	2	*	5	382'-8"	798
SPIRAL REINFORCING STEEL (LBS.)					2954

CLASS A CONCRETE
POUR #2 (COLUMNS) 22.4 C.Y.
POUR #3 (CAP) 18.1 C.Y.
TOTAL 40.5 C.Y.

DRILLED PIERS

DRILLED PIER CONCRETE
POUR #1 (DRILLED PIERS) 17.5 C.Y.
3'-6" Ø DRILLED PIERS IN SOIL 24.25 FT.
3'-6" Ø DRILLED PIERS NOT IN SOIL 25.0 FT.
CSL TUBES 227.0 FT.

* THE SP-1 & SP-3 SPIRAL REINFORCING STEEL SHALL BE W31 OR D-31 COLD DRAWN WIRE OR #5 PLAIN OR DEFORMED BAR.

** THE SP-2 SPIRAL REINFORCING STEEL SHALL BE W20 OR D-20 COLD DRAWN WIRE OR #4 PLAIN OR DEFORMED BAR.

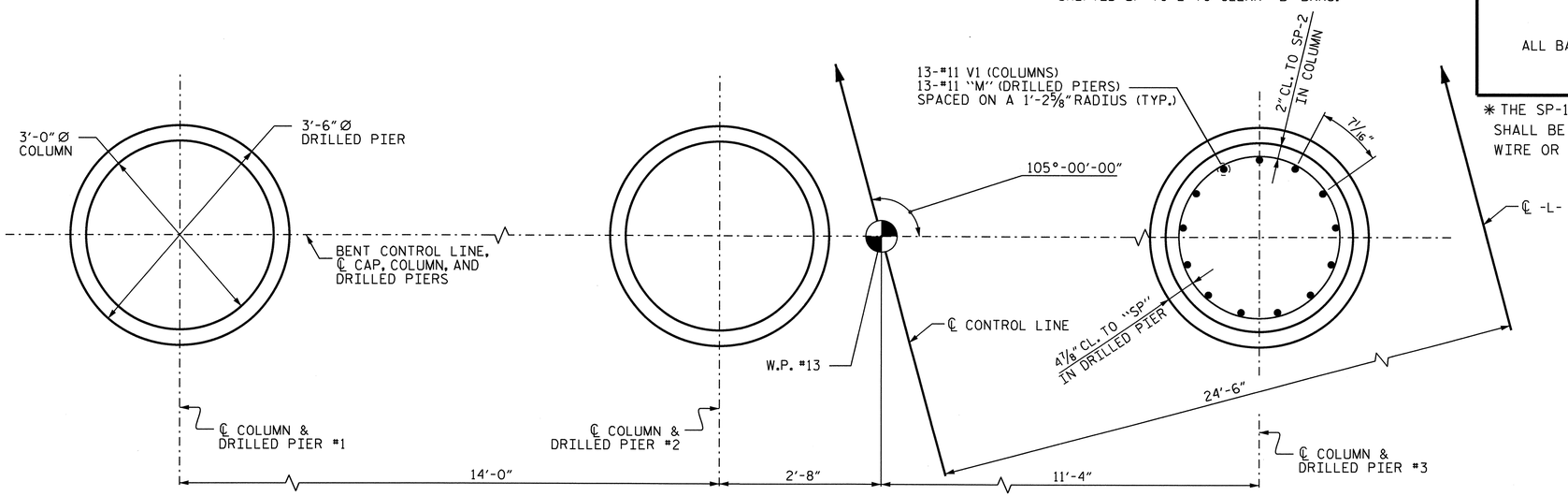

PLAN OF COLUMNS AND DRILLED PIERS

ALL COLUMNS ARE IDENTICAL AND ALL DRILLED PIERS ARE SIMILAR

PROJECT NO. U-4703
WAKE COUNTY
STATION: 33+54.00 -L-

SHEET 2 OF 2

STATE OF NORTH CAROLINA
DEPARTMENT OF TRANSPORTATION
RALEIGH

SUBSTRUCTURE
BENT #2
LEFT LANE

NORTH CAROLINA PROFESSIONAL SEAL 10730 ENGINEER DAVID ANDREW DAVENPORT, JR.
3-26-10

REVISIONS						SHEET NO.
NO.	BY:	DATE:	NO.	BY:	DATE:	S-34
1			3			TOTAL SHEETS
2			4			89

STR. #1

DRAWN BY : D.A. DAVENPORT DATE : 7/09
CHECKED BY : M.G. SHAIKH DATE : 8/09

26-MAR-2010 09:29
Z:\Structures\addavenport\Microstation\u4703_sd_b*.dgn
addavenport

NOTES

STIRRUPS IN CAP MAY BE SHIFTED AS NECESSARY TO CLEAR ANCHOR BOLTS.

FOR DRILLED PIERS, SEE SPECIAL PROVISIONS.

THE CONTRACTOR'S ATTENTION IS CALLED TO THE FACT THAT THE LONGITUDINAL REINFORCEMENT FOR THE DRILLED PIERS IS DETAILED WITH 3 FEET OF EXTRA LENGTH.

ALL STEEL IN THE DRILLED PIERS IS INCLUDED IN THE PAY ITEMS FOR "REINFORCING STEEL" AND "SPIRAL COLUMN REINFORCING STEEL."

HOOKS ON V1 BARS MAY BE TURNED AS NECESSARY FOR PLACING REINFORCING STEEL.

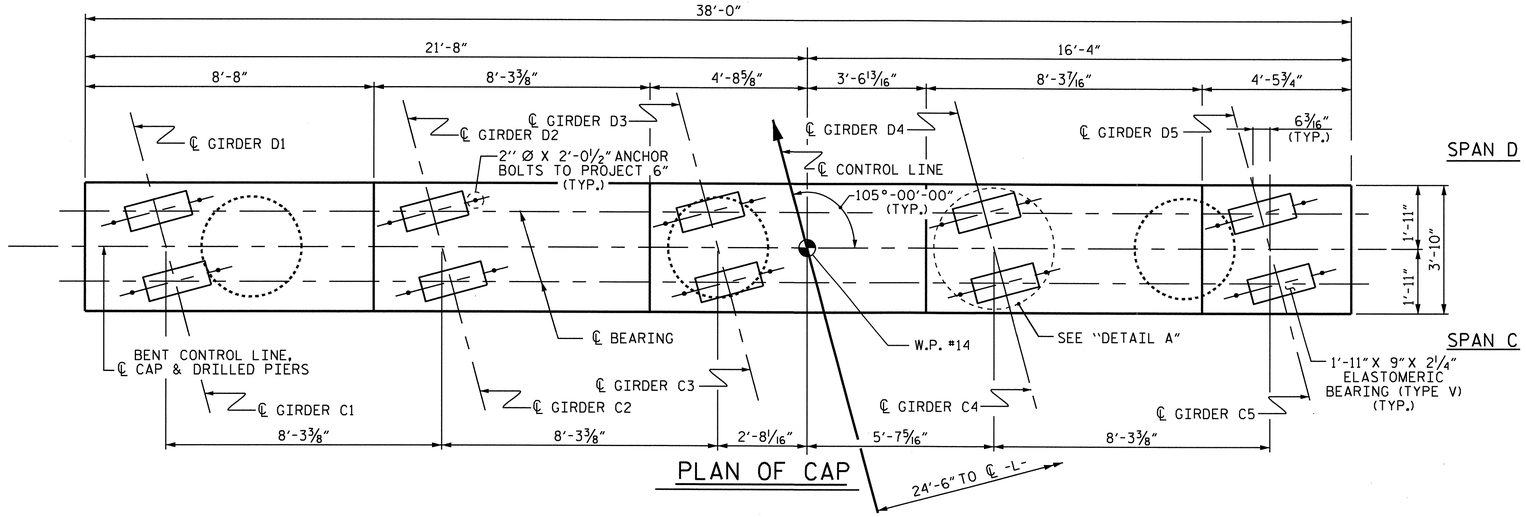

PLAN OF CAP

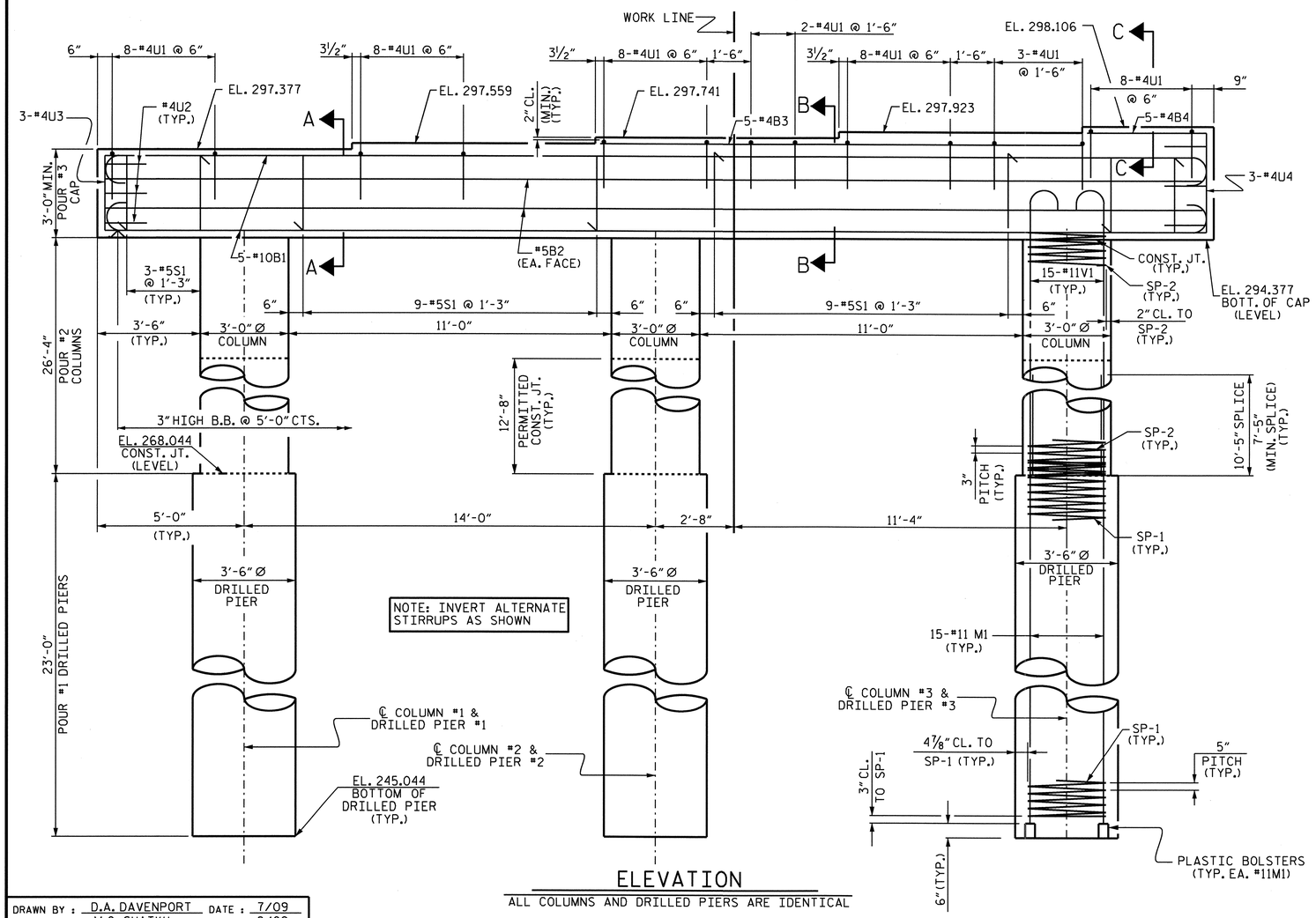

ELEVATION

ALL COLUMNS AND DRILLED PIERS ARE IDENTICAL

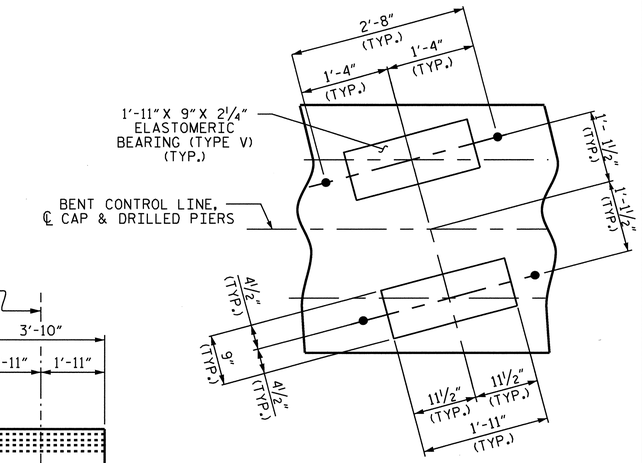

DETAIL A

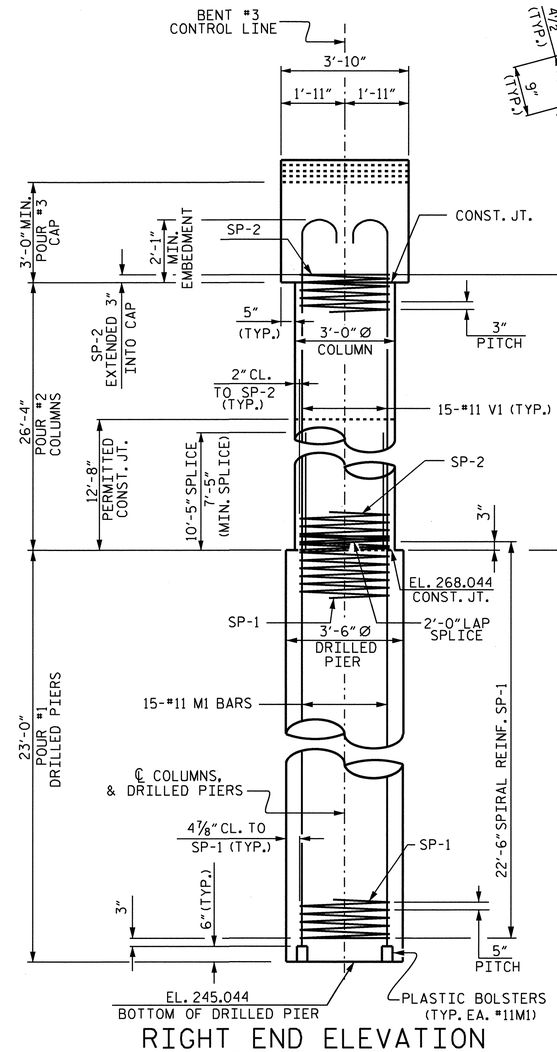

RIGHT END ELEVATION

NORTH CAROLINA PROFESSIONAL SEAL 10730 ENGINEER D. ANDREW DAVENPORT, JR. 3-23-10

PROJECT NO. U-4703

WAKE COUNTY

STATION: 33+54.00-L-

SHEET 1 OF 2

STATE OF NORTH CAROLINA
DEPARTMENT OF TRANSPORTATION
RALEIGH

SUBSTRUCTURE
BENT #3
LEFT LANE

REVISIONS							SHEET NO.
NO.	BY:	DATE:	NO.	BY:	DATE:		S-35
1			3				TOTAL SHEETS
2			4				89

DRAWN BY : D.A. DAVENPORT DATE : 7/09
CHECKED BY : M.G. SHAIKH DATE : 8/09

22-MAR-2010 15:11
r:\structures\ddavenport\microstation\u4703_sd_b*.dgn
dgladden

STR.#1

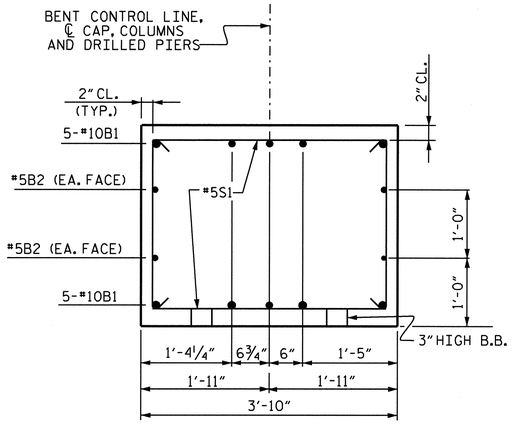

SECTION A-A

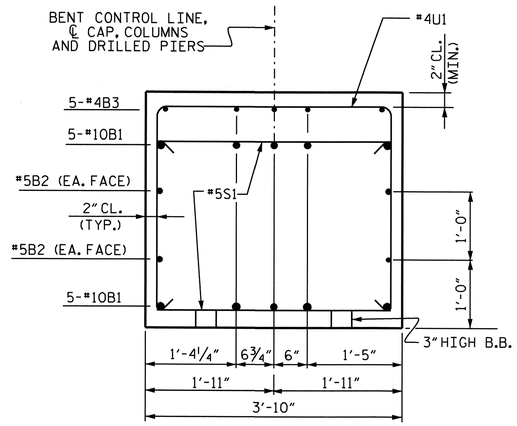

SECTION B-B

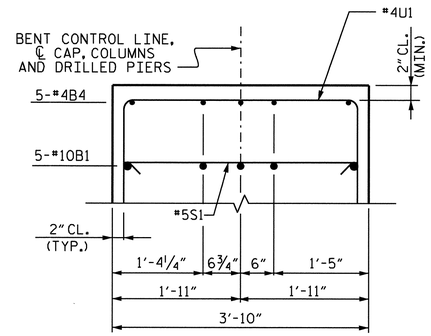

SECTION C-C

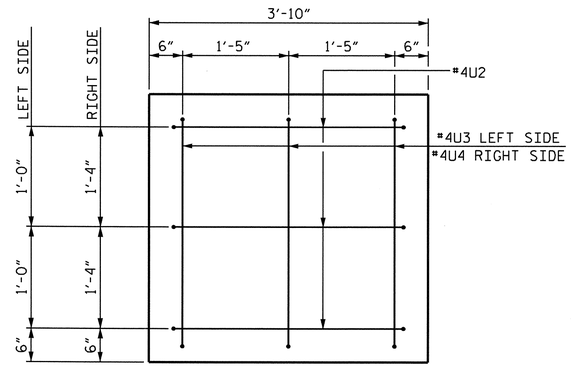

END VIEW

2" MIN. CONCRETE COVER FROM END OF CAP REQUIRED FOR ALL #4U3 AND #4U2 BARS.

#4U3 AND #4U2 BARS MAY BE SHIFTED UP TO 2" TO CLEAR "B" BARS.

BAR TYPES

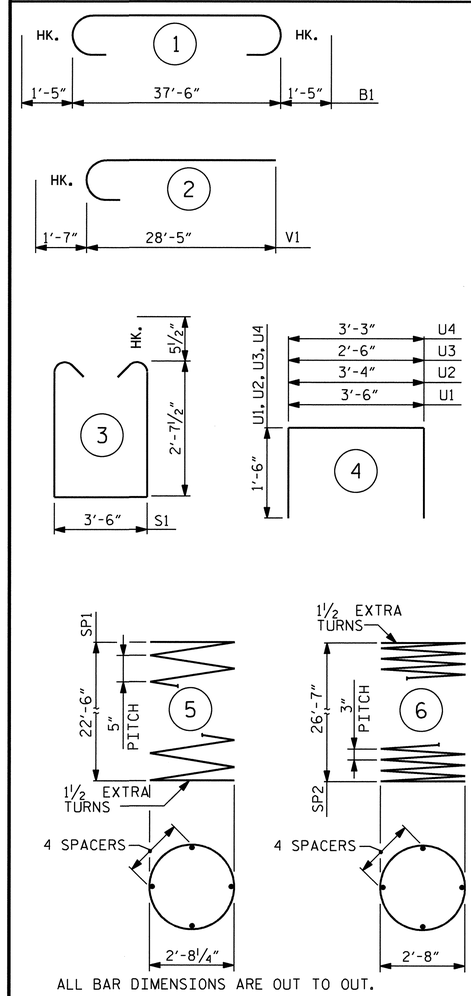

ALL BAR DIMENSIONS ARE OUT TO OUT.

BILL OF MATERIAL

BENT #3

BAR	NO.	SIZE	TYPE	LENGTH	WEIGHT
B1	10	#10	1	40'-4"	1736
B2	4	#5	STR.	37'-8"	157
B3	5	#4	STR.	16'-5"	55
B4	5	#4	STR.	4'-1"	14
M1	45	#11	STR.	32'-11"	7870
S1	24	#5	3	9'-8"	242
U1	45	#4	4	6'-6"	195
U2	6	#4	4	6'-4"	25
U3	3	#4	4	5'-6"	11
U4	3	#4	4	6'-3"	13
V1	45	#11	2	30'-0"	7173
REINFORCING STEEL (LBS.)					17491
SP-1	3	*	5	459'-3"	1437
SP-2	3	**	6	889'-4"	1782
SPIRAL REINFORCING STEEL (LBS.)					3219

CLASS A CONCRETE
POUR #2 (COLUMNS) 20.7 C.Y.
POUR #3 (CAP) 17.9 C.Y.
TOTAL 38.6 C.Y.

DRILLED PIERS

DRILLED PIER CONCRETE
POUR #1 (DRILLED PIERS) 24.6 C.Y.

3'-6" Ø DRILLED PIERS IN SOIL 41.0 FT.

3'-6" Ø DRILLED PIERS NOT IN SOIL 28.0 FT.

CSL TUBES 306.0 FT.

* THE SP-1 SPIRAL REINFORCING STEEL SHALL BE W31 OR D-31 COLD DRAWN WIRE OR #5 PLAIN OR DEFORMED BAR.

** THE SP-2 SPIRAL REINFORCING STEEL SHALL BE W20 OR D-20 COLD DRAWN WIRE OR #4 PLAIN OR DEFORMED BAR.

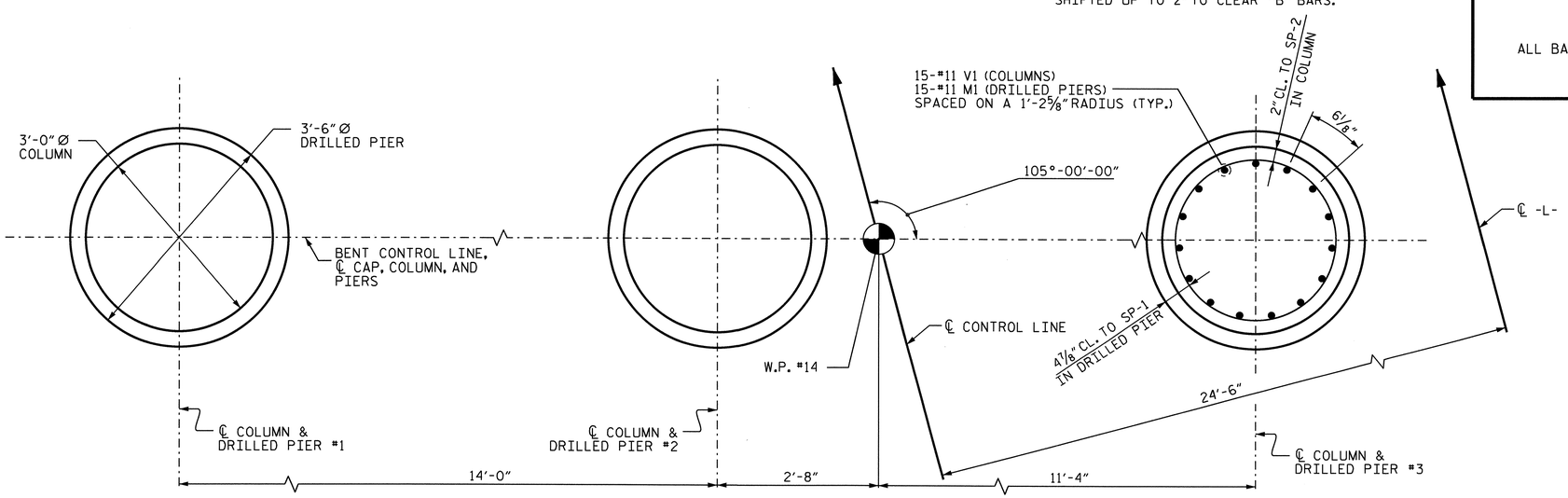

PLAN OF COLUMNS AND DRILLED PIERS

ALL COLUMNS AND DRILLED PIERS ARE IDENTICAL

PROJECT NO. U-4703
WAKE COUNTY
STATION: 33+54.00 -L-

SHEET 2 OF 2

STATE OF NORTH CAROLINA
DEPARTMENT OF TRANSPORTATION
RALEIGH

SUBSTRUCTURE
BENT #3
LEFT LANE

NORTH CAROLINA PROFESSIONAL SEAL 10730 ENGINEER D. ANDRE DAVENPORT, JR.
3-26-10

REVISIONS						SHEET NO.
NO.	BY:	DATE:	NO.	BY:	DATE:	S-36
1			3			TOTAL SHEETS
2			4			89

STR. #1

DRAWN BY : D.A. DAVENPORT DATE : 7/09
CHECKED BY : M.G. SHAIKH DATE : 8/09

26-MAR-2010 09:29
Z:\Structures\ddavenport\Microstation\u4703_sd_b*.dgn
ddavenport

NOTES

SEE SUPERSTRUCTURE SHEETS FOR UPPER PART OF INTEGRAL END BENT DETAILS.

THE CONTRACTOR SHALL PROVIDE FOR INSTALLATION OF THE 4" DIAMETER DRAIN PIPE THROUGH THE WING WALL AS REQUIRED FOR REINFORCED BRIDGE APPROACH FILLS. SEE THE ROADWAY PLANS. REINFORCING STEEL IN THE WING WALL MAY BE SHIFTED AS NECESSARY TO CLEAR THE DRAIN PIPE.

THE CONTRACTOR'S ATTENTION IS CALLED TO THE FACT THAT THE UPPER PART OF THE END BENT WINGS ARE TO BE POURED WITH POUR #5 OF THE SUPERSTRUCTURE.

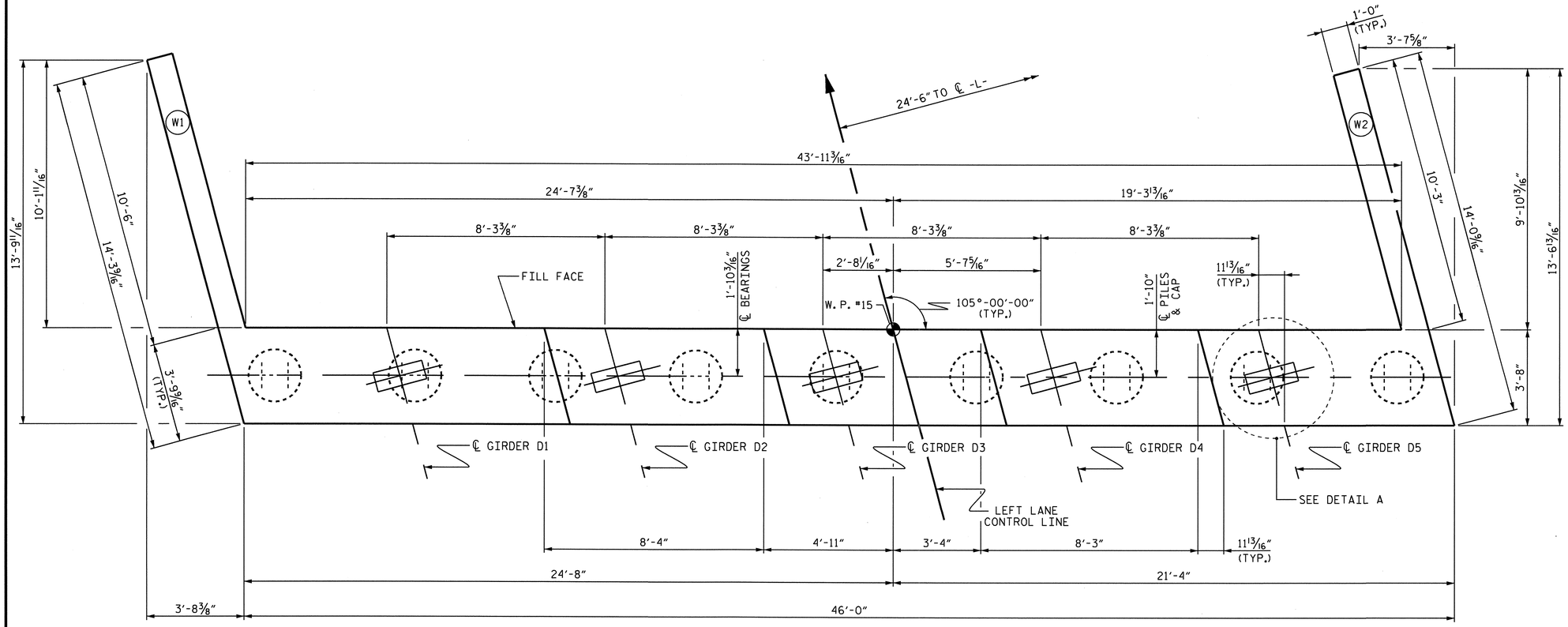

PLAN

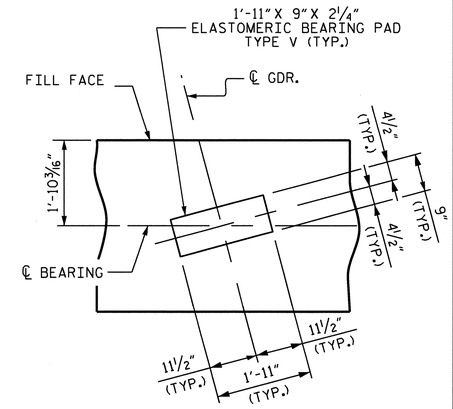

DETAIL A

PILES NOT SHOWN FOR CLARITY

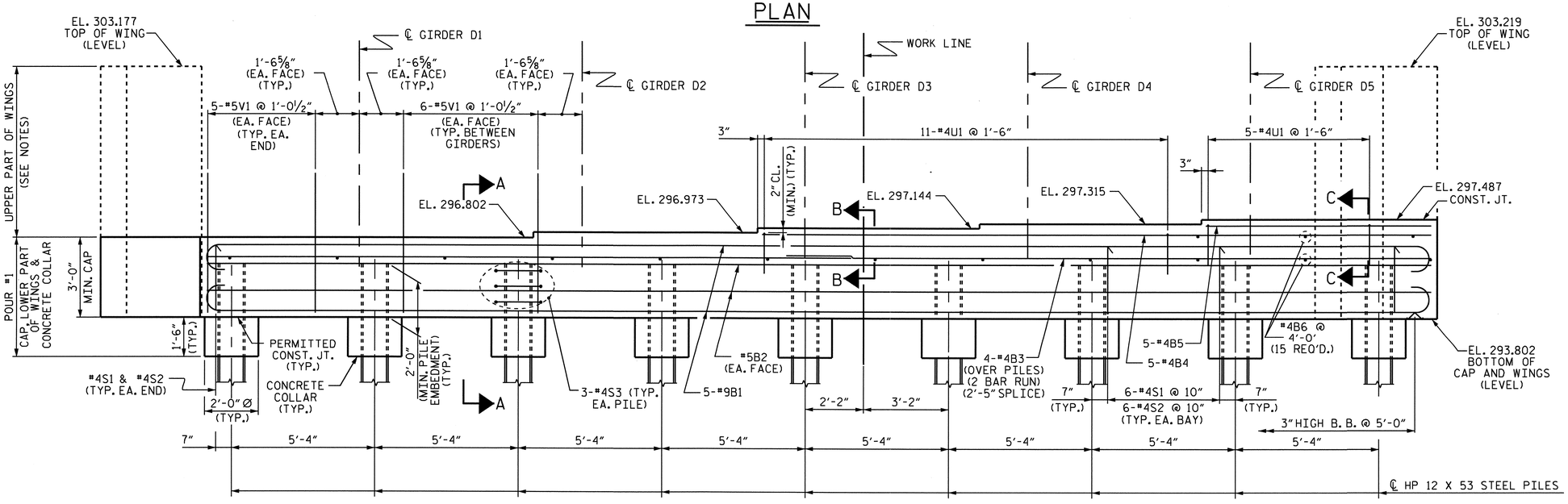

ELEVATION

NORTH CAROLINA PROFESSIONAL SEAL 10730 ENGINEER D. ANDREW DAVENPORT

PROJECT NO. U-4703

WAKE COUNTY

STATION: 33+54.00-L-

SHEET 1 OF 3

STATE OF NORTH CAROLINA
DEPARTMENT OF TRANSPORTATION
RALEIGH

SUBSTRUCTURE INTEGRAL END BENT #2 (LEFT LANE)

REVISIONS								SHEET NO.
NO.	BY:	DATE:	NO.	BY:	DATE:			S-37
1			3					TOTAL SHEETS
2			4					89

DRAWN BY : H. T. BARBOUR DATE : 7-01-09
CHECKED BY : M.G. SHAIKH DATE : 09/09/09

23-MAR-2010 08:38
Z:\Structures\tbarbour\Microstation\str1\u-4703_sd_e*.dgn
adavenport

STR. #1

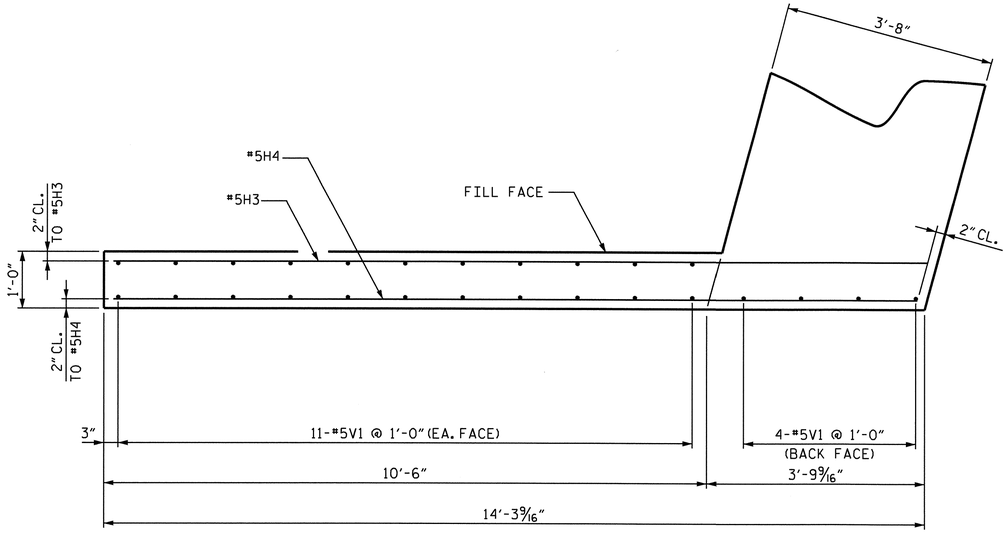

PLAN OF LEFT WING (W1)

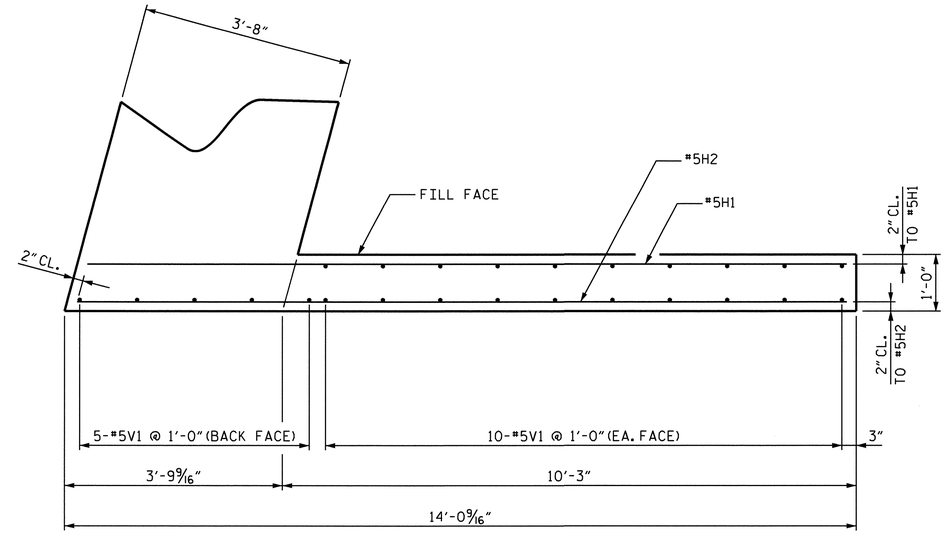

PLAN OF RIGHT WING (W2)

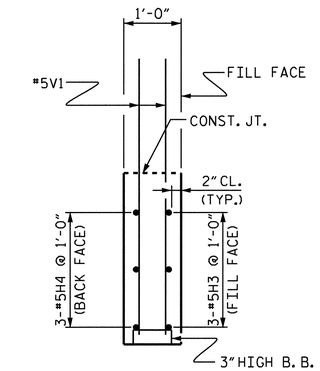

SECTION Y-Y

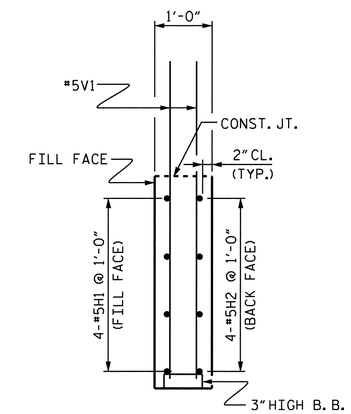

SECTION X-X

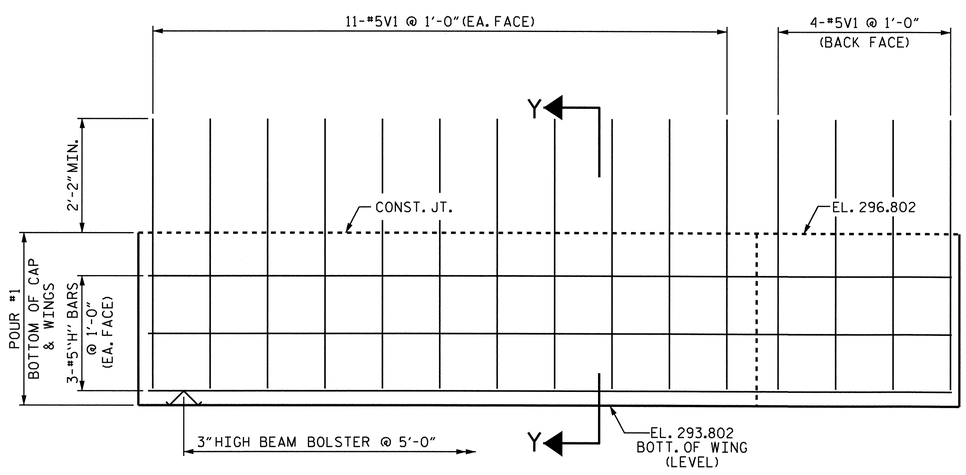

ELEVATION OF LEFT WING (W1)

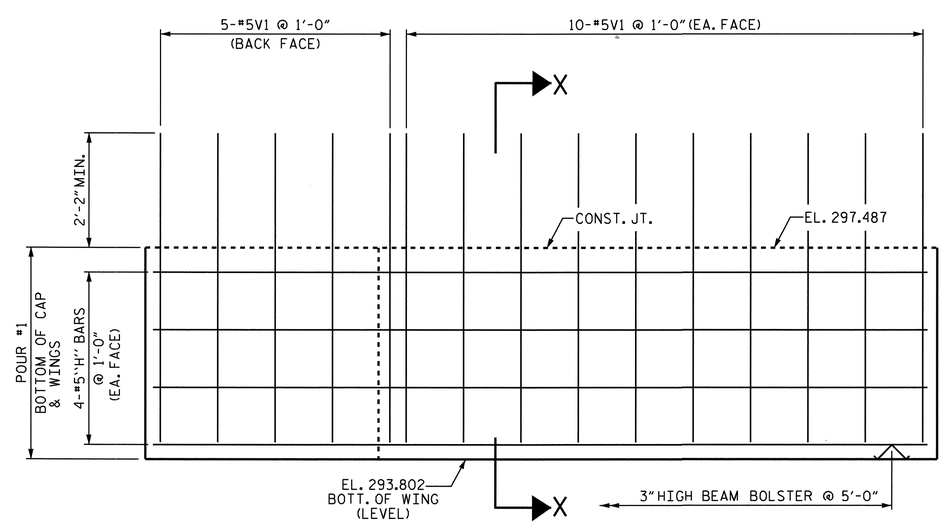

ELEVATION OF RIGHT WING (W2)

PROJECT NO. U-4703

WAKE COUNTY

STATION: 33+54.00-L-

SHEET 2 OF 3

STATE OF NORTH CAROLINA
DEPARTMENT OF TRANSPORTATION
RALEIGH

SUBSTRUCTURE INTEGRAL END BENT #2 (LEFT LANE)

NORTH CAROLINA PROFESSIONAL SEAL 10730 ENGINEER D. ANDREW DAVENPORT, JR.
2-5-10

REVISIONS							SHEET NO.
NO.	BY:	DATE:	NO.	BY:	DATE:		S-38
1			3				TOTAL SHEETS
2			4				89

DRAWN BY : H. T. BARBOUR DATE : 7-08-09
CHECKED BY : M.G. SHAIKH DATE : 09/09/09

03-FEB-2010 12:10
Y:\Structures\tbarbour\Microstation\str1\u-4703_sd_e*.dgn
ADAVENPORT

STR. #1

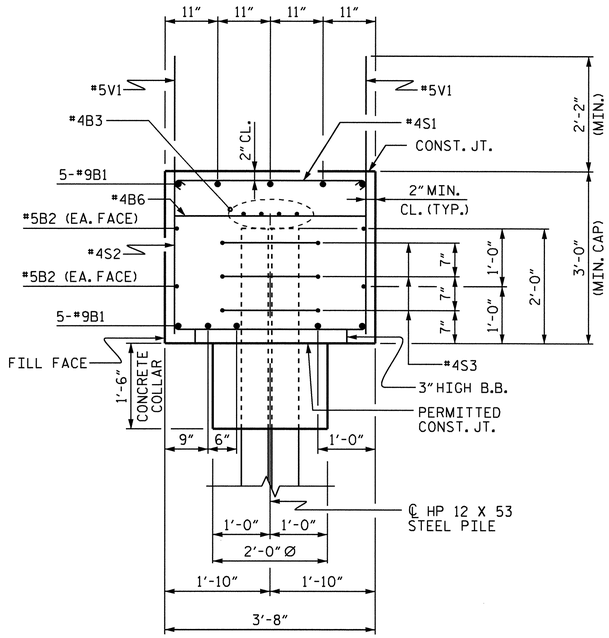

SECTION A-A

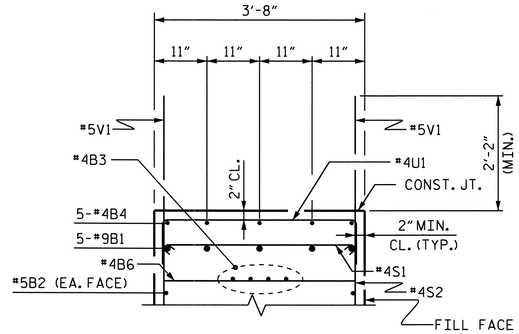

SECTION B-B

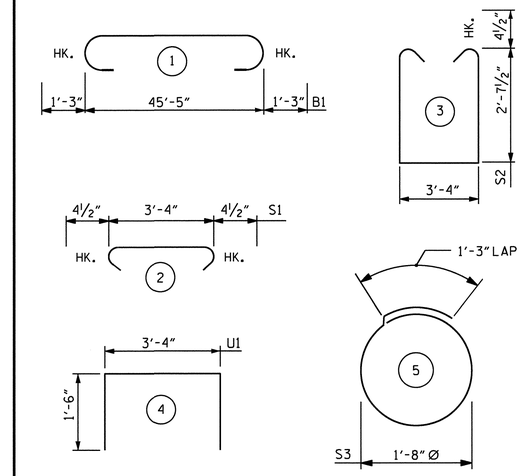

BAR TYPES

ALL BAR DIMENSIONS ARE OUT TO OUT.

BILL OF MATERIAL

END BENT #2

BAR	NO.	SIZE	TYPE	LENGTH	WEIGHT
B1	10	#9	1	47'-11"	1629
B2	4	#5	STR	45'-7"	190
B3	8	#4	STR	24'-1"	129
B4	5	#4	STR	24'-11"	83
B5	5	#4	STR	8'-5"	28
B6	15	#4	STR	3'-4"	33
H1	4	#5	STR	13'-5"	56
H2	4	#5	STR	13'-7"	57
H3	3	#5	STR	14'-2"	44
H4	3	#5	STR	14'-0"	44
S1	50	#4	2	4'-1"	136
S2	50	#4	3	9'-4"	312
S3	27	#4	5	6'-6"	117
U1	16	#4	4	6'-4"	68
V1	119	#5	STR	5'-8"	703

REINFORCING STEEL = 3629 LBS.

CLASS A CONCRETE

* POUR #1 (CAP, LOWER PART OF WINGS & CONCRETE COLLAR)

CU. YDS. 25.0

TOTAL CU. YDS. 25.0

HP 12 X 53 STEEL PILES

NO. 9 LIN. FT. 180

* CONCRETE QUANTITY FOR UPPER PART OF WINGS IN POUR #5 ON SUPERSTRUCTURE.

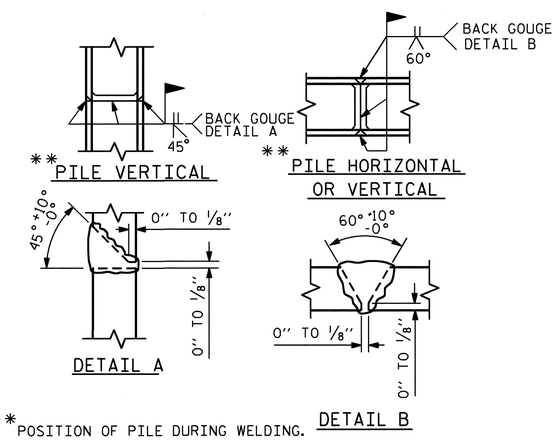

** POSITION OF PILE DURING WELDING.

PILE SPLICE DETAILS

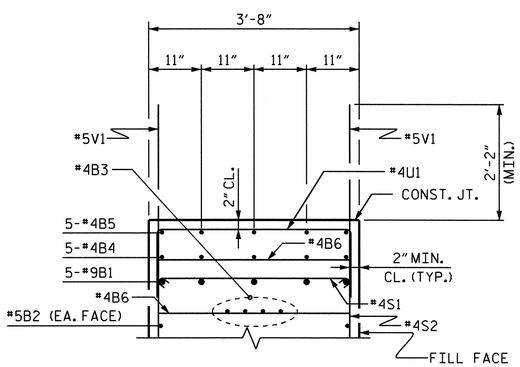

SECTION C-C

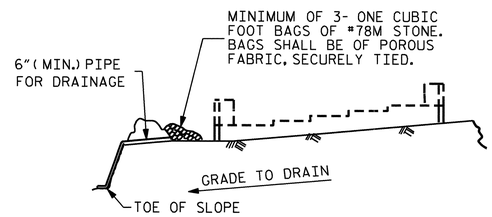

BAGGED STONE AND PIPE SHALL BE PLACED IMMEDIATELY AFTER COMPLETION OF END BENT EXCAVATION. PIPE MAY BE EITHER CONCRETE, CORRUGATED STEEL, CORRUGATED ALUMINUM ALLOY, OR CORRUGATED PLASTIC. PERFORATED PIPE WILL NOT BE ALLOWED.

BAGGED STONE SHALL REMAIN IN PLACE UNTIL THE ENGINEER DIRECTS THAT IT BE REMOVED. THE CONTRACTOR SHALL REMOVE AND DISPOSE OF SILT ACCUMULATIONS AT BAGGED STONE WHEN SO DIRECTED BY THE ENGINEER. BAGS SHALL BE REMOVED AND REPLACED WHENEVER THE ENGINEER DETERMINES THAT THEY HAVE DETERIORATED AND LOST THEIR EFFECTIVENESS.

NO SEPARATE PAYMENT WILL BE MADE FOR THIS WORK AND THE ENTIRE COST OF THIS WORK SHALL BE INCLUDED IN THE UNIT CONTRACT PRICE BID FOR THE SEVERAL PAY ITEMS.

TEMPORARY DRAINAGE AT END BENT

PROJECT NO. U-4703

WAKE COUNTY

STATION: 33+54.00-L-

SHEET 3 OF 3

STATE OF NORTH CAROLINA
DEPARTMENT OF TRANSPORTATION
RALEIGH

SUBSTRUCTURE INTEGRAL END BENT #2 (LEFT LANE)

NORTH CAROLINA PROFESSIONAL SEAL 10730 ENGINEER D. ANDREW DAVENPORT, JR.

REVISIONS						SHEET NO.
NO.	BY:	DATE:	NO.	BY:	DATE:	S-39
1			3			TOTAL SHEETS
2			4			89

DRAWN BY : H. T. BARBOUR DATE : 7-08-09

CHECKED BY : M.G. SHAIKH DATE : 09/09/09

03-FEB-2010 12:10
Y:\Structures\tbarbour\Microstation\strl\u-4703_sd_e*.dgn
ADAVENPORT

STR. #1

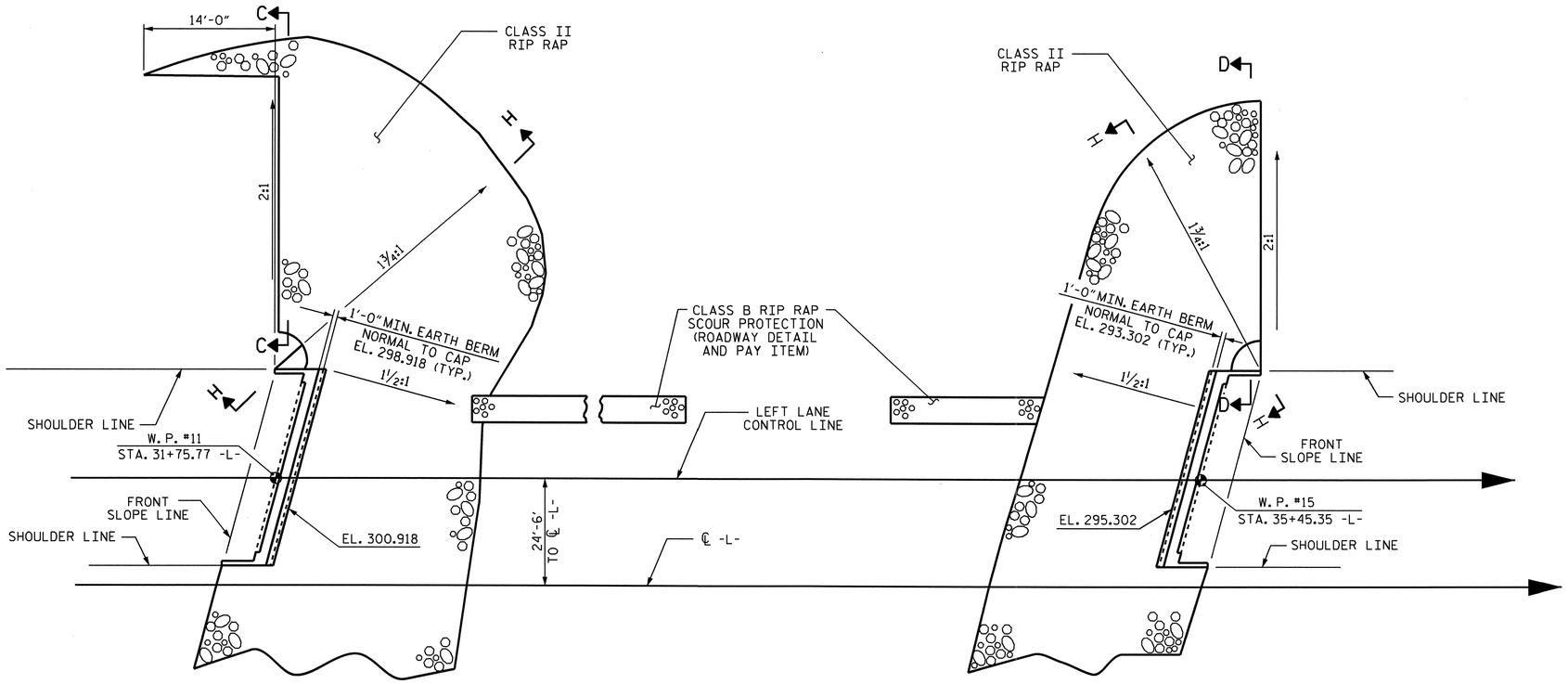

END BENT #1

END BENT #2

PLAN

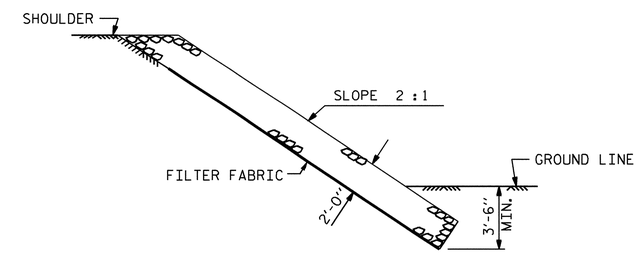

SECTION D-D

ESTIMATED QUANTITIES		
BRIDGE @ STA. 33+54.00 -L-	RIP RAP CLASS II (2'-0" THICK)	FILTER FABRIC FOR DRAINAGE
	TONS	SQUARE YARDS
END BENT 1	375	420
END BENT 2	335	370
TOTAL	710	790

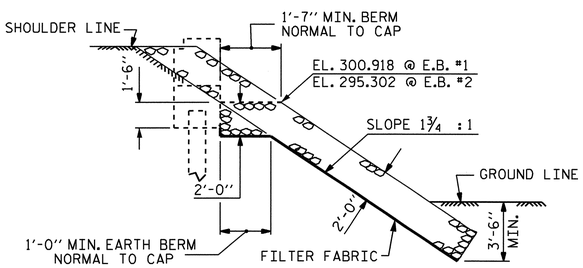

SECTION H-H

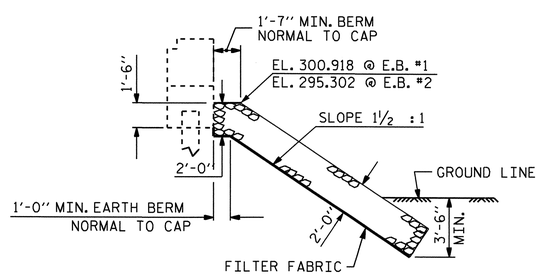

℄ SECTION
BERM RIP RAPPED

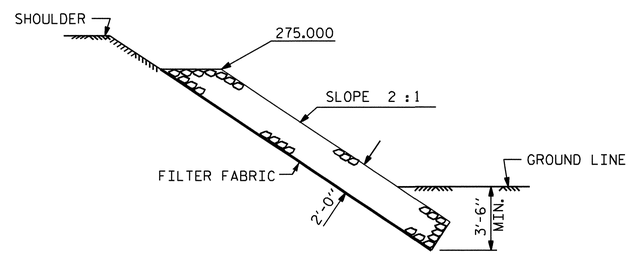

SECTION C-C

PROJECT NO. U-4703
WAKE COUNTY
STATION: 33+54.00 -L-

STATE OF NORTH CAROLINA
DEPARTMENT OF TRANSPORTATION
RALEIGH

RIP RAP DETAILS
LEFT LANE

NORTH CAROLINA PROFESSIONAL SEAL 10730 ENGINEER D. ANDREW DAVENPORT, JR.
2-8-10

REVISIONS								SHEET NO.
NO.	BY:	DATE:	NO.	BY:	DATE:			S-40
1			3					TOTAL SHEETS
2			4					89

ASSEMBLED BY : M. G. SHIAKH	DATE : 05-29-08		
CHECKED BY : H. T. BARBOUR	DATE : 01-22-09		
DRAWN BY : REK 1/84	REV. 8/16/99	RWW/LES	
CHECKED BY : RDU 1/84	REV. 10/17/00	RWW/LES	
	REV. 5/1/06	TLA/GM	

03-FEB-2010 12:11
Y:\Structures\mshaikh\Microstation\STR 1\U-4703_sd_RR.dgn
ADAVENPORT

SKEW > 90°

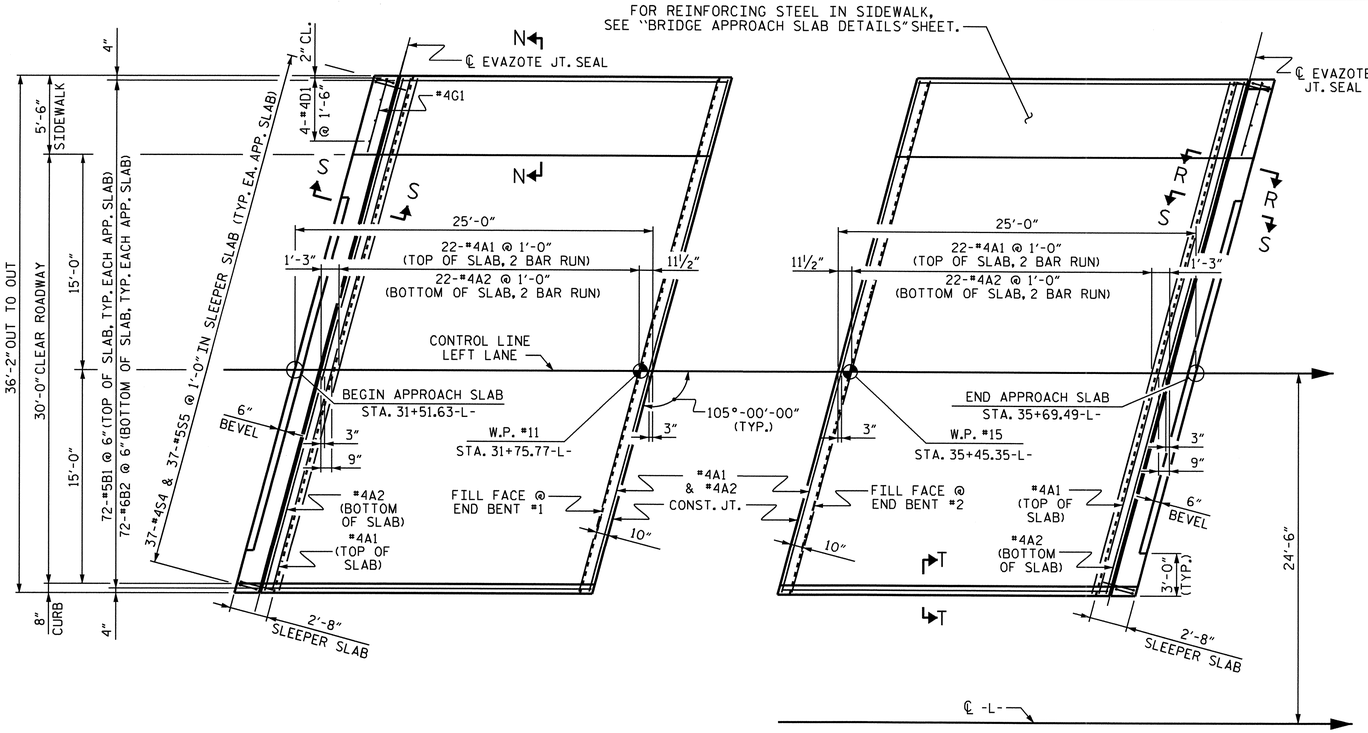

PLAN @ END BENT #1

PLAN @ END BENT #2

DIMENSIONS SHOWN ARE TYPICAL FOR BOTH APPROACH SLABS. #4 A1 BARS IN SLEEPER SLAB NOT SHOWN FOR CLARITY.

NOTES

APPROACH SLAB SHALL NOT BE CONSTRUCTED PRIOR TO COMPLETION OF THE BRIDGE DECK.

FOR REINFORCED BRIDGE APPROACH FILL INCLUDING FABRIC, IMPERMEABLE GEOMEMBRANE, 4" Ø DRAINAGE PIPE, #78M STONE, AND SELECT MATERIAL, SEE ROADWAY PLANS.

AREA BETWEEN THE WINGWALL AND APPROACH SLAB SHALL BE GRADED TO DRAIN THE WATER AWAY FROM THE FILL FACE OF THE BRIDGE AND SHALL BE PAVED. SEE ROADWAY PLANS.

THE 6" COMP. A.B.C. SHALL BE FLUSH WITH THE SLEEPER SLAB AND SHALL EXTEND 1'-0" OUTSIDE OF EACH EDGE OF THE APPROACH SLAB.

THE CONTRACTOR MAY USE 4" TYPE B-25.0B ASPHALT CONCRETE BASE COURSE IN LIEU OF 6" COMP. A.B.C. IF THIS OPTION IS USED, THE BASE COURSE SHALL BE FLUSH WITH THE SLEEPER SLAB, AND THE WIDTH SHALL BE THE SAME AS THAT OF THE APPROACH SLAB.

THE CONTRACTOR MAY USE 5" CLASS "A" CONCRETE BASE IN LIEU OF 6" COMP. A.B.C. IF THIS OPTION IS USED, THE CONCRETE BASE SHALL BE FLUSH WITH THE SLEEPER SLAB, AND THE WIDTH SHALL BE THE SAME AS THAT OF THE APPROACH SLAB. THE CONCRETE SHALL BE FINISHED TO A SMOOTH SURFACE AND A LAYER OF 30 LB ROOFING FELT SHALL BE PLACED BETWEEN THE CONCRETE BASE AND THE APPROACH SLAB TO PREVENT BOND. THE APPROACH SLAB SHALL NOT BE CAST UNTIL THE CONCRETE BASE HAS REACHED AN AGE OF THREE CURING DAYS.

THE VERTICAL JOINT ON THE RIGHT AND LEFT SIDE OF THE APPROACH SLAB AT THE ENDS OF THE EVAZOTE JOINT SHALL BE FILLED WITH SILICONE OR OTHER APPROVED MATERIAL IN ORDER TO PREVENT BACKFILL FROM ENTERING THE JOINT OPENING.

THE JOINT OPENING AT THE APPROACH SLAB/DECK INTERFACE SHALL BE SAWED NO MORE THAN 12 HOURS AFTER THE APPROACH SLAB IS CAST. THE JOINT SHALL BE CLEANED OF ALL DEBRIS BEFORE THE SEALANT IS APPLIED. THE JOINT SEALER MATERIAL SHALL CONFORM TO THE REQUIREMENTS OF TYPE SL LOW MODULUS SILICONE SEALANT.

FOR EVAZOTE JOINT SEALS, SEE SPECIAL PROVISIONS.

THE NOMINAL UNCOMPRESSED SEAL WIDTH OF THE EVAZOTE JOINT SEAL SHALL BE 3 7/16".

FOR ELASTOMERIC CONCRETE, SEE SPECIAL PROVISIONS.

#4D1 DOWELS MAY BE PUSHED INTO GREEN CONCRETE AFTER SLAB HAS BEEN SCREED OFF.

THE ¾" Ø HEX HEAD BOLTS SHALL CONFORM TO ASTM F593 ALLOY 304 STAINLESS STEEL. NO SEPARATE PAYMENT WILL BE MADE FOR FURNISHING AND INSTALLING THE COVER PLATE. THE ENTIRE COST OF THIS WORK SHALL BE INCLUDED IN THE LUMP SUM PRICE FOR EVAZOTE JOINT SEALS.

BILL OF MATERIAL

FOR ONE APPROACH SLAB (2 REQ'D)

BAR	NO.	SIZE	TYPE	LENGTH	WEIGHT
* A1	62	#4	STR	19'-7"	811
A2	48	#4	STR	19'-6"	625
* B1	72	#5	STR	22'-3"	1671
B2	72	#6	STR	22'-9"	2460
* B3	4	#4	STR	22'-3"	59
* D1	20	#4	STR	1'-3"	17
* G1	24	#4	STR	5'-4"	86
* S4	37	#4	1	3'-11"	97
S5	37	#5	2	2'-11"	113

REINFORCING STEEL 3198 LBS.

* EPOXY COATED REINFORCING STEEL 2741 LBS.

CLASS AA CONCRETE

POUR #1 - BOTTOM SLEEPER SLAB	1.8 C. Y.
POUR #2 - TOP OF SLEEPER SLAB	2.1 C. Y.
POUR #3 - APPROACH SLAB, CURB & SIDEWALK	35.4 C. Y.
TOTAL	39.3 C. Y.

BAR TYPES

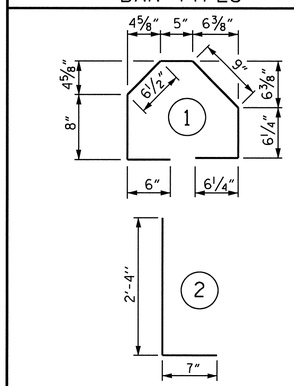

ALL BAR DIMENSIONS ARE OUT TO OUT

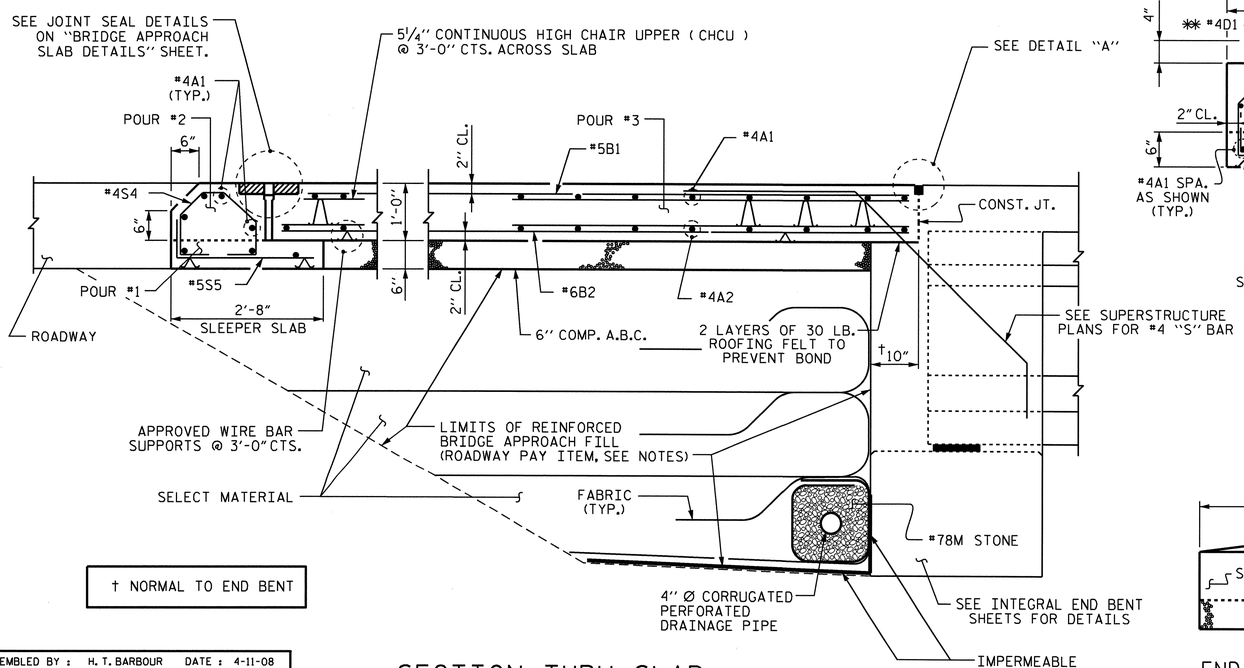

† NORMAL TO END BENT

SECTION THRU SLAB

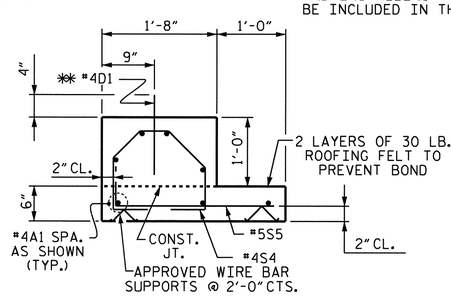

SECTION R-R

SHOWING SLEEPER SLAB @ SIDEWALK

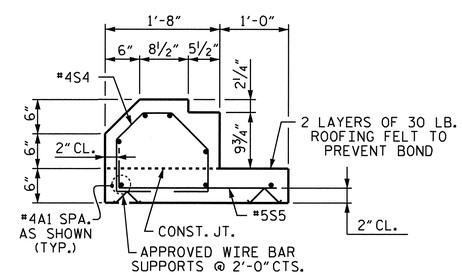

SECTION S-S

SHOWING SLEEPER SLAB

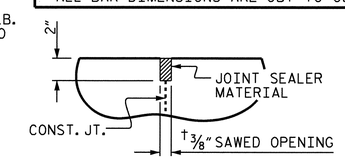

DETAIL "A"

** THESE #4D1 DOWELS ARE TO BE PLACED AFTER THE SAWING OF THE JOINT. THE HOLES SHALL BE DRILLED AND THE #4D1 DOWELS GROUTED INTO PLACE.

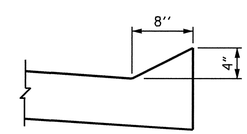

SECTION T-T

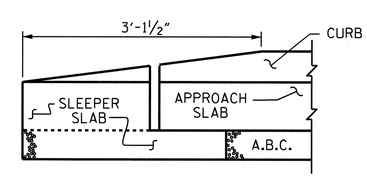

END OF CURB WITHOUT SHOULDER BERM GUTTER

PROJECT NO. U-4703

WAKE COUNTY

STATION: 33+54.00-L-

SHEET 1 OF 2

STATE OF NORTH CAROLINA
DEPARTMENT OF TRANSPORTATION
RALEIGH

BRIDGE APPROACH SLAB FOR INTEGRAL ABUTMENT (LEFT LANE)

NORTH CAROLINA PROFESSIONAL SEAL 10730 ENGINEER D. ANDREW DAVENPORT, JR.

D. Andrew Davenport 2-3-10

REVISIONS							
NO.	BY:	DATE:	NO.	BY:	DATE:	SHEET NO. S-41	
1			3			TOTAL SHEETS 89	
2			4				

STR. #1

STD. NO. BAS11 (SHT 5)

ASSEMBLED BY : H. T. BARBOUR		DATE : 4-11-08	
CHECKED BY : A. SORSENGINH		DATE : 4-08	
DRAWN BY : TLA 10/05	ADDED 5/1/06R KMM/GM		
CHECKED BY : GM 5/06			

03-FEB-2010 12:03
Y:\Structures\tbarbour\Microstation\str1\U4703_sd_AS.dgn
ADAVENPORT

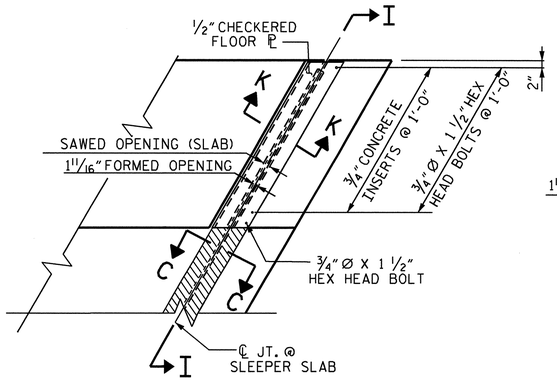

PLAN VIEW OF EVAZOTE

JOINT SEAL @ SLEEPER SLAB FOR SIDEWALK

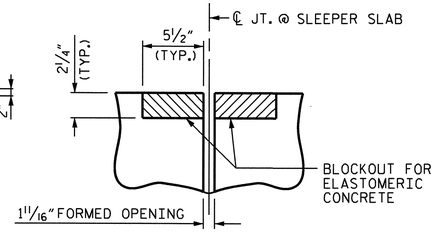

SECTION C-C

EVAZOTE JOINT SEAL (PRE-SAWED ELASTOMERIC CONCRETE DIMENSIONS)

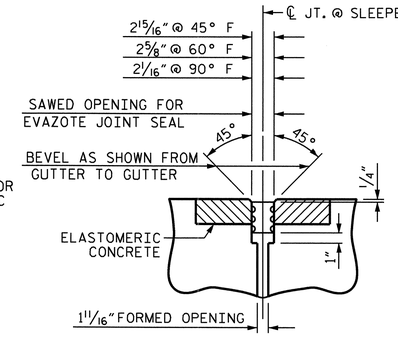

SECTION C-C

EVAZOTE JOINT SEAL (EXPANSION)

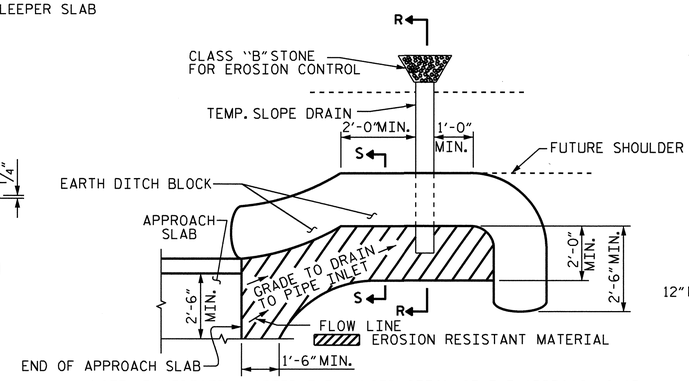

NOTE: IMMEDIATELY AFTER THE CONSTRUCTION OF THE APPROACH SLAB, THE CONTRACTOR SHALL PROVIDE TEMPORARY BERM AND SLOPE DRAIN. CONTRACTOR SHALL GRADE TO PIPE INLET AND PROVIDE EROSION RESISTANT MATERIAL AS SHOWN. THE EROSION RESISTANT MATERIAL SHALL BE EITHER 1) ASPHALT PLANT MIX, TYPE 1 OR TYPE 2, MIN. 2" DEPTH, 2) EROSION CONTROL MAT, OR 3) CONCRETE, AS DIRECTED BY THE ENGINEER. THE SLOPE DRAIN SHALL CONSIST OF A NON-PERFORATED TEMPORARY DRAINAGE PIPE, 12 INCHES IN DIAMETER.

PLAN VIEW

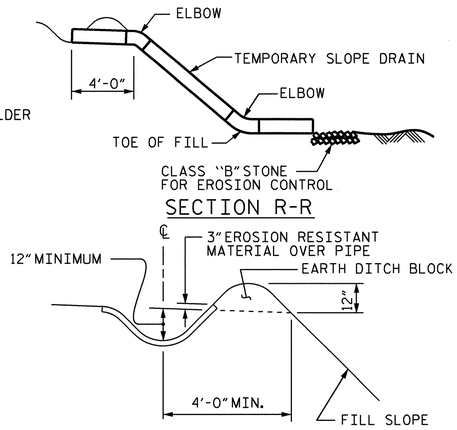

SECTION S-S

TEMPORARY BERM AND SLOPE DRAIN DETAILS

(TO BE USED WHEN SHOULDER BERM GUTTER IS REQUIRED)

ELASTOMERIC CONCRETE	
END BENT NO.	ELASTOMERIC CONCRETE * (CU. FT.)
1	5.3
2	5.3
TOTAL	10.6

* BASED ON THE MINIMUM BLOCKOUT SHOWN.

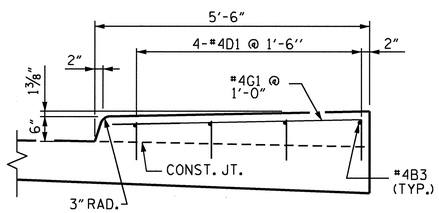

SECTION N-N

SIDEWALK DETAILS

THE STEEL PLATES SHALL CONFORM TO AASHTO M270 GRADE 36 OR APPROVED EQUAL. AFTER FABRICATION, THE PLATES SHALL BE COMMERCIALLY BLAST CLEANED AND COATED WITH A MINIMUM THICKNESS OF 4 MILS (DRY) OF ZINC-RICH PAINT IN ACCORDANCE WITH THE STANDARD SPECIFICATIONS. AT THE CONTRACTOR'S OPTION, THESE SURFACES MAY BE METALLIZED TO A MINIMUM THICKNESS OF 6 MILS. SEE SPECIAL PROVISIONS FOR THERMAL SPRAYED COATINGS (METALLIZATION).

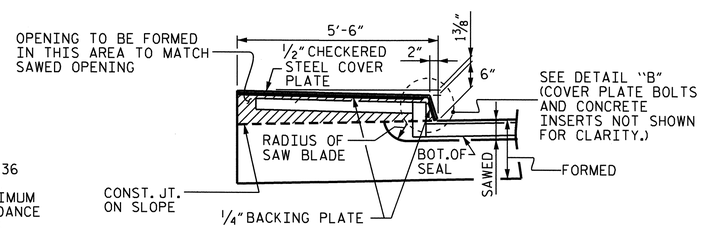

SECTION I-I

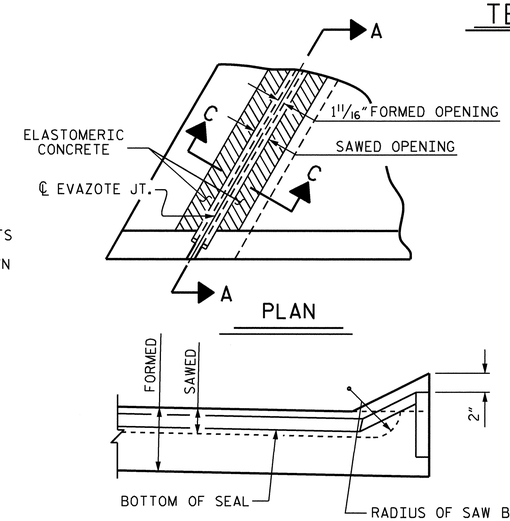

PLAN

SECTION A-A

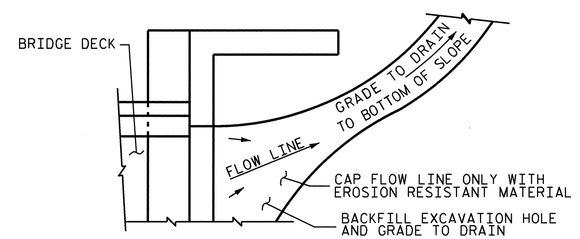

NOTE: IF THE APPROACH SLAB IS NOT CONSTRUCTED IMMEDIATELY AFTER THE BACKFILLING OF THE END BENT EXCAVATION, GRADE TO DRAIN TO THE BOTTOM OF THE SLOPE AND PROVIDE EROSION RESISTANT MATERIAL, SUCH AS FIBERGLASS ROVING OR AS DIRECTED BY THE ENGINEER TO PREVENT SOIL EROSION AND TO PROTECT THE AREA ADJACENT TO THE STRUCTURE. THE CONTRACTOR WILL BE REQUIRED TO REMOVE THESE MATERIALS PRIOR TO CONSTRUCTION OF THE APPROACH SLAB.

TEMPORARY DRAINAGE DETAIL

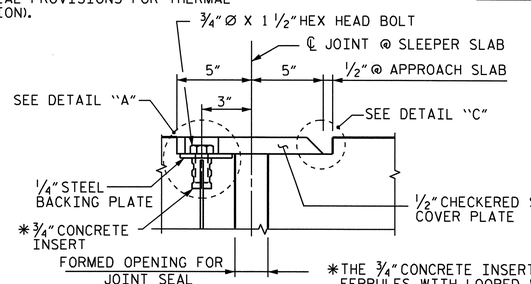

SECTION K-K

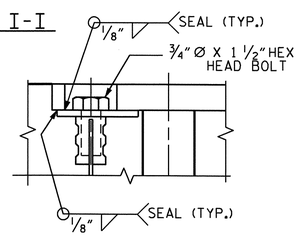

DETAIL "A"

*THE 3/4" CONCRETE INSERTS SHALL BE CLOSED-END FERRULES WITH LOOPED WIRE STRUTS ATTACHED TO THEM. THE INSERTS SHALL CONFORM TO AASHTO M169, GRADE 12L14 AND SHALL HAVE A TENSILE WORKING LOAD CAPACITY OF 3000 LBS.

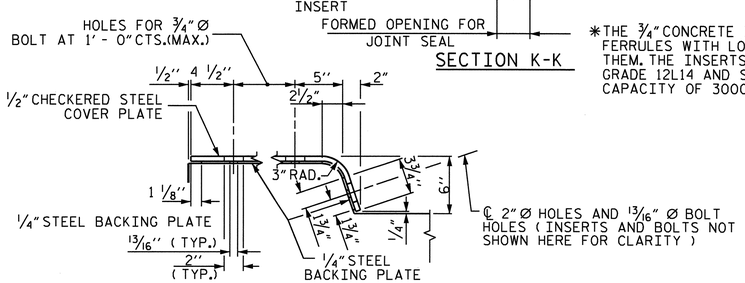

DETAIL "B"

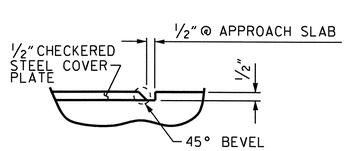

DETAIL "C"

JOINT SEAL DETAILS @ APPROACH SLAB

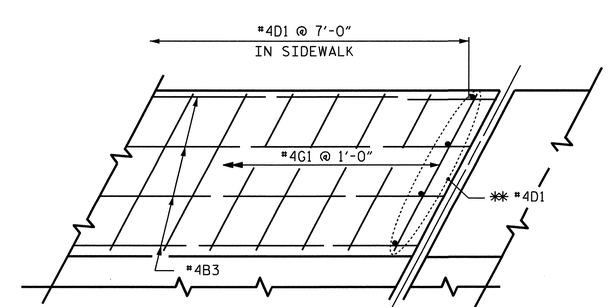

** THESE DOWELS ARE TO BE PLACED AFTER THE SAWING OF THE JOINT. THE HOLES SHALL BE DRILLED AND THE DOWELS GROUTED INTO PLACE.

PLAN

DETAIL OF SIDEWALK ON APPROACH SLAB

PROJECT NO. U-4703

WAKE COUNTY

STATION: 33+54.00-L-

SHEET 2 OF 2

STATE OF NORTH CAROLINA
DEPARTMENT OF TRANSPORTATION
RALEIGH

BRIDGE APPROACH SLAB DETAILS (LEFT LANE)

NORTH CAROLINA PROFESSIONAL SEAL 10730 ENGINEER D. ANDREW DAVENPORT JR.

REVISIONS							SHEET NO.
NO.	BY:	DATE:	NO.	BY:	DATE:		S-42
1			3				TOTAL SHEETS
2			4				89

ASSEMBLED BY :	H. T. BARBOUR	DATE :	4-11-08
CHECKED BY :	A. SORSENGINH	DATE :	4-08
DRAWN BY : FCJ	11/88	REV. 10/17/00	RWW/LES
CHECKED BY : ARB	11/88	REV. 5/7/03	RWW/JTE
		REV. 5/1/06R	MAA/KMM

23-MAR-2010 08:39
Z:\Structures\tbarbour\Microstation\str1\U4703_sd_AS.dgn
addavenport

STR. #1

STD. NO. BAS10 (SHT 12)

OVERHANG BRACKET CALCULATION INSTRUCTIONS

AASHTO SHAPES - TYPES III, IV, V, AND VI

1. RECORD KNOWN INFORMATION ON "BRIDGE OVERHANG BRACKET SUMMARY" ON SHEET 2
2. CALCULATE THE MAXIMUM SCREED LOAD PER BRACKET (SLPB) WITH AN ESTIMATED R = 1.5. SLPB = R X W. ROUND VALUE UP TO NEAREST SLPB VALUE INDICATED ON APPROPRIATE TABLE 1-1, 1-2, 1-3, OR 1-4.
3. WITH THE ESTIMATED SLPB, OVERHANG SLAB THICKNESS, "K" VALUE, AND 45° HANGER SAFE WORKING LOAD (SWL), ENTER THE APPROPRIATE TABLE 1-1, 1-2, 1-3, OR 1-4 (BASED ON OVERHANG DIMENSION) AND DETERMINE THE BRACKET SPACING, S.
4. CALCULATE S/D1 AND S/D2, ROUNDING UP TO NEAREST VALUE IN TABLE 2. ENTER TABLE 2 AND DETERMINE R VALUE.
5. CALCULATE REVISED SLPB. ROUND VALUE UP TO NEAREST SLPB VALUE INDICATED ON APPROPRIATE TABLE 1-1, 1-2, 1-3, OR 1-4.
6. WITH THE REVISED SLPB, OVERHANG SLAB THICKNESS, "K" VALUE AND 45 HANGER SAFE WORKING LOAD (SWL), ENTER THE APPROPRIATE TABLE 1-1, 1-2, 1-3 OR 1-4 (BASED ON OVERHANG DIMENSION) AND DETERMINE REVISED BRACKET SPACING, S.
7. CONTINUE ITERATIONS OF STEPS 4-6 UNTIL THE REVISED BRACKET SPACING, S, IS THE SAME AS THE PREVIOUS S VALUE.
8. CHECK LUMBER JOIST SPACING: WITH BRACKET SPACING VALUE, S, ROUND THIS VALUE UP TO THE NEAREST VALUE OF ALLOWABLE SPAN LENGTH OF JOIST OF TABLE 3. USING THIS VALUE, ALONG WITH THE AVERAGE OVERHANG SLAB THICKNESS AND THE LUMBER JOIST SIZE, DETERMINE JOIST SPACING FROM TABLE 3. IF NECESSARY, ADJUST LUMBER JOIST SIZE AND/OR JOIST SPACING TO MEET ALLOWABLE SPAN LENGTH OF JOIST.
9. CONVERSELY, IF THE DESIRED JOIST SPACING IS KNOWN, USE THIS ALONG WITH THE AVERAGE OVERHANG SLAB THICKNESS AND THE LUMBER JOIST SIZE TO DETERMINE IF ALLOWABLE SPAN LENGTH OF JOIST IS GREATER THAN THE BRACKET SPACING, S. IF NECESSARY, ADJUST LUMBER JOIST SIZE TO MEET REQUIREMENTS OF ALLOWABLE SPAN LENGTH OF JOIST AND JOIST SPACING.
10. RECORD REMAINING INFORMATION ON "BRIDGE OVERHANG BRACKET SUMMARY" FORM.
11. SUBMIT FORM AND CALCULATIONS FOR REVIEW AND APPROVAL.

TABLE 1-1

(FOR USE ON **UP TO 2'-0" OVERHANG Ⓛ** & 54" HORIZONTAL LEG LENGTH OF THE OVERHANG BRACKET)

AVG. SLAB THICKNESS Ⓣ (in)	BRACKET Ⓚ DIMENSION (in)	SCREED LOAD PER BRACKET									45° HANGER SWL (lbs)
		2500 lbs.	2250 lbs.	2000 lbs.	1750 lbs.	1500 lbs.	1250 lbs.	1000 lbs.	750 lbs.	0 lbs.	
		BRACKET SPACING									
10	30				2'-1"	2'-7"	3'-2"	3'-8"	4'-2"	5'-9"	4000
		3'-6"	4'-0"	4'-5"	4'-9"	5'-1"	5'-3"	5'-5"	5'-7"	6'-7"	6000
	40				2'-1"	2'-7"	3'-2"	3'-8"	4'-2"	5'-9"	4000
		3'-6"	4'-0"	4'-5"	4'-9"	5'-1"	5'-3"	5'-5"	5'-7"	6'-7"	6000
	50				2'-1"	2'-7"	3'-2"	3'-8"	4'-2"	5'-9"	4000
		3'-6"	4'-0"	4'-5"	4'-9"	5'-1"	5'-3"	5'-5"	5'-7"	6'-7"	6000
12	30					2'-4"	2'-10"	3'-4"	3'-9"	5'-2"	4000
		3'-2"	3'-7"	4'-1"	4'-7"	5'-0"	5'-2"	5'-4"	5'-7"	6'-5"	6000
	40					2'-4"	2'-10"	3'-4"	3'-9"	5'-2"	4000
		3'-2"	3'-7"	4'-1"	4'-7"	5'-0"	5'-2"	5'-4"	5'-7"	6'-5"	6000
	50					2'-4"	2'-10"	3'-4"	3'-9"	5'-2"	4000
		3'-2"	3'-7"	4'-1"	4'-7"	5'-0"	5'-2"	5'-4"	5'-7"	6'-5"	6000
14	30					2'-2"	2'-7"	3'-0"	3'-5"	4'-9"	4000
		2'-10"	3'-4"	3'-9"	4'-2"	4'-7"	5'-0"	5'-4"	5'-7"	6'-4"	6000
	40					2'-2"	2'-7"	3'-0"	3'-5"	4'-9"	4000
		2'-10"	3'-4"	3'-9"	4'-2"	4'-7"	5'-0"	5'-4"	5'-7"	6'-4"	6000
	50					2'-2"	2'-7"	3'-0"	3'-5"	4'-9"	4000
		2'-10"	3'-4"	3'-9"	4'-2"	4'-7"	5'-0"	5'-4"	5'-7"	6'-4"	6000
16	30					2'-0"	2'-4"	2'-9"	3'-2"	4'-4"	4000
		2'-8"	3'-0"	3'-5"	3'-10"	4'-3"	4'-7"	5'-0"	5'-5"	6'-3"	6000
	40					2'-0"	2'-4"	2'-9"	3'-2"	4'-4"	4000
		2'-8"	3'-0"	3'-5"	3'-10"	4'-3"	4'-7"	5'-0"	5'-5"	6'-3"	6000
	50					2'-0"	2'-4"	2'-9"	3'-2"	4'-4"	4000
		2'-8"	3'-0"	3'-5"	3'-10"	4'-3"	4'-7"	5'-0"	5'-5"	6'-3"	6000

TABLE 1-2

(FOR USE ON **OVER 2'-0" TO 2'-6" OVERHANG Ⓛ** & 54" HORIZONTAL LEG LENGTH OF THE OVERHANG BRACKET)

AVG. SLAB THICKNESS Ⓣ (in)	BRACKET Ⓚ DIMENSION (in)	SCREED LOAD PER BRACKET									45° HANGER SWL (lbs)
		2500 lbs.	2250 lbs.	2000 lbs.	1750 lbs.	1500 lbs.	1250 lbs.	1000 lbs.	750 lbs.	0 lbs.	
		BRACKET SPACING									
10	30					2'-4"	2'-9"	3'-3"	3'-8"	5'-1"	4000
		3'-1"	3'-6"	4'-0"	4'-5"	4'-11"	5'-3"	5'-5"	5'-7"	6'-7"	6000
	40					2'-4"	2'-9"	3'-3"	3'-8"	5'-1"	4000
		3'-1"	3'-6"	4'-0"	4'-5"	4'-11"	5'-3"	5'-5"	5'-7"	6'-7"	6000
	50					2'-4"	2'-9"	3'-3"	3'-8"	5'-1"	4000
		3'-1"	3'-6"	4'-0"	4'-5"	4'-11"	5'-3"	5'-5"	5'-7"	6'-7"	6000
12	30					2'-1"	2'-6"	2'-11"	3'-4"	4'-6"	4000
		2'-9"	3'-2"	3'-7"	4'-0"	4'-5"	4'-10"	5'-3"	5'-7"	6'-5"	6000
	40					2'-1"	2'-6"	2'-11"	3'-4"	4'-6"	4000
		2'-9"	3'-2"	3'-7"	4'-0"	4'-5"	4'-10"	5'-3"	5'-7"	6'-5"	6000
	50					2'-1"	2'-6"	2'-11"	3'-4"	4'-6"	4000
		2'-9"	3'-2"	3'-7"	4'-0"	4'-5"	4'-10"	5'-3"	5'-7"	6'-5"	6000
14	30						2'-7"	3'-0"	3'-5"	4'-1"	4000
		2'-6"	2'-10"	3'-3"	3'-7"	4'-0"	4'-4"	4'-9"	5'-1"	6'-3"	6000
	40						2'-7"	3'-0"	3'-5"	4'-1"	4000
		2'-6"	2'-10"	3'-3"	3'-7"	4'-0"	4'-4"	4'-9"	5'-1"	6'-3"	6000
	50						2'-7"	3'-0"	3'-5"	4'-1"	4000
		2'-6"	2'-10"	3'-3"	3'-7"	4'-0"	4'-4"	4'-9"	5'-1"	6'-3"	6000
16	30						2'-1"	2'-5"	2'-9"	3'-9"	4000
		2'-3"	2'-7"	2'-11"	3'-4"	3'-8"	4'-0"	4'-4"	4'-8"	5'-8"	6000
	40						2'-1"	2'-5"	2'-9"	3'-9"	4000
		2'-3"	2'-7"	2'-11"	3'-4"	3'-8"	4'-0"	4'-4"	4'-8"	5'-8"	6000
	50						2'-1"	2'-5"	2'-9"	3'-9"	4000
		2'-3"	2'-7"	2'-11"	3'-4"	3'-8"	4'-0"	4'-4"	4'-8"	5'-8"	6000

TABLE 1-3

(FOR USE ON **OVER 2'-6" TO 3'-0" OVERHANG Ⓛ** & 54" HORIZONTAL LEG LENGTH OF THE OVERHANG BRACKET)

AVG. SLAB THICKNESS Ⓣ (in)	BRACKET Ⓚ DIMENSION (in)	SCREED LOAD PER BRACKET									45° HANGER SWL (lbs)
		2500 lbs.	2250 lbs.	2000 lbs.	1750 lbs.	1500 lbs.	1250 lbs.	1000 lbs.	750 lbs.	0 lbs.	
		BRACKET SPACING									
10	30					2'-1"	2'-6"	2'-11"	3'-4"	4'-6"	4000
						4'-5"	4'-10"	5'-3"	5'-7"	6'-7"	6000
	40					2'-1"	2'-6"	2'-11"	3'-4"	4'-6"	4000
		2'-9"	3'-2"	3'-7"	4'-0"	4'-5"	4'-10"	5'-3"	5'-7"	6'-7"	6000
	50					2'-1"	2'-6"	2'-11"	3'-4"	4'-6"	4000
		2'-9"	3'-2"	3'-7"	4'-0"	4'-5"	4'-10"	5'-3"	5'-7"	6'-7"	6000
12	30						2'-2"	2'-7"	2'-11"	4'-0"	4000
						3'-11"	4'-3"	4'-8"	5'-0"	6'-1"	6000
	40						2'-2"	2'-7"	2'-11"	4'-0"	4000
		2'-5"	2'-10"	3'-2"	3'-6"	3'-11"	4'-3"	4'-8"	5'-0"	6'-1"	6000
	50						2'-2"	2'-7"	2'-11"	4'-0"	4000
		2'-5"	2'-10"	3'-2"	3'-6"	3'-11"	4'-3"	4'-8"	5'-0"	6'-1"	6000
14	30						2'-0"	2'-4"	2'-8"	3'-8"	4000
					3'-2"	3'-6"	3'-10"	4'-2"	4'-6"	5'-6"	6000
	40						2'-0"	2'-4"	2'-8"	3'-8"	4000
		2'-2"	2'-6"	2'-10"	3'-2"	3'-6"	3'-10"	4'-2"	4'-6"	5'-6"	6000
	50						2'-0"	2'-4"	2'-8"	3'-8"	4000
		2'-2"	2'-6"	2'-10"	3'-2"	3'-6"	3'-10"	4'-2"	4'-6"	5'-6"	6000
16	30							2'-1"	2'-5"	3'-4"	4000
					2'-11"	3'-2"	3'-6"	3'-10"	4'-1"	5'-0"	6000
	40							2'-1"	2'-5"	3'-4"	4000
		2'-0"	2'-4"	2'-7"	2'-11"	3'-2"	3'-6"	3'-10"	4'-1"	5'-0"	6000
	50							2'-1"	2'-5"	3'-4"	4000
		2'-0"	2'-4"	2'-7"	2'-11"	3'-2"	3'-6"	3'-10"	4'-1"	5'-0"	6000

TABLE 1-4

(FOR USE ON **OVER 3'-0" TO 3'-6" OVERHANG Ⓛ** & 54" HORIZONTAL LEG LENGTH OF THE OVERHANG BRACKET)

AVG. SLAB THICKNESS Ⓣ (in)	BRACKET Ⓚ DIMENSION (in)	SCREED LOAD PER BRACKET									45° HANGER SWL (lbs)
		2500 lbs.	2250 lbs.	2000 lbs.	1750 lbs.	1500 lbs.	1250 lbs.	1000 lbs.	750 lbs.	0 lbs.	
		BRACKET SPACING									
10	30						2'-1"	2'-5"	2'-9"	3'-10"	4000
						2'-3"	2'-11"	3'-7"	4'-3"	5'-9"	6000
	40						2'-1"	2'-5"	2'-9"	3'-10"	4000
				2'-4"	3'-0"	3'-7"	4'-1"	4'-5"	4'-9"	5'-9"	6000
	50						2'-1"	2'-5"	2'-9"	3'-10"	4000
		2'-4"	2'-8"	3'-0"	3'-4"	3'-8"	4'-1"	4'-5"	4'-9"	5'-9"	6000
12	30							2'-2"	2'-6"	3'-5"	4000
						2'-1"	2'-8"	3'-4"	3'-11"	5'-2"	6000
	40							2'-2"	2'-6"	3'-5"	4000
				2'-2"	2'-9"	3'-4"	3'-7"	3'-11"	4'-3"	5'-2"	6000
	50							2'-2"	2'-6"	3'-5"	4000
		2'-1"	2'-4"	2'-8"	3'-0"	3'-4"	3'-7"	3'-11"	4'-3"	5'-2"	6000
14	30								2'-3"	3'-1"	4000
						2'-0"	2'-6"	3'-1"	3'-8"	4'-8"	6000
	40								2'-3"	3'-1"	4000
				2'-0"	2'-7"	3'-0"	3'-3"	3'-6"	3'-10"	4'-8"	6000
	50								2'-3"	3'-1"	4000
			2'-2"	2'-5"	2'-8"	3'-0"	3'-3"	3'-6"	3'-10"	4'-8"	6000
16	30								2'-0"	2'-9"	4000
							2'-4"	2'-10"	3'-5"	4'-3"	6000
	40								2'-0"	2'-9"	4000
					2'-5"	2'-8"	2'-11"	3'-3"	3'-6"	4'-3"	6000
	50								2'-0"	2'-9"	4000
				2'-2"	2'-5"	2'-8"	2'-11"	3'-3"	3'-6"	4'-3"	6000

DEFINITIONS

SLPB = SCREED LOAD PER BRACKET (R x W)
R = SCREED LOAD FACTOR, OBTAINED FROM TABLE 2
W = WHEEL LOAD
S = BRACKET SPACING
T = AVERAGE SLAB THICKNESS
SWL = SAFE WORKING LOAD
K = DIMENSION DEFINED ON "BRIDGE OVERHANG BRACKET SUMMARY" ON SHEET 2
L = OVERHANG MEASURED FROM EDGE OF TOP FLANGE TO EDGE OF SUPERSTRUCTURE

NORTH CAROLINA PROFESSIONAL SEAL 18788 ENGINEER CHANG-CHUAN VICTOR CHAO

Chang-Chuan Victor Chao
2-5-2010

PROJECT NO. U-4703
WAKE COUNTY
STATION: 33+54.00 -L-

SHEET 1 OF 3

STATE OF NORTH CAROLINA
DEPARTMENT OF TRANSPORTATION
RALEIGH

STANDARD OVERHANG FALSEWORK

AASHTO TYPES
III, IV, V, AND VI

(LEFT LANE)

REVISIONS						SHEET NO.
NO.	BY:	DATE:	NO.	BY:	DATE:	S-43
1			3			TOTAL SHEETS 57
2			4			

ASSEMBLED BY:	DATE:
CHECKED BY:	DATE:
DRAWN BY: R. WRIGHT 06/04	REV.
CHECKED BY: C. V. CHAO 06/04	

05-FEB-2010 13:38
d:\wdir\victor\overhangfalsework\tiebar&strut\u4703_type_iv\u4703overhangesheetsleft.dgn
vchao

STR. #1 OF1

BRIDGE OVERHANG BRACKET SUMMARY

TOTAL SCREED WEIGHT = _____ LBS.
NUMBER OF SCREED WHEELS = _____
SCREED WHEEL LOAD (W) = _____ LBS.
SCREED LOAD PER BRACKET = _____ LBS.

PROJECT No. : _____
COUNTY : _____
STATION : _____
DESCRIPTION : _____
DATE : _____
DESIGN BY : _____
CHECK BY : _____

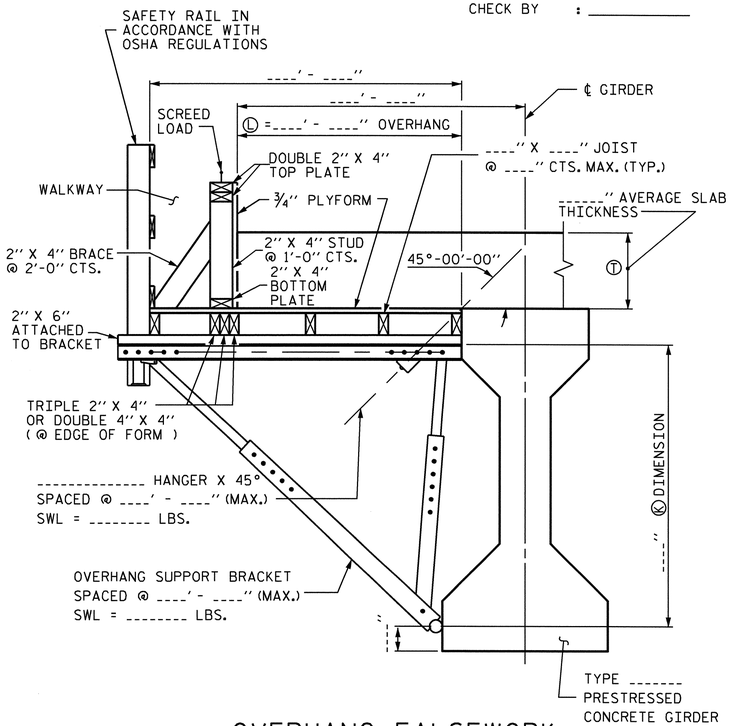

OVERHANG FALSEWORK

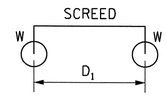

4-WHEEL MACHINE

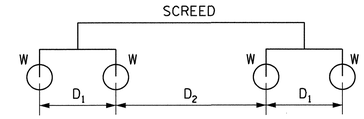

8-WHEEL MACHINE

4 WHEEL MACHINE	
S/D1	R
<= 1.0	1.00
1.1	1.09
1.2	1.17
1.3	1.23
1.4	1.29
1.5	1.33
1.6	1.38
1.7	1.41
1.8	1.44
1.9	1.47
2.0	1.50
2.2	1.55
2.4	1.58
2.6	1.62
2.8	1.64
3.0	1.67
3.5	1.71
4.0	1.75

TABLE 2: SCREED LOAD FACTOR "R"

		THE SCREED LOAD FACTOR R (FOR 8 WHEEL MACHINE)																	
		S/D_2																	
		<= 1.0	1.1	1.2	1.3	1.4	1.5	1.6	1.7	1.8	1.9	2.0	2.2	2.4	2.6	2.8	3.0	3.5	4.0
S/D_1	<= 1.0	1.00	1.09	1.17	1.23	1.29	1.33	1.38	1.41	1.44	1.47	1.50	1.55	1.58	1.62	1.64	1.67	1.71	1.75
	1.1	1.09	1.18	1.26	1.32	1.38	1.42	1.47	1.50	1.54	1.56	1.59	1.64	1.67	1.71	1.73	1.76	1.81	1.84
	1.2	1.17	1.26	1.33	1.40	1.45	1.50	1.54	1.58	1.61	1.64	1.67	1.71	1.75	1.78	1.81	1.83	1.88	1.92
	1.3	1.23	1.32	1.40	1.46	1.52	1.56	1.61	1.64	1.68	1.70	1.73	1.78	1.81	1.85	1.87	1.90	1.95	1.98
	1.4	1.29	1.38	1.45	1.52	1.57	1.62	1.66	1.70	1.73	1.76	1.79	1.83	1.87	1.90	1.93	1.95	2.00	2.07
	1.5	1.33	1.42	1.50	1.56	1.62	1.67	1.71	1.75	1.78	1.81	1.83	1.88	1.92	1.95	1.98	2.00	2.10	2.17
	1.6	1.38	1.47	1.54	1.61	1.66	1.71	1.75	1.79	1.82	1.85	1.88	1.92	1.96	1.99	2.04	2.08	2.18	2.25
	1.7	1.41	1.50	1.58	1.64	1.70	1.75	1.79	1.82	1.86	1.89	1.91	1.96	2.00	2.05	2.11	2.16	2.25	2.32
	1.8	1.44	1.54	1.61	1.68	1.73	1.78	1.82	1.86	1.89	1.92	1.94	1.99	2.06	2.12	2.17	2.22	2.32	2.39
	1.9	1.47	1.56	1.64	1.70	1.76	1.81	1.85	1.89	1.92	1.95	1.97	2.04	2.11	2.18	2.23	2.28	2.38	2.45
	2.0	1.50	1.59	1.67	1.73	1.79	1.83	1.88	1.91	1.94	1.97	2.00	2.09	2.17	2.23	2.29	2.33	2.43	2.50
	2.2	1.55	1.64	1.71	1.78	1.83	1.88	1.92	1.96	1.99	2.04	2.09	2.18	2.26	2.32	2.38	2.42	2.52	2.59
	2.4	1.58	1.67	1.75	1.81	1.87	1.92	1.96	2.00	2.06	2.11	2.17	2.26	2.33	2.40	2.45	2.50	2.60	2.67
	2.6	1.62	1.71	1.78	1.85	1.90	1.95	1.99	2.05	2.12	2.18	2.23	2.32	2.40	2.46	2.52	2.56	2.66	2.73
	2.8	1.64	1.73	1.81	1.87	1.93	1.98	2.04	2.11	2.17	2.23	2.29	2.38	2.45	2.52	2.57	2.62	2.71	2.79
	3.0	1.67	1.76	1.83	1.90	1.95	2.00	2.08	2.16	2.22	2.28	2.33	2.42	2.50	2.56	2.62	2.67	2.76	2.83
	3.5	1.71	1.81	1.88	1.95	2.00	2.10	2.18	2.25	2.32	2.38	2.43	2.52	2.60	2.66	2.71	2.76	2.86	2.93
	4.0	1.75	1.84	1.92	1.98	2.07	2.17	2.25	2.32	2.39	2.45	2.50	2.59	2.67	2.73	2.79	2.83	2.93	3.00

TABLE 3: ALLOWABLE SPAN LENGTH OF JOISTS AND JOIST SPACINGS

AVG. SLAB THICKNESS Ⓣ (IN)	LUMBER JOIST SIZE (IN X IN)	JOIST SPACINGS			
		15 IN	12 IN	10 IN	8 IN
		THE ALLOWABLE SPAN LENGTH OF JOISTS			
10	2 X 4	———	4' - 6"	4' - 9"	5' - 0"
	4 X 4	5' - 9"	6' - 3"	6' - 6"	6' - 7"
12	2 X 4	———	4' - 3"	4' - 9"	5' - 0"
	4 X 4	5' - 3"	6' - 0"	6' - 3"	6' - 5"
14	2 X 4	———	4' - 0"	4' - 6"	5' - 0"
	4 X 4	———	5' - 6"	6' - 0"	6' - 4"
16	2 X 4	———	4' - 0"	4' - 3"	4' - 9"
	4 X 4	———	5' - 3"	5' - 9"	6' - 3"

NOTES

DESIGN INCLUDES CONSTRUCTION LIVE LOAD 20 PSF ON THE AREA SUPPORTED AND 75 PLF AT THE OUTSIDE DECK OF OVERHANGS.

REQUIRED MINIMUM DIAGONAL LEG CAPACITY: 3600 LB WORKING LOAD

THE CONTRACTOR HAS THE OPTION OF SUBMITTING HIS OWN DESIGN FOR OVERHANG FALSEWORK IN ACCORDANCE WITH THE SPECIAL PROVISIONS.

SUBMITTALS UTILIZING THE INSTRUCTIONS AND PROCEDURES DESCRIBED ON SHEET 1 OF 3 SHALL BE IN ACCORDANCE WITH THE APPLICABLE SECTIONS OF THE SPECIFICATIONS AND SPECIAL PROVISIONS, EXCEPT THAT CALCULATIONS FOR OVERHANG FALSEWORK NEED NOT BE SEALED BY A REGISTERED ENGINEER.

FOR OVERHANG FALSEWORK BRACING DESIGN, SEE SHEET 3 OF 3.

PROJECT NO. U-4703
WAKE COUNTY
STATION: 33+54.00 -L-

SHEET 2 OF 3

STATE OF NORTH CAROLINA
DEPARTMENT OF TRANSPORTATION
RALEIGH

STANDARD OVERHANG FALSEWORK

AASHTO TYPES
III, IV, V, AND VI

(LEFT LANE)

NORTH CAROLINA PROFESSIONAL SEAL 18788 ENGINEER CHANG-CHUAN VICTOR CHAO

Chang-Chuan Victor Chao
2-5-2010

REVISIONS						SHEET NO.
NO.	BY:	DATE:	NO.	BY:	DATE:	S-44
1			3			TOTAL SHEETS
2			4			89

ASSEMBLED BY:	DATE:
CHECKED BY:	DATE:
DRAWN BY: R. WRIGHT 06/04	REV.
CHECKED BY: C. V. CHAO 06/04	

05-FEB-2010 13:38
d:\wdir\victor\overhangfalsework\tiebar&strut\u4703_type_iv\u4703overhangesheetsleft.dgn
vchao

STR. #1

OF2

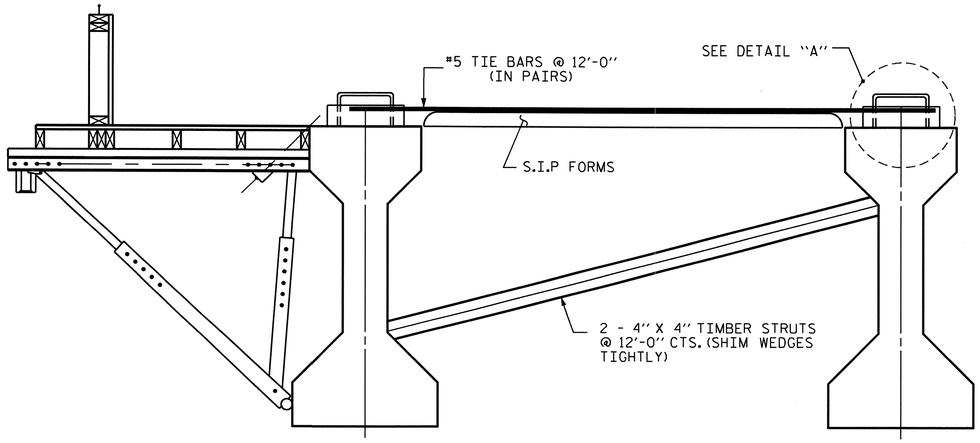

EXTERIOR GIRDER

INTERIOR GIRDER

DETAIL OF REQUIRED OVERHANG FALSEWORK BRACING SYSTEM

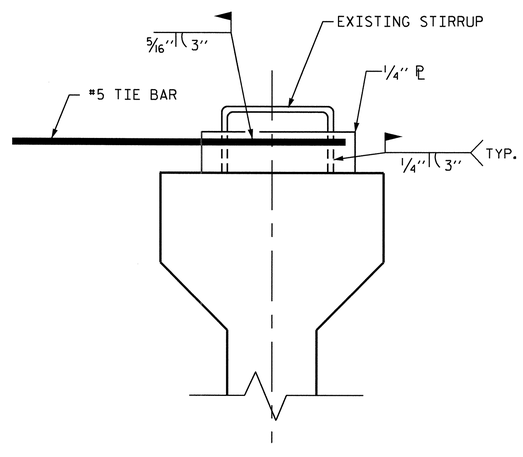

DETAIL "A"

NOTES:

EACH #5 TIE BAR SHALL BE WELDED TO ONE STIRRUP LOOP AS SHOWN IN DETAIL "A". #5 TIE BARS SHALL BE WELDED TO TWO ADJACENT STIRRUPS OF THE EXTERIOR GIRDER AND THE ADJACENT INTERIOR GIRDER BETWEEN PERMANENT DIAPHRAGMS. WELD STEEL PLATES IN BETWEEN THE TIE BARS AND THE STIRRUP LOOP. WELDING TWO TIE BARS TO THE SAME STIRRUP LOOP SHALL NOT BE PERMITTED.

MAXIMUM SPACING BETWEEN THE BRACING (TIE BARS-TIMBER STRUT) IS 12'-0" CTS. #5 TIE BARS SHALL BE LOCATED OVER A TIMBER STRUT.

INSTALL TIE BARS AND TIMBER STRUTS PRIOR TO PLACEMENT OF CONCRETE OR SCREED WEIGHT ONTO THE OVERHANG FALSEWORK.

PROJECT NO. U-4703

WAKE COUNTY

STATION: 33+54.00 -L-

SHEET 3 OF 3

STATE OF NORTH CAROLINA
DEPARTMENT OF TRANSPORTATION
RALEIGH

STANDARD OVERHANG FALSEWORK

AASHTO TYPES
III, IV, V, AND VI

(LEFT LANE)

NORTH CAROLINA PROFESSIONAL SEAL 18788 ENGINEER CHANG-CHUAN VICTOR CHAO

Chang-Chuan Victor Chao
2-5-2010

REVISIONS						SHEET NO.
NO.	BY:	DATE:	NO.	BY:	DATE:	S-45
1			3			TOTAL SHEETS
2			4			89

DRAWN BY: R. WRIGHT 06/04 DATE : _____
CHECKED BY: C. V. CHAO 06/04 DATE : _____

05-FEB-2010 13:39
d:\wdir\victor\overhangfalsework\tiebar&strut\u4703_type_iv\u4703overhangesheetsleft.dgn
vchao

STR. #1 OF 3

F.A. PROJECT No.: STPDA-0508(3)

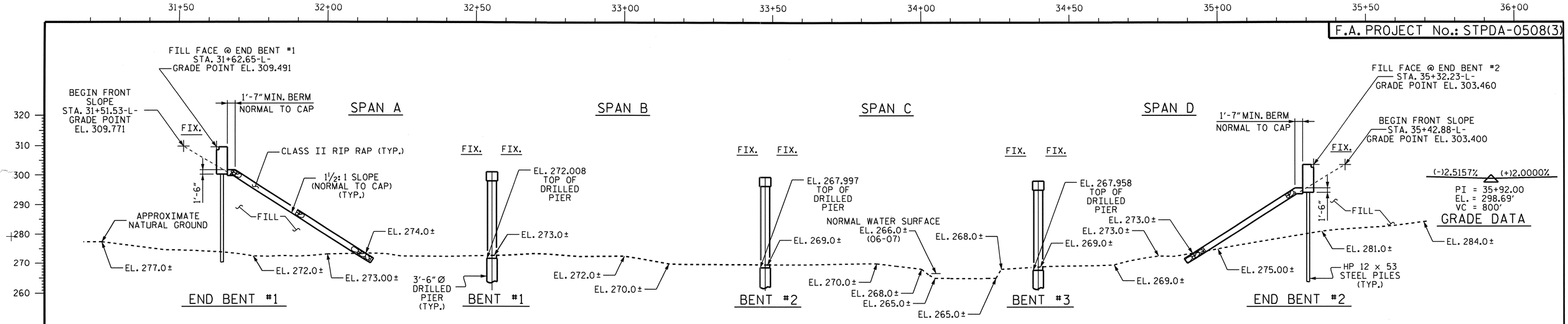

SECTION ALONG ℄ RIGHT LANE

(BENTS ON SECTION AT RIGHT ANGLES TO BENTS)

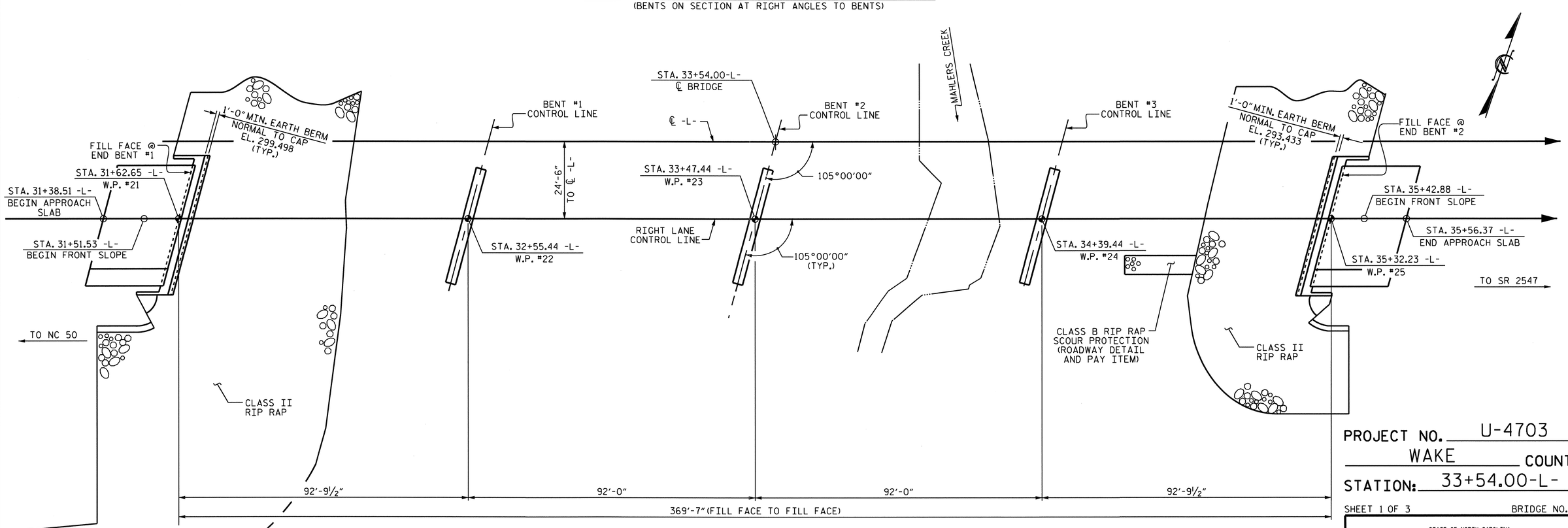

PLAN

(PILES AND COLUMNS NOT SHOWN IN PLAN VIEW)

PROJECT NO. U-4703

WAKE COUNTY

STATION: 33+54.00-L-

SHEET 1 OF 3 BRIDGE NO. 1205

STATE OF NORTH CAROLINA
DEPARTMENT OF TRANSPORTATION
RALEIGH

GENERAL DRAWING
FOR BRIDGE OVER
MAHLERS CREEK ON
SR 2812 BETWEEN
NC 50 AND SR 2547
(RIGHT LANE)

NORTH CAROLINA PROFESSIONAL SEAL 022506 ENGINEER JESSE McARTHUR BAILEY

NORTH CAROLINA PROFESSIONAL SEAL 10730 ENGINEER D. ANDREW DAVENPORT, JR.

REVISIONS								SHEET NO.
NO.	BY:	DATE:	NO.	BY:	DATE:			S-46
1			3					TOTAL SHEETS
2			4					89

DRAWN BY : D. A. GLADDEN DATE : 9-10-09
CHECKED BY : D. A. DAVENPORT DATE : 12/09

04-FEB-2010 16:29
Y:\Structures\dgladden\Microstation\U4703_SD_GD.dgn
ddavenport

STR. #2

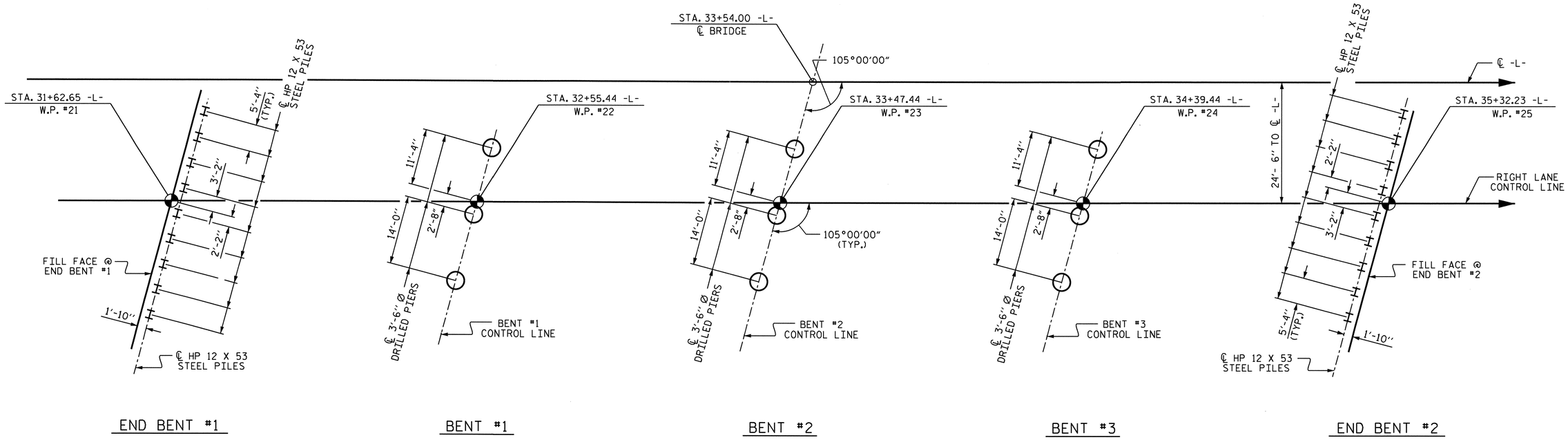

FOUNDATION LAYOUT

DIMENSIONS LOCATING PILES ARE TO PILE CENTERLINE

FOR DRILLED PIERS SEE SPECIAL PROVISIONS.

DRILLED PIERS AT BENT #1, BENT #2 AND BENT #3 ARE DESIGNED FOR BOTH SKIN FRICTION AND END BEARING. CHECK FIELD CONDITIONS FOR THE REQUIRED END BEARING CAPACITY OF 75 TSF.

DRILLED PIERS AT BENT #1, BENT #2, AND BENT #3 ARE DESIGNED FOR AN APPLIED LOAD OF 177 TONS EACH, AT THE TOP OF THE COLUMN.

INSTALL DRILLED PIERS AT BENT #1 THAT EXTEND TO AN ELEVATION NO HIGHER THAN 256 FT. (LEFT), 246 FT. (CENTER) AND 246 FT. (RIGHT), SATISFY THE REQUIRED END BEARING CAPACITY AND HAVE A MINIMUM PENETRATION OF 6 FT. INTO ROCK AS DEFINED BY DRILLED PIERS PROVISION.

INSTALL DRILLED PIERS AT BENT #2 THAT EXTEND TO AN ELEVATION NO HIGHER THAN 247 FT., SATISFY THE REQUIRED END BEARING CAPACITY AND HAVE A MINIMUM PENETRATION OF 6 FT. INTO ROCK AS DEFINED BY DRILLED PIERS PROVISION.

INSTALL DRILLED PIERS AT BENT #3 THAT EXTEND TO AN ELEVATION NO HIGHER THAN 248 FT., SATISFY THE REQUIRED END BEARING CAPACITY AND HAVE A MINIMUM PENETRATION OF 6 FT. INTO ROCK AS DEFINED BY DRILLED PIERS PROVISION.

THE SCOUR CRITICAL ELEVATION FOR BENT #1 IS ELEVATION 269 FT.. THE SCOUR CRITICAL ELEVATION IS USED TO MONITOR POSSIBLE SCOUR PROBLEMS DURING THE LIFE OF THE STRUCTURE.

THE SCOUR CRITICAL ELEVATION FOR BENT #2 IS ELEVATION 258 FT.. THE SCOUR CRITICAL ELEVATION IS USED TO MONITOR POSSIBLE SCOUR PROBLEMS DURING THE LIFE OF THE STRUCTURE.

THE SCOUR CRITICAL ELEVATION FOR BENT #3 IS ELEVATION 256 FT.. THE SCOUR CRITICAL ELEVATION IS USED TO MONITOR POSSIBLE SCOUR PROBLEMS DURING THE LIFE OF THE STRUCTURE.

SID INSPECTIONS MAY BE REQUIRED FOR DRILLED PIERS. THE ENGINEER WILL DETERMINE THE NEED FOR SID INSPECTIONS.

CSL TUBES ARE REQUIRED AND CSL TESTING MAY BE REQUIRED FOR DRILLED PIERS. THE ENGINEER WILL DETERMINE THE NEED FOR CSL TESTING. FOR CROSSHOLE SONIC LOGGING, SEE SPECIAL PROVISIONS.

DRIVE PILES AT END BENT #1 AND END BENT #2 TO A REQUIRED BEARING CAPACITY OF 120 TONS PER PILE. THE REQUIRED BEARING CAPACITY IS EQUAL TO THE ALLOWABLE BEARING CAPACITY WITH A MINIMUM FACTOR OF SAFETY OF TWO.

THE ALLOWABLE BEARING CAPACITY FOR PILES AT END BENT #1 AND END BENT #2 IS 60 TONS PER PILE.

PERMANENT STEEL CASING MAY BE REQUIRED FOR DRILLED PIERS AT BENT #3. IF REQUIRED, DO NOT EXTEND CASING BELOW ELEVATION 258 FT. WITHOUT PRIOR APPROVAL FROM THE ENGINEER. THE ENGINEER WILL DETERMINE THE NEED FOR PERMANENT STEEL CASING.

FOR PILES, SEE SPECIAL PROVISIONS.

NORTH CAROLINA PROFESSIONAL SEAL 10730 ENGINEER D. AARON DAVENPORT, JR.

D. Aaron Davenport 2/3/10

PROJECT NO. U-4703

WAKE COUNTY

STATION: 33+54.00-L-

SHEET 2 OF 3

STATE OF NORTH CAROLINA
DEPARTMENT OF TRANSPORTATION
RALEIGH

GENERAL DRAWING FOR BRIDGE OVER MAHLERS CREEK ON SR 2812 BETWEEN NC 50 AND SR 2547 (RIGHT LANE)

REVISIONS						SHEET NO.
NO.	BY:	DATE:	NO.	BY:	DATE:	S-47
1			3			TOTAL SHEETS
2			4			89

STR. #2

DRAWN BY : D. A. GLADDEN DATE : 9-10-09
CHECKED BY : D. A. DAVENPORT DATE : 12/09

03-FEB-2010 12:00
Y:\Structures\dgladden\Microstation\U4703_SD_GD.dgn
ADAVENPORT

BENCHMARK: BM #2 RAILROAD SPIKE IN BASE OF 14"Ø OAK TREE; STA. 29+94.27-L-, 61.82' RT. EL. 306.530

HYDRAULIC DATA

DESIGN DISCHARGE	= 880 C.F.S.
FREQUENCY OF DESIGN FLOOD	= 50 YR.
DESIGN HIGH WATER ELEVATION	= 272.000
DRAINAGE AREA	= 1.07 SQ. MI.
BASIC DISCHARGE (Q100)	= 1230 C.F.S.
BASIC HIGH WATER ELEVATION	= 272.700

OVERTOPPING FLOOD DATA

OVERTOPPING DISCHARGE	= 2480 C.F.S.
FREQUENCY OF OVERTOPPING FLOOD	= 500 YR. +
OVERTOPPING FLOOD ELEVATION	= 303.600

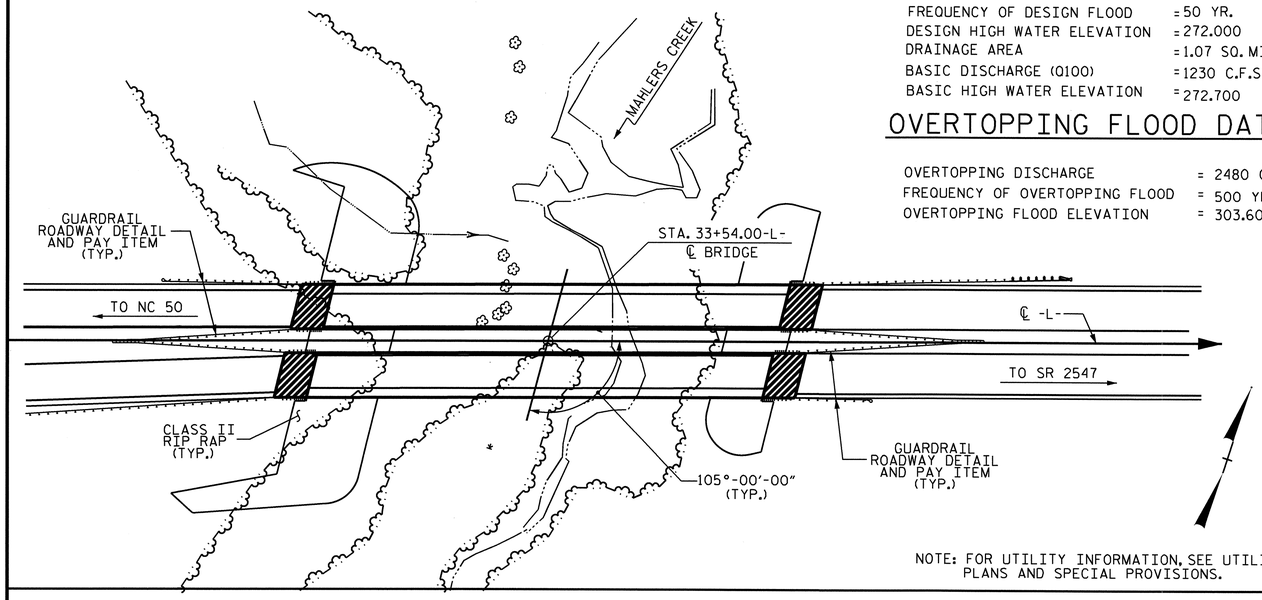

NOTE: FOR UTILITY INFORMATION, SEE UTILITY PLANS AND SPECIAL PROVISIONS.

LOCATION SKETCH

NOTES

ASSUMED LIVE LOAD = HS 20 OR ALTERNATE LOADING.

FOR OTHER DESIGN DATA AND GENERAL NOTES, SEE SHEET SN.

FOR EROSION CONTROL MEASURES SEE EROSION CONTROL PLANS.

THIS BRIDGE HAS BEEN DESIGNED BY THE STRENGTH DESIGN METHOD AS SPECIFIED IN AASHTO STANDARD SPECIFICATIONS.

REMOVABLE FORMS MAY BE USED IN LIEU OF METAL STAY-IN-PLACE FORMS IN ACCORDANCE WITH ARTICLE 420-3 OF THE STANDARD SPECIFICATIONS.

THE LOCATION OF THE CONSTRUCTION JOINT IN THE DRILLED PIERS IS BASED ON AN APPROXIMATE GROUND LINE ELEVATION. IF THE CONSTRUCTION JOINT IS ABOVE THE ACTUAL GROUND ELEVATION, THE CONTRACTOR SHALL PLACE THE CONSTRUCTION JOINT 1 FT. BELOW THE GROUND LINE.

THIS STRUCTURE HAS BEEN DESIGNED IN ACCORDANCE WITH HEC 18, "EVALUATING SCOUR AT BRIDGES", MAY, 2001.

THE CONTRACTOR SHALL PROVIDE INDEPENDENT ASSURANCE SAMPLES OF REINFORCING STEEL AS FOLLOWS: FOR PROJECTS REQUIRING UP TO 400 TONS OF REINFORCING STEEL, ONE 30 INCH SAMPLE OF EACH SIZE BAR USED, AND FOR PROJECTS REQUIRING OVER 400 TONS OF REINFORCING STEEL, TWO 30 INCH SAMPLES OF EACH SIZE BAR USED. THE BARS FROM WHICH THE SAMPLES ARE TAKEN MUST THEN BE SPLICED WITH REPLACEMENT BARS OF THE SIZE AND LENGTH OF THE SAMPLE, PLUS A MINIMUM LAP SPLICE OF THIRTY BAR DIAMETERS.

FOR SUBMITTAL OF WORKING DRAWINGS, SEE SPECIAL PROVISIONS.

FOR FALSEWORK AND FORMWORK, SEE SPECIAL PROVISIONS.

THE CONTRACTOR MUST COORDINATE WITH THE RESIDENT ENGINEER TO MAXIMIZE THE USE OF TIMBER MATS IN WETLAND AND RIPARIAN BUFFER AREAS WHERE PRACTICABLE AND ONLY USE TEMPORARY FILL (I.E. RIP RAP) WHERE NECESSARY BECAUSE OF TERRAIN OR OTHER FACTORS FOR TEMPORARY ACCESS. FILTER FABRIC WILL BE REQUIRED UNDER THE TIMBER MAT AND RIP RAP OF THE TEMPORARY ACCESS. NO SEPARATE PAYMENT WILL BE MADE FOR THE FILTER FABRIC. SEE "CONSTRUCTION, MAINTENANCE AND REMOVAL OF TEMPORARY ACCESS AT STATION 33+54.00-L-" SPECIAL PROVISION.

NEEDLE BEAMS WILL NOT BE ALLOWED UNLESS OTHERWISE CALLED FOR ON THE PLANS OR APPROVED BY THE ENGINEER.

AT THE CONTRACTOR'S OPTION, AND UPON REMOVAL OF THE TEMPORARY ACCESS, THE CLASS II RIP RAP USED IN THE TEMPORARY ACCESS MAY BE PLACED AS RIP RAP SLOPE PROTECTION. SEE SPECIAL PROVISIONS FOR CONSTRUCTION, MAINTENANCE AND REMOVAL OF TEMPORARY ACCESS AT STATION 33+54.00-L-.

THE CLASS AA CONCRETE IN THE BRIDGE DECK SHALL CONTAIN FLY ASH OR GROUND GRANULATED BLAST FURNACE SLAG AT THE SUBSTITUTION RATE SPECIFIED IN ARTICLE 1024-1 AND IN ACCORDANCE WITH ARTICLES 1024-5 AND 1024-6 OF THE STANDARD SPECIFICATIONS. NO PAYMENT WILL BE MADE FOR THIS SUBSTITUTION AS IT IS CONSIDERED INCIDENTAL TO THE COST OF THE REINFORCED CONCRETE DECK SLAB.

FOR CURING CONCRETE, SEE SPECIAL PROVISIONS.

FOR CRANE SAFETY, SEE SPECIAL PROVISIONS.

FOR GROUT FOR STRUCTURE, SEE SPECIAL PROVISIONS.

FOR PLACING LOAD ON STRUCTURE MEMBERS, SEE SPECIAL PROVISIONS.

FOR PRESTRESSED CONCRETE MEMBERS, SEE SPECIAL PROVISIONS.

FOR CONSTRUCTION, MAINTENANCE, AND REMOVAL OF TEMPORARY ACCESS, SEE LEFT LANE STRUCTURE AT STATION 33+54.00-L-.

NORTH CAROLINA PROFESSIONAL SEAL 10730 ENGINEER D. AARON DAVENPORT, JR.
3-23-10

TOTAL BILL OF MATERIAL

	3'-6" Ø DRILLED PIERS IN SOIL	3'-6" Ø DRILLED PIERS NOT IN SOIL	PERMANENT STEEL CASING FOR 3'-6 Ø PIER	SID INSPECTION	CROSSHOLE SONIC LOGGING	REINFORCED CONCRETE DECK SLAB	GROOVING BRIDGE FLOORS	CLASS A CONCRETE	BRIDGE APPROACH SLABS	REINFORCING STEEL	SPIRAL COLUMN REINFORCING STEEL	54" PRESTRESSED CONCRETE GIRDERS	HP 12 X 53 STEEL PILES		THREE BAR METAL RAIL	CONCRETE BARRIER RAIL	RIP RAP CLASS II (2'- 0" THICK)	FILTER FABRIC FOR DRAINAGE	ELASTOMERIC BEARINGS	EVAZOTE JOINT SEALS
	LIN. FT.	LIN. FT.	LIN. FT.	EACH	EACH	SQ. FT.	SQ. FT.	CU. YDS.	LUMP SUM	LBS.	LBS.	LIN. FT.	NO.	LIN. FT.	LIN. FT.	LIN. FT.	TONS	SQ. YDS.	LUMP SUM	LUMP SUM
SUPERSTRUCTURE						14198	11109		LUMP SUM			1823.33			360.016	367.859			LUMP SUM	LUMP SUM
END BENT NO.1								24.0		3538			9	315			480	535		
BENT NO. 1	45.00	23.00						38.3		15276	3154									
BENT NO. 2	35.00	28.00						41.4		15400	3172									
BENT NO. 3	31.00	29.00	29.90					39.0		16746	3059									
END BENT NO.2								24.6		3590			9	180			390	430		
TOTAL	111.000	80.00	29.90	1	1	14198	11109	167.3	LUMP SUM	54550	9385	1823.33	18	495	360.016	367.859	870	965	LUMP SUM	LUMP SUM

DRAWN BY : D. A. GLADDEN DATE : 9-10-09
CHECKED BY : D. A. DAVENPORT DATE : 12/09

23-MAR-2010 08:44
Z:\Structures\dgladden\Microstation\U4703_SD_GD.dgn
ddavenport

PROJECT NO. U-4703
WAKE COUNTY
STATION: 33+54.00-L-

SHEET 3 OF 3

STATE OF NORTH CAROLINA
DEPARTMENT OF TRANSPORTATION
RALEIGH

GENERAL DRAWING FOR BRIDGE OVER MAHLERS CREEK ON SR 2812 BETWEEN NC 50 AND SR 2547 (RIGHT LANE)

REVISIONS								SHEET NO.
NO.	BY:	DATE:	NO.	BY:	DATE:			S-48
1			3					TOTAL SHEETS
2			4					89

STR. #2

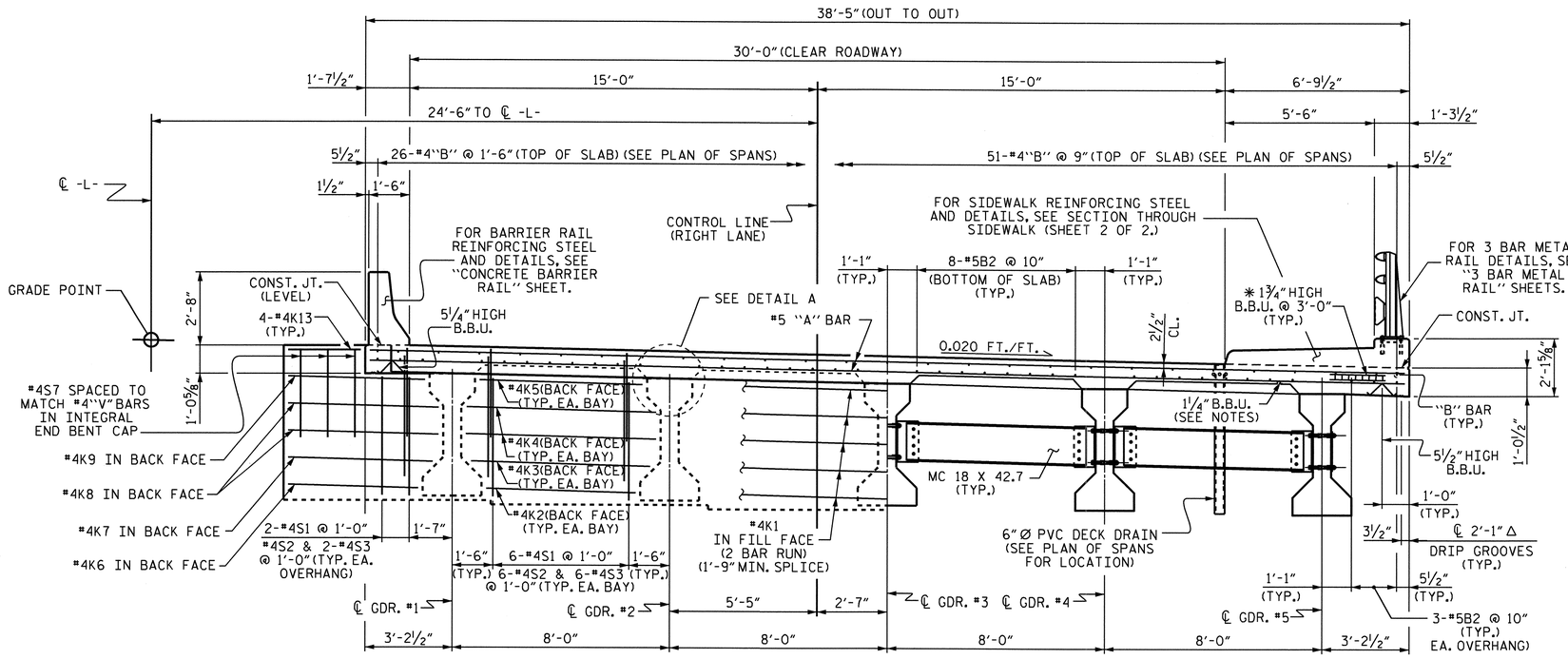

AT INTEGRAL END BENTS

AT INTERMEDIATE DIAPHRAGMS

TYPICAL SECTION

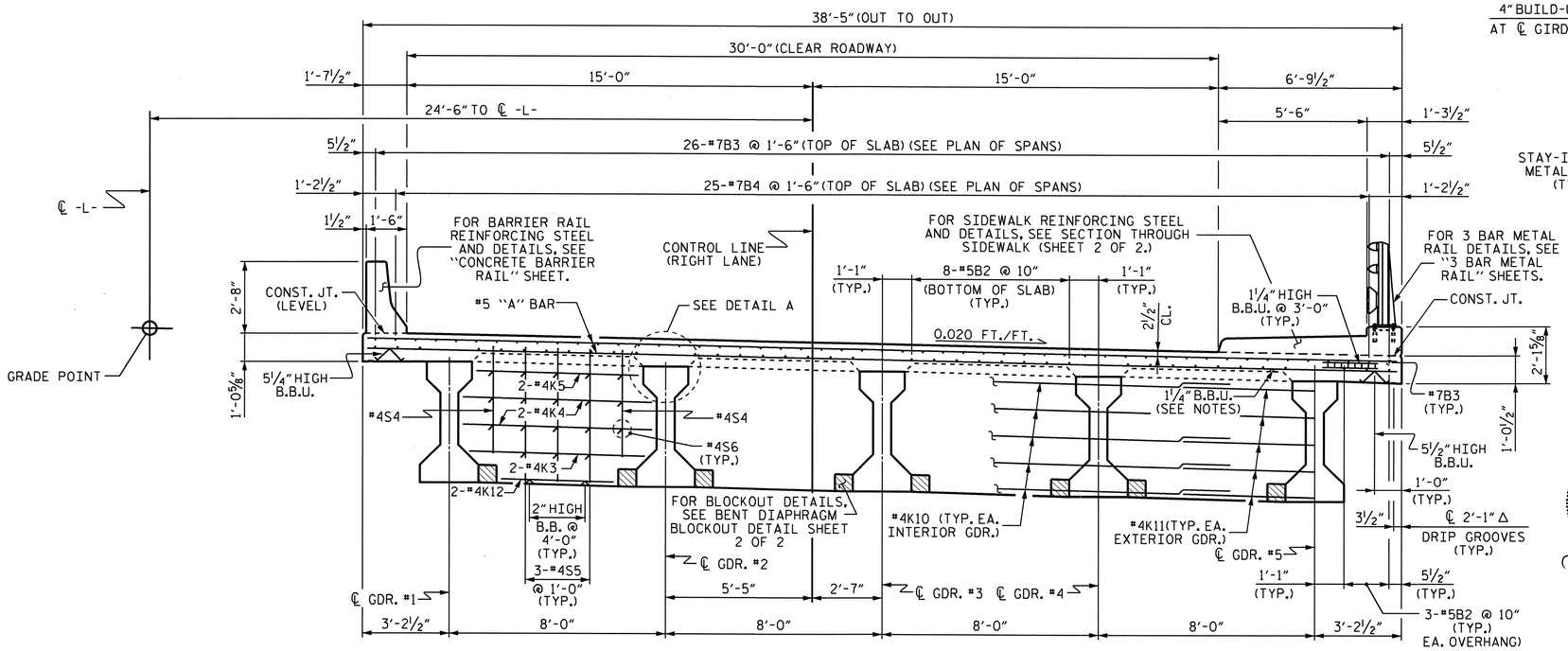

TYPICAL SECTION @ BENT DIAPHRAGM

NOTES

LONGITUDINAL STEEL MAY BE SHIFTED SLIGHTLY, AS NECESSARY, TO AVOID INTERFERENCE WITH STIRRUPS IN PRESTRESSED CONCRETE GIRDERS.

PREVIOUSLY CAST CONCRETE IN A CONTINUOUS UNIT SHALL HAVE ATTAINED A MINIMUM COMPRESSIVE STRENGTH OF 3,000 PSI BEFORE ADDITIONAL CONCRETE IS CAST IN THE UNIT.

BARRIER RAIL IN A CONTINUOUS UNIT SHALL NOT BE CAST UNTIL ALL SLAB CONCRETE IN THE UNIT HAS BEEN CAST AND HAS REACHED A MINIMUM COMPRESSIVE STRENGTH OF 3,000 PSI.

PROVIDE 1¼" HIGH BEAM BOLSTERS UPPER AT 4'-0" CTS. ATOP THE METAL STAY-IN-PLACE FORMS TO SUPPORT THE BOTTOM MAT OF 'A' BARS. WHEN USING REMOVABLE FORMS, PROVIDE CONTINUOUS HIGH CHAIRS FOR METAL DECK (C.H.C.M.) @ 4'-0" CTS. WITH A HEIGHT TO SUPPORT THE BOTTOM MAT OF 'A' BARS A CLEAR DISTANCE OF 2½" ABOVE THE TOP OF THE REMOVABLE FORM.

✱ USE THIS SIZE BAR SUPPORT IN THE AREAS WITH THE #4 "B" BARS. FOR OTHER AREAS WITH #7 "B" BARS, USE THE BAR SUPPORT AS SHOWN IN THE TYPICAL SECTION AT BENT.

COUPLING IN DRAIN PIPE WILL BE PERMITTED AS APPROVED BY THE ENGINEER.

TOP OF FLOOR DRAIN TO BE SET ⅜" BELOW SURFACE OF SLAB.

4 - ½" SQUARE LUGS TO BE GLUED TO THE PVC PLASTIC PIPE AT EQUAL SPACES AROUND THE PIPE DRAIN APPROXIMATELY 4" FROM THE TOP OF THE PIPE.

THE JOINT IN THE DECK SHALL BE SAWED PRIOR TO CASTING THE SIDEWALK.

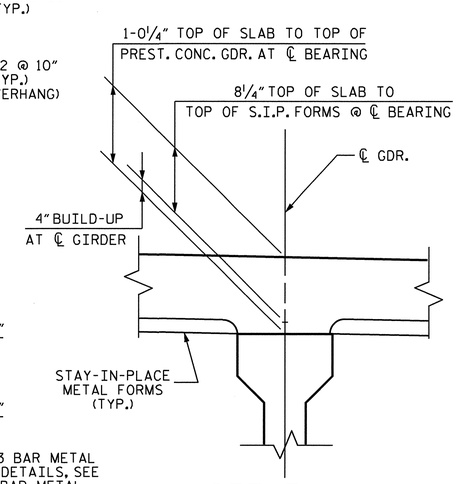

DETAIL A

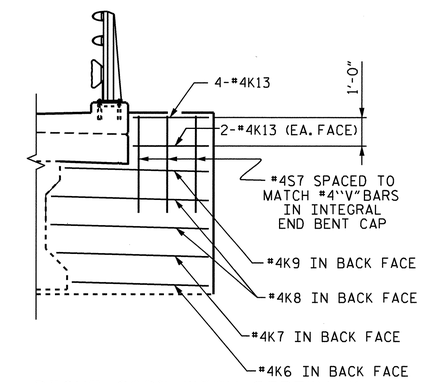

RIGHT SIDE WITH SIDEWALK INTEGRAL END BENT DETAIL

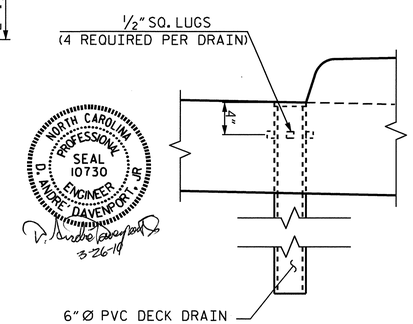

DRAIN DETAIL

(25 REQUIRED)

NORTH CAROLINA PROFESSIONAL SEAL 10730 ENGINEER D. ANDREW DAVENPORT, JR.
3-26-10

PROJECT NO. U-4703

WAKE COUNTY

STATION: 33+54.00-L-

SHEET 1 OF 2

STATE OF NORTH CAROLINA
DEPARTMENT OF TRANSPORTATION
RALEIGH

SUPERSTRUCTURE TYPICAL SECTION RIGHT LANE

REVISIONS						SHEET NO.
NO.	BY:	DATE:	NO.	BY:	DATE:	S-49
1			3			TOTAL SHEETS
2			4			89

DRAWN BY : H. T. BARBOUR DATE : 10-05-07
CHECKED BY : M. G. SHAIKH DATE : 3-08

26-MAR-2010 09:45
Z:\Structures\tbarbour\Microstation\str2\U4703_sd_TS.dgn
ddavenport

STR. #2

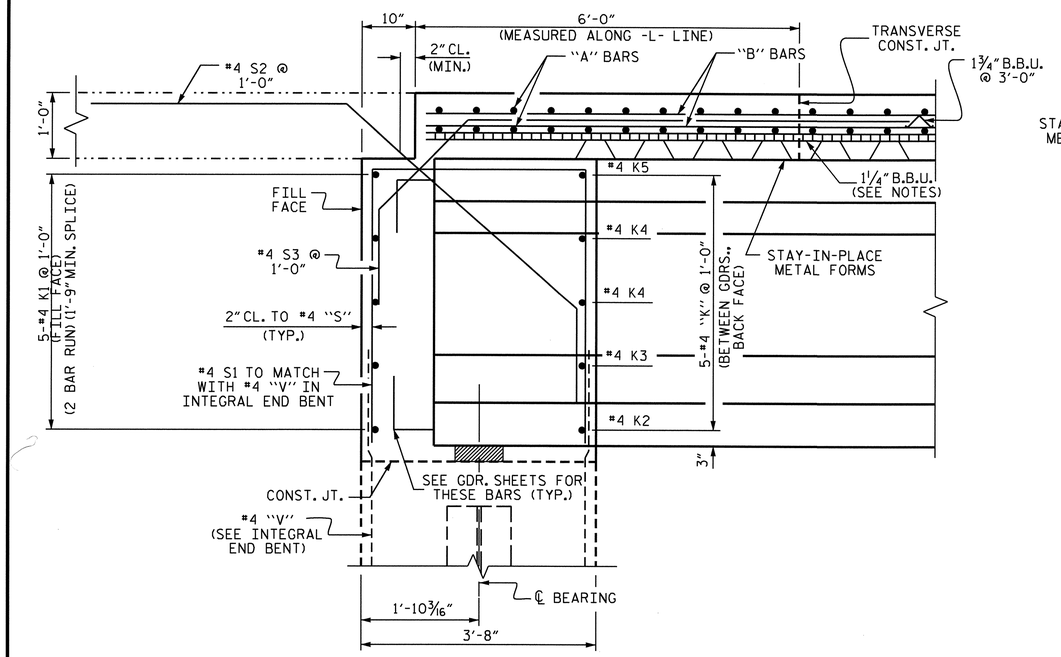

SECTION AT INTEGRAL END BENT

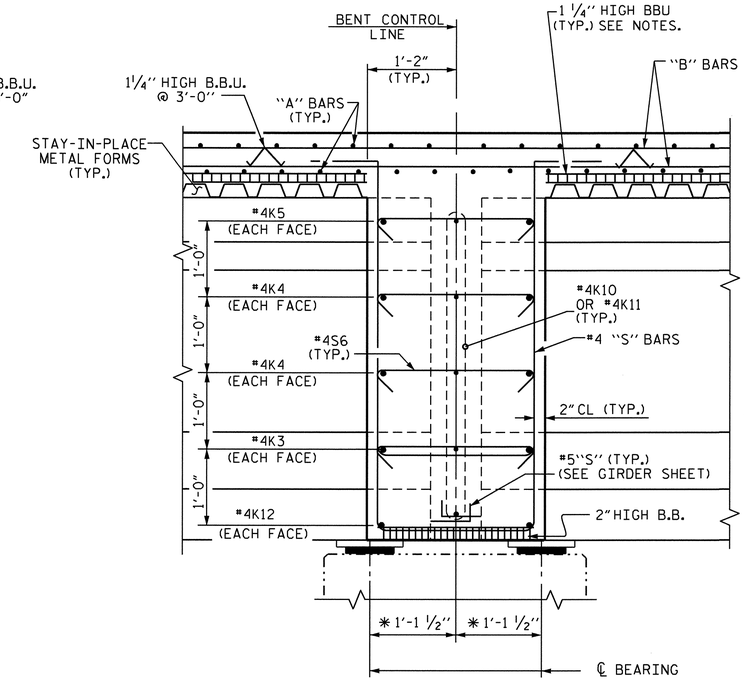

SECTION AT BENT DIAPHRAGM

✱ MEASURED ALONG ℄ GIRDER

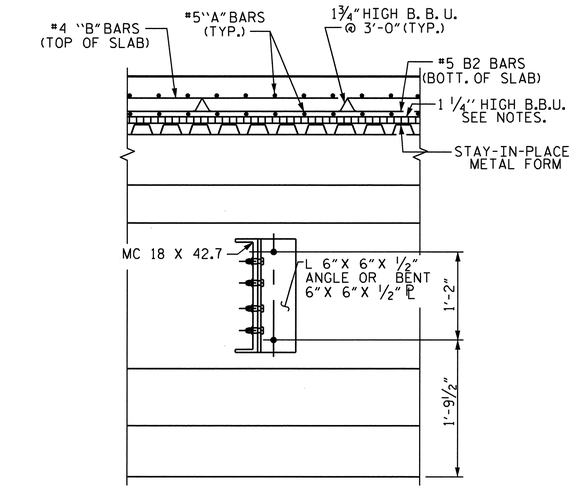

SECTION AT INTERMEDIATE STEEL DIAPHRAGM

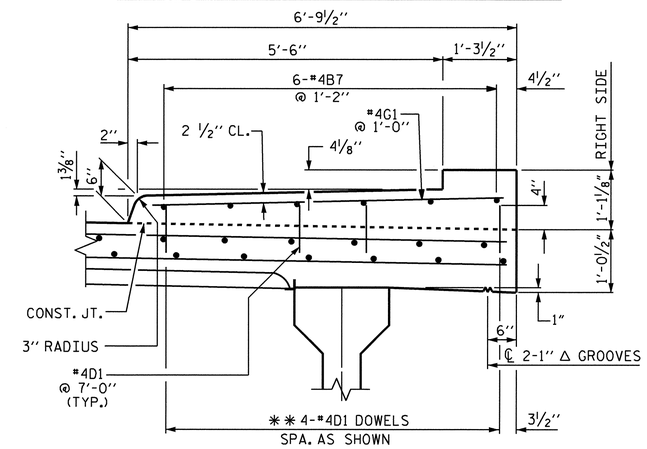

SECTION THROUGH SIDEWALK

✱✱ DOWELS MAY BE PUSHED INTO GREEN CONCRETE AFTER SPAN HAS BEEN SCREEDED OFF.

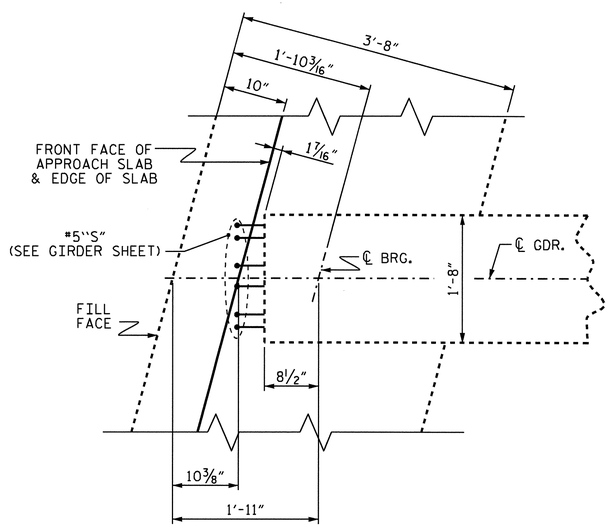

PLAN OF GIRDER AT INTEGRAL END BENT

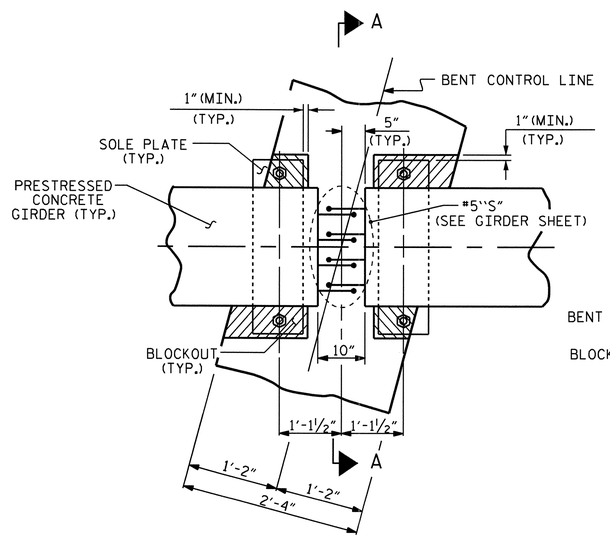

PLAN

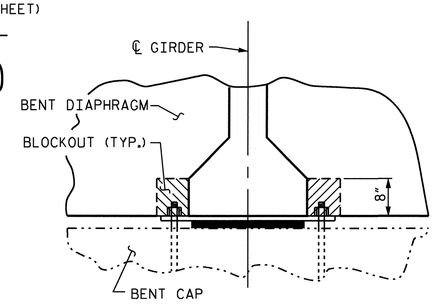

SECTION A-A

BENT DIAPHRAGM BLOCKOUT DETAIL

PROJECT NO. U- 4703

WAKE COUNTY

STATION: 33+54.00-L-

SHEET 2 OF 2

STATE OF NORTH CAROLINA
DEPARTMENT OF TRANSPORTATION
RALEIGH

SUPERSTRUCTURE TYPICAL SECTION DETAILS RIGHT LANE

NORTH CAROLINA PROFESSIONAL SEAL 10730 ENGINEER D. ANDREW DAVENPORT, JR.
2-3-10

REVISIONS						SHEET NO.
NO.	BY:	DATE:	NO.	BY:	DATE:	S-50
1			3			TOTAL SHEETS
2			4			89

DRAWN BY : H. T. BARBOUR DATE : 10-16-07
CHECKED BY : M. G. SHAIKH DATE : 4-08

03-FEB-2010 14:15
Y:\Structures\tbarbour\Microstation\str2\U4703_sd_TS.dgn
ADAVENPORT

STR. #2

NOTES

SIDEWALK IN EACH CONTINUOUS UNIT SHALL NOT BE CAST UNTIL ALL SLAB CONCRETE IN THAT UNIT HAS BEEN CAST AND HAS REACHED A MINIMUM COMPRESSIVE STRENGTH OF 3,000 PSI.

ALL REINFORCING STEEL IN SIDEWALK SHALL BE EPOXY COATED.

#4D1 DOWELS MAY BE PUSHED INTO GREEN CONCRETE AFTER SPAN HAS BEEN SCREEDED OFF.

FOR END POST DETAILS AND REINFORCING STEEL SEE "RAIL POST SPACINGS AND END OF RAIL DETALIS".

GROOVED CONTRACTION JOINTS 1/2" IN DEPTH, SHALL BE TOOLED IN ALL EXPOSED FACES OF THE SIDEWALK IN ACCORDANCE WITH ARTICLE 825-10(B) OF THE STANDARD SPECIFICATIONS. THE CONTRACTION JOINTS SHALL BE LOCATED AT A SPACING OF 8 FEET TO 10 FEET BETWEEN EXPANSION JOINTS. NO CONTRACTION JOINTS WILL BE REQUIRED FOR SEGMENTS LESS THAN 10 FEET IN LENGTH.

NO SEPARATE PAYMENT WILL BE MADE FOR THE SIDEWALK AS IT IS INCLUDED WITH THE REINFORCED CONCRETE DECK SLAB PAY ITEM.

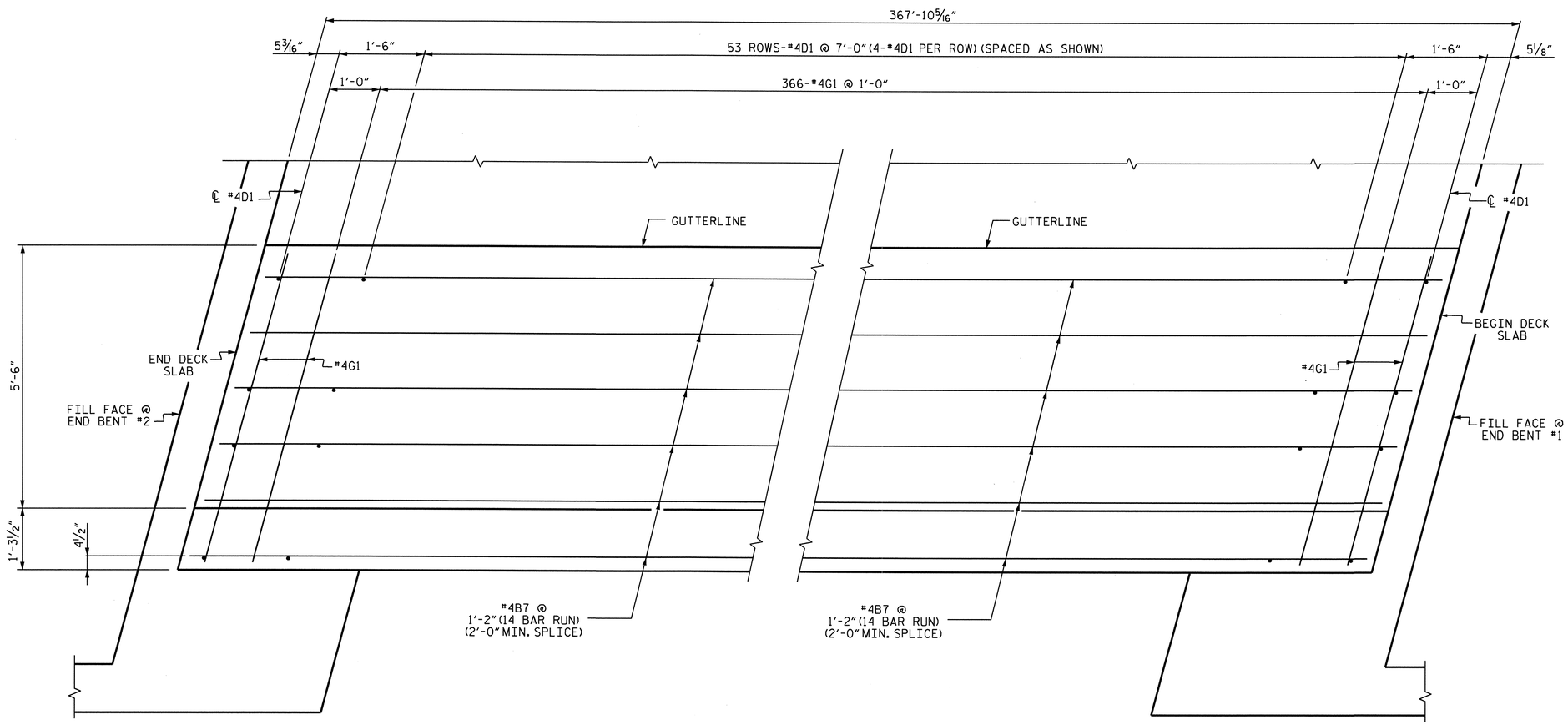

PLAN OF SIDEWALK

PROJECT NO. U-4703
WAKE COUNTY
STATION: 33+54.00-L-

STATE OF NORTH CAROLINA
DEPARTMENT OF TRANSPORTATION
RALEIGH

SUPERSTRUCTURE
SIDEWALK PLAN
RIGHT LANE

NORTH CAROLINA PROFESSIONAL SEAL 10730 ENGINEER D. ANDREW DAVENPORT JR.
3-23-10

REVISIONS						SHEET NO.
NO.	BY:	DATE:	NO.	BY:	DATE:	S-51
1			3			TOTAL SHEETS
2			4			89

STR. #2

DRAWN BY : H.T. BARBOUR DATE : 10-24-07
CHECKED BY : M.G.SHAIKH DATE : 3-08

23-MAR-2010 08:47
Z:\Structures\tbarbour\Microstation\str2\U4703_sd_TS.dgn
adavenport

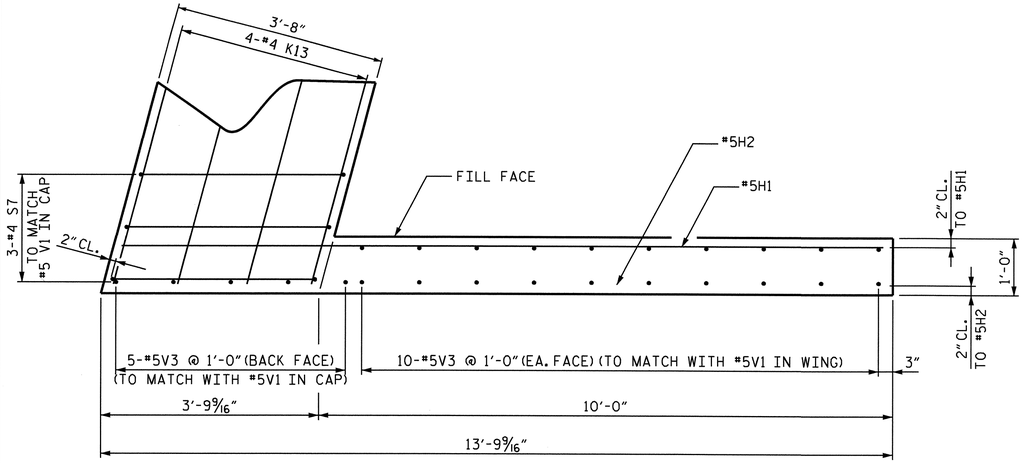

PLAN OF LEFT WING (W1)

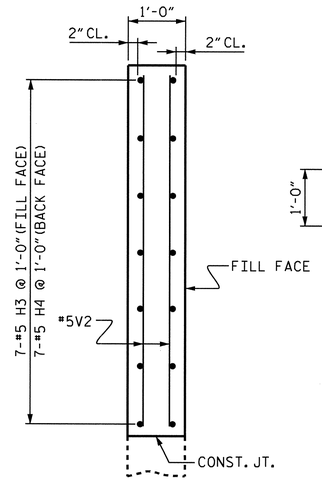

SECTION Y-Y

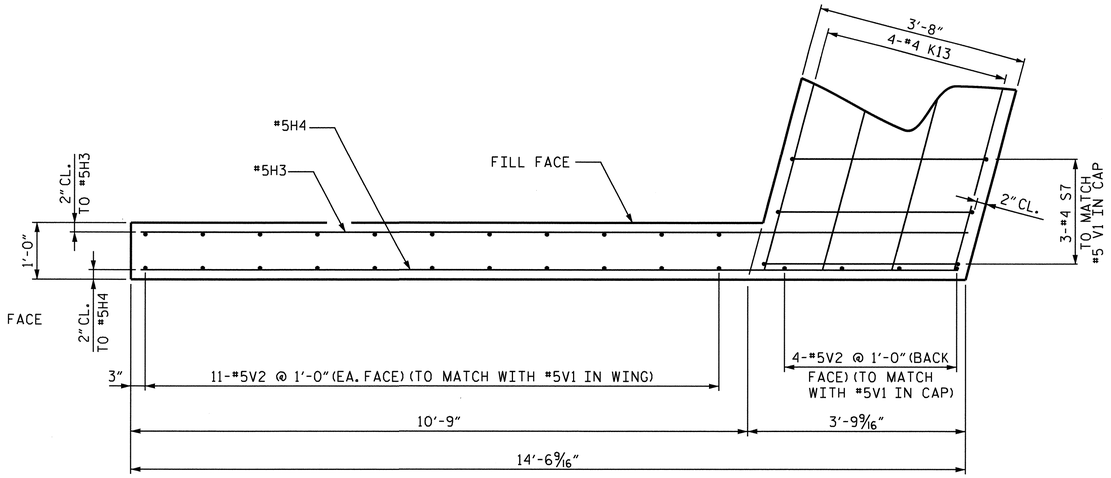

PLAN OF RIGHT WING (W2)

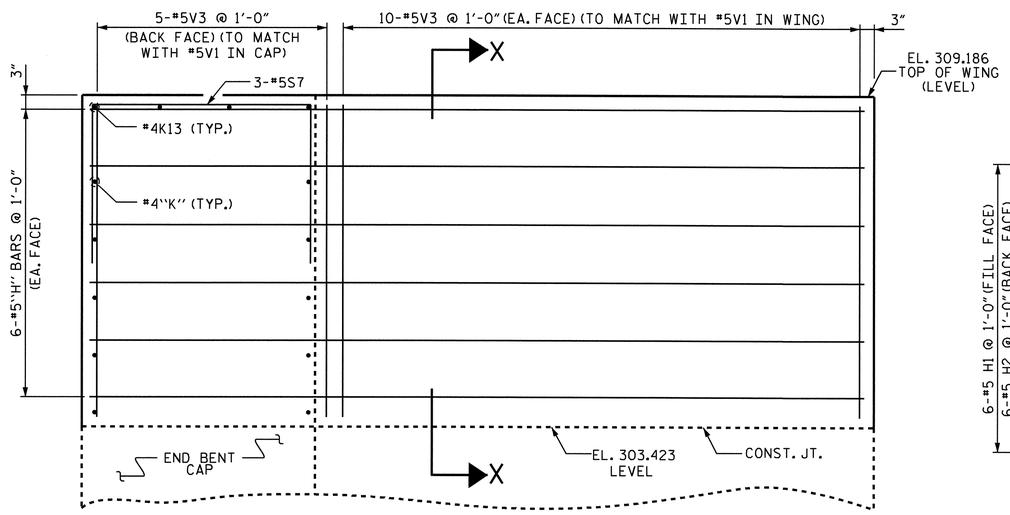

ELEVATION OF LEFT WING (W1)

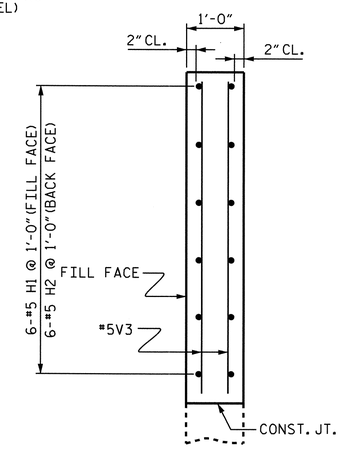

SECTION X-X

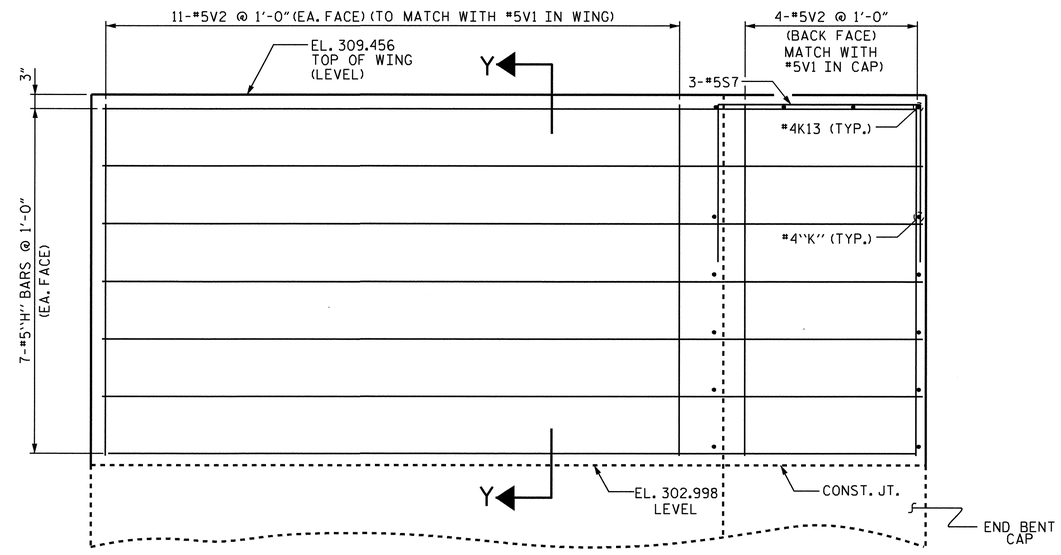

ELEVATION OF RIGHT WING (W2)

PROJECT NO. U-4703

WAKE COUNTY

STATION: 33+54.00-L-

STATE OF NORTH CAROLINA
DEPARTMENT OF TRANSPORTATION
RALEIGH

SUPERSTRUCTURE TOP OF WINGS DETAILS END BENT #1 (RIGHT LANE)

NORTH CAROLINA PROFESSIONAL SEAL 10730 ENGINEER D. ANDREW DAVENPORT, JR.

2-3-10

REVISIONS						SHEET NO.
NO.	BY:	DATE:	NO.	BY:	DATE:	S-52
1			3			TOTAL SHEETS
2			4			89

DRAWN BY : H. T. BARBOUR DATE : 7-08-09
CHECKED BY : D.A. DAVENPORT DATE : 11/09

03-FEB-2010 12:22
Y:\Structures\tbarbour\Microstation\str2\U4703_sd_S*.dgn
ADAVENPORT

STR. #2

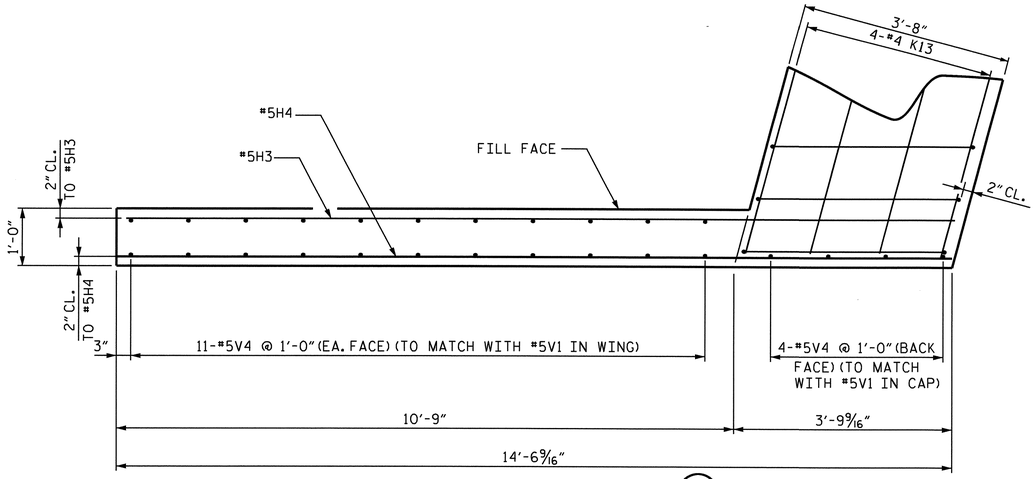

PLAN OF LEFT WING (W1)

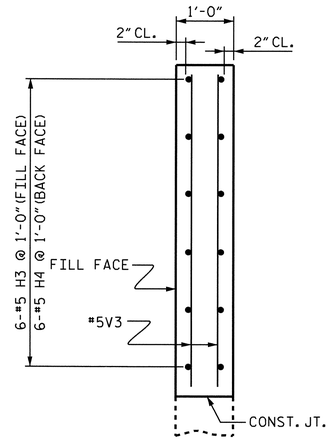

SECTION Y-Y

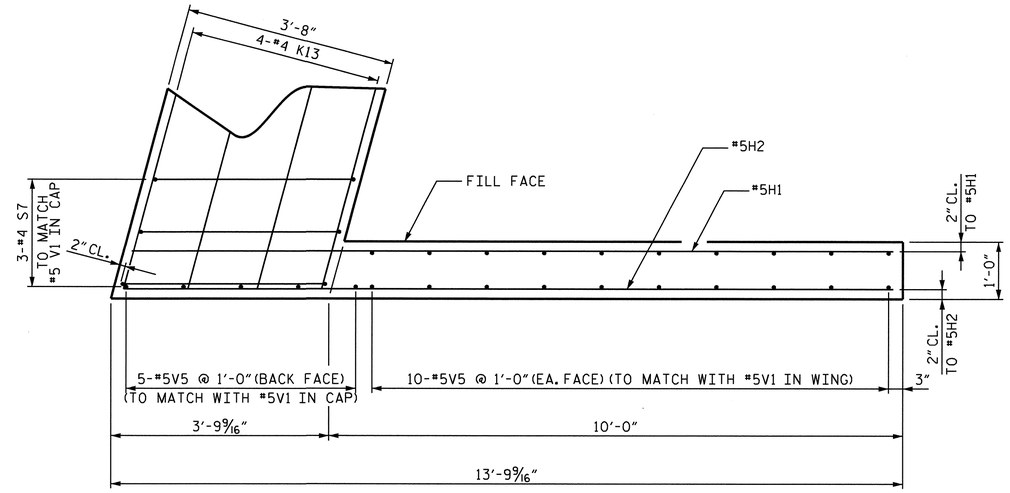

PLAN OF RIGHT WING (W2)

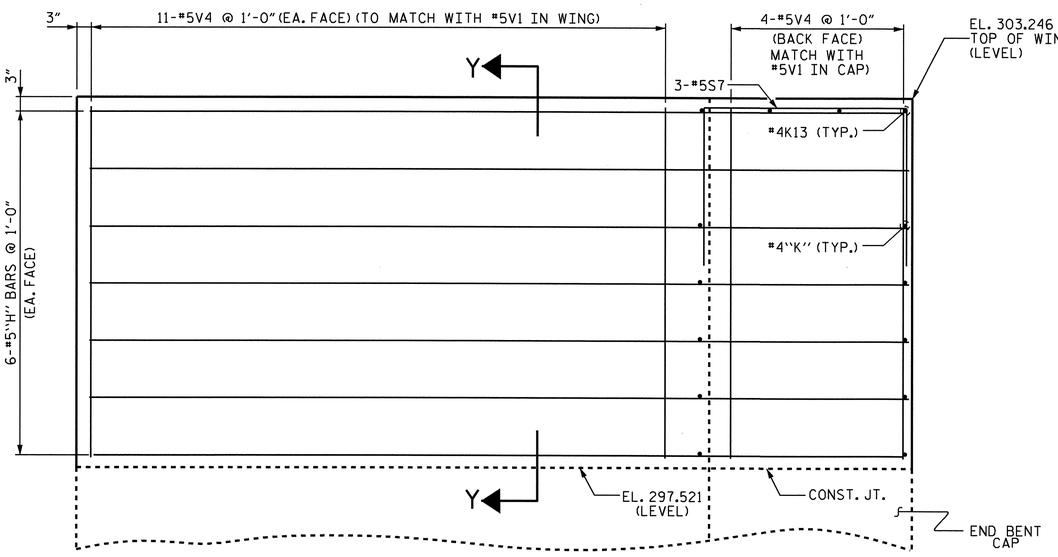

ELEVATION OF LEFT WING (W1)

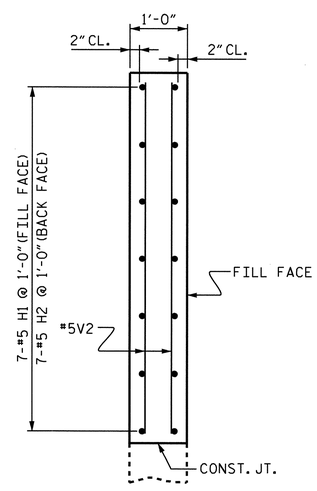

SECTION X-X

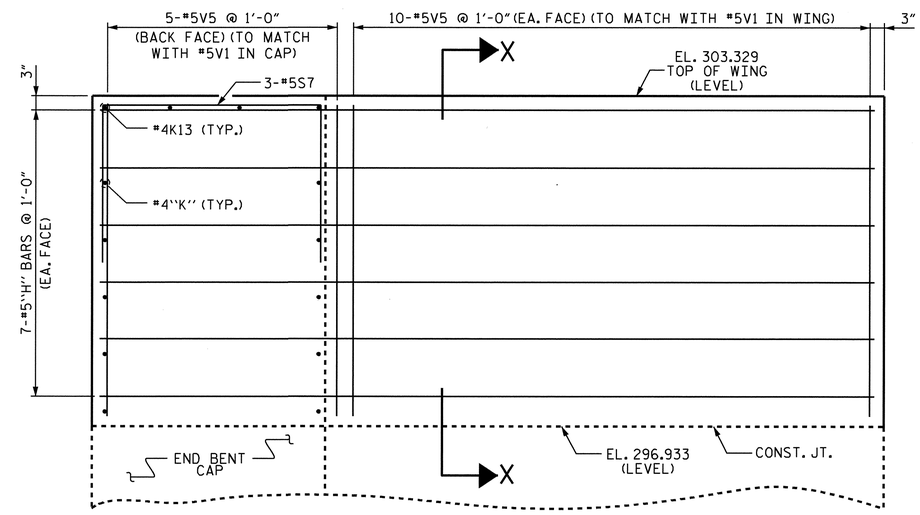

ELEVATION OF RIGHT WING (W2)

PROJECT NO. U-4703

WAKE COUNTY

STATION: 33+54.00-L-

STATE OF NORTH CAROLINA
DEPARTMENT OF TRANSPORTATION
RALEIGH

SUPERSTRUCTURE
TOP OF WINGS DETAILS
END BENT #2
(RIGHT LANE)

NORTH CAROLINA PROFESSIONAL SEAL 10730 ENGINEER D. ANDREW DAVENPORT, JR.

REVISIONS						SHEET NO.
NO.	BY:	DATE:	NO.	BY:	DATE:	S-53
1			3			TOTAL SHEETS
2			4			89

DRAWN BY : H. T. BARBOUR DATE : 7-08-09
CHECKED BY : D.A. DAVENPORT DATE : 11/09

04-FEB-2010 11:05
Y:\Structures\tbarbour\Microstation\str2\U4703_sd_S*.dgn
ddavenport

STR. #2

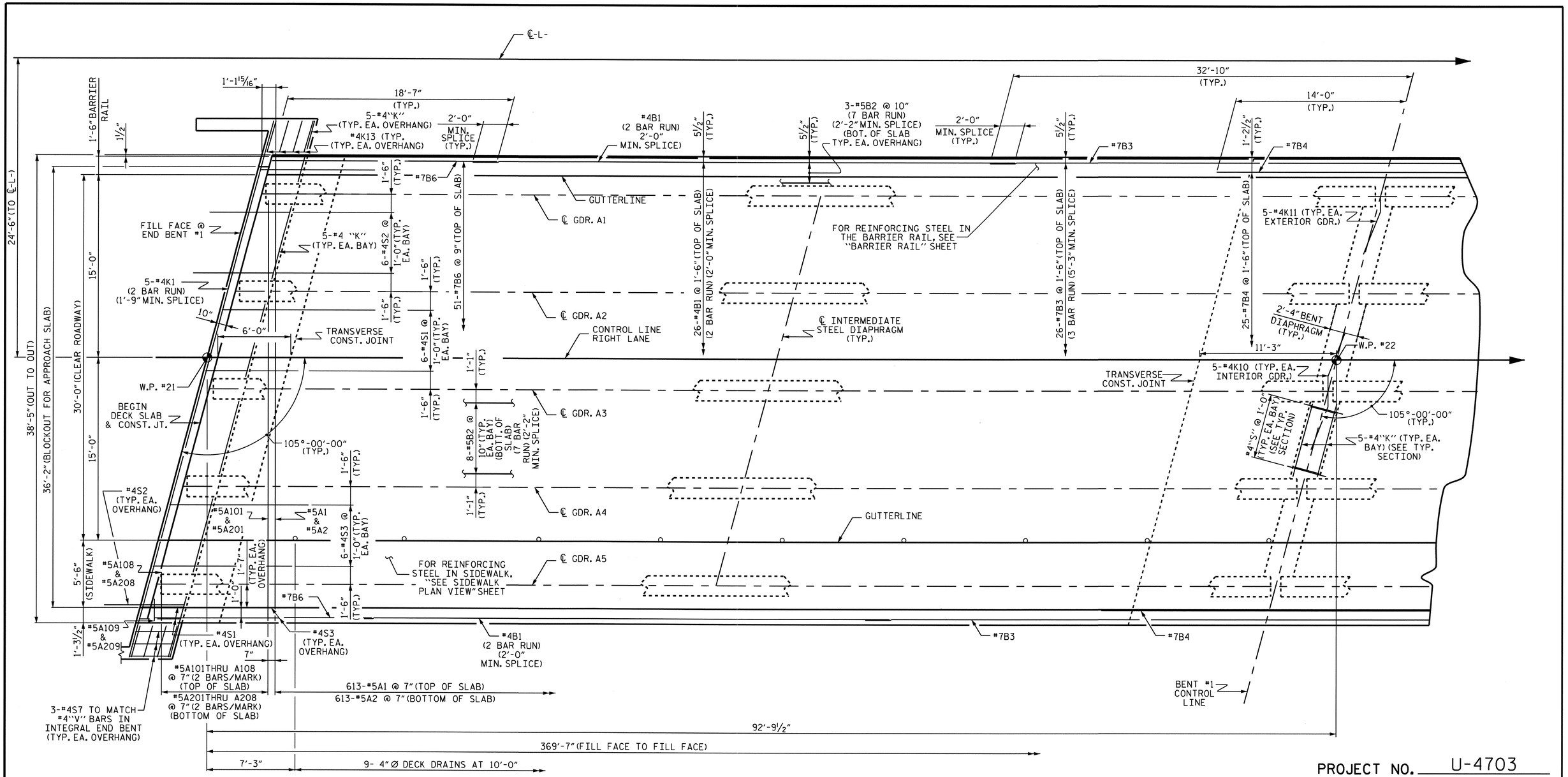

SPAN A

PROJECT NO. U-4703

WAKE COUNTY

STATION: 33+54.00-L-

SHEET 1 OF 4

STATE OF NORTH CAROLINA
DEPARTMENT OF TRANSPORTATION
RALEIGH

SUPERSTRUCTURE PLAN OF SPAN A (RIGHT LANE)

NORTH CAROLINA PROFESSIONAL SEAL 10730 ENGINEER D. ANDREW DAVENPORT, JR.
2-3-10

REVISIONS						SHEET NO.
NO.	BY:	DATE:	NO.	BY:	DATE:	S-54
1			3			TOTAL SHEETS
2			4			89

STR. #2

DRAWN BY :	H. T. BARBOUR	DATE :	10-05-07
CHECKED BY :	M. G. SHAIKH	DATE :	3-08

03-FEB-2010 12:21
Y:\Structures\tbarbour\Microstation\str2\U4703_sd_S*.dgn
ADAVENPORT

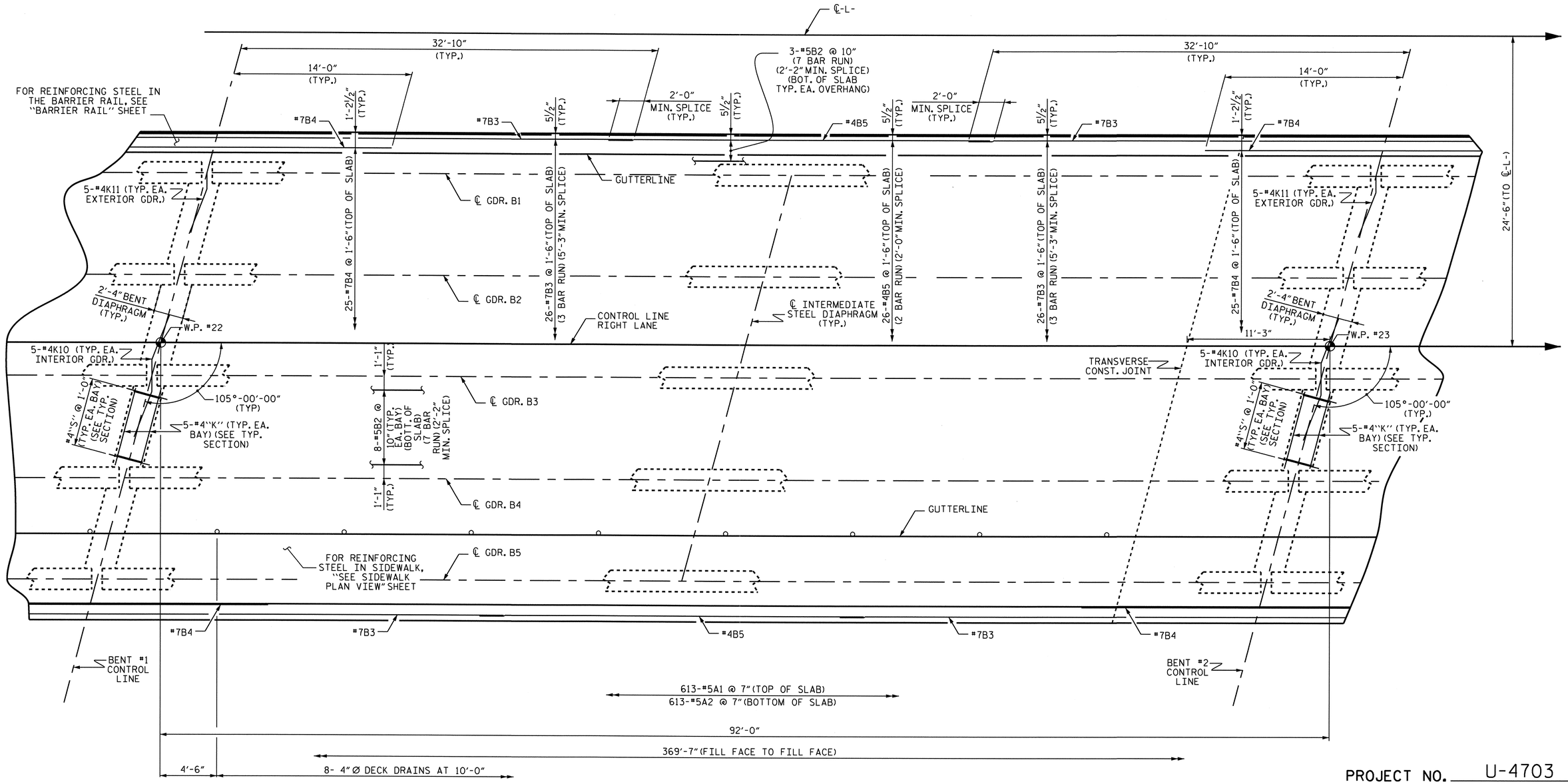

SPAN B

PROJECT NO. U-4703

WAKE COUNTY

STATION: 33+54.00-L-

SHEET 2 OF 4

STATE OF NORTH CAROLINA
DEPARTMENT OF TRANSPORTATION
RALEIGH

SUPERSTRUCTURE PLAN OF SPAN B (RIGHT LANE)

NORTH CAROLINA PROFESSIONAL SEAL 10730 ENGINEER D. ANDREW DAVENPORT, JR.

2-3-10

REVISIONS						SHEET NO.
NO.	BY:	DATE:	NO.	BY:	DATE:	S-55
1			3			TOTAL SHEETS
2			4			89

STR. #2

DRAWN BY : H. T. BARBOUR DATE : 10-05-07
CHECKED BY : M. G. SHAIKH DATE : 3-08

03-FEB-2010 12:21
Y:\Structures\tbarbour\Microstation\str2\U4703_sd_S*.dgn
ADAVENPORT

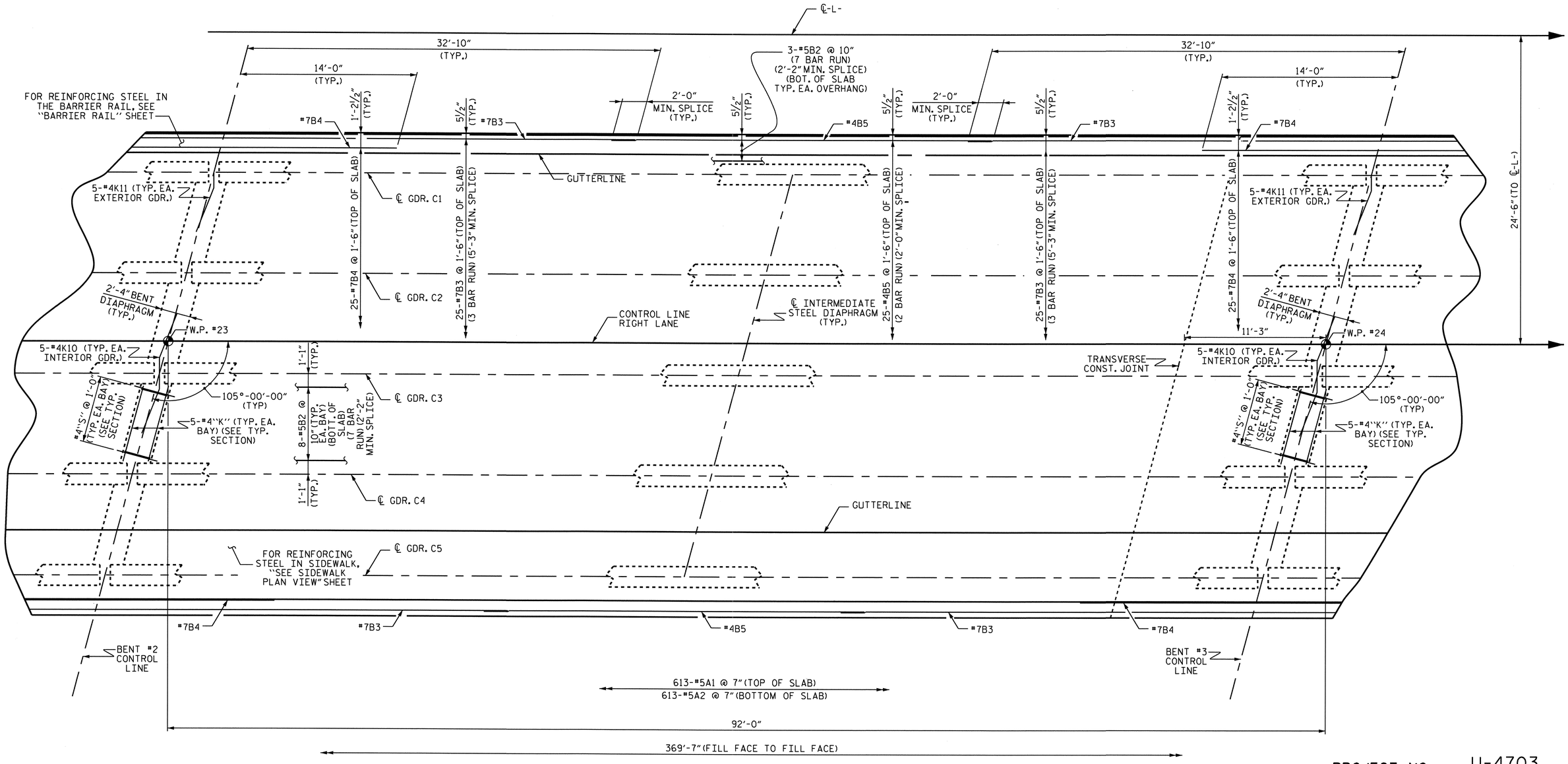

SPAN C

PROJECT NO. U-4703

WAKE COUNTY

STATION: 33+54.00-L-

SHEET 3 OF 4

STATE OF NORTH CAROLINA
DEPARTMENT OF TRANSPORTATION
RALEIGH

SUPERSTRUCTURE PLAN OF SPAN C (RIGHT LANE)

NORTH CAROLINA PROFESSIONAL SEAL 10730 ENGINEER D. ANDRE DAVENPORT, JR.

2-3-10

REVISIONS						SHEET NO.
NO.	BY:	DATE:	NO.	BY:	DATE:	S-56
1			3			TOTAL SHEETS
2			4			89

DRAWN BY : H. T. BARBOUR DATE : 10-05-07
CHECKED BY : M. G. SHAIKH DATE : 3-08

03-FEB-2010 12:21
Y:\Structures\tbarbour\Microstation\str2\U4703_sd_S*.dgn
ADAVENPORT

STR. #2

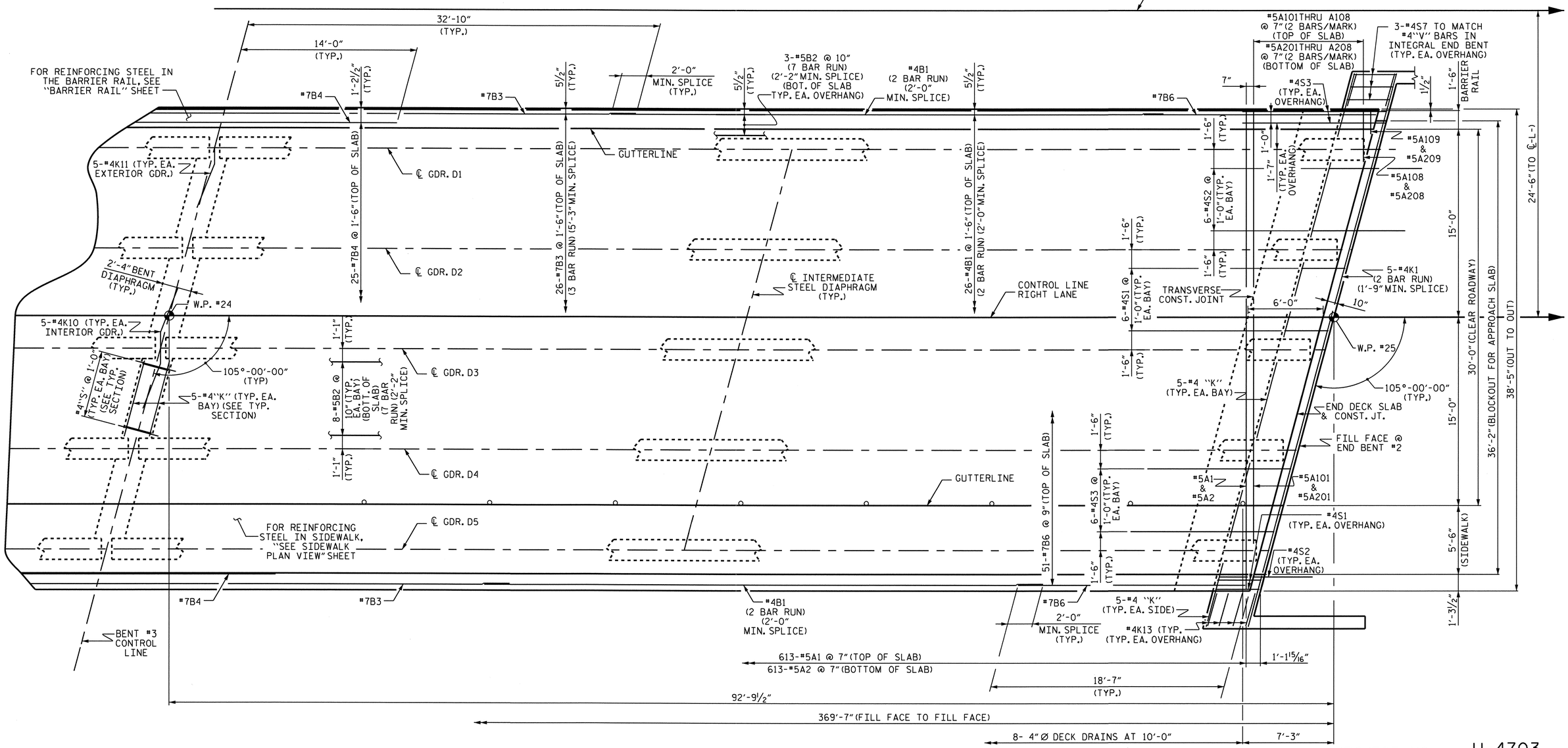

SPAN D

PROJECT NO. U-4703

WAKE COUNTY

STATION: 33+54.00-L-

SHEET 4 OF 4

STATE OF NORTH CAROLINA
DEPARTMENT OF TRANSPORTATION
RALEIGH

SUPERSTRUCTURE PLAN OF SPAN D (RIGHT LANE)

NORTH CAROLINA PROFESSIONAL SEAL 10730 ENGINEER D. ANDRE DAVENPORT

REVISIONS						SHEET NO.
NO.	BY:	DATE:	NO.	BY:	DATE:	S-57
1			3			TOTAL SHEETS
2			4			89

STR. #2

DRAWN BY : H. T. BARBOUR DATE : 10-05-07
CHECKED BY : M. G. SHAIKH DATE : 3-08

03-FEB-2010 12:22
Y:\Structures\tbarbour\Microstation\str2\U4703_sd_S*.dgn
ADAVENPORT

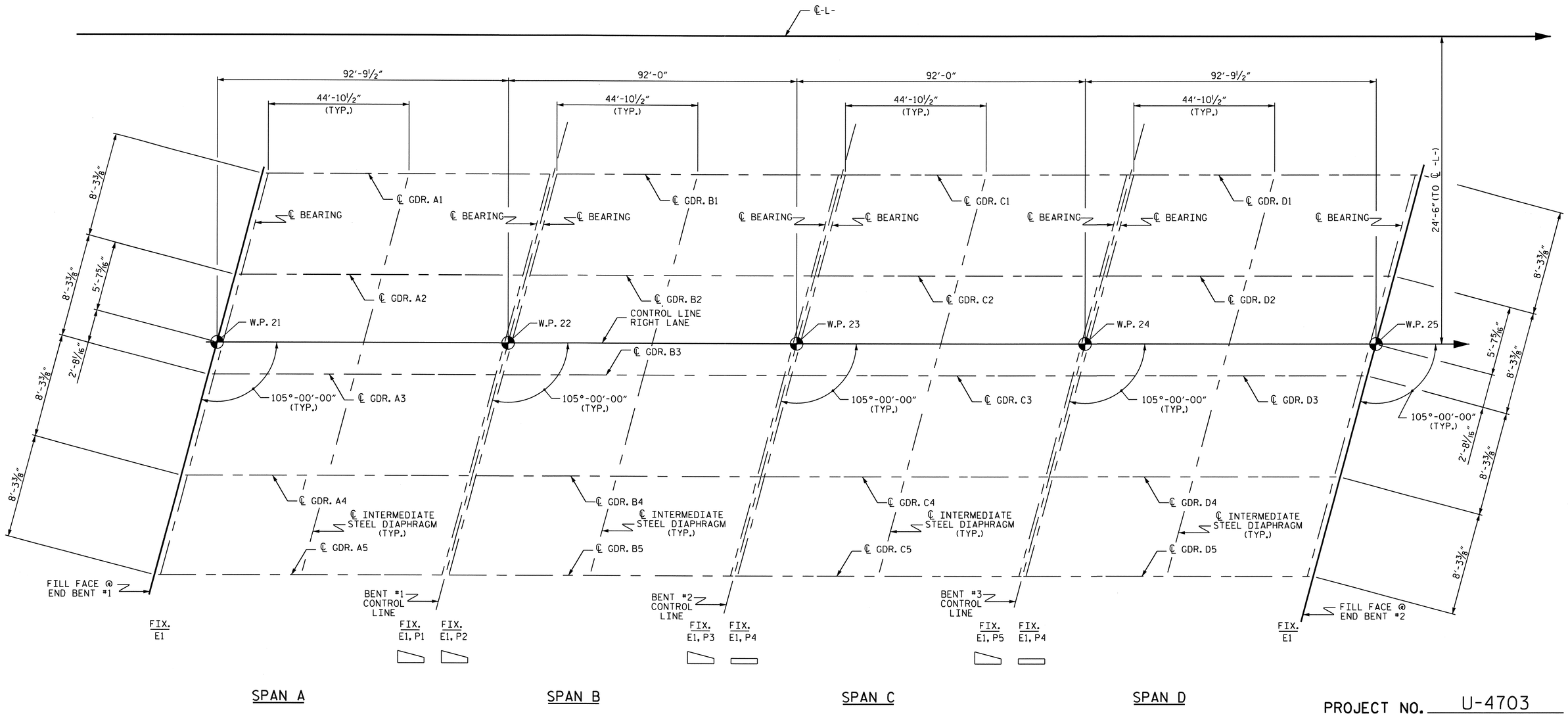

FRAMING PLAN

PROJECT NO. U-4703

WAKE COUNTY

STATION: 33+54.00-L-

STATE OF NORTH CAROLINA
DEPARTMENT OF TRANSPORTATION
RALEIGH

SUPERSTRUCTURE FRAMING PLAN RIGHT LANE

NORTH CAROLINA PROFESSIONAL SEAL 10730 ENGINEER D. ANDREW DAVENPORT, JR.
2-5-10

REVISIONS						SHEET NO.
NO.	BY:	DATE:	NO.	BY:	DATE:	S-58
1			3			TOTAL SHEETS
2			4			89

DRAWN BY : H. T. BARBOUR DATE : 10-26-07
CHECKED BY : M. G. SHAIKH DATE : 3-08

05-FEB-2010 15:58
Y:\Structures\tbarbour\Microstation\str2\U4703_sd_FP.dgn
ADAVENPORT

STR. #2 NCBDS

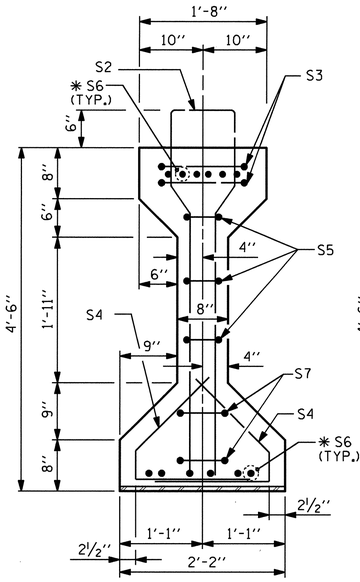

SECTION A-A

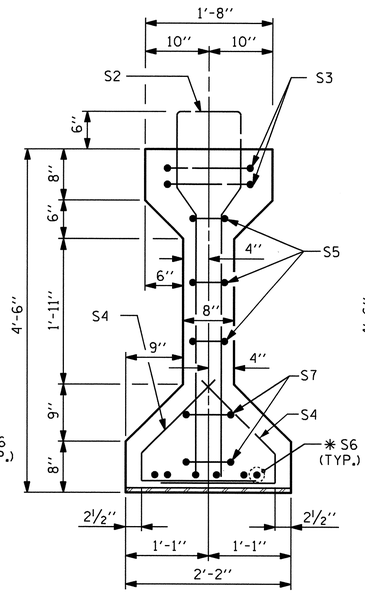

SECTION B-B

* FOR S6 BARS, SEE DETAIL "A" OF PRESTRESSED CONCRETE GIRDER CONTINUOUS FOR LIVE LOAD DETAILS SHEET

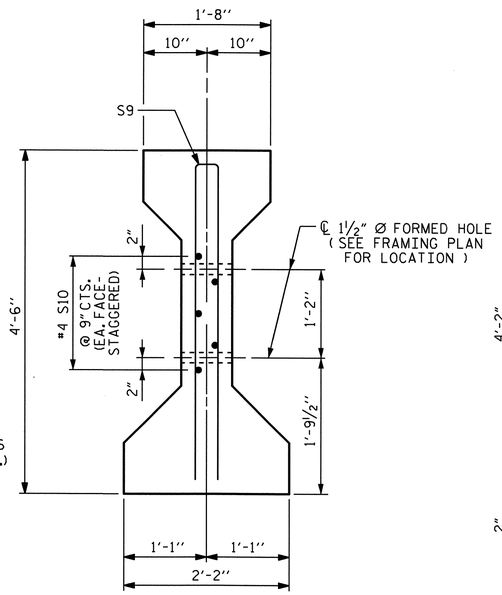

SECTION C-C

(S1 BARS NOT SHOWN)

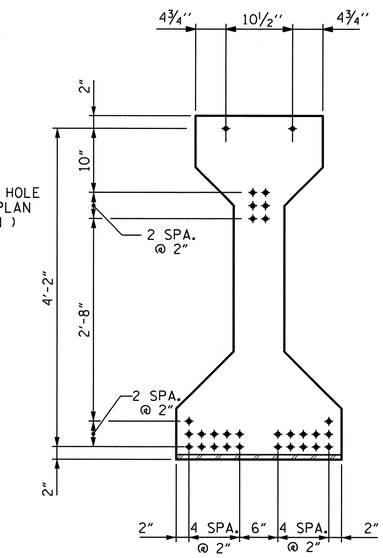

AT END OF GIRDER

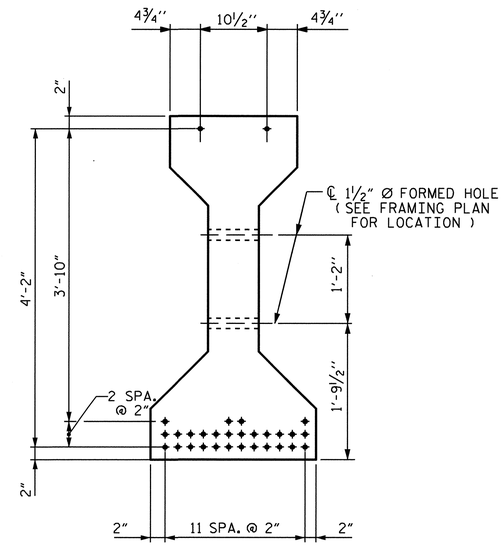

AT ℄ OF GIRDER

0.6" Ø LOW RELAXATION STRAND LAYOUT

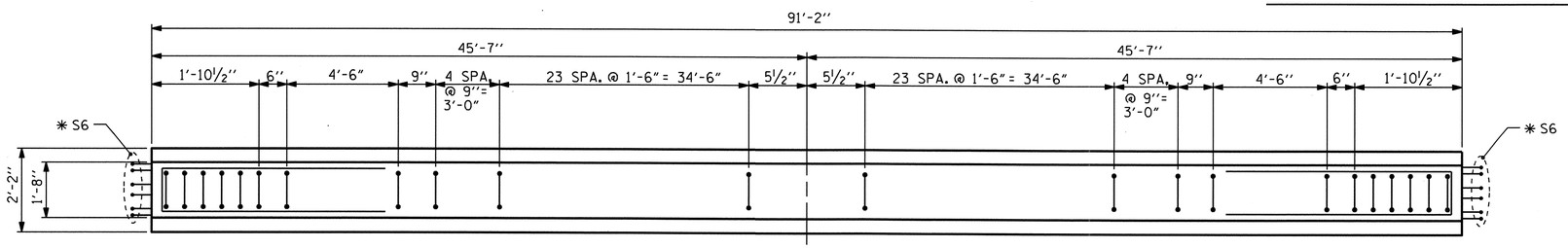

PLAN OF GIRDER

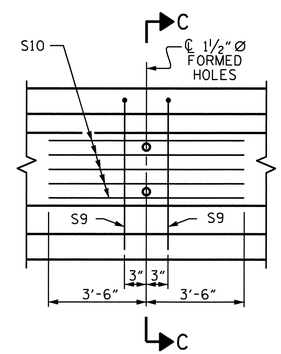

PARTIAL ELEVATION

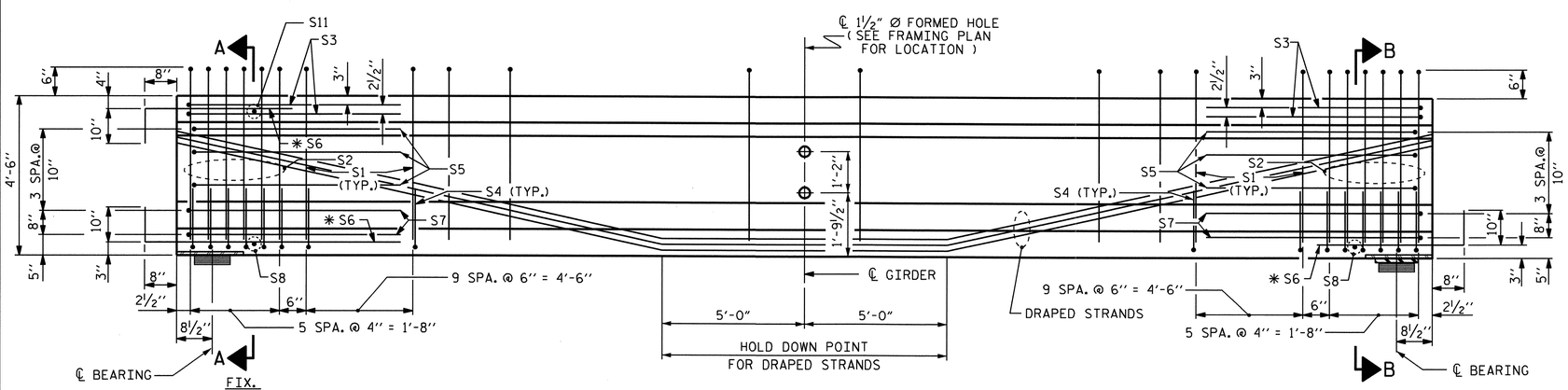

AT INTREGRAL END BENTS

ELEVATION OF GIRDER

(SEE PARTIAL ELEVATION FOR S9 AND S10 BARS)

0.6" Ø L. R. GRADE 270 STRANDS

AREA (SQUARE INCHES)	ULTIMATE STRENGTH (LBS. PER STRAND)	APPLIED PRESTRESS (LBS. PER STRAND)
0.217	58,600	43,950

REINFORCING STEEL FOR ONE GIRDER

BAR	NUMBER	SIZE	TYPE	LENGTH	WEIGHT
S1	76	#4	1	10'-8"	542
S2	12	#6	1	10'-8"	192
S3	4	#4	2	9'-1"	24
S4	64	#4	3	3'-5"	146
S5	6	#4	2	8'-5"	34
* S6	18	#5	STR	3'-8"	69
S7	4	#4	2	8'-7"	23
S8	2	#3	STR	1'-10"	1
S9	2	#5	2	8'-8"	18
S10	5	#4	STR	7'-0"	23
S11	1	#3	STR	1'-4"	1

* NOTE: S6 BARS SHALL BE BENT BEFORE SHIPMENT. HEAT BENDING SHALL NOT BE ALLOWED.

BAR TYPES

ALL BAR DIMENSIONS ARE OUT-TO-OUT

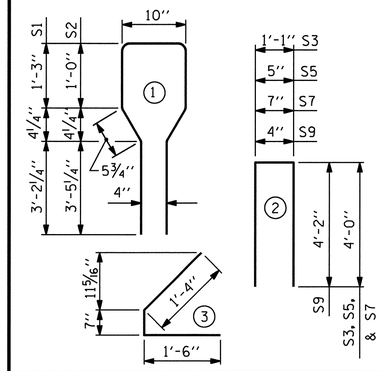

QUANTITIES FOR ONE GIRDER

	REINFORCING STEEL LB.	6000 PSI CONCRETE C.Y.	0.6" Ø L.R. STRANDS No.
GIRDERS 1-5	1073	18.5	30

GIRDERS REQUIRED

SPAN	NUMBER	LENGTH	TOTAL LENGTH
A	5	91.1667	455.833
D	5	91.1667	455.833
		TOTAL	911.666

PROJECT NO. U-4703

WAKE COUNTY

STATION: 33+54.00-L-

SHEET 1 OF 4

STATE OF NORTH CAROLINA
DEPARTMENT OF TRANSPORTATION
RALEIGH

AASHTO TYPE IV PRESTRESSED CONCRETE GIRDER CONTINUOUS FOR LIVE LOAD SPANS A & D (RT. LANE)

NORTH CAROLINA PROFESSIONAL SEAL 10730 ENGINEER D. ANDRE DAVENPORT, JR.

REVISIONS							
NO.	BY:	DATE:	NO.	BY:	DATE:	SHEET NO.	S-59
1			3			TOTAL SHEETS	89
2			4				

STR. #2

ASSEMBLED BY : H. T. BARBOUR	DATE : 12-05-07		CADD STANDARD
CHECKED BY : M. G. SHAIKH	DATE : 4-08		
DRAWN BY : ELR 8/91	REV. 2/6/97	EEM/RGW	
CHECKED BY : GRP 8/91	REV. 7/17/98	RWW/LES	
	REV. 10/17/00R	RWW/LES	

22-MAR-2010 15:41
r:\structures\tbarbour\microstation\str2\u4703_sd_g*.dgn
dgladden

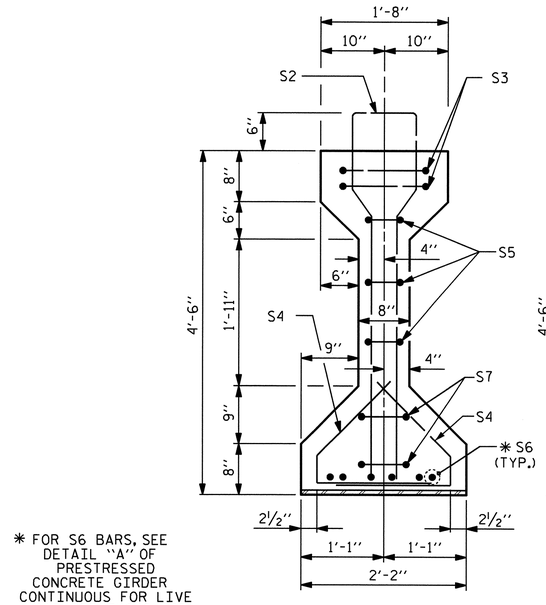

* FOR S6 BARS, SEE DETAIL "A" OF PRESTRESSED CONCRETE GIRDER CONTINUOUS FOR LIVE LOAD DETAILS SHEET

SECTION B-B

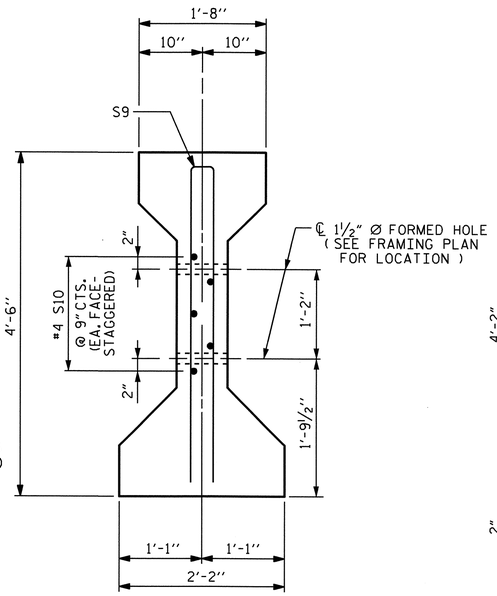

SECTION C-C

(S1 BARS NOT SHOWN)

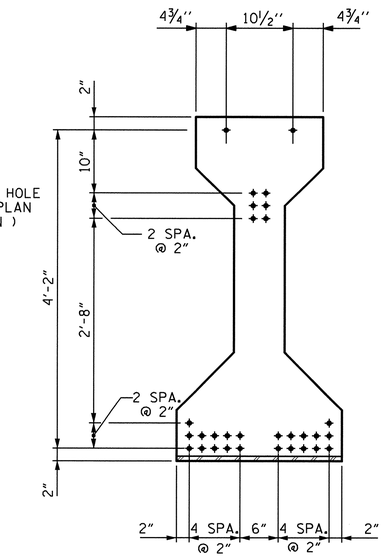

AT END OF GIRDER

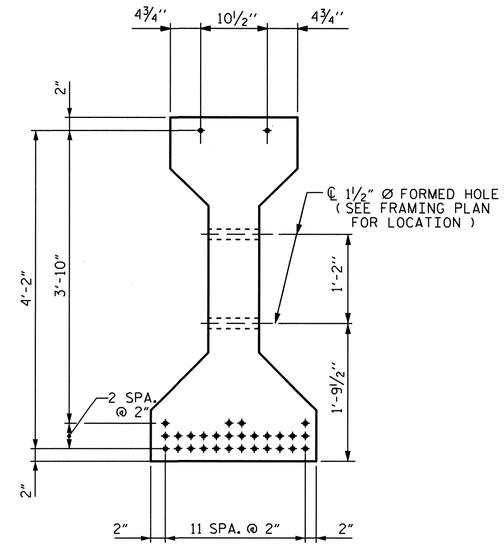

AT ℄ OF GIRDER

0.6" Ø LOW RELAXATION STRAND LAYOUT

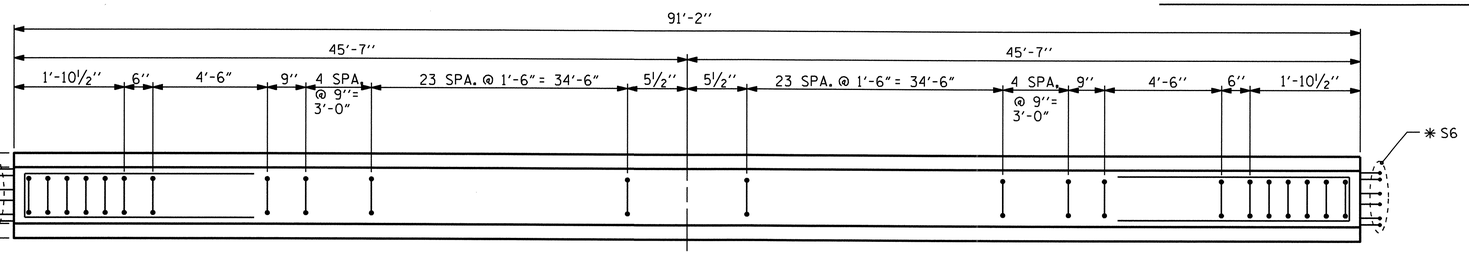

PLAN OF GIRDER

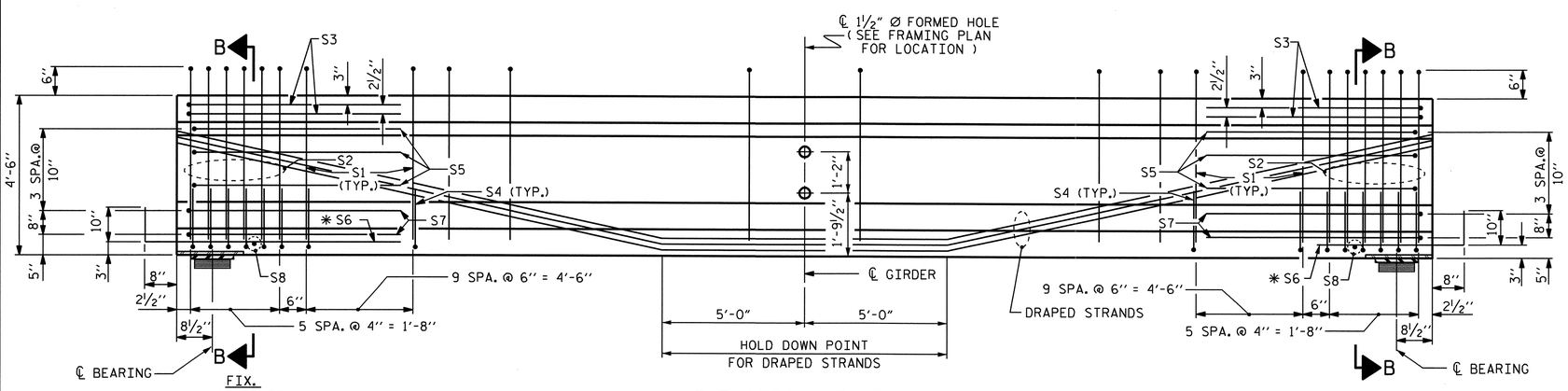

ELEVATION OF GIRDER

(SEE PARTIAL ELEVATION FOR S9 AND S10 BARS)

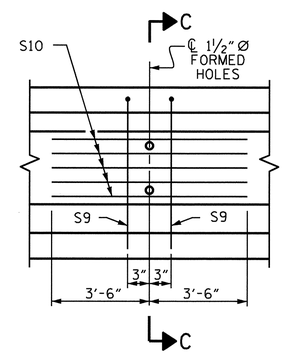

PARTIAL ELEVATION

0.6" Ø L. R. GRADE 270 STRANDS

AREA (SQUARE INCHES)	ULTIMATE STRENGTH (LBS. PER STRAND)	APPLIED PRESTRESS (LBS. PER STRAND)
0.217	58,600	43,950

REINFORCING STEEL FOR ONE GIRDER

BAR	NUMBER	SIZE	TYPE	LENGTH	WEIGHT
S1	76	#4	1	10'-8"	542
S2	12	#6	1	10'-8"	192
S3	4	#4	2	9'-1"	24
S4	64	#4	3	3'-5"	146
S5	6	#4	2	8'-5"	34
* S6	12	#5	STR	3'-8"	46
S7	4	#4	2	8'-7"	23
S8	2	#3	STR	1'-10"	1
S9	2	#5	2	8'-8"	18
S10	5	#4	STR	7'-0"	23

* NOTE: S6 BARS SHALL BE BENT BEFORE SHIPMENT. HEAT BENDING SHALL NOT BE ALLOWED.

BAR TYPES

ALL BAR DIMENSIONS ARE OUT-TO-OUT

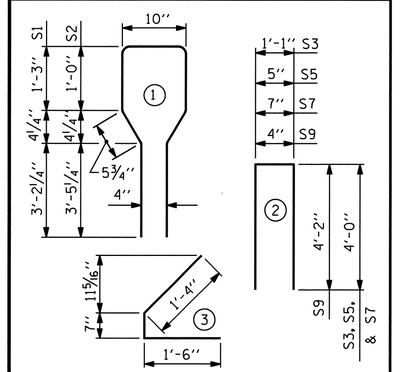

QUANTITIES FOR ONE GIRDER

	REINFORCING STEEL LB.	6000 PSI CONCRETE C.Y.	0.6" Ø L.R. STRANDS No.
GIRDERS 1-5	1049	18.5	30

GIRDERS REQUIRED

SPAN	NUMBER	LENGTH	TOTAL LENGTH
B	5	91.1667	455.83
C	5	91.1667	455.83
		TOTAL	911.666

PROJECT NO. U-4703

WAKE COUNTY

STATION: 33+54.00-L-

SHEET 2 OF 4

STATE OF NORTH CAROLINA
DEPARTMENT OF TRANSPORTATION
RALEIGH

AASHTO TYPE IV PRESTRESSED CONCRETE GIRDER CONTINUOUS FOR LIVE LOAD SPANS B & C (RT. LANE)

NORTH CAROLINA PROFESSIONAL SEAL 10730 ENGINEER D. KNOKE DAVENPORT, JR.

REVISIONS							
NO.	BY:	DATE:	NO.	BY:	DATE:		
1			3				
2			4				

SHEET NO. S-60

TOTAL SHEETS 89

STR. #2

ASSEMBLED BY : H. T. BARBOUR	DATE : 12-05-07		CADD STANDARD
CHECKED BY : M. G. SHAIKH	DATE : 4-08		
DRAWN BY : ELR 8/91	REV. 2/6/97	EEM/RGW	
CHECKED BY : GRP 8/91	REV. 7/17/98	RWW/LES	
	REV. 10/17/00R	RWW/LES	

22-MAR-2010 15:42
r:\structures\tbarbour\microstation\str2\u4703_sd_g*.dgn
dgladden

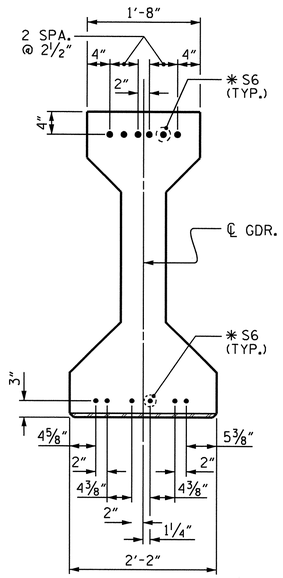

DETAIL "A"

(FOR AASHTO TYPE IV GIRDERS)

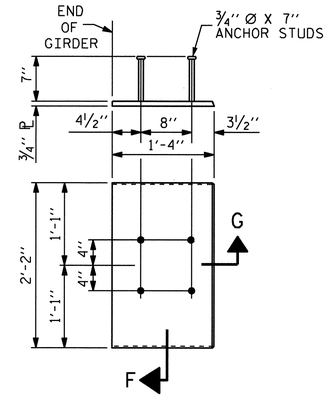

EMBEDDED PLATE "B-1" DETAILS FOR AASHTO TYPE IV GIRDER

(2 REQ'D PER GIRDER)

NOTES

ALL PRESTRESSING STRANDS SHALL BE 7-WIRE LOW-RELAXATION GRADE 270 STRANDS AND SHALL CONFORM TO AASHTO M203 EXCEPT FOR SAMPLING REQUIREMENTS WHICH SHALL BE IN ACCORDANCE WITH THE STANDARD SPECIFICATIONS.

ALL REINFORCING STEEL SHALL BE GRADE 60.

EMBEDDED PLATE "B-1" SHALL BE GALVANIZED IN ACCORDANCE WITH THE STANDARD SPECIFICATIONS. BEVEL EDGES OF PLATE "B-1" TO GIVE CLOSE FIT BUT NOT TIGHT FIT TO STEEL CASTING FORM.

ANCHOR STUDS SHALL CONFORM TO AASHTO M169 GRADES 1010 THROUGH 1020 OR APPROVED EQUAL, AND SHALL MEET THE TYPE "B" REQUIREMENTS OF SUBSECTION 7.3 OF THE ANSI/AASHTO/AWS D1.5 BRIDGE WELDING CODE.

AT ENDS OF GIRDERS TO BE EMBEDDED IN CONCRETE DIAPHRAGMS OR END WALLS, PRESTRESSING STRANDS MAY EXTEND A MAXIMUM OF 2" BEYOND THE GIRDER ENDS. OTHERWISE, PRESTRESSING STRANDS SHALL BE CUT FLUSH WITH THE GIRDER ENDS.

THE TRANSFER OF LOAD FROM THE ANCHORAGES TO THE GIRDER SHALL BE DONE WHEN CONCRETE HAS REACHED A COMPRESSIVE STRENGTH OF NOT LESS THAN 4600 PSI.

DEPENDING ON THE TYPE OF SYSTEM USED TO SUPPORT THE DECK SLAB FORMS, PRESET ANCHORS MAY BE NECESSARY IN THE PRESTRESSED CONCRETE GIRDER.

THE TOP SURFACE OF THE GIRDER, EXCLUDING THE OUTSIDE 4", SHALL BE RAKED TO A DEPTH OF ¼".

WHEN DRAPED STRANDS ARE DETAILED, THE LONGITUDINAL LOCATION OF THE HOLD DOWN DEVICES SHALL BE WITHIN 6" OF THE LOCATION SHOWN AND THE CENTER OF GRAVITY OF THE GROUP OF DRAPED STRANDS SHALL BE LOCATED WITHIN ½" OF THE THEORETICAL LOCATION SHOWN.

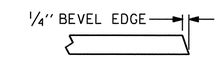

SECTION "G"

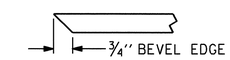

SECTION "F"

(SEE NOTES)

DEAD LOAD DEFLECTION TABLE FOR GIRDERS

0.6" Ø LOW RELAXATION	SPANS A, B, C & D GIRDERS 1-5										
TENTH POINTS	0	.1	.2	.3	.4	.5	.6	.7	.8	.9	0
CAMBER (GIRDER ALONE IN PLACE) ↑	0.0	0.095	0.180	0.247	0.289	0.304	0.289	0.247	0.180	0.095	0.0
✱ DEFLECTION DUE TO SUPERIMPOSED D.L. ↓	0.0	0.040	0.075	0.103	0.120	0.126	0.120	0.103	0.075	0.040	0.0
FINAL CAMBER ↑	0.0	11/16"	1¼"	1¾"	2"	2⅛"	2"	1¾"	1¼"	11/16"	0.0

✱ INCLUDES FUTURE WEARING SURFACE IN SUPERIMPOSED DEAD LOAD.
ALL VALUES ARE SHOWN IN FEET (DECIMAL FORM), EXCEPT "FINAL CAMBER", WHICH IS GIVEN IN INCHES (FRACTION FORM).

PROJECT NO. U-4703
WAKE COUNTY
STATION: 33+54.00-L-

SHEET 3 OF 4

STATE OF NORTH CAROLINA
DEPARTMENT OF TRANSPORTATION
RALEIGH

PRESTRESSED CONCRETE GIRDER CONTINUOUS FOR LIVE LOAD DETAILS (RT. LANE)

NORTH CAROLINA PROFESSIONAL SEAL 10730 ENGINEER D. AUBREY DAVENPORT, JR.

REVISIONS								SHEET NO.
NO.	BY:	DATE:	NO.	BY:	DATE:			S-61
1			3					TOTAL SHEETS
2			4					89

STR. #2

STD. NO. PCG11 (Sht. 3a)

ASSEMBLED BY : H. T. BARBOUR		DATE : 12-06-07	
CHECKED BY : M. G. SHAIKH		DATE : 4-08	
DRAWN BY : ELR 11/91	REV. 10/17/00 RWW/LES		
CHECKED BY : GRP 11/91	REV. 7/10/01RR LES/RDR		
	REV. 5/1/06 TLA/GM		

22-MAR-2010 15:42
r:\structures\tbarbour\microstation\str2\u4703_sd_g*.dgn
dgladden

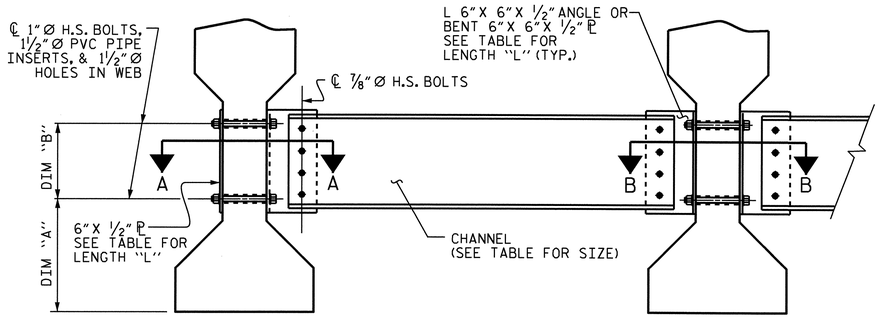

EXTERIOR GIRDER

INTERIOR GIRDER

PART SECTION AT INTERMEDIATE DIAPHRAGM

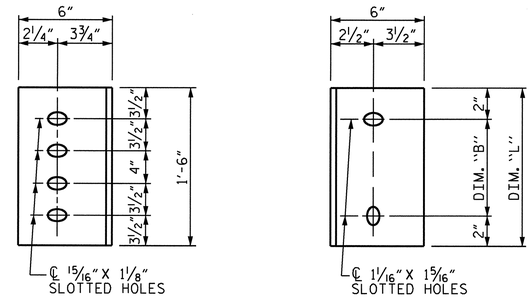

DIAPHRAGM FACE

WEB FACE

CONNECTOR PLATE DETAILS

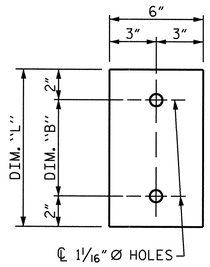

PLATE DETAILS

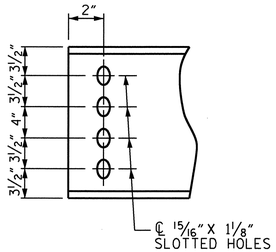

CHANNEL END

STRUCTURAL STEEL NOTES

ALL INTERMEDIATE DIAPHRAGM STEEL, CONNECTOR PLATES AND PLATE WASHERS SHALL BE AASHTO M270 GRADE 50 OR APPROVED EQUAL.

TENSION ON THE AASHTO M164 BOLTS THROUGH THE CHANNEL MEMBER SHALL BE CALIBRATED USING DIRECT TENSION INDICATOR WASHERS IN ACCORDANCE WITH THE STANDARD SPECIFICATIONS. FOR DIRECT TENSION INDICATOR WASHERS, SEE SPECIAL PROVISIONS.

TENSION ON THE AASHTO M164 BOLTS THROUGH THE GIRDER WEB SHALL BE SNUG TIGHTENED FOLLOWED BY AN ADDITIONAL ¼ TURN.

THE CHANNELS, ANGLES, WASHERS, PLATE WASHERS, AND DIRECT TENSION INDICATORS SHALL BE GALVANIZED OR METALLIZED IN ACCORDANCE WITH THE STANDARD SPECIFICATIONS. FOR THERMAL SPRAYED COATINGS (METALLIZATION), SEE SPECIAL PROVISIONS.

FOR METALLIZATION, APPLY AN 8 MIL THICK 99.99 PERCENT ZINC (W-Zn-1) THERMAL SPRAYED COATING WITH A 0.5 MIL THICK SEAL COAT TO ALL STEEL DIAPHRAGM SURFACES IN ACCORDANCE WITH THE THERMAL SPRAYED COATINGS SPECIAL PROVISIONS AND SECTION 442 OF THE STANDARD SPECIFICATIONS.

GALVANIZE THE HIGH STRENGTH BOLTS, NUTS, AND WASHERS IN ACCORDANCE WITH THE STANDARD SPECIFICATIONS. FOR HIGH STRENGTH BOLTS, SEE SPECIAL PROVISIONS.

USE A MINIMUM 7/16" THICK PLATE WASHER WITH STANDARD HOLES UNDER EACH BOLT HEAD AND NUT. THE PLATE WASHERS SHALL HAVE SUFFICIENT SIZE TO COVER THE HOLES AFTER INSTALLATION. DIRECT TENSION INDICATORS ARE TO BE USED IN CONJUNCTION WITH THE PLATE WASHERS.

PROVIDE SUFFICIENT LENGTH OF ALL BOLTS TO ACCOMMODATE WASHERS, DIRECT TENSION INDICATORS, THE THICKNESS OF CONNECTING MEMBER PLUS AT LEAST ¼" PROJECTION BEYOND THE NUT.

INTERMEDIATE DIAPHRAGM ASSEMBLY SHALL COMPLY WITH SECTION 1072 OF THE STANDARD SPECIFICATIONS.

CONTRACTOR SHALL SUBMIT TWO SETS OF WORKING DRAWINGS FOR THE INTERMEDIATE DIAPHRAGM ASSEMBLY FOR REVIEW, COMMENTS AND ACCEPTANCE. AFTER REVIEW, COMMENTS, AND ACCEPTANCE, SUBMIT SEVEN SETS FOR DISTRIBUTION.

IN THE EXTERIOR BAYS, TEMPORARY STRUTS SHALL BE PLACED BETWEEN PRESTRESSED GIRDERS ADJACENT TO THE STEEL DIAPHRAGMS. STRUTS SHALL REMAIN IN PLACE 3 DAYS AFTER CONCRETE IS PLACED. ALL AASHTO M164 H.S. BOLTS SHALL BE FULLY TIGHTENED AFTER THE STRUTS HAVE BEEN REMOVED.

THE COST OF THE STEEL DIAPHRAGMS AND ASSEMBLIES SHALL BE INCLUDED IN THE UNIT PRICE BID FOR PRESTRESSED CONCRETE GIRDERS.

TABLE

GIRDER TYPE	CHANNEL SIZE	DIM "A"	DIM "B"	DIM "L"
IV	MC 18 × 42.7	1'-9½"	1'-2"	1'-6"

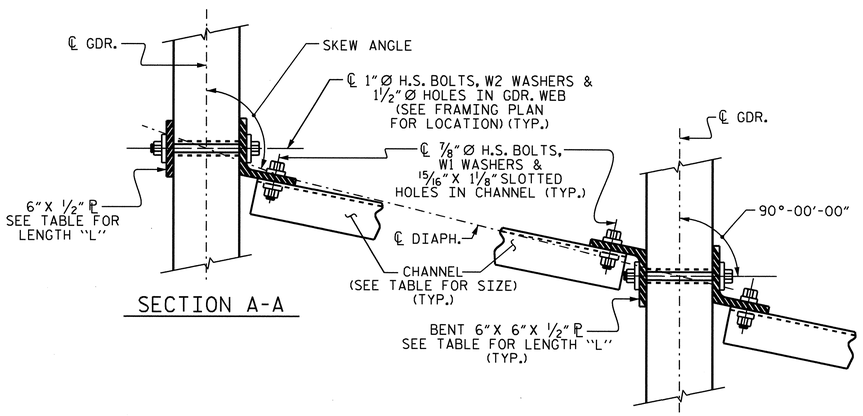

SECTION A-A

SECTION B-B

CONNECTION DETAILS

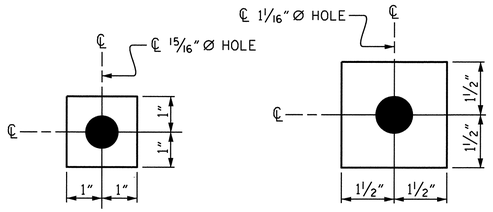

W1

ℙ 7/16"X 2"X 2"

USE WITH ⅞"Ø HVY. HEX NUTS & DIRECT TENSION INDICATOR WASHERS AT DIAPHRAGM CHANNEL TO CONNECTOR PLATE CONNECTIONS

W2

ℙ 7/16"X 3"X 3"

USE WITH 1"Ø HVY. HEX NUTS AT CONNECTOR PLATE TO GIRDER CONNECTIONS

WASHER DETAILS

PROJECT NO. U-4703

WAKE COUNTY

STATION: 33+54.00-L-

SHEET 4 OF 4

STATE OF NORTH CAROLINA
DEPARTMENT OF TRANSPORTATION
RALEIGH

INTERMEDIATE STEEL DIAPHRAGMS FOR TYPE IV PRESTRESSED CONCRETE GIRDERS (RIGHT LANE)

NORTH CAROLINA PROFESSIONAL SEAL 10730 ENGINEER D. ANDREW DAVENPORT, JR.

REVISIONS						
NO.	BY:	DATE:	NO.	BY:	DATE:	
1			3			
2			4			

SHEET NO. S-62

TOTAL SHEETS 89

ASSEMBLED BY :	H. T. BARBOUR	DATE :	12-05-07
CHECKED BY :	M. G. SHAIKH	DATE :	3-08
DRAWN BY : TLA 6/05	ADDED 10/21/05		
CHECKED BY : VC 6/05	REV. 5/1/06R KMM/GM		

23-MAR-2010 09:04
Z:\Structures\tbarbour\Microstation\str2\U4703_sd_FP.dgn
ddavenport

STR. #2

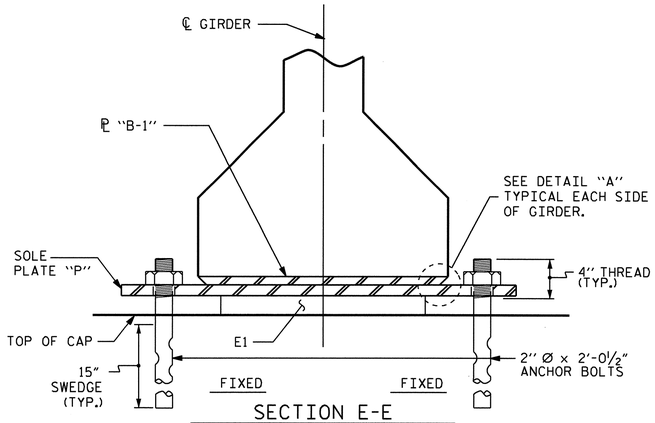

SECTION E-E

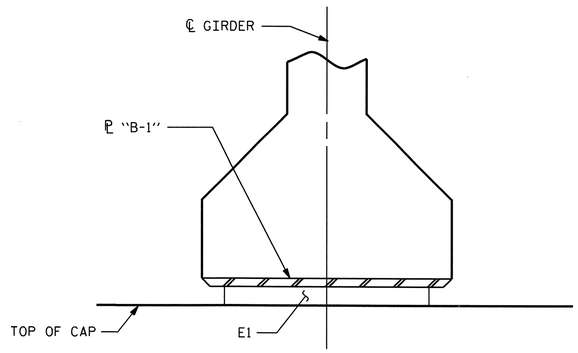

SECTION F-F

LOAD RATINGS	
	MAX.D.L.+ L.L.
TYPE V	180 K

NOTES

AT ALL FIXED POINTS OF SUPPORT, NUTS FOR ANCHOR BOLTS ARE TO BE TIGHTENED FINGER TIGHT AND THEN BACKED OFF ½ TURN. THE THREAD OF THE NUT AND BOLT SHALL THEN BE BURRED WITH A SHARP POINTED TOOL.

STEEL SOLE PLATES, ANCHOR BOLTS, NUTS, AND WASHERS SHALL BE GALVANIZED IN ACCORDANCE WITH THE STANDARD SPECIFICATIONS.

PRIOR TO WELDING, GRIND THE GALVANIZED SURFACE OF THE PORTION OF THE EMBEDDED PLATE AND SOLE PLATE THAT ARE TO BE WELDED. AFTER WELDING, DAMAGED GALVANIZED SURFACES SHALL BE REPAIRED IN ACCORDANCE WITH THE STANDARD SPECIFICATIONS.

WHEN WELDING THE SOLE PLATE TO THE EMBEDDED PLATE IN THE GIRDER, USE TEMPERATURE INDICATING WAX PENS, OR OTHER SUITABLE MEANS, TO ENSURE THAT THE TEMPERATURE OF THE SOLE PLATE DOES NOT EXCEED 300°F. TEMPERATURES ABOVE THIS MAY DAMAGE THE ELASTOMER.

SOLE PLATE "P", BOLTS, NUTS AND WASHERS SHALL BE INCLUDED IN THE PAY ITEM FOR PRESTRESSED CONCRETE GIRDERS.

ANCHOR BOLTS SHALL MEET THE REQUIREMENTS OF ASTM A449. NUTS SHALL MEET THE REQUIREMENTS OF AASHTO M291-DH OR AASHTO M292-2H. WASHERS SHALL MEET THE REQUIREMENTS OF AASHTO M293. NO SHOP DRAWINGS ARE REQUIRED FOR ANCHOR BOLTS, NUTS AND WASHERS. SHOP INSPECTION IS REQUIRED.

ALL SURFACES OF BEARING PLATES SHALL BE SMOOTH AND STRAIGHT.

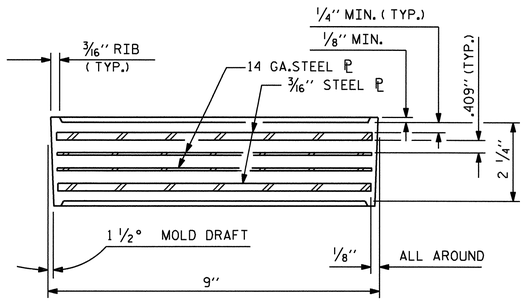

TYPICAL SECTION OF ELASTOMERIC BEARINGS

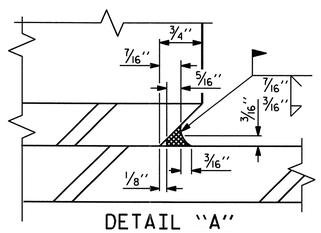

DETAIL "A"

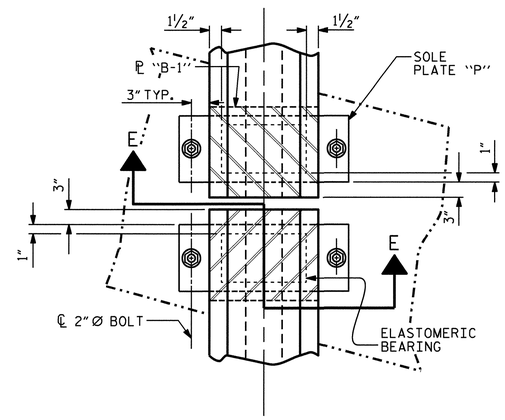

TYPICAL HALF-PLAN
(SHOWING CONTINUOUS BENT)

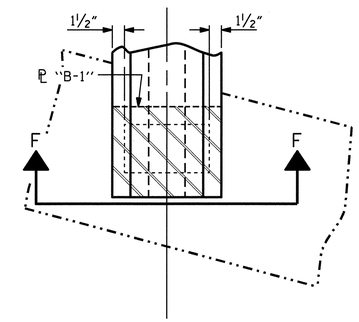

TYPICAL HALF-PLAN
(SHOWING INTEGRAL END BENT)

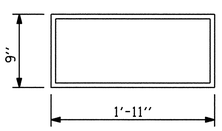

E1 (40 REQ'D)

PLAN VIEW OF ELASTOMERIC BEARING

TYPE V

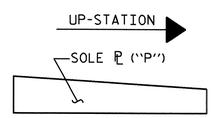

SOLE ℗ PLACEMENT DETAIL

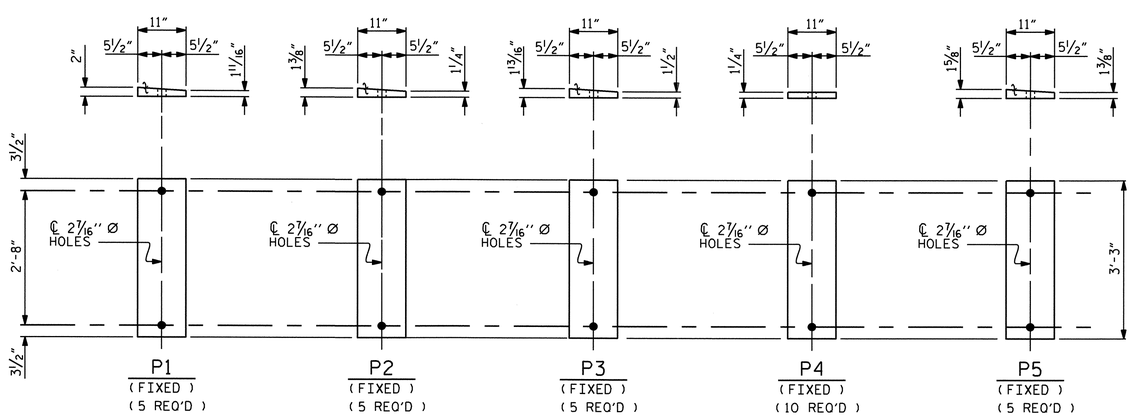

SOLE PLATE DETAILS ("P")

PROJECT NO. U-4703
WAKE COUNTY
STATION: 33+54.00-L-

STATE OF NORTH CAROLINA
DEPARTMENT OF TRANSPORTATION
RALEIGH

ELASTOMERIC BEARING DETAILS

PRESTRESSED CONCRETE GIRDER
SUPERSTRUCTURE RIGHT LANE

REVISIONS						SHEET NO.
NO.	BY:	DATE:	NO.	BY:	DATE:	S-63
1			3			TOTAL SHEETS
2			4			89

NORTH CAROLINA PROFESSIONAL SEAL 10730 ENGINEER D. ANDREW DAVENPORT, JR.
2-3-10

ASSEMBLED BY : H. T. BARBOUR	DATE : 2-15-08		
CHECKED BY : M. G. SHAIKH	DATE : 4-08		
DRAWN BY : EEM 2/97	REV. 8/16/99	RWW/LES	
CHECKED BY : VAP 2/97	REV. 10/17/00	RWW/LES	
	REV. 5/1/06	TLA/GM	

03-FEB-2010 12:18
Y:\Structures\tbarbour\Microstation\str2\U4703_sd_BG.dgn
ADAVENPORT

STR. #2 STD. NO. EB4 (SHT 2)

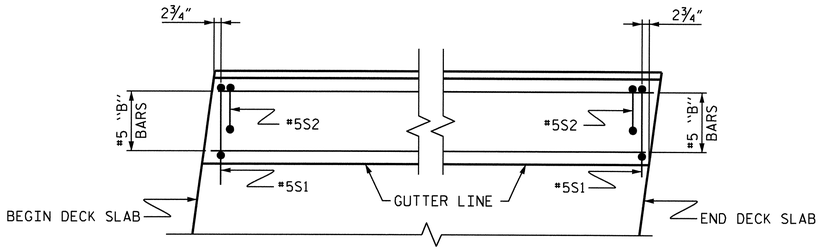

PLAN

END OF RAIL DETAILS

BILL OF MATERIAL

FOR CONCRETE BARRIER RAIL ONLY

BAR	NO.	SIZE	TYPE	LENGTH	WEIGHT
* S1	368	#5	1	4'-8"	1791
* S2	368	#5	2	5'-2"	1982
* B1	98	#5	STR	22'-7"	2308
* B2	14	#5	STR	13'-0"	190
* B3	14	#5	STR	13'-2"	192

* EPOXY COATED REINFORCING STEEL	6464 LBS.
CLASS AA CONCRETE	37.0 CU. YDS.
CONCRETE BARRIER RAIL	367'-10 5/16" LIN. FT.

BAR TYPES

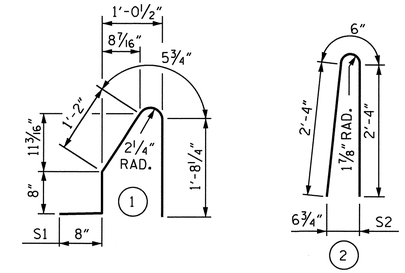

ALL BAR DIMENSIONS ARE OUT TO OUT

NOTES

THE BARRIER RAIL IN EACH CONTINUOUS UNIT SHALL NOT BE CAST UNTIL ALL SLAB CONCRETE IN THAT UNIT HAS BEEN CAST AND HAS REACHED A MINIMUM COMPRESSIVE STRENGTH OF 3,000 PSI.

ALL REINFORCING STEEL IN BARRIER RAILS SHALL BE EPOXY COATED.

VERTICAL GROOVED CONTRACTION JOINTS, ½" IN DEPTH, SHALL BE TOOLED IN ALL EXPOSED FACES OF THE BARRIER RAIL AND IN ACCORDANCE WITH ARTICLE 825-10(B) OF THE STANDARD SPECIFICATIONS. THE CONTRACTION JOINT SHALL BE LOCATED AT EACH THIRD POINT BETWEEN BARRIER RAIL EXPANSION JOINTS. ONLY ONE CONTRACTION JOINT IS REQUIRED AT MIDPOINT OF BARRIER RAIL SEGMENTS LESS THAN 20 FEET IN LENGTH AND NO CONTRACTION JOINTS ARE REQUIRED FOR THOSE SEGMENTS LESS THAN 10 FEET IN LENGTH.

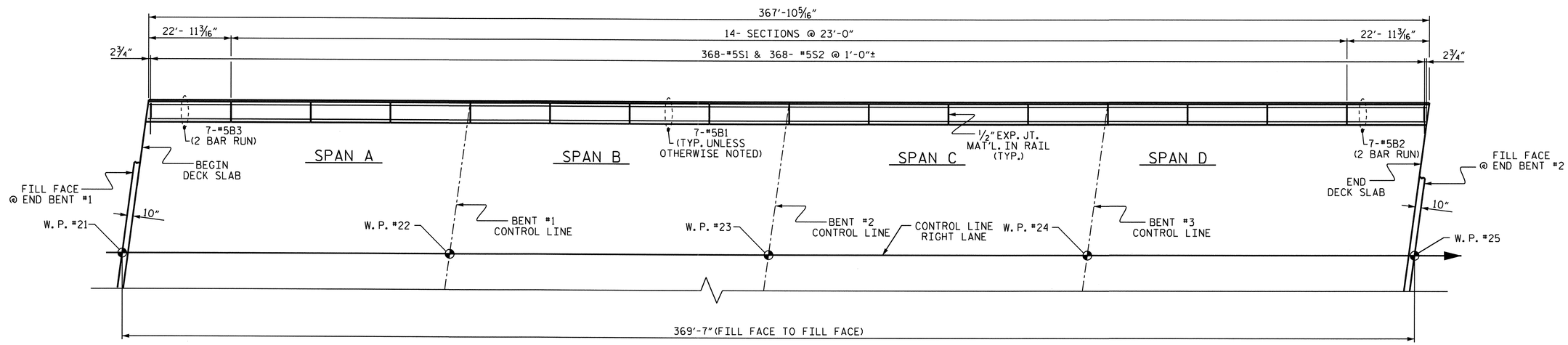

PLAN

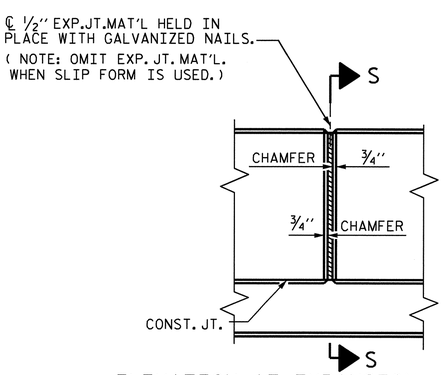

ELEVATION AT EXPANSION JOINTS

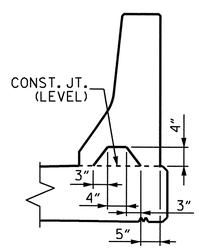

SECTION S-S

@ DAM IN OPEN JOINT (THIS IS TO BE USED ONLY WHEN SLIP FORM IS USED)

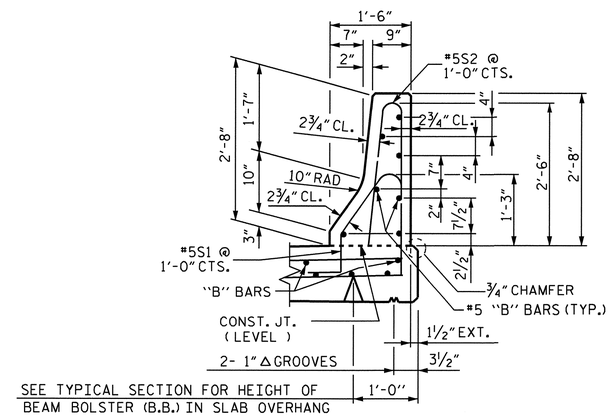

SEE TYPICAL SECTION FOR HEIGHT OF BEAM BOLSTER (B.B.) IN SLAB OVERHANG

SECTION THRU RAIL

BARRIER RAIL DETAILS

PROJECT NO. U-4703

WAKE COUNTY

STATION: 33+54.00-L-

STATE OF NORTH CAROLINA
DEPARTMENT OF TRANSPORTATION
RALEIGH

CONCRETE BARRIER RAIL RIGHT LANE

NORTH CAROLINA PROFESSIONAL SEAL 10730 ENGINEER D. ANDREW DAVENPORT, JR.

REVISIONS						SHEET NO.
NO.	BY:	DATE:	NO.	BY:	DATE:	S-64
1			3			TOTAL SHEETS
2			4			89

DRAWN BY : H. T. BARBOUR DATE : 2-15-08
CHECKED BY : M. G. SHAIKH DATE : 3-08

03-FEB-2010 12:19
Y:\Structures\tbarbour\Microstation\str2\U4703_sd_BR.dgn
ADAVENPORT

STR. #2

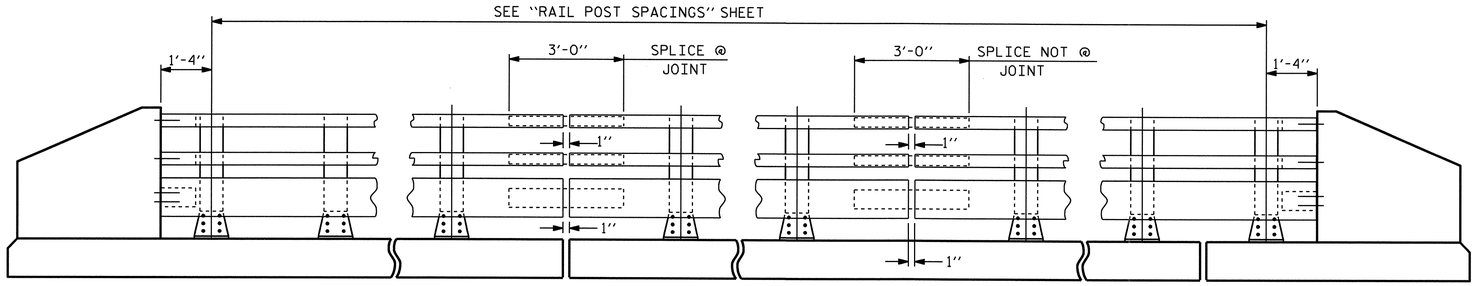

NOTE:
FOR ATTACHMENT OF METAL RAIL TO END POST, SEE SHEET S-67.

ELEVATION

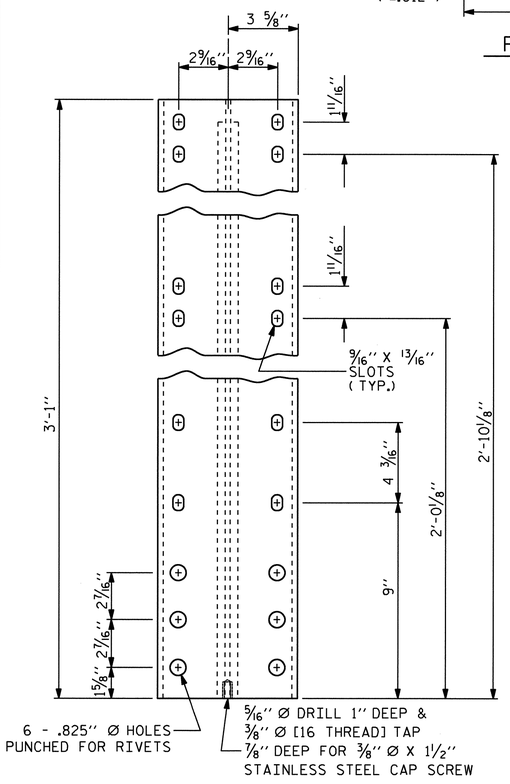

FRONT ELEVATION

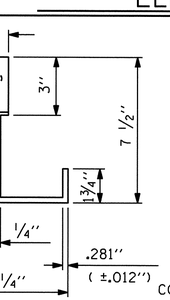

PLAN

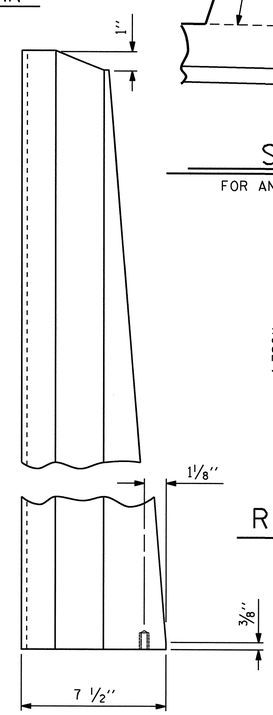

SIDE ELEVATION

DETAILS OF POST

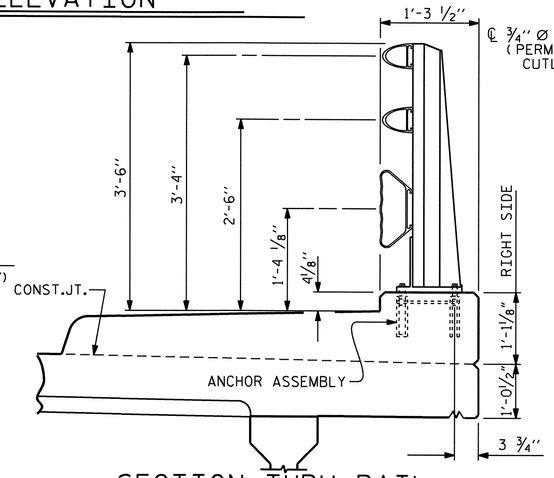

SECTION THRU RAIL

FOR ANCHOR ASSEMBLY, SEE "3 BAR METAL RAIL" SHEET S-66

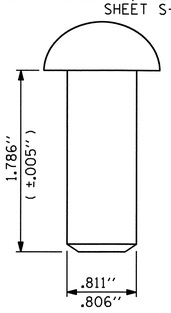

RIVET DETAIL

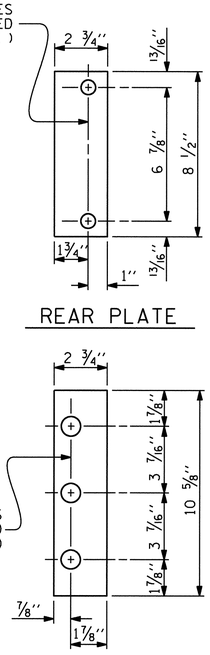

REAR PLATE

FRONT PLATE

SHIM DETAILS

NOTE :
SHIMS MAY BE CUT ALONG PERMITTED CUTLINE OR SLOTTED TO EDGE OF PLATE TO FACILITATE PLACEMENT.

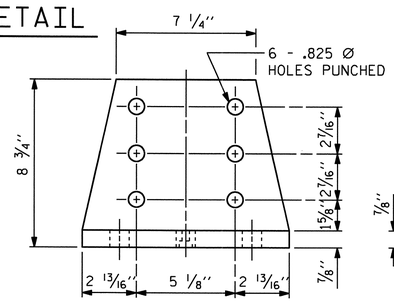

FRONT ELEVATION

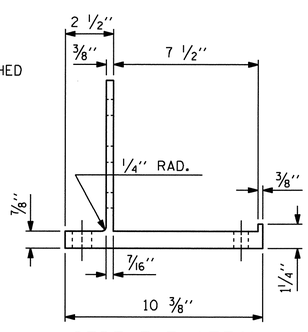

SIDE ELEVATION

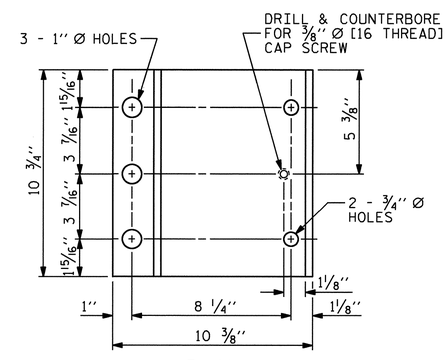

PLAN

POST BASE DETAILS

NOTES

AT THE CONTRACTOR'S OPTION, METAL RAIL MAY BE EITHER ALUMINUM OR GALVANIZED STEEL IN ACCORDANCE WITH THE REQUIREMENTS OF THE GENERAL NOTES AND THE FOLLOWING SPECIFICATIONS FOR THE ALTERNATE MATERIALS; HOWEVER, THE CONTRACTOR WILL BE REQUIRED TO USE THE SAME RAIL MATERIAL ON ALL STRUCTURES ON THE PROJECT FOR WHICH METAL RAIL IS DESIGNATED.

ALUMINUM RAILS

MATERIAL FOR POSTS, BASES AND RAILS, EXPANSION BARS AND CLAMP BARS SHALL BE ASTM B221 ALLOY 6061-T6.

MATERIAL FOR RIVETS SHALL BE ASTM B316 ALLOY 6061-T6. RIVETS SHALL BE STANDARD BUTTON HEAD AND CONE POINT COLD DRIVEN AS PER DRAWING.

THE BASE OF RAIL POSTS, OR ANY OTHER ALUMINUM SURFACE IN CONTACT WITH CONCRETE SHALL BE THOROUGHLY COATED WITH AN ALUMINUM IMPREGNATED CAULKING COMPOUND OF APPROVED QUALITY.

MATERIAL FOR SHIMS TO BE ASTM B209 ALLOY 6061-T6.

GALVANIZED STEEL RAILS

MATERIAL AND GALVANIZING ARE TO CONFORM TO THE FOLLOWING SPECIFICATIONS:

POST, POST BASES, RAILS, EXPANSION BARS AND CLAMP BARS : AASHTO M270 GRADE 36 STRUCTURAL STEEL - GALVANIZED TO AASHTO M111.

RIVETS: RIVETS SHALL MEET THE REQUIREMENTS OF ASTM A502 FOR GRADE 1 RIVETS.

THE CUT ENDS OF GALVANIZED STEEL RAILING, AFTER GRINDING SMOOTH SHALL BE GIVEN TWO COATS OF ZINC RICH PAINT MEETING THE REQUIREMENTS OF FEDERAL SPECIFICATION MIL-P-26915 USAF TYPE 1, OR OF FEDERAL SPECIFICATIONS TT-P-641.

SHIMS: SHIMS SHALL MEET THE REQUIREMENTS OF ASTM A570 FOR GRADE 33 OR A611 FOR GRADE C AND SHALL BE GALVANIZED IN ACCORDANCE WITH AASHTO M111.

RAIL CAPS: RAIL CAPS SHALL MEET THE REQUIREMENTS OF ASTM A570 FOR GRADE 33 OR A611 FOR GRADE C AND SHALL BE GALVANIZED IN ACCORDANCE WITH AASHTO M111.

GENERAL NOTES

RAILING SHALL BE CONTINUOUS FROM END POST TO END POST OF BRIDGE. EACH JOINT IN RAIL LENGTH SHALL BE SPLICED AS DETAILED. PANEL LENGTHS OF RAIL SHALL BE ATTACHED TO A MINIMUM OF THREE POSTS. PLACE ONE JOINT SPLICE JUST BEYOND THE 3RD RAIL POST FROM EACH END, TYPICALLY 14' FROM THE END. PLACE OTHER JOINTS AS NEEDED.

FOR END OF RAIL TO CLEAR FACE OF CONCRETE END POST DIMENSION, SEE SHEET S-67.

CAP SCREWS SHALL BE ASTM F593 ALLOY 305 STAINLESS STEEL. WASHERS FOR RAIL ATTACHMENT SHALL MEET THE REQUIREMENTS OF ASTM F844 EXCEPT THEY SHALL BE MADE FROM ALLOY 304 STAINLESS STEEL.

CERTIFIED MILL REPORTS ARE REQUIRED FOR RAILS AND POSTS. SHOP INSPECTION IS NOT REQUIRED.

METAL RAIL POSTS SHALL BE SET NORMAL TO CURB GRADE.

METHOD OF MEASUREMENT FOR METAL RAILS: FOR LENGTH OF METAL RAILS TO BE PAID FOR, SEE THE STANDARD SPECIFICATIONS.

CURVED RAIL USAGE: WHERE RAILS ARE TO BE USED ON BRIDGES ON HORIZONTAL AND/OR VERTICAL CURVATURE THE CONTRACTOR MAY, AT HIS OPTION, HAVE THE REQUIRED CURVATURE IN THE RAIL FORMED IN THE SHOP OR IN THE FIELD. IN EITHER EVENT, THE RAIL SHALL CONFORM WITHOUT BUCKLING OR KINKING TO THE REQUIRED CURVATURE IN A UNIFORM MANNER ACCEPTABLE TO THE ENGINEER.

TO INSURE FUTURE IDENTIFICATION OF THE FABRICATOR, A PERMANENT IDENTIFYING MARK SHALL BE PLACED ON EACH POST. THE METHOD OF MARKING AND LOCATION SHALL BE SUCH THAT IT DOES NOT DETRACT FROM THE APPEARANCE OF THE POST, BUT REMAIN VISIBLE AFTER RAIL PLACEMENT.

SHIMS SHALL BE USED AS NECESSARY FOR POST ALIGNMENT.

ALLOY 6351-T5 MAY BE SUBSTITUTED FOR ALLOY 6061-T6 WHERE APPLICABLE.

MINOR VARIATIONS IN DETAILS OF METAL RAIL WILL BE CONSIDERED. DETAILS OF SUCH VARIATIONS, IF DESIRED, SHALL BE SUBMITTED FOR APPROVAL.

PAY LENGTH = 360.016 LIN. FT.

NORTH CAROLINA PROFESSIONAL SEAL 10730 ENGINEER D. ANDREW DAVENPORT, JR.
2-5-10

PROJECT NO. U-4703
WAKE COUNTY
STATION: 33+54.00-L-

SHEET 1 OF 3

STATE OF NORTH CAROLINA
DEPARTMENT OF TRANSPORTATION
RALEIGH

3 BAR METAL RAIL
RIGHT LANE

ASSEMBLED BY : H. T. BARBOUR	DATE : 12-05-07				
CHECKED BY : M. G. SHAIKH	DATE : 4-08				
DRAWN BY : JMB 1/88	REV. 10/17/00	RWW/LES			
CHECKED BY : GGH 1/88	REV. 5/7/03	RWW/JTE			
	REV. 5/1/06	TLA/GM			

REVISIONS						SHEET NO.
NO.	BY:	DATE:	NO.	BY:	DATE:	S-65
1			3			TOTAL SHEETS
2			4			89

STR. #2

STD. NO. BMR5

04-FEB-2010 16:32
Y:\Structures\tbarbour\Microstation\str2\U4703_sd_3MR.dgn
ddavenport

NOTES

STRUCTURAL CONCRETE ANCHOR ASSEMBLY

THE STRUCTURAL CONCRETE ANCHOR ASSEMBLY SHALL CONSIST OF THE FOLLOWING COMPONENTS:

A. FERRULES SHALL BE MADE FROM STEEL MEETING THE REQUIREMENTS OF AASHTO M169, GRADE 12L14 AND SHALL HAVE A MINIMUM LENGTH OF THREADS OF 2" FOR ¾" FERRULES AND 1¾" FOR ⅝" FERRULES.

B. 3 - ¾" Ø X 2½" BOLTS WITH WASHERS. BOLTS SHALL CONFORM TO THE REQUIREMENTS OF ASTM A307. BOLTS AND WASHERS SHALL BE GALVANIZED. AT THE CONTRACTOR'S OPTION, STAINLESS STEEL BOLTS AND WASHERS MAY BE USED AS AN ALTERNATE FOR THE ¾" Ø X 2½" GALVANIZED BOLTS AND WASHERS. THEY SHALL CONFORM TO OR EXCEED THE MECHANICAL REQUIREMENTS OF ASTM A307. THE USE OF THIS ALTERNATE SHALL BE APPROVED BY THE ENGINEER.

C. 2 - ⅝" Ø X 2¼" BOLTS WITH WASHERS. BOLTS SHALL CONFORM TO THE REQUIREMENTS OF ASTM A307. BOLTS AND WASHERS SHALL BE GALVANIZED. AT THE CONTRACTOR'S OPTION, STAINLESS STEEL BOLTS AND WASHERS MAY BE USED AS AN ALTERNATE FOR THE ⅝" Ø X 2¼" GALVANIZED BOLTS AND WASHERS. THEY SHALL CONFORM TO OR EXCEED THE MECHANICAL REQUIREMENTS OF ASTM A307. THE USE OF THIS ALTERNATE SHALL BE APPROVED BY THE ENGINEER.

D. WIRE STRUT SHOWN IN THE CONCRETE ANCHOR ASSEMBLY DETAIL IS THE MINIMUM ALLOWABLE SIZE AND SHALL HAVE A MINIMUM TENSILE STRENGTH OF 100,000 PSI. AS AN OPTION, A 7/16" Ø WIRE STRUT WITH A MINIMUM TENSILE STRENGTH OF 90,000 PSI IS ACCEPTABLE.

E. THE METAL RAIL ANCHOR ASSEMBLIES TO BE HOT DIPPED GALVANIZED TO CONFORM TO REQUIREMENTS OF AASHTO M111.

F. THE COST OF THE METAL RAIL ANCHOR ASSEMBLY WITH BOLTS AND WASHERS COMPLETE IN PLACE SHALL BE INCLUDED IN THE PRICE BID FOR LINEAR FEET OF METAL RAIL.

G. BOLTS TO BE TIGHTENED ONE-HALF TURN WITH A WRENCH FROM A FINGER-TIGHT POSITION.

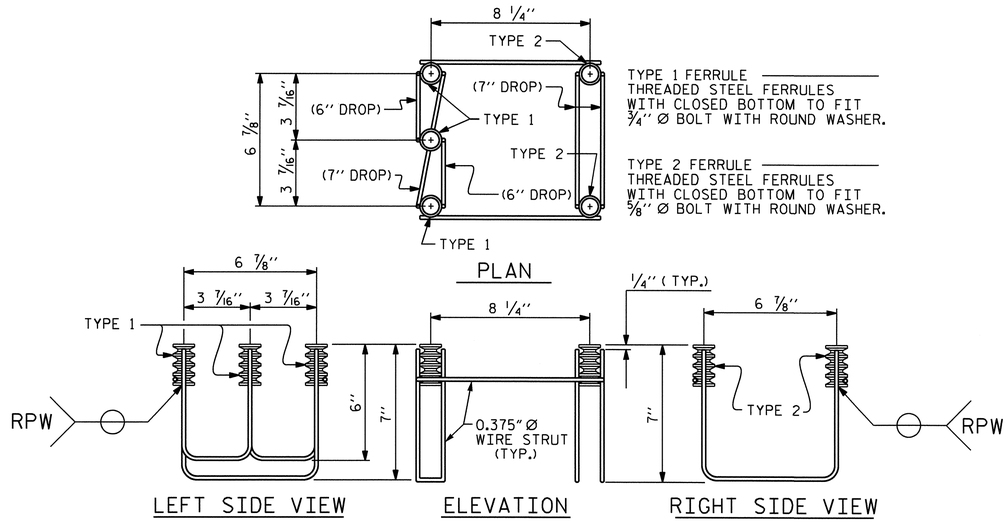

5-BOLT METAL RAIL ANCHOR ASSEMBLY

(58 ASSEMBLIES REQUIRED)

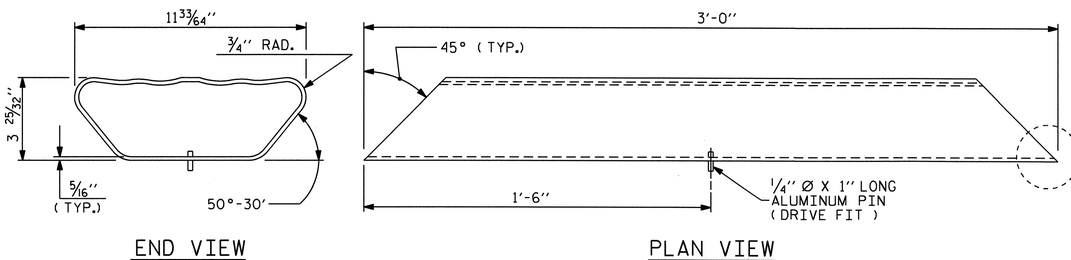

BOTTOM RAIL EXPANSION BAR

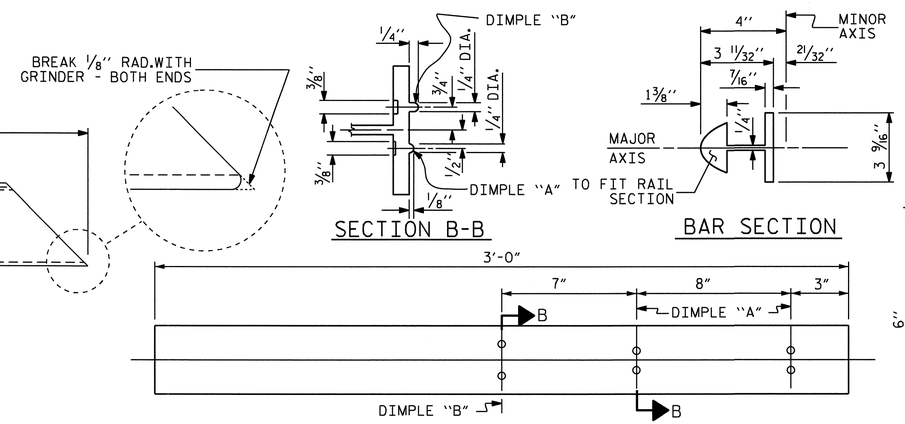

TOP & MIDDLE RAIL EXPANSION BAR

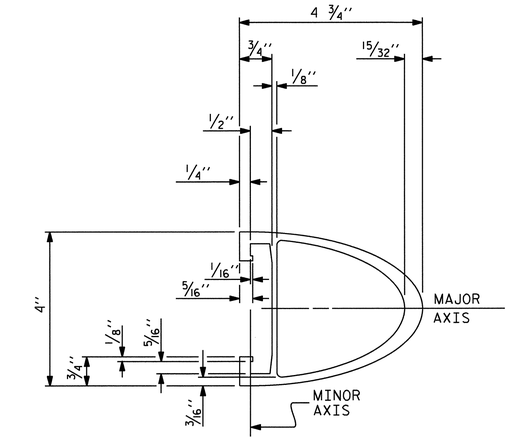

TOP & MIDDLE RAIL SECTION

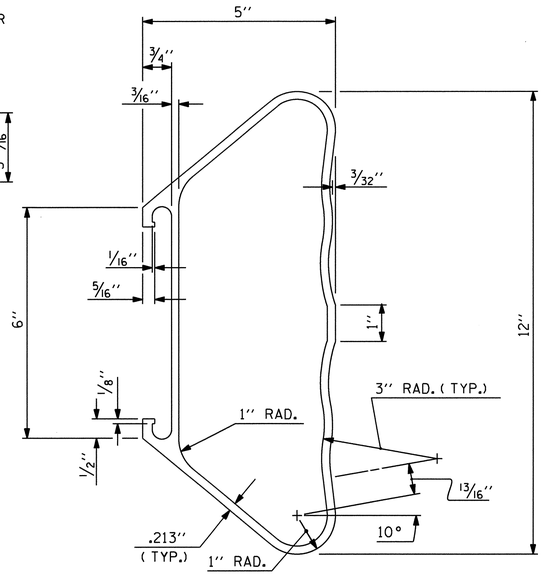

BOTTOM RAIL SECTION

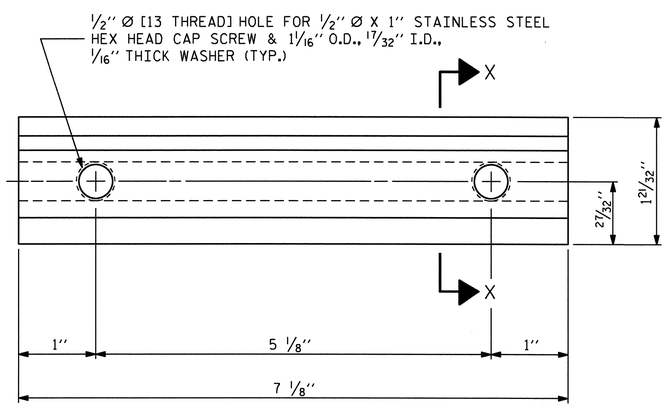

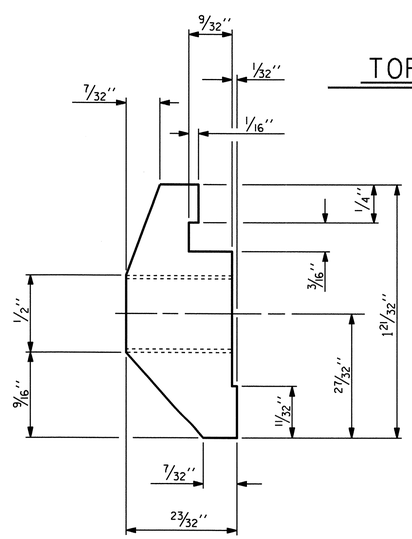

CLAMP BAR DETAIL

(6 REQUIRED PER POST)

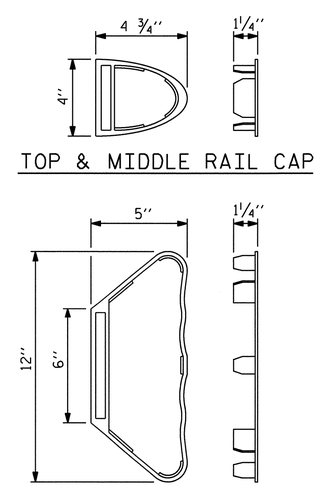

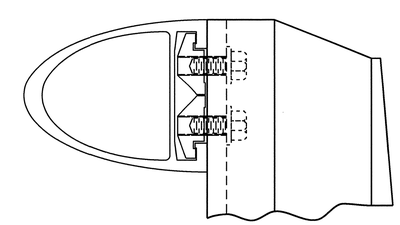

CLAMP ASSEMBLY

TOP RAIL SHOWN
(MIDDLE & BOTTOM RAIL ARE SIMILAR)

NORTH CAROLINA PROFESSIONAL SEAL 10730 ENGINEER D. ANDRE DAVENPORT, JR.

PROJECT NO. U-4703

WAKE COUNTY

STATION: 33+54.00-L-

SHEET 2 OF 3

STATE OF NORTH CAROLINA
DEPARTMENT OF TRANSPORTATION
RALEIGH

STANDARD

3 BAR METAL RAIL
RIGHT LANE

ASSEMBLED BY : H. T. BARBOUR	DATE : 12-05-07				
CHECKED BY : M. G. SHAIKH	DATE : 4-08				
DRAWN BY : JMB 1/88	REV. 7/10/01 RWW/LES				
CHECKED BY : GGH 1/88	REV. 5/7/03 RWW/JTE				
	REV. 5/1/06 TLA/GM				

REVISIONS						SHEET NO.
NO.	BY:	DATE:	NO.	BY:	DATE:	S-66
1			3			TOTAL SHEETS
2			4			89

STR. #2

STD. NO. BMR6

03-FEB-2010 12:17
Y:\Structures\tbarbour\Microstation\str2\U4703_sd_3MR.dgn
ADAVENPORT

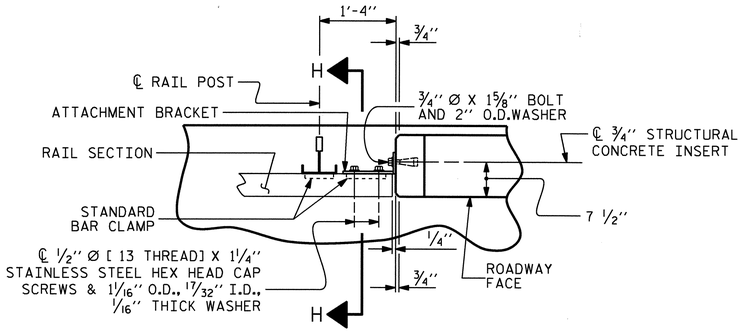

PLAN OF RAIL AND END POST

(STIFFENER ON 1/2" ℙ NOT SHOWN FOR CLARITY)

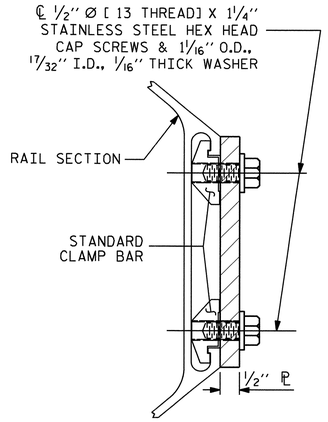

SECTION H-H

(FOR BOTTOM RAIL)

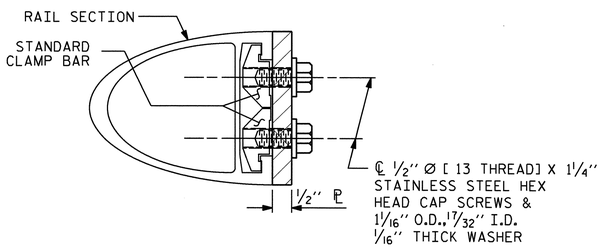

SECTION H-H

(FOR TOP & MIDDLE RAIL)

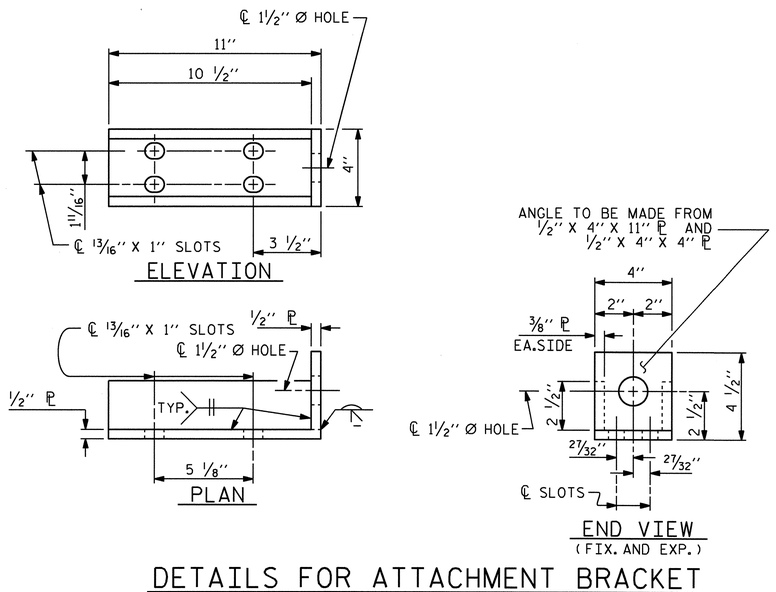

DETAILS FOR ATTACHMENT BRACKET

(TOP & MIDDLE RAIL ONLY)

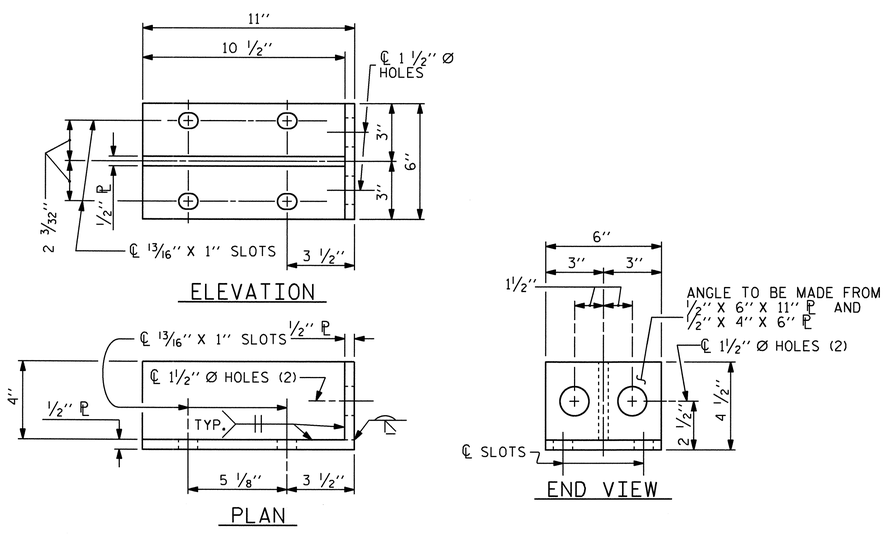

DETAILS FOR ATTACHMENT BRACKET

(BOTTOM RAIL ONLY)

NOTES

METAL RAIL TO END POST CONNECTION

THE METAL RAIL TO END POST CONNECTION SHALL CONSIST OF THE FOLLOWING COMPONENTS:

A. 1/2" PLATES SHALL CONFORM TO AASHTO M270 GRADE 36 AND SHALL BE GALVANIZED AFTER FABRICATION.

B. 3/4" STRUCTURAL CONCRETE INSERT SHALL HAVE A WORKING LOAD SHEAR CAPACITY OF 4800 LBS. THE FERRULES SHALL ENGAGE A 3/4" Ø X 1 5/8" BOLT WITH 2" O.D. WASHER IN PLACE. THE 3/4" Ø X 1 5/8" BOLT SHALL HAVE N. C. THREADS.

C. CAP SCREWS FOR RAIL ATTACHMENT TO ANGLE SHALL CONFORM TO THE REQUIREMENTS OF ASTM F593 ALLOY 305 STAINLESS STEEL. CAP SCREWS TO BE CENTERED IN SLOTS AT 60°F. WASHERS FOR RAIL ATTACHMENT SHALL MEET THE REQUIREMENTS OF ASTM F844 EXCEPT THEY SHALL BE MADE FROM ALLOY 304 STAINLESS STEEL.

D. STANDARD CLAMP BARS (STD. No. BMR6).

THE COST OF THE STANDARD CLAMP BARS AND CAP SCREWS USED IN THE METAL RAIL TO END POST CONNECTION SHALL BE INCLUDED IN THE UNIT CONTRACT PRICE BID FOR LINEAR FEET OF 3 BAR METAL RAIL.

THE 3/4" STRUCTURAL CONCRETE INSERT WITH BOLT SHALL BE ASSEMBLED IN THE SHOP.

THE COST OF THE 3/4" STRUCTURAL CONCRETE INSERT ASSEMBLY, AND THE 1/2" PLATES COMPLETE IN PLACE SHALL BE INCLUDED IN THE VARIOUS PAY ITEMS.

THE CONTRACTOR, AT HIS OPTION, MAY USE AN ADHESIVE BONDING SYSTEM IN LIEU OF THE STRUCTURAL CONCRETE INSERT EMBEDDED IN THE END POST. IF THE ADHESIVE BONDING SYSTEM IS USED, THE 3/4" Ø X 1 5/8" BOLT WITH WASHER SHALL BE REPLACED WITH A 3/4" Ø X 6 1/2" BOLT AND 2" O.D.WASHER. ALL SPECIFICATIONS THAT APPLY TO THE 3/4" Ø X 1 5/8" BOLT SHALL APPLY TO THE 3/4" Ø X 6 1/2" BOLT. FIELD TESTING OF THE ADHESIVE BONDING SYSTEM IS NOT REQUIRED.

NOTES

STRUCTURAL CONCRETE INSERT

THE STRUCTURAL CONCRETE INSERT ASSEMBLY SHALL CONSIST OF THE FOLLOWING COMPONENTS:

A. FERRULES SHALL BE MADE FROM STEEL MEETING THE REQUIREMENTS OF AASHTO M169, GRADE 12L14 AND SHALL HAVE A MINIMUM LENGTH OF THREADS OF 1 1/2".

B. 1 - 3/4" Ø X 1 5/8" BOLT WITH WASHER. BOLT SHALL CONFORM TO THE REQUIREMENTS OF ASTM A307. BOLT AND WASHER SHALL BE GALVANIZED. AT THE CONTRACTORS OPTION, STAINLESS STEEL BOLT AND WASHER MAY BE USED AS AN ALTERNATE FOR THE 3/4" Ø X 1 5/8" GALVANIZED BOLT AND WASHER. THEY SHALL CONFORM TO OR EXCEED THE MECHANICAL REQUIREMENTS OF ASTM A307. THE USE OF THIS ALTERNATE SHALL BE APPROVED BY THE ENGINEER.

C. WIRE STRUT SHOWN IN THE CONCRETE INSERT ASSEMBLY DETAIL IS THE MINIMUM ALLOWABLE SIZE AND SHALL HAVE A MINIMUM TENSILE STRENGTH OF 100,000 PSI. AS AN OPTION, A 7/16" Ø WIRE STRUT WITH A MINIMUM TENSILE STRENGTH OF 90,000 PSI IS ACCEPTABLE.

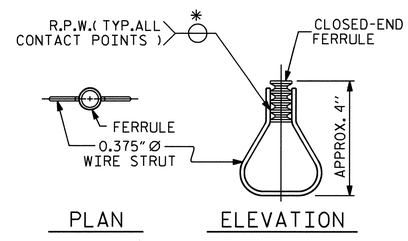

STRUCTURAL CONCRETE INSERT

* EACH WELDED ATTACHMENT OF WIRE TO FERRULE SHALL DEVELOP THE TENSILE STRENGTH OF THE WIRE.

PROJECT NO. U-4703

WAKE COUNTY

STATION: 33+54.00-L-

SHEET 3 OF 3

STATE OF NORTH CAROLINA
DEPARTMENT OF TRANSPORTATION
RALEIGH

STANDARD

3 BAR METAL RAIL
RIGHT LANE

NORTH CAROLINA PROFESSIONAL SEAL 10730 ENGINEER D. ANDREW DAVENPORT, JR.

ASSEMBLED BY : H. T. BARBOUR	DATE : 12-05-07
CHECKED BY : M. G. SHAIKH	DATE : 4-08

DRAWN BY : JMB 1/88	REV. 7/10/01 RWW/LES
CHECKED BY : GGH 1/88	REV. 5/7/03 RWW/JTE
	REV. 5/1/06 TLA/GM

REVISIONS						SHEET NO.
NO.	BY:	DATE:	NO.	BY:	DATE:	S-67
1			3			TOTAL SHEETS
2			4			89

STR. #2

STD. NO. BMR7

03-FEB-2010 12:17
Y:\Structures\tbarbour\Microstation\str2\U4703_sd_3MR.dgn
ADAVENPORT

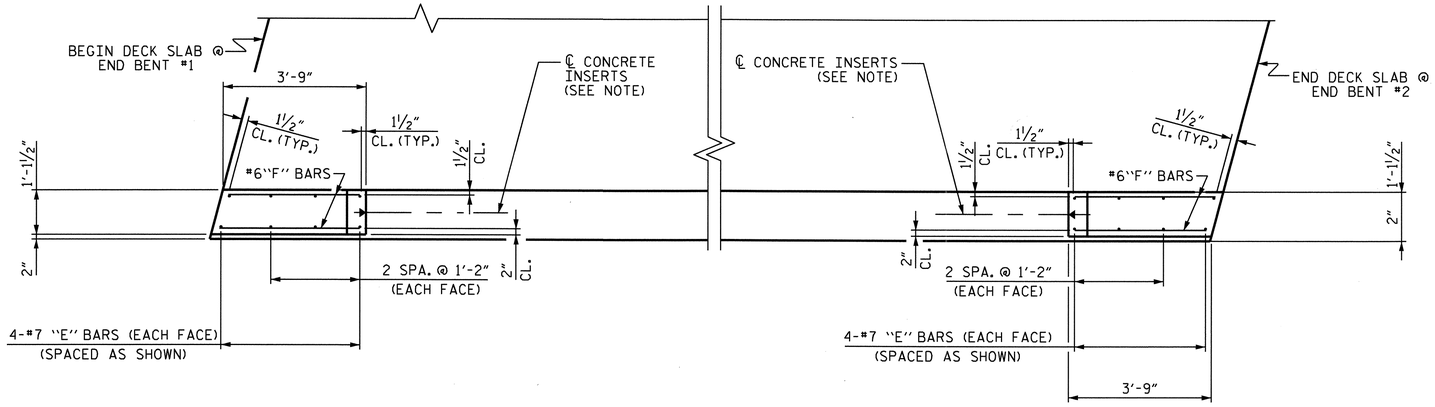

PLAN OF END POST

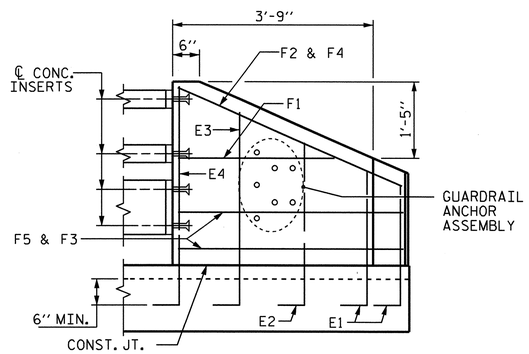

ELEVATION

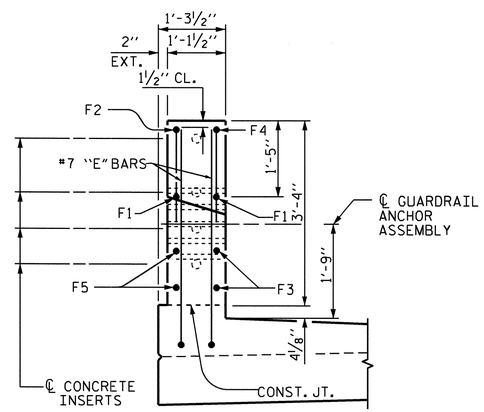

END VIEW

END POST DETAILS

@ END BENT #2, END BENT #1 SIMILAR

NOTE

FOR DETAILS OF CONCRETE INSERTS, AND GUARDRAILS ANCHOR ASSEMBLIES, SEE "GUARDRAIL ANCHORAGE DETAILS FOR METAL RAILS" & "3 BAR METAL RAIL" SHEETS.

NO ADDITIONAL PAYMENT SHALL BE MADE FOR THE CONCRETE END POST AS THIS IS CONSIDERED INCIDENTAL TO THE CONSTRUCTION OF THE 3 BAR METAL RAIL.

BILL FOR ONE END POST (2 REQUIRED)

BAR	NO.	SIZE	TYPE	LENGTH	WEIGHT
✱E1	2	#7	1	3'-5"	14
✱E2	2	#7	1	4'-0"	16
✱E3	2	#7	1	4'-7"	19
✱E4	2	#7	1	5'-1"	21
✱F1	2	#6	STR	3'-2"	10
✱F2	1	#6	STR	3'-6"	5
✱F3	2	#6	STR	3'-8"	11
✱F4	1	#6	STR	3'-11"	6
✱F5	2	#6	STR	3'-5"	10
✱EPOXY COATED REINFORCING STEEL					112
CLASS AA CONCRETE					0.5 CY

BAR TYPE

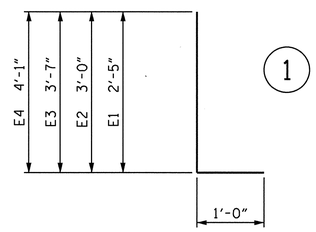

ALL BAR DIMENSIONS ARE OUT TO OUT

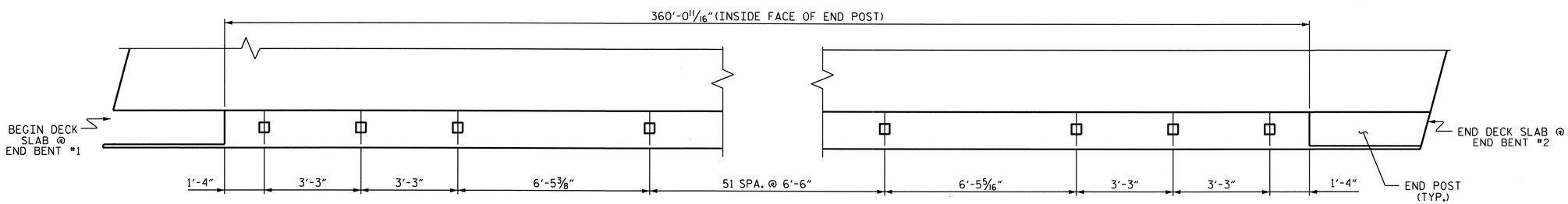

PLAN OF RAIL POST SPACING

PROJECT NO. U-4703
WAKE COUNTY
STATION: 33+54.00-L-

STATE OF NORTH CAROLINA
DEPARTMENT OF TRANSPORTATION
RALEIGH

RAIL POST SPACING AND END POST DETAILS RIGHT LANE

NORTH CAROLINA PROFESSIONAL SEAL 10730 ENGINEER D. ANDRE DAVENPORT
3-26-10

REVISIONS						SHEET NO.
NO.	BY:	DATE:	NO.	BY:	DATE:	S-68
1			3			TOTAL SHEETS
2			4			89

DRAWN BY : H. T. BARBOUR DATE : 12-06-07
CHECKED BY : M. G. SHAIKH DATE : 4-08

26-MAR-2010 09:24
Z:\Structures\tbarbour\Microstation\str2\U4703_sd_3MR.dgn
ddavenport

STR. #2

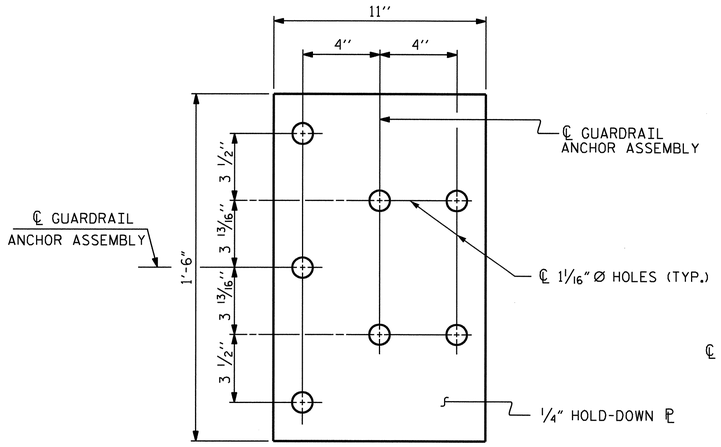

PLAN

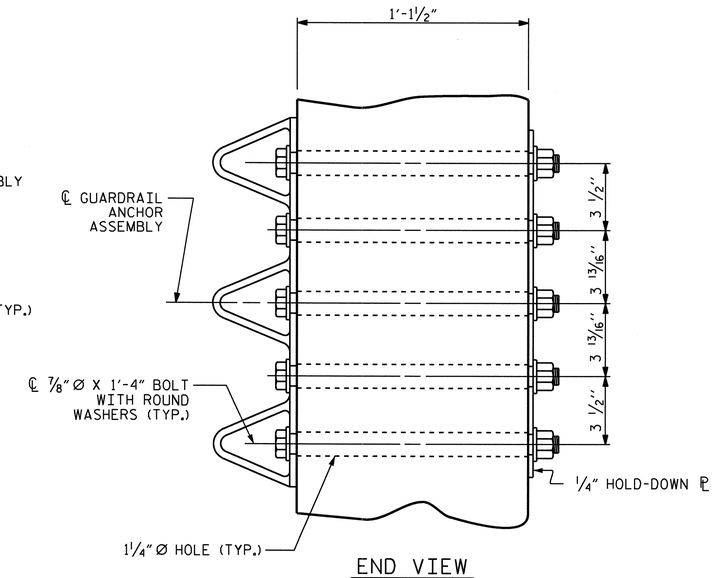

END VIEW

GUARDRAIL ANCHOR ASSEMBLY DETAILS

NOTES

THE GUARDRAIL ANCHOR ASSEMBLY SHALL CONSIST OF A 1/4" HOLD DOWN PLATE AND 7 - 7/8" Ø BOLTS WITH NUTS AND WASHERS.

THE HOLD-DOWN PLATE SHALL CONFORM TO AASHTO M270 GRADE 36. AFTER FABRICATION, THE HOLD-DOWN PLATE SHALL BE HOT-DIP GALVANIZED IN ACCORDANCE WITH AASHTO M111.

BOLTS SHALL CONFORM TO THE REQUIREMENTS OF ASTM A307 AND NUTS SHALL CONFORM TO THE REQUIREMENTS OF AASHTO M291. BOLTS, NUTS AND WASHERS SHALL BE GALVANIZED. AT THE CONTRACTOR'S OPTION, STAINLESS STEEL BOLTS, NUTS AND WASHERS MAY BE USED AS AN ALTERNATE FOR THE 7/8" Ø GALVANIZED BOLTS, NUTS AND WASHERS. THEY SHALL CONFORM TO OR EXCEED THE MECHANICAL REQUIREMENTS OF ASTM A307. THE USE OF THIS ALTERNATE SHALL BE APPROVED BY THE ENGINEER.

AFTER INSTALLATION, THE EXPOSED THREAD OF THE BOLT SHALL BE BURRED WITH A SHARP POINTED TOOL.

THE COST OF THE GUARDRAIL ANCHOR ASSEMBLIES WITH BOLTS, NUTS AND WASHERS COMPLETE IN PLACE, SHALL BE INCLUDED IN THE VARIOUS PAY ITEMS.

THE VERTICAL REINFORCING BARS MAY BE SHIFTED SLIGHTLY IN THE END POST TO CLEAR ASSEMBLY BOLTS.

THE 1 1/4" Ø HOLES SHALL BE FORMED OR DRILLED WITH A CORE BIT. IMPACT TOOLS WILL NOT BE PERMITTED. ANY CONCRETE DAMAGED BY THIS WORK SHALL BE REPAIRED TO THE SATISFACTION OF THE ENGINEER.

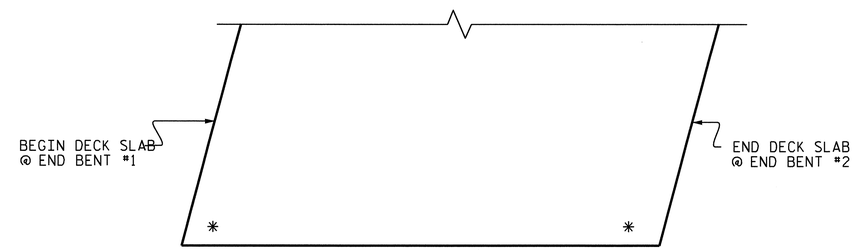

SKETCH SHOWING POINTS OF ATTACHMENT

*LOCATION OF GUARDRAIL ATTACHMENT FOR 3 BAR METAL RAIL

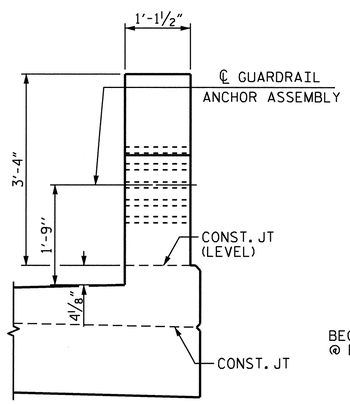

END VIEW
(THREE BAR METAL RAIL)

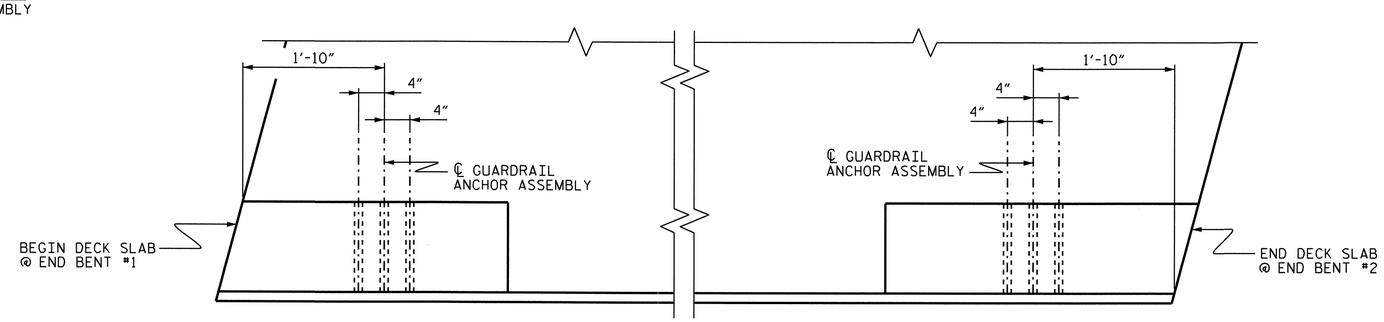

PLAN

LOCATION OF GUARDRAIL ANCHOR AT END POST

PROJECT NO. U-4703
WAKE COUNTY
STATION: 33+54.00-L-

SHEET 1 OF 2

STATE OF NORTH CAROLINA
DEPARTMENT OF TRANSPORTATION
RALEIGH

STANDARD
GUARDRAIL ANCHORAGE DETAILS FOR METAL RAILS RIGHT LANE

NORTH CAROLINA PROFESSIONAL SEAL 10730 ENGINEER D. ANDREW DAVENPORT, JR.

ASSEMBLED BY : H. T. BARBOUR	DATE : 2-14-08		
CHECKED BY : M. G. SHAIKH	DATE : 3-08		
DRAWN BY : EEM 6/94	REV. 10/17/00	RWW/LES	
CHECKED BY : RGW 6/94	REV. 5/7/03	RWW/JTE	
	REV. 5/1/06	TLA/GM	

REVISIONS						SHEET NO.
NO.	BY:	DATE:	NO.	BY:	DATE:	S-69
1			3			TOTAL SHEETS
2			4			89

STR. #2 STD. NO. BMR8

04-FEB-2010 16:34
Y:\Structures\tbarbour\Microstation\str2\U4703_sd_GR.dgn
ddavenport

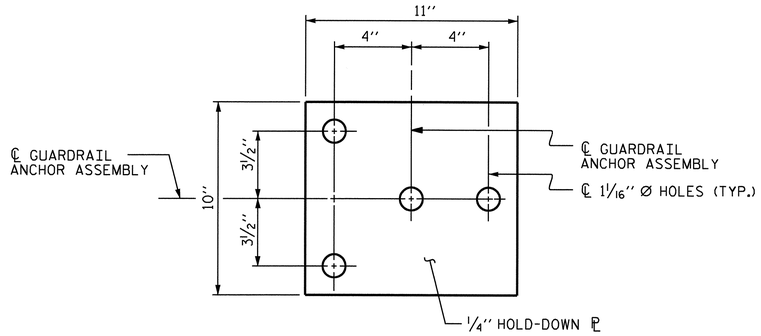

PLAN

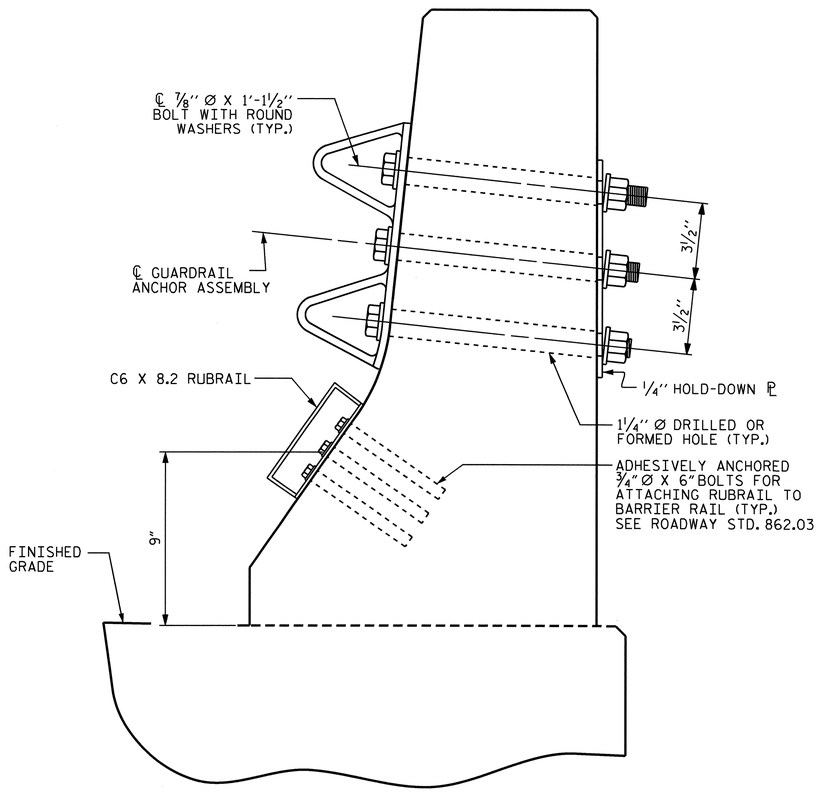

SECTION E-E

GUARDRAIL ANCHOR ASSEMBLY DETAILS

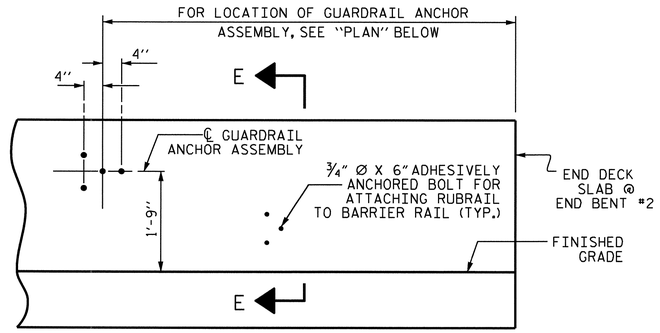

ELEVATION

FOR LOCATION OF RUBRAIL, SEE ROADWAY STD. 862.03

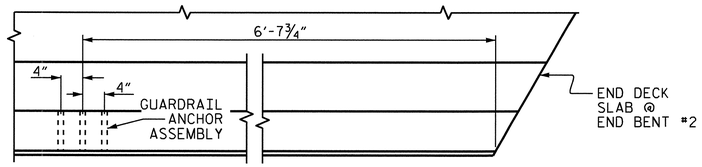

PLAN

LOCATION OF ANCHORS FOR GUARDRAIL

END BENT #2 SHOWN, END BENT #1 SIMILAR.

NOTES

THE GUARDRAIL ANCHOR ASSEMBLY SHALL CONSIST OF A 1/4'' HOLD DOWN PLATE AND 4 - 7/8'' Ø BOLTS WITH NUTS AND WASHERS, RUBRAIL, AND ADHESIVELY ANCHORED BOLTS.

THE HOLD-DOWN PLATE SHALL CONFORM TO AASHTO M270 GRADE 36. AFTER FABRICATION, THE HOLD-DOWN PLATE SHALL BE HOT-DIP GALVANIZED IN ACCORDANCE WITH AASHTO M111.

BOLTS SHALL CONFORM TO THE REQUIREMENTS OF ASTM A307 AND NUTS SHALL CONFORM TO THE REQUIREMENTS OF AASHTO M291. BOLTS, NUTS AND WASHERS SHALL BE GALVANIZED. (AT THE CONTRACTOR'S OPTION, STAINLESS STEEL BOLTS, NUTS AND WASHERS MAY BE USED AS AN ALTERNATE FOR THE 7/8'' Ø GALVANIZED BOLTS, NUTS AND WASHERS. THEY SHALL CONFORM TO OR EXCEED THE MECHANICAL REQUIREMENTS OF ASTM A307. THE USE OF THIS ALTERNATE SHALL BE APPROVED BY THE ENGINEER.)

THE GUARDRAIL ANCHOR ASSEMBLY IS REQUIRED AT ALL POINTS WHERE APPROACH GUARDRAIL IS TO BE ATTACHED TO THE END OF BARRIER RAIL. FOR POINTS OF ATTACHMENT, SEE SKETCH.

AFTER INSTALLATION, THE EXPOSED THREAD OF THE BOLT SHALL BE BURRED WITH A SHARP POINTED TOOL.

THE COST OF THE GUARDRAIL ANCHOR ASSEMBLY SHALL BE INCLUDED IN THE UNIT CONTRACT PRICE BID FOR CONCRETE BARRIER RAIL.

THE 1 1/4'' Ø HOLES SHALL BE FORMED OR DRILLED WITH A CORE BIT. IMPACT TOOLS WILL NOT BE PERMITTED. ANY CONCRETE DAMAGED BY THIS WORK SHALL BE REPAIRED TO THE SATISFACTION OF THE ENGINEER.

THE C6 X 8.2 RUBRAIL IS TO BE ADHESIVELY ANCHORED TO THE RAIL USING THREE 3/4'' Ø X 6'' BOLTS WITH WASHERS. LEVEL ONE FIELD TESTING IS REQUIRED, AND THE YIELD LOAD OF THE 3/4'' Ø BOLT IS 12 KIPS. FOR ADHESIVELY ANCHORED ANCHOR BOLTS OR DOWELS, SEE SPECIAL PROVISIONS. SEE ROADWAY STANDARD 862.03 FOR DETAILS AND LOCATION OF THE RUBRAIL.

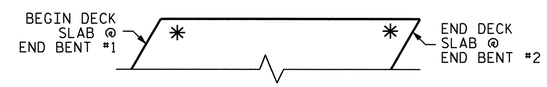

SKETCH SHOWING POINTS OF ATTACHMENTS

✳ DENOTES GUARDRAIL ANCHOR ASSEMBLY

PROJECT NO. U-4703

WAKE COUNTY

STATION: 33+54.00-L-

SHEET 2 OF 2

STATE OF NORTH CAROLINA
DEPARTMENT OF TRANSPORTATION
RALEIGH

GUARDRAIL ANCHORAGE FOR BARRIER RAIL RIGHT LANE

NORTH CAROLINA PROFESSIONAL SEAL 10730 ENGINEER D. ANDREW DAVENPORT, JR.

REVISIONS						SHEET NO.
NO.	BY:	DATE:	NO.	BY:	DATE:	S-70
1			3			TOTAL SHEETS
2			4			89

STR. #2

STD. NO. GRA2

ASSEMBLED BY : H. T. BARBOUR	DATE : 2-15-08	
CHECKED BY : M. G. SHAIKH	DATE : 3-08	
DRAWN BY : TLA 5/06	ADDED 5/1/06R KMM/GM	
CHECKED BY : GM 5/06		

03-FEB-2010 12:21
Y:\Structures\tbarbour\Microstation\str2\U4703_sd_GR.dgn
ADAVENPORT

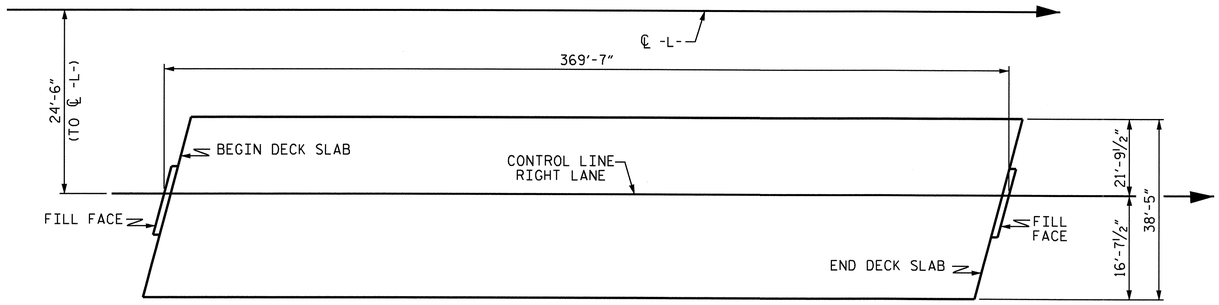

LAYOUT FOR COMPUTING AREA REINFORCED CONCRETE DECK SLAB (SQ. FT. = 14198)

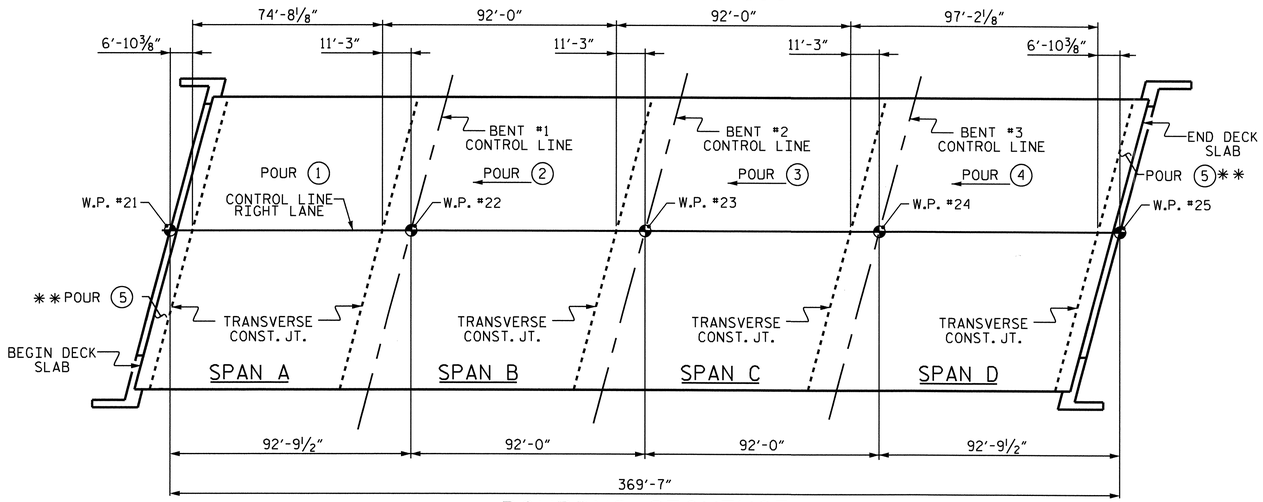

POURING SEQUENCE

** POUR INCLUDES UPPER PART OF INTEGRAL END BENT WINGS, UPPER PART OF THE INTEGRAL END BENT AND 6'-0" SECTION OF THE BRIDGE DECK.

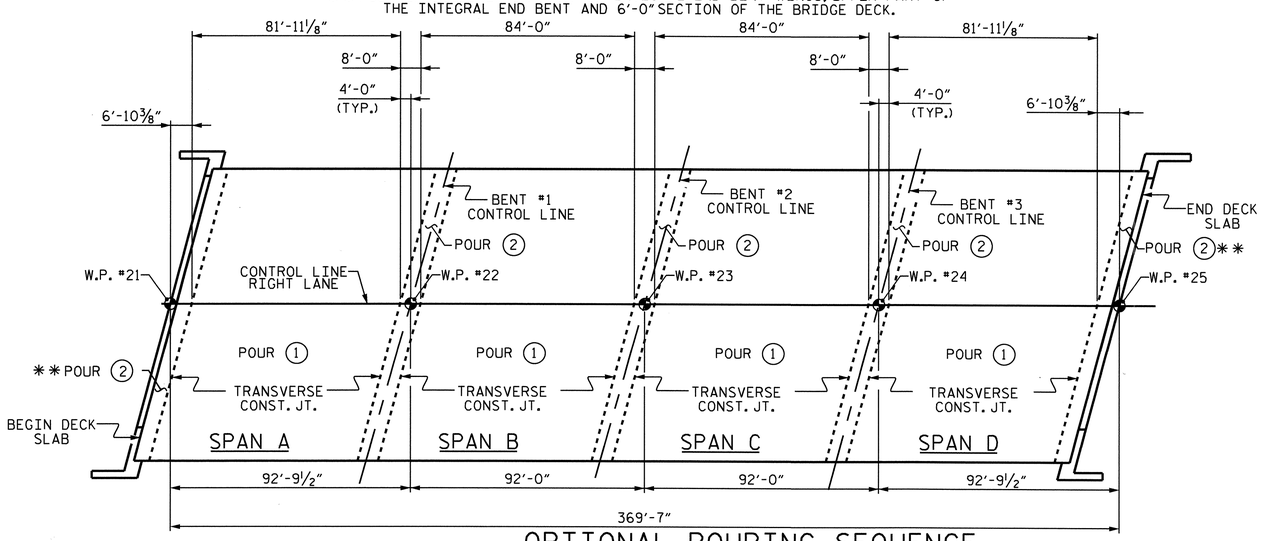

OPTIONAL POURING SEQUENCE

POUR 2 CAN NOT BE STARTED UNTIL BOTH ADJACENT 1 POURS REACH A MINIMUM OF 3000 PSI

** POUR INCLUDES UPPER PART OF INTEGRAL END BENT WINGS, UPPER PART OF THE INTEGRAL END BENT AND 6'-0" SECTION OF THE BRIDGE DECK.

REINFORCING BAR SCHEDULE

BAR	NO.	SIZE	TYPE	LENGTH	WEIGHT
* A1	613	#5	STR	38'-1"	24349
A2	613	#5	STR	38'-1"	24349
* A101	4	#5	STR	34'-3"	143
* A102	4	#5	STR	29'-11"	125
* A103	4	#5	STR	25'-7"	107
* A104	4	#5	STR	21'-2"	88
* A105	4	#5	STR	16'-10"	70
* A106	4	#5	STR	12'-6"	52
* A107	4	#5	STR	8'-2"	34
* A108	4	#5	STR	3'-9"	16
* A109	2	#5	STR	1'-7"	3
A201	4	#5	STR	34'-3"	143
A202	4	#5	STR	29'-11"	125
A203	4	#5	STR	25'-7"	107
A204	4	#5	STR	21'-2"	88
A205	4	#5	STR	16'-10"	70
A206	4	#5	STR	12'-6"	52
A207	4	#5	STR	8'-2"	34
A208	4	#5	STR	3'-9"	16
A209	2	#5	STR	1'-7"	3
* B1	104	#4	STR	23'-4"	1621
B2	266	#5	STR	54'-5"	15097
* B3	243	#7	STR	25'-5"	12624
* B4	75	#7	STR	28'-0"	4292
* B5	108	#4	STR	16'-2"	1166
* B6	102	#7	STR	18'-5"	3840
* B7	84	#4	STR	28'-2"	1580
* D1	220	#4	STR	1'-0"	147
* G1	368	#4	STR	6'-3"	1536
H1	6	#5	STR	13'-2"	82
H2	6	#5	STR	13'-4"	83
H3	7	#5	STR	14'-5"	105
H4	7	#5	STR	14'-3"	105
H5	6	#5	STR	14'-2"	89
H6	6	#5	STR	14'-0"	88
H7	7	#5	STR	13'-5"	98
H8	7	#5	STR	13'-7"	99
K1	20	#4	STR	23'-9"	317
K2	8	#4	STR	5'-8"	30
K3	32	#4	STR	6'-9"	144
K4	64	#4	STR	7'-3"	310
K5	32	#4	STR	6'-2"	132
K6	4	#4	STR	4'-11"	13
K7	4	#4	STR	5'-6"	15
K8	8	#4	STR	5'-8"	30
K9	4	#4	STR	5'-2"	14
K10	45	#4	5	10'-2"	306
K11	30	#4	6	5'-1"	102
K12	24	#4	STR	4'-3"	68
K13	20	#4	STR	2'-9"	37
S1	56	#4	1	12'-1"	452
* S2	52	#4	2	11'-1"	385
* S3	56	#4	2	11'-8"	436
S4	24	#4	3	11'-0"	176
S5	36	#4	3	13'-0"	313
S6	216	#4	4	2'-9"	397
S7	12	#4	1	9'-9"	78
V2	26	#5	STR	6'-1"	165
V3	25	#5	STR	5'-5"	141
V4	26	#5	STR	5'-4"	145
V5	25	#5	STR	6'-0"	156

REINFORCING STEEL = 44374 LBS
* EPOXY COATED REINF. STEEL = 52614 LBS

BAR TYPES

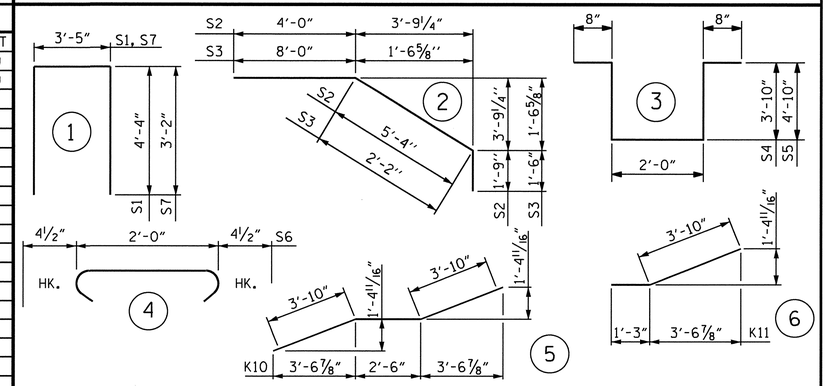

ALL BAR DIMENSIONS ARE OUT TO OUT

SUPERSTRUCTURE BILL OF MATERIAL

	CLASS AA CONCRETE	REINFORCING STEEL	* EPOXY COATED REINFORCING STEEL
	(CU.YDS.)	(LBS.)	(LBS.)
POUR 1	92.2		
POUR 2	126.2		
POUR 3	126.2		
POUR 4	132.6		
POUR 5	78.9		
SIDEWALK	64.2		
TOTALS***	620.3	44375	52614

***QUANTITIES FOR BARRIER RAIL ARE NOT INCLUDED

GROOVING BRIDGE FLOORS

BRIDGE DECK	9923	SQ.FT.
APPROACH SLAB	1186	SQ.FT.
TOTAL	11109	SQ.FT.

SUPERSTRUCTURE REINFORCING STEEL LENGTHS ARE BASED ON THE FOLLOWING MINIMUM SPLICE LENGTHS

BAR SIZE	SUPERSTRUCTURE EXCEPT APPROACH SLABS, PARAPET, AND BARRIER RAIL		APPROACH SLABS		PARAPET AND BARRIER RAIL
	EPOXY COATED	UNCOATED	EPOXY COATED	UNCOATED	
#4	2'-0"	1'-9"	2'-0"	1'-9"	2'-9"
#5	2'-6"	2'-2"	2'-6"	2'-2"	3'-5"
#6	3'-0"	2'-7"	3'-10"	2'-7"	4'-4"
#7	5'-3"	3'-6"			
#8	6'-10"	4'-7"			

PROJECT NO. U-4703
WAKE COUNTY
STATION: 33+54.00-L-

STATE OF NORTH CAROLINA
DEPARTMENT OF TRANSPORTATION
RALEIGH

SUPERSTRUCTURE BILL OF MATERIAL RIGHT LANE

NORTH CAROLINA PROFESSIONAL SEAL 10730 ENGINEER DAVENPORT, JR.
3-26-10

ASSEMBLED BY : H. T. BARBOUR	DATE : 02-26-08
CHECKED BY : M. G. SHAIKH	DATE : 4-08
DRAWN BY : JMB 5/87	REV. 6/1/94 EEM/GRP
CHECKED BY : SJD 9/87	REV. 8/16/99 RWW/LES

REVISIONS							SHEET NO.
NO.	BY:	DATE:	NO.	BY:	DATE:		S-71
1			3				TOTAL SHEETS
2			4				89

NOTES

SEE SUPERSTRUCTURE SHEETS FOR UPPER PART OF INTEGRAL END BENT DETAILS.

THE CONTRACTOR SHALL PROVIDE FOR INSTALLATION OF THE 4"DIAMETER DRAIN PIPE THROUGH THE WING WALL AS REQUIRED FOR REINFORCED BRIDGE APPROACH FILLS. SEE THE ROADWAY PLANS. REINFORCING STEEL IN THE WING WALL MAY BE SHIFTED AS NECESSARY TO CLEAR THE DRAIN PIPE.

THE CONTRACTOR'S ATTENTION IS CALLED TO THE FACT THAT THE UPPER PART OF THE END BENT WINGS ARE TO BE POURED WITH POUR #5 OF THE SUPERSTRUCTURE.

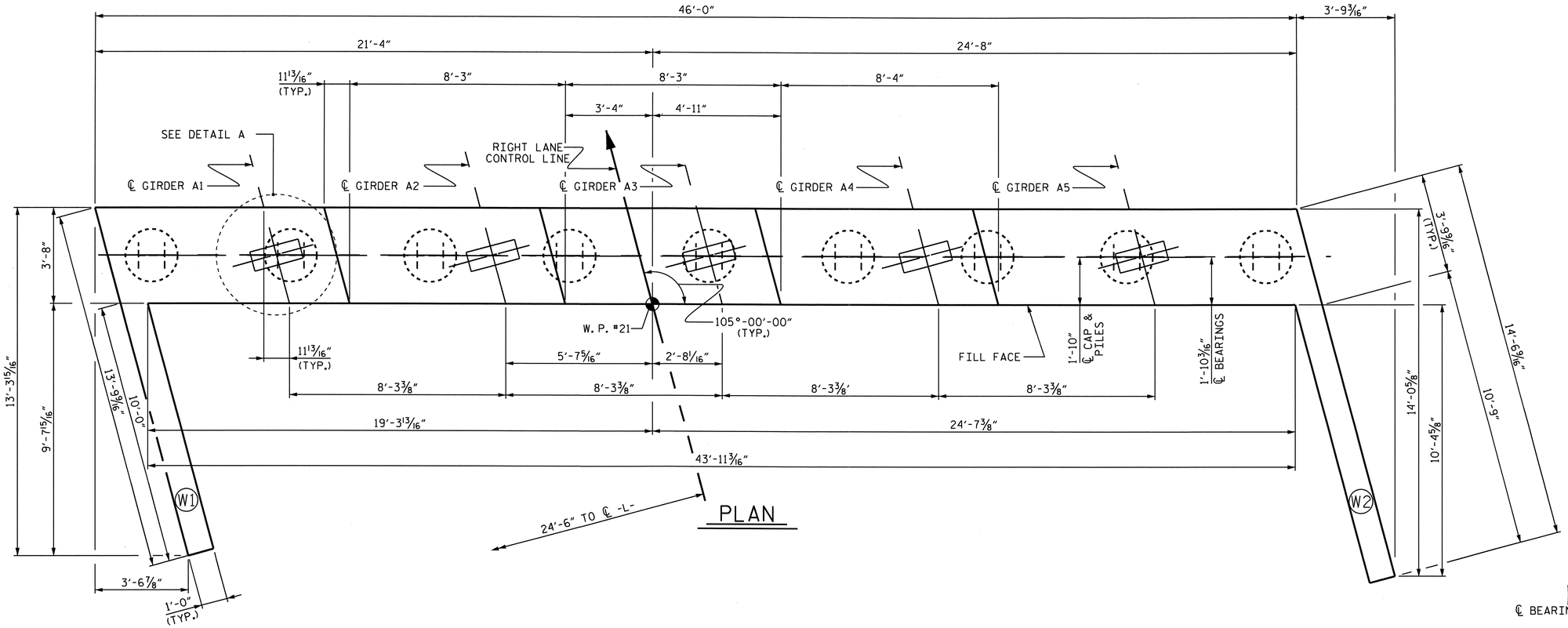

PLAN

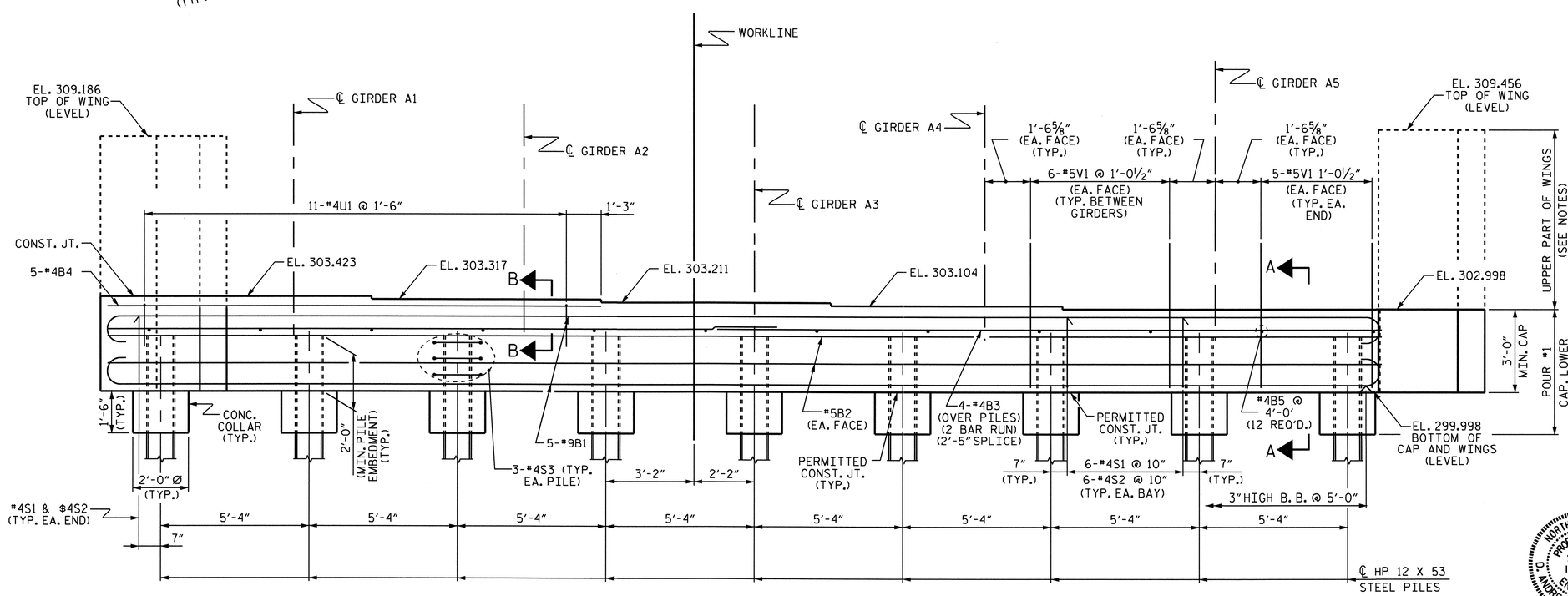

ELEVATION

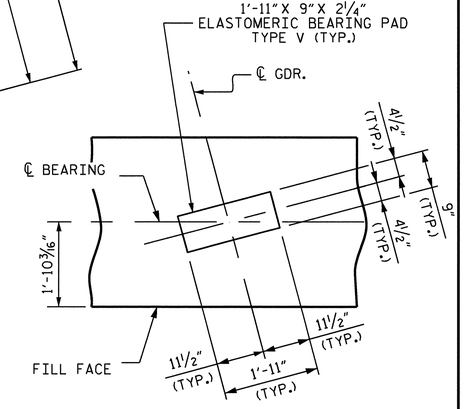

DETAIL A

PILES NOT SHOWN FOR CLARITY

PROJECT NO. U-4703

WAKE COUNTY

STATION: 33+54.00-L-

SHEET 1 OF 3

STATE OF NORTH CAROLINA
DEPARTMENT OF TRANSPORTATION
RALEIGH

SUBSTRUCTURE INTEGRAL END BENT #1 (RIGHT LANE)

NORTH CAROLINA PROFESSIONAL SEAL 10730 ENGINEER D. ANDRE DAVENPORT, JR.

REVISIONS						SHEET NO.
NO.	BY:	DATE:	NO.	BY:	DATE:	S-72
1			3			TOTAL SHEETS
2			4			89

DRAWN BY : H. T. BARBOUR DATE : 7-01-09
CHECKED BY : M.G. SHAIKH DATE : 09/09/09

23-MAR-2010 09:21
Z:\Structures\tbarbour\Microstation\str2\U-4703_SD_E*.dgn
addavenport

STR. #2

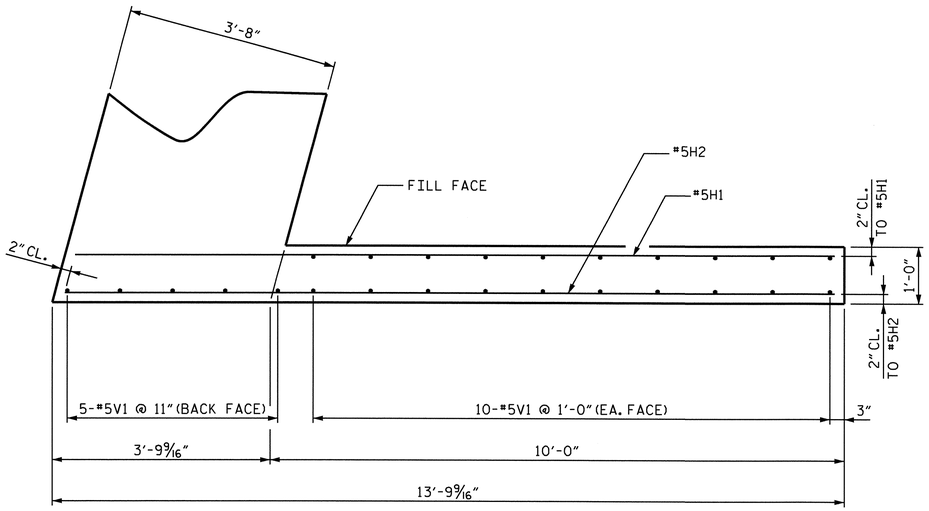

PLAN OF LEFT WING (W1)

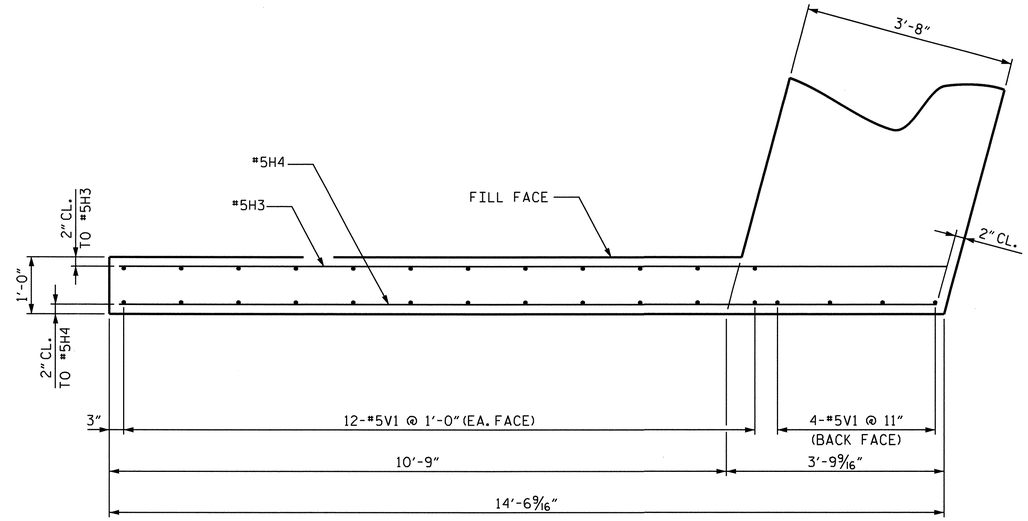

PLAN OF RIGHT WING (W2)

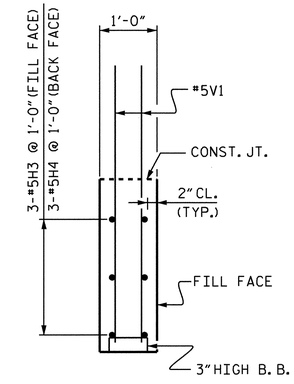

SECTION Y-Y

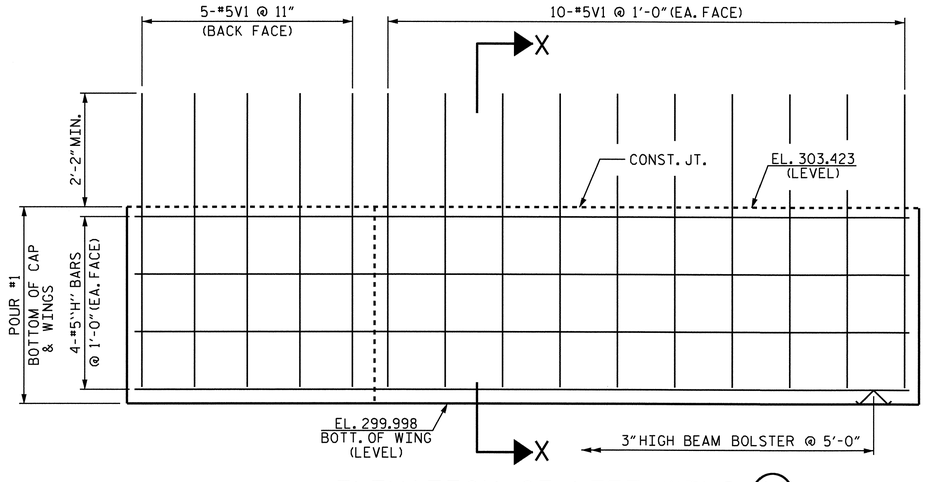

ELEVATION OF LEFT WING (W1)

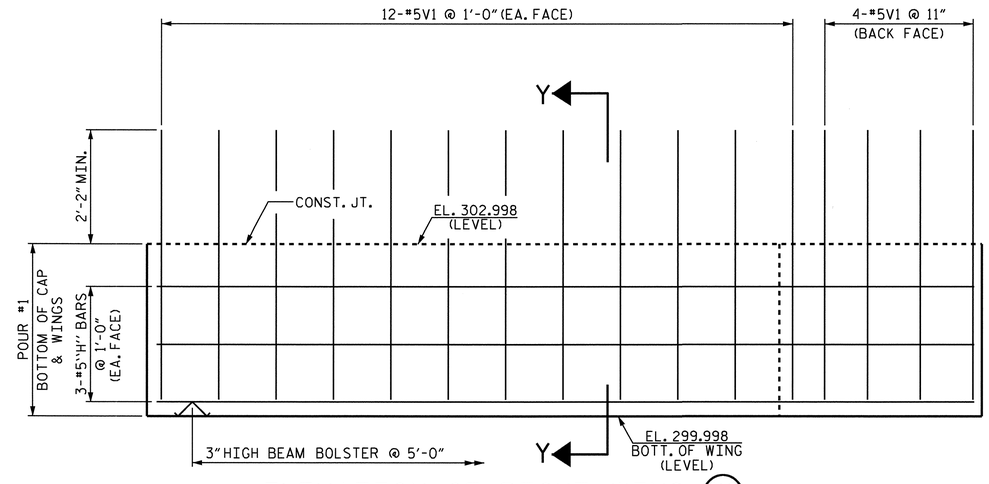

ELEVATION OF RIGHT WING (W2)

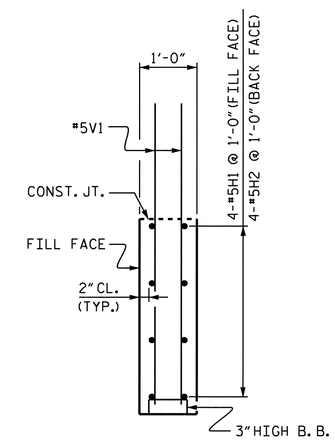

SECTION X-X

PROJECT NO. U-4703

WAKE COUNTY

STATION: 33+54.00-L-

SHEET 2 OF 3

STATE OF NORTH CAROLINA
DEPARTMENT OF TRANSPORTATION
RALEIGH

SUBSTRUCTURE INTEGRAL END BENT #1 (RIGHT LANE)

NORTH CAROLINA PROFESSIONAL SEAL 10730 ENGINEER D. ANDREW DAVENPORT, JR.

2-3-10

REVISIONS						SHEET NO.
NO.	BY:	DATE:	NO.	BY:	DATE:	S-73
1			3			TOTAL SHEETS
2			4			89

DRAWN BY : H. T. BARBOUR DATE : 7-08-09
CHECKED BY : M.G. SHAIKH DATE : 09/09/09

03-FEB-2010 12:22
Y:\Structures\tbarbour\Microstation\str2\U-4703_SD_E*.dgn
ADAVENPORT

STR. #2

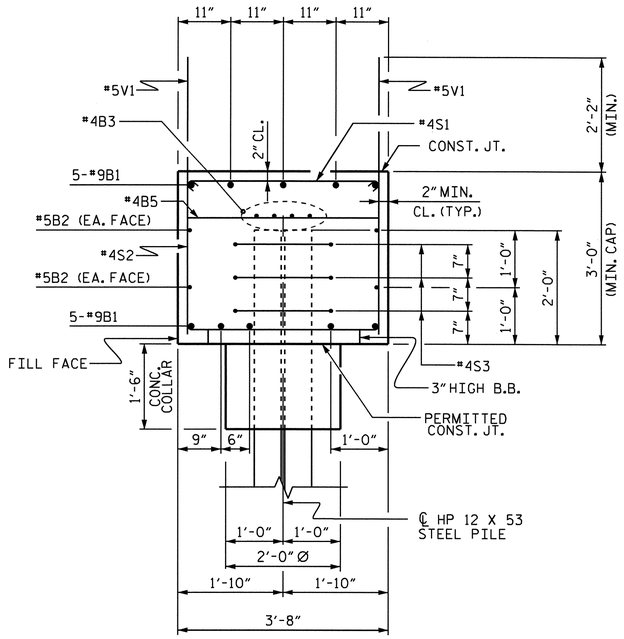

SECTION A-A

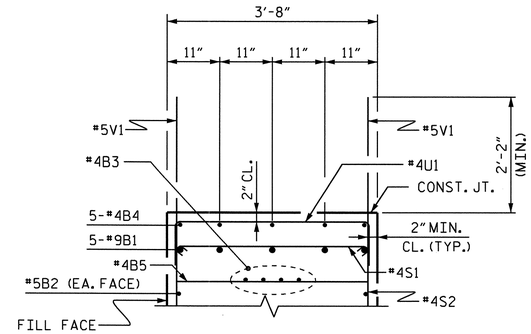

SECTION B-B

BAR TYPES

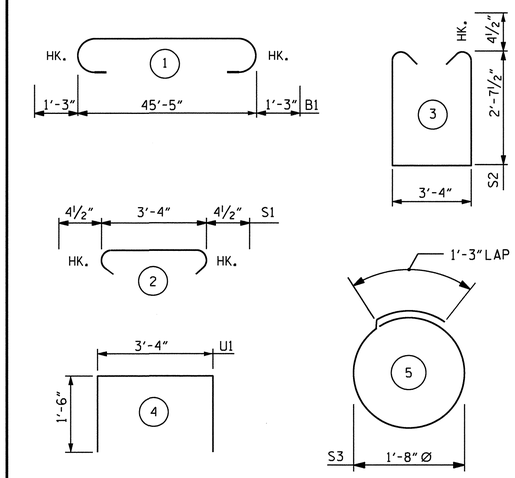

ALL BAR DIMENSIONS ARE OUT TO OUT.

BILL OF MATERIAL

END BENT #1

BAR	NO.	SIZE	TYPE	LENGTH	WEIGHT
B1	10	#9	1	47'-11"	1629
B2	4	#5	STR	45'-7"	190
B3	8	#4	STR	24'-1"	129
B4	5	#4	STR	16'-8"	56
B5	12	#4	STR	3'-4"	27
H1	4	#5	STR	13'-2"	55
H2	4	#5	STR	13'-4"	56
H3	3	#5	STR	14'-5"	45
H4	3	#5	STR	14'-3"	45
S1	50	#4	2	4'-1"	136
S2	50	#4	3	9'-4"	312
S3	27	#4	5	6'-6"	117
U1	11	#4	4	6'-4"	47
V1	121	#5	STR	5'-6"	694

REINFORCING STEEL = 3538 LBS.

CLASS A CONCRETE

* POUR #1 (CAP, LOWER PART OF WINGS, & CONC. COLLAR) CU. YDS. 24.0

TOTAL CU. YDS. 24.0

* CONCRETE QUANTITY FOR UPPER PART OF WINGS IN POUR #5 ON SUPERSTRUCTURE.

HP 12 X 53 STEEL PILES

NO. 9 LIN. FT. 315

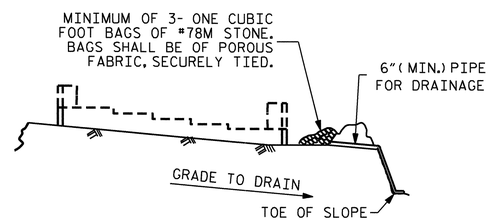

BAGGED STONE AND PIPE SHALL BE PLACED IMMEDIATELY AFTER COMPLETION OF END BENT EXCAVATION. PIPE MAY BE EITHER CONCRETE, CORRUGATED STEEL, CORRUGATED ALUMINUM ALLOY, OR CORRUGATED PLASTIC. PERFORATED PIPE WILL NOT BE ALLOWED.

BAGGED STONE SHALL REMAIN IN PLACE UNTIL THE ENGINEER DIRECTS THAT IT BE REMOVED. THE CONTRACTOR SHALL REMOVE AND DISPOSE OF SILT ACCUMULATIONS AT BAGGED STONE WHEN SO DIRECTED BY THE ENGINEER. BAGS SHALL BE REMOVED AND REPLACED WHENEVER THE ENGINEER DETERMINES THAT THEY HAVE DETERIORATED AND LOST THEIR EFFECTIVENESS.

NO SEPARATE PAYMENT WILL BE MADE FOR THIS WORK AND THE ENTIRE COST OF THIS WORK SHALL BE INCLUDED IN THE UNIT CONTRACT PRICE BID FOR THE SEVERAL PAY ITEMS.

TEMPORARY DRAINAGE AT END BENT

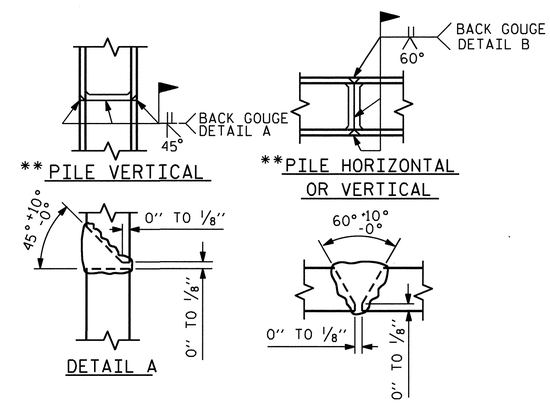

** POSITION OF PILE DURING WELDING.

PILE SPLICE DETAILS

PROJECT NO. U-4703

WAKE COUNTY

STATION: 33+54.00-L-

SHEET 3 OF 3

STATE OF NORTH CAROLINA
DEPARTMENT OF TRANSPORTATION
RALEIGH

SUBSTRUCTURE INTEGRAL END BENT #1 (RIGHT LANE)

NORTH CAROLINA PROFESSIONAL SEAL 10730 ENGINEER D. ANDRE DAVENPORT, JR.

D. Andre Davenport 2-23-10

REVISIONS						SHEET NO.
NO.	BY:	DATE:	NO.	BY:	DATE:	S-74
1			3			TOTAL SHEETS
2			4			89

DRAWN BY : H. T. BARBOUR DATE : 7-08-09
CHECKED BY : M.G. SHAIKH DATE : 09/09/09

03-FEB-2010 12:23
Y:\Structures\tbarbour\Microstation\str2\U-4703_SD_E*.dgn
ADAVENPORT

STR. #2

NOTES

STIRRUPS IN CAP MAY BE SHIFTED AS NECESSARY TO CLEAR ANCHOR BOLTS.

FOR DRILLED PIERS, SEE SPECIAL PROVISIONS.

THE CONTRACTOR'S ATTENTION IS CALLED TO THE FACT THAT THE LONGITUDINAL REINFORCEMENT FOR THE DRILLED PIERS IS DETAILED WITH 3 FEET OF EXTRA LENGTH.

ALL STEEL IN THE DRILLED PIERS IS INCLUDED IN THE PAY ITEMS FOR "REINFORCING STEEL" AND "SPIRAL COLUMN REINFORCING STEEL."

HOOKS ON V1 BARS MAY BE TURNED AS NECESSARY FOR PLACING REINFORCING STEEL.

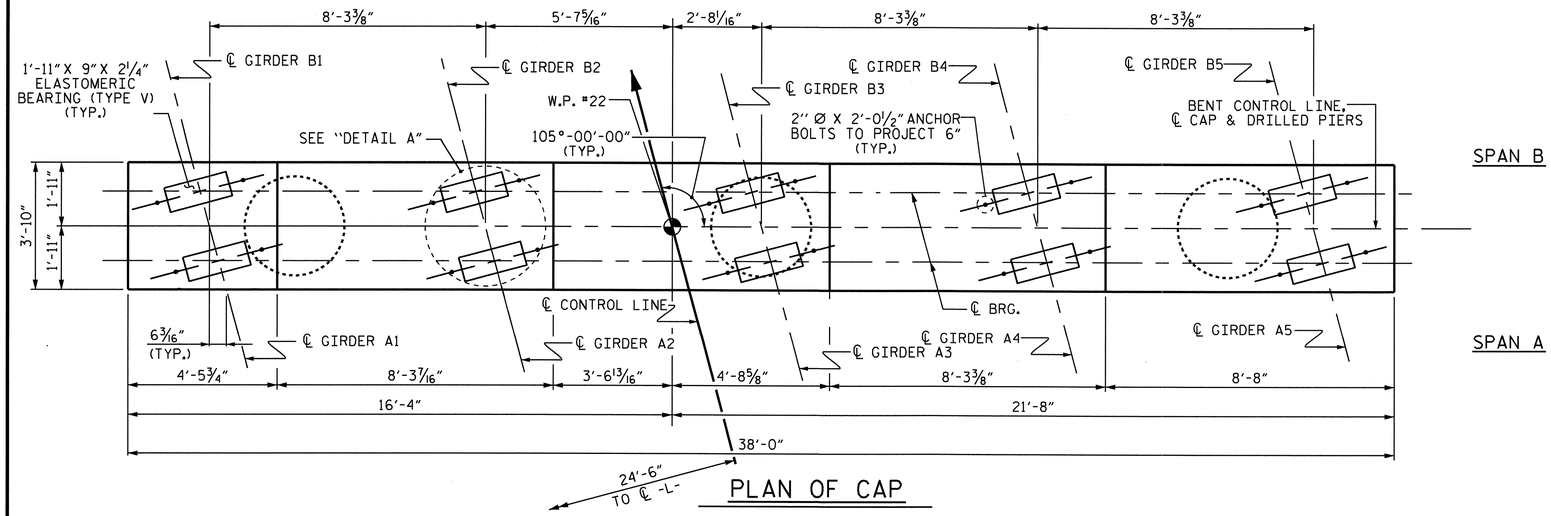

PLAN OF CAP

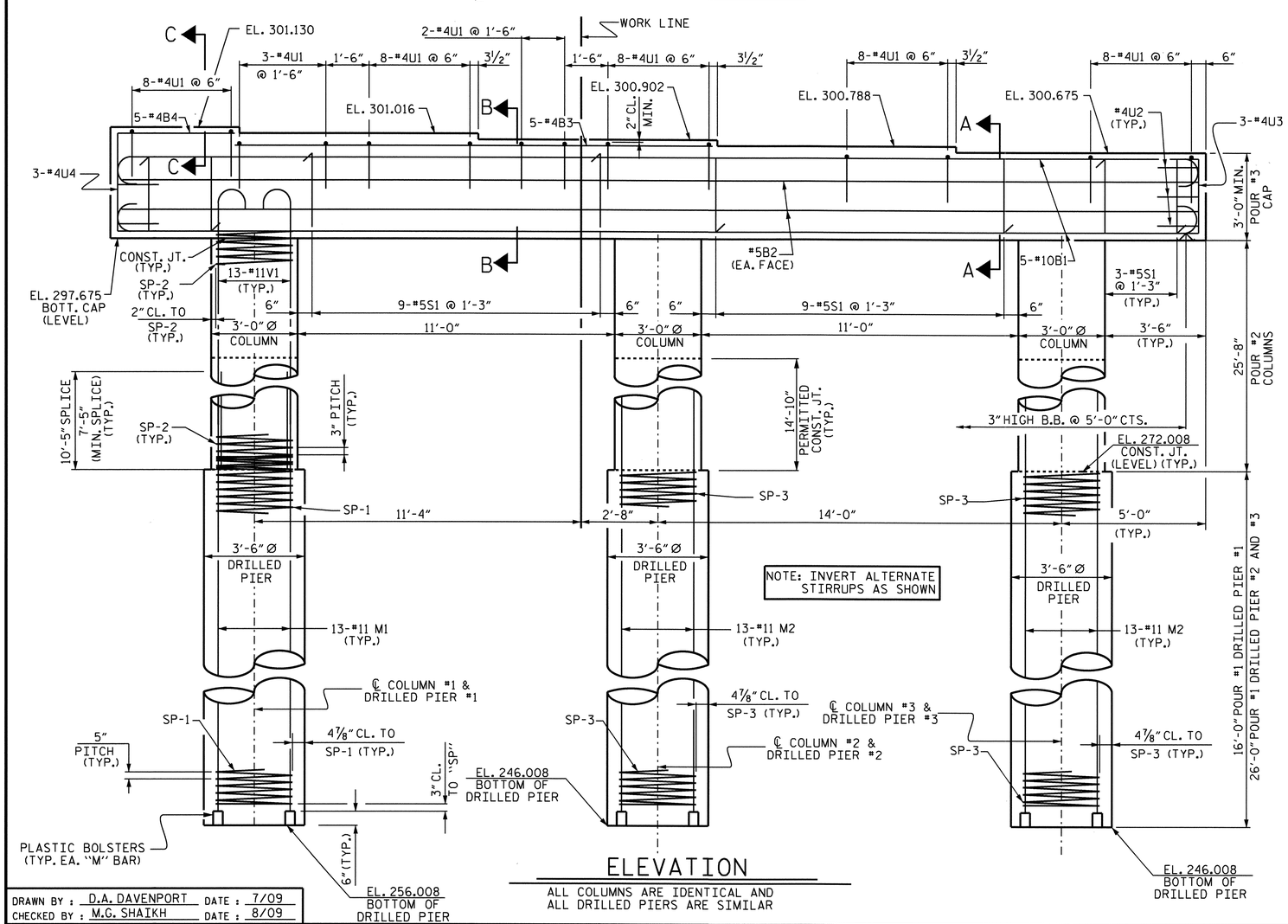

ELEVATION

ALL COLUMNS ARE IDENTICAL AND ALL DRILLED PIERS ARE SIMILAR

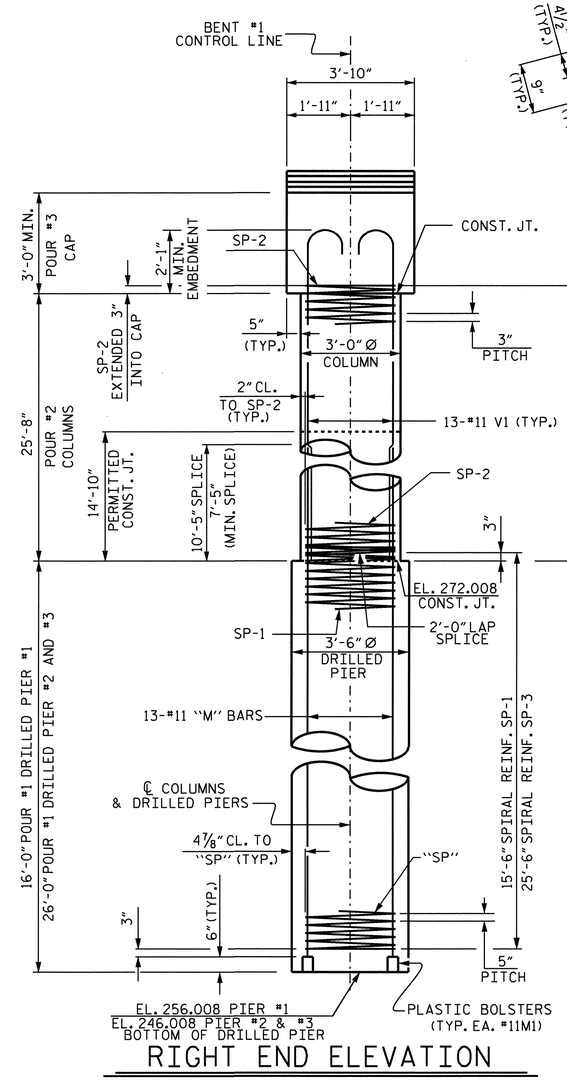

RIGHT END ELEVATION

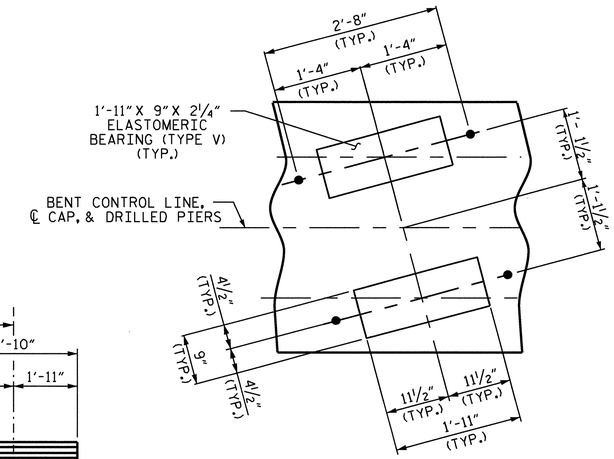

DETAIL A

NORTH CAROLINA PROFESSIONAL SEAL 10730 ENGINEER D. ANDRE DAVENPORT, JR.

PROJECT NO. U-4703

WAKE COUNTY

STATION: 33+54.00-L-

SHEET 1 OF 2

STATE OF NORTH CAROLINA
DEPARTMENT OF TRANSPORTATION
RALEIGH

SUBSTRUCTURE
BENT #1
RIGHT LANE

REVISIONS							SHEET NO.
NO.	BY:	DATE:	NO.	BY:	DATE:		S-75
1			3				TOTAL SHEETS
2			4				89

DRAWN BY : D.A. DAVENPORT DATE : 7/09
CHECKED BY : M.G. SHAIKH DATE : 8/09

22-MAR-2010 15:12
r:\structures\ddavenport\microstation\u4703_sd_b*.dgn
dgladden

STR.#2

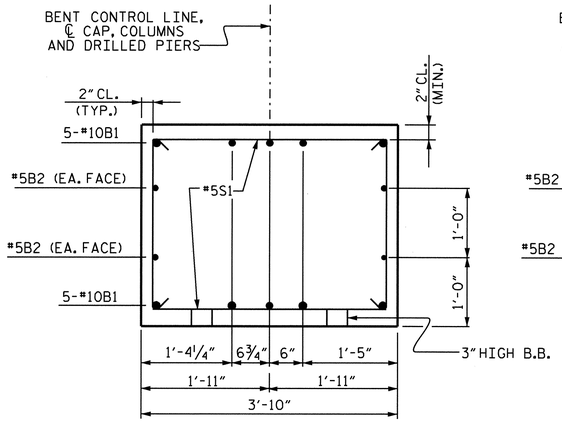

SECTION A-A

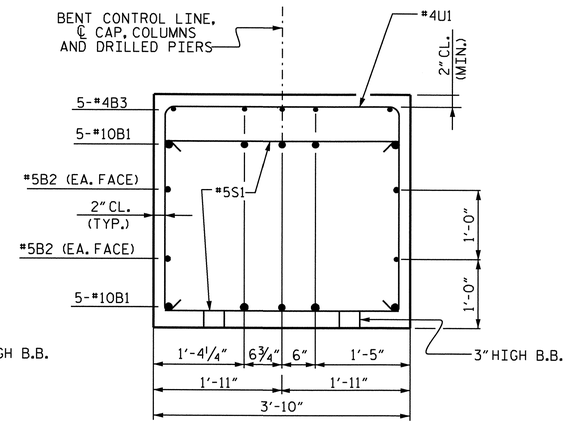

SECTION B-B

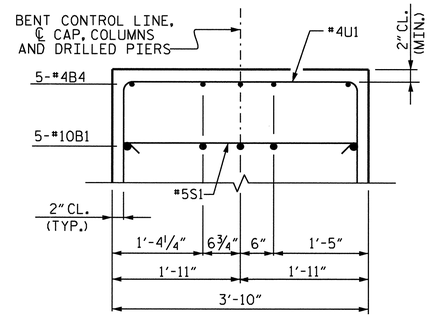

SECTION C-C

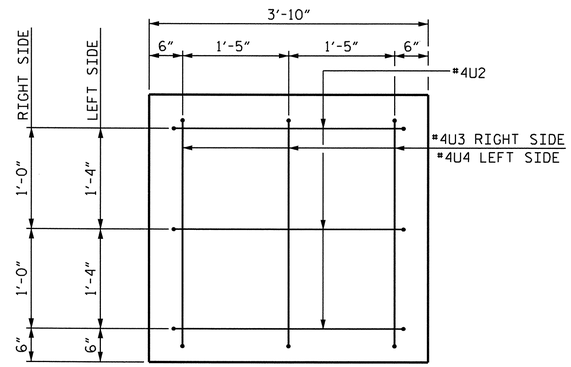

END VIEW

2" MIN. CONCRETE COVER FROM END OF CAP REQUIRED FOR ALL #4U3 AND #4U2 BARS.

#4U3 AND #4U2 BARS MAY BE SHIFTED UP TO 2" TO CLEAR "B" BARS.

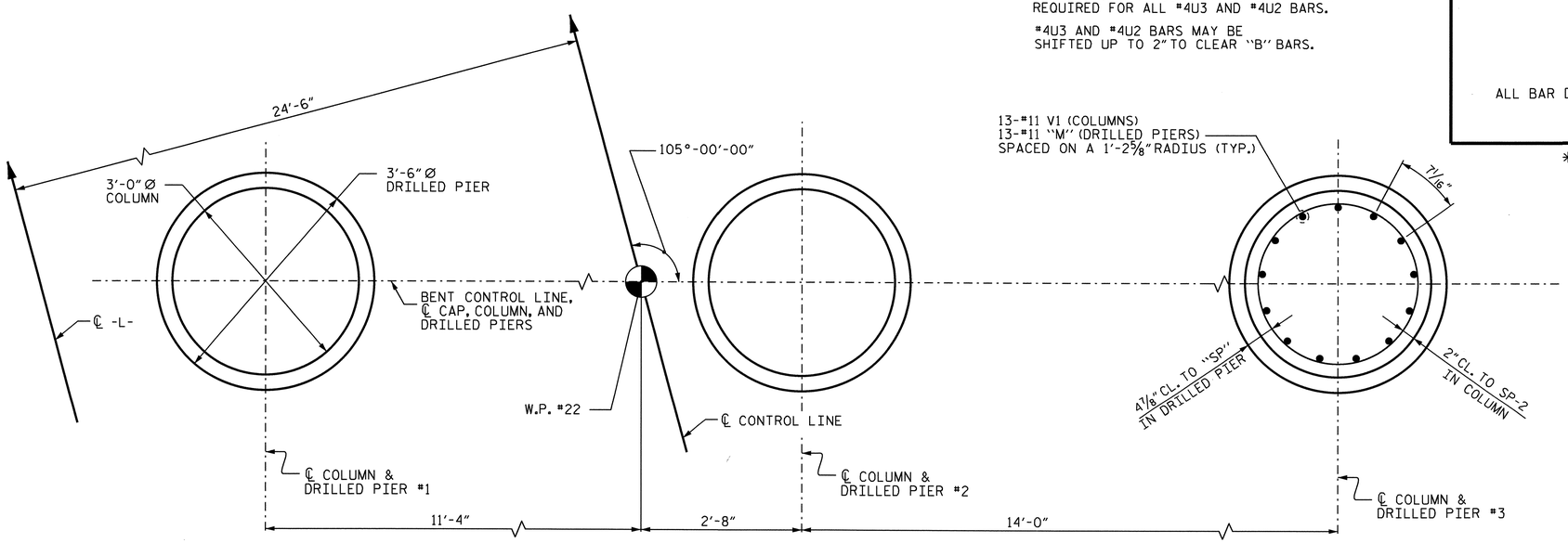

PLAN OF COLUMNS AND DRILLED PIERS

ALL COLUMNS ARE IDENTICAL AND ALL DRILLED PIERS ARE SIMILAR

BAR TYPES

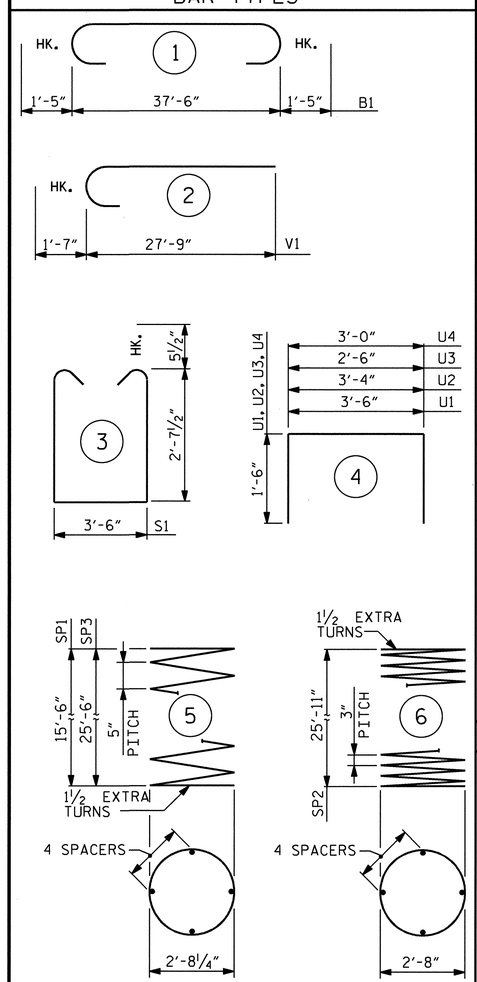

ALL BAR DIMENSIONS ARE OUT TO OUT.

BILL OF MATERIAL

BENT #1

BAR	NO.	SIZE	TYPE	LENGTH	WEIGHT
B1	10	#10	1	40'-4"	1736
B2	4	#5	STR.	37'-8"	157
B3	5	#4	STR.	16'-5"	55
B4	5	#4	STR.	4'-1"	14
M1	13	#11	STR.	25'-11"	1790
M2	26	#11	STR.	35'-11"	4961
S1	24	#5	3	9'-8"	242
U1	45	#4	4	6'-6"	195
U2	6	#4	4	6'-4"	25
U3	3	#4	4	5'-6"	11
U4	3	#4	4	6'-0"	12
V1	39	#11	2	29'-4"	6078
REINFORCING STEEL (LBS.)					15276
SP-1	1	*	5	320'-8"	334
SP-2	3	**	6	866'-8"	1737
SP-3	2	*	5	519'-2"	1083
SPIRAL REINFORCING STEEL (LBS.)					3154

CLASS A CONCRETE
POUR #2 (COLUMNS) 20.2 C.Y.
POUR #3 (CAP) 18.1 C.Y.
TOTAL 38.3 C.Y.

DRILLED PIERS

DRILLED PIER CONCRETE
POUR #1 (DRILLED PIERS) 24.2 C.Y.

3'-6" Ø DRILLED PIERS IN SOIL 45.0 FT.

3'-6" Ø DRILLED PIERS NOT IN SOIL 23.0 FT.

CSL TUBES 302.0 FT.

* THE SP-1 SPIRAL REINFORCING STEEL SHALL BE W31 OR D-31 COLD DRAWN WIRE OR #5 PLAIN OR DEFORMED BAR.

** THE SP-2 SPIRAL REINFORCING STEEL SHALL BE W20 OR D-20 COLD DRAWN WIRE OR #4 PLAIN OR DEFORMED BAR.

PROJECT NO. U-4703
WAKE COUNTY
STATION: 33+54.00 -L-

SHEET 2 OF 2

STATE OF NORTH CAROLINA
DEPARTMENT OF TRANSPORTATION
RALEIGH

SUBSTRUCTURE
BENT #1
RIGHT LANE

NORTH CAROLINA PROFESSIONAL SEAL 10730 ENGINEER D. ANDREW DAVENPORT, JR.
3-26-10

REVISIONS						SHEET NO.
NO.	BY:	DATE:	NO.	BY:	DATE:	S-76
1			3			TOTAL SHEETS
2			4			89

STR. #2

DRAWN BY : D.A. DAVENPORT DATE : 7/09
CHECKED BY : M.G. SHAIKH DATE : 8/09

26-MAR-2010 09:30
Z:\Structures\ddavenport\Microstation\u4703_sd_b*.dgn
ddavenport

NOTES

STIRRUPS IN CAP MAY BE SHIFTED AS NECESSARY TO CLEAR ANCHOR BOLTS.

FOR DRILLED PIERS, SEE SPECIAL PROVISIONS.

THE CONTRACTOR'S ATTENTION IS CALLED TO THE FACT THAT THE LONGITUDINAL REINFORCEMENT FOR THE DRILLED PIERS IS DETAILED WITH 3 FEET OF EXTRA LENGTH.

ALL STEEL IN THE DRILLED PIERS IS INCLUDED IN THE PAY ITEMS FOR "REINFORCING STEEL" AND "SPIRAL COLUMN REINFORCING STEEL."

HOOKS ON V1 BARS MAY BE TURNED AS NECESSARY FOR PLACING REINFORCING STEEL.

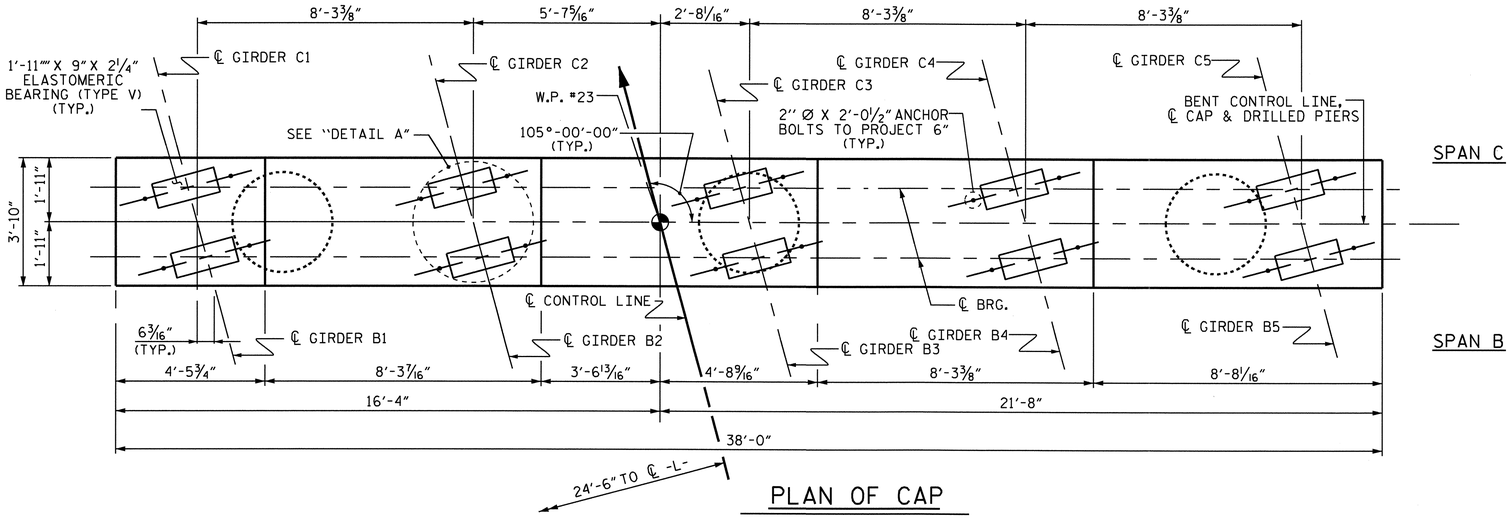

PLAN OF CAP

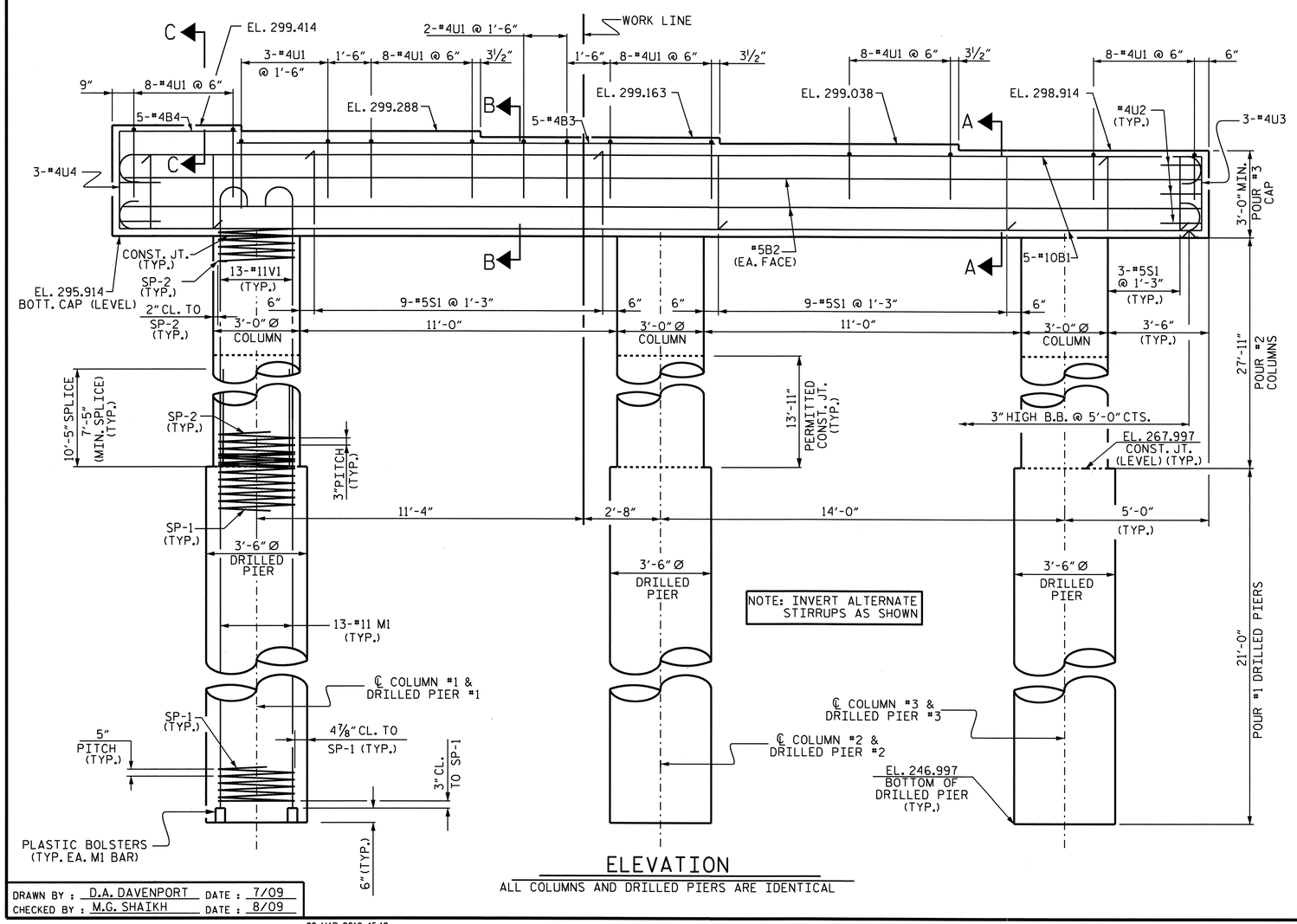

ELEVATION

ALL COLUMNS AND DRILLED PIERS ARE IDENTICAL

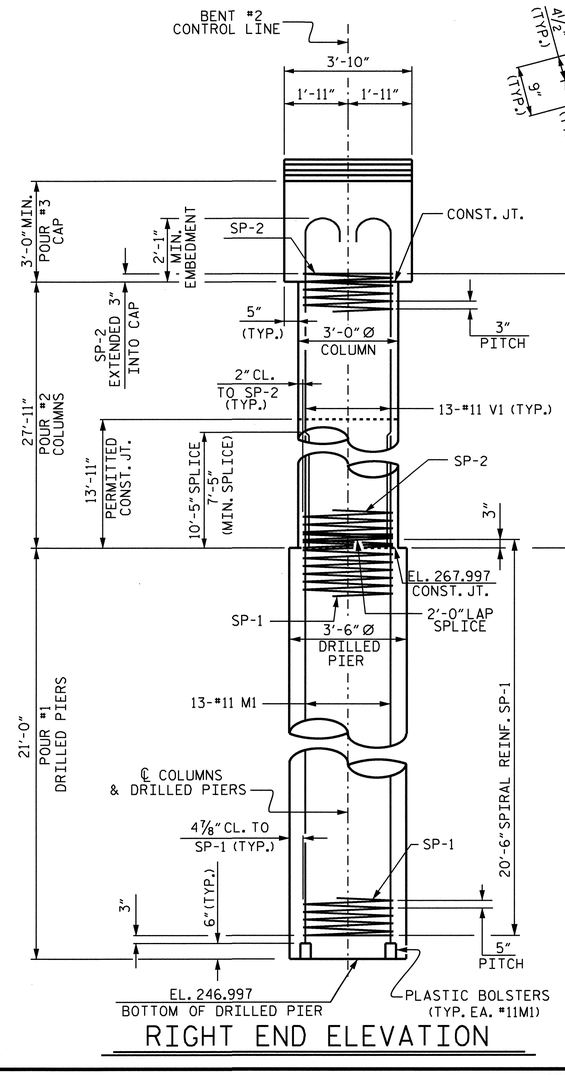

RIGHT END ELEVATION

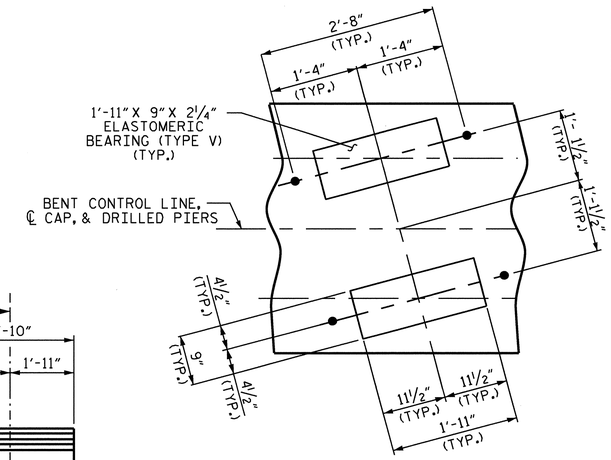

DETAIL A

NORTH CAROLINA PROFESSIONAL SEAL 10730 ENGINEER D. ANDREW DAVENPORT
3-23-10

PROJECT NO. U-4703

WAKE COUNTY

STATION: 33+54.00-L-

SHEET 1 OF 2

STATE OF NORTH CAROLINA
DEPARTMENT OF TRANSPORTATION
RALEIGH

SUBSTRUCTURE
BENT #2
RIGHT LANE

REVISIONS						SHEET NO.
NO.	BY:	DATE:	NO.	BY:	DATE:	S-77
1			3			TOTAL SHEETS
2			4			89

DRAWN BY : D.A. DAVENPORT DATE : 7/09
CHECKED BY : M.G. SHAIKH DATE : 8/09

22-MAR-2010 15:12
r:\structures\ddavenport\microstation\u4703_sd_b*.dgn
dgladden

STR.#2

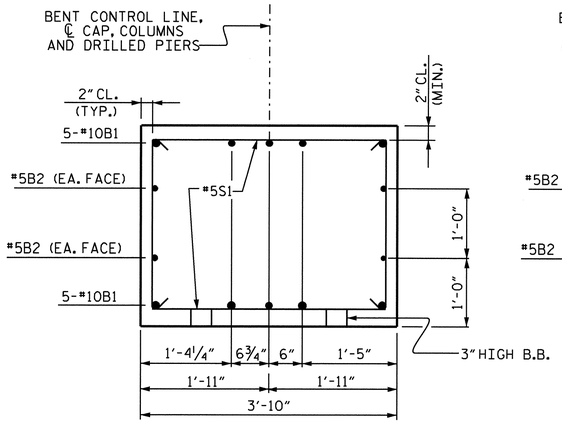

SECTION A-A

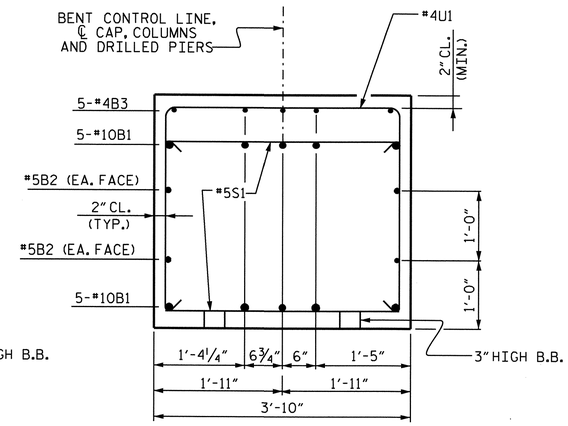

SECTION B-B

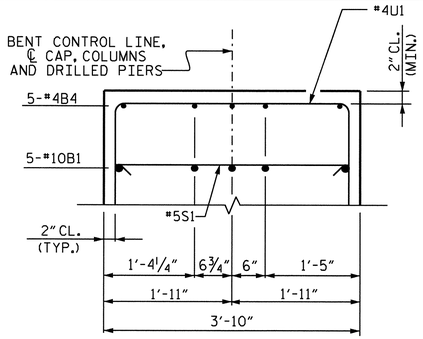

SECTION C-C

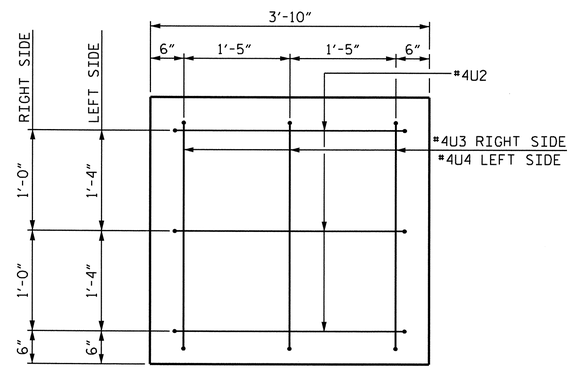

END VIEW

2" MIN. CONCRETE COVER FROM END OF CAP REQUIRED FOR ALL #4U3 AND #4U2 BARS.

#4U3 AND #4U2 BARS MAY BE SHIFTED UP TO 2" TO CLEAR "B" BARS.

BAR TYPES

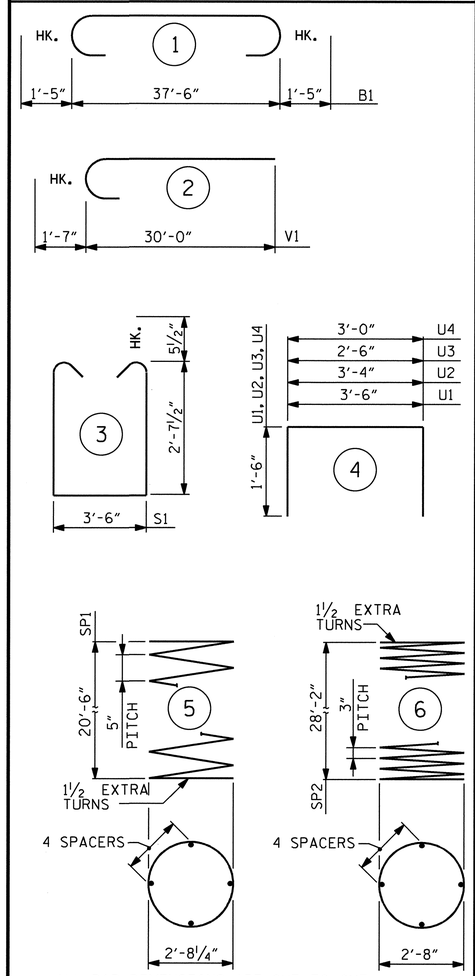

ALL BAR DIMENSIONS ARE OUT TO OUT.

BILL OF MATERIAL

BENT #2

BAR	NO.	SIZE	TYPE	LENGTH	WEIGHT
B1	10	#10	1	40'-4"	1736
B2	4	#5	STR.	37'-8"	157
B3	5	#4	STR.	16'-5"	55
B4	5	#4	STR.	4'-1"	14
M1	39	#11	STR.	30'-11"	6409
S1	24	#5	3	9'-8"	242
U1	45	#4	4	6'-6"	195
U2	6	#4	4	6'-4"	25
U3	3	#4	4	5'-6"	11
U4	3	#4	4	6'-0"	12
V1	39	#11	2	31'-7"	6544
REINFORCING STEEL (LBS.)					15400
SP-1	1	*	5	242'-1"	252
SP-2	3	**	6	998'-5"	2001
SP-3	2	*	5	440'-7"	919
SPIRAL REINFORCING STEEL (LBS.)					3172

CLASS A CONCRETE
POUR #2 (COLUMNS) 23.3 C.Y.
POUR #3 (CAP) 18.1 C.Y.
TOTAL 41.4 C.Y.

DRILLED PIERS

DRILLED PIER CONCRETE
POUR #1 (DRILLED PIERS) 22.4 C.Y.
3'-6" Ø DRILLED PIERS IN SOIL 35.0 FT.
3'-6" Ø DRILLED PIERS NOT IN SOIL 28.0 FT.

CSL TUBES 282.0 FT.

* THE SP-1 SPIRAL REINFORCING STEEL SHALL BE W31 OR D-31 COLD DRAWN WIRE OR #5 PLAIN OR DEFORMED BAR.

** THE SP-2 SPIRAL REINFORCING STEEL SHALL BE W20 OR D-20 COLD DRAWN WIRE OR #4 PLAIN OR DEFORMED BAR.

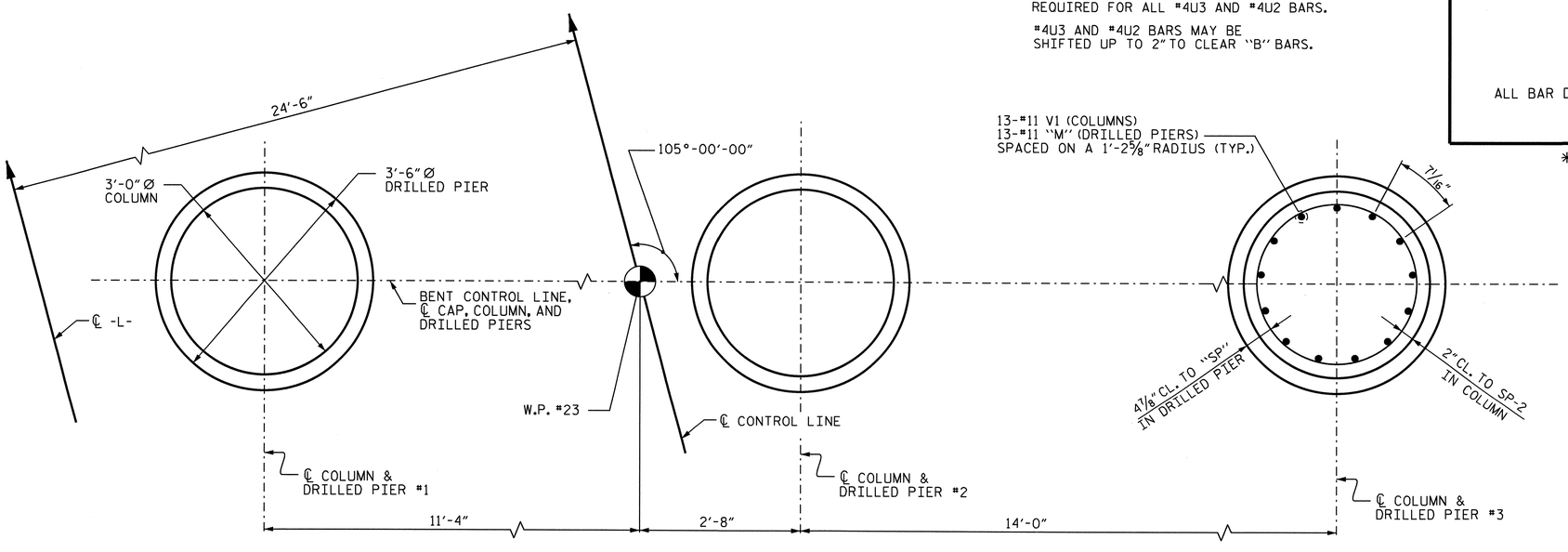

PLAN OF COLUMNS AND DRILLED PIERS

ALL COLUMNS ARE IDENTICAL AND ALL DRILLED PIERS ARE SIMILAR

PROJECT NO. U-4703
WAKE COUNTY
STATION: 33+54.00 -L-

SHEET 2 OF 2

STATE OF NORTH CAROLINA
DEPARTMENT OF TRANSPORTATION
RALEIGH

SUBSTRUCTURE
BENT #2
RIGHT LANE

NORTH CAROLINA PROFESSIONAL SEAL 10730 ENGINEER ANDREW DAVENPORT, JR.

REVISIONS						SHEET NO.
NO.	BY:	DATE:	NO.	BY:	DATE:	S-78
1			3			TOTAL SHEETS
2			4			89

STR. #2

DRAWN BY : D.A. DAVENPORT DATE : 7/09
CHECKED BY : M.G. SHAIKH DATE : 8/09

26-MAR-2010 09:30
Z:\Structures\adavenport\Microstation\u4703_sd_b*.dgn
adavenport

NOTES

STIRRUPS IN CAP MAY BE SHIFTED AS NECESSARY TO CLEAR ANCHOR BOLTS.

FOR DRILLED PIERS, SEE SPECIAL PROVISIONS.

THE CONTRACTOR'S ATTENTION IS CALLED TO THE FACT THAT THE LONGITUDINAL REINFORCEMENT FOR THE DRILLED PIERS IS DETAILED WITH 3 FEET OF EXTRA LENGTH.

ALL STEEL IN THE DRILLED PIERS IS INCLUDED IN THE PAY ITEMS FOR "REINFORCING STEEL" AND "SPIRAL COLUMN REINFORCING STEEL."

FOR PERMANENT STEEL CASING, SEE SPECIAL PROVISION FOR DRILLED PIERS.

HOOKS ON V1 BARS MAY BE TURNED AS NECESSARY FOR PLACING REINFORCING STEEL.

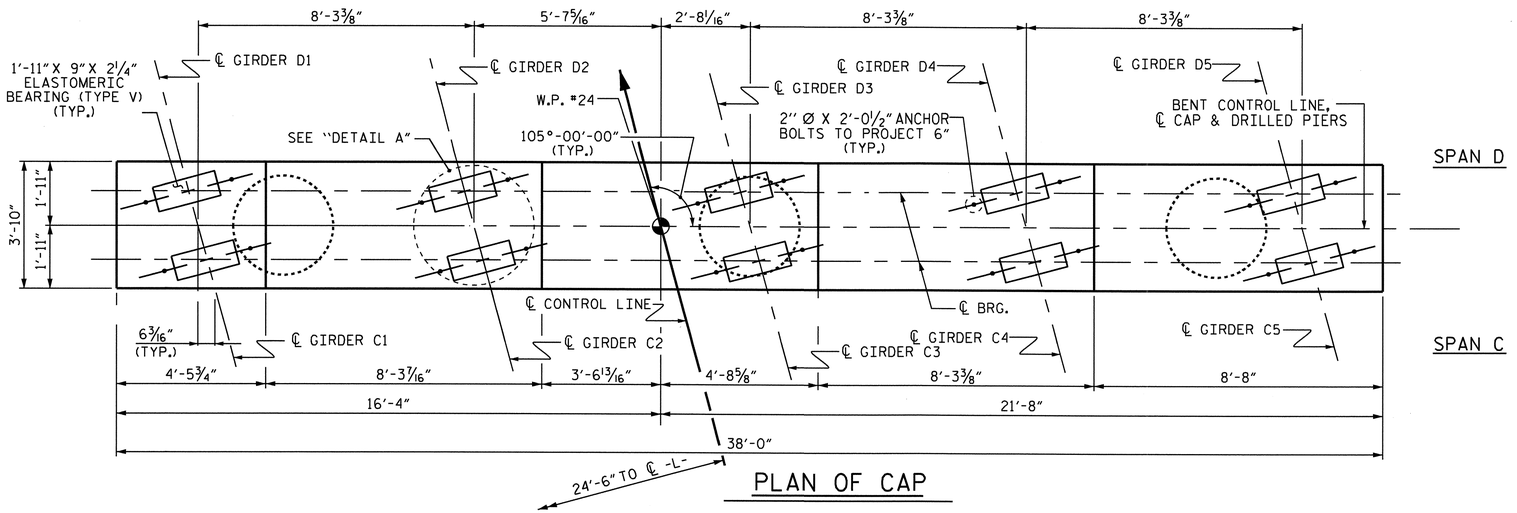

PLAN OF CAP

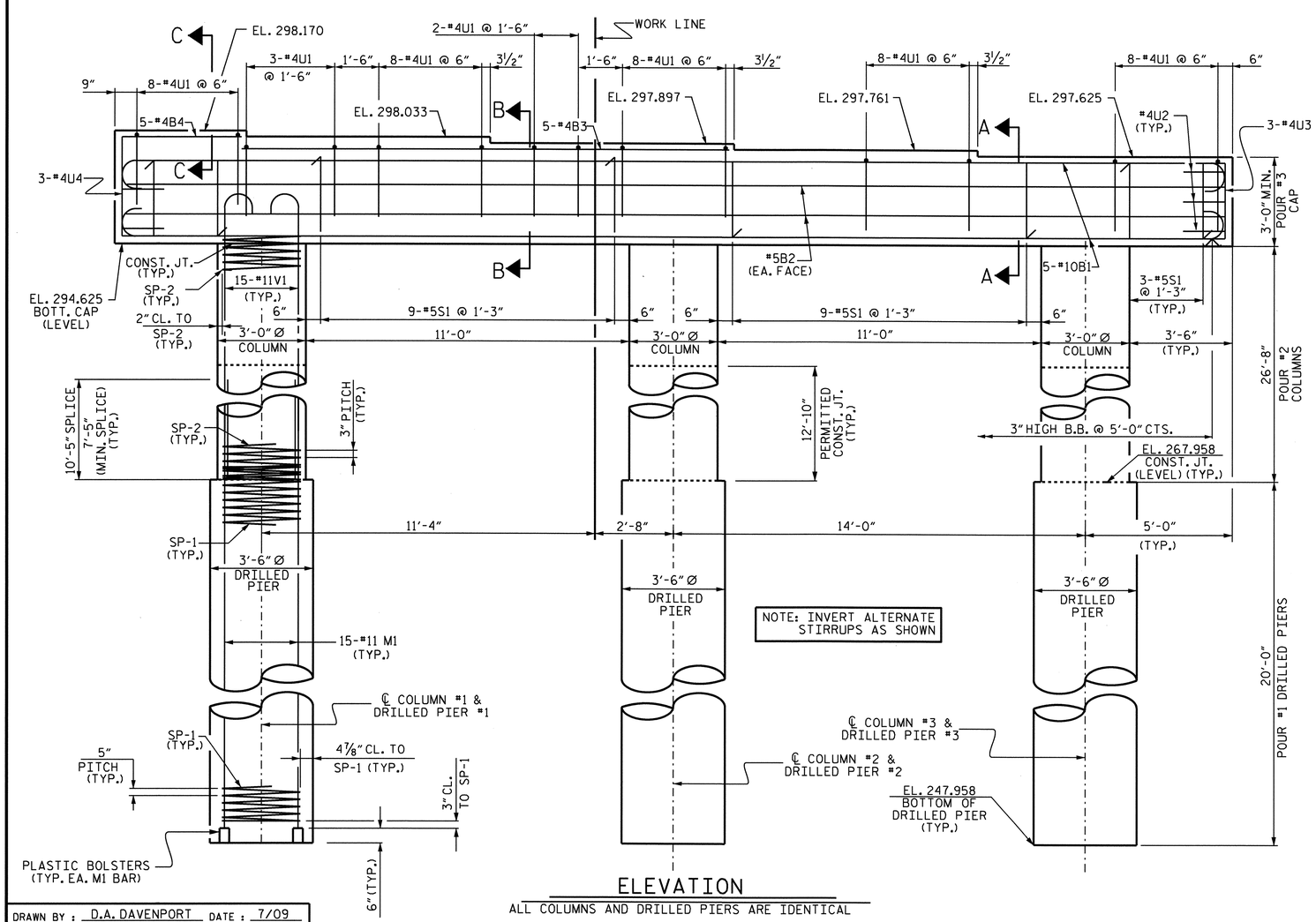

ELEVATION

ALL COLUMNS AND DRILLED PIERS ARE IDENTICAL

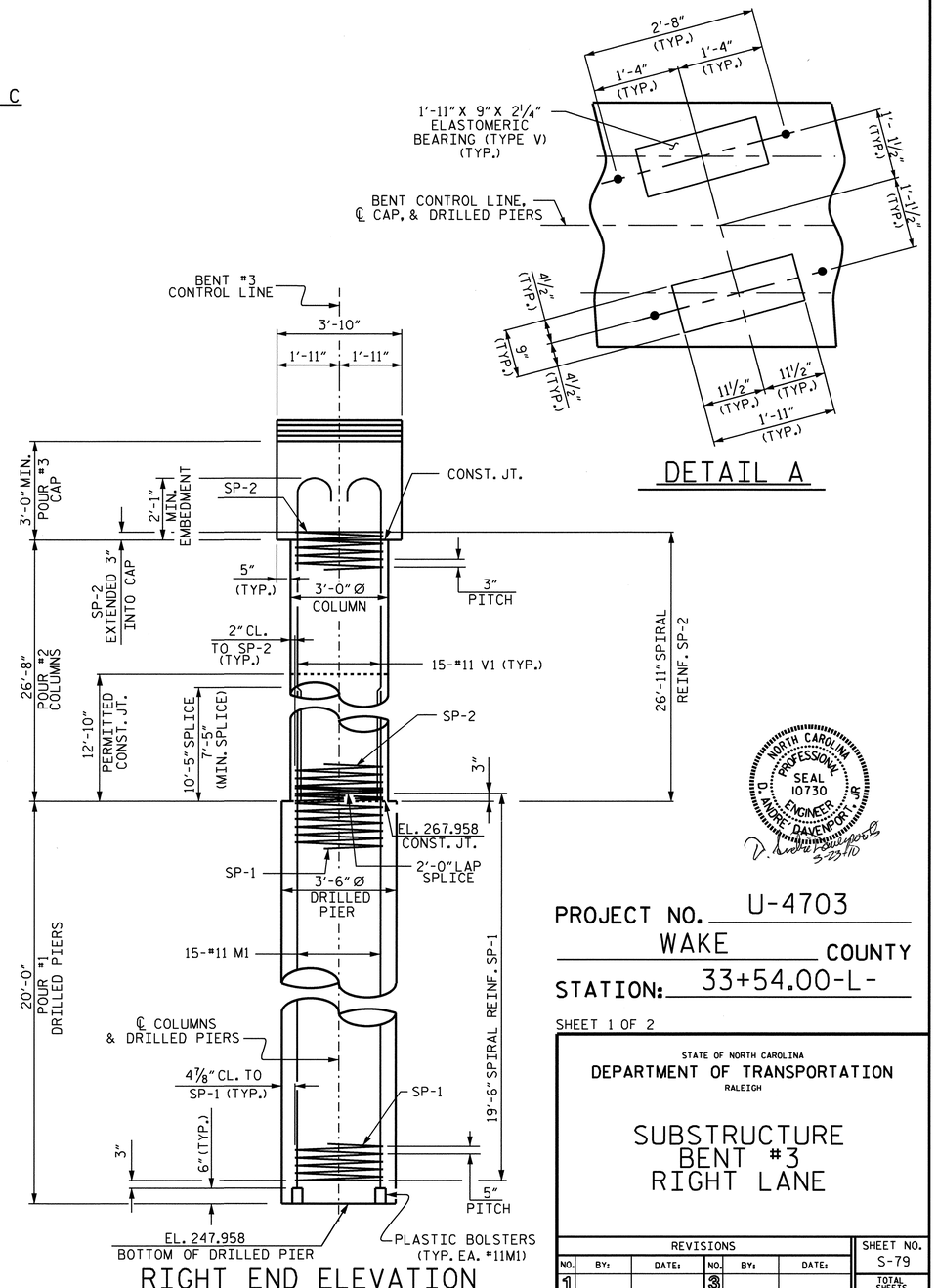

RIGHT END ELEVATION

NORTH CAROLINA PROFESSIONAL SEAL 10730 ENGINEER D. ANDRE DAVENPORT

PROJECT NO. U-4703

WAKE COUNTY

STATION: 33+54.00-L-

SHEET 1 OF 2

STATE OF NORTH CAROLINA
DEPARTMENT OF TRANSPORTATION
RALEIGH

SUBSTRUCTURE
BENT #3
RIGHT LANE

REVISIONS						SHEET NO.
NO.	BY:	DATE:	NO.	BY:	DATE:	S-79
1			3			TOTAL SHEETS
2			4			89

DRAWN BY : D.A. DAVENPORT DATE : 7/09
CHECKED BY : M.G. SHAIKH DATE : 8/09

22-MAR-2010 15:13
r:\structures\ddavenport\microstation\u4703_sd_b*.dgn
dgladden

STR.#2

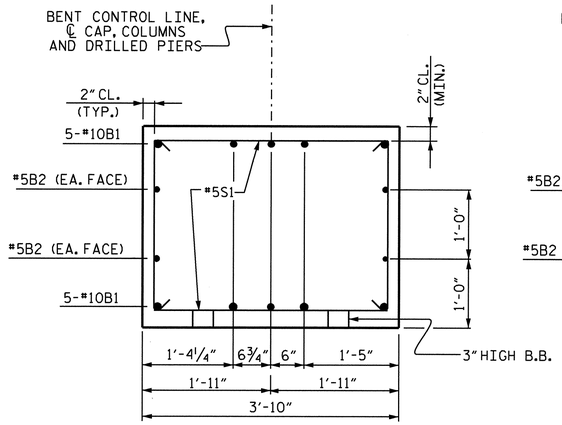

SECTION A-A

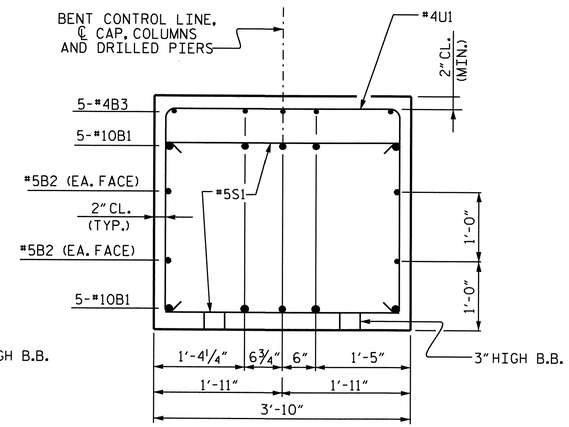

SECTION B-B

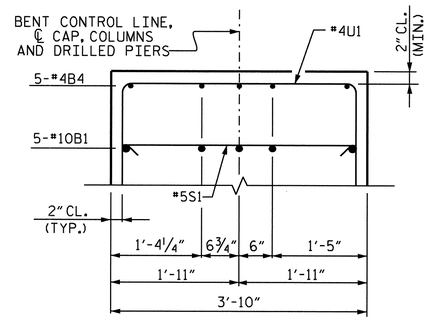

SECTION C-C

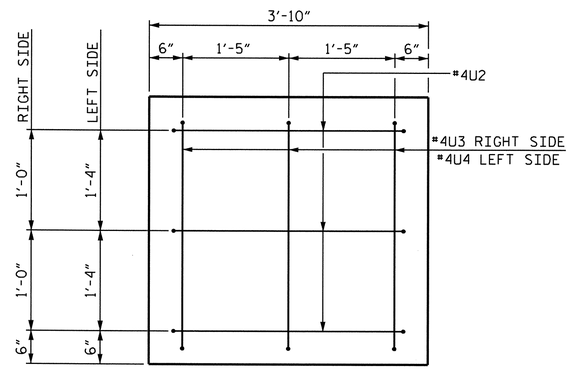

END VIEW

2" MIN. CONCRETE COVER FROM END OF CAP REQUIRED FOR ALL #4U3 AND #4U2 BARS.

#4U3 AND #4U2 BARS MAY BE SHIFTED UP TO 2" TO CLEAR "B" BARS.

BAR TYPES

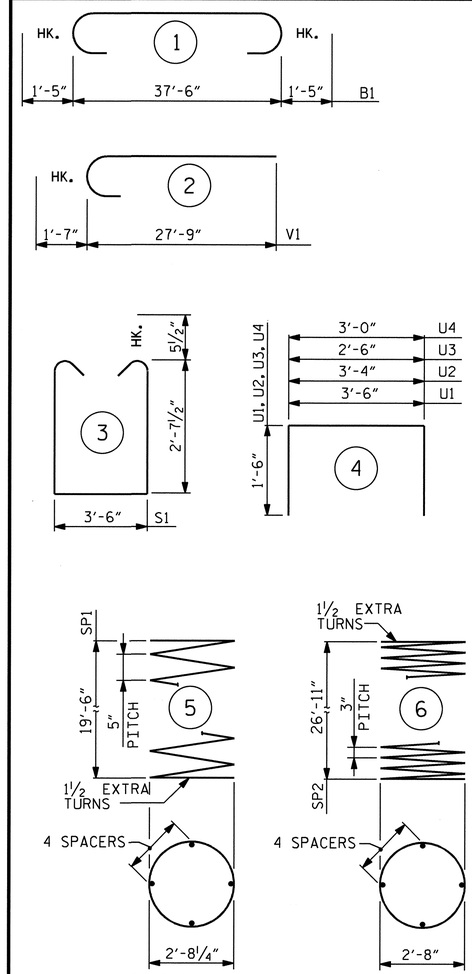

ALL BAR DIMENSIONS ARE OUT TO OUT.

BILL OF MATERIAL

BENT #3

BAR	NO.	SIZE	TYPE	LENGTH	WEIGHT
B1	10	#10	1	40'-4"	1736
B2	4	#5	STR.	37'-8"	157
B3	5	#4	STR.	16'-5"	55
B4	5	#4	STR.	4'-1"	14
M1	45	#11	STR.	30'-11"	7392
S1	24	#5	3	9'-8"	242
U1	45	#4	4	6'-6"	195
U2	6	#4	4	6'-4"	25
U3	3	#4	4	5'-6"	11
U4	3	#4	4	6'-0"	12
V1	39	#11	2	33'-4"	6907
REINFORCING STEEL (LBS.)					16746
SP-1	1	*	5	401'-4"	1256
SP-2	3	**	6	899'-7"	1803
SPIRAL REINFORCING STEEL (LBS.)					3059

CLASS A CONCRETE
POUR #2 (COLUMNS) 20.9 C.Y.
POUR #3 (CAP) 18.1 C.Y.

TOTAL 39.0 C.Y.

DRILLED PIERS

DRILLED PIER CONCRETE
POUR #1 (DRILLED PIERS) 21.4 C.Y.

3'-6" Ø DRILLED PIERS IN SOIL 31.0 FT.

3'-6" Ø DRILLED PIERS NOT IN SOIL 29.0 FT.

3'-6" Ø PERMANENT STEEL CASING 29.9 FT.

CSL TUBES 270.0 FT.

* THE SP-1 SPIRAL REINFORCING STEEL SHALL BE W31 OR D-31 COLD DRAWN WIRE OR #5 PLAIN OR DEFORMED BAR.

** THE SP-2 SPIRAL REINFORCING STEEL SHALL BE W20 OR D-20 COLD DRAWN WIRE OR #4 PLAIN OR DEFORMED BAR.

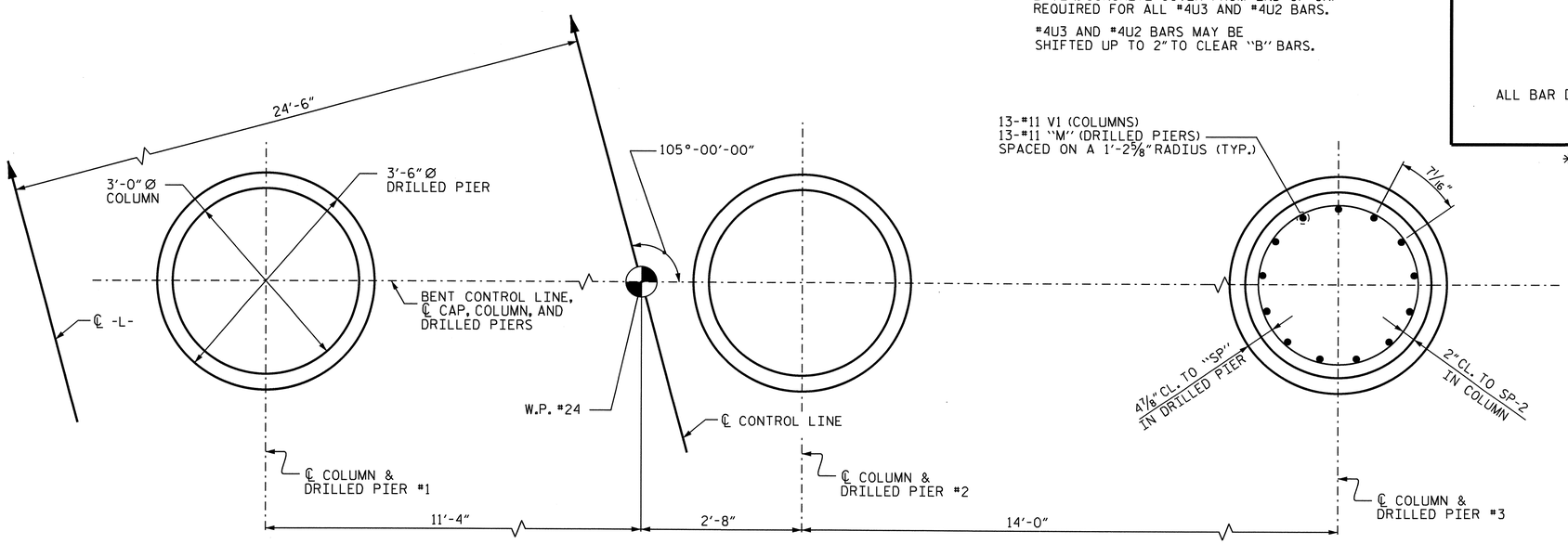

PLAN OF COLUMNS AND DRILLED PIERS

ALL COLUMNS ARE IDENTICAL AND ALL DRILLED PIERS ARE SIMILAR

PROJECT NO. U-4703
WAKE COUNTY
STATION: 33+54.00 -L-

SHEET 2 OF 2

STATE OF NORTH CAROLINA
DEPARTMENT OF TRANSPORTATION
RALEIGH

SUBSTRUCTURE
BENT #3
RIGHT LANE

NORTH CAROLINA PROFESSIONAL SEAL 10730 ENGINEER D. ANDREW DAVENPORT, JR.
3-26-10

REVISIONS							SHEET NO.
NO.	BY:	DATE:	NO.	BY:	DATE:		S-80
1			3				TOTAL SHEETS
2			4				89

STR. #2

DRAWN BY : D.A. DAVENPORT DATE : 7/09
CHECKED BY : M.G. SHAIKH DATE : 8/09

26-MAR-2010 09:29
Z:\Structures\adavenport\Microstation\u4703_sd_b*.dgn
adavenport

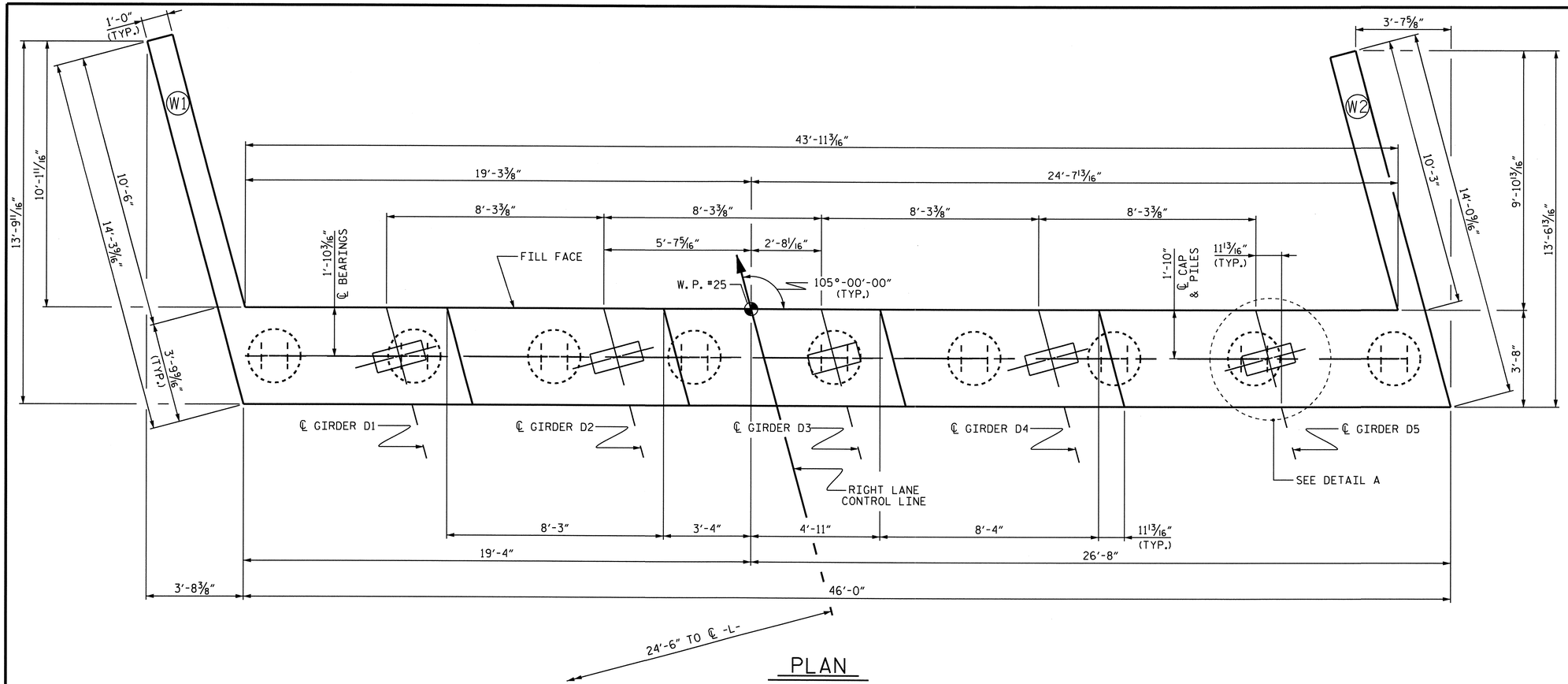

PLAN

NOTES

SEE SUPERSTRUCTURE SHEETS FOR UPPER PART OF INTEGRAL END BENT DETAILS.

THE CONTRACTOR SHALL PROVIDE FOR INSTALLATION OF THE 4"DIAMETER DRAIN PIPE THROUGH THE WING WALL AS REQUIRED FOR REINFORCED BRIDGE APPROACH FILLS. SEE THE ROADWAY PLANS. REINFORCING STEEL IN THE WING WALL MAY BE SHIFTED AS NECESSARY TO CLEAR THE DRAIN PIPE.

THE CONTRACTOR'S ATTENTION IS CALLED TO THE FACT THAT THE UPPER PART OF THE END BENT WINGS ARE TO BE POURED WITH POUR #5 OF THE SUPERSTRUCTURE.

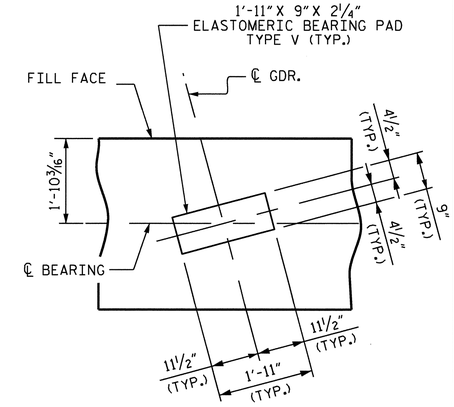

DETAIL A

PILES NOT SHOWN FOR CLARITY

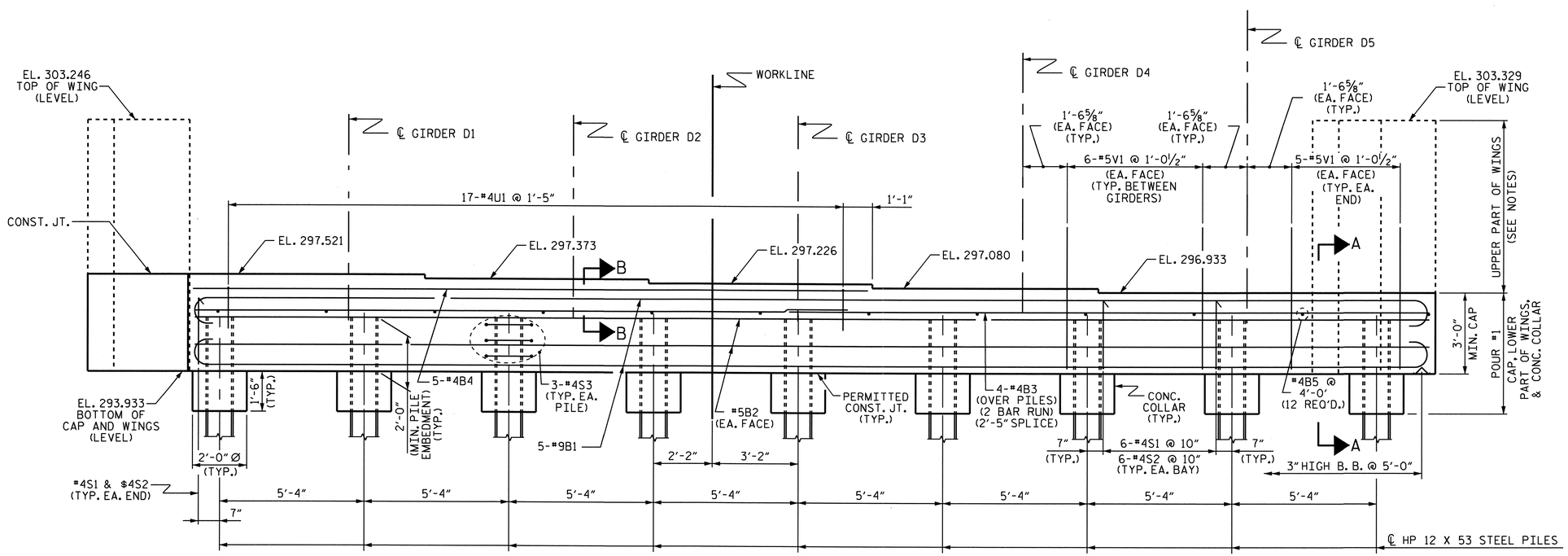

ELEVATION

PROJECT NO. U-4703

WAKE COUNTY

STATION: 33+54.00-L-

SHEET 1 OF 3

STATE OF NORTH CAROLINA
DEPARTMENT OF TRANSPORTATION
RALEIGH

SUBSTRUCTURE INTEGRAL END BENT #2 (RIGHT LANE)

REVISIONS						SHEET NO.
NO.	BY:	DATE:	NO.	BY:	DATE:	S-81
1			3			TOTAL SHEETS
2			4			89

DRAWN BY : H. T. BARBOUR DATE : 7-01-09
CHECKED BY : M.G. SHAIKH DATE : 09/09/09

23-MAR-2010 09:21
Z:\Structures\tbarbour\Microstation\str2\U-4703_SD_E*.dgn
ddavenport

STR. #2

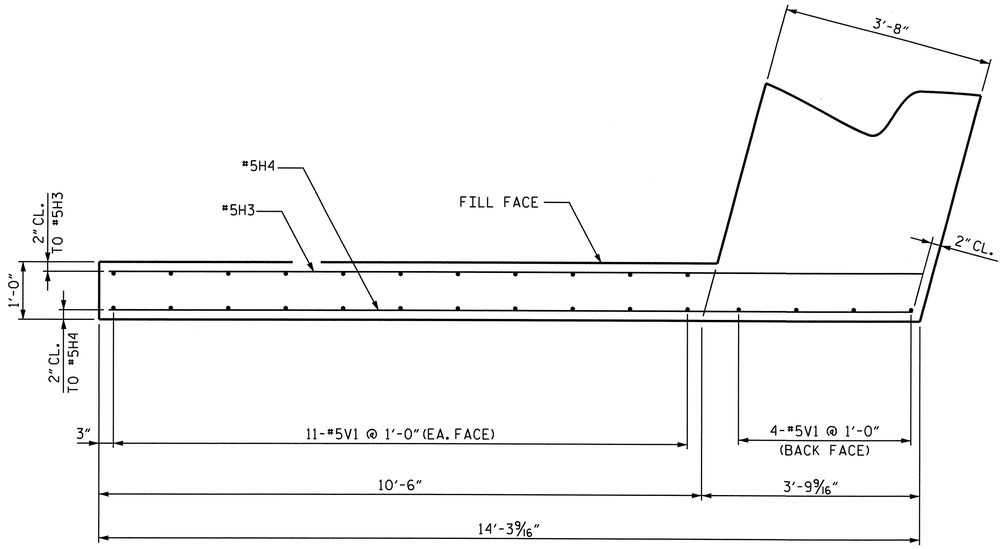

PLAN OF LEFT WING (W1)

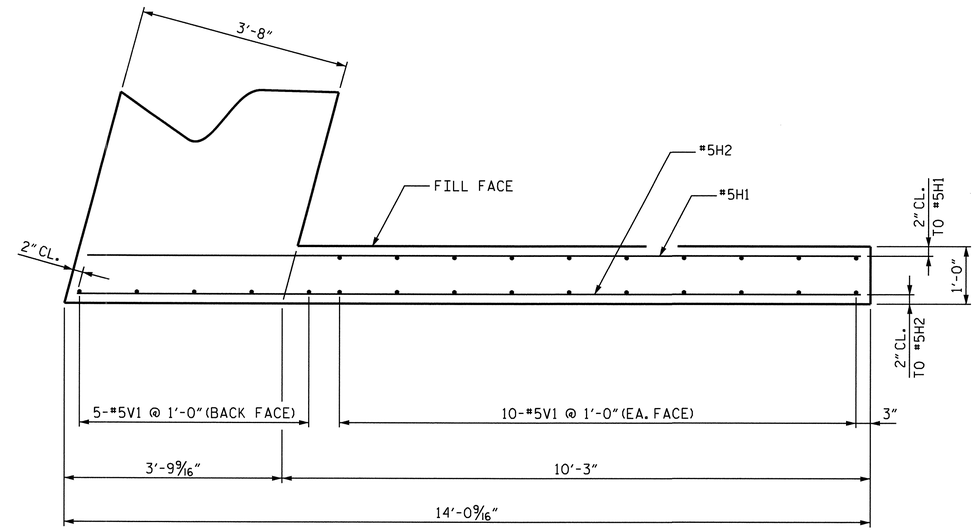

PLAN OF RIGHT WING (W2)

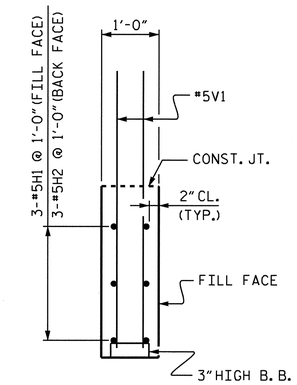

SECTION Y-Y

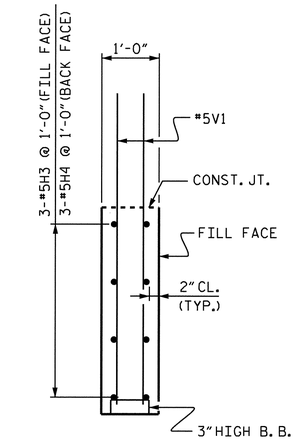

SECTION X-X

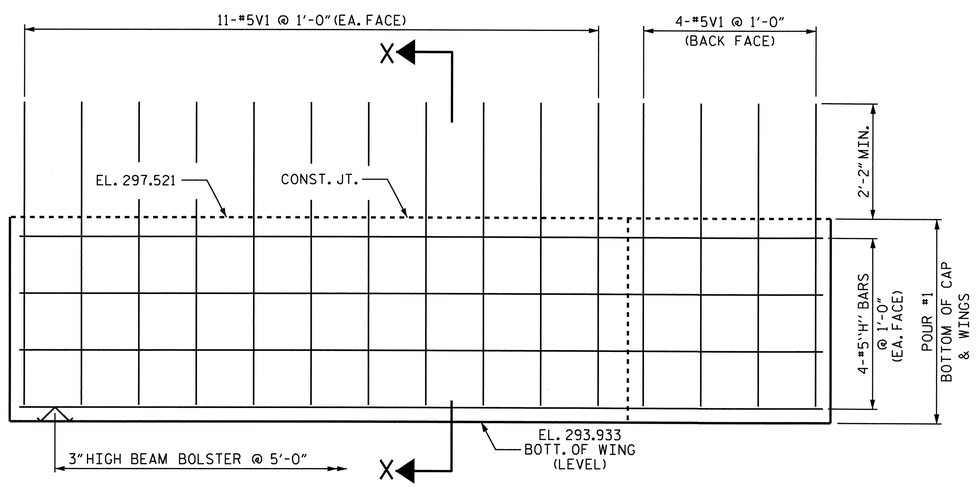

ELEVATION OF LEFT WING (W1)

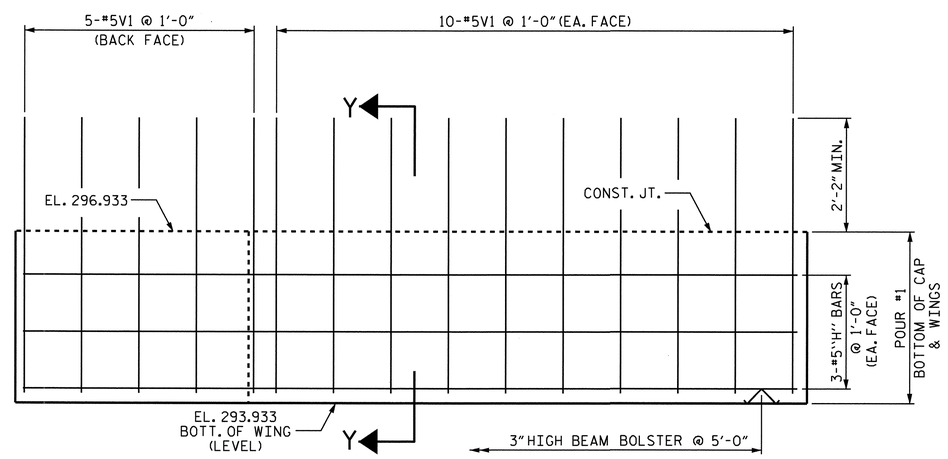

ELEVATION OF RIGHT WING (W2)

PROJECT NO. U-4703

WAKE COUNTY

STATION: 33+54.00-L-

SHEET 2 OF 3

STATE OF NORTH CAROLINA
DEPARTMENT OF TRANSPORTATION
RALEIGH

SUBSTRUCTURE INTEGRAL END BENT #2 (RIGHT LANE)

NORTH CAROLINA PROFESSIONAL SEAL 10730 ENGINEER D. ANDREW DAVENPORT, JR.

2-3-10

REVISIONS						SHEET NO.
NO.	BY:	DATE:	NO.	BY:	DATE:	S-82
1			3			TOTAL SHEETS
2			4			89

DRAWN BY : H. T. BARBOUR DATE : 7-08-09
CHECKED BY : M.G. SHAIKH DATE : 09/09/09

03-FEB-2010 12:23
Y:\Structures\tbarbour\Microstation\str2\U-4703_SD_E*.dgn
ADAVENPORT

STR. #2

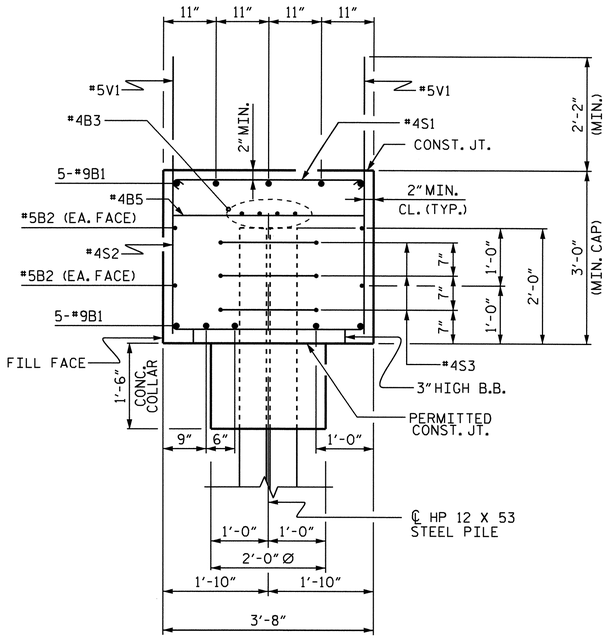

SECTION A-A

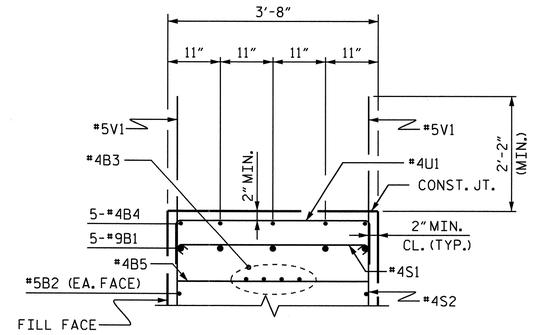

SECTION B-B

BAR TYPES

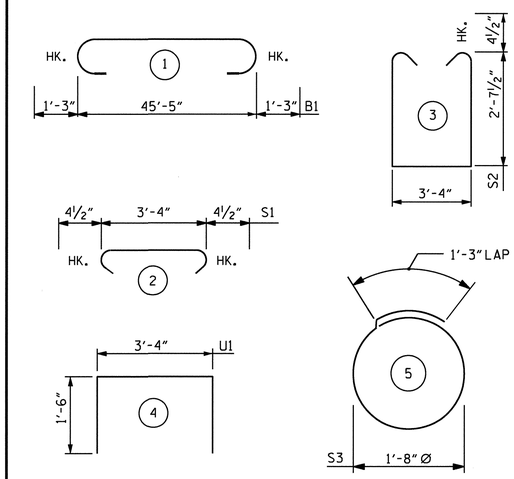

ALL BAR DIMENSIONS ARE OUT TO OUT.

BILL OF MATERIAL

END BENT #2

BAR	NO.	SIZE	TYPE	LENGTH	WEIGHT
B1	10	#9	1	47'-11"	1629
B2	4	#5	STR	45'-7"	190
B3	8	#4	STR	24'-1"	129
B4	5	#4	STR	24'-9"	83
B5	12	#4	STR	3'-4"	27
H1	3	#5	STR	13'-5"	42
H2	3	#5	STR	13'-7"	43
H3	4	#5	STR	14'-2"	59
H4	4	#5	STR	14'-0"	58
S1	50	#4	2	4'-1"	136
S2	50	#4	3	9'-4"	312
S3	27	#4	5	6'-6"	117
U1	17	#4	4	6'-4"	72
V1	119	#5	STR	5'-7"	693

REINFORCING STEEL = 3590 LBS.

CLASS A CONCRETE

* POUR #1 (CAP, LOWER PART OF WINGS, CONC. COLLAR) CU. YDS. 24.6

TOTAL CU. YDS. 24.6

HP 12 X 53 STEEL PILES

NO. 9 LIN. FT. 180

* CONCRETE QUANTITY FOR UPPER PART OF WINGS IN POUR #5 ON SUPERSTRUCTURE.

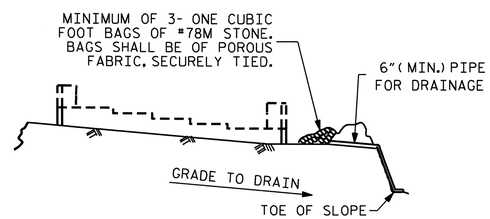

BAGGED STONE AND PIPE SHALL BE PLACED IMMEDIATELY AFTER COMPLETION OF END BENT EXCAVATION. PIPE MAY BE EITHER CONCRETE, CORRUGATED STEEL, CORRUGATED ALUMINUM ALLOY, OR CORRUGATED PLASTIC. PERFORATED PIPE WILL NOT BE ALLOWED.

BAGGED STONE SHALL REMAIN IN PLACE UNTIL THE ENGINEER DIRECTS THAT IT BE REMOVED. THE CONTRACTOR SHALL REMOVE AND DISPOSE OF SILT ACCUMULATIONS AT BAGGED STONE WHEN SO DIRECTED BY THE ENGINEER. BAGS SHALL BE REMOVED AND REPLACED WHENEVER THE ENGINEER DETERMINES THAT THEY HAVE DETERIORATED AND LOST THEIR EFFECTIVENESS.

NO SEPARATE PAYMENT WILL BE MADE FOR THIS WORK AND THE ENTIRE COST OF THIS WORK SHALL BE INCLUDED IN THE UNIT CONTRACT PRICE BID FOR THE SEVERAL PAY ITEMS.

TEMPORARY DRAINAGE AT END BENT

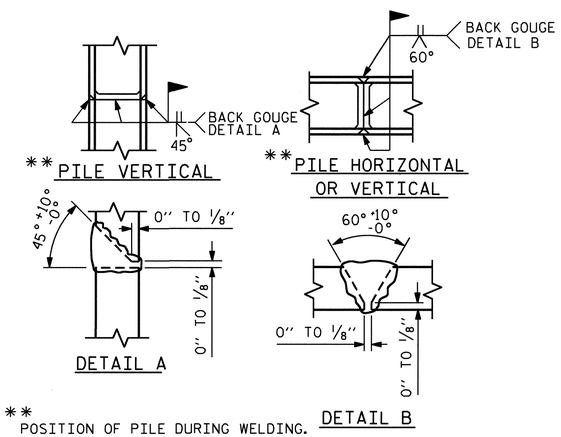

** POSITION OF PILE DURING WELDING.

PILE SPLICE DETAILS

PROJECT NO. U-4703

WAKE COUNTY

STATION: 33+54.00-L-

SHEET 3 OF 3

STATE OF NORTH CAROLINA
DEPARTMENT OF TRANSPORTATION
RALEIGH

SUBSTRUCTURE INTEGRAL END BENT #2 (RIGHT LANE)

NORTH CAROLINA PROFESSIONAL SEAL 10730 ENGINEER D. ANDREW DAVENPORT, JR.

REVISIONS						SHEET NO.
NO.	BY:	DATE:	NO.	BY:	DATE:	S-83
1			3			TOTAL SHEETS
2			4			89

DRAWN BY : H. T. BARBOUR DATE : 7-08-09
CHECKED BY : M.G. SHAIKH DATE : 09/09/09

03-FEB-2010 12:24
Y:\Structures\tbarbour\Microstation\str2\U-4703_SD_E*.dgn
ADAVENPORT

STR. #2

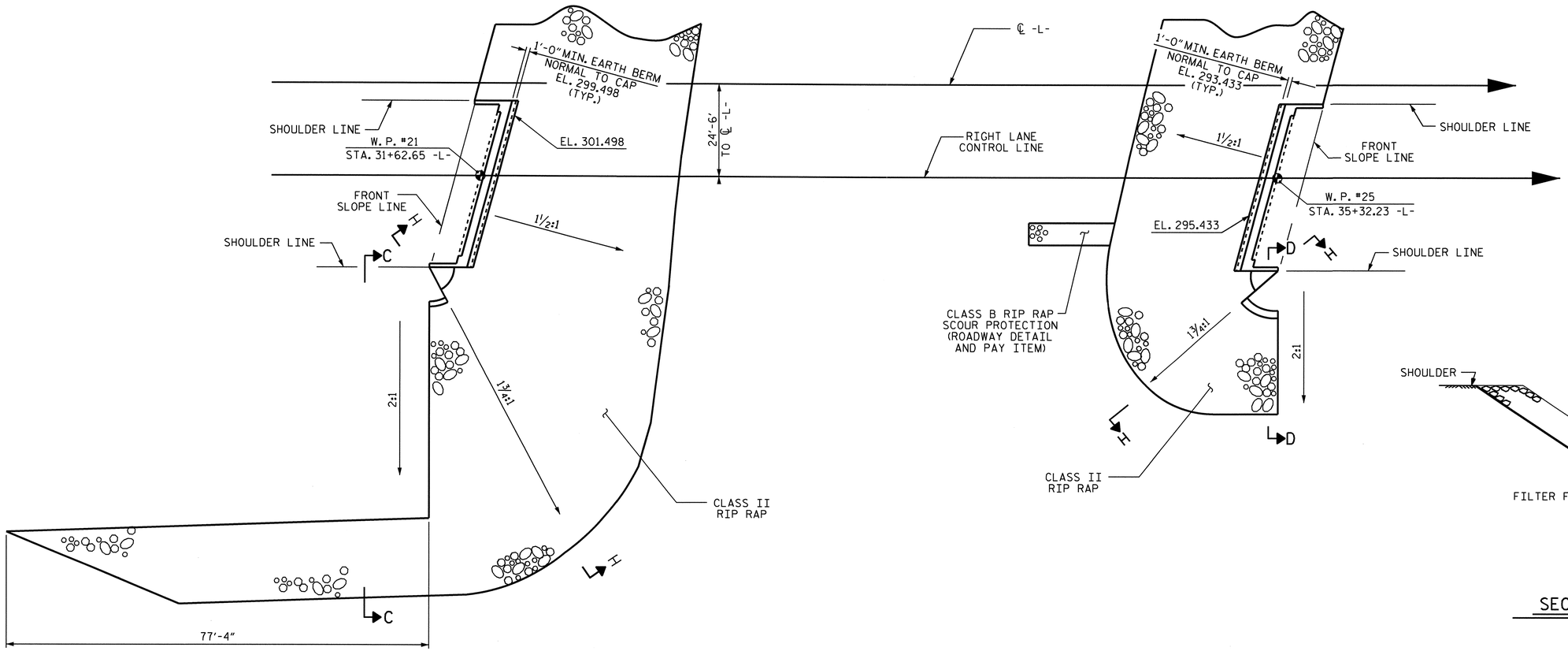

END BENT #1

PLAN

END BENT #2

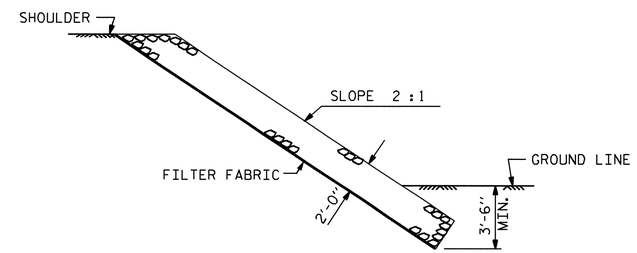

SECTION D-D

ESTIMATED QUANTITIES		
BRIDGE @ STA. 33+54.00 -L-	RIP RAP CLASS II (2'-0" THICK)	FILTER FABRIC FOR DRAINAGE
	TONS	SQUARE YARDS
END BENT 1	480	535
END BENT 2	390	430
TOTAL	870	965

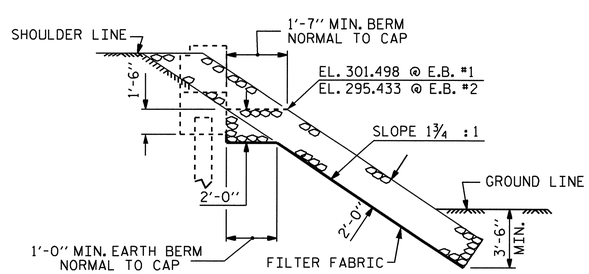

SECTION H-H

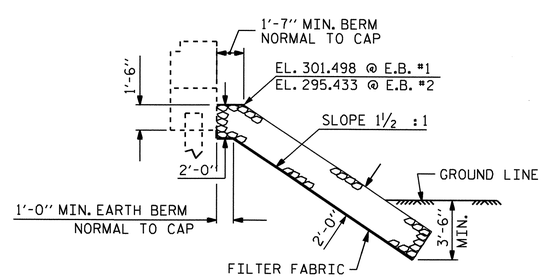

℄ SECTION
BERM RIP RAPPED

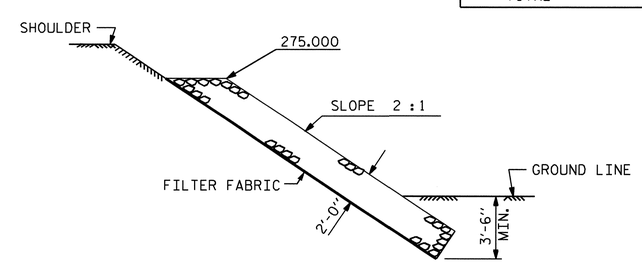

SECTION C-C

PROJECT NO. U-4703
WAKE COUNTY
STATION: 33+54.00 -L-

STATE OF NORTH CAROLINA
DEPARTMENT OF TRANSPORTATION
RALEIGH

RIP RAP DETAILS
(RIGHT LANE)

NORTH CAROLINA PROFESSIONAL SEAL 10730 ENGINEER D. ANDREW DAVENPORT JR.
2/3/10

REVISIONS						SHEET NO.
NO.	BY:	DATE:	NO.	BY:	DATE:	S-84
1			3			TOTAL SHEETS
2			4			89

ASSEMBLED BY : M. G. SHIAKH DATE : 05-29-08		
CHECKED BY : H. T. BARBOUR DATE : 01-22-09		
DRAWN BY : REK 1/84	REV. 8/16/99	RWW/LES
CHECKED BY : RDU 1/84	REV. 10/17/00	RWW/LES
	REV. 5/1/06	TLA/GM

03-FEB-2010 12:14
Y:\Structures\mshaikh\Microstation\STR 2\U-4703_sd_RR.dgn
ADAVENPORT

STR. #2

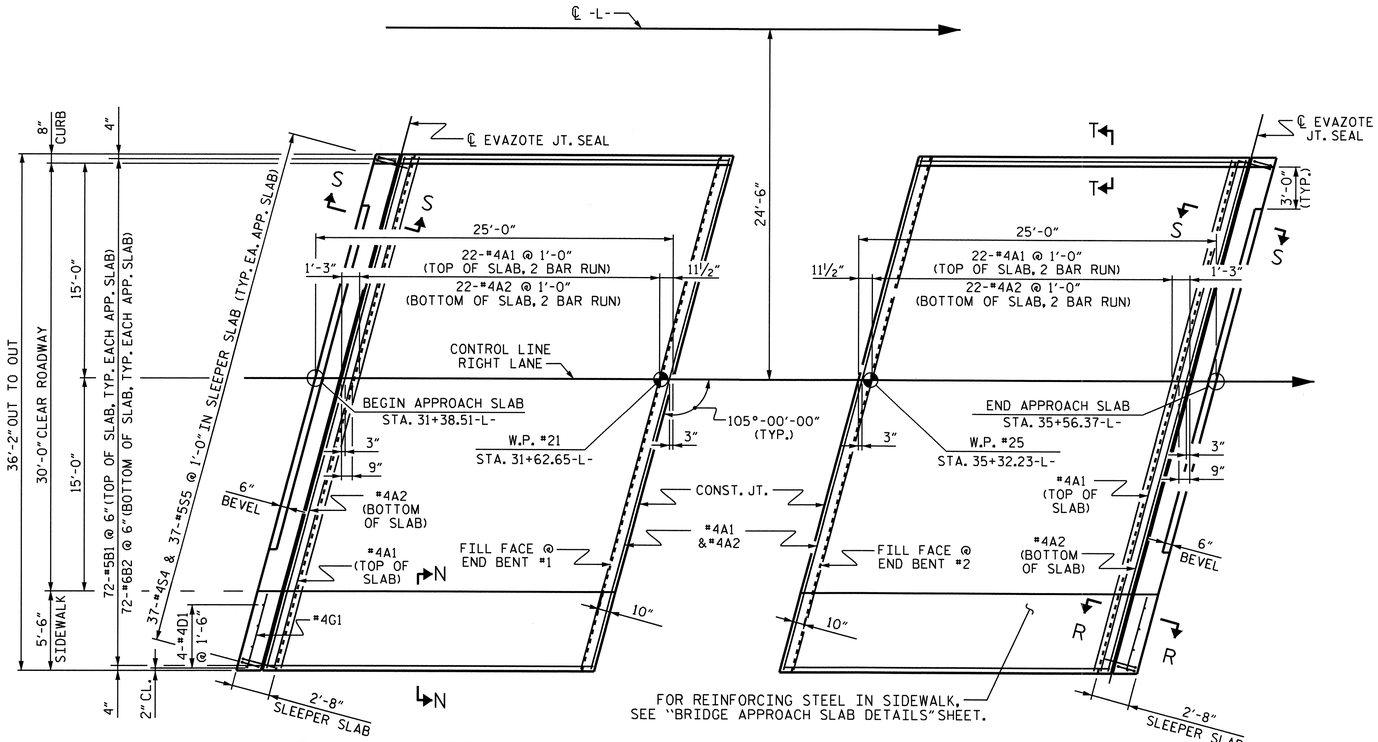

PLAN @ END BENT #1

PLAN @ END BENT #2

DIMENSIONS SHOWN ARE TYPICAL FOR BOTH APPROACH SLABS. #4 A1 BARS IN SLEEPER SLAB NOT SHOWN FOR CLARITY.

NOTES

APPROACH SLAB SHALL NOT BE CONSTRUCTED PRIOR TO COMPLETION OF THE BRIDGE DECK.

FOR REINFORCED BRIDGE APPROACH FILL INCLUDING FABRIC, IMPERMEABLE GEOMEMBRANE, 4" Ø DRAINAGE PIPE, #78M STONE, AND SELECT MATERIAL, SEE ROADWAY PLANS.

AREA BETWEEN THE WINGWALL AND APPROACH SLAB SHALL BE GRADED TO DRAIN THE WATER AWAY FROM THE FILL FACE OF THE BRIDGE AND SHALL BE PAVED. SEE ROADWAY PLANS.

THE 6" COMP. A.B.C. SHALL BE FLUSH WITH THE SLEEPER SLAB AND SHALL EXTEND 1'-0" OUTSIDE OF EACH EDGE OF THE APPROACH SLAB.

THE CONTRACTOR MAY USE 4" TYPE B-25.0B ASPHALT CONCRETE BASE COURSE IN LIEU OF 6" COMP. A.B.C. IF THIS OPTION IS USED, THE BASE COURSE SHALL BE FLUSH WITH THE SLEEPER SLAB, AND THE WIDTH SHALL BE THE SAME AS THAT OF THE APPROACH SLAB.

THE CONTRACTOR MAY USE 5" CLASS "A" CONCRETE BASE IN LIEU OF 6" COMP. A.B.C. IF THIS OPTION IS USED, THE CONCRETE BASE SHALL BE FLUSH WITH THE SLEEPER SLAB, AND THE WIDTH SHALL BE THE SAME AS THAT OF THE APPROACH SLAB. THE CONCRETE SHALL BE FINISHED TO A SMOOTH SURFACE AND A LAYER OF 30 LB ROOFING FELT SHALL BE PLACED BETWEEN THE CONCRETE BASE AND THE APPROACH SLAB TO PREVENT BOND. THE APPROACH SLAB SHALL NOT BE CAST UNTIL THE CONCRETE BASE HAS REACHED AN AGE OF THREE CURING DAYS.

THE VERTICAL JOINT ON THE RIGHT AND LEFT SIDE OF THE APPROACH SLAB AT THE ENDS OF THE EVAZOTE JOINT SHALL BE FILLED WITH SILICONE OR OTHER APPROVED MATERIAL IN ORDER TO PREVENT BACKFILL FROM ENTERING THE JOINT OPENING.

THE JOINT OPENING AT THE APPROACH SLAB/DECK INTERFACE SHALL BE SAWED NO MORE THAN 12 HOURS AFTER THE APPROACH SLAB IS CAST. THE JOINT SHALL BE CLEANED OF ALL DEBRIS BEFORE THE SEALANT IS APPLIED. THE JOINT SEALER MATERIAL SHALL CONFORM TO THE REQUIREMENTS OF TYPE SL LOW MODULUS SILICONE SEALANT.

FOR EVAZOTE JOINT SEALS, SEE SPECIAL PROVISIONS.

THE NOMINAL UNCOMPRESSED SEAL WIDTH OF THE EVAZOTE JOINT SEAL SHALL BE 3 7/16".

FOR ELASTOMERIC CONCRETE, SEE SPECIAL PROVISIONS.

#4D1 DOWELS MAY BE PUSHED INTO GREEN CONCRETE AFTER SLAB HAS BEEN SCREED OFF.

THE ¾" Ø HEX HEAD BOLTS SHALL CONFORM TO ASTM F593 ALLOY 304 STAINLESS STEEL. NO SEPARATE PAYMENT WILL BE MADE FOR FURNISHING AND INSTALLING THE COVER PLATE. THE ENTIRE COST OF THIS WORK SHALL BE INCLUDED IN THE LUMP SUM PRICE FOR EVAZOTE JOINT SEALS.

BILL OF MATERIAL

FOR ONE APPROACH SLAB (2 REQ'D)

BAR	NO.	SIZE	TYPE	LENGTH	WEIGHT
✳ A1	62	#4	STR	19'-7"	811
A2	48	#4	STR	19'-6"	625
✳ B1	72	#5	STR	22'-3"	1671
B2	72	#6	STR	22'-9"	2460
✳ B3	4	#4	STR	22'-3"	59
✳ D1	20	#4	STR	1'-3"	17
✳ G1	24	#4	STR	5'-4"	86
✳ S4	37	#4	1	3'-11"	97
S5	37	#5	2	2'-11"	113

REINFORCING STEEL	3198 LBS.
✳ EPOXY COATED REINFORCING STEEL	2741 LBS.

CLASS AA CONCRETE	
POUR #1 - BOTTOM SLEEPER SLAB	1.8 C. Y.
POUR #2 - TOP OF SLEEPER SLAB	2.1 C. Y.
POUR #3 - APPROACH SLAB, CURB & SIDEWALK	35.4 C. Y.
TOTAL	39.3 C. Y.

BAR TYPES

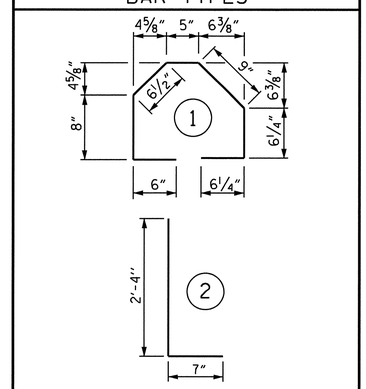

ALL BAR DIMENSIONS ARE OUT TO OUT

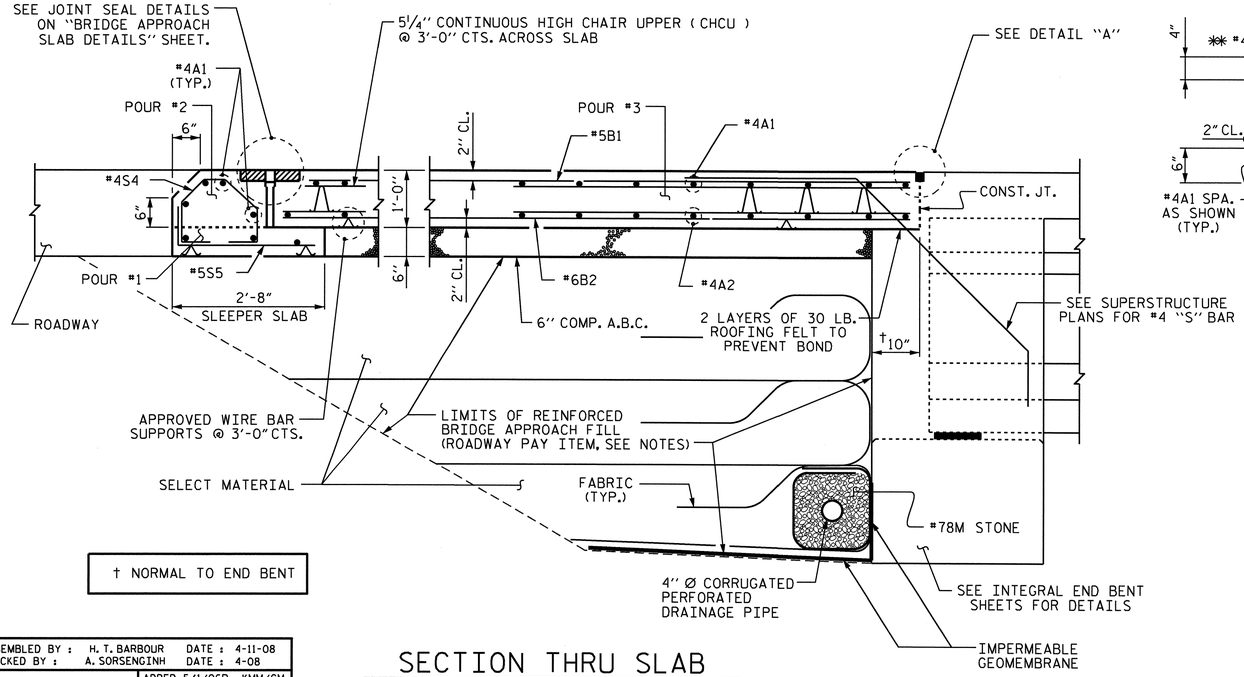

† NORMAL TO END BENT

SECTION THRU SLAB

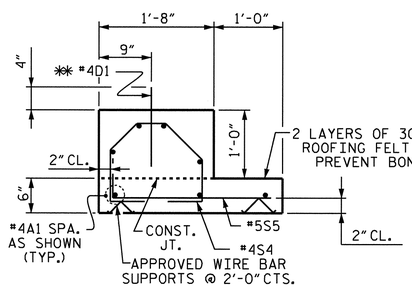

SECTION R-R

SHOWING SLEEPER SLAB @ SIDEWALK

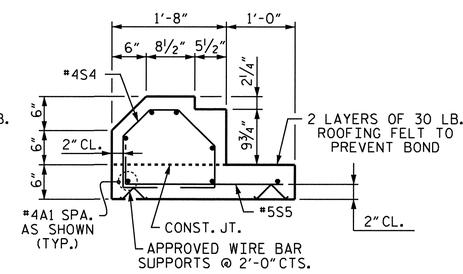

SECTION S-S

SHOWING SLEEPER SLAB

✳✳ THESE #4D1 DOWELS ARE TO BE PLACED AFTER THE SAWING OF THE JOINT. THE HOLES SHALL BE DRILLED AND THE #4D1 DOWELS GROUTED INTO PLACE.

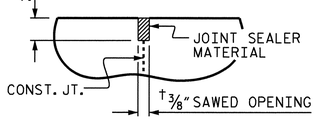

DETAIL "A"

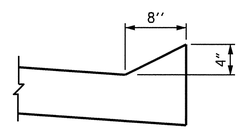

SECTION T-T

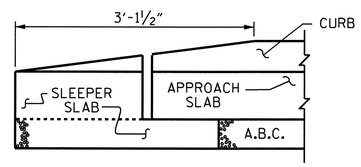

END OF CURB WITHOUT SHOULDER BERM GUTTER

PROJECT NO. U-4703

WAKE COUNTY

STATION: 33+54.00-L-

SHEET 1 OF 2

STATE OF NORTH CAROLINA
DEPARTMENT OF TRANSPORTATION
RALEIGH

BRIDGE APPROACH SLAB FOR INTEGRAL ABUTMENT (RIGHT LANE)

NORTH CAROLINA PROFESSIONAL SEAL 10730 ENGINEER D. ANDREW DAVENPORT, JR.

REVISIONS						SHEET NO.
NO.	BY:	DATE:	NO.	BY:	DATE:	S-85
1			3			TOTAL SHEETS
2			4			89

ASSEMBLED BY :	H. T. BARBOUR	DATE :	4-11-08
CHECKED BY :	A. SORSENGINH	DATE :	4-08
DRAWN BY :	TLA 10/05	ADDED 5/1/06R	KMM/GM
CHECKED BY :	GM 5/06		

03-FEB-2010 12:17
Y:\Structures\tbarbour\Microstation\str2\u4703_sd_AS.dgn
ADAVENPORT

STR. #2

STD. NO. BAS11 (SHT 5)

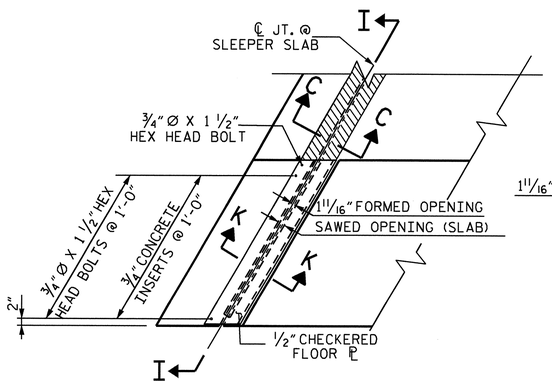

PLAN VIEW OF EVAZOTE

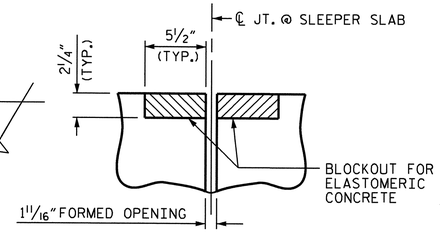

SECTION C-C
EVAZOTE JOINT SEAL
(PRE-SAWED ELASTOMERIC CONCRETE DIMENSIONS)

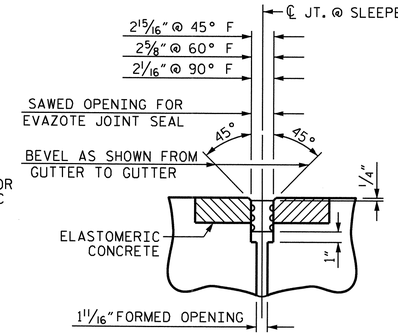

SECTION C-C
EVAZOTE JOINT SEAL
(EXPANSION)

JOINT SEAL @ SLEEPER SLAB FOR SIDEWALK

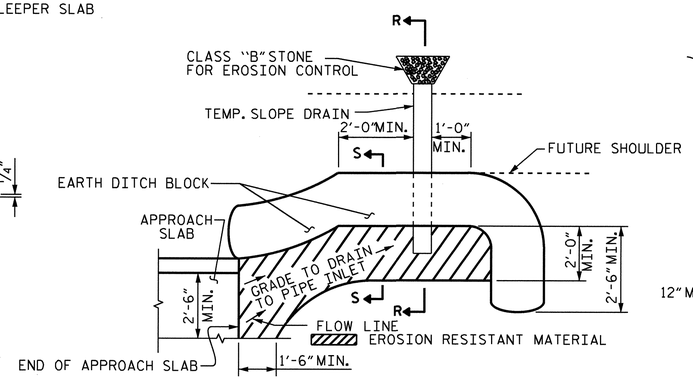

NOTE: IMMEDIATELY AFTER THE CONSTRUCTION OF THE APPROACH SLAB, THE CONTRACTOR SHALL PROVIDE TEMPORARY BERM AND SLOPE DRAIN. CONTRACTOR SHALL GRADE TO PIPE INLET AND PROVIDE EROSION RESISTANT MATERIAL AS SHOWN. THE EROSION RESISTANT MATERIAL SHALL BE EITHER 1) ASPHALT PLANT MIX, TYPE 1 OR TYPE 2, MIN. 2" DEPTH, 2) EROSION CONTROL MAT, OR 3) CONCRETE, AS DIRECTED BY THE ENGINEER. THE SLOPE DRAIN SHALL CONSIST OF A NON-PERFORATED TEMPORARY DRAINAGE PIPE, 12 INCHES IN DIAMETER.

PLAN VIEW

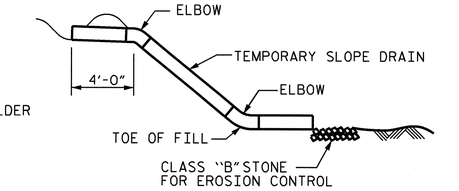

SECTION R-R

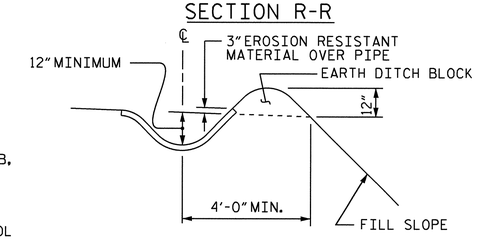

SECTION S-S

TEMPORARY BERM AND SLOPE DRAIN DETAILS

(TO BE USED WHEN SHOULDER BERM GUTTER IS REQUIRED)

ELASTOMERIC CONCRETE	
END BENT NO.	ELASTOMERIC CONCRETE * (CU. FT.)
1	5.3
2	5.3
TOTAL	10.6

* BASED ON THE MINIMUM BLOCKOUT SHOWN.

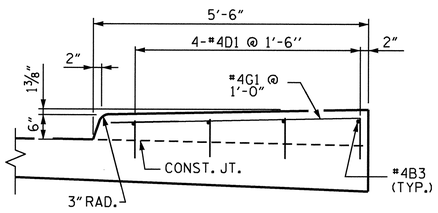

SECTION N-N

SIDEWALK DETAILS

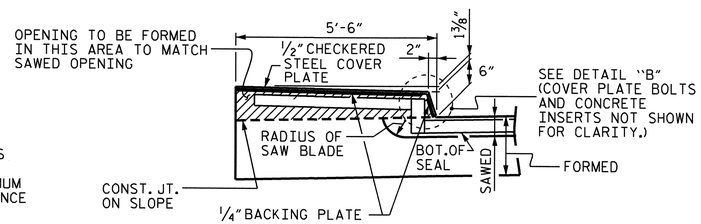

SECTION I-I

THE STEEL PLATES SHALL CONFORM TO AASHTO M270 GRADE 36 OR APPROVED EQUAL. AFTER FABRICATION, THE PLATES SHALL BE COMMERCIALLY BLAST CLEANED AND COATED WITH A MINIMUM THICKNESS OF 4 MILS (DRY) OF ZINC-RICH PAINT IN ACCORDANCE WITH THE STANDARD SPECIFICATIONS. AT THE CONTRACTOR'S OPTION, THESE SURFACES MAY BE METALLIZED TO A MINIMUM THICKNESS OF 6 MILS. SEE SPECIAL PROVISIONS FOR THERMAL SPRAYED COATINGS (METALLIZATION).

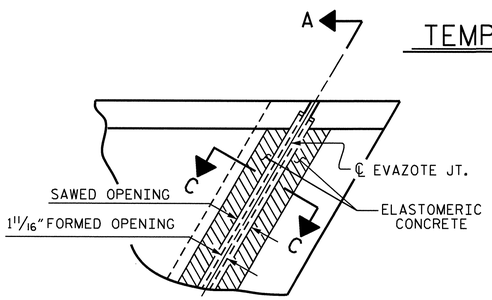

PLAN

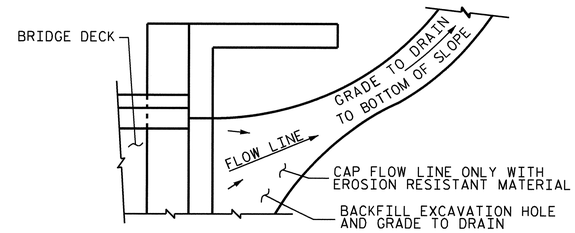

NOTE: IF THE APPROACH SLAB IS NOT CONSTRUCTED IMMEDIATELY AFTER THE BACKFILLING OF THE END BENT EXCAVATION, GRADE TO DRAIN TO THE BOTTOM OF THE SLOPE AND PROVIDE EROSION RESISTANT MATERIAL, SUCH AS FIBERGLASS ROVING OR AS DIRECTED BY THE ENGINEER TO PREVENT SOIL EROSION AND TO PROTECT THE AREA ADJACENT TO THE STRUCTURE. THE CONTRACTOR WILL BE REQUIRED TO REMOVE THESE MATERIALS PRIOR TO CONSTRUCTION OF THE APPROACH SLAB.

TEMPORARY DRAINAGE DETAIL

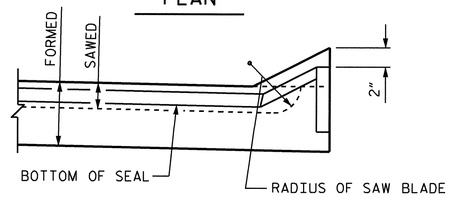

SECTION A-A

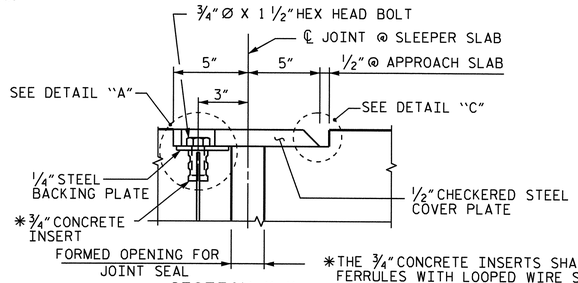

SECTION K-K

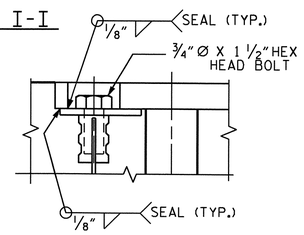

DETAIL "A"

* THE 3/4" CONCRETE INSERTS SHALL BE CLOSED-END FERRULES WITH LOOPED WIRE STRUTS ATTACHED TO THEM. THE INSERTS SHALL CONFORM TO AASHTO M169, GRADE 12L14 AND SHALL HAVE A TENSILE WORKING LOAD CAPACITY OF 3000 LBS.

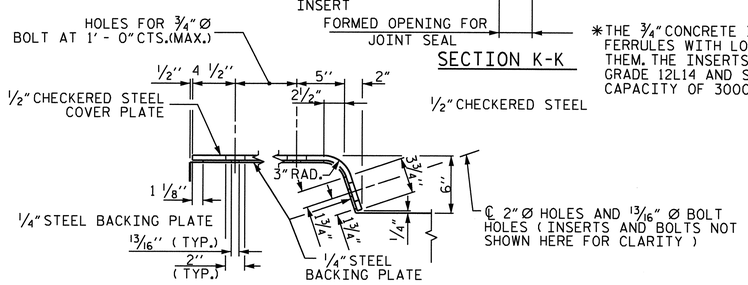

DETAIL "B"

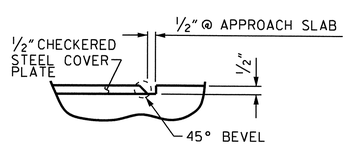

DETAIL "C"

JOINT SEAL DETAILS @ APPROACH SLAB

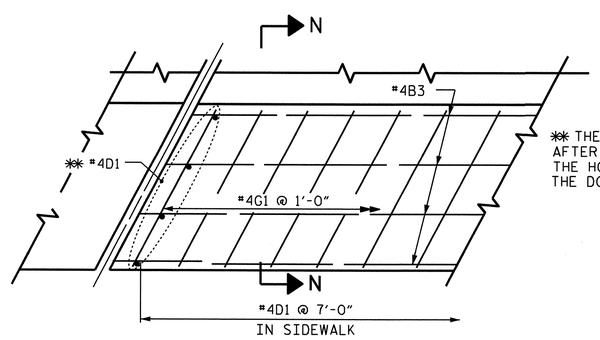

** THESE DOWELS ARE TO BE PLACED AFTER THE SAWING OF THE JOINT. THE HOLES SHALL BE DRILLED AND THE DOWELS GROUTED INTO PLACE.

PLAN

DETAIL OF SIDEWALK ON APPROACH SLAB

PROJECT NO. U-4703
WAKE COUNTY
STATION: 33+54.00-L-

SHEET 2 OF 2

STATE OF NORTH CAROLINA
DEPARTMENT OF TRANSPORTATION
RALEIGH

BRIDGE APPROACH SLAB DETAILS (RIGHT LANE)

NORTH CAROLINA PROFESSIONAL SEAL 10730 ENGINEER ANDREW DAVENPORT, JR.
2-3-10

ASSEMBLED BY :	H. T. BARBOUR	DATE :	4-11-08
CHECKED BY :	A. SORSENGINH	DATE :	4-08

DRAWN BY : FCJ	11/88	REV. 10/17/00	RWW/LES
CHECKED BY : ARB	11/88	REV. 5/7/03	RWW/JTE
		REV. 5/1/06R	MAA/KMM

REVISIONS							SHEET NO.
NO.	BY:	DATE:	NO.	BY:	DATE:		S-86
1			3				TOTAL SHEETS
2			4				89

STR. #2 STD. NO. BAS10

03-FEB-2010 14:29
Y:\Structures\tbarbour\Microstation\str2\u4703_sd_AS.dgn
ADAVENPORT

OVERHANG BRACKET CALCULATION INSTRUCTIONS

AASHTO SHAPES - TYPES III, IV, V, AND VI

1. RECORD KNOWN INFORMATION ON "BRIDGE OVERHANG BRACKET SUMMARY" ON SHEET 2
2. CALCULATE THE MAXIMUM SCREED LOAD PER BRACKET (SLPB) WITH AN ESTIMATED R = 1.5. SLPB = R X W. ROUND VALUE UP TO NEAREST SLPB VALUE INDICATED ON APPROPRIATE TABLE 1-1, 1-2, 1-3, OR 1-4.
3. WITH THE ESTIMATED SLPB, OVERHANG SLAB THICKNESS, "K" VALUE, AND 45° HANGER SAFE WORKING LOAD (SWL), ENTER THE APPROPRIATE TABLE 1-1, 1-2, 1-3, OR 1-4 (BASED ON OVERHANG DIMENSION) AND DETERMINE THE BRACKET SPACING, S.
4. CALCULATE S/D1 AND S/D2, ROUNDING UP TO NEAREST VALUE IN TABLE 2. ENTER TABLE 2 AND DETERMINE R VALUE.
5. CALCULATE REVISED SLPB. ROUND VALUE UP TO NEAREST SLPB VALUE INDICATED ON APPROPRIATE TABLE 1-1, 1-2, 1-3, OR 1-4.
6. WITH THE REVISED SLPB, OVERHANG SLAB THICKNESS, "K" VALUE AND 45 HANGER SAFE WORKING LOAD (SWL), ENTER THE APPROPRIATE TABLE 1-1, 1-2, 1-3 OR 1-4 (BASED ON OVERHANG DIMENSION) AND DETERMINE REVISED BRACKET SPACING, S.
7. CONTINUE ITERATIONS OF STEPS 4-6 UNTIL THE REVISED BRACKET SPACING, S, IS THE SAME AS THE PREVIOUS S VALUE.
8. CHECK LUMBER JOIST SPACING: WITH BRACKET SPACING VALUE, S, ROUND THIS VALUE UP TO THE NEAREST VALUE OF ALLOWABLE SPAN LENGTH OF JOIST OF TABLE 3. USING THIS VALUE, ALONG WITH THE AVERAGE OVERHANG SLAB THICKNESS AND THE LUMBER JOIST SIZE, DETERMINE JOIST SPACING FROM TABLE 3. IF NECESSARY, ADJUST LUMBER JOIST SIZE AND/OR JOIST SPACING TO MEET ALLOWABLE SPAN LENGTH OF JOIST.
9. CONVERSELY, IF THE DESIRED JOIST SPACING IS KNOWN, USE THIS ALONG WITH THE AVERAGE OVERHANG SLAB THICKNESS AND THE LUMBER JOIST SIZE TO DETERMINE IF ALLOWABLE SPAN LENGTH OF JOIST IS GREATER THAN THE BRACKET SPACING, S. IF NECESSARY, ADJUST LUMBER JOIST SIZE TO MEET REQUIREMENTS OF ALLOWABLE SPAN LENGTH OF JOIST AND JOIST SPACING.
10. RECORD REMAINING INFORMATION ON "BRIDGE OVERHANG BRACKET SUMMARY" FORM.
11. SUBMIT FORM AND CALCULATIONS FOR REVIEW AND APPROVAL.

TABLE 1-1

(FOR USE ON **UP TO 2'-0" OVERHANG Ⓛ** & 54" HORIZONTAL LEG LENGTH OF THE OVERHANG BRACKET)

AVG. SLAB THICKNESS Ⓣ (in)	BRACKET Ⓚ DIMENSION (in)	SCREED LOAD PER BRACKET									45° HANGER SWL (lbs)
		2500 lbs.	2250 lbs.	2000 lbs.	1750 lbs.	1500 lbs.	1250 lbs.	1000 lbs.	750 lbs.	0 lbs.	
		BRACKET SPACING									
10	30				2'-1"	2'-7"	3'-2"	3'-8"	4'-2"	5'-9"	4000
		3'-6"	4'-0"	4'-5"	4'-9"	5'-1"	5'-3"	5'-5"	5'-7"	6'-7"	6000
	40				2'-1"	2'-7"	3'-2"	3'-8"	4'-2"	5'-9"	4000
		3'-6"	4'-0"	4'-5"	4'-9"	5'-1"	5'-3"	5'-5"	5'-7"	6'-7"	6000
	50				2'-1"	2'-7"	3'-2"	3'-8"	4'-2"	5'-9"	4000
		3'-6"	4'-0"	4'-5"	4'-9"	5'-1"	5'-3"	5'-5"	5'-7"	6'-7"	6000
12	30					2'-4"	2'-10"	3'-4"	3'-9"	5'-2"	4000
		3'-2"	3'-7"	4'-1"	4'-7"	5'-0"	5'-2"	5'-4"	5'-7"	6'-5"	6000
	40					2'-4"	2'-10"	3'-4"	3'-9"	5'-2"	4000
		3'-2"	3'-7"	4'-1"	4'-7"	5'-0"	5'-2"	5'-4"	5'-7"	6'-5"	6000
	50					2'-4"	2'-10"	3'-4"	3'-9"	5'-2"	4000
		3'-2"	3'-7"	4'-1"	4'-7"	5'-0"	5'-2"	5'-4"	5'-7"	6'-5"	6000
14	30					2'-2"	2'-7"	3'-0"	3'-5"	4'-9"	4000
		2'-10"	3'-4"	3'-9"	4'-2"	4'-7"	5'-0"	5'-4"	5'-7"	6'-4"	6000
	40					2'-2"	2'-7"	3'-0"	3'-5"	4'-9"	4000
		2'-10"	3'-4"	3'-9"	4'-2"	4'-7"	5'-0"	5'-4"	5'-7"	6'-4"	6000
	50					2'-2"	2'-7"	3'-0"	3'-5"	4'-9"	4000
		2'-10"	3'-4"	3'-9"	4'-2"	4'-7"	5'-0"	5'-4"	5'-7"	6'-4"	6000
16	30					2'-0"	2'-4"	2'-9"	3'-2"	4'-4"	4000
		2'-8"	3'-0"	3'-5"	3'-10"	4'-3"	4'-7"	5'-0"	5'-5"	6'-3"	6000
	40					2'-0"	2'-4"	2'-9"	3'-2"	4'-4"	4000
		2'-8"	3'-0"	3'-5"	3'-10"	4'-3"	4'-7"	5'-0"	5'-5"	6'-3"	6000
	50					2'-0"	2'-4"	2'-9"	3'-2"	4'-4"	4000
		2'-8"	3'-0"	3'-5"	3'-10"	4'-3"	4'-7"	5'-0"	5'-5"	6'-3"	6000

TABLE 1-2

(FOR USE ON **OVER 2'-0" TO 2'-6" OVERHANG Ⓛ** & 54" HORIZONTAL LEG LENGTH OF THE OVERHANG BRACKET)

AVG. SLAB THICKNESS Ⓣ (in)	BRACKET Ⓚ DIMENSION (in)	SCREED LOAD PER BRACKET									45° HANGER SWL (lbs)
		2500 lbs.	2250 lbs.	2000 lbs.	1750 lbs.	1500 lbs.	1250 lbs.	1000 lbs.	750 lbs.	0 lbs.	
		BRACKET SPACING									
10	30					2'-4"	2'-9"	3'-3"	3'-8"	5'-1"	4000
		3'-1"	3'-6"	4'-0"	4'-5"	4'-11"	5'-3"	5'-5"	5'-7"	6'-7"	6000
	40					2'-4"	2'-9"	3'-3"	3'-8"	5'-1"	4000
		3'-1"	3'-6"	4'-0"	4'-5"	4'-11"	5'-3"	5'-5"	5'-7"	6'-7"	6000
	50					2'-4"	2'-9"	3'-3"	3'-8"	5'-1"	4000
		3'-1"	3'-6"	4'-0"	4'-5"	4'-11"	5'-3"	5'-5"	5'-7"	6'-7"	6000
12	30					2'-1"	2'-6"	2'-11"	3'-4"	4'-6"	4000
		2'-9"	3'-2"	3'-7"	4'-0"	4'-5"	4'-10"	5'-3"	5'-7"	6'-5"	6000
	40					2'-1"	2'-6"	2'-11"	3'-4"	4'-6"	4000
		2'-9"	3'-2"	3'-7"	4'-0"	4'-5"	4'-10"	5'-3"	5'-7"	6'-5"	6000
	50					2'-1"	2'-6"	2'-11"	3'-4"	4'-6"	4000
		2'-9"	3'-2"	3'-7"	4'-0"	4'-5"	4'-10"	5'-3"	5'-7"	6'-5"	6000
14	30						2'-3"	2'-7"	3'-0"	4'-1"	4000
		2'-6"	2'-10"	3'-3"	3'-7"	4'-0"	4'-4"	4'-9"	5'-1"	6'-3"	6000
	40						2'-3"	2'-7"	3'-0"	4'-1"	4000
		2'-6"	2'-10"	3'-3"	3'-7"	4'-0"	4'-4"	4'-9"	5'-1"	6'-3"	6000
	50						2'-3"	2'-7"	3'-0"	4'-1"	4000
		2'-6"	2'-10"	3'-3"	3'-7"	4'-0"	4'-4"	4'-9"	5'-1"	6'-3"	6000
16	30						2'-1"	2'-5"	2'-9"	3'-9"	4000
		2'-3"	2'-7"	2'-11"	3'-4"	3'-8"	4'-0"	4'-4"	4'-8"	5'-8"	6000
	40						2'-1"	2'-5"	2'-9"	3'-9"	4000
		2'-3"	2'-7"	2'-11"	3'-4"	3'-8"	4'-0"	4'-4"	4'-8"	5'-8"	6000
	50						2'-1"	2'-5"	2'-9"	3'-9"	4000
		2'-3"	2'-7"	2'-11"	3'-4"	3'-8"	4'-0"	4'-4"	4'-8"	5'-8"	6000

TABLE 1-3

(FOR USE ON **OVER 2'-6" TO 3'-0" OVERHANG Ⓛ** & 54" HORIZONTAL LEG LENGTH OF THE OVERHANG BRACKET)

AVG. SLAB THICKNESS Ⓣ (in)	BRACKET Ⓚ DIMENSION (in)	SCREED LOAD PER BRACKET									45° HANGER SWL (lbs)
		2500 lbs.	2250 lbs.	2000 lbs.	1750 lbs.	1500 lbs.	1250 lbs.	1000 lbs.	750 lbs.	0 lbs.	
		BRACKET SPACING									
10	30					2'-1"	2'-6"	2'-11"	3'-4"	4'-6"	4000
						4'-5"	4'-10"	5'-3"	5'-7"	6'-7"	6000
	40					2'-1"	2'-6"	2'-11"	3'-4"	4'-6"	4000
		2'-9"	3'-2"	3'-7"	4'-0"	4'-5"	4'-10"	5'-3"	5'-7"	6'-7"	6000
	50					2'-1"	2'-6"	2'-11"	3'-4"	4'-6"	4000
		2'-9"	3'-2"	3'-7"	4'-0"	4'-5"	4'-10"	5'-3"	5'-7"	6'-7"	6000
12	30						2'-2"	2'-7"	2'-11"	4'-0"	4000
						3'-11"	4'-3"	4'-8"	5'-0"	6'-1"	6000
	40						2'-2"	2'-7"	2'-11"	4'-0"	4000
		2'-5"	2'-10"	3'-2"	3'-6"	3'-11"	4'-3"	4'-8"	5'-0"	6'-1"	6000
	50						2'-2"	2'-7"	2'-11"	4'-0"	4000
		2'-5"	2'-10"	3'-2"	3'-6"	3'-11"	4'-3"	4'-8"	5'-0"	6'-1"	6000
14	30						2'-0"	2'-4"	2'-8"	3'-8"	4000
					3'-2"	3'-6"	3'-10"	4'-2"	4'-6"	5'-6"	6000
	40						2'-0"	2'-4"	2'-8"	3'-8"	4000
		2'-2"	2'-6"	2'-10"	3'-2"	3'-6"	3'-10"	4'-2"	4'-6"	5'-6"	6000
	50						2'-0"	2'-4"	2'-8"	3'-8"	4000
		2'-2"	2'-6"	2'-10"	3'-2"	3'-6"	3'-10"	4'-2"	4'-6"	5'-6"	6000
16	30							2'-1"	2'-5"	3'-4"	4000
					2'-11"	3'-2"	3'-6"	3'-10"	4'-1"	5'-0"	6000
	40							2'-1"	2'-5"	3'-4"	4000
		2'-0"	2'-4"	2'-7"	2'-11"	3'-2"	3'-6"	3'-10"	4'-1"	5'-0"	6000
	50							2'-1"	2'-5"	3'-4"	4000
		2'-0"	2'-4"	2'-7"	2'-11"	3'-2"	3'-6"	3'-10"	4'-1"	5'-0"	6000

TABLE 1-4

(FOR USE ON **OVER 3'-0" TO 3'-6" OVERHANG Ⓛ** & 54" HORIZONTAL LEG LENGTH OF THE OVERHANG BRACKET)

AVG. SLAB THICKNESS Ⓣ (in)	BRACKET Ⓚ DIMENSION (in)	SCREED LOAD PER BRACKET									45° HANGER SWL (lbs)
		2500 lbs.	2250 lbs.	2000 lbs.	1750 lbs.	1500 lbs.	1250 lbs.	1000 lbs.	750 lbs.	0 lbs.	
		BRACKET SPACING									
10	30						2'-1"	2'-5"	2'-9"	3'-10"	4000
						2'-3"	2'-11"	3'-7"	4'-3"	5'-9"	6000
	40						2'-1"	2'-5"	2'-9"	3'-10"	4000
				2'-4"	3'-0"	3'-7"	4'-1"	4'-5"	4'-9"	5'-9"	6000
	50						2'-1"	2'-5"	2'-9"	3'-10"	4000
		2'-4"	2'-8"	3'-0"	3'-4"	3'-8"	4'-1"	4'-5"	4'-9"	5'-9"	6000
12	30							2'-2"	2'-6"	3'-5"	4000
						2'-1"	2'-8"	3'-4"	3'-11"	5'-2"	6000
	40							2'-2"	2'-6"	3'-5"	4000
				2'-2"	2'-9"	3'-4"	3'-7"	3'-11"	4'-3"	5'-2"	6000
	50							2'-2"	2'-6"	3'-5"	4000
		2'-1"	2'-4"	2'-8"	3'-0"	3'-4"	3'-7"	3'-11"	4'-3"	5'-2"	6000
14	30								2'-3"	3'-1"	4000
						2'-0"	2'-6"	3'-1"	3'-8"	4'-8"	6000
	40								2'-3"	3'-1"	4000
				2'-0"	2'-7"	3'-0"	3'-3"	3'-6"	3'-10"	4'-8"	6000
	50								2'-3"	3'-1"	4000
			2'-2"	2'-5"	2'-8"	3'-0"	3'-3"	3'-6"	3'-10"	4'-8"	6000
16	30								2'-0"	2'-9"	4000
							2'-4"	2'-10"	3'-5"	4'-3"	6000
	40								2'-0"	2'-9"	4000
					2'-5"	2'-8"	2'-11"	3'-3"	3'-6"	4'-3"	6000
	50								2'-0"	2'-9"	4000
				2'-2"	2'-5"	2'-8"	2'-11"	3'-3"	3'-6"	4'-3"	6000

DEFINITIONS

SLPB = SCREED LOAD PER BRACKET (R x W)
R = SCREED LOAD FACTOR, OBTAINED FROM TABLE 2
W = WHEEL LOAD
S = BRACKET SPACING
T = AVERAGE SLAB THICKNESS
SWL = SAFE WORKING LOAD
K = DIMENSION DEFINED ON "BRIDGE OVERHANG BRACKET SUMMARY" ON SHEET 2
L = OVERHANG MEASURED FROM EDGE OF TOP FLANGE TO EDGE OF SUPERSTRUCTURE

PROJECT NO. U-4703
WAKE COUNTY
STATION: 33+54.00 -L-

SHEET 1 OF 3

STATE OF NORTH CAROLINA
DEPARTMENT OF TRANSPORTATION
RALEIGH

STANDARD OVERHANG FALSEWORK

AASHTO TYPES
III, IV, V, AND VI

(RIGHT LANE)

NORTH CAROLINA PROFESSIONAL SEAL 18788 ENGINEER CHANG-CHUAN VICTOR CHAO

Chang-Chuan Victor Chao
2-5-2010

REVISIONS						SHEET NO.
NO.	BY:	DATE:	NO.	BY:	DATE:	S-87
1			3			TOTAL SHEETS 87
2			4			

ASSEMBLED BY:	DATE:
CHECKED BY:	DATE:
DRAWN BY: R. WRIGHT 06/04	REV.
CHECKED BY: C. V. CHAO 06/04	

05-FEB-2010 13:41
d:\wdir\victor\overhangfalsework\tiebar&strut\u4703_type_iv\u4703overhangesheetsright.dgn
vchao

STR. #2

OF1

BRIDGE OVERHANG BRACKET SUMMARY

TOTAL SCREED WEIGHT = _____ LBS.
NUMBER OF SCREED WHEELS = _____
SCREED WHEEL LOAD (W) = _____ LBS.
SCREED LOAD PER BRACKET = _____ LBS.

PROJECT No. : _____
COUNTY : _____
STATION : _____
DESCRIPTION : _____

DATE : _____
DESIGN BY : _____
CHECK BY : _____

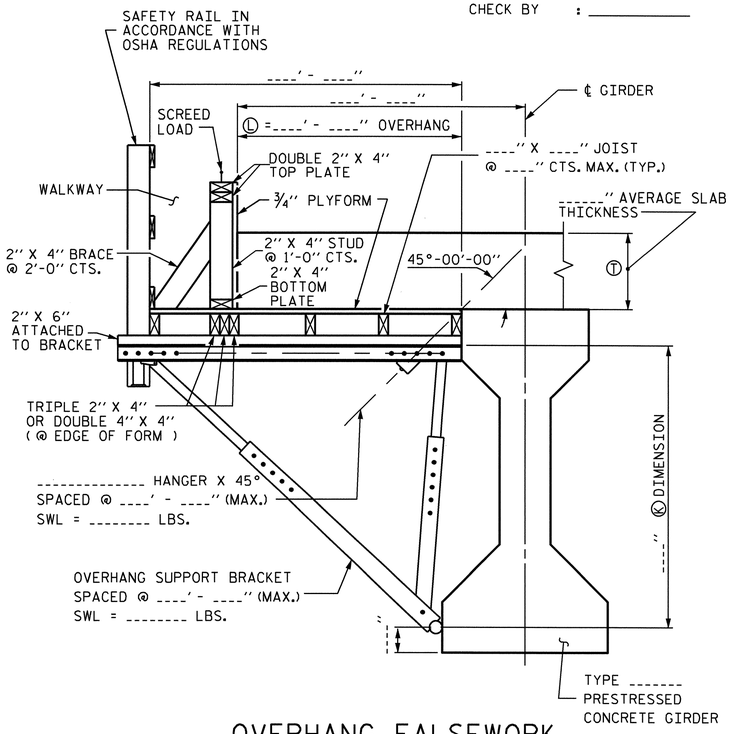

OVERHANG FALSEWORK

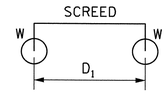

4-WHEEL MACHINE

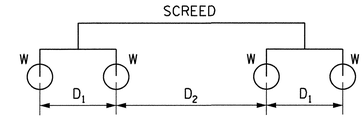

8-WHEEL MACHINE

4 WHEEL MACHINE	
S/D1	R
<= 1.0	1.00
1.1	1.09
1.2	1.17
1.3	1.23
1.4	1.29
1.5	1.33
1.6	1.38
1.7	1.41
1.8	1.44
1.9	1.47
2.0	1.50
2.2	1.55
2.4	1.58
2.6	1.62
2.8	1.64
3.0	1.67
3.5	1.71
4.0	1.75

TABLE 2: SCREED LOAD FACTOR "R"

		THE SCREED LOAD FACTOR R (FOR 8 WHEEL MACHINE)																	
		S/D_2																	
		<= 1.0	1.1	1.2	1.3	1.4	1.5	1.6	1.7	1.8	1.9	2.0	2.2	2.4	2.6	2.8	3.0	3.5	4.0
S/D_1	<= 1.0	1.00	1.09	1.17	1.23	1.29	1.33	1.38	1.41	1.44	1.47	1.50	1.55	1.58	1.62	1.64	1.67	1.71	1.75
	1.1	1.09	1.18	1.26	1.32	1.38	1.42	1.47	1.50	1.54	1.56	1.59	1.64	1.67	1.71	1.73	1.76	1.81	1.84
	1.2	1.17	1.26	1.33	1.40	1.45	1.50	1.54	1.58	1.61	1.64	1.67	1.71	1.75	1.78	1.81	1.83	1.88	1.92
	1.3	1.23	1.32	1.40	1.46	1.52	1.56	1.61	1.64	1.68	1.70	1.73	1.78	1.81	1.85	1.87	1.90	1.95	1.98
	1.4	1.29	1.38	1.45	1.52	1.57	1.62	1.66	1.70	1.73	1.76	1.79	1.83	1.87	1.90	1.93	1.95	2.00	2.07
	1.5	1.33	1.42	1.50	1.56	1.62	1.67	1.71	1.75	1.78	1.81	1.83	1.88	1.92	1.95	1.98	2.00	2.10	2.17
	1.6	1.38	1.47	1.54	1.61	1.66	1.71	1.75	1.79	1.82	1.85	1.88	1.92	1.96	1.99	2.04	2.08	2.18	2.25
	1.7	1.41	1.50	1.58	1.64	1.70	1.75	1.79	1.82	1.86	1.89	1.91	1.96	2.00	2.05	2.11	2.16	2.25	2.32
	1.8	1.44	1.54	1.61	1.68	1.73	1.78	1.82	1.86	1.89	1.92	1.94	1.99	2.06	2.12	2.17	2.22	2.32	2.39
	1.9	1.47	1.56	1.64	1.70	1.76	1.81	1.85	1.89	1.92	1.95	1.97	2.04	2.11	2.18	2.23	2.28	2.38	2.45
	2.0	1.50	1.59	1.67	1.73	1.79	1.83	1.88	1.91	1.94	1.97	2.00	2.09	2.17	2.23	2.29	2.33	2.43	2.50
	2.2	1.55	1.64	1.71	1.78	1.83	1.88	1.92	1.96	1.99	2.04	2.09	2.18	2.26	2.32	2.38	2.42	2.52	2.59
	2.4	1.58	1.67	1.75	1.81	1.87	1.92	1.96	2.00	2.06	2.11	2.17	2.26	2.33	2.40	2.45	2.50	2.60	2.67
	2.6	1.62	1.71	1.78	1.85	1.90	1.95	1.99	2.05	2.12	2.18	2.23	2.32	2.40	2.46	2.52	2.56	2.66	2.73
	2.8	1.64	1.73	1.81	1.87	1.93	1.98	2.04	2.11	2.17	2.23	2.29	2.38	2.45	2.52	2.57	2.62	2.71	2.79
	3.0	1.67	1.76	1.83	1.90	1.95	2.00	2.08	2.16	2.22	2.28	2.33	2.42	2.50	2.56	2.62	2.67	2.76	2.83
	3.5	1.71	1.81	1.88	1.95	2.00	2.10	2.18	2.25	2.32	2.38	2.43	2.52	2.60	2.66	2.71	2.76	2.86	2.93
	4.0	1.75	1.84	1.92	1.98	2.07	2.17	2.25	2.32	2.39	2.45	2.50	2.59	2.67	2.73	2.79	2.83	2.93	3.00

TABLE 3: ALLOWABLE SPAN LENGTH OF JOISTS AND JOIST SPACINGS

AVG. SLAB THICKNESS Ⓣ (IN)	LUMBER JOIST SIZE (IN X IN)	JOIST SPACINGS			
		15 IN	12 IN	10 IN	8 IN
		THE ALLOWABLE SPAN LENGTH OF JOISTS			
10	2 X 4	———	4' - 6"	4' - 9"	5' - 0"
	4 X 4	5' - 9"	6' - 3"	6' - 6"	6' - 7"
12	2 X 4	———	4' - 3"	4' - 9"	5' - 0"
	4 X 4	5' - 3"	6' - 0"	6' - 3"	6' - 5"
14	2 X 4	———	4' - 0"	4' - 6"	5' - 0"
	4 X 4	———	5' - 6"	6' - 0"	6' - 4"
16	2 X 4	———	4' - 0"	4' - 3"	4' - 9"
	4 X 4	———	5' - 3"	5' - 9"	6' - 3"

NOTES

DESIGN INCLUDES CONSTRUCTION LIVE LOAD 20 PSF ON THE AREA SUPPORTED AND 75 PLF AT THE OUTSIDE DECK OF OVERHANGS.

REQUIRED MINIMUM DIAGONAL LEG CAPACITY: 3600 LB WORKING LOAD

THE CONTRACTOR HAS THE OPTION OF SUBMITTING HIS OWN DESIGN FOR OVERHANG FALSEWORK IN ACCORDANCE WITH THE SPECIAL PROVISIONS.

SUBMITTALS UTILIZING THE INSTRUCTIONS AND PROCEDURES DESCRIBED ON SHEET 1 OF 3 SHALL BE IN ACCORDANCE WITH THE APPLICABLE SECTIONS OF THE SPECIFICATIONS AND SPECIAL PROVISIONS, EXCEPT THAT CALCULATIONS FOR OVERHANG FALSEWORK NEED NOT BE SEALED BY A REGISTERED ENGINEER.

FOR OVERHANG FALSEWORK BRACING DESIGN, SEE SHEET 3 OF 3.

PROJECT NO. U-4703
WAKE COUNTY
STATION: 33+54.00 -L-

SHEET 2 OF 3

STATE OF NORTH CAROLINA
DEPARTMENT OF TRANSPORTATION
RALEIGH

STANDARD OVERHANG FALSEWORK

AASHTO TYPES
III, IV, V, AND VI

(RIGHT LANE)

NORTH CAROLINA PROFESSIONAL SEAL 18788 ENGINEER CHANG-CHUAN VICTOR CHAO

Chang-Chuan Victor Chao
2-5-2010

REVISIONS						SHEET NO.
NO.	BY:	DATE:	NO.	BY:	DATE:	5-88
1			3			TOTAL SHEETS
2			4			89

ASSEMBLED BY:	DATE:
CHECKED BY:	DATE:
DRAWN BY: R. WRIGHT 06/04	REV.
CHECKED BY: C. V. CHAO 06/04	

05-FEB-2010 13:42
d:\wdir\victor\overhangfalsework\tiebar&strut\u4703_type_iv\u4703overhangesheetsright.dgn
vchao

STR. #2

OF2

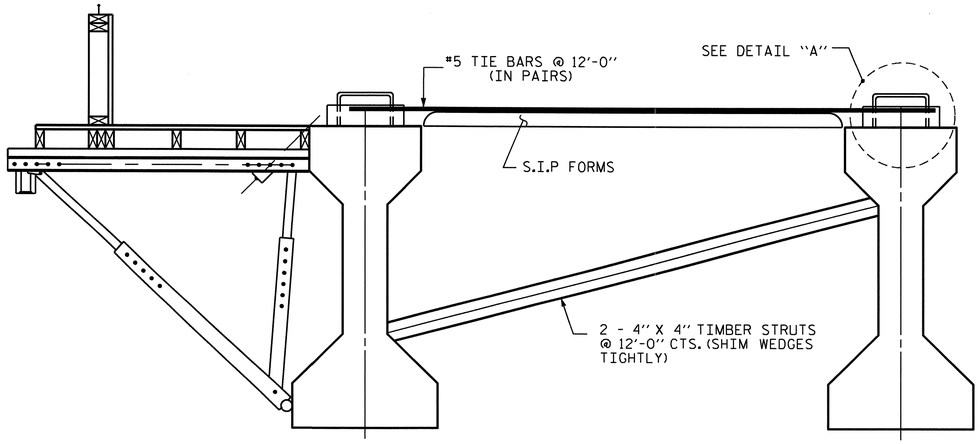

EXTERIOR GIRDER

INTERIOR GIRDER

DETAIL OF REQUIRED OVERHANG FALSEWORK BRACING SYSTEM

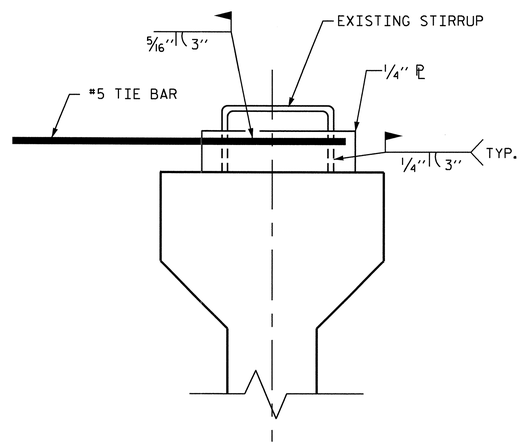

DETAIL "A"

NOTES:

EACH #5 TIE BAR SHALL BE WELDED TO ONE STIRRUP LOOP AS SHOWN IN DETAIL "A". #5 TIE BARS SHALL BE WELDED TO TWO ADJACENT STIRRUPS OF THE EXTERIOR GIRDER AND THE ADJACENT INTERIOR GIRDER BETWEEN PERMANENT DIAPHRAGMS. WELD STEEL PLATES IN BETWEEN THE TIE BARS AND THE STIRRUP LOOP. WELDING TWO TIE BARS TO THE SAME STIRRUP LOOP SHALL NOT BE PERMITTED.

MAXIMUM SPACING BETWEEN THE BRACING (TIE BARS-TIMBER STRUT) IS 12'-0" CTS. #5 TIE BARS SHALL BE LOCATED OVER A TIMBER STRUT.

INSTALL TIE BARS AND TIMBER STRUTS PRIOR TO PLACEMENT OF CONCRETE OR SCREED WEIGHT ONTO THE OVERHANG FALSEWORK.

PROJECT NO. U-4703

WAKE COUNTY

STATION: 33+54.00 -L-

SHEET 3 OF 3

STATE OF NORTH CAROLINA
DEPARTMENT OF TRANSPORTATION
RALEIGH

STANDARD OVERHANG FALSEWORK

AASHTO TYPES
III, IV, V, AND VI

(RIGHT LANE)

NORTH CAROLINA PROFESSIONAL SEAL 18788 ENGINEER CHANG-CHUAN VICTOR CHAO

Chang-Chuan Victor Chao
2-5-2010

REVISIONS						SHEET NO.
NO.	BY:	DATE:	NO.	BY:	DATE:	S-89
1			3			TOTAL SHEETS
2			4			89

DRAWN BY: R. WRIGHT 06/04 DATE :

CHECKED BY: C. V. CHAO 06/04 DATE :

05-FEB-2010 13:42
d:\wdir\victor\overhangfalsework\tiebar&strut\u4703_type_iv\u4703overhangesheetsright.dgn
vchao

STR. #2

OF3

STANDARD NOTES

DESIGN DATA:

SPECIFICATIONS	A.A.S.H.T.O. (CURRENT)
LIVE LOAD	SEE PLANS
IMPACT ALLOWANCE	SEE A.A.S.H.T.O.
STRESS IN EXTREME FIBER OF	
STRUCTURAL STEEL - AASHTO M270 GRADE 36	20,000 LBS. PER SQ. IN.
- AASHTO M270 GRADE 50W	27,000 LBS. PER SQ. IN.
- AASHTO M270 GRADE 50	27,000 LBS. PER SQ. IN.
REINFORCING STEEL IN TENSION	
GRADE 60	24,000 LBS. PER SQ. IN.
CONCRETE IN COMPRESSION	1,200 LBS. PER SQ. IN.
CONCRETE IN SHEAR	SEE A.A.S.H.T.O.
STRUCTURAL TIMBER - TREATED OR	
UNTREATED - EXTREME FIBER STRESS	1,800 LBS. PER SQ. IN.
COMPRESSION PERPENDICULAR TO GRAIN OF TIMBER	375 LBS. PER SQ. IN.
EQUIVALENT FLUID PRESSURE OF EARTH	30 LBS. PER CU. FT. (MINIMUM)

MATERIAL AND WORKMANSHIP:

EXCEPT AS MAY OTHERWISE BE SPECIFIED ON PLANS OR IN THE SPECIAL PROVISIONS, ALL MATERIAL AND WORKMANSHIP SHALL BE IN ACCORDANCE WITH THE 2006 "STANDARD SPECIFICATIONS FOR ROADS AND STRUCTURES" OF THE N.C. DEPARTMENT OF TRANSPORTATION.

STEEL SHEET PILING FOR PERMANENT OR TEMPORARY APPLICATIONS SHALL BE HOT ROLLED.

CONCRETE:

UNLESS OTHERWISE REQUIRED ON PLANS, CLASS A CONCRETE SHALL BE USED FOR ALL PORTIONS OF ALL STRUCTURES WITH THE EXCEPTION THAT: CLASS AA CONCRETE SHALL BE USED IN BRIDGE SUPERSTRUCTURES, ABUTMENT BACKWALLS, AND APPROACH SLABS; AND CLASS B CONCRETE SHALL BE USED FOR SLOPE PROTECTION AND RIP RAP.

CONCRETE CHAMFERS:

UNLESS OTHERWISE NOTED ON THE PLANS, ALL EXPOSED CORNERS ON STRUCTURES SHALL BE CHAMFERED 3/4" WITH THE FOLLOWING EXCEPTIONS: TOP CORNERS OF CURBS MAY BE ROUNDED TO 1-1/2" RADIUS WHICH IS BUILT INTO CURB FORMS; CORNERS OF TRANSVERSE FLOOR EXPANSION JOINTS SHALL BE ROUNDED WITH A 1/4" FINISHING TOOL UNLESS OTHERWISE REQUIRED ON PLANS; AND CORNERS OF EXPANSION JOINTS IN THE ROADWAY FACES AND TOPS OF CURBS AND SIDEWALKS SHALL BE ROUNDED TO A 1/4" RADIUS WITH A FINISHING STONE OR TOOL UNLESS OTHERWISE REQUIRED ON PLANS.

DOWELS:

DOWELS WHEN INDICATED ON PLANS AS FOR CULVERT EXTENSIONS, SHALL BE EMBEDDED AT LEAST 12" INTO THE OLD CONCRETE AND GROUTED INTO PLACE WITH 1:2 CEMENT MORTAR.

ALLOWANCE FOR DEAD LOAD DEFLECTION, SETTLEMENT, ETC. IN CASTING SUPERSTRUCTURES:

BRIDGES SHALL BE BUILT ON THE GRADE OR VERTICAL CURVE SHOWN ON PLANS. SLABS, CURBS AND PARAPETS SHALL CONFORM TO THE GRADE OR CURVE.

ALL DIMENSIONS WHICH ARE GIVEN IN SECTION AND ARE AFFECTED BY DEAD LOAD DEFLECTIONS ARE DIMENSIONS AT CENTER LINE OF BEARING UNLESS OTHERWISE NOTED ON PLANS. IN SETTING FORMS FOR STEEL BEAM BRIDGES AND PRESTRESSED CONCRETE GIRDER BRIDGES, ADJUSTMENTS SHALL BE MADE DUE TO THE DEAD LOAD DEFLECTIONS FOR THE ELEVATIONS SHOWN. WHERE BLOCKS ARE SHOWN OVER BEAMS FOR BUILDING UP TO THE SLAB, THE VERTICAL DIMENSIONS OF THE BLOCKS SHALL BE ADJUSTED BETWEEN BEARINGS TO COMPENSATE FOR DEAD LOAD DEFLECTIONS, VERTICAL CURVE ORDINATE, AND ACTUAL BEAM CAMBER. WHERE BOTTOM OF SLAB IS IN LINE WITH BOTTOM OF TOP FLANGES, DEPTH OF SLAB BETWEEN BEARINGS SHALL BE ADJUSTED TO COMPENSATE FOR DEAD LOAD DEFLECTION, VERTICAL CURVE ORDINATE, AND ACTUAL BEAM CAMBER.

IN SETTING FALSEWORK AND FORMS FOR REINFORCED CONCRETE SPANS, AN ALLOWANCE SHALL BE MADE FOR DEAD LOAD DEFLECTIONS, SETTLEMENT OF FALSEWORK, AND PERMANENT CAMBER WHICH SHALL BE PROVIDED FOR IN ADDITION TO THE ELEVATIONS SHOWN. AFTER REMOVAL OF THE FALSEWORK, THE FINISHED STRUCTURES SHALL CONFORM TO THE PROFILE AND ELEVATIONS SHOWN ON THE PLANS AND CONSTRUCTION ELEVATIONS FURNISHED BY THE ENGINEER.

DETAILED DRAWINGS FOR FALSEWORK OR FORMS FOR BRIDGE SUPERSTRUCTURE AND ANY STRUCTURE OR PARTS OF A STRUCTURE AS NOTED ON THE PLANS SHALL BE SUBMITTED TO THE ENGINEER FOR APPROVAL BEFORE CONSTRUCTION OF THE FALSEWORK OR FORMS IS STARTED.

REINFORCING STEEL:

ALL REINFORCING STEEL SHALL BE DEFORMED. DIMENSIONS RELATIVE TO PLACEMENT OF REINFORCING ARE TO CENTERS OF BARS UNLESS OTHERWISE INDICATED IN THE PLANS. DIMENSIONS ON BAR DETAILS ARE TO CENTERS OF BARS OR ARE OUT TO OUT AS INDICATED ON PLANS.

WIRE BAR SUPPORTS SHALL BE PROVIDED FOR REINFORCING STEEL WHERE INDICATED ON THE PLANS. WHEN BAR SUPPORT PIECES ARE PLACED IN CONTINUOUS LINES, THEY SHALL BE SO PLACED THAT THE ENDS OF THE SUPPORTING WIRES SHALL BE LAPPED TO LOCK LEGS ON ADJOINING PIECES.

STRUCTURAL STEEL:

AT THE CONTRACTOR'S OPTION, HE MAY SUBSTITUTE 7/8" Ø SHEAR STUDS FOR THE 3/4" Ø STUDS SPECIFIED ON THE PLANS. THIS SUBSTITUTION SHALL BE MADE AT THE RATE OF 3 - 7/8" Ø STUDS FOR 4 - 3/4" Ø STUDS, AND STUD SPACING CHANGES SHALL BE MADE AS NECESSARY TO PROVIDE THE SAME EQUIVALENT NUMBER OF 7/8" Ø STUDS ALONG THE BEAM AS SHOWN FOR 3/4" Ø STUDS BASED ON THE RATIO OF 3 - 7/8" Ø STUDS FOR 4 - 3/4" Ø STUDS. STUDS OF THE LENGTH SPECIFIED ON THE PLANS MUST BE PROVIDED. THE MAXIMUM SPACING SHALL BE 2'-0".

EXCEPT AT THE INTERIOR SUPPORTS OF CONTINUOUS BEAMS WHERE THE COVER PLATE IS IN CONTACT WITH BEARING PLATE, THE CONTRACTOR MAY, AT HIS OPTION, SUBSTITUTE FOR THE COVER PLATES DESIGNATED ON THE PLANS COVER PLATES OF THE EQUIVALENT AREA PROVIDED THESE PLATES ARE AT LEAST 5/16" IN THICKNESS AND DO NOT EXCEED A WIDTH EQUAL TO THE FLANGE WIDTH LESS 2" OR A THICKNESS EQUAL TO 2 TIMES THE FLANGE THICKNESS. THE SIZE OF FILLET WELDS SHALL CONFORM TO THE REQUIREMENTS OF THE CURRENT ANSI/AASHTO/AWS "BRIDGE WELDING CODE". ELECTROSLAG WELDING WILL NOT BE PERMITTED.

WITH THE SOLE EXCEPTION OF EDGES AT SURFACES WHICH BEAR ON OTHER SURFACES, ALL SHARP EDGES AND ENDS OF SHAPES AND PLATES SHALL BE SLIGHTLY ROUNDED BY SUITABLE MEANS TO A RADIUS OF APPROXIMATELY 1/16 INCH OR EQUIVALENT FLAT SURFACE AT A SUITABLE ANGLE PRIOR TO PAINTING, GALVANIZING, OR METALLIZING.

HANDRAILS AND POSTS:

METAL STANDARDS AND FACES OF THE CONCRETE END POSTS FOR THE METAL RAIL SHALL BE SET NORMAL TO THE GRADE OF THE CURB, UNLESS OTHERWISE SHOWN ON PLANS. THE METAL RAIL AND TOPS OF CONCRETE POSTS USED WITH THE ALUMINUM RAIL SHALL BE BUILT PARALLEL TO THE GRADE OF THE CURB.

METAL HANDRAILS SHALL BE IN ACCORDANCE WITH THE PLANS. RAILS SHALL BE AS MANUFACTURED FOR BRIDGE RAILING. CASTINGS SHALL BE OF A UNIFORM APPEARANCE. FINS AND OTHER DEFORMATIONS RESULTING FROM CASTING OR OTHERWISE SHALL BE REMOVED IN A MANNER SO THAT A UNIFORM COLORING OF THE COMPLETED CASTING SHALL BE OBTAINED. CASTINGS WITH DISCOLORATIONS OR OF NON-UNIFORM COLORING WILL NOT BE ACCEPTED. CERTIFIED MILL REPORTS ARE REQUIRED FOR METAL RAILS AND POSTS.

SPECIAL NOTES:

GENERALLY, IN CASE OF DISCREPANCY, THIS STANDARD SHEET OF NOTES SHALL GOVERN OVER THE SPECIFICATIONS, BUT THE REMAINDER OF THE PLANS SHALL GOVERN OVER NOTES HEREON, AND SPECIAL PROVISIONS SHALL GOVERN OVER ALL. SEE SPECIFICATIONS ARTICLE 105-4.

ENGLISH

JANUARY, 1990

STD. NO. SN