09/08/99

TIP PROJECT: B-3611

CONTRACT: C202334

STRUCTURE

STATE OF NORTH CAROLINA
DIVISION OF HIGHWAYS

BEAUFORT COUNTY

LOCATION: BRIDGE NO. 77 OVER PANTEGO CREEK ON NC 99

TYPE OF WORK: GRADING, DRAINAGE, STRUCTURE AND PAVING

STATE	STATE PROJECT REFERENCE NO.	SHEET NO.	TOTAL SHEETS
N.C.	B-3611		

STATE PROJ. NO.	F. A. PROJ. NO.	DESCRIPTION
33162.1.1	BRSTP-99(3)	PE
33162.2.2	BRSTP-99(3)	R/W & UTIL
33162.3.2	BRSTP-99(7)	CONST.

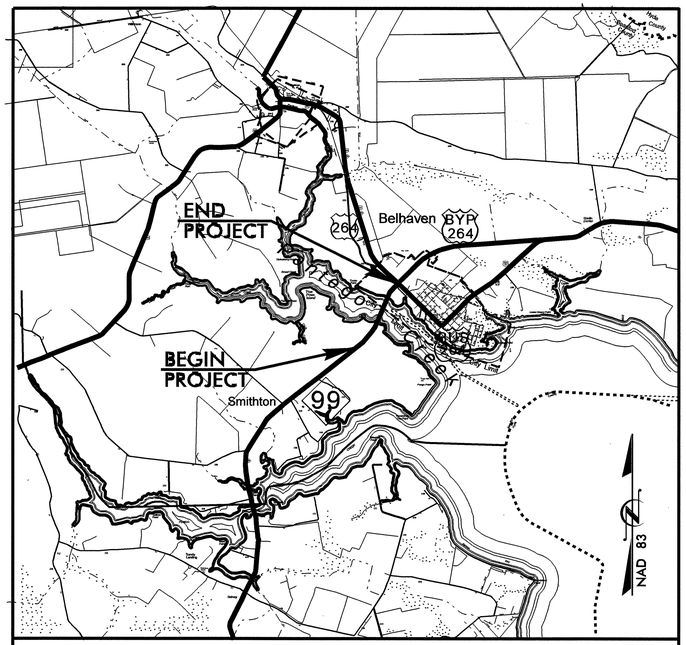

VICINITY MAP

NAD 83

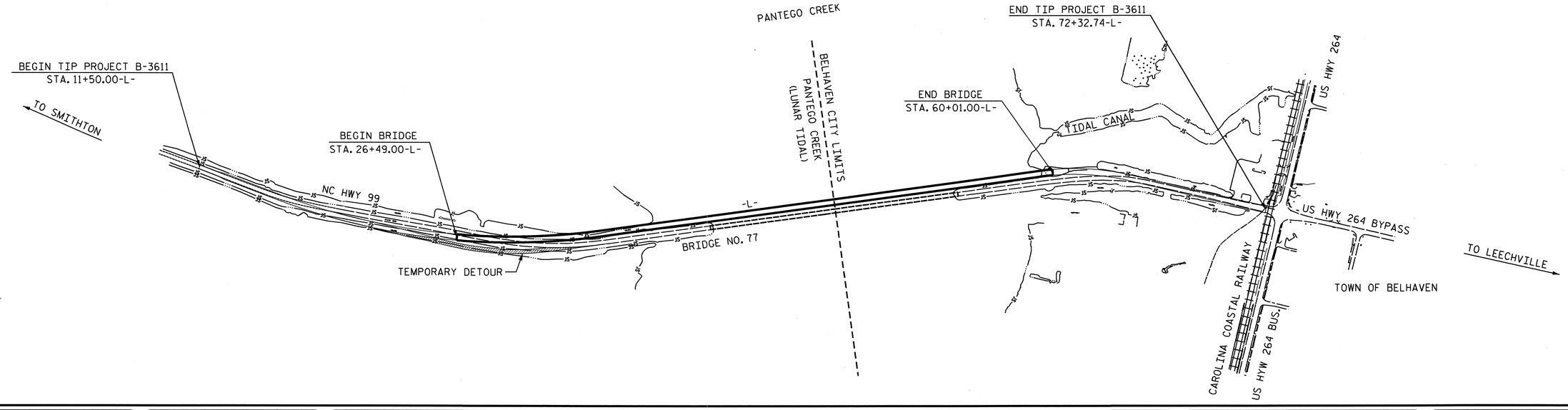

STATE OF NORTH CAROLINA DEPARTMENT OF TRANSPORTATION

DESIGN DATA

ADT 2009 = 6270
ADT 2030 = 9600
DHV = 10 %
D = 60 %
T = 9 % *
V = 50/40 MPH
* TTST 6 DUAL 3
FUNC. CLASS = COLLECTOR

PROJECT LENGTH

LENGTH ROADWAY TIP PROJECT B-3611 = 0.517 Miles
LENGTH STRUCTURE TIP PROJECT B-3611 = 0.635 Miles
TOTAL LENGTH TIP PROJECT B-3611 = 1.152 Miles

Prepared In the Office of:
DIVISION OF HIGHWAYS
1000 Birch Ridge Dr., Raleigh NC, 27610

2006 STANDARD SPECIFICATIONS

LETTING DATE:
MAY 18, 2010

J. M. BAILEY, P.E.
PROJECT ENGINEER

B. D. KLAPPENBACH, P.E.
PROJECT DESIGN ENGINEER

STRUCTURE DESIGN UNIT
1000 Birch Ridge Dr.
Raleigh NC, 27610

DIVISION OF HIGHWAYS
STATE OF NORTH CAROLINA

P.E.
STATE HIGHWAY DESIGN ENGINEER

24-MAR-2010 12:09
$$$$$$$$$$$$$$$$$$$$DGN$$$$$$$$$$$$$$$$$$$$
tbarbour

F.A. PROJECT No. BRSTP-99(7)

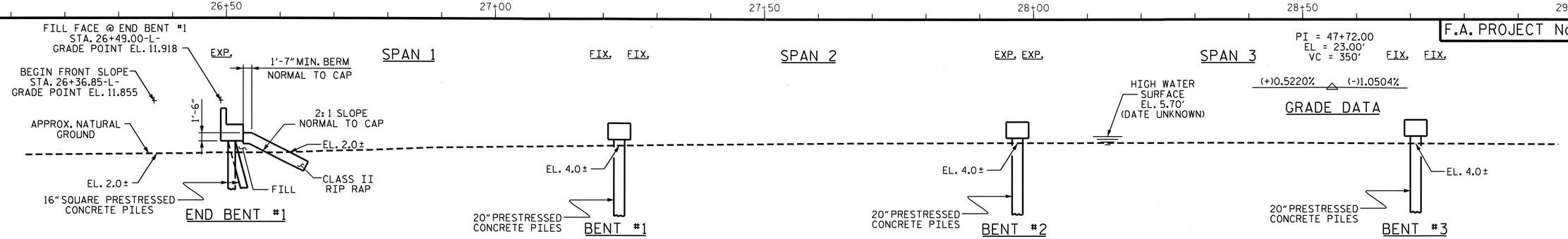

SECTION ALONG ℄ SURVEY

(BENTS ON SECTION AT RIGHT ANGLES TO BENTS)

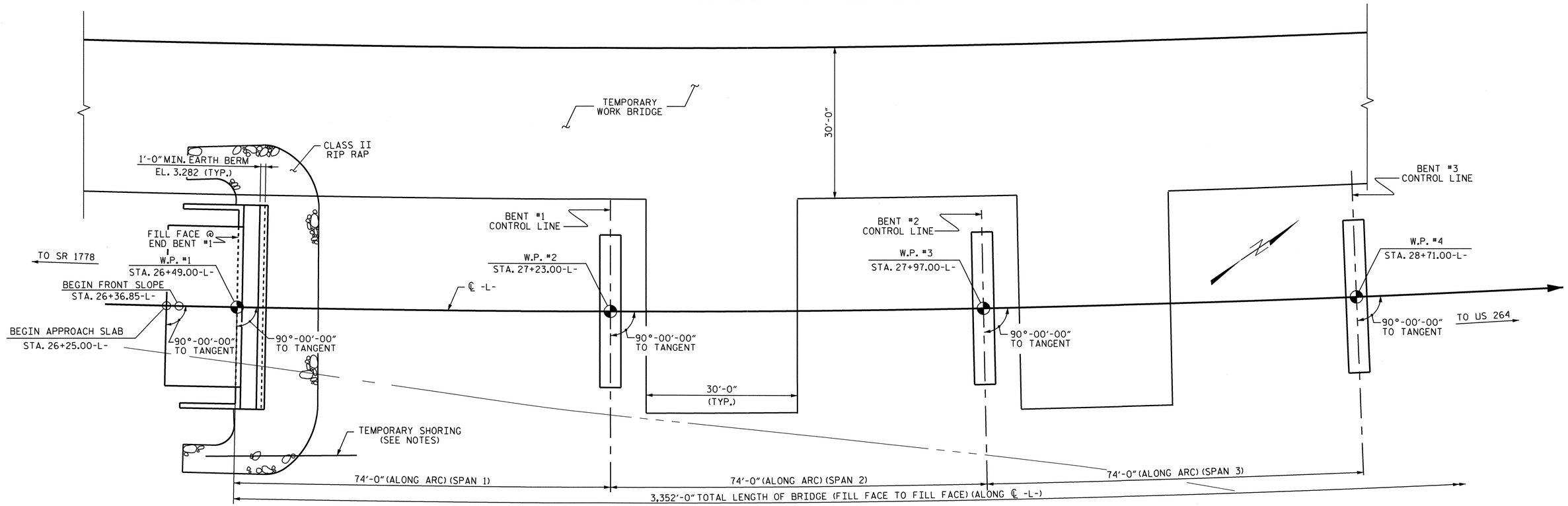

HORIZONTAL CURVE DATA-L-

P.I. = 25+52.04-L-
DELTA = 28°-24'-54.6" (LT)
D = 1°-33'-09.8"
L = 1,830.01'
T = 934.23'
R = 3,690.00'

PLAN

(PILES NOT SHOWN IN PLAN VIEW FOR CLARITY)

TIDAL CANAL

NORTH CAROLINA PROFESSIONAL SEAL 022506 ENGINEER JESSE McARTHUR BAILEY

4/1/10

NORTH CAROLINA PROFESSIONAL SEAL 15926 ENGINEER BRUCE D. KLAPPENBACH

3-29-2010

PROJECT NO. B-3611

BEAUFORT COUNTY

STATION: 43+25.00-L-

SHEET 1 OF 23 REPLACES BRIDGE #77

STATE OF NORTH CAROLINA
DEPARTMENT OF TRANSPORTATION
RALEIGH

GENERAL DRAWING FOR BRIDGE OVER PANTEGO CREEK ON NC 99 BETWEEN SR 1778 AND US 264

REVISIONS						SHEET NO.
NO.	BY:	DATE:	NO.	BY:	DATE:	S-1
1			3			TOTAL SHEETS
2			4			120

DRAWN BY : H. T. BARBOUR DATE : 7-08-08
CHECKED BY : C. R. YARBROUGH DATE : 1-10

24-MAR-2010 14:36
m:\structures\tbarbour\microstation\b3611_sd_gd.dgn
tbarbour

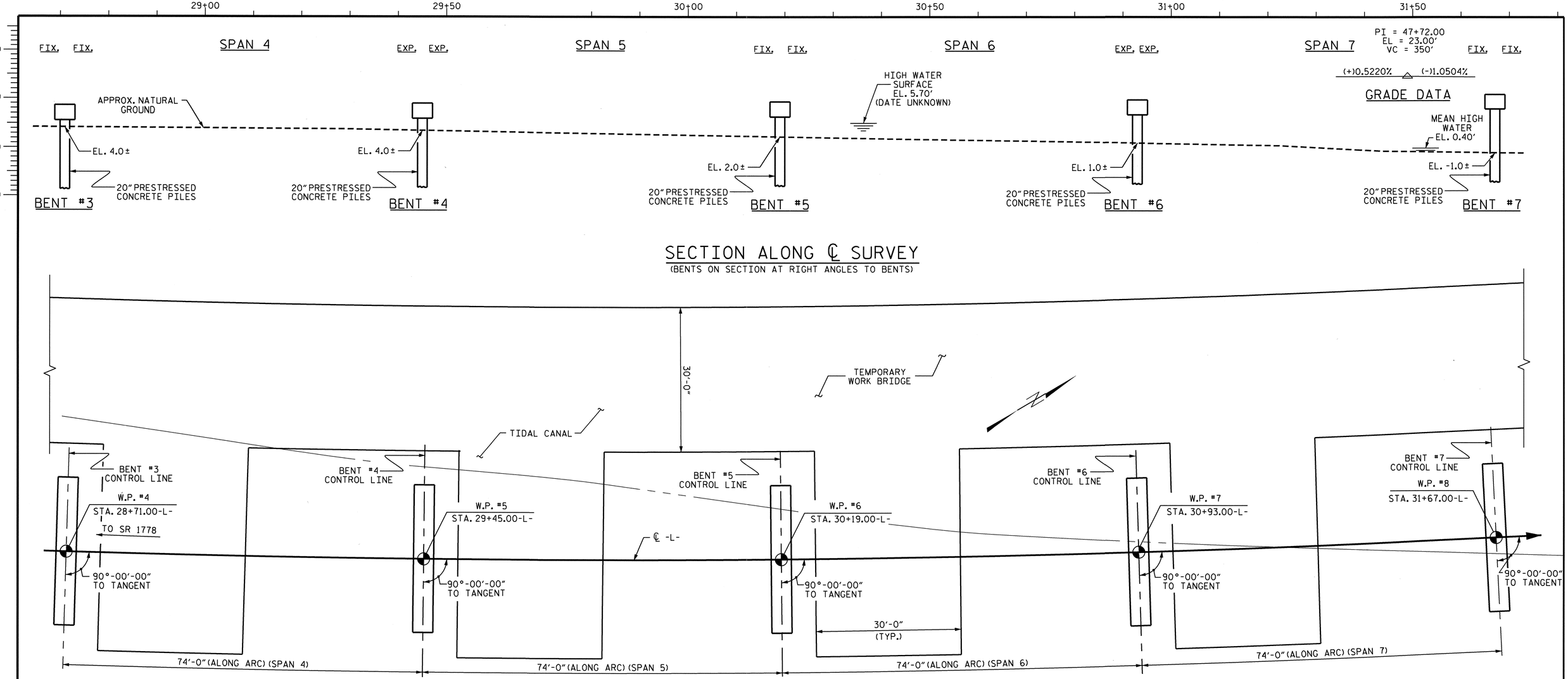

SECTION ALONG ℄ SURVEY

(BENTS ON SECTION AT RIGHT ANGLES TO BENTS)

PLAN

(PILES NOT SHOWN IN PLAN VIEW FOR CLARITY)

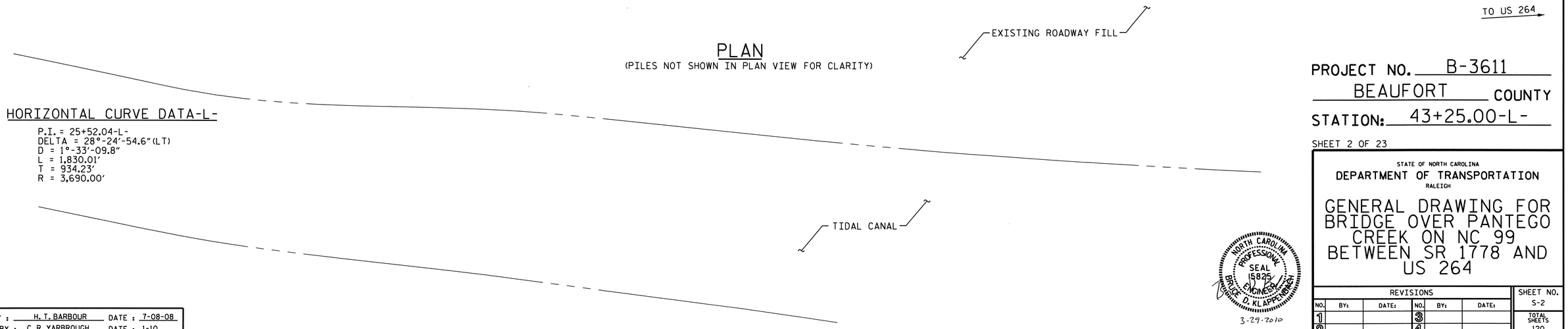

HORIZONTAL CURVE DATA-L-

P.I. = 25+52.04-L-
DELTA = 28°-24'-54.6" (LT)
D = 1°-33'-09.8"
L = 1,830.01'
T = 934.23'
R = 3,690.00'

PROJECT NO. B-3611

BEAUFORT COUNTY

STATION: 43+25.00-L-

SHEET 2 OF 23

STATE OF NORTH CAROLINA
DEPARTMENT OF TRANSPORTATION
RALEIGH

GENERAL DRAWING FOR BRIDGE OVER PANTEGO CREEK ON NC 99 BETWEEN SR 1778 AND US 264

NORTH CAROLINA PROFESSIONAL SEAL 15825 ENGINEER D. KLAPPENBACH
3-29-2010

REVISIONS						SHEET NO.
NO.	BY:	DATE:	NO.	BY:	DATE:	S-2
1			3			TOTAL SHEETS
2			4			120

DRAWN BY : H. T. BARBOUR DATE : 7-08-08
CHECKED BY : C. R. YARBROUGH DATE : 1-10

24-MAR-2010 12:09
M:\Structures\tbarbour\Microstation\b3611_sd_gd.dgn
tbarbour

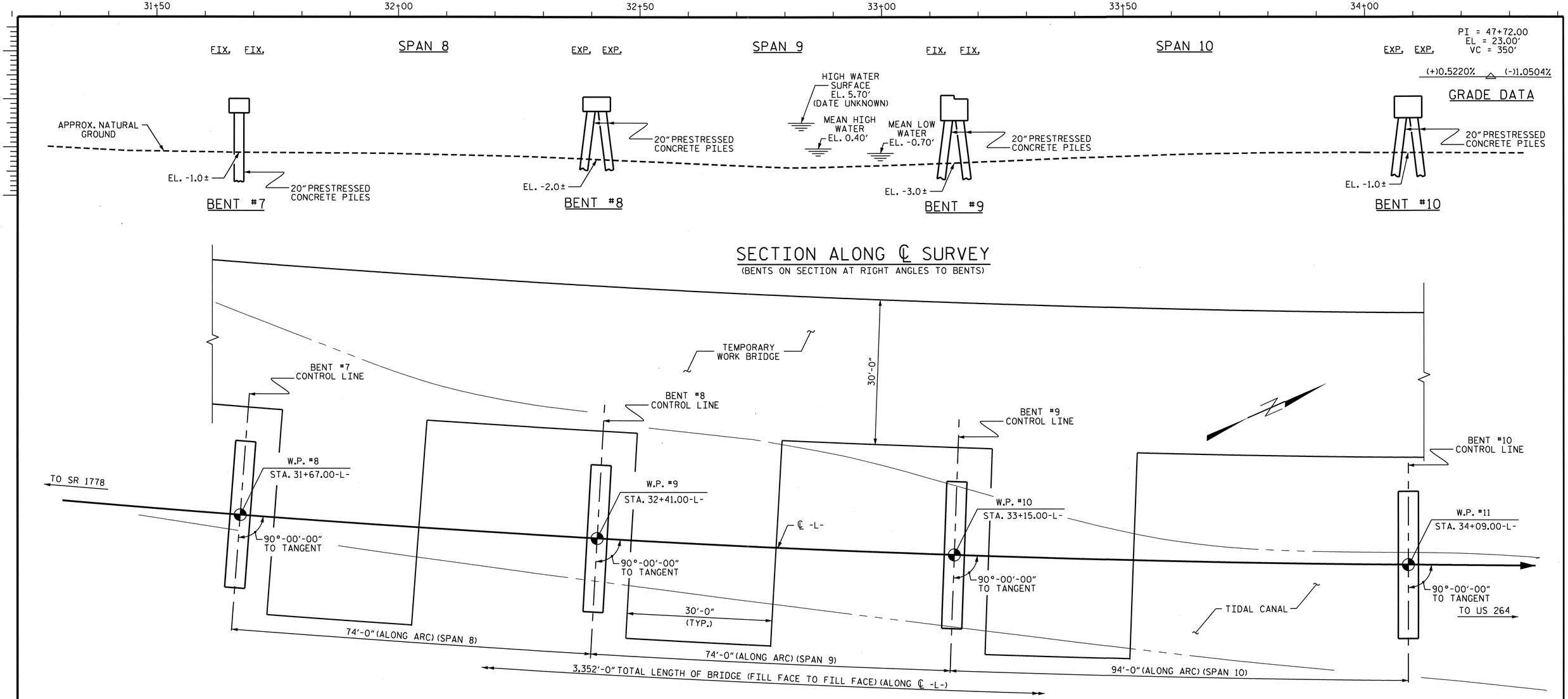

HORIZONTAL CURVE DATA-L-

P.I. = 25+52.04-L-
DELTA = 28°-24'-54.6"(LT)
D = 1°-33'-09.8"
L = 1,830.01'
T = 934.23'
R = 3,690.00'

PLAN

(PILES NOT SHOWN IN PLAN VIEW FOR CLARITY)

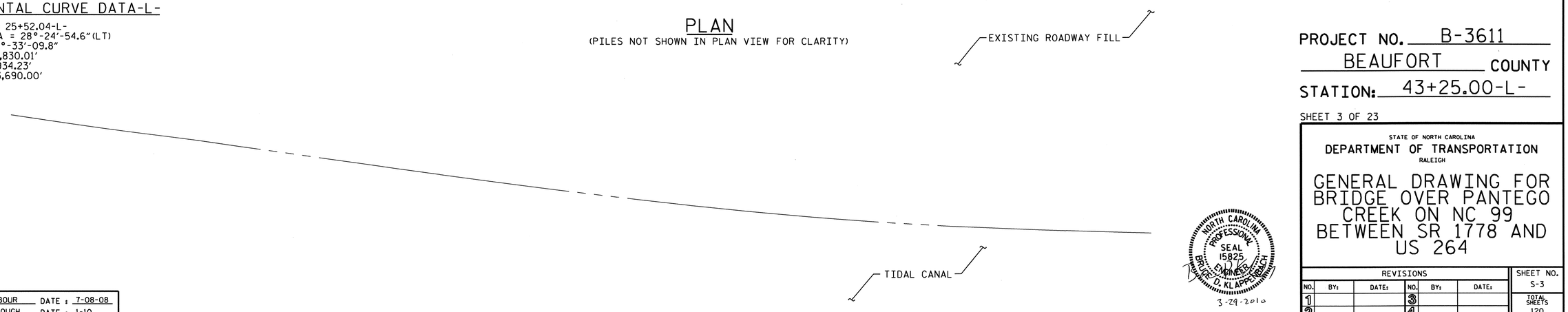

PROJECT NO. B-3611
BEAUFORT COUNTY
STATION: 43+25.00-L-

SHEET 3 OF 23

STATE OF NORTH CAROLINA
DEPARTMENT OF TRANSPORTATION
RALEIGH

GENERAL DRAWING FOR BRIDGE OVER PANTEGO CREEK ON NC 99 BETWEEN SR 1778 AND US 264

NORTH CAROLINA PROFESSIONAL SEAL 15825 ENGINEER BRUCE D. KLAPPENBACH
3-29-2010

REVISIONS						SHEET NO.
NO.	BY:	DATE:	NO.	BY:	DATE:	S-3
1			3			TOTAL SHEETS
2			4			120

DRAWN BY : H. T. BARBOUR DATE : 7-08-08
CHECKED BY : C. R. YARBROUGH DATE : 1-10

24-MAR-2010 12:09
M:\Structures\tbarbour\Microstation\b3611_sd_gd.dgn
tbarbour

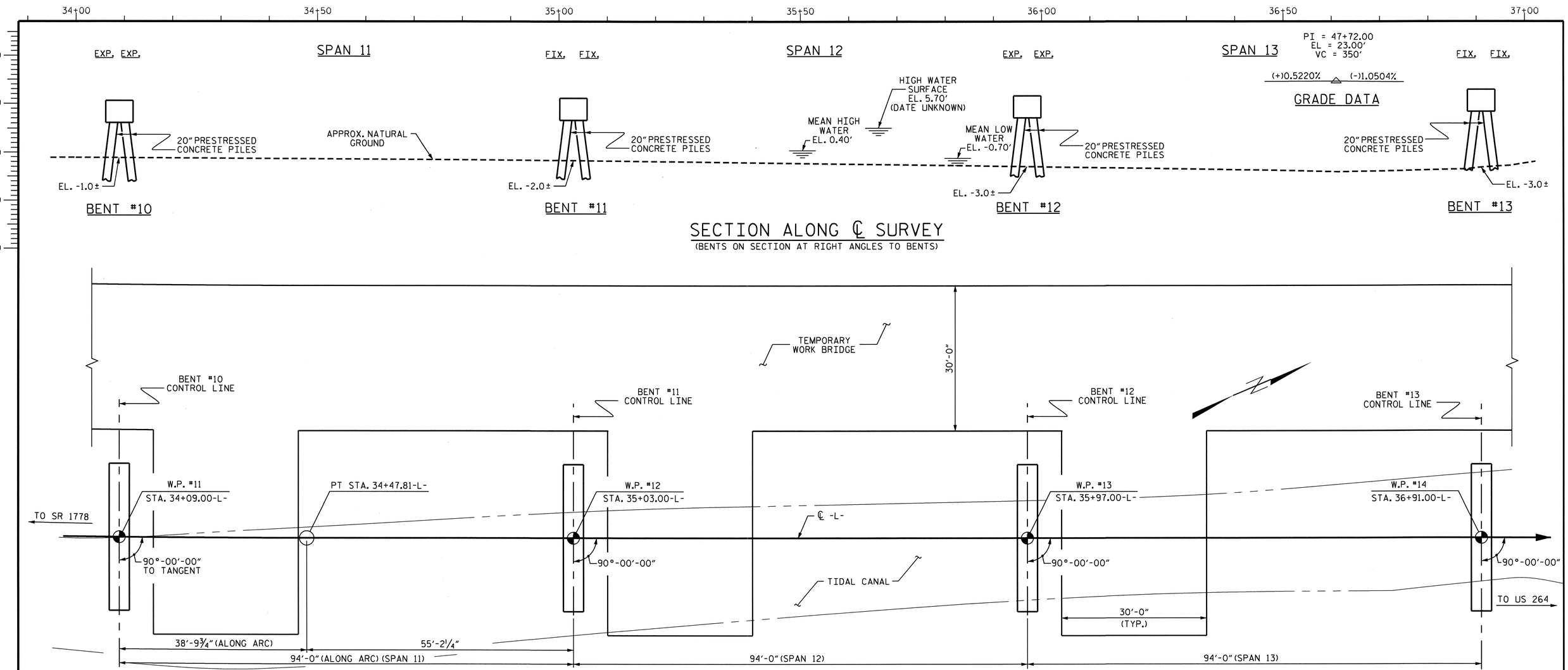

SECTION ALONG ℄ SURVEY

(BENTS ON SECTION AT RIGHT ANGLES TO BENTS)

PLAN

(PILES NOT SHOWN IN PLAN VIEW FOR CLARITY)

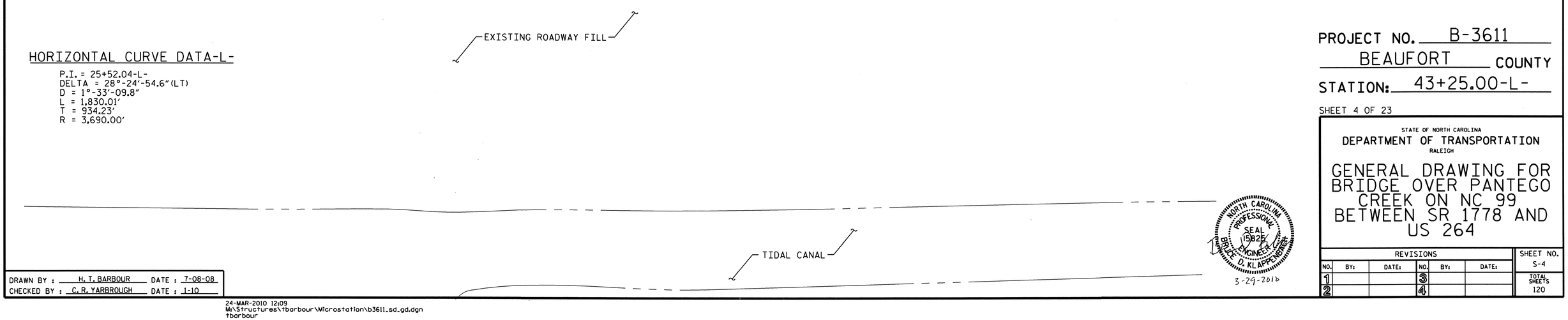

HORIZONTAL CURVE DATA-L-

P.I. = 25+52.04-L-
DELTA = 28°-24'-54.6" (LT)
D = 1°-33'-09.8"
L = 1,830.01'
T = 934.23'
R = 3,690.00'

PROJECT NO. B-3611

BEAUFORT COUNTY

STATION: 43+25.00-L-

SHEET 4 OF 23

STATE OF NORTH CAROLINA
DEPARTMENT OF TRANSPORTATION
RALEIGH

GENERAL DRAWING FOR BRIDGE OVER PANTEGO CREEK ON NC 99 BETWEEN SR 1778 AND US 264

REVISIONS						SHEET NO.
NO.	BY:	DATE:	NO.	BY:	DATE:	S-4
1			3			TOTAL SHEETS
2			4			120

NORTH CAROLINA PROFESSIONAL SEAL 15825 ENGINEER BRADLEY D. KLAPPENBACH
3-29-2010

DRAWN BY : H. T. BARBOUR DATE : 7-08-08
CHECKED BY : C. R. YARBROUGH DATE : 1-10

24-MAR-2010 12:09
M:\Structures\tbarbour\Microstation\b3611_sd_gd.dgn
tbarbour

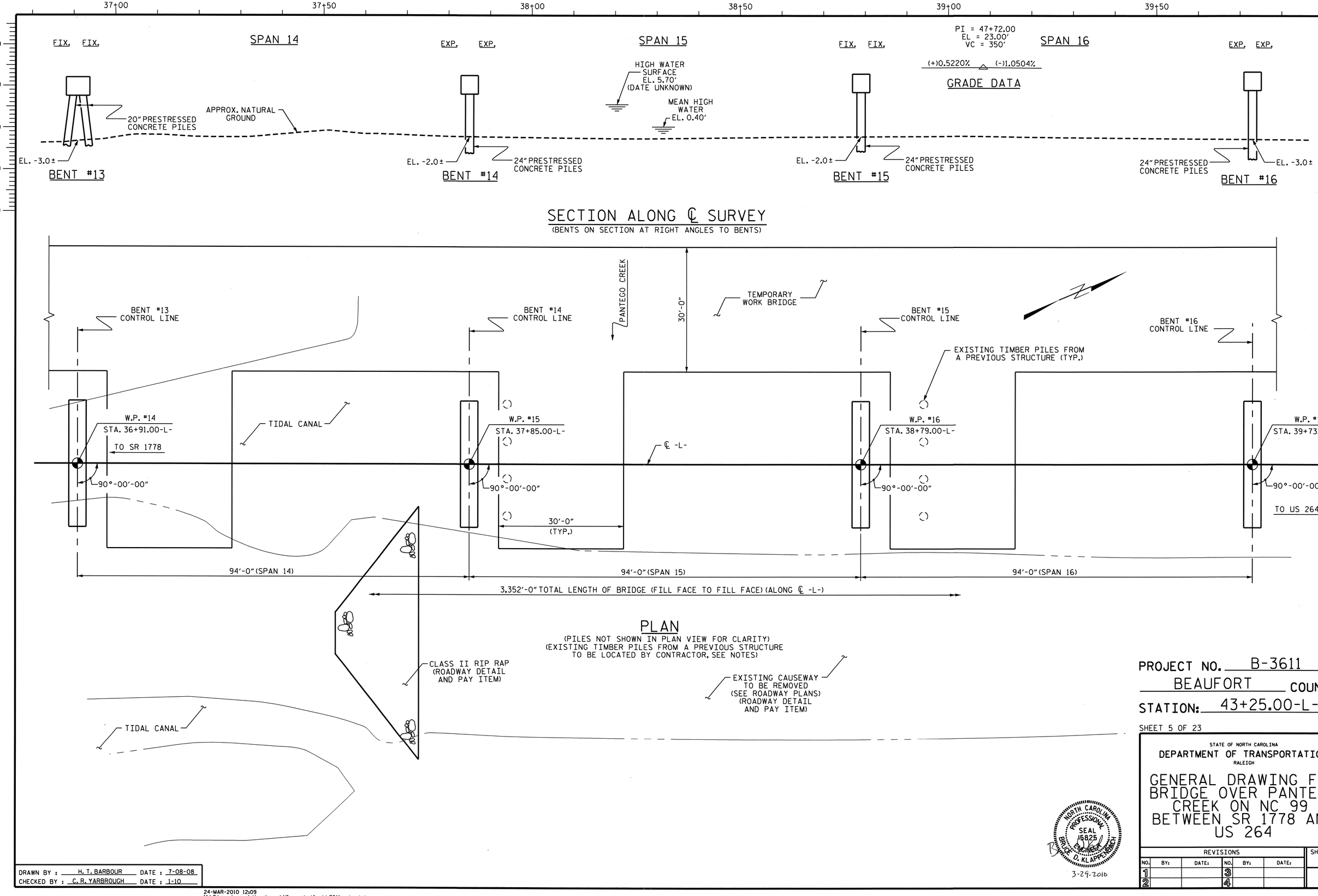

PROJECT NO. B-3611

BEAUFORT COUNTY

STATION: 43+25.00-L-

SHEET 5 OF 23

STATE OF NORTH CAROLINA
DEPARTMENT OF TRANSPORTATION
RALEIGH

GENERAL DRAWING FOR BRIDGE OVER PANTEGO CREEK ON NC 99 BETWEEN SR 1778 AND US 264

NORTH CAROLINA PROFESSIONAL SEAL 15825 ENGINEER R. D. KLAPPENBACH
3-29-2016

REVISIONS						SHEET NO.
NO.	BY:	DATE:	NO.	BY:	DATE:	S-5
1			3			TOTAL SHEETS
2			4			120

DRAWN BY : H. T. BARBOUR DATE : 7-08-08
CHECKED BY : C. R. YARBROUGH DATE : 1-10

24-MAR-2010 12:09
M:\Structures\tbarbour\Microstation\b3611_sd_gd.dgn
tbarbour

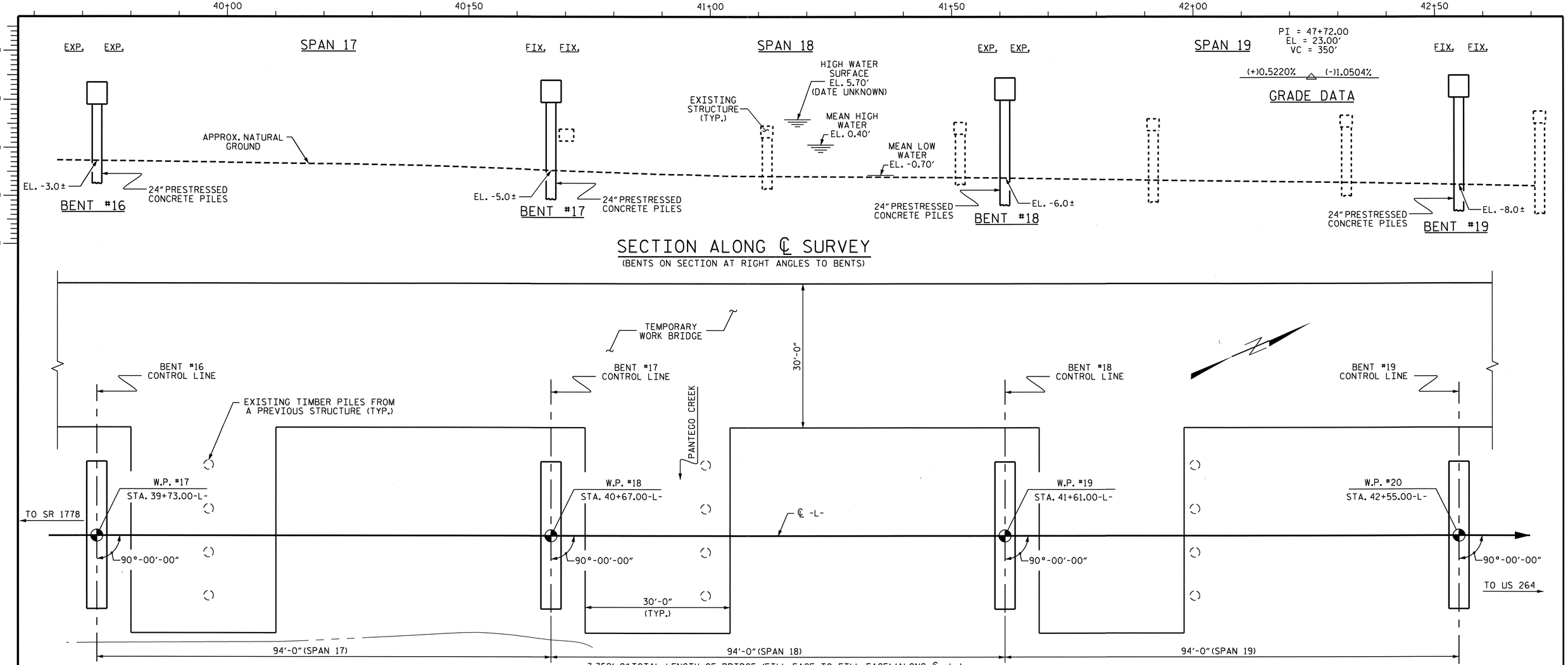

SECTION ALONG ℄ SURVEY

(BENTS ON SECTION AT RIGHT ANGLES TO BENTS)

PLAN

(PILES NOT SHOWN IN PLAN VIEW FOR CLARITY)

(EXISTING TIMBER PILES FROM A PREVIOUS STRUCTURE TO BE LOCATED BY CONTRACTOR, SEE NOTES)

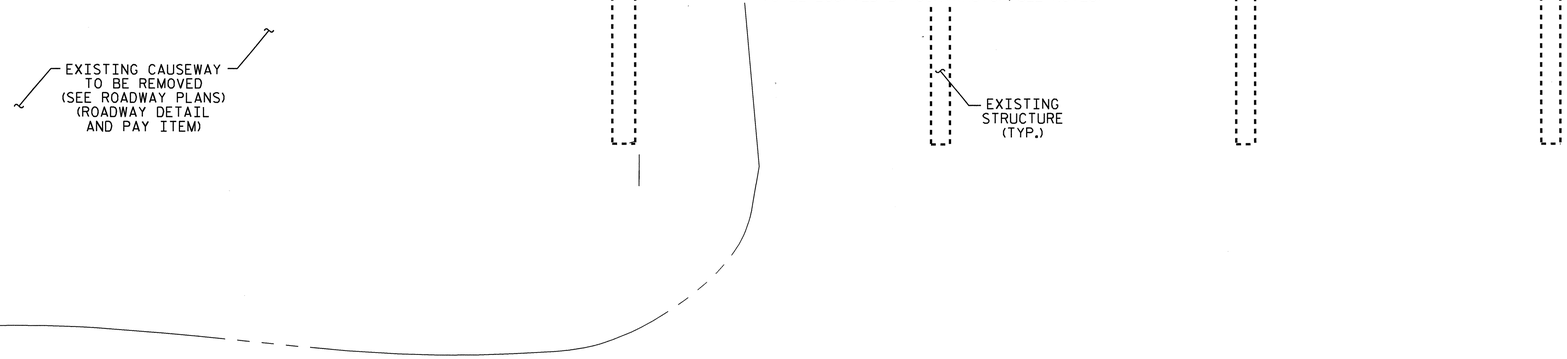

PROJECT NO. B-3611

BEAUFORT COUNTY

STATION: 43+25.00-L-

SHEET 6 OF 23

STATE OF NORTH CAROLINA
DEPARTMENT OF TRANSPORTATION
RALEIGH

GENERAL DRAWING FOR BRIDGE OVER PANTEGO CREEK ON NC 99 BETWEEN SR 1778 AND US 264

REVISIONS						SHEET NO.
NO.	BY:	DATE:	NO.	BY:	DATE:	S-6
1			3			TOTAL SHEETS
2			4			120

NORTH CAROLINA PROFESSIONAL SEAL 15825 ENGINEER BRIAN C. KLAPPERICH

3-29-2010

DRAWN BY : H. T. BARBOUR DATE : 7-08-08

CHECKED BY : C. R. YARBROUGH DATE : 1-10

24-MAR-2010 12:09
M:\Structures\tbarbour\Microstation\b3611_sd_gd.dgn
tbarbour

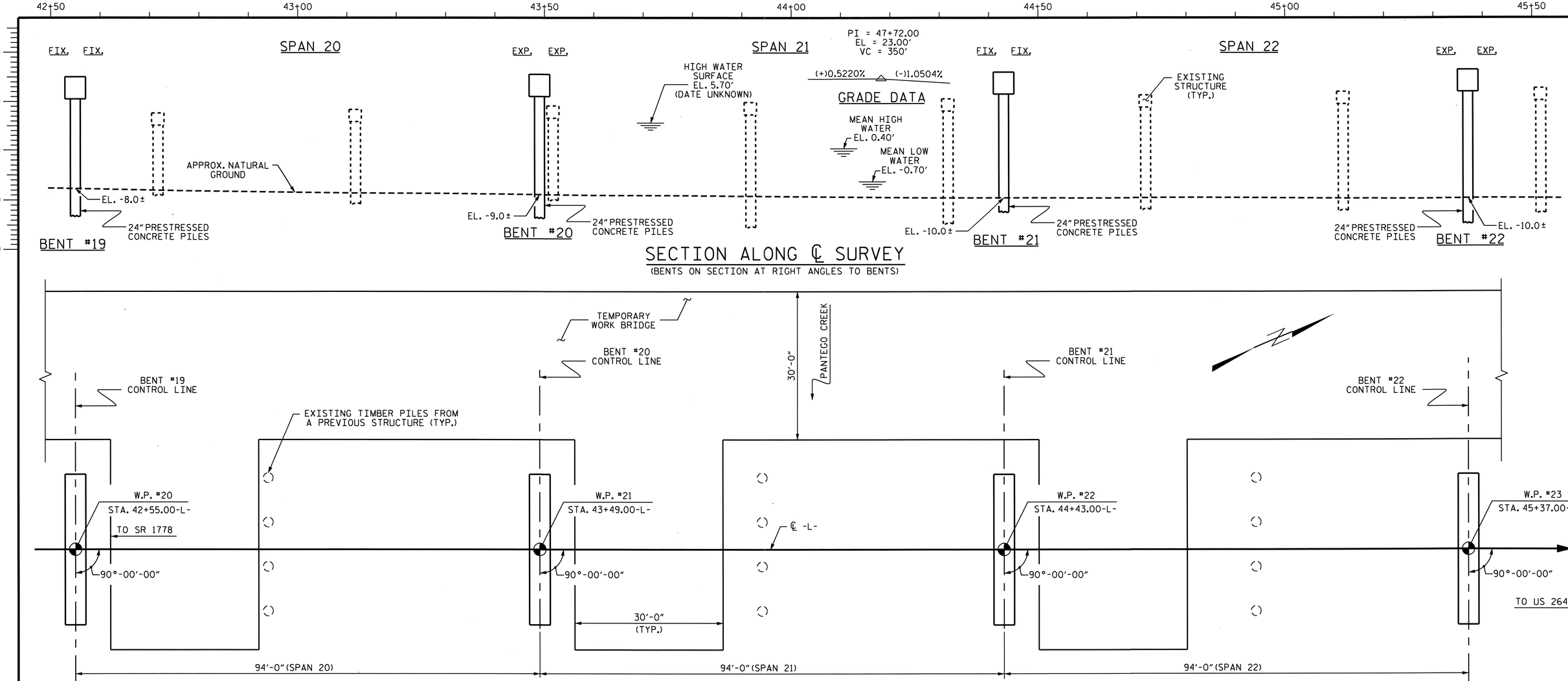

SECTION ALONG ℄ SURVEY

(BENTS ON SECTION AT RIGHT ANGLES TO BENTS)

PLAN

(PILES NOT SHOWN IN PLAN VIEW FOR CLARITY)

(EXISTING TIMBER PILES FROM A PREVIOUS STRUCTURE TO BE LOCATED BY CONTRACTOR, SEE NOTES)

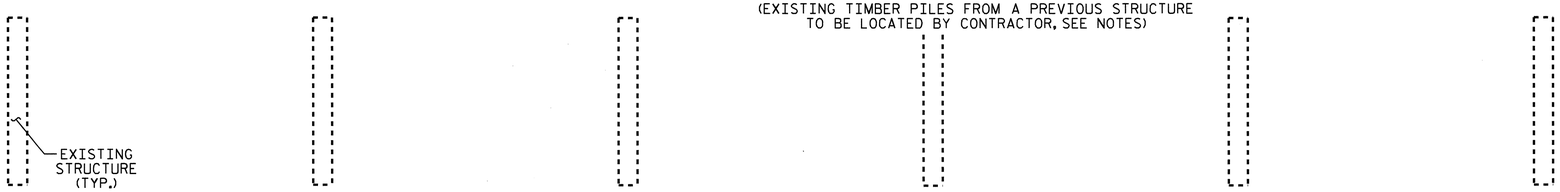

PROJECT NO. B-3611

BEAUFORT COUNTY

STATION: 43+25.00-L-

SHEET 7 OF 23

STATE OF NORTH CAROLINA
DEPARTMENT OF TRANSPORTATION
RALEIGH

GENERAL DRAWING FOR BRIDGE OVER PANTEGO CREEK ON NC 99 BETWEEN SR 1778 AND US 264

NORTH CAROLINA PROFESSIONAL SEAL 15825 ENGINEER BRUCE D. KLAPPENBACH
3-29-2010

REVISIONS						SHEET NO.
NO.	BY:	DATE:	NO.	BY:	DATE:	S-7
1			3			TOTAL SHEETS
2			4			120

DRAWN BY : H. T. BARBOUR DATE : 7-08-08
CHECKED BY : C. R. YARBROUGH DATE : 1-10

24-MAR-2010 12:09
M:\Structures\tbarbour\Microstation\b3611_sd_gd.dgn
tbarbour

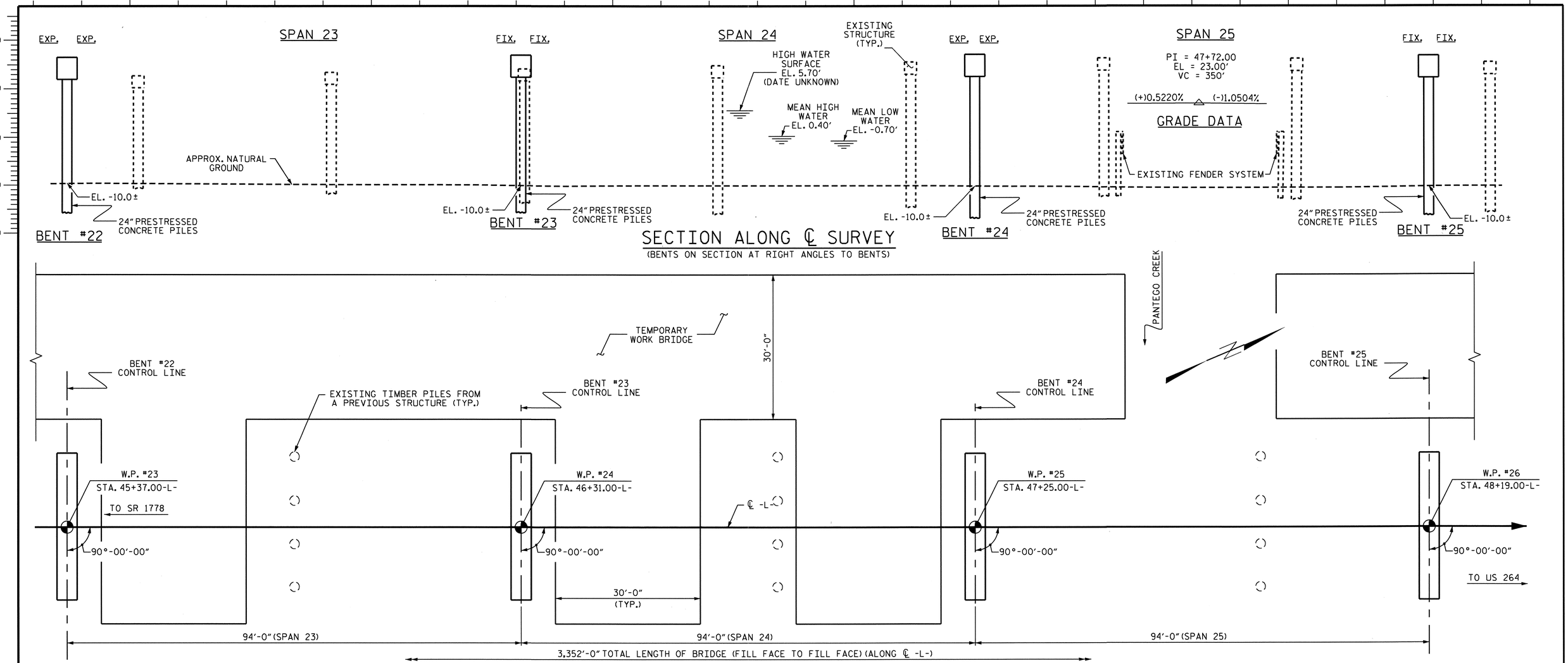

SECTION ALONG ℄ SURVEY

(BENTS ON SECTION AT RIGHT ANGLES TO BENTS)

PLAN

(PILES NOT SHOWN IN PLAN VIEW FOR CLARITY)

(EXISTING TIMBER PILES FROM A PREVIOUS STRUCTURE TO BE LOCATED BY CONTRACTOR, SEE NOTES)

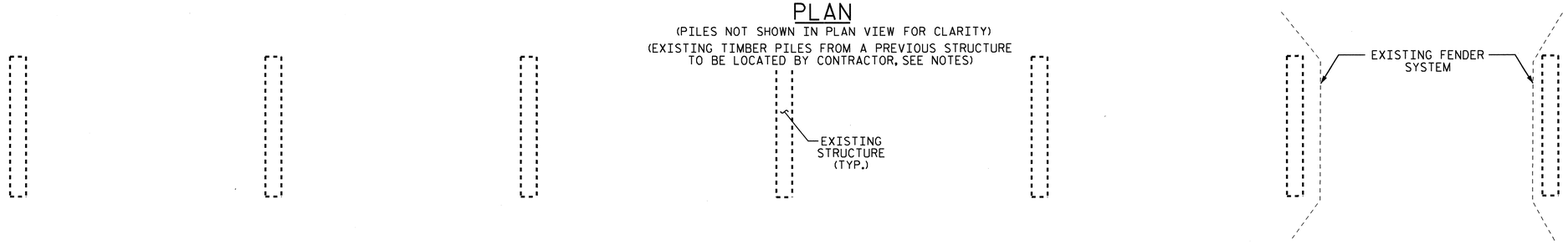

PROJECT NO. B-3611

BEAUFORT COUNTY

STATION: 43+25.00-L-

SHEET 8 OF 23

STATE OF NORTH CAROLINA
DEPARTMENT OF TRANSPORTATION
RALEIGH

GENERAL DRAWING FOR BRIDGE OVER PANTEGO CREEK ON NC 99 BETWEEN SR 1778 AND US 264

NORTH CAROLINA PROFESSIONAL SEAL 19825 ENGINEER BRUCE D. KLAPPENBACH
3-29-2010

REVISIONS						SHEET NO.
NO.	BY:	DATE:	NO.	BY:	DATE:	S-8
1			3			TOTAL SHEETS
2			4			120

DRAWN BY : H. T. BARBOUR DATE : 7-08-08
CHECKED BY : C. R. YARBROUGH DATE : 1-10

24-MAR-2010 12:09
M:\Structures\tbarbour\Microstation\b3611_sd_gd.dgn
tbarbour

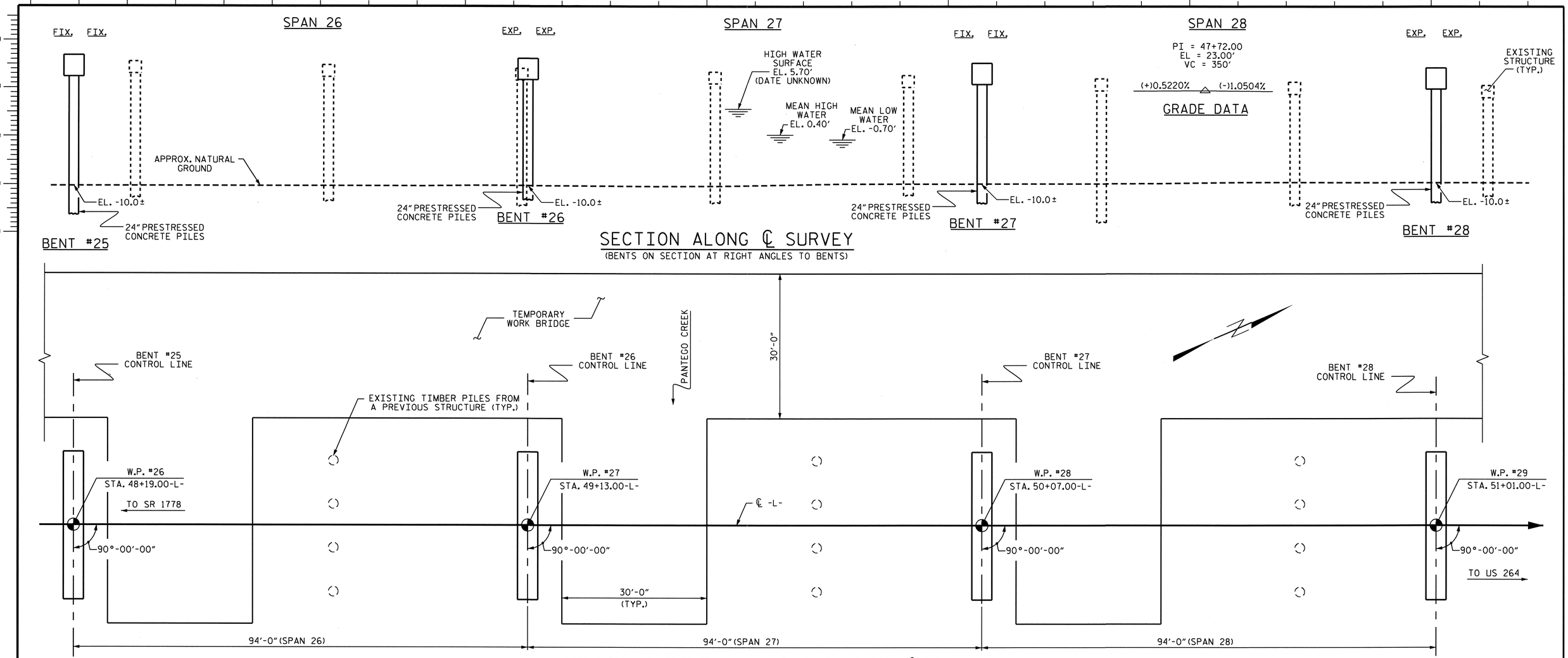

SECTION ALONG ℄ SURVEY

(BENTS ON SECTION AT RIGHT ANGLES TO BENTS)

PLAN

(PILES NOT SHOWN IN PLAN VIEW FOR CLARITY)
(EXISTING TIMBER PILES FROM A PREVIOUS STRUCTURE TO BE LOCATED BY CONTRACTOR, SEE NOTES)

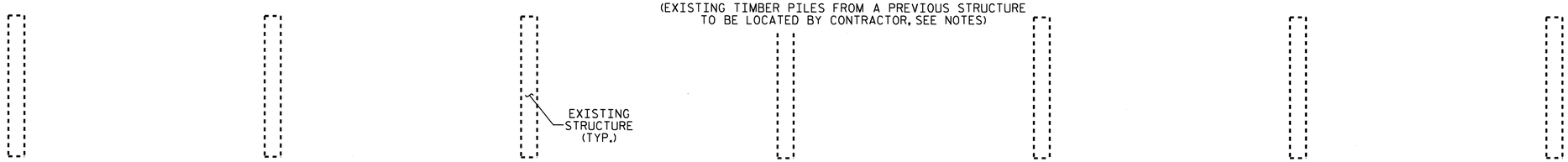

PROJECT NO. B-3611

BEAUFORT COUNTY

STATION: 43+25.00-L-

SHEET 9 OF 23

STATE OF NORTH CAROLINA
DEPARTMENT OF TRANSPORTATION
RALEIGH

GENERAL DRAWING FOR BRIDGE OVER PANTEGO CREEK ON NC 99 BETWEEN SR 1778 AND US 264

NORTH CAROLINA PROFESSIONAL SEAL 15825 ENGINEER BRUCE D. KLAPPENBACH
3-24-2010

REVISIONS						SHEET NO.
NO.	BY:	DATE:	NO.	BY:	DATE:	S-9
1			3			TOTAL SHEETS
2			4			120

DRAWN BY : H. T. BARBOUR DATE : 7-08-08
CHECKED BY : C. R. YARBROUGH DATE : 1-10

24-MAR-2010 12:09
M:\Structures\tbarbour\Microstation\b3611_sd_gd.dgn
tbarbour

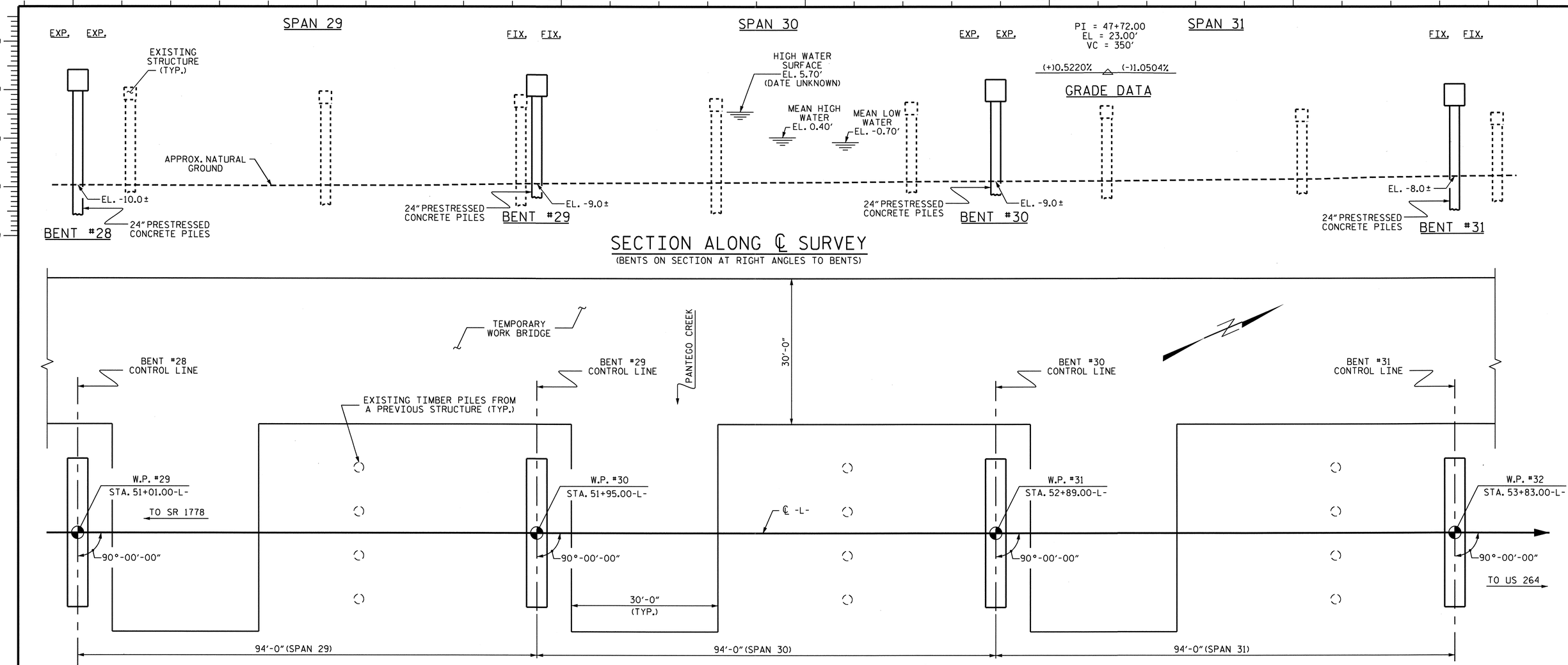

SECTION ALONG ℄ SURVEY

(BENTS ON SECTION AT RIGHT ANGLES TO BENTS)

PLAN

(PILES NOT SHOWN IN PLAN VIEW FOR CLARITY)
(EXISTING TIMBER PILES FROM A PREVIOUS STRUCTURE TO BE LOCATED BY CONTRACTOR, SEE NOTES)

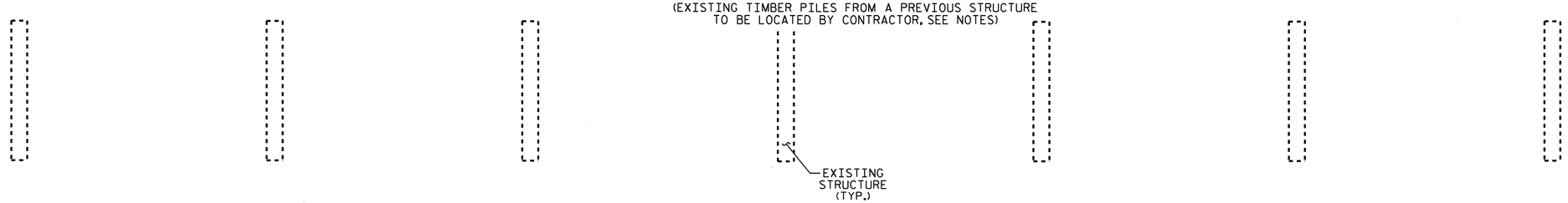

PROJECT NO. B-3611

BEAUFORT COUNTY

STATION: 43+25.00-L-

SHEET 10 OF 23

STATE OF NORTH CAROLINA
DEPARTMENT OF TRANSPORTATION
RALEIGH

GENERAL DRAWING FOR BRIDGE OVER PANTEGO CREEK ON NC 99 BETWEEN SR 1778 AND US 264

NORTH CAROLINA PROFESSIONAL SEAL 15825 ENGINEER BRUCE D. KLAPPENBACH
3-27-2010

REVISIONS						SHEET NO.
NO.	BY:	DATE:	NO.	BY:	DATE:	S-10
1			3			TOTAL SHEETS
2			4			120

DRAWN BY : H. T. BARBOUR DATE : 7-08-08
CHECKED BY : C. R. YARBROUGH DATE : 1-10

24-MAR-2010 12:09
M:\Structures\tbarbour\Microstation\b3611_sd_gd.dgn
tbarbour

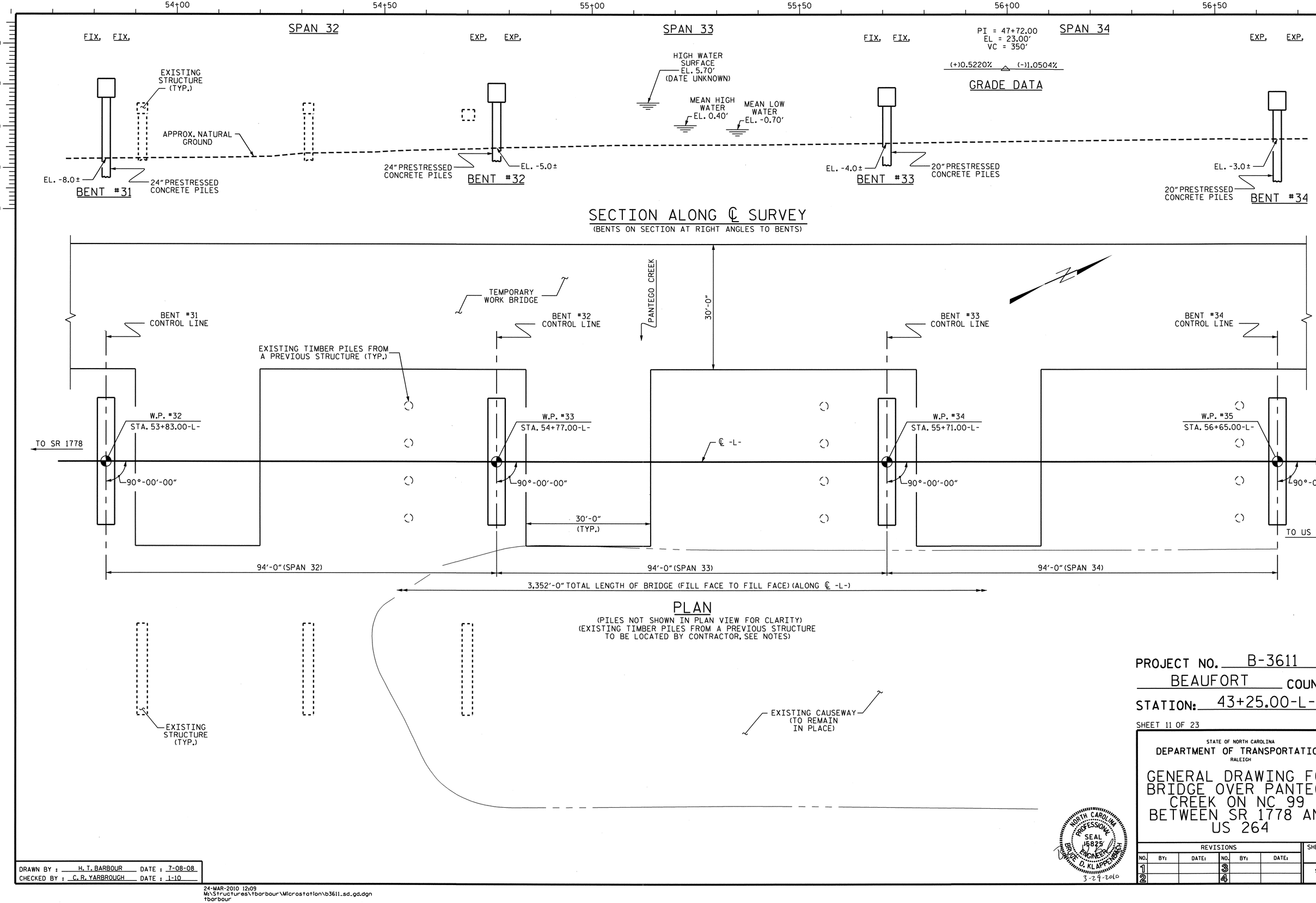

SECTION ALONG ℄ SURVEY

(BENTS ON SECTION AT RIGHT ANGLES TO BENTS)

PLAN

(PILES NOT SHOWN IN PLAN VIEW FOR CLARITY)
(EXISTING TIMBER PILES FROM A PREVIOUS STRUCTURE TO BE LOCATED BY CONTRACTOR, SEE NOTES)

PROJECT NO. B-3611

BEAUFORT COUNTY

STATION: 43+25.00-L-

SHEET 11 OF 23

STATE OF NORTH CAROLINA
DEPARTMENT OF TRANSPORTATION
RALEIGH

GENERAL DRAWING FOR BRIDGE OVER PANTEGO CREEK ON NC 99 BETWEEN SR 1778 AND US 264

REVISIONS						SHEET NO.
NO.	BY:	DATE:	NO.	BY:	DATE:	S-11
1			3			TOTAL SHEETS
2			4			120

NORTH CAROLINA PROFESSIONAL SEAL 15825 ENGINEER DAVID D. KLAPPENBERGER
3-29-2010

DRAWN BY : H. T. BARBOUR DATE : 7-08-08
CHECKED BY : C. R. YARBROUGH DATE : 1-10

24-MAR-2010 12:09
M:\Structures\tbarbour\Microstation\b3611_sd_gd.dgn
tbarbour

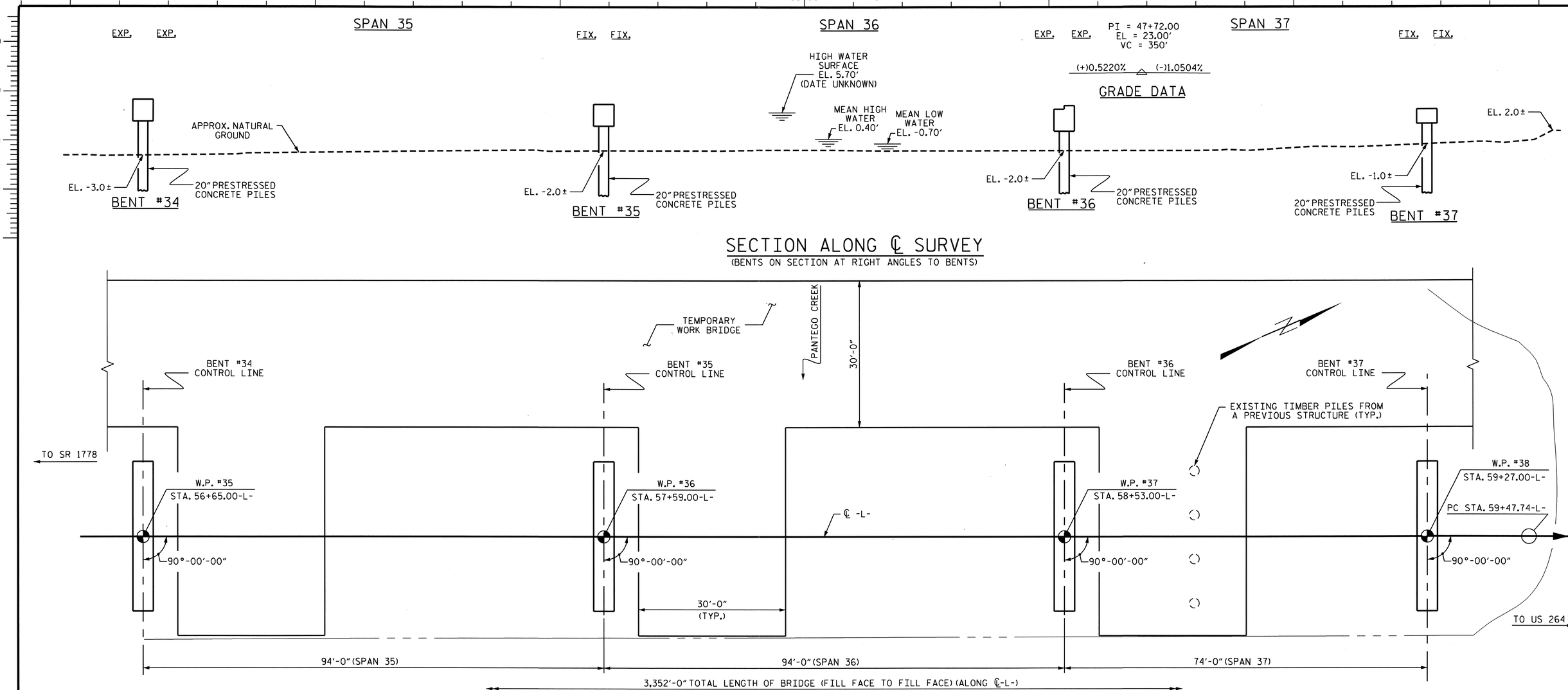

SECTION ALONG ℄ SURVEY

(BENTS ON SECTION AT RIGHT ANGLES TO BENTS)

PLAN

(PILES NOT SHOWN IN PLAN VIEW FOR CLARITY)
(EXISTING TIMBER PILES FROM A PREVIOUS STRUCTURE TO BE LOCATED BY CONTRACTOR, SEE NOTES)

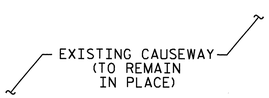

PROJECT NO. B-3611

BEAUFORT COUNTY

STATION: 43+25.00-L-

SHEET 12 OF 23

STATE OF NORTH CAROLINA
DEPARTMENT OF TRANSPORTATION
RALEIGH

GENERAL DRAWING FOR BRIDGE OVER PANTEGO CREEK ON NC 99 BETWEEN SR 1778 AND US 264

REVISIONS						SHEET NO.
NO.	BY:	DATE:	NO.	BY:	DATE:	S-12
1			3			TOTAL SHEETS
2			4			120

DRAWN BY : H. T. BARBOUR DATE : 7-08-08
CHECKED BY : C. R. YARBROUGH DATE : 1-10

24-MAR-2010 12:09
M:\Structures\tbarbour\Microstation\b3611_sd_gd.dgn
tbarbour

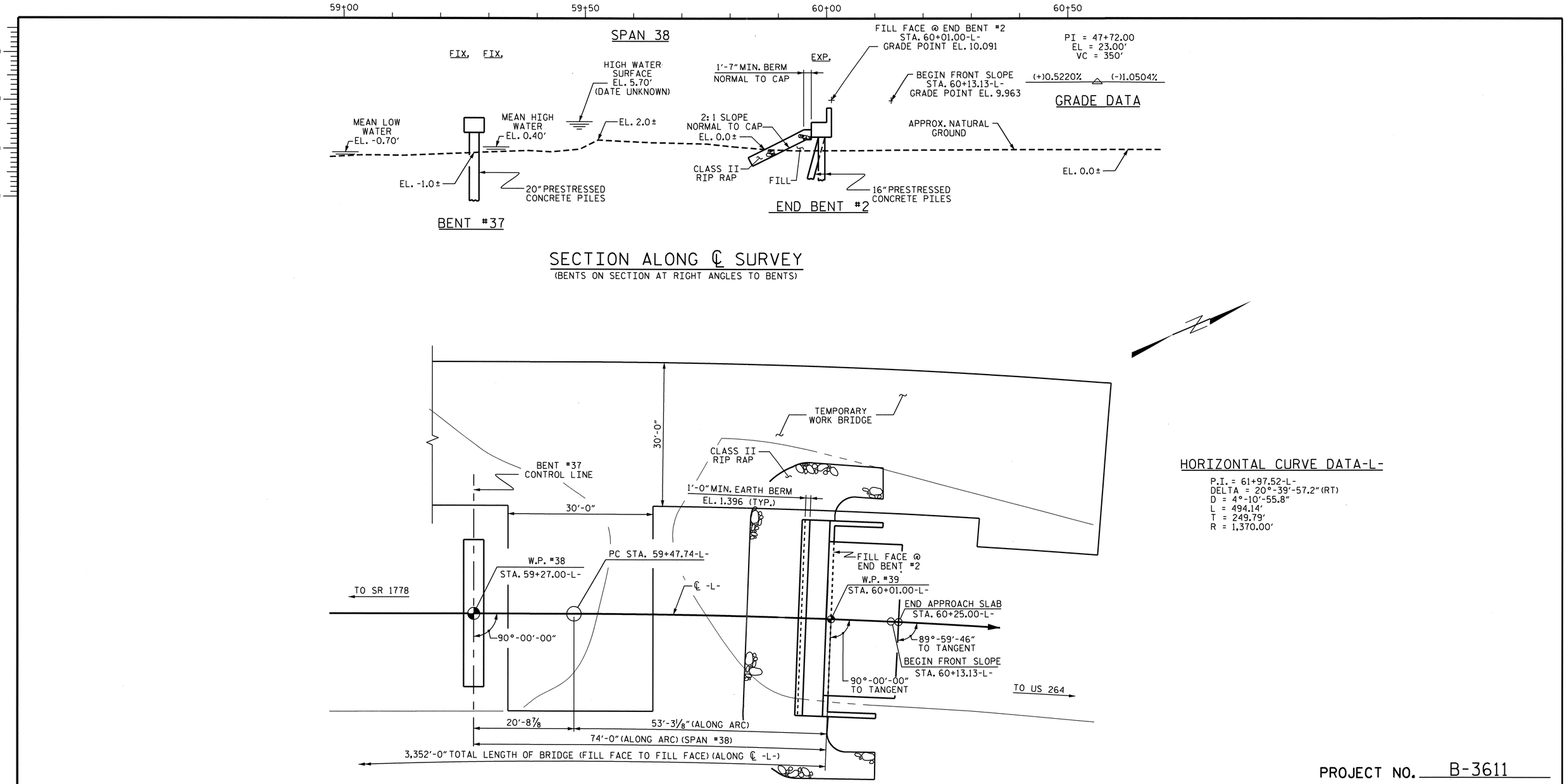

SECTION ALONG ℄ SURVEY

(BENTS ON SECTION AT RIGHT ANGLES TO BENTS)

PLAN

(PILES NOT SHOWN IN PLAN VIEW FOR CLARITY)

HORIZONTAL CURVE DATA-L-

P.I. = 61+97.52-L-
DELTA = 20°-39'-57.2" (RT)
D = 4°-10'-55.8"
L = 494.14'
T = 249.79'
R = 1,370.00'

PROJECT NO. B-3611

BEAUFORT COUNTY

STATION: 43+25.00-L-

SHEET 13 OF 23

STATE OF NORTH CAROLINA
DEPARTMENT OF TRANSPORTATION
RALEIGH

GENERAL DRAWING FOR BRIDGE OVER PANTEGO CREEK ON NC 99 BETWEEN SR 1778 AND US 264

REVISIONS						SHEET NO.
NO.	BY:	DATE:	NO.	BY:	DATE:	S-13
1			3			TOTAL SHEETS
2			4			120

NORTH CAROLINA PROFESSIONAL SEAL 15825 ENGINEER TIMOTHY D. KLAPPENBACH
3-29-2010

DRAWN BY : H. T. BARBOUR DATE : 7-08-08
CHECKED BY : C. R. YARBROUGH DATE : 1-10

24-MAR-2010 12:09
M:\Structures\tbarbour\Microstation\b3611_sd_gd.dgn
tbarbour

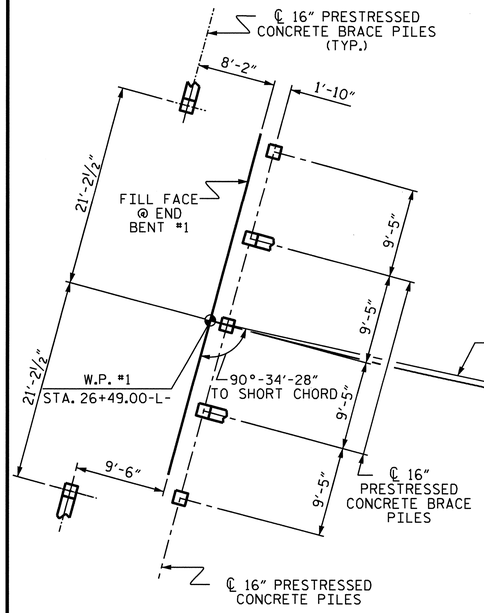

END BENT #1

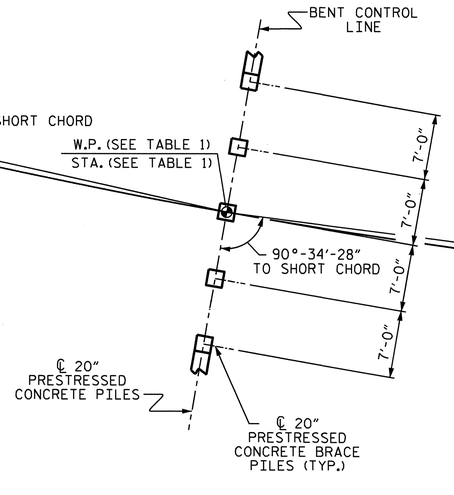

BENTS #1-#7

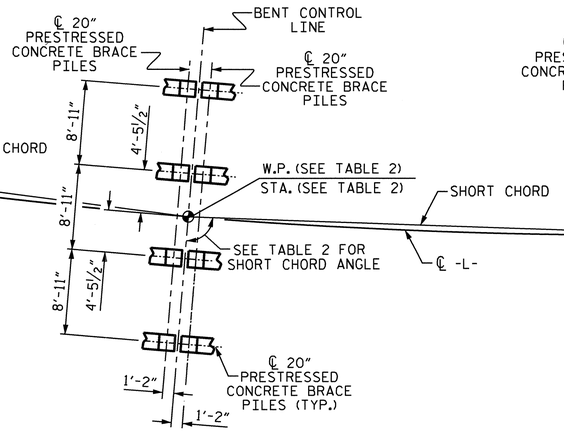

BENTS #8-#10

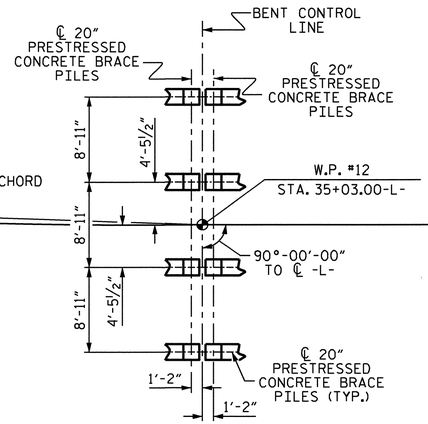

BENT #11

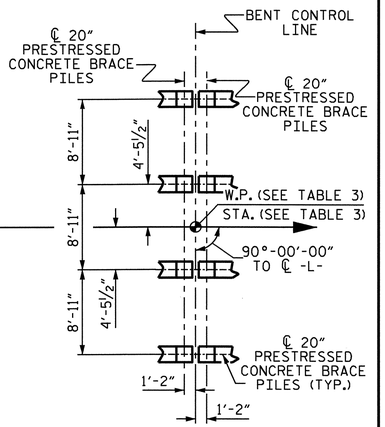

BENTS #12-#13

TABLE 1		
BENT #	W. P. #	STATION
1	2	27+23.00-L-
2	3	27+97.00-L-
3	4	28+71.00-L-
4	5	29+45.00-L-
5	6	30+19.00-L-
6	7	30+93.00-L-
7	8	31+67.00-L-

TABLE 2			
BENT #	W. P. #	STATION	SHORT CHORD ANGLE
8	9	32+41.00-L-	90°-34'-28"
9	10	33+15.00-L-	90°-43'-47"
10	11	34+09.00-L-	90°-28'-42"

TABLE 3		
BENT #	W. P. #	STATION
12	13	35+97.00-L-
13	14	36+91.00-L-

FOUNDATION LAYOUT

DIMENSIONS LOCATING PILES ARE TO THE PILE CENTERLINE.
BRACE PILES AT END BENTS ARE BATTERED 3:12. BENTS ARE BATTERED 1½:12.

NORTH CAROLINA PROFESSIONAL SEAL 15825 ENGINEER BRUCE D. KLAPPENBACH
3-29-2010

PROJECT NO. B-3611
BEAUFORT COUNTY
STATION: 43+25.00-L-
SHEET 14 OF 23

STATE OF NORTH CAROLINA
DEPARTMENT OF TRANSPORTATION
RALEIGH

GENERAL DRAWING FOR BRIDGE OVER PANTEGO CREEK ON NC 99 BETWEEN SR 1778 AND US 264

REVISIONS						SHEET NO.
NO.	BY:	DATE:	NO.	BY:	DATE:	S-14
1			3			TOTAL SHEETS
2			4			120

DRAWN BY : H. T. BARBOUR DATE : 12-18-09
CHECKED BY : C. R. YARBROUGH DATE : 1-10

24-MAR-2010 12:09
M:\Structures\tbarbour\Microstation\b3611_sd_f1.dgn
tbarbour

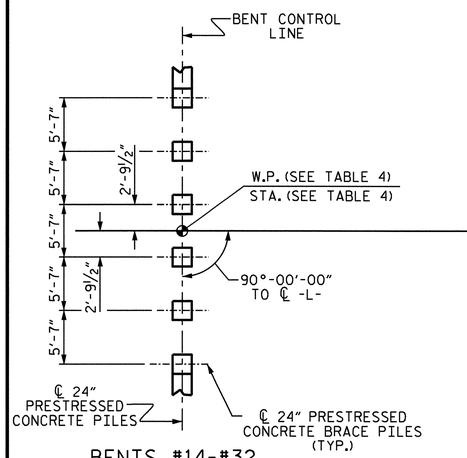

BENTS #14-#32

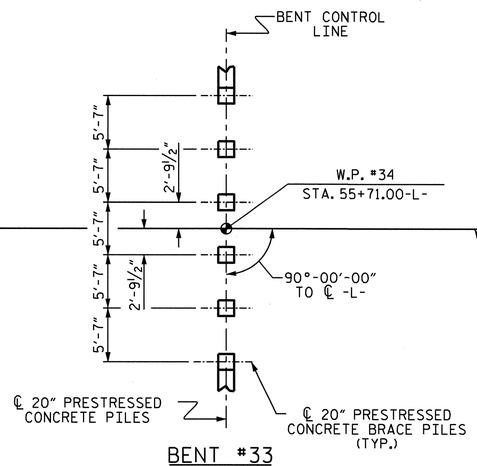

BENT #33

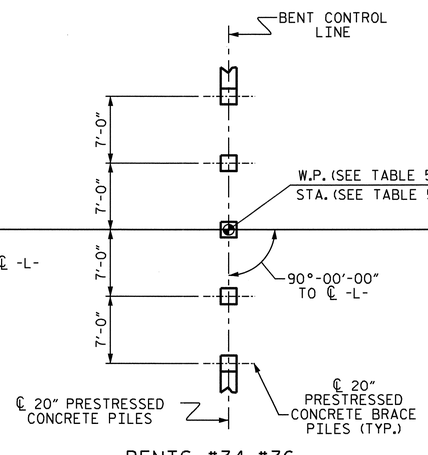

BENTS #34-#36

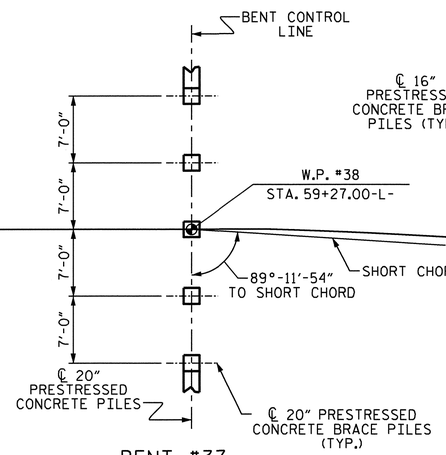

BENT #37

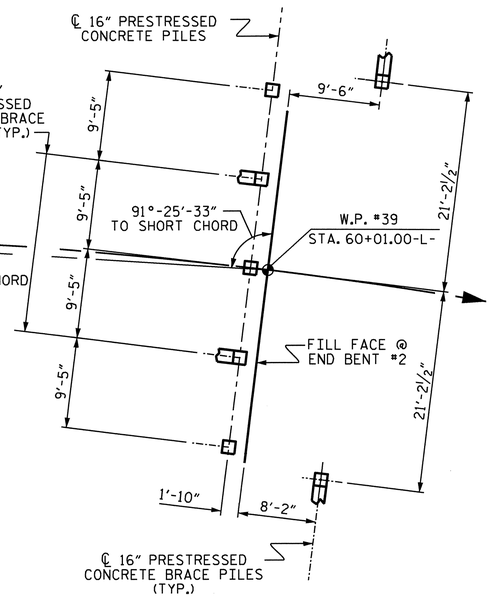

END BENT #2

TABLE 4		
BENT #	W.P. #	STATION
14	15	37+85.00-L-
15	16	38+79.00-L-
16	17	39+73.00-L-
17	18	40+67.00-L-
18	19	41+61.00-L-
19	20	42+55.00-L-
20	21	43+49.00-L-
21	22	44+43.00-L-
22	23	45+37.00-L-
23	24	46+31.00-L-
24	25	47+25.00-L-
25	26	48+19.00-L-
26	27	49+13.00-L-
27	28	50+07.00-L-
28	29	51+01.00-L-
29	30	51+95.00-L-
30	31	52+89.00-L-
31	32	53+83.00-L-
32	33	54+77.00-L-

TABLE 5		
BENT #	W.P. #	STATION
34	35	56+65.00-L-
35	36	57+59.00-L-
36	37	58+53.00-L-

FOUNDATION LAYOUT

DIMENSIONS LOCATING PILES ARE TO THE PILE CENTERLINE.
BRACE PILES AT END BENTS ARE BATTERED 3:12. BENTS ARE BATTERED 1½:12.

NORTH CAROLINA PROFESSIONAL SEAL 5825 ENGINEER BRUCE D. KLAPPENBERGER
3-29-2010

PROJECT NO. B-3611
BEAUFORT COUNTY
STATION: 43+25.00-L-

SHEET 15 OF 23

STATE OF NORTH CAROLINA
DEPARTMENT OF TRANSPORTATION
RALEIGH

GENERAL DRAWING FOR BRIDGE OVER PANTEGO CREEK ON NC 99 BETWEEN SR 1778 AND US 264

REVISIONS						SHEET NO.
NO.	BY:	DATE:	NO.	BY:	DATE:	S-15
1			3			TOTAL SHEETS
2			4			120

DRAWN BY : H. T. BARBOUR DATE : 12-18-09
CHECKED BY : C. R. YARBROUGH DATE : 1-10

24-MAR-2010 12:09
M:\Structures\tbarbour\Microstation\b3611_sd_fl.dgn
tbarbour

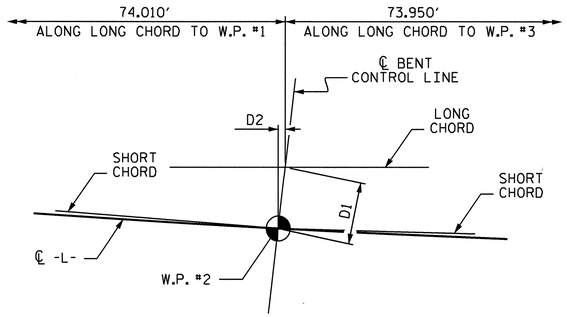

DETAIL "A"

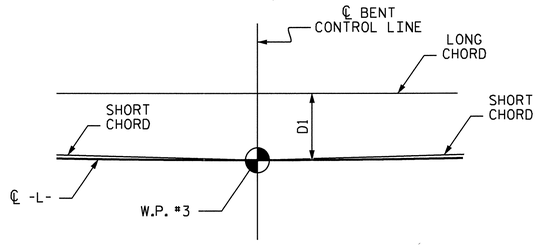

DETAIL "B"

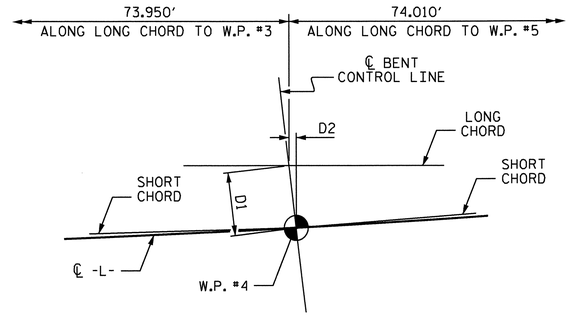

DETAIL "C"

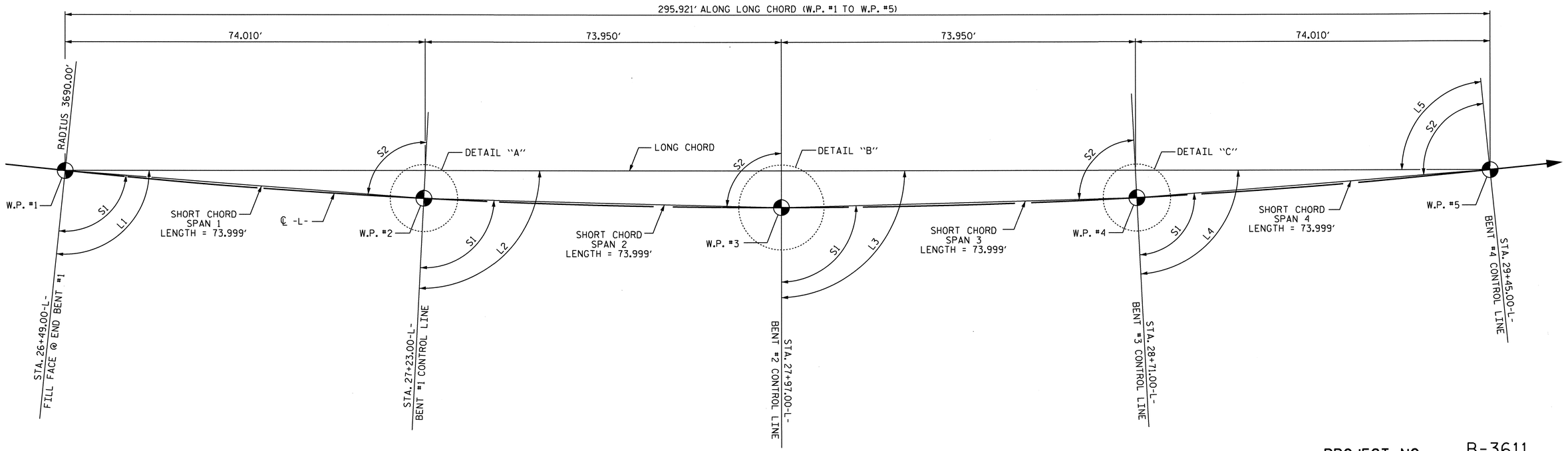

HORIZONTAL CURVE DATA -L-

P.I. = 25+52.04-L-
DELTA = 28°-24'-54.6"(LT)
D = 1°-33'-09.8"
L = 1830.01'
T = 934.23'
R = 3690.00'

LONG CHORD LAYOUT

SPANS 1 THRU 4

OFFSETS			
CONTROL LINE	DETAIL	D1	D2
BENT #1	A	2.226'	.045'
BENT #2	B	2.968'	-
BENT #3	C	2.226'	.045'

LONG CHORD ANGLES	
L1	92°-17'-53"
L2	91°-08'-56"
L3	90°-00'-00"
L4	88°-51'-04"
L5	87°-42'-07"

SHORT CHORD ANGLES	
S1	90°-34'-28"
S2	89°-25'-32"

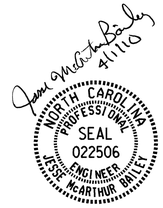

PROJECT NO. B-3611
BEAUFORT COUNTY
STATION: 43+25.00-L-

SHEET 16 OF 23

STATE OF NORTH CAROLINA
DEPARTMENT OF TRANSPORTATION
RALEIGH

GENERAL DRAWING FOR BRIDGE OVER PANTEGO CREEK ON NC 99 BETWEEN SR 1778 AND US 264

REVISIONS						SHEET NO.
NO.	BY:	DATE:	NO.	BY:	DATE:	S-16
1			3			TOTAL SHEETS
2			4			120

DRAWN BY : S.H. SOCKWELL DATE : 9/16/09
CHECKED BY : J.M. BAILEY DATE : 01/10

24-MAR-2010 12:09
M:\Structures\ssockwell\b-3611.sd.lc.dgn
tbarbour

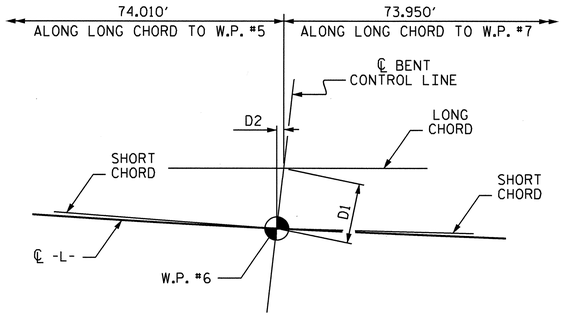

DETAIL "D"

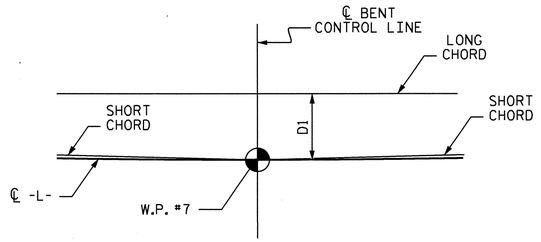

DETAIL "E"

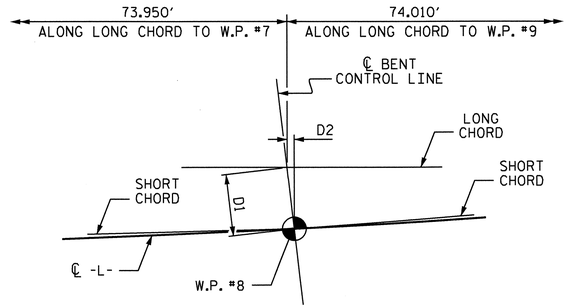

DETAIL "F"

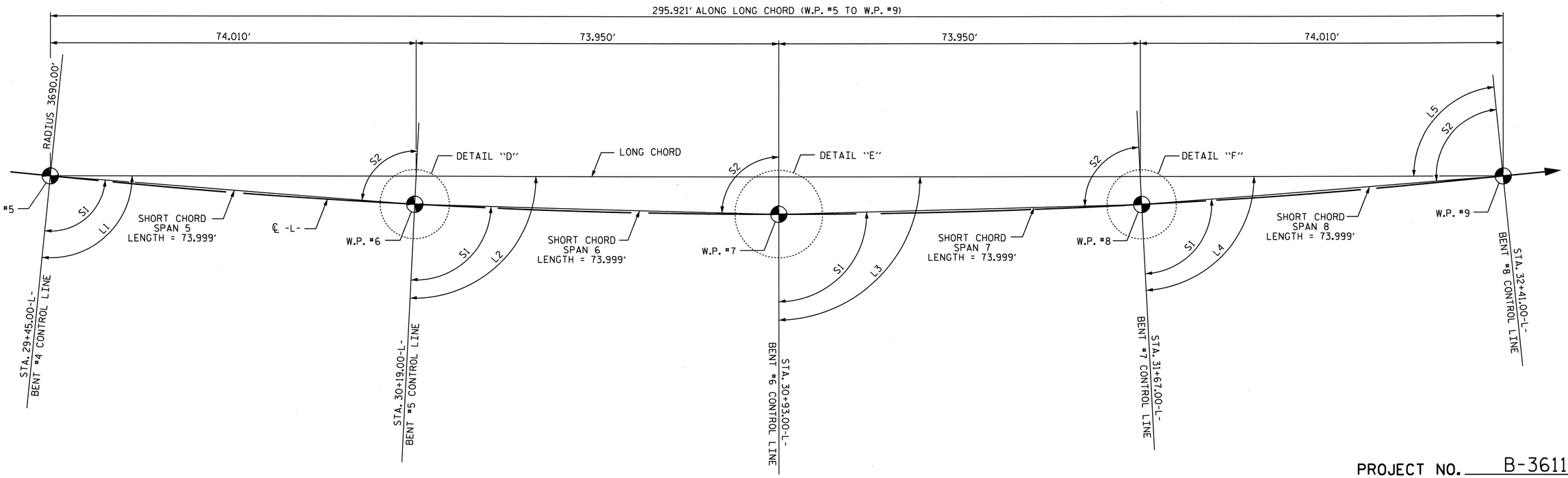

LONG CHORD LAYOUT
SPANS 5 THRU 8

HORIZONTAL CURVE DATA -L-

P.I. = 25+52.04-L-
DELTA = 28°-24'-54.6"(LT)
D = 1°-33'-09.8"
L = 1830.01'
T = 934.23'
R = 3690.00'

OFFSETS			
CONTROL LINE	DETAIL	D1	D2
BENT #5	D	2.226'	.045'
BENT #6	E	2.968'	-
BENT #7	F	2.226'	.045'

LONG CHORD ANGLES	
L1	92°-17'-53"
L2	91°-08'-56"
L3	90°-00'-00"
L4	88°-51'-04"
L5	87°-42'-07"

SHORT CHORD ANGLES	
S1	90°-34'-28"
S2	89°-25'-32"

NORTH CAROLINA PROFESSIONAL SEAL 022506 ENGINEER JESSE MCARTHUR BAILEY
4/1/10

PROJECT NO. B-3611
BEAUFORT COUNTY
STATION: 43+25.00-L-

SHEET 17 OF 23

STATE OF NORTH CAROLINA
DEPARTMENT OF TRANSPORTATION
RALEIGH

GENERAL DRAWING FOR BRIDGE OVER PANTEGO CREEK ON NC 99 BETWEEN SR 1778 AND US 264

REVISIONS						SHEET NO.
NO.	BY:	DATE:	NO.	BY:	DATE:	S-17
1			3			TOTAL SHEETS
2			4			120

DRAWN BY : S.H. SOCKWELL DATE : 9/16/09
CHECKED BY : J.M. BAILEY DATE : 01/10

24-MAR-2010 12:09
M:\Structures\ssockwell\b-3611_sd_lc.dgn
tbarbour

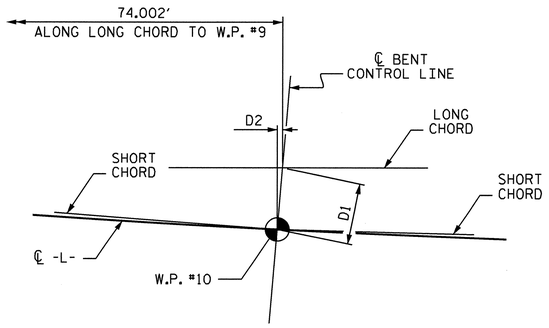

DETAIL "G"

HORIZONTAL CURVE DATA -L-

P.I. = 25+52.04-L-
DELTA = 28°-24'-54.6"(LT)
D = 1°-33'-09.8"
L = 1830.01'
T = 934.23'
R = 3690.00'

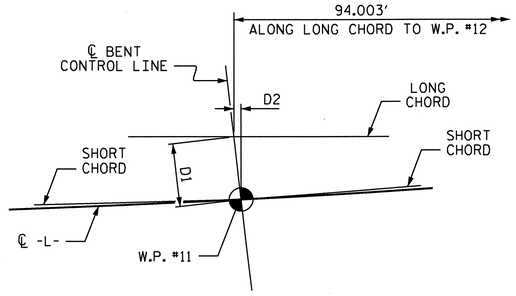

DETAIL "H"

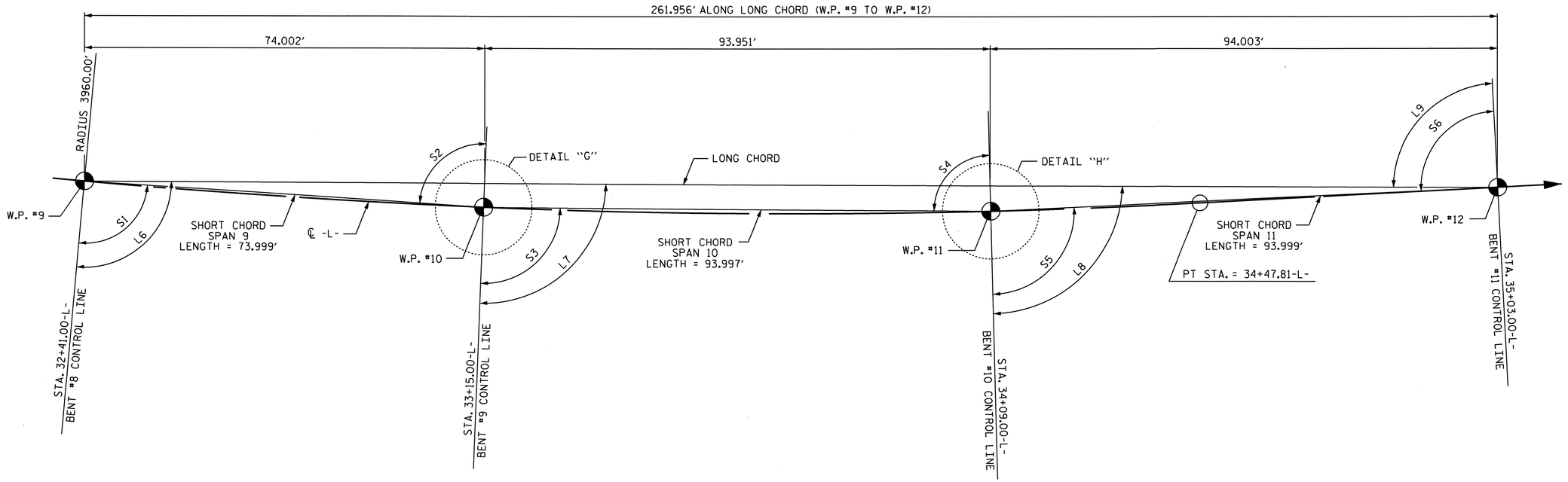

LONG CHORD LAYOUT
SPANS 9 THRU 11

OFFSETS			
CONTROL LINE	DETAIL	D1	D2
BENT #9	G	1.769'	.025'
BENT #10	H	1.875'	.022'

LONG CHORD ANGLES	
L6	91°-56'-38"
L7	90°-47'-41"
L8	89°-20'-07"
L9	88°-43'-57"

SHORT CHORD ANGLES	
S1	90°-34'-28"
S2	89°-25'-32"
S3	90°-43'-47"
S4	89°-16'-13"
S5	90°-28'-42"
S6	89°-52'-32"

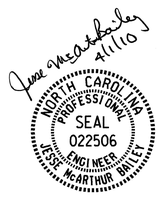

DRAWN BY : S.H. SOCKWELL DATE : 9/16/09
CHECKED BY : J.M. BAILEY DATE : 01/10

24-MAR-2010 12:09
M:\Structures\ssockwell\b-3611.sd.lc.dgn
tbarbour

PROJECT NO. B-3611
BEAUFORT COUNTY
STATION: 43+25.00-L-

SHEET 18 OF 23

STATE OF NORTH CAROLINA
DEPARTMENT OF TRANSPORTATION
RALEIGH

GENERAL DRAWING FOR BRIDGE OVER PANTEGO CREEK ON NC 99 BETWEEN SR 1778 AND US 264

REVISIONS						SHEET NO.
NO.	BY:	DATE:	NO.	BY:	DATE:	S-18
1			3			TOTAL SHEETS
2			4			120

HORIZONTAL CURVE DATA -L-

P.I. = 61+97.52-L-
DELTA = 20°-39'-57.2"(RT)
D = 4°-10'-55.8"
L = 494.14'
T = 249.79'
R = 1370.00'

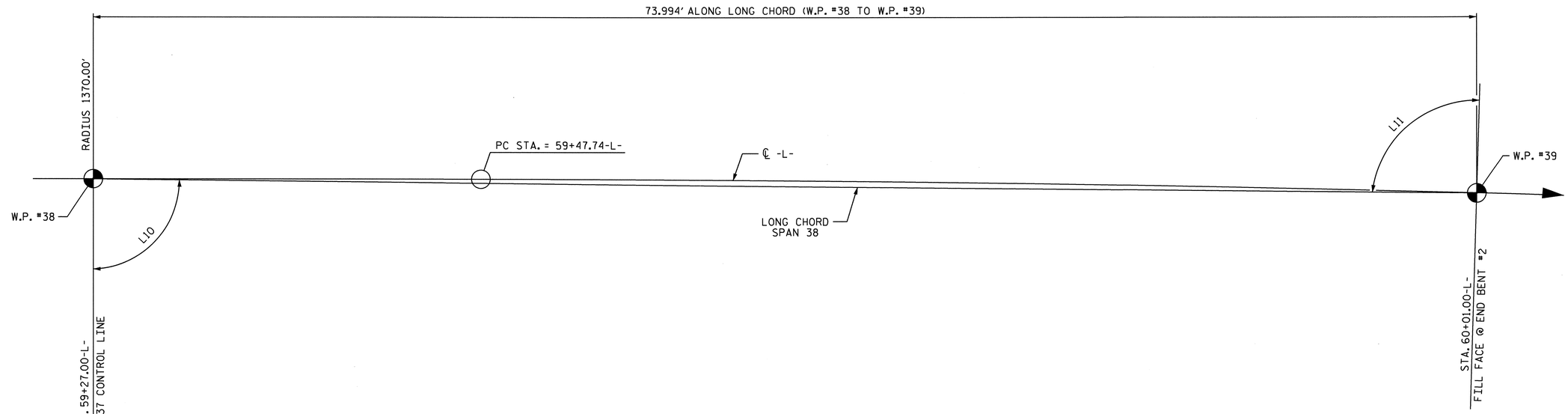

LONG CHORD LAYOUT

SPAN 38

ANGLES	
LONG CHORD	
L10	89°-11'-54"
L11	91°-25'-33"

PROJECT NO. B-3611
BEAUFORT COUNTY
STATION: 43+25.00-L-

SHEET 19 OF 23

STATE OF NORTH CAROLINA
DEPARTMENT OF TRANSPORTATION
RALEIGH

GENERAL DRAWING FOR BRIDGE OVER PANTEGO CREEK ON NC 99 BETWEEN SR 1778 AND US 264

REVISIONS						SHEET NO.
NO.	BY:	DATE:	NO.	BY:	DATE:	S-19
1			3			TOTAL SHEETS
2			4			120

NORTH CAROLINA PROFESSIONAL SEAL 022506 ENGINEER JESSE McARTHUR BAILEY

DRAWN BY : S.H. SOCKWELL DATE : 9/16/09
CHECKED BY : J.M. BAILEY DATE : 01/10

24-MAR-2010 12:09
M:\Structures\ssockwell\b-3611_sd_lc.dgn
tbarbour

BENCHMARK #1: N 657958.1 E 2701394.1 -BL-STATION BM-1 OFF BASELINE RAILROAD SPIKE IN 24"PINE, EL. 3.61.

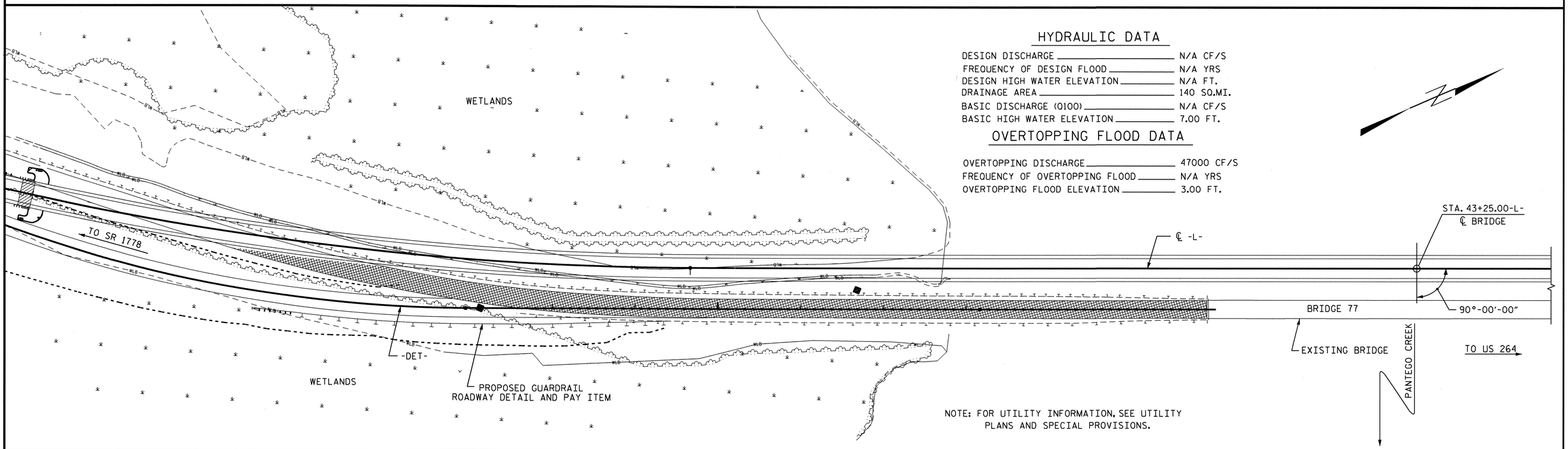

HYDRAULIC DATA

DESIGN DISCHARGE	N/A CF/S
FREQUENCY OF DESIGN FLOOD	N/A YRS
DESIGN HIGH WATER ELEVATION	N/A FT.
DRAINAGE AREA	140 SQ.MI.
BASIC DISCHARGE (Q100)	N/A CF/S
BASIC HIGH WATER ELEVATION	7.00 FT.

OVERTOPPING FLOOD DATA

OVERTOPPING DISCHARGE	47000 CF/S
FREQUENCY OF OVERTOPPING FLOOD	N/A YRS
OVERTOPPING FLOOD ELEVATION	3.00 FT.

NOTE: FOR UTILITY INFORMATION, SEE UTILITY PLANS AND SPECIAL PROVISIONS.

LOCATION SKETCH

NOTES

ASSUMED LIVE LOAD = HL 93 OR ALTERNATE LOADING.

FOR OTHER DESIGN DATA AND GENERAL NOTES, SEE SHEET SN.

FOR EROSION CONTROL MEASURES SEE EROSION CONTROL PLANS.

THIS BRIDGE HAS BEEN DESIGNED IN ACCORDANCE WITH THE AASHTO LRFD BRIDGE DESIGN SPECIFICATIONS.

REMOVABLE FORMS MAY BE USED IN LIEU OF PRECAST CONCRETE DECK PANELS IN ACCORDANCE WITH ARTICLE 420-3 OF THE STANDARD SPECIFICATIONS.

AFTER SERVING AS A TEMPORARY STRUCTURE THE EXISTING STRUCTURE CONSISTING OF 35 SPANS @ 40'-0", WITH A 5.75" CONCRETE DECK ON STEEL I-BEAMS, WITH A CLEAR ROADWAY WIDTH OF 22.0' ON REINFORCED CONCRETE CAPS ON TIMBER PILES AT THE END BENTS AND INTERIOR BENTS LOCATED 50' DOWN STREAM, SHALL BE REMOVED. THE EXISTING BRIDGE IS PRESENTLY POSTED BELOW THE LEGAL LOAD LIMIT. SHOULD THE STRUCTURAL INTEGRITY OF THE BRIDGE FURTHER DETERIORATE, THIS LOAD LIMITATION MAY BE REDUCED AS FOUND NECESSARY DURING THE LIFE OF THE PROJECT.

REMOVAL OF THE EXISTING BRIDGE SHALL BE PERFORMED SO AS NOT TO ALLOW DEBRIS TO FALL INTO THE WATER. THE CONTRACTOR SHALL REMOVE THE BRIDGE AND SUBMIT PLANS FOR DEMOLITION IN ACCORDANCE WITH ARTICLE 402-2 OF THE STANDARD SPECIFICATIONS.

THE SUBSTRUCTURE OF THE EXISTING BRIDGE AND PREVIOUSLY EXISTING BRIDGE INDICATED ON THE PLANS IS FROM THE BEST INFORMATION AVAILABLE. SINCE THIS INFORMATION IS SHOWN FOR THE CONVENIENCE OF THE CONTRACTOR, THE CONTRACTOR SHALL HAVE NO CLAIM WHATSOEVER AGAINST THE DEPARTMENT OF TRANSPORTATION FOR ANY DELAYS OR ADDITIONAL COST INCURRED BASED ON DIFFERENCES BETWEEN THE EXISTING BRIDGE OR THE PREVIOUSLY EXISTING BRIDGE SUBSTRUCTURE SHOWN ON THE PLANS AND THE ACTUAL CONDITIONS AT THE PROJECT SITE.

THIS STRUCTURE CONTAINS THE NECESSARY CORROSION PROTECTION REQUIRED FOR A CORROSIVE SITE.

THE CLASS AA CONCRETE IN THE BRIDGE DECK SHALL CONTAIN FLY ASH OR GROUND GRANULATED BLAST FURNACE SLAG AT THE SUBSTITUTION RATE SPECIFIED IN ARTICLE 1024-1 AND IN ACCORDANCE WITH ARTICLES 1024-5 AND 1024-6 OF THE STANDARD SPECIFICATIONS. NO PAYMENT WILL BE MADE FOR THIS SUBSTITUTION AS IT IS CONSIDERED INCIDENTAL TO THE COST OF THE REINFORCED CONCRETE DECK SLAB.

CLASS AA CONCRETE SHALL BE USED IN ALL CAST-IN-PLACE BENT CAPS, END BENT CAPS, AND SHALL CONTAIN CALCIUM NITRITE CORROSION INHIBITOR.

PRESTRESSED CONCRETE GIRDERS, PRECAST DECK PANELS, AND PRESTRESSED CONCRETE PILES SHALL CONTAIN CALCIUM NITRITE CORROSION INHIBITOR.

ALL BAR SUPPORTS USED IN THE PARAPET, DECK, BENT CAPS, END BENT CAPS AND ALL INCIDENTAL REINFORCING STEEL SHALL BE EPOXY COATED IN ACCORDANCE WITH THE STANDARD SPECIFICATIONS.

THE CONCRETE IN THE PRESTRESSED CONCRETE PILES OF ALL INTERIOR BENTS SHALL CONTAIN SILICA FUME. SILICA FUME SHALL BE SUBSTITUTED FOR 5% OF THE PORTLAND CEMENT BY WEIGHT. IF THE OPTION OF ARTICLE 1024-1 OF THE STANDARD SPECIFICATIONS TO PARTIALLY SUBSTITUTE CLASS F FLY ASH FOR PORTLAND CEMENT IS EXERCISED, THEN THE RATE OF FLY ASH SUBSTITUTION SHALL BE REDUCED TO 1.0 LB OF FLY ASH PER 1.0 LB OF CEMENT. NO PAYMENT WILL BE MADE FOR THIS SUBSTITUTION AS IT IS CONSIDERED INCIDENTAL TO THE VARIOUS PAY ITEMS.

ALL METALIZED SURFACES SHALL RECEIVE A SEAL COATING AS SPECIFIED IN THE SPECIAL PROVISION FOR THERMAL SPRAYED COATINGS (METALIZATION).

THIS STRUCTURE HAS BEEN DESIGNED IN ACCORDANCE WITH HEC 18, "EVALUATING SCOUR AT BRIDGES", MAY, 2001.

FOR SECURING OF VESSELS, SEE SPECIAL PROVISIONS.

FOR LIMITS OF TEMPORARY SHORING FOR MAINTENANCE OF TRAFFIC, SEE TRAFFIC CONTROL PLANS. FOR PAY ITEM FOR TEMPORARY SHORING FOR MAINTENANCE OF TRAFFIC, SEE ROADWAY PLANS.

THE CONTRACTOR SHALL PROVIDE INDEPENDENT ASSURANCE SAMPLES OF REINFORCING STEEL AS FOLLOWS: FOR PROJECTS REQUIRING UP TO 400 TONS OF REINFORCING STEEL, ONE 30 INCH SAMPLE OF EACH SIZE BAR USED, AND FOR PROJECTS REQUIRING OVER 400 TONS OF REINFORCING STEEL, TWO 30 INCH SAMPLES OF EACH SIZE BAR USED. THE BARS FROM WHICH THE SAMPLES ARE TAKEN MUST THEN BE SPLICED WITH REPLACEMENT BARS OF THE SIZE AND LENGTH OF THE SAMPLE, PLUS A MINIMUM LAP SPLICE OF THIRTY BAR DIAMETERS.

INASMUCH AS THE PAINT SYSTEM ON THE EXISTING STRUCTURAL STEEL CONTAINS LEAD, THE CONTRACTOR'S ATTENTION IS DIRECTED TO ARTICLE 107-1 OF THE STANDARD SPECIFICATIONS. ANY COSTS RESULTING FROM COMPLIANCE WITH APPLICABLE STATE OR FEDERAL REGULATIONS PERTAINING TO HANDLING OF MATERIALS CONTAINING LEAD BASED PAINT SHALL BE INCLUDED IN THE BID PRICE FOR "REMOVAL OF EXISTING STRUCTURE AT STATION 43+25.00-L-."

NEEDLE BEAMS WILL NOT BE ALLOWED UNLESS OTHERWISE CALLED FOR ON THE PLANS OR APPROVED BY THE ENGINEER.

FOR FALSEWORK AND FORMWORK, SEE SPECIAL PROVISIONS.

FOR CRANE SAFETY, SEE SPECIAL PROVISIONS.

FOR PRESTRESSED CONCRETE MEMBERS, SEE SPECIAL PROVISIONS.

FOR STRUCTURE DRAINAGE SYSTEM, SEE SPECIAL PROVISIONS.

THE CONTRACTOR SHALL LOCATE AND REMOVE THE EXISTING TIMBER PILES REMAINING FROM A PREVIOUSLY CONSTRUCTED BRIDGE LOCATED APPROXIMATELY ALONG THE PROPOSED ALIGNMENT. THESE EXISTING TIMBER PILES SHALL BE REMOVED DOWN TO THE MUD LINE. ALL WORK REQUIRED FOR THE REMOVAL OF THESE EXISTING TIMBER PILES SHALL BE INCLUDED IN THE LUMP SUM PAY ITEM "REMOVAL OF EXISTING STRUCTURE AT STA. 43+25.00-L-."

THE CONTRACTOR SHALL REMOVE THE EXISTING FENDER SYSTEM. THE EXISTING PILES FROM THE FENDER SYSTEM SHALL BE REMOVED TO THE MUD LINE. ALL WORK REQUIRED FOR THE REMOVAL OF THE FENDER SYSTEM SHALL BE INCLUDED IN THE LUMP SUM PAY ITEM "REMOVAL OF EXISTING STRUCTURE AT STA. 43+25.00-L-."

FOR FORMS FOR CONCRETE BRIDGE DECKS, SEE SPECIAL PROVISIONS.

FOR PLACING LOAD ON STRUCTURE MEMBERS, SEE SPECIAL PROVISIONS.

FOR GROUT FOR STRUCTURE, SEE SPECIAL PROVISIONS.

FOR CURING CONCRETE, SEE SPECIAL PROVISIONS.

FOR CONSTRUCTION, MAINTENANCE AND REMOVAL OF TEMPORARY ACCESS AT STA. 43+25.00-L-, SEE SPECIAL PROVISIONS.

FOR BRIDGE RIDEABILITY AND GROOVING AT STA. 43+25.00-L-, SEE SPECIAL PROVISIONS.

FOR MAINTENANCE OF WATER TRAFFIC, SEE SPECIAL PROVISIONS.

FOR WORK IN, OVER, OR ADJACENT TO NAVIGABLE WATERS, SEE SPECIAL PROVISIONS.

FOR NAVIGATIONAL CLEARANCE VERIFICATION AND WATERWAY INSPECTION, SEE SPECIAL PROVISIONS.

FOR NAVIGATIONAL LIGHTING SYSTEM, SEE SPECIAL PROVISIONS.

FOR SUBMITTAL OF WORKING DRAWINGS, SEE SPECIAL PROVISIONS.

FOR VERTICAL CLEARANCE GAUGES, SEE SPECIAL PROVISIONS.

NORTH CAROLINA PROFESSIONAL SEAL 15823 ENGINEER D. KLAPPENBACH
4-1-2010

DRAWN BY : H. T. BARBOUR DATE : 6-25-08
CHECKED BY : C. R. YARBROUGH DATE : 1-10

01-APR-2010 10:58
M:\Structures\tbarbour\Microstation\b3611_sd_gdlocsketch.dgn
tbarbour

PROJECT NO. B-3611
BEAUFORT COUNTY
STATION: 43+25.00-L-

SHEET 20 OF 23

STATE OF NORTH CAROLINA
DEPARTMENT OF TRANSPORTATION
RALEIGH

GENERAL DRAWING FOR BRIDGE OVER PANTEGO CREEK ON NC 99 BETWEEN SR 1778 AND US 264

REVISIONS						SHEET NO.
NO.	BY:	DATE:	NO.	BY:	DATE:	S-20
1			3			TOTAL SHEETS
2			4			120

BENCHMARK #1: N 657958.1 E 2701394.1 -BL-STATION BM-1 OFF BASELINE RAILROAD SPIKE IN 24" PINE, EL. 3.61.

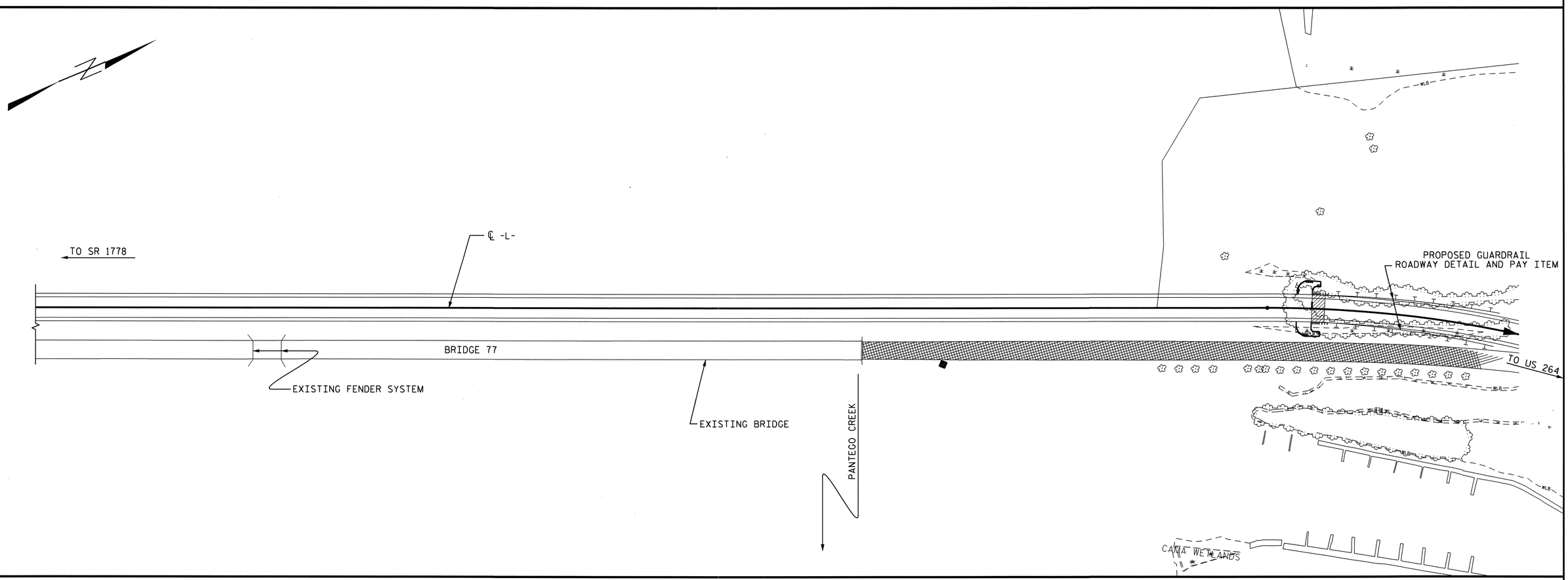

LOCATION SKETCH

FOUNDATION NOTES

FOR PILES, SEE SPECIAL PROVISIONS.

PILES AT END BENT NO. 1 AND END BENT NO. 2 ARE DESIGNED FOR A FACTORED RESISTANCE OF 120 TONS PER PILE. DRIVE PILES TO A REQUIRED DRIVING RESISTANCE OF 200 TONS PER PILE.

PILES AT BENT NO. 1 THROUGH BENT NO. 7 AND BENT NO. 37 ARE DESIGNED FOR A FACTORED RESISTANCE OF 200 TONS PER PILE. DRIVE PILES TO A REQUIRED DRIVING RESISTANCE OF 275 TONS PER PILE. THIS REQUIRED DRIVING RESISTANCE INCLUDES ADDITIONAL RESISTANCE FOR DOWNDRAG OR SCOUR.

PILES AT BENT NO. 8 AND BENT NO. 13 ARE DESIGNED FOR A FACTORED RESISTANCE OF 145 TONS PER PILE. DRIVE PILES TO A REQUIRED DRIVING RESISTANCE OF 205 TONS PER PILE. THIS REQUIRED DRIVING RESISTANCE INCLUDES ADDITIONAL RESISTANCE FOR DOWNDRAG OR SCOUR.

PILES AT BENT NO. 14 THROUGH BENT NO. 33 AND BENT NO. 36 ARE DESIGNED FOR A FACTORED RESISTANCE OF 230 TONS PER PILE. DRIVE PILES TO A REQUIRED DRIVING RESISTANCE OF 325 TONS PER PILE. THIS REQUIRED DRIVING RESISTANCE INCLUDES ADDITIONAL RESISTANCE FOR DOWNDRAG OR SCOUR.

PILES AT BENT NO. 34 AND BENT NO. 35 ARE DESIGNED FOR A FACTORED RESISTANCE OF 245 TONS PER PILE. DRIVE PILES TO A REQUIRED DRIVING RESISTANCE OF 335 TONS PER PILE. THIS REQUIRED DRIVING RESISTANCE INCLUDES ADDITIONAL RESISTANCE FOR DOWNDRAG OR SCOUR.

INSTALL PILES AT BENT NO. 1 THROUGH BENT NO. 5 TO A TIP ELEVATION NO HIGHER THAN -30 FT.

INSTALL PILES AT BENT NO. 6 THROUGH BENT NO. 13 TO A TIP ELEVATION NO HIGHER THAN -36 FT.

INSTALL PILES AT BENT NO. 14 THROUGH BENT NO. 16 TO A TIP ELEVATION NO HIGHER THAN -40 FT.

INSTALL PILES AT BENT NO. 17 THROUGH BENT NO. 19 TO A TIP ELEVATION NO HIGHER THAN -45 FT.

INSTALL PILES AT BENT NO. 20 THROUGH BENT NO. 30 TO A TIP ELEVATION NO HIGHER THAN -50 FT.

INSTALL PILES AT BENT NO. 31 TO A TIP ELEVATION NO HIGHER THAN -45 FT.

INSTALL PILES AT BENT NO. 32 TO A TIP ELEVATION NO HIGHER THAN -42 FT.

INSTALL PILES AT BENT NO. 33 TO A TIP ELEVATION NO HIGHER THAN -38 FT.

INSTALL PILES AT BENT NO. 34 THROUGH BENT NO. 37 TO A TIP ELEVATION NO HIGHER THAN -36 FT.

FOR SCOUR CRITICAL ELEVATIONS SEE CHART. SCOUR CRITICAL ELEVATIONS ARE USED TO MONITOR POSSIBLE SCOUR PROBLEMS DURING THE LIFE OF THE STRUCTURE.

IT HAS BEEN ESTIMATED THAT A HAMMER WITH AN EQUIVALENT RATED ENERGY IN THE RANGE OF 50,000 FT-LBS PER BLOW TO 125,000 FT-LBS PER BLOW WILL BE REQUIRED TO DRIVE PILES AT BENT NO. 1 THROUGH BENT NO. 37. THIS ESTIMATED ENERGY RANGE DOES NOT RELEASE THE CONTRACTOR FROM PROVIDING DRIVING EQUIPMENT IN ACCORDANCE WITH THE PILES SPECIAL PROVISION.

TESTING THE FIRST PRODUCTION PILES WITH THE PILE DRIVING ANALYZER DURING DRIVING, RESTRIKING OR REDRIVING IS REQUIRED AT BOTH BENT NO. 1 AND BENT NO. 37. FOR PILE DRIVING ANALYZER, SEE PILES SPECIAL PROVISION.

TESTING PILES WITH THE PILE DRIVING ANALYZER DURING DRIVING, RESTRIKING OR REDRIVING IS REQUIRED AT BENT NO. 11, BENT NO. 15, BENT NO. 22, BENT NO. 24 AND BENT NO. 32. FOR PILE DRIVING ANALYZER, SEE PILES SPECIAL PROVISION.

IF NECESSARY, PREDRILL PILE LOCATIONS AT BENT NO. 11, BENT NO. 12 AND BENT NO. 13 TO ELEVATION -20 FT. WITH EQUIPMENT THAT WILL RESULT IN A MAXIMUM PREDRILLING DIAMETER OF 20 INCHES. FOR PREDRILLING FOR PILES, SEE PILES SPECIAL PROVISION.

SCOUR CRITICAL ELEVATIONS	
BENT NO.	ELEVATION
1-4	-4
5	-6
6	-7
7	-9
8	-10
9	-11
10-11	-9
12-13	-11
14-16	-10
17	-13
18	-15
19	-16
20-22	-18
23-26	-19
27-29	-18
30	-17
31	-16
32	-14
33	-12
34	-11
35-36	-10
37	-9

NORTH CAROLINA PROFESSIONAL SEAL 15805 ENGINEER BRUCE D. KLAPPENBACH
3-29-2010

DRAWN BY : H. T. BARBOUR DATE : 6-25-08
CHECKED BY : C. R. YARBROUGH DATE : 1-10

24-MAR-2010 12:09
M:\Structures\tbarbour\Microstation\b3611_sd_gdlocsketch.dgn
tbarbour

PROJECT NO. B-3611
BEAUFORT COUNTY
STATION: 43+25.00-L-

SHEET 21 OF 23

STATE OF NORTH CAROLINA
DEPARTMENT OF TRANSPORTATION
RALEIGH

GENERAL DRAWING FOR BRIDGE OVER PANTEGO CREEK ON NC 99 BETWEEN SR 1778 AND US 264

REVISIONS						SHEET NO.
NO.	BY:	DATE:	NO.	BY:	DATE:	S-21
1			3			TOTAL SHEETS
2			4			120

TOTAL BILL OF MATERIAL

	CONST. MAINT. & REMOVAL OF TEMP. ACCESS	REMOVAL OF EXISTING STRUCTURE	PDA TESTING	PDA ASSISTANCE	REINFORCED CONCRETE DECK SLAB	GROOVING BRIDGE FLOORS	CLASS AA CONCRETE	BRIDGE APPROACH SLABS	EPOXY COATED REINFORCING STEEL	45" PRESTRESSED CONCRETE GIRDERS		54" PRESTRESSED CONCRETE GIRDERS	
	LUMP SUM	LUMP SUM	EACH	EACH	SQ. FT.	SQ. FT.	CU. YDS.	LUMP SUM	LBS.	NO.	LIN. FT.	NO.	LIN. FT.
SUPERSTRUCTURE	LUMP SUM	LUMP SUM			115886	97742		LUMP SUM		44	3231.885	108	10115.979
END BENT NO. 1							30.4		5126				
BENT NO. 1			1	1			12.6		2813				
BENT NO. 2							12.6		2813				
BENT NO. 3							12.6		2813				
BENT NO. 4							12.6		2813				
BENT NO. 5							12.6		2813				
BENT NO. 6							12.6		2813				
BENT NO. 7							12.6		2813				
BENT NO. 8							21.5		2976				
BENT NO. 9							22.7		3160				
BENT NO. 10							21.5		2976				
BENT NO. 11			1	1			21.1		2976				
BENT NO. 12							21.1		2976				
BENT NO. 13							21.1		2976				
BENT NO. 14							14.9		2934				
BENT NO. 15			1	1			14.9		2934				
BENT NO. 16							14.9		2934				
BENT NO. 17							14.9		2934				
BENT NO. 18							14.9		2934				
BENT NO. 19							14.9		2934				
BENT NO. 20							14.9		2934				
BENT NO. 21							14.9		2934				
BENT NO. 22			1	1			14.9		2934				
BENT NO. 23							14.9		2934				
BENT NO. 24			1	1			14.0		2806				
BENT NO. 25							14.9		2934				
BENT NO. 26							14.9		2934				
BENT NO. 27							14.9		2934				
BENT NO. 28							14.9		2934				
BENT NO. 29							14.9		2934				
BENT NO. 30							14.9		2934				
BENT NO. 31							14.9		2934				
BENT NO. 32			1	1			14.9		2934				
BENT NO. 33							13.3		2898				
BENT NO. 34							14.5		2872				
BENT NO. 35							14.5		2872				
BENT NO. 36							15.3		3010				
BENT NO. 37			1	1			12.3		2813				
END BENT NO. 2							30.7		5149				
TOTAL	LUMP SUM	LUMP SUM	7	7	115886	97742	630.4	LUMP SUM	118089	44	3231.885	108	10115.979

PROJECT NO. B-3611

BEAUFORT COUNTY

STATION: 43+25.00-L-

SHEET 22 OF 23

STATE OF NORTH CAROLINA
DEPARTMENT OF TRANSPORTATION
RALEIGH

GENERAL DRAWING FOR BRIDGE OVER PANTEGO CREEK ON NC 99 BETWEEN SR 1778 AND US 264

NORTH CAROLINA PROFESSIONAL SEAL 15025 ENGINEER BRUCE D. KLAPPENBERGER
4-1-2010

REVISIONS						SHEET NO.
NO.	BY:	DATE:	NO.	BY:	DATE:	S-22
1			3			TOTAL SHEETS
2			4			120

DRAWN BY : H. T. BARBOUR DATE : 1-28-10
CHECKED BY : C. R. YARBROUGH DATE : 1-10

01-APR-2010 11:01
M:\Structures\tbarbour\Microstation\b3611_sd_gdlocsketch.dgn
tbarbour

TOTAL BILL OF MATERIAL

	16" PRESTRESSED CONCRETE PILES		20" PRESTRESSED CONCRETE PILES		24" PRESTRESSED CONCRETE PILES		PILE REDRIVES	TWO BAR METAL RAIL	1'-2" X 2'-6" CONCRETE PARAPET	RIP RAP CLASS II 2'-0" THICK	FILTER FABRIC FOR DRAINAGE	ELASTOMERIC BEARINGS	EVAZOTE JOINT SEALS	STRUCTURE DRAINAGE SYSTEM	SOLAR ARRAY SUPPORT PLATFORM	PREDRILLING FOR PILES
	NO.	LIN. FT.	NO.	LIN. FT.	NO.	LIN. FT.	EACH	LIN. FT.	LIN. FT.	TONS	SQ. YDS.	LUMP SUM	LUMP SUM	LUMP SUM	LUMP SUM	LIN. FT.
SUPERSTRUCTURE								6684.0	6699.5			LUMP SUM	LUMP SUM	LUMP SUM	LUMP SUM	
END BENT NO. 1	7	420					3			175	195					
BENT NO. 1			5	325			3									
BENT NO. 2			5	325			3									
BENT NO. 3			5	325			3									
BENT NO. 4			5	350			3									
BENT NO. 5			5	350			3									
BENT NO. 6			5	350			3									
BENT NO. 7			5	350			3									
BENT NO. 8			8	560			4									
BENT NO. 9			8	560			4									
BENT NO. 10			8	560			4									
BENT NO. 11			8	560			4									120
BENT NO. 12			8	600			4									120
BENT NO. 13			8	600			4									120
BENT NO. 14					6	450	3									
BENT NO. 15					6	450	3									
BENT NO. 16					6	480	3									
BENT NO. 17					6	480	3									
BENT NO. 18					6	480	3									
BENT NO. 19					6	510	3									
BENT NO. 20					6	570	3									
BENT NO. 21					6	630	3									
BENT NO. 22					6	510	3									
BENT NO. 23					6	510	3									
BENT NO. 24					6	630	3									
BENT NO. 25					6	510	3									
BENT NO. 26					6	540	3									
BENT NO. 27					6	510	3									
BENT NO. 28					6	510	3									
BENT NO. 29					6	510	3									
BENT NO. 30					6	480	3									
BENT NO. 31					6	480	3									
BENT NO. 32					6	450	3									
BENT NO. 33			6	450			3									
BENT NO. 34			5	375			3									
BENT NO. 35			5	375			3									
BENT NO. 36			5	400			3									
BENT NO. 37			5	400			3									
END BENT NO. 2	7	105					3			142	158					
TOTAL	14	525	109	7815	114	9690	123	6684.0	6699.5	317	353	LUMP SUM	LUMP SUM	LUMP SUM	LUMP SUM	360

PROJECT NO. B-3611

BEAUFORT COUNTY

STATION: 43+25.00-L-

SHEET 23 OF 23

STATE OF NORTH CAROLINA
DEPARTMENT OF TRANSPORTATION
RALEIGH

GENERAL DRAWING FOR BRIDGE OVER PANTEGO CREEK ON NC 99 BETWEEN SR 1778 AND US 264

NORTH CAROLINA PROFESSIONAL SEAL 15825 ENGINEER BRUCE D. KLAPPENBACH
4-1-2010

REVISIONS						SHEET NO.
NO.	BY:	DATE:	NO.	BY:	DATE:	S-23
1			3			TOTAL SHEETS
2			4			120

DRAWN BY : H. T. BARBOUR DATE : 1-28-10
CHECKED BY : C. R. YARBROUGH DATE : 1-10

01-APR-2010 11:03
M:\Structures\tbarbour\Microstation\b3611_sd_gdlocsketch.dgn
tbarbour

LOAD AND RESISTANCE FACTOR RATING (LRFD) SUMMARY FOR TYPE III PRESTRESSED CONCRETE GIRDERS

LEVEL		VEHICLE	WEIGHT (W) (TONS)	CONTROLLING LOAD RATING (#)	MINIMUM RATING FACTORS (RF)	TONS = W X RF	STRENGTH I LIMIT STATE											SERVICE III LIMIT STATE						COMMENT NUMBER
								MOMENT					SHEAR						MOMENT						
							LIVELOAD FACTORS	DISTRIBUTION FACTORS (DF)	RATING FACTOR	SPAN	GIRDER LOCATION	DISTANCE FROM LEFT END OF SPAN (ft)	DISTRIBUTION FACTORS (DF)	RATING FACTOR	SPAN	GIRDER LOCATION	DISTANCE FROM LEFT END OF SPAN (ft)	LIVELOAD FACTORS	DISTRIBUTION FACTORS (DF)	RATING FACTOR	SPAN	GIRDER LOCATION	DISTANCE FROM LEFT END OF SPAN (ft)	
DESIGN LOAD RATING		HL-93(Inv)	N/A	1	1.012	--	1.75	0.84	2	2	ER	36.304	0.895	2.88	2	I	3.621	0.80	0.84	1.01	2	ER	36.304	
		HL-93(Opr)	N/A	--	2.592	--	1.35	0.84	2.59	2	ER	36.304	0.895	3.73	2	I	3.621	N/A	--	--	--	--	--	
		HS-20(Inv)	36.000	2	1.321	47.55	1.75	0.84	2.61	2	ER	36.304	0.895	3.67	2	I	3.621	0.80	0.84	1.32	2	ER	36.304	
		HS-20(Opr)	36.000	--	3.382	121.742	1.35	0.84	3.38	2	ER	36.304	0.895	4.76	2	I	3.621	N/A	--	--	--	--	--	
LEGAL LOAD RATING	SV	SNSH	13.500	--	2.98	40.237	1.4	0.84	7.36	2	ER	36.304	0.895	10.98	2	I	3.621	0.80	0.84	2.98	2	ER	36.304	
		SNGARBS2	20.000	--	2.222	44.431	1.4	0.84	5.48	2	ER	36.304	0.895	7.79	2	I	3.621	0.80	0.84	2.22	2	ER	36.304	
		SNAGRIS2	22.000	--	2.104	46.288	1.4	0.84	5.19	2	ER	36.304	0.895	7.22	2	I	3.621	0.80	0.84	2.10	2	ER	36.304	
		SNCOTTS3	27.250	--	1.483	40.417	1.4	0.84	3.66	2	ER	36.304	0.895	5.48	2	I	3.621	0.80	0.84	1.48	2	ER	36.304	
		SNAGGRS4	34.925	--	1.24	43.294	1.4	0.84	3.06	2	ER	36.304	0.895	4.53	2	I	3.621	0.80	0.84	1.24	2	ER	36.304	
		SNS5A	35.550	--	1.212	43.095	1.4	0.84	2.99	2	ER	36.304	0.895	4.58	2	I	3.621	0.80	0.84	1.21	2	ER	36.304	
		SNS6A	39.950	--	1.112	44.436	1.4	0.84	2.75	2	ER	36.304	0.895	4.18	2	I	3.621	0.80	0.84	1.11	2	ER	36.304	
		SNS7B	42.000	--	1.059	44.488	1.4	0.84	2.62	2	ER	36.304	0.895	4.09	2	I	3.621	0.80	0.84	1.06	2	ER	36.304	
	TTST	TNAGRIT3	33.000	--	1.356	44.761	1.4	0.84	3.35	2	ER	36.304	0.895	4.97	2	I	3.621	0.80	0.84	1.36	2	ER	36.304	
		TNT4A	33.075	--	1.362	45.061	1.4	0.84	3.36	2	ER	36.304	0.895	4.85	2	I	3.621	0.80	0.84	1.36	2	ER	36.304	
		TNT6A	41.600	--	1.114	46.341	1.4	0.84	2.75	2	ER	36.304	0.895	4.35	2	I	3.621	0.80	0.84	1.11	2	ER	36.304	
		TNT7A	42.000	--	1.12	47.022	1.4	0.84	2.76	2	ER	36.304	0.895	4.26	2	I	3.621	0.80	0.84	1.12	2	ER	36.304	
		TNT7B	42.000	--	1.158	48.648	1.4	0.84	2.86	2	ER	36.304	0.895	4	2	I	3.621	0.80	0.84	1.16	2	ER	36.304	
		TNAGRIT4	43.000	--	1.102	47.379	1.4	0.84	2.72	2	ER	36.304	0.895	3.88	2	I	3.621	0.80	0.84	1.10	2	ER	36.304	
		TNAGT5A	45.000	--	1.039	46.749	1.4	0.84	2.56	2	ER	36.304	0.895	3.84	2	I	3.621	0.80	0.84	1.04	2	ER	36.304	
		TNAGT5B	45.000	3	1.026	46.183	1.4	0.84	2.53	2	ER	36.304	0.895	3.69	2	I	3.621	0.80	0.84	1.03	2	ER	36.304	

LOAD FACTORS:

DESIGN LOAD RATING FACTORS	LIMIT STATE	γ_{DC}	γ_{DW}
	STRENGTH I	1.25	1.50
	SERVICE III	1.00	1.00

	YEAR	ADTT
CURRENT	2009	339
FUTURE	2030	518

NOTES:

MINIMUM RATING FACTORS ARE BASED ON THE STRENGTH I AND SERVICE III LIMIT STATES.

ALLOWABLE STRESSES FOR SERVICE III LIMIT STATE ARE AS REQUIRED FOR DESIGN.

COMMENTS:

1.

2.

3.

4.

(#) CONTROLLING LOAD RATING

(1) DESIGN LOAD RATING (HL-93)

(2) DESIGN LOAD RATING (HS-20)

(3) LEGAL LOAD RATING **

** SEE CHART FOR VEHICLE TYPE

GIRDER LOCATION

I - INTERIOR GIRDER
EL - EXTERIOR LEFT GIRDER
ER - EXTERIOR RIGHT GIRDER

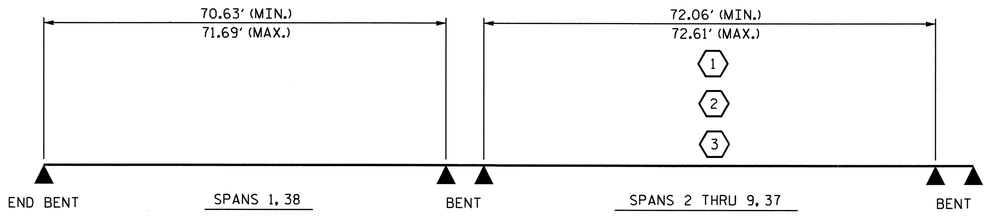

LRFR SUMMARY

PROJECT NO. B-3611

BEAUFORT COUNTY

STATION: 43+25.00 -L-

SHEET 1 OF 2

STATE OF NORTH CAROLINA
DEPARTMENT OF TRANSPORTATION
RALEIGH

STANDARD

LRFR SUMMARY FOR TYPE III PRESTRESSED CONCRETE GIRDERS (NON-INTERSTATE TRAFFIC)

REVISIONS						SHEET NO.
NO.	BY:	DATE:	NO.	BY:	DATE:	S-24
1			3			TOTAL SHEETS
2			4			120

STD. NO. LRFR1

NORTH CAROLINA PROFESSIONAL SEAL 15823 ENGINEER BRUCE D. KLAPPENBACH
3-31-2010

ASSEMBLED BY : S.T. CHAMPION	DATE : 01/2010
CHECKED BY : G.W. DICKEY	DATE : 01/2010
DRAWN BY : MAA 1/08	REV. 11/12/08R MAA/GM
CHECKED BY : GM/DI 2/08	

24-MAR-2010 12:09
M:\Structures\schampion\NCBDS\NCBDS_LRFR_Type3\typeIII.dgn
tbarbour

LOAD AND RESISTANCE FACTOR RATING (LRFD) SUMMARY FOR TYPE IV PRESTRESSED CONCRETE GIRDERS

LEVEL		VEHICLE	WEIGHT (W) (TONS)	CONTROLLING LOAD RATING (#)	MINIMUM RATING FACTORS (RF)	TONS = W X RF	STRENGTH I LIMIT STATE										SERVICE III LIMIT STATE						COMMENT NUMBER
								MOMENT					SHEAR					MOMENT						
							LIVELOAD FACTORS	DISTRIBUTION FACTORS (DF)	RATING FACTOR	SPAN	GIRDER LOCATION	DISTANCE FROM LEFT END OF SPAN (ft)	DISTRIBUTION FACTORS (DF)	RATING FACTOR	SPAN	GIRDER LOCATION	DISTANCE FROM LEFT END OF SPAN (ft)	LIVELOAD FACTORS	DISTRIBUTION FACTORS (DF)	RATING FACTOR	SPAN	GIRDER LOCATION	DISTANCE FROM LEFT END OF SPAN (ft)	
DESIGN LOAD RATING		HL-93(Inv)	N/A	1	1.002	--	1.75	0.84	2.01	12	EL	46.126	0.895	3.05	10	I	4.618	0.80	0.84	1.00	12	EL	46.126	
		HL-93(Opr)	N/A	--	2.607	--	1.35	0.84	2.61	12	EL	46.126	0.895	3.96	10	I	4.618	N/A	--	--	--	--	--	
		HS-20(Inv)	36.000	2	1.374	49.452	1.75	0.84	2.76	12	EL	46.126	0.895	4.08	10	I	4.618	0.80	0.84	1.37	12	EL	46.126	
		HS-20(Opr)	36.000	--	3.574	128.679	1.35	0.84	3.57	12	EL	46.126	0.895	5.29	10	I	4.618	N/A	--	--	--	--	--	
LEGAL LOAD RATING	SV	SNSH	13.500	--	3.227	43.562	1.4	0.84	8.1	12	EL	46.126	0.895	12.54	10	I	4.618	0.80	0.84	3.23	12	EL	46.126	
		SNGARBS2	20.000	--	2.35	46.998	1.4	0.84	5.9	12	EL	46.126	0.895	8.79	10	I	4.618	0.80	0.84	2.35	12	EL	46.126	
		SNAGRIS2	22.000	--	2.203	48.469	1.4	0.84	5.53	12	EL	46.126	0.895	8.11	10	I	4.618	0.80	0.84	2.20	12	EL	46.126	
		SNCOTTS3	27.250	--	1.604	43.713	1.4	0.84	4.03	12	EL	46.126	0.895	6.25	10	I	4.618	0.80	0.84	1.60	12	EL	46.126	
		SNAGGRS4	34.925	--	1.319	46.083	1.4	0.84	3.31	12	EL	46.126	0.895	5.1	10	I	4.618	0.80	0.84	1.32	12	EL	46.126	
		SNS5A	35.550	--	1.292	45.921	1.4	0.84	3.24	12	EL	46.126	0.895	5.12	10	I	4.618	0.80	0.84	1.29	12	EL	46.126	
		SNS6A	39.950	--	1.177	47.002	1.4	0.84	2.95	12	EL	46.126	0.895	4.64	10	I	4.618	0.80	0.84	1.18	12	EL	46.126	
		SNS7B	42.000	--	1.12	47.044	1.4	0.84	2.81	12	EL	46.126	0.895	4.51	10	I	4.618	0.80	0.84	1.12	12	EL	46.126	
	TTST	TNAGRIT3	33.000	--	1.432	47.262	1.4	0.84	3.59	12	EL	46.126	0.895	5.55	10	I	4.618	0.80	0.84	1.43	12	EL	46.126	
		TNT4A	33.075	--	1.436	47.5	1.4	0.84	3.6	12	EL	46.126	0.895	5.44	10	I	4.618	0.80	0.84	1.44	12	EL	46.126	
		TNT6A	41.600	--	1.166	48.511	1.4	0.84	2.93	12	EL	46.126	0.895	4.73	10	I	4.618	0.80	0.84	1.17	12	EL	46.126	
		TNT7A	42.000	--	1.168	49.042	1.4	0.84	2.93	12	EL	46.126	0.895	4.65	10	I	4.618	0.80	0.84	1.17	12	EL	46.126	
		TNT7B	42.000	--	1.198	50.297	1.4	0.84	3	12	EL	46.126	0.895	4.44	10	I	4.618	0.80	0.84	1.20	12	EL	46.126	
		TNAGRIT4	43.000	--	1.147	49.32	1.4	0.84	2.88	12	EL	46.126	0.895	4.31	10	I	4.618	0.80	0.84	1.15	12	EL	46.126	
		TNAGT5A	45.000	--	1.085	48.83	1.4	0.84	2.72	12	EL	46.126	0.895	4.23	10	I	4.618	0.80	0.84	1.09	12	EL	46.126	
		TNAGT5B	45.000	3	1.075	48.387	1.4	0.84	2.7	12	EL	46.126	0.895	4.1	10	I	4.618	0.80	0.84	1.08	12	EL	46.126	

LOAD FACTORS:

DESIGN LOAD RATING FACTORS	LIMIT STATE	γ_{DC}	γ_{DW}
	STRENGTH I	1.25	1.50
	SERVICE III	1.00	1.00

	YEAR	ADTT
CURRENT	2009	339
FUTURE	2030	518

NOTES:

MINIMUM RATING FACTORS ARE BASED ON THE STRENGTH I AND SERVICE III LIMIT STATES.

ALLOWABLE STRESSES FOR SERVICE III LIMIT STATE ARE AS REQUIRED FOR DESIGN.

COMMENTS:

1.
2.
3.
4.

(#) CONTROLLING LOAD RATING

(1) DESIGN LOAD RATING (HL-93)

(2) DESIGN LOAD RATING (HS-20)

(3) LEGAL LOAD RATING **

** SEE CHART FOR VEHICLE TYPE

GIRDER LOCATION

I - INTERIOR GIRDER
EL - EXTERIOR LEFT GIRDER
ER - EXTERIOR RIGHT GIRDER

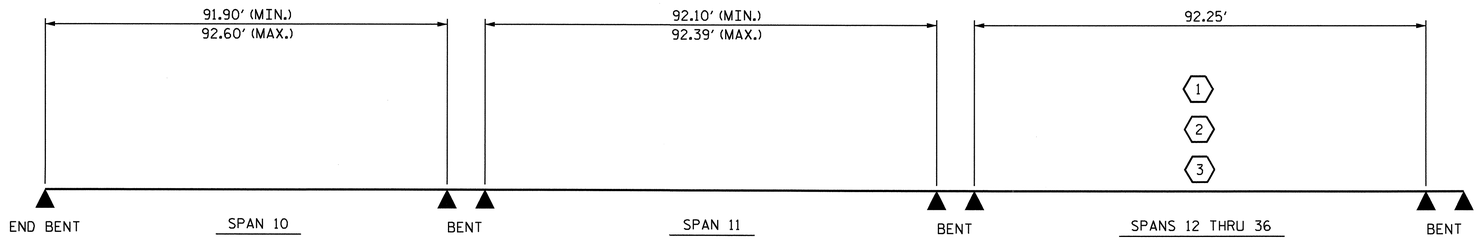

LRFR SUMMARY

NORTH CAROLINA PROFESSIONAL SEAL 038241 ENGINEER BRUCE D. KLAPPENBACH
3-31-2010

PROJECT NO. B-3611
BEAUFORT COUNTY
STATION: 43+25.00 -L-

SHEET 2 OF 2

STATE OF NORTH CAROLINA
DEPARTMENT OF TRANSPORTATION
RALEIGH

STANDARD
LRFR SUMMARY FOR TYPE IV PRESTRESSED CONCRETE GIRDERS
(NON-INTERSTATE TRAFFIC)

REVISIONS						SHEET NO.
NO.	BY:	DATE:	NO.	BY:	DATE:	S-25
1			3			TOTAL SHEETS
2			4			120

STD. NO. LRFR1

ASSEMBLED BY : S.T. CHAMPION DATE : 01/2010	
CHECKED BY : G.W. DICKEY DATE : 01/2010	
DRAWN BY : MAA 1/08	REV. 11/12/08R MAA/GM
CHECKED BY : GM/DI 2/08	

24-MAR-2010 12:09
M:\Structures\schampion\NCBDS\NCBDS_LRFR_Type4\typeIv.dgn
tbarbour

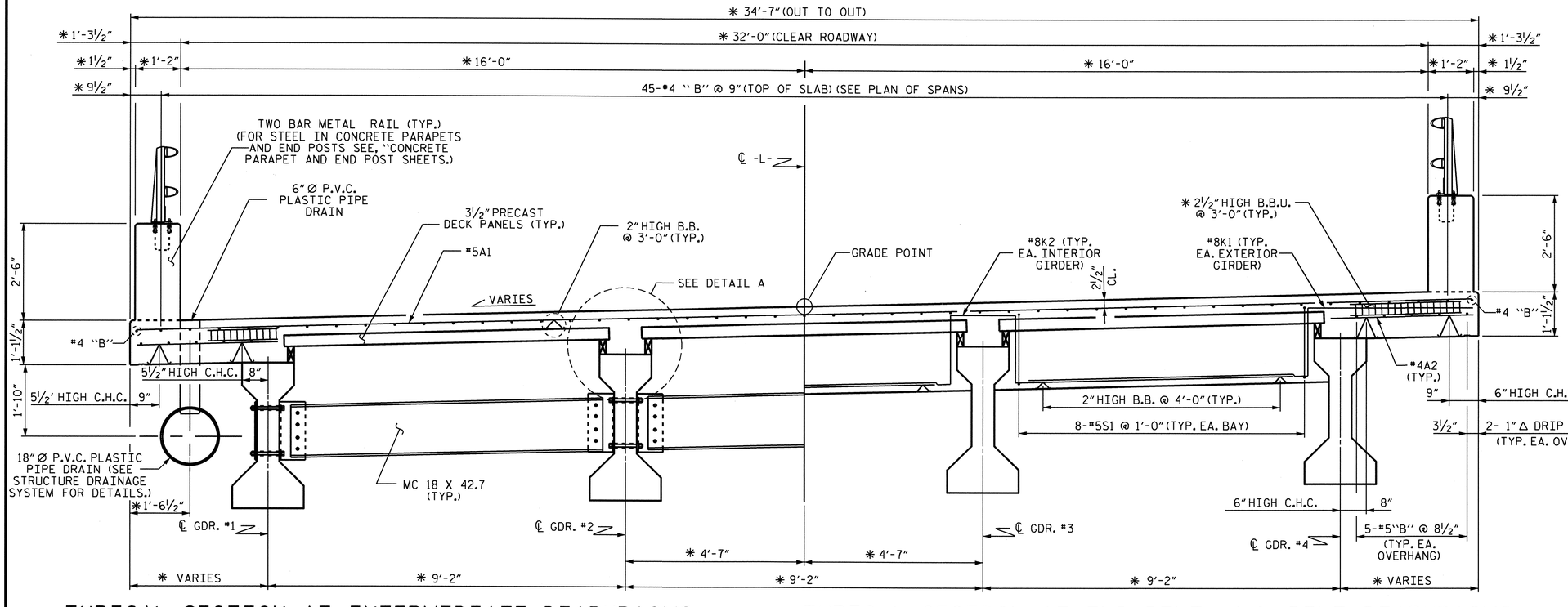

TYPICAL SECTION AT INTERMEDIATE DIAPHRAGMS

TYPICAL SECTION AT END BENT #1 & BENT DIAPHRAGMS

(BENTS #2, #4, #6 & #8)

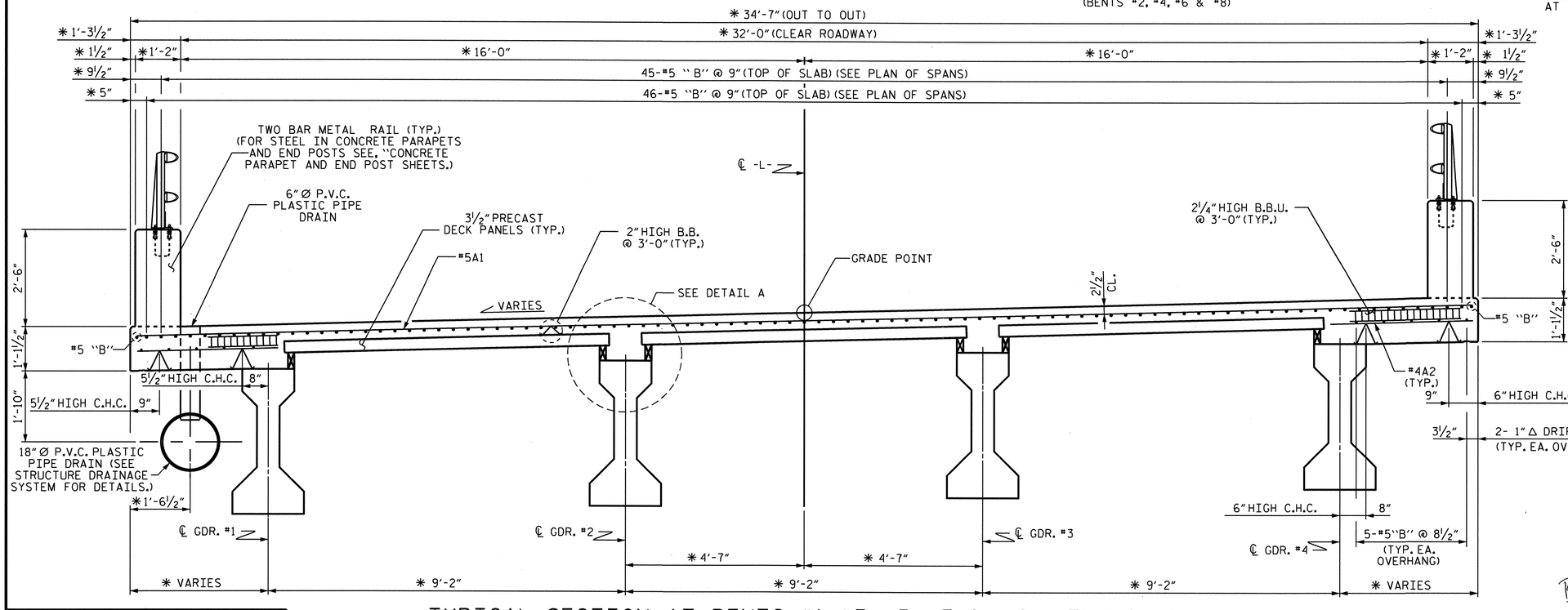

TYPICAL SECTION AT BENTS #1, #3, #5, #7 & #9 (LINK SLAB)

NOTES

LONGITUDINAL STEEL MAY BE SHIFTED SLIGHTLY, AS NECESSARY, TO AVOID INTERFERENCE WITH STIRRUPS IN PRESTRESSED CONCRETE GIRDERS.

PREVIOUSLY CAST CONCRETE IN A CONTINUOUS UNIT SHALL HAVE ATTAINED A MINIMUM COMPRESSIVE STRENGTH OF 3,000 PSI BEFORE ADDITIONAL CONCRETE IS CAST IN THE UNIT.

CONCRETE PARAPET IN A CONTINUOUS UNIT SHALL NOT BE CAST UNTIL ALL SLAB CONCRETE IN THE UNIT HAS BEEN CAST AND HAS REACHED A MINIMUM COMPRESSIVE STRENGTH OF 3,000 PSI.

* USE THIS SIZE BAR SUPPORT IN THE AREAS WITH THE #4 "B" BARS. FOR OTHER AREAS WITH #5 "B" BARS, USE THE BAR SUPPORT AS SHOWN IN THE TYPICAL SECTION AT LINK SLAB.

TOP OF FLOOR DRAIN TO BE SET ⅜" BELOW SURFACE OF SLAB.

4 - ½" SQUARE LUGS TO BE GLUED TO THE PVC PLASTIC PIPE AT EQUAL SPACES AROUND THE PIPE DRAIN APPROXIMATELY 4" FROM THE TOP OF THE PIPE.

PRESTRESSED CONCRETE GIRDERS ARE DESIGNED FOR 0 PSI TENSION IN THE PRECOMPRESSED TENSILE ZONE UNDER ALL LOADING CONDITIONS.

PRESTRESSED CONCRETE GIRDERS, PRECAST DECK PANELS AND PILES SHALL CONTAIN CALCIUM NITRITE CORROSION INHIBITOR.

PRECAST PANELS SHALL BE DESIGNED FOR AN ALLOWABLE TENSILE STRESS OF 0 PSI IN THE PRECOMPRESSED TENSILE ZONE UNDER ALL LOADING CONDITIONS.

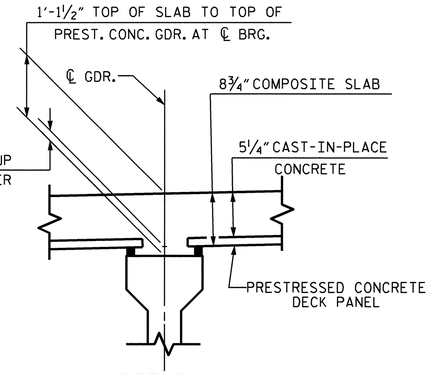

DETAIL A

* DIMENSIONS ARE TO CIRCLES CONCENTRIC WITH ℄ -L-. GIRDERS ARE ON THE CHORDS OF THESE CIRCLES.

PROJECT NO. B-3611

BEAUFORT COUNTY

STATION: 43+25.00 -L-

SHEET 1 OF 6

STATE OF NORTH CAROLINA
DEPARTMENT OF TRANSPORTATION
RALEIGH

TYPICAL SECTION SPANS 1-9 WITH 45" PCG

REVISIONS						SHEET NO.
NO.	BY:	DATE:	NO.	BY:	DATE:	S-26
1			3			TOTAL SHEETS
2			4			120

NORTH CAROLINA PROFESSIONAL SEAL 15825 ENGINEER BRUCE D. KLAPPENBACH
3-31-2010

DRAWN BY : H. T. BARBOUR DATE : 8-12-09
CHECKED BY : D. A. GLADDEN DATE : 2-3-10

31-MAR-2010 12:10
M:\Structures\tbarbour\Microstation\b3611_sd_ts.dgn
tbarbour

NCDOT

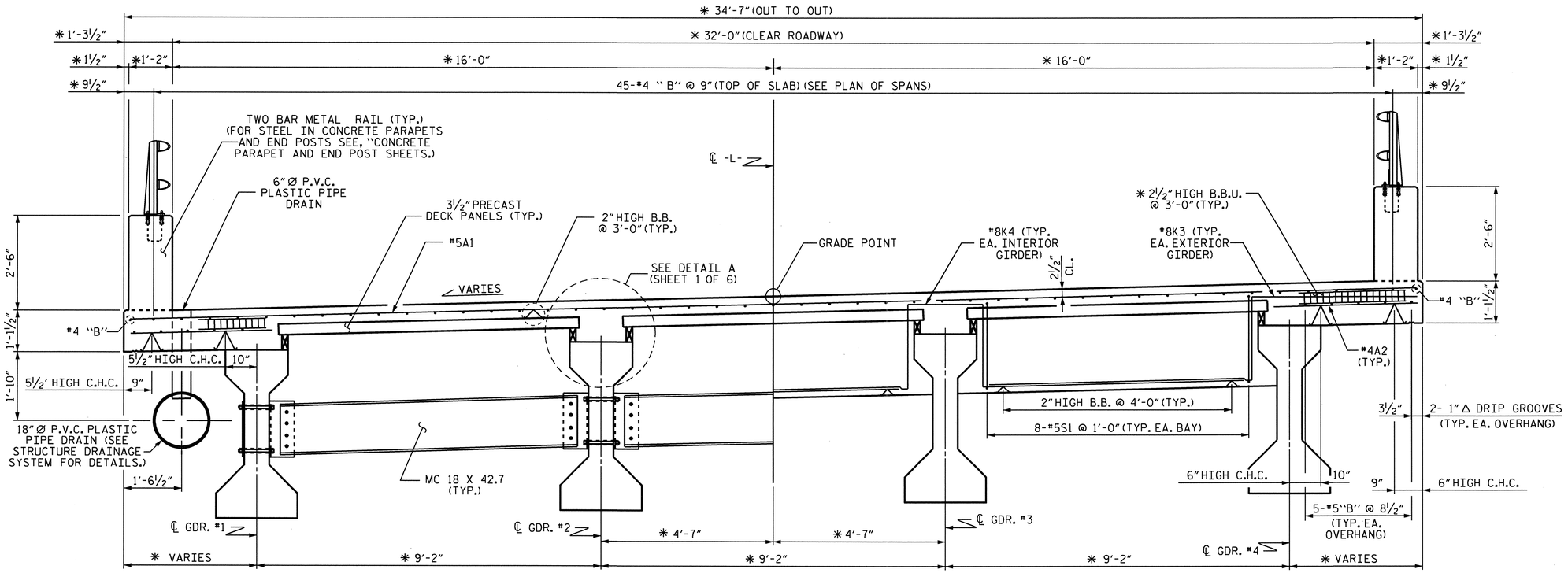

TYPICAL SECTION AT INTERMEDIATE DIAPHRAGMS

TYPICAL SECTION BENT DIAPHRAGMS

(BENTS #10, #12, #14, #16, #18, #20, #22 & #24)

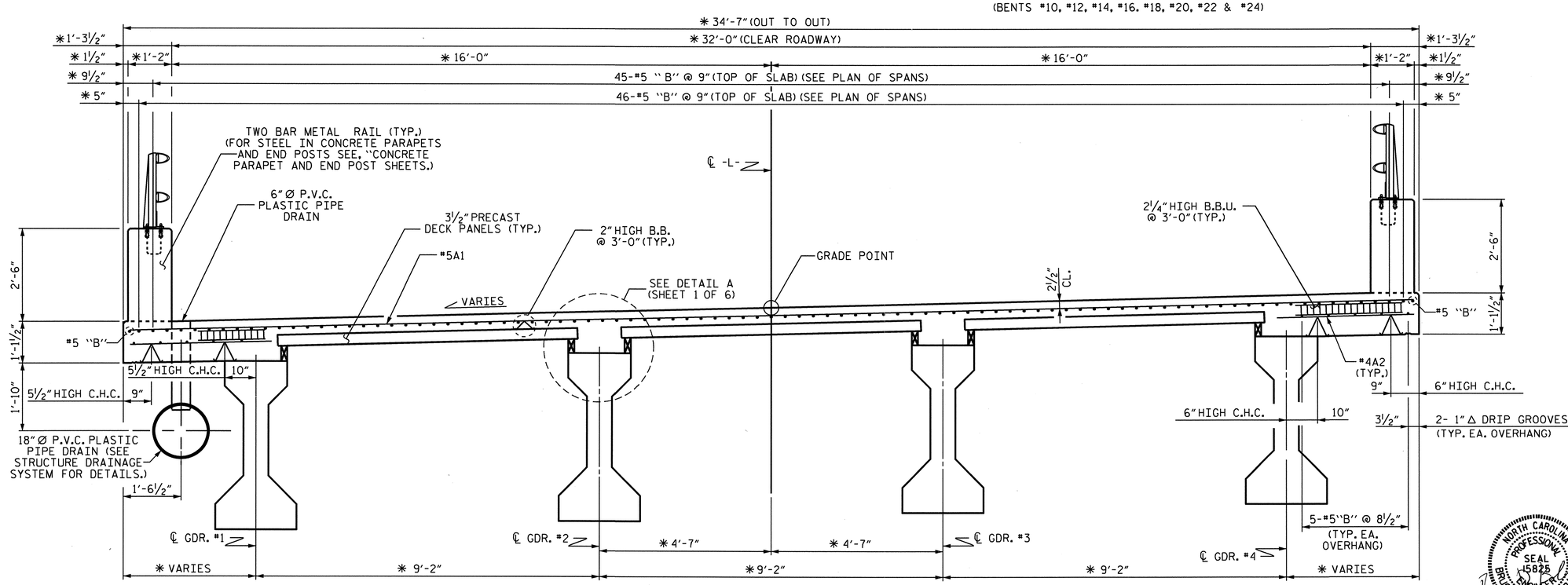

TYPICAL SECTION AT BENTS #9, #11, #13, #15, #17, #19, #21 & #23 (LINK SLAB)

DRAWN BY : H. T. BARBOUR DATE : 8-12-09
CHECKED BY : D. A. GLADDEN DATE : 2-3-10

24-MAR-2010 12:09
M:\Structures\tbarbour\Microstation\b3611_sd_ts.dgn
tbarbour

PROJECT NO. B-3611
BEAUFORT COUNTY
STATION: 43+25.00 -L-

SHEET 2 OF 6

STATE OF NORTH CAROLINA
DEPARTMENT OF TRANSPORTATION
RALEIGH

TYPICAL SECTION SPANS 10-24 WITH 54" PCG

NORTH CAROLINA PROFESSIONAL SEAL 15825 ENGINEER BRUCE D. KLAPPENBACH
3-31-2010

REVISIONS						SHEET NO.
NO.	BY:	DATE:	NO.	BY:	DATE:	S-27
1			3			TOTAL SHEETS
2			4			120

NCDOS

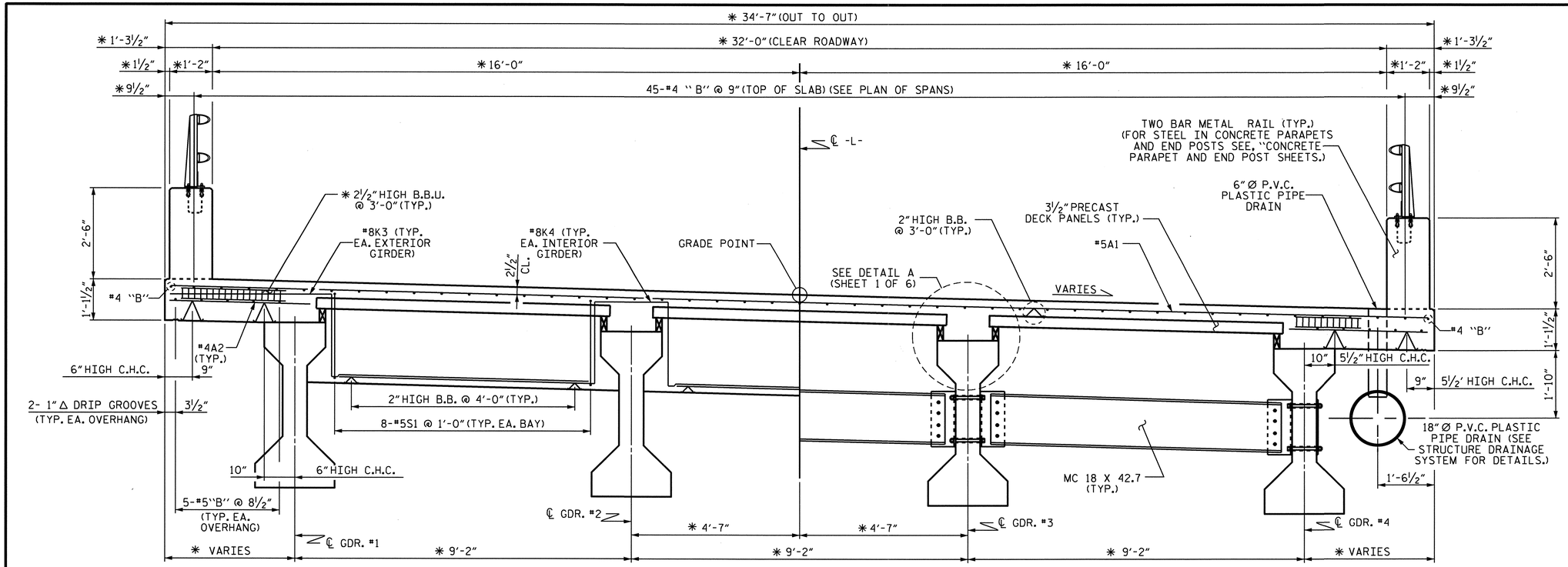

TYPICAL SECTION AT BENT DIAPHRAGMS

(BENTS #26, #28, #30, #32, #34 & #36)

TYPICAL SECTION AT INTERMEDIATE DIAPHRAGMS

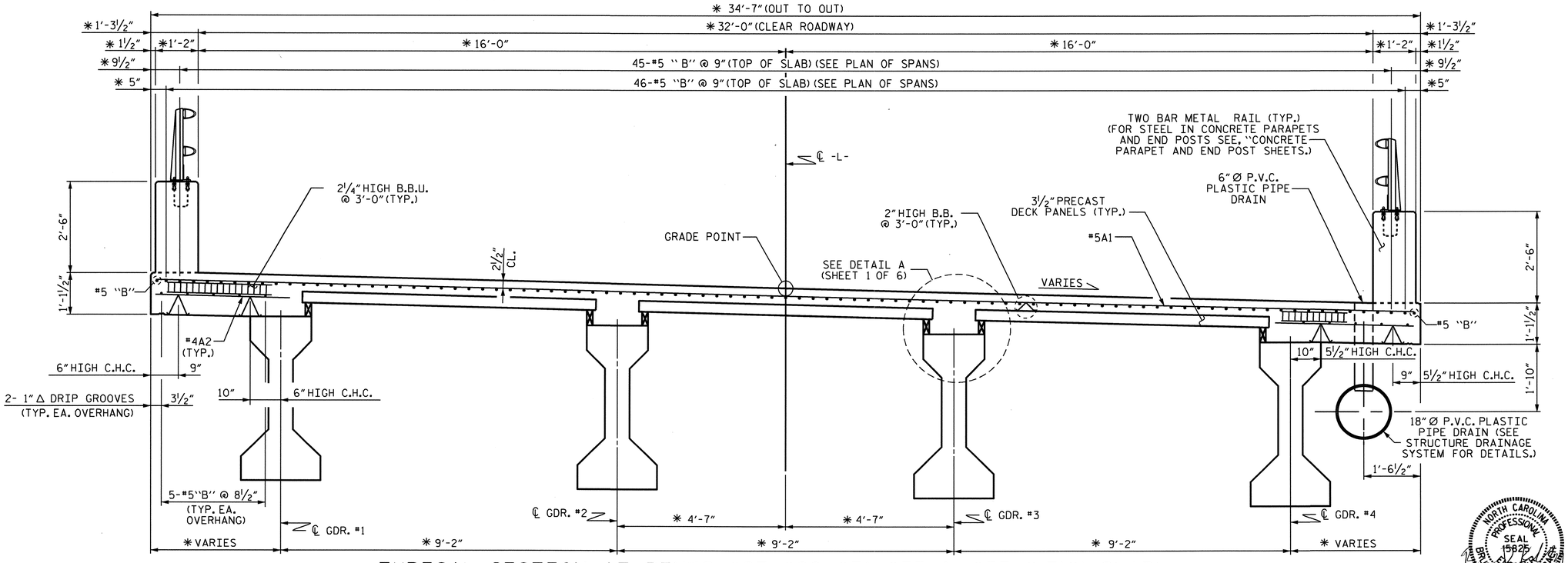

TYPICAL SECTION AT BENTS #27, #29, #31, #33 & #35 (LINK SLAB)

DRAWN BY : H. T. BARBOUR DATE : 8-12-09
CHECKED BY : D. A. GLADDEN DATE : 2-3-10

24-MAR-2010 12:09
M:\Structures\tbarbour\Microstation\b3611_sd_ts.dgn
tbarbour

PROJECT NO. B-3611
BEAUFORT COUNTY
STATION: 43+25.00 -L-

SHEET 3 OF 6

STATE OF NORTH CAROLINA
DEPARTMENT OF TRANSPORTATION
RALEIGH

TYPICAL SECTION SPANS 25-36 WITH 54" PCG

NORTH CAROLINA PROFESSIONAL SEAL 15825 ENGINEER BRIDGE D. KLAPPENBERG
3-31-2010

REVISIONS						SHEET NO.
NO.	BY:	DATE:	NO.	BY:	DATE:	S-28
1			3			TOTAL SHEETS
2			4			120

NCDOT

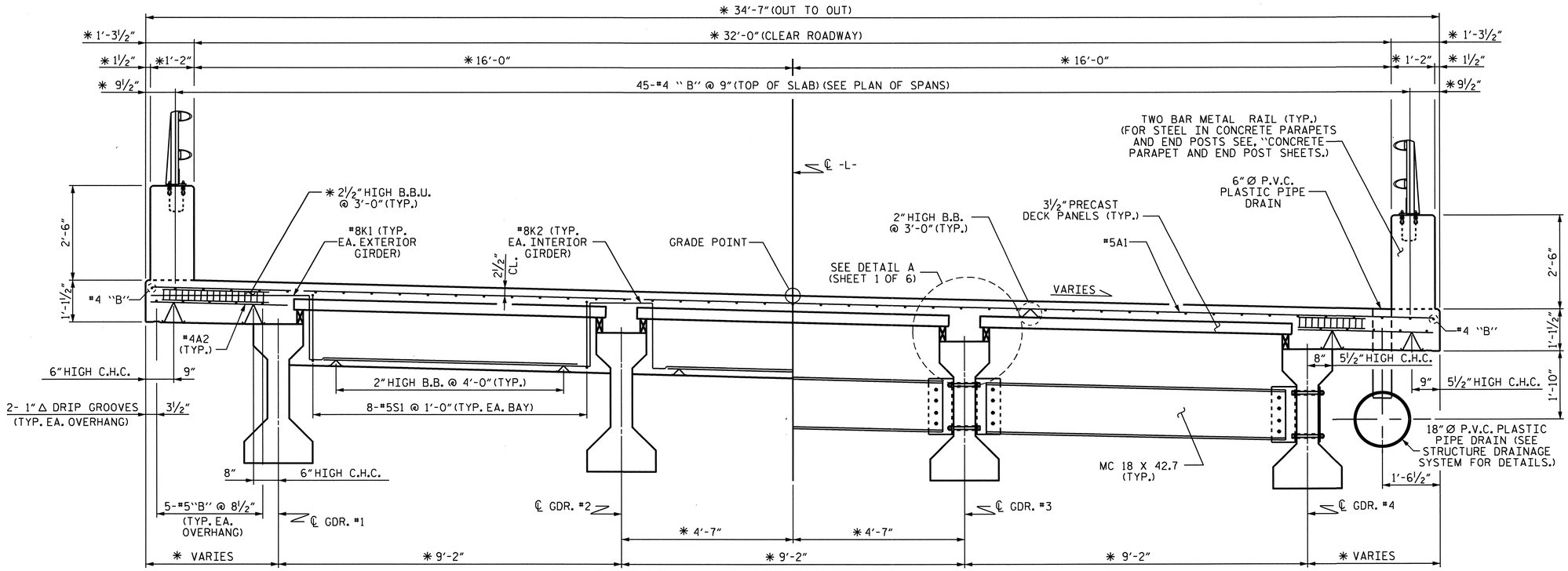

TYPICAL SECTION AT BENT AND END BENT #2 DIAPHRAGMS

(BENT #2 & BENT #36)

TYPICAL SECTION AT INTERMEDIATE DIAPHRAGMS

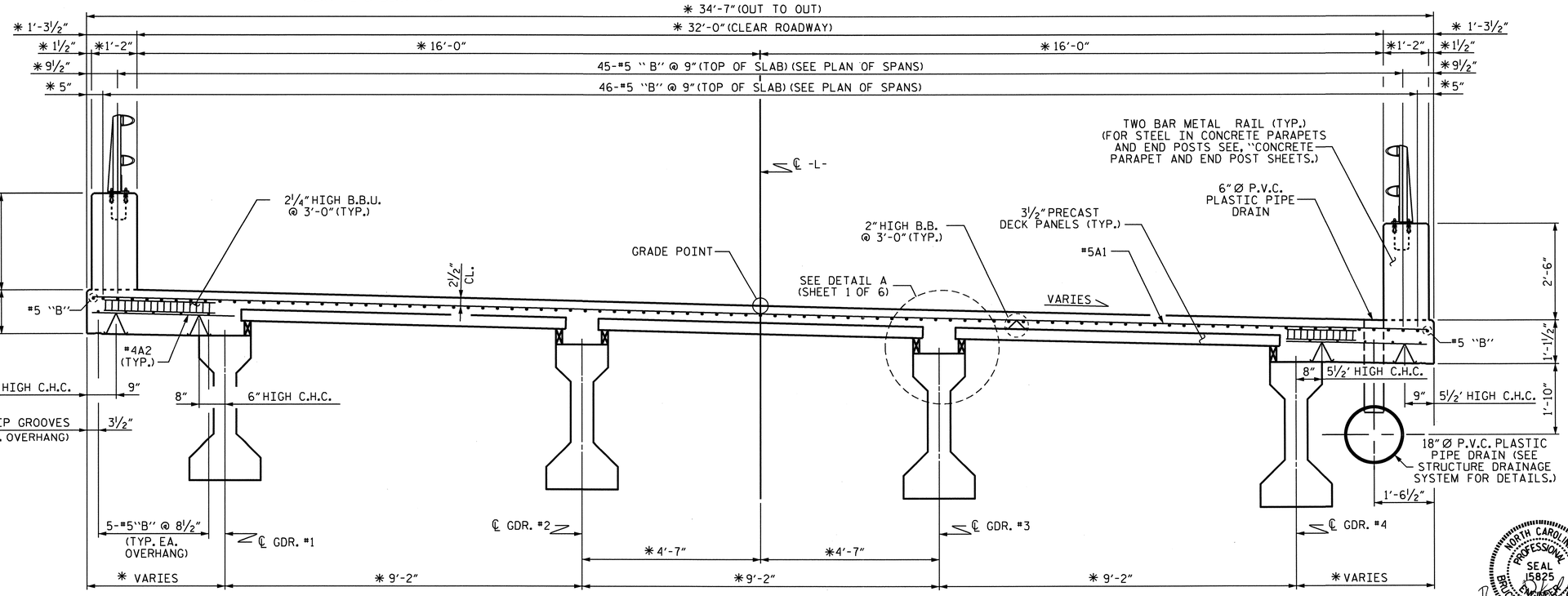

TYPICAL SECTION AT BENT #37 (LINK SLAB)

DRAWN BY : H. T. BARBOUR DATE : 8-12-09
CHECKED BY : D. A. GLADDEN DATE : 2-3-10

24-MAR-2010 12:09
M:\Structures\tbarbour\Microstation\b3611_sd_ts.dgn
tbarbour

PROJECT NO. B-3611
BEAUFORT COUNTY
STATION: 43+25.00 -L-

SHEET 4 OF 6

STATE OF NORTH CAROLINA
DEPARTMENT OF TRANSPORTATION
RALEIGH

TYPICAL SECTION SPANS 37-38 WITH 45" PCG

NORTH CAROLINA PROFESSIONAL SEAL 15825 ENGINEER BRUCE T. KLAPPENBACH
3-31-2010

REVISIONS						SHEET NO.
NO.	BY:	DATE:	NO.	BY:	DATE:	S-29
1			3			TOTAL SHEETS
2			4			120

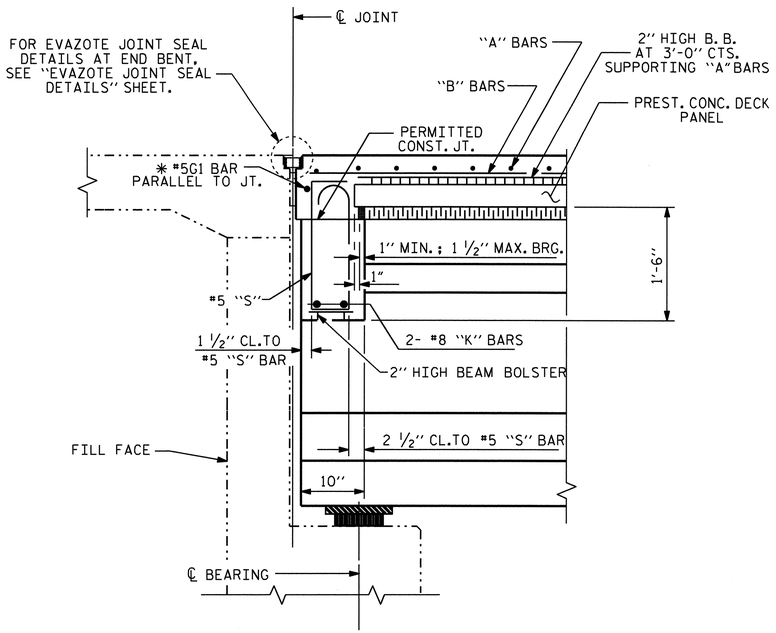

SECTION @ END BENT

* #5G1 BAR MAY BE SHIFTED SLIGHTLY, AS NECESSARY, TO CLEAR REINFORCING STEEL AND STIRRUPS.

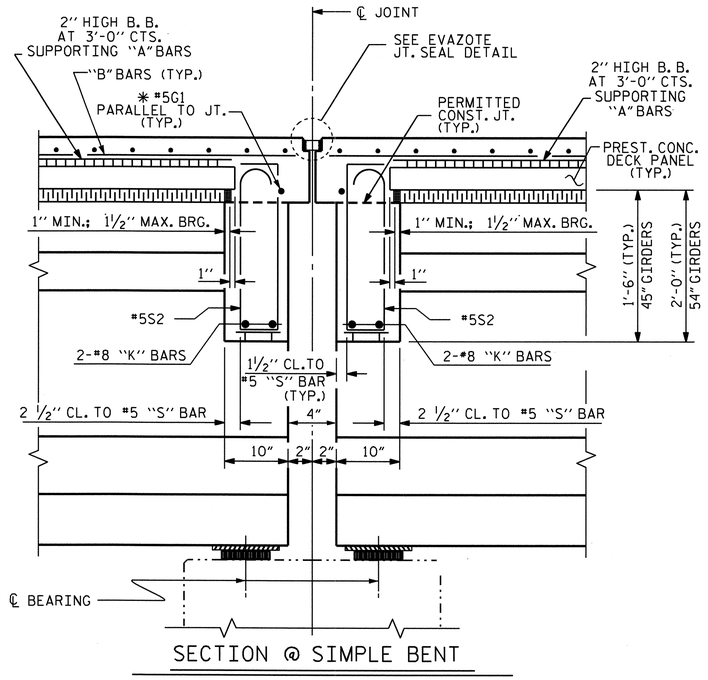

SECTION @ SIMPLE BENT

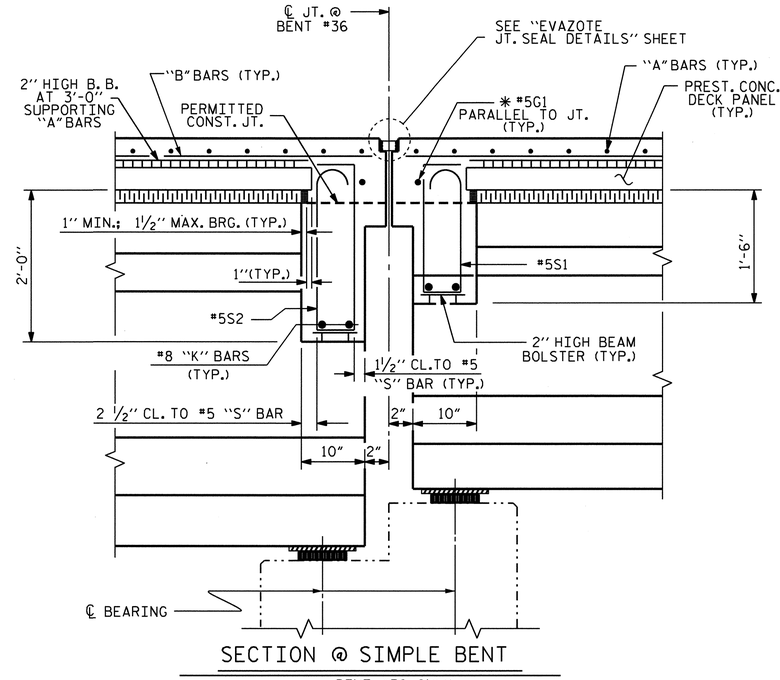

SECTION @ SIMPLE BENT

(BENT #36 ONLY)

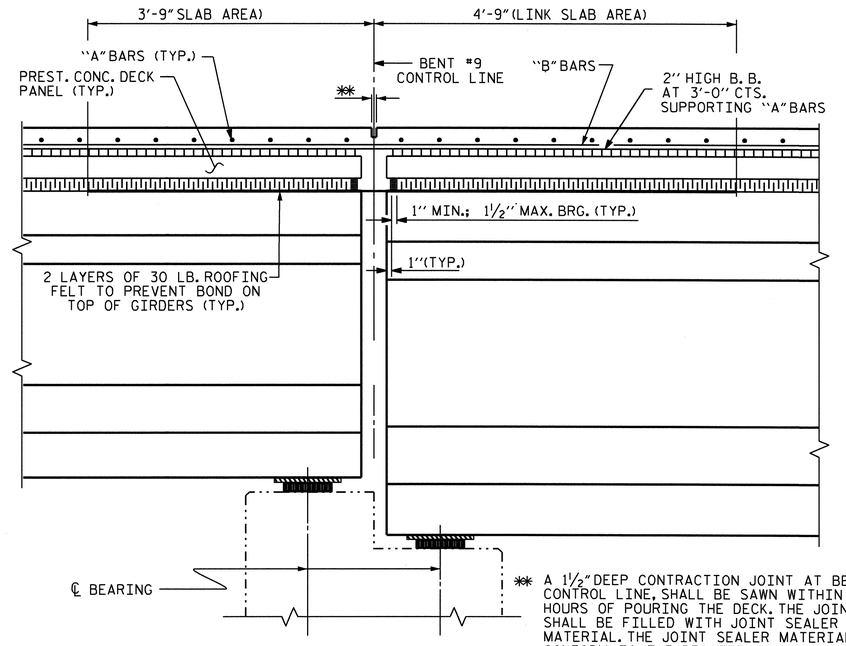

** A 1 1/2" DEEP CONTRACTION JOINT AT BENT CONTROL LINE, SHALL BE SAWN WITHIN 24 HOURS OF POURING THE DECK. THE JOINT SHALL BE FILLED WITH JOINT SEALER MATERIAL. THE JOINT SEALER MATERIAL SHALL CONFORM TO THE REQUIREMENTS OF TYPE B LOW MODULUS SILICONE SEALANT, SEE SECTION 1028 OF THE STANDARD SPECIFICATIONS.

SECTION @ LINK SLAB

(BENT #9 ONLY)

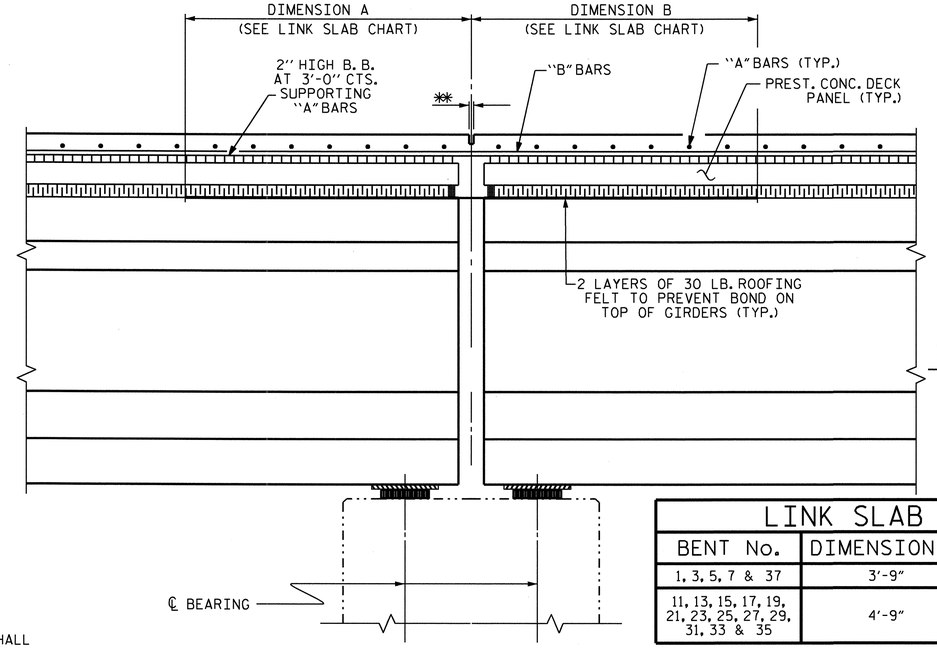

SECTION @ LINK SLAB

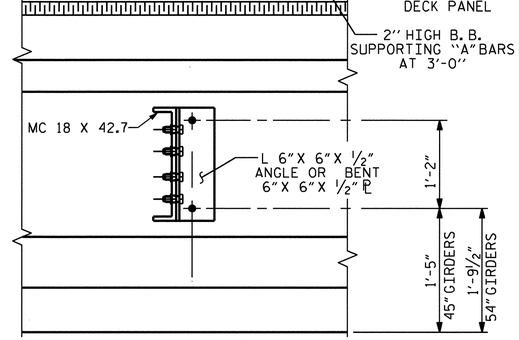

SECTION @ INTERMEDIATE DIAPHRAGM

LINK SLAB CHART		
BENT No.	DIMENSION A	DIMENSION B
1, 3, 5, 7 & 37	3'-9"	3'-9"
11, 13, 15, 17, 19, 21, 23, 25, 27, 29, 31, 33 & 35	4'-9"	4'-9"

PROJECT NO. B-3611

BEAUFORT COUNTY

STATION: 43+25.00-L-

SHEET 5 OF 6

STATE OF NORTH CAROLINA
DEPARTMENT OF TRANSPORTATION
RALEIGH

SUPERSTRUCTURE TYPICAL SECTION DETAILS

NORTH CAROLINA PROFESSIONAL SEAL 15825 ENGINEER BRUCE D. KLAPPENBACH
3-31-2010

REVISIONS						SHEET NO.
NO.	BY:	DATE:	NO.	BY:	DATE:	S-30
1			3			TOTAL SHEETS
2			4			120

DRAWN BY : H. T. BARBOUR DATE : 08-16-09
CHECKED BY : D. A. GLADDEN DATE : 2-3-10

31-MAR-2010 12:11
W:\Structures\tbarbour\Microstation\b3611_sd_ts.dgn
tbarbour

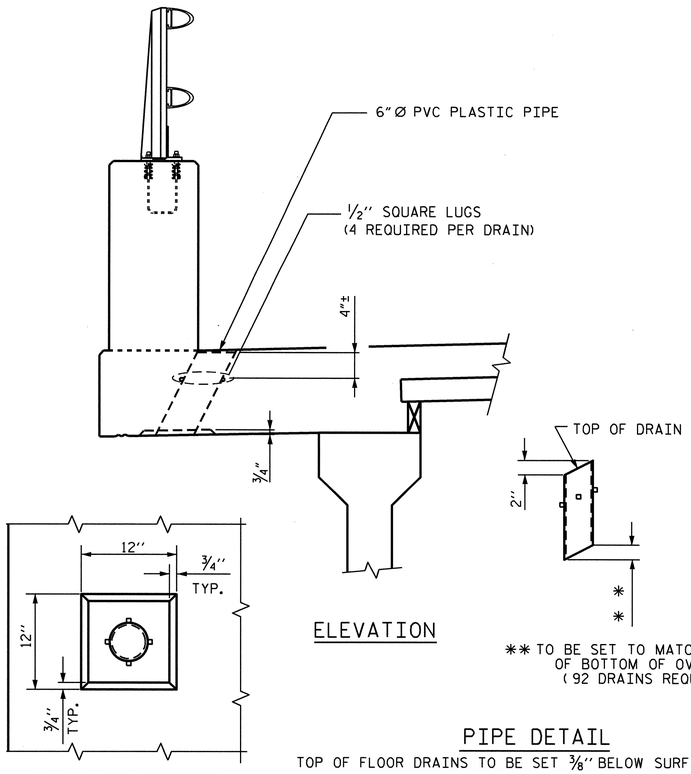

ELEVATION

PLAN OF RECESS

** TO BE SET TO MATCH SLOPE OF BOTTOM OF OVERHANG (92 DRAINS REQUIRED)

PIPE DETAIL

TOP OF FLOOR DRAINS TO BE SET 3/8" BELOW SURFACE OF SLAB.

4 - 1/2" SQUARE LUGS TO BE GLUED TO THE P.V.C. PLASTIC PIPE AT EQUAL SPACES AROUND THE PIPE DRAIN APPROXIMATELY 4" FROM THE TOP OF THE PIPE.

THE 6" Ø PVC PLASTIC PIPE AND FITTINGS SHALL BE SCHEDULE 40 AND CONFORM TO ASTM D1785.

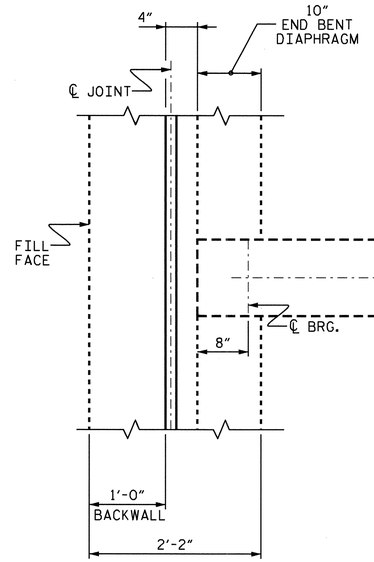

END BENT DIAPHRAGM

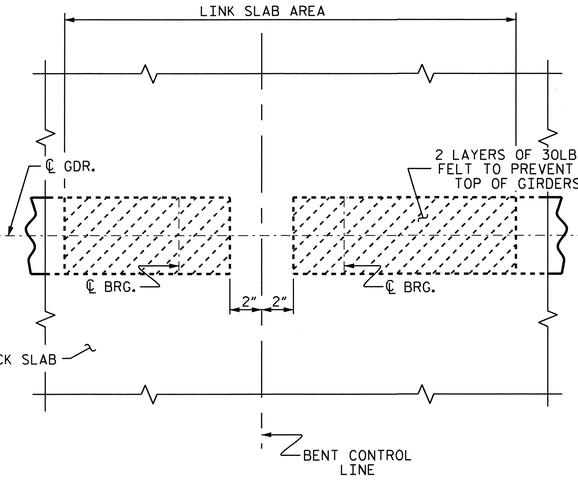

PLAN OF LINK SLAB

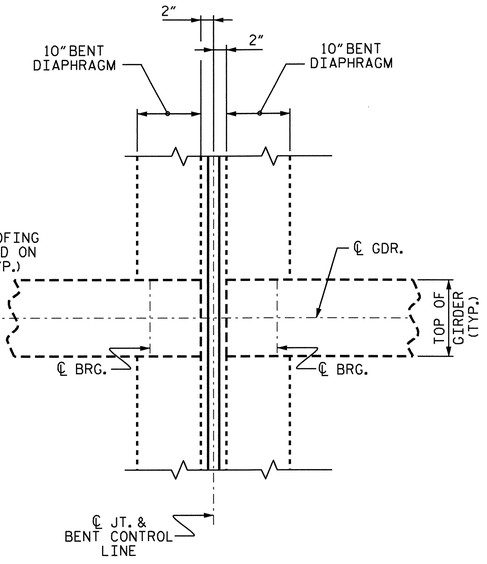

BENT DIAPHRAGM

OPEN DRAIN DETAILS

(USE FROM STA. 26+49.00-L- TO STA. 27+97.00-L-)
(SEE PLAN OF SPANS FOR DRAIN LOCATIONS)

PROJECT NO. B-3611

BEAUFORT COUNTY

STATION: 43+25.00-L-

SHEET 6 OF 6

STATE OF NORTH CAROLINA
DEPARTMENT OF TRANSPORTATION
RALEIGH

SUPERSTRUCTURE TYPICAL SECTION DETAILS

NORTH CAROLINA PROFESSIONAL SEAL 15825 ENGINEER D. K. LAPPENBUSCH BRIDGE

3-29-2010

REVISIONS						SHEET NO.
NO.	BY:	DATE:	NO.	BY:	DATE:	S-31
1			3			TOTAL SHEETS
2			4			120

DRAWN BY : H. T. BARBOUR DATE : 08-16-09
CHECKED BY : D. A. GLADDEN DATE : 2-3-10

24-MAR-2010 12:09
M:\Structures\tbarbour\Microstation\b3611_sd_ts.dgn
tbarbour

DECK PANEL SUPPORTS

PRESTRESSED CONCRETE DECK PANELS SHALL BE SUPPORTED ON THE END BENT DIAPHRAGM BY LAYERS OF ½" THICK BITUMINOUS TYPE MATERIAL. THE BITUMINOUS TYPE MATERIAL SHALL HAVE A MINIMUM WIDTH OF 1" AND A MAXIMUM WIDTH OF 1½". THE DECK PANEL SHALL OVERHANG THE BITUMINOUS TYPE MATERIAL BY 1".

BITUMINOUS TYPE MATERIAL SHALL CONFORM TO THE REQUIREMENTS OF AASHTO M213.

THE CONTRACTOR MAY SELECT ONE OF THE TWO DECK PANEL SUPPORT SYSTEMS SHOWN, UNLESS OTHERWISE INDICATED, OR HE MAY SUBMIT A DECK PANEL SUPPORT SYSTEM OF HIS OWN DESIGN TO THE ENGINEER FOR APPROVAL.

A. GROUT BED SUPPORT SYSTEM

1. THE GROUT BED SHALL HAVE A MINIMUM WIDTH OF 1 1/2" AND A MAXIMUM WIDTH OF 2". THE VERTICAL FACES OF THE GROUT BED SHALL BE FORMED. ONE LAYER OF 1/2" THICK BITUMINOUS TYPE MATERIAL OF THE SAME WIDTH AS THE GROUT BED SHALL BE GLUED TO THE TOP OF THE GROUT BED; MORE THAN ONE LAYER IS NOT ALLOWED. THE ADHESIVE SHALL BE APPROVED BY THE ENGINEER. THE BITUMINOUS TYPE MATERIAL SHALL HAVE 1/2" SLOTS LOCATED AT 4'-0" CENTERS. THE GROUT BED SHALL HAVE 1/2" X 1/2" WIDE SLOTS OR OTHER EQUIVALENT SIZE OPENINGS @ 4'-0" CENTERS ALONG THE BOTTOM STAGGERED WITH THE SLOTS IN THE TOP.
2. THE GROUT SHALL BE NON-SHRINK, NON-METALLIC GROUT HAVING A MINIMUM 28 DAY COMPRESSIVE STRENGTH OF 2500 PSI. THE GROUT SHALL BE APPROVED BY THE ENGINEER.

B. POLYSTYRENE SUPPORT SYSTEM

1. ALL POLYSTYRENE SHALL BE DOW STYROFOAM 60 HIGH-LOAD, UC INDUSTRIES FOAMULAR 600 OR APPROVED EQUAL.
2. THE POLYSTYRENE SUPPORT SYSTEM SHALL CONSIST OF ONE LAYER WITH A MINIMUM WIDTH OF 1 1/2" AND A MAXIMUM WIDTH OF 2". THE POLYSTYRENE SHALL HAVE 1/2" X 1/2" WIDE SLOTS OR 1/2" DIAMETER HOLES AT 4'-0" CENTERS STAGGERED ALONG THE TOP AND BOTTOM.
3. THE POLYSTYRENE MAY BE CUT AND PLACED ON EDGE AS NECESSARY TO MATCH THE REQUIRED BUILDUP PROFILE ALONG THE GIRDER.
4. ADHESIVE, AS APPROVED BY THE ENGINEER, SHALL BE APPLIED TO THE TOP OF THE GIRDER IN A CONTINUOUS BEAD AND IN SUFFICIENT AMOUNT TO PREVENT THE POLYSTYRENE FROM BLOWING OUT AND TO PREVENT GAPS FROM FORMING BETWEEN THE POLYSTYRENE AND THE GIRDER. PRIOR TO PLACEMENT OF THE DECK PANELS, THE ADHESIVE SHALL ALSO BE APPLIED TO THE TOP OF THE POLYSTYRENE.
5. CONCRETE-FILLED BUCKETS, STACKS OF DECK PANELS, BUNDLED REINFORCING BARS OR OTHER HEAVY CONCENTRATED LOADS WILL NOT BE PERMITTED ON THE DECK PANEL ONCE THE PANEL HAS BEEN PLACED ON THE POLYSTYRENE SUPPORT SYSTEM.

GENERAL NOTES

1. THE DESIGN COMPRESSIVE STRENGTH (f'c) FOR THE CONCRETE IN PRESTRESSED PANELS SHALL BE 5000 PSI MINIMUM AT 28 DAYS. COMPRESSIVE STRENGTH OF CONCRETE AT TIME OF RELEASE OF STRANDS SHALL BE 4000 PSI MINIMUM.
2. THE PRECAST PRESTRESSED PANEL SHALL HAVE A THICKNESS OF 3 ½" WITH THE PRESTRESSED STRANDS LOCATED AT HALF THE DEPTH OF THE PANEL.
3. FOR SKEWED SPANS, TRAPEZOIDAL CLOSURE PANELS SHALL HAVE A MINIMUM WIDTH OF 2 FEET ON THE SHORT SIDE.
4. ALL PRESTRESSING STRANDS SHALL EXTEND 2" BEYOND THE PANEL EDGES.
5. SHEAR REINFORCING OF 0.60 SQ. INCHES OF REINFORCING STEEL PER 10 SQ. FEET OF PANEL SURFACE SHALL BE PROVIDED IN THE PANEL TO ENSURE COMPOSITE ACTION BETWEEN PANEL AND THE CAST-IN-PLACE CONCRETE. SHEAR REINFORCEMENT SHALL BE MADE OF WELDED WIRE HAVING A MINIMUM YIELD STRENGTH OF 60 KSI.
6. SHEAR REINFORCEMENT AND LIFTING DEVICES SHALL BE CONSTRUCTED AND PLACED SO AS TO AVOID ANY INTERFERENCE WITH REINFORCING STEEL IN THE CAST-IN-PLACE DECK SLAB AND TO ALLOW FOR PROPER CONCRETE CONSOLIDATION IN THE DECK PANEL.
7. SHIFT LONGITUDINAL "B" BARS AS NECESSARY TO OBTAIN A MINIMUM CLEAR DISTANCE OF 2 ½" TO THE RIGHT OR LEFT OF THE EDGE OF THE DECK PANEL. IF, IN SHIFTING TO OBTAIN THIS CLEARANCE, THE "B" BAR INTERFERES WITH THE STIRRUP IN THE TOP OF THE GIRDER THE "B" BAR MAY BE ELIMINATED.
8. WHEN CASTING THE DECK, PLACE CONCRETE FIRST OVER THE GIRDERS IN CONTINUOUS STRIPS A MINIMUM OF THREE PANEL LENGTHS AHEAD OF THE REST OF THE CONCRETE. CAREFULLY VIBRATE THE CONCRETE OVER THE GIRDERS SO THAT CONCRETE COMPLETELY FILLS THE AREA UNDER THE DECK PANEL OVERHANGS. THEN PLACE AND VIBRATE THE REMAINING DECK CONCRETE.
9. PRECAST PANELS SHALL BE DESIGNED FOR AN ALLOWABLE TENSILE STRESS OF 0 PSI IN THE PRESTRESSED TENSILE ZONE UNDER ALL LOADING CONDITIONS.
10. PRECAST CONCRETE DECK PANELS SHALL CONTAIN CALCIUM NITRITE CORROSION INHIBITOR.

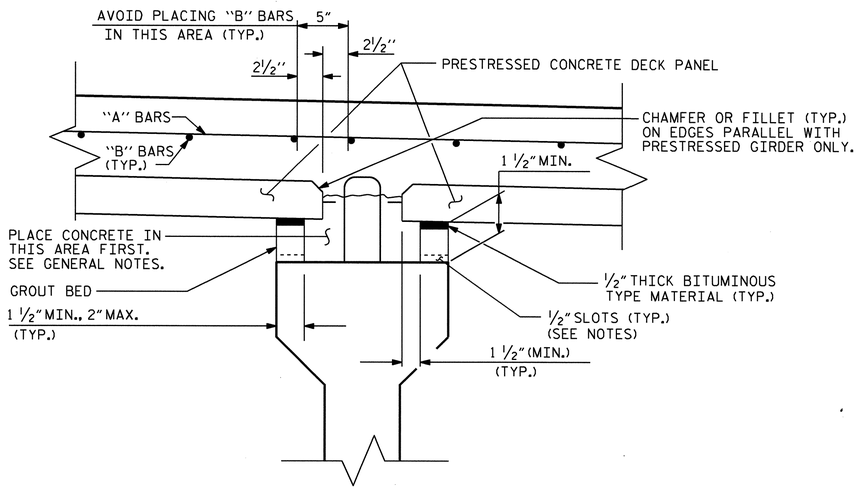

GROUT BED SUPPORT

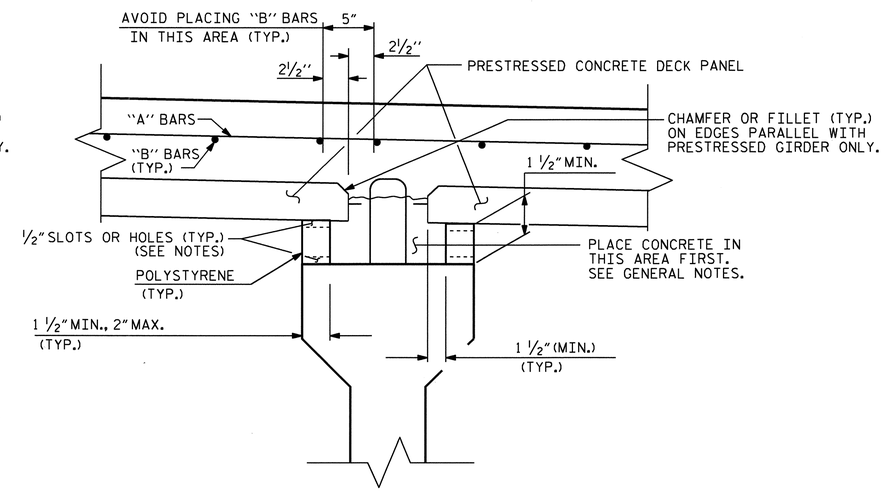

POLYSTYRENE SUPPORT

PROJECT NO. B-3611

BEAUFORT COUNTY

STATION: 43+25.00-L-

STATE OF NORTH CAROLINA
DEPARTMENT OF TRANSPORTATION
RALEIGH

STANDARD

PRECAST PRESTRESSED CONCRETE DECK PANELS

REVISIONS						SHEET NO.
NO.	BY:	DATE:	NO.	BY:	DATE:	S-32
1			3			TOTAL SHEETS
2			4			120

STD. NO. PDP1

ASSEMBLED BY : H. T. BARBOUR		DATE :	10-26-09
CHECKED BY : D. A. GLADDEN		DATE :	2-3-10
DRAWN BY : ELR 1/92	REV. 3/3/93		ELR/RGW
CHECKED BY : GRP 4/92	REV. 5/7/03R		RWW/JTE
	REV. 5/1/06		TLA/GM

NORTH CAROLINA PROFESSIONAL SEAL 15825 ENGINEER BRUCE O. KLAPPENBERGER
3-29-2010

24-MAR-2010 12:09
M:\Structures\tbarbour\Microstation\b3611_sd_ts.dgn
tbarbour

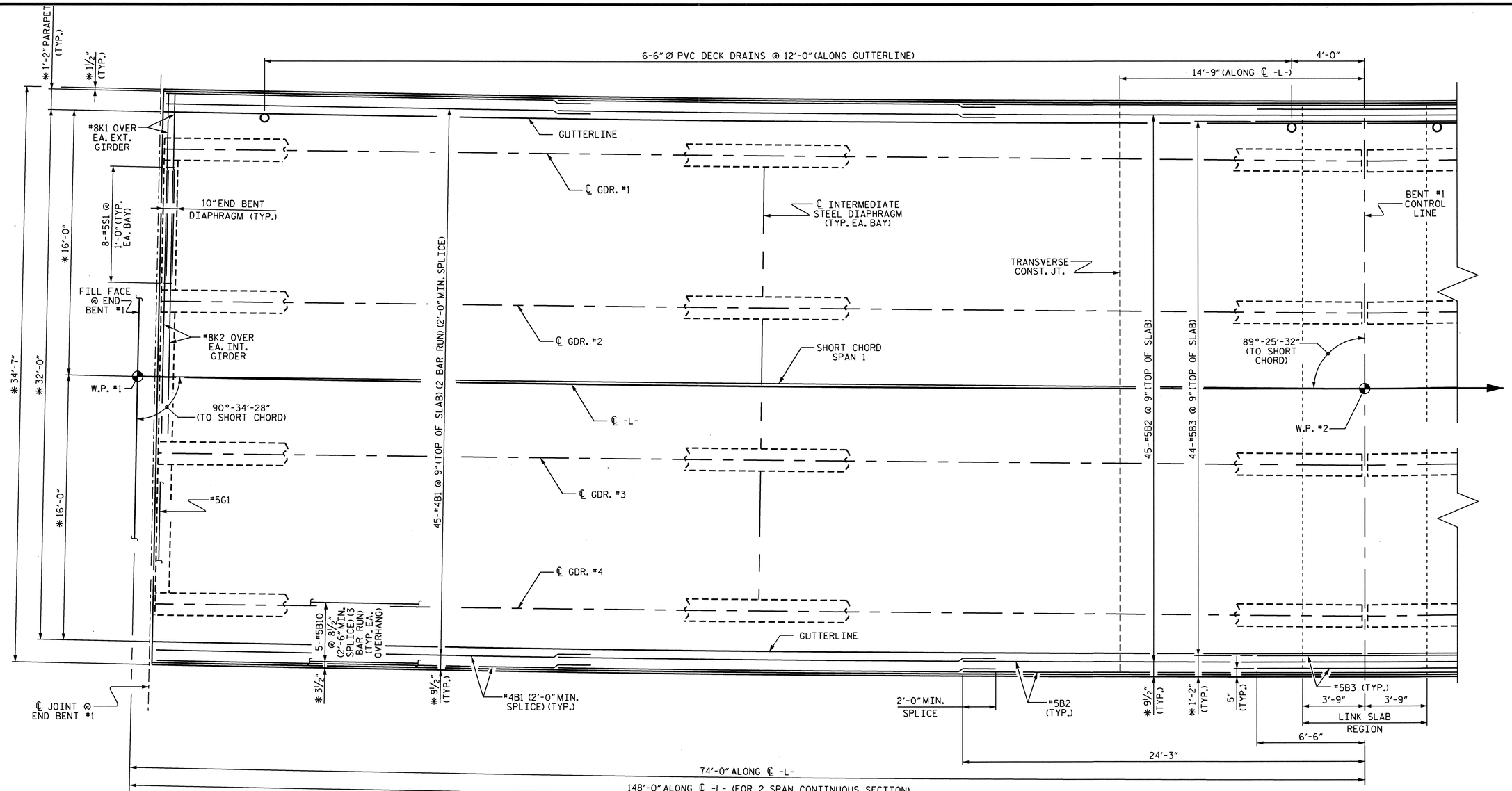

PLAN OF SPAN 1

*DIMENSIONS ARE TO CIRCLES CONCENTRIC WITH ℄ -L-. GIRDERS ARE ON THE CHORDS OF THESE CIRCLES.

FOR "A" BARS SEE "PLAN OF SPAN "A" BAR LAYOUT" SHEET.

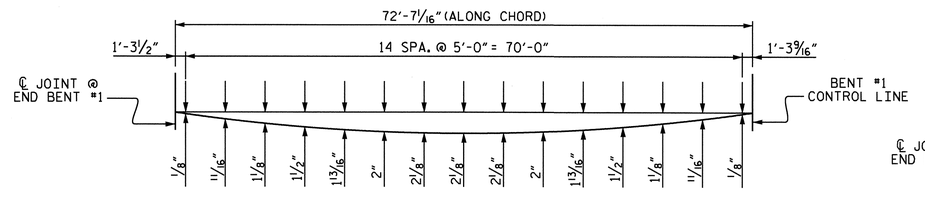

ARC OFFSETS
(LEFT SIDE)(SPAN 1)

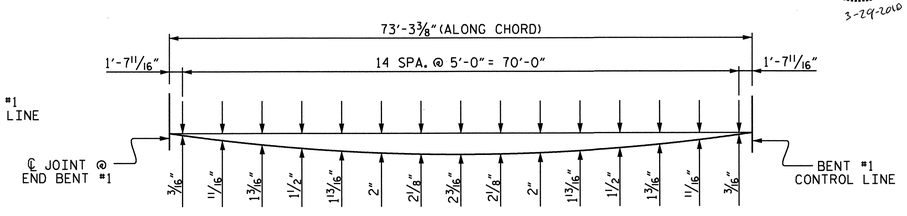

ARC OFFSETS
(RIGHT SIDE)(SPAN 1)

PROJECT NO. B-3611

BEAUFORT COUNTY

STATION: 43+25.00-L-

SHEET 1 OF 18

NORTH CAROLINA PROFESSIONAL SEAL 15825 ENGINEER D. KLAPPENBACH
3-29-2010

STATE OF NORTH CAROLINA
DEPARTMENT OF TRANSPORTATION
RALEIGH

PLAN OF SPAN 1

REVISIONS						SHEET NO.
NO.	BY:	DATE:	NO.	BY:	DATE:	S-33
1			3			TOTAL SHEETS
2			4			120

DRAWN BY : H. T. BARBOUR DATE : 08-20-09
CHECKED BY : D. A. GLADDEN DATE : 2-3-10

24-MAR-2010 12:09
M:\Structures\tbarbour\Microstation\b3611_sd_s*.dgn
tbarbour

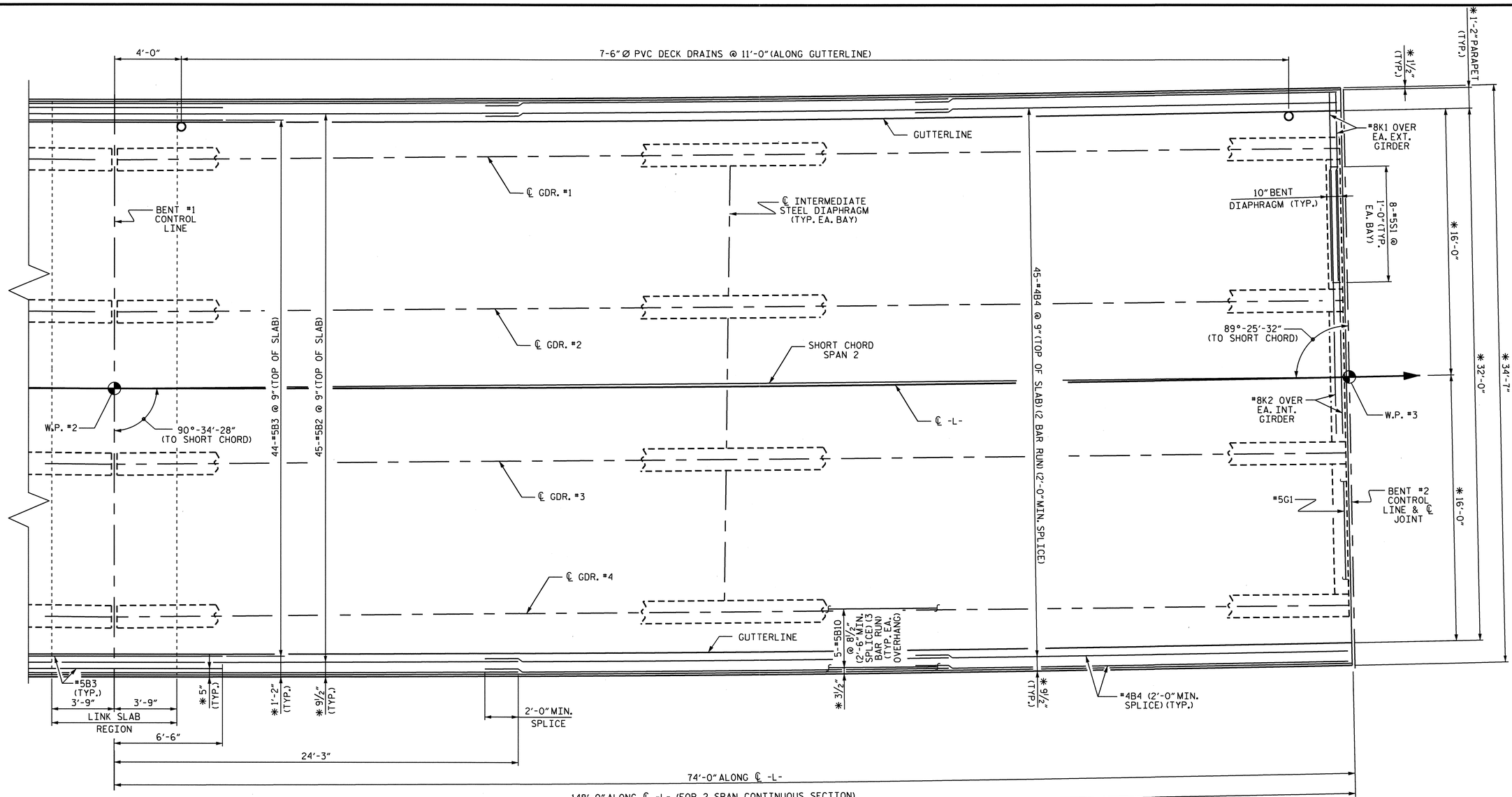

PLAN OF SPAN 2

*DIMENSIONS ARE TO CIRCLES CONCENTRIC WITH ℄ -L-. GIRDERS ARE ON THE CHORDS OF THESE CIRCLES.

FOR "A" BARS SEE "PLAN OF SPAN "A" BAR LAYOUT" SHEET.

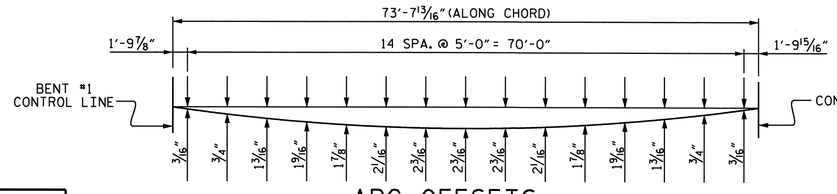

ARC OFFSETS
(LEFT SIDE)(SPAN 2)

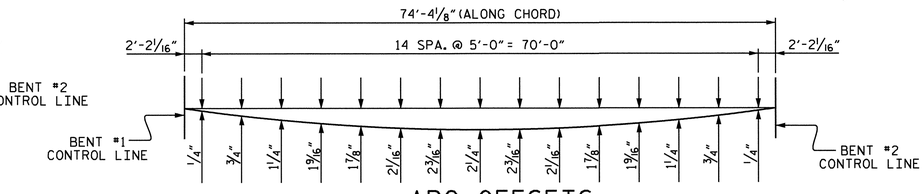

ARC OFFSETS
(RIGHT SIDE)(SPAN 2)

PROJECT NO. B-3611

BEAUFORT COUNTY

STATION: 43+25.00-L-

SHEET 2 OF 18

STATE OF NORTH CAROLINA
DEPARTMENT OF TRANSPORTATION
RALEIGH

PLAN OF SPAN 2

REVISIONS						SHEET NO.
NO.	BY:	DATE:	NO.	BY:	DATE:	S-34
1			3			TOTAL SHEETS
2			4			120

NORTH CAROLINA PROFESSIONAL SEAL 15825 ENGINEER BRUCE O. KLAPPENBACH
3-24-2010

DRAWN BY : H. T. BARBOUR DATE : 08-20-09
CHECKED BY : D. A. GLADDEN DATE : 2-3-10

24-MAR-2010 12:09
M:\Structures\tbarbour\Microstation\b3611_sd_s*.dgn
tbarbour

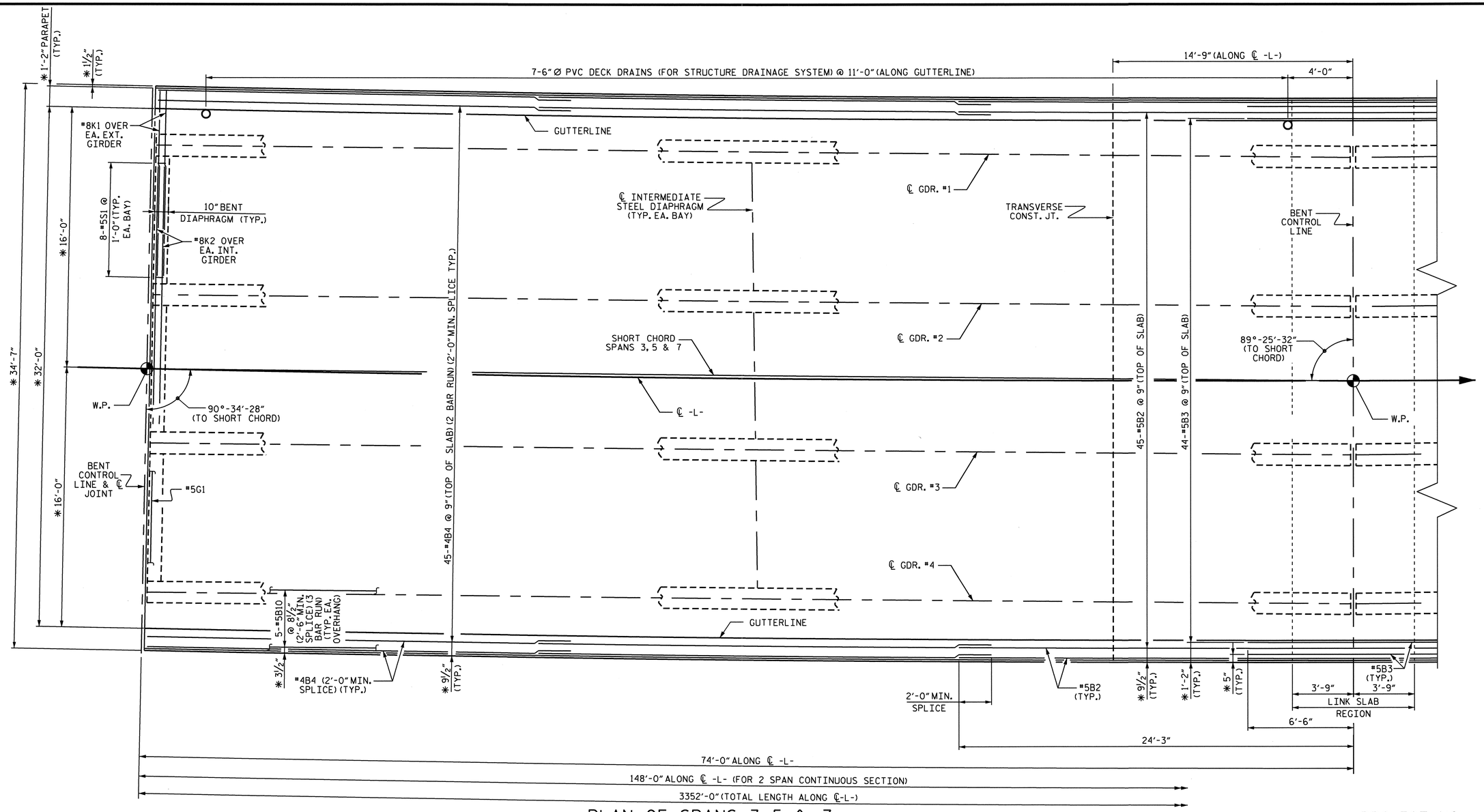

PLAN OF SPANS 3, 5, & 7

* DIMENSIONS ARE TO CIRCLES CONCENTRIC WITH ℄ -L-. GIRDERS ARE ON THE CHORDS OF THESE CIRCLES.

FOR WORK POINT NUMBERS SEE, "GENERAL DRAWING".

FOR "A" BARS SEE "PLAN OF SPAN "A" BAR LAYOUT" SHEET.

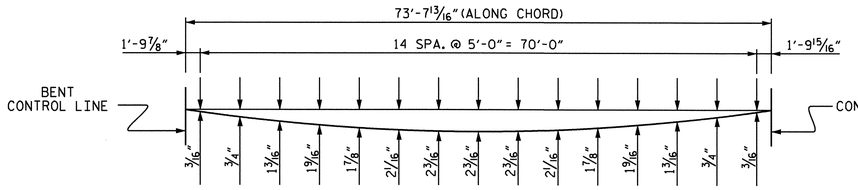

ARC OFFSETS

(LEFT SIDE)(SPANS 3, 5 & 7)

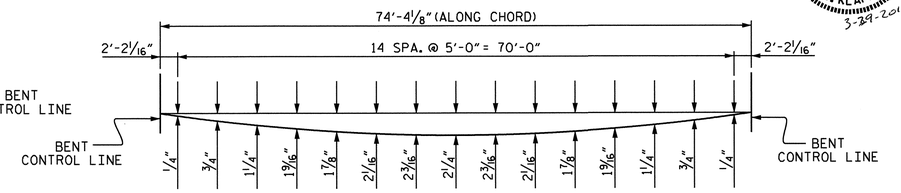

ARC OFFSETS

(RIGHT SIDE)(SPANS 3, 5 & 7)

PROJECT NO. B-3611

BEAUFORT COUNTY

STATION: 43+25.00-L-

SHEET 3 OF 18

NORTH CAROLINA PROFESSIONAL SEAL 15825 ENGINEER BRUCE H. KLAPPENBACH 3-29-2010

STATE OF NORTH CAROLINA
DEPARTMENT OF TRANSPORTATION
RALEIGH

PLAN OF SPANS 3, 5 & 7

REVISIONS						SHEET NO.
NO.	BY:	DATE:	NO.	BY:	DATE:	S-35
1			3			TOTAL SHEETS
2			4			120

DRAWN BY : H. T. BARBOUR DATE : 08-20-09
CHECKED BY : D. A. GLADDEN DATE : 2-3-10

24-MAR-2010 12:09
M:\Structures\tbarbour\Microstation\b3611_sd_s*.dgn
tbarbour

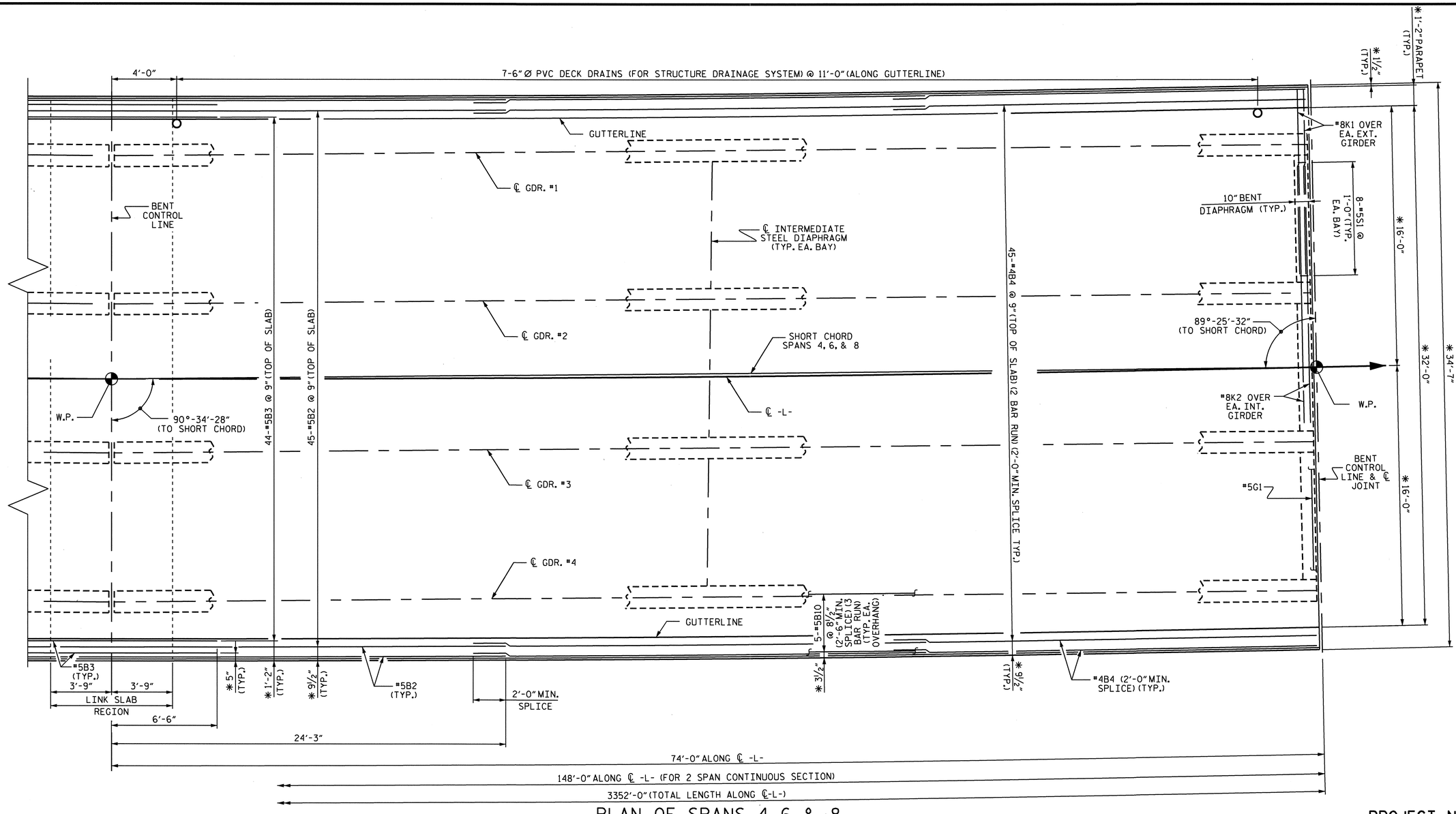

PLAN OF SPANS 4, 6 & 8

* DIMENSIONS ARE TO CIRCLES CONCENTRIC WITH ℄ -L-. GIRDERS ARE ON THE CHORDS OF THESE CIRCLES.

FOR "A" BARS SEE "PLAN OF SPAN "A" BAR LAYOUT" SHEET.

FOR WORK POINT NUMBERS SEE, "GENERAL DRAWING".

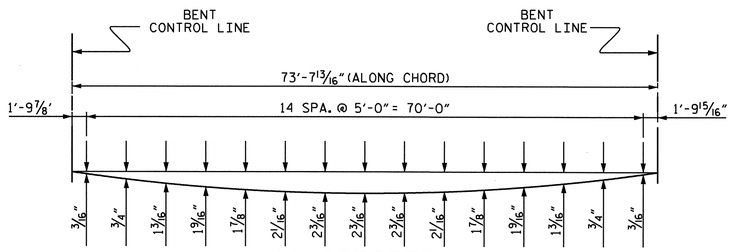

ARC OFFSETS

(LEFT SIDE)(SPANS 4, 6 & 8)

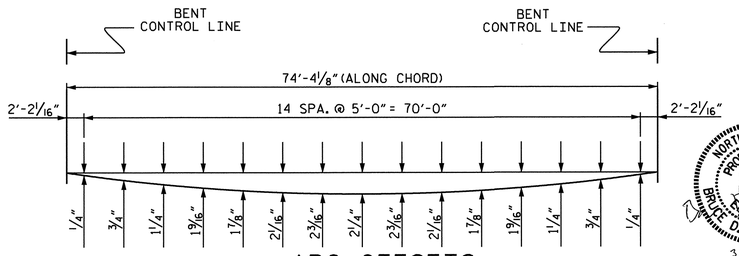

ARC OFFSETS

(RIGHT SIDE)(SPANS 4, 6, & 8)

NORTH CAROLINA PROFESSIONAL SEAL 15825 ENGINEER BRUCE D. KLAPPENBACH 3-29-2010

PROJECT NO. B-3611

BEAUFORT COUNTY

STATION: 43+25.00-L-

SHEET 4 OF 18

STATE OF NORTH CAROLINA
DEPARTMENT OF TRANSPORTATION
RALEIGH

PLAN OF SPANS 4, 6, & 8

REVISIONS						SHEET NO.
NO.	BY:	DATE:	NO.	BY:	DATE:	S-36
1			3			TOTAL SHEETS
2			4			120

DRAWN BY : H. T. BARBOUR DATE : 08-20-09
CHECKED BY : D. A. GLADDEN DATE : 2-3-10

24-MAR-2010 12:09
M:\Structures\tbarbour\Microstation\b3611_sd_s*.dgn
tbarbour

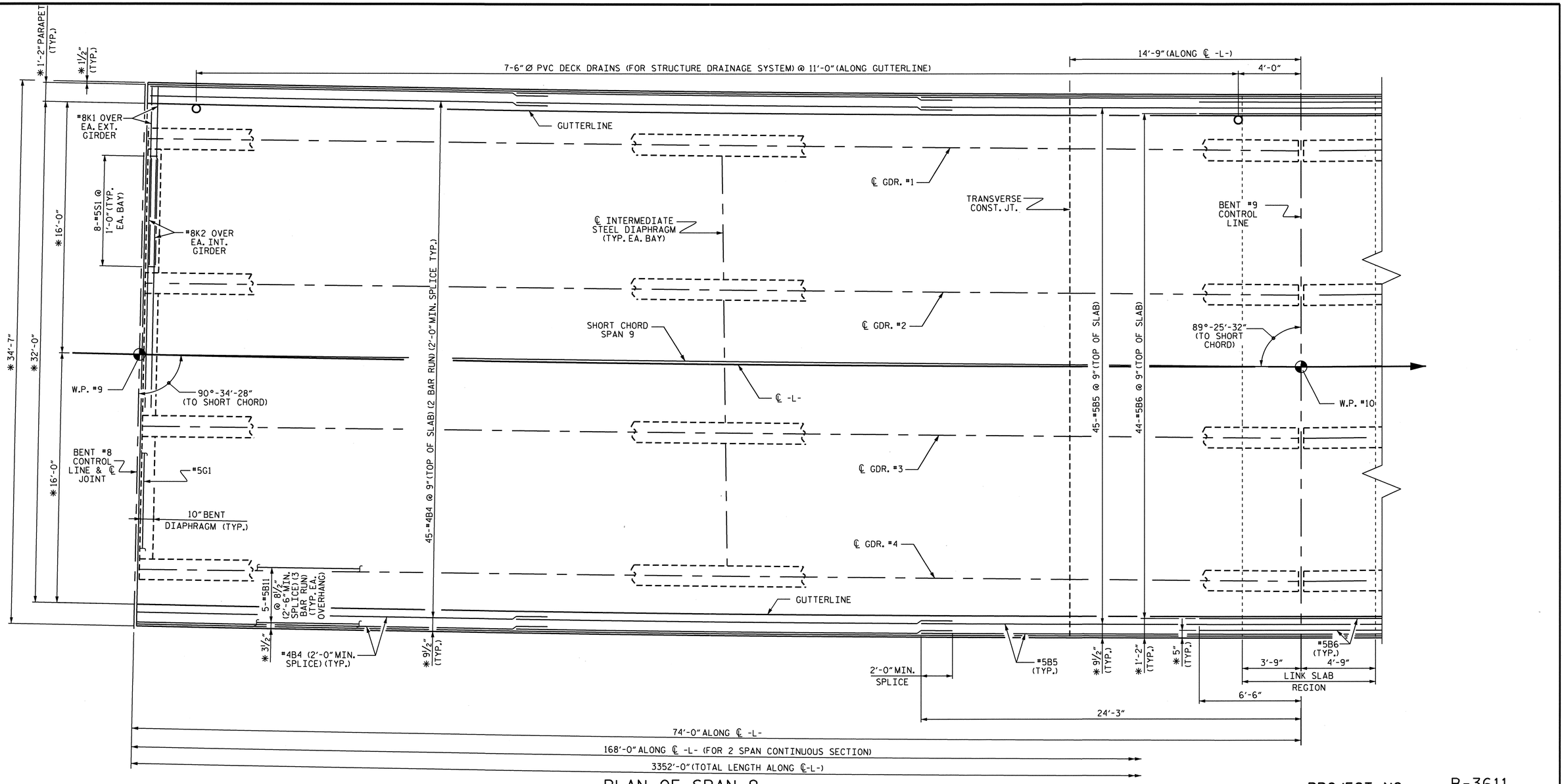

PLAN OF SPAN 9

*DIMENSIONS ARE TO CIRCLES CONCENTRIC WITH ℄ -L-. GIRDERS ARE ON THE CHORDS OF THESE CIRCLES.

FOR "A" BARS SEE "PLAN OF SPAN "A" BAR LAYOUT" SHEET.

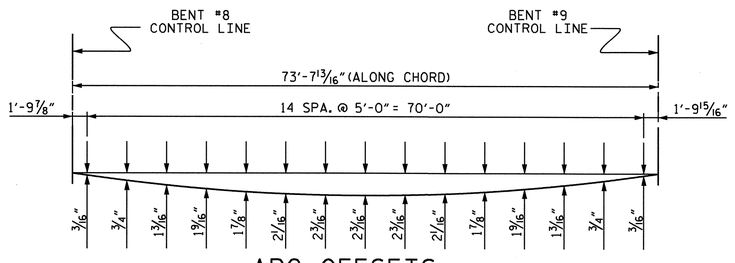

ARC OFFSETS
(LEFT SIDE)(SPAN 9)

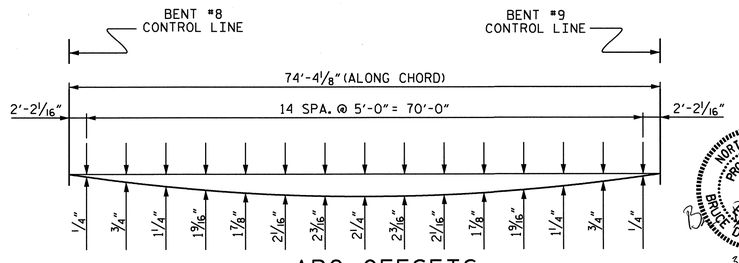

ARC OFFSETS
(RIGHT SIDE)(SPAN 9)

NORTH CAROLINA PROFESSIONAL SEAL 15825 ENGINEER BRUCE D. KLAPPENBACH
3-29-2012

PROJECT NO. B-3611
BEAUFORT COUNTY
STATION: 43+25.00-L-

SHEET 5 OF 18

STATE OF NORTH CAROLINA
DEPARTMENT OF TRANSPORTATION
RALEIGH

PLAN OF SPAN 9

REVISIONS						SHEET NO.
NO.	BY:	DATE:	NO.	BY:	DATE:	S-37
1			3			TOTAL SHEETS
2			4			120

DRAWN BY : H. T. BARBOUR DATE : 08-20-09
CHECKED BY : D. A. GLADDEN DATE : 2-3-10

24-MAR-2010 12:09
W:\Structures\tbarbour\Microstation\b3611_sd_s*.dgn
tbarbour

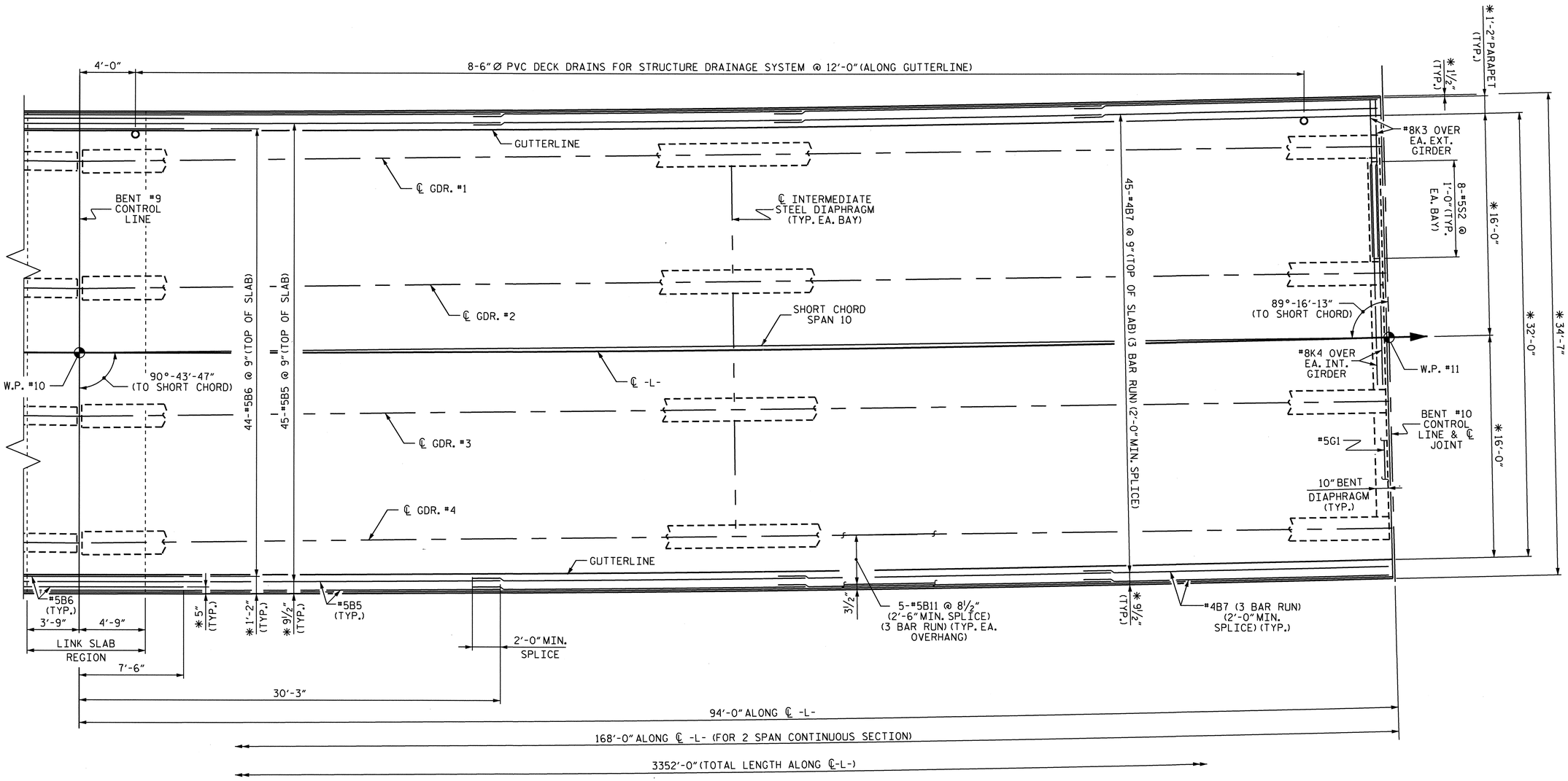

PLAN OF SPAN 10

*DIMENSIONS ARE TO CIRCLES CONCENTRIC WITH ℄ -L-. GIRDERS ARE ON THE CHORDS OF THESE CIRCLES.

FOR "A" BARS SEE "PLAN OF SPAN "A" BAR LAYOUT" SHEET.

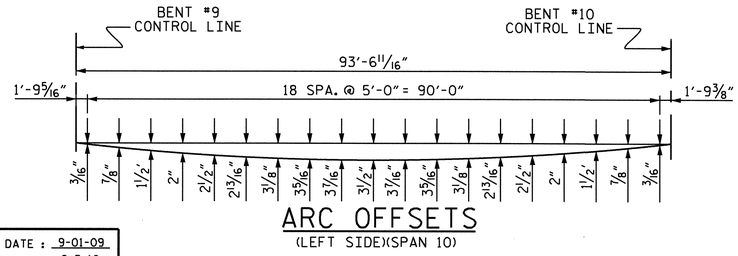

ARC OFFSETS
(LEFT SIDE)(SPAN 10)

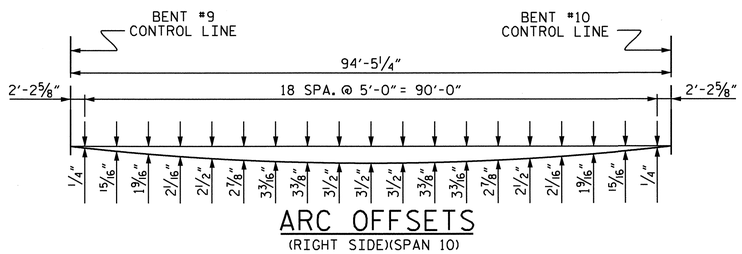

ARC OFFSETS
(RIGHT SIDE)(SPAN 10)

NORTH CAROLINA PROFESSIONAL SEAL 15825 ENGINEER BRUCE D. KLAPPENBACH
3-29-2010

PROJECT NO. B-3611
BEAUFORT COUNTY
STATION: 43+25.00-L-

SHEET 6 OF 18

STATE OF NORTH CAROLINA
DEPARTMENT OF TRANSPORTATION
RALEIGH

PLAN OF SPAN 10

REVISIONS						SHEET NO.
NO.	BY:	DATE:	NO.	BY:	DATE:	S-38
1			3			TOTAL SHEETS
2			4			120

DRAWN BY : H. T. BARBOUR DATE : 9-01-09
CHECKED BY : D. A. GLADDEN DATE : 2-3-10

24-MAR-2010 12:09
M:\Structures\tbarbour\Microstation\b3611_sd_s*.dgn
tbarbour

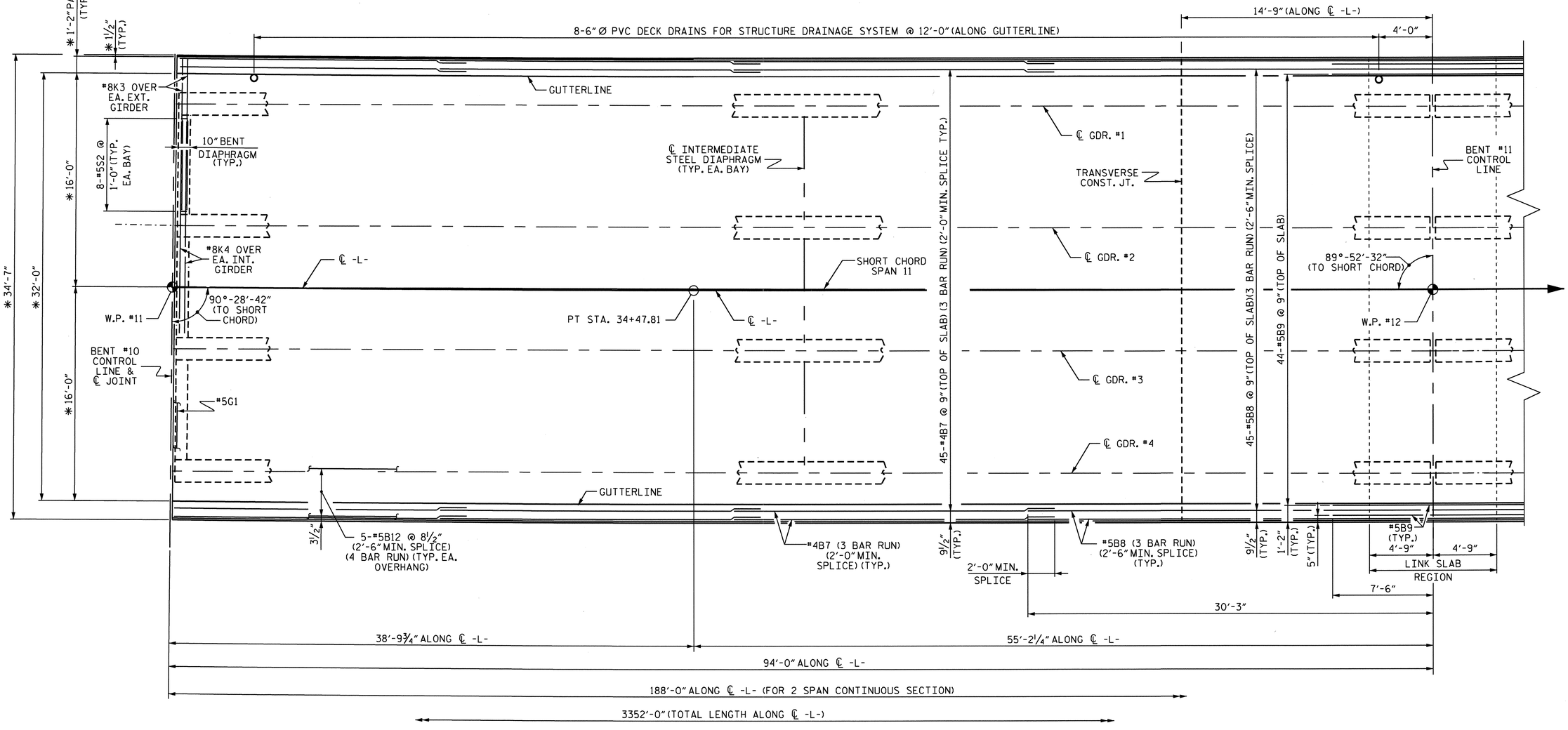

PLAN OF SPAN 11

*DIMENSIONS ARE TO CIRCLES CONCENTRIC WITH ℄ -L-. GIRDERS ARE ON THE CHORDS OF THESE CIRCLES.

FOR "A" BARS SEE "PLAN OF SPAN "A" BAR LAYOUT" SHEET.

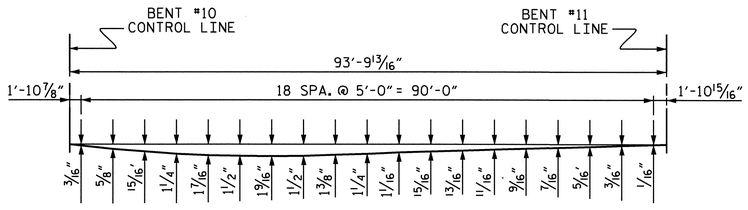

ARC OFFSETS
(LEFT SIDE)(SPAN 11)

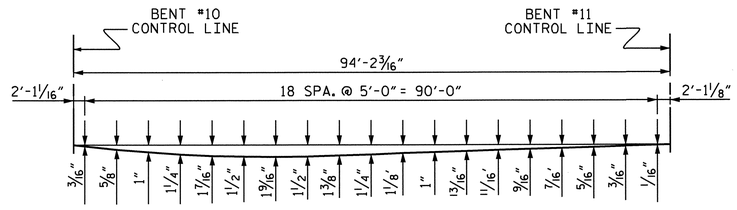

ARC OFFSETS
(RIGHT SIDE)(SPAN 11)

NORTH CAROLINA PROFESSIONAL SEAL 15825 ENGINEER D. A. KLAPPENBACH
3-29-2010

PROJECT NO. B-3611
BEAUFORT COUNTY
STATION: 43+25.00-L-

SHEET 7 OF 18

STATE OF NORTH CAROLINA
DEPARTMENT OF TRANSPORTATION
RALEIGH

PLAN OF SPAN 11

REVISIONS						SHEET NO.
NO.	BY:	DATE:	NO.	BY:	DATE:	S-39
1			3			TOTAL SHEETS
2			4			120

DRAWN BY : H. T. BARBOUR DATE : 9-09-09
CHECKED BY : D. A. GLADDEN DATE : 2-3-10

24-MAR-2010 12:09
M:\Structures\tbarbour\Microstation\b3611_sd_s*.dgn
tbarbour

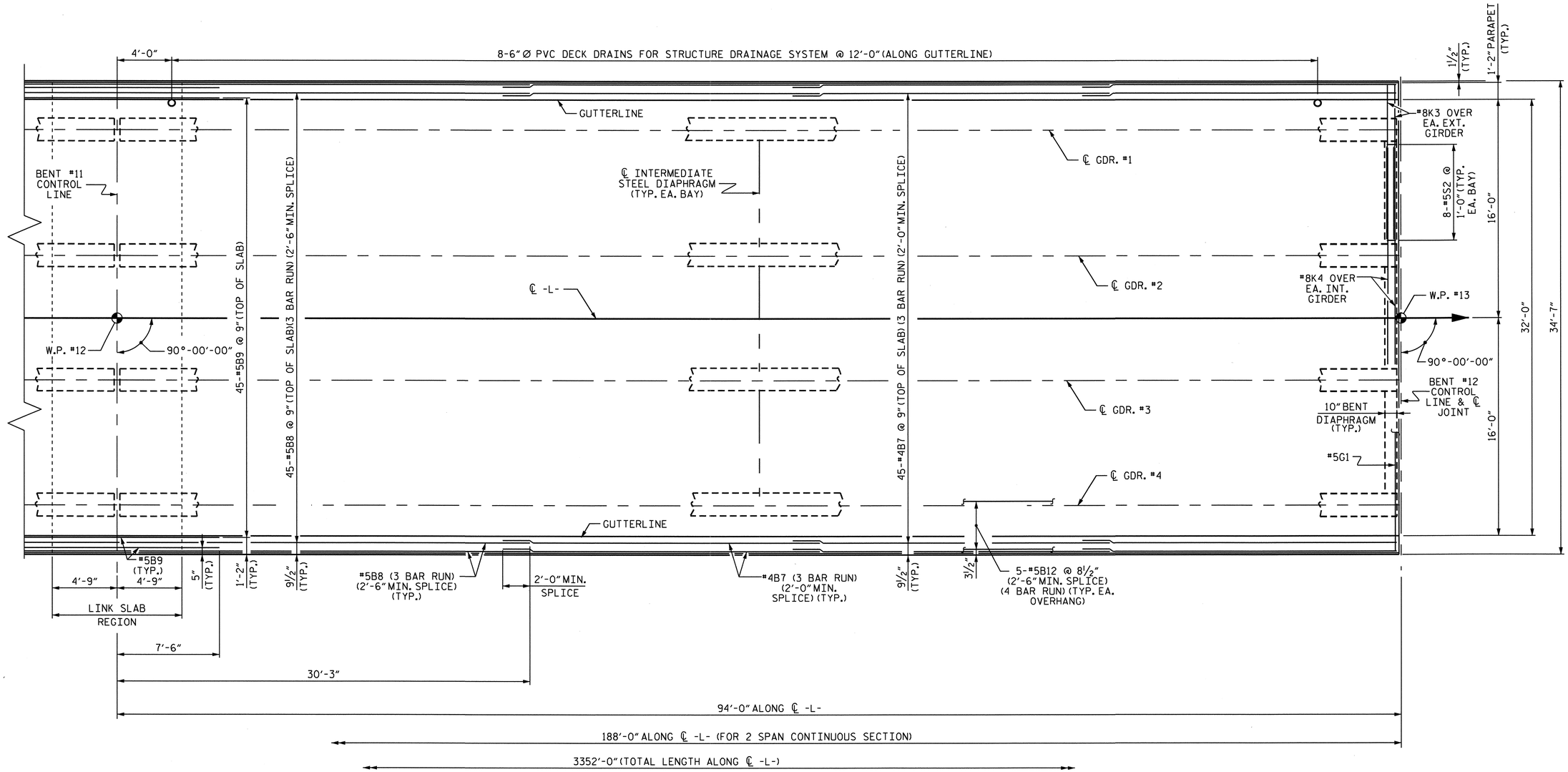

PLAN OF SPAN 12

FOR WORK POINT NUMBERS SEE, "GENERAL DRAWING".

FOR "A" BARS SEE "PLAN OF SPAN "A" BAR LAYOUT" SHEET.

PROJECT NO. B-3611

BEAUFORT COUNTY

STATION: 43+25.00-L-

SHEET 8 OF 18

STATE OF NORTH CAROLINA
DEPARTMENT OF TRANSPORTATION
RALEIGH

PLAN OF SPAN 12

NORTH CAROLINA PROFESSIONAL SEAL 15825 ENGINEER D. KLAPPENBACH
3-29-2010

REVISIONS						SHEET NO.
NO.	BY:	DATE:	NO.	BY:	DATE:	S-40
1			3			TOTAL SHEETS
2			4			120

DRAWN BY : H. T. BARBOUR DATE : 9-09-09
CHECKED BY : D. A. GLADDEN DATE : 2-3-10

24-MAR-2010 12:09
M:\Structures\tbarbour\Microstation\b3611_sd_s*.dgn
tbarbour

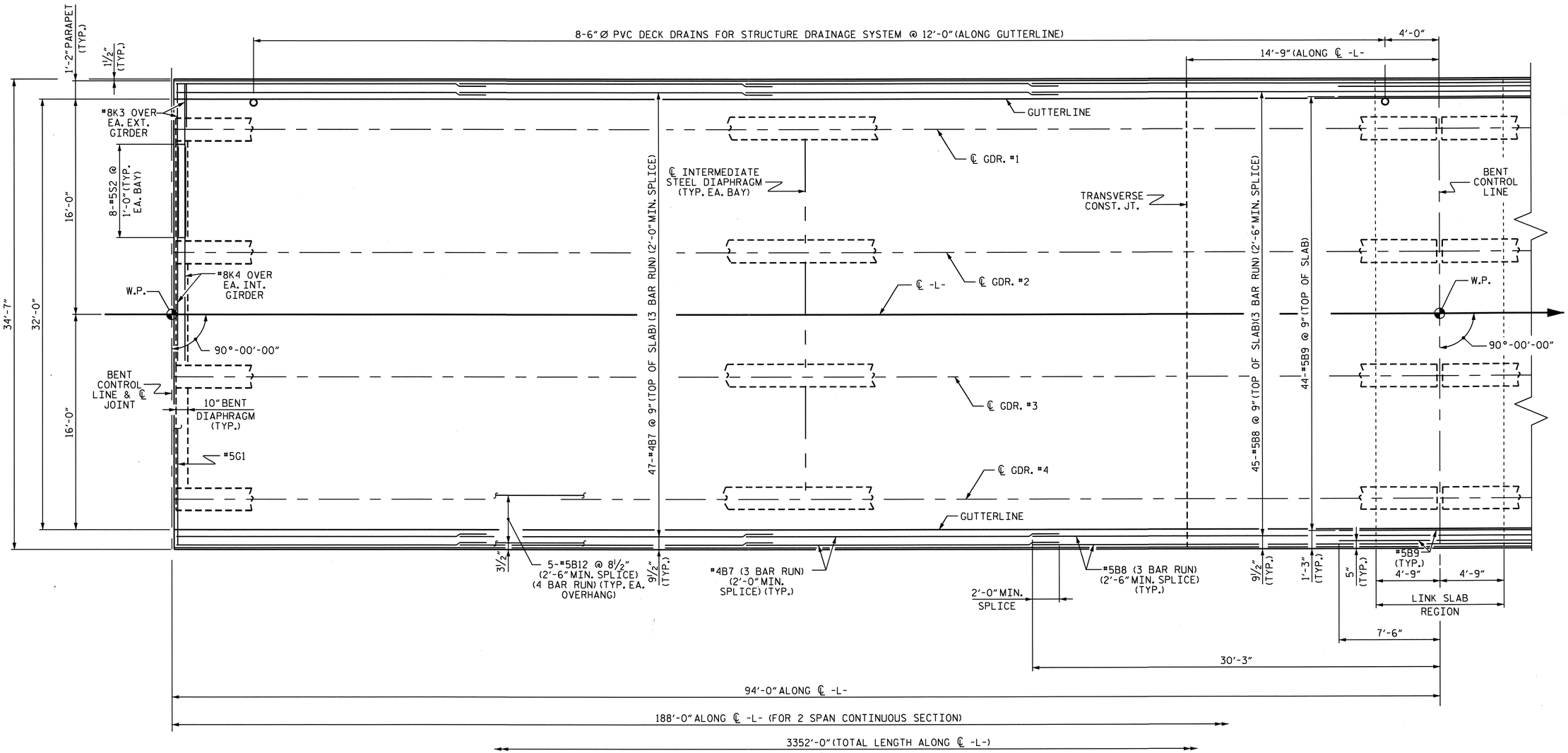

PLAN OF SPANS 13, 15, 17, 19 & 21

FOR WORK POINT NUMBERS SEE, "GENERAL DRAWING".

FOR "A" BARS SEE "PLAN OF SPAN "A" BAR LAYOUT" SHEET.

PROJECT NO. B-3611

BEAUFORT COUNTY

STATION: 43+25.00-L-

SHEET 9 OF 18

STATE OF NORTH CAROLINA
DEPARTMENT OF TRANSPORTATION
RALEIGH

PLAN OF SPANS 13, 15, 17, 19 & 21

NORTH CAROLINA PROFESSIONAL SEAL 15825 ENGINEER D. KLAPPENBACH
3-29-2010

REVISIONS						SHEET NO.
NO.	BY:	DATE:	NO.	BY:	DATE:	S-41
1			3			TOTAL SHEETS
2			4			120

DRAWN BY : H. T. BARBOUR DATE : 9-09-09
CHECKED BY : D. A. GLADDEN DATE : 2-3-10

24-MAR-2010 12:09
M:\Structures\tbarbour\Microstation\b3611_sd_s*.dgn
tbarbour

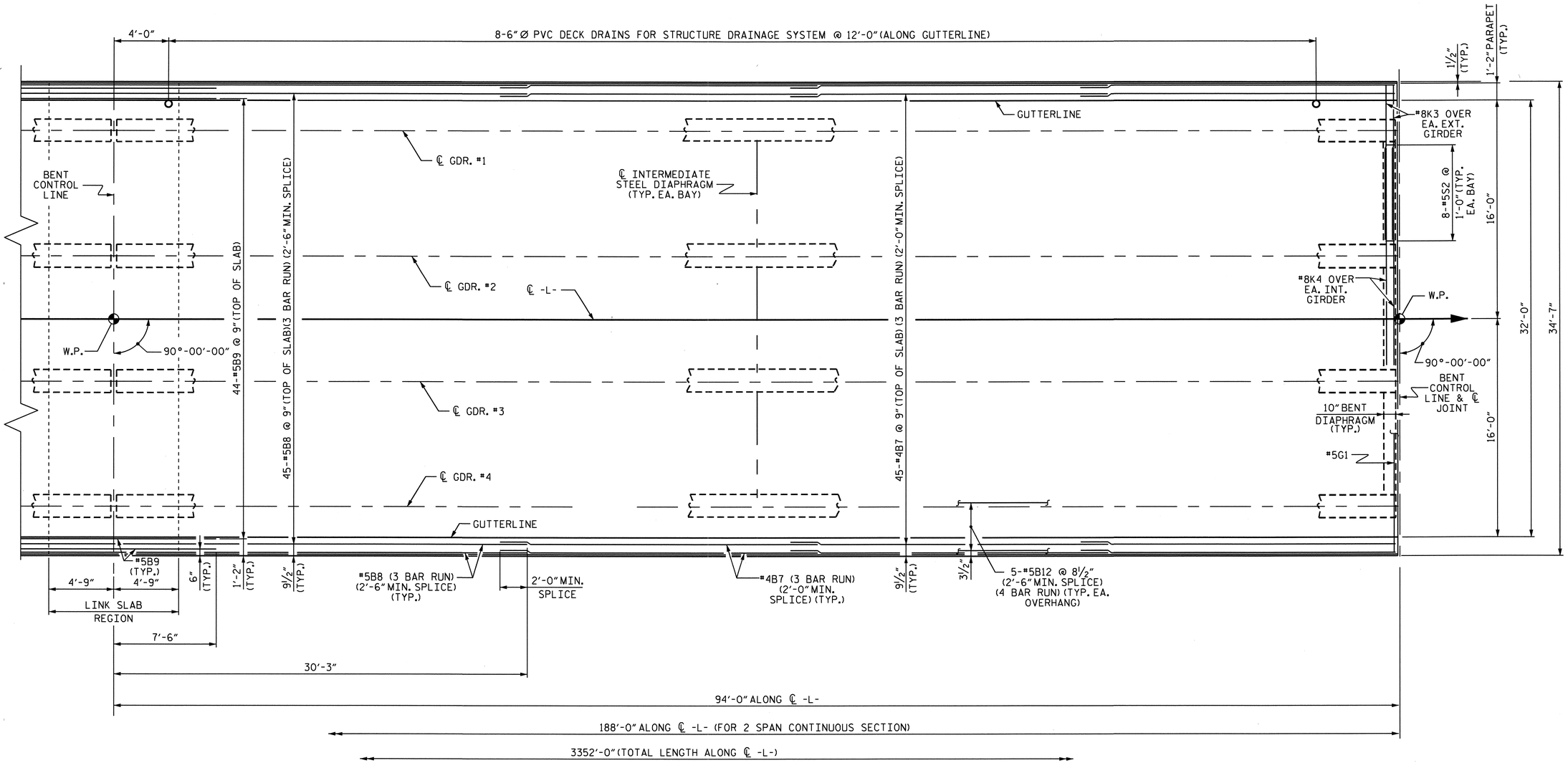

PLAN OF SPAN 14, 16, 18, 20 & 22

FOR WORK POINT NUMBERS SEE, "GENERAL DRAWING".

FOR "A" BARS SEE "PLAN OF SPAN "A" BAR LAYOUT" SHEET.

PROJECT NO. B-3611

BEAUFORT COUNTY

STATION: 43+25.00-L-

SHEET 10 OF 18

STATE OF NORTH CAROLINA
DEPARTMENT OF TRANSPORTATION
RALEIGH

PLAN OF SPANS 14, 16, 18, 20 & 22

NORTH CAROLINA PROFESSIONAL SEAL 15825 ENGINEER D. KLAPPENBACH
3-29-2010

REVISIONS						SHEET NO.
NO.	BY:	DATE:	NO.	BY:	DATE:	S-42
1			3			TOTAL SHEETS
2			4			120

DRAWN BY : H. T. BARBOUR DATE : 9-09-09
CHECKED BY : D. A. GLADDEN DATE : 2-3-10

24-MAR-2010 12:09
M:\Structures\tbarbour\Microstation\b3611_sd_s*.dgn
tbarbour

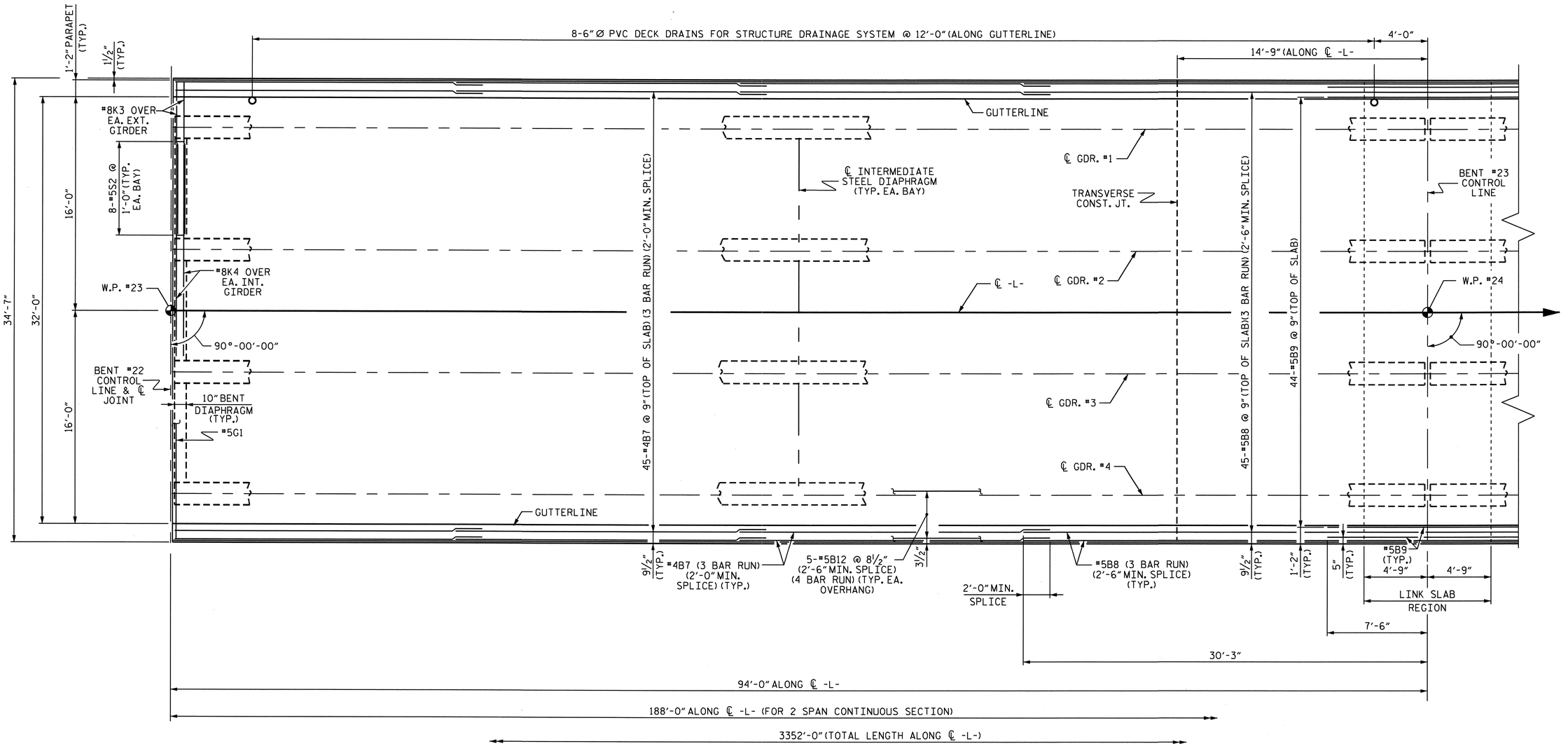

PLAN OF SPANS 23

FOR "A" BARS SEE "PLAN OF SPAN "A" BAR LAYOUT" SHEET.

PROJECT NO. B-3611

BEAUFORT COUNTY

STATION: 43+25.00-L-

SHEET 11 OF 18

STATE OF NORTH CAROLINA
DEPARTMENT OF TRANSPORTATION
RALEIGH

PLAN OF SPAN 23

NORTH CAROLINA PROFESSIONAL SEAL 15825 ENGINEER BRUCE D. KLAPPENBERGER
3-29-2010

REVISIONS						SHEET NO.
NO.	BY:	DATE:	NO.	BY:	DATE:	S-43
1			3			TOTAL SHEETS
2			4			120

DRAWN BY : H. T. BARBOUR DATE : 9-09-09
CHECKED BY : D. A. GLADDEN DATE : 2-3-10

24-MAR-2010 12:09
M:\Structures\tbarbour\Microstation\b3611_sd_s*.dgn
tbarbour

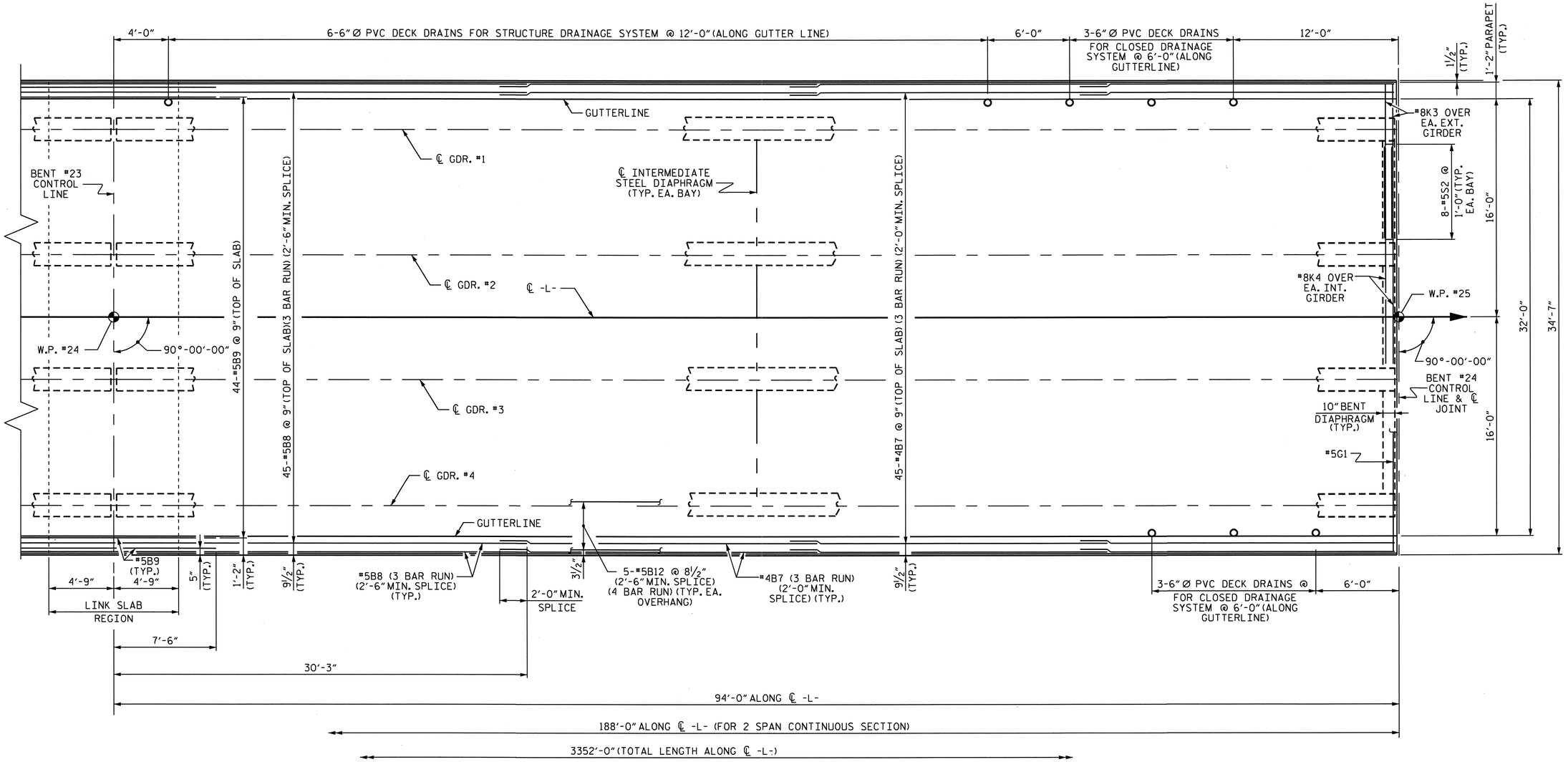

PLAN OF SPAN 24

FOR "A" BARS SEE "PLAN OF SPAN "A" BAR LAYOUT" SHEET.

PROJECT NO. B-3611

BEAUFORT COUNTY

STATION: 43+25.00-L-

SHEET 12 OF 18

STATE OF NORTH CAROLINA
DEPARTMENT OF TRANSPORTATION
RALEIGH

PLAN OF SPAN 24

NORTH CAROLINA PROFESSIONAL SEAL 15825 ENGINEER BRUCE O. KLAPPENBACH
3-29-2010

REVISIONS						SHEET NO.
NO.	BY:	DATE:	NO.	BY:	DATE:	S-44
1			3			TOTAL SHEETS
2			4			120

DRAWN BY : H. T. BARBOUR DATE : 9-09-09
CHECKED BY : D. A. GLADDEN DATE : 2-3-10

24-MAR-2010 12:09
M:\Structures\tbarbour\Microstation\b3611_sd_s*.dgn
tbarbour

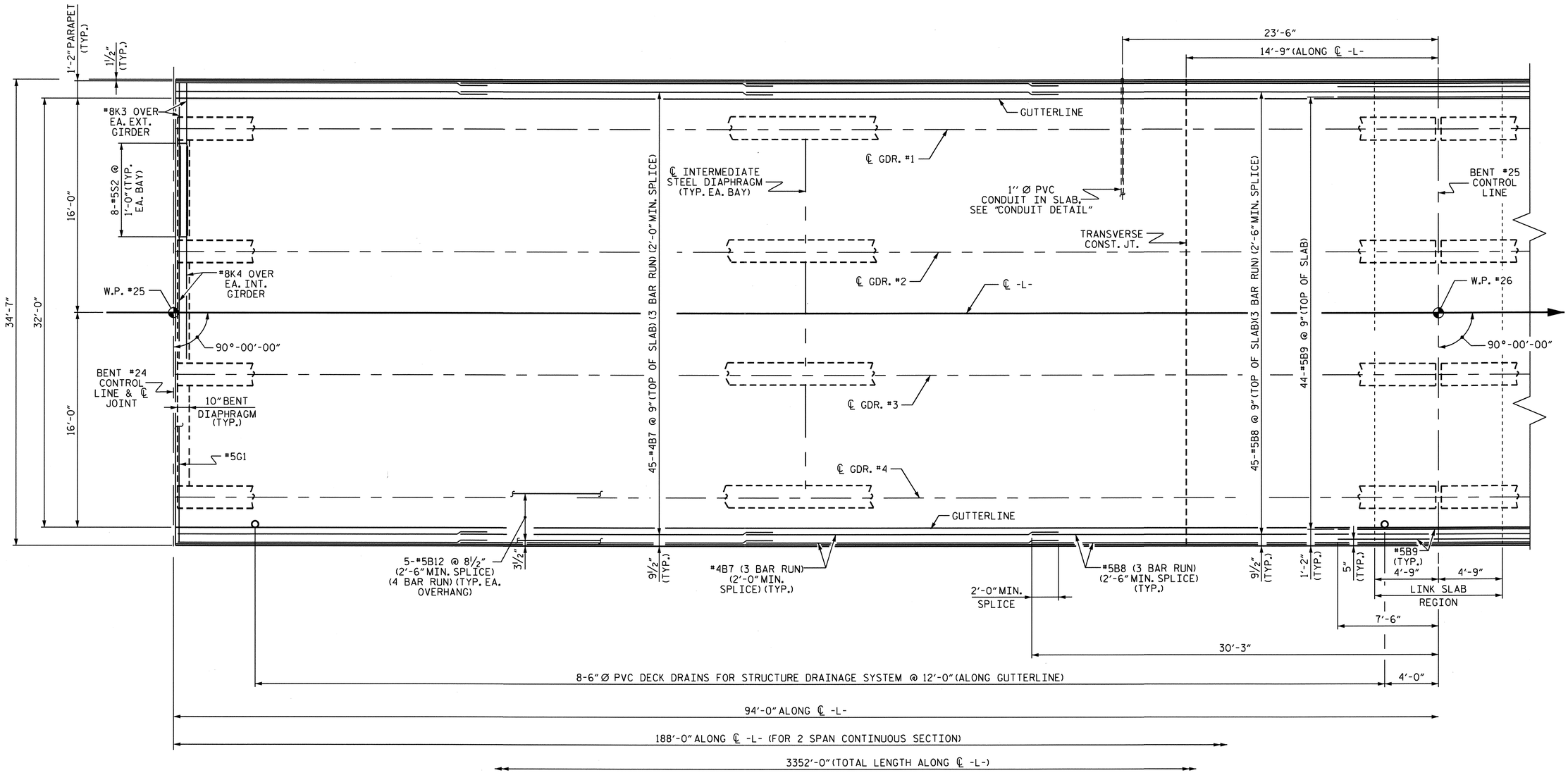

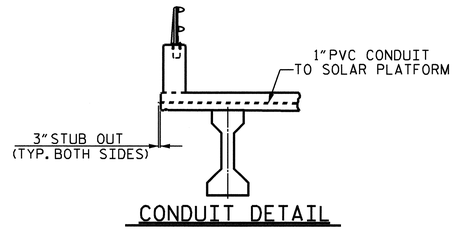

CONDUIT DETAIL

PLAN OF SPAN 25

FOR "A" BARS SEE "PLAN OF SPAN "A" BAR LAYOUT" SHEET.

PROJECT NO. B-3611

BEAUFORT COUNTY

STATION: 43+25.00-L-

SHEET 13 OF 18

STATE OF NORTH CAROLINA
DEPARTMENT OF TRANSPORTATION
RALEIGH

PLAN OF SPAN 25

NORTH CAROLINA PROFESSIONAL SEAL 15825 ENGINEER BRUCE D. KLAPPENBACH
3-29-2010

REVISIONS						SHEET NO.
NO.	BY:	DATE:	NO.	BY:	DATE:	S-45
1			3			TOTAL SHEETS
2			4			120

DRAWN BY : H. T. BARBOUR DATE : 9-09-09
CHECKED BY : D. A. GLADDEN DATE : 2-3-10

24-MAR-2010 12:09
M:\Structures\tbarbour\Microstation\b3611_sd_s*.dgn
tbarbour

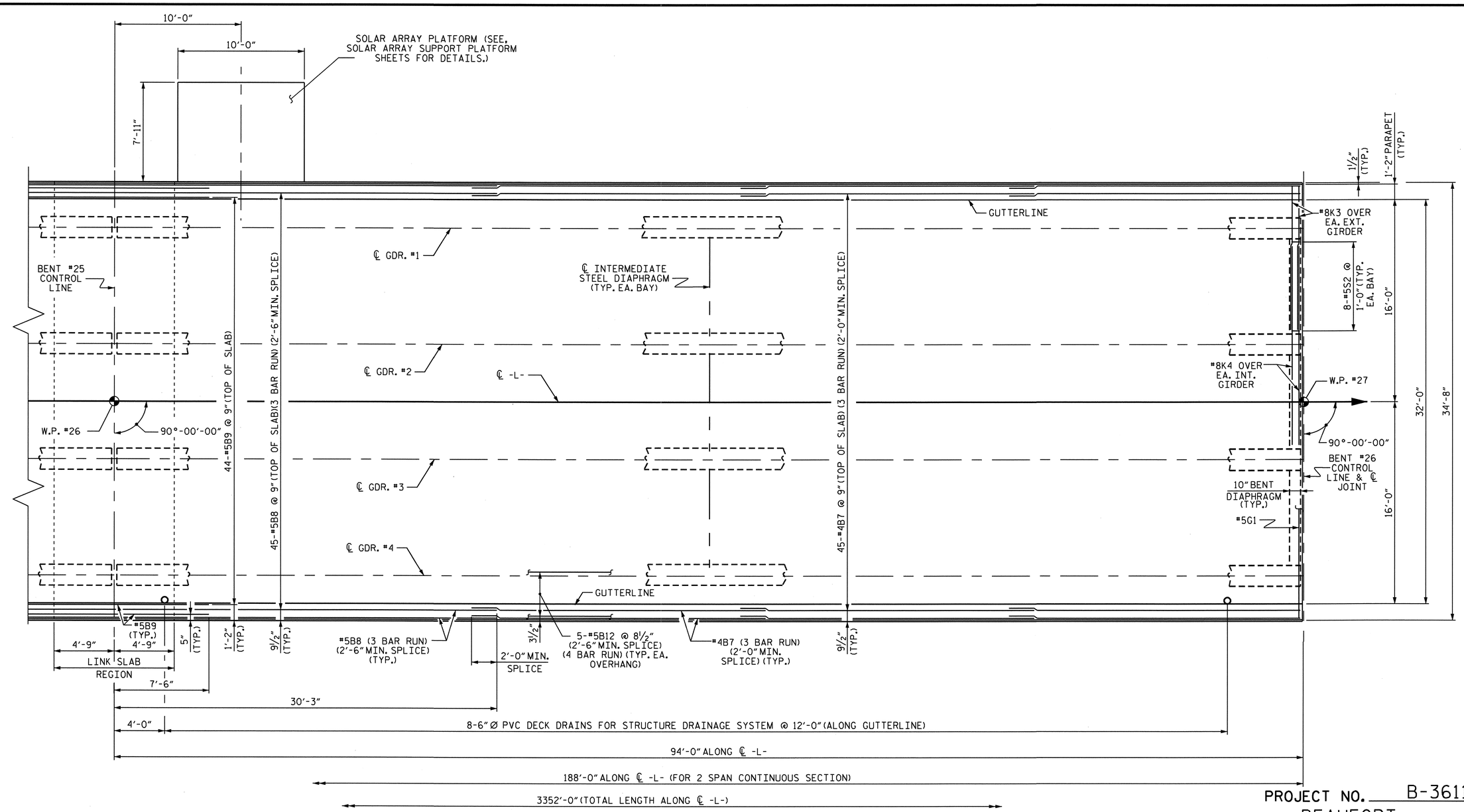

PLAN OF SPAN 26

FOR "A" BARS SEE "PLAN OF SPAN "A" BAR LAYOUT" SHEET.

PROJECT NO. B-3611

BEAUFORT COUNTY

STATION: 43+25.00-L-

SHEET 14 OF 18

STATE OF NORTH CAROLINA
DEPARTMENT OF TRANSPORTATION
RALEIGH

PLAN OF SPAN 26

NORTH CAROLINA PROFESSIONAL SEAL 15825 ENGINEER BRUCE D. KLAPPENBACH
3-29-2010

REVISIONS						SHEET NO.
NO.	BY:	DATE:	NO.	BY:	DATE:	S-46
1			3			TOTAL SHEETS
2			4			120

DRAWN BY : H. T. BARBOUR DATE : 9-09-09
CHECKED BY : D. A. GLADDEN DATE : 2-3-10

24-MAR-2010 12:09
M:\Structures\tbarbour\Microstation\b3611_sd_s*.dgn
tbarbour

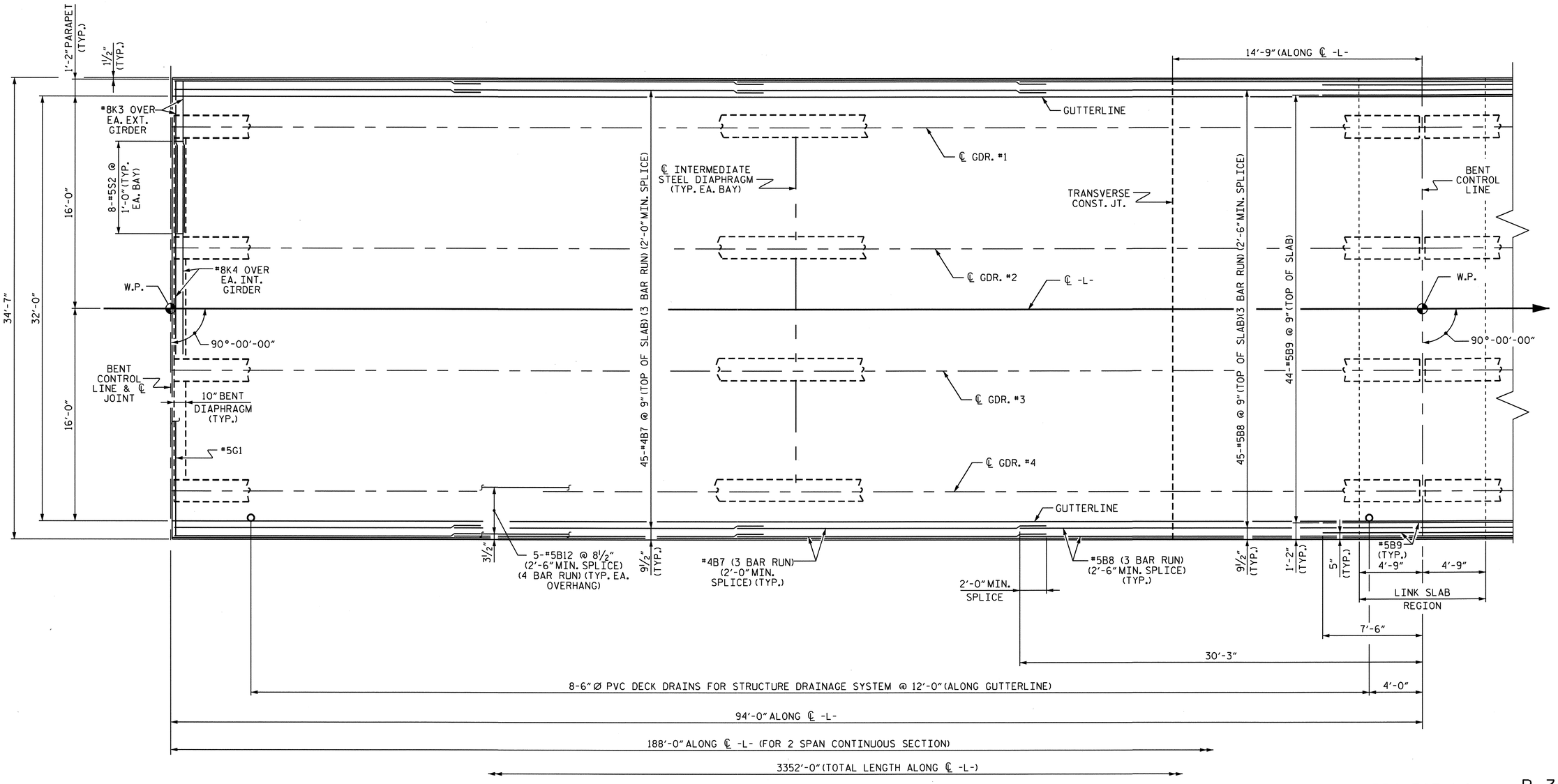

PLAN OF SPANS 27, 29, 31, 33 & 35

FOR WORK POINT NUMBERS SEE, "GENERAL DRAWING".

FOR "A" BARS SEE "PLAN OF SPAN "A" BAR LAYOUT" SHEET.

PROJECT NO. B-3611

BEAUFORT COUNTY

STATION: 43+25.00-L-

SHEET 15 OF 18

STATE OF NORTH CAROLINA
DEPARTMENT OF TRANSPORTATION
RALEIGH

PLAN OF SPANS 27, 29, 31, 33 & 35

NORTH CAROLINA PROFESSIONAL SEAL 19825 ENGINEER BRUCE D. KLAPPERICH
3-29-2010

REVISIONS						SHEET NO.
NO.	BY:	DATE:	NO.	BY:	DATE:	S-47
1			3			TOTAL SHEETS
2			4			120

DRAWN BY : H. T. BARBOUR DATE : 9-09-09
CHECKED BY : D. A. GLADDEN DATE : 2-3-10

24-MAR-2010 12:09
M:\Structures\tbarbour\Microstation\b3611_sd_s*.dgn
tbarbour

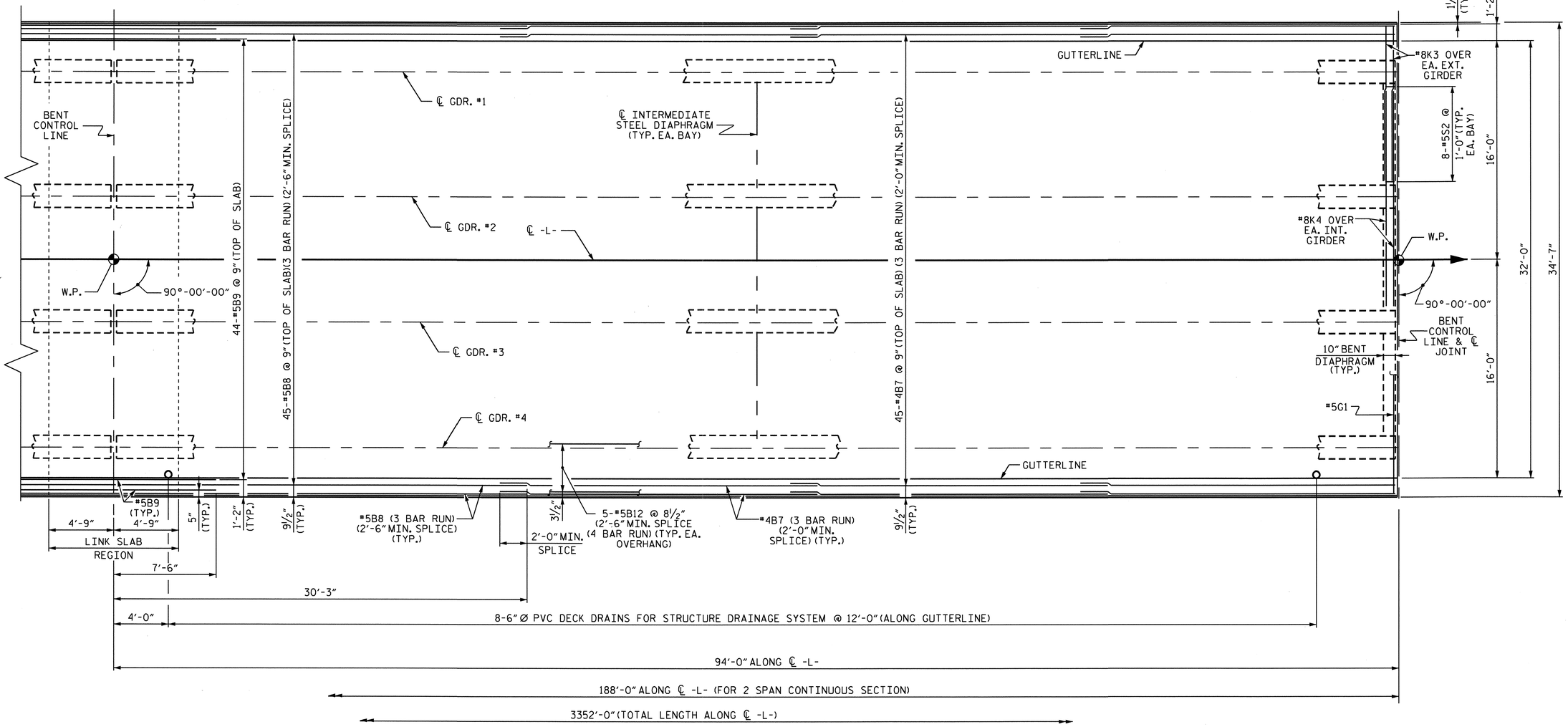

PLAN OF SPANS 28, 30, 32, 34 & 36

FOR WORK POINT NUMBERS SEE, "GENERAL DRAWING".
FOR "A" BARS SEE "PLAN OF SPAN "A" BAR LAYOUT" SHEET.

PROJECT NO. B-3611

BEAUFORT COUNTY

STATION: 43+25.00-L-

SHEET 16 OF 18

STATE OF NORTH CAROLINA
DEPARTMENT OF TRANSPORTATION
RALEIGH

PLAN OF SPANS 28, 30, 32, 34 & 36

NORTH CAROLINA PROFESSIONAL SEAL 15825 ENGINEER BRUCE D. KLAPPENBACH
3-29-2010

REVISIONS						SHEET NO.
NO.	BY:	DATE:	NO.	BY:	DATE:	S-48
1			3			TOTAL SHEETS
2			4			120

DRAWN BY : H. T. BARBOUR DATE : 9-09-09
CHECKED BY : D. A. GLADDEN DATE : 2-3-10

24-MAR-2010 12:09
M:\Structures\tbarbour\Microstation\b3611_sd_s*.dgn
tbarbour

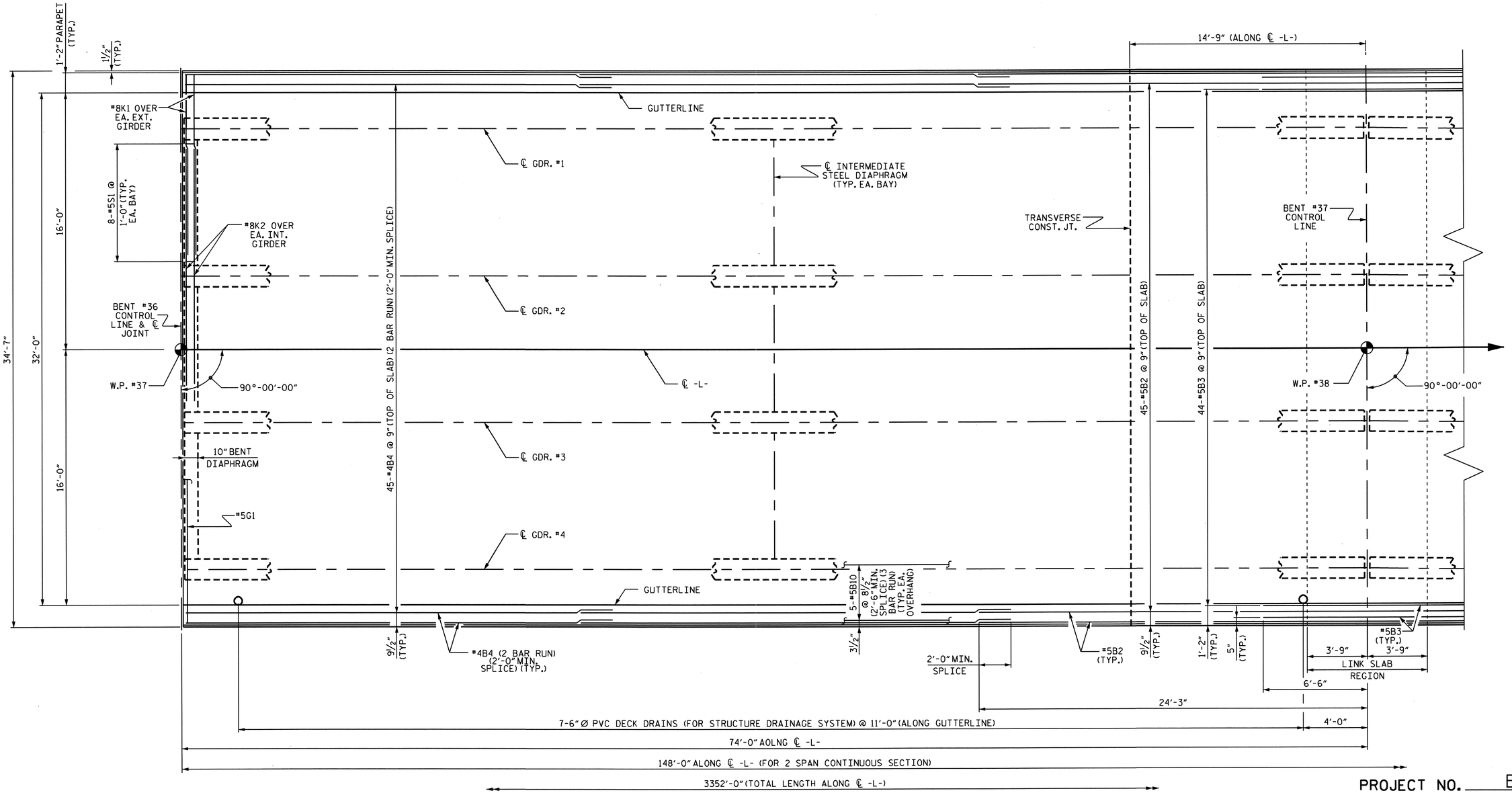

PLAN OF SPAN 37

FOR WORK POINT NUMBERS SEE, "GENERAL DRAWING".

FOR "A" BARS SEE "PLAN OF SPAN "A" BAR LAYOUT" SHEET.

PROJECT NO. B-3611

BEAUFORT COUNTY

STATION: 43+25.00-L-

SHEET 17 OF 18

STATE OF NORTH CAROLINA
DEPARTMENT OF TRANSPORTATION
RALEIGH

PLAN OF SPAN 37

NORTH CAROLINA PROFESSIONAL SEAL 15825 ENGINEER BRUCE D. KLAPPENBACH
3-24-2010

REVISIONS						SHEET NO.
NO.	BY:	DATE:	NO.	BY:	DATE:	S-49
1			3			TOTAL SHEETS
2			4			120

DRAWN BY : H. T. BARBOUR DATE : 08-20-09
CHECKED BY : D. A. GLADDEN DATE : 2-3-10

24-MAR-2010 12:09
M:\Structures\tbarbour\Microstation\b3611_sd_s*.dgn
tbarbour

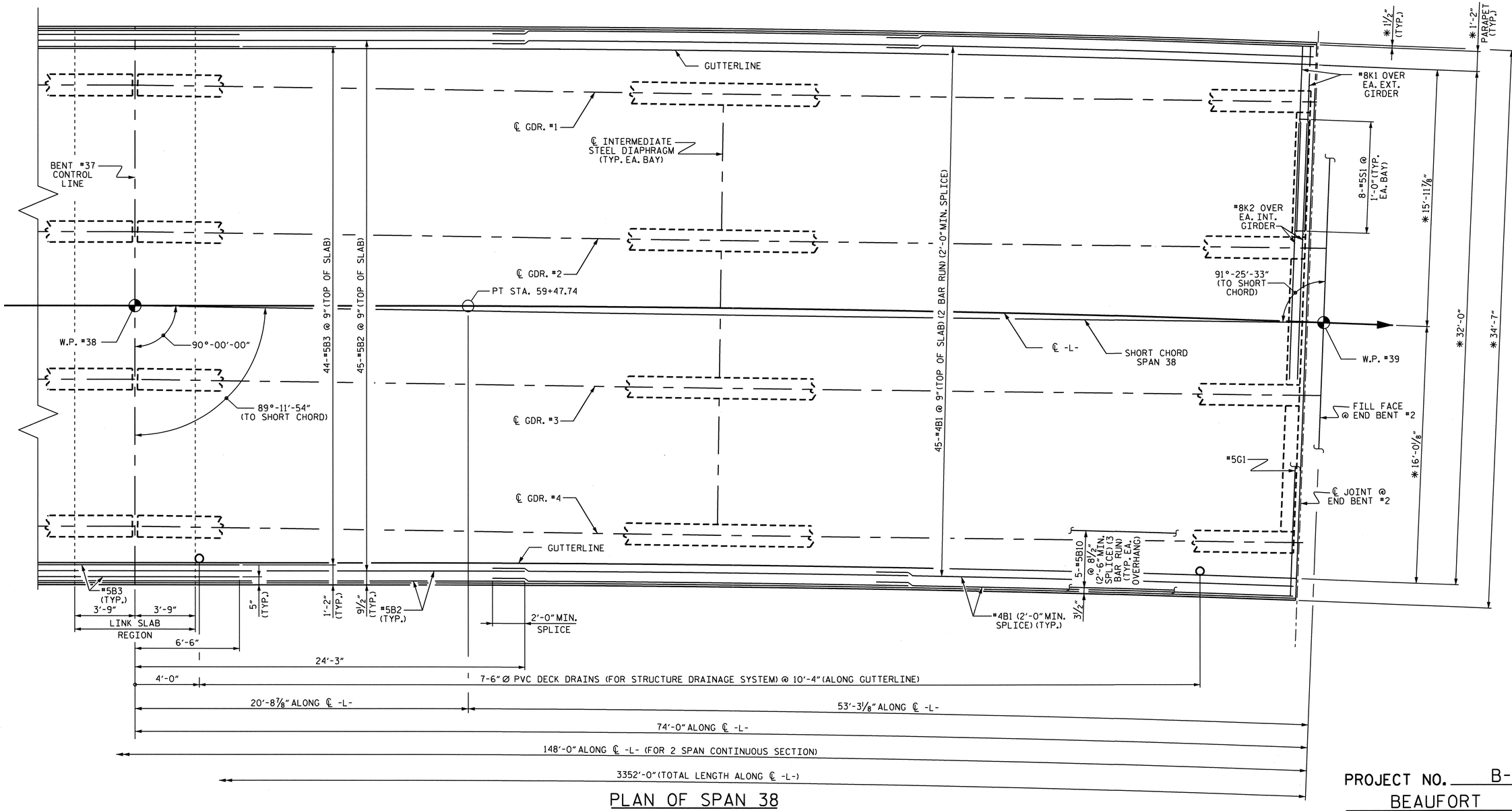

PLAN OF SPAN 38

*DIMENSIONS ARE TO CIRCLES CONCENTRIC WITH ℄ -L-. GIRDERS ARE ON THE CHORDS OF THESE CIRCLES.

FOR "A" BARS SEE "PLAN OF SPAN "A" BAR LAYOUT" SHEET.

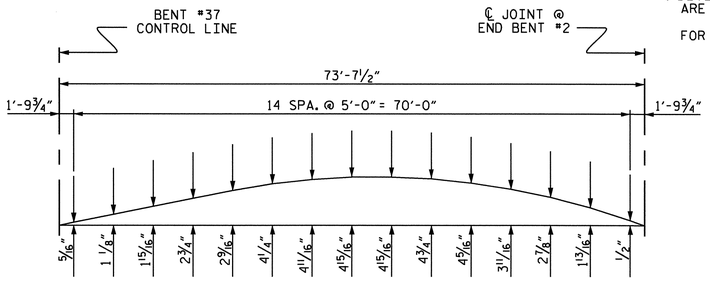

ARC OFFSETS
(LEFT SIDE)(SPAN 38)

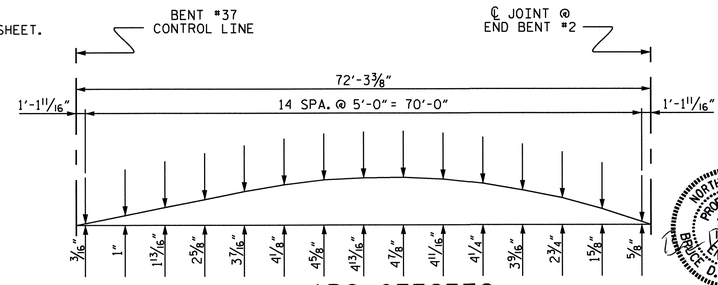

ARC OFFSETS
(RIGHT SIDE)(SPAN 38)

NORTH CAROLINA PROFESSIONAL SEAL 15825 ENGINEER BRUCE O. KLAPPENBACH
3-29-2010

PROJECT NO. B-3611
BEAUFORT COUNTY
STATION: 43+25.00-L-
SHEET 18 OF 18

STATE OF NORTH CAROLINA
DEPARTMENT OF TRANSPORTATION
RALEIGH

PLAN OF SPAN 38

REVISIONS						SHEET NO.
NO.	BY:	DATE:	NO.	BY:	DATE:	S-50
1			3			TOTAL SHEETS
2			4			120

DRAWN BY : H. T. BARBOUR DATE : 08-20-09
CHECKED BY : D. A. GLADDEN DATE : 2-3-10

24-MAR-2010 12:09
M:\Structures\tbarbour\Microstation\b3611_sd_s*.dgn
tbarbour

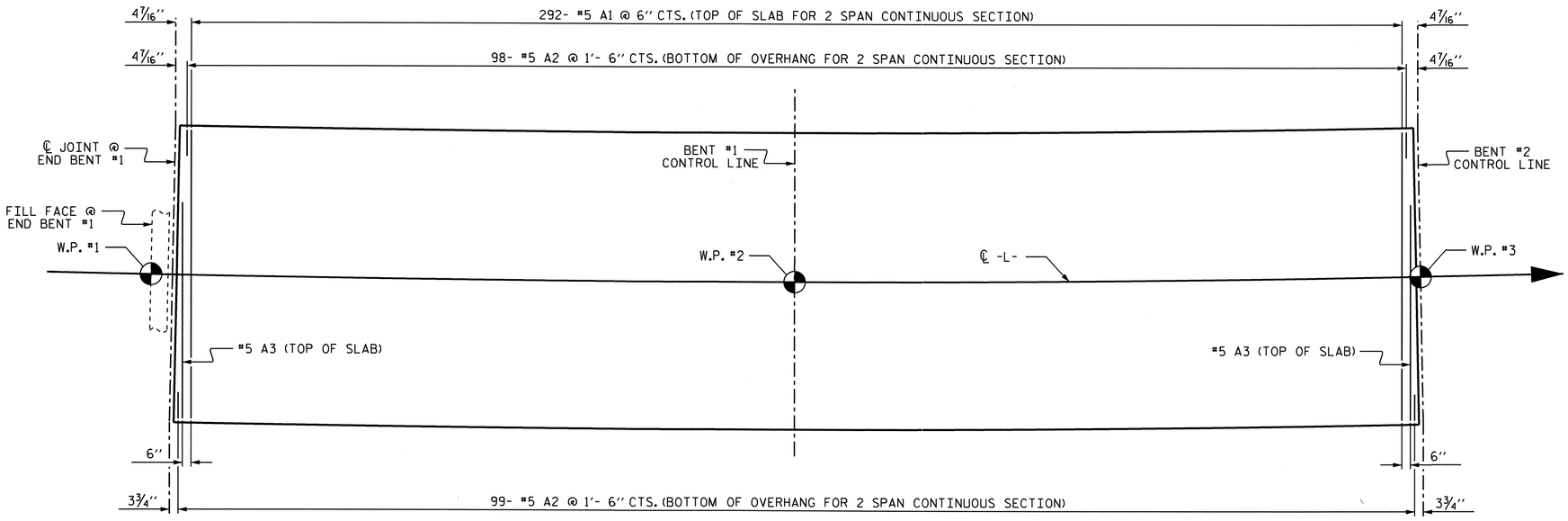

''A'' BARS FOR PLAN OF SPANS 1 & 2

''A'' BARS ARE PERPENDICULAR ALONG THE LONG CHORD
OF THE TWO SPAN LINK SLAB SECTION

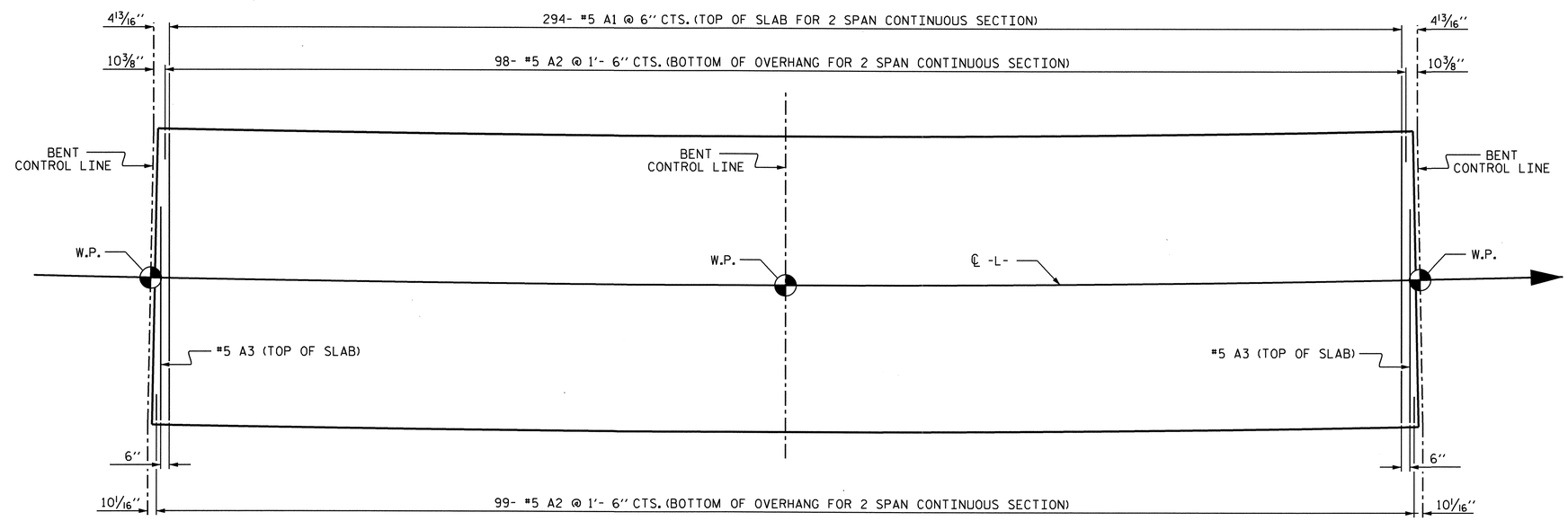

SPANS 3, 5, & 7

SPANS 4, 6, & 8

''A'' BARS FOR PLAN OF SPANS

FOR WORK POINT NUMBERS, SEE ''GENERAL DRAWING''.

''A'' BARS ARE PERPENDICULAR ALONG THE LONG CHORD
OF THE TWO SPAN LINK SLAB SECTION

DRAWN BY : D. A. GLADDEN DATE : 2-9-10
CHECKED BY : B. D. KLAPPENBACH DATE : 2-9-10

31-MAR-2010 12:14
M:\Structures\tbarbour\Microstation\b3611_sd_abarlayout.dgn
tbarbour

NORTH CAROLINA PROFESSIONAL SEAL 15825 ENGINEER BRUCE D. KLAPPENBACH
3-31-2010

PROJECT NO. B-3611
BEAUFORT COUNTY
STATION: 43+25.00 -L-

SHEET 1 OF 3

STATE OF NORTH CAROLINA
DEPARTMENT OF TRANSPORTATION
RALEIGH

SUPERSTRUCTURE PLAN OF SPANS ''A'' BAR LAYOUT

REVISIONS						SHEET NO.
NO.	BY:	DATE:	NO.	BY:	DATE:	S-51
1			3			TOTAL SHEETS
2			4			120

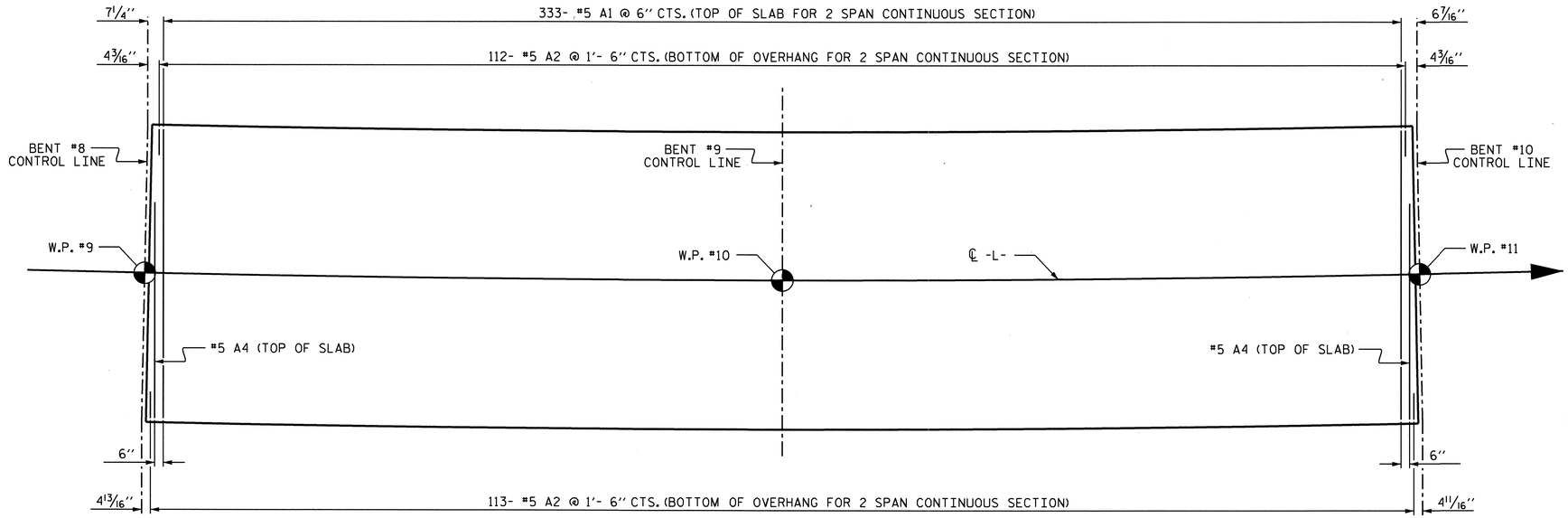

''A'' BARS FOR PLAN OF SPANS 9 & 10

''A'' BARS ARE PERPENDICULAR ALONG THE LONG CHORD
OF THE TWO SPAN LINK SLAB SECTION

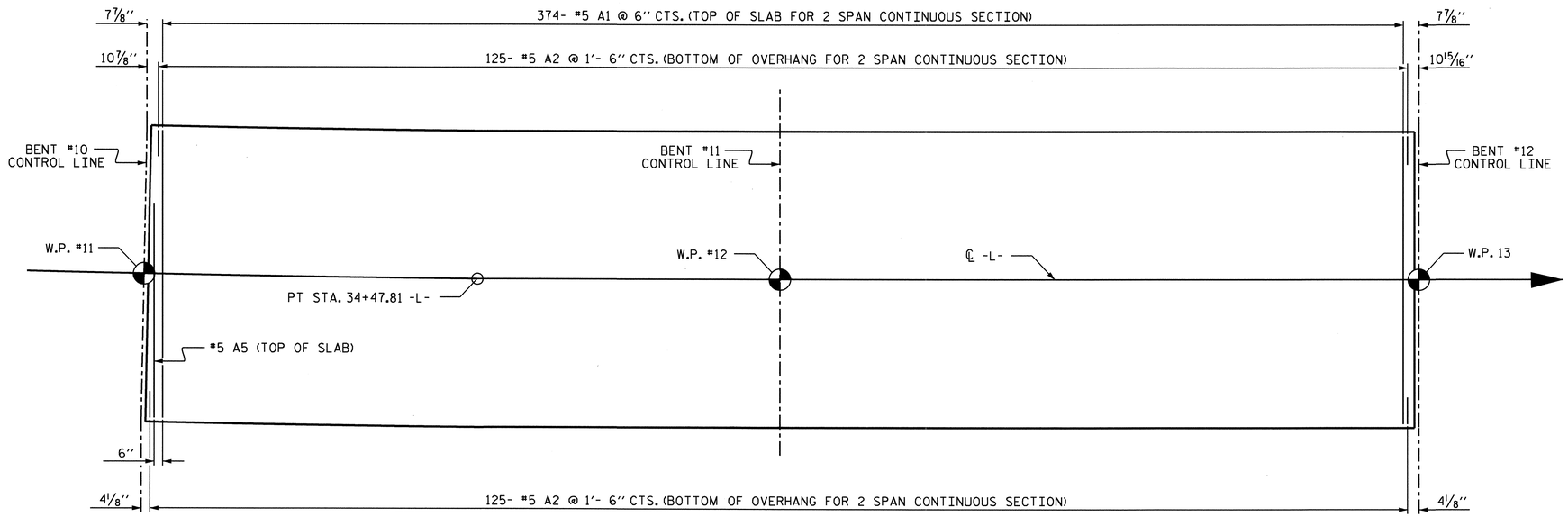

''A'' BARS FOR PLAN OF SPANS 11 & 12

''A'' BARS ARE PERPENDICULAR ALONG THE LONG CHORD
OF THE TWO SPAN LINK SLAB SECTION

PROJECT NO. B-3611
BEAUFORT COUNTY
STATION: 43+25.00 -L-

SHEET 2 OF 3

STATE OF NORTH CAROLINA
DEPARTMENT OF TRANSPORTATION
RALEIGH

SUPERSTRUCTURE PLAN OF SPANS ''A'' BAR LAYOUT

REVISIONS						SHEET NO.
NO.	BY:	DATE:	NO.	BY:	DATE:	S-52
1			3			TOTAL SHEETS
2			4			120

NORTH CAROLINA PROFESSIONAL SEAL 19825 ENGINEER BRIDGE D. KLAPPENBACH
3-29-2010

DRAWN BY : D. A. GLADDEN DATE : 2-9-10
CHECKED BY : B. D. KLAPPENBACH DATE : 2-9-10

24-MAR-2010 12:10
M:\Structures\tbarbour\Microstation\b3611_sd_abarlayout.dgn
tbarbour

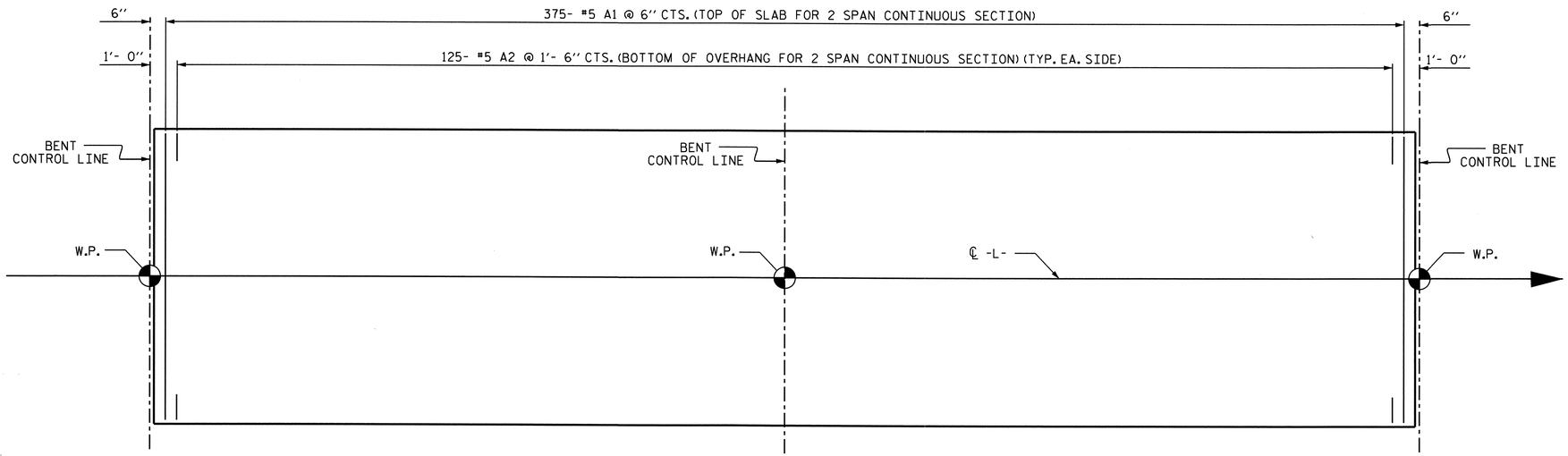

SPANS 13, 15, 17, 19, 21, 23, 25, 27, 29, 31, 33, & 35

SPANS 14, 16, 18, 20, 22, 24, 26, 28, 30, 32, 34, & 36

''A'' BARS FOR PLAN OF SPANS

FOR WORK POINT NUMBERS, SEE ''GENERAL DRAWING''.

''A'' BARS ARE PERPENDICULAR ALONG THE LONG CHORD OF THE TWO SPAN LINK SLAB SECTION

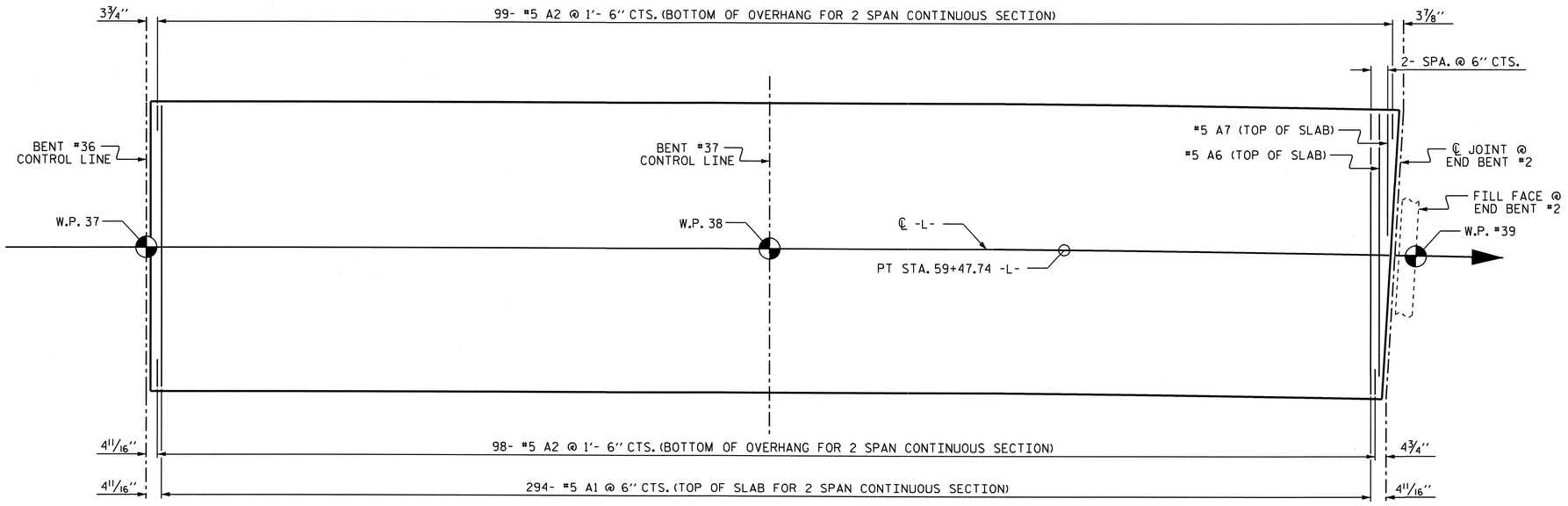

''A'' BARS FOR PLAN OF SPANS 37 & 38

''A'' BARS ARE PERPENDICULAR ALONG THE LONG CHORD OF THE TWO SPAN LINK SLAB SECTION

PROJECT NO. B-3611

BEAUFORT COUNTY

STATION: 43+25.00 -L-

SHEET 3 OF 3

STATE OF NORTH CAROLINA
DEPARTMENT OF TRANSPORTATION
RALEIGH

SUPERSTRUCTURE PLAN OF SPANS ''A'' BAR LAYOUT

REVISIONS						SHEET NO.
NO.	BY:	DATE:	NO.	BY:	DATE:	S-53
1			3			TOTAL SHEETS
2			4			120

NORTH CAROLINA PROFESSIONAL SEAL 15825 ENGINEER BRUCE D. KLAPPENBACH
3-31-2010

DRAWN BY : D. A. GLADDEN DATE : 2-9-10
CHECKED BY : B. D. KLAPPENBACH DATE : 2-9-10

31-MAR-2010 12:14
M:\Structures\tbarbour\Microstation\b3611_sd_abarlayout.dgn
tbarbour

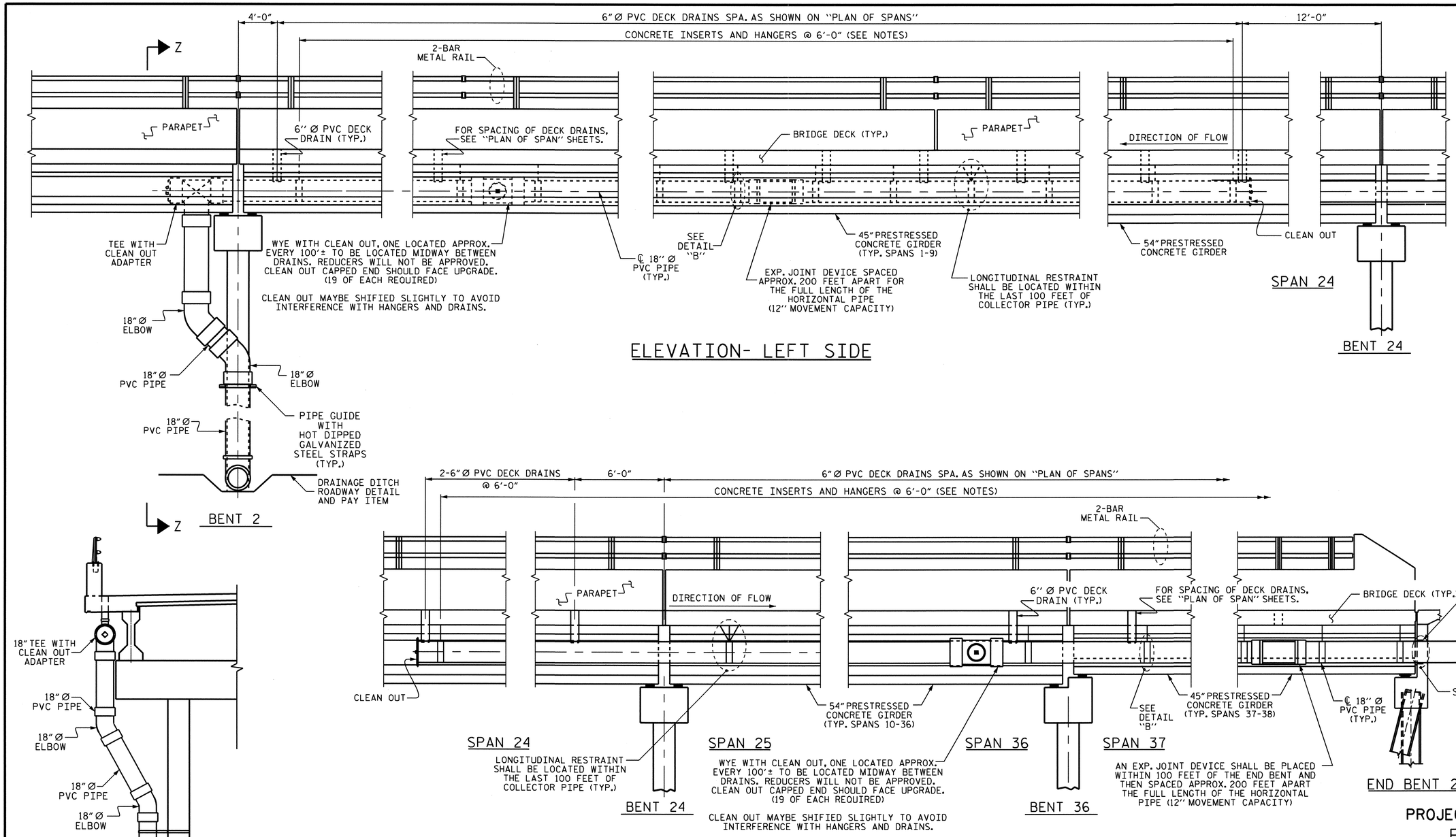

DRAWN BY : H. T. BARBOUR DATE : 11-02-09
CHECKED BY : D. A. GLADDEN DATE : 2-3-10

24-MAR-2010 12:10
M:\Structures\tbarbour\Microstation\b3611_sd_drain.dgn
tbarbour

PROJECT NO. B-3611
BEAUFORT COUNTY
STATION: 43+25.00-L-

SHEET 1 OF 2

STATE OF NORTH CAROLINA
DEPARTMENT OF TRANSPORTATION
RALEIGH

SUPERSTRUCTURE
STRUCTURE
DRAINAGE SYSTEM

NORTH CAROLINA PROFESSIONAL SEAL 15825 ENGINEER BRUCE O. KLAPPENBERGER
3-29-2010

REVISIONS						SHEET NO.
NO.	BY:	DATE:	NO.	BY:	DATE:	S-54
1			3			TOTAL SHEETS
2			4			120

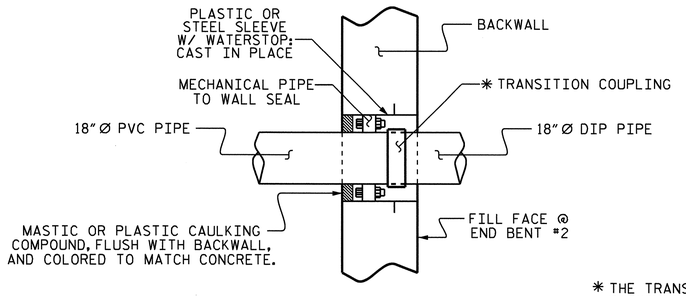

DETAIL OF PIPE THROUGH BACKWALL
(SEE NOTES)

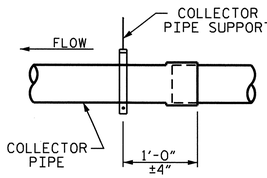

DETAIL B

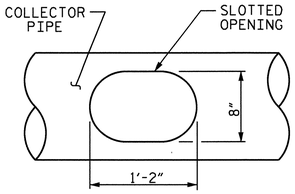

SLOT DETAIL

* THE TRANSITION COUPLING OF THE STRUCTURE DRAINAGE SYSTEM TO THE 18"Ø DIP SHALL BE LOCATED IN THE BACKWALL OF THE END BENT #2 AS DIRECTED BY THE ENGINEER.

* THE CONTRACTOR HAS THE OPTION TO LOCATE THE TRANSITION COUPLING OF THE STRUCTURE DRAINAGE SYSTEM TO THE 18"Ø DIP WITHIN 4 FEET OF BACKWALL AT END BENT #2 IN SPAN 38. IF THE CONTRACTOR CHOOSES THIS OPTION, THE COUPLING SHALL BE SUPPORTED BY THE APPROVED HANGER SYSTEM.

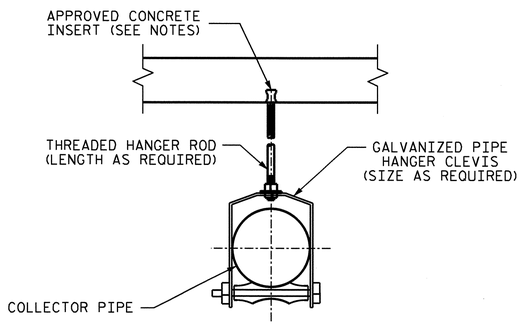

COLLECTOR PIPE SUPPORT

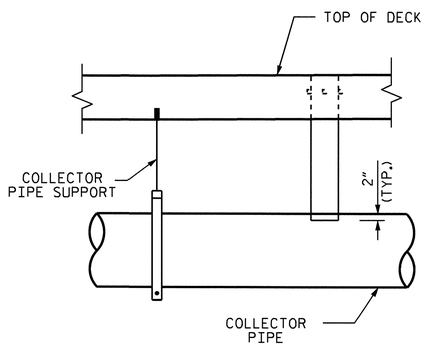

AT 6"Ø DECK DRAINS

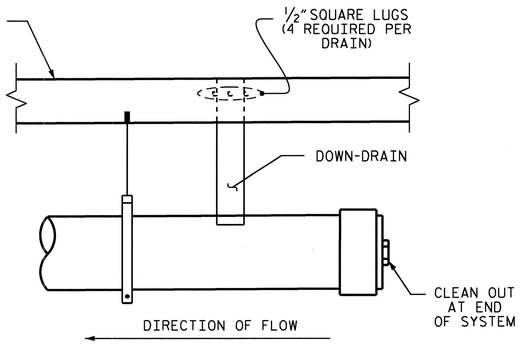

AT END OF SYSTEM

ELEVATION THRU DRAINAGE SYSTEM

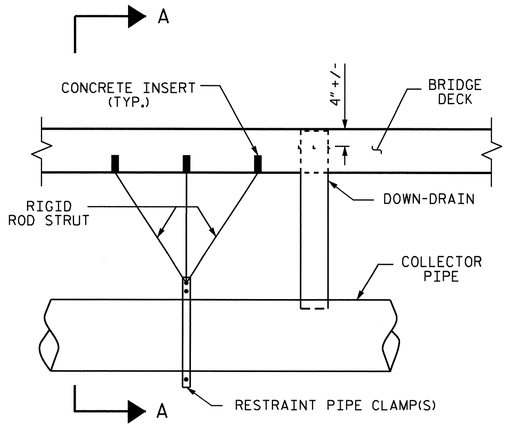

ELEVATION VIEW

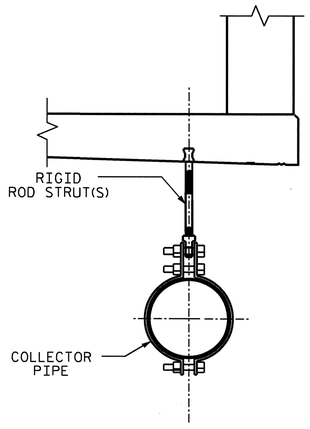

DETAIL A

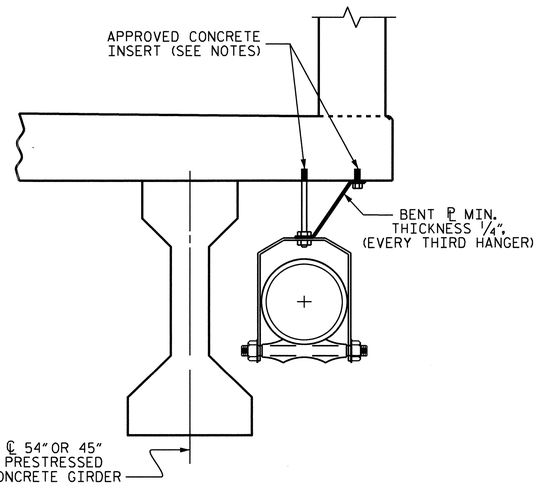

LATERAL GUIDE

LONGITUDINAL RESTRAINT

TOP OF DECK DRAIN TO BE SET 3/8" BELOW SURFACE OF SLAB.

4 -1/2" SQUARE LUGS TO BE GLUED TO THE PVC PLASTIC PIPE AT EQUAL SPACES AROUND THE PIPE DRAIN APPROXIMATELY 4" FROM THE TOP OF THE PIPE.

NOTES

FOR STRUCTURE DRAINAGE SYSTEM, SEE SPECIAL PROVISIONS.

THE CONTRACTOR SHALL SUBMIT A LAYOUT PLAN FOR THE DRAINAGE SYSTEM, INCLUDING, BUT NOT LIMITED TO, ATTACHMENTS TO THE BRIDGE, PIPE ALIGNMENT AND PIPE LENGTHS, AND ALL NECESSARY FITTINGS, ELBOWS, WYES, ADAPTERS, GUIDES, RESTRAINTS, AND JOINTS.

THE CONTRACTOR SHALL BE RESPONSIBLE FOR DETERMINING THE HORIZONTAL AND VERTICAL ALIGNMENT OF THE PVC DRAINAGE SYSTEM USING NECESSARY FITTINGS, TEES, AND WYES TO PROVIDE A CONTINUOUS DRAINAGE SYSTEM.

SEE "PLAN OF SPANS" SHEETS FOR LOCATION OF 6" Ø PVC PIPE DRAINS.

DRAINAGE SYSTEM WILL BE PAID FOR UNDER THE PAY ITEM "STRUCTURE DRAINAGE SYSTEM".

BOLTS, NUTS, AND WASHERS SHALL BE GALVANIZED IN ACCORDANCE WITH THE STANDARD SPECIFICATIONS.

CONCRETE INSERTS SHALL HAVE A MINIMUM WORKING LOAD TENSION CAPACITY OF 2.5 KIPS.

COLLECTOR PIPES SHALL BE ASTM D2241, SDR 26 OR ASTM D3034, SDR 35 WITH A BELL GASKET JOINT MEETING THE REQUIREMENTS OF STM D3139. FURNISHED IN LAYING LENGTHS OF 20 FEET.

GASKET MATERIALS SHALL BE ELASTOMERIC SEALS AND SHALL COMPLY WITH THE PHYSICAL REQUIREMENTS OF ASTM F477.

COLLECTOR PIPES SHALL BE FURNISHED IN LAYING LENGTHS OF 20 FEET.

DOWN-DRAIN PIPE SHALL BE ASTM D1785, SCHEDULE 40 OR ASTM D2665, SCHEDULE 40.

PIPES SUPPLIED FOR SOLVENT CEMENT JOINTS SHALL MEET ASTM D2672.

COLLECTOR PIPE SADDLE WYE CLEANOUT FITTINGS AND COLLECTOR PIPE END FITTINGS SHALL BE SOLVENT CEMENT TYPE.

SOLVENT CEMENT SHALL CONFORM TO ASTM D2235. PRIMER SHALL CONFORM TO ASTM F656.

THE ASSEMBLY OF SOLVENT CEMENT JOINTS SHALL BE IN ACCORDANCE WITH ASTM D2855.

MATERIAL SAFETY DATA SHEETS (MSDS) FOR SOLVENT CEMENT AND PRIMER SHALL BE FURNISHED.

ALL FITTINGS SHALL BE ASTM D2665, SCHEDULE 40 OR THICKER.

EXPANSION JOINT DEVICES SHALL BE LOCATED WITHIN THE FIRST 100 FEET OF THE BEGINNING AND ENDING OF ANY CONTIUOUS SECTION OF DRAINAGE SYSTEM THAT IS FIXED, IE. BACKWALL, THEN SPACED A MAXIMUM OF 200 FEET APART FOR THE FULL LENGTH OF EACH HORIZONTAL PIPE.

EXPANSION JOINT DEVICES IN THE COLLECTOR PIPE SHALL HAVE A MINIMUM EXPANSION CAPACITY OF 12-INCHES.

GASKETED JOINTS SHALL BE POSITIONED TO OCCUR APPROXIMATELY 12"FROM PIPE SUPPORTS. SEE DETAIL "A".

A LONGITUDINAL RESTRAINT SHALL BE LOCATED WITHIN THE FIRST 100 FEET OF THE BEGINNING AND ENDING OF ANY CONTINUOUS SECTION OF THE DRAINAGE SYSTEM THAT IS NOT FIXED, THEN SPACED A MIDPOINTS BETWEEN THE EXPANSION JOINTS.

AN OPTIONAL DETAIL FOR THE LONGITUDINAL RESTRAINTS AND THE LATERAL GUIDE MAY BE SUBMITTED FOR APPROVAL.

COLLECTOR PIPE SUPPORTS SHALL BE LOCATED WITHIN 12-INCHES, +/- 4-INCHES, OF A COLLECTOR PIPE JOINT.

DECK DOWN-DRAIN PIPES SHALL BE CENTERED IN SLOTTED OPENING IN COLLECTOR PIPE REGARDLESS OF TEMPERATURE AT TIME OF INSTALLATION.

THREADED RODS SHALL BE ASTM A193, GRADE B7 OR CARBON STEEL ALL-THREAD HANGER RODS.

NUTS SHALL BE ASTM A194, GRADE 2H, HEAVY HEX NUTS.

ALL METALLIC COMPONENTS IN THE DRAINAGE SYSTEM, EXCEPT STAINLESS STEEL AND MALLEABLE IRON PARTS, ARE REQUIRED TO BE HOT-DIPPED GALVANIZED, ELECTRO-PLATE COATING ON STELL RODS, STEEL YOKE TYPE PIPE ROLLS, BRACKETS, OTHER STEEL HARDWARE IS CONSIDERED BY NCDOT AS TOO THIN FOR OUTDOOR APLLICATIONS.

THE DETAILS OF ALL PIPING, HARDWARE, OR OTHER MATERIAL SHALL BE PROVIDED BY THE CONTRACTOR AND IS SUBJECT TO THE APPROVAL OF THE ENGINEER.

PROJECT NO. B-3611

BEAUFORT COUNTY

STATION: 43+25.00-L-

SHEET 2 OF 2

STATE OF NORTH CAROLINA
DEPARTMENT OF TRANSPORTATION
RALEIGH

SUPERSTRUCTURE
STRUCTURE
DRAINAGE SYSTEM

REVISIONS						SHEET NO.
NO.	BY:	DATE:	NO.	BY:	DATE:	S-55
1			3			TOTAL SHEETS
2			4			120

NORTH CAROLINA PROFESSIONAL SEAL 19825 ENGINEER BRUCE D. KLAPPENBACH
3-29-2010

DRAWN BY : H. T. BARBOUR DATE : 11-02-09
CHECKED BY : D. A. GLADDEN DATE : 2-3-10

24-MAR-2010 12:10
M:\Structures\tbarbour\Microstation\b3611_sd_drain.dgn
tbarbour

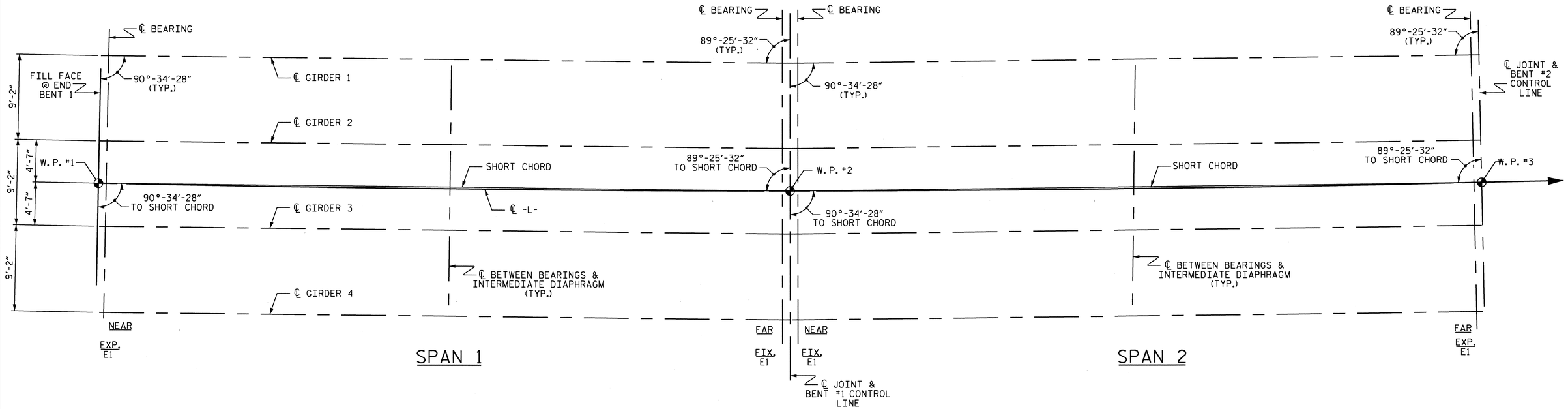

FRAMING PLAN

BEARING AND SOLE PLATE TABLE

	GIRDER #	BEARING TYPE		SOLE PLATE		SOLE PLATE ORIENTATION	
		NEAR	FAR	NEAR	FAR	NEAR	FAR
SPAN 1	GIRDER 1	V	V	P1	P4	▱	▭
	GIRDER 2	V	V	P1	P4	▱	▭
	GIRDER 3	V	V	P1	P4	▱	▭
	GIRDER 4	V	V	P1	P4	▱	▭

BEARING AND SOLE PLATE TABLE

	GIRDER #	BEARING TYPE		SOLE PLATE		SOLE PLATE ORIENTATION	
		NEAR	FAR	NEAR	FAR	NEAR	FAR
SPAN 2	GIRDER 1	V	V	P2	P3	▱	▭
	GIRDER 2	V	V	P2	P3	▱	▭
	GIRDER 3	V	V	P2	P3	▱	▭
	GIRDER 4	V	V	P2	P3	▱	▭

PROJECT NO. B-3611

BEAUFORT COUNTY

STATION: 43+25.00-L-

SHEET 1 OF 6

STATE OF NORTH CAROLINA
DEPARTMENT OF TRANSPORTATION
RALEIGH

SUPERSTRUCTURE FRAMING PLAN SPANS 1 & 2

NORTH CAROLINA PROFESSIONAL SEAL 15826 ENGINEER BRUCE D. KLAPPENBACH
3-29-2010

REVISIONS						SHEET NO.
NO.	BY:	DATE:	NO.	BY:	DATE:	S-56
1			3			TOTAL SHEETS
2			4			120

DRAWN BY : H. T. BARBOUR DATE : 9-15-09
CHECKED BY : D. A. GLADDEN DATE : 2-3-10

24-MAR-2010 12:10
M:\Structures\tbarbour\Microstation\b3611_sd_fp.dgn
tbarbour

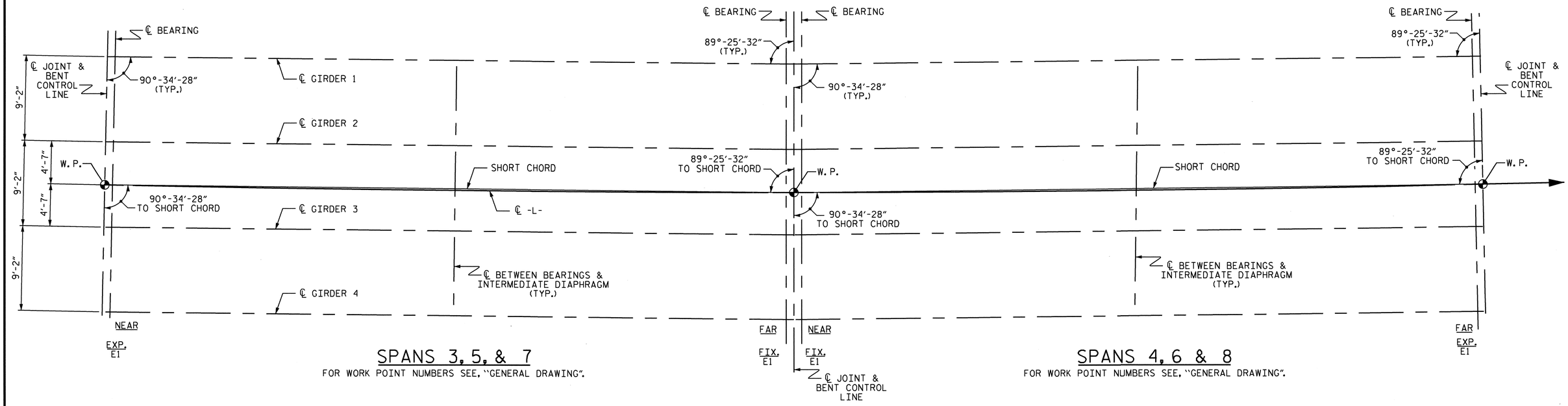

SPANS 3, 5, & 7

FOR WORK POINT NUMBERS SEE, "GENERAL DRAWING".

SPANS 4, 6 & 8

FOR WORK POINT NUMBERS SEE, "GENERAL DRAWING".

FRAMING PLAN

BEARING AND SOLE PLATE TABLE

SPANS 3, 5 & 7	GIRDER #	BEARING TYPE		SOLE PLATE		SOLE PLATE ORIENTATION	
		NEAR	FAR	NEAR	FAR	NEAR	FAR
	GIRDER 1	V	V	P1	P4	▱	▭
	GIRDER 2	V	V	P1	P4	▱	▭
	GIRDER 3	V	V	P1	P4	▱	▭
	GIRDER 4	V	V	P1	P4	▱	▭

BEARING AND SOLE PLATE TABLE

SPANS 4, 6 & 8	GIRDER #	BEARING TYPE		SOLE PLATE		SOLE PLATE ORIENTATION	
		NEAR	FAR	NEAR	FAR	NEAR	FAR
	GIRDER 1	V	V	P2	P3	▱	▭
	GIRDER 2	V	V	P2	P3	▱	▭
	GIRDER 3	V	V	P2	P3	▱	▭
	GIRDER 4	V	V	P2	P3	▱	▭

PROJECT NO. B-3611

BEAUFORT COUNTY

STATION: 43+25.00-L-

SHEET 2 OF 6

STATE OF NORTH CAROLINA
DEPARTMENT OF TRANSPORTATION
RALEIGH

SUPERSTRUCTURE FRAMING PLAN SPANS 3, 4, 5, 6, 7 & 8

NORTH CAROLINA PROFESSIONAL SEAL 15825 ENGINEER BRUCE D. KLAPPENBACH
3-29-2010

REVISIONS						SHEET NO.
NO.	BY:	DATE:	NO.	BY:	DATE:	S-57
1			3			TOTAL SHEETS
2			4			120

DRAWN BY : H. T. BARBOUR DATE : 9-15-09
CHECKED BY Q. A. GLADDEN DATE 2-3-10

24-MAR-2010 12:10
M:\Structures\tbarbour\Microstation\b3611_sd_fp.dgn
tbarbour

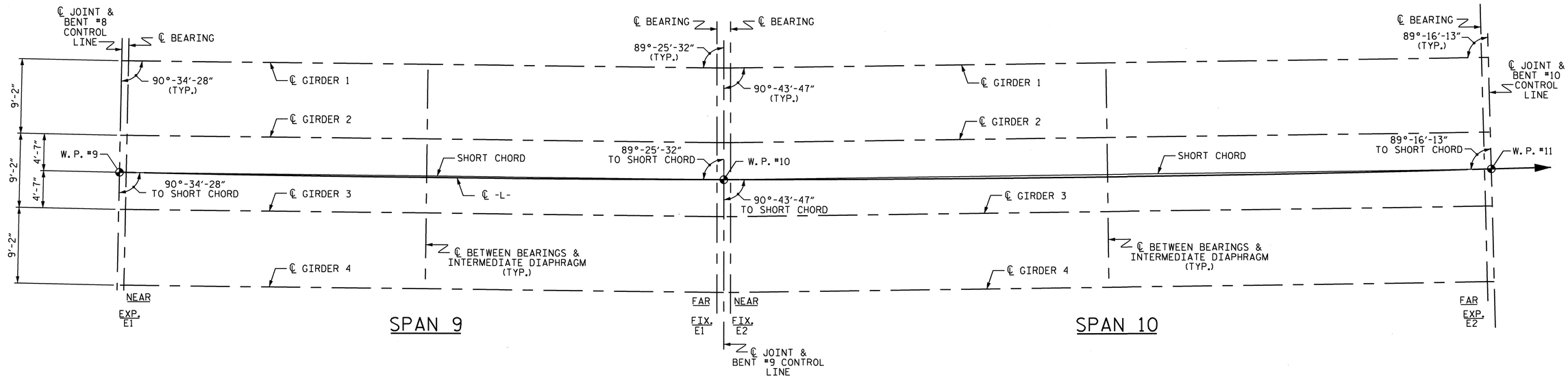

FRAMING PLAN

BEARING AND SOLE PLATE TABLE

SPAN 9 GIRDER #	BEARING TYPE		SOLE PLATE		SOLE PLATE ORIENTATION	
	NEAR	FAR	NEAR	FAR	NEAR	FAR
GIRDER 1	V	V	P1	P4		
GIRDER 2	V	V	P1	P4		
GIRDER 3	V	V	P1	P4		
GIRDER 4	V	V	P1	P4		

BEARING AND SOLE PLATE TABLE

SPAN 10 GIRDER #	BEARING TYPE		SOLE PLATE		SOLE PLATE ORIENTATION	
	NEAR	FAR	NEAR	FAR	NEAR	FAR
GIRDER 1	VI	VI	P6	P7		
GIRDER 2	VI	VI	P6	P7		
GIRDER 3	VI	VI	P6	P7		
GIRDER 4	VI	VI	P6	P7		

PROJECT NO. B-3611

BEAUFORT COUNTY

STATION: 43+25.00-L-

SHEET 3 OF 6

STATE OF NORTH CAROLINA
DEPARTMENT OF TRANSPORTATION
RALEIGH

SUPERSTRUCTURE FRAMING PLAN SPANS 9 & 10

NORTH CAROLINA PROFESSIONAL SEAL 15825 ENGINEER BRUCE D. KLAPPENBACH
3-29-2010

REVISIONS						SHEET NO.
NO.	BY:	DATE:	NO.	BY:	DATE:	S-58
1			3			TOTAL SHEETS
2			4			120

DRAWN BY : H. T. BARBOUR DATE : 9-16-09
CHECKED BY : D. A. GLADDEN DATE : 2-3-10

24-MAR-2010 12:10
M:\Structures\tbarbour\Microstation\b3611_sd_fp.dgn
tbarbour

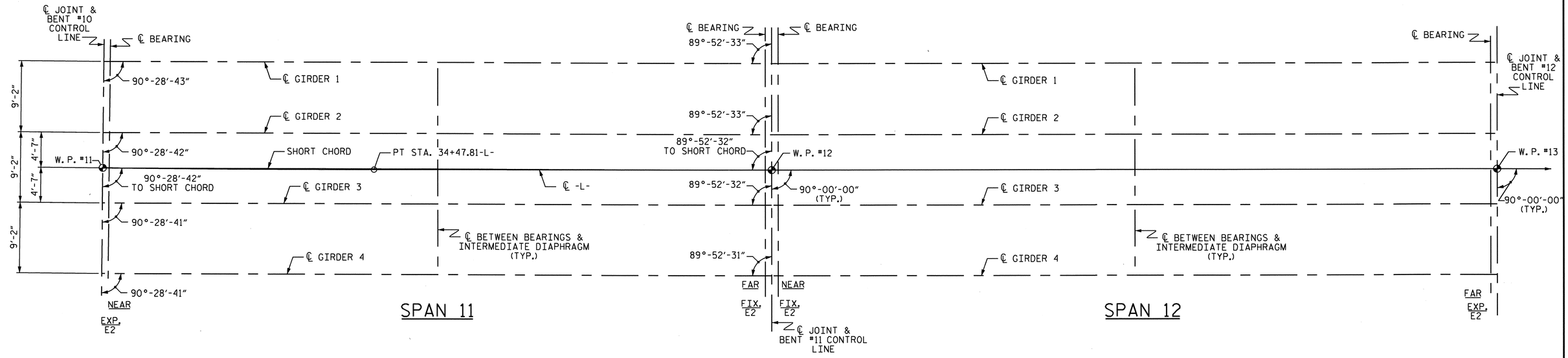

FRAMING PLAN

BEARING AND SOLE PLATE TABLE

	GIRDER #	BEARING TYPE		SOLE PLATE		SOLE PLATE ORIENTATION	
		NEAR	FAR	NEAR	FAR	NEAR	FAR
SPAN 11	GIRDER 1	VI	VI	P5	P8	▱	▭
	GIRDER 2	VI	VI	P5	P8	▱	▭
	GIRDER 3	VI	VI	P5	P8	▱	▭
	GIRDER 4	VI	VI	P5	P8	▱	▭

BEARING AND SOLE PLATE TABLE

	GIRDER #	BEARING TYPE		SOLE PLATE		SOLE PLATE ORIENTATION	
		NEAR	FAR	NEAR	FAR	NEAR	FAR
SPAN 12	GIRDER 1	VI	VI	P6	P7	▱	▭
	GIRDER 2	VI	VI	P6	P7	▱	▭
	GIRDER 3	VI	VI	P6	P7	▱	▭
	GIRDER 4	VI	VI	P6	P7	▱	▭

PROJECT NO. B-3611

BEAUFORT COUNTY

STATION: 43+25.00-L-

SHEET 4 OF 6

STATE OF NORTH CAROLINA
DEPARTMENT OF TRANSPORTATION
RALEIGH

SUPERSTRUCTURE FRAMING PLAN SPANS 11 & 12

REVISIONS						SHEET NO.
NO.	BY:	DATE:	NO.	BY:	DATE:	S-59
1			3			TOTAL SHEETS
2			4			120

NORTH CAROLINA PROFESSIONAL SEAL 15825 ENGINEER BRUCE D. KLAPPENBERG
3-24-2010

DRAWN BY : H. T. BARBOUR DATE : 9-16-09
CHECKED BY : D. A. GLADDEN DATE : 2-3-10

24-MAR-2010 12:10
M:\Structures\tbarbour\Microstation\b3611_sd_fp.dgn
tbarbour

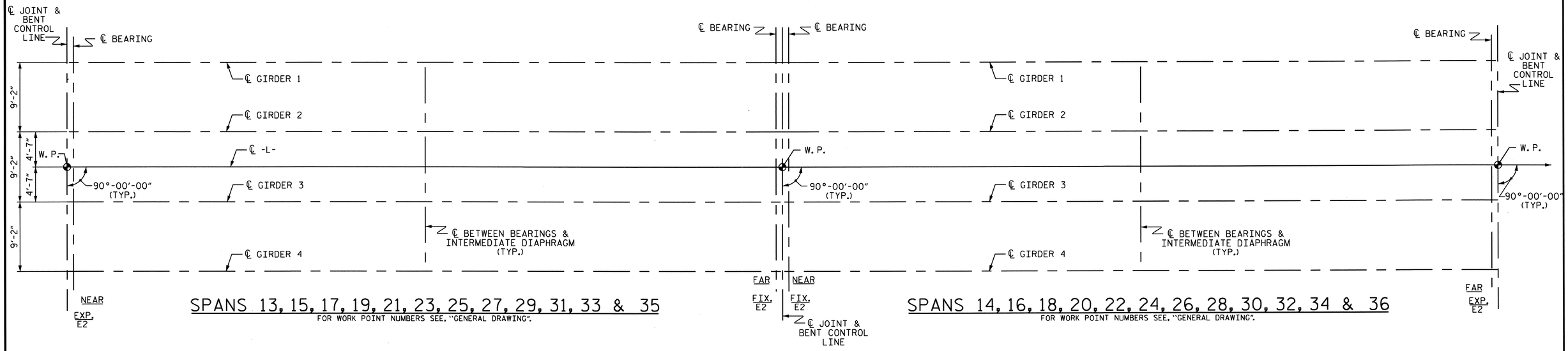

FRAMING PLAN

BEARING AND SOLE PLATE TABLE

	GIRDER #	BEARING TYPE		SOLE PLATE		SOLE PLATE ORIENTATION	
		NEAR	FAR	NEAR	FAR	NEAR	FAR
SPANS 13, 15, 17, 19 & 21	GIRDER 1	VI	VI	P5	P8		
	GIRDER 2	VI	VI	P5	P8		
	GIRDER 3	VI	VI	P5	P8		
	GIRDER 4	VI	VI	P5	P8		
SPAN 23	GIRDER 1	VI	VI	P5	P8		
	GIRDER 2	VI	VI	P5	P8		
	GIRDER 3	VI	VI	P5	P8		
	GIRDER 4	VI	VI	P5	P8		
SPAN 25	GIRDER 1	VI	VI	P11	P10		
	GIRDER 2	VI	VI	P9	P10		
	GIRDER 3	VI	VI	P11	P10		
	GIRDER 4	VI	VI	P9	P10		
SPANS 27, 29, 31, 33 & 35	GIRDER 1	VI	VI	P7	P6		
	GIRDER 2	VI	VI	P7	P6		
	GIRDER 3	VI	VI	P7	P6		
	GIRDER 4	VI	VI	P7	P6		

BEARING AND SOLE PLATE TABLE

	GIRDER #	BEARING TYPE		SOLE PLATE		SOLE PLATE ORIENTATION	
		NEAR	FAR	NEAR	FAR	NEAR	FAR
SPANS 14, 16, 18, 20 & 22	GIRDER 1	VI	VI	P6	P7		
	GIRDER 2	VI	VI	P6	P7		
	GIRDER 3	VI	VI	P6	P7		
	GIRDER 4	VI	VI	P6	P7		
SPAN 24	GIRDER 1	VI	VI	P10	P11		
	GIRDER 2	VI	VI	P10	P9		
	GIRDER 3	VI	VI	P10	P11		
	GIRDER 4	VI	VI	P10	P9		
SPAN 26	GIRDER 1	VI	VI	P8	P5		
	GIRDER 2	VI	VI	P8	P5		
	GIRDER 3	VI	VI	P8	P5		
	GIRDER 4	VI	VI	P8	P5		
SPANS 28, 30, 32, 34 & 36	GIRDER 1	VI	VI	P8	P5		
	GIRDER 2	VI	VI	P8	P5		
	GIRDER 3	VI	VI	P8	P5		
	GIRDER 4	VI	VI	P8	P5		

NORTH CAROLINA PROFESSIONAL SEAL 15825 ENGINEER BRUCE D. KLAPPENBACH
3-29-2010

PROJECT NO. B-3611
BEAUFORT COUNTY
STATION: 43+25.00-L-

SHEET 5 OF 6

STATE OF NORTH CAROLINA
DEPARTMENT OF TRANSPORTATION
RALEIGH

SUPERSTRUCTURE FRAMING PLAN SPANS 13 THROUGH 36

REVISIONS						SHEET NO.
NO.	BY:	DATE:	NO.	BY:	DATE:	S-60
1			3			TOTAL SHEETS
2			4			120

DRAWN BY : H. T. BARBOUR DATE : 9-16-09
CHECKED BY : D. A. GLADDEN DATE : 2-3-10

24-MAR-2010 12:10
M:\Structures\tbarbour\Microstation\b3611_sd_fp.dgn
tbarbour

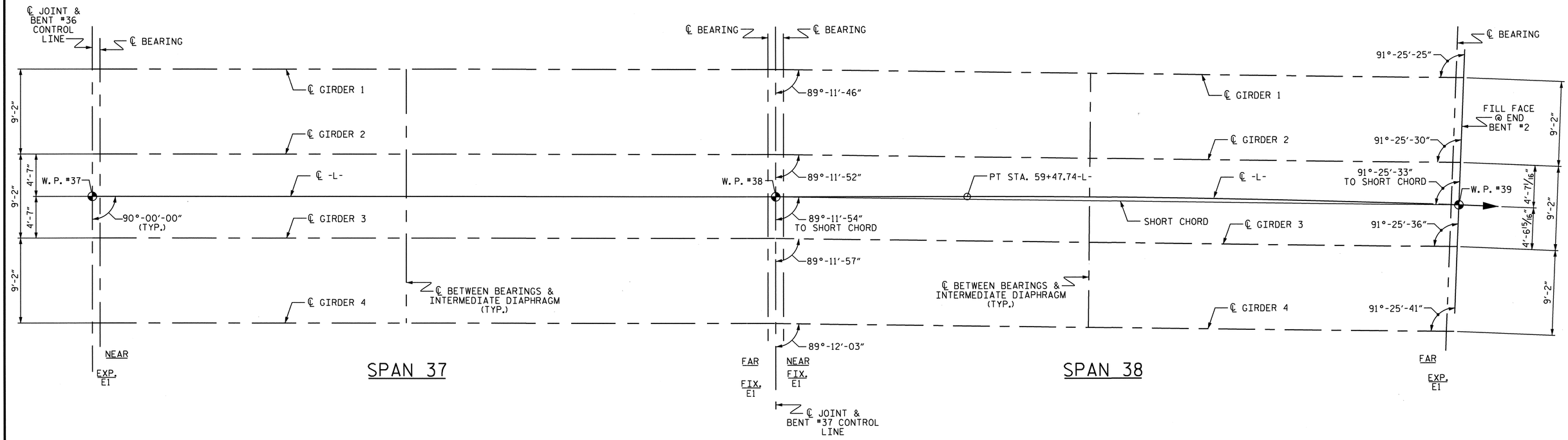

FRAMING PLAN

BEARING AND SOLE PLATE TABLE

	GIRDER #	BEARING TYPE		SOLE PLATE		SOLE PLATE ORIENTATION	
		NEAR	FAR	NEAR	FAR	NEAR	FAR
SPAN 37	GIRDER 1	V	V	P3	P2	▭	◥
	GIRDER 2	V	V	P3	P2	▭	◥
	GIRDER 3	V	V	P3	P2	▭	◥
	GIRDER 4	V	V	P3	P2	▭	◥

BEARING AND SOLE PLATE TABLE

	GIRDER #	BEARING TYPE		SOLE PLATE		SOLE PLATE ORIENTATION	
		NEAR	FAR	NEAR	FAR	NEAR	FAR
SPAN 38	GIRDER 1	V	V	P4	P1	▭	◥
	GIRDER 2	V	V	P4	P1	▭	◥
	GIRDER 3	V	V	P4	P1	▭	◥
	GIRDER 4	V	V	P4	P1	▭	◥

PROJECT NO. B-3611

BEAUFORT COUNTY

STATION: 43+25.00-L-

SHEET 6 OF 6

STATE OF NORTH CAROLINA
DEPARTMENT OF TRANSPORTATION
RALEIGH

SUPERSTRUCTURE FRAMING PLAN SPANS 37 & 38

NORTH CAROLINA PROFESSIONAL SEAL 15825 ENGINEER BRUCE D. KLAPPENBACH
3-29-2010

REVISIONS						SHEET NO.
NO.	BY:	DATE:	NO.	BY:	DATE:	S-61
1			3			TOTAL SHEETS
2			4			120

DRAWN BY : H. T. BARBOUR DATE : 9-16-09
CHECKED BY : D. A. GLADDEN DATE : 2-3-10

24-MAR-2010 12:10
M:\Structures\tbarbour\Microstation\b3611_sd_fp.dgn
tbarbour

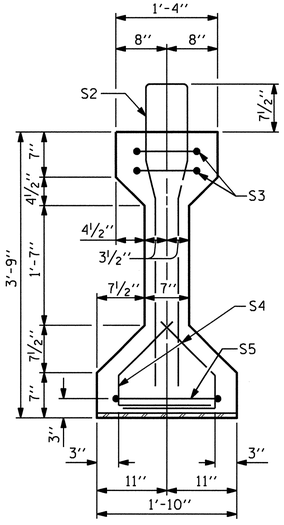

SECTION A-A

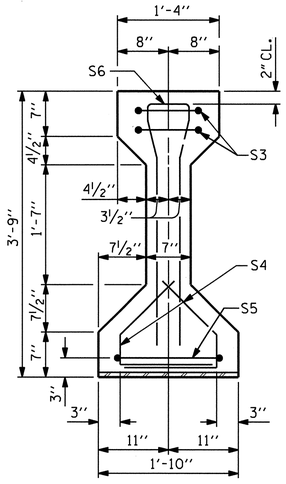

SECTION B-B

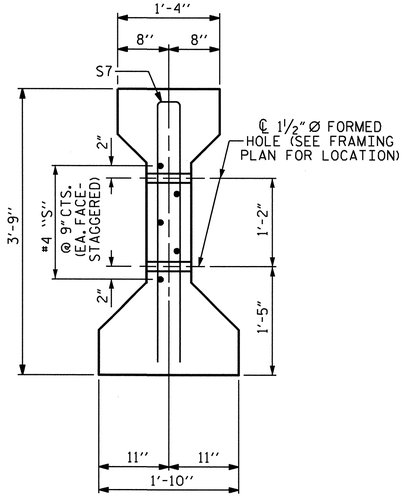

SECTION C-C

(S1 BARS NOT SHOWN)

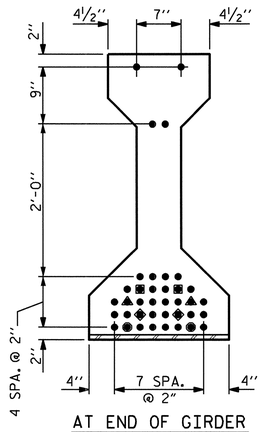

AT END OF GIRDER

DEBONDING LEGEND

- ● FULLY BONDED STRANDS
- ■ STRANDS DEBONDED FOR 4'-0" FROM ENDS OF GIRDER
- ▲ STRANDS DEBONDED FOR 8'-0" FROM ENDS OF GIRDER
- ◆ STRANDS DEBONDED FOR 14'-0" FROM ENDS OF GIRDER
- ● STRANDS DEBONDED FOR 20'-0" FROM ENDS OF GIRDER

0.6 Ø LOW RELAXATION STRAND LAYOUT

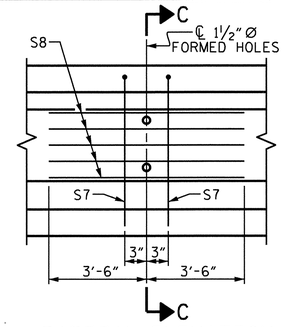

PARTIAL ELEVATION

SHOWING INTERMEDIATE DIAPHRAGM REINFORCING STEEL FOR ALL GIRDERS.

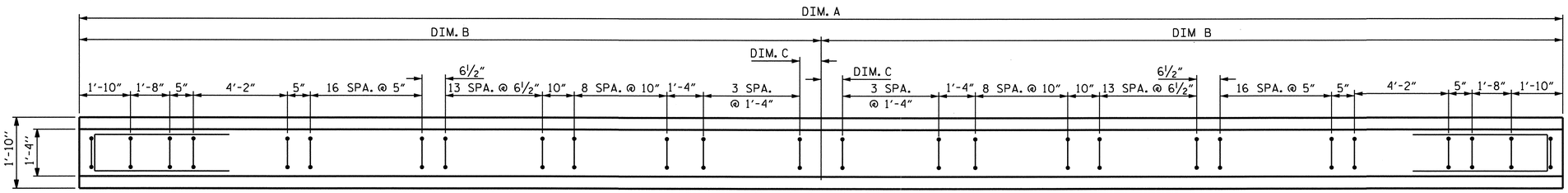

PLAN OF GIRDER

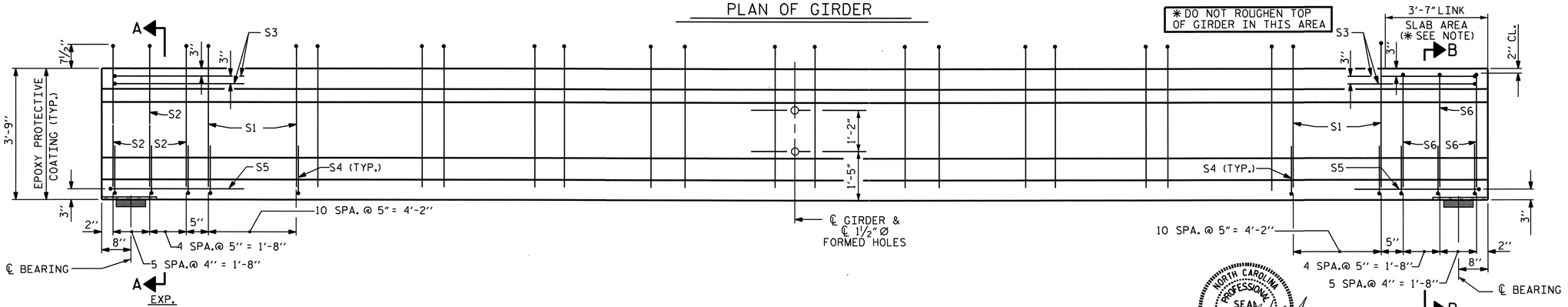

ELEVATION OF GIRDER

(SEE PARTIAL ELEVATION FOR ADDITIONAL "S" BARS)

	GIRDER #	DIM. A	DIM. B	DIM. C
SPAN 1	1	72'-2⅝"	36'-1⁵⁄₁₆"	6⅝"
	2	72'-4⅞"	36'-2⁷⁄₁₆"	7⅞"
	3	72'-7⅛"	36'-3⁹⁄₁₆"	8⅛"
	4	72'-9¼"	36'-4⅝"	9⅝"
SPANS 2-9	GIRDER #	DIM. A	DIM. B	DIM. C
	1	73'-4⅝"	36'-1⁵⁄₁₆"	1'-1⁵⁄₁₆"
	2	73'-6⅞"	36'-9⁷⁄₁₆"	1'-2⁷⁄₁₆"
	3	73'-9⅛"	36'-10⁹⁄₁₆"	1'-3⁹⁄₁₆"
	4	73'-11¼"	36'-11⅝"	1'-4⅝"
SPAN 37	GIRDER #	DIM. A	DIM. B	DIM. C
	1	73'-8"	36'-10"	1'-3"
	2	73'-8"	36'-10"	1'-3"
	3	73'-8"	36'-10"	1'-3"
	4	73'-8"	36'-10"	1'-3"
SPAN 38	GIRDER #	DIM. A	DIM. B	DIM. C
	1	73'-0⅜"	36'-6⅜₁₆"	11¾₁₆"
	2	72'-8⅛"	36'-4¹⁄₁₆"	9¹⁄₁₆"
	3	72'-3¾"	36'-1⅞"	6⅞"
	4	71'-11½"	35'-11¾"	4¾"

GIRDERS REQUIRED

	NUMBER	LENGTH	TOTAL LENGTH
SPAN 1	1	72'-2⅝"	72'-2⅝"
	1	72'-4⅞"	72'-4⅞"
	1	72'-7⅛"	72'-7⅛"
	1	72'-9¼"	72'-9¼"
SPAN 2-9	8	73'-4⅝"	587'-1"
	8	73'-6⅞"	588'-7"
	8	73'-9⅛"	590'-1"
	8	73'-11¼"	591'-6"
SPAN 37	4	73'-8"	294'-8"
SPAN 38	1	73'-0⅜"	73'-0⅜"
	1	72'-8⅛"	72'-8⅛"
	1	72'-3¾"	72'-3¾"
	1	71'-11½"	71'-11½"
TOTAL LENGTH			3231.885

0.6 Ø L. R. GRADE 270 STRANDS

AREA (SQUARE INCHES)	ULTIMATE STRENGTH (LBS. PER STRAND)	APPLIED PRESTRESS (LBS. PER STRAND)
0.217	58,600	43,950

REINFORCING STEEL FOR ONE GIRDER

BAR	NUMBER	SIZE	TYPE	LENGTH	WEIGHT
S1	110	#4	1	8'-9"	643
S2	10	#6	1	8'-9"	131
S3	4	#4	3	8'-8"	23
S4	84	#4	2	2'-9"	154
S5	2	#4	3	9'-6"	13
S6	10	#6	1	7'-2"	108
S7	2	#5	3	7'-2"	15
S8	5	#4	STR	7'-0"	23

BAR TYPES

ALL BAR DIMENSIONS ARE OUT-TO-OUT

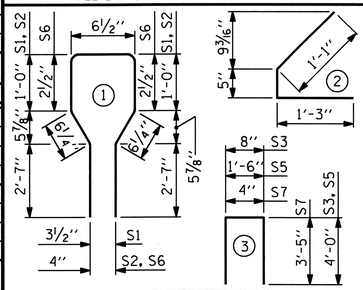

QUANTITIES FOR ONE GIRDER

		REINFORCING STEEL	10,000 PSI CONCRETE	0.6 Ø L.R. STRANDS
	GIRDER #	LB.	C.Y.	No.
SPAN 1	1	1110	10.4	38
	2	1110	10.4	38
	3	1110	10.4	38
	4	1110	10.5	38
SPANS 2-9	GIRDER #	LB.	C.Y.	No.
	1	1110	10.6	38
	2	1110	10.6	38
	3	1110	10.6	38
	4	1110	10.6	38
SPAN 37	GIRDER #	LB.	C.Y.	No.
	1	1110	10.6	38
	2	1110	10.6	38
	3	1110	10.6	38
	4	1110	10.6	38
SPAN 38	GIRDER #	LB.	C.Y.	No.
	1	1110	10.5	38
	2	1110	10.5	38
	3	1110	10.4	38
	4	1110	10.4	38

PROJECT NO. B-3611

BEAUFORT COUNTY

STATION: 43+25.00-L-

STATE OF NORTH CAROLINA
DEPARTMENT OF TRANSPORTATION
RALEIGH

AASHTO TYPE III PRESTRESSED CONCRETE GIRDER FOR LINK SLAB

ASSEMBLED BY :	H. T. BARBOUR	DATE :	10-02-09
CHECKED BY :	G. W. DICKEY	DATE :	1-10
DRAWN BY : ELR	8/91	REV. 7/17/98	RWW/LES
CHECKED BY : GRP	8/91	REV. 10/17/00R	RWW/LES
		REV. 5/1/06	TLA/GM

REVISIONS						SHEET NO.
NO.	BY:	DATE:	NO.	BY:	DATE:	S-62
1			3			TOTAL SHEETS
2			4			120

NORTH CAROLINA PROFESSIONAL SEAL 5822 ENGINEER D. KLAPPENBACH
3-29-2010

STD. NO. PCG5

24-MAR-2010 12:10
M:\Structures\tbarbour\Microstation\b3611_sd_g*.dgn
tbarbour

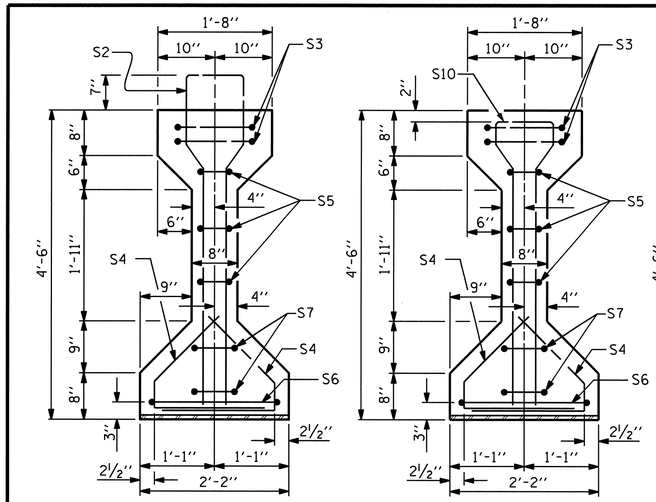

SECTION A-A

SECTION B-B

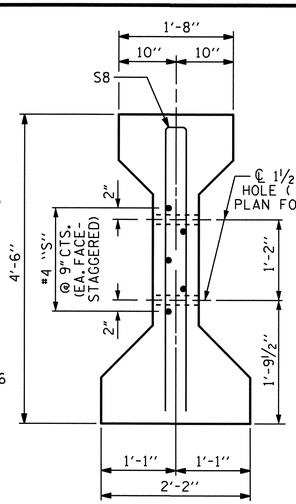

SECTION C-C

(S1 BARS NOT SHOWN)

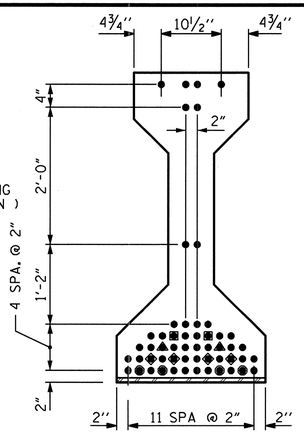

AT END OF GIRDER

0.6" Ø LOW RELAXATION STRAND LAYOUT

DEBONDING LEGEND

- ● FULLY BONDED STRANDS
- ■ STRANDS DEBONDED FOR 4'-0" FROM ENDS OF GIRDER
- ▲ STRANDS DEBONDED FOR 6'-0" FROM ENDS OF GIRDER
- ◆ STRANDS DEBONDED FOR 12'-0" FROM ENDS OF GIRDER
- ● STRANDS DEBONDED FOR 26'-0" FROM ENDS OF GIRDER

	GIRDER #	DIM. A	DIM. B	DIM. C
SPAN 10	1	93'-3¾"	46'-7⅞"	5⅛"
	2	93'-6½"	46'-9¼"	7¼"
	3	93'-9⅜"	46'-10¹¹⁄₁₆"	8¹¹⁄₁₆"
	4	94'-0⅛"	47'-0¹⁄₁₆"	10¹⁄₁₆"
	GIRDER #	DIM. A	DIM. B	DIM. C
SPAN 11	1	93'-6¼"	46'-9⅛"	7⅛"
	2	93'-7⅜"	46'-9¹¹⁄₁₆"	7¹¹⁄₁₆"
	3	93'-8⅝"	46'-10⅝"	8⅝"
	4	93'-9¾"	46'-10⅞"	8⅞"
	GIRDER #	DIM. A	DIM. B	DIM. C
SPAN 12-36	1	93'-8"	46'-10"	8"
	2	93'-8"	46'-10"	8"
	3	93'-8"	46'-10"	8"
	4	93'-8"	46'-10"	8"

GIRDERS REQUIRED

	NUMBER	LENGTH	TOTAL LENGTH
SPAN 10	1	93'-3¾"	93'-3¾"
	1	93'-6½"	93'-6½"
	1	93'-9⅜"	93'-9⅜"
	1	94'-0⅛"	94'-0⅛"
SPAN 11	1	93'-6¼"	93'-6¼"
	1	93'-7⅜"	93'-7⅜"
	1	93'-8⅝"	93'-8⅝"
	1	93'-9¾"	93'-9¾"
SPAN 12-36	100	93'-8"	9366'-8"
TOTAL LENGTH			10115.979

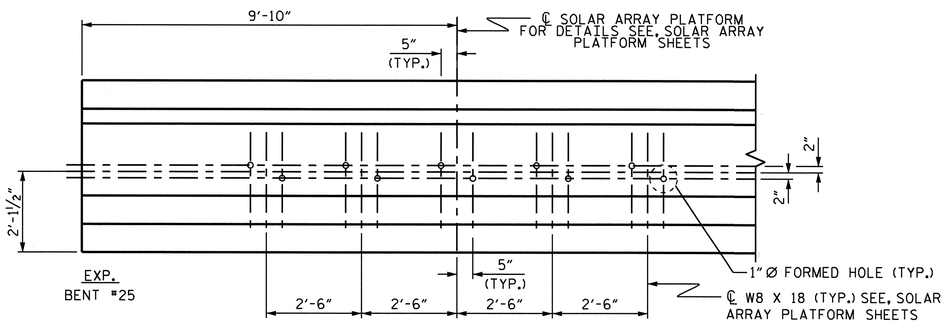

PARTIAL ELEVATION OF GIRDER #1, (EXTERIOR LEFT SIDE) SPAN 26

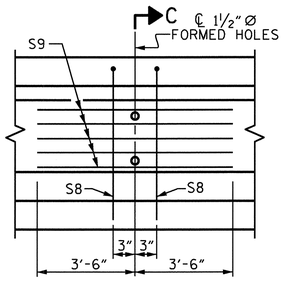

PARTIAL ELEVATION

SHOWING INTERMEDIATE DIAPHRAGM REINFORCING STEEL FOR ALL GIRDERS.

SHOWING SOLAR ARRAY PLATFORM ANCHORAGE LOCATIONS

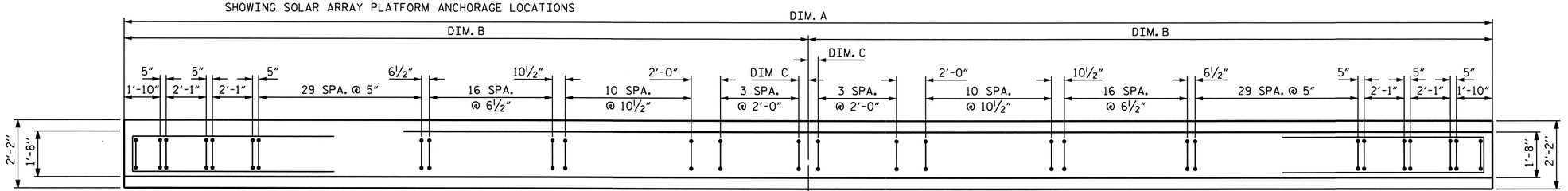

PLAN OF GIRDER

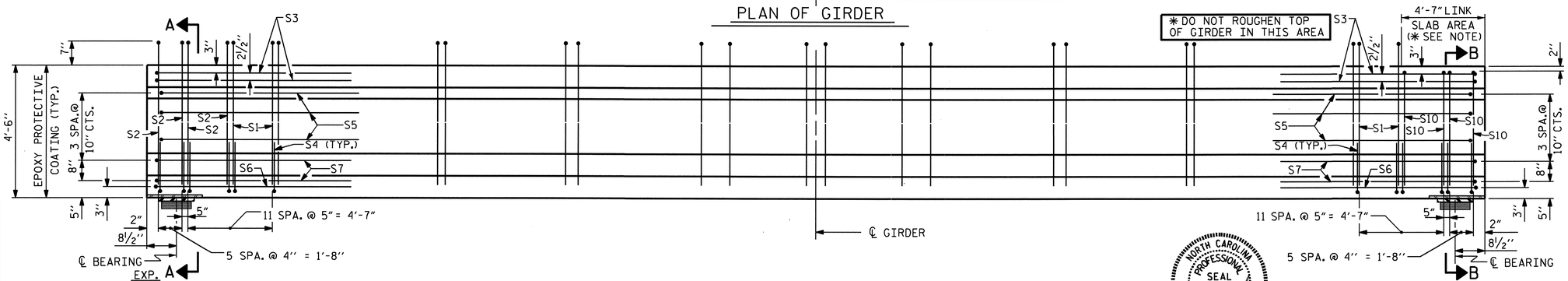

ELEVATION OF GIRDER

(SEE PARTIAL ELEVATION FOR ADDITIONAL "S" BARS)

ASSEMBLED BY :	H. T. BARBOUR
CHECKED BY :	G. W. DICKEY
DRAWN BY :	JMB 12/87
CHECKED BY :	ARB 12/87

DATE :	10-02-09	
DATE :	1-10	
REV. 7/17/98		RWW/LES
REV. 8/16/99RR		RWW/LES
REV. 5/1/06		TLA/GM

24-MAR-2010 12:10
M:\Structures\tbarbour\Microstation\b3611_sd_g*.dgn
tbarbour

0.6 Ø L. R. GRADE 270 STRANDS

AREA (SQUARE INCHES)	ULTIMATE STRENGTH (LBS. PER STRAND)	APPLIED PRESTRESS (LBS. PER STRAND)
0.217	58,600	43,950

REINFORCING STEEL FOR ONE GIRDER

BAR	NUMBER	SIZE	TYPE	LENGTH	WEIGHT
S1	136	#4	1	10'-10"	984
S2	12	#7	1	10'-10"	266
S3	4	#4	3	9'-1"	24
S4	72	#4	2	3'-5"	164
S5	6	#4	3	8'-5"	34
S6	2	#4	3	9'-11"	13
S7	4	#4	3	8'-7"	23
S8	2	#5	3	8'-8"	18
S9	5	#4	STR	7'-0"	23
S10	12	#7	1	9'-4"	229

BAR TYPES

ALL BAR DIMENSIONS ARE OUT-TO-OUT

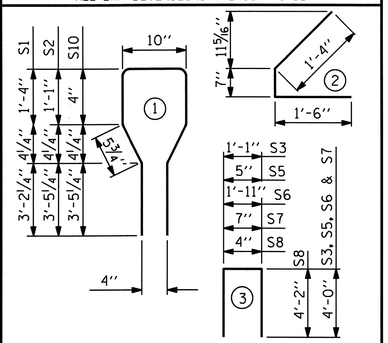

QUANTITIES FOR ONE GIRDER

	GIRDER #	REINFORCING STEEL LB.	9,600 PSI CONCRETE C.Y.	0.6 Ø L.R. STRANDS No.
SPAN 10	1	1778	18.9	54
	2	1778	19.0	54
	3	1778	19.0	54
	4	1778	19.0	54
SPANS 11	GIRDER #	LB.	C.Y.	No.
	1	1778	19.0	54
	2	1778	19.0	54
	3	1778	19.0	54
	4	1778	19.0	54
SPAN 12-36	GIRDER #	LB.	C.Y.	No.
	1	1778	19.0	54
	2	1778	19.0	54
	3	1778	19.0	54
	4	1778	19.0	54

PROJECT NO. B-3611

BEAUFORT COUNTY

STATION: 43+25.00-L-

STATE OF NORTH CAROLINA
DEPARTMENT OF TRANSPORTATION
RALEIGH

AASHTO TYPE IV PRESTRESSED CONCRETE GIRDER FOR LINK SLAB

NORTH CAROLINA PROFESSIONAL SEAL 15825 ENGINEER BRUCE O. KLAPPENBACH
3-24-2010

REVISIONS						SHEET NO.
NO.	BY:	DATE:	NO.	BY:	DATE:	S-63
1			3			TOTAL SHEETS
2			4			120

STD. NO. PCG3

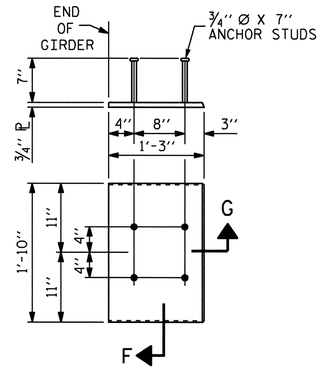

EMBEDDED PLATE "B-1" DETAILS
FOR AASHTO TYPE III GIRDER

TWO EMBEDDED PLATES "B-1" ARE REQUIRED FOR EACH GIRDER.

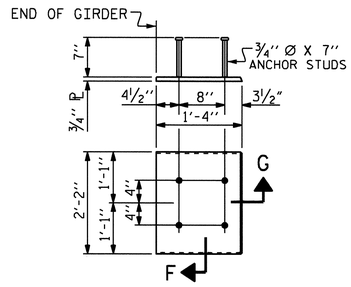

EMBEDDED PLATE "B-1" DETAILS
FOR AASHTO TYPE IV GIRDER

TWO EMBEDDED PLATES "B-1" ARE REQUIRED FOR EACH GIRDER.

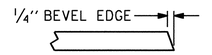

SECTION "G"

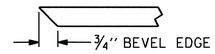

SECTION "F"

(SEE NOTES)

NOTES

ALL PRESTRESSING STRANDS SHALL BE 7-WIRE LOW-RELAXATION GRADE 270 STRANDS AND SHALL CONFORM TO AASHTO M203 EXCEPT FOR SAMPLING REQUIREMENTS WHICH SHALL BE IN ACCORDANCE WITH THE STANDARD SPECIFICATIONS.

ALL REINFORCING STEEL SHALL BE GRADE 60.

APPLY EPOXY PROTECTIVE COATING TO END OF GIRDER SURFACES.

EMBEDDED PLATE "B-1" SHALL BE METALIZED IN ACCORDANCE WITH THE SPECIFICATIONS. BEVEL EDGES OF PLATE "B-1" TO GIVE CLOSE FIT BUT NOT TIGHT FIT TO STEEL CASTING FORM.

FOR METALLIZATION, APPLY AN 8 MIL THICK 99.50 PERCENT 1350 ALUMINUM (W-A1-1350) THERMAL SPRAYED COATING WITH A 0.5 MIL THICK SEAL COAT TO ALL STEEL DIAPHRAGM SURFACES IN ACCORDANCE WITH THE THERMAL SPRAYED COATINGS SPECIAL PROVISIONS AND SECTION 442 OF THE STANDARD SPECIFICATIONS.

ANCHOR STUDS SHALL CONFORM TO AASHTO M169 GRADES 1010 THROUGH 1020 OR APPROVED EQUAL, AND SHALL MEET THE TYPE "B" REQUIREMENTS OF SUBSECTION 7.3 OF THE ANSI/AASHTO/AWS D1.5 BRIDGE WELDING CODE.

ALL PRESTRESSED STRANDS SHALL BE CUT FLUSH WITH THE GIRDER ENDS.

THE TRANSFER OF LOAD FROM THE ANCHORAGES TO THE GIRDER SHALL BE DONE WHEN CONCRETE HAS REACHED A COMPRESSIVE STRENGTH OF NOT LESS THAN 8,000 PSI FOR ALL 45" PRESTRESSED CONCRETE GIRDERS AND 7,700 PSI FOR ALL 54" PRESTRESSED CONCRETE GIRDERS.

DEPENDING ON THE TYPE OF SYSTEM USED TO SUPPORT THE DECK SLAB FORMS, PRESET ANCHORS MAY BE NECESSARY IN THE PRESTRESSED CONCRETE GIRDER.

THE TOP SURFACE OF THE GIRDER SHALL BE RAKED TO A DEPTH OF ¼" EXCEPT IN THE AREA BETWEEN THE STIRRUP, THE LINK SLAB AREA AND THE EDGE OF THE GIRDER.

PRESTRESSED CONCRETE GIRDERS ARE DESIGNED FOR 0 PSI TENSION IN THE PRECOMPRESSED TENSILE ZONE UNDER ALL LOADING CONDITIONS.

PRESTRESSED CONCRETE GIRDERS SHALL CONTAIN CALCIUM NITRITE CORROSION INHIBITOR.

DEAD LOAD DEFLECTION TABLE FOR GIRDERS

0.6 Ø LOW RELAXATION	SPAN 1											SPAN 2-9											SPAN 10-36										
	GIRDER 1-4											GIRDERS 1-4											GIRDERS 1-4										
TENTH POINTS	0	.1	.2	.3	.4	.5	.6	.7	.8	.9	0	0	.1	.2	.3	.4	.5	.6	.7	.8	.9	0	0	.1	.2	.3	.4	.5	.6	.7	.8	.9	0
CAMBER (GIRDER ALONE IN PLACE) ↑	0.0	0.097	0.183	0.250	0.293	0.308	0.293	0.250	0.183	0.097	0.0	0.0	0.099	0.187	0.256	0.300	0.315	0.300	0.256	0.187	0.099	0.0	0.0	0.124	0.234	0.321	0.376	0.395	0.376	0.321	0.234	0.124	0.0
* DEFLECTION DUE TO SUPERIMPOSED D.L. ↓	0.0	0.028	0.054	0.074	0.086	0.090	0.086	0.074	0.054	0.028	0.0	0.0	0.030	0.057	0.078	0.092	0.096	0.092	0.078	0.057	0.030	0.0	0.0	0.040	0.076	0.104	0.122	0.128	0.122	0.104	0.076	0.040	0.0
FINAL CAMBER ↑	0.0	13/16"	1 9/16"	2 1/8"	2 1/2"	2 5/8"	2 1/2"	2 1/8"	1 9/16"	13/16"	0.0	0.0	13/16"	1 9/16"	2 1/8"	2 1/2"	2 5/8"	2 1/2"	2 1/8"	1 9/16"	13/16"	0.0	0.0	1"	1 7/8"	2 9/16"	3 1/16"	3 3/16"	3 1/16"	2 9/16"	1 7/8"	1"	0.0

DEAD LOAD DEFLECTION TABLE FOR GIRDERS

0.6 Ø LOW RELAXATION	SPAN 37											SPAN 38										
	GIRDERS 1-4											GIRDERS 1-4										
TENTH POINTS	0	.1	.2	.3	.4	.5	.6	.7	.8	.9	0	0	.1	.2	.3	.4	.5	.6	.7	.8	.9	0
CAMBER (GIRDER ALONE IN PLACE) ↑	0.0	0.099	0.187	0.256	0.300	0.315	0.300	0.256	0.187	0.099	0.0	0.0	0.097	0.183	0.251	0.294	0.306	0.294	0.251	0.183	0.097	0.0
* DEFLECTION DUE TO SUPERIMPOSED D.L. ↓	0.0	0.030	0.057	0.078	0.091	0.096	0.091	0.078	0.057	0.030	0.0	0.0	0.029	0.054	0.074	0.087	0.091	0.087	0.074	0.054	0.029	0.0
FINAL CAMBER ↑	0.0	13/16"	1 9/16"	2 1/8"	2 1/2'	2 5/8"	2 1/2'	2 1/8"	1 9/16"	13/16"	0.0	0.0	13/16"	1 9/16"	2 1/8"	2 1/2"	2 5/8"	2 1/2"	2 1/8"	1 9/16"	13/16"	0.0

* INCLUDES FUTURE WEARING SURFACE

ALL VALUES ARE SHOWN IN FEET (DECIMAL FORM), EXCEPT " FINAL CAMBER ", WHICH IS GIVEN IN INCHES (FRACTION FORM).

PROJECT NO. B-3611

BEAUFORT COUNTY

STATION: 43+25.00-L-

STATE OF NORTH CAROLINA
DEPARTMENT OF TRANSPORTATION
RALEIGH

PRESTRESSED CONCRETE GIRDER DETAILS

ASSEMBLED BY : H. T. BARBOUR	DATE : 10-02-09
CHECKED BY : G. W. DICKEY	DATE : 1-10
DRAWN BY : ELR 11/91	REV. 10/17/00 RWW/LES
CHECKED BY : GRP 11/91	REV. 7/10/01RR LES/RDR
	REV. 5/1/06 TLA/GM

NORTH CAROLINA PROFESSIONAL SEAL 19829 ENGINEER D. KL APPENBRINK
3-29-2010

REVISIONS						SHEET NO.
NO.	BY:	DATE:	NO.	BY:	DATE:	S-64
1			3			TOTAL SHEETS
2			4			120

24-MAR-2010 12:10
M:\Structures\tbarbour\Microstation\b3611_sd_g*.dgn
tbarbour

STD. NO. PCG11 (Sht. 2)

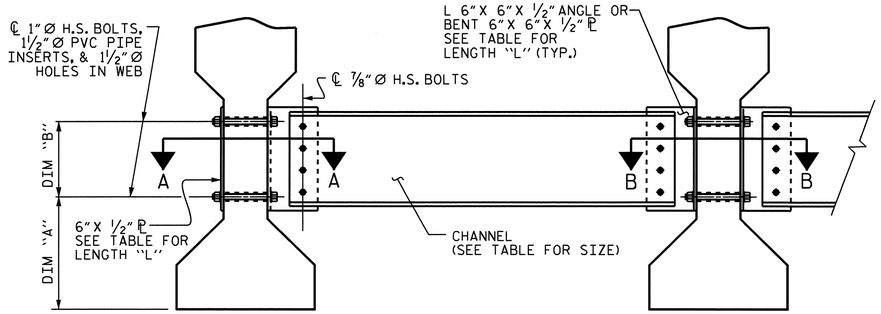

EXTERIOR GIRDER

INTERIOR GIRDER

PART SECTION AT INTERMEDIATE DIAPHRAGM

(TYPE III OR TYPE IV GIRDER SHOWN)

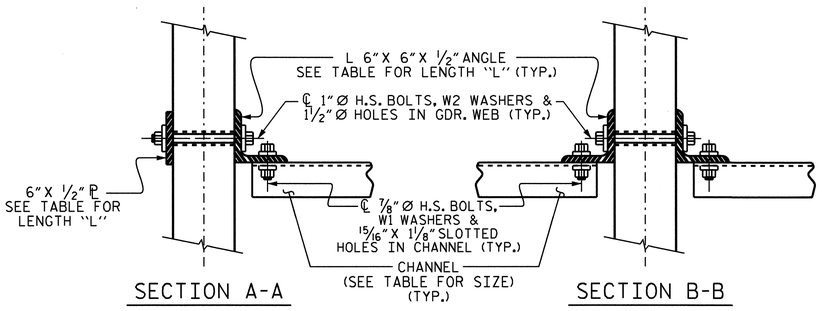

CONNECTION DETAILS

(FOR SKEW = 90°)

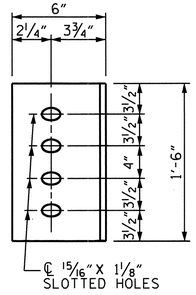

DIAPHRAGM FACE

(TYPE III OR TYPE IV GDR.)

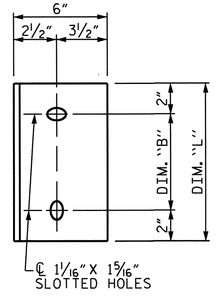

WEB FACE

CONNECTOR PLATE DETAILS

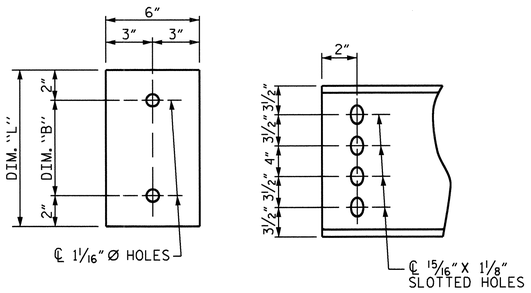

PLATE DETAILS CHANNEL END

(TYPE III OR TYPE IV GDR.)

TABLE

GIRDER TYPE	CHANNEL SIZE	DIM "A"	DIM "B"	DIM "L"
III	MC 18 x 42.7	1'-5"	1'-2"	1'-6"
IV	MC 18 x 42.7	1'-9½"	1'-2"	1'-6"

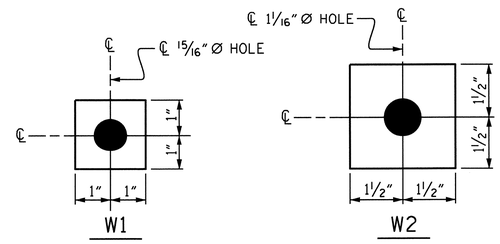

USE WITH ⅞" Ø HVY. HEX NUTS & DIRECT TENSION INDICATOR WASHERS AT DIAPHRAGM CHANNEL TO CONNECTOR PLATE CONNECTIONS

USE WITH 1" Ø HVY. HEX NUTS AT CONNECTOR PLATE TO GIRDER CONNECTIONS

WASHER DETAILS

STRUCTURAL STEEL NOTES

ALL INTERMEDIATE DIAPHRAGM STEEL, CONNECTOR PLATES AND PLATE WASHERS SHALL BE AASHTO M270 GRADE 50 OR APPROVED EQUAL.

TENSION ON THE AASHTO M164 BOLTS THROUGH THE CHANNEL MEMBER SHALL BE CALIBRATED USING DIRECT TENSION INDICATOR WASHERS IN ACCORDANCE WITH THE STANDARD SPECIFICATIONS. FOR DIRECT TENSION INDICATORS, SEE SPECIAL PROVISIONS.

TENSION ON THE AASHTO M164 BOLTS THROUGH THE GIRDER WEB SHALL BE SNUG TIGHTENED FOLLOWED BY AN ADDITIONAL ¼ TURN.

THE PLATES, BENT PLATES, CHANNELS, ANGLES, AND PLATE WASHERS SHALL BE METALLIZED IN ACCORDANCE WITH THE STANDARD SPECIFICATIONS. FOR THERMAL SPRAYED COATINGS (METALLIZATION), SEE SPECIAL PROVISIONS.

FOR METALLIZATION, APPLY AN 8 MIL THICK 99.50 PERCENT 1350 ALUMINUM (W-A1-1350) THERMAL SPRAYED COATING WITH A 0.5 MIL THICK SEAL COAT TO ALL PLATES, BENT PLATES, CHANNELS, ANGLES, AND PLATE WASHERS IN ACCORDANCE WITH THE THERMAL SPRAYED COATINGS SPECIAL PROVISIONS AND SECTION 442 OF THE STANDARD SPECIFICATIONS.

APPLY 1 COAT EACH OF 1080-12 BROWN AND 1080-12 GRAY PAINT ON THE EDGES AND THE WEB FACE OF THE CONNECTOR PLATE WHICH COMES IN CONTACT WITH THE CONCRETE GIRDER IN ACCORDANCE WITH SECTION 442 OF THE STANDARD SPECIFICATIONS.

GALVANIZE THE HIGH STRENGTH BOLTS, NUTS, WASHERS AND DIRECT TENSION INDICATORS IN ACCORDANCE WITH THE STANDARD SPECIFICATIONS. FOR HIGH STRENGTH BOLTS, SEE SPECIAL PROVISIONS.

USE A MINIMUM 7⁄16" THICK PLATE WASHER WITH STANDARD HOLES UNDER EACH BOLT HEAD AND NUT. THE PLATE WASHERS SHALL HAVE SUFFICIENT SIZE TO COVER THE HOLES AFTER INSTALLATION. HARDENED WASHERS AND DIRECT TENSION INDICATORS ARE TO BE USED IN CONJUNCTION WITH THE PLATE WASHERS IN THE CHANNEL MEMBER CONNECTION.

FOR BOLTS THROUGH THE GIRDER WEB, PROVIDE SUFFICIENT LENGTH OF ALL BOLTS TO ACCOMMODATE WASHERS AND THE THICKNESS OF CONNECTING MEMBER PLUS AT LEAST ¼" PROJECTION BEYOND THE NUT.

INTERMEDIATE DIAPHRAGM ASSEMBLY SHALL COMPLY WITH SECTION 1072 OF THE STANDARD SPECIFICATIONS.

CONTRACTOR SHALL SUBMIT TWO SETS OF WORKING DRAWINGS FOR THE INTERMEDIATE DIAPHRAGM ASSEMBLY FOR REVIEW, COMMENTS AND ACCEPTANCE. AFTER REVIEW, COMMENTS, AND ACCEPTANCE, SUBMIT SEVEN SETS FOR DISTRIBUTION.

IN THE EXTERIOR BAYS, TEMPORARY STRUTS SHALL BE PLACED BETWEEN PRESTRESSED GIRDERS ADJACENT TO THE STEEL DIAPHRAGMS. STRUTS SHALL REMAIN IN PLACE 3 DAYS AFTER CONCRETE IS PLACED. ALL AASHTO M164 H.S. BOLTS SHALL BE FULLY TIGHTENED AFTER THE STRUTS HAVE BEEN REMOVED.

THE COST OF THE STEEL DIAPHRAGMS AND ASSEMBLIES SHALL BE INCLUDED IN THE UNIT PRICE BID FOR PRESTRESSED CONCRETE GIRDERS.

PROJECT NO. B-3611

BEAUFORT COUNTY

STATION: 43+25.00-L-

STATE OF NORTH CAROLINA
DEPARTMENT OF TRANSPORTATION
RALEIGH

INTERMEDIATE STEEL DIAPHRAGMS FOR TYPE III & IV PRESTRESSED CONCRETE GIRDERS

REVISIONS						SHEET NO.
NO.	BY:	DATE:	NO.	BY:	DATE:	S-65
1			3			TOTAL SHEETS
2			4			120

NORTH CAROLINA PROFESSIONAL SEAL 15825 ENGINEER BRUCE D. KLAPPENBACH
3-29-2010

STD. NO. PCG12

ASSEMBLED BY : H. T. BARBOUR		DATE : 10-07-09	
CHECKED BY : G. W. DICKEY		DATE : 1-10	
DRAWN BY : TLA 6/05	ADDED 10/21/05		
CHECKED BY : VC 6/05	REV. 5/1/06R		KMM/GM

24-MAR-2010 12:10
M:\Structures\tbarbour\Microstation\b3611_sd_g*.dgn
tbarbour

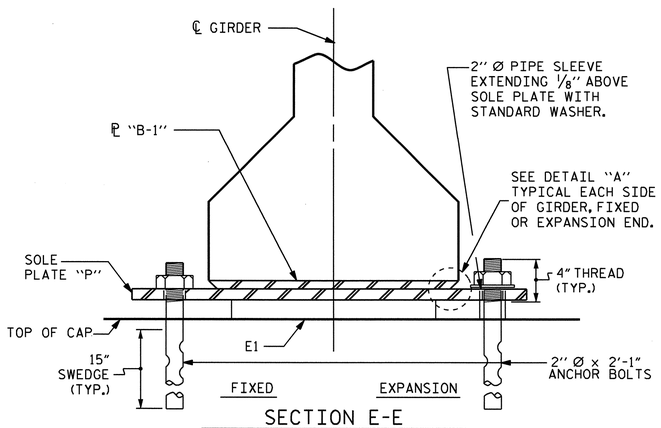

SECTION E-E

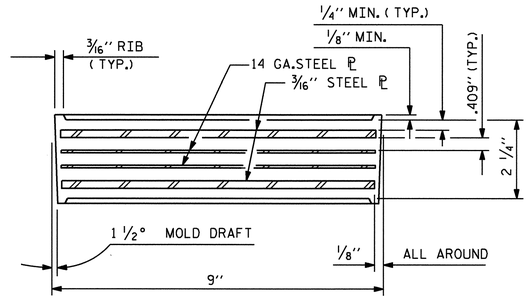

TYPICAL SECTION OF ELASTOMERIC BEARINGS

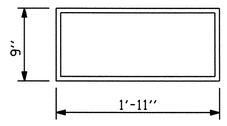

E1 (88 REQ'D)

PLAN VIEW OF ELASTOMERIC BEARING

TYPE V

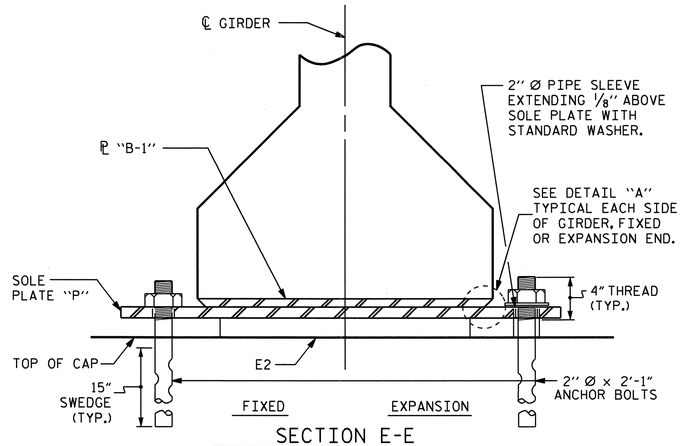

SECTION E-E

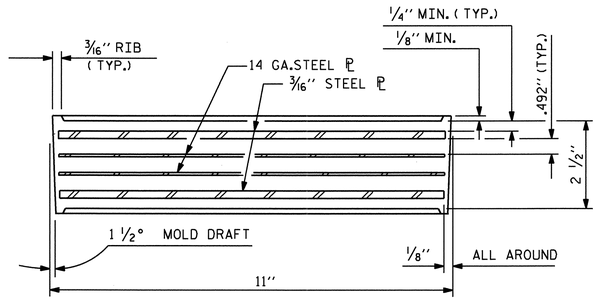

TYPICAL SECTION OF ELASTOMERIC BEARINGS

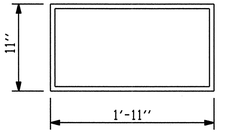

E2 (216 REQ'D)

PLAN VIEW OF ELASTOMERIC BEARING

TYPE VI

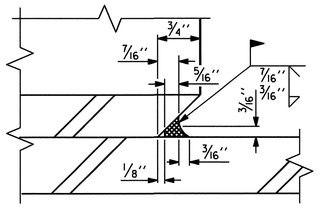

DETAIL "A"

— LOAD RATINGS —	
	MAX.D.L.+L.L.
TYPE V	180 K
TYPE VI	211 K

NOTES

AT ALL FIXED POINTS OF SUPPORT, NUTS FOR ANCHOR BOLTS ARE TO BE TIGHTENED FINGER TIGHT AND THEN BACKED OFF 1/2 TURN. THE THREAD OF THE NUT AND BOLT SHALL THEN BE BURRED WITH A SHARP POINTED TOOL.

THE 2" Ø PIPE SLEEVE SHALL BE CUT FROM SCHEDULE 40 PVC PLASTIC PIPE. THE PVC PLASTIC PIPE SHALL MEET THE REQUIREMENTS OF ASTM D1785.

STEEL SOLE PLATES, ANCHOR BOLTS, NUTS, AND WASHERS SHALL BE GALVANIZED IN ACCORDANCE WITH THE STANDARD SPECIFICATIONS.

PRIOR TO WELDING, GRIND THE GALVANIZED SURFACE OF THE PORTION OF THE EMBEDDED PLATE AND SOLE PLATE THAT ARE TO BE WELDED. AFTER WELDING, DAMAGED GALVANIZED SURFACES SHALL BE REPAIRED IN ACCORDANCE WITH THE STANDARD SPECIFICATIONS.

WHEN WELDING THE SOLE PLATE TO THE EMBEDDED PLATE IN THE GIRDER, USE TEMPERATURE INDICATING WAX PENS, OR OTHER SUITABLE MEANS, TO ENSURE THAT THE TEMPERATURE OF THE SOLE PLATE DOES NOT EXCEED 300°F. TEMPERATURES ABOVE THIS MAY DAMAGE THE ELASTOMER.

SOLE PLATE "P", BOLTS, NUTS, WASHERS, AND PIPE SLEEVE SHALL BE INCLUDED IN THE PAY ITEM FOR PRESTRESSED CONCRETE GIRDERS.

ANCHOR BOLTS SHALL MEET THE REQUIREMENTS OF ASTM A449. NUTS SHALL MEET THE REQUIREMENTS OF AASHTO M291-DH OR AASHTO M292-2H. WASHERS SHALL MEET THE REQUIREMENTS OF AASHTO M293. SHOP DRAWINGS ARE NOT REQUIRED FOR ANCHOR BOLT, NUTS AND WASHERS. SHOP INSPECTION IS REQUIRED.

ALL SURFACES OF BEARING PLATES SHALL BE SMOOTH AND STRAIGHT.

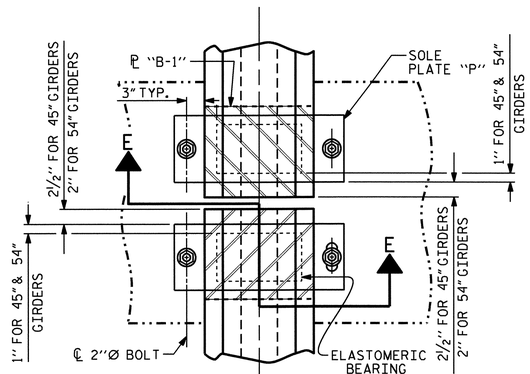

TYPICAL HALF-PLAN (SHOWING CONTINUOUS BENT)

TYPICAL HALF-PLAN (SHOWING SIMPLE SPAN BENT)

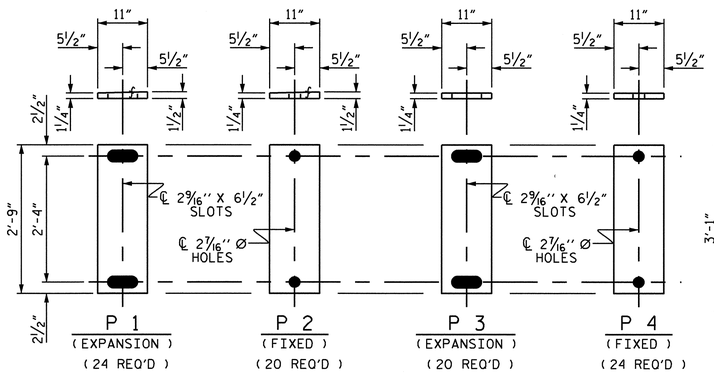

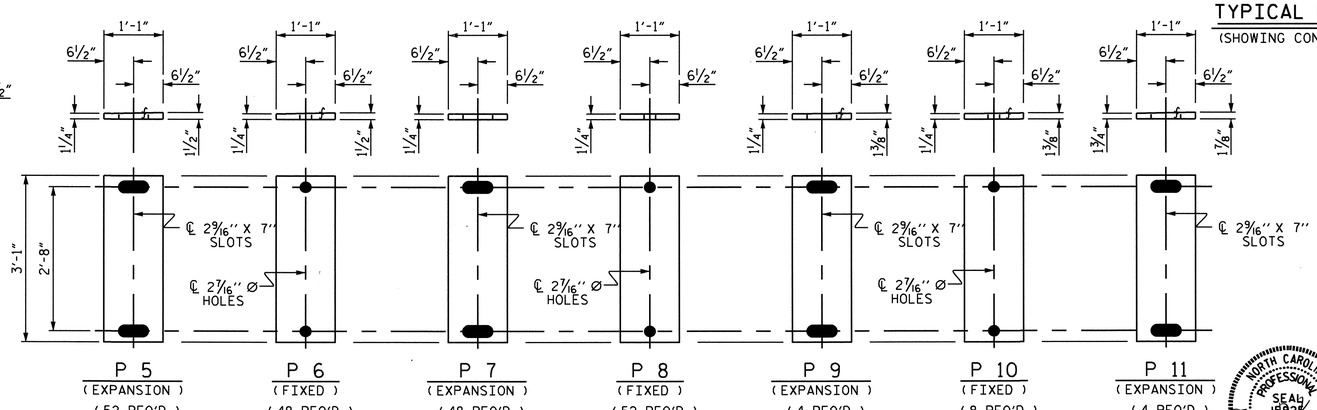

SOLE PLATE DETAILS ("P")

FOR SOLE PLATE ORINTENTATION, SEE FRAMING PLAN SHEET.

ASSEMBLED BY : H. T. BARBOUR	DATE : 10-08-09		
CHECKED BY : D. A. GLADDEN	DATE : 2-3-10		
DRAWN BY : WJH 8/89	REV. 10/17/00	RWW/LES	
CHECKED BY : CRK 8/89	REV. 7/10/01	RWW/LES	
	REV. 5/1/06	TLA/GM	

NORTH CAROLINA PROFESSIONAL SEAL 15827 ENGINEER BRUCE D. KLAPPENBACH 3-29-2010

STATE OF NORTH CAROLINA
DEPARTMENT OF TRANSPORTATION
RALEIGH
STANDARD

ELASTOMERIC BEARING DETAILS

PRESTRESSED CONCRETE GIRDER SUPERSTRUCTURE

PROJECT NO. B-3611
BEAUFORT COUNTY
STATION: 43+25.00-L-

REVISIONS						SHEET NO.
NO.	BY:	DATE:	NO.	BY:	DATE:	S-66
1			3			TOTAL SHEETS
2			4			120

STD. NO. EB3

24-MAR-2010 12:10
M:\Structures\tbarbour\Microstation\b3611_sd_bg.dgn
tbarbour

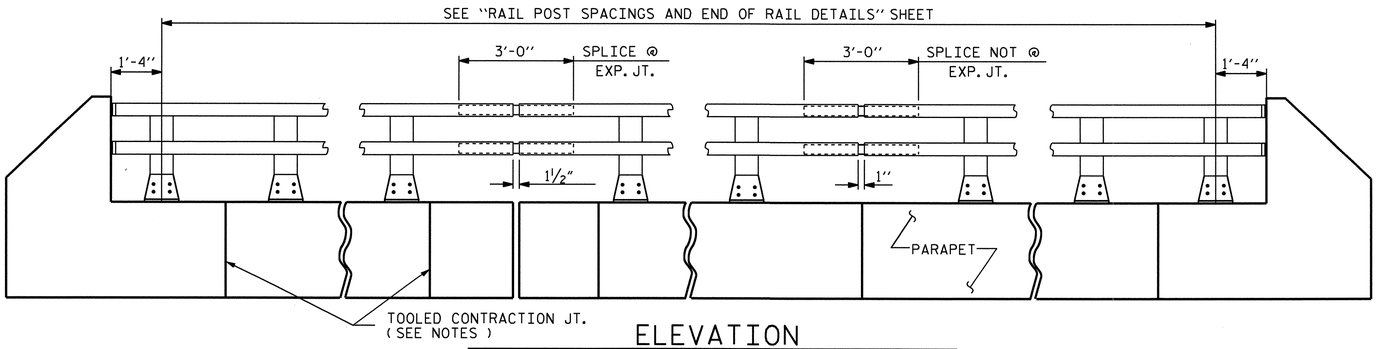

ELEVATION

NOTE : FOR ATTACHMENT OF METAL RAIL TO END POST, SEE "END OF RAIL DETAILS FOR TWO BAR METAL RAILS".

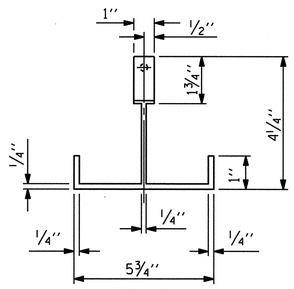

PLAN

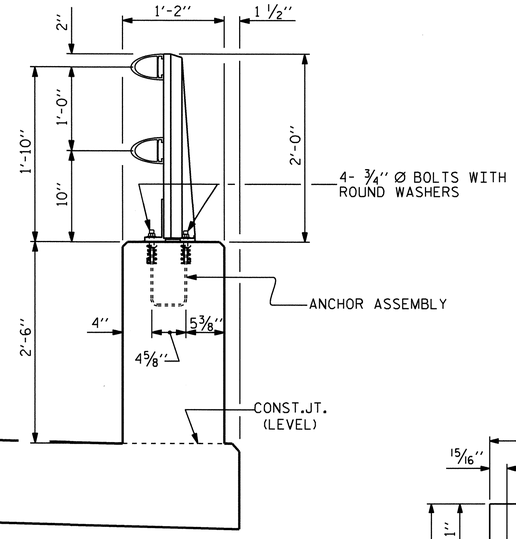

SECTION THRU PARAPET AND RAIL

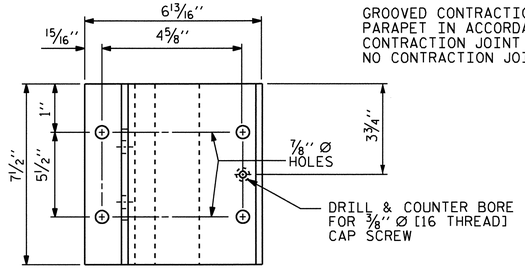

PLAN

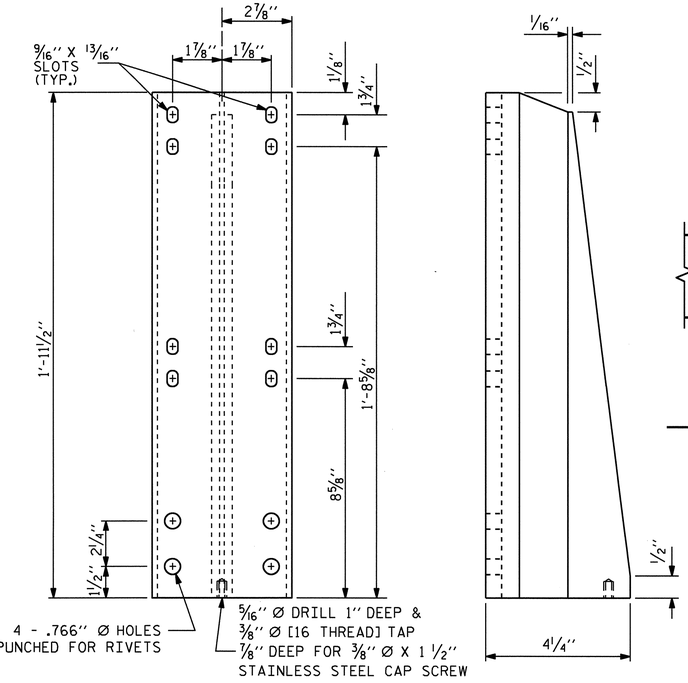

FRONT ELEVATION

SIDE ELEVATION

DETAILS OF POST

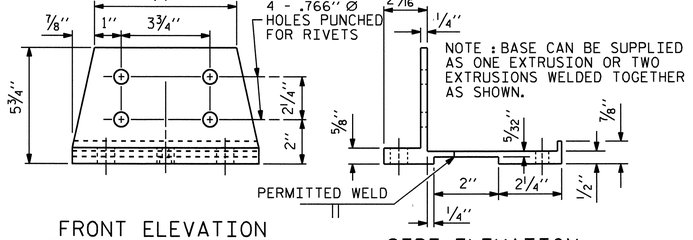

FRONT ELEVATION

SIDE ELEVATION

POST BASE DETAILS

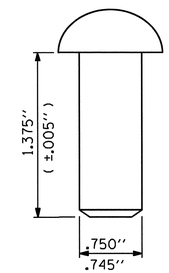

RIVET DETAIL

NOTES

AT THE CONTRACTOR'S OPTION, METAL RAIL MAY BE EITHER ALUMINUM OR GALVANIZED STEEL IN ACCORDANCE WITH THE REQUIREMENTS OF THE GENERAL NOTES AND THE FOLLOWING SPECIFICATIONS FOR THE ALTERNATE MATERIALS; HOWEVER, THE CONTRACTOR WILL BE REQUIRED TO USE THE SAME RAIL MATERIAL ON ALL STRUCTURES ON THE PROJECT FOR WHICH METAL RAIL IS DESIGNATED.

ALUMINUM RAILS

MATERIAL FOR POSTS, BASES AND RAILS, EXPANSION BARS AND CLAMP BARS SHALL BE ASTM B-221 ALLOY 6061-T6.

MATERIAL FOR RIVETS SHALL BE ASTM B316 ALLOY 6061-T6. RIVETS SHALL BE STANDARD BUTTON HEAD AND CONE POINT COLD DRIVEN AS PER DRAWING.

THE BASE OF RAIL POSTS, OR ANY OTHER ALUMINUM SURFACE IN CONTACT WITH CONCRETE SHALL BE THOROUGHLY COATED WITH AN ALUMINUM IMPREGNATED CAULKING COMPOUND OF APPROVED QUALITY.

MATERIAL FOR SHIMS TO BE ASTM B209 ALLOY 6061-T6.

GALVANIZED STEEL RAILS

MATERIAL AND GALVANIZING ARE TO CONFORM TO THE FOLLOWING SPECIFICATIONS:

POST, POST BASES, RAILS, EXPANSION BARS AND CLAMP BARS: AASHTO M270 GRADE 36 STRUCTURAL STEEL - GALVANIZED TO AASHTO M111.

RIVETS: RIVETS SHALL MEET THE REQUIREMENTS OF ASTM A502 FOR GRADE 1 RIVETS.

THE CUT ENDS OF GALVANIZED STEEL RAILING, AFTER GRINDING SMOOTH SHALL BE GIVEN TWO COATS OF ZINC RICH PAINT MEETING THE REQUIREMENTS OF FEDERAL SPECIFICATION MIL-P-26915 USAF TYPE 1, OR OF FEDERAL SPECIFICATIONS TT-P-641.

SHIMS: SHIMS SHALL MEET THE REQUIREMENTS OF ASTM A570 FOR GRADE 33 OR A611 FOR GRADE C AND SHALL BE GALVANIZED IN ACCORDANCE WITH AASHTO M111.

RAIL CAPS: RAIL CAPS SHALL MEET THE REQUIREMENTS OF ASTM A570 FOR GRADE 33 OR A611 FOR GRADE C AND SHALL BE GALVANIZED IN ACCORDANCE WITH AASHTO M111.

GENERAL NOTES

RAILING SHALL BE CONTINUOUS FROM END POST TO END POST OF BRIDGE. EACH JOINT IN RAIL LENGTH SHALL BE SPLICED AS DETAILED. PANEL LENGTHS OF RAIL SHALL BE ATTACHED TO A MINIMUM OF THREE POSTS.

FOR END OF RAIL TO CLEAR FACE OF CONCRETE END POST DIMENSION, SEE "END OF RAIL DETAILS FOR TWO BAR METAL RAILS".

CAP SCREWS SHALL BE ASTM F593 ALLOY 305 STAINLESS STEEL. WASHERS SHALL MEET THE REQUIREMENTS OF ASTM F844 EXCEPT THEY SHALL BE MADE FROM ALLOY 304 STAINLESS STEEL.

CERTIFIED MILL REPORTS ARE REQUIRED FOR RAILS AND POSTS. SHOP INSPECTION IS NOT REQUIRED.

METAL RAIL POSTS SHALL BE SET NORMAL TO CURB GRADE.

METHOD OF MEASUREMENT FOR METAL RAILS: FOR LENGTH OF METAL RAILS TO BE PAID FOR, SEE THE STANDARD SPECIFICATIONS.

CURVED RAIL USAGE: WHERE RAILS ARE TO BE USED ON BRIDGES ON HORIZONTAL AND/OR VERTICAL CURVATURE THE CONTRACTOR MAY, AT HIS OPTION, HAVE THE REQUIRED CURVATURE IN THE RAIL FORMED IN THE SHOP OR IN THE FIELD. IN EITHER EVENT, THE RAIL SHALL CONFORM WITHOUT BUCKLING OR KINKING TO THE REQUIRED CURVATURE IN A UNIFORM MANNER ACCEPTABLE TO THE ENGINEER.

TO INSURE FUTURE IDENTIFICATION OF THE FABRICATOR, A PERMANENT IDENTIFYING MARK SHALL BE PLACED ON EACH POST. THE METHOD OF MARKING AND LOCATION SHALL BE SUCH THAT IT DOES NOT DETRACT FROM THE APPEARANCE OF THE POST, BUT REMAINS VISIBLE AFTER RAIL PLACEMENT.

SHIMS SHALL BE USED AS NECESSARY FOR POST ALIGNMENT.

ALLOY 6351-T5 MAY BE SUBSTITUTED FOR ALLOY 6061-T6 WHERE APPLICABLE.

MINOR VARIATIONS IN DETAILS OF METAL RAIL WILL BE CONSIDERED. DETAILS OF SUCH VARIATIONS, IF DESIRED, SHALL BE SUBMITTED FOR APPROVAL.

GROOVED CONTRACTION JOINTS, ½" IN DEPTH, SHALL BE TOOLED IN ALL EXPOSED FACES OF THE PARAPET IN ACCORDANCE WITH ARTICLE 825-10(B) OF THE STANDARD SPECIFICATIONS. THE CONTRACTION JOINT SHALL BE LOCATED AT A SPACING OF 8FT. TO 10FT. BETWEEN EXPANSION JOINTS. NO CONTRACTION JOINTS WILL BE REQUIRED FOR SEGMENTS LESS THAN 10 FEET IN LENGTH.

PAY LENGTH = 6684.0 LIN. FT.

PROJECT NO. B-3611

BEAUFORT COUNTY

STATION: 43+25.00-L-

SHEET 1 OF 11

STATE OF NORTH CAROLINA
DEPARTMENT OF TRANSPORTATION
RALEIGH

STANDARD

2 BAR METAL RAIL

NORTH CAROLINA PROFESSIONAL SEAL 15825 ENGINEER BRUCE D. KLAPPENBACH
3-29-2010

ASSEMBLED BY :	H. T. BARBOUR	DATE :	10-19-09
CHECKED BY :	G. W. DICKEY	DATE :	1-10
DRAWN BY : EEM 6/94	REV. 10/17/00		LES/RDR
CHECKED BY : RGW 6/94	REV. 5/7/03R		RWW/JTE
	REV. 5/1/06		TLA/GM

REVISIONS						SHEET NO.
NO.	BY:	DATE:	NO.	BY:	DATE:	S-67
1			3			TOTAL SHEETS
2			4			120

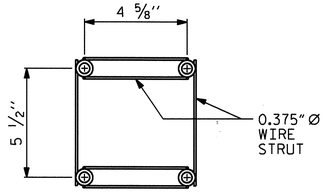

PLAN

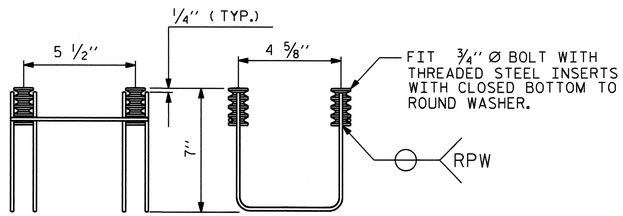

SIDE VIEW ELEVATION

MINIMUM LENGTH OF THREADS IN INSERT (FERRULE): 1 3/4"

4-BOLT METAL RAIL ANCHOR ASSEMBLY

(1096 ASSEMBLIES REQUIRED)

NOTES

STRUCTURAL CONCRETE ANCHOR ASSEMBLY

THE STRUCTURAL CONCRETE ANCHOR ASSEMBLY SHALL CONSIST OF THE FOLLOWING COMPONENTS :

A. FERRULES SHALL BE MADE FROM STEEL MEETING THE REQUIREMENTS OF AASHTO M169, GRADE 12L14 AND SHALL HAVE A MINIMUM LENGTH OF THREADS OF 2" FOR 3/4" FERRULES.

B. 4 - 3/4" Ø X 2 1/2" BOLTS WITH WASHERS. BOLTS SHALL CONFORM TO THE REQUIREMENTS OF ASTM A307. BOLTS AND WASHERS SHALL BE GALVANIZED. AT THE CONTRACTOR'S OPTION, STAINLESS STEEL BOLTS AND WASHERS MAY BE USED AS AN ALTERNATE FOR THE 3/4" Ø X 2 1/2" GALVANIZED BOLTS AND WASHERS. THEY SHALL CONFORM TO OR EXCEED THE MECHANICAL REQUIREMENTS OF ASTM A307. THE USE OF THIS ALTERNATE SHALL BE APPROVED BY THE ENGINEER.

C. WIRE STRUT SHOWN IN THE CONCRETE ANCHOR ASSEMBLY DETAIL IS THE MINIMUM ALLOWABLE SIZE AND SHALL HAVE A MINIMUM TENSILE STRENGTH OF 100,000 PSI. AS AN OPTION, A 7/16" Ø WIRE STRUT WITH A MINIMUM TENSILE STRENGTH OF 90,000 PSI IS ACCEPTABLE.

D. THE METAL RAIL ANCHOR ASSEMBLIES TO BE HOT DIPPED GALVANIZED TO CONFORM TO REQUIREMENTS OF AASHTO M111.

E. THE COST OF THE METAL RAIL ANCHOR ASSEMBLY WITH BOLTS AND WASHERS COMPLETE IN PLACE SHALL BE INCLUDED IN THE PRICE BID FOR LINEAR FEET OF METAL RAIL.

F. BOLTS TO BE TIGHTENED ONE-HALF TURN WITH A WRENCH FROM A FINGER-TIGHT POSITION.

THE CONTRACTOR MAY USE ADHESIVELY ANCHORED ANCHOR BOLTS IN PLACE OF THE METAL RAIL ANCHOR ASSEMBLY. LEVEL ONE FIELD TESTING IS REQUIRED, AND THE YIELD LOAD OF THE 3/4" Ø BOLT IS 10 KIPS. FOR ADHESIVELY ANCHORED ANCHOR BOLTS OR DOWELS, SEE SPECIAL PROVISIONS.

WHEN ADHESIVELY ANCHORED ANCHOR BOLTS ARE USED, BOLTS SHALL MEET THE REQUIREMENTS OF ASTM F593 ALLOY 304 STAINLESS STEEL WITH MINIMUM 75,000 PSI ULTIMATE STRENGTH. NUTS SHALL MEET THE REQUIREMENTS OF ASTM F594 ALLOY 304 STAINLESS STEEL AND WASHERS SHALL MEET THE REQUIREMENTS OF ASTM F844 EXCEPT THEY SHALL BE MADE FROM ALLOY 304 STAINLESS STEEL.

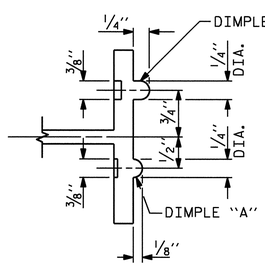

SECTION B - B

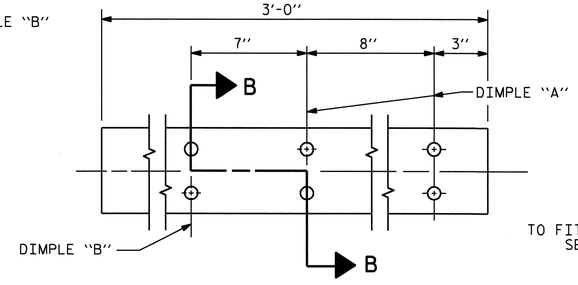

EXPANSION BAR DETAILS

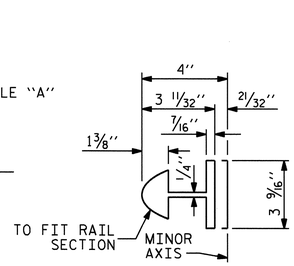

BAR SECTION

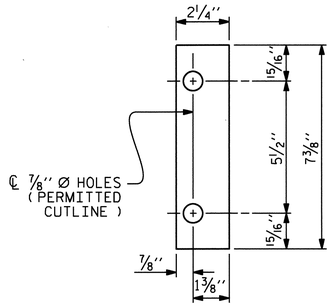

FRONT PLATE

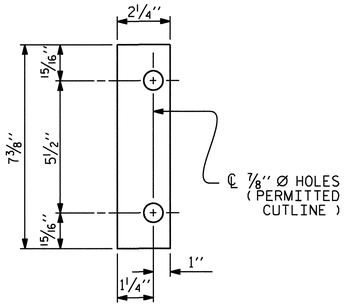

REAR PLATE

SHIM DETAILS

NOTE :
SHIMS MAY BE CUT ALONG PERMITTED CUTLINE OR SLOTTED TO EDGE OF PLATE TO FACILITATE PLACEMENT.

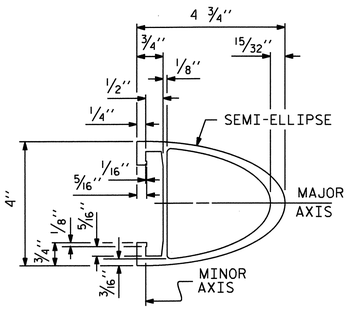

RAIL SECTION

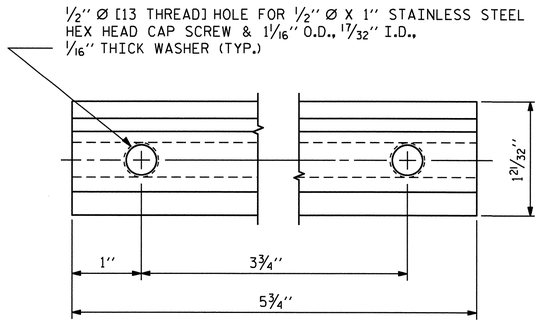

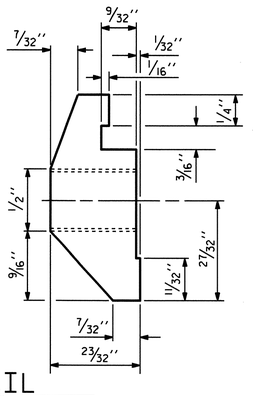

CLAMP BAR DETAIL

(4 REQUIRED PER POST)

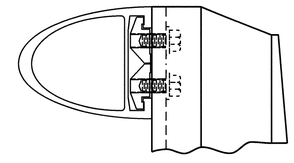

CLAMP ASSEMBLY

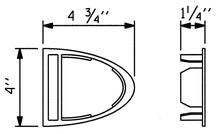

RAIL CAP

PROJECT NO. B-3611

BEAUFORT COUNTY

STATION: 43+25.00-L-

SHEET 2 OF 11

STATE OF NORTH CAROLINA
DEPARTMENT OF TRANSPORTATION
RALEIGH

STANDARD

2 BAR METAL RAIL

REVISIONS						SHEET NO.
NO.	BY:	DATE:	NO.	BY:	DATE:	S-68
1			3			TOTAL SHEETS
2			4			120

NORTH CAROLINA PROFESSIONAL SEAL 15825 ENGINEER BRUCE O. KLAPPENBACH
3-29-2010

ASSEMBLED BY : H. T. BARBOUR	DATE : 10-19-09		
CHECKED BY : G. W. DICKEY	DATE : 1-10		
DRAWN BY : EEM 6/94	REV. 2/6/97	EEM/RGW	
CHECKED BY : RGW 6/94	REV. 8/16/99	MAB/LES	
	REV. 5/1/06R	KMM/GM	

24-MAR-2010 12:10
M:\Structures\tbarbour\Microstation\b-3611_sd_2mr.dgn
tbarbour

STD. NO. BMR4

(FOR RAIL POST SPACINGS, SEE RAIL POST SPACING SHEETS)

ELEVATION

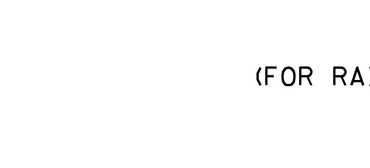

TOP VIEW

END VIEW (FIX AND EXP.)

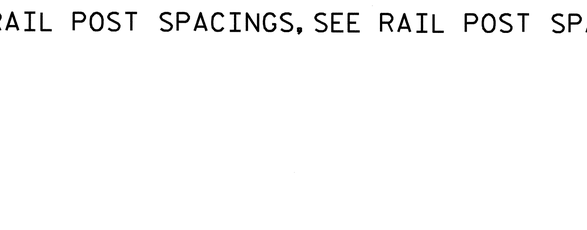

SECTION H-H (FIX)

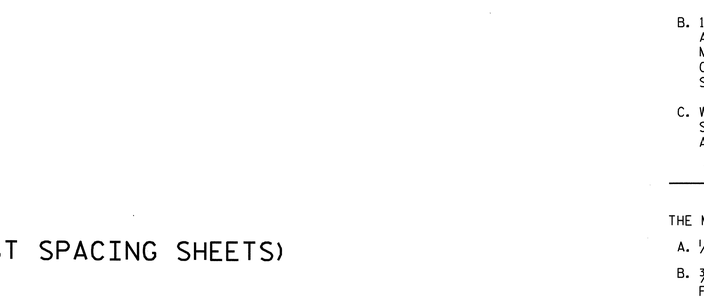

PLAN - RAIL AND END POST

FIXED

DETAILS FOR ATTACHING METAL RAIL TO END POST

NOTES

STRUCTURAL CONCRETE INSERT

THE STRUCTURAL CONCRETE INSERT ASSEMBLY SHALL CONSIST OF THE FOLLOWING COMPONENTS:

A. FERRULES SHALL BE MADE FROM STEEL MEETING THE REQUIREMENTS OF AASHTO M169, GRADE 12L14 AND SHALL HAVE A MINIMUM LENGTH OF THREADS OF 1½".

B. 1 - ¾" Ø X 1⅝" BOLT WITH WASHER. BOLT SHALL CONFORM TO THE REQUIREMENTS OF ASTM A307. BOLT AND WASHER SHALL BE GALVANIZED. (AT THE CONTRACTOR'S OPTION, STAINLESS STEEL BOLT AND WASHER MAY BE USED AS AN ALTERNATE FOR THE ¾" Ø X 1⅝" GALVANIZED BOLT AND WASHER. THEY SHALL CONFORM TO OR EXCEED THE MECHANICAL REQUIREMENTS OF ASTM A307. THE USE OF THIS ALTERNATE SHALL BE APPROVED BY THE ENGINEER.)

C. WIRE STRUT SHOWN IN THE CONCRETE INSERT ASSEMBLY DETAIL IS THE MINIMUM ALLOWABLE SIZE AND SHALL HAVE A MINIMUM TENSILE STRENGTH OF 100,000 PSI. AS AN OPTION, A 7/16" Ø WIRE STRUT WITH A MINIMUM TENSILE STRENGTH OF 90,000 PSI IS ACCEPTABLE.

NOTES

METAL RAIL TO END POST CONNECTION

THE METAL RAIL TO END POST CONNECTION SHALL CONSIST OF THE FOLLOWING COMPONENTS:

A. ½" PLATES SHALL CONFORM TO AASHTO M270 GRADE 36 AND SHALL BE GALVANIZED AFTER FABRICATION.

B. ¾" STRUCTURAL CONCRETE INSERT SHALL HAVE A WORKING LOAD SHEAR CAPACITY OF 4800 LBS. THE FERRULES SHALL ENGAGE A ¾"Ø X 1⅝" BOLT WITH 2" O.D. WASHER IN PLACE. THE ¾"Ø X 1⅝" BOLT SHALL HAVE N. C. THREADS.

C. CAP SCREWS FOR RAIL ATTACHMENT TO ANGLE SHALL CONFORM TO THE REQUIREMENTS OF ASTM F593 ALLOY 305 STAINLESS STEEL. CAP SCREWS TO BE CENTERED IN SLOTS AT 60°F.

D. STANDARD CLAMP BARS (SEE METAL RAIL SHEET).

E. ½" Ø PIPE SLEEVES (IF REQUIRED) TO BE GALVANIZED.

THE COST OF THE STANDARD CLAMP BARS AND CAP SCREWS USED IN THE METAL RAIL TO END POST CONNECTION SHALL BE INCLUDED IN THE UNIT CONTRACT PRICE BID FOR LINEAR FEET OF 1 OR 2 BAR METAL RAILS.

THE ¾" STRUCTURAL CONCRETE INSERT WITH BOLT SHALL BE ASSEMBLED IN THE SHOP.

THE COST OF THE ¾" STRUCTURAL CONCRETE INSERT ASSEMBLY, AND THE ½" PLATES COMPLETE IN PLACE SHALL BE INCLUDED IN THE VARIOUS PAY ITEMS.

THE CONTRACTOR, AT HIS OPTION, MAY USE AN ADHESIVE BONDING SYSTEM IN LIEU OF THE STRUCTURAL CONCRETE INSERT EMBEDDED IN THE END POST. IF THE ADHESIVE BONDING SYSTEM IS USED, THE ¾" Ø X 1⅝" BOLT WITH WASHER SHALL BE REPLACED WITH A ¾"Ø X 6½" BOLT AND 2" O.D. WASHER. ALL SPECIFICATIONS THAT APPLY TO THE ¾" Ø X 1⅝" BOLT SHALL APPLY TO THE ¾"Ø X 6 ½" BOLT. FIELD TESTING OF THE ADHESIVE BONDING SYSTEM IS NOT REQUIRED.

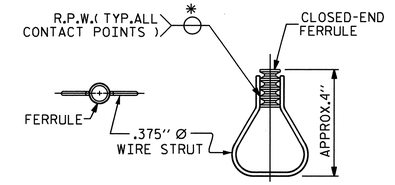

PLAN ELEVATION

STRUCTURAL CONCRETE INSERT

* EACH WELDED ATTACHMENT OF WIRE TO FERRULE SHALL DEVELOP THE TENSILE STRENGTH OF THE WIRE.

PROJECT NO. B-3611

BEAUFORT COUNTY

STATION: 43+25.00-L-

SHEET 3 OF 11

STATE OF NORTH CAROLINA
DEPARTMENT OF TRANSPORTATION
RALEIGH

END OF RAIL DETAILS
FOR TWO BAR
METAL RAILS

REVISIONS						SHEET NO.
NO.	BY:	DATE:	NO.	BY:	DATE:	S-69
1			3			TOTAL SHEETS
2			4			120

STD. NO. BMR2

ASSEMBLED BY :	H. T. BARBOUR	DATE :	10-19-09
CHECKED BY :	G. W. DICKEY	DATE :	1-10
DRAWN BY : FCJ 1/88	REV. 10/17/00		LES/RDR
CHECKED BY : CRK 3/89	REV. 5/7/03		RWW/JTE
	REV. 5/1/06		TLA/GM

31-MAR-2010 12:15
M:\Structures\tbarbour\Microstation\b-3611_sd_2mr.dgn
tbarbour

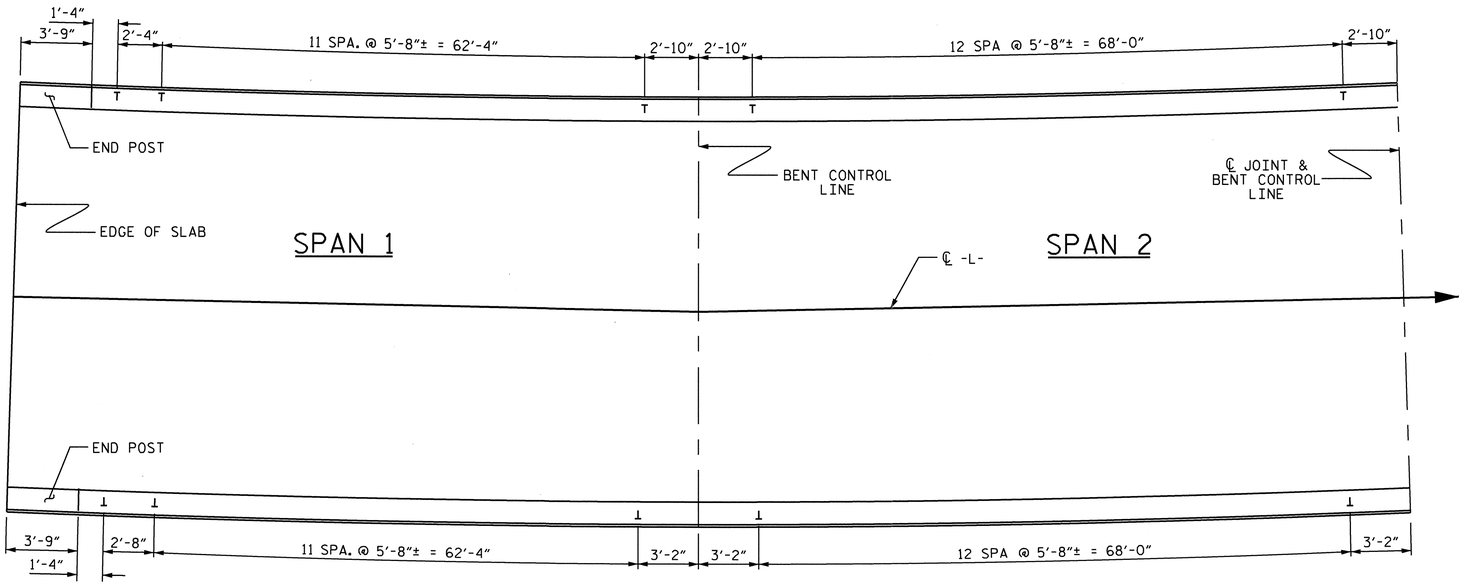

PLAN OF RAIL POST SPACINGS

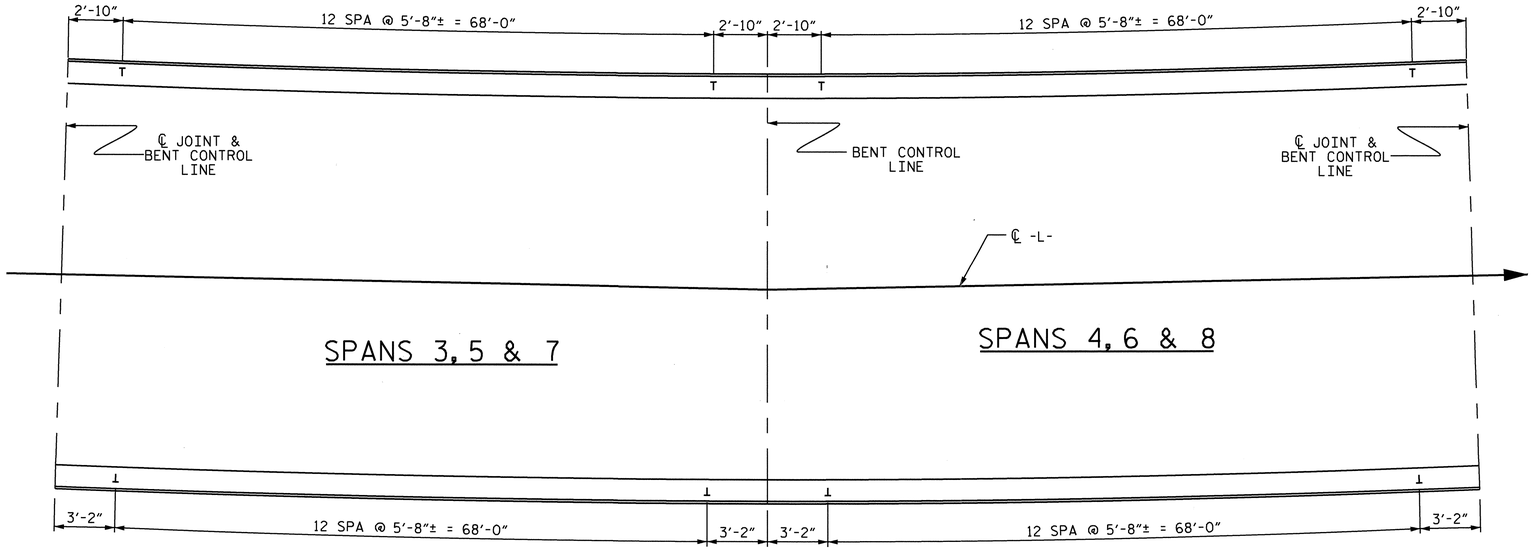

PLAN OF RAIL POST SPACINGS

PROJECT NO. B-3611

BEAUFORT COUNTY

STATION: 43+25.00-L-

SHEET 4 OF 11

STATE OF NORTH CAROLINA
DEPARTMENT OF TRANSPORTATION
RALEIGH

RAIL POST SPACING FOR TWO BAR METAL RAIL

NORTH CAROLINA PROFESSIONAL SEAL 15825 ENGINEER BRUCE D. KLAPPENBACH
3-29-2010

REVISIONS						SHEET NO.
NO.	BY:	DATE:	NO.	BY:	DATE:	S-70
1			3			TOTAL SHEETS
2			4			120

DRAWN BY : H. T. BARBOUR DATE : 10-13-09
CHECKED BY : G. W. DICKEY DATE : 1-10

24-MAR-2010 12:10
M:\Structures\tbarbour\Microstation\b-3611_sd_2mr.dgn
tbarbour

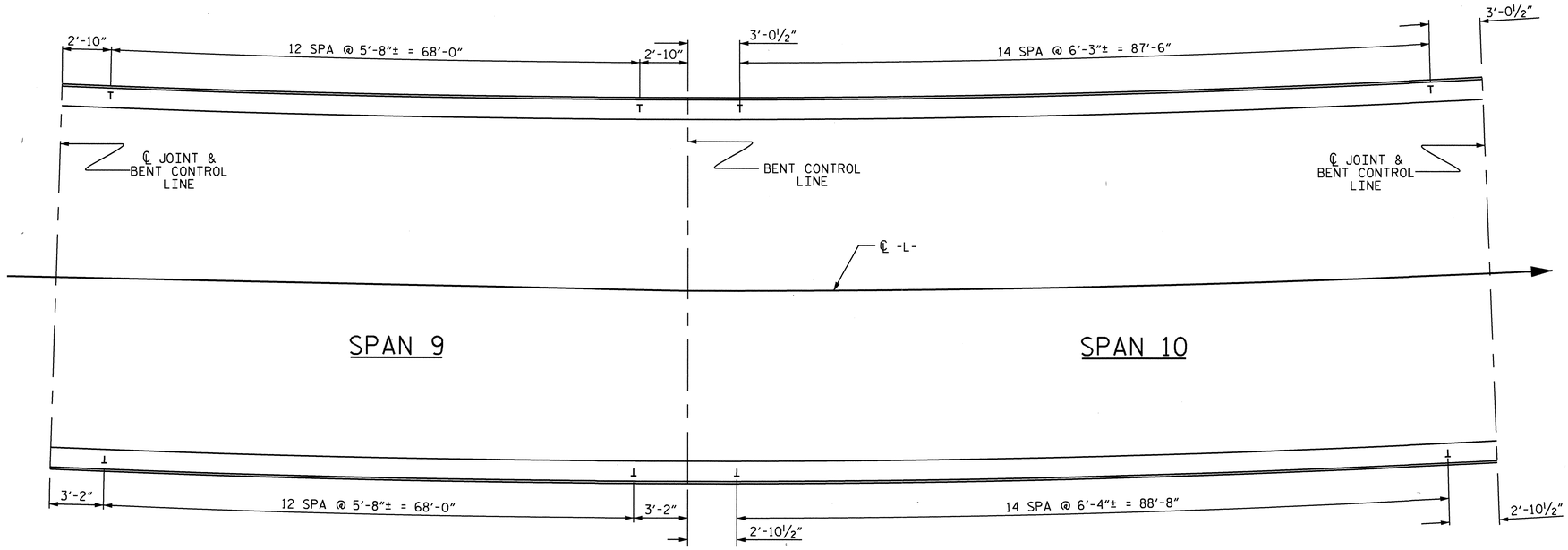

PLAN OF RAIL POST SPACINGS

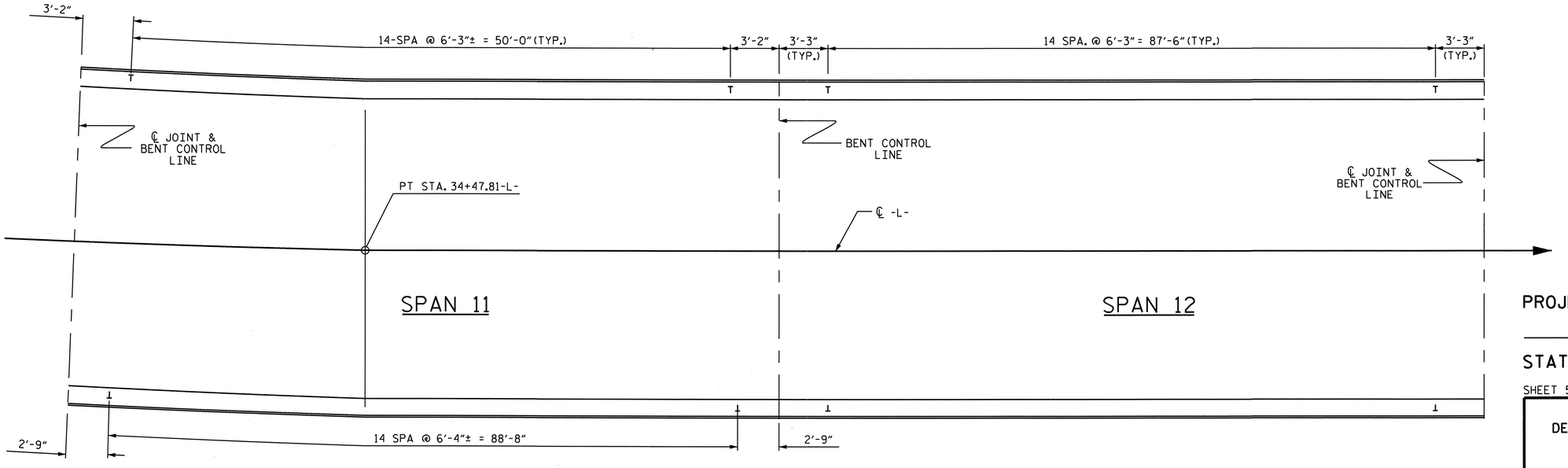

PLAN OF RAIL POST SPACINGS

PROJECT NO. B-3611

BEAUFORT COUNTY

STATION: 43+25.00-L-

SHEET 5 OF 11

STATE OF NORTH CAROLINA
DEPARTMENT OF TRANSPORTATION
RALEIGH

RAIL POST SPACING FOR TWO BAR METAL RAIL

REVISIONS						SHEET NO.
NO.	BY:	DATE:	NO.	BY:	DATE:	S-71
1			3			TOTAL SHEETS
2			4			120

NORTH CAROLINA PROFESSIONAL SEAL 15825 ENGINEER BRIDGE D. KLAPPENBACH
3-29-2010

DRAWN BY : H. T. BARBOUR DATE : 10-13-09
CHECKED BY : G. W. DICKEY DATE : 1-10

24-MAR-2010 12:10
M:\Structures\tbarbour\Microstation\b-3611_sd_2mr.dgn
tbarbour

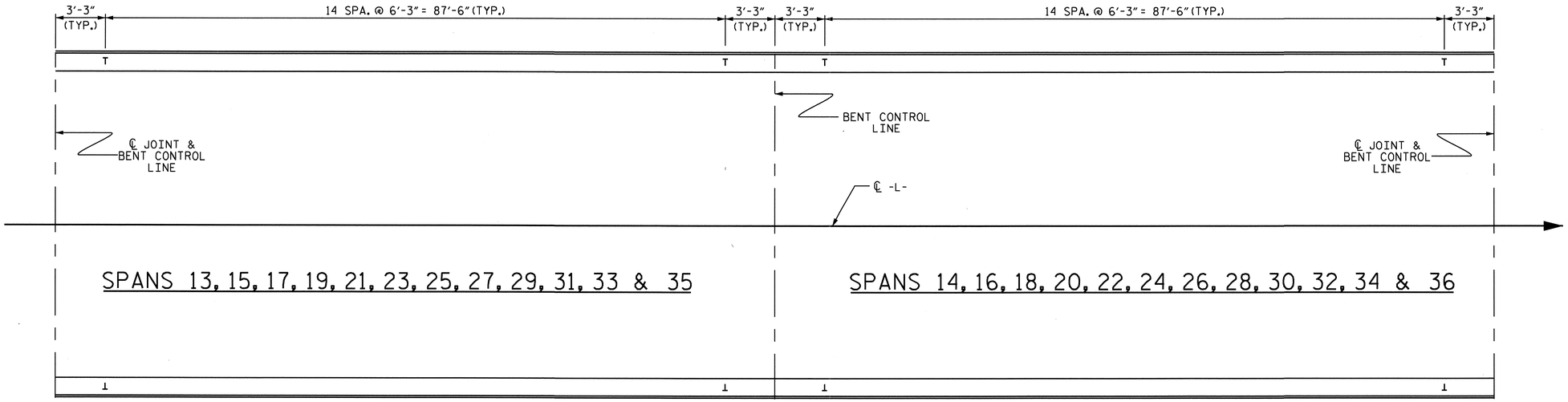

PLAN OF RAIL POST SPACINGS

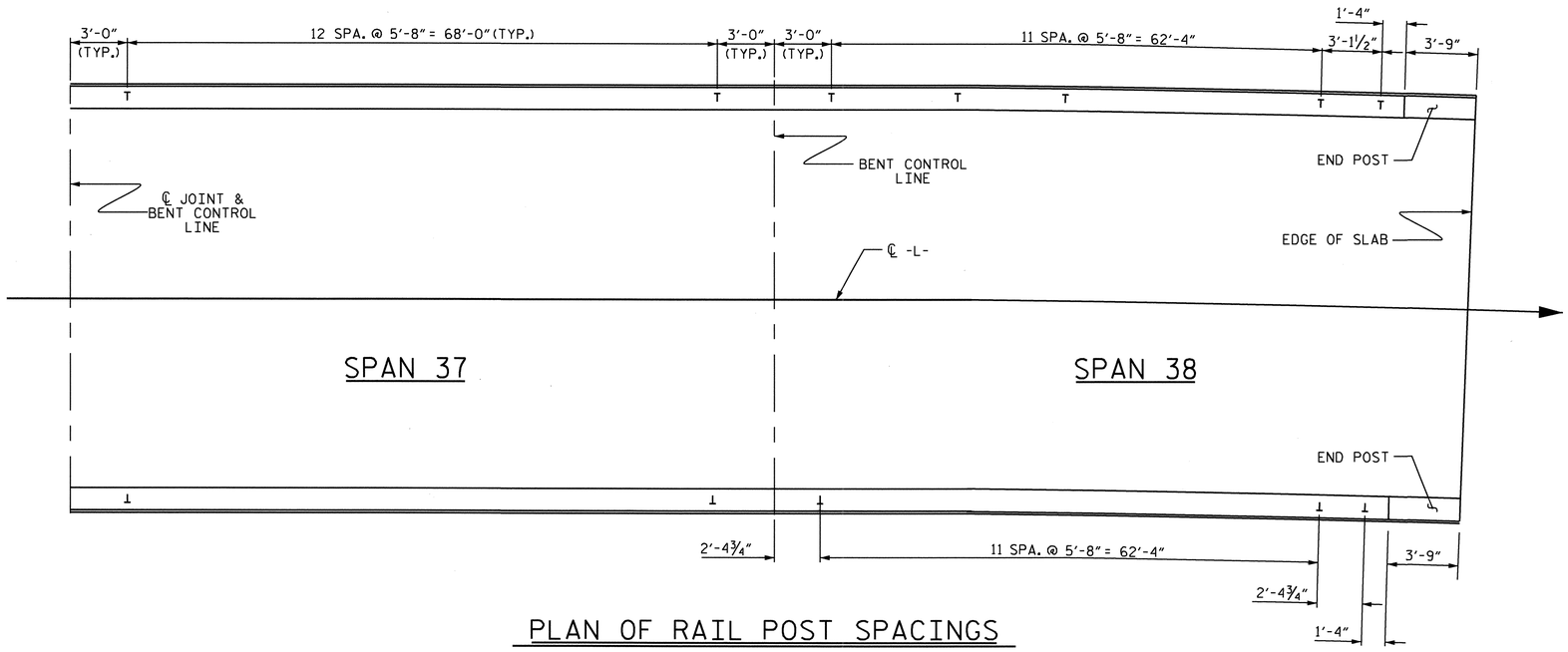

PLAN OF RAIL POST SPACINGS

PROJECT NO. B-3611

BEAUFORT COUNTY

STATION: 43+25.00-L-

SHEET 6 OF 11

STATE OF NORTH CAROLINA
DEPARTMENT OF TRANSPORTATION
RALEIGH

RAIL POST SPACING FOR TWO BAR METAL RAIL

NORTH CAROLINA PROFESSIONAL SEAL 13825 ENGINEER BRUCE O. KLAPPENBACH
3-29-2010

REVISIONS						SHEET NO.
NO.	BY:	DATE:	NO.	BY:	DATE:	S-72
1			3			TOTAL SHEETS
2			4			120

DRAWN BY : H. T. BARBOUR DATE : 10-13-09
CHECKED BY : G. W. DICKEY DATE : 1-10

24-MAR-2010 12:10
M:\Structures\tbarbour\Microstation\b-3611_sd_2mr.dgn
tbarbour

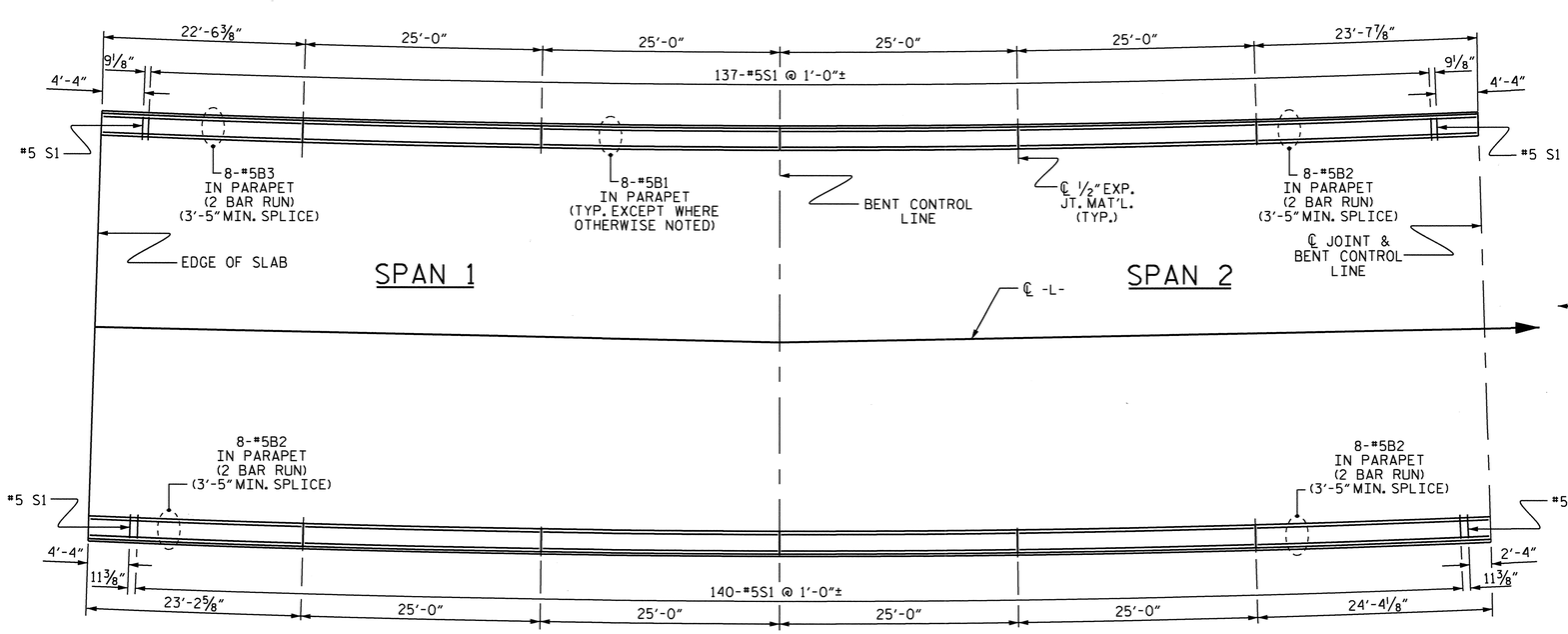

PLAN OF CONCRETE PARAPET

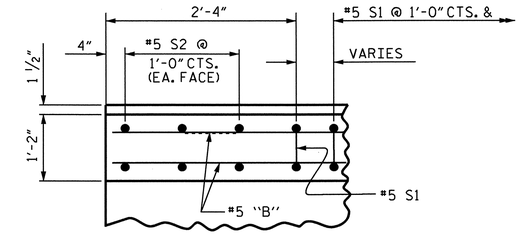

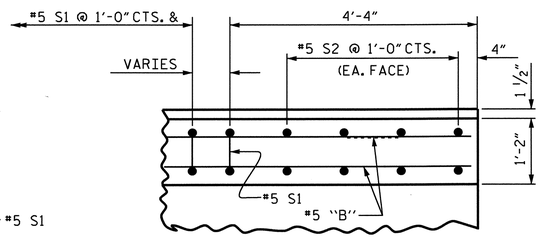

PLAN OF PARAPET @ ALL JOINTS EXCLUDING JOINTS @ END POST

(LEFT SIDE SHOWN. RIGHT SIDE OPPOSITE ROTATION.)
(FOR S1 AND S2 BARS IN END POST SEE, END POST SHEETS.)
ALL S2 BARS ARE ADHESIVELY ANCHORED.

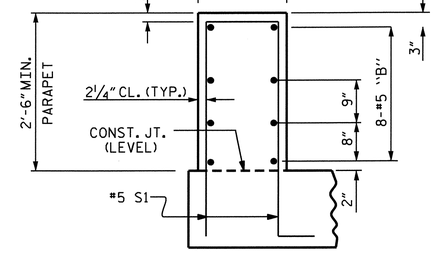

SECTION THROUGH PARAPET

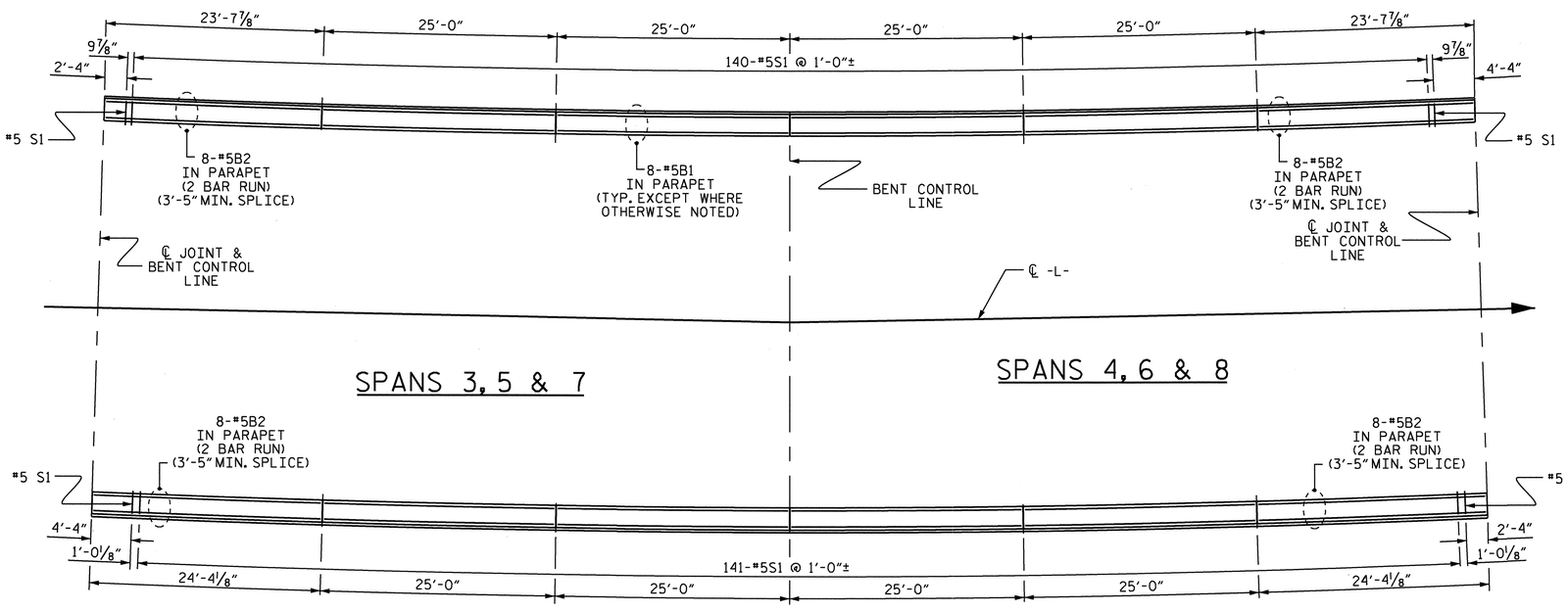

PLAN OF CONCRETE PARAPET

PROJECT NO. B-3611
BEAUFORT COUNTY
STATION: 43+25.00-L-

SHEET 7 OF 11

STATE OF NORTH CAROLINA
DEPARTMENT OF TRANSPORTATION
RALEIGH

CONCRETE PARAPET FOR TWO BAR METAL RAIL

REVISIONS						SHEET NO.
NO.	BY:	DATE:	NO.	BY:	DATE:	S-73
1			3			TOTAL SHEETS
2			4			120

NORTH CAROLINA PROFESSIONAL SEAL 15825 ENGINEER BRUCE O. KLAPPENBACH
3-29-2010

DRAWN BY : H. T. BARBOUR DATE : 10-13-09
CHECKED BY : G. W. DICKEY DATE : 1-10

24-MAR-2010 12:10
M:\Structures\tbarbour\Microstation\b-3611_sd_2mr.dgn
tbarbour

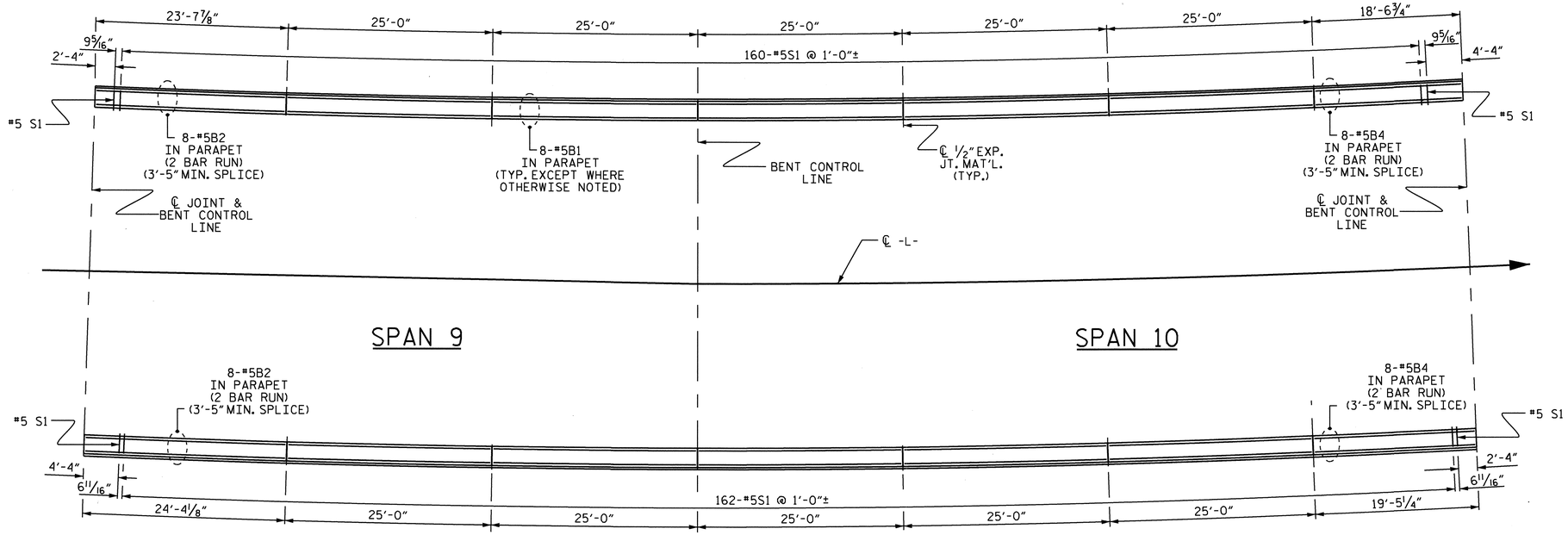

PLAN OF CONCRETE PARAPET

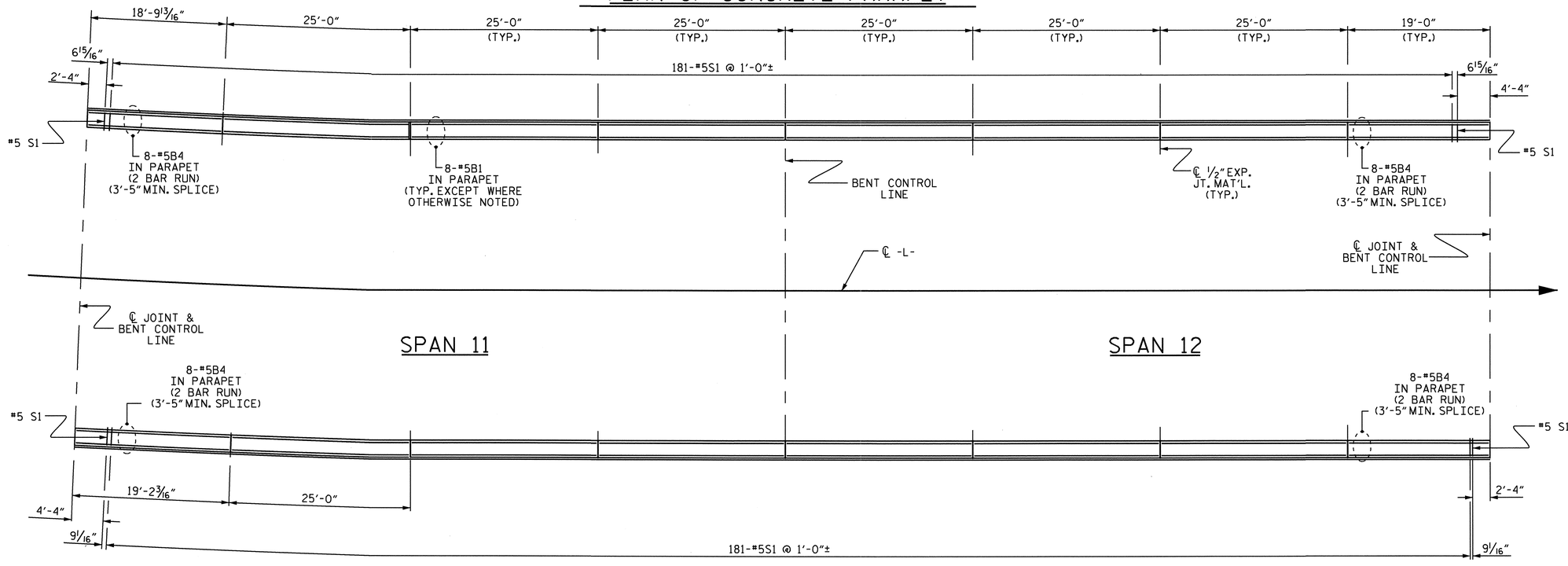

PLAN OF CONCRETE PARAPET

NORTH CAROLINA PROFESSIONAL SEAL 15825 ENGINEER D. K. LAPPERARA
3-29-2010

PROJECT NO. B-3611

BEAUFORT COUNTY

STATION: 43+25.00-L-

SHEET 8 OF 11

STATE OF NORTH CAROLINA
DEPARTMENT OF TRANSPORTATION
RALEIGH

CONCRETE PARAPET FOR TWO BAR METAL RAIL

REVISIONS						SHEET NO.
NO.	BY:	DATE:	NO.	BY:	DATE:	S-74
1			3			TOTAL SHEETS
2			4			120

DRAWN BY : H. T. BARBOUR DATE : 10-13-09
CHECKED BY : G. W. DICKEY DATE : 1-10

24-MAR-2010 12:10
M:\Structures\tbarbour\Microstation\b-3611_sd_2mr.dgn
tbarbour

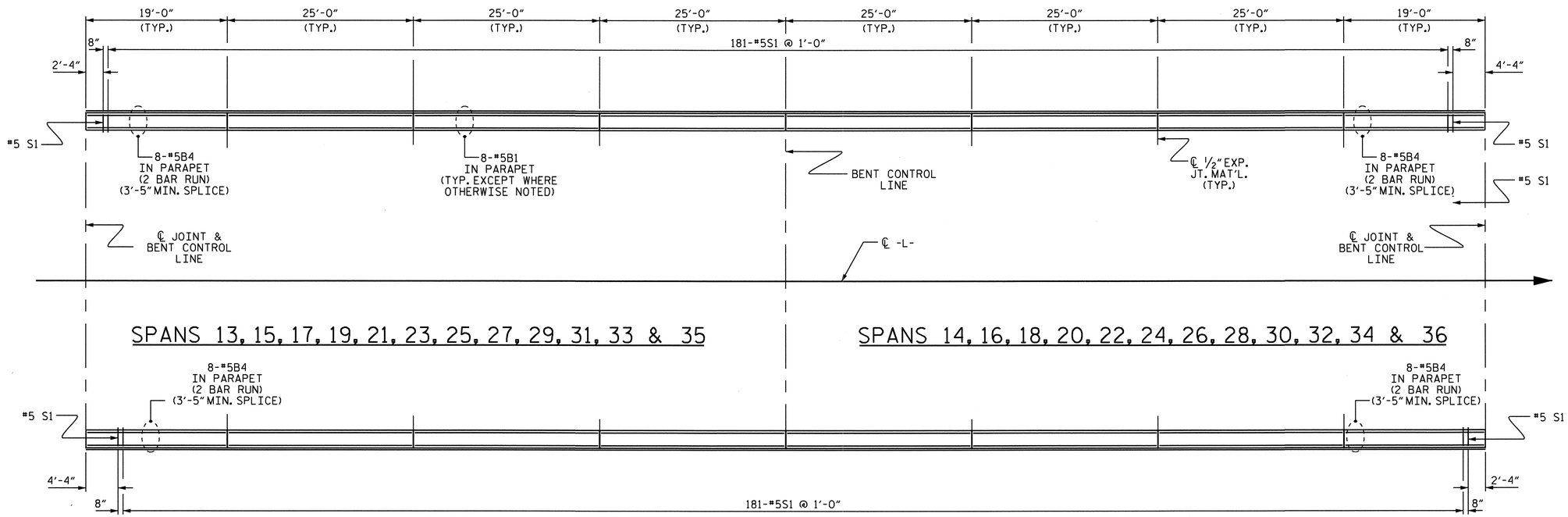

PLAN OF CONCRETE PARAPET

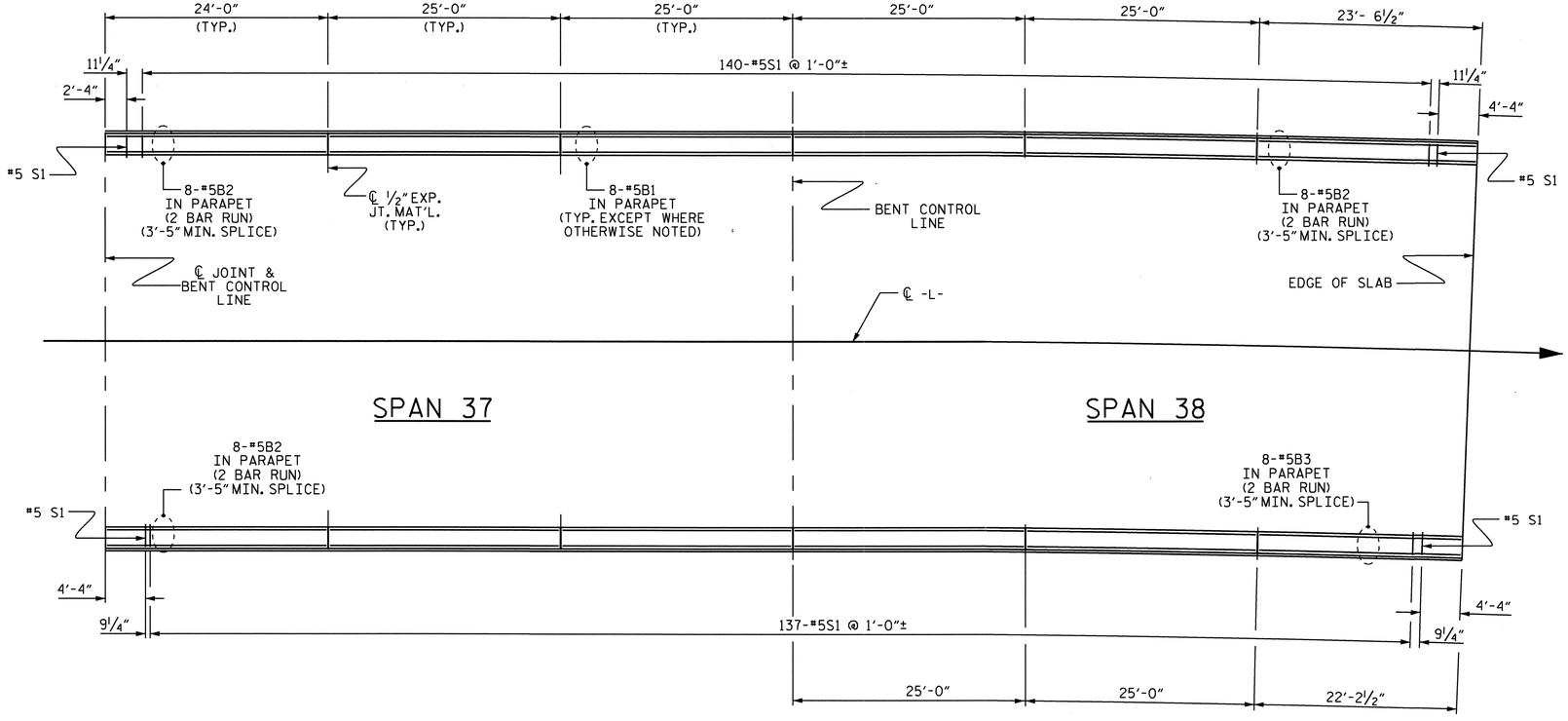

PLAN OF CONCRETE PARAPET

PROJECT NO. B-3611

BEAUFORT COUNTY

STATION: 43+25.00-L-

SHEET 9 OF 11

STATE OF NORTH CAROLINA
DEPARTMENT OF TRANSPORTATION
RALEIGH

CONCRETE PARAPET FOR TWO BAR METAL RAIL

REVISIONS						SHEET NO.
NO.	BY:	DATE:	NO.	BY:	DATE:	S-75
1			3			TOTAL SHEETS
2			4			120

NORTH CAROLINA PROFESSIONAL SEAL 15825 ENGINEER BRUCE D. KLAPPENBACH
3-29-2010

DRAWN BY : H. T. BARBOUR DATE : 10-13-09
CHECKED BY : G. W. DICKEY DATE : 1-10

24-MAR-2010 12:10
M:\Structures\tbarbour\Microstation\b-3611_sd_2mr.dgn
tbarbour

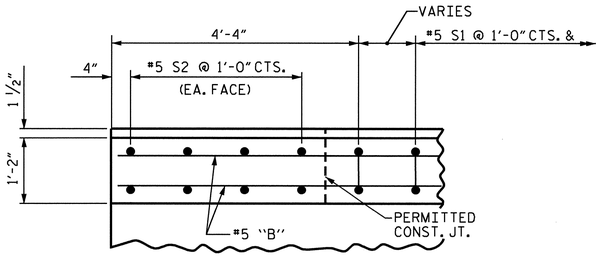

PLAN OF PARAPET

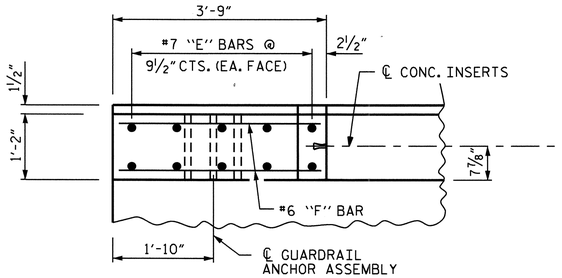

PLAN OF END POST

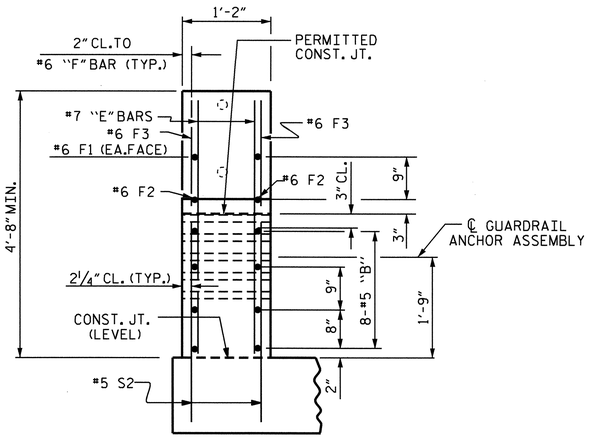

END VIEW

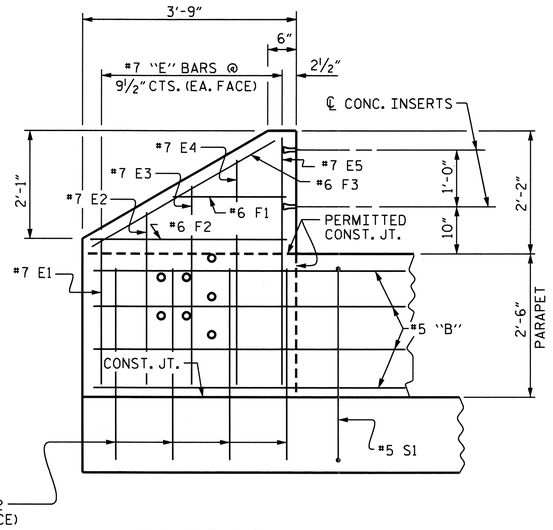

ELEVATION

PARAPET AND END POST FOR TWO BAR RAIL

ALL S2 BARS ARE TO BE ADHESIVELY ANCHORED.

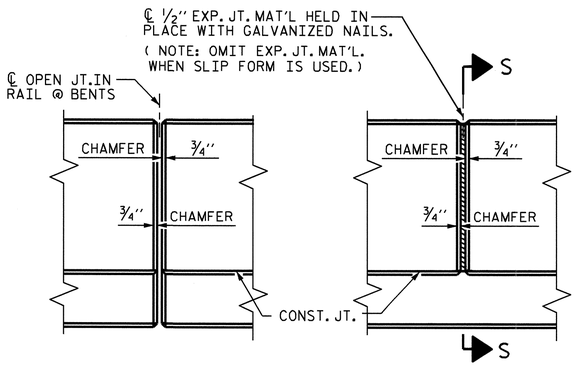

ELEVATION AT EXPANSION JOINTS

BARRIER RAIL DETAILS

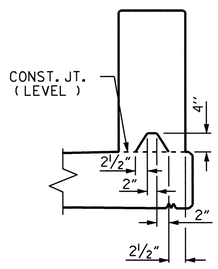

SECTION S-S

AT DAM IN OPEN JOINT
(THIS IS TO BE USED ONLY
WHEN SLIP FORM IS USED)

BAR TYPE

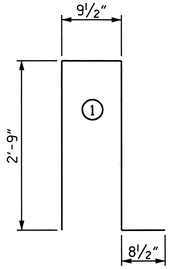

ALL BAR DIMENSIONS ARE OUT TO OUT.

BILL OF MATERIAL FOR PARAPETS AND END POSTS

BAR	NO.	SIZE	TYPE	LENGTH	WEIGHT
✱ B1	1648	#5	STR	24'-8"	42399
✱ B2	320	#5	STR	13'-9"	4589
✱ B3	32	#5	STR	12'-10"	428
✱ B4	864	#5	STR	11'-4"	10213
✱ E1	8	#7	STR	2'-6"	41
✱ E2	8	#7	STR	3'-0"	49
✱ E3	8	#7	STR	3'-6"	57
✱ E4	8	#7	STR	4'-0"	65
✱ E5	8	#7	STR	4'-4"	71
✱ F1	8	#6	STR	1'-10"	22
✱ F2	8	#6	STR	3'-0"	36
✱ F3	8	#6	STR	3'-8"	44
✱ S1	6501	#5	1	7'-0"	47463
✱ S2	536	#5	STR	3'-0"	1677
✱ EPOXY COATED REINF. STEEL				LBS.	107154
CLASS AA CONCRETE				CU. YDS.	723.7
TOTAL LIN. FT. OF CONCRETE PARAPET					6699.5

NOTES

FOR DETAIL OF CONCRETE INSERT AND GUARDRAIL ANCHOR ASSEMBLY, SEE "RAIL POST SPACINGS AND END OF RAIL DETAIL" SHEETS.

THE #5 S2 BARS SHALL BE INSTALLED USING AN ADHESIVE ANCHORING SYSTEM AFTER SAWING THE JOINT. THE YIELD LOAD FOR THE #5S2 BARS IS 18.6 kips.

FIELD TESTING OF THE ADHESIVE BONDING SYSTEM IS REQUIRED.

ADHESIVE ANCHOR SYSTEM SHALL HAVE A MINIMUM PULLOUT STRENGTH OF 50% OF THE YIELD LOAD AND A MINIMUM OF 20% OF THE FIRST 50 ANCHORS SHALL BE TESTED. IF ANY ANCHOR FAILS THE CONTRACTOR SHALL AT HIS EXPENSE TEST ALL ANCHORS UNLESS DIRECTED OTHERWISE BY THE ENGINEER.

PARAPETS IN A CONTINUOUS UNIT SHALL NOT BE CAST UNTIL ALL SLAB CONCRETE IN THE UNIT HAS BEEN CAST AND REACHED A MINIMUM COMPRESSIVE STRENGTH OF 3000 psi.

ALL REINFORCING STEEL IN PARAPETS AND END POSTS SHALL BE EPOXY COATED.

GROOVED CONTRACTION JOINTS, ½" IN DEPTH, SHALL BE TOOLED IN ALL EXPOSED FACES OF THE PARAPET IN ACCORDANCE WITH ARTICLE 825-10(B) OF THE STANDARD SPECIFICATIONS. THE CONTRACTION JOINTS SHALL BE LOCATED AT A SPACING OF 8 FEET TO 10 FEET BETWEEN EXPANSION JOINTS. NO CONTRACTION JOINTS WILL BE REQUIRED FOR SEGMENTS LESS THAN 10 FEET IN LENGTH.

THE JOINT IN THE DECK SHALL BE SAWED PRIOR TO THE CASTING OF THE PARAPET.

PROJECT NO. B-3611

BEAUFORT COUNTY

STATION: 43+25.00-L-

SHEET 10 OF 11

STATE OF NORTH CAROLINA
DEPARTMENT OF TRANSPORTATION
RALEIGH

END POST DETAILS FOR TWO BAR METAL RAIL

NORTH CAROLINA PROFESSIONAL SEAL 15825 ENGINEER BRUCE D. KLAPPENBACH
3-29-2010

REVISIONS						SHEET NO.
NO.	BY:	DATE:	NO.	BY:	DATE:	S-76
1			3			TOTAL SHEETS
2			4			120

DRAWN BY : H. T. BARBOUR DATE : 10-21-09
CHECKED BY : G. W. DICKEY DATE : 1-10

24-MAR-2010 12:10
M:\Structures\tbarbour\Microstation\b-3611_sd_2mr.dgn
tbarbour

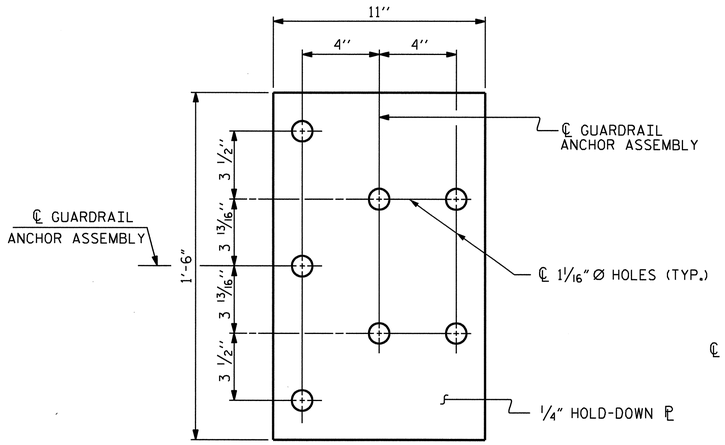

PLAN

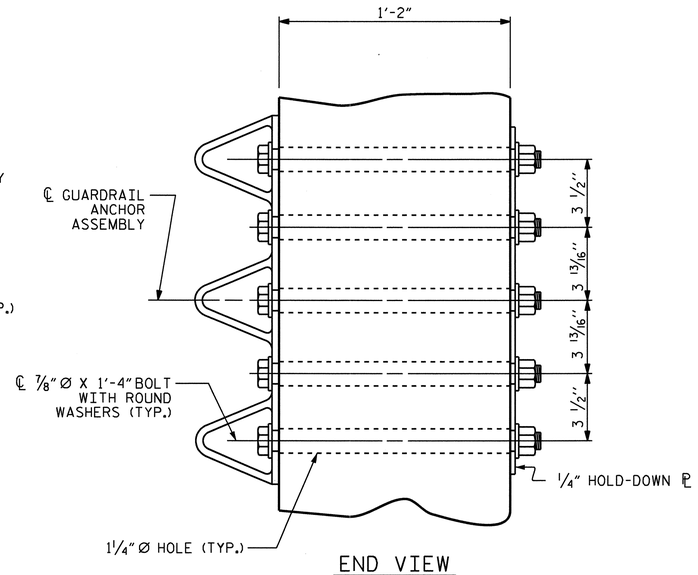

END VIEW

GUARDRAIL ANCHOR ASSEMBLY DETAILS

NOTES

THE GUARDRAIL ANCHOR ASSEMBLY SHALL CONSIST OF A 1/4'' HOLD DOWN PLATE AND 7 - 7/8'' Ø BOLTS WITH NUTS AND WASHERS.

THE HOLD-DOWN PLATE SHALL CONFORM TO AASHTO M270 GRADE 36. AFTER FABRICATION, THE HOLD-DOWN PLATE SHALL BE HOT-DIP GALVANIZED IN ACCORDANCE WITH AASHTO M111.

BOLTS SHALL CONFORM TO THE REQUIREMENTS OF ASTM A307 AND NUTS SHALL CONFORM TO THE REQUIREMENTS OF AASHTO M291. BOLTS, NUTS AND WASHERS SHALL BE GALVANIZED. AT THE CONTRACTOR'S OPTION, STAINLESS STEEL BOLTS, NUTS AND WASHERS MAY BE USED AS AN ALTERNATE FOR THE 7/8'' Ø GALVANIZED BOLTS, NUTS AND WASHERS. THEY SHALL CONFORM TO OR EXCEED THE MECHANICAL REQUIREMENTS OF ASTM A307. THE USE OF THIS ALTERNATE SHALL BE APPROVED BY THE ENGINEER.

AFTER INSTALLATION, THE EXPOSED THREAD OF THE BOLT SHALL BE BURRED WITH A SHARP POINTED TOOL.

THE COST OF THE GUARDRAIL ANCHOR ASSEMBLIES WITH BOLTS, NUTS AND WASHERS COMPLETE IN PLACE, SHALL BE INCLUDED IN THE VARIOUS PAY ITEMS.

THE VERTICAL REINFORCING BARS MAY BE SHIFTED SLIGHTLY IN THE END POST TO CLEAR ASSEMBLY BOLTS.

THE 1 1/4'' Ø HOLES SHALL BE FORMED OR DRILLED WITH A CORE BIT. IMPACT TOOLS WILL NOT BE PERMITTED. ANY CONCRETE DAMAGED BY THIS WORK SHALL BE REPAIRED TO THE SATISFACTION OF THE ENGINEER.

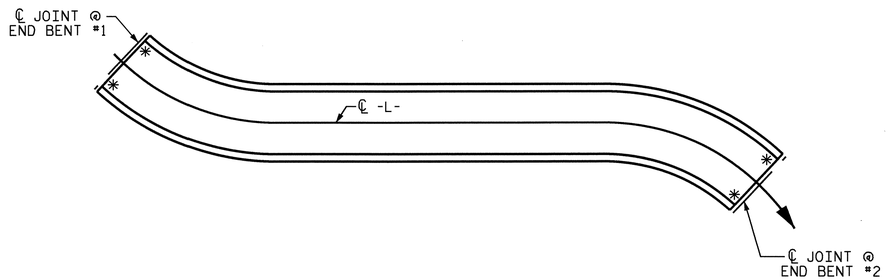

SKETCH SHOWING POINTS OF ATTACHMENT

* LOCATION OF GUARDRAIL ATTACHMENT

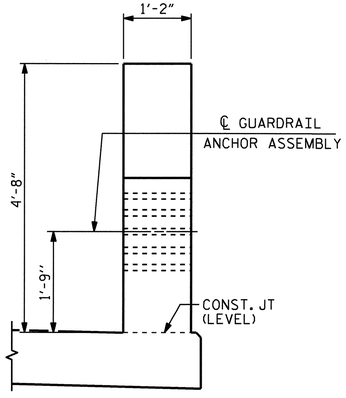

END VIEW
(TWO BAR METAL RAIL)

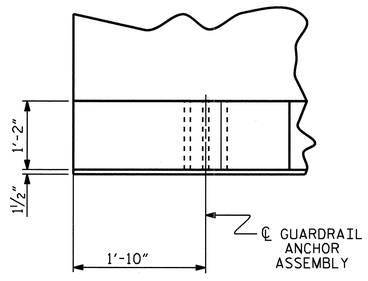

PLAN

LOCATION OF GUARDRAIL ANCHOR AT END POST

ASSEMBLED BY :	H. T. BARBOUR	DATE :	10-19-09
CHECKED BY :	G. W. DICKEY	DATE :	1-10
DRAWN BY : EEM	6/94	REV. 10/17/00	RWW/LES
CHECKED BY : RGW	6/94	REV. 5/7/03	RWW/JTE
		REV. 5/1/06	TLA/GM

PROJECT NO. B-3611

BEAUFORT COUNTY

STATION: 43+25.00-L-

SHEET 11 OF 11

STATE OF NORTH CAROLINA
DEPARTMENT OF TRANSPORTATION
RALEIGH

STANDARD

GUARDRAIL ANCHORAGE DETAILS FOR METAL RAILS

REVISIONS						SHEET NO.
NO.	BY:	DATE:	NO.	BY:	DATE:	S-77
1			3			TOTAL SHEETS
2			4			120

NORTH CAROLINA PROFESSIONAL SEAL 15825 ENGINEER D. K. LAPPENBUSCH
3-29-2010

STD. NO. BMR8

24-MAR-2010 12:10
M:\Structures\tbarbour\Microstation\b-3611_sd_2mr.dgn
tbarbour

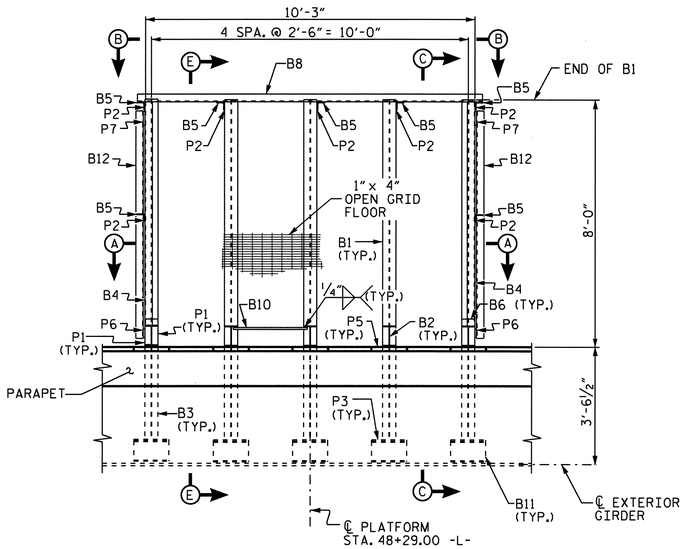

PLAN

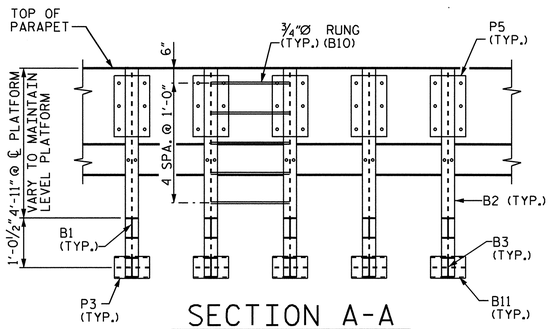

SECTION A-A

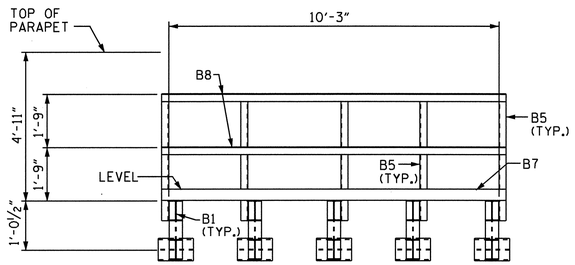

SECTION B-B

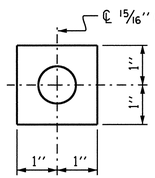

PLATE WASHER DETAIL (W1)

℄ 7/16" X 2" X 2"

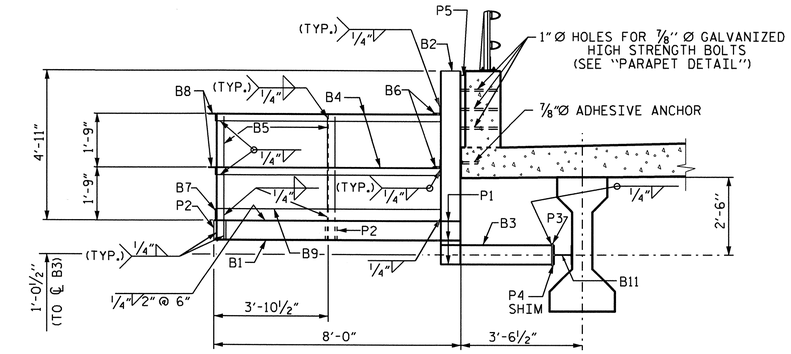

SECTION E-E

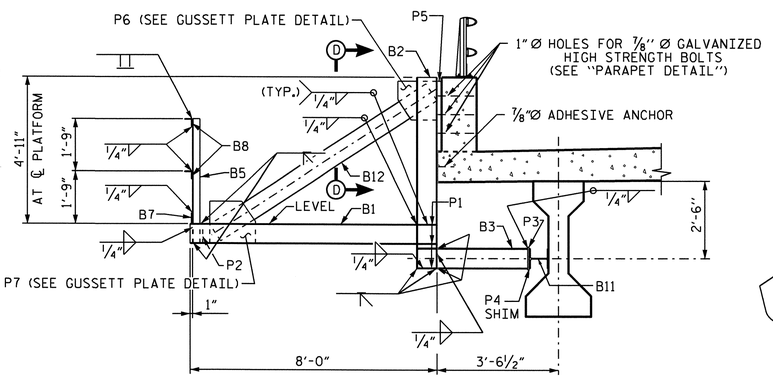

SECTION C-C

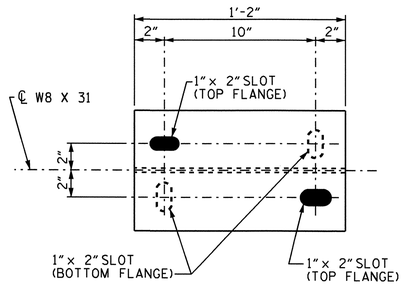

ELEVATION

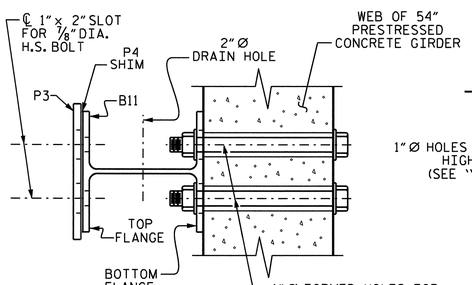

END VIEW

B11 DETAIL

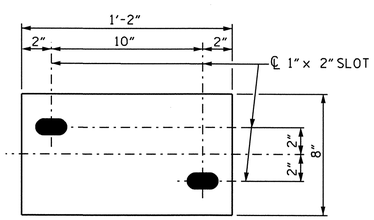

P4 SHIM DETAIL

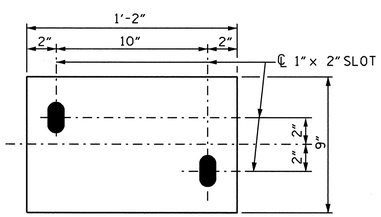

P3 DETAIL

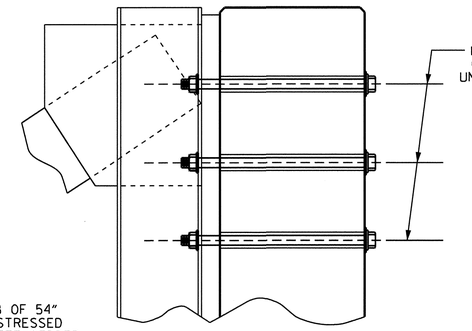

PARAPET DETAIL

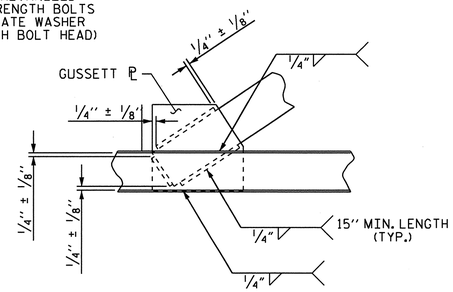

GUSSET PLATE DETAIL

(TYP. FOR P6 AND P7)

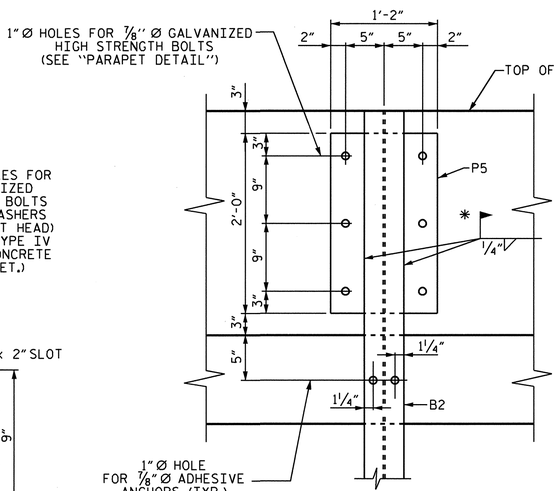

SECTION D-D

* CONTRACTOR HAS THE OPTION TO SHOP WELD

NOTES:

ALL STRUCTURAL STEEL SHALL BE AASHTO M270 GRADE 50.

ALL FABRICATION SHALL CONFORM TO THE APPLICABLE SECTION OF THE NORTH CAROLINA DEPARTMENT OF TRANSPORTATION STANDARD SPECIFICATIONS FOR ROADS AND STRUCTURES.

BAND ALL EDGES OF OPEN GRID FLOOR.

OPEN GRID FLOOR SHALL BE ATTACHED TO EACH HORIZONTAL FLOOR MEMBER USING AN APPROVED FASTENER.

ALL FIELD CONNECTIONS TO BE ⅞"Ø HIGH STRENGTH BOLTS UNLESS OTHERWISE NOTED.

⅞"Ø ADHESIVE ANCHORS SHALL BE STAINLESS STEEL.

ADHESIVE ANCHOR SYSTEM SHALL HAVE A MINIMUM PULLOUT STRENGTH OF 50% OF THE YIELD LOAD. A MINIMUM OF TWO (2) ANCHORS SHALL BE TESTED. IF ANY ANCHOR FAILS, THE CONTRACTOR SHALL AT HIS EXPENSE TEST ALL ANCHORS UNLESS DIRECTED OTHERWISE BY THE ENGINEER.

FOR SOLAR ARRAY SUPPORT PLATFORM, SEE SPECIAL PROVISIONS.

FOR DETAILS OF NAVIGATIONAL LIGHTING, SEE "NAVIGATIONAL LIGHTING AND CONDUIT SYSTEM" PLAN SHEET.

GALVANIZE THE HIGH STRENGTH BOLTS, NUTS, PLATE WASHERS (W1), AND WASHERS IN ACCORDANCE WITH THE STANDARD SPECIFICATIONS.

FOR HIGH STRENGTH BOLTS, SEE SPECIAL PROVISIONS.

DIRECT TENSION INDICATORS ARE TO BE USED IN CONJUNCTION WITH THE PLATE WASHERS. FOR DIRECT TENSION INDICATORS, SEE SPECIAL PROVISIONS.

THE 1" DIAMETER HOLES IN THE PARAPET SHALL BE FORMED OR DRILLED WITH A CORE BIT. IMPACT TOOLS WILL NOT BE PERMITTED. ANY CONCRETE DAMAGED BY THIS WORK SHALL BE REPAIRED TO THE SATISFACTION OF THE ENGINEER.

BILL OF MATERIAL

ITEM	NUMBER	DESCRIPTION
B1	5	W8 x 18
B2	5	W8 x 18
B3	5	W8 x 18
B4	4	L3 x 3 x ¼
B5	7	L3 x 3 x ¼
B6	4	L3 x 3 x ¼
B7	1	ℙ ¼ x 5
B8	2	L3 x 3 x ¼
B9	2	ℙ ¼ x 5
B10	5	¾"Ø RUNG
B11	5	W8 x 31
B12	2	WT8 x 18
P1	40	ℙ 5/16 x 2½ x 7½
P2	7	ℙ ¼ x 5 x 8
P3	5	ℙ ½ x 9 x 14
P4	AS REQ'D	ℙ 3/16 x 8 x 14
P5	5	ℙ 1¾" x 14 x 24
P6	2	⅜" GUSSETT ℙ
P7	2	⅜" GUSSETT ℙ
W1	40	ℙ 7/16" x 2" x 2"
1"x4" OPEN GRID FLOOR W/ 3/16"x¾" BRG. BARS		
⅞" Ø STAINLESS STEEL ADHESIVE ANCHORS (10 REQ'D.)		
⅞" Ø H.S. BOLT W/ WASHER (40 REQ'D.)		

NORTH CAROLINA PROFESSIONAL SEAL 15825 ENGINEER B. D. KLAPPENBACH
9-6-2010

PROJECT NO. B-3611

BEAUFORT COUNTY

STATION: 43+25.00 -L-

STATE OF NORTH CAROLINA
DEPARTMENT OF TRANSPORTATION
RALEIGH

SOLAR ARRAY PLATFORM

REVISIONS						SHEET NO.
NO.	BY:	DATE:	NO.	BY:	DATE:	S-78
1			3			TOTAL SHEETS
2			4			120

DRAWN BY : D. A. GLADDEN DATE : 2-4-10
CHECKED BY : B.D. KLAPPENBACH DATE : 2-9-10

06-APR-2010 11:49
R:\Structures\dgladden\Microstation\b3611_sd_ab.dgn
bklappenbach

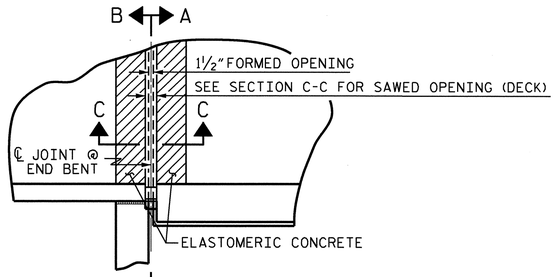

PLAN AT END BENT

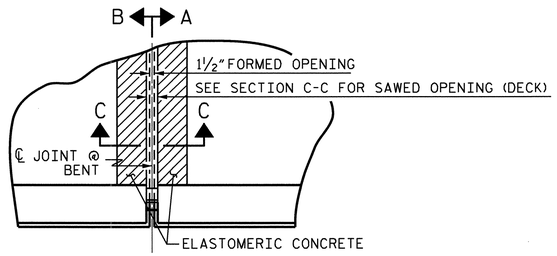

PLAN AT BENT

NOTES

FOR EVAZOTE JOINT SEALS, SEE SPECIAL PROVISIONS.

THE NOMINAL UNCOMPRESSED SEAL WIDTH OF THE EVAZOTE JOINT SEAL SHALL BE 3⁷⁄₁₆".

FOR ELASTOMERIC CONCRETE, SEE SPECIAL PROVISIONS.

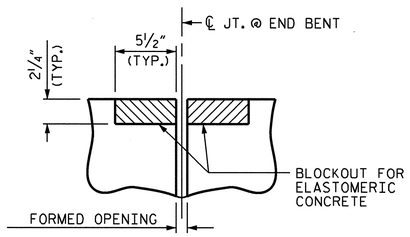

SECTION C-C
EVAZOTE JOINT SEAL
(PRE-SAWED ELASTOMERIC
CONCRETE DIMENSIONS)

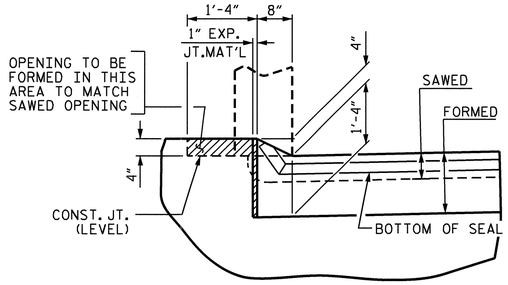

SECTION B-B

JOINT SEAL DETAILS @ END BENT

EVAZOTE JOINT SEAL TO BE CUT, HEAT WELDED AND TURNED UP PARALLEL TO SLOPED FACE OF THE PARAPET.

THE JOINT SHALL BE SAWED PRIOR TO THE CASTING OF THE PARAPET.

ELASTOMERIC CONCRETE		
END BENT NO.	BENT NO.	ELASTOMERIC CONCRETE * (CU. FT.)
1		5.5
2		5.5
	2	5.5
	4	5.5
	6	5.5
	8	5.5
	10	5.5
	12	5.5
	14	5.5
	16	5.5
	18	5.5
	20	5.5
	22	5.5
	24	5.5
	26	5.5
	28	5.5
	30	5.5
	32	5.5
	34	5.5
	36	5.5
TOTAL		110.0 CU. FT.

* BASED ON THE MINIMUM BLOCKOUT SHOWN.

JOINT TEMPERATURE CUTS				
END BENT NO.	BENT NO.	@ 45° F	@ 60° F	@ 90° F
1		2½"	2⅜"	2³⁄₁₆"
2		2½"	2⅜"	2³⁄₁₆"
	2	2⁹⁄₁₆"	2⅜"	2¹⁵⁄₁₆"
	4	2⁹⁄₁₆"	2⅜"	2¹⁵⁄₁₆"
	6	2⁹⁄₁₆"	2⅜"	2¹⁵⁄₁₆"
	8	2⁹⁄₁₆"	2⅜"	2¹⁵⁄₁₆"
	10	2⅝"	2⅜"	1¹³⁄₁₆"
	12	2⅝"	2⅜"	1¹³⁄₁₆"
	14	2⅝"	2⅜"	1¹³⁄₁₆"
	16	2⅝"	2⅜"	1¹³⁄₁₆"
	18	2⅝"	2⅜"	1¹³⁄₁₆"
	20	2⅝"	2⅜"	1¹³⁄₁₆"
	22	2⅝"	2⅜"	1¹³⁄₁₆"
	24	2⅝"	2⅜"	1¹³⁄₁₆"
	26	2⅝"	2⅜"	1¹³⁄₁₆"
	28	2⅝"	2⅜"	1¹³⁄₁₆"
	30	2⅝"	2⅜"	1¹³⁄₁₆"
	32	2⅝"	2⅜"	1¹³⁄₁₆"
	34	2⅝"	2⅜"	1¹³⁄₁₆"
	36	2⅝"	2⅜"	1⅞"

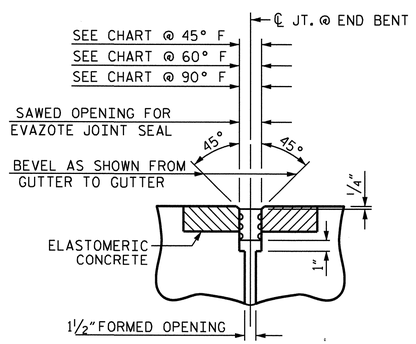

SECTION C-C
EVAZOTE JOINT SEAL
(EXPANSION)

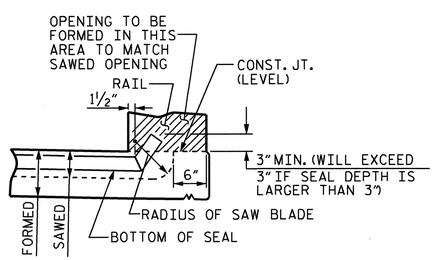

SECTION A-A

PROJECT NO. B-3611

BEAUFORT COUNTY

STATION: 43+25.00-L-

STATE OF NORTH CAROLINA
DEPARTMENT OF TRANSPORTATION
RALEIGH

EVAZOTE JOINT SEAL DETAILS

REVISIONS						SHEET NO.
NO.	BY:	DATE:	NO.	BY:	DATE:	S-79
1			3			TOTAL SHEETS
2			4			120

ASSEMBLED BY :	H. T. BARBOUR	DATE :	10-26-09
CHECKED BY :	D. A. GLADDEN	DATE :	2-3-10
DRAWN BY : FCJ	11/88	REV. 10/17/00	RWW/LES
CHECKED BY : ARB	11/88	REV. 5/17/03	RWW/JTE
		REV. 5/1/06R	MAA/KMM

NORTH CAROLINA PROFESSIONAL SEAL 15825 ENGINEER BRUCE D. KLAPPENBACH
3-29-2010

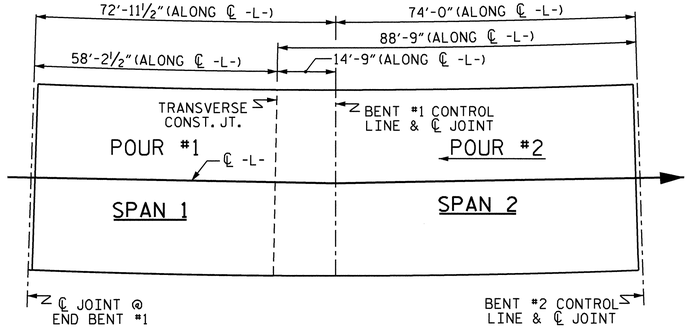

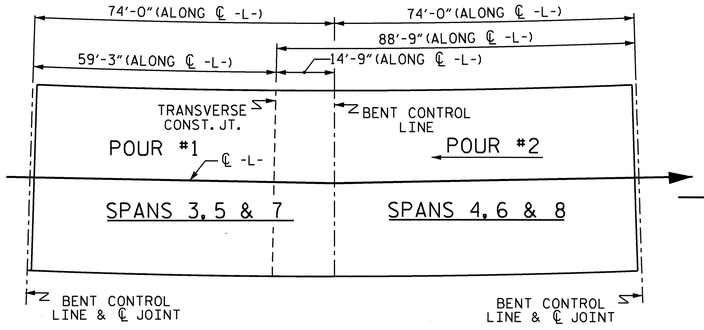

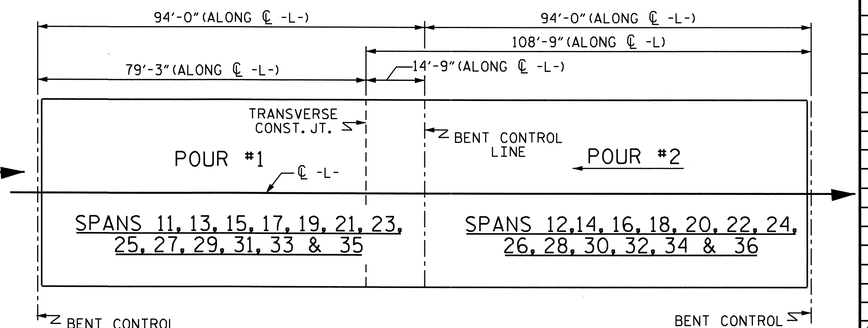

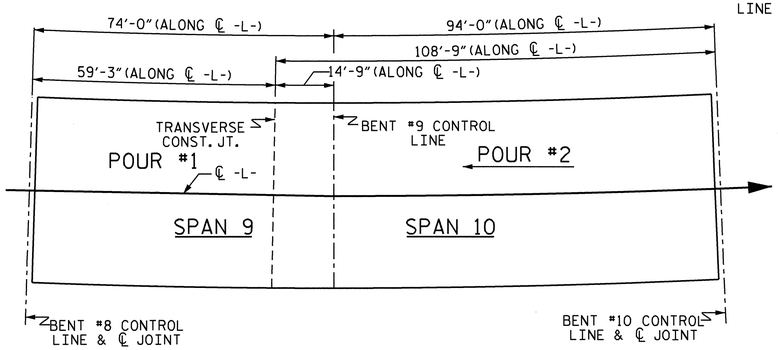

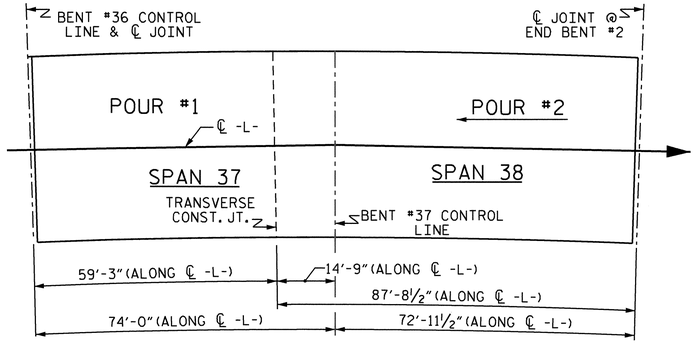

SUPERSTRUCTURE REINFORCING STEEL LENGTHS ARE BASED ON THE FOLLOWING MINIMUM SPLICE LENGTHS

BAR SIZE	SUPERSTRUCTURE EXCEPT APPROACH SLABS, PARAPET, AND BARRIER RAIL		APPROACH SLABS		PARAPET AND BARRIER RAIL
	EPOXY COATED	UNCOATED	EPOXY COATED	UNCOATED	
#4	2'-0"	1'-9"	2'-0"	1'-9"	2'-9"
#5	2'-6"	2'-2"	2'-6"	2'-2"	3'-5"
#6	3'-0"	2'-7"	3'-10"	2'-7"	4'-4"
#7	5'-3"	3'-6"			
#8	6'-10"	4'-7"			

REINFORCING BAR SCHEDULE

SPANS 1 THROUGH 38

BAR	NO.	SIZE	TYPE	LENGTH	WEIGHT
✱A1	6675	#5	STR	34'-3"	238449
✱A2	4460	#5	STR	2'-10"	13180
✱A3	8	#5	STR	15'-7"	130
✱A4	2	#5	STR	16'-11"	35
✱A5	1	#5	STR	17'-0"	18
✱A6	1	#5	STR	26'-4"	27
✱A7	1	#5	STR	13'-5"	14
✱B1	188	#4	STR	26'-6"	3328
✱B2	235	#5	STR	48'-6"	11888
✱B3	230	#5	STR	13'-0"	3119
✱B4	846	#4	STR	27'-0"	15258
✱B5	47	#5	STR	54'-6"	2672
✱B6	46	#5	STR	14'-0"	672
✱B7	3807	#4	STR	23'-5"	59550
✱B8	1833	#5	STR	21'-10"	41741
✱B9	598	#5	STR	15'-0"	9356
✱B10	150	#5	STR	51'-2"	8005
✱B11	30	#5	STR	58'-0"	1815
✱B12	520	#5	STR	49'-5"	26802
✱G1	38	#5	STR	34'-3"	1357
✱K1	44	#8	1	11'-9"	1380
✱K2	44	#8	2	19'-5"	2281
✱K3	108	#8	1	12'-3"	3532
✱K4	108	#8	2	20'-5"	5887
✱S1	264	#5	3	4'-11"	1354
✱S2	648	#5	3	5'-11"	3999

✱EPOXY COATED REINF. STEEL = 455849LBS

BAR TYPES

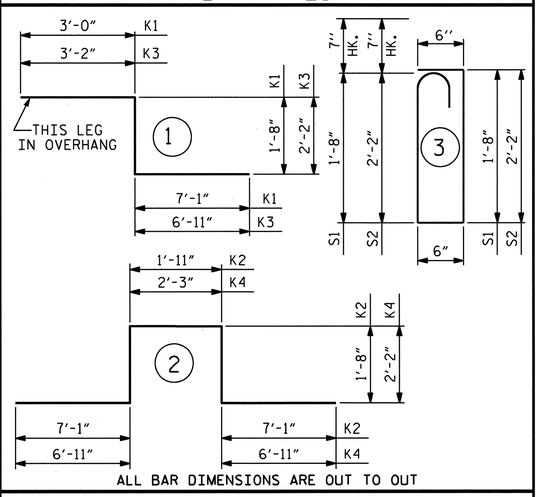

GROOVING BRIDGE FLOORS

APPROACH SLABS	1385.0	SQ.FT.
BRIDGE DECK	96357.0	SQ.FT.
TOTAL	97742	SQ.FT.

SUPERSTRUCTURE BILL OF MATERIAL

2 SPAN CONTINUOUS UNITS	POUR #1 EA. CONTINUOUS UNIT	POUR #2 EA. CONTINUOUS UNIT	SUB TOT. EA. CONTINUOUS UNIT IN (CU. YDS.)	TOTAL UNITS REQUIRED	TOTAL CLASS AA CONCRETE (CU. YDS.)	✱EPOXY COATED REINFORCING STEEL (LBS.)
SPAN 1-2	50.0	78.6	128.6	1	128.6	
SPAN 3-8	51.0	75.8	126.8	3	380.4	
SPAN 9-10	51.0	95.8	146.8	1	146.8	
SPAN 11-36	72.8	93.2	166.0	13	2158.0	
SPAN 37-38	51.0	74.9	125.9	1	125.9	
			✱✱ TOTALS		2939.7	455849

✱✱ QUANTITIES FOR TWO BAR METAL RAIL PARAPET ARE NOT INCLUDED

POURING SEQUENCE FOR TWO SPAN CONTINUOUS UNITS

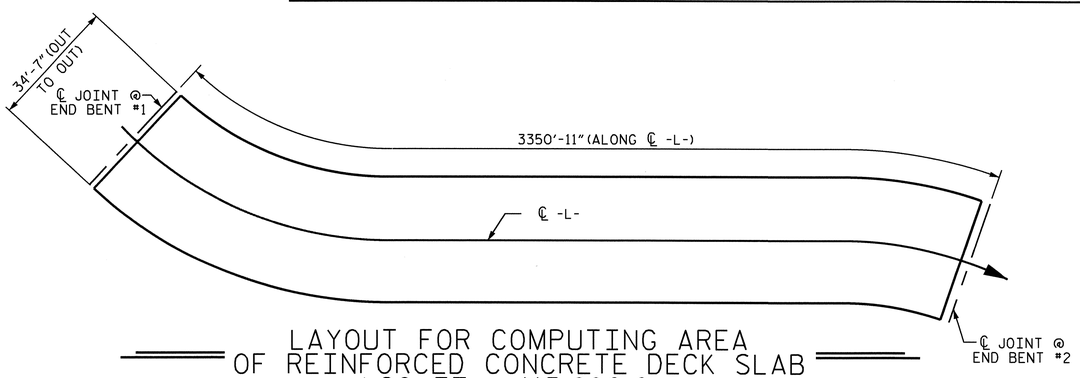

LAYOUT FOR COMPUTING AREA OF REINFORCED CONCRETE DECK SLAB
(SQ. FT. = 115,886.0)

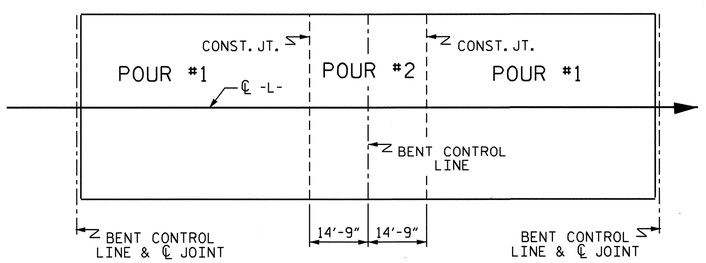

OPTIONAL POURING SEQUENCE FOR TWO SPAN CONTINUOUS UNITS

TYPICAL FOR ALL TWO SPAN CONTINUOUS UNITS

PROJECT NO. B-3611

BEAUFORT COUNTY

STATION: 43+25.00-L-

STATE OF NORTH CAROLINA
DEPARTMENT OF TRANSPORTATION
RALEIGH

STANDARD

SUPERSTRUCTURE BILL OF MATERIAL

NORTH CAROLINA PROFESSIONAL SEAL 15823 ENGINEER TRAVIS L. KLAPPENBACH 3-31-2010

REVISIONS						SHEET NO.
NO.	BY:	DATE:	NO.	BY:	DATE:	S-80
1			3			TOTAL SHEETS
2			4			120

STD. NO. BOM1

ASSEMBLED BY :	H. T. BARBOUR	DATE :	10-26-09
CHECKED BY :	D. A. GLADDEN	DATE :	2-3-10
DRAWN BY : JMB 5/87	REV. 6/1/94		EEM/GRP
CHECKED BY : SJD 9/87	REV. 8/16/99		RWW/LES
	REV. 5/1/06		TLA/GM

31-MAR-2010 12:28
M:\Structures\tbarbour\Microstation\b3611_sd_bm.dgn
tbarbour

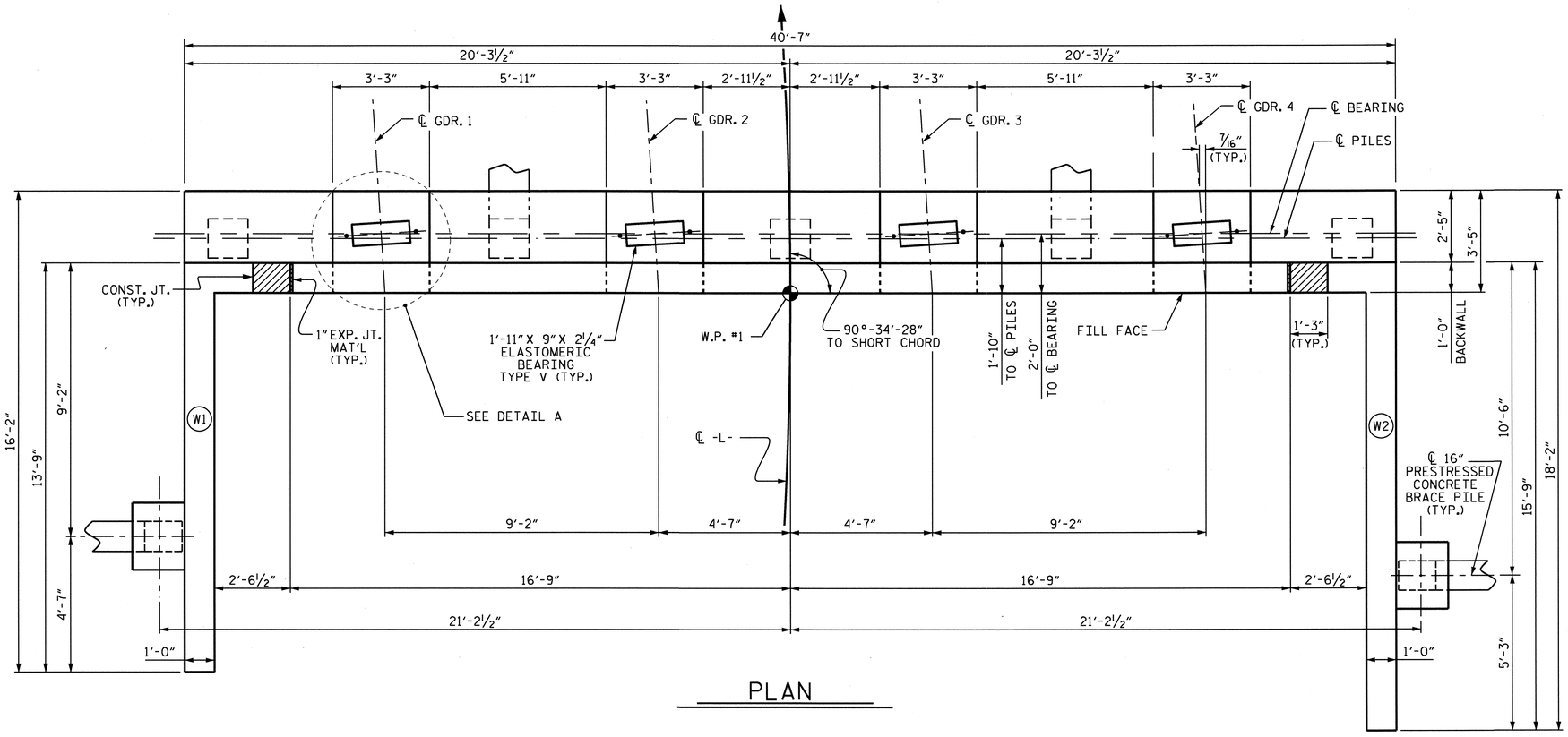

PLAN

NOTES

STIRRUPS IN CAP MAY BE SHIFTED AS NECESSARY TO CLEAR ANCHOR BOLTS.

THE CONTRACTOR SHALL PROVIDE FOR INSTALLATION OF THE 4" DIAMETER DRAIN PIPE THROUGH THE WING WALL AS REQUIRED FOR REINFORCED BRIDGE APPROACH FILLS, SEE THE ROADWAY PLANS. REINFORCING STEEL IN THE WING WALL MAY BE SHIFTED AS NECESSARY TO CLEAR THE DRAIN PIPE.

** FOR LOCATION OF ELEVATIONS BETWEEN BRIDGE SEAT BUILD-UPS, SEE SECTION A-A, SHEET 3 OF 3.

THE CONCRETE IN THE SHADED AREA OF THE WING SHALL BE POURED AFTER THE JOINT BETWEEN THE DECK AND THE APPROACH SLAB HAS BEEN SAWED AND THE PARAPET AND END POST ARE CAST IF SLIP FORMING IS USED.

BACKWALL SHALL BE PLACED BEFORE APPLYING THE EPOXY PROTECTIVE COATING.

THE TOP SURFACE AREAS OF THE END BENT CAP SHALL BE CURED IN ACCORDANCE WITH THE STANDARD SPECIFICATIONS EXCEPT THE MEMBRANE CURING COMPOUND METHOD SHALL NOT BE USED.

THE TOP SURFACE OF THE CAP EXCEPT THE BRIDGE SEAT BUILDUPS SHALL BE SLOPED TRANSVERSELY FROM THE FILL FACE TO THE BACK FACE AT THE RATE OF 2%.

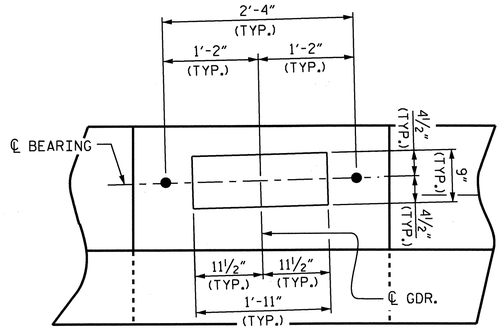

DETAIL A

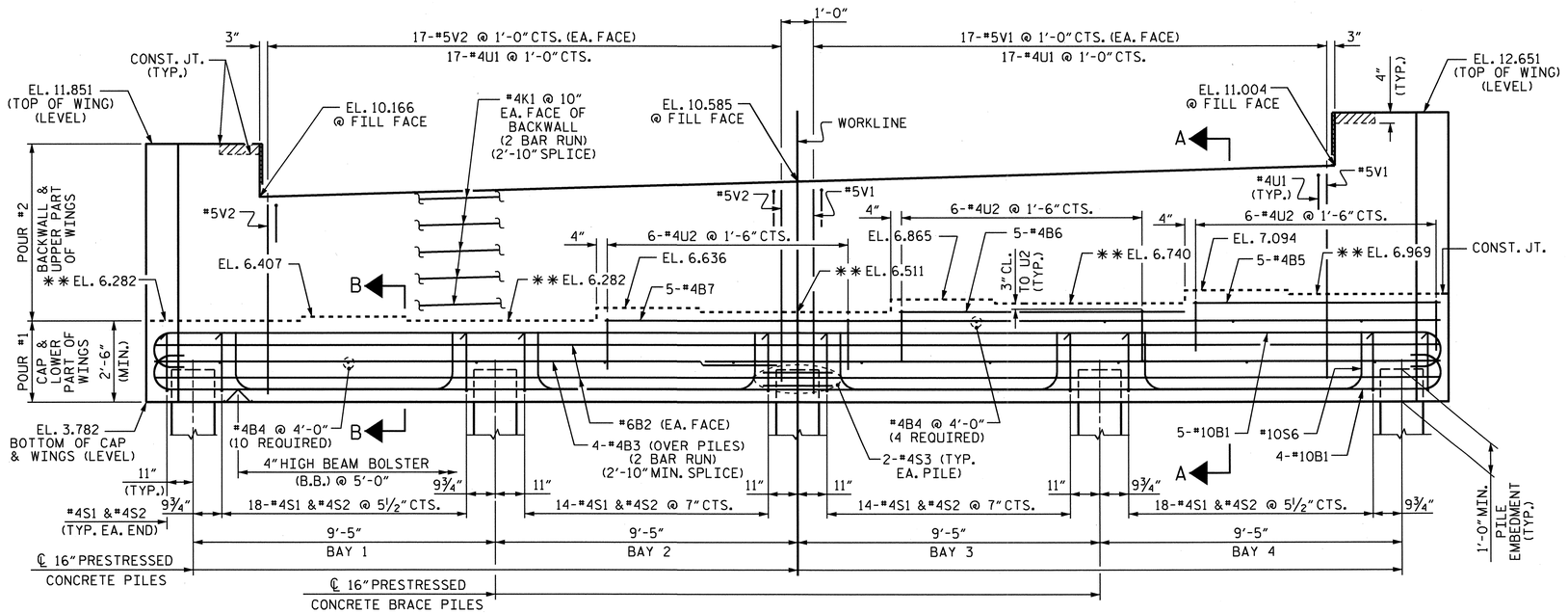

ELEVATION

(WING PILES NOT SHOWN)

PROJECT NO. B-3611

BEAUFORT COUNTY

STATION: 43+25.00 -L-

SHEET 1 OF 3

STATE OF NORTH CAROLINA
DEPARTMENT OF TRANSPORTATION
RALEIGH

SUBSTRUCTURE END BENT #1

REVISIONS						SHEET NO.
NO.	BY:	DATE:	NO.	BY:	DATE:	S-81
1			3			TOTAL SHEETS
2			4			120

NORTH CAROLINA PROFESSIONAL SEAL 15826 ENGINEER BRADLEY D. KLAPPENBACH
3-31-2010

DRAWN BY : M. G. SHAIKH DATE : 10-12-09
CHECKED BY : H. T. BARBOUR DATE : 11-12-09

24-MAR-2010 10:58
p:\structures\mshaikh\microstation\b-3611_sd_e*.dgn
mshaikh

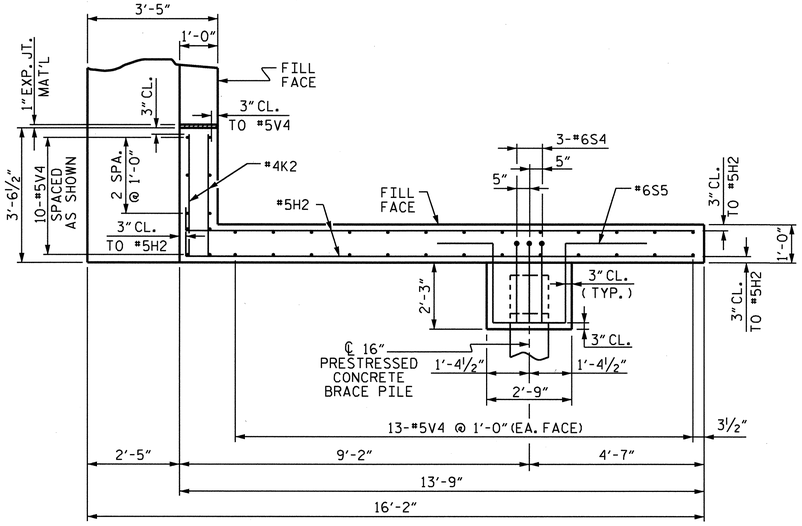

PLAN OF LEFT WING - (W1)

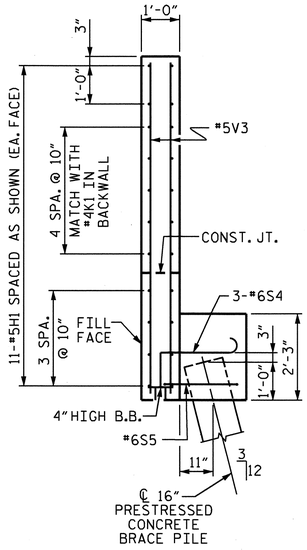

SECTION Y-Y

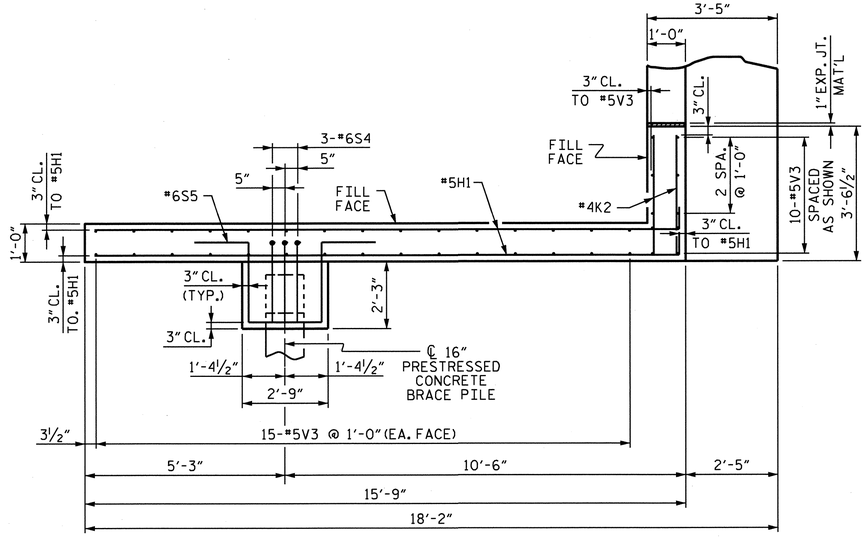

PLAN OF RIGHT WING - (W2)

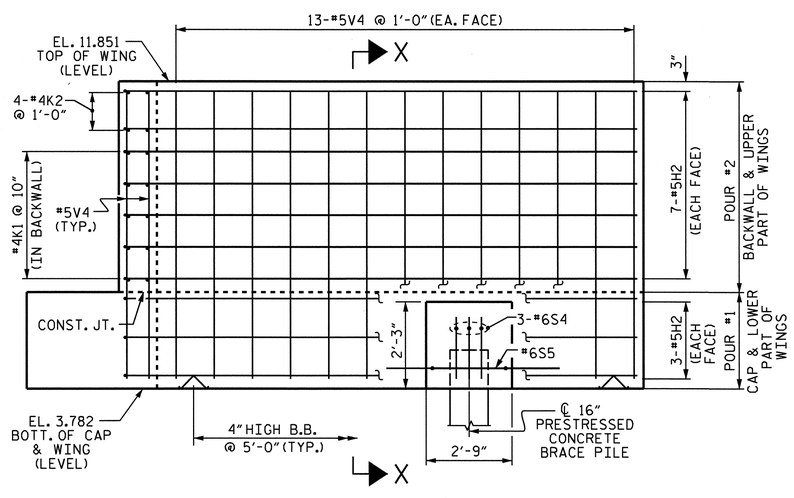

ELEVATION OF LEFT WING - (W1)

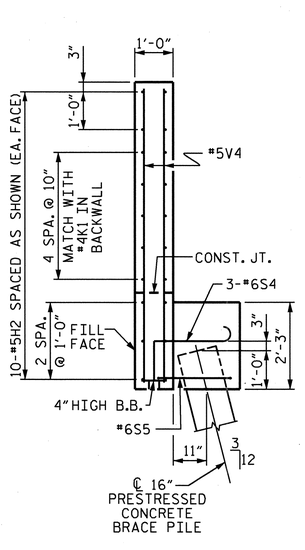

SECTION X-X

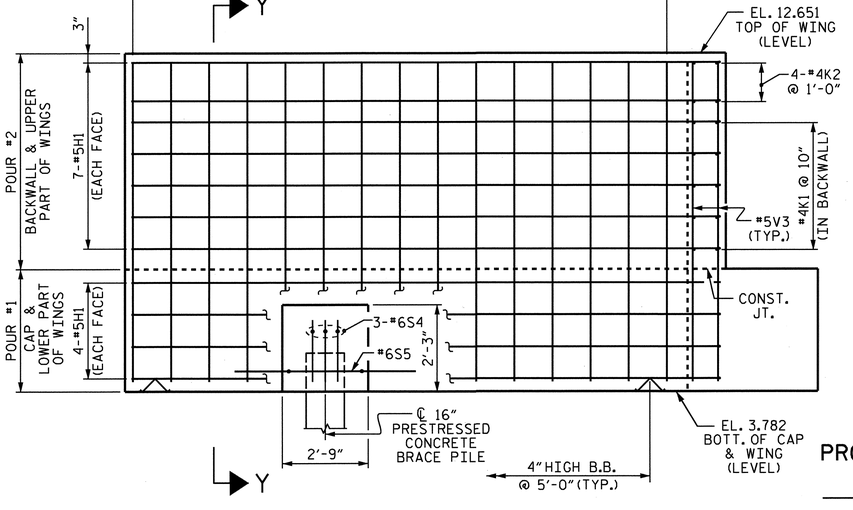

ELEVATION OF RIGHT WING - (W2)

PROJECT NO. B-3611

BEAUFORT COUNTY

STATION: 43+25.00 -L-

SHEET 2 OF 3

STATE OF NORTH CAROLINA
DEPARTMENT OF TRANSPORTATION
RALEIGH

SUBSTRUCTURE END BENT #1

NORTH CAROLINA PROFESSIONAL SEAL 5825 ENGINEER BRUCE D. KLAPPENBACH
3-31-2010

REVISIONS						SHEET NO.
NO.	BY:	DATE:	NO.	BY:	DATE:	S-82
1			3			TOTAL SHEETS
2			4			120

DRAWN BY : M. G. SHAIKH DATE : 10-13-09
CHECKED BY : H. T. BARBOUR DATE : 11-12-09

24-MAR-2010 10:58
p:\structures\mshaikh\microstation\b-3611_sd_e*.dgn
mshaikh

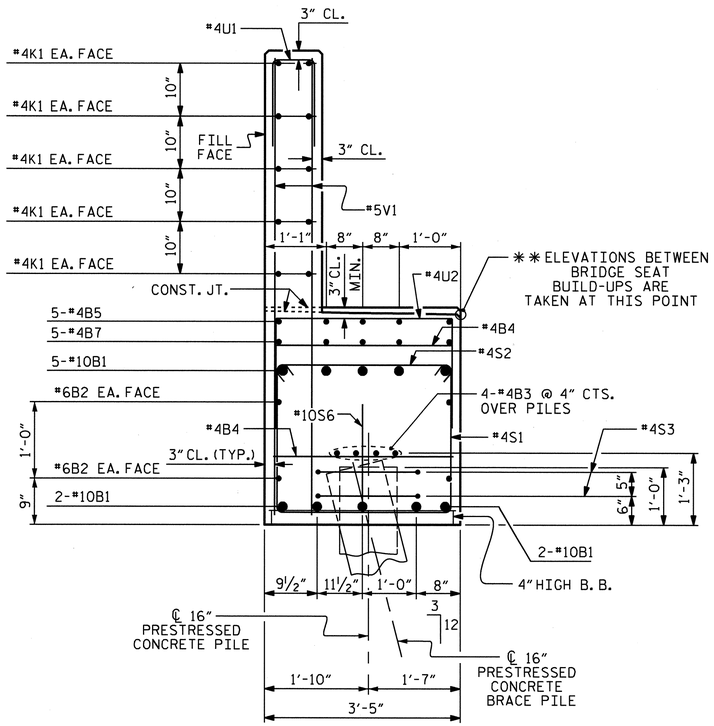

SECTION A-A

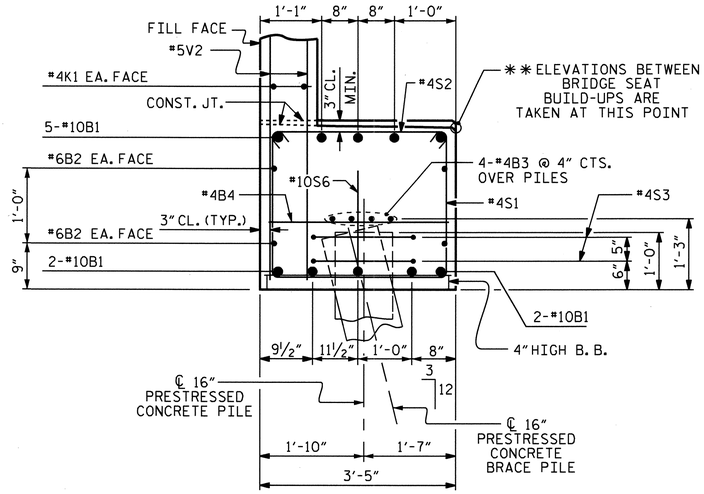

SECTION B-B

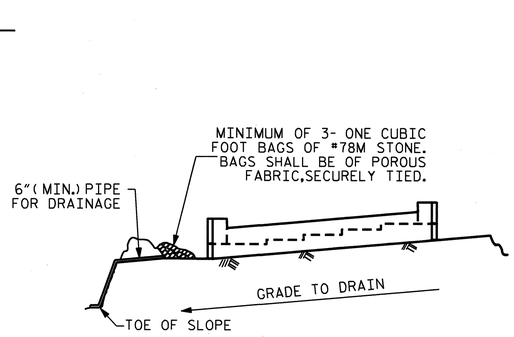

BAGGED STONE AND PIPE SHALL BE PLACED IMMEDIATELY AFTER COMPLETION OF END BENT EXCAVATION. PIPE MAY BE EITHER CONCRETE, CORRUGATED STEEL, CORRUGATED ALUMINUM ALLOY, OR CORRUGATED PLASTIC. PERFORATED PIPE WILL NOT BE ALLOWED.

BAGGED STONE SHALL REMAIN IN PLACE UNTIL THE ENGINEER DIRECTS THAT IT BE REMOVED. THE CONTRACTOR SHALL REMOVE AND DISPOSE OF SILT ACCUMULATIONS AT BAGGED STONE WHEN SO DIRECTED BY THE ENGINEER. BAGS SHALL BE REMOVED AND REPLACED WHENEVER THE ENGINEER DETERMINES THAT THEY HAVE DETERIORATED AND LOST THEIR EFFECTIVENESS.

NO SEPARATE PAYMENT WILL BE MADE FOR THIS WORK AND THE ENTIRE COST OF THIS WORK SHALL BE INCLUDED IN THE UNIT CONTRACT PRICE BID FOR THE SEVERAL PAY ITEMS.

TEMPORARY DRAINAGE AT END BENT

BAR TYPES

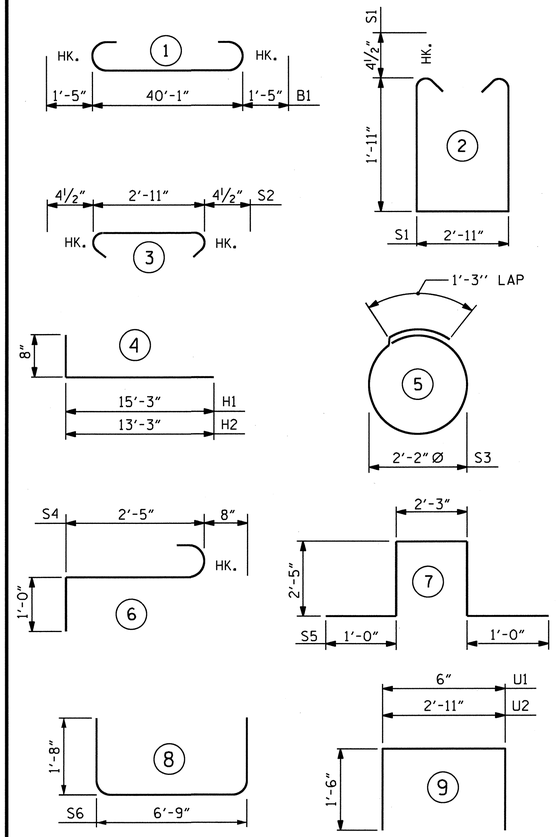

ALL BAR DIMENSIONS ARE OUT TO OUT.

BILL OF MATERIAL

END BENT #1

BAR	NO.	SIZE	TYPE	LENGTH	WEIGHT
✱B1	9	#10	1	42'-11"	1662
✱B2	4	#6	STR	40'-1"	241
✱B3	8	#4	STR	21'-6"	115
✱B4	14	#4	STR	2'-11"	27
✱B5	5	#4	STR	7'-8"	26
✱B6	5	#4	STR	8'-11"	30
✱B7	5	#4	STR	26'-0"	87
✱H1	22	#5	4	15'-11"	365
✱H2	20	#5	4	13'-11"	290
✱K1	20	#4	STR	21'-6"	287
✱K2	8	#4	STR	3'-0"	16
✱S1	66	#4	2	7'-6"	331
✱S2	66	#4	3	3'-8"	162
✱S3	10	#4	5	8'-1"	54
✱S4	6	#6	6	4'-1"	37
✱S5	2	#6	7	9'-1"	27
✱S6	4	#10	8	10'-1"	174
✱U1	34	#4	9	3'-6"	79
✱U2	18	#4	9	5'-11"	71
✱V1	34	#5	STR	6'-2"	219
✱V2	34	#5	STR	5'-9"	204
✱V3	40	#5	STR	8'-3"	344
✱V4	36	#5	STR	7'-5"	278

✱EPOXY COATED REINFORCING STEEL = 5126 LBS.

CLASS AA CONCRETE
POUR #1 18.2 CU. YDS.
POUR #2 12.2 CU. YDS.
▲ TOTAL 30.4 CU. YDS.

16" PRESTRESSED CONCRETE PILES
NO. 7 420 FEET

PILE REDRIVES 3 EA.

▲ CONCRETE DISPLACED BY THE PRESTRESSED CONCRETE PILES HAS BEEN DEDUCTED FROM THE CONCRETE QUANTITY.

PROJECT NO. B-3611
BEAUFORT COUNTY
STATION: 43+25.00 -L-

SHEET 3 OF 3

STATE OF NORTH CAROLINA
DEPARTMENT OF TRANSPORTATION
RALEIGH

SUBSTRUCTURE END BENT #1

REVISIONS						SHEET NO.
NO.	BY:	DATE:	NO.	BY:	DATE:	S-83
1			3			TOTAL SHEETS
2			4			120

NORTH CAROLINA PROFESSIONAL SEAL 15823 ENGINEER BRUCE D. KLAPPENBACH
3-31-2010

DRAWN BY : M. G. SHAIKH DATE : 10-12-09
CHECKED BY : H. T. BARBOUR DATE : 11-12-09

24-MAR-2010 10:57
p:\structures\mshaikh\microstation\b-3611_sd_e*.dgn
mshaikh

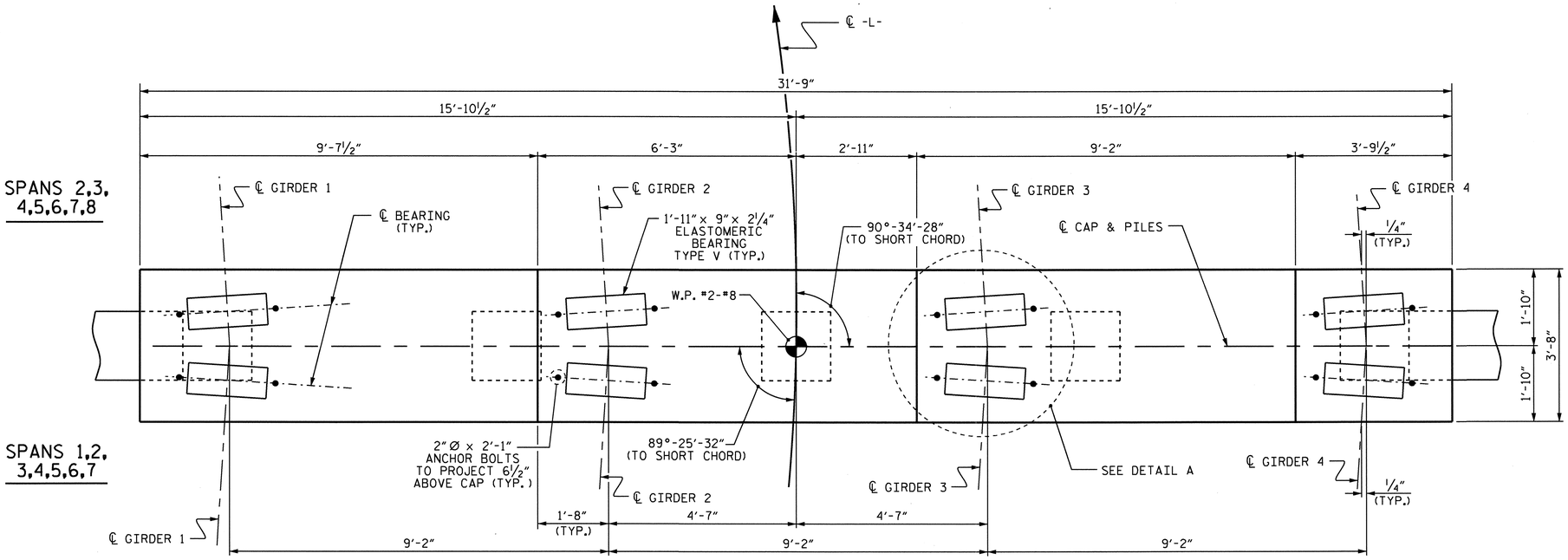

PLAN

NOTES

STIRRUPS IN CAP MAY BE SHIFTED AS NECESSARY TO CLEAR ANCHOR BOLTS.

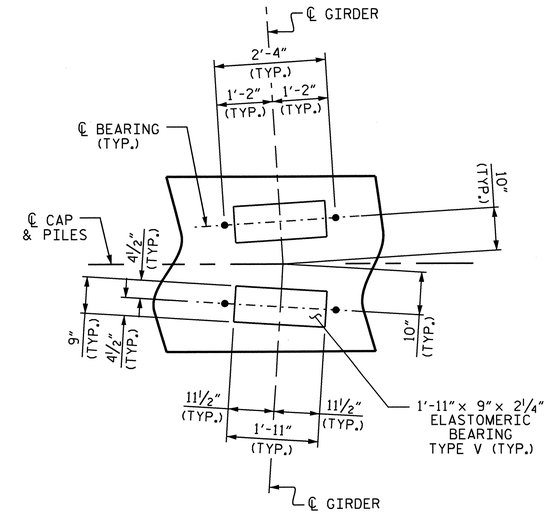

DETAIL A

PILES ARE NOT SHOWN FOR CLARITY.

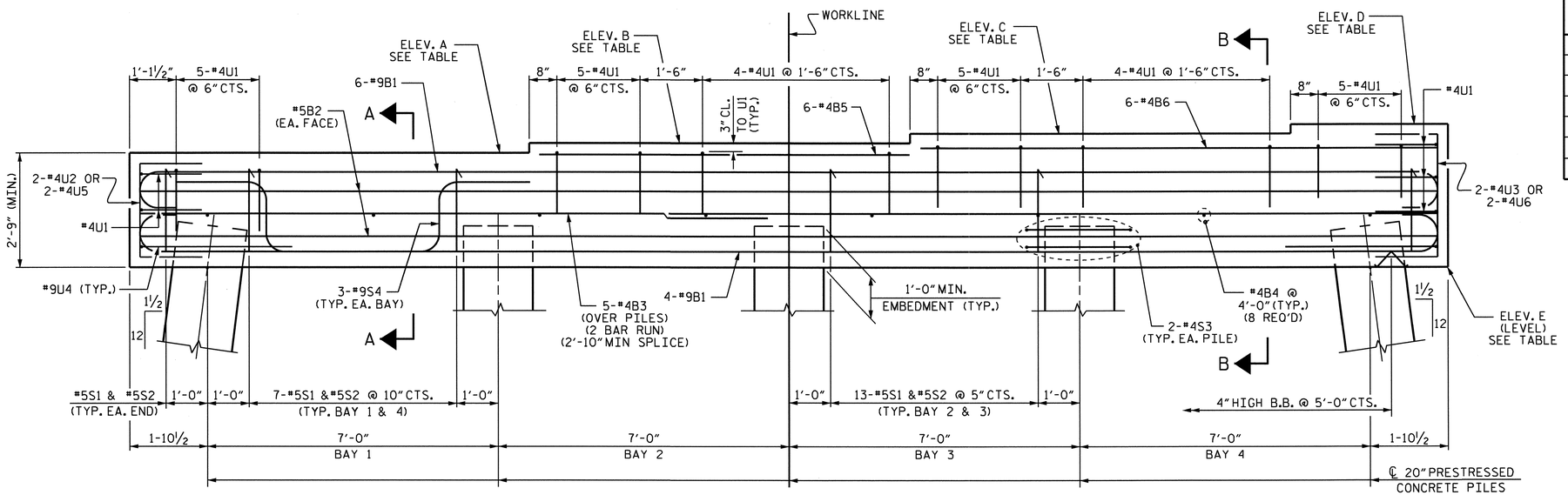

ELEVATION

BENT NO.	BRIDGE SEAT ELEVATIONS				BOTTOM OF CAP ELEVATIONS
	A	B	C	D	E
BENT #1	6.787	7.017	7.246	7.475	4.037
BENT #2	7.174	7.403	7.632	7.861	4.424
BENT #3	7.560	7.789	8.018	8.247	4.810
BENT #4	7.946	8.175	8.405	8.634	5.196
BENT #5	8.332	8.562	8.791	9.020	5.582
BENT #6	8.719	8.948	9.177	9.406	5.969
BENT #7	9.105	9.334	9.563	9.793	6.355

PROJECT NO. B-3611

BEAUFORT COUNTY

STATION: 43+25.00 -L-

SHEET 1 OF 2

STATE OF NORTH CAROLINA
DEPARTMENT OF TRANSPORTATION
RALEIGH

SUBSTRUCTURE BENT #1 THROUGH BENT #7

NORTH CAROLINA PROFESSIONAL SEAL 15825 ENGINEER BRUCE D. KLAPPENBACH
3-31-2010

REVISIONS						SHEET NO.
NO.	BY:	DATE:	NO.	BY:	DATE:	S-84
1			3			TOTAL SHEETS
2			4			120

DRAWN BY : M. G. SHAIKH DATE : 10-20-09
CHECKED BY : H. T. BARBOUR DATE : 11-19-09

24-MAR-2010 11:07
p:\structures\mshaikh\microstation\b-3611_sd_b*.dgn
mshaikh

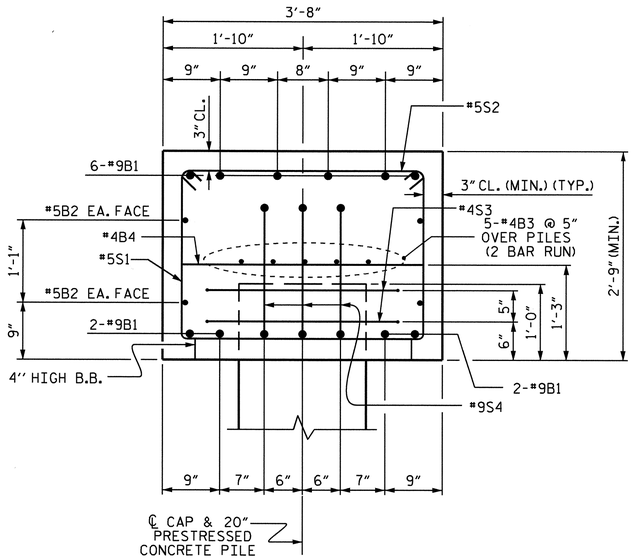

SECTION A-A

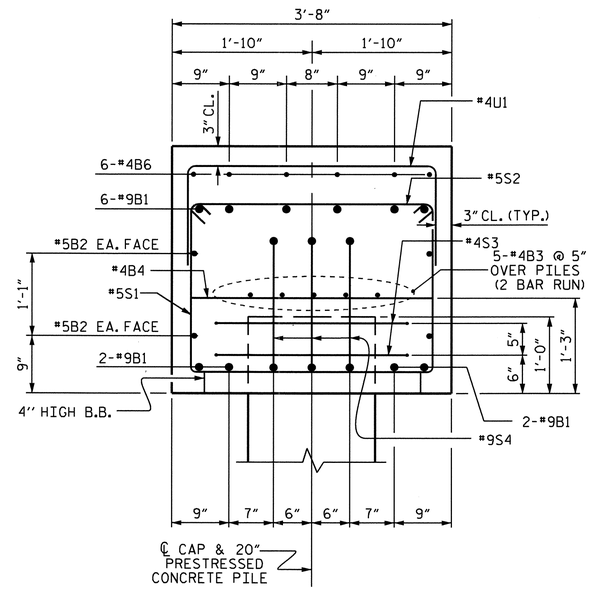

SECTION B-B

BAR TYPES

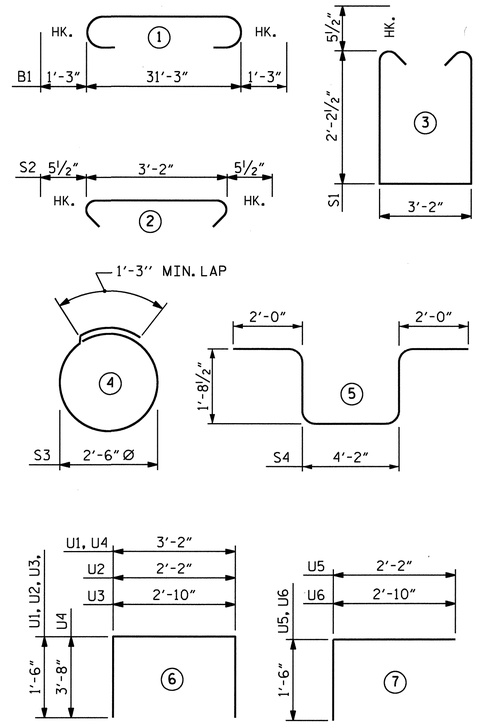

ALL BAR DIMENSIONS ARE OUT TO OUT.

BILL OF MATERIAL FOR ONE BENT (7 REQUIRED)

BAR	NO.	SIZE	TYPE	LENGTH	WEIGHT
✱B1	10	#9	1	33'-9"	1148
✱B2	4	#5	STR	31'-3"	130
✱B3	10	#4	STR	17'-1"	114
✱B4	8	#4	STR	3'-2"	17
✱B5	6	#4	STR	8'-11"	36
✱B6	6	#4	STR	12'-5"	50
✱S1	42	#5	3	8'-6"	372
✱S2	42	#5	2	4'-1"	179
✱S3	10	#4	4	9'-2"	61
✱S4	12	#9	5	11'-7"	473
✱U1	33	#4	6	6'-2"	136
✱U2	2	#4	6	5'-2"	7
✱U3	2	#4	6	5'-10"	8
✱U4	2	#9	6	10'-6"	71
✱U5	2	#4	7	3'-8"	5
✱U6	2	#4	7	4'-4"	6

✱EPOXY COATED REINFORCING STEEL = 2813 LBS.

▲ CLASS AA CONCRETE = 12.6 CU. YDS.

20" PRESTRESSED CONCRETE PILES

BENT NO.	NO.	LIN. FT.
1	5	325
2	5	325
3	5	325
4	5	350
5	5	350
6	5	350
7	5	350

PILE REDRIVES (BENT #1-#7) 3 EA.

PDA TESTING (BENT #1) 1 EA.

PDA ASSISTANCE (BENT #1) 1 EA.

▲ CONCRETE DISPLACED BY THE PRESTRESSED CONCRETE PILES HAS BEEN DEDUCTED FROM THE CONCRETE QUANTITY.

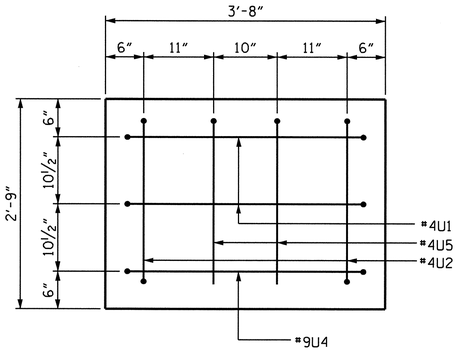

END VIEW LEFT

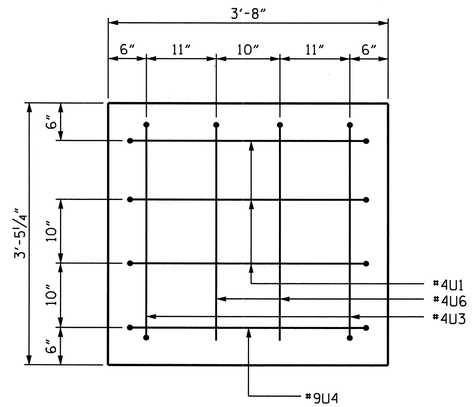

END VIEW RIGHT

PROJECT NO. B-3611

BEAUFORT COUNTY

STATION: 43+25.00 -L-

SHEET 2 OF 2

STATE OF NORTH CAROLINA
DEPARTMENT OF TRANSPORTATION
RALEIGH

SUBSTRUCTURE BENT #1 THROUGH BENT #7

REVISIONS						SHEET NO.
NO.	BY:	DATE:	NO.	BY:	DATE:	S-85
1			3			TOTAL SHEETS
2			4			120

NORTH CAROLINA PROFESSIONAL SEAL 15825 ENGINEER BRUCE D. KLAPPENBACH
3-31-2010

DRAWN BY : M. G. SHAIKH DATE : 10-21-09
CHECKED BY : H. T. BARBOUR DATE : 12-17-09

24-MAR-2010 11:06
p:\structures\mshaikh\microstation\b-3611_sd_b*.dgn
mshaikh

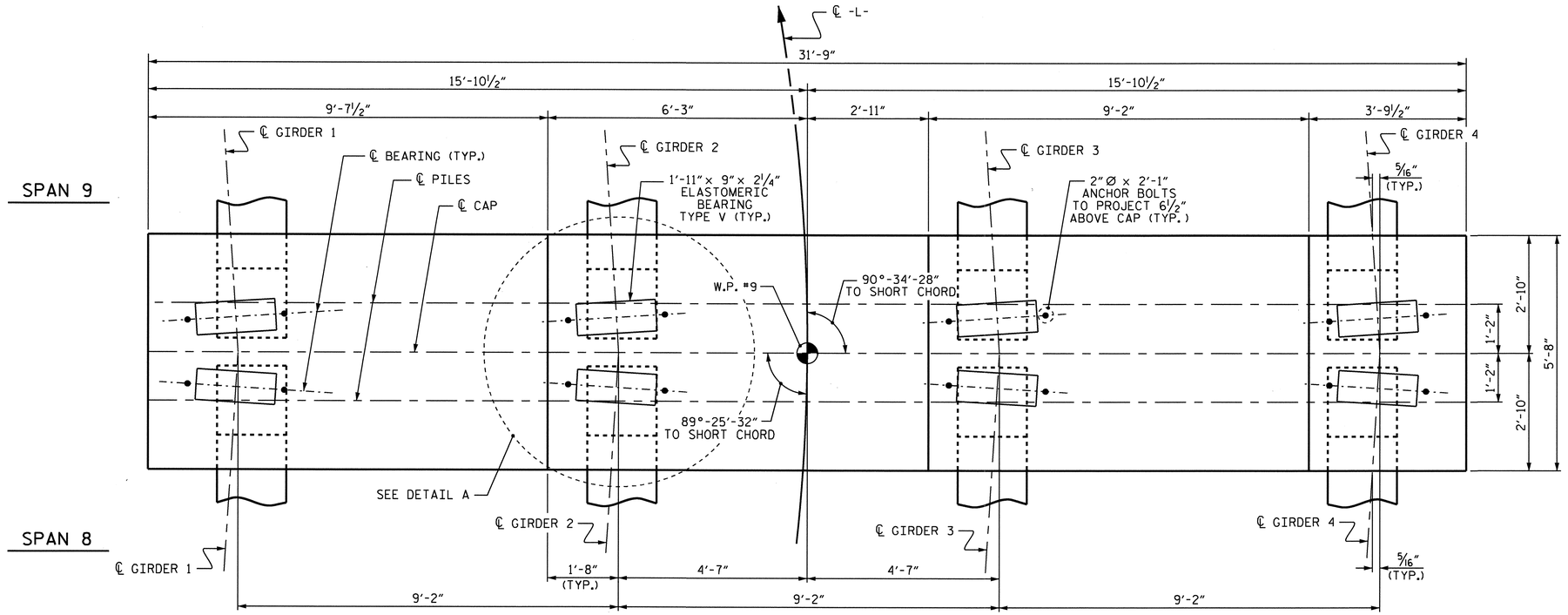

PLAN

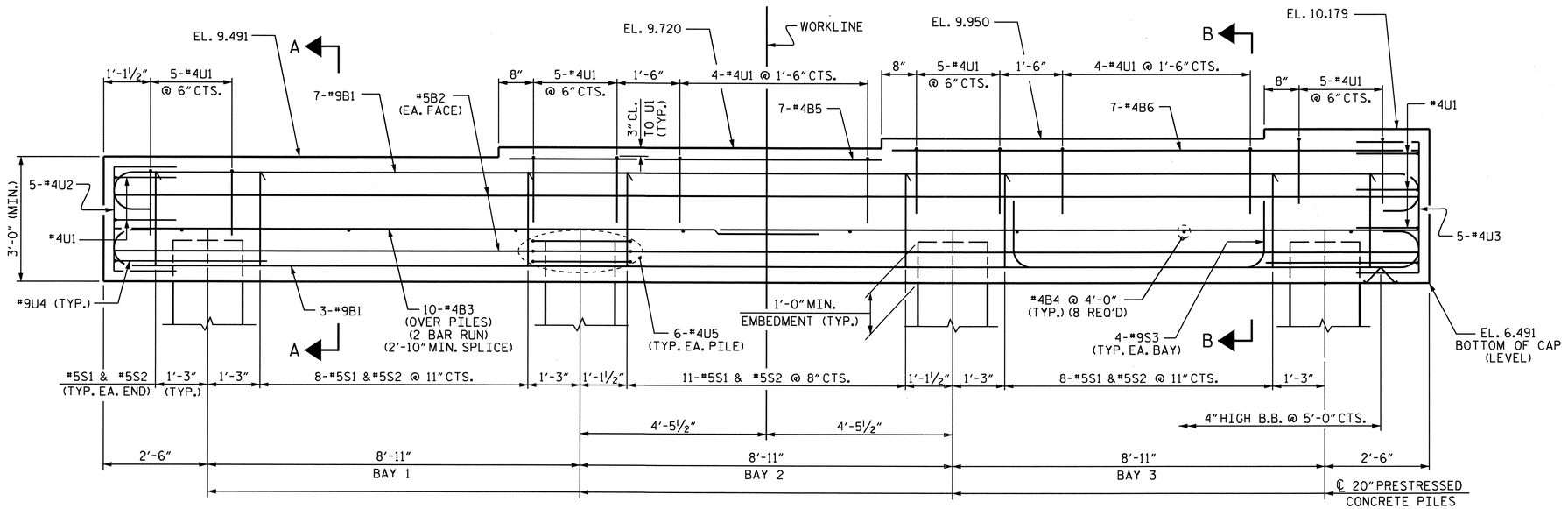

ELEVATION

NOTES

STIRRUPS IN CAP MAY BE SHIFTED AS NECESSARY TO CLEAR ANCHOR BOLTS.

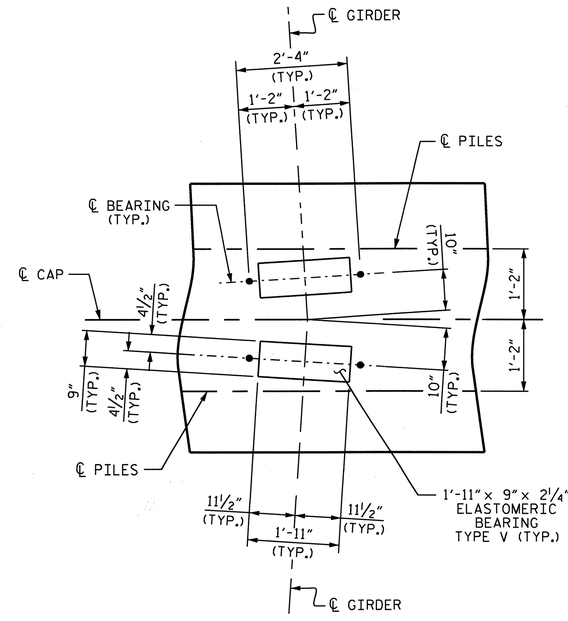

DETAIL A

PILES ARE NOT SHOWN FOR CLARITY.

PROJECT NO. B-3611

BEAUFORT COUNTY

STATION: 43+25.00 -L-

SHEET 1 OF 2

STATE OF NORTH CAROLINA
DEPARTMENT OF TRANSPORTATION
RALEIGH

SUBSTRUCTURE BENT #8

REVISIONS						SHEET NO.
NO.	BY:	DATE:	NO.	BY:	DATE:	S-86
1			3			TOTAL SHEETS
2			4			120

NORTH CAROLINA PROFESSIONAL SEAL 15825 ENGINEER BRYAN D. KLAPPENBACH
3-31-2010

DRAWN BY : M. G. SHAIKH DATE : 11-04-09
CHECKED BY : H. T. BARBOUR DATE : 12-17-09

24-MAR-2010 11:06
p:\structures\mshaikh\microstation\b-3611_sd_b*.dgn
mshaikh

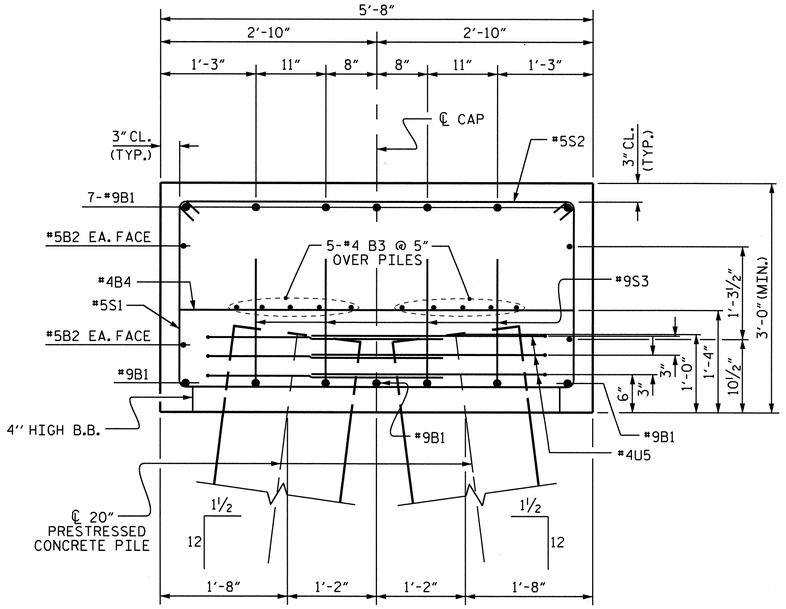

SECTION A-A

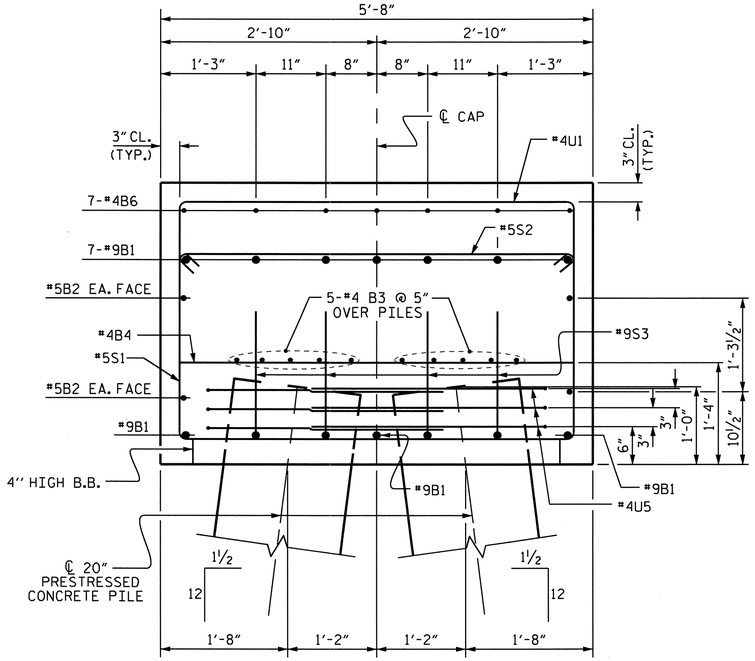

SECTION B-B

BAR TYPES

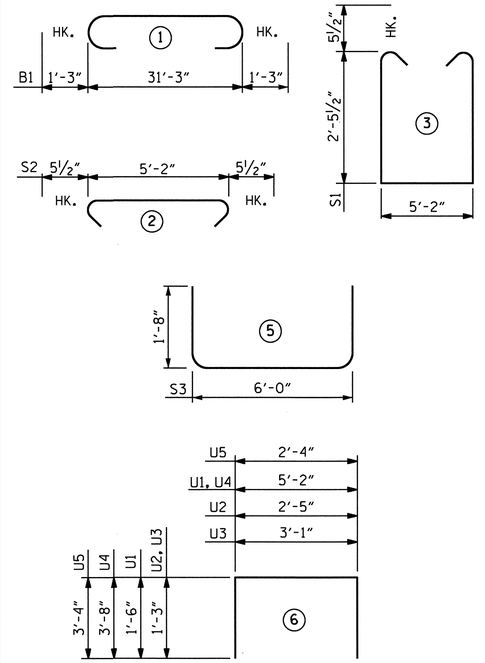

ALL BAR DIMENSIONS ARE OUT TO OUT.

BILL OF MATERIAL
BENT #8

BAR	NO.	SIZE	TYPE	LENGTH	WEIGHT
✱B1	10	#9	1	33'-9"	1148
✱B2	4	#5	STR	31'-3"	130
✱B3	20	#4	STR	17'-1"	228
✱B4	8	#4	STR	5'-2"	28
✱B5	7	#4	STR	8'-11"	42
✱B6	7	#4	STR	12'-5"	58
✱S1	29	#5	3	11'-0"	333
✱S2	29	#5	2	6'-1"	184
✱S3	12	#9	5	9'-4"	381
✱U1	33	#4	6	8'-2"	180
✱U2	5	#4	6	4'-11"	16
✱U3	5	#4	6	5'-7"	19
✱U4	2	#9	6	12'-6"	85
✱U5	24	#4	6	9'-0"	144

✱EPOXY COATED REINFORCING STEEL = 2976 LBS.

▲ CLASS AA CONCRETE = 21.5 CU. YDS.

20" PRESTRESSED CONCRETE PILES
NO. 8 560 LIN. FT.

PILE REDRIVES 4 EA.

▲ CONCRETE DISPLACED BY THE PRESTRESSED CONCRETE PILES HAS BEEN DEDUCTED FROM THE CONCRETE QUANTITY.

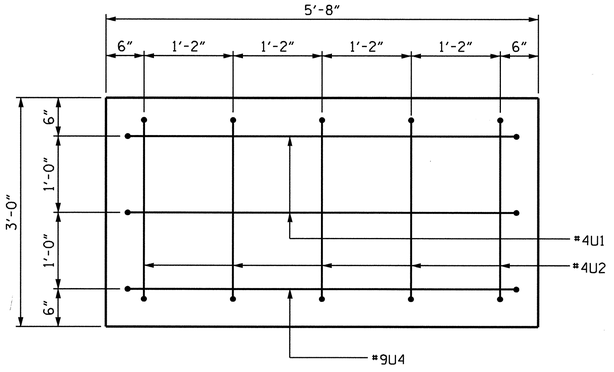

END VIEW LEFT

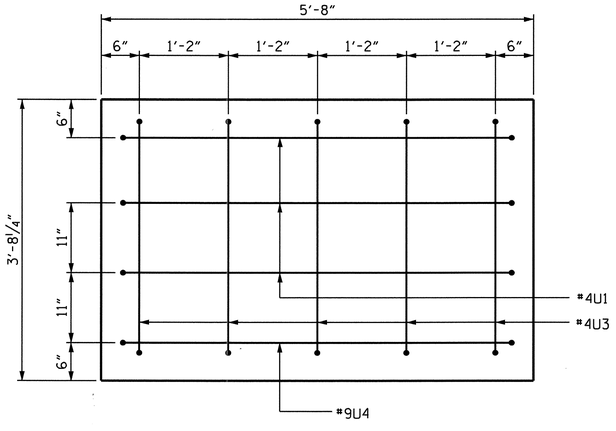

END VIEW RIGHT

PROJECT NO. B-3611
BEAUFORT COUNTY
STATION: 43+25.00 -L-

SHEET 2 OF 2

STATE OF NORTH CAROLINA
DEPARTMENT OF TRANSPORTATION
RALEIGH

SUBSTRUCTURE BENT #8

NORTH CAROLINA PROFESSIONAL SEAL 15825 ENGINEER BRUCE D. KLAPPENBACH
3-31-2010

REVISIONS						SHEET NO.
NO.	BY:	DATE:	NO.	BY:	DATE:	S-87
1			3			TOTAL SHEETS
2			4			120

DRAWN BY : M. G. SHAIKH DATE : 11-03-09
CHECKED BY : H. T. BARBOUR DATE : 12-17-09

24-MAR-2010 11:06
p:\structures\mshaikh\microstation\b-3611_sd_b*.dgn
mshaikh

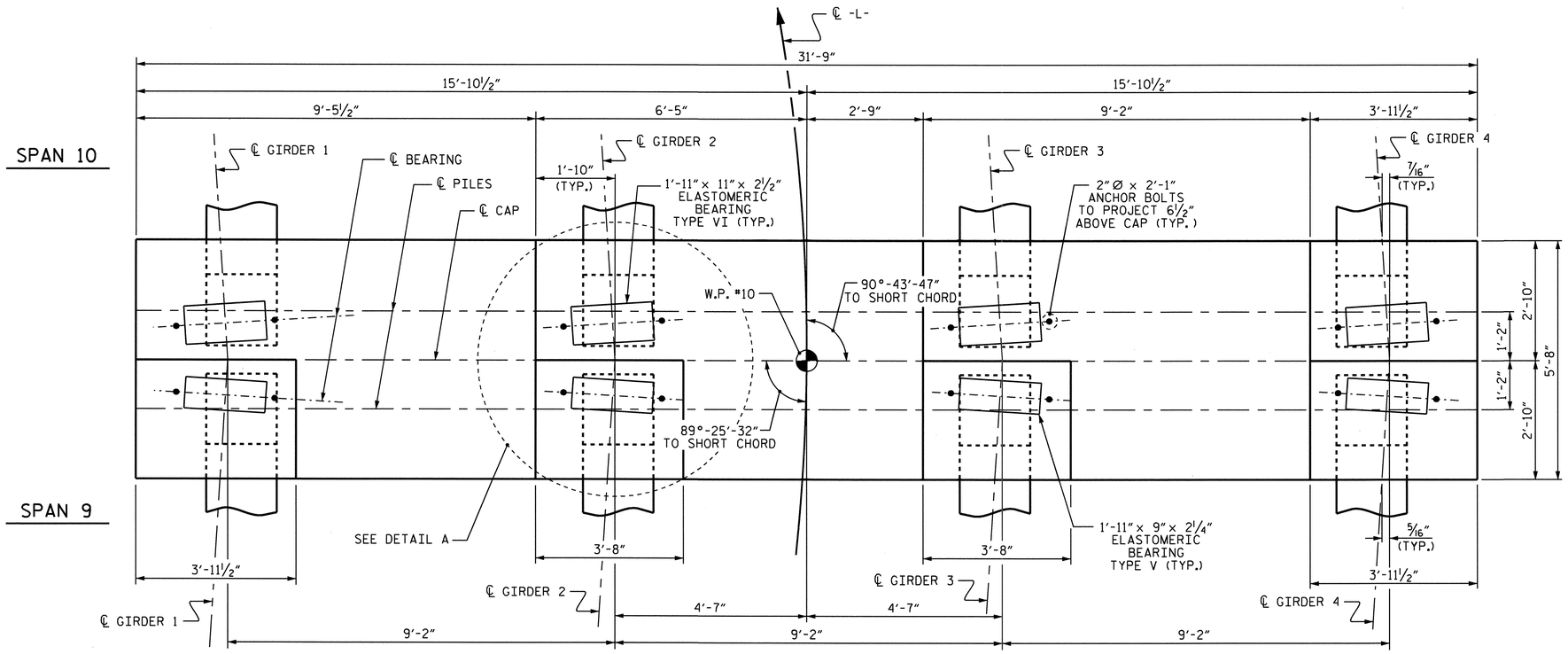

PLAN

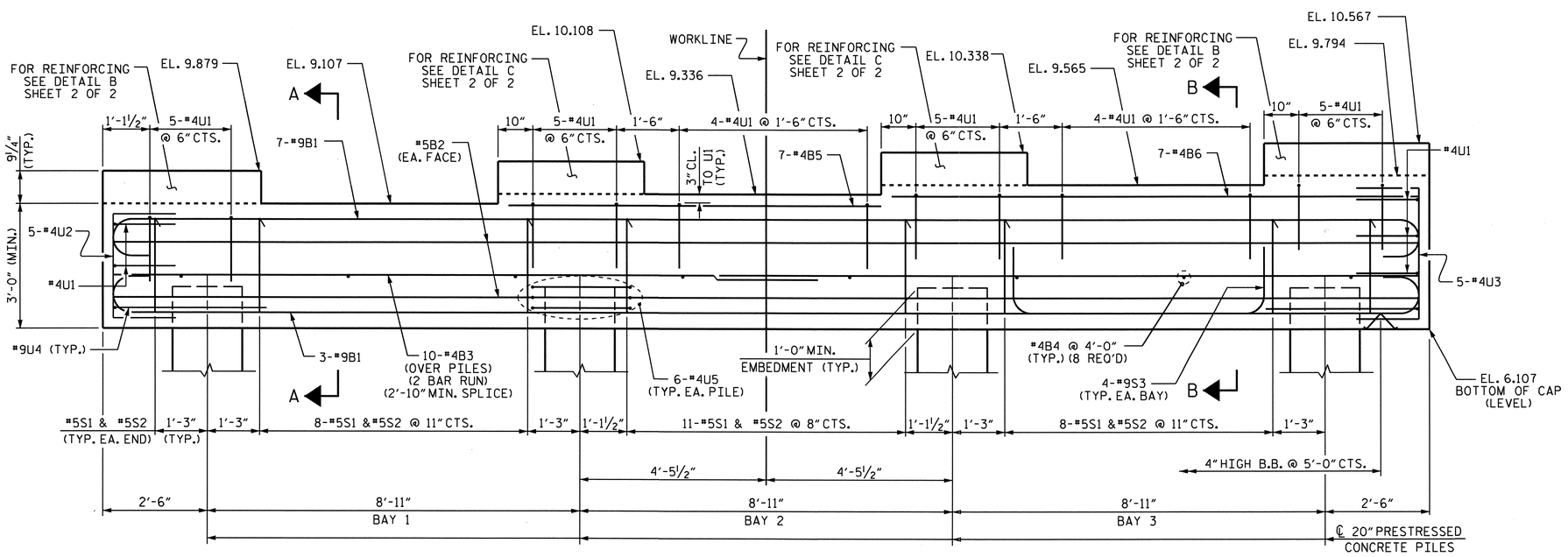

ELEVATION

NOTES

STIRRUPS IN CAP MAY BE SHIFTED AS NECESSARY TO CLEAR ANCHOR BOLTS.

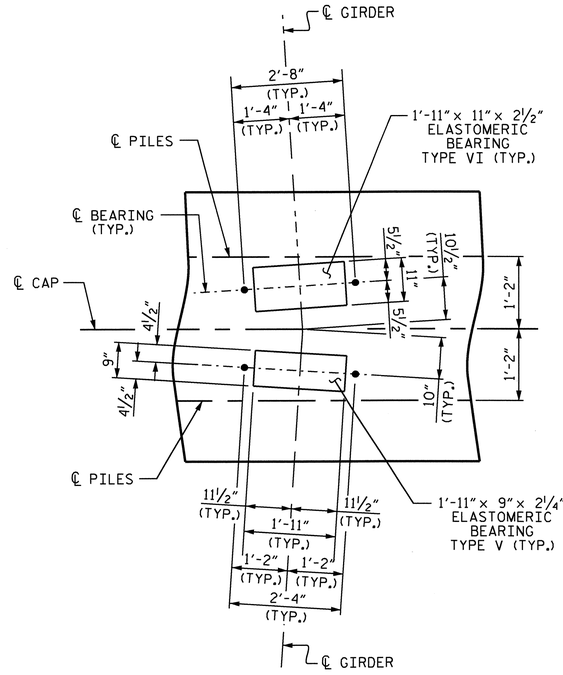

DETAIL A

PILES ARE NOT SHOWN FOR CLARITY.

PROJECT NO. B-3611

BEAUFORT COUNTY

STATION: 43+25.00 -L-

SHEET 1 OF 2

STATE OF NORTH CAROLINA
DEPARTMENT OF TRANSPORTATION
RALEIGH

SUBSTRUCTURE
BENT #9

NORTH CAROLINA PROFESSIONAL SEAL 15825 ENGINEER BRUCE D. KLAPPENBACH
3-31-2010

REVISIONS						SHEET NO.
NO.	BY:	DATE:	NO.	BY:	DATE:	S-88
1			3			TOTAL SHEETS
2			4			120

DRAWN BY : M. G. SHAIKH DATE : 11-05-09
CHECKED BY : H. T. BARBOUR DATE : 12-17-09

24-MAR-2010 11:06
p:\structures\mshaikh\microstation\b-3611_sd_b*.dgn
mshaikh

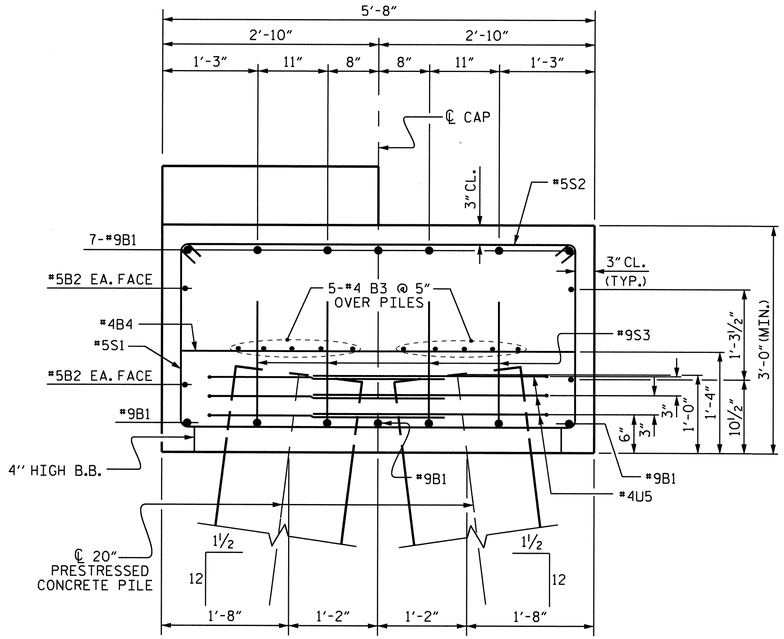

SECTION A-A

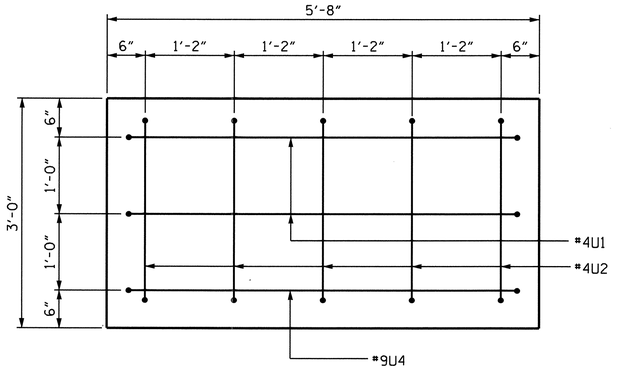

END VIEW LEFT

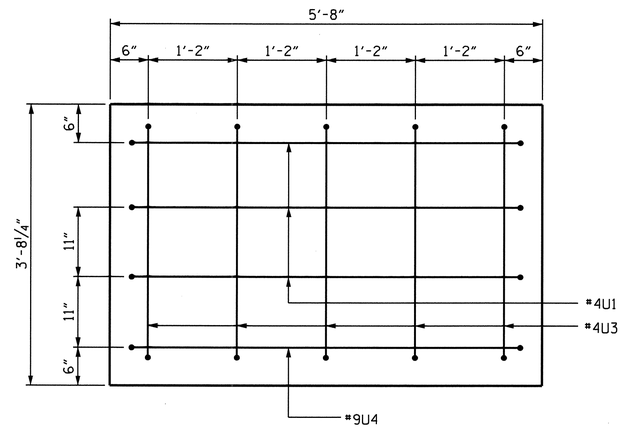

END VIEW RIGHT

BAR TYPES

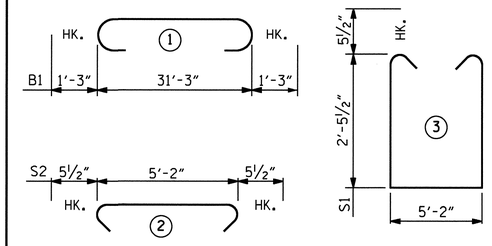

ALL BAR DIMENSIONS ARE OUT TO OUT.

BILL OF MATERIAL
BENT #9

BAR	NO.	SIZE	TYPE	LENGTH	WEIGHT
✳B1	10	#9	1	33'-9"	1148
✳B2	4	#5	STR	31'-3"	130
✳B3	20	#4	STR	17'-1"	228
✳B4	8	#4	STR	5'-2"	20
✳B5	7	#4	STR	8'-11"	42
✳B6	7	#4	STR	12'-7"	59
✳S1	29	#5	3	11'-0"	333
✳S2	29	#5	2	6'-1"	184
✳S3	12	#9	5	9'-4"	381
✳U1	33	#4	6	8'-2"	180
✳U2	5	#4	6	4'-11"	16
✳U3	5	#4	6	5'-7"	19
✳U4	2	#9	6	12'-6"	85
✳U5	24	#4	6	9'-0"	144
✳U6	30	#4	6	5'-4"	107
✳U7	10	#4	6	6'-5"	43
✳U8	10	#4	6	6'-2"	41

✳EPOXY COATED REINFORCING STEEL = 3160 LBS.

▲ CLASS AA CONCRETE = 22.7 CU. YDS.

20" PRESTRESSED CONCRETE PILES
NO. 8 560 LIN. FT.

PILE REDRIVES 4 EA.

▲ CONCRETE DISPLACED BY THE PRESTRESSED CONCRETE PILES HAS BEEN DEDUCTED FROM THE CONCRETE QUANTITY.

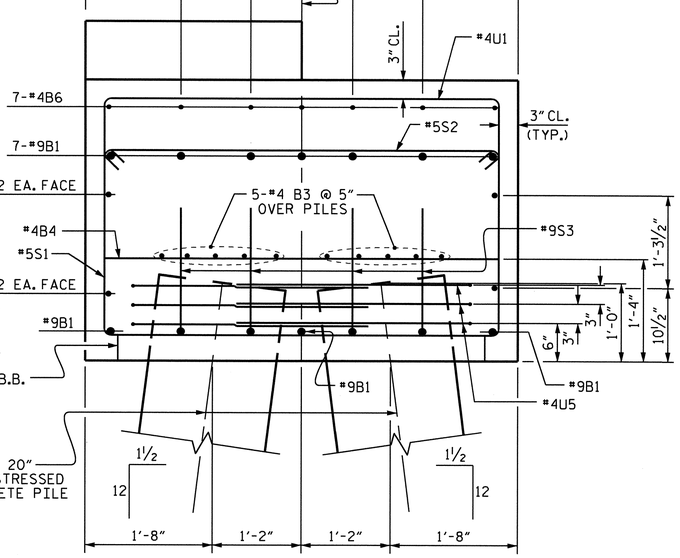

SECTION B-B

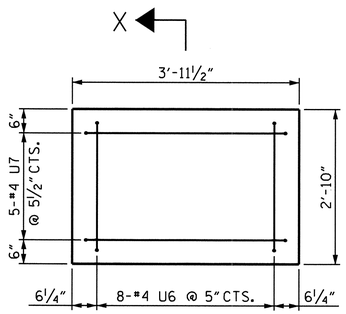

DETAIL B
(PLAN VIEW AT GIRDERS 1 & 4)

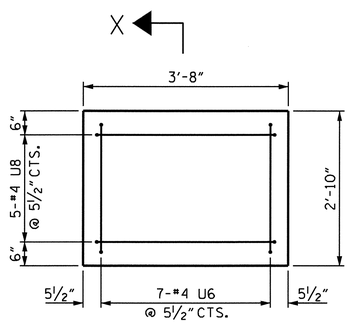

DETAIL C
(PLAN VIEW AT GIRDERS 2 & 3)

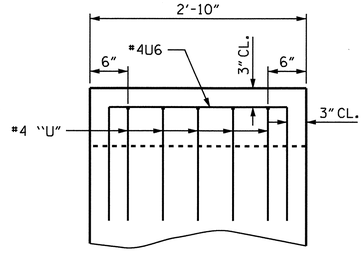

SECTION X-X

PROJECT NO. B-3611
BEAUFORT COUNTY
STATION: 43+25.00 -L-

SHEET 2 OF 2

STATE OF NORTH CAROLINA
DEPARTMENT OF TRANSPORTATION
RALEIGH

SUBSTRUCTURE BENT #9

REVISIONS						SHEET NO.
NO.	BY:	DATE:	NO.	BY:	DATE:	S-89
1			3			TOTAL SHEETS
2			4			120

NORTH CAROLINA PROFESSIONAL SEAL 15825 ENGINEER BRUCE D. KLAPPENBACH 3-31-2010

DRAWN BY : M. G. SHAIKH DATE : 11-05-09
CHECKED BY : H. T. BARBOUR DATE : 12-17-09

24-MAR-2010 11:06
p:\structures\mshaikh\microstation\b-3611_sd_b*.dgn
mshaikh

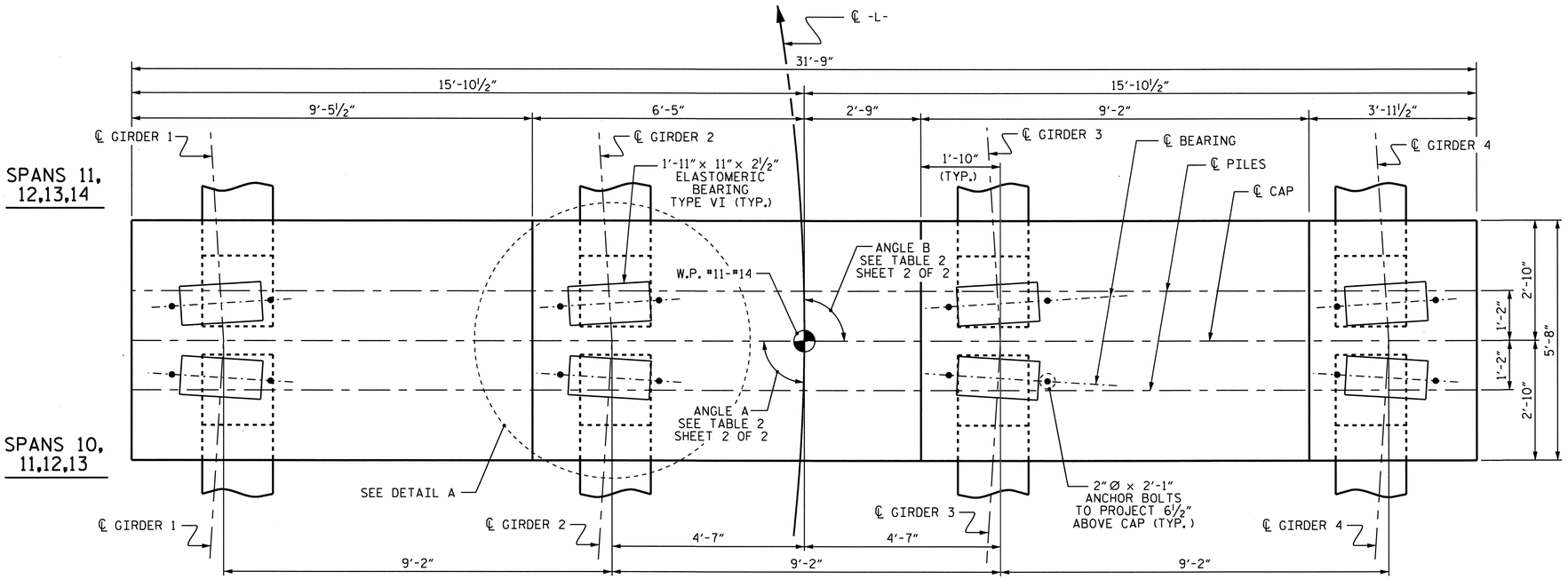

PLAN

NOTES

STIRRUPS IN CAP MAY BE SHIFTED AS NECESSARY TO CLEAR ANCHOR BOLTS.

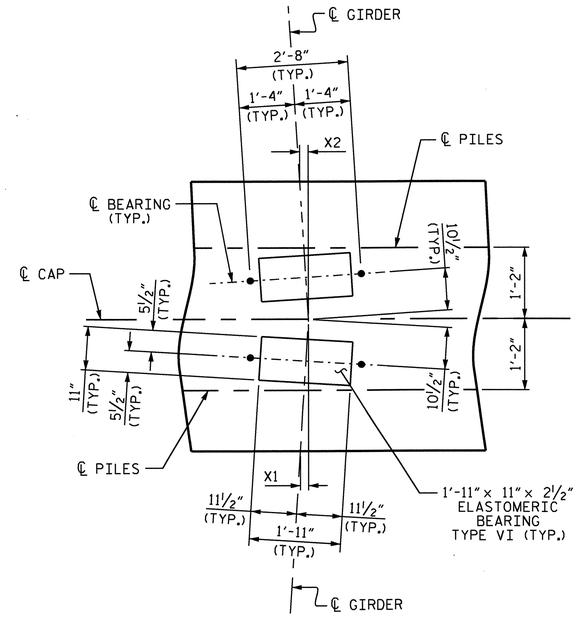

DETAIL A

PILES ARE NOT SHOWN FOR CLARITY.
FOR X1 & X2 SEE TABLE 2, SHEET 2 OF 2.

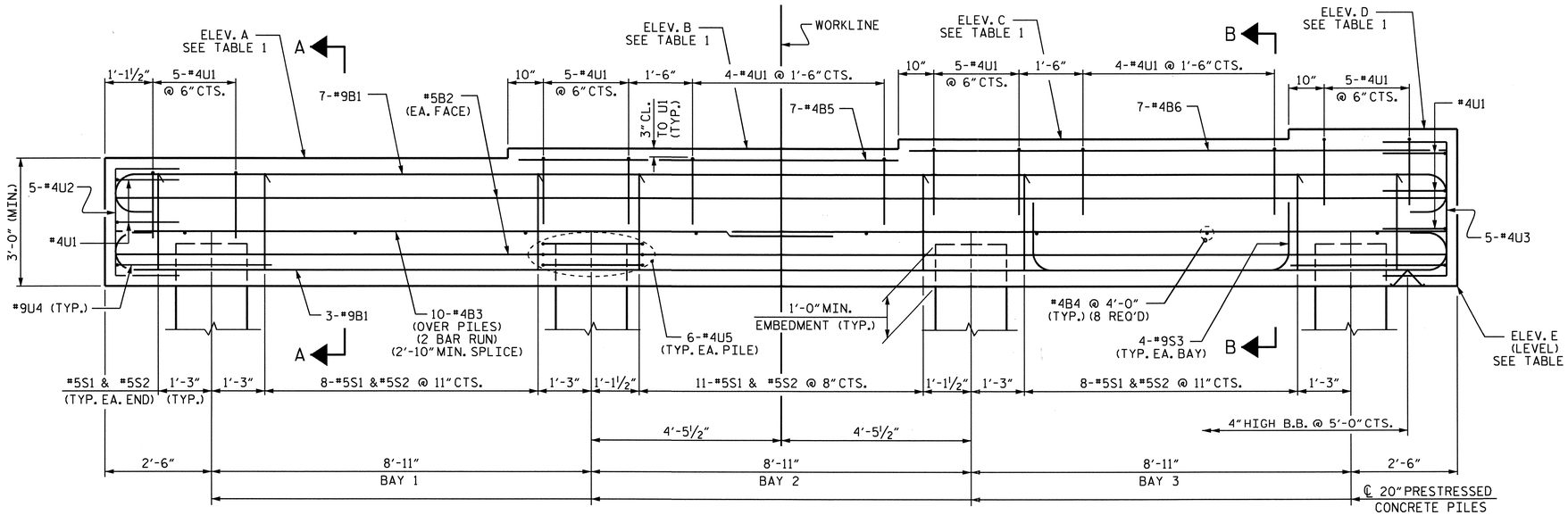

ELEVATION

BENT NO.	BRIDGE SEAT ELEVATIONS				BOTTOM OF CAP ELEVATIONS
	A	B	C	D	E
BENT #10	9.598	9.827	10.056	10.285	6.598
BENT #11	10.157	10.341	10.524	10.707	7.157
BENT #12	10.648	10.831	11.015	11.198	7.648
BENT #13	11.139	11.322	11.505	11.689	8.139

TABLE 1

PROJECT NO. B-3611
BEAUFORT COUNTY
STATION: 43+25.00 -L-

SHEET 1 OF 2

STATE OF NORTH CAROLINA
DEPARTMENT OF TRANSPORTATION
RALEIGH

SUBSTRUCTURE BENT #10 THROUGH #13

NORTH CAROLINA PROFESSIONAL SEAL 15825 ENGINEER BRUCE D. KLAPPENBERG
3-31-2010

REVISIONS						SHEET NO.
NO.	BY:	DATE:	NO.	BY:	DATE:	S-90
1			3			TOTAL SHEETS
2			4			120

DRAWN BY : M. G. SHAIKH DATE : 11-30-09
CHECKED BY : H. T. BARBOUR DATE : 12-17-09

24-MAR-2010 11:05
p:\structures\mshaikh\microstation\b-3611_sd_b*.dgn
mshaikh

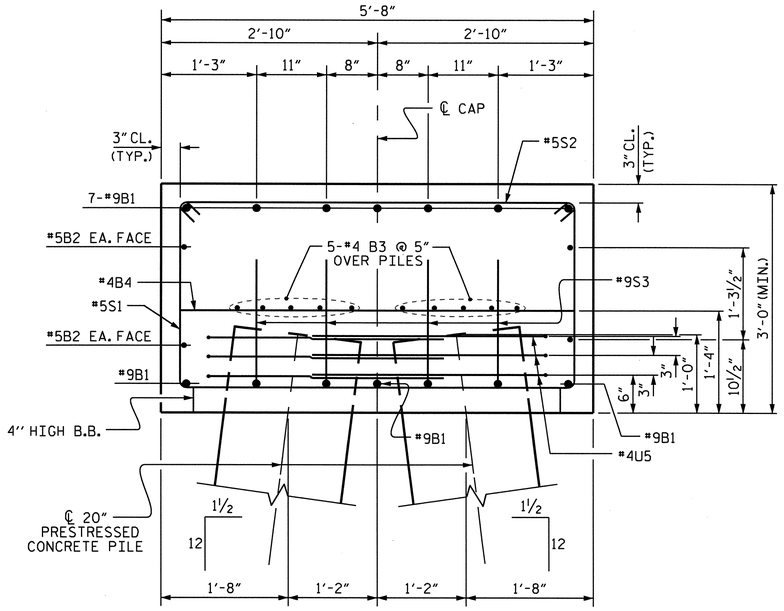

SECTION A-A

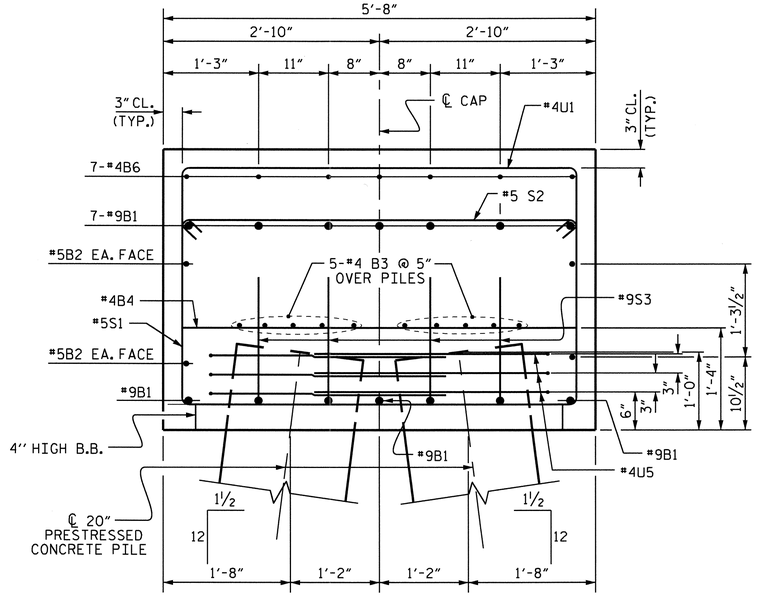

SECTION B-B

BAR TYPES

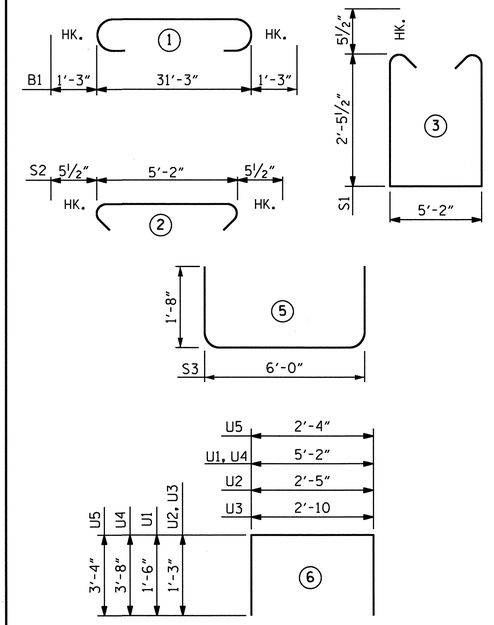

ALL BAR DIMENSIONS ARE OUT TO OUT.

BILL OF MATERIAL FOR ONE BENT (4 REQUIRED)

BAR	NO.	SIZE	TYPE	LENGTH	WEIGHT
✱B1	10	#9	1	33'-9"	1148
✱B2	4	#5	STR	31'-3"	130
✱B3	20	#4	STR	17'-1"	228
✱B4	8	#4	STR	5'-2"	28
✱B5	7	#4	STR	8'-11"	42
✱B6	7	#4	STR	12'-7"	59
✱S1	29	#5	3	11'-0"	333
✱S2	29	#5	2	6'-1"	184
✱S3	12	#9	5	9'-4"	381
✱U1	33	#4	6	8'-2"	180
✱U2	5	#4	6	4'-11"	16
✱U3	5	#4	6	5'-4"	18
✱U4	2	#9	6	12'-6"	85
✱U5	24	#4	6	9'-0"	144

✱EPOXY COATED REINFORCING STEEL = 2976 LBS.

CLASS AA CONCRETE	CU. YDS.
▲ BENT 10	21.5
▲ BENT 11, 12 & 13	21.1

20" PRESTRESSED CONCRETE PILES

BENT NO.	NO.	LIN. FT.
10	8	560
11	8	560
12	8	600
13	8	600

PILE REDRIVES (BENT #10-#13) 4 EA.
PDA TESTING (BENT #11) 1 EA.
PDA ASSISTANCE (BENT #11) 1 EA.

PREDRILLING FOR PILES

BENT NO.	LIN. FT.
11	120
12	120
13	120

▲ CONCRETE DISPLACED BY THE PRESTRESSED CONCRETE PILES HAS BEEN DEDUCTED FROM THE CONCRETE QUANTITY.

BENT NO.	ANGLE A (TO SHORT CHORD)	ANGLE B (TO SHORT CHORD)	X1	X2
BENT #10	89°-16'-13"	90°-28'-42"	7/16"	5/16"
BENT #11	89°-52'-32"	90°-00'-00"	1/16"	0
BENT #12	90°-00'-00"	90°-00'-00"	0	0
BENT #13	90°-00'-00"	90°-00'-00"	0	0

TABLE 2

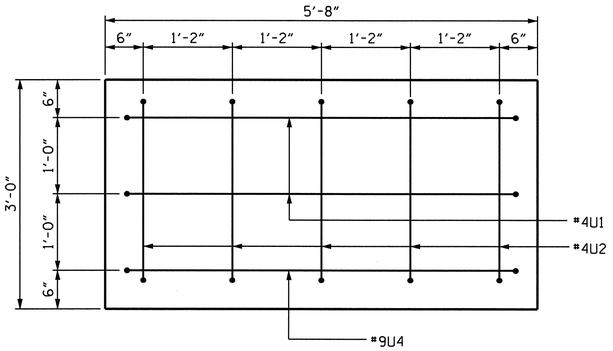

END VIEW LEFT

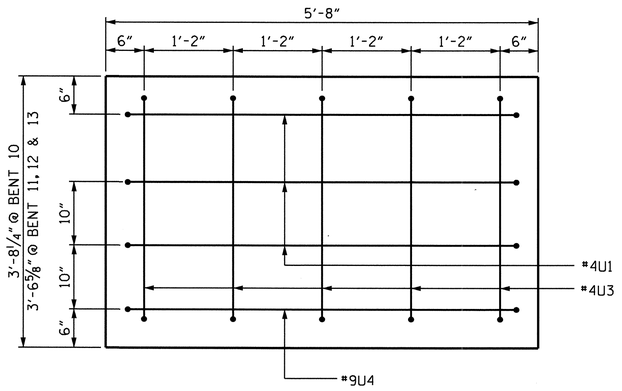

END VIEW RIGHT

PROJECT NO. B-3611
BEAUFORT COUNTY
STATION: 43+25.00 -L-

SHEET 2 OF 2

STATE OF NORTH CAROLINA
DEPARTMENT OF TRANSPORTATION
RALEIGH

SUBSTRUCTURE BENT #10 THROUGH #13

NORTH CAROLINA PROFESSIONAL SEAL 15825 ENGINEER D. KLAPPENBERGER
3-31-2010

REVISIONS						SHEET NO.
NO.	BY:	DATE:	NO.	BY:	DATE:	S-91
1			3			TOTAL SHEETS
2			4			120

DRAWN BY : M. G. SHAIKH DATE : 11-30-09
CHECKED BY : H. T. BARBOUR DATE : 12-17-09

24-MAR-2010 11:05
p:\structures\mshaikh\microstation\b-3611_sd_b*.dgn
mshaikh

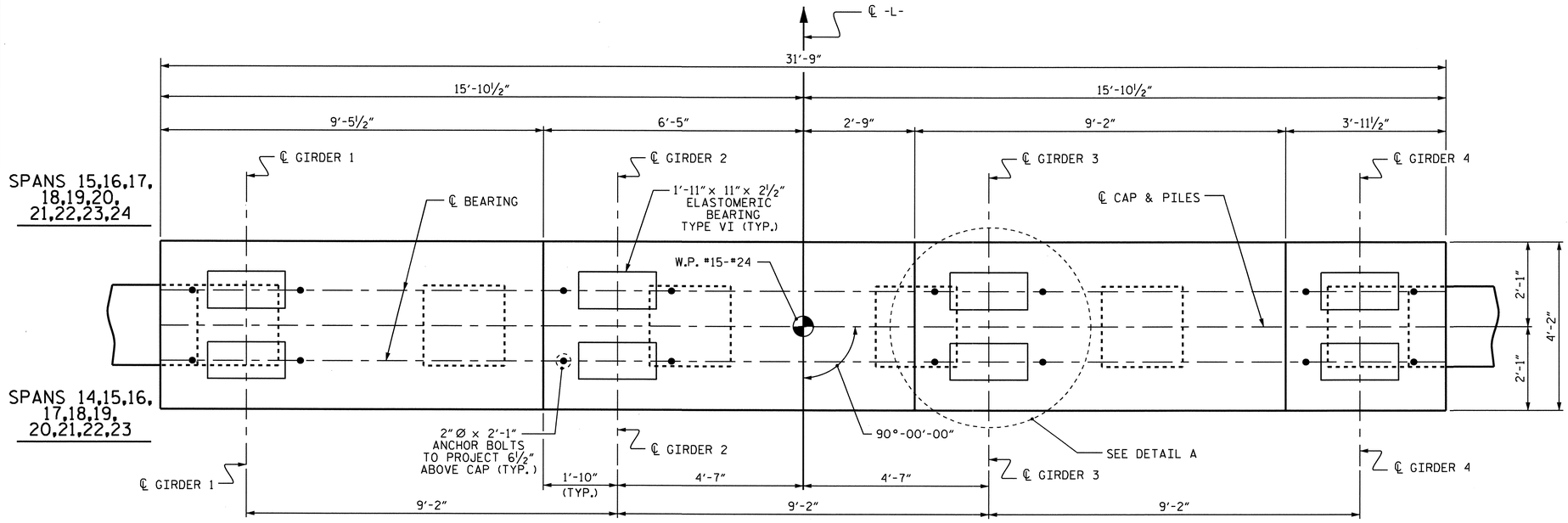

PLAN

NOTES

STIRRUPS IN CAP MAY BE SHIFTED AS NECESSARY TO CLEAR ANCHOR BOLTS.

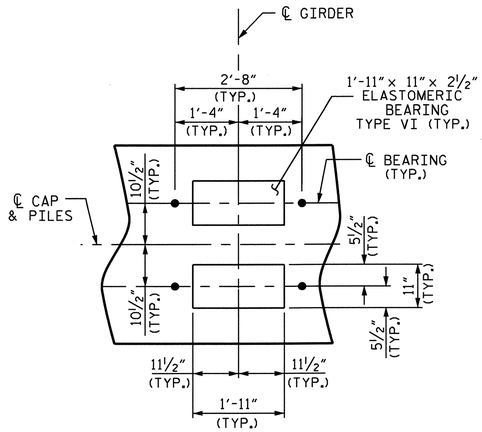

DETAIL A

PILES ARE NOT SHOWN FOR CLARITY.

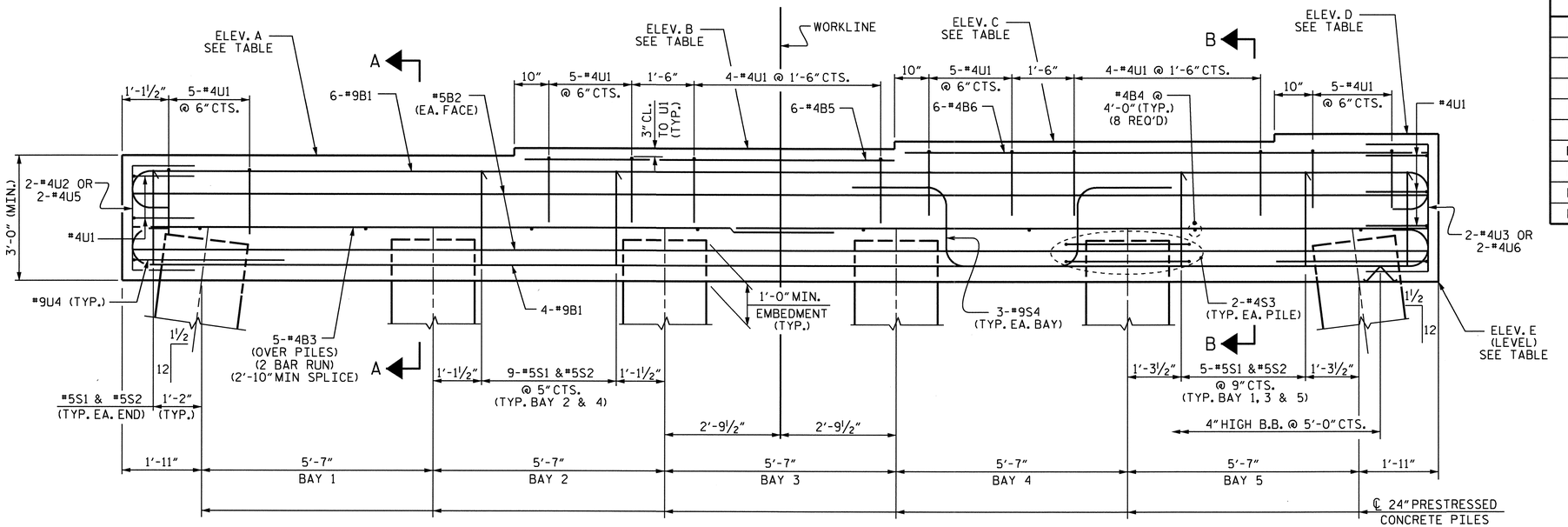

ELEVATION

BENT NO.	BRIDGE SEAT ELEVATIONS				BOTTOM OF CAP ELEVATIONS
	A	B	C	D	E
BENT #14	11.629	11.813	11.996	12.179	8.629
BENT #15	12.120	12.303	12.487	12.670	9.120
BENT #16	12.611	12.794	12.977	13.161	9.611
BENT #17	13.101	13.285	13.468	13.651	10.101
BENT #18	13.592	13.776	13.959	14.142	10.592
BENT #19	14.083	14.266	14.450	14.633	11.083
BENT #20	14.574	14.757	14.940	15.124	11.574
BENT #21	15.064	15.248	15.431	15.614	12.064
BENT #22	15.555	15.738	15.922	16.105	12.555
BENT #23	16.022	16.206	16.389	16.572	13.022

PROJECT NO. B-3611

BEAUFORT COUNTY

STATION: 43+25.00 -L-

SHEET 1 OF 2

STATE OF NORTH CAROLINA
DEPARTMENT OF TRANSPORTATION
RALEIGH

SUBSTRUCTURE BENT #14 THROUGH BENT #23

NORTH CAROLINA PROFESSIONAL SEAL 5825 ENGINEER BRADLEY D. KLAPPENBACH 3-31-2010

REVISIONS						SHEET NO.
NO.	BY:	DATE:	NO.	BY:	DATE:	S-92
1			3			TOTAL SHEETS
2			4			120

DRAWN BY : M. G. SHAIKH DATE : 10-21-09
CHECKED BY : H. T. BARBOUR DATE : 11-19-09

24-MAR-2010 11:05
p:\structures\mshaikh\microstation\b-3611_sd.b*.dgn
mshaikh

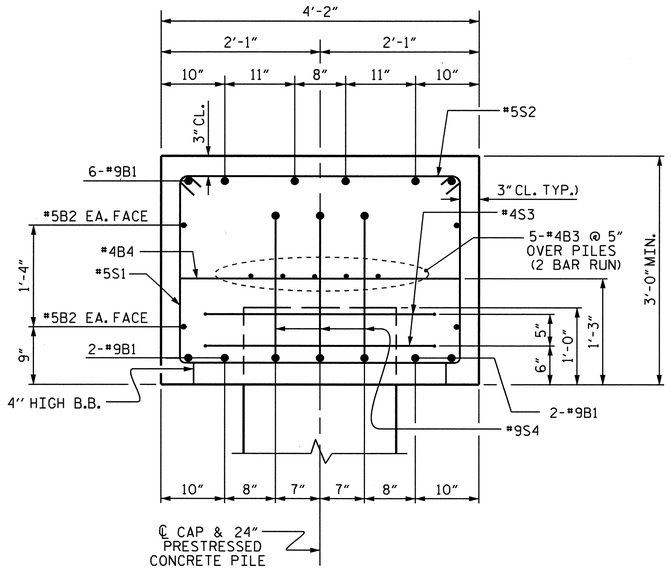

SECTION A-A

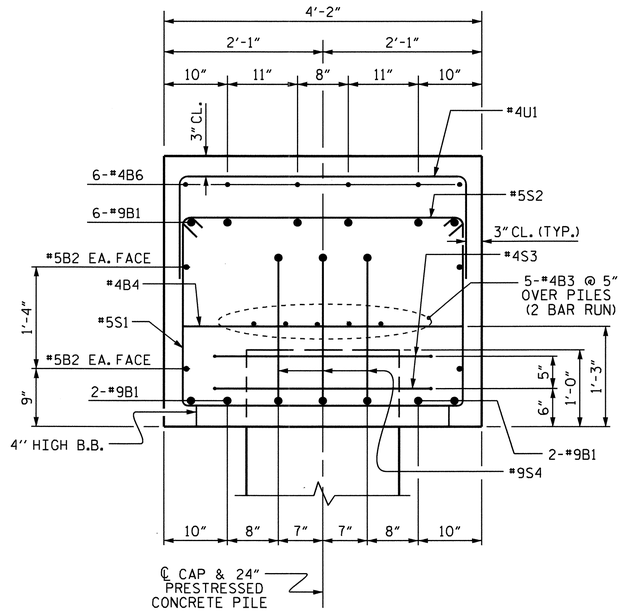

SECTION B-B

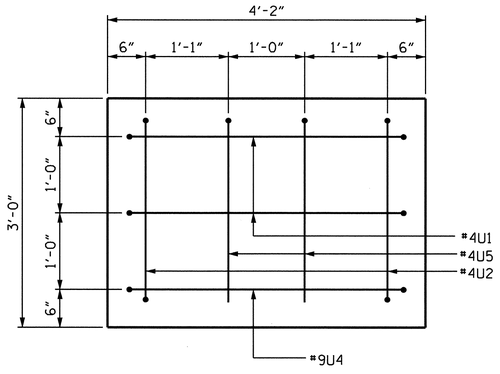

END VIEW LEFT

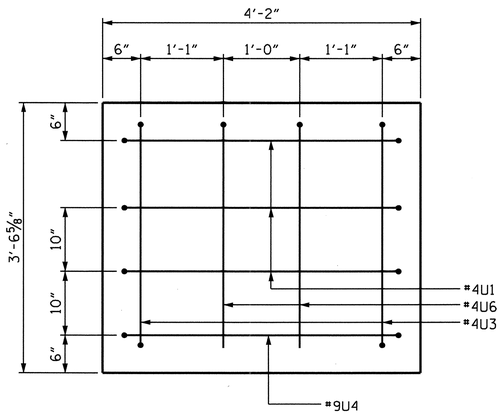

END VIEW RIGHT

BAR TYPES

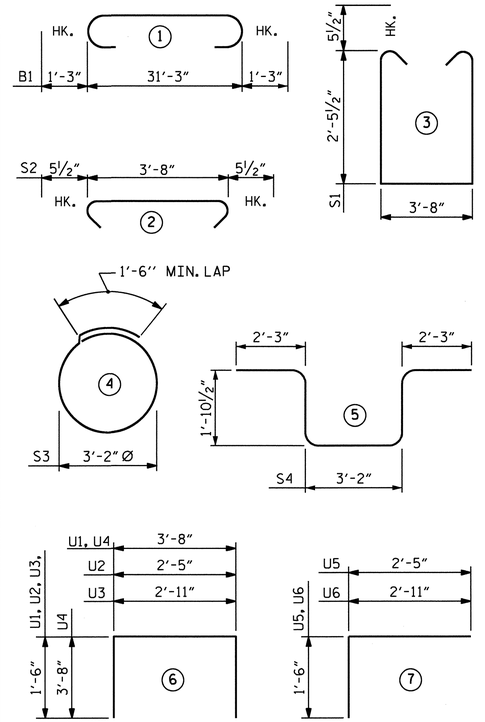

ALL BAR DIMENSIONS ARE OUT TO OUT.

BILL OF MATERIAL FOR ONE BENT (10 REQUIRED)

BAR	NO.	SIZE	TYPE	LENGTH	WEIGHT
✱B1	10	#9	1	33'-9"	1148
✱B2	4	#5	STR	31'-3"	130
✱B3	10	#4	STR	17'-1"	114
✱B4	8	#4	STR	3'-8"	20
✱B5	6	#4	STR	8'-11"	36
✱B6	6	#4	STR	12'-7"	50
✱S1	35	#5	3	9'-6"	347
✱S2	35	#5	2	4'-7"	167
✱S3	12	#4	4	11'-6"	92
✱S4	15	#9	5	11'-5"	582
✱U1	33	#4	6	6'-8"	147
✱U2	2	#4	6	5'-5"	7
✱U3	2	#4	6	5'-11"	8
✱U4	2	#9	6	11'-0"	75
✱U5	2	#4	7	3'-11"	5
✱U6	2	#4	7	4'-5"	6

✱EPOXY COATED REINFORCING STEEL = 2934 LBS.

▲ CLASS AA CONCRETE = 14.9 CU. YDS.

24" PRESTRESSED CONCRETE PILES

BENT NO.	NO.	LIN. FT.
14	6	450
15	6	450
16	6	480
17	6	480
18	6	480
19	6	510
20	6	570
21	6	630
22	6	510
23	6	510

PILE REDRIVES (BENT #14-#23) 3 EA.
PDA TESTING (BENT #15) 1 EA.
PDA TESTING (BENT #22) 1 EA.
PDA ASSISTANCE (BENT #15) 1 EA.
PDA ASSISTANCE (BENT #22) 1 EA.

▲ CONCRETE DISPLACED BY THE PRESTRESSED CONCRETE PILES HAS BEEN DEDUCTED FROM THE CONCRETE QUANTITY.

PROJECT NO. B-3611
BEAUFORT COUNTY
STATION: 43+25.00 -L-

SHEET 2 OF 2

STATE OF NORTH CAROLINA
DEPARTMENT OF TRANSPORTATION
RALEIGH

SUBSTRUCTURE BENT #14 THROUGH BENT #23

REVISIONS						SHEET NO.
NO.	BY:	DATE:	NO.	BY:	DATE:	S-93
1			3			TOTAL SHEETS
2			4			120

NORTH CAROLINA PROFESSIONAL SEAL 15823 ENGINEER BRADLEY D. KLAPPENBACH 3-31-2010

DRAWN BY : M. G. SHAIKH DATE : 10-21-09
CHECKED BY : H. T. BARBOUR DATE : 11-19-09

24-MAR-2010 11:05
p:\structures\mshaikh\microstation\b-3611_sd_b*.dgn
mshaikh

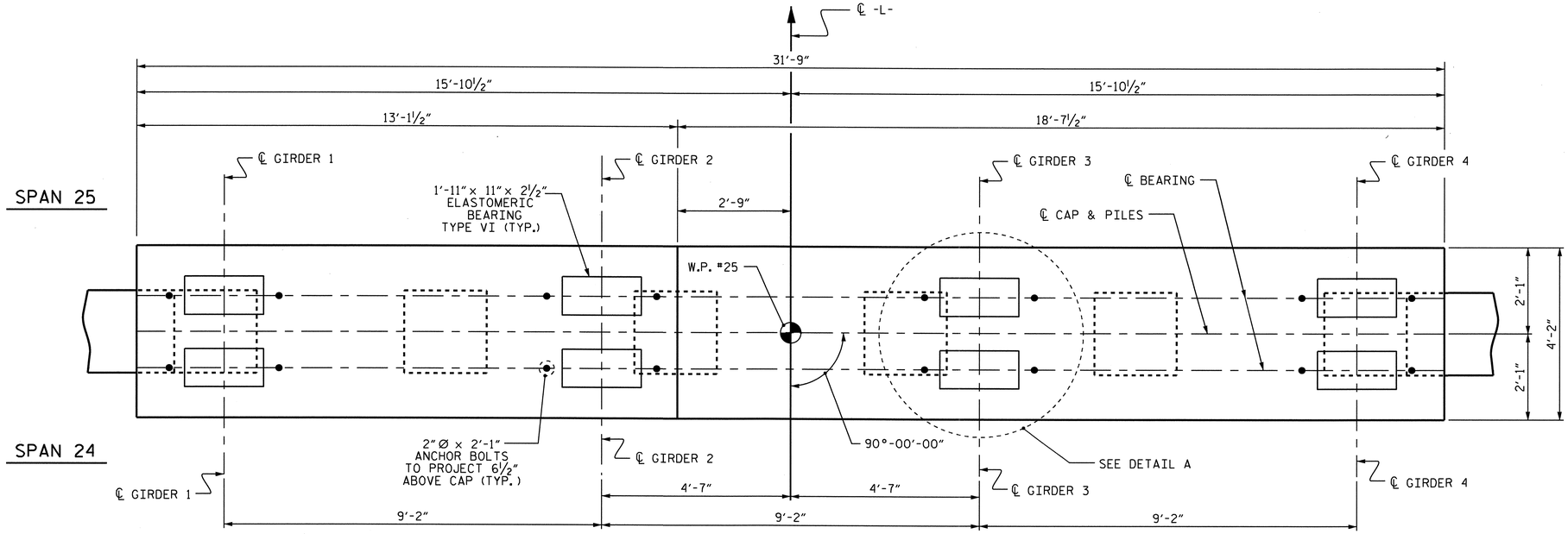

PLAN

NOTES

STIRRUPS IN CAP MAY BE SHIFTED AS NECESSARY TO CLEAR ANCHOR BOLTS.

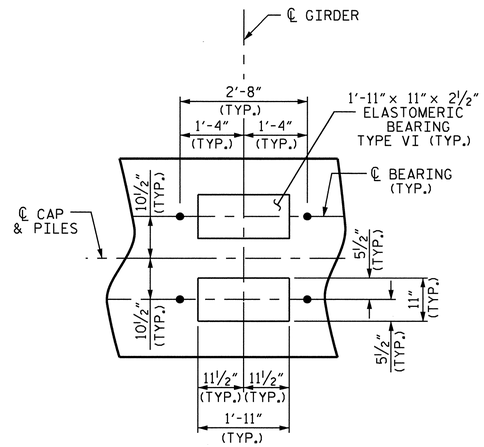

DETAIL A

PILES ARE NOT SHOWN FOR CLARITY.

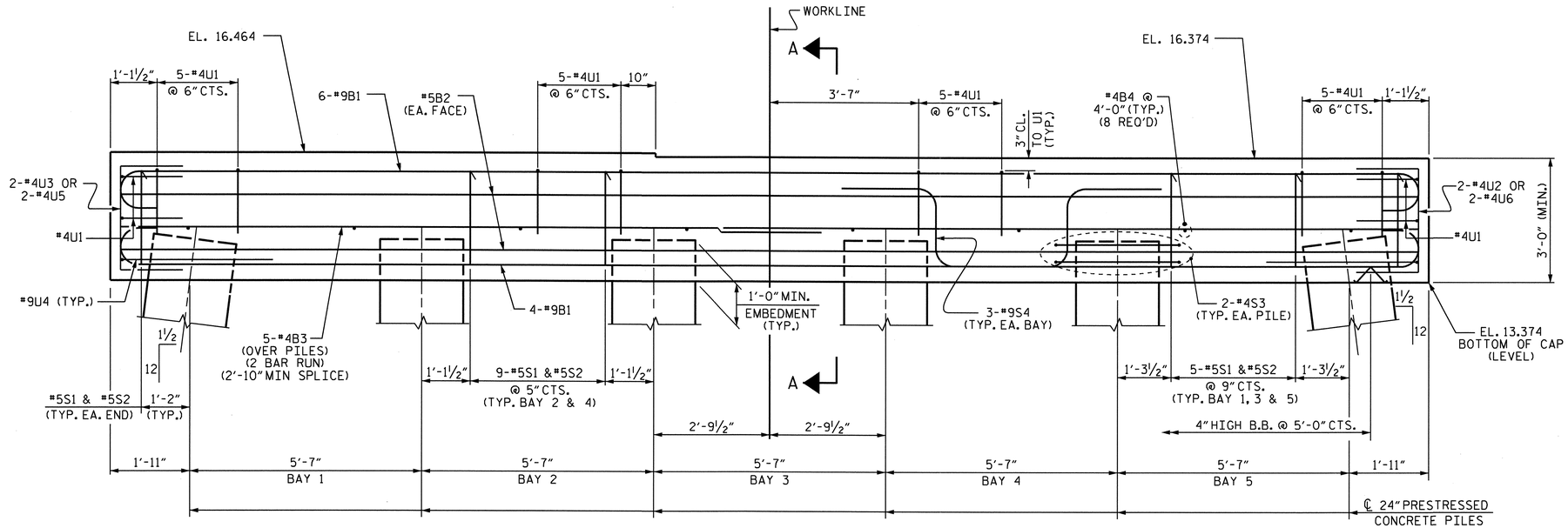

ELEVATION

PROJECT NO. B-3611

BEAUFORT COUNTY

STATION: 43+25.00 -L-

SHEET 1 OF 2

STATE OF NORTH CAROLINA
DEPARTMENT OF TRANSPORTATION
RALEIGH

SUBSTRUCTURE BENT #24

REVISIONS						SHEET NO.
NO.	BY:	DATE:	NO.	BY:	DATE:	S-94
1			3			TOTAL SHEETS
2			4			120

NORTH CAROLINA PROFESSIONAL SEAL 15821 ENGINEER BRUCE D. KLAPPENBACH
3-31-2010

DRAWN BY : M. G. SHAIKH DATE : 10-22-09
CHECKED BY : H. T. BARBOUR DATE : 11-19-09

31-MAR-2010 11:07
P:\Structures\mshaikh\Microstation\b-3611_sd_b*.dgn
mshaikh

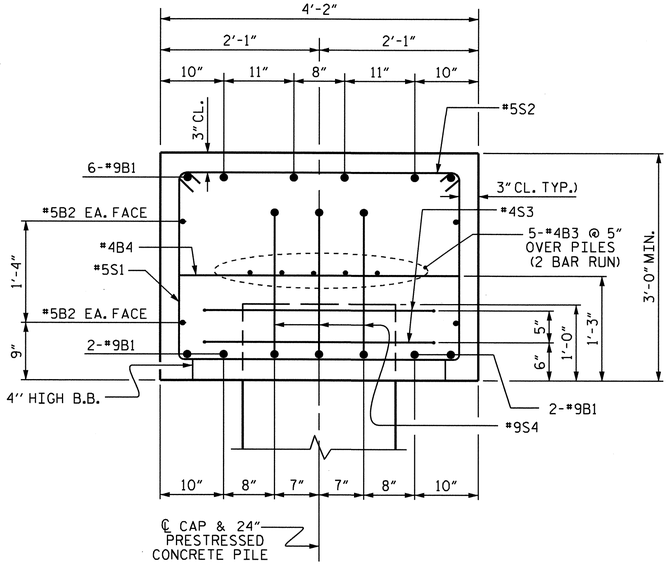

SECTION A-A

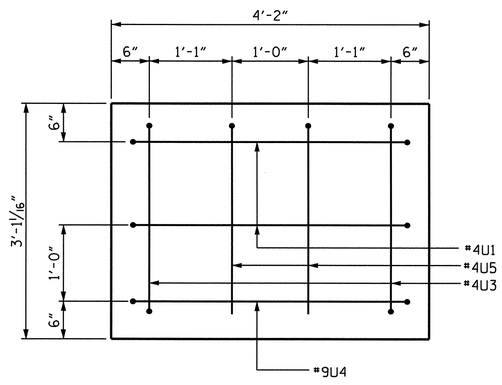

END VIEW LEFT

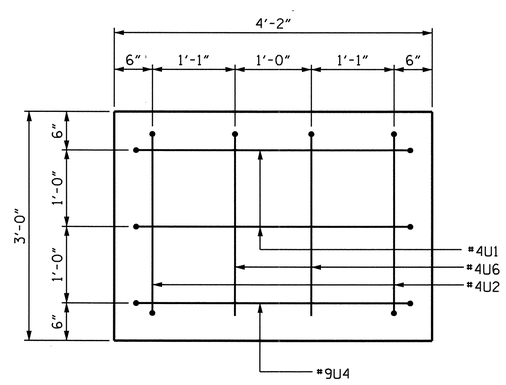

END VIEW RIGHT

BAR TYPES

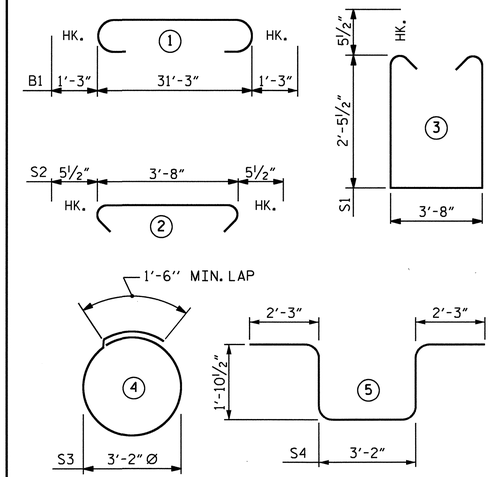

ALL BAR DIMENSIONS ARE OUT TO OUT.

BILL OF MATERIAL
BENT #24

BAR	NO.	SIZE	TYPE	LENGTH	WEIGHT
✱B1	10	#9	1	33'-9"	1148
✱B2	4	#5	STR	31'-3"	130
✱B3	10	#4	STR	17'-1"	114
✱B4	8	#4	STR	3'-8"	20
✱S1	35	#5	3	9'-6"	347
✱S2	35	#5	2	4'-7"	167
✱S3	12	#4	4	11'-6"	92
✱S4	15	#9	5	11'-5"	582
✱U1	24	#4	6	6'-8"	107
✱U2	2	#4	6	5'-5"	7
✱U3	2	#4	6	5'-6"	7
✱U4	2	#9	6	11'-0"	75
✱U5	2	#4	7	4'-0"	5
✱U6	2	#4	7	3'-11"	5

✱EPOXY COATED REINFORCING STEEL = 2806 LBS.

▲ CLASS AA CONCRETE = 14.0 CU. YDS.

24" PRESTRESSED CONCRETE PILES
NO. 6 630 LIN. FT.

PILE REDRIVES 3 EA.
PDA TESTING 1 EA.
PDA ASSISTANCE 1 EA.

▲ CONCRETE DISPLACED BY THE PRESTRESSED CONCRETE PILES HAS BEEN DEDUCTED FROM THE CONCRETE QUANTITY.

PROJECT NO. B-3611
BEAUFORT COUNTY
STATION: 43+25.00 -L-

SHEET 2 OF 2

STATE OF NORTH CAROLINA
DEPARTMENT OF TRANSPORTATION
RALEIGH

SUBSTRUCTURE BENT #24

NORTH CAROLINA PROFESSIONAL SEAL 15828 ENGINEER D. KLAPPENBACH
3-31-2010

REVISIONS						SHEET NO.
NO.	BY:	DATE:	NO.	BY:	DATE:	S-95
1			3			TOTAL SHEETS
2			4			120

DRAWN BY : M. G. SHAIKH DATE : 10-21-09
CHECKED BY : H. T. BARBOUR DATE : 11-19-09

24-MAR-2010 11:04
p:\structures\mshaikh\microstation\b-3611_sd_b*.dgn
mshaikh

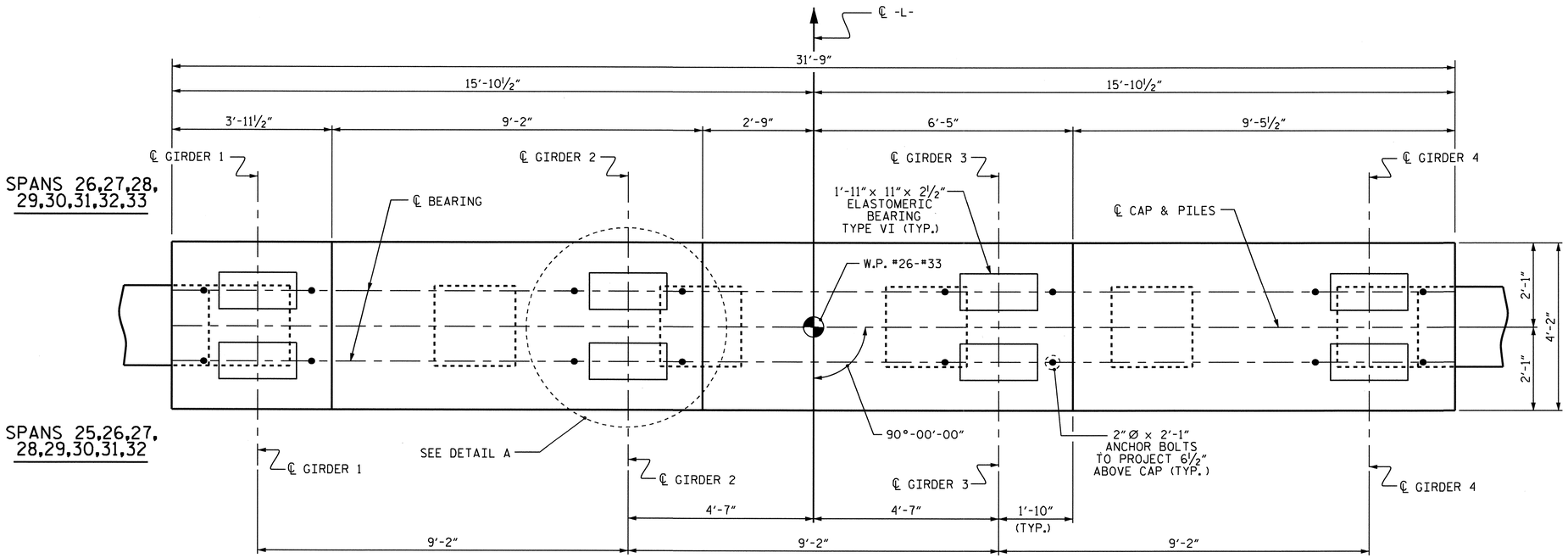

PLAN

NOTES

STIRRUPS IN CAP MAY BE SHIFTED AS NECESSARY TO CLEAR ANCHOR BOLTS.

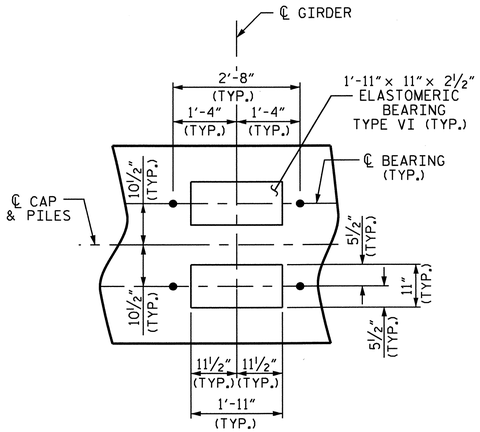

DETAIL A

PILES ARE NOT SHOWN FOR CLARITY.

BENT NO.	BRIDGE SEAT ELEVATIONS				BOTTOM OF CAP ELEVATIONS
	A	B	C	D	E
BENT #25	16.472	16.288	16.105	15.922	12.922
BENT #26	15.823	16.639	15.456	15.273	12.273
BENT #27	14.860	14.677	14.493	14.310	11.310
BENT #28	13.872	13.689	13.506	13.322	10.322
BENT #29	12.885	12.702	12.518	12.335	9.335
BENT #30	11.898	11.714	11.531	11.348	8.348
BENT #31	10.910	10.727	10.544	10.360	7.360
BENT #32	9.923	9.740	9.556	9.373	6.373

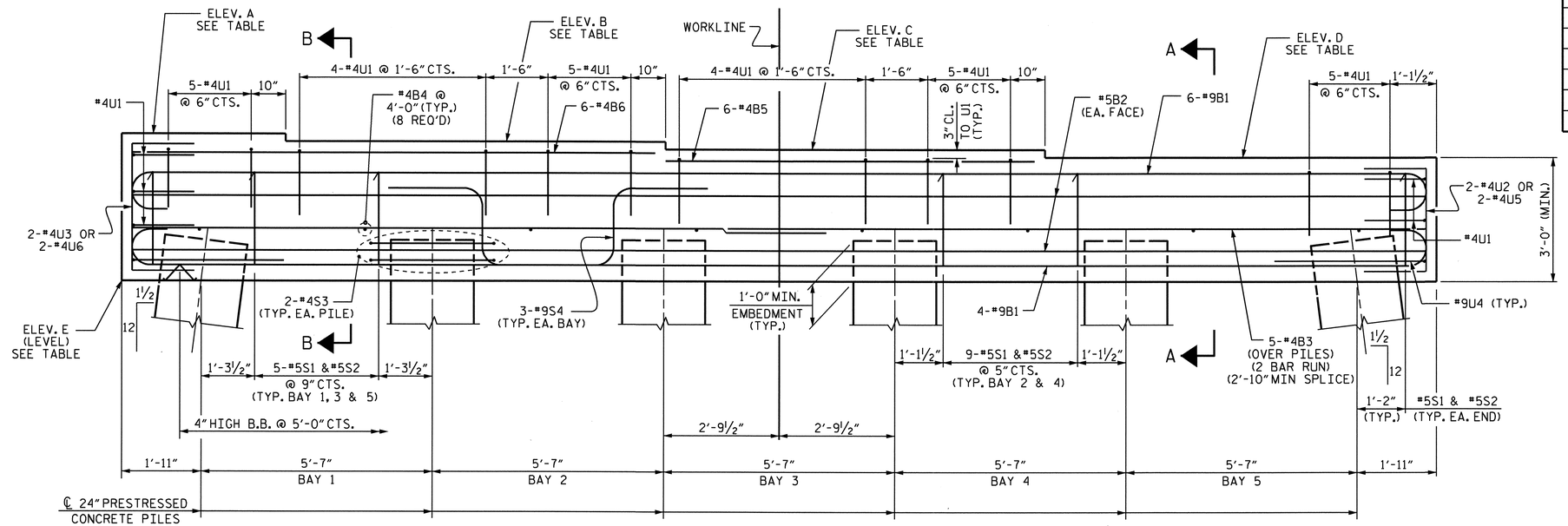

ELEVATION

PROJECT NO. B-3611

BEAUFORT COUNTY

STATION: 43+25.00 -L-

SHEET 1 OF 2

STATE OF NORTH CAROLINA
DEPARTMENT OF TRANSPORTATION
RALEIGH

SUBSTRUCTURE BENT #25 THROUGH BENT #32

NORTH CAROLINA PROFESSIONAL SEAL 15825 ENGINEER BRUCE D. KLAPPENBACH
3-31-2010

REVISIONS						SHEET NO.
NO.	BY:	DATE:	NO.	BY:	DATE:	S-96
1			3			TOTAL SHEETS
2			4			120

DRAWN BY : M. G. SHAIKH DATE : 10-27-09
CHECKED BY : H. T. BARBOUR DATE : 11-19-09

24-MAR-2010 11:04
p:\structures\mshaikh\microstation\b-3611_sd_b*.dgn
mshaikh

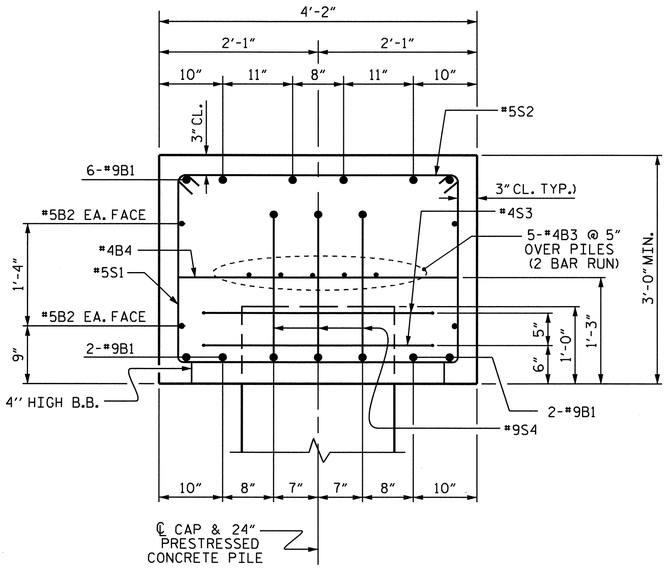

SECTION A-A

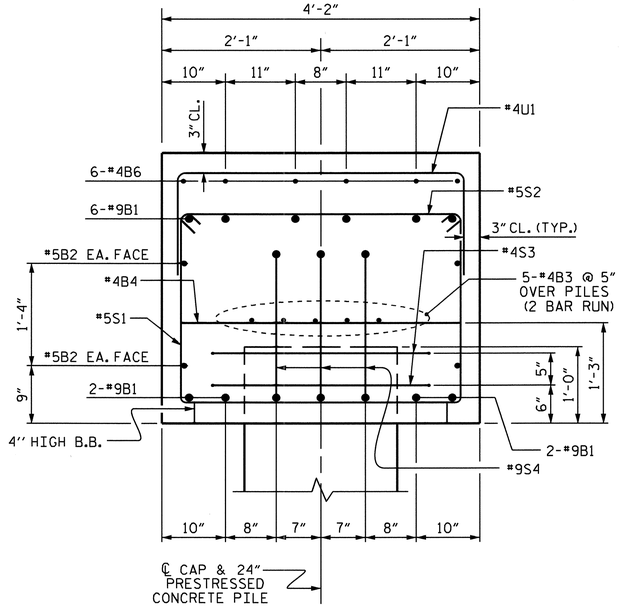

SECTION B-B

BAR TYPES

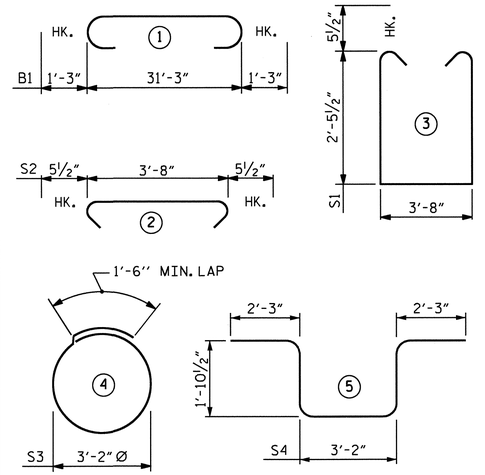

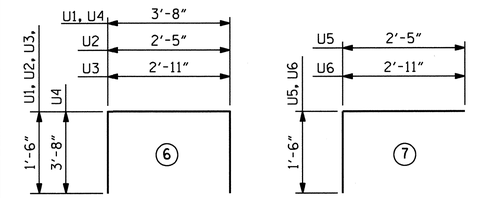

ALL BAR DIMENSIONS ARE OUT TO OUT.

BILL OF MATERIAL FOR ONE BENT (8 REQUIRED)

BAR	NO.	SIZE	TYPE	LENGTH	WEIGHT
✱B1	10	#9	1	33'-9"	1148
✱B2	4	#5	STR	31'-3"	130
✱B3	10	#4	STR	17'-1"	114
✱B4	8	#4	STR	3'-8"	20
✱B5	6	#4	STR	8'-11"	36
✱B6	6	#4	STR	12'-7"	50
✱S1	35	#5	3	9'-6"	347
✱S2	35	#5	2	4'-7"	167
✱S3	12	#4	4	11'-6"	92
✱S4	15	#9	5	11'-5"	582
✱U1	33	#4	6	6'-8"	147
✱U2	2	#4	6	5'-5"	7
✱U3	2	#4	6	5'-11"	8
✱U4	2	#9	6	11'-0"	75
✱U5	2	#4	7	3'-11"	5
✱U6	2	#4	7	4'-5"	6

✱EPOXY COATED REINFORCING STEEL = 2934 LBS.

▲ CLASS AA CONCRETE = 14.9 CU. YDS.

24" PRESTRESSED CONCRETE PILES

BENT NO.	NO.	LIN. FT.
25	6	510
26	6	540
27	6	510
28	6	510
29	6	510
30	6	480
31	6	480
32	6	450

PILE REDRIVES (BENT #25-#32) 3 EA.

PDA TESTING (BENT #32) 1 EA.

PDA ASSISTANCE (BENT #32) 1 EA.

▲ CONCRETE DISPLACED BY THE PRESTRESSED CONCRETE PILES HAS BEEN DEDUCTED FROM THE CONCRETE QUANTITY.

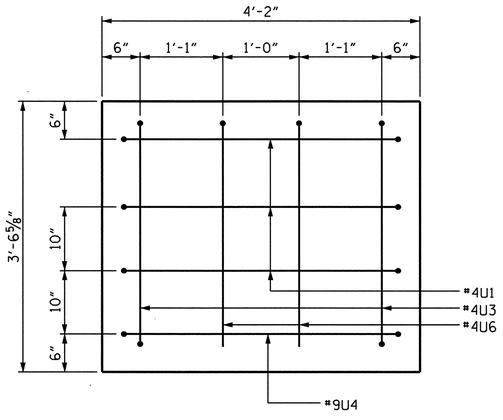

END VIEW LEFT

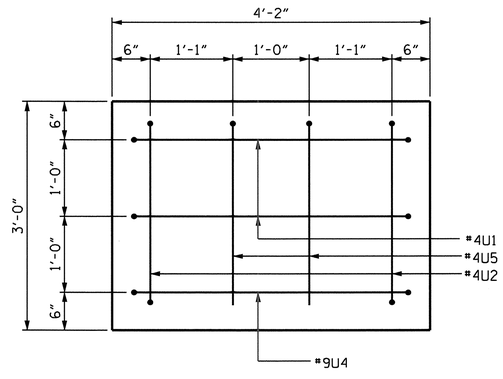

END VIEW RIGHT

PROJECT NO. B-3611

BEAUFORT COUNTY

STATION: 43+25.00 -L-

SHEET 2 OF 2

STATE OF NORTH CAROLINA
DEPARTMENT OF TRANSPORTATION
RALEIGH

SUBSTRUCTURE BENT #25 THROUGH BENT #32

REVISIONS						SHEET NO.
NO.	BY:	DATE:	NO.	BY:	DATE:	S-97
1			3			TOTAL SHEETS
2			4			120

NORTH CAROLINA PROFESSIONAL SEAL 15822 ENGINEER BRUCE D. KLAPPENBACH
3-31-2010

DRAWN BY : M. G. SHAIKH DATE : 10-27-09
CHECKED BY : H. T. BARBOUR DATE : 11-19-09

24-MAR-2010 11:04
p:\structures\mshaikh\microstation\b-3611_sd_b*.dgn
mshaikh

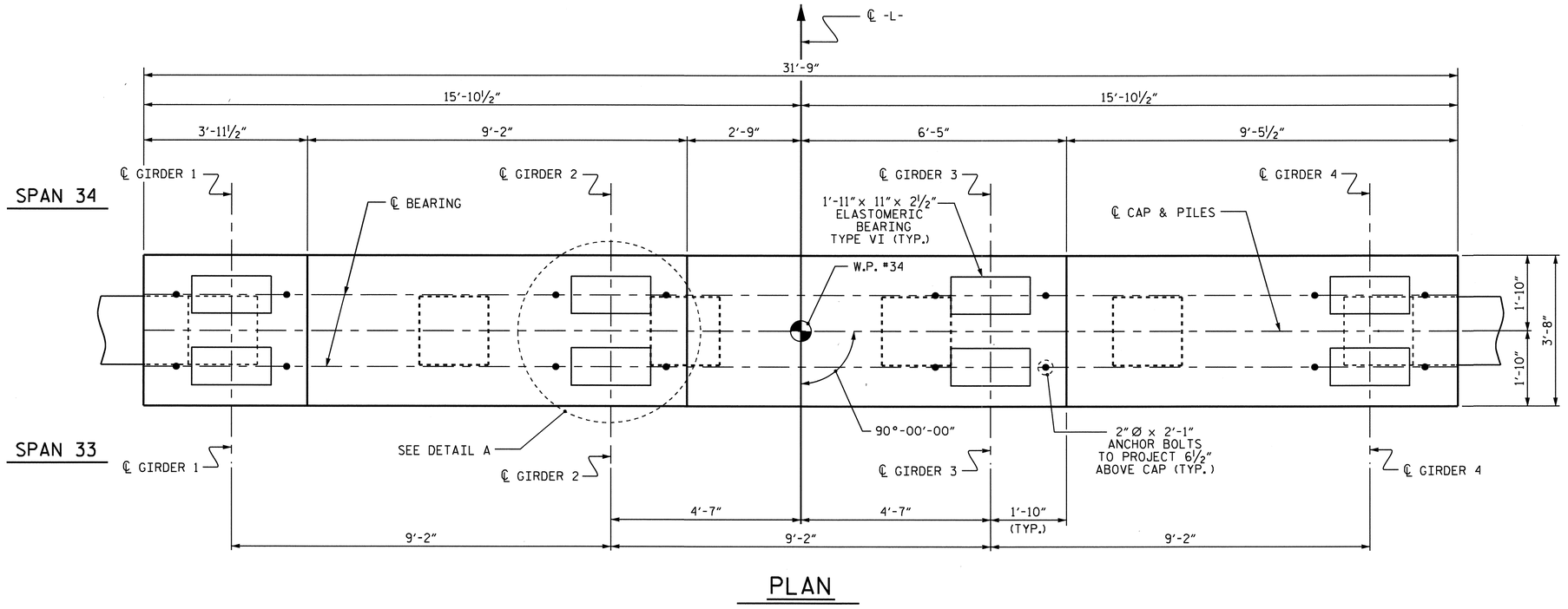

PLAN

NOTES

STIRRUPS IN CAP MAY BE SHIFTED AS NECESSARY TO CLEAR ANCHOR BOLTS.

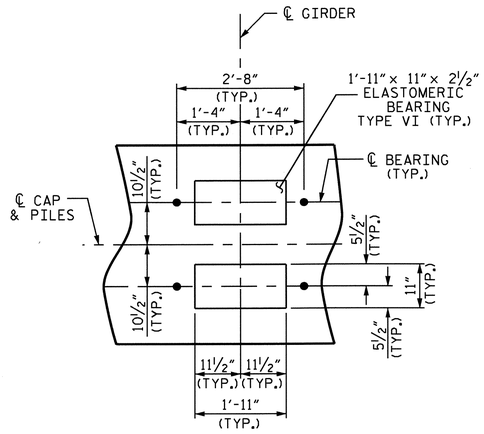

DETAIL A

PILES ARE NOT SHOWN FOR CLARITY.

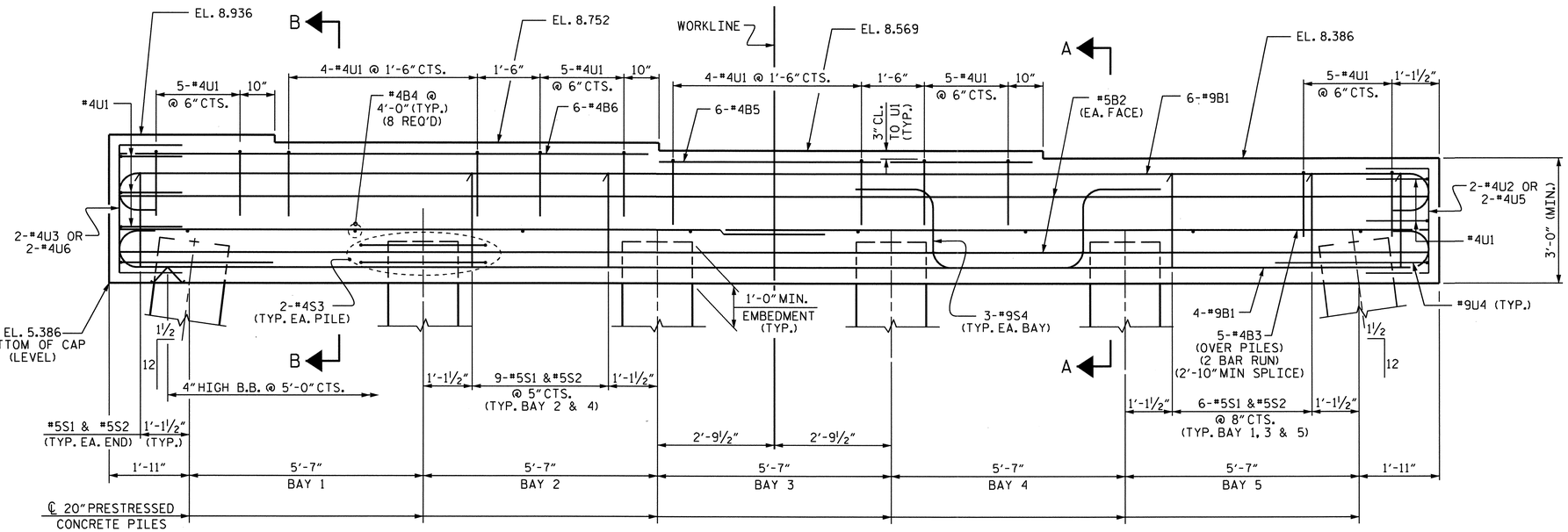

ELEVATION

PROJECT NO. B-3611

BEAUFORT COUNTY

STATION: 43+25.00 -L-

SHEET 1 OF 2

STATE OF NORTH CAROLINA
DEPARTMENT OF TRANSPORTATION
RALEIGH

SUBSTRUCTURE BENT #33

REVISIONS						SHEET NO.
NO.	BY:	DATE:	NO.	BY:	DATE:	S-98
1			3			TOTAL SHEETS
2			4			120

NORTH CAROLINA PROFESSIONAL SEAL 15825 ENGINEER D. KLAPPENBACH BRIDGE
3-31-2010

DRAWN BY : M. G. SHAIKH DATE : 10-28-09
CHECKED BY : H. T. BARBOUR DATE : 11-19-09

24-MAR-2010 11:04
p:\structures\mshaikh\microstation\b-3611_sd_b*.dgn
mshaikh

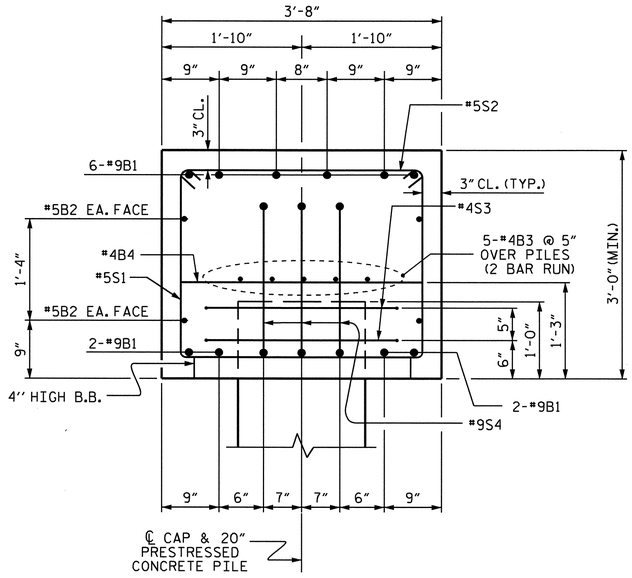

SECTION A-A

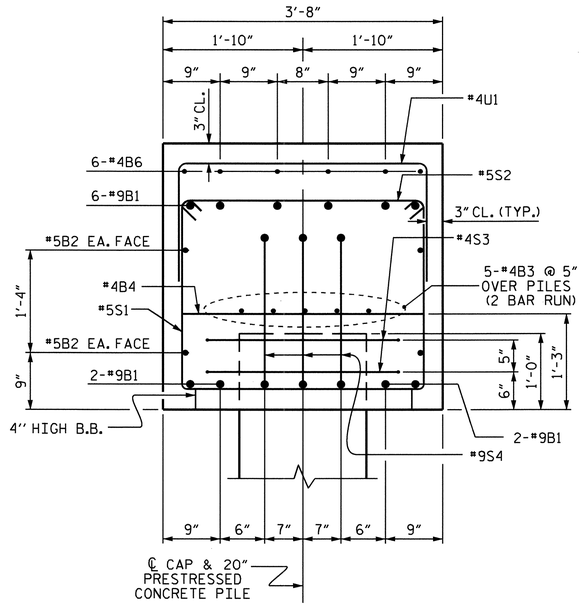

SECTION B-B

BAR TYPES

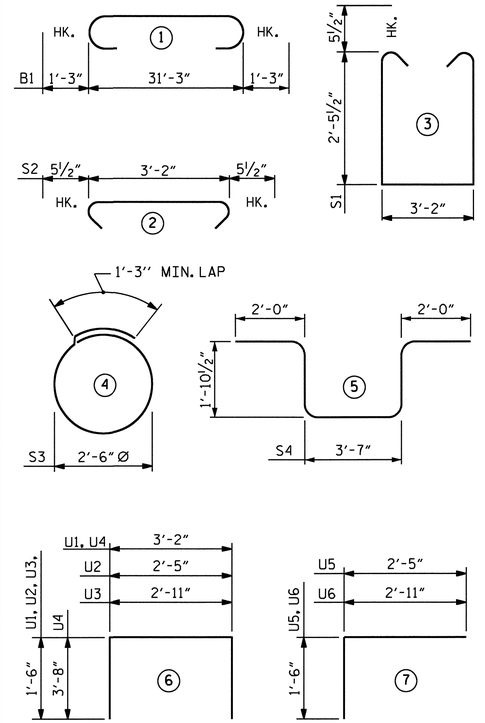

ALL BAR DIMENSIONS ARE OUT TO OUT.

BILL OF MATERIAL
BENT #33

BAR	NO.	SIZE	TYPE	LENGTH	WEIGHT
✱B1	10	#9	1	33'-9"	1148
✱B2	4	#5	STR	31'-3"	130
✱B3	10	#4	STR	17'-1"	114
✱B4	8	#4	STR	3'-2"	17
✱B5	6	#4	STR	8'-11"	36
✱B6	6	#4	STR	12'-7"	50
✱S1	38	#5	3	9'-0"	357
✱S2	38	#5	2	4'-1"	162
✱S3	12	#4	4	9'-2"	73
✱S4	15	#9	5	11'-4"	578
✱U1	33	#4	6	6'-2"	136
✱U2	2	#4	6	5'-5"	7
✱U3	2	#4	6	5'-11"	8
✱U4	2	#9	6	10'-6"	71
✱U5	2	#4	7	3'-11"	5
✱U6	2	#4	7	4'-5"	6

✱EPOXY COATED REINFORCING STEEL = 2898 LBS.

▲ CLASS AA CONCRETE = 13.3 CU. YDS.

20" PRESTRESSED CONCRETE PILES
NO. 6 450 LIN. FT.

PILE REDRIVES 3 EA.

▲ CONCRETE DISPLACED BY THE PRESTRESSED CONCRETE PILES HAS BEEN DEDUCTED FROM THE CONCRETE QUANTITY.

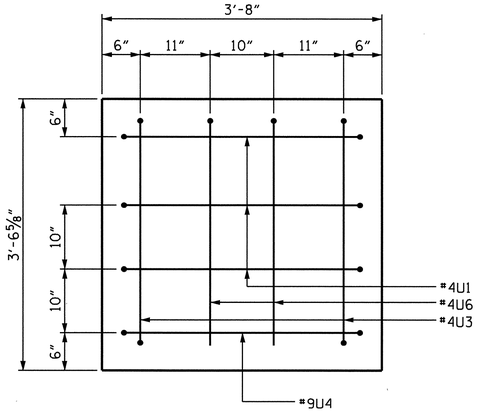

END VIEW LEFT

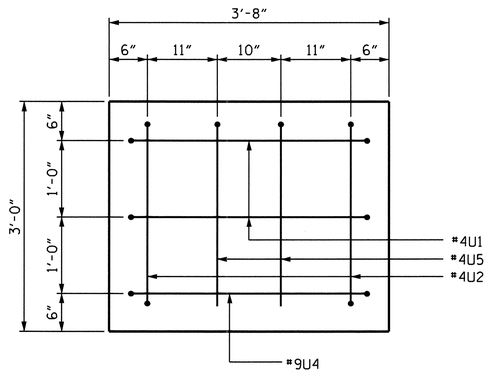

END VIEW RIGHT

PROJECT NO. B-3611
BEAUFORT COUNTY
STATION: 43+25.00 -L-

SHEET 2 OF 2

STATE OF NORTH CAROLINA
DEPARTMENT OF TRANSPORTATION
RALEIGH

SUBSTRUCTURE BENT #33

REVISIONS						SHEET NO.
NO.	BY:	DATE:	NO.	BY:	DATE:	S-99
1			3			TOTAL SHEETS
2			4			120

NORTH CAROLINA PROFESSIONAL SEAL 15825 ENGINEER BRUCE D. KLAPPENBACH
3-31-2010

DRAWN BY : M. G. SHAIKH DATE : 10-28-09
CHECKED BY : H. T. BARBOUR DATE : 11-19-09

24-MAR-2010 11:03
p:\structures\mshaikh\microstation\b-3611_sd_b*.dgn
mshaikh

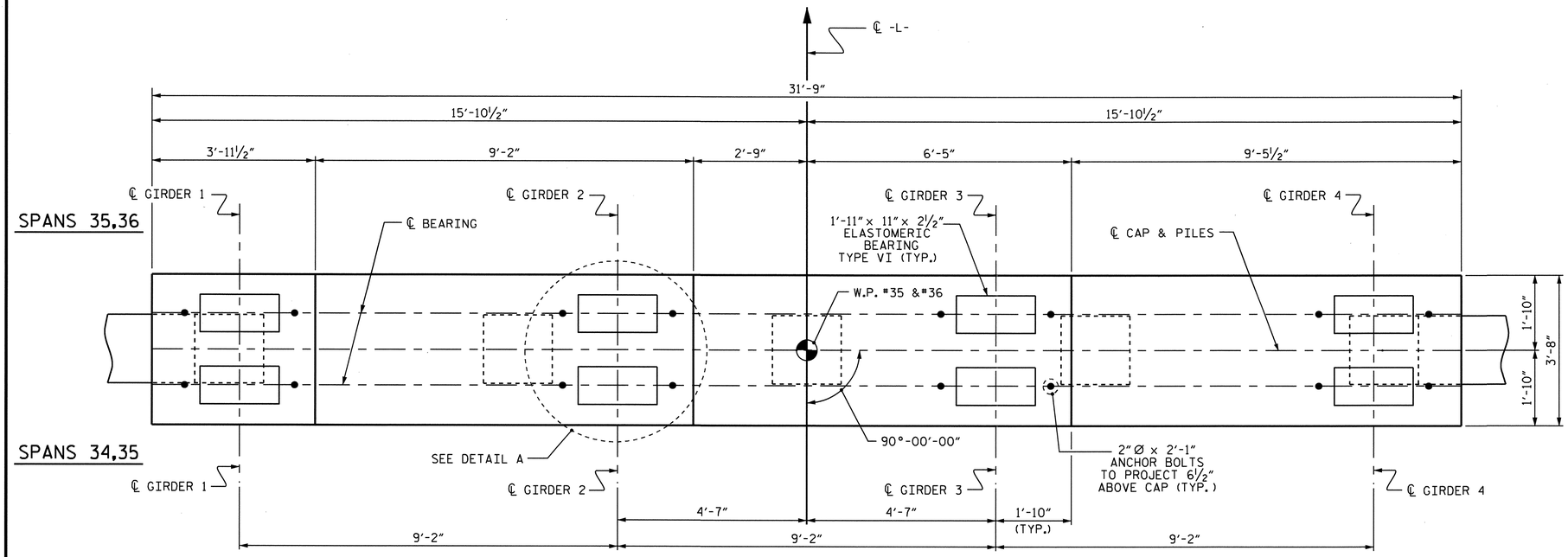

PLAN

NOTES

STIRRUPS IN CAP MAY BE SHIFTED AS NECESSARY TO CLEAR ANCHOR BOLTS.

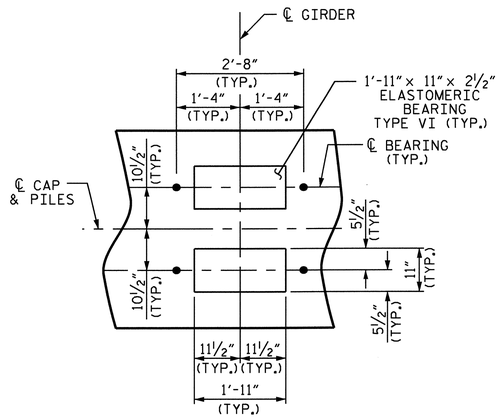

DETAIL A

PILES ARE NOT SHOWN FOR CLARITY.

BENT NO.	BRIDGE SEAT ELEVATIONS				BOTTOM OF CAP ELEVATIONS
	A	B	C	D	E
BENT #34	7.948	7.765	7.582	7.398	4.148
BENT #35	6.961	6.778	6.594	6.411	3.161

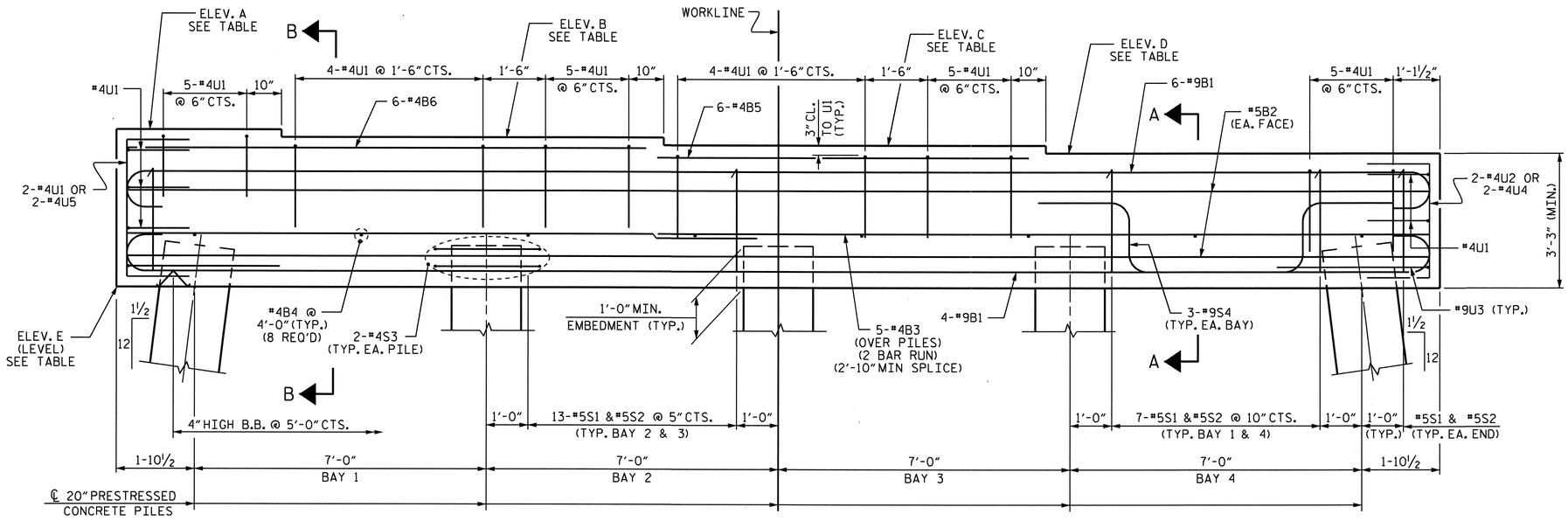

ELEVATION

PROJECT NO. B-3611

BEAUFORT COUNTY

STATION: 43+25.00 -L-

SHEET 1 OF 2

STATE OF NORTH CAROLINA
DEPARTMENT OF TRANSPORTATION
RALEIGH

SUBSTRUCTURE BENT #34 & BENT #35

NORTH CAROLINA PROFESSIONAL SEAL 15825 ENGINEER BRUCE D. KLAPPENBACH
3-31-2010

REVISIONS						SHEET NO.
NO.	BY:	DATE:	NO.	BY:	DATE:	S-100
1			3			TOTAL SHEETS
2			4			120

DRAWN BY : M. G. SHAIKH DATE : 10-29-09
CHECKED BY : H. T. BARBOUR DATE : 11-23-09

24-MAR-2010 11:03
p:\structures\mshaikh\microstation\b-3611_sd_b*.dgn
mshaikh

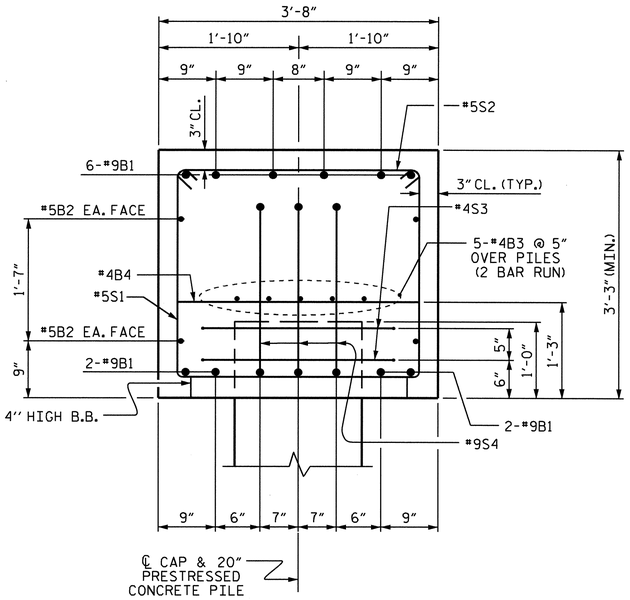

SECTION A-A

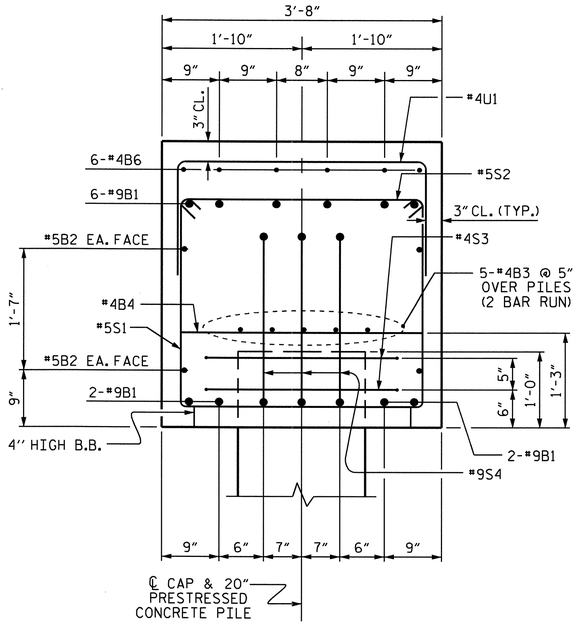

SECTION B-B

BAR TYPES

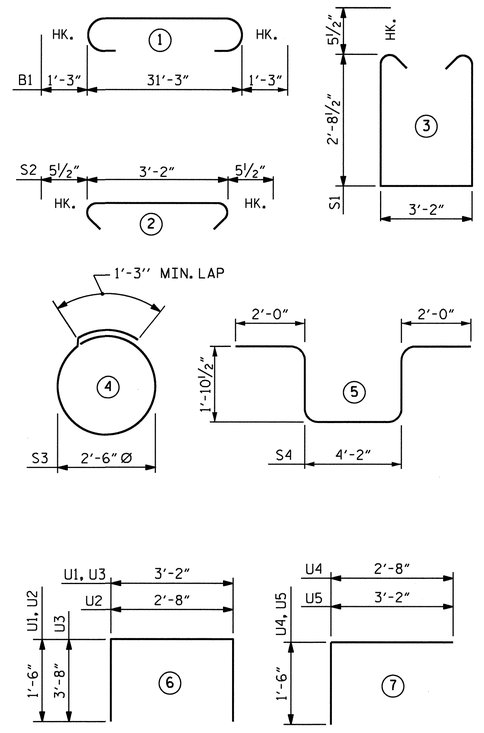

ALL BAR DIMENSIONS ARE OUT TO OUT.

BILL OF MATERIAL FOR ONE BENT (2 REQUIRED)

BAR	NO.	SIZE	TYPE	LENGTH	WEIGHT
✱B1	10	#9	1	33'-9"	1148
✱B2	4	#5	STR	31'-3"	130
✱B3	10	#4	STR	17'-1"	114
✱B4	8	#4	STR	3'-2"	17
✱B5	6	#4	STR	8'-11"	36
✱B6	6	#4	STR	12'-7"	50
✱S1	42	#5	3	9'-6"	416
✱S2	42	#5	2	4'-1"	179
✱S3	10	#4	4	9'-2"	61
✱S4	12	#9	5	11'-11"	486
✱U1	35	#4	6	6'-2"	144
✱U2	2	#4	6	5'-8"	8
✱U3	2	#9	6	10'-6"	71
✱U4	2	#4	7	4'-2"	6
✱U5	2	#4	7	4'-8"	6

✱EPOXY COATED REINFORCING STEEL = 2872 LBS.

▲ CLASS AA CONCRETE = 14.5 CU. YDS.

PILE REDRIVES 3 EA.

20" PRESTRESSED CONCRETE PILES

BENT NO.	NO.	LIN. FT.
34	5	375
35	5	375

▲ CONCRETE DISPLACED BY THE PRESTRESSED CONCRETE PILES HAS BEEN DEDUCTED FROM THE CONCRETE QUANTITY.

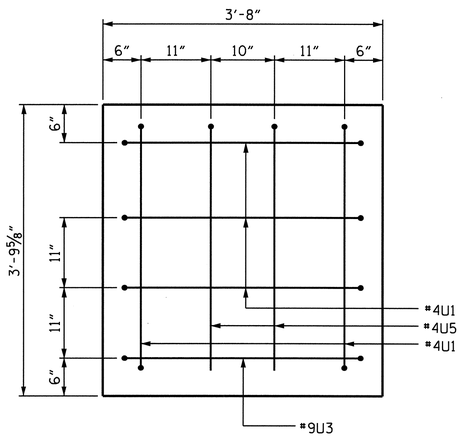

END VIEW LEFT

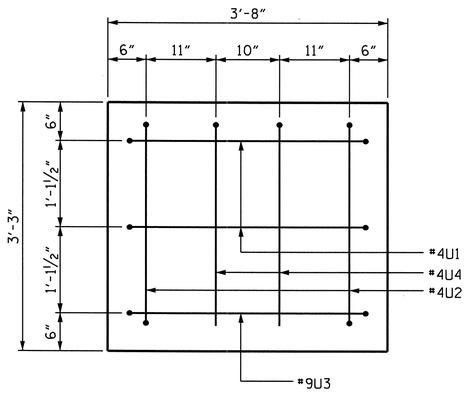

END VIEW RIGHT

PROJECT NO. B-3611

BEAUFORT COUNTY

STATION: 43+25.00 -L-

SHEET 2 OF 2

STATE OF NORTH CAROLINA
DEPARTMENT OF TRANSPORTATION
RALEIGH

SUBSTRUCTURE BENT #34 & BENT #35

NORTH CAROLINA PROFESSIONAL SEAL 15825 ENGINEER BRUCE D. KLAPPENBACH
3-31-2010

REVISIONS						SHEET NO.
NO.	BY:	DATE:	NO.	BY:	DATE:	S-101
1			3			TOTAL SHEETS
2			4			120

DRAWN BY : M. G. SHAIKH DATE : 10-29-09
CHECKED BY : H. T. BARBOUR DATE : 11-25-09

31-MAR-2010 11:08
P:\Structures\mshaikh\Microstation\b-3611_sd_b*.dgn
mshaikh

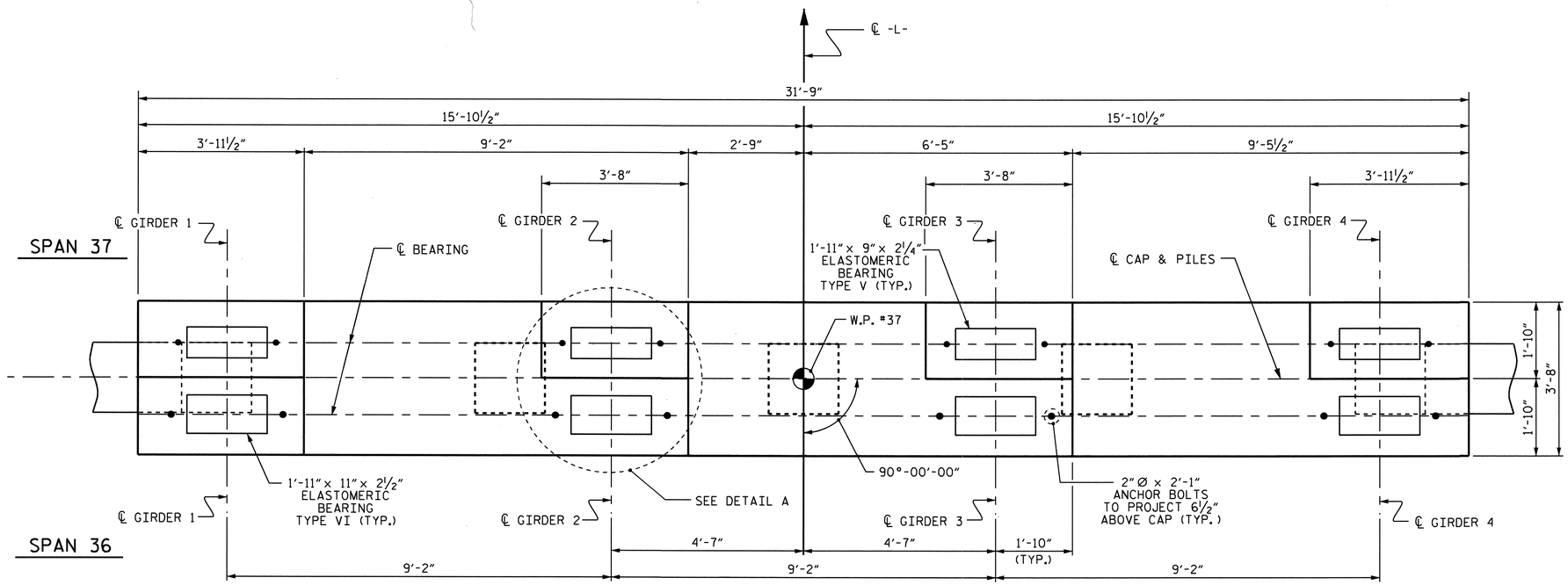

PLAN

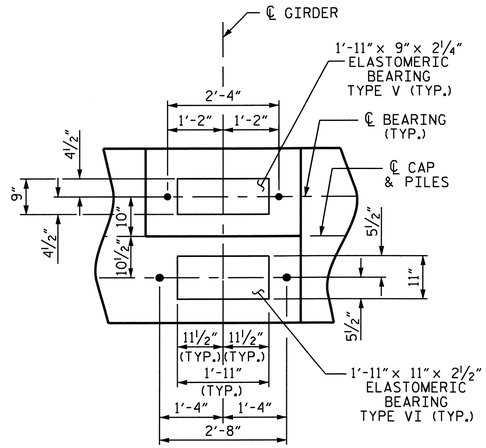

DETAIL A

PILES ARE NOT SHOWN FOR CLARITY.

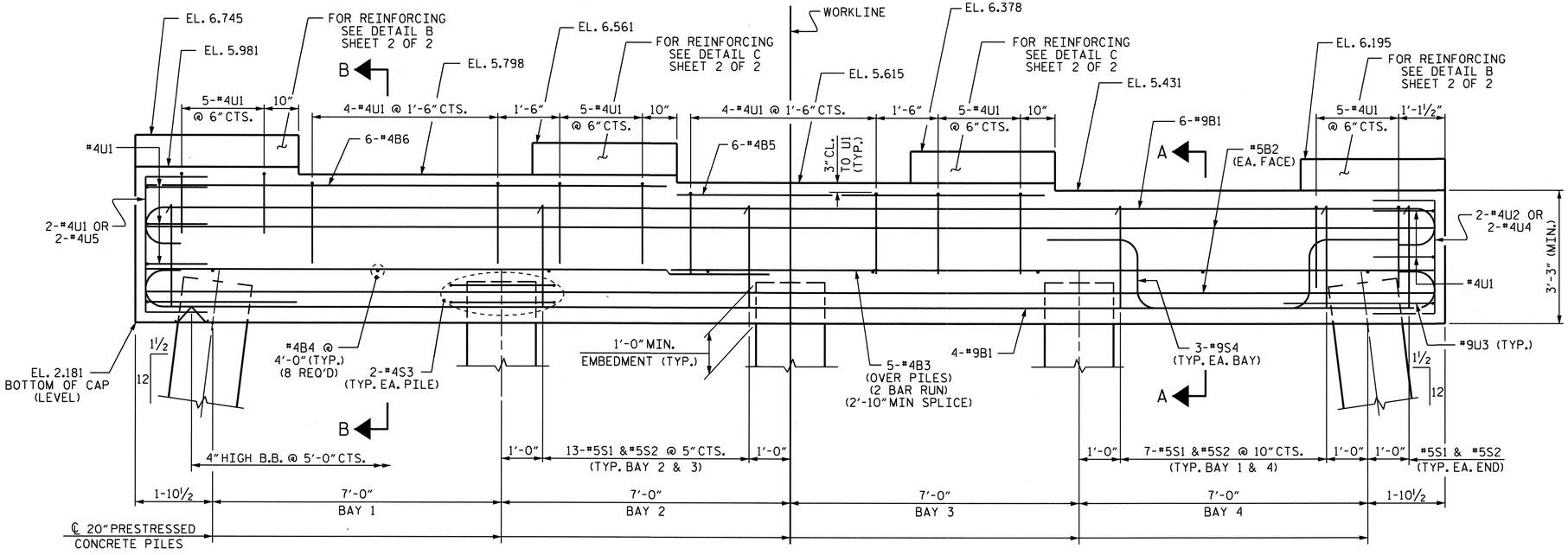

ELEVATION

NOTES

STIRRUPS IN CAP MAY BE SHIFTED AS NECESSARY TO CLEAR ANCHOR BOLTS.

PROJECT NO. B-3611

BEAUFORT COUNTY

STATION: 43+25.00 -L-

SHEET 1 OF 2

STATE OF NORTH CAROLINA
DEPARTMENT OF TRANSPORTATION
RALEIGH

SUBSTRUCTURE BENT #36

REVISIONS						SHEET NO.
NO.	BY:	DATE:	NO.	BY:	DATE:	S-102
1			3			TOTAL SHEETS
2			4			120

NORTH CAROLINA PROFESSIONAL SEAL 15828 ENGINEER BRUCE D. KLAPPENBACH
3-31-2010

DRAWN BY : M. G. SHAIKH DATE : 11-09-09
CHECKED BY : H. T. BARBOUR DATE : 11-24-09

24-MAR-2010 11:03
p:\structures\mshaikh\microstation\b-3611_sd_b*.dgn
mshaikh

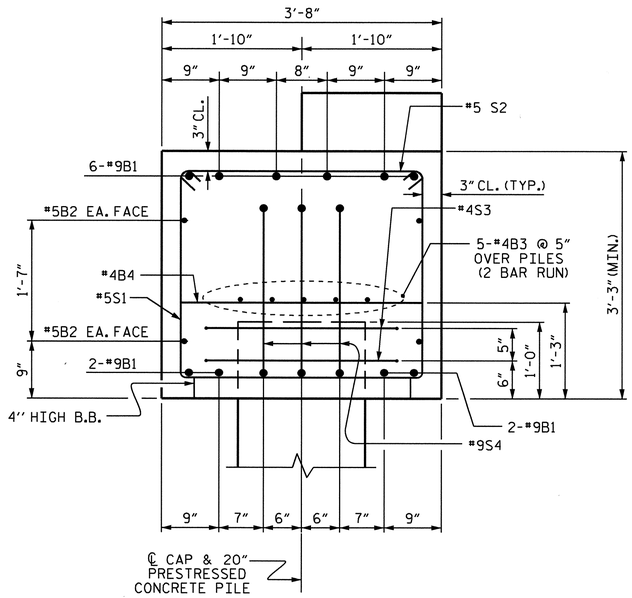

SECTION A-A

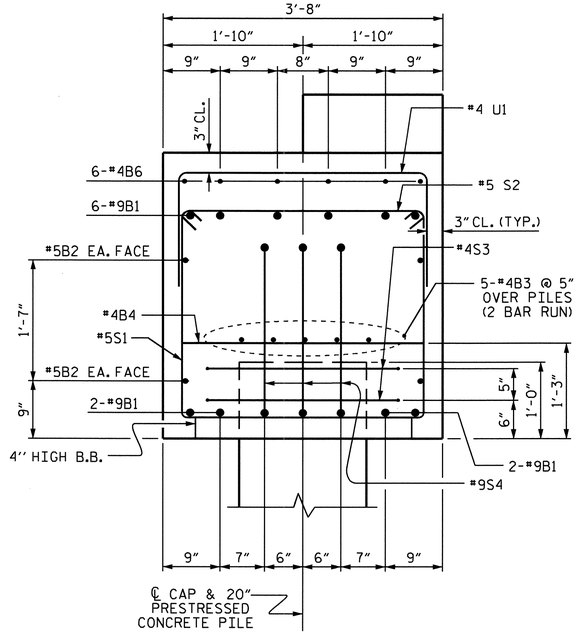

SECTION B-B

BAR TYPES

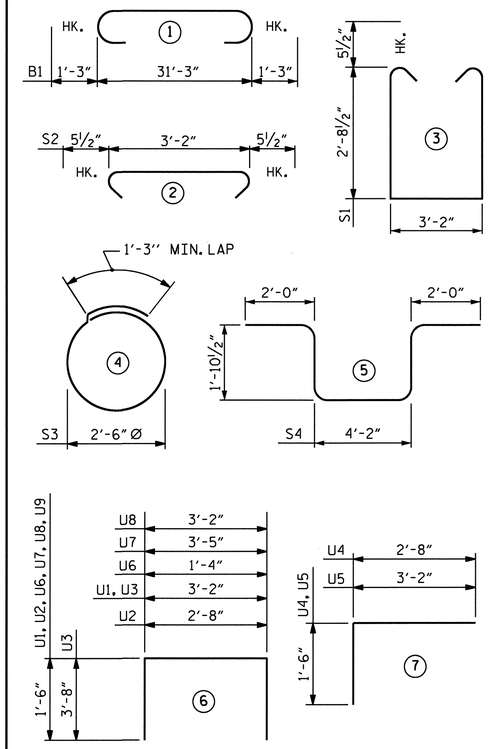

ALL BAR DIMENSIONS ARE OUT TO OUT.

BILL OF MATERIAL
BENT #36

BAR	NO.	SIZE	TYPE	LENGTH	WEIGHT
✱B1	10	#9	1	33'-9"	1148
✱B2	4	#5	STR	31'-3"	130
✱B3	10	#4	STR	17'-1"	114
✱B4	8	#4	STR	3'-2"	17
✱B5	6	#4	STR	8'-11"	36
✱B6	6	#4	STR	12'-7"	50
✱S1	42	#5	3	9'-6"	416
✱S2	42	#5	2	4'-1"	179
✱S3	10	#4	4	9'-2"	61
✱S4	12	#9	5	11'-11"	486
✱U1	35	#4	6	6'-2"	144
✱U2	2	#4	6	5'-8"	8
✱U3	2	#9	6	10'-6"	71
✱U4	2	#4	7	4'-2"	6
✱U5	2	#4	7	4'-8"	6
✱U6	30	#4	6	4'-4"	87
✱U7	6	#4	6	6'-5"	26
✱U8	6	#4	6	6'-2"	25

✱EPOXY COATED REINFORCING STEEL = 3010 LBS.

▲ CLASS AA CONCRETE = 15.3 CU. YDS.

20" PRESTRESSED CONCRETE PILES
NO. 5 400 LIN. FT.

PILE REDRIVES 3 EA.

▲ CONCRETE DISPLACED BY THE PRESTRESSED CONCRETE PILES HAS BEEN DEDUCTED FROM THE CONCRETE QUANTITY.

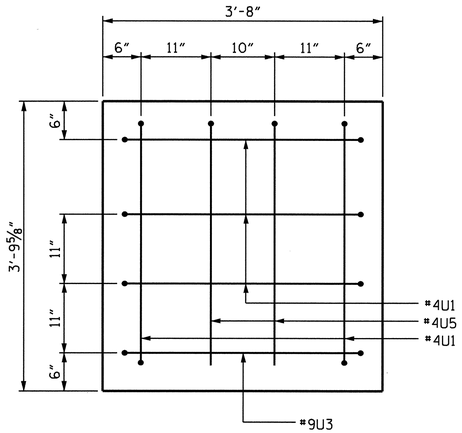

END VIEW LEFT

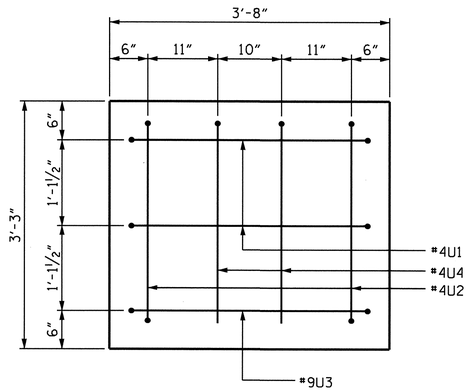

END VIEW RIGHT

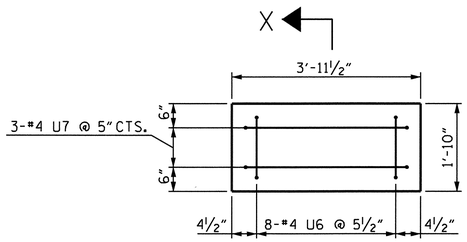

DETAIL B
(PLAN VIEW AT GIRDERS 1 & 4)

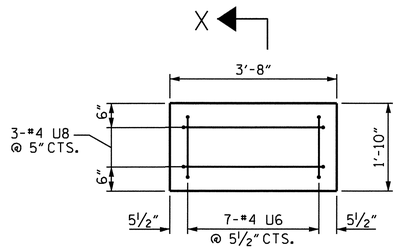

DETAIL C
(PLAN VIEW AT GIRDERS 2 & 3)

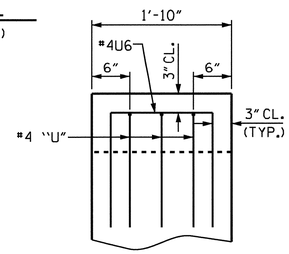

SECTION X-X

PROJECT NO. B-3611
BEAUFORT COUNTY
STATION: 43+25.00 -L-

SHEET 2 OF 2

STATE OF NORTH CAROLINA
DEPARTMENT OF TRANSPORTATION
RALEIGH

SUBSTRUCTURE BENT #36

REVISIONS						SHEET NO.
NO.	BY:	DATE:	NO.	BY:	DATE:	S-103
1			3			TOTAL SHEETS
2			4			120

NORTH CAROLINA PROFESSIONAL SEAL 15825 ENGINEER BRUCE D. KLAPPENBACH
3-31-2010

DRAWN BY : M. G. SHAIKH DATE : 11-10-09
CHECKED BY : H. T. BARBOUR DATE : 11-25-09

24-MAR-2010 11:03
p:\structures\mshaikh\microstation\b-3611_sd_b*.dgn
mshaikh

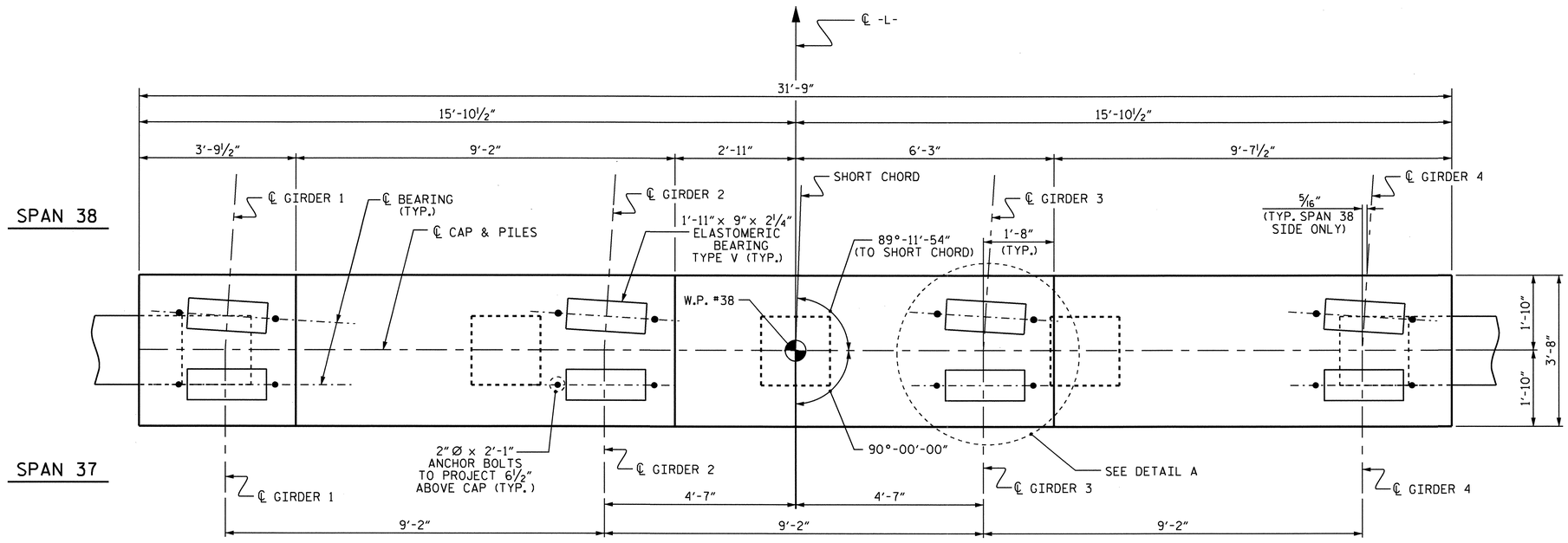

PLAN

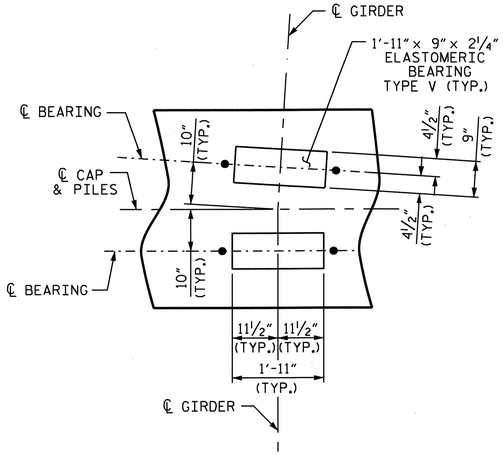

DETAIL A

PILES ARE NOT SHOWN FOR CLARITY.

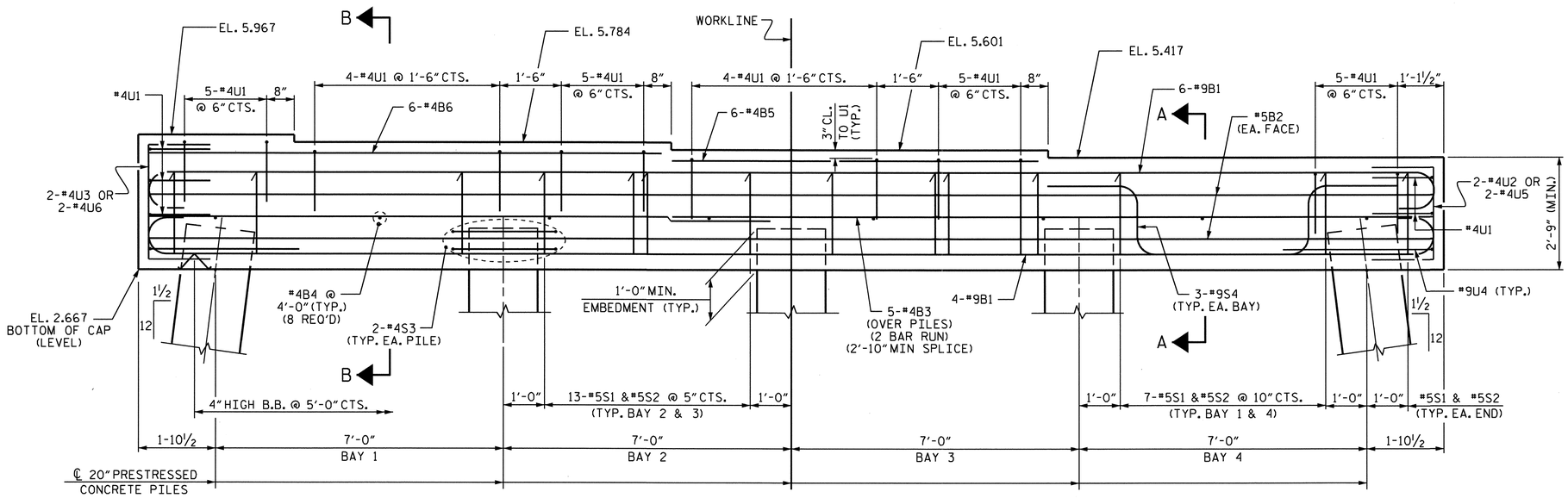

ELEVATION

NOTES

STIRRUPS IN CAP MAY BE SHIFTED AS NECESSARY TO CLEAR ANCHOR BOLTS.

PROJECT NO. B-3611

BEAUFORT COUNTY

STATION: 43+25.00 -L-

SHEET 1 OF 2

STATE OF NORTH CAROLINA
DEPARTMENT OF TRANSPORTATION
RALEIGH

SUBSTRUCTURE BENT #37

REVISIONS						SHEET NO.
NO.	BY:	DATE:	NO.	BY:	DATE:	S-104
1			3			TOTAL SHEETS
2			4			120

NORTH CAROLINA PROFESSIONAL SEAL 15825 ENGINEER BRUCE D. KLAPPENBACH
3-31-2010

DRAWN BY : M. G. SHAIKH DATE : 10-29-09
CHECKED BY : H. T. BARBOUR DATE : 11-24-09

24-MAR-2010 11:02
p:\structures\mshaikh\microstation\b-3611_sd_b*.dgn
mshaikh

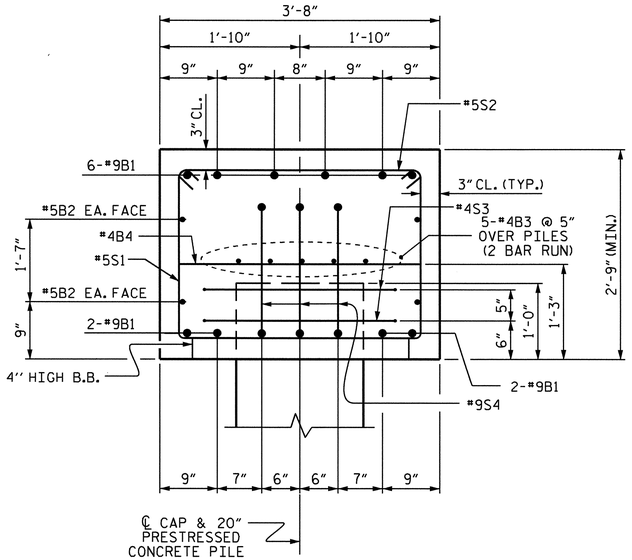

SECTION A-A

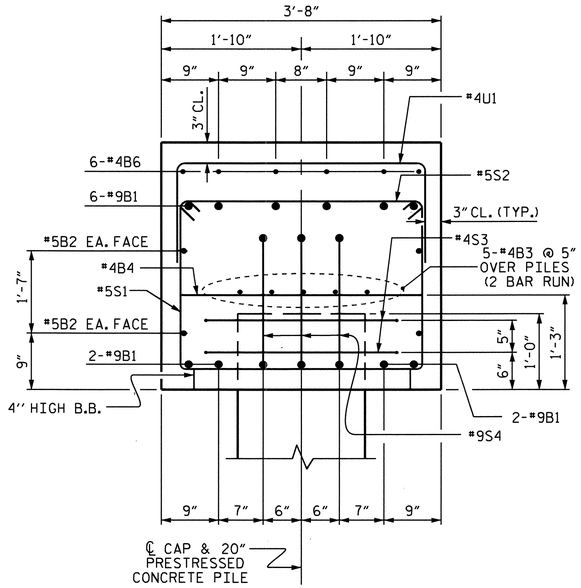

SECTION B-B

BAR TYPES

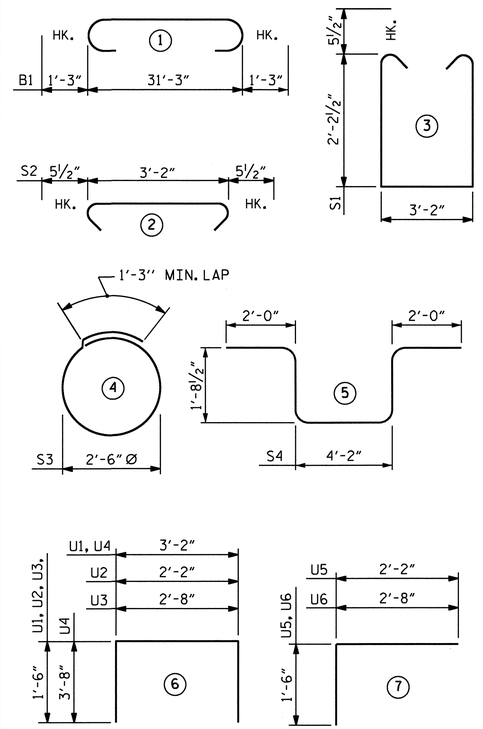

ALL BAR DIMENSIONS ARE OUT TO OUT.

BILL OF MATERIAL
BENT #37

BAR	NO.	SIZE	TYPE	LENGTH	WEIGHT
✱B1	10	#9	1	33'-9"	1148
✱B2	4	#5	STR	31'-3"	130
✱B3	10	#4	STR	17'-1"	114
✱B4	8	#4	STR	3'-2"	17
✱B5	6	#4	STR	8'-11"	36
✱B6	6	#4	STR	12'-5"	50
✱S1	42	#5	3	8'-6"	372
✱S2	42	#5	2	4'-1"	179
✱S3	10	#4	4	9'-2"	61
✱S4	12	#9	5	11'-7"	473
✱U1	33	#4	6	6'-2"	136
✱U2	2	#4	6	5'-2"	7
✱U3	2	#4	6	5'-8"	8
✱U4	2	#9	6	10'-6"	71
✱U5	2	#4	7	3'-8"	5
✱U6	2	#4	7	4'-2"	6

✱EPOXY COATED REINFORCING STEEL = 2813 LBS.

▲ CLASS AA CONCRETE = 12.3 CU. YDS.

20" PRESTRESSED CONCRETE PILES
NO. 5 400 LIN. FT.

PILE REDRIVES 3 EA.
PDA TESTING 1 EA.
PDA ASSISTANCE 1 EA.

▲ CONCRETE DISPLACED BY THE PRESTRESSED CONCRETE PILES HAS BEEN DEDUCTED FROM THE CONCRETE QUANTITY.

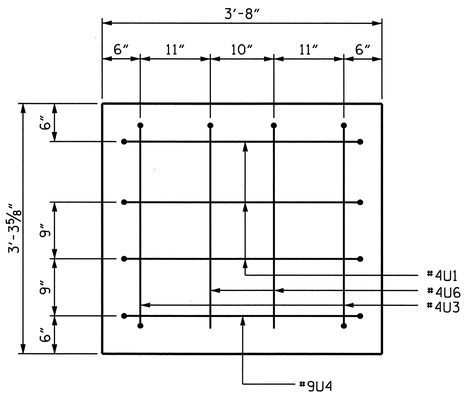

END VIEW LEFT

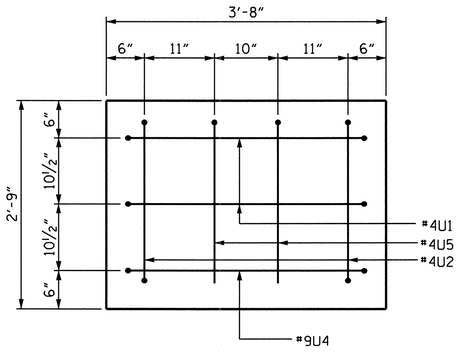

END VIEW RIGHT

PROJECT NO. B-3611
BEAUFORT COUNTY
STATION: 43+25.00 -L-

SHEET 2 OF 2

STATE OF NORTH CAROLINA
DEPARTMENT OF TRANSPORTATION
RALEIGH

SUBSTRUCTURE BENT #37

REVISIONS						SHEET NO.
NO.	BY:	DATE:	NO.	BY:	DATE:	S-105
1			3			TOTAL SHEETS
2			4			120

NORTH CAROLINA PROFESSIONAL SEAL 15825 ENGINEER BRUCE D. KLAPPENBERGER
3-31-2010

DRAWN BY : M. G. SHAIKH DATE : 10-29-09
CHECKED BY : H. T. BARBOUR DATE : 11-25-09

24-MAR-2010 11:32
p:\structures\mshaikh\microstation\b-3611_sd_b*.dgn
mshaikh

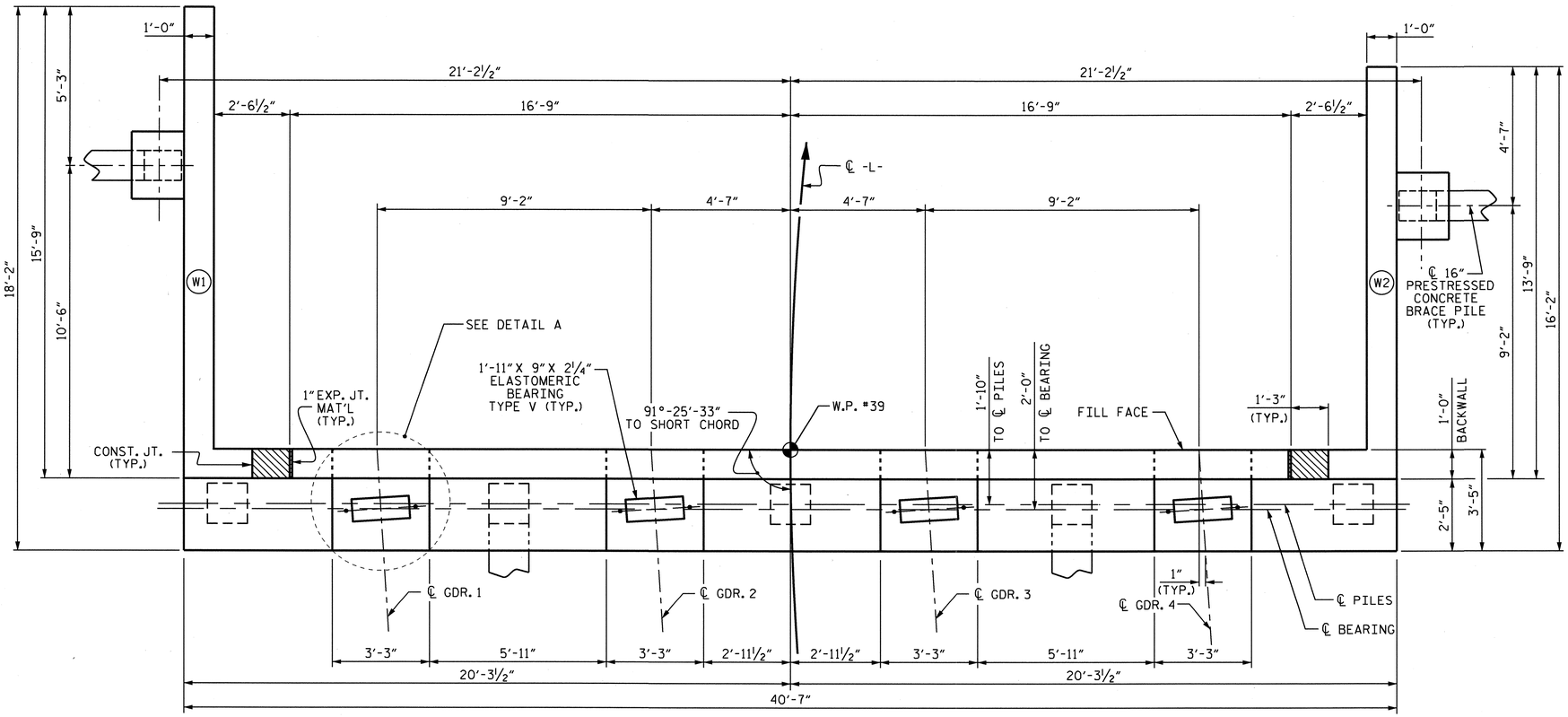

PLAN

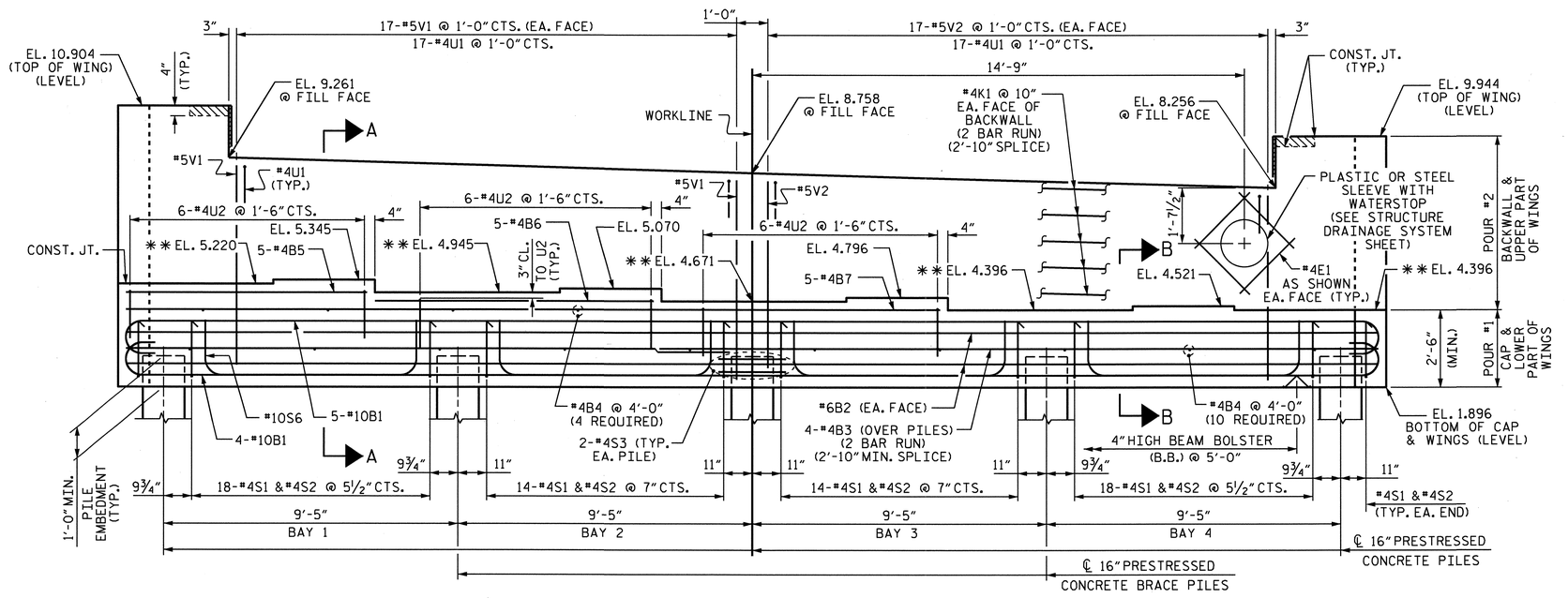

ELEVATION

(WING PILES NOT SHOWN)

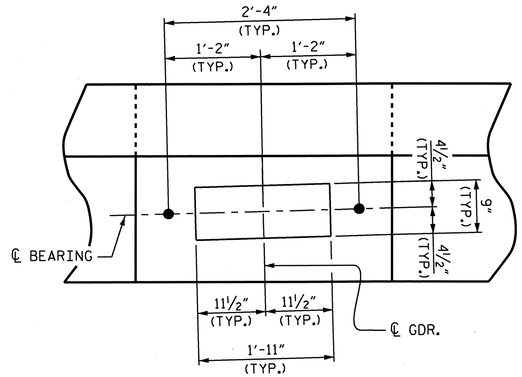

DETAIL A

NOTES

STIRRUPS IN CAP MAY BE SHIFTED AS NECESSARY TO CLEAR ANCHOR BOLTS.

THE CONTRACTOR SHALL PROVIDE FOR INSTALLATION OF THE 4" DIAMETER DRAIN PIPE THROUGH THE WING WALL AS REQUIRED FOR REINFORCED BRIDGE APPROACH FILLS, SEE THE ROADWAY PLANS. REINFORCING STEEL IN THE WING WALL MAY BE SHIFTED AS NECESSARY TO CLEAR THE DRAIN PIPE.

** FOR LOCATION OF ELEVATIONS BETWEEN BRIDGE SEAT BUILD-UPS, SEE SECTION A-A, SHEET 3 OF 3.

THE CONCRETE IN THE SHADED AREA OF THE WING SHALL BE POURED AFTER THE JOINT BETWEEN THE DECK AND THE APPROACH SLAB HAS BEEN SAWED AND THE PARAPET AND END POST ARE CAST IF SLIP FORMING IS USED.

BACKWALL SHALL BE PLACED BEFORE APPLYING THE EPOXY PROTECTIVE COATING.

THE TOP SURFACE AREAS OF THE END BENT CAP SHALL BE CURED IN ACCORDANCE WITH THE STANDARD SPECIFICATIONS EXCEPT THE MEMBRANE CURING COMPOUND METHOD SHALL NOT BE USED.

THE TOP SURFACE OF THE CAP EXCEPT THE BRIDGE SEAT BUILDUPS SHALL BE SLOPED TRANSVERSELY FROM THE FILL FACE TO THE BACK FACE AT THE RATE OF 2%.

PROJECT NO. B-3611

BEAUFORT COUNTY

STATION: 43+25.00 -L-

SHEET 1 OF 3

STATE OF NORTH CAROLINA
DEPARTMENT OF TRANSPORTATION
RALEIGH

SUBSTRUCTURE END BENT #2

REVISIONS						SHEET NO.
NO.	BY:	DATE:	NO.	BY:	DATE:	S-106
1			3			TOTAL SHEETS
2			4			120

NORTH CAROLINA PROFESSIONAL SEAL 15826 ENGINEER BRUCE D. KLAPPENBACH
3-31-2010

DRAWN BY : M. G. SHAIKH DATE : 10-07-09
CHECKED BY : H. T. BARBOUR DATE : 11-12-09

24-MAR-2010 10:57
p:\structures\mshaikh\microstation\b-3611_sd_e*.dgn
mshaikh

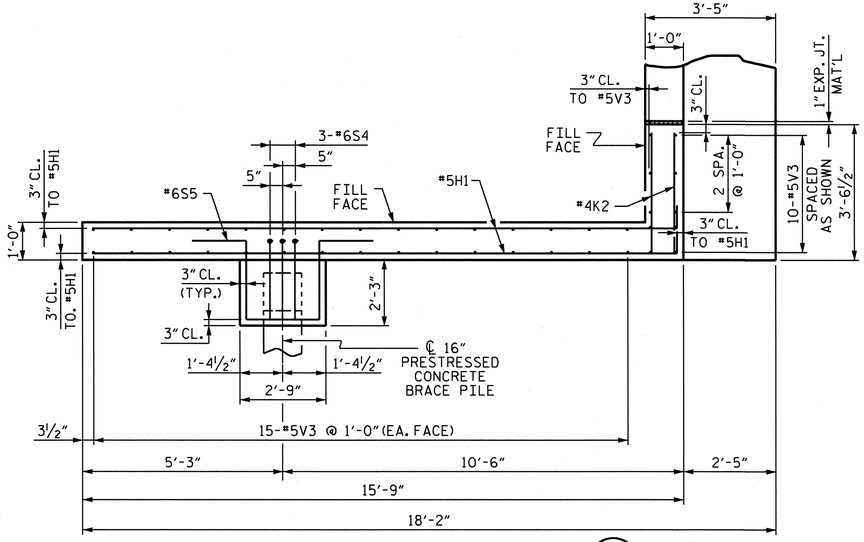

PLAN OF LEFT WING - (W1)

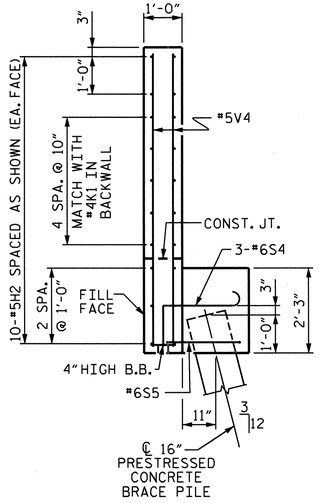

SECTION Y-Y

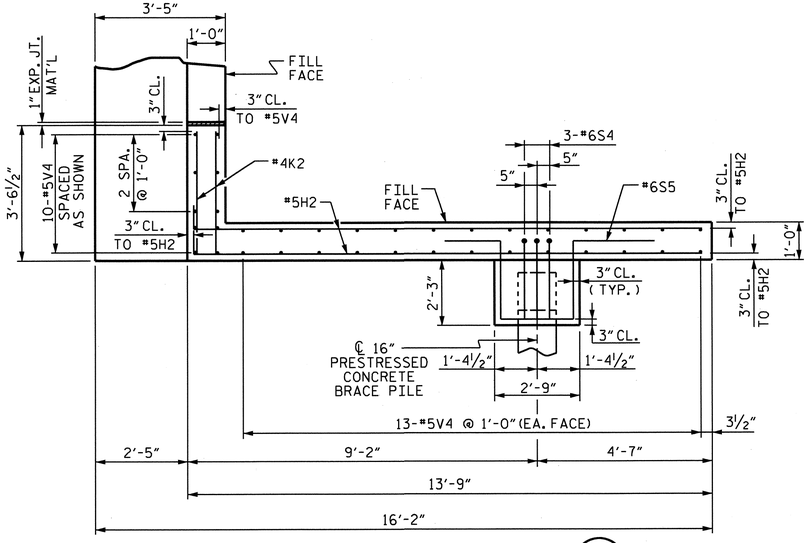

PLAN OF RIGHT WING - (W2)

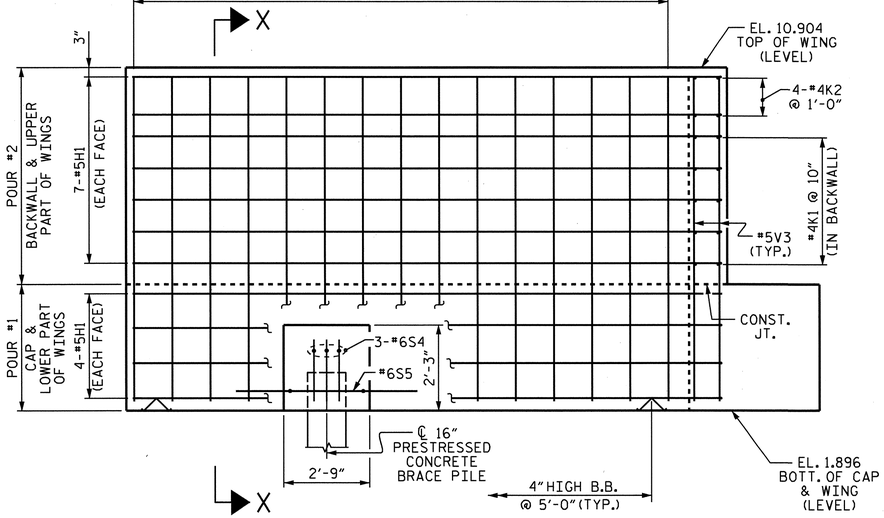

ELEVATION OF LEFT WING - (W1)

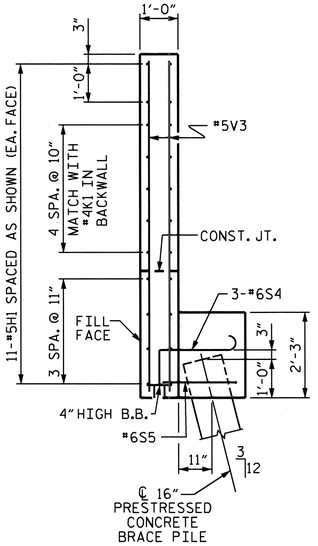

SECTION X-X

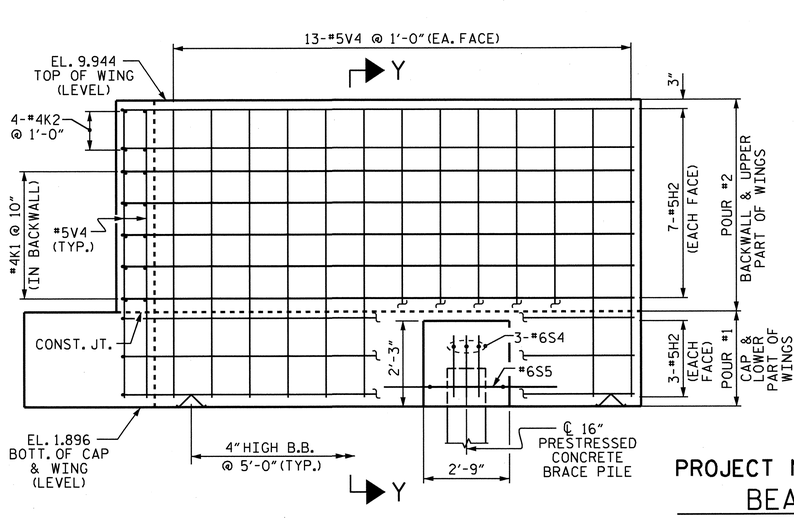

ELEVATION OF RIGHT WING - (W2)

PROJECT NO. B-3611

BEAUFORT COUNTY

STATION: 43+25.00 -L-

SHEET 2 OF 3

STATE OF NORTH CAROLINA
DEPARTMENT OF TRANSPORTATION
RALEIGH

SUBSTRUCTURE END BENT #2

NORTH CAROLINA PROFESSIONAL SEAL 17582 ENGINEER BRUCE D. KLAPPENBACH
3-31-2010

REVISIONS						SHEET NO.
NO.	BY:	DATE:	NO.	BY:	DATE:	S-107
1			3			TOTAL SHEETS
2			4			120

DRAWN BY : M. G. SHAIKH DATE : 10-08-09
CHECKED BY : H. T. BARBOUR DATE : 11-12-09

24-MAR-2010 10:56
p:\structures\mshaikh\microstation\b-3611_sd_e*.dgn
mshaikh

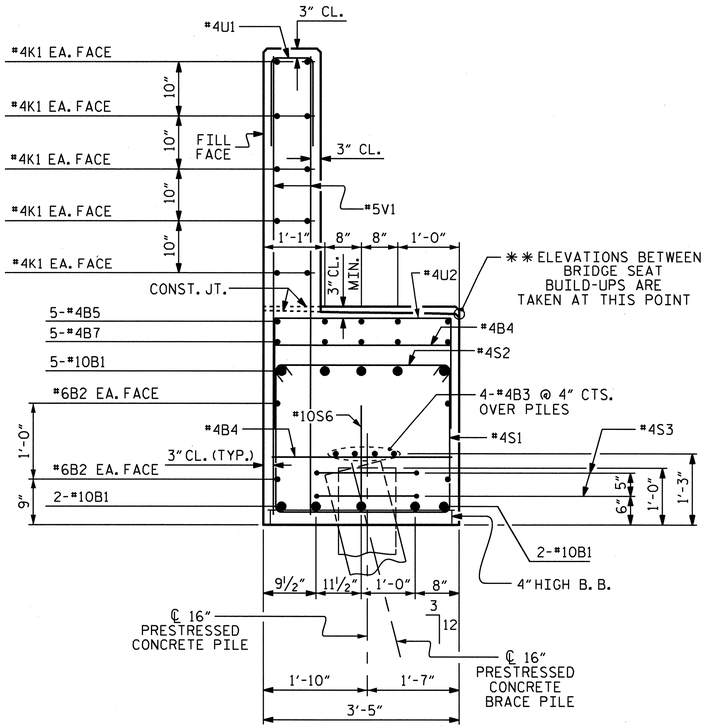

SECTION A-A

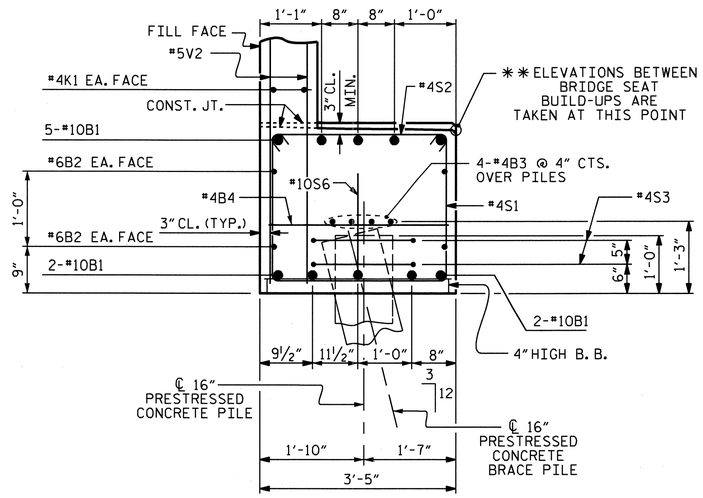

SECTION B-B

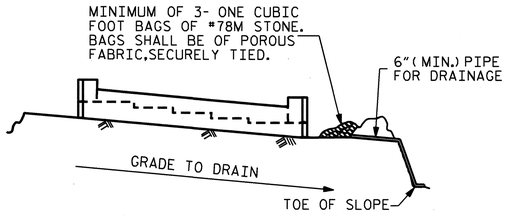

BAGGED STONE AND PIPE SHALL BE PLACED IMMEDIATELY AFTER COMPLETION OF END BENT EXCAVATION. PIPE MAY BE EITHER CONCRETE, CORRUGATED STEEL, CORRUGATED ALUMINUM ALLOY, OR CORRUGATED PLASTIC. PERFORATED PIPE WILL NOT BE ALLOWED.

BAGGED STONE SHALL REMAIN IN PLACE UNTIL THE ENGINEER DIRECTS THAT IT BE REMOVED. THE CONTRACTOR SHALL REMOVE AND DISPOSE OF SILT ACCUMULATIONS AT BAGGED STONE WHEN SO DIRECTED BY THE ENGINEER. BAGS SHALL BE REMOVED AND REPLACED WHENEVER THE ENGINEER DETERMINES THAT THEY HAVE DETERIORATED AND LOST THEIR EFFECTIVENESS.

NO SEPARATE PAYMENT WILL BE MADE FOR THIS WORK AND THE ENTIRE COST OF THIS WORK SHALL BE INCLUDED IN THE UNIT CONTRACT PRICE BID FOR THE SEVERAL PAY ITEMS.

TEMPORARY DRAINAGE AT END BENT

BAR TYPES

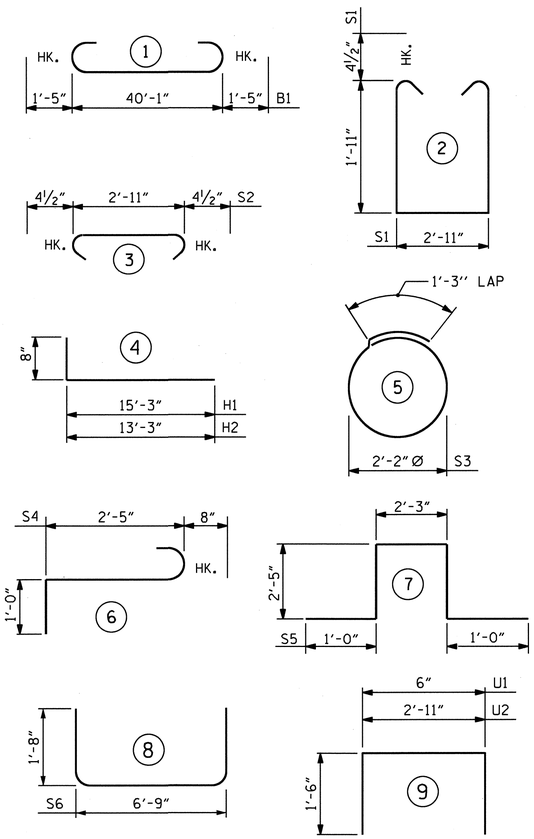

ALL BAR DIMENSIONS ARE OUT TO OUT.

BILL OF MATERIAL

END BENT #2

BAR	NO.	SIZE	TYPE	LENGTH	WEIGHT
✱B1	9	#10	1	42'-11"	1662
✱B2	4	#6	STR	40'-1"	241
✱B3	8	#4	STR	21'-6"	115
✱B4	14	#4	STR	2'-11"	27
✱B5	5	#4	STR	7'-8"	26
✱B6	5	#4	STR	8'-11"	30
✱B7	5	#4	STR	26'-0"	87
✱E1	8	#4	STR	2'-6"	13
✱H1	22	#5	4	15'-11"	365
✱H2	20	#5	4	13'-11"	290
✱K1	20	#4	STR	21'-6"	287
✱K2	8	#4	STR	3'-0"	16
✱S1	66	#4	2	7'-6"	331
✱S2	66	#4	3	3'-8"	162
✱S3	10	#4	5	8'-1"	54
✱S4	6	#6	6	4'-1"	37
✱S5	2	#6	7	9'-1"	27
✱S6	4	#10	8	10'-1"	174
✱U1	34	#4	9	3'-6"	79
✱U2	18	#4	9	5'-11"	71
✱V1	34	#5	STR	6'-3"	222
✱V2	34	#5	STR	5'-9"	204
✱V3	40	#5	STR	8'-5"	351
✱V4	36	#5	STR	7'-5"	278

✱EPOXY COATED REINFORCING STEEL = 5149 LBS.

CLASS AA CONCRETE
POUR #1 18.5 CU. YDS.
POUR #2 12.2 CU. YDS.
▲ TOTAL 30.7 CU. YDS.

16" PRESTRESSED CONCRETE PILES
NO. 7 105 FEET

PILE REDRIVES 3 EA.

▲ CONCRETE DISPLACED BY THE PRESTRESSED CONCRETE PILES HAS BEEN DEDUCTED FROM THE CONCRETE QUANTITY.

PROJECT NO. B-3611
BEAUFORT COUNTY
STATION: 43+25.00 -L-

SHEET 3 OF 3

STATE OF NORTH CAROLINA
DEPARTMENT OF TRANSPORTATION
RALEIGH

SUBSTRUCTURE
END BENT #2

REVISIONS						SHEET NO.
NO.	BY:	DATE:	NO.	BY:	DATE:	S-108
1			3			TOTAL SHEETS
2			4			120

DRAWN BY : M. G. SHAIKH DATE : 10-12-09
CHECKED BY : H. T. BARBOUR DATE : 11-12-09

24-MAR-2010 10:56
p:\structures\mshaikh\microstation\b-3611_sd_e*.dgn
mshaikh

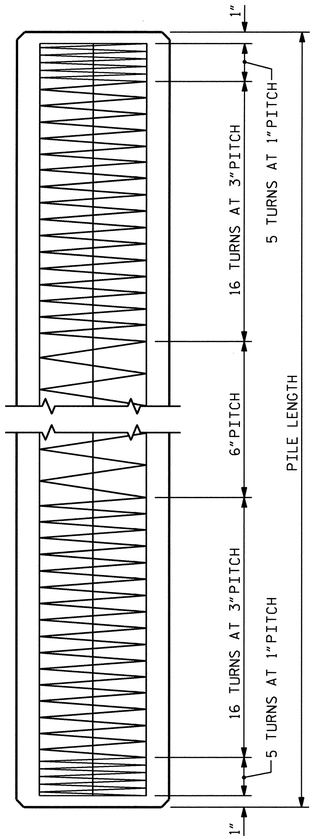

ELEVATION

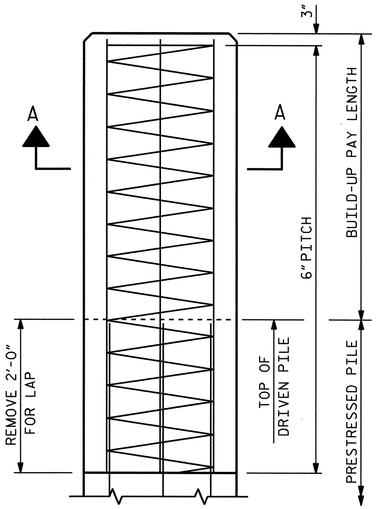

BUILD-UP
WITHOUT DRIVING

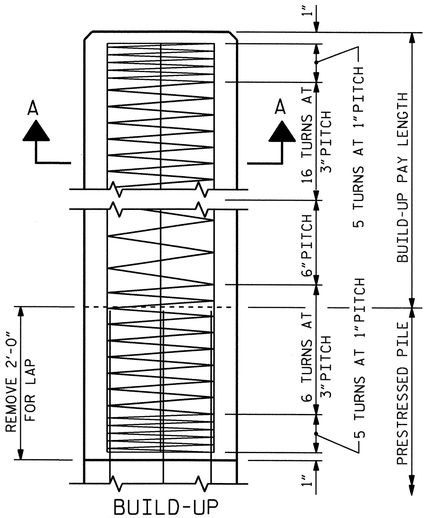

BUILD-UP
WITH DRIVING

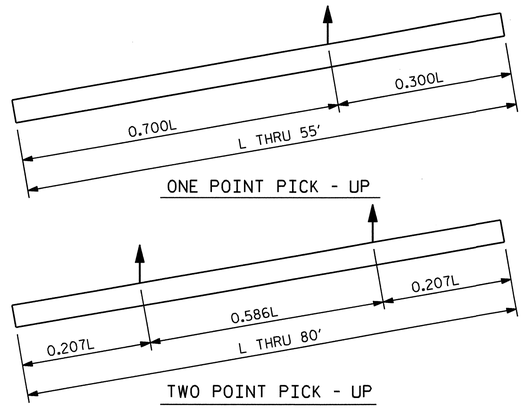

ONE POINT PICK - UP

TWO POINT PICK - UP

PICK - UP POINTS

NOTES

CONCRETE DESIGN DATA : f'c = 5,000 PSI ; fc = 2,000 PSI

IMPACT IN HANDLING = 50%

THE TRANSFER OF LOAD FROM THE ANCHORAGES TO THE PILE SHALL BE DONE WHEN THE CONCRETE HAS REACHED A COMPRESSIVE STRENGTH OF NOT LESS THAN 3,500 PSI.

IN DRIVING PILES, A METHOD APPROVED BY THE ENGINEER SHALL BE USED, WHEREBY THE HEAD OF THE PILE IS NOT DAMAGED.

PROPOSED DEVICES FOR LIFTING PILES, RECESS DETAILS, AND PATCHING MATERIAL SHALL BE DETAILED IN SHOP DRAWINGS. AFTER ATTACHMENTS HAVE BEEN REMOVED, OPENINGS SHALL BE REPAIRED SUCH THAT THE APPEARANCE OF THE PILE IS UNIFORM.

WHERE CAST - IN - PLACE LIFTING DEVICES ARE NOT USED, PICK-UP POINTS TO BE INDICATED WITH A BLACK MARK 2" WIDE.

ALL PRESTRESSING STRANDS SHALL BE 7-WIRE LOW-RELAXATION GRADE 270 STRANDS AND SHALL CONFORM TO AASHTO M203 EXCEPT FOR SAMPLING REQUIREMENTS WHICH SHALL BE IN ACCORDANCE WITH STANDARD SPECIFICATIONS.

THE CONTRACTOR SHALL USE THE FOLLOWING STRAND TYPE:

SIZE	GRADE	NUMBER OF STRANDS	AREA SQ. IN.	ULTIMATE STRENGTH LBS.	APPLIED PRESTRESS FORCE LBS.
½"	270 L.R.	8	0.153	41,300 PER STRAND	30,980 PER STRAND

THE SLIP-FORM METHOD OF CASTING PILES WILL NOT BE PERMITTED.

IF STRAND STRESS IS RELIEVED BY BURNING, THE STRANDS SHALL BE BURNED IN OPPOSITE PAIRS AS INDICATED IN THE TYPICAL PATTERN SHOWN. FOR ANY NUMBER OF STRANDS BURN IN OPPOSITE PAIRS AND SYMMETRICAL ABOUT BOTH VERTICAL AND HORIZONTAL AXES. STRANDS 1-1 SHALL BE BURNED BEFORE 2-2, ETC. NOT MORE THAN 4 STRANDS, SAY 3-3 AND 4-4, MAY BE BURNED AT ANY ONE SECTION BEFORE THESE SAME PAIRS OF STRANDS ARE BURNED AT BOTH ENDS OF THE BED AND BETWEEN EACH PAIR OF PILES IN THE BED.

BUILD-UPS SHALL BE 'CLASS A' CONCRETE WITH 20% ADDITIONAL CEMENT. NO DRIVING OF THE BUILT-UP PILE WILL BE PERMITTED UNTIL THE CONCRETE HAS REACHED A COMPRESSIVE STRENGTH OF 3,000 PSI AND UNTIL A PERIOD OF SEVEN DAYS HAS ELAPSED SINCE CASTING OF THE BUILD-UP.

THE CONCRETE IN THE PRESTRESSED CONCRETE PILES OF ALL BENTS SHALL CONTAIN SILICA FUME. SILICA FUME SHALL BE SUBSTITUTED FOR 5% OF THE PORTLAND CEMENT BY WEIGHT. IF THE OPTION OF ARTICLE 1024-1 OF THE STANDARD SPECIFICATIONS TO PARTIALLY SUBSTITUTE CLASS F FLY ASH FOR PORTLAND CEMENT IS EXERCISED, THEN THE RATE OF FLY ASH SUBSTITUTION SHALL BE REDUCED TO 1.0 LB OF FLY ASH PER 1.0 LB OF CEMENT. NO PAYMENT WILL BE MADE FOR THIS SUBSTITUTION AS IT IS CONSIDERED INCIDENTAL TO THE VARIOUS PAY ITEMS.

THE WATER/CEMENT RATIO FOR CONCRETE PILES SHALL NOT EXCEED 0.40.

PRESTRESSED CONCRETE PILES SHALL CONTAIN CALCIUM NITRITE CORROSION INHIBITOR.

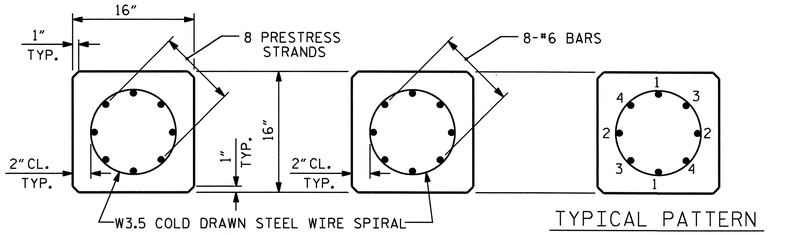

TYPICAL SECTION SECTION "A-A" TYPICAL PATTERN FOR BURNING STRANDS

½" Ø GRADE 270 L.R. PRESTRESS STRANDS

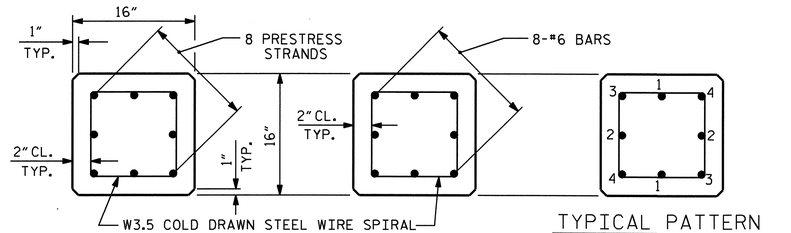

TYPICAL SECTION SECTION "A-A" TYPICAL PATTERN FOR BURNING STRANDS

½" Ø GRADE 270 L.R. PRESTRESS STRANDS

QUANTITIES FOR ONE 16" PRESTRESSED PILE

LENGTH	CONCRETE CU. YDS.	PILE WT. TONS	ONE POINT PICK-UP 0.300L	ONE POINT PICK-UP 0.700L	TWO POINT PICK-UP 0.207L	TWO POINT PICK-UP 0.586L
25'-0"	1.63	3.31	7'-6"	17'-6"	5'-2"	14'-8"
30'-0"	1.96	3.97	9'-0"	21'-0"	6'-2½"	17'-7"
35'-0"	2.29	4.63	10'-6"	24'-6"	7'-3"	20'-6"
40'-0"	2.61	5.29	12'-0"	28'-0"	8'-3½"	23'-5"
45'-0"	2.94	5.95	13'-6"	31'-6"	9'-4"	26'-4"
50'-0"	3.27	6.61	15'-0"	35'-0"	10'-4"	29'-4"
55'-0"	3.59	7.28	16'-6"	38'-6"	11'-4½"	32'-3"
60'-0"	3.92	7.94			12'-5"	35'-2"
65'-0"	4.25	8.60			13'-5½"	38'-1"
70'-0"	4.57	9.26			14'-6"	41'-0"
75'-0"	4.90	9.92			15'-6½"	43'-11"
80'-0"	5.23	10.58			16'-7"	46'-10"

PROJECT NO. B-3611
BEAUFORT COUNTY
STATION: 43+25.00-L-

SHEET 1 OF 3

STATE OF NORTH CAROLINA
DEPARTMENT OF TRANSPORTATION
RALEIGH

STANDARD

16" PRESTRESSED CONCRETE PILE

REVISIONS						SHEET NO.
NO.	BY:	DATE:	NO.	BY:	DATE:	S-109
1			3			TOTAL SHEETS
2			4			120

STD. NO. PCP2

NORTH CAROLINA PROFESSIONAL SEAL 15825 ENGINEER BRADLEY D. KLAPPENBACH
3-31-2010

ASSEMBLED BY : H. T. BARBOUR	DATE : 2-8-10	ADDED 12/2/98	
CHECKED BY : B. D. KLAPPENBACH	DATE : 2-8-10	REV. 8/16/99RR	RWW/LES
DRAWN BY : RH 9/98		REV. 5/1/06	TLA/GM
CHECKED BY : LES 10/98			

31-MAR-2010 12:17
M:\Structures\tbarbour\Microstation\b3611_sd_pp.dgn
tbarbour

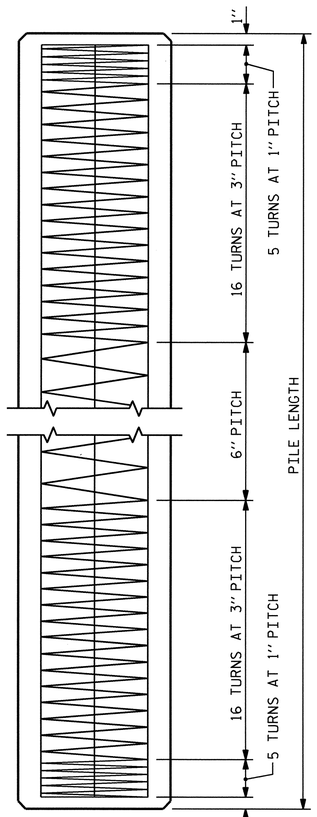

ELEVATION

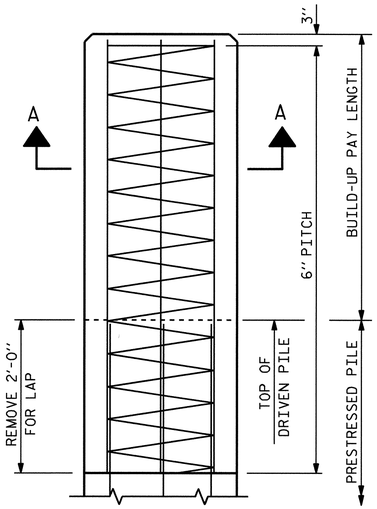

BUILD-UP
WITHOUT DRIVING

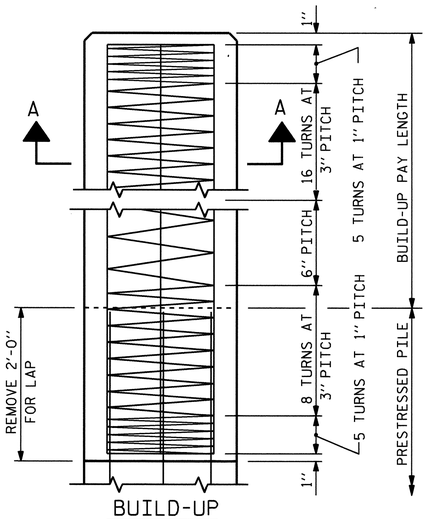

BUILD-UP
WITH DRIVING

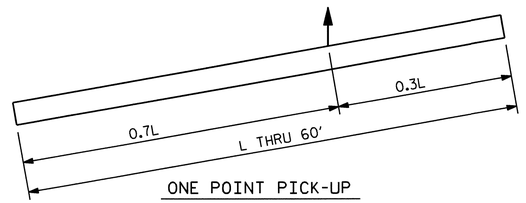

ONE POINT PICK-UP

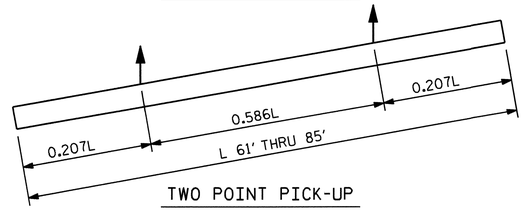

TWO POINT PICK-UP

PICK-UP POINTS

NOTES

CONCRETE DESIGN DATA : f'c= 5,000 PSI ;fc= 2,000 PSI

IMPACT IN HANDLING = 50%

IN DRIVING PILES, A METHOD APPROVED BY THE ENGINEER SHALL BE USED, WHEREBY THE HEAD OF THE PILE IS NOT DAMAGED.

PROPOSED DEVICES FOR LIFTING PILES, RECESS DETAILS, AND PATCHING MATERIAL SHALL BE DETAILED IN SHOP DRAWINGS. AFTER ATTACHMENTS HAVE BEEN REMOVED, OPENINGS SHALL BE REPAIRED SUCH THAT THE APPEARANCE OF THE PILE IS UNIFORM.

THE CONTRACTOR SHALL USE THE FOLLOWING STRAND TYPE:

SIZE	GRADE	NUMBER OF STRANDS	AREA	ULTIMATE STRENGTH	APPLIED PRESTRESS FORCE
½"	270 L.R.	12	0.153	41,300# PER STRAND	30,980# PER STRAND

STRANDS SHALL BE EQUALLY SPACED AS SHOWN IN THE "TYPICAL SECTION".

A CIRCULAR STRAND PATTERN SHALL NOT BE PERMITTED.

THE SLIP-FORM METHOD OF CASTING PILES WILL NOT BE PERMITTED.

IF STRAND STRESS IS RELIEVED BY BURNING, THE STRANDS SHALL BE BURNED IN OPPOSITE PAIRS AS INDICATED IN THE TYPICAL PATTERN SHOWN. FOR ANY NUMBER OF STRANDS BURN IN OPPOSITE PAIRS AND SYMMETRICAL ABOUT BOTH VERTICAL AND HORIZONTAL AXES, STRANDS 1-1 SHALL BE BURNED BEFORE 2-2, ETC. NOT MORE THAN 4 STRANDS, SAY 5-5 AND 6-6, MAY BE BURNED AT ANY ONE SECTION BEFORE THESE SAME PAIRS OF STRANDS ARE BURNED AT BOTH ENDS OF THE BED AND BETWEEN EACH PAIR OF PILES IN THE BED.

BUILD-UPS SHALL BE OF 'CLASS A' CONCRETE WITH 20% ADDITIONAL CEMENT. NO DRIVING OF THE BUILT-UP PILE WILL BE PERMITTED UNTIL THE CONCRETE HAS REACHED A COMPRESSIVE STRENGTH OF 3,000 P.S.I. AND UNTIL A PERIOD OF SEVEN DAYS HAS ELAPSED SINCE CASTING OF THE BUILD-UP.

ALL PRESTRESSING STRANDS SHALL BE 7-WIRE LOW-RELAXATION GRADE 270 STRANDS AND SHALL CONFORM TO AASHTO M203 EXCEPT FOR SAMPLING REQUIREMENTS WHICH SHALL BE IN ACCORDANCE WITH STANDARD SPECIFICATIONS.

THE TRANSFER OF LOAD FROM THE ANCHORAGES TO THE PILE SHALL BE DONE WHEN THE CONCRETE HAS REACHED A COMPRESSIVE STRENGTH OF NOT LESS THAN 3500 PSI.

THE CONCRETE IN THE PRESTRESSED CONCRETE PILES OF ALL BENTS SHALL CONTAIN SILICA FUME. SILICA FUME SHALL BE SUBSTITUTED FOR 5% OF THE PORTLAND CEMENT BY WEIGHT. IF THE OPTION OF ARTICLE 1024-1 OF THE STANDARD SPECIFICATIONS TO PARTIALLY SUBSTITUTE CLASS F FLY ASH FOR PORTLAND CEMENT IS EXERCISED, THEN THE RATE OF FLY ASH SUBSTITUTION SHALL BE REDUCED TO 1.0 LB OF FLY ASH PER 1.0 LB OF CEMENT. NO PAYMENT WILL BE MADE FOR THIS SUBSTITUTION AS IT IS CONSIDERED INCIDENTAL TO THE VARIOUS PAY ITEMS.

THE WATER/CEMENT RATIO FOR CONCRETE PILES SHALL NOT EXCEED 0.40.

PRESTRESSED CONCRETE PILES SHALL CONTAIN CALCIUM NITRITE CORROSION INHIBITOR.

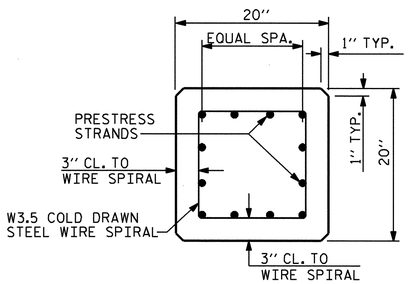

TYPICAL SECTION

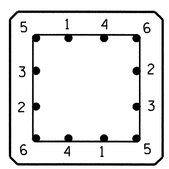

TYPICAL PATTERN FOR BURNING STRANDS

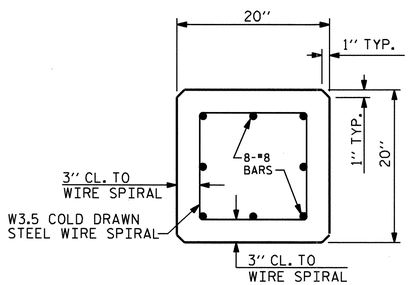

SECTION A-A

QUANTITIES FOR ONE 20" SQUARE PILE						
	CONCRETE	PILE WT.	ONE PICK-UP POINTS		TWO PICK-UP POINTS	
LENGTH	CU. YDS.	TONS	0.3L	0.7L	0.207L	0.586L
25'-0"	2.56	5.18	7'-6"	17'-6"		
30'-0"	3.07	6.22	9'-0"	21'-0"		
35'-0"	3.58	7.26	10'-6"	24'-6"		
40'-0"	4.09	8.29	12'-0"	28'-0"		
45'-0"	4.61	9.33	13'-6"	31'-6"		
50'-0"	5.12	10.36	15'-0"	35'-0"		
55'-0"	5.63	11.40	16'-6"	38'-6"		
60'-0"	6.14	12.44	18'-0"	42'-0"		
65'-0"	6.65	13.47			13'-5½"	38'-1"
70'-0"	7.17	14.51			14'-6"	41'-0"
75'-0"	7.68	15.55			15'-6½"	43'-11"
80'-0"	8.19	16.58			16'-6½"	46'-11"
85'-0"	8.70	17.62			17'-7"	49'-10"

NORTH CAROLINA PROFESSIONAL SEAL 15825 ENGINEER BRUCE D. KLAPPENBACH
3-31-2010

PROJECT NO. B-3611
BEAUFORT COUNTY
STATION: 43+25.00-L-

SHEET 2 OF 3

STATE OF NORTH CAROLINA
DEPARTMENT OF TRANSPORTATION
RALEIGH

STANDARD

20" PRESTRESSED CONCRETE PILE

REVISIONS						SHEET NO.
NO.	BY:	DATE:	NO.	BY:	DATE:	S-110
1			3			TOTAL SHEETS 120
2			4			

STD. NO. PCP3

ASSEMBLED BY : H. T. BARBOUR	DATE : 2-8-10		
CHECKED BY : B. D. KLAPPENBACH	DATE : 2-8-10		
DRAWN BY : WJH 1/89	REV. 6/1/94	EEM/GRP	
CHECKED BY : CRK 3/89	REV. 8/16/99R	RAL/LES	
	REV. 5/1/06	TLA/GM	

24-MAR-2010 12:10
M:\Structures\tbarbour\Microstation\b3611_sd_pp.dgn
tbarbour

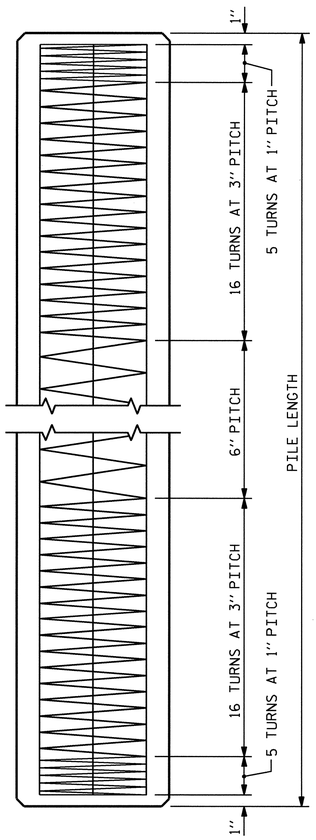

ELEVATION

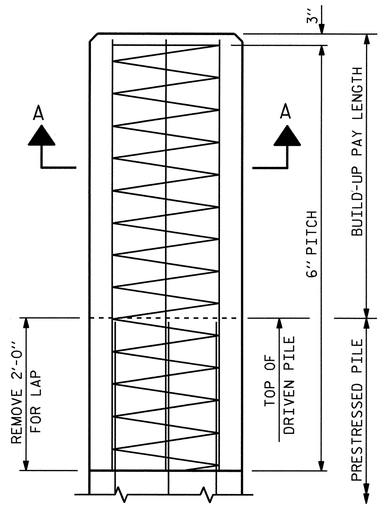

BUILD-UP
WITHOUT DRIVING

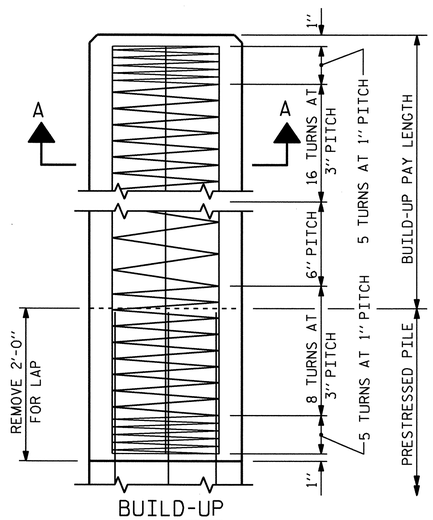

BUILD-UP
WITH DRIVING

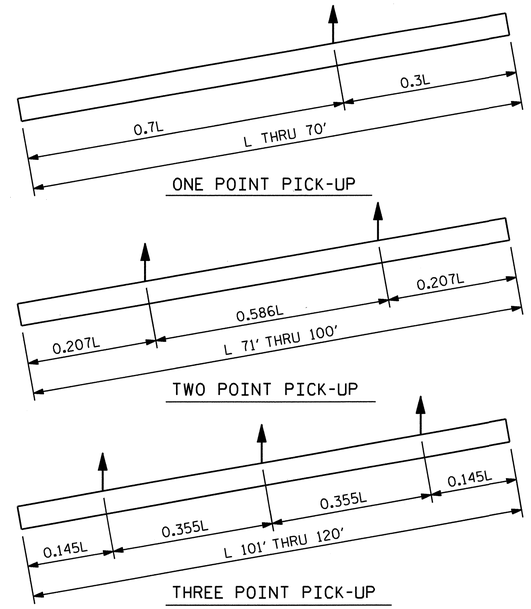

ONE POINT PICK-UP

TWO POINT PICK-UP

THREE POINT PICK-UP

PICK-UP POINTS

NOTES

CONCRETE DESIGN DATA : f'c= 5,000 PSI ;fc= 2,000 PSI

IMPACT IN HANDLING = 50%

IN DRIVING PILES, A METHOD APPROVED BY THE ENGINEER SHALL BE USED, WHEREBY THE HEAD OF THE PILE IS NOT DAMAGED.

PROPOSED DEVICES FOR LIFTING PILES, RECESS DETAILS, AND PATCHING MATERIAL SHALL BE DETAILED IN SHOP DRAWINGS. AFTER ATTACHMENTS HAVE BEEN REMOVED, OPENINGS SHALL BE REPAIRED SUCH THAT THE APPEARANCE OF THE PILE IS UNIFORM.

THE CONTRACTOR SHALL USE THE FOLLOWING STRAND TYPE:

SIZE	GRADE	NUMBER OF STRANDS	AREA	ULTIMATE STRENGTH	APPLIED PRESTRESS FORCE
½''	270 L.R.	16	0.153	41,300# PER STRAND	30,980# PER STRAND

STRANDS SHALL BE EQUALLY SPACED AS SHOWN IN THE "TYPICAL SECTION".

A CIRCULAR STRAND PATTERN SHALL NOT BE PERMITTED.

THE SLIP-FORM METHOD OF CASTING PILES WILL NOT BE PERMITTED.

IF STRAND STRESS IS RELIEVED BY BURNING, THE STRANDS SHALL BE BURNED IN OPPOSITE PAIRS AS INDICATED IN THE TYPICAL PATTERN SHOWN. FOR ANY NUMBER OF STRANDS BURN IN OPPOSITE PAIRS AND SYMMETRICAL ABOUT BOTH VERTICAL AND HORIZONTAL AXES, STRANDS 1-1 SHALL BE BURNED BEFORE 2-2, ETC. NOT MORE THAN 4 STRANDS, SAY 5-5 AND 6-6, MAY BE BURNED AT ANY ONE SECTION BEFORE THESE SAME PAIRS OF STRANDS ARE BURNED AT BOTH ENDS OF THE BED AND BETWEEN EACH PAIR OF PILES IN THE BED.

BUILD-UPS SHALL BE OF 'CLASS A' CONCRETE WITH 20% ADDITIONAL CEMENT. NO DRIVING OF THE BUILT-UP PILE WILL BE PERMITTED UNTIL THE CONCRETE HAS REACHED A COMPRESSIVE STRENGTH OF 3,000 P.S.I. AND UNTIL A PERIOD OF SEVEN DAYS HAS ELAPSED SINCE CASTING OF THE BUILD-UP.

ALL PRESTRESSING STRANDS SHALL BE 7-WIRE LOW-RELAXATION GRADE 270 STRANDS AND SHALL CONFORM TO AASHTO M203 EXCEPT FOR SAMPLING REQUIREMENTS WHICH SHALL BE IN ACCORDANCE WITH STANDARD SPECIFICATIONS.

THE TRANSFER OF LOAD FROM THE ANCHORAGES TO THE PILE SHALL BE DONE WHEN THE CONCRETE HAS REACHED A COMPRESSIVE STRENGTH OF NOT LESS THAN 3500 PSI.

THE CONCRETE IN THE PRESTRESSED CONCRETE PILES OF ALL BENTS SHALL CONTAIN SILICA FUME. SILICA FUME SHALL BE SUBSTITUTED FOR 5% OF THE PORTLAND CEMENT BY WEIGHT. IF THE OPTION OF ARTICLE 1024-1 OF THE STANDARD SPECIFICATIONS TO PARTIALLY SUBSTITUTE CLASS F FLY ASH FOR PORTLAND CEMENT IS EXERCISED, THEN THE RATE OF FLY ASH SUBSTITUTION SHALL BE REDUCED TO 1.0 LB OF FLY ASH PER 1.0 LB OF CEMENT. NO PAYMENT WILL BE MADE FOR THIS SUBSTITUTION AS IT IS CONSIDERED INCIDENTAL TO THE VARIOUS PAY ITEMS.

THE WATER/CEMENT RATIO FOR CONCRETE PILES SHALL NOT EXCEED 0.40.

PRESTRESSED CONCRETE PILES SHALL CONTAIN CALCIUM NITRITE CORROSION INHIBITOR.

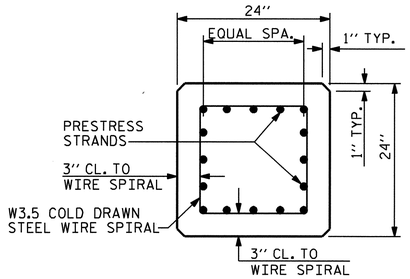

TYPICAL SECTION

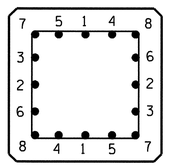

TYPICAL PATTERN FOR BURNING STRANDS

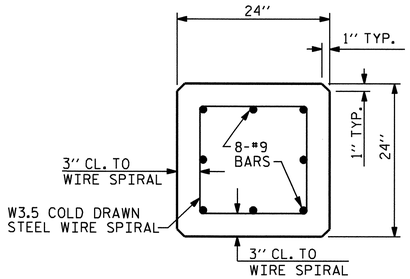

SECTION A-A

QUANTITIES FOR ONE 24'' SQUARE PILE

LENGTH	CONCRETE CU. YDS.	PILE WT. TONS	ONE PICK-UP POINT 0.3L	ONE PICK-UP POINT 0.7L	TWO PICK-UP POINTS 0.207L	TWO PICK-UP POINTS 0.586L	THREE PICK-UP POINTS 0.145L	THREE PICK-UP POINTS 0.355L
25'-0''	3.69	7.47	7'-6''	17'-6''				
30'-0''	4.43	8.97	9'-0''	21'-0''				
35'-0''	5.17	10.46	10'-6''	24'-6''				
40'-0''	5.91	11.96	12'-0''	28'-0''				
45'-0''	6.64	13.45	13'-6''	31'-6''				
50'-0''	7.38	14.95	15'-0''	35'-0''				
55'-0''	8.12	16.44	16'-6''	38'-6''				
60'-0''	8.86	17.94	18'-0''	42'-0''				
65'-0''	9.60	19.43	19'-6''	45'-6''				
70'-0''	10.33	20.93	21'-0''	49'-0''				
75'-0''	11.07	22.42			15'-6½''	43'-11''		
80'-0''	11.81	23.92			16'-6½''	46'-11''		
85'-0''	12.55	25.41			17'-7''	49'-10''		
90'-0''	13.29	26.91			18'-7½''	52'-9''		
95'-0''	14.03	28.40			19'-8''	55'-8''		
100'-0''	14.76	29.90			20'-8½''	58'-7''		
105'-0''	15.50	31.39					15'-3''	37'-3''
110'-0''	16.24	32.89					15'-11½''	39'-0½''
115'-0''	16.98	34.38					16'-8''	40'-10''
120'-0''	17.72	35.87					17'-5''	42'-7''

ASSEMBLED BY :	H. T. BARBOUR	DATE :	2-8-10
CHECKED BY :	B. D. KLAPPENBACH	DATE :	2-8-10
DRAWN BY : WJH 1/89	REV. 6/1/94	EEM/GRP	
CHECKED BY : CRK 3/89	REV. 8/16/99R	RAL/LES	
	REV. 5/1/06	TLA/GM	

24-MAR-2010 12:10
M:\Structures\tbarbour\Microstation\b3611_sd_pp.dgn
tbarbour

NORTH CAROLINA PROFESSIONAL SEAL 15825 ENGINEER BRUCE D. KLAPPENBACH
3-31-2010

PROJECT NO. B-3611

BEAUFORT COUNTY

STATION: 43+25.00-L-

SHEET 3 OF 3

STATE OF NORTH CAROLINA
DEPARTMENT OF TRANSPORTATION
RALEIGH

STANDARD

24'' PRESTRESSED CONCRETE PILE

REVISIONS						SHEET NO.
NO.	BY:	DATE:	NO.	BY:	DATE:	S-111
1			3			TOTAL SHEETS
2			4			120

STD. NO. PCP4

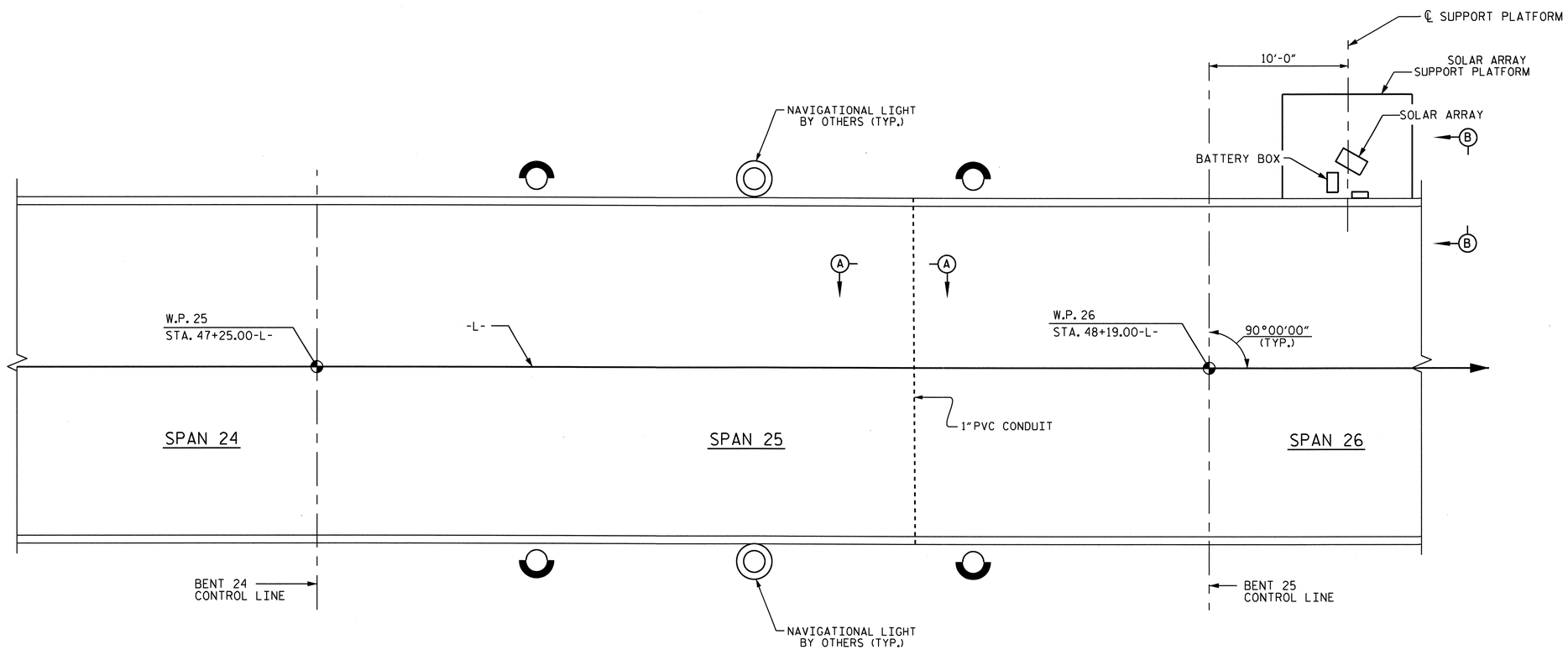

PLAN

NOTES:

FOR NAVIGATIONAL LIGHTING SYSTEM, SEE SPECIAL PROVISIONS.

SEE "SOLAR ARRAY PLATFORM" SHEET FOR ADDITIONAL DETAILS.

1"PVC CONDUIT TO BE PLACED DURING BRIDGE DECK CONSTRUCTION.

PIER NAVIGATION
180° RED

CHANNEL CENTER
360° GREEN

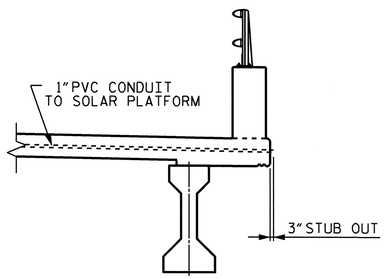

SECTION A-A

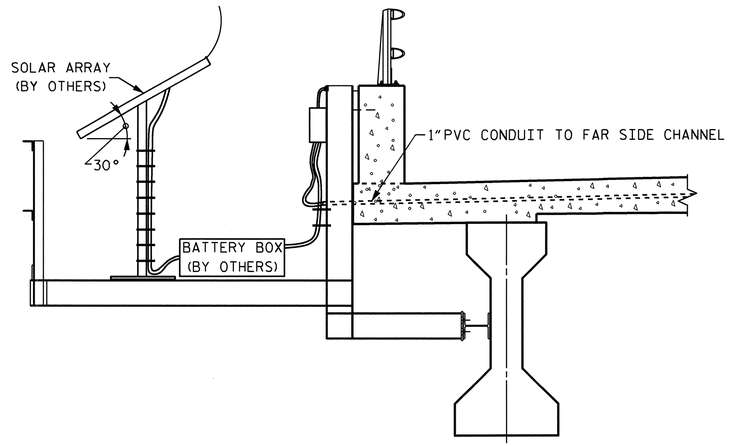

SECTION B-B

PROJECT NO. B-3611

BEAUFORT COUNTY

STATION: 43+25.00-L-

STATE OF NORTH CAROLINA
DEPARTMENT OF TRANSPORTATION
RALEIGH

NAVIGATIONAL LIGHTING AND CONDUIT SYSTEM

REVISIONS						SHEET NO.
NO.	BY:	DATE:	NO.	BY:	DATE:	S-112
1			3			TOTAL SHEETS
2			4			120

NORTH CAROLINA PROFESSIONAL SEAL 15825 ENGINEER BRADLEY D. KLAPPENBACH
3-31-2010

DRAWN BY : H. T. BARBOUR DATE : 2-8-10
CHECKED BY : B. D. KLAPPENBACH DATE : 2-8-10

31-MAR-2010 10:09
R:\Structures\tbarbour\Microstation\b3611_sd_utnavigationlighting.dgn
bklappenbach

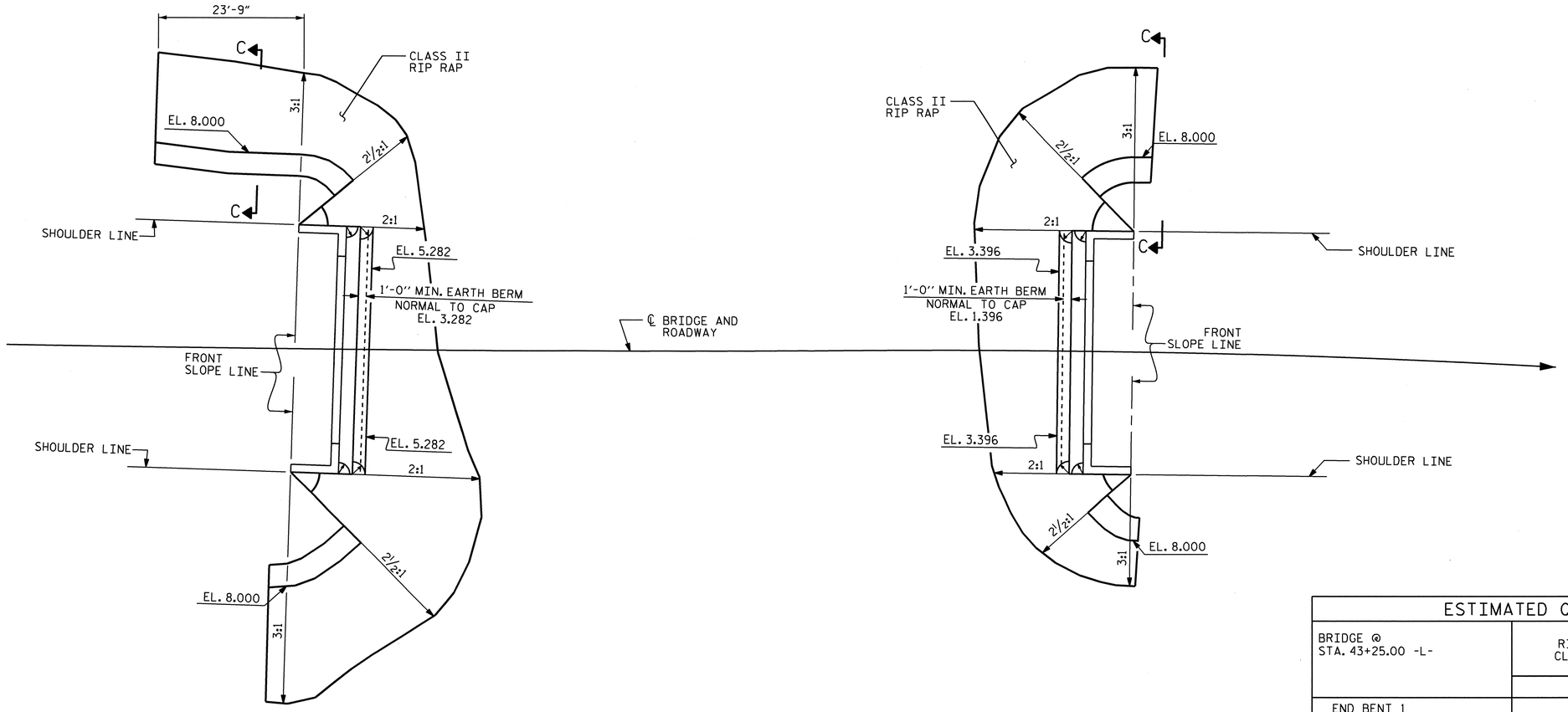

END BENT #1

END BENT #2

PLAN

ESTIMATED QUANTITIES		
BRIDGE @ STA. 43+25.00 -L-	RIP RAP CLASS II	FILTER FABRIC FOR DRAINAGE
	TONS	SQUARE YARDS
END BENT 1	175	195
END BENT 2	142	158

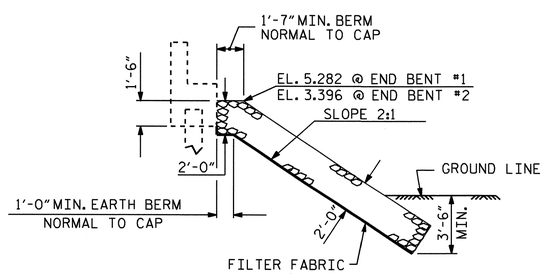

℄ SECTION
BERM RIP RAPPED

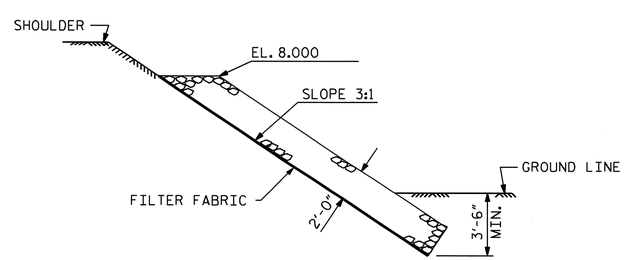

SECTION C-C

PROJECT NO. B-3611
BEAUFORT COUNTY
STATION: 43+25.00 -L-

STATE OF NORTH CAROLINA
DEPARTMENT OF TRANSPORTATION
RALEIGH

STANDARD

RIP RAP DETAILS

NORTH CAROLINA PROFESSIONAL SEAL 15825 ENGINEER D. KLAPPENBACH
BRIDGE DESIGN
3-31-2010

REVISIONS						SHEET NO.
NO.	BY:	DATE:	NO.	BY:	DATE:	S-113
1			3			TOTAL SHEETS
2			4			120

SKEW 90°

STD. NO. RR2

ASSEMBLED BY : C.R. YARBROUGH	DATE : 09/09		
CHECKED BY : M.G. SHAIKH	DATE : 11/09		
DRAWN BY : FCJ 2/88	REV. 8/16/99	RWW/LES	
CHECKED BY : ARB 8/88	REV. 10/17/00	RWW/LES	
	REV. 5/1/06	TLA/GM	

23-MAR-2010 14:14
r:\structures\cyarbrough\microstation\b-3611_sd_rr.dgn
cyarbrough

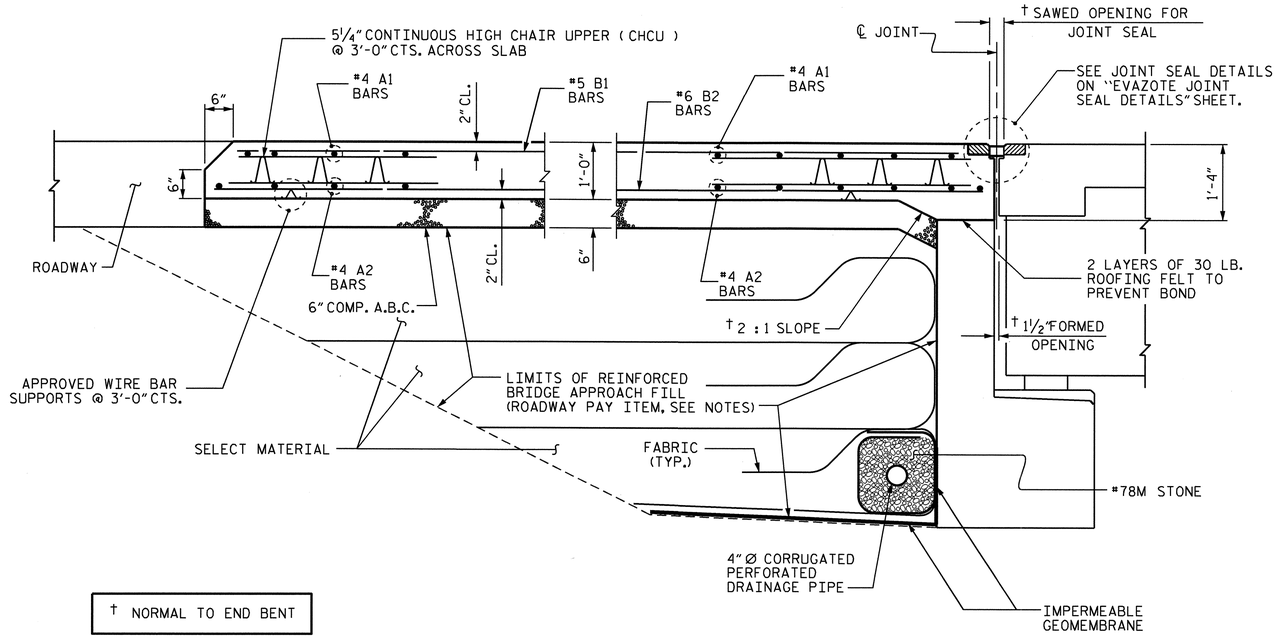

† NORMAL TO END BENT

SECTION THRU SLAB

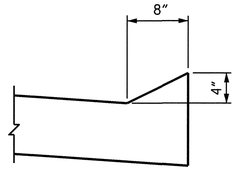

SECTION N-N

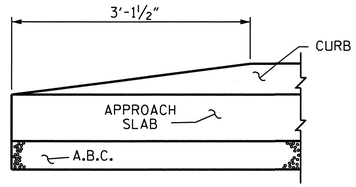

END OF CURB WITHOUT SHOULDER BERM GUTTER

CURB DETAILS

NOTES

APPROACH SLAB SHALL NOT BE CONSTRUCTED PRIOR TO COMPLETION OF THE BRIDGE DECK.

FOR REINFORCED BRIDGE APPROACH FILL INCLUDING FABRIC, IMPERMEABLE GEOMEMBRANE, 4" Ø DRAINAGE PIPE, #78M STONE, AND SELECT MATERIAL, SEE ROADWAY PLANS.

AREA BETWEEN THE WINGWALL AND APPROACH SLAB SHALL BE GRADED TO DRAIN THE WATER AWAY FROM THE FILL FACE OF THE BRIDGE AND SHALL BE PAVED. SEE ROADWAY PLANS.

THE 6" COMP. A.B.C. SHALL BE FLUSH WITH THE ROADWAY END OF THE APPROACH SLAB AND SHALL EXTEND 1'-0" OUTSIDE EACH EDGE OF THE APPROACH SLAB.

THE CONTRACTOR MAY USE 4" TYPE B-25.0B ASPHALT CONCRETE BASE COURSE IN LIEU OF 6" COMP. A.B.C. IF THIS OPTION IS USED, THE BASE COURSE SHALL BE FLUSH WITH THE ROADWAY END OF THE APPROACH SLAB, AND THE WIDTH SHALL BE THE SAME AS THAT OF THE APPROACH SLAB.

THE CONTRACTOR MAY USE 5" CLASS "A" CONCRETE BASE IN LIEU OF 6" COMP. A.B.C. IF THIS OPTION IS USED, THE CONCRETE BASE SHALL BE FLUSH WITH THE ROADWAY END OF THE APPROACH SLAB, AND THE WIDTH SHALL BE THE SAME AS THAT OF THE APPROACH SLAB. THE CONCRETE SHALL BE FINISHED TO A SMOOTH SURFACE AND A LAYER OF 30 LB ROOFING FELT SHALL BE PLACED BETWEEN THE CONCRETE BASE AND THE APPROACH SLAB TO PREVENT BOND. THE APPROACH SLAB SHALL NOT BE CAST UNTIL THE CONCRETE BASE HAS REACHED AN AGE OF THREE CURING DAYS.

APPROACH SLABS SHALL BE POURED AFTER CONCRETE OVERLAY IS POURED.

THE JOINT SHALL BE SAWED AFTER THE CASTING OF THE PARAPET AND END POST.

BILL OF MATERIAL

APPROACH SLAB AT EB #1

BAR	NO.	SIZE	TYPE	LENGTH	WEIGHT
* A1	50	#4	STR	17'-6"	585
A2	52	#4	STR	17'-5"	605
* B1	66	#5	STR	23'-8"	1629
B2	66	#6	STR	24'-8"	2445
REINFORCING STEEL				LBS.	3050
* EPOXY COATED REINFORCING STEEL				LBS.	2214
CLASS AA CONCRETE				C. Y.	31.6

APPROACH SLAB AT EB #2

BAR	NO.	SIZE	TYPE	LENGTH	WEIGHT
* A1	50	#4	STR	17'-6"	585
A2	52	#4	STR	17'-5"	605
* B1	66	#5	STR	23'-8"	1629
B2	66	#6	STR	24'-8"	2445
REINFORCING STEEL				LBS.	3050
* EPOXY COATED REINFORCING STEEL				LBS.	2214
CLASS AA CONCRETE				C. Y.	31.6

PROJECT NO. B-3611

BEAUFORT COUNTY

STATION: 43+25.00 -L-

SHEET 1 OF 3

STATE OF NORTH CAROLINA
DEPARTMENT OF TRANSPORTATION
RALEIGH

STANDARD

BRIDGE APPROACH SLAB FOR FLEXIBLE PAVEMENT

NORTH CAROLINA PROFESSIONAL SEAL 15825 ENGINEER DAVID L. KLAPPENBACH
3-31-2010

REVISIONS						SHEET NO.
NO.	BY:	DATE:	NO.	BY:	DATE:	S-114
1			3			TOTAL SHEETS
2			4			120

STD. NO. BAS4 (SHT 4)

ASSEMBLED BY : C.R. YARBROUGH	DATE : 09/09	
CHECKED BY : M.G. SHAIKH	DATE : 09/09	
DRAWN BY : EEM 3/95	REV. 7/10/01	LES/RDR
CHECKED BY : VAP 3/95	REV. 5/7/03R	RWW/JTE
	REV. 5/1/06R	KMM/GM

23-MAR-2010 14:17
r:\structures\cyarbrough\microstation\b-3611_sd_as.dgn
cyarbrough

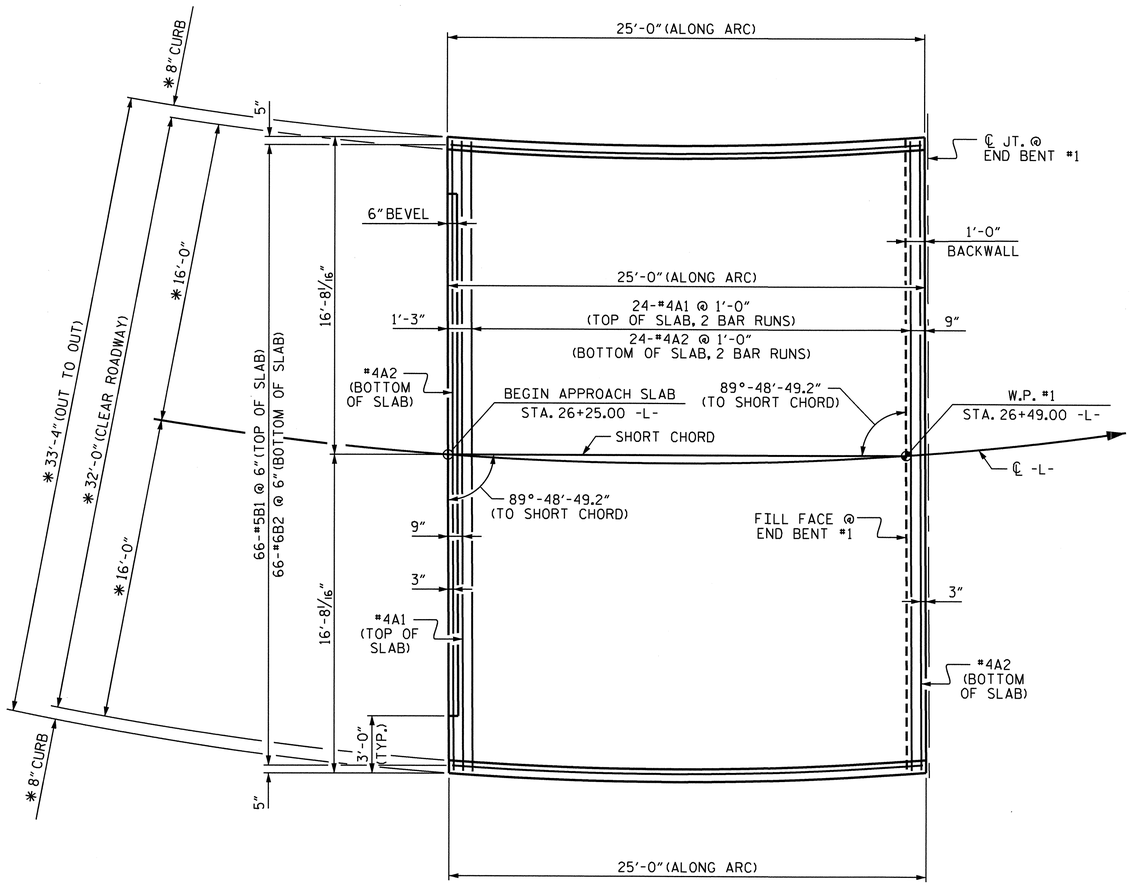

PLAN @ END BENT #1

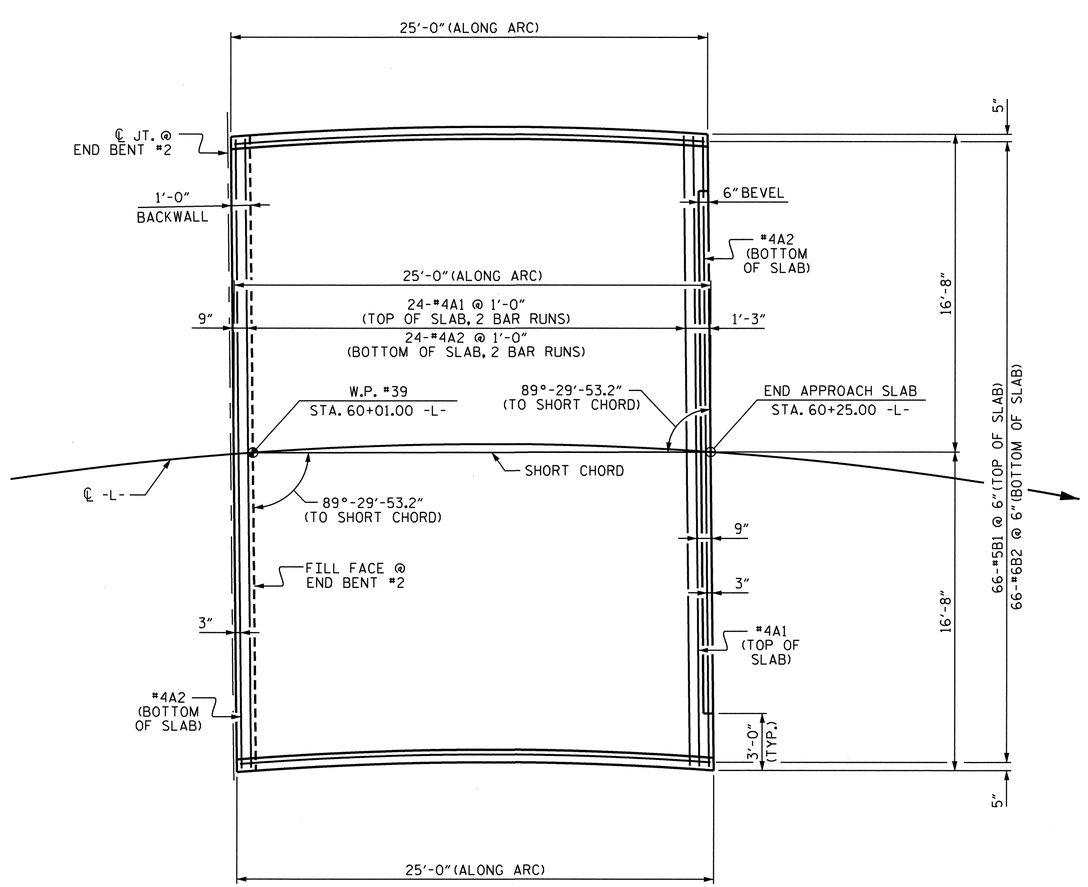

PLAN @ END BENT #2

DIMENSIONS SHOWN ARE TYPICAL FOR BOTH APPROACH SLABS
(* RADIAL DIMENSION)
ARC OFFSETS ARE NEGLIGIBLE, THEREFORE NOT SHOWN

PROJECT NO. B-3611

BEAUFORT COUNTY

STATION: 43+25.00 -L-

SHEET 2 OF 3

STATE OF NORTH CAROLINA
DEPARTMENT OF TRANSPORTATION
RALEIGH

BRIDGE APPROACH SLAB FOR FLEXABLE PAVEMENT

NORTH CAROLINA PROFESSIONAL SEAL 15825 ENGINEER BRUCE D. KLAPPENBACH
3-31-2010

REVISIONS						SHEET NO.
NO.	BY:	DATE:	NO.	BY:	DATE:	S-115
1			3			TOTAL SHEETS
2			4			120

DRAWN BY : C.R. YARBROUGH DATE : 09/09
CHECKED BY : M.G. SHAIKH DATE : 09/09

23-MAR-2010 14:17
r:\structures\cyarbrough\microstation\b-3611_sd_as.dgn
cyarbrough

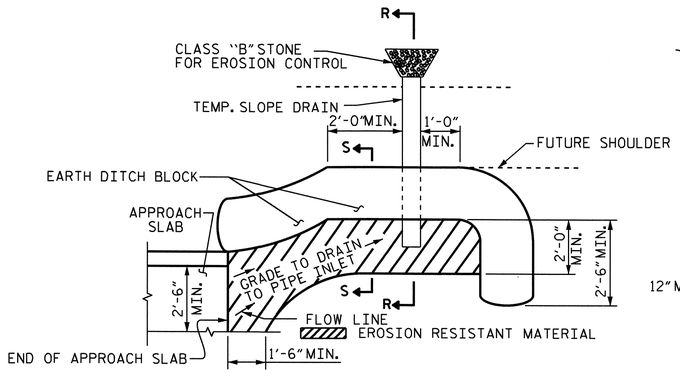

NOTE: IMMEDIATELY AFTER THE CONSTRUCTION OF THE APPROACH SLAB, THE CONTRACTOR SHALL PROVIDE TEMPORARY BERM AND SLOPE DRAIN. CONTRACTOR SHALL GRADE TO PIPE INLET AND PROVIDE EROSION RESISTANT MATERIAL AS SHOWN. THE EROSION RESISTANT MATERIAL SHALL BE EITHER 1) ASPHALT PLANT MIX, TYPE 1 OR TYPE 2, MIN. 2" DEPTH, 2) EROSION CONTROL MAT, OR 3) CONCRETE, AS DIRECTED BY THE ENGINEER. THE SLOPE DRAIN SHALL CONSIST OF A NON-PERFORATED TEMPORARY DRAINAGE PIPE, 12 INCHES IN DIAMETER.

PLAN VIEW

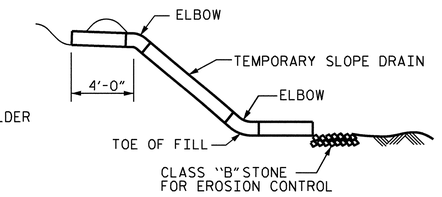

SECTION R-R

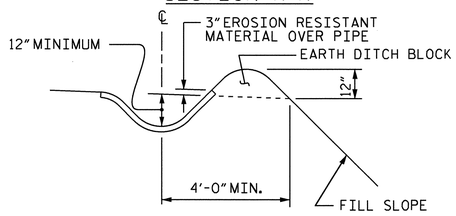

SECTION S-S

TEMPORARY BERM AND SLOPE DRAIN DETAILS

(TO BE USED WHEN SHOULDER BERM GUTTER IS REQUIRED)

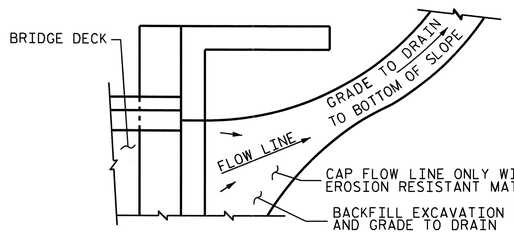

NOTE: IF THE APPROACH SLAB IS NOT CONSTRUCTED IMMEDIATELY AFTER THE BACKFILLING OF THE END BENT EXCAVATION, GRADE TO DRAIN TO THE BOTTOM OF THE SLOPE AND PROVIDE EROSION RESISTANT MATERIAL, SUCH AS FIBERGLASS ROVING OR AS DIRECTED BY THE ENGINEER TO PREVENT SOIL EROSION AND TO PROTECT THE AREA ADJACENT TO THE STRUCTURE. THE CONTRACTOR WILL BE REQUIRED TO REMOVE THESE MATERIALS PRIOR TO CONSTRUCTION OF THE APPROACH SLAB.

TEMPORARY DRAINAGE DETAIL

PROJECT NO. B-3611

BEAUFORT COUNTY

STATION: 43+25.00 -L-

SHEET 3 OF 3

ASSEMBLED BY : C.R. YARBROUGH	DATE : 09/09		
CHECKED BY : M.G. SHAIKH	DATE : 09/09		
DRAWN BY : FCJ 11/88	REV. 10/17/00	RWW/LES	
CHECKED BY : ARB 11/88	REV. 5/7/03	RWW/JTE	
	REV. 5/1/06R	MAA/KMM	

23-MAR-2010 14:17
r:\structures\cyarbrough\microstation\b-3611_sd_as.dgn
cyarbrough

NORTH CAROLINA PROFESSIONAL SEAL 15822 ENGINEER BRUCE D. KLAPPENBACH
3-31-2010

STATE OF NORTH CAROLINA
DEPARTMENT OF TRANSPORTATION
RALEIGH

STANDARD

BRIDGE APPROACH SLAB DETAILS

REVISIONS						SHEET NO.
NO.	BY:	DATE:	NO.	BY:	DATE:	S-116
1			3			TOTAL SHEETS
2			4			120

STD. NO. BAS10

OVERHANG BRACKET CALCULATION INSTRUCTIONS

AASHTO SHAPES - TYPES III, IV, V, AND VI

1. RECORD KNOWN INFORMATION ON "BRIDGE OVERHANG BRACKET SUMMARY" ON SHEET 2
2. CALCULATE THE MAXIMUM SCREED LOAD PER BRACKET (SLPB) WITH AN ESTIMATED R = 1.5. SLPB = R X W. ROUND VALUE UP TO NEAREST SLPB VALUE INDICATED ON APPROPRIATE TABLE 1-1, 1-2, 1-3, OR 1-4.
3. WITH THE ESTIMATED SLPB, OVERHANG SLAB THICKNESS, "K" VALUE, AND 45° HANGER SAFE WORKING LOAD (SWL), ENTER THE APPROPRIATE TABLE 1-1, 1-2, 1-3, OR 1-4 (BASED ON OVERHANG DIMENSION) AND DETERMINE THE BRACKET SPACING, S.
4. CALCULATE S/D1 AND S/D2, ROUNDING UP TO NEAREST VALUE IN TABLE 2. ENTER TABLE 2 AND DETERMINE R VALUE.
5. CALCULATE REVISED SLPB. ROUND VALUE UP TO NEAREST SLPB VALUE INDICATED ON APPROPRIATE TABLE 1-1, 1-2, 1-3, OR 1-4.
6. WITH THE REVISED SLPB, OVERHANG SLAB THICKNESS, "K" VALUE AND 45 HANGER SAFE WORKING LOAD (SWL), ENTER THE APPROPRIATE TABLE 1-1, 1-2, 1-3 OR 1-4 (BASED ON OVERHANG DIMENSION) AND DETERMINE REVISED BRACKET SPACING, S.
7. CONTINUE ITERATIONS OF STEPS 4-6 UNTIL THE REVISED BRACKET SPACING, S, IS THE SAME AS THE PREVIOUS S VALUE.
8. CHECK LUMBER JOIST SPACING: WITH BRACKET SPACING VALUE, S, ROUND THIS VALUE UP TO THE NEAREST VALUE OF ALLOWABLE SPAN LENGTH OF JOIST OF TABLE 3. USING THIS VALUE, ALONG WITH THE AVERAGE OVERHANG SLAB THICKNESS AND THE LUMBER JOIST SIZE, DETERMINE JOIST SPACING FROM TABLE 3. IF NECESSARY, ADJUST LUMBER JOIST SIZE AND/OR JOIST SPACING TO MEET ALLOWABLE SPAN LENGTH OF JOIST.
9. CONVERSELY, IF THE DESIRED JOIST SPACING IS KNOWN, USE THIS ALONG WITH THE AVERAGE OVERHANG SLAB THICKNESS AND THE LUMBER JOIST SIZE TO DETERMINE IF ALLOWABLE SPAN LENGTH OF JOIST IS GREATER THAN THE BRACKET SPACING, S. IF NECESSARY, ADJUST LUMBER JOIST SIZE TO MEET REQUIREMENTS OF ALLOWABLE SPAN LENGTH OF JOIST AND JOIST SPACING.
10. RECORD REMAINING INFORMATION ON "BRIDGE OVERHANG BRACKET SUMMARY" FORM.
11. SUBMIT FORM AND CALCULATIONS FOR REVIEW AND APPROVAL.

TABLE 1-1 (FOR USE ON **UP TO 2'-0" OVERHANG (L)** & 54" HORIZONTAL LEG LENGTH OF THE OVERHANG BRACKET)

AVG. SLAB THICKNESS (T) (in)	BRACKET (K) DIMENSION (in)	SCREED LOAD PER BRACKET									45° HANGER SWL (lbs)
		2500 lbs.	2250 lbs.	2000 lbs.	1750 lbs.	1500 lbs.	1250 lbs.	1000 lbs.	750 lbs.	0 lbs.	
		BRACKET SPACING									
10	30				2'-1"	2'-7"	3'-2"	3'-8"	4'-2"	5'-9"	4000
		3'-6"	4'-0"	4'-5"	4'-9"	5'-1"	5'-3"	5'-5"	5'-7"	6'-7"	6000
	40				2'-1"	2'-7"	3'-2"	3'-8"	4'-2"	5'-9"	4000
		3'-6"	4'-0"	4'-5"	4'-9"	5'-1"	5'-3"	5'-5"	5'-7"	6'-7"	6000
	50				2'-1"	2'-7"	3'-2"	3'-8"	4'-2"	5'-9"	4000
		3'-6"	4'-0"	4'-5"	4'-9"	5'-1"	5'-3"	5'-5"	5'-7"	6'-7"	6000
12	30					2'-4"	2'-10"	3'-4"	3'-9"	5'-2"	4000
		3'-2"	3'-7"	4'-1"	4'-7"	5'-0"	5'-2"	5'-4"	5'-7"	6'-5"	6000
	40					2'-4"	2'-10"	3'-4"	3'-9"	5'-2"	4000
		3'-2"	3'-7"	4'-1"	4'-7"	5'-0"	5'-2"	5'-4"	5'-7"	6'-5"	6000
	50					2'-4"	2'-10"	3'-4"	3'-9"	5'-2"	4000
		3'-2"	3'-7"	4'-1"	4'-7"	5'-0"	5'-2"	5'-4"	5'-7"	6'-5"	6000
14	30					2'-2"	2'-7"	3'-0"	3'-5"	4'-9"	4000
		2'-10"	3'-4"	3'-9"	4'-2"	4'-7"	5'-0"	5'-4"	5'-7"	6'-4"	6000
	40					2'-2"	2'-7"	3'-0"	3'-5"	4'-9"	4000
		2'-10"	3'-4"	3'-9"	4'-2"	4'-7"	5'-0"	5'-4"	5'-7"	6'-4"	6000
	50					2'-2"	2'-7"	3'-0"	3'-5"	4'-9"	4000
		2'-10"	3'-4"	3'-9"	4'-2"	4'-7"	5'-0"	5'-4"	5'-7"	6'-4"	6000
16	30					2'-0"	2'-4"	2'-9"	3'-2"	4'-4"	4000
		2'-8"	3'-0"	3'-5"	3'-10"	4'-3"	4'-7"	5'-0"	5'-5"	6'-3"	6000
	40					2'-0"	2'-4"	2'-9"	3'-2"	4'-4"	4000
		2'-8"	3'-0"	3'-5"	3'-10"	4'-3"	4'-7"	5'-0"	5'-5"	6'-3"	6000
	50					2'-0"	2'-4"	2'-9"	3'-2"	4'-4"	4000
		2'-8"	3'-0"	3'-5"	3'-10"	4'-3"	4'-7"	5'-0"	5'-5"	6'-3"	6000

TABLE 1-2 (FOR USE ON **OVER 2'-0" TO 2'-6" OVERHANG (L)** & 54" HORIZONTAL LEG LENGTH OF THE OVERHANG BRACKET)

AVG. SLAB THICKNESS (T) (in)	BRACKET (K) DIMENSION (in)	SCREED LOAD PER BRACKET									45° HANGER SWL (lbs)
		2500 lbs.	2250 lbs.	2000 lbs.	1750 lbs.	1500 lbs.	1250 lbs.	1000 lbs.	750 lbs.	0 lbs.	
		BRACKET SPACING									
10	30					2'-4"	2'-9"	3'-3"	3'-8"	5'-1"	4000
		3'-1"	3'-6"	4'-0"	4'-5"	4'-11"	5'-3"	5'-5"	5'-7"	6'-7"	6000
	40					2'-4"	2'-9"	3'-3"	3'-8"	5'-1"	4000
		3'-1"	3'-6"	4'-0"	4'-5"	4'-11"	5'-3"	5'-5"	5'-7"	6'-7"	6000
	50					2'-4"	2'-9"	3'-3"	3'-8"	5'-1"	4000
		3'-1"	3'-6"	4'-0"	4'-5"	4'-11"	5'-3"	5'-5"	5'-7"	6'-7"	6000
12	30					2'-1"	2'-6"	2'-11"	3'-4"	4'-6"	4000
		2'-9"	3'-2"	3'-7"	4'-0"	4'-5"	4'-10"	5'-3"	5'-7"	6'-5"	6000
	40					2'-1"	2'-6"	2'-11"	3'-4"	4'-6"	4000
		2'-9"	3'-2"	3'-7"	4'-0"	4'-5"	4'-10"	5'-3"	5'-7"	6'-5"	6000
	50					2'-1"	2'-6"	2'-11"	3'-4"	4'-6"	4000
		2'-9"	3'-2"	3'-7"	4'-0"	4'-5"	4'-10"	5'-3"	5'-7"	6'-5"	6000
14	30						2'-3"	2'-7"	3'-0"	4'-1"	4000
		2'-6"	2'-10"	3'-3"	3'-7"	4'-0"	4'-4"	4'-9"	5'-1"	6'-3"	6000
	40						2'-3"	2'-7"	3'-0"	4'-1"	4000
		2'-6"	2'-10"	3'-3"	3'-7"	4'-0"	4'-4"	4'-9"	5'-1"	6'-3"	6000
	50						2'-3"	2'-7"	3'-0"	4'-1"	4000
		2'-6"	2'-10"	3'-3"	3'-7"	4'-0"	4'-4"	4'-9"	5'-1"	6'-3"	6000
16	30						2'-1"	2'-5"	2'-9"	3'-9"	4000
		2'-3"	2'-7"	2'-11"	3'-4"	3'-8"	4'-0"	4'-4"	4'-8"	5'-8"	6000
	40						2'-1"	2'-5"	2'-9"	3'-9"	4000
		2'-3"	2'-7"	2'-11"	3'-4"	3'-8"	4'-0"	4'-4"	4'-8"	5'-8"	6000
	50						2'-1"	2'-5"	2'-9"	3'-9"	4000
		2'-3"	2'-7"	2'-11"	3'-4"	3'-8"	4'-0"	4'-4"	4'-8"	5'-8"	6000

TABLE 1-3 (FOR USE ON **OVER 2'-6" TO 3'-0" OVERHANG (L)** & 54" HORIZONTAL LEG LENGTH OF THE OVERHANG BRACKET)

AVG. SLAB THICKNESS (T) (in)	BRACKET (K) DIMENSION (in)	SCREED LOAD PER BRACKET									45° HANGER SWL (lbs)
		2500 lbs.	2250 lbs.	2000 lbs.	1750 lbs.	1500 lbs.	1250 lbs.	1000 lbs.	750 lbs.	0 lbs.	
		BRACKET SPACING									
10	30					2'-1"	2'-6"	2'-11"	3'-4"	4'-6"	4000
						4'-5"	4'-10"	5'-3"	5'-7"	6'-7"	6000
	40					2'-1"	2'-6"	2'-11"	3'-4"	4'-6"	4000
		2'-9"	3'-2"	3'-7"	4'-0"	4'-5"	4'-10"	5'-3"	5'-7"	6'-7"	6000
	50					2'-1"	2'-6"	2'-11"	3'-4"	4'-6"	4000
		2'-9"	3'-2"	3'-7"	4'-0"	4'-5"	4'-10"	5'-3"	5'-7"	6'-7"	6000
12	30						2'-2"	2'-7"	2'-11"	4'-0"	4000
						3'-11"	4'-3"	4'-8"	5'-0"	6'-1"	6000
	40						2'-2"	2'-7"	2'-11"	4'-0"	4000
		2'-5"	2'-10"	3'-2"	3'-6"	3'-11"	4'-3"	4'-8"	5'-0"	6'-1"	6000
	50						2'-2"	2'-7"	2'-11"	4'-0"	4000
		2'-5"	2'-10"	3'-2"	3'-6"	3'-11"	4'-3"	4'-8"	5'-0"	6'-1"	6000
14	30						2'-0"	2'-4"	2'-8"	3'-8"	4000
						3'-2"	3'-6"	3'-10"	4'-2"	4'-6"	6000
	40						2'-0"	2'-4"	2'-8"	3'-8"	4000
		2'-2"	2'-6"	2'-10"	3'-2"	3'-6"	3'-10"	4'-2"	4'-6"	5'-6"	6000
	50						2'-0"	2'-4"	2'-8"	3'-8"	4000
		2'-2"	2'-6"	2'-10"	3'-2"	3'-6"	3'-10"	4'-2"	4'-6"	5'-6"	6000
16	30							2'-1"	2'-5"	3'-4"	4000
						2'-11"	3'-2"	3'-6"	3'-10"	4'-1"	6000
	40							2'-1"	2'-5"	3'-4"	4000
		2'-0"	2'-4"	2'-7"	2'-11"	3'-2"	3'-6"	3'-10"	4'-1"	5'-0"	6000
	50							2'-1"	2'-5"	3'-4"	4000
		2'-0"	2'-4"	2'-7"	2'-11"	3'-2"	3'-6"	3'-10"	4'-1"	5'-0"	6000

TABLE 1-4 (FOR USE ON **OVER 3'-0" TO 3'-6" OVERHANG (L)** & 54" HORIZONTAL LEG LENGTH OF THE OVERHANG BRACKET)

AVG. SLAB THICKNESS (T) (in)	BRACKET (K) DIMENSION (in)	SCREED LOAD PER BRACKET									45° HANGER SWL (lbs)
		2500 lbs.	2250 lbs.	2000 lbs.	1750 lbs.	1500 lbs.	1250 lbs.	1000 lbs.	750 lbs.	0 lbs.	
		BRACKET SPACING									
10	30						2'-1"	2'-5"	2'-9"	3'-10"	4000
						2'-3"	2'-11"	3'-7"	4'-3"	5'-9"	6000
	40						2'-1"	2'-5"	2'-9"	3'-10"	4000
					2'-4"	3'-0"	3'-7"	4'-1"	4'-5"	4'-9"	5'-9"	6000
	50						2'-1"	2'-5"	2'-9"	3'-10"	4000
		2'-4"	2'-8"	3'-0"	3'-4"	3'-8"	4'-1"	4'-5"	4'-9"	5'-9"	6000
12	30							2'-2"	2'-6"	3'-5"	4000
						2'-1"	2'-8"	3'-4"	3'-11"	5'-2"	6000
	40							2'-2"	2'-6"	3'-5"	4000
					2'-2"	2'-9"	3'-4"	3'-7"	3'-11"	4'-3"	5'-2"	6000
	50							2'-2"	2'-6"	3'-5"	4000
		2'-1"	2'-4"	2'-8"	3'-0"	3'-4"	3'-7"	3'-11"	4'-3"	5'-2"	6000
14	30								2'-3"	3'-1"	4000
						2'-0"	2'-6"	3'-1"	3'-8"	4'-8"	6000
	40								2'-3"	3'-1"	4000
					2'-0"	2'-7"	3'-0"	3'-3"	3'-6"	3'-10"	4'-8"	6000
	50								2'-3"	3'-1"	4000
				2'-2"	2'-5"	2'-8"	3'-0"	3'-3"	3'-6"	3'-10"	4'-8"	6000
16	30								2'-0"	2'-9"	4000
							2'-4"	2'-10"	3'-5"	4'-3"	6000
	40								2'-0"	2'-9"	4000
						2'-5"	2'-8"	2'-11"	3'-3"	3'-6"	4'-3"	6000
	50								2'-0"	2'-9"	4000
				2'-2"	2'-5"	2'-8"	2'-11"	3'-3"	3'-6"	4'-3"	6000

DEFINITIONS

SLPB = SCREED LOAD PER BRACKET (R x W)
R = SCREED LOAD FACTOR, OBTAINED FROM TABLE 2
W = WHEEL LOAD
S = BRACKET SPACING
T = AVERAGE SLAB THICKNESS
SWL = SAFE WORKING LOAD
K = DIMENSION DEFINED ON "BRIDGE OVERHANG BRACKET SUMMARY" ON SHEET 2
L = OVERHANG MEASURED FROM EDGE OF TOP FLANGE TO EDGE OF SUPERSTRUCTURE

NORTH CAROLINA PROFESSIONAL SEAL 18788 ENGINEER CHARNG-CHUAN VICTOR CHAO

Charng-Chuan Victor Chao
1-8-2010

PROJECT NO. B-3611
BEAUFORT COUNTY
STATION: 43+25.00 -L-

SHEET 1 OF 4

STATE OF NORTH CAROLINA
DEPARTMENT OF TRANSPORTATION
RALEIGH

STANDARD OVERHANG FALSEWORK
AASHTO TYPES
III, IV, V, AND VI

REVISIONS						SHEET NO.
NO.	BY:	DATE:	NO.	BY:	DATE:	S-117
1			3			TOTAL SHEETS
2			4			120

ASSEMBLED BY:	DATE:
CHECKED BY:	DATE:
DRAWN BY: R. WRIGHT 06/04	REV.
CHECKED BY: C. V. CHAO 06/04	

08-JAN-2010 10:25
dt\wdlr\victor\overhangfalsework\tiebar&strut\b-3611_type_III&IV\b3611overhangsheets.dgn
vchao

OF1

BRIDGE OVERHANG BRACKET SUMMARY

TOTAL SCREED WEIGHT = _____ LBS.
NUMBER OF SCREED WHEELS = _____
SCREED WHEEL LOAD (W) = _____LBS.
SCREED LOAD PER BRACKET = _____ LBS.

PROJECT No. : _____
COUNTY : _____
STATION : _____
DESCRIPTION : _____
_____
DATE : _____
DESIGN BY : _____
CHECK BY : _____

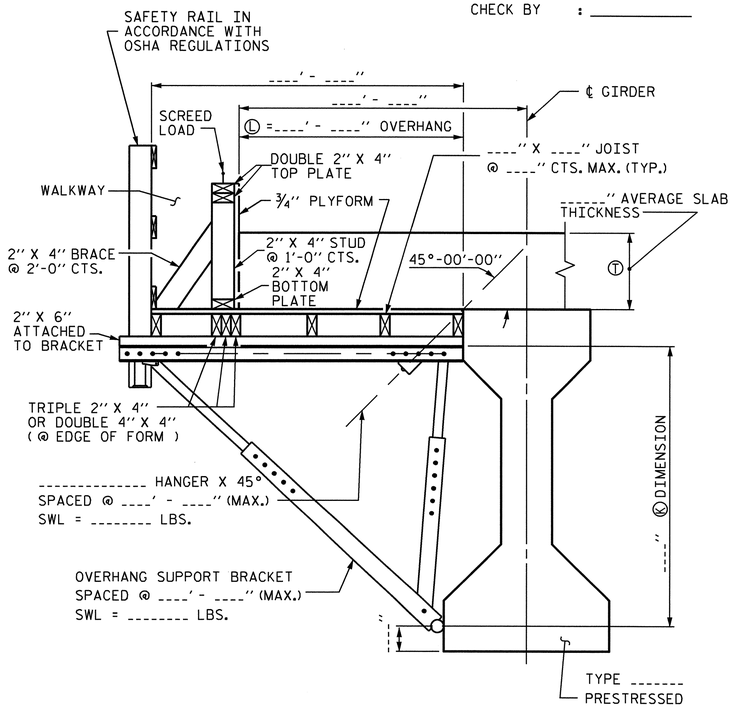

OVERHANG FALSEWORK

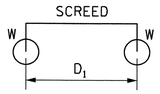

4-WHEEL MACHINE

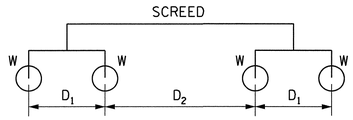

8-WHEEL MACHINE

4 WHEEL MACHINE	
S/D1	R
<= 1.0	1.00
1.1	1.09
1.2	1.17
1.3	1.23
1.4	1.29
1.5	1.33
1.6	1.38
1.7	1.41
1.8	1.44
1.9	1.47
2.0	1.50
2.2	1.55
2.4	1.58
2.6	1.62
2.8	1.64
3.0	1.67
3.5	1.71
4.0	1.75

TABLE 2: SCREED LOAD FACTOR "R"

		THE SCREED LOAD FACTOR R (FOR 8 WHEEL MACHINE)																	
		S/D2																	
		<= 1.0	1.1	1.2	1.3	1.4	1.5	1.6	1.7	1.8	1.9	2.0	2.2	2.4	2.6	2.8	3.0	3.5	4.0
S/D1	<= 1.0	1.00	1.09	1.17	1.23	1.29	1.33	1.38	1.41	1.44	1.47	1.50	1.55	1.58	1.62	1.64	1.67	1.71	1.75
	1.1	1.09	1.18	1.26	1.32	1.38	1.42	1.47	1.50	1.54	1.56	1.59	1.64	1.67	1.71	1.73	1.76	1.81	1.84
	1.2	1.17	1.26	1.33	1.40	1.45	1.50	1.54	1.58	1.61	1.64	1.67	1.71	1.75	1.78	1.81	1.83	1.88	1.92
	1.3	1.23	1.32	1.40	1.46	1.52	1.56	1.61	1.64	1.68	1.70	1.73	1.78	1.81	1.85	1.87	1.90	1.95	1.98
	1.4	1.29	1.38	1.45	1.52	1.57	1.62	1.66	1.70	1.73	1.76	1.79	1.83	1.87	1.90	1.93	1.95	2.00	2.07
	1.5	1.33	1.42	1.50	1.56	1.62	1.67	1.71	1.75	1.78	1.81	1.83	1.88	1.92	1.95	1.98	2.00	2.10	2.17
	1.6	1.38	1.47	1.54	1.61	1.66	1.71	1.75	1.79	1.82	1.85	1.88	1.92	1.96	1.99	2.04	2.08	2.18	2.25
	1.7	1.41	1.50	1.58	1.64	1.70	1.75	1.79	1.82	1.86	1.89	1.91	1.96	2.00	2.05	2.11	2.16	2.25	2.32
	1.8	1.44	1.54	1.61	1.68	1.73	1.78	1.82	1.86	1.89	1.92	1.94	1.99	2.06	2.12	2.17	2.22	2.32	2.39
	1.9	1.47	1.56	1.64	1.70	1.76	1.81	1.85	1.89	1.92	1.95	1.97	2.04	2.11	2.18	2.23	2.28	2.38	2.45
	2.0	1.50	1.59	1.67	1.73	1.79	1.83	1.88	1.91	1.94	1.97	2.00	2.09	2.17	2.23	2.29	2.33	2.43	2.50
	2.2	1.55	1.64	1.71	1.78	1.83	1.88	1.92	1.96	1.99	2.04	2.09	2.18	2.26	2.32	2.38	2.42	2.52	2.59
	2.4	1.58	1.67	1.75	1.81	1.87	1.92	1.96	2.00	2.06	2.11	2.17	2.26	2.33	2.40	2.45	2.50	2.60	2.67
	2.6	1.62	1.71	1.78	1.85	1.90	1.95	1.99	2.05	2.12	2.18	2.23	2.32	2.40	2.46	2.52	2.56	2.66	2.73
	2.8	1.64	1.73	1.81	1.87	1.93	1.98	2.04	2.11	2.17	2.23	2.29	2.38	2.45	2.52	2.57	2.62	2.71	2.79
	3.0	1.67	1.76	1.83	1.90	1.95	2.00	2.08	2.16	2.22	2.28	2.33	2.42	2.50	2.56	2.62	2.67	2.76	2.83
	3.5	1.71	1.81	1.88	1.95	2.00	2.10	2.18	2.25	2.32	2.38	2.43	2.52	2.60	2.66	2.71	2.76	2.86	2.93
	4.0	1.75	1.84	1.92	1.98	2.07	2.17	2.25	2.32	2.39	2.45	2.50	2.59	2.67	2.73	2.79	2.83	2.93	3.00

TABLE 3: ALLOWABLE SPAN LENGTH OF JOISTS AND JOIST SPACINGS

AVG. SLAB THICKNESS Ⓣ (IN)	LUMBER JOIST SIZE (IN X IN)	JOIST SPACINGS			
		15 IN	12 IN	10 IN	8 IN
		THE ALLOWABLE SPAN LENGTH OF JOISTS			
10	2 X 4	———	4' - 6"	4' - 9"	5' - 0"
	4 X 4	5' - 9"	6' - 3"	6' - 6"	6' - 7"
12	2 X 4	———	4' - 3"	4' - 9"	5' - 0"
	4 X 4	5' - 3"	6' - 0"	6' - 3"	6' - 5"
14	2 X 4	———	4' - 0"	4' - 6"	5' - 0"
	4 X 4	———	5' - 6"	6' - 0"	6' - 4"
16	2 X 4	———	4' - 0"	4' - 3"	4' - 9"
	4 X 4	———	5' - 3"	5' - 9"	6' - 3"

NOTES

DESIGN INCLUDES CONSTRUCTION LIVE LOAD 20 PSF ON THE AREA SUPPORTED AND 75 PLF AT THE OUTSIDE DECK OF OVERHANGS.

REQUIRED MINIMUM DIAGONAL LEG CAPACITY: 3600 LB WORKING LOAD

THE CONTRACTOR HAS THE OPTION OF SUBMITTING HIS OWN DESIGN FOR OVERHANG FALSEWORK IN ACCORDANCE WITH THE SPECIAL PROVISIONS.

SUBMITTALS UTILIZING THE INSTRUCTIONS AND PROCEDURES DESCRIBED ON SHEET 1 OF 3 SHALL BE IN ACCORDANCE WITH THE APPLICABLE SECTIONS OF THE SPECIFICATIONS AND SPECIAL PROVISIONS, EXCEPT THAT CALCULATIONS FOR OVERHANG FALSEWORK NEED NOT BE SEALED BY A REGISTERED ENGINEER.

FOR OVERHANG FALSEWORK BRACING DESIGN, SEE SHEET 3 OF 3.

ASSEMBLED BY:	DATE:
CHECKED BY:	DATE:
DRAWN BY: R. WRIGHT 06/04	REV.
CHECKED BY: C. V. CHAO 06/04	

08-JAN-2010 10:26
d:\wdir\victor\overhangfalsework\tiebar&strut\b-3611_type_III&IV\b3611overhangsheets.dgn
vchao

NORTH CAROLINA PROFESSIONAL SEAL 18788 ENGINEER CHARNG-CHUAN VICTOR CHAO
Charng-Chuan Victor Chao
1-8-2010

PROJECT NO. B-3611
BEAUFORT COUNTY
STATION: 43+25.00 -L-

SHEET 2 OF 4

STATE OF NORTH CAROLINA
DEPARTMENT OF TRANSPORTATION
RALEIGH

STANDARD OVERHANG FALSEWORK
AASHTO TYPES
III, IV, V, AND VI

REVISIONS						SHEET NO.
NO.	BY:	DATE:	NO.	BY:	DATE:	S-118
1			3			TOTAL SHEETS
2			4			120

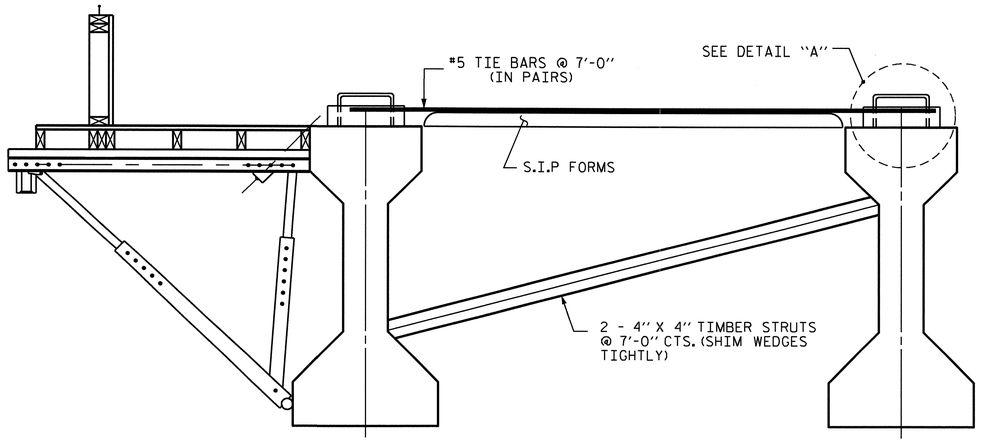

EXTERIOR GIRDER

INTERIOR GIRDER

DETAIL OF REQUIRED OVERHANG FALSEWORK BRACING SYSTEM

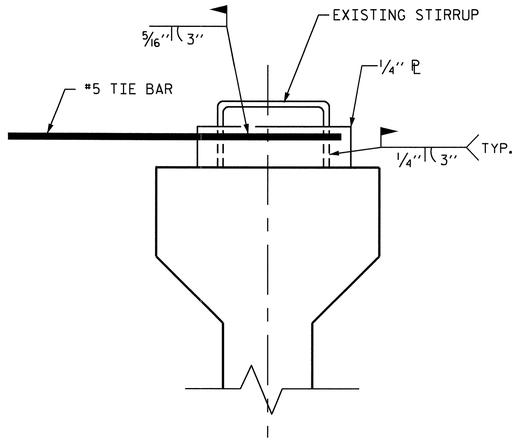

DETAIL "A"

NOTES:

EACH #5 TIE BAR SHALL BE WELDED TO ONE STIRRUP LOOP AS SHOWN IN DETAIL "A". #5 TIE BARS SHALL BE WELDED TO TWO ADJACENT STIRRUPS OF THE EXTERIOR GIRDER AND THE ADJACENT INTERIOR GIRDER BETWEEN PERMANENT DIAPHRAGMS. WELD STEEL PLATES IN BETWEEN THE TIE BARS AND THE STIRRUP LOOP. WELDING TWO TIE BARS TO THE SAME STIRRUP LOOP SHALL NOT BE PERMITTED.

MAXIMUM SPACING BETWEEN THE BRACING (TIE BARS-TIMBER STRUT) IS 7'-0" CTS. #5 TIE BARS SHALL BE LOCATED OVER A TIMBER STRUT.

INSTALL TIE BARS AND TIMBER STRUTS PRIOR TO PLACEMENT OF CONCRETE OR SCREED WEIGHT ONTO THE OVERHANG FALSEWORK.

PROJECT NO. B-3611

BEAUFORT COUNTY

STATION: 43+25.00 -L-

SHEET 3 OF 4

STATE OF NORTH CAROLINA
DEPARTMENT OF TRANSPORTATION
RALEIGH

STANDARD OVERHANG FALSEWORK
AASHTO TYPES
III, IV, V, AND VI

SPANS 1-9 & 37-38
WITH 45"PCG

REVISIONS						SHEET NO.
NO.	BY:	DATE:	NO.	BY:	DATE:	S-119
1			3			TOTAL SHEETS
2			4			120

NORTH CAROLINA PROFESSIONAL SEAL 18788 ENGINEER CHANG-CHUAN VICTOR CHAO

Chang-Chuan Victor Chao
1-8-2010

DRAWN BY: R. WRIGHT 06/04 DATE :
CHECKED BY: C. V. CHAO 06/04 DATE :

08-JAN-2010 10:26
d:\wdir\victor\overhangfalsework\tiebar&strut\b-3611_type_III&iv\b3611overhangsheets.dgn
vchao

OF 3

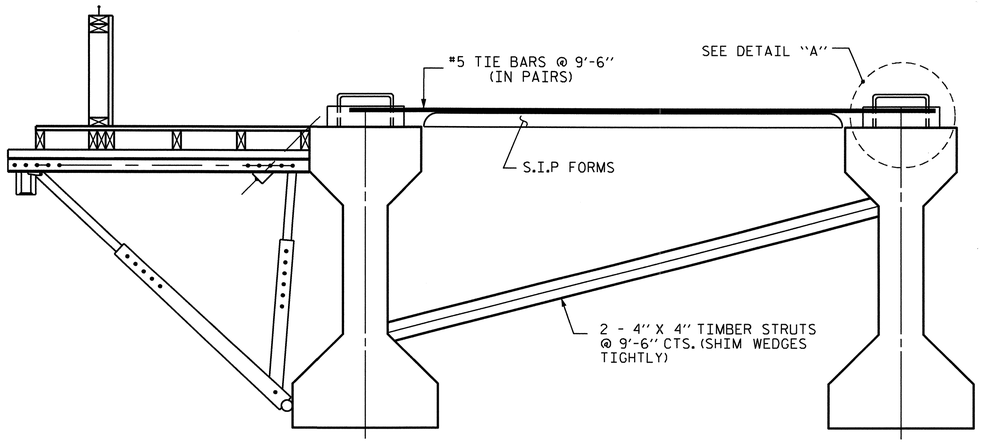

EXTERIOR GIRDER INTERIOR GIRDER

DETAIL OF REQUIRED OVERHANG FALSEWORK BRACING SYSTEM

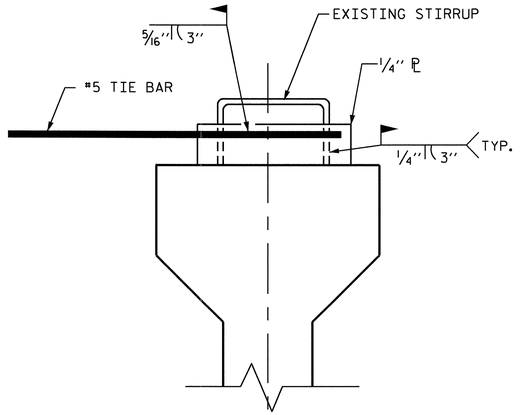

DETAIL "A"

NOTES:

EACH #5 TIE BAR SHALL BE WELDED TO ONE STIRRUP LOOP AS SHOWN IN DETAIL "A". #5 TIE BARS SHALL BE WELDED TO TWO ADJACENT STIRRUPS OF THE EXTERIOR GIRDER AND THE ADJACENT INTERIOR GIRDER BETWEEN PERMANENT DIAPHRAGMS. WELD STEEL PLATES IN BETWEEN THE TIE BARS AND THE STIRRUP LOOP. WELDING TWO TIE BARS TO THE SAME STIRRUP LOOP SHALL NOT BE PERMITTED.

MAXIMUM SPACING BETWEEN THE BRACING (TIE BARS-TIMBER STRUT) IS 9'-6" CTS. #5 TIE BARS SHALL BE LOCATED OVER A TIMBER STRUT.

INSTALL TIE BARS AND TIMBER STRUTS PRIOR TO PLACEMENT OF CONCRETE OR SCREED WEIGHT ONTO THE OVERHANG FALSEWORK.

PROJECT NO. B-3611

BEAUFORT COUNTY

STATION: 43+25.00 -L-

SHEET 4 OF 4

STATE OF NORTH CAROLINA
DEPARTMENT OF TRANSPORTATION
RALEIGH

STANDARD OVERHANG FALSEWORK
AASHTO TYPES
III, IV, V, AND VI

SPANS 10-36
WITH 54"PCG

REVISIONS						SHEET NO.
NO.	BY:	DATE:	NO.	BY:	DATE:	S-120
1			3			TOTAL SHEETS
2			4			120

NORTH CAROLINA PROFESSIONAL SEAL 18788 ENGINEER CHANG-CHUAN VICTOR CHAO

Chang-Chuan Victor Chao
1-8-2010

DRAWN BY: R. WRIGHT 06/04 DATE : _____
CHECKED BY: C. V. CHAO 06/04 DATE : _____

08-JAN-2010 10:27
ds\wdir\victor\overhangfalsework\tiebar&strut\b-3611_type_III&IV\b3611overhangsheets.dgn
vchao

STANDARD NOTES

DESIGN DATA:

SPECIFICATIONS	A.A.S.H.T.O. (CURRENT)
LIVE LOAD	SEE PLANS
IMPACT ALLOWANCE	SEE A.A.S.H.T.O.
STRESS IN EXTREME FIBER OF	
STRUCTURAL STEEL - AASHTO M270 GRADE 36	20,000 LBS. PER SQ. IN.
- AASHTO M270 GRADE 50W	27,000 LBS. PER SQ. IN.
- AASHTO M270 GRADE 50	27,000 LBS. PER SQ. IN.
REINFORCING STEEL IN TENSION	
GRADE 60	24,000 LBS. PER SQ. IN.
CONCRETE IN COMPRESSION	1,200 LBS. PER SQ. IN.
CONCRETE IN SHEAR	SEE A.A.S.H.T.O.
STRUCTURAL TIMBER - TREATED OR	
UNTREATED - EXTREME FIBER STRESS	1,800 LBS. PER SQ. IN.
COMPRESSION PERPENDICULAR TO GRAIN OF TIMBER	375 LBS. PER SQ. IN.
EQUIVALENT FLUID PRESSURE OF EARTH	30 LBS. PER CU. FT. (MINIMUM)

MATERIAL AND WORKMANSHIP:

EXCEPT AS MAY OTHERWISE BE SPECIFIED ON PLANS OR IN THE SPECIAL PROVISIONS, ALL MATERIAL AND WORKMANSHIP SHALL BE IN ACCORDANCE WITH THE 2006 "STANDARD SPECIFICATIONS FOR ROADS AND STRUCTURES" OF THE N. C. DEPARTMENT OF TRANSPORTATION.

STEEL SHEET PILING FOR PERMANENT OR TEMPORARY APPLICATIONS SHALL BE HOT ROLLED.

CONCRETE:

UNLESS OTHERWISE REQUIRED ON PLANS, CLASS A CONCRETE SHALL BE USED FOR ALL PORTIONS OF ALL STRUCTURES WITH THE EXCEPTION THAT: CLASS AA CONCRETE SHALL BE USED IN BRIDGE SUPERSTRUCTURES, ABUTMENT BACKWALLS, AND APPROACH SLABS; AND CLASS B CONCRETE SHALL BE USED FOR SLOPE PROTECTION AND RIP RAP.

CONCRETE CHAMFERS:

UNLESS OTHERWISE NOTED ON THE PLANS, ALL EXPOSED CORNERS ON STRUCTURES SHALL BE CHAMFERED 3/4" WITH THE FOLLOWING EXCEPTIONS: TOP CORNERS OF CURBS MAY BE ROUNDED TO 1-1/2" RADIUS WHICH IS BUILT INTO CURB FORMS; CORNERS OF TRANSVERSE FLOOR EXPANSION JOINTS SHALL BE ROUNDED WITH A 1/4" FINISHING TOOL UNLESS OTHERWISE REQUIRED ON PLANS; AND CORNERS OF EXPANSION JOINTS IN THE ROADWAY FACES AND TOPS OF CURBS AND SIDEWALKS SHALL BE ROUNDED TO A 1/4" RADIUS WITH A FINISHING STONE OR TOOL UNLESS OTHERWISE REQUIRED ON PLANS.

DOWELS:

DOWELS WHEN INDICATED ON PLANS AS FOR CULVERT EXTENSIONS, SHALL BE EMBEDDED AT LEAST 12" INTO THE OLD CONCRETE AND GROUTED INTO PLACE WITH 1:2 CEMENT MORTAR.

ALLOWANCE FOR DEAD LOAD DEFLECTION, SETTLEMENT, ETC. IN CASTING SUPERSTRUCTURES:

BRIDGES SHALL BE BUILT ON THE GRADE OR VERTICAL CURVE SHOWN ON PLANS. SLABS, CURBS AND PARAPETS SHALL CONFORM TO THE GRADE OR CURVE.

ALL DIMENSIONS WHICH ARE GIVEN IN SECTION AND ARE AFFECTED BY DEAD LOAD DEFLECTIONS ARE DIMENSIONS AT CENTER LINE OF BEARING UNLESS OTHERWISE NOTED ON PLANS. IN SETTING FORMS FOR STEEL BEAM BRIDGES AND PRESTRESSED CONCRETE GIRDER BRIDGES, ADJUSTMENTS SHALL BE MADE DUE TO THE DEAD LOAD DEFLECTIONS FOR THE ELEVATIONS SHOWN. WHERE BLOCKS ARE SHOWN OVER BEAMS FOR BUILDING UP TO THE SLAB, THE VERTICAL DIMENSIONS OF THE BLOCKS SHALL BE ADJUSTED BETWEEN BEARINGS TO COMPENSATE FOR DEAD LOAD DEFLECTIONS, VERTICAL CURVE ORDINATE, AND ACTUAL BEAM CAMBER. WHERE BOTTOM OF SLAB IS IN LINE WITH BOTTOM OF TOP FLANGES, DEPTH OF SLAB BETWEEN BEARINGS SHALL BE ADJUSTED TO COMPENSATE FOR DEAD LOAD DEFLECTION, VERTICAL CURVE ORDINATE, AND ACTUAL BEAM CAMBER.

IN SETTING FALSEWORK AND FORMS FOR REINFORCED CONCRETE SPANS, AN ALLOWANCE SHALL BE MADE FOR DEAD LOAD DEFLECTIONS, SETTLEMENT OF FALSEWORK, AND PERMANENT CAMBER WHICH SHALL BE PROVIDED FOR IN ADDITION TO THE ELEVATIONS SHOWN. AFTER REMOVAL OF THE FALSEWORK, THE FINISHED STRUCTURES SHALL CONFORM TO THE PROFILE AND ELEVATIONS SHOWN ON THE PLANS AND CONSTRUCTION ELEVATIONS FURNISHED BY THE ENGINEER.

DETAILED DRAWINGS FOR FALSEWORK OR FORMS FOR BRIDGE SUPERSTRUCTURE AND ANY STRUCTURE OR PARTS OF A STRUCTURE AS NOTED ON THE PLANS SHALL BE SUBMITTED TO THE ENGINEER FOR APPROVAL BEFORE CONSTRUCTION OF THE FALSEWORK OR FORMS IS STARTED.

REINFORCING STEEL:

ALL REINFORCING STEEL SHALL BE DEFORMED. DIMENSIONS RELATIVE TO PLACEMENT OF REINFORCING ARE TO CENTERS OF BARS UNLESS OTHERWISE INDICATED IN THE PLANS. DIMENSIONS ON BAR DETAILS ARE TO CENTERS OF BARS OR ARE OUT TO OUT AS INDICATED ON PLANS.

WIRE BAR SUPPORTS SHALL BE PROVIDED FOR REINFORCING STEEL WHERE INDICATED ON THE PLANS. WHEN BAR SUPPORT PIECES ARE PLACED IN CONTINUOUS LINES, THEY SHALL BE SO PLACED THAT THE ENDS OF THE SUPPORTING WIRES SHALL BE LAPPED TO LOCK LEGS ON ADJOINING PIECES.

STRUCTURAL STEEL:

AT THE CONTRACTOR'S OPTION, HE MAY SUBSTITUTE 7/8" Ø SHEAR STUDS FOR THE 3/4" Ø STUDS SPECIFIED ON THE PLANS. THIS SUBSTITUTION SHALL BE MADE AT THE RATE OF 3 - 7/8" Ø STUDS FOR 4 - 3/4" Ø STUDS, AND STUD SPACING CHANGES SHALL BE MADE AS NECESSARY TO PROVIDE THE SAME EQUIVALENT NUMBER OF 7/8" Ø STUDS ALONG THE BEAM AS SHOWN FOR 3/4" Ø STUDS BASED ON THE RATIO OF 3 - 7/8" Ø STUDS FOR 4 - 3/4" Ø STUDS. STUDS OF THE LENGTH SPECIFIED ON THE PLANS MUST BE PROVIDED. THE MAXIMUM SPACING SHALL BE 2'-0".

EXCEPT AT THE INTERIOR SUPPORTS OF CONTINUOUS BEAMS WHERE THE COVER PLATE IS IN CONTACT WITH BEARING PLATE, THE CONTRACTOR MAY, AT HIS OPTION, SUBSTITUTE FOR THE COVER PLATES DESIGNATED ON THE PLANS COVER PLATES OF THE EQUIVALENT AREA PROVIDED THESE PLATES ARE AT LEAST 5/16" IN THICKNESS AND DO NOT EXCEED A WIDTH EQUAL TO THE FLANGE WIDTH LESS 2" OR A THICKNESS EQUAL TO 2 TIMES THE FLANGE THICKNESS. THE SIZE OF FILLET WELDS SHALL CONFORM TO THE REQUIREMENTS OF THE CURRENT ANSI/AASHTO/AWS "BRIDGE WELDING CODE". ELECTROSLAG WELDING WILL NOT BE PERMITTED.

WITH THE SOLE EXCEPTION OF EDGES AT SURFACES WHICH BEAR ON OTHER SURFACES, ALL SHARP EDGES AND ENDS OF SHAPES AND PLATES SHALL BE SLIGHTLY ROUNDED BY SUITABLE MEANS TO A RADIUS OF APPROXIMATELY 1/16 INCH OR EQUIVALENT FLAT SURFACE AT A SUITABLE ANGLE PRIOR TO PAINTING, GALVANIZING, OR METALLIZING.

HANDRAILS AND POSTS:

METAL STANDARDS AND FACES OF THE CONCRETE END POSTS FOR THE METAL RAIL SHALL BE SET NORMAL TO THE GRADE OF THE CURB, UNLESS OTHERWISE SHOWN ON PLANS. THE METAL RAIL AND TOPS OF CONCRETE POSTS USED WITH THE ALUMINUM RAIL SHALL BE BUILT PARALLEL TO THE GRADE OF THE CURB.

METAL HANDRAILS SHALL BE IN ACCORDANCE WITH THE PLANS. RAILS SHALL BE AS MANUFACTURED FOR BRIDGE RAILING. CASTINGS SHALL BE OF A UNIFORM APPEARANCE. FINS AND OTHER DEFORMATIONS RESULTING FROM CASTING OR OTHERWISE SHALL BE REMOVED IN A MANNER SO THAT A UNIFORM COLORING OF THE COMPLETED CASTING SHALL BE OBTAINED. CASTINGS WITH DISCOLORATIONS OR OF NON-UNIFORM COLORING WILL NOT BE ACCEPTED. CERTIFIED MILL REPORTS ARE REQUIRED FOR METAL RAILS AND POSTS.

SPECIAL NOTES:

GENERALLY, IN CASE OF DISCREPANCY, THIS STANDARD SHEET OF NOTES SHALL GOVERN OVER THE SPECIFICATIONS, BUT THE REMAINDER OF THE PLANS SHALL GOVERN OVER NOTES HEREON, AND SPECIAL PROVISIONS SHALL GOVERN OVER ALL. SEE SPECIFICATIONS ARTICLE 105-4.

ENGLISH

JANUARY, 1990

STD. NO. SN

REV. 6-16-95 EEM (W) RGW REV. 5-7-03 RWW (W) JTE
REV. 8-16-99 RWW (W) LES REV. 5-1-06 TLA (W) GM

30-NOV-2006 15:26
S:\Share\Structures Standards\Standards english 2006\sn_06.std
rblissette