TIP PROJECT: R-2417C

CONTRACT: C202128

STRUCTURES

STATE	STATE PROJECT REFERENCE NO.	
N.C.	R-2417C	
STATE PROJ. NO.	F.A. PROJ. NO.	DESCRIPTION
34431.1.6	STP-NHF-421(2)	P.E.
34431.2.6	STP-NHF-421(2)	R/W & UTIL.
34431.3.ST1	STM-0421(50)	CONST.

STATE OF NORTH CAROLINA
DIVISION OF HIGHWAYS
LEE COUNTY

LOCATION: US 421/NC 87 (SANFORD BYPASS) FROM EAST OF NC 42 TO NC 87 NEAR SR 1138.

TYPE OF WORK: GRADING, PAVING, DRAINAGE, SIGNING, SIGNALS, STRUCTURES AND CULVERTS.

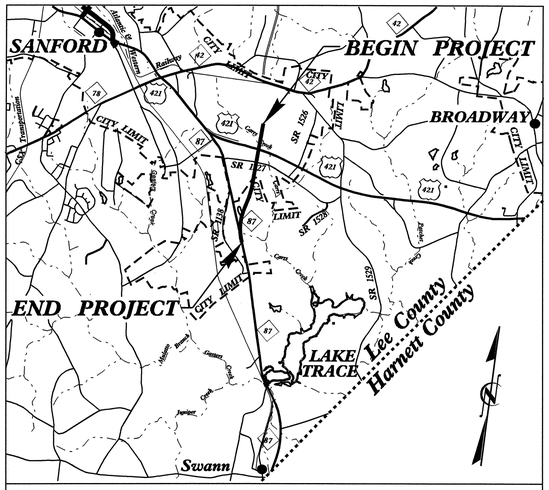

VICINITY MAP

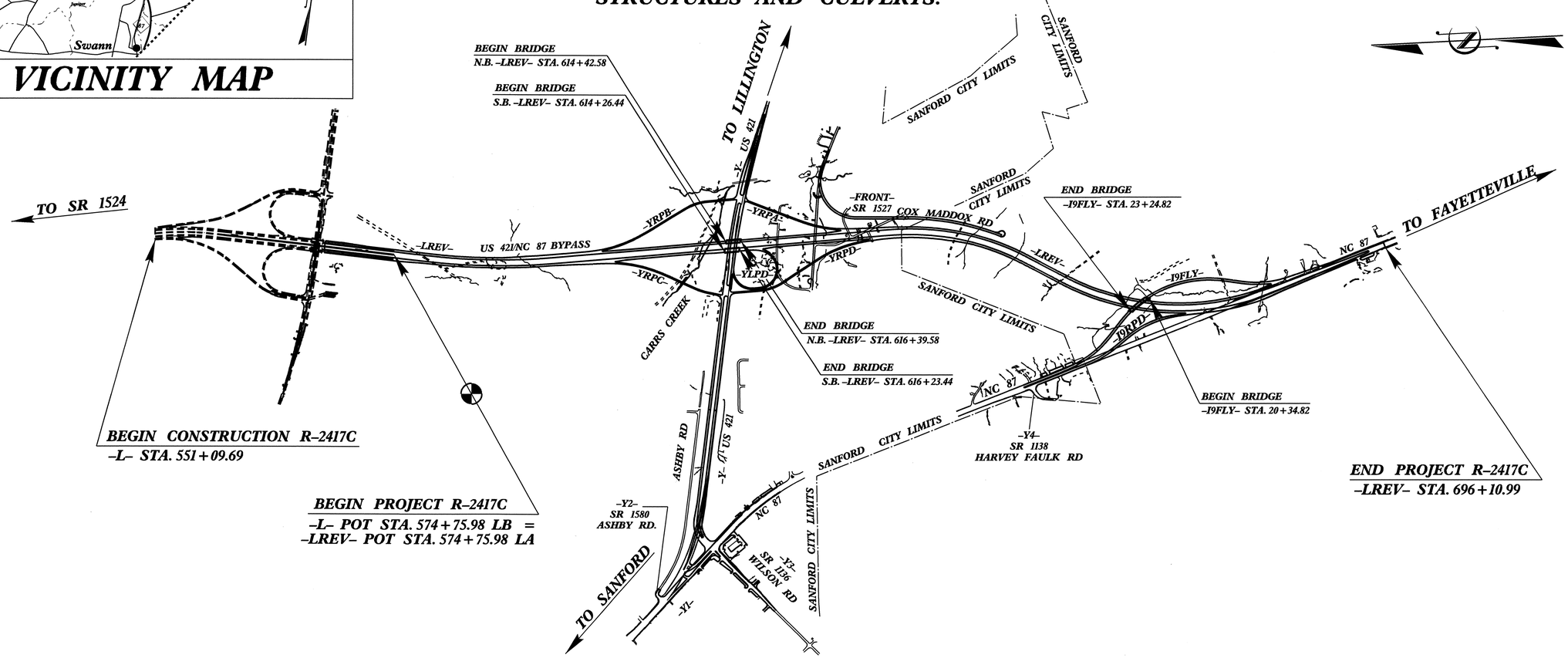

STATE OF NORTH CAROLINA DEPARTMENT OF TRANSPORTATION

DESIGN DATA

ADT 2009 = 18,600 VPD
ADT 2030 = 30,000 VPD
DHV = 10 %
D = 60 %
T = 8 % *
V = 70 MPH

*TTST 3% & DUAL 5%

PROJECT LENGTH

LENGTH ROADWAY TIP PROJECT R-2417C = 2.256 mi.
LENGTH STRUCTURE TIP PROJECT R-2417C = 0.042 mi.
TOTAL LENGTH TIP PROJECT R-2417C = 2.298 mi.

Prepared In the Office of:

DIVISION OF HIGHWAYS

2006 STANDARD SPECIFICATIONS

LETTING DATE :
DECEMBER 15, 2009

B. S. COX, P.E.
PROJECT ENGINEER

K. W. ALFORD, P.E.
PROJECT DESIGN ENGINEER

STRUCTURE DESIGN UNIT
1000 BIRCH RIDGE DR.
RALEIGH, N.C. 27610

DIVISION OF HIGHWAYS
STATE OF NORTH CAROLINA

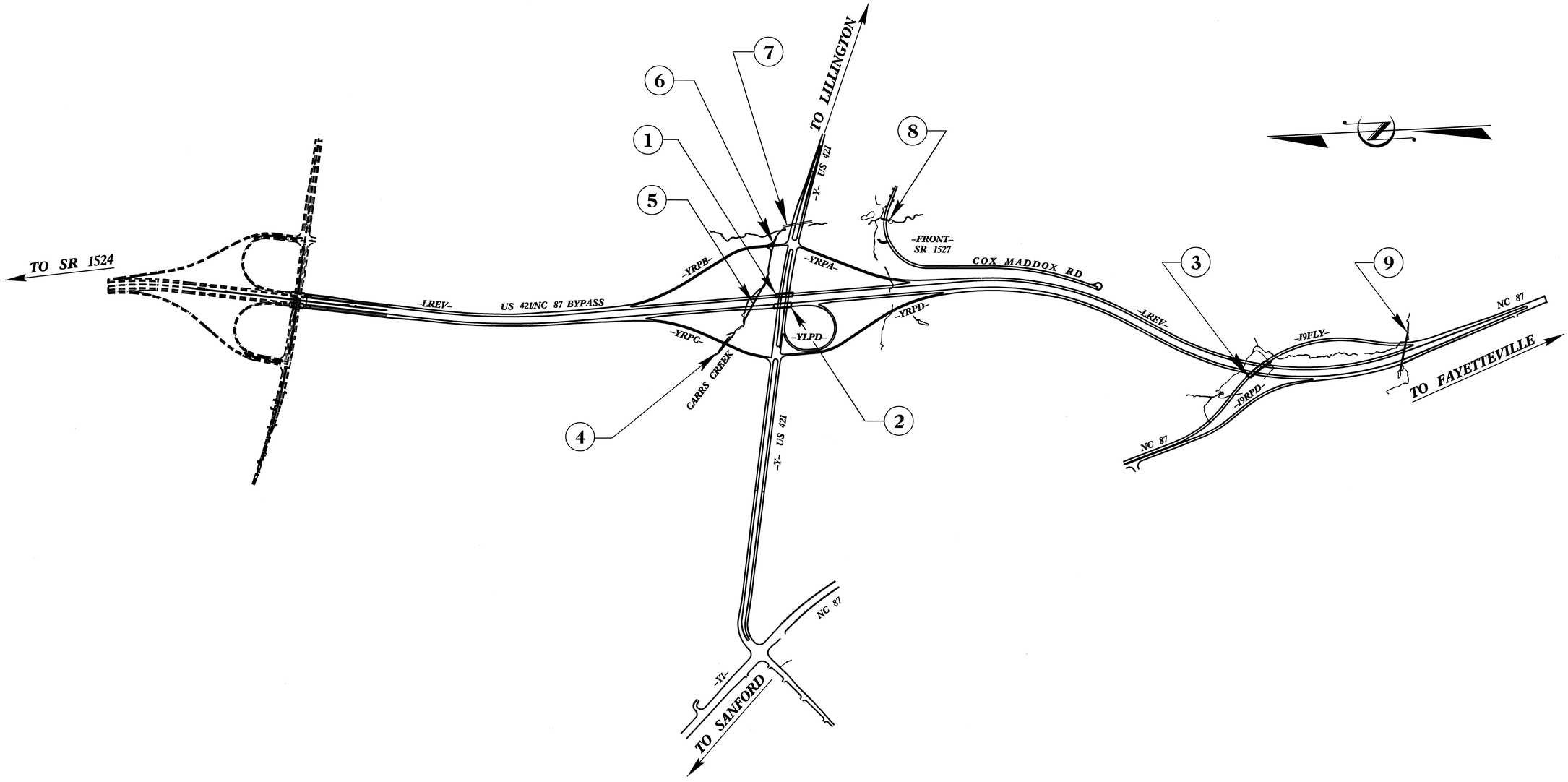

INDEX

STATION	DESCRIPTION	SHEET NUMBERS	STATION	DESCRIPTION	SHEET NUMBERS
1 615+26.51 -LREV- = 27+41.48 -Y-	NBL BRIDGE OVER US 421 ON US 421/NC 87 (SANFORD BYPASS) BETWEEN NC 42 AND NC 87	S1 THRU S-32	6 19+18.00 -YRPB-	DOUBLE 9′ x 9′ RCBC	C-8 THRU C-11
2 615+26.51-LREV- =27+41.48 -Y-	SBL BRIDGE OVER US 421 ON US 421/NC 87 (SANFORD BYPASS) BETWEEN NC 42 AND NC 87	S-33 THRU S-64	7 19+93.70 -Y-	DOUBLE 6′ x 6′ EXTENSIONS AND 84″Ø PIPES DOUBLE	C-12 THRU C-23
3 665+35.34 -LREV- = 21+87.82 -I9FLY-	FLYOVER BRIDGE OVER US 421/NC 87 SANFORD BYPASS BETWEEN US 421 AND NC 87	S-65 THRU S-104	8 13+63.00 -FRONT-	DOUBLE 10′ x 10′ RCBC CULVERT No. 142	C-24 THRU C-28
4 12+96.00 -YRPC-	DOUBLE 9′ x 9′ RCBC	C-1 THRU C-4	9 680+39.00 -LREV-	SINGLE 6′ X 8′ SINGLE 8′ X 8′ RCBC	C-29 THRU C-40
5 612+27.00 -LREV-	DOUBLE 9′ x 9′ RCBC	C-5 THRU C-7			

PROJECT NO. R-2417C
LEE COUNTY

STATE OF NORTH CAROLINA
DEPARTMENT OF TRANSPORTATION
RALEIGH

INDEX

REVISIONS						SHEET NO.
NO.	BY:	DATE:	NO.	BY:	DATE:	
1			3			TOTAL SHEETS
2			4			

13-AUG-2009 11:34
K:\Structures\R2417C_sd_INDEX.dgn
kalford

F.A. PROJECT No. STM-0421 (50)

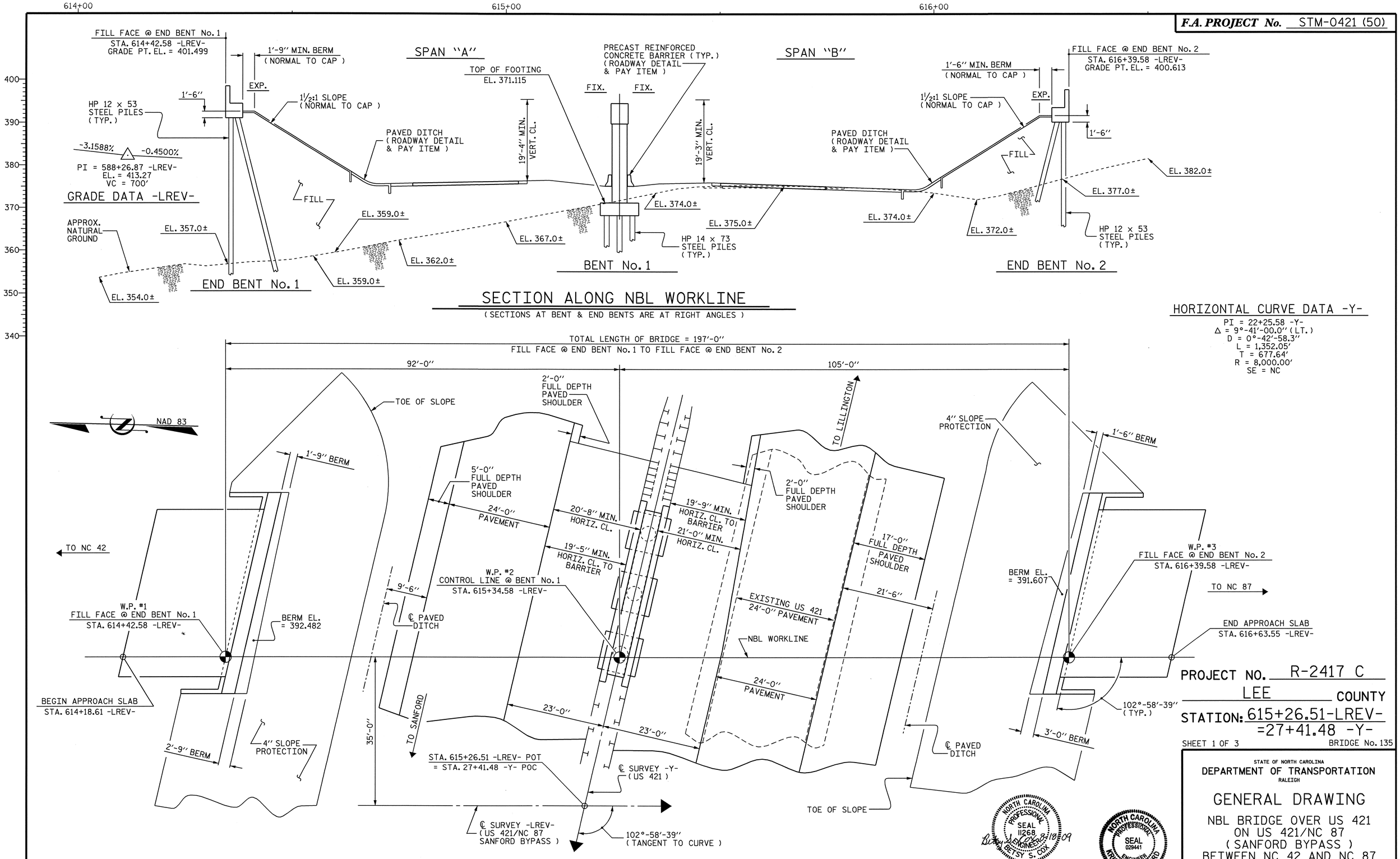

SECTION ALONG NBL WORKLINE

(SECTIONS AT BENT & END BENTS ARE AT RIGHT ANGLES)

PLAN

PILES ARE NOT SHOWN IN PLAN VIEW FOR CLARITY

HORIZONTAL CURVE DATA -Y-

PI = 22+25.58 -Y-
Δ = 9°-41'-00.0" (LT.)
D = 0°-42'-58.3"
L = 1,352.05'
T = 677.64'
R = 8,000.00'
SE = NC

PROJECT NO. R-2417 C

LEE COUNTY

STATION: 615+26.51-LREV-
=27+41.48 -Y-

SHEET 1 OF 3

BRIDGE No. 135

STATE OF NORTH CAROLINA
DEPARTMENT OF TRANSPORTATION
RALEIGH

GENERAL DRAWING

NBL BRIDGE OVER US 421
ON US 421/NC 87
(SANFORD BYPASS)
BETWEEN NC 42 AND NC 87

NORTH CAROLINA PROFESSIONAL SEAL 11268 ENGINEER BETSY S. COX — 9-10-09

NORTH CAROLINA PROFESSIONAL SEAL 029441 ENGINEER KRISTY W. ALFORD — 10/13/09

REVISIONS						SHEET NO.
NO.	BY:	DATE:	NO.	BY:	DATE:	S-1
1			3			TOTAL SHEETS
2			4			104

DRAWN BY : MIKE BRITT DATE : 4-1-09
CHECKED BY : A.V. ROYAL DATE : 4-15-09

31-JUL-2009 09:31
k:\structures\str_1\gen_draw\r2417c_str1_gd.dgn
kalford

STR. #1

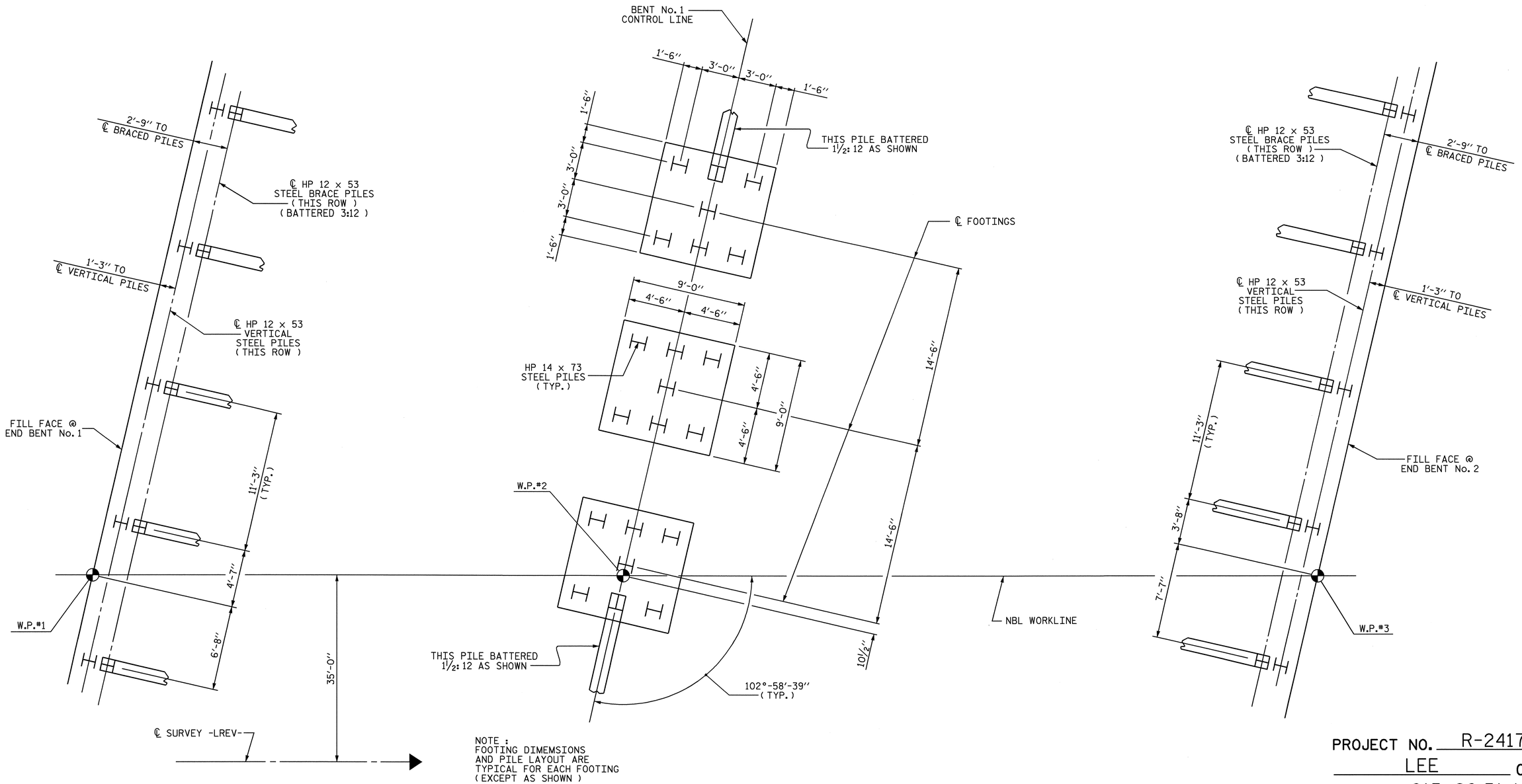

NOTE :
FOOTING DIMEMSIONS
AND PILE LAYOUT ARE
TYPICAL FOR EACH FOOTING
(EXCEPT AS SHOWN)

FOUNDATION LAYOUT

(DIMENSIONS LOCATING PILES ARE TO THE PILE CENTERLINE AT THE BOTTOM OF THE CAP & FOOTING)

PROJECT NO. R-2417 C
LEE COUNTY
STATION: 615+26.51-LREV-

SHEET 2 OF 3

STATE OF NORTH CAROLINA
DEPARTMENT OF TRANSPORTATION
RALEIGH

GENERAL DRAWING

NBL BRIDGE OVER US 421
ON US 421/NC 87
(SANFORD BYPASS)
BETWEEN NC 42 AND NC 87

NORTH CAROLINA PROFESSIONAL SEAL 029441 ENGINEER KRISTY W. ALFORD
6/3/09

REVISIONS						SHEET NO.
NO.	BY:	DATE:	NO.	BY:	DATE:	S-2
1			3			TOTAL SHEETS
2			4			104

DRAWN BY : MIKE BRITT DATE : 4-2-09
CHECKED BY : A.V. ROYAL DATE : 4-15-09

31-JUL-2009 09:31
k:\structures\str_1\gen_draw\r2417c_str1_gd.dgn
kalford

STR. #1

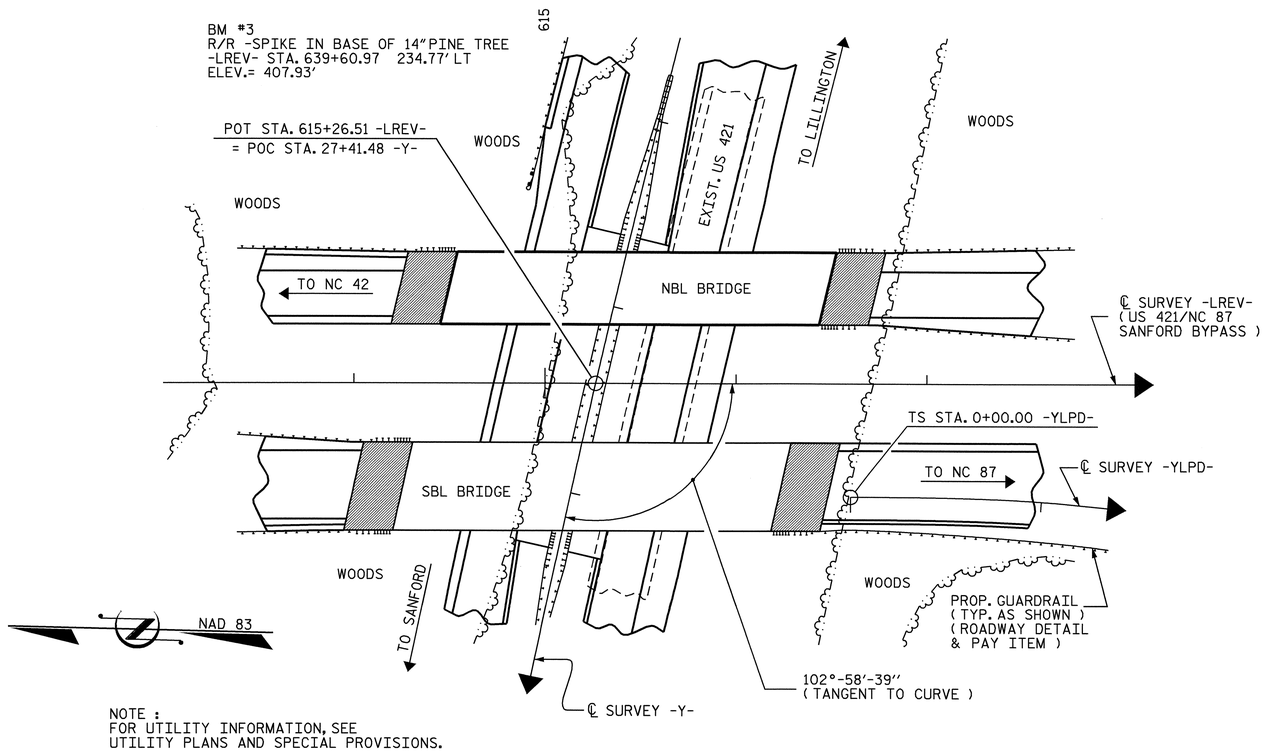

NOTE :
FOR UTILITY INFORMATION, SEE
UTILITY PLANS AND SPECIAL PROVISIONS.

LOCATION SKETCH

NOTES :

ASSUMED LIVE LOAD = HS20 OR ALTERNATE LOADING, EXCEPT THAT THE PRESTRESSED GIRDERS HAVE BEEN DESIGNED FOR HS25.

THIS BRIDGE HAS BEEN DESIGNED IN ACCORDANCE WITH THE REQUIREMENTS OF THE "STANDARD SPECIFICATIONS FOR SEISMIC DESIGN OF HIGHWAY BRIDGES", FOR SEISMIC PERFORMANCE CATEGORY A.

FOR OTHER DESIGN DATA AND GENERAL NOTES, SEE SHEET SN.

PRESTRESSED CONCRETE DECK PANELS MAY BE USED IN LIEU OF METAL STAY-IN-PLACE FORMS IN ACCORDANCE WITH ARTICLE 420-3 OF THE STANDARD SPECIFICATIONS.

REMOVABLE FORMS MAY BE USED IN LIEU OF METAL STAY-IN-PLACE FORMS IN ACCORDANCE WITH ARTICLE 420-3 OF THE STANDARD SPECIFICATIONS.

FOR MAINTENANCE AND PROTECTION OF TRAFFIC BENEATH PROPOSED STRUCTURE, SEE SPECIAL PROVISIONS.

THE CONTRACTOR SHALL PROVIDE INDEPENDENT ASSURANCE SAMPLES OF REINFORCING STEEL AS FOLLOWS: FOR PROJECTS REQUIRING UP TO 400 TONS OF REINFORCING STEEL, ONE 30 INCH SAMPLE OF EACH SIZE BAR USED, AND FOR PROJECTS REQUIRING OVER 400 TONS OF REINFORCING STEEL, TWO 30 INCH SAMPLES OF EACH SIZE BAR USED. THE BARS FROM WHICH THE SAMPLES ARE TAKEN MUST THEN BE SPLICED WITH REPLACEMENT BARS OF THE SIZE AND LENGTH OF THE SAMPLE, PLUS A MINIMUM LAP SPLICE OF THIRTY BAR DIAMETERS.

NEEDLE BEAMS WILL NOT BE ALLOWED UNLESS OTHERWISE CALLED FOR ON THE PLANS OR APPROVED BY THE ENGINEER.

FOR SUBMITTAL OF WORKING DRAWINGS, SEE SPECIAL PROVISIONS.

FOR FALSEWORK AND FORMWORK, SEE SPECIAL PROVISIONS.

FOR CRANE SAFETY, SEE SPECIAL PROVISIONS.

THIS BRIDGE HAS BEEN DESIGNED BY THE STRENGTH DESIGN METHOD AS SPECIFIED IN AASHTO STANDARD SPECIFICATIONS.

DRIVE PILES AT END BENT No. 1 TO A REQUIRED BEARING CAPACITY OF 120 TONS PER PILE. THE REQUIRED BEARING CAPACITY IS EQUAL TO THE ALLOWABLE BEARING CAPACITY WITH A MINIMUM FACTOR OF SAFETY OF TWO.

THE ALLOWABLE BEARING CAPACITY FOR PILES AT END BENT No. 1 IS 60 TONS PER PILE.

DRIVE PILES AT BENT No. 1 TO A REQUIRED BEARING CAPACITY OF 120 TONS PER PILE. THE REQUIRED BEARING CAPACITY IS EQUAL TO THE ALLOWABLE BEARING CAPACITY WITH A MINIMUM FACTOR OF SAFETY OF TWO.

THE ALLOWABLE BEARING CAPACITY FOR PILES AT BENT No. 1 IS 60 TONS PER PILE.

DRIVE PILES AT END BENT No. 2 TO A REQUIRED BEARING CAPACITY OF 120 TONS PER PILE. THE REQUIRED BEARING CAPACITY IS EQUAL TO THE ALLOWABLE BEARING CAPACITY WITH A MINIMUM FACTOR OF SAFETY OF TWO.

THE ALLOWABLE BEARING CAPACITY FOR PILES AT END BENT No. 2 IS 60 TONS PER PILE.

FOR PRESTRESSED CONCRETE MEMBERS, SEE SPECIAL PROVISIONS.

FOR GROUT FOR STRUCTURES, SEE SPECIAL PROVISIONS.

FOR ADHESIVELY ANCHORED ANCHOR BOLTS OR DOWELS, SEE SPECIAL PROVISIONS.

FOR CURING CONCRETE, SEE SPECIAL PROVISIONS.

FOR PILES, SEE SPECIAL PROVISIONS.

FOR PLACING LOAD ON STRUCTURE MEMBERS, SEE SPECIAL PROVISIONS.

TOTAL BILL OF MATERIAL

NBL	FOUNDATION EXCAVATION	REINFORCED CONCRETE DECK SLAB	GROOVING BRIDGE FLOORS	CLASS A CONCRETE	BRIDGE APPROACH SLABS	REINFORCING STEEL	SPIRAL COLUMN REINFORCING STEEL	MODIFIED 63" PRESTRESSED CONCRETE GIRDERS		HP 12 x 53 STEEL PILES		HP 14 x 73 STEEL PILES		CONCRETE BARRIER RAIL	4" SLOPE PROTECTION	ELASTOMERIC BEARINGS	EVAZOTE JOINT SEALS
	LUMP SUM	SQ. FT.	SQ. FT.	CU. YDS.	LUMP SUM	LBS.	LBS.	No.	LIN. FT.	No.	LIN. FT.	No.	LIN. FT.	LIN. FT.	SQ. YDS.	LUMP SUM	LUMP SUM
SUPERSTRUCTURE		8,038.2	8,429		LUMP SUM			10	963.54					389.73		LUMP SUM	LUMP SUM
END BENT No. 1				40.9		6,003				10	650				410		
BENT No. 1	LUMP SUM			72.2		10,262	1,555					21	1,050				
END BENT No. 2				40.9		6,121				10	550				405		
TOTAL	LUMP SUM	8,038.2	8,429	154.0	LUMP SUM	22,386	1,555	10	963.54	20	1,200	21	1,050	389.73	815	LUMP SUM	LUMP SUM

PROJECT NO. R-2417 C
LEE COUNTY
STATION: 615+26.51-LREV-

SHEET 3 OF 3

STATE OF NORTH CAROLINA
DEPARTMENT OF TRANSPORTATION
RALEIGH

GENERAL DRAWING
NBL BRIDGE OVER US 421
ON US 421/NC 87
(SANFORD BYPASS)
BETWEEN NC 42 AND NC 87

NORTH CAROLINA PROFESSIONAL SEAL 029441 ENGINEER KRISTY W. ALFORD
10/21/09

REVISIONS						SHEET NO.
NO.	BY:	DATE:	NO.	BY:	DATE:	S-3
1			3			TOTAL SHEETS
2			4			104

DRAWN BY : MIKE BRITT DATE : 4-6-09
CHECKED BY : A.V. ROYAL DATE : 4-15-09

21-OCT-2009 08:24
k:\structures\STR_1\Gen_Draw\r2417c_str1_gd.dgn
kalford

STR. #1

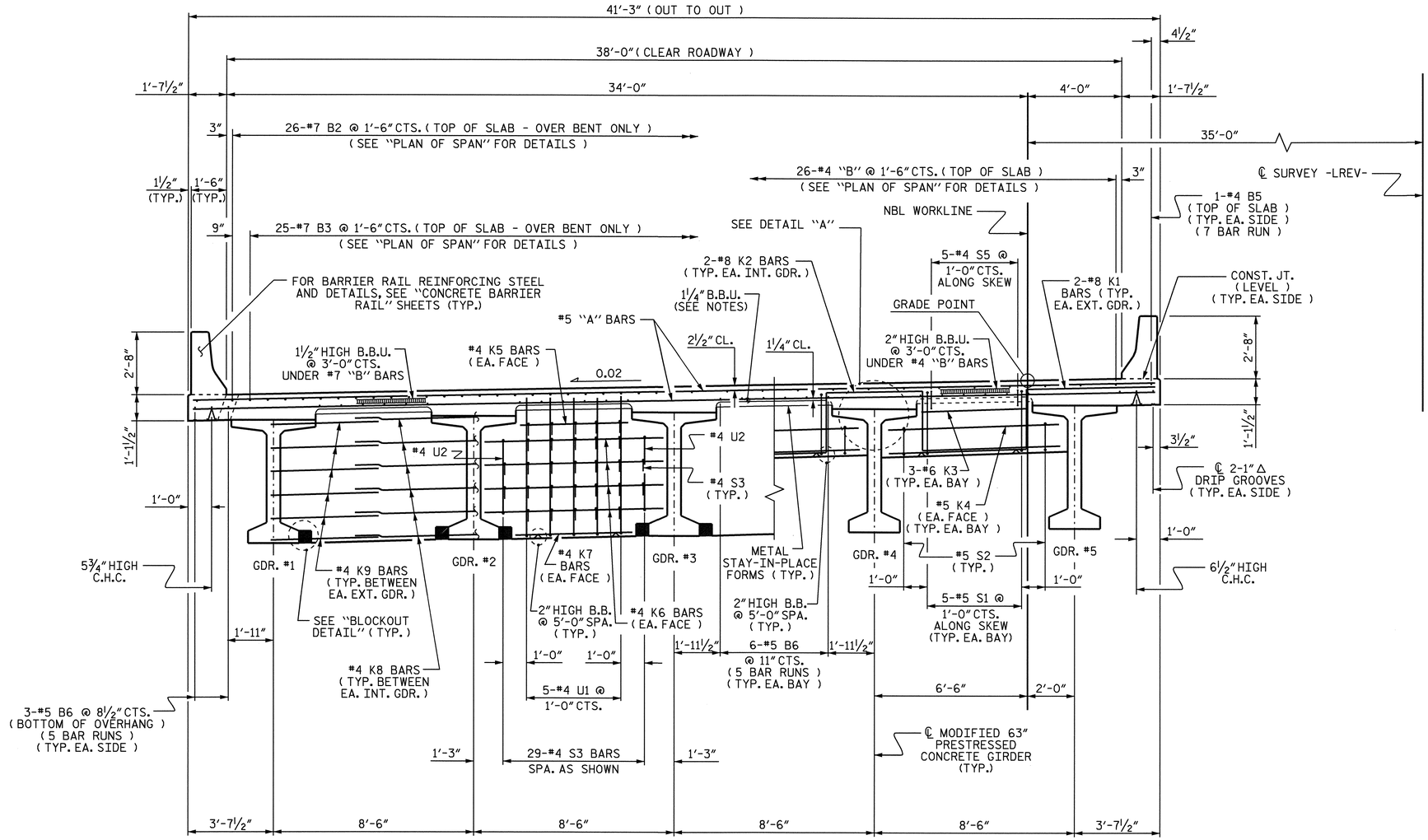

HALF TYPICAL SECTION

SHOWING BENT DIAPHRAGMS
(TYP. EA. BAY, EXCEPT AS NOTED)

HALF TYPICAL SECTION

SHOWING END BENT DIAPHRAGMS

NOTES :

PROVIDE 1¼" HIGH BEAM BOLSTERS UPPER AT 4'-0" CTS. ATOP THE METAL STAY-IN-PLACE FORMS TO SUPPORT THE BOTTOM MAT OF "A" BARS. WHEN USING REMOVABLE FORMS, PROVIDE CONTINUOUS HIGH CHAIRS FOR METAL DECK (C.H.C.M.) @ 4'-0" CTS. WITH A HEIGHT TO SUPPORT THE BOTTOM MAT OF "A" BARS A CLEAR DISTANCE OF 2½" ABOVE THE TOP OF THE REMOVABLE FORM.

LONGITUDINAL STEEL MAY BE SHIFTED SLIGHTLY, AS NECESSARY, TO AVOID INTERFERENCE WITH STIRRUPS IN PRESTRESSED CONCRETE GIRDERS.

BARRIER RAIL IN A CONTINUOUS UNIT SHALL NOT BE CAST UNTIL ALL SLAB CONCRETE IN THE UNIT HAS BEEN CAST AND HAS REACHED A MINIMUM COMPRESSIVE STRENGTH OF 3,000 PSI.

TEMPORARY STRUTS SHALL BE PLACED BETWEEN PRESTRESSED GIRDERS ADJACENT TO THE DIAPHRAGMS, AND THE NUTS ON THE 1¼" DIA. TIE RODS SHALL BE FULLY TIGHTENED BEFORE THE DIAPHRAGMS ARE CAST. STRUTS SHALL REMAIN IN PLACE 3 DAYS AFTER CONCRETE IS PLACED. THE TIE RODS SHALL BE RE-TIGHTENED AFTER THE STRUTS HAVE BEEN REMOVED.

CONCRETE IN INTERMEDIATE DIAPHRAGMS MAY BE CLASS A IN LIEU OF CLASS AA. PAYMENT SHALL BE MADE UNDER THE UNIT CONTRACT PRICE FOR REINFORCED CONCRETE DECK SLAB.

PREVIOUSLY CAST CONCRETE IN A CONTINUOUS UNIT SHALL HAVE ATTAINED A MINIMUM COMPRESSIVE STRENGTH OF 3,000 PSI BEFORE ADDITIONAL CONCRETE IS CAST IN THE UNIT.

DECK DRAINS ARE REQUIRED ALONG LEFT GUTTERLINE. SEE "DRAIN DETAILS", SHEET 2 OF 2. SEE PLAN OF SPANS FOR LOCATION.

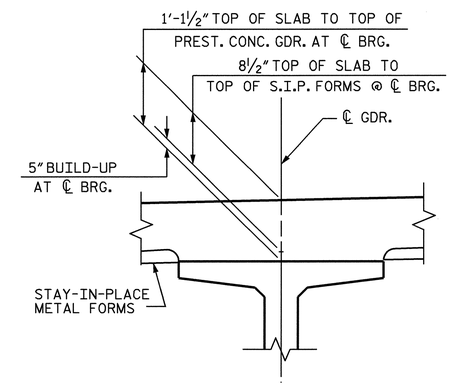

DETAIL "A"

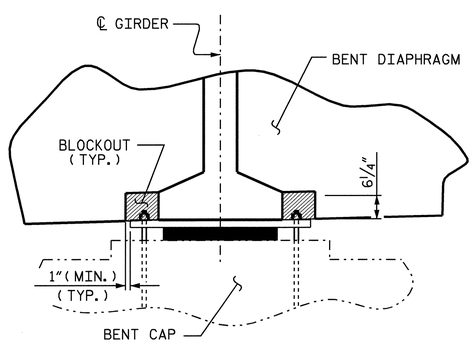

SECTION

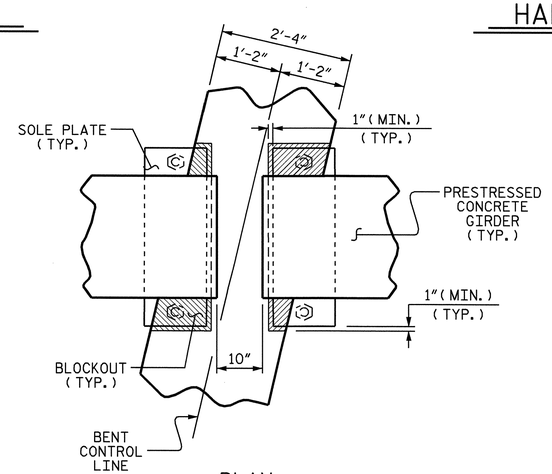

PLAN

BLOCKOUT DETAIL

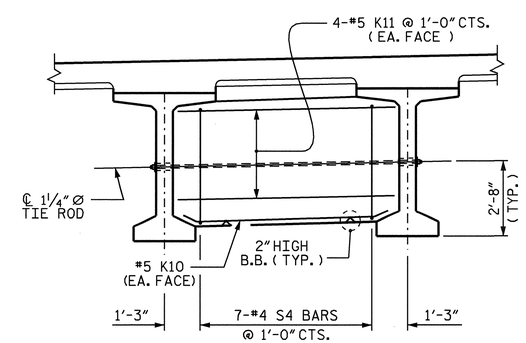

PARTIAL TYPICAL SECTION

SHOWING INTERMEDIATE DIAPHRAGMS
(TYP. EACH SPAN, TYP. EACH BAY)

PROJECT NO. R-2417C
LEE COUNTY
STATION: 615+26.51-LREV-

SHEET 1 OF 2

STATE OF NORTH CAROLINA
DEPARTMENT OF TRANSPORTATION
RALEIGH

SUPERSTRUCTURE

TYPICAL SECTIONS

(NBL)

NORTH CAROLINA PROFESSIONAL SEAL 029441 ENGINEER KRISTY W. ALFORD

REVISIONS								SHEET NO.
NO.	BY:	DATE:	NO.	BY:	DATE:			S-4
1			3					TOTAL SHEETS
2			4					104

DRAWN BY : D. G. ELY DATE : 8-2008
CHECKED BY : S. B. WILLIAMS DATE : 10-2008

31-JUL-2009 10:24
k:\structures\str_1\super_draw\r2417c_sd_ts_str1.dgn
kalford

STR. #1

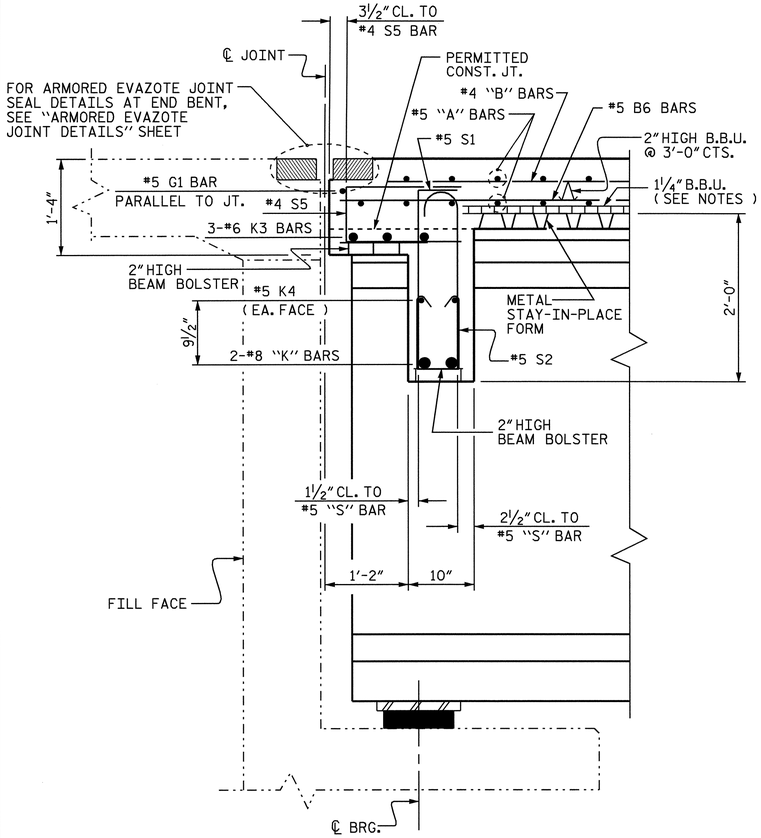

SECTION THRU END BENT DIAPHRAGM

#5 G1 BAR MAY BE SHIFTED SLIGHTLY, AS NECESSARY, TO CLEAR REINFORCING STEEL AND STIRRUPS.

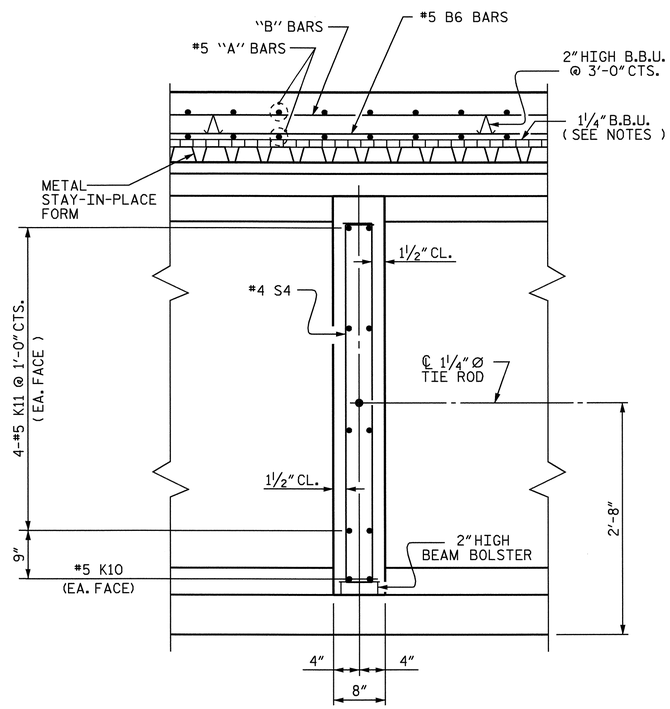

SECTION THRU INTERMEDIATE DIAPHRAGM

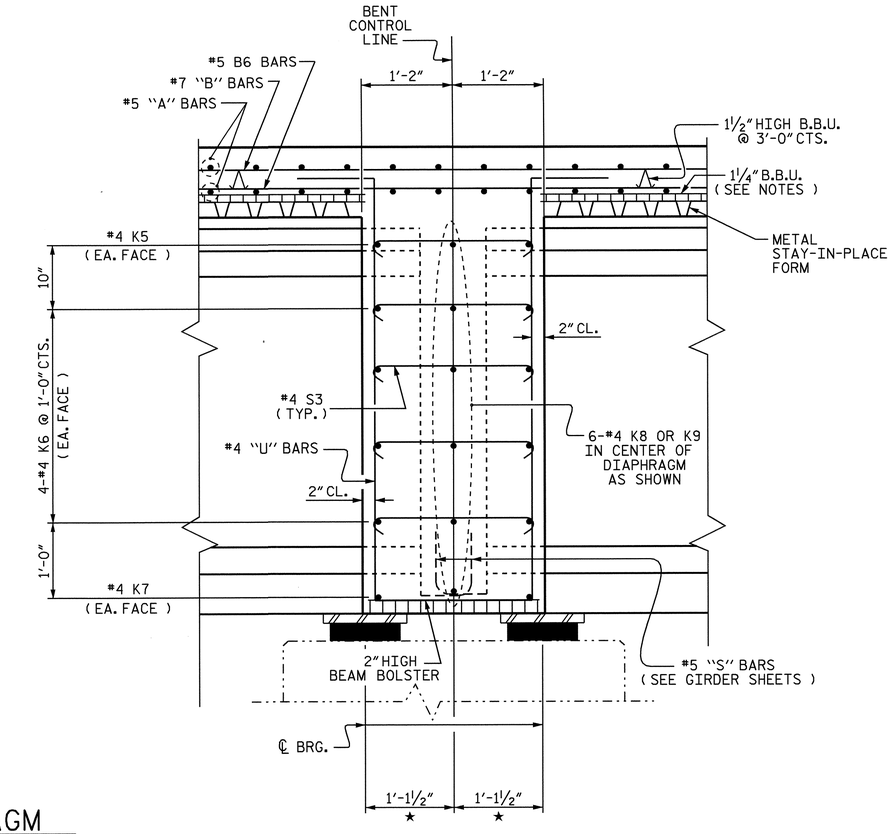

SECTION THRU BENT DIAPHRAGM

★ MEASURED ALONG ℄ GIRDER

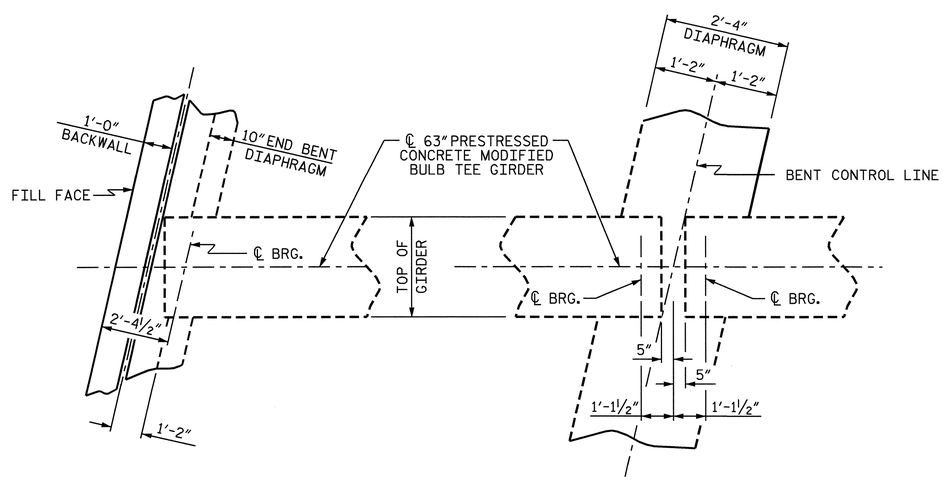

END BENT

BENT

PLAN OF DIAPHRAGMS

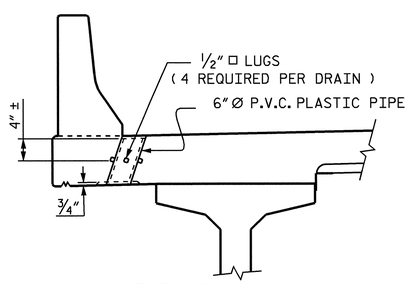

ELEVATION

TOP OF FLOOR DRAINS TO BE SET ⅜" BELOW SURFACE OF SLAB.

4 - ½" □ LUGS TO BE GLUED TO THE P.V.C. PLASTIC PIPE AT EQUAL SPACES AROUND THE PIPE DRAIN APPROXIMATELY 4" FROM THE TOP OF PIPE.

THE 6" Ø PVC PLASTIC PIPE AND FITTINGS SHALL BE SCHEDULE 40 AND CONFORM TO ASTM D1785.

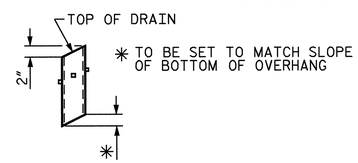

PIPE DETAIL

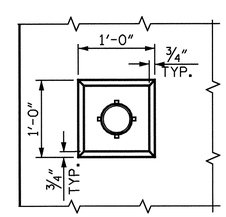

PLAN OF RECESS

DRAIN DETAILS

SEE "PLAN OF SPAN" SHEETS FOR DRAIN LOCATIONS
(8 DRAINS REQUIRED)

PROJECT NO. R-2417C
LEE COUNTY
STATION: 615+26.51-LREV-

SHEET 2 OF 2

STATE OF NORTH CAROLINA
DEPARTMENT OF TRANSPORTATION
RALEIGH

SUPERSTRUCTURE
TYPICAL SECTIONS
(NBL)

NORTH CAROLINA PROFESSIONAL SEAL 029441 ENGINEER KRISTY W. ALFORD
8/3/09

REVISIONS						SHEET NO.
NO.	BY:	DATE:	NO.	BY:	DATE:	S-5
1			3			TOTAL SHEETS
2			4			104

DRAWN BY : D. G. ELY DATE : 8-2008
CHECKED BY : S. B. WILLIAMS DATE : 10-2008

31-JUL-2009 10:24
k:\structures\str_1\super_draw\r2417c_sd_ts_str1.dgn
kalford

STR. #1

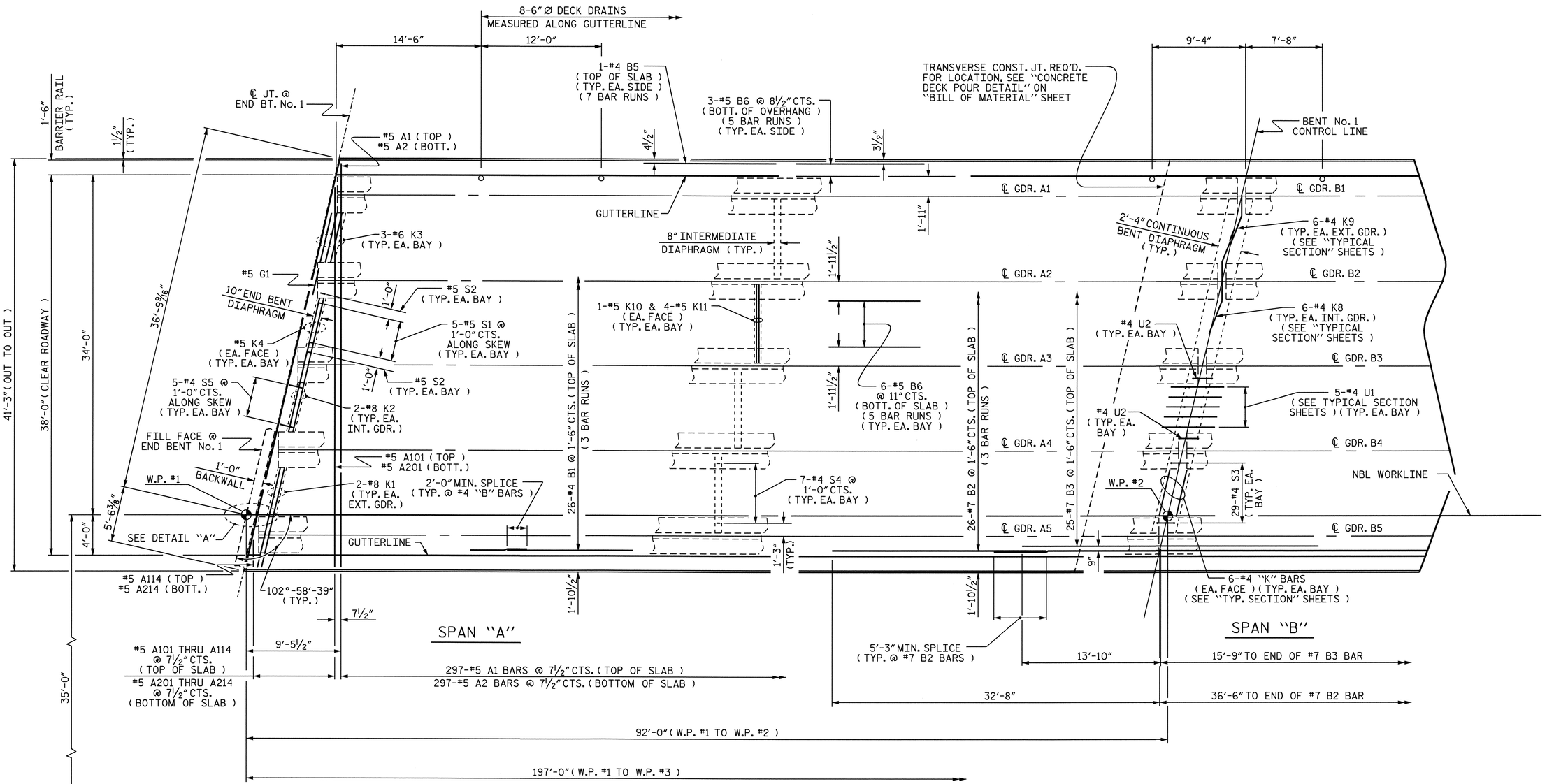

PARTIAL PLAN OF SPAN

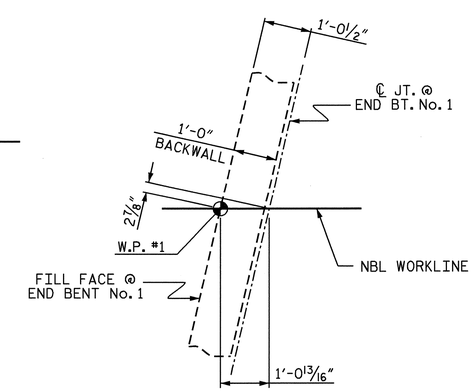

DETAIL "A"

NOTES :

FOR BARRIER RAIL REINFORCING STEEL, SEE "CONCRETE BARRIER RAIL" SHEETS.

FOR LOCATION OF INTERMEDIATE DIAPHRAGMS, SEE "FRAMING PLAN" SHEET.

PROJECT NO. R-2417C
LEE COUNTY
STATION: 615+26.51-LREV-

SHEET 1 OF 2

STATE OF NORTH CAROLINA
DEPARTMENT OF TRANSPORTATION
RALEIGH

SUPERSTRUCTURE
PLAN OF SPANS
(NBL)

NORTH CAROLINA PROFESSIONAL SEAL 029441 ENGINEER KRISTY W. ALFORD
8/3/09

REVISIONS						SHEET NO.
NO.	BY:	DATE:	NO.	BY:	DATE:	S-6
1			3			TOTAL SHEETS
2			4			104

DRAWN BY : D. G. ELY DATE : 8/2008
CHECKED BY : S. B. WILLIAMS DATE : 11/2008

31-JUL-2009 10:31
k:\structures\str_1\super_draw\R2417C_sd_PS_STR1.dgn
kalford

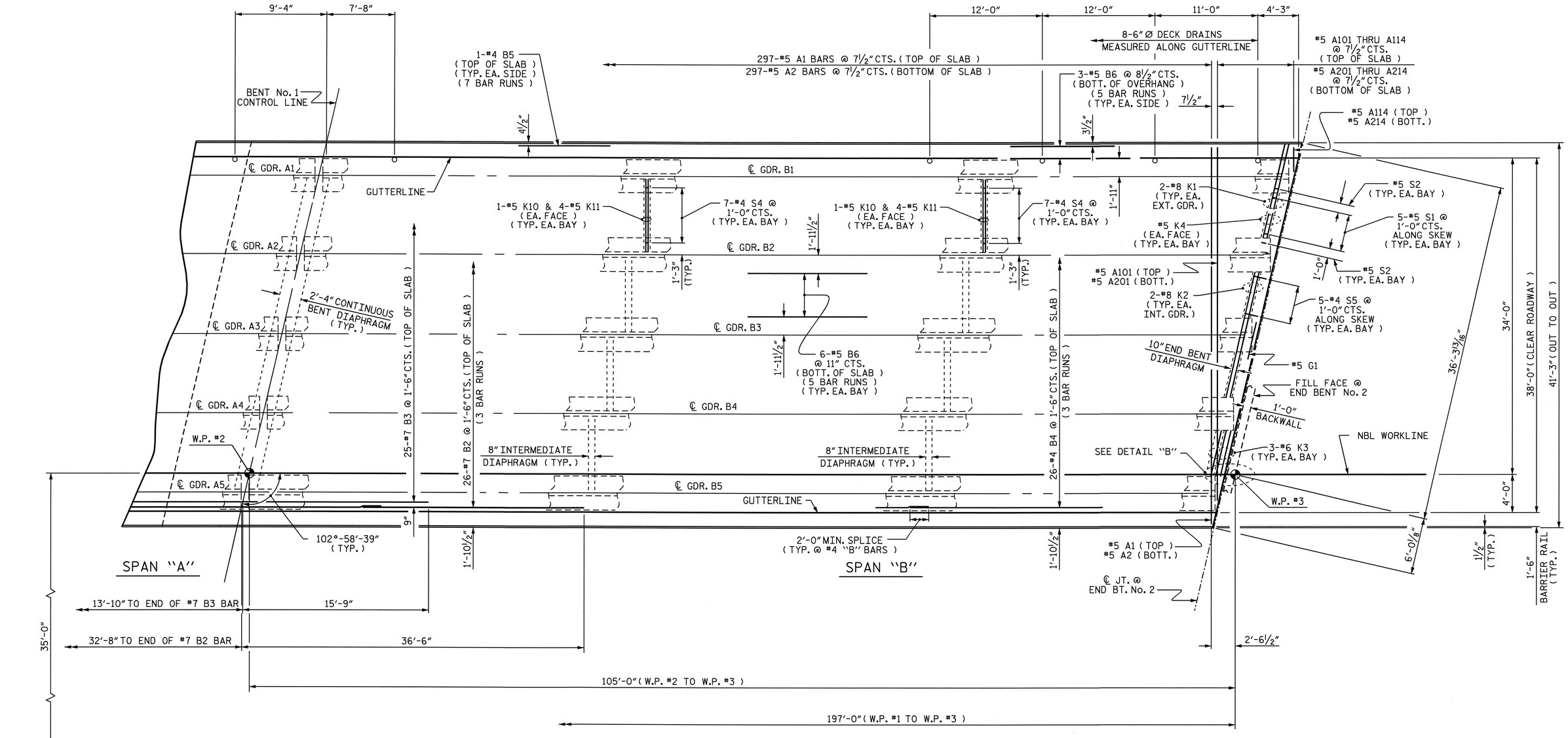

PARTIAL PLAN OF SPAN

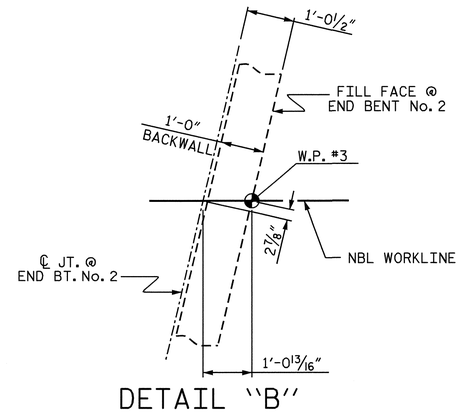

DETAIL "B"

NOTES :

FOR BARRIER RAIL REINFORCING STEEL, SEE "CONCRETE BARRIER RAIL" SHEETS.

FOR LOCATION OF INTERMEDIATE DIAPHRAGMS, SEE "FRAMING PLAN" SHEET.

PROJECT NO. R-2417C
LEE COUNTY
STATION: 615+26.51-LREV-

SHEET 2 OF 2

STATE OF NORTH CAROLINA
DEPARTMENT OF TRANSPORTATION
RALEIGH

SUPERSTRUCTURE
PLAN OF SPANS
(NBL)

REVISIONS						SHEET NO.
NO.	BY:	DATE:	NO.	BY:	DATE:	S-7
1			3			TOTAL SHEETS
2			4			104

DRAWN BY : D. G. ELY DATE : 8/2008
CHECKED BY : S. B. WILLIAMS DATE : 11/2008

31-JUL-2009 10:31
k:\structures\str_1\super_draw\R2417C_sd_PS_STR1.dgn
kalford

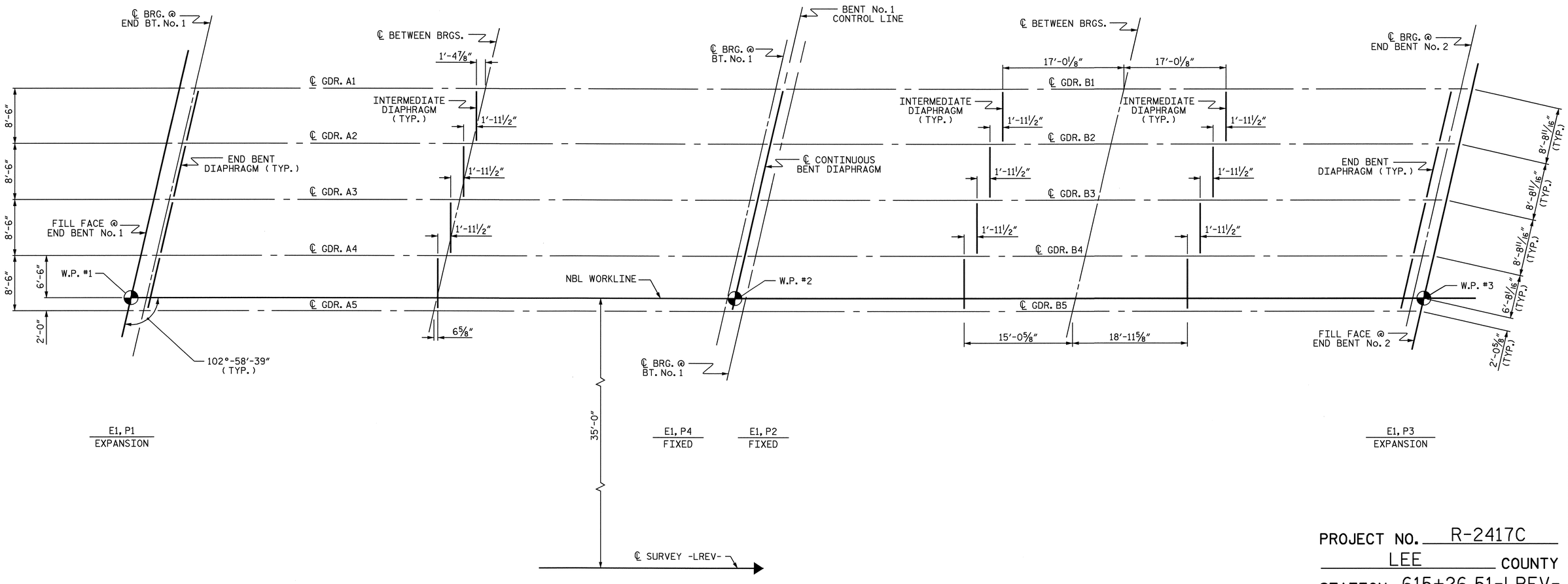

FRAMING PLAN

PROJECT NO. R-2417C
LEE COUNTY
STATION: 615+26.51-LREV-

STATE OF NORTH CAROLINA
DEPARTMENT OF TRANSPORTATION
RALEIGH

SUPERSTRUCTURE
FRAMING PLAN
(NBL)

NORTH CAROLINA PROFESSIONAL SEAL 029441 ENGINEER KRISTY W. ALFORD
8/4/09

REVISIONS						SHEET NO.
NO.	BY:	DATE:	NO.	BY:	DATE:	S-8
1			3			TOTAL SHEETS
2			4			104

DRAWN BY : D. G. ELY DATE : 8/2008
CHECKED BY : S. B. WILLIAMS DATE : 11/2008

31-JUL-2009 10:35
k:\structures\str_1\super_draw\R2417C_sd_FP_STR1.dgn
kalford

STR. #1

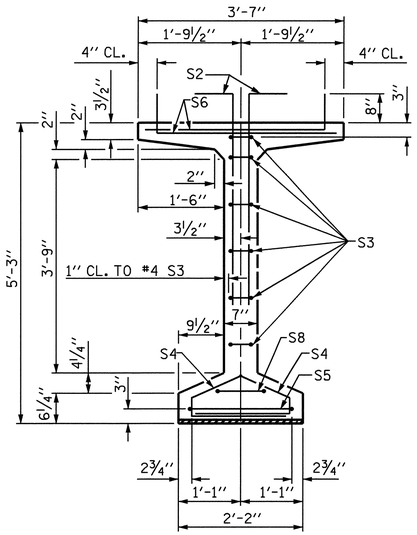

SECTION A-A

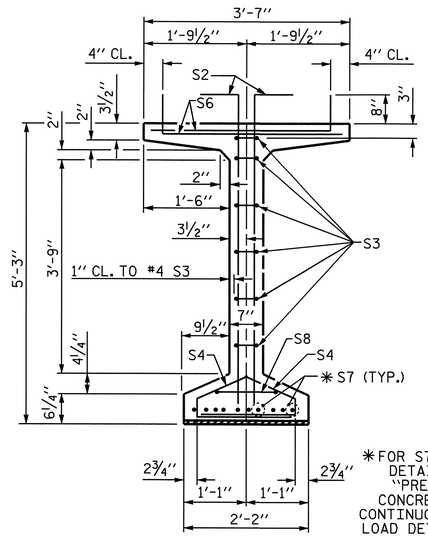

✱ FOR S7 BARS, SEE DETAIL "C" OF "PRESTRESSED CONCRETE GIRDER CONTINUOUS FOR LIVE LOAD DETAILS" SHEET

SECTION B-B

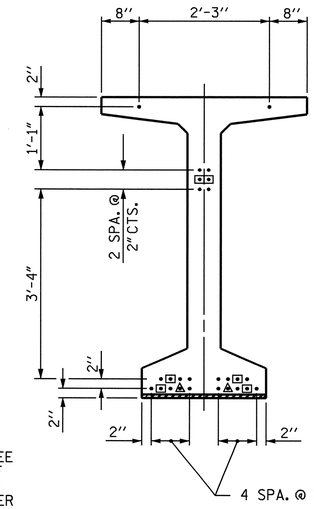

AT END OF GIRDER

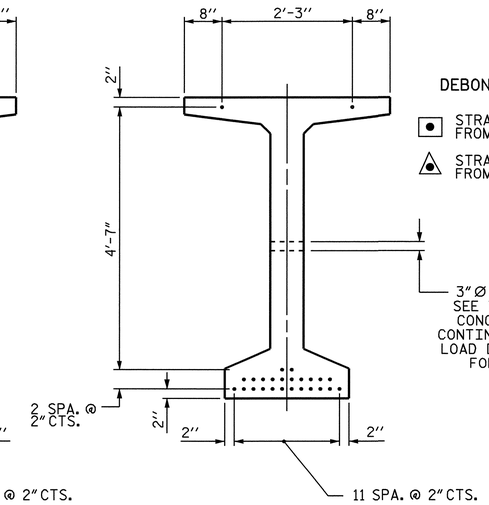

AT ℄ OF GIRDER

0.6" Ø LOW RELAXATION STRAND LAYOUT

DEBONDING LEGEND

- ● STRANDS DEBONDED FOR 2'-0" FROM END OF GIRDER
- ▲ STRANDS DEBONDED FOR 4'-0" FROM END OF GIRDER

3" Ø FORMED HOLE SEE "PRESTRESSED CONCRETE GIRDER CONTINUOUS FOR LIVE LOAD DETAILS" SHEET FOR LOCATION

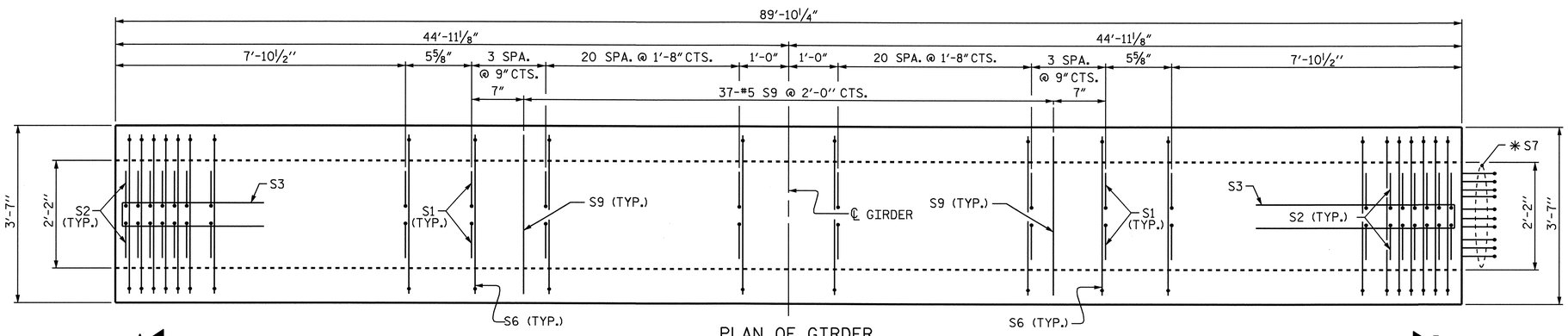

PLAN OF GIRDER

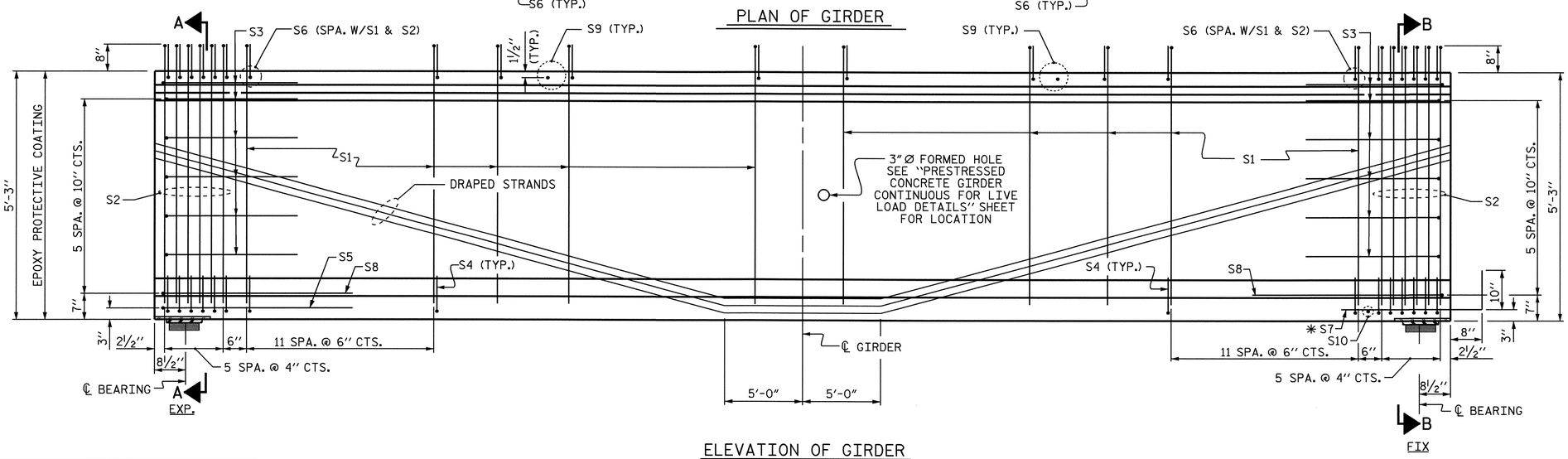

ELEVATION OF GIRDER

NOTE

THE UPLIFT FORCE DUE TO DRAPED STRANDS IS 23.0 KIPS

0.6" Ø L. R. GRADE 270 STRANDS

AREA (SQUARE INCHES)	ULTIMATE STRENGTH (LBS. PER STRAND)	APPLIED PRESTRESS (LBS. PER STRAND)
0.217	58,600	43,950

REINFORCING STEEL FOR ONE GIRDER

BAR	NUMBER	SIZE	TYPE	LENGTH	WEIGHT
S1	144	#4	1	6'-3"	601
S2	24	#5	1	6'-3"	156
S3	12	#4	2	8'-5"	67
S4	72	#4	3	3'-0"	144
S5	1	#5	2	9'-10"	10
S6	168	#5	1	3'-10"	672
✱ S7	10	#5	STR	3'-8"	38
S8	2	#5	2	9'-0"	19
S9	37	#5	STR	3'-3"	125
S10	1	#3	STR	1'-10"	1

✱ NOTE: S7 BARS SHALL BE BENT BEFORE SHIPMENT. HEAT BENDING SHALL NOT BE ALLOWED.

BAR TYPES

ALL BAR DIMENSIONS ARE OUT-TO-OUT

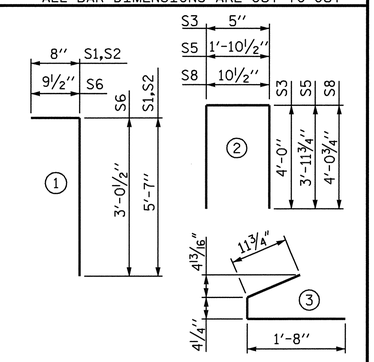

QUANTITIES FOR ONE GIRDER

SPAN "A" (NBL)	REINFORCING STEEL	8000 PSI CONCRETE	0.6" Ø L.R. STRANDS
	LB.	C.Y.	No.
GIRDERS A1 THRU A5	1833	17.8	26

GIRDERS REQUIRED

NUMBER	LENGTH	TOTAL LENGTH
5	89'-10¼"	449.27'

PROJECT NO. R-2417C

LEE COUNTY

STATION: 615+26.51-LREV-

STATE OF NORTH CAROLINA
DEPARTMENT OF TRANSPORTATION
RALEIGH

STANDARD

63" PRESTRESSED CONCRETE MODIFIED BULB TEE CONTINUOUS FOR LIVE LOAD

SPAN "A" (NBL)

NORTH CAROLINA PROFESSIONAL SEAL 029441 ENGINEER KRISTY W. ALFORD
8/3/09

REVISIONS						SHEET NO.
NO.	BY:	DATE:	NO.	BY:	DATE:	S-9
1			3			TOTAL SHEETS
2			4			104

ASSEMBLED BY : D. G. ELY	DATE : 9/2008	
CHECKED BY : S. B. WILLIAMS	DATE : 11/2008	
DRAWN BY : EEM 2/6/97	REV. 8/16/99	RWW/LES
CHECKED BY : VAP 2/6/97	REV. 10/17/00	RWW/LES
	REV. 5/1/06	TLA/GM

31-JUL-2009 11:00
k:\structures\str_1\super_draw\r2417c_sd_pcg_str1.dgn
kalford

STD. NO. PCG9

STR. #1

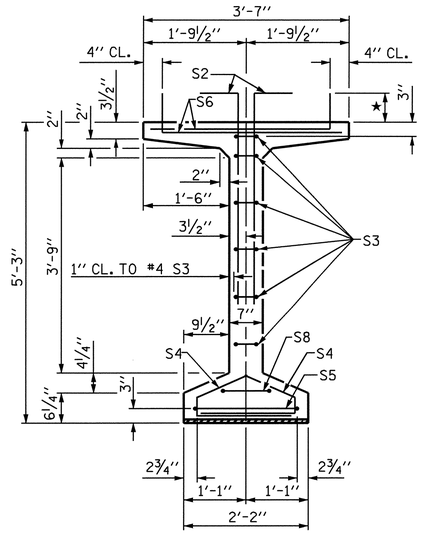

SECTION A-A

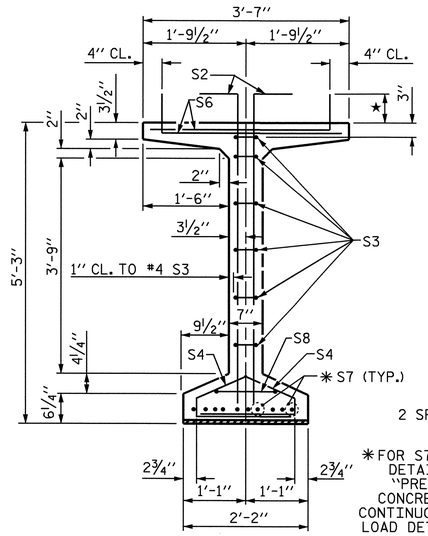

SECTION B-B

✱ FOR S7 BARS, SEE DETAIL "C" OF "PRESTRESSED CONCRETE GIRDER CONTINUOUS FOR LIVE LOAD DETAILS" SHEET

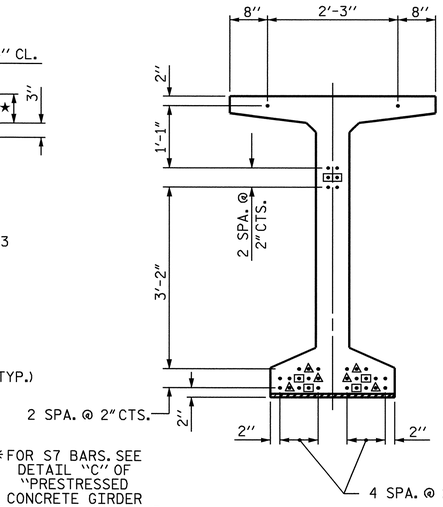

AT END OF GIRDER

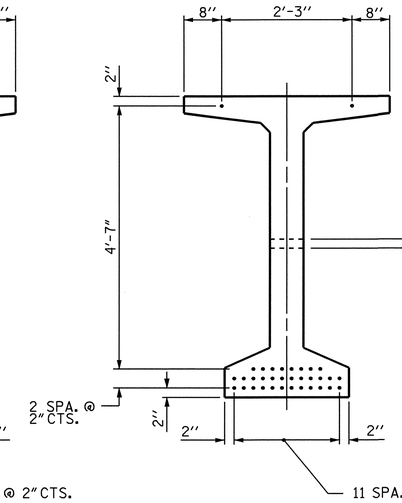

AT ℄ OF GIRDER

0.6" Ø LOW RELAXATION STRAND LAYOUT

DEBONDING LEGEND

- ● STRANDS DEBONDED FOR 2'-0" FROM END OF GIRDER
- ▲ STRANDS DEBONDED FOR 4'-0" FROM END OF GIRDER

3" Ø FORMED HOLE SEE "PRESTRESSED CONCRETE GIRDER CONTINUOUS FOR LIVE LOAD DETAILS" SHEET FOR LOCATION

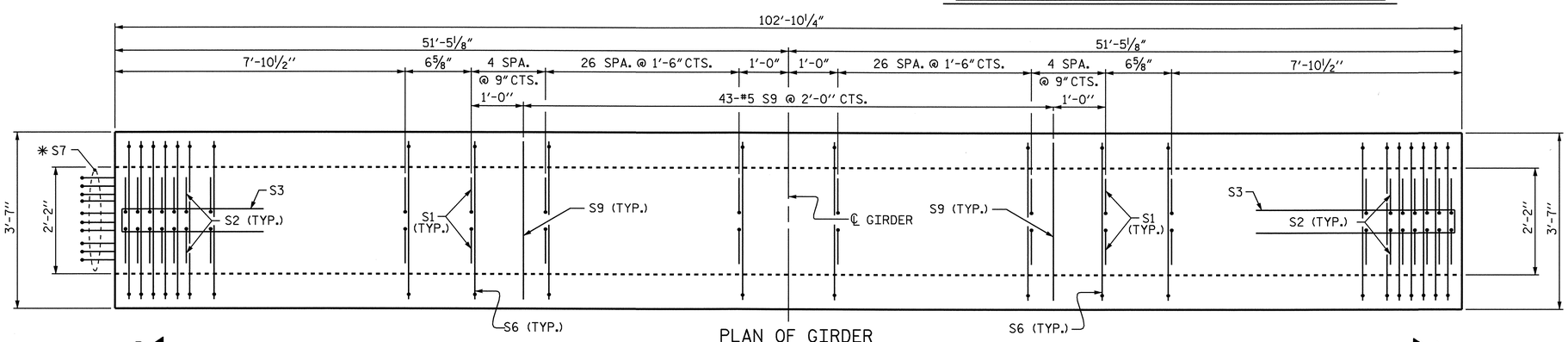

PLAN OF GIRDER

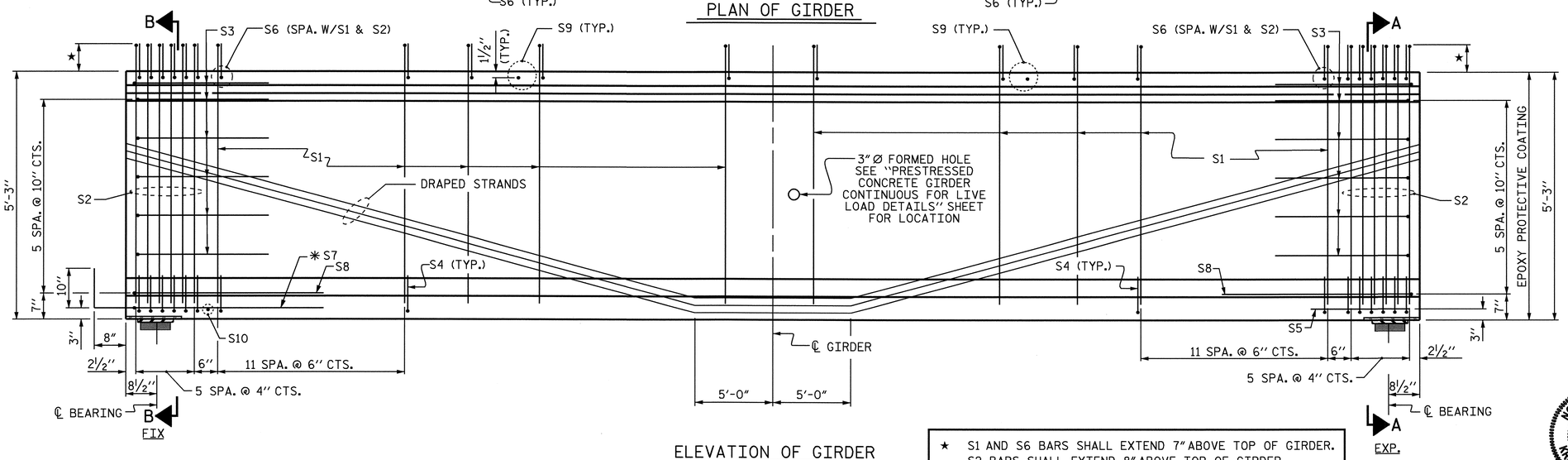

ELEVATION OF GIRDER

★ S1 AND S6 BARS SHALL EXTEND 7" ABOVE TOP OF GIRDER. S2 BARS SHALL EXTEND 8" ABOVE TOP OF GIRDER.

0.6" Ø L. R. GRADE 270 STRANDS

AREA (SQUARE INCHES)	ULTIMATE STRENGTH (LBS. PER STRAND)	APPLIED PRESTRESS (LBS. PER STRAND)
0.217	58,600	43,950

REINFORCING STEEL FOR ONE GIRDER

BAR	NUMBER	SIZE	TYPE	LENGTH	WEIGHT
S1	172	#4	1	6'-2"	709
S2	24	#5	1	6'-3"	156
S3	12	#4	2	8'-5"	67
S4	72	#4	3	3'-0"	144
S5	1	#5	2	9'-10"	10
S6	196	#5	1	3'-9"	767
✱ S7	10	#5	STR	3'-8"	38
S8	2	#5	2	9'-0"	19
S9	43	#5	STR	3'-3"	146
S10	1	#3	STR	1'-10"	1

✱ NOTE: S7 BARS SHALL BE BENT BEFORE SHIPMENT. HEAT BENDING SHALL NOT BE ALLOWED.

BAR TYPES

ALL BAR DIMENSIONS ARE OUT-TO-OUT

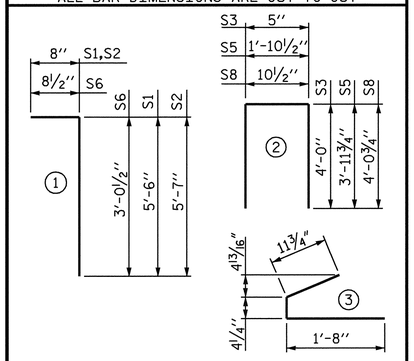

QUANTITIES FOR ONE GIRDER

SPAN "B" (NBL)	REINFORCING STEEL LB.	8000 PSI CONCRETE C.Y.	0.6" Ø L.R. STRANDS No.
GIRDERS B1 THRU B5	2057	20.4	34

GIRDERS REQUIRED

NUMBER	LENGTH	TOTAL LENGTH
5	102'-10¼"	514.27'

PROJECT NO. R-2417C

LEE COUNTY

STATION: 615+26.51-LREV-

STATE OF NORTH CAROLINA
DEPARTMENT OF TRANSPORTATION
RALEIGH

STANDARD

63" PRESTRESSED CONCRETE MODIFIED BULB TEE CONTINUOUS FOR LIVE LOAD

SPAN "B" (NBL)

NORTH CAROLINA PROFESSIONAL SEAL 029441 ENGINEER KRISTY W. ALFORD

6/23/09

ASSEMBLED BY : D. G. ELY	DATE : 9/2008
CHECKED BY : S. B. WILLIAMS	DATE : 11/2008
DRAWN BY : EEM 2/6/97	REV. 8/16/99 RWW/LES
CHECKED BY : VAP 2/6/97	REV. 10/17/00 RWW/LES
	REV. 5/1/06 TLA/GM

REVISIONS

NO.	BY:	DATE:	NO.	BY:	DATE:
1			3		
2			4		

SHEET NO. S-10

TOTAL SHEETS 104

STD. NO. PCG9

STR. #1

21-OCT-2009 08:24
k:\structures\STR_1\Super_Draw\R2417C_sd_PCG_STR1.dgn
kalford

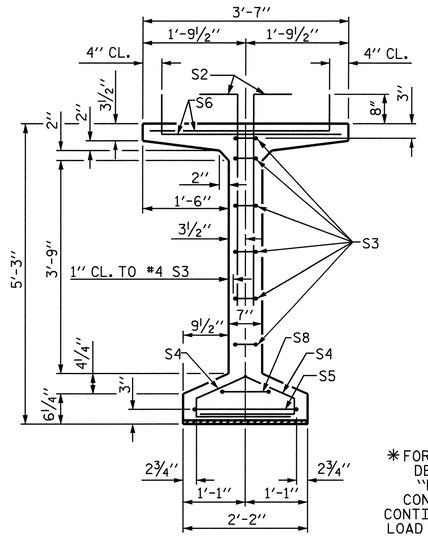

SECTION A-A

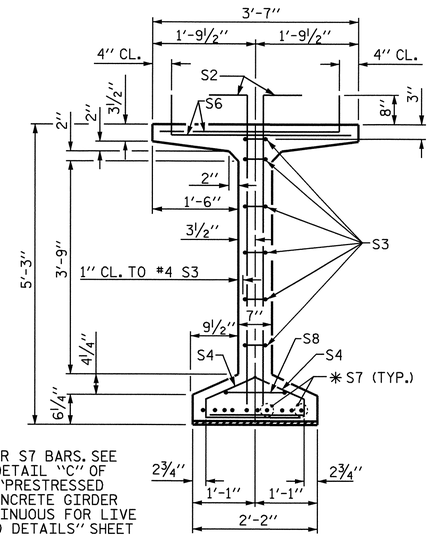

✱ FOR S7 BARS. SEE DETAIL "C" OF "PRESTRESSED CONCRETE GIRDER CONTINUOUS FOR LIVE LOAD DETAILS" SHEET

SECTION B-B

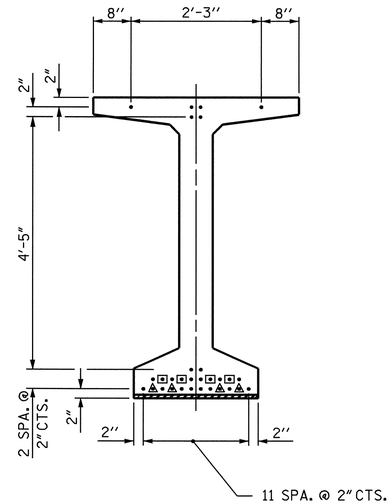

AT END OF GIRDER

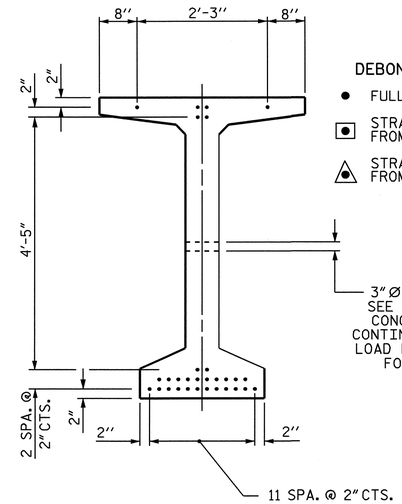

AT ℄ OF GIRDER

0.6" Ø LOW RELAXATION STRAND LAYOUT

DEBONDING LEGEND

- ● FULLY BONDED STRANDS
- ▣ STRANDS DEBONDED FOR 4'-0" FROM END OF GIRDER
- ◬ STRANDS DEBONDED FOR 6'-0" FROM END OF GIRDER

3" Ø FORMED HOLE SEE "PRESTRESSED CONCRETE GIRDER CONTINUOUS FOR LIVE LOAD DETAILS" SHEET FOR LOCATION

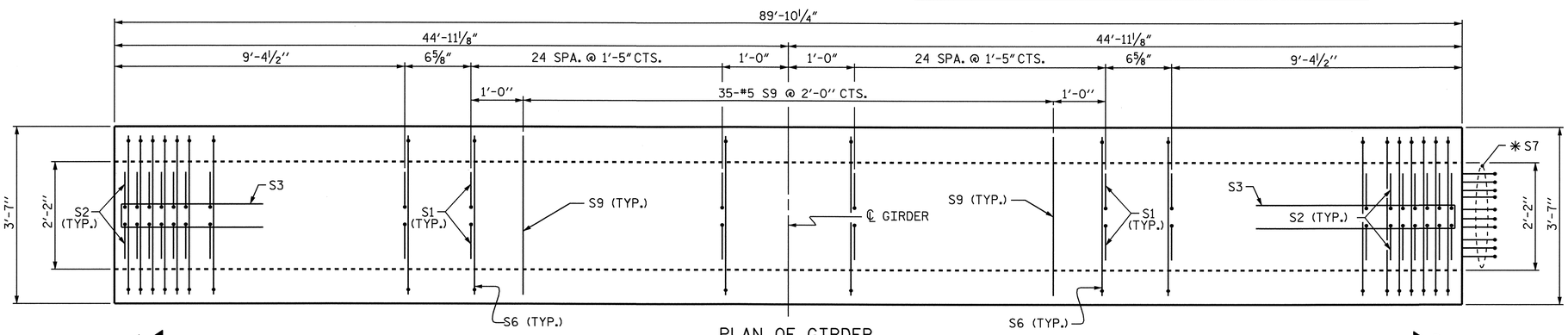

PLAN OF GIRDER

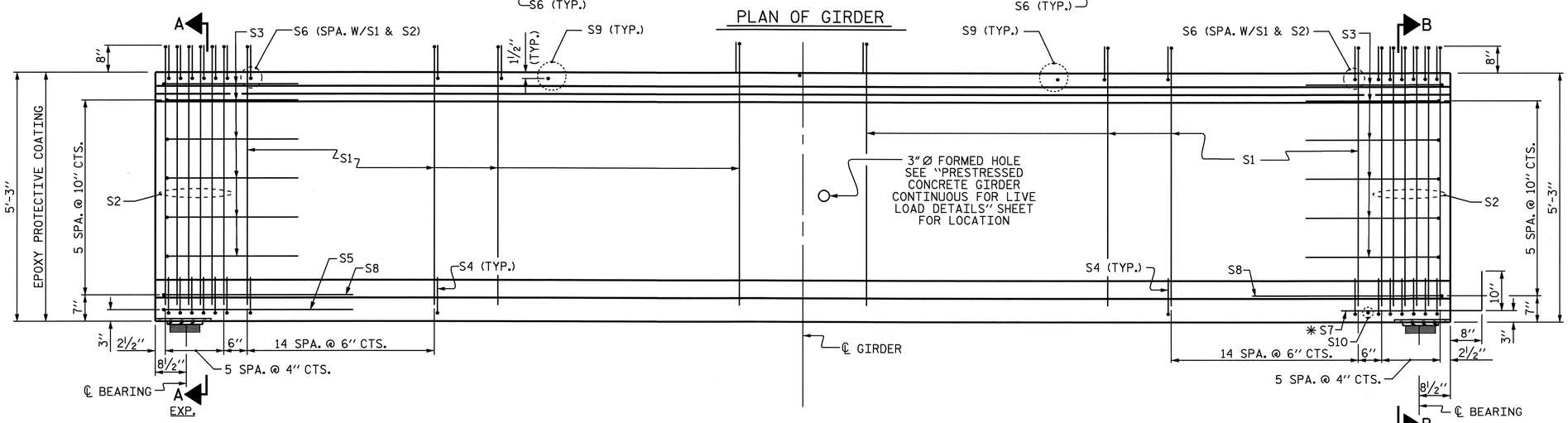

ELEVATION OF GIRDER

0.6" Ø L. R. GRADE 270 STRANDS

AREA (SQUARE INCHES)	ULTIMATE STRENGTH (LBS. PER STRAND)	APPLIED PRESTRESS (LBS. PER STRAND)
0.217	58,600	43,950

REINFORCING STEEL FOR ONE GIRDER

BAR	NUMBER	SIZE	TYPE	LENGTH	WEIGHT
S1	160	#4	1	6'-3"	668
S2	24	#5	1	6'-3"	156
S3	12	#4	2	8'-5"	67
S4	84	#4	3	3'-0"	168
S5	1	#5	2	9'-10"	10
S6	184	#5	1	3'-10"	736
✱ S7	10	#5	STR	3'-8"	38
S8	2	#5	2	9'-0"	19
S9	35	#5	STR	3'-3"	119
S10	1	#3	STR	1'-10"	1

✱ NOTE: S7 BARS SHALL BE BENT BEFORE SHIPMENT. HEAT BENDING SHALL NOT BE ALLOWED.

BAR TYPES

ALL BAR DIMENSIONS ARE OUT-TO-OUT

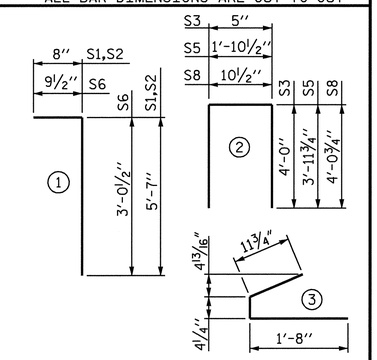

QUANTITIES FOR ONE GIRDER

SPAN "A" (NBL)	REINFORCING STEEL	8500 PSI CONCRETE	0.6" Ø L.R. STRANDS
	LB.	C.Y.	No.
GIRDERS A1 THRU A5	1982	17.8	30

GIRDERS REQUIRED

NUMBER	LENGTH	TOTAL LENGTH
5	89'-10¼"	449.27'

PROJECT NO. R-2417C

LEE COUNTY

STATION: 615+26.51-LREV-

STATE OF NORTH CAROLINA
DEPARTMENT OF TRANSPORTATION
RALEIGH

OPTIONAL

63" PRESTRESSED CONCRETE MODIFIED BULB TEE CONTINUOUS FOR LIVE LOAD (WITH 0.6" Ø PARTIALLY DEBONDED STRANDS)

SPAN "A" (NBL)

NORTH CAROLINA PROFESSIONAL SEAL 029441 ENGINEER KRISTY W. ALFORD
8/3/09

REVISIONS						
NO.	BY:	DATE:	NO.	BY:	DATE:	
1			3			
2			4			

SHEET NO. S-11

TOTAL SHEETS 104

ASSEMBLED BY : D. G. ELY	DATE : 9/2008	
CHECKED BY : S. B. WILLIAMS	DATE : 10/2008	
DRAWN BY : EEM 2/6/97	REV. 8/16/99	RWW/LES
CHECKED BY : VAP 2/6/97	REV. 10/17/00	RWW/LES
	REV. 5/1/06	TLA/GM

31-JUL-2009 11:02
k:\structures\str_1\super_draw\R2417C_sd_OPT_PCG_STR1.dgn
kalford

STD. NO. PCGD9

STR. #1

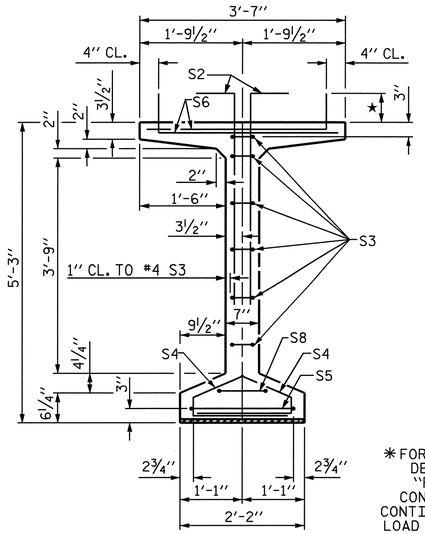

SECTION A-A

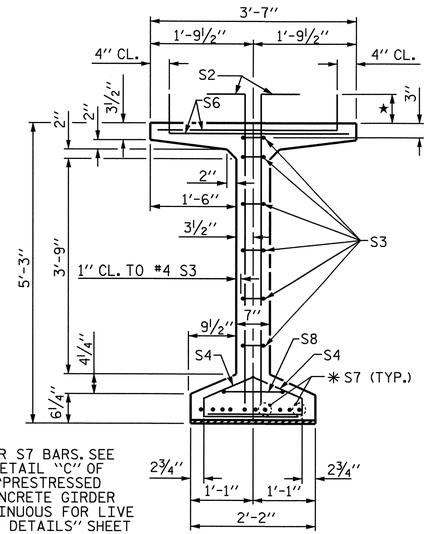

* FOR S7 BARS, SEE DETAIL "C" OF "PRESTRESSED CONCRETE GIRDER CONTINUOUS FOR LIVE LOAD DETAILS" SHEET

SECTION B-B

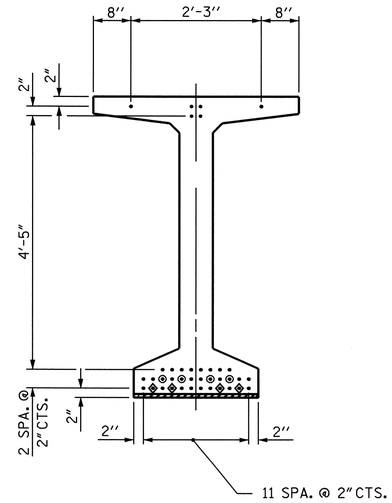

AT END OF GIRDER

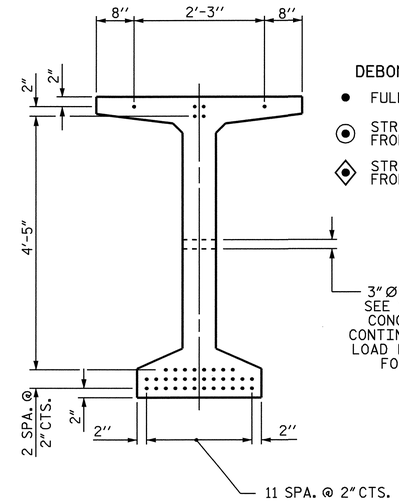

AT ℄ OF GIRDER

0.6" Ø LOW RELAXATION STRAND LAYOUT

DEBONDING LEGEND

- ● FULLY BONDED STRANDS
- ⊙ STRANDS DEBONDED FOR 8'-0" FROM END OF GIRDER
- ◈ STRANDS DEBONDED FOR 10'-0" FROM END OF GIRDER

3" Ø FORMED HOLE SEE "PRESTRESSED CONCRETE GIRDER CONTINUOUS FOR LIVE LOAD DETAILS" SHEET FOR LOCATION

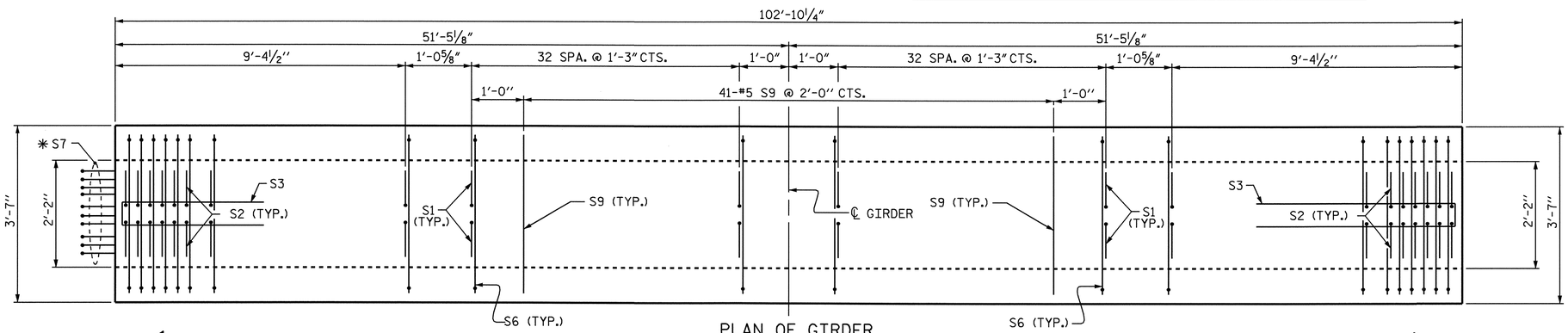

PLAN OF GIRDER

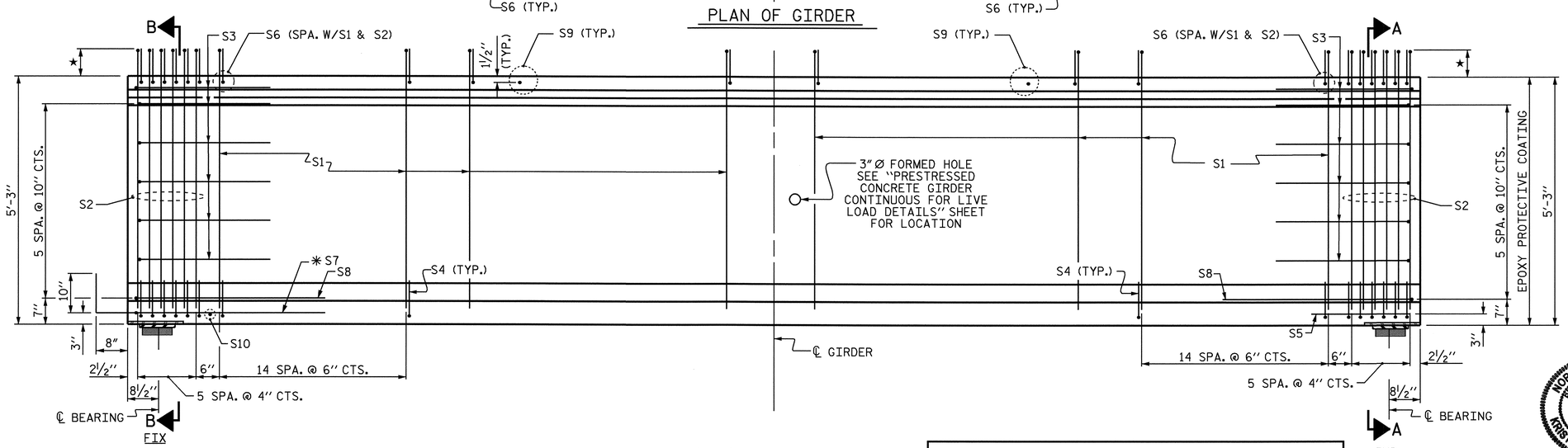

ELEVATION OF GIRDER

★ S1 AND S6 BARS SHALL EXTEND 7" ABOVE TOP OF GIRDER. S2 BARS SHALL EXTEND 8" ABOVE TOP OF GIRDER.

0.6" Ø L. R. GRADE 270 STRANDS

AREA (SQUARE INCHES)	ULTIMATE STRENGTH (LBS. PER STRAND)	APPLIED PRESTRESS (LBS. PER STRAND)
0.217	58,600	43,950

REINFORCING STEEL FOR ONE GIRDER

BAR	NUMBER	SIZE	TYPE	LENGTH	WEIGHT
S1	192	#4	1	6'-2"	791
S2	24	#5	1	6'-3"	156
S3	12	#4	2	8'-5"	67
S4	84	#4	3	3'-0"	168
S5	1	#5	2	9'-10"	10
S6	216	#5	1	3'-9"	845
* S7	10	#5	STR	3'-8"	38
S8	2	#5	2	9'-0"	19
S9	41	#5	STR	3'-3"	139
S10	1	#3	STR	1'-10"	1

* NOTE: S7 BARS SHALL BE BENT BEFORE SHIPMENT. HEAT BENDING SHALL NOT BE ALLOWED.

BAR TYPES

ALL BAR DIMENSIONS ARE OUT-TO-OUT

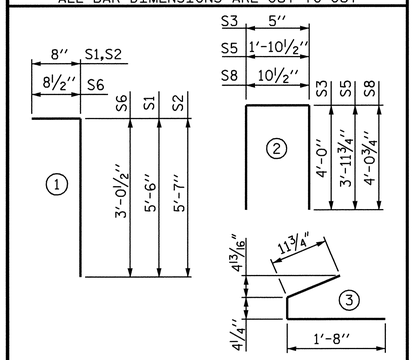

QUANTITIES FOR ONE GIRDER

SPAN "B" (NBL)	REINFORCING STEEL	8500 PSI CONCRETE	0.6" Ø L.R. STRANDS
	LB.	C.Y.	No.
GIRDERS B1 THRU B5	2234	20.4	38

GIRDERS REQUIRED

NUMBER	LENGTH	TOTAL LENGTH
5	102'-10¼"	514.27'

PROJECT NO. R-2417C

LEE COUNTY

STATION: 615+26.51-LREV-

STATE OF NORTH CAROLINA
DEPARTMENT OF TRANSPORTATION
RALEIGH

OPTIONAL

63" PRESTRESSED CONCRETE MODIFIED BULB TEE CONTINUOUS FOR LIVE LOAD (WITH 0.6" Ø PARTIALLY DEBONDED STRANDS)

SPAN "B" (NBL)

NORTH CAROLINA PROFESSIONAL SEAL 029441 ENGINEER KRISTY W. ALFORD

ASSEMBLED BY : D. G. ELY	DATE : 9/2008
CHECKED BY : S. B. WILLIAMS	DATE : 10/2008

DRAWN BY : EEM 2/6/97	REV. 8/16/99	RWW/LES
CHECKED BY : VAP 2/6/97	REV. 10/17/00	RWW/LES
	REV. 5/1/06	TLA/GM

REVISIONS

NO.	BY:	DATE:	NO.	BY:	DATE:
1			3		
2			4		

SHEET NO. S-12

TOTAL SHEETS 104

STD. NO. PCGD9

STR. #1

21-OCT-2009 08:27
k:\structures\STR_1\Super_Draw\R2417C_sd_OPT_PCG_STR1.dgn
kalford

TIE ROD PLACEMENT TABLE

GIRDER	"A"	"B"	"C"	"D"	"E"	"F"	"G"	"H"
GDR. A1	43'-6 1/4"	46'-4"						
GDR. A2			43'-6 1/4"	44'-4 1/2"				
GDR. A3			43'-6 1/4"	44'-4 1/2"				
GDR. A4			43'-6 1/4"	44'-4 1/2"				
GDR. A5	45'-5 3/4"	44'-4 1/2"						
GDR. B1			34'-5"	34'-0 1/4"	34'-5"			
GDR. B2						34'-5"	32'-0 3/4"	32'-5 1/2"
GDR. B3						34'-5"	32'-0 3/4"	32'-5 1/2"
GDR. B4						34'-5"	32'-0 3/4"	32'-5 1/2"
GDR. B5			36'-4 1/2"	34'-0 1/4"	32'-5 1/2"			

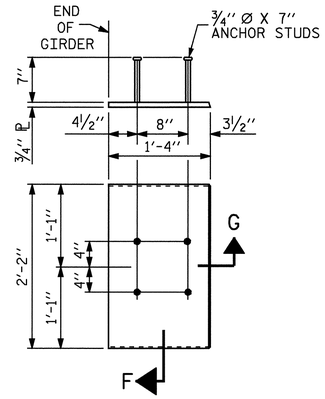

EMBEDDED PLATE "B-1" DETAILS FOR 63" MODIFIED BULB TEES

(2 REQ'D PER GIRDER)

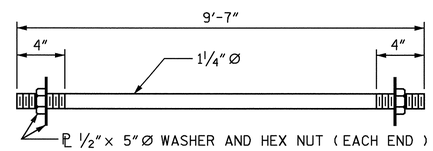

1 1/4" Ø TIE ROD ASSEMBLY

(12 COMPLETE ASSEMBLIES REQUIRED)

NOTES

ALL PRESTRESSING STRANDS SHALL BE 7-WIRE LOW-RELAXATION GRADE 270 STRANDS AND SHALL CONFORM TO AASHTO M203 EXCEPT FOR SAMPLING REQUIREMENTS WHICH SHALL BE IN ACCORDANCE WITH THE STANDARD SPECIFICATIONS.

TIE ROD ASSEMBLY SHALL BE AASHTO M270 GRADE 36 STRUCTURAL STEEL.

ALL REINFORCING STEEL SHALL BE GRADE 60.

APPLY EPOXY PROTECTIVE COATING TO END OF GIRDER SURFACES INDICATED IN ELEVATION VIEW.

EMBEDDED PLATE "B-1" SHALL BE GALVANIZED IN ACCORDANCE WITH THE STANDARD SPECIFICATIONS. BEVEL EDGES OF PLATE "B-1" TO GIVE CLOSE FIT BUT NOT TIGHT FIT TO STEEL CASTING FORM.

ANCHOR STUDS SHALL CONFORM TO AASHTO M169 GRADES 1010 THROUGH 1020 OR APPROVED EQUAL, AND SHALL MEET THE TYPE "B" REQUIREMENTS OF SUBSECTION 7.3 OF THE ANSI/AASHTO/AWS D1.5 BRIDGE WELDING CODE.

AT ENDS OF GIRDERS TO BE EMBEDDED IN CONCRETE DIAPHRAGMS OR END WALLS, PRESTRESSING STRANDS MAY EXTEND A MAXIMUM OF 2" BEYOND THE GIRDER ENDS. OTHERWISE, PRESTRESSING STRANDS SHALL BE CUT FLUSH WITH THE GIRDER ENDS.

FOR DRAPED STRANDS, THE TRANSFER OF LOAD FROM THE ANCHORAGES TO THE GIRDER SHALL BE DONE WHEN CONCRETE HAS REACHED A COMPRESSIVE STRENGTH OF NOT LESS THAN 6100 PSI.

FOR THE OPTIONAL PARTIALLY DEBONDED STRANDS, THE TRANSFER OF LOAD FROM THE ANCHORAGES TO THE GIRDER SHALL BE DONE WHEN CONCRETE HAS REACHED A COMPRESSIVE STRENGTH OF NOT LESS THAN 6600 PSI.

DEPENDING ON THE TYPE OF SYSTEM USED TO SUPPORT THE DECK SLAB FORMS, PRESET ANCHORS MAY BE NECESSARY IN THE PRESTRESSED CONCRETE GIRDER.

THE TOP SURFACE OF THE GIRDER, EXCLUDING THE OUTSIDE 4", SHALL BE RAKED TO A DEPTH OF 1/4".

WHEN DRAPED STRANDS ARE DETAILED, THE LONGITUDINAL LOCATION OF THE HOLD DOWN DEVICES SHALL BE WITHIN 6" OF THE LOCATION SHOWN AND THE CENTER OF GRAVITY OF THE GROUP OF DRAPED STRANDS SHALL BE LOCATED WITHIN 1/2" OF THE THEORETICAL LOCATION SHOWN.

A 2" x 2" CHAMFER IS ALLOWED AT THE INTERSECTION OF THE WEB AND THE BOTTOM FLANGE OF THE 63" MODIFIED BULB TEES ONLY.

THE CONTRACTOR HAS THE OPTION TO PROVIDE, AT NO ADDITIONAL COST TO THE DEPARTMENT, 2 ADDITIONAL STRANDS AT THE TOP OF THE GIRDER TO FACILITATE TYING OF THE REINFORCING STEEL. THESE STRANDS SHALL BE PULLED TO A LOAD OF 4500 lbs.

FOR PRESTRESSED CONCRETE MEMBERS, SEE SPECIAL PROVISIONS.

THE UPLIFT FORCE DUE TO DRAPED STRANDS IS 23.0 KIPS FOR SPAN A.

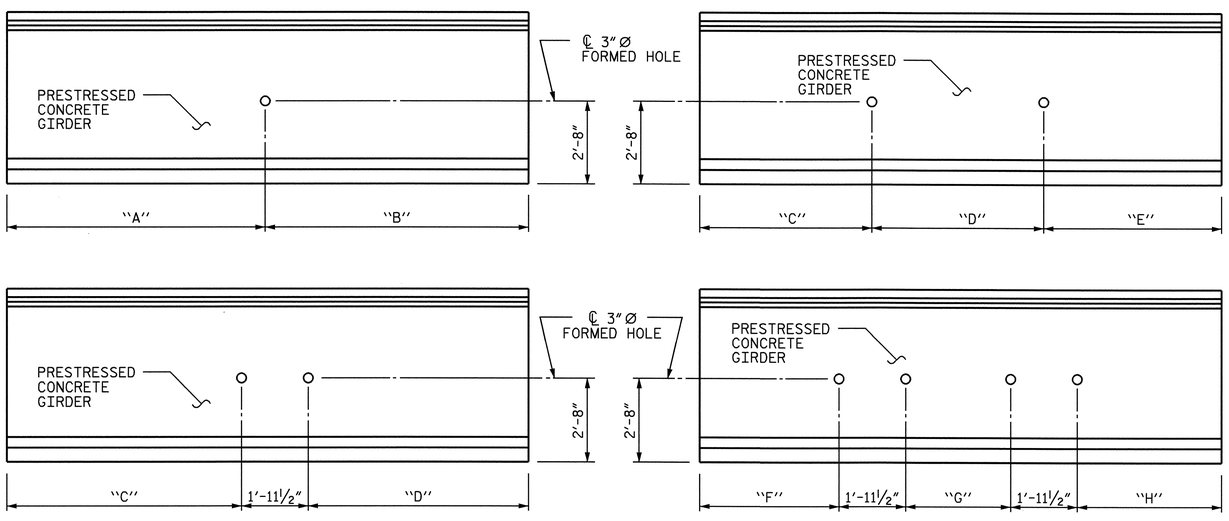

ELEVATION

TIE ROD PLACEMENT DETAIL

SPAN A

ELEVATION

TIE ROD PLACEMENT DETAIL

SPAN B

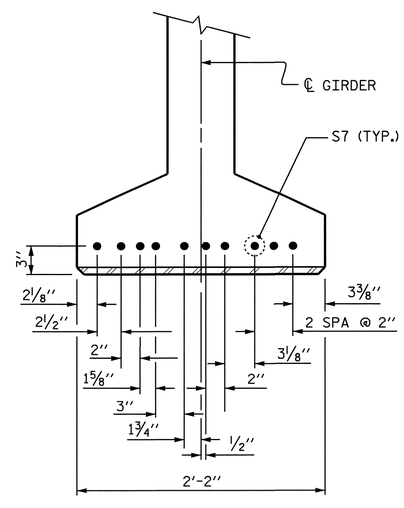

DETAIL "C"

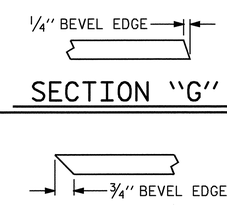

SECTION "G"

SECTION "F"

(SEE NOTES)

PROJECT NO. R-2417C

LEE COUNTY

STATION: 615+26.51-LREV-

STATE OF NORTH CAROLINA
DEPARTMENT OF TRANSPORTATION
RALEIGH

STANDARD

PRESTRESSED CONCRETE GIRDER CONTINUOUS FOR LIVE LOAD DETAILS

(NBL)

NORTH CAROLINA PROFESSIONAL SEAL 029441 ENGINEER KRISTY W. ALFORD
10/21/09

REVISIONS						SHEET NO.
NO.	BY:	DATE:	NO.	BY:	DATE:	S-13
1			3			TOTAL SHEETS
2			4			104

ASSEMBLED BY : D. G. ELY DATE : 9/2008	
CHECKED BY : S. B. WILLIAMS DATE : 10/2008	
DRAWN BY : ELR 11/91	REV. 10/17/00 RWW/LES
CHECKED BY : GRP 11/91	REV. 7/10/01RR LES/RDR
	REV. 5/1/06 TLA/GM

21-OCT-2009 08:25
K:\structures\STR_1\Super_Draw\R2417C_sd_PCG_STR1.dgn
kalford

STD. NO. PCG11 STR. #1

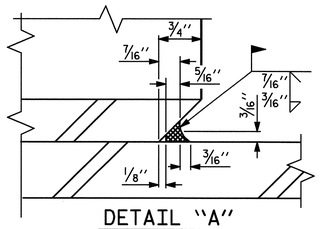

DETAIL "A"

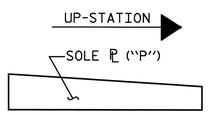

SOLE ℙ PLACEMENT DETAIL

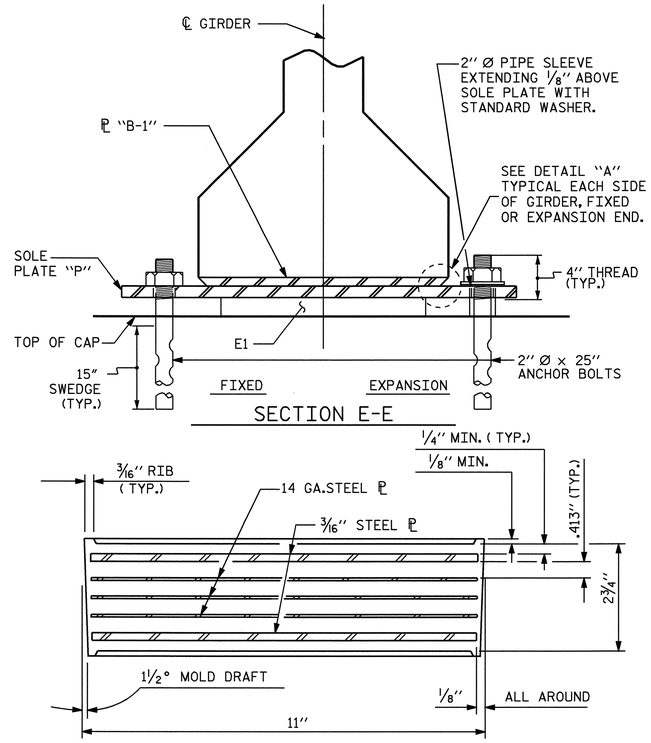

SECTION E-E

TYPICAL SECTION OF ELASTOMERIC BEARINGS

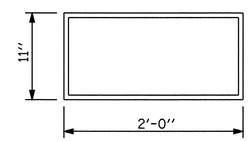

E1 (20 REQ'D)

PLAN VIEW OF ELASTOMERIC BEARING

TYPE VII

NOTES

AT ALL FIXED POINTS OF SUPPORT, NUTS FOR ANCHOR BOLTS ARE TO BE TIGHTENED FINGER TIGHT AND THEN BACKED OFF 1/2 TURN. THE THREAD OF THE NUT AND BOLT SHALL THEN BE BURRED WITH A SHARP POINTED TOOL.

THE 2" Ø PIPE SLEEVE SHALL BE CUT FROM SCHEDULE 40 PVC PLASTIC PIPE. THE PVC PLASTIC PIPE SHALL MEET THE REQUIREMENTS OF ASTM D1785.

STEEL SOLE PLATES, ANCHOR BOLTS, NUTS, AND WASHERS SHALL BE GALVANIZED IN ACCORDANCE WITH THE STANDARD SPECIFICATIONS.

PRIOR TO WELDING, GRIND THE GALVANIZED SURFACE OF THE PORTION OF THE EMBEDDED PLATE AND SOLE PLATE THAT ARE TO BE WELDED. AFTER WELDING, DAMAGED GALVANIZED SURFACES SHALL BE REPAIRED IN ACCORDANCE WITH THE STANDARD SPECIFICATIONS.

WHEN WELDING THE SOLE PLATE TO THE EMBEDDED PLATE IN THE GIRDER, USE TEMPERATURE INDICATING WAX PENS, OR OTHER SUITABLE MEANS, TO ENSURE THAT THE TEMPERATURE OF THE SOLE PLATE DOES NOT EXCEED 300°F. TEMPERATURES ABOVE THIS MAY DAMAGE THE ELASTOMER.

SOLE PLATE "P", BOLTS, NUTS, WASHERS, AND PIPE SLEEVE SHALL BE INCLUDED IN THE PAY ITEM FOR PRESTRESSED CONCRETE GIRDERS.

ANCHOR BOLTS SHALL MEET THE REQUIREMENTS OF ASTM A449. NUTS SHALL MEET THE REQUIREMENTS OF AASHTO M291-DH OR AASHTO M292-2H. WASHERS SHALL MEET THE REQUIREMENTS OF AASHTO M293. NO SHOP DRAWINGS ARE REQUIRED FOR ANCHOR BOLTS, NUTS AND WASHERS. SHOP INSPECTION IS REQUIRED.

ALL SURFACES OF BEARING PLATES SHALL BE SMOOTH AND STRAIGHT.

ELASTOMER IN ALL BEARINGS SHALL BE 60 DUROMETER HARDNESS.

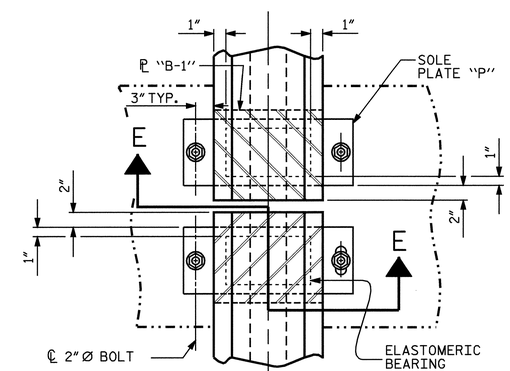

TYPICAL HALF-PLAN (FIXED END)

TYPICAL HALF-PLAN (EXPANSION END)

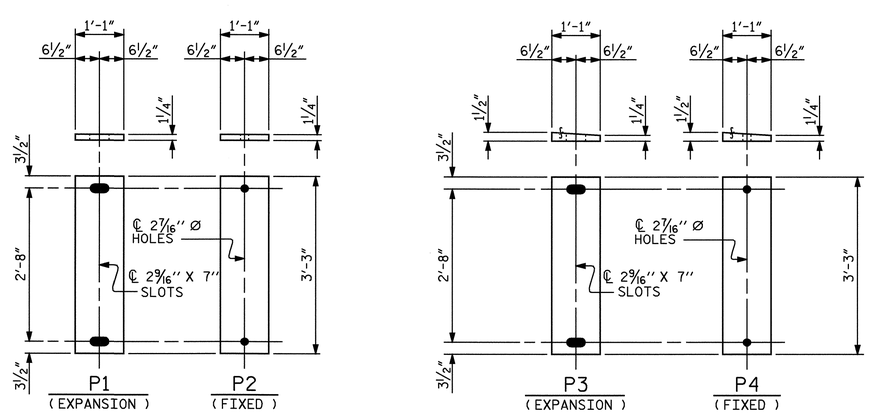

SOLE PLATE DETAILS ("P")

— LOAD RATINGS —	
	MAX.D.L.+ L.L.
TYPE VII	384 K

PROJECT NO. R-2417C

LEE COUNTY

STATION: 615+26.51-LREV-

STATE OF NORTH CAROLINA
DEPARTMENT OF TRANSPORTATION
RALEIGH

STANDARD

ELASTOMERIC BEARING DETAILS

(NBL)

NORTH CAROLINA PROFESSIONAL SEAL 029441 ENGINEER KRISTY W. ALFORD 8/3/09

REVISIONS						SHEET NO.
NO.	BY:	DATE:	NO.	BY:	DATE:	S-14
1			3			TOTAL SHEETS
2			4			104

ASSEMBLED BY : D. G. ELY		DATE : 9/2008	
CHECKED BY : S. B. WILLIAMS		DATE : 10/2008	
DRAWN BY : EEM 2/97	REV. 8/16/99	RWW/LES	
CHECKED BY : VAP 2/97	REV. 10/17/00	RWW/LES	
	REV. 5/1/06	TLA/GM	

31-JUL-2009 11:10
k:\structures\str_1\super_draw\R2417C_sd_BG_STR1.dgn
kalford

STD. NO. EB4

STR. #1

DEAD LOAD DEFLECTION TABLE FOR GIRDERS

0.6'' Ø LOW RELAXATION	GIRDER A1										
TENTH POINTS	0	.1	.2	.3	.4	.5	.6	.7	.8	.9	0
CAMBER (GIRDER ALONE IN PLACE) ↑	0.000	0.070	0.133	0.182	0.213	0.223	0.213	0.182	0.133	0.070	0.000
✳ DEFLECTION DUE TO SUPERIMPOSED D.L. ↓	0.000	0.025	0.047	0.064	0.075	0.079	0.075	0.064	0.047	0.025	0.000
FINAL CAMBER ↑	0	9/16"	1 1/16"	1 7/16"	1 5/8"	1 3/4"	1 5/8"	1 7/16"	1 1/16"	9/16"	0

DEAD LOAD DEFLECTION TABLE FOR GIRDERS

0.6'' Ø LOW RELAXATION	GIRDERS A2 THRU A4										
TENTH POINTS	0	.1	.2	.3	.4	.5	.6	.7	.8	.9	0
CAMBER (GIRDER ALONE IN PLACE) ↑	0.000	0.070	0.133	0.182	0.213	0.223	0.213	0.182	0.133	0.070	0.000
✳ DEFLECTION DUE TO SUPERIMPOSED D.L. ↓	0.000	0.025	0.048	0.065	0.077	0.080	0.077	0.065	0.048	0.025	0.000
FINAL CAMBER ↑	0	9/16"	1"	1 3/8"	1 5/8"	1 11/16"	1 5/8"	1 3/8"	1"	9/16"	0

DEAD LOAD DEFLECTION TABLE FOR GIRDERS

0.6'' Ø LOW RELAXATION	GIRDER A5										
TENTH POINTS	0	.1	.2	.3	.4	.5	.6	.7	.8	.9	0
CAMBER (GIRDER ALONE IN PLACE) ↑	0.000	0.070	0.133	0.182	0.213	0.223	0.213	0.182	0.133	0.070	0.000
✳ DEFLECTION DUE TO SUPERIMPOSED D.L. ↓	0.000	0.025	0.048	0.065	0.076	0.080	0.076	0.065	0.048	0.025	0.000
FINAL CAMBER ↑	0	9/16"	1"	1 3/8"	1 5/8"	1 11/16"	1 5/8"	1 3/8"	1"	9/16"	0

✳ INCLUDES FUTURE WEARING SURFACE
ALL VALUES ARE SHOWN IN FEET, EXCEPT "FINAL CAMBER" WHICH IS SHOWN IN INCHES (FRACTION FORM).

DEAD LOAD DEFLECTION TABLE FOR GIRDERS

0.6'' Ø LOW RELAXATION	GIRDER B1										
TENTH POINTS	0	.1	.2	.3	.4	.5	.6	.7	.8	.9	0
CAMBER (GIRDER ALONE IN PLACE) ↑	0.000	0.124	0.235	0.322	0.377	0.396	0.377	0.322	0.235	0.124	0.000
✳ DEFLECTION DUE TO SUPERIMPOSED D.L. ↓	0.000	0.043	0.081	0.110	0.129	0.136	0.129	0.110	0.081	0.043	0.000
FINAL CAMBER ↑	0	1"	1 7/8"	2 9/16"	3"	3 1/8"	3"	2 9/16"	1 7/8"	1"	0

DEAD LOAD DEFLECTION TABLE FOR GIRDERS

0.6'' Ø LOW RELAXATION	GIRDERS B2 THRU B4										
TENTH POINTS	0	.1	.2	.3	.4	.5	.6	.7	.8	.9	0
CAMBER (GIRDER ALONE IN PLACE) ↑	0.000	0.124	0.235	0.322	0.377	0.396	0.377	0.322	0.235	0.124	0.000
✳ DEFLECTION DUE TO SUPERIMPOSED D.L. ↓	0.000	0.043	0.082	0.112	0.132	0.138	0.132	0.112	0.082	0.043	0.000
FINAL CAMBER ↑	0	1"	1 13/16"	2 1/2"	2 15/16"	3 1/8"	2 15/16"	2 1/2"	1 13/16"	1"	0

DEAD LOAD DEFLECTION TABLE FOR GIRDERS

0.6'' Ø LOW RELAXATION	GIRDER B5										
TENTH POINTS	0	.1	.2	.3	.4	.5	.6	.7	.8	.9	0
CAMBER (GIRDER ALONE IN PLACE) ↑	0.000	0.124	0.235	0.322	0.377	0.396	0.377	0.322	0.235	0.124	0.000
✳ DEFLECTION DUE TO SUPERIMPOSED D.L. ↓	0.000	0.043	0.082	0.112	0.131	0.138	0.131	0.112	0.082	0.043	0.000
FINAL CAMBER ↑	0	1"	1 13/16"	2 1/2"	2 15/16"	3 1/8"	2 15/16"	2 1/2"	1 13/16"	1"	0

✳ INCLUDES FUTURE WEARING SURFACE
ALL VALUES ARE SHOWN IN FEET, EXCEPT "FINAL CAMBER" WHICH IS SHOWN IN INCHES (FRACTION FORM).

NOTE :
THESE DEAD LOAD DEFLECTIONS ARE TO BE USED WITH THE STANDARD (DRAPED STRANDS) 63'' PRESTRESSED CONCRETE MODIFIED BULB TEE CONTINUOUS FOR LIVE LOAD GIRDERS

PROJECT NO. R-2417C
LEE COUNTY
STATION: 615+26.51-LREV-

STATE OF NORTH CAROLINA
DEPARTMENT OF TRANSPORTATION
RALEIGH

SUPERSTRUCTURE

STANDARD DEAD LOAD DEFLECTIONS

(NBL)

NORTH CAROLINA PROFESSIONAL SEAL 029441 ENGINEER KRISTY W. ALFORD
8/3/09

REVISIONS								SHEET NO.
NO.	BY:	DATE:	NO.	BY:	DATE:			S-15
1			3					TOTAL SHEETS
2			4					104

DRAWN BY : D. G. ELY DATE : 9/2008
CHECKED BY : S. B. WILLIAMS DATE : 10/2008

31-JUL-2009 11:10
k:\structures\str_1\super_draw\R2417C_sd_DL_STR1.dgn
kalford

STR. #1

DEAD LOAD DEFLECTION TABLE FOR GIRDERS

0.6'' Ø LOW RELAXATION	GIRDER A1										
TENTH POINTS	0	.1	.2	.3	.4	.5	.6	.7	.8	.9	0
CAMBER (GIRDER ALONE IN PLACE) ↑	0.000	0.061	0.115	0.157	0.184	0.194	0.184	0.157	0.115	0.061	0.000
✳ DEFLECTION DUE TO SUPERIMPOSED D.L. ↓	0.000	0.024	0.045	0.062	0.073	0.076	0.073	0.062	0.045	0.024	0.000
FINAL CAMBER ↑	0	7/16"	13/16"	1 1/8"	1 3/8"	1 3/8"	1 3/8"	1 1/8"	13/16"	7/16"	0

DEAD LOAD DEFLECTION TABLE FOR GIRDERS

0.6'' Ø LOW RELAXATION	GIRDERS A2 THRU A4										
TENTH POINTS	0	.1	.2	.3	.4	.5	.6	.7	.8	.9	0
CAMBER (GIRDER ALONE IN PLACE) ↑	0.000	0.061	0.115	0.157	0.184	0.194	0.184	0.157	0.115	0.061	0.000
✳ DEFLECTION DUE TO SUPERIMPOSED D.L. ↓	0.000	0.024	0.046	0.063	0.074	0.078	0.074	0.063	0.046	0.024	0.000
FINAL CAMBER ↑	0	7/16"	13/16"	1 1/8"	1 5/16"	1 3/8"	1 5/16"	1 1/8"	13/16"	7/16"	0

DEAD LOAD DEFLECTION TABLE FOR GIRDERS

0.6'' Ø LOW RELAXATION	GIRDER A5										
TENTH POINTS	0	.1	.2	.3	.4	.5	.6	.7	.8	.9	0
CAMBER (GIRDER ALONE IN PLACE) ↑	0.000	0.061	0.115	0.157	0.184	0.194	0.184	0.157	0.115	0.061	0.000
✳ DEFLECTION DUE TO SUPERIMPOSED D.L. ↓	0.000	0.024	0.046	0.063	0.074	0.077	0.074	0.063	0.046	0.024	0.000
FINAL CAMBER ↑	0	7/16"	13/16"	1 1/8"	1 5/16"	1 3/8"	1 5/16"	1 1/8"	13/16"	7/16"	0

✳ INCLUDES FUTURE WEARING SURFACE
ALL VALUES ARE SHOWN IN FEET, EXCEPT "FINAL CAMBER" WHICH IS SHOWN IN INCHES (FRACTION FORM).

DEAD LOAD DEFLECTION TABLE FOR GIRDERS

0.6'' Ø LOW RELAXATION	GIRDER B1										
TENTH POINTS	0	.1	.2	.3	.4	.5	.6	.7	.8	.9	0
CAMBER (GIRDER ALONE IN PLACE) ↑	0.000	0.113	0.213	0.292	0.342	0.359	0.342	0.292	0.213	0.113	0.000
✳ DEFLECTION DUE TO SUPERIMPOSED D.L. ↓	0.000	0.041	0.078	0.107	0.126	0.132	0.126	0.107	0.078	0.041	0.000
FINAL CAMBER ↑	0	7/8"	1 5/8"	2 1/4"	2 9/16"	2 3/4"	2 9/16"	2 1/4"	1 5/8"	7/8"	0

DEAD LOAD DEFLECTION TABLE FOR GIRDERS

0.6'' Ø LOW RELAXATION	GIRDERS B2 THRU B4										
TENTH POINTS	0	.1	.2	.3	.4	.5	.6	.7	.8	.9	0
CAMBER (GIRDER ALONE IN PLACE) ↑	0.000	0.113	0.213	0.292	0.342	0.359	0.342	0.292	0.213	0.113	0.000
✳ DEFLECTION DUE TO SUPERIMPOSED D.L. ↓	0.000	0.042	0.080	0.109	0.128	0.134	0.128	0.109	0.080	0.042	0.000
FINAL CAMBER ↑	0	7/8"	1 5/8"	2 3/16"	2 9/16"	2 11/16"	2 9/16"	2 3/16"	1 5/8"	7/8"	0

DEAD LOAD DEFLECTION TABLE FOR GIRDERS

0.6'' Ø LOW RELAXATION	GIRDER B5										
TENTH POINTS	0	.1	.2	.3	.4	.5	.6	.7	.8	.9	0
CAMBER (GIRDER ALONE IN PLACE) ↑	0.000	0.113	0.213	0.292	0.342	0.359	0.342	0.292	0.213	0.113	0.000
✳ DEFLECTION DUE TO SUPERIMPOSED D.L. ↓	0.000	0.042	0.079	0.109	0.127	0.134	0.127	0.109	0.079	0.042	0.000
FINAL CAMBER ↑	0	7/8"	1 5/8"	2 3/16"	2 9/16"	2 11/16"	2 9/16"	2 3/16"	1 5/8"	7/8"	0

✳ INCLUDES FUTURE WEARING SURFACE
ALL VALUES ARE SHOWN IN FEET, EXCEPT "FINAL CAMBER" WHICH IS SHOWN IN INCHES (FRACTION FORM).

NOTE :
THESE DEAD LOAD DEFLECTIONS ARE TO BE USED WITH
THE OPTIONAL (STRAIGHT STRANDS)
63'' PRESTRESSED CONCRETE MODIFIED BULB TEE
CONTINUOUS FOR LIVE LOAD GIRDERS
(WITH 0.6'' Ø PARTIALLY DEBONDED STRANDS)

PROJECT NO. R-2417C
LEE COUNTY
STATION: 615+26.51-LREV-

STATE OF NORTH CAROLINA
DEPARTMENT OF TRANSPORTATION
RALEIGH

SUPERSTRUCTURE

OPTIONAL DEAD LOAD DEFLECTIONS

(NBL)

NORTH CAROLINA PROFESSIONAL SEAL 029441 ENGINEER KRISTY W. ALFORD
8/3/09

REVISIONS						SHEET NO.
NO.	BY:	DATE:	NO.	BY:	DATE:	S-16
1			3			TOTAL SHEETS
2			4			104

DRAWN BY : D. G. ELY DATE : 9/2008
CHECKED BY : S. B. WILLIAMS DATE : 10/2008

31-JUL-2009 11:11
k:\structures\str_1\super_draw\R2417C_sd_OPT_DL_STR1.dgn
kalford

STR. #1

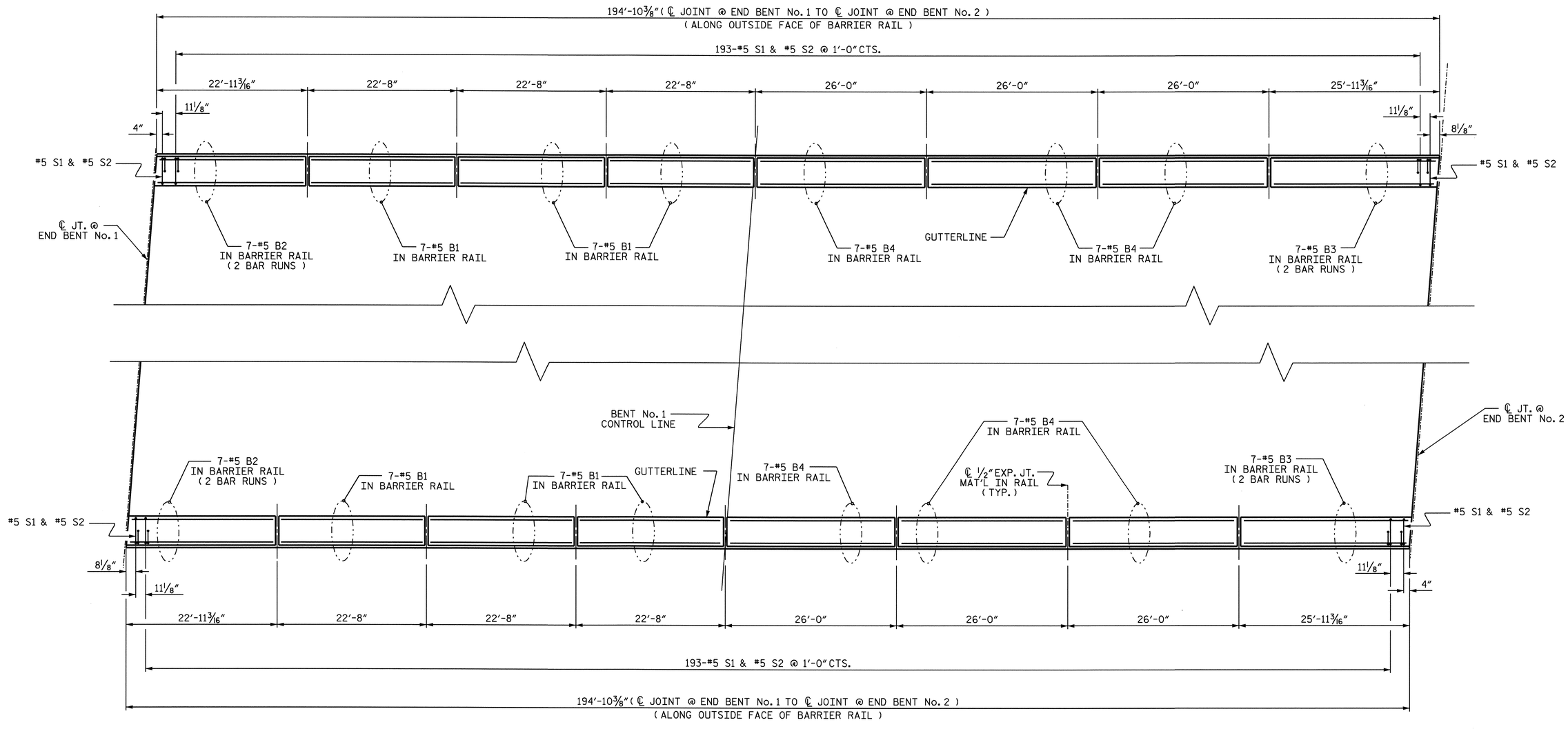

PLAN OF BARRIER RAIL

PROJECT NO. R-2417C

LEE COUNTY

STATION: 615+26.51-LREV-

SHEET 1 OF 2

STATE OF NORTH CAROLINA
DEPARTMENT OF TRANSPORTATION
RALEIGH

SUPERSTRUCTURE

CONCRETE BARRIER RAIL

(NBL)

NORTH CAROLINA PROFESSIONAL SEAL 029441 ENGINEER KRISTY W. ALFORD

8/3/09

REVISIONS						SHEET NO.
NO.	BY:	DATE:	NO.	BY:	DATE:	S-17
1			3			TOTAL SHEETS
2			4			104

DRAWN BY : D. G. ELY DATE : 9/2008
CHECKED BY : S. B. WILLIAMS DATE : 11/2008

31-JUL-2009 11:11
k:\structures\str_1\super_draw\R2417C_sd_BR_STR1.dgn
kalford

STR. #1

NOTES

THE BARRIER RAIL IN A CONTINUOUS UNIT SHALL NOT BE CAST UNTIL ALL SLAB CONCRETE IN THE UNIT HAS BEEN CAST AND HAS REACHED A MINIMUM COMPRESSIVE STRENGTH OF 3,000 PSI.

ALL REINFORCING STEEL IN BARRIER RAILS SHALL BE EPOXY COATED.

VERTICAL GROOVED CONTRACTION JOINTS, 1/2" IN DEPTH, SHALL BE TOOLED IN ALL EXPOSED FACES OF THE BARRIER RAIL AND IN ACCORDANCE WITH ARTICLE 825-10(B) OF THE STANDARD SPECIFICATIONS. THE CONTRACTION JOINT SHALL BE LOCATED AT EACH THIRD POINT BETWEEN BARRIER RAIL EXPANSION JOINTS. ONLY ONE CONTRACTION JOINT IS REQUIRED AT MIDPOINT OF BARRIER RAIL SEGMENTS LESS THAN 20 FEET IN LENGTH AND NO CONTRACTION JOINTS ARE REQUIRED FOR THOSE SEGMENTS LESS THAN 10 FEET IN LENGTH.

THE #5 S1 AND #5 S2 BARS MAY BE SHIFTED SLIGHTLY IN ORDER TO MAINTAIN A 2" MINIMUM CLEARANCE TO THE 1/2" EXPANSION JOINT MATERIAL IN THE BARRIER RAIL.

BAR TYPES

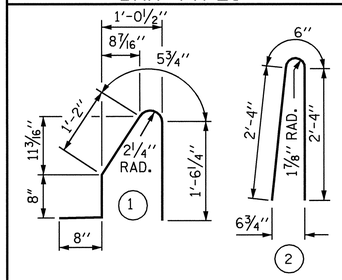

ALL BAR DIMENSIONS ARE OUT TO OUT

BILL OF MATERIAL

FOR CONCRETE BARRIER RAIL ONLY

BAR	NO.	SIZE	TYPE	LENGTH	WEIGHT
* B1	42	#5	STR	22'-3"	975
* B2	28	#5	STR	13'-2"	385
* B3	28	#5	STR	14'-8"	428
* B4	42	#5	STR	25'-7"	1121
* S1	390	#5	1	4'-6"	1830
* S2	390	#5	2	5'-2"	2102

* EPOXY COATED REINFORCING STEEL	6841	LBS.
CLASS AA CONCRETE	39.0	CU. YDS.
CONCRETE BARRIER RAIL	389.73	LIN. FT.

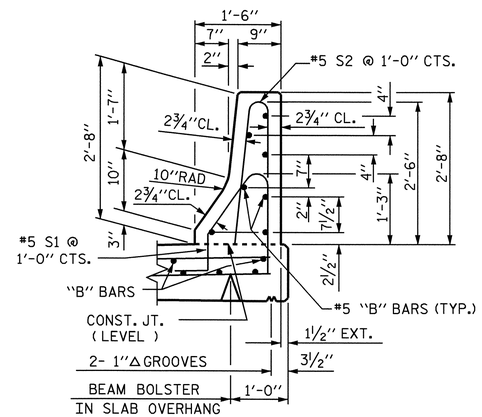

SECTION THRU RAIL

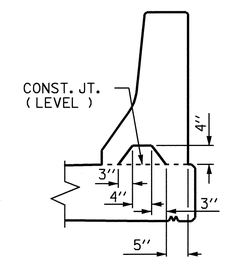

SECTION S-S

AT DAM IN OPEN JOINT
(THIS IS TO BE USED ONLY WHEN SLIP FORM IS USED)

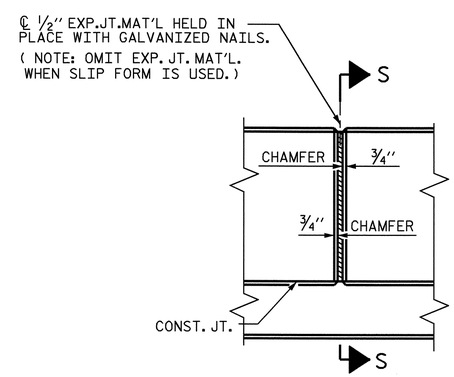

ELEVATION AT EXPANSION JOINTS

BARRIER RAIL DETAILS

PROJECT NO. R-2417C

LEE COUNTY

STATION: 615+26.51-LREV-

SHEET 2 OF 2

STATE OF NORTH CAROLINA
DEPARTMENT OF TRANSPORTATION
RALEIGH

STANDARD

CONCRETE BARRIER RAIL

(NBL)

NORTH CAROLINA PROFESSIONAL SEAL 029441 ENGINEER KRISTY W. ALFORD

8/3/09

REVISIONS						SHEET NO.
NO.	BY:	DATE:	NO.	BY:	DATE:	S-18
1			3			TOTAL SHEETS
2			4			104

ASSEMBLED BY : D. G. ELY		DATE : 9/2008	
CHECKED BY : S. B. WILLIAMS		DATE : 11/2008	
DRAWN BY : ARB 5/87	REV. 10/17/00	RWW/LES	
CHECKED BY : SJD 9/87	REV. 5/7/03R	RWW/JTE	
	REV. 5/1/06	TLA/GM	

31-JUL-2009 11:12
k:\structures\str_1\super_draw\R2417C_sd_BR_STR1.dgn
kalford

STD. NO. CBR1

STR. #1

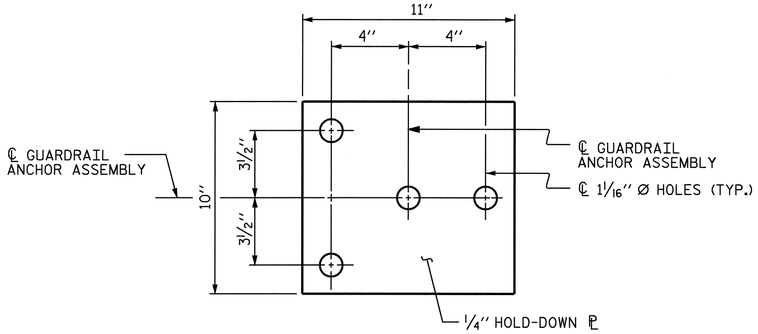

PLAN

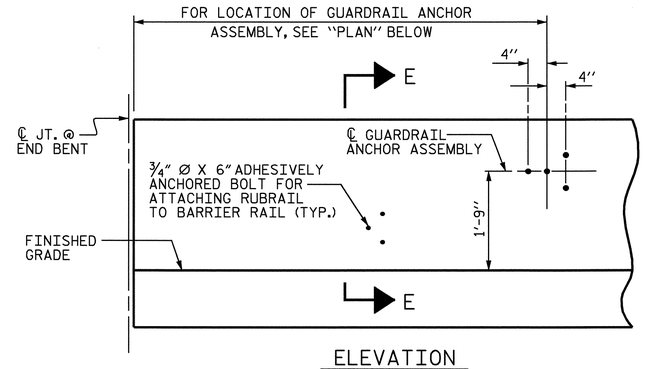

ELEVATION

FOR LOCATION OF RUBRAIL, SEE ROADWAY STD. 862.03

NOTES

THE GUARDRAIL ANCHOR ASSEMBLY SHALL CONSIST OF A 1/4'' HOLD DOWN PLATE AND 4 - 7/8'' Ø BOLTS WITH NUTS AND WASHERS, RUBRAIL, AND ADHESIVELY ANCHORED BOLTS.

THE HOLD-DOWN PLATE SHALL CONFORM TO AASHTO M270 GRADE 36. AFTER FABRICATION, THE HOLD-DOWN PLATE SHALL BE HOT-DIP GALVANIZED IN ACCORDANCE WITH AASHTO M111.

BOLTS SHALL CONFORM TO THE REQUIREMENTS OF ASTM A307 AND NUTS SHALL CONFORM TO THE REQUIREMENTS OF AASHTO M291. BOLTS, NUTS AND WASHERS SHALL BE GALVANIZED. (AT THE CONTRACTOR'S OPTION, STAINLESS STEEL BOLTS, NUTS AND WASHERS MAY BE USED AS AN ALTERNATE FOR THE 7/8'' Ø GALVANIZED BOLTS, NUTS AND WASHERS. THEY SHALL CONFORM TO OR EXCEED THE MECHANICAL REQUIREMENTS OF ASTM A307. THE USE OF THIS ALTERNATE SHALL BE APPROVED BY THE ENGINEER.)

THE GUARDRAIL ANCHOR ASSEMBLY IS REQUIRED AT ALL POINTS WHERE APPROACH GUARDRAIL IS TO BE ATTACHED TO THE END OF BARRIER RAIL. FOR POINTS OF ATTACHMENT, SEE SKETCH.

AFTER INSTALLATION, THE EXPOSED THREAD OF THE BOLT SHALL BE BURRED WITH A SHARP POINTED TOOL.

THE COST OF THE GUARDRAIL ANCHOR ASSEMBLY SHALL BE INCLUDED IN THE UNIT CONTRACT PRICE BID FOR CONCRETE BARRIER RAIL.

THE 1 1/4'' Ø HOLES SHALL BE FORMED OR DRILLED WITH A CORE BIT. IMPACT TOOLS WILL NOT BE PERMITTED. ANY CONCRETE DAMAGED BY THIS WORK SHALL BE REPAIRED TO THE SATISFACTION OF THE ENGINEER.

THE C6 X 8.2 RUBRAIL IS TO BE ADHESIVELY ANCHORED TO THE RAIL USING THREE 3/4" Ø X 6" BOLTS WITH WASHERS. LEVEL ONE FIELD TESTING IS REQUIRED, AND THE YIELD LOAD OF THE 3/4" Ø BOLT IS 12 KIPS. FOR ADHESIVELY ANCHORED ANCHOR BOLTS OR DOWELS, SEE SPECIAL PROVISIONS. SEE ROADWAY STANDARD 862.03 FOR DETAILS AND LOCATION OF THE RUBRAIL.

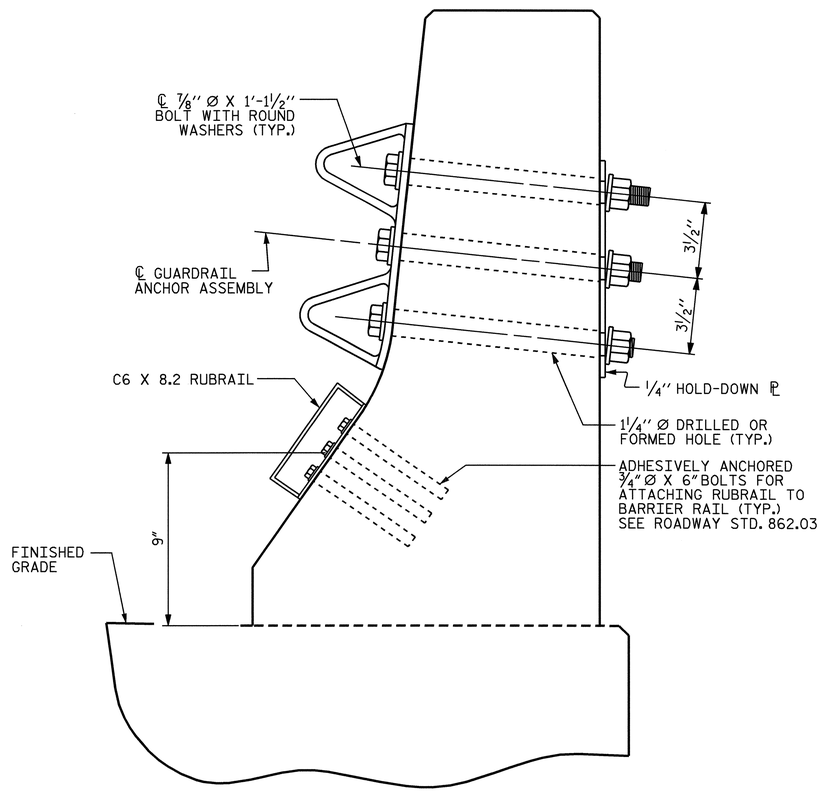

SECTION E-E

GUARDRAIL ANCHOR ASSEMBLY DETAILS

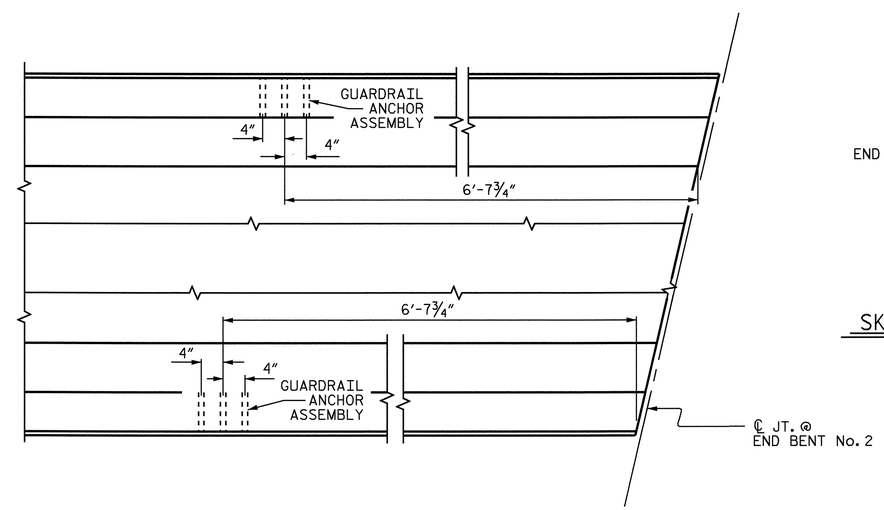

PLAN

LOCATION OF ANCHORS FOR GUARDRAIL

END BENT No. 2 SHOWN, END BENT No. 1 SIMILAR.

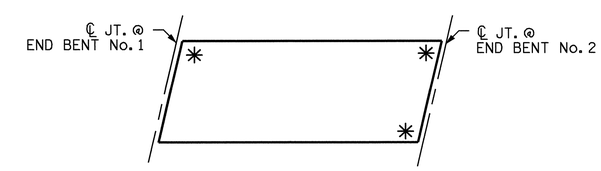

SKETCH SHOWING POINTS OF ATTACHMENTS

✳ DENOTES GUARDRAIL ANCHOR ASSEMBLY

PROJECT NO. R-2417C

LEE COUNTY

STATION: 615+26.51-LREV-

STATE OF NORTH CAROLINA
DEPARTMENT OF TRANSPORTATION
RALEIGH

STANDARD

GUARDRAIL ANCHORAGE FOR BARRIER RAIL

(NBL)

NORTH CAROLINA PROFESSIONAL SEAL 029441 ENGINEER KRISTY W. ALFORD

REVISIONS						SHEET NO.
NO.	BY:	DATE:	NO.	BY:	DATE:	S-19
1			3			TOTAL SHEETS
2			4			104

ASSEMBLED BY : D. G. ELY DATE : 9/2008
CHECKED BY : S. B. WILLIAMS DATE : 11/2008
DRAWN BY : TLA 5/06
CHECKED BY : GM 5/06
ADDED 5/1/06R KMM/GM

31-JUL-2009 11:12
k:\structures\str_1\super_draw\R2417C_sd_BR_STR1.dgn
kalford

STD. NO. GRA2

STR. #1

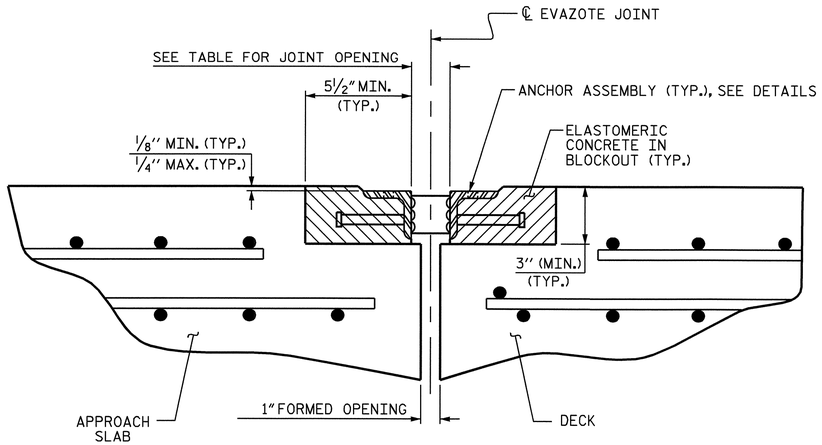

ARMORED JOINT DETAILS

SECTION NORMAL TO JOINT AT END BENT

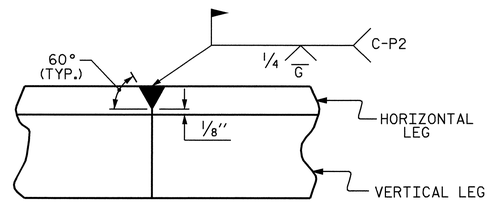

DETAIL- FIELD WELD SPLICE OF ANGLE

NOTES

ANGLES SHALL CONFORM TO AASHTO M270 GRADE 36 STEEL OR APPROVED EQUAL. ALL STUD ANCHORS SHALL CONFORM TO AASHTO M169 GRADES 1010 THRU 1020 OR APPROVED EQUAL.

STUD ANCHORS SHALL BE SHOP WELDED AND ALL HOLES SHALL BE SHOP DRILLED AS SHOWN ON THE PLANS. STUD ANCHORS SHALL BE ELECTRIC ARC END WELDED WITH COMPLETE FUSION.

UPON COMPLETION OF SHOP FABRICATION, THE ENTIRE ANCHOR ASSEMBLY SHALL BE METALLIZED. THE ½" Ø STUD ANCHORS AND ANCHOR TABS NEED NOT BE METALLIZED. SEE SPECIAL PROVISION FOR THERMAL SPRAYED COATINGS (METALLIZATION).

ANCHOR ASSEMBLY SHALL BE MADE CONTINUOUS THE LENGTH OF THE JOINT FROM GUTTER TO GUTTER. FOR FIELD SPLICES AT ALL CROWN BREAK POINTS, THE ENDS OF THE STEEL ANGLES SHALL BE CUT PARALLEL TO THE BRIDGE CENTERLINE. FINISHED FIELD WELDS SHALL BE GROUND SMOOTH AND COATED WITH A MINIMUM THICKNESS OF 4 DRY MILS OF ZINC-RICH PAINT IN ACCORDANCE WITH THE STANDARD SPECIFICATIONS.

ANCHOR ASSEMBLY SEGMENTS SHALL NOT BE LESS THAN 12 FEET NOR MORE THAN 20 FEET IN LENGTH. SHORTER SEGMENTS MAY BE USED AT THE EDGE OF ROADWAY OR AT POINTS OF STAGED CONSTRUCTION.

THE ANCHOR ASSEMBLY SHALL BE SECURED AND LEVELED AS SHOWN IN THE "ARMORED JOINT ANCHOR ASSEMBLY DETAILS". NO SUBMITTALS ARE REQUIRED FOR ⅜" Ø EXPANSION ANCHORS, NUTS OR WASHERS. THE CONTRACTOR MAY SUBMIT FOR APPROVAL AN ALTERNATE METHOD OF ALIGNING AND LEVELING THE ANGLES. THE ALTERNATE METHOD SHALL NOT INCLUDE ANY WELDING TO THE OUTSIDE FACE OF THE ANGLES.

AFTER THE ELASTOMERIC CONCRETE HAS BEEN CAST ON BOTH SIDES OF THE JOINT, REMOVE ANY EXCESS CONCRETE THAT COMES THROUGH THE WEEP HOLES AND THOROUGHLY CLEAN THE ANGLES. ANY DAMAGED STEEL SHALL BE COATED WITH A MINIMUM OF 4 MILS OF ZINC-RICH PAINT IN ACCORDANCE WITH THE STANDARD SPECIFICATIONS.

SEE SPECIAL PROVISIONS FOR EVAZOTE JOINT SEALS.

SEE SPECIAL PROVISIONS FOR ELASTOMERIC CONCRETE.

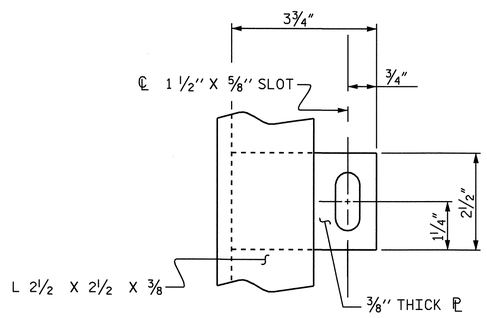

PLAN VIEW OF TAB

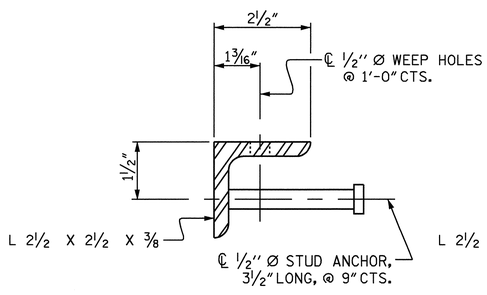

SECTION VIEW OF STUD

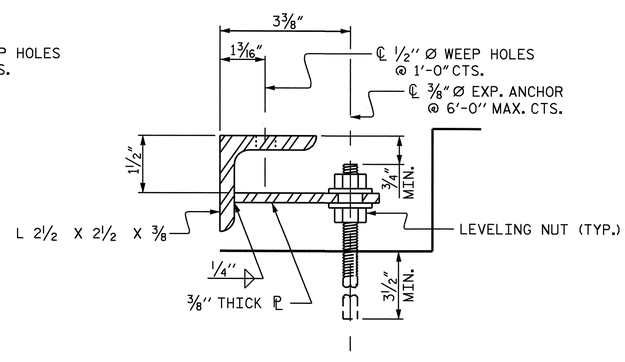

SECTION VIEW OF TAB

ARMORED JOINT ANCHOR ASSEMBLY DETAILS

MOVEMENT AND SETTING AT EVAZOTE JOINT

LOCATION	SKEW ANGLE	NOMINAL UNCOMPRESSED SEAL WIDTH	TOTAL MOVEMENT (ALONG ℄ RDWY)	PERPENDICULAR JOINT OPENING AT 45° F	PERPENDICULAR JOINT OPENING AT 60° F	PERPENDICULAR JOINT OPENING AT 90° F
END BENT No. 1	102°-58'-39"	2½"	13⁄16"	2⅛"	2"	1¾"
END BENT No. 2	102°-58'-39"	2½"	13⁄16"	2⅛"	2"	1¾"

TOTAL MOVEMENT IS CALCULATED ALONG THE CENTERLINE OF ROADWAY.
JOINT OPENINGS ARE MEASURED PERPENDICULAR TO THE JOINT.

BILL OF MATERIAL

LOCATION	ELASTOMERIC CONCRETE * (CU. FT.)	TOTAL LENGTH OF ANGLE (FT)
END BENT No. 1	8.9	78'-0"
END BENT No. 2	8.9	78'-0"

* BASED ON THE MINIMUM BLOCKOUT SHOWN.

PROJECT NO. R-2417C
LEE COUNTY
STATION: 615+26.51-LREV-

STATE OF NORTH CAROLINA
DEPARTMENT OF TRANSPORTATION
RALEIGH

STANDARD
ARMORED EVAZOTE JOINT DETAILS
(NBL)

NORTH CAROLINA PROFESSIONAL SEAL 029441 ENGINEER KRISTY W. ALFORD
8/3/09

REVISIONS						SHEET NO.
NO.	BY:	DATE:	NO.	BY:	DATE:	S-20
1			3			TOTAL SHEETS
2			4			104

STD. NO. AEJ1 STR. #1

ASSEMBLED BY : D. G. ELY	DATE : 12/2008	
CHECKED BY : K. W. ALFORD	DATE : 2/2009	
DRAWN BY : EEM 1/96	REV. 7/10/01 LES/RDR	
CHECKED BY : RGW 1/96	REV. 5/7/03RR RWW/JTE	
	REV. 5/1/06 TLA/GM	

31-JUL-2009 11:12
k:\structures\str_1\super_draw\R2417C_sd_AEJ_STR1.dgn
kalford

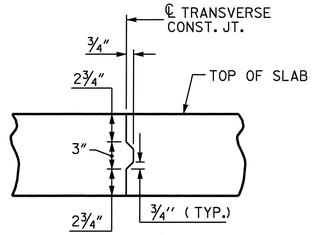

TRANSVERSE CONSTRUCTION JOINT DETAIL

NOTE: REINFORCING STEEL IN SLAB NOT SHOWN. LONGITUDINAL REINFORCING STEEL SHALL BE CONTINUOUS THRU JOINT

BAR TYPES

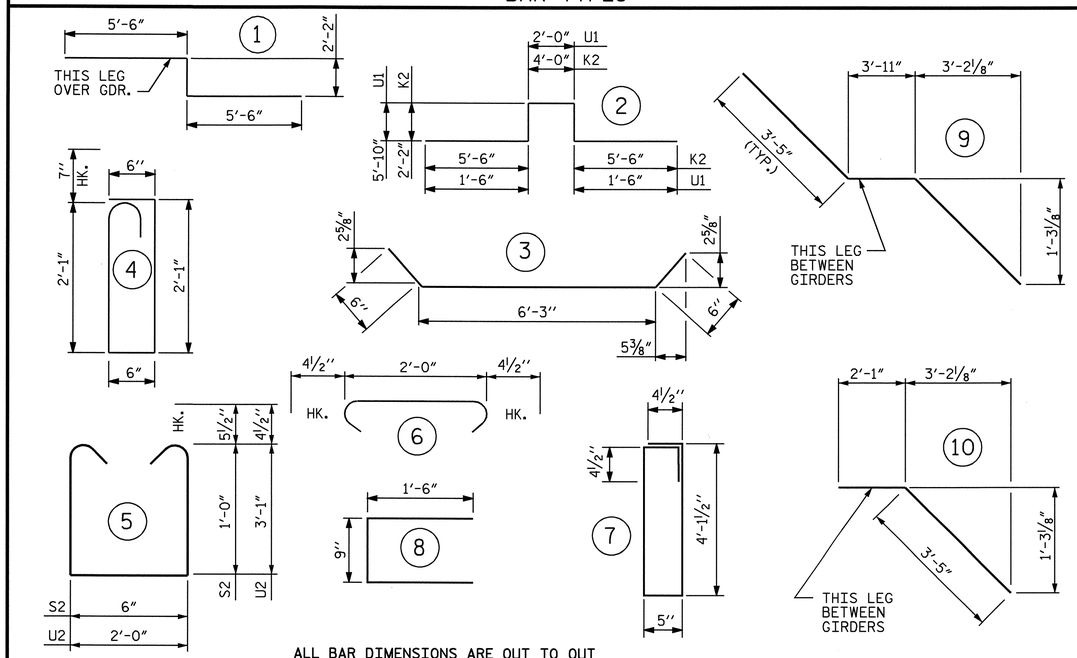

ALL BAR DIMENSIONS ARE OUT TO OUT

BILL OF MATERIAL

BAR	NO.	SIZE	TYPE	LENGTH	WEIGHT	BAR	NO.	SIZE	TYPE	LENGTH	WEIGHT
✳ A1	297	#5	STR	40'-11"	12675	✳ B1	78	#4	STR	21'-5"	1116
A2	297	#5	STR	40'-11"	12675	✳ B2	78	#7	STR	26'-7"	4238
						✳ B3	25	#7	STR	29'-7"	1512
✳ A101	2	#5	STR	38'-2"	80	✳ B4	78	#4	STR	24'-5"	1272
✳ A102	2	#5	STR	35'-6"	74	✳ B5	14	#4	STR	29'-6"	276
✳ A103	2	#5	STR	32'-9"	68	B6	150	#5	STR	40'-8"	6362
✳ A104	2	#5	STR	30'-0"	63						
✳ A105	2	#5	STR	27'-4"	57	✳ G1	2	#5	STR	41'-11"	87
✳ A106	2	#5	STR	24'-7"	51						
✳ A107	2	#5	STR	21'-11"	46	✳ K1	8	#8	1	13'-2"	281
✳ A108	2	#5	STR	19'-2"	40	✳ K2	12	#8	2	19'-4"	619
✳ A109	2	#5	STR	16'-6"	34	✳ K3	24	#6	STR	4'-8"	168
✳ A110	2	#5	STR	13'-9"	29	K4	16	#5	STR	7'-5"	124
✳ A111	2	#5	STR	11'-1"	23	K5	8	#4	STR	4'-8"	25
✳ A112	2	#5	STR	8'-4"	17	K6	32	#4	STR	7'-9"	166
✳ A113	2	#5	STR	5'-8"	12	K7	8	#4	STR	4'-10"	26
✳ A114	2	#5	STR	2'-11"	6	K8	18	#4	9	10'-9"	129
						K9	12	#4	10	5'-6"	44
A201	2	#5	STR	38'-2"	80	K10	24	#5	3	7'-3"	181
A202	2	#5	STR	35'-6"	74	K11	96	#5	STR	7'-7"	759
A203	2	#5	STR	32'-9"	68						
A204	2	#5	STR	30'-0"	63	✳ S1	40	#5	4	5'-9"	240
A205	2	#5	STR	27'-4"	57	✳ S2	16	#5	5	3'-5"	57
A206	2	#5	STR	24'-7"	51	S3	116	#4	6	2'-9"	213
A207	2	#5	STR	21'-11"	46	S4	84	#4	7	9'-10"	552
A208	2	#5	STR	19'-2"	40	✳ S5	40	#4	8	3'-9"	100
A209	2	#5	STR	16'-6"	34						
A210	2	#5	STR	13'-9"	29	U1	20	#4	2	16'-8"	223
A211	2	#5	STR	11'-1"	23	U2	8	#4	5	8'-11"	48
A212	2	#5	STR	8'-4"	17						
A213	2	#5	STR	5'-8"	12	REINFORCING STEEL = 22127 LBS					
A214	2	#5	STR	2'-11"	6	✳ EPOXY COATED REINF. STEEL= 23241 LBS					

✳ DENOTES EPOXY COATED REINFORCING STEEL

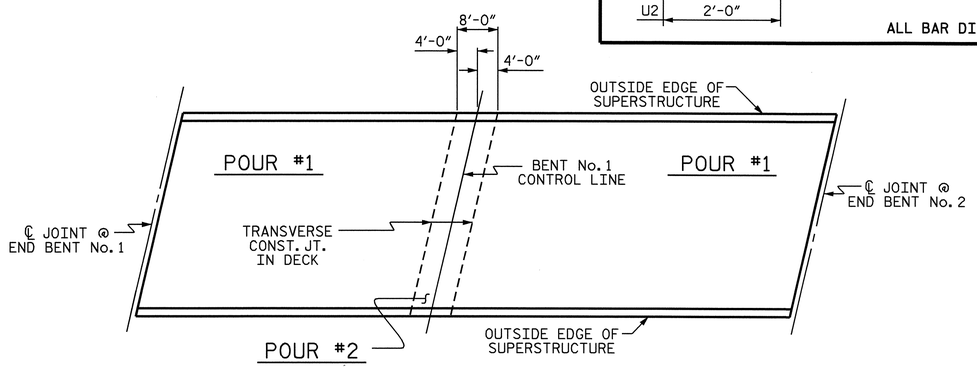

OPTIONAL CONCRETE DECK POUR DETAIL

(POUR #2 CANNOT BE STARTED UNTIL BOTH ADJACENT POUR #1'S REACH A MINIMUM COMPRESSIVE STRENGTH OF 3000 PSI)

SUPERSTRUCTURE REINFORCING STEEL LENGTHS ARE BASED ON THE FOLLOWING MINIMUM SPLICE LENGTHS

BAR SIZE	SUPERSTRUCTURE EXCEPT APPROACH SLABS, PARAPET, AND BARRIER RAIL		APPROACH SLABS		PARAPET AND BARRIER RAIL
	EPOXY COATED	UNCOATED	EPOXY COATED	UNCOATED	
#4	2'-0"	1'-9"	2'-0"	1'-9"	2'-9"
#5	2'-6"	2'-2"	2'-6"	2'-2"	3'-5"
#6	3'-0"	2'-7"	3'-10"	2'-7"	4'-4"
#7	5'-3"	3'-6"			
#8	6'-10"	4'-7"			

SUPERSTRUCTURE BILL OF MATERIAL

SPANS "A" AND "B"	CLASS AA CONCRETE	REINFORCING STEEL	EPOXY COATED REINFORCING STEEL
	(CU. YDS.)	(LBS.)	(LBS.)
POUR 1	127.6		
POUR 2	189.6		
TOTAL ✳✳	317.2	22127	23241

✳✳ QUANTITIES FOR BARRIER RAIL ARE NOT INCLUDED

GROOVING BRIDGE FLOORS

APPROACH SLABS	1657	SQ.FT.
BRIDGE DECK	6772	SQ.FT.
TOTAL	8429	SQ.FT.

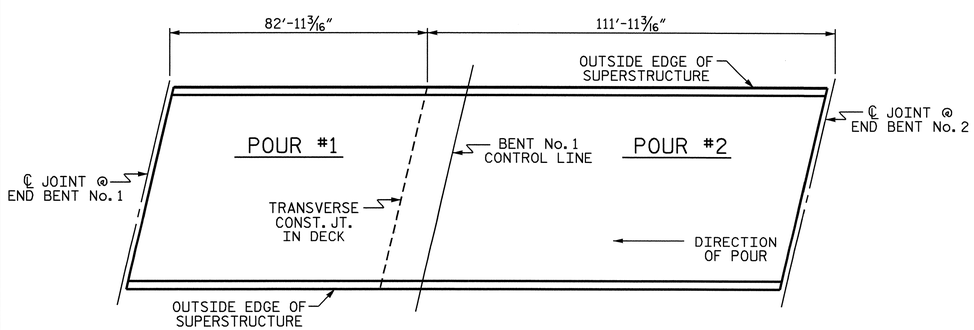

CONCRETE DECK POUR DETAIL

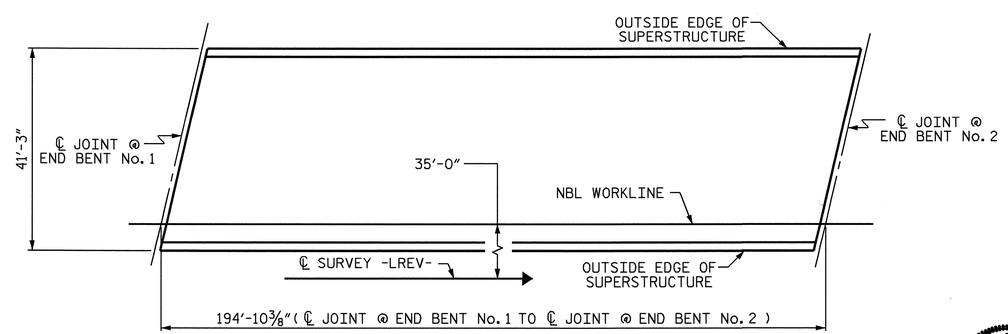

LAYOUT FOR COMPUTING AREA REINFORCED CONCRETE DECK SLAB

(SQ. FT. = 8038.2)

PROJECT NO. R-2417C

LEE COUNTY

STATION: 615+26.51-LREV-

STATE OF NORTH CAROLINA
DEPARTMENT OF TRANSPORTATION
RALEIGH

SUPERSTRUCTURE

SUPERSTRUCTURE BILL OF MATERIAL

(NBL)

NORTH CAROLINA PROFESSIONAL SEAL 029441 ENGINEER KRISTY W. ALFORD
8/3/09

ASSEMBLED BY : D. G. ELY	DATE : 8/2008
CHECKED BY : S. B. WILLIAMS	DATE : 11/2008

DRAWN BY : JMB	5/87	REV. 6/1/94	EEM/GRP
CHECKED BY : SJD	9/87	REV. 8/16/99	RWW/LES
		REV. 5/1/06	TLA/GM

REVISIONS						SHEET NO.
NO.	BY:	DATE:	NO.	BY:	DATE:	S-21
1			3			TOTAL SHEETS
2			4			104

STD. NO. BOM2

STR. #1

31-JUL-2009 11:12
k:\structures\str_1\super_draw\R2417C_sd_BM_STR1.dgn
kalford

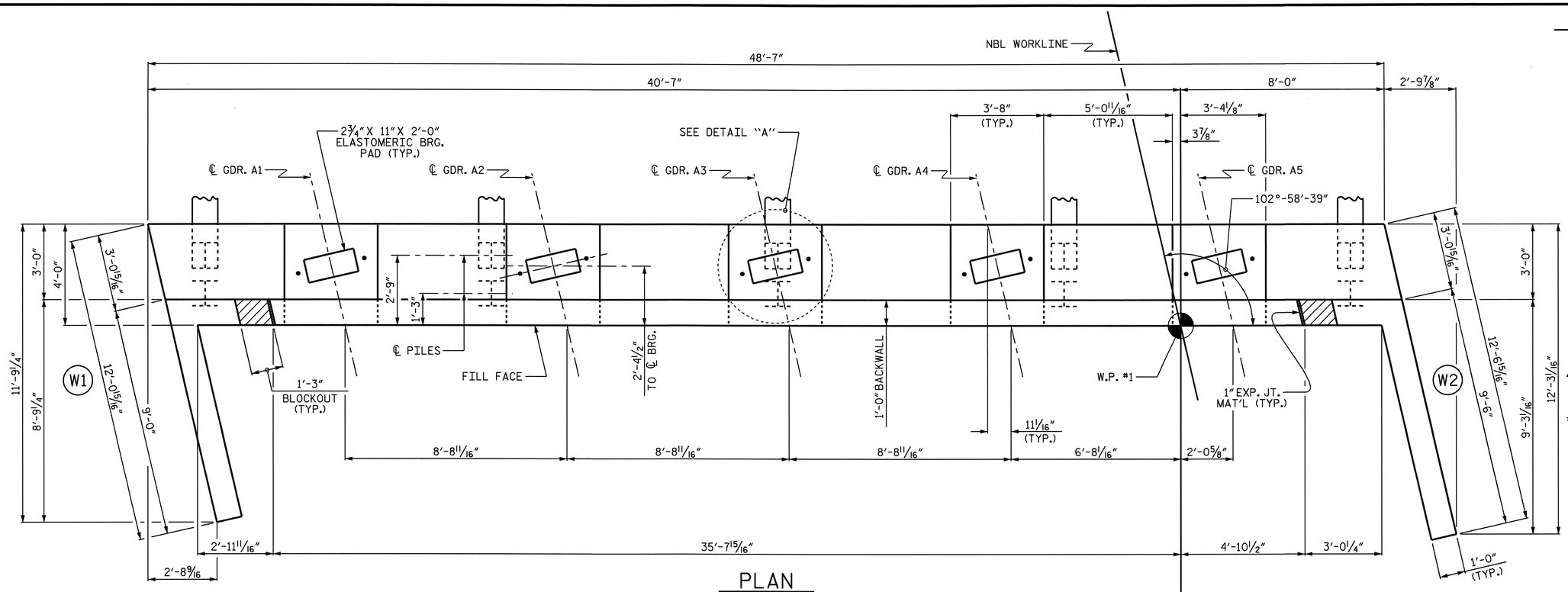

PLAN

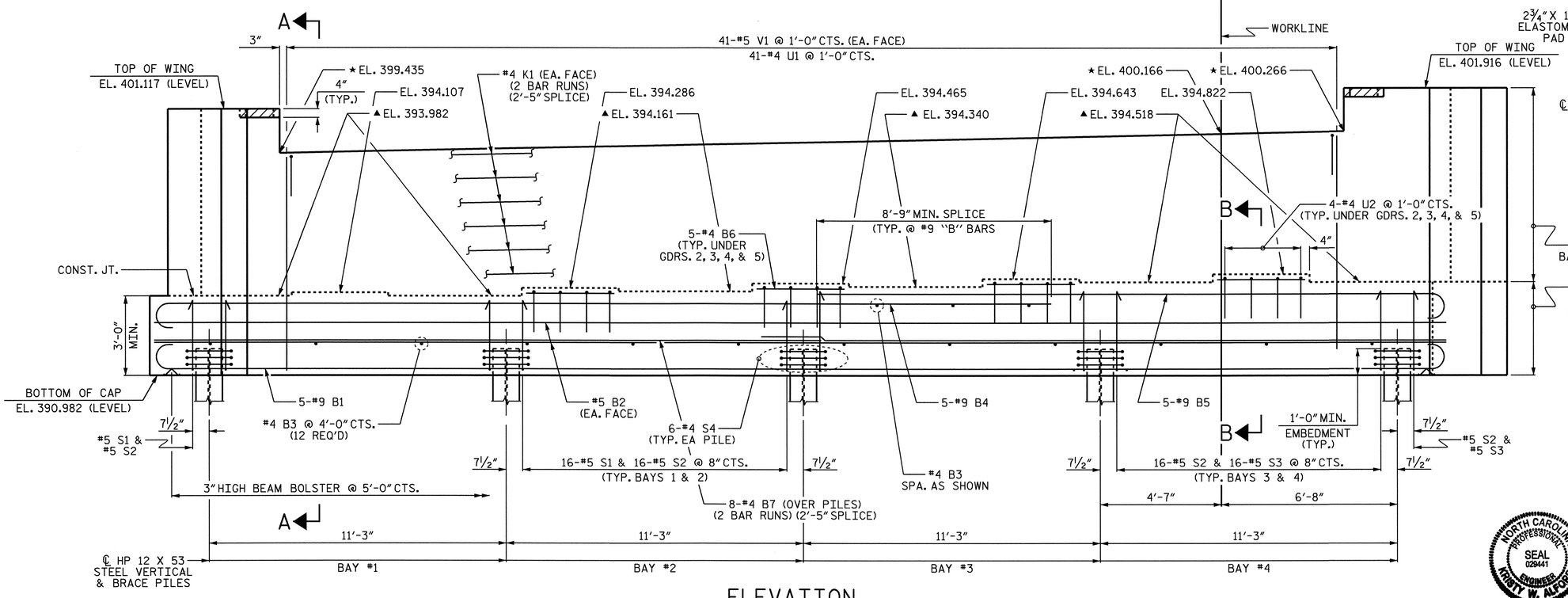

ELEVATION

NOTES:

STIRRUPS AND U2 BARS IN CAP MAY BE SHIFTED AS NECESSARY TO CLEAR ANCHOR BOLTS.

BACKWALL SHALL BE PLACED BEFORE APPLYING THE EPOXY PROTECTIVE COATING.

THE TOP SURFACE OF THE CAP EXCEPT THE BRIDGE SEAT BUILDUPS SHALL BE SLOPED TRANSVERSELY FROM THE FILL FACE TO THE BACK FACE AT THE RATE OF 2%.

THE CONTRACTOR SHALL PROVIDE FOR INSTALLATION OF THE 4" DIAMETER DRAIN PIPE THROUGH THE WING WALL AS REQUIRED FOR REINFORCED BRIDGE APPROACH FILLS, SEE THE ROADWAY PLANS. REINFORCING STEEL IN THE WING WALL MAY BE SHIFTED AS NECESSARY TO CLEAR THE DRAIN PIPE.

#5 V1 BARS IN BACKWALL SHALL BE PLACED 2" FROM TOP OF BACKWALL.

THE CONCRETE IN THE SHADED AREA OF THE WING SHALL BE POURED AFTER THE BARRIER RAIL IS CAST IF SLIP FORMING IS USED.

▲ FOR LOCATION OF ELEVATION BETWEEN BUILDUPS, SEE SECTION A-A, ON SHEET 3 OF 3.

★ THIS ELEVATION TAKEN ON FILL FACE OF BACKWALL.

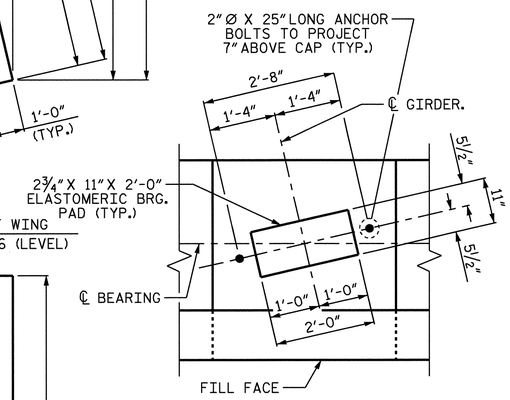

DETAIL "A"

(TYP. EA. GIRDER)

PROJECT NO. R-2417C

LEE COUNTY

STATION: 615+26.51 -LREV-

SHEET 1 OF 3

STATE OF NORTH CAROLINA
DEPARTMENT OF TRANSPORTATION
RALEIGH

SUBSTRUCTURE

END BENT No. 1

NBL

NORTH CAROLINA PROFESSIONAL SEAL 029441 ENGINEER KRISTY W. ALFORD

8/3/09

REVISIONS						SHEET NO.
NO.	BY:	DATE:	NO.	BY:	DATE:	S-22
1			3			TOTAL SHEETS
2			4			104

DRAWN BY : T. BANKOVICH DATE : 9-2008

CHECKED BY : D.G. ELY DATE : 9-2008

31-JUL-2009 11:13
k:\structures\str_1\Sub_Draw\R-2417C_str1_E*_1.dgn
Kalford

STR. #1

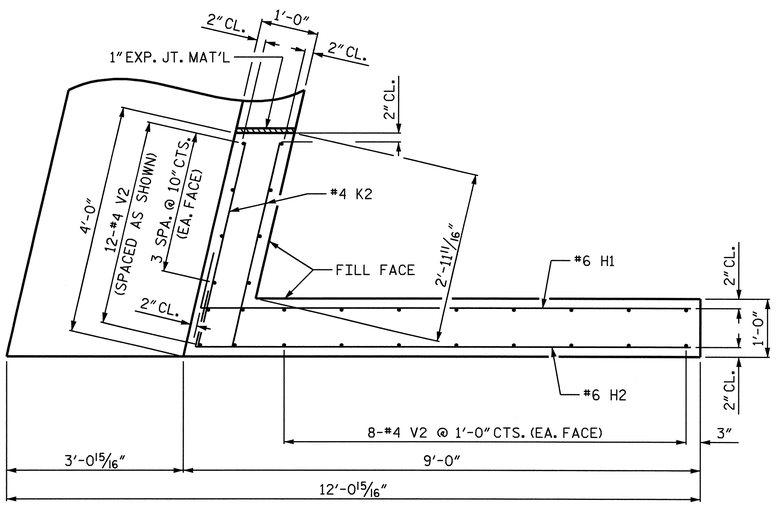

PLAN OF WING (W1)

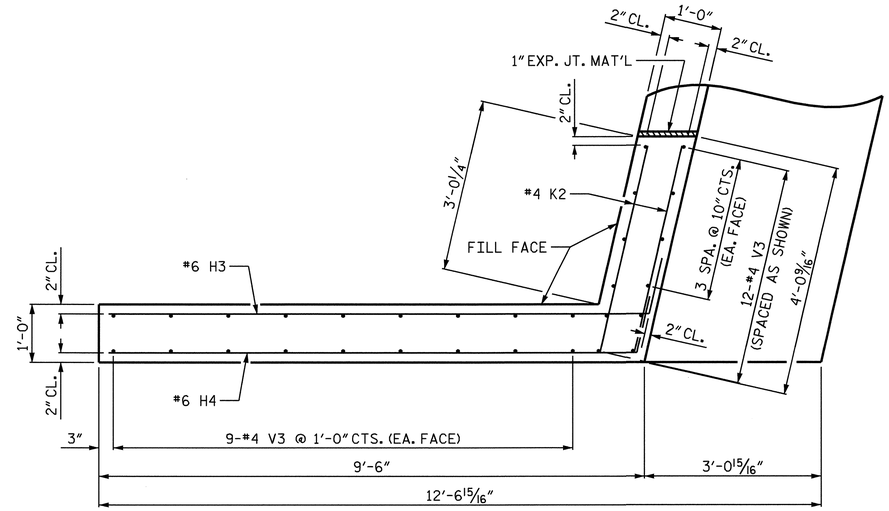

PLAN OF WING (W2)

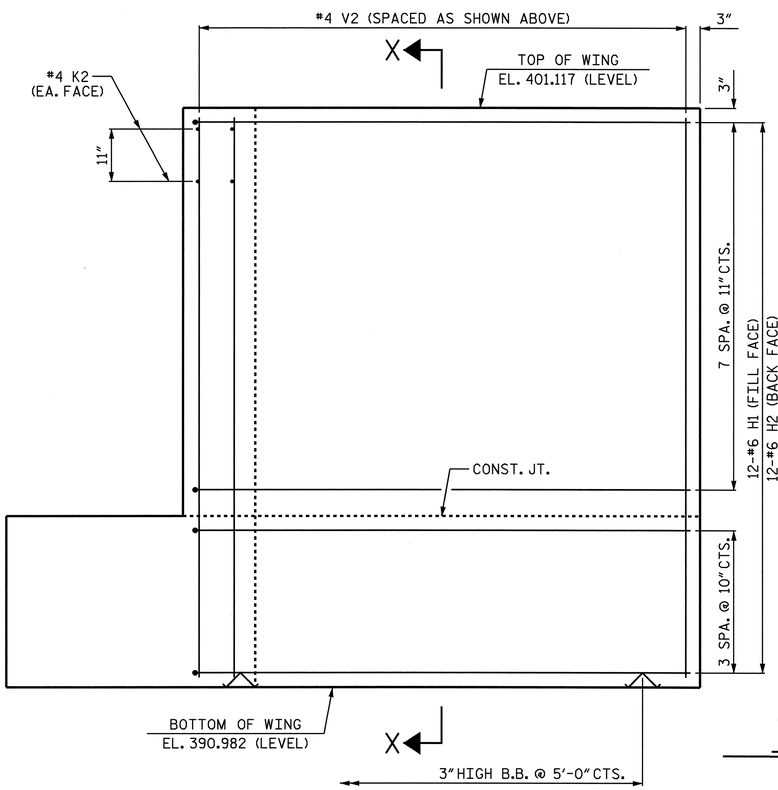

ELEVATION OF WING (W1)

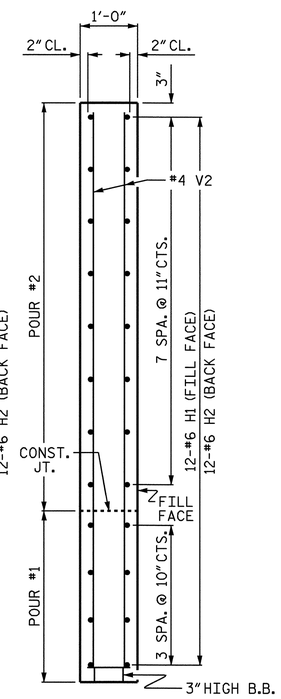

SECTION X-X

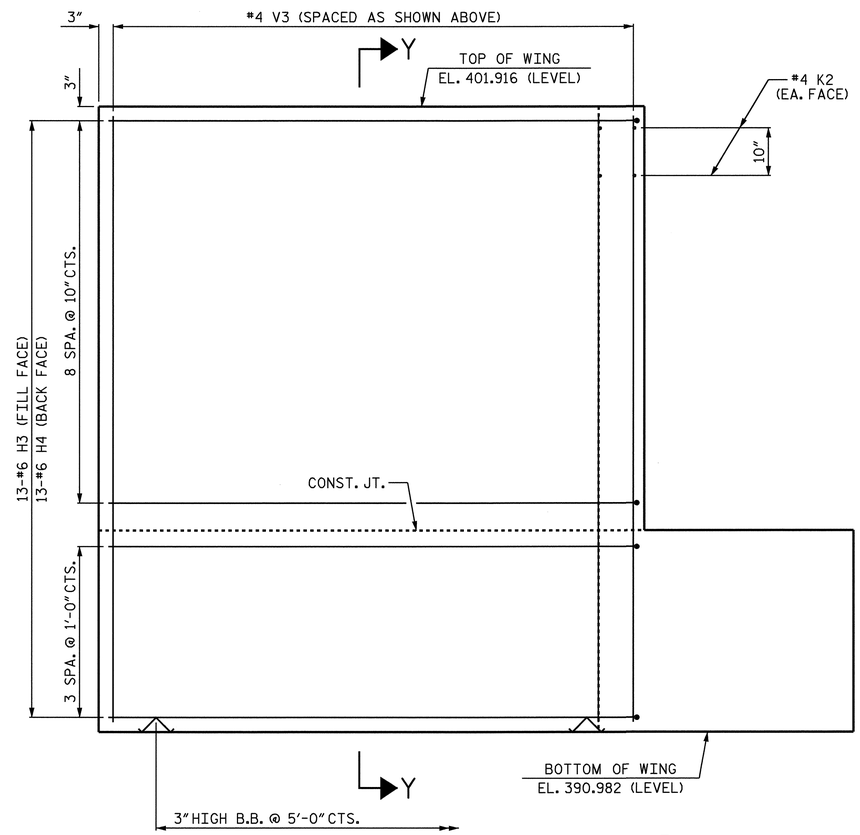

ELEVATION OF WING (W2)

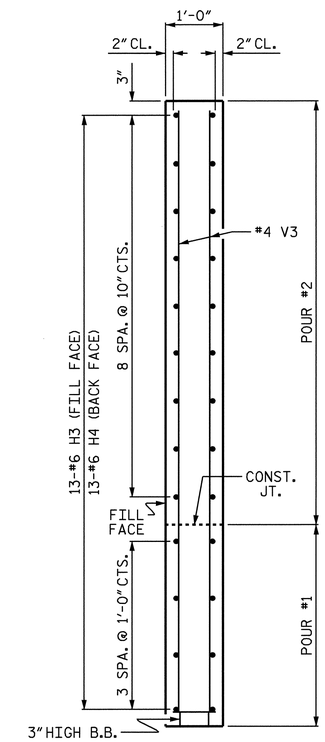

SECTION Y-Y

PROJECT NO. R-2417C
LEE COUNTY
STATION: 615+26.51 -LREV-

SHEET 2 OF 3

STATE OF NORTH CAROLINA
DEPARTMENT OF TRANSPORTATION
RALEIGH

SUBSTRUCTURE

END BENT No. 1
NBL

NORTH CAROLINA PROFESSIONAL SEAL 029441 ENGINEER KRISTY W. ALFORD
8/3/09

REVISIONS						SHEET NO.
NO.	BY:	DATE:	NO.	BY:	DATE:	S-23
1			3			TOTAL SHEETS
2			4			104

DRAWN BY : T. BANKOVICH DATE : 9-2008
CHECKED BY : D.G. ELY DATE : 9-2008

31-JUL-2009 11:14
k:\structures\str_1\Sub_Draw\R-2417C_str1_E*_1.dgn
kalford

STR. #1

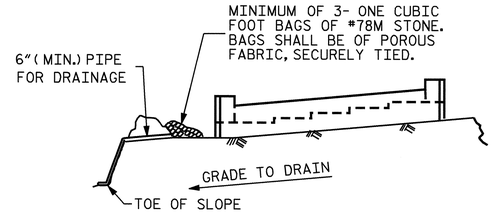

BAGGED STONE AND PIPE SHALL BE PLACED IMMEDIATELY AFTER COMPLETION OF END BENT EXCAVATION. PIPE MAY BE EITHER CONCRETE, CORRUGATED STEEL, CORRUGATED ALUMINUM ALLOY, OR CORRUGATED PLASTIC. PERFORATED PIPE WILL NOT BE ALLOWED.

BAGGED STONE SHALL REMAIN IN PLACE UNTIL THE ENGINEER DIRECTS THAT IT BE REMOVED. THE CONTRACTOR SHALL REMOVE AND DISPOSE OF SILT ACCUMULATIONS AT BAGGED STONE WHEN SO DIRECTED BY THE ENGINEER. BAGS SHALL BE REMOVED AND REPLACED WHENEVER THE ENGINEER DETERMINES THAT THEY HAVE DETERIORATED AND LOST THEIR EFFECTIVENESS.

NO SEPARATE PAYMENT WILL BE MADE FOR THIS WORK AND THE ENTIRE COST OF THIS WORK SHALL BE INCLUDED IN THE UNIT CONTRACT PRICE BID FOR THE SEVERAL PAY ITEMS.

TEMPORARY DRAINAGE AT END BENT

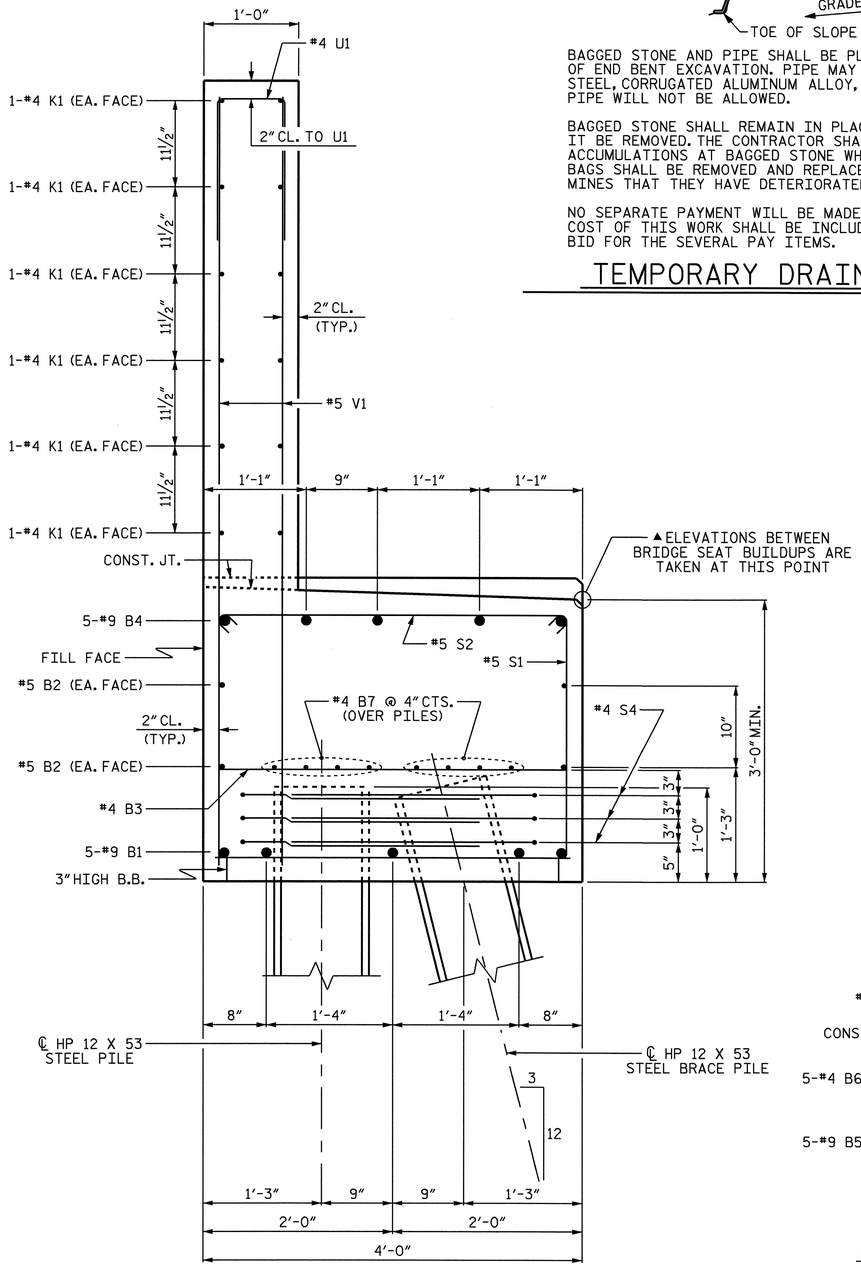

SECTION A-A

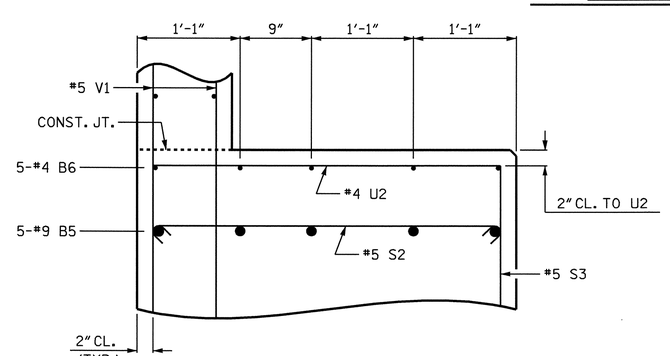

PARTIAL SECTION B-B

BAR TYPES

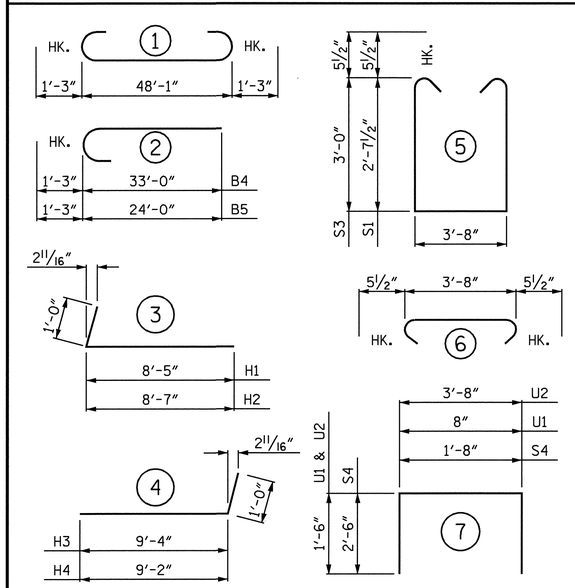

ALL BAR DIMENSIONS ARE OUT TO OUT

BILL OF MATERIAL
END BENT No. 1

BAR	NO.	SIZE	TYPE	LENGTH	WEIGHT
B1	5	#9	1	50'-7"	860
B2	4	#5	STR	48'-3"	201
B3	15	#4	STR	3'-8"	37
B4	5	#9	2	34'-3"	582
B5	5	#9	2	25'-3"	429
B6	20	#4	STR	3'-4"	45
B7	16	#4	STR	25'-4"	271
H1	12	#6	3	9'-5"	170
H2	12	#6	3	9'-7"	173
H3	13	#6	4	10'-4"	202
H4	13	#6	4	10'-2"	199
K1	24	#4	STR	25'-4"	406
K2	8	#4	STR	3'-8"	20
S1	33	#5	5	9'-10"	338
S2	66	#5	6	4'-7"	316
S3	33	#5	5	10'-7"	364
S4	30	#4	7	6'-8"	134
U1	41	#4	7	3'-8"	100
U2	16	#4	7	6'-8"	71
V1	82	#5	STR	8'-1"	691
V2	28	#4	STR	9'-9"	182
V3	30	#4	STR	10'-7"	212
REINFORCING STEEL					6003 LBS.

CLASS A CONCRETE BREAKDOWN	
POUR #1 (CAP & LOWER WINGS)	26.1 C.Y.
POUR #2 (BACKWALL & UPPER WINGS)	14.8 C.Y.
TOTAL CLASS A CONCRETE	40.9 C.Y.
HP 12 X 53 STEEL PILES	
No. = 10	650 LIN FT.

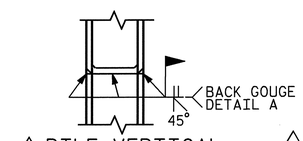

△ PILE VERTICAL

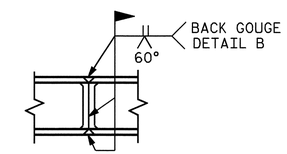

△ PILE HORIZONTAL OR VERTICAL

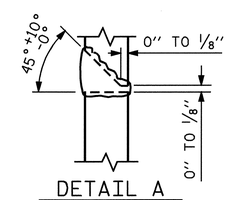

DETAIL A

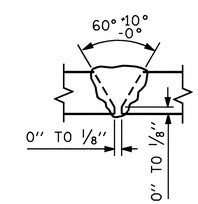

DETAIL B

△ POSITION OF PILE DURING WELDING.

PILE SPLICE DETAILS

PROJECT NO. R-2417C
LEE COUNTY
STATION: 615+26.51 -LREV-

SHEET 3 OF 3

STATE OF NORTH CAROLINA
DEPARTMENT OF TRANSPORTATION
RALEIGH

SUBSTRUCTURE

END BENT No. 1
NBL

NORTH CAROLINA PROFESSIONAL SEAL 029441 ENGINEER KRISTY W. ALFORD
8/3/09

REVISIONS						SHEET NO.
NO.	BY:	DATE:	NO.	BY:	DATE:	S-24
1			3			TOTAL SHEETS
2			4			104

STR. #1

DRAWN BY : T. BANKOVICH DATE : 9-2008
CHECKED BY : D.G. ELY DATE : 9-2008

31-JUL-2009 11:14
k:\structures\str_1\Sub_Draw\R-2417C_str1_E*_1.dgn
kalford

NOTES:

STIRRUPS AND "U" BARS IN CAP MAY BE SHIFTED AS NECESSARY TO CLEAR ANCHOR BOLTS.

HOOKS ON "V" BARS MAY BE TURNED AS NECESSARY FOR PLACING REINFORCING STEEL.

FOR PILE SPLICE DETAILS, SEE END BENT No. 1, SHEET 3 OF 3.

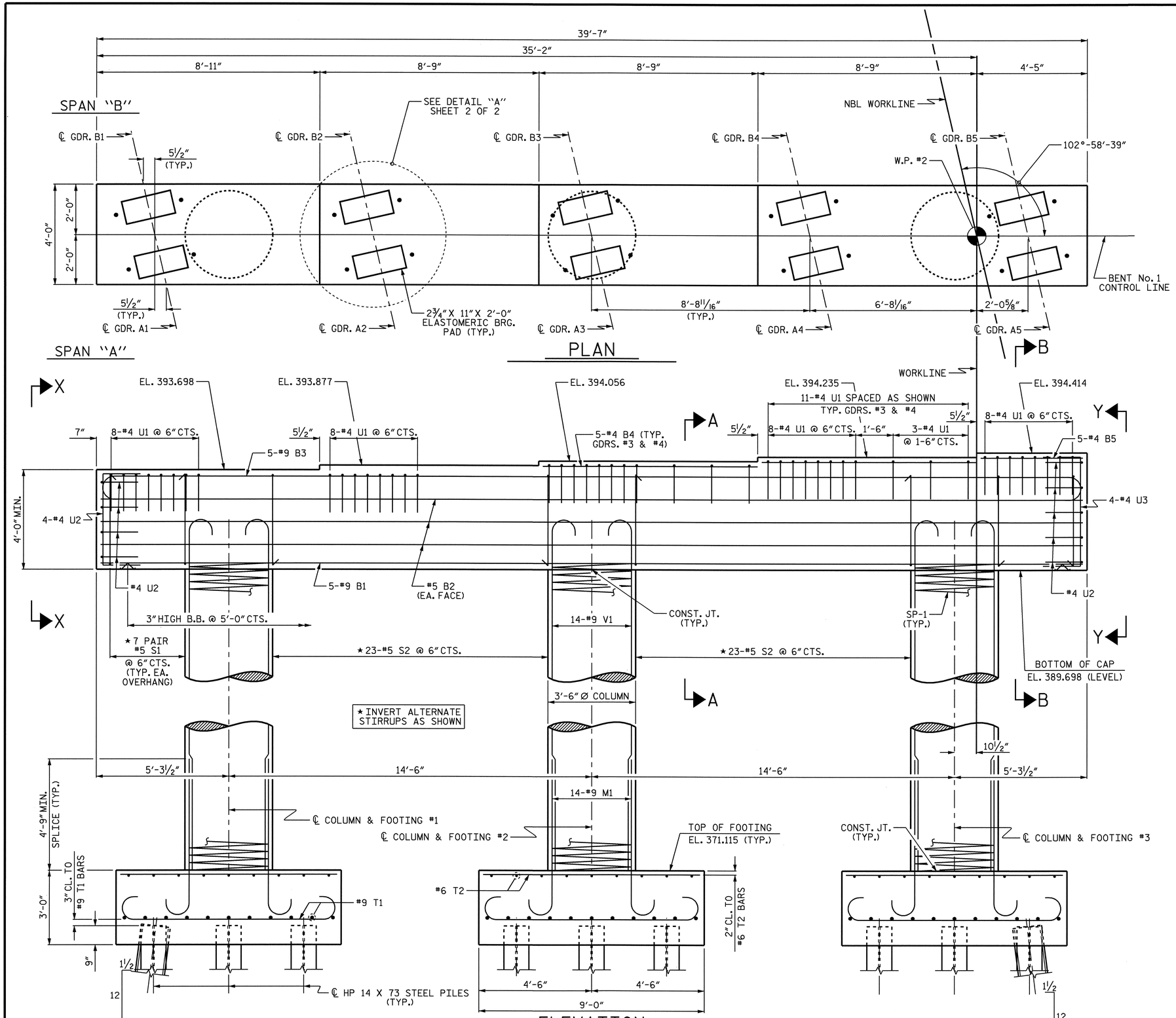

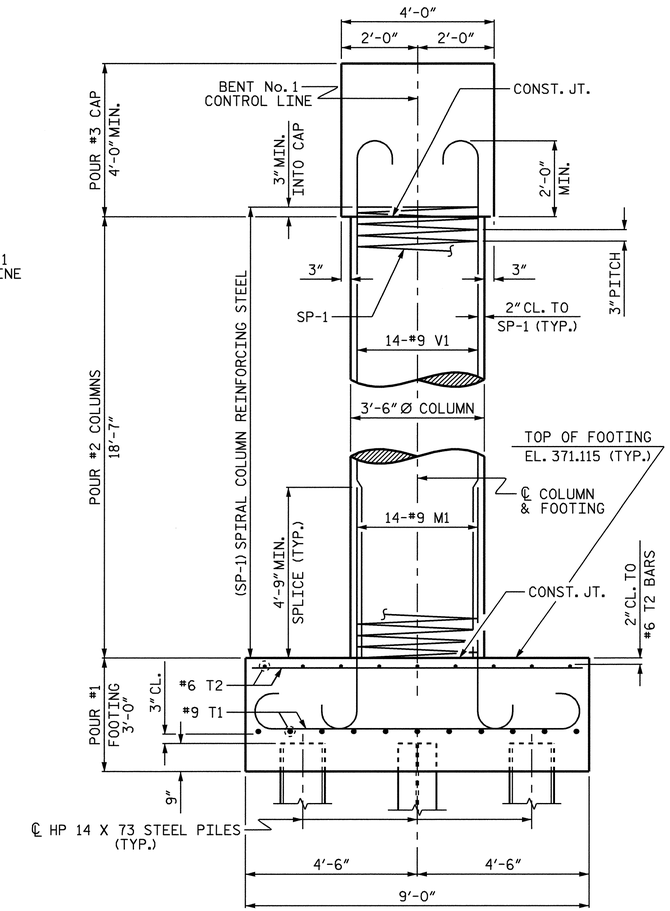

END ELEVATION

REINFORCING STEEL, DIMENSION AND DETAILS ARE TYPICAL FOR EACH COLUMN & FOOTING UNLESS OTHERWISE NOTED.

PROJECT NO. R-2417C

LEE COUNTY

STATION: 615+26.51 -LREV-

SHEET 1 OF 2

STATE OF NORTH CAROLINA
DEPARTMENT OF TRANSPORTATION
RALEIGH

SUBSTRUCTURE

BENT No. 1
(NBL)

NORTH CAROLINA PROFESSIONAL SEAL 029441 ENGINEER KRISTY W. ALFORD
8/3/09

REVISIONS						SHEET NO.
NO.	BY:	DATE:	NO.	BY:	DATE:	S-25
1			3			TOTAL SHEETS
2			4			104

STR. #1

DRAWN BY : T. BANKOVICH DATE : 10-2008
CHECKED BY : D.G. ELY DATE : 11-2008

31-JUL-2009 11:16
k:\structures\str_1\Sub_Draw\R-2417C_str1_B*_1.dgn
kalford

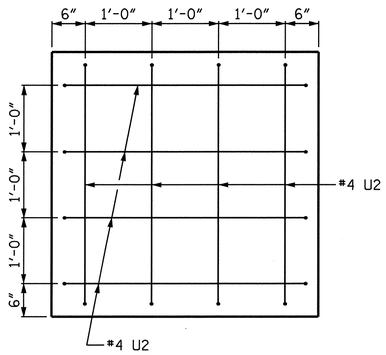

SECTION X-X

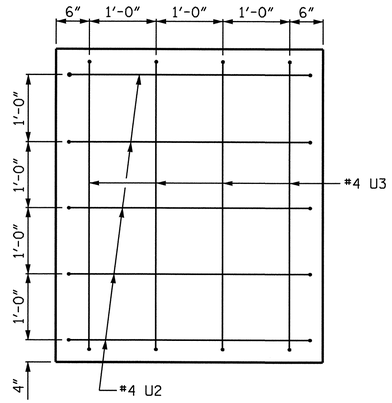

SECTION Y-Y

BAR TYPE

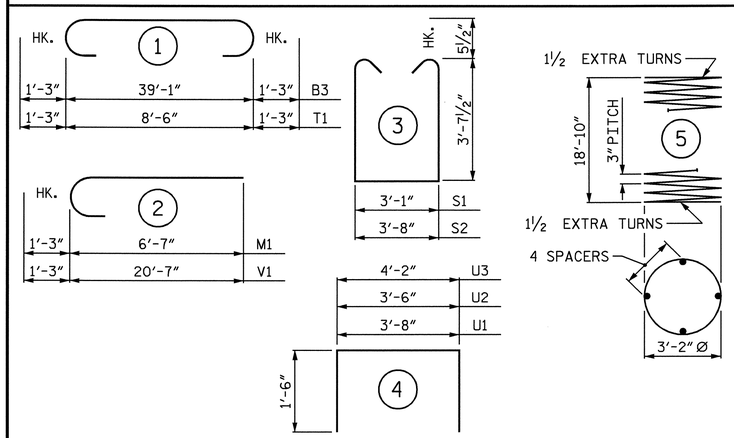

ALL BAR DIMENSIONS ARE OUT TO OUT

BILL OF MATERIAL

BENT No. 1

BAR	NO.	SIZE	TYPE	LENGTH	WEIGHT
B1	5	#9	STR	39'-3"	667
B2	6	#5	STR	39'-3"	246
B3	5	#9	1	41'-7"	707
B4	10	#4	STR	8'-7"	57
B5	5	#4	STR	4'-1"	14
M1	42	#9	2	7'-10"	1119
S1	28	#5	3	11'-3"	329
S2	46	#5	3	11'-10"	568
T1	66	#9	1	11'-0"	2468
T2	54	#6	STR	8'-6"	689
U1	46	#4	4	6'-8"	205
U2	13	#4	4	6'-6"	56
U3	4	#4	4	7'-2"	19
V1	42	#9	2	21'-10"	3118
REINFORCING STEEL					10262 LBS.

BAR	NO.	SIZE	TYPE	LENGTH	WEIGHT
SP-1	3	✱	5	775'-10"	1555

SPRIAL COLUMN REINFORCING STEEL 1555 LBS.

✱ THE SP-1 SPIRAL REINFORCING STEEL SHALL BE W20 OF D-20 COLD DRAWN WIRE OR #4 PLAIN OR DEFORMED BAR

CLASS A CONCRETE BREAKDOWN	
POUR #1 (FOOTINGS)	27.0 C.Y.
POUR #2 (COLUMNS)	19.9 C.Y.
POUR #3 (CAP)	25.3 C.Y.
TOTAL CLASS A CONCRETE	72.2 C.Y.
HP 14 X 73 STEEL PILES	
No. = 21	1050 LIN. FT.

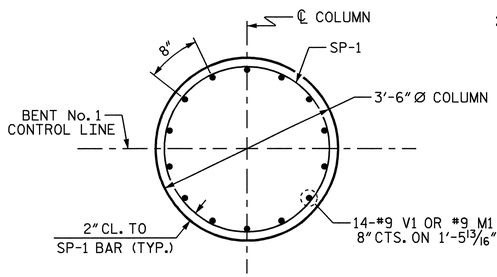

PLAN OF COLUMN

REINFORCING STEEL AND DIMENSIONS ARE TYPICAL FOR EACH COLUMN

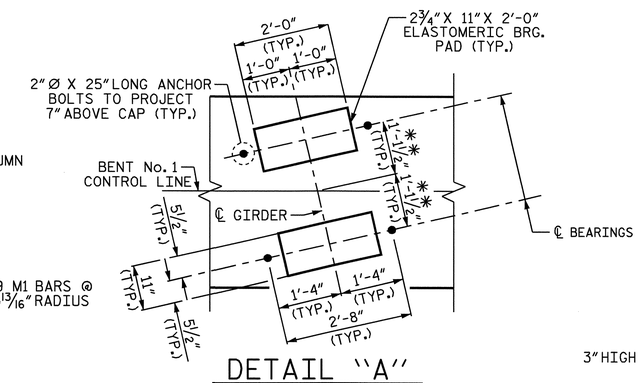

DETAIL "A"

✱✱ MEASURED ALONG ℄ GIRDER (TYP. EA GIRDER)

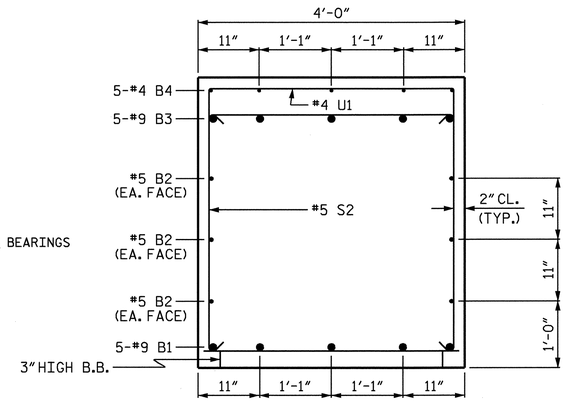

SECTION A-A

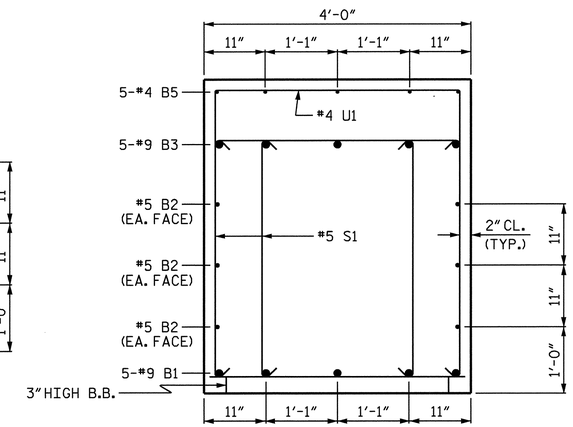

SECTION B-B

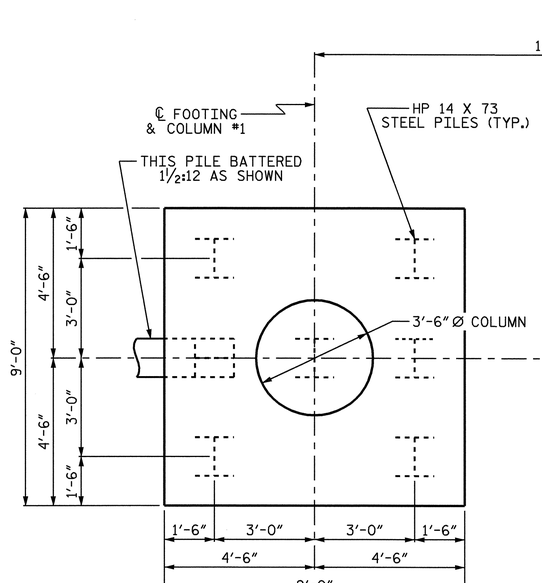

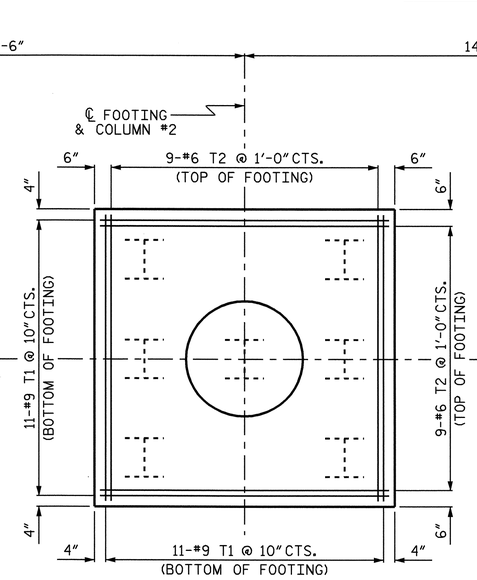

PLAN OF FOOTING

PILE PLACEMENT, DIMENSIONS AND REINFORCING STEEL ARE TYPICAL FOR EACH FOOTING

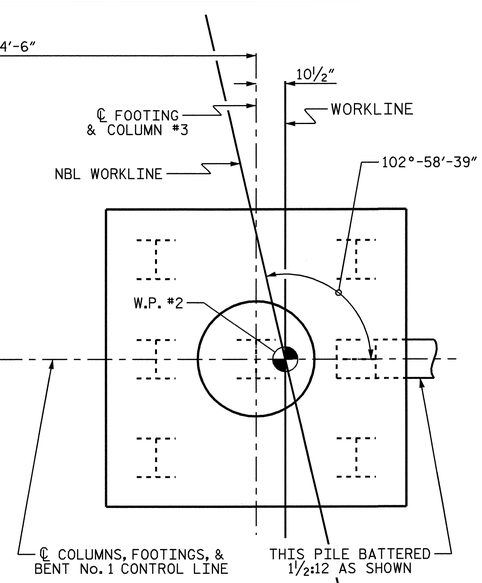

PROJECT NO. R-2417C

LEE COUNTY

STATION: 615+26.51 -LREV-

SHEET 2 OF 2

STATE OF NORTH CAROLINA
DEPARTMENT OF TRANSPORTATION
RALEIGH

SUBSTRUCTURE

BENT No. 1
NBL

NORTH CAROLINA PROFESSIONAL SEAL 029441 ENGINEER KRISTY W. ALFORD
8/3/09

REVISIONS						SHEET NO.
NO.	BY:	DATE:	NO.	BY:	DATE:	S-26
1			3			TOTAL SHEETS
2			4			104

STR. #1

DRAWN BY : T. BANKOVICH DATE : 10-2008
CHECKED BY : D.G. ELY DATE : 11-2008

31-JUL-2009 11:16
K:\structures\str_1\Sub_Draw\R-2417C_str1_B*_1.dgn
kalford

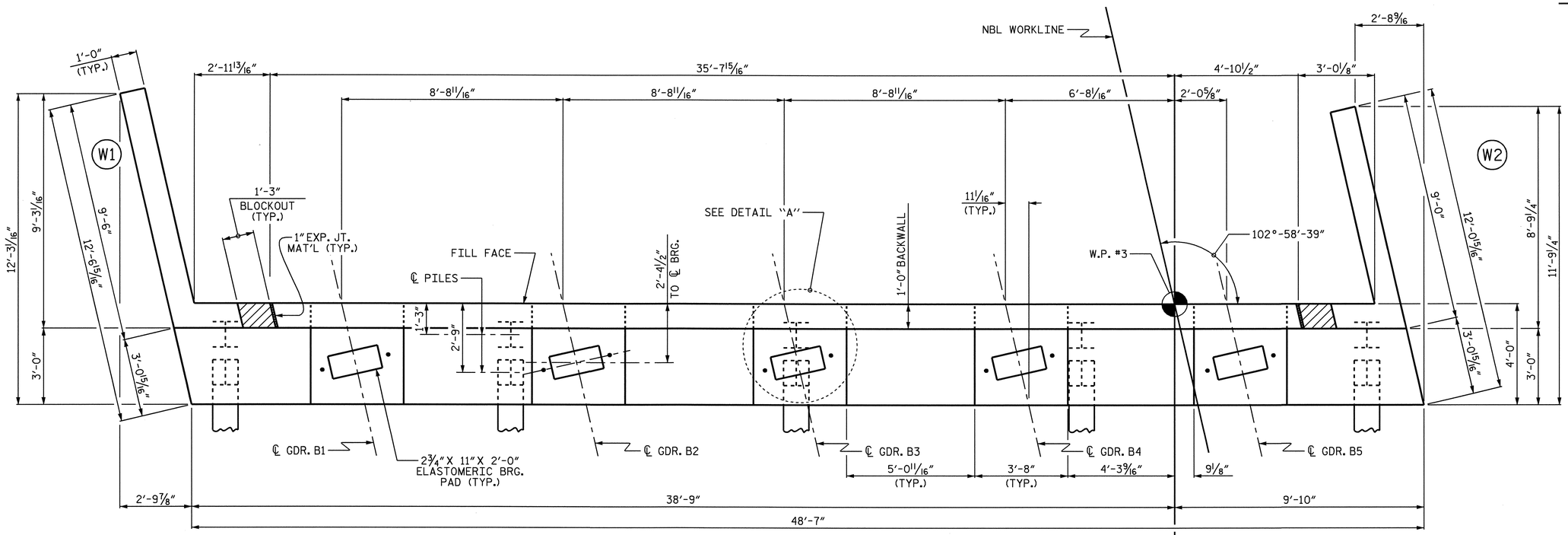

PLAN

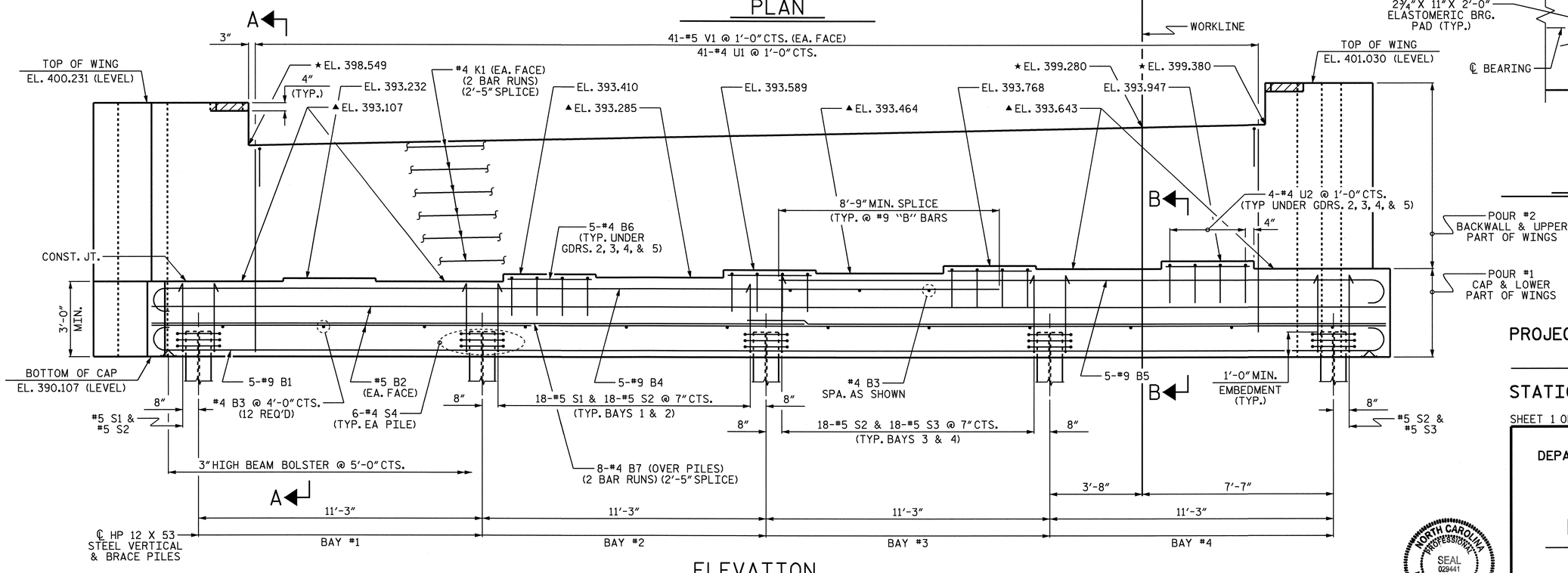

ELEVATION

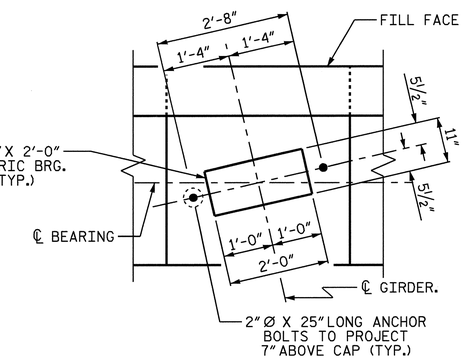

DETAIL "A"

(TYP. EA. GIRDER)

NOTES:

STIRRUPS AND U2 BARS IN CAP MAY BE SHIFTED AS NECESSARY TO CLEAR ANCHOR BOLTS.

BACKWALL SHALL BE PLACED BEFORE APPLYING THE EPOXY PROTECTIVE COATING.

THE TOP SURFACE OF THE CAP EXCEPT THE BRIDGE SEAT BUILDUPS SHALL BE SLOPED TRANSVERSELY FROM THE FILL FACE TO THE BACK FACE AT THE RATE OF 2%.

THE CONTRACTOR SHALL PROVIDE FOR INSTALLATION OF THE 4" DIAMETER DRAIN PIPE THROUGH THE WING WALL AS REQUIRED FOR REINFORCED BRIDGE APPROACH FILLS, SEE THE ROADWAY PLANS. REINFORCING STEEL IN THE WING WALL MAY BE SHIFTED AS NECESSARY TO CLEAR THE DRAIN PIPE.

#5 V1 BARS IN BACKWALL SHALL BE PLACED 2" FROM TOP OF BACKWALL.

THE CONCRETE IN THE SHADED AREA OF THE WING SHALL BE POURED AFTER THE BARRIER RAIL IS CAST IF SLIP FORMING IS USED.

▲ FOR LOCATION OF ELEVATION BETWEEN BUILDUPS, SEE SECTION A-A, ON SHEET 3 OF 3.

★ THIS ELEVATION TAKEN ON FILL FACE OF BACKWALL.

PROJECT NO. R-2417C

LEE COUNTY

STATION: 615+26.51 -LREV-

SHEET 1 OF 3

STATE OF NORTH CAROLINA
DEPARTMENT OF TRANSPORTATION
RALEIGH

SUBSTRUCTURE

END BENT No. 2

NBL

NORTH CAROLINA PROFESSIONAL SEAL 029441 ENGINEER KRISTY W. ALFORD

8/3/09

REVISIONS						SHEET NO.
NO.	BY:	DATE:	NO.	BY:	DATE:	S-27
1			3			TOTAL SHEETS
2			4			104

DRAWN BY : T. BANKOVICH DATE : 9-2008

CHECKED BY : D.G. ELY DATE : 9-2008

31-JUL-2009 11:17
k:\structures\str_1\Sub_Draw\R-2417C_str1_E*_2.dgn
kalford

STR. #1

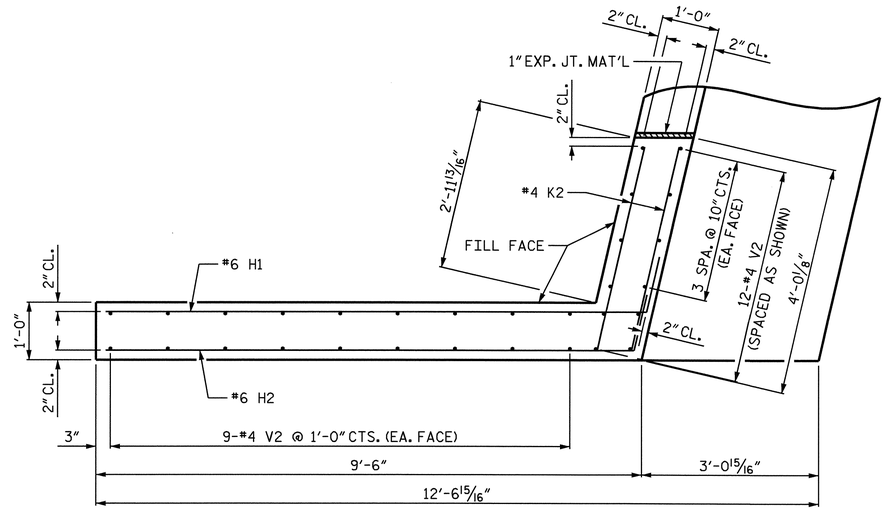

PLAN OF WING (W1)

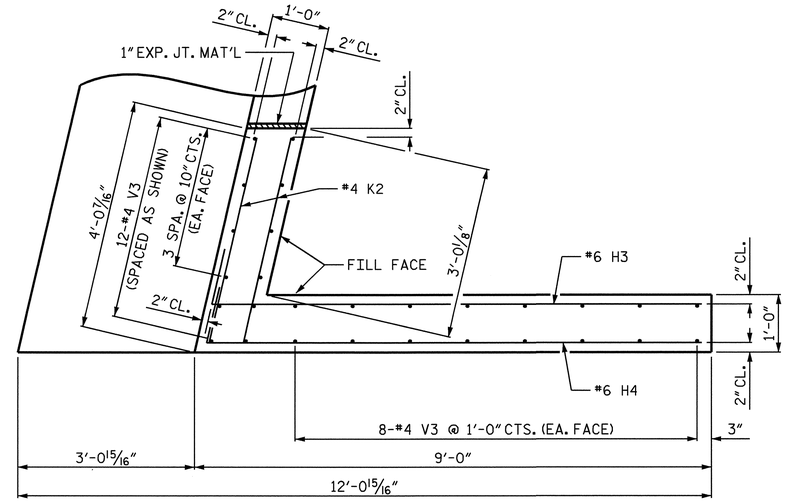

PLAN OF WING (W2)

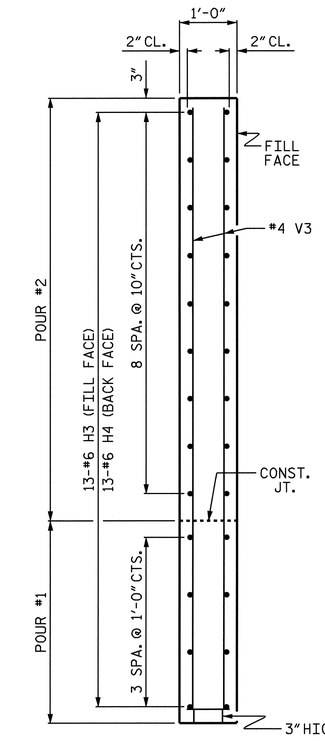

SECTION Y-Y

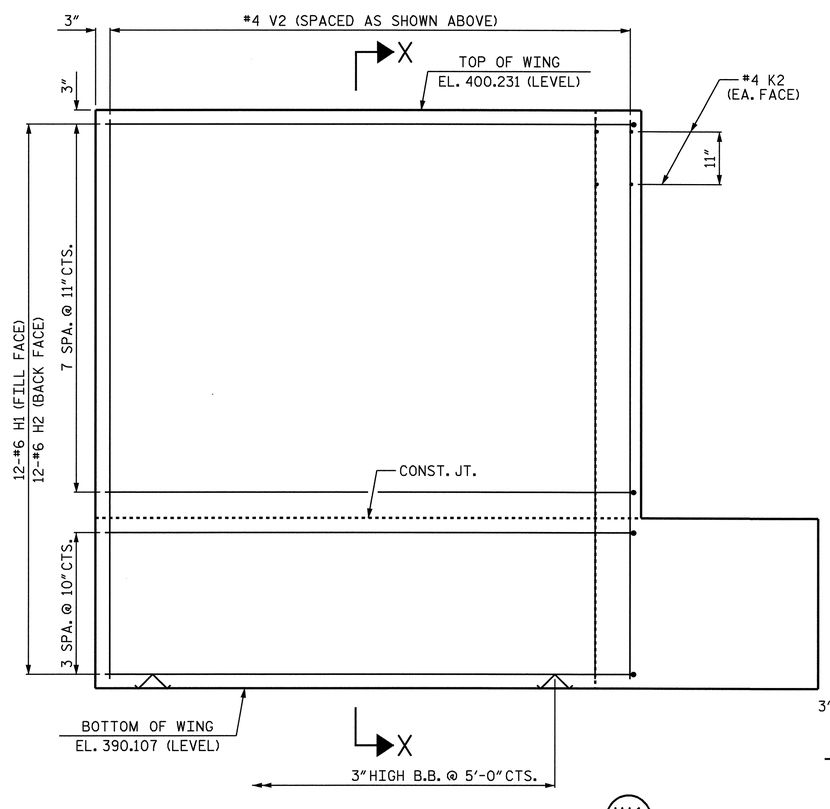

ELEVATION OF WING (W1)

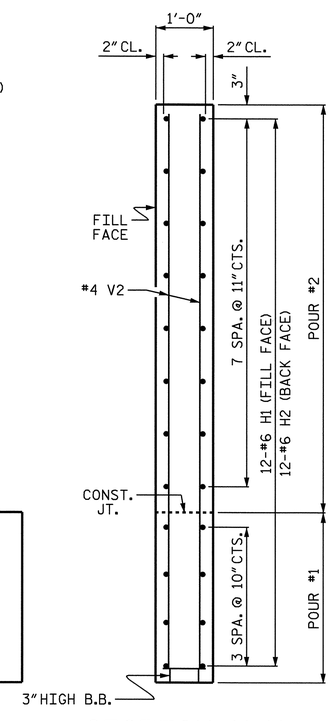

SECTION X-X

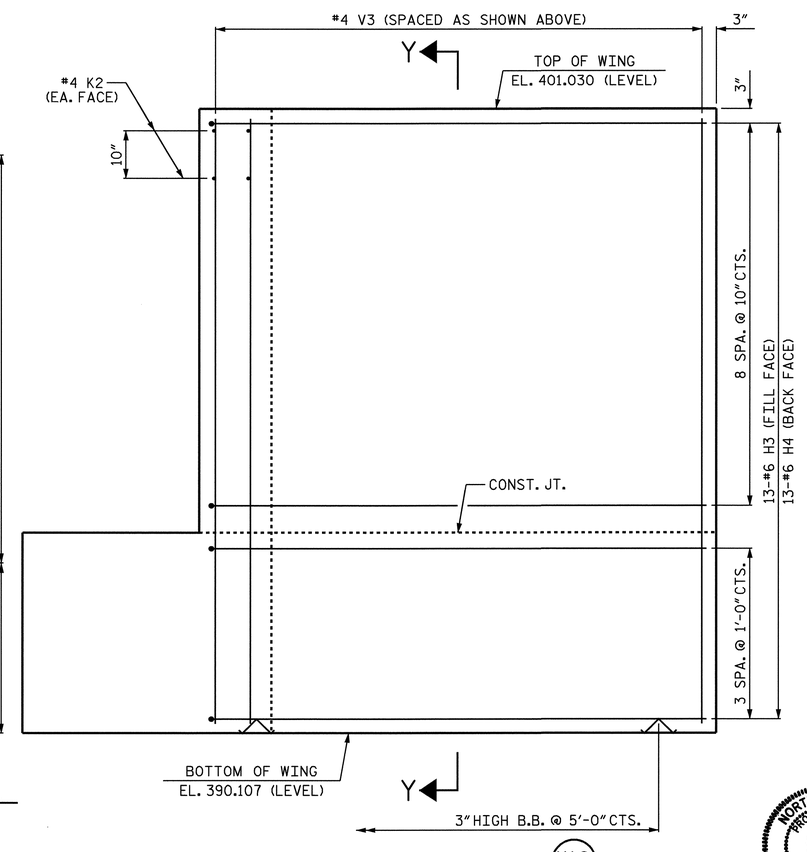

ELEVATION OF WING (W2)

PROJECT NO. R-2417C
LEE COUNTY
STATION: 615+26.51 -LREV-

SHEET 2 OF 3

STATE OF NORTH CAROLINA
DEPARTMENT OF TRANSPORTATION
RALEIGH

SUBSTRUCTURE

END BENT No. 2
NBL

NORTH CAROLINA PROFESSIONAL SEAL 029441 ENGINEER KRISTY W. ALFORD
8/3/09

REVISIONS						SHEET NO.
NO.	BY:	DATE:	NO.	BY:	DATE:	S-28
1			3			TOTAL SHEETS
2			4			104

DRAWN BY : T. BANKOVICH DATE : 9-2008
CHECKED BY : D.G. ELY DATE : 9-2008

31-JUL-2009 11:17
k:\structures\str_1\Sub_Draw\R-2417C_str1_E*_2.dgn
kalford

STR. #1

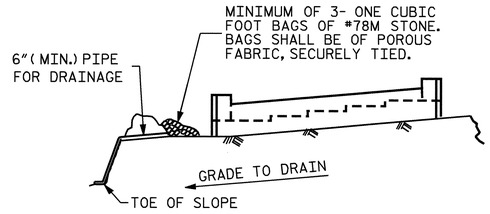

BAGGED STONE AND PIPE SHALL BE PLACED IMMEDIATELY AFTER COMPLETION OF END BENT EXCAVATION. PIPE MAY BE EITHER CONCRETE, CORRUGATED STEEL, CORRUGATED ALUMINUM ALLOY, OR CORRUGATED PLASTIC. PERFORATED PIPE WILL NOT BE ALLOWED.

BAGGED STONE SHALL REMAIN IN PLACE UNTIL THE ENGINEER DIRECTS THAT IT BE REMOVED. THE CONTRACTOR SHALL REMOVE AND DISPOSE OF SILT ACCUMULATIONS AT BAGGED STONE WHEN SO DIRECTED BY THE ENGINEER. BAGS SHALL BE REMOVED AND REPLACED WHENEVER THE ENGINEER DETERMINES THAT THEY HAVE DETERIORATED AND LOST THEIR EFFECTIVENESS.

NO SEPARATE PAYMENT WILL BE MADE FOR THIS WORK AND THE ENTIRE COST OF THIS WORK SHALL BE INCLUDED IN THE UNIT CONTRACT PRICE BID FOR THE SEVERAL PAY ITEMS.

TEMPORARY DRAINAGE AT END BENT

BAR TYPES

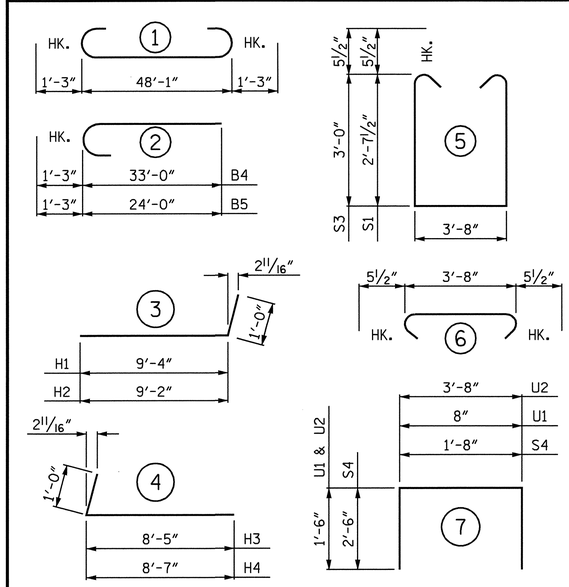

ALL BAR DIMENSIONS ARE OUT TO OUT

BILL OF MATERIAL
END BENT No. 2

BAR	NO.	SIZE	TYPE	LENGTH	WEIGHT
B1	5	#9	1	50'-7"	860
B2	4	#5	STR	48'-3"	201
B3	15	#4	STR	3'-8"	37
B4	5	#9	2	34'-3"	582
B5	5	#9	2	25'-3"	429
B6	20	#4	STR	3'-4"	45
B7	16	#4	STR	25'-4"	271
H1	12	#6	3	10'-4"	186
H2	12	#6	3	10'-2"	183
H3	13	#6	4	9'-5"	184
H4	13	#6	4	9'-7"	187
K1	24	#4	STR	25'-4"	406
K2	8	#4	STR	3'-8"	20
S1	37	#5	5	9'-10"	379
S2	74	#5	6	4'-7"	354
S3	37	#5	5	10'-7"	408
S4	30	#4	7	6'-8"	134
U1	41	#4	7	3'-8"	100
U2	16	#4	7	6'-8"	71
V1	82	#5	STR	8'-1"	691
V2	30	#4	STR	9'-9"	195
V3	28	#4	STR	10'-7"	198
REINFORCING STEEL					6121 LBS.

CLASS A CONCRETE BREAKDOWN	
POUR #1 (CAP & LOWER WINGS)	26.1 C.Y.
POUR #2 (BACKWALL & UPPER WINGS)	14.8 C.Y.
TOTAL CLASS A CONCRETE	40.9 C.Y.
HP 12 X 53 STEEL PILES	
No. = 10	550 LIN FT.

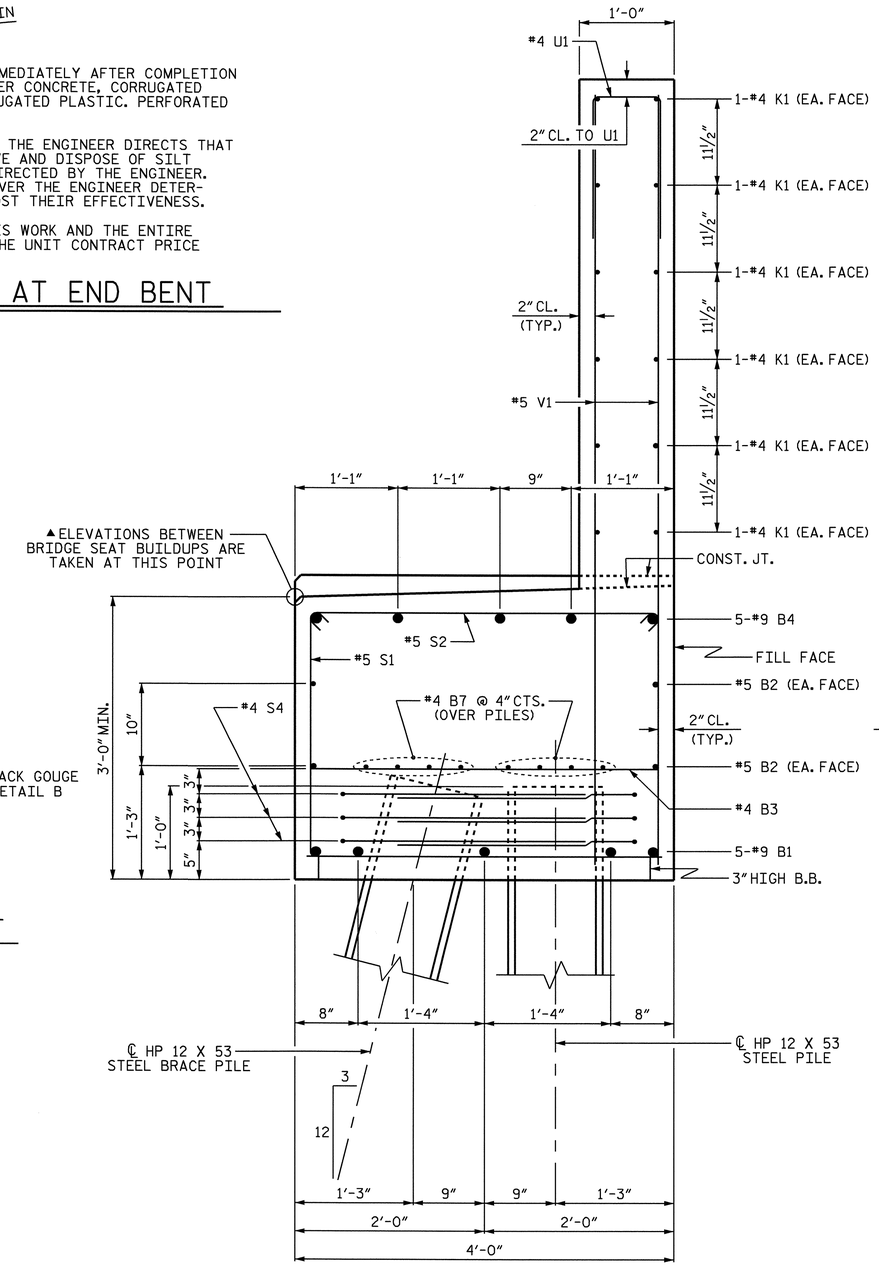

SECTION A-A

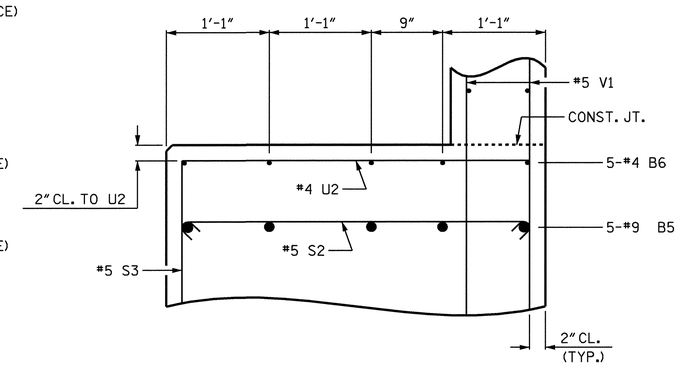

PARTIAL SECTION B-B

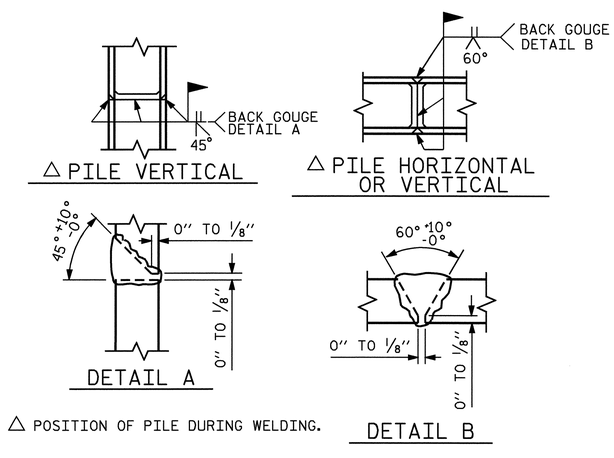

△ POSITION OF PILE DURING WELDING.

PILE SPLICE DETAILS

PROJECT NO. R-2417C
LEE COUNTY
STATION: 615+26.51 -LREV-

SHEET 3 OF 3

STATE OF NORTH CAROLINA
DEPARTMENT OF TRANSPORTATION
RALEIGH

SUBSTRUCTURE

END BENT No. 2
NBL

NORTH CAROLINA PROFESSIONAL SEAL 029441 ENGINEER KRISTY W. ALFORD

REVISIONS						SHEET NO.
NO.	BY:	DATE:	NO.	BY:	DATE:	S-29
1			3			TOTAL SHEETS
2			4			104

DRAWN BY : T. BANKOVICH DATE : 9-2008
CHECKED BY : D.G. ELY DATE : 9-2008

31-JUL-2009 11:17
k:\structures\str_1\Sub_Draw\R-2417C_str1_E*_2.dgn
kalford

STR. #1

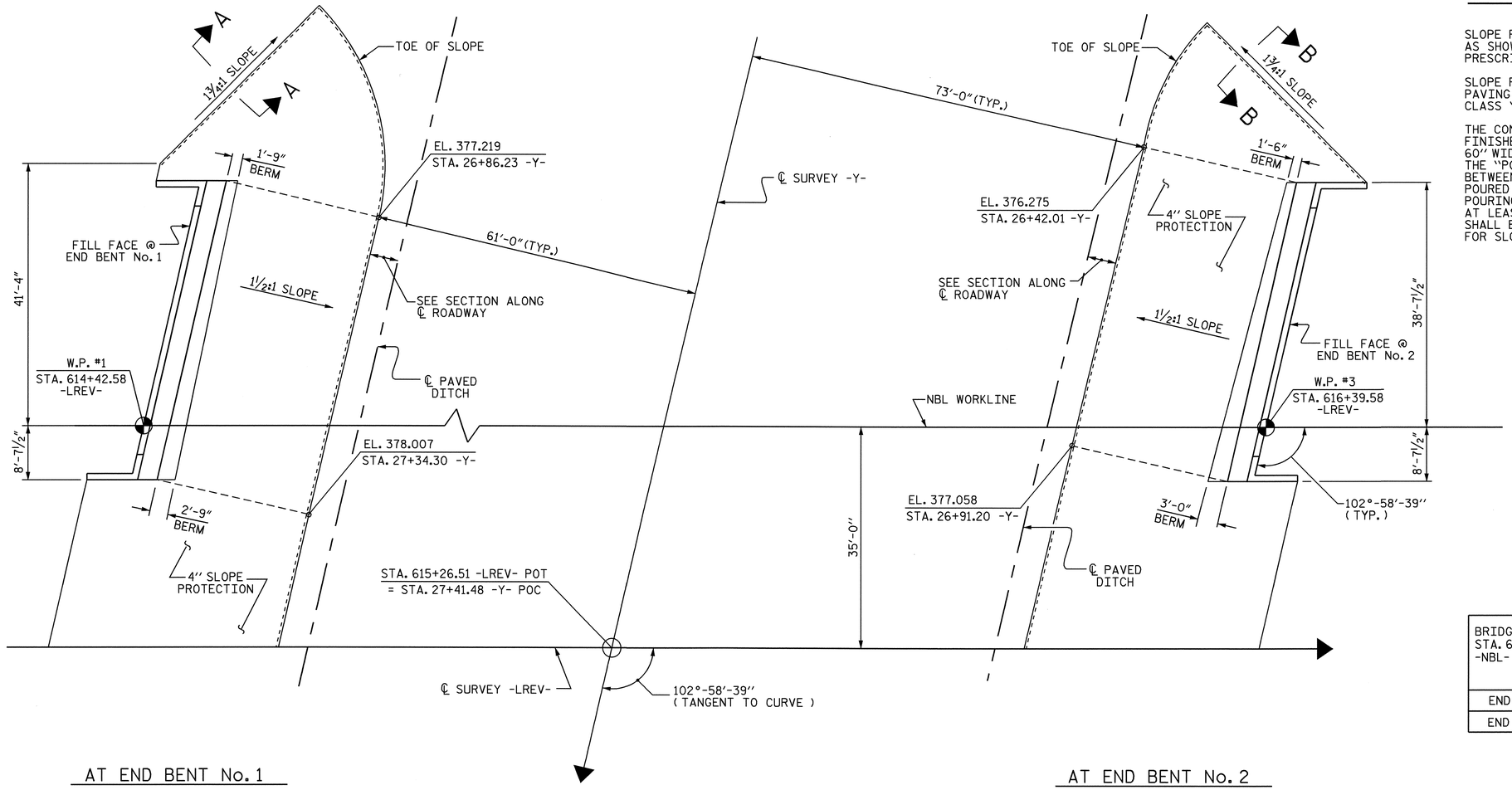

AT END BENT No. 1

AT END BENT No. 2

PLAN

SEE GENERAL DRAWING FOR BERM ELEVATION

GENERAL NOTES

SLOPE PROTECTION SHALL BE PLACED UNDER THE ENDS OF THE BRIDGE AS SHOWN IN THE DETAILS. MEASUREMENT AND PAYMENT SHALL BE AS PRESCRIBED IN SECTION 462 OF THE STANDARD SPECIFICATIONS.

SLOPE PROTECTION SHALL CONSIST OF 4" POURED-IN-PLACE CONCRETE PAVING AS SHOWN IN THE DETAILS ON THIS SHEET. CONCRETE SHALL BE CLASS "B".

THE CONCRETE SURFACE SHALL BE FLOATED WITH A WOODEN FLOAT AND FINISHED. WELDED WIRE FABRIC REINFORCING SHALL BE 6 X 6 - W1.4 X W1.4, 60" WIDE. SLOPE PROTECTION SHALL BE POURED IN 5' STRIPS AS SHOWN IN THE "POURING DETAIL" WITH 2'-0" LONG #4 BARS PLACED ALONG THE SLOPE BETWEEN STRIPS AT 1'-6" MAXIMUM SPACING. SLOPE PROTECTION MAY BE POURED IN ALTERNATE 4' AND 5' STRIPS AS SHOWN IN THE "OPTIONAL POURING DETAIL" WITH ADJACENT RUNS OF WELDED WIRE FABRIC LAPPING AT LEAST 6". THE COST OF THE WELDED WIRE FABRIC AND #4 BARS, IF USED, SHALL BE INCLUDED IN THE CONTRACT UNIT PRICE BID PER SQUARE YARD FOR SLOPE PROTECTION.

BRIDGE @ STA. 615+26.51 -LREV- -NBL-	4 INCH SLOPE PROTECTION	* WELDED WIRE FABRIC 60 INCHES WIDE
	SQUARE YARDS	APPROX. L.F.
END BENT 1	410	740
END BENT 2	405	730

* QUANTITY SHOWN IS BASED ON 5' POURS.

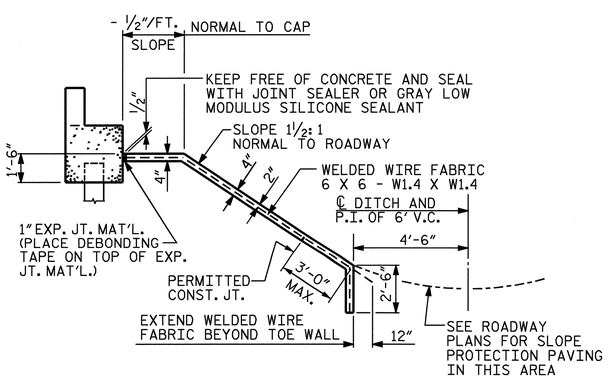

SECTION ALONG ℄ ROADWAY WHEN FILL CATCHES IN DITCH

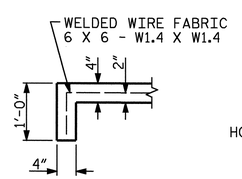

SECTION A-A

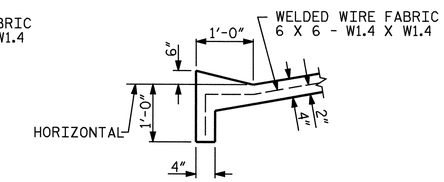

SECTION B-B

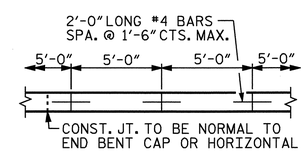

STRIP WIDTHS MAY VARY IN CURVED PORTION.

POURING DETAIL

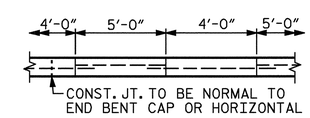

POUR A 4'-0" STRIP FIRST. STRIP WIDTHS MAY VARY IN CURVED PORTION.

OPTIONAL POURING DETAIL

PROJECT NO. R-2417C

LEE COUNTY

STATION: 615+26.51-LREV-

STATE OF NORTH CAROLINA
DEPARTMENT OF TRANSPORTATION
RALEIGH

STANDARD SLOPE PROTECTION DETAILS
(NBL)

NORTH CAROLINA PROFESSIONAL SEAL 029441 ENGINEER KRISTY W. ALFORD
10/21/09

REVISIONS						SHEET NO.
NO.	BY:	DATE:	NO.	BY:	DATE:	S-30
1			3			TOTAL SHEETS
2			4			104

DRAWN BY : A. V. ROYAL DATE : 11/08
CHECKED BY : M. L. BROWN DATE : 11/08

DETAILS FOR SLOPE PROTECTION

21-OCT-2009 08:28
k:\structures\STR_1\Misc_draw\R2417C_sd_SP_str. #1.dgn
kalford

STR. #1

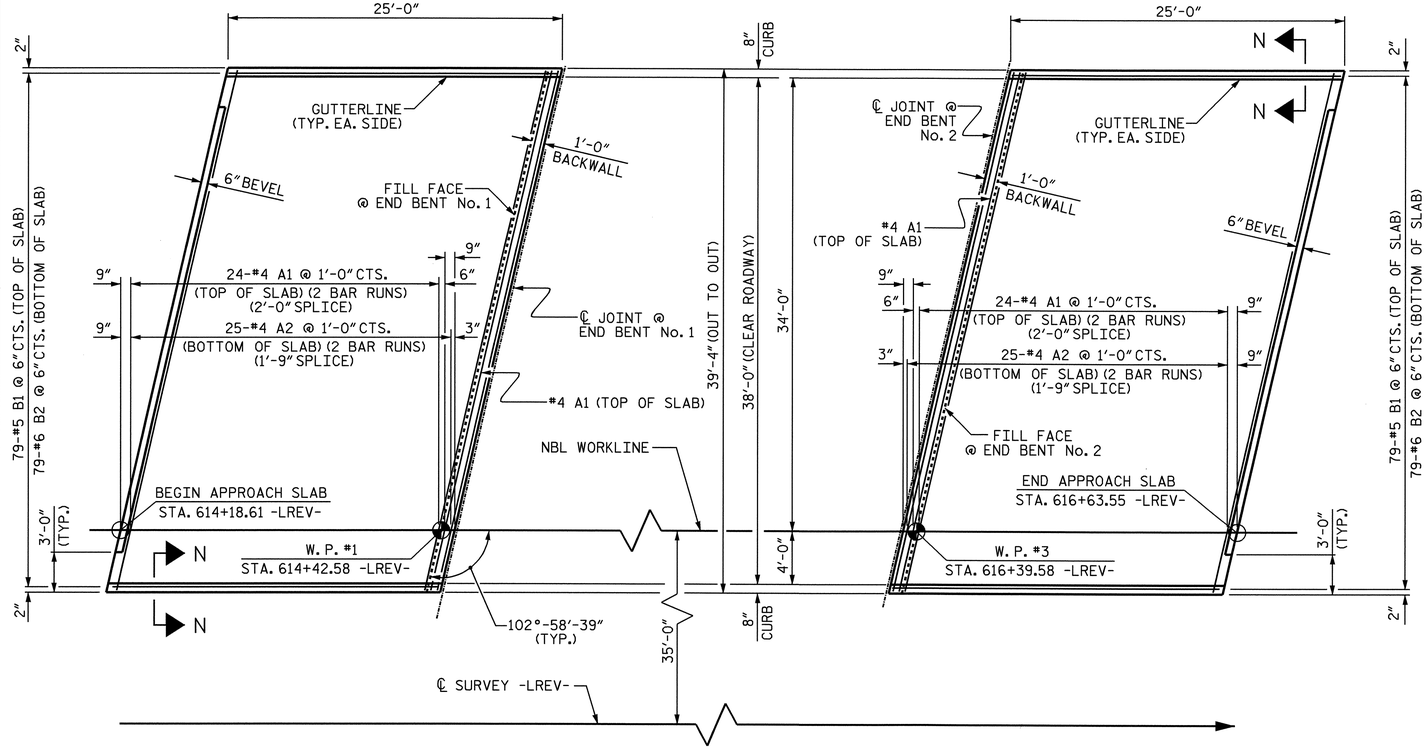

PLAN AT END BENT No. 1

PLAN AT END BENT No. 2

PLAN OF APPROACH SLABS

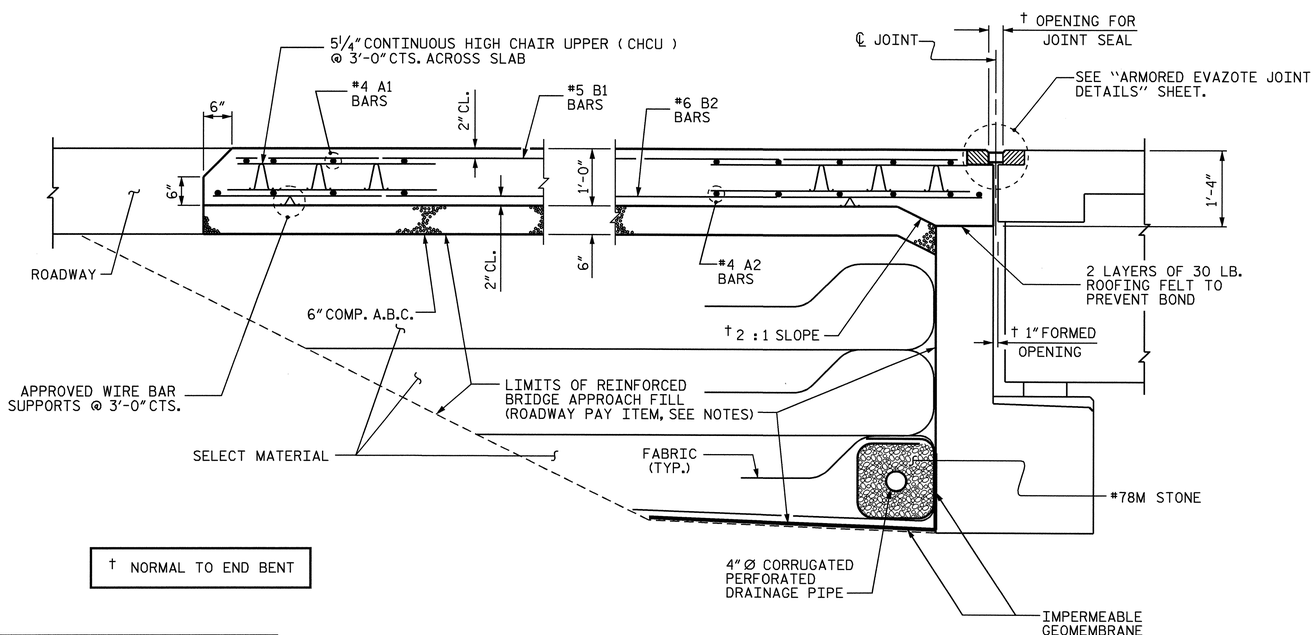

† NORMAL TO END BENT

SECTION THRU SLAB

NOTES

APPROACH SLAB SHALL NOT BE CONSTRUCTED PRIOR TO COMPLETION OF THE BRIDGE DECK.

FOR REINFORCED BRIDGE APPROACH FILL INCLUDING FABRIC, IMPERMEABLE GEOMEMBRANE, 4" Ø DRAINAGE PIPE, #78M STONE, AND SELECT MATERIAL, SEE ROADWAY PLANS.

AREA BETWEEN THE WINGWALL AND APPROACH SLAB SHALL BE GRADED TO DRAIN THE WATER AWAY FROM THE FILL FACE OF THE BRIDGE AND SHALL BE PAVED. SEE ROADWAY PLANS.

THE 6" COMP. A.B.C. SHALL BE FLUSH WITH THE ROADWAY END OF THE APPROACH SLAB AND SHALL EXTEND 1'-0" OUTSIDE EACH EDGE OF THE APPROACH SLAB.

THE CONTRACTOR MAY USE 4" TYPE B-25.0B ASPHALT CONCRETE BASE COURSE IN LIEU OF 6" COMP. A.B.C. IF THIS OPTION IS USED, THE BASE COURSE SHALL BE FLUSH WITH THE ROADWAY END OF THE APPROACH SLAB, AND THE WIDTH SHALL BE THE SAME AS THAT OF THE APPROACH SLAB.

THE CONTRACTOR MAY USE 5" CLASS "A" CONCRETE BASE IN LIEU OF 6" COMP. A.B.C. IF THIS OPTION IS USED, THE CONCRETE BASE SHALL BE FLUSH WITH THE ROADWAY END OF THE APPROACH SLAB, AND THE WIDTH SHALL BE THE SAME AS THAT OF THE APPROACH SLAB. THE CONCRETE SHALL BE FINISHED TO A SMOOTH SURFACE AND A LAYER OF 30 LB ROOFING FELT SHALL BE PLACED BETWEEN THE CONCRETE BASE AND THE APPROACH SLAB TO PREVENT BOND. THE APPROACH SLAB SHALL NOT BE CAST UNTIL THE CONCRETE BASE HAS REACHED AN AGE OF THREE CURING DAYS.

FOR EVAZOTE JOINT SEALS, SEE SPECIAL PROVISIONS.

THE NOMINAL UNCOMPRESSED SEAL WIDTH OF THE EVAZOTE JOINT SEAL SHALL BE 2½".

FOR ELASTOMERIC CONCRETE, SEE SPECIAL PROVISIONS.

BILL OF MATERIAL

APPROACH SLAB AT EB #1

BAR	NO.	SIZE	TYPE	LENGTH	WEIGHT
✳ A1	50	#4	STR	21'-1"	704
A2	50	#4	STR	20'-11"	699
✳ B1	79	#5	STR	23'-8"	1950
B2	79	#6	STR	24'-8"	2927
REINFORCING STEEL				LBS.	3626
✳ EPOXY COATED REINFORCING STEEL				LBS.	2654
CLASS AA CONCRETE				C. Y.	37.1

APPROACH SLAB AT EB #2

BAR	NO.	SIZE	TYPE	LENGTH	WEIGHT
✳ A1	50	#4	STR	21'-1"	704
A2	50	#4	STR	20'-11"	699
✳ B1	79	#5	STR	23'-8"	1950
B2	79	#6	STR	24'-8"	2927
REINFORCING STEEL				LBS.	3626
✳ EPOXY COATED REINFORCING STEEL				LBS.	2654
CLASS AA CONCRETE				C. Y.	37.1

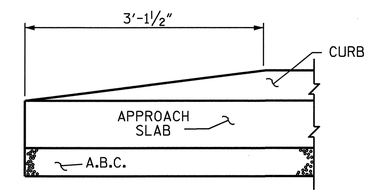

END OF CURB WITHOUT SHOULDER BERM GUTTER

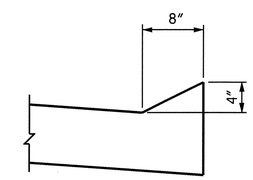

SECTION N-N

CURB DETAILS

PROJECT NO. R-2417 C

LEE COUNTY

STATION: 615+26.51-LREV-

SHEET 1 OF 2

STATE OF NORTH CAROLINA
DEPARTMENT OF TRANSPORTATION
RALEIGH

BRIDGE APPROACH SLAB FOR FLEXIBLE PAVEMENT

(NBL)

NORTH CAROLINA PROFESSIONAL SEAL 029441 ENGINEER KRISTY W. ALFORD

REVISIONS						SHEET NO.
NO.	BY:	DATE:	NO.	BY:	DATE:	S-31
1			3			TOTAL SHEETS
2			4			104

ASSEMBLED BY : A. V. ROYAL	DATE : 09/08		
CHECKED BY : M. L. BROWN	DATE : 11/08		
DRAWN BY : EEM 3/95	REV. 7/10/01	LES/RDR	
CHECKED BY : VAP 3/95	REV. 5/7/03R	RWW/JTE	
	REV. 5/1/06R	KMM/GM	

31-JUL-2009 11:35
k:\structures\str_1\Misc_draw\R2417C_sd_AS_str. #1.dgn
kalford

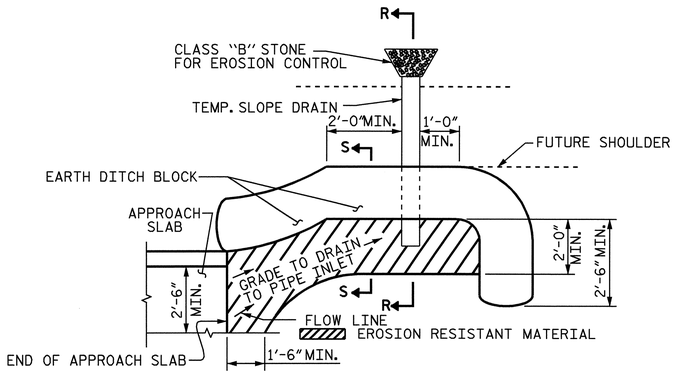

NOTE: IMMEDIATELY AFTER THE CONSTRUCTION OF THE APPROACH SLAB, THE CONTRACTOR SHALL PROVIDE TEMPORARY BERM AND SLOPE DRAIN. CONTRACTOR SHALL GRADE TO PIPE INLET AND PROVIDE EROSION RESISTANT MATERIAL AS SHOWN. THE EROSION RESISTANT MATERIAL SHALL BE EITHER 1) ASPHALT PLANT MIX, TYPE 1 OR TYPE 2, MIN. 2" DEPTH, 2) EROSION CONTROL MAT, OR 3) CONCRETE, AS DIRECTED BY THE ENGINEER. THE SLOPE DRAIN SHALL CONSIST OF A NON-PERFORATED TEMPORARY DRAINAGE PIPE, 12 INCHES IN DIAMETER.

PLAN VIEW

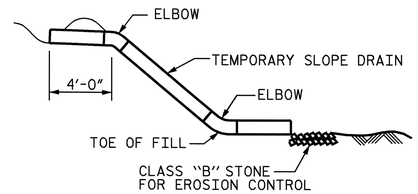

SECTION R-R

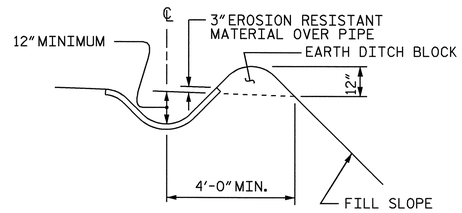

SECTION S-S

TEMPORARY BERM AND SLOPE DRAIN DETAILS

(TO BE USED WHEN SHOULDER BERM GUTTER IS REQUIRED)

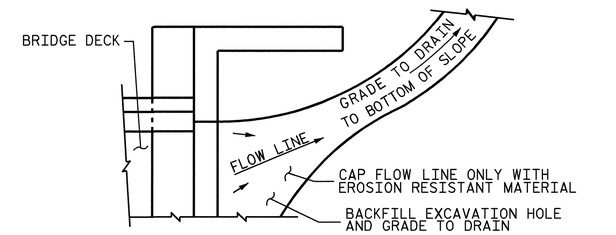

NOTE: IF THE APPROACH SLAB IS NOT CONSTRUCTED IMMEDIATELY AFTER THE BACKFILLING OF THE END BENT EXCAVATION, GRADE TO DRAIN TO THE BOTTOM OF THE SLOPE AND PROVIDE EROSION RESISTANT MATERIAL, SUCH AS FIBERGLASS ROVING OR AS DIRECTED BY THE ENGINEER TO PREVENT SOIL EROSION AND TO PROTECT THE AREA ADJACENT TO THE STRUCTURE. THE CONTRACTOR WILL BE REQUIRED TO REMOVE THESE MATERIALS PRIOR TO CONSTRUCTION OF THE APPROACH SLAB.

TEMPORARY DRAINAGE DETAIL

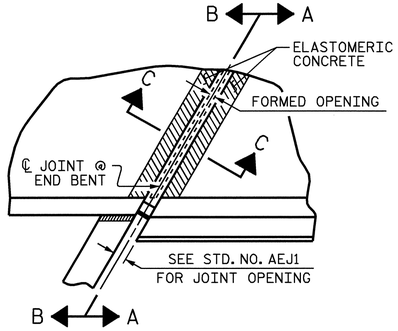

PLAN

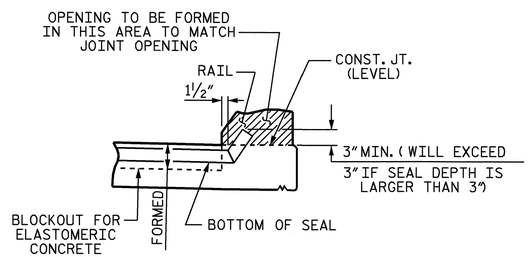

SECTION A-A

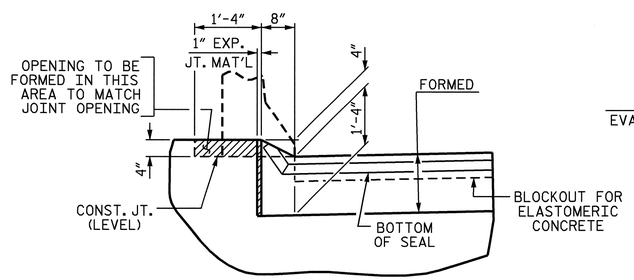

SECTION B-B

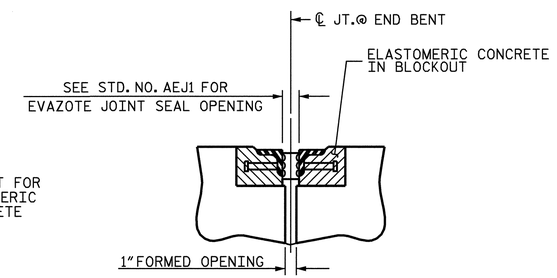

SECTION C-C

ARMORED EVAZOTE JOINT SEAL

NOTE: EVAZOTE JOINT SEAL TO BE CUT, HEAT WELDED AND TURNED UP PARALLEL TO SLOPED FACE OF THE BARRIER RAIL.

JOINT SEAL DETAILS @ END BENT

END BENT NO.1 SHOWN, END BENT No.2 SIMILAR

PROJECT NO. R-2417 C

LEE COUNTY

STATION: 615+26.51-LREV-

SHEET 2 OF 2

STATE OF NORTH CAROLINA
DEPARTMENT OF TRANSPORTATION
RALEIGH

STANDARD

BRIDGE APPROACH SLAB DETAILS

(NBL)

NORTH CAROLINA PROFESSIONAL SEAL 029441 ENGINEER KRISTY W. ALFORD

8/3/09

REVISIONS						SHEET NO.
NO.	BY:	DATE:	NO.	BY:	DATE:	S-32
1			3			TOTAL SHEETS
2			4			104

STD. NO. BAS10

ASSEMBLED BY : A. V. ROYAL		DATE : 09/08	
CHECKED BY : M. L. BROWN		DATE : 11/08	
DRAWN BY : FCJ 11/88	REV. 10/17/00	RWW/LES	
CHECKED BY : ARB 11/88	REV. 5/7/03	RWW/JTE	
	REV. 5/1/06R	MAA/KMM	

31-JUL-2009 11:21
k:\structures\str_1\Misc_draw\R2417C_sd_AS_str. #1.dgn
kalford

STR. #1

F.A. PROJECT No. STM-0421 (50)

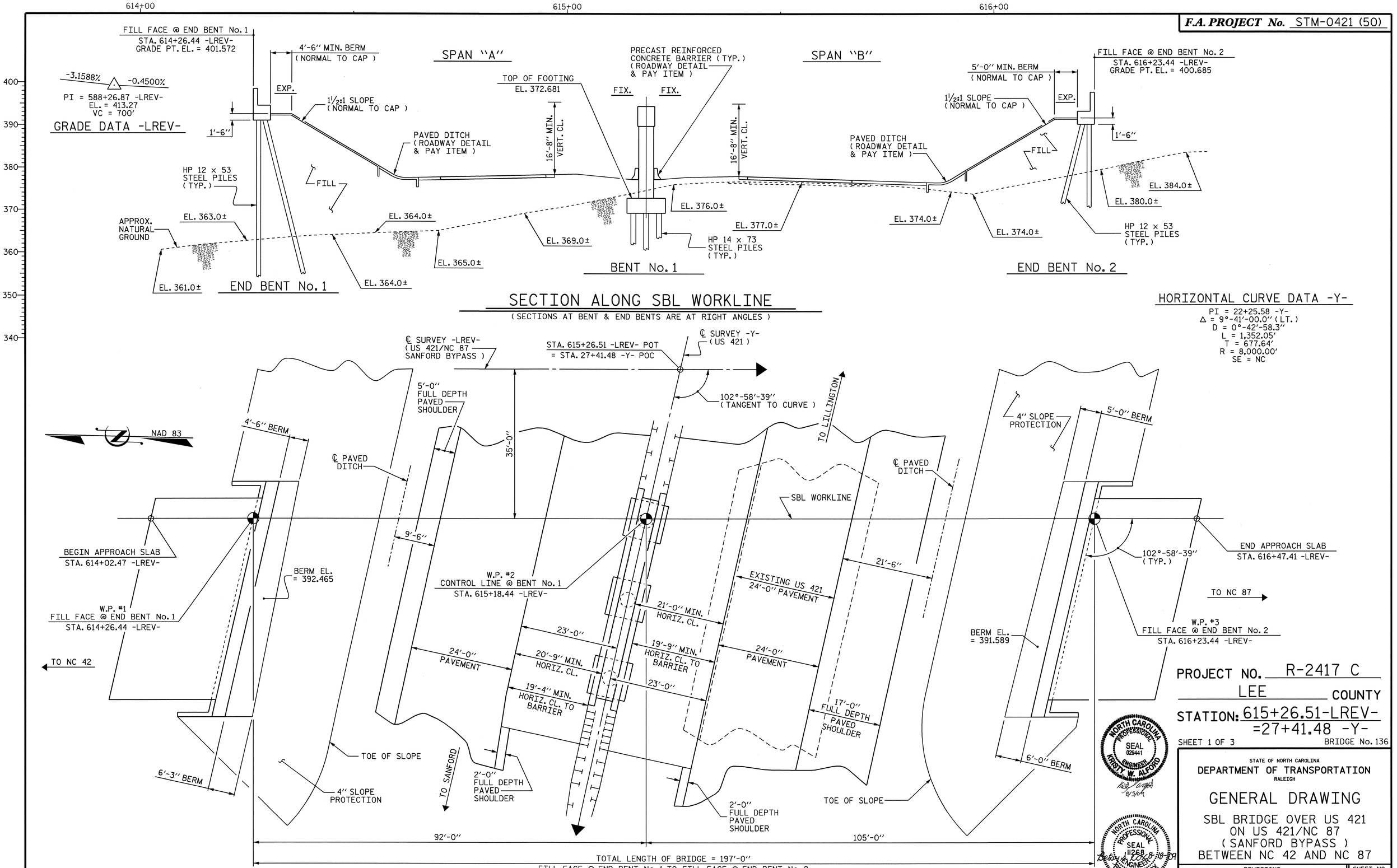

PROJECT NO. R-2417 C

LEE COUNTY

STATION: 615+26.51-LREV-
=27+41.48 -Y-

SHEET 1 OF 3

BRIDGE No. 136

NORTH CAROLINA PROFESSIONAL SEAL 029441 ENGINEER KRISTY W. ALFORD

8/3/09

NORTH CAROLINA PROFESSIONAL SEAL 11268 ENGINEER BETSY S. COX

8-18-09

STATE OF NORTH CAROLINA
DEPARTMENT OF TRANSPORTATION
RALEIGH

GENERAL DRAWING

SBL BRIDGE OVER US 421
ON US 421/NC 87
(SANFORD BYPASS)
BETWEEN NC 42 AND NC 87

REVISIONS						
NO.	BY:	DATE:	NO.	BY:	DATE:	
1			3			
2			4			

SHEET NO. S-33

TOTAL SHEETS 104

DRAWN BY : MIKE BRITT DATE : 4-6-09

CHECKED BY : A.V. ROYAL DATE : 4-16-09

03-AUG-2009 08:57
k:\structures\str_2\gen_draw\r2417c_str2_gd.dgn
kalford

STR. #2

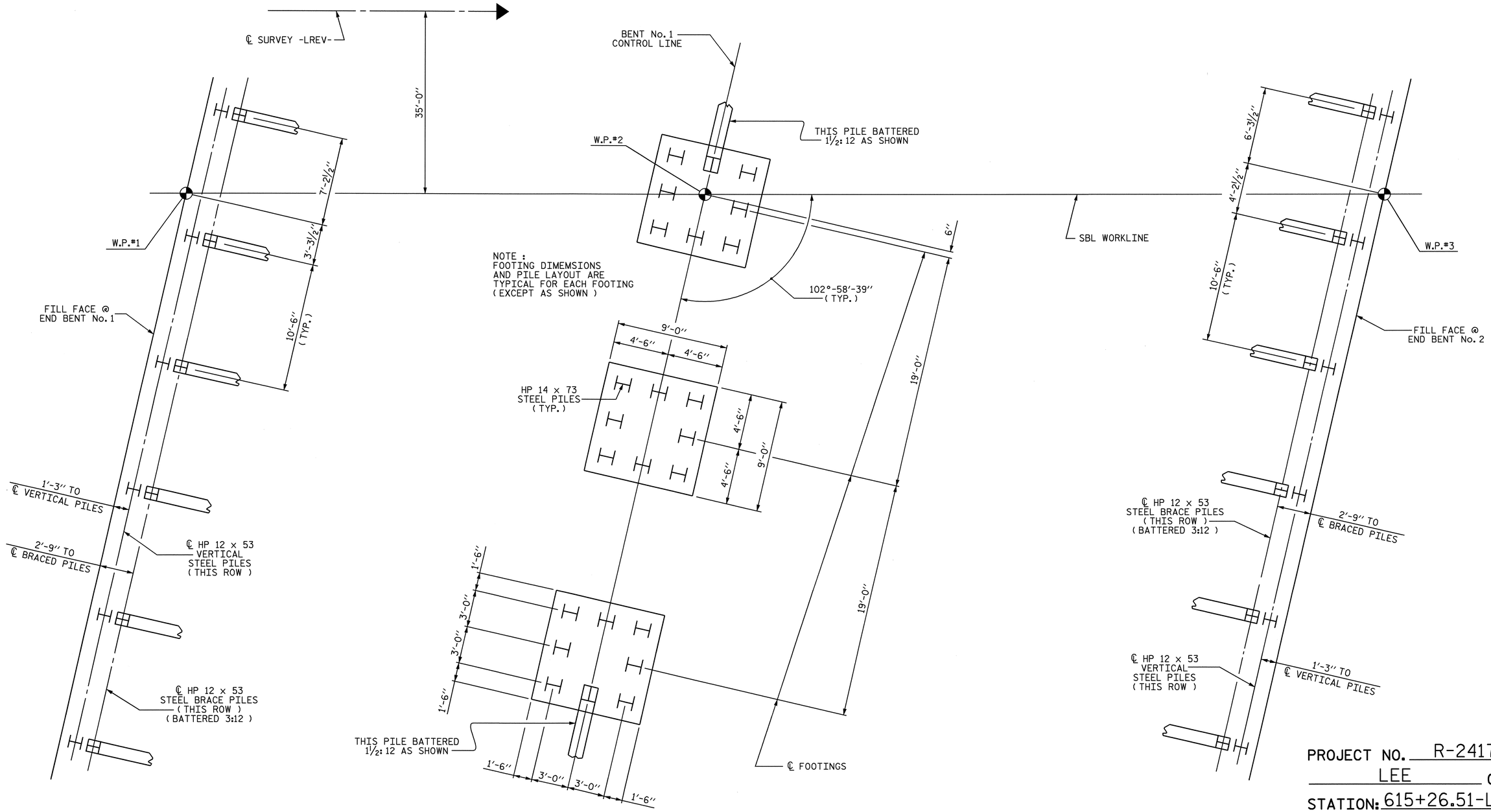

END BENT No. 1

BENT No. 1

END BENT No. 2

FOUNDATION LAYOUT

(DIMENSIONS LOCATING PILES ARE TO THE PILE CENTERLINE AT THE BOTTOM OF THE CAP & FOOTING)

PROJECT NO. R-2417 C

LEE COUNTY

STATION: 615+26.51-LREV-

SHEET 2 OF 3

STATE OF NORTH CAROLINA
DEPARTMENT OF TRANSPORTATION
RALEIGH

GENERAL DRAWING

SBL BRIDGE OVER US 421
ON US 421/NC 87
(SANFORD BYPASS)
BETWEEN NC 42 AND NC 87

NORTH CAROLINA PROFESSIONAL SEAL 029441 ENGINEER KRISTY W. ALFORD

Kristy W. Alford 2/13/09

REVISIONS						SHEET NO.
NO.	BY:	DATE:	NO.	BY:	DATE:	S-34
1			3			TOTAL SHEETS
2			4			104

DRAWN BY : MIKE BRITT DATE : 4-7-09
CHECKED BY : A.V. ROYAL DATE : 4-16-09

03-AUG-2009 08:55
k:\structures\str_2\gen_draw\r2417c_str2_gd.dgn
kalford

STR. #2

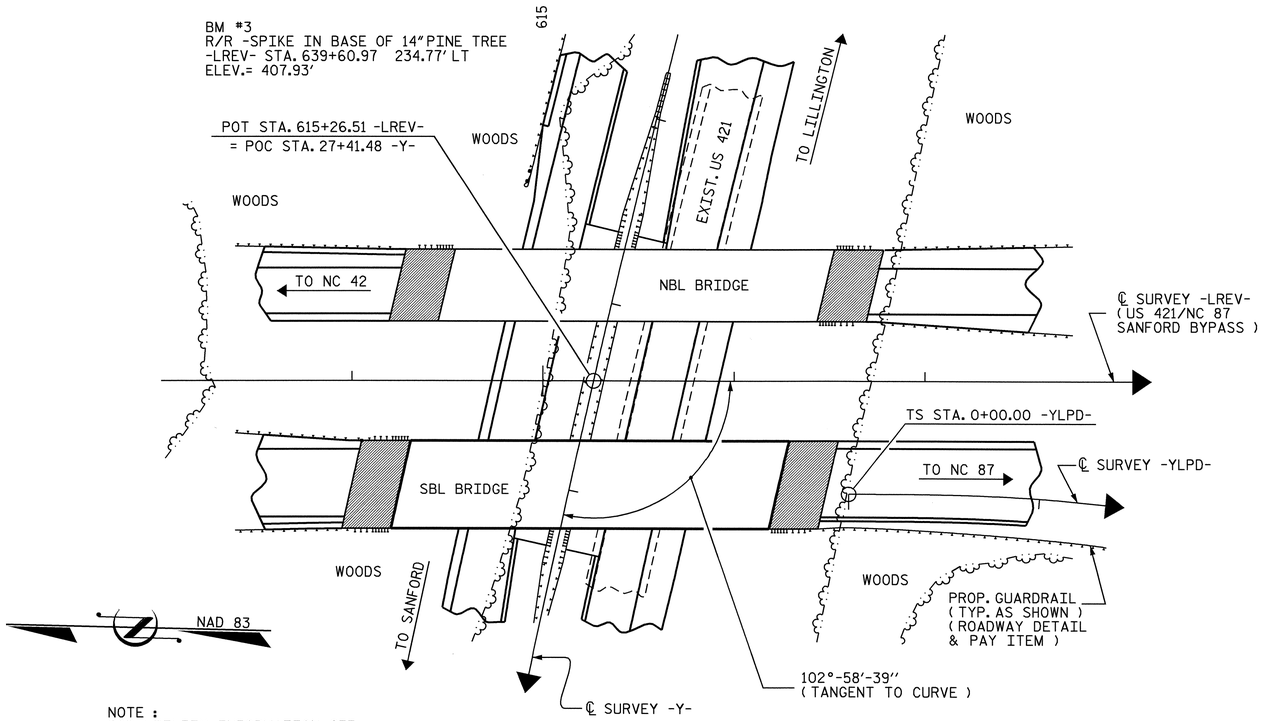

NOTE :
FOR UTILITY INFORMATION, SEE
UTILITY PLANS AND SPECIAL PROVISIONS.

LOCATION SKETCH

NOTES :

ASSUMED LIVE LOAD = HS20 OR ALTERNATE LOADING, EXCEPT THAT THE PRESTRESSED GIRDERS HAVE BEEN DESIGNED FOR HS25.

THIS BRIDGE HAS BEEN DESIGNED IN ACCORDANCE WITH THE REQUIREMENTS OF THE "STANDARD SPECIFICATIONS FOR SEISMIC DESIGN OF HIGHWAY BRIDGES", FOR SEISMIC PERFORMANCE CATEGORY A.

FOR OTHER DESIGN DATA AND GENERAL NOTES, SEE SHEET SN.

PRESTRESSED CONCRETE DECK PANELS MAY BE USED IN LIEU OF METAL STAY-IN-PLACE FORMS IN ACCORDANCE WITH ARTICLE 420-3 OF THE STANDARD SPECIFICATIONS.

REMOVABLE FORMS MAY BE USED IN LIEU OF METAL STAY-IN-PLACE FORMS IN ACCORDANCE WITH ARTICLE 420-3 OF THE STANDARD SPECIFICATIONS.

FOR MAINTENANCE AND PROTECTION OF TRAFFIC BENEATH PROPOSED STRUCTURE, SEE SPECIAL PROVISIONS.

THE CONTRACTOR SHALL PROVIDE INDEPENDENT ASSURANCE SAMPLES OF REINFORCING STEEL AS FOLLOWS: FOR PROJECTS REQUIRING UP TO 400 TONS OF REINFORCING STEEL, ONE 30 INCH SAMPLE OF EACH SIZE BAR USED, AND FOR PROJECTS REQUIRING OVER 400 TONS OF REINFORCING STEEL, TWO 30 INCH SAMPLES OF EACH SIZE BAR USED. THE BARS FROM WHICH THE SAMPLES ARE TAKEN MUST THEN BE SPLICED WITH REPLACEMENT BARS OF THE SIZE AND LENGTH OF THE SAMPLE, PLUS A MINIMUM LAP SPLICE OF THIRTY BAR DIAMETERS.

NEEDLE BEAMS WILL NOT BE ALLOWED UNLESS OTHERWISE CALLED FOR ON THE PLANS OR APPROVED BY THE ENGINEER.

FOR SUBMITTAL OF WORKING DRAWINGS, SEE SPECIAL PROVISIONS.

FOR FALSEWORK AND FORMWORK, SEE SPECIAL PROVISIONS.

FOR CRANE SAFETY, SEE SPECIAL PROVISIONS.

THIS BRIDGE HAS BEEN DESIGNED BY THE STRENGTH DESIGN METHOD AS SPECIFIED IN AASHTO STANDARD SPECIFICATIONS.

DRIVE PILES AT END BENT No. 1 TO A REQUIRED BEARING CAPACITY OF 120 TONS PER PILE. THE REQUIRED BEARING CAPACITY IS EQUAL TO THE ALLOWABLE BEARING CAPACITY WITH A MINIMUM FACTOR OF SAFETY OF TWO.

THE ALLOWABLE BEARING CAPACITY FOR PILES AT END BENT No. 1 IS 60 TONS PER PILE.

DRIVE PILES AT BENT No. 1 TO A REQUIRED BEARING CAPACITY OF 120 TONS PER PILE. THE REQUIRED BEARING CAPACITY IS EQUAL TO THE ALLOWABLE BEARING CAPACITY WITH A MINIMUM FACTOR OF SAFETY OF TWO.

THE ALLOWABLE BEARING CAPACITY FOR PILES AT BENT No. 1 IS 60 TONS PER PILE.

DRIVE PILES AT END BENT No. 2 TO A REQUIRED BEARING CAPACITY OF 120 TONS PER PILE. THE REQUIRED BEARING CAPACITY IS EQUAL TO THE ALLOWABLE BEARING CAPACITY WITH A MINIMUM FACTOR OF SAFETY OF TWO.

THE ALLOWABLE BEARING CAPACITY FOR PILES AT END BENT No. 2 IS 60 TONS PER PILE.

FOR PRESTRESSED CONCRETE MEMBERS, SEE SPECIAL PROVISIONS.

FOR GROUT FOR STRUCTURES, SEE SPECIAL PROVISIONS.

FOR ADHESIVELY ANCHORED ANCHOR BOLTS OR DOWELS, SEE SPECIAL PROVISIONS.

FOR CURING CONCRETE, SEE SPECIAL PROVISIONS.

FOR PILES, SEE SPECIAL PROVISIONS.

FOR PLACING LOAD ON STRUCTURE MEMBERS, SEE SPECIAL PROVISIONS.

TOTAL BILL OF MATERIAL

SBL	FOUNDATION EXCAVATION	REINFORCED CONCRETE DECK SLAB	GROOVING BRIDGE FLOORS	CLASS A CONCRETE	BRIDGE APPROACH SLABS	REINFORCING STEEL	SPIRAL COLUMN REINFORCING STEEL	MODIFIED 63" PRESTRESSED CONCRETE GIRDERS		HP 12 x 53 STEEL PILES		HP 14 x 73 STEEL PILES		CONCRETE BARRIER RAIL	4" SLOPE PROTECTION	ELASTOMERIC BEARINGS	EVAZOTE JOINT SEALS
	LUMP SUM	SQ. FT.	SQ. FT.	CU. YDS.	LUMP SUM	LBS.	LBS.	No.	LIN. FT.	No.	LIN. FT.	No.	LIN. FT.	LIN. FT.	SQ. YDS.	LUMP SUM	LUMP SUM
SUPERSTRUCTURE		9,597.1	10,356		LUMP SUM			12	1,156.26					389.73		LUMP SUM	LUMP SUM
END BENT No. 1				45.0		6,130				12	930				415		
BENT No. 1	LUMP SUM			81.0		11,594	1,417					24	1,080				
END BENT No. 2				44.8		6,118				12	720				410		
TOTAL	LUMP SUM	9,597.1	10,356	170.8	LUMP SUM	23,842	1,417	12	1,156.26	24	1,650	24	1,080	389.73	825	LUMP SUM	LUMP SUM

PROJECT NO. R-2417 C
LEE COUNTY
STATION: 615+26.51-LREV-

SHEET 3 OF 3

STATE OF NORTH CAROLINA
DEPARTMENT OF TRANSPORTATION
RALEIGH

GENERAL DRAWING

SBL BRIDGE OVER US 421
ON US 421/NC 87
(SANFORD BYPASS)
BETWEEN NC 42 AND NC 87

NORTH CAROLINA PROFESSIONAL SEAL 029441 ENGINEER KRISTY W. ALFORD
10/21/09

REVISIONS						SHEET NO.
NO.	BY:	DATE:	NO.	BY:	DATE:	S-35
1			3			TOTAL SHEETS
2			4			104

DRAWN BY : MIKE BRITT DATE : 4-6-09
CHECKED BY : A.V. ROYAL DATE : 4-16-09

21-OCT-2009 09:08
k:\structures\str_2\gen_draw\r2417c_str2_gd.dgn
kalford

STR. #2

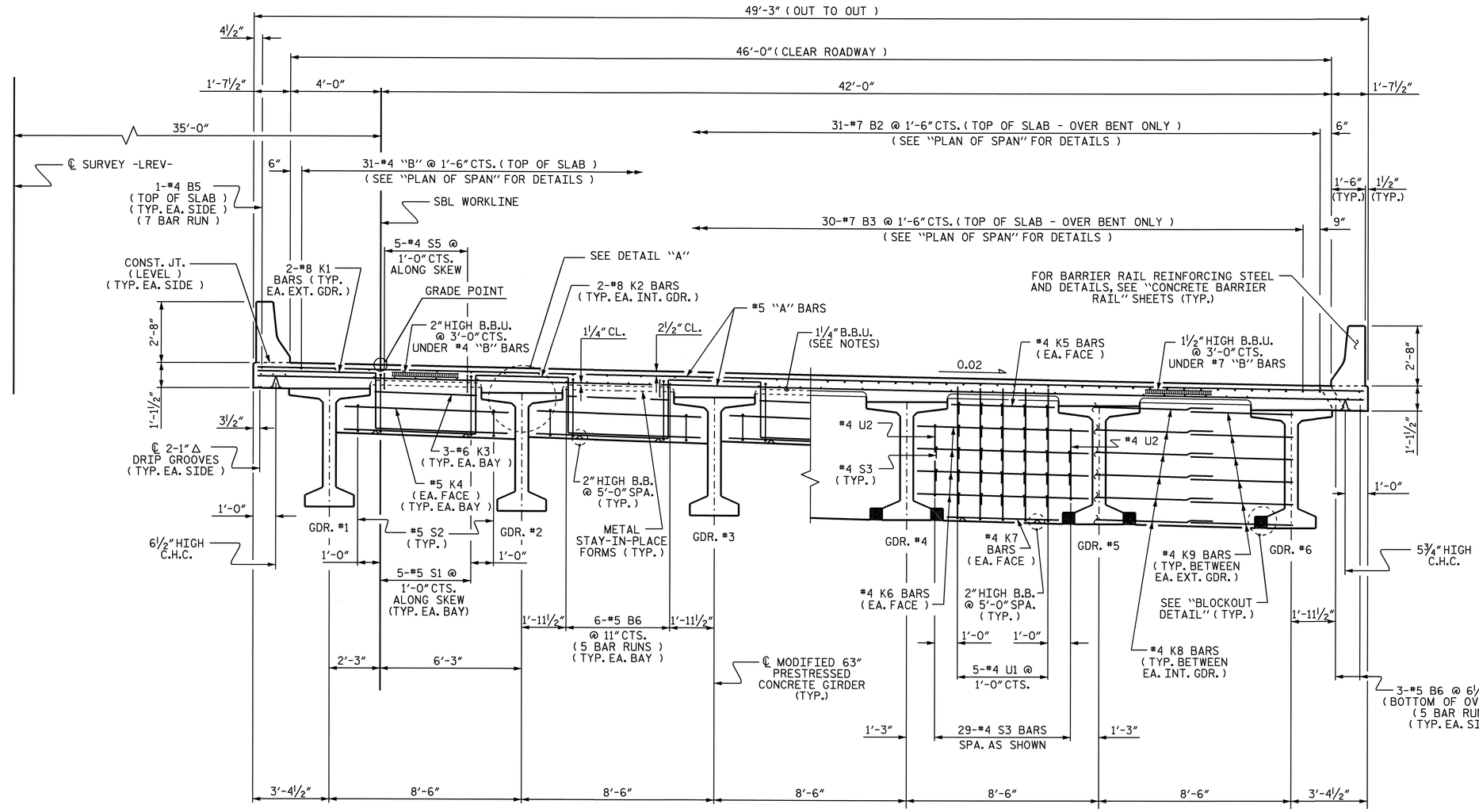

HALF TYPICAL SECTION

SHOWING END BENT DIAPHRAGMS

HALF TYPICAL SECTION

SHOWING BENT DIAPHRAGMS (TYP. EA. BAY, EXCEPT AS NOTED)

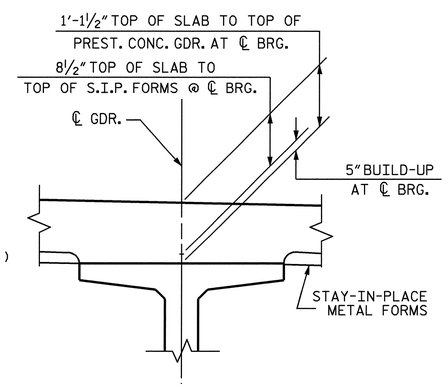

DETAIL

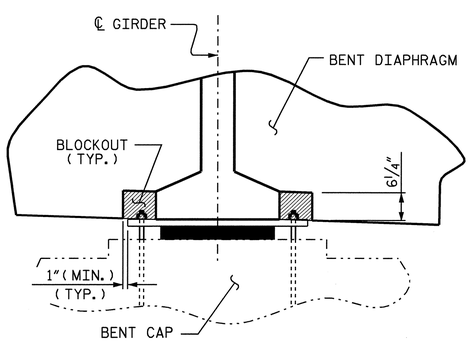

SECTION

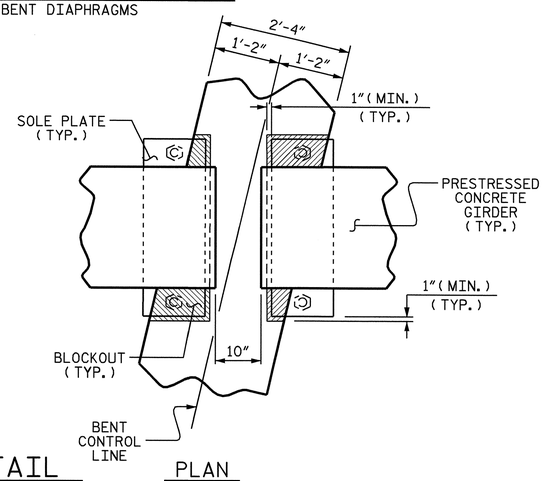

PLAN

BLOCKOUT DETAIL

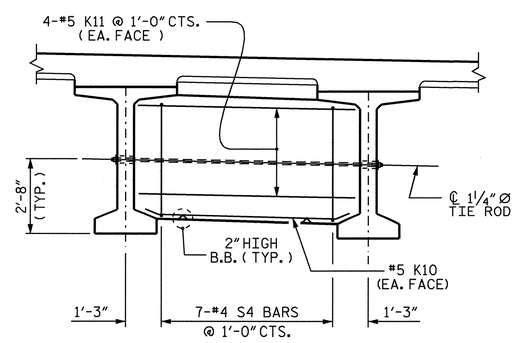

PARTIAL TYPICAL SECTION

SHOWING INTERMEDIATE DIAPHRAGMS (TYP. EACH SPAN, TYP. EA. BAY)

NOTES :

PROVIDE 1¼" HIGH BEAM BOLSTERS UPPER AT 4'-0" CTS. ATOP THE METAL STAY-IN-PLACE FORMS TO SUPPORT THE BOTTOM MAT OF "A" BARS. WHEN USING REMOVABLE FORMS, PROVIDE CONTINUOUS HIGH CHAIRS FOR METAL DECK (C.H.C.M.) @ 4'-0" CTS. WITH A HEIGHT TO SUPPORT THE BOTTOM MAT OF "A" BARS A CLEAR DISTANCE OF 2½" ABOVE THE TOP OF THE REMOVABLE FORM.

LONGITUDINAL STEEL MAY BE SHIFTED SLIGHTLY, AS NECESSARY, TO AVOID INTERFERENCE WITH STIRRUPS IN PRESTRESSED CONCRETE GIRDERS.

BARRIER RAIL IN A CONTINUOUS UNIT SHALL NOT BE CAST UNTIL ALL SLAB CONCRETE IN THE UNIT HAS BEEN CAST AND HAS REACHED A MINIMUM COMPRESSIVE STRENGTH OF 3,000 PSI.

TEMPORARY STRUTS SHALL BE PLACED BETWEEN PRESTRESSED GIRDERS ADJACENT TO THE DIAPHRAGMS, AND THE NUTS ON THE 1¼" DIA. TIE RODS SHALL BE FULLY TIGHTENED BEFORE THE DIAPHRAGMS ARE CAST. STRUTS SHALL REMAIN IN PLACE 3 DAYS AFTER CONCRETE IS PLACED. THE TIE RODS SHALL BE RE-TIGHTENED AFTER THE STRUTS HAVE BEEN REMOVED.

CONCRETE IN INTERMEDIATE DIAPHRAGMS MAY BE CLASS A IN LIEU OF CLASS AA. PAYMENT SHALL BE MADE UNDER THE UNIT CONTRACT PRICE FOR REINFORCED CONCRETE DECK SLAB.

PREVIOUSLY CAST CONCRETE IN A CONTINUOUS UNIT SHALL HAVE ATTAINED A MINIMUM COMPRESSIVE STRENGTH OF 3,000 PSI BEFORE ADDITIONAL CONCRETE IS CAST IN THE UNIT.

DECK DRAINS ARE REQUIRED ALONG RIGHT GUTTERLINE. SEE "DRAIN DETAILS", SHEET 2 OF 2. SEE PLAN OF SPANS FOR LOCATION.

PROJECT NO. R-2417C
LEE COUNTY
STATION: 615+26.51-LREV-

SHEET 1 OF 2

STATE OF NORTH CAROLINA
DEPARTMENT OF TRANSPORTATION
RALEIGH

SUPERSTRUCTURE
TYPICAL SECTIONS
(SBL)

NORTH CAROLINA PROFESSIONAL SEAL 029441 ENGINEER KRISTY W. ALFORD
8/3/09

REVISIONS								SHEET NO.
NO.	BY:	DATE:	NO.	BY:	DATE:			S-36
1			3					TOTAL SHEETS
2			4					104

DRAWN BY : D. G. ELY DATE : 9-2008
CHECKED BY : S. B. WILLIAMS DATE : 11/2008

03-AUG-2009 08:58
k:\structures\str_2\Super_Draw\R2417C_sd_TS_STR2.dgn
kalford

STR. #2

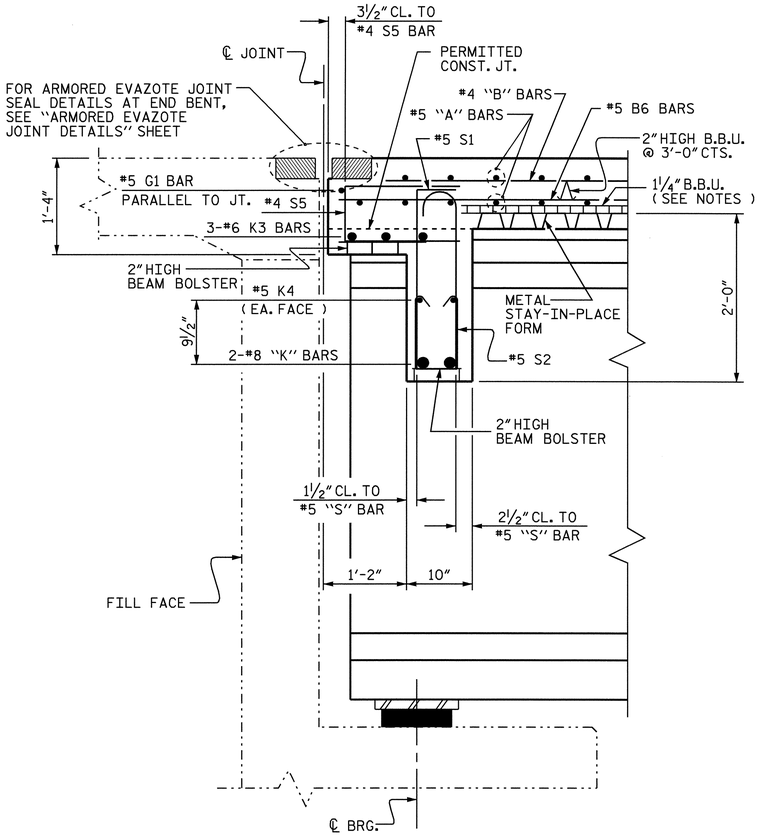

SECTION THRU END BENT DIAPHRAGM

#5 G1 BAR MAY BE SHIFTED SLIGHTLY, AS NECESSARY, TO CLEAR REINFORCING STEEL AND STIRRUPS.

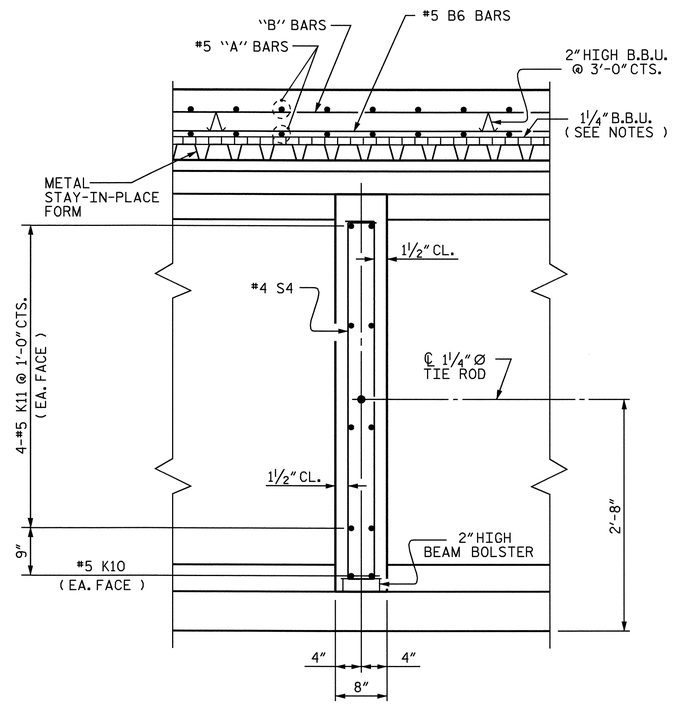

SECTION THRU INTERMEDIATE DIAPHRAGM

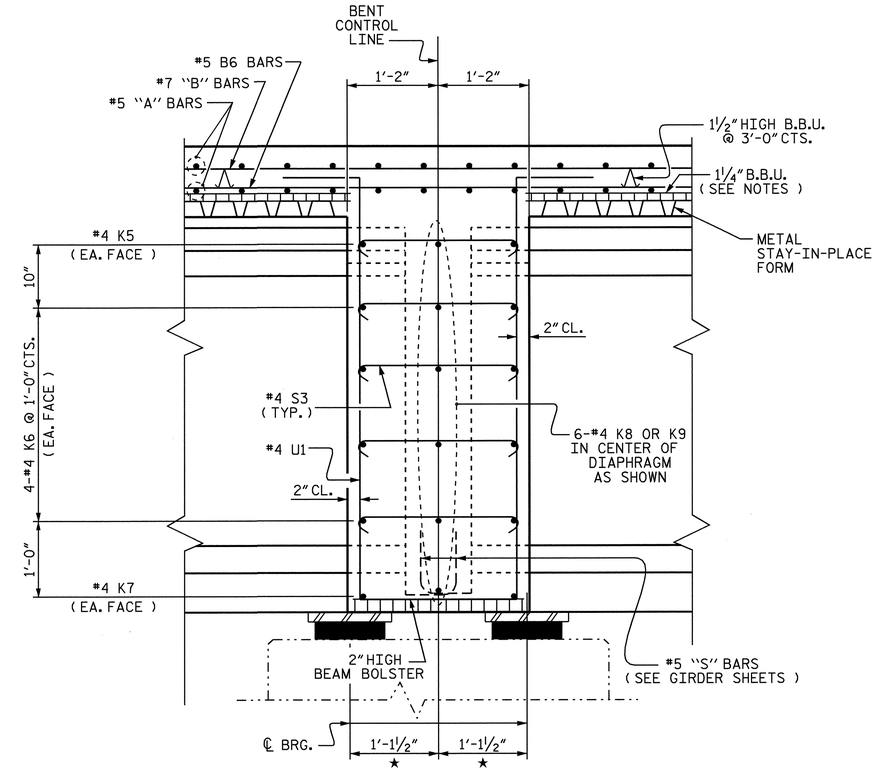

SECTION THRU BENT DIAPHRAGM

★ MEASURED ALONG ℄ GIRDER

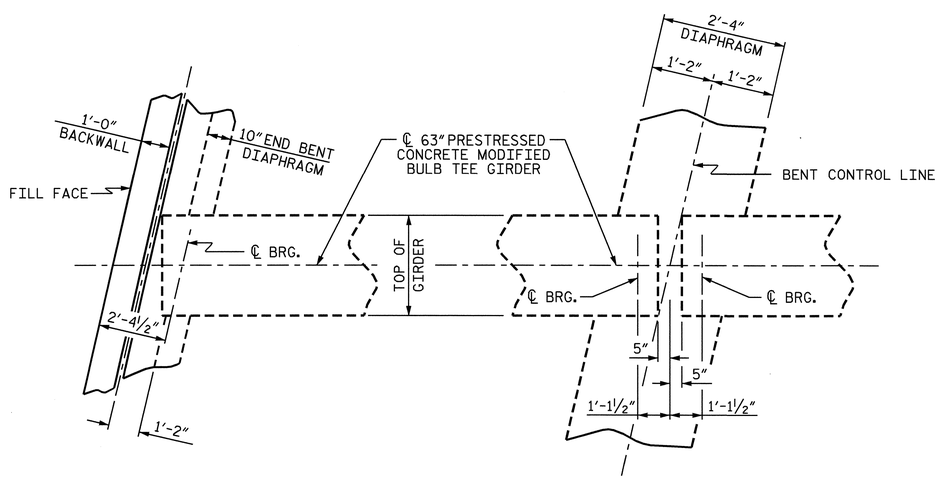

PLAN OF DIAPHRAGMS

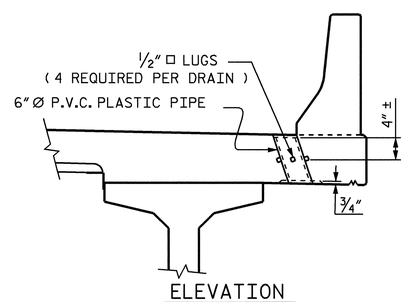

ELEVATION

TOP OF FLOOR DRAINS TO BE SET ⅜" BELOW SURFACE OF SLAB.

4 - ½" □ LUGS TO BE GLUED TO THE P.V.C. PLASTIC PIPE AT EQUAL SPACES AROUND THE PIPE DRAIN APPROXIMATELY 4" FROM THE TOP OF PIPE.

THE 6" Ø PVC PLASTIC PIPE AND FITTINGS SHALL BE SCHEDULE 40 AND CONFORM TO ASTM D1785.

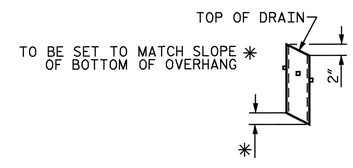

PIPE DETAIL

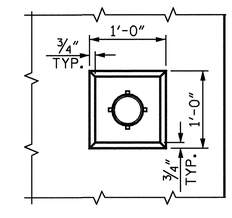

PLAN OF RECESS

DRAIN DETAILS

SEE "PLAN OF SPAN" SHEETS FOR DRAIN LOCATIONS
(8 DRAINS REQUIRED)

PROJECT NO. R-2417C
LEE COUNTY
STATION: 615+26.51-LREV-

SHEET 2 OF 2

STATE OF NORTH CAROLINA
DEPARTMENT OF TRANSPORTATION
RALEIGH

SUPERSTRUCTURE
TYPICAL SECTIONS
(SBL)

NORTH CAROLINA PROFESSIONAL SEAL 029441 ENGINEER KRISTY W. ALFORD
9/3/09

REVISIONS						SHEET NO.
NO.	BY:	DATE:	NO.	BY:	DATE:	S-37
1			3			TOTAL SHEETS
2			4			104

DRAWN BY : D. G. ELY DATE : 9-2008
CHECKED BY : S. B. WILLIAMS DATE : 11/2008

03-AUG-2009 08:58
k:\structures\str_2\Super_Draw\R2417C_sd_TS_STR2.dgn
kalford

STR. #2

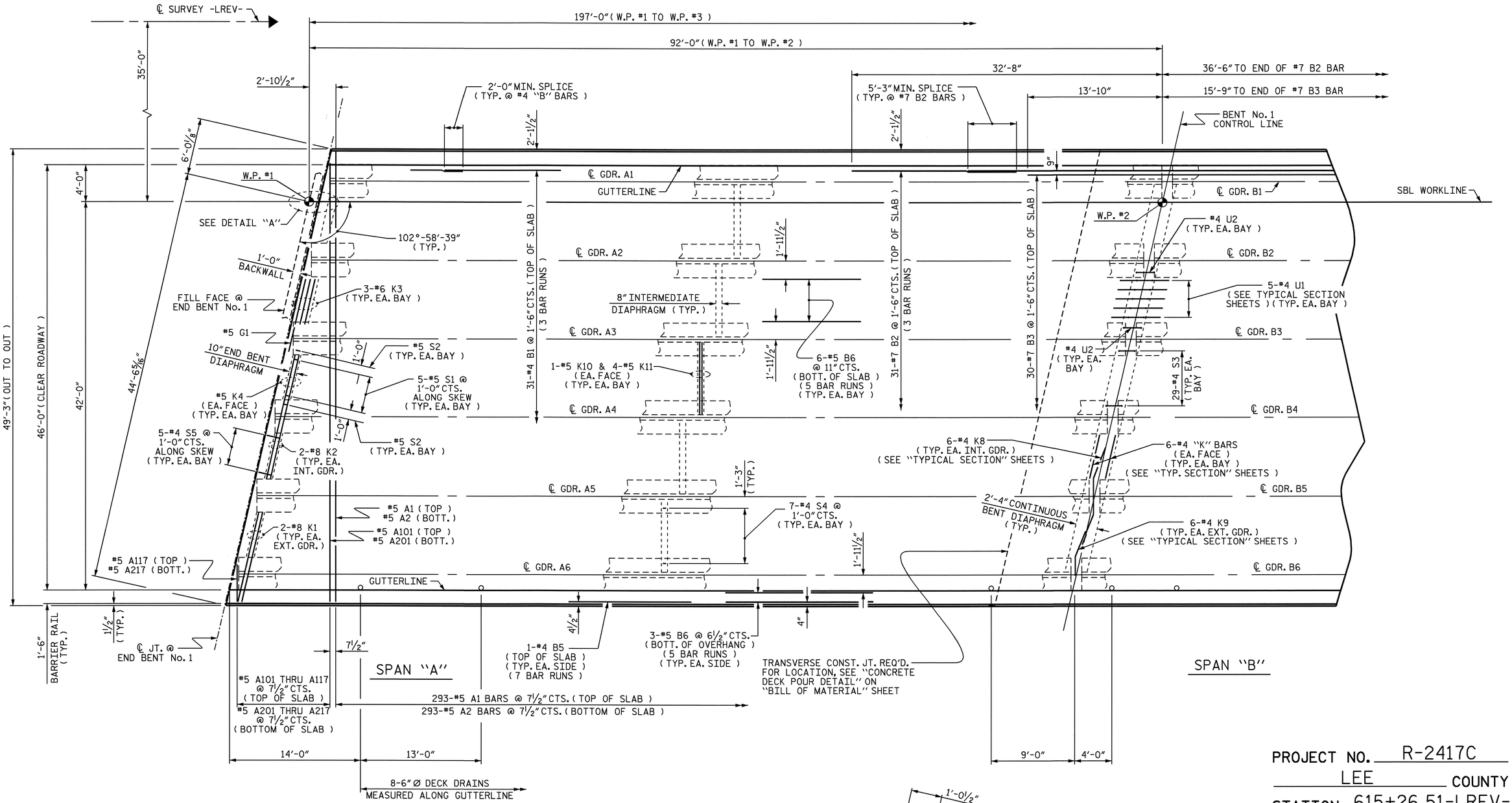

PARTIAL PLAN OF SPAN

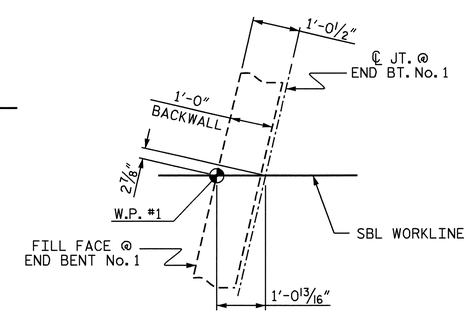

DETAIL "A"

NOTES :

FOR BARRIER RAIL REINFORCING STEEL, SEE "CONCRETE BARRIER RAIL" SHEETS.

FOR LOCATION OF INTERMEDIATE DIAPHRAGMS, SEE "FRAMING PLAN" SHEET.

PROJECT NO. R-2417C
LEE COUNTY
STATION: 615+26.51-LREV-

SHEET 1 OF 2

STATE OF NORTH CAROLINA
DEPARTMENT OF TRANSPORTATION
RALEIGH

SUPERSTRUCTURE
PLAN OF SPANS
(SBL)

NORTH CAROLINA PROFESSIONAL SEAL 029441 ENGINEER KRISTY W. ALFORD
8/3/09

REVISIONS						SHEET NO.
NO.	BY:	DATE:	NO.	BY:	DATE:	S-38
1			3			TOTAL SHEETS
2			4			104

DRAWN BY : D. G. ELY DATE : 9/2008
CHECKED BY : S. B. WILLIAMS DATE : 11/2008

03-AUG-2009 08:59
k:\structures\str_2\Super_Draw\R2417C_sd_PS_STR2.dgn
kalford

STR. #2

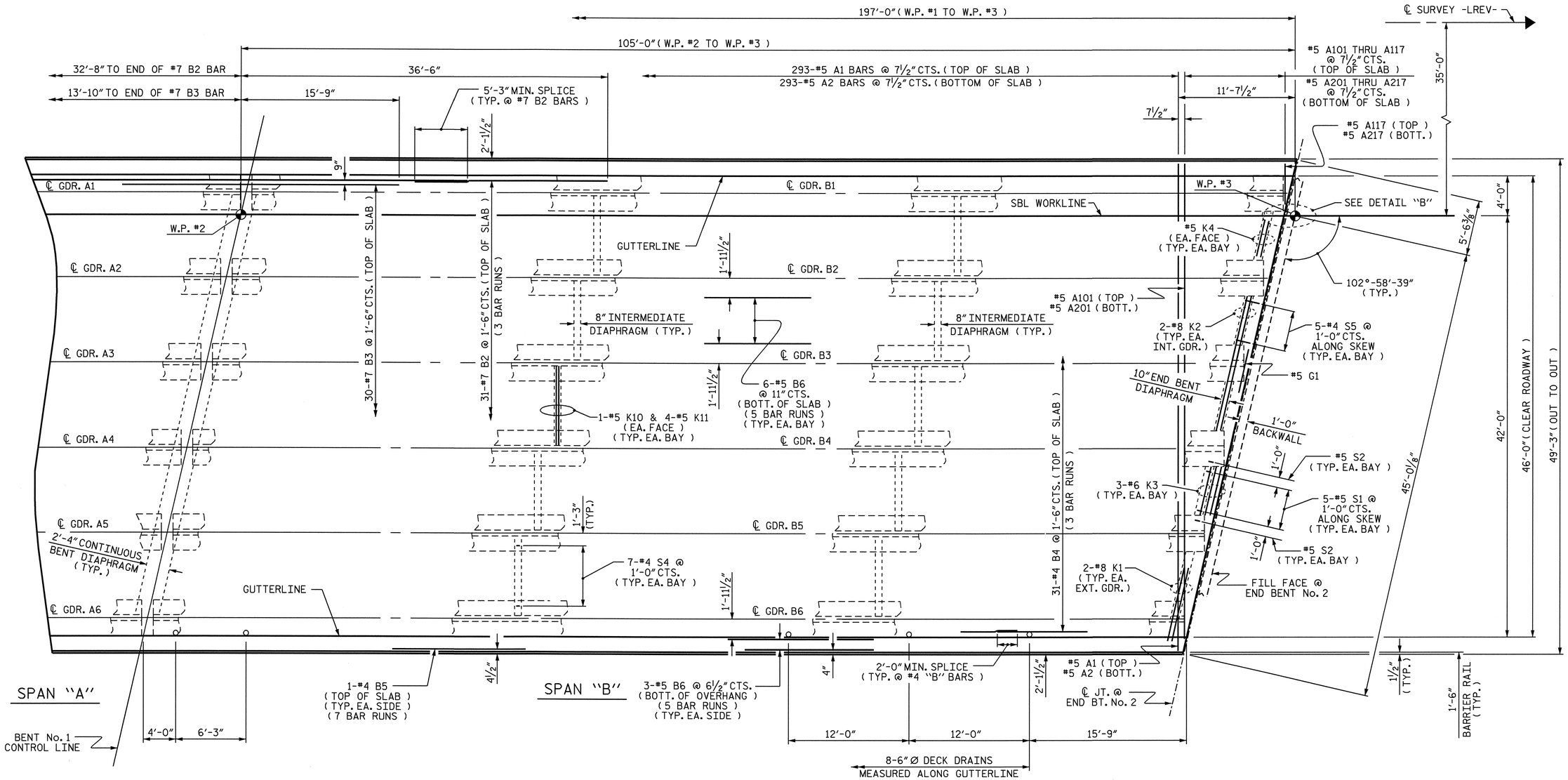

PARTIAL PLAN OF SPAN

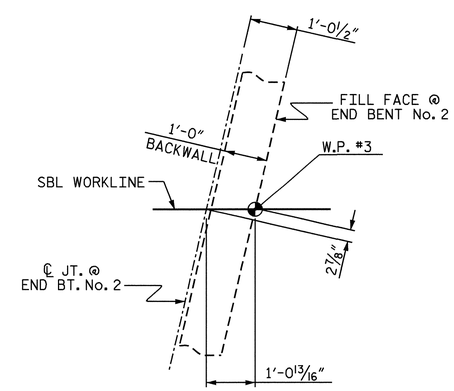

DETAIL "B"

NOTES :

FOR BARRIER RAIL REINFORCING STEEL, SEE "CONCRETE BARRIER RAIL" SHEETS.

FOR LOCATION OF INTERMEDIATE DIAPHRAGMS, SEE "FRAMING PLAN" SHEET.

PROJECT NO. R-2417C
LEE COUNTY
STATION: 615+26.51-LREV-

SHEET 2 OF 2

STATE OF NORTH CAROLINA
DEPARTMENT OF TRANSPORTATION
RALEIGH

SUPERSTRUCTURE
PLAN OF SPANS
(SBL)

NORTH CAROLINA PROFESSIONAL SEAL 029441 ENGINEER KRISTY W. ALFORD
8/3/09

REVISIONS						SHEET NO.
NO.	BY:	DATE:	NO.	BY:	DATE:	S-39
1			3			TOTAL SHEETS
2			4			104

DRAWN BY : D. G. ELY DATE : 9/2008
CHECKED BY : S. B. WILLIAMS DATE : 11/2008

03-AUG-2009 08:59
k:\structures\str_2\Super_Draw\R2417C_sd_PS_STR2.dgn
kalford

STR. #2

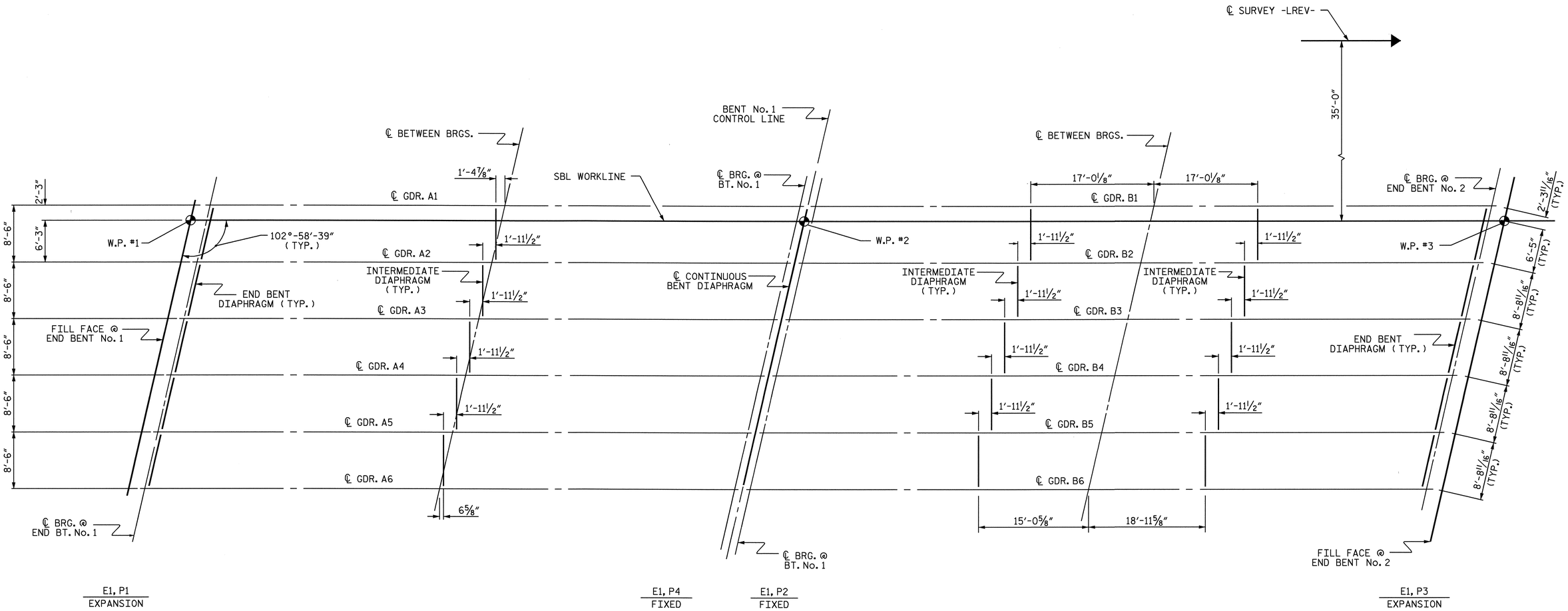

PROJECT NO. R-2417C

LEE COUNTY

STATION: 615+26.51-LREV-

FRAMING PLAN

STATE OF NORTH CAROLINA
DEPARTMENT OF TRANSPORTATION
RALEIGH

SUPERSTRUCTURE
FRAMING PLAN
(SBL)

NORTH CAROLINA PROFESSIONAL SEAL 029441 ENGINEER KRISTY W. ALFORD

REVISIONS						SHEET NO.
NO.	BY:	DATE:	NO.	BY:	DATE:	S-40
1			3			TOTAL SHEETS
2			4			104

DRAWN BY : D. G. ELY DATE : 9/2008
CHECKED BY : S. B. WILLIAMS DATE : 11/2008

03-AUG-2009 09:04
k:\structures\str_2\Super_Draw\R2417C_sd_FP_STR2.dgn
kalford

STR. #2

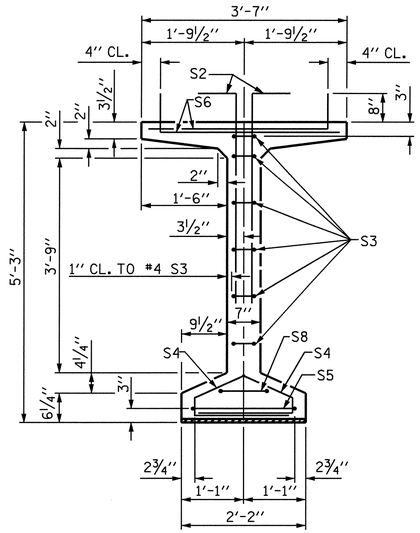

SECTION A-A

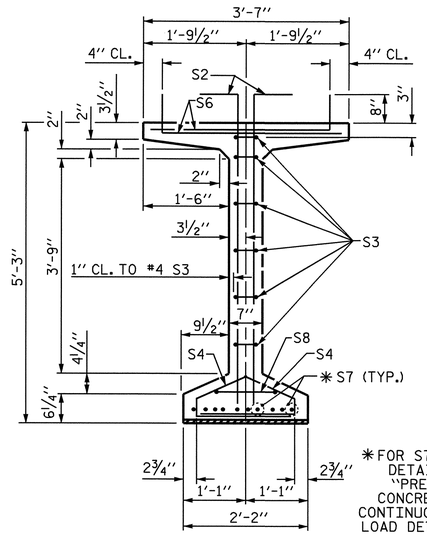

SECTION B-B

✱FOR S7 BARS. SEE DETAIL "C" OF "PRESTRESSED CONCRETE GIRDER CONTINUOUS FOR LIVE LOAD DETAILS" SHEET

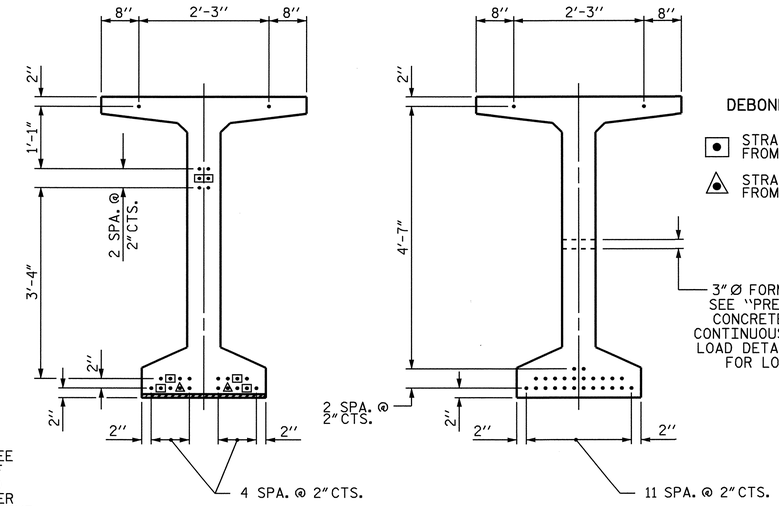

AT END OF GIRDER

AT ℄ OF GIRDER

0.6" Ø LOW RELAXATION STRAND LAYOUT

DEBONDING LEGEND

- ● STRANDS DEBONDED FOR 2'-0" FROM END OF GIRDER
- ▲ STRANDS DEBONDED FOR 4'-0" FROM END OF GIRDER

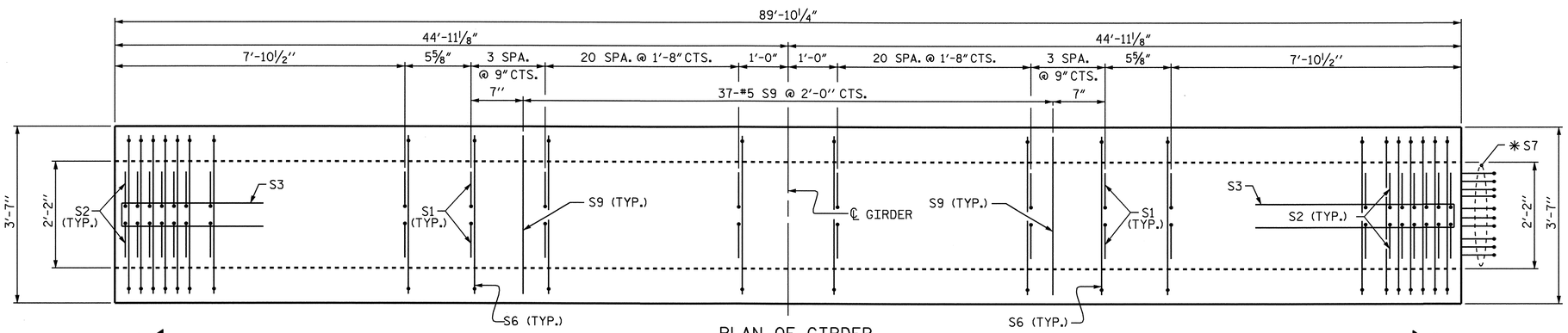

PLAN OF GIRDER

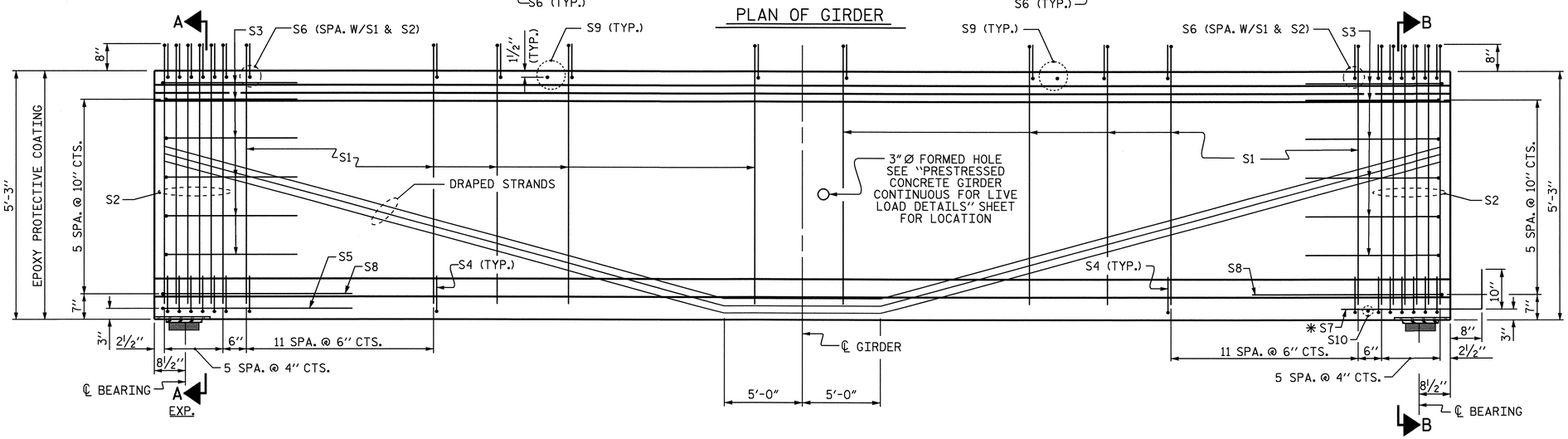

ELEVATION OF GIRDER

NOTE

THE UPLIFT FORCE DUE TO DRAPED STRANDS IS 23.0 KIPS

0.6" Ø L. R. GRADE 270 STRANDS

AREA (SQUARE INCHES)	ULTIMATE STRENGTH (LBS. PER STRAND)	APPLIED PRESTRESS (LBS. PER STRAND)
0.217	58,600	43,950

REINFORCING STEEL FOR ONE GIRDER

BAR	NUMBER	SIZE	TYPE	LENGTH	WEIGHT
S1	144	#4	1	6'-3"	601
S2	24	#5	1	6'-3"	156
S3	12	#4	2	8'-5"	67
S4	72	#4	3	3'-0"	144
S5	1	#5	2	9'-10"	10
S6	168	#5	1	3'-10"	672
✱S7	10	#5	STR	3'-8"	38
S8	2	#5	2	9'-0"	19
S9	37	#5	STR	3'-3"	125
S10	1	#3	STR	1'-10"	1

✱NOTE: S7 BARS SHALL BE BENT BEFORE SHIPMENT. HEAT BENDING SHALL NOT BE ALLOWED.

BAR TYPES

ALL BAR DIMENSIONS ARE OUT-TO-OUT

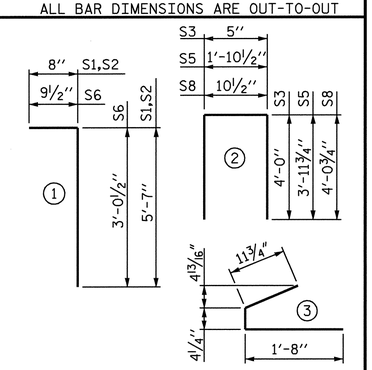

QUANTITIES FOR ONE GIRDER

SPAN "A" (SBL)	REINFORCING STEEL	8000 PSI CONCRETE	0.6" Ø L.R. STRANDS
	LB.	C.Y.	No.
GIRDERS A1 THRU A6	1833	17.8	26

GIRDERS REQUIRED

NUMBER	LENGTH	TOTAL LENGTH
6	89'-10¼"	539.13'

PROJECT NO. R-2417C

LEE COUNTY

STATION: 615+26.51-LREV-

STATE OF NORTH CAROLINA
DEPARTMENT OF TRANSPORTATION
RALEIGH

STANDARD

63" PRESTRESSED CONCRETE MODIFIED BULB TEE CONTINUOUS FOR LIVE LOAD

SPAN "A" (SBL)

NORTH CAROLINA PROFESSIONAL SEAL 029441 ENGINEER KRISTY W. ALFORD

8/3/09

ASSEMBLED BY : D. G. ELY	DATE : 9/2008
CHECKED BY : S. B. WILLIAMS	DATE : 11/2008
DRAWN BY : EEM 2/6/97	REV. 8/16/99 RWW/LES
CHECKED BY : VAP 2/6/97	REV. 10/17/00 RWW/LES
	REV. 5/1/06 TLA/GM

REVISIONS

NO.	BY:	DATE:	NO.	BY:	DATE:
1			3		
2			4		

SHEET NO. S-41

TOTAL SHEETS 104

STD. NO. PCG9

STR. #2

03-AUG-2009 09:04
k:\structures\str_2\Super_Draw\R2417C_sd_PCG_STR2.dgn
kdford

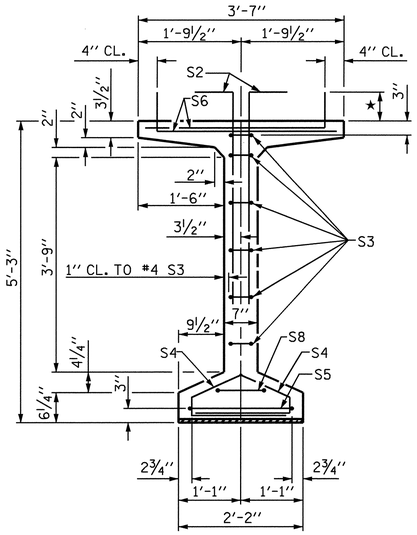

SECTION A-A

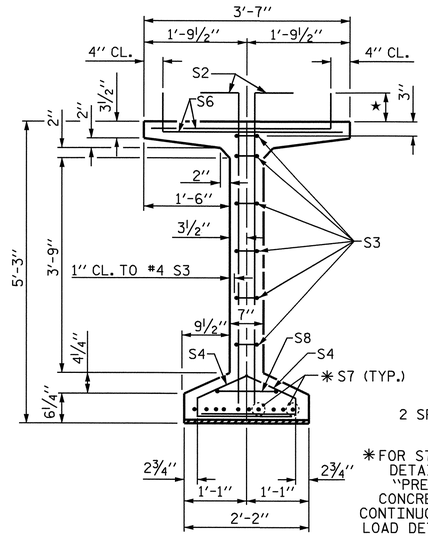

SECTION B-B

✱ FOR S7 BARS, SEE DETAIL "C" OF "PRESTRESSED CONCRETE GIRDER CONTINUOUS FOR LIVE LOAD DETAILS" SHEET

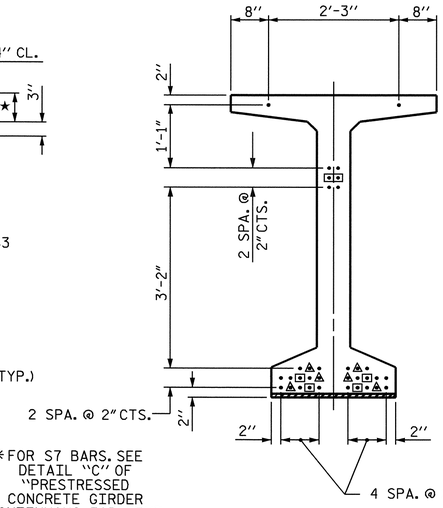

AT END OF GIRDER

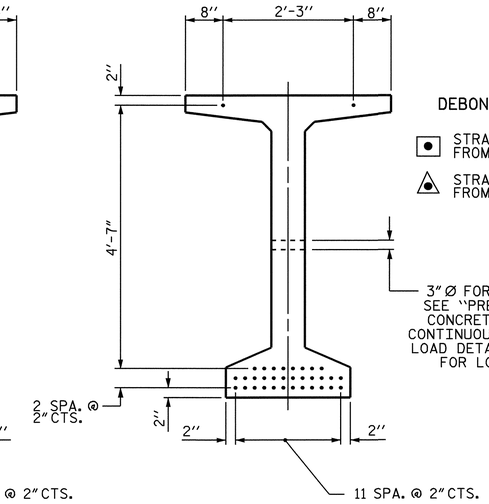

AT ℄ OF GIRDER

0.6" Ø LOW RELAXATION STRAND LAYOUT

DEBONDING LEGEND

- ● STRANDS DEBONDED FOR 2'-0" FROM END OF GIRDER
- ▲ STRANDS DEBONDED FOR 4'-0" FROM END OF GIRDER

3" Ø FORMED HOLE SEE "PRESTRESSED CONCRETE GIRDER CONTINUOUS FOR LIVE LOAD DETAILS" SHEET FOR LOCATION

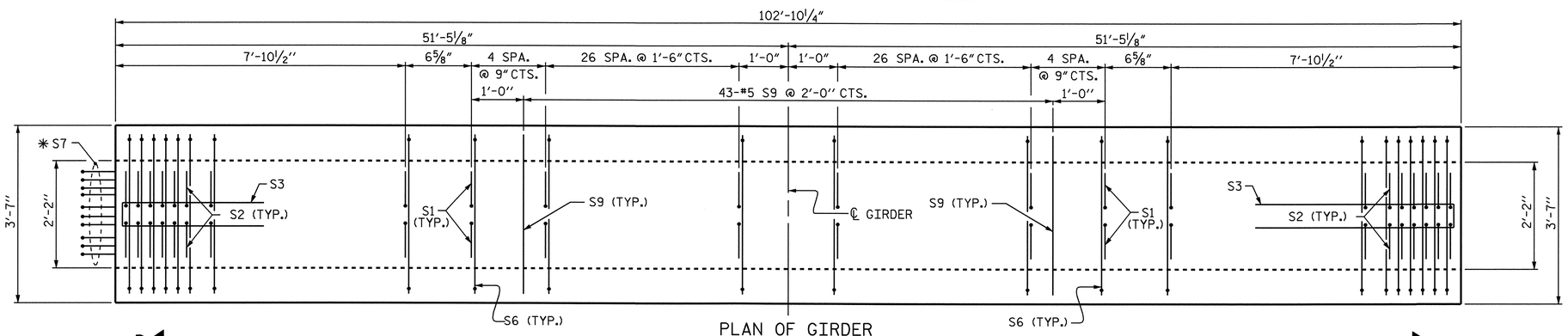

PLAN OF GIRDER

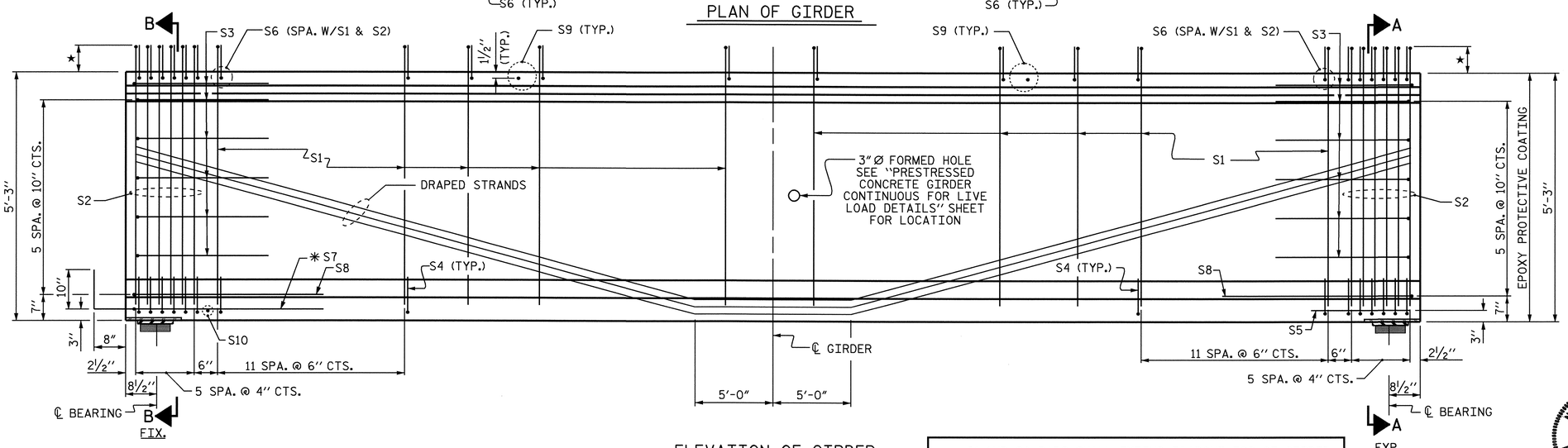

ELEVATION OF GIRDER

★ S1 AND S6 BARS SHALL EXTEND 7" ABOVE TOP OF GIRDER. S2 BARS SHALL EXTEND 8" ABOVE TOP OF GIRDER.

0.6" Ø L. R. GRADE 270 STRANDS

AREA (SQUARE INCHES)	ULTIMATE STRENGTH (LBS. PER STRAND)	APPLIED PRESTRESS (LBS. PER STRAND)
0.217	58,600	43,950

REINFORCING STEEL FOR ONE GIRDER

BAR	NUMBER	SIZE	TYPE	LENGTH	WEIGHT
S1	172	#4	1	6'-2"	709
S2	24	#5	1	6'-3"	156
S3	12	#4	2	8'-5"	67
S4	72	#4	3	3'-0"	144
S5	1	#5	2	9'-10"	10
S6	196	#5	1	3'-9"	767
✱S7	10	#5	STR	3'-8"	38
S8	2	#5	2	9'-0"	19
S9	43	#5	STR	3'-3"	146
S10	1	#3	STR	1'-10"	1

✱NOTE: S7 BARS SHALL BE BENT BEFORE SHIPMENT. HEAT BENDING SHALL NOT BE ALLOWED.

BAR TYPES

ALL BAR DIMENSIONS ARE OUT-TO-OUT

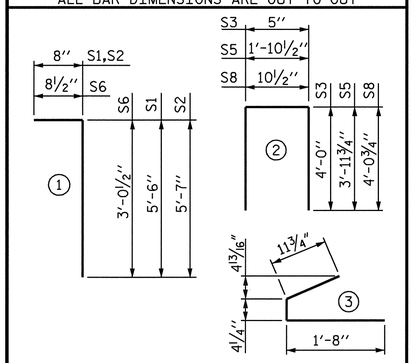

QUANTITIES FOR ONE GIRDER

SPAN "B" (SBL)	REINFORCING STEEL	8000 PSI CONCRETE	0.6" Ø L.R. STRANDS
	LB.	C.Y.	No.
GIRDERS B1 THRU B6	2057	20.4	34

GIRDERS REQUIRED

NUMBER	LENGTH	TOTAL LENGTH
6	102'-10¼"	617.13'

PROJECT NO. R-2417C

LEE COUNTY

STATION: 615+26.51-LREV-

STATE OF NORTH CAROLINA
DEPARTMENT OF TRANSPORTATION
RALEIGH

STANDARD

63" PRESTRESSED CONCRETE MODIFIED BULB TEE CONTINUOUS FOR LIVE LOAD

SPAN "B" (SBL)

NORTH CAROLINA PROFESSIONAL SEAL 029441 ENGINEER KRISTY W. ALFORD
10/21/09

ASSEMBLED BY : D. G. ELY	DATE : 9/2008
CHECKED BY : S. B. WILLIAMS	DATE : 11/2008
DRAWN BY : EEM 2/6/97	REV. 8/16/99 RWW/LES
CHECKED BY : VAP 2/6/97	REV. 10/17/00 RWW/LES
	REV. 5/1/06 TLA/GM

REVISIONS

NO.	BY:	DATE:	NO.	BY:	DATE:
1			3		
2			4		

SHEET NO. S-42

TOTAL SHEETS 104

STD. NO. PCG9

STR. #2

21-OCT-2009 09:16
k:\structures\str_2\Super_Draw\R2417C_sd_PCG_STR2.dgn
kalford

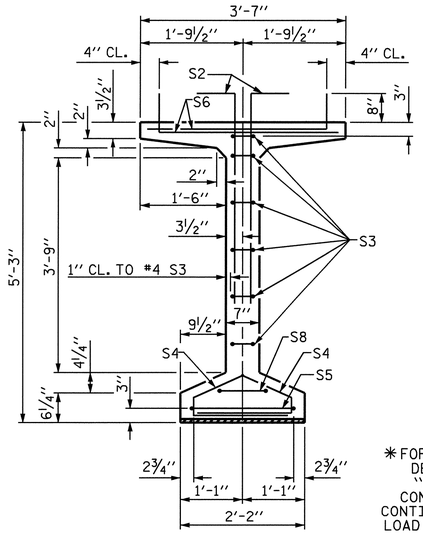

SECTION A-A

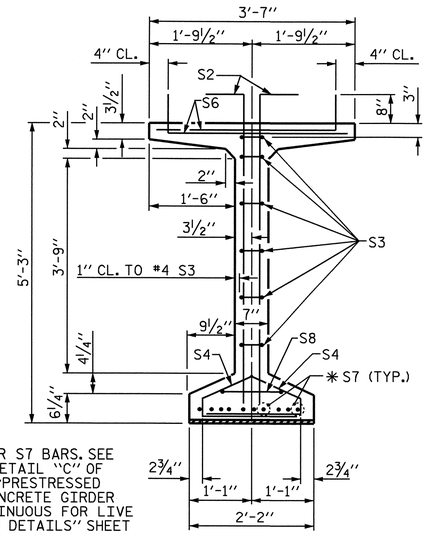

*FOR S7 BARS, SEE DETAIL "C" OF "PRESTRESSED CONCRETE GIRDER CONTINUOUS FOR LIVE LOAD DETAILS" SHEET

SECTION B-B

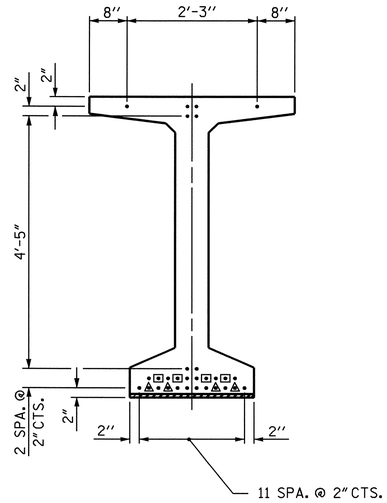

AT END OF GIRDER

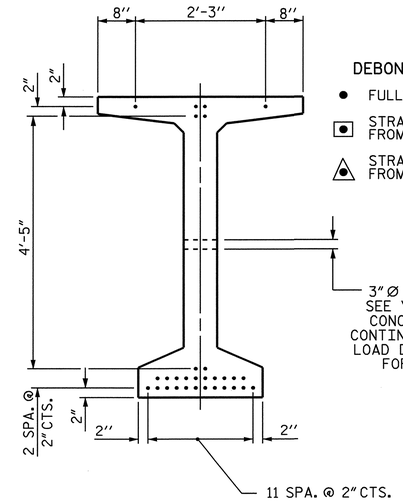

AT ℄ OF GIRDER

0.6" Ø LOW RELAXATION STRAND LAYOUT

DEBONDING LEGEND

- ● FULLY BONDED STRANDS
- ⊡ STRANDS DEBONDED FOR 4'-0" FROM END OF GIRDER
- ⊡ STRANDS DEBONDED FOR 6'-0" FROM END OF GIRDER

3" Ø FORMED HOLE SEE "PRESTRESSED CONCRETE GIRDER CONTINUOUS FOR LIVE LOAD DETAILS" SHEET FOR LOCATION

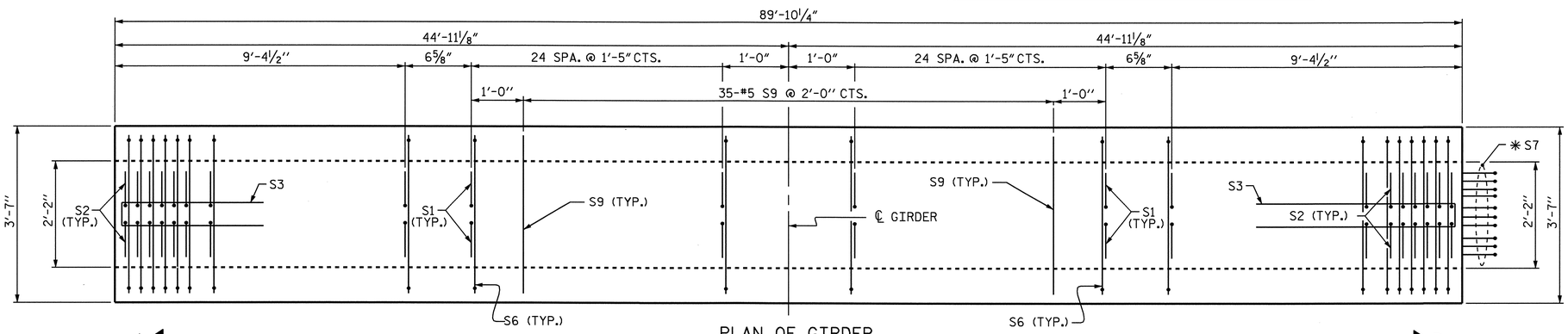

PLAN OF GIRDER

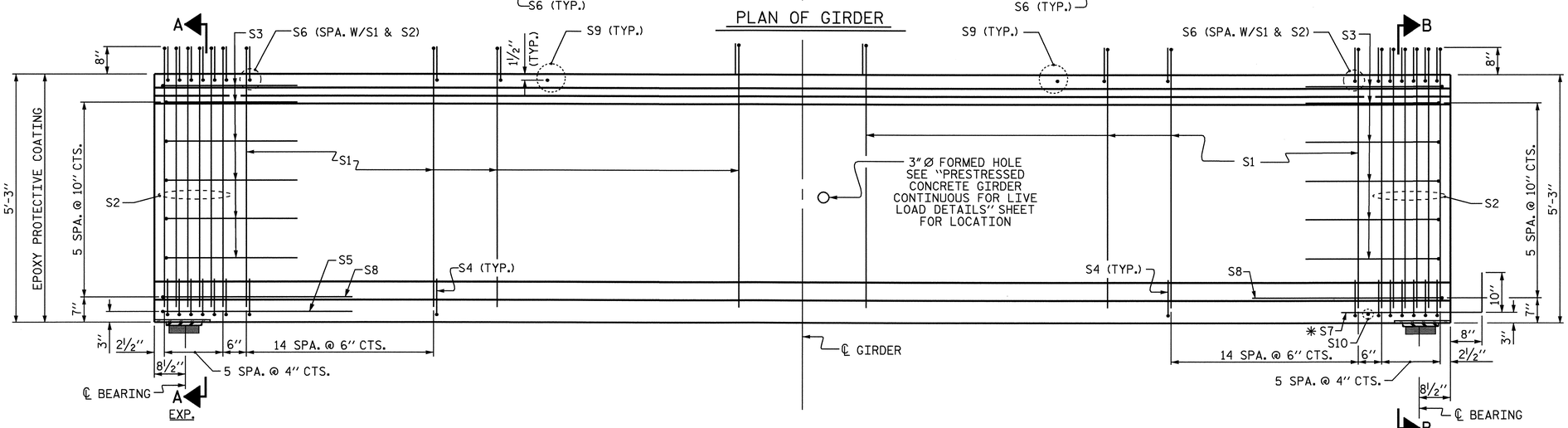

ELEVATION OF GIRDER

0.6" Ø L. R. GRADE 270 STRANDS

AREA (SQUARE INCHES)	ULTIMATE STRENGTH (LBS. PER STRAND)	APPLIED PRESTRESS (LBS. PER STRAND)
0.217	58,600	43,950

REINFORCING STEEL FOR ONE GIRDER

BAR	NUMBER	SIZE	TYPE	LENGTH	WEIGHT
S1	160	#4	1	6'-3"	668
S2	24	#5	1	6'-3"	156
S3	12	#4	2	8'-5"	67
S4	84	#4	3	3'-0"	168
S5	1	#5	2	9'-10"	10
S6	184	#5	1	3'-10"	736
*S7	10	#5	STR	3'-8"	38
S8	2	#5	2	9'-0"	19
S9	35	#5	STR	3'-3"	119
S10	1	#3	STR	1'-10"	1

*NOTE: S7 BARS SHALL BE BENT BEFORE SHIPMENT. HEAT BENDING SHALL NOT BE ALLOWED.

BAR TYPES

ALL BAR DIMENSIONS ARE OUT-TO-OUT

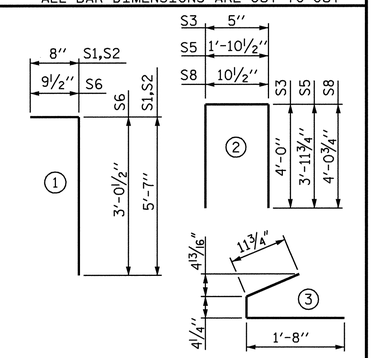

QUANTITIES FOR ONE GIRDER

SPAN "A" (SBL)	REINFORCING STEEL	8500 PSI CONCRETE	0.6" Ø L.R. STRANDS
	LB.	C.Y.	No.
GIRDERS A1 THRU A6	1982	17.8	30

GIRDERS REQUIRED

NUMBER	LENGTH	TOTAL LENGTH
6	89'-10¼"	539.13'

PROJECT NO. R-2417C

LEE COUNTY

STATION: 615+26.51-LREV-

STATE OF NORTH CAROLINA
DEPARTMENT OF TRANSPORTATION
RALEIGH

OPTIONAL

63" PRESTRESSED CONCRETE MODIFIED BULB TEE CONTINUOUS FOR LIVE LOAD (WITH 0.6" Ø PARTIALLY DEBONDED STRANDS)

SPAN "A" (SBL)

NORTH CAROLINA PROFESSIONAL SEAL 029441 ENGINEER KRISTY W. ALFORD
8/3/09

REVISIONS						
NO.	BY:	DATE:	NO.	BY:	DATE:	
1			3			
2			4			

SHEET NO. S-43

TOTAL SHEETS 104

ASSEMBLED BY : D. G. ELY	DATE : 9/2008	
CHECKED BY : S. B. WILLIAMS	DATE : 11/2008	
DRAWN BY : EEM 2/6/97	REV. 8/16/99	RWW/LES
CHECKED BY : VAP 2/6/97	REV. 10/17/00	RWW/LES
	REV. 5/1/06	TLA/GM

03-AUG-2009 09:04
k:\structures\str_2\Super_Draw\R2417C_sd_OPT_PCG_STR2.dgn
kalford

STD. NO. PCGD9

STR. #2

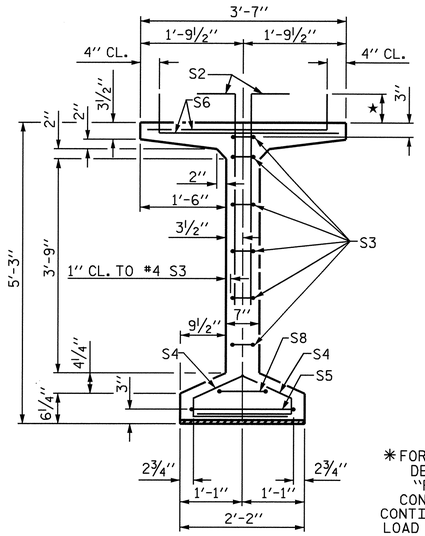

SECTION A-A

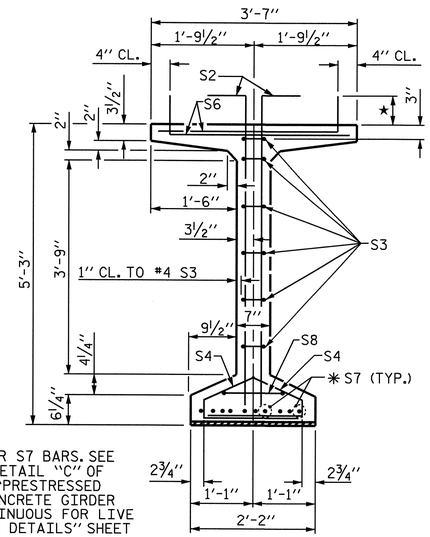

✱ FOR S7 BARS, SEE DETAIL "C" OF "PRESTRESSED CONCRETE GIRDER CONTINUOUS FOR LIVE LOAD DETAILS" SHEET

SECTION B-B

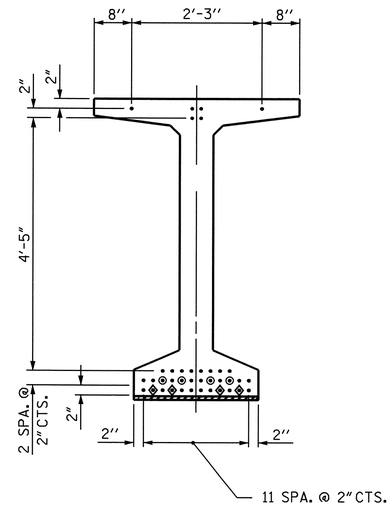

AT END OF GIRDER

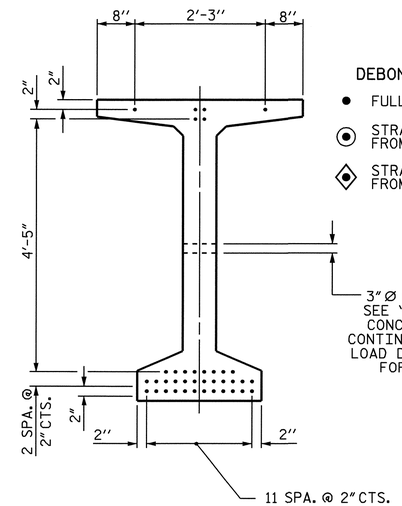

AT ℄ OF GIRDER

0.6" Ø LOW RELAXATION STRAND LAYOUT

DEBONDING LEGEND

- ● FULLY BONDED STRANDS
- ⊙ STRANDS DEBONDED FOR 8'-0" FROM END OF GIRDER
- ◈ STRANDS DEBONDED FOR 10'-0" FROM END OF GIRDER

3" Ø FORMED HOLE SEE "PRESTRESSED CONCRETE GIRDER CONTINUOUS FOR LIVE LOAD DETAILS" SHEET FOR LOCATION

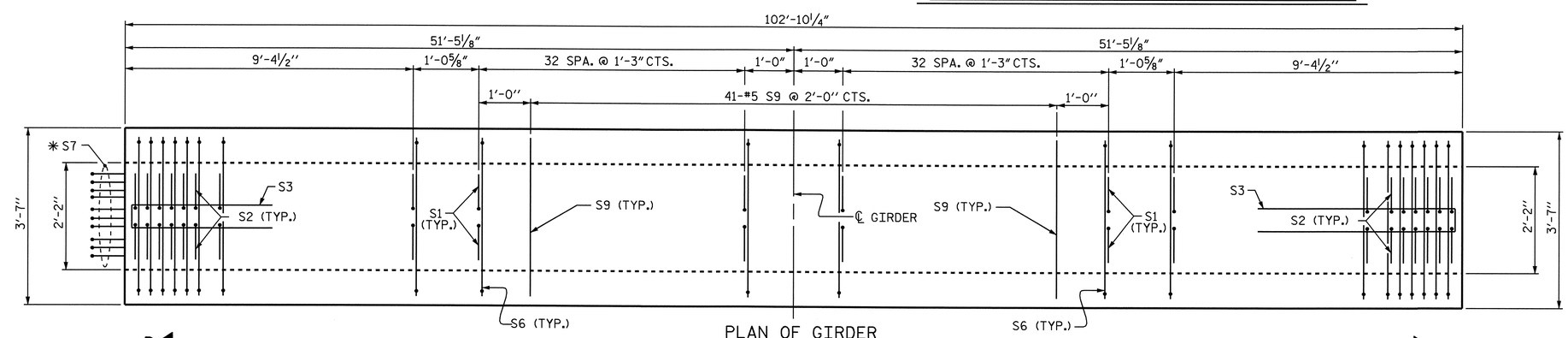

PLAN OF GIRDER

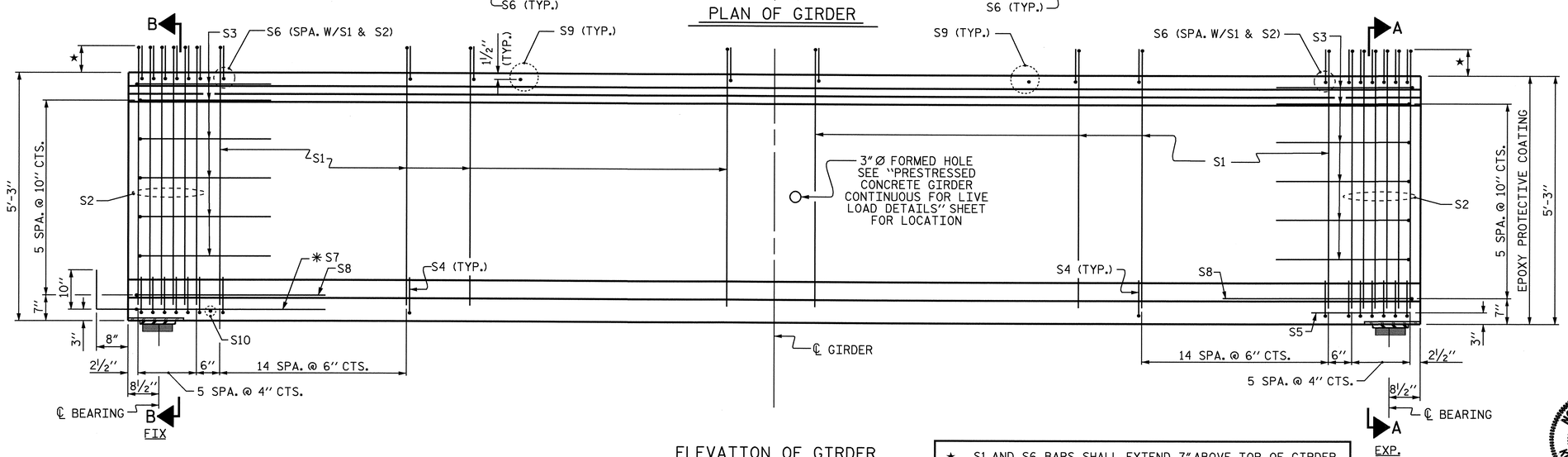

ELEVATION OF GIRDER

★ S1 AND S6 BARS SHALL EXTEND 7" ABOVE TOP OF GIRDER. S2 BARS SHALL EXTEND 8" ABOVE TOP OF GIRDER.

0.6" Ø L. R. GRADE 270 STRANDS

AREA (SQUARE INCHES)	ULTIMATE STRENGTH (LBS. PER STRAND)	APPLIED PRESTRESS (LBS. PER STRAND)
0.217	58,600	43,950

REINFORCING STEEL FOR ONE GIRDER

BAR	NUMBER	SIZE	TYPE	LENGTH	WEIGHT
S1	192	#4	1	6'-2"	791
S2	24	#5	1	6'-3"	156
S3	12	#4	2	8'-5"	67
S4	84	#4	3	3'-0"	168
S5	1	#5	2	9'-10"	10
S6	216	#5	1	3'-9"	845
✱ S7	10	#5	STR	3'-8"	38
S8	2	#5	2	9'-0"	19
S9	41	#5	STR	3'-3"	139
S10	1	#3	STR	1'-10"	1

✱ NOTE: S7 BARS SHALL BE BENT BEFORE SHIPMENT. HEAT BENDING SHALL NOT BE ALLOWED.

BAR TYPES

ALL BAR DIMENSIONS ARE OUT-TO-OUT

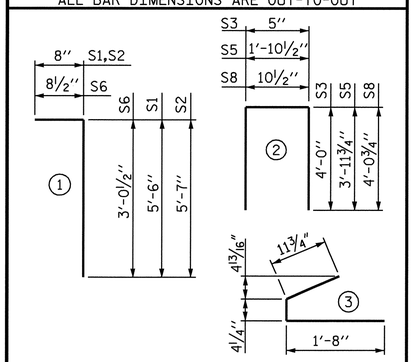

QUANTITIES FOR ONE GIRDER

SPAN "B" (SBL)	REINFORCING STEEL	8500 PSI CONCRETE	0.6" Ø L.R. STRANDS
	LB.	C.Y.	No.
GIRDERS B1 THRU B6	2234	20.4	38

GIRDERS REQUIRED

NUMBER	LENGTH	TOTAL LENGTH
6	102'-10¼"	617.13'

PROJECT NO. R-2417C

LEE COUNTY

STATION: 615+26.51-LREV-

STATE OF NORTH CAROLINA
DEPARTMENT OF TRANSPORTATION
RALEIGH

OPTIONAL
63" PRESTRESSED CONCRETE MODIFIED BULB TEE CONTINUOUS FOR LIVE LOAD (WITH 0.6" Ø PARTIALLY DEBONDED STRANDS)
SPAN "B" (SBL)

NORTH CAROLINA PROFESSIONAL SEAL 029441 ENGINEER KRISTY W. ALFORD
10/21/09

ASSEMBLED BY : D. G. ELY	DATE : 9/2008
CHECKED BY : S. B. WILLIAMS	DATE : 11/2008
DRAWN BY : EEM 2/6/97	REV. 8/16/99 RWW/LES
CHECKED BY : VAP 2/6/97	REV. 10/17/00 RWW/LES
	REV. 5/1/06 TLA/GM

REVISIONS

NO.	BY:	DATE:	NO.	BY:	DATE:
1			3		
2			4		

SHEET NO. S-44

TOTAL SHEETS 104

STD. NO. PCGD9

STR. #2

21-OCT-2009 09:20
k:\structures\str_2\Super_Draw\R2417C_sd_OPT_PCG_STR2.dgn
kalford

TIE ROD PLACEMENT TABLE

GIRDER	"A"	"B"	"C"	"D"	"E"	"F"	"G"	"H"
GDR. A1	43'-6¼"	46'-4"						
GDR. A2			43'-6¼"	44'-4½"				
GDR. A3			43'-6¼"	44'-4½"				
GDR. A4			43'-6¼"	44'-4½"				
GDR. A5			43'-6¼"	44'-4½"				
GDR. A6	45'-5¾"	44'-4½"						
GDR. B1			34'-5"	34'-0¼"	34'-5"			
GDR. B2						34'-5"	32'-0¾"	32'-5½"
GDR. B3						34'-5"	32'-0¾"	32'-5½"
GDR. B4						34'-5"	32'-0¾"	32'-5½"
GDR. B5						34'-5"	32'-0¾"	32'-5½"
GDR. B6			36'-4½"	34'-0¼"	32'-5½"			

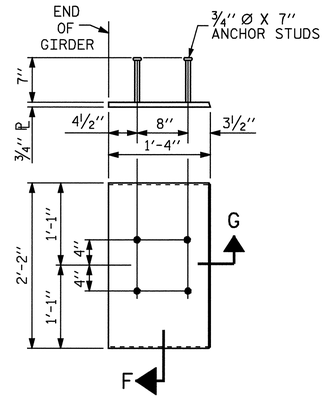

EMBEDDED PLATE "B-1" DETAILS FOR 63" MODIFIED BULB TEES

(2 REQ'D PER GIRDER)

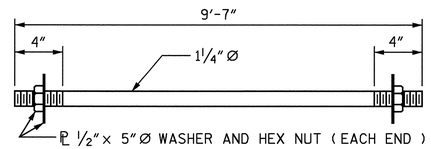

1¼" Ø TIE ROD ASSEMBLY

(15 COMPLETE ASSEMBLIES REQUIRED)

NOTES

ALL PRESTRESSING STRANDS SHALL BE 7-WIRE LOW-RELAXATION GRADE 270 STRANDS AND SHALL CONFORM TO AASHTO M203 EXCEPT FOR SAMPLING REQUIREMENTS WHICH SHALL BE IN ACCORDANCE WITH THE STANDARD SPECIFICATIONS.

TIE ROD ASSEMBLY SHALL BE AASHTO M270 GRADE 36 STRUCTURAL STEEL.

ALL REINFORCING STEEL SHALL BE GRADE 60.

APPLY EPOXY PROTECTIVE COATING TO END OF GIRDER SURFACES INDICATED IN ELEVATION VIEW.

EMBEDDED PLATE "B-1" SHALL BE GALVANIZED IN ACCORDANCE WITH THE STANDARD SPECIFICATIONS. BEVEL EDGES OF PLATE "B-1" TO GIVE CLOSE FIT BUT NOT TIGHT FIT TO STEEL CASTING FORM.

ANCHOR STUDS SHALL CONFORM TO AASHTO M169 GRADES 1010 THROUGH 1020 OR APPROVED EQUAL, AND SHALL MEET THE TYPE "B" REQUIREMENTS OF SUBSECTION 7.3 OF THE ANSI/AASHTO/AWS D1.5 BRIDGE WELDING CODE.

AT ENDS OF GIRDERS TO BE EMBEDDED IN CONCRETE DIAPHRAGMS OR END WALLS, PRESTRESSING STRANDS MAY EXTEND A MAXIMUM OF 2" BEYOND THE GIRDER ENDS. OTHERWISE, PRESTRESSING STRANDS SHALL BE CUT FLUSH WITH THE GIRDER ENDS.

FOR DRAPED STRANDS, THE TRANSFER OF LOAD FROM THE ANCHORAGES TO THE GIRDER SHALL BE DONE WHEN CONCRETE HAS REACHED A COMPRESSIVE STRENGTH OF NOT LESS THAN 6100 PSI.

FOR THE OPTIONAL PARTIALLY DEBONDED STRANDS, THE TRANSFER OF LOAD FROM THE ANCHORAGES TO THE GIRDER SHALL BE DONE WHEN CONCRETE HAS REACHED A COMPRESSIVE STRENGTH OF NOT LESS THAN 6600 PSI.

DEPENDING ON THE TYPE OF SYSTEM USED TO SUPPORT THE DECK SLAB FORMS, PRESET ANCHORS MAY BE NECESSARY IN THE PRESTRESSED CONCRETE GIRDER.

THE TOP SURFACE OF THE GIRDER, EXCLUDING THE OUTSIDE 4", SHALL BE RAKED TO A DEPTH OF ¼".

WHEN DRAPED STRANDS ARE DETAILED, THE LONGITUDINAL LOCATION OF THE HOLD DOWN DEVICES SHALL BE WITHIN 6" OF THE LOCATION SHOWN AND THE CENTER OF GRAVITY OF THE GROUP OF DRAPED STRANDS SHALL BE LOCATED WITHIN ½" OF THE THEORETICAL LOCATION SHOWN.

A 2" x 2" CHAMFER IS ALLOWED AT THE INTERSECTION OF THE WEB AND THE BOTTOM FLANGE OF THE 63" MODIFIED BULB TEES ONLY.

THE CONTRACTOR HAS THE OPTION TO PROVIDE, AT NO ADDITIONAL COST TO THE DEPARTMENT, 2 ADDITIONAL STRANDS AT THE TOP OF THE GIRDER TO FACILITATE TYING OF THE REINFORCING STEEL. THESE STRANDS SHALL BE PULLED TO A LOAD OF 4500 lbs.

FOR PRESTRESSED CONCRETE MEMBERS, SEE SPECIAL PROVISIONS.

THE UPLIFT FORCE DUE TO DRAPED STRANDS IS 23.0 KIPS FOR SPAN A.

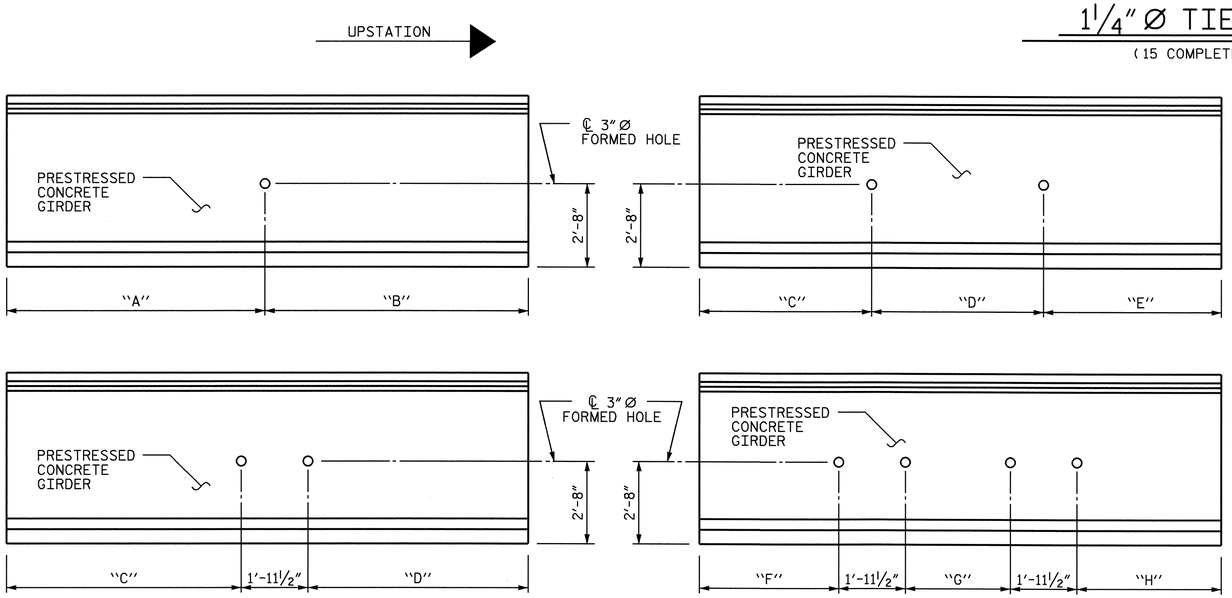

ELEVATION

TIE ROD PLACEMENT DETAIL

SPAN A

ELEVATION

TIE ROD PLACEMENT DETAIL

SPAN B

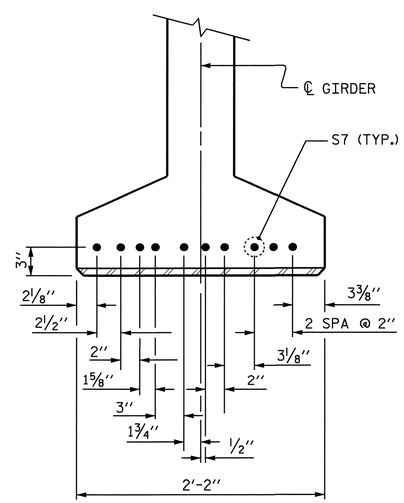

DETAIL "C"

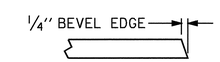

SECTION "G"

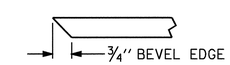

SECTION "F"

(SEE NOTES)

PROJECT NO. R-2417C

LEE COUNTY

STATION: 615+26.51-LREV-

STATE OF NORTH CAROLINA
DEPARTMENT OF TRANSPORTATION
RALEIGH

STANDARD

PRESTRESSED CONCRETE GIRDER CONTINUOUS FOR LIVE LOAD DETAILS

(SBL)

NORTH CAROLINA PROFESSIONAL SEAL 029441 ENGINEER KRISTY W. ALFORD

10/21/09

ASSEMBLED BY : D. G. ELY	DATE : 9/2008
CHECKED BY : S. B. WILLIAMS	DATE : 10/2008

DRAWN BY : ELR 11/91	REV. 10/17/00 RWW/LES
CHECKED BY : GRP 11/91	REV. 7/10/01RR LES/RDR
	REV. 5/1/06 TLA/GM

REVISIONS						SHEET NO.
NO.	BY:	DATE:	NO.	BY:	DATE:	S-45
1			3			TOTAL SHEETS
2			4			104

STD. NO. PCG11 STR. #2

21-OCT-2009 09:16
k:\structures\str_2\Super_Draw\R2417C_sd_PCG_STR2.dgn
kalford

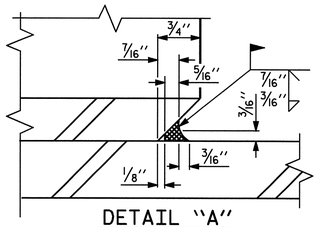

DETAIL "A"

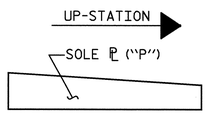

SOLE ℙ PLACEMENT DETAIL

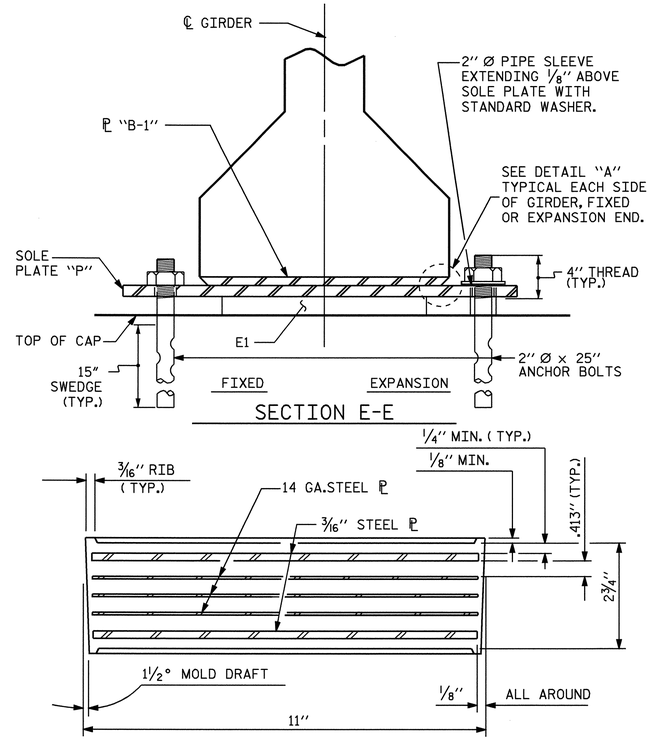

TYPICAL SECTION OF ELASTOMERIC BEARINGS

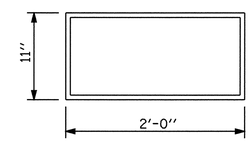

E1 (24 REQ'D)

PLAN VIEW OF ELASTOMERIC BEARING

TYPE VII

NOTES

AT ALL FIXED POINTS OF SUPPORT, NUTS FOR ANCHOR BOLTS ARE TO BE TIGHTENED FINGER TIGHT AND THEN BACKED OFF 1/2 TURN. THE THREAD OF THE NUT AND BOLT SHALL THEN BE BURRED WITH A SHARP POINTED TOOL.

THE 2" Ø PIPE SLEEVE SHALL BE CUT FROM SCHEDULE 40 PVC PLASTIC PIPE. THE PVC PLASTIC PIPE SHALL MEET THE REQUIREMENTS OF ASTM D1785.

STEEL SOLE PLATES, ANCHOR BOLTS, NUTS, AND WASHERS SHALL BE GALVANIZED IN ACCORDANCE WITH THE STANDARD SPECIFICATIONS.

PRIOR TO WELDING, GRIND THE GALVANIZED SURFACE OF THE PORTION OF THE EMBEDDED PLATE AND SOLE PLATE THAT ARE TO BE WELDED. AFTER WELDING, DAMAGED GALVANIZED SURFACES SHALL BE REPAIRED IN ACCORDANCE WITH THE STANDARD SPECIFICATIONS.

WHEN WELDING THE SOLE PLATE TO THE EMBEDDED PLATE IN THE GIRDER, USE TEMPERATURE INDICATING WAX PENS, OR OTHER SUITABLE MEANS, TO ENSURE THAT THE TEMPERATURE OF THE SOLE PLATE DOES NOT EXCEED 300°F. TEMPERATURES ABOVE THIS MAY DAMAGE THE ELASTOMER.

SOLE PLATE "P", BOLTS, NUTS, WASHERS, AND PIPE SLEEVE SHALL BE INCLUDED IN THE PAY ITEM FOR PRESTRESSED CONCRETE GIRDERS.

ANCHOR BOLTS SHALL MEET THE REQUIREMENTS OF ASTM A449. NUTS SHALL MEET THE REQUIREMENTS OF AASHTO M291-DH OR AASHTO M292-2H. WASHERS SHALL MEET THE REQUIREMENTS OF AASHTO M293. NO SHOP DRAWINGS ARE REQUIRED FOR ANCHOR BOLTS, NUTS AND WASHERS. SHOP INSPECTION IS REQUIRED.

ALL SURFACES OF BEARING PLATES SHALL BE SMOOTH AND STRAIGHT.

ELASTOMER IN ALL BEARINGS SHALL BE 60 DUROMETER HARDNESS.

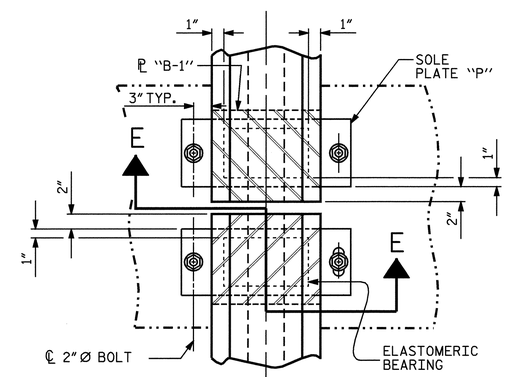

TYPICAL HALF-PLAN (FIXED END)

TYPICAL HALF-PLAN (EXPANSION END)

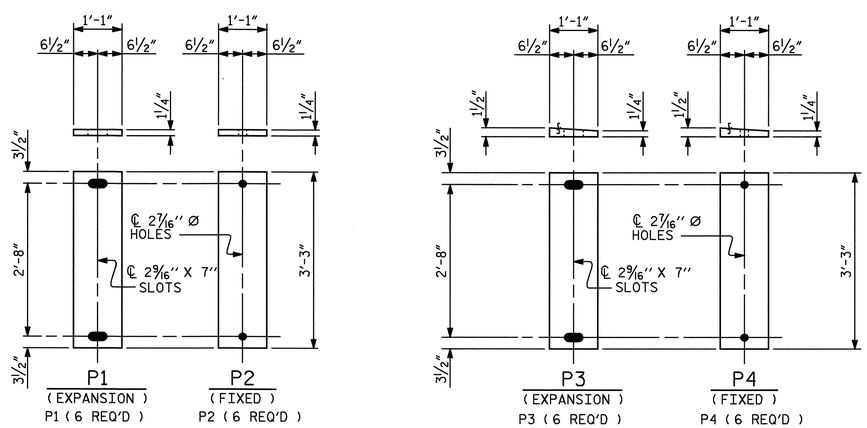

P1 (EXPANSION) P1 (6 REQ'D)

P2 (FIXED) P2 (6 REQ'D)

P3 (EXPANSION) P3 (6 REQ'D)

P4 (FIXED) P4 (6 REQ'D)

SOLE PLATE DETAILS ("P")

LOAD RATINGS	
	MAX.D.L.+ L.L.
TYPE VII	384 K

PROJECT NO. R-2417C

LEE COUNTY

STATION: 615+26.51-LREV-

STATE OF NORTH CAROLINA
DEPARTMENT OF TRANSPORTATION
RALEIGH

STANDARD

ELASTOMERIC BEARING DETAILS

(SBL)

NORTH CAROLINA PROFESSIONAL SEAL 029441 ENGINEER KRISTY W. ALFORD
8/3/09

REVISIONS							SHEET NO.
NO.	BY:	DATE:	NO.	BY:	DATE:		S-46
1			3				TOTAL SHEETS
2			4				104

STD. NO. EB4 STR. #2

ASSEMBLED BY : D. G. ELY		DATE : 9/2008	
CHECKED BY : S. B. WILLIAMS		DATE : 12/2008	
DRAWN BY : EEM 2/97	REV. 8/16/99	RWW/LES	
CHECKED BY : VAP 2/97	REV. 10/17/00	RWW/LES	
	REV. 5/1/06	TLA/GM	

03-AUG-2009 09:05
k:\structures\str_2\Super_Draw\R2417C_sd_BG_STR2.dgn
kalford

DEAD LOAD DEFLECTION TABLE FOR GIRDERS

0.6'' Ø LOW RELAXATION	GIRDER A1										
TENTH POINTS	0	.1	.2	.3	.4	.5	.6	.7	.8	.9	0
CAMBER (GIRDER ALONE IN PLACE) ↑	0.000	0.070	0.132	0.181	0.212	0.223	0.212	0.181	0.132	0.070	0.000
✳ DEFLECTION DUE TO SUPERIMPOSED D.L. ↓	0.000	0.024	0.046	0.062	0.073	0.077	0.073	0.062	0.046	0.024	0.000
FINAL CAMBER ↑	0	9/16"	1 1/16"	1 7/16"	1 11/16"	1 3/4"	1 11/16"	1 7/16"	1 1/16"	9/16"	0

DEAD LOAD DEFLECTION TABLE FOR GIRDERS

0.6'' Ø LOW RELAXATION	GIRDERS A2 THRU A5										
TENTH POINTS	0	.1	.2	.3	.4	.5	.6	.7	.8	.9	0
CAMBER (GIRDER ALONE IN PLACE) ↑	0.000	0.070	0.132	0.181	0.212	0.223	0.212	0.181	0.132	0.070	0.000
✳ DEFLECTION DUE TO SUPERIMPOSED D.L. ↓	0.000	0.025	0.047	0.065	0.076	0.079	0.076	0.065	0.047	0.025	0.000
FINAL CAMBER ↑	0	9/16"	1"	1 3/8"	1 5/8"	1 3/4"	1 5/8"	1 3/8"	1"	9/16"	0

DEAD LOAD DEFLECTION TABLE FOR GIRDERS

0.6'' Ø LOW RELAXATION	GIRDER A6										
TENTH POINTS	0	.1	.2	.3	.4	.5	.6	.7	.8	.9	0
CAMBER (GIRDER ALONE IN PLACE) ↑	0.000	0.070	0.132	0.181	0.212	0.223	0.212	0.181	0.132	0.070	0.000
✳ DEFLECTION DUE TO SUPERIMPOSED D.L. ↓	0.000	0.024	0.045	0.062	0.072	0.076	0.072	0.062	0.045	0.024	0.000
FINAL CAMBER ↑	0	9/16"	1 1/16"	1 7/16"	1 11/16"	1 3/4"	1 11/16"	1 7/16"	1 1/16"	9/16"	0

✳ INCLUDES FUTURE WEARING SURFACE
ALL VALUES ARE SHOWN IN FEET, EXCEPT "FINAL CAMBER" WHICH IS SHOWN IN INCHES (FRACTION FORM).

DEAD LOAD DEFLECTION TABLE FOR GIRDERS

0.6'' Ø LOW RELAXATION	GIRDER B1										
TENTH POINTS	0	.1	.2	.3	.4	.5	.6	.7	.8	.9	0
CAMBER (GIRDER ALONE IN PLACE) ↑	0.000	0.124	0.235	0.322	0.377	0.396	0.377	0.322	0.235	0.124	0.000
✳ DEFLECTION DUE TO SUPERIMPOSED D.L. ↓	0.000	0.042	0.079	0.108	0.126	0.132	0.126	0.108	0.079	0.042	0.000
FINAL CAMBER ↑	0	1"	1 7/8"	2 9/16"	3"	3 3/16"	3"	2 9/16"	1 7/8"	1"	0

DEAD LOAD DEFLECTION TABLE FOR GIRDERS

0.6'' Ø LOW RELAXATION	GIRDERS B2 THRU B5										
TENTH POINTS	0	.1	.2	.3	.4	.5	.6	.7	.8	.9	0
CAMBER (GIRDER ALONE IN PLACE) ↑	0.000	0.124	0.235	0.322	0.377	0.396	0.377	0.322	0.235	0.124	0.000
✳ DEFLECTION DUE TO SUPERIMPOSED D.L. ↓	0.000	0.043	0.081	0.111	0.130	0.137	0.130	0.111	0.081	0.043	0.000
FINAL CAMBER ↑	0	1"	1 7/8"	2 9/16"	2 15/16"	3 1/8"	2 15/16"	2 9/16"	1 7/8"	1"	0

DEAD LOAD DEFLECTION TABLE FOR GIRDERS

0.6'' Ø LOW RELAXATION	GIRDER B6										
TENTH POINTS	0	.1	.2	.3	.4	.5	.6	.7	.8	.9	0
CAMBER (GIRDER ALONE IN PLACE) ↑	0.000	0.124	0.235	0.322	0.377	0.396	0.377	0.322	0.235	0.124	0.000
✳ DEFLECTION DUE TO SUPERIMPOSED D.L. ↓	0.000	0.041	0.078	0.106	0.124	0.131	0.124	0.106	0.078	0.041	0.000
FINAL CAMBER ↑	0	1"	1 7/8"	2 9/16"	3 1/16"	3 3/16"	3 1/16"	2 9/16"	1 7/8"	1"	0

✳ INCLUDES FUTURE WEARING SURFACE
ALL VALUES ARE SHOWN IN FEET, EXCEPT "FINAL CAMBER" WHICH IS SHOWN IN INCHES (FRACTION FORM).

NOTE :
THESE DEAD LOAD DEFLECTIONS ARE TO BE USED WITH
THE STANDARD (DRAPED STRANDS)
63" PRESTRESSED CONCRETE MODIFIED BULB TEE
CONTINUOUS FOR LIVE LOAD GIRDERS

PROJECT NO. R-2417C
LEE COUNTY
STATION: 615+26.51-LREV-

NORTH CAROLINA PROFESSIONAL SEAL 029441 ENGINEER KRISTY W. ALFORD
8/3/09

STATE OF NORTH CAROLINA
DEPARTMENT OF TRANSPORTATION
RALEIGH

SUPERSTRUCTURE

STANDARD DEAD LOAD DEFLECTIONS

(SBL)

REVISIONS						SHEET NO.
NO.	BY:	DATE:	NO.	BY:	DATE:	S-47
1			3			TOTAL SHEETS
2			4			104

DRAWN BY : D. G. ELY DATE : 9/2008
CHECKED BY : S. B. WILLIAMS DATE : 11/2008

03-AUG-2009 09:05
k:\structures\str_2\Super_Draw\R2417C_sd_DL_STR2.dgn
kalford

STR. #2

DEAD LOAD DEFLECTION TABLE FOR GIRDERS

0.6'' Ø LOW RELAXATION	GIRDER A1										
TENTH POINTS	0	.1	.2	.3	.4	.5	.6	.7	.8	.9	0
CAMBER (GIRDER ALONE IN PLACE) ↑	0.000	0.061	0.115	0.157	0.184	0.194	0.184	0.157	0.115	0.061	0.000
✱ DEFLECTION DUE TO SUPERIMPOSED D.L. ↓	0.000	0.023	0.044	0.061	0.071	0.075	0.071	0.061	0.044	0.023	0.000
FINAL CAMBER ↑	0	7/16"	7/8"	1 1/8"	1 3/8"	1 7/16"	1 3/8"	1 1/8"	7/8"	7/16"	0

DEAD LOAD DEFLECTION TABLE FOR GIRDERS

0.6'' Ø LOW RELAXATION	GIRDERS A2 THRU A5										
TENTH POINTS	0	.1	.2	.3	.4	.5	.6	.7	.8	.9	0
CAMBER (GIRDER ALONE IN PLACE) ↑	0.000	0.061	0.115	0.157	0.184	0.194	0.184	0.157	0.115	0.061	0.000
✱ DEFLECTION DUE TO SUPERIMPOSED D.L. ↓	0.000	0.024	0.046	0.063	0.073	0.077	0.073	0.063	0.046	0.024	0.000
FINAL CAMBER ↑	0	7/16"	13/16"	1 1/8"	1 5/16"	1 3/8"	1 5/16"	1 1/8"	13/16"	7/16"	0

DEAD LOAD DEFLECTION TABLE FOR GIRDERS

0.6'' Ø LOW RELAXATION	GIRDER A6										
TENTH POINTS	0	.1	.2	.3	.4	.5	.6	.7	.8	.9	0
CAMBER (GIRDER ALONE IN PLACE) ↑	0.000	0.061	0.115	0.157	0.184	0.194	0.184	0.157	0.115	0.061	0.000
✱ DEFLECTION DUE TO SUPERIMPOSED D.L. ↓	0.000	0.023	0.044	0.060	0.070	0.074	0.070	0.060	0.044	0.023	0.000
FINAL CAMBER ↑	0	7/16"	7/8"	1 3/16"	1 3/8"	1 7/16"	1 3/8"	1 3/16"	7/8"	7/16"	0

✱ INCLUDES FUTURE WEARING SURFACE
ALL VALUES ARE SHOWN IN FEET, EXCEPT "FINAL CAMBER" WHICH IS SHOWN IN INCHES (FRACTION FORM).

DEAD LOAD DEFLECTION TABLE FOR GIRDERS

0.6'' Ø LOW RELAXATION	GIRDER B1										
TENTH POINTS	0	.1	.2	.3	.4	.5	.6	.7	.8	.9	0
CAMBER (GIRDER ALONE IN PLACE) ↑	0.000	0.113	0.213	0.292	0.342	0.359	0.342	0.292	0.213	0.113	0.000
✱ DEFLECTION DUE TO SUPERIMPOSED D.L. ↓	0.000	0.040	0.076	0.105	0.123	0.129	0.123	0.105	0.076	0.040	0.000
FINAL CAMBER ↑	0	7/8"	1 5/8"	2 1/4"	2 5/8"	2 3/4"	2 5/8"	2 1/4"	1 5/8"	7/8"	0

NOTE :
THESE DEAD LOAD DEFLECTIONS ARE TO BE USED WITH
THE OPTIONAL (STRAIGHT STRANDS)
63'' PRESTRESSED CONCRETE MODIFIED BULB TEE
CONTINUOUS FOR LIVE LOAD GIRDERS
(WITH 0.6'' Ø PARTIALLY DEBONDED STRANDS)

DEAD LOAD DEFLECTION TABLE FOR GIRDERS

0.6'' Ø LOW RELAXATION	GIRDERS B2 THRU B5										
TENTH POINTS	0	.1	.2	.3	.4	.5	.6	.7	.8	.9	0
CAMBER (GIRDER ALONE IN PLACE) ↑	0.000	0.113	0.213	0.292	0.342	0.359	0.342	0.292	0.213	0.113	0.000
✱ DEFLECTION DUE TO SUPERIMPOSED D.L. ↓	0.000	0.042	0.079	0.108	0.127	0.133	0.127	0.108	0.079	0.042	0.000
FINAL CAMBER ↑	0	7/8"	1 5/8"	2 3/16"	2 9/16"	2 11/16"	2 9/16"	2 3/16"	1 5/8"	7/8"	0

DEAD LOAD DEFLECTION TABLE FOR GIRDERS

0.6'' Ø LOW RELAXATION	GIRDER B6										
TENTH POINTS	0	.1	.2	.3	.4	.5	.6	.7	.8	.9	0
CAMBER (GIRDER ALONE IN PLACE) ↑	0.000	0.113	0.213	0.292	0.342	0.359	0.342	0.292	0.213	0.113	0.000
✱ DEFLECTION DUE TO SUPERIMPOSED D.L. ↓	0.000	0.040	0.075	0.103	0.121	0.127	0.121	0.103	0.075	0.040	0.000
FINAL CAMBER ↑	0	7/8"	1 5/8"	2 1/4"	2 5/8"	2 13/16"	2 5/8"	2 1/4"	1 5/8"	7/8"	0

✱ INCLUDES FUTURE WEARING SURFACE
ALL VALUES ARE SHOWN IN FEET, EXCEPT "FINAL CAMBER" WHICH IS SHOWN IN INCHES (FRACTION FORM).

PROJECT NO. R-2417C
LEE COUNTY
STATION: 615+26.51-LREV-

NORTH CAROLINA PROFESSIONAL SEAL 029441 ENGINEER KRISTY W. ALFORD
8/3/09

STATE OF NORTH CAROLINA
DEPARTMENT OF TRANSPORTATION
RALEIGH

SUPERSTRUCTURE

OPTIONAL DEAD LOAD DEFLECTIONS

(SBL)

REVISIONS						SHEET NO.
NO.	BY:	DATE:	NO.	BY:	DATE:	S-48
1			3			TOTAL SHEETS
2			4			104

DRAWN BY : D. G. ELY DATE : 9/2008
CHECKED BY : S. B. WILLIAMS DATE : 11/2008

03-AUG-2009 09:06
k:\structures\str_2\Super_Draw\R2417C_sd_OPT_DL_STR2.dgn
kalford

STR. #2

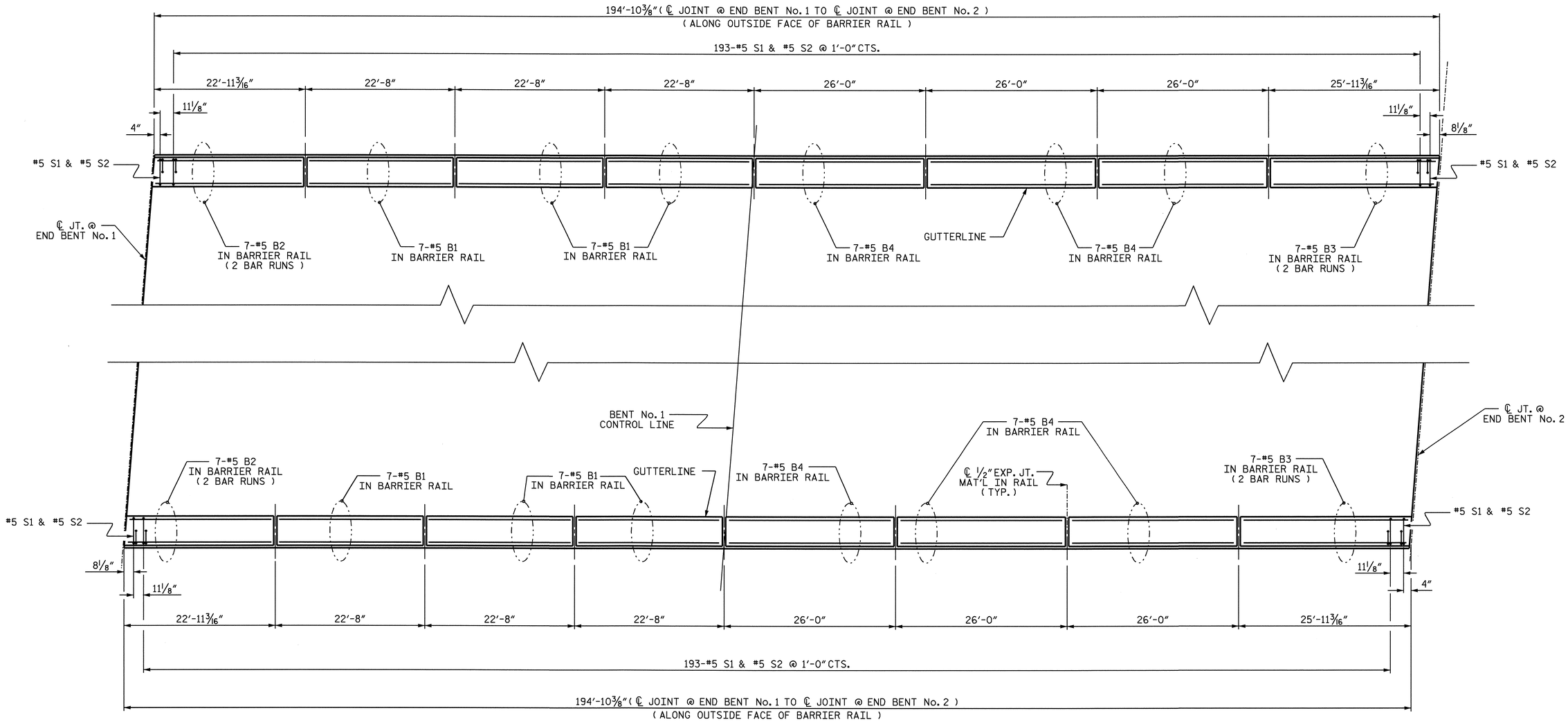

PLAN OF BARRIER RAIL

PROJECT NO. R-2417C

LEE COUNTY

STATION: 615+26.51-LREV-

SHEET 1 OF 2

STATE OF NORTH CAROLINA
DEPARTMENT OF TRANSPORTATION
RALEIGH

SUPERSTRUCTURE

CONCRETE BARRIER RAIL

(SBL)

NORTH CAROLINA PROFESSIONAL SEAL 029441 ENGINEER KRISTY W. ALFORD
8/3/09

REVISIONS						SHEET NO.
NO.	BY:	DATE:	NO.	BY:	DATE:	S-49
1			3			TOTAL SHEETS
2			4			104

DRAWN BY : D. G. ELY DATE : 9/2008
CHECKED BY : S. B. WILLIAMS DATE : 11/2008

03-AUG-2009 09:06
k:\structures\str_2\Super_Draw\R2417C_sd_BR_STR2.dgn
kalford

STR. #2

NOTES

THE BARRIER RAIL IN A CONTINUOUS UNIT SHALL NOT BE CAST UNTIL ALL SLAB CONCRETE IN THE UNIT HAS BEEN CAST AND HAS REACHED A MINIMUM COMPRESSIVE STRENGTH OF 3,000 PSI.

ALL REINFORCING STEEL IN BARRIER RAILS SHALL BE EPOXY COATED.

VERTICAL GROOVED CONTRACTION JOINTS, 1/2" IN DEPTH, SHALL BE TOOLED IN ALL EXPOSED FACES OF THE BARRIER RAIL AND IN ACCORDANCE WITH ARTICLE 825-10(B) OF THE STANDARD SPECIFICATIONS. THE CONTRACTION JOINT SHALL BE LOCATED AT EACH THIRD POINT BETWEEN BARRIER RAIL EXPANSION JOINTS. ONLY ONE CONTRACTION JOINT IS REQUIRED AT MIDPOINT OF BARRIER RAIL SEGMENTS LESS THAN 20 FEET IN LENGTH AND NO CONTRACTION JOINTS ARE REQUIRED FOR THOSE SEGMENTS LESS THAN 10 FEET IN LENGTH.

THE #5 S1 AND #5 S2 BARS MAY BE SHIFTED SLIGHTLY IN ORDER TO MAINTAIN A 2" MINIMUM CLEARANCE TO THE 1/2" EXPANSION JOINT MATERIAL IN THE BARRIER RAIL.

BAR TYPES

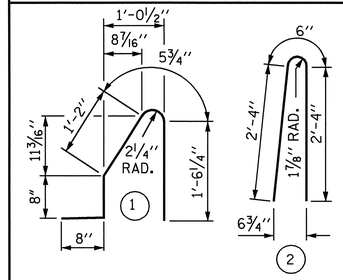

ALL BAR DIMENSIONS ARE OUT TO OUT

BILL OF MATERIAL

FOR CONCRETE BARRIER RAIL ONLY

BAR	NO.	SIZE	TYPE	LENGTH	WEIGHT
* B1	42	#5	STR	22'-3"	975
* B2	28	#5	STR	13'-2"	385
* B3	28	#5	STR	14'-8"	428
* B4	42	#5	STR	25'-7"	1121
* S1	390	#5	1	4'-6"	1830
* S2	390	#5	2	5'-2"	2102

* EPOXY COATED REINFORCING STEEL	6841	LBS.
CLASS AA CONCRETE	39.0	CU. YDS.
CONCRETE BARRIER RAIL	389.73	LIN. FT.

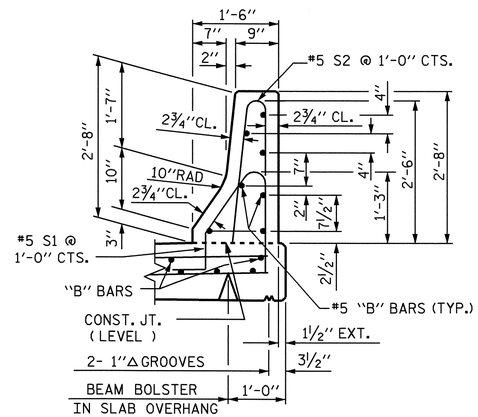

SECTION THRU RAIL

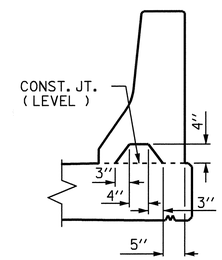

SECTION S-S

AT DAM IN OPEN JOINT
(THIS IS TO BE USED ONLY WHEN SLIP FORM IS USED)

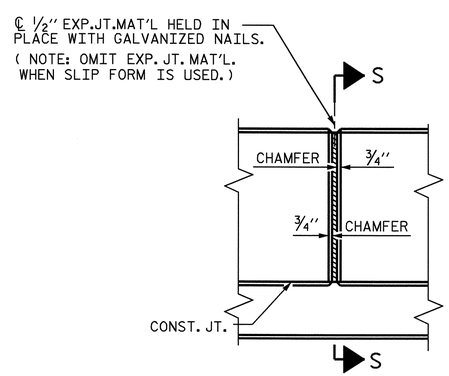

ELEVATION AT EXPANSION JOINTS

BARRIER RAIL DETAILS

PROJECT NO. R-2417C

LEE COUNTY

STATION: 615+26.51-LREV-

SHEET 2 OF 2

STATE OF NORTH CAROLINA
DEPARTMENT OF TRANSPORTATION
RALEIGH

STANDARD

CONCRETE BARRIER RAIL

(SBL)

NORTH CAROLINA PROFESSIONAL SEAL 029441 ENGINEER KRISTY W. ALFORD
8/3/09

REVISIONS							SHEET NO.
NO.	BY:	DATE:	NO.	BY:	DATE:		S-50
1			3				TOTAL SHEETS
2			4				104

STD. NO. CBR1

STR. #2

ASSEMBLED BY : D. G. ELY		DATE : 9/2008	
CHECKED BY : S. B. WILLIAMS		DATE : 11/2008	
DRAWN BY : ARB 5/87	REV. 10/17/00	RWW/LES	
CHECKED BY : SJD 9/87	REV. 5/7/03R	RWW/JTE	
	REV. 5/1/06	TLA/GM	

03-AUG-2009 09:07
ki\structures\str_2\Super_Draw\R2417C_sd_BR_STR2.dgn
kalford

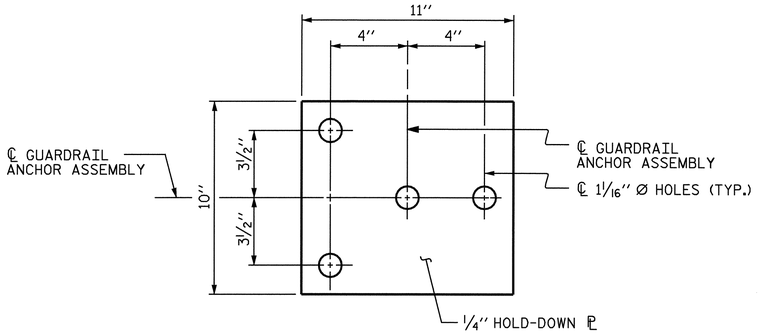

PLAN

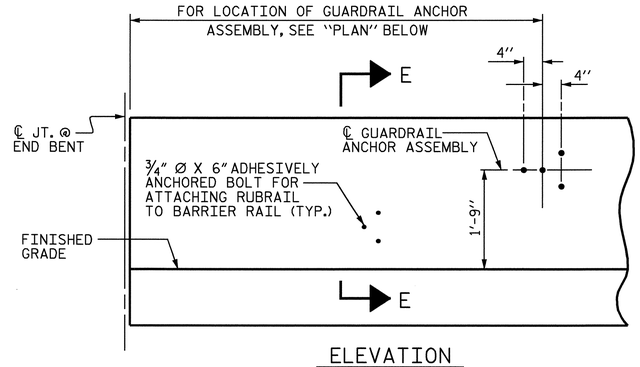

ELEVATION

FOR LOCATION OF RUBRAIL, SEE ROADWAY STD. 862.03

NOTES

THE GUARDRAIL ANCHOR ASSEMBLY SHALL CONSIST OF A 1/4" HOLD DOWN PLATE AND 4 - 7/8" Ø BOLTS WITH NUTS AND WASHERS, RUBRAIL, AND ADHESIVELY ANCHORED BOLTS.

THE HOLD-DOWN PLATE SHALL CONFORM TO AASHTO M270 GRADE 36. AFTER FABRICATION, THE HOLD-DOWN PLATE SHALL BE HOT-DIP GALVANIZED IN ACCORDANCE WITH AASHTO M111.

BOLTS SHALL CONFORM TO THE REQUIREMENTS OF ASTM A307 AND NUTS SHALL CONFORM TO THE REQUIREMENTS OF AASHTO M291. BOLTS, NUTS AND WASHERS SHALL BE GALVANIZED. (AT THE CONTRACTOR'S OPTION, STAINLESS STEEL BOLTS, NUTS AND WASHERS MAY BE USED AS AN ALTERNATE FOR THE 7/8" Ø GALVANIZED BOLTS, NUTS AND WASHERS. THEY SHALL CONFORM TO OR EXCEED THE MECHANICAL REQUIREMENTS OF ASTM A307. THE USE OF THIS ALTERNATE SHALL BE APPROVED BY THE ENGINEER.)

THE GUARDRAIL ANCHOR ASSEMBLY IS REQUIRED AT ALL POINTS WHERE APPROACH GUARDRAIL IS TO BE ATTACHED TO THE END OF BARRIER RAIL. FOR POINTS OF ATTACHMENT, SEE SKETCH.

AFTER INSTALLATION, THE EXPOSED THREAD OF THE BOLT SHALL BE BURRED WITH A SHARP POINTED TOOL.

THE COST OF THE GUARDRAIL ANCHOR ASSEMBLY SHALL BE INCLUDED IN THE UNIT CONTRACT PRICE BID FOR CONCRETE BARRIER RAIL.

THE 1 1/4" Ø HOLES SHALL BE FORMED OR DRILLED WITH A CORE BIT. IMPACT TOOLS WILL NOT BE PERMITTED. ANY CONCRETE DAMAGED BY THIS WORK SHALL BE REPAIRED TO THE SATISFACTION OF THE ENGINEER.

THE C6 X 8.2 RUBRAIL IS TO BE ADHESIVELY ANCHORED TO THE RAIL USING THREE 3/4"Ø X 6" BOLTS WITH WASHERS. LEVEL ONE FIELD TESTING IS REQUIRED, AND THE YIELD LOAD OF THE 3/4"Ø BOLT IS 12 KIPS. FOR ADHESIVELY ANCHORED ANCHOR BOLTS OR DOWELS, SEE SPECIAL PROVISIONS. SEE ROADWAY STANDARD 862.03 FOR DETAILS AND LOCATION OF THE RUBRAIL.

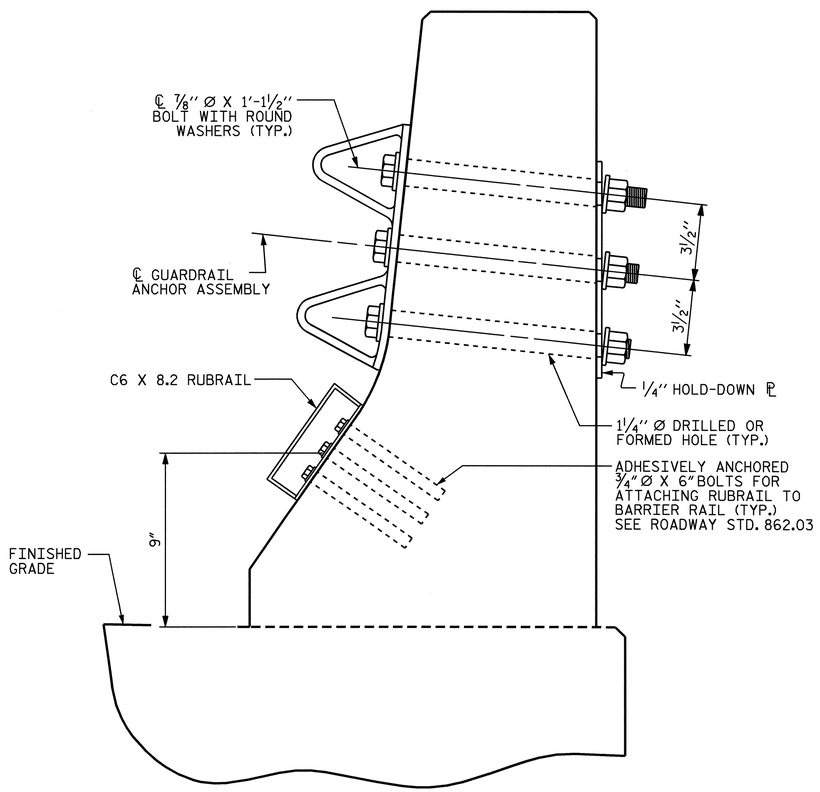

SECTION E-E

GUARDRAIL ANCHOR ASSEMBLY DETAILS

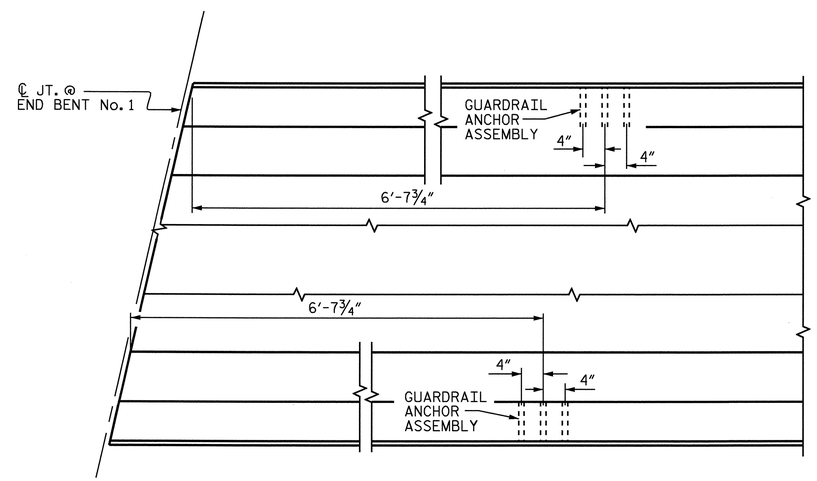

PLAN

LOCATION OF ANCHORS FOR GUARDRAIL

END BENT No. 1 SHOWN, END BENT No. 2 SIMILAR.

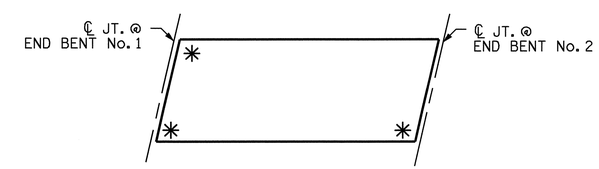

SKETCH SHOWING POINTS OF ATTACHMENTS

✳ DENOTES GUARDRAIL ANCHOR ASSEMBLY

PROJECT NO. R-2417C
LEE COUNTY
STATION: 615+26.51-LREV-

STATE OF NORTH CAROLINA
DEPARTMENT OF TRANSPORTATION
RALEIGH

STANDARD
GUARDRAIL ANCHORAGE FOR BARRIER RAIL
(SBL)

NORTH CAROLINA PROFESSIONAL SEAL 029441 ENGINEER KRISTY W. ALFORD
8/3/09

REVISIONS						SHEET NO.
NO.	BY:	DATE:	NO.	BY:	DATE:	S-51
1			3			TOTAL SHEETS
2			4			104

ASSEMBLED BY : D. G. ELY DATE : 9/2008
CHECKED BY : S. B. WILLIAMS DATE : 11/2008
DRAWN BY : TLA 5/06
CHECKED BY : GM 5/06
ADDED 5/1/06R KMM/GM

03-AUG-2009 09:07
k:\structures\str_2\Super_Draw\R2417C_sd_BR_STR2.dgn
kalford

STD. NO. GRA2

STR. #2

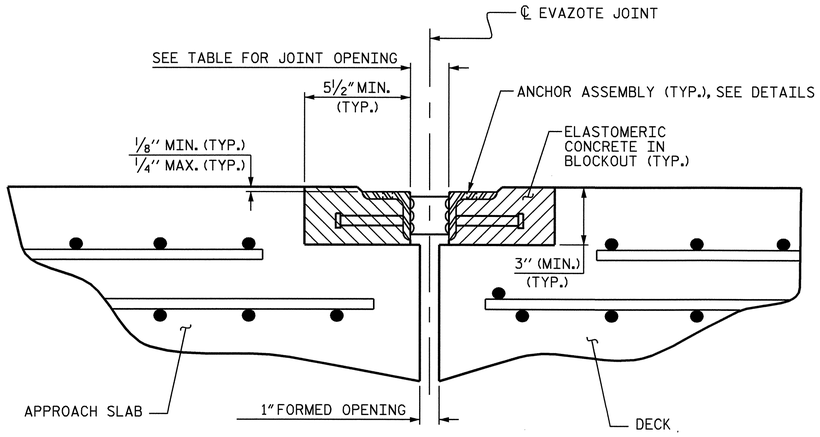

ARMORED JOINT DETAILS

SECTION NORMAL TO JOINT AT END BENT

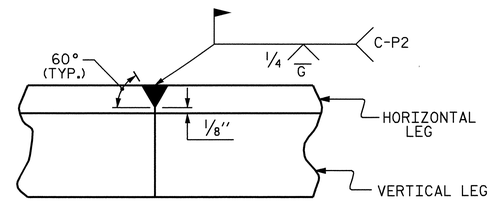

DETAIL- FIELD WELD SPLICE OF ANGLE

NOTES

ANGLES SHALL CONFORM TO AASHTO M270 GRADE 36 STEEL OR APPROVED EQUAL. ALL STUD ANCHORS SHALL CONFORM TO AASHTO M169 GRADES 1010 THRU 1020 OR APPROVED EQUAL.

STUD ANCHORS SHALL BE SHOP WELDED AND ALL HOLES SHALL BE SHOP DRILLED AS SHOWN ON THE PLANS. STUD ANCHORS SHALL BE ELECTRIC ARC END WELDED WITH COMPLETE FUSION.

UPON COMPLETION OF SHOP FABRICATION, THE ENTIRE ANCHOR ASSEMBLY SHALL BE METALLIZED. THE ½" Ø STUD ANCHORS AND ANCHOR TABS NEED NOT BE METALLIZED. SEE SPECIAL PROVISION FOR THERMAL SPRAYED COATINGS (METALLIZATION).

ANCHOR ASSEMBLY SHALL BE MADE CONTINUOUS THE LENGTH OF THE JOINT FROM GUTTER TO GUTTER. FOR FIELD SPLICES AT ALL CROWN BREAK POINTS, THE ENDS OF THE STEEL ANGLES SHALL BE CUT PARALLEL TO THE BRIDGE CENTERLINE. FINISHED FIELD WELDS SHALL BE GROUND SMOOTH AND COATED WITH A MINIMUM THICKNESS OF 4 DRY MILS OF ZINC-RICH PAINT IN ACCORDANCE WITH THE STANDARD SPECIFICATIONS.

ANCHOR ASSEMBLY SEGMENTS SHALL NOT BE LESS THAN 12 FEET NOR MORE THAN 20 FEET IN LENGTH. SHORTER SEGMENTS MAY BE USED AT THE EDGE OF ROADWAY OR AT POINTS OF STAGED CONSTRUCTION.

THE ANCHOR ASSEMBLY SHALL BE SECURED AND LEVELED AS SHOWN IN THE "ARMORED JOINT ANCHOR ASSEMBLY DETAILS". NO SUBMITTALS ARE REQUIRED FOR ⅜" Ø EXPANSION ANCHORS, NUTS OR WASHERS. THE CONTRACTOR MAY SUBMIT FOR APPROVAL AN ALTERNATE METHOD OF ALIGNING AND LEVELING THE ANGLES. THE ALTERNATE METHOD SHALL NOT INCLUDE ANY WELDING TO THE OUTSIDE FACE OF THE ANGLES.

AFTER THE ELASTOMERIC CONCRETE HAS BEEN CAST ON BOTH SIDES OF THE JOINT, REMOVE ANY EXCESS CONCRETE THAT COMES THROUGH THE WEEP HOLES AND THOROUGHLY CLEAN THE ANGLES. ANY DAMAGED STEEL SHALL BE COATED WITH A MINIMUM OF 4 MILS OF ZINC-RICH PAINT IN ACCORDANCE WITH THE STANDARD SPECIFICATIONS.

SEE SPECIAL PROVISIONS FOR EVAZOTE JOINT SEALS.

SEE SPECIAL PROVISIONS FOR ELASTOMERIC CONCRETE.

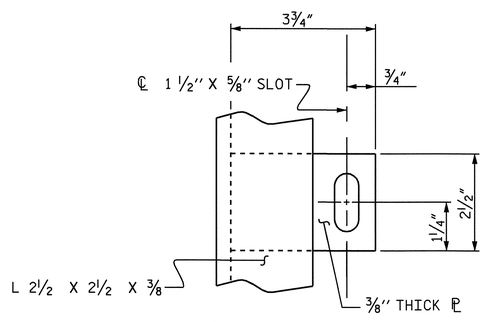

PLAN VIEW OF TAB

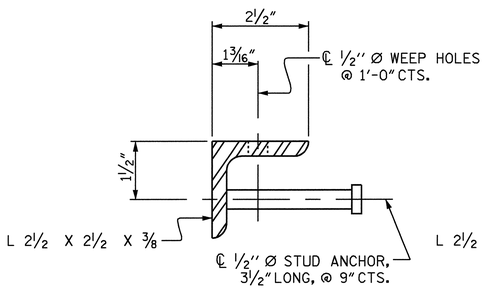

SECTION VIEW OF STUD

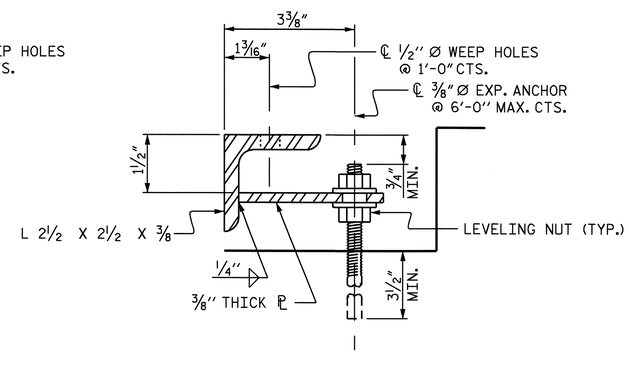

SECTION VIEW OF TAB

ARMORED JOINT ANCHOR ASSEMBLY DETAILS

MOVEMENT AND SETTING AT EVAZOTE JOINT

LOCATION	SKEW ANGLE	NOMINAL UNCOMPRESSED SEAL WIDTH	TOTAL MOVEMENT (ALONG ℄ RDWY)	PERPENDICULAR JOINT OPENING AT 45° F	PERPENDICULAR JOINT OPENING AT 60° F	PERPENDICULAR JOINT OPENING AT 90° F
END BENT No. 1	102°-58'-39"	2½"	13⁄16"	2⅛"	2"	1¾"
END BENT No. 2	102°-58'-39"	2½"	13⁄16"	2⅛"	2"	1¾"

TOTAL MOVEMENT IS CALCULATED ALONG THE CENTERLINE OF ROADWAY.
JOINT OPENINGS ARE MEASURED PERPENDICULAR TO THE JOINT.

BILL OF MATERIAL

LOCATION	ELASTOMERIC CONCRETE ✳ (CU. FT.)	TOTAL LENGTH OF ANGLE (FT)
END BENT No. 1	10.8	94'-5"
END BENT No. 2	10.8	94'-5"

✳ BASED ON THE MINIMUM BLOCKOUT SHOWN.

PROJECT NO. R-2417C
LEE COUNTY
STATION: 615+26.51-LREV-

STATE OF NORTH CAROLINA
DEPARTMENT OF TRANSPORTATION
RALEIGH

STANDARD
ARMORED EVAZOTE JOINT DETAILS
(SBL)

NORTH CAROLINA PROFESSIONAL SEAL 029441 ENGINEER KRISTY W. ALFORD
8/3/09

REVISIONS						
NO.	BY:	DATE:	NO.	BY:	DATE:	
1			3			
2			4			

SHEET NO. S-52
TOTAL SHEETS 104

ASSEMBLED BY : D. G. ELY	DATE : 12/2008		
CHECKED BY : K. W. ALFORD	DATE : 02/2009		
DRAWN BY : EEM 1/96	REV. 7/10/01 LES/RDR		
CHECKED BY : RGW 1/96	REV. 5/7/03RR RWW/JTE		
	REV. 5/1/06 TLA/GM		

03-AUG-2009 09:07
K:\structures\str_2\Super_Draw\R2417C_sd_AEJ_STR2.dgn
kalford

STD. NO. AEJ1 STR. #2

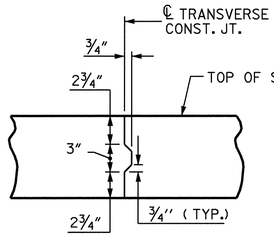

TRANSVERSE CONSTRUCTION JOINT DETAIL

NOTE: REINFORCING STEEL IN SLAB NOT SHOWN. LONGITUDINAL REINFORCING STEEL SHALL BE CONTINUOUS THRU JOINT

BAR TYPES

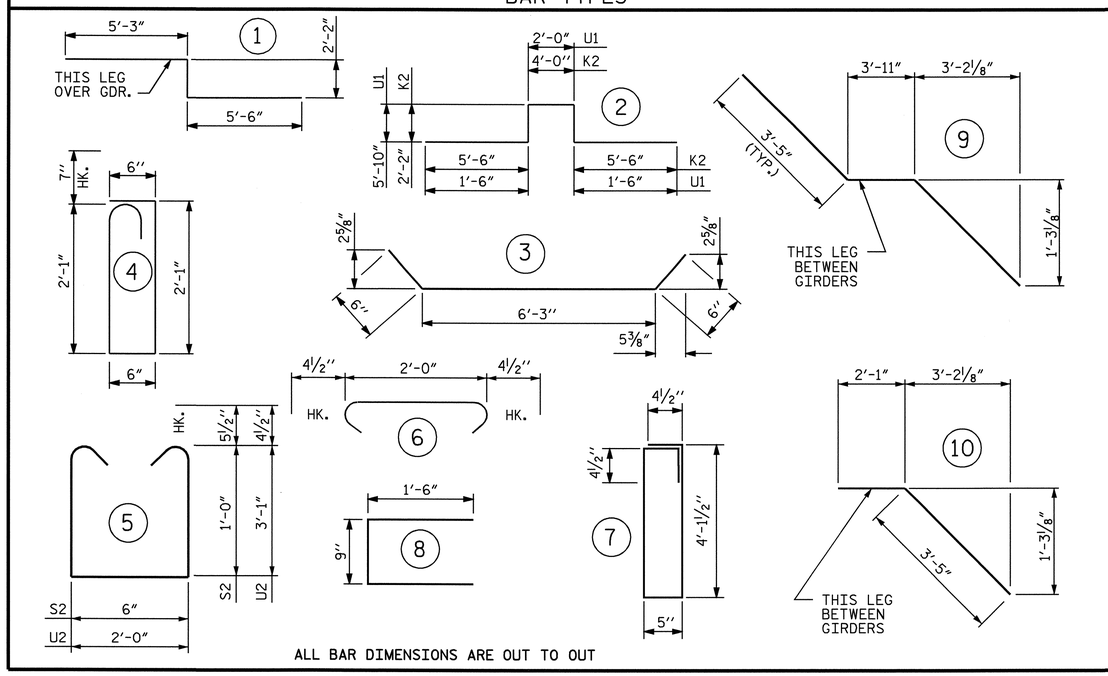

ALL BAR DIMENSIONS ARE OUT TO OUT

BILL OF MATERIAL

BAR	NO.	SIZE	TYPE	LENGTH	WEIGHT
✳ A1	293	#5	STR	48'-11"	14949
A2	293	#5	STR	48'-11"	14949
✳ A101	2	#5	STR	47'-7"	99
✳ A102	2	#5	STR	44'-11"	94
✳ A103	2	#5	STR	42'-2"	88
✳ A104	2	#5	STR	39'-5"	82
✳ A105	2	#5	STR	36'-9"	77
✳ A106	2	#5	STR	34'-0"	71
✳ A107	2	#5	STR	31'-4"	65
✳ A108	2	#5	STR	28'-7"	60
✳ A109	2	#5	STR	25'-11"	54
✳ A110	2	#5	STR	23'-2"	48
✳ A111	2	#5	STR	20'-6"	43
✳ A112	2	#5	STR	17'-9"	37
✳ A113	2	#5	STR	15'-1"	31
✳ A114	2	#5	STR	12'-4"	26
✳ A115	2	#5	STR	9'-7"	20
✳ A116	2	#5	STR	6'-11"	14
✳ A117	2	#5	STR	4'-2"	9
A201	2	#5	STR	47'-7"	99
A202	2	#5	STR	44'-11"	94
A203	2	#5	STR	42'-2"	88
A204	2	#5	STR	39'-5"	82
A205	2	#5	STR	36'-9"	77
A206	2	#5	STR	34'-0"	71
A207	2	#5	STR	31'-4"	65
A208	2	#5	STR	28'-7"	60
A209	2	#5	STR	25'-11"	54
A210	2	#5	STR	23'-2"	48
A211	2	#5	STR	20'-6"	43
A212	2	#5	STR	17'-9"	37
A213	2	#5	STR	15'-1"	31
A214	2	#5	STR	12'-4"	26

BAR	NO.	SIZE	TYPE	LENGTH	WEIGHT
A215	2	#5	STR	9'-7"	20
A216	2	#5	STR	6'-11"	14
A217	2	#5	STR	4'-2"	9
✳ B1	93	#4	STR	21'-5"	1330
✳ B2	93	#7	STR	26'-7"	5053
✳ B3	30	#7	STR	29'-7"	1814
✳ B4	93	#4	STR	24'-5"	1517
✳ B5	14	#4	STR	29'-6"	276
B6	180	#5	STR	40'-8"	7635
✳ G1	2	#5	STR	50'-2"	105
✳ K1	8	#8	1	12'-11"	276
✳ K2	16	#8	2	19'-4"	826
✳ K3	30	#6	STR	4'-8"	210
K4	20	#5	STR	7'-5"	155
K5	10	#4	STR	4'-8"	31
K6	40	#4	STR	7'-9"	207
K7	10	#4	STR	4'-10"	32
K8	24	#4	9	10'-9"	172
K9	12	#4	10	5'-6"	44
K10	30	#5	3	7'-3"	227
K11	120	#5	STR	7'-7"	949
✳ S1	50	#5	4	5'-9"	300
✳ S2	20	#5	5	3'-5"	71
S3	145	#4	6	2'-9"	266
S4	105	#4	7	9'-10"	690
✳ S5	50	#4	8	3'-9"	125
U1	25	#4	2	16'-8"	278
U2	10	#4	5	8'-11"	60
REINFORCING STEEL = 26613 LBS.					
✳ EPOXY COATED REINF. STEEL= 27770 LBS.					

✳ DENOTES EPOXY COATED REINFORCING STEEL

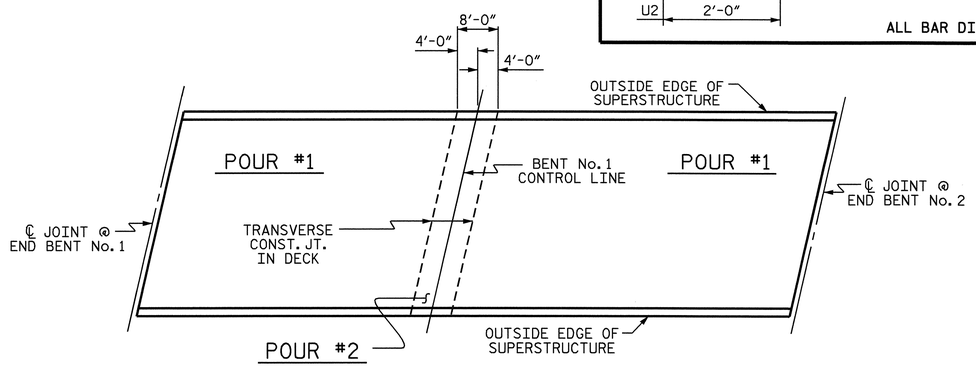

OPTIONAL CONCRETE DECK POUR DETAIL

(POUR #2 CANNOT BE STARTED UNTIL BOTH ADJACENT POUR #1'S REACH A MINIMUM COMPRESSIVE STRENGTH OF 3000 PSI)

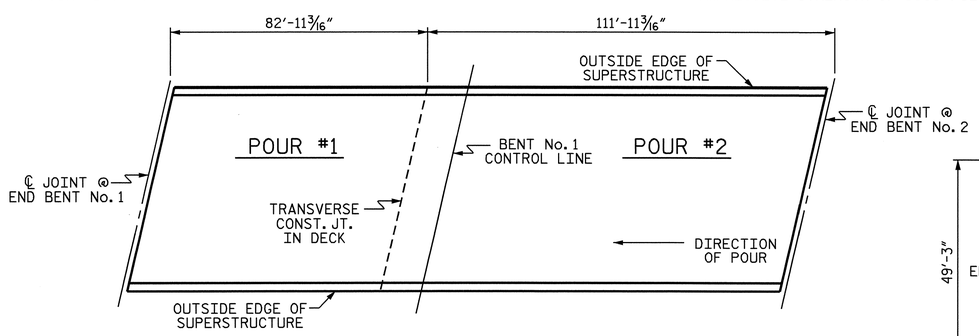

CONCRETE DECK POUR DETAIL

SUPERSTRUCTURE REINFORCING STEEL LENGTHS ARE BASED ON THE FOLLOWING MINIMUM SPLICE LENGTHS

BAR SIZE	SUPERSTRUCTURE EXCEPT APPROACH SLABS, PARAPET, AND BARRIER RAIL		APPROACH SLABS		PARAPET AND BARRIER RAIL
	EPOXY COATED	UNCOATED	EPOXY COATED	UNCOATED	
#4	2'-0"	1'-9"	2'-0"	1'-9"	2'-9"
#5	2'-6"	2'-2"	2'-6"	2'-2"	3'-5"
#6	3'-0"	2'-7"	3'-10"	2'-7"	4'-4"
#7	5'-3"	3'-6"			
#8	6'-10"	4'-7"			

SUPERSTRUCTURE BILL OF MATERIAL

SPANS "A" AND "B"	CLASS AA CONCRETE	REINFORCING STEEL	EPOXY COATED REINFORCING STEEL
	(CU. YDS.)	(LBS.)	(LBS.)
POUR 1	151.2		
POUR 2	227.0		
TOTAL ✳✳	378.2	26613	27770

✳✳ QUANTITIES FOR BARRIER RAIL ARE NOT INCLUDED

GROOVING BRIDGE FLOORS

APPROACH SLABS	2036	SQ.FT.
BRIDGE DECK	8320	SQ.FT.
TOTAL	10356	SQ.FT.

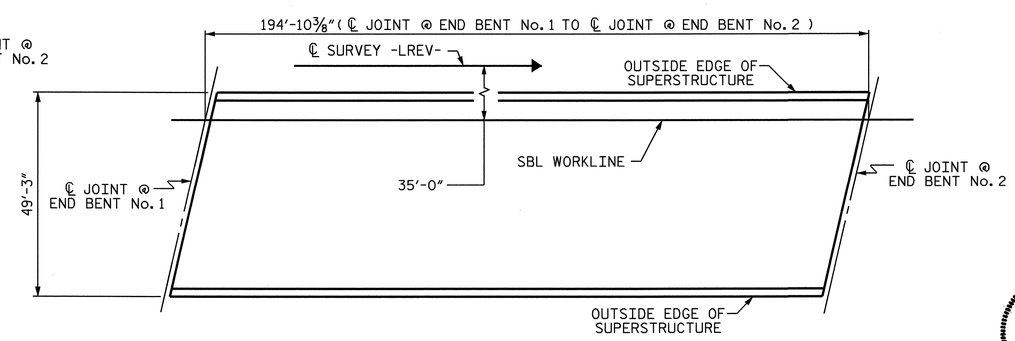

LAYOUT FOR COMPUTING AREA REINFORCED CONCRETE DECK SLAB

(SQ. FT. = 9597.1)

PROJECT NO. R-2417C
LEE COUNTY
STATION: 615+26.51-LREV-

STATE OF NORTH CAROLINA
DEPARTMENT OF TRANSPORTATION
RALEIGH

SUPERSTRUCTURE
SUPERSTRUCTURE BILL OF MATERIAL
(SBL)

NORTH CAROLINA PROFESSIONAL SEAL 029441 ENGINEER KRISTY W. ALFORD
8/3/09

ASSEMBLED BY : D. G. ELY	DATE : 9/2008
CHECKED BY : S. B. WILLIAMS	DATE : 11/2008
DRAWN BY : JMB 5/87	REV. 6/1/94 EEM/GRP
CHECKED BY : SJD 9/87	REV. 8/16/99 RWW/LES
	REV. 5/1/06 TLA/GM

REVISIONS							SHEET NO.
NO.	BY:	DATE:	NO.	BY:	DATE:		S-53
2			3				TOTAL SHEETS
			4				104

STD. NO. BOM2

STR. #2

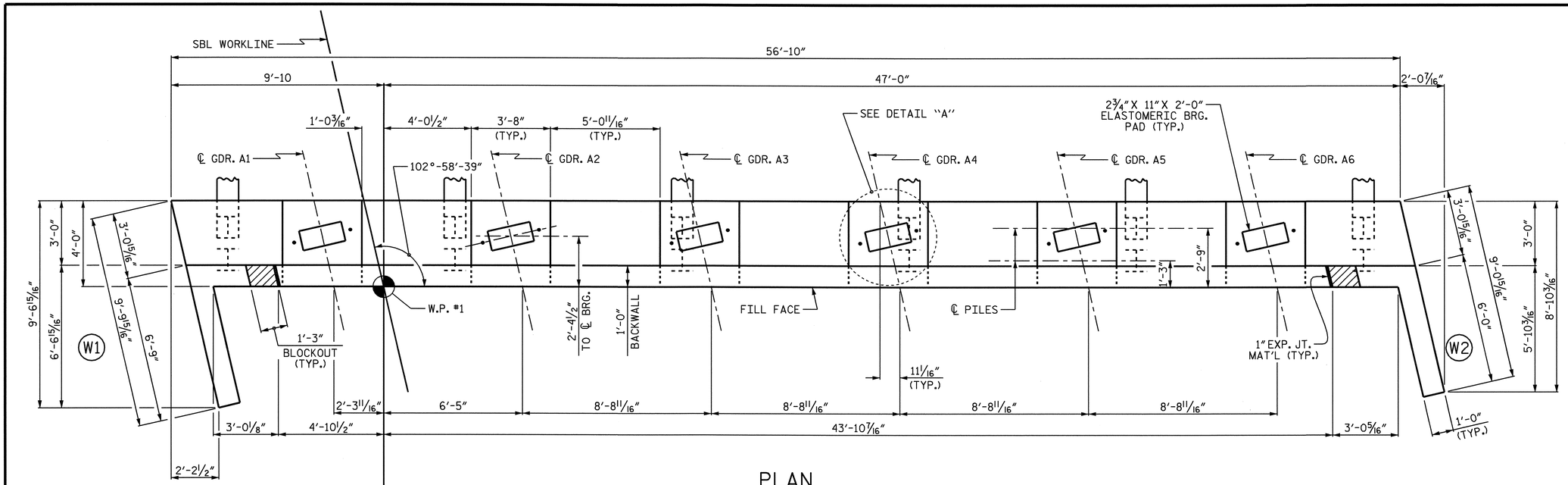

PLAN

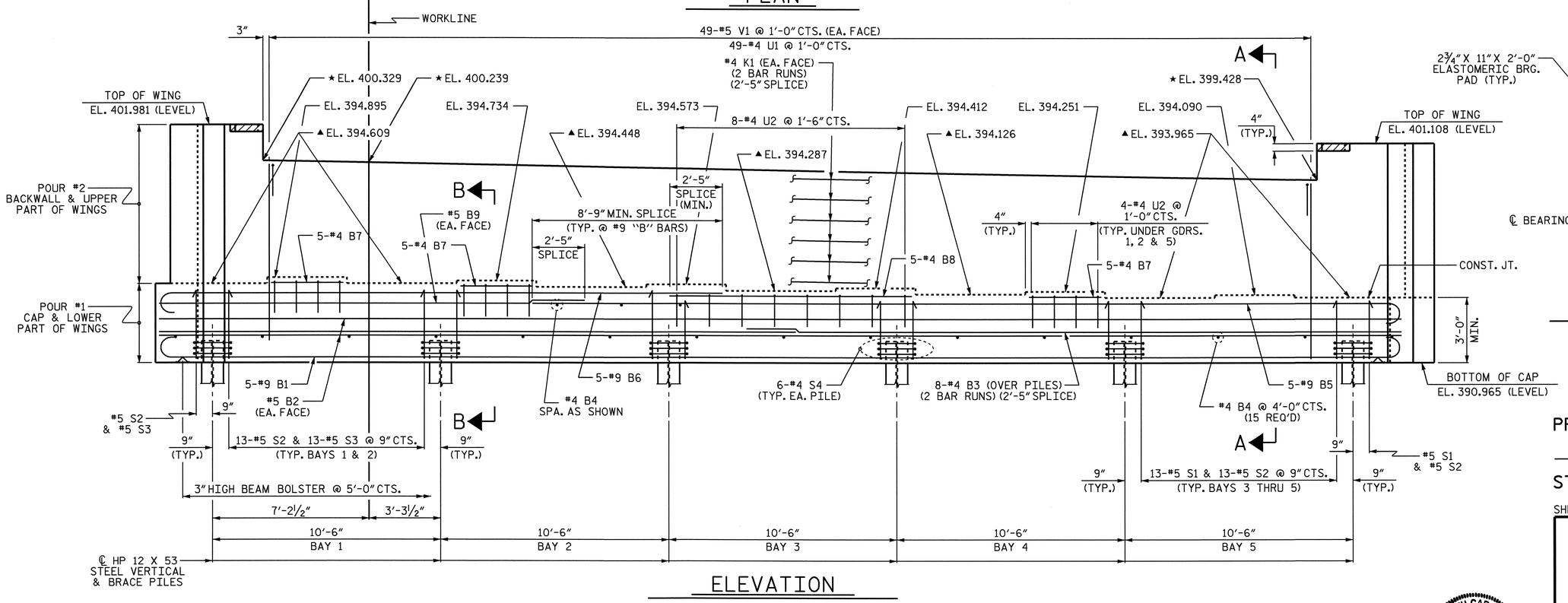

ELEVATION

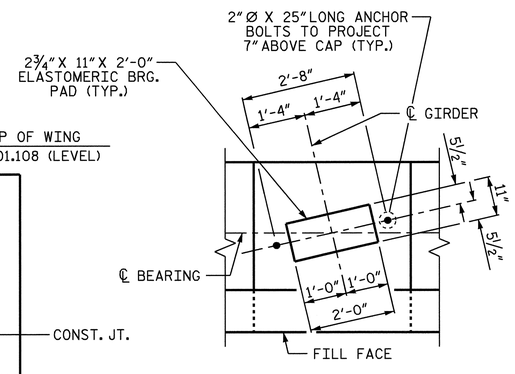

DETAIL "A"

(TYP. EA. GIRDER)

NOTES:

STIRRUPS AND U2 BARS IN CAP MAY BE SHIFTED AS NECESSARY TO CLEAR ANCHOR BOLTS.

BACKWALL SHALL BE PLACED BEFORE APPLYING THE EPOXY PROTECTIVE COATING.

THE TOP SURFACE OF THE CAP EXCEPT THE BRIDGE SEAT BUILDUPS SHALL BE SLOPED TRANSVERSELY FROM THE FILL FACE TO THE BACK FACE AT THE RATE OF 2%.

THE CONTRACTOR SHALL PROVIDE FOR INSTALLATION OF THE 4" DIAMETER DRAIN PIPE THROUGH THE WING WALL AS REQUIRED FOR REINFORCED BRIDGE APPROACH FILLS. SEE THE ROADWAY PLANS. REINFORCING STEEL IN THE WING WALL MAY BE SHIFTED AS NECESSARY TO CLEAR THE DRAIN PIPE.

#5 V1 BARS IN BACKWALL SHALL BE PLACED 2" FROM TOP OF BACKWALL.

THE CONCRETE IN THE SHADED AREA OF THE WING SHALL BE POURED AFTER THE BARRIER RAIL IS CAST IF SLIP FORMING IS USED.

▲ FOR LOCATION OF ELEVATION BETWEEN BUILDUPS, SEE SECTION A-A, ON SHEET 3 OF 3.

★ THIS ELEVATION TAKEN ON FILL FACE OF BACKWALL.

PROJECT NO. R-2417C
LEE COUNTY
STATION: 615+26.51 -LREV-

SHEET 1 OF 3

STATE OF NORTH CAROLINA
DEPARTMENT OF TRANSPORTATION
RALEIGH

SUBSTRUCTURE

END BENT No. 1
SBL

NORTH CAROLINA PROFESSIONAL SEAL 029441 ENGINEER KRISTY W. ALFORD
8/3/09

REVISIONS						SHEET NO.
NO.	BY:	DATE:	NO.	BY:	DATE:	S-54
1			3			TOTAL SHEETS
2			4			104

DRAWN BY : T. BANKOVICH DATE : 9-2008
CHECKED BY : D.G. ELY DATE : 9-2008

03-AUG-2009 09:11
k:\structures\str_2\Sub_Draw\r-2417c_str2_e*_1.dgn
kalford

STR. #2

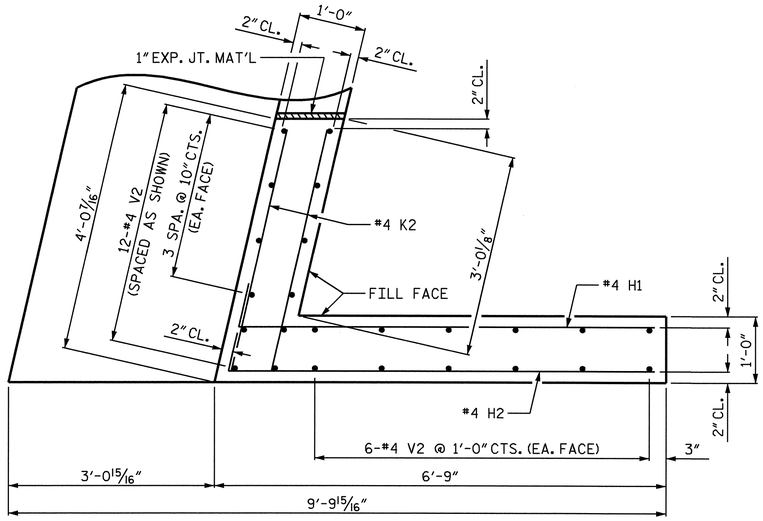

PLAN OF WING (W1)

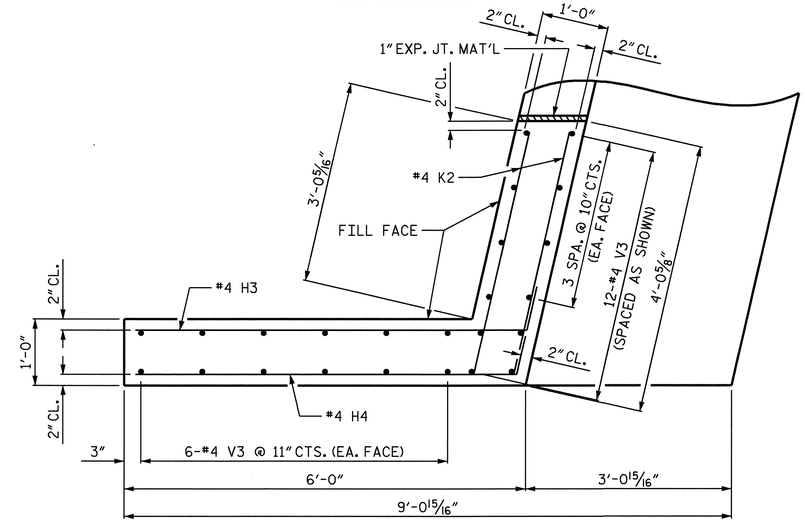

PLAN OF WING (W2)

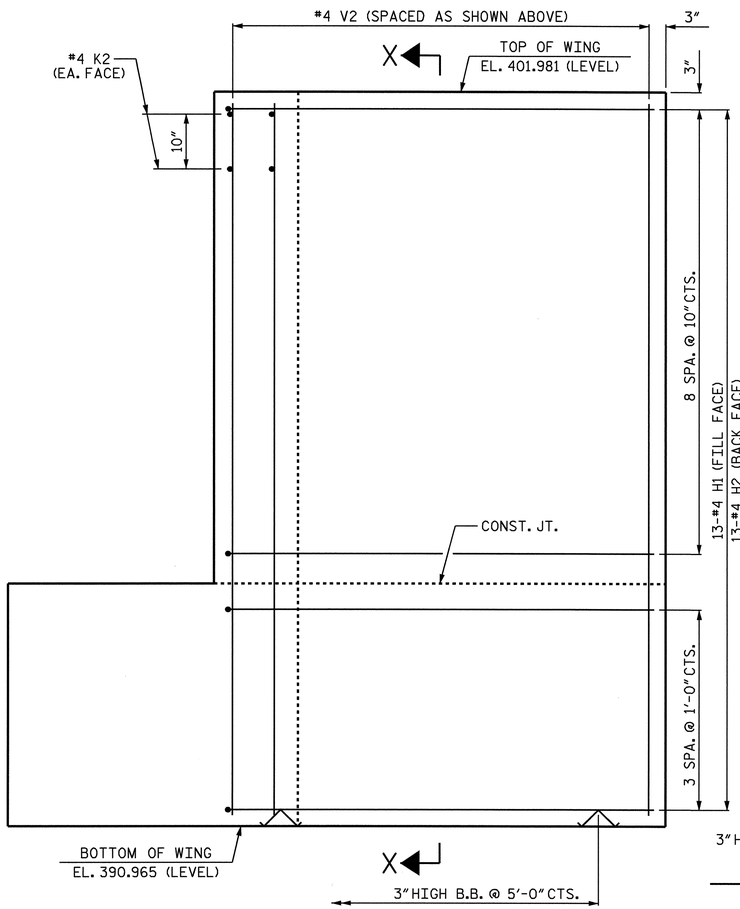

ELEVATION OF WING (W1)

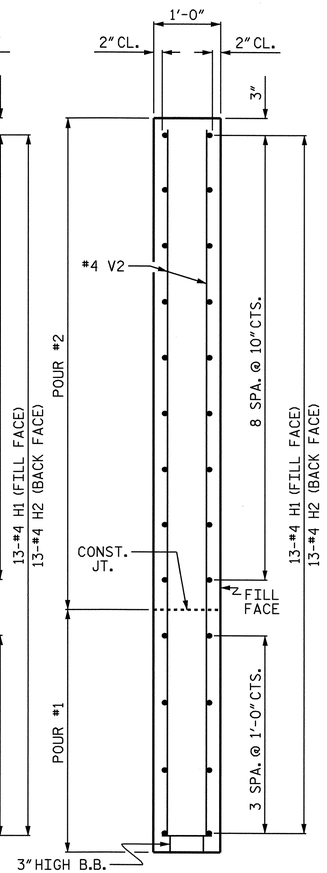

SECTION X-X

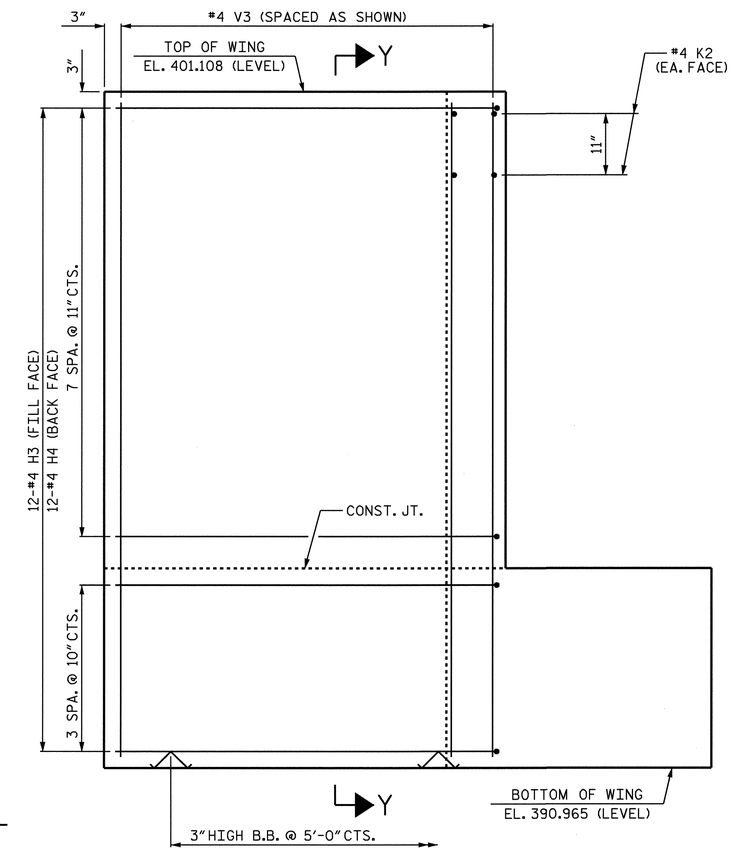

ELEVATION OF WING (W2)

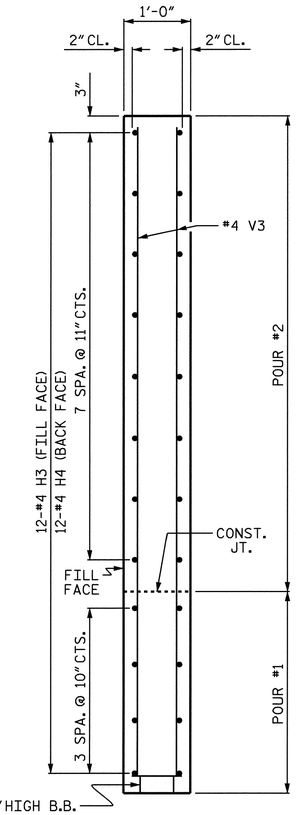

SECTION Y-Y

PROJECT NO. R-2417C

LEE COUNTY

STATION: 615+26.51 -LREV-

SHEET 2 OF 3

STATE OF NORTH CAROLINA
DEPARTMENT OF TRANSPORTATION
RALEIGH

SUBSTRUCTURE

END BENT No. 1

SBL

NORTH CAROLINA PROFESSIONAL SEAL 029441 ENGINEER KRISTY W. ALFORD

8/3/09

REVISIONS						SHEET NO.
NO.	BY:	DATE:	NO.	BY:	DATE:	S-55
1			3			TOTAL SHEETS
2			4			104

DRAWN BY : T. BANKOVICH DATE : 9-2008
CHECKED BY : D.G. ELY DATE : 9-2008

03-AUG-2009 09:12
k:\structures\str_2\Sub_Draw\r-2417c_str2_e*_1.dgn
kalford

STR. #2

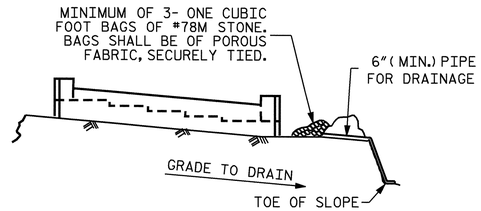

BAGGED STONE AND PIPE SHALL BE PLACED IMMEDIATELY AFTER COMPLETION OF END BENT EXCAVATION. PIPE MAY BE EITHER CONCRETE, CORRUGATED STEEL, CORRUGATED ALUMINUM ALLOY, OR CORRUGATED PLASTIC. PERFORATED PIPE WILL NOT BE ALLOWED.

BAGGED STONE SHALL REMAIN IN PLACE UNTIL THE ENGINEER DIRECTS THAT IT BE REMOVED. THE CONTRACTOR SHALL REMOVE AND DISPOSE OF SILT ACCUMULATIONS AT BAGGED STONE WHEN SO DIRECTED BY THE ENGINEER. BAGS SHALL BE REMOVED AND REPLACED WHENEVER THE ENGINEER DETERMINES THAT THEY HAVE DETERIORATED AND LOST THEIR EFFECTIVENESS.

NO SEPARATE PAYMENT WILL BE MADE FOR THIS WORK AND THE ENTIRE COST OF THIS WORK SHALL BE INCLUDED IN THE UNIT CONTRACT PRICE BID FOR THE SEVERAL PAY ITEMS.

TEMPORARY DRAINAGE AT END BENT

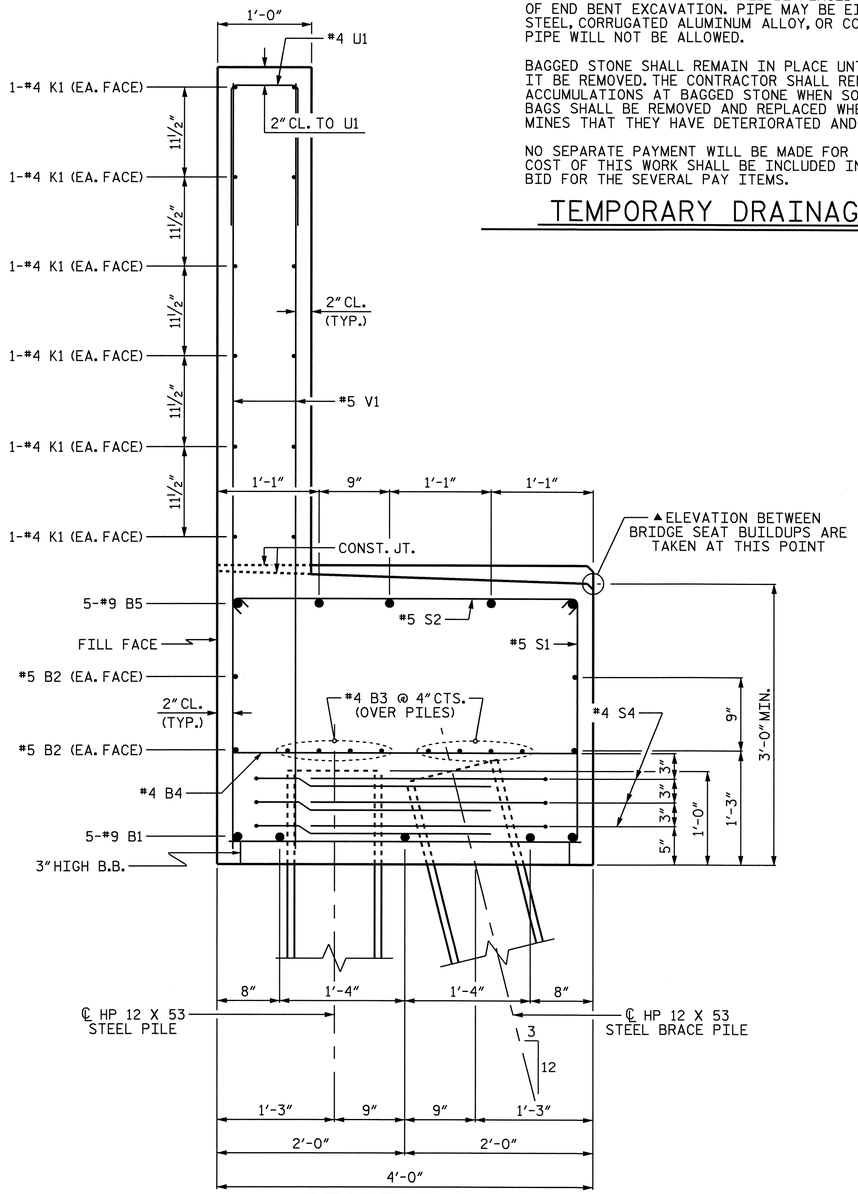

SECTION A-A

BAR TYPES

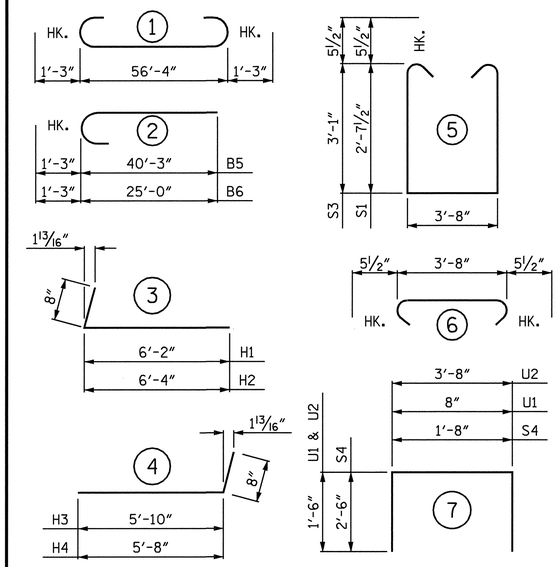

ALL BAR DIMENSIONS ARE OUT TO OUT

BILL OF MATERIAL
END BENT No. 1

BAR	NO.	SIZE	TYPE	LENGTH	WEIGHT
B1	5	#9	1	58'-10"	1000
B2	4	#5	STR	56'-6"	236
B3	16	#4	STR	29'-6"	315
B4	18	#4	STR	3'-8"	44
B5	5	#9	2	41'-6"	706
B6	5	#9	2	26'-3"	446
B7	15	#4	STR	3'-4"	33
B8	5	#4	STR	12'-0"	40
B9	2	#5	STR	18'-8"	39
H1	13	#4	3	6'-10"	59
H2	13	#4	3	7'-0"	61
H3	12	#4	4	6'-6"	52
H4	12	#4	4	6'-4"	51
K1	24	#4	STR	29'-6"	473
K2	8	#4	STR	3'-8"	20
S1	40	#5	5	9'-10"	410
S2	67	#5	6	4'-7"	320
S3	27	#5	5	10'-9"	303
S4	36	#4	7	6'-8"	160
U1	49	#4	7	3'-8"	120
U2	20	#4	7	6'-8"	89
V1	98	#5	STR	8'-1"	826
V2	24	#4	STR	10'-8"	171
V3	24	#4	STR	9'-9"	156
REINFORCING STEEL					6130 LBS.

CLASS A CONCRETE BREAKDOWN	
POUR #1 (CAP & LOWER WINGS)	30.0 C.Y.
POUR #2 (BACKWALL & UPPER WINGS)	15.0 C.Y.
TOTAL CLASS A CONCRETE	45.0 C.Y.
HP 12 X 53 STEEL PILES	
No. = 12	930 LIN FT.

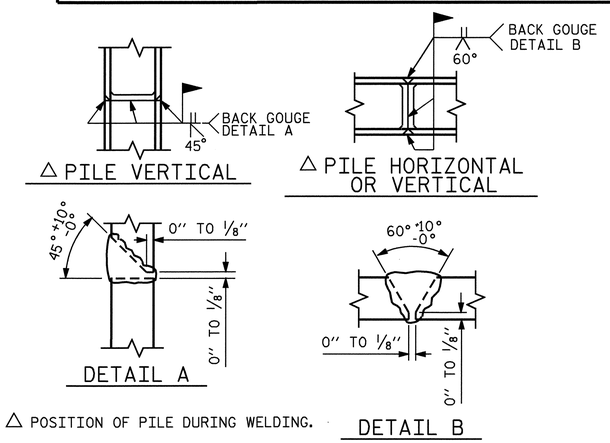

△ POSITION OF PILE DURING WELDING.

PILE SPLICE DETAILS

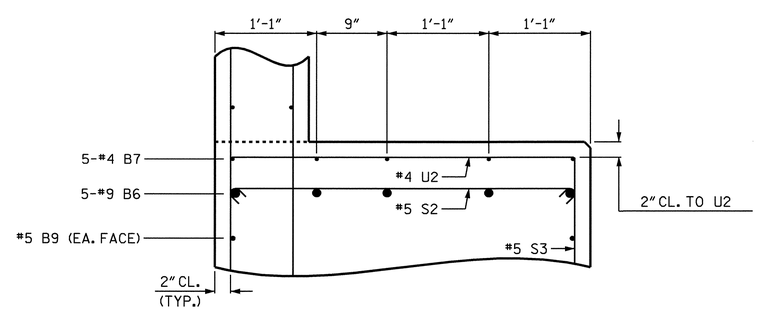

PARTIAL SECTION B-B

PROJECT NO. R-2417C
LEE COUNTY
STATION: 615+26.51 -LREV-

SHEET 3 OF 3

STATE OF NORTH CAROLINA
DEPARTMENT OF TRANSPORTATION
RALEIGH
SUBSTRUCTURE

END BENT No. 1
SBL

NORTH CAROLINA PROFESSIONAL SEAL 029441 ENGINEER KRISTY W. ALFORD
8/3/09

REVISIONS								SHEET NO.
NO.	BY:	DATE:	NO.	BY:	DATE:			S-56
1			3					TOTAL SHEETS
2			4					104

DRAWN BY : T. BANKOVICH DATE : 9-2008
CHECKED BY : D.G. ELY DATE : 9-2008

03-AUG-2009 09:12
k:\structures\str_2\Sub_Draw\r-2417c_str2_e*_1.dgn
kalford

STR. #2

NOTES:

STIRRUPS AND "U" BARS IN CAP MAY BE SHIFTED AS NECESSARY TO CLEAR ANCHOR BOLTS.

HOOKS ON "V" BARS MAY BE TURNED AS NECESSARY FOR PLACING REINFORCING STEEL.

FOR PILE SPLICE DETAILS, SEE END BENT No. 1, SHEET 3 OF 3.

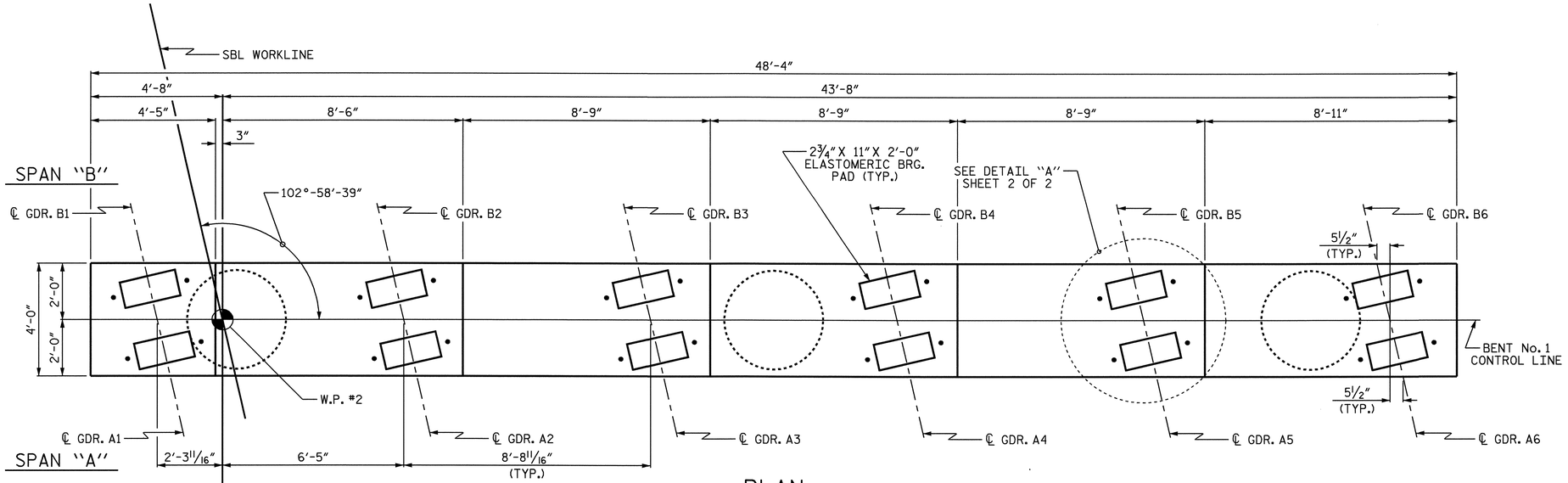

PLAN

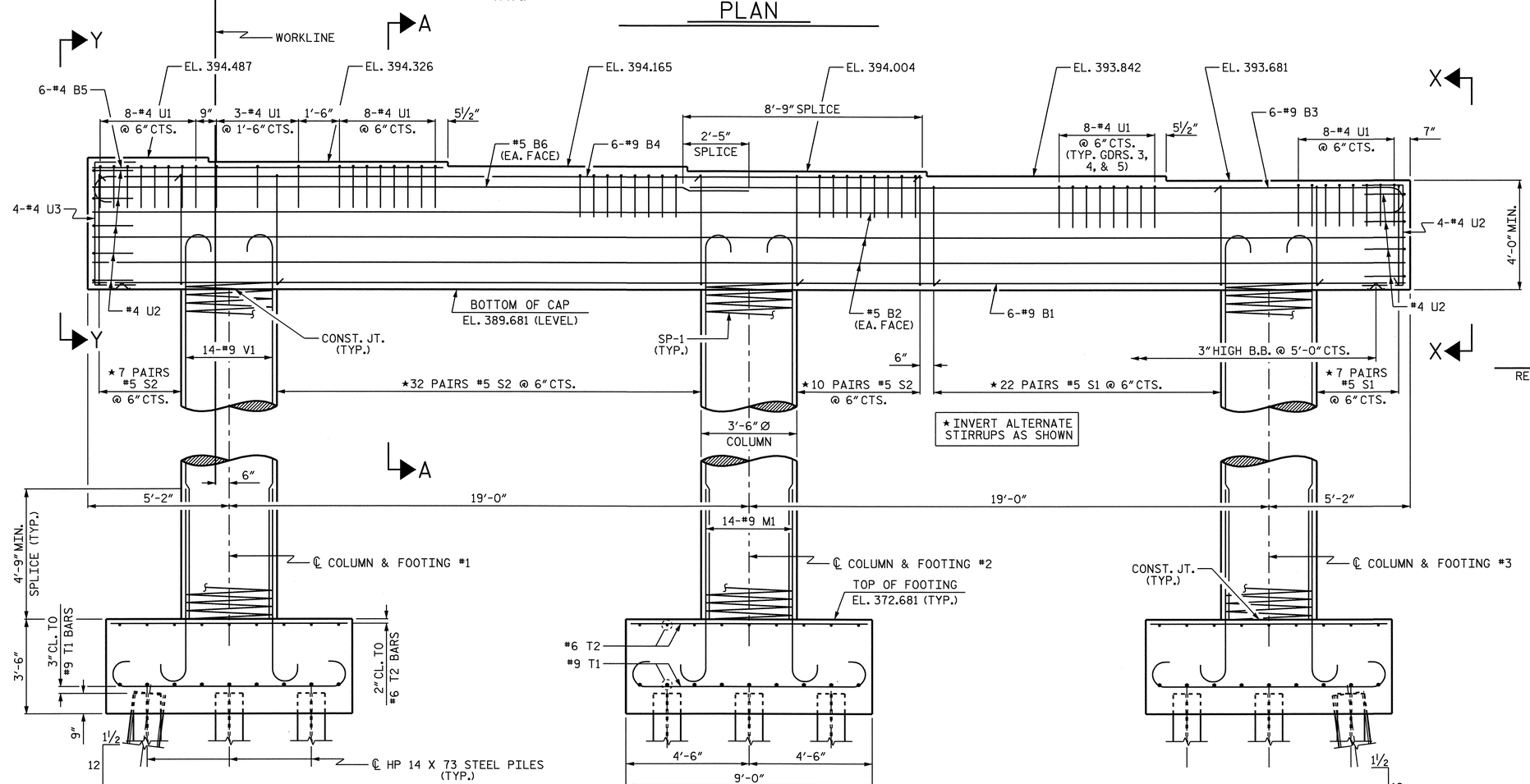

ELEVATION

DIMENSIONS & REINFORCING STEEL ARE TYPICAL FOR EACH COLUMN & FOOTING

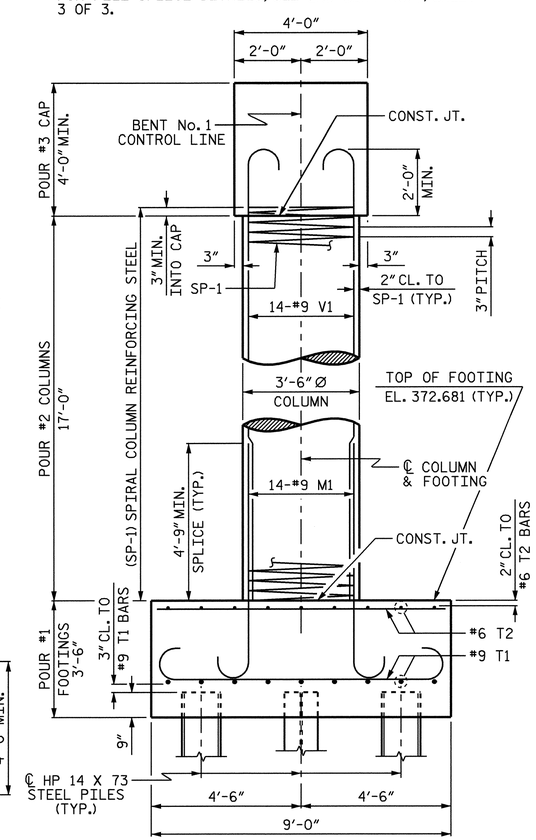

END ELEVATION

REINFORCING STEEL, DIMENSION AND DETAILS ARE TYPICAL FOR EACH COLUMN & FOOTING UNLESS OTHERWISE NOTED.

PROJECT NO. R-2417C

LEE COUNTY

STATION: 615+26.51 -LREV-

SHEET 1 OF 2

STATE OF NORTH CAROLINA
DEPARTMENT OF TRANSPORTATION
RALEIGH

SUBSTRUCTURE

BENT No. 1

SBL

NORTH CAROLINA PROFESSIONAL SEAL 029441 ENGINEER KRISTY W. ALFORD

8/3/09

REVISIONS						SHEET NO.
NO.	BY:	DATE:	NO.	BY:	DATE:	S-57
1			3			TOTAL SHEETS
2			4			104

STR. #2

DRAWN BY : T. BANKOVICH DATE : 10-2008

CHECKED BY : D.G. ELY DATE : 11-2008

03-AUG-2009 09:13
k:\structures\str_2\Sub_Draw\R-2417C_sd_B*_1.dgn
kalford

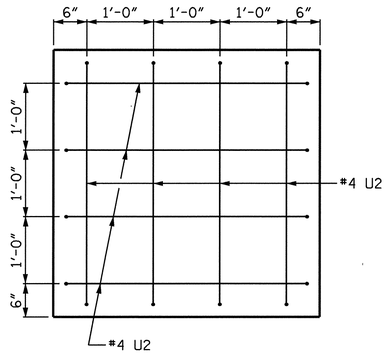

SECTION X-X

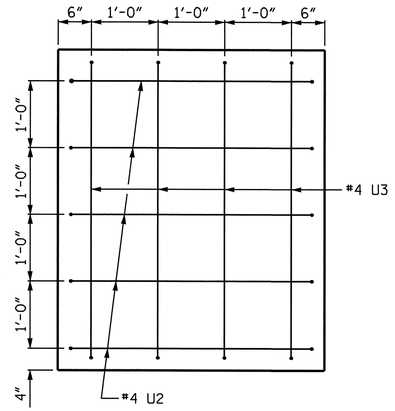

SECTION Y-Y

BAR TYPE

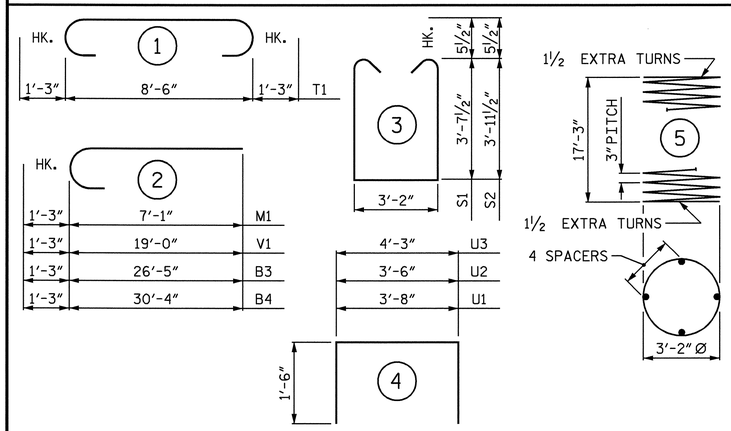

ALL BAR DIMENSIONS ARE OUT TO OUT

BILL OF MATERIAL

BENT No. 1

BAR	NO.	SIZE	TYPE	LENGTH	WEIGHT
B1	6	#9	STR	48'-0"	979
B2	6	#5	STR	48'-0"	300
B3	6	#9	2	27'-8"	564
B4	6	#9	2	31'-7"	644
B5	6	#4	STR	12'-10"	51
B6	2	#5	STR	24'-0"	50
M1	42	#9	2	8'-4"	1190
S1	58	#5	3	11'-4"	686
S2	98	#5	3	12'-0"	1227
T1	54	#9	1	11'-0"	2020
T2	54	#6	STR	8'-6"	689
U1	51	#4	4	6'-8"	227
U2	13	#4	4	6'-6"	56
U3	4	#4	4	7'-3"	19
V1	42	#9	2	20'-3"	2892
REINFORCING STEEL					11594 LBS.

BAR	NO.	SIZE	TYPE	LENGTH	WEIGHT
SP-1	3	✳	5	707'-1"	1417
SPRIAL COLUMN REINFORCING STEEL					1417 LBS.

✳ THE SP-1 SPIRAL REINFORCING STEEL SHALL BE W20 OF D-20 COLD DRAWN WIRE OR #4 PLAIN OR DEFORMED BAR

CLASS A CONCRETE BREAKDOWN	
POUR #1 (FOOTINGS)	31.5 C.Y.
POUR #2 (COLUMNS)	18.2 C.Y.
POUR #3 (CAP)	31.3 C.Y.
TOTAL CLASS A CONCRETE	81.0 C.Y.

HP 14 X 73 STEEL PILES	
No. = 24	1080 LIN. FT.

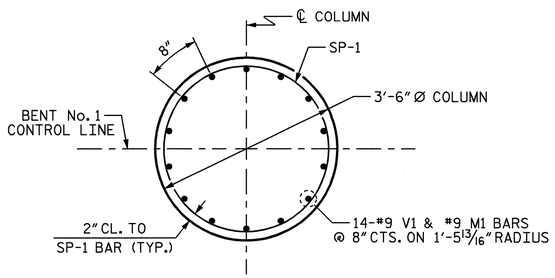

PLAN OF COLUMN

REINFORCING STEEL AND DIMENSIONS ARE TYPICAL FOR EACH COLUMN

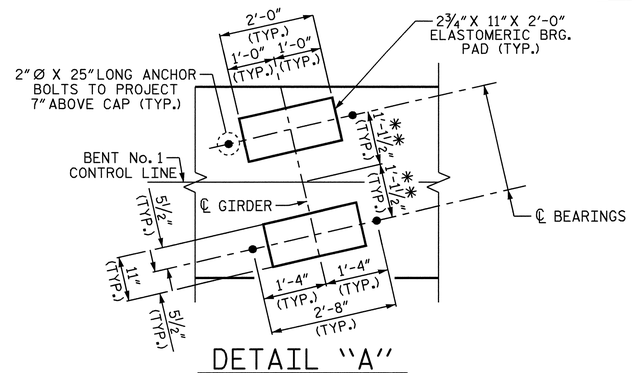

DETAIL "A"

✳✳ MEASURED ALONG ℄ GIRDER (TYP. EA GIRDER)

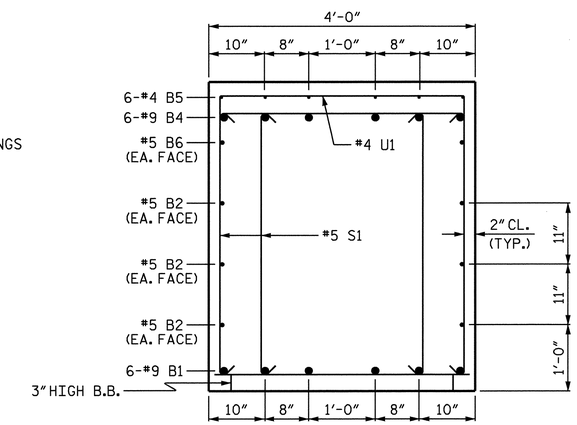

SECTION A-A

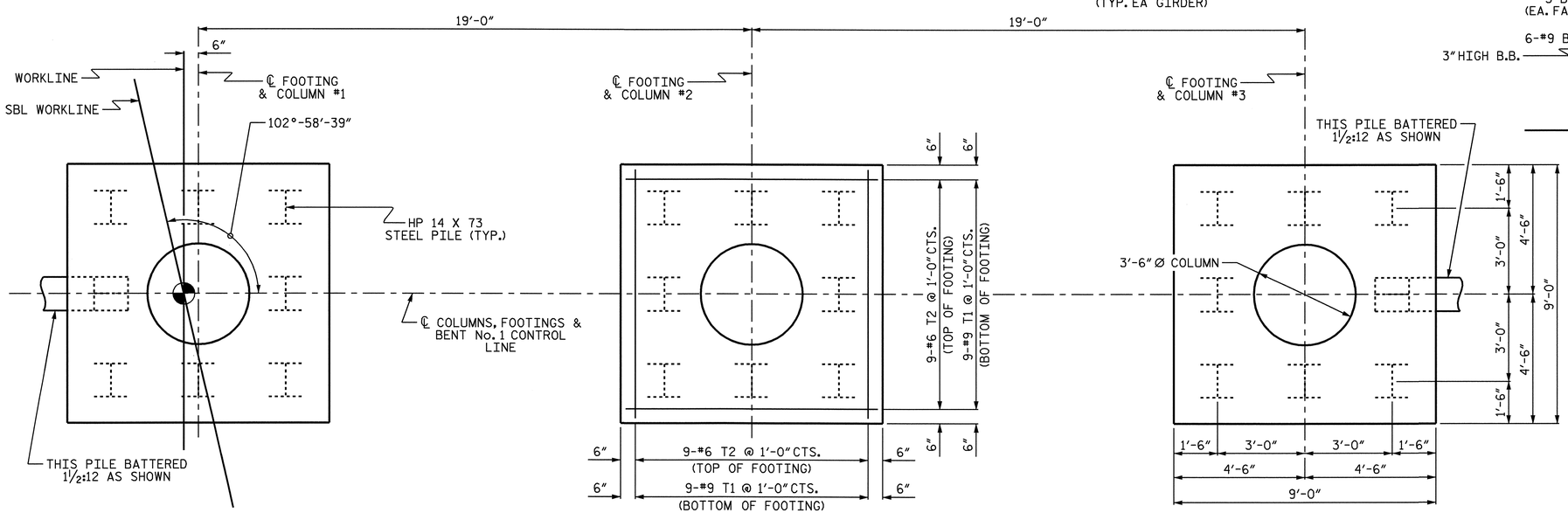

PLAN OF FOOTING

PILE PLACEMENT, DIMENSIONS AND REINFORCING STEEL ARE TYPICAL FOR EACH FOOTING

PROJECT NO. R-2417C

LEE COUNTY

STATION: 615+26.51 -LREV-

SHEET 2 OF 2

STATE OF NORTH CAROLINA
DEPARTMENT OF TRANSPORTATION
RALEIGH

SUBSTRUCTURE

BENT No. 1

SBL

NORTH CAROLINA PROFESSIONAL SEAL 029441 ENGINEER KRISTY W. ALFORD
8/3/09

REVISIONS								SHEET NO.
NO.	BY:	DATE:	NO.	BY:	DATE:			S-58
1			3					TOTAL SHEETS
2			4					104

STR. #2

DRAWN BY : T. BANKOVICH DATE : 10-2008
CHECKED BY : D.G. ELY DATE : 11-2008

03-AUG-2009 09:13
k:\structures\str_2\Sub_Draw\R-2417C_sd_B*_1.dgn
kalford

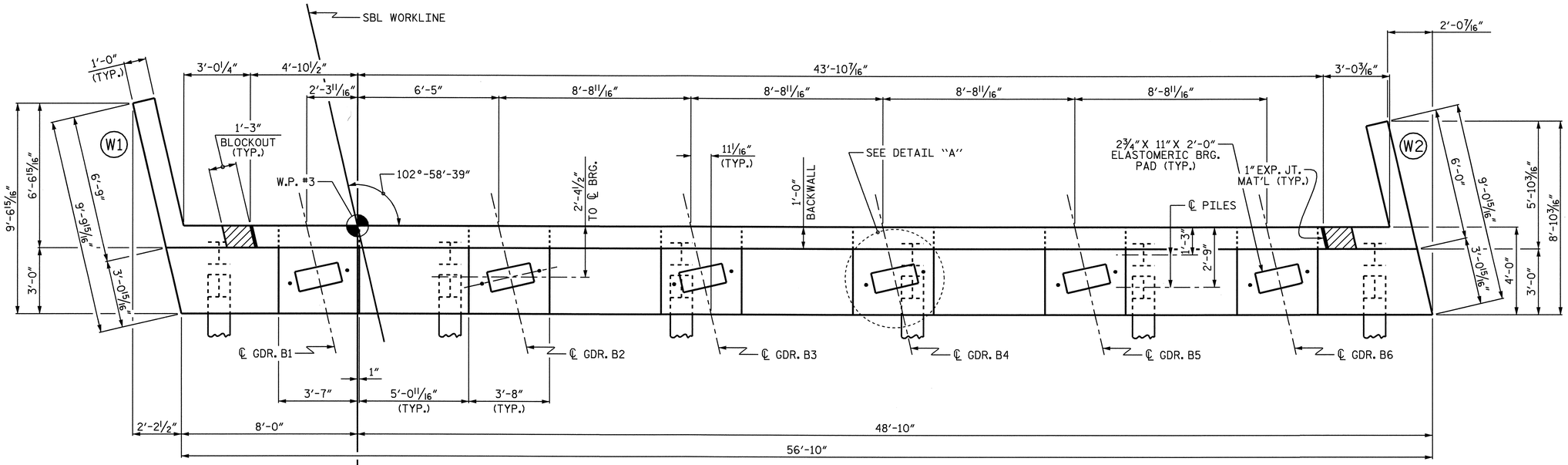

PLAN

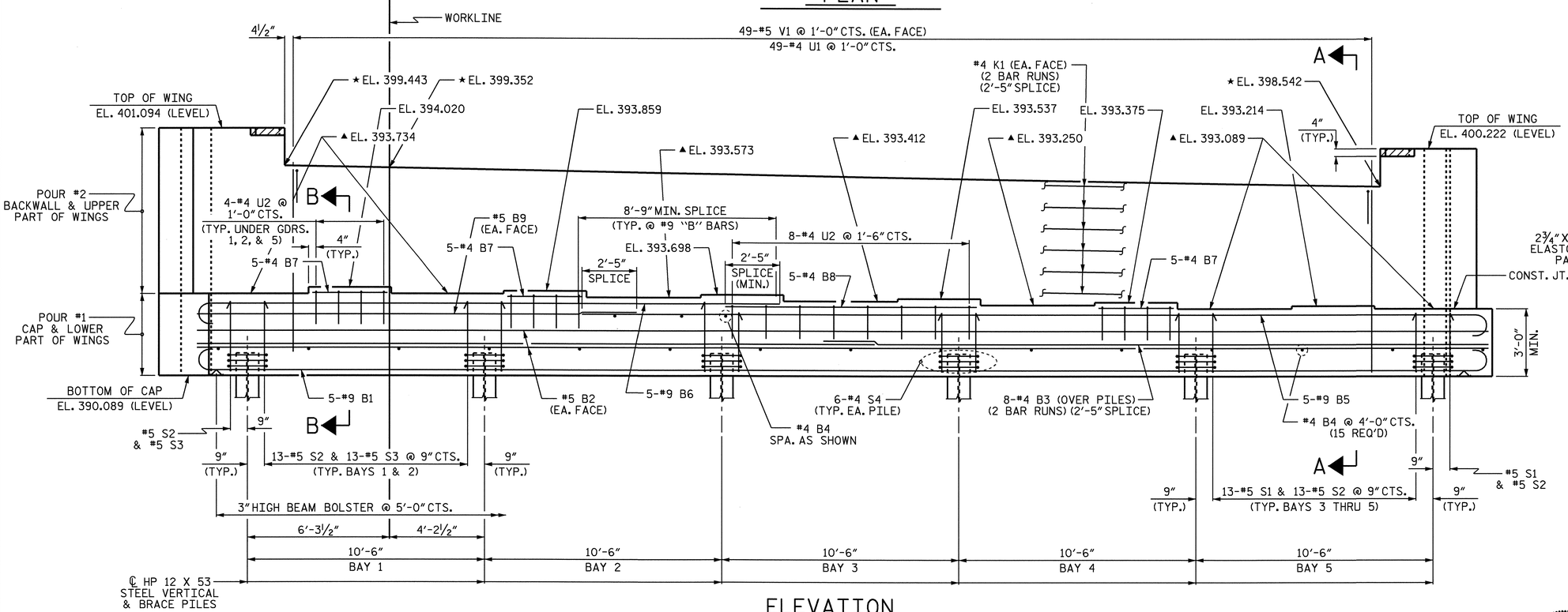

ELEVATION

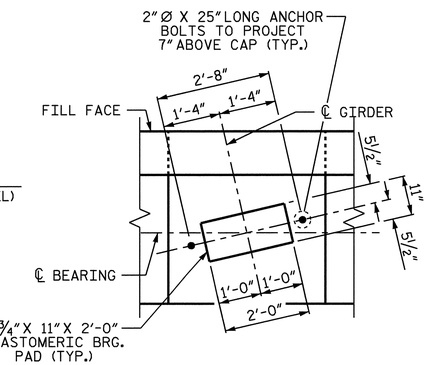

DETAIL "A"

(TYP. EA. GIRDER)

NOTES:

STIRRUPS AND U2 BARS IN CAP MAY BE SHIFTED AS NECESSARY TO CLEAR ANCHOR BOLTS.

BACKWALL SHALL BE PLACED BEFORE APPLYING THE EPOXY PROTECTIVE COATING.

THE TOP SURFACE OF THE CAP EXCEPT THE BRIDGE SEAT BUILDUPS SHALL BE SLOPED TRANSVERSELY FROM THE FILL FACE TO THE BACK FACE AT THE RATE OF 2%.

THE CONTRACTOR SHALL PROVIDE FOR INSTALLATION OF THE 4" DIAMETER DRAIN PIPE THROUGH THE WING WALL AS REQUIRED FOR REINFORCED BRIDGE APPROACH FILLS. SEE THE ROADWAY PLANS. REINFORCING STEEL IN THE WING WALL MAY BE SHIFTED AS NECESSARY TO CLEAR THE DRAIN PIPE.

#5 V1 BARS IN BACKWALL SHALL BE PLACED 2" FROM TOP OF BACKWALL.

THE CONCRETE IN THE SHADED AREA OF THE WING SHALL BE POURED AFTER THE BARRIER RAIL IS CAST IF SLIP FORMING IS USED.

▲ FOR LOCATION OF ELEVATION BETWEEN BUILDUPS, SEE SECTION A-A, ON SHEET 3 OF 3.

★ THIS ELEVATION TAKEN ON FILL FACE OF BACKWALL.

PROJECT NO. R-2417C
LEE COUNTY
STATION: 615+26.51 -LREV-

SHEET 1 OF 3

STATE OF NORTH CAROLINA
DEPARTMENT OF TRANSPORTATION
RALEIGH

SUBSTRUCTURE

END BENT No. 2
SBL

NORTH CAROLINA PROFESSIONAL SEAL 029441 ENGINEER KRISTY W. ALFORD
8/3/09

REVISIONS						SHEET NO.
NO.	BY:	DATE:	NO.	BY:	DATE:	S-59
1			3			TOTAL SHEETS
2			4			104

STR. #2

DRAWN BY : T. BANKOVICH DATE : 10-2008
CHECKED BY : D.G. ELY DATE : 10-2008

03-AUG-2009 09:13
k:\structures\str_2\Sub_Draw\R-2417C_str2_E*_2.dgn
kalford

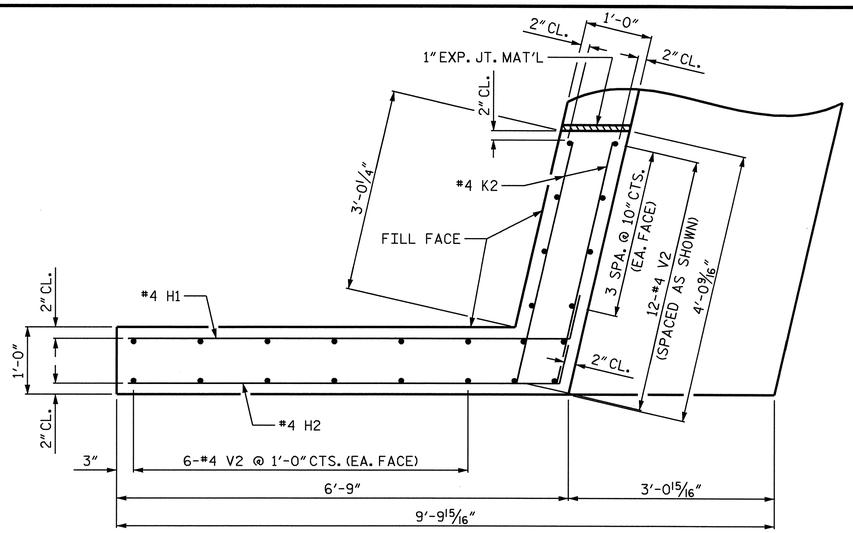

PLAN OF WING (W1)

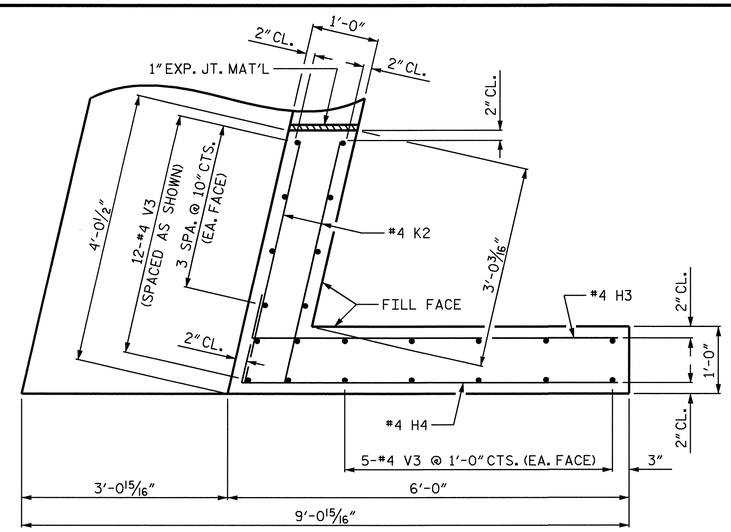

PLAN OF WING (W2)

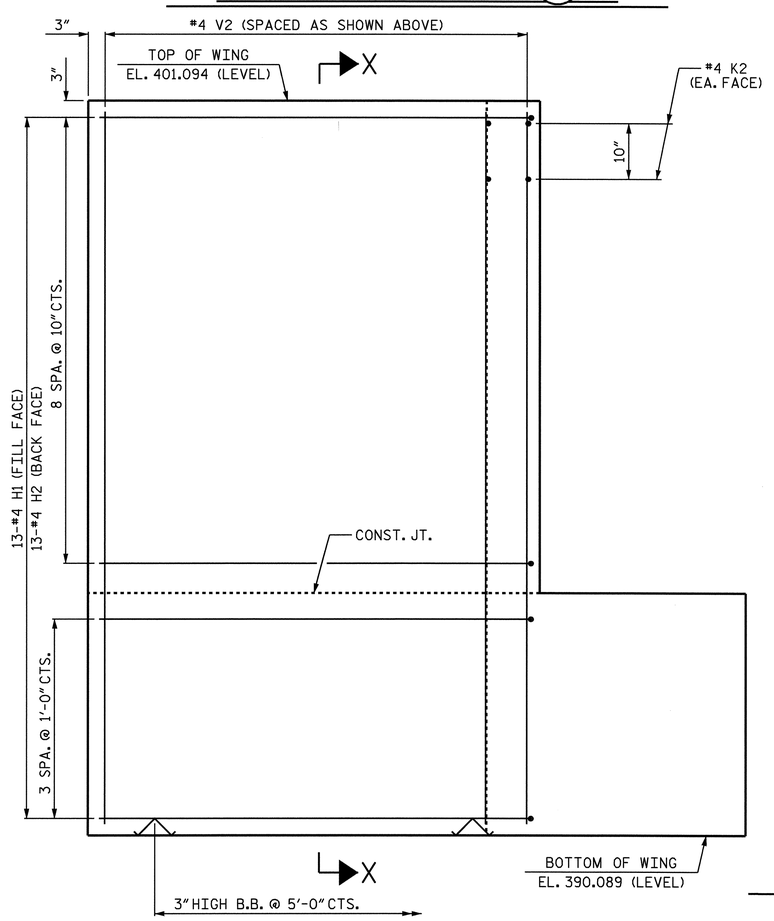

ELEVATION OF WING (W1)

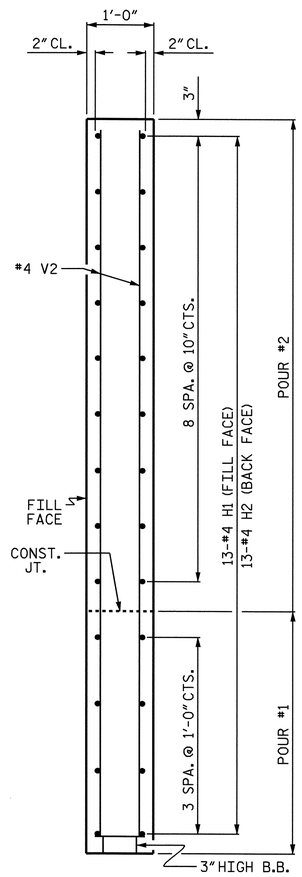

SECTION X-X

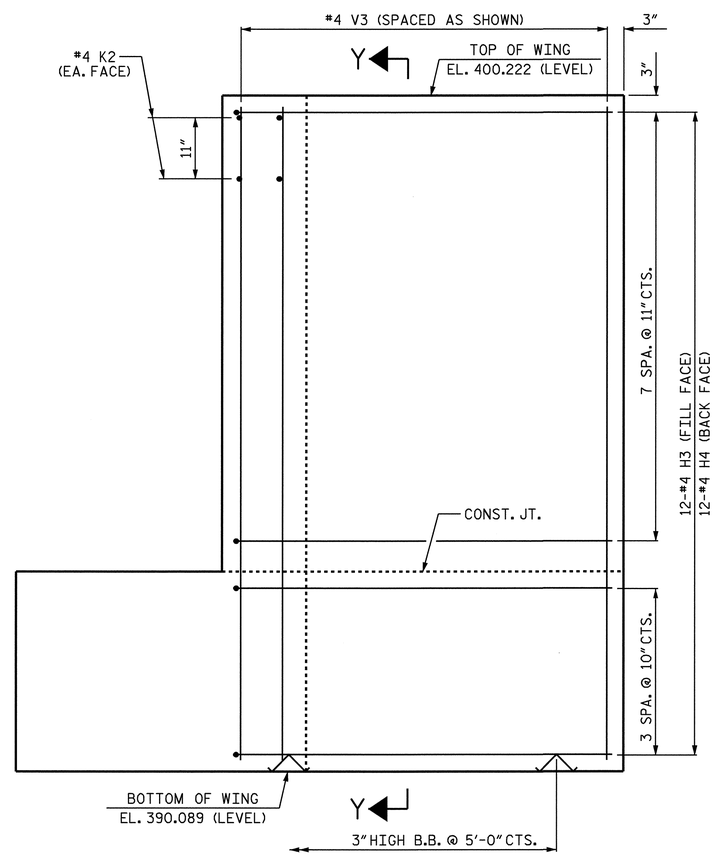

ELEVATION OF WING (W2)

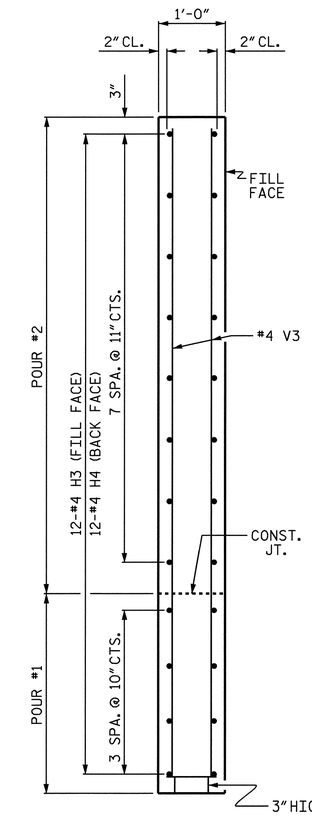

SECTION Y-Y

PROJECT NO. R-2417C

LEE COUNTY

STATION: 615+26.51 -LREV-

SHEET 2 OF 3

STATE OF NORTH CAROLINA
DEPARTMENT OF TRANSPORTATION
RALEIGH

SUBSTRUCTURE

END BENT No. 2

SBL

NORTH CAROLINA PROFESSIONAL SEAL 029441 ENGINEER KRISTY W. ALFORD

REVISIONS							SHEET NO.
NO.	BY:	DATE:	NO.	BY:	DATE:		S-60
1			3				TOTAL SHEETS
2			4				104

DRAWN BY : T. BANKOVICH DATE : 10-2008
CHECKED BY : D.G. ELY DATE : 10-2008

03-AUG-2009 09:14
k:\structures\str_2\Sub_Draw\R-2417C_str2_E*_2.dgn
kalford

STR. #2

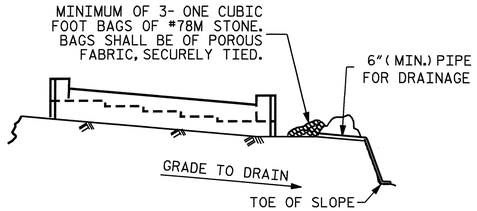

BAGGED STONE AND PIPE SHALL BE PLACED IMMEDIATELY AFTER COMPLETION OF END BENT EXCAVATION. PIPE MAY BE EITHER CONCRETE, CORRUGATED STEEL, CORRUGATED ALUMINUM ALLOY, OR CORRUGATED PLASTIC. PERFORATED PIPE WILL NOT BE ALLOWED.

BAGGED STONE SHALL REMAIN IN PLACE UNTIL THE ENGINEER DIRECTS THAT IT BE REMOVED. THE CONTRACTOR SHALL REMOVE AND DISPOSE OF SILT ACCUMULATIONS AT BAGGED STONE WHEN SO DIRECTED BY THE ENGINEER. BAGS SHALL BE REMOVED AND REPLACED WHENEVER THE ENGINEER DETERMINES THAT THEY HAVE DETERIORATED AND LOST THEIR EFFECTIVENESS.

NO SEPARATE PAYMENT WILL BE MADE FOR THIS WORK AND THE ENTIRE COST OF THIS WORK SHALL BE INCLUDED IN THE UNIT CONTRACT PRICE BID FOR THE SEVERAL PAY ITEMS.

TEMPORARY DRAINAGE AT END BENT

BAR TYPES

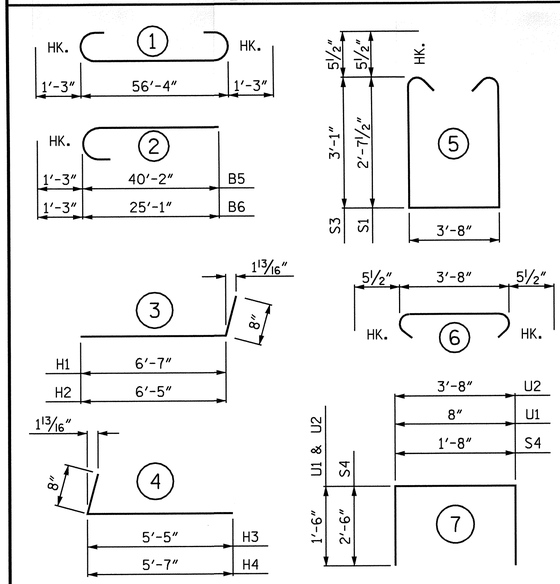

ALL BAR DIMENSIONS ARE OUT TO OUT

BILL OF MATERIAL
END BENT No. 2

BAR	NO.	SIZE	TYPE	LENGTH	WEIGHT
B1	5	#9	1	58'-10"	1000
B2	4	#5	STR	56'-6"	236
B3	16	#4	STR	29'-6"	315
B4	18	#4	STR	3'-8"	44
B5	5	#9	2	41'-5"	704
B6	5	#9	2	26'-4"	448
B7	15	#4	STR	3'-4"	33
B8	5	#4	STR	12'-0"	40
B9	2	#5	STR	18'-9"	39
H1	13	#4	3	7'-3"	63
H2	13	#4	3	7'-1"	62
H3	12	#4	4	6'-1"	49
H4	12	#4	4	6'-3"	50
K1	24	#4	STR	29'-6"	473
K2	8	#4	STR	3'-8"	20
S1	40	#5	5	9'-10"	410
S2	67	#5	6	4'-7"	320
S3	27	#5	5	10'-9"	303
S4	36	#4	7	6'-8"	160
U1	49	#4	7	3'-8"	120
U2	20	#4	7	6'-8"	89
V1	98	#5	STR	8'-1"	826
V2	24	#4	STR	10'-8"	171
V3	22	#4	STR	9'-9"	143

REINFORCING STEEL	6118 LBS.
CLASS A CONCRETE BREAKDOWN	
POUR #1 (CAP & LOWER WINGS)	29.9 C.Y.
POUR #2 (BACKWALL & UPPER WINGS)	14.9 C.Y.
TOTAL CLASS A CONCRETE	44.8 C.Y.
HP 12 X 53 STEEL PILES	
No. = 12	720 LIN FT.

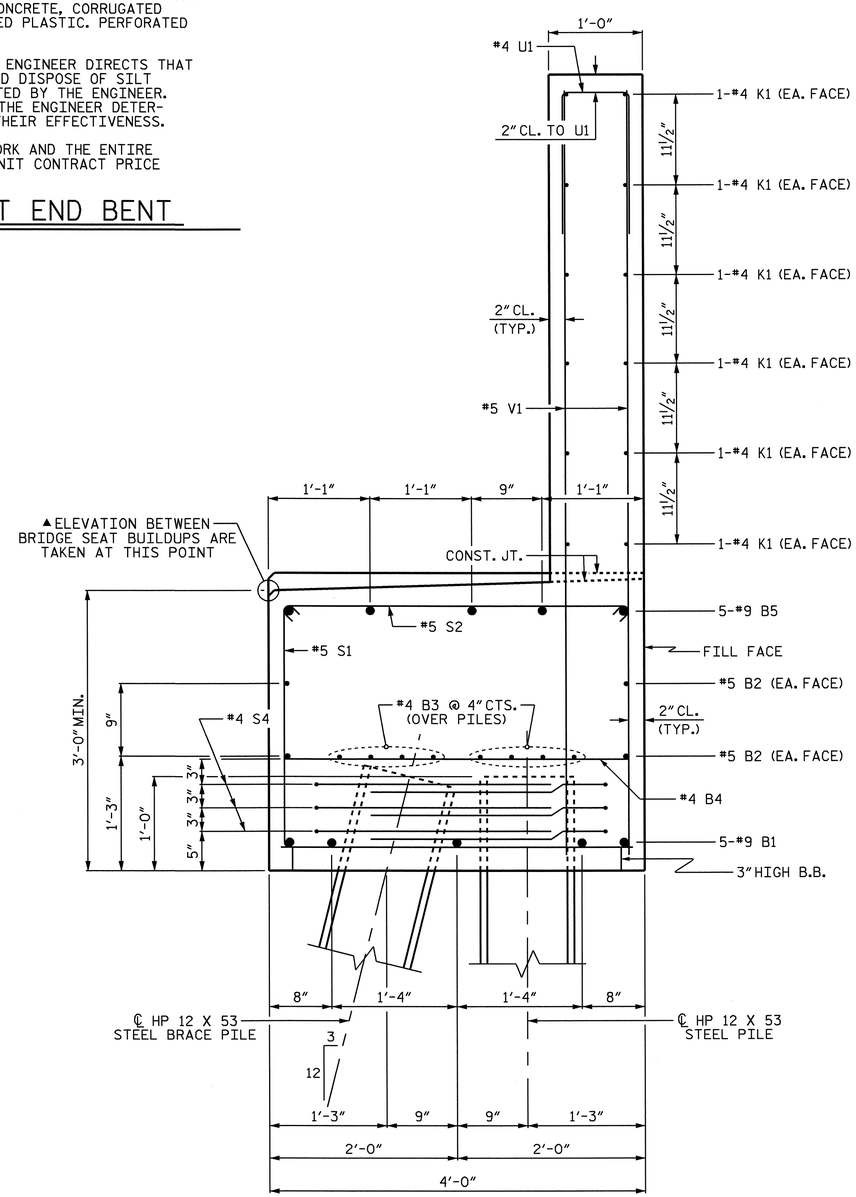

SECTION A-A

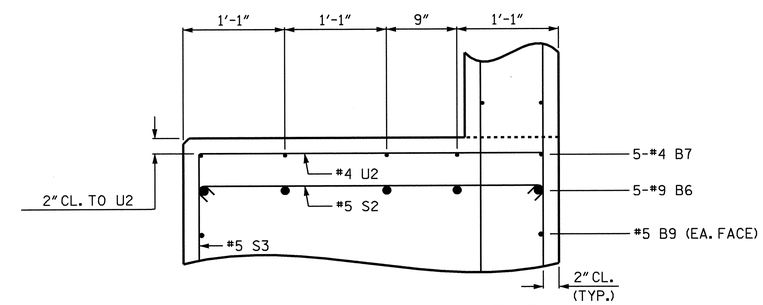

PARTIAL SECTION B-B

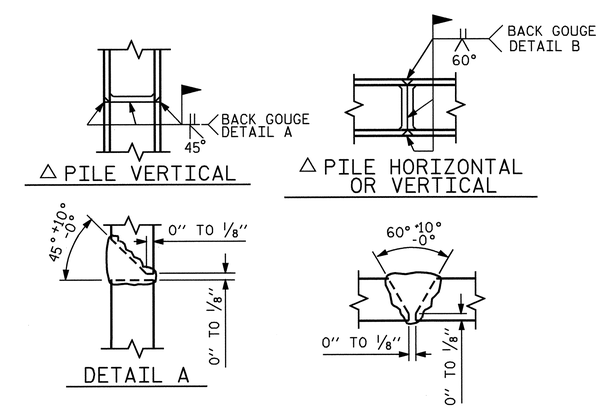

△ POSITION OF PILE DURING WELDING.

PILE SPLICE DETAILS

PROJECT NO. R-2417C

LEE COUNTY

STATION: 615+26.51 -LREV-

SHEET 3 OF 3

STATE OF NORTH CAROLINA
DEPARTMENT OF TRANSPORTATION
RALEIGH

SUBSTRUCTURE

END BENT No. 2

SBL

NORTH CAROLINA PROFESSIONAL SEAL 029441 ENGINEER KRISTY W. ALFORD
8/3/09

REVISIONS						SHEET NO.
NO.	BY:	DATE:	NO.	BY:	DATE:	S-61
1			3			TOTAL SHEETS
2			4			104

STR. #2

DRAWN BY : T. BANKOVICH DATE : 10-2008
CHECKED BY : D.G. ELY DATE : 10-2008

03-AUG-2009 09:14
k:\structures\str_2\Sub_Draw\R-2417C_str2_E*_2.dgn
kalford

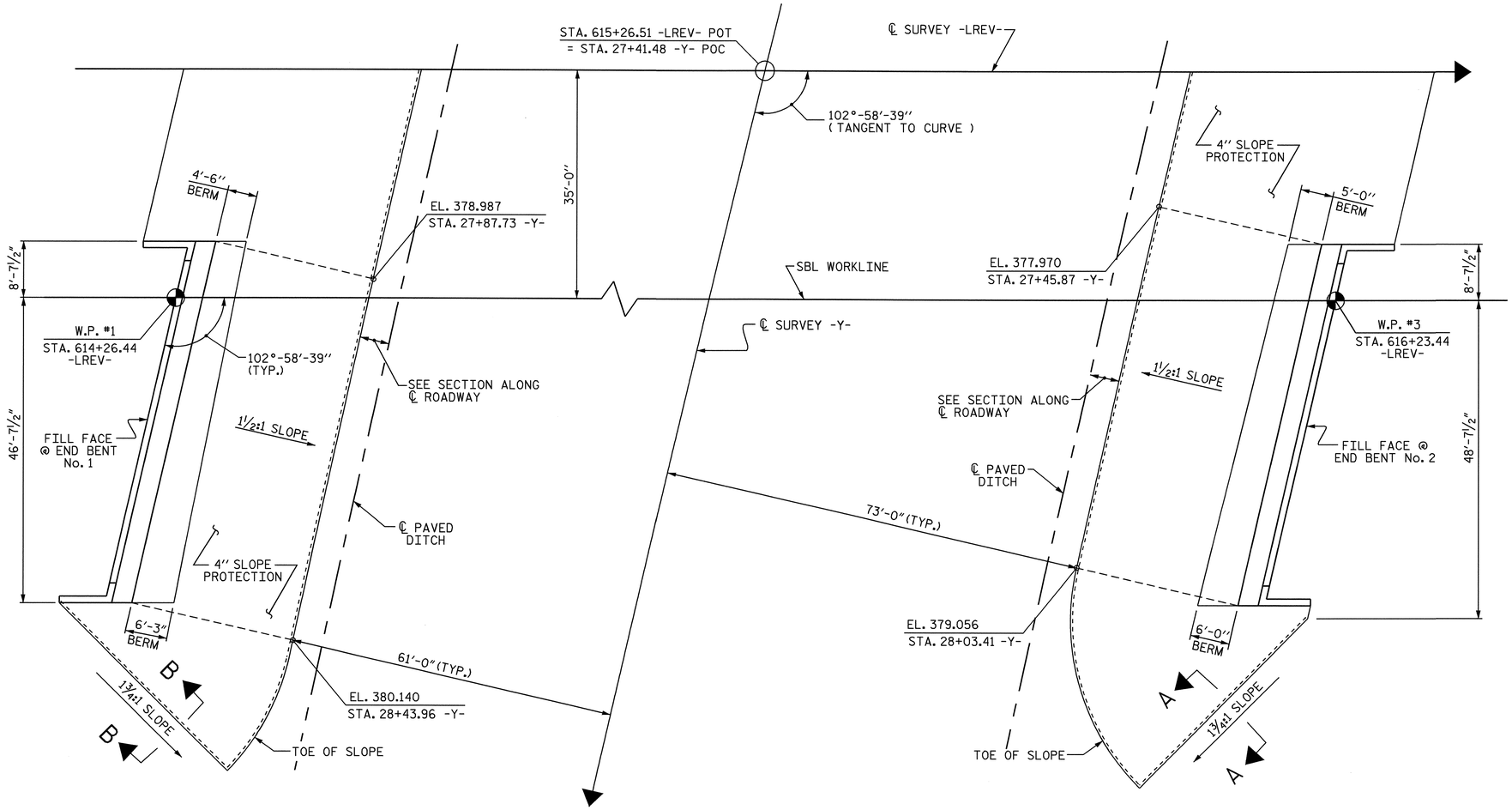

AT END BENT No. 1

AT END BENT No. 2

PLAN

SEE GENERAL DRAWING FOR BERM ELEVATION

GENERAL NOTES

SLOPE PROTECTION SHALL BE PLACED UNDER THE ENDS OF THE BRIDGE AS SHOWN IN THE DETAILS. MEASUREMENT AND PAYMENT SHALL BE AS PRESCRIBED IN SECTION 462 OF THE STANDARD SPECIFICATIONS.

SLOPE PROTECTION SHALL CONSIST OF 4"POURED-IN-PLACE CONCRETE PAVING AS SHOWN IN THE DETAILS ON THIS SHEET. CONCRETE SHALL BE CLASS "B".

THE CONCRETE SURFACE SHALL BE FLOATED WITH A WOODEN FLOAT AND FINISHED. WELDED WIRE FABRIC REINFORCING SHALL BE 6 X 6 - W1.4 X W1.4, 60" WIDE. SLOPE PROTECTION SHALL BE POURED IN 5' STRIPS AS SHOWN IN THE "POURING DETAIL" WITH 2'-0" LONG #4 BARS PLACED ALONG THE SLOPE BETWEEN STRIPS AT 1'-6" MAXIMUM SPACING. SLOPE PROTECTION MAY BE POURED IN ALTERNATE 4' AND 5' STRIPS AS SHOWN IN THE "OPTIONAL POURING DETAIL" WITH ADJACENT RUNS OF WELDED WIRE FABRIC LAPPING AT LEAST 6". THE COST OF THE WELDED WIRE FABRIC AND #4 BARS, IF USED, SHALL BE INCLUDED IN THE CONTRACT UNIT PRICE BID PER SQUARE YARD FOR SLOPE PROTECTION.

BRIDGE @ STA. 615+26.51 -LREV- -SBL-	4 INCH SLOPE PROTECTION	* WELDED WIRE FABRIC 60 INCHES WIDE
	SQUARE YARDS	APPROX. L.F.
END BENT 1	415	750
END BENT 2	410	740

* QUANTITY SHOWN IS BASED ON 5' POURS.

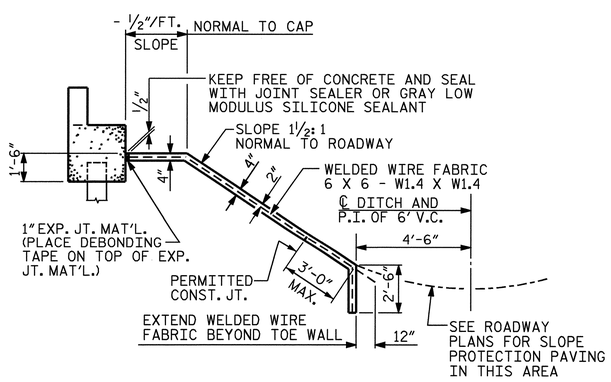

SECTION ALONG ℄ ROADWAY WHEN FILL CATCHES IN DITCH

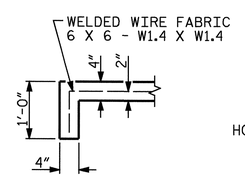

SECTION A-A

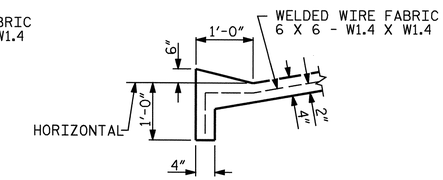

SECTION B-B

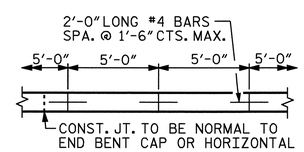

STRIP WIDTHS MAY VARY IN CURVED PORTION.

POURING DETAIL

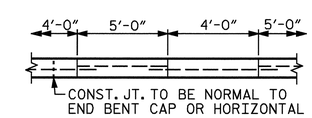

POUR A 4'-0" STRIP FIRST. STRIP WIDTHS MAY VARY IN CURVED PORTION.

OPTIONAL POURING DETAIL

DETAILS FOR SLOPE PROTECTION

PROJECT NO. R-2417C

LEE COUNTY

STATION: 615+26.51-LREV-

STATE OF NORTH CAROLINA
DEPARTMENT OF TRANSPORTATION
RALEIGH

STANDARD
SLOPE PROTECTION
DETAILS

(SBL)

NORTH CAROLINA PROFESSIONAL SEAL 029441 ENGINEER KRISTY W. ALFORD
10/19/09

REVISIONS						SHEET NO.
NO.	BY:	DATE:	NO.	BY:	DATE:	S-62
1			3			TOTAL SHEETS
2			4			104

DRAWN BY : A. V. ROYAL DATE : 11/08
CHECKED BY : M. L. BROWN DATE : 11/08

21-OCT-2009 09:20
k:\structures\STR_2\Misc_draw\R2417C_sd_SP_STR. #2.dgn
kalford

STR. #2

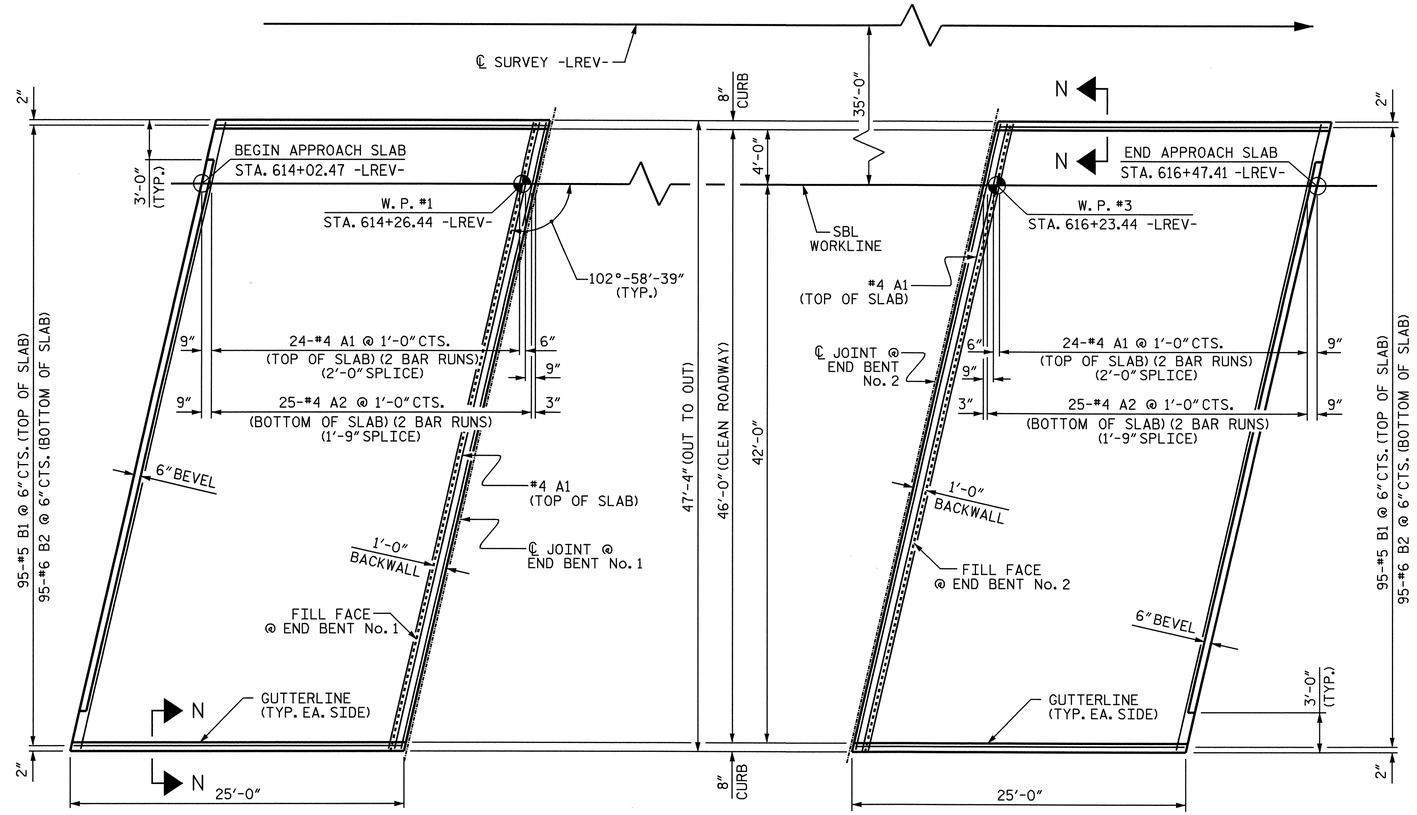

PLAN AT END BENT No. 1

PLAN AT END BENT No. 2

PLAN OF APPROACH SLABS

NOTES

APPROACH SLAB SHALL NOT BE CONSTRUCTED PRIOR TO COMPLETION OF THE BRIDGE DECK.

FOR REINFORCED BRIDGE APPROACH FILL INCLUDING FABRIC, IMPERMEABLE GEOMEMBRANE, 4" Ø DRAINAGE PIPE, #78M STONE, AND SELECT MATERIAL, SEE ROADWAY PLANS.

AREA BETWEEN THE WINGWALL AND APPROACH SLAB SHALL BE GRADED TO DRAIN THE WATER AWAY FROM THE FILL FACE OF THE BRIDGE AND SHALL BE PAVED. SEE ROADWAY PLANS.

THE 6" COMP. A.B.C. SHALL BE FLUSH WITH THE ROADWAY END OF THE APPROACH SLAB AND SHALL EXTEND 1'-0" OUTSIDE EACH EDGE OF THE APPROACH SLAB.

THE CONTRACTOR MAY USE 4" TYPE B-25.0B ASPHALT CONCRETE BASE COURSE IN LIEU OF 6" COMP. A.B.C. IF THIS OPTION IS USED, THE BASE COURSE SHALL BE FLUSH WITH THE ROADWAY END OF THE APPROACH SLAB, AND THE WIDTH SHALL BE THE SAME AS THAT OF THE APPROACH SLAB.

THE CONTRACTOR MAY USE 5" CLASS "A" CONCRETE BASE IN LIEU OF 6" COMP. A.B.C. IF THIS OPTION IS USED, THE CONCRETE BASE SHALL BE FLUSH WITH THE ROADWAY END OF THE APPROACH SLAB, AND THE WIDTH SHALL BE THE SAME AS THAT OF THE APPROACH SLAB. THE CONCRETE SHALL BE FINISHED TO A SMOOTH SURFACE AND A LAYER OF 30 LB ROOFING FELT SHALL BE PLACED BETWEEN THE CONCRETE BASE AND THE APPROACH SLAB TO PREVENT BOND. THE APPROACH SLAB SHALL NOT BE CAST UNTIL THE CONCRETE BASE HAS REACHED AN AGE OF THREE CURING DAYS.

FOR EVAZOTE JOINT SEALS, SEE SPECIAL PROVISIONS.

THE NOMINAL UNCOMPRESSED SEAL WIDTH OF THE EVAZOTE JOINT SEAL SHALL BE 2½".

FOR ELASTOMERIC CONCRETE, SEE SPECIAL PROVISIONS.

BILL OF MATERIAL

APPROACH SLAB AT EB #1

BAR	NO.	SIZE	TYPE	LENGTH	WEIGHT
* A1	50	#4	STR	25'-2"	841
A2	50	#4	STR	25'-0"	835
* B1	95	#5	STR	23'-8"	2345
B2	95	#6	STR	24'-8"	3520
REINFORCING STEEL				LBS.	4355
* EPOXY COATED REINFORCING STEEL				LBS.	3186
CLASS AA CONCRETE				C. Y.	44.6

APPROACH SLAB AT EB #2

BAR	NO.	SIZE	TYPE	LENGTH	WEIGHT
* A1	50	#4	STR	25'-2"	841
A2	50	#4	STR	25'-0"	835
* B1	95	#5	STR	23'-8"	2345
B2	95	#6	STR	24'-8"	3520
REINFORCING STEEL				LBS.	4355
* EPOXY COATED REINFORCING STEEL				LBS.	3186
CLASS AA CONCRETE				C. Y.	44.6

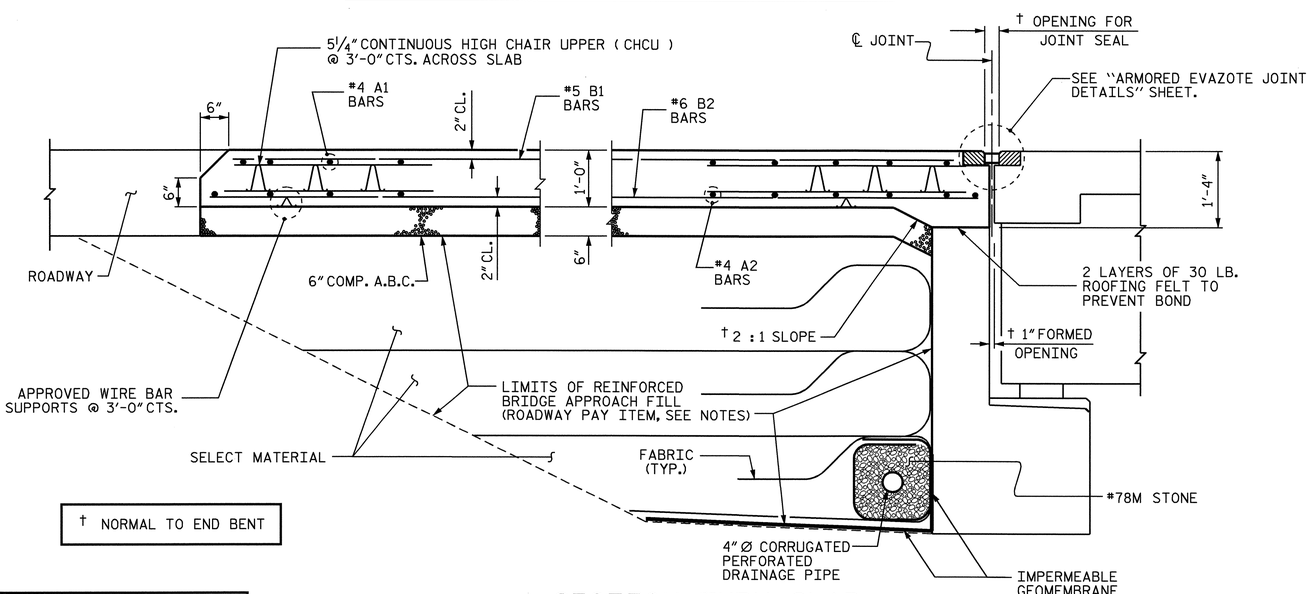

† NORMAL TO END BENT

SECTION THRU SLAB

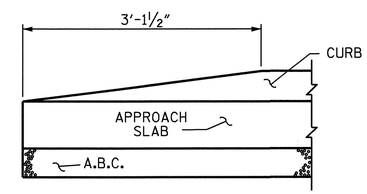

END OF CURB WITHOUT SHOULDER BERM GUTTER

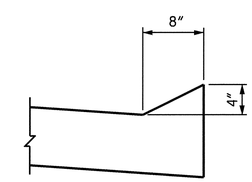

SECTION N-N

CURB DETAILS

PROJECT NO. R-2417 C

LEE COUNTY

STATION: 615+26.51-LREV-

SHEET 1 OF 2

STATE OF NORTH CAROLINA
DEPARTMENT OF TRANSPORTATION
RALEIGH

BRIDGE APPROACH SLAB
FOR FLEXIBLE PAVEMENT

(SBL)

NORTH CAROLINA PROFESSIONAL SEAL 029441 ENGINEER KRISTY W. ALFORD
8/13/09

REVISIONS						SHEET NO.
NO.	BY:	DATE:	NO.	BY:	DATE:	S-63
1			3			TOTAL SHEETS
2			4			104

ASSEMBLED BY : A. V. ROYAL	DATE : 09/08		
CHECKED BY : M. L. BROWN	DATE : 11/08		
DRAWN BY : EEM 3/95	REV. 7/10/01	LES/RDR	
CHECKED BY : VAP 3/95	REV. 5/7/03R	RWW/JTE	
	REV. 5/1/06R	KMM/GM	

03-AUG-2009 09:15
k:\structures\str_2\Misc_draw\R2417C_sd_AS_STR.#2.dgn
kalford

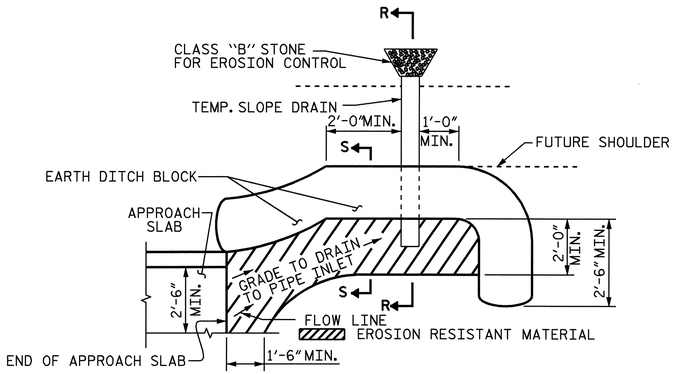

NOTE: IMMEDIATELY AFTER THE CONSTRUCTION OF THE APPROACH SLAB, THE CONTRACTOR SHALL PROVIDE TEMPORARY BERM AND SLOPE DRAIN. CONTRACTOR SHALL GRADE TO PIPE INLET AND PROVIDE EROSION RESISTANT MATERIAL AS SHOWN. THE EROSION RESISTANT MATERIAL SHALL BE EITHER 1) ASPHALT PLANT MIX, TYPE 1 OR TYPE 2, MIN. 2" DEPTH, 2) EROSION CONTROL MAT, OR 3) CONCRETE, AS DIRECTED BY THE ENGINEER. THE SLOPE DRAIN SHALL CONSIST OF A NON-PERFORATED TEMPORARY DRAINAGE PIPE, 12 INCHES IN DIAMETER.

PLAN VIEW

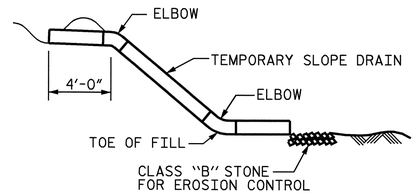

SECTION R-R

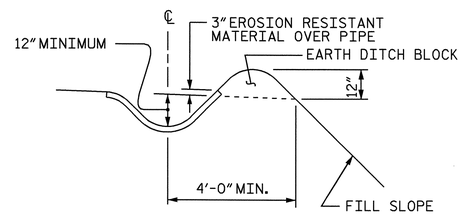

SECTION S-S

TEMPORARY BERM AND SLOPE DRAIN DETAILS

(TO BE USED WHEN SHOULDER BERM GUTTER IS REQUIRED)

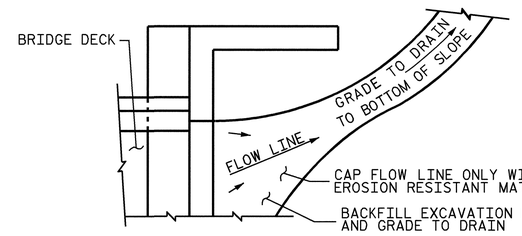

NOTE: IF THE APPROACH SLAB IS NOT CONSTRUCTED IMMEDIATELY AFTER THE BACKFILLING OF THE END BENT EXCAVATION, GRADE TO DRAIN TO THE BOTTOM OF THE SLOPE AND PROVIDE EROSION RESISTANT MATERIAL, SUCH AS FIBERGLASS ROVING OR AS DIRECTED BY THE ENGINEER TO PREVENT SOIL EROSION AND TO PROTECT THE AREA ADJACENT TO THE STRUCTURE. THE CONTRACTOR WILL BE REQUIRED TO REMOVE THESE MATERIALS PRIOR TO CONSTRUCTION OF THE APPROACH SLAB.

TEMPORARY DRAINAGE DETAIL

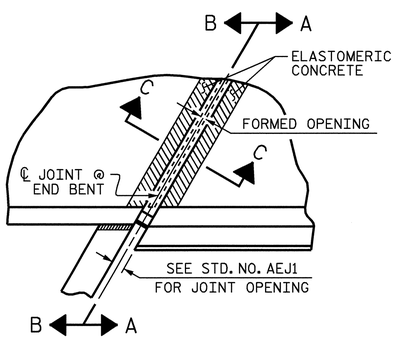

PLAN

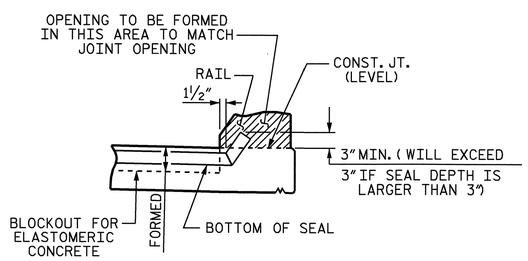

SECTION A-A

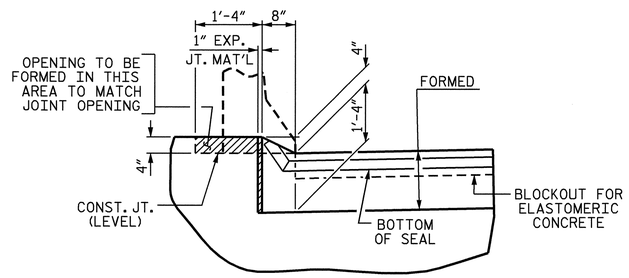

SECTION B-B

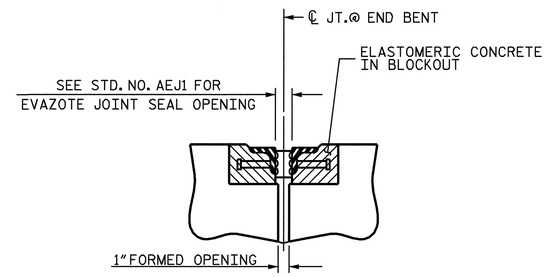

SECTION C-C

ARMORED EVAZOTE JOINT SEAL

NOTE: EVAZOTE JOINT SEAL TO BE CUT, HEAT WELDED AND TURNED UP PARALLEL TO SLOPED FACE OF THE BARRIER RAIL.

JOINT SEAL DETAILS @ END BENT

END BENT NO.1 SHOWN, END BENT No.2 SIMILAR

PROJECT NO. R-2417 C

LEE COUNTY

STATION: 615+26.51-LREV-

SHEET 2 OF 2

STATE OF NORTH CAROLINA
DEPARTMENT OF TRANSPORTATION
RALEIGH

STANDARD

BRIDGE APPROACH SLAB DETAILS

(SBL)

NORTH CAROLINA PROFESSIONAL SEAL 029441 ENGINEER KRISTY W. ALFORD

8/3/09

REVISIONS						SHEET NO.
NO.	BY:	DATE:	NO.	BY:	DATE:	S-64
1			3			TOTAL SHEETS
2			4			104

STD. NO. BAS10

ASSEMBLED BY : A. V. ROYAL		DATE : 09/08	
CHECKED BY : M. L. BROWN		DATE : 11/08	
DRAWN BY : FCJ	11/88	REV. 10/17/00	RWW/LES
CHECKED BY : ARB	11/88	REV. 5/7/03	RWW/JTE
		REV. 5/1/06R	MAA/KMM

03-AUG-2009 14:08
k:\structures\str_2\misc_draw\r2417c_sd_as_str.#2.dgn
kalford

STR. #2

F.A. PROJECT No. STM-0421 (50)

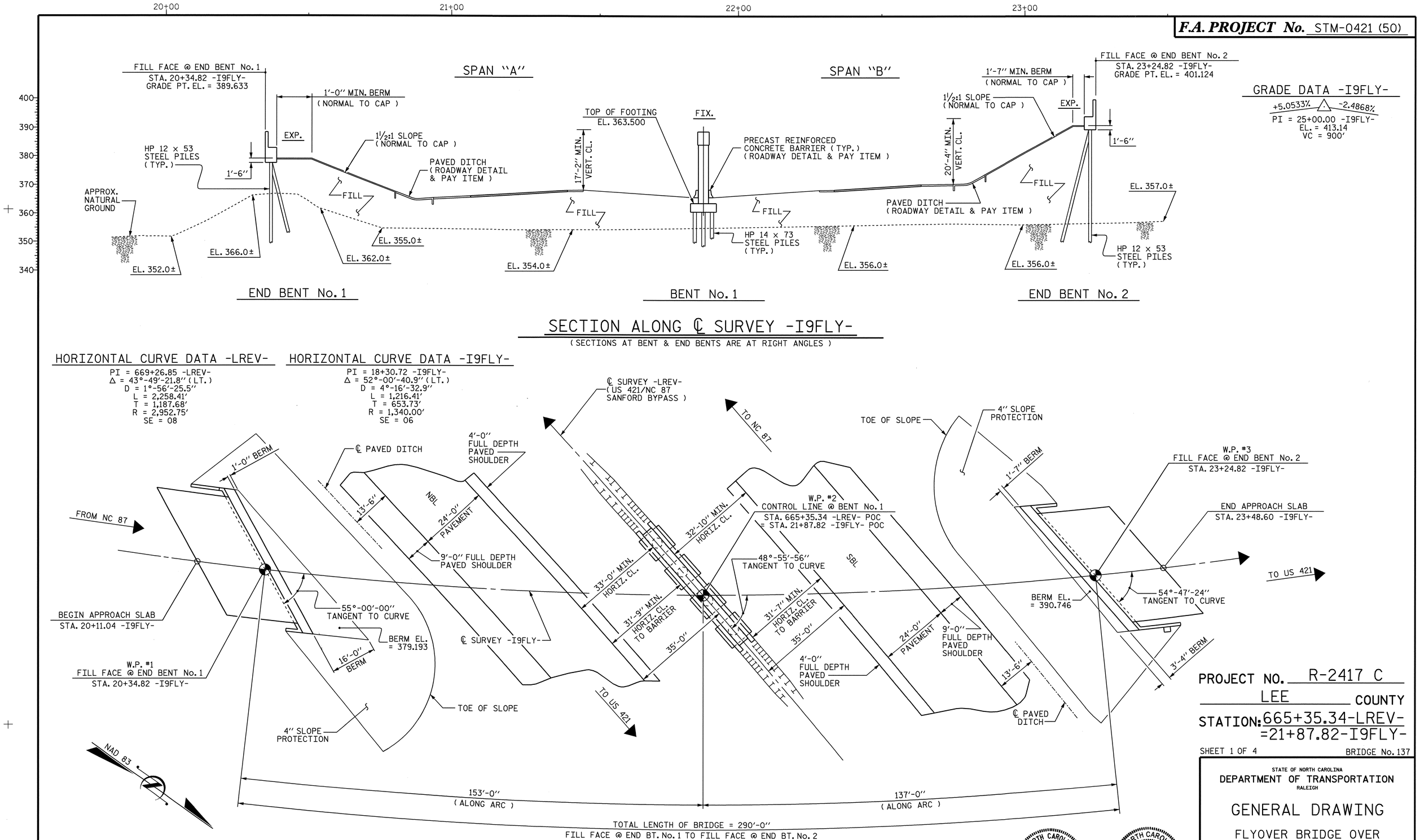

PROJECT NO. R-2417 C

LEE COUNTY

STATION: 665+35.34-LREV-
=21+87.82-I9FLY-

SHEET 1 OF 4

BRIDGE No. 137

STATE OF NORTH CAROLINA
DEPARTMENT OF TRANSPORTATION
RALEIGH

GENERAL DRAWING

FLYOVER BRIDGE OVER
US 421/NC 87 SANFORD BYPASS
BETWEEN US 421 AND NC 87

NORTH CAROLINA PROFESSIONAL SEAL 11268 ENGINEER BETSY S. COX — 8-19-09

NORTH CAROLINA PROFESSIONAL SEAL 029441 ENGINEER KRISTY W. ALFORD — 8/17/09

REVISIONS						SHEET NO.
NO.	BY:	DATE:	NO.	BY:	DATE:	S-65
1			3			TOTAL SHEETS
2			4			104

DRAWN BY : MIKE BRITT DATE : 4-6-09
CHECKED BY : D.G. ELY DATE : 4-21-09

13-AUG-2009 12:30
k:\structures\str_3\gen_draw\r2417c_str3_gd.dgn
kalford

STR. #3

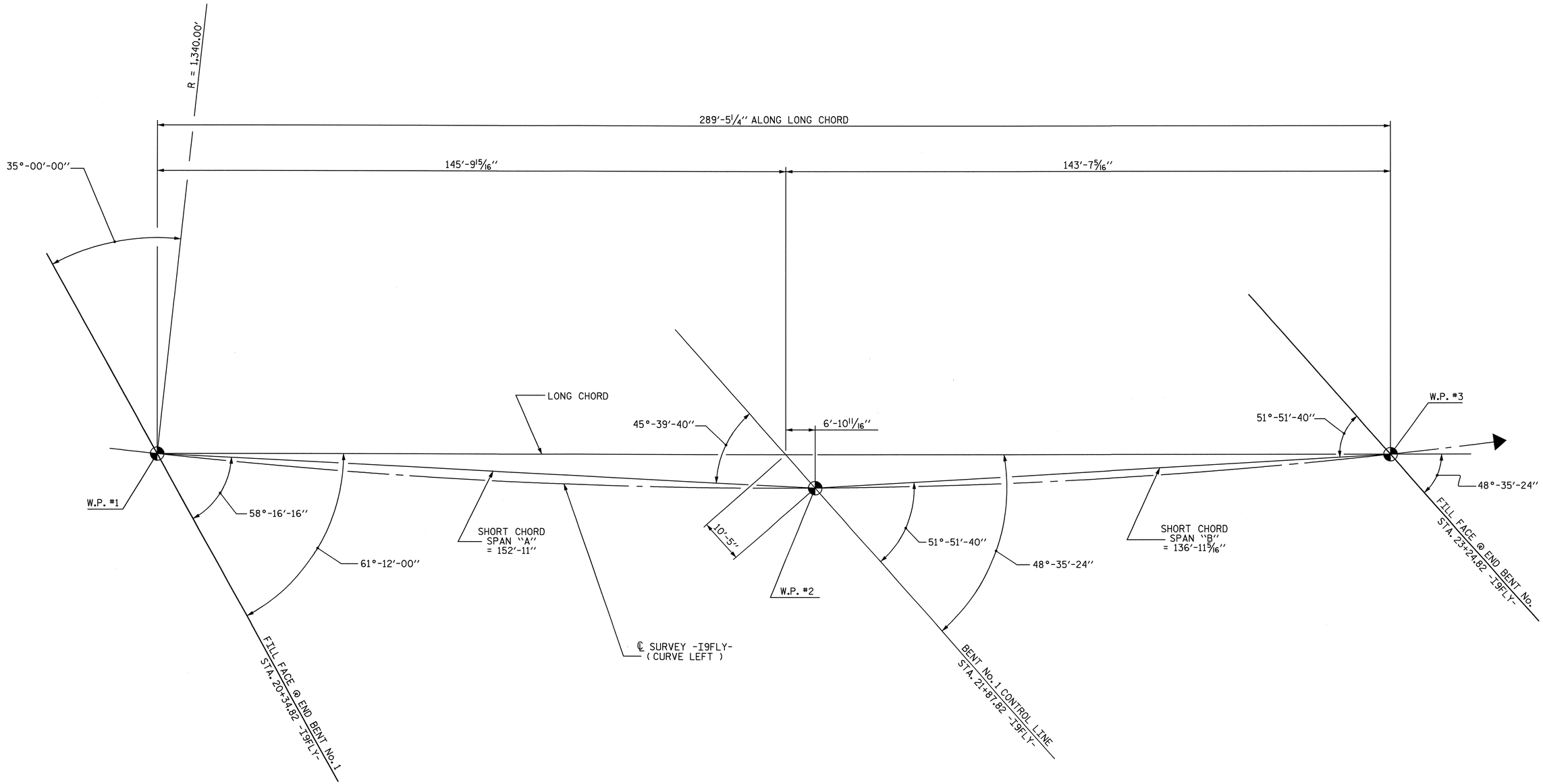

LONG CHORD LAYOUT

HORIZONTAL CURVE DATA -I9FLY-

PI = 18+30.72 -I9FLY-
Δ = 52°-00'-40.9" (LT.)
D = 4°-16'-32.9"
L = 1,216.41'
T = 653.73'
R = 1,340.00'
SE = 06

PROJECT NO. R-2417 C
LEE COUNTY
STATION: 665+35.34-LREV-

SHEET 2 OF 4

STATE OF NORTH CAROLINA
DEPARTMENT OF TRANSPORTATION
RALEIGH

GENERAL DRAWING

FLYOVER BRIDGE OVER
US 421/NC 87 SANFORD BYPASS
BETWEEN US 421 AND NC 87

NORTH CAROLINA PROFESSIONAL SEAL 029441 ENGINEER KRISTY W. ALFORD
8/19/09

REVISIONS						SHEET NO.
NO.	BY:	DATE:	NO.	BY:	DATE:	S-66
1			3			TOTAL SHEETS
2			4			104

DRAWN BY : MIKE BRITT DATE : 4-9-09
CHECKED BY : D.G. ELY DATE : 4-21-09

13-AUG-2009 12:30
K:\structures\str_3\gen_draw\r2417c_str3_gd.dgn
kalford

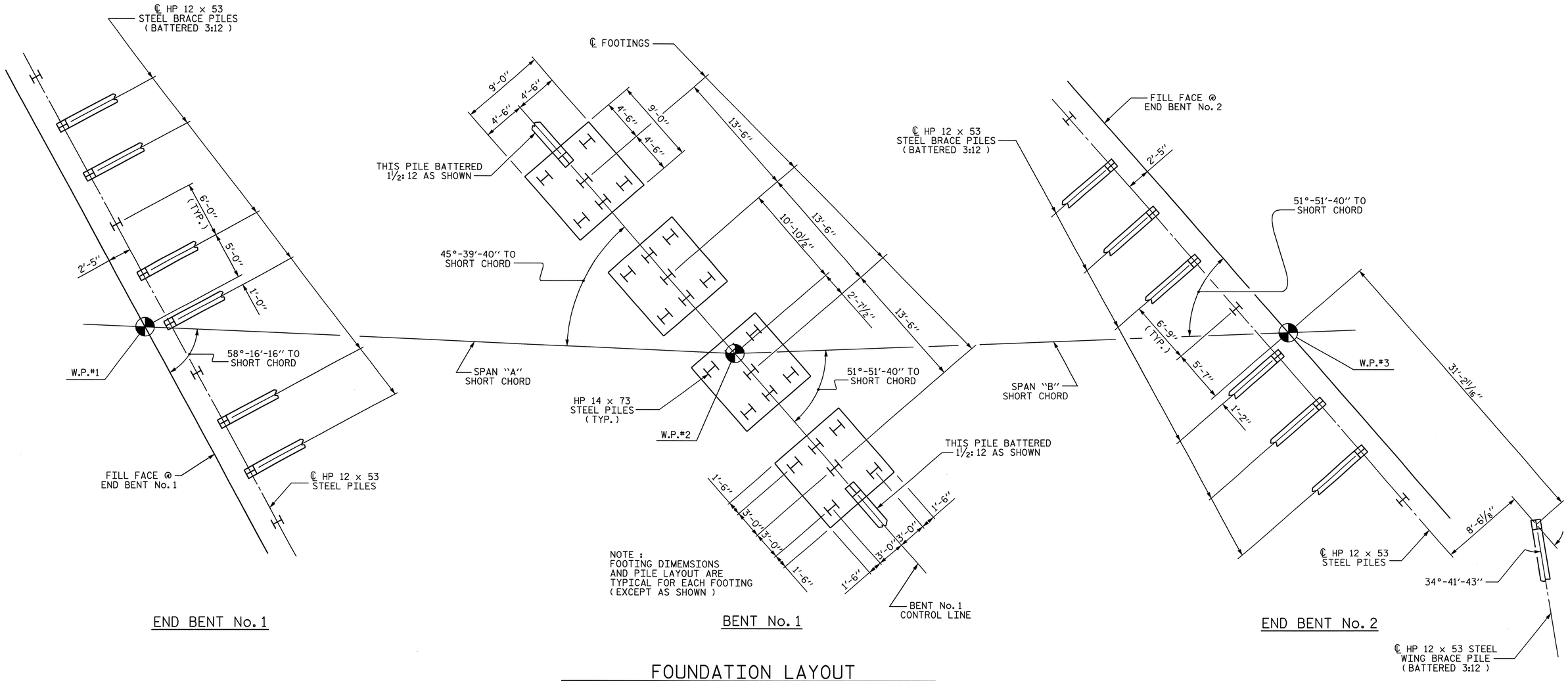

FOUNDATION LAYOUT

(DIMENSIONS LOCATING PILES ARE TO THE PILE CENTERLINE AT THE BOTTOM OF THE CAP & FOOTING)

PROJECT NO. R-2417 C

LEE COUNTY

STATION: 665+35.34-LREV-

SHEET 3 OF 4

STATE OF NORTH CAROLINA
DEPARTMENT OF TRANSPORTATION
RALEIGH

GENERAL DRAWING

FLYOVER BRIDGE OVER
US 421/NC 87 SANFORD BYPASS
BETWEEN US 421 AND NC 87

NORTH CAROLINA PROFESSIONAL SEAL 029441 ENGINEER KRISTY W. ALFORD

REVISIONS						SHEET NO.
NO.	BY:	DATE:	NO.	BY:	DATE:	S-67
1			3			TOTAL SHEETS
2			4			104

DRAWN BY : MIKE BRITT DATE : 4-8-09
CHECKED BY : D.G. ELY DATE : 4-21-09

13-AUG-2009 12:30
k:\structures\str_3\gen_draw\r2417c_str3_gd.dgn
kalford

STR. #3

BM #6
R/R -SPIKE IN BASE OF POWER POLE (CP&L #6DQ88)
-I9FLY- STA. 37+04.08 218.32' LT
ELEV.= 399.14'

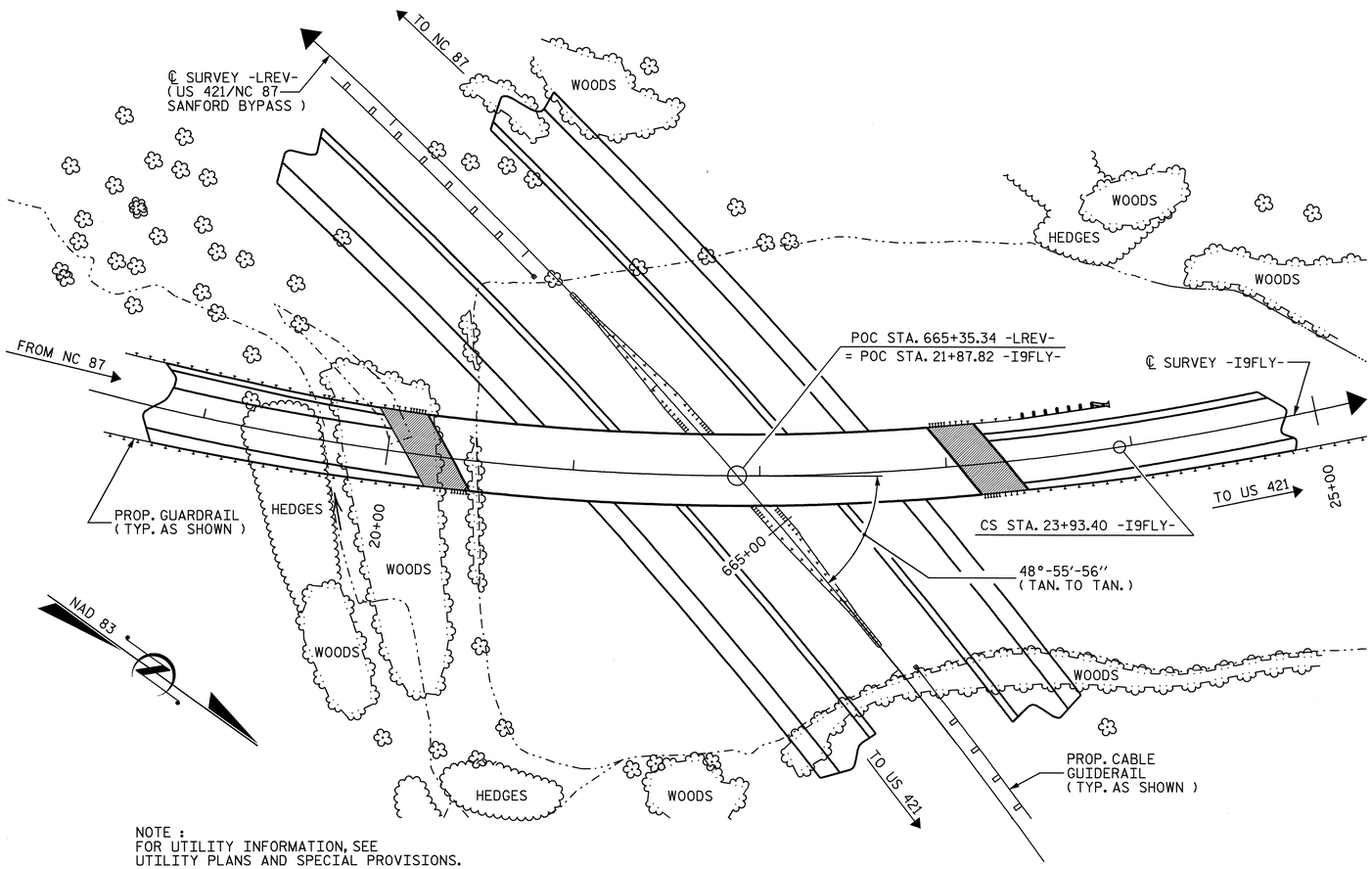

NOTE :
FOR UTILITY INFORMATION, SEE
UTILITY PLANS AND SPECIAL PROVISIONS.

LOCATION SKETCH

NOTES :

ASSUMED LIVE LOAD = HS20 OR ALTERNATE LOADING, EXCEPT THAT THE STEEL GIRDERS HAVE BEEN DESIGNED FOR HS25.

THIS BRIDGE HAS BEEN DESIGNED IN ACCORDANCE WITH THE REQUIREMENTS OF THE "STANDARD SPECIFICATIONS FOR SEISMIC DESIGN OF HIGHWAY BRIDGES", FOR SEISMIC PERFORMANCE CATEGORY A.

FOR OTHER DESIGN DATA AND GENERAL NOTES, SEE SHEET SN.

REMOVABLE FORMS MAY BE USED IN LIEU OF METAL STAY-IN-PLACE FORMS IN ACCORDANCE WITH ARTICLE 420-3 OF THE STANDARD SPECIFICATIONS.

THE CONTRACTOR SHALL PROVIDE INDEPENDENT ASSURANCE SAMPLES OF REINFORCING STEEL AS FOLLOWS: FOR PROJECTS REQUIRING UP TO 400 TONS OF REINFORCING STEEL, ONE 30 INCH SAMPLE OF EACH SIZE BAR USED, AND FOR PROJECTS REQUIRING OVER 400 TONS OF REINFORCING STEEL, TWO 30 INCH SAMPLES OF EACH SIZE BAR USED. THE BARS FROM WHICH THE SAMPLES ARE TAKEN MUST THEN BE SPLICED WITH REPLACEMENT BARS OF THE SIZE AND LENGTH OF THE SAMPLE, PLUS A MINIMUM LAP SPLICE OF THIRTY BAR DIAMETERS.

NEEDLE BEAMS WILL NOT BE ALLOWED UNLESS OTHERWISE CALLED FOR ON THE PLANS OR APPROVED BY THE ENGINEER.

FOR SUBMITTAL OF WORKING DRAWINGS, SEE SPECIAL PROVISIONS.

FOR FALSEWORK AND FORMWORK, SEE SPECIAL PROVISIONS.

FOR CRANE SAFETY, SEE SPECIAL PROVISIONS.

THIS BRIDGE HAS BEEN DESIGNED BY THE STRENGTH DESIGN METHOD AS SPECIFIED IN AASHTO STANDARD SPECIFICATIONS.

DRIVE PILES AT END BENT No. 1 AND END BENT No. 2 TO A REQUIRED BEARING CAPACITY OF 120 TONS PER PILE. THE REQUIRED BEARING CAPACITY IS EQUAL TO THE ALLOWABLE BEARING CAPACITY WITH A MINIMUM FACTOR OF SAFETY OF TWO.

DRIVE PILES AT BENT No. 1 TO A REQUIRED BEARING CAPACITY OF 140 TONS PER PILE. THE REQUIRED BEARING CAPACITY IS EQUAL TO THE ALLOWABLE BEARING CAPACITY WITH A MINIMUM FACTOR OF SAFETY OF TWO.

WORK ON BENT No. 1 SHALL NOT BE STARTED UNTIL ROADWAY SECTION HAS BEEN PLACED.

ALL STRUCTURAL STEEL SHALL BE AASHTO M270 GRADE 50W AND PAINTED IN ACCORDANCE WITH SYSTEM 4 OF ARTICLE 442-7 OF THE STANDARD SPECIFICATIONS UNLESS OTHERWISE NOTED ON THE PLANS.

FOR SHIPPING STEEL STRUCTURAL MEMBERS, SEE SPECIAL PROVISIONS.

FOR GROUT FOR STRUCTURES, SEE SPECIAL PROVISIONS.

FOR CURING CONCRETE, SEE SPECIAL PROVISIONS.

FOR ADHESIVELY ANCHORED ANCHOR BOLTS OR DOWELS, SEE SPECIAL PROVISIONS.

FOR DIRECT TENSION INDICATORS, SEE SPECIAL PROVISIONS.

FOR PILES, SEE SPECIAL PROVISIONS.

FOR PLACING LOAD ON STRUCTURE MEMBERS, SEE SPECIAL PROVISIONS.

TOTAL BILL OF MATERIAL

	FOUNDATION EXCAVATION	REINFORCED CONCRETE DECK SLAB	GROOVING BRIDGE FLOORS	CLASS A CONCRETE	BRIDGE APPROACH SLABS	REINFORCING STEEL	SPIRAL COLUMN REINFORCING STEEL	STRUCTURAL STEEL	HP 12 x 53 STEEL PILES		HP 14 x 73 STEEL PILES		CONCRETE BARRIER RAIL	4" SLOPE PROTECTION	POT BEARINGS	EVAZOTE JOINT SEALS
	LUMP SUM	SQ. FT.	SQ. FT.	CU. YDS.	LUMP SUM	LBS.	LBS.	APPROX. LBS.	No.	LIN. FT.	No.	LIN. FT.	LIN. FT.	SQ. YDS.	LUMP SUM	LUMP SUM
SUPERSTRUCTURE		11,830.0	11,621.7		LUMP SUM			524,000					573.57		LUMP SUM	LUMP SUM
END BENT No. 1				51.2		6,928			10	400				405		
BENT No. 1	LUMP SUM			102.9		14,253	2,256				28	700				
END BENT No. 2				54.5		7,244			10	550				495		
TOTAL	LUMP SUM	11,830.0	11,621.7	208.6	LUMP SUM	28,425	2,256	524,000	20	950	28	700	573.57	900	LUMP SUM	LUMP SUM

PROJECT NO. R-2417 C
LEE COUNTY
STATION: 665+35.34-LREV-

SHEET 4 OF 4

STATE OF NORTH CAROLINA
DEPARTMENT OF TRANSPORTATION
RALEIGH

GENERAL DRAWING

FLYOVER BRIDGE OVER
US 421/NC 87 SANFORD BYPASS
BETWEEN US 421 AND NC 87

NORTH CAROLINA PROFESSIONAL SEAL 029441 ENGINEER KRISTY W. ALFORD
8/27/09

REVISIONS						SHEET NO.
NO.	BY:	DATE:	NO.	BY:	DATE:	S-68
1			3			TOTAL SHEETS
2			4			104

DRAWN BY : MIKE BRITT DATE : 4-9-09
CHECKED BY : D.G. ELY DATE : 4-22-09

27-AUG-2009 09:13
k:\structures\str_3\gen_draw\r2417c_str3_gd.dgn
kalford

STR. #3

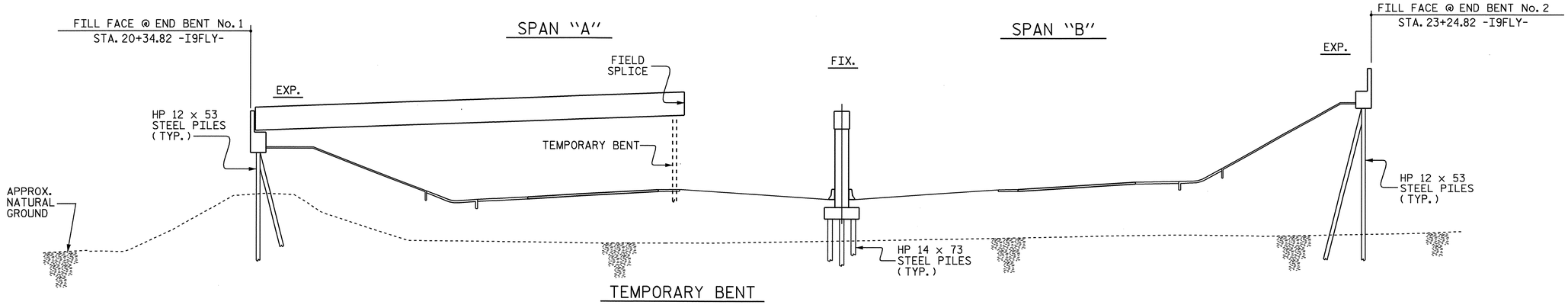

STAGE I GIRDER ERECTION

(SECTIONS AT BENT & END BENTS ARE AT RIGHT ANGLES)

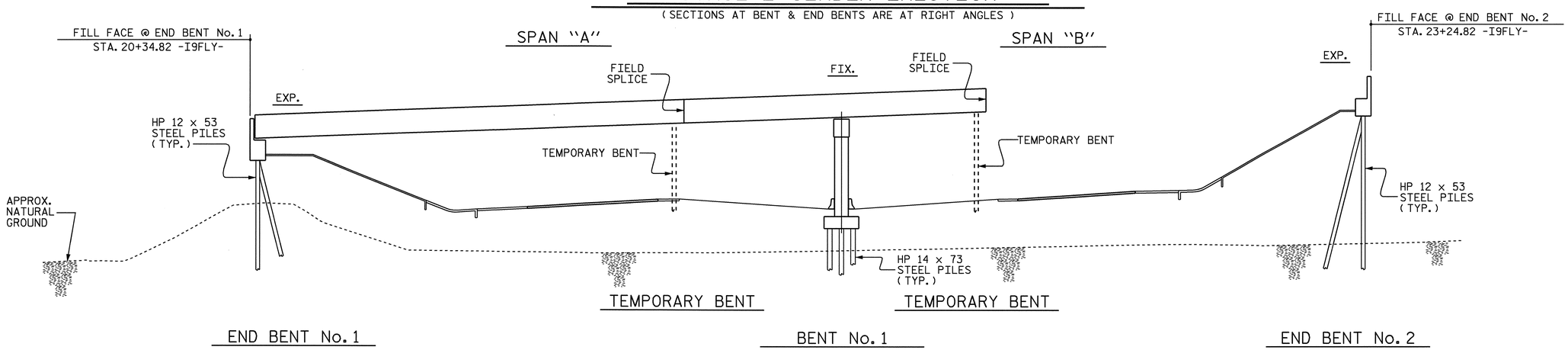

STAGE II GIRDER ERECTION

(SECTIONS AT BENT & END BENTS ARE AT RIGHT ANGLES)

ERECTION NOTES

ERECT A MINIMUM OF TWO GIRDERS WITH ALL DIAPHRAGMS/CROSSFRAMES BETWEEN THE GIRDERS IN PLACE AND THE BOLTS TIGHTENED PRIOR TO RELEASING THE GIRDERS.

ERECT EACH SUBSEQUENT GIRDER WITH DIAPHRAGMS/CROSSFRAMES CONNECTING TO THE ADJACENT PREVIOUSLY ERECTED GIRDER AND TIGHTEN ALL BOLTS BEFORE RELEASING THE GIRDER.

THE STRUCTURAL STEEL SHALL BE SUPPORTED DURING ERECTION IN ITS CAMBERED POSITION. A MINIMUM OF ONE TEMPORARY BENT SHALL BE USED IN BOTH SPANS "A" & "B".

PLACEMENT OF TEMPORARY BENTS SHALL BE COORDINATED WITH TRAFFIC PHASING REQUIREMENTS. SEE TRAFFIC CONTROL PLANS.

TEMPORARY BENTS SHALL REMAIN IN PLACE UNTIL ALL DIAPHRAGMS/CROSSFRAMES ARE IN PLACE AND ALL HIGH STRENGTH BOLTS ARE TIGHTENED.

TEMPORARY BENTS SHALL PROVIDE BEARING AT CONNECTOR PLATE LOCATIONS. WHEN CONNECTOR PLATES ARE USED AS TEMPORARY BEARING STIFFENERS, DIAPHRAGMS MUST BE ATTACHED.

THE CONTRACTOR'S ERECTION PLANS SHALL INCLUDE A METHOD OF TEMPORARY BENT REMOVAL THAT WILL UNIFORMLY TRANSFER THE STRUCTURAL WEIGHT TO THE DIAPHRAGMS/CROSSFRAMES AND THE GIRDERS WILL REMAIN IN THE CAMBERED POSITIONS.

PLANS FOR TEMPORARY BENT ERECTION AND REMOVAL SHALL BE SUBMITTED TO THE ENGINEER FOR REVIEW.

THE CONTRACTOR IS RESPONSIBLE FOR DESIGNING THE TEMPORARY BENTS. THE DESIGNS SHALL BE COMPLETED BY A PROFESSIONAL ENGINEER REGISTERED IN THE STATE OF NORTH CAROLINA. THE CONTRACTOR SHALL SUBMIT SIGNED AND SEALED WORKING DRAWINGS AND CALCULATIONS FOR APPROVAL BY THE ENGINEER.

DURING THE GIRDER ERECTION PROCEDURE, THE CONTRACTOR IS RESPONSIBLE FOR PROVIDING TEMPORARY LATERAL BRACING AND OTHER MEANS OF SUPPORT, AS REQUIRED, TO ENSURE STABILITY OF THE GIRDERS, AVOID UPLIFT OF THE GIRDERS AT THE TEMPORARY BENTS AND TO ENSURE PLUMBNESS OF THE GIRDERS IN THE FINAL CONDITION.

NO SEPARATE MEASUREMENT OR PAYMENT WILL BE MADE FOR PROVIDING THE TEMPORARY BENT. THE COST FOR ALL MATERIALS, EQUIPMENT, TOOLS, LABOR AND ANY INCIDENTALS NECESSARY TO PROVIDE THE TEMPORARY BENT SHALL BE CONSIDERED INCIDENTAL TO THE LUMP SUM BID PRICE FOR STRUCTURAL STEEL.

THE CONTRACTOR MAY SUBMIT AN ALTERNATE ERECTION METHOD TO THE ENGINEER FOR REVIEW AND APPROVAL.

NORTH CAROLINA PROFESSIONAL SEAL 029441 ENGINEER KRISTY W. ALFORD

8/14/09

PROJECT NO. R-2417 C
LEE COUNTY
STATION: 665+35.34-LREV-

STATE OF NORTH CAROLINA
DEPARTMENT OF TRANSPORTATION
RALEIGH

GIRDER ERECTION DETAILS

REVISIONS						SHEET NO.
NO.	BY:	DATE:	NO.	BY:	DATE:	S-69
1			3			TOTAL SHEETS
2			4			104

DRAWN BY : MIKE BRITT DATE : 7-22-09
CHECKED BY : K.W. ALFORD DATE : 7-23-09

13-AUG-2009 08:08
k:\structures\str_3\gen_draw\r2417c_str3_erection.dgn
kalford

STR. #3

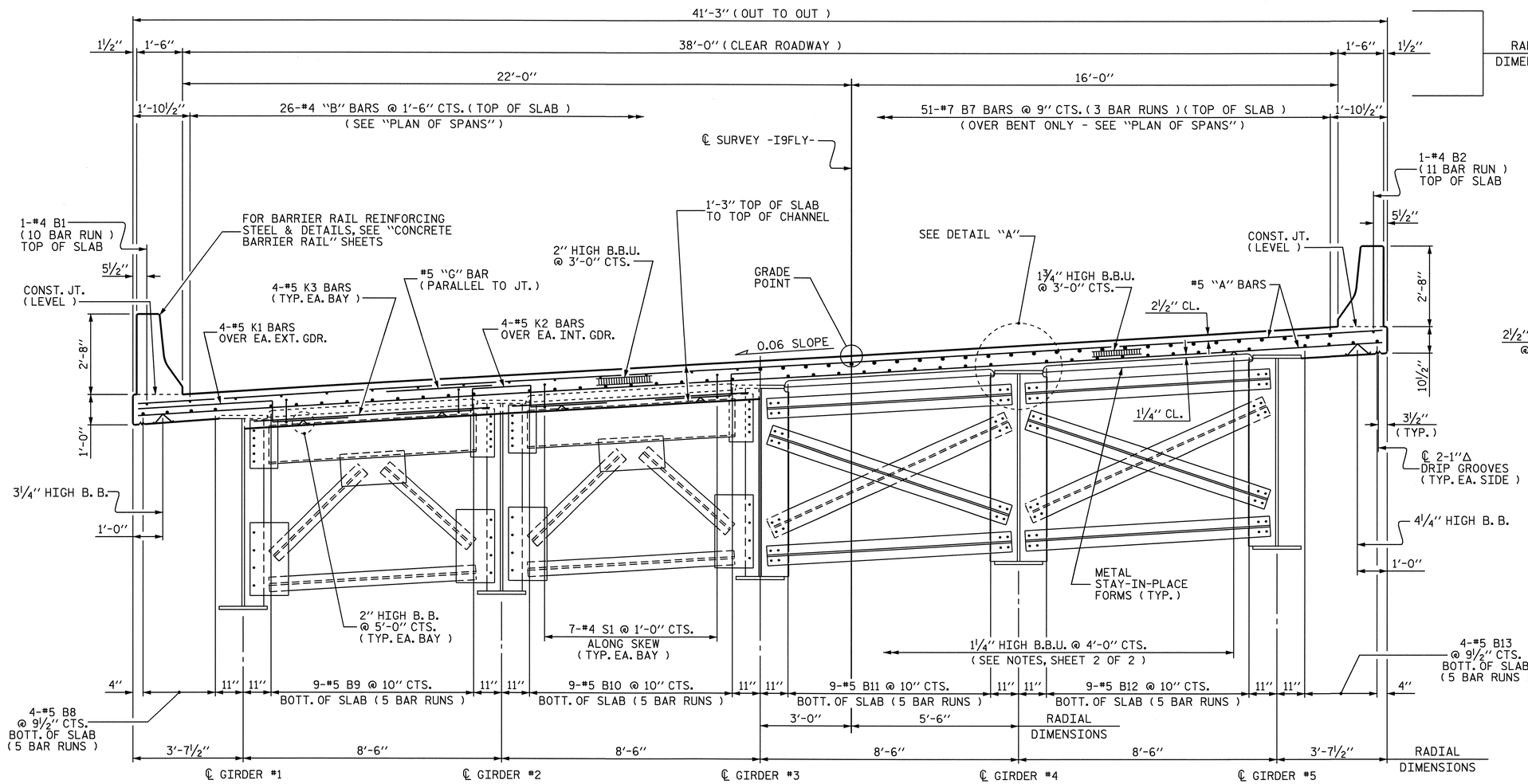

HALF TYPICAL SECTION

SHOWING END BENT DIAPHRAGMS (D1)

HALF TYPICAL SECTION

SHOWING BENT DIAPHRAGMS (D2)

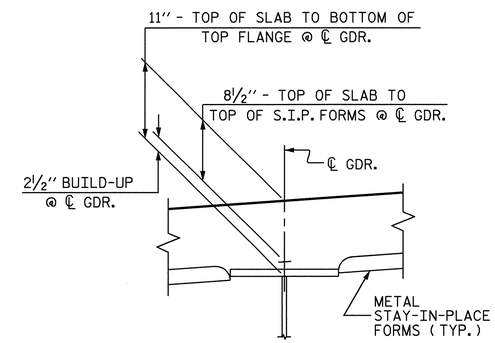

DETAIL "A"

PROJECT NO. R-2417 C

LEE COUNTY

STATION: 665+35.34-LREV-

SHEET 1 OF 2

STATE OF NORTH CAROLINA
DEPARTMENT OF TRANSPORTATION
RALEIGH

SUPERSTRUCTURE

TYPICAL SECTIONS

NORTH CAROLINA PROFESSIONAL SEAL 029441 ENGINEER KRISTY W. ALFORD
8/14/09

REVISIONS						SHEET NO.
NO.	BY:	DATE:	NO.	BY:	DATE:	S-70
1			3			TOTAL SHEETS
2			4			104

DRAWN BY : MIKE BRITT DATE : 10-29-08
CHECKED BY : D.G. ELY DATE : 1-28-09

13-AUG-2009 12:50
k:\structures\str_3\Super_Draw\r2417c_str3_ts.dgn
kalford

STR. #3

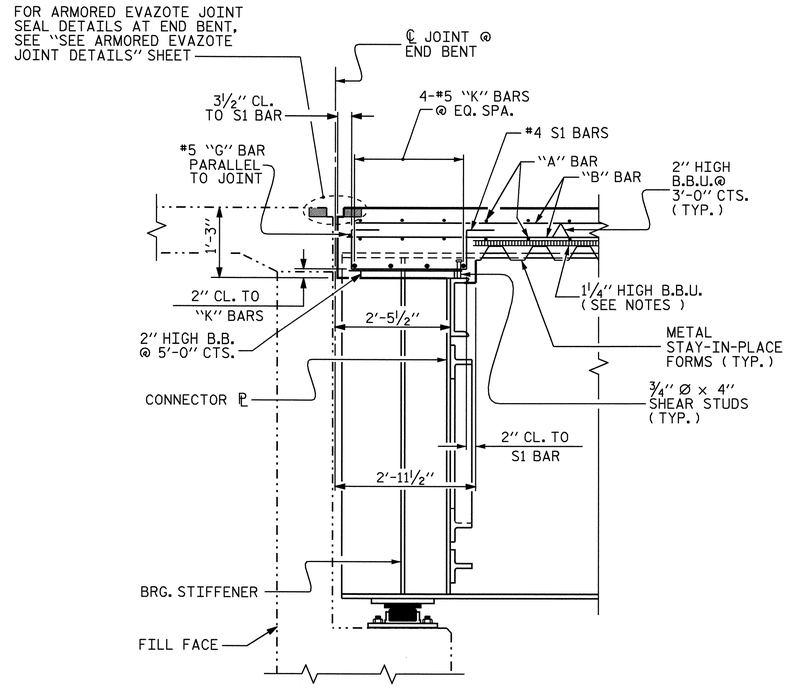

SECTION THRU END BENT DIAPHRAGM (D1)

(SECTION TAKEN NORMAL TO FILL FACE)

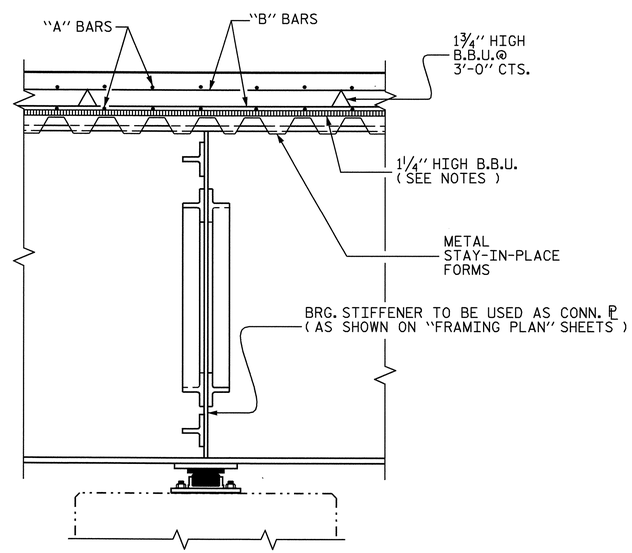

SECTION THRU BENT DIAPHRAGM (D2)

NOTES :

PROVIDE 1¼" HIGH BEAM BOLSTERS UPPER AT 4'-0" CTS. ATOP THE METAL STAY-IN-PLACE FORMS TO SUPPORT THE BOTTOM MAT OF "A" BARS. WHEN USING REMOVABLE FORMS, PROVIDE CONTINUOUS HIGH CHAIRS FOR METAL DECK (C.H.C.M.) @ 4'-0" CTS. WITH A HEIGHT TO SUPPORT THE BOTTOM MAT OF "A" BARS A CLEAR DISTANCE OF 2½" ABOVE THE TOP OF THE REMOVABLE FORM.

METAL STAY-IN-PLACE FORMS SHALL NOT BE WELDED TO GIRDER FLANGES IN THE ZONES REQUIRING CHARPY V-NOTCH TEST. SEE STRUCTURAL STEEL DETAIL SHEETS.

PREVIOUSLY CAST CONCRETE IN A CONTINUOUS UNIT SHALL HAVE ATTAINED A MINIMUM COMPRESSIVE STRENGTH OF 3,000 PSI BEFORE ADDITIONAL CONCRETE IS CAST IN THE UNIT.

BARRIER RAIL IN A CONTINUOUS UNIT SHALL NOT BE CAST UNTIL ALL SLAB CONCRETE IN THE UNIT HAS BEEN CAST AND HAS REACHED A MINIMUM COMPRESSIVE STRENGTH OF 3,000 PSI.

STRUCTURAL STEEL ERECTION IN A CONTINUOUS UNIT SHALL BE COMPLETE BEFORE FALSEWORK OR FORMS ARE PLACED ON THE UNIT.

#5 "G" BAR MAY BE SHIFTED SLIGHTLY, AS NECESSARY, TO CLEAR REINFORCING STEEL AND STIRRUPS.

THE CONTRACTOR MAY, WHEN NECESSARY, PROPOSE A SCHEME FOR AVOIDING INTERFERENCE BETWEEN METAL STAY-IN-PLACE FORM SUPPORTS OR FORMS AND GIRDER STIFFENERS OR CONNECTOR PLATES. THE PROPOSAL SHALL BE INDICATED, AS APPROPRIATE, ON EITHER THE STEEL WORKING DRAWINGS OR THE METAL STAY-IN-PLACE FORM WORKING DRAWINGS.

THE NOMINAL UNCOMPRESSED SEAL WIDTH OF THE EVAZOTE JOINT SEAL SHALL BE 2½" AT END BENTS. FOR EVAZOTE JOINT SEALS, SEE SPECIAL PROVISIONS.

THE CONTRACTOR SHALL ADJUST THE GIRDER BUILDUPS AS NECESSARY TO INCORPORATE A MAXIMUM PERMISSIBLE VARIATION IN POT BEARING DEPTH OF ½", SEE SPECIAL PROVISION FOR POT BEARINGS.

PROJECT NO. R-2417 C
LEE COUNTY
STATION: 665+35.34-LREV-

SHEET 2 OF 2

STATE OF NORTH CAROLINA
DEPARTMENT OF TRANSPORTATION
RALEIGH

SUPERSTRUCTURE

TYPICAL SECTIONS

NORTH CAROLINA PROFESSIONAL SEAL 029441 ENGINEER KRISTY W. ALFORD
8/13/09

REVISIONS						SHEET NO.
NO.	BY:	DATE:	NO.	BY:	DATE:	S-71
1			3			TOTAL SHEETS
2			4			104

DRAWN BY : MIKE BRITT DATE : 10-29-08
CHECKED BY : D.G. ELY DATE : 1-28-09

13-AUG-2009 12:50
k:\structures\str_3\Super_Draw\r2417c_str3_ts.dgn
kalford

STR. #3

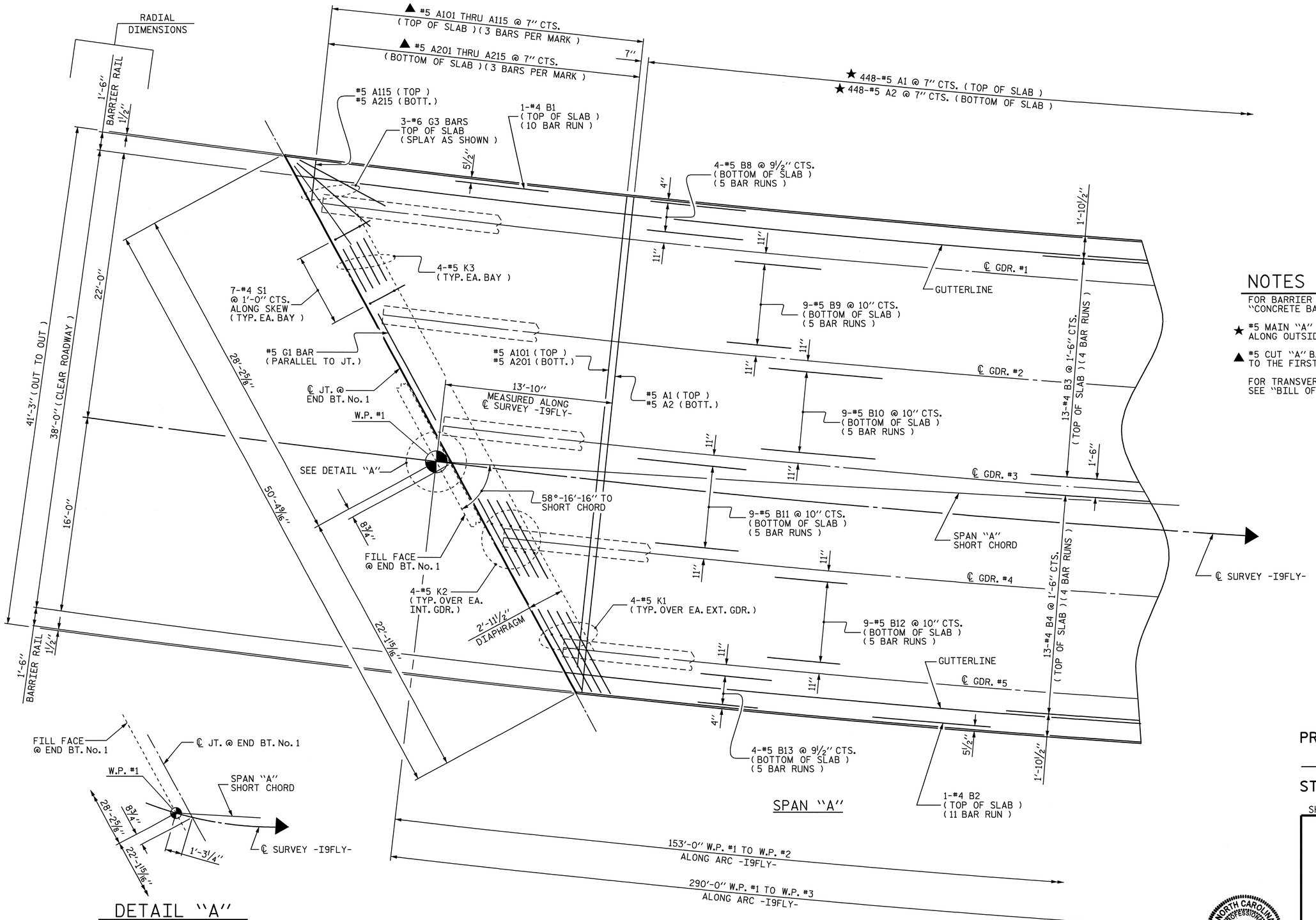

PARTIAL PLAN OF SPAN

DETAIL "A"

NOTES :

FOR BARRIER RAIL REINFORCING STEEL, SEE "CONCRETE BARRIER RAIL" SHEETS.

★ #5 MAIN "A" BARS ARE TO BE PLACED RADIALLY ALONG OUTSIDE RIGHT EDGE OF SUPERSTRUCTURE.

▲ #5 CUT "A" BARS ARE TO BE PLACED PARALLEL TO THE FIRST #5 MAIN "A" BAR.

FOR TRANSVERSE CONSTRUCTION JOINT LOCATIONS, SEE "BILL OF MATERIAL" SHEET.

PROJECT NO. R-2417 C
LEE COUNTY
STATION: 665+35.34-LREV-

SHEET 1 OF 3

STATE OF NORTH CAROLINA
DEPARTMENT OF TRANSPORTATION
RALEIGH

SUPERSTRUCTURE
PLAN OF SPANS

NORTH CAROLINA PROFESSIONAL SEAL 029441 ENGINEER KRISTY W. ALFORD

REVISIONS						SHEET NO.
NO.	BY:	DATE:	NO.	BY:	DATE:	S-72
1			3			TOTAL SHEETS
2			4			104

DRAWN BY : MIKE BRITT DATE : 12-9-08
CHECKED BY : D.G. ELY DATE : 1-29-09

13-AUG-2009 12:51
k:\structures\str_3\Super_Draw\r2417c_str3_ps.dgn
kalford

STR. #3

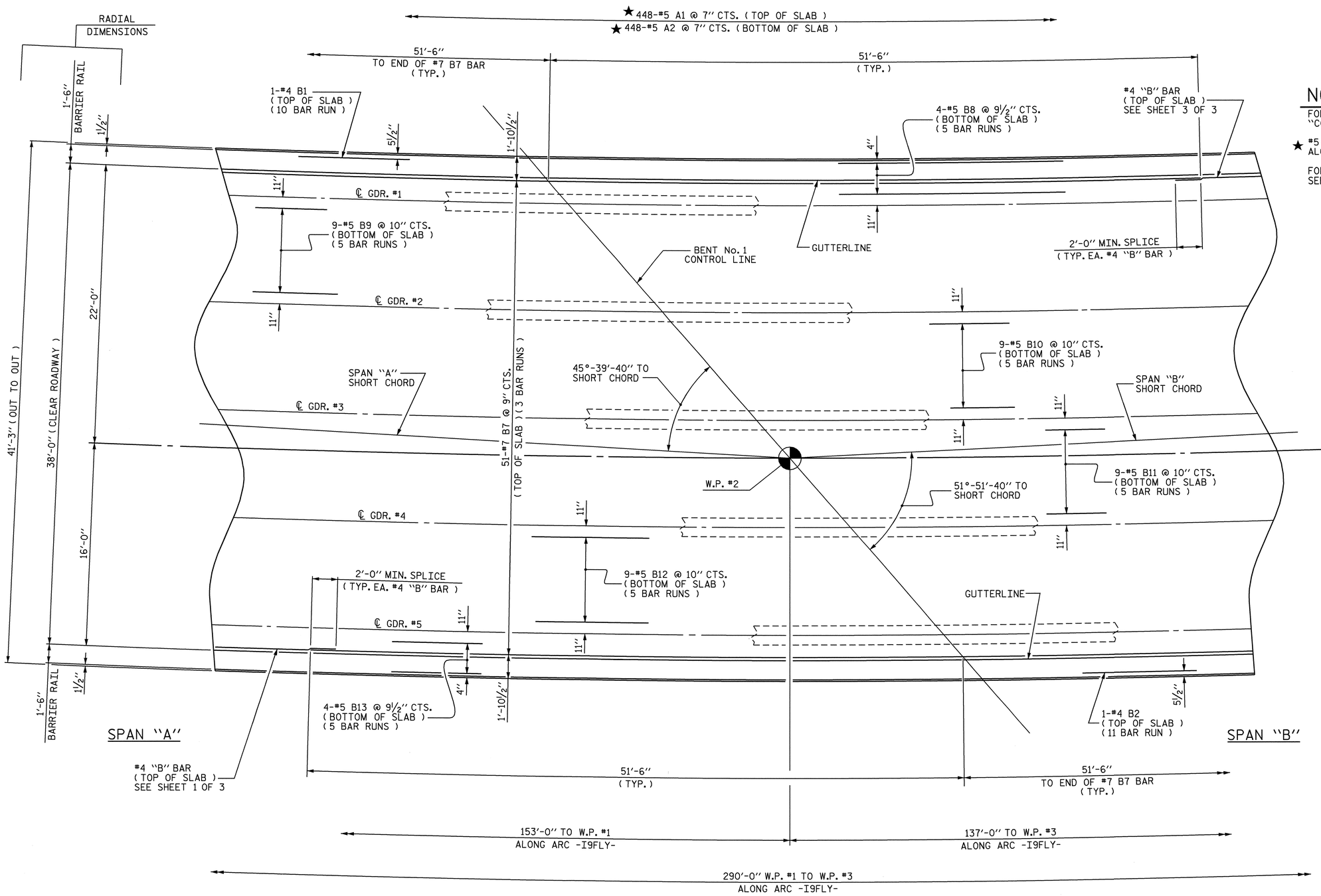

NOTES :

FOR BARRIER RAIL REINFORCING STEEL, SEE "CONCRETE BARRIER RAIL" SHEETS.

★ #5 MAIN "A" BARS ARE TO BE PLACED RADIALLY ALONG OUTSIDE RIGHT EDGE OF SUPERSTRUCTURE.

FOR TRANSVERSE CONSTRUCTION JOINT LOCATIONS, SEE "BILL OF MATERIAL" SHEET.

PARTIAL PLAN OF SPAN

PROJECT NO. R-2417 C
LEE COUNTY
STATION: 665+35.34-LREV-

SHEET 2 OF 3

STATE OF NORTH CAROLINA
DEPARTMENT OF TRANSPORTATION
RALEIGH

SUPERSTRUCTURE
PLAN OF SPANS

NORTH CAROLINA PROFESSIONAL SEAL 029441 ENGINEER KRISTY W. ALFORD

REVISIONS						SHEET NO.
NO.	BY:	DATE:	NO.	BY:	DATE:	S-73
1			3			TOTAL SHEETS
2			4			104

DRAWN BY : MIKE BRITT DATE : 12-9-08
CHECKED BY : D.G. ELY DATE : 1-29-09

13-AUG-2009 12:51
k:\structures\str_3\Super_Draw\r2417c_str3_ps.dgn
kalford

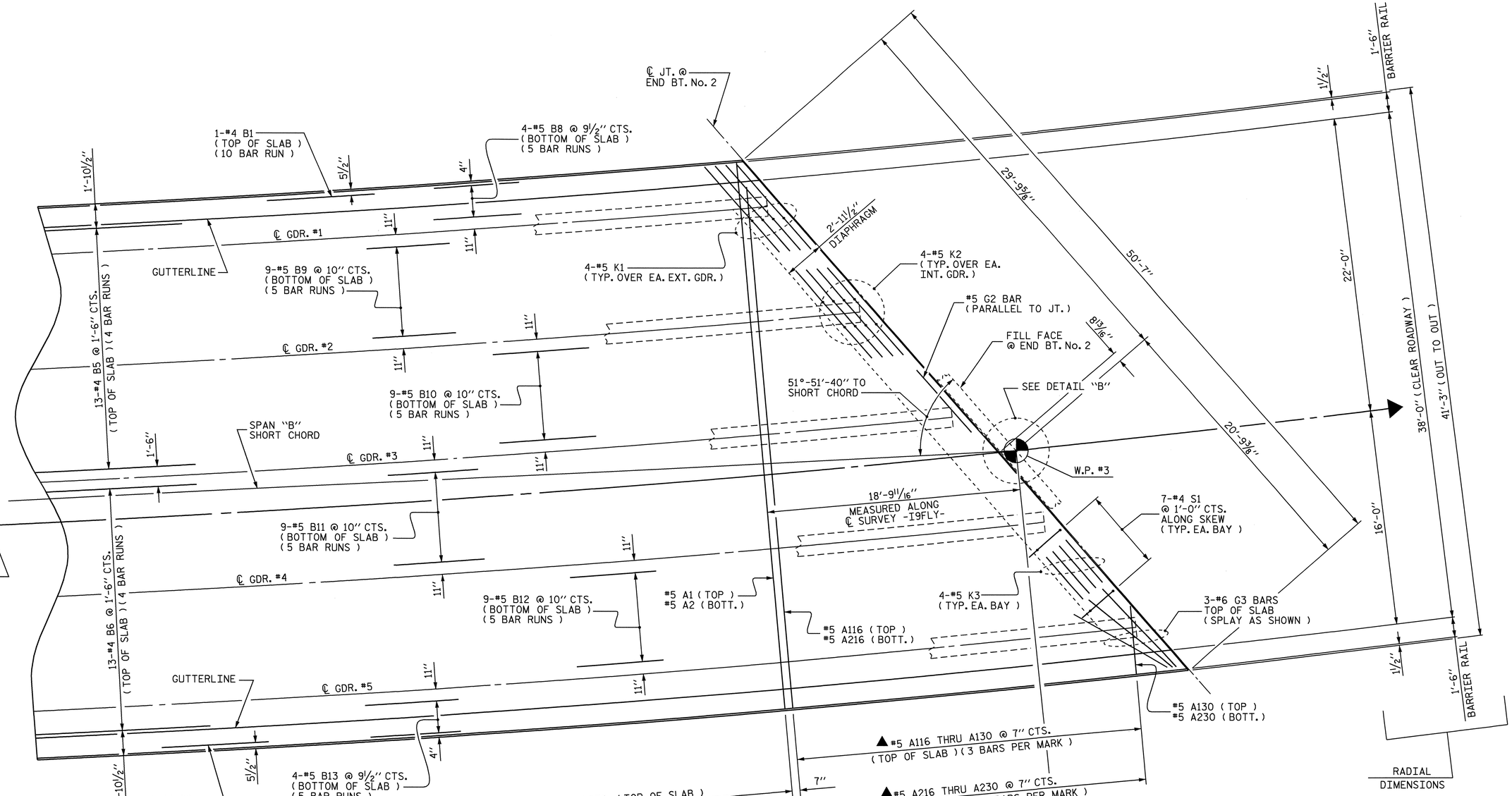

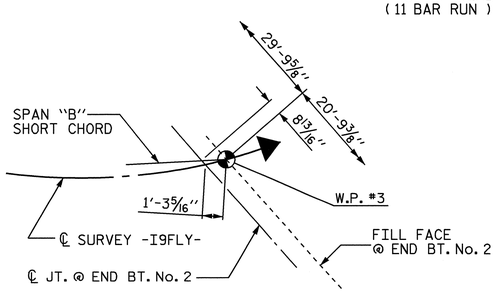

DETAIL "B"

PARTIAL PLAN OF SPAN

NOTES :

FOR BARRIER RAIL REINFORCING STEEL, SEE "CONCRETE BARRIER RAIL" SHEETS.

★ #5 MAIN "A" BARS ARE TO BE PLACED RADIALLY ALONG OUTSIDE RIGHT EDGE OF SUPERSTRUCTURE.

▲ #5 CUT "A" BARS ARE TO BE PLACED PARALLEL TO THE LAST #5 MAIN "A" BAR.

FOR TRANSVERSE CONSTRUCTION JOINT LOCATIONS, SEE "BILL OF MATERIAL" SHEET.

NORTH CAROLINA PROFESSIONAL SEAL 029441 ENGINEER KRISTY W. ALFORD
8/13/09

PROJECT NO. R-2417 C
LEE COUNTY
STATION: 665+35.34-LREV-

SHEET 3 OF 3

STATE OF NORTH CAROLINA
DEPARTMENT OF TRANSPORTATION
RALEIGH

SUPERSTRUCTURE
PLAN OF SPANS

REVISIONS						SHEET NO.
NO.	BY:	DATE:	NO.	BY:	DATE:	S-74
1			3			TOTAL SHEETS
2			4			104

DRAWN BY : MIKE BRITT DATE : 12-10-08
CHECKED BY : D.G. ELY DATE : 1-29-09

13-AUG-2009 12:51
ki\structures\str_3\Super_Draw\r2417c_str3_ps.dgn
kalford

STR. #3

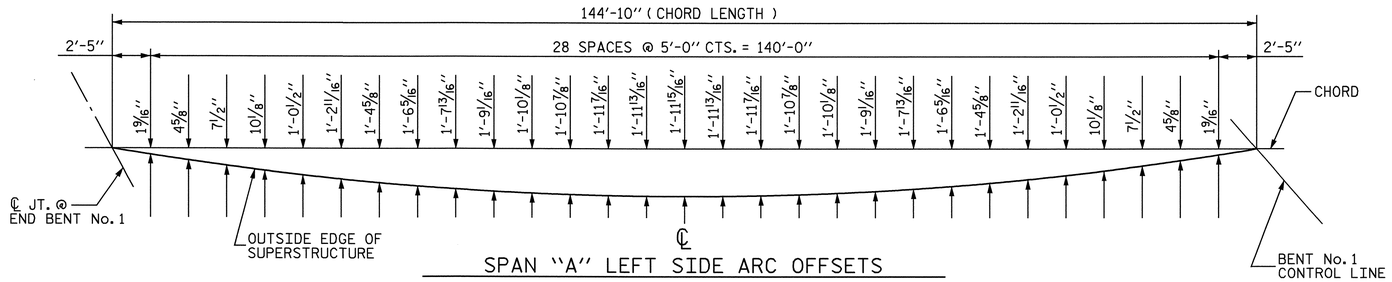

SPAN "A" LEFT SIDE ARC OFFSETS

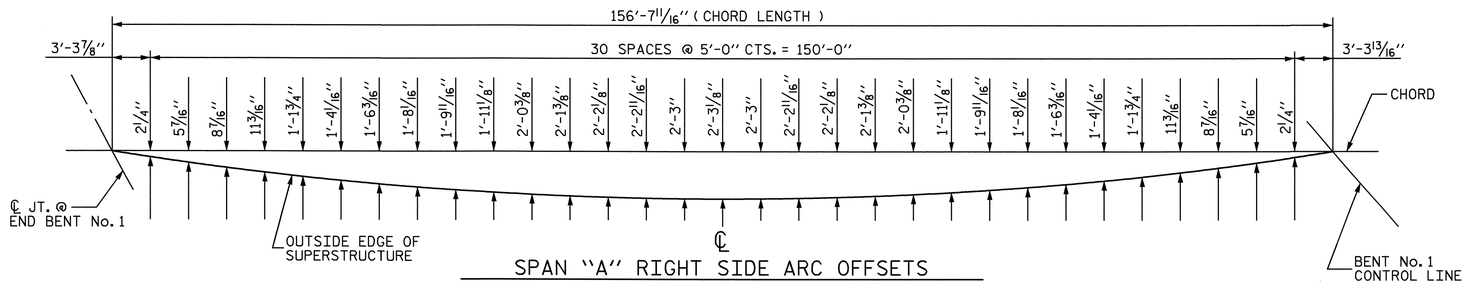

SPAN "A" RIGHT SIDE ARC OFFSETS

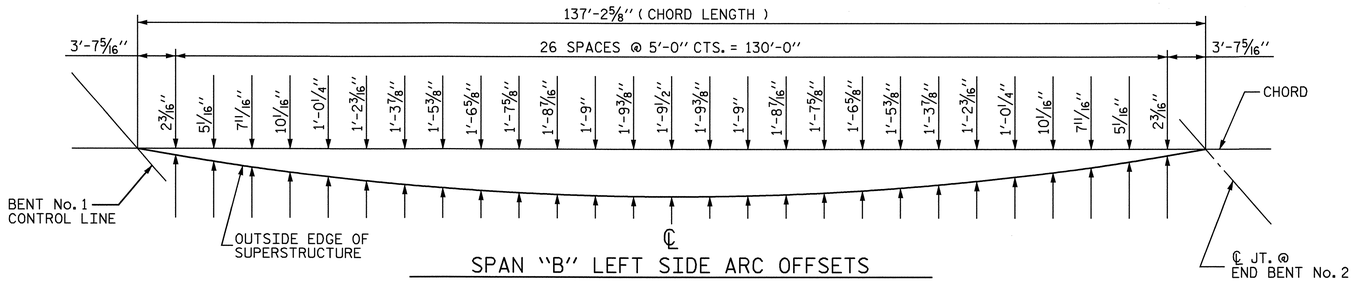

SPAN "B" LEFT SIDE ARC OFFSETS

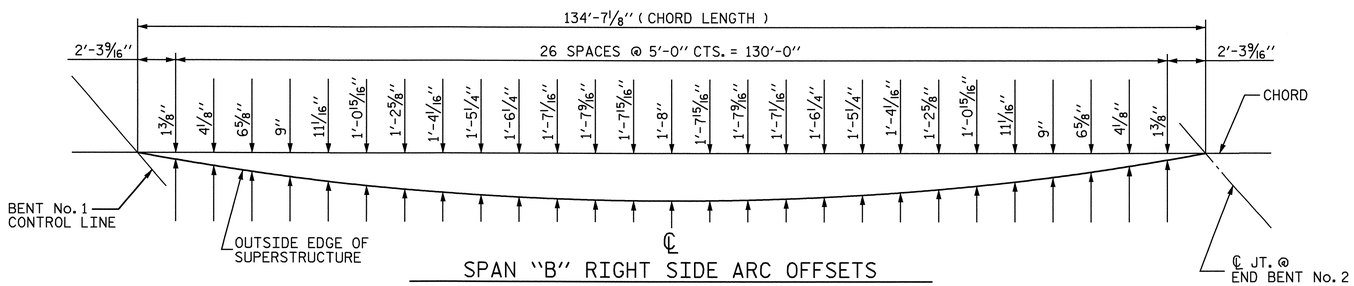

SPAN "B" RIGHT SIDE ARC OFFSETS

PROJECT NO. R-2417 C
LEE COUNTY
STATION: 665+35.34-LREV-

STATE OF NORTH CAROLINA
DEPARTMENT OF TRANSPORTATION
RALEIGH

SUPERSTRUCTURE

ARC OFFSETS

NORTH CAROLINA PROFESSIONAL SEAL 029441 ENGINEER KRISTY W. ALFORD
8/19/09

REVISIONS						SHEET NO.
NO.	BY:	DATE:	NO.	BY:	DATE:	S-75
1			3			TOTAL SHEETS
2			4			104

DRAWN BY : MIKE BRITT DATE : 12-16-08
CHECKED BY : D.G. ELY DATE : 1-30-09

14-AUG-2009 08:32
ki\structures\str_3\super_draw\r2417c_str3_arc.dgn
kalford

STR. #3

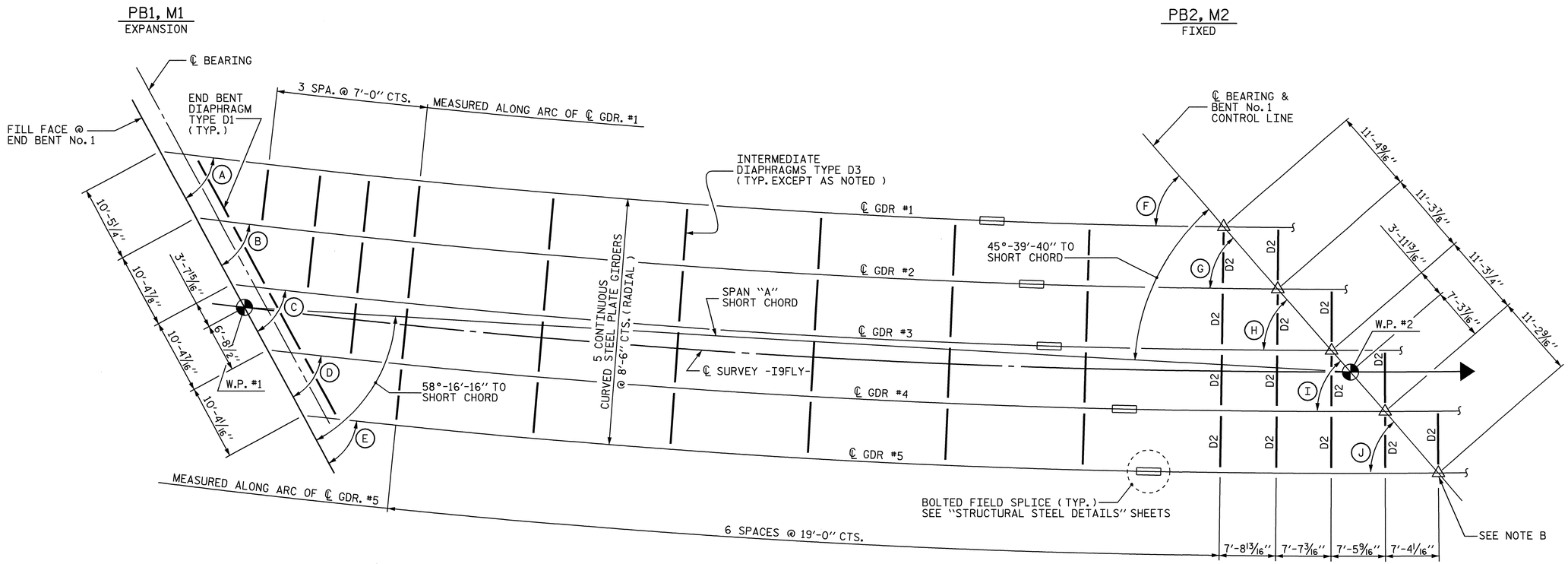

SPAN "A" FRAMING PLAN

ANGLES

ANGLES ARE TANGENT TO CURVE AT FILL FACE AND BENT CONTROL LINE

A	54°-23'-24"	F	48°-10'-17"
B	54°-39'-07"	G	48°-29'-55"
C	54°-54'-36"	H	48°-49'-12"
D	55°-09'-50"	I	49°-08'-10"
E	55°-24'-50"	J	49°-26'-47"

NOTE A :
ALL BENT & INTERMEDIATE DIAPHRAGMS (TYPES D2 & D3) ARE TO BE PLACED RADIALLY TO ℄ GIRDERS.

△ NOTE B :
BEARING STIFFENERS TO BE USED AS CONNECTOR PLATES.

PROJECT NO. R-2417 C
LEE COUNTY
STATION: 665+35.34-LREV-

SHEET 1 OF 2

STATE OF NORTH CAROLINA
DEPARTMENT OF TRANSPORTATION
RALEIGH

SUPERSTRUCTURE

FRAMING PLAN

NORTH CAROLINA PROFESSIONAL SEAL 029441 ENGINEER KRISTY W. ALFORD
9/14/09

REVISIONS						SHEET NO.
NO.	BY:	DATE:	NO.	BY:	DATE:	S-76
1			3			TOTAL SHEETS
2			4			104

DRAWN BY : MIKE BRITT DATE : 12-11-08
CHECKED BY : D.G. ELY DATE : 1-30-09

14-AUG-2009 08:39
k:\structures\str_3\super_draw\r2417c_str3_fp.dgn
kalford

STR. #3

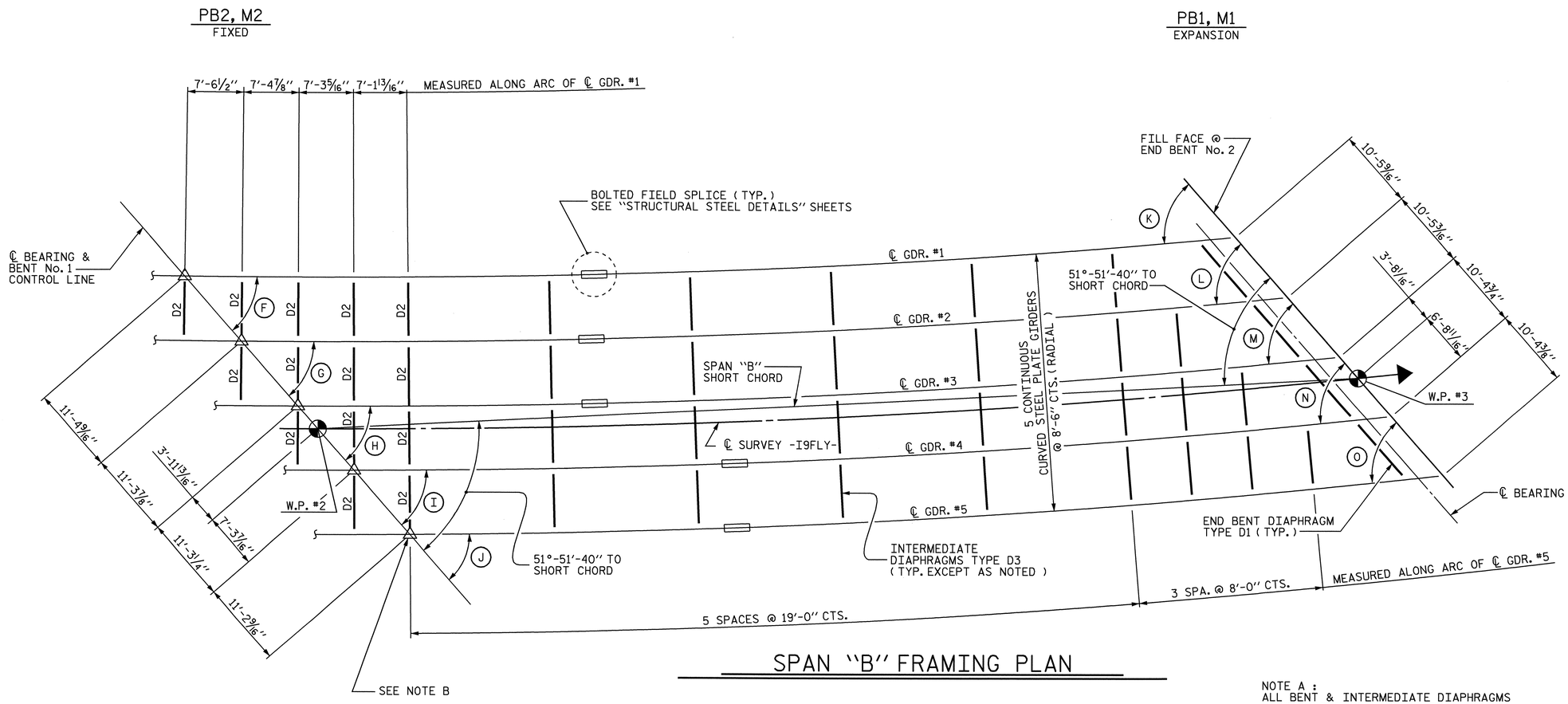

SPAN "B" FRAMING PLAN

ANGLES

ANGLES ARE TANGENT TO CURVE AT FILL FACE AND BENT CONTROL LINE

F	48°-10'-17"	K	54°-10'-30"
G	48°-29'-55"	L	54°-26'-21"
H	48°-49'-12"	M	54°-41'-57"
I	49°-08'-10"	N	54°-57'-19"
J	49°-26'-47"	O	55°-12'-25"

NOTE A :
ALL BENT & INTERMEDIATE DIAPHRAGMS (TYPES D2 & D3) ARE TO BE PLACED RADIALLY TO ℄ GIRDERS.

△ NOTE B :
BEARING STIFFENERS TO BE USED AS CONNECTOR PLATES.

PROJECT NO. R-2417 C
LEE COUNTY
STATION: 665+35.34-LREV-

SHEET 2 OF 2

STATE OF NORTH CAROLINA
DEPARTMENT OF TRANSPORTATION
RALEIGH

SUPERSTRUCTURE

FRAMING PLAN

NORTH CAROLINA PROFESSIONAL SEAL 029441 ENGINEER KRISTY W. ALFORD
8/14/09

REVISIONS						SHEET NO.
NO.	BY:	DATE:	NO.	BY:	DATE:	S-77
1			3			TOTAL SHEETS
2			4			104

DRAWN BY : MIKE BRITT DATE : 12-11-08
CHECKED BY : D.G. ELY DATE : 1-30-09

14-AUG-2009 08:39
k:\structures\str_3\super_draw\r2417c_str3_fp.dgn
kalford

STR. #3

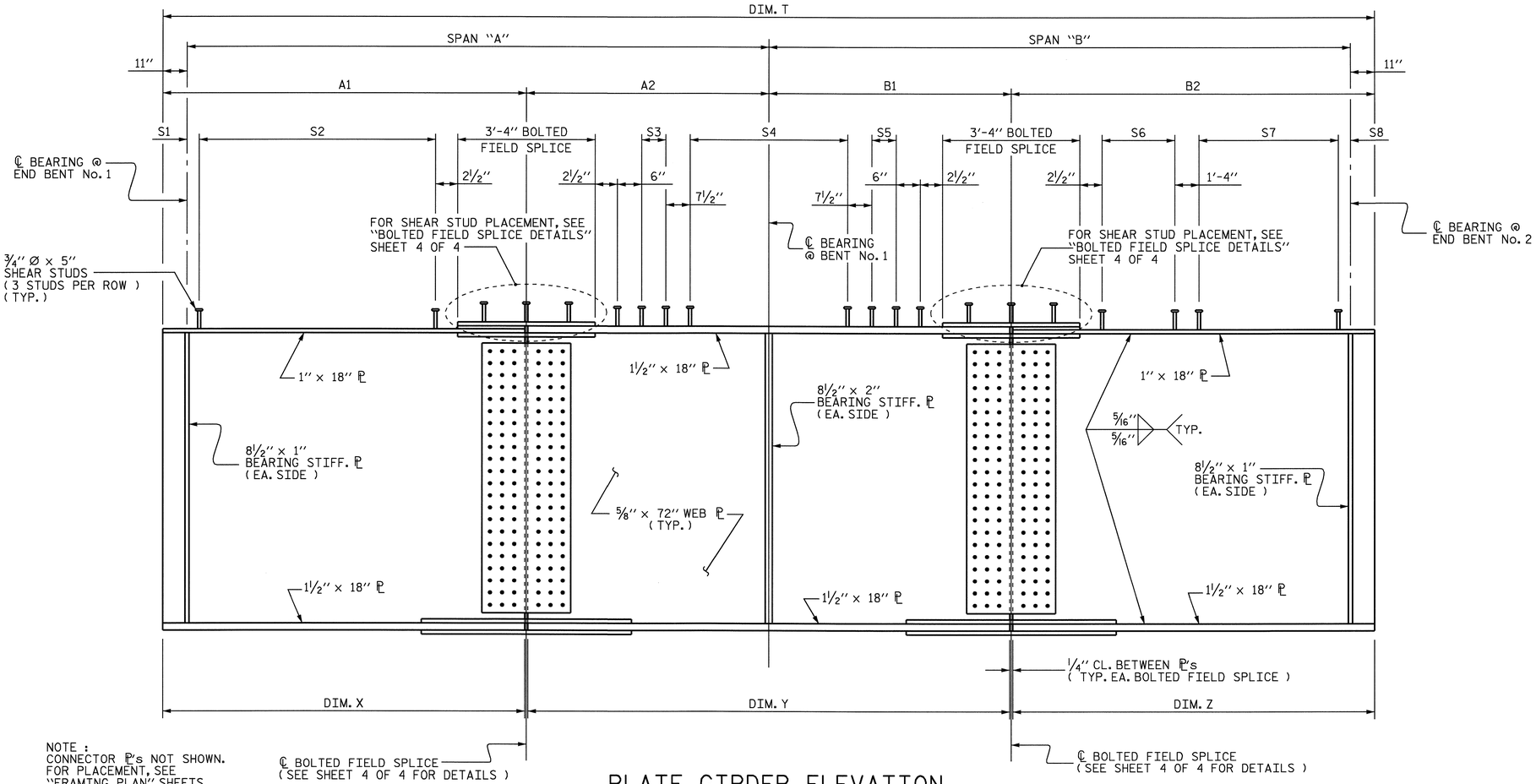

NOTE :
CONNECTOR ℙ's NOT SHOWN.
FOR PLACEMENT, SEE "FRAMING PLAN" SHEETS.

PLATE GIRDER ELEVATION

(TYP. FOR GIRDERS #1 THRU #5)
(SEE TABLES BELOW)

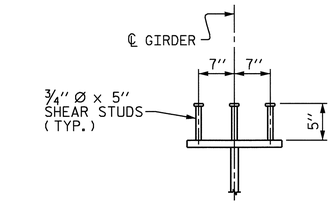

SHEAR STUD DETAIL

(TYPICAL EXCEPT @ SPLICE ℙ)

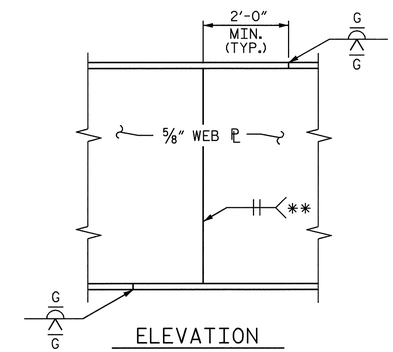

PERMISSIBLE SHOP FLANGE & WEB SPLICE

** GRIND SMOOTH AND FLUSH ON OUTSIDE OF EXTERIOR GIRDER

SHEAR STUD SPACING TABLE FOR SPAN "A-B" GIRDERS

GIRDER	S1	S2	S3	S4	S5	S6	S7	S8
#1	9⅛"	83 ROWS @ 1'-4" CTS.	5 ROWS @ 6" CTS.	75 ROWS @ 1'-0" CTS.	5 ROWS @ 6" CTS.	27 ROWS @ 1'-0" CTS.	41 ROWS @ 1'-4" CTS.	5¾"
#2	1'-2¾"	83 ROWS @ 1'-4" CTS.	5 ROWS @ 6" CTS.	71 ROWS @ 1'-0" CTS.	5 ROWS @ 6" CTS.	32 ROWS @ 1'-0" CTS.	41 ROWS @ 1'-4" CTS.	11⅛"
#3	⅛"	82 ROWS @ 1'-4" CTS.	5 ROWS @ 6" CTS.	69 ROWS @ 1'-0" CTS.	5 ROWS @ 6" CTS.	34 ROWS @ 1'-0" CTS.	44 ROWS @ 1'-4" CTS.	1'-4½"
#4	1⅜"	86 ROWS @ 1'-4" CTS.	5 ROWS @ 6" CTS.	77 ROWS @ 1'-0" CTS.	5 ROWS @ 6" CTS.	17 ROWS @ 1'-0" CTS.	49 ROWS @ 1'-4" CTS.	2¼"
#5	1'-2⅜"	84 ROWS @ 1'-4" CTS.	5 ROWS @ 6" CTS.	74 ROWS @ 1'-0" CTS.	5 ROWS @ 6" CTS.	27 ROWS @ 1'-0" CTS.	46 ROWS @ 1'-4" CTS.	8⅛"

TABLE "A-B"

GIRDER	RADIUS (FEET)	SPAN "A" HORIZONTAL DISTANCE ℄ BRG. TO ℄ BRG.	SPAN "B" HORIZONTAL DISTANCE ℄ BRG. TO ℄ BRG.	SPAN "A" SLOPED DISTANCE ℄ BRG. TO ℄ BRG.	SPAN "B" SLOPED DISTANCE ℄ BRG. TO ℄ BRG.	A1 END OF GIRDER TO ℄ BFS	A2 ℄ BFS TO ℄ BRG. @ BENT No. 1	B1 ℄ BRG. @ BENT No. 1 TO ℄ BFS	B2 ℄ BFS TO END OF GIRDER	DIM. X WEB ℙ AND TOP & BOTTOM FLANGE ℙ LENGTHS	DIM. Y WEB ℙ AND TOP & BOTTOM FLANGE ℙ LENGTHS	DIM. Z WEB ℙ AND TOP & BOTTOM FLANGE ℙ LENGTHS	DIM. T TOTAL GIRDER LENGTH (ALONG ARC)
#1	1,320.00	143'-11⅝"	135'-0¼"	144'-1½"	135'-1⅜"	112'-10⅝"	32'-0"	52'-0"	83'-11¼"	112'-10½"	83'-11¾"	83'-11⅛"	280'-9⅞"
#2	1,328.50	146'-5¼"	134'-5⅝"	146'-7⅛"	134'-6⅝"	113'-4¼"	34'-0"	46'-0"	89'-4⅝"	113'-4⅛"	79'-11¾"	89'-4½"	282'-8⅞"
#3	1,337.00	148'-10⅝"	133'-11"	149'-0½"	134'-0"	110'-9⅝"	39'-0"	39'-0"	95'-10"	110'-9½"	77'-11¾"	95'-9⅞"	284'-7⅝"
#4	1,345.50	151'-3⅞"	133'-4¾"	151'-5⅝"	133'-5⅝"	116'-2⅞"	36'-0"	50'-0"	84'-3¾"	116'-2¾"	85'-11¾"	84'-3⅝"	286'-6⅝"
#5	1,354.00	153'-8⅞"	132'-10⅝"	153'-10⅝"	132'-11½"	114'-7⅞"	40'-0"	43'-0"	90'-9⅝"	114'-7¾"	82'-11¾"	90'-9½"	288'-5½"

NOTE : ALL GIRDER DIMENSIONS IN THE ABOVE TABLES ARE MEASURED ALONG THE ℄ GIRDER.
ALL LENGTHS IN TABLE "A-B" ARE HORIZONTAL DISTANCES UNLESS OTHERWISE NOTED.
"BFS" DENOTES BOLTED FIELD SPLICE

PROJECT NO. R-2417 C
LEE COUNTY
STATION: 665+35.34-LREV-

SHEET 1 OF 4

STATE OF NORTH CAROLINA
DEPARTMENT OF TRANSPORTATION
RALEIGH

SUPERSTRUCTURE

STRUCTURAL STEEL DETAILS

NORTH CAROLINA PROFESSIONAL SEAL 029441 ENGINEER KRISTY W. ALFORD
8/19/09

REVISIONS						SHEET NO.
NO.	BY:	DATE:	NO.	BY:	DATE:	S-78
1			3			TOTAL SHEETS
2			4			104

DRAWN BY : MIKE BRITT DATE : 12-17-08
CHECKED BY : D.G. ELY DATE : 2-2-09

14-AUG-2009 08:40
k:\structures\str_3\super_draw\r2417c_str3_ss.dgn
kalford

STR. #3

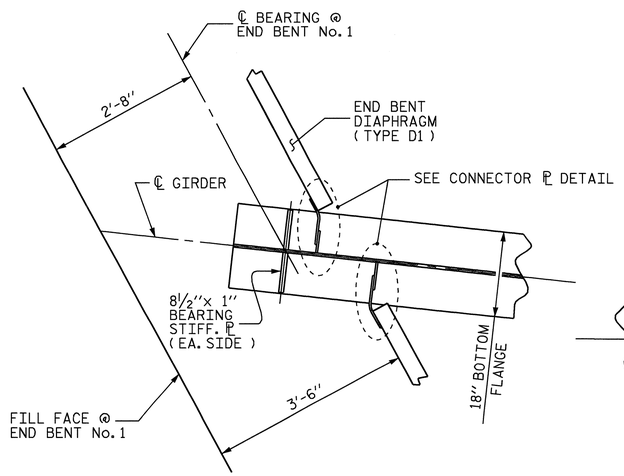

@ END BENT No. 1

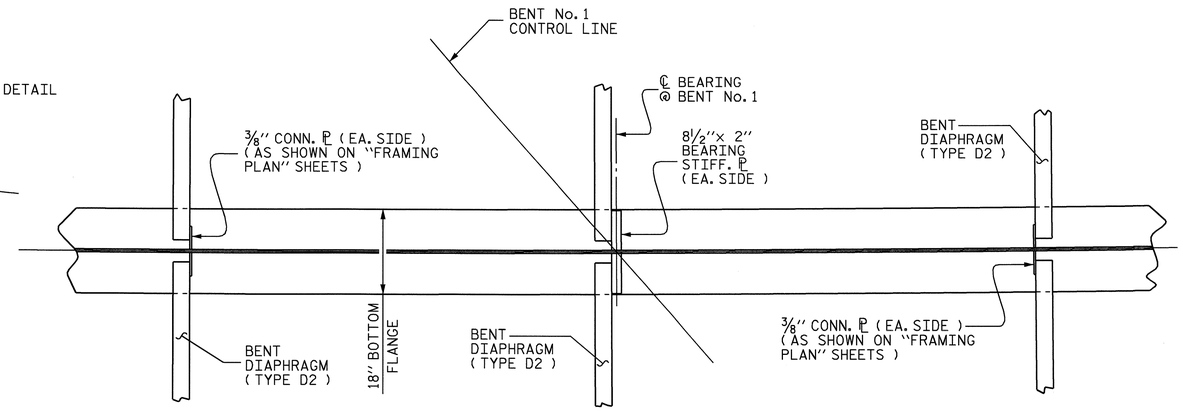

@ BENT No. 1

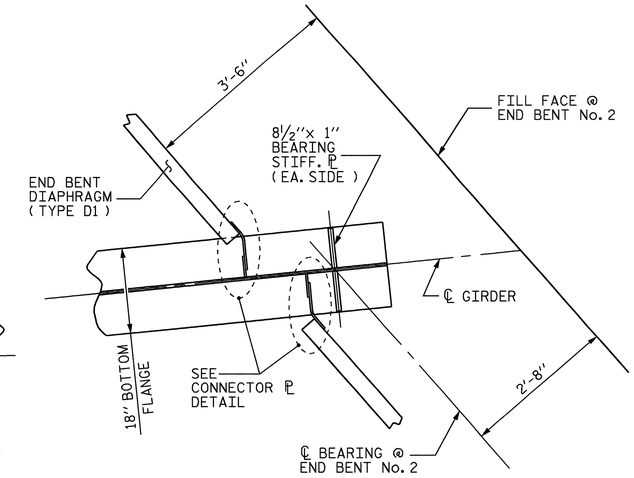

@ END BENT No. 2

SPAN "A-B" BOTTOM FLANGE DETAIL

SEE FRAMING PLAN SHEETS FOR DIAPHRAGM LOCATIONS

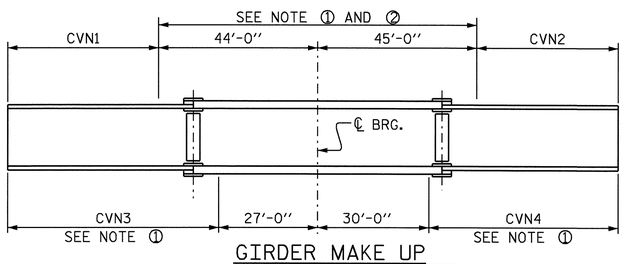

GIRDER MAKE UP

NOTE ① : CHARPY V-NOTCH TESTS ARE REQUIRED FOR ALL TOP OR BOTTOM FLANGE PLATES WHICH FALL WITHIN THESE LIMITS, ALL WEB PLATES, AND ALL SPLICE PLATES. IF A PERMITTED SHOP FLANGE SPLICE IS NOT USED, CHARPY V-NOTCH TESTS WILL BE REQUIRED FOR THE ENTIRE FLANGE PLATE. FOR CHARPY V-NOTCH TESTS, SEE ARTICLE 1072-9 OF THE STANDARD SPECIFICATIONS.

NOTE ② : NO WELDING OF FORMS OR FALSEWORK TO THE TOP FLANGE WILL BE PERMITTED IN THIS REGION

CHARPY V-NOTCH TESTS FOR CONTINUOUS PLATE GIRDERS

TABLE FOR CHARPY V-NOTCH TEST

GIRDER	CVN1	CVN2	CVN3	CVN4
#1	100'-10⅝"	90'-11¼"	117'-10⅝"	105'-11¼"
#2	103'-4¼"	90'-4⅝"	120'-4¼"	105'-4⅝"
#3	105'-9⅝"	89'-10"	122'-9⅝"	104'-10"
#4	108'-2⅞"	89'-3¾"	125'-2⅞"	104'-3¾"
#5	110'-7⅞"	88'-9⅝"	127'-7⅞"	103'-9⅝"

NOTE : ALL GIRDER DIMENSIONS IN THE ABOVE TABLE ARE MEASURED ALONG THE ℄ GIRDER AND ARE HORIZONTAL DIMENSIONS.

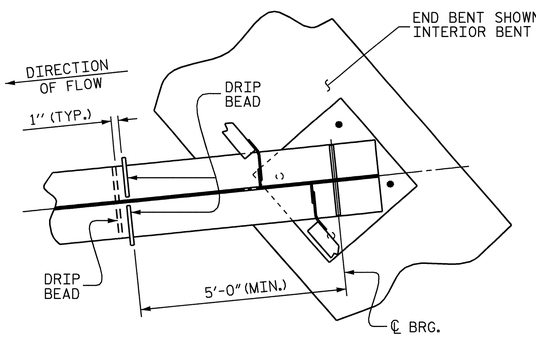

PART PLAN - BOTTOM FLANGE

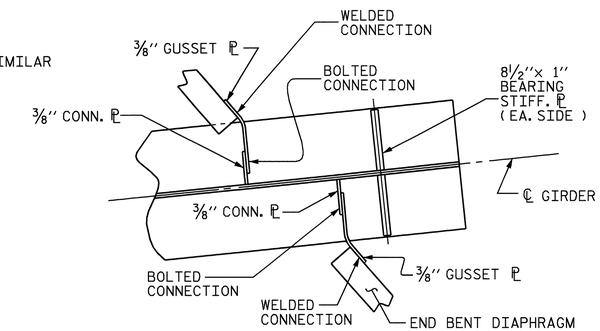

CONNECTOR ℙ DETAIL

(EACH END SIMILAR)

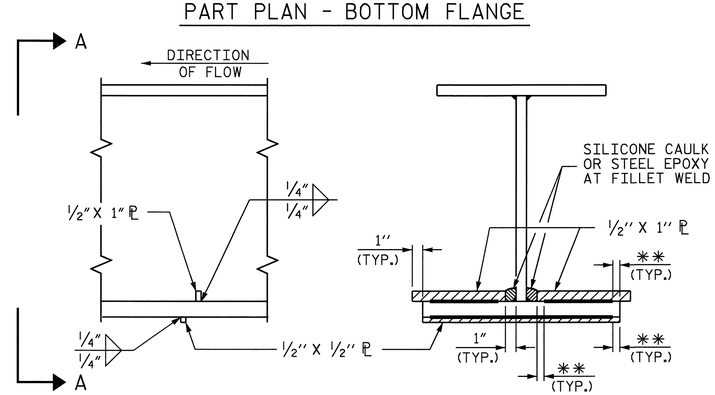

SECTION

VIEW A-A

** SEE "WELD TERMINATION DETAILS" SHEET 3 OF 4

DRIP BEAD DETAILS

PROJECT NO. R-2417 C

LEE COUNTY

STATION: 665+35.34-LREV-

SHEET 2 OF 4

STATE OF NORTH CAROLINA
DEPARTMENT OF TRANSPORTATION
RALEIGH

SUPERSTRUCTURE

STRUCTURAL STEEL DETAILS

NORTH CAROLINA PROFESSIONAL SEAL 029441 ENGINEER KRISTY W. ALFORD

REVISIONS						SHEET NO.
NO.	BY:	DATE:	NO.	BY:	DATE:	S-79
1			3			TOTAL SHEETS
2			4			104

DRAWN BY : MIKE BRITT DATE : 12-18-08
CHECKED BY : D.G. ELY DATE : 2-2-09

14-AUG-2009 08:40
k:\structures\str_3\super_draw\r2417c_str3_ss.dgn
kalford

STR. #3

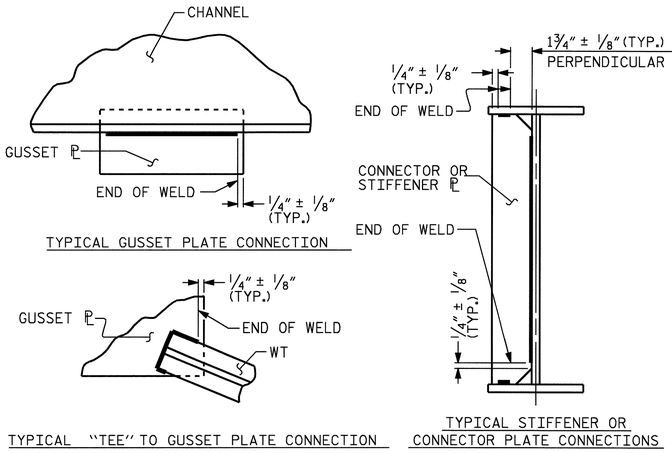

WELD TERMINATION DETAILS

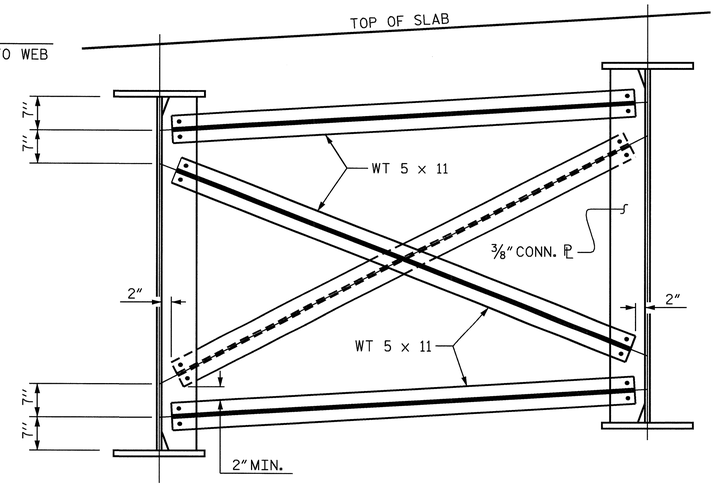

TYPICAL INTERMEDIATE DIAPHRAGM (TYPE D3)

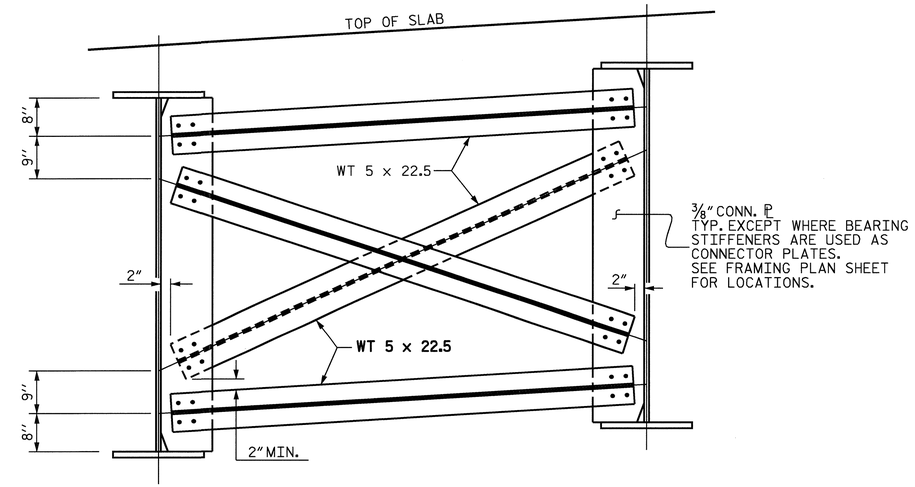

TYPICAL BENT DIAPHRAGM (TYPE D2)

USE 2" THICK PLATE WHERE BEARING STIFFENERS ARE USED AS CONNECTOR PLATE FOR BENT DIAPHRAGM.

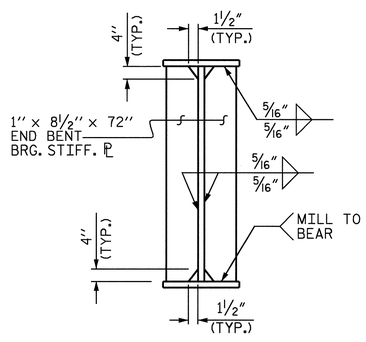

BEARING STIFFENER

(AT END BENTS)

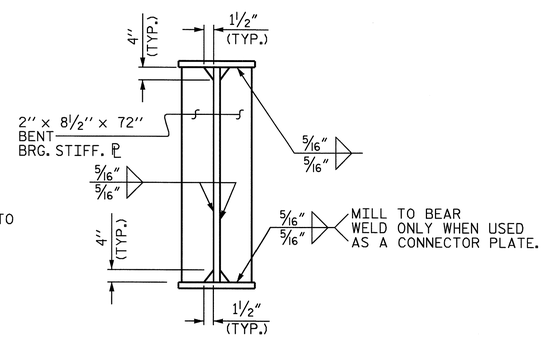

BEARING STIFFENER

(AT BENT No. 1)

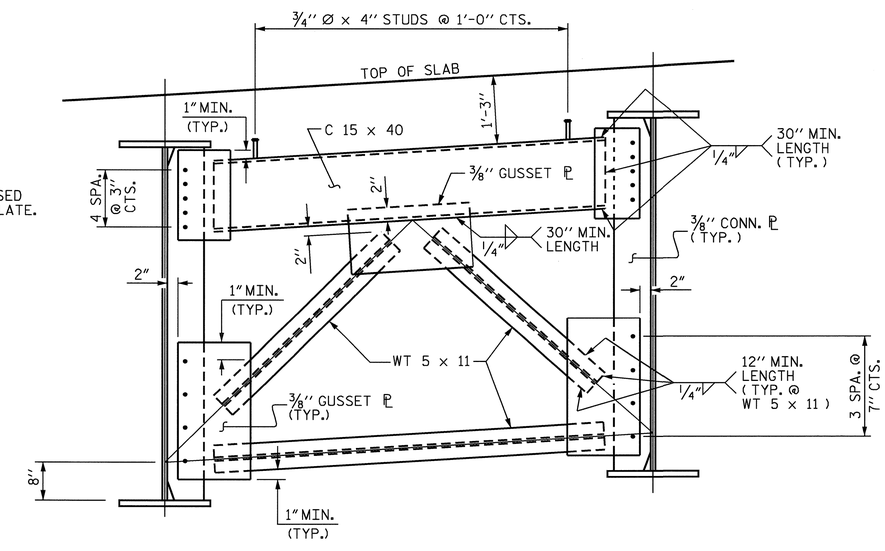

TYPICAL END BENT DIAPHRAGM (TYPE D1)

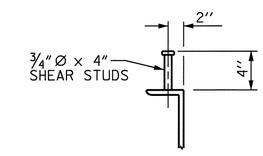

SHEAR STUD DETAILS

(TYP. EA. END BENT DIAPHRAGM)

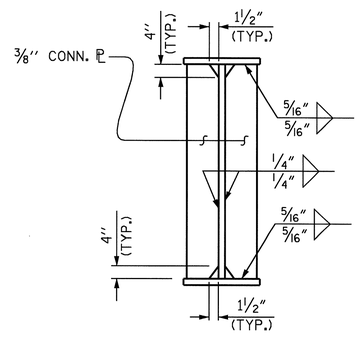

CONNECTOR PL

PROJECT NO. R-2417 C

LEE COUNTY

STATION: 665+35.34-LREV-

SHEET 3 OF 4

STATE OF NORTH CAROLINA
DEPARTMENT OF TRANSPORTATION
RALEIGH

SUPERSTRUCTURE

STRUCTURAL STEEL DETAILS

NORTH CAROLINA PROFESSIONAL SEAL 029441 ENGINEER KRISTY W. ALFORD
12/21/09

REVISIONS						SHEET NO.
NO.	BY:	DATE:	NO.	BY:	DATE:	S-80
1			3			TOTAL SHEETS
2			4			104

DRAWN BY : MIKE BRITT DATE : 12-22-08
CHECKED BY : D.G. ELY DATE : 2-2-09

21-OCT-2009 09:41
k:\structures\STR_3\Super_Draw\r2417c_str3_ss.dgn
kalford

STR. #3

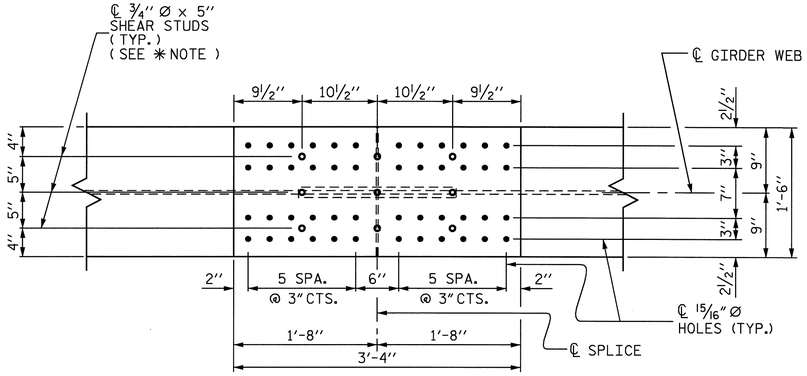

PLAN (TOP OF TOP FLANGE)

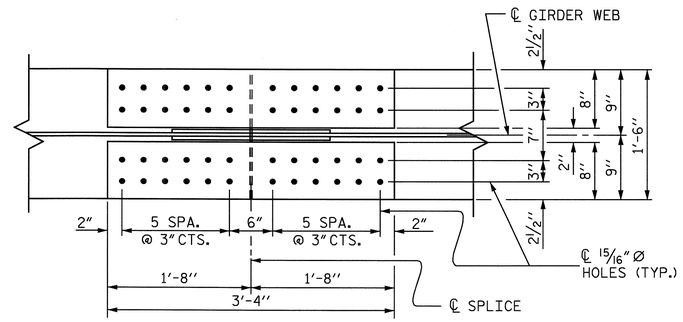

PLAN (TOP OF BOTTOM FLANGE)

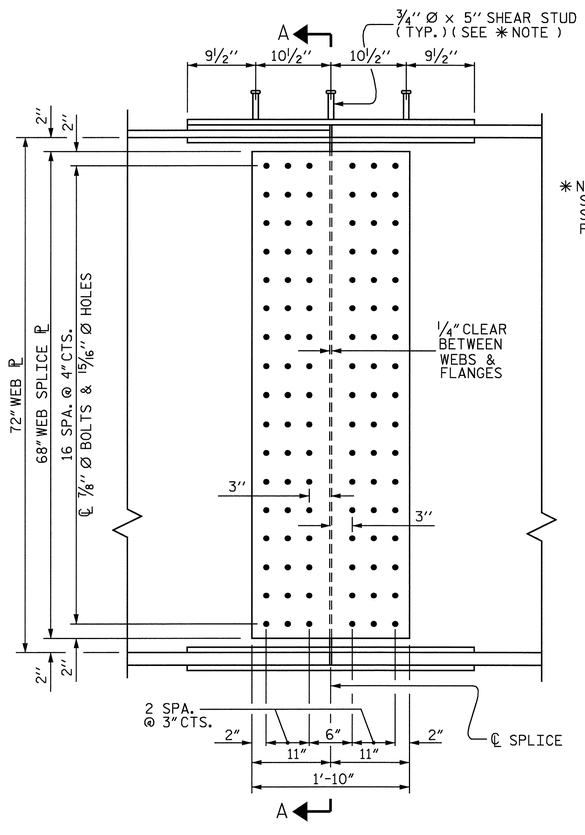

ELEVATION

✳ NOTE:
SHEAR STUDS ARE TO BE SHOP WELDED ON TOP OF PLATE BEFORE FIELD ASSEMBLY.

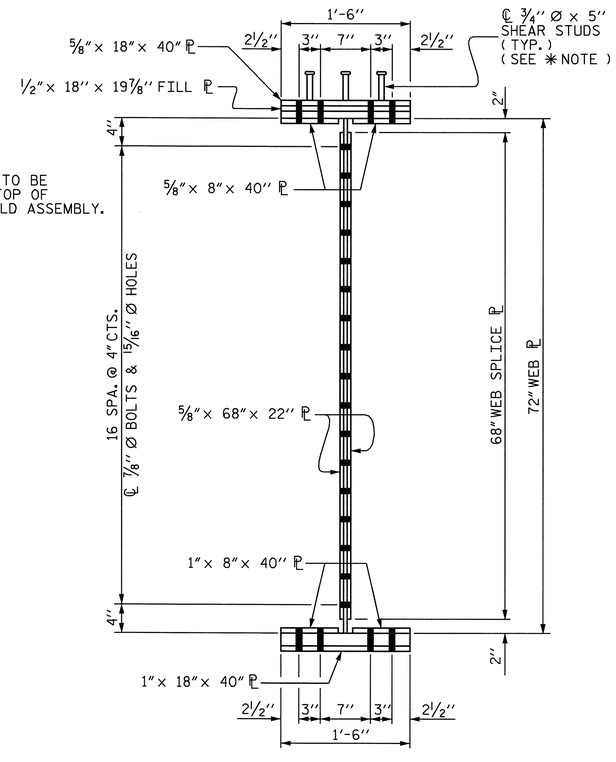

SECTION A-A

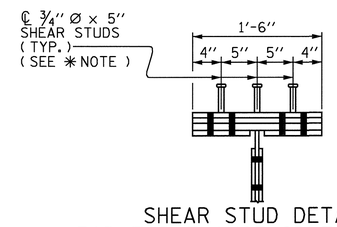

SHEAR STUD DETAIL
FOR TOP FLANGE SPLICE PLATE

BOLTED FIELD SPLICE DETAILS

(ALL BOLTED FIELD SPLICES ARE TYPICAL)

STRUCTURAL STEEL NOTES :

ALL STRUCTURAL STEEL SHALL BE AASHTO M270 GRADE 50W AND PAINTED IN ACCORDANCE WITH SYSTEM 4 OF ARTICLE 442-7 OF THE STANDARD SPECIFICATIONS UNLESS OTHERWISE NOTED ON THE PLANS.

ALL DIMENSIONS SHOWN ARE HORIZONTAL OR VERTICAL, UNLESS OTHERWISE NOTED.

ALL FIELD CONNECTIONS TO BE ⅞″ DIA. HIGH STRENGTH BOLTS UNLESS OTHERWISE NOTED.

BEARING STIFFENERS ARE TO BE PLACED NORMAL TO THE WEB OF THE GIRDER AND SHALL BE PLUMB.

SHOP SPLICES ARE PERMITTED TO LIMIT THE MAXIMUM REQUIRED FLANGE PIECE LENGTHS TO 60 FEET AND WEB PIECE LENGTHS TO 45 FEET. PERMITTED FLANGE AND WEB SHOP SPLICES SHALL NOT BE LOCATED WITHIN 15 FEET OF MAXIMUM DEAD LOAD DEFLECTION (NOR WITHIN 15 FEET OF INTERMEDIATE BEARINGS OF CONTINUOUS UNITS). KEEP 2 FEET MINIMUM BETWEEN WEB AND FLANGE SHOP SPLICES. KEEP 6″ MINIMUM BETWEEN CONNECTOR PLATE OR TRANSVERSE STIFFENER WELDS AND WEB OR FLANGE SHOP SPLICES.

STUDS ON GIRDERS MAY BE SHIFTED UP TO 1″ IF NECESSARY TO CLEAR FLANGE SPLICE WELD.

TENSION ON THE AASHTO M164 BOLTS SHALL BE CALIBRATED USING DIRECT TENSION INDICATOR WASHERS IN ACCORDANCE WITH ARTICLE 440-8 OF THE STANDARD SPECIFICATIONS.

FOR DIRECT TENSION INDICATORS, SEE SPECIAL PROVISIONS.

END OF GIRDERS SHALL BE PLUMB.

THE CONTRACTOR SHALL MAINTAIN STABILITY OF THE CURVED GIRDERS UNTIL ALL FIELD SPLICES AND CROSSFRAME CONNECTIONS HAVE BEEN COMPLETED. STRUCTURAL STEEL ERECTION IN A CONTINUOUS UNIT SHALL BE COMPLETE BEFORE FALSEWORK OR FORMS ARE PLACED ON THE UNIT.

CURVATURE OF STEEL GIRDERS MAY BE ACCOMPLISHED BY CUTTING PLATES TO THE REQUIRED CURVATURE OR BY HEAT TREATMENT.

BEARING STIFFENER PLATE WIDTHS SHOWN ON THE PLANS ARE A MINIMUM WIDTH. THE BEARING STIFFENER PLATE WIDTHS MAY BE INCREASED AS NECESSARY IN ORDER TO CONNECT THE DIAPHRAGM MEMBERS.

PROJECT NO. R-2417 C
LEE COUNTY
STATION: 665+35.34-LREV-

SHEET 4 OF 4

STATE OF NORTH CAROLINA
DEPARTMENT OF TRANSPORTATION
RALEIGH

SUPERSTRUCTURE

STRUCTURAL STEEL DETAILS

NORTH CAROLINA PROFESSIONAL SEAL 029441 ENGINEER KRISTY W. ALFORD
8/19/09

REVISIONS						SHEET NO.
NO.	BY:	DATE:	NO.	BY:	DATE:	S-81
1			3			TOTAL SHEETS
2			4			104

DRAWN BY : MIKE BRITT DATE : 12-23-08
CHECKED BY : D.G. ELY DATE : 2-2-09

14-AUG-2009 08:41
ki\structures\str_3\super_draw\r2417c_str3_ss.dgn
kalford

STR. #3

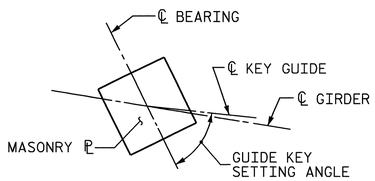

AT END BT. No. 1

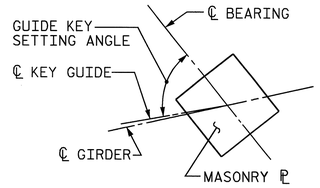

AT END BT. No. 2

GUIDE KEY SETTING DETAILS

(SEE TABLE BELOW)

GUIDE KEY SETTING ANGLES		
GIRDER	POT BEARING PB1 AT END BT. No. 1	POT BEARING PB1 AT END BT. No. 2
#1	57°-39′-24″	51°-06′-06″
#2	57°-57′-02″	51°-23′-53″
#3	58°-14′-23″	51°-41′-23″
#4	58°-31′-26″	51°-58′-34″
#5	58°-48′-13″	52°-15′-29″

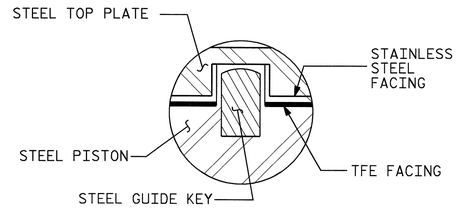

GUIDE KEY DETAIL

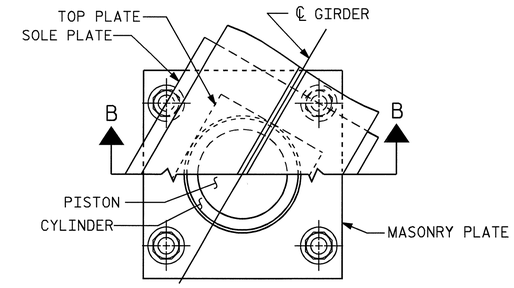

CUT-AWAY PLAN

NOTES

FOR POT BEARINGS, SEE SPECIAL PROVISIONS.

AT ALL POINTS OF SUPPORT, NUTS FOR ANCHOR BOLTS SHALL BE TIGHTENED FINGER TIGHT AND GIVEN AN ADDITIONAL 1/4 TURN. THE THREAD OF THE NUT AND BOLT SHALL THEN BE BURRED WITH A SHARP POINTED TOOL.

WHEN WELDING THE SOLE PLATE TO THE GIRDER, USE TEMPERATURE INDICATING WAX PENS, OR OTHER SUITABLE MEANS, TO ENSURE THAT THE TEMPERATURE OF THE BEARING DOES NOT EXCEED 250°F TEMPERATURES ABOVE THIS MAY DAMAGE THE TFE OR ELASTOMER.

AFTER BEARING ASSEMBLY IS IN PLACE AND ANCHOR BOLTS HAVE BEEN FINALLY POSITIONED. THEY SHALL BE GROUTED IN PLACE AS SHOWN.

THE CLOSURE PLATE, GROUT PIPE AND STANDARD PIPE FOR THIS ASSEMBLY NEED NOT BE GALVANIZED.

SOLE PLATES SHOULD BE WELDED TO GIRDER FLANGES AND ANCHOR BOLTS SHOULD BE GROUTED BEFORE FALSEWORK IS PLACED.

ALL SURFACES OF BEARING PLATES SHALL BE SMOOTH AND STRAIGHT.

FOR THERMAL SPRAYED COATINGS (METALLIZATION), SEE SPECIAL PROVISIONS.

THE CONTRACTOR MAY SUBSTITUTE DISC BEARINGS FOR THE POT BEARINGS SHOWN. FOR OPTIONAL DISC BEARINGS, SEE SPECIAL PROVISIONS.

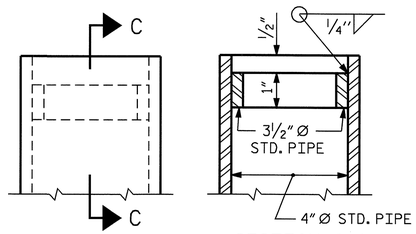

SECTION C-C

DETAIL "A"

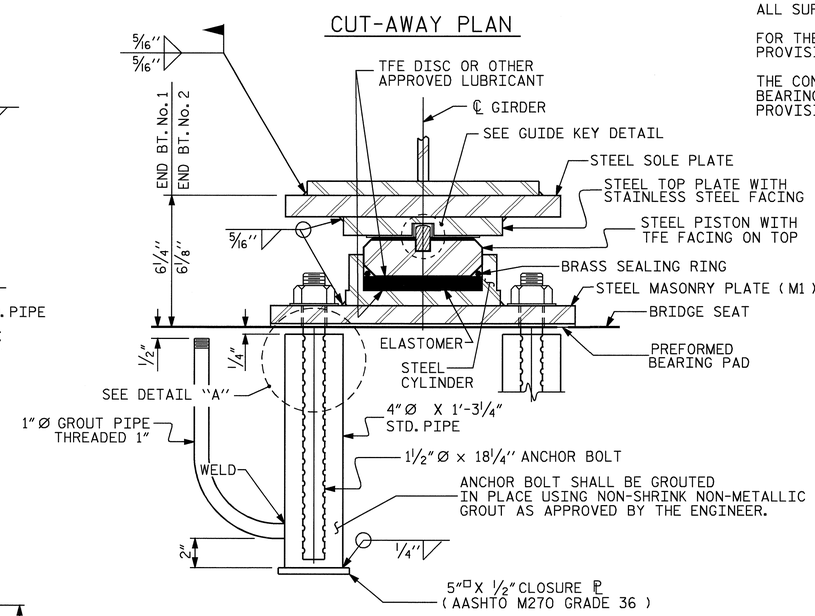

SECTION B-B

PB1, EXP.
(10 REQ'D.)

POT BEARING DETAILS

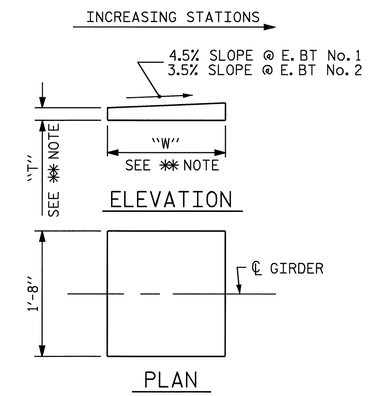

✱✱ NOTE:
DIMENSIONS "W" AND "T" ARE TO BE DETERMINED BY THE MANUFACTURER.

SOLE PLATE DETAILS

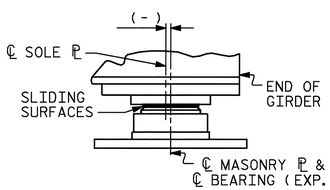

TABLE FOR PLATE SETTING DATA (EXPANSION POT BEARINGS)				
TEMPERATURE AT TIME OF SETTING	30° F	60° F	90° F	✱
@ END BT. No. 1	-7/16″	0″	7/16″	-1/4″
@ END BT. No. 2	-7/16″	0″	7/16″	-1/8″

✱ CORRECTION FOR END ROTATION DUE TO WEIGHT OF SLAB AND COMPOSITE DEAD LOAD.

TEMPERATURE SETTING DETAIL

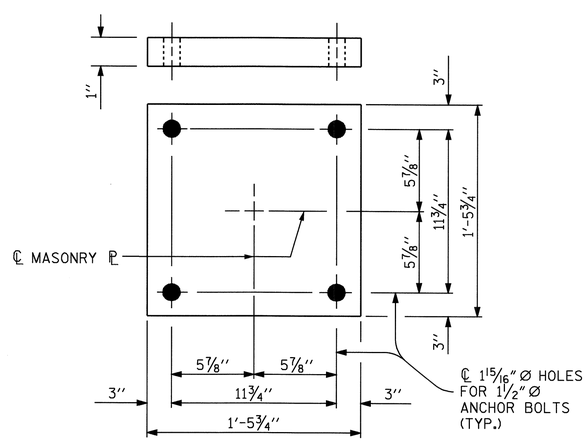

PLAN
M1 (10 REQ'D.)

MASONRY PLATE DETAILS

TABLE FOR LOADS AND MOVEMENTS						
BEARING	LOCATION	VERTICAL LOAD (KIPS)			LATERAL LOAD (KIPS)	TOTAL MOVEMENT (INCHES)
		DEAD	LIVE	TOTAL		
PB1 (EXP.)	END BT. No. 1	121	48	169	25	1
PB1 (EXP.)	END BT. No. 2	89	44	133	18	1

PROJECT NO. R-2417 C
LEE COUNTY
STATION: 665+35.34-LREV-

SHEET 1 OF 2

STATE OF NORTH CAROLINA
DEPARTMENT OF TRANSPORTATION
RALEIGH

STANDARD

POT BEARING DETAILS
(EXPANSION BEARING)

NORTH CAROLINA PROFESSIONAL SEAL 029441 ENGINEER KRISTY W. ALFORD
8/19/09

REVISIONS								SHEET NO.
NO.	BY:	DATE:	NO.	BY:	DATE:			S-82
1			3					TOTAL SHEETS
2			4					104

ASSEMBLED BY : MIKE BRITT		DATE : 12-29-08	
CHECKED BY : D.G. ELY		DATE : 2-2-09	
DRAWN BY : RWW 8/99	REV. 7/10/01	LES/RDR	
CHECKED BY : LES 8/99	REV. 5/7/03	RWW/JTE	
	REV. 5/1/06	TLA/GM	

14-AUG-2009 08:41
k:\structures\str_3\super_draw\r2417c_str3_pot.dgn
kalford

STD. NO. PB1

STR. #3

NOTES

FOR POT BEARINGS, SEE SPECIAL PROVISIONS.

AT ALL POINTS OF SUPPORT, NUTS FOR ANCHOR BOLTS SHALL BE TIGHTENED FINGER TIGHT AND GIVEN AN ADDITIONAL 1/4 TURN. THE THREAD OF THE NUT AND BOLT SHALL THEN BE BURRED WITH A SHARP POINTED TOOL.

WHEN WELDING THE SOLE PLATE TO THE GIRDER, USE TEMPERATURE INDICATING WAX PENS, OR OTHER SUITABLE MEANS, TO ENSURE THAT THE TEMPERATURE OF THE BEARING DOES NOT EXCEED 250°F TEMPERATURES ABOVE THIS MAY DAMAGE THE TFE OR ELASTOMER.

SOLE PLATES SHOULD BE WELDED TO GIRDER FLANGES AND ANCHOR BOLTS SHOULD BE GROUTED BEFORE FALSEWORK IS PLACED.

ALL SURFACES OF BEARING PLATES SHALL BE SMOOTH AND STRAIGHT.

FOR THERMAL SPRAYED COATINGS (METALLIZATION), SEE SPECIAL PROVISIONS.

THE CONTRACTOR MAY SUBSTITUTE DISC BEARINGS FOR THE POT BEARINGS SHOWN. FOR OPTIONAL DISC BEARINGS, SEE SPECIAL PROVISIONS.

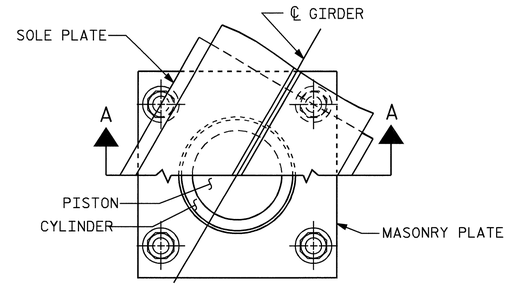

CUT-AWAY PLAN

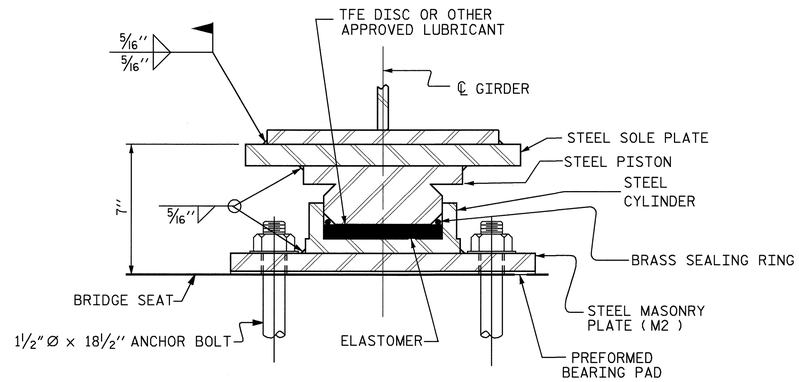

SECTION A-A

PB2, FIXED
(5 REQ'D.)

POT BEARING DETAILS

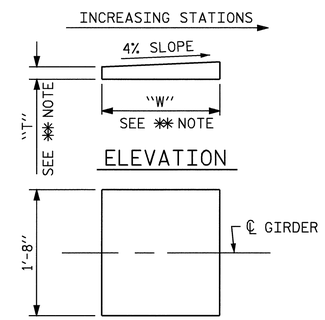

✱✱ NOTE:
DIMENSIONS "W" AND "T" ARE TO BE DETERMINED BY THE MANUFACTURER.

SOLE PLATE DETAILS

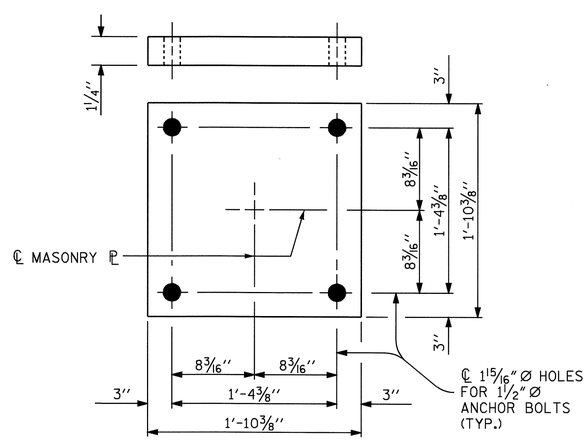

PLAN
M2 (5 REQ'D.)

MASONRY PLATE DETAILS

TABLE FOR LOADS AND MOVEMENTS						
BEARING	LOCATION	VERTICAL LOAD (KIPS)			LATERAL LOAD (KIPS)	TOTAL MOVEMENT (INCHES)
		DEAD	LIVE	TOTAL		
PB2 (FIXED)	BENT No. 1	376	92	468	76	0

PROJECT NO. R-2417 C
LEE COUNTY
STATION: 665+35.34-LREV-

SHEET 2 OF 2

STATE OF NORTH CAROLINA
DEPARTMENT OF TRANSPORTATION
RALEIGH

STANDARD

POT BEARING DETAILS
(FIXED BEARING)

NORTH CAROLINA PROFESSIONAL SEAL 029441 ENGINEER KRISTY W. ALFORD
8/19/09

REVISIONS						
NO.	BY:	DATE:	NO.	BY:	DATE:	
1			3			
2			4			

SHEET NO. S-83
TOTAL SHEETS 104

STD. NO. PB1

STR. #3

ASSEMBLED BY : MIKE BRITT		DATE : 12-29-08	
CHECKED BY : D.G. ELY		DATE : 2-2-09	
DRAWN BY : RWW 8/99	REV. 7/10/01	LES/RDR	
CHECKED BY : LES 8/99	REV. 5/7/03	RWW/JTE	
	REV. 5/1/06	TLA/GM	

14-AUG-2009 08:42
k:\structures\str_3\super_draw\r2417c_str3_pot.dgn
kalford

DEAD LOAD DEFLECTION TABLE FOR GIRDERS

GIRDER #1

TWENTIETH POINTS	SPAN "A" 0	.05	.10	.15	.20	.25	.30	.35	.40	.45	.50	.55	.60	.65	.70	.75	.80	.85	.90	.95	SPAN "B" 0	.05	.10	.15	.20	.25	.30	.35	.40	.45	.50	.55	.60	.65	.70	.75	.80	.85	.90	.95	0
DEFLECTION DUE TO WEIGHT OF GIRDER	0.000	0.011	0.021	0.030	0.039	0.046	0.051	0.055	0.057	0.057	0.056	0.053	0.049	0.043	0.037	0.030	0.022	0.015	0.009	0.004	0.000	0.000	0.000	0.001	0.004	0.008	0.012	0.016	0.020	0.023	0.026	0.027	0.028	0.028	0.027	0.024	0.021	0.017	0.011	0.006	0.000
DEFLECTION DUE TO WEIGHT OF SLAB ✳	0.000	0.031	0.061	0.088	0.112	0.133	0.149	0.159	0.165	0.166	0.163	0.154	0.141	0.126	0.107	0.086	0.065	0.044	0.026	0.012	0.000	0.000	0.000	0.002	0.011	0.021	0.032	0.044	0.056	0.065	0.072	0.077	0.080	0.079	0.076	0.069	0.060	0.047	0.033	0.017	0.000
DEFLECTION DUE TO WEIGHT OF BARRIER RAIL	0.000	0.003	0.006	0.009	0.012	0.014	0.016	0.017	0.017	0.018	0.017	0.017	0.015	0.014	0.012	0.010	0.007	0.005	0.003	0.001	0.000	0.000	0.000	0.001	0.002	0.003	0.004	0.006	0.007	0.008	0.009	0.009	0.009	0.009	0.008	0.008	0.007	0.005	0.004	0.002	0.000
TOTAL DEAD LOAD DEFLECTION	0.000	0.045	0.088	0.127	0.163	0.193	0.216	0.231	0.239	0.241	0.236	0.224	0.205	0.183	0.156	0.126	0.094	0.064	0.038	0.017	0.000	0.000	0.000	0.004	0.017	0.032	0.048	0.066	0.083	0.096	0.107	0.113	0.117	0.116	0.111	0.101	0.088	0.069	0.048	0.025	0.000
VERTICAL CURVE ORDINATE	0.000	0.030	0.060	0.091	0.120	0.147	0.169	0.186	0.199	0.207	0.211	0.210	0.205	0.195	0.181	0.162	0.138	0.111	0.078	0.041	0.000	0.038	0.072	0.101	0.127	0.149	0.167	0.181	0.191	0.197	0.199	0.197	0.191	0.181	0.167	0.149	0.127	0.101	0.072	0.038	0.000
REQUIRED CAMBER	0	7/8"	1 3/4"	2 5/8"	3 3/8"	4 1/16"	4 5/8"	5"	5 1/4"	5 3/8"	5 3/8"	5 3/16"	4 15/16"	4 9/16"	4 1/16"	3 7/16"	2 13/16"	2 1/8"	1 3/8"	11/16"	0	7/16"	7/8"	1 1/4"	1 3/4"	2 3/16"	2 9/16"	2 15/16"	3 5/16"	3 1/2"	3 11/16"	3 3/4"	3 11/16"	3 9/16"	3 5/16"	3"	2 9/16"	2 1/16"	1 7/16"	3/4"	0

DEAD LOAD DEFLECTION TABLE FOR GIRDERS

GIRDER #2

TWENTIETH POINTS	SPAN "A" 0	.05	.10	.15	.20	.25	.30	.35	.40	.45	.50	.55	.60	.65	.70	.75	.80	.85	.90	.95	SPAN "B" 0	.05	.10	.15	.20	.25	.30	.35	.40	.45	.50	.55	.60	.65	.70	.75	.80	.85	.90	.95	0
DEFLECTION DUE TO WEIGHT OF GIRDER	0.000	0.011	0.022	0.031	0.040	0.047	0.053	0.057	0.059	0.060	0.059	0.055	0.051	0.045	0.038	0.031	0.023	0.016	0.009	0.003	0.000	0.000	0.000	0.002	0.006	0.009	0.013	0.018	0.021	0.025	0.027	0.029	0.030	0.029	0.028	0.025	0.022	0.017	0.012	0.006	0.000
DEFLECTION DUE TO WEIGHT OF SLAB ✳	0.000	0.032	0.063	0.091	0.117	0.138	0.155	0.166	0.173	0.174	0.170	0.161	0.148	0.132	0.111	0.090	0.067	0.046	0.027	0.010	0.000	0.000	0.000	0.006	0.015	0.026	0.037	0.049	0.061	0.070	0.077	0.082	0.085	0.084	0.080	0.073	0.063	0.049	0.034	0.018	0.000
DEFLECTION DUE TO WEIGHT OF BARRIER RAIL	0.000	0.003	0.007	0.009	0.012	0.014	0.016	0.018	0.018	0.019	0.018	0.018	0.016	0.015	0.012	0.010	0.008	0.005	0.003	0.001	0.000	0.000	0.000	0.001	0.002	0.004	0.005	0.006	0.007	0.008	0.009	0.009	0.010	0.009	0.009	0.008	0.007	0.005	0.004	0.002	0.000
TOTAL DEAD LOAD DEFLECTION	0.000	0.046	0.092	0.131	0.169	0.199	0.224	0.241	0.250	0.253	0.247	0.234	0.215	0.192	0.161	0.131	0.098	0.067	0.039	0.014	0.000	0.000	0.000	0.009	0.023	0.039	0.055	0.073	0.089	0.103	0.113	0.120	0.125	0.122	0.117	0.106	0.092	0.071	0.050	0.026	0.000
VERTICAL CURVE ORDINATE	0.000	0.034	0.068	0.102	0.133	0.159	0.181	0.198	0.210	0.218	0.221	0.220	0.214	0.203	0.188	0.168	0.144	0.115	0.081	0.043	0.000	0.037	0.070	0.099	0.124	0.146	0.163	0.177	0.187	0.193	0.194	0.193	0.187	0.177	0.163	0.146	0.124	0.099	0.070	0.037	0.000
REQUIRED CAMBER	0	15/16"	1 15/16"	2 13/16"	3 5/8"	4 5/16"	4 7/8"	5 1/4"	5 1/2"	5 5/8"	5 5/8"	5 7/16"	5 1/8"	4 3/4"	4 3/16"	3 9/16"	2 7/8"	2 3/16"	1 7/16"	11/16"	0	7/16"	13/16"	1 5/16"	1 3/4"	2 1/4"	2 5/8"	3"	3 5/16"	3 9/16"	3 11/16"	3 3/4"	3 3/4"	3 9/16"	3 3/8"	3"	2 9/16"	2 1/16"	1 7/16"	3/4"	0

DEAD LOAD DEFLECTION TABLE FOR GIRDERS

GIRDER #3

TWENTIETH POINTS	SPAN "A" 0	.05	.10	.15	.20	.25	.30	.35	.40	.45	.50	.55	.60	.65	.70	.75	.80	.85	.90	.95	SPAN "B" 0	.05	.10	.15	.20	.25	.30	.35	.40	.45	.50	.55	.60	.65	.70	.75	.80	.85	.90	.95	0
DEFLECTION DUE TO WEIGHT OF GIRDER	0.000	0.012	0.023	0.033	0.043	0.050	0.056	0.061	0.063	0.063	0.062	0.059	0.054	0.047	0.040	0.032	0.024	0.016	0.009	0.003	0.000	0.000	0.001	0.003	0.007	0.011	0.015	0.019	0.023	0.026	0.029	0.031	0.031	0.031	0.029	0.027	0.023	0.018	0.013	0.006	0.000
DEFLECTION DUE TO WEIGHT OF SLAB ✳	0.000	0.034	0.067	0.097	0.124	0.147	0.165	0.177	0.184	0.185	0.180	0.171	0.157	0.138	0.117	0.093	0.069	0.047	0.026	0.010	0.000	0.000	0.001	0.009	0.019	0.030	0.043	0.055	0.066	0.076	0.083	0.089	0.090	0.089	0.085	0.077	0.066	0.052	0.036	0.019	0.000
DEFLECTION DUE TO WEIGHT OF BARRIER RAIL	0.000	0.004	0.007	0.010	0.013	0.015	0.017	0.019	0.020	0.020	0.020	0.019	0.017	0.015	0.013	0.011	0.008	0.006	0.003	0.001	0.000	0.000	0.000	0.001	0.003	0.004	0.005	0.007	0.008	0.009	0.010	0.010	0.010	0.010	0.009	0.008	0.007	0.006	0.004	0.002	0.000
TOTAL DEAD LOAD DEFLECTION	0.000	0.050	0.097	0.140	0.180	0.212	0.238	0.257	0.267	0.268	0.262	0.249	0.228	0.200	0.170	0.136	0.101	0.069	0.038	0.014	0.000	0.000	0.002	0.013	0.029	0.045	0.063	0.081	0.097	0.111	0.122	0.130	0.131	0.130	0.123	0.112	0.096	0.076	0.053	0.027	0.000
VERTICAL CURVE ORDINATE	0.000	0.038	0.077	0.112	0.143	0.170	0.191	0.208	0.220	0.228	0.231	0.229	0.222	0.211	0.195	0.174	0.149	0.119	0.084	0.044	0.000	0.036	0.069	0.097	0.122	0.143	0.160	0.173	0.183	0.189	0.190	0.189	0.183	0.173	0.160	0.143	0.122	0.097	0.069	0.036	0.000
REQUIRED CAMBER	0	1 1/16"	2 1/16"	3"	3 7/8"	4 9/16"	5 1/8"	5 9/16"	5 7/8"	5 15/16"	5 15/16"	5 3/4"	5 3/8"	4 15/16"	4 3/8"	3 3/4"	3"	2 1/4"	1 7/16"	11/16"	0	7/16"	7/8"	1 5/16"	1 13/16"	2 1/4"	2 11/16"	3 1/16"	3 3/8"	3 5/8"	3 3/4"	3 13/16"	3 3/4"	3 5/8"	3 3/8"	3 1/16"	2 5/8"	2 1/16"	1 7/16"	3/4"	0

✳ INCLUDES SLAB, BUILDUPS & STAY-IN-PLACE FORMS.
ALL VALUES ARE SHOWN IN FEET (DECIMAL FORM), EXCEPT "REQUIRED CAMBER", WHICH IS GIVEN IN INCHES (FRACTION FORM).
DEFLECTIONS ARE TAKEN AT TWENTIETH POINTS BETWEEN BEARINGS.

NOTE :
ORDINATE DUE TO SUPERELEVATION AND CAMBER DISSIPATION DUE TO HEAT CURVING ARE ZERO FOR EACH GIRDER.

PROJECT NO. R-2417 C
LEE COUNTY
STATION: 665+35.34-LREV-

SHEET 1 OF 2

STATE OF NORTH CAROLINA
DEPARTMENT OF TRANSPORTATION
RALEIGH

SUPERSTRUCTURE
DEAD LOAD DEFLECTIONS

NORTH CAROLINA PROFESSIONAL SEAL 029441 ENGINEER KRISTY W. ALFORD
8/17/09

REVISIONS						SHEET NO.
NO.	BY:	DATE:	NO.	BY:	DATE:	S-84
1			3			TOTAL SHEETS
2			4			104

DRAWN BY : MIKE BRITT DATE : 1-8-09
CHECKED BY : D.G. ELY DATE : 1-30-09

14-AUG-2009 08:42
k:\structures\str_3\super_draw\r2417c_str3_dl.dgn
kalford

STR. #3

DEAD LOAD DEFLECTION TABLE FOR GIRDERS

GIRDER #4

TWENTIETH POINTS	SPAN "A" 0	.05	.10	.15	.20	.25	.30	.35	.40	.45	.50	.55	.60	.65	.70	.75	.80	.85	.90	.95	0
DEFLECTION DUE TO WEIGHT OF GIRDER	0.000	0.013	0.025	0.036	0.046	0.055	0.061	0.066	0.068	0.068	0.066	0.062	0.057	0.050	0.042	0.033	0.024	0.016	0.009	0.003	0.000
DEFLECTION DUE TO WEIGHT OF SLAB *	0.000	0.037	0.073	0.106	0.135	0.159	0.178	0.191	0.198	0.198	0.193	0.182	0.165	0.145	0.122	0.096	0.070	0.046	0.025	0.009	0.000
DEFLECTION DUE TO WEIGHT OF BARRIER RAIL	0.000	0.004	0.008	0.011	0.014	0.017	0.019	0.020	0.021	0.021	0.021	0.020	0.018	0.016	0.014	0.011	0.008	0.006	0.003	0.001	0.000
TOTAL DEAD LOAD DEFLECTION	0.000	0.054	0.106	0.153	0.195	0.231	0.258	0.277	0.287	0.287	0.280	0.264	0.240	0.211	0.178	0.140	0.102	0.068	0.037	0.013	0.000
VERTICAL CURVE ORDINATE	0.000	0.043	0.083	0.120	0.151	0.177	0.199	0.216	0.228	0.236	0.238	0.236	0.229	0.217	0.200	0.179	0.153	0.122	0.086	0.045	0.000
REQUIRED CAMBER	0	1 3/16"	2 1/4"	3 1/4"	4 1/8"	4 7/8"	5 1/2"	5 15/16"	6 3/16"	6 1/4"	6 3/16"	6"	5 5/8"	5 1/8"	4 9/16"	3 13/16"	3 1/16"	2 1/4"	1 1/2"	11/16"	0

TWENTIETH POINTS	SPAN "B" 0	.05	.10	.15	.20	.25	.30	.35	.40	.45	.50	.55	.60	.65	.70	.75	.80	.85	.90	.95	0
DEFLECTION DUE TO WEIGHT OF GIRDER	0.000	0.002	0.004	0.008	0.012	0.017	0.022	0.026	0.029	0.032	0.033	0.034	0.033	0.032	0.029	0.025	0.019	0.014	0.007	0.000
DEFLECTION DUE TO WEIGHT OF SLAB *	0.000	0.004	0.012	0.022	0.035	0.048	0.062	0.074	0.084	0.091	0.096	0.098	0.096	0.091	0.083	0.071	0.056	0.039	0.020	0.000
DEFLECTION DUE TO WEIGHT OF BARRIER RAIL	0.000	0.001	0.002	0.003	0.005	0.006	0.007	0.009	0.010	0.010	0.011	0.011	0.011	0.010	0.009	0.008	0.006	0.004	0.002	0.000
TOTAL DEAD LOAD DEFLECTION	0.000	0.007	0.018	0.033	0.052	0.071	0.091	0.109	0.123	0.133	0.140	0.143	0.140	0.133	0.121	0.104	0.081	0.057	0.029	0.000
VERTICAL CURVE ORDINATE	0.035	0.067	0.095	0.119	0.140	0.157	0.170	0.179	0.185	0.187	0.185	0.179	0.170	0.157	0.140	0.119	0.095	0.067	0.035	0.000
REQUIRED CAMBER	7/16"	7/8"	1 3/8"	1 13/16"	2 5/16"	2 3/4"	3 1/8"	3 7/16"	3 11/16"	3 13/16"	3 7/8"	3 7/8"	3 3/4"	3 1/2"	3 1/8"	2 11/16"	2 1/8"	1 1/2"	3/4"	0

DEAD LOAD DEFLECTION TABLE FOR GIRDERS

GIRDER #5

TWENTIETH POINTS	SPAN "A" 0	.05	.10	.15	.20	.25	.30	.35	.40	.45	.50	.55	.60	.65	.70	.75	.80	.85	.90	.95	0
DEFLECTION DUE TO WEIGHT OF GIRDER	0.000	0.014	0.028	0.041	0.052	0.061	0.068	0.072	0.074	0.074	0.071	0.066	0.060	0.052	0.042	0.033	0.024	0.015	0.008	0.003	0.000
DEFLECTION DUE TO WEIGHT OF SLAB *	0.000	0.042	0.083	0.119	0.151	0.178	0.198	0.210	0.216	0.216	0.208	0.193	0.175	0.151	0.124	0.096	0.069	0.044	0.023	0.008	0.000
DEFLECTION DUE TO WEIGHT OF BARRIER RAIL	0.000	0.004	0.009	0.013	0.016	0.019	0.021	0.023	0.023	0.024	0.023	0.022	0.020	0.017	0.014	0.011	0.008	0.005	0.003	0.001	0.000
TOTAL DEAD LOAD DEFLECTION	0.000	0.060	0.120	0.173	0.219	0.258	0.287	0.305	0.313	0.314	0.302	0.281	0.255	0.220	0.180	0.140	0.101	0.064	0.034	0.012	0.000
VERTICAL CURVE ORDINATE	0.000	0.046	0.088	0.124	0.156	0.183	0.205	0.222	0.234	0.242	0.244	0.242	0.234	0.222	0.205	0.183	0.156	0.125	0.088	0.046	0.000
REQUIRED CAMBER	0	1 1/4"	2 1/2"	3 9/16"	4 1/2"	5 5/16"	5 7/8"	6 5/16"	6 9/16"	6 11/16"	6 9/16"	6 1/4"	5 7/8"	5 5/16"	4 5/8"	3 7/8"	3 1/16"	2 1/4"	1 7/16"	11/16"	0

TWENTIETH POINTS	SPAN "B" 0	.05	.10	.15	.20	.25	.30	.35	.40	.45	.50	.55	.60	.65	.70	.75	.80	.85	.90	.95	0
DEFLECTION DUE TO WEIGHT OF GIRDER	0.000	0.001	0.003	0.006	0.010	0.015	0.020	0.025	0.029	0.033	0.035	0.037	0.037	0.037	0.034	0.031	0.026	0.021	0.014	0.007	0.000
DEFLECTION DUE TO WEIGHT OF SLAB *	0.000	0.002	0.007	0.015	0.028	0.042	0.056	0.071	0.083	0.094	0.101	0.106	0.108	0.105	0.099	0.090	0.076	0.060	0.042	0.022	0.000
DEFLECTION DUE TO WEIGHT OF BARRIER RAIL	0.000	0.000	0.001	0.002	0.004	0.005	0.007	0.009	0.010	0.011	0.012	0.012	0.012	0.012	0.011	0.010	0.008	0.007	0.005	0.002	0.000
TOTAL DEAD LOAD DEFLECTION	0.000	0.003	0.011	0.023	0.042	0.062	0.083	0.105	0.122	0.138	0.148	0.155	0.157	0.154	0.144	0.131	0.110	0.088	0.061	0.031	0.000
VERTICAL CURVE ORDINATE	0.035	0.066	0.093	0.117	0.137	0.154	0.166	0.175	0.181	0.183	0.181	0.175	0.166	0.154	0.137	0.117	0.093	0.066	0.035	0.000
REQUIRED CAMBER	7/16"	15/16"	1 3/8"	1 15/16"	2 3/8"	2 7/8"	3 1/4"	3 9/16"	3 13/16"	4"	4 1/16"	4"	3 13/16"	3 9/16"	3 3/16"	2 3/4"	2 3/16"	1 1/2"	13/16"	0

* INCLUDES SLAB, BUILDUPS & STAY-IN-PLACE FORMS.
ALL VALUES ARE SHOWN IN FEET (DECIMAL FORM), EXCEPT "REQUIRED CAMBER", WHICH IS GIVEN IN INCHES (FRACTION FORM).
DEFLECTIONS ARE TAKEN AT TWENTIETH POINTS BETWEEN BEARINGS.

NOTE :
ORDINATE DUE TO SUPERELEVATION AND
CAMBER DISSIPATION DUE TO HEAT CURVING
ARE ZERO FOR EACH GIRDER.

PROJECT NO. R-2417 C
LEE COUNTY
STATION: 665+35.34-LREV-

SHEET 2 OF 2

STATE OF NORTH CAROLINA
DEPARTMENT OF TRANSPORTATION
RALEIGH

SUPERSTRUCTURE

DEAD LOAD DEFLECTIONS

NORTH CAROLINA PROFESSIONAL SEAL 029441 ENGINEER KRISTY W. ALFORD
8/17/09

REVISIONS								SHEET NO.
NO.	BY:	DATE:	NO.	BY:	DATE:			S-85
1			3					TOTAL SHEETS
2			4					104

DRAWN BY : MIKE BRITT DATE : 1-12-09
CHECKED BY : D.G. ELY DATE : 1-30-09

14-AUG-2009 08:43
k:\structures\str_3\super_draw\r2417c_str3_dl.dgn
kalford

STR. #3

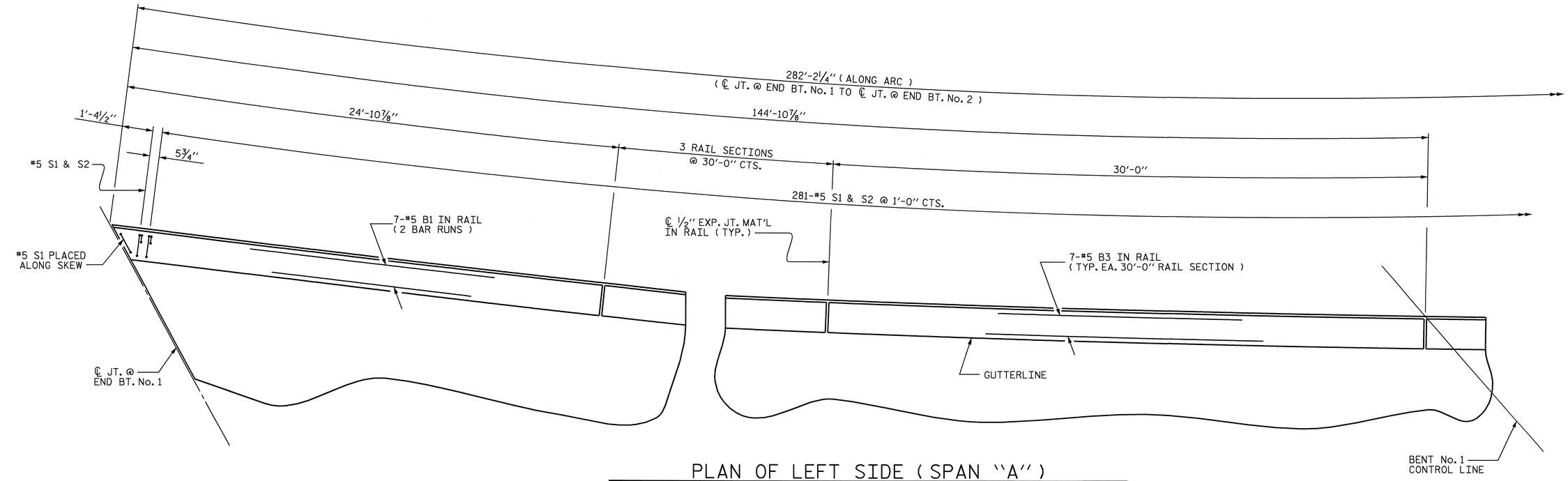

PLAN OF LEFT SIDE (SPAN "A")

ALL DIMENSIONS ARE TAKEN ALONG ARC AT OUTSIDE EDGE OF SUPERSTRUCTURE

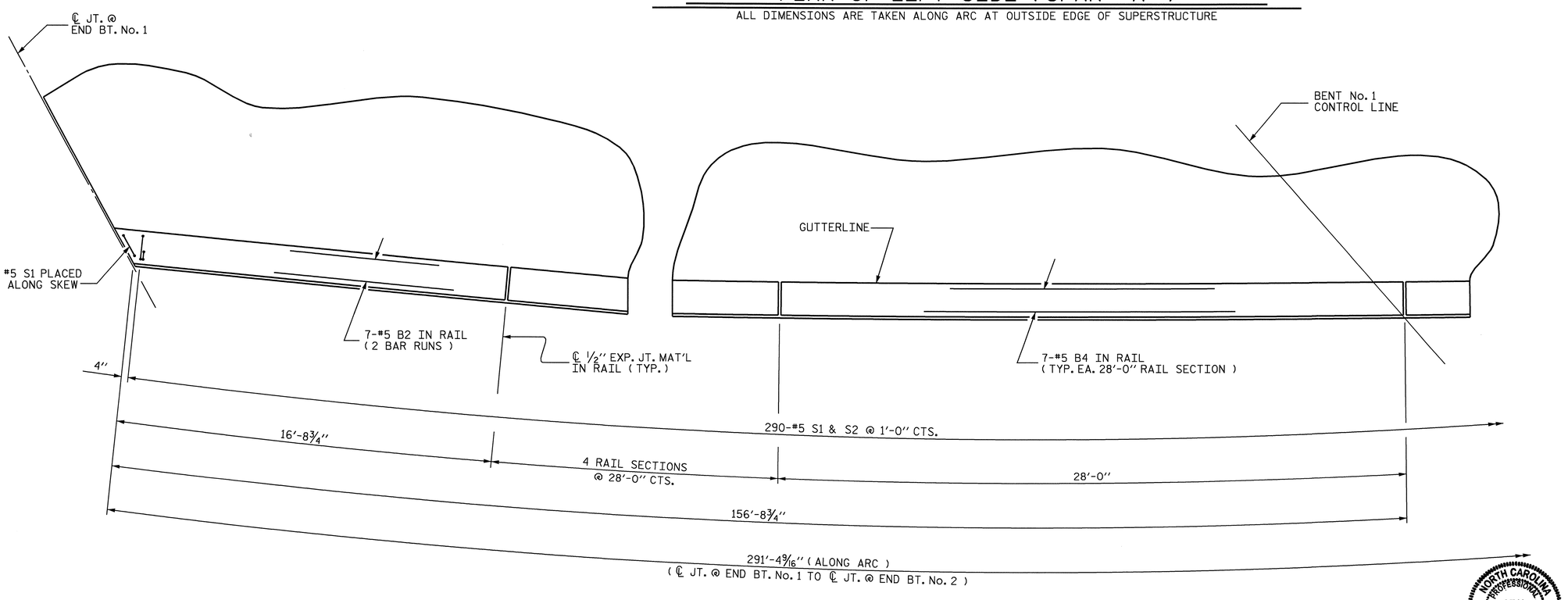

PLAN OF RIGHT SIDE (SPAN "A")

ALL DIMENSIONS ARE TAKEN ALONG ARC AT OUTSIDE EDGE OF SUPERSTRUCTURE

PROJECT NO. R-2417 C

LEE COUNTY

STATION: 665+35.34-LREV-

SHEET 1 OF 3

STATE OF NORTH CAROLINA
DEPARTMENT OF TRANSPORTATION
RALEIGH

SUPERSTRUCTURE
CONCRETE
BARRIER RAIL
(SPAN "A")

NORTH CAROLINA PROFESSIONAL SEAL 029441 ENGINEER KRISTY W. ALFORD
8/19/09

REVISIONS						SHEET NO.
NO.	BY:	DATE:	NO.	BY:	DATE:	S-86
1			3			TOTAL SHEETS
2			4			104

DRAWN BY : MIKE BRITT DATE : 12-31-08
CHECKED BY : D.G. ELY DATE : 2-3-09

14-AUG-2009 08:43
k:\structures\str_3\super_draw\r2417c_str3_br.dgn
kalford

STR. #3

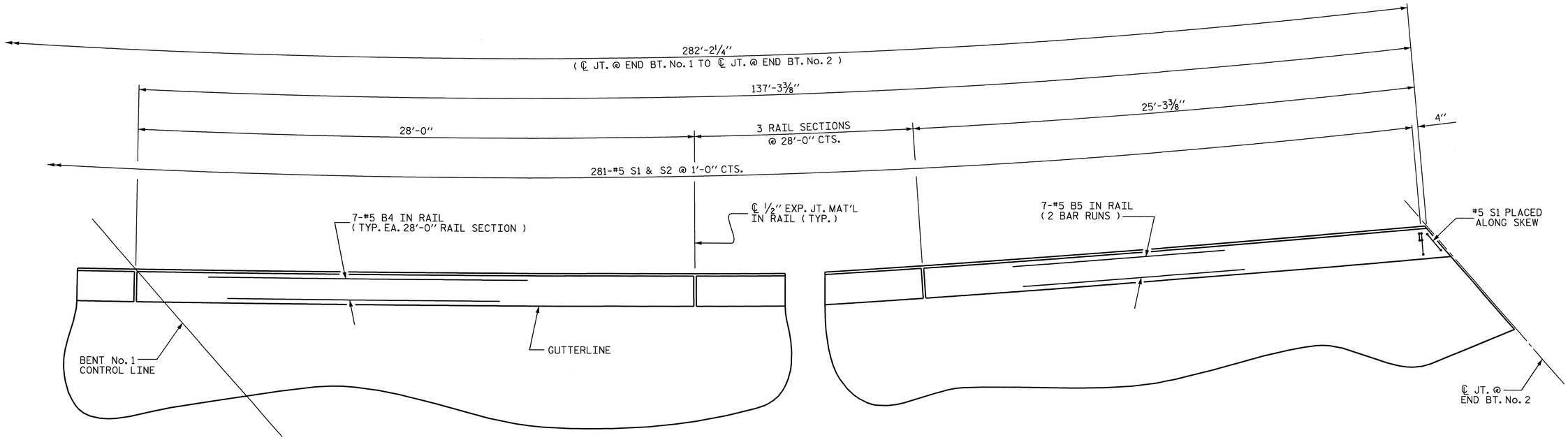

PLAN OF LEFT SIDE (SPAN "B")

ALL DIMENSIONS ARE TAKEN ALONG ARC AT OUTSIDE EDGE OF SUPERSTRUCTURE

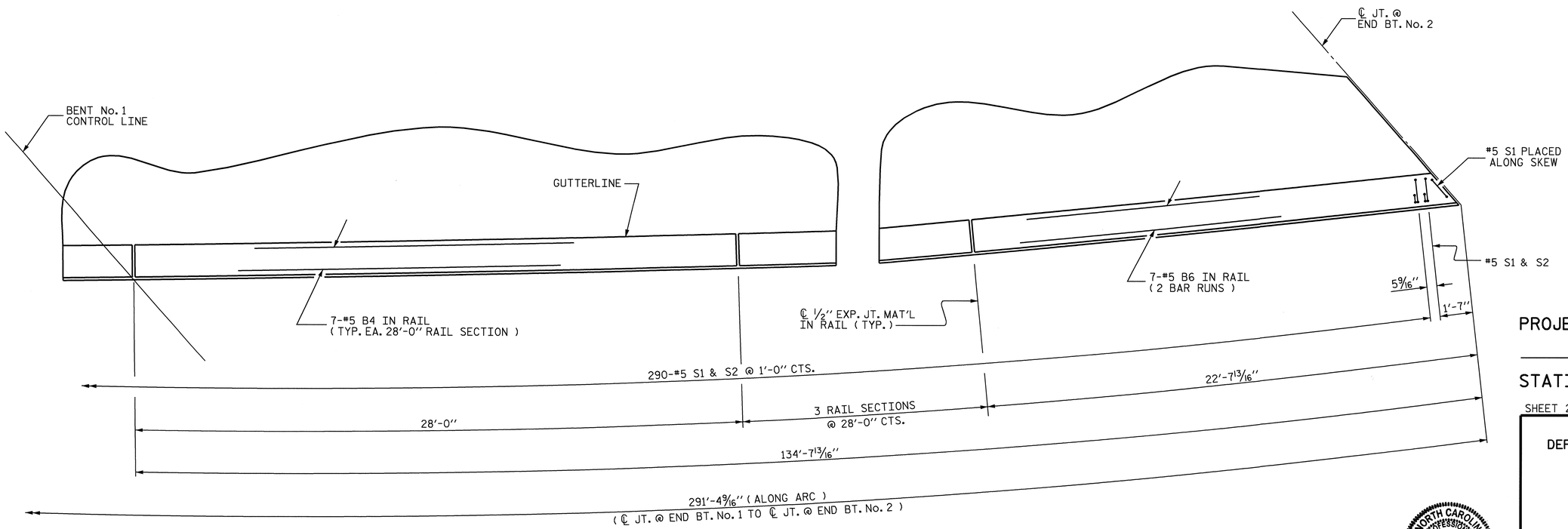

PLAN OF RIGHT SIDE (SPAN "B")

ALL DIMENSIONS ARE TAKEN ALONG ARC AT OUTSIDE EDGE OF SUPERSTRUCTURE

NORTH CAROLINA PROFESSIONAL SEAL 029441 ENGINEER KRISTY W. ALFORD

01/14/09

PROJECT NO. R-2417 C

LEE COUNTY

STATION: 665+35.34-LREV-

SHEET 2 OF 3

STATE OF NORTH CAROLINA
DEPARTMENT OF TRANSPORTATION
RALEIGH

SUPERSTRUCTURE
CONCRETE
BARRIER RAIL
(SPAN "B")

REVISIONS						SHEET NO.
NO.	BY:	DATE:	NO.	BY:	DATE:	S-87
1			3			TOTAL SHEETS
2			4			104

DRAWN BY : MIKE BRITT DATE : 12-31-08
CHECKED BY : D.G. ELY DATE : 2-3-09

14-AUG-2009 08:43
k:\structures\str_3\super_draw\r2417c_str3_br.dgn
kalford

STR. #3

BAR TYPES

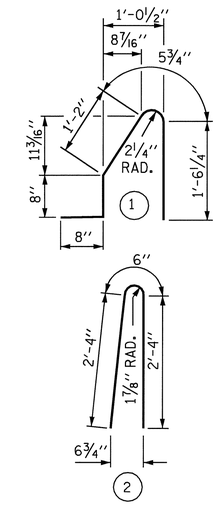

ALL BAR DIMENSIONS ARE OUT TO OUT

BILL OF MATERIAL

FOR CONCRETE BARRIER RAIL ONLY

BAR	NO.	SIZE	TYPE	LENGTH	WEIGHT
✳ S1	577	#5	1	4'-6"	2708
✳ S2	573	#5	2	5'-2"	3088
✳ B1	14	#5	STR	13'-10"	202
✳ B2	14	#5	STR	10'-4"	151
✳ B3	28	#5	STR	29'-7"	864
✳ B4	91	#5	STR	27'-7"	2618
✳ B5	14	#5	STR	14'-8"	214
✳ B6	14	#5	STR	12'-8"	185
✳ EPOXY COATED REINFORCING STEEL					10,030 LBS.
CLASS AA CONCRETE					57.5 CU. YDS.
CONCRETE BARRIER RAIL					573.57 LIN. FT.

NOTES

THE BARRIER RAIL IN A CONTINUOUS UNIT SHALL NOT BE CAST UNTIL ALL SLAB CONCRETE IN THAT UNIT HAS BEEN CAST AND HAS REACHED A MINIMUM COMPRESSIVE STRENGTH OF 3,000 PSI.

ALL REINFORCING STEEL IN BARRIER RAILS SHALL BE EPOXY COATED.

VERTICAL GROOVED CONTRACTION JOINTS, 1/2" IN DEPTH, SHALL BE TOOLED IN ALL EXPOSED FACES OF THE BARRIER RAIL AND IN ACCORDANCE WITH ARTICLE 825-10(B) OF THE STANDARD SPECIFICATIONS. THE CONTRACTION JOINT SHALL BE LOCATED AT EACH THIRD POINT BETWEEN BARRIER RAIL EXPANSION JOINTS. ONLY ONE CONTRACTION JOINT IS REQUIRED AT MIDPOINT OF BARRIER RAIL SEGMENTS LESS THAN 20 FEET IN LENGTH AND NO CONTRACTION JOINTS ARE REQUIRED FOR THOSE SEGMENTS LESS THAN 10 FEET IN LENGTH.

THE #5 S1 & S2 BARS MAY BE SHIFTED SLIGHTLY IN ORDER TO MAINTAIN A 2" MINIMUM CLEARANCE TO THE 1/2" EXPANSION JOINT MATERIAL IN RAIL.

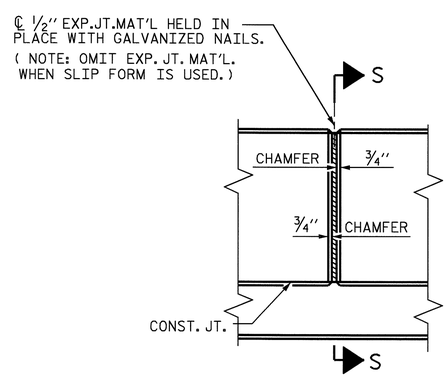

ELEVATION AT EXPANSION JOINTS

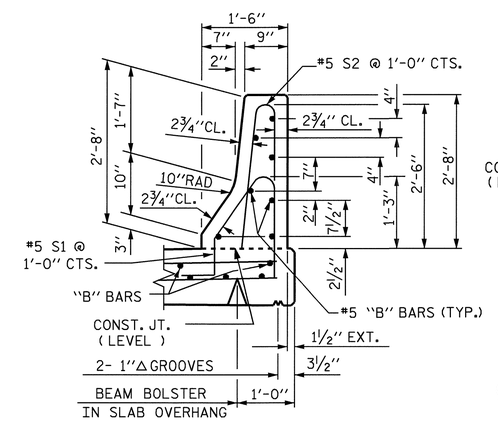

SECTION THRU RAIL

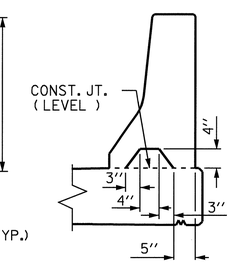

SECTION S-S

AT DAM IN OPEN JOINT
(THIS IS TO BE USED ONLY WHEN SLIP FORM IS USED)

BARRIER RAIL DETAILS

PROJECT NO. R-2417 C

LEE COUNTY

STATION: 665+35.34-LREV-

SHEET 3 OF 3

STATE OF NORTH CAROLINA
DEPARTMENT OF TRANSPORTATION
RALEIGH

STANDARD

CONCRETE BARRIER RAIL

NORTH CAROLINA PROFESSIONAL SEAL 029441 ENGINEER KRISTY W. ALFORD
8/14/09

REVISIONS						SHEET NO.
NO.	BY:	DATE:	NO.	BY:	DATE:	S-88
1			3			TOTAL SHEETS
2			4			104

ASSEMBLED BY : MIKE BRITT		DATE : 1-5-09	
CHECKED BY : D.G. ELY		DATE : 2-3-09	
DRAWN BY : ARB 5/87	REV. 10/17/00	RWW/LES	
CHECKED BY : SJD 9/87	REV. 5/7/03R	RWW/JTE	
	REV. 5/1/06	TLA/GM	

14-AUG-2009 08:44
k:\structures\str_3\super_draw\r2417c_str3_br.dgn
kalford

STD. NO. CBR1

STR. #3

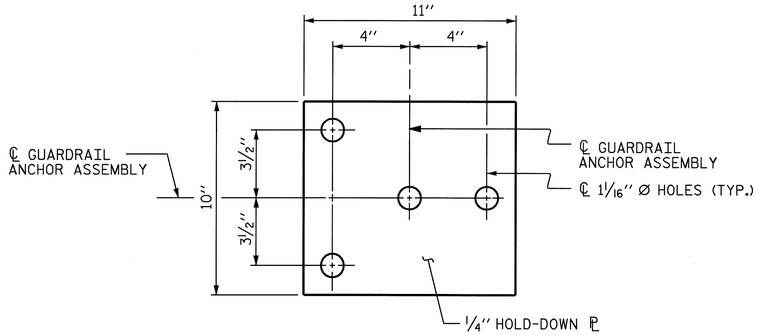

PLAN

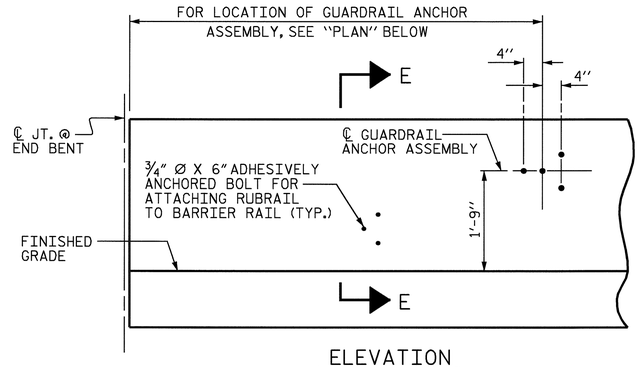

ELEVATION

FOR LOCATION OF RUBRAIL, SEE ROADWAY STD. 862.03

NOTES

THE GUARDRAIL ANCHOR ASSEMBLY SHALL CONSIST OF A 1/4'' HOLD DOWN PLATE AND 4 - 7/8'' Ø BOLTS WITH NUTS AND WASHERS, RUBRAIL, AND ADHESIVELY ANCHORED BOLTS.

THE HOLD-DOWN PLATE SHALL CONFORM TO AASHTO M270 GRADE 36. AFTER FABRICATION, THE HOLD-DOWN PLATE SHALL BE HOT-DIP GALVANIZED IN ACCORDANCE WITH AASHTO M111.

BOLTS SHALL CONFORM TO THE REQUIREMENTS OF ASTM A307 AND NUTS SHALL CONFORM TO THE REQUIREMENTS OF AASHTO M291. BOLTS, NUTS AND WASHERS SHALL BE GALVANIZED. (AT THE CONTRACTOR'S OPTION, STAINLESS STEEL BOLTS, NUTS AND WASHERS MAY BE USED AS AN ALTERNATE FOR THE 7/8'' Ø GALVANIZED BOLTS, NUTS AND WASHERS. THEY SHALL CONFORM TO OR EXCEED THE MECHANICAL REQUIREMENTS OF ASTM A307. THE USE OF THIS ALTERNATE SHALL BE APPROVED BY THE ENGINEER.)

THE GUARDRAIL ANCHOR ASSEMBLY IS REQUIRED AT ALL POINTS WHERE APPROACH GUARDRAIL IS TO BE ATTACHED TO THE END OF BARRIER RAIL. FOR POINTS OF ATTACHMENT, SEE SKETCH.

AFTER INSTALLATION, THE EXPOSED THREAD OF THE BOLT SHALL BE BURRED WITH A SHARP POINTED TOOL.

THE COST OF THE GUARDRAIL ANCHOR ASSEMBLY SHALL BE INCLUDED IN THE UNIT CONTRACT PRICE BID FOR CONCRETE BARRIER RAIL.

THE 1 1/4'' Ø HOLES SHALL BE FORMED OR DRILLED WITH A CORE BIT. IMPACT TOOLS WILL NOT BE PERMITTED. ANY CONCRETE DAMAGED BY THIS WORK SHALL BE REPAIRED TO THE SATISFACTION OF THE ENGINEER.

THE C6 X 8.2 RUBRAIL IS TO BE ADHESIVELY ANCHORED TO THE RAIL USING THREE 3/4" Ø X 6" BOLTS WITH WASHERS. LEVEL ONE FIELD TESTING IS REQUIRED, AND THE YIELD LOAD OF THE 3/4" Ø BOLT IS 12 KIPS. FOR ADHESIVELY ANCHORED ANCHOR BOLTS OR DOWELS, SEE SPECIAL PROVISIONS. SEE ROADWAY STANDARD 862.03 FOR DETAILS AND LOCATION OF THE RUBRAIL.

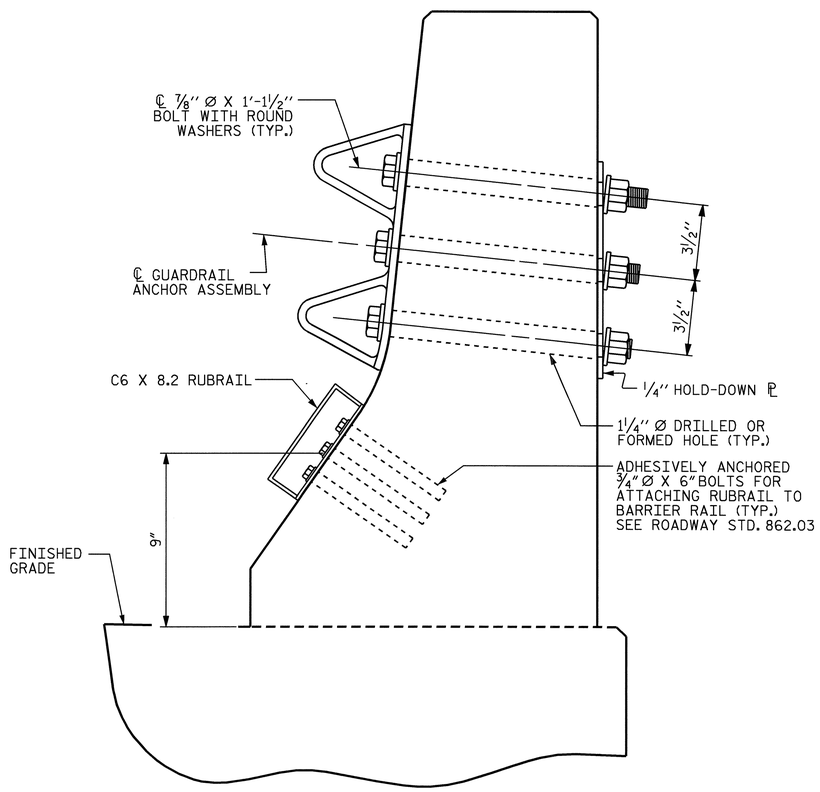

SECTION E-E

GUARDRAIL ANCHOR ASSEMBLY DETAILS

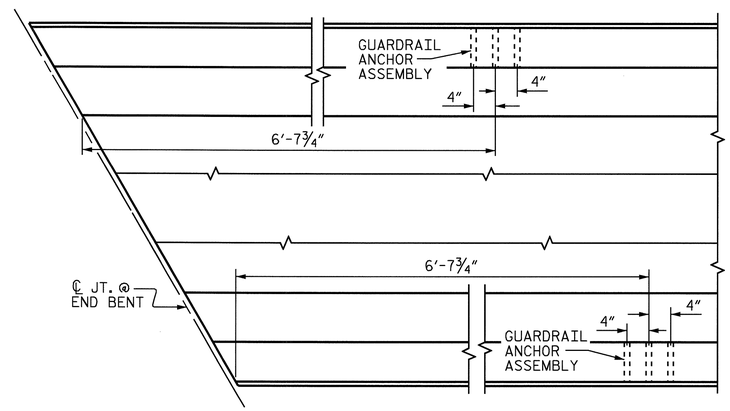

PLAN

LOCATION OF ANCHORS FOR GUARDRAIL

END BENT No. 1 SHOWN, END BENT No. 2 SIMILAR.

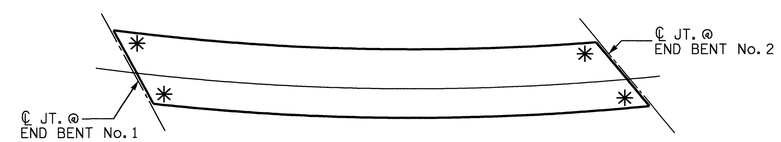

SKETCH SHOWING POINTS OF ATTACHMENTS

✳ DENOTES GUARDRAIL ANCHOR ASSEMBLY

PROJECT NO. R-2417 C

LEE COUNTY

STATION: 665+35.34-LREV-

STATE OF NORTH CAROLINA
DEPARTMENT OF TRANSPORTATION
RALEIGH

STANDARD

GUARDRAIL ANCHORAGE FOR BARRIER RAIL

NORTH CAROLINA PROFESSIONAL SEAL 029441 ENGINEER KRISTY W. ALFORD
8/14/01

REVISIONS						SHEET NO.
NO.	BY:	DATE:	NO.	BY:	DATE:	S-89
1			3			TOTAL SHEETS
2			4			104

ASSEMBLED BY : MIKE BRITT	DATE : 6-11-09
CHECKED BY : K.W. ALFORD	DATE : 6-09
DRAWN BY : TLA 5/06	ADDED 5/1/06R KMM/GM
CHECKED BY : GM 5/06	

14-AUG-2009 08:44
k:\structures\str_3\super_draw\r2417c_str3_gra.dgn
kalford

STD. NO. GRA2

STR. #3

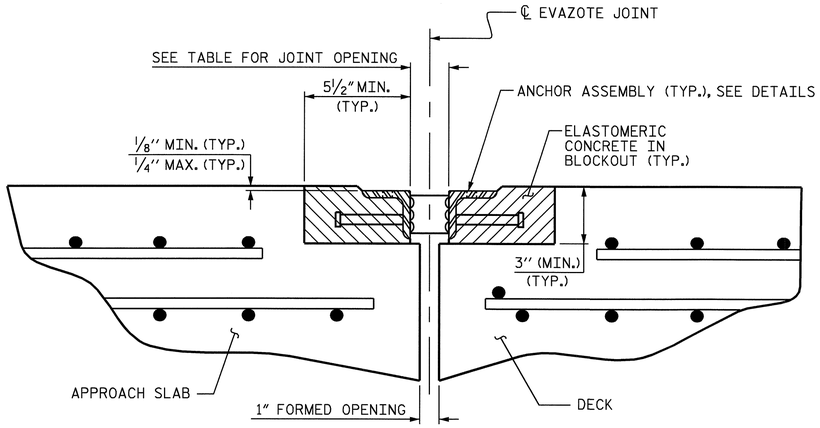

ARMORED JOINT DETAILS

SECTION NORMAL TO JOINT AT END BENT No. 1
END BENT No. 2 SIMILAR

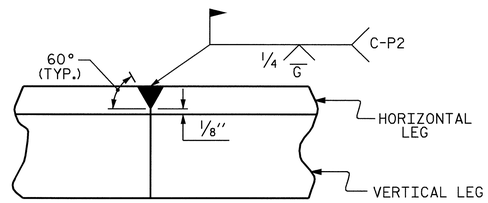

DETAIL- FIELD WELD SPLICE OF ANGLE

NOTES

ANGLES SHALL CONFORM TO AASHTO M270 GRADE 36 STEEL OR APPROVED EQUAL. ALL STUD ANCHORS SHALL CONFORM TO AASHTO M169 GRADES 1010 THRU 1020 OR APPROVED EQUAL.

STUD ANCHORS SHALL BE SHOP WELDED AND ALL HOLES SHALL BE SHOP DRILLED AS SHOWN ON THE PLANS. STUD ANCHORS SHALL BE ELECTRIC ARC END WELDED WITH COMPLETE FUSION.

UPON COMPLETION OF SHOP FABRICATION, THE ENTIRE ANCHOR ASSEMBLY SHALL BE METALLIZED. THE ½" Ø STUD ANCHORS AND ANCHOR TABS NEED NOT BE METALLIZED. SEE SPECIAL PROVISION FOR THERMAL SPRAYED COATINGS (METALLIZATION).

ANCHOR ASSEMBLY SHALL BE MADE CONTINUOUS THE LENGTH OF THE JOINT FROM GUTTER TO GUTTER. FOR FIELD SPLICES AT ALL CROWN BREAK POINTS, THE ENDS OF THE STEEL ANGLES SHALL BE CUT PARALLEL TO THE BRIDGE CENTERLINE. FINISHED FIELD WELDS SHALL BE GROUND SMOOTH AND COATED WITH A MINIMUM THICKNESS OF 4 DRY MILS OF ZINC-RICH PAINT IN ACCORDANCE WITH THE STANDARD SPECIFICATIONS.

ANCHOR ASSEMBLY SEGMENTS SHALL NOT BE LESS THAN 12 FEET NOR MORE THAN 20 FEET IN LENGTH. SHORTER SEGMENTS MAY BE USED AT THE EDGE OF ROADWAY OR AT POINTS OF STAGED CONSTRUCTION.

THE ANCHOR ASSEMBLY SHALL BE SECURED AND LEVELED AS SHOWN IN THE "ARMORED JOINT ANCHOR ASSEMBLY DETAILS". NO SUBMITTALS ARE REQUIRED FOR ⅜" Ø EXPANSION ANCHORS, NUTS OR WASHERS. THE CONTRACTOR MAY SUBMIT FOR APPROVAL AN ALTERNATE METHOD OF ALIGNING AND LEVELING THE ANGLES. THE ALTERNATE METHOD SHALL NOT INCLUDE ANY WELDING TO THE OUTSIDE FACE OF THE ANGLES.

AFTER THE ELASTOMERIC CONCRETE HAS BEEN CAST ON BOTH SIDES OF THE JOINT, REMOVE ANY EXCESS CONCRETE THAT COMES THROUGH THE WEEP HOLES AND THOROUGHLY CLEAN THE ANGLES. ANY DAMAGED STEEL SHALL BE COATED WITH A MINIMUM OF 4 MILS OF ZINC-RICH PAINT IN ACCORDANCE WITH THE STANDARD SPECIFICATIONS.

SEE SPECIAL PROVISIONS FOR EVAZOTE JOINT SEALS.

SEE SPECIAL PROVISIONS FOR ELASTOMERIC CONCRETE.

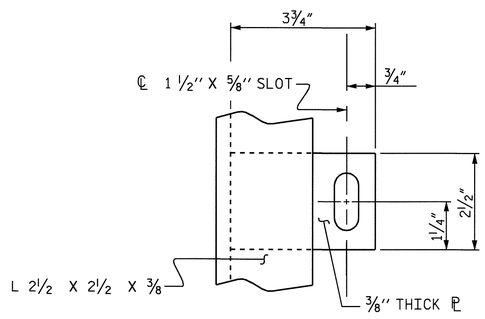

PLAN VIEW OF TAB

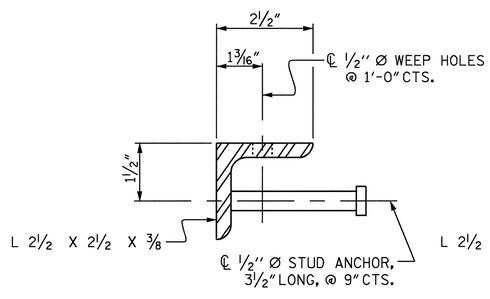

SECTION VIEW OF STUD

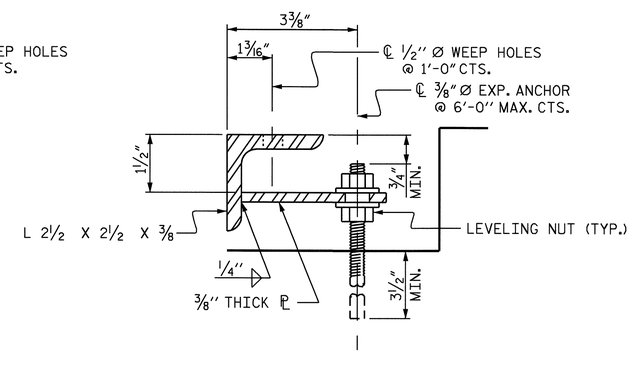

SECTION VIEW OF TAB

ARMORED JOINT ANCHOR ASSEMBLY DETAILS

MOVEMENT AND SETTING AT EVAZOTE JOINT

END BENT No.	SKEW ANGLE	NOMINAL UNCOMPRESSED SEAL WIDTH	TOTAL MOVEMENT (ALONG ℄ RDWY)	PERPENDICULAR JOINT OPENING AT 45° F	PERPENDICULAR JOINT OPENING AT 60° F	PERPENDICULAR JOINT OPENING AT 90° F
1	55°-03'-16"	2½"	1¼"	2 1/16"	1⅞"	1½"
2	54°-44'-08"	2½"	1¼"	2 1/16"	1⅞"	1½"

TOTAL MOVEMENT IS CALCULATED ALONG THE CENTERLINE OF ROADWAY.
JOINT OPENINGS ARE MEASURED PERPENDICULAR TO THE JOINT.

BILL OF MATERIAL

END BENT No.	ELASTOMERIC CONCRETE ✳ (CU. FT.)	TOTAL LENGTH OF ANGLE (FT.)
1	10.6	92.82
2	10.7	93.20

✳ BASED ON THE MINIMUM BLOCKOUT SHOWN.

PROJECT NO. R-2417 C
LEE COUNTY
STATION: 665+35.34-LREV-

STATE OF NORTH CAROLINA
DEPARTMENT OF TRANSPORTATION
RALEIGH

STANDARD
ARMORED EVAZOTE JOINT DETAILS

NORTH CAROLINA PROFESSIONAL SEAL 029441 ENGINEER KRISTY W. ALFORD
6/19/09

REVISIONS						SHEET NO.
NO.	BY:	DATE:	NO.	BY:	DATE:	S-90
1			3			TOTAL SHEETS
2			4			104

ASSEMBLED BY : MIKE BRITT	DATE : 1-13-09
CHECKED BY : D.G. ELY	DATE : 2-2-09
DRAWN BY : EEM 1/96	REV. 7/10/01 LES/RDR
CHECKED BY : RGW 1/96	REV. 5/7/03RR RWW/JTE
	REV. 5/1/06 TLA/GM

14-AUG-2009 08:44
k:\structures\str_3\super_draw\r2417c_str3_aej.dgn
kalford

STD. NO. AEJ1

STR. #3

SUPERSTRUCTURE REINFORCING STEEL LENGTHS ARE BASED ON THE FOLLOWING MINIMUM SPLICE LENGTHS					
BAR SIZE	SUPERSTRUCTURE EXCEPT APPROACH SLABS, PARAPET, AND BARRIER RAIL		APPROACH SLABS		PARAPET AND BARRIER RAIL
	EPOXY COATED	UNCOATED	EPOXY COATED	UNCOATED	
#4	2'-0"	1'-9"	2'-0"	1'-9"	2'-9"
#5	2'-6"	2'-2"	2'-6"	2'-2"	3'-5"
#6	3'-0"	2'-7"	3'-10"	2'-7"	4'-4"
#7	5'-3"	3'-6"			
#8	6'-10"	4'-7"			

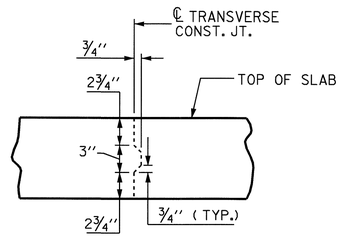

TRANSVERSE CONSTRUCTION JOINT DETAIL

NOTE: REINFORCING STEEL IN SLAB NOT SHOWN. LONGITUDINAL REINFORCING STEEL SHALL BE CONTINUOUS THRU JOINT.

BILL OF MATERIAL

SPAN "A-B"

BAR	No.	SIZE	TYPE	LENGTH	WEIGHT
✳ A1	448	#5	STR.	40'-11"	19119
A2	448	#5	STR.	40'-11"	19119
✳ A101	3	#5	STR.	38'-9"	121
✳ A102	3	#5	STR.	36'-3"	113
✳ A103	3	#5	STR.	33'-8"	105
✳ A104	3	#5	STR.	31'-2"	98
✳ A105	3	#5	STR.	28'-7"	89
✳ A106	3	#5	STR.	26'-0"	81
✳ A107	3	#5	STR.	23'-6"	74
✳ A108	3	#5	STR.	21'-0"	66
✳ A109	3	#5	STR.	18'-5"	58
✳ A110	3	#5	STR.	15'-11"	50
✳ A111	3	#5	STR.	13'-4"	42
✳ A112	3	#5	STR.	10'-10"	34
✳ A113	3	#5	STR.	8'-4"	26
✳ A114	3	#5	STR.	5'-9"	18
✳ A115	3	#5	STR.	3'-3"	10
✳ A116	3	#5	STR.	38'-11"	122
✳ A117	3	#5	STR.	36'-6"	114
✳ A118	3	#5	STR.	34'-1"	107
✳ A119	3	#5	STR.	31'-8"	99
✳ A120	3	#5	STR.	29'-3"	92
✳ A121	3	#5	STR.	26'-10"	84
✳ A122	3	#5	STR.	24'-5"	76
✳ A123	3	#5	STR.	22'-0"	69
✳ A124	3	#5	STR.	19'-6"	61
✳ A125	3	#5	STR.	17'-1"	53
✳ A126	3	#5	STR.	14'-8"	46
✳ A127	3	#5	STR.	12'-3"	38
✳ A128	3	#5	STR.	9'-10"	31
✳ A129	3	#5	STR.	7'-4"	23
✳ A130	3	#5	STR.	4'-11"	15

✳ THESE BARS ARE EPOXY COATED

BAR	No.	SIZE	TYPE	LENGTH	WEIGHT
A201	3	#5	STR.	38'-9"	121
A202	3	#5	STR.	36'-3"	113
A203	3	#5	STR.	33'-8"	105
A204	3	#5	STR.	31'-2"	98
A205	3	#5	STR.	28'-7"	89
A206	3	#5	STR.	26'-0"	81
A207	3	#5	STR.	23'-6"	74
A208	3	#5	STR.	21'-0"	66
A209	3	#5	STR.	18'-5"	58
A210	3	#5	STR.	15'-11"	50
A211	3	#5	STR.	13'-4"	42
A212	3	#5	STR.	10'-10"	34
A213	3	#5	STR.	8'-4"	26
A214	3	#5	STR.	5'-9"	18
A215	3	#5	STR.	3'-3"	10
A216	3	#5	STR.	38'-11"	122
A217	3	#5	STR.	36'-6"	114
A218	3	#5	STR.	34'-1"	107
A219	3	#5	STR.	31'-8"	99
A220	3	#5	STR.	29'-3"	92
A221	3	#5	STR.	26'-10"	84
A222	3	#5	STR.	24'-5"	76
A223	3	#5	STR.	22'-0"	69
A224	3	#5	STR.	19'-6"	61
A225	3	#5	STR.	17'-1"	53
A226	3	#5	STR.	14'-8"	46
A227	3	#5	STR.	12'-3"	38
A228	3	#5	STR.	9'-10"	31
A229	3	#5	STR.	7'-4"	23
A230	3	#5	STR.	4'-11"	15
✳ B1	10	#4	STR.	30'-0"	200
✳ B2	11	#4	STR.	28'-4"	208
✳ B3	52	#4	STR.	26'-9"	929
✳ B4	52	#4	STR.	28'-2"	978
✳ B5	52	#4	STR.	23'-5"	813
✳ B6	52	#4	STR.	23'-1"	802
✳ B7	153	#7	STR.	37'-10"	11832
B8	20	#5	STR.	58'-3"	1215
B9	45	#5	STR.	58'-8"	2754
B10	45	#5	STR.	59'-0"	2769
B11	45	#5	STR.	59'-4"	2785
B12	45	#5	STR.	59'-9"	2804
B13	20	#5	STR.	59'-11"	1250
✳ G1	1	#5	STR.	49'-11"	52
✳ G2	1	#5	STR.	50'-2"	52
✳ G3	6	#6	STR.	8'-0"	72
✳ K1	16	#5	1	8'-4"	139
✳ K2	24	#5	2	8'-9"	219
✳ K3	32	#5	STR.	9'-10"	328
✳ S1	56	#4	3	5'-0"	187

REINFORCING STEEL 34,711 LBS.

✳ EPOXY COATED REINFORCING STEEL 37,945 LBS.

BAR TYPES

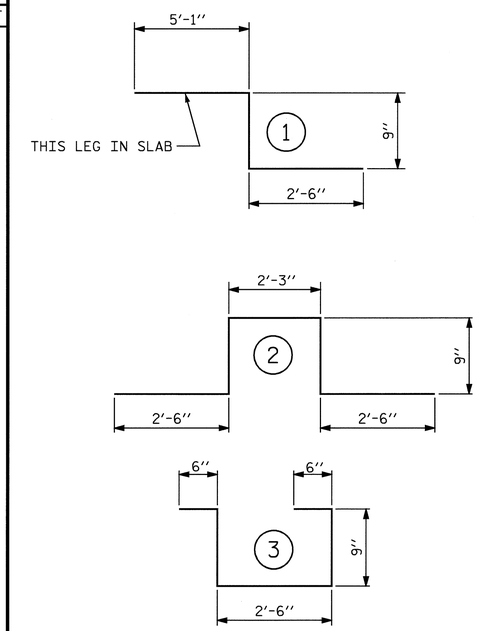

ALL BAR DIMENSIONS ARE OUT TO OUT

SUPERSTRUCTURE BILL OF MATERIAL

	CLASS AA CONCRETE	REINFORCING STEEL	EPOXY COATED REINFORCING STEEL
	(CU.YDS.)	(LBS.)	(LBS.)
POUR #1	109.3		
POUR #2	253.3		
TOTALS✳✳	362.6	34,711	37,945

✳✳ QUANTITIES FOR CONCRETE BARRIER RAIL ARE NOT INCLUDED

GROOVING BRIDGE FLOORS		
APPROACH SLABS	1,641.2	SQ.FT.
BRIDGE DECK	9,980.5	SQ.FT.
TOTAL	11,621.7	SQ.FT.

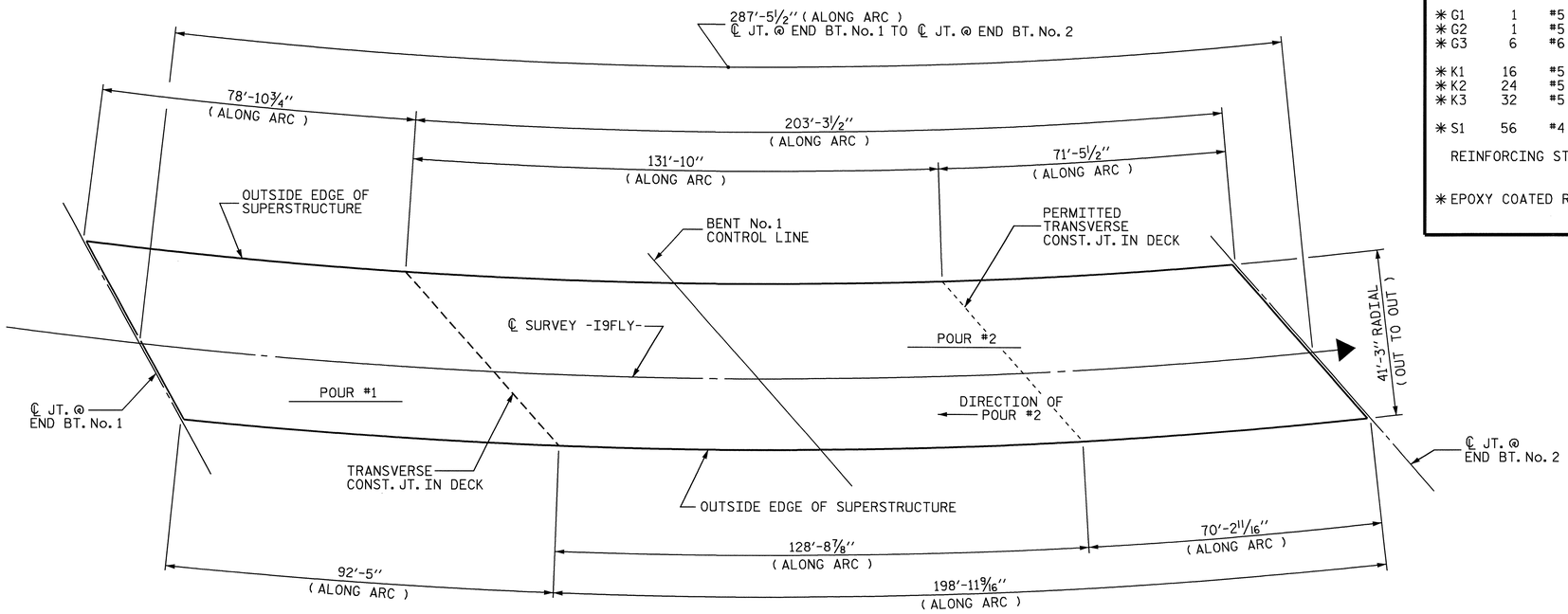

CONCRETE POURING SEQUENCE AND LAYOUT FOR COMPUTING AREA OF REINFORCED CONCRETE DECK SLAB (SQ. FT. = 11,830.0)

PROJECT NO. R-2417 C
LEE COUNTY
STATION: 665+35.34-LREV-

STATE OF NORTH CAROLINA
DEPARTMENT OF TRANSPORTATION
RALEIGH

SUPERSTRUCTURE
BILL OF MATERIAL

NORTH CAROLINA PROFESSIONAL SEAL 029441 ENGINEER KRISTY W. ALFORD
8/19/09

REVISIONS						SHEET NO.
NO.	BY:	DATE:	NO.	BY:	DATE:	S-91
1			3			TOTAL SHEETS
2			4			104

DRAWN BY : MIKE BRITT DATE : 1-14-09
CHECKED BY : D.G. ELY DATE : 2-3-09

14-AUG-2009 08:45
k:\structures\str_3\super_draw\r2417c_str3_bm.dgn
kalford

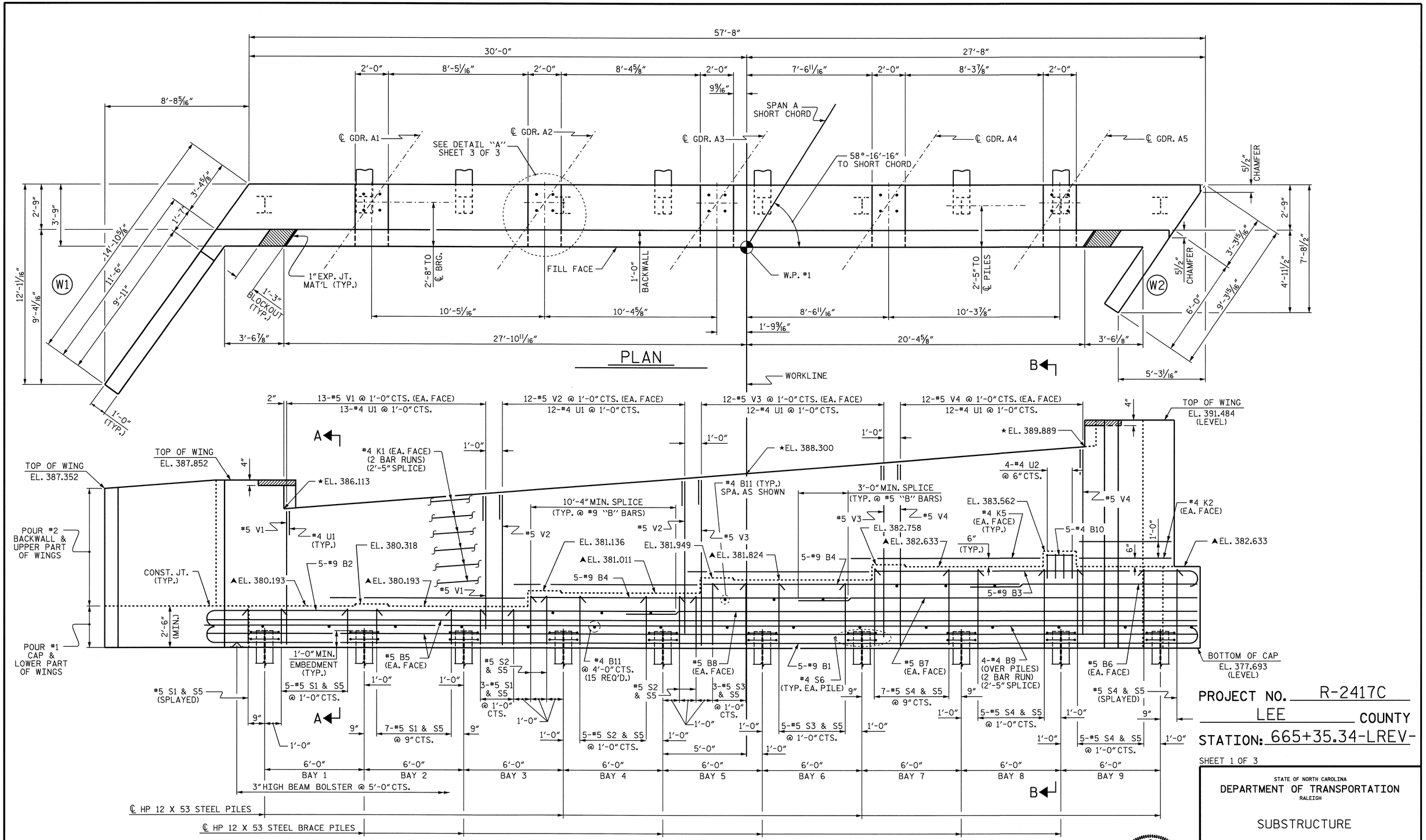

PROJECT NO. R-2417C

LEE COUNTY

STATION: 665+35.34-LREV-

SHEET 1 OF 3

STATE OF NORTH CAROLINA
DEPARTMENT OF TRANSPORTATION
RALEIGH

SUBSTRUCTURE

END BENT No. 1

REVISIONS						SHEET NO.
NO.	BY:	DATE:	NO.	BY:	DATE:	S-92
1			3			TOTAL SHEETS
2			4			104

DRAWN BY : D. G. ELY DATE : 11/2008
CHECKED BY : A. V. ROYAL DATE : 12/2008

14-AUG-2009 08:47
k:\structures\str_3\Sub_Draw\R2417C_sd_EBTS.dgn
kalford

STR. #3

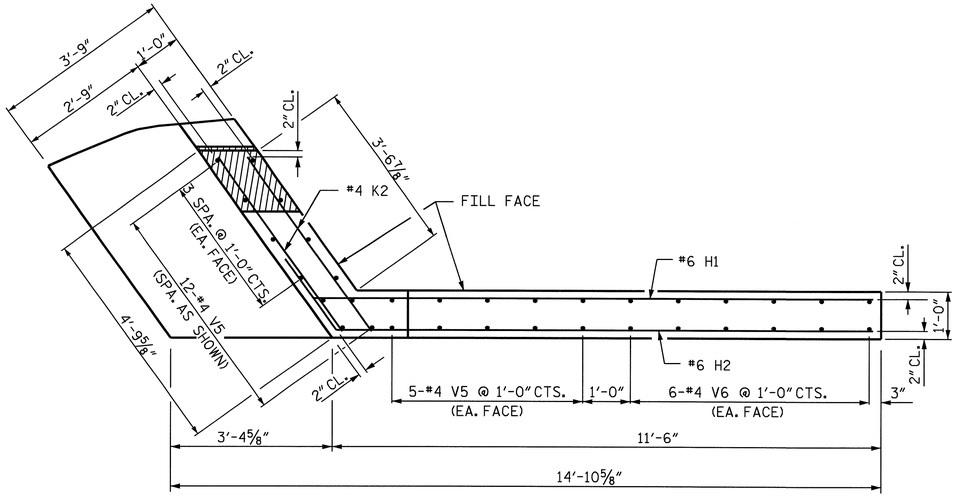

PLAN OF WING (W1)

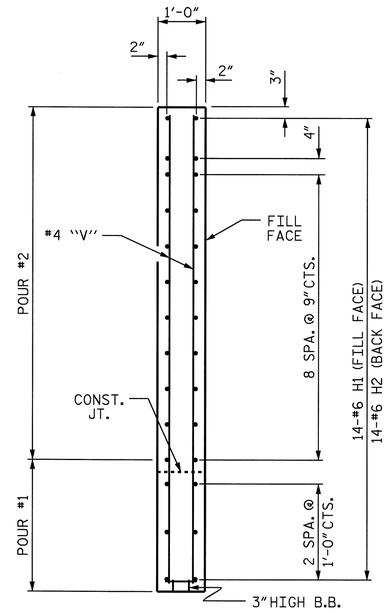

SECTION X-X

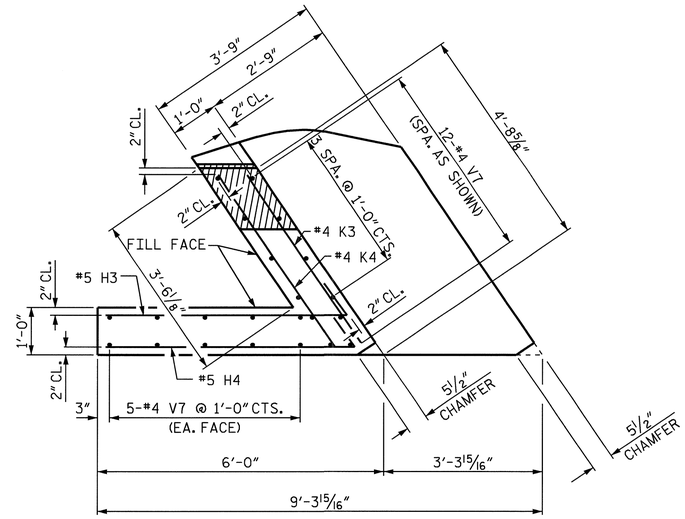

PLAN OF WING (W2)

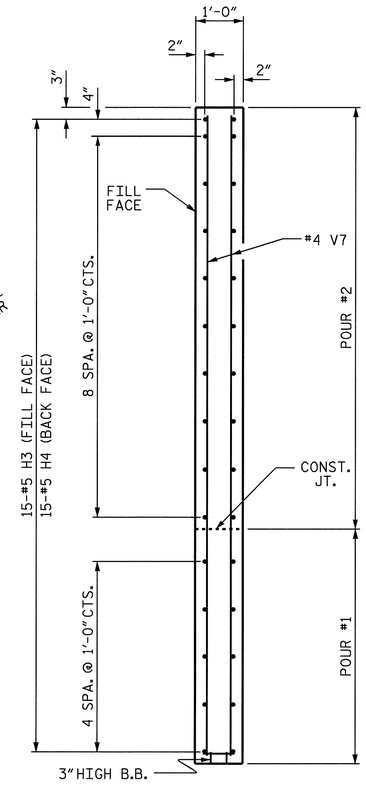

SECTION Y-Y

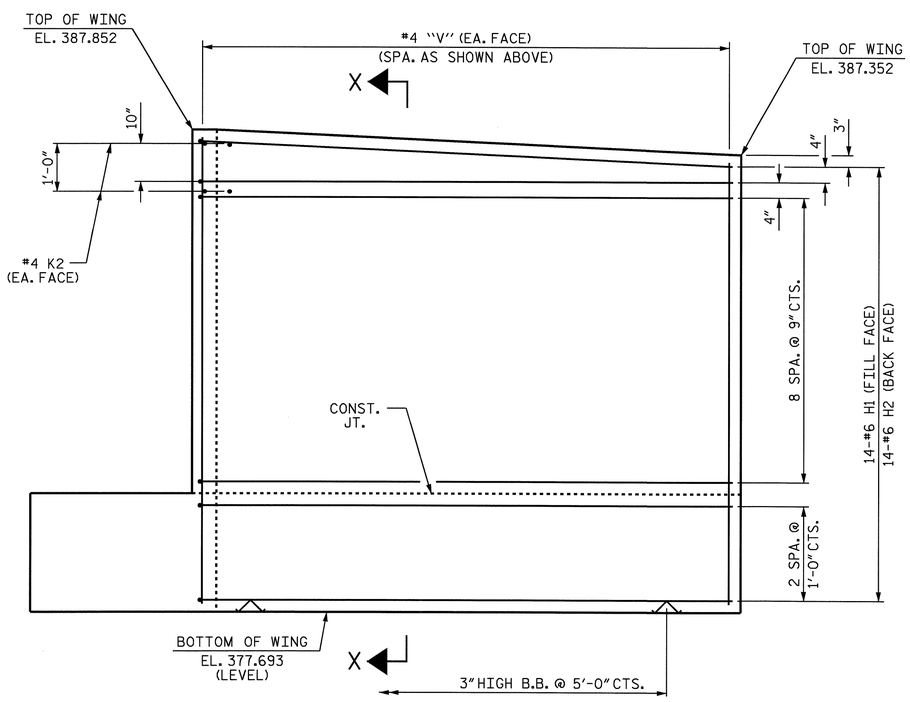

ELEVATION OF WING (W1)

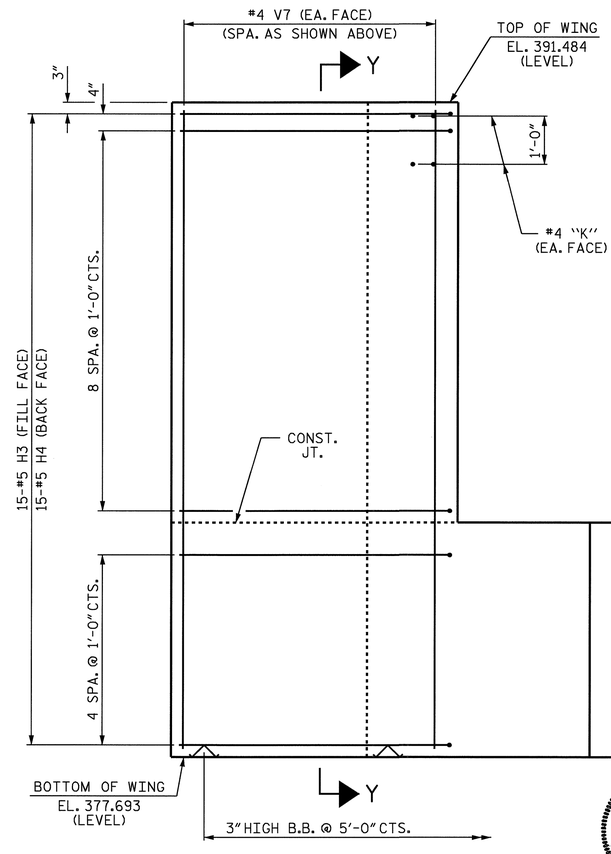

ELEVATION OF WING (W2)

NORTH CAROLINA PROFESSIONAL SEAL 029441 ENGINEER KRISTY W. ALFORD
8/18/09

PROJECT NO. R-2417C
LEE COUNTY
STATION: 665+35.34-LREV-

SHEET 2 OF 3

STATE OF NORTH CAROLINA
DEPARTMENT OF TRANSPORTATION
RALEIGH

SUBSTRUCTURE
END BENT No. 1

REVISIONS						SHEET NO.
NO.	BY:	DATE:	NO.	BY:	DATE:	S-93
1			3			TOTAL SHEETS
2			4			104

DRAWN BY : D. G. ELY DATE : 11/2008
CHECKED BY : A. V. ROYAL DATE : 12/2008

14-AUG-2009 08:47
k:\structures\str_3\Sub_Draw\R2417C_sd_EBTS.dgn
kalford

STR. #3

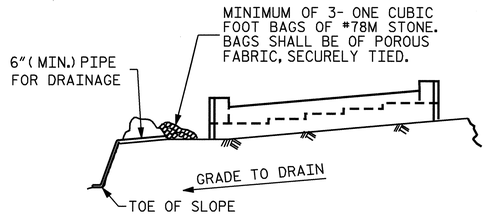

BAGGED STONE AND PIPE SHALL BE PLACED IMMEDIATELY AFTER COMPLETION OF END BENT EXCAVATION. PIPE MAY BE EITHER CONCRETE, CORRUGATED STEEL, CORRUGATED ALUMINUM ALLOY, OR CORRUGATED PLASTIC. PERFORATED PIPE WILL NOT BE ALLOWED.

BAGGED STONE SHALL REMAIN IN PLACE UNTIL THE ENGINEER DIRECTS THAT IT BE REMOVED. THE CONTRACTOR SHALL REMOVE AND DISPOSE OF SILT ACCUMULATIONS AT BAGGED STONE WHEN SO DIRECTED BY THE ENGINEER. BAGS SHALL BE REMOVED AND REPLACED WHENEVER THE ENGINEER DETERMINES THAT THEY HAVE DETERIORATED AND LOST THEIR EFFECTIVENESS.

NO SEPARATE PAYMENT WILL BE MADE FOR THIS WORK AND THE ENTIRE COST OF THIS WORK SHALL BE INCLUDED IN THE UNIT CONTRACT PRICE BID FOR THE SEVERAL PAY ITEMS.

TEMPORARY DRAINAGE AT END BENT

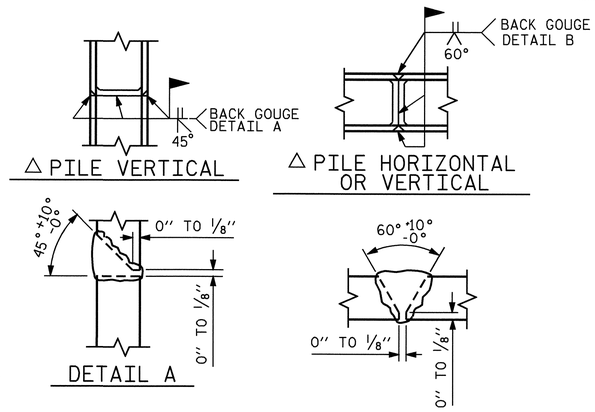

△ POSITION OF PILE DURING WELDING.

PILE SPLICE DETAILS

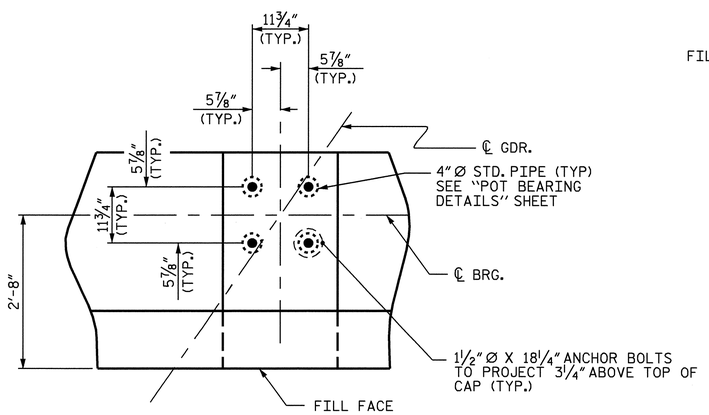

DETAIL "A"

(TYP. EACH GIRDER)

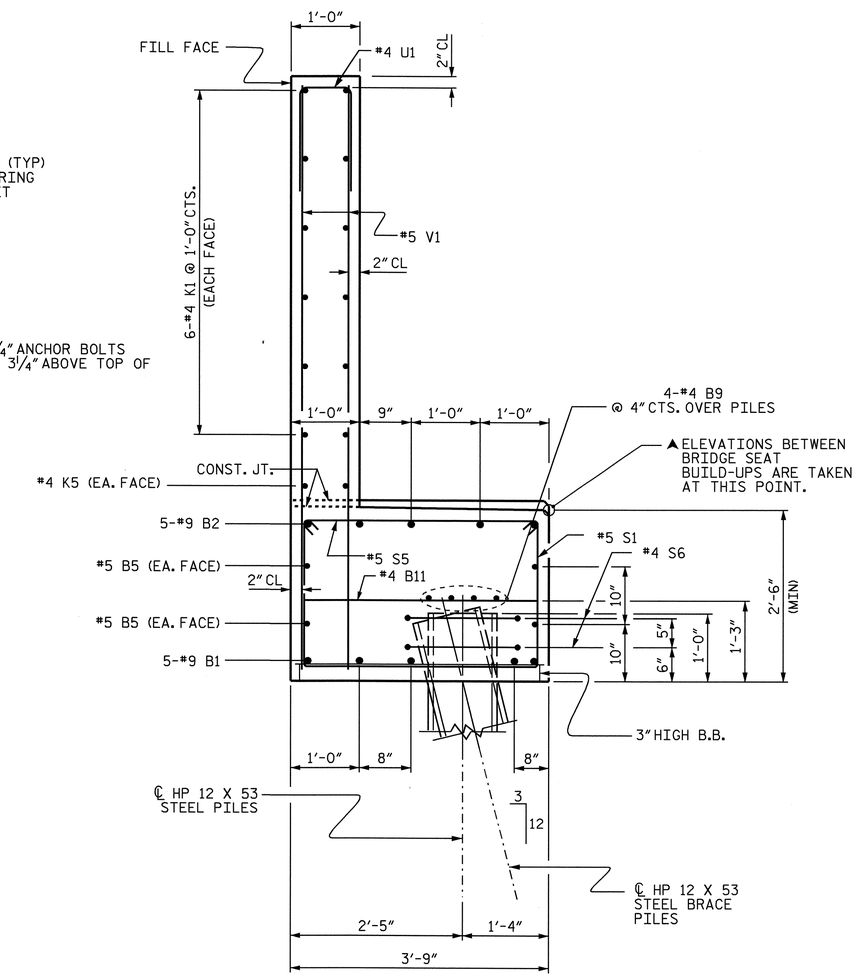

SECTION A-A

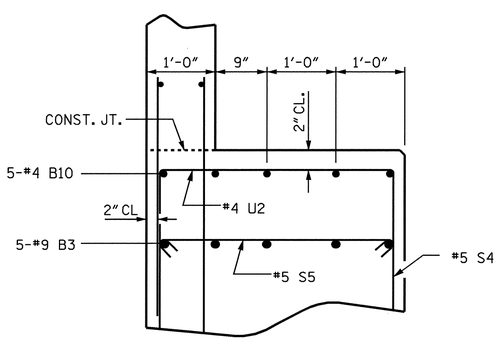

SECTION B-B

BAR TYPES

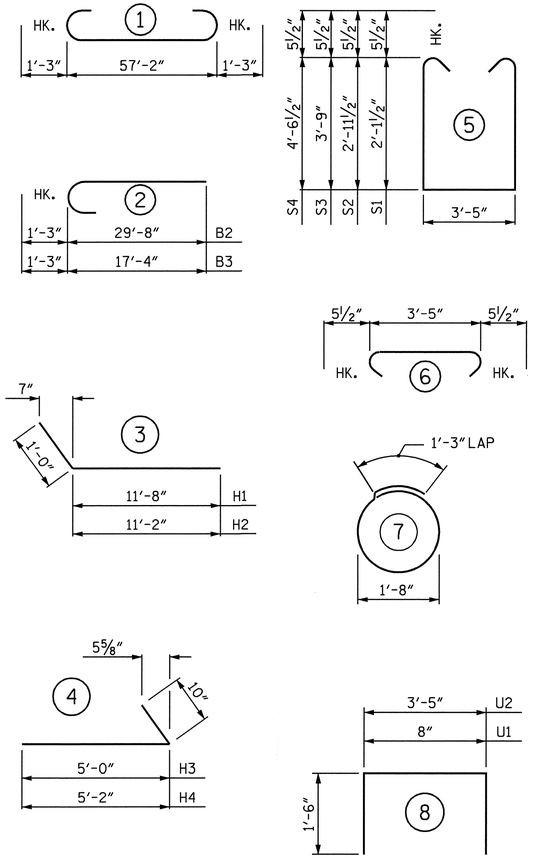

ALL BAR DIMENSIONS ARE OUT TO OUT

BILL OF MATERIAL

END BENT No. 1

BAR	NO.	SIZE	TYPE	LENGTH	WEIGHT
B1	5	#9	1	59'-8"	1014
B2	5	#9	2	30'-11"	526
B3	5	#9	2	18'-7"	316
B4	10	#9	STR	22'-10"	776
B5	4	#5	STR	57'-3"	239
B6	2	#5	STR	10'-0"	21
B7	2	#5	STR	20'-5"	43
B8	2	#5	STR	30'-5"	63
B9	8	#4	STR	29'-11"	160
B10	5	#4	STR	1'-8"	6
B11	24	#4	STR	3'-5"	55
H1	14	#6	3	12'-8"	266
H2	14	#6	3	12'-2"	256
H3	15	#5	4	5'-10"	91
H4	15	#5	4	6'-0"	94
K1	24	#4	STR	30'-0"	481
K2	8	#4	STR	4'-4"	23
K3	2	#4	STR	4'-1"	5
K4	2	#4	STR	4'-3"	6
K5	8	#4	STR	11'-0"	59
S1	16	#5	5	8'-7"	143
S2	9	#5	5	10'-3"	96
S3	8	#5	5	11'-10"	99
S4	18	#5	5	13'-5"	252
S5	51	#5	6	4'-4"	230
S6	20	#4	7	6'-6"	87
U1	49	#4	8	3'-8"	120
U2	4	#4	8	6'-5"	17
V1	26	#5	STR	8'-1"	219
V2	24	#5	STR	9'-1"	227
V3	24	#5	STR	10'-0"	250
V4	24	#5	STR	11'-0"	275
V5	22	#4	STR	9'-7"	141
V6	12	#4	STR	9'-4"	75
V7	22	#4	STR	13'-5"	197
REINFORCING STEEL					6928 LBS.
CLASS A CONCRETE BREAKDOWN					
POUR #1 (CAP & LOWER WINGS)					32.1 C.Y.
POUR #2 (BACKWALL & UPPER WINGS)					19.1 C.Y.
TOTAL CLASS A CONCRETE					51.2 C.Y.
HP 12 X 53 STEEL PILES					
No. = 10					400 LIN FT.

NOTES:

STIRRUPS AND U2 BARS IN CAP MAY BE SHIFTED AS NECESSARY TO CLEAR ANCHOR BOLTS.

THE #5 "V" BARS IN THE BACKWALL SHALL BE PLACED 2" FROM TOP OF BACKWALL.

BACKWALL SHALL BE PLACED BEFORE APPLYING THE EPOXY PROTECTIVE COATING.

THE TOP SURFACE OF THE CAP EXCEPT THE BRIDGE SEAT BUILDUPS SHALL BE SLOPED TRANSVERSELY FROM THE FILL FACE TO THE BACK FACE AT THE RATE OF 2%.

THE CONCRETE IN THE SHADED AREA OF THE WING SHALL BE POURED AFTER THE BARRIER RAIL IS CAST IF SLIP FORMING IS USED.

THE CONTRACTOR SHALL PROVIDE FOR INSTALLATION OF THE 4" DIAMETER DRAIN PIPE THROUGH THE WING WALL AS REQUIRED FOR REINFORCED BRIDGE APPROACH FILLS, SEE THE ROADWAY PLANS. REINFORCING STEEL IN THE WING WALL MAY BE SHIFTED AS NECESSARY TO CLEAR THE DRAIN PIPE.

NORTH CAROLINA PROFESSIONAL SEAL 029441 ENGINEER KRISTY W. ALFORD

11/4/09

PROJECT NO. R-2417C

LEE COUNTY

STATION: 665+35.34-LREV-

SHEET 3 OF 3

STATE OF NORTH CAROLINA
DEPARTMENT OF TRANSPORTATION
RALEIGH

SUBSTRUCTURE

END BENT No. 1

REVISIONS						SHEET NO.
NO.	BY:	DATE:	NO.	BY:	DATE:	S-94
1			3			TOTAL SHEETS
2			4			104

DRAWN BY : D. G. ELY DATE : 11/2008
CHECKED BY : A. V. ROYAL DATE : 12/2008

04-NOV-2009 11:40
k:\structures\str_3\sub_draw\r2417c_sd_ebts.dgn
kalford

STR. #3

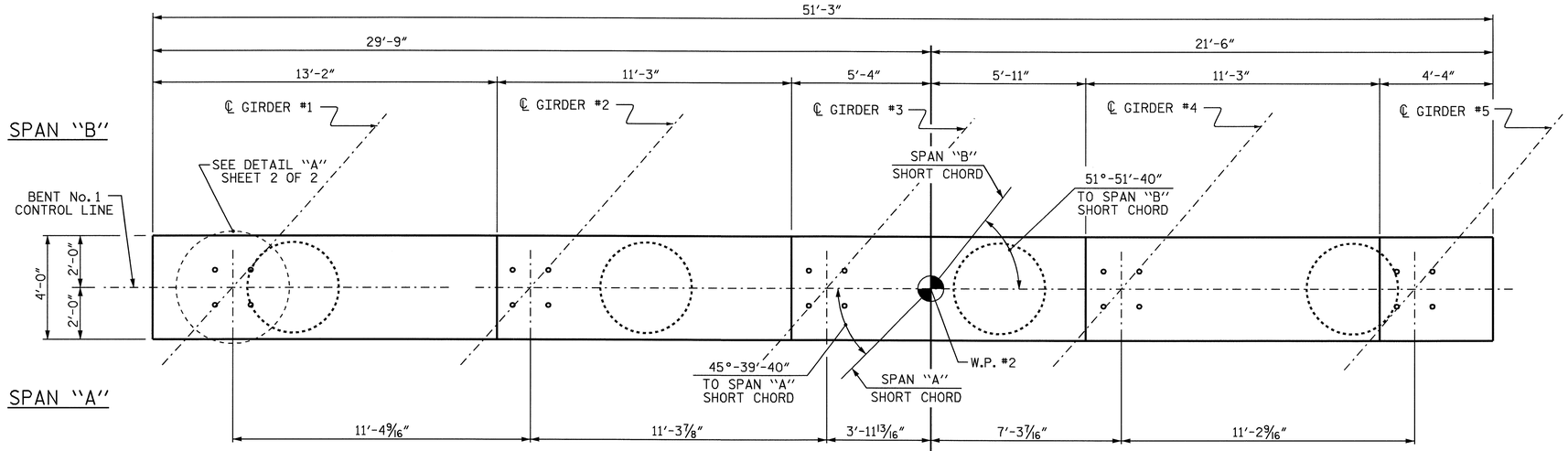

PLAN

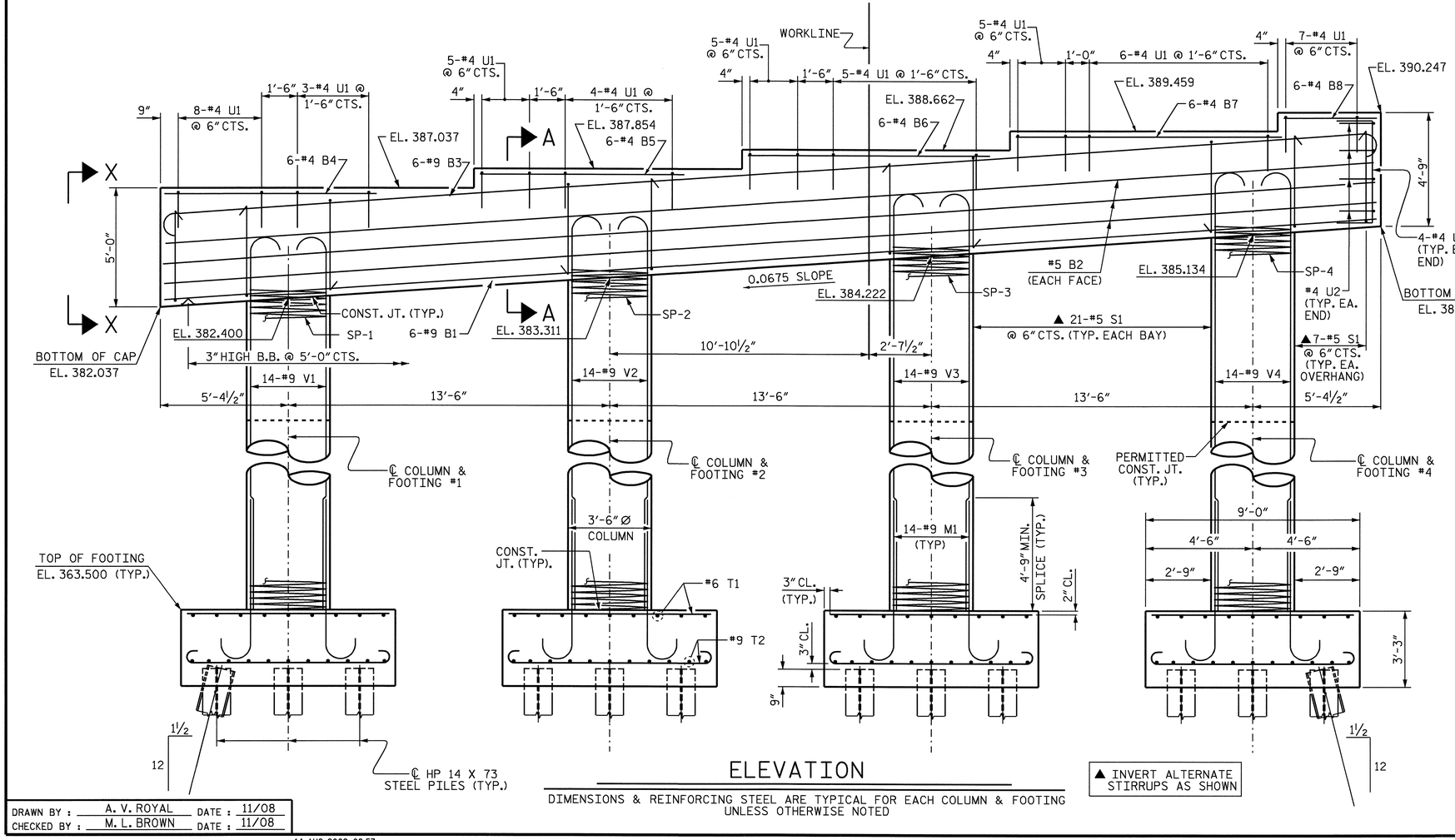

ELEVATION

DIMENSIONS & REINFORCING STEEL ARE TYPICAL FOR EACH COLUMN & FOOTING UNLESS OTHERWISE NOTED

▲ INVERT ALTERNATE STIRRUPS AS SHOWN

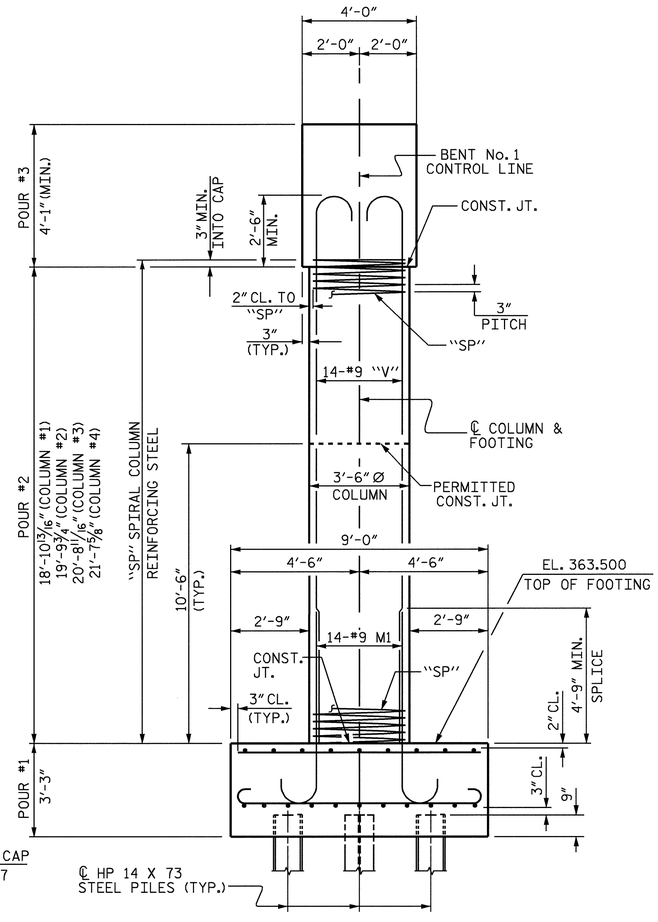

END ELEVATION

REINFORCING STEEL, DIMENSIONS, & DETAILS ARE TYPICAL FOR EACH COLUMN & FOOTING UNLESS OTHERWISE NOTED.

PROJECT NO. R-2417C

LEE COUNTY

STATION: 665+35.34 -LREV-

SHEET 1 OF 2

STATE OF NORTH CAROLINA
DEPARTMENT OF TRANSPORTATION
RALEIGH

SUBSTRUCTURE
BENT No. 1

NORTH CAROLINA PROFESSIONAL SEAL 029441 ENGINEER KRISTY W. ALFORD
8/19/09

REVISIONS						SHEET NO.
NO.	BY:	DATE:	NO.	BY:	DATE:	S-95
1			3			TOTAL SHEETS
2			4			104

DRAWN BY : A. V. ROYAL DATE : 11/08
CHECKED BY : M. L. BROWN DATE : 11/08

14-AUG-2009 08:57
k:\structures\str_3\Sub_Draw\R2417C_sd_B*.dgn
Kalford

STR. #3

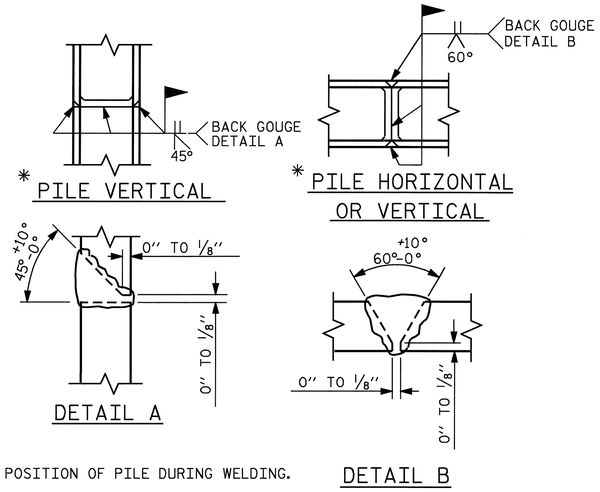

* POSITION OF PILE DURING WELDING.

PILE SPLICE DETAILS

BAR TYPES

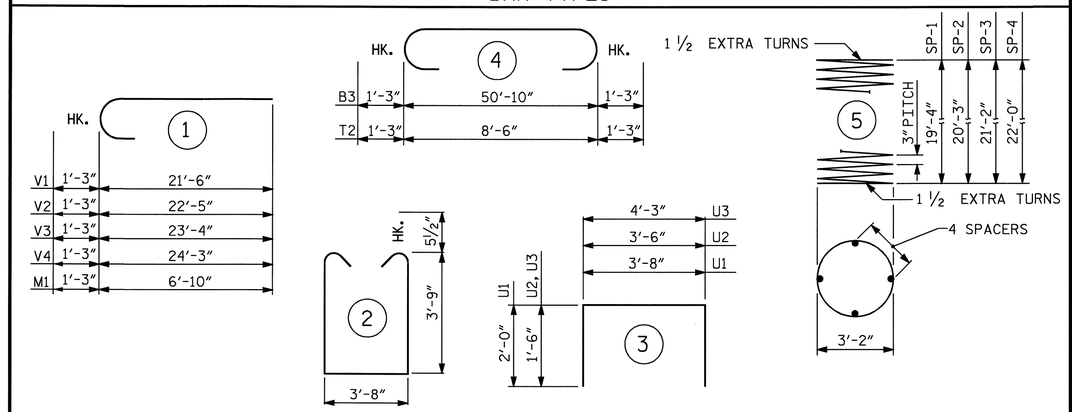

ALL BAR DIMENSIONS ARE OUT TO OUT.

BILL OF MATERIAL

BENT No. 1

BAR	NO.	SIZE	TYPE	LENGTH	WEIGHT
B1	6	#9	STR	50'-11"	1039
B2	6	#5	STR	50'-11"	319
B3	6	#9	4	53'-4"	1088
B4	6	#4	STR	9'-1"	36
B5	6	#4	STR	8'-11"	36
B6	6	#4	STR	10'-7"	42
B7	6	#4	STR	11'-1"	44
B8	6	#4	STR	3'-11"	16
M1	56	#9	1	8'-1"	1539
S1	77	#5	2	12'-1"	970
T1	72	#6	STR	8'-6"	919
T2	88	#9	4	11'-0"	3291
U1	48	#4	3	7'-8"	246
U2	8	#4	3	6'-6"	35
U3	8	#4	3	7'-3"	39
V1	14	#9	1	22'-9"	1083
V2	14	#9	1	23'-8"	1127
V3	14	#9	1	24'-7"	1170
V4	14	#9	1	25'-6"	1214
REINFORCING STEEL					14253 LBS.

BAR	NO.	SIZE	TYPE	LENGTH	WEIGHT
SP-1	1	*	5	795'-6"	531
SP-2	1	*	5	825'-0"	551
SP-3	1	*	5	864'-3"	577
SP-4	1	*	5	893'-9"	597
SPIRAL COLUMN REINFORCING STEEL					2256 LBS.

* THE "SP" SPIRAL REINFORCING STEEL SHALL BE W20 OR D-20 COLD DRAWN WIRE OR #4 PLAIN OR DEFORMED BAR.

CLASS A CONCRETE (C.Y.)		
POUR #1 (FOOTINGS)	=	39.0
POUR #2 (COLUMNS)	=	28.9
POUR #3 (CAP)	=	35.0
TOTAL	=	102.9

HP 14 X 73 STEEL PILES
No. 28 L.F. = 700

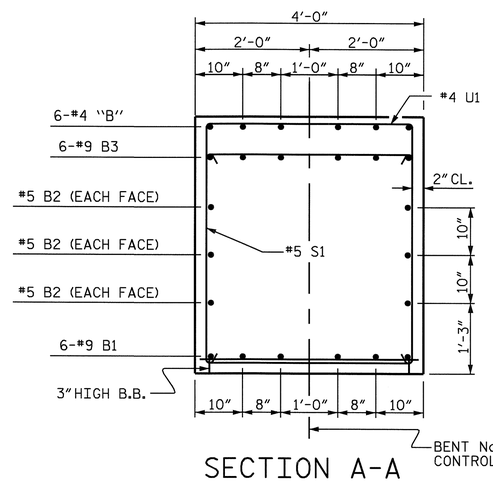

SECTION A-A

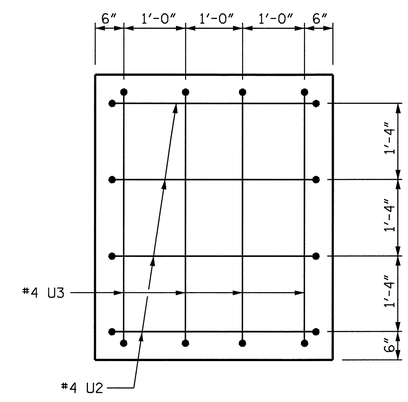

VIEW X-X

NOTES

STIRRUPS AND "U" BARS IN CAP MAY BE SHIFTED AS NECESSARY TO CLEAR ANCHOR BOLTS.

HOOKS ON "V" BARS MAY BE TURNED AS NECESSARY FOR PLACING REINFORCING STEEL.

THE CONTRACTOR SHALL ADJUST THE GIRDER BUILDUPS AS NECESSARY TO INCORPORATE A MAXIMUM PERMISSIBLE VARIATION IN POT BEARING DEPTH OF 1/2", SEE SPECIAL PROVISION FOR POT BEARINGS.

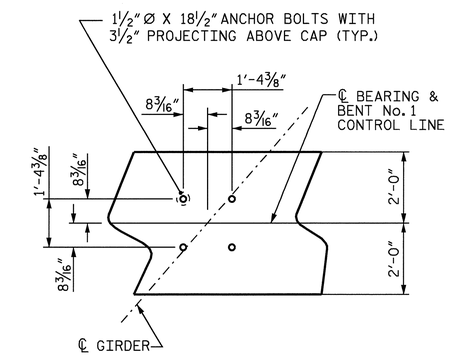

DETAIL "A"

(TYPICAL EACH GIRDER)

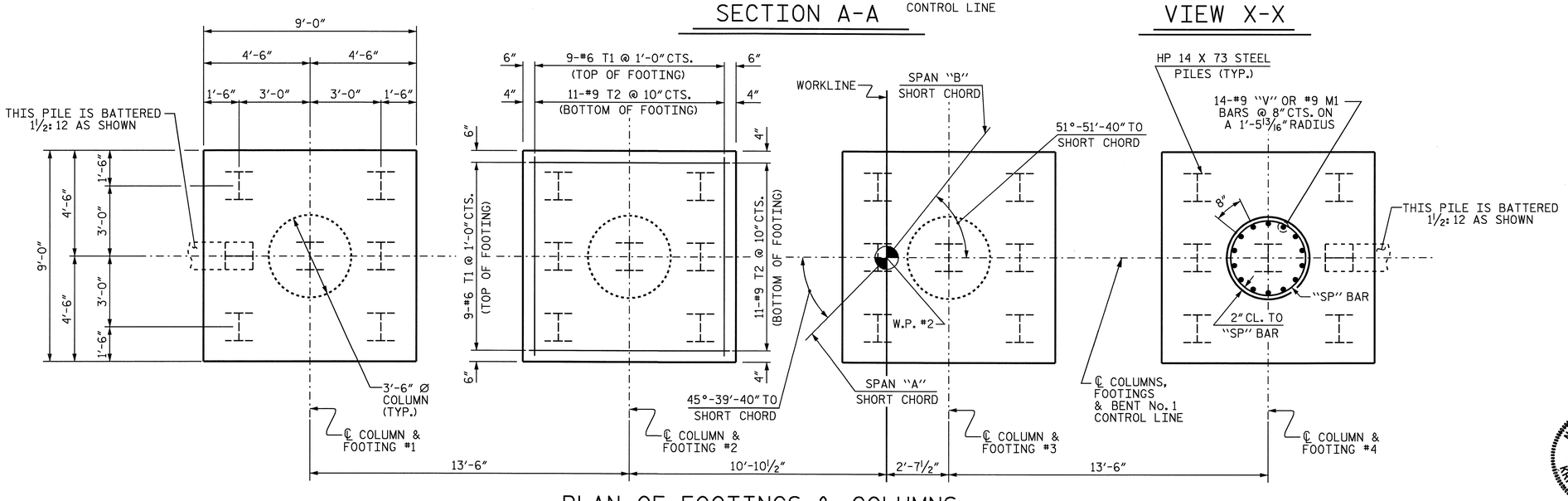

PLAN OF FOOTINGS & COLUMNS

(REINFORCING STEEL, DIMENSIONS & PILE PLACEMENT ARE TYPICAL FOR EACH COLUMN & FOOTING)

PROJECT NO. R-2417C
LEE COUNTY
STATION: 665+35.34 -LREV-

SHEET 2 OF 2

STATE OF NORTH CAROLINA
DEPARTMENT OF TRANSPORTATION
RALEIGH

SUBSTRUCTURE
BENT No. 1

NORTH CAROLINA PROFESSIONAL SEAL 029441 ENGINEER KRISTY W. ALFORD
6/9/09

REVISIONS						SHEET NO.
NO.	BY:	DATE:	NO.	BY:	DATE:	S-96
1			3			TOTAL SHEETS
2			4			104

DRAWN BY : A. V. ROYAL DATE : 11/08
CHECKED BY : M. L. BROWN DATE : 11/08

14-AUG-2009 08:57
k:\structures\str_3\Sub_Draw\R2417C_sd_B*.dgn
kalford

STR. #3

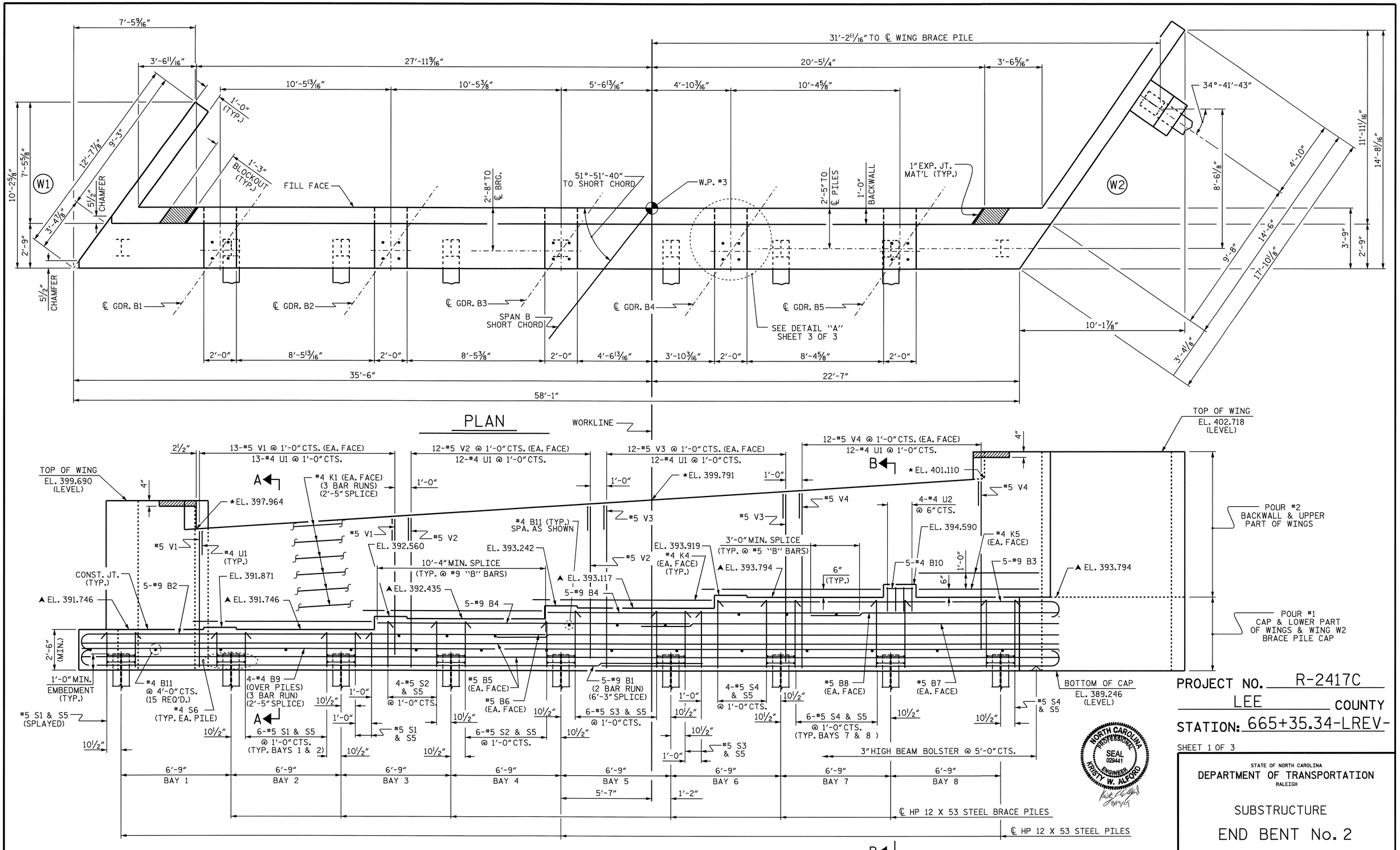

▲FOR LOCATION OF ELEVATION BETWEEN BUILDUPS, SEE SECTION A-A, ON SHEET 3 OF 3.

★THIS ELEVATION TAKEN ON FILL FACE OF BACKWALL.

PROJECT NO. R-2417C

LEE COUNTY

STATION: 665+35.34-LREV-

SHEET 1 OF 3

STATE OF NORTH CAROLINA
DEPARTMENT OF TRANSPORTATION
RALEIGH

SUBSTRUCTURE

END BENT No. 2

REVISIONS						SHEET NO.
NO.	BY:	DATE:	NO.	BY:	DATE:	S-97
1			3			TOTAL SHEETS
2			4			104

DRAWN BY : D. G. ELY DATE : 11/2008
CHECKED BY : A. V. ROYAL DATE : 12/2008

14-AUG-2009 08:56
k:\structures\str_3\Sub_Draw\R2417C_sd_EBTS.dgn
kalford

STR. #3

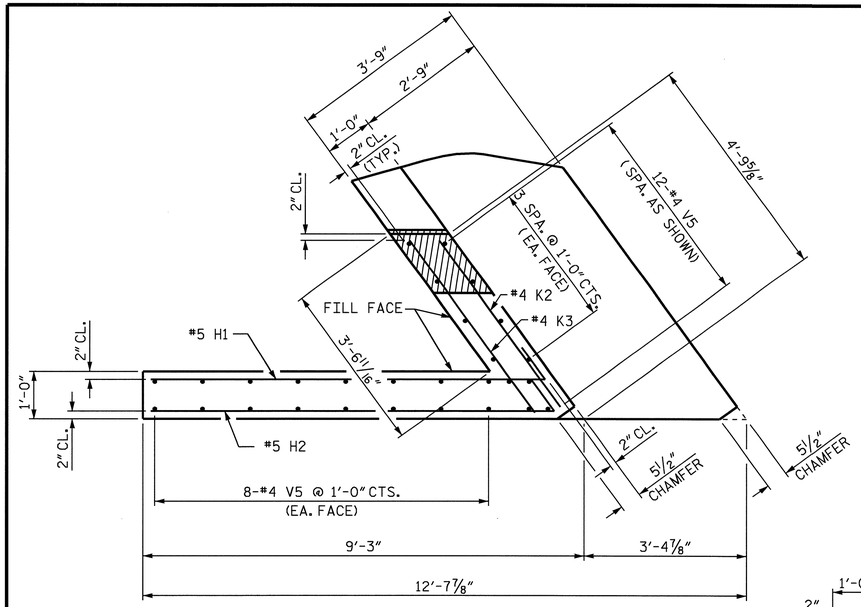

PLAN OF WING (W1)

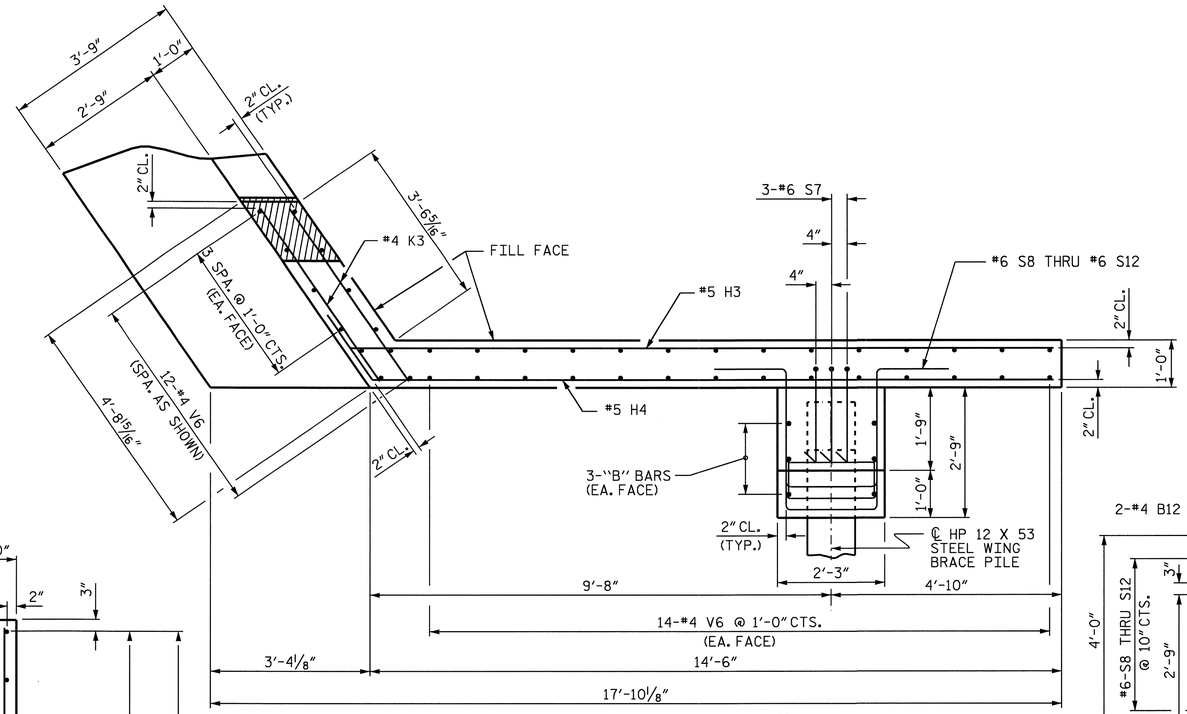

PLAN OF WING (W2)

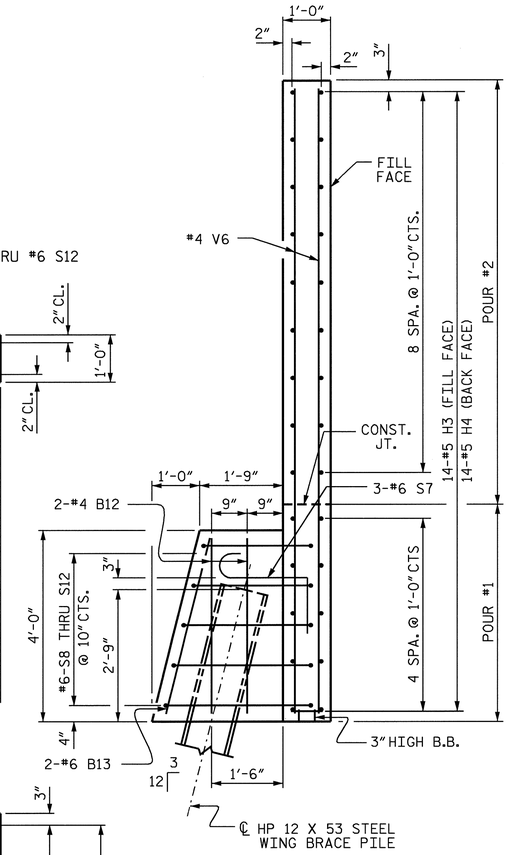

SECTION Y-Y

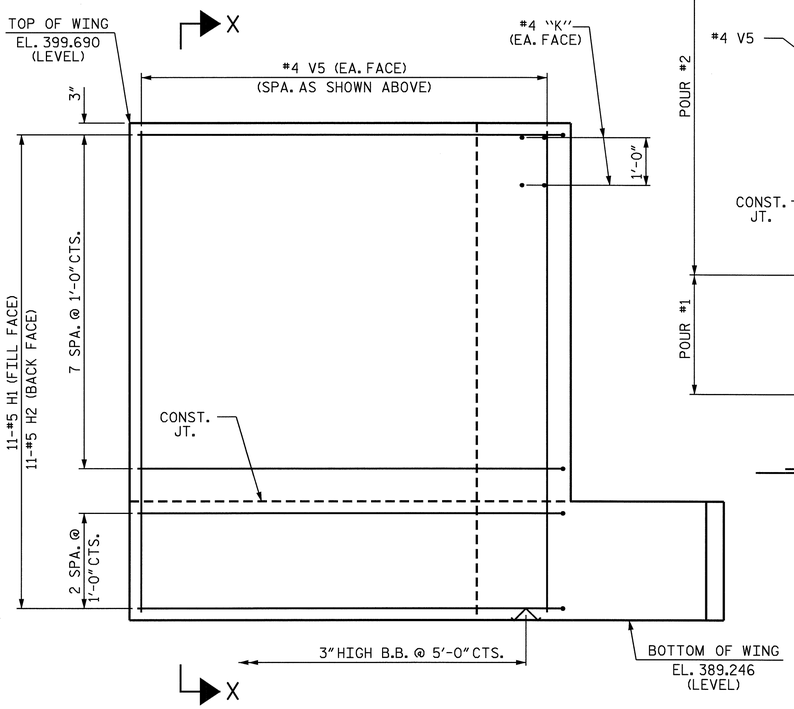

ELEVATION OF WING (W1)

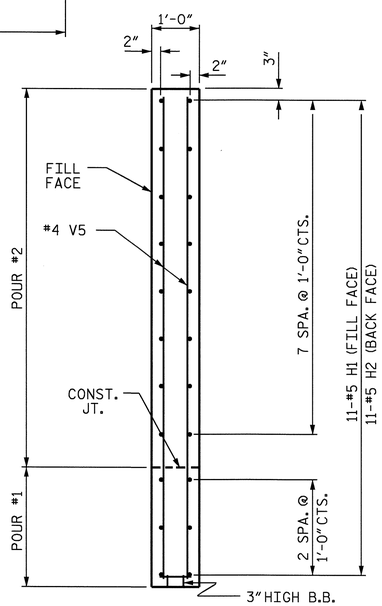

SECTION X-X

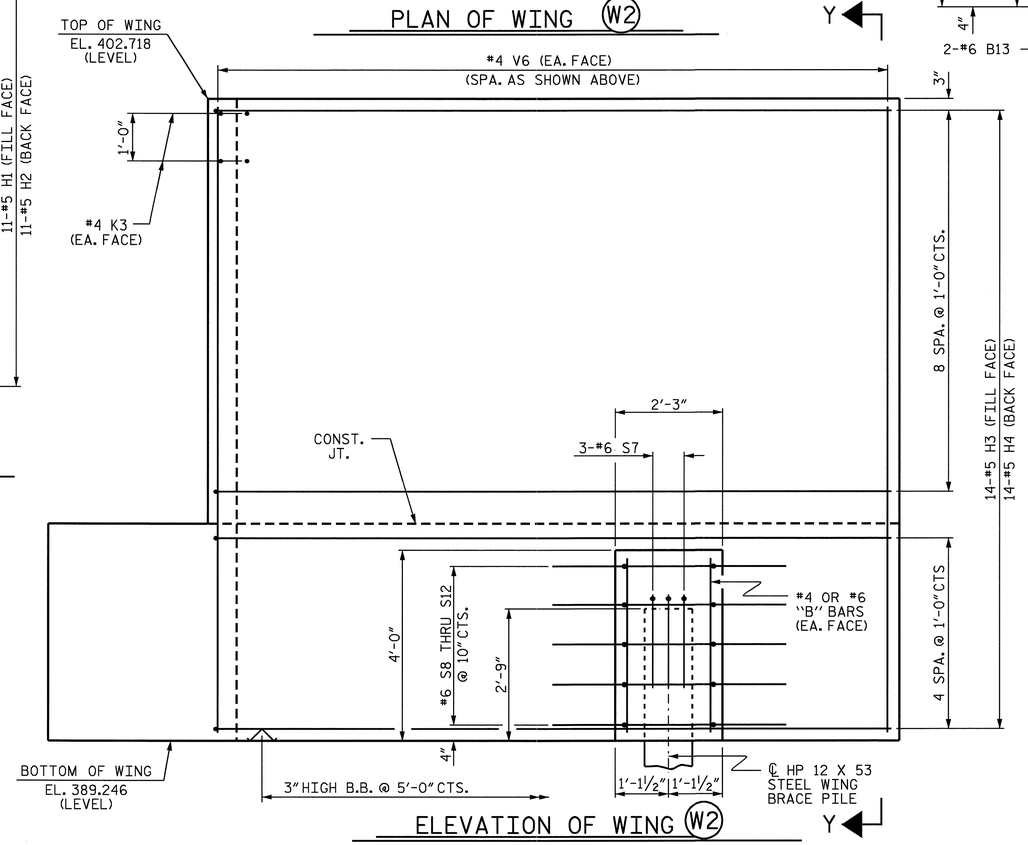

ELEVATION OF WING (W2)

NORTH CAROLINA PROFESSIONAL SEAL 029441 ENGINEER KRISTY W. ALFORD

PROJECT NO. R-2417C

LEE COUNTY

STATION: 665+35.34-LREV-

SHEET 2 OF 3

STATE OF NORTH CAROLINA
DEPARTMENT OF TRANSPORTATION
RALEIGH

SUBSTRUCTURE

END BENT No. 2

REVISIONS						SHEET NO.
NO.	BY:	DATE:	NO.	BY:	DATE:	S-98
1			3			TOTAL SHEETS
2			4			104

DRAWN BY : D. G. ELY DATE : 11/2008
CHECKED BY : A. V. ROYAL DATE : 12/2008

14-AUG-2009 08:56
k:\structures\str_3\Sub_Draw\R2417C_sd_EBTS.dgn
kalford

STR. #3

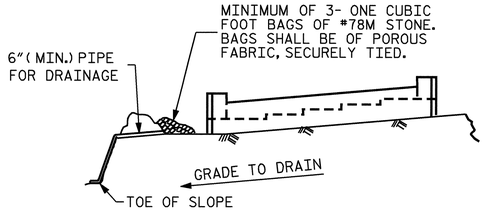

BAGGED STONE AND PIPE SHALL BE PLACED IMMEDIATELY AFTER COMPLETION OF END BENT EXCAVATION. PIPE MAY BE EITHER CONCRETE, CORRUGATED STEEL, CORRUGATED ALUMINUM ALLOY, OR CORRUGATED PLASTIC. PERFORATED PIPE WILL NOT BE ALLOWED.

BAGGED STONE SHALL REMAIN IN PLACE UNTIL THE ENGINEER DIRECTS THAT IT BE REMOVED. THE CONTRACTOR SHALL REMOVE AND DISPOSE OF SILT ACCUMULATIONS AT BAGGED STONE WHEN SO DIRECTED BY THE ENGINEER. BAGS SHALL BE REMOVED AND REPLACED WHENEVER THE ENGINEER DETERMINES THAT THEY HAVE DETERIORATED AND LOST THEIR EFFECTIVENESS.

NO SEPARATE PAYMENT WILL BE MADE FOR THIS WORK AND THE ENTIRE COST OF THIS WORK SHALL BE INCLUDED IN THE UNIT CONTRACT PRICE BID FOR THE SEVERAL PAY ITEMS.

TEMPORARY DRAINAGE AT END BENT

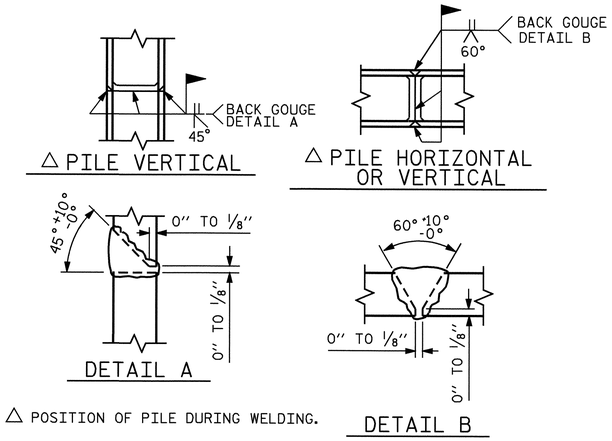

△ POSITION OF PILE DURING WELDING.

PILE SPLICE DETAILS

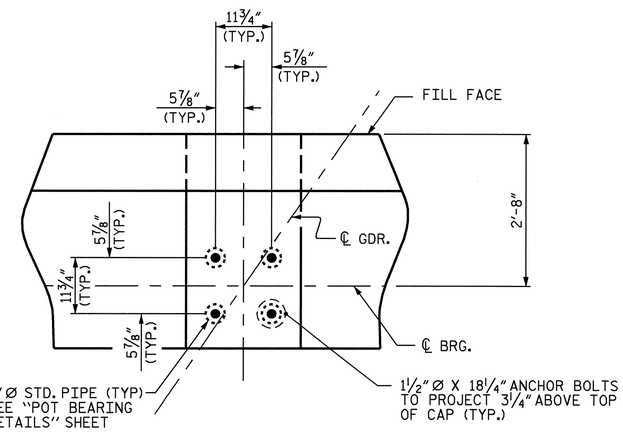

DETAIL "A"

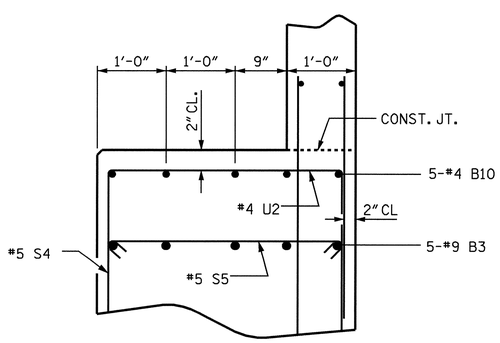

SECTION B-B

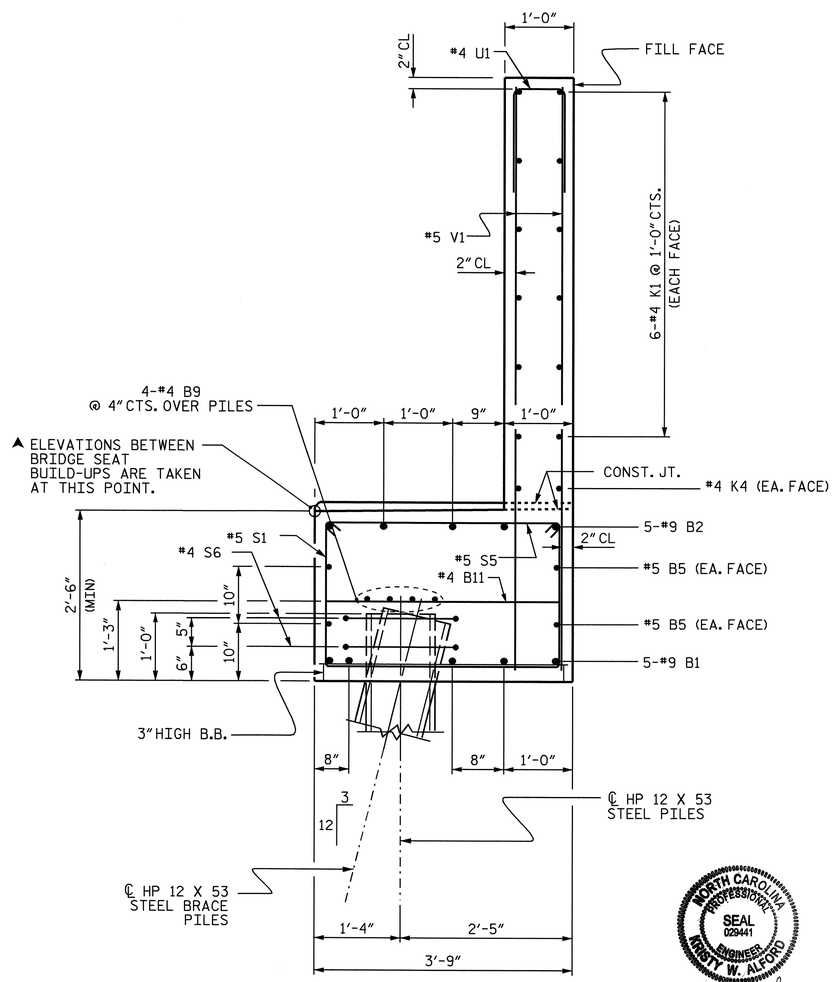

SECTION A-A

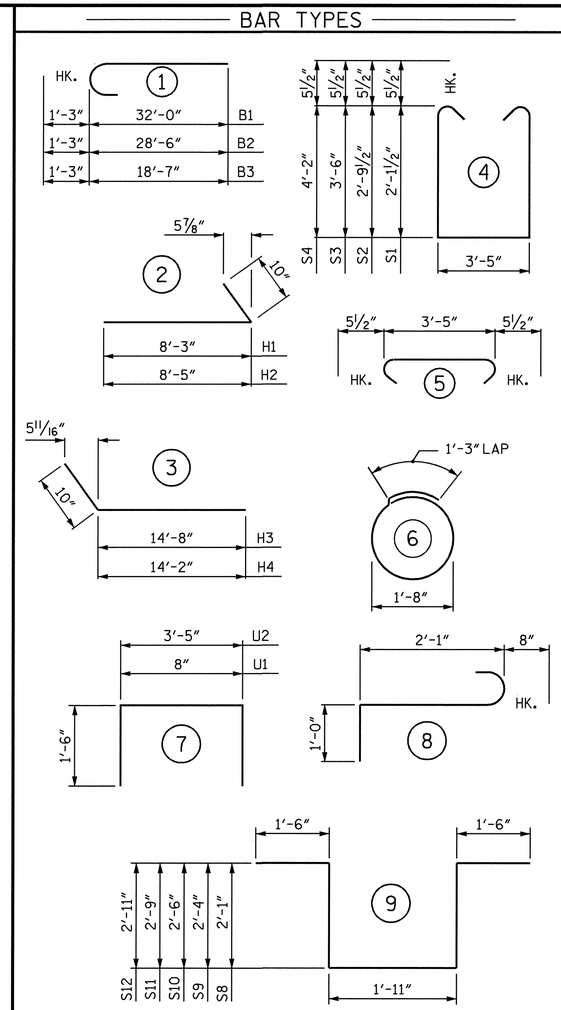

NOTES:

STIRRUPS AND U2 BARS IN CAP MAY BE SHIFTED AS NECESSARY TO CLEAR ANCHOR BOLTS.

THE #5 "V" BARS IN THE BACKWALL SHALL BE PLACED 2" FROM TOP OF BACKWALL.

BACKWALL SHALL BE PLACED BEFORE APPLYING THE EPOXY PROTECTIVE COATING.

THE TOP SURFACE OF THE CAP EXCEPT THE BRIDGE SEAT BUILDUPS SHALL BE SLOPED TRANSVERSELY FROM THE FILL FACE TO THE BACK FACE AT THE RATE OF 2%.

THE CONCRETE IN THE SHADED AREA OF THE WING SHALL BE POURED AFTER THE BARRIER RAIL IS CAST IF SLIP FORMING IS USED.

THE CONTRACTOR SHALL PROVIDE FOR INSTALLATION OF THE 4" DIAMETER DRAIN PIPE THROUGH THE WING WALL AS REQUIRED FOR REINFORCED BRIDGE APPROACH FILLS, SEE THE ROADWAY PLANS. REINFORCING STEEL IN THE WING WALL MAY BE SHIFTED AS NECESSARY TO CLEAR THE DRAIN PIPE.

BILL OF MATERIAL
END BENT No. 2

BAR	NO.	SIZE	TYPE	LENGTH	WEIGHT
B1	10	#9	1	33'-3"	1131
B2	5	#9	1	29'-9"	506
B3	5	#9	1	19'-10"	337
B4	10	#9	STR	23'-0"	782
B5	4	#5	STR	57'-8"	241
B6	2	#5	STR	32'-3"	67
B7	2	#5	STR	21'-9"	45
B8	2	#5	STR	11'-3"	23
B9	12	#4	STR	20'-11"	168
B10	5	#4	STR	1'-8"	6
B11	24	#4	STR	3'-5"	55
B12	4	#4	STR	3'-8"	10
B13	2	#6	STR	3'-9"	11
H1	11	#5	2	9'-1"	104
H2	11	#5	2	9'-3"	106
H3	14	#5	3	15'-6"	226
H4	14	#5	3	15'-0"	219
K1	36	#4	STR	20'-11"	503
K2	2	#4	STR	4'-2"	6
K3	6	#4	STR	4'-4"	17
K4	8	#4	STR	11'-0"	59
K5	4	#4	STR	7'-9"	21
S1	15	#5	4	8'-7"	134
S2	10	#5	4	9'-11"	103
S3	8	#5	4	11'-4"	95
S4	17	#5	4	12'-8"	225
S5	50	#5	5	4'-4"	226
S6	18	#4	6	6'-6"	78
S7	3	#6	8	3'-9"	17
S8	1	#6	9	9'-1"	14
S9	1	#6	9	9'-7"	14
S10	1	#6	9	9'-11	15
S11	1	#6	9	10'-5"	16
S12	1	#6	9	10'-9"	16
U1	49	#4	7	3'-8"	120
U2	4	#4	7	6'-5"	17
V1	26	#5	STR	8'-4"	226
V2	24	#5	STR	9'-2"	229
V3	24	#5	STR	9'-11"	248
V4	24	#5	STR	10'-9"	269
V5	28	#4	STR	10'-1"	189
V6	40	#4	STR	13'-1"	350

REINFORCING STEEL	7244 LBS.
CLASS A CONCRETE BREAKDOWN	
POUR #1 (CAP & LOWER WINGS & WING 2 BRACE PILE CAP)	32.9 C.Y.
POUR #2 (BACKWALL & UPPER WINGS)	21.6 C.Y.
TOTAL CLASS A CONCRETE	54.5 C.Y.
HP 12 X 53 STEEL PILES	
No. = 10	550 LIN FT.

PROJECT NO. R-2417C

LEE COUNTY

STATION: 665+35.34-LREV-

SHEET 3 OF 3

STATE OF NORTH CAROLINA
DEPARTMENT OF TRANSPORTATION
RALEIGH

SUBSTRUCTURE

END BENT No. 2

NORTH CAROLINA PROFESSIONAL SEAL 029441 ENGINEER KRISTY W. ALFORD
11/4/09

REVISIONS							SHEET NO.
NO.	BY:	DATE:	NO.	BY:	DATE:		S-99
1			3				TOTAL SHEETS
2			4				104

DRAWN BY : D. G. ELY DATE : 11/2008
CHECKED BY : A. V. ROYAL DATE : 12/2008

04-NOV-2009 11:41
k:\structures\str_3\sub_draw\r2417c_sd_ebts.dgn
kalford

STR. #3

BRIDGE @ STA. 665+35.34 -LREV-	4 INCH SLOPE PROTECTION	* WELDED WIRE FABRIC 60 INCHES WIDE
	SQUARE YARDS	APPROX. L.F.
END BENT 1	405	730
END BENT 2	495	890

* QUANTITY SHOWN IS BASED ON 5' POURS.

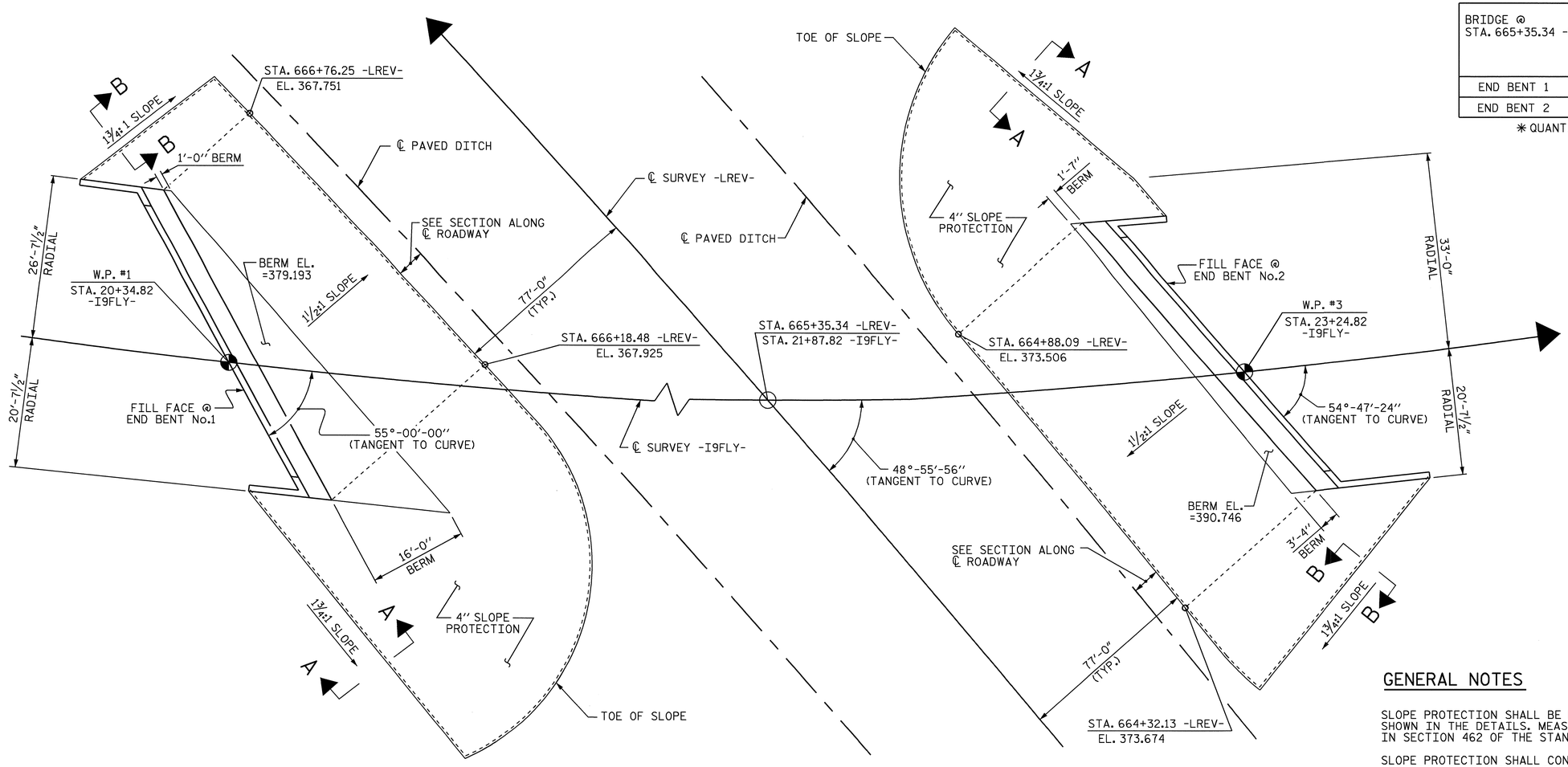

AT END BENT No. 1

AT END BENT No. 2

PLAN

GENERAL NOTES

SLOPE PROTECTION SHALL BE PLACED UNDER THE ENDS OF THE BRIDGE AS SHOWN IN THE DETAILS. MEASUREMENT AND PAYMENT SHALL BE AS PRESCRIBED IN SECTION 462 OF THE STANDARD SPECIFICATIONS.

SLOPE PROTECTION SHALL CONSIST OF 4" POURED-IN-PLACE CONCRETE PAVING AS SHOWN IN THE DETAILS ON THIS SHEET. CONCRETE SHALL BE CLASS "B". CONCRETE SURFACE SHALL BE FLOATED WITH A WOODEN FLOAT AND FINISHED. WELDED WIRE FABRIC REINFORCING SHALL BE 6 X 6 - W1.4 X W1.4, 60" WIDE. SLOPE PROTECTION SHALL BE POURED IN 5' STRIPS AS SHOWN IN THE "POURING DETAIL" WITH 2'-0" LONG #4 BARS PLACED ALONG THE SLOPE BETWEEN STRIPS AT 1'-6" MAXIMUM SPACING. SLOPE PROTECTION MAY BE POURED IN ALTERNATE 4' AND 5' STRIPS AS SHOWN IN THE "OPTIONAL POURING DETAIL" WITH ADJACENT RUNS OF WELDED WIRE FABRIC LAPPING AT LEAST 6". THE COST OF THE WELDED WIRE FABRIC AND #4 BARS, IF USED, SHALL BE INCLUDED IN THE CONTRACT UNIT PRICE BID PER SQUARE YARD FOR SLOPE PROTECTION.

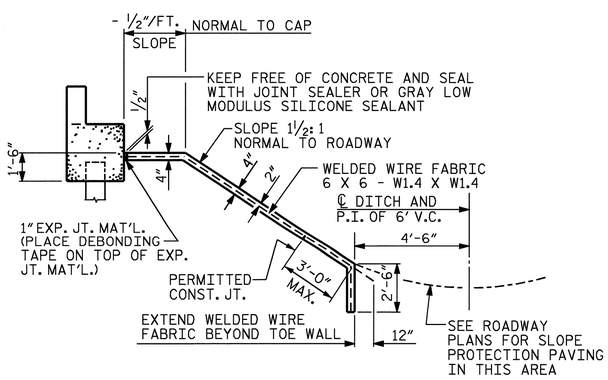

SECTION ALONG ℄ ROADWAY WHEN FILL CATCHES IN DITCH

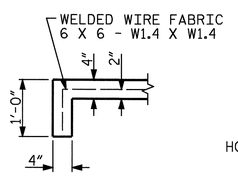

SECTION A-A

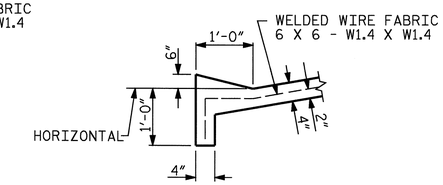

SECTION B-B

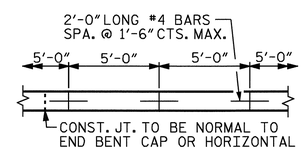

STRIP WIDTHS MAY VARY IN CURVED PORTION.

POURING DETAIL

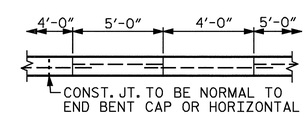

POUR A 4'-0" STRIP FIRST. STRIP WIDTHS MAY VARY IN CURVED PORTION.

OPTIONAL POURING DETAIL

PROJECT NO. R-2417C
LEE COUNTY
STATION: 665+35.34-LREV-

STATE OF NORTH CAROLINA
DEPARTMENT OF TRANSPORTATION
RALEIGH

STANDARD SLOPE PROTECTION DETAILS

NORTH CAROLINA PROFESSIONAL SEAL 029441 ENGINEER KRISTY W. ALFORD
8/17/09

REVISIONS							SHEET NO.
NO.	BY:	DATE:	NO.	BY:	DATE:		S-100
1			3				TOTAL SHEETS
2			4				104

DRAWN BY : A. V. ROYAL DATE : 01/09
CHECKED BY : D. G. ELY DATE : 02/09

14-AUG-2009 08:58
k:\structures\str_3\Misc_Draw\R2417C_str3_SP.dgn
kalford

STR. #3

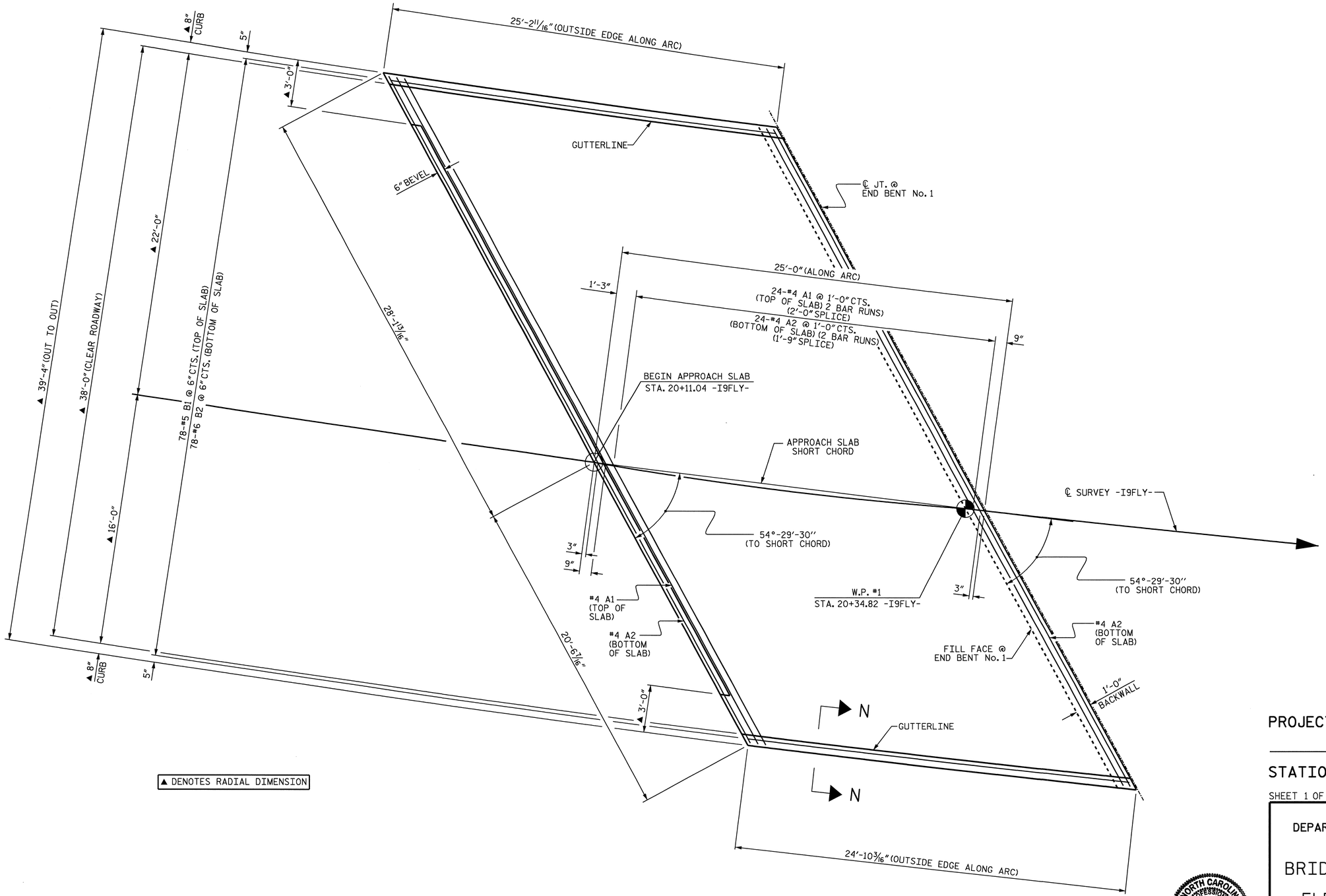

▲ DENOTES RADIAL DIMENSION

PLAN OF APPROACH SLAB @ END BENT No. 1

PROJECT NO. R-2417C
LEE COUNTY
STATION: 665+35.34 -LREV-

SHEET 1 OF 4

STATE OF NORTH CAROLINA
DEPARTMENT OF TRANSPORTATION
RALEIGH

BRIDGE APPROACH SLAB FOR FLEXIBLE PAVEMENT

NORTH CAROLINA PROFESSIONAL SEAL 029441 ENGINEER KRISTY W. ALFORD
8/19/09

REVISIONS						SHEET NO.
NO.	BY:	DATE:	NO.	BY:	DATE:	S-101
1			3			TOTAL SHEETS
2			4			104

DRAWN BY : A. V. ROYAL DATE : 11/08
CHECKED BY : D. G. ELY DATE : 12/08

14-AUG-2009 08:58
k:\structures\str_3\Misc_Draw\r2417c_sd_as.dgn
kalford

STR. #3

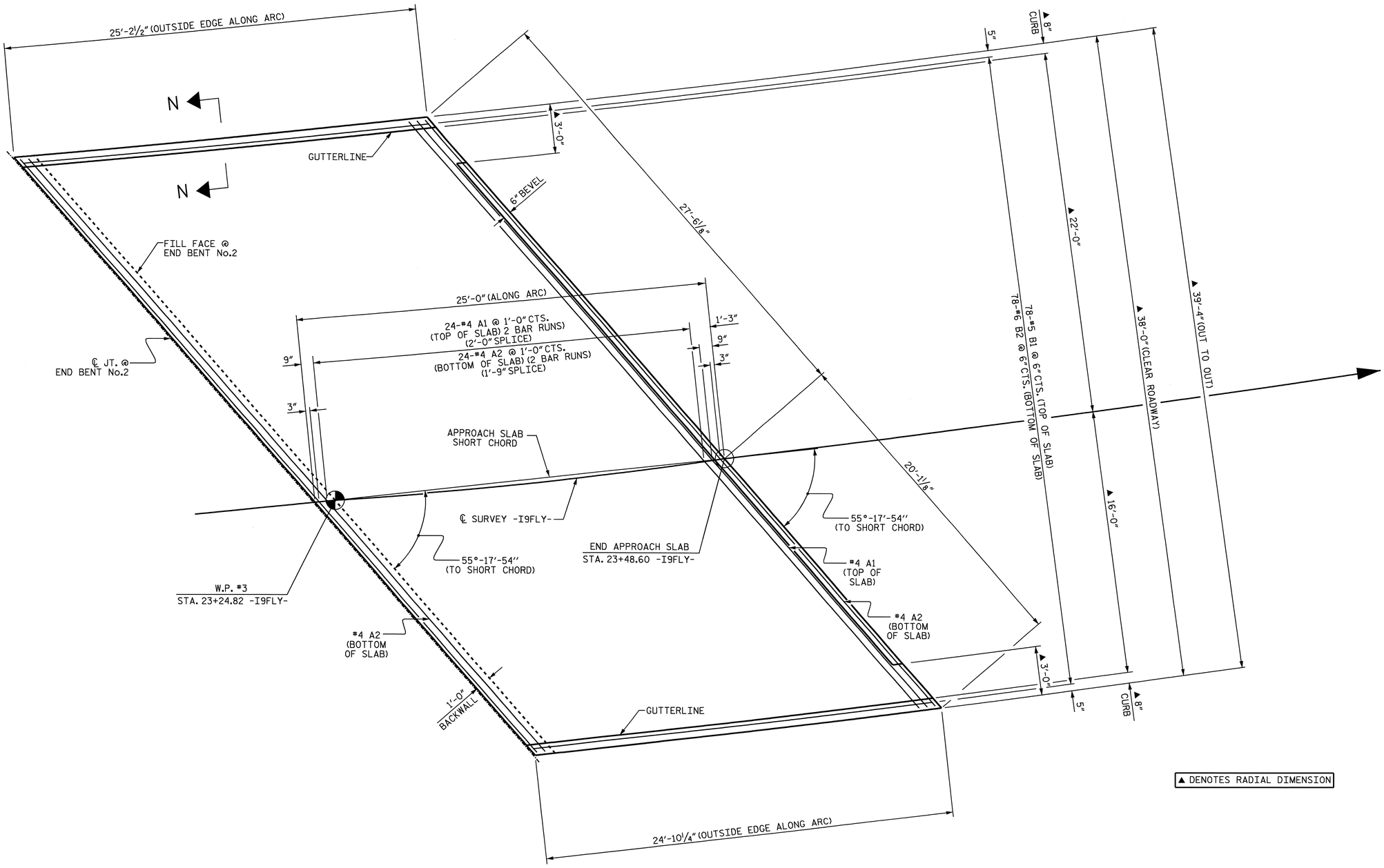

▲ DENOTES RADIAL DIMENSION

PLAN OF APPROACH SLAB @ END BENT No. 2

PROJECT NO. R-2417C

LEE COUNTY

STATION: 665+35.34 -LREV-

SHEET 2 OF 4

STATE OF NORTH CAROLINA
DEPARTMENT OF TRANSPORTATION
RALEIGH

BRIDGE APPROACH SLAB FOR FLEXIBLE PAVEMENT

NORTH CAROLINA PROFESSIONAL SEAL 029441 ENGINEER KRISTY W. ALFORD

8/19/09

REVISIONS						SHEET NO.
NO.	BY:	DATE:	NO.	BY:	DATE:	S-102
1			3			TOTAL SHEETS
2			4			104

DRAWN BY : A. V. ROYAL DATE : 11/08
CHECKED BY : D. G. ELY DATE : 12/08

14-AUG-2009 08:58
k:\structures\str_3\Misc_Draw\r2417c_sd_as.dgn
Kalford

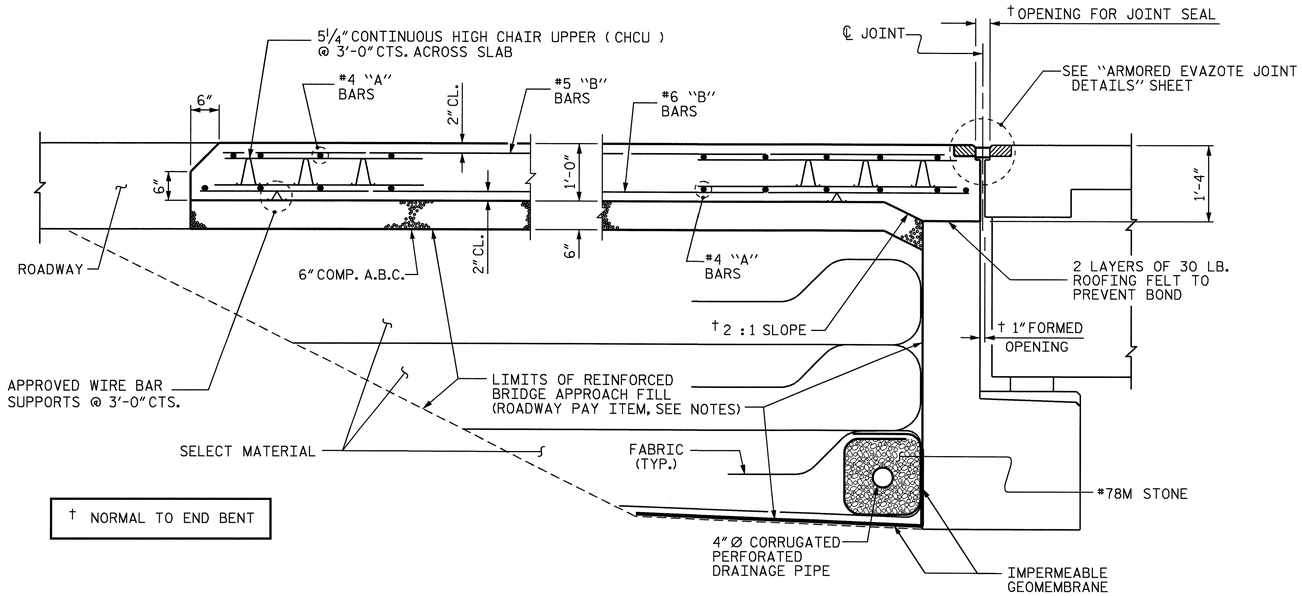

† NORMAL TO END BENT

SECTION THRU SLAB

NOTES

APPROACH SLAB SHALL NOT BE CONSTRUCTED PRIOR TO COMPLETION OF THE BRIDGE DECK.

FOR REINFORCED BRIDGE APPROACH FILL INCLUDING FABRIC, IMPERMEABLE GEOMEMBRANE, 4" Ø DRAINAGE PIPE, #78M STONE, AND SELECT MATERIAL, SEE ROADWAY PLANS.

AREA BETWEEN THE WINGWALL AND APPROACH SLAB SHALL BE GRADED TO DRAIN THE WATER AWAY FROM THE FILL FACE OF THE BRIDGE AND SHALL BE PAVED. SEE ROADWAY PLANS.

THE 6" COMP. A.B.C. SHALL BE FLUSH WITH THE ROADWAY END OF THE APPROACH SLAB AND SHALL EXTEND 1'-0" OUTSIDE EACH EDGE OF THE APPROACH SLAB.

THE CONTRACTOR MAY USE 4" TYPE B-25.0B ASPHALT CONCRETE BASE COURSE IN LIEU OF 6" COMP. A.B.C. IF THIS OPTION IS USED, THE BASE COURSE SHALL BE FLUSH WITH THE ROADWAY END OF THE APPROACH SLAB, AND THE WIDTH SHALL BE THE SAME AS THAT OF THE APPROACH SLAB.

THE CONTRACTOR MAY USE 5" CLASS "A" CONCRETE BASE IN LIEU OF 6" COMP. A.B.C. IF THIS OPTION IS USED, THE CONCRETE BASE SHALL BE FLUSH WITH THE ROADWAY END OF THE APPROACH SLAB, AND THE WIDTH SHALL BE THE SAME AS THAT OF THE APPROACH SLAB. THE CONCRETE SHALL BE FINISHED TO A SMOOTH SURFACE AND A LAYER OF 30 LB ROOFING FELT SHALL BE PLACED BETWEEN THE CONCRETE BASE AND THE APPROACH SLAB TO PREVENT BOND. THE APPROACH SLAB SHALL NOT BE CAST UNTIL THE CONCRETE BASE HAS REACHED AN AGE OF THREE CURING DAYS.

FOR EVAZOTE JOINT SEALS, SEE SPECIAL PROVISIONS.

THE NOMINAL UNCOMPRESSED SEAL WIDTH OF THE EVAZOTE JOINT SEAL SHALL BE 2½".

FOR ELASTOMERIC CONCRETE, SEE SPECIAL PROVISIONS.

BILL OF MATERIAL

APPROACH SLAB AT EB No.1

BAR	NO.	SIZE	TYPE	LENGTH	WEIGHT
✳ A1	50	#4	STR	25'-3"	843
A2	52	#4	STR	25'-1"	871
✳ B1	78	#5	STR	23'-6"	1912
B2	78	#6	STR	24'-6"	2870
REINFORCING STEEL				LBS.	3741
✳ EPOXY COATED REINFORCING STEEL				LBS.	2755
CLASS AA CONCRETE				C. Y.	37.1

APPROACH SLAB AT EB No.2

BAR	NO.	SIZE	TYPE	LENGTH	WEIGHT
✳ A3	50	#4	STR	25'-0"	835
A4	52	#4	STR	24'-10"	863
✳ B1	78	#5	STR	23'-6"	1912
B2	78	#6	STR	24'-6"	2870
REINFORCING STEEL				LBS.	3733
✳ EPOXY COATED REINFORCING STEEL				LBS.	2747
CLASS AA CONCRETE				C. Y.	37.1

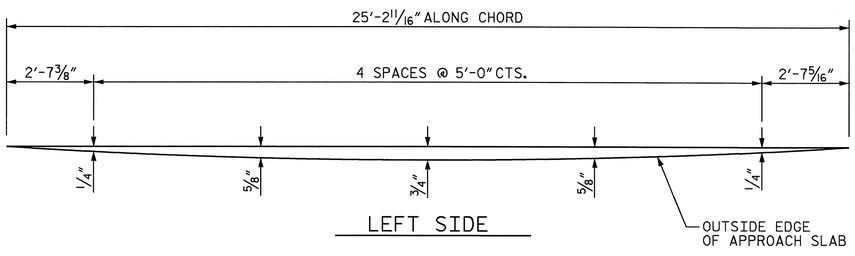

LEFT SIDE

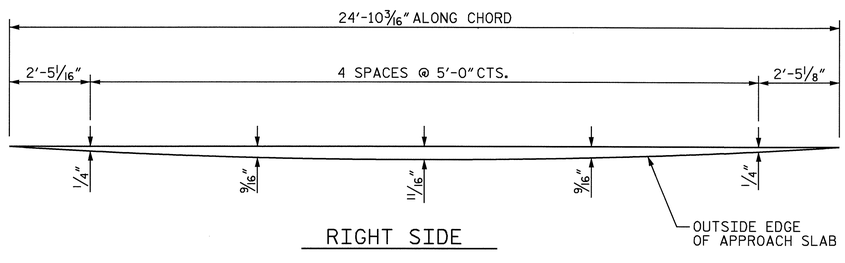

RIGHT SIDE

ARC OFFSETS FOR APPROACH SLAB @ END BENT No. 1

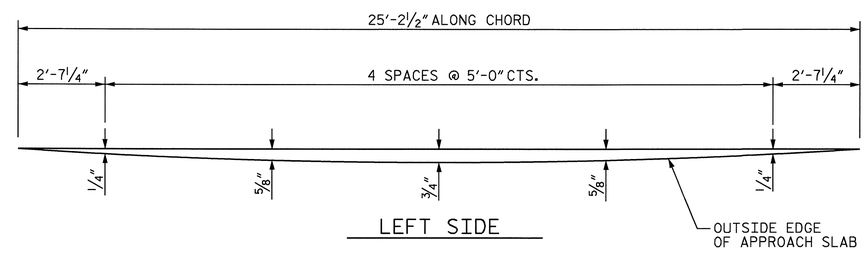

LEFT SIDE

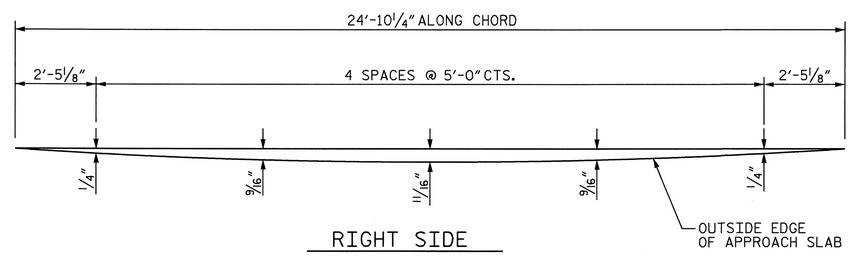

RIGHT SIDE

ARC OFFSETS FOR APPROACH SLAB @ END BENT No. 2

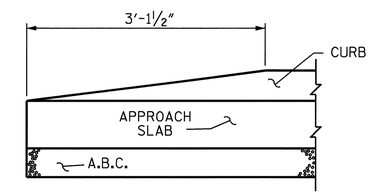

END OF CURB WITHOUT SHOULDER BERM GUTTER

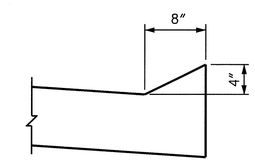

SECTION N-N

CURB DETAILS

PROJECT NO. R-2417C

LEE COUNTY

STATION: 665+35.34 -LREV-

SHEET 3 OF 4

STATE OF NORTH CAROLINA
DEPARTMENT OF TRANSPORTATION
RALEIGH

BRIDGE APPROACH SLAB FOR FLEXIBLE PAVEMENT

NORTH CAROLINA PROFESSIONAL SEAL 029441 ENGINEER KRISTY W. ALFORD
8/14/09

REVISIONS						SHEET NO.
NO.	BY:	DATE:	NO.	BY:	DATE:	S-103
1			3			TOTAL SHEETS
2			4			104

ASSEMBLED BY : A. V. ROYAL		DATE : 09/08	
CHECKED BY : D. G. ELY		DATE : 12/08	
DRAWN BY : EEM 3/95	REV. 7/10/01	LES/RDR	
CHECKED BY : VAP 3/95	REV. 5/7/03R	RWW/JTE	
	REV. 5/1/06R	KMM/GM	

14-AUG-2009 08:59
k:\structures\str_3\Misc_Draw\r2417c_sd_as.dgn
kalford

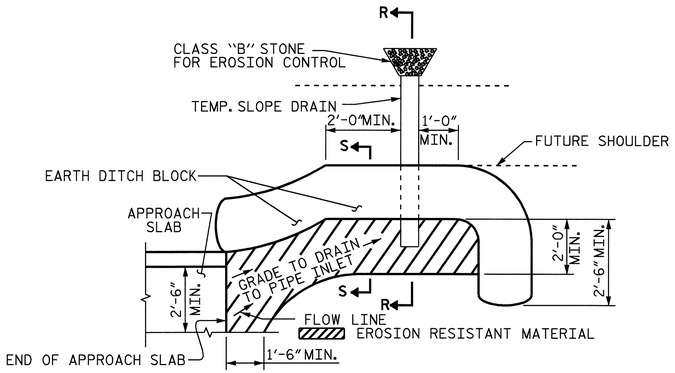

NOTE: IMMEDIATELY AFTER THE CONSTRUCTION OF THE APPROACH SLAB, THE CONTRACTOR SHALL PROVIDE TEMPORARY BERM AND SLOPE DRAIN. CONTRACTOR SHALL GRADE TO PIPE INLET AND PROVIDE EROSION RESISTANT MATERIAL AS SHOWN. THE EROSION RESISTANT MATERIAL SHALL BE EITHER 1) ASPHALT PLANT MIX, TYPE 1 OR TYPE 2, MIN. 2" DEPTH, 2) EROSION CONTROL MAT, OR 3) CONCRETE, AS DIRECTED BY THE ENGINEER. THE SLOPE DRAIN SHALL CONSIST OF A NON-PERFORATED TEMPORARY DRAINAGE PIPE, 12 INCHES IN DIAMETER.

PLAN VIEW

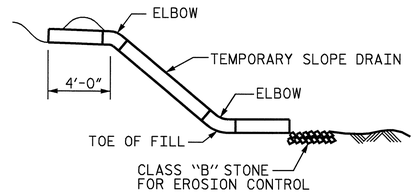

SECTION R-R

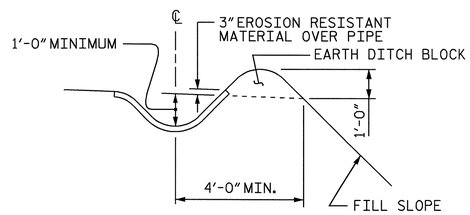

SECTION S-S

TEMPORARY BERM AND SLOPE DRAIN DETAILS

(TO BE USED WHEN SHOULDER BERM GUTTER IS REQUIRED)

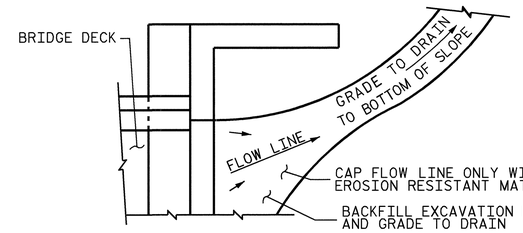

NOTE: IF THE APPROACH SLAB IS NOT CONSTRUCTED IMMEDIATELY AFTER THE BACKFILLING OF THE END BENT EXCAVATION, GRADE TO DRAIN TO THE BOTTOM OF THE SLOPE AND PROVIDE EROSION RESISTANT MATERIAL, SUCH AS FIBERGLASS ROVING OR AS DIRECTED BY THE ENGINEER TO PREVENT SOIL EROSION AND TO PROTECT THE AREA ADJACENT TO THE STRUCTURE. THE CONTRACTOR WILL BE REQUIRED TO REMOVE THESE MATERIALS PRIOR TO CONSTRUCTION OF THE APPROACH SLAB.

TEMPORARY DRAINAGE DETAIL

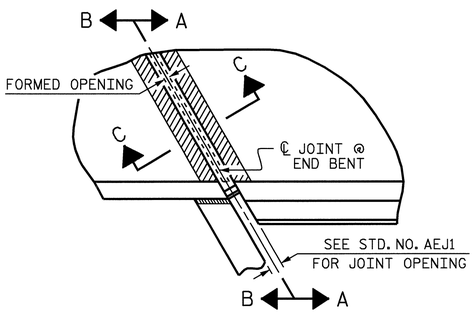

PLAN

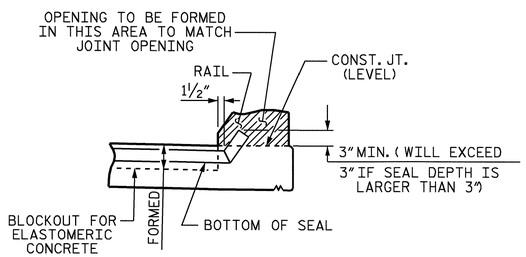

SECTION A-A

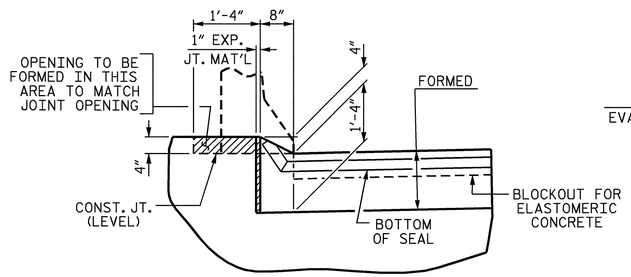

SECTION B-B

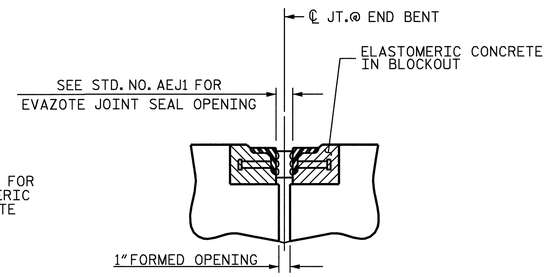

SECTION C-C

ARMORED EVAZOTE JOINT SEAL

NOTE: EVAZOTE JOINT SEAL TO BE CUT, HEAT WELDED AND TURNED UP PARALLEL TO SLOPED FACE OF THE BARRIER RAIL.

JOINT SEAL DETAILS @ END BENT

END BENT NO.1 SHOWN, END BENT No.2 SIMILAR

PROJECT NO. R-2417C

LEE COUNTY

STATION: 665+35.34 -LREV-

SHEET 4 OF 4

STATE OF NORTH CAROLINA
DEPARTMENT OF TRANSPORTATION
RALEIGH

STANDARD

BRIDGE APPROACH SLAB DETAILS

NORTH CAROLINA PROFESSIONAL SEAL 029441 ENGINEER KRISTY W. ALFORD
8/14/09

ASSEMBLED BY : A. V. ROYAL		DATE : 09/08	
CHECKED BY : D. G. ELY		DATE : 12/08	
DRAWN BY : FCJ 11/88	REV. 10/17/00	RWW/LES	
CHECKED BY : ARB 11/88	REV. 5/7/03	RWW/JTE	
	REV. 5/1/06R	MAA/KMM	

REVISIONS						SHEET NO.
NO.	BY:	DATE:	NO.	BY:	DATE:	S-104
1			3			TOTAL SHEETS
2			4			104

STD. NO. BAS10

14-AUG-2009 08:58
k:\structures\str_3\Misc_Draw\r2417c_sd_as.dgn
kalford

STR. #3

F. A. PROJECT NO. STM-0421(50)

BM #1 RR SPIKE IN BASE OF 24"PINE TREE 89.96' RIGHT STA. 34+25.09 -Y- EL. 412.41'

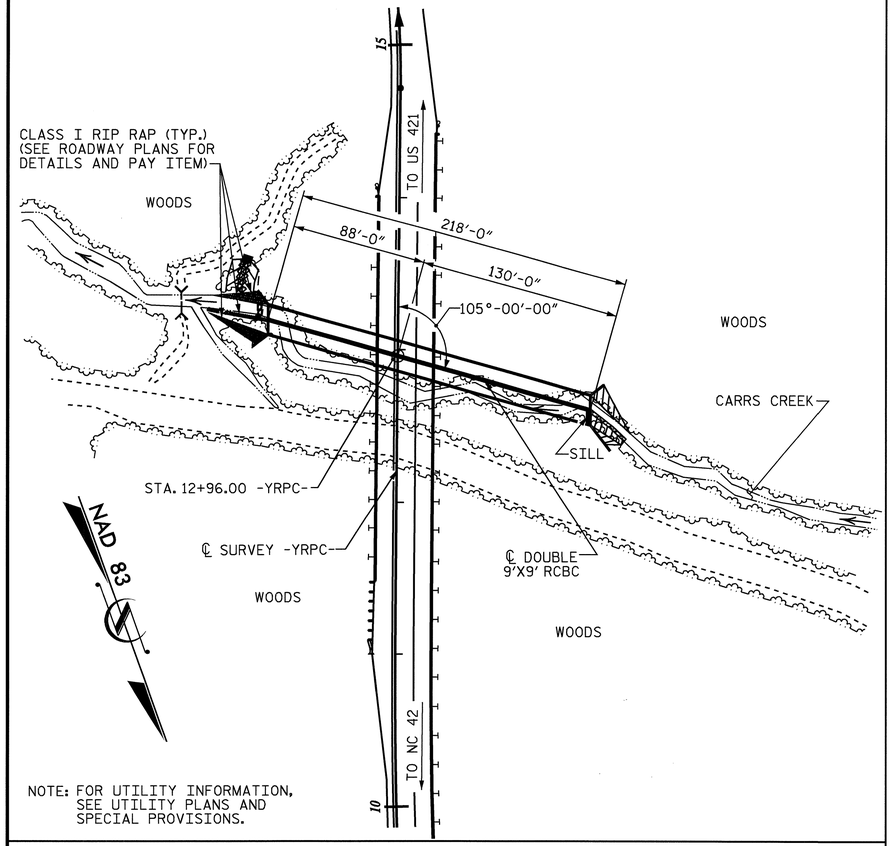

NOTE: FOR UTILITY INFORMATION, SEE UTILITY PLANS AND SPECIAL PROVISIONS.

LOCATION SKETCH

REINFORCING STEEL BAR SCHEDULE

BAR	NO.	SIZE	TYPE	LENGTH	WEIGHT	BAR	NO.	SIZE	TYPE	LENGTH	WEIGHT
A100	365	5	STR	19'-8"	7487	A400	426	6	STR	19'-8"	12584
A101	4	5	STR	14'-10"	62	A401	4	6	STR	15'-5"	93
A102	4	5	STR	10'-6"	44	A402	4	6	STR	11'-9"	71
A103	4	5	STR	6'-2"	26	A403	4	6	STR	8'-0"	48
						A404	4	6	STR	4'-3"	26
A200	393	5	STR	19'-8"	8061						
A201	4	5	STR	15'-2"	63	A1	872	6	6	8'-6"	11133
A202	4	5	STR	11'-1"	46	A2	872	6	6	6'-8"	8732
A203	4	5	STR	7'-1"	30	B1	698	5	STR	12'-1"	8797
A204	4	5	STR	3'-0"	13	B2	872	4	STR	8'-4"	4854
						B3	524	4	STR	12'-1"	4230
A300	426	6	STR	19'-8"	12584	C1	792	4	STR	29'-1"	15387
A301	4	6	STR	15'-5"	93	D1	3	6	STR	3'-5"	15
A302	4	6	STR	11'-9"	71	G1	8	5	STR	20'-5"	170
A303	4	6	STR	8'-0"	48	S2	12	8	STR	20'-5"	654
A304	4	6	STR	4'-3"	26						
						REINFORCING STEEL				LBS.	95448

SPLICE LENGTH CHART

BAR	SIZE	SPLICE LENGTH
A200	5	2'-5"
A400	6	2'-4"
B1	5	1'-9"
B3	4	1'-9"
C1	4	1'-11"

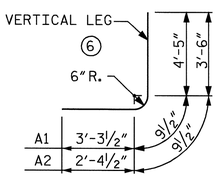

BAR TYPE

BAR DIMENSIONS ARE OUT TO OUT

TOTAL STRUCTURE QUANTITIES

CLASS A CONCRETE	
BARREL @ 3.368 CY/FT	734.2 C.Y.
SILL	0.7 C.Y.
WING ETC.	41.9 C.Y.
TOTAL	776.8 C.Y.
REINFORCING STEEL	
BARREL & SILL	95448 LBS.
WINGS ETC.	2654 LBS.
TOTAL	98102 LBS.
FOUNDATION CONDITIONING MAT'L.	309 TONS
CULVERT EXCAVATION	LUMP SUM

HYDRAULIC DATA

DESIGN DISCHARGE	= 1,300 CFS
FREQUENCY OF DESIGN FLOOD	= 50 YRS.
DESIGN HIGH WATER ELEVATION	= 354.4
DRAINAGE AREA	= 1.153 SQ. MILES
BASIC DISCHARGE (Q100)	= 1,500 CFS
BASIC HIGH WATER ELEVATION	= 355.4

OVERTOPPING FLOOD DATA

OVERTOPPING DISCHARGE	= 2,400 CFS ±
FREQUENCY OF OVERTOPPING FLOOD	= 500 YRS. ±
OVERTOPPING FLOOD ELEVATION	= 383.5
OVERTOPPING LOCATION @ STA. 15+27.81 -YRPC-	

GRADE DATA

GRADE POINT ELEV. @ STA. 12+96.00 -YRPC- = 387.196
BED ELEV. @ STA. 12+96.00 -YRPC- = 342.69
ROADWAY SLOPE = 2:1 LEFT, 3:1 RIGHT

NOTES:

ASSUMED LIVE LOAD ----------HS20-44 OR ALTERNATE LOADING.

DESIGN FILL---------- 34.22'

FOR OTHER DESIGN DATA AND NOTES SEE STANDARD NOTE SHEET.

3"Ø WEEP HOLES INDICATED TO BE IN ACCORDANCE WITH THE SPECIFICATIONS.

CONCRETE IN CULVERTS TO BE POURED IN THE FOLLOWING ORDER:

1. WING FOOTINGS AND FLOOR SLAB INCLUDING 4" OF ALL VERTICAL WALLS.
2. THE REMAINING PORTIONS OF THE WALLS AND WINGS FULL HEIGHT FOLLOWED BY ROOF SLAB AND HEADWALLS.

THE RESIDENT ENGINEER SHALL CHECK THE LENGTH OF CULVERT BEFORE STAKING IT OUT TO MAKE CERTAIN THAT IT WILL PROPERLY TAKE CARE OF THE FILL.

DIMENSIONS FOR WING LAYOUT AS WELL AS ADDITIONAL REINFORCING STEEL EMBEDDED IN BARREL ARE SHOWN ON WING SHEET.

TRANSVERSE CONSTRUCTION JOINTS SHALL BE USED IN THE BARREL, SPACED TO LIMIT THE POURS TO A MAXIMUM OF 50 FT. LOCATION OF JOINTS SHALL BE SUBJECT TO APPROVAL OF THE ENGINEER.

STEEL IN THE BOTTOM SLAB MAY BE SPLICED AT THE PERMITTED CONSTRUCTION JOINT AT THE CONTRACTOR'S OPTION. EXTRA WEIGHT OF STEEL DUE TO THE SPLICES SHALL BE PAID FOR BY THE CONTRACTOR.

AT THE CONTRACTOR'S OPTION, HE MAY SPLICE THE VERTICAL REINFORCING STEEL IN THE INTERIOR FACE OF EXTERIOR WALL AND BOTH FACES OF INTERIOR WALLS ABOVE LOWER WALL CONSTRUCTION JOINT. THE SPLICE LENGTH SHALL BE AS PROVIDED IN THE SPLICE LENGTH CHART SHOWN ON THE PLANS. EXTRA WEIGHT OF STEEL DUE TO THE SPLICES SHALL BE PAID FOR BY THE CONTRACTOR.

THE CONTRACTOR SHALL PROVIDE INDEPENDENT ASSURANCE SAMPLES OF REINFORCING STEEL AS FOLLOWS: FOR PROJECTS REQUIRING UP TO 400 TONS OF REINFORCING STEEL, ONE 30 INCH SAMPLE OF EACH SIZE BAR USED, AND FOR PROJECTS REQUIRING OVER 400 TONS OF REINFORCING STEEL, TWO 30 INCH SAMPLES OF EACH SIZE BAR USED. THE BARS FROM WHICH THE SAMPLES ARE TAKEN MUST THEN BE SPLICED WITH REPLACEMENT BARS OF THE SIZE AND LENGTH OF THE SAMPLE, PLUS A MINIMUM LAP SPLICE OF THIRTY BAR DIAMETERS.

A 3 FOOT STRIP OF FILTER FABRIC SHALL BE ATTACHED TO THE FILL FACE OF THE WING COVERING THE ENTIRE LENGTH OF THE EXPANSION JOINT.

DETAILED DRAWINGS FOR FALSEWORK AND FORMS FOR THIS CULVERT SHALL BE SUBMITTED. SEE SHEET SN.

NO PRECAST REINFORCED CONCRETE BOX CULVERT OPTION WILL BE ALLOWED.

FOR SUBMITTAL OF WORKING DRAWINGS, SEE SPECIAL PROVISIONS.

FOR FALSEWORK AND FORMWORK, SEE SPECIAL PROVISIONS.

FOR CRANE SAFETY, SEE SPECIAL PROVISIONS.

FOR GROUT FOR STRUCTURE, SEE SPECIAL PROVISION

FOR CULVERT DIVERSION DETAILS AND PAY ITEM, SEE EROSION CONTROL PLANS.

FOR CONSTRUCTION SEQUENCE, SEE EROSION CONTROL PLANS.

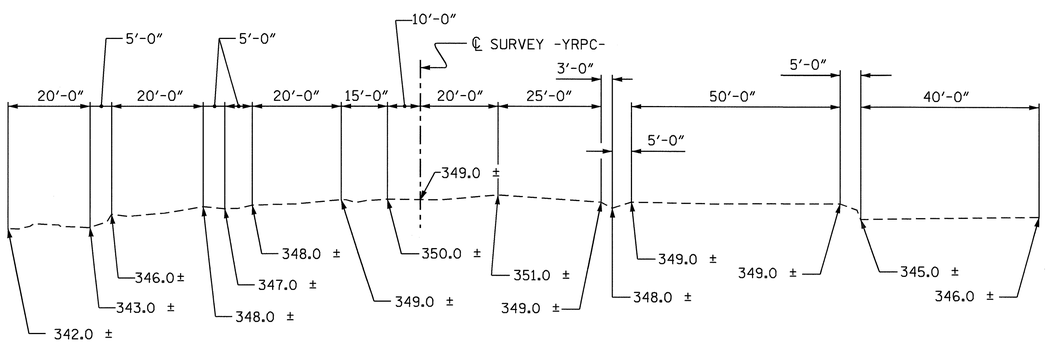

PROFILE ALONG ℄ CULVERT

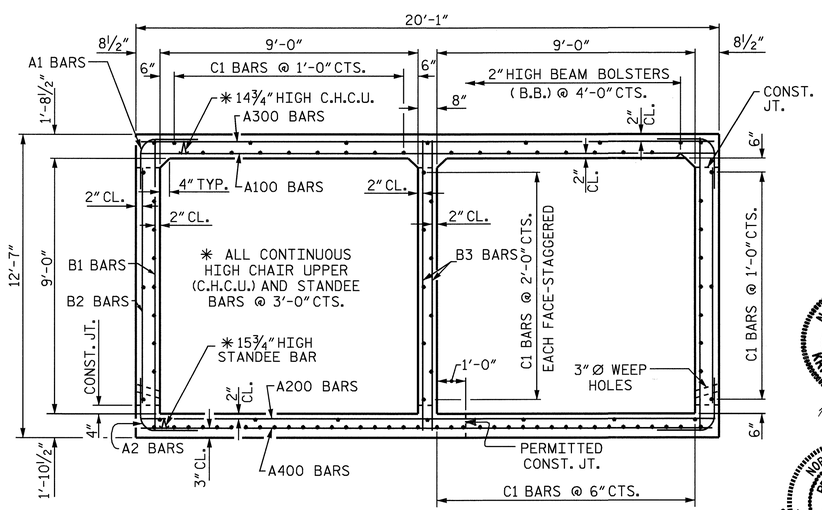

RIGHT ANGLE SECTION OF BARREL

THERE ARE 99 "C" BARS IN SECTION OF BARREL.
C1 BARS ARE 8 BAR RUNS

NORTH CAROLINA PROFESSIONAL SEAL 029441 ENGINEER KRISTY W. ALFORD
8/13/09

NORTH CAROLINA PROFESSIONAL SEAL 11268 ENGINEER BETSY S. COX
8-19-09

PROJECT NO. R-2417C
LEE COUNTY
STATION: 12+96.00-YRPC-

SHEET 1 OF 4 CULVERT No. 138

STATE OF NORTH CAROLINA
DEPARTMENT OF TRANSPORTATION
RALEIGH

DOUBLE 9 FT. X 9 FT. CONCRETE BOX CULVERT 105° SKEW

REVISIONS						SHEET NO.
NO.	BY:	DATE:	NO.	BY:	DATE:	C-1
1			3			TOTAL SHEETS
2			4			40

ASSEMBLED BY : A. V. ROYAL DATE : 07-08
CHECKED BY : D. G. ELY DATE : 07-08
DRAWN BY : R.W. WRIGHT DATE : OCT. 1989
CHECKED BY : C.R.K. DATE : OCT. 1989

SPECIAL
STANDARD

ADDED NOV.1990

STD. NO. CB222A STR. #4

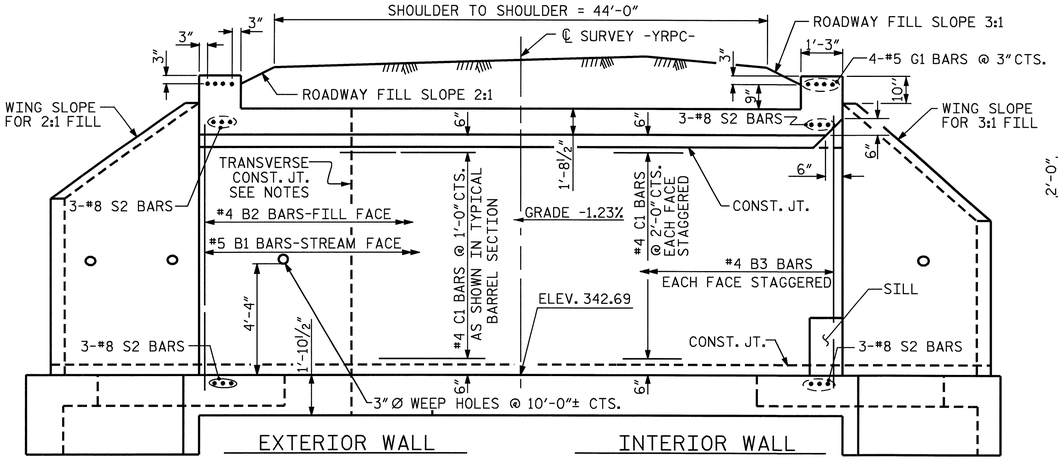

CULVERT SECTION NORMAL TO ROADWAY

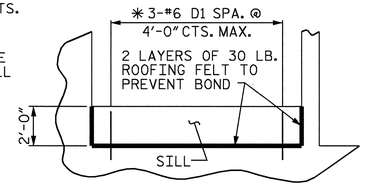

ELEVATION

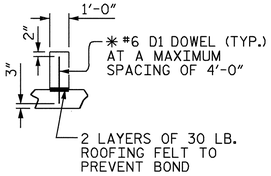

SECTION THRU SILL

✱#6 D1 DOWELS MAY BE PUSHED INTO GREEN CONCRETE AFTER SLAB HAS BEEN FLOAT FINISHED.

CULVERT SILL DETAILS

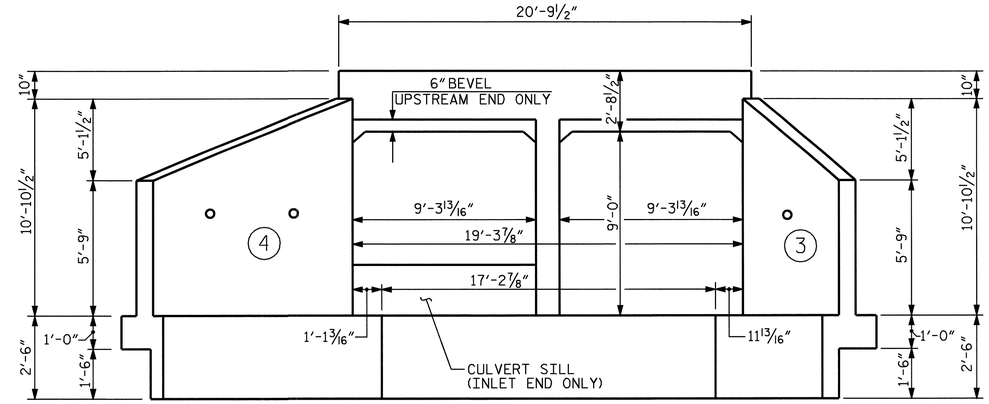

INLET END ELEVATION NORMAL TO SKEW

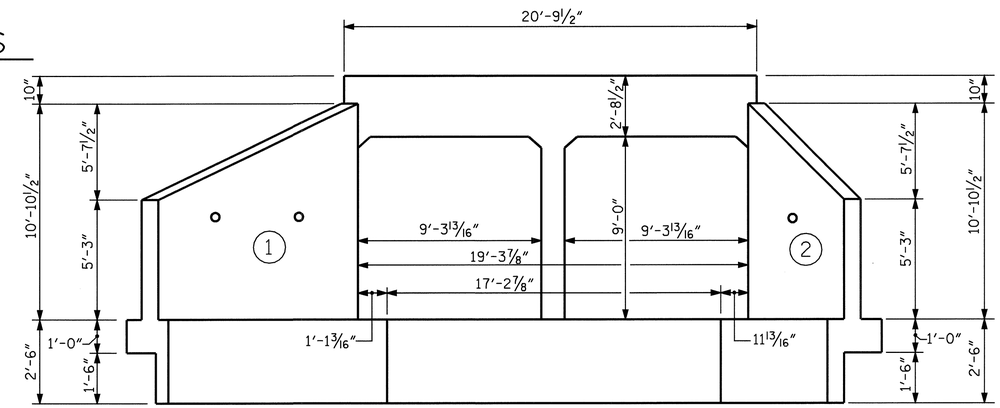

OUTLET END ELEVATION NORMAL TO SKEW

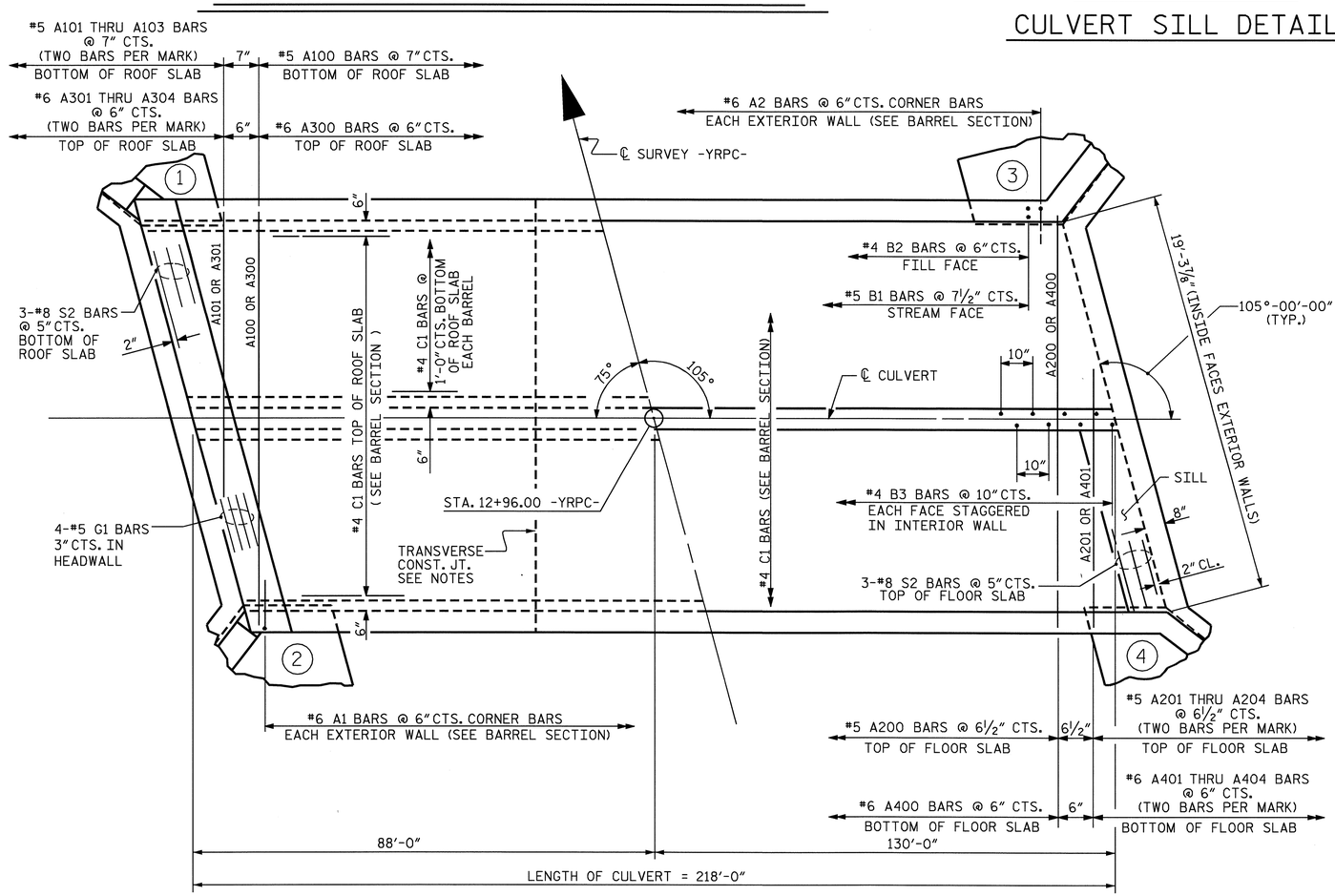

PART PLAN - ROOF SLAB

PART PLAN - FLOOR SLAB

C1 BARS ARE 8 BAR RUNS.

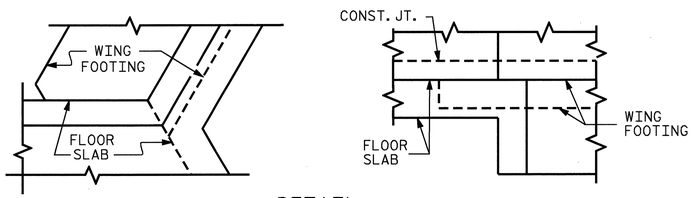

DETAIL

CONNECTION OF WING FOOTING AND FLOOR SLAB WHEN SLAB IS THICKER THAN FOOTING

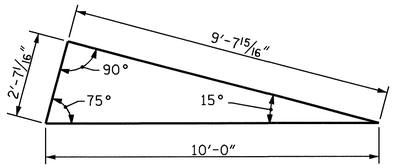

SKEW TRIANGLE

NORTH CAROLINA PROFESSIONAL SEAL 029441 ENGINEER KRISTY W. ALFORD
7/31/09

PROJECT NO. R-2417C
LEE COUNTY
STATION: 12+96.00-YRPC-

SHEET 2 OF 4

STATE OF NORTH CAROLINA
DEPARTMENT OF TRANSPORTATION
RALEIGH

BARREL STANDARD

DOUBLE 9 FT. X 9 FT. CONCRETE BOX CULVERT 105° SKEW

REVISIONS						SHEET NO.
NO.	BY:	DATE:	NO.	BY:	DATE:	C-2
1			3			TOTAL SHEETS
2			4			40

STD. NO. CB222

STR. #4

ASSEMBLED BY : A. V. ROYAL	DATE : 07-08	SPECIAL	
CHECKED BY : D. G. ELY	DATE : 10-08		
DRAWN BY : W. BRYAN STANLEY II	DATE : NOV.1971	STANDARD	
CHECKED BY : JOEL A. JOHNSON	DATE : DEC.1971		

REVISED 11-19-99 BY M.M. CHECKED BY R.W.W.
REVISED 8-28-92 BY E.L.R. CHECKED BY G.R.P.
REDRAWN 11-90 BY A.R.B. CHECKED BY C.R.K.

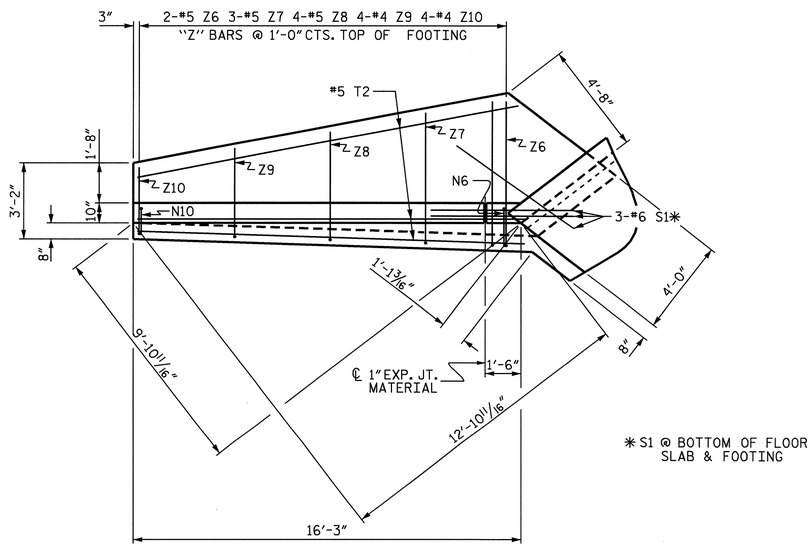

* S1 @ BOTTOM OF FLOOR SLAB & FOOTING

PLAN W1

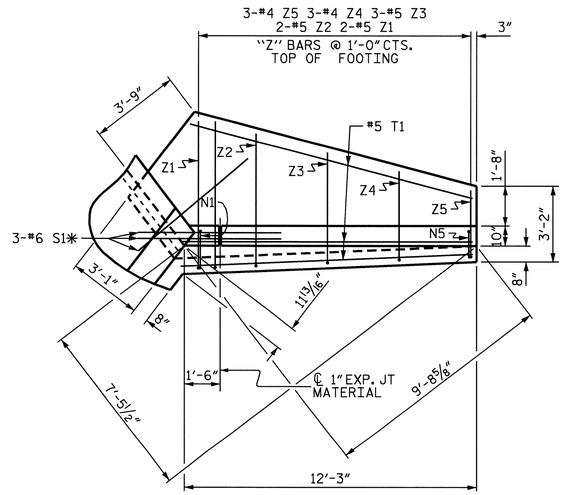

PLAN W2

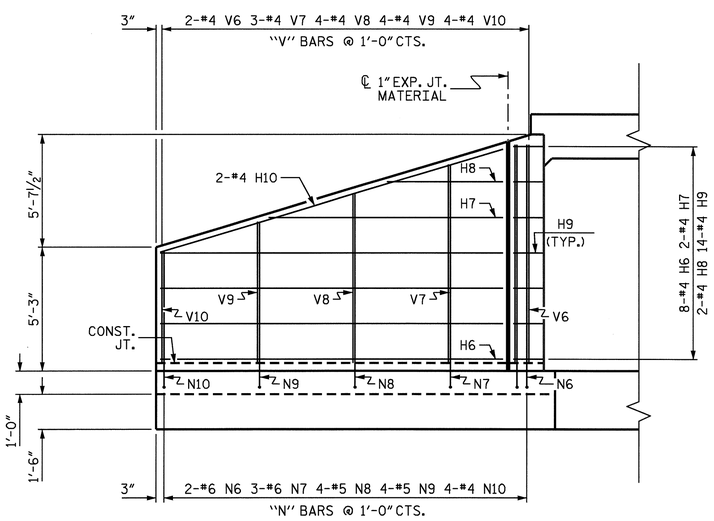

ELEVATION W1

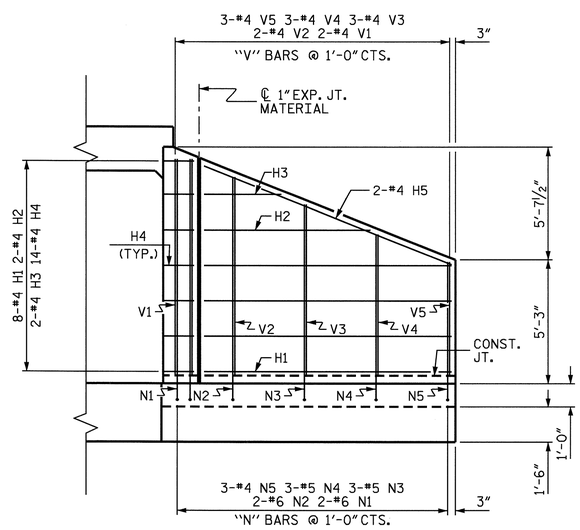

ELEVATION W2

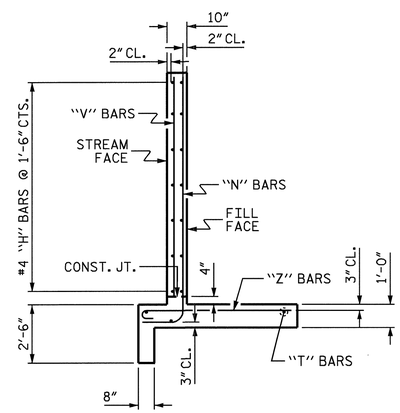

TYPICAL WING SECTION

BAR TYPES

ALL BAR DIMENSIONS ARE OUT TO OUT.

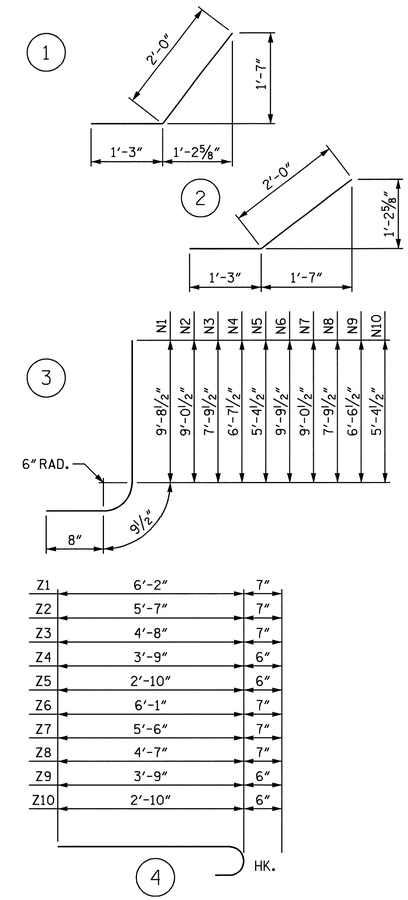

BILL OF MATERIAL

BAR	NO.	SIZE	TYPE	LENGTH	WEIGHT
H1	8	#4	STR	10'-4"	55
H2	2	#4	STR	6'-11"	9
H3	2	#4	STR	3'-3"	4
H4	14	#4	1	3'-3"	30
H5	2	#4	STR	11'-2"	15
H6	8	#4	STR	14'-4"	77
H7	2	#4	STR	9'-10"	13
H8	2	#4	STR	4'-10"	6
H9	14	#4	2	3'-3"	30
H10	2	#4	STR	15'-0"	20
N1	2	#6	3	11'-2"	34
N2	2	#6	3	10'-6"	32
N3	3	#5	3	9'-3"	29
N4	3	#5	3	8'-1"	25
N5	3	#4	3	6'-10"	14
N6	2	#6	3	11'-3"	34
N7	3	#6	3	10'-6"	47
N8	4	#5	3	9'-3"	39
N9	4	#5	3	8'-0"	33
N10	4	#4	3	6'-10"	18
S1	6	#6	STR	6'-0"	54
T1	3	#5	STR	12'-3"	38
T2	3	#5	STR	16'-3"	51
V1	2	#4	STR	9'-2"	12
V2	2	#4	STR	8'-5"	11
V3	3	#4	STR	7'-3"	15
V4	3	#4	STR	6'-0"	12
V5	3	#4	STR	4'-10"	10
V6	2	#4	STR	9'-3"	12
V7	3	#4	STR	8'-5"	17
V8	4	#4	STR	7'-2"	19
V9	4	#4	STR	6'-0"	16
V10	4	#4	STR	4'-9"	13
Z1	2	#5	4	6'-9"	14
Z2	2	#5	4	6'-2"	13
Z3	3	#5	4	5'-3"	16
Z4	3	#4	4	4'-3"	9
Z5	3	#4	4	3'-4"	7
Z6	2	#5	4	6'-8"	14
Z7	3	#5	4	6'-1"	19
Z8	4	#5	4	5'-2"	22
Z9	4	#4	4	4'-3"	11
Z10	4	#4	4	3'-4"	9

REINFORCING STEEL FOR 2 WINGS 978 LBS

CLASS A CONCRETE
- 2 WINGS 13.9 CY
- 1 HEADWALL 1.0 CY
- 1 END CURTAIN WALL 1.1 CY
- TOTAL 16.0 CY

PROJECT NO. R-2417C
LEE COUNTY
STATION: 12+96.00-YRPC-

SHEET 3 OF 4

STATE OF NORTH CAROLINA
DEPARTMENT OF TRANSPORTATION
RALEIGH

OUTLET WINGS FOR CONCRETE BOX CULVERT

H = 9'-0" SLOPE = 2:1
105° SKEW

NORTH CAROLINA PROFESSIONAL SEAL 029441 ENGINEER KRISTY W. ALFORD
7/31/09

REVISIONS						SHEET NO.
NO.	BY:	DATE:	NO.	BY:	DATE:	C-3
1			3			TOTAL SHEETS
2			4			40

ASSEMBLED BY :	A. V. ROYAL	DATE :	07-08
CHECKED BY :	D. G. ELY	DATE :	10-08
DRAWN BY :	CCJ		01/00
CHECKED BY :	RWW		03/00

STD. NO. CW7509 STR. #4

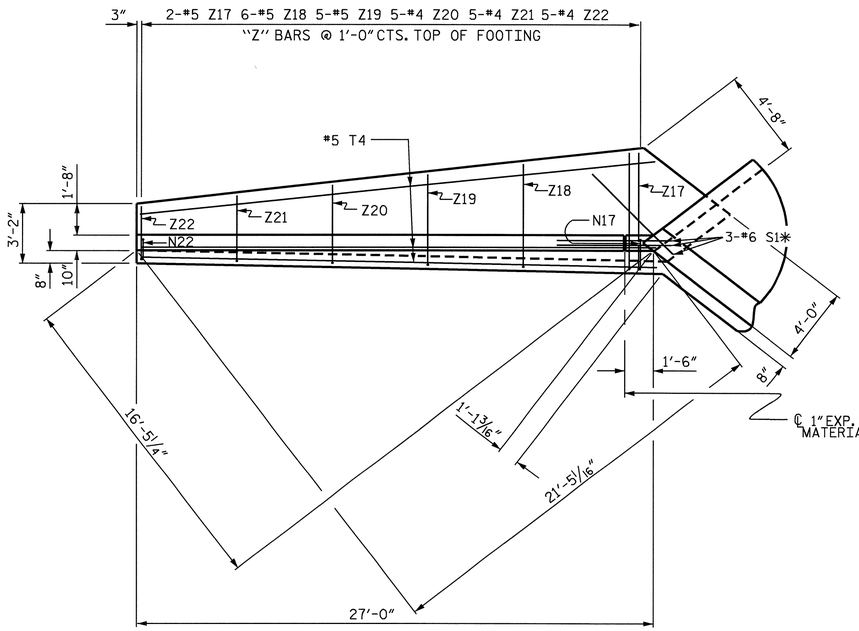

PLAN W4

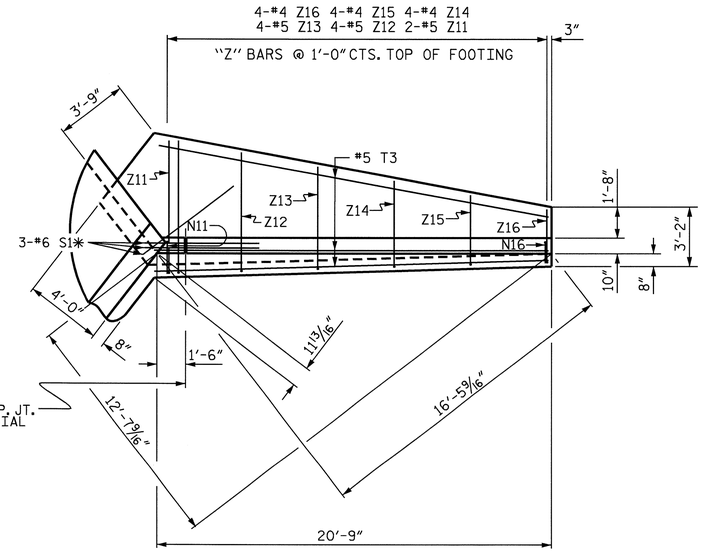

PLAN W3

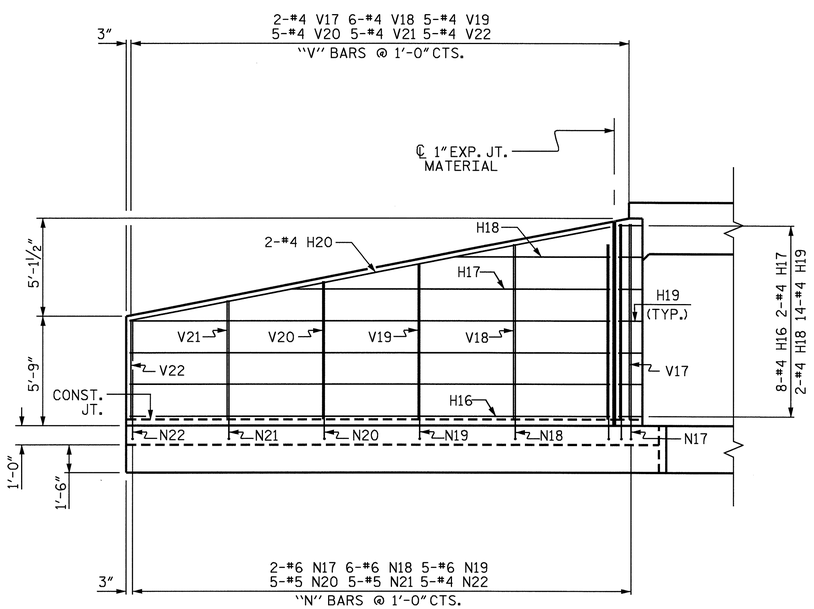

ELEVATION W4

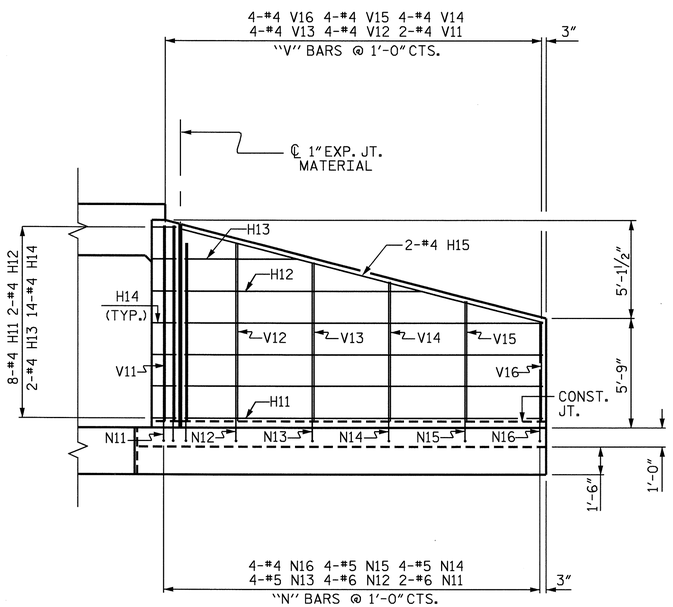

ELEVATION W3

BAR TYPES

ALL BAR DIMENSIONS ARE OUT TO OUT.

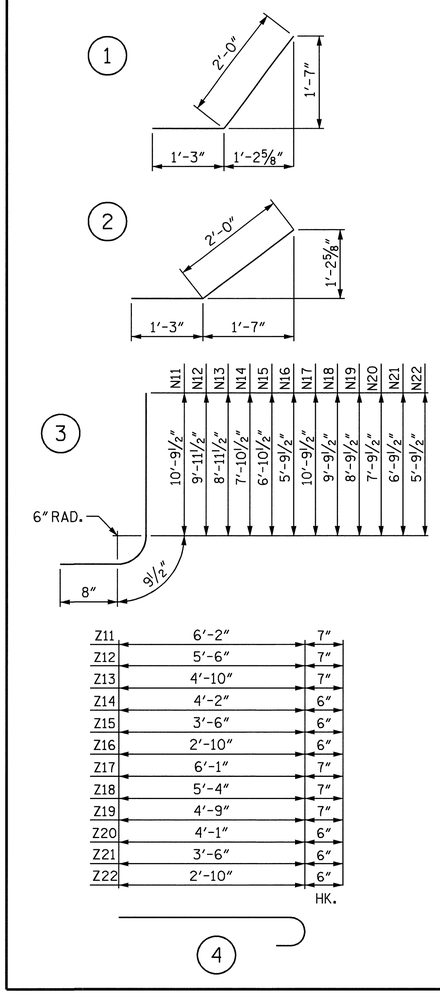

BILL OF MATERIAL

BAR	NO.	SIZE	TYPE	LENGTH	WEIGHT
H11	8	#4	STR	18'-9"	100
H12	2	#4	STR	16'-0"	21
H13	2	#4	STR	10'-4"	14
H14	14	#4	1	3'-3"	30
H15	2	#4	STR	19'-5"	26
H16	8	#4	STR	25'-1"	134
H17	2	#4	STR	21'-4"	29
H18	2	#4	STR	13'-10"	18
H19	14	#4	2	3'-3"	30
H20	2	#4	STR	25'-7"	34
N11	2	#6	3	12'-3"	37
N12	4	#6	3	11'-5"	69
N13	4	#5	3	10'-5"	43
N14	4	#5	3	9'-4"	39
N15	4	#5	3	8'-4"	35
N16	4	#4	3	7'-3"	19
N17	2	#6	3	12'-3"	37
N18	6	#6	3	11'-3"	101
N19	5	#6	3	10'-3"	77
N20	5	#5	3	9'-3"	48
N21	5	#5	3	8'-3"	43
N22	5	#4	3	7'-3"	24
S1	6	#6	STR	6'-0"	54
T3	3	#5	STR	20'-9"	65
T4	3	#5	STR	27'-0"	84
V11	2	#4	STR	10'-3"	14
V12	4	#4	STR	9'-6"	25
V13	4	#4	STR	8'-5"	22
V14	4	#4	STR	7'-4"	20
V15	4	#4	STR	6'-4"	17
V16	4	#4	STR	5'-3"	14
V17	2	#4	STR	10'-3"	14
V18	6	#4	STR	9'-2"	37
V19	5	#4	STR	8'-2"	27
V20	5	#4	STR	7'-3"	24
V21	5	#4	STR	6'-3"	21
V22	5	#4	STR	5'-3"	18
Z11	2	#5	4	6'-9"	14
Z12	4	#5	4	6'-1"	25
Z13	4	#5	4	5'-5"	23
Z14	4	#4	4	4'-8"	12
Z15	4	#4	4	4'-0"	11
Z16	4	#4	4	3'-4"	9
Z17	2	#5	4	6'-8"	14
Z18	6	#5	4	5'-11"	37
Z19	5	#5	4	5'-4"	28
Z20	5	#4	4	4'-7"	15
Z21	5	#4	4	4'-0"	13
Z22	5	#4	4	3'-4"	11

REINFORCING STEEL FOR 2 WINGS 1676 LBS

CLASS A CONCRETE
- 2 WINGS 23.8 CY
- 1 HEADWALL 1.0 CY
- 1 END CURTAIN WALL 1.1 CY
- TOTAL 25.9 CY

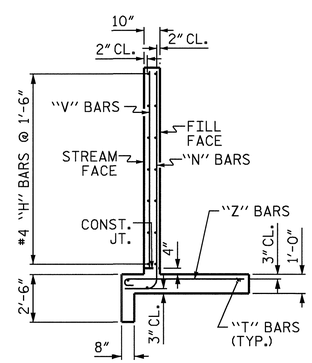

TYPICAL WING SECTION

PROJECT NO. R-2417C

LEE COUNTY

STATION: 12+96.00-YRPC-

SHEET 4 OF 4

STATE OF NORTH CAROLINA
DEPARTMENT OF TRANSPORTATION
RALEIGH

INLET WINGS FOR CONCRETE BOX CULVERT

H = 9'-0" SLOPE = 3:1

105° SKEW

NORTH CAROLINA PROFESSIONAL SEAL 029441 ENGINEER KRISTY W. ALFORD 7/31/09

REVISIONS						SHEET NO.
NO.	BY:	DATE:	NO.	BY:	DATE:	C-4
1			3			TOTAL SHEETS
2			4			40

DRAWN BY : A. V. ROYAL DATE : 07/08

CHECKED BY : D. G. ELY DATE : 10/08

F. A. PROJECT NO.: STM-0421(50)

BM #3 RR SPIKE IN BASE OF 14"PINE TREE, STA. 639+60.97-LREV- 237.77' LT, EL. 407.93'

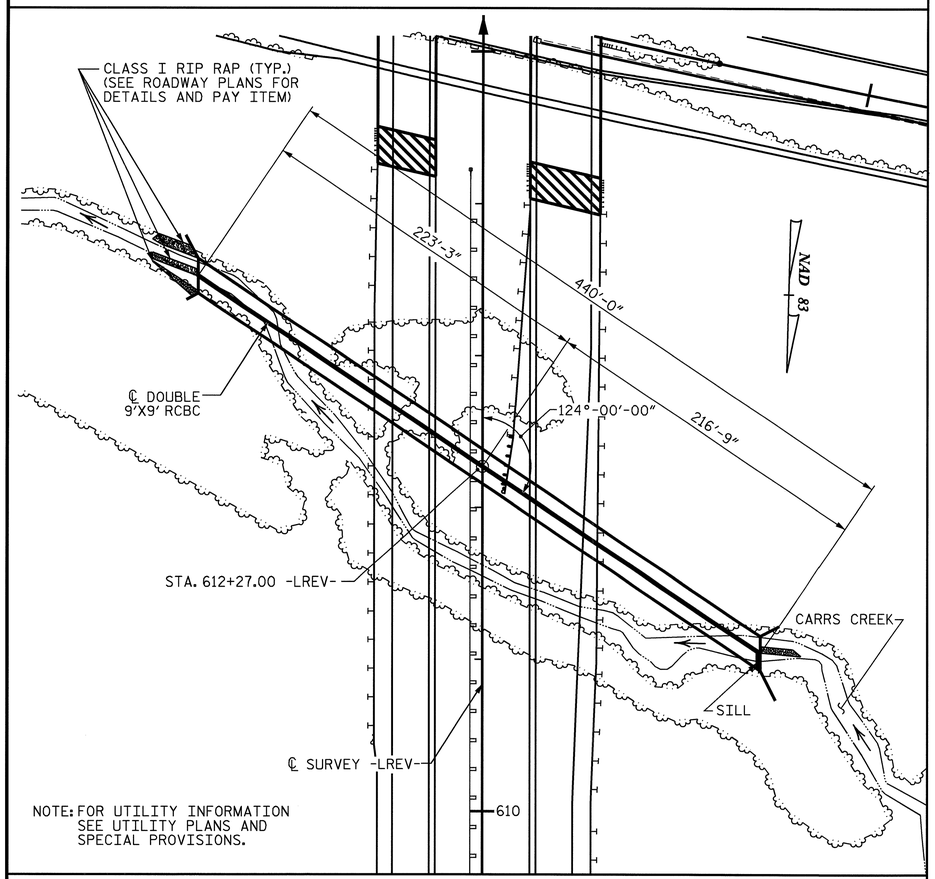

NOTE: FOR UTILITY INFORMATION SEE UTILITY PLANS AND SPECIAL PROVISIONS.

LOCATION SKETCH

REINFORCING STEEL BAR SCHEDULE

BAR	NO.	SIZE	TYPE	LENGTH	WEIGHT	BAR	NO.	SIZE	TYPE	LENGTH	WEIGHT
A100	643	6	STR	20'-0"	19316	A400	857	6	STR	20'-0"	25744
A101	4	6	STR	17'-6"	105	A401	4	6	STR	18'-1"	109
A102	4	6	STR	15'-3"	92	A402	4	6	STR	16'-4"	98
A103	4	6	STR	12'-11"	78	A403	4	6	STR	14'-8"	88
A104	4	6	STR	10'-7"	64	A404	4	6	STR	12'-11"	78
A105	4	6	STR	8'-3"	50	A405	4	6	STR	11'-2"	67
A106	4	6	STR	6'-0"	36	A406	4	6	STR	9'-5"	57
A107	4	6	STR	3'-8"	22	A407	4	6	STR	7'-9"	47
						A408	4	6	STR	6'-0"	36
A200	686	6	STR	20'-0"	20607	A409	4	6	STR	4'-3"	26
A201	4	6	STR	17'-8"	106	A410	4	6	STR	2'-6"	15
A202	4	6	STR	15'-6"	93						
A203	4	6	STR	13'-4"	80	A1	1760	6	6	9'-1"	24012
A204	4	6	STR	11'-2"	67	A2	1760	6	6	7'-3"	19166
A205	4	6	STR	9'-0"	54						
A206	4	6	STR	6'-10"	41	B1	1112	6	STR	12'-11"	21574
A207	4	6	STR	4'-8"	28	B2	1760	5	STR	8'-4"	15297
A208	4	6	STR	2'-6"	15	B3	1056	5	STR	12'-11"	14227
A300	857	6	STR	20'-0"	25744	C1	1584	4	STR	29'-6"	31214
A301	4	6	STR	18'-1"	109						
A302	4	6	STR	16'-4"	98	D1	3	6	STR	3'-10"	17
A303	4	6	STR	14'-8"	88						
A304	4	6	STR	12'-11"	78	G1	8	5	STR	23'-2"	193
A305	4	6	STR	11'-2"	67						
A306	4	6	STR	9'-5"	57	S2	12	8	STR	23'-2"	742
A307	4	6	STR	7'-9"	47	REINFORCING STEEL				LBS.	220026
A308	4	6	STR	6'-0"	36						
A309	4	6	STR	4'-3"	26						
A310	4	6	STR	2'-6"	15						

TOTAL STRUCTURE QUANTITIES

CLASS A CONCRETE		
BARREL @ 4.185 CY/FT	1841.4	C.Y.
SILL	0.8	C.Y.
WING ETC.	34.8	C.Y.
TOTAL	1877.0	C.Y.
REINFORCING STEEL		
BARREL	220026	LBS.
WINGS ETC.	2148	LBS.
TOTAL	222174	LBS.
FOUNDATION CONDITIONING MAT'L.	633	TONS
CULVERT EXCAVATION	LUMP	SUM

SPLICE LENGTH CHART

BAR	SIZE	SPLICE LENGTH
A200	6	3'-2"
A400	6	2'-4"
B1	6	2'-4"
B3	5	1'-9"
C1	4	1'-11"

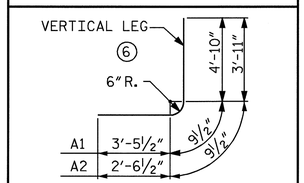

BAR TYPE

BAR DIMENSIONS ARE OUT TO OUT

NOTES

ASSUMED LIVE LOAD ----------HS20-44 OR ALTERNATE LOADING.

DESIGN FILL----------54.36'.

FOR OTHER DESIGN DATA AND NOTES SEE STANDARD NOTE SHEET.

3"Ø WEEP HOLES INDICATED TO BE IN ACCORDANCE WITH THE SPECIFICATIONS.

CONCRETE IN CULVERTS TO BE POURED IN THE FOLLOWING ORDER:

1. WING FOOTINGS AND FLOOR SLAB INCLUDING 4" OF ALL VERTICAL WALLS.
2. THE REMAINING PORTIONS OF THE WALLS AND WINGS FULL HEIGHT FOLLOWED BY ROOF SLAB AND HEADWALLS.

THE RESIDENT ENGINEER SHALL CHECK THE LENGTH OF CULVERT BEFORE STAKING IT OUT TO MAKE CERTAIN THAT IT WILL PROPERLY TAKE CARE OF THE FILL.

DIMENSIONS FOR WING LAYOUT AS WELL AS ADDITIONAL REINFORCING STEEL EMBEDDED IN BARREL ARE SHOWN ON WING SHEET.

TRANSVERSE CONSTRUCTION JOINTS SHALL BE USED IN THE BARREL, SPACED TO LIMIT THE POURS TO A MAXIMUM OF 50 FT. LOCATION OF JOINTS SHALL BE SUBJECT TO APPROVAL OF THE ENGINEER.

STEEL IN THE BOTTOM SLAB MAY BE SPLICED AT THE PERMITTED CONSTRUCTION JOINT AT THE CONTRACTOR'S OPTION. EXTRA WEIGHT OF STEEL DUE TO THE SPLICES SHALL BE PAID FOR BY CONTRACTOR.

AT THE CONTRACTOR'S OPTION, HE MAY SPLICE THE VERTICAL REINFORCING STEEL IN THE INTERIOR FACE OF EXTERIOR WALL AND BOTH FACES OF INTERIOR WALLS ABOVE LOWER WALL CONSTRUCTION JOINT. THE SPLICE LENGTH SHALL BE AS PROVIDED IN THE SPLICE LENGTH CHART SHOWN ON THE PLANS. EXTRA WEIGHT OF STEEL DUE TO THE SPLICES SHALL BE PAID FOR BY THE CONTRACTOR.

THE CONTRACTOR SHALL PROVIDE INDEPENDENT ASSURANCE SAMPLES OF REINFORCING STEEL AS FOLLOWS: FOR PROJECTS REQUIRING UP TO 400 TONS OF REINFORCING STEEL, ONE 30 INCH SAMPLE OF EACH SIZE BAR USED, AND FOR PROJECTS REQUIRING OVER 400 TONS OF REINFORCING STEEL, TWO 30 INCH SAMPLES OF EACH SIZE BAR USED. THE BARS FROM WHICH THE SAMPLES ARE TAKEN MUST THEN BE SPLICED WITH REPLACEMENT BARS OF THE SIZE AND LENGTH OF THE SAMPLE, PLUS A MINIMUM LAP SPLICE OF THIRTY BAR DIAMETERS.

A 3 FOOT STRIP OF FILTER FABRIC SHALL BE ATTACHED TO THE FILL FACE OF THE WING COVERING THE ENTIRE LENGTH OF THE EXPANSION JOINT.

DETAILED DRAWINGS FOR FALSEWORK AND FORMS FOR THIS CULVERT SHALL BE SUBMITTED. SEE SHEET SN.

NO PRECAST REINFORCED CONCRETE BOX CULVERT OPTION WILL BE ALLOWED.

FOR SUBMITTAL OF WORKING DRAWINGS, SEE SPECIAL PROVISIONS.

FOR FALSEWORK AND FORMWORK, SEE SPECIAL PROVISIONS.

FOR CRANE SAFETY, SEE SPECIAL PROVISIONS.

FOR CULVERT DIVERSION DETAILS AND PAY ITEM, SEE EROSION CONTROL PLANS.

FOR CONSTRUCTION SEQUENCE, SEE EROSION CONTROL PLANS.

GRADE DATA

GRADE POINT ELEV. @ STA. 612+27.00-LREV- = 402.47
BED ELEV. @ STA. 612+27.00 -LREV- = 337.44
ROADWAY SLOPE = 2:1 LEFT & RIGHT

HYDRAULIC DATA

DESIGN DISCHARGE	= 1,300 CFS
FREQUENCY OF DESIGN FLOOD	= 50 YRS.
DESIGN HIGH WATER ELEVATION	= 350.6
DRAINAGE AREA	= 1.19 SQ. MILES
BASIC DISCHARGE (Q100)	= 1,500 CFS
BASIC HIGH WATER ELEVATION	= 351.6

OVERTOPPING FLOOD DATA

OVERTOPPING DISCHARGE	= >2,400 CFS
FREQUENCY OF OVERTOPPING FLOOD	= 500 YRS.+
OVERTOPPING FLOOD ELEVATION	= 379.1
OVERTOPPING LOCATION @ STA. 29+00 -Y-	

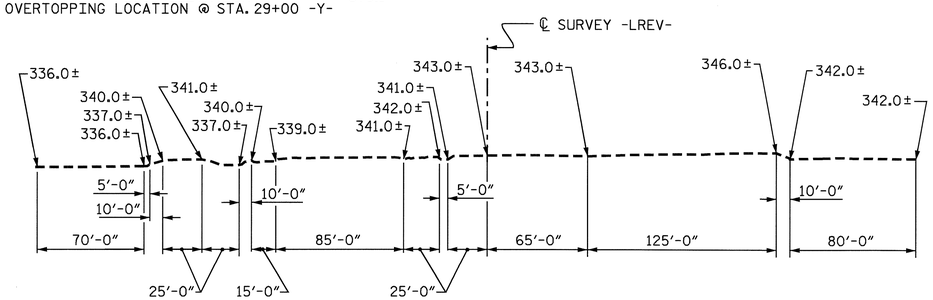

PROFILE ALONG ℄ CULVERT

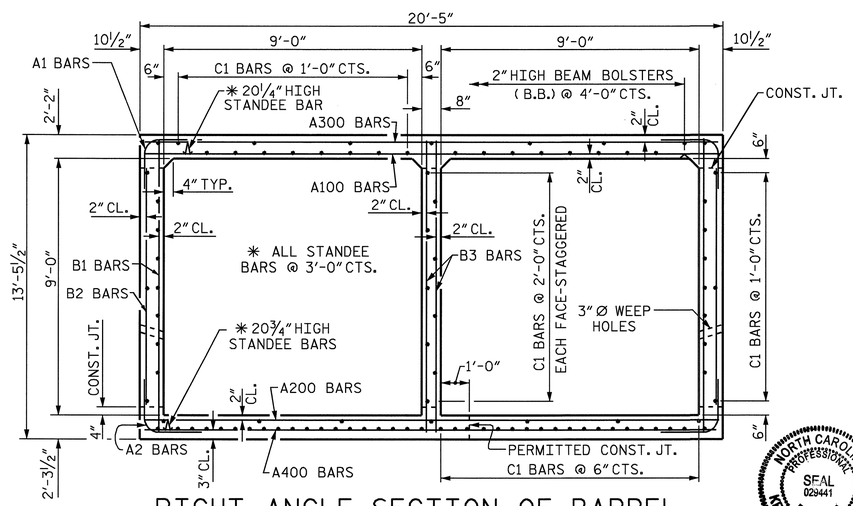

RIGHT ANGLE SECTION OF BARREL

THERE ARE 99 "C" BARS IN SECTION OF BARREL.
C1 BARS ARE 16 BAR RUNS.

NORTH CAROLINA PROFESSIONAL SEAL 029441 ENGINEER KRISTY W. ALFORD 4/30/09

NORTH CAROLINA PROFESSIONAL SEAL 026268 ENGINEER BETSY S. COX 04/30/2009

PROJECT NO. R-2417C
LEE COUNTY
STATION: 612+27.00-LREV-

SHEET 1 OF 3 CULVERT No. 139

STATE OF NORTH CAROLINA
DEPARTMENT OF TRANSPORTATION
RALEIGH

DOUBLE 9 FT. X 9 FT. CONCRETE BOX CULVERT 124° SKEW

ASSEMBLED BY : A. V. ROYAL	DATE : 08/08	SPECIAL
CHECKED BY : D. G. ELY	DATE : 02/09	
DRAWN BY : B.M. MEYERS	DATE : AUG. 1989	STANDARD
CHECKED BY : A.R. BISSETTE	DATE : AUG. 1989	

ADDED 11-90

REVISIONS								SHEET NO.
NO.	BY:	DATE:	NO.	BY:	DATE:			C-5
1			3					TOTAL SHEETS
2			4					40

STD. NO. CB332A STR. #5

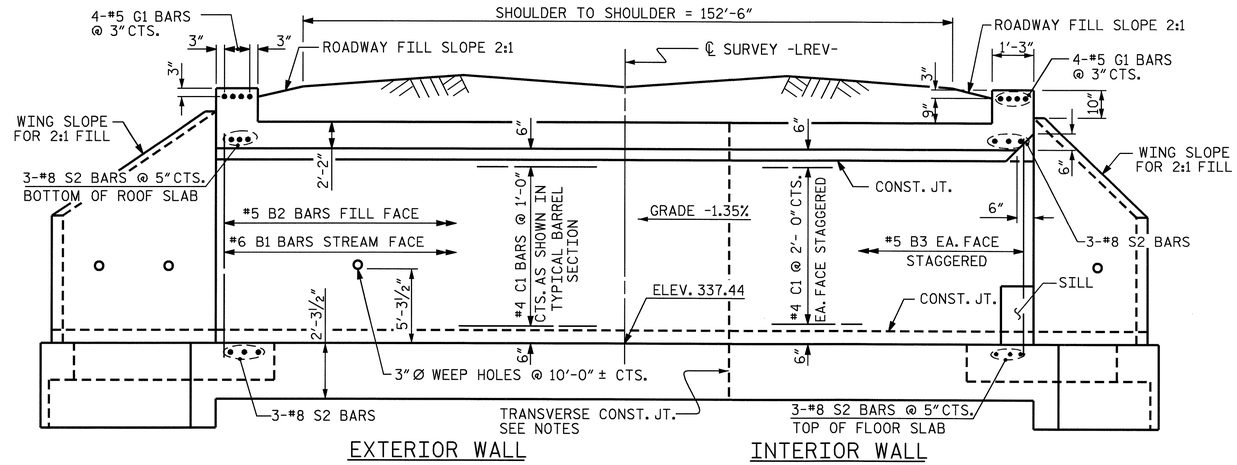

CULVERT SECTION NORMAL TO ROADWAY

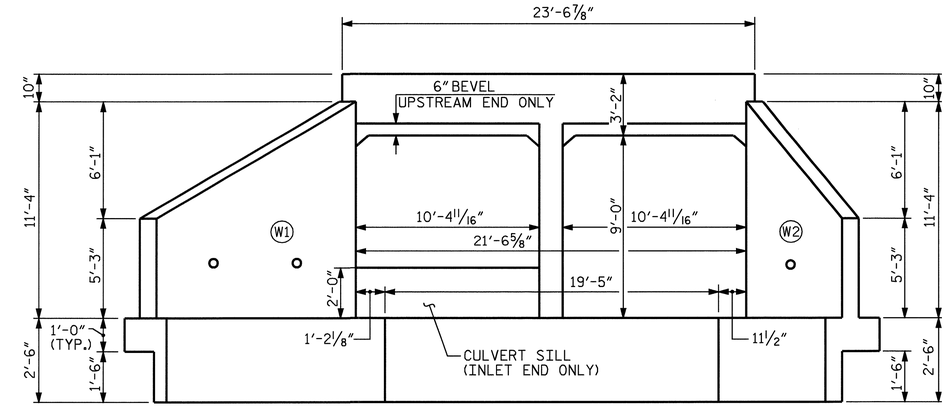

END ELEVATION NORMAL TO SKEW

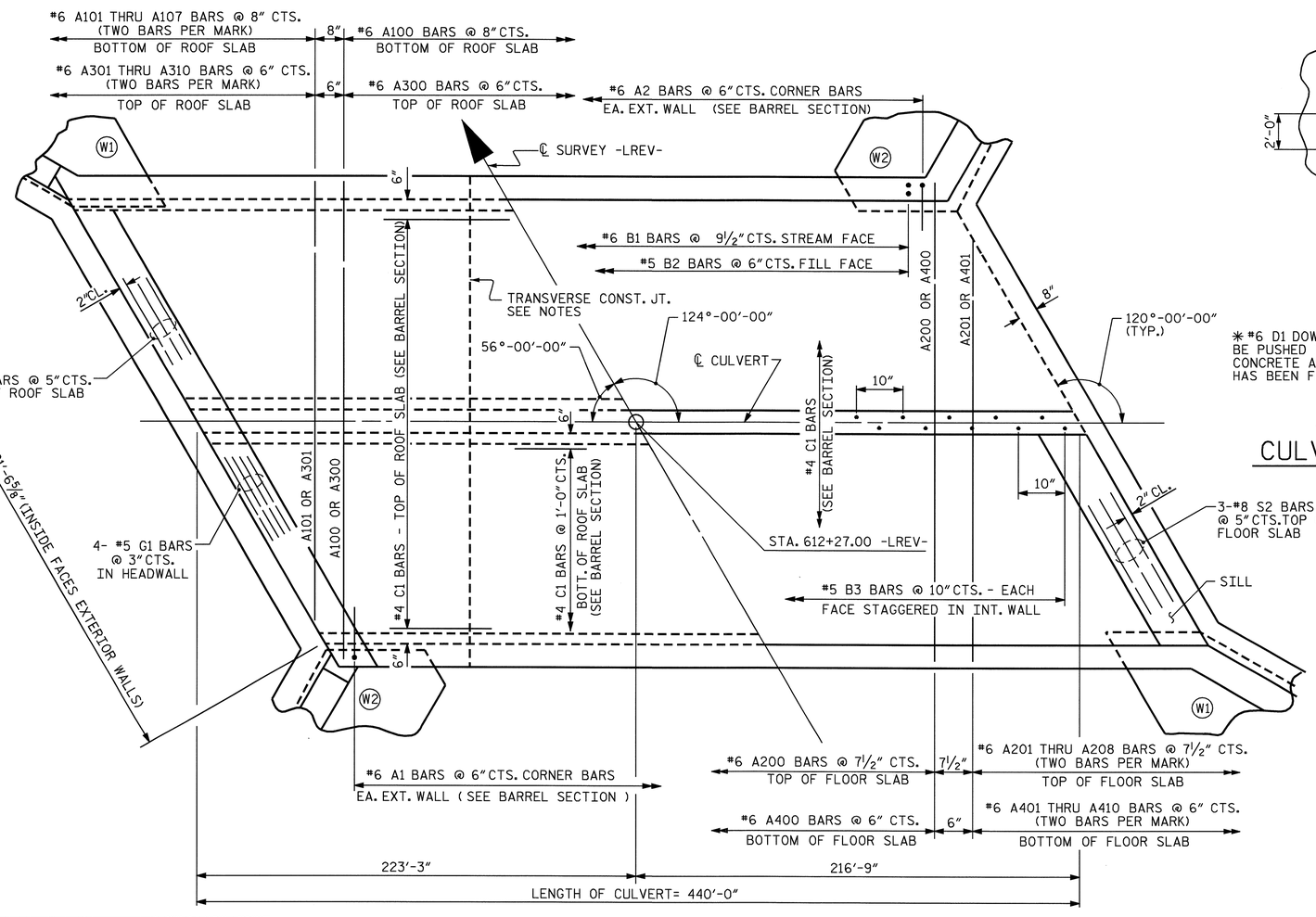

PART PLAN - ROOF SLAB

PART PLAN - FLOOR SLAB

C1 BARS ARE 16 BAR RUNS.

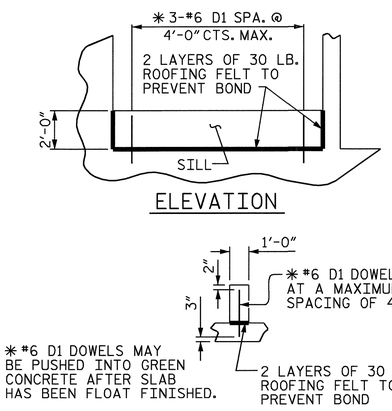

CULVERT SILL DETAILS

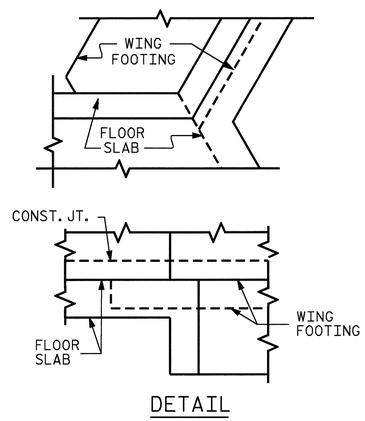

CONNECTION OF WING FOOTING AND FLOOR SLAB WHEN SLAB IS THICKER THAN FOOTING

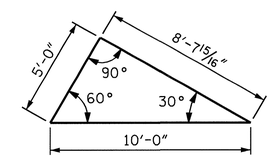

SKEW TRIANGLE

PROJECT NO. R-2417C
LEE COUNTY
STATION: 612+27.00-LREV-

SHEET 2 OF 3

STATE OF NORTH CAROLINA
DEPARTMENT OF TRANSPORTATION
RALEIGH

BARREL STANDARD
DOUBLE 9 FT.X 9 FT.
CONCRETE BOX CULVERT
124° SKEW

NORTH CAROLINA PROFESSIONAL SEAL 024441 ENGINEER KRISTY W. ALFORD
7/31/09

REVISIONS						SHEET NO.
NO.	BY:	DATE:	NO.	BY:	DATE:	C-6
1			3			TOTAL SHEETS
2			4			40

ASSEMBLED BY : A. V. ROYAL	DATE : 08/08	SPECIAL	
CHECKED BY : D. G. ELY	DATE : 02/09		
DRAWN BY : W.BRYAN STALEY II	DATE : NOV.5,1971	STANDARD	
CHECKED BY : JOEL A. JOHNSON	DATE : NOV.13,1971		

REVISED 11-19-99 BY M.M. CHECKED BY R.W.W.
REVISED 8-28-92 BY E.L.R. CHECKED BY G.R.P.
REDRAWN 8/1990 BY S.A.T., CHECKED BY E.L.R.

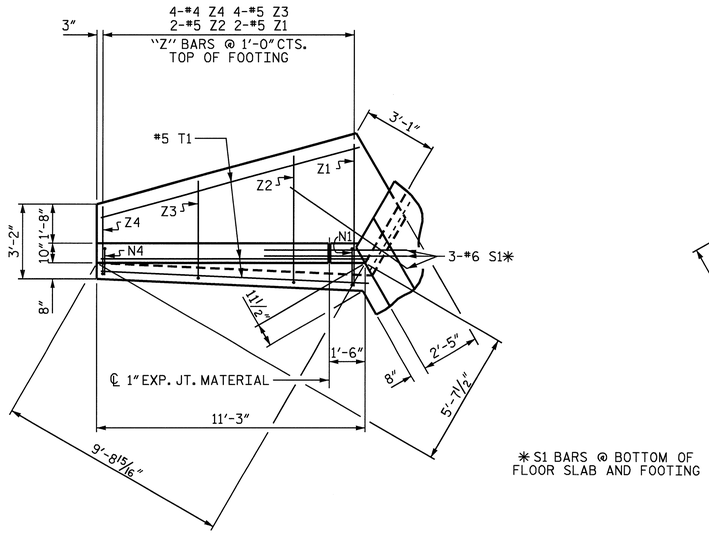

PLAN W2

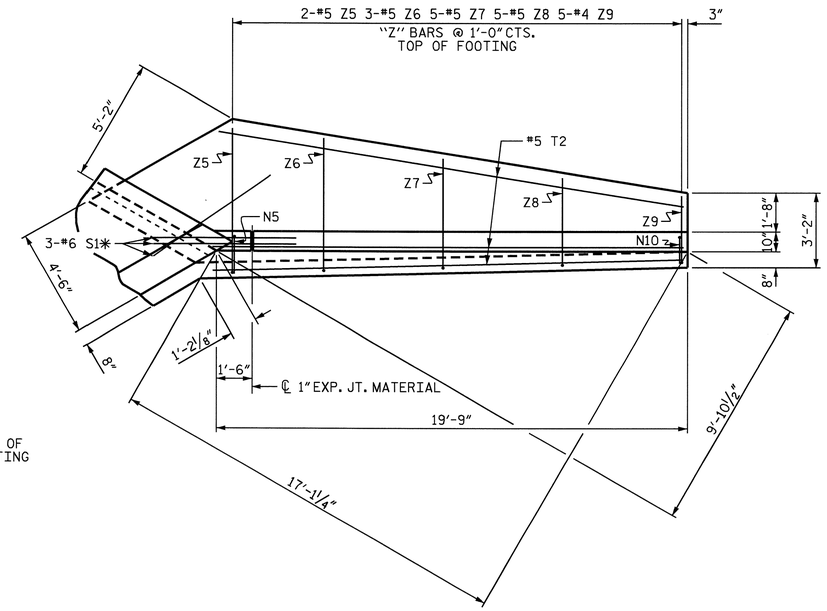

PLAN W1

*S1 BARS @ BOTTOM OF FLOOR SLAB AND FOOTING

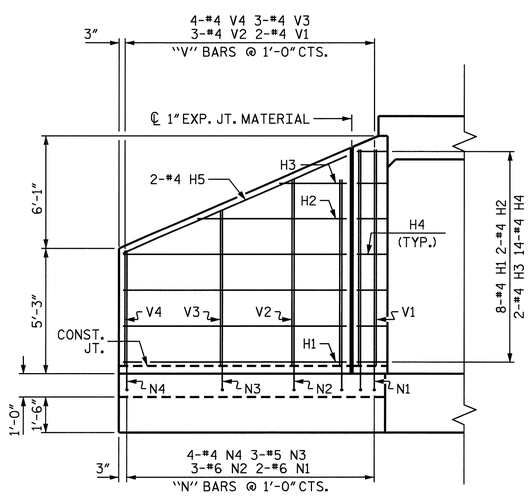

ELEVATION W2

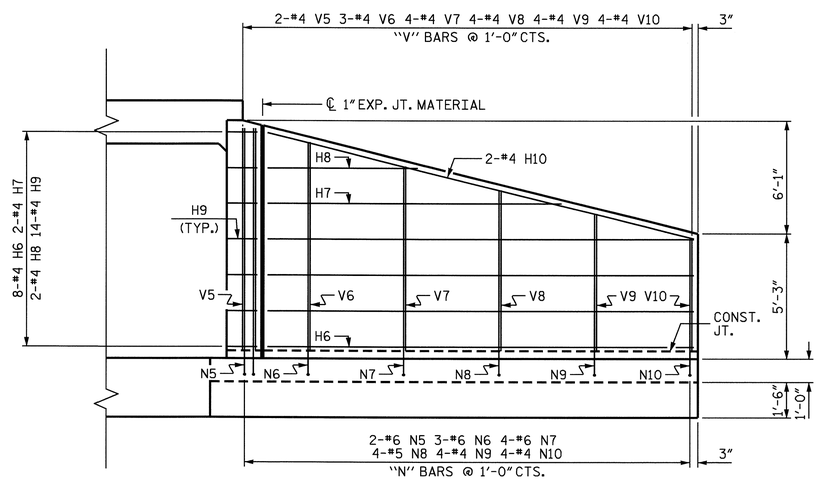

ELEVATION W1

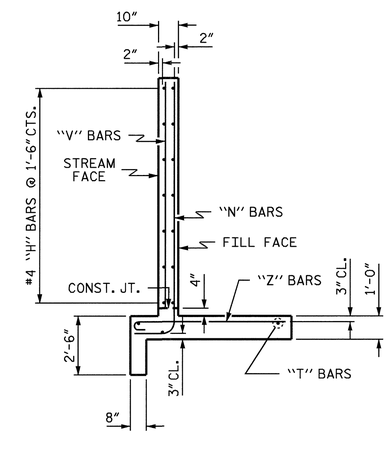

TYPICAL WING SECTION

BAR TYPES

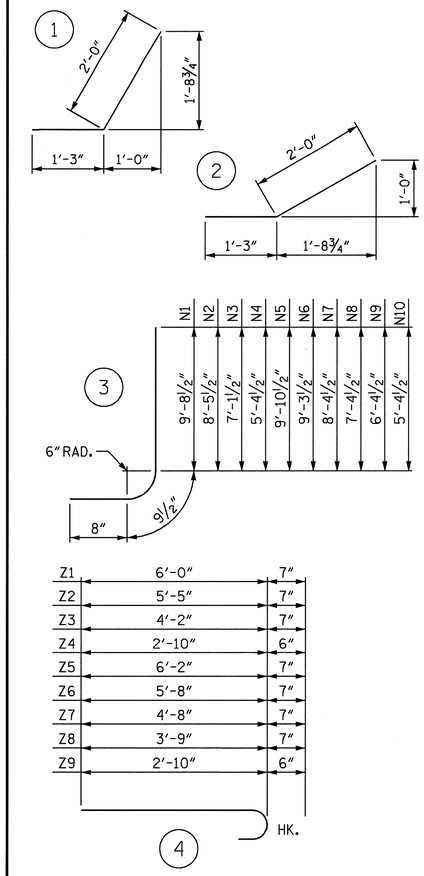

ALL BAR DIMENSIONS ARE OUT TO OUT.

BILL OF MATERIAL

BAR	NO.	SIZE	TYPE	LENGTH	WEIGHT
H1	16	#4	STR	9'-4"	100
H2	4	#4	STR	6'-3"	17
H3	4	#4	STR	2'-10"	8
H4	28	#4	1	3'-3"	61
H5	4	#4	STR	10'-2"	27
H6	16	#4	STR	17'-10"	191
H7	4	#4	STR	12'-4"	33
H8	4	#4	STR	6'-3"	17
H9	28	#4	2	3'-3"	61
H10	4	#4	STR	18'-5"	49
N1	4	#6	3	11'-2"	67
N2	6	#6	3	9'-11"	89
N3	6	#5	3	8'-7"	54
N4	8	#4	3	6'-10"	37
N5	4	#6	3	11'-4"	68
N6	6	#6	3	10'-9"	97
N7	8	#6	3	9'-10"	118
N8	8	#5	3	8'-10"	74
N9	8	#4	3	7'-10"	42
N10	8	#4	3	6'-10"	37
S1	12	#6	STR	6'-0"	108
T1	6	#5	STR	11'-3"	70
T2	6	#5	STR	19'-9"	124
V1	4	#4	STR	9'-1"	24
V2	6	#4	STR	7'-10"	31
V3	6	#4	STR	6'-6"	26
V4	8	#4	STR	4'-10"	26
V5	4	#4	STR	9'-4"	25
V6	6	#4	STR	8'-9"	35
V7	8	#4	STR	7'-9"	41
V8	8	#4	STR	6'-9"	36
V9	8	#4	STR	5'-9"	31
V10	8	#4	STR	4'-9"	25
Z1	4	#5	4	6'-7"	27
Z2	4	#5	4	6'-0"	25
Z3	8	#5	4	4'-9"	40
Z4	8	#4	4	3'-4"	18
Z5	4	#5	4	6'-9"	28
Z6	6	#5	4	6'-3"	39
Z7	10	#5	4	5'-3"	55
Z8	10	#5	4	4'-4"	45
Z9	10	#4	4	3'-4"	22
REINFORCING STEEL FOR 4 WINGS					2148 LBS
CLASS A CONCRETE					
4 WINGS					30.2 CY
2 HEADWALLS					2.2 CY
2 END CURTAIN WALLS					2.4 CY
TOTAL					34.8 CY

PROJECT NO. R-2417C

LEE COUNTY

STATION: 612+27.00-LREV-

SHEET 3 OF 3

STATE OF NORTH CAROLINA
DEPARTMENT OF TRANSPORTATION
RALEIGH

WINGS FOR CONCRETE BOX CULVERT

H = 9'-0" SLOPE = 2:1

120° SKEW

NORTH CAROLINA PROFESSIONAL SEAL 029441 ENGINEER KRISTY W. ALFORD

7/31/09

REVISIONS						SHEET NO.
NO.	BY:	DATE:	NO.	BY:	DATE:	C-7
1			3			TOTAL SHEETS
2			4			40

ASSEMBLED BY : A. V. ROYAL	DATE : 08/08
CHECKED BY : D. G. ELY	DATE : 02/09
DRAWN BY : CCJ 12/99	
CHECKED BY : RWW 03/00	

STD. NO. CW6009 STR. #5

BM #1 RR SPIKE IN BASE OF 24" PINE TREE, 89.96' RT. STA. 34+25.09 -Y-, EL. 412.41

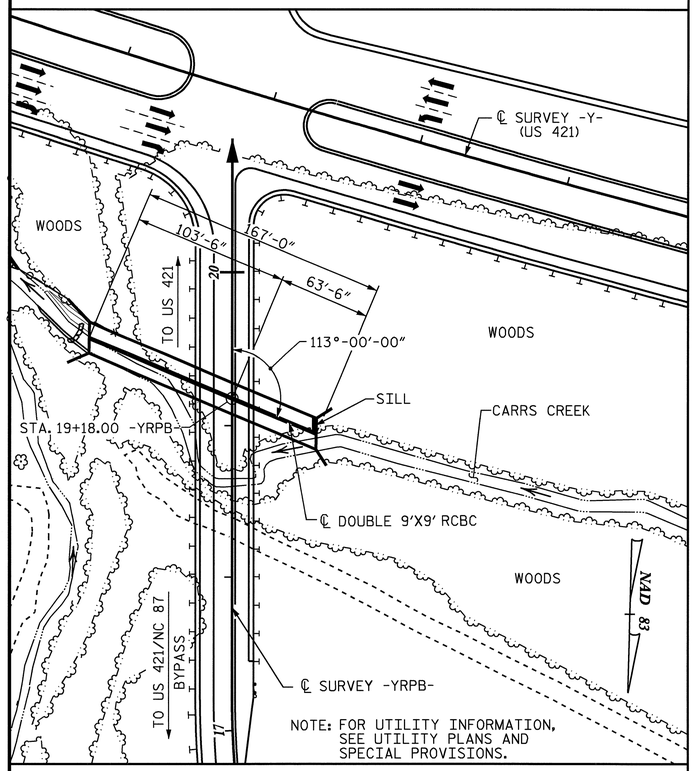

LOCATION SKETCH

REINFORCING STEEL BAR SCHEDULE

BAR	NO.	SIZE	TYPE	LENGTH	WEIGHT	BAR	NO.	SIZE	TYPE	LENGTH	WEIGHT
A100	254	5	STR	19'-7"	5188	A400	317	6	STR	19'-7"	9324
A101	4	5	STR	16'-5"	68	A401	4	6	STR	17'-0"	102
A102	4	5	STR	13'-5"	56	A402	4	6	STR	14'-7"	88
A103	4	5	STR	10'-6"	44	A403	4	6	STR	12'-3"	74
A104	4	5	STR	7'-7"	32	A404	4	6	STR	9'-11"	60
A105	4	5	STR	4'-7"	19	A405	4	6	STR	7'-7"	46
						A406	4	6	STR	5'-2"	31
A200	254	5	STR	19'-7"	5188	A407	4	6	STR	2'-10"	17
A201	4	5	STR	16'-5"	68						
A202	4	5	STR	13'-5"	56	A1	668	5	6	6'-6"	4529
A203	4	5	STR	10'-6"	44	A2	668	6	6	6'-3"	6271
A204	4	5	STR	7'-7"	32						
A205	4	5	STR	4'-7"	19	B1	536	4	STR	11'-2"	3998
						B2	668	4	STR	8'-4"	3719
A300	317	6	STR	19'-7"	9324	B3	334	4	STR	11'-2"	2491
A301	4	6	STR	17'-0"	102						
A302	4	6	STR	14'-7"	88	C1	594	4	STR	29'-7"	11739
A303	4	6	STR	12'-3"	74						
A304	4	6	STR	9'-11"	60	D1	3	6	STR	3'-0"	14
A305	4	6	STR	7'-7"	46						
A306	4	6	STR	5'-2"	31	G1	8	5	STR	21'-4"	178
A307	4	6	STR	2'-10"	17						
						S2	12	8	STR	21'-4"	684
						REINFORCING STEEL				LBS.	63921

SPLICE LENGTH CHART

BAR	SIZE	SPLICE LENGTH
A200	5	2'-5"
A400	6	2'-4"
B1	4	1'-9"
B3	4	1'-9"
C1	4	1'-11"

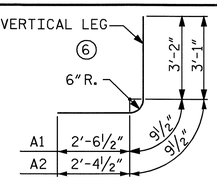

BAR TYPE

BAR DIMENSIONS ARE OUT TO OUT

TOTAL STRUCTURE QUANTITIES

CLASS A CONCRETE	
BARREL @ 2.650 CY/FT	442.6 C.Y.
SILL	0.7 C.Y.
WING ETC	43.6 C.Y.
TOTAL	486.9 C.Y.
REINFORCING STEEL	
BARREL & SILL	63921 LBS.
WINGS ETC	2819 LBS.
TOTAL	66740 LBS.
FOUNDATION CONDITIONING MAT'L.	236 TONS
CULVERT EXCAVATION	LUMP SUM

NOTES:

F. A. PROJECT NO. STM-0421(50)

ASSUMED LIVE LOAD----------HS20-44 OR ALTERNATE LOADING.

DESIGN FILL----------21.63'.

FOR OTHER DESIGN DATA AND NOTES SEE STANDARD NOTE SHEET.

3"Ø WEEP HOLES INDICATED TO BE IN ACCORDANCE WITH THE SPECIFICATIONS.

CONCRETE IN CULVERTS TO BE POURED IN THE FOLLOWING ORDER:

1. WING FOOTINGS AND FLOOR SLAB INCLUDING 4" OF ALL VERTICAL WALLS.
2. THE REMAINING PORTIONS OF THE WALLS AND WINGS FULL HEIGHT FOLLOWED BY ROOF SLAB AND HEADWALLS.

THE RESIDENT ENGINEER SHALL CHECK THE LENGTH OF CULVERT BEFORE STAKING IT OUT TO MAKE CERTAIN THAT IT WILL PROPERLY TAKE CARE OF THE FILL.

DIMENSIONS FOR WING LAYOUT AS WELL AS ADDITIONAL REINFORCING STEEL EMBEDDED IN BARREL ARE SHOWN ON WING SHEET.

TRANSVERSE CONSTRUCTION JOINTS SHALL BE USED IN THE BARREL, SPACED TO LIMIT THE POURS TO A MAXIMUM OF 50 FT. LOCATION OF JOINTS SHALL BE SUBJECT TO APPROVAL OF THE ENGINEER.

STEEL IN THE BOTTOM SLAB MAY BE SPLICED AT THE PERMITTED CONSTRUCTION JOINT AT THE CONTRACTOR'S OPTION. EXTRA WEIGHT OF STEEL DUE TO THE SPLICES SHALL BE PAID FOR BY CONTRACTOR.

AT THE CONTRACTOR'S OPTION, HE MAY SPLICE THE VERTICAL REINFORCING STEEL IN THE INTERIOR FACE OF EXTERIOR WALL AND BOTH FACES OF INTERIOR WALLS ABOVE LOWER WALL CONSTRUCTION JOINT. THE SPLICE LENGTH SHALL BE AS PROVIDED IN THE SPLICE LENGTH CHART SHOWN ON THE PLANS. EXTRA WEIGHT OF STEEL DUE TO THE SPLICES SHALL BE PAID FOR BY THE CONTRACTOR.

THE CONTRACTOR SHALL PROVIDE INDEPENDENT ASSURANCE SAMPLES OF REINFORCING STEEL AS FOLLOWS: FOR PROJECTS REQUIRING UP TO 400 TONS OF REINFORCING STEEL, ONE 30 INCH SAMPLE OF EACH SIZE BAR USED, AND FOR PROJECTS REQUIRING OVER 400 TONS OF REINFORCING STEEL, TWO 30 INCH SAMPLES OF EACH SIZE BAR USED. THE BARS FROM WHICH THE SAMPLES ARE TAKEN MUST THEN BE SPLICED WITH REPLACEMENT BARS OF THE SIZE AND LENGTH OF THE SAMPLE, PLUS A MINIMUM LAP SPLICE OF THIRTY BAR DIAMETERS.

NO PRECAST REINFORCED CONCRETE BOX CULVERT OPTION WILL BE ALLOWED.

A 3 FOOT STRIP OF FILTER FABRIC SHALL BE ATTACHED TO THE FILL FACE OF THE WING COVERING THE ENTIRE LENGTH OF THE EXPANSION JOINT.

FOR SUBMITTAL OF WORKING DRAWINGS, SEE SPECIAL PROVISIONS.

FOR FALSEWORK AND FORMWORK, SEE SPECIAL PROVISIONS.

FOR CRANE SAFETY, SEE SPECIAL PROVISIONS.

FOR CULVERT DIVERSION DETAILS AND PAY ITEM, SEE EROSION CONTROL PLANS.

FOR CONSTRUCTION SEQUENCE, SEE EROSION CONTROL PLANS.

HYDRAULIC DATA

DESIGN DISCHARGE	= 1,400 CFS
FREQUENCY OF DESIGN FLOOD	= 50 YRS.
DESIGN HIGH WATER ELEVATION	= 342.7
DRAINAGE AREA	= 1.21 SQ. MILES
BASIC DISCHARGE (Q100)	= 1,500 CFS
BASIC HIGH WATER ELEVATION	= 344.3

OVERTOPPING FLOOD DATA

OVERTOPPING DISCHARGE	= 2,400 CFS
FREQUENCY OF OVERTOPPING FLOOD	= 500 YRS.
OVERTOPPING FLOOD ELEVATION	= 360.7
OVERTOPPING LOCATION @ STA. 17+46.71 -YRPB-	

GRADE DATA

GRADE POINT ELEV. @ STA. 19+18.00 -YRPB- = 363.183
BED ELEV. @ STA. 19+18.00 -YRPB- = 331.80
ROAD SLOPE = 3:1 LEFT, 2.1:1 RIGHT

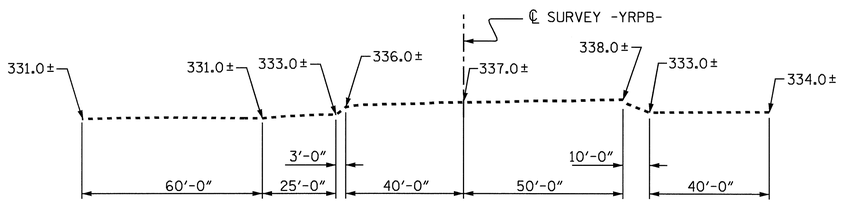

PROFILE ALONG ℄ CULVERT

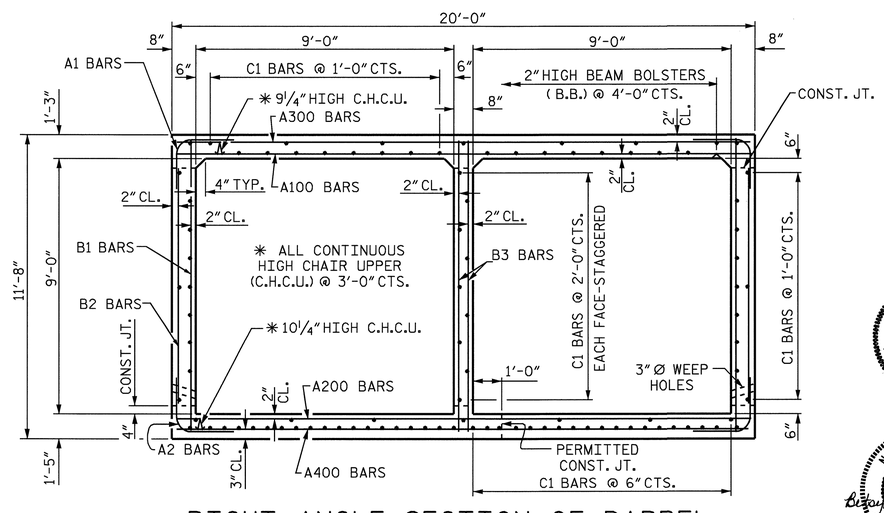

RIGHT ANGLE SECTION OF BARREL

THERE ARE 99 "C" BARS IN SECTION OF BARREL.
C1 BARS ARE 6 BAR RUNS.

PROJECT NO. R-2417C
LEE COUNTY
STATION: 19+18.00 -YRPB-

SHEET 1 OF 4 CULVERT No. 140

STATE OF NORTH CAROLINA
DEPARTMENT OF TRANSPORTATION
RALEIGH

DOUBLE 9 FT. X 9 FT. CONCRETE BOX CULVERT 113° SKEW

NORTH CAROLINA PROFESSIONAL SEAL 029441 ENGINEER KRISTY W. ALFORD
12/9/09

NORTH CAROLINA PROFESSIONAL SEAL 4268 ENGINEER BETSY S. COX
Betsy S. Cox 12-10-09

REVISIONS							SHEET NO.
NO.	BY:	DATE:	NO.	BY:	DATE:		C-8
1			3				TOTAL SHEETS
2			4				40

ASSEMBLED BY : A. V. ROYAL DATE : 09/08
CHECKED BY : D. G. ELY DATE : 02/09
DRAWN BY : B.M. MEYERS DATE : AUG. 1989
CHECKED BY : A.R. BISSETTE DATE : AUG. 1989

SPECIAL
STANDARD

ADDED 11-90

STD. NO. CB332A STR. #6

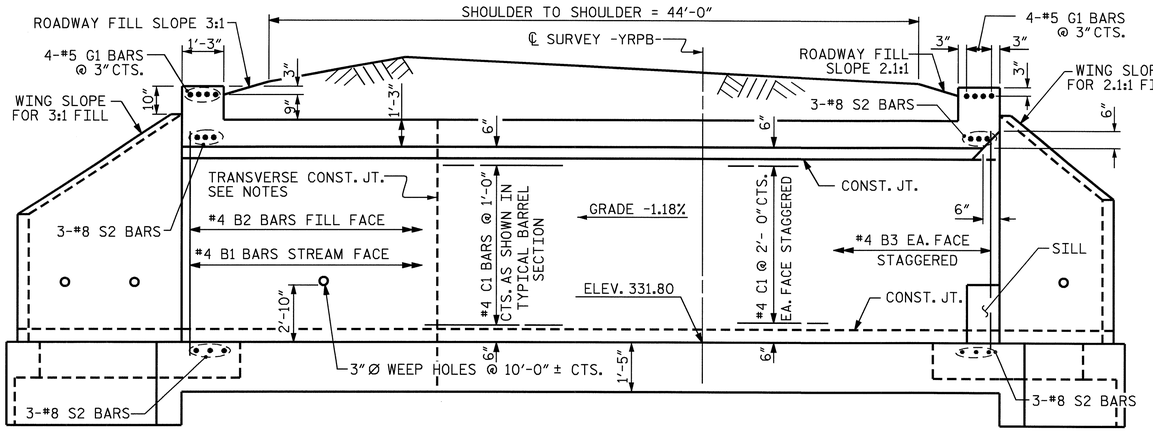

EXTERIOR WALL INTERIOR WALL

CULVERT SECTION NORMAL TO ROADWAY

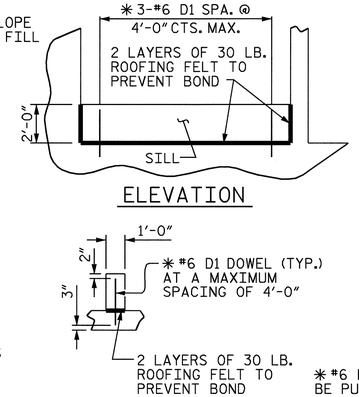

✱#6 D1 DOWELS MAY BE PUSHED INTO GREEN CONCRETE AFTER SLAB HAS BEEN FLOAT FINISHED.

CULVERT SILL DETAILS

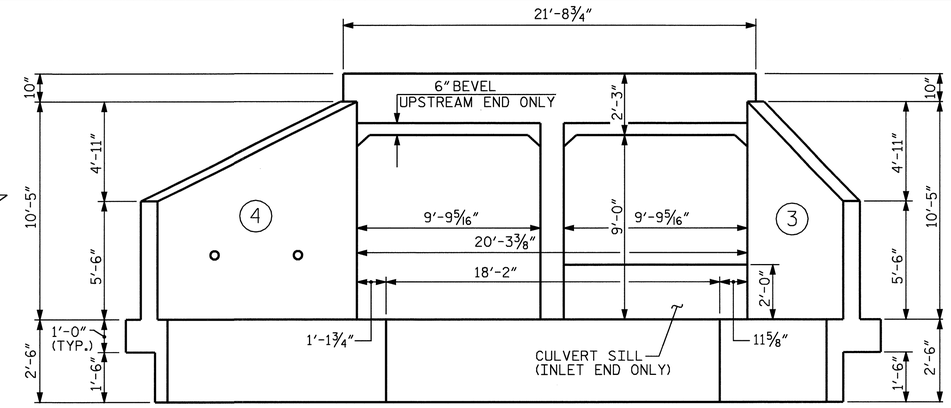

INLET END ELEVATION NORMAL TO SKEW

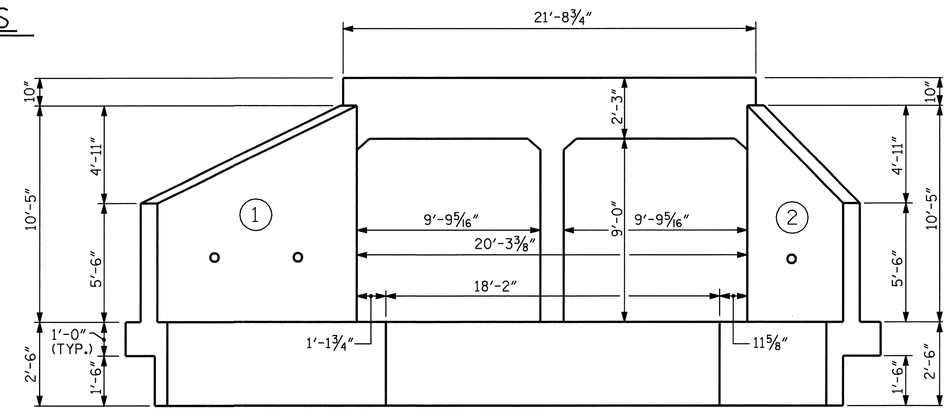

OUTLET END ELEVATION NORMAL TO SKEW

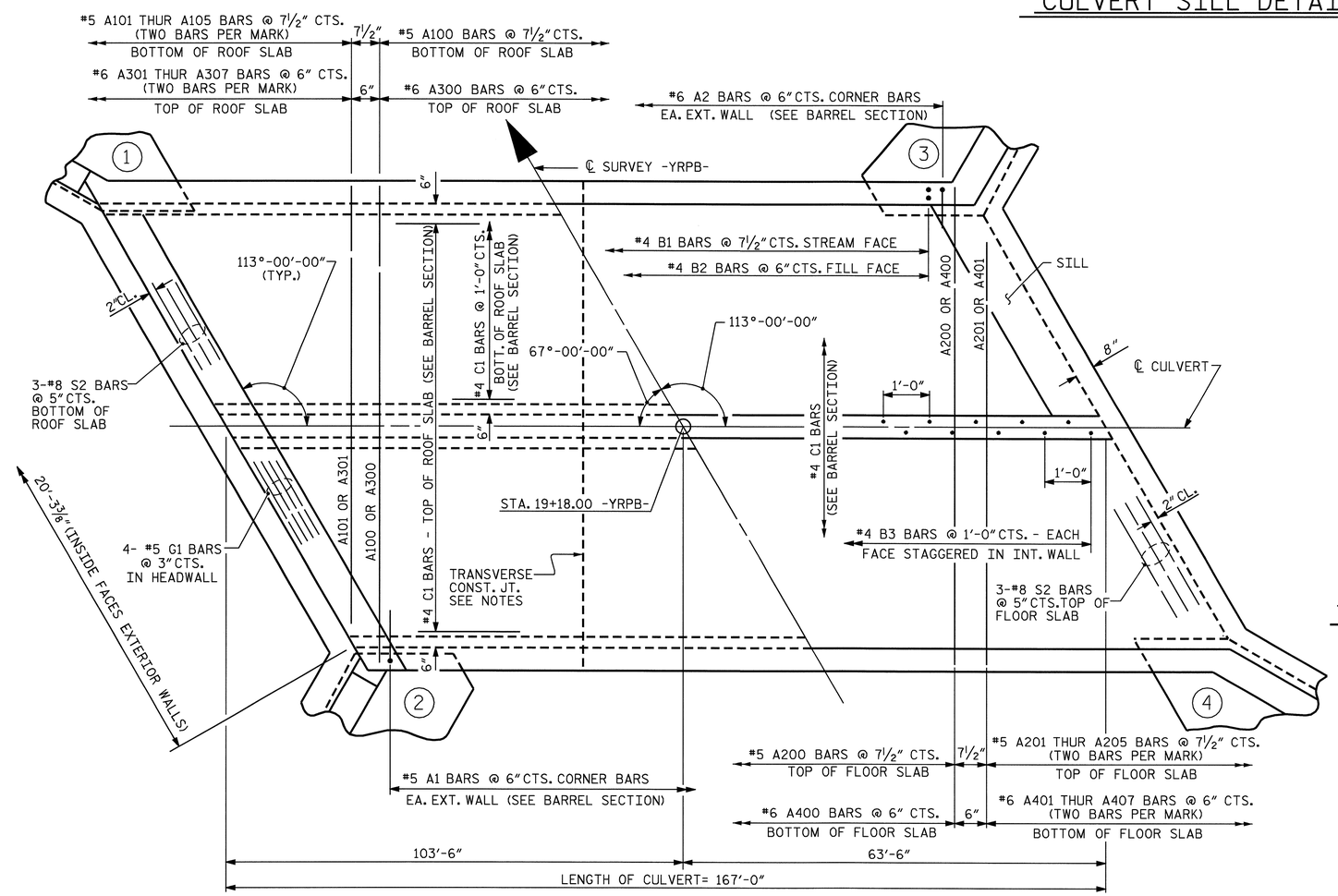

PART PLAN - ROOF SLAB

PART PLAN - FLOOR SLAB

C1 BARS ARE 6 BAR RUNS.

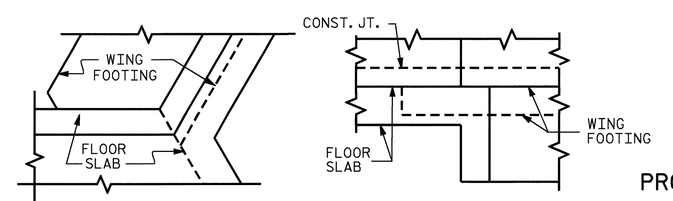

DETAIL

CONNECTION OF WING FOOTING AND FLOOR SLAB WHEN SLAB IS THICKER THAN FOOTING

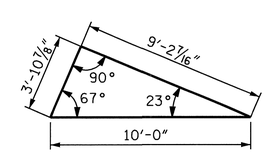

SKEW TRIANGLE

NORTH CAROLINA PROFESSIONAL ENGINEER SEAL 029441 KRISTY W. ALFORD
7/31/09

PROJECT NO. R-2417C
LEE COUNTY
STATION: 19+18.00-YRPB-

SHEET 2 OF 4

STATE OF NORTH CAROLINA
DEPARTMENT OF TRANSPORTATION
RALEIGH

BARREL STANDARD
DOUBLE 9 FT.X 9 FT. CONCRETE BOX CULVERT 113° SKEW

REVISIONS						SHEET NO.
NO.	BY:	DATE:	NO.	BY:	DATE:	C-9
1			3			TOTAL SHEETS
2			4			40

ASSEMBLED BY : A. V. ROYAL DATE : 09/08
CHECKED BY : D. G. ELY DATE : 02/09
DRAWN BY : W.BRYAN STALEY II DATE : NOV.5,1971
CHECKED BY : JOEL A. JOHNSON DATE : NOV.13,1971

SPECIAL STANDARD

REVISED 11-19-99 BY M.M. CHECKED BY R.W.W.
REVISED 8-28-92 BY E.L.R. CHECKED BY G.R.P.
REDRAWN 8/1990 BY S.A.T., CHECKED BY E.L.R.

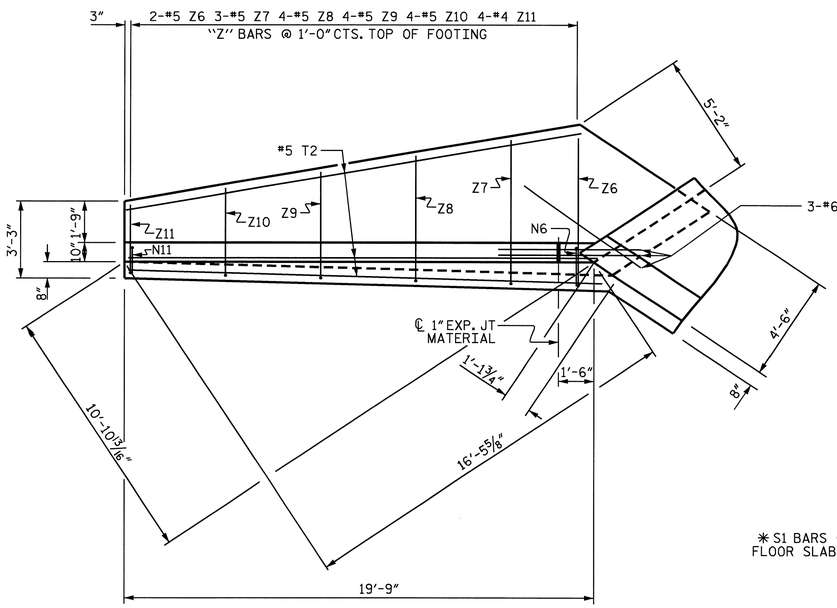

PLAN W4

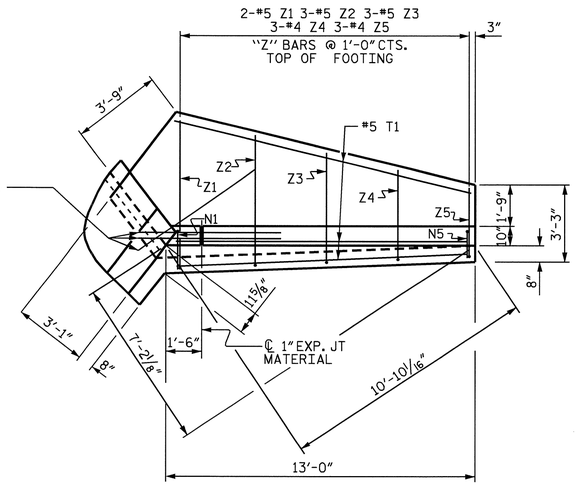

PLAN W3

* S1 BARS @ BOTTOM OF FLOOR SLAB AND FOOTING

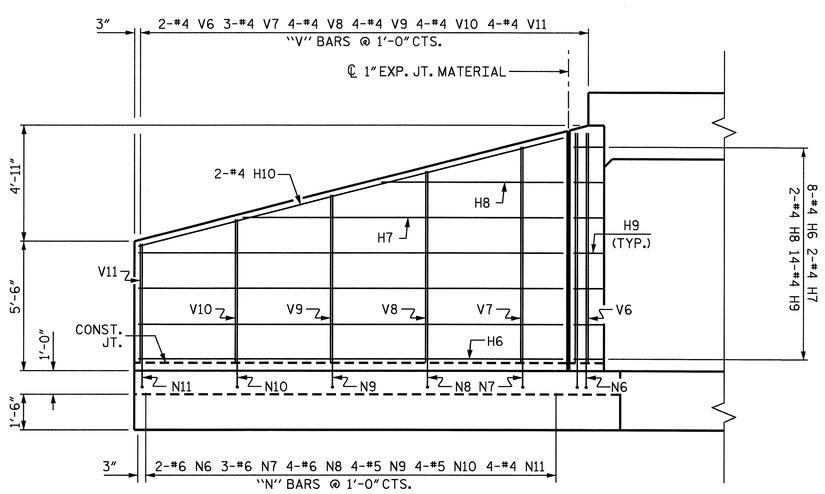

ELEVATION W4

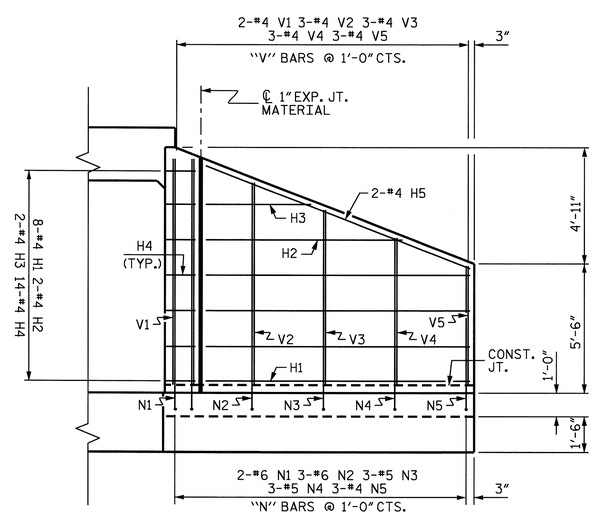

ELEVATION W3

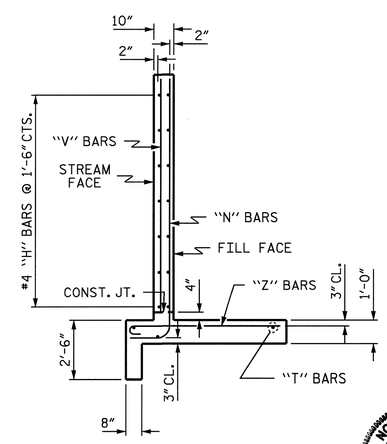

TYPICAL WING SECTION

BAR TYPES

ALL BAR DIMENSIONS ARE OUT TO OUT.

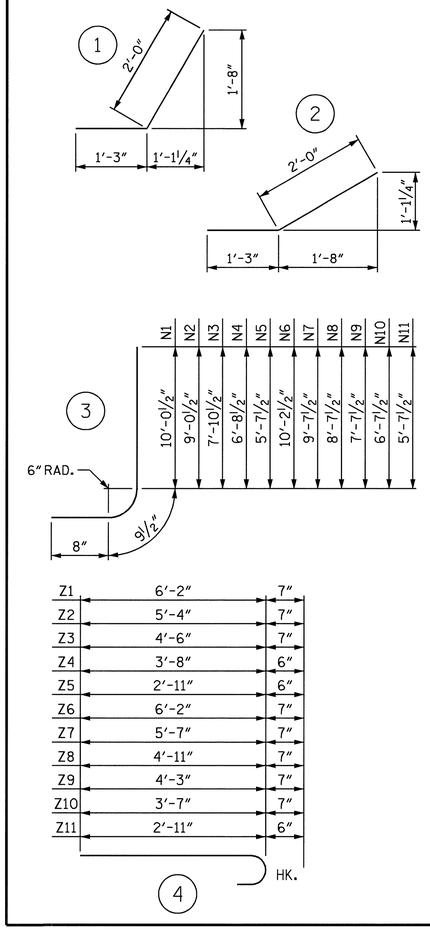

BILL OF MATERIAL

BAR	NO.	SIZE	TYPE	LENGTH	WEIGHT
H1	8	#4	STR	11'-1"	59
H2	2	#4	STR	8'-5"	11
H3	2	#4	STR	4'-5"	6
H4	14	#4	1	3'-3"	30
H5	2	#4	STR	11'-11"	16
H6	8	#4	STR	17'-10"	95
H7	2	#4	STR	13'-9"	18
H8	2	#4	STR	7'-9"	10
H9	14	#4	2	3'-3"	30
H10	2	#4	STR	18'-5"	25
N1	2	#6	3	11'-6"	35
N2	3	#6	3	10'-6"	47
N3	3	#5	3	9'-4"	29
N4	3	#5	3	8'-2"	26
N5	3	#4	3	7'-1"	14
N6	2	#6	3	11'-8"	35
N7	3	#6	3	11'-1"	50
N8	4	#6	3	10'-1"	61
N9	4	#5	3	9'-1"	38
N10	4	#5	3	8'-1"	34
N11	4	#4	3	7'-1"	19
S1	6	#6	STR	6'-0"	54
T1	3	#5	STR	13'-0"	41
T2	3	#5	STR	19'-9"	62
V1	2	#4	STR	9'-5"	13
V2	3	#4	STR	8'5"	17
V3	3	#4	STR	7'-4"	15
V4	3	#4	STR	6'-2"	12
V5	3	#4	STR	5'-1"	10
V6	2	#4	STR	9'-7"	13
V7	3	#4	STR	9'-0"	18
V8	4	#4	STR	8'-0"	21
V9	4	#4	STR	7'-0"	19
V10	4	#4	STR	6'-0"	16
V11	4	#4	STR	5'-0"	13
Z1	2	#5	4	6'-9"	14
Z2	3	#5	4	5'-11"	19
Z3	3	#5	4	5'-1"	16
Z4	3	#4	4	4'-2"	8
Z5	3	#4	4	3'-5"	7
Z6	2	#5	4	6'-9"	14
Z7	3	#5	4	6'-2"	19
Z8	4	#5	4	5'-6"	23
Z9	4	#5	4	4'-10"	20
Z10	4	#5	4	4'-2"	17
Z11	4	#4	4	3'-5"	9

REINFORCING STEEL 1178 LBS
FOR 2 WINGS

CLASS A CONCRETE
2 WINGS 16.2 CY
1 HEADWALL 1.0 CY
1 END CURTAIN WALL 1.1 CY
TOTAL 18.3 CY

PROJECT NO. R-2417C
LEE COUNTY
STATION: 19+18.00 -YRPB-

SHEET 3 OF 4

STATE OF NORTH CAROLINA
DEPARTMENT OF TRANSPORTATION
RALEIGH

INLET WINGS FOR CONCRETE BOX CULVERT

H = 9'-0" SLOPE = 2.1:1
113° SKEW

NORTH CAROLINA PROFESSIONAL SEAL 029441 ENGINEER KRISTY W. ALFORD
4/31/09

ASSEMBLED BY : A. V. ROYAL	DATE : 09-08
CHECKED BY : D. G. ELY	DATE : 02-09
DRAWN BY : CCJ 12/99	
CHECKED BY : RWW 03/00	

REVISIONS						SHEET NO.
NO.	BY:	DATE:	NO.	BY:	DATE:	C-10
1			3			TOTAL SHEETS
2			4			40

STR. #6

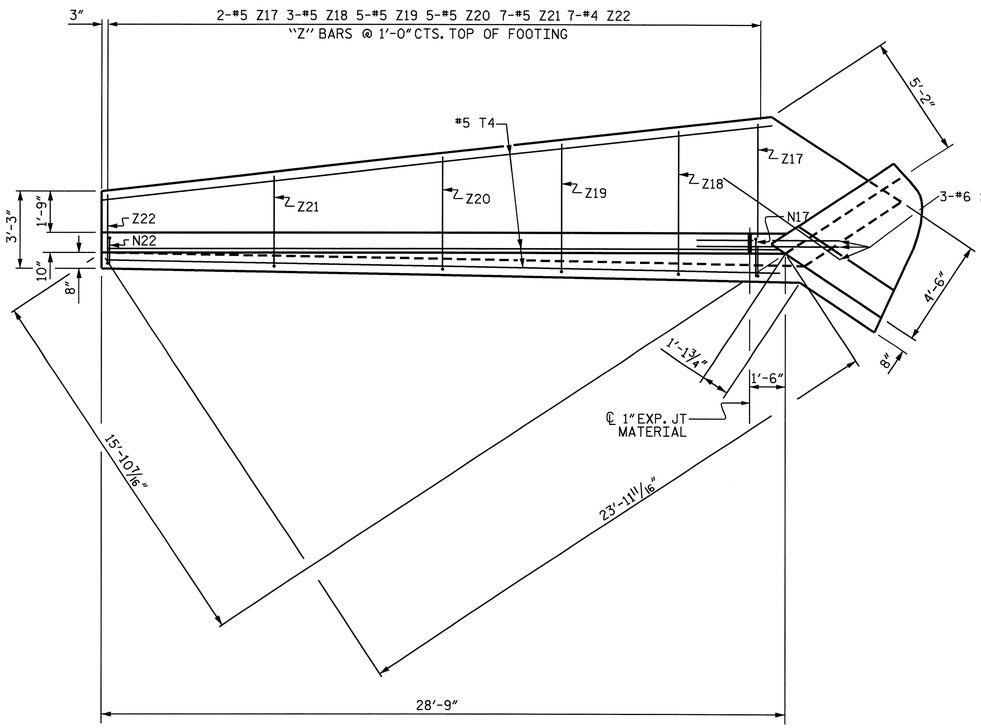

PLAN W1

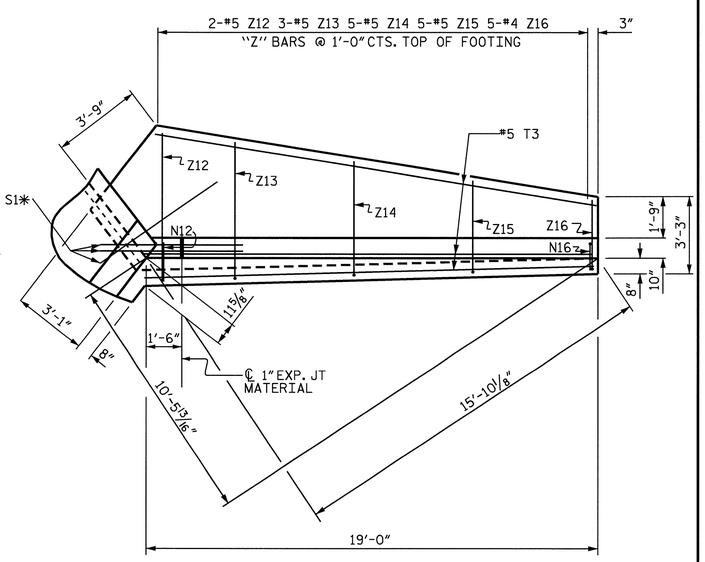

PLAN W2

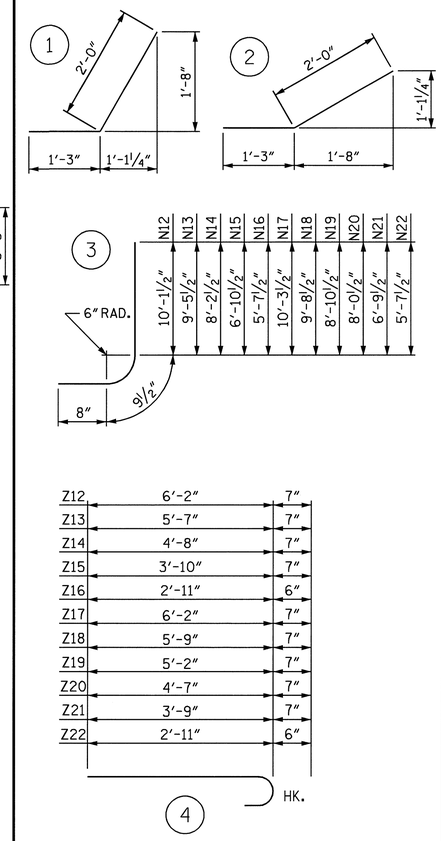

BAR TYPES

ALL BAR DIMENSIONS ARE OUT TO OUT.

Z12	6'-2"	7"
Z13	5'-7"	7"
Z14	4'-8"	7"
Z15	3'-10"	7"
Z16	2'-11"	6"
Z17	6'-2"	7"
Z18	5'-9"	7"
Z19	5'-2"	7"
Z20	4'-7"	7"
Z21	3'-9"	7"
Z22	2'-11"	6"

BILL OF MATERIAL

BAR	NO.	SIZE	TYPE	LENGTH	WEIGHT
H11	8	#4	STR	17'-1"	91
H12	2	#4	STR	13'-2"	18
H13	2	#4	STR	7'-5"	10
H14	14	#4	1	3'-3"	30
H15	2	#4	STR	17'-10"	24
H16	8	#4	STR	26'-10"	143
H17	2	#4	STR	21'-0"	28
H18	2	#4	STR	12'-2"	16
H19	2	#4	STR	3'-5"	5
H20	14	#4	2	3'-3"	30
H21	2	#4	STR	27'-3"	36
N12	2	#6	3	11'-7"	35
N13	3	#6	3	10'-11"	49
N14	5	#6	3	9'-8"	73
N15	5	#5	3	8'-4"	35
N16	5	#4	3	7'-1"	24
N17	2	#6	3	11'-9"	35
N18	4	#6	3	11'-2"	67
N19	5	#6	3	10'-4"	78
N20	5	#5	3	9'-6"	50
N21	7	#5	3	8'-3"	60
N22	7	#4	3	7'-1"	33
S1	6	#6	STR	6'-0"	54
T3	3	#5	STR	19'-0"	59
T4	3	#5	STR	28'-9"	90
V12	2	#4	STR	9'-7"	13
V13	3	#4	STR	8'-10"	18
V14	5	#4	STR	7'-7"	25
V15	5	#4	STR	6'-3"	21
V16	5	#4	STR	5'-0"	17
V17	2	#4	STR	9'-7"	13
V18	4	#4	STR	9'-1"	24
V19	5	#4	STR	8'-3"	28
V20	5	#4	STR	7'-4"	24
V21	7	#4	STR	6'-2"	29
V22	7	#4	STR	5'-0"	23
Z12	2	#5	4	6'-9"	14
Z13	3	#5	4	6'-2"	19
Z14	5	#5	4	5'-3"	27
Z15	5	#5	4	4'-5"	23
Z16	5	#4	4	3'-5"	11
Z17	2	#5	4	6'-9"	14
Z18	3	#5	4	6'-4"	20
Z19	5	#5	4	5'-9"	30
Z20	5	#5	4	5'-2"	27
Z21	7	#5	4	4'-4"	32
Z22	7	#4	4	3'-5"	16

REINFORCING STEEL FOR 2 WINGS 1641 LBS

CLASS A CONCRETE
- 2 WINGS 23.2 CY
- 1 HEADWALL 1.0 CY
- 1 END CURTAIN WALL 1.1 CY
- TOTAL 25.3 CY

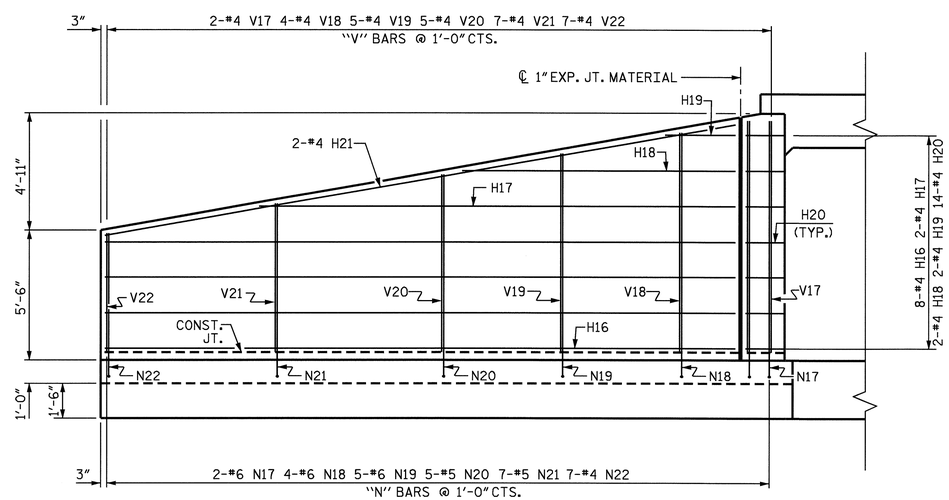

ELEVATION W1

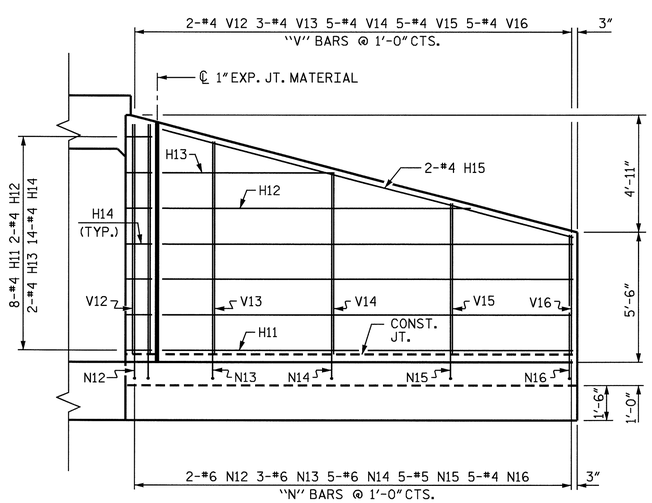

ELEVATION W2

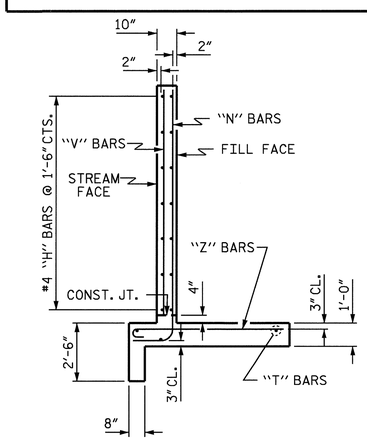

TYPICAL WING SECTION

PROJECT NO. R-2417C

LEE COUNTY

STATION: 19+18.00 -YRPB-

SHEET 4 OF 4

STATE OF NORTH CAROLINA
DEPARTMENT OF TRANSPORTATION
RALEIGH

OUTLET WINGS FOR CONCRETE BOX CULVERT

H = 9'-0" SLOPE = 3:1
113° SKEW

NORTH CAROLINA PROFESSIONAL SEAL 029441 ENGINEER KRISTY W. ALFORD
7/31/09

ASSEMBLED BY : A. V. ROYAL	DATE : 09-08
CHECKED BY : D. G. ELY	DATE : 02-09
DRAWN BY : CCJ 12/99	
CHECKED BY : RWW 03/00	

REVISIONS						
NO.	BY:	DATE:	NO.	BY:	DATE:	SHEET NO. C-11
1			3			TOTAL SHEETS 40
2			4			

STR. #6

F.A. PROJECT No. **STM–0421 (50)**

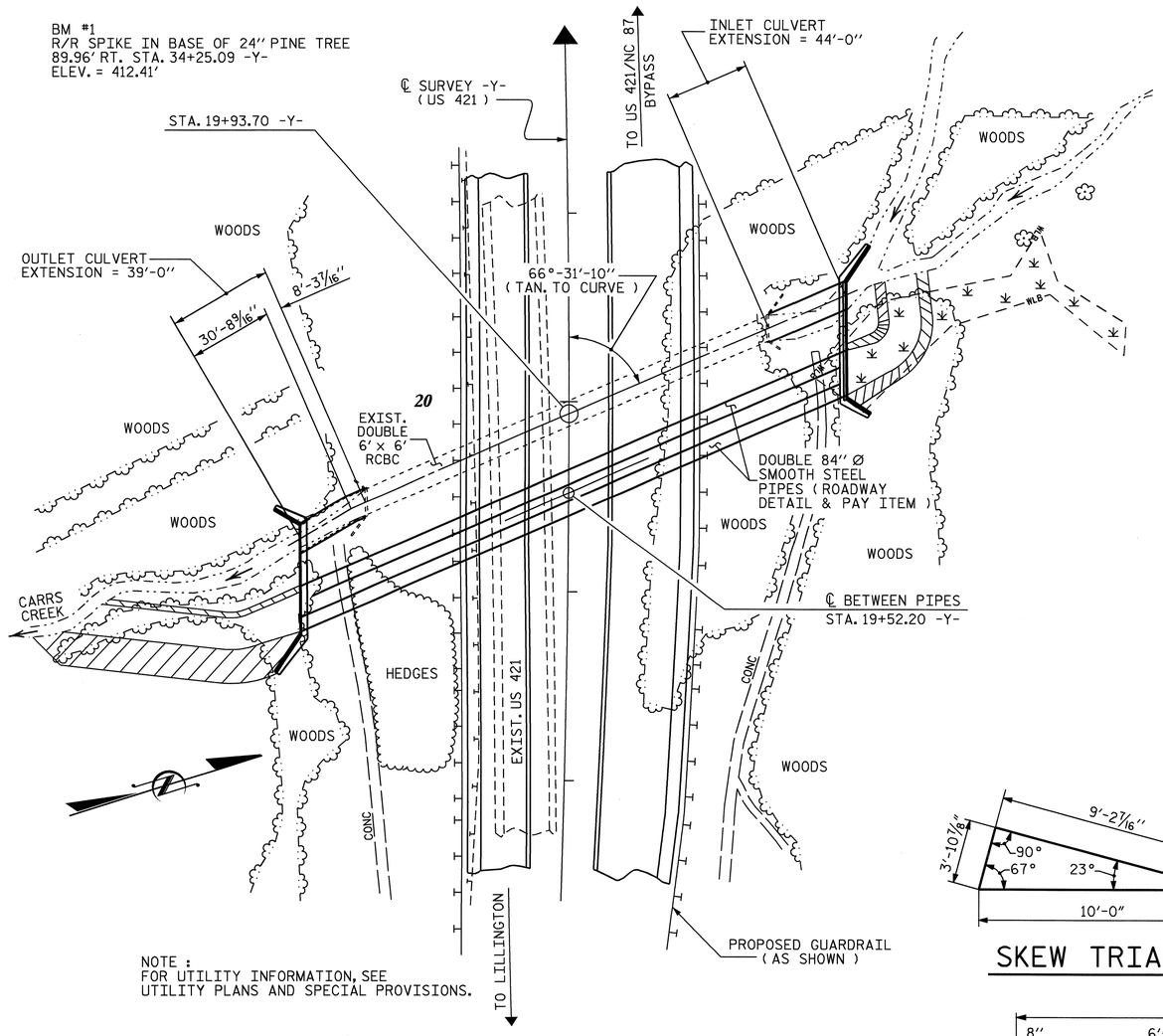

NOTE :
FOR UTILITY INFORMATION, SEE
UTILITY PLANS AND SPECIAL PROVISIONS.

LOCATION SKETCH

HYDROGRAPHIC DATA

GRADE POINT ELEV. @ STA. 19+93.70-Y-	= 364.09
BED ELEV. @ STA. 19+93.70-Y-	= 328.23
ROADWAY SLOPES	= 3 : 1
DESIGN DISCHARGE	= 1600 CFS
FREQUENCY OF DESIGN FLOOD	= 50 YRS
DESIGN HIGH WATER ELEVATION	= 339.9'
DRAINAGE AREA	= 1.61 SQ. MI.
BASIC DISCHARGE (Q100)	= 1800 CFS
BASIC HIGH WATER ELEVATION	= 341.0'

OVERTOPPING FLOOD DATA

OVERTOPPING DISCHARGE	= >2900 CFS
FREQUENCY OF OVERTOPPING FLOOD	= >500 YRS
OVERTOPPING FLOOD ELEVATION	= 351.3'
OVERTOPPING LOCATION	= STA. 17+79.69 -Y-

TOTAL STRUCTURE QUANTITIES

CLASS A CONCRETE	
STAGE I CONSTRUCTION	54.0 C.Y.
STAGE II CONSTRUCTION	173.6 C.Y.
TOTAL	227.6 C.Y.
REINFORCING STEEL	
STAGE I CONSTRUCTION	3,873 LBS.
STAGE II CONSTRUCTION	19,423 LBS.
TOTAL	23,296 LBS.
FOUNDATION CONDITIONING MATERIAL	
STAGE I CONSTRUCTION	N/A
STAGE II CONSTRUCTION	82 TONS
TOTAL	82 TONS
CULVERT EXCAVATION	
STAGE I CONSTRUCTION	N/A
STAGE II CONSTRUCTION	LUMP SUM
TOTAL	LUMP SUM

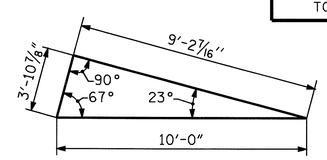

SKEW TRIANGLE

NOTES

ASSUMED LIVE LOAD ----------HS20-44 OR ALTERNATE LOADING.

DESIGN FILL----------27.75

FOR OTHER DESIGN DATA AND NOTES SEE STANDARD NOTE SHEET.

3"Ø WEEP HOLES INDICATED TO BE IN ACCORDANCE WITH THE SPECIFICATIONS.

CONCRETE IN CULVERTS TO BE POURED IN THE FOLLOWING ORDER:

STAGE I
1. WING AND HEADWALL FOOTINGS INCLUDING 4" OF ALL VERTICAL WALLS PLUS AREAS AS SHOWN UNDER PIPES.

2. THE REMAINING PORTIONS OF THE HEADWALLS AROUND THE 84" Ø PIPES AND WINGS W1 & W2 FULL HEIGHT.

STAGE II
1. WING FOOTINGS AND FLOOR SLAB INCLUDING 4" OF ALL VERTICAL WALLS.

2. THE REMAINING PORTIONS OF THE WALLS AND WINGS W3 & W4 FULL HEIGHT FOLLOWED BY ROOF SLAB AND HEADWALLS.

THE RESIDENT ENGINEER SHALL CHECK THE LENGTH OF CULVERT BEFORE STAKING IT OUT TO MAKE CERTAIN THAT IT WILL PROPERLY TAKE CARE OF THE FILL.

DIMENSIONS FOR WING LAYOUT AS WELL AS ADDITIONAL REINFORCING STEEL EMBEDDED IN BARREL ARE SHOWN ON WING SHEETS.

STEEL IN THE BOTTOM SLAB MAY BE SPLICED AT THE PERMITTED CONSTRUCTION JOINT AT THE CONTRACTOR'S OPTION. EXTRA WEIGHT OF STEEL DUE TO THE SPLICES SHALL BE PAID FOR BY THE CONTRACTOR.

AT THE CONTRACTOR'S OPTION, HE MAY SPLICE THE VERTICAL REINFORCING STEEL IN THE INTERIOR FACE OF EXTERIOR WALL AND BOTH FACES OF INTERIOR WALLS ABOVE LOWER WALL CONSTRUCTION JOINT. THE SPLICE LENGTH SHALL BE AS PROVIDED IN THE SPLICE LENGTH CHART SHOWN ON THE PLANS. EXTRA WEIGHT OF STEEL DUE TO THE SPLICES SHALL BE PAID FOR BY THE CONTRACTOR.

FOR CULVERT DIVERSION DETAILS AND PAY ITEM, SEE EROSION CONTROL PLANS.

FOR CONSTRUCTION SEQUENCE, SEE EROSION CONTROL PLANS.

FOR MAINTENANCE OF TRAFFIC, SEE TRAFFIC CONTROL PLANS.

FOR SUBMITTAL OF WORKING DRAWINGS, SEE SPECIAL PROVISIONS.

FOR FALSEWORK AND FORMWORK, SEE SPECIAL PROVISIONS.

FOR CRANE SAFETY, SEE SPECIAL PROVISIONS.

IF APPROVED BY THE ENGINEER, THE CONTRACTOR MAY USE THE EXISTING WINGS AS TEMPORARY SHORING FOR THE CONSTRUCTION OF THE CULVERT EXTENSIONS. IN THIS CASE, THE BOTTOM SLAB OF THE EXTENSION SHALL BE POURED AT LEAST 72 HOURS PRIOR TO CUTTING THE WINGS. THE WINGS MAY BE CUT EARLIER PROVIDED THE SLAB CONCRETE STRENGTH HAS REACHED A MINIMUM COMPRESSIVE STRENGTH OF 1500 PSI.

DOWELS SHALL BE USED TO CONNECT THE CULVERT EXTENSION TO THE EXISTING CULVERT AS SHOWN. FOR NOTE REGARDING SETTING OF DOWELS, SEE SHEET SN.

THE CONTRACTOR SHALL PROVIDE INDEPENDENT ASSURANCE SAMPLES OF REINFORCING STEEL AS FOLLOWS: FOR PROJECTS REQUIRING UP TO 400 TONS OF REINFORCING STEEL, ONE 30 INCH SAMPLE OF EACH SIZE BAR USED, AND FOR PROJECTS REQUIRING OVER 400 TONS OF REINFORCING STEEL, TWO 30 INCH SAMPLES OF EACH SIZE BAR USED. THE BARS FROM WHICH THE SAMPLES ARE TAKEN MUST THEN BE SPLICED WITH REPLACEMENT BARS OF THE SIZE AND LENGTH OF THE SAMPLE, PLUS A MINIMUM LAP SPLICE OF THIRTY BAR DIAMETERS.

A 3 FOOT STRIP OF FILTER FABRIC SHALL BE ATTACHED TO THE FILL FACE OF THE WING COVERING THE ENTIRE LENGTH OF THE EXPANSION JOINT.

NO PRECAST REINFORCED CONCRETE BOX CULVERT OPTION WILL BE ALLOWED.

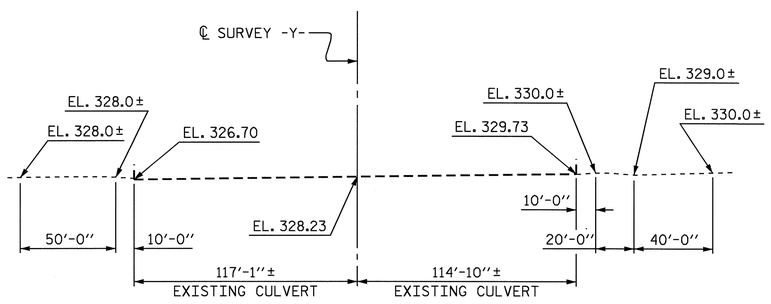

PROFILE ALONG ℄ CULVERT

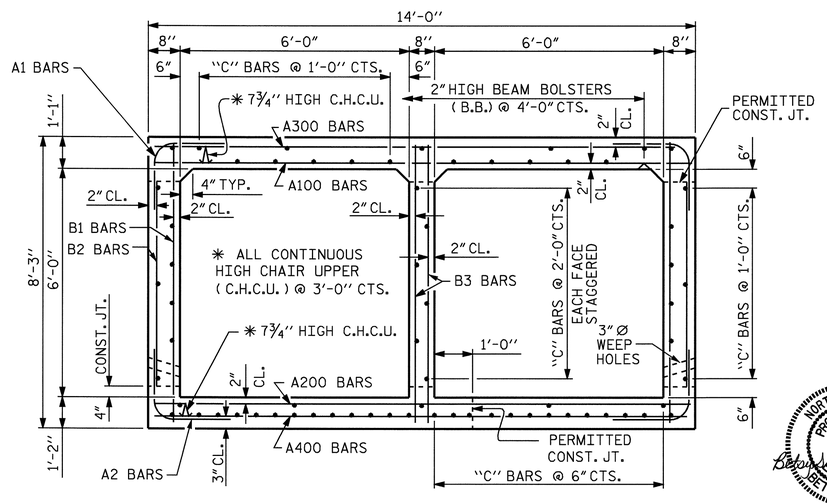

RIGHT ANGLE SECTION OF BARREL

(TYPICAL FOR INLET AND OUTLET EXTENSIONS)
THERE ARE 68 "C" BARS IN SECTION OF BARREL

NORTH CAROLINA PROFESSIONAL SEAL U268 ENGINEER BETSY S. COX
Betsy S. Cox 8-19-09

NORTH CAROLINA PROFESSIONAL SEAL 029441 ENGINEER KRISTY W. ALFORD
8/17/09

PROJECT NO. R-2417 C
LEE COUNTY
STATION: 19+93.70 -Y-

SHEET 1 OF 12 CULVERT No. 141

STATE OF NORTH CAROLINA
DEPARTMENT OF TRANSPORTATION
RALEIGH

DOUBLE 6 FT. x 6 FT. CONCRETE BOX CULVERT EXTENSIONS AND 84"Ø PIPE HEADWALLS

REVISIONS							SHEET NO.
NO.	BY:	DATE:	NO.	BY:	DATE:		C-12
1			3				TOTAL SHEETS
2			4				40

DRAWN BY : MIKE BRITT DATE : 4-1-09
CHECKED BY : K.W. ALFORD DATE : 4-8-09

17-AUG-2009 14:27
r:\structures\culv_7\culv_07_draft\r2417c_cul7.dgn
mbritt

STR. #7

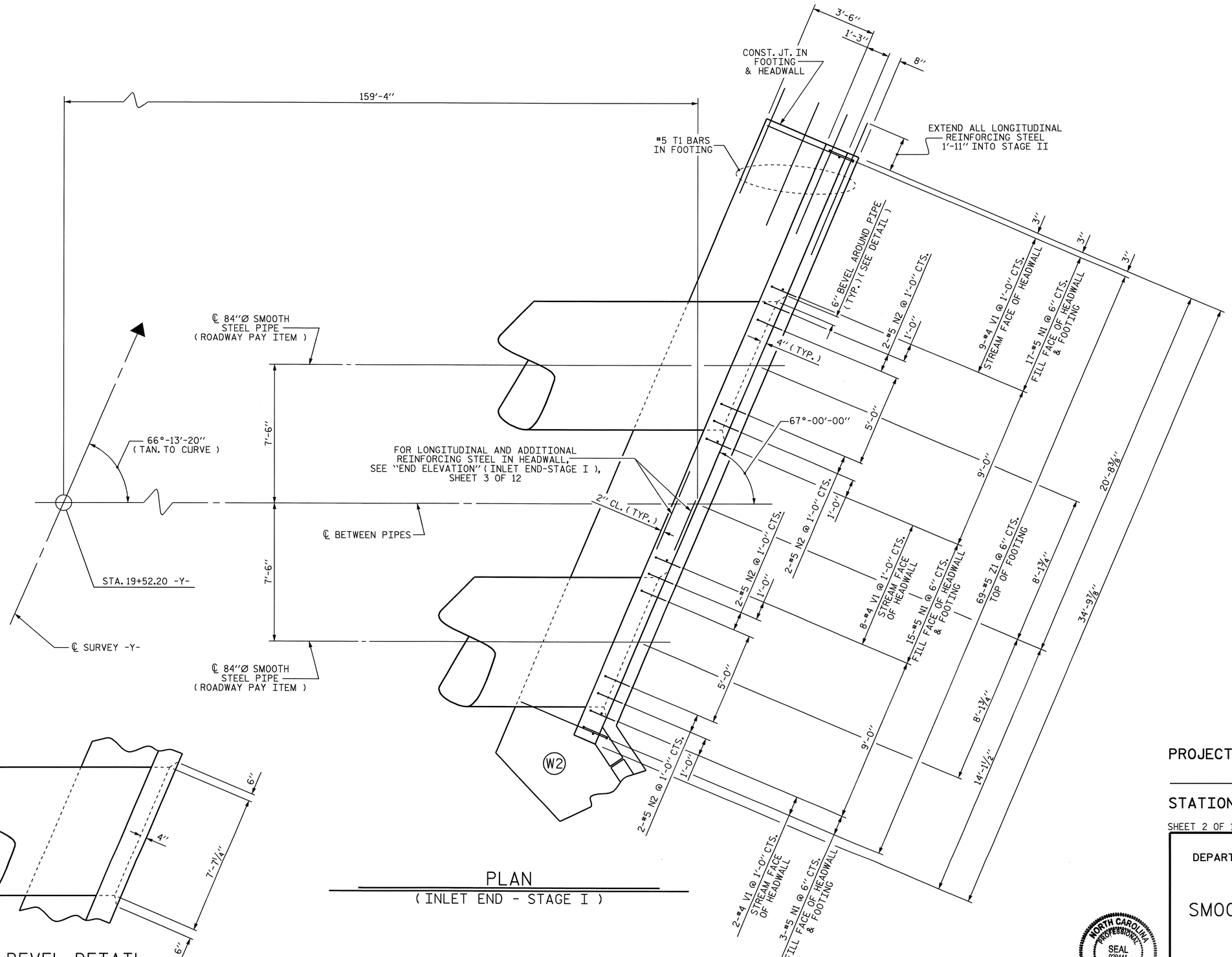

PLAN
(INLET END - STAGE I)

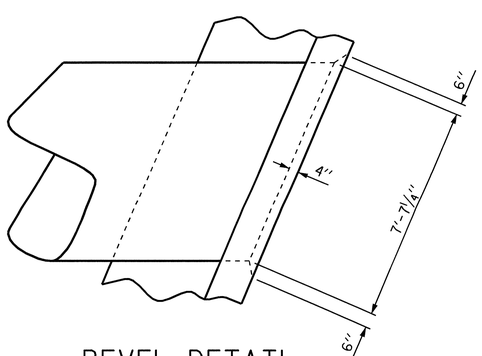

BEVEL DETAIL

PROJECT NO. R-2417 C
LEE COUNTY
STATION: 19+93.70 -Y-

SHEET 2 OF 12

STATE OF NORTH CAROLINA
DEPARTMENT OF TRANSPORTATION
RALEIGH

DOUBLE 84"Ø SMOOTH STEEL PIPES INLET END (STAGE I)

NORTH CAROLINA PROFESSIONAL SEAL 029441 ENGINEER KRISTY W. ALFORD

REVISIONS						SHEET NO.
NO.	BY:	DATE:	NO.	BY:	DATE:	C-13
1			3			TOTAL SHEETS
2			4			40

DRAWN BY : MIKE BRITT DATE : 3-4-09
CHECKED BY : K.W. ALFORD DATE : 4-8-09

30-JUL-2009 12:53
k:\structures\culv_7\culv_07_draft\r2417c_cul7.dgn
kdford

STR. #7

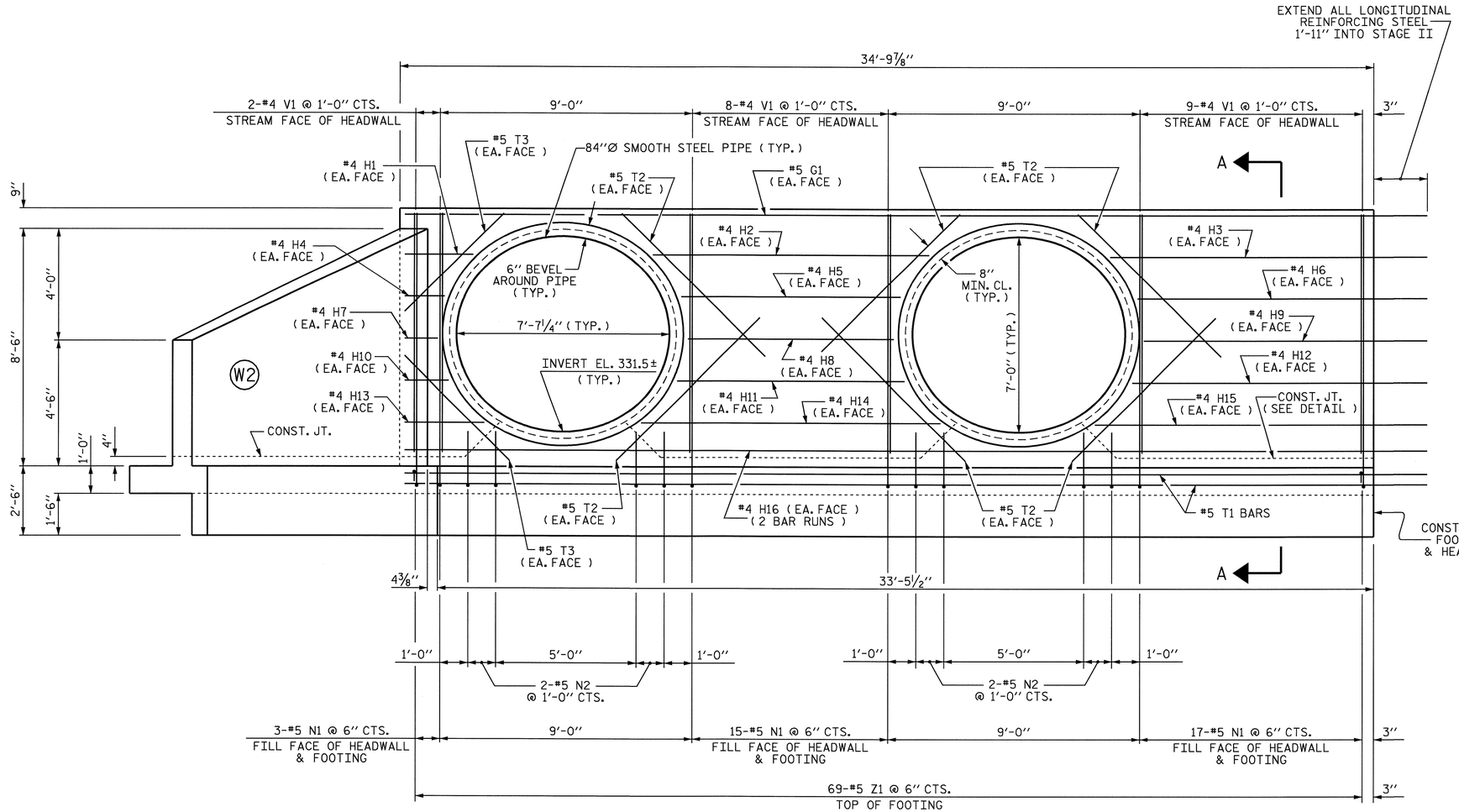

END ELEVATION - NORMAL TO SKEW

(INLET END - STAGE I)

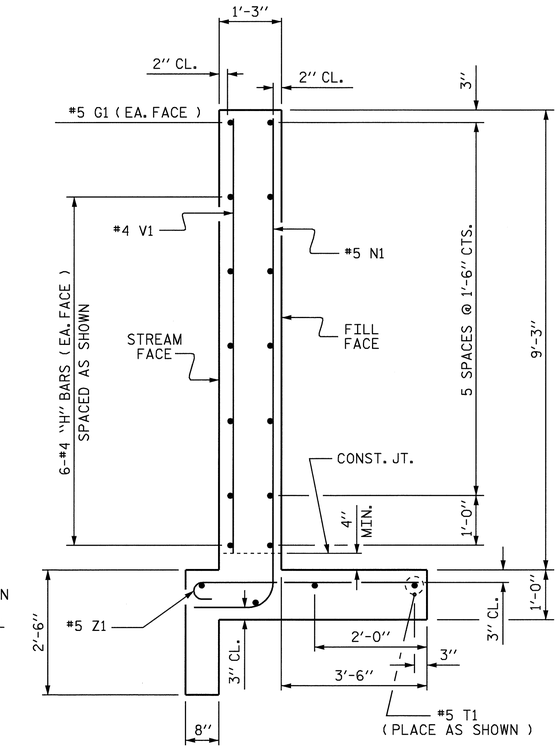

SECTION A-A

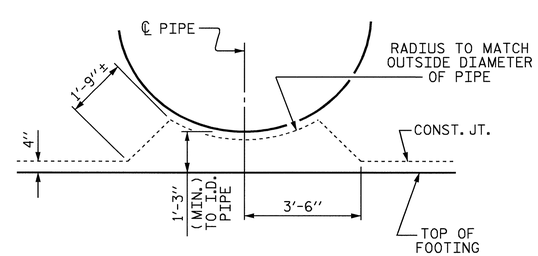

CONSTRUCTION JOINT DETAIL

(TYP. EACH PIPE, INLET END)

PROJECT NO. R-2417 C

LEE COUNTY

STATION: 19+93.70 -Y-

SHEET 3 OF 12

STATE OF NORTH CAROLINA
DEPARTMENT OF TRANSPORTATION
RALEIGH

DOUBLE 84"Ø SMOOTH STEEL PIPES INLET END (STAGE I)

NORTH CAROLINA PROFESSIONAL SEAL 029441 ENGINEER KRISTY W. ALFORD

7/31/09

REVISIONS						SHEET NO.
NO.	BY:	DATE:	NO.	BY:	DATE:	C-14
1			3			TOTAL SHEETS
2			4			40

DRAWN BY : MIKE BRITT DATE : 3-5-09
CHECKED BY : K.W. ALFORD DATE : 4-8-09

30-JUL-2009 12:53
k:\structures\culv_7\culv_07_draft\r2417c_cul7.dgn
kalford

STR. #7

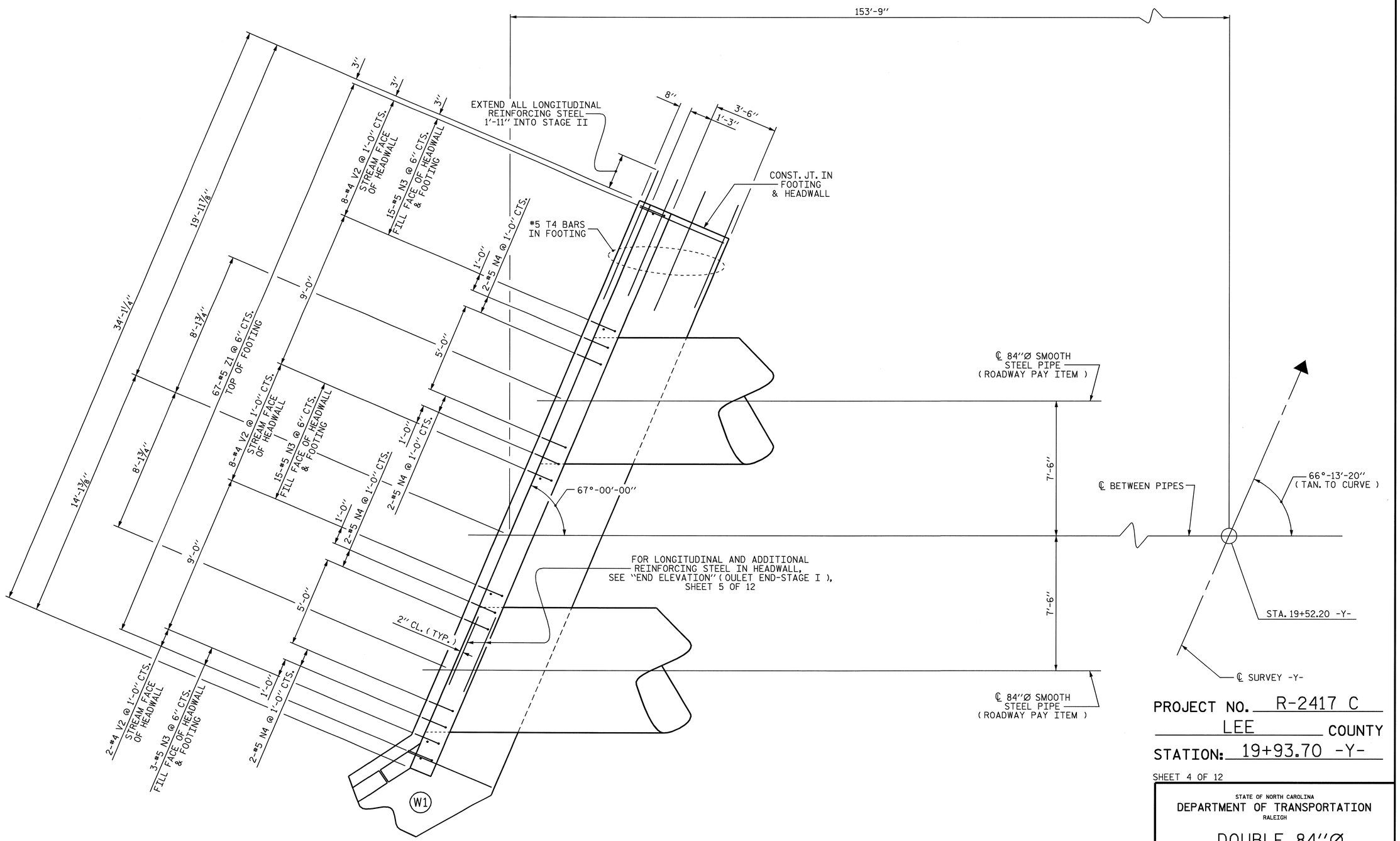

PLAN

(OULET END - STAGE I)

PROJECT NO. R-2417 C

LEE COUNTY

STATION: 19+93.70 -Y-

SHEET 4 OF 12

STATE OF NORTH CAROLINA
DEPARTMENT OF TRANSPORTATION
RALEIGH

DOUBLE 84"Ø SMOOTH STEEL PIPES OUTLET END (STAGE I)

NORTH CAROLINA PROFESSIONAL SEAL 029441 ENGINEER KRISTY W. ALFORD

REVISIONS						SHEET NO.
NO.	BY:	DATE:	NO.	BY:	DATE:	C-15
1			3			TOTAL SHEETS
2			4			40

DRAWN BY : MIKE BRITT DATE : 3-11-09
CHECKED BY : K.W. ALFORD DATE : 4-8-09

30-JUL-2009 12:53
k:\structures\culv_7\culv_07_draft\r2417c_cul7.dgn
kalford

STR. #7

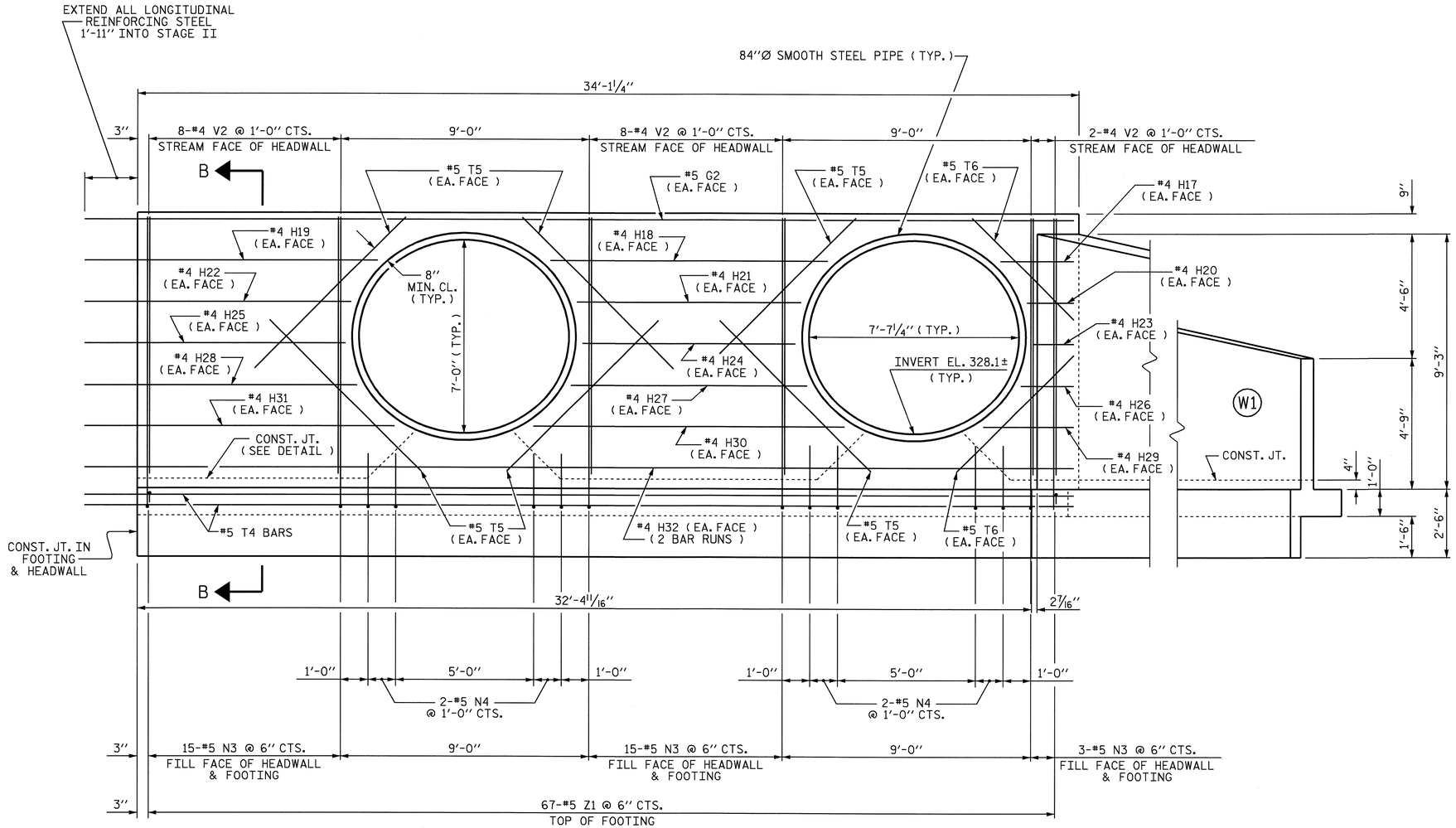

END ELEVATION - NORMAL TO SKEW

(OULET END - STAGE I)

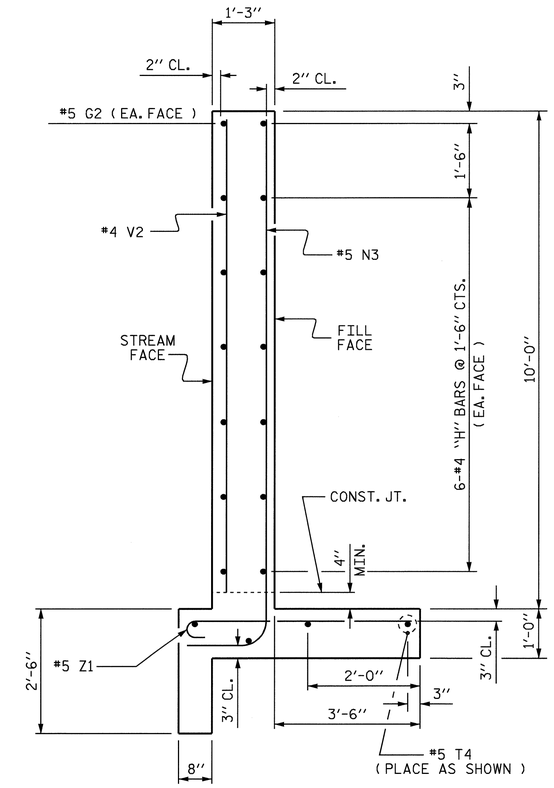

SECTION B-B

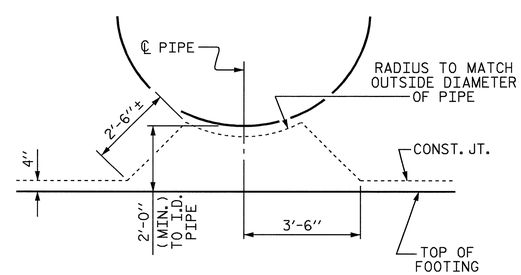

CONSTRUCTION JOINT DETAIL

(TYP. EACH PIPE, OUTLET END)

PROJECT NO. R-2417 C

LEE COUNTY

STATION: 19+93.70 -Y-

SHEET 5 OF 12

STATE OF NORTH CAROLINA
DEPARTMENT OF TRANSPORTATION
RALEIGH

DOUBLE 84"Ø SMOOTH STEEL PIPES OUTLET END (STAGE I)

NORTH CAROLINA PROFESSIONAL SEAL 029441 ENGINEER KRISTY W. ALFORD

REVISIONS						SHEET NO.
NO.	BY:	DATE:	NO.	BY:	DATE:	C-16
1			3			TOTAL SHEETS
2			4			40

DRAWN BY : MIKE BRITT DATE : 3-11-09
CHECKED BY : K.W. ALFORD DATE : 4-8-09

30-JUL-2009 12:54
k:\structures\culv_7\culv_07_draft\r2417c_cul7.dgn
kalford

STR. #7

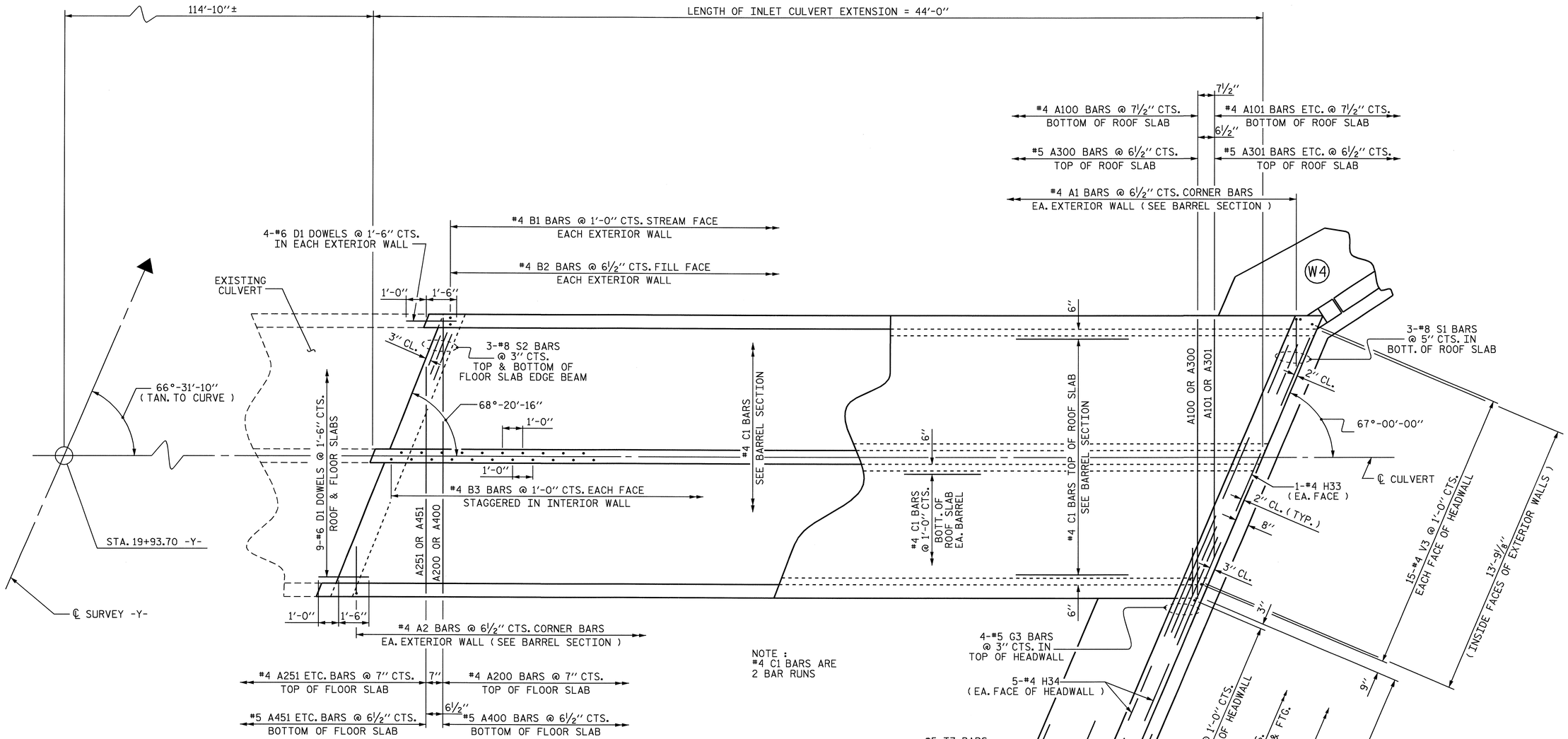

PART PLAN - FLOOR SLAB
(INLET EXTENSION - STAGE II)

PART PLAN - ROOF SLAB
(INLET EXTENSION - STAGE II)

NOTE :
STAGE I REINFORCING STEEL EXTENDING INTO STAGE II NOT SHOWN FOR CLARITY

PROJECT NO. R-2417 C
LEE COUNTY
STATION: 19+93.70 -Y-

SHEET 6 OF 12

STATE OF NORTH CAROLINA
DEPARTMENT OF TRANSPORTATION
RALEIGH

DOUBLE 6 FT. x 6 FT. CONCRETE BOX CULVERT INLET EXTENSION (STAGE II)

NORTH CAROLINA PROFESSIONAL SEAL 029441 ENGINEER KRISTY W. ALFORD
7/31/09

REVISIONS						SHEET NO.
NO.	BY:	DATE:	NO.	BY:	DATE:	C-17
1			3			TOTAL SHEETS
2			4			40

DRAWN BY : MIKE BRITT DATE : 2-24-09
CHECKED BY : K.W. ALFORD DATE : 4-8-09

30-JUL-2009 12:54
k:\structures\culv_7\culv_07_draft\r2417c_cul7.dgn
kalford

STR. #7

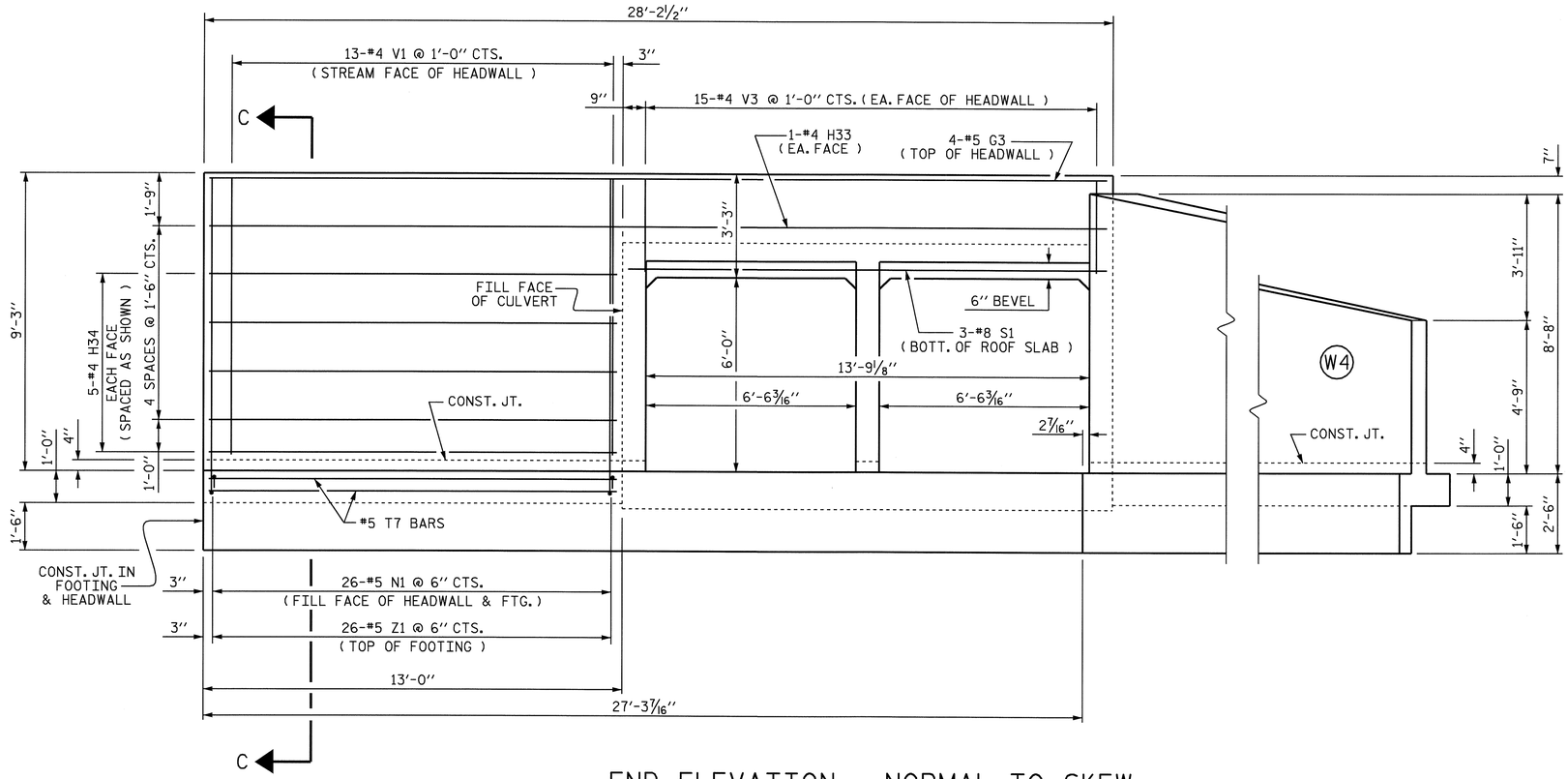

END ELEVATION - NORMAL TO SKEW

(INLET EXTENSION - STAGE II)

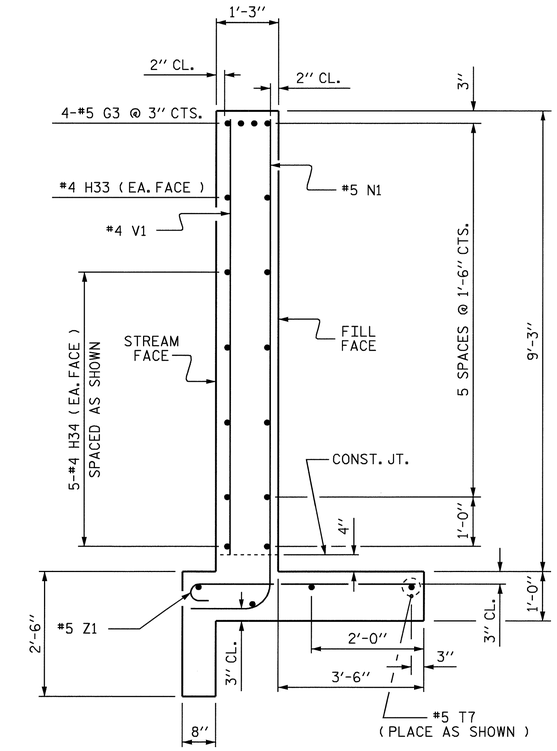

SECTION C-C

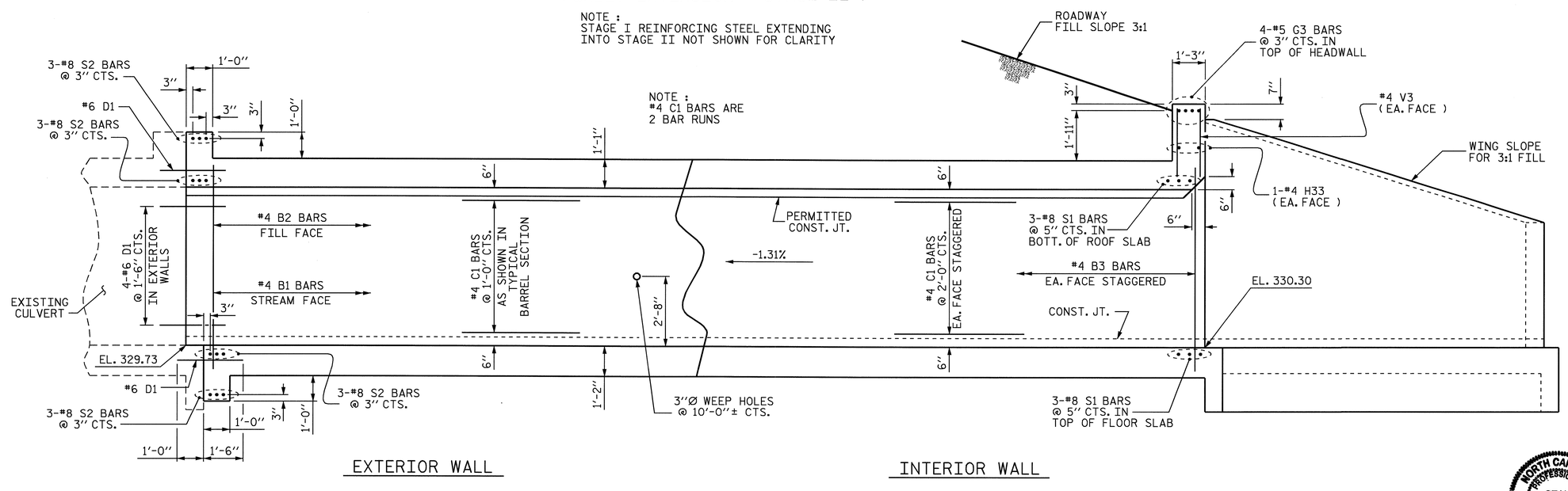

CULVERT SECTION - NORMAL TO ROADWAY

(INLET EXTENSION - STAGE II)

PROJECT NO. R-2417 C

LEE COUNTY

STATION: 19+93.70 -Y-

SHEET 7 OF 12

STATE OF NORTH CAROLINA
DEPARTMENT OF TRANSPORTATION
RALEIGH

DOUBLE 6 FT. x 6 FT. CONCRETE BOX CULVERT INLET EXTENSION (STAGE II)

NORTH CAROLINA PROFESSIONAL SEAL 029441 ENGINEER KRISTY W. ALFORD

7/31/09

REVISIONS						SHEET NO.
NO.	BY:	DATE:	NO.	BY:	DATE:	C-18
1			3			TOTAL SHEETS
2			4			40

DRAWN BY : MIKE BRITT DATE : 2-26-09
CHECKED BY : K.W. ALFORD DATE : 4-9-09

30-JUL-2009 12:54
k:\structures\culv_7\culv_07_draft\r2417c_cul7.dgn
kalford

STR. #7

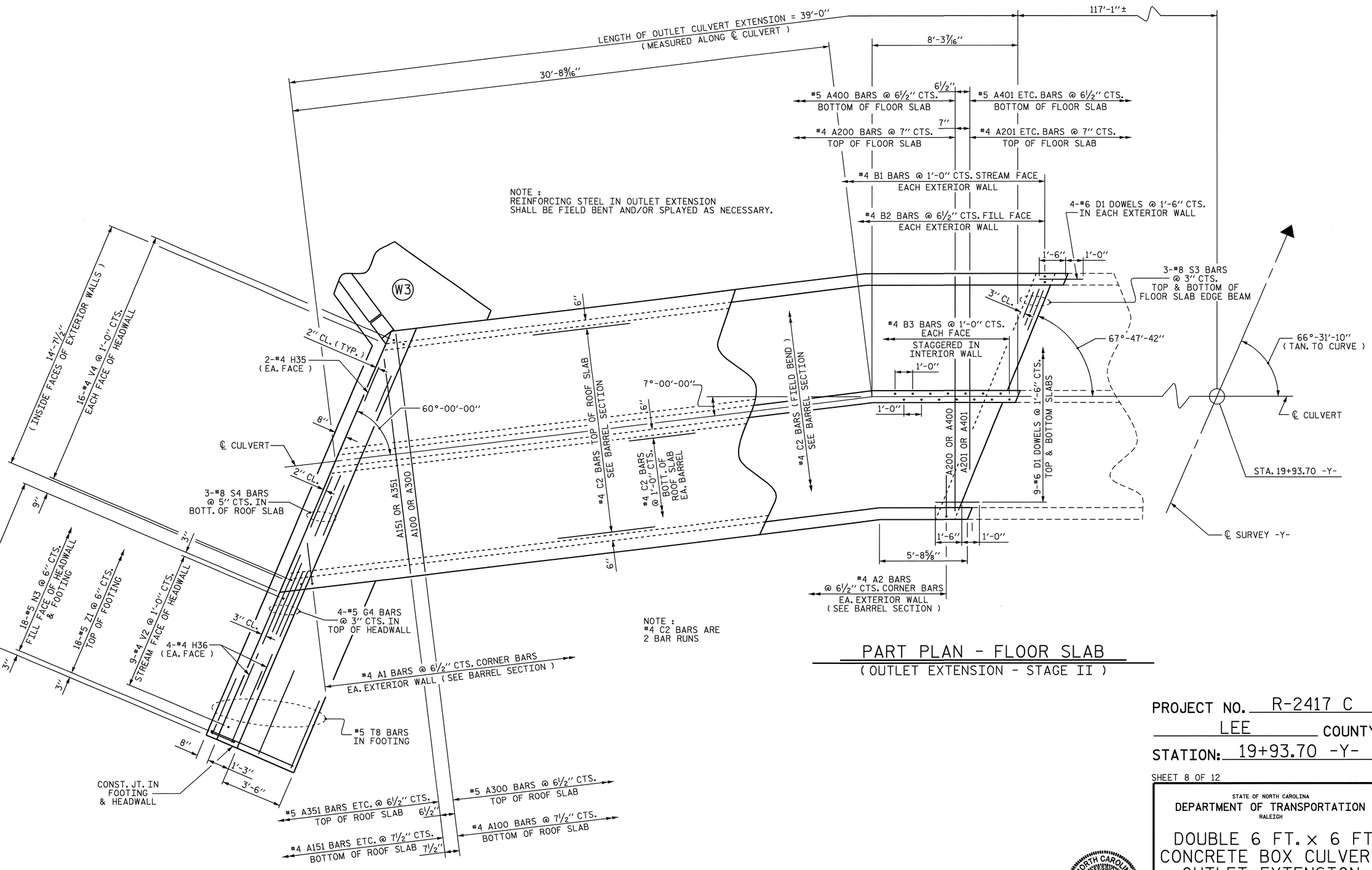

PART PLAN - FLOOR SLAB

(OUTLET EXTENSION - STAGE II)

PART PLAN - ROOF SLAB

(OUTLET EXTENSION - STAGE II)

NOTE :
STAGE I REINFORCING STEEL EXTENDING
INTO STAGE II NOT SHOWN FOR CLARITY

PROJECT NO. R-2417 C

LEE COUNTY

STATION: 19+93.70 -Y-

SHEET 8 OF 12

STATE OF NORTH CAROLINA
DEPARTMENT OF TRANSPORTATION
RALEIGH

DOUBLE 6 FT. x 6 FT. CONCRETE BOX CULVERT OUTLET EXTENSION (STAGE II)

NORTH CAROLINA PROFESSIONAL SEAL 029441 ENGINEER KRISTY W. ALFORD

7/13/09

REVISIONS						SHEET NO.
NO.	BY:	DATE:	NO.	BY:	DATE:	C-19
1			3			TOTAL SHEETS
2			4			40

DRAWN BY : MIKE BRITT DATE : 3-3-09
CHECKED BY : K.W. ALFORD DATE : 4-9-09

30-JUL-2009 12:54
k:\structures\culv_7\culv_07_draft\r2417c_cul7.dgn
kalford

STR. #7

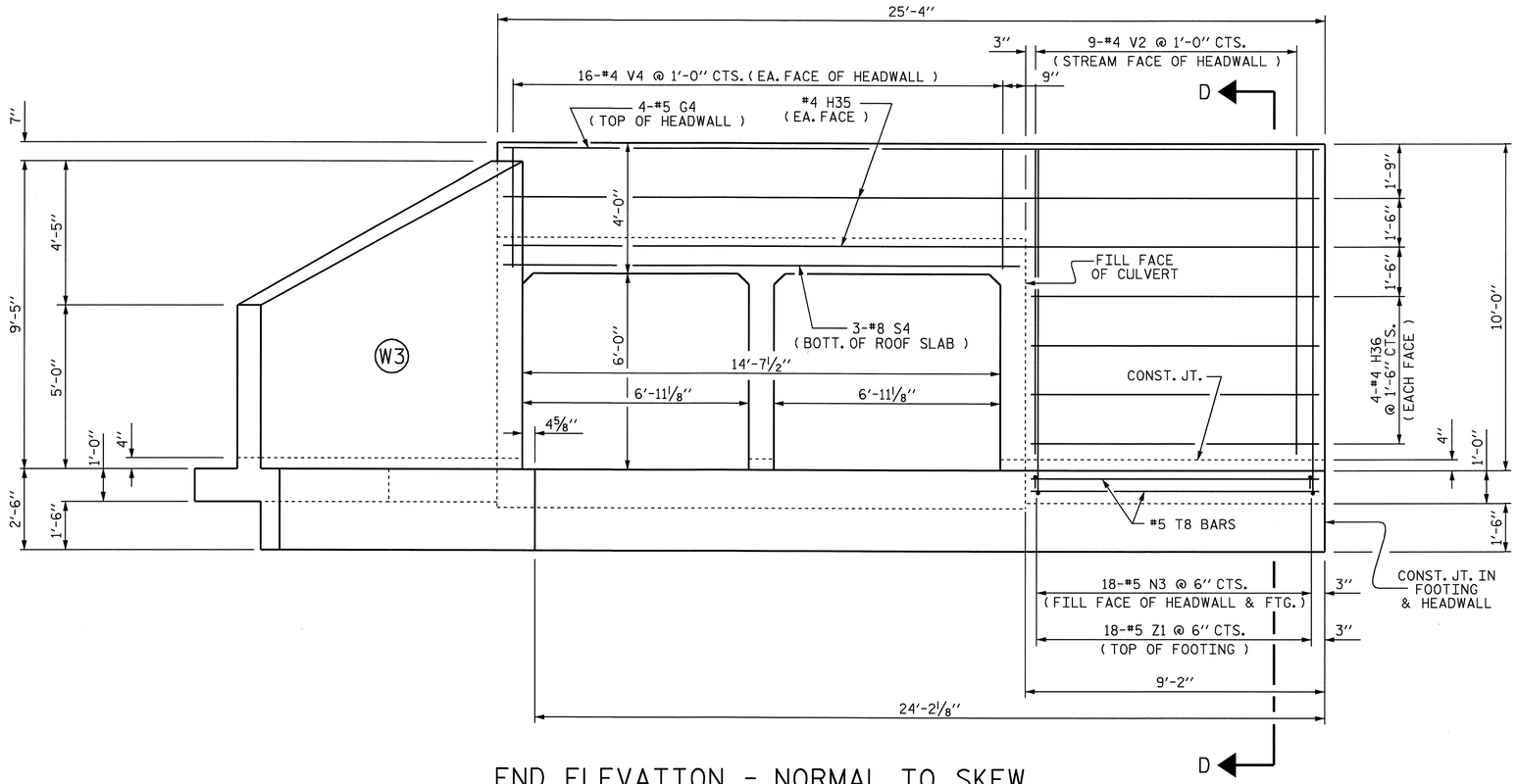

END ELEVATION - NORMAL TO SKEW

(OUTLET EXTENSION - STAGE II)

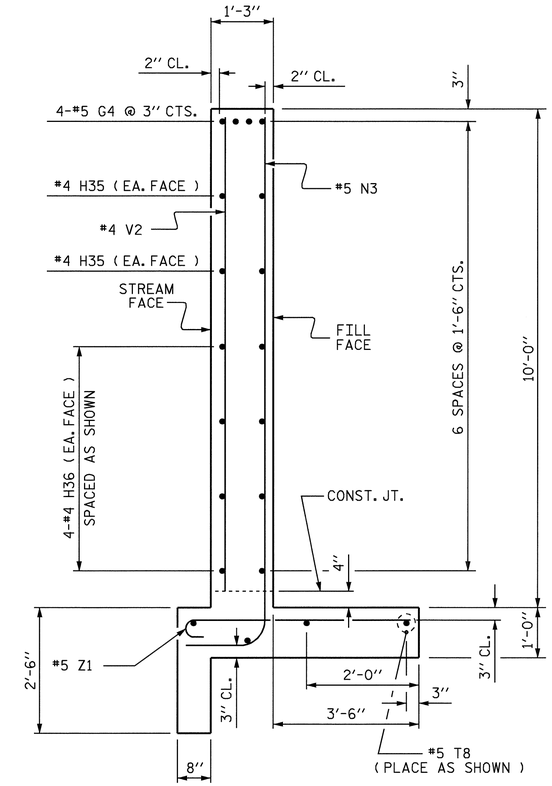

SECTION D-D

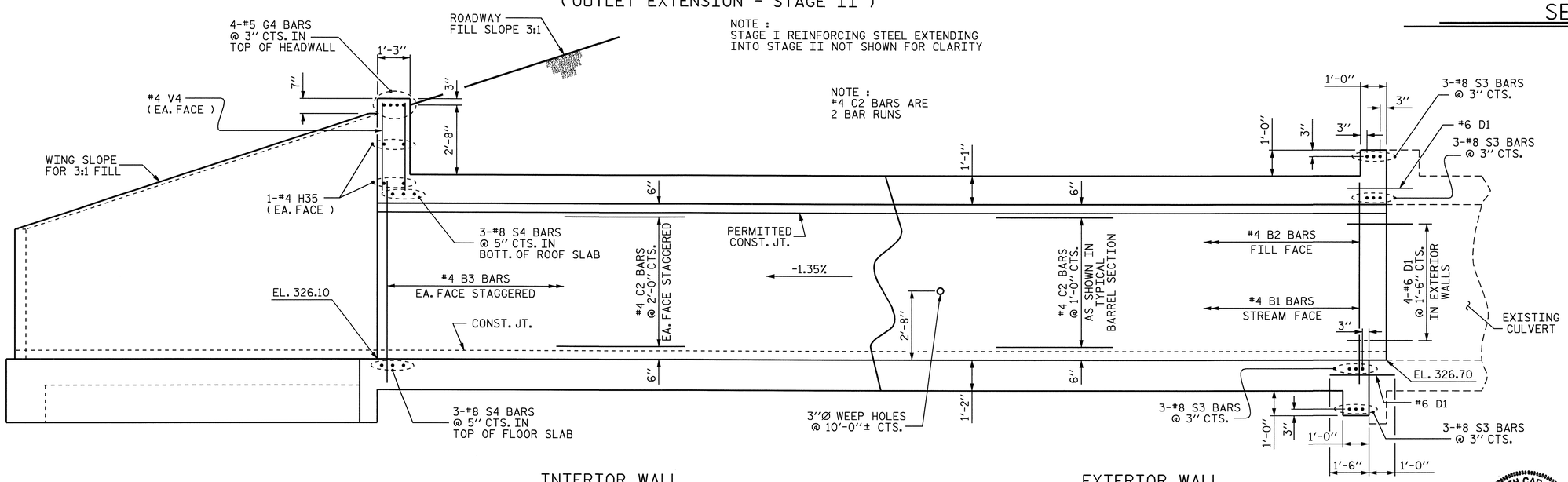

CULVERT SECTION - NORMAL TO ROADWAY

(OUTLET EXTENSION - STAGE II)

PROJECT NO. R-2417 C

LEE COUNTY

STATION: 19+93.70 -Y-

SHEET 9 OF 12

STATE OF NORTH CAROLINA
DEPARTMENT OF TRANSPORTATION
RALEIGH

DOUBLE 6 FT. x 6 FT. CONCRETE BOX CULVERT OUTLET EXTENSION (STAGE II)

NORTH CAROLINA PROFESSIONAL SEAL 029441 ENGINEER KRISTY W. ALFORD
7/3/09

REVISIONS								SHEET NO.
NO.	BY:	DATE:	NO.	BY:	DATE:			C-20
1			3					TOTAL SHEETS
2			4					40

DRAWN BY : MIKE BRITT DATE : 3-4-09
CHECKED BY : K.W. ALFORD DATE : 4-9-09

30-JUL-2009 12:54
k:\structures\culv_7\culv_07_draft\r2417c_cul7.dgn
kalford

STR. #7

REINFORCING BAR SCHEDULE FOR PIPE HEADWALL INLET END - STAGE I

BAR	No.	SIZE	TYPE	LENGTH	WEIGHT
G1	2	#5	STR.	36'-6"	76
H1	2	#4	STR.	2'-5"	3
H2	2	#4	STR.	9'-10"	13
H3	2	#4	STR.	11'-4"	15
H4	2	#4	STR.	1'-5"	2
H5	2	#4	STR.	7'-10"	10
H6	2	#4	STR.	10'-4"	14
H7	2	#4	STR.	1'-2"	2
H8	2	#4	STR.	7'-4"	10
H9	2	#4	STR.	10'-1"	13
H10	2	#4	STR.	1'-7"	2
H11	2	#4	STR.	8'-1"	11
H12	2	#4	STR.	10'-6"	14
H13	2	#4	STR.	2'-10"	4
H14	2	#4	STR.	10'-8"	14
H15	2	#4	STR.	11'-10"	16
H16	4	#4	STR.	19'-2"	51
N1	35	#5	1	11'-1"	405
N2	8	#5	1	3'-1"	26
T1	4	#5	STR.	36'-6"	152
T2	12	#5	STR.	7'-3"	91
T3	4	#5	STR.	5'-0"	21
V1	19	#4	STR.	8'-9"	111
Z1	69	#5	2	5'-7"	402

TOTAL REINFORCING STEEL 1,478 LBS.

REINFORCING BAR SCHEDULE FOR PIPE HEADWALL OUTLET END - STAGE I

BAR	No.	SIZE	TYPE	LENGTH	WEIGHT
G2	2	#5	STR.	35'-10"	75
H17	2	#4	STR.	2'-8"	4
H18	2	#4	STR.	10'-0"	13
H19	2	#4	STR.	10'-7"	14
H20	2	#4	STR.	1'-8"	2
H21	2	#4	STR.	8'-1"	11
H22	2	#4	STR.	9'-8"	13
H23	2	#4	STR.	1'-6"	2
H24	2	#4	STR.	7'-8"	10
H25	2	#4	STR.	9'-5"	13
H26	2	#4	STR.	1'-11"	3
H27	2	#4	STR.	8'-6"	11
H28	2	#4	STR.	9'-10"	13
H29	2	#4	STR.	3'-3"	4
H30	2	#4	STR.	11'-3"	15
H31	2	#4	STR.	11'-2"	15
H32	4	#4	STR.	18'-10"	50
N3	33	#5	1	11'-10"	407
N4	8	#5	1	3'-7"	30
T4	4	#5	STR.	35'-10"	149
T5	12	#5	STR.	7'-9"	97
T6	4	#5	STR.	5'-2"	22
V2	18	#4	STR.	9'-6"	114
Z1	67	#5	2	5'-7"	390

TOTAL REINFORCING STEEL 1,477 LBS.

BAR TYPES

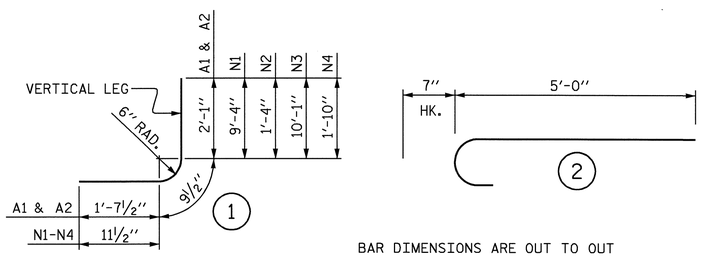

BAR DIMENSIONS ARE OUT TO OUT

REINFORCING BAR SCHEDULE FOR BARREL INLET EXTENSION - STAGE II

BAR	No.	SIZE	TYPE	LENGTH	WEIGHT
A1	164	#4	1	4'-6"	493
A2	164	#4	1	4'-6"	493
A100	61	#4	STR.	13'-8"	557
A101	1	#4	STR.	12'-6"	8
A102	1	#4	STR.	11'-0"	7
A103	1	#4	STR.	9'-6"	6
A104	1	#4	STR.	8'-1"	5
A105	1	#4	STR.	6'-7"	4
A106	1	#4	STR.	5'-1"	3
A107	1	#4	STR.	3'-8"	2
A108	1	#4	STR.	2'-2"	1
A151	1	#4	STR.	12'-5"	8
A152	1	#4	STR.	10'-10"	7
A153	1	#4	STR.	9'-3"	6
A154	1	#4	STR.	7'-8"	5
A155	1	#4	STR.	6'-1"	4
A156	1	#4	STR.	4'-6"	3
A157	1	#4	STR.	2'-11"	2
A200	65	#4	STR.	13'-8"	593
A201	1	#4	STR.	12'-7"	8
A202	1	#4	STR.	11'-2"	7
A203	1	#4	STR.	9'-10"	7
A204	1	#4	STR.	8'-6"	6
A205	1	#4	STR.	7'-1"	5
A206	1	#4	STR.	5'-9"	4
A207	1	#4	STR.	4'-4"	3
A208	1	#4	STR.	3'-0"	2
A209	1	#4	STR.	1'-7"	1
A251	1	#4	STR.	12'-6"	8
A252	1	#4	STR.	11'-0"	7
A253	1	#4	STR.	9'-7"	6
A254	1	#4	STR.	8'-1"	5
A255	1	#4	STR.	6'-8"	4
A256	1	#4	STR.	5'-2"	3
A257	1	#4	STR.	3'-8"	2
A258	1	#4	STR.	2'-3"	2
A300	70	#5	STR.	13'-8"	998
A301	1	#5	STR.	12'-8"	13
A302	1	#5	STR.	11'-5"	12
A303	1	#5	STR.	10'-2"	11
A304	1	#5	STR.	8'-10"	9
A305	1	#5	STR.	7'-7"	8
A306	1	#5	STR.	6'-4"	7
A307	1	#5	STR.	5'-0"	5
A308	1	#5	STR.	3'-9"	4
A309	1	#5	STR.	2'-6"	3
A351	1	#5	STR.	12'-7"	13
A352	1	#5	STR.	11'-3"	12
A353	1	#5	STR.	9'-11"	10
A354	1	#5	STR.	8'-6"	9
A355	1	#5	STR.	7'-2"	7
A356	1	#5	STR.	5'-9"	6
A357	1	#5	STR.	4'-5"	5
A358	1	#5	STR.	3'-1"	3
A359	1	#5	STR.	1'-8"	2
A400	70	#5	STR.	13'-8"	998
A401	1	#5	STR.	12'-8"	13
A402	1	#5	STR.	11'-5"	12
A403	1	#5	STR.	10'-2"	11
A404	1	#5	STR.	8'-10"	9
A405	1	#5	STR.	7'-7"	8
A406	1	#5	STR.	6'-4"	7
A407	1	#5	STR.	5'-0"	5
A408	1	#5	STR.	3'-9"	4
A409	1	#5	STR.	2'-6"	3
A451	1	#5	STR.	12'-7"	13
A452	1	#5	STR.	11'-3"	12
A453	1	#5	STR.	9'-11"	10
A454	1	#5	STR.	8'-6"	9
A455	1	#5	STR.	7'-2"	7
A456	1	#5	STR.	5'-9"	6
A457	1	#5	STR.	4'-5"	5
A458	1	#5	STR.	3'-1"	3
A459	1	#5	STR.	1'-8"	2
B1	88	#4	STR.	7'-9"	456
B2	160	#4	STR.	5'-4"	570
B3	88	#4	STR.	7'-9"	456
C1	136	#4	STR.	23'-0"	2090
D1	26	#6	STR.	2'-6"	98
G3	4	#5	STR.	27'-10"	116
H33	2	#4	STR.	27'-10"	37
H34	10	#4	STR.	12'-8"	85
N1	26	#5	1	11'-1"	301
S1	6	#8	STR.	14'-8"	235
S2	12	#8	STR.	14'-6"	465
T7	4	#5	STR.	10'-7"	44
V1	13	#4	STR.	8'-9"	76
V3	30	#4	STR.	2'-7"	52
Z1	26	#5	2	5'-7"	151

TOTAL REINFORCING STEEL 9,793 LBS.

REINFORCING BAR SCHEDULE FOR BARREL OUTLET EXTENSION - STAGE II

BAR	No.	SIZE	TYPE	LENGTH	WEIGHT
A1	143	#4	1	4'-6"	430
A2	143	#4	1	4'-6"	430
A100	50	#4	STR.	13'-8"	456
A101	1	#4	STR.	12'-5"	8
A102	1	#4	STR.	10'-11"	7
A103	1	#4	STR.	9'-4"	6
A104	1	#4	STR.	7'-10"	5
A105	1	#4	STR.	6'-4"	4
A106	1	#4	STR.	4'-9"	3
A107	1	#4	STR.	3'-3"	2
A108	1	#4	STR.	1'-9"	1
A151	1	#4	STR.	12'-10"	9
A152	1	#4	STR.	11'-9"	8
A153	1	#4	STR.	10'-8"	7
A154	1	#4	STR.	9'-7"	6
A155	1	#4	STR.	8'-6"	6
A156	1	#4	STR.	7'-5"	5
A157	1	#4	STR.	6'-4"	4
A158	1	#4	STR.	5'-3"	4
A159	1	#4	STR.	4'-2"	3
A160	1	#4	STR.	3'-1"	2
A161	1	#4	STR.	2'-0"	1
A200	53	#4	STR.	13'-8"	484
A201	1	#4	STR.	12'-6"	8
A202	1	#4	STR.	11'-1"	7
A203	1	#4	STR.	9'-8"	6
A204	1	#4	STR.	8'-3"	6
A205	1	#4	STR.	6'-10"	5
A206	1	#4	STR.	5'-5"	4
A207	1	#4	STR.	4'-0"	3
A208	1	#4	STR.	2'-6"	2
A251	1	#4	STR.	12'-11"	9
A252	1	#4	STR.	11'-10"	8
A253	1	#4	STR.	10'-10"	7
A254	1	#4	STR.	9'-10"	7
A255	1	#4	STR.	8'-10"	6
A256	1	#4	STR.	7'-10"	5
A257	1	#4	STR.	6'-10"	5
A258	1	#4	STR.	5'-10"	4
A259	1	#4	STR.	4'-10"	3
A260	1	#4	STR.	3'-9"	3
A261	1	#4	STR.	2'-9"	2
A262	1	#4	STR.	1'-9"	1
A300	57	#5	STR.	13'-8"	812
A301	1	#5	STR.	12'-8"	13
A302	1	#5	STR.	11'-4"	12
A303	1	#5	STR.	10'-0"	10
A304	1	#5	STR.	8'-8"	9
A305	1	#5	STR.	7'-4"	8
A306	1	#5	STR.	6'-0"	6
A307	1	#5	STR.	4'-8"	5
A308	1	#5	STR.	3'-4"	3
A309	1	#5	STR.	2'-0"	2
A351	1	#5	STR.	12'-11"	13
A352	1	#5	STR.	12'-0"	13
A353	1	#5	STR.	11'-1"	12
A354	1	#5	STR.	10'-2"	11
A355	1	#5	STR.	9'-2"	10
A356	1	#5	STR.	8'-3"	9
A357	1	#5	STR.	7'-4"	8
A358	1	#5	STR.	6'-5"	7
A359	1	#5	STR.	5'-5"	6
A360	1	#5	STR.	4'-6"	5
A361	1	#5	STR.	3'-7"	4
A362	1	#5	STR.	2'-8"	3
A363	1	#5	STR.	1'-8"	2
A400	57	#5	STR.	13'-8"	812
A401	1	#5	STR.	12'-8"	13
A402	1	#5	STR.	11'-4"	12
A403	1	#5	STR.	10'-0"	10
A404	1	#5	STR.	8'-8"	9
A405	1	#5	STR.	7'-4"	8
A406	1	#5	STR.	6'-0"	6
A407	1	#5	STR.	4'-8"	5
A408	1	#5	STR.	3'-4"	3
A409	1	#5	STR.	2'-0"	2
A451	1	#5	STR.	12'-11"	13
A452	1	#5	STR.	12'-0"	13
A453	1	#5	STR.	11'-1"	12
A454	1	#5	STR.	10'-2"	11
A455	1	#5	STR.	9'-2"	10
A456	1	#5	STR.	8'-3"	9
A457	1	#5	STR.	7'-4"	8
A458	1	#5	STR.	6'-5"	7
A459	1	#5	STR.	5'-5"	6
A460	1	#5	STR.	4'-6"	5
A461	1	#5	STR.	3'-7"	4
A462	1	#5	STR.	2'-8"	3
A463	1	#5	STR.	1'-8"	2
B1	79	#4	STR.	7'-9"	409
B2	144	#4	STR.	5'-4"	513
B3	79	#4	STR.	7'-9"	409
C2	136	#4	STR.	20'-6"	1862
D1	26	#6	STR.	2'-6"	98
G4	4	#5	STR.	25'-0"	104
H35	4	#4	STR.	25'-0"	67
H36	8	#4	STR.	8'-10"	47
N3	18	#5	1	11'-10"	222
S3	12	#8	STR.	14'-9"	473
S4	6	#8	STR.	15'-10"	254
T8	4	#5	STR.	8'-10"	37
V2	9	#4	STR.	9'-6"	57
V4	32	#4	STR.	3'-8"	78
Z1	18	#5	2	5'-7"	105

TOTAL REINFORCING STEEL 8,693 LBS.

***** SPLICE LENGTHS CHART *****

BAR	SIZE	SPLICE LENGTH
A200	#4	1'-9"
A400	#5	1'-9"
B1	#4	1'-9"
B3	#4	1'-9"
C1	#4	1'-11"
C2	#4	1'-11"
H16	#4	1'-9"
H32	#4	1'-9"

STAGE I QUANTITIES

CLASS A CONCRETE		
INLET END HEADWALL & WING W2	=	24.8 CY
OUTLET END HEADWALL & WING W1	=	29.2 CY
TOTAL		54.0 CY
REINFORCING STEEL		
INLET END HEADWALL	=	1,478 LBS.
OUTLET END HEADWALL	=	1,477 LBS.
OUTLET & INLET WINGS W1 & W2	=	918 LBS.
TOTAL		3,873 LBS.

STAGE II QUANTITIES

CLASS A CONCRETE		
INLET EXTENSION BARREL @ 1.619 CY/FT	=	71.2 CY
INLET EXTENSION WING W4, ETC.	=	20.1 CY
INLET EXTENSION EDGE BEAMS	=	1.1 CY
OUTLET EXTENSION BARREL @ 1.619 CY/FT	=	63.1 CY
OUTLET EXTENSION WING W3, ETC.	=	17.0 CY
OUTLET EXTENSION EDGE BEAMS	=	1.1 CY
TOTAL		173.6 CY
REINFORCING STEEL		
INLET EXTENSION BARREL, ETC.	=	9,793 LBS.
OUTLET EXTENSION BARREL, ETC.	=	8,693 LBS.
OUTLET & INLET WINGS W3 & W4	=	937 LBS.
TOTAL		19,423 LBS.
FOUNDATION CONDITIONING MATERIAL		
INLET EXTENSION		43 TONS
OUTLET EXTENSION		39 TONS
TOTAL		82 TONS
CULVERT EXCAVATION		
INLET EXTENSION		LUMP SUM
OUTLET EXTENSION		LUMP SUM
TOTAL		LUMP SUM

PROJECT NO. R-2417 C
LEE COUNTY
STATION: 19+93.70 -Y-

SHEET 10 OF 12

STATE OF NORTH CAROLINA
DEPARTMENT OF TRANSPORTATION
RALEIGH

DOUBLE 6 FT. x 6 FT. CONCRETE BOX CULVERT EXTENSIONS AND 84"Ø PIPE HEADWALLS

NORTH CAROLINA PROFESSIONAL SEAL 029441 ENGINEER KRISTY W. ALFORD
7/31/09

REVISIONS						SHEET NO.
NO.	BY:	DATE:	NO.	BY:	DATE:	C-21
1			3			TOTAL SHEETS
2			4			40

DRAWN BY : MIKE BRITT DATE : 3-18-09
CHECKED BY : K.W. ALFORD DATE : 4-13-09

30-JUL-2009 12:55
k:\structures\culv_7\culv_07_draft\r2417c_cul7.dgn
kalford

STR. #7

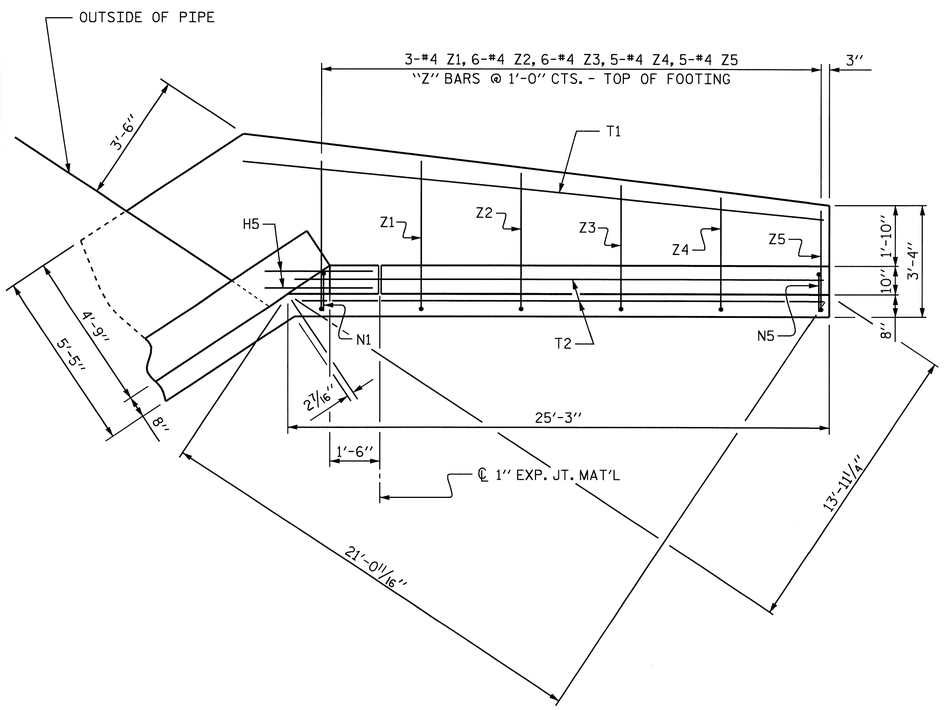

PLAN WING W1
(OUTLET END)

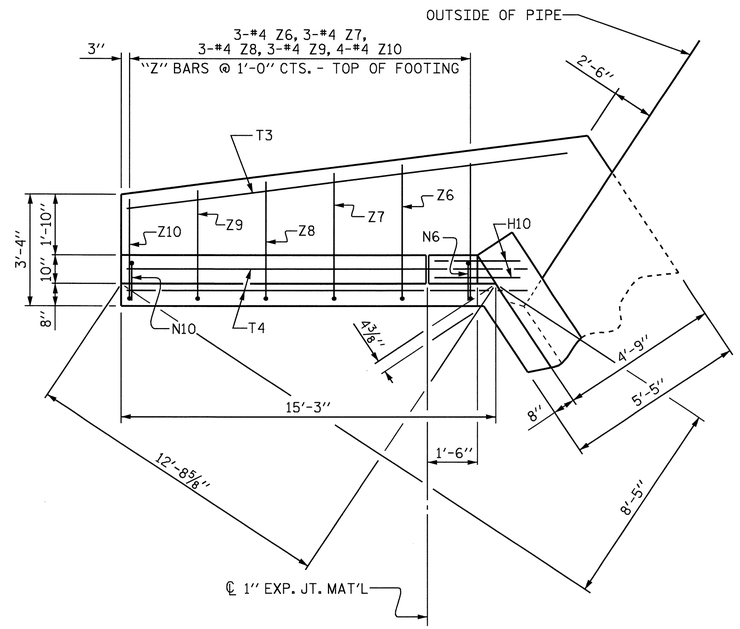

PLAN WING W2
(INLET END)

BAR TYPES

ALL BAR DIMENSIONS ARE OUT TO OUT.

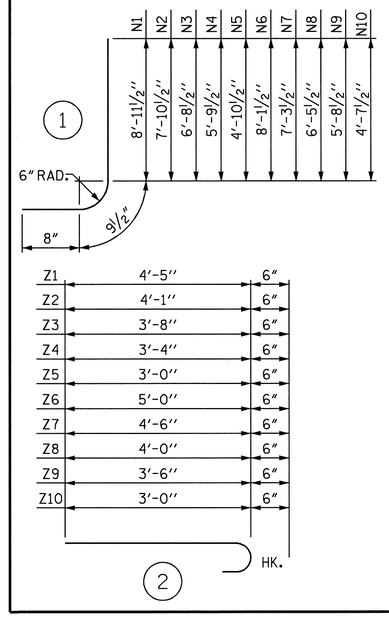

BILL OF MATERIAL

BAR	No.	SIZE	TYPE	LENGTH	WEIGHT
H1	6	#4	STR	22'-1"	89
H2	2	#4	STR	19'-7"	26
H3	2	#4	STR	11'-7"	15
H4	2	#4	STR	22'-6"	30
H5	12	#4	STR	3'-3"	26
H6	6	#4	STR	12'-9"	51
H7	2	#4	STR	10'-1"	13
H8	2	#4	STR	4'-5"	6
H9	2	#4	STR	13'-3"	18
H10	10	#4	STR	2'-7"	17
N1	3	#4	1	10'-5"	21
N2	6	#4	1	9'-4"	37
N3	6	#4	1	8'-2"	33
N4	5	#4	1	7'-3"	24
N5	5	#4	1	6'-4"	21
N6	3	#4	1	9'-7"	19
N7	3	#4	1	8'-9"	18
N8	3	#4	1	7'-11"	16
N9	3	#4	1	7'-2"	14
N10	4	#4	1	6'-1"	16
T1	1	#5	STR	26'-6"	28
T2	2	#5	STR	25'-0"	52
T3	1	#5	STR	17'-4"	18
T4	2	#5	STR	16'-0"	33
V1	3	#4	STR	8'-4"	17
V2	6	#4	STR	7'-3"	29
V3	6	#4	STR	6'-1"	24
V4	5	#4	STR	5'-2"	17
V5	5	#4	STR	4'-3"	14
V6	3	#4	STR	7'-6"	15
V7	3	#4	STR	6'-8"	13
V8	3	#4	STR	5'-10"	12
V9	3	#4	STR	5'-0"	10
V10	4	#4	STR	4'-0"	11
Z1	3	#4	2	4'-11"	10
Z2	6	#4	2	4'-7"	18
Z3	6	#4	2	4'-2"	17
Z4	5	#4	2	3'-10"	13
Z5	5	#4	2	3'-6"	12
Z6	3	#4	2	5'-6"	11
Z7	3	#4	2	5'-0"	10
Z8	3	#4	2	4'-6"	9
Z9	3	#4	2	4'-0"	8
Z10	4	#4	2	3'-6"	7

REINFORCING STEEL FOR WINGS W1 & W2	918 LBS

CLASS A CONCRETE	
OUTLET END WING W1	8.6 CY
OUTLET END HEADWALL	17.0 CY
OUTLET END CURTAIN WALL	3.6 CY
INLET END WING W2	5.5 CY
INLET END HEADWALL	16.3 CY
INLET END CURTAIN WALL	3.0 CY
TOTAL	54.0 CY

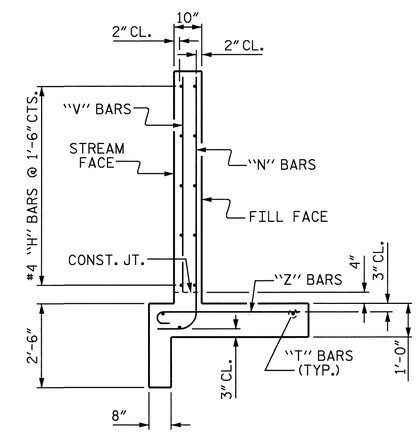

TYPICAL WING SECTION

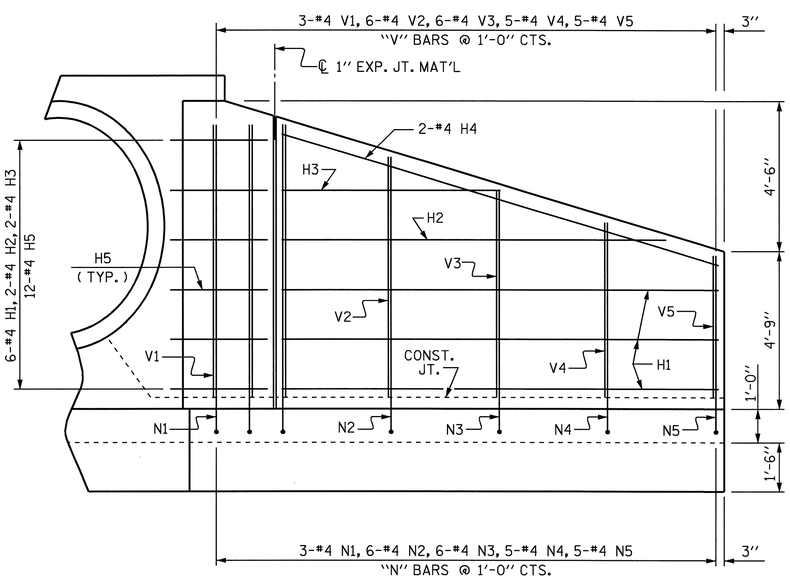

ELEVATION WING W1
(OUTLET END)

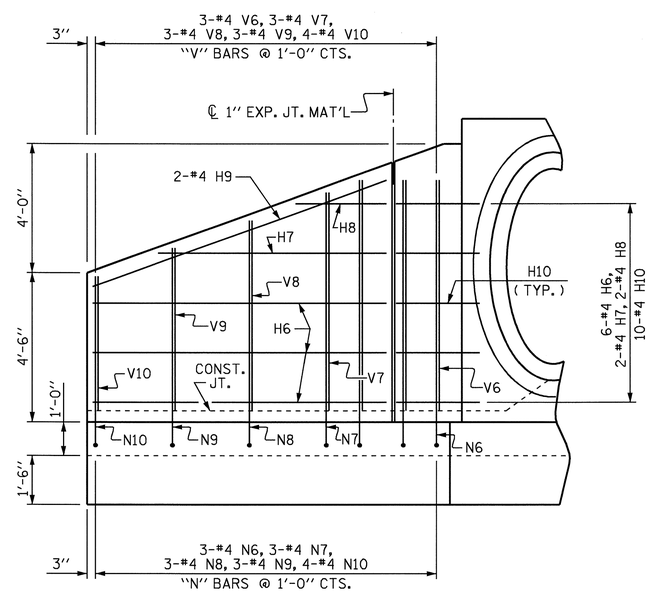

ELEVATION WING W2
(INLET END)

PROJECT NO. R-2417 C

LEE COUNTY

STATION: 19+93.70 -Y-

SHEET 11 OF 12

STATE OF NORTH CAROLINA
DEPARTMENT OF TRANSPORTATION
RALEIGH

WINGS W1 & W2 FOR STAGE I CONSTRUCTION

NORTH CAROLINA PROFESSIONAL ENGINEER SEAL KRISTY W. ALFORD 7/31/09

REVISIONS							SHEET NO.
NO.	BY:	DATE:	NO.	BY:	DATE:		C-22
1			3				TOTAL SHEETS
2			4				40

DRAWN BY : MIKE BRITT DATE : 3-24-09
CHECKED BY : K.W. ALFORD DATE : 4-13-09

30-JUL-2009 12:55
k:\structures\culv_7\culv_07_draft\r2417c_cul7.dgn
kalford

STR. #7

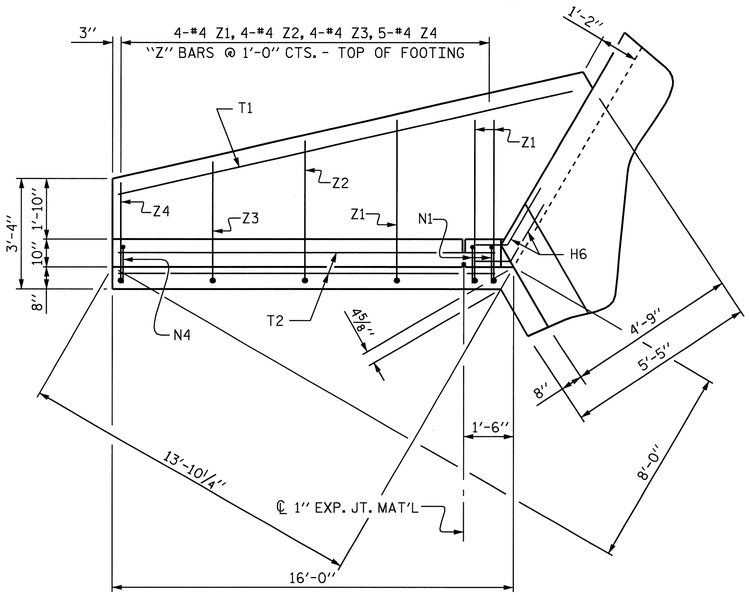

PLAN WING W3

(OUTLET END)

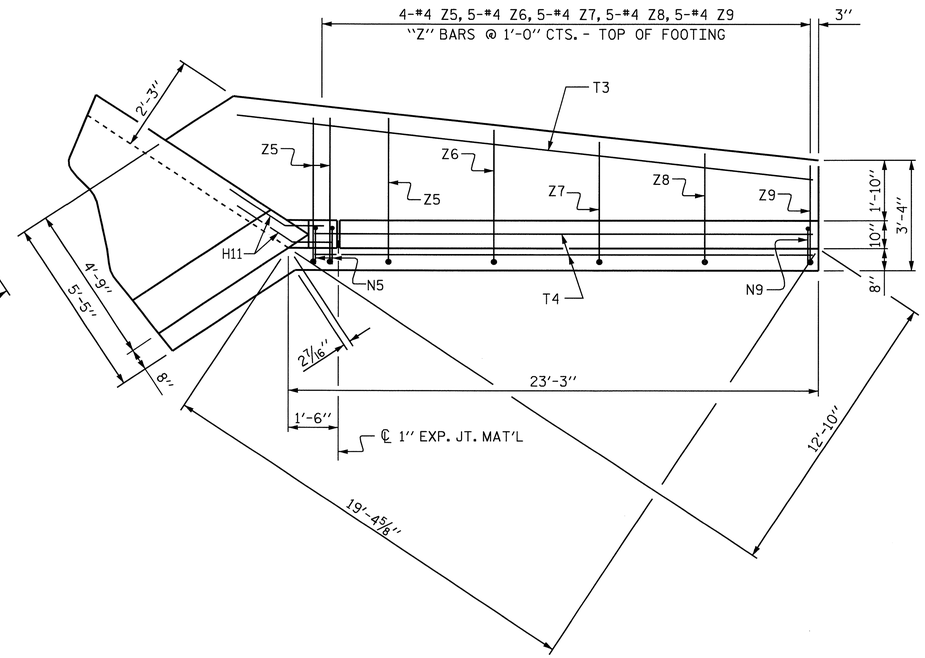

PLAN WING W4

(INLET END)

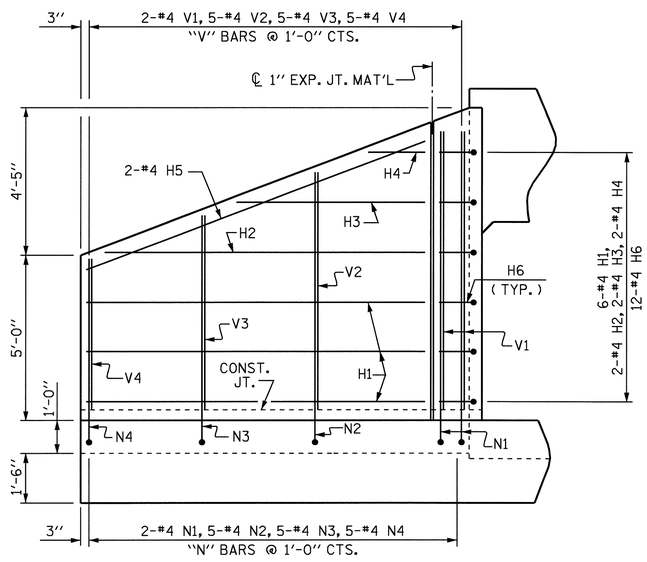

ELEVATION WING W3

(OUTLET END)

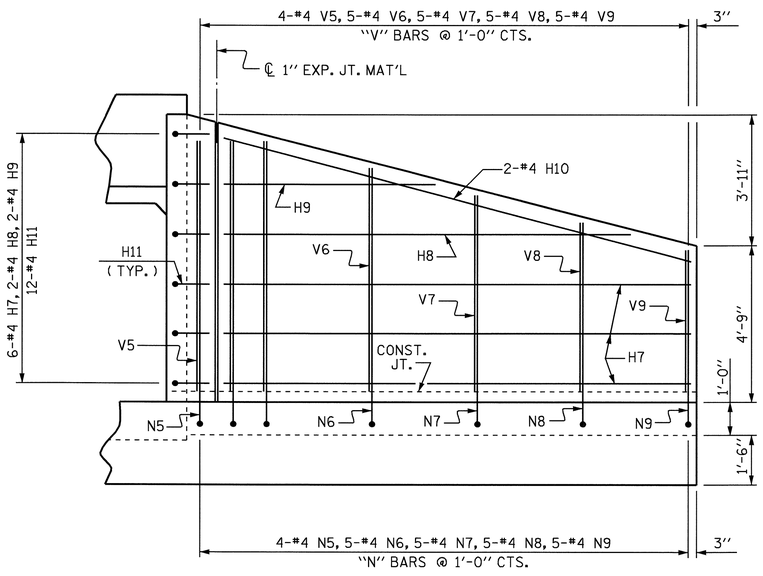

ELEVATION WING W4

(INLET END)

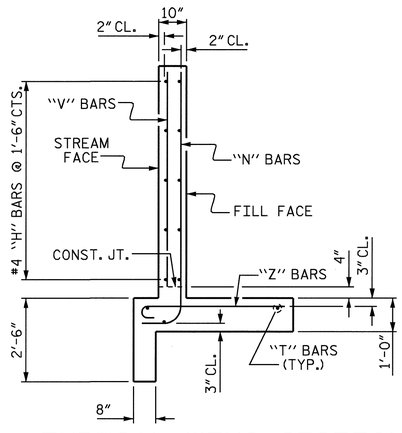

TYPICAL WING SECTION

BAR TYPES

ALL BAR DIMENSIONS ARE OUT TO OUT.

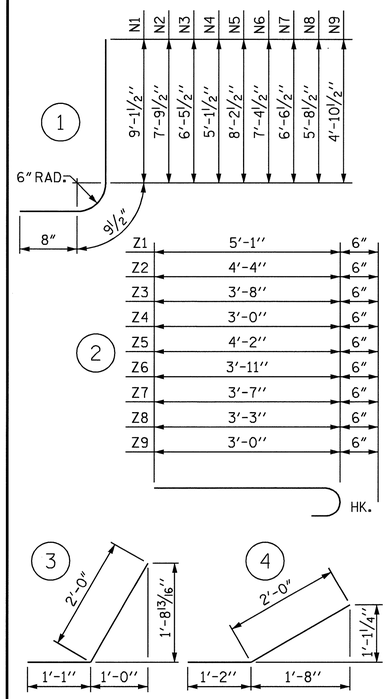

BILL OF MATERIAL

BAR	No.	SIZE	TYPE	LENGTH	WEIGHT
H1	6	#4	STR	14'-1"	56
H2	2	#4	STR	13'-4"	18
H3	2	#4	STR	8'-1"	11
H4	2	#4	STR	2'-9"	4
H5	2	#4	STR	14'-8"	20
H6	12	#4	3	3'-1"	25
H7	6	#4	STR	21'-4"	86
H8	2	#4	STR	18'-7"	25
H9	2	#4	STR	9'-11"	13
H10	2	#4	STR	21'-8"	29
H11	12	#4	4	3'-2"	25
N1	2	#4	1	10'-7"	14
N2	5	#4	1	9'-3"	31
N3	5	#4	1	7'-11"	26
N4	5	#4	1	6'-7"	22
N5	4	#4	1	9'-8"	26
N6	5	#4	1	8'-10"	30
N7	5	#4	1	8'-0"	27
N8	5	#4	1	7'-2"	24
N9	5	#4	1	6'-4"	21
T1	1	#5	STR	18'-0"	19
T2	2	#5	STR	15'-3"	32
T3	1	#5	STR	25'-5"	27
T4	2	#5	STR	22'-3"	46
V1	2	#4	STR	8'-6"	11
V2	5	#4	STR	7'-3"	24
V3	5	#4	STR	5'-9"	19
V4	5	#4	STR	4'-6"	15
V5	4	#4	STR	7'-7"	20
V6	5	#4	STR	6'-9"	23
V7	5	#4	STR	5'-11"	20
V8	5	#4	STR	5'-0"	17
V9	5	#4	STR	4'-3"	14
Z1	4	#4	2	5'-7"	15
Z2	4	#4	2	4'-10"	13
Z3	4	#4	2	4'-2"	11
Z4	5	#4	2	3'-6"	12
Z5	4	#4	2	4'-8"	12
Z6	5	#4	2	4'-5"	15
Z7	5	#4	2	4'-1"	14
Z8	5	#4	2	3'-9"	13
Z9	5	#4	2	3'-6"	12

REINFORCING STEEL FOR WINGS W3 & W4 — 937 LBS

CLASS A CONCRETE	
OUTLET END WING W3	6.1 CY
OUTLET END HEADWALL	8.4 CY
OUTLET END CURTAIN WALL	2.5 CY
INLET END WING W4	7.9 CY
INLET END HEADWALL	9.1 CY
INLET END CURTAIN WALL	3.1 CY
TOTAL	37.1 CY

PROJECT NO. R-2417 C

LEE COUNTY

STATION: 19+93.70 -Y-

SHEET 12 OF 12

STATE OF NORTH CAROLINA
DEPARTMENT OF TRANSPORTATION
RALEIGH

WINGS W3 & W4 FOR STAGE II CONSTRUCTION

NORTH CAROLINA PROFESSIONAL SEAL 029441 ENGINEER KRISTY W. ALFORD

7/31/09

REVISIONS						
NO.	BY:	DATE:	NO.	BY:	DATE:	
1			3			
2			4			

SHEET NO. C-23

TOTAL SHEETS 40

DRAWN BY : MIKE BRITT DATE : 3-30-09
CHECKED BY : K.W. ALFORD DATE : 4-13-09

30-JUL-2009 12:55
k:\structures\culv_7\culv_07_draft\r2417c_cul7.dgn
kalford

STR. #7

BM #2: RR SPIKE IN BASE OF 24" GUM TREE, 295.09' LT., STA. 14+32.13-YRPD-, EL. 387.93

F.A. PROJECT No. STM-0421(50)

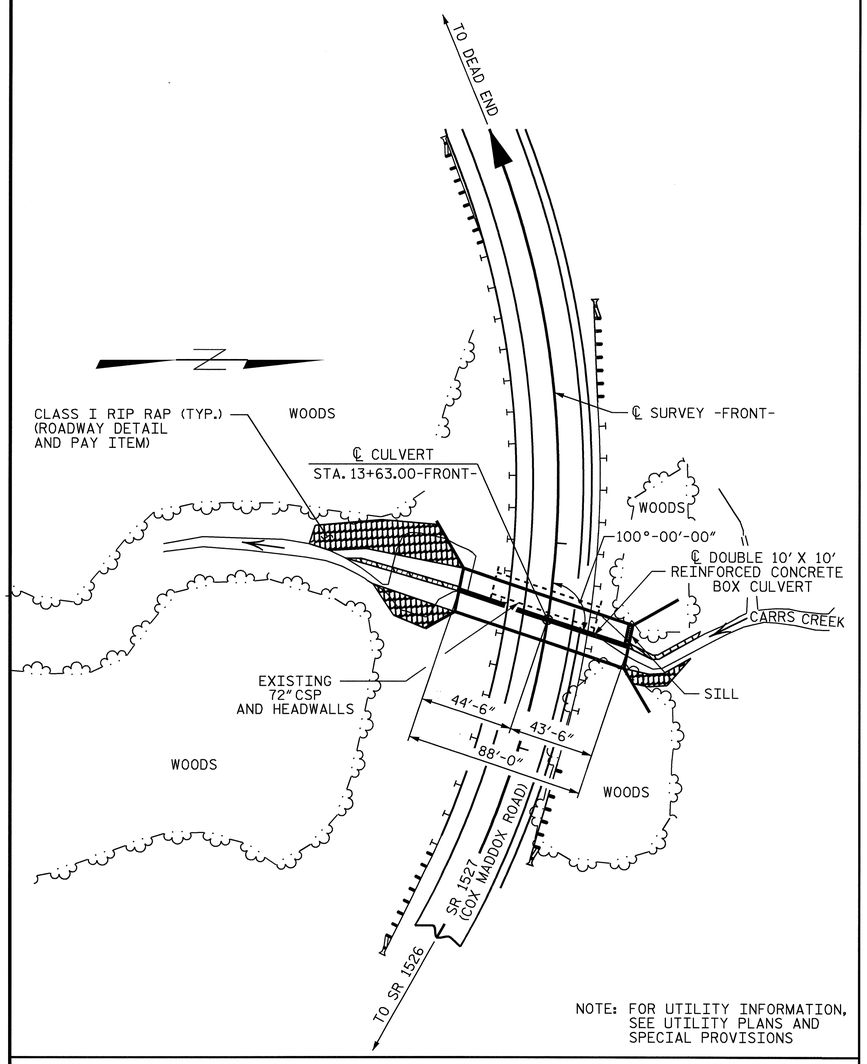

NOTE: FOR UTILITY INFORMATION, SEE UTILITY PLANS AND SPECIAL PROVISIONS

LOCATION SKETCH

NOTES

ASSUMED LIVE LOAD = HS20-44 OR ALTERNATE LOADING.

DESIGN FILL ----------7.70'

FOR OTHER DESIGN DATA AND NOTES SEE STANDARD NOTE SHEET.

3"Ø WEEP HOLES INDICATED TO BE IN ACCORDANCE WITH THE SPECIFICATIONS.

CONCRETE IN CULVERT TO BE POURED IN THE FOLLOWING ORDER:

1. WING FOOTINGS AND FLOOR SLAB OF STAGE 1 INCLUDING 4" OF ALL VERTICAL WALLS.
2. THE REMAINING PORTIONS OF THE STAGE 1 WALLS AND WINGS FULL HEIGHT FOLLOWED BY THE ROOF SLAB AND HEADWALLS.
3. WING FOOTINGS AND FLOOR SLAB OF STAGE 2 INCLUDING 4" OF VERTICAL WALL.
4. THE REMAINING PORTION OF STAGE 2 WALL AND WINGS FULL HEIGHT FOLLOWED BY THE ROOF SLAB, HEADWALLS, AND SILL IN STAGE 2.

THE RESIDENT ENGINEER SHALL CHECK THE LENGTH OF CULVERT BEFORE STAKING IT OUT TO MAKE CERTAIN THAT IT WILL PROPERLY TAKE CARE OF THE FILL.

DIMENSIONS FOR WING LAYOUT AS WELL AS ADDITIONAL REINFORCING STEEL EMBEDDED IN BARREL ARE SHOWN ON WING SHEET.

NO PRECAST REINFORCED CONCRETE BOX CULVERT OPTION WILL BE ALLOWED.

TRANSVERSE CONSTRUCTION JOINTS SHALL BE USED IN THE BARREL, SPACED TO LIMIT THE POURS TO A MAXIMUM OF 50 FT. LOCATION OF JOINTS SHALL BE SUBJECT TO APPROVAL OF THE ENGINEER.

THE CONTRACTOR SHALL PROVIDE INDEPENDENT ASSURANCE SAMPLES OF REINFORCING STEEL AS FOLLOWS: FOR PROJECTS REQUIRING UP TO 400 TONS OF REINFORCING STEEL, ONE 30 INCH SAMPLE OF EACH SIZE BAR USED, AND FOR PROJECTS REQUIRING OVER 400 TONS OF REINFORCING STEE, TWO 30 INCH SAMPLES OF EACH SIZE BAR USED. THE BARS FROM WHICH THE SAMPLES ARE TAKEN MUST THEN BE SPLICED WITH REPLACEMENT BARS OF THE SIZE AND LENGTH OF THE SAMPLE, PLUS A MINIMUM LAP SPLICE OF THIRTY BAR DIAMETERS.

AT THE CONTRACTOR'S OPTION, HE MAY SPLICE THE VERTICAL REINFORCING STEEL IN THE INTERIOR FACE OF EXTERIOR WALL AND BOTH FACES OF INTERIOR WALLS ABOVE LOWER WALL CONSTRUCTION JOINT. THE SPLICE LENGTH SHALL BE AS PROVIDED IN THE SPLICE LENGTH CHART SHOWN ON THE PLANS. EXTRA WEIGHT OF STEEL DUE TO THE SPLICES SHALL BE PAID FOR BY THE CONTRACTOR.

FOR CONSTRUCTION SEQUENCE, SEE EROSION CONTROL PLANS.

FOR CULVERT DIVERSION DETAILS AND PAY ITEM, SEE EROSION CONTROL PLANS.

A 3 FOOT STRIP OF FILTER FABRIC SHALL BE ATTACHED TO THE FILL FACE OF THE WING COVERING THE ENTIRE LENGTH OF THE EXPANSION JOINT.

FOR MAINTENANCE OF TRAFFIC, SEE TRAFFIC CONTROL PLANS.

FOR SUBMITTAL OF WORKING DRAWINGS, SEE SPECIAL PROVISIONS.

FOR FALSEWORK AND FORMWORK, SEE SPECIAL PROVISIONS.

FOR CRANE SAFETY, SEE SPECIAL PROVISIONS.

FOR GROUT FOR STRUCTURE, SEE SPECIAL PROVISION.

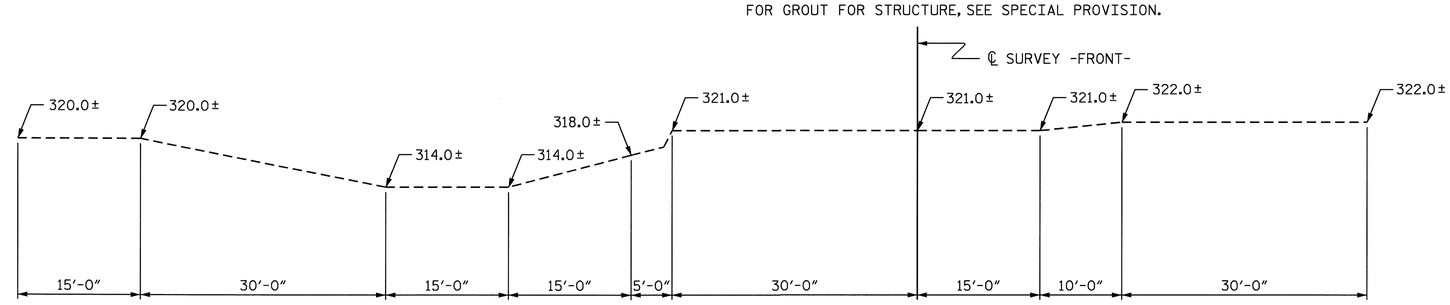

PROFILE ALONG ℄ CULVERT

HYDRAULIC DATA

DESIGN DISCHARGE	= 1600 C.F.S.
FREQUENCY OF DESIGN FLOOD	= 25 YRS.
DESIGN HIGH WATER ELEVATION	= 331.0
DRAINAGE AREA	= 1.87 SQ. MI.
BASIC DISCHARGE (Q100)	= 1900 C.F.S.
BASIC HIGH WATER ELEVATION	= 332.1

OVERTOPPING FLOOD DATA

OVERTOPPING DISCHARGE	= 2700 C.F.S.
FREQUENCY OF OVERTOPPING FLOOD	= 200 YRS. ±
OVERTOPPING FLOOD ELEVATION	= 335.8

GRADE DATA

GRADE POINT ELEVATION @ STA. 13+63.00 -FRONT-	= 337.28
BED ELEVATION @ STA. 13+63.00 -FRONT-	= 319.58
ROADWAY SLOPE	= 3:1

TOTAL STRUCTURE QUANTITIES

CLASS A CONCRETE			
BARREL @ 2.209 CY/FT		194.4	C.Y.
SILL		0.8	C.Y.
WING ETC.		53.8	C.Y.
TOTAL		249.0	C.Y.
REINFORCING STEEL			
BARREL AND SILL		37400	LBS.
WING ETC.		3769	LBS.
TOTAL		41169	LBS.
FOUNDATION CONDITIONING MAT'L		137	TONS
CULVERT EXCAVATION			LUMP SUM

NORTH CAROLINA PROFESSIONAL SEAL 11268 ENGINEER BETSY S. COX
8-19-09

NORTH CAROLINA PROFESSIONAL SEAL 029441 ENGINEER KRISTY W. ALFORD
7/31/09

PROJECT NO. R-2417C

LEE COUNTY

STATION: 13+63.00-FRONT-

SHEET 1 OF 5 CULVERT No. 142

STATE OF NORTH CAROLINA
DEPARTMENT OF TRANSPORTATION
RALEIGH

DOUBLE 10 FT. X 10 FT. CONCRETE BOX CULVERT 100° SKEW

REVISIONS						SHEET NO.
NO.	BY:	DATE:	NO.	BY:	DATE:	C-24
1			3			TOTAL SHEETS
2			4			40

DRAWN BY : W.G. PRICE, II DATE : 3/2009
CHECKED BY : D.G. ELY DATE : 4/2009

30-JUL-2009 12:56
k:\structures\culv_8\culv_draft\r-2417c_sd_cu8.dgn
kalford

STR. #8

REINFORCING STEEL BAR SCHEDULE											
BAR	NO.	SIZE	TYPE	LENGTH	WEIGHT	BAR	NO.	SIZE	TYPE	LENGTH	WEIGHT
A1	302	#5	1	4'-7"	1444	A353	2	#7	STR	2'-4"	10
A2	302	#6	1	5'-9"	2608						
						A400	146	#7	STR	9'-6"	2835
A100	146	#5	STR	9'-6"	1447	A401	2	#7	STR	6'-11"	28
A101	2	#5	STR	5'-4"	11	A402	2	#7	STR	2'-7"	11
A102	2	#5	STR	6'-11"	14	A403	2	#7	STR	5'-5"	22
A103	2	#5	STR	2'-7"	5	A450	144	#7	STR	15'-3"	4489
A150	144	#5	STR	13'-11"	2090	A451	4	#7	STR	11'-0"	90
A151	4	#5	STR	10'-5"	43	A452	4	#7	STR	6'-8"	55
A152	4	#5	STR	6'-0"	25	A453	2	#7	STR	2'-4"	10
A200	146	#5	STR	9'-6"	1447	B1	176	#4	STR	11'-3"	1323
A201	2	#5	STR	5'-4"	11	B2	302	#4	STR	9'-4"	1883
A202	2	#5	STR	6'-11"	14	B3	176	#4	STR	11'-3"	1323
A203	2	#5	STR	2'-7"	5						
A250	144	#5	STR	13'-11"	2090	C1	344	#4	STR	23'-6"	5400
A251	4	#5	STR	10'-5"	43						
A252	4	#5	STR	6'-0"	25	D1	3	#6	STR	2'-6"	11
A300	146	#7	STR	9'-6"	2835	G1	8	#5	STR	15'-8"	131
A301	2	#7	STR	6'-11"	28	G2	8	#5	STR	9'-9"	81
A302	2	#7	STR	2'-7"	11						
A303	2	#7	STR	5'-5"	22	S3	12	#8	STR	16'-8"	534
A350	144	#7	STR	15'-3"	4489	S4	12	#8	STR	9'-9"	312
A351	4	#7	STR	11'-0"	90						
A352	4	#7	STR	6'-8"	55	REINFORCING STEEL					37400 LBS.

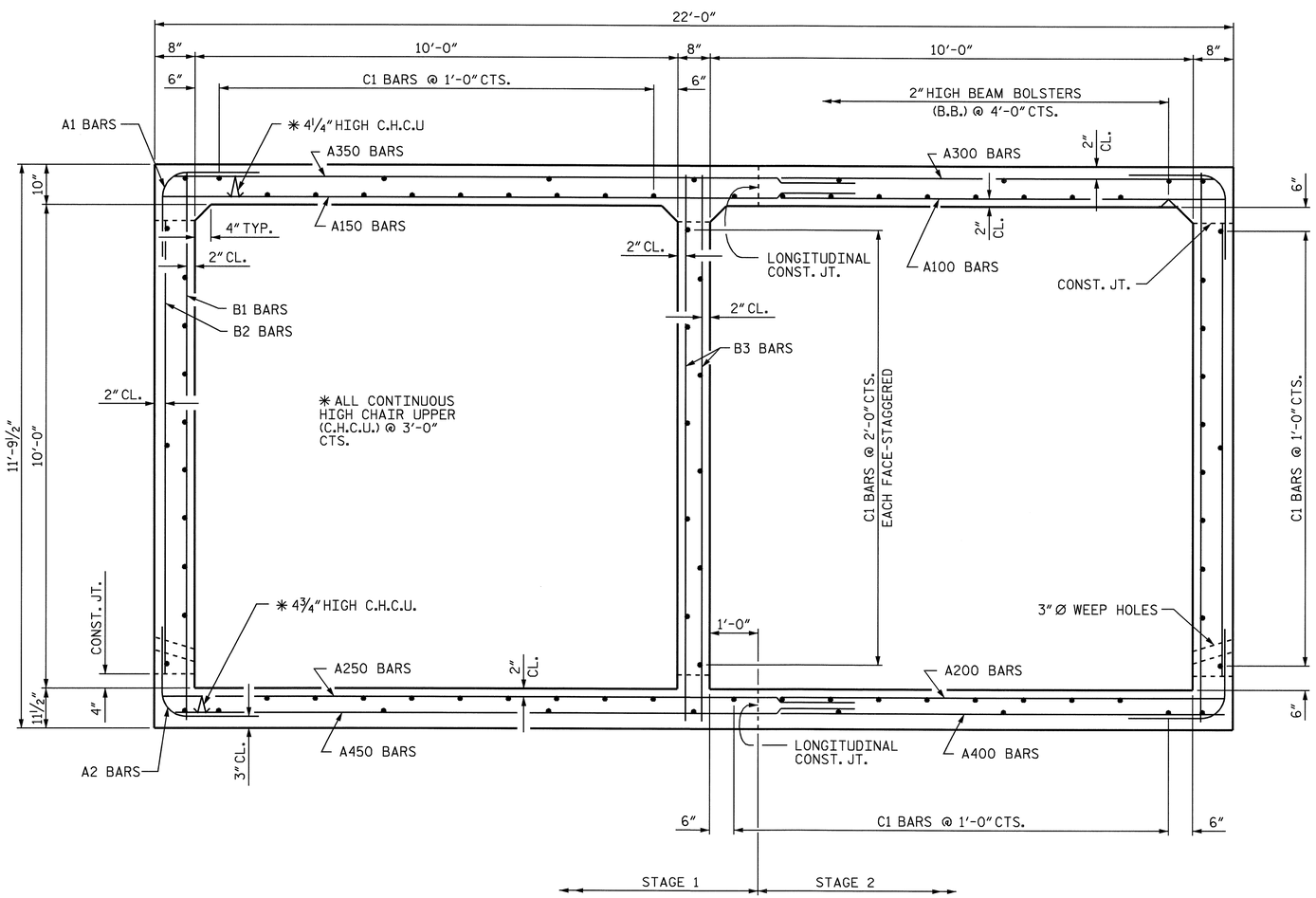

RIGHT ANGLE SECTION OF BARREL

THERE ARE 86 "C" BARS IN SECTION OF BARREL.
LOOKING DOWNSTREAM

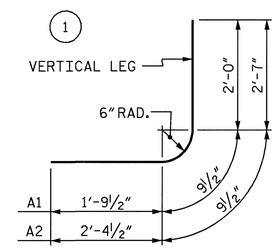

BAR TYPE

DIMENSIONS ARE OUT TO OUT

SPLICE LENGTH CHART		
BAR	SIZE	LENGTH
A150	#5	1'-9"
A250	#5	1'-9"
A350	#7	3'-1"
A450	#7	3'-1"
B1	#4	1'-9"
B3	#4	1'-9"
C1	#4	1'-11"
G1	#5	3'-0
S3	#8	4'-0"

PROJECT NO. R-2417C
LEE COUNTY
STATION: 13+63.00-FRONT-

SHEET 2 OF 5

STATE OF NORTH CAROLINA
DEPARTMENT OF TRANSPORTATION
RALEIGH

DOUBLE 10 FT. X 10 FT. CONCRETE BOX CULVERT 100° SKEW

NORTH CAROLINA PROFESSIONAL SEAL 029441 ENGINEER KRISTY W. ALFORD
7/31/09

REVISIONS						SHEET NO.
NO.	BY:	DATE:	NO.	BY:	DATE:	C-25
1			3			TOTAL SHEETS
2			4			40

STR. #8

DRAWN BY : W.G. PRICE, II DATE : 1/2009
CHECKED BY : D.G. ELY DATE : 4/2009

30-JUL-2009 12:56
k:\structures\culv_8\culv_draft\r-2417c_sd_cu8.dgn
kalford

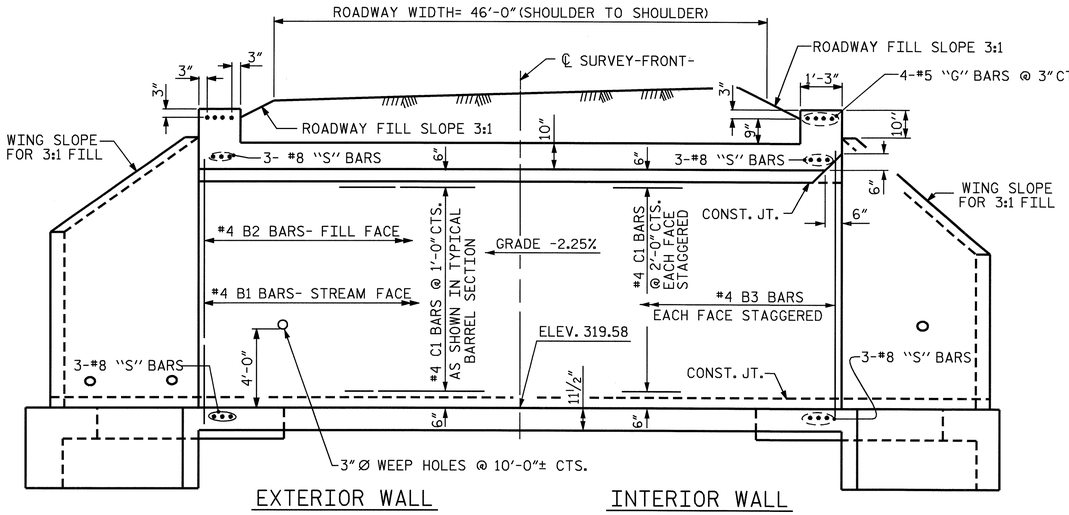

CULVERT SECTION NORMAL TO ROADWAY

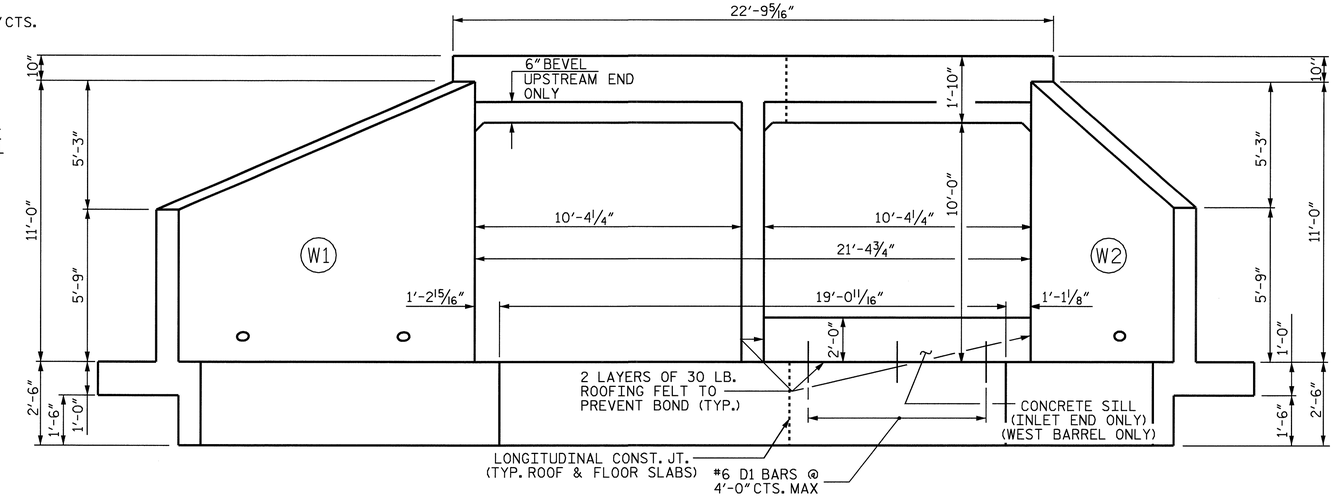

END ELEVATION NORMAL TO SKEW

(OUTLET END SIMILAR)

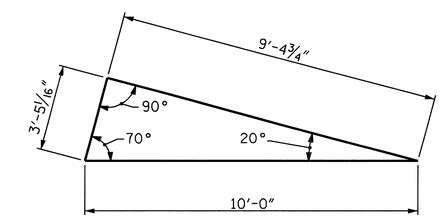

SKEW TRIANGLE

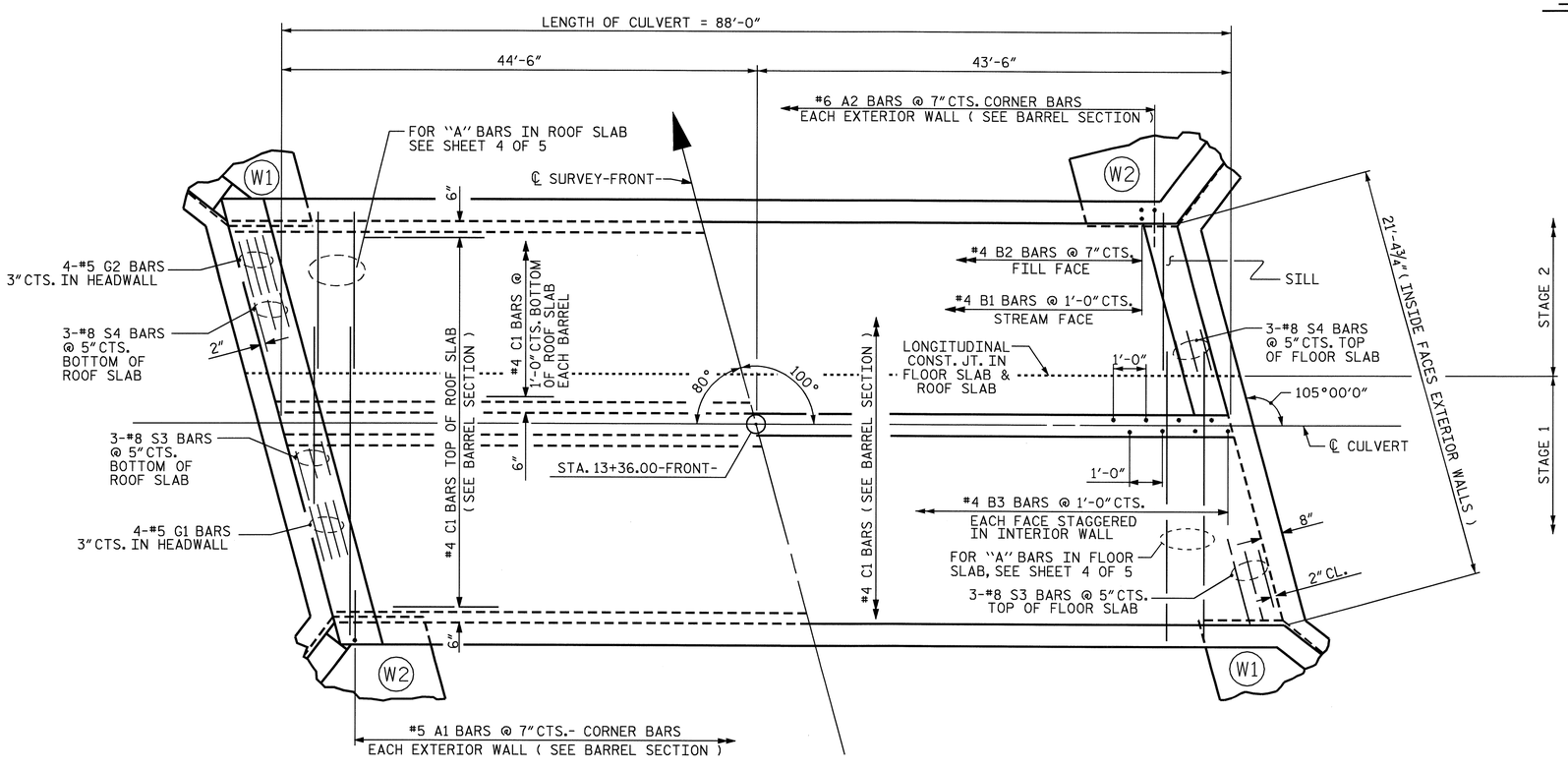

PART PLAN - ROOF SLAB

PART PLAN - FLOOR SLAB

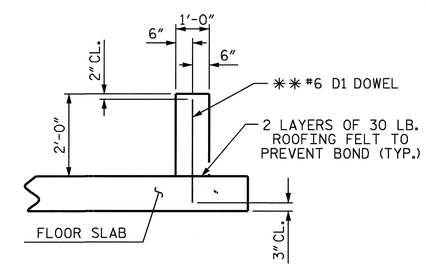

SECTION THROUGH SILL

** DOWELS MAY BE PUSHED INTO GREEN CONCRETE AFTER SLAB HAS BEEN FLOAT FINISHED

PROJECT NO. R-2417C

LEE COUNTY

STATION: 13+63.00-FRONT-

SHEET 3 OF 5

NORTH CAROLINA PROFESSIONAL SEAL 029441 ENGINEER KRISTY W. ALFORD
8/24/09

STATE OF NORTH CAROLINA
DEPARTMENT OF TRANSPORTATION
RALEIGH

DOUBLE 10 FT. X 10 FT. CONCRETE BOX CULVERT 100° SKEW

REVISIONS						SHEET NO.
NO.	BY:	DATE:	NO.	BY:	DATE:	C-26
1			3			TOTAL SHEETS
2			4			40

STD. NO. CB222 STR. #8

ASSEMBLED BY : W.G. PRICE, II	DATE : 11/2008	SPECIAL	
CHECKED BY : D.G. ELY	DATE : 4/2009		
DRAWN BY : W. BRYAN STANLEY II	DATE : NOV.1971	STANDARD	
CHECKED BY : JOEL A. JOHNSON	DATE : DEC.1971		

REVISED 11-19-99 BY M.M. CHECKED BY R.W.W.
REVISED 8-28-92 BY E.L.R. CHECKED BY G.R.P.
REDRAWN 11-90 BY A.R.B. CHECKED BY C.R.K.

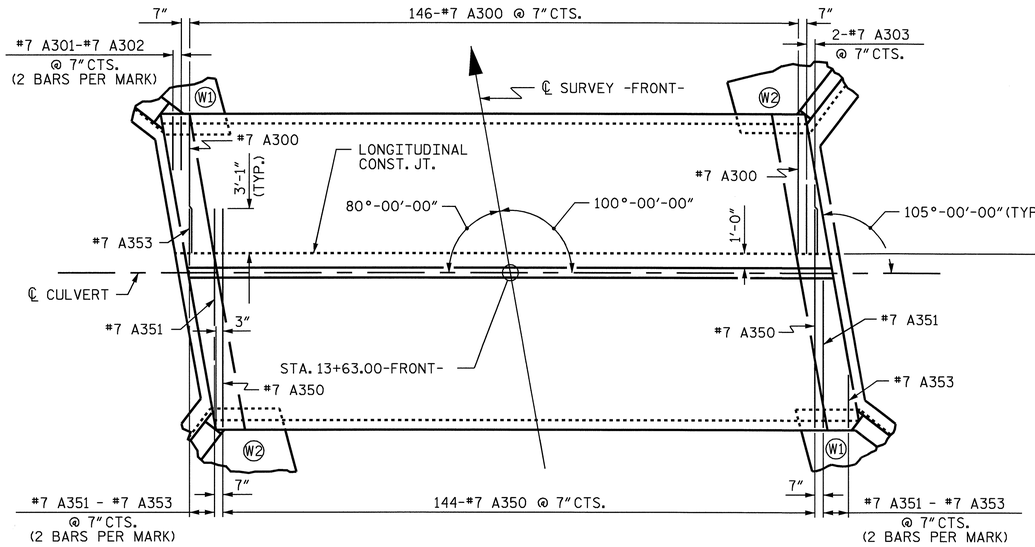

TOP OF ROOF SLAB
"A" BAR LAYOUT

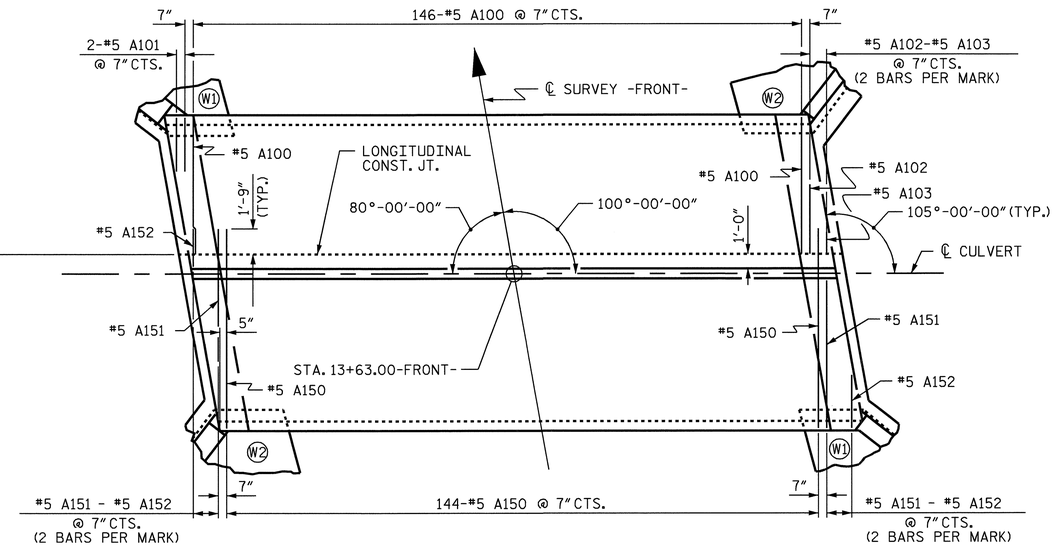

BOTTOM OF ROOF SLAB
"A" BAR LAYOUT

STAGE 2

STAGE 1

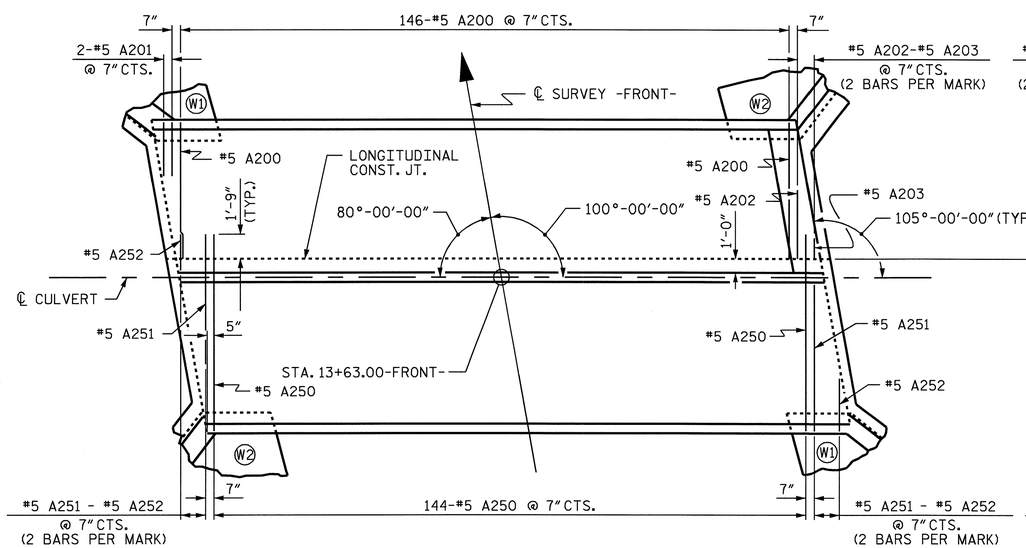

TOP OF FLOOR SLAB
"A" BAR LAYOUT

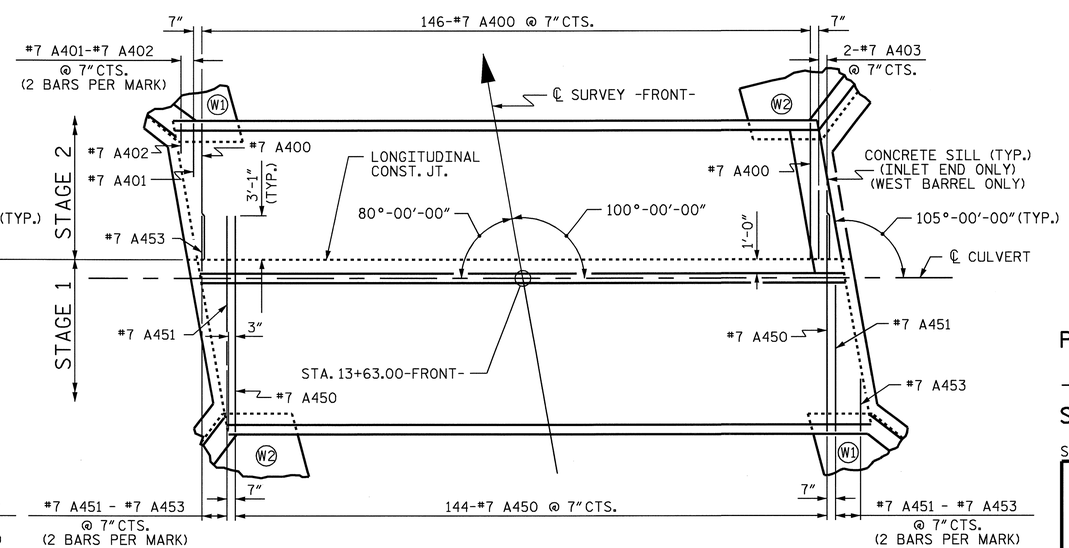

BOTTOM OF FLOOR SLAB
"A" BAR LAYOUT

STAGE 2

STAGE 1

PROJECT NO. R-2417C

LEE COUNTY

STATION: 13+63.00-FRONT-

SHEET 4 OF 5

STATE OF NORTH CAROLINA
DEPARTMENT OF TRANSPORTATION
RALEIGH

DOUBLE 10 FT. X 10 FT. CONCRETE BOX CULVERT 100° SKEW

NORTH CAROLINA PROFESSIONAL SEAL 029441 ENGINEER KRISTY W. ALFORD

4/31/09

REVISIONS						SHEET NO.
NO.	BY:	DATE:	NO.	BY:	DATE:	C-27
1			3			TOTAL SHEETS
2			4			40

DRAWN BY : W.G. PRICE, II DATE : 12/2008
CHECKED BY : D.G. ELY DATE : 4/2009

30-JUL-2009 12:57
k:\structures\culv_8\culv_draft\r-2417c_sd_cu8.dgn
kalford

STR. #8

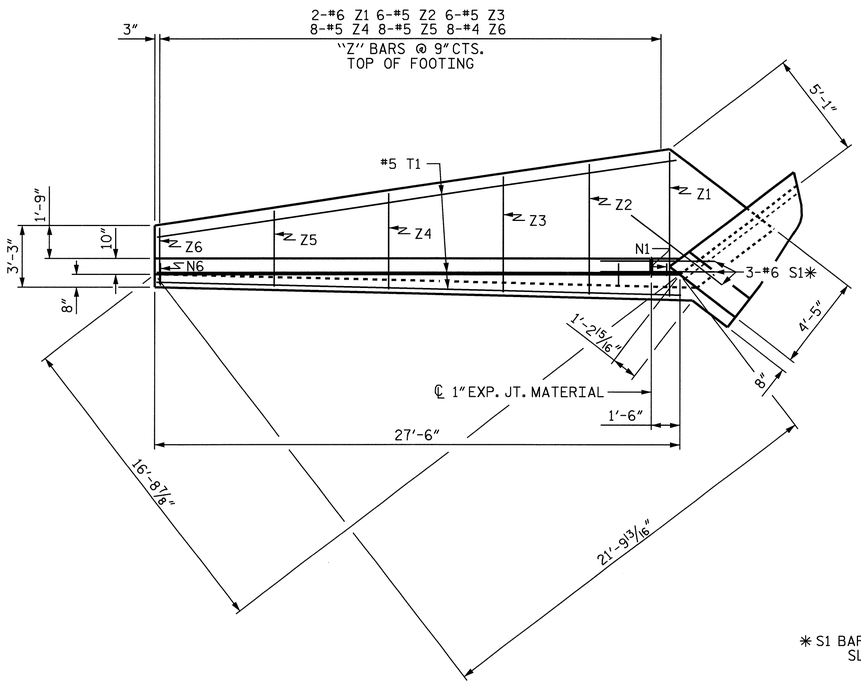

PLAN W1

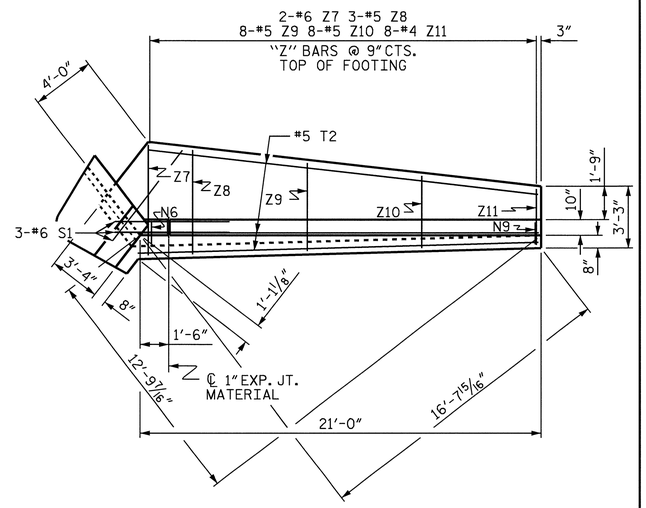

PLAN W2

✱ S1 BARS @ BOTTOM OF FLOOR SLAB AND FOOTING

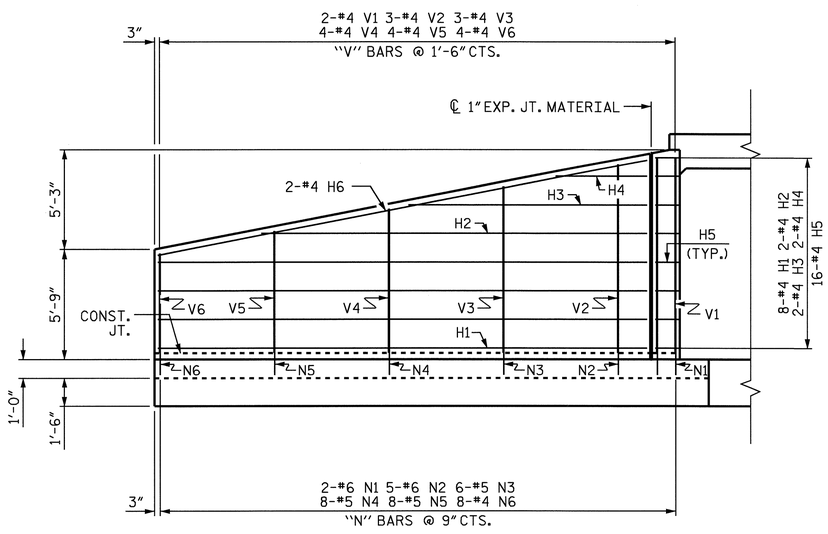

ELEVATION W1

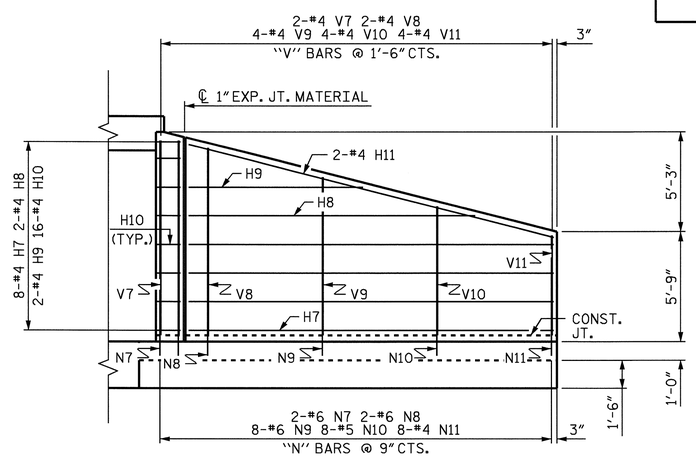

ELEVATION W2

BAR TYPES

ALL BAR DIMENSIONS ARE OUT TO OUT

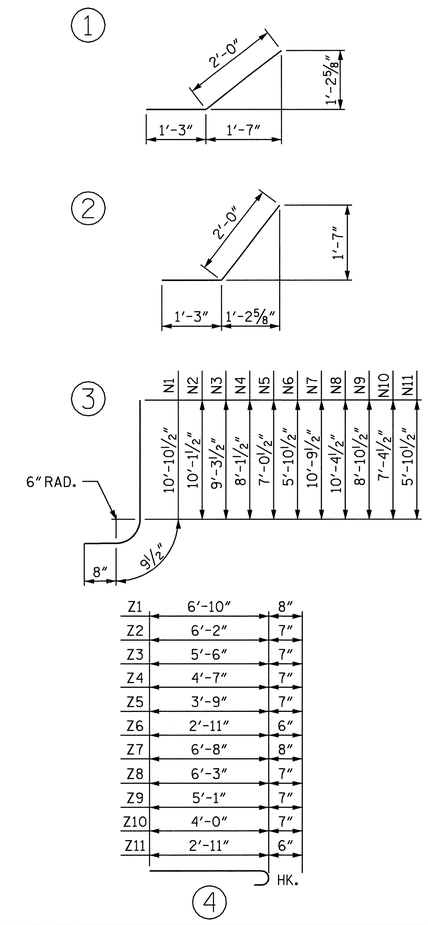

BILL OF MATERIAL

BAR	NO.	SIZE	TYPE	LENGTH	WEIGHT
H1	16	#4	STR	25'-7"	273
H2	4	#4	STR	21'-7"	58
H3	4	#4	STR	13'-9"	37
H4	4	#4	STR	5'-11"	16
H5	32	#4	1	3'-3"	69
H6	4	#4	STR	26'-1"	70
H7	16	#4	STR	19'-1"	204
H8	4	#4	STR	16'-1"	43
H9	4	#4	STR	10'-1"	27
H10	32	#4	2	3'-3"	69
H11	4	#4	STR	19'-8"	53
N1	4	#6	3	12'-4"	74
N2	10	#6	3	11'-7"	174
N3	12	#5	3	10'-9"	135
N4	16	#5	3	9'-7"	160
N5	16	#5	3	8'-6"	142
N6	16	#4	3	7'-4"	78
N7	4	#6	3	12'-3"	74
N8	4	#6	3	11'-10"	71
N9	16	#6	3	10'-4"	248
N10	16	#5	3	8'-10"	147
N11	16	#4	3	7'-4"	78
S1	12	#6	STR	6'-0"	108
T1	6	#5	STR	27'-6"	172
T2	6	#5	STR	21'-0"	131
V1	4	#4	STR	10'-3"	27
V2	6	#4	STR	9'-6"	38
V3	6	#4	STR	8'-8"	35
V4	8	#4	STR	7'-6"	40
V5	8	#4	STR	6'-4"	34
V6	8	#4	STR	5'-3"	28
V7	4	#4	STR	10'-2"	27
V8	4	#4	STR	9'-9"	26
V9	8	#4	STR	8'-3"	44
V10	8	#4	STR	6'-9"	36
V11	8	#4	STR	5'-3"	28
Z1	4	#6	4	7'-6"	45
Z2	12	#5	4	6'-9"	84
Z3	12	#5	4	6'-1"	76
Z4	16	#5	4	5'-2"	86
Z5	16	#5	4	4'-4"	72
Z6	16	#4	4	3'-5"	37
Z7	4	#6	4	7'-4"	44
Z8	6	#5	4	6'-10"	43
Z9	16	#5	4	5'-8"	95
Z10	16	#5	4	4'-7"	76
Z11	16	#4	4	3'-5"	37

REINFORCING STEEL FOR 4 WINGS 3769 LBS

CLASS A CONCRETE
- 4 WINGS 49.3 C.Y.
- 2 HEADWALLS 2.1 C.Y.
- 2 END CURTAIN WALLS 2.4 C.Y.
- TOTAL 53.8 C.Y.

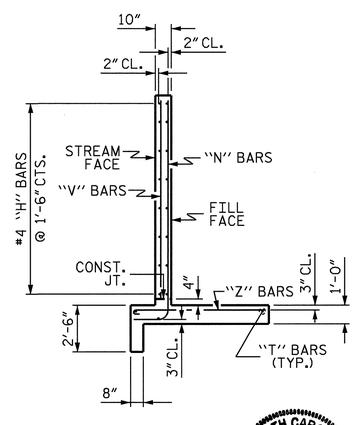

PROJECT NO. R-2417C

LEE COUNTY

STATION: 13+63.00-FRONT-

SHEET 5 OF 5

STATE OF NORTH CAROLINA
DEPARTMENT OF TRANSPORTATION
RALEIGH

WINGS FOR CONCRETE BOX CULVERT

H = 10'-0" SLOPE = 3:1

105° SKEW

NORTH CAROLINA PROFESSIONAL SEAL 029441 ENGINEER KRISTY W. ALFORD

7/31/09

REVISIONS						SHEET NO.
NO.	BY:	DATE:	NO.	BY:	DATE:	C-28
1			3			TOTAL SHEETS
2			4			40

DRAWN BY : W.G. PRICE, II DATE : 3/2009
CHECKED BY : D.G. ELY DATE : 4/2009

30-JUL-2009 12:57
k:\structures\culv_8\culv_draft\r-2417c_sd_cu8.dgn
Kalford

STR. #8

B.M. #4 : RR SPIKE IN BASE OF 24" GUM TREE, 533.83 LT. OF STA. 659+14.05 -LREV-, ELEV. 396.42'

F.A. PROJECT No. STM-0421(50)

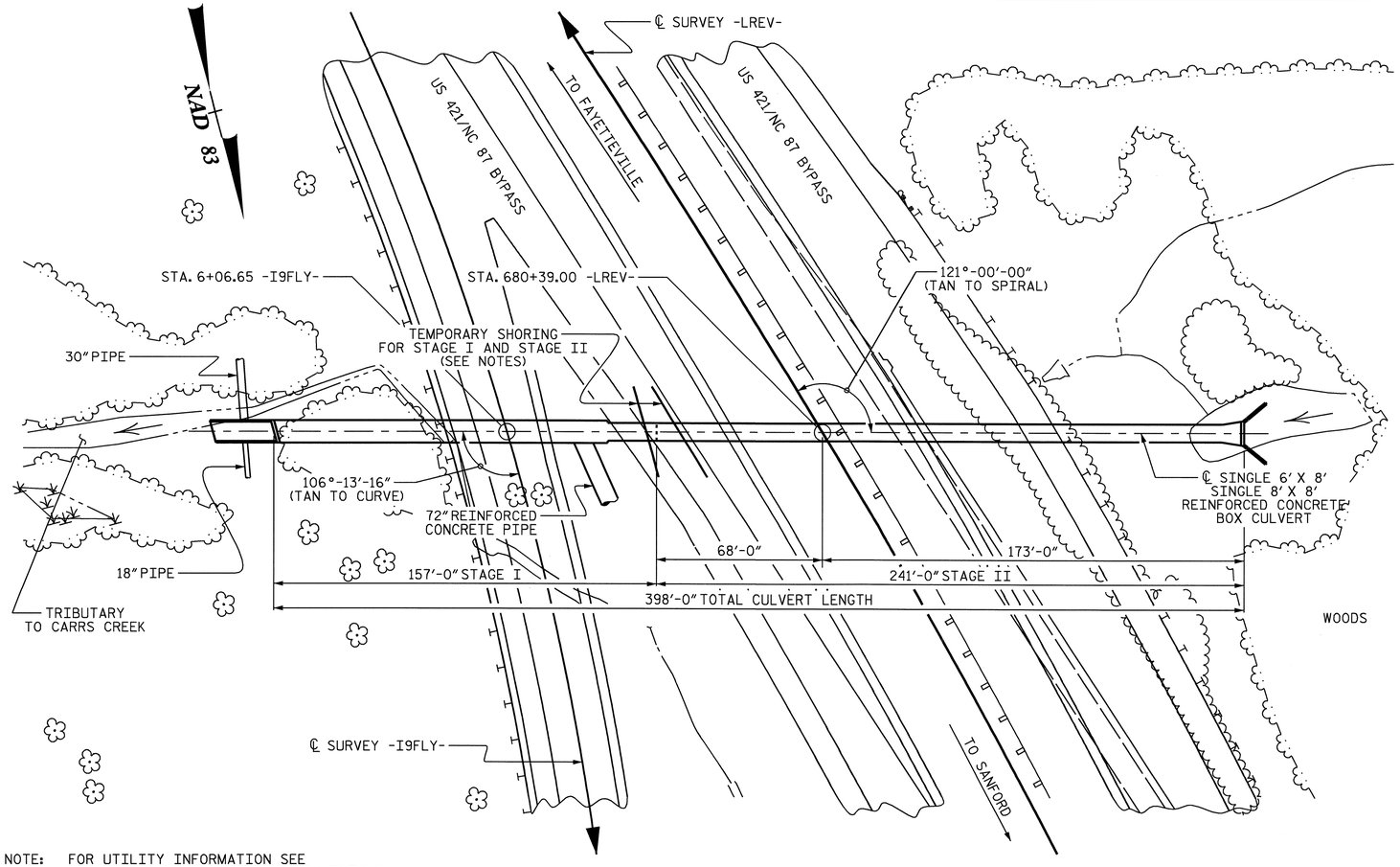

NOTE: FOR UTILITY INFORMATION SEE
UTILITY PLANS AND SPECIAL PROVISIONS.

LOCATION SKETCH

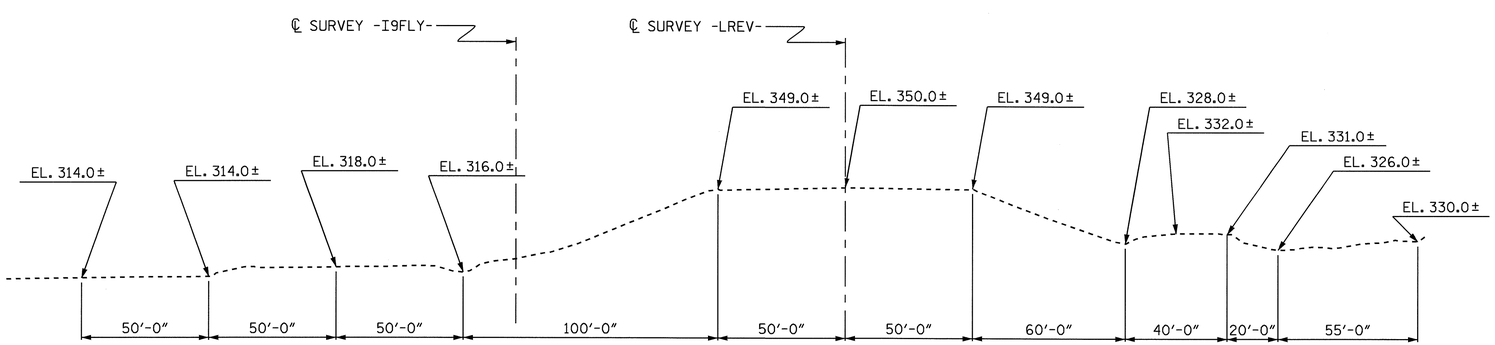

PROFILE ALONG ℄ CULVERT

STAGE I QUANTITIES

CLASS A CONCRETE	
BARREL @ 0.874 C.Y./FT.	17.5 C.Y.
BARREL @ 1.004 C.Y./FT.	137.6 C.Y.
OUTLET WINGS	16.0 C.Y.
TOTAL	171.1 C.Y.
REINFORCING STEEL	
BARREL	26,847 LBS.
OUTLET WINGS ETC.	1,188 LBS
TOTAL	28,035 LBS
CULVERT EXCAVATION	LUMP SUM
FOUNDATION CONDITIONING MAT'L	117 TONS

STAGE II QUANTITIES

CLASS A CONCRETE	
BARREL @ 0.874 C.Y./FT.	202.9 C.Y.
TAPERED INLET	8.8 C.Y.
INLET WINGS	13.0 C.Y.
TOTAL	224.7 C.Y.
REINFORCING STEEL	
BARREL	29,133 LBS.
INLET WINGS ETC.	754 LBS
TOTAL	29,887 LBS
CULVERT EXCAVATION	LUMP SUM
FOUNDATION CONDITIONING MAT'L	126 TONS

TOTAL STRUCTURE QUANTITIES

CLASS A CONCRETE	
STAGE I	171.1 C.Y.
STAGE II	224.7 C.Y.
TOTAL	395.8 C.Y.
REINFORCING STEEL	
STAGE I	28,035 LBS.
STAGE II	29,887 LBS
TOTAL	57,922 LBS
FOUNDATION CONDITIONING MAT'L	
STAGE I	117 TONS
STAGE II	126 TONS
TOTAL	243 TONS
CULVERT EXCAVATION	LUMP SUM

HYDROGRAPHIC DATA

DESIGN DISCHARGE	470 CFS.
FREQUENCY OF DESIGN FLOOD	50 YRS.
DESIGN HIGH WATER ELEVATION	332.6
DRAINAGE AREA	0.330 SQ. MI.
BASIC DISCHARGE (Q100)	550 CFS
BASIC HIGH WATER ELEVATION	333.9

OVERTOPPING FLOOD DATA

OVERTOPPING DISCHARGE	750+ CFS
FREQUENCY OF OVERTOPPING FLOOD	200+ YRS.
OVERTOPPING FLOOR ELEVATION	351.1

GRADE DATA

GRADE POINT ELEV. @ STA. 680+39.00 -LREV- = 350.177
BED ELEV. @ 680+39.00 -LREV- = 319.920
ROADWAY SLOPE = 3:1

NORTH CAROLINA PROFESSIONAL SEAL 11268 ENGINEER BETSY S. COX
8/13/09

NORTH CAROLINA PROFESSIONAL SEAL 029441 ENGINEER KRISTY W. ALFORD
8/13/09

PROJECT NO. R-2417C
LEE COUNTY
STATION: 680+39.00-LREV-

SHEET 1 OF 12

STATE OF NORTH CAROLINA
DEPARTMENT OF TRANSPORTATION
RALEIGH

SINGLE 6 FT. X 8 FT. SINGLE 8 FT. X 8 FT. CONCRETE BOX CULVERT

REVISIONS						SHEET NO.
NO.	BY:	DATE:	NO.	BY:	DATE:	C-29
1			3			TOTAL SHEETS
2			4			40

DRAWN BY : T. BANKOVICH DATE : 3-2009
CHECKED BY : K.W. ALFORD DATE : 3-2009

03-AUG-2009 12:13
k:\structures\culv_9\culv_draft\r-2417c_str9_cu.dgn
kalford

STR. #9

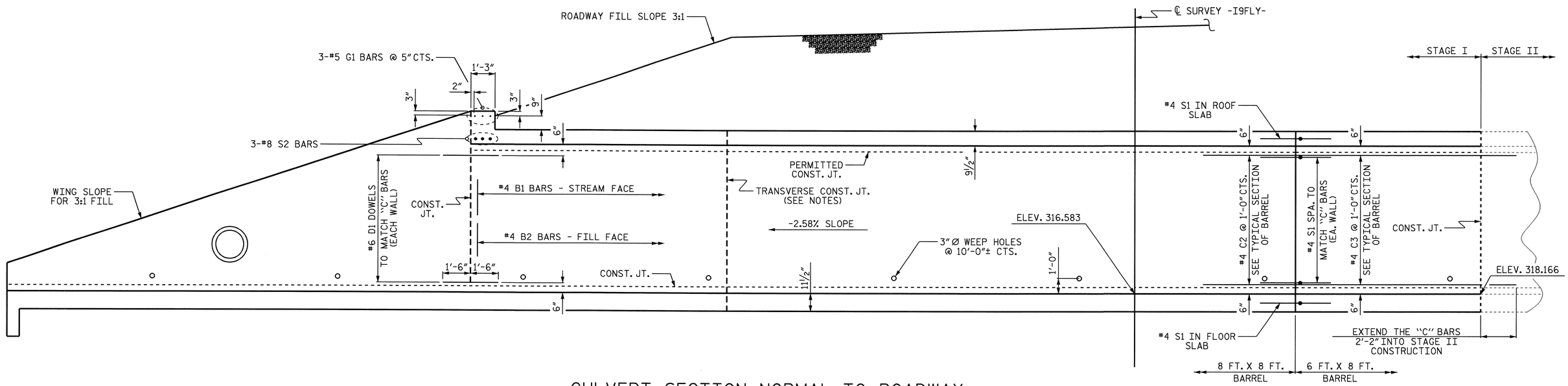

CULVERT SECTION NORMAL TO ROADWAY

LOOKING DOWNSTATION ON -I9FLY-
72"Ø RCP. NOT SHOWN FOR CLARITY

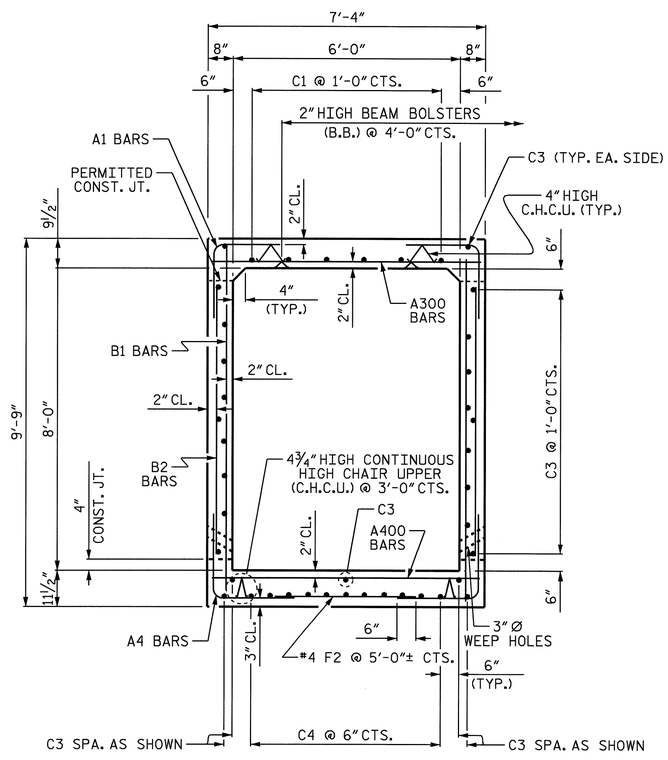

RIGHT ANGLE SECTION OF 6 FT. X 8 FT. BARREL

THERE ARE 42 "C" BARS IN SECTION OF BARREL

NOTE:
C1 & C4 BARS ARE 7 BAR RUNS

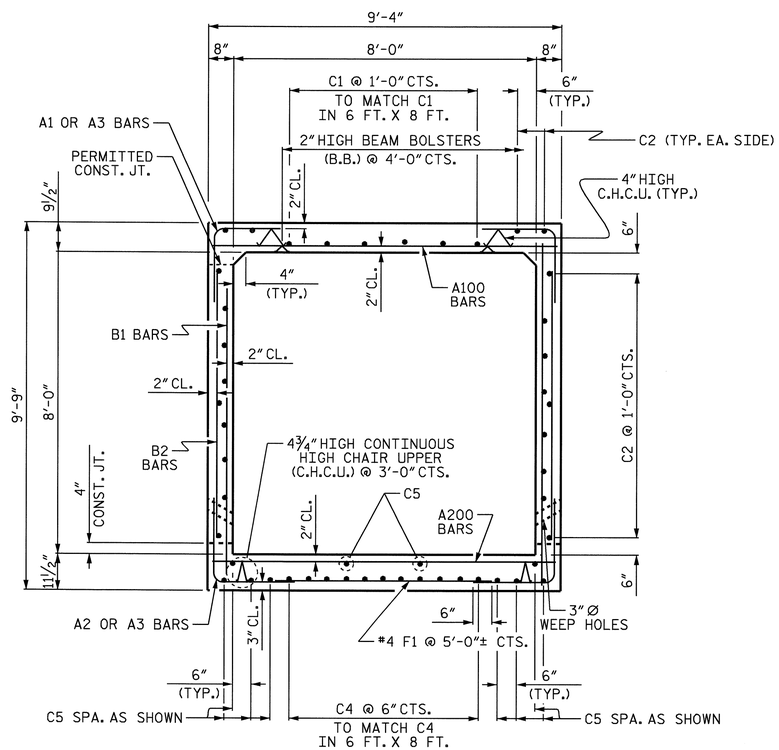

RIGHT ANGLE SECTION OF 8 FT. X 8 FT. BARREL

THERE ARE 49 "C" BARS IN SECTION OF BARREL

NOTES:
C1 & C4 BARS ARE 7 BAR RUNS

C2 & C5 BARS ARE 6 BAR RUNS

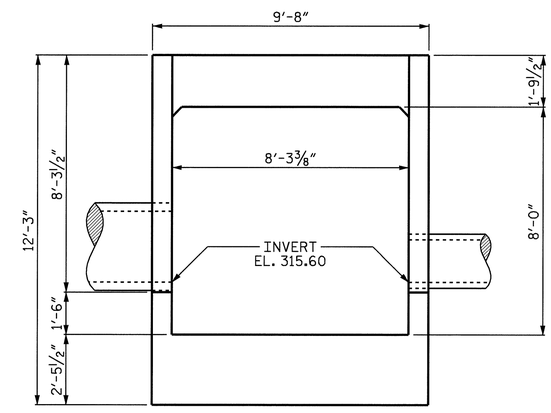

OUTLET END ELEVATION

NORMAL TO SKEW

PROJECT NO. R-2417C
LEE COUNTY
STATION: 680+39.00-LREV-

SHEET 2 OF 12

STATE OF NORTH CAROLINA
DEPARTMENT OF TRANSPORTATION
RALEIGH

SINGLE 6 FT. X 8 FT. SINGLE 8 FT. X 8 FT. CONCRETE BOX CULVERT (STAGE I)

NORTH CAROLINA PROFESSIONAL SEAL 029441 ENGINEER KRISTY W. ALFORD
7/31/09

REVISIONS								SHEET NO.
NO.	BY:	DATE:	NO.	BY:	DATE:			C-30
1			3					TOTAL SHEETS
2			4					40

DRAWN BY : T. BANKOVICH DATE : 2-2009
CHECKED BY : K.W. ALFORD DATE : 3-2009

30-JUL-2009 12:57
k:\structures\culv_9\culv_draft\r-2717c_str9_cu.dgn
kalford

STR. #9

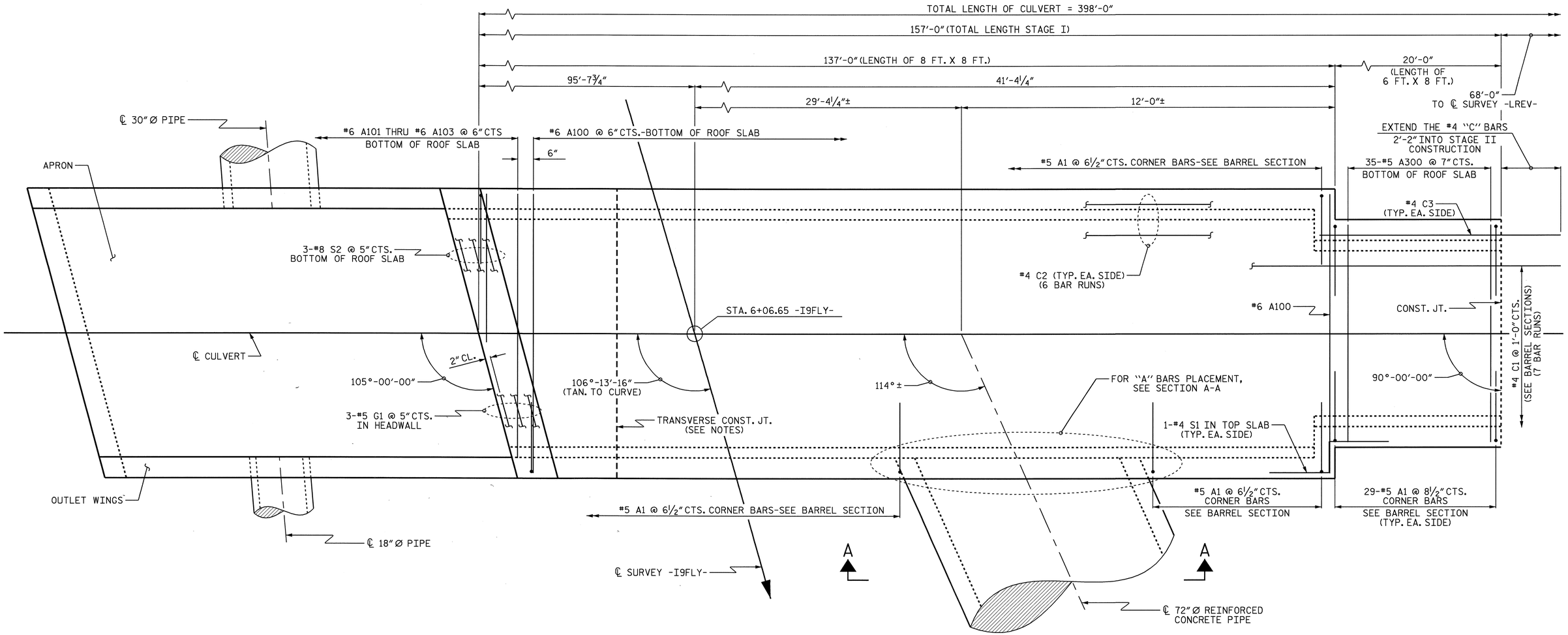

PLAN OF ROOF SLAB - STAGE I

FOR SECTION A-A, SEE SHEET 5 OF 12.

PROJECT NO. R-2417C

LEE COUNTY

STATION: 680+39.00-LREV-

SHEET 3 OF 12

STATE OF NORTH CAROLINA
DEPARTMENT OF TRANSPORTATION
RALEIGH

SINGLE 6 FT. X 8 FT. SINGLE 8 FT. X 8 FT. CONCRETE BOX CULVERT (STAGE I)

NORTH CAROLINA PROFESSIONAL SEAL 029441 ENGINEER KRISTY W. ALFORD

7/31/09

REVISIONS						SHEET NO.
NO.	BY:	DATE:	NO.	BY:	DATE:	C-31
1			3			TOTAL SHEETS
2			4			40

DRAWN BY : T. BANKOVICH DATE : 2-2009
CHECKED BY : K.W. ALFORD DATE : 3-2009

30-JUL-2009 12:58
k:\structures\culv_9\culv_draft\r-2717c_str9_cu.dgn
kalford

STR. #9

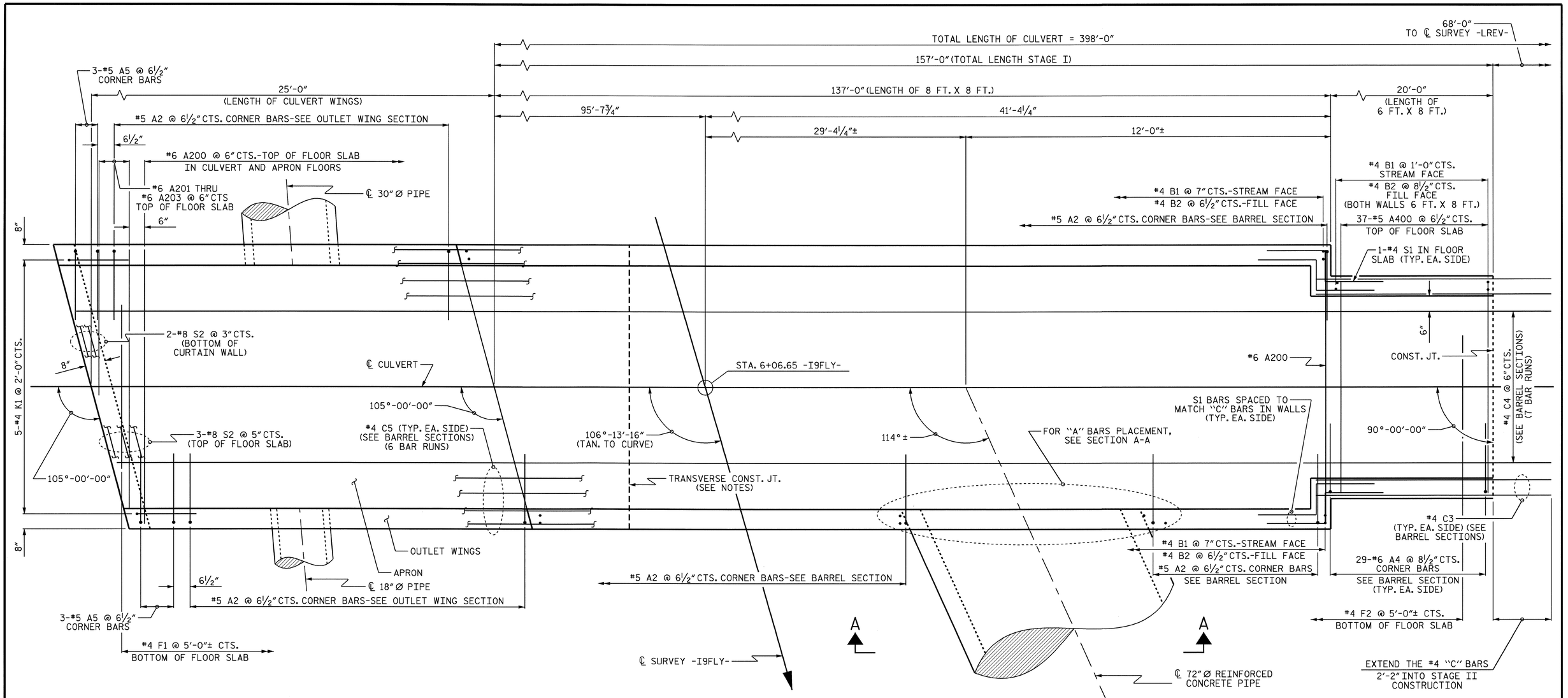

PLAN OF FLOOR SLAB - STAGE I

FOR SECTION A-A, SEE SHEET 5 OF 12.

NOTE:

#4 "C" BARS IN WALL MAY BE FIELD BENT AND CUT AS DIRECTED BY THE ENGINEER TO CLEAR 72" Ø REINFORCED CONCRETE PIPE

PROJECT NO. R-2417C

LEE COUNTY

STATION: 680+39.00-LREV-

SHEET 4 OF 12

STATE OF NORTH CAROLINA
DEPARTMENT OF TRANSPORTATION
RALEIGH

SINGLE 6 FT. X 8 FT.
SINGLE 8 FT. X 8 FT.
CONCRETE BOX CULVERT
(STAGE I)

NORTH CAROLINA PROFESSIONAL SEAL 029441 ENGINEER KRISTY W. ALFORD
7/3/09

REVISIONS						SHEET NO.
NO.	BY:	DATE:	NO.	BY:	DATE:	C-32
1			3			TOTAL SHEETS
2			4			40

DRAWN BY : T. BANKOVICH DATE : 2-2009
CHECKED BY : K.W. ALFORD DATE : 3-2009

30-JUL-2009 12:58
k:\structures\culv_9\culv_draft\r-2717c_str9_cu.dgn
kalford

STR. #9

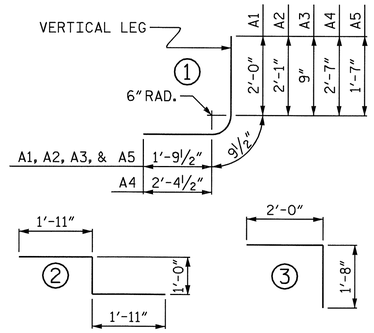

BAR TYPES

ALL BAR DIMENSIONS ARE OUT TO OUT

SPLICE LENGTHS CHART		
BAR	SIZE	SPLICE LENGTH
B1	#4	1'-9"
"C"	#4	1'-11"

REINFORCING STEEL BAR SCHEDULE FOR BARREL (STAGE I)					
BAR	NO.	SIZE	TYPE	LENGTH	WEIGHT
A1	556	#5	1	4'-7"	2658
A2	584	#5	1	4'-8"	2843
A3	16	#5	1	3'-4"	56
A4	58	#6	1	5'-9"	501
A5	6	#5	1	4'-2"	26
A100	273	#6	STR	8'-11"	3656
A101	1	#6	STR	8'-6"	13
A102	1	#6	STR	6'-7"	10
A103	1	#6	STR	4'-9"	7
A200	323	#6	STR	8'-11"	4326
A201	1	#6	STR	8'-6"	13
A202	1	#6	STR	6'-7"	10
A203	1	#6	STR	4'-9"	7
A300	35	#5	STR	6'-11"	252
A400	37	#5	STR	6'-11"	267
B1	510	#4	STR	9'-3"	3151
B2	564	#4	STR	7'-4"	2763
C1	42	#4	STR	24'-5"	685
C2	132	#4	STR	24'-7"	2168
C3	25	#4	STR	22'-0"	367
C4	77	#4	STR	28'-0"	1440
C5	48	#4	STR	28'-9"	922
D1	18	#6	STR	3'-0"	81
F1	33	#4	STR	6'-5"	141
F2	5	#4	STR	3'-3"	11
G1	3	#5	STR	9'-4"	29
K1	5	#4	3	3'-8"	12
S1	22	#4	2	4'-10"	71
S2	8	#8	STR	9'-4"	199
T3	16	#6	STR	6'-9"	162
TOTAL REINFORCING STEEL (LBS.)					26,847

STAGE I CULVERT NOTES:

ASSUMED LIVE LOAD----------HS20-44 OR ALTERNATE LOADING.

DESIGN FILL----------22.52'

FOR OTHER DESIGN DATA AND NOTES SEE STANDARD NOTE SHEET.

3"Ø WEEP HOLES INDICATED TO BE IN ACCORDANCE WITH THE SPECIFICATIONS.

CONCRETE IN STAGE I TO BE POURED IN THE FOLLOWING ORDER:

1. APRON OF OUTLET WINGS AND FLOOR SLAB INCLUDING 4" OF ALL VERTICAL WALLS
2. THE REMAINING PORTIONS OF THE WALLS AND OUTLET WINGS FULL HEIGHT FOLLOWED BY ROOF SLAB AND HEADWALL.

THE RESIDENT ENGINEER SHALL CHECK THE LENGTH OF CULVERT BEFORE STAKING IT OUT TO MAKE CERTAIN THAT IT WILL PROPERLY TAKE CARE OF THE FILL.

AT THE CONTRACTOR'S OPTION, HE MAY SPLICE THE VERTICAL REINFORCING STEEL IN THE INTERIOR FACE OF EXTERIOR WALL ABOVE LOWER WALL CONSTRUCTION JOINT. THE SPLICE LENGTH SHALL BE AS PROVIDED IN THE SPLICE LENGTH CHART SHOWN ON THE PLANS. EXTRA WEIGHT OF STEEL DUE TO THE SPLICES SHALL BE PAID FOR BY THE CONTRACTOR.

THE CONTRACTOR SHALL PROVIDE INDEPENDENT ASSURANCE SAMPLES OF REINFORCING STEEL AS FOLLOWS: FOR PROJECTS REQUIRING UP TO 400 TONS OF REINFORCING STEEL, ONE 30 INCH SAMPLE OF EACH SIZE BAR USED, AND FOR PROJECTS REQUIRING OVER 400 TONS OF REINFORCING STEEL, TWO 30 INCH SAMPLES OF EACH SIZE BAR USED. THE BARS FROM WHICH THE SAMPLES ARE TAKEN MUST THEN BE SPLICED WITH REPLACEMENT BARS OF THE SIZE AND LENGTH OF THE SAMPLE, PLUS A MINIMUM LAP SPLICE OF THIRTY BAR DIAMETERS.

FOR CULVERT DIVERSION DETAILS AND PAY ITEM, SEE EROSION CONTROL PLANS.

FOR CONSTRUCTION SEQUENCE, SEE EROSION CONTROL PLANS.

FOR MAINTENANCE OF TRAFFIC, SEE TRAFFIC CONTROL PLANS.

FOR SUBMITTAL OF WORKING DRAWINGS, SEE SPECIAL PROVISIONS.

FOR FALSEWORK AND FORMWORK, SEE SPECIAL PROVISIONS.

NO PRECAST REINFORCED CONCRETE BOX CULVERT OPTION WILL BE ALLOWED.

FOR CRANE SAFETY, SEE SPECIAL PROVISIONS.

FOR LIMITS OF TEMPORARY SHORING FOR MAINTENANCE OF TRAFFIC, SEE TRAFFIC CONTROL PLANS. FOR PAY ITEM FOR TEMPORARY SHORING FOR MAINTENANCE OF TRAFFIC, SEE ROADWAY PLANS.

TRANSVERSE CONSTRUCTION JOINTS SHALL BE USED IN THE BARREL, SPACED TO LIMIT THE POURS TO A MAXIMUM OF 50 FEET. LOCATION OF JOINTS SHALL BE SUBJECT TO THE APPROVAL OF THE ENGINEER.

THE 72"Ø REINFORCED CONCRETE PIPE THROUGH THE SIDEWALL OF THE CULVERT SHALL BE LOCATED BY THE ENGINEER, THE REINFORCING STEEL SHALL BE FIELD BENT AND CUT AS NECESSARY TO CLEAR PIPE AS DIRECTED BY THE ENGINEER.

AT THE CONTRACTORS OPTION, THE VERTICAL CONSTRUCTION JOINT BETWEEN THE OUTLET WINGS AND THE BARREL MAY BE ELIMINATED AND THE "C" BARS IN THE BARREL MAY BE EXTENDED TO REPLACE THE "D" AND "H" BARS IN THE WINGS.

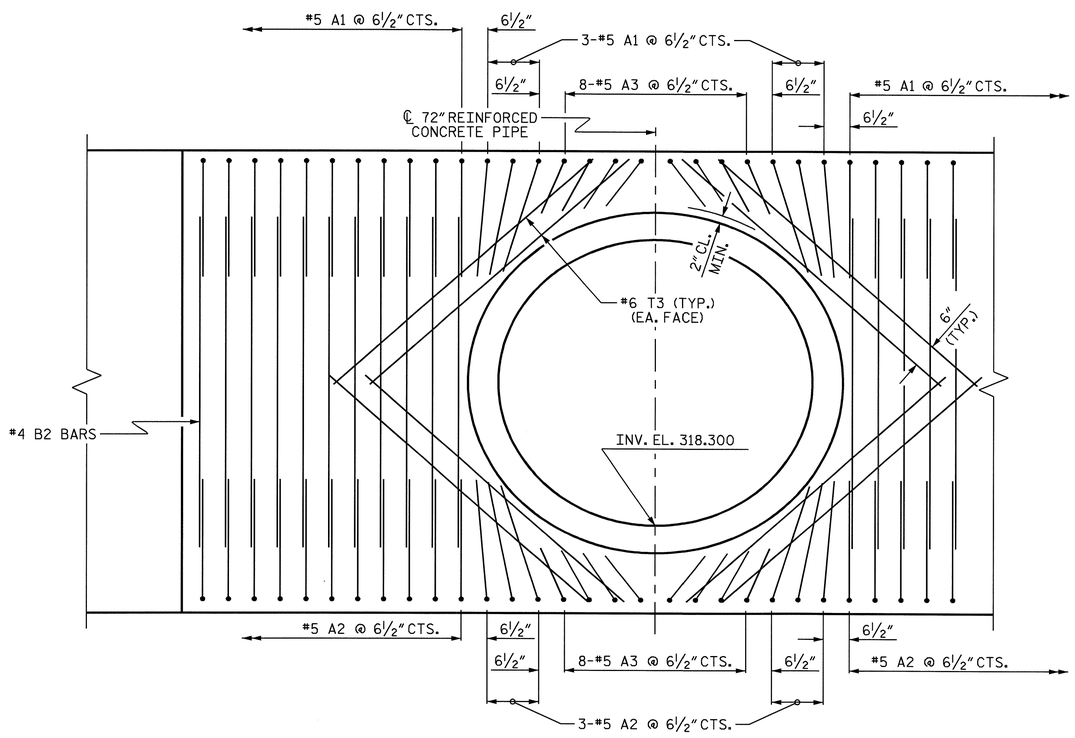

SECTION A-A

PROJECT NO. R-2417C

LEE COUNTY

STATION: 680+39.00-LREV-

SHEET 5 OF 12

STATE OF NORTH CAROLINA
DEPARTMENT OF TRANSPORTATION
RALEIGH

SINGLE 6 FT. X 8 FT. SINGLE 8 FT. X 8 FT. CONCRETE BOX CULVERT (STAGE I)

NORTH CAROLINA PROFESSIONAL SEAL 029441 ENGINEER KRISTY W. ALFORD

7/31/09

REVISIONS								SHEET NO.
NO.	BY:	DATE:	NO.	BY:	DATE:			C-33
1			3					TOTAL SHEETS
2			4					40

DRAWN BY : T. BANKOVICH DATE : 2-2009
CHECKED BY : K.W. ALFORD DATE : 3-2009

30-JUL-2009 12:58
k:\structures\culv_9\culv_draft\r-2717c_str9_cu.dgn
kalford

STR. #9

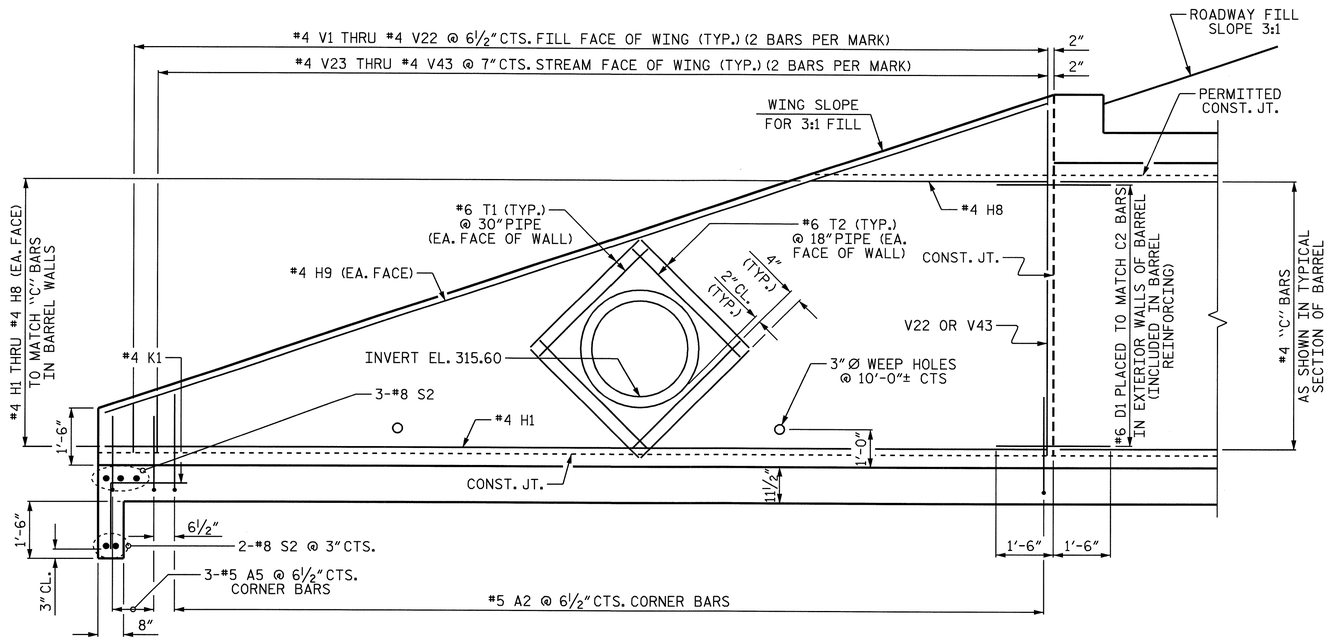

OUTLET WING SECTION NORMAL TO ROADWAY

SOUTH WING SHOWN, NORTH WING SIMILAR

BILL OF MATERIAL

OUTLET WINGS

BAR	NO.	SIZE	TYPE	LENGTH	WEIGHT	BAR	NO.	SIZE	TYPE	LENGTH	WEIGHT
H1	4	#4	STR	24'-8"	66	V16	4	#4	STR	6'-10"	18
H2	4	#4	STR	24'-3"	65	V17	4	#4	STR	7'-3"	19
H3	4	#4	STR	21'-3"	57	V18	4	#4	STR	7'-7"	20
H4	4	#4	STR	18'-3"	49	V19	4	#4	STR	7'-11"	21
H5	4	#4	STR	15'-3"	41	V20	4	#4	STR	8'-3"	22
H6	4	#4	STR	12'-2"	33	V21	4	#4	STR	8'-8"	23
H7	4	#4	STR	9'-2"	24	V22	4	#4	STR	9'-0"	24
H8	4	#4	STR	6'-2"	16	V23	4	#4	STR	1'-3"	3
H9	4	#4	STR	25'-11"	69	V24	4	#4	STR	1'-8"	4
						V25	4	#4	STR	2'-0"	5
T1	16	#6	STR	4'-2"	100	V26	4	#4	STR	2'-5"	6
T2	16	#6	STR	3'-0"	72	V27	4	#4	STR	2'-10"	8
						V28	4	#4	STR	3'-2"	8
V1	4	#4	STR	1'-6"	4	V29	4	#4	STR	3'-7"	10
V2	4	#4	STR	1'-10"	5	V30	4	#4	STR	4'-0"	11
V3	4	#4	STR	2'-2"	6	V31	4	#4	STR	4'-4"	12
V4	4	#4	STR	2'-6"	7	V32	4	#4	STR	4'-9"	13
V5	4	#4	STR	2'-11"	8	V33	4	#4	STR	5'-2"	14
V6	4	#4	STR	3'-3"	9	V34	4	#4	STR	5'-6"	15
V7	4	#4	STR	3'-7"	10	V35	4	#4	STR	5'-11"	16
V8	4	#4	STR	4'-0"	11	V36	4	#4	STR	6'-3"	17
V9	4	#4	STR	4'-4"	12	V37	4	#4	STR	6'-8"	18
V10	4	#4	STR	4'-8"	12	V38	4	#4	STR	7'-1"	19
V11	4	#4	STR	5'-1"	14	V39	4	#4	STR	7'-5"	20
V12	4	#4	STR	5'-5"	14	V40	4	#4	STR	7'-10"	21
V13	4	#4	STR	5'-9"	15	V41	4	#4	STR	8'-3"	22
V14	4	#4	STR	6'-2"	16	V42	4	#4	STR	8'-7"	23
V15	4	#4	STR	6'-6"	17	V43	4	#4	STR	9'-0"	24

REINFORCING STEEL FOR 2 OUTLET WINGS	1188 LBS.
CLASS A CONCRETE	
2 OUTLET WINGS	6.6 C.Y.
1 HEADWALL	0.4 C.Y.
1 END CURTAIN WALL AND OUTLET WING FLOOR SLAB	9.0 C.Y.
TOTAL	16.0 C.Y.

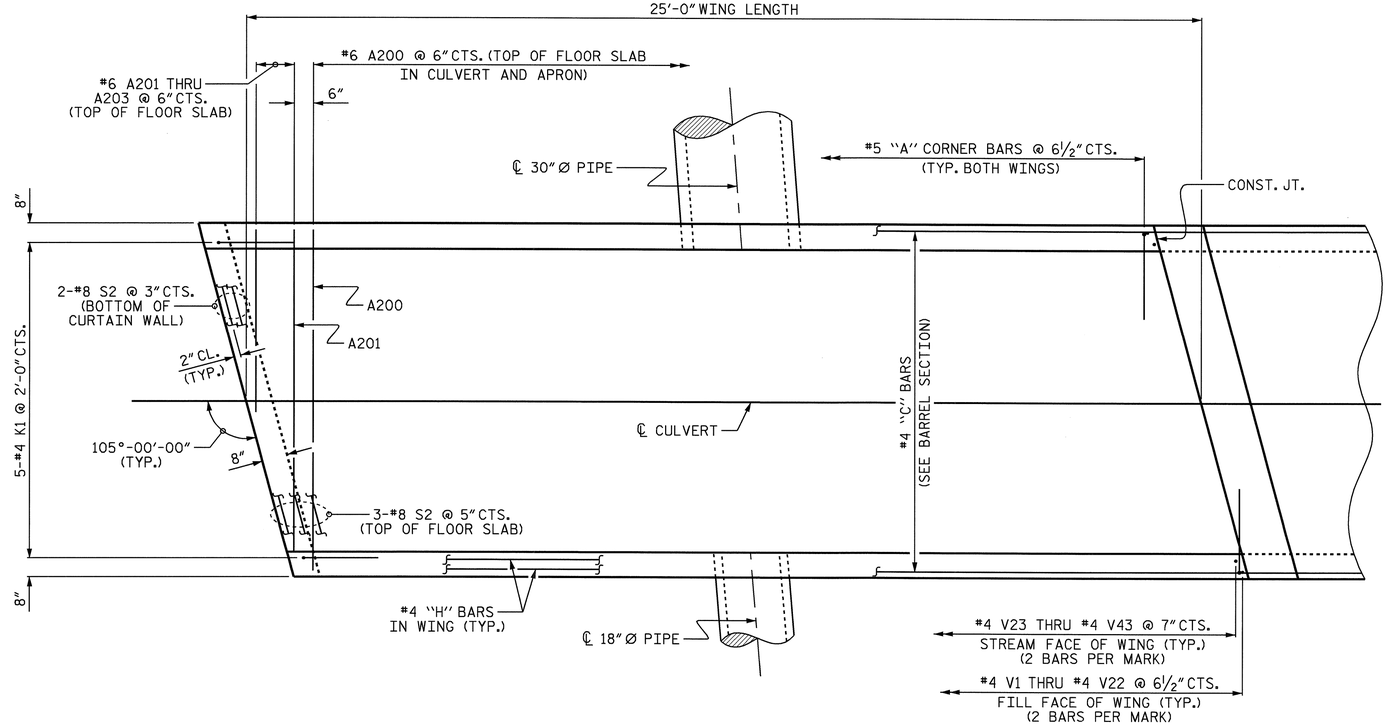

PLAN - OUTLET WINGS

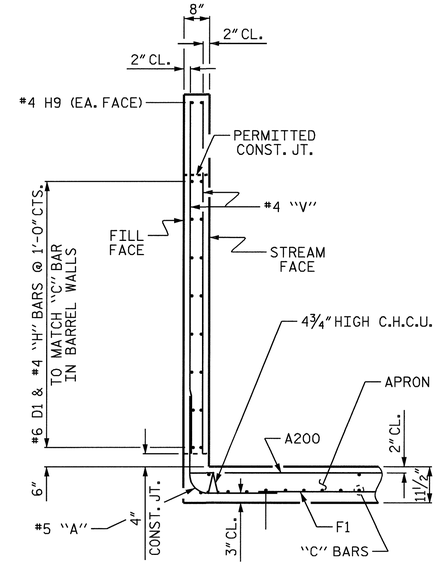

TYPICAL WING SECTION

CONTINUOUS HIGH CHAIR UPPER (C.H.C.U.) @ 3'-0"CTS.

PIPE THROUGH WING WALL NOT SHOWN FOR CLARITY.

NOTES

FOR PIPE LOCATION SEE PLAN VIEW

THE 18"Ø AND 30"Ø PIPES THROUGH THE WING WALL OF THE CULVERT SHALL BE LOCATED BY THE ENGINEER. THE REINFORCING STEEL SHALL BE FIELD BENT AS NECESSARY TO CLEAR THE PIPES.

QUANTITIES FOR "A", "C", "D", "F", "K" AND "S" BARS ARE INCLUDED IN STAGE I BARREL REINFORCING STEEL.

PROJECT NO. R-2417C

LEE COUNTY

STATION: 680+39.00-LREV-

SHEET 6 OF 12

STATE OF NORTH CAROLINA
DEPARTMENT OF TRANSPORTATION
RALEIGH

OUTLET WINGS FOR CONCRETE BOX CULVERT

H = 8'-0" SLOPE = 3:1

105° SKEW

NORTH CAROLINA PROFESSIONAL SEAL 029441 ENGINEER KRISTY W. ALFORD

REVISIONS						SHEET NO.
NO.	BY:	DATE:	NO.	BY:	DATE:	C-34
1			3			TOTAL SHEETS
2			4			40

DRAWN BY : T. BANKOVICH DATE : 2-2009
CHECKED BY : K.W. ALFORD DATE : 3-2009

30-JUL-2009 12:58
k:\structures\culv_9\culv_draft\r-2717c_str9_cu.dgn
kalford

STR. #9

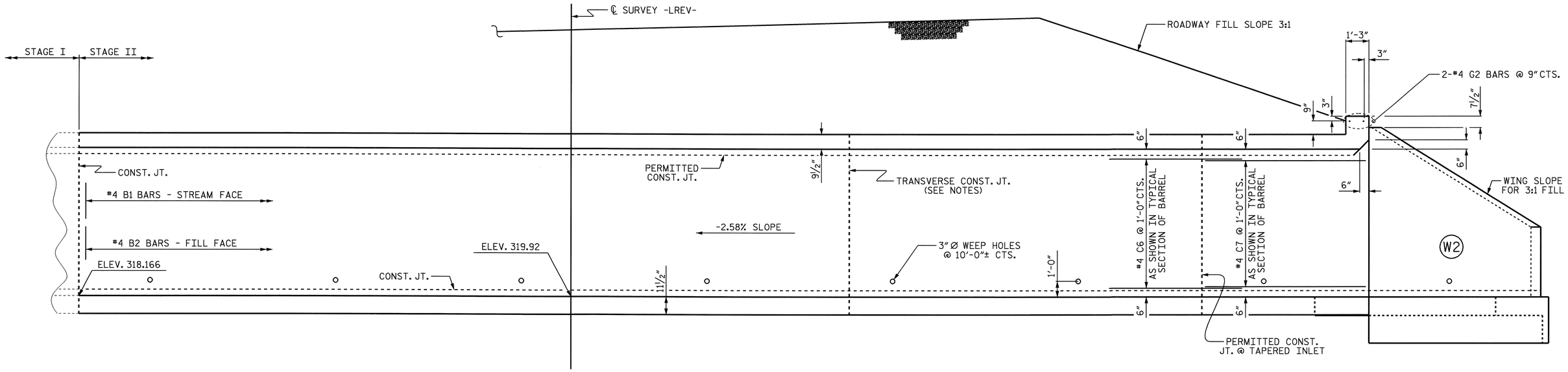

CULVERT SECTION NORMAL TO ROADWAY

(W1 NOT SHOWN FOR CLARITY)

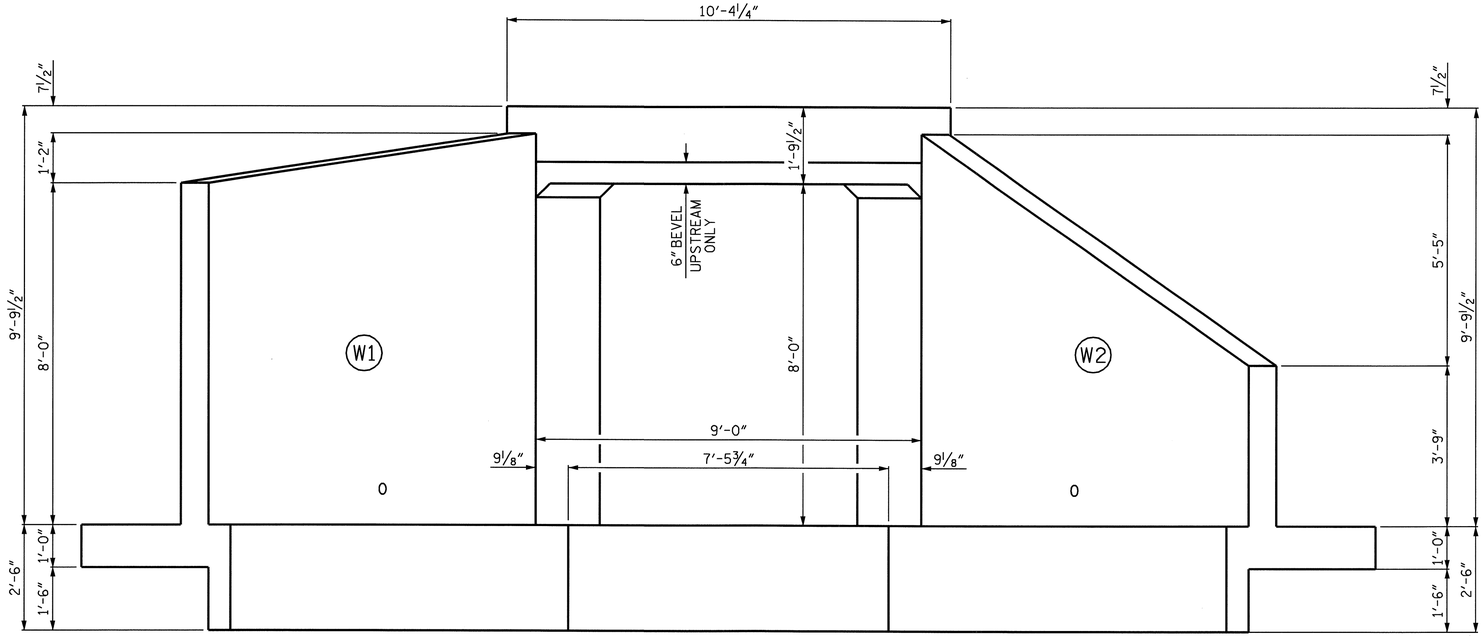

INLET END ELVEVATION

PROJECT NO. R-2417C

LEE COUNTY

STATION: 680+39.00-LREV-

SHEET 7 OF 12

STATE OF NORTH CAROLINA
DEPARTMENT OF TRANSPORTATION
RALEIGH

SINGLE 6 FT. X 8 FT. CONCRETE BOX CULVERT (STAGE II)

NORTH CAROLINA PROFESSIONAL SEAL 029441 ENGINEER KRISTY W. ALFORD

7/31/09

REVISIONS						SHEET NO.
NO.	BY:	DATE:	NO.	BY:	DATE:	C-35
1			3			TOTAL SHEETS
2			4			40

DRAWN BY : T. BANKOVICH DATE : 3-2009
CHECKED BY : K.W.ALFORD DATE : 3-2009

30-JUL-2009 12:58
k:\structures\culv_9\culv_draft\r-2717c_str9_cu.dgn
kalford

STR. #9

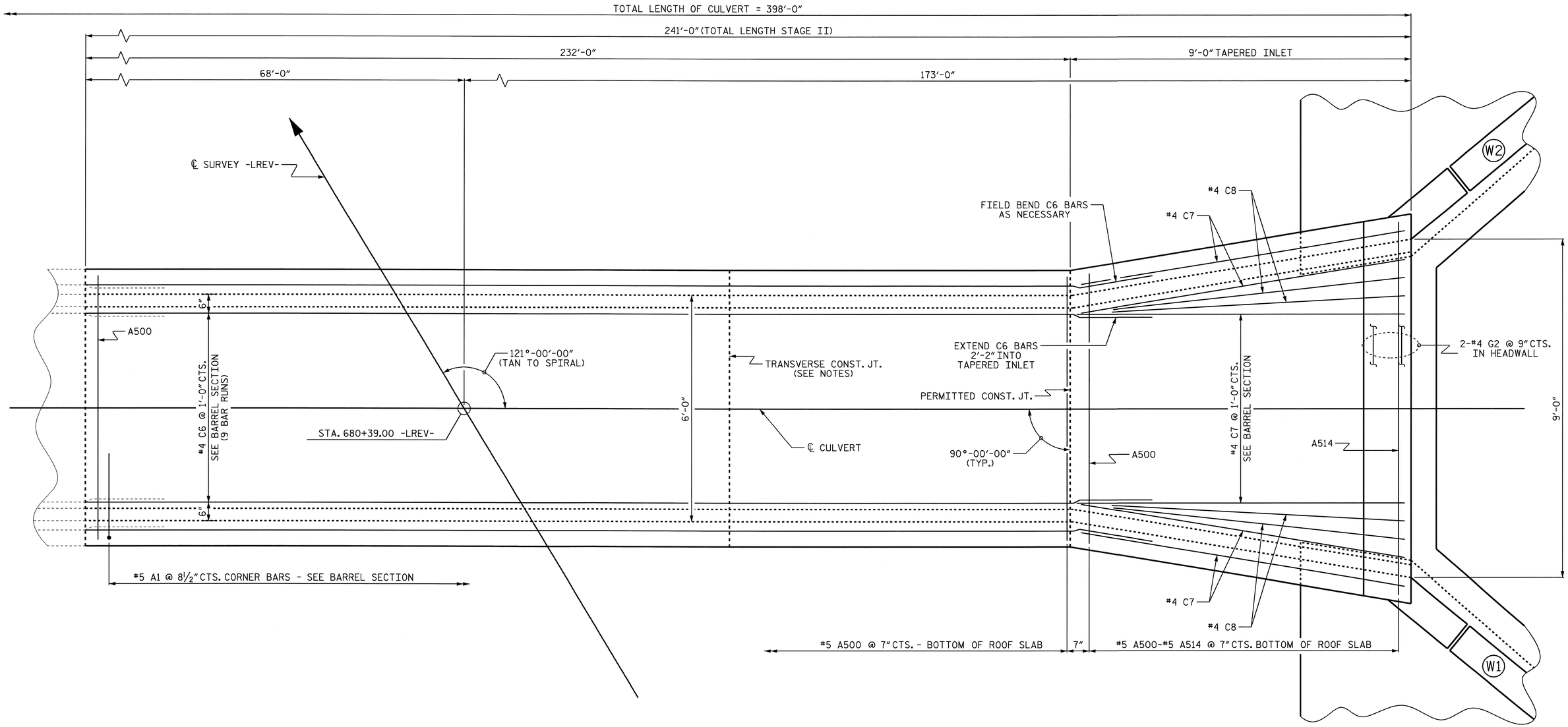

PLAN OF ROOF SLAB - STAGE II

PROJECT NO. R-2417C

LEE COUNTY

STATION: 680+39.00-LREV-

SHEET 8 OF 12

STATE OF NORTH CAROLINA
DEPARTMENT OF TRANSPORTATION
RALEIGH

SINGLE 6 FT. X 8 FT. CONCRETE BOX CULVERT (STAGE II)

NORTH CAROLINA PROFESSIONAL SEAL 029441 ENGINEER KRISTY W. ALFORD

Kristy W. Alford 7/31/09

REVISIONS						SHEET NO.
NO.	BY:	DATE:	NO.	BY:	DATE:	C-36
1			3			TOTAL SHEETS
2			4			40

DRAWN BY : T. BANKOVICH DATE : 3-2009
CHECKED BY : K.W. ALFORD DATE : 3-2009

30-JUL-2009 12:58
k:\structures\culv_9\culv_draft\r-2717c_str9_cu.dgn
kalford

STR. #9

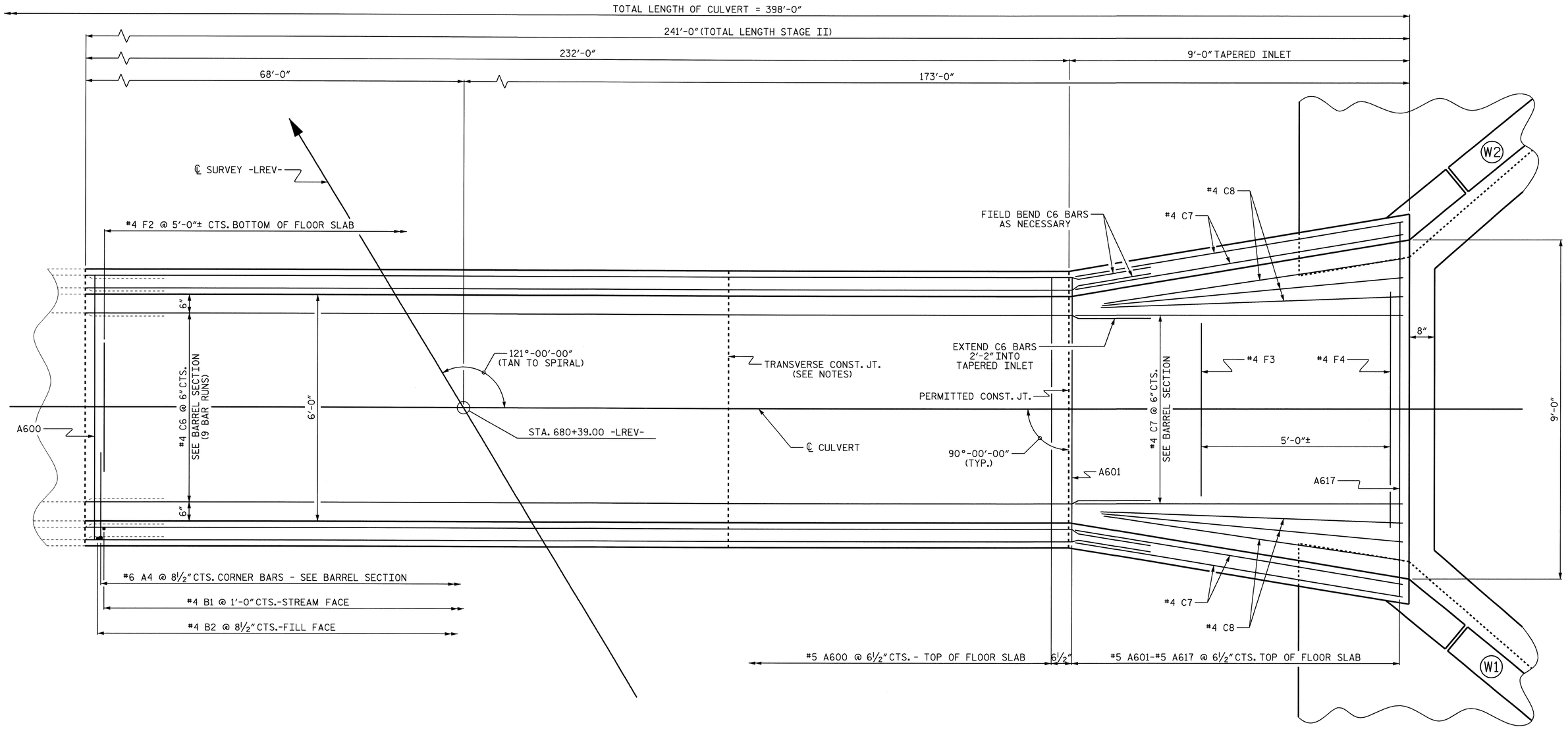

PLAN OF FLOOR SLAB - STAGE II

PROJECT NO. R-2417C

LEE COUNTY

STATION: 680+39.00-LREV-

SHEET 9 OF 12

STATE OF NORTH CAROLINA
DEPARTMENT OF TRANSPORTATION
RALEIGH

SINGLE 6 FT. X 8 FT. CONCRETE BOX CULVERT (STAGE II)

NORTH CAROLINA PROFESSIONAL SEAL 029441 ENGINEER KRISTY W. ALFORD
7/31/09

REVISIONS							SHEET NO.
NO.	BY:	DATE:	NO.	BY:	DATE:		C-37
1			3				TOTAL SHEETS
2			4				40

DRAWN BY : T. BANKOVICH DATE : 3-2009
CHECKED BY : K.W. ALFORD DATE : 3-2009

30-JUL-2009 12:58
k:\structures\culv_9\culv_draft\r-2717c_str9_cu.dgn
kalford

STR. #9

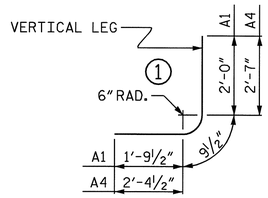

BAR TYPES

ALL BAR DIMENSIONS ARE OUT TO OUT

SPLICE LENGTHS CHART		
BAR	SIZE	SPLICE LENGTH
B1	#4	1'-9"
C6	#4	1'-11"

REINFORCING STEEL BAR SCHEDULE FOR BARREL (STAGE II)

BAR	NO.	SIZE	TYPE	LENGTH	WEIGHT	BAR	NO.	SIZE	TYPE	LENGTH	WEIGHT
A1	682	#5	1	4'-7"	3260	A608	1	#5	STR	8'-3"	9
A4	682	#6	1	5'-9"	5890	A609	1	#5	STR	8'-5"	9
						A610	1	#5	STR	8'-7"	9
A500	399	#5	STR	6'-11"	2878	A611	1	#5	STR	8'-9"	9
A501	1	#5	STR	7'-1"	7	A612	1	#5	STR	9'-0"	9
A502	1	#5	STR	7'-4"	8	A613	1	#5	STR	9'-2"	10
A503	1	#5	STR	7'-6"	8	A614	1	#5	STR	9'-4"	10
A504	1	#5	STR	7'-9"	8	A615	1	#5	STR	9'-6"	10
A505	1	#5	STR	7'-11"	8	A616	1	#5	STR	9'-8"	10
A506	1	#5	STR	8'-2"	9	A617	1	#5	STR	9'-10"	10
A507	1	#5	STR	8'-4"	9						
A508	1	#5	STR	8'-7"	9	B1	482	#4	STR	9'-3"	2978
A509	1	#5	STR	8'-9"	9	B2	682	#4	STR	7'-4"	3341
A510	1	#5	STR	9'-0"	9						
A511	1	#5	STR	9'-2"	10	C6	378	#4	STR	27'-9"	7007
A512	1	#5	STR	9'-5"	10	C7	42	#4	STR	8'-8"	243
A513	1	#5	STR	9'-7"	10	C8	10	#4	STR	8'-0"	53
A514	1	#5	STR	9'-10"	10						
A600	428	#5	STR	6'-11"	3088	F2	47	#4	STR	3'-3"	102
A601	1	#5	STR	7'-1"	7	F3	1	#4	STR	4'-7"	3
A602	1	#5	STR	7'-2"	7	F4	1	#4	STR	6'-3"	4
A603	1	#5	STR	7'-4"	8						
A604	1	#5	STR	7'-6"	8	G2	2	#4	STR	10'-0"	13
A605	1	#5	STR	7'-8"	8						
A606	1	#5	STR	7'-11"	8	TOTAL REINFORCING STEEL (LBS.)					29,133
A607	1	#5	STR	8'-1"	8						

STAGE II CULVERT NOTES:

ASSUMED LIVE LOAD----------HS20-44 OR ALTERNATE LOADING.

DESIGN FILL----------22.52'

FOR OTHER DESIGN DATA AND NOTES SEE STANDARD NOTE SHEET.

3"Ø WEEP HOLES INDICATED TO BE IN ACCORDANCE WITH THE SPECIFICATIONS.

CONCRETE IN STAGE II TO BE POURED IN THE FOLLOWING ORDER:

1. WING FOOTINGS AND FLOOR SLAB INCLUDING 4" OF ALL VERTICAL WALLS
2. THE REMAINING PORTIONS OF THE WALLS AND WINGS FULL HEIGHT FOLLOWED BY ROOF SLAB AND HEADWALL.

THE RESIDENT ENGINEER SHALL CHECK THE LENGTH OF CULVERT BEFORE STAKING IT OUT TO MAKE CERTAIN THAT IT WILL PROPERLY TAKE CARE OF THE FILL.

DIMENSIONS FOR WING LAYOUT AS WELL AS ADDITIONAL REINFORCING STEEL EMBEDDED IN BARREL ARE SHOWN ON WING SHEETS.

AT THE CONTRACTOR'S OPTION, HE MAY SPLICE THE VERTICAL REINFORCING STEEL IN THE INTERIOR FACE OF EXTERIOR WALL ABOVE LOWER WALL CONSTRUCTION JOINT. THE SPLICE LENGTH SHALL BE AS PROVIDED IN THE SPLICE LENGTH CHART SHOWN ON THE PLANS. EXTRA WEIGHT OF STEEL DUE TO THE SPLICES SHALL BE PAID FOR BY THE CONTRACTOR.

THE CONTRACTOR SHALL PROVIDE INDEPENDENT ASSURANCE SAMPLES OF REINFORCING STEEL AS FOLLOWS: FOR PROJECTS REQUIRING UP TO 400 TONS OF REINFORCING STEEL, ONE 30 INCH SAMPLE OF EACH SIZE BAR USED, AND FOR PROJECTS REQUIRING OVER 400 TONS OF REINFORCING STEEL, TWO 30 INCH SAMPLES OF EACH SIZE BAR USED. THE BARS FROM WHICH THE SAMPLES ARE TAKEN MUST THEN BE SPLICED WITH REPLACEMENT BARS OF THE SIZE AND LENGTH OF THE SAMPLE, PLUS A MINIMUM LAP SPLICE OF THIRTY BAR DIAMETERS.

A 3 FOOT STRIP OF FILTER FABRIC SHALL BE ATTACHED TO THE FILL FACE OF THE WING COVERING THE ENTIRE LENGTH OF THE EXPANSION JOINT.

FOR CULVERT DIVERSION DETAILS AND PAY ITEM, SEE EROSION CONTROL PLANS.

FOR CONSTRUCTION SEQUENCE, SEE EROSION CONTROL PLANS.

FOR MAINTENANCE OF TRAFFIC, SEE TRAFFIC CONTROL PLANS.

FOR SUBMITTAL OF WORKING DRAWINGS, SEE SPECIAL PROVISIONS.

FOR FALSEWORK AND FORMWORK, SEE SPECIAL PROVISIONS.

NO PRECAST REINFORCED CONCRETE BOX CULVERT OPTION WILL BE ALLOWED.

FOR CRANE SAFETY, SEE SPECIAL PROVISIONS.

FOR LIMITS OF TEMPORARY SHORING FOR MAINTENANCE OF TRAFFIC, SEE TRAFFIC CONTROL PLANS. FOR PAY ITEM FOR TEMPORARY SHORING FOR MAINTENANCE OF TRAFFIC, SEE ROADWAY PLANS.

TRANSVERSE CONSTRUCTION JOINTS SHALL BE USED IN THE BARREL, SPACED TO LIMIT THE POURS TO A MAXIMUM OF 50 FEET. LOCATION OF JOINTS SHALL BE SUBJECT TO THE APPROVAL OF THE ENGINEER.

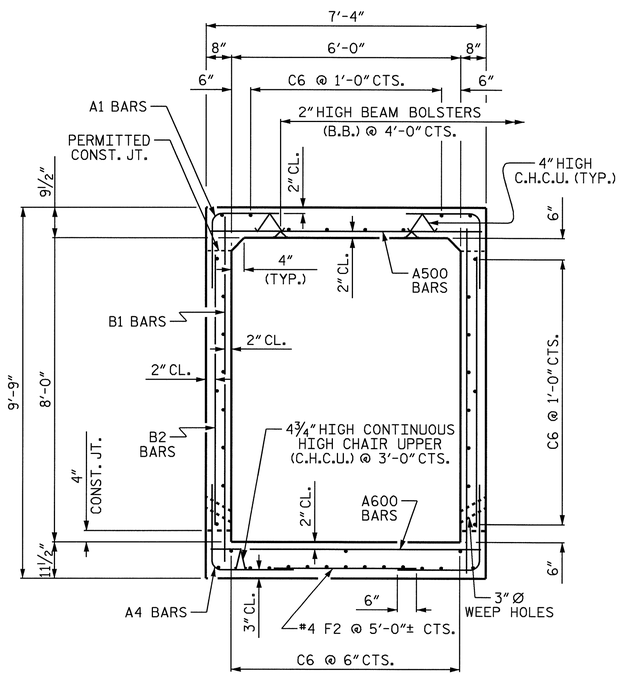

RIGHT ANGLE SECTION OF 6 FT. X 8 FT. BARREL

THERE ARE 42 "C" BARS IN SECTION OF BARREL

NOTE:
C6 BARS ARE 9 BAR RUNS

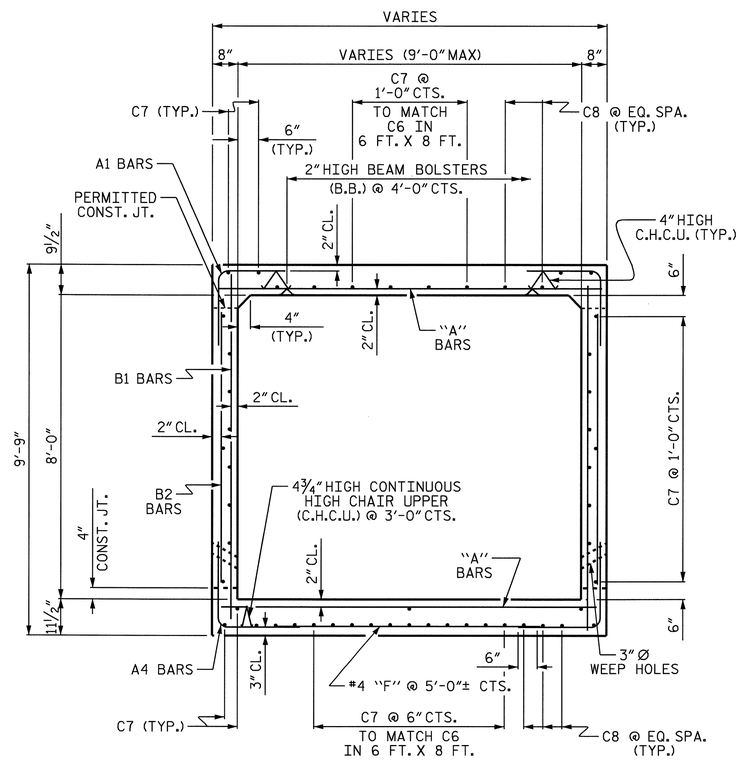

RIGHT ANGLE SECTION OF 6 FT. X 8 FT. BARREL AT TAPERED INLET

THERE ARE 52 "C" BARS IN SECTION OF BARREL

PROJECT NO. R-2417C
LEE COUNTY
STATION: 680+39.00-LREV-

SHEET 10 OF 12

STATE OF NORTH CAROLINA
DEPARTMENT OF TRANSPORTATION
RALEIGH

SINGLE 6 FT. X 8 FT. CONCRETE BOX CULVERT (STAGE II)

NORTH CAROLINA PROFESSIONAL ENGINEER SEAL 029441 KRISTY W. ALFORD
7/31/09

REVISIONS						SHEET NO.
NO.	BY:	DATE:	NO.	BY:	DATE:	C-38
1			3			TOTAL SHEETS
2			4			40

DRAWN BY : T. BANKOVICH DATE : 2-2009
CHECKED BY : K.W. ALFORD DATE : 3-2009

30-JUL-2009 12:59
k:\structures\culv_9\culv_draft\r-2717c_str9_cu.dgn
kalford

STR. #9

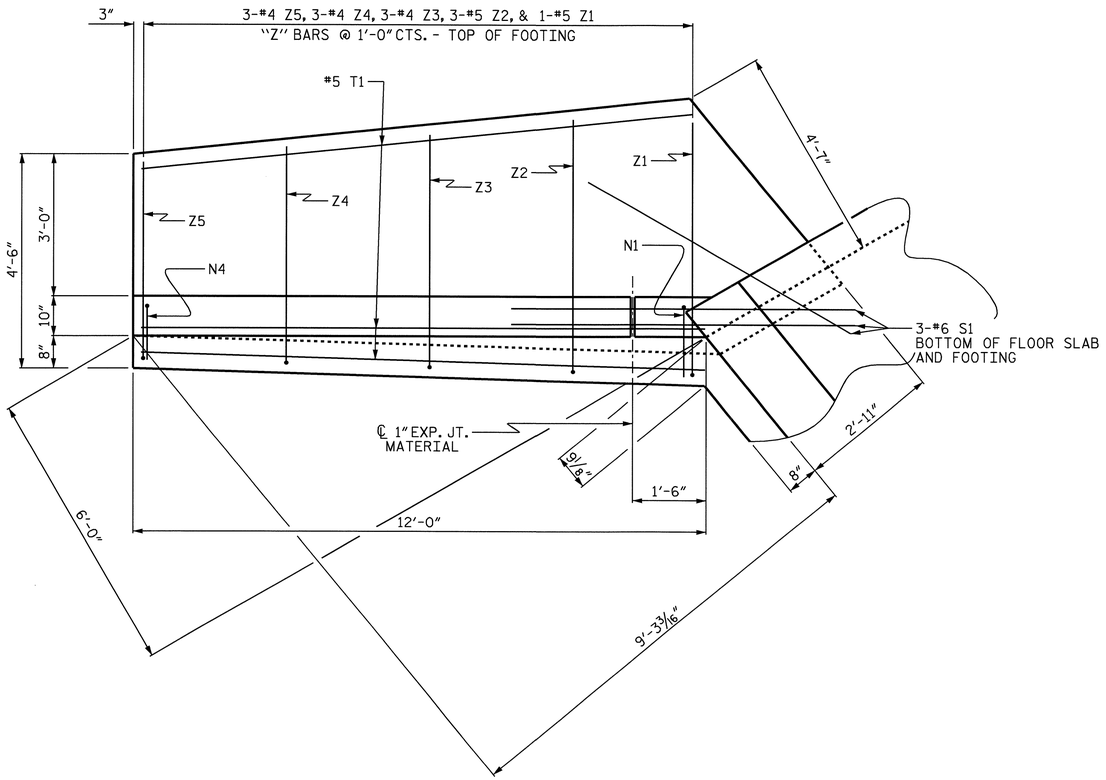

PLAN W1

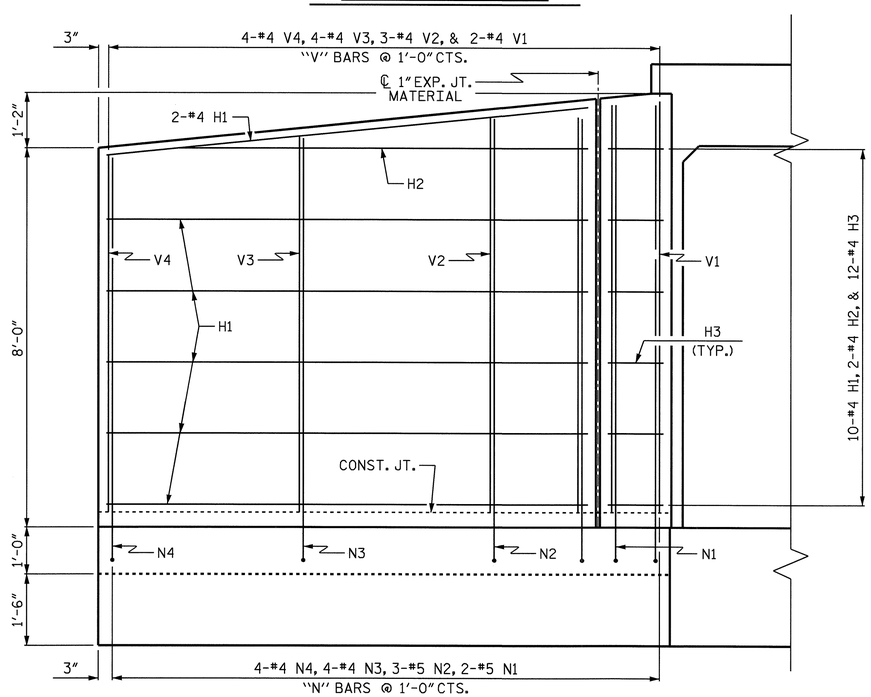

ELEVATION W1

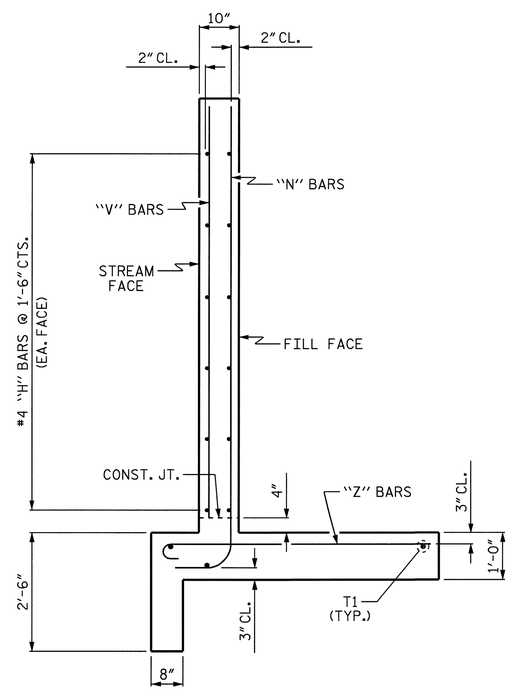

TYPICAL WING SECTION

NOTE:

FOR W1 BILL OF MATERIAL SEE SHEET 12 OF 12.

PROJECT NO. R-2417C

LEE COUNTY

STATION: 680+39.00-LREV-

SHEET 11 OF 12

STATE OF NORTH CAROLINA
DEPARTMENT OF TRANSPORTATION
RALEIGH

INLET WING FOR CONCRETE BOX CULVERT

H = 8'-0" SLOPE = 3:1

90° SKEW

NORTH CAROLINA PROFESSIONAL SEAL 029441 ENGINEER KRISTY W. ALFORD

Kristy W. Alford 4/31/09

REVISIONS								SHEET NO.
NO.	BY:	DATE:	NO.	BY:	DATE:			C-39
1			3					TOTAL SHEETS
2			4					40

DRAWN BY : T. BANKOVICH DATE : 2-2009

CHECKED BY : K.W. ALFORD DATE : 3-2009

30-JUL-2009 12:59
k:\structures\culv_9\culv_draft\r-2717c_str9_cu.dgn
kalford

STR. #9

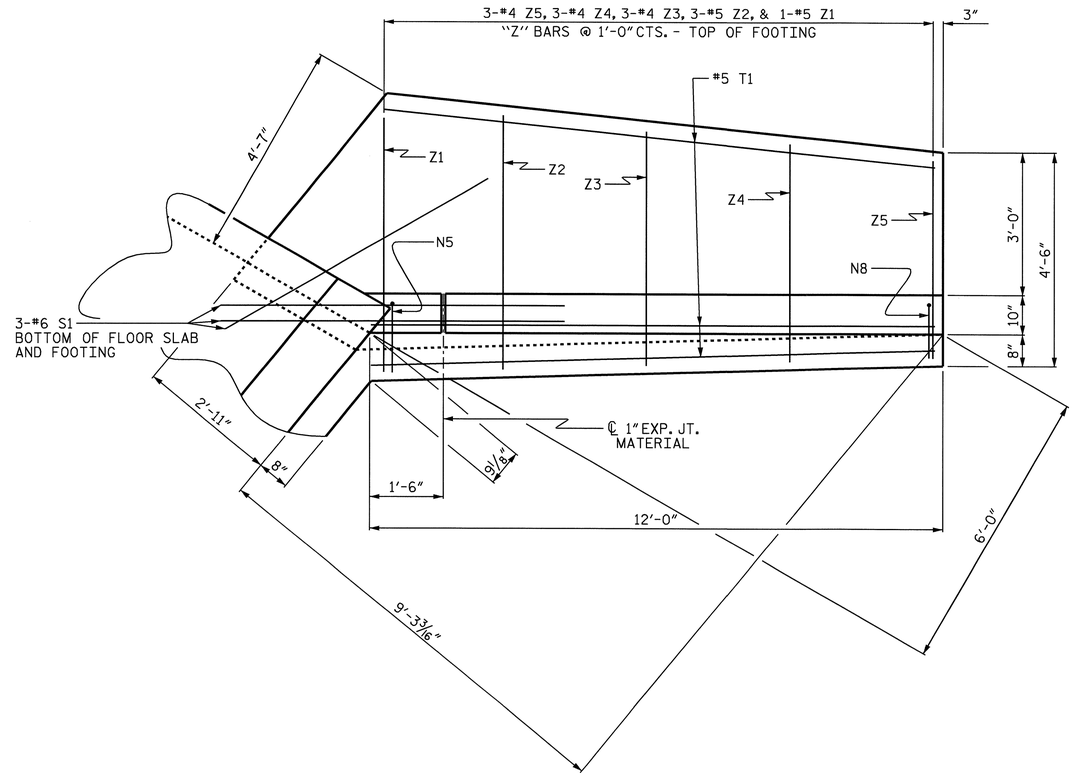

PLAN W2

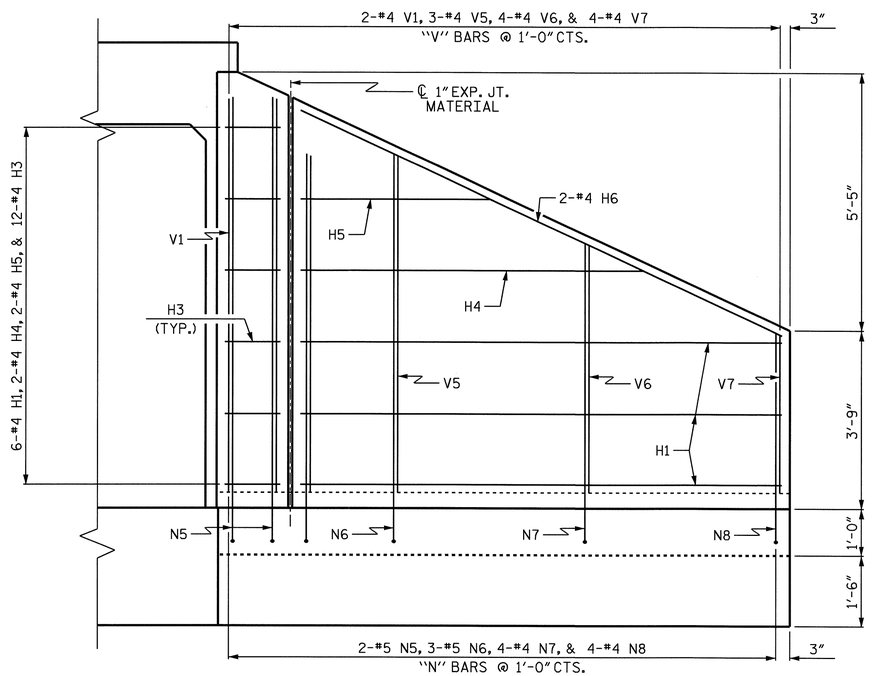

ELEVATION W2

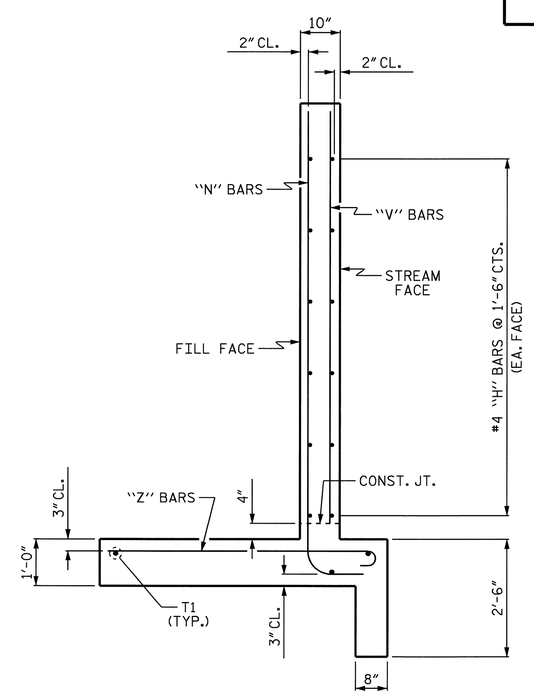

TYPICAL WING SECTION

BAR TYPES

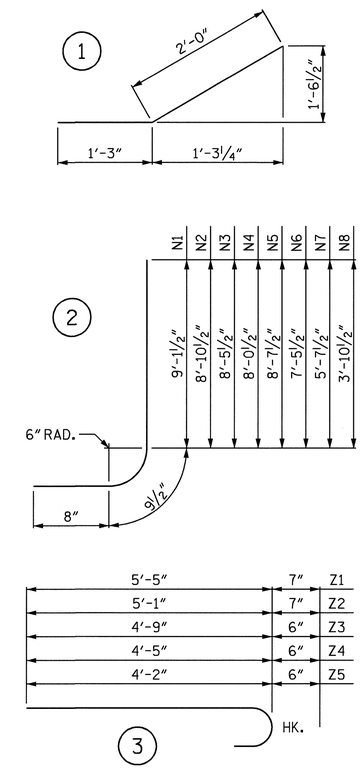

ALL BAR DIMENSIONS ARE OUT TO OUT.

BILL OF MATERIAL

BAR	NO.	SIZE	TYPE	LENGTH	WEIGHT
H1	18	#4	STR	10'-1"	121
H2	2	#4	STR	8'-7"	11
H3	24	#4	1	3'-3"	52
H4	2	#4	STR	7'-2"	10
H5	2	#4	STR	3'-11"	5
H6	2	#4	STR	11'-1"	15
N1	2	#5	2	10'-7"	22
N2	3	#5	2	10'-4"	32
N3	4	#4	2	9'-11"	26
N4	4	#4	2	9'-6"	25
N5	2	#5	2	10'-1"	21
N6	3	#5	2	8'-11"	28
N7	4	#4	2	7'-1"	19
N8	4	#4	2	5'-4"	14
S1	6	#6	STR	6'-0"	54
T1	6	#5	STR	12'-0"	75
V1	4	#4	STR	8'-1"	22
V2	3	#4	STR	8'-3"	17
V3	4	#4	STR	7'-11"	21
V4	4	#4	STR	7'-6"	20
V5	3	#4	STR	6'-10"	14
V6	4	#4	STR	5'-0"	13
V7	4	#4	STR	3'-3"	9
Z1	2	#5	3	6'-0"	13
Z2	6	#5	3	5'-8"	35
Z3	6	#4	3	5'-3"	21
Z4	6	#4	3	4'-11"	20
Z5	6	#4	3	4'-8"	19
REINFORCING STEEL FOR INLET WINGS					754 LBS.
CLASS A CONCRETE					
2 WINGS					12.0 C.Y.
1 HEADWALL					0.5 C.Y.
1 CURTAIN WALL					0.5 C.Y.
TOTAL					13.0 C.Y.

PROJECT NO. R-2417C

LEE COUNTY

STATION: 680+39.00-LREV-

SHEET 12 OF 12

STATE OF NORTH CAROLINA
DEPARTMENT OF TRANSPORTATION
RALEIGH

INLET WING FOR CONCRETE BOX CULVERT

H = 8'-0" SLOPE = 3:1

90° SKEW

NORTH CAROLINA PROFESSIONAL SEAL 029441 ENGINEER KRISTY W. ALFORD

7/31/09

REVISIONS							SHEET NO.
NO.	BY:	DATE:	NO.	BY:	DATE:		C-40
1			3				TOTAL SHEETS
2			4				40

DRAWN BY : T. BANKOVICH DATE : 2-2009

CHECKED BY : K.W. ALFORD DATE : 3-2009

30-JUL-2009 12:59
k:\structures\culv_9\culv_draft\r-2717c_str9_cu.dgn
kalford

STR. #9

STANDARD NOTES

DESIGN DATA:

SPECIFICATIONS	A.A.S.H.T.O. (CURRENT)
LIVE LOAD	SEE PLANS
IMPACT ALLOWANCE	SEE A.A.S.H.T.O.
STRESS IN EXTREME FIBER OF	
STRUCTURAL STEEL - AASHTO M270 GRADE 36	20,000 LBS. PER SQ. IN.
- AASHTO M270 GRADE 50W	27,000 LBS. PER SQ. IN.
- AASHTO M270 GRADE 50	27,000 LBS. PER SQ. IN.
REINFORCING STEEL IN TENSION	
GRADE 60	24,000 LBS. PER SQ. IN.
CONCRETE IN COMPRESSION	1,200 LBS. PER SQ. IN.
CONCRETE IN SHEAR	SEE A.A.S.H.T.O.
STRUCTURAL TIMBER - TREATED OR	
UNTREATED - EXTREME FIBER STRESS	1,800 LBS. PER SQ. IN.
COMPRESSION PERPENDICULAR TO GRAIN OF TIMBER	375 LBS. PER SQ. IN.
EQUIVALENT FLUID PRESSURE OF EARTH	30 LBS. PER CU. FT. (MINIMUM)

MATERIAL AND WORKMANSHIP:

EXCEPT AS MAY OTHERWISE BE SPECIFIED ON PLANS OR IN THE SPECIAL PROVISIONS, ALL MATERIAL AND WORKMANSHIP SHALL BE IN ACCORDANCE WITH THE 2006 "STANDARD SPECIFICATIONS FOR ROADS AND STRUCTURES" OF THE N.C. DEPARTMENT OF TRANSPORTATION.

STEEL SHEET PILING FOR PERMANENT OR TEMPORARY APPLICATIONS SHALL BE HOT ROLLED.

CONCRETE:

UNLESS OTHERWISE REQUIRED ON PLANS, CLASS A CONCRETE SHALL BE USED FOR ALL PORTIONS OF ALL STRUCTURES WITH THE EXCEPTION THAT: CLASS AA CONCRETE SHALL BE USED IN BRIDGE SUPERSTRUCTURES, ABUTMENT BACKWALLS, AND APPROACH SLABS; AND CLASS B CONCRETE SHALL BE USED FOR SLOPE PROTECTION AND RIP RAP.

CONCRETE CHAMFERS:

UNLESS OTHERWISE NOTED ON THE PLANS, ALL EXPOSED CORNERS ON STRUCTURES SHALL BE CHAMFERED 3/4" WITH THE FOLLOWING EXCEPTIONS: TOP CORNERS OF CURBS MAY BE ROUNDED TO 1-1/2" RADIUS WHICH IS BUILT INTO CURB FORMS; CORNERS OF TRANSVERSE FLOOR EXPANSION JOINTS SHALL BE ROUNDED WITH A 1/4" FINISHING TOOL UNLESS OTHERWISE REQUIRED ON PLANS; AND CORNERS OF EXPANSION JOINTS IN THE ROADWAY FACES AND TOPS OF CURBS AND SIDEWALKS SHALL BE ROUNDED TO A 1/4" RADIUS WITH A FINISHING STONE OR TOOL UNLESS OTHERWISE REQUIRED ON PLANS.

DOWELS:

DOWELS WHEN INDICATED ON PLANS AS FOR CULVERT EXTENSIONS, SHALL BE EMBEDDED AT LEAST 12" INTO THE OLD CONCRETE AND GROUTED INTO PLACE WITH 1:2 CEMENT MORTAR.

ALLOWANCE FOR DEAD LOAD DEFLECTION, SETTLEMENT, ETC. IN CASTING SUPERSTRUCTURES:

BRIDGES SHALL BE BUILT ON THE GRADE OR VERTICAL CURVE SHOWN ON PLANS. SLABS, CURBS AND PARAPETS SHALL CONFORM TO THE GRADE OR CURVE.

ALL DIMENSIONS WHICH ARE GIVEN IN SECTION AND ARE AFFECTED BY DEAD LOAD DEFLECTIONS ARE DIMENSIONS AT CENTER LINE OF BEARING UNLESS OTHERWISE NOTED ON PLANS. IN SETTING FORMS FOR STEEL BEAM BRIDGES AND PRESTRESSED CONCRETE GIRDER BRIDGES, ADJUSTMENTS SHALL BE MADE DUE TO THE DEAD LOAD DEFLECTIONS FOR THE ELEVATIONS SHOWN. WHERE BLOCKS ARE SHOWN OVER BEAMS FOR BUILDING UP TO THE SLAB, THE VERTICAL DIMENSIONS OF THE BLOCKS SHALL BE ADJUSTED BETWEEN BEARINGS TO COMPENSATE FOR DEAD LOAD DEFLECTIONS, VERTICAL CURVE ORDINATE, AND ACTUAL BEAM CAMBER. WHERE BOTTOM OF SLAB IS IN LINE WITH BOTTOM OF TOP FLANGES, DEPTH OF SLAB BETWEEN BEARINGS SHALL BE ADJUSTED TO COMPENSATE FOR DEAD LOAD DEFLECTION, VERTICAL CURVE ORDINATE, AND ACTUAL BEAM CAMBER.

IN SETTING FALSEWORK AND FORMS FOR REINFORCED CONCRETE SPANS, AN ALLOWANCE SHALL BE MADE FOR DEAD LOAD DEFLECTIONS, SETTLEMENT OF FALSEWORK, AND PERMANENT CAMBER WHICH SHALL BE PROVIDED FOR IN ADDITION TO THE ELEVATIONS SHOWN. AFTER REMOVAL OF THE FALSEWORK, THE FINISHED STRUCTURES SHALL CONFORM TO THE PROFILE AND ELEVATIONS SHOWN ON THE PLANS AND CONSTRUCTION ELEVATIONS FURNISHED BY THE ENGINEER.

DETAILED DRAWINGS FOR FALSEWORK OR FORMS FOR BRIDGE SUPERSTRUCTURE AND ANY STRUCTURE OR PARTS OF A STRUCTURE AS NOTED ON THE PLANS SHALL BE SUBMITTED TO THE ENGINEER FOR APPROVAL BEFORE CONSTRUCTION OF THE FALSEWORK OR FORMS IS STARTED.

REINFORCING STEEL:

ALL REINFORCING STEEL SHALL BE DEFORMED. DIMENSIONS RELATIVE TO PLACEMENT OF REINFORCING ARE TO CENTERS OF BARS UNLESS OTHERWISE INDICATED IN THE PLANS. DIMENSIONS ON BAR DETAILS ARE TO CENTERS OF BARS OR ARE OUT TO OUT AS INDICATED ON PLANS.

WIRE BAR SUPPORTS SHALL BE PROVIDED FOR REINFORCING STEEL WHERE INDICATED ON THE PLANS. WHEN BAR SUPPORT PIECES ARE PLACED IN CONTINUOUS LINES, THEY SHALL BE SO PLACED THAT THE ENDS OF THE SUPPORTING WIRES SHALL BE LAPPED TO LOCK LEGS ON ADJOINING PIECES.

STRUCTURAL STEEL:

AT THE CONTRACTOR'S OPTION, HE MAY SUBSTITUTE 7/8" Ø SHEAR STUDS FOR THE 3/4" Ø STUDS SPECIFIED ON THE PLANS. THIS SUBSTITUTION SHALL BE MADE AT THE RATE OF 3 - 7/8" Ø STUDS FOR 4 - 3/4" Ø STUDS, AND STUD SPACING CHANGES SHALL BE MADE AS NECESSARY TO PROVIDE THE SAME EQUIVALENT NUMBER OF 7/8" Ø STUDS ALONG THE BEAM AS SHOWN FOR 3/4" Ø STUDS BASED ON THE RATIO OF 3 - 7/8" Ø STUDS FOR 4 - 3/4" Ø STUDS. STUDS OF THE LENGTH SPECIFIED ON THE PLANS MUST BE PROVIDED. THE MAXIMUM SPACING SHALL BE 2'-0".

EXCEPT AT THE INTERIOR SUPPORTS OF CONTINUOUS BEAMS WHERE THE COVER PLATE IS IN CONTACT WITH BEARING PLATE, THE CONTRACTOR MAY, AT HIS OPTION, SUBSTITUTE FOR THE COVER PLATES DESIGNATED ON THE PLANS COVER PLATES OF THE EQUIVALENT AREA PROVIDED THESE PLATES ARE AT LEAST 5/16" IN THICKNESS AND DO NOT EXCEED A WIDTH EQUAL TO THE FLANGE WIDTH LESS 2" OR A THICKNESS EQUAL TO 2 TIMES THE FLANGE THICKNESS. THE SIZE OF FILLET WELDS SHALL CONFORM TO THE REQUIREMENTS OF THE CURRENT ANSI/AASHTO/AWS "BRIDGE WELDING CODE". ELECTROSLAG WELDING WILL NOT BE PERMITTED.

WITH THE SOLE EXCEPTION OF EDGES AT SURFACES WHICH BEAR ON OTHER SURFACES, ALL SHARP EDGES AND ENDS OF SHAPES AND PLATES SHALL BE SLIGHTLY ROUNDED BY SUITABLE MEANS TO A RADIUS OF APPROXIMATELY 1/16 INCH OR EQUIVALENT FLAT SURFACE AT A SUITABLE ANGLE PRIOR TO PAINTING, GALVANIZING, OR METALLIZING.

HANDRAILS AND POSTS:

METAL STANDARDS AND FACES OF THE CONCRETE END POSTS FOR THE METAL RAIL SHALL BE SET NORMAL TO THE GRADE OF THE CURB, UNLESS OTHERWISE SHOWN ON PLANS. THE METAL RAIL AND TOPS OF CONCRETE POSTS USED WITH THE ALUMINUM RAIL SHALL BE BUILT PARALLEL TO THE GRADE OF THE CURB.

METAL HANDRAILS SHALL BE IN ACCORDANCE WITH THE PLANS. RAILS SHALL BE AS MANUFACTURED FOR BRIDGE RAILING. CASTINGS SHALL BE OF A UNIFORM APPEARANCE. FINS AND OTHER DEFORMATIONS RESULTING FROM CASTING OR OTHERWISE SHALL BE REMOVED IN A MANNER SO THAT A UNIFORM COLORING OF THE COMPLETED CASTING SHALL BE OBTAINED. CASTINGS WITH DISCOLORATIONS OR OF NON-UNIFORM COLORING WILL NOT BE ACCEPTED. CERTIFIED MILL REPORTS ARE REQUIRED FOR METAL RAILS AND POSTS.

SPECIAL NOTES:

GENERALLY, IN CASE OF DISCREPANCY, THIS STANDARD SHEET OF NOTES SHALL GOVERN OVER THE SPECIFICATIONS, BUT THE REMAINDER OF THE PLANS SHALL GOVERN OVER NOTES HEREON, AND SPECIAL PROVISIONS SHALL GOVERN OVER ALL. SEE SPECIFICATIONS ARTICLE 105-4.

ENGLISH

JANUARY, 1990

STD. NO. SN